Dist	COUNTY	ROUTE	POST MILES TOTAL PROJECT	SHEET No.	TOTAL SHEETS
04	SM	1,35,82,84, 109,280	Var	1	96

ACSTP-000C(378)E

STATE OF CALIFORNIA
DEPARTMENT OF TRANSPORTATION

PROJECT PLANS FOR CONSTRUCTION ON
STATE HIGHWAY

IN SAN MATEO COUNTY AT VARIOUS LOCATIONS

TO BE SUPPLEMENTED BY STANDARD PLANS DATED 2010

INDEX OF PLANS

SHEET No.	DESCRIPTION
1	TITLE SHEET AND LOCATION MAP
2	TYPICAL CROSS SECTIONS
3 - 14	LAYOUT
15	CONSTRUCTION DETAILS
16 - 17	DRAINAGE DETAILS AND QUANTITIES
18 - 29	UTILITY PLAN
30 - 33	CONSTRUCTION AREA SIGNS
34 - 35	TRAFFIC HANDLING PLAN AND QUANTITIES
36 - 41	PAVEMENT DELINEATION PLAN AND QUANTITIES
42 - 44	SIGN PLAN AND QUANTITIES
45	SUMMARY OF QUANTITIES
46 - 53	ELECTRICAL PLANS
54 - 85	REVISED STANDARD PLANS
	STRUCTURE PLANS
86 - 88	PALOMA AVENUE OVERCROSSING Br No. 35-0187
89 - 96	MODIFY PUMP PLANT TOP SLAB (ROUTE 82 & 38TH AVENUE)

THE STANDARD PLANS LIST APPLICABLE TO THIS CONTRACT IS INCLUDED IN THE NOTICE TO BIDDERS AND SPECIAL PROVISIONS BOOK.

LOCATION MAP

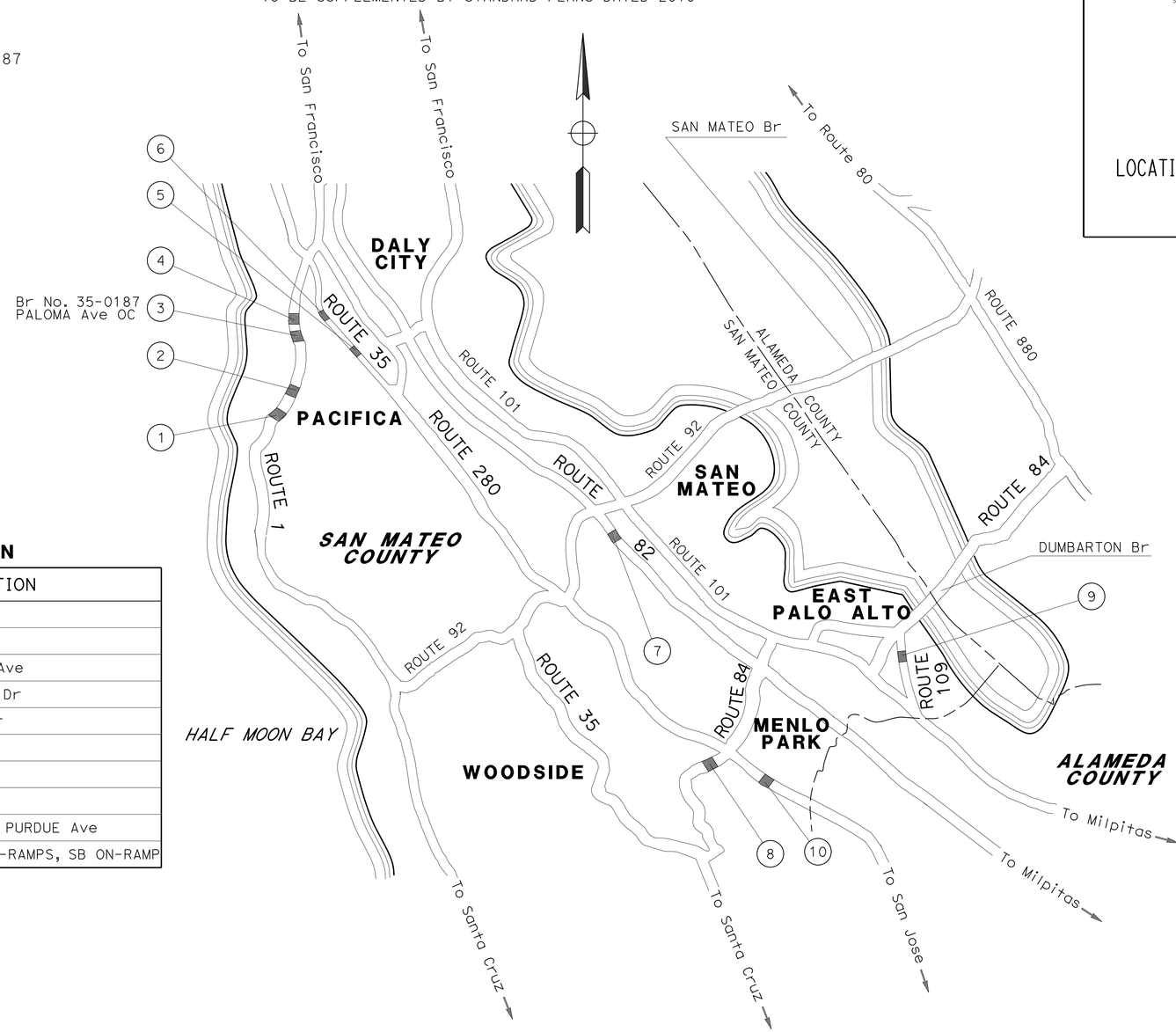

NO SCALE

LOCATIONS OF CONSTRUCTION

No. (#)	COUNTY	ROUTE	PM	DESCRIPTION
1	SM	1	42.0	FASSLER Ave
2		1	R43.1	WESTPORT Dr
3		1	R44.3	SB OFF-RAMP TO PALOMA Ave
4		1	R44.8	NB OFF-RAMP TO MILAGRA Dr
5		35	25.5	COLLEGE Dr/BERKSHIRE Dr
6		35	27.1	GLENCOURT WAY/KING Dr
7		82	9.0	38TH Ave
8		84	20.9	WHISKEY HILL Rd
9		109	1.1/1.3	FROM NOTRE DAME Ave TO PURDUE Ave
10		280	1.6/1.8	SANDHILL, NB AND SB OFF-RAMPS, SB ON-RAMP

PROJECT MANAGER RON MORIGUCHI

DESIGN MANAGER ARLISSA PANG

THE CONTRACTOR SHALL POSSESS THE CLASS (OR CLASSES) OF LICENSE AS SPECIFIED IN THE "NOTICE TO BIDDERS."

An T. Nguyen 4/10/14
PROJECT ENGINEER DATE
REGISTERED CIVIL ENGINEER

April 28, 2014
PLANS APPROVAL DATE

REGISTERED PROFESSIONAL ENGINEER An T. Nguyen No. 62776 Exp. 6-30-14 CIVIL STATE OF CALIFORNIA

THE STATE OF CALIFORNIA OR ITS OFFICERS OR AGENTS SHALL NOT BE RESPONSIBLE FOR THE ACCURACY OR COMPLETENESS OF SCANNED COPIES OF THIS PLAN SHEET.

CONTRACT No.	04-0G2224
PROJECT ID	0413000471

LAST REVISION 04-10-14

DATE PLOTTED => 30-JUN-2014
TIME PLOTTED => 13:37

Dist	COUNTY	ROUTE	POST MILES TOTAL PROJECT	SHEET No.	TOTAL SHEETS
04	SM	1,35,82,84, 109,280	Var	2	96

REGISTERED CIVIL ENGINEER 4/10/14 DATE

4-28-14
PLANS APPROVAL DATE

REGISTERED PROFESSIONAL ENGINEER An T. Nguyen No. 62776 Exp. 6-30-14 CIVIL STATE OF CALIFORNIA

THE STATE OF CALIFORNIA OR ITS OFFICERS OR AGENTS SHALL NOT BE RESPONSIBLE FOR THE ACCURACY OR COMPLETENESS OF SCANNED COPIES OF THIS PLAN SHEET.

NOTE:

1. DIMENSIONS OF THE PAVEMENT STRUCTURES (STRUCTURAL SECTIONS) ARE SUBJECT TO TOLERANCES SPECIFIED IN THE STANDARD SPECIFICATIONS.

TYPICAL PAVEMENT STRUCTURE SECTIONS

1 — 0.20′ COLD PLANE AC Pvmt
0.20′ MINOR HMA

2 — 0.50′ MINOR HMA

3 — 0.50′ PCC

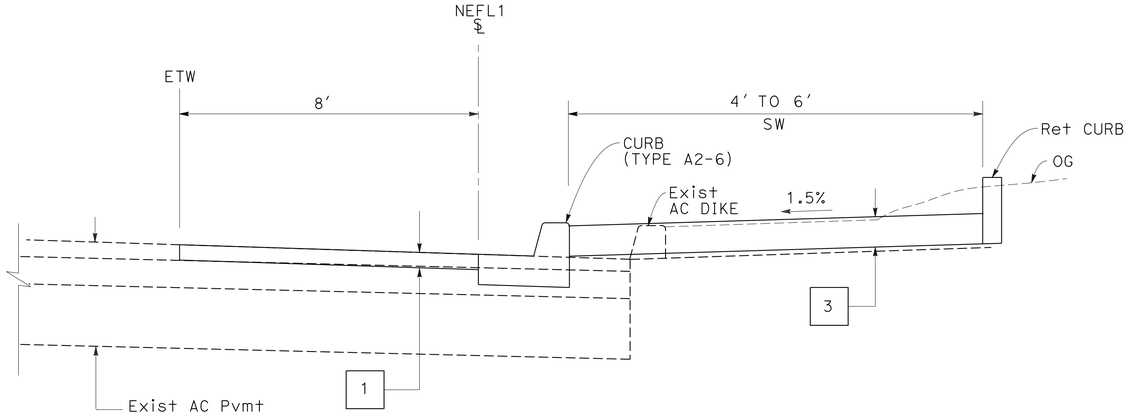

LOCATION No. 2
NEFL1 10+48.66 TO 11+07.76

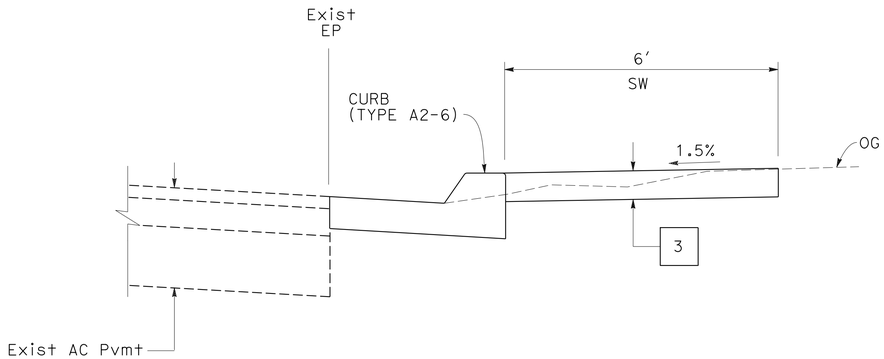

CURB AND SIDEWALK (TYPICAL)

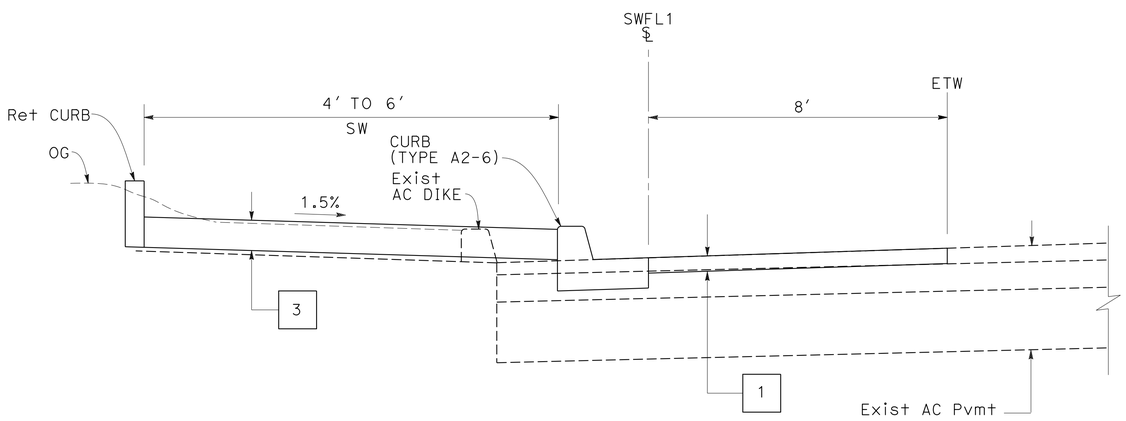

LOCATION No. 2
SWFL1 10+11.12 TO 10+63.47

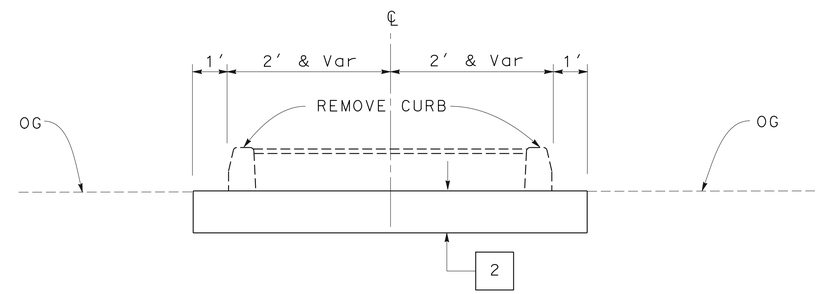

LOCATION No. 5
MEDIAN ISLAND
A1 15+30 TO 15+60

TYPICAL CROSS SECTIONS
NO SCALE

X-1

STATE OF CALIFORNIA - DEPARTMENT OF TRANSPORTATION
Caltrans
DESIGN

FUNCTIONAL SUPERVISOR: LAWRENCE A. JONES
CALCULATED-DESIGNED BY: AN NGUYEN
CHECKED BY: ARLISSA PANG
REVISED BY: AN
DATE REVISED: 4/10/14

LAST REVISION 04-10-14
DATE PLOTTED => 30-JUN-2014
TIME PLOTTED => 13:37

Dist	COUNTY	ROUTE	POST MILES TOTAL PROJECT	SHEET No.	TOTAL SHEETS
04	SM	1,35,82,84, 109,280	Var	3	96

REGISTERED CIVIL ENGINEER 4/10/14 DATE

4-28-14
PLANS APPROVAL DATE

REGISTERED PROFESSIONAL ENGINEER An T. Nguyen No. 62776 Exp. 6-30-14 CIVIL STATE OF CALIFORNIA

THE STATE OF CALIFORNIA OR ITS OFFICERS OR AGENTS SHALL NOT BE RESPONSIBLE FOR THE ACCURACY OR COMPLETENESS OF SCANNED COPIES OF THIS PLAN SHEET.

NOTE:

FOR ACCURATE RIGHT OF WAY DATA, CONTACT RIGHT OF WAY ENGINEERING AT THE DISTRICT OFFICE.

LEGEND:

No. STRUCTURAL SECTION NUMBER

CURVE DATA

No. (#)	R	Δ	T	L
1	244′	55° 27′ 46″	128.20′	236.06′
2	34.90′	28° 55′ 23″	9′	17.62′

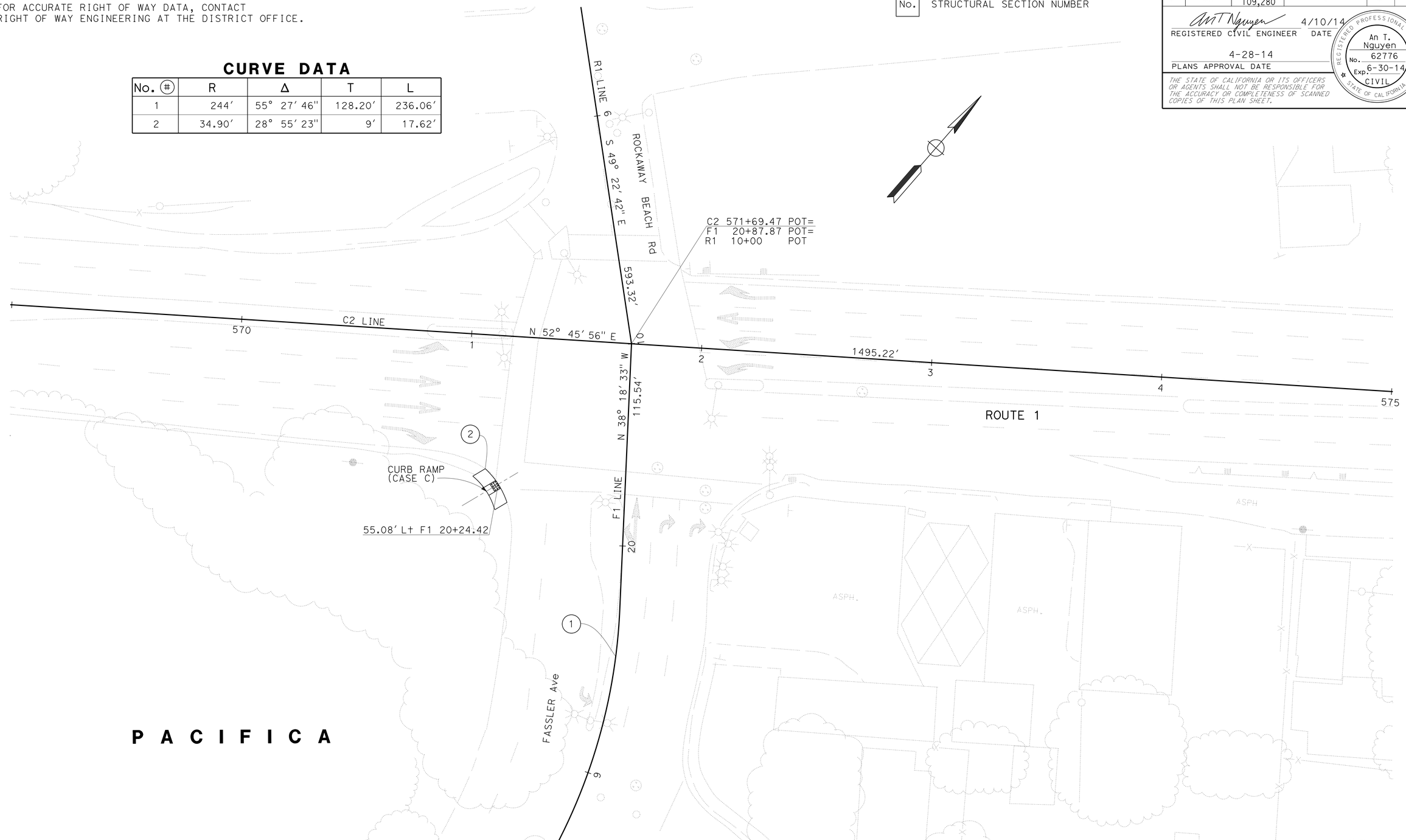

LAYOUT
LOCATION No. 1
SCALE: 1″ = 20′

L-1

AN	4/10/14	REVISED BY	DATE REVISED
AN NGUYEN	ARLISSA PANG	CALCULATED-DESIGNED BY	CHECKED BY
FUNCTIONAL SUPERVISOR	LAWRENCE A. JONES		

STATE OF CALIFORNIA - DEPARTMENT OF TRANSPORTATION

Caltrans

DESIGN

LAST REVISION 04-10-14 | DATE PLOTTED => 30-JUN-2014 TIME PLOTTED => 13:37

Dist	COUNTY	ROUTE	POST MILES TOTAL PROJECT	SHEET No.	TOTAL SHEETS
04	SM	1,35,82,84, 109,280	Var	4	96

REGISTERED CIVIL ENGINEER 4/10/14 DATE

4-28-14
PLANS APPROVAL DATE

REGISTERED PROFESSIONAL ENGINEER An T. Nguyen No. 62776 Exp. 6-30-14 CIVIL STATE OF CALIFORNIA

THE STATE OF CALIFORNIA OR ITS OFFICERS OR AGENTS SHALL NOT BE RESPONSIBLE FOR THE ACCURACY OR COMPLETENESS OF SCANNED COPIES OF THIS PLAN SHEET.

NOTE:

FOR ACCURATE RIGHT OF WAY DATA, CONTACT RIGHT OF WAY ENGINEERING AT THE DISTRICT OFFICE.

CURVE DATA

No. ⑬	R	Δ	T	L
3	6.26′	93°46′15"	6.69′	10.24′
4	6.26′	99°25′01"	7.38′	10.86′
5	39.57′	92°25′24"	41.28′	63.83′

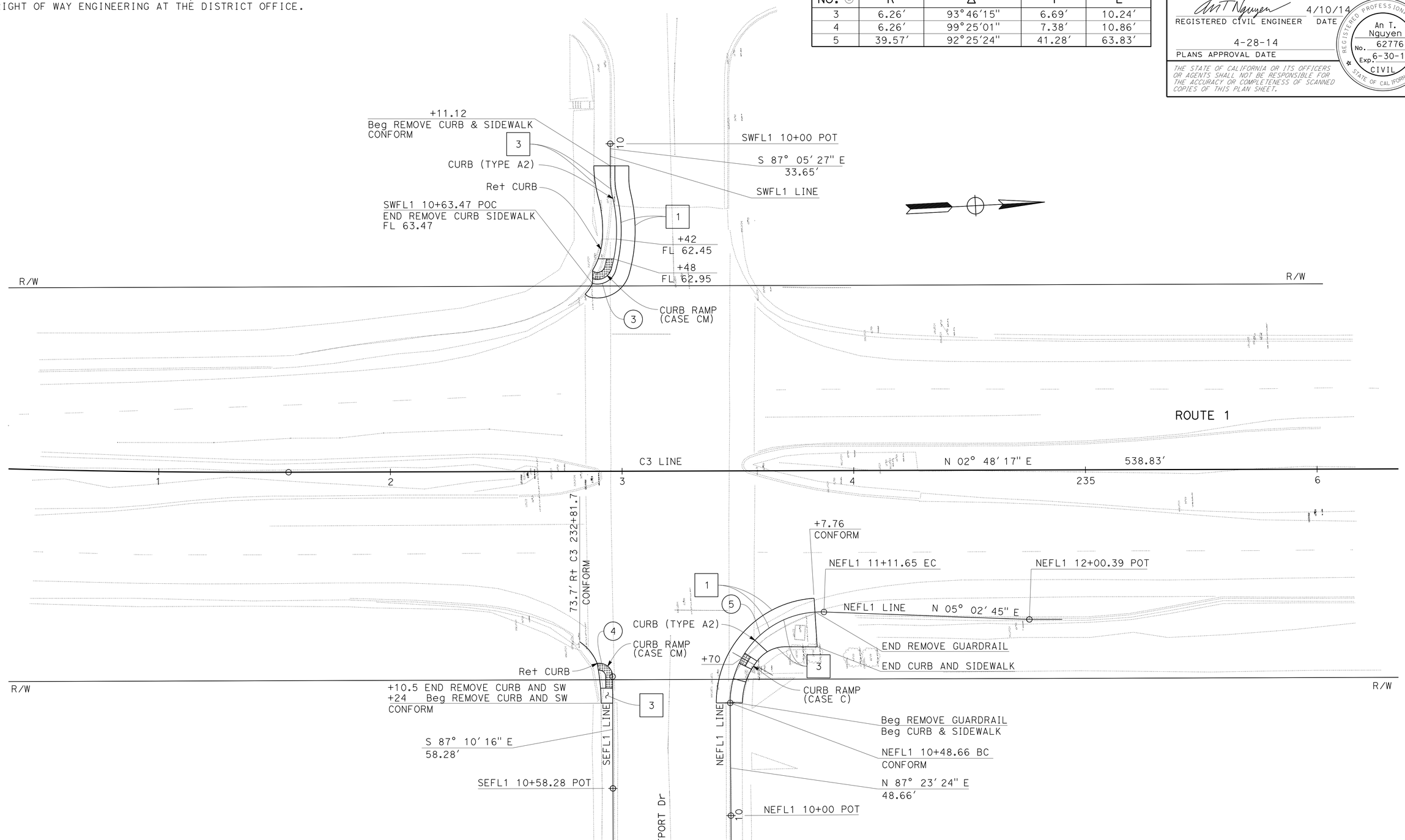

FOR NOTES, ABBREVIATIONS AND LEGEND, SEE SHEET L-1

LAYOUT
LOCATION No. 2
SCALE: 1" = 20′

L-2

REVISED BY	AN
DATE REVISED	4/10/14
CALCULATED-DESIGNED BY	AN NGUYEN
CHECKED BY	ARLISSA PANG
FUNCTIONAL SUPERVISOR	LAWRENCE A. JONES

STATE OF CALIFORNIA - DEPARTMENT OF TRANSPORTATION
Caltrans
DESIGN

LAST REVISION 04-10-14 | DATE PLOTTED => 30-JUN-2014 | TIME PLOTTED => 13:37

Dist	COUNTY	ROUTE	POST MILES TOTAL PROJECT	SHEET No.	TOTAL SHEETS
04	SM	1,35,82,84, 109,280	Var	5	96

REGISTERED CIVIL ENGINEER 4/10/14 DATE

4-28-14
PLANS APPROVAL DATE

REGISTERED PROFESSIONAL ENGINEER An T. Nguyen No. 62776 Exp. 6-30-14 CIVIL STATE OF CALIFORNIA

THE STATE OF CALIFORNIA OR ITS OFFICERS OR AGENTS SHALL NOT BE RESPONSIBLE FOR THE ACCURACY OR COMPLETENESS OF SCANNED COPIES OF THIS PLAN SHEET.

NOTE:

FOR ACCURATE RIGHT OF WAY DATA, CONTACT RIGHT OF WAY ENGINEERING AT THE DISTRICT OFFICE.

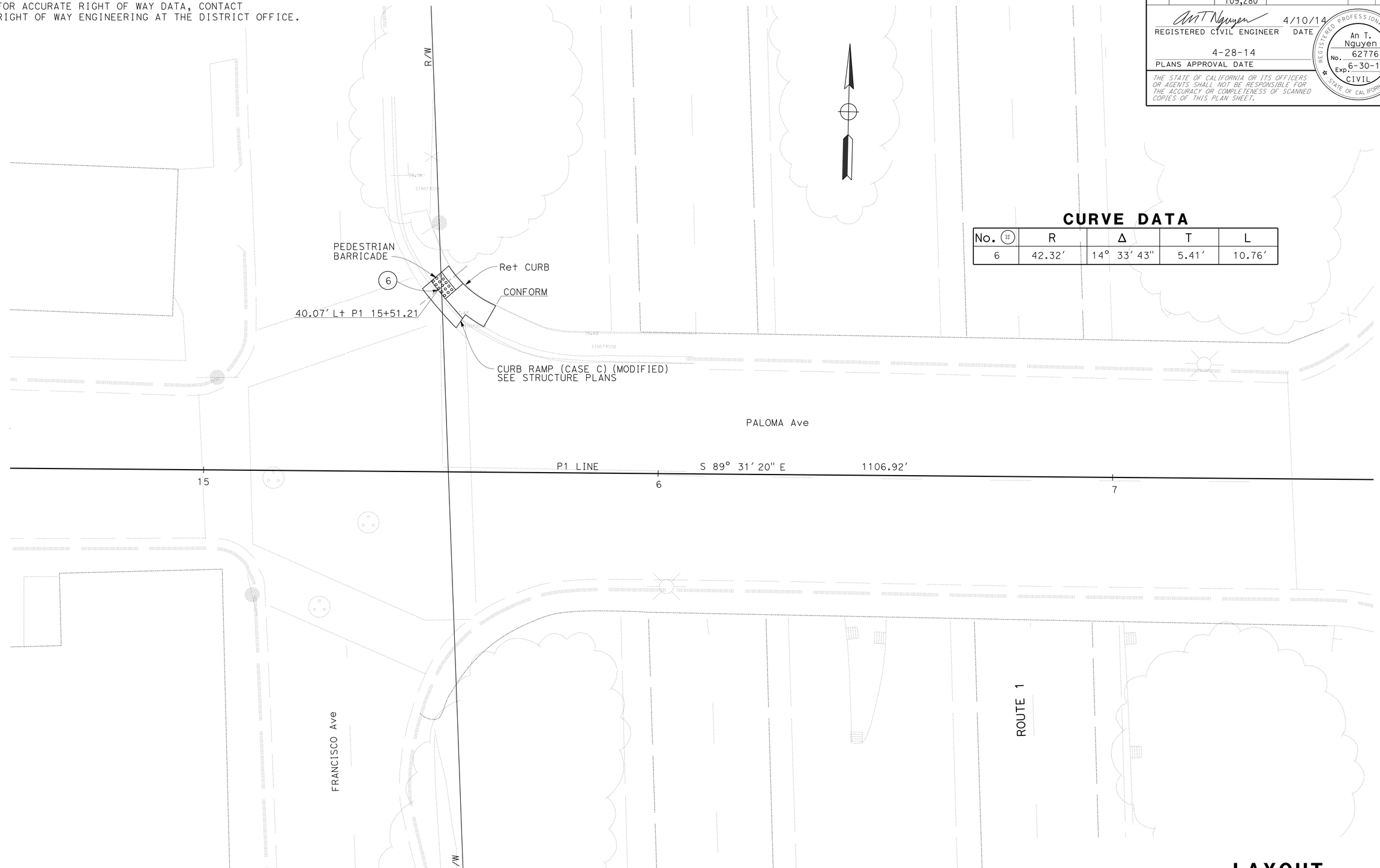

CURVE DATA

No. (#)	R	Δ	T	L
6	42.32'	14° 33' 43"	5.41'	10.76'

FOR NOTES, ABBREVIATIONS AND LEGEND, SEE SHEET L-1

LAYOUT
LOCATION No. 3
SCALE: 1" = 10'

L-3

AN	4/10/14	REVISED BY	DATE REVISED
AN NGUYEN	ARLISSA PANG	CALCULATED-DESIGNED BY	CHECKED BY
FUNCTIONAL SUPERVISOR	LAWRENCE A. JONES		

STATE OF CALIFORNIA - DEPARTMENT OF TRANSPORTATION
Caltrans
DESIGN

LAST REVISION 04-02-14 | DATE PLOTTED => 30-JUN-2014 TIME PLOTTED => 13:37

Dist	COUNTY	ROUTE	POST MILES TOTAL PROJECT	SHEET No.	TOTAL SHEETS
04	SM	1,35,82,84, 109,280	Var	6	96

REGISTERED CIVIL ENGINEER 4/10/14 DATE

4-28-14
PLANS APPROVAL DATE

REGISTERED PROFESSIONAL ENGINEER
An T. Nguyen
No. 62776
Exp. 6-30-14
CIVIL
STATE OF CALIFORNIA

THE STATE OF CALIFORNIA OR ITS OFFICERS OR AGENTS SHALL NOT BE RESPONSIBLE FOR THE ACCURACY OR COMPLETENESS OF SCANNED COPIES OF THIS PLAN SHEET.

NOTE:

FOR ACCURATE RIGHT OF WAY DATA, CONTACT RIGHT OF WAY ENGINEERING AT THE DISTRICT OFFICE.

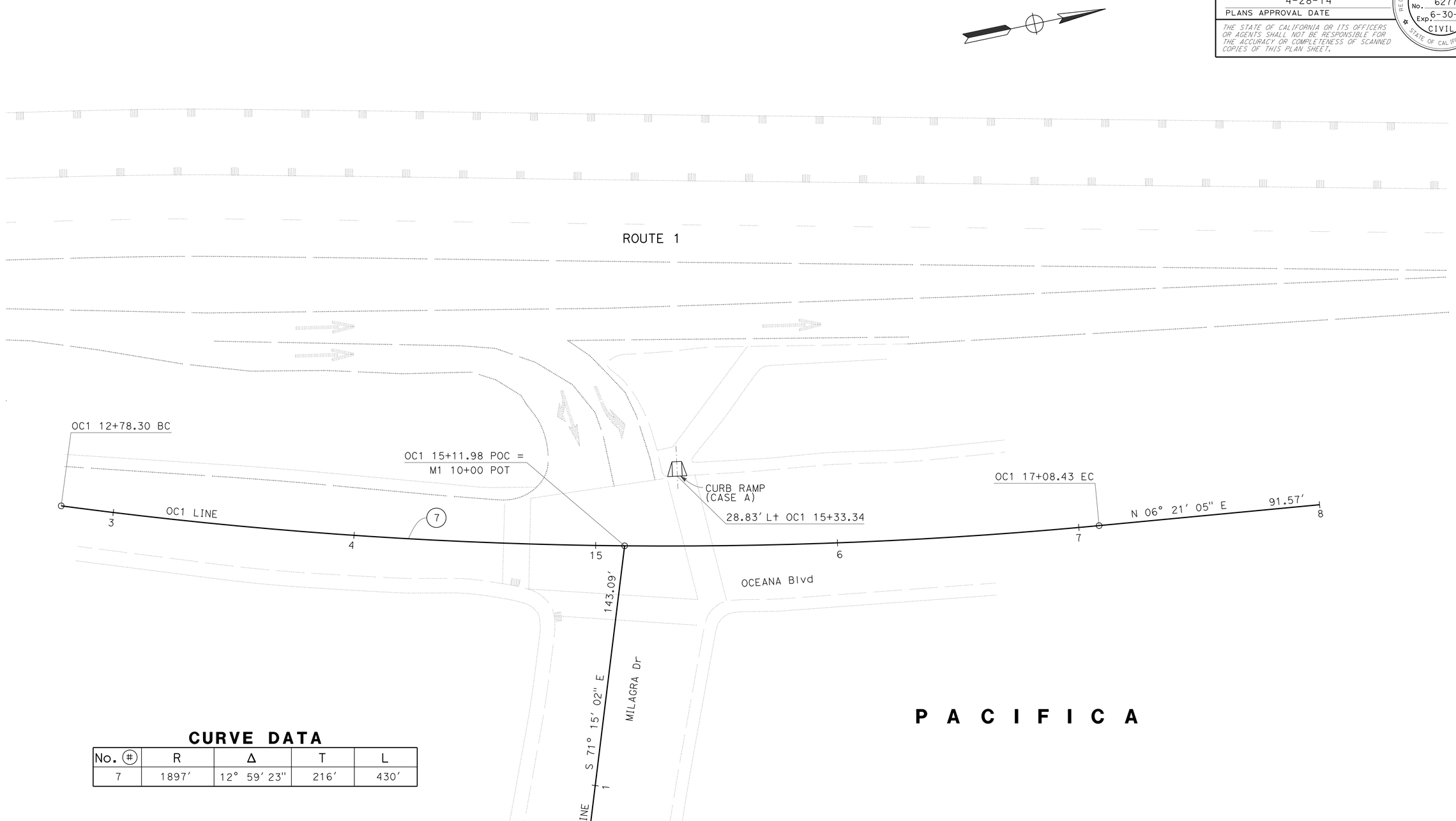

CURVE DATA

No. (#)	R	Δ	T	L
7	1897'	12° 59' 23"	216'	430'

FOR NOTES, ABBREVIATIONS AND LEGEND, SEE SHEET L-1

LAYOUT
LOCATION No. 4
SCALE: 1" = 20'

L-4

REVISED BY	AN
DATE REVISED	4/10/14
CALCULATED-DESIGNED BY	AN NGUYEN
CHECKED BY	ARLISSA PANG
FUNCTIONAL SUPERVISOR	LAWRENCE A. JONES

STATE OF CALIFORNIA - DEPARTMENT OF TRANSPORTATION
Caltrans®
DESIGN

LAST REVISION 04-10-14 | DATE PLOTTED => 30-JUN-2014 | TIME PLOTTED => 13:37

Dist	COUNTY	ROUTE	POST MILES TOTAL PROJECT	SHEET No.	TOTAL SHEETS
04	SM	1,35,82,84, 109,280	Var	7	96

REGISTERED CIVIL ENGINEER 4/10/14 DATE

4-28-14
PLANS APPROVAL DATE

REGISTERED PROFESSIONAL ENGINEER An T. Nguyen No. 62776 Exp. 6-30-14 CIVIL STATE OF CALIFORNIA

THE STATE OF CALIFORNIA OR ITS OFFICERS OR AGENTS SHALL NOT BE RESPONSIBLE FOR THE ACCURACY OR COMPLETENESS OF SCANNED COPIES OF THIS PLAN SHEET.

NOTE:

FOR ACCURATE RIGHT OF WAY DATA, CONTACT RIGHT OF WAY ENGINEERING AT THE DISTRICT OFFICE.

CURVE DATA

No. (#)	R	Δ	T	L
8	14954′	01° 49′ 33"	238′	477′
9	133′	71° 20′ 56"	96′	166′
10	93′	84° 56′ 54"	85′	138′
11	30.90′	44° 35′ 10"	12.67′	24.05′
12	24.92′	64° 38′ 11"	15.77′	28.12′
13	42.94′	46° 58′ 59"	18.66′	35.21′

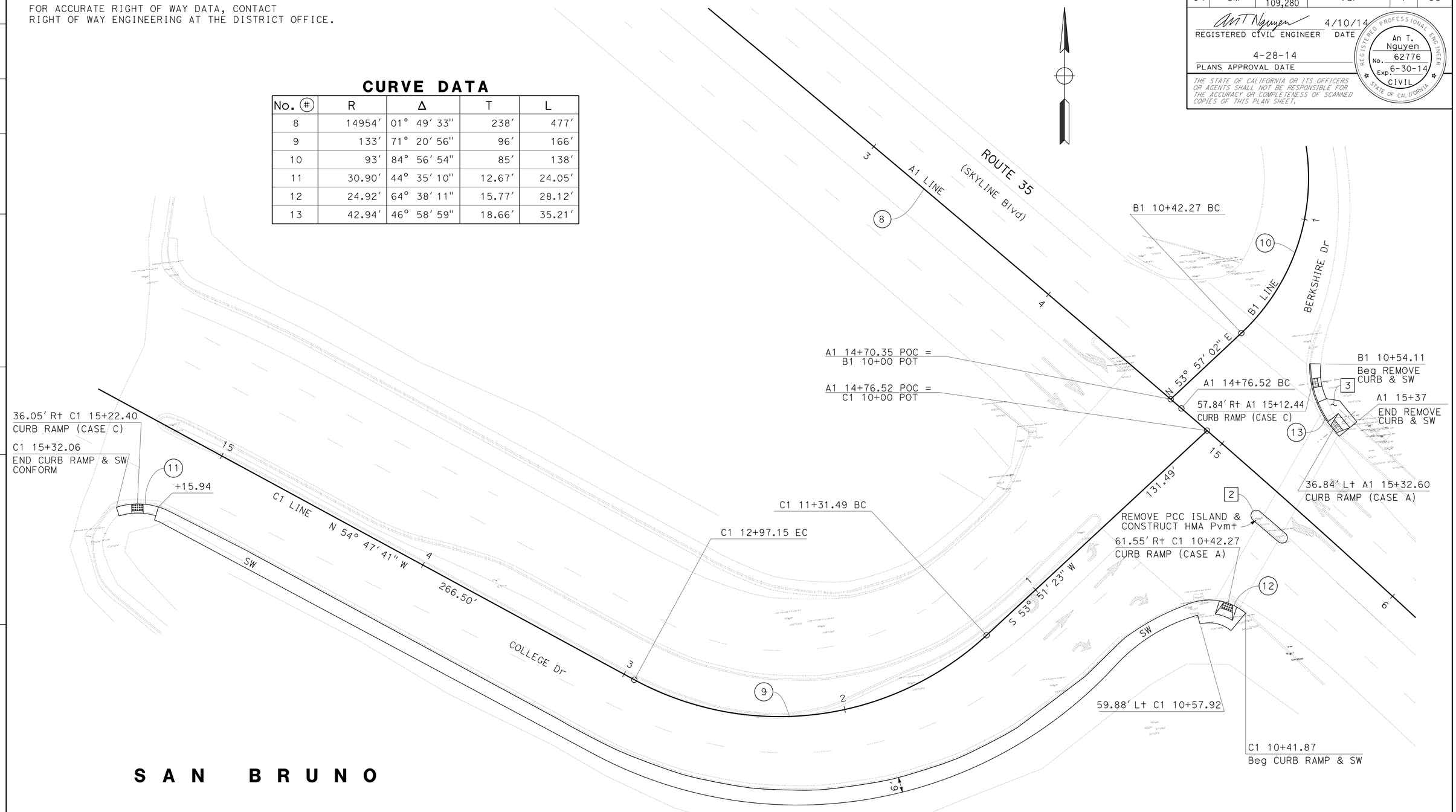

S A N B R U N O

FOR NOTES, ABBREVIATIONS AND LEGEND, SEE SHEET L-1

LAYOUT
LOCATION No. 5
SCALE: 1" = 20′

L-5

CALCULATED-DESIGNED BY	AN NGUYEN	REVISED BY	AN
CHECKED BY	ARLISSA PANG	DATE REVISED	4/10/14
FUNCTIONAL SUPERVISOR	LAWRENCE A. JONES		

STATE OF CALIFORNIA - DEPARTMENT OF TRANSPORTATION
Caltrans
DESIGN

LAST REVISION 04-10-14 | DATE PLOTTED => 30-JUN-2014 TIME PLOTTED => 13:37

Dist	COUNTY	ROUTE	POST MILES TOTAL PROJECT	SHEET No.	TOTAL SHEETS
04	SM	1,35,82,84, 109,280	Var	8	96

REGISTERED CIVIL ENGINEER 4/10/14 DATE

4-28-14
PLANS APPROVAL DATE

REGISTERED PROFESSIONAL ENGINEER
An T. Nguyen
No. 62776
Exp. 6-30-14
CIVIL
STATE OF CALIFORNIA

THE STATE OF CALIFORNIA OR ITS OFFICERS OR AGENTS SHALL NOT BE RESPONSIBLE FOR THE ACCURACY OR COMPLETENESS OF SCANNED COPIES OF THIS PLAN SHEET.

NOTE:

FOR ACCURATE RIGHT OF WAY DATA, CONTACT RIGHT OF WAY ENGINEERING AT THE DISTRICT OFFICE.

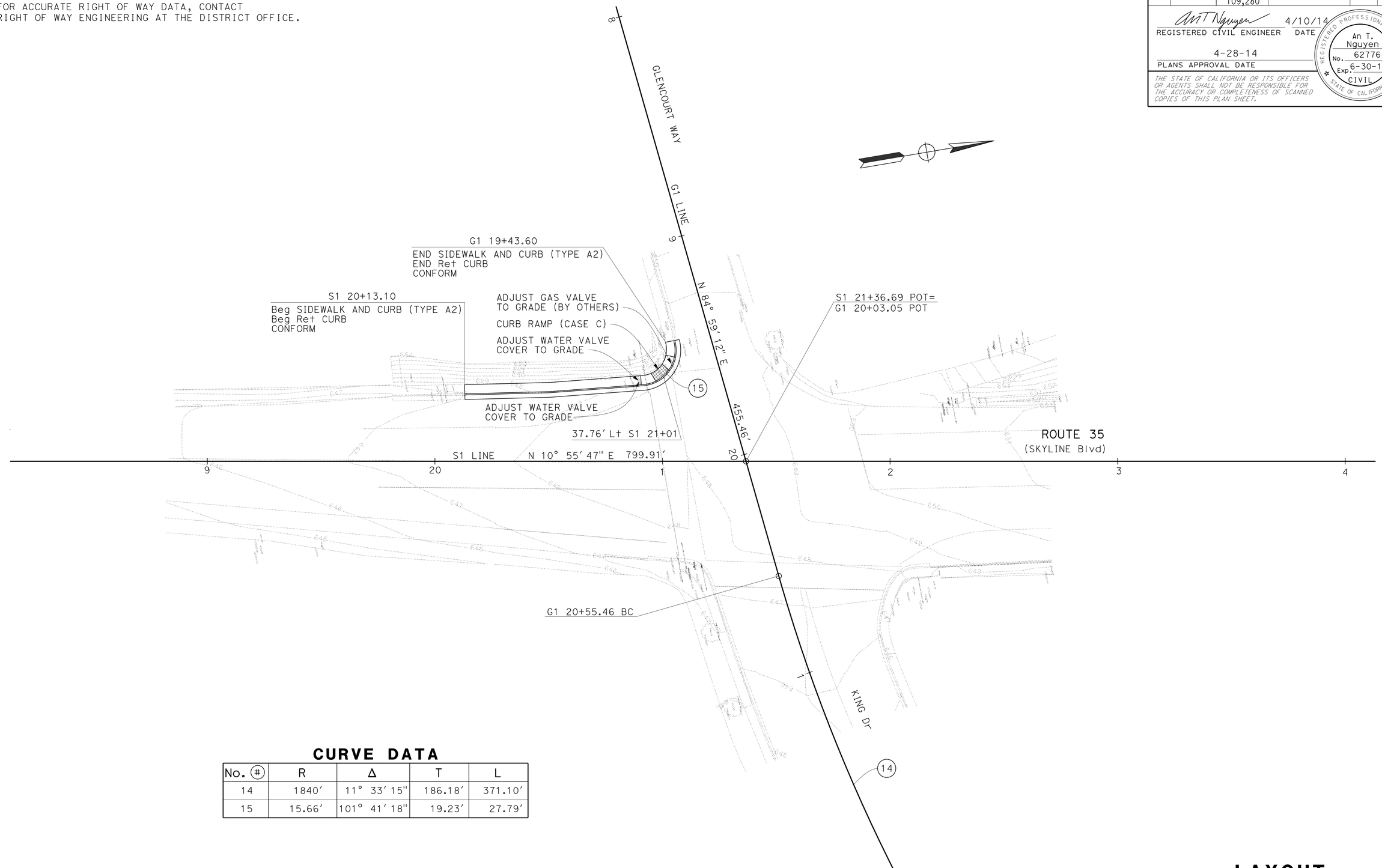

CURVE DATA

No. (#)	R	Δ	T	L
14	1840'	11° 33' 15"	186.18'	371.10'
15	15.66'	101° 41' 18"	19.23'	27.79'

FOR NOTES, ABBREVIATIONS AND LEGEND, SEE SHEET L-1

LAYOUT
LOCATION No. 6
SCALE: 1" = 20'

L-6

CALCULATED-DESIGNED BY	AN NGUYEN
CHECKED BY	ARLISSA PANG
REVISED BY	AN
DATE REVISED	4/10/14
FUNCTIONAL SUPERVISOR	LAWRENCE A. JONES

STATE OF CALIFORNIA - DEPARTMENT OF TRANSPORTATION
Caltrans
DESIGN

LAST REVISION 04-10-14 | DATE PLOTTED => 30-JUN-2014 | TIME PLOTTED => 13:37

Dist	COUNTY	ROUTE	POST MILES TOTAL PROJECT	SHEET No.	TOTAL SHEETS
04	SM	1,35,82,84, 109,280	Var	9	96

REGISTERED CIVIL ENGINEER 4/10/14 DATE

4-28-14
PLANS APPROVAL DATE

REGISTERED PROFESSIONAL ENGINEER An T. Nguyen No. 62776 Exp. 6-30-14 CIVIL STATE OF CALIFORNIA

THE STATE OF CALIFORNIA OR ITS OFFICERS OR AGENTS SHALL NOT BE RESPONSIBLE FOR THE ACCURACY OR COMPLETENESS OF SCANNED COPIES OF THIS PLAN SHEET.

NOTE:

FOR ACCURATE RIGHT OF WAY DATA, CONTACT RIGHT OF WAY ENGINEERING AT THE DISTRICT OFFICE.

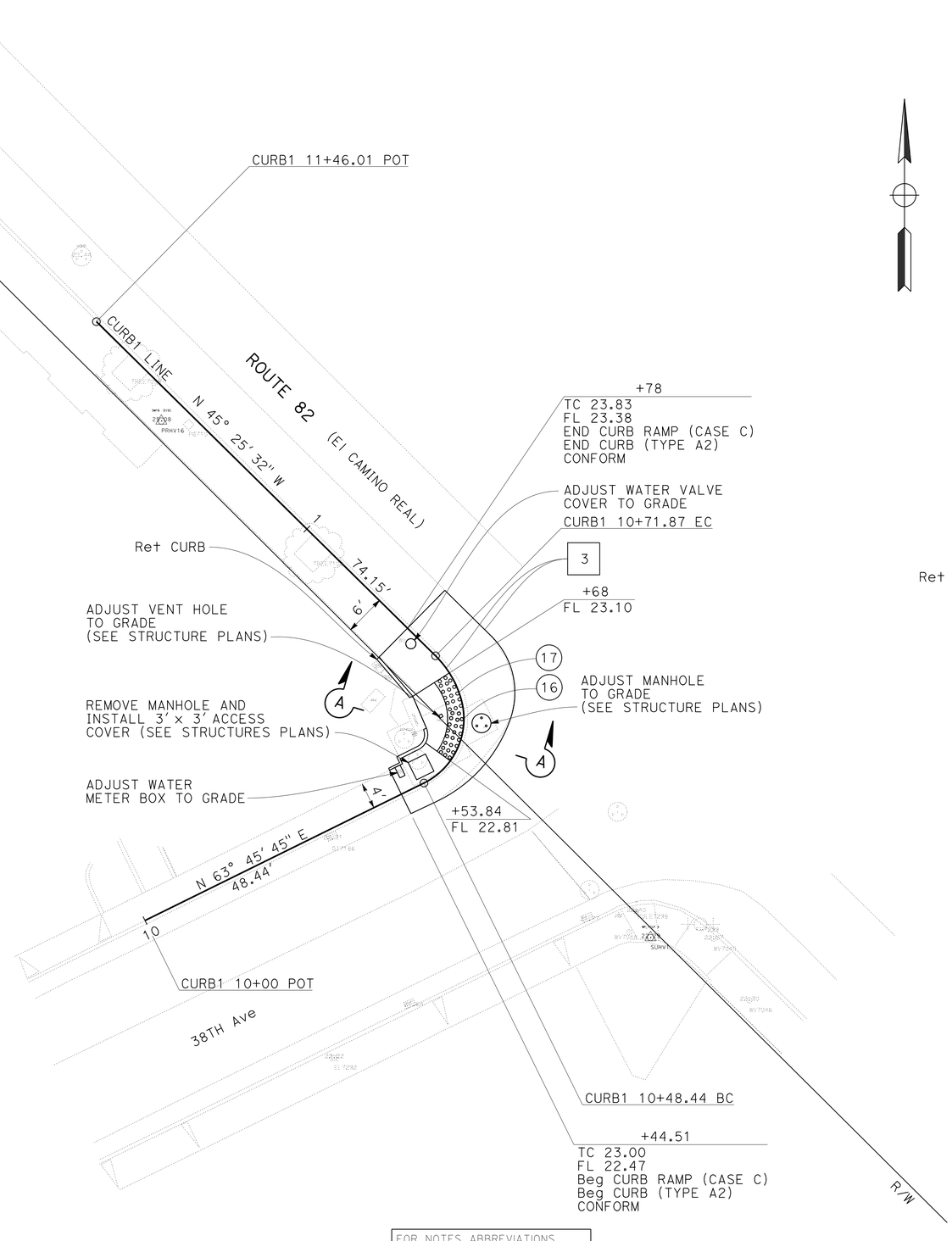

FOR NOTES, ABBREVIATIONS AND LEGEND, SEE SHEET L-1

CURVE DATA

No. (#)	R	Δ	T	L
16	11.14'	78° 41' 15"	9.13'	15.30'
17	15.27'	30° 30' 35"	4.16'	8.13'

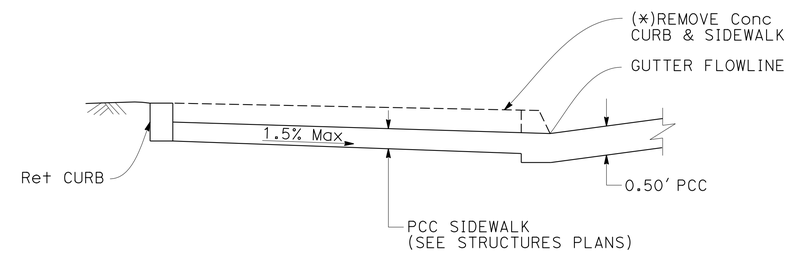

(*) SEE STRUCTURE PLANS FOR CONCRETE TOP SLAB REMOVAL.

SECTION A-A
NO SCALE

S A N M A T E O

LAYOUT
LOCATION No. 7
SCALE: 1" = 10'

L-7

REVISED BY	AN	CALCULATED-DESIGNED BY	AN NGUYEN
DATE REVISED	4/10/14	CHECKED BY	ARLISSA PANG

FUNCTIONAL SUPERVISOR LAWRENCE A. JONES

STATE OF CALIFORNIA - DEPARTMENT OF TRANSPORTATION

Caltrans® DESIGN

LAST REVISION 04-10-14 | DATE PLOTTED => 30-JUN-2014 | TIME PLOTTED => 13:37

Dist	COUNTY	ROUTE	POST MILES TOTAL PROJECT	SHEET No.	TOTAL SHEETS
04	SM	1,35,82,84, 109,280	Var	10	96

REGISTERED CIVIL ENGINEER 4/10/14 DATE

4-28-14
PLANS APPROVAL DATE

REGISTERED PROFESSIONAL ENGINEER
An T. Nguyen
No. 62776
Exp. 6-30-14
CIVIL
STATE OF CALIFORNIA

THE STATE OF CALIFORNIA OR ITS OFFICERS OR AGENTS SHALL NOT BE RESPONSIBLE FOR THE ACCURACY OR COMPLETENESS OF SCANNED COPIES OF THIS PLAN SHEET.

NOTE:

FOR ACCURATE RIGHT OF WAY DATA, CONTACT RIGHT OF WAY ENGINEERING AT THE DISTRICT OFFICE.

CURVE DATA

No. (#)	R	Δ	T	L
18	1246.30′	19° 17′ 24"	211.80′	419.59′
19	14.84′	31° 53′ 20"	4.24′	8.26′

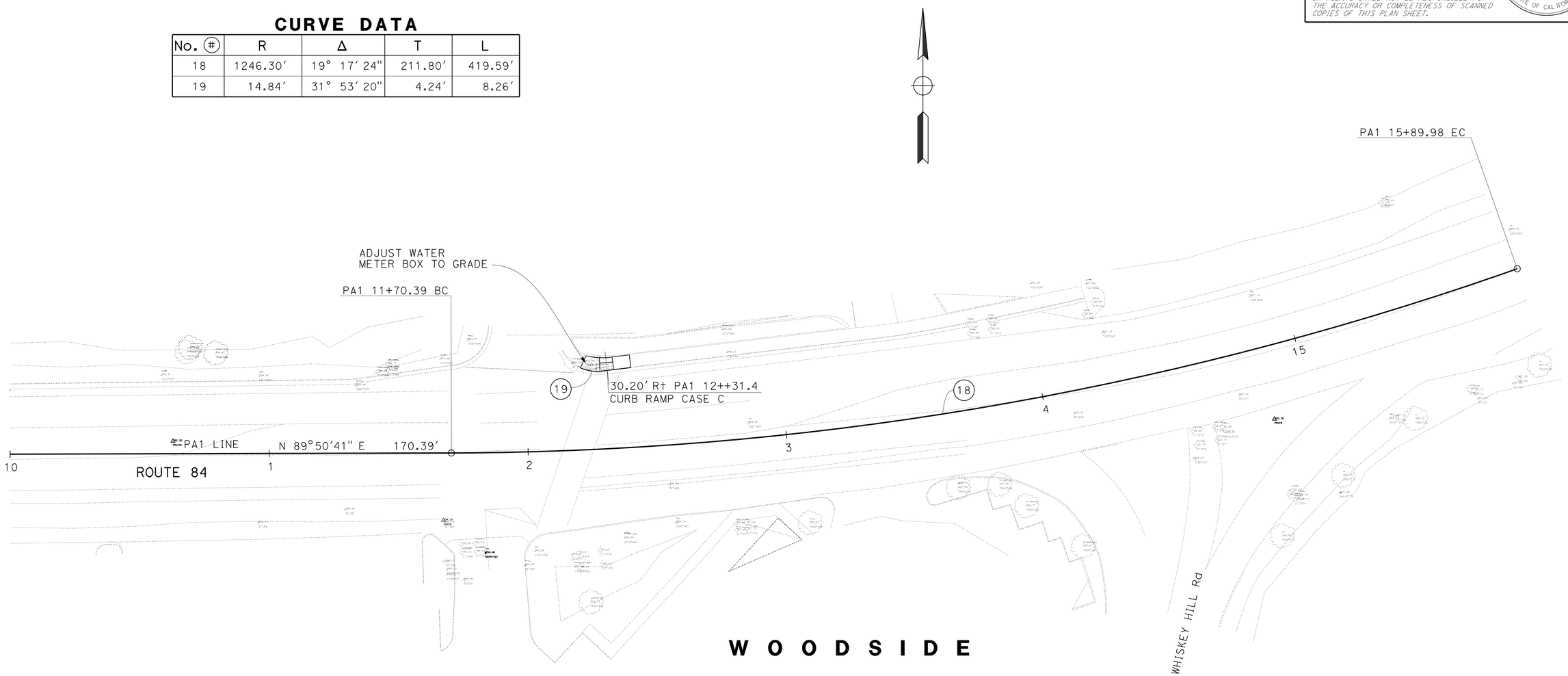

FOR NOTES, ABBREVIATIONS AND LEGEND, SEE SHEET L-1

LAYOUT
LOCATION No. 8
SCALE: 1" = 20′

L-8

REVISED BY	DATE REVISED
AN	4/10/14

CALCULATED-DESIGNED BY: AN NGUYEN
CHECKED BY: ARLISSA PANG
FUNCTIONAL SUPERVISOR: LAWRENCE A. JONES

STATE OF CALIFORNIA - DEPARTMENT OF TRANSPORTATION
Caltrans
DESIGN

LAST REVISION 04-10-14
DATE PLOTTED => 30-JUN-2014
TIME PLOTTED => 13:37

Dist	COUNTY	ROUTE	POST MILES TOTAL PROJECT	SHEET No.	TOTAL SHEETS
04	SM	1,35,82,84, 109,280	Var	11	96

REGISTERED CIVIL ENGINEER 4/10/14 DATE

4-28-14
PLANS APPROVAL DATE

REGISTERED PROFESSIONAL ENGINEER An T. Nguyen No. 62776 Exp. 6-30-14 CIVIL STATE OF CALIFORNIA

THE STATE OF CALIFORNIA OR ITS OFFICERS OR AGENTS SHALL NOT BE RESPONSIBLE FOR THE ACCURACY OR COMPLETENESS OF SCANNED COPIES OF THIS PLAN SHEET.

NOTE:

FOR ACCURATE RIGHT OF WAY DATA, CONTACT RIGHT OF WAY ENGINEERING AT THE DISTRICT OFFICE.

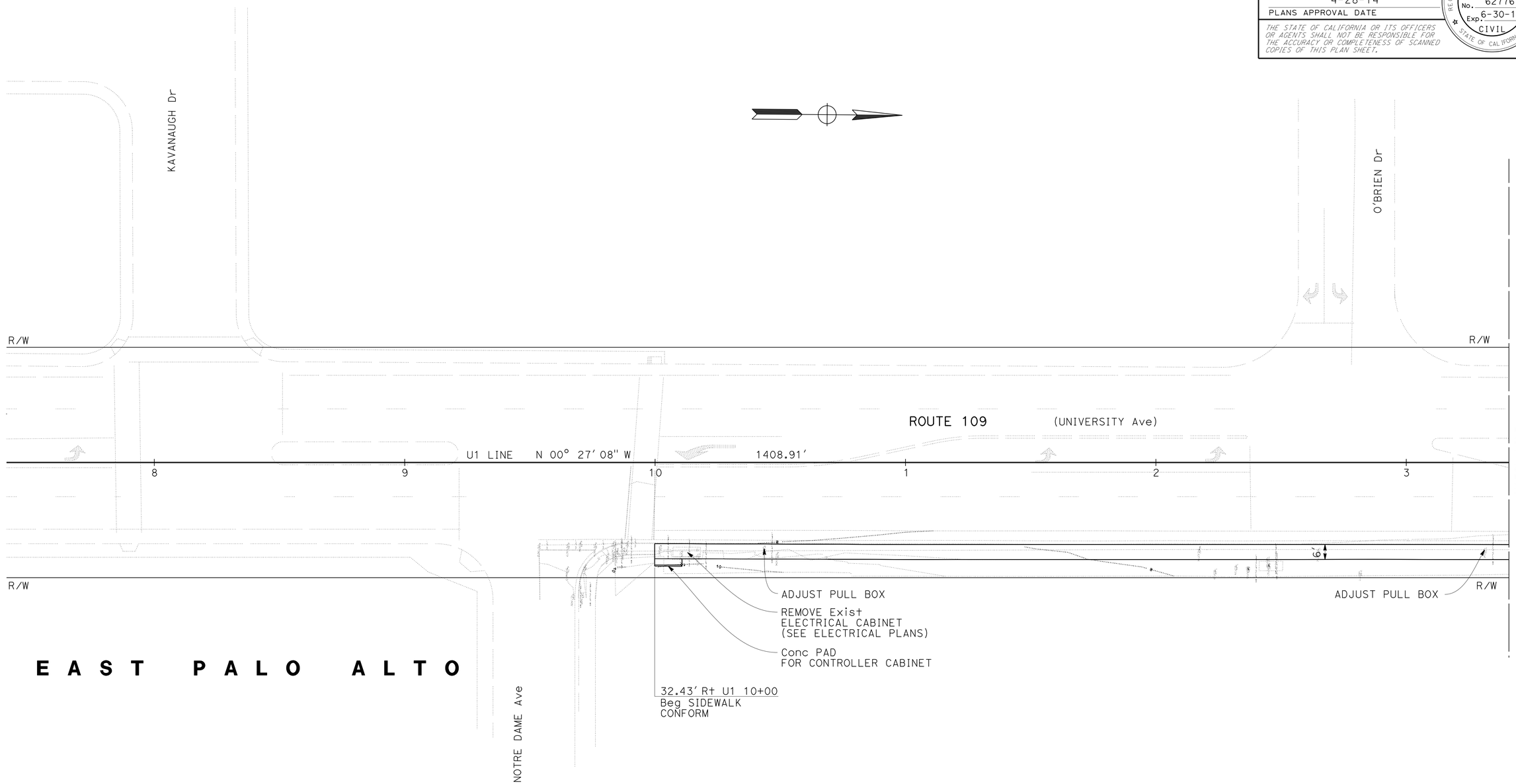

FOR NOTES, ABBREVIATIONS AND LEGEND, SEE SHEET L-1

LAYOUT
LOCATION No. 9
SCALE: 1" = 20'

L-9

REVISED BY	DATE REVISED
AN	4/10/14

CALCULATED-DESIGNED BY: AN NGUYEN
CHECKED BY: ARLISSA PANG
FUNCTIONAL SUPERVISOR: LAWRENCE A. JONES

STATE OF CALIFORNIA - DEPARTMENT OF TRANSPORTATION
Caltrans
DESIGN

LAST REVISION 04-08-14
DATE PLOTTED => 30-JUN-2014
TIME PLOTTED => 13:37

Dist	COUNTY	ROUTE	POST MILES TOTAL PROJECT	SHEET No.	TOTAL SHEETS
04	SM	1,35,82,84, 109,280	Var	12	96

REGISTERED CIVIL ENGINEER 4/10/14 DATE

4-28-14
PLANS APPROVAL DATE

REGISTERED PROFESSIONAL ENGINEER
An T. Nguyen
No. 62776
Exp. 6-30-14
CIVIL
STATE OF CALIFORNIA

THE STATE OF CALIFORNIA OR ITS OFFICERS OR AGENTS SHALL NOT BE RESPONSIBLE FOR THE ACCURACY OR COMPLETENESS OF SCANNED COPIES OF THIS PLAN SHEET.

NOTE:

FOR ACCURATE RIGHT OF WAY DATA, CONTACT
RIGHT OF WAY ENGINEERING AT THE DISTRICT OFFICE.

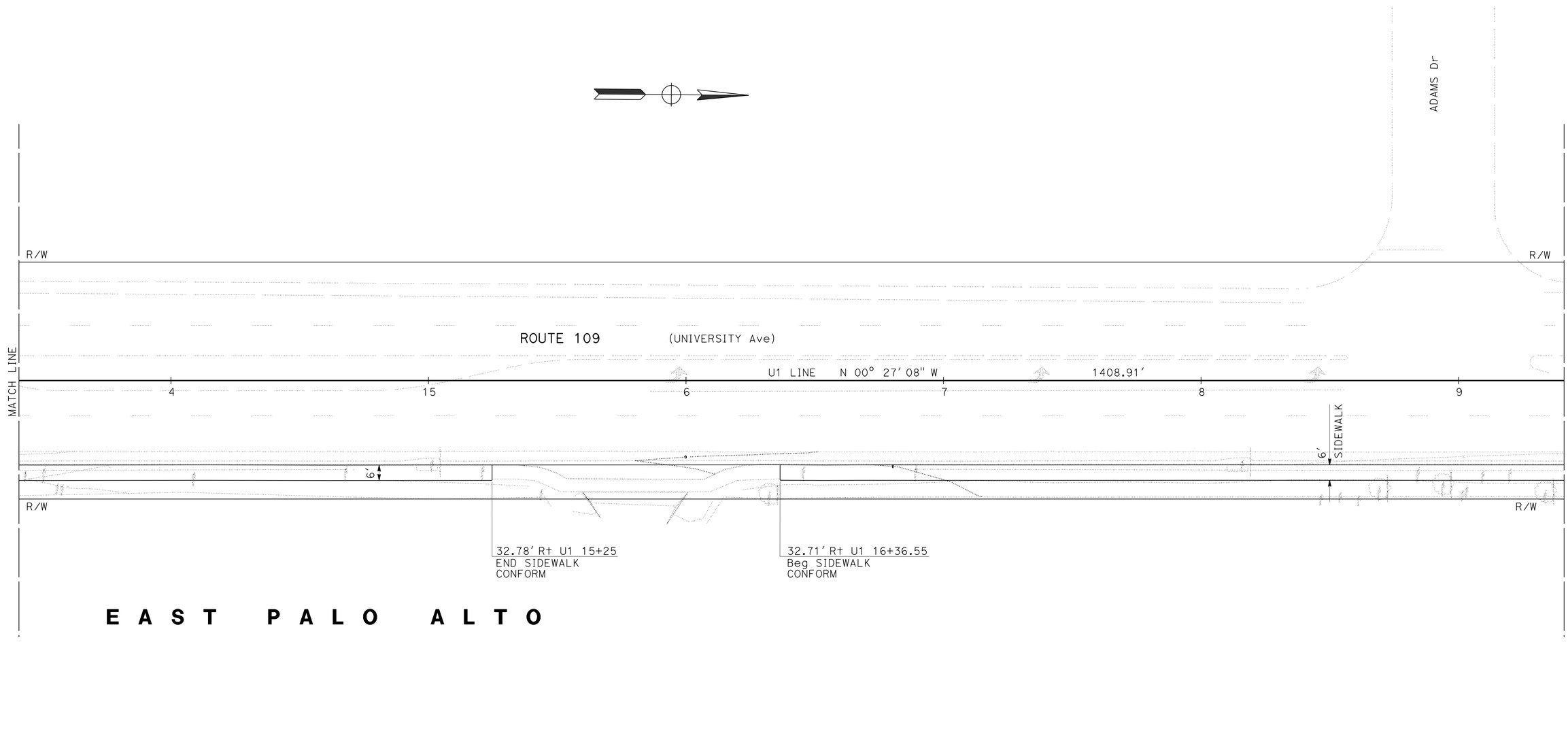

FOR NOTES, ABBREVIATIONS
AND LEGEND, SEE SHEET L-1

LAYOUT
LOCATION No. 9
SCALE: 1" = 20'

L-10

REVISED BY	DATE REVISED
AN	4/10/14

CALCULATED-DESIGNED BY: AN NGUYEN
CHECKED BY: ARLISSA PANG
FUNCTIONAL SUPERVISOR: LAWRENCE A. JONES

STATE OF CALIFORNIA - DEPARTMENT OF TRANSPORTATION
Caltrans
DESIGN

LAST REVISION 04-08-14
DATE PLOTTED => 30-JUN-2014
TIME PLOTTED => 13:37

Dist	COUNTY	ROUTE	POST MILES TOTAL PROJECT	SHEET No.	TOTAL SHEETS
04	SM	1,35,82,84, 109,280	Var	13	96

REGISTERED CIVIL ENGINEER 4/10/14 DATE

4-28-14
PLANS APPROVAL DATE

REGISTERED PROFESSIONAL ENGINEER
An T. Nguyen
No. 62776
Exp. 6-30-14
CIVIL
STATE OF CALIFORNIA

THE STATE OF CALIFORNIA OR ITS OFFICERS OR AGENTS SHALL NOT BE RESPONSIBLE FOR THE ACCURACY OR COMPLETENESS OF SCANNED COPIES OF THIS PLAN SHEET.

NOTE:

FOR ACCURATE RIGHT OF WAY DATA, CONTACT RIGHT OF WAY ENGINEERING AT THE DISTRICT OFFICE.

CURVE DATA

No. (#)	R	Δ	T	L
20	15.19′	94° 18′ 17″	16.38′	25′
21	23.12′	68° 14′ 48″	15.67′	27.54′

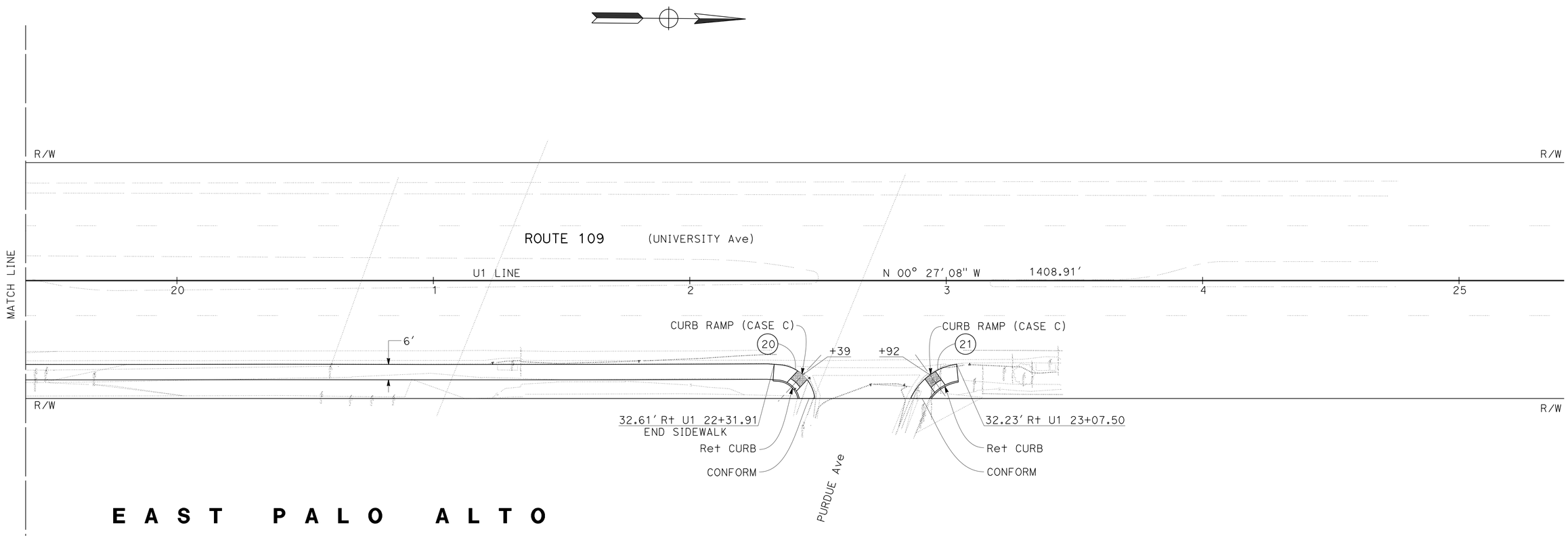

FOR NOTES, ABBREVIATIONS AND LEGEND, SEE SHEET L-1

LAYOUT
LOCATION No. 9
SCALE: 1" = 20′

L-11

AN	4/10/14	REVISED BY / DATE REVISED
AN NGUYEN	ARLISSA PANG	CALCULATED-DESIGNED BY / CHECKED BY
FUNCTIONAL SUPERVISOR	LAWRENCE A. JONES	

STATE OF CALIFORNIA - DEPARTMENT OF TRANSPORTATION
Caltrans
DESIGN

LAST REVISION 04-08-14 | DATE PLOTTED => 30-JUN-2014 | TIME PLOTTED => 13:37

NOTE:

FOR ACCURATE RIGHT OF WAY DATA, CONTACT
RIGHT OF WAY ENGINEERING AT THE DISTRICT OFFICE.

CURVE DATA

No. (#)	R	Δ	T	L
22	150′	319° 49′ 13″	55′	836′
23	399′	68° 05′ 07″	270′	474′
24	333′	62° 09′ 23″	201′	362′
25	760′	17° 41′ 36″	118′	235′
26	161′	206° 06′ 55″	694′	579′

Dist	COUNTY	ROUTE	POST MILES TOTAL PROJECT	SHEET No.	TOTAL SHEETS
04	SM	1,35,82,84, 109,280	Var	14	96

An T Nguyen 4/10/14
REGISTERED CIVIL ENGINEER DATE

4-28-14
PLANS APPROVAL DATE

REGISTERED PROFESSIONAL ENGINEER
An T. Nguyen
No. 62776
Exp. 6-30-14
CIVIL
STATE OF CALIFORNIA

THE STATE OF CALIFORNIA OR ITS OFFICERS OR AGENTS SHALL NOT BE RESPONSIBLE FOR THE ACCURACY OR COMPLETENESS OF SCANNED COPIES OF THIS PLAN SHEET.

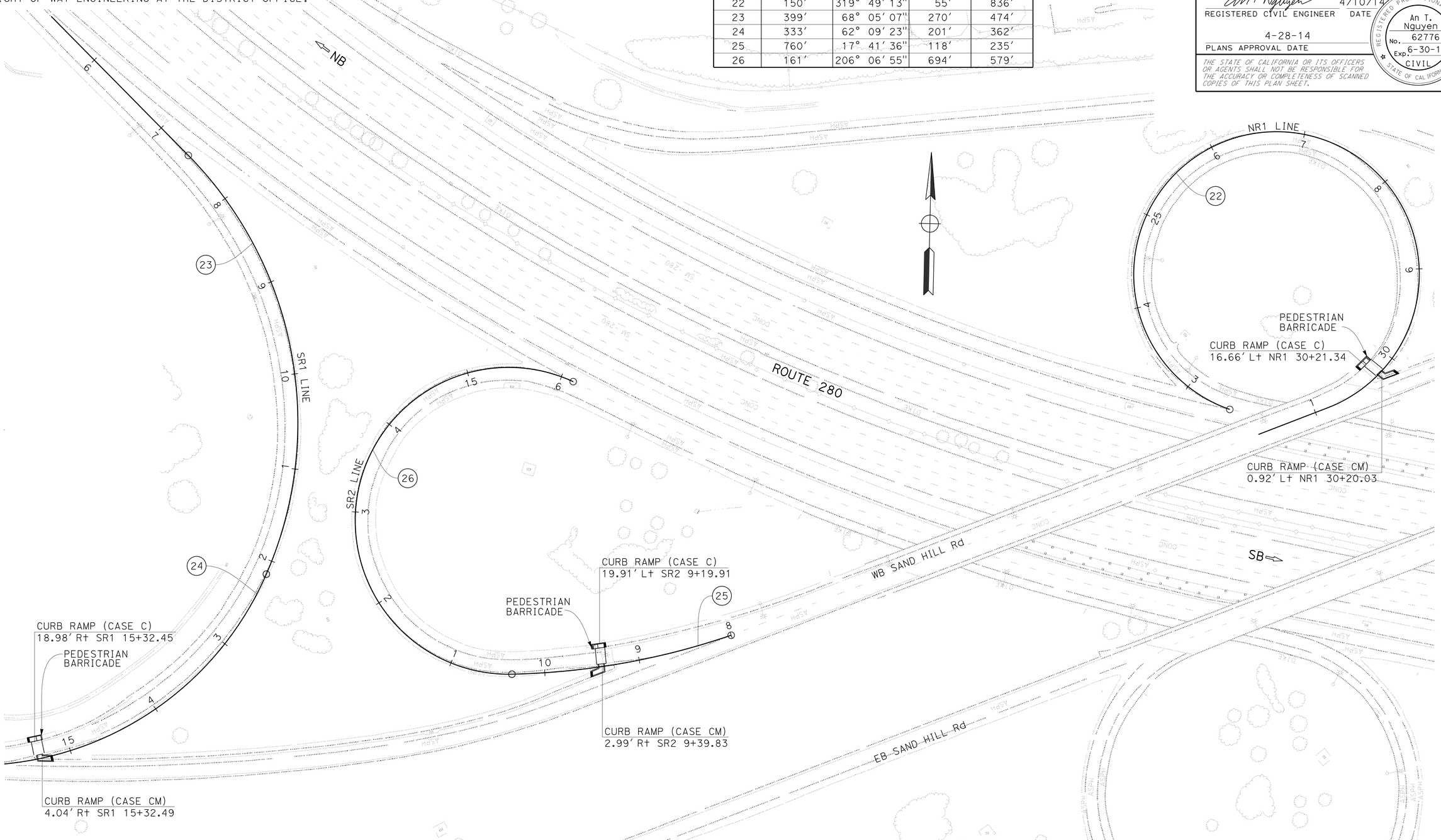

FOR NOTES, ABBREVIATIONS AND LEGEND, SEE SHEET L-1

LAYOUT
LOCATION No. 10
SCALE: 1″ = 50′

L-12

REVISED BY	DATE REVISED
AN	4/10/14

CALCULATED-DESIGNED BY: AN NGUYEN
CHECKED BY: ARLISSA PANG
FUNCTIONAL SUPERVISOR: LAWRENCE A. JONES

STATE OF CALIFORNIA - DEPARTMENT OF TRANSPORTATION
Caltrans
DESIGN

LAST REVISION 04-08-14
DATE PLOTTED => 30-JUN-2014
TIME PLOTTED => 13:37

Dist	COUNTY	ROUTE	POST MILES TOTAL PROJECT	SHEET No.	TOTAL SHEETS
04	SM	1,35,82,84, 109,280	Var	15	96

REGISTERED CIVIL ENGINEER 4/10/14 DATE

4-28-14
PLANS APPROVAL DATE

REGISTERED PROFESSIONAL ENGINEER
An T. Nguyen
No. 62776
Exp. 6-30-14
CIVIL
STATE OF CALIFORNIA

THE STATE OF CALIFORNIA OR ITS OFFICERS OR AGENTS SHALL NOT BE RESPONSIBLE FOR THE ACCURACY OR COMPLETENESS OF SCANNED COPIES OF THIS PLAN SHEET.

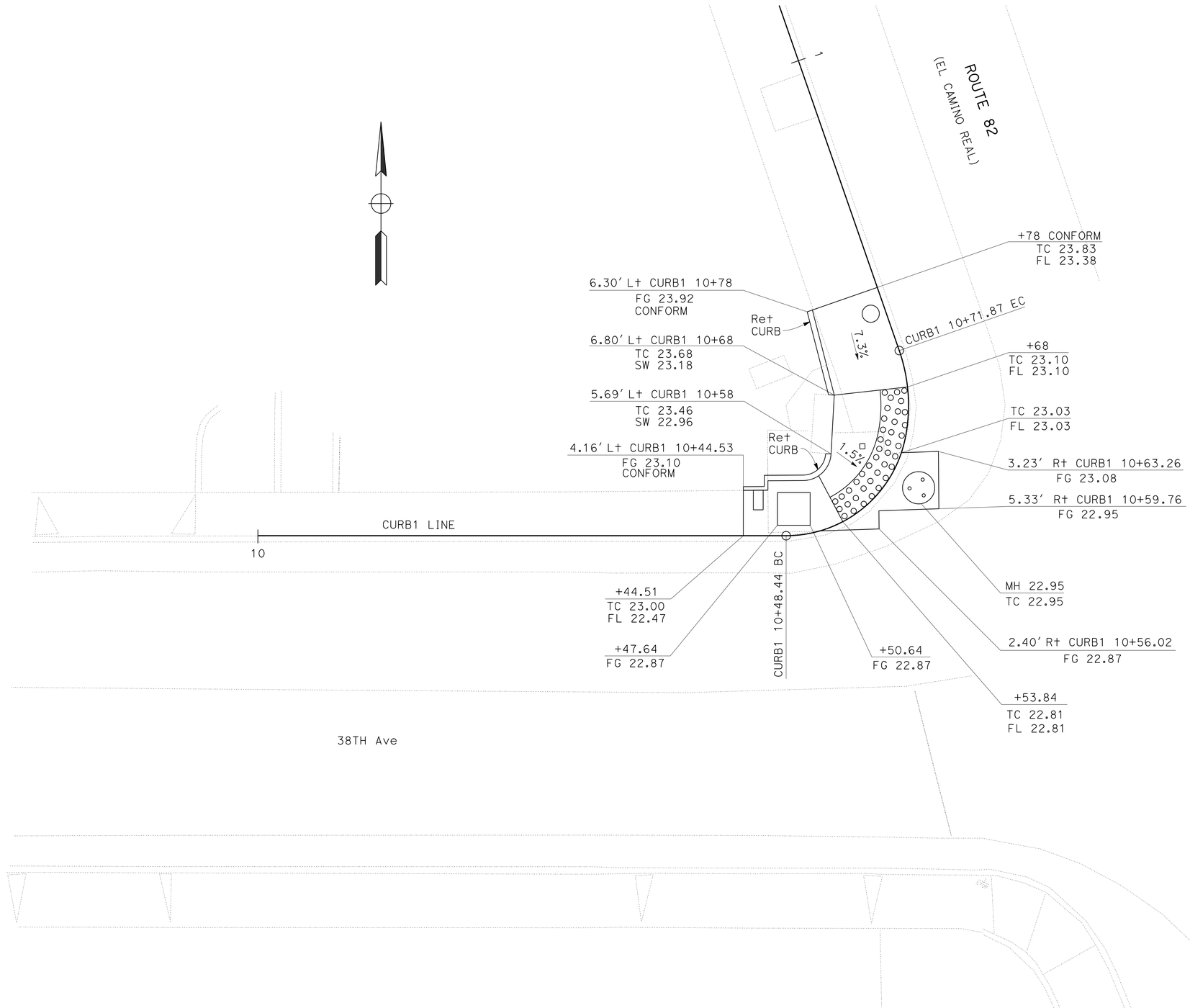

CONSTRUCTION DETAILS
LOCATION No. 7
SCALE: 1' = 5'

C-1

CALCULATED-DESIGNED BY	AN NGUYEN	REVISED BY	AN
CHECKED BY	ARLISSA PANG	DATE REVISED	4/10/14
FUNCTIONAL SUPERVISOR	LAWRENCE A. JONES		

STATE OF CALIFORNIA - DEPARTMENT OF TRANSPORTATION
Caltrans
DESIGN

LAST REVISION 04-10-14 | DATE PLOTTED => 30-JUN-2014 | TIME PLOTTED => 13:37

Dist	COUNTY	ROUTE	POST MILES TOTAL PROJECT	SHEET No.	TOTAL SHEETS
04	SM	1,35,82,84, 109,280	Var	16	96

REGISTERED CIVIL ENGINEER 4/9/14 DATE

4-28-14
PLANS APPROVAL DATE

REGISTERED PROFESSIONAL ENGINEER Eric K. Wong No. 70259 Exp. 9-30-14 CIVIL STATE OF CALIFORNIA

THE STATE OF CALIFORNIA OR ITS OFFICERS OR AGENTS SHALL NOT BE RESPONSIBLE FOR THE ACCURACY OR COMPLETENESS OF SCANNED COPIES OF THIS PLAN SHEET.

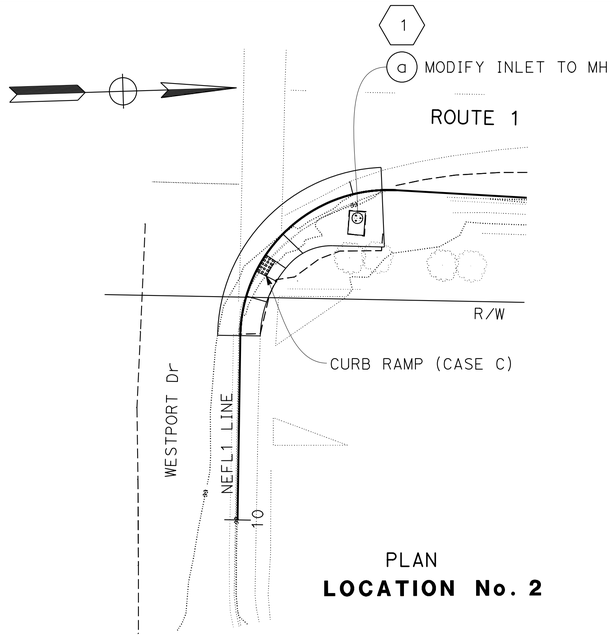

PLAN
LOCATION No. 2

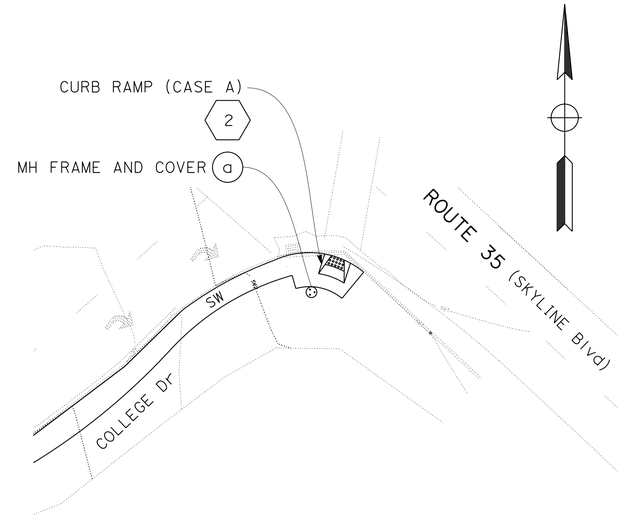

PLAN
LOCATION No. 5

DRAINAGE QUANTITIES

DRAINAGE SYSTEM No. ⬡	DRAINAGE UNIT ◯	MODIFY INLET TO MANHOLE EA	MANHOLE FRAME AND COVER LF	MINOR CONCRETE (MINOR STRUCTURE)	REMOVE CULVERT (PORTION) LF	CAP MANHOLE EA	HEIGHT OF INLET (N) FT	DESCRIPTION
1	a	1	1					MODIFY INLET TO MH
2	a		1					MH FRAME AND COVER
3	a					1		CAP MH
	b				3		3	REMOVE CULVERT (PORTION)
	c		1	1.3				G2 MH
TOTAL		1	3	1.3	3	1		

(N) - NOT A SEPARATE PAY ITEM, FOR INFORMATION ONLY

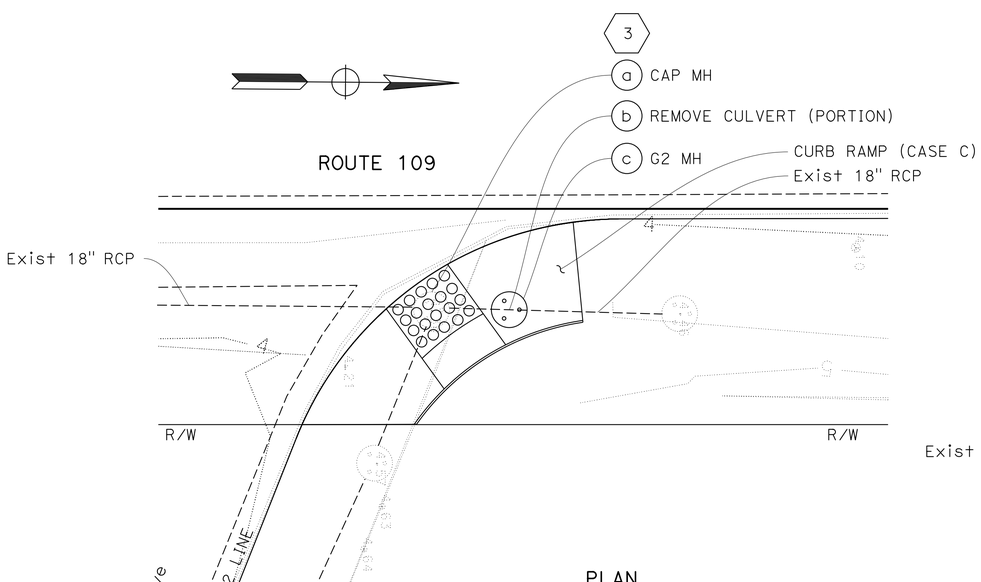

PLAN

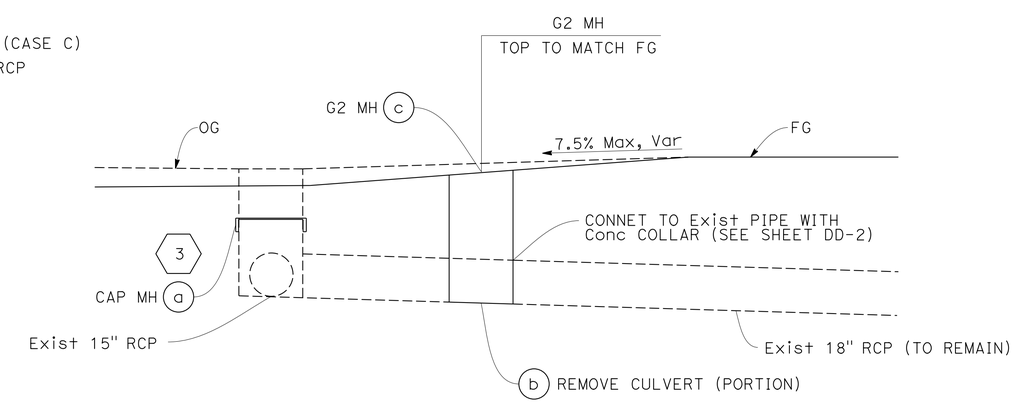

ELEVATION

LOCATION No. 9

DRAINAGE DETAILS AND QUANTITIES

NO SCALE

DD-1

STATE OF CALIFORNIA - DEPARTMENT OF TRANSPORTATION
Caltrans® HYDRAULICS

FUNCTIONAL SUPERVISOR: JOSEPH PETERSON
CALCULATED-DESIGNED BY: ERIC K. WONG
CHECKED BY: DIXON LAU
REVISED BY: EW
DATE REVISED: 4/9/14

LAST REVISION 04-09-14
DATE PLOTTED => 30-JUN-2014
TIME PLOTTED => 13:37

Dist	COUNTY	ROUTE	POST MILES TOTAL PROJECT	SHEET No.	TOTAL SHEETS
04	SM	1,35,82,84, 109,280	Var	17	96

REGISTERED CIVIL ENGINEER 4/9/14 DATE

4-28-14
PLANS APPROVAL DATE

REGISTERED PROFESSIONAL ENGINEER Eric K. Wong No. 70259 Exp. 9-30-14 CIVIL STATE OF CALIFORNIA

THE STATE OF CALIFORNIA OR ITS OFFICERS OR AGENTS SHALL NOT BE RESPONSIBLE FOR THE ACCURACY OR COMPLETENESS OF SCANNED COPIES OF THIS PLAN SHEET.

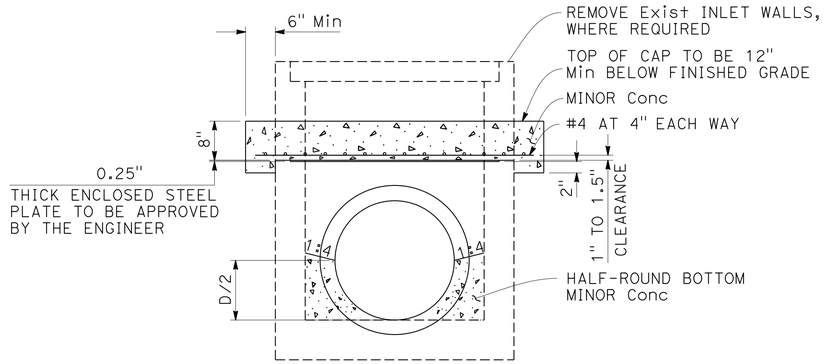

CAP MANHOLE

3 a

NOTES:

1. LOCATE MH OPENING AWAY FROM TRAVEL WAY OR AS DIRECTED BY THE ENGINEER.
2. PLACE NEW STEP RUNGS WHERE REQUIRED AND REMOVE EXISTING.
3. SEE Std PLAN RSP D73 FOR INLET DETAILS NOT SHOWN.

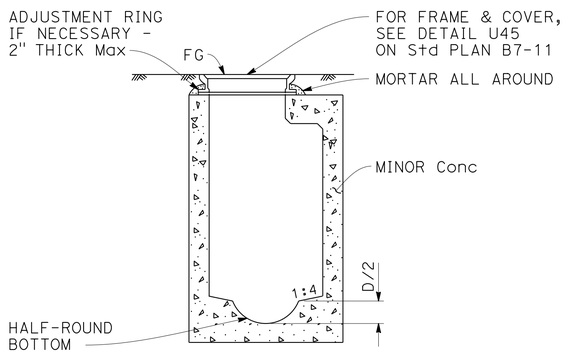

SECTION A-A

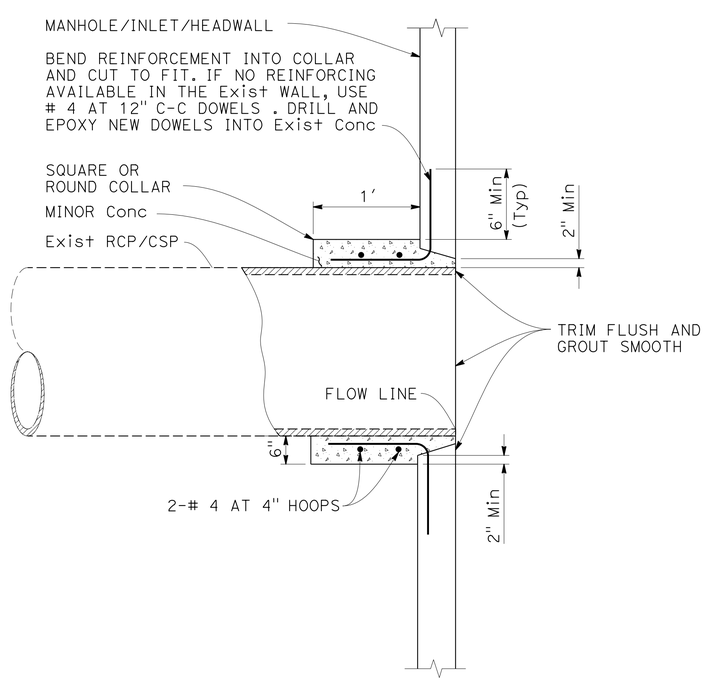

CONCRETE COLLAR
EXISTING PIPE CONNECTION TO MANHOLE

3 c

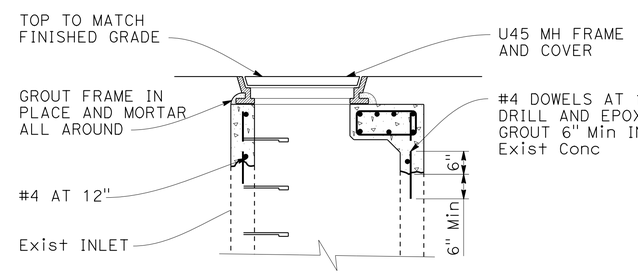

SECTION C-C

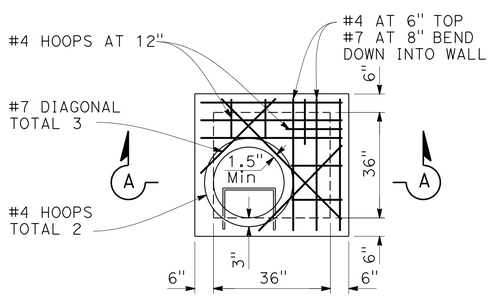

PLAN

G2 MANHOLE

3 c

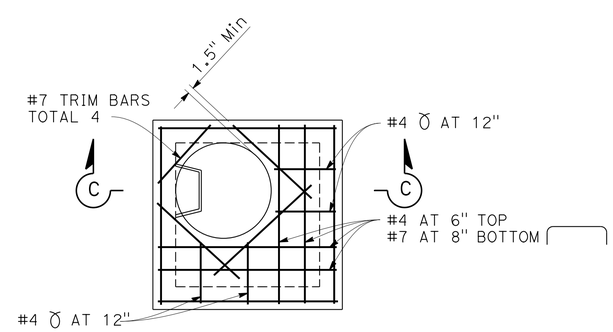

PLAN

MODIFY INLET TO MANHOLE

1 a

DRAINAGE DETAILS

NO SCALE

DD-2

STATE OF CALIFORNIA - DEPARTMENT OF TRANSPORTATION
Caltrans® HYDRAULICS

FUNCTIONAL SUPERVISOR: JOSEPH PETERSON
CALCULATED-DESIGNED BY: ERIC K. WONG
CHECKED BY: DIXON LAU
REVISED BY: EW
DATE REVISED: 4/9/14

LAST REVISION 04-08-14 | DATE PLOTTED => 30-JUN-2014 | TIME PLOTTED => 13:37

Dist	COUNTY	ROUTE	POST MILES TOTAL PROJECT	SHEET No.	TOTAL SHEETS
04	SM	1,35,82,84, 109,280	Var	18	96

REGISTERED CIVIL ENGINEER 4/10/14 DATE

4-28-14
PLANS APPROVAL DATE

REGISTERED PROFESSIONAL ENGINEER An T. Nguyen No. 62776 Exp. 6-30-14 CIVIL STATE OF CALIFORNIA

THE STATE OF CALIFORNIA OR ITS OFFICERS OR AGENTS SHALL NOT BE RESPONSIBLE FOR THE ACCURACY OR COMPLETENESS OF SCANNED COPIES OF THIS PLAN SHEET.

NOTE:

FOR ACCURATE RIGHT OF WAY DATA, CONTACT RIGHT OF WAY ENGINEERING AT THE DISTRICT OFFICE.

ABBREVIATIONS:

AT&T AMERICAN TELEPHONE & TELEGRAPH
PG&E PACIFIC GAS & ELECTRIC

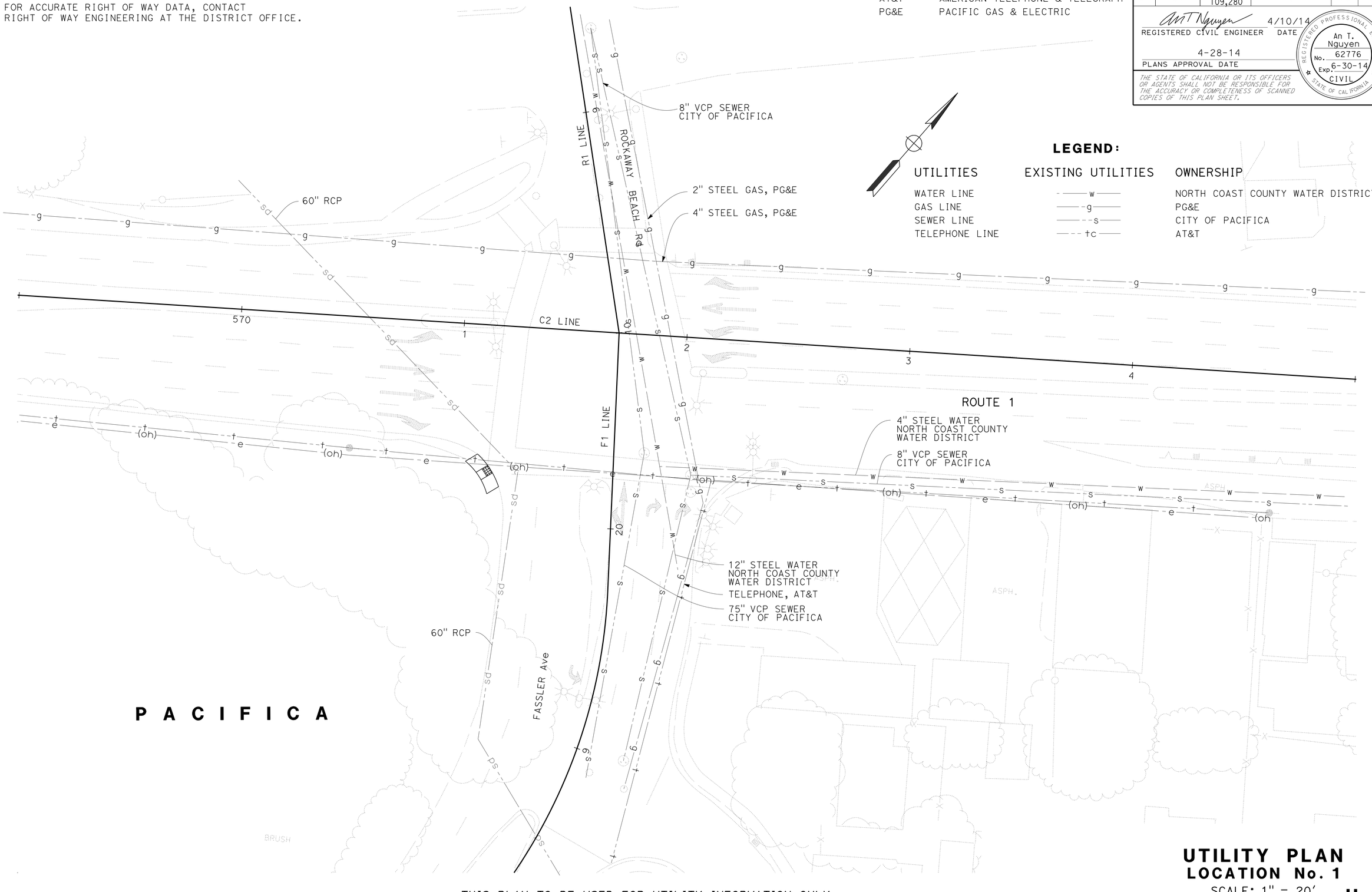

LEGEND:

UTILITIES	EXISTING UTILITIES	OWNERSHIP
WATER LINE	w	NORTH COAST COUNTY WATER DISTRICT
GAS LINE	g	PG&E
SEWER LINE	s	CITY OF PACIFICA
TELEPHONE LINE	tc	AT&T

THIS PLAN TO BE USED FOR UTILITY INFORMATION ONLY

UTILITY PLAN
LOCATION No. 1
SCALE: 1" = 20'

U-1

STATE OF CALIFORNIA - DEPARTMENT OF TRANSPORTATION
Caltrans
DESIGN

FUNCTIONAL SUPERVISOR: LAWRENCE A. JONES
CALCULATED-DESIGNED BY: AN NGUYEN
CHECKED BY: ARLISSA PANG
REVISED BY: AN
DATE REVISED: 4/10/14

LAST REVISION 04-10-14
DATE PLOTTED => 30-JUN-2014
TIME PLOTTED => 13:37

Dist	COUNTY	ROUTE	POST MILES TOTAL PROJECT	SHEET No.	TOTAL SHEETS
04	SM	1,35,82,84, 109,280	Var	19	96

REGISTERED CIVIL ENGINEER 4/10/14 DATE

4-28-14
PLANS APPROVAL DATE

REGISTERED PROFESSIONAL ENGINEER
An T. Nguyen
No. 62776
Exp. 6-30-14
CIVIL
STATE OF CALIFORNIA

THE STATE OF CALIFORNIA OR ITS OFFICERS OR AGENTS SHALL NOT BE RESPONSIBLE FOR THE ACCURACY OR COMPLETENESS OF SCANNED COPIES OF THIS PLAN SHEET.

NOTE:

FOR ACCURATE RIGHT OF WAY DATA, CONTACT RIGHT OF WAY ENGINEERING AT THE DISTRICT OFFICE.

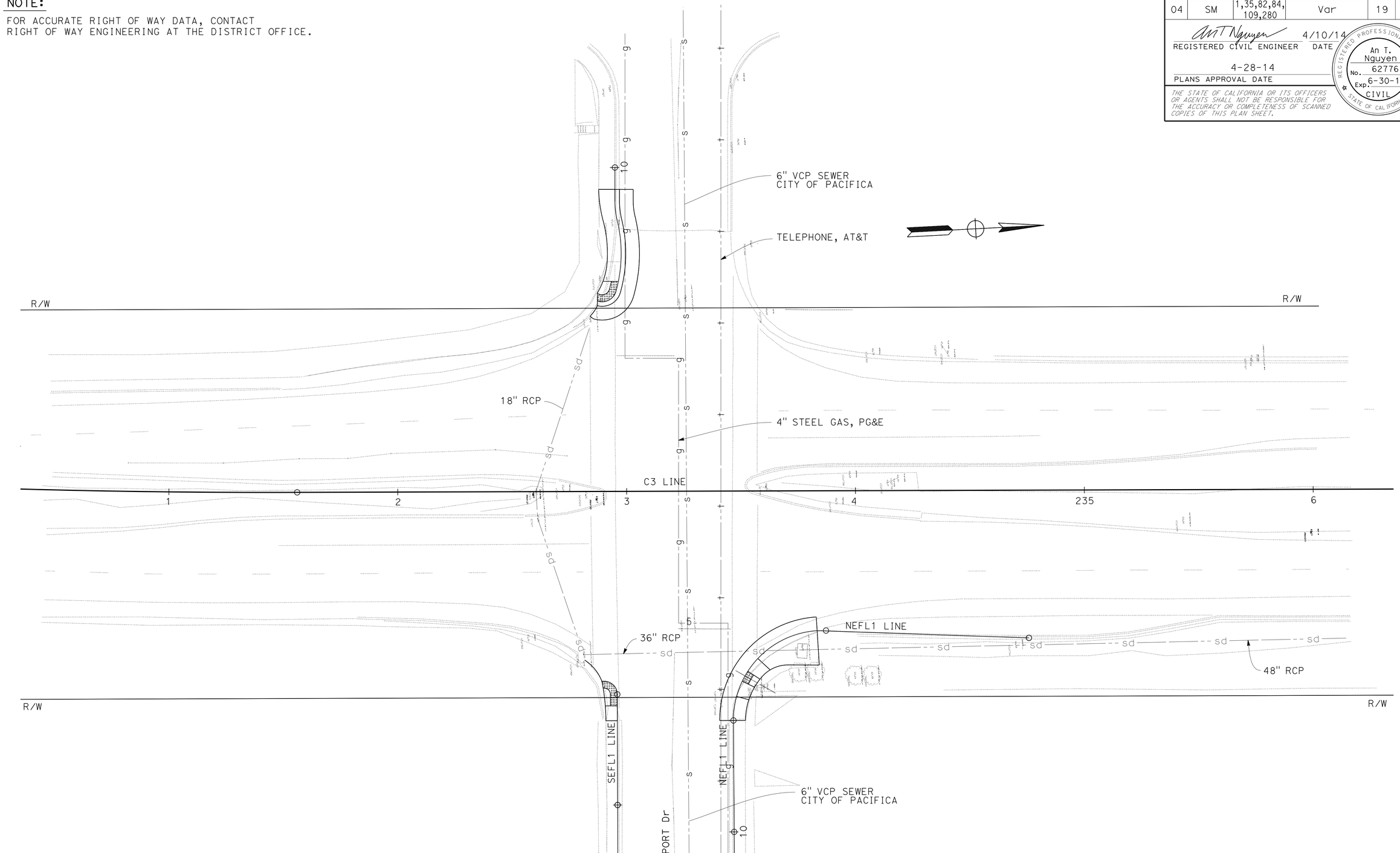

THIS PLAN TO BE USED FOR UTILITY INFORMATION ONLY

FOR NOTES, ABBREVIATIONS AND LEGEND, SEE SHEET U-1

UTILITY PLAN
LOCATION No. 2
SCALE: 1" = 20'

U-2

STATE OF CALIFORNIA - DEPARTMENT OF TRANSPORTATION
Caltrans® DESIGN

FUNCTIONAL SUPERVISOR: LAWRENCE A. JONES

CALCULATED-DESIGNED BY: AN NGUYEN
CHECKED BY: ARLISSA PANG

REVISED BY: AN
DATE REVISED: 4/10/14

LAST REVISION 04-10-14 | DATE PLOTTED => 30-JUN-2014 | TIME PLOTTED => 13:37

Dist	COUNTY	ROUTE	POST MILES TOTAL PROJECT	SHEET No.	TOTAL SHEETS
04	SM	1,35,82,84, 109,280	Var	20	96

REGISTERED CIVIL ENGINEER — DATE 4/10/14

4-28-14
PLANS APPROVAL DATE

REGISTERED PROFESSIONAL ENGINEER — An T. Nguyen — No. 62776 — Exp. 6-30-14 — CIVIL — STATE OF CALIFORNIA

THE STATE OF CALIFORNIA OR ITS OFFICERS OR AGENTS SHALL NOT BE RESPONSIBLE FOR THE ACCURACY OR COMPLETENESS OF SCANNED COPIES OF THIS PLAN SHEET.

NOTE:

FOR ACCURATE RIGHT OF WAY DATA, CONTACT RIGHT OF WAY ENGINEERING AT THE DISTRICT OFFICE.

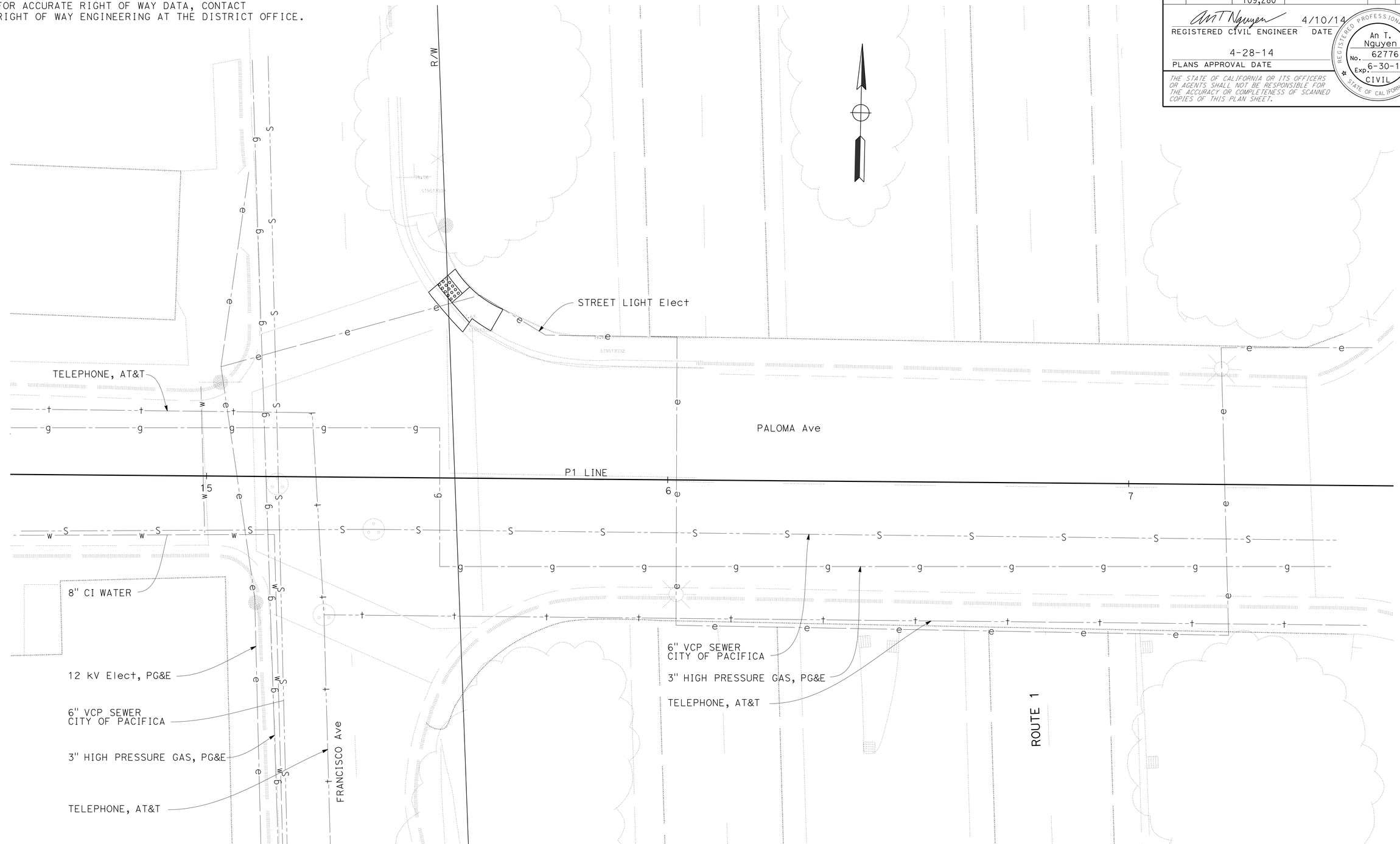

THIS PLAN TO BE USED FOR UTILITY INFORMATION ONLY

FOR NOTES, ABBREVIATIONS AND LEGEND, SEE SHEET U-1

UTILITY PLAN
LOCATION No. 3
SCALE: 1" = 20'

U-3

REVISED BY	DATE REVISED
AN	4/10/14

CALCULATED-DESIGNED BY: AN NGUYEN
CHECKED BY: ARLISSA PANG
FUNCTIONAL SUPERVISOR: LAWRENCE A. JONES

STATE OF CALIFORNIA - DEPARTMENT OF TRANSPORTATION
Caltrans
DESIGN

LAST REVISION 04-10-14 | DATE PLOTTED => 30-JUN-2014 | TIME PLOTTED => 13:37

Dist	COUNTY	ROUTE	POST MILES TOTAL PROJECT	SHEET No.	TOTAL SHEETS
04	SM	1,35,82,84, 109,280	Var	21	96

REGISTERED CIVIL ENGINEER 4/10/14 DATE

4-28-14
PLANS APPROVAL DATE

REGISTERED PROFESSIONAL ENGINEER An T. Nguyen No. 62776 Exp. 6-30-14 CIVIL STATE OF CALIFORNIA

THE STATE OF CALIFORNIA OR ITS OFFICERS OR AGENTS SHALL NOT BE RESPONSIBLE FOR THE ACCURACY OR COMPLETENESS OF SCANNED COPIES OF THIS PLAN SHEET.

NOTE:

FOR ACCURATE RIGHT OF WAY DATA, CONTACT RIGHT OF WAY ENGINEERING AT THE DISTRICT OFFICE.

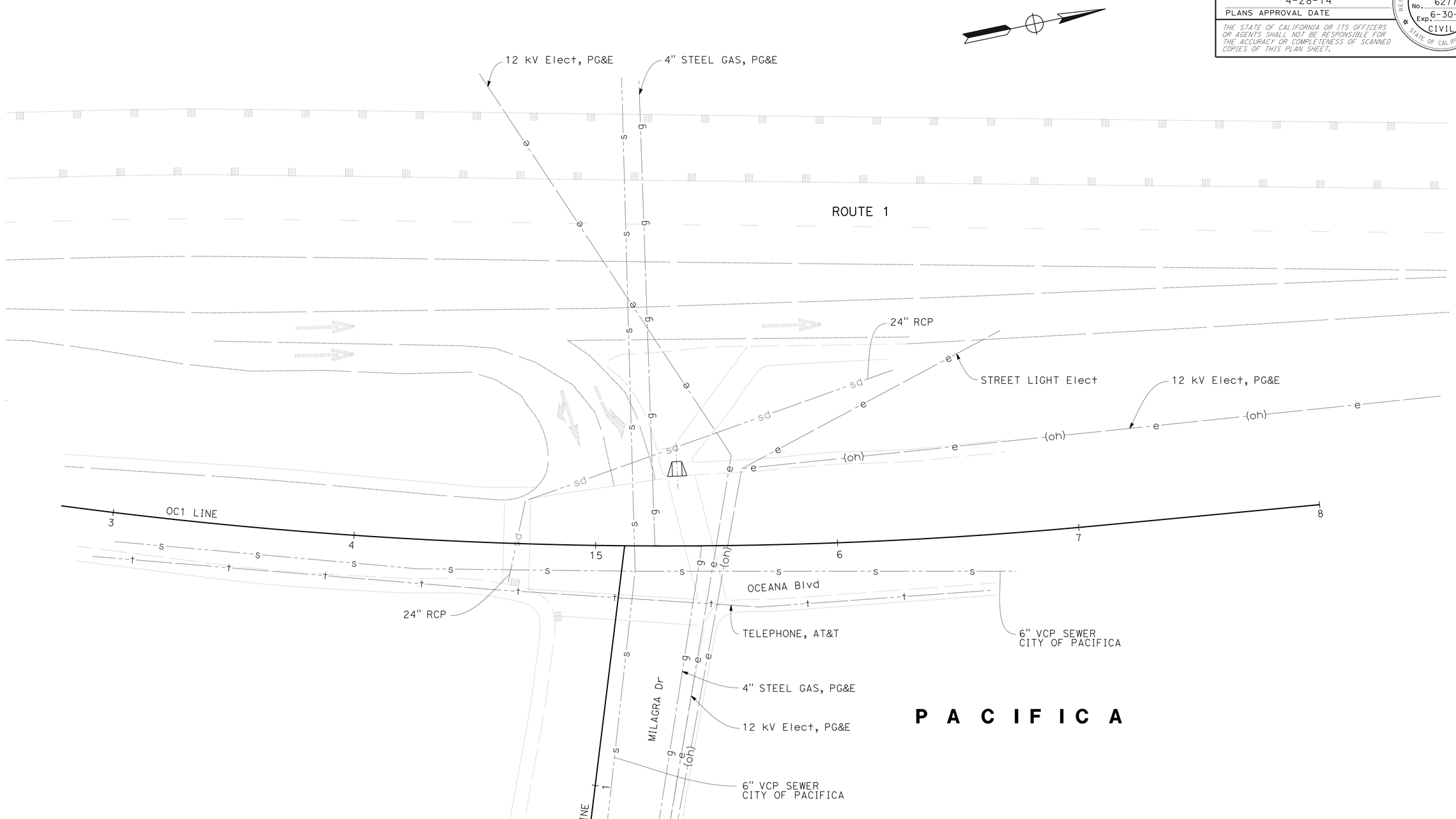

THIS PLAN TO BE USED FOR UTILITY INFORMATION ONLY

FOR NOTES, ABBREVIATIONS AND LEGEND, SEE SHEET U-1

UTILITY PLAN
LOCATION No. 4
SCALE: 1" = 20'

U-4

REVISED BY	DATE REVISED
AN	4/10/14

CALCULATED-DESIGNED BY: AN NGUYEN
CHECKED BY: ARLISSA PANG
FUNCTIONAL SUPERVISOR: LAWRENCE A. JONES

STATE OF CALIFORNIA - DEPARTMENT OF TRANSPORTATION
Caltrans
DESIGN

LAST REVISION 04-10-14
DATE PLOTTED => 30-JUN-2014
TIME PLOTTED => 13:37

Dist	COUNTY	ROUTE	POST MILES TOTAL PROJECT	SHEET No.	TOTAL SHEETS
04	SM	1,35,82,84, 109,280	Var	22	96

REGISTERED CIVIL ENGINEER — DATE: 4/10/14

4-28-14
PLANS APPROVAL DATE

REGISTERED PROFESSIONAL ENGINEER — An T. Nguyen — No. 62776 — Exp. 6-30-14 — CIVIL — STATE OF CALIFORNIA

THE STATE OF CALIFORNIA OR ITS OFFICERS OR AGENTS SHALL NOT BE RESPONSIBLE FOR THE ACCURACY OR COMPLETENESS OF SCANNED COPIES OF THIS PLAN SHEET.

NOTE:

FOR ACCURATE RIGHT OF WAY DATA, CONTACT RIGHT OF WAY ENGINEERING AT THE DISTRICT OFFICE.

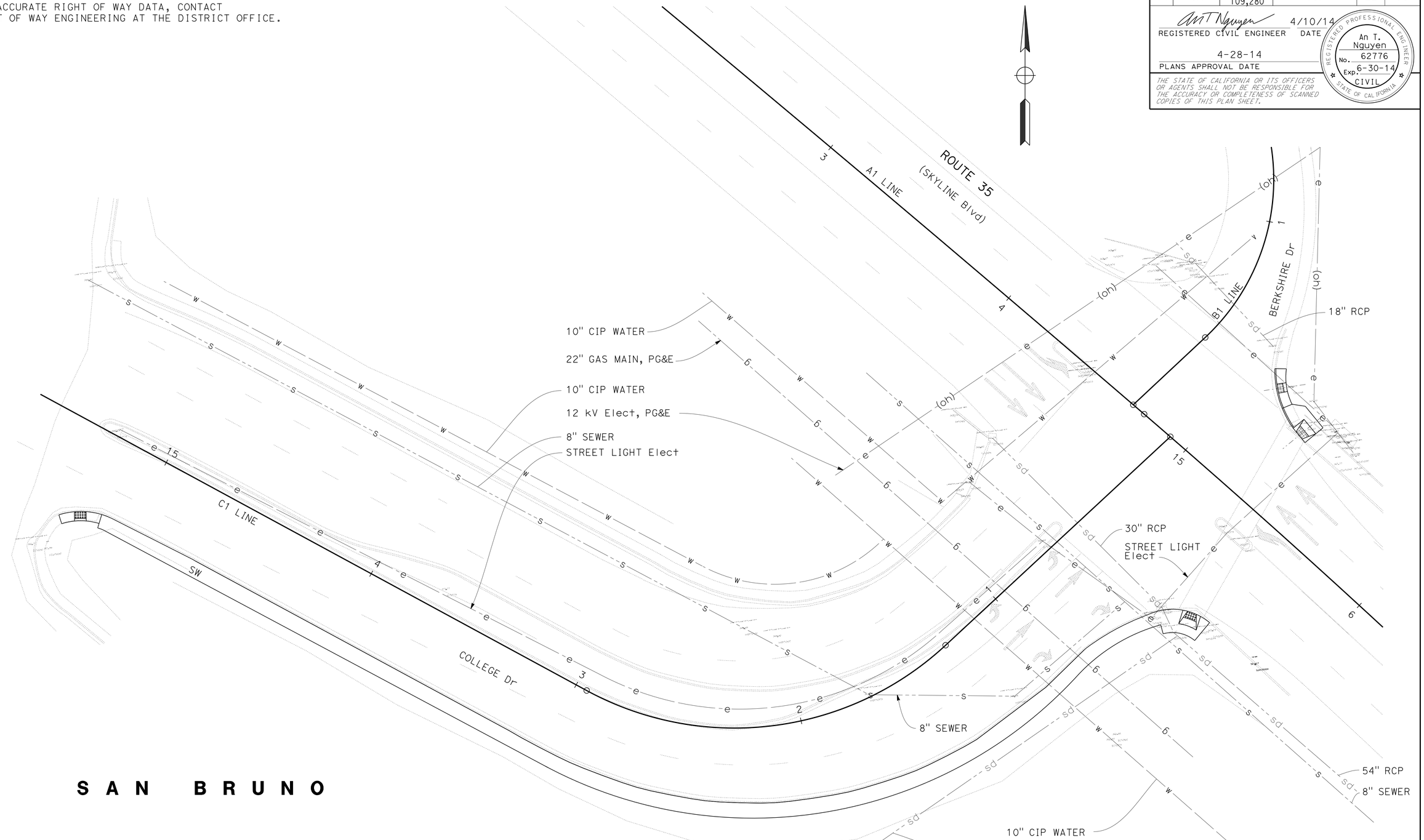

SAN BRUNO

THIS PLAN TO BE USED FOR UTILITY INFORMATION ONLY

FOR NOTES, ABBREVIATIONS AND LEGEND, SEE SHEET U-1

UTILITY PLAN
LOCATION No. 5
SCALE: 1" = 20'

U-5

REVISED BY	AN
DATE REVISED	4/10/14
CALCULATED-DESIGNED BY	AN NGUYEN
CHECKED BY	ARLISSA PANG
FUNCTIONAL SUPERVISOR	LAWRENCE A. JONES

STATE OF CALIFORNIA - DEPARTMENT OF TRANSPORTATION
Caltrans
DESIGN

LAST REVISION 04-10-04 | DATE PLOTTED => 30-JUN-2014 | TIME PLOTTED => 13:37

Dist	COUNTY	ROUTE	POST MILES TOTAL PROJECT	SHEET No.	TOTAL SHEETS
04	SM	1,35,82,84, 109,280	Var	23	96

REGISTERED CIVIL ENGINEER 4/10/14 DATE

4-28-14
PLANS APPROVAL DATE

REGISTERED PROFESSIONAL ENGINEER An T. Nguyen No. 62776 Exp. 6-30-14 CIVIL STATE OF CALIFORNIA

THE STATE OF CALIFORNIA OR ITS OFFICERS OR AGENTS SHALL NOT BE RESPONSIBLE FOR THE ACCURACY OR COMPLETENESS OF SCANNED COPIES OF THIS PLAN SHEET.

NOTE:

FOR ACCURATE RIGHT OF WAY DATA, CONTACT RIGHT OF WAY ENGINEERING AT THE DISTRICT OFFICE.

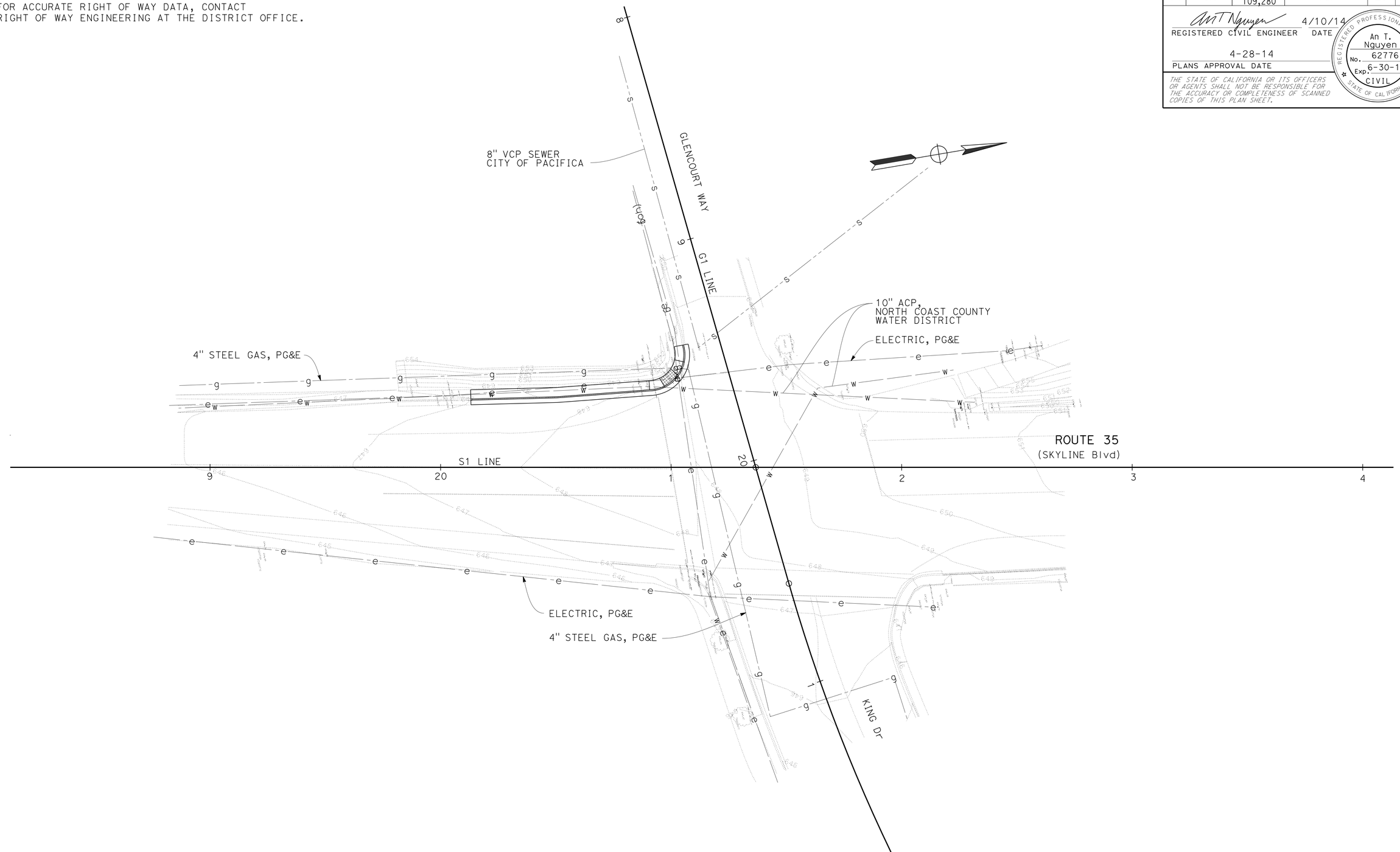

THIS PLAN TO BE USED FOR UTILITY INFORMATION ONLY

FOR NOTES, ABBREVIATIONS AND LEGEND, SEE SHEET U-1

UTILITY PLAN
LOCATION No. 6
SCALE: 1" = 20'

U-6

REVISED BY	DATE REVISED
AN	4/10/14

CALCULATED-DESIGNED BY: AN NGUYEN
CHECKED BY: ARLISSA PANG
FUNCTIONAL SUPERVISOR: LAWRENCE A. JONES

STATE OF CALIFORNIA - DEPARTMENT OF TRANSPORTATION
Caltrans
DESIGN

LAST REVISION 04-10-14
DATE PLOTTED => 30-JUN-2014
TIME PLOTTED => 13:37

Dist	COUNTY	ROUTE	POST MILES TOTAL PROJECT	SHEET No.	TOTAL SHEETS
04	SM	1,35,82,84, 109,280	Var	24	96

REGISTERED CIVIL ENGINEER — DATE 4/10/14

4-28-14
PLANS APPROVAL DATE

REGISTERED PROFESSIONAL ENGINEER — An T. Nguyen — No. 62776 — Exp. 6-30-14 — CIVIL — STATE OF CALIFORNIA

THE STATE OF CALIFORNIA OR ITS OFFICERS OR AGENTS SHALL NOT BE RESPONSIBLE FOR THE ACCURACY OR COMPLETENESS OF SCANNED COPIES OF THIS PLAN SHEET.

NOTE:

FOR ACCURATE RIGHT OF WAY DATA, CONTACT RIGHT OF WAY ENGINEERING AT THE DISTRICT OFFICE.

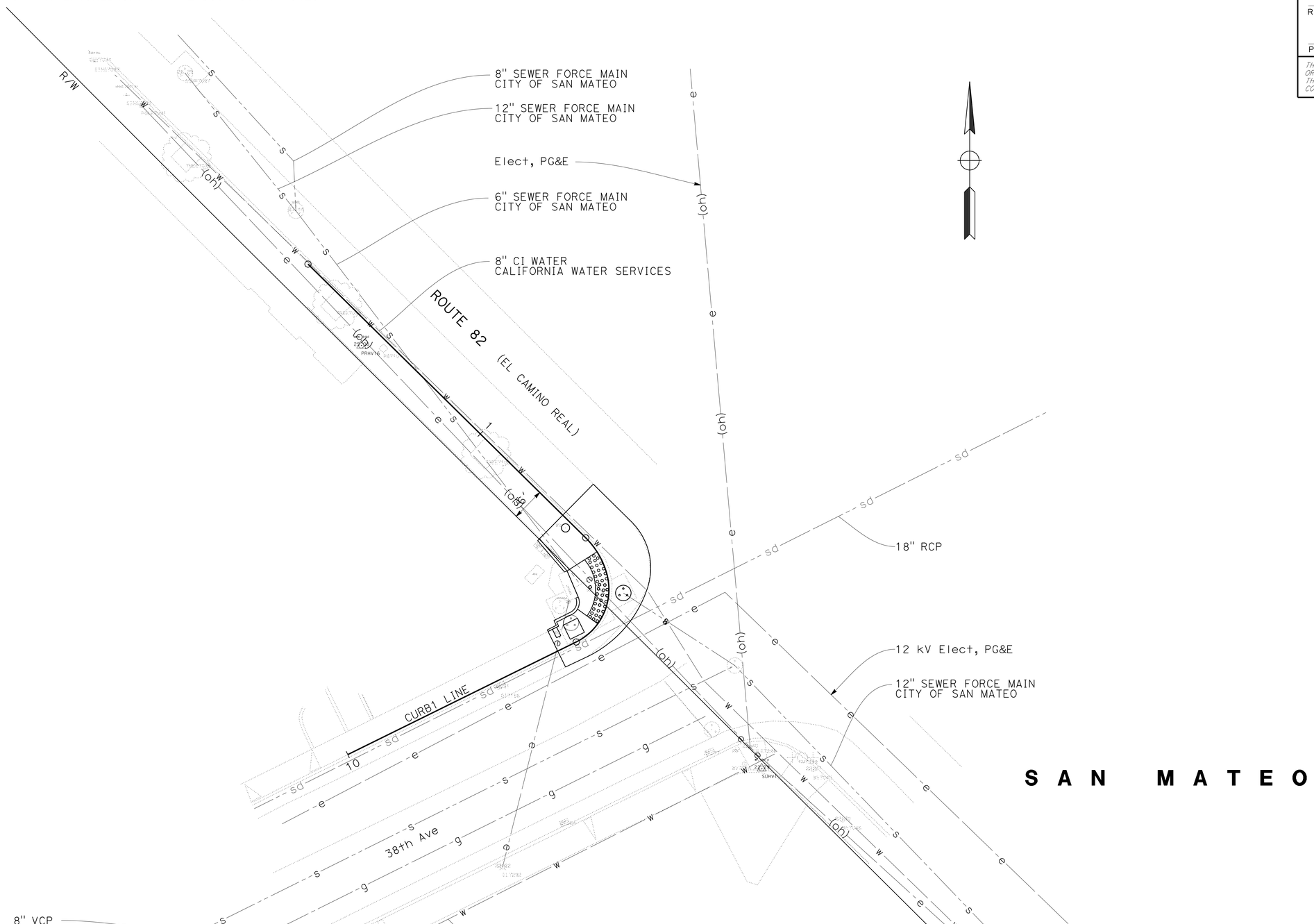

THIS PLAN TO BE USED FOR UTILITY INFORMATION ONLY

FOR NOTES, ABBREVIATIONS AND LEGEND, SEE SHEET U-1

UTILITY PLAN
LOCATION No. 7
SCALE: 1" = 20'

U-7

LAST REVISION	04-10-14
DATE PLOTTED =>	30-JUN-2014
TIME PLOTTED =>	13:37

STATE OF CALIFORNIA - DEPARTMENT OF TRANSPORTATION
Caltrans
DESIGN

FUNCTIONAL SUPERVISOR	LAWRENCE A. JONES
CALCULATED-DESIGNED BY	AN NGUYEN
CHECKED BY	ARLISSA PANG
REVISED BY	AN
DATE REVISED	4/10/14

Dist	COUNTY	ROUTE	POST MILES TOTAL PROJECT	SHEET No.	TOTAL SHEETS
04	SM	1,35,82,84, 109,280	Var	25	96

REGISTERED CIVIL ENGINEER 4/10/14 DATE

4-28-14
PLANS APPROVAL DATE

REGISTERED PROFESSIONAL ENGINEER
An T. Nguyen
No. 62776
Exp. 6-30-14
CIVIL
STATE OF CALIFORNIA

THE STATE OF CALIFORNIA OR ITS OFFICERS OR AGENTS SHALL NOT BE RESPONSIBLE FOR THE ACCURACY OR COMPLETENESS OF SCANNED COPIES OF THIS PLAN SHEET.

NOTE:

FOR ACCURATE RIGHT OF WAY DATA, CONTACT
RIGHT OF WAY ENGINEERING AT THE DISTRICT OFFICE.

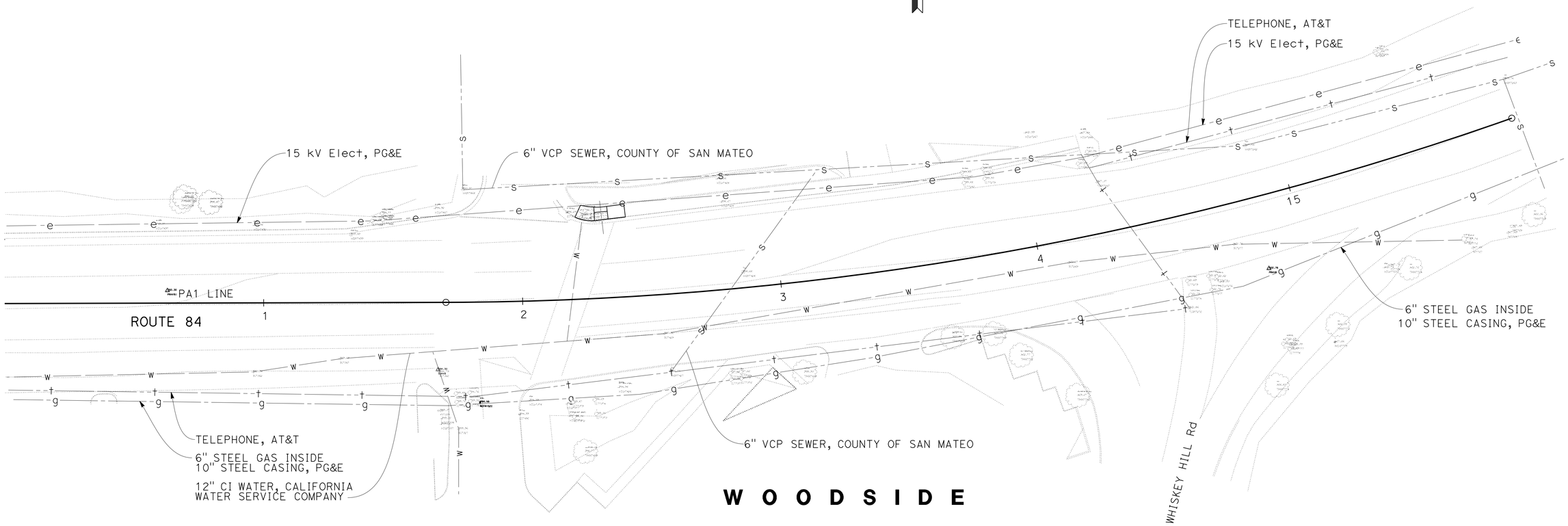

THIS PLAN TO BE USED FOR UTILITY INFORMATION ONLY

FOR NOTES, ABBREVIATIONS AND LEGEND, SEE SHEET U-1

UTILITY PLAN
LOCATION No. 8
SCALE: 1" = 20'

U-8

REVISED BY	DATE REVISED
AN	4/10/14

CALCULATED-DESIGNED BY: AN NGUYEN
CHECKED BY: ARLISSA PANG
FUNCTIONAL SUPERVISOR: LAWRENCE A. JONES

STATE OF CALIFORNIA - DEPARTMENT OF TRANSPORTATION
Caltrans
DESIGN

LAST REVISION 04-10-14
DATE PLOTTED => 30-JUN-2014
TIME PLOTTED => 13:37

Dist	COUNTY	ROUTE	POST MILES TOTAL PROJECT	SHEET No.	TOTAL SHEETS
04	SM	1,35,82,84, 109,280	Var	26	96

REGISTERED CIVIL ENGINEER — DATE 4/10/14

4-28-14
PLANS APPROVAL DATE

REGISTERED PROFESSIONAL ENGINEER — An T. Nguyen — No. 62776 — Exp. 6-30-14 — CIVIL — STATE OF CALIFORNIA

THE STATE OF CALIFORNIA OR ITS OFFICERS OR AGENTS SHALL NOT BE RESPONSIBLE FOR THE ACCURACY OR COMPLETENESS OF SCANNED COPIES OF THIS PLAN SHEET.

NOTE:

FOR ACCURATE RIGHT OF WAY DATA, CONTACT RIGHT OF WAY ENGINEERING AT THE DISTRICT OFFICE.

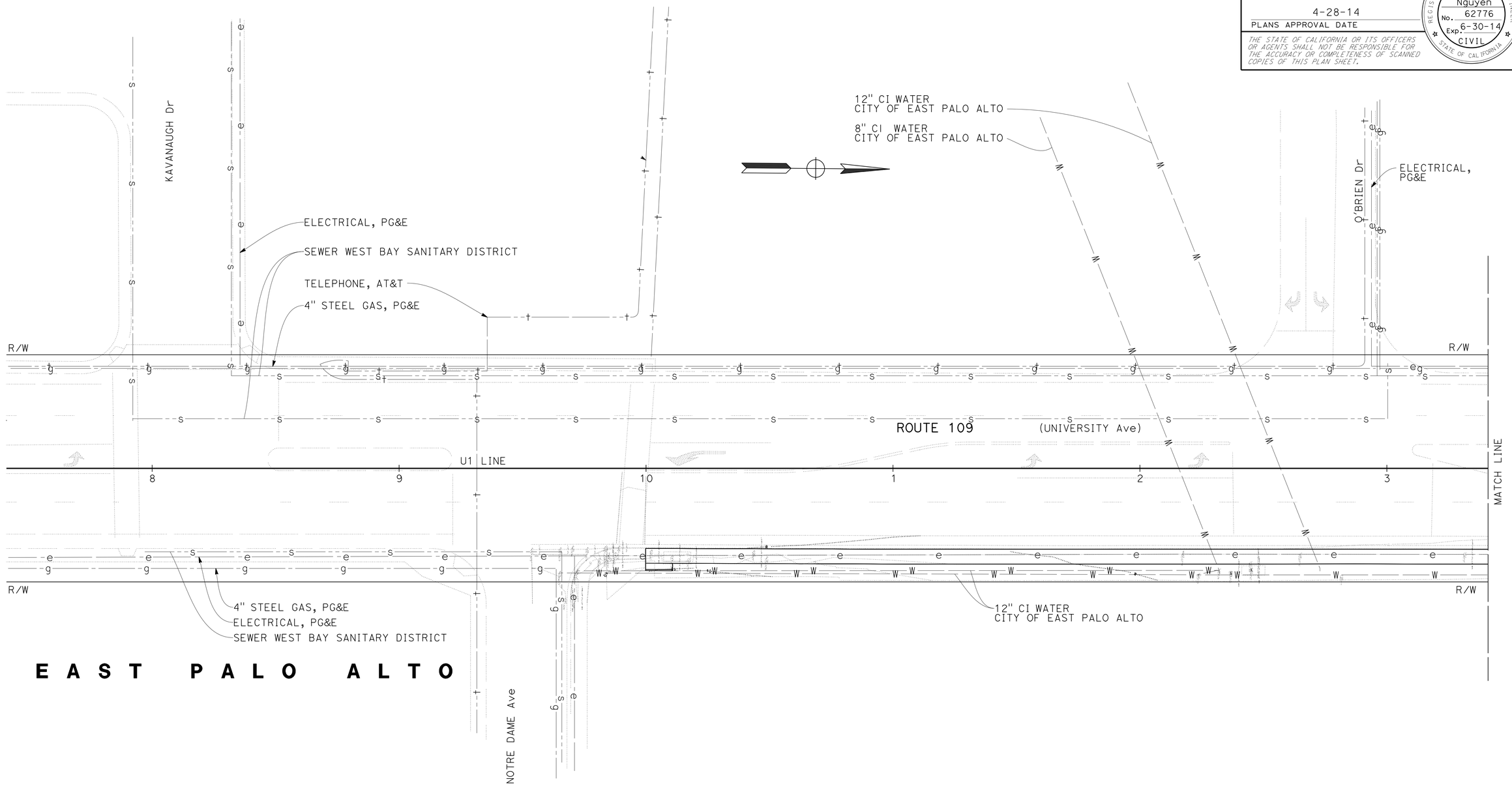

THIS PLAN TO BE USED FOR UTILITY INFORMATION ONLY

FOR NOTES, ABBREVIATIONS AND LEGEND, SEE SHEET U-1

UTILITY PLAN
LOCATION No. 9
SCALE: 1" = 20'

U-9

REVISED BY	DATE REVISED
AN	4/10/14

CALCULATED-DESIGNED BY: AN NGUYEN
CHECKED BY: ARLISSA PANG
FUNCTIONAL SUPERVISOR: LAWRENCE A. JONES

STATE OF CALIFORNIA - DEPARTMENT OF TRANSPORTATION
Caltrans
DESIGN

LAST REVISION 04-10-14 | DATE PLOTTED => 30-JUN-2014 | TIME PLOTTED => 13:38

Dist	COUNTY	ROUTE	POST MILES TOTAL PROJECT	SHEET No.	TOTAL SHEETS
04	SM	1,35,82,84, 109,280	Var	27	96

REGISTERED CIVIL ENGINEER 4/10/14 DATE

4-28-14
PLANS APPROVAL DATE

REGISTERED PROFESSIONAL ENGINEER
An T. Nguyen
No. 62776
Exp. 6-30-14
CIVIL
STATE OF CALIFORNIA

THE STATE OF CALIFORNIA OR ITS OFFICERS OR AGENTS SHALL NOT BE RESPONSIBLE FOR THE ACCURACY OR COMPLETENESS OF SCANNED COPIES OF THIS PLAN SHEET.

NOTE:

FOR ACCURATE RIGHT OF WAY DATA, CONTACT
RIGHT OF WAY ENGINEERING AT THE DISTRICT OFFICE.

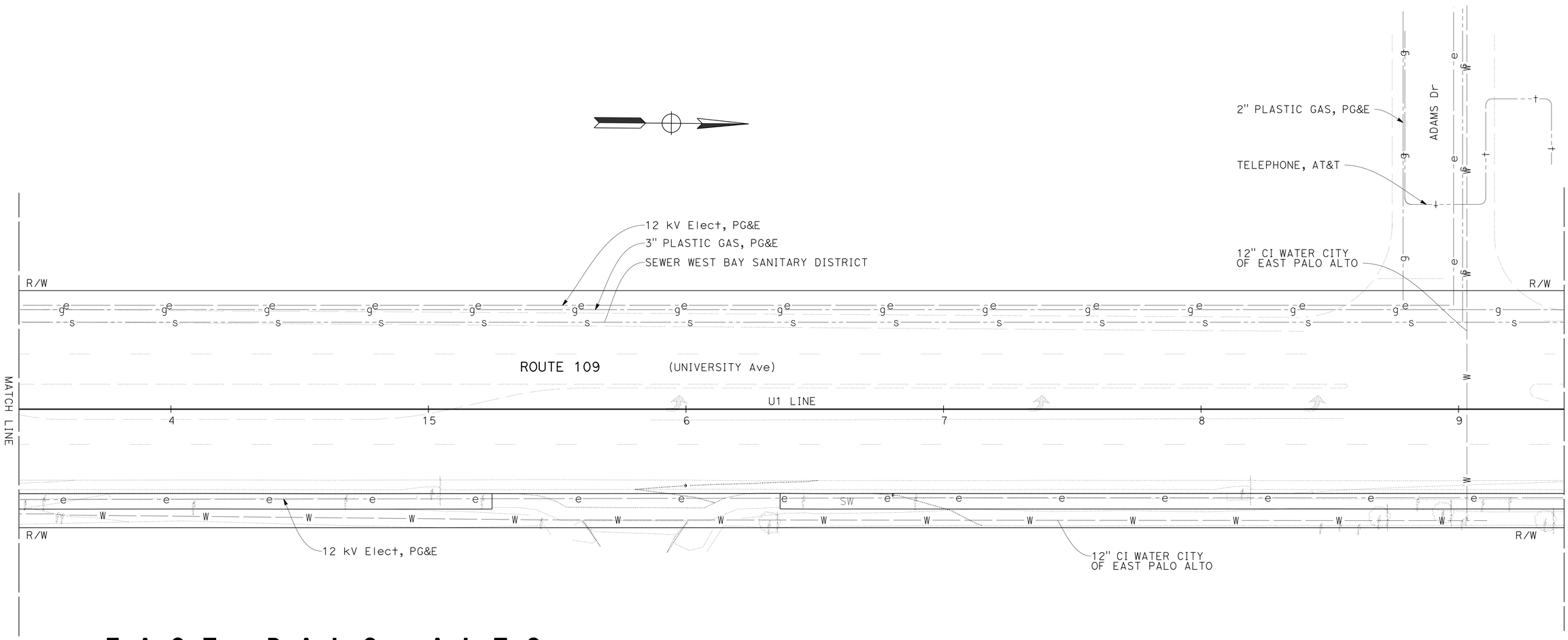

E A S T P A L O A L T O

THIS PLAN TO BE USED FOR UTILITY INFORMATION ONLY

FOR NOTES, ABBREVIATIONS
AND LEGEND, SEE SHEET U-1

UTILITY PLAN
LOCATION No. 9
SCALE: 1" = 20'

U-10

REVISED BY	AN
DATE REVISED	4/10/14
CALCULATED-DESIGNED BY	AN NGUYEN
CHECKED BY	ARLISSA PANG
FUNCTIONAL SUPERVISOR	LAWRENCE A. JONES

STATE OF CALIFORNIA - DEPARTMENT OF TRANSPORTATION
Caltrans
DESIGN

LAST REVISION 04-10-14
DATE PLOTTED => 30-JUN-2014
TIME PLOTTED => 13:38

Dist	COUNTY	ROUTE	POST MILES TOTAL PROJECT	SHEET No.	TOTAL SHEETS
04	SM	1,35,82,84, 109,280	Var	28	96

REGISTERED CIVIL ENGINEER 4/10/14 DATE

4-28-14
PLANS APPROVAL DATE

REGISTERED PROFESSIONAL ENGINEER
An T. Nguyen
No. 62776
Exp. 6-30-14
CIVIL
STATE OF CALIFORNIA

THE STATE OF CALIFORNIA OR ITS OFFICERS OR AGENTS SHALL NOT BE RESPONSIBLE FOR THE ACCURACY OR COMPLETENESS OF SCANNED COPIES OF THIS PLAN SHEET.

NOTE:

FOR ACCURATE RIGHT OF WAY DATA, CONTACT RIGHT OF WAY ENGINEERING AT THE DISTRICT OFFICE.

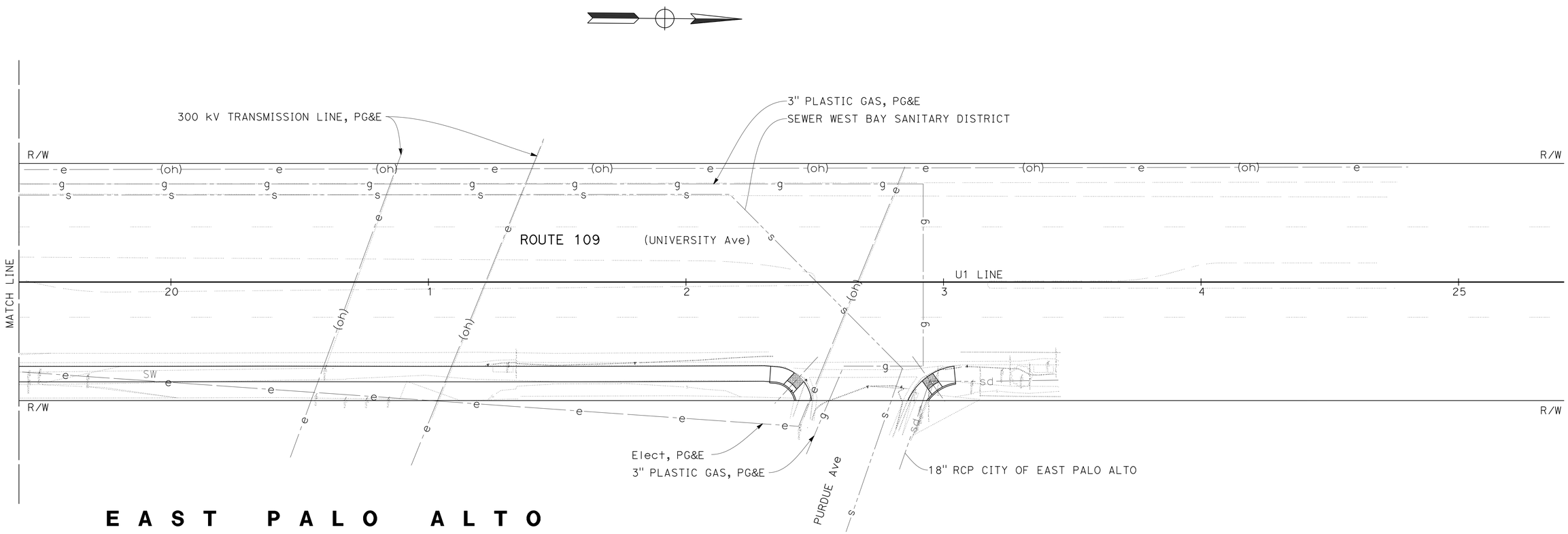

THIS PLAN TO BE USED FOR UTILITY INFORMATION ONLY

FOR NOTES, ABBREVIATIONS AND LEGEND, SEE SHEET U-1

UTILITY PLAN
LOCATION No. 9
SCALE: 1" = 20'

U-11

REVISED BY	DATE REVISED
AN	4/10/14

CALCULATED-DESIGNED BY: AN NGUYEN
CHECKED BY: ARLISSA PANG
FUNCTIONAL SUPERVISOR: LAWRENCE A. JONES

STATE OF CALIFORNIA - DEPARTMENT OF TRANSPORTATION
Caltrans
DESIGN

LAST REVISION 04-10-14
DATE PLOTTED => 30-JUN-2014
TIME PLOTTED => 13:38

Dist	COUNTY	ROUTE	POST MILES TOTAL PROJECT	SHEET No.	TOTAL SHEETS
04	SM	1,35,82,84, 109,280	Var	29	96

REGISTERED CIVIL ENGINEER 4/10/14 DATE

4-28-14
PLANS APPROVAL DATE

REGISTERED PROFESSIONAL ENGINEER An T. Nguyen No. 62776 Exp. 6-30-14 CIVIL STATE OF CALIFORNIA

THE STATE OF CALIFORNIA OR ITS OFFICERS OR AGENTS SHALL NOT BE RESPONSIBLE FOR THE ACCURACY OR COMPLETENESS OF SCANNED COPIES OF THIS PLAN SHEET.

NOTE:

FOR ACCURATE RIGHT OF WAY DATA, CONTACT RIGHT OF WAY ENGINEERING AT THE DISTRICT OFFICE.

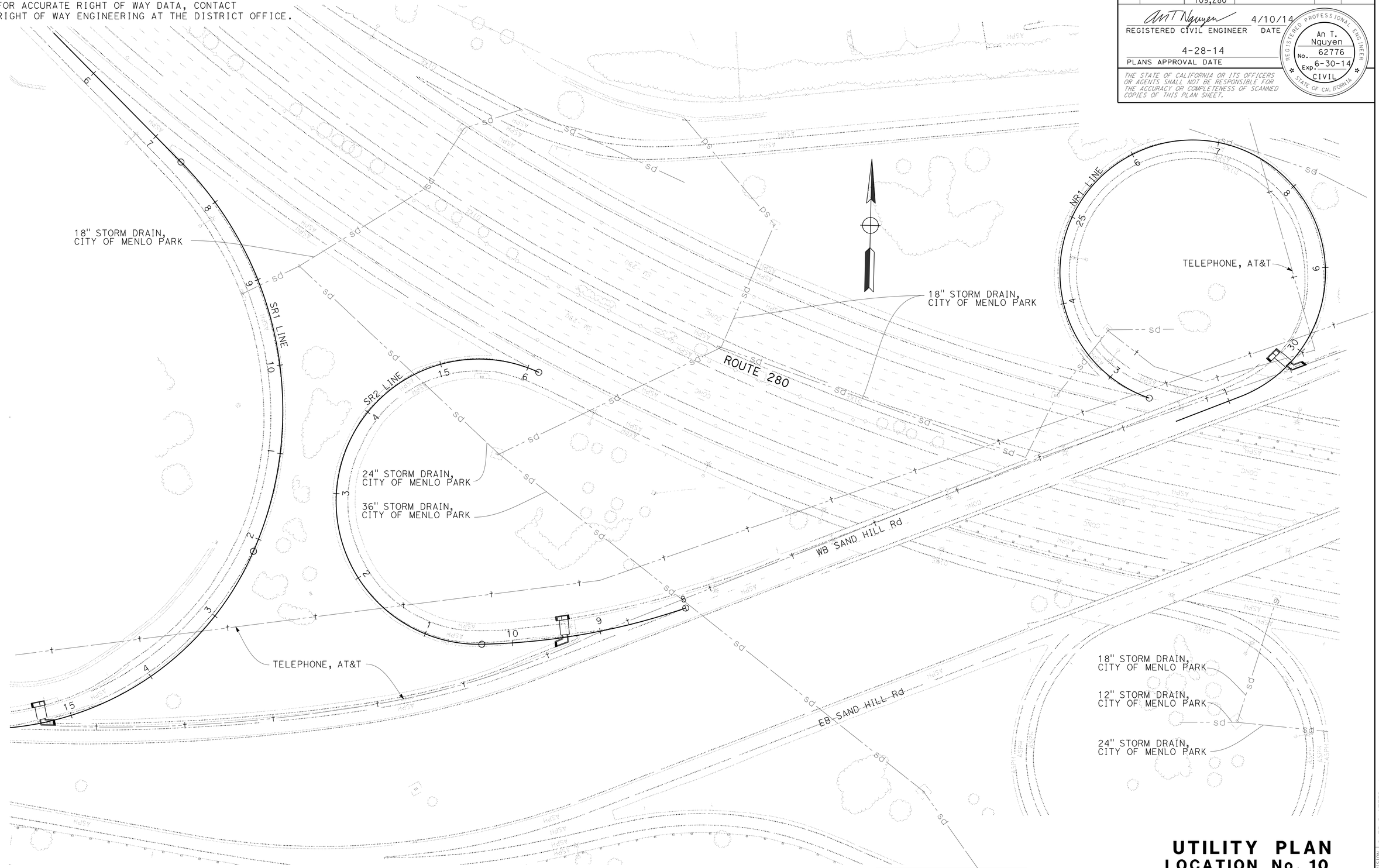

THIS PLAN TO BE USED FOR UTILITY INFORMATION ONLY

FOR NOTES, ABBREVIATIONS AND LEGEND, SEE SHEET U-1

UTILITY PLAN
LOCATION No. 10
SCALE: 1" = 50'

U-12

REVISED BY	AN	CALCULATED-DESIGNED BY	AN NGUYEN
DATE REVISED	4/10/14	CHECKED BY	ARLISSA PANG

FUNCTIONAL SUPERVISOR: LAWRENCE A. JONES

STATE OF CALIFORNIA - DEPARTMENT OF TRANSPORTATION

Caltrans® DESIGN

LAST REVISION 04-10-14 | DATE PLOTTED => 30-JUN-2014 | TIME PLOTTED => 13:38

Dist	COUNTY	ROUTE	POST MILES TOTAL PROJECT	SHEET No.	TOTAL SHEETS
04	SM	1,35,82,84, 109,280	Var	30	96

REGISTERED CIVIL ENGINEER — DATE 4/9/14

4-28-14
PLANS APPROVAL DATE

REGISTERED PROFESSIONAL ENGINEER — Jerilyn L. Struven — No. 49964 — Exp. 12-31-14 — CIVIL — STATE OF CALIFORNIA

THE STATE OF CALIFORNIA OR ITS OFFICERS OR AGENTS SHALL NOT BE RESPONSIBLE FOR THE ACCURACY OR COMPLETENESS OF SCANNED COPIES OF THIS PLAN SHEET.

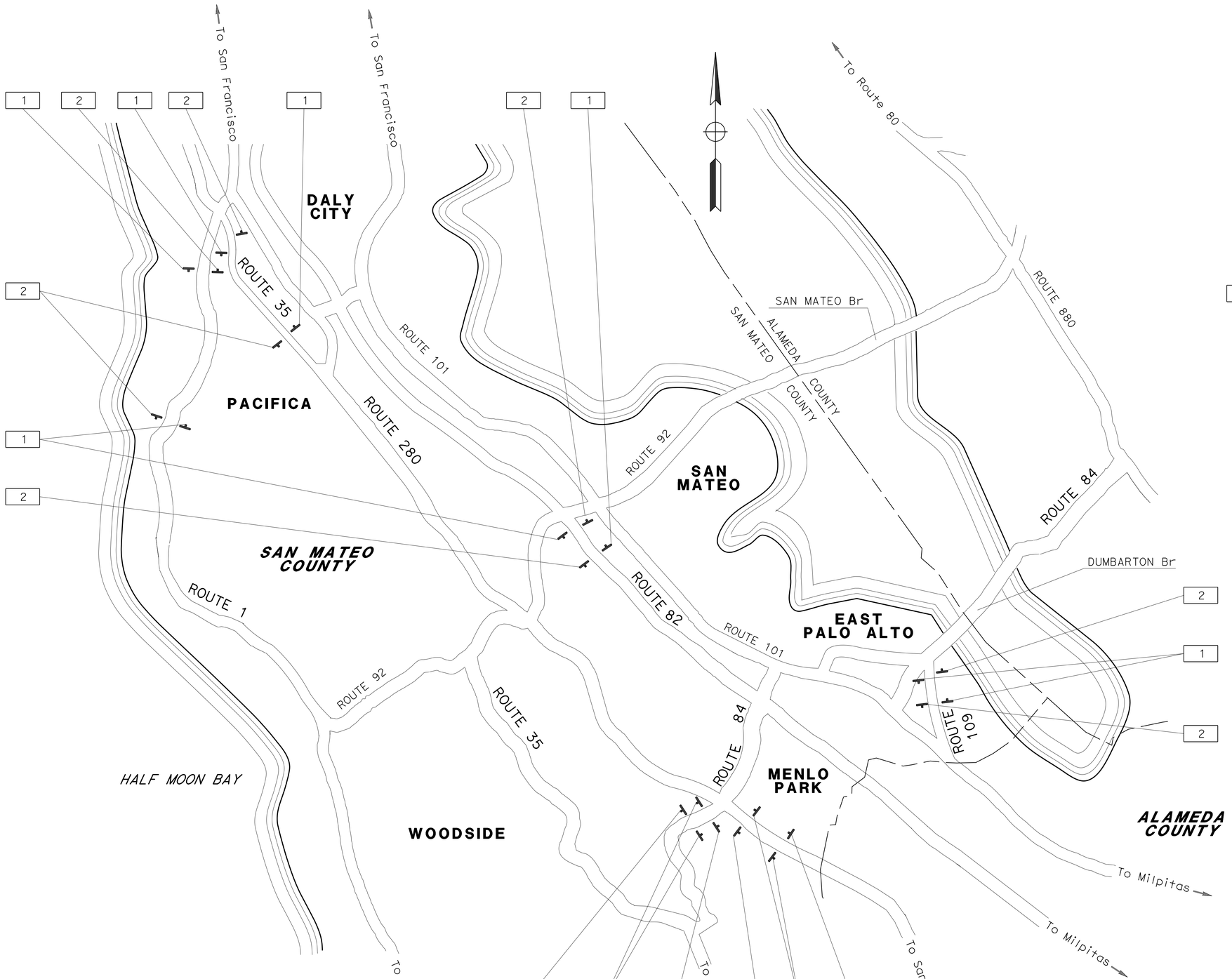

NOTE:
EXACT LOCATION AND POSITION OF SIGNS TO BE DETERMINED BY THE ENGINEER.

LEGEND:
No. — CONSTRUCTION AREA SIGN NUMBER

CONSTRUCTION AREA SIGNS
NO SCALE

APPROVED FOR CONSTRUCTION AREA SIGN WORK ONLY

CS-1

STATE OF CALIFORNIA - DEPARTMENT OF TRANSPORTATION
Caltrans
TRAFFIC

FUNCTIONAL SUPERVISOR: ROLAND AU-YEUNG
CALCULATED-DESIGNED BY: STEPHEN LAU
CHECKED BY: JERILYN STRUVEN
REVISED BY: SL
DATE REVISED: 4/9/14

LAST REVISION: 04-09-14
DATE PLOTTED => 30-JUN-2014
TIME PLOTTED => 13:38

Dist	COUNTY	ROUTE	POST MILES TOTAL PROJECT	SHEET No.	TOTAL SHEETS
04	SM	1,35,82,84, 109,280	Var	31	96

REGISTERED CIVIL ENGINEER — DATE 4/9/14

4-28-14
PLANS APPROVAL DATE

REGISTERED PROFESSIONAL ENGINEER — Jerilyn L. Struven — No. 49964 — Exp. 12-31-14 — CIVIL — STATE OF CALIFORNIA

THE STATE OF CALIFORNIA OR ITS OFFICERS OR AGENTS SHALL NOT BE RESPONSIBLE FOR THE ACCURACY OR COMPLETENESS OF SCANNED COPIES OF THIS PLAN SHEET.

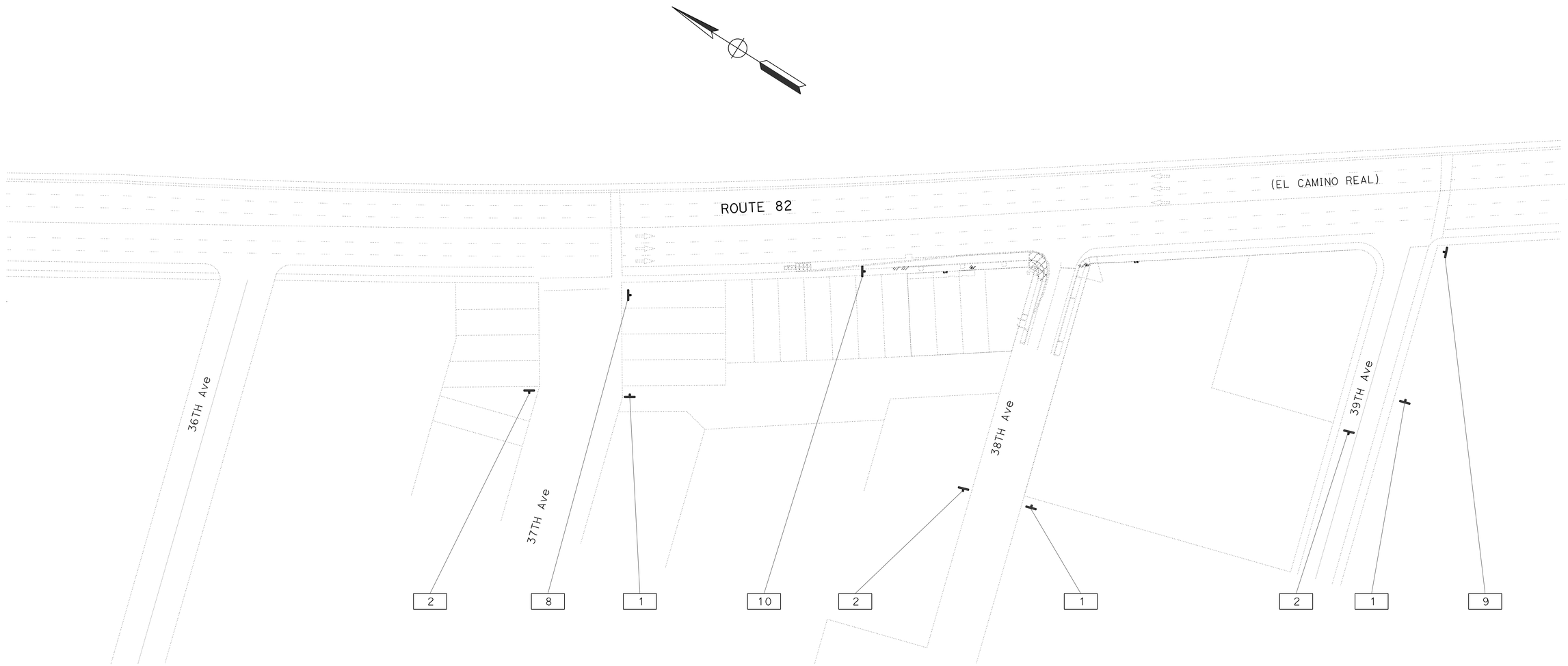

APPROVED FOR CONSTRUCTION AREA SIGN WORK ONLY

FOR NOTE AND LEGEND, SEE SHEET CS-1

CONSTRUCTION AREA SIGNS
LOCATION No. 7
NO SCALE

CS-2

STATE OF CALIFORNIA - DEPARTMENT OF TRANSPORTATION
Caltrans®
TRAFFIC

FUNCTIONAL SUPERVISOR: ROLAND AU-YEUNG
CALCULATED-DESIGNED BY: STEPHEN LAU
CHECKED BY: JERILYN STRUVEN
REVISED BY: SL
DATE REVISED: 4/9/14

LAST REVISION 04-09-14 | DATE PLOTTED => 30-JUN-2014 | TIME PLOTTED => 13:38

BORDER LAST REVISED 7/2/2010 | USERNAME => s130888 | DGN FILE => 04130004711a002.dgn | RELATIVE BORDER SCALE IS IN INCHES 0 1 2 3 | UNIT 0834 | PROJECT NUMBER & PHASE 04130004711

Dist	COUNTY	ROUTE	POST MILES TOTAL PROJECT	SHEET No.	TOTAL SHEETS
04	SM	1,35,82,84, 109,280	Var	32	96

REGISTERED CIVIL ENGINEER — DATE 4/9/14

4-28-14
PLANS APPROVAL DATE

REGISTERED PROFESSIONAL ENGINEER
Jerilyn L. Struven
No. 49964
Exp. 12-31-14
CIVIL
STATE OF CALIFORNIA

THE STATE OF CALIFORNIA OR ITS OFFICERS OR AGENTS SHALL NOT BE RESPONSIBLE FOR THE ACCURACY OR COMPLETENESS OF SCANNED COPIES OF THIS PLAN SHEET.

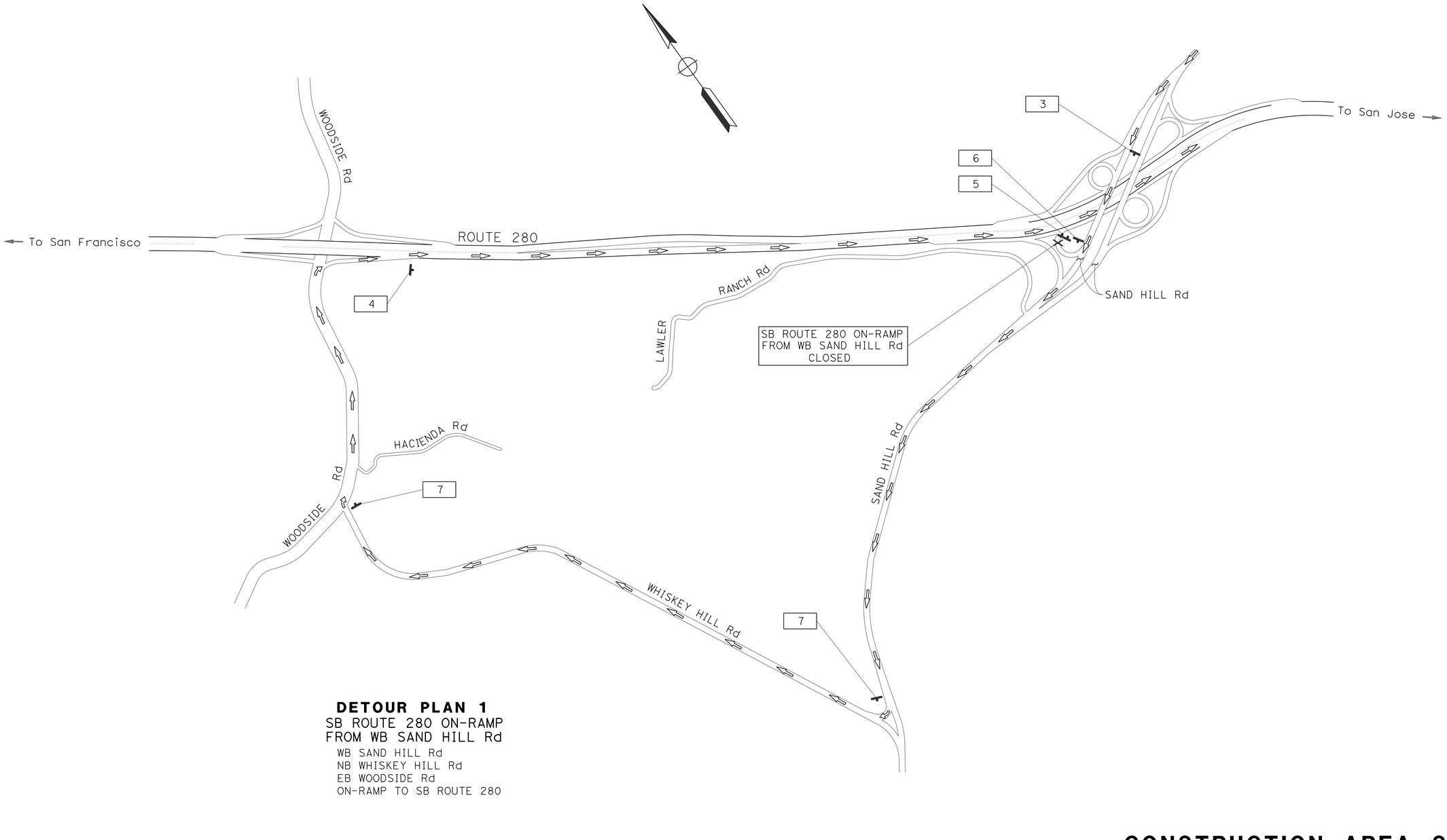

DETOUR PLAN 1
SB ROUTE 280 ON-RAMP
FROM WB SAND HILL Rd
WB SAND HILL Rd
NB WHISKEY HILL Rd
EB WOODSIDE Rd
ON-RAMP TO SB ROUTE 280

APPROVED FOR CONSTRUCTION AREA SIGN WORK ONLY

FOR NOTE AND LEGEND, SEE SHEET CS-1

CONSTRUCTION AREA SIGNS
NO SCALE

CS-3

STATE OF CALIFORNIA - DEPARTMENT OF TRANSPORTATION
Caltrans®
TRAFFIC

FUNCTIONAL SUPERVISOR: ROLAND AU-YEUNG
CALCULATED-DESIGNED BY: STEPHEN LAU
CHECKED BY: JERILYN STRUVEN
REVISED BY: SL
DATE REVISED: 4/9/14

LAST REVISION 04-09-14 | DATE PLOTTED => 30-JUN-2014 | TIME PLOTTED => 13:38

Dist	COUNTY	ROUTE	POST MILES TOTAL PROJECT	SHEET No.	TOTAL SHEETS
04	SM	1,35,82,84, 109,280	Var	33	96

REGISTERED CIVIL ENGINEER 4/9/14 DATE

4-28-14
PLANS APPROVAL DATE

REGISTERED PROFESSIONAL ENGINEER Jerilyn L. Struven No. 49964 Exp. 12-31-14 CIVIL STATE OF CALIFORNIA

THE STATE OF CALIFORNIA OR ITS OFFICERS OR AGENTS SHALL NOT BE RESPONSIBLE FOR THE ACCURACY OR COMPLETENESS OF SCANNED COPIES OF THIS PLAN SHEET.

SPECIAL

STATIONARY MOUNTED CONSTRUCTION AREA SIGNS

SIGN No.	SIGN CODE	PANEL SIZE	SIGN MESSAGE	NUMBER OF POSTS AND SIZE	No. OF SIGNS
1	W20-1	48" x 48"	ROAD WORK AHEAD	1 - 4" x 6"	15
2	G20-2	48" x 24"	END ROAD WORK	1 - 4" x 4"	15
3	W20-2	48" x 48"	DETOUR AHEAD	1 - 4" x 6"	1
4	M4-8a	48" x 18"	END DETOUR	1 - 4" x 4"	1
5	SC6-4(CA)	60" x 48"	RAMP CLOSED	2 - 4" x 6"	1
6	SC3(CA)(↑)	48" x 18"	DETOUR (STRAIGHT)	1 - 4" x 6"	1
	M3-3	21" x 9"	SOUTH		
	G27-2(280)	30" x 25"	ROUTE SHIELD (280)		
7	M4-10(Rt)	48" x 18"	DETOUR (RIGHT)	1 - 4" x 6"	2
	M3-3	21" x 9"	SOUTH		
	G27-2(280)	30" x 25"	ROUTE SHIELD (280)		
8	R9-11A(Lt)	24" x 12"	SIDEWALK CLOSED, CROSS HERE	1 - 4" x 4"	1
9	R9-11A(Rt)	24" x 12"	SIDEWALK CLOSED, CROSS HERE	1 - 4" x 4"	1
10	SPECIAL	30" x 18"	SIDEWALK CLOSED	1 - 4" x 4"	1

CONSTRUCTION AREA SIGNS

NO SCALE

CS-4

CALCULATED-DESIGNED BY	STEPHEN LAU	REVISED BY	SL
CHECKED BY	JERILYN STRUVEN	DATE REVISED	4/9/14

FUNCTIONAL SUPERVISOR: ROLAND AU-YEUNG

STATE OF CALIFORNIA - DEPARTMENT OF TRANSPORTATION

Caltrans®

TRAFFIC

LAST REVISION 04-09-14 | DATE PLOTTED => 30-JUN-2014 | TIME PLOTTED => 13:38

Dist	COUNTY	ROUTE	POST MILES TOTAL PROJECT	SHEET No.	TOTAL SHEETS
04	SM	1,35,82,84, 109,280	Var	34	96

REGISTERED CIVIL ENGINEER 4/10/14 DATE

4-28-14
PLANS APPROVAL DATE

REGISTERED PROFESSIONAL ENGINEER An T. Nguyen No. 62776 Exp. 6-30-14 CIVIL STATE OF CALIFORNIA

THE STATE OF CALIFORNIA OR ITS OFFICERS OR AGENTS SHALL NOT BE RESPONSIBLE FOR THE ACCURACY OR COMPLETENESS OF SCANNED COPIES OF THIS PLAN SHEET.

NOTES:

1. EXACT LOCATION AND POSITION OF CONSTRUCTION AREA SIGNS TO BE DETERMINED BY THE ENGINEER.
2. FOR ADDITIONAL CONSTRUCTION AREA SIGNS, SEE CONTRUCTION AREA SIGNS PLAN.

LEGEND:

CONSTRUCTION AREA

CHANNELIZER (SURFACE MOUNTED) AT 25' C-C

No. CONSTRUCTION AREA SIGN (STATIONARY-MOUNTED)

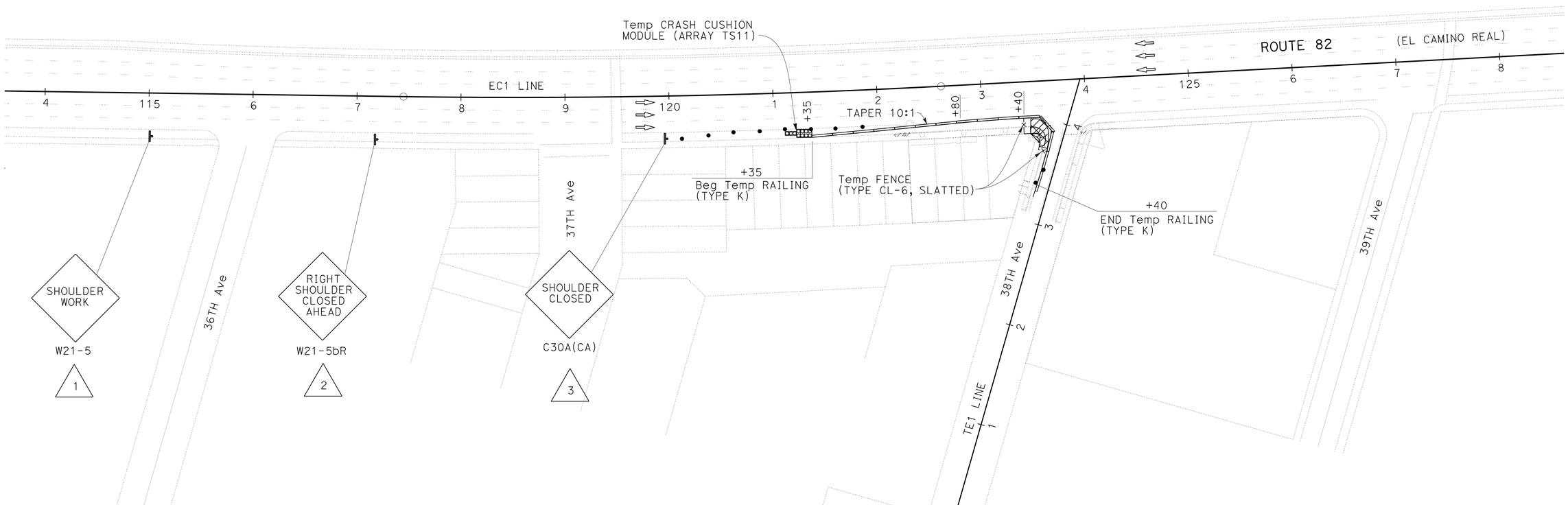

TRAFFIC HANDLING PLAN
LOCATION No. 7
SCALE: 1" = 50'

APPROVED FOR TRAFFIC HANDLING WORK ONLY

TH-1

AN	4/10/14	REVISED BY	DATE REVISED
AN NGUYEN	ARLISSA PANG	CALCULATED-DESIGNED BY	CHECKED BY
FUNCTIONAL SUPERVISOR	LAWRENCE A. JONES		

STATE OF CALIFORNIA - DEPARTMENT OF TRANSPORTATION
Caltrans
DESIGN

LAST REVISION 04-09-14 | DATE PLOTTED => 30-JUN-2014 | TIME PLOTTED => 13:38

Dist	COUNTY	ROUTE	POST MILES TOTAL PROJECT	SHEET No.	TOTAL SHEETS
04	SM	1,35,82,84, 109,280	Var	35	96

REGISTERED CIVIL ENGINEER 4/10/14 DATE

4-28-14
PLANS APPROVAL DATE

REGISTERED PROFESSIONAL ENGINEER An T. Nguyen No. 62776 Exp. 6-30-14 CIVIL STATE OF CALIFORNIA

THE STATE OF CALIFORNIA OR ITS OFFICERS OR AGENTS SHALL NOT BE RESPONSIBLE FOR THE ACCURACY OR COMPLETENESS OF SCANNED COPIES OF THIS PLAN SHEET.

STATIONARY MOUNTED CONSTRUCTION AREA SIGNS

LOCATION	SHEET No.	SIGN No.	SIGN CODE	PANEL SIZE	NUMBER OF POSTS AND SIZE	SIGN MESSAGE
Loc 7 (SB ROUTE 82	TH-1	1	W21-5	48" x 48"	1 - 4" x 6"	SHOULDER WORK
		2	W21-5bR			RIGHT SHOULDER CLOSED AHEAD
		3	C30A(CA)			SHOULDER CLOSED

NOTE: FOR ADDITIONAL CONSTRUCTION AREA SIGNS, SEE CONSTRUCTION AREA SIGNS PLAN

TRAFFIC HANDLING QUANTITIES

SHEET No.	STATION	TEMPORARY CRASH CUSHION MODULE (ARRAY TS11)	TEMPORARY RAILING (TYPE K)	CHANNELIZER (SURFACE MOUNTED)	TEMPORARY FENCE (TYPE CL-6, SLATTED)
		EA	LF	EA	LF
TH-1	EC1 121+35	11			
	EC1 121+35 TO TE1 13+40		290		
	EC1 120+00 TO TE1 13+40			10	
	EC1 123+40 TO TE1 13+80				50

REVISED BY AN
DATE REVISED 4/10/14

AN NGUYEN
ARLISSA PANG

CALCULATED-DESIGNED BY
CHECKED BY

FUNCTIONAL SUPERVISOR
LAWRENCE A. JONES

STATE OF CALIFORNIA - DEPARTMENT OF TRANSPORTATION
Caltrans
DESIGN

TRAFFIC HANDLING QUANTITIES

THQ-1

LAST REVISION 04-09-14
DATE PLOTTED => 30-JUN-2014
TIME PLOTTED => 13:38

Dist	COUNTY	ROUTE	POST MILES TOTAL PROJECT	SHEET No.	TOTAL SHEETS
04	SM	1,35,82,84, 109,280	Var	36	96

REGISTERED CIVIL ENGINEER 4/10/14 DATE

4-28-14
PLANS APPROVAL DATE

REGISTERED PROFESSIONAL ENGINEER
An T. Nguyen
No. 62776
Exp. 6-30-14
CIVIL
STATE OF CALIFORNIA

THE STATE OF CALIFORNIA OR ITS OFFICERS OR AGENTS SHALL NOT BE RESPONSIBLE FOR THE ACCURACY OR COMPLETENESS OF SCANNED COPIES OF THIS PLAN SHEET.

NOTE:

FOR ACCURATE RIGHT OF WAY DATA, CONTACT RIGHT OF WAY ENGINEERING AT THE DISTRICT OFFICE.

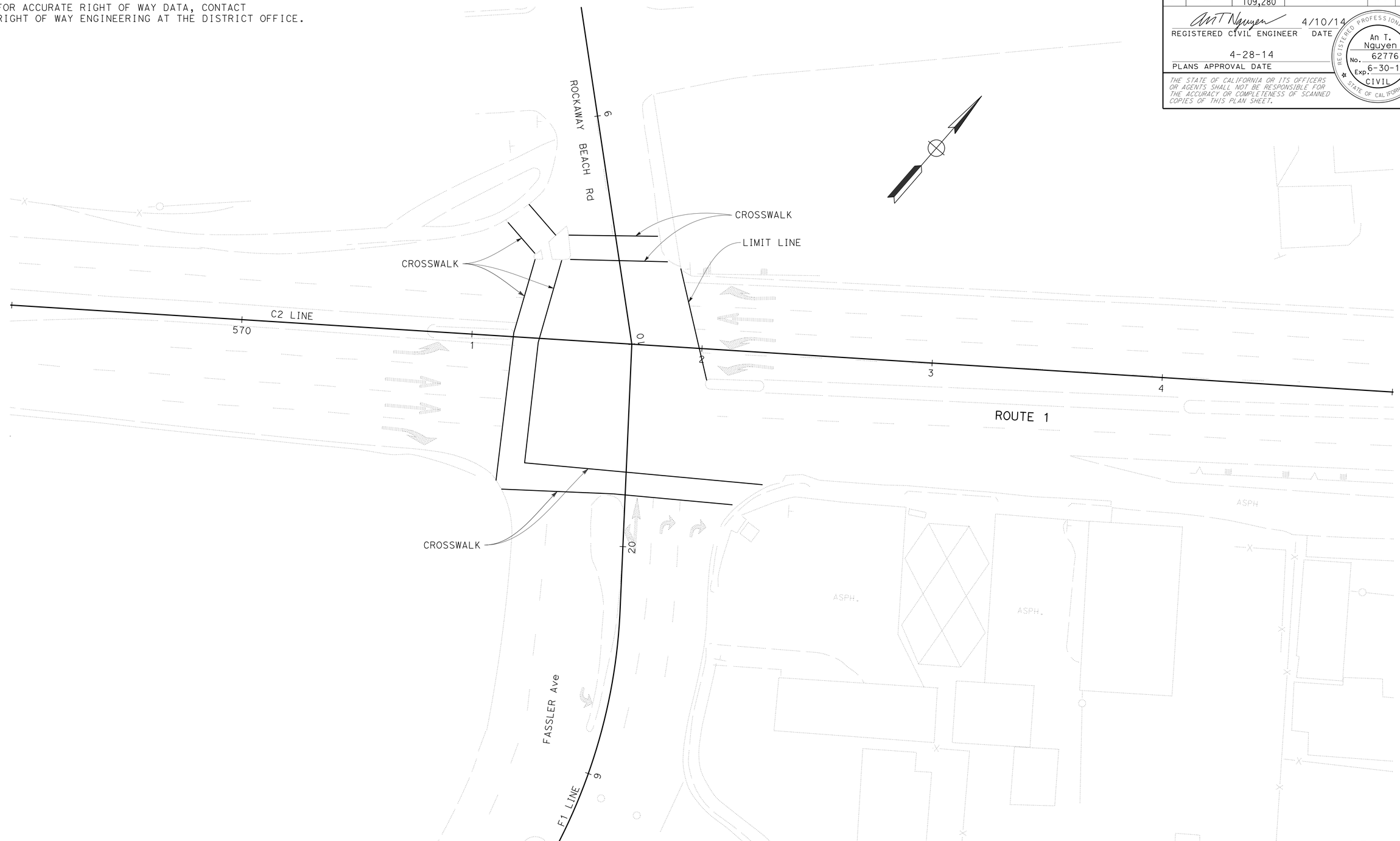

APPROVED FOR PAVEMENT DELINEATION WORK ONLY

PAVEMENT DELINEATION PLAN
LOCATION No. 1
SCALE: 1" = 20'

PD-1

AN	4/10/14	REVISED BY	DATE REVISED
AN NGUYEN	ARLISSA PANG	CALCULATED-DESIGNED BY	CHECKED BY
FUNCTIONAL SUPERVISOR	LAWRENCE A. JONES		

STATE OF CALIFORNIA - DEPARTMENT OF TRANSPORTATION
Caltrans
DESIGN

LAST REVISION 04-08-14
DATE PLOTTED => 30-JUN-2014
TIME PLOTTED => 13:38

Dist	COUNTY	ROUTE	POST MILES TOTAL PROJECT	SHEET No.	TOTAL SHEETS
04	SM	1,35,82,84, 109,280	Var	37	96

REGISTERED CIVIL ENGINEER 4/10/14 DATE

4-28-14
PLANS APPROVAL DATE

REGISTERED PROFESSIONAL ENGINEER
An T. Nguyen
No. 62776
Exp. 6-30-14
CIVIL
STATE OF CALIFORNIA

THE STATE OF CALIFORNIA OR ITS OFFICERS OR AGENTS SHALL NOT BE RESPONSIBLE FOR THE ACCURACY OR COMPLETENESS OF SCANNED COPIES OF THIS PLAN SHEET.

NOTE:

FOR ACCURATE RIGHT OF WAY DATA, CONTACT RIGHT OF WAY ENGINEERING AT THE DISTRICT OFFICE.

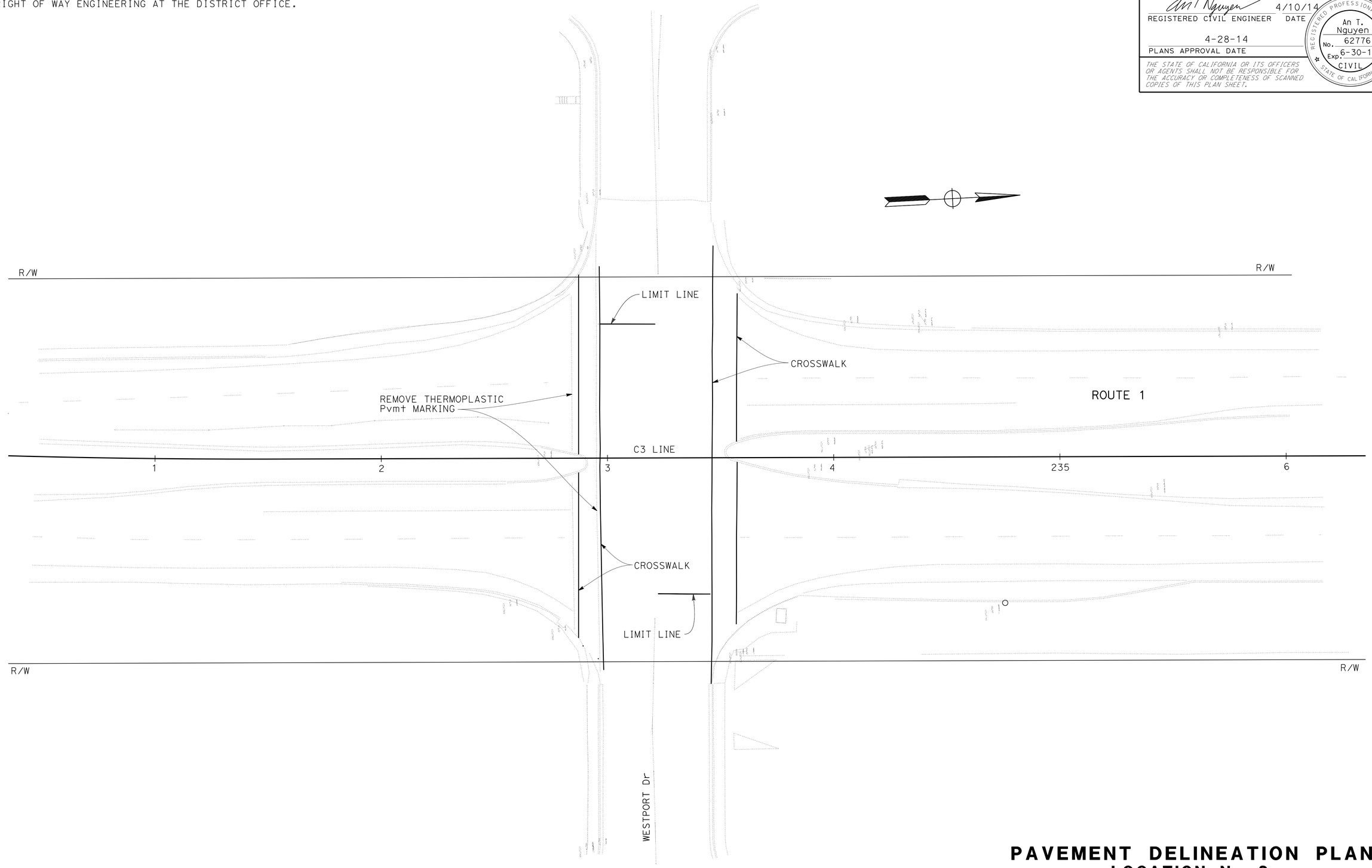

APPROVED FOR PAVEMENT DELINEATION WORK ONLY

FOR NOTES, ABBREVIATIONS AND LEGEND, SEE SHEET PD-1

PAVEMENT DELINEATION PLAN
LOCATION No. 2
SCALE: 1" = 20'

PD-2

REVISED BY	AN
DATE REVISED	4/10/14
CALCULATED-DESIGNED BY	AN NGUYEN
CHECKED BY	ARLISSA PANG
FUNCTIONAL SUPERVISOR	LAWRENCE A. JONES

STATE OF CALIFORNIA - DEPARTMENT OF TRANSPORTATION
Caltrans
DESIGN

LAST REVISION 04-08-14
DATE PLOTTED => 30-JUN-2014
TIME PLOTTED => 13:38

Dist	COUNTY	ROUTE	POST MILES TOTAL PROJECT	SHEET No.	TOTAL SHEETS
04	SM	1,35,82,84, 109,280	Var	38	96

REGISTERED CIVIL ENGINEER — DATE 4/10/14

4-28-14
PLANS APPROVAL DATE

REGISTERED PROFESSIONAL ENGINEER — An T. Nguyen — No. 62776 — Exp. 6-30-14 — CIVIL — STATE OF CALIFORNIA

THE STATE OF CALIFORNIA OR ITS OFFICERS OR AGENTS SHALL NOT BE RESPONSIBLE FOR THE ACCURACY OR COMPLETENESS OF SCANNED COPIES OF THIS PLAN SHEET.

NOTE:

FOR ACCURATE RIGHT OF WAY DATA, CONTACT RIGHT OF WAY ENGINEERING AT THE DISTRICT OFFICE.

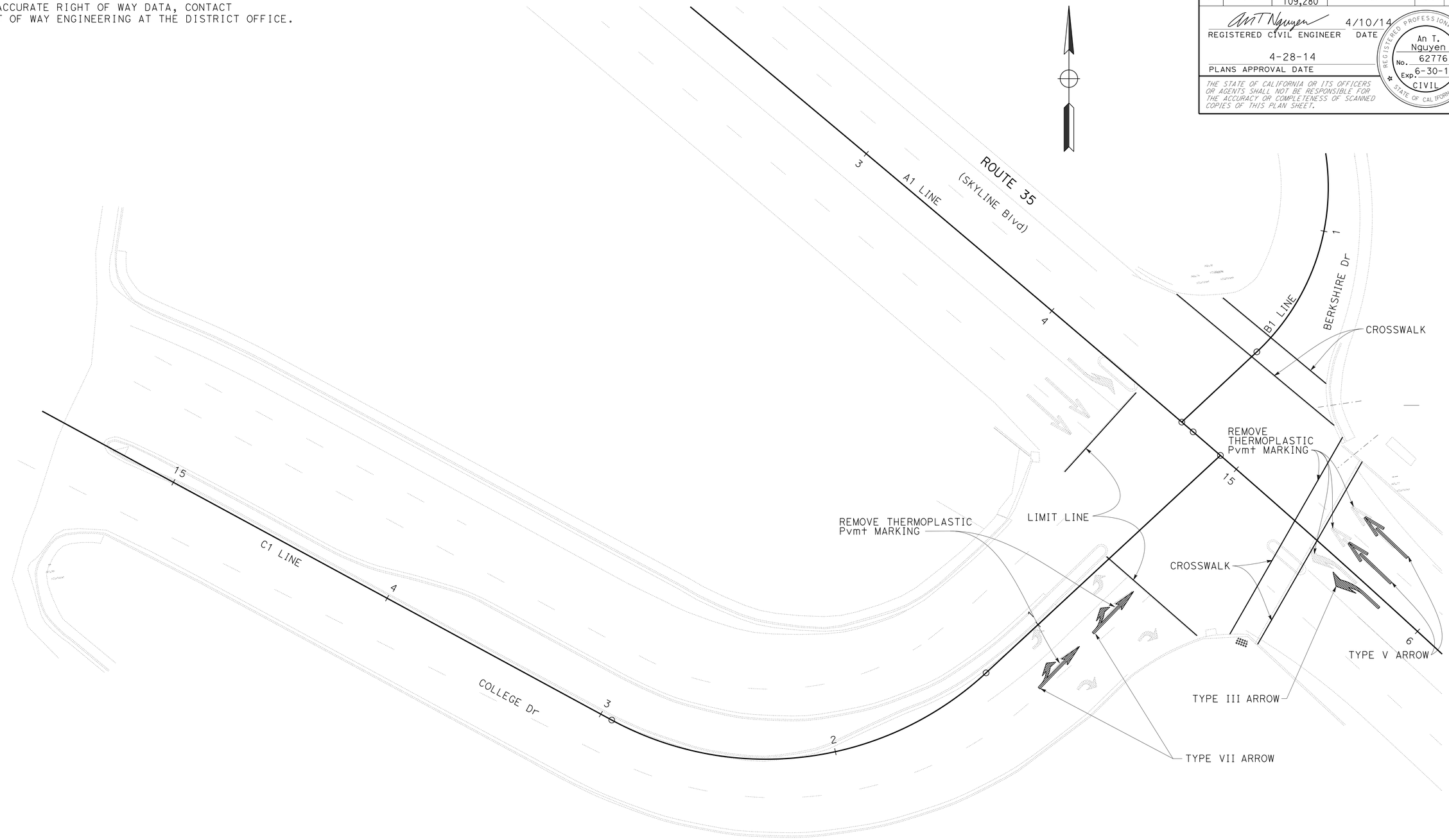

PAVEMENT DELINEATION PLAN
LOCATION No. 5
SCALE: 1" = 20'

APPROVED FOR PAVEMENT DELINEATION WORK ONLY

FOR NOTES, ABBREVIATIONS AND LEGEND, SEE SHEET PD-1

PD-3

REVISED BY	AN
DATE REVISED	4/10/14
CALCULATED-DESIGNED BY	AN NGUYEN
CHECKED BY	ARLISSA PANG
FUNCTIONAL SUPERVISOR	LAWRENCE A. JONES

STATE OF CALIFORNIA - DEPARTMENT OF TRANSPORTATION
Caltrans
DESIGN

LAST REVISION 04-08-14 | DATE PLOTTED => 30-JUN-2014 | TIME PLOTTED => 13:38

Dist	COUNTY	ROUTE	POST MILES TOTAL PROJECT	SHEET No.	TOTAL SHEETS
04	SM	1,35,82,84, 109,280	Var	39	96

REGISTERED CIVIL ENGINEER — DATE 4/10/14

4-28-14
PLANS APPROVAL DATE

REGISTERED PROFESSIONAL ENGINEER — An T. Nguyen — No. 62776 — Exp. 6-30-14 — CIVIL — STATE OF CALIFORNIA

THE STATE OF CALIFORNIA OR ITS OFFICERS OR AGENTS SHALL NOT BE RESPONSIBLE FOR THE ACCURACY OR COMPLETENESS OF SCANNED COPIES OF THIS PLAN SHEET.

NOTE:

FOR ACCURATE RIGHT OF WAY DATA, CONTACT RIGHT OF WAY ENGINEERING AT THE DISTRICT OFFICE.

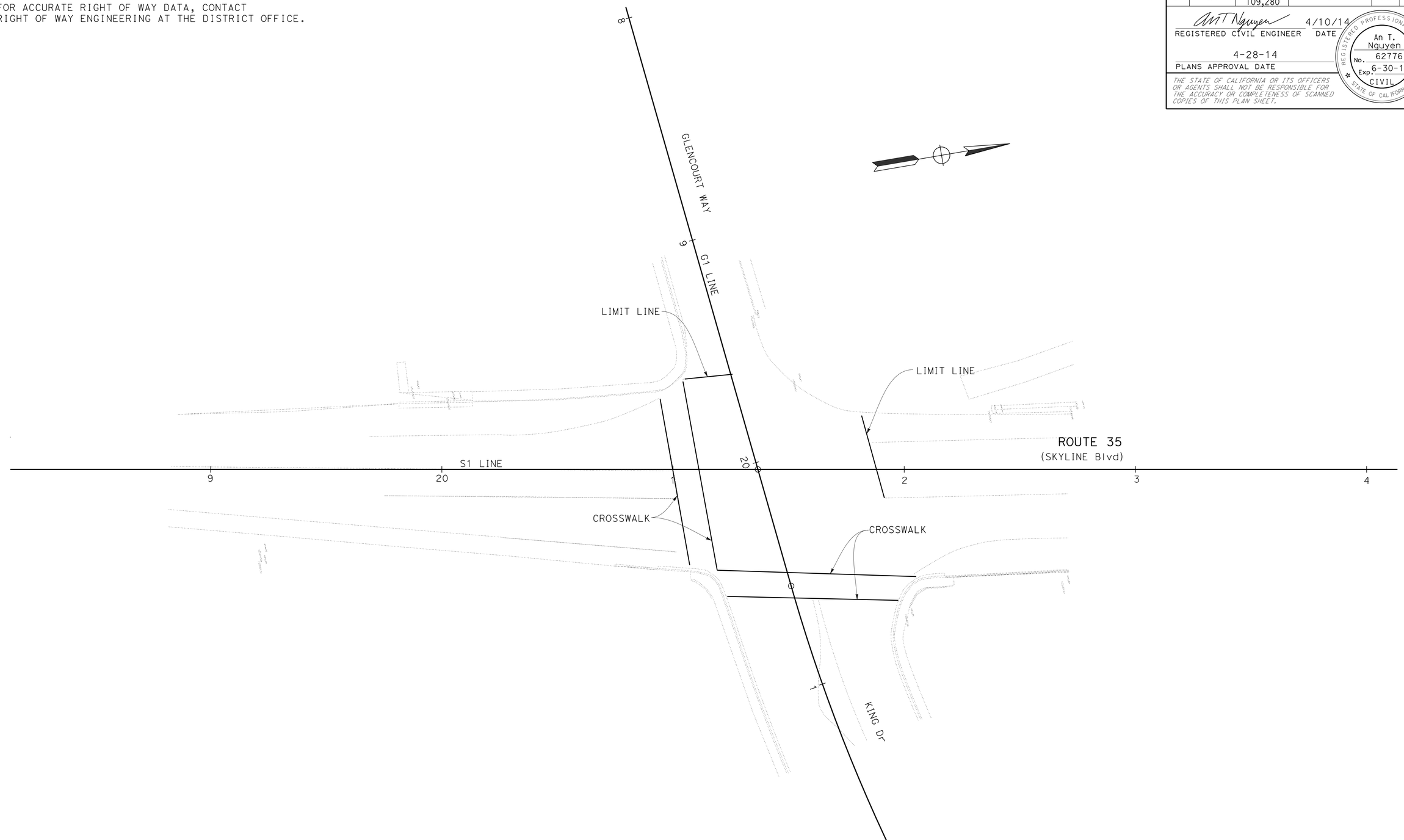

APPROVED FOR PAVEMENT DELINEATION WORK ONLY

FOR NOTES, ABBREVIATIONS AND LEGEND, SEE SHEET PD-1

PAVEMENT DELINEATION PLAN
LOCATION No. 6
SCALE: 1" = 20'

PD-4

REVISED BY	AN
DATE REVISED	4/10/14
CALCULATED-DESIGNED BY	AN NGUYEN
CHECKED BY	ARLISSA PANG
FUNCTIONAL SUPERVISOR	LAWRENCE A. JONES

STATE OF CALIFORNIA - DEPARTMENT OF TRANSPORTATION
Caltrans®
DESIGN

LAST REVISION 04-02-14 | DATE PLOTTED => 30-JUN-2014 | TIME PLOTTED => 13:38

Dist	COUNTY	ROUTE	POST MILES TOTAL PROJECT	SHEET No.	TOTAL SHEETS
04	SM	1,35,82,84, 109,280	Var	40	96

REGISTERED CIVIL ENGINEER 4/10/14 DATE

4-28-14
PLANS APPROVAL DATE

REGISTERED PROFESSIONAL ENGINEER
An T. Nguyen
No. 62776
Exp. 6-30-14
CIVIL
STATE OF CALIFORNIA

THE STATE OF CALIFORNIA OR ITS OFFICERS OR AGENTS SHALL NOT BE RESPONSIBLE FOR THE ACCURACY OR COMPLETENESS OF SCANNED COPIES OF THIS PLAN SHEET.

NOTE:

FOR ACCURATE RIGHT OF WAY DATA, CONTACT RIGHT OF WAY ENGINEERING AT THE DISTRICT OFFICE.

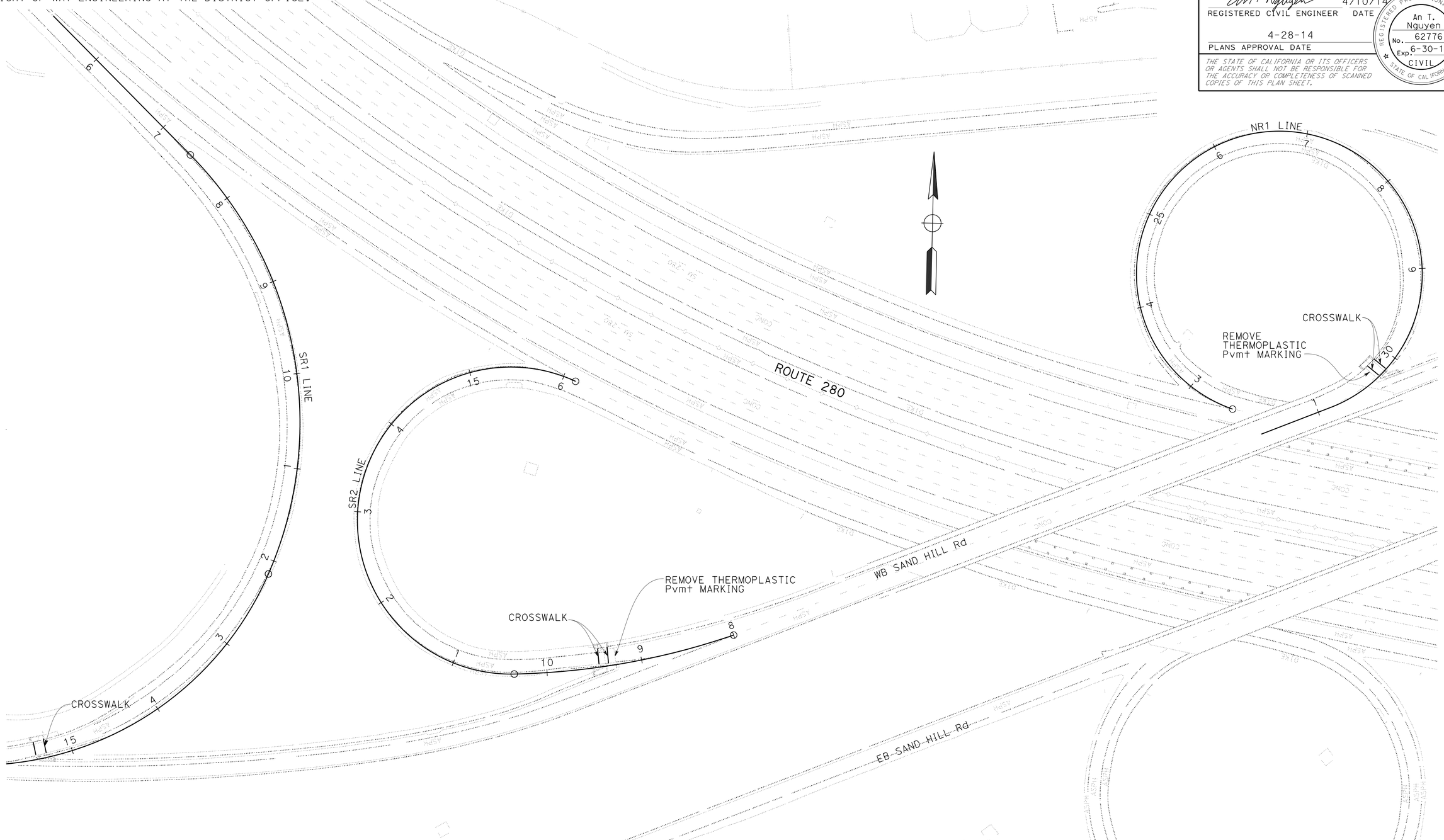

APPROVED FOR PAVEMENT DELINEATION WORK ONLY

FOR NOTES, ABBREVIATIONS AND LEGEND, SEE SHEET PD-1

PAVEMENT DELINEATION PLAN
LOCATION No. 10
SCALE: 1" = 50'

PD-5

REVISED BY	AN
DATE REVISED	4/10/14
CALCULATED-DESIGNED BY	AN NGUYEN
CHECKED BY	ARLISSA PANG
FUNCTIONAL SUPERVISOR	LAWRENCE A. JONES

STATE OF CALIFORNIA - DEPARTMENT OF TRANSPORTATION
Caltrans
DESIGN

LAST REVISION | DATE PLOTTED => 30-JUN-2014
04-08-14 | TIME PLOTTED => 13:38

Dist	COUNTY	ROUTE	POST MILES TOTAL PROJECT	SHEET No.	TOTAL SHEETS
04	SM	1,35,82,84, 109,280	Var	41	96

REGISTERED CIVIL ENGINEER 4/10/14 DATE

4-28-14
PLANS APPROVAL DATE

REGISTERED PROFESSIONAL ENGINEER An T. Nguyen No. 62776 Exp. 6-30-14 CIVIL STATE OF CALIFORNIA

THE STATE OF CALIFORNIA OR ITS OFFICERS OR AGENTS SHALL NOT BE RESPONSIBLE FOR THE ACCURACY OR COMPLETENESS OF SCANNED COPIES OF THIS PLAN SHEET.

PAVEMENT DELINEATION QUANTITIES

SHEET No.	STATION LIMITS	PAVEMENT MARKING	REMOVE THERMOPLASTIC PAVEMENT MARKING	THERMOPLASTIC PAVEMENT MARKING
			SQFT	
PD-1	C2 570+00 TO 573+00	LIMIT LINE		50
	C2 570+00 TO 573+00	CROSSWALK		500
PD-2	C3 232+80 TO 233+80	LIMIT LINE		50
	C3 232+80 TO 233+80	CROSSWALK	140	620
PD-3	A1 14+00 TO 15+50	CROSSWALK		320
	A1 14+00 TO 15+50	LIMIT LINE		100
	A1 14+00 TO 15+50	TYPE V ARROW	66	66
	A1 14+00 TO 15+50	TYPE III ARROW	42	42
	C1 10+00 TO 11+50	TYPE I ARROW	50	
	C1 10+00 TO 11+50	TYPE VII ARROW		54
PD-4	S1 20+50 TO 22+50	LIMIT LINE		60
	S1 20+50 TO 22+50	CROSSWALK		280
PD-5	SR1 15+20 TO 15+60	CROSSWALK		30
	SR2 9+00 TO 10+00	CROSSWALK	30	30
	NR1 30+00 TO 30+50	CROSSWALK	30	30
SUBTOTAL			358	2232
TOTAL			358	2232

STATE OF CALIFORNIA - DEPARTMENT OF TRANSPORTATION
Caltrans® DESIGN

FUNCTIONAL SUPERVISOR: LAWRENCE A. JONES
CALCULATED-DESIGNED BY: AN NGUYEN
CHECKED BY: ARLISSA PANG
REVISED BY: AN
DATE REVISED: 4/10/14

PAVEMENT DELINEATION QUANTITIES

PDQ-1

LAST REVISION 04-08-14 | DATE PLOTTED => 30-JUN-2014 | TIME PLOTTED => 13:38

Dist	COUNTY	ROUTE	POST MILES TOTAL PROJECT	SHEET No.	TOTAL SHEETS
04	SM	1,35,82,84, 109,280	Var	42	96

REGISTERED CIVIL ENGINEER 4/9/14 DATE

4-28-14
PLANS APPROVAL DATE

REGISTERED PROFESSIONAL ENGINEER
Jerilyn L. Struven
No. 49964
Exp. 12-31-14
CIVIL
STATE OF CALIFORNIA

THE STATE OF CALIFORNIA OR ITS OFFICERS OR AGENTS SHALL NOT BE RESPONSIBLE FOR THE ACCURACY OR COMPLETENESS OF SCANNED COPIES OF THIS PLAN SHEET.

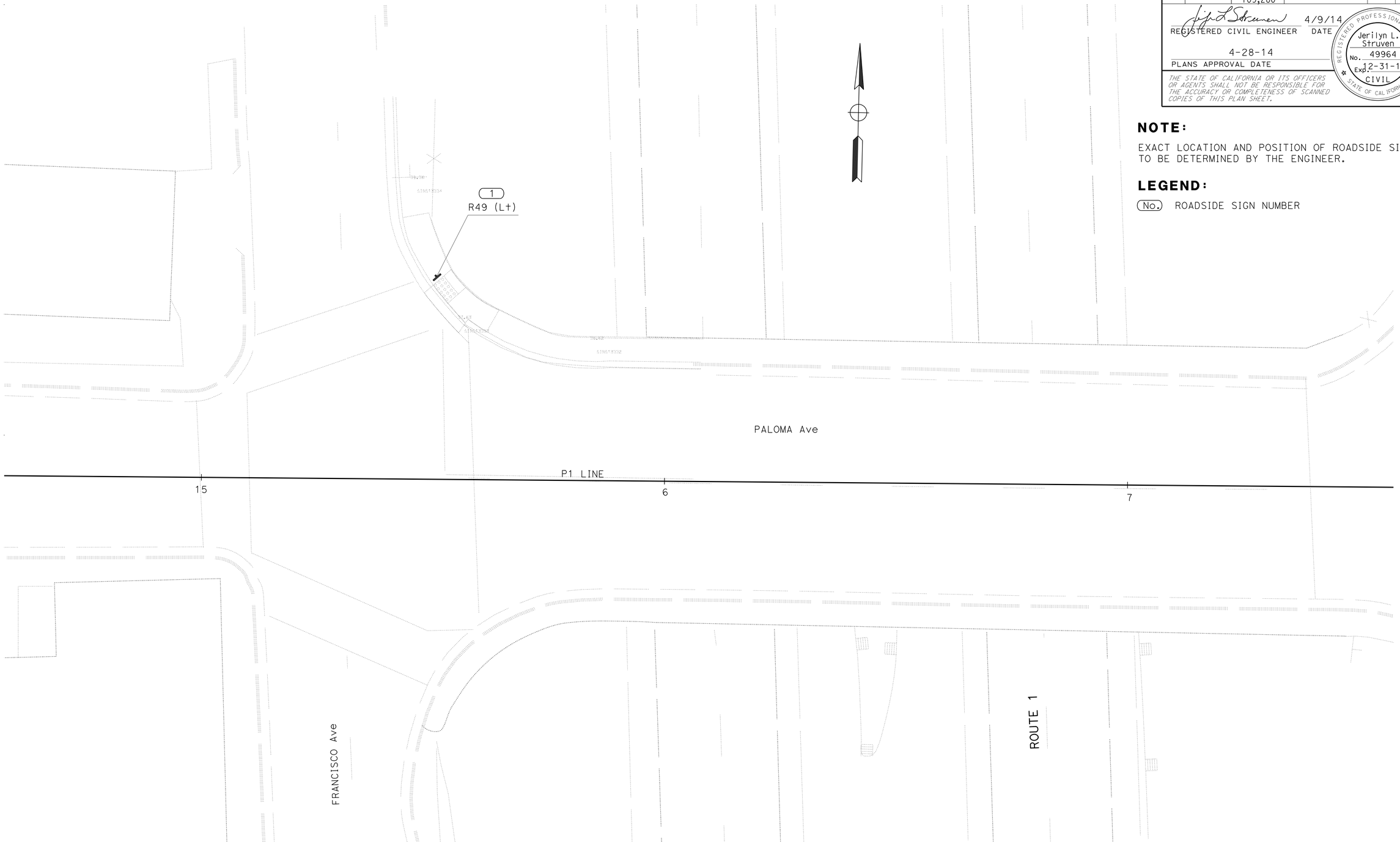

NOTE:

EXACT LOCATION AND POSITION OF ROADSIDE SIGNS TO BE DETERMINED BY THE ENGINEER.

LEGEND:

(No.) ROADSIDE SIGN NUMBER

APPROVED FOR SIGN WORK ONLY

SIGN PLAN
LOCATION No. 3
NO SCALE

S-1

REVISED BY	SL
DATE REVISED	4/9/14
STEPHEN LAU	
JERILYN STRUVEN	
CALCULATED-DESIGNED BY	
CHECKED BY	
FUNCTIONAL SUPERVISOR	
ROLAND AU-YEUNG	

STATE OF CALIFORNIA - DEPARTMENT OF TRANSPORTATION
Caltrans
TRAFFIC

LAST REVISION 04-09-14 | DATE PLOTTED => 30-JUN-2014 TIME PLOTTED => 13:38

Dist	COUNTY	ROUTE	POST MILES TOTAL PROJECT	SHEET No.	TOTAL SHEETS
04	SM	1,35,82,84, 109,280	Var	43	96

REGISTERED CIVIL ENGINEER 4/9/14 DATE

4-28-14
PLANS APPROVAL DATE

REGISTERED PROFESSIONAL ENGINEER Jerilyn L. Struven No. 49964 Exp. 12-31-14 CIVIL STATE OF CALIFORNIA

THE STATE OF CALIFORNIA OR ITS OFFICERS OR AGENTS SHALL NOT BE RESPONSIBLE FOR THE ACCURACY OR COMPLETENESS OF SCANNED COPIES OF THIS PLAN SHEET.

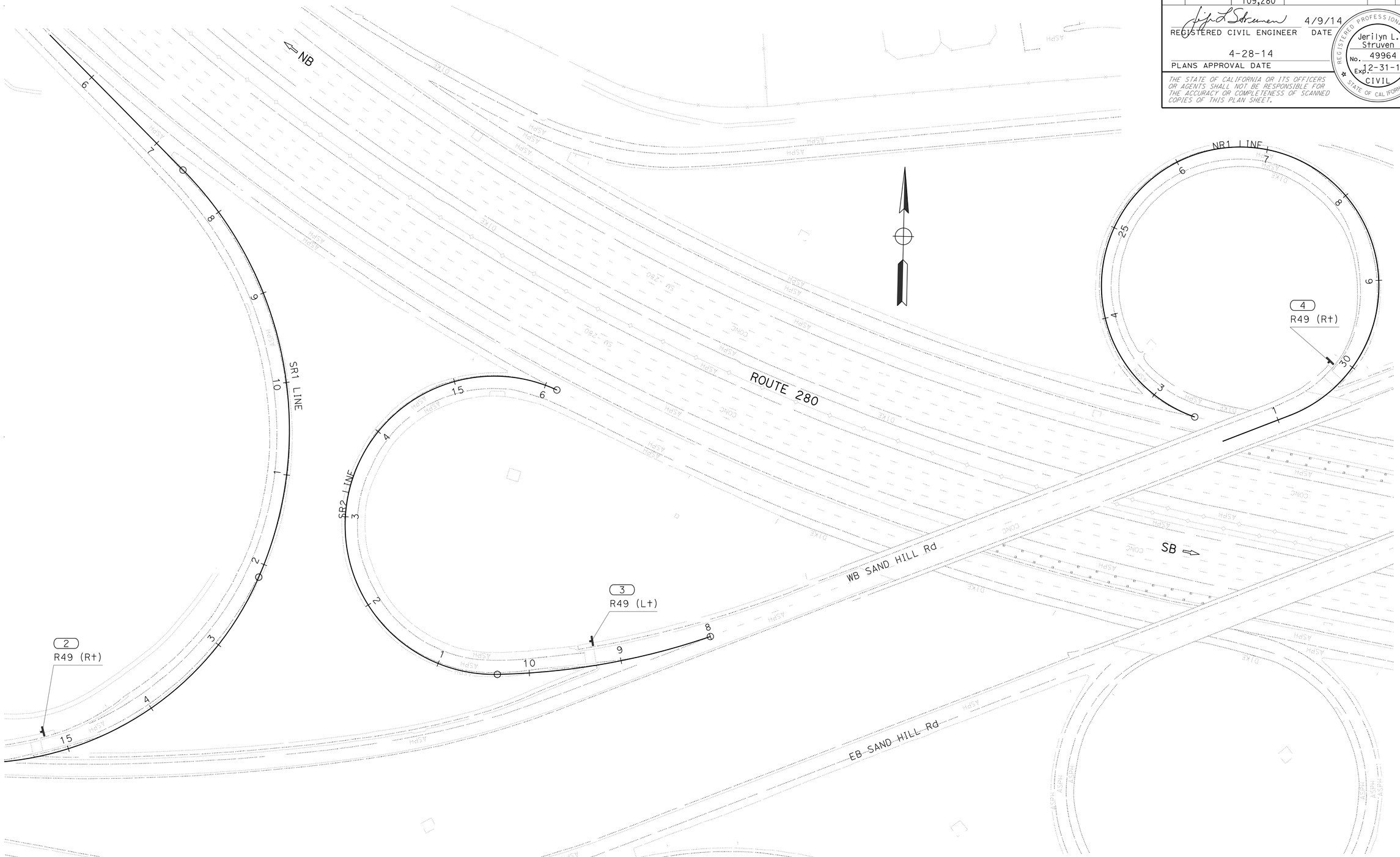

APPROVED FOR SIGN WORK ONLY

FOR NOTES, ABBREVIATIONS AND LEGEND, SEE SHEET S-1

SIGN PLAN
LOCATION No. 10
NO SCALE

S-2

STATE OF CALIFORNIA - DEPARTMENT OF TRANSPORTATION
Caltrans
TRAFFIC

FUNCTIONAL SUPERVISOR: ROLAND AU-YEUNG
CALCULATED-DESIGNED BY: STEPHEN LAU
CHECKED BY: JERILYN STRUVEN
REVISED BY: SL
DATE REVISED: 4/9/14

LAST REVISION DATE PLOTTED => 30-JUN-2014
TIME PLOTTED => 13:38

Dist	COUNTY	ROUTE	POST MILES TOTAL PROJECT	SHEET No.	TOTAL SHEETS
04	SM	1,35,82,84, 109,280	Var	44	96

REGISTERED CIVIL ENGINEER 4/9/14 DATE

4-28-14
PLANS APPROVAL DATE

REGISTERED PROFESSIONAL ENGINEER Jerilyn L. Struven No. 49964 Exp. 12-31-14 CIVIL STATE OF CALIFORNIA

THE STATE OF CALIFORNIA OR ITS OFFICERS OR AGENTS SHALL NOT BE RESPONSIBLE FOR THE ACCURACY OR COMPLETENESS OF SCANNED COPIES OF THIS PLAN SHEET.

ROADSIDE SIGN INSTALLATION

SHEET No.	SIGN No.	MUTCD CODE	PANEL SIZE	POST LENGTH 4" x 4" (FT)	POST LENGTH 4" x 6" (FT)	REMARKS
S-1	1	R49(L+)	42" x 18"			MOUNT ON PEDESTRIAN BARRICADE
S-2	2	R49(R+)				
	3	R49(L+)				
	4	R49(R+)				

SIGN PANEL SUMMARY (CONTRACTOR FURNISHED SIGNS)

SHEET No.	SIGN No.	MUTCD CODE	PANEL SIZE	AREA SQFT	SINGLE FACED	BACKGROUND LEGEND SHEETING COLOR	BACKGROUND LEGEND RETROREFLECTIVE ASTM TYPE	LEGEND SHEETING COLOR	PROTECTIVE OVERLAY PREMIUM	ROADSIDE SIGNS SINGLE SHEET UNFRAMED ALUMIMUM 0.063" SQFT	REMARKS
S-1	1	R49(L+)	42" x 18"	5.25	X	WHITE	III	BLACK	X	6.25	MOUNT ON PEDESTRIAN BARRICADE
S-2	2	R49(R+)		5.25						6.25	
	3	R49(L+)		5.25						6.25	
	4	R49(R+)		5.25						6.25	
TOTAL				22.00						25	

SIGN QUANTITIES

SQ-1

STATE OF CALIFORNIA - DEPARTMENT OF TRANSPORTATION
Caltrans
TRAFFIC

FUNCTIONAL SUPERVISOR: ROLAND AU-YEUNG
CALCULATED-DESIGNED BY: STEPHEN LAU
CHECKED BY: JERILYN STRUVEN
REVISED BY: SL
DATE REVISED: 4/9/14

LAST REVISION 04-09-14 | DATE PLOTTED => 30-JUN-2014 | TIME PLOTTED => 13:38

Dist	COUNTY	ROUTE	POST MILES TOTAL PROJECT	SHEET No.	TOTAL SHEETS
04	SM	1,35,82,84, 109,280	Var	45	96

REGISTERED CIVIL ENGINEER 4/10/14 DATE

4-28-14
PLANS APPROVAL DATE

REGISTERED PROFESSIONAL ENGINEER An T. Nguyen No. 62776 Exp. 6-30-14 CIVIL STATE OF CALIFORNIA

THE STATE OF CALIFORNIA OR ITS OFFICERS OR AGENTS SHALL NOT BE RESPONSIBLE FOR THE ACCURACY OR COMPLETENESS OF SCANNED COPIES OF THIS PLAN SHEET.

ADJUST UTILITY COVER TO GRADE

SHEET No.	STATION	ADJUST WATER VALVE COVER TO GRADE	ADJUST WATER METER BOX TO GRADE	ADJUST PULL BOX	MANHOLE FRAME AND COVER
		EA			
L-6	S1 20+90	1			
L-7	CURB1 10+45		1		
	CURB1 10+60				1
	CURB1 10+75	1			
L-8	PA1 12+20		1		
L-9	U1 10+40			1	
	U1 13+20			1	
DD-1	FROM SHEET DD-1				3
TOTAL		2	2	2	4

TEMPORARY WATER POLLUTION CONTROL

SHEET No.	STATION	TEMPORARY DI PROTECTION
		EA
L-1	C1 570+90	1
	C1 572+40	1
L-2	C3 232+80	1
	C3 232+85	1
L-5	C1 10+50	1
	C1 10+55	1
	B1 10+50	1
L-7	CURB1 10+30	1
L-10	U1 15+00	1
	U1 18+20	1
L-11	U1 21+20	1
TOTAL		11

GUARDRAIL

SHEET No.	STATION	REMOVE GUARDRAIL
		LF
L-2	NEFL1 10+48.66 TO 11+10	70
TOTAL		70

PEDESTRIAN BARRICADE

SHEET No.	STATION	PEDESTRIAN BARRICADE
		EA
L-3	P1 15+50	1
L-12	SR1 15+40	1
	SR2 09+50	1
	NR1 30+30	1
TOTAL		4

ROADWAY QUANTITES

SHEET No.	STATION	DIRECTION	MINOR CONCRETE (Misc CONSTRUCTION) CURB RAMP	CURB AND SIDEWALK CURB	CURB AND SIDEWALK RETAINING CURB	CURB AND SIDEWALK SIDEWALK	REMOVE CONCRETE CURB AND SIDEWALK	MINOR HMA	COLD PLANE AC Pvmt	PAINT CURB (2-COAT)	ROADWAY EXCAVATION
			CY					TON	SQYD	SQFT	CY
L-1	F1 20+24.42	R†	2.3	1.0	0.5						3.5
L-2	C3 232+90	L†	2.0	3.6		5.1	10.5	60	1200		
	C3 232+90	R†	2.0	0.2	0.8	0.6	2.0				
	C3 233+60	R†	2.3	3.5	0.5	6.4		81	1500		12.0
L-4	OC1 15+33.34	L†	3.7				3.7				
L-5	C1 10+42.27	L†	3.7								3.7
	C1 15+22.40	L†	2.3	1.0	0.5		2.3				
	C1 10+41.87 TO 15+15.94	R†				60.0					60.0
	B1 10+54.11 TO A1 15+32.60	R†	5.7	2.0	0.5	1.9	2.3				2.7
	A1 15+30 TO 15+60	MEDIAN ISLAND					2.5	5			
L-6	S1 20+13 TO G1 19+43	L†	2.3	6.5	3.0	7.0					16.0
L-7	CURB1 10+44 TO 10+78	L†		1.0	0.5	2.0	3.0			30	
L-8	PA1 12+31.40	L†	2.3	1.0	0.5		3.3				
L-9	U1 10+00 TO 13+42	R†				38.0					38.0
L-10	U1 13+42 TO 15+25	R†				20.4					20.4
	U1 16+36.55 TO 19+30	R†				34.0					34.0
L-11	U1 19+30 TO 22+50	R†	2.3	1.0	0.5	32.5					36.0
	U1 22+92	R†	2.3	1.0	0.5		3.3				
L-12	SR1 15+32.49	L†	2.0		0.5		2.0				
	SR1 15+32.45	R†	2.0		0.5		2.0				
	SR2 9+19.91	R†	2.0		0.5		2.0				
	SR2 9+39.83	L†	2.0		0.5		2.0				
	NR1 30+21.34	R†	2.0		0.5		2.0				
	NR1 30+20.03	L†	2.0		0.5		2.0				
SUBTOTAL			45.2	21.8	10.8	207.9	44.9	146	2700	30	226.3
TOTAL			285.70				44.9	146	2700	30	226.3

SUMMARY OF QUANTITIES

Q-1

REVISED BY	DATE REVISED	CALCULATED-DESIGNED BY	CHECKED BY	FUNCTIONAL SUPERVISOR
AN	4/10/14	AN NGUYEN	ARLISSA PANG	LAWRENCE A. JONES

STATE OF CALIFORNIA - DEPARTMENT OF TRANSPORTATION
Caltrans DESIGN

LAST REVISION 04-10-14 | DATE PLOTTED => 30-JUN-2014 | TIME PLOTTED => 13:38

Dist	COUNTY	ROUTE	POST MILES TOTAL PROJECT	SHEET No.	TOTAL SHEETS
04	SM	1,35,82,84, 109,280	Var	46	96

REGISTERED ELECTRICAL ENGINEER — DATE: 4/9/14

4-28-14
PLANS APPROVAL DATE

REGISTERED PROFESSIONAL ENGINEER — Mahmood Noii — No. 13717 — Exp. 6-30-15 — ELECT — STATE OF CALIFORNIA

THE STATE OF CALIFORNIA OR ITS OFFICERS OR AGENTS SHALL NOT BE RESPONSIBLE FOR THE ACCURACY OR COMPLETENESS OF SCANNED COPIES OF THIS PLAN SHEET.

NOTE:

FOR ACCURATE RIGHT OF WAY DATA, CONTACT RIGHT OF WAY ENGINEERING AT THE DISTRICT OFFICE.

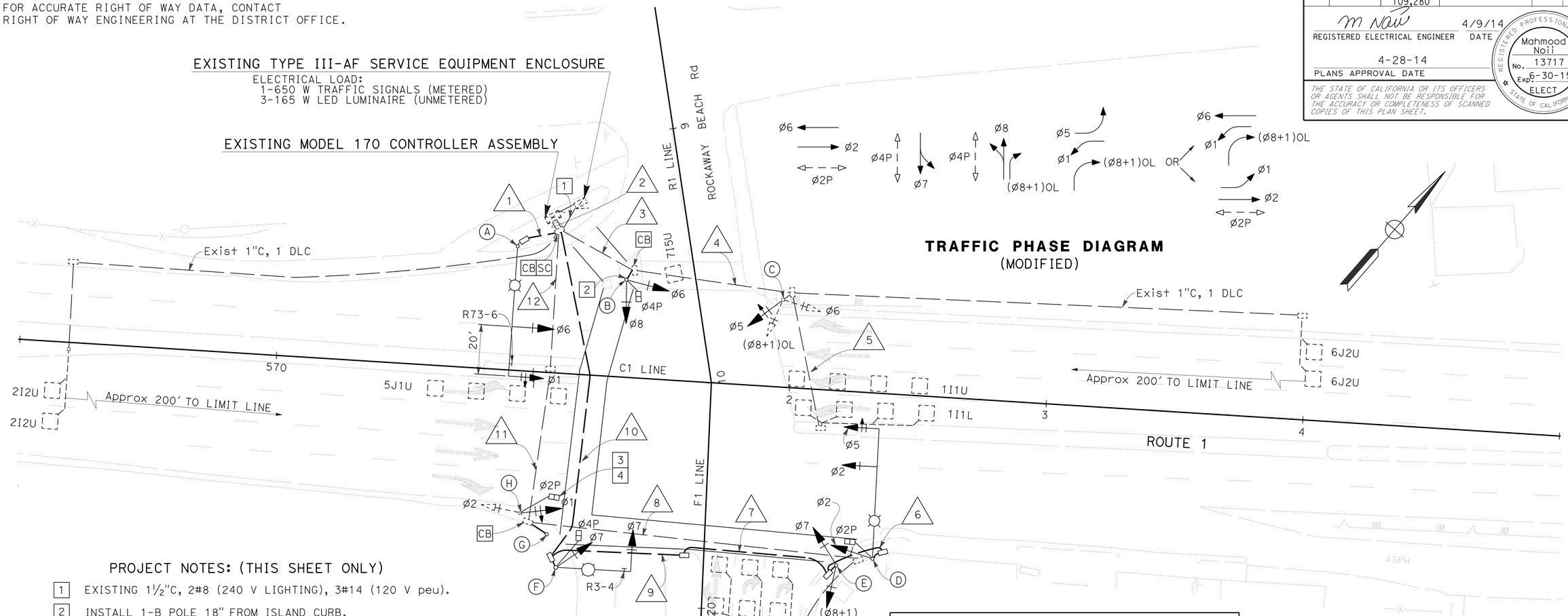

PROJECT NOTES: (THIS SHEET ONLY)

1. EXISTING 1½"C, 2#8 (240 V LIGHTING), 3#14 (120 V peu).
2. INSTALL 1-B POLE 18" FROM ISLAND CURB.
3. REPLACE EXISTING PEDESTRIAN SIGNAL FACE WITH NEW TYPE A WITH LED COUNTDOWN PEDESTRIAN SIGNAL FACE MODULE. RECONNECT SIGNAL FACE INSIDE CONTROLLER AS Ø2 PEDESTRIAN SIGNAL.
4. REMOVE EXISTING PEDESTRIAN PUSH BUTTON FROM 1-B POLE.
5. INSTALL APS ON TYPE 1-B STANDARD WITH APS PUSH BUTTON LOCATED 40 INCHES ABOVE GRADE. HEIGHT OF TYPE 1-B STANDARD SHALL BE SUCH THAT TOP OF STANDARD EXTENDS 3 INCHES ABOVE TOP OF APS. PROVIDE REMOVABLE RAIN TIGHT CAP FOR TOP OF STANDARD.

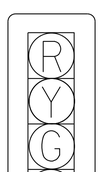

12'' CIRCULAR RED

12'' CIRCULAR YELLOW

12'' CIRCULAR GREEN

OL 12'' YELLOW

OL 12'' GREEN

(Ø8+1) OL SIGNAL HEAD CONFIGURATION

DETAIL A

NO SCALE

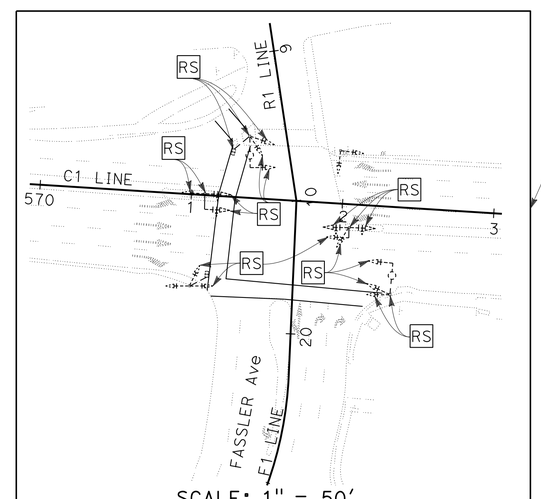

EXISTING EQUIPMENT TO BE REMOVED & SALVAGED

- 2-TYPE 19-1-100 STANDARDS
- 1-TYPE 16-1-100 STANDARD
- 1-TYPE 33 LEFT TURN STANDARD
- 9-SIGNAL HEADS (3-12")
- 5-SIGNAL HEADS (3-12" LEFT ARROW)
- 1-SIGNAL HEAD (5-12")
- 2-200 WATT hps LUMINAIRES
- 2-PEDESTRIAN SIGNAL FACES

MODIFY SIGNAL AND LIGHTING
LOCATION No. 1

SCALE: 1" = 20'

E-1

APPROVED FOR ELECTRICAL WORK ONLY

REVISED BY	DATE REVISED
GB	4/9/14

CALCULATED-DESIGNED BY: GUILLERMO F. BAUTISTA
CHECKED BY: MAHMOOD NOII
FUNCTIONAL SUPERVISOR: BEHZAD GOLEMOHAMMADI

STATE OF CALIFORNIA - DEPARTMENT OF TRANSPORTATION
Caltrans
ELECTRICAL

LAST REVISION 04-09-14 | DATE PLOTTED => 30-JUN-2014 | TIME PLOTTED => 13:38

Dist	COUNTY	ROUTE	POST MILES TOTAL PROJECT	SHEET No.	TOTAL SHEETS
04	SM	1,35,82,84, 109,280	Var	47	96

REGISTERED ELECTRICAL ENGINEER — DATE 4/9/14

4-28-14
PLANS APPROVAL DATE

REGISTERED PROFESSIONAL ENGINEER — Mahmood Noii — No. 13717 — Exp. 6-30-15 — ELECT — STATE OF CALIFORNIA

THE STATE OF CALIFORNIA OR ITS OFFICERS OR AGENTS SHALL NOT BE RESPONSIBLE FOR THE ACCURACY OR COMPLETENESS OF SCANNED COPIES OF THIS PLAN SHEET.

CONDUCTOR AND CONDUIT SCHEDULE

AWG	CIRCUIT	1	2 *	3 *	4 *	5 *	6	7	8 *	9	10	11 *	12 *
#14	Ø1	3	3									3 *	3 *
	Ø2	3	3+3*				3	3	3 **	3	3	3 *	3 *
	Ø5		3	3	3	3 **	3	3		3	3		
	Ø6	3	3+3*	3 *	3 *								
	Ø7		3+3**					3	3 **	3	3	3 **	3 **
	Ø8		3	3 *	3 *		2	3		3	3		
	Ø0L		2+2*	2 *	2 *		2	2		2	2		
	Ø2P		2					2		2	2		
	Ø4P			2 *									
	PPB(Ø2P)		1					1		1	1		
	PPB(Ø4P)		1 *	1 *								1 *	1 *
	PPB NEUTRAL		1+1*					1		1	1		
	PEU	3											
	SPARES	3	3+3*	3 *	3 *	3 **	3	3	3 **	3	3	3 *	3 *
	TOTAL No. 14	15	40	17	14	6 **	13	21		21	21	10	10
#10													
	No. 10 CONDUCTORS												
	SIGNAL NEUTRAL (120 V)	1	2+1	1 *	1 *	1 **	1	1	1 **	1	1	1 *	1 *
#8													
	No. 8 CONDUCTORS												
	LIGHTING (240 V)	2		2 **		2	2	2	2 **	2	2	2 **	2 **
DLC													
	DETECTOR CABLES												
	1I1U		1 *	1 *	1 *	1 *							
	1I1L		1 *	1 *	1 *	1 *							
	1I9U		1 *						1 *			1 *	1 *
	1I9L		1 *						1 *			1 *	1 *
	2I2U		1 *										
	5J1U		1 *										1 *
	6J2U				1 *	1 *							
	7I5U		1 *	1 *									
	8J6U		1 *						1 *			1 *	1 *
	TOTAL		8 *	3 *	3 *	3 *			3 *			3 *	4 *
CONDUIT SIZE (INCHES)		2	2-3*	2½*	2½*	2½*	2	3	2½*	3	3	2½*	2½*
PERCENT FULL (%)													

NOTES:
1. ALL EQUIPMENT IS NEW UNLESS OTHERWISE NOTED.
2. * EXISTING CONDUCTORS AND/OR CONDUIT TO REMAIN.
3. ** REMOVE EXISTING CONDUCTORS FROM CONDUIT.

POLE AND EQUIPMENT SCHEDULE

LOCATION	STANDARD			VEH. SIGNAL MOUNTING		PED SIGNAL MOUNTING	PPB Ø	LED LUM (WATTS)	SPECIAL REQUIREMENTS *
	TYPE	SMA	LMA	MAST ARM	POLE				
Ⓐ	29-5-100	50′	12′	MAS MAS				165	INSTALL R73-6 SIGN ON SMA. INSTALL PEU
Ⓑ	1-B				TV-2-T	SP-1-T	4 →		
Ⓒ	1-B (EXISTING)				TV-3-T (MODIFIED)				MODIFY EXISTING VEHICLE MOUNTING TO BECOME TV-3-T MOUNTING TO ACCOMODATE NEW 3-12" RED, YELLOW, GREEN LEFT ARROW SECTIONS.
Ⓓ	29-5-100	50′	12′	MAS MAS	SV-1-T	SP-1-T		165	
Ⓔ	1-B				TV-2-T		2 →		
Ⓕ	19-3-100	30′	12′	MAS	SV-1-T	SP-1-T	2 ←	165	INSTALL R3-4 SIGN ON SMA.
Ⓖ	1-B (MODIFIED)						4 →		SEE NOTE 5
Ⓗ	1-B (EXISTING)				TV-2-T (MODIFIED)	SP-1-T			
○									
○									
○									
○									

* OTHER REQUIREMENTS ARE COVERED BY NOTES, LEGEND, SPECIAL PROVISIONS AND CALTRANS STANDARD SPECIFICATIONS. FOR THE TYPE OF STANDARD, VEHICLE AND PEDESTRIAN MOUNTING, SEE CALTRANS STANDARD PLANS.

NOTES:
1. ALL EQUIPMENT IS NEW UNLESS OTHERWISE NOTED.
2. PEDESTRIAN PUSH BUTTON SHALL BE ACCESSIBLE PEDESTRIAN SIGNALS (APS).
3. PEDESTRIAN SIGNALS SHALL BE LED COUNTDOWN PEDESTRIAN SIGNAL MODULE.

MODIFY SIGNAL AND LIGHTING

(CONDUCTOR, POLE AND EQUIPMENT SCHEDULES)

LOCATION No. 1

E-2

GB	4/9/14
REVISED BY	DATE REVISED
GUILLERMO F. BAUTISTA	MAHMOOD NOII
CALCULATED-DESIGNED BY	CHECKED BY
FUNCTIONAL SUPERVISOR	BEHZAD GOLEMOHAMMADI

STATE OF CALIFORNIA - DEPARTMENT OF TRANSPORTATION — Caltrans — ELECTRICAL

LAST REVISION 04-09-14 | DATE PLOTTED => 30-JUN-2014 | TIME PLOTTED => 13:38

Dist	COUNTY	ROUTE	POST MILES TOTAL PROJECT	SHEET No.	TOTAL SHEETS
04	SM	1,35,82,84, 109,280	Var	48	96

REGISTERED ELECTRICAL ENGINEER — DATE 4/9/14

4-28-14
PLANS APPROVAL DATE

REGISTERED PROFESSIONAL ENGINEER Mahmood Noii No. 13717 Exp. 6-30-15 ELECT STATE OF CALIFORNIA

THE STATE OF CALIFORNIA OR ITS OFFICERS OR AGENTS SHALL NOT BE RESPONSIBLE FOR THE ACCURACY OR COMPLETENESS OF SCANNED COPIES OF THIS PLAN SHEET.

NOTE:

FOR ACCURATE RIGHT OF WAY DATA, CONTACT RIGHT OF WAY ENGINEERING AT THE DISTRICT OFFICE.

PROJECT NOTES: (THIS SHEET ONLY)

1. REPLACE EXISTING SIGNAL HEADS FROM TYPE 9B CANTILEVER FLASHING BEACON STANDARD WITH 2-12" YELLOW LED FLASHING BEACONS WITH STANDARD VISOR AND 5" x 5" BACK PLATE. RE-USE EXISTING MAT MOUNTING.
2. REPLACE EXISTING FLASHING BEACON CONTROL ASSEMBLY WITH NEW LED FLASHING BEACON CONTROL ASSEMBLY, SEE WIRING DIAGRAM IN ES-14B DETAIL B.
3. REPLACE EXISTING PULL BOX WITH NEW No. 5 PULL BOX.
4. INSTALL 2"C, 3-10 (120 V FLASHING BEACONS), 2 DLC.
5. REMOVE EXISTING 4#14 CONDUCTORS FROM EXISTING 1½" CONDUIT. INSTALL 3#10 (120 V FLASHING BEACONS).
6. REPLACE EXISTING TYPE III-AF SEVICE EQUIPMENT ENCLOSURE WITH NEW TYPE III-AF SERVICE EQUIPMENT ENCLOSURE. SEE SERVICE WIRING DIAGRAM IN STANDARD PLAN ES-2D AND PROVIDE EQUIPMENT ITEMS (1) THROUGH (8), (13), (15) THROUGH (27). EXCEPT (18) SHALL BE 15 A, 120 V, IP, CB FOR FLASHING BEACONS WB. ITEMS (19), (21), (24), (25), (26), (27) ARE FOR FUTURE USE.
7. EXISTING 2"C, 3#2 (120/240 V) SERVICE.

EXISTING SYSTEM No. 35-035-25592 (PG&E)

EXISTING TYPE H RISER (120/240 V)

EXISTING LOAD

600 W OF TRAFFIC SIGNALS (METERED)
600 W OF FLASHING BEACONS (METERED)
5-200 W OF HPS LUMINAIRES (UNMETERED)

MODIFIED LOAD

600 W OF TRAFFIC SIGNALS (METERED)
400 W OF FLASHING BEACONS (METERED)
5-165 W OF LED LUMINAIRES (METERED)

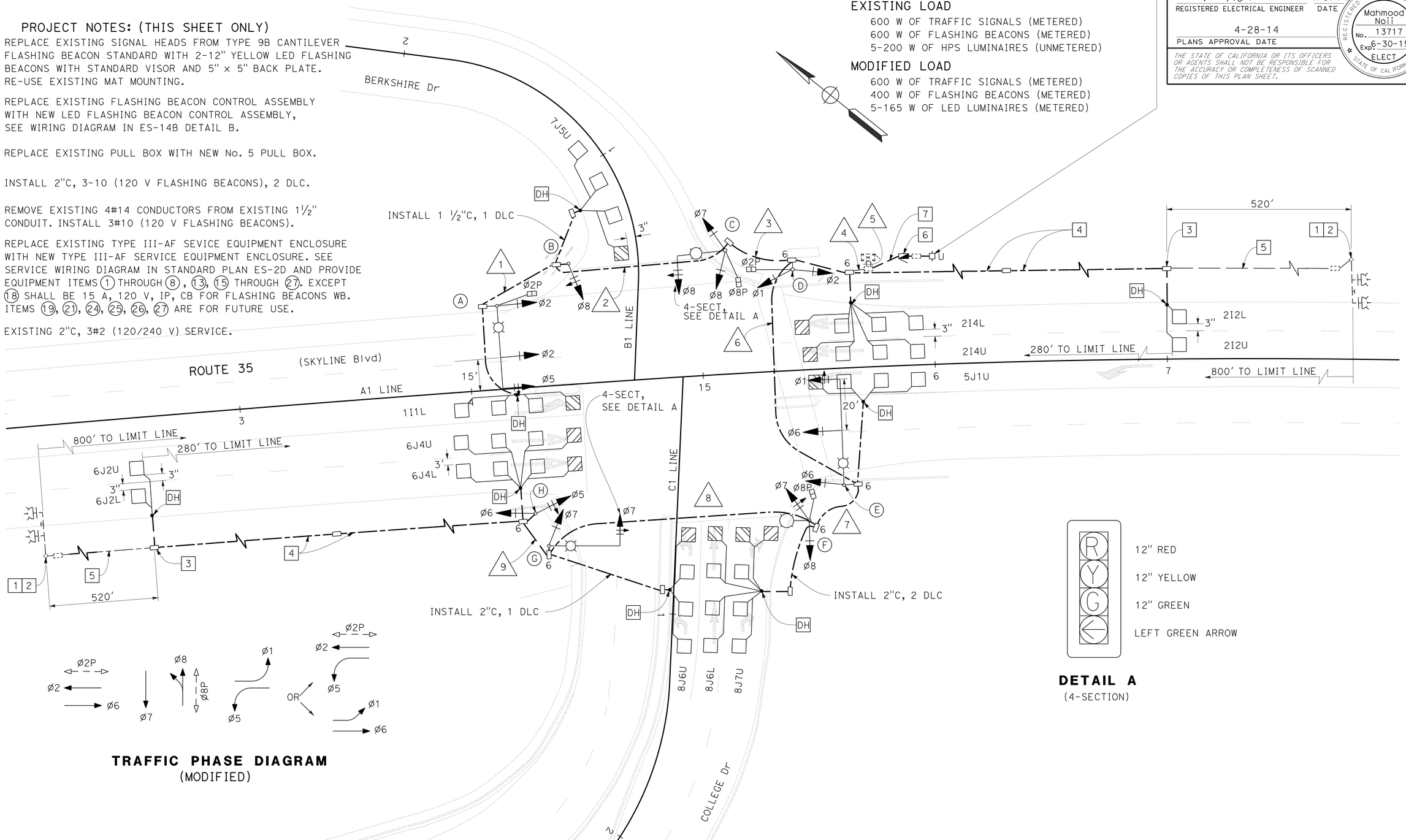

APPROVED FOR ELECTRICAL WORK ONLY

MODIFY SIGNAL AND LIGHTING
LOCATION No. 2

SCALE: 1" = 20'

E-3

REVISED BY	DATE REVISED
GB	4/9/14

CALCULATED-DESIGNED BY: GUILLERMO F. BAUTISTA
CHECKED BY: MAHMOOD NOII
FUNCTIONAL SUPERVISOR: BEHZAD GOLEMOHAMMADI

STATE OF CALIFORNIA - DEPARTMENT OF TRANSPORTATION
Caltrans
ELECTRICAL

LAST REVISION 04-09-14 | DATE PLOTTED => 30-JUN-2014 | TIME PLOTTED => 13:38

Dist	COUNTY	ROUTE	POST MILES TOTAL PROJECT	SHEET No.	TOTAL SHEETS
04	SM	1,35,82,84, 109,280	Var	49	96

REGISTERED ELECTRICAL ENGINEER — DATE 4/9/14

4-28-14
PLANS APPROVAL DATE

REGISTERED PROFESSIONAL ENGINEER — Mahmood Noii — No. 13717 — Exp. 6-30-15 — ELECT — STATE OF CALIFORNIA

THE STATE OF CALIFORNIA OR ITS OFFICERS OR AGENTS SHALL NOT BE RESPONSIBLE FOR THE ACCURACY OR COMPLETENESS OF SCANNED COPIES OF THIS PLAN SHEET.

CONDUCTOR AND CONDUIT SCHEDULE

AWG	CIRCUIT	1	2	3	4	5*	6	7	8	9
#14	Ø1				3	3	3			
	Ø2	3	3	3	3	3				
	Ø5	3	3	3	6	6	3	3	3	3
	Ø6				3	3	3	3	3	3
	Ø7			3	6	6	3	3	3	
	Ø8		3	3	6	6	3	3		
	Ø2P	2	2	2	2	2				
	Ø8P			2	2	2	2	2		
	PPB(Ø2P)		1	1	1	1				
	PPB(Ø8P)				1	1	1			
	PPB NEUTRAL		1	1	1	1	1			
	PEU			3	3					
	SPARES	3	3	3	6	6	3	3	3	3
	TOTAL No. 14	11	16	24	43	43	22	17	12	9
#10	No. 10 CONDUCTORS									
	FLASHING BEACON (120 V)						3	3	3	3
	SIGNAL NEUTRAL (120 V)	1	1	1	2	2	1	1	1	1
	TOTAL No. 10	1	1	1	2	2	4	4	4	4
#8	No. 8 CONDUCTORS									
	LIGHTING (240 V)	2	2	2	2		2	2	2	
DLC										
	DETECTOR CABLES									
	1I1L	1	1	1	1	1				
	2I2U, 2I2L				2	2				
	2I4U, 2I4L				2	2				
	5J1U				1	1	1			
	6J2U, 6J2L				2	2	2	2	2	2
	6J4U, 6J4L				2	2	2	2	2	2
	7J5U		1	1	1	1				
	6J6U, 8J6L				2	2	2	2		
	8J7U				1	1	1	1		
	TOTAL	1	2	2	14	14	8	7	4	4
CONDUIT SIZE (INCHES)		2	3	3	2-3	2-3*	3	3	3	2
PERCENT FULL (%)										

NOTES:
1. ALL EQUIPMENT IS NEW UNLESS OTHERWISE NOTED.
2. * EXISTING CONDUCTORS AND/OR CONDUIT TO REMAIN.

POLE AND EQUIPMENT SCHEDULE

LOCATION	STANDARD TYPE	STANDARD SMA	STANDARD LMA	VEH. SIGNAL MOUNTING MAST ARM	VEH. SIGNAL MOUNTING POLE	PED SIGNAL MOUNTING	PPB Ø	LED LUM (WATTS)	SPECIAL REQUIREMENTS*
A	26-4-100	45′	12′	MAS MAS	SV-1-T	SP-1-T		165	
B	1-B				TV-1-T		2 →		
C	19-3-100	25′	12′	MAS	SV-1-T SV-1-T		2 ←	165	
D	1-B				TV-2-T	SP-1-T	8 →		
E	26-4-100	45′	12′	MAS MAS	SV-1-T		8 ←	165	
F	1STS		12′		SV-2-T	SP-1-T		165	
G	19-3-100	30′	12′	MAS	SV-1-T			165	
H	1-B				TV-2-T				

* OTHER REQUIREMENTS ARE COVERED BY NOTES, LEGEND, SPECIAL PROVISIONS AND CALTRANS STANDARD SPECIFICATIONS. FOR THE TYPE OF STANDARD, VEHICLE AND PEDESTRIAN MOUNTING, SEE CALTRANS STANDARD PLANS.

NOTES:
1. ALL EQUIPMENT IS NEW UNLESS OTHERWISE NOTED.
2. PEDESTRIAN PUSH BUTTON SHALL BE ACCESSIBLE PEDESTRIAN SIGNALS (APS).
3. PEDESTRIAN SIGNALS SHALL BE LED COUNTDOWN PEDESTRIAN SIGNAL MODULE.

MODIFY SIGNAL AND LIGHTING

(CONDUCTOR, POLE AND EQUIPMENT SCHEDULES)

LOCATION No. 2

E-4

STATE OF CALIFORNIA - DEPARTMENT OF TRANSPORTATION — Caltrans — ELECTRICAL

FUNCTIONAL SUPERVISOR: BEHZAD GOLEMOHAMMADI

CALCULATED-DESIGNED BY: GUILLERMO F. BAUTISTA — CHECKED BY: MAHMOOD NOII

REVISED BY: GB — DATE REVISED: 4/9/14

LAST REVISION 04-09-14 — DATE PLOTTED => 30-JUN-2014 — TIME PLOTTED => 13:38

Dist	COUNTY	ROUTE	POST MILES TOTAL PROJECT	SHEET No.	TOTAL SHEETS
04	SM	1,35,82,84, 109,280	Var	50	96

REGISTERED ELECTRICAL ENGINEER — DATE 4/9/14

4-28-14
PLANS APPROVAL DATE

REGISTERED PROFESSIONAL ENGINEER — Mahmood Noii — No. 13717 — Exp. 6-30-15 — ELECT — STATE OF CALIFORNIA

THE STATE OF CALIFORNIA OR ITS OFFICERS OR AGENTS SHALL NOT BE RESPONSIBLE FOR THE ACCURACY OR COMPLETENESS OF SCANNED COPIES OF THIS PLAN SHEET.

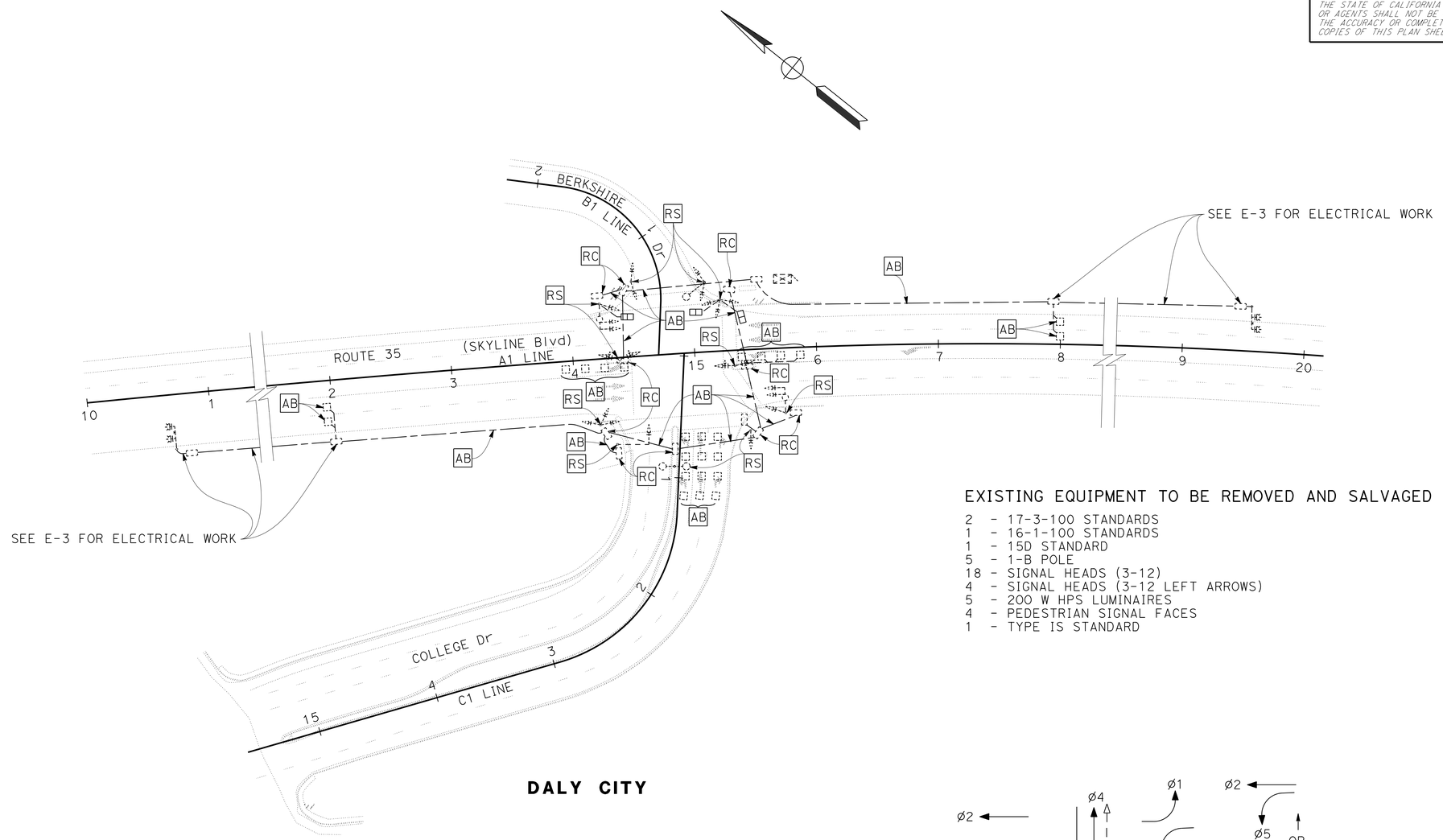

EXISTING EQUIPMENT TO BE REMOVED AND SALVAGED

2 - 17-3-100 STANDARDS
1 - 16-1-100 STANDARDS
1 - 15D STANDARD
5 - 1-B POLE
18 - SIGNAL HEADS (3-12)
4 - SIGNAL HEADS (3-12 LEFT ARROWS)
5 - 200 W HPS LUMINAIRES
4 - PEDESTRIAN SIGNAL FACES
1 - TYPE IS STANDARD

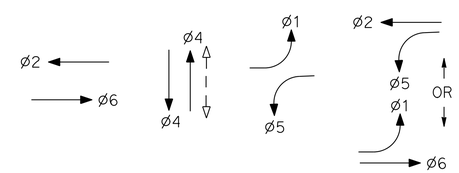

EXISTING TRAFFIC PHASE DIAGRAM

APPROVED FOR ELECTRICAL WORK ONLY

MODIFY SIGNAL AND LIGHTING
LOCATION No. 2

SCALE: 1" = 50'

E-5

STATE OF CALIFORNIA - DEPARTMENT OF TRANSPORTATION
Caltrans
ELECTRICAL

FUNCTIONAL SUPERVISOR: BEHZAD GOLEMOHAMMADI
CALCULATED-DESIGNED BY: GUILLERMO F. BAUTISTA
CHECKED BY: MAHMOOD NOII
REVISED BY: GB
DATE REVISED: 4/9/14

LAST REVISION 04-09-14 | DATE PLOTTED => 30-JUN-2014 | TIME PLOTTED => 13:38

Dist	COUNTY	ROUTE	POST MILES TOTAL PROJECT	SHEET No.	TOTAL SHEETS
04	SM	1,35,82,84, 109,280	Var	51	96

REGISTERED ELECTRICAL ENGINEER — DATE 4/9/14

4-28-14
PLANS APPROVAL DATE

REGISTERED PROFESSIONAL ENGINEER — Mahmood Noii — No. 13717 — Exp. 6-30-15 — ELECT — STATE OF CALIFORNIA

THE STATE OF CALIFORNIA OR ITS OFFICERS OR AGENTS SHALL NOT BE RESPONSIBLE FOR THE ACCURACY OR COMPLETENESS OF SCANNED COPIES OF THIS PLAN SHEET.

NOTE:

FOR ACCURATE RIGHT OF WAY DATA, CONTACT RIGHT OF WAY ENGINEERING AT THE DISTRICT OFFICE.

PROJECT NOTES: (THIS SHEET ONLY)

1. REPLACE EXISTING PEDESTRIAN SIGNALS WITH NEW LED COUNTDOWN PEDESTRIAN SIGNAL FACE MODULES.
2. REPLACE EXISTING PEDESTRIAN PUSH BUTTON WITH ACCESSIBLE PEDESTRIAN SIGNALS (APS).
3. REMOVE AND SALVAGE EXISTING 170 CONTROLLER CABINET.
4. INSTALL STATE-FURNISHED MODEL 2070 CONTROLLER AND MODEL 334 CABINET. FRONT DOOR SHALL FACE WEST.
5. INSTALL TYPE 111-AF SERVICE EQUIPMENT ENCLOSURE (120/240 V). SEE SERVICE WIRING DIAGRAM IN STANDARD PLAN ES-2D AND PROVIDE EQUIPMENT ITEMS 1 THROUGH 8, 13, 15 THROUGH 27.
6. DISCONNECT EXISTING DETECTOR LEAD-IN CABLES FROM EXISTING DETECTOR LOOPS. RE-SPLICE NEW DETECTOR LEAD-IN CABLES TO EXISTING DETECTOR LOOPS.
7. INSTALL 2½"C, 13#14, 3#8, 7 DLC.
8. 2-3"C, 25#14, 3#8, 7 DLC.
9. REMOVE EXISTING CONDUCTORS AND DETECTOR LEAD IN CABLES FROM EXISTING CONDUIT. INSTALL NEW CONDUCTORS AND DETECTOR LEAD IN CABLES, SEE SHEET E-7.
10. REMOVE EXISTING CABLES AND INSTALL 2 NEW DLC.

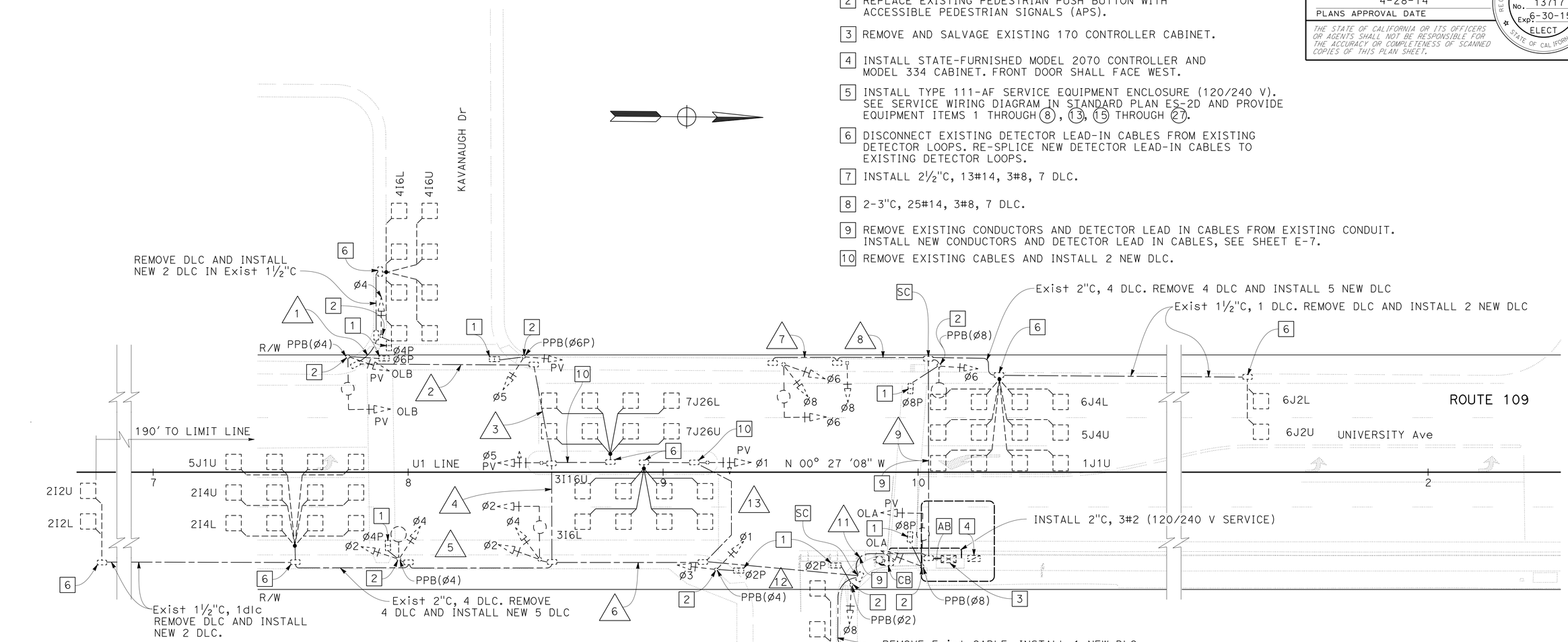

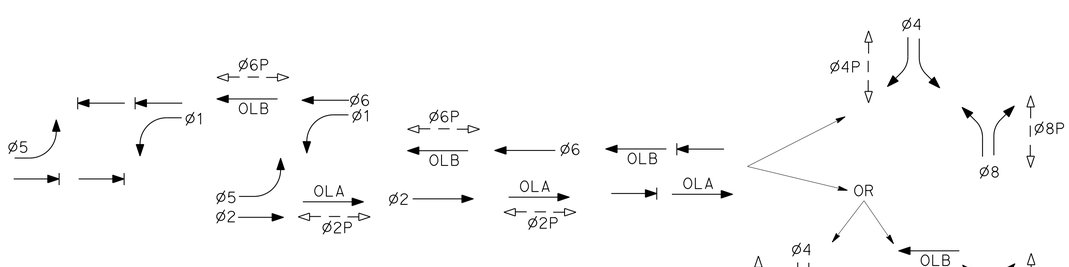

EXISTING TRAFFIC PHASE DIAGRAM

MODIFY SIGNAL AND LIGHTING
LOCATION No. 3

SCALE: 1" = 20'

APPROVED FOR ELECTRICAL WORK ONLY

E-6

STATE OF CALIFORNIA - DEPARTMENT OF TRANSPORTATION — ELECTRICAL

FUNCTIONAL SUPERVISOR: BEHZAD GOLEMOHAMMADI

CALCULATED-DESIGNED BY: GUILLERMO F. BAUTISTA — CHECKED BY: MAHMOOD NOII

REVISED BY: GB — DATE REVISED: 4/9/14

LAST REVISION 04-09-14 — DATE PLOTTED => 30-JUN-2014 — TIME PLOTTED => 13:38

Dist	COUNTY	ROUTE	POST MILES TOTAL PROJECT	SHEET No.	TOTAL SHEETS
04	SM	1,35,82,84, 109,280	Var	52	96

REGISTERED ELECTRICAL ENGINEER — DATE 4/9/14

4-28-14
PLANS APPROVAL DATE

REGISTERED PROFESSIONAL ENGINEER — Mahmood Noii — No. 13717 — Exp. 6-30-15 — ELECT — STATE OF CALIFORNIA

THE STATE OF CALIFORNIA OR ITS OFFICERS OR AGENTS SHALL NOT BE RESPONSIBLE FOR THE ACCURACY OR COMPLETENESS OF SCANNED COPIES OF THIS PLAN SHEET.

CONDUCTOR AND CONDUIT SCHEDULE

AWG	CIRCUIT	1	2	3	4	5	6	7	8	9	10	11	12	13	14
#14	Ø1										3*		3	3	
	Ø2					3	3				3*	3*	3		
	Ø4	3	3	3	3	3	3				3*	3*	3		
	Ø5			3	3		3				3*	3*	3		
	Ø6							3	3	3*	3*				
	Ø8							3	3	3*	6*	3*			
	ØOLA										3*				3*
	ØOLB		3	3	3		3				3*		3		
	Ø2P										2*	2*	2		
	Ø4P	2	2	2	2	2	2				2*	2*	2		
	Ø6P		2	2	2		2				2*	2*	2		
	Ø8P									2*	4*				2*
	PPB(Ø2P)										1*	1*	1		
	PPB(Ø4P)		1	1	1		1				1*	1*	1		
	PPB(Ø6P)	1	1	1	1		1				1*	1*	1		
	PPB(Ø8P)									1*	2*				1*
	PPB NEUTRAL	1	1	1	1		1			1*	2*	1*	1		1*
	PEU														3*
	SPARES	3	3	3	3	3	3	3	3	3*	9*	3*	3	3	3*
	TOTAL No. 14	10	16	19	19	11	22	9	9	13*	53*	25*	28	6	13*
#8	No. 8 CONDUCTORS														
	LIGHTING (240 V)		2	2	2	2	2	2	2	2*		2*	2		2*
	SIGNAL NEUTRAL(120 V)	1	1	1	1	1	1	1	1	1*	2*	1*	1	1	1*
	TOTAL No. 8	1	3	3	3	3	3	3	3	3*	2*	3*	3	1	1*
DLC															
	DETECTOR CABLES														
	1JIU									1*	1*				
	2I2U, 2I2L, 2I4U, 2I4L					4*	4*				4*	4*	4*		
	3I6U, 3I6L										2*	2*	2*	2*	
	4I6U, 4I6L	2*	2*	2*	2*		2*				2*	2*	2*		
	5JIU					1*	1*				1*	1*	1*		
	6J2U, 6J2L, 6J4U, 6J4L									4*	4*				
	8J6U										1*	1*			
	TOTAL	2*	2*	2*	2*	5*	7*			5*	15*	10*	9*	2*	
CONDUIT SIZE (INCHES)		2	2 ½	2 ½	2 ½	2 ½	3	2	2	2 ½	2-3*	2-3	2-3	2	2*
PERCENT FULL (%)															

NOTES:
1. ALL EQUIPMENT ARE EXISTING UNLESS OTHERWISE NOTED
2. * NEW CONDUCTORS AND/OR CONDUIT

MODIFY SIGNAL AND LIGHTING

(CONDUCTOR, POLE AND EQUIPMENT SCHEDULES)

LOCATION No. 3

E-7

GB	4/9/14	REVISED BY	DATE REVISED
GUILLERMO F. BAUTISTA	MAHMOOD NOII	CALCULATED-DESIGNED BY	CHECKED BY
FUNCTIONAL SUPERVISOR	BEHZAD GOLEMOHAMMADI		

STATE OF CALIFORNIA - DEPARTMENT OF TRANSPORTATION
Caltrans
ELECTRICAL

LAST REVISION 04-09-14 | DATE PLOTTED => 30-JUN-2014 | TIME PLOTTED => 13:38

Dist	COUNTY	ROUTE	POST MILES TOTAL PROJECT	SHEET No.	TOTAL SHEETS
04	SM	1,35,82,84, 109,280	Var	53	96

REGISTERED ELECTRICAL ENGINEER — DATE 4/9/14

4-28-14
PLANS APPROVAL DATE

REGISTERED PROFESSIONAL ENGINEER — Mahmood Noii — No. 13717 — Exp. 6-30-15 — ELECT — STATE OF CALIFORNIA

THE STATE OF CALIFORNIA OR ITS OFFICERS OR AGENTS SHALL NOT BE RESPONSIBLE FOR THE ACCURACY OR COMPLETENESS OF SCANNED COPIES OF THIS PLAN SHEET.

MODIFY SIGNAL AND LIGHTING

SHEET No.	165 W LED LUMINAIRE	TYPE III-AF SERVICE ENCLOSURE	No. 5 PB	No. 6 PB	DLC	No. 6 CONDUCTORS	No. 8 CONDUCTORS	No. 10 CONDUCTORS	No. 14 CONDUCTORS	TYPE A DETECTOR LOOP	TYPE D DETECTOR LOOP	DETECTOR HANDHOLE
	EA				LF					EA		
E-1	3		5				700	300	6600			
E-3	5	1	10	6	3515	50	750	5875	7315	34	11	9
E-6		1	3	1	3350	30	500		2100			

ITEMS SHOWN IN THIS TABLE ARE NOT A SEPARATE PAY ITEM, FOR INFORMATION ONLY

MODIFY SIGNAL AND LIGHTING

SHEET No.	29-5-100 STANDARD	24-4-100 STANDARD	19-3-100 STANDARD	15TS STANDARD	1-B	APS PB	LED COUNTDOWN PED SIGNAL	3-12" VEHICLE SIGNAL FACE	3-12" LEFT ARROW VEHICLE SIGNAL FACE	4 SECTION VEHICLE SIGNAL FACE	5 SECTION VEHICLE SIGNAL FACE	1½"C	2"C	3"C
	EA											LF		
E-1	2		1		2	4	4	9	4		1		40	240
E-3		2	2	1	3	4	4	10	4	2		100	780	350
E-6						8	8							

ITEMS SHOWN IN THIS TABLE ARE NOT A SEPARATE PAY ITEM, FOR INFORMATION ONLY

ELECTRICAL QUANTITIES

E-8

GUILLERMO F. BAUTISTA	REVISED BY
MAHMOOD NOII	DATE REVISED
GB	
4/9/14	
CALCULATED-DESIGNED BY	
CHECKED BY	
FUNCTIONAL SUPERVISOR	
BEHZAD GOLEMOHAMMADI	

STATE OF CALIFORNIA - DEPARTMENT OF TRANSPORTATION
Caltrans
ELECTRICAL

LAST REVISION 04-09-14 | DATE PLOTTED => 30-JUN-2014 | TIME PLOTTED => 13:38

M

Maint	MAINTENANCE
Max	MAXIMUM
MB	METAL BEAM
MBB	METAL BEAM BARRIER
MBGR	METAL BEAM GUARD RAILING
Med	MEDIAN
MGS	MIDWEST GUARDRAIL SYSTEM
MH	MANHOLE
Min	MINIMUM
Misc	MISCELLANEOUS
Misc I & S	MISCELLANEOUS IRON AND STEEL
Mkr	MARKER
Mod	MODIFIED,
	MODIFY
Mon	MONUMENT
MP	METAL PLATE
MPGR	METAL PLATE GUARD RAILING
MR	MOVEMENT RATING
MSE	MECHANICALLY STABILIZED EMBANKMENT
Mt	MOUNTAIN, MOUNT
Mtl	MATERIAL
MVP	MAINTENANCE VEHICLE PULLOUT

N

N	NORTH
NB	NORTHBOUND
No.	NUMBER (MUST HAVE PERIOD)
Nos.	NUMBERS (MUST HAVE PERIOD)
NPS	NOMINAL PIPE SIZE
NS	NEAR SIDE
NSP	NEW STANDARD PLAN
NTS	NOT TO SCALE

O

Oblr	OBLITERATE
OC	OVERCROSSING
OD	OUTSIDE DIAMETER
OF	OUTSIDE FACE
OG	ORIGINAL GROUND
OGAC	OPEN GRADED ASPHALT CONCRETE
OGFC	OPEN GRADED FRICTION COURSE
OH	OVERHEAD
OHWM	ORDINARY HIGH WATER MARK
O-O	OUT TO OUT
Opp	OPPOSITE
OSD	OVERSIDE DRAIN

P

P	PAGE
PAP	PERFORATED ALUMINUM PIPE
PB	PULL BOX
PC	POINT OF CURVATURE,
	PRECAST
PCC	POINT OF COMPOUND CURVE,
	PORTLAND CEMENT CONCRETE
PCMS	PORTABLE CHANGEABLE MESSAGE SIGN
PCP	PERFORATED CONCRETE PIPE,
	PRESTRESSED CONCRETE PIPE
PCVC	POINT OF COMPOUND VERTICAL CURVE
PEC	PERMIT TO ENTER AND CONSTRUCT
Ped	PEDESTRIAN
Ped OC	PEDESTRIAN OVERCROSSING
Ped UC	PEDESTRIAN UNDERCROSSING
Perm Mtl	PERMEABLE MATERIAL

P continued

PG	PROFILE GRADE
PI	POINT OF INTERSECTION
PJP	PARTIAL JOINT PENETRATION
Pkwy	PARKWAY
ℙ,PL	PLATE
P/L	PROPERTY LINE
PM	POST MILE,
	TIME FROM NOON TO MIDNIGHT
PN	PAVING NOTCH
POC	POINT OF HORIZONTAL CURVE
POT	POINT OF TANGENT
POVC	POINT OF VERTICAL CURVE
PP	PIPE PILE,
	PLASTIC PIPE,
	POWER POLE
PPL	PREFORMED PERMEABLE LINER
PPP	PERFORATED PLASTIC PIPE
PRC	POINT OF REVERSE CURVE
PRF	PAVEMENT REINFORCING FABRIC
PRVC	POINT OF REVERSE VERTICAL CURVE
PS&E	PLANS, SPECIFICATIONS AND ESTIMATES
PS, P/S	PRESTRESSED
PSP	PERFORATED STEEL PIPE
PT	POINT OF TANGENCY
PVC	POLYVINYL CHLORIDE
Pvmt	PAVEMENT

Q

Qty	QUANTITY

R

R	RADIUS
R & D	REMOVE AND DISPOSE
R & S	REMOVE AND SALVAGE
R/C	RATE OF CHANGE
RCA	REINFORCED CONCRETE ARCH
RCB	REINFORCED CONCRETE BOX
RCP	REINFORCED CONCRETE PIPE
RCPA	REINFORCED CONCRETE PIPE ARCH
Rd	ROAD
Reinf	REINFORCED,
	REINFORCEMENT,
	REINFORCING
Rel	RELOCATE
Repl	REPLACEMENT
Ret	RETAINING
Rev	REVISED, REVISION
Rdwy	ROADWAY
RHMA	RUBBERIZED HOT MIX ASPHALT
Riv	RIVER
RM	ROAD-MIXED
RP	RADIUS POINT,
	REFERENCE POINT
RR	RAILROAD
RSP	ROCK SLOPE PROTECTION,
	REVISED STANDARD PLAN
Rt	RIGHT
Rte	ROUTE
RW	REDWOOD,
	RETAINING WALL
R/W	RIGHT OF WAY
Rwy	RAILWAY

S

S	SOUTH,
	SUPPLEMENT
SAE	STRUCTURE APPROACH EMBANKMENT
Salv	SALVAGE
SAPP	STRUCTURAL ALUMINUM PLATE PIPE
SB	SOUTHBOUND
SC	SAND CUSHION
SCSP	SLOTTED CORRUGATED STEEL PIPE
SD	STORM DRAIN
Sec	SECOND,
	SECTION
Sep	SEPARATION
SG	SUBGRADE
Shld	SHOULDER
Sht	SHEET
Sim	SIMILAR
℄	STATION LINE
SM	SELECTED MATERIAL
Spec	SPECIAL,
	SPECIFICATIONS
SPP	SLOTTED PLASTIC PIPE
SS	SLOPE STAKE
SSBM	STRAP AND SADDLE BRACKET METHOD
SSD	STRUCTURAL SECTION DRAIN
SSPA	STRUCTURAL STEEL PLATE ARCH
SSPP	STRUCTURAL STEEL PLATE PIPE
SSPPA	STRUCTURAL STEEL PLATE PIPE ARCH
SSRP	STEEL SPIRAL RIB PIPE
St	STREET
Sta	STATION
STBB	SINGLE THRIE BEAM BARRIER
Std	STANDARD
Str	STRUCTURE
Surf	SURFACING
SW	SIDEWALK,
	SOUND WALL
Swr	SEWER
Sym	SYMMETRICAL
S4S	SURFACE 4 SIDES

T

T	SEMI-TANGENT
Tan	TANGENT
TBB	THRIE BEAM BARRIER
Tbr	TIMBER
TC	TOP OF CURB
TCB	TRAFFIC CONTROL BOX
TCE	TEMPORARY CONSTRUCTION EASEMENT
Tel	TELEPHONE
Temp	TEMPORARY
TG	TOP OF GRADE
Tot	TOTAL
TP	TELEPHONE POLE
TPB	TREATED PERMEABLE BASE
TPM	TREATED PERMEABLE MATERIAL
Trans	TRANSITION

T continued

TS	TRANSVERSE,
	TRAFFIC SIGNAL,
	TUBULAR STEEL
Typ	TYPICAL

U

UC	UNDERCROSSING
UD	UNDERDRAIN
UG	UNDERGROUND
UON	UNLESS OTHERWISE NOTED
UP	UNDERPASS

V

V	VALVE,
	DESIGN SPEED
Var	VARIABLE,
	VARIES
VC	VERTICAL CURVE
VCP	VITRIFIED CLAY PIPE
Vert	VERTICAL
Via	VIADUCT
Vol	VOLUME

W

W	WEST,
	WIDTH
WB	WESTBOUND
WH	WEEP HOLE
WM	WIRE MESH
WS	WATER SURFACE
WSP	WELDED STEEL PIPE
Wt	WEIGHT
WV	WATER VALVE
WW	WINGWALL
WWLOL	WINGWALL LAYOUT LINE

X

X Sec	CROSS SECTION
Xing	CROSSING

Y

Yr	YEAR
Yrs	YEARS

Dist	COUNTY	ROUTE	POST MILES TOTAL PROJECT	SHEET No.	TOTAL SHEETS
04	SM	1,35,82,84, 109,280	Var	54	96

Grace M. Tsushima
REGISTERED CIVIL ENGINEER

July 19, 2013
PLANS APPROVAL DATE

REGISTERED PROFESSIONAL ENGINEER Grace M. Tsushima No. C49814 Exp. 9-30-14 CIVIL STATE OF CALIFORNIA

THE STATE OF CALIFORNIA OR ITS OFFICERS OR AGENTS SHALL NOT BE RESPONSIBLE FOR THE ACCURACY OR COMPLETENESS OF SCANNED COPIES OF THIS PLAN SHEET.

TO ACCOMPANY PLANS DATED 4-28-14

UNIT OF MEASUREMENT SYMBOLS:

Some of the symbols used in the project plan quantity tables and in the Bid Item List are:

TABLE A

SYMBOL USED	DEFINITIONS
ACRE	ACRE
CF	CUBIC FOOT
CY	CUBIC YARD
EA	EACH
GAL	GALLON
LB	POUND
LF	LINEAR FOOT
SQFT	SQUARE FOOT
SQYD	SQUARE YARD
STA	100 FEET
TAB	TABLET
TON	2,000 POUNDS

Some of the symbols used in the plans other than in the project plan quantity tables are:

TABLE B

SYMBOL USED	DEFINITIONS
ksi	KIPS PER SQUARE INCH
ksf	KIPS PER SQUARE FOOT
psi	POUNDS PER SQUARE INCH
psf	POUNDS PER SQUARE FOOT
lb/ft^3, pcf	POUNDS PER CUBIC FOOT
tsf	TONS PER SQUARE FOOT
mph, MPH *	MILES PER HOUR
ø	NOMINAL DIAMETER
oz	OUNCE
lb	POUND
kip	1,000 POUNDS
cal	CALORIE
ft	FOOT OR FEET
gal	GALLON

* For use on a sign panel only

STATE OF CALIFORNIA
DEPARTMENT OF TRANSPORTATION

ABBREVIATIONS (SHEET 2 OF 2)

NO SCALE

RSP A10B DATED JULY 19, 2013 SUPERSEDES STANDARD PLAN A10B DATED MAY 20, 2011 - PAGE 2 OF THE STANDARD PLANS BOOK DATED 2010.

REVISED STANDARD PLAN RSP A10B

2010 REVISED STANDARD PLAN RSP A10B

6-7-13

Dist	COUNTY	ROUTE	POST MILES TOTAL PROJECT	SHEET No.	TOTAL SHEETS
04	SM	1,35,82,84, 109,280	Var	55	96

REGISTERED CIVIL ENGINEER

April 20, 2012
PLANS APPROVAL DATE

Roberta L. McLaughlin
No. C40375
Exp. 3-31-13
CIVIL
REGISTERED PROFESSIONAL ENGINEER
STATE OF CALIFORNIA

THE STATE OF CALIFORNIA OR ITS OFFICERS OR AGENTS SHALL NOT BE RESPONSIBLE FOR THE ACCURACY OR COMPLETENESS OF SCANNED COPIES OF THIS PLAN SHEET.

TO ACCOMPANY PLANS DATED 4-28-14

2010 REVISED STANDARD PLAN RSP A24A

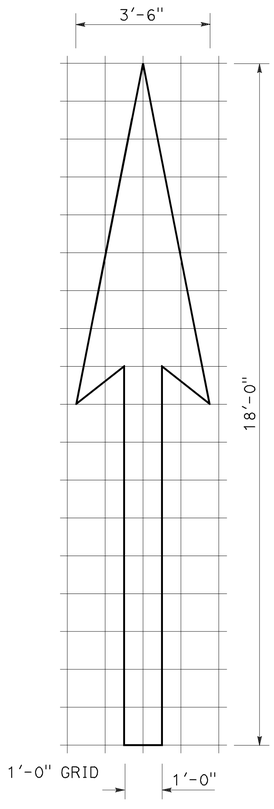

A=25 ft^2

TYPE I 18'-0" ARROW

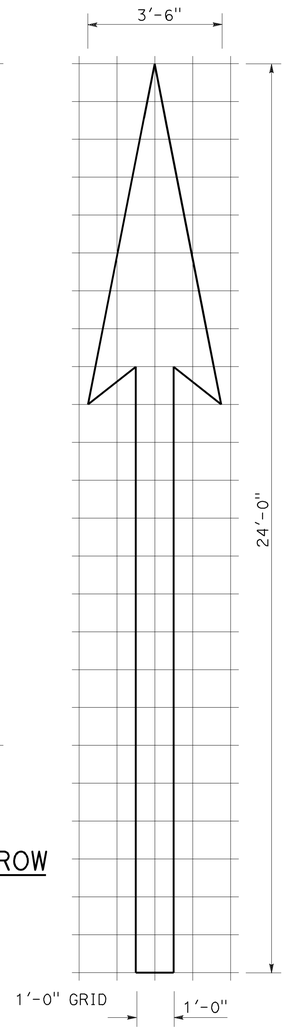

A=31 ft^2

TYPE I 24'-0" ARROW

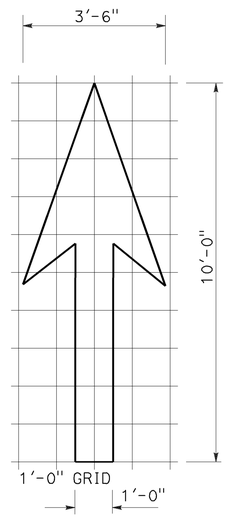

A=14 ft^2

TYPE I 10'-0" ARROW

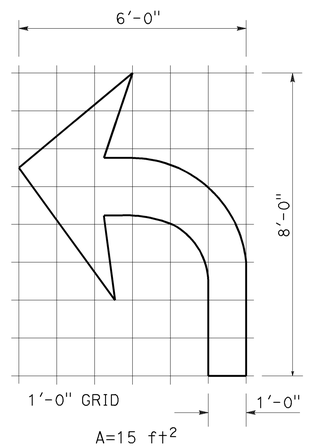

A=15 ft^2

TYPE IV (L) ARROW

(For Type IV (R) arrow, use mirror image)

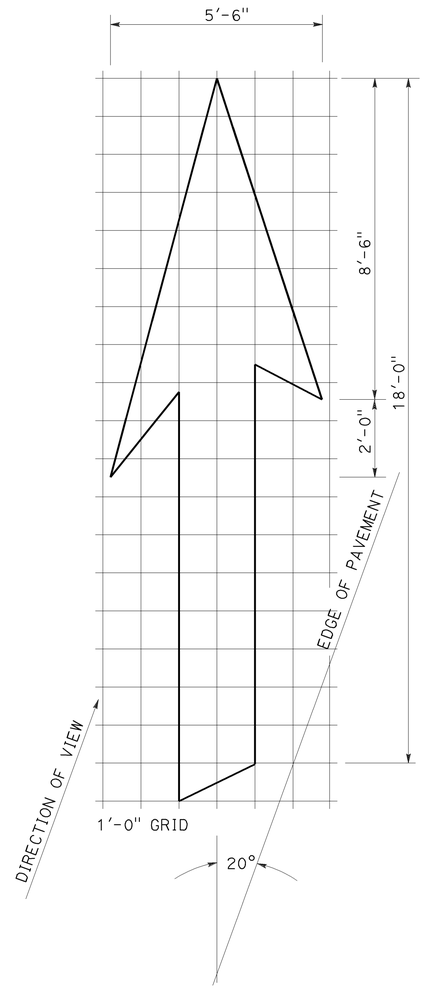

A=42 ft^2

TYPE VI ARROW

Right lane drop arrow
(For left lane, use mirror image)

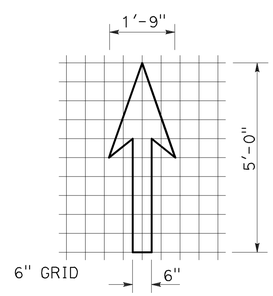

A=3.5 ft^2

BIKE LANE ARROW

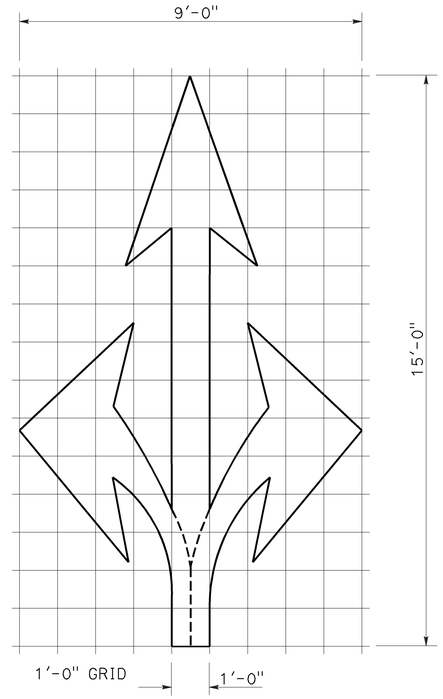

A=36 ft^2

TYPE VIII ARROW

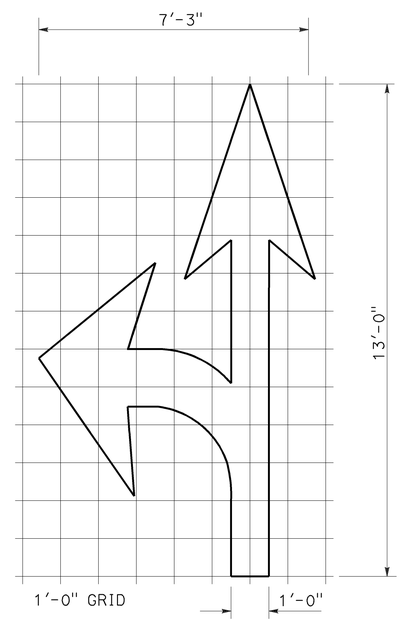

A=27 ft^2

TYPE VII (L) ARROW

(For Type VII (R) arrow, use mirror image)

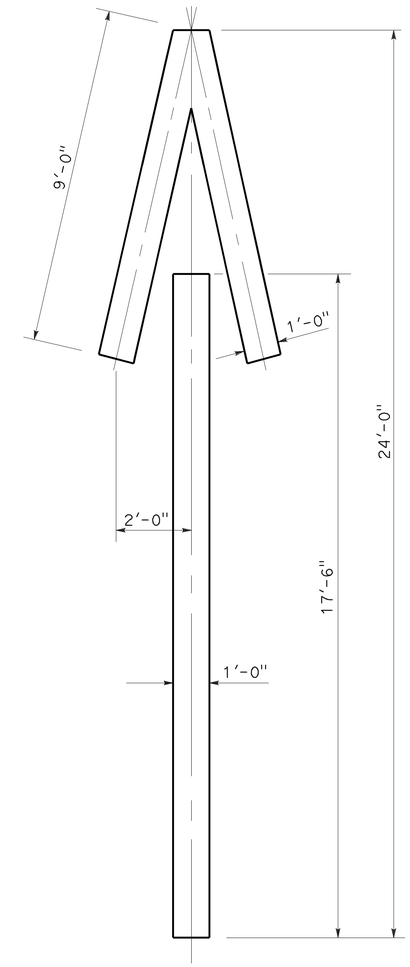

A=33 ft^2

TYPE V ARROW

NOTE:
Minor variations in dimensions may be accepted by the Engineer.

STATE OF CALIFORNIA
DEPARTMENT OF TRANSPORTATION

PAVEMENT MARKINGS ARROWS

NO SCALE

RSP A24A DATED APRIL 20, 2012 SUPERSEDES STANDARD PLAN A24A DATED MAY 20, 2011 - PAGE 13 OF THE STANDARD PLANS BOOK DATED 2010.

REVISED STANDARD PLAN RSP A24A

3-14-12

Dist	COUNTY	ROUTE	POST MILES TOTAL PROJECT	SHEET No.	TOTAL SHEETS
04	SM	1,35,82,84, 109,280	Var	56	96

REGISTERED CIVIL ENGINEER

July 20, 2012
PLANS APPROVAL DATE

REGISTERED PROFESSIONAL ENGINEER
Roberta L. McLaughlin
No. C40375
Exp. 3-31-13
CIVIL
STATE OF CALIFORNIA

THE STATE OF CALIFORNIA OR ITS OFFICERS OR AGENTS SHALL NOT BE RESPONSIBLE FOR THE ACCURACY OR COMPLETENESS OF SCANNED COPIES OF THIS PLAN SHEET.

TO ACCOMPANY PLANS DATED 4-28-14

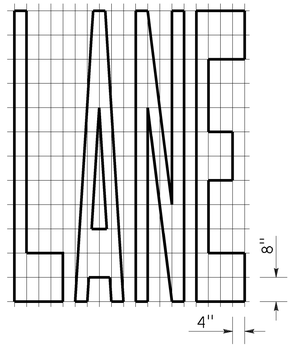

A=24 ft^2

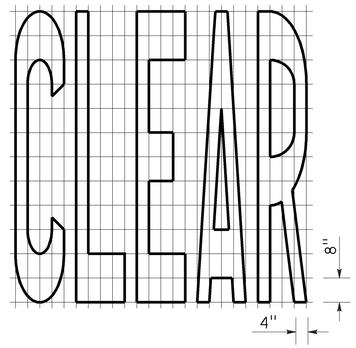

A=27 ft^2

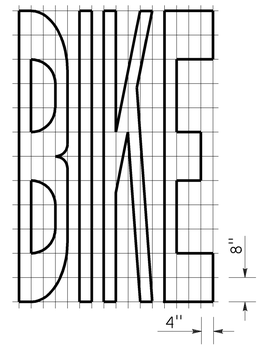

A=21 ft^2

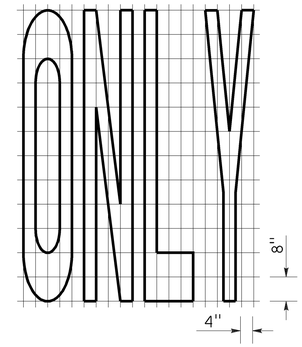

A=22 ft^2

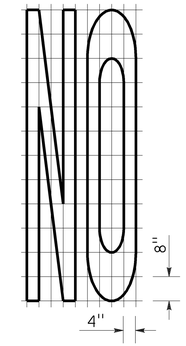

A=14 ft^2

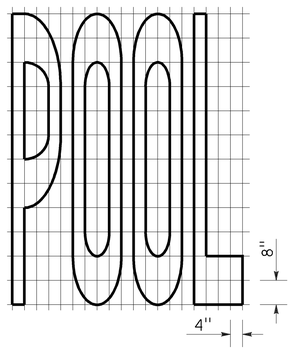

A=23 ft^2

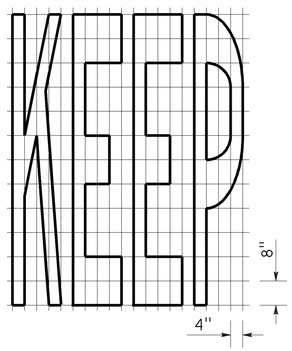

A=24 ft^2

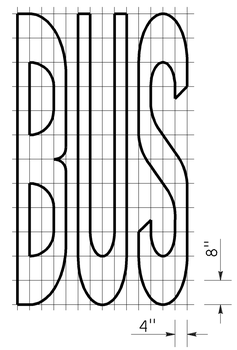

A=20 ft^2

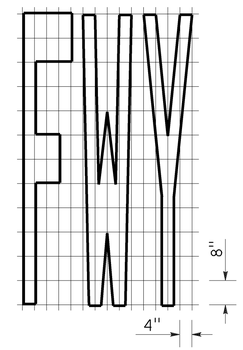

A=16 ft^2

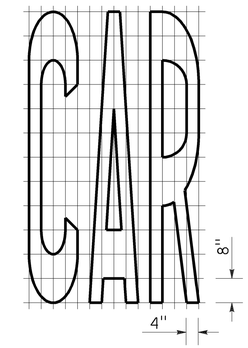

A=17 ft^2

WORD MARKINGS			
ITEM	ft^2	ITEM	ft^2
LANE	24	NO	14
POOL	23	BIKE	21
CAR	17	BUS	20
CLEAR	27	ONLY	22
KEEP	24	FWY	16

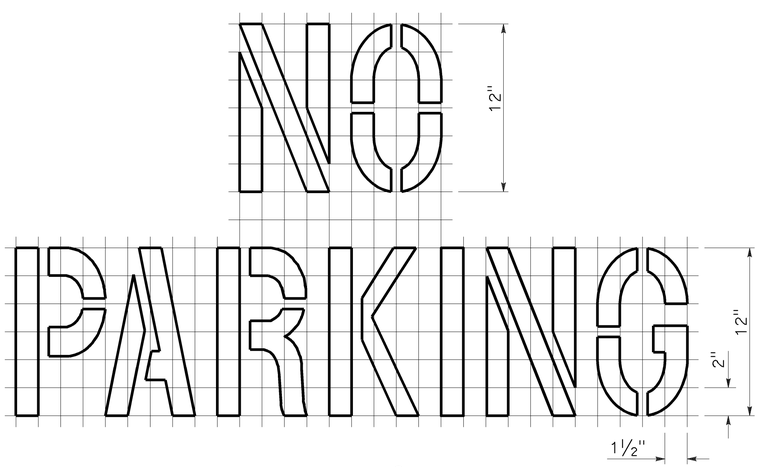

A=2 ft^2

See Notes 6 and 7

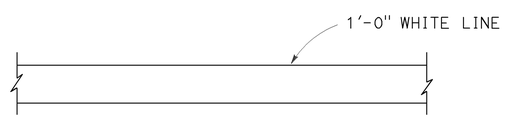

LIMIT LINE (STOP LINE)

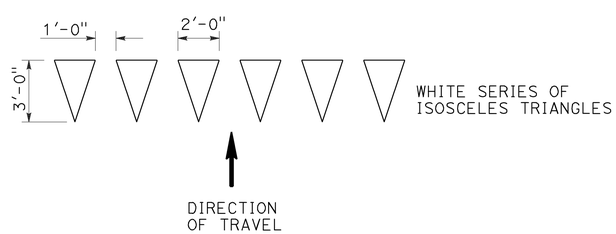

YIELD LINE

NOTES:

1. If a message consists of more than one word, it should read "UP", i.e., the first word should be nearest the driver.
2. The space between words should be at least four times the height of the characters for low speed roads, but not more than ten times the height of the characters. The space may be reduced appropriately where there is limited space because of local conditions.
3. Minor variations in dimensions may be accepted by the Engineer.
4. Portions of a letter, number or symbol may be separated by connecting segments not to exceed 2" in width.
5. The words "NO PARKING" pavement marking is to be used for parking facilities. For typical locations of markings, see Standard Plans A90A and A90B.
6. The words "NO PARKING", shall be painted in white letters no less than 1'-0" high on a contrasting background and located so that it is visible to traffic enforcement officials.

STATE OF CALIFORNIA
DEPARTMENT OF TRANSPORTATION

PAVEMENT MARKINGS WORDS, LIMIT AND YIELD LINES

NO SCALE

RSP A24E DATED JULY 20, 2012 SUPERSEDES STANDARD PLAN A24E DATED MAY 20, 2011 - PAGE 17 OF THE STANDARD PLANS BOOK DATED 2010.

REVISED STANDARD PLAN RSP A24E

2010 REVISED STANDARD PLAN RSP A24E

6-12-12

Dist	COUNTY	ROUTE	POST MILES TOTAL PROJECT	SHEET No.	TOTAL SHEETS
04	SM	1,35,82,84, 109,280	Var	57	96

REGISTERED CIVIL ENGINEER

July 20, 2012
PLANS APPROVAL DATE

REGISTERED PROFESSIONAL ENGINEER
Roberta L. McLaughlin
No. C40375
Exp. 3-31-13
CIVIL
STATE OF CALIFORNIA

THE STATE OF CALIFORNIA OR ITS OFFICERS OR AGENTS SHALL NOT BE RESPONSIBLE FOR THE ACCURACY OR COMPLETENESS OF SCANNED COPIES OF THIS PLAN SHEET.

TO ACCOMPANY PLANS DATED 4-28-14

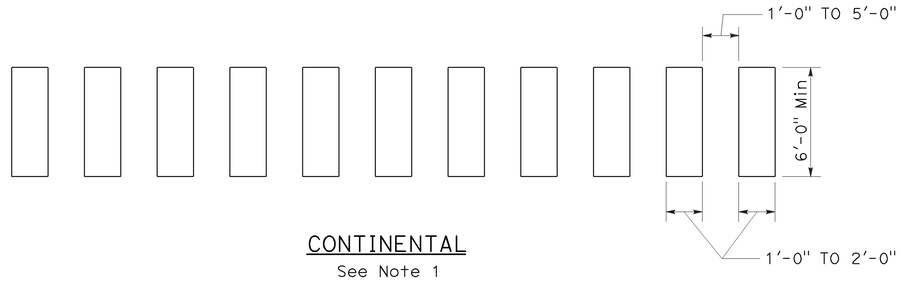

CONTINENTAL
See Note 1

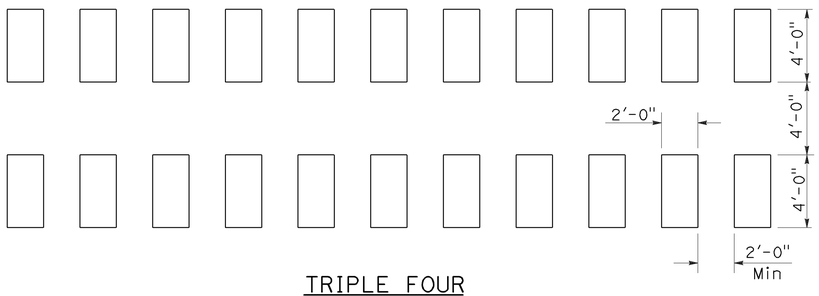

TRIPLE FOUR
See Note 1

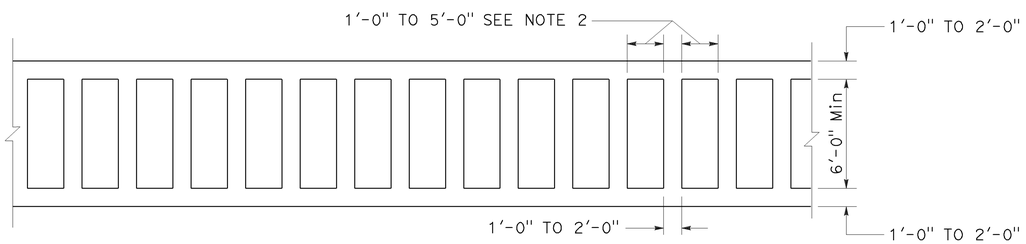

LADDER

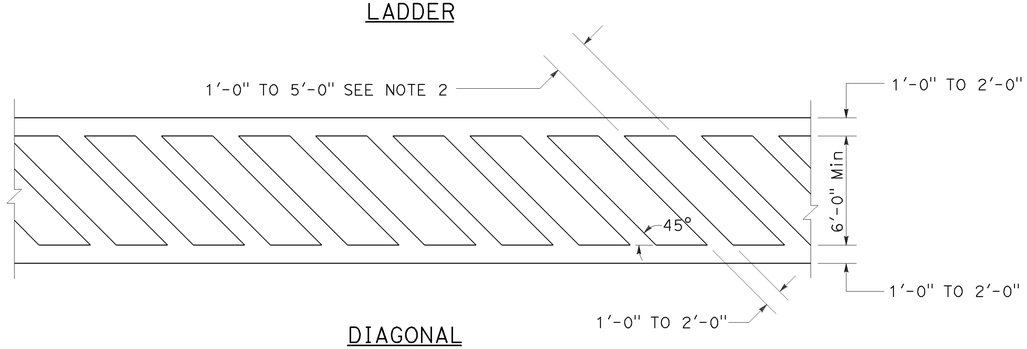

DIAGONAL

HIGHER VISIBILITY CROSSWALKS

NOTES:

1. Spaces between markings should be placed in wheel tracks of each lane.
2. Spacings not to exceed 2.5 times width of longitudinal line.
3. All crosswalk markings must be white except for those near schools must be yellow.

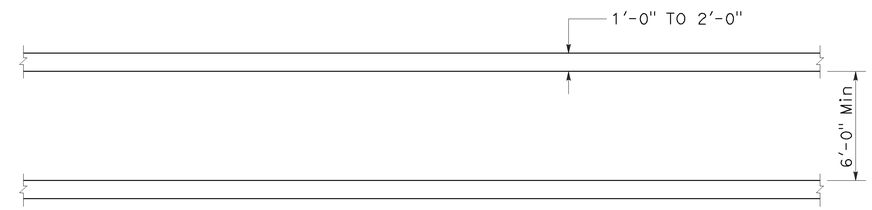

BASIC

STATE OF CALIFORNIA
DEPARTMENT OF TRANSPORTATION

PAVEMENT MARKINGS CROSSWALKS

NO SCALE

RSP A24F DATED JULY 20, 2012 SUPPLEMENTS THE STANDARD PLANS BOOK DATED 2010.

REVISED STANDARD PLAN RSP A24F

2010 REVISED STANDARD PLAN RSP A24F

6-28-12

Dist	COUNTY	ROUTE	POST MILES TOTAL PROJECT	SHEET No.	TOTAL SHEETS
04	SM	1,35,82,84, 109,280	Var	58	96

REGISTERED CIVIL ENGINEER

July 19, 2013
PLANS APPROVAL DATE

REGISTERED PROFESSIONAL ENGINEER Michael Janzen No. 44788 Exp. 03-31-14 CIVIL STATE OF CALIFORNIA

THE STATE OF CALIFORNIA OR ITS OFFICERS OR AGENTS SHALL NOT BE RESPONSIBLE FOR THE ACCURACY OR COMPLETENESS OF SCANNED COPIES OF THIS PLAN SHEET.

TO ACCOMPANY PLANS DATED 4-28-14

2010 REVISED STANDARD PLAN RSP A87A

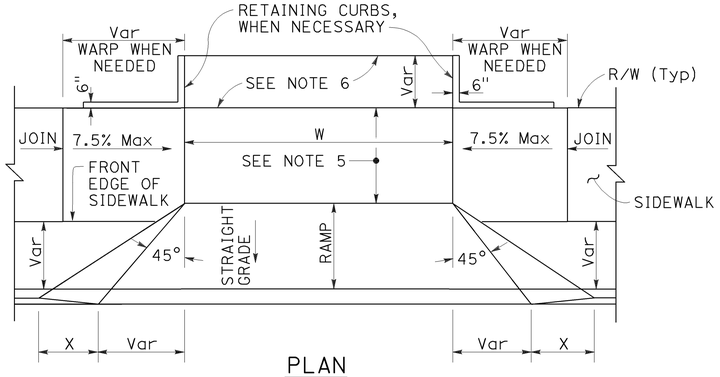

PLAN

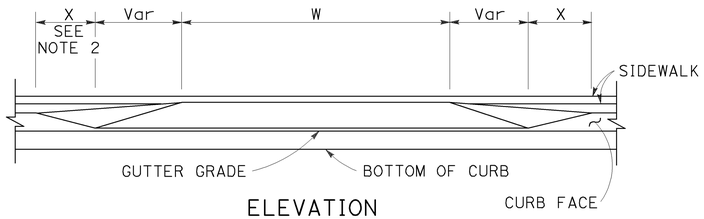

ELEVATION

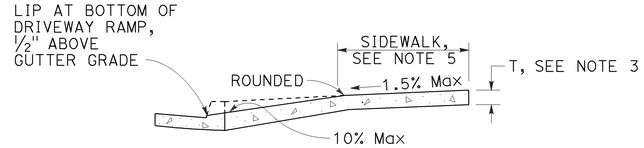

CASE A

Typical driveway, sidewalk not depressed

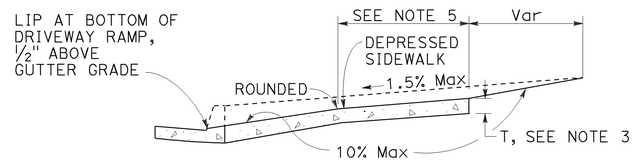

CASE B

Driveway with depressed sidewalk

SECTIONS

DRIVEWAYS

TABLE A

CURB TYPE	DIMENSIONS			
	"H1"	"H2"	"W1"	"W2"
A1-6	1'-2"	6"	7½"	1½"
A1-8	1'-4"	8"	8"	2"
A2-6	1'-0"	6"	2'-7½"	1½"
A2-8	1'-2"	8"	2'-8"	2"
A3-6	6"	5"	7¼"	1¼"
A3-8	8"	7"	7¾"	1¾"
B1-4	1'-0"	4"	7½"	2½"
B1-6	1'-2"	6"	9"	4"
B2-4	10"	4"	2'-7½"	2½"
B2-6	1'-0"	6"	2'-9"	4"
B3-4	4"	3"	7"	2"
B3-6	6"	5"	8½"	3½"
D-4	10"	4"	1'-6"	1'-1"
D-6	1'-0"	6"	2'-2"	1'-9"

CURB QUANTITIES

TYPE	CUBIC YARDS PER LINEAR FOOT
A1-6	0.02585
A1-8	0.03084
A2-6	0.05903
A2-8	0.06379
A3-6	0.01036
A3-8	0.01435
B1-4	0.02185
B1-6	0.02930
B2-4	0.05515
B2-6	0.06171
B3-4	0.00641
B3-6	0.01074
B4	0.05709
D-4	0.04083
D-6	0.06804
E	0.06661

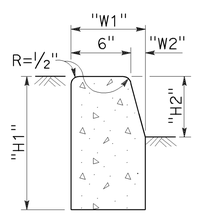

TYPE A1 CURBS

See Table A

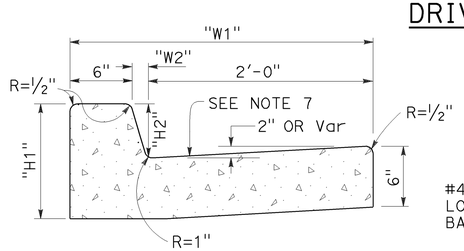

TYPE A2 CURBS

See Table A

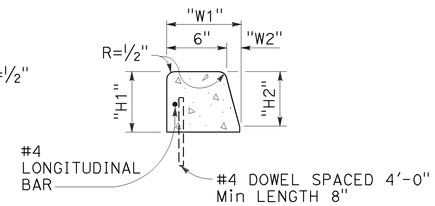

TYPE A3 CURBS

Superimposed on existing pavement
See Table A

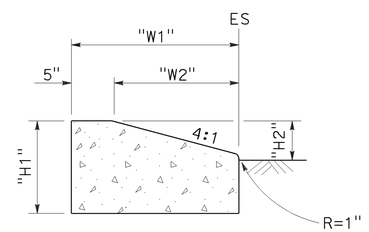

TYPE D CURBS

See Table A

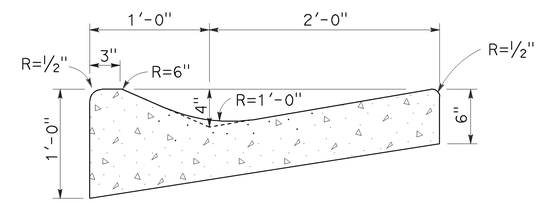

TYPE E CURB

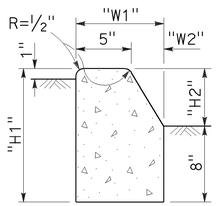

TYPE B1 CURBS

See Table A

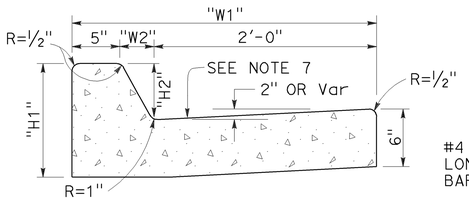

TYPE B2 CURBS

See Table A

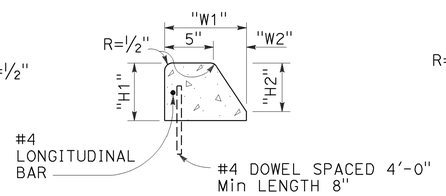

TYPE B3 CURBS

Superimposed on existing pavement
See Table A

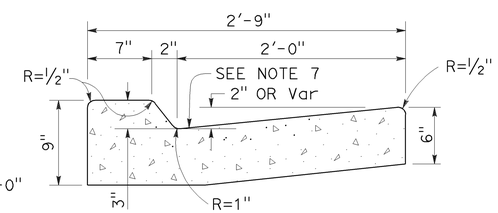

TYPE B4 CURBS

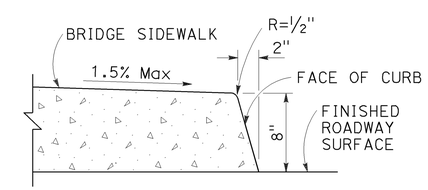

TYPE H CURB

On Bridges

CURBS

NOTES:

1. Case A driveway section typically applies.
2. X=3'-0" except for curb heights over 10" where 4:1 slopes shall be used on curb slope.
3. Sidewalk and ramp thickness "T" at driveway shall be 4" for residental and 6" for commercial.
4. Difference in slope of the driveway ramp and the slope of a line between the gutter and a point on the roadway 5'-0" from gutter line shall not exceed 15%. Reduce driveway ramp slope, not gutter slope, where required.
5. Minimum width of clear passageway for sidewalk shall be 4'-2".
6. Retaining curbs and acquisition of construction easement may be necessary for narrow sidewalks or curb heights in excess of 6".
7. Across the pedestrian route at curb ramp locations, the gutter pan slope shall not exceed 1" of depth for each 2'-0" of width.

STATE OF CALIFORNIA
DEPARTMENT OF TRANSPORTATION

CURBS AND DRIVEWAYS

NO SCALE

RSP A87A DATED JULY 19, 2013 SUPERSEDES STANDARD PLAN A87A
DATED MAY 20, 2011 - PAGE 119 OF THE STANDARD PLANS BOOK DATED 2010.

REVISED STANDARD PLAN RSP A87A

Dist	COUNTY	ROUTE	POST MILES TOTAL PROJECT	SHEET No.	TOTAL SHEETS
04	SM	1,35,82,84, 109,280	Var	59	96

REGISTERED CIVIL ENGINEER

March 21, 2014
PLANS APPROVAL DATE

REGISTERED PROFESSIONAL ENGINEER Hector David Cordova No. C41957 Exp. 3-31-14 CIVIL STATE OF CALIFORNIA

THE STATE OF CALIFORNIA OR ITS OFFICERS OR AGENTS SHALL NOT BE RESPONSIBLE FOR THE ACCURACY OR COMPLETENESS OF SCANNED COPIES OF THIS PLAN SHEET.

TO ACCOMPANY PLANS DATED 4-28-14

2010 REVISED STANDARD PLAN RSP A88A

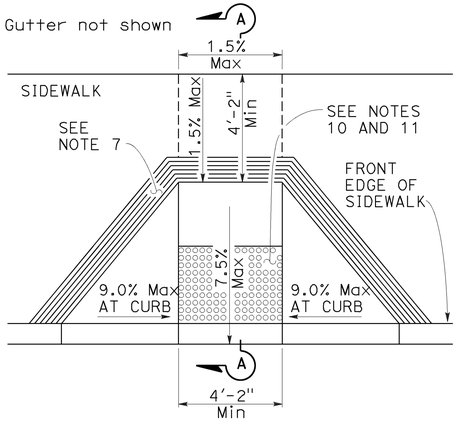

CASE A

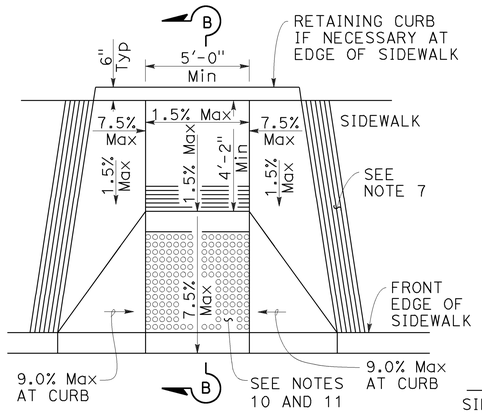

CASE B

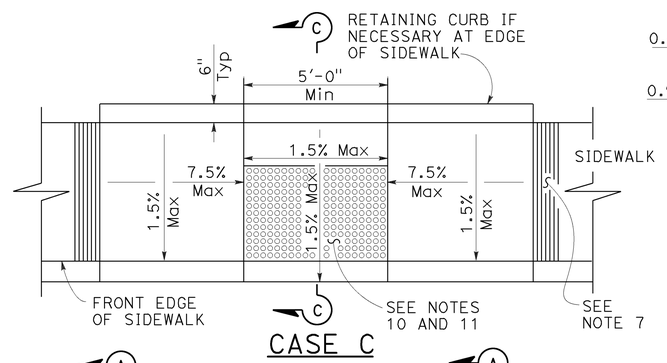

CASE C

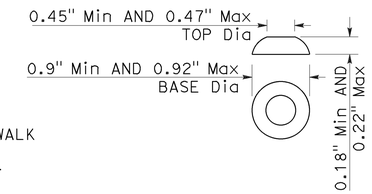

RAISED TRUNCATED DOME

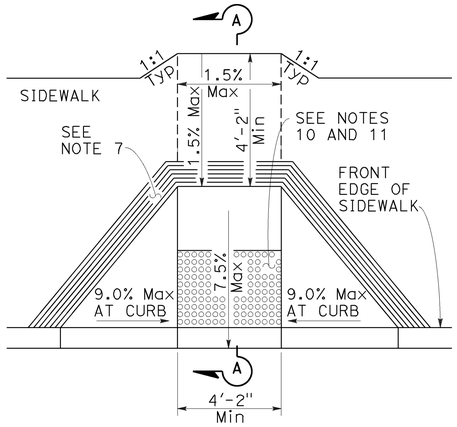

CASE D

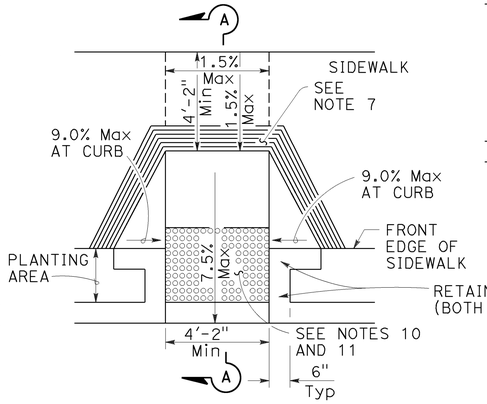

CASE E

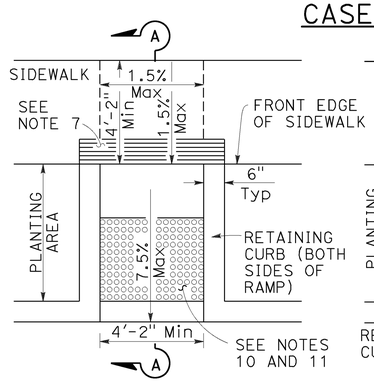

CASE F

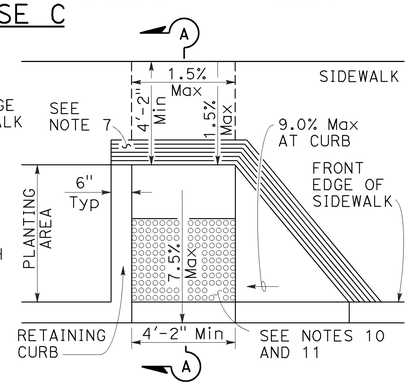

CASE G
See Note 4

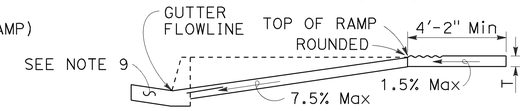

SECTION A-A

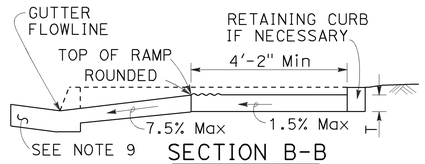

SECTION B-B
Depress entire sidewalk as required

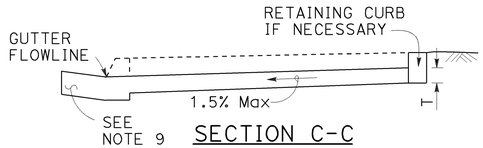

SECTION C-C

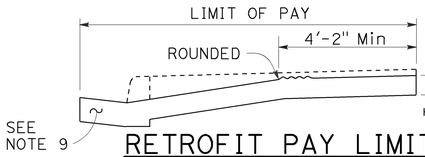

RETROFIT PAY LIMITS
Existing curb and sidewalk

RAISED TRUNCATED DOME PATTERN (IN-LINE)

DETECTABLE WARNING SURFACE
See Note 10

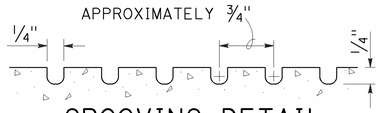

GROOVING DETAIL

NOTES:

1. As site conditions dictate, Case A through Case G curb ramps may be used for corner installations similar to those shown in Detail A and Detail B. The case of curb ramps used in Detail A do not have to be the same. Case A through Case G curb ramps also may be used at mid block locations, as site conditions dictate.
2. If distance from curb to back of sidewalk is too short to accommodate ramp and 4'-2" platform (landing) as shown in Case A, the sidewalk may be depressed longitudinally as in Case B, or C or may be widened as in Case D.
3. When ramp is located in center of curb return, crosswalk configuration must be similar to that shown for Detail B.
4. As site conditions dictate, the retaining curb side and the flared side of the Case G ramp shall be constructed in reversed position.
5. If located on a curve, the sides of the ramp need not be parallel, but the minimum width of the ramp shall be 4'-2".
6. Side slope of ramp flares vary uniformly from a maximum of 9.0% at curb to conform with longitudinal sidewalk slope adjacent to top of the ramp, except in Case C and Case F.
7. The curb ramp shall be outlined, as shown, with a 1'-0" wide border with 1/4" grooves approximately 3/4" on center. See grooving detail.
8. Transitions from ramps and landing to walks, gutters or streets shall be flush (no lip) and free of abrupt changes.
9. Counter slopes of adjoining gutters and road surfaces immediately adjacent to and within 24 inches of the curb ramp shall not be steeper than 1:20 (5.0%). Gutter pan slope shall not exceed 1" of depth for each 2'-0" of width.
10. Curb ramps shall have a detectable warning surface that extends the full width and 3'-0" depth of the ramp. A 4'-0" wide detectable warning surface may be used on a 4'-2" wide curb ramp. Detectable Warning Surfaces shall conform to the requirements in the Standard Specifications.
11. The edge of the detectable warning surface nearest the street shall be between 6" and 8" from the gutter flowline.
12. Sidewalk and ramp thickness, "T", shall be 3½" minimum.
13. Utility pull boxes, manholes, vaults and all other utility facilities within the boundaries of the curb ramp will be relocated or adjusted to grade by the owner prior to, or in conjunction with, curb ramp construction.
14. Detectable warning surface may have to be cut to allow removal of utility covers while maintaining full detectable warning width and depth.

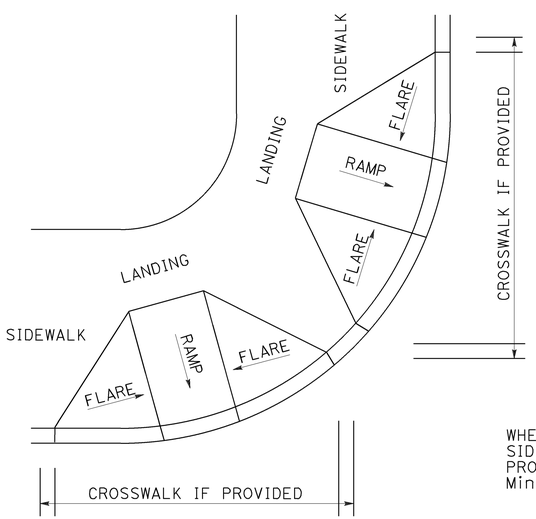

DETAIL A

TYPICAL TWO-RAMP CORNER INSTALLATION
See Note 1

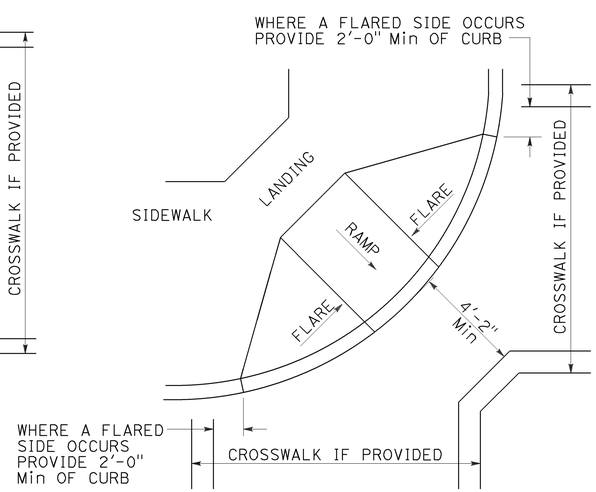

DETAIL B

TYPICAL ONE-RAMP CORNER INSTALLATION
See Notes 1 and 3

STATE OF CALIFORNIA
DEPARTMENT OF TRANSPORTATION

CURB RAMP DETAILS

NO SCALE

RSP A88A DATED MARCH 21, 2014 SUPERSEDES RSP A88A DATED JULY 19, 2013 AND STANDARD PLAN A88A DATED MAY 20, 2011 - PAGE 121 OF THE STANDARD PLANS BOOK DATED 2010.

REVISED STANDARD PLAN RSP A88A

2-25-14

Dist	COUNTY	ROUTE	POST MILES TOTAL PROJECT	SHEET No.	TOTAL SHEETS
04	SM	1,35,82,84, 109,280	Var	60	96

REGISTERED CIVIL ENGINEER

March 21, 2014
PLANS APPROVAL DATE

REGISTERED PROFESSIONAL ENGINEER Hector David Cordova No. C41957 Exp. 3-31-14 CIVIL STATE OF CALIFORNIA

THE STATE OF CALIFORNIA OR ITS OFFICERS OR AGENTS SHALL NOT BE RESPONSIBLE FOR THE ACCURACY OR COMPLETENESS OF SCANNED COPIES OF THIS PLAN SHEET.

TO ACCOMPANY PLANS DATED 4-28-14

Gutter not shown

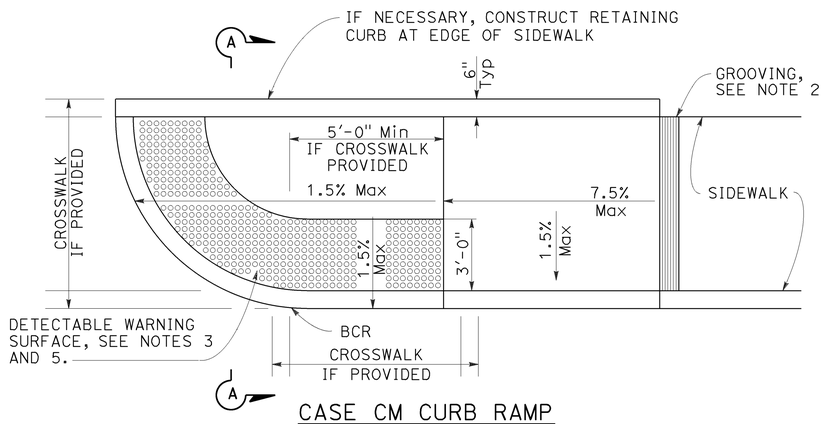

CASE CM CURB RAMP

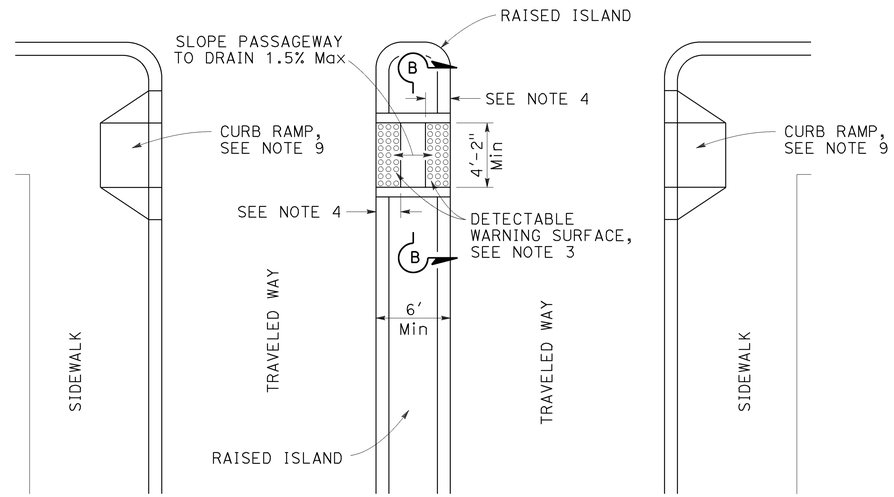

TYPE A PASSAGEWAY

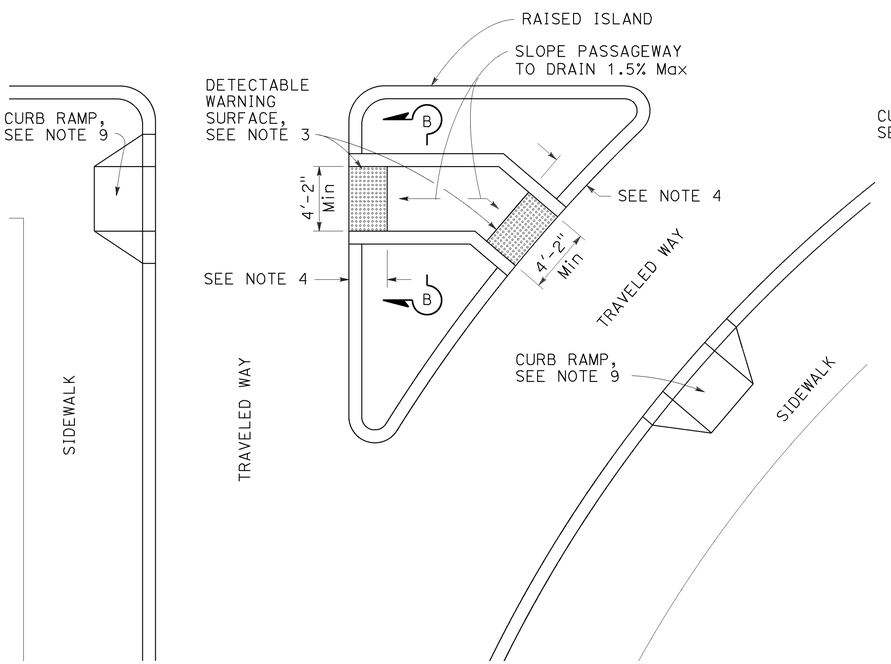

TYPE B PASSAGEWAY

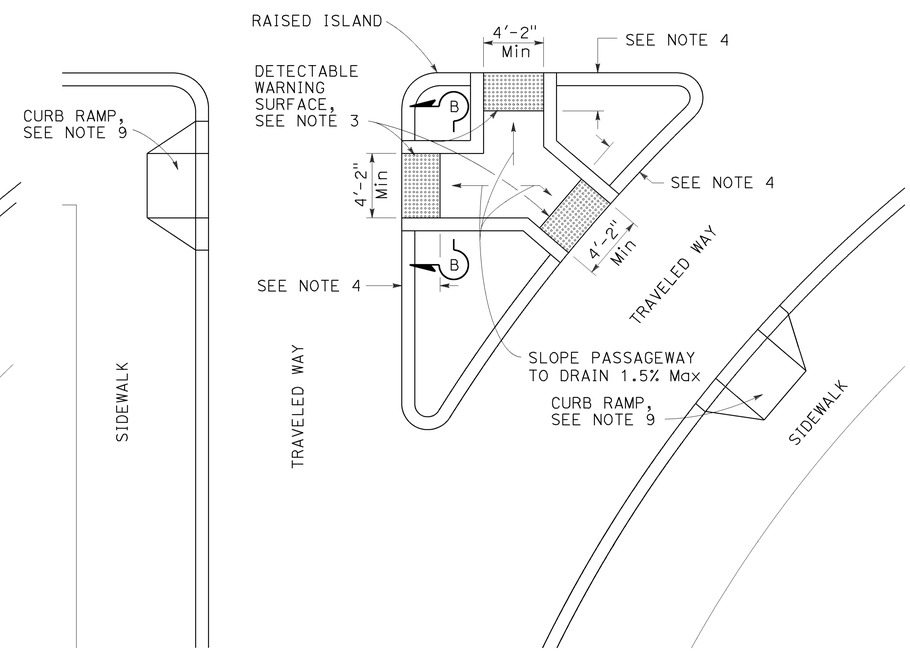

TYPE C PASSAGEWAY

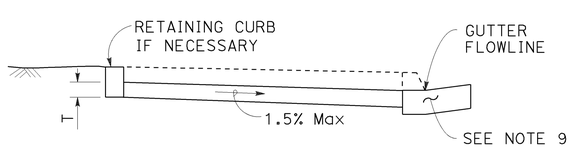

SECTION A-A

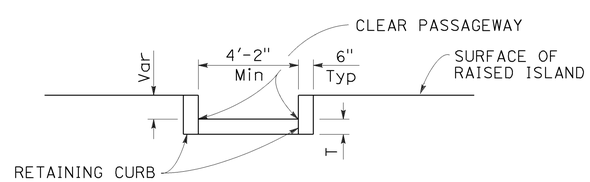

SECTION B-B

NOTES:

1. Sidewalk, ramp and passageway thickness, "T", shall be 3½" minimum.
2. For details of grooving used with Case CM curb ramp, see Revised Standard Plan RSP A88A.
3. For details of detectable warning surfaces, see Revised Standard Plan RSP A88A.
4. Where an island passageway length is greater than or equal to 6'-0", but less than 8'-0", each detectable warning surface shall extend the full width and 2'-0" depth of the passageway length. Where an island passageway length is greater than or equal to 8'-0", each detectable warning surface shall extend the full width and 3'-0" depth of the passageway length. A 4'-0" wide detectable warning surface may be used on a 4'-2" wide island passageway.
5. For Case CM curb ramp, the edge of the detectable warning surface nearest the street shall be between 6" and 8" from the gutter flowline.
6. Transitions from ramps to walks, gutters or streets shall be flush (no lip) and free of abrupt changes.
7. Utility pull boxes, manholes, vaults and all other utility facilities within the boundaries of the curb ramp will be relocated or adjusted to grade by the owner prior to, or in conjunction with, curb ramp construction.
8. Detectable warning surface may have to be cut to allow removal of utility covers while maintaining full detectable warning width and depth.
9. For additional curb ramp details, see Revised Standard Plan RSP A88A.

STATE OF CALIFORNIA
DEPARTMENT OF TRANSPORTATION

CURB RAMP AND ISLAND PASSAGEWAY DETAILS

NO SCALE

RSP A88B DATED MARCH 21, 2014 SUPERSEDES RSP A88B DATED JULY 19, 2013 AND STANDARD PLAN A88B DATED MAY 20, 2011 - PAGE 122 OF THE STANDARD PLANS BOOK DATED 2010.

REVISED STANDARD PLAN RSP A88B

2010 REVISED STANDARD PLAN RSP A88B

2-25-14

TO ACCOMPANY PLANS DATED 4-28-14

Dist	COUNTY	ROUTE	POST MILES TOTAL PROJECT	SHEET No.	TOTAL SHEETS
04	SM	1,35,82,84, 109,280	Var	61	96

Glenn DeCou
REGISTERED CIVIL ENGINEER

October 19, 2012
PLANS APPROVAL DATE

REGISTERED PROFESSIONAL ENGINEER Glenn DeCou No. C34547 Exp. 9-30-13 CIVIL STATE OF CALIFORNIA

THE STATE OF CALIFORNIA OR ITS OFFICERS OR AGENTS SHALL NOT BE RESPONSIBLE FOR THE ACCURACY OR COMPLETENESS OF SCANNED COPIES OF THIS PLAN SHEET.

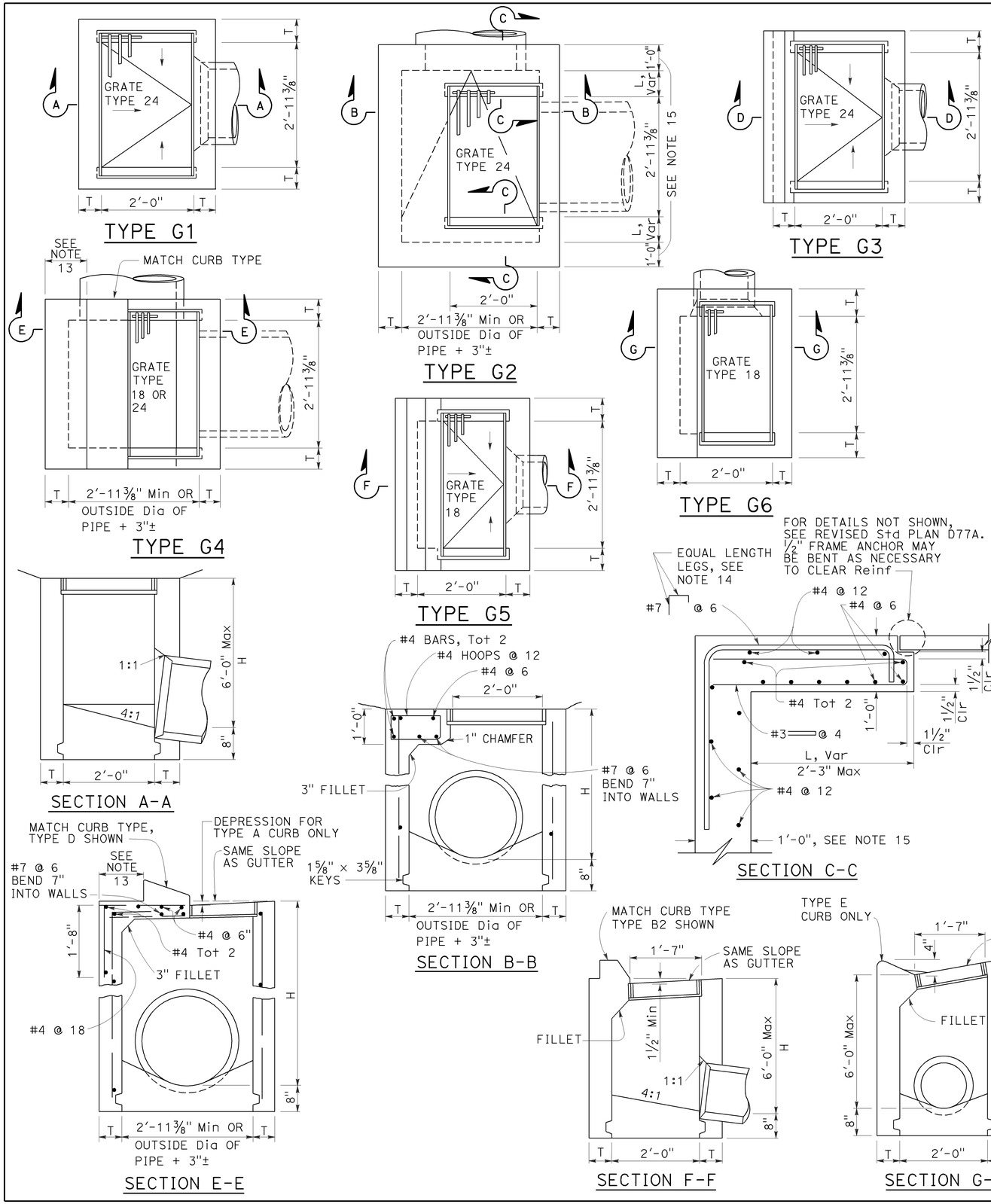

NOTES:

1. "H" is the difference in elevation between the outlet pipe flow line and the normal gutter grade line undepressed.
2. For "T" wall thickness, see Table A below.
3. Wall reinforcing not required when "H" is 8'-0" or less and the unsupported width or length is 7'-0" or less. Walls exceeding these limits shall be reinforced with #4 bars @ 1'-6" ± centers placed 1½" clear to inside of box unless otherwise shown.
4. Inlet bottom reinforcing not required. See Standard Plan D74C for alternative reinforced bottom and alternative half round bottom.
5. Steps-None required where "H" is less than 2'-6". Where "H" is 2'-6" or more, install steps with lowest rung 1'-0" above the floor and highest rung not more than 6" below top of inlet. The distance between steps shall not exceed 1'-0" and shall be uniform throughout the length of the wall. Place steps in the wall without an opening. Steps inserts may be substituted for the bar steps. Step inserts shall comply with State Industrial Safety requirements. See Standard Plan D74C for step details.
6. Details shown apply to both metal and concrete pipe.
7. Pipe(s) can be placed in any wall.
8. Curb section shall match adjacent curb.
9. Basin floors shall have wood trowel finish and a minimum slope of 12:3 from all directions toward outlet pipe.
10. Set inlet so that grate bars are parallel to direction of principal surface flow.
11. See Revised Standard Plans D77A and D77B for grate and frame details and weights of miscellaneous iron and steel.
12. See Standard Plan D78A for gutter depression details.
13. This dimenison will vary with different grates, curbs types, box width and wall thickness.
14. Bar may be rotated as necessary to clear opening. Where "L" is 6" or less, bar may be omitted.
15. Where "L" is 6" or less, wall thickness shall be as shown in Table A.
16. Cast-in-place inlets to be formed around all pipes/stubs intersecting the inlet, and concrete poured in one continuous operation. Precast inlets shall have mortared connections conforming to details for Type GCP Inlet shown on Standard Plan D75B. See Standard Specifications for mortar composition.

TABLE A

CONCRETE QUANTITIES				
TYPE	H=3'-0" TO 8'-0" (T=6")		H=8'-1" TO 20'-0" (T=8")	
	H=3'-0" (CY)	ADDITIONAL PCC PER FOOT (CY)	H=8'-1" (CY)	ADDITIONAL PCC PER FOOT (CY)
G-1	0.95	0.220	See Note A	SEE NOTE A
G-2*	1.31	0.255	3.50	0.357
G-3	1.03	0.220	See Note A	SEE NOTE A
G-4* (TYPE 24)	1.27	0.255	3.48	0.357
G-4* (TYPE 18)	1.30	0.255	3.50	0.357
G-5	1.02	0.220	SEE NOTE A	SEE NOTE A
G-6	1.04	0.220	SEE NOTE A	SEE NOTE A

TABLE BASED ON 8" FLOOR SLAB. NO DEDUCTIONS ARE TO BE MADE TO THESE QUANTITIES BECAUSE OF PIPE OPENINGS, DIFFERENT FLOOR ALTERNATIVES OR DIFFERENT CURB TYPES. * QUANTITIES FOR TYPE G-2 AND G-4 INLETS BASED ON THE MINIMUM INTERIOR DIMENSIONS.

NOTE A:

Maximum allowable height 6'-0".

STATE OF CALIFORNIA
DEPARTMENT OF TRANSPORTATION

DRAINAGE INLETS

NO SCALE

RSP D73 DATED OCTOBER 19, 2012 SUPERSEDES STANDARD PLAN D73 DATED MAY 20, 2011 - PAGE 156 OF THE STANDARD PLANS BOOK DATED 2010.

REVISED STANDARD PLAN RSP D73

2010 REVISED STANDARD PLAN RSP D73

7-19-12

Dist	COUNTY	ROUTE	POST MILES TOTAL PROJECT	SHEET No.	TOTAL SHEETS
04	SM	1,35,82,84, 109,280	Var	62	96

REGISTERED CIVIL ENGINEER

April 19, 2013
PLANS APPROVAL DATE

Raymond Don Tsztoo No. C37332 Exp. 6-30-14 CIVIL — REGISTERED PROFESSIONAL ENGINEER — STATE OF CALIFORNIA

THE STATE OF CALIFORNIA OR ITS OFFICERS OR AGENTS SHALL NOT BE RESPONSIBLE FOR THE ACCURACY OR COMPLETENESS OF SCANNED COPIES OF THIS PLAN SHEET.

TO ACCOMPANY PLANS DATED 4-28-14

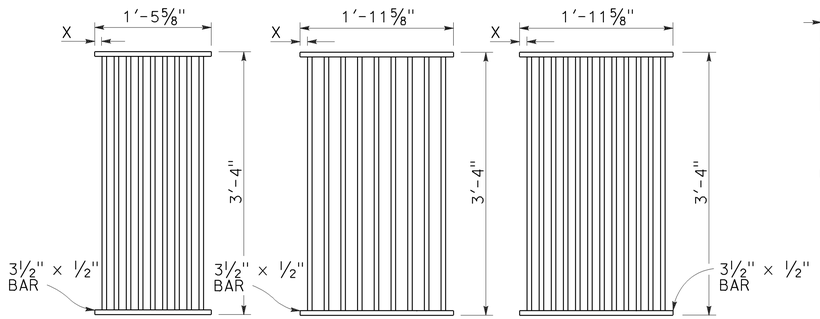

TYPE 18-9

1⅜" Clear spacing. Use within the roadbed on highways where bicycles and pedestrians are excluded.

TYPE 24-9

2" Clear spacing. Use in locations off the roadbed on all types of highways.

TYPE 24-12

1⅜" Clear spacing. Use within the roadbed on highways where bicycles and pedestrians are excluded.

RECTANGULAR GRATE DETAILS

(See table below)

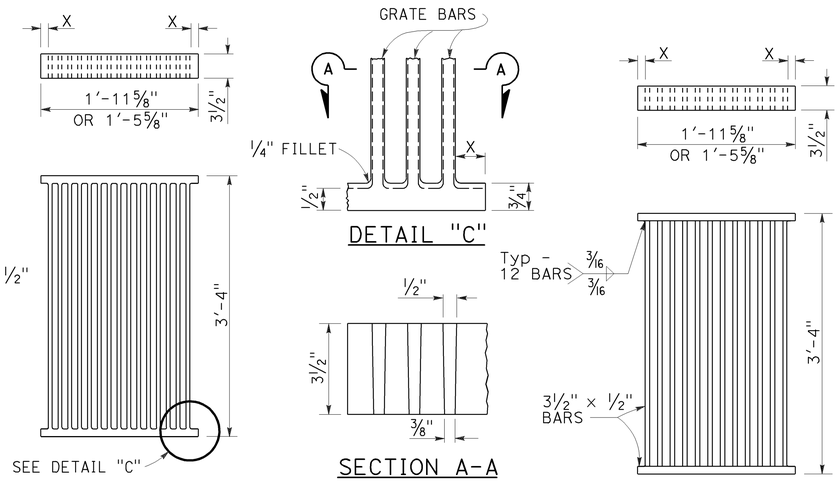

ALTERNATIVE CAST DUCTILE IRON GRATE OR CAST CARBON STEEL GRATE

ALTERNATIVE WELDED GRATE

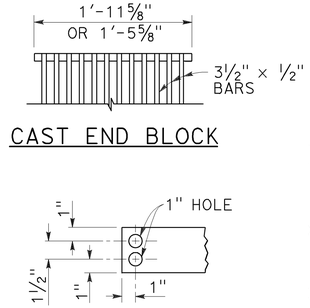

CAST END BLOCK

END OF BAR

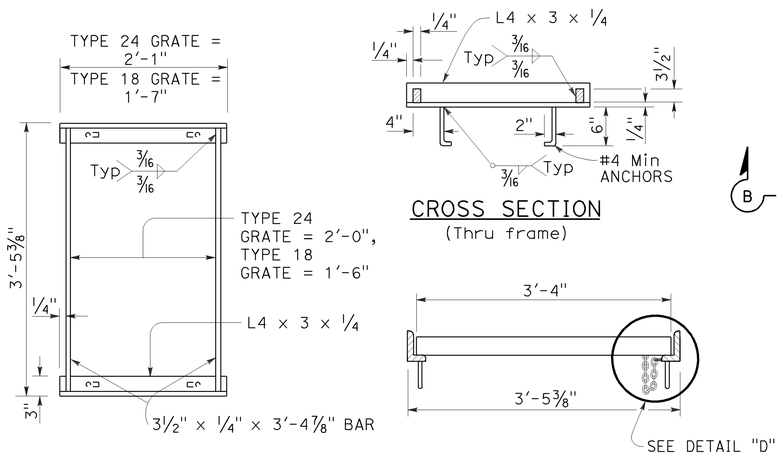

TYPICAL FRAME

CROSS SECTION
(Thru frame)

LONGITUDINAL SECTION
(Thru frame and grate)

RECTANGULAR FRAME DETAILS

(For all rectangular grates)

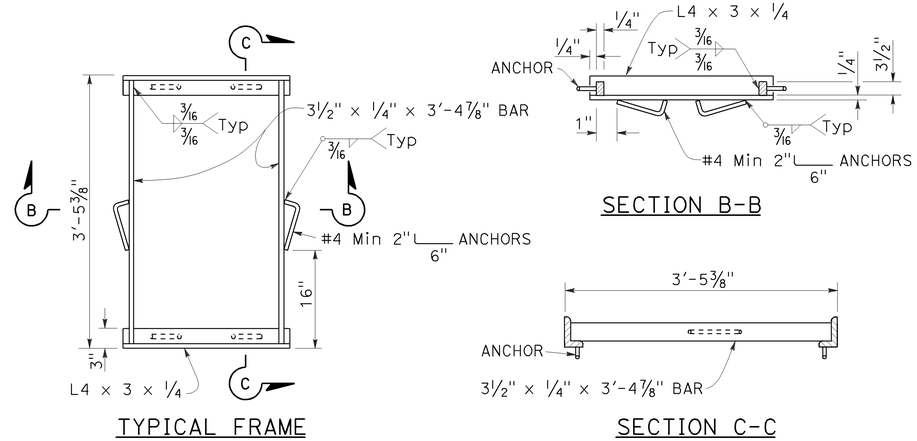

TYPICAL FRAME

SECTION B-B

SECTION C-C

ALTERNATIVE ANCHOR FOR RECTANGULAR FRAME

(For details not shown, See Rectangular Frame Details)

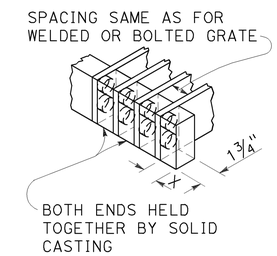

ALTERNATIVE CAST DUCTILE IRON OR CAST CARBON STEEL END BLOCK GRATE

NOTES:

1. Grate type numbers refer to approximate width of grate in inches and number of bars, respectively.
2. Contractor has the option of using cast ductile iron, cast carbon steel, welded, bolted, or cast end block grate.
3. Rounded top of bars optional on all grates.
4. Pipe inlets with a grate shall be placed so that bars parallel direction of principle surface flow.
5. Complete joint penetration butt welds may be substituted for the fillet welds on all anchors.
6. Standard square, hexagon, round or equivalent headed anchors may be substituted for the right angle hooks on the anchors shown on this plan.
7. Grate and frame weights are based on welded grates (weights of face angles, steps, protection bars, etc. are not included).
8. Connect chain to grate and frame only at locations shown on the plans. When chain is required, do not use cast ductile iron grates.

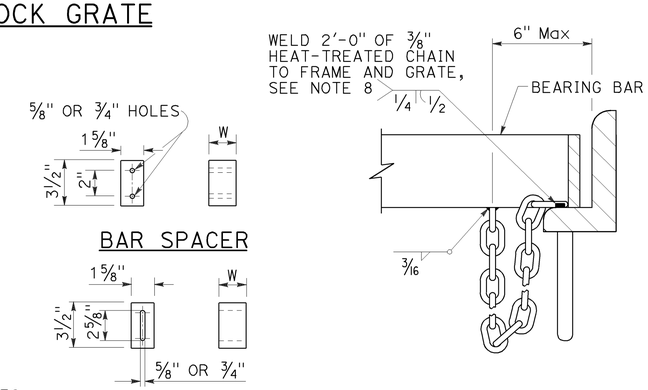

GRATE BAR SPACING TABLE

TYPE	No. OF BARS	CLEAR BAR SPACING	X
18-9	9	1⅜"	1 1/16"
24-9	9	2"	1 9/16"
24-12	12	1⅜"	1¼"

INLET TYPE	COVER TYPE	WEIGHT LB
OS	PLATE	174
OL-7	PLATE	170
OL-10	PLATE	170
OL-14	PLATE	170
OL-21	PLATE	170
OCP	PLATE	112
OCPI	PLATE	112
OCPI	REDWOOD	42
OMP	PLATE	177
OMPI	PLATE	177

INLET TYPE	GRATE TYPE	No. OF GRATES	WEIGHT LB
GDO	24-12	2	634
GOL-7	24-12	1	326
GOL-10	24-12	1	326
GO,G1,G2,G3,G4 (TYPE 24)	24-9	1	263
	24-12	1	326
G4 (TYPE 18),G5,G6	18-9	1	249
GT1	18-9	2	498
GT2	18-9	2	498
GT3	24-12	2	652
GT4	24-12	2	652
TRASH RACK			22
GRATE CHAIN			3

BASIS FOR Misc IRON & STEEL FINAL PAY WEIGHTS FOR DRAINAGE INLETS

(See Note 7)

STATE OF CALIFORNIA
DEPARTMENT OF TRANSPORTATION

GRATE DETAILS No. 1

NO SCALE

RSP D77A DATED APRIL 19, 2013 SUPERSEDES RSP D77A DATED JULY 20, 2012 AND STANDARD PLAN D77A DATED MAY 20, 2011 - PAGE 164 OF THE STANDARD PLANS BOOK DATED 2010.

REVISED STANDARD PLAN RSP D77A

2010 REVISED STANDARD PLAN RSP D77A

4-4-13

Dist	COUNTY	ROUTE	POST MILES TOTAL PROJECT	SHEET No.	TOTAL SHEETS
04	SM	1,35,82,84, 109,280	Var	63	96

REGISTERED CIVIL ENGINEER

July 19, 2013
PLANS APPROVAL DATE

REGISTERED PROFESSIONAL ENGINEER
Gurinderpal Bhullar
No. C48815
Exp. 9-30-14
CIVIL
STATE OF CALIFORNIA

THE STATE OF CALIFORNIA OR ITS OFFICERS OR AGENTS SHALL NOT BE RESPONSIBLE FOR THE ACCURACY OR COMPLETENESS OF SCANNED COPIES OF THIS PLAN SHEET.

TO ACCOMPANY PLANS DATED 4-28-14

2010 REVISED STANDARD PLAN RSP T9

TABLE 1

TAPER LENGTH CRITERIA AND CHANNELIZING DEVICE SPACING

SPEED (S)	MINIMUM TAPER LENGTH * FOR WIDTH OF OFFSET 12 FEET (W)				MAXIMUM CHANNELIZING DEVICE SPACING		
					X	Y	Z **
	TANGENT 2L	MERGING L	SHIFTING L/2	SHOULDER L/3	TAPER	TANGENT	CONFLICT
mph	ft	ft	ft	ft	ft	ft	ft
20	160	80	40	27	20	40	10
25	250	125	63	42	25	50	12
30	360	180	90	60	30	60	15
35	490	245	123	82	35	70	17
40	640	320	160	107	40	80	20
45	1080	540	270	180	45	90	22
50	1200	600	300	200	50	100	25
55	1320	660	330	220	55	110	27
60	1440	720	360	240	60	120	30
65	1560	780	390	260	65	130	32
70	1680	840	420	280	70	140	35

* - For other offsets, use the following merging taper length formula for L:
For speed of 40 mph or less, $L = WS^2/60$
For speed of 45 mph or more, $L = WS$

Where: L = Taper length in feet
W = Width of offset in feet
S = Posted speed limit, off-peak 85th-percentile speed prior to work starting, or the anticipated operating speed in mph

** - Use for taper and tangent sections where there are no pavement markings or where there is a conflict between existing pavement markings and channelizers (CA).

TABLE 2

LONGITUDINAL BUFFER SPACE AND FLAGGER STATION SPACING

SPEED *	Min D **	DOWNGRADE Min D ***		
		-3%	-6%	-9%
mph	ft	ft	ft	ft
20	115	116	120	126
25	155	158	165	173
30	200	205	215	227
35	250	257	271	287
40	305	315	333	354
45	360	378	400	427
50	425	446	474	507
55	495	520	553	593
60	570	598	638	686
65	645	682	728	785
70	730	771	825	891

* - Speed is posted speed limit, off-peak 85th-percentile speed prior to work starting, or the anticipated operating speed in mph

** - Longitudinal buffer space or flagger station spacing

*** - Use on sustained downgrade steeper than -3 percent and longer than 1 mile.

TABLE 3

ADVANCE WARNING SIGN SPACING

ROAD TYPE	DISTANCE BETWEEN SIGNS *		
	A	B	C
	ft	ft	ft
URBAN - 25 mph OR LESS	100	100	100
URBAN - MORE THAN 25 mph TO 40 mph	250	250	250
URBAN - MORE THAN 40 mph	350	350	350
RURAL	500	500	500
EXPRESSWAY / FREEWAY	1000	1500	2640

* - The distances are approximate, are intended for guidance purposes only, and should be applied with engineering judgment. These distances should be adjusted by the Engineer for field conditions, if necessary, by increasing or decreasing the recommmended distances.

STATE OF CALIFORNIA
DEPARTMENT OF TRANSPORTATION

TRAFFIC CONTROL SYSTEM TABLES FOR LANE AND RAMP CLOSURES

NO SCALE

RSP T9 DATED JULY 19, 2013 SUPERSEDES RSP T9 DATED APRIL 19, 2013 THAT SUPPLEMENTS THE STANDARD PLANS BOOK DATED 2010.

REVISED STANDARD PLAN RSP T9

TO ACCOMPANY PLANS DATED 4-28-14

Dist	COUNTY	ROUTE	POST MILES TOTAL PROJECT	SHEET No.	TOTAL SHEETS
04	SM	1,35,82,84, 109,280	Var	64	96

REGISTERED CIVIL ENGINEER

April 19, 2013
PLANS APPROVAL DATE

REGISTERED PROFESSIONAL ENGINEER Gurinderpal Bhullar No. C48815 Exp. 9-30-14 CIVIL STATE OF CALIFORNIA

THE STATE OF CALIFORNIA OR ITS OFFICERS OR AGENTS SHALL NOT BE RESPONSIBLE FOR THE ACCURACY OR COMPLETENESS OF SCANNED COPIES OF THIS PLAN SHEET.

NOTES:

See Revised Standard Plan RSP T9 for tables.

Use cone spacing X for taper segment, Y for tangent segment or Z for conflict situations, as approriate, per Table 1, unless X, Y, or Z cone spacing is shown on this sheet.

Unless otherwise specified in the special provisions, all temporary warning signs shall have black legend on fluorescent orange background.

California codes are designated by (CA). Otherwise, Federal (MUTCD) codes are shown.

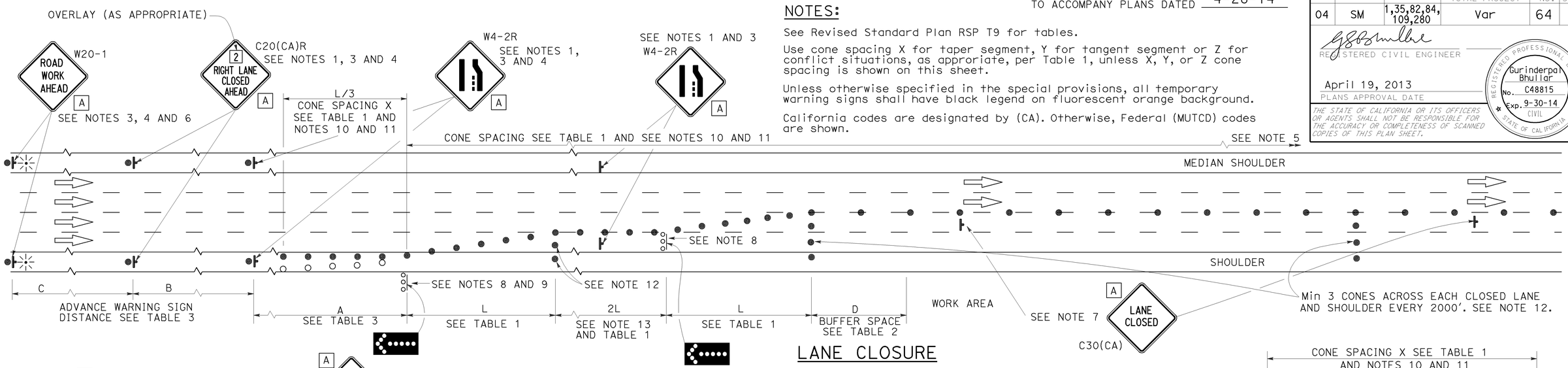

LANE CLOSURE

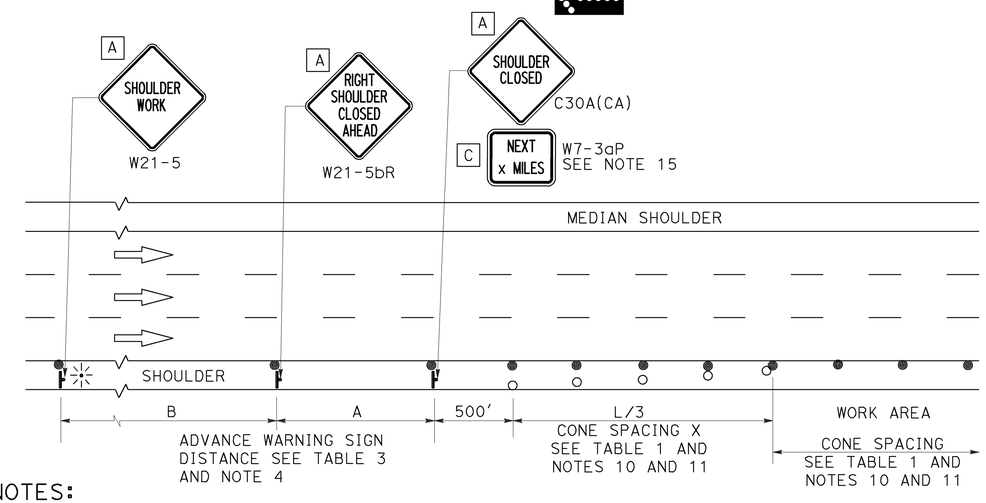

SHOULDER CLOSURE

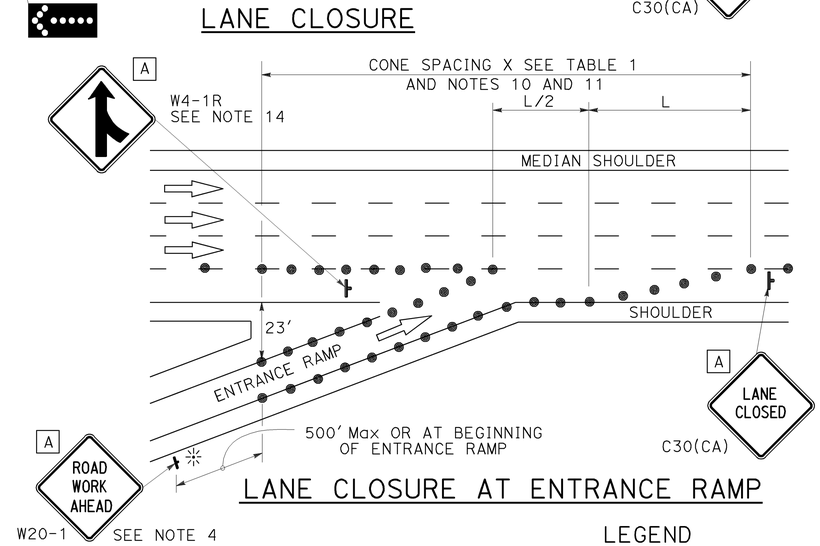

LANE CLOSURE AT ENTRANCE RAMP

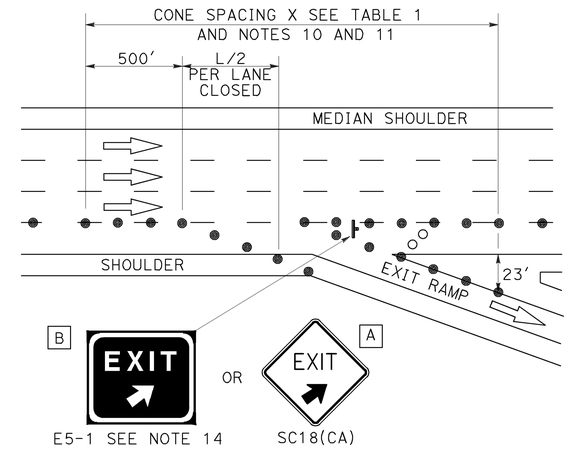

LANE CLOSURE AT EXIT RAMP

NOTES:

1. Median lane closures shall conform to the details as shown except that C20(CA)L and W4-2L signs shall be used.
2. At least one person shall be assigned to provide full time maintenance of traffic control devices for lane closures.
3. Duplicate sign installations are not required:
   a) On opposite shoulder if at least one-half of the available lanes remain open to traffic.
   b) In the median if the width of the median shoulder is less than 8' and the outside lanes are to be closed.
4. Each advance warning sign on each side of the roadway shall be equipped with at least two flags for daytime closure. Each flag shall be at least 16" x 16" in size and shall be orange or fluorescent red-orange in color. Flashing beacons shall be placed at the locations indicated for lane closure during hours of darkness.
5. A G20-2 "END ROAD WORK" sign, with minimum size of 48" x 24" as appropriate, shall be placed at the end of the lane closure unless the end of work area is obvious or ends within a larger project's limits.
6. If the W20-1 sign would follow within 2000' of a stationary W20-1 or G20-1 "ROAD WORK NEXT _____ MILES", use a C20(CA) sign for the first advance warning sign.
7. Place a C30(CA) sign every 2000' throughout length of lane closure.
8. One flashing arrow sign for each lane closed. The flashing arrow signs shall be Type I.
9. A minimum 1500' of sight distance shall be provided where possible for vehicles approaching the first flashing arrow sign. Lane closures shall not begin at top of crest vertical curve or on a horizontal curve.
10. All cones used for lane closures during the hours of darkness shall be fitted with retroreflective bands (or sleeves) as specified in the specifications.
11. Portable delineators, placed at one-half the spacing indicated for traffic cones may be used instead of cones for daytime closures only.
12. Unless otherwise specified in the special provisions, a minimum of 3 cones shall be placed transversely across each closed lane and shoulder at each location where a taper across a traffic lane ends and every 2000' as shown on the "Lane Closure" detail. Two Type II barricades may be used instead of the 3 cones. The transverse alignment of the cones or barricades on the closed shoulder may be shifted from the transverse alignment to provide access to the work.
13. Unless otherwise specified in the special provisions, the 2L tangent shown along lane lines shall be used between the L tapers required for each closed traffic lane.
14. Unless otherwise specified in the special provisions, the E5-1 or SC18(CA) and W4-1 signs shall be used as shown.
15. A W7-3aP "NEXT____ MILES" plaque must be used if theshoulder closure extends beyond the distance that can be perceived by road users.

LEGEND

- TRAFFIC CONE
- TRAFFIC CONE (OPTIONAL TAPER)
- TEMPORARY TRAFFIC CONTROL SIGN
- FLASHING ARROW SIGN (FAS)
- FAS SUPPORT OR TRAILER
- PORTABLE FLASHING BEACON

SIGN PANEL SIZE (Min)

A	48" x 48"
B	72" x 60"
C	36" x 30"

STATE OF CALIFORNIA
DEPARTMENT OF TRANSPORTATION

TRAFFIC CONTROL SYSTEM FOR LANE CLOSURE ON FREEWAYS AND EXPRESSWAYS

NO SCALE

RSP T10 DATED APRIL 19, 2013 SUPERSEDES STANDARD PLAN T10 DATED MAY 20, 2011 - PAGE 237 OF THE STANDARD PLANS BOOK DATED 2010.

REVISED STANDARD PLAN RSP T10

2010 REVISED STANDARD PLAN RSP T10

12-18-12

Dist	COUNTY	ROUTE	POST MILES TOTAL PROJECT	SHEET No.	TOTAL SHEETS
04	SM	1,35,82,84, 109,280	Var	65	96

REGISTERED CIVIL ENGINEER

April 19, 2013
PLANS APPROVAL DATE

REGISTERED PROFESSIONAL ENGINEER
Gurinderpal Bhullar
No. C48815
Exp. 9-30-14
CIVIL
STATE OF CALIFORNIA

THE STATE OF CALIFORNIA OR ITS OFFICERS OR AGENTS SHALL NOT BE RESPONSIBLE FOR THE ACCURACY OR COMPLETENESS OF SCANNED COPIES OF THIS PLAN SHEET.

TO ACCOMPANY PLANS DATED 4-28-14

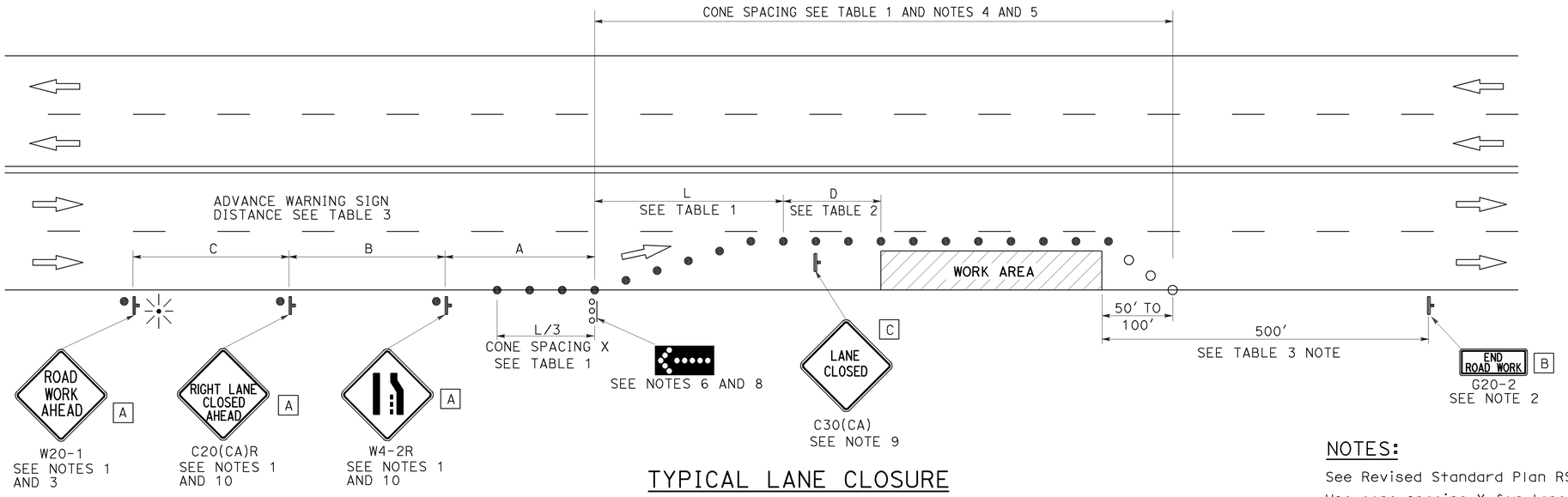

TYPICAL LANE CLOSURE

NOTES:

See Revised Standard Plan RSP T9 for tables.

Use cone spacing X for taper segment, Y for tangent segment or Z for conflict situations, as approriate, per Table 1, unless X, Y, or Z cone spacing is shown on this sheet.

Unless otherwise specified in the special provisions, all temporary warning signs shall have black legend on fluorescent orange background.

California codes are designated by (CA). Otherwise, Federal (MUTCD) codes are shown.

NOTES:

1. Each advance warning sign shall be equipped with at least two flags for daytime closure. Each flag shall be at least 16" x 16" in size and shall be orange or fluorescent red-orange in color. Flashing beacons shall be placed at the locations indicated for lane closure during hours of darkness.
2. A G20-2 "END ROAD WORK" sign, as appropriate, shall be placed at the end of the lane closure unless the end of work area is obvious, or ends within a larger project's limits.
3. If the W20-1 sign would follow within 2000' of a stationary W20-1 or G20-1 "ROAD WORK NEXT _____ MILES", use a C20(CA) sign for the first advance warning sign.
4. All cones used for lane closures during the hours of darkness shall be fitted with retroreflective bands (or sleeves) as specified in the specifications.
5. Portable delineators, placed at one-half the spacing indicated for traffic cones, may be used instead of cones for daytime closures only.
6. Flashing arrow sign shall be either Type I or Type II.
7. For approach speeds over 50 mph, use the "Traffic Control System for Lane Closure On Freeways And Expressways" plan for lane closure details and requirements.
8. A minimum 1500' of sight distance shall be provided where possible for vehicles approaching the first flashing arrow sign. Lane closures shall not begin at the top of crest vertical curve or on a horizontal curve.
9. Place a C30(CA) sign every 2000' throughout length of lane closure.
10. Median lane closures shall conform to the details as shown except that C20(CA)L and W4-2L signs shall be used.
11. At least one person shall be assigned to provide full time maintenance of traffic control devices for lane closure unless, otherwise directed by the Engineer.

LEGEND

- ● TRAFFIC CONE
- ○ TRAFFIC CONE (OPTIONAL TAPER)
- TEMPORARY TRAFFIC CONTROL SIGN
- FLASHING ARROW SIGN (FAS)
- FAS SUPPORT OR TRAILER
- PORTABLE FLASHING BEACON

SIGN PANEL SIZE (Min)

A	48" x 48"
B	36" x 18"
C	30" x 30"

STATE OF CALIFORNIA
DEPARTMENT OF TRANSPORTATION

TRAFFIC CONTROL SYSTEM FOR LANE CLOSURE ON MULTILANE CONVENTIONAL HIGHWAYS

NO SCALE

RSP T11 DATED APRIL 19, 2013 SUPERSEDES STANDARD PLAN T11 DATED MAY 20, 2011 - PAGE 239 OF THE STANDARD PLANS BOOK DATED 2010.

REVISED STANDARD PLAN RSP T11

2010 REVISED STANDARD PLAN RSP T11

4-2-13

Dist	COUNTY	ROUTE	POST MILES TOTAL PROJECT	SHEET No.	TOTAL SHEETS
04	SM	1,35,82,84, 109,280	Var	66	96

REGISTERED CIVIL ENGINEER

April 19, 2013
PLANS APPROVAL DATE

REGISTERED PROFESSIONAL ENGINEER Gurinderpal Bhullar No. C48815 Exp. 9-30-14 CIVIL STATE OF CALIFORNIA

THE STATE OF CALIFORNIA OR ITS OFFICERS OR AGENTS SHALL NOT BE RESPONSIBLE FOR THE ACCURACY OR COMPLETENESS OF SCANNED COPIES OF THIS PLAN SHEET.

TO ACCOMPANY PLANS DATED 4-28-14

2010 REVISED STANDARD PLAN RSP T13

NOTES:

See Revised Standard Plan RSP T9 for tables.

Use cone spacing X for taper segment, Y for tangent segment or Z for conflict situations, as approriate, per Table 1, unless X, Y, or Z cone spacing is shown on this sheet.

Unless otherwise specified in the special provisions, all temporary warning signs shall have black legend on fluorescent orange background.

California codes are designated by (CA). Otherwise, Federal (MUTCD) codes are shown.

TYPICAL LANE CLOSURE WITH REVERSIBLE CONTROL

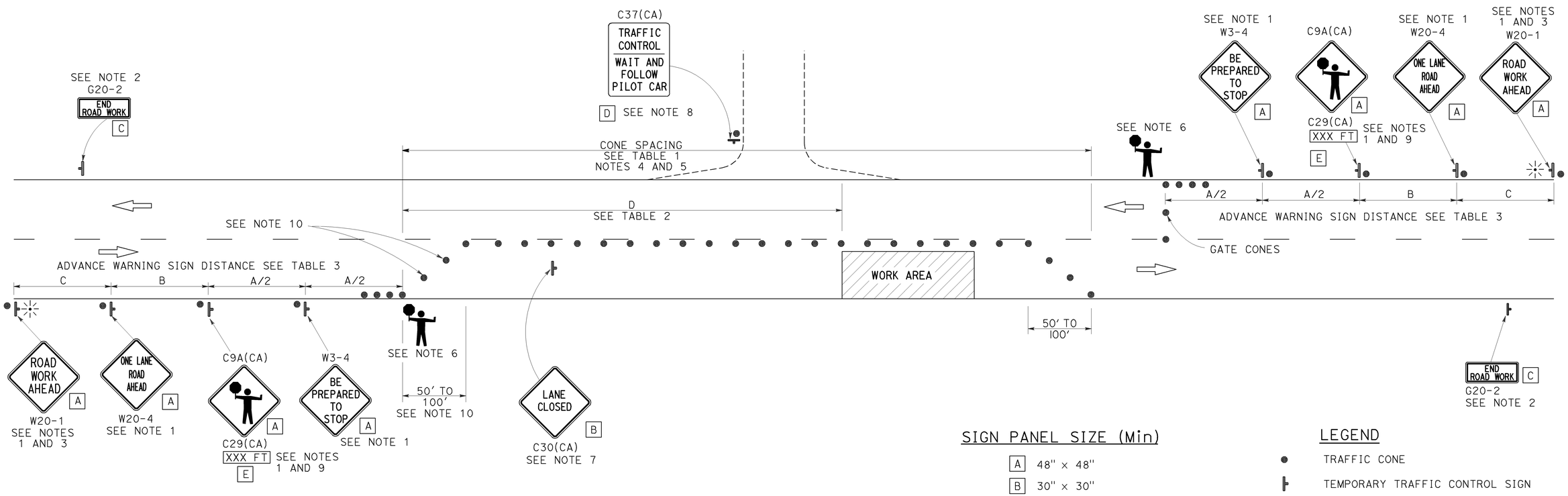

SIGN PANEL SIZE (Min)

A	48" × 48"
B	30" × 30"
C	36" × 18"
D	36" × 42"
E	20" × 7"

LEGEND

- TRAFFIC CONE
- TEMPORARY TRAFFIC CONTROL SIGN
- PORTABLE FLASHING BEACON
- FLAGGER

NOTES:

1. Each advance warning sign in each direction of travel shall be equipped with at least two flags for daytime closure. Each flag shall be at least 16" x 16" in size and shall be orange or fluorescent red-orange in color. Flashing beacons shall be placed at the locations indicated for lane closure during hours of darkness.
2. A G20-2 "END ROAD WORK" sign, as appropriate, shall be placed at the end of the lane control unless the end of work area is obvious, or ends within a larger project's limits.
3. If the W20-1 sign would follow within 2000' of a stationary W20-1 or G20-1 "ROAD WORK NEXT _____ MILES", use a W20-4 sign for the first advance warning sign.
4. All cones used for lane closures during the hours of darkness shall be fitted with retroreflective bands (or sleeves) as specified in the specifications.
5. Portable delineators, placed at one-half the spacing indicated for traffic cones, may be used instead of cones for daytime closures only.
6. Additional advance flaggers may be required. Flagger should stand in a conspicuous place, be visible to approaching traffic as well as approaching vehicles after the first vehicle has stopped. During the hours of darkness, the flagging-station and flagger shall be illuminated and clearly visible to approaching traffic. The illumination footprint of the lighting on the ground shall be at least 20' in diameter. Place a minimum of four cones at 50' intervals in advance of flagger station as shown.
7. Place C30(CA) "LANE CLOSED" sign at 500' to 1000' intervals throughout extended work areas. They are optional if the work area is visible from the flagger station.
8. When a pilot car is used, place a C37(CA) "TRAFFIC CONTROL-WAIT AND FOLLOW PILOT CAR" sign with black legend on white background at all intersections, driveways and alleys without a flagger within traffic control area. Signs shall be clean and visible at all times. Where traffic can not be effectively self-regulated, at least one flagger shall be used at each intersection within traffic control area.
9. An optional C29(CA) sign may be placed below the C9A(CA) sign.
10. Either traffic cones or barricades shall be placed on the taper. Barricades shall be Type I, II, or III.

STATE OF CALIFORNIA
DEPARTMENT OF TRANSPORTATION

TRAFFIC CONTROL SYSTEM FOR LANE CLOSURE ON TWO LANE CONVENTIONAL HIGHWAYS

NO SCALE

RSP T13 DATED APRIL 19, 2013 SUPERSEDES STANDARD PLAN T13 DATED MAY 20, 2011 - PAGE 241 OF THE STANDARD PLANS BOOK DATED 2010.

REVISED STANDARD PLAN RSP T13

Dist	COUNTY	ROUTE	POST MILES TOTAL PROJECT	SHEET No.	TOTAL SHEETS
04	SM	1,35,82,84, 109,280	Var	67	96

REGISTERED CIVIL ENGINEER

April 19, 2013
PLANS APPROVAL DATE

REGISTERED PROFESSIONAL ENGINEER Gurinderpal Bhullar No. C48815 Exp. 9-30-14 CIVIL STATE OF CALIFORNIA

THE STATE OF CALIFORNIA OR ITS OFFICERS OR AGENTS SHALL NOT BE RESPONSIBLE FOR THE ACCURACY OR COMPLETENESS OF SCANNED COPIES OF THIS PLAN SHEET.

TO ACCOMPANY PLANS DATED 4-28-14

TYPICAL RAMP CLOSURES

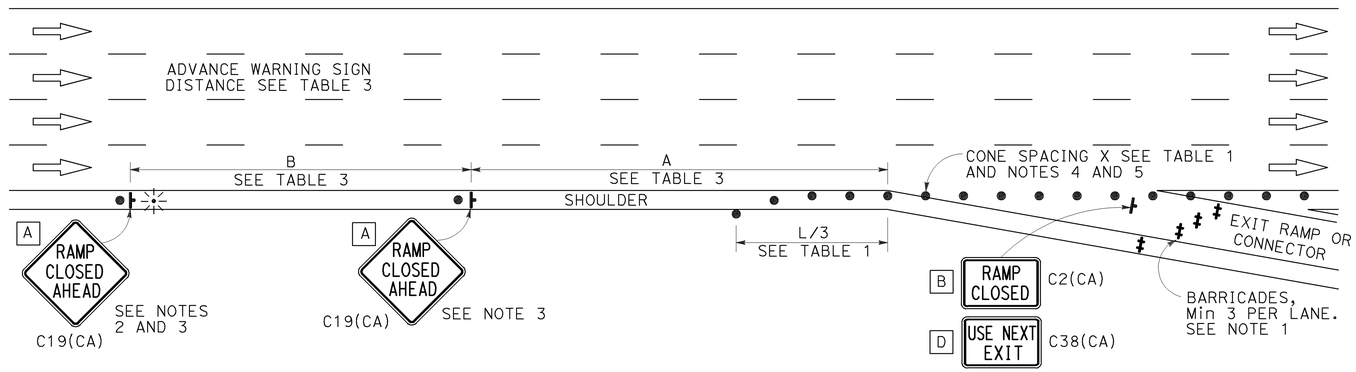

EXIT RAMP OR CONNECTOR

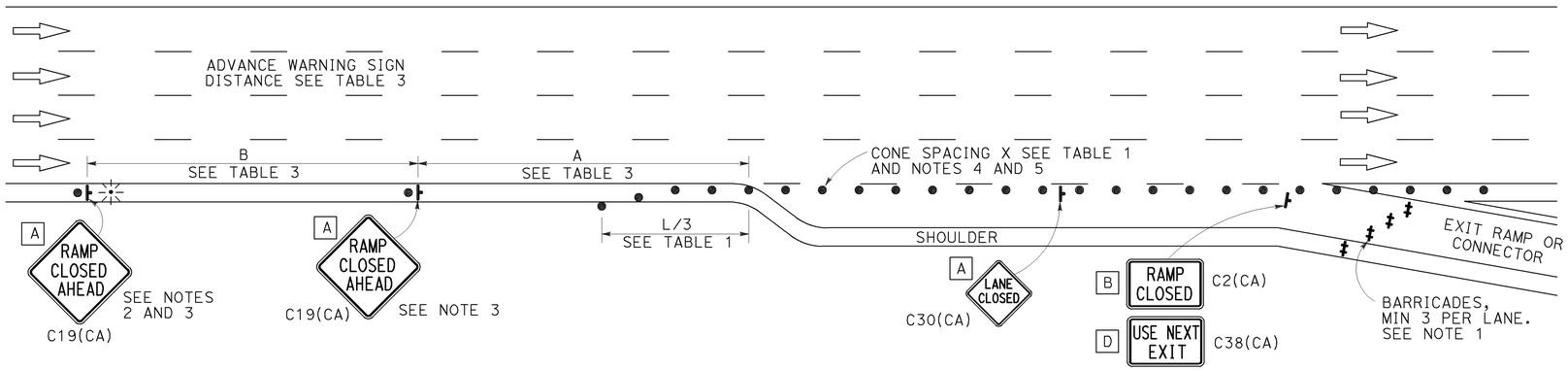

EXIT RAMP OR CONNECTOR WITH ADDITIONAL LANE

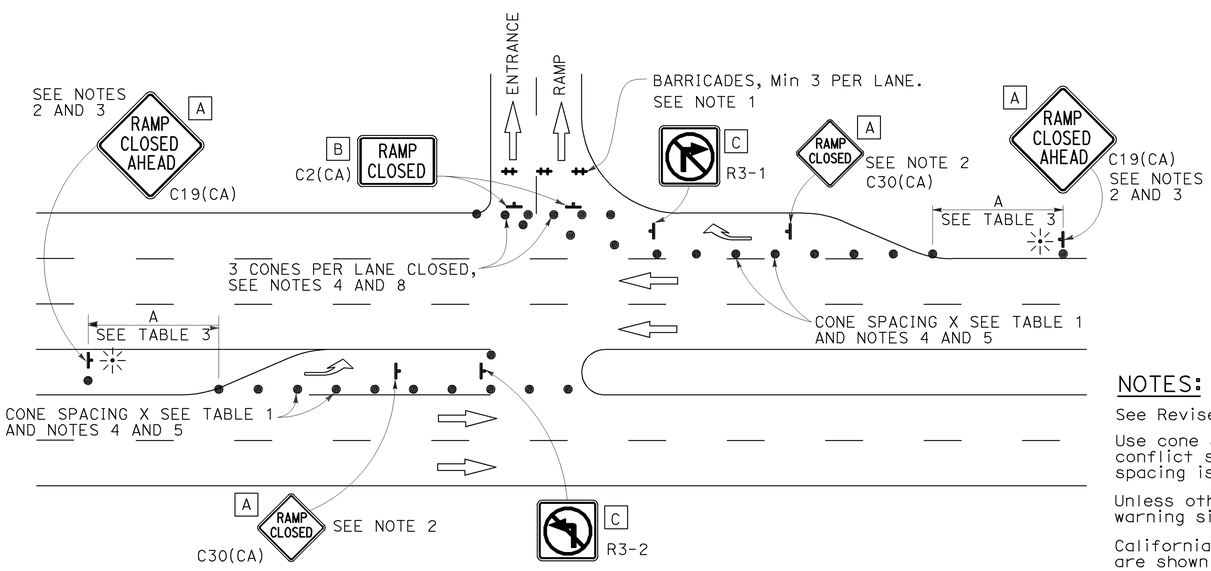

ENTRANCE RAMP WITH TURNING POCKETS

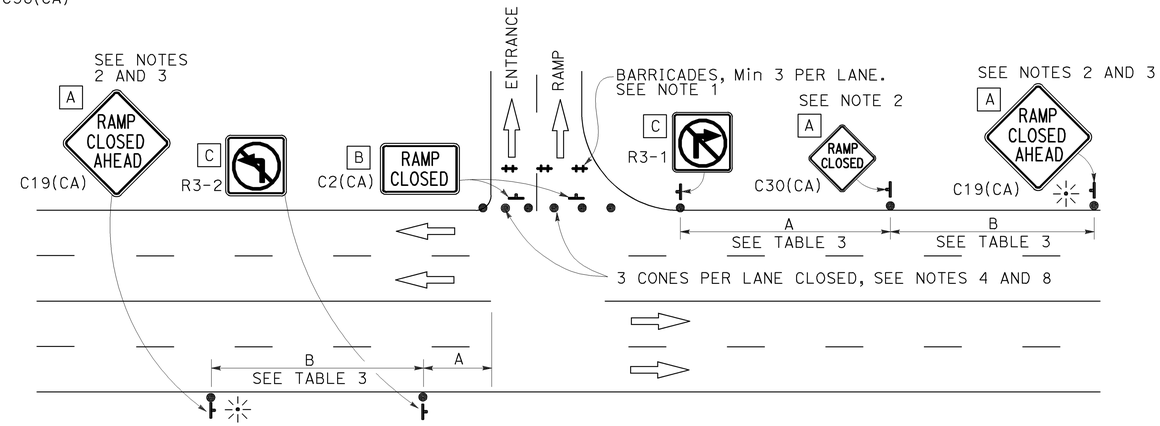

ENTRANCE RAMP WITHOUT TURNING POCKETS

SIGN PANEL SIZE (Min)

- A 48" × 48"
- B 48" × 30"
- C 36" × 36"
- D 48" × 36"

LEGEND

- TRAFFIC CONE
- TEMPORARY TRAFFIC CONTROL SIGN
- BARRICADES
- PORTABLE FLASHING BEACON

NOTES:

1. Barricades shall be Type I, II, or III for closures lasting one week or less and Type III for closures lasting longer than one week.
2. In addition to placing the C19(CA) "RAMP CLOSED AHEAD" and C30(CA) "RAMP CLOSED" signs, black on orange overlay plates with the word "CLOSED" may be mounted, as directed by the Engineer, on all guide signs that refer to the closed ramp. The letter size on the overlay shall be the same as the guide sign.
3. Each advance C19(CA) "RAMP CLOSED AHEAD" sign shall be equipped with at least two flags for daytime closure. Each flag shall be at least 16" × 16" in size and shall be orange or fluorescent red-orange in color. A flashing beacon shall be placed on top of the first C19(CA) sign during hours of darkness.
4. All cones used for ramp closures during the hours of darkness shall be fitted with retroreflective bands (or sleeves) as specified in the specifications.
5. Portable delineators, placed at one-half the spacing indicated for traffic cones, may be used instead of cones for daytime ramp closures only.
6. At least one person shall be assigned to provide full time maintenance of traffic control devices, unless otherwise directed by the Engineer.
7. The existing "EXIT" signs shall be covered during ramp closures.
8. A minimum of 3 cones shall be placed transversely across each closed lane and shoulder.

NOTES:

See Revised Standard Plan RSP T9 for tables.

Use cone spacing X for taper segment, Y for tangent segment or Z for conflict situations, as approriate, per Table 1, unless X, Y, or Z cone spacing is shown on this sheet.

Unless otherwise specified in the special provisions, all temporary warning signs shall have black legend on fluorescent orange background.

California codes are designated by (CA). Otherwise, Federal (MUTCD) codes are shown.

STATE OF CALIFORNIA
DEPARTMENT OF TRANSPORTATION

TRAFFIC CONTROL SYSTEM FOR RAMP CLOSURE

NO SCALE

RSP T14 DATED APRIL 19, 2013 SUPERSEDES STANDARD PLAN T14 DATED MAY 20, 2011 - PAGE 242 OF THE STANDARD PLANS BOOK DATED 2010.

REVISED STANDARD PLAN RSP T14

2010 REVISED STANDARD PLAN RSP T14

12-18-12

Dist	COUNTY	ROUTE	POST MILES TOTAL PROJECT	SHEET No.	TOTAL SHEETS
04	SM	1,35,82,84, 109,280	Var	68	96

Theresa Gabriel
REGISTERED ELECTRICAL ENGINEER

July 19, 2013
PLANS APPROVAL DATE

REGISTERED PROFESSIONAL ENGINEER Theresa Aziz Gabriel No. E15129 Exp. 6-30-14 ELECTRICAL STATE OF CALIFORNIA

THE STATE OF CALIFORNIA OR ITS OFFICERS OR AGENTS SHALL NOT BE RESPONSIBLE FOR THE ACCURACY OR COMPLETENESS OF SCANNED COPIES OF THIS PLAN SHEET.

TO ACCOMPANY PLANS DATED 4-28-14

LEGEND:

AB	ABANDON. IF APPLIED TO CONDUIT, REMOVE CONDUCTORS
BC	INSTALL PULL BOX IN EXISTING CONDUIT RUN
BP	PEDESTRIAN BARRICADE, TYPE AS INDICATED ON PLAN
CB	INSTALL CONDUIT INTO EXISTING PULL BOX
CC	CONNECT NEW AND EXISTING CONDUIT. REMOVE EXISTING CONDUCTORS AND INSTALL CONDUCTORS AS INDICATED
CF	CONDUIT TO REMAIN FOR FUTURE USE. REMOVE CONDUCTORS. INSTALL PULL TAPE
DH	DETECTOR HANDHOLE
FA	FOUNDATION TO BE ABANDONED
IS	INSTALL SIGN ON SIGNAL MAST ARM
NS	NO SLIP BASE ON STANDARD
PEC	PHOTOELECTRIC CONTROL
PEU	PHOTOELECTRIC UNIT
RC	EQUIPMENT OR MATERIAL TO BE REMOVED AND BECOME THE PROPERTY OF THE CONTRACTOR
RE	REMOVE ELECTROLIER, FUSES AND BALLAST. TAPE ENDS OF CONDUCTORS
RL	RELOCATE EQUIPMENT
RR	REMOVE AND REUSE EQUIPMENT
RS	REMOVE AND SALVAGE EQUIPMENT
SC	SPLICE NEW TO EXISTING CONDUCTORS
SD	SERVICE DISCONNECT
TSP	TELEPHONE SERVICE POINT

ABBREVIATIONS

APS	ACCESSIBLE PEDESTRIAN SIGNAL
BBS	BATTERY BACKUP SYSTEM
BC	BOLT CIRCLE
BPB	BICYCLE PUSH BUTTON
C	CONDUIT
CB	CIRCUIT BREAKER
CCTV	CLOSED CIRCUIT TELEVISION
Ckt	CIRCUIT
CMS	CHANGEABLE MESSAGE SIGN
Ctid	CALTRANS IDENTIFICATION
Comm	COMMUNICATION
DLC	LOOP DETECTOR LEAD-IN CABLE
EMS	EXTINGUISHABLE MESSAGE SIGN
EVUC	EMERGENCY VEHICLE UNIT CABLE
EVUD	EMERGENCY VEHICLE UNIT DETECTOR
FB	FLASHING BEACON
FBCA	FLASHING BEACON CONTROL ASSEMBLY
FBS	FLASHING BEACON WITH SLIP BASE
FO	FIBER OPTIC
G	EQUIPMENT GROUNDING CONDUCTOR
GB	GROUND BUS
GFCI	GROUND FAULT CIRCUIT INTERRUPTER
HAR	HIGHWAY ADVISORY RADIO
Hex	HEXAGONAL
HPS	HIGH PRESSURE SODIUM
IISNS	INTERNALLY ILLUMINATED STREET NAME SIGN
ISL	INDUCTION SIGN LIGHTING
LED	LIGHT EMITTING DIODE
LMA	LUMINAIRE MAST ARM
LPS	LOW PRESSURE SODIUM
Ltg	LIGHTING
Lum	LUMINAIRE
M	METERED
MAT	MAST ARM MOUNTING TOP ATTACHMENT
MAS	MAST ARM MOUNTING SIDE ATTACHMENT
M/M	MULTIPLE TO MULTIPLE TRANSFORMER
Mtg	MOUNTING
MV	MERCURY VAPOR LIGHTING FIXTURE
MVDS	MICROWAVE VEHICLE DETECTION SYSTEM
N	NEUTRAL (GROUNDED CONDUCTOR)
NB	NEUTRAL BUS
NC	NORMALLY CLOSE
NO	NORMALLY OPEN
P	CIRCUIT BREAKER'S POLE
PB	PULL BOX
PBA	PUSH BUTTON ASSEMBLY
PEC	PHOTOELECTRIC CONTROL
Ped	PEDESTRIAN
PEU	PHOTOELECTRIC UNIT
PT	CONDUIT WITH PULL TAPE
RE	RELOCATED EQUIPMENT
RM	RAMP METERING
RWIS	ROADSIDE WEATHER INFORMATION SYSTEM
SB	SLIP BASE
SIC	SIGNAL INTERCONNECT CABLE
Sig	SIGNAL
SMA	SIGNAL MAST ARM
SNS	STREET NAME SIGN
SP	SERVICE POINT
TDC	TELEPHONE DEMARCATION CABINET
TMS	TRAFFIC MONITORING STATION
TOS	TRAFFIC OPERATIONS SYSTEM
Veh	VEHICLE
VIVDS	VIDEO IMAGE VEHICLE DETECTION SYSTEM
WIM	WEIGH-IN-MOTION
Xfmr	TRANSFORMER

SOFFIT AND WALL MOUNTED LUMINAIRES

- PENDANT, 70 W HPS UNLESS OTHERWISE SPECIFIED
- FLUSH, 70 W HPS UNLESS OTHERWISE SPECIFIED
- WALL SURFACE, 70 W HPS UNLESS OTHERWISE SPECIFIED
- EXISTING SOFFIT OR WALL LUMINAIRE TO REMAIN UNMODIFIED
- EXISTING SOFFIT OR WALL LUMINAIRE TO BE MODIFIED AS SPECIFIED

NOTE:
Arrow indicates "street side" of luminaire.

COMMONLY USED SYMBOLS FOR UNITED STATES CUSTOMARY UNITS OF MEASUREMENT:

SYMBOL USED	DEFINITIONS
Ω	OHMS
min	MINUTE
s	SECOND
bps	BITS PER SECOND
Bps	BYTES PER SECOND
A	AMPERE
V	VOLT
V(dc)	VOLT (DIRECT CURRENT)
V(ac)	VOLT (ALTERNATING CURRENT)
FC	FOOT - CANDLE
W	WATTS
VA	VOLT-AMPERE
M	MEGA
k	KILO
m	MILLI
μ	MICRO
P	PICO
Hz	HERTZ

MISCELLANEOUS ELECTROLIERS

NEW	EXISTING	
		LUMINAIRE ON WOOD POLE
		NON-STANDARD ELECTROLIER (SEE PROJECT NOTES OR PROJECT PLANS)
		CITY ELECTROLIER
		ELECTROLIER FOUNDATION (FUTURE INSTALLATION)

NOTES:

1. HPS luminaires shall be 310 W HPS when installed on Type 21, 21D, 30, 31 and 32 Standards, unless otherwise specified. HPS luminaires shall be 200 W when installed on other type standards or poles, unless otherwise specified.
2. LED luminaires shall be 235 W when installed on Type 21, 21D, 30, 31 and 32 Standards, unless otherwise specified. LED luminaires shall be 165 W when installed on other type standards or poles, unless otherwise specified.
3. Luminaires shall be the cutoff type, ANSI Type III medium cutoff lighting distribution, unless otherwise specified.

STANDARD ELECTROLIER

NEW	EXISTING	STANDARD TYPE
		15
		15D
		15 STRUCTURE
		15D STRUCTURE
		21
		21D
		21 STRUCTURE
		21D STRUCTURE
		30
		31
		32

STATE OF CALIFORNIA
DEPARTMENT OF TRANSPORTATION

ELECTRICAL SYSTEMS (LEGEND AND ABBREVIATIONS)

NO SCALE

RSP ES-1A DATED JULY 19, 2013 SUPERSEDES STANDARD PLAN ES-1A DATED MAY 20, 2011 - PAGE 425 OF THE STANDARD PLANS BOOK DATED 2010.

REVISED STANDARD PLAN RSP ES-1A

2010 REVISED STANDARD PLAN RSP ES-1A

Dist	COUNTY	ROUTE	POST MILES TOTAL PROJECT	SHEET No.	TOTAL SHEETS
04	SM	1,35,82,84, 109,280	Var	69	96

Theresa Gabriel
REGISTERED ELECTRICAL ENGINEER

July 19, 2013
PLANS APPROVAL DATE

REGISTERED PROFESSIONAL ENGINEER
Theresa Aziz Gabriel
No. E15129
Exp. 6-30-14
ELECTRICAL
STATE OF CALIFORNIA

THE STATE OF CALIFORNIA OR ITS OFFICERS OR AGENTS SHALL NOT BE RESPONSIBLE FOR THE ACCURACY OR COMPLETENESS OF SCANNED COPIES OF THIS PLAN SHEET.

TO ACCOMPANY PLANS DATED 4-28-14

CONDUIT

NEW	EXISTING	
		LIGHTING CONDUIT, UNLESS OTHERWISE INDICATED OR NOTED
		TRAFFIC SIGNAL CONDUIT
C	c	COMMUNICATION CONDUIT
T	t	TELEPHONE CONDUIT
F	f	FIRE ALARM CONDUIT
FO	fo	FIBER OPTIC CONDUIT
		CONDUIT TERMINATION
R	r	CONDUIT RISER ATTACHED TO THE STRUCTURE OR SERVICE POLE

SERVICE EQUIPMENT

NEW	EXISTING	
OH	oh	OVERHEAD LINES
U	U	WOOD POLE, "U" INDICATES UTILITY OWNED
		POLE GUY WITH ANCHOR
		UTILITY TRANSFORMER - GROUND MOUNTED
III	III	SERVICE EQUIPMENT ENCLOSURE TYPE. DOOR INDICATES FRONT OF ENCLOSURE
T	t	TELEPHONE DEMARCATION CABINET

POLE-MOUNTED SERVICE DESIGNATION

TYPE H SERVICE, 28'-10" — TYPE OF INSTALLATION AND POLE HEIGHT ABOVE GRADE

FLASHING BEACON

NEW	EXISTING	
R	R	FLASHING BEACON (ONE VEHICLE SIGNAL HEAD WITH BACKPLATE AND VISOR) "R" INDICATES RED INDICATION, "Y" INDICATES YELLOW INDICATION
Y Y	Y Y	FLASHING BEACON WITH TYPE 15-FBS STANDARD AND A SIGN.
R R	R R	FLASHING BEACON WITH TYPES 9, 9A OR 9B SIGN UNLESS OTHERWISE SPECIFIED OR INDICATED

SIGNAL EQUIPMENT

NEW	EXISTING	
C	C	PEDESTRIAN SIGNAL HEAD "C" INDICATES COUNTDOWN PEDESTRIAN HEAD
		PUSH BUTTON ASSEMBLY POST
		PEDESTRIAN BARRICADE
		VEHICLE SIGNAL HEAD (WITH BACKPLATE AND 3-SECTIONS: RED, YELLOW AND GREEN)
		VEHICLE SIGNAL HEAD WITH ANGLE VISOR
PV	PV	MODIFICATIONS OF BASIC SYMBOL: "L" INDICATES ALL NON-ARROW SECTIONS LOUVERED "LG" INDICATES LOUVERED GREEN SECTION ONLY "PV" INDICATES ALL 12" SECTIONS PROGRAMMED VISIBILITY "8" INDICATES ALL 8" SECTIONS (ONLY WHEN SPECIFIED)
		VEHICLE SIGNAL HEAD CONSISTING OF RED, YELLOW AND GREEN LEFT ARROW SECTIONS
		VEHICLE SIGNAL HEAD CONSISTING OF RED AND YELLOW SECTIONS WITH AN UP GREEN ARROW SECTION
		VEHICLE SIGNAL HEAD (5 SECTION) CONSISTING OF RED, YELLOW AND GREEN SECTIONS WITH YELLOW AND GREEN RIGHT ARROW SECTIONS
		TYPE 15TS STANDARD WITH VEHICLE SIGNAL HEAD AND LUMINAIRE
		TYPE 21TS STANDARD WITH VEHICLE SIGNAL HEAD AND LUMINAIRE
		STANDARD WITH LUMINAIRE AND SIGNAL MAST ARMS AND ATTACHED VEHICLE SIGNAL HEADS
		TYPE 1 STANDARD WITH ATTACHED VEHICLE SIGNAL HEADS
		STANDARD WITH A SIGNAL MAST ARM, ATTACHED VEHICLE SIGNAL HEADS AND INTERNALLY ILLUMINATED STREET NAME SIGN
		CONTROLLER ASSEMBLY. DOOR INDICATES FRONT OF CABINET

SIGNAL EQUIPMENT Cont

NEW	EXISTING	
		GUARD POST
		TYPE 1 STANDARD WITH RAMP METERING SIGN
		OPTICAL DETECTOR FOR THE EMERGENCY VEHICLE DETECTION SYSTEM

NOTES:

1. All signal sections shall be 12" unless shown otherwise.
2. Signal heads shall be provided with backplates unless shown otherwise.

ILLUMINATED OVERHEAD SIGN

NEW	EXISTING	
		SINGLE POST, SINGLE ILLUMINATED SIGN, BALANCED BUTTERFLY
		SINGLE POST, DOUBLE ILLUMINATED SIGN, BALANCED BUTTERFLY
		SINGLE POST, SINGLE ILLUMINATED SIGN, FULL CANTILEVER
		DOUBLE POST, SINGLE ILLUMINATED SIGN
		SINGLE ILLUMINATED SIGN MOUNTED ON STRUCTURE
		DOUBLE POST, SINGLE ILLUMINATED SIGN WITH ELECTROLIER

STATE OF CALIFORNIA
DEPARTMENT OF TRANSPORTATION

ELECTRICAL SYSTEMS (LEGEND AND ABBREVIATIONS)

NO SCALE

RSP ES-1B DATED JULY 19, 2013 SUPERSEDES STANDARD PLAN ES-1B DATED MAY 20, 2011 - PAGE 426 OF THE STANDARD PLANS BOOK DATED 2010.

REVISED STANDARD PLAN RSP ES-1B

2010 REVISED STANDARD PLAN RSP ES-1B

7-15-13

Dist	COUNTY	ROUTE	POST MILES TOTAL PROJECT	SHEET No.	TOTAL SHEETS
04	SM	1,35,82,84, 109,280	Var	70	96

Theresa Gabriel
REGISTERED ELECTRICAL ENGINEER

July 19, 2013
PLANS APPROVAL DATE

REGISTERED PROFESSIONAL ENGINEER
Theresa Aziz Gabriel
No. E15129
Exp. 6-30-14
ELECTRICAL
STATE OF CALIFORNIA

THE STATE OF CALIFORNIA OR ITS OFFICERS OR AGENTS SHALL NOT BE RESPONSIBLE FOR THE ACCURACY OR COMPLETENESS OF SCANNED COPIES OF THIS PLAN SHEET.

TO ACCOMPANY PLANS DATED 4-28-14

EQUIPMENT IDENTIFICATION

ILLUMINATED SIGN IDENTIFICATION NUMBER:

SIGN No. 12345
10 ISL SCI 1.0

- SIGN NUMBER - PLACE ON POST OR STRUCTURE
- TRANSFORMER RATING (kVA)
- LIGHTING CONTROL TYPE
- NUMBER AND TYPE OF FIXTURES

DO NOT PLACE ON STANDARD OR STRUCTURE

ELECTROLIER OR EQUIPMENT IDENTIFICATION NUMBER:

12345 - 15'-0"

- MAST ARM LENGTH, IF SHOWN. DO NOT PLACE ON STANDARD OR STRUCTURE
- EQUIPMENT NUMBER - PLACE ON STANDARD OR STRUCTURE. EXISTING EQUIPMENT NUMBERS ARE SHOWN IN PARENTHESIS

CONDUIT AND CONDUCTOR IDENTIFICATION:

1½"C, 2#10, 15#14, 2 DLC, 12P#18 (PAIR)

- NUMBER AND SIZE OF CONDUCTORS AND CABLES
- SIZE OF CONDUIT IN INCHES

ø1, ø2, ø2P, etc.	TRAFFIC PHASE IDENTIFICATION FOR SIGNAL FACES, DETECTORS AND PHASE DIAGRAMS
1 2 3	LEGEND NUMBERS
A B C	EQUIPMENT, SIGNAL POLES, INSTALLATION OR ITEMS
1 2 3	CONDUIT RUN NUMBERS

SIGNAL AND LIGHTING STANDARD (TYPICAL DESIGNATION):

19A - 3 - 100

- WIND VELOCITY = 100 mph
- CASE 3 ARM LOADING
- STANDARD TYPE
- STANDARD PLAN SHEET NUMBER
- DETAIL, NUMBER, SECTION, TYPE OR ELEVATION

MISCELLANEOUS EQUIPMENT

NEW	EXISTING	
CMS	cms	CHANGEABLE MESSAGE SIGN
		CLOSED CIRCUIT TELEVISION CAMERA
		HIGHWAY ADVISORY RADIO POLE AND ANTENNA
EMS	ems	EXTINGUISHABLE MESSAGE SIGN
M V	m v	DETECTION DEVICE M = MICROWAVE SENSOR V = VIDEO IMAGE SENSOR

WIRING DIAGRAM LEGEND

----	EXTERNAL CONDUCTOR
———	CONDUCTOR OR BUS
	TIE POINT
	CONTACTOR COIL
	CONTACTOR, NO CONTACT
	TERMINAL BLOCKS
	CONTACTOR, NC CONTACT
	ENCLOSURE BOND
	GROUNDING ELECTRODE
	CIRCUIT BREAKER
	RECEPTACLE

PULL BOXES

NEW	EXISTING	
		PULL BOX, No. 5 UNLESS OTHERWISE INDICATED OR NOTED
3	9A(21)	PULL BOX, ADDITIONAL DESIGNATIONS OR DESCRIPTIONS

3 No. 3½ PULL BOX
5 No. 5 PULL BOX
6 No. 6 PULL BOX
7 No. 7 (CEILING PULL BOX)
8 No. 8 (PENDANT SOFFIT PULL BOX)
9 No. 9 PULL BOX
9A No. 9A PULL BOX

(C) COMMUNICATIONS PULL BOX
(E) PULL BOX WITH EXTENSION
(S) SPRINKLER CONTROL PULL BOX
(21) ANCHOR BOLTS AND CONDUIT FOR FUTURE INSTALLATION OF TYPE 21 STANDARD
(T) TRAFFIC PULL BOX

VEHICLE DETECTORS

5 J 9 U

- VEHICLE DETECTOR DESIGNATION
- U = UPPER
  L = LOWER
- SLOT NUMBER IN INPUT FILE
- INPUT FILE (I OR J)
- PHASE

NEW	EXISTING	
		TYPE A DETECTOR LOOP. OUTLINE OF SAWCUT SHOWN
		TYPE B DETECTOR LOOP. OUTLINE OF SAWCUT SHOWN
		TYPE C DETECTOR LOOP. OUTLINE OF SAWCUT SHOWN
		TYPE D DETECTOR LOOP. OUTLINE OF SAWCUT SHOWN
		TYPE E DETECTOR LOOP. OUTLINE OF SAWCUT SHOWN
		TYPE Q DETECTOR LOOP. OUTLINE OF SAWCUT SHOWN
		MAGNETIC DETECTOR
DH	dh	DETECTOR HANDHOLE
		MICROWAVE OR VIDEO DETECTION ZONE

STATE OF CALIFORNIA
DEPARTMENT OF TRANSPORTATION

ELECTRICAL SYSTEMS (LEGEND AND ABBREVIATIONS)

NO SCALE

RSP ES-1C DATED JULY 19, 2013 SUPERSEDES STANDARD PLAN ES-1C DATED MAY 20, 2011 - PAGE 427 OF THE STANDARD PLANS BOOK DATED 2010.

REVISED STANDARD PLAN RSP ES-1C

2010 REVISED STANDARD PLAN RSP ES-1C

7-11-13

Dist	COUNTY	ROUTE	POST MILES TOTAL PROJECT	SHEET No.	TOTAL SHEETS
04	SM	1,35,82,84, 109,280	Var	71	96

Theresa Gabriel
REGISTERED ELECTRICAL ENGINEER

July 19, 2013
PLANS APPROVAL DATE

REGISTERED PROFESSIONAL ENGINEER
Theresa Aziz Gabriel
No. E15129
Exp. 6-30-14
ELECTRICAL
STATE OF CALIFORNIA

THE STATE OF CALIFORNIA OR ITS OFFICERS OR AGENTS SHALL NOT BE RESPONSIBLE FOR THE ACCURACY OR COMPLETENESS OF SCANNED COPIES OF THIS PLAN SHEET.

TO ACCOMPANY PLANS DATED 4-28-14

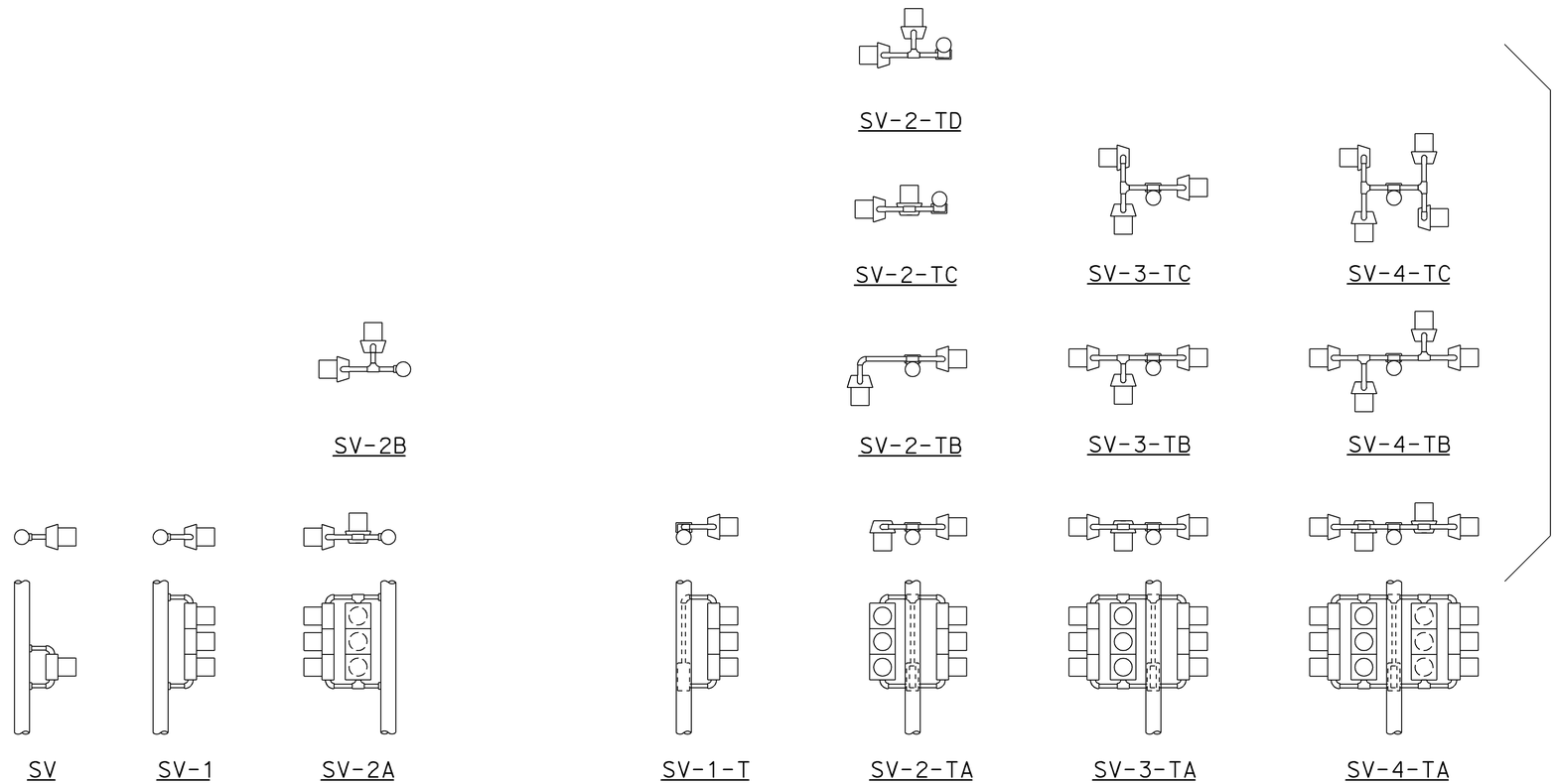

SIDE MOUNTINGS

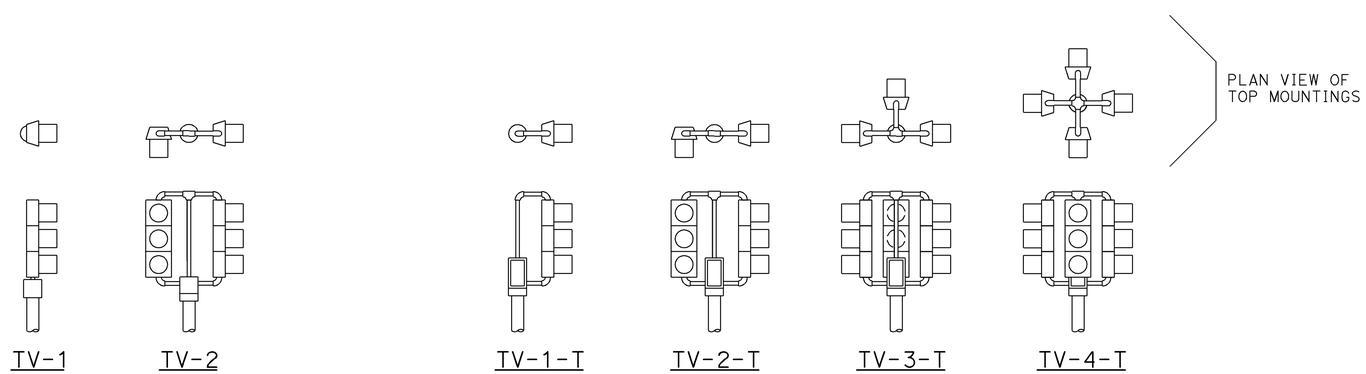

TOP MOUNTINGS

ABBREVIATIONS:

SV	SIDE MOUNTED VEHICLE SIGNALS
T	TERMINAL COMPARTMENT
TV	TOP MOUNTED VEHICLE SIGNALS
1, 2, 3, 4	NUMBER OF SIGNAL FACES (3 - SECTION, UNLESS OTHERWISE INDICATED)
A, B, C, D	CONFIGURATION OF SIGNALS

NOTES:

1. Mountings shall be oriented to provide maximum horizontal clearance to adjacent roadway.
2. Bracket arms shall be long enough to permit proper alignment of signals and backplate installation.
3. See Standard Plans ES-4D and ES-4E for attachment fitting details.

STATE OF CALIFORNIA
DEPARTMENT OF TRANSPORTATION

ELECTRICAL SYSTEMS (VEHICULAR SIGNAL HEADS AND MOUNTINGS)

NO SCALE

RSP ES-4A DATED JULY 19, 2013 SUPERSEDES STANDARD PLAN ES-4A DATED MAY 20, 2011 - PAGE 443 OF THE STANDARD PLANS BOOK DATED 2010.

REVISED STANDARD PLAN RSP ES-4A

2010 REVISED STANDARD PLAN RSP ES-4A

7-9-13

Dist	COUNTY	ROUTE	POST MILES TOTAL PROJECT	SHEET No.	TOTAL SHEETS
04	SM	1,35,82,84, 109,280	Var	72	96

Theresa Gabriel
REGISTERED ELECTRICAL ENGINEER

July 19, 2013
PLANS APPROVAL DATE

REGISTERED PROFESSIONAL ENGINEER
Theresa Aziz Gabriel
No. E15129
Exp. 6-30-14
ELECTRICAL
STATE OF CALIFORNIA

THE STATE OF CALIFORNIA OR ITS OFFICERS OR AGENTS SHALL NOT BE RESPONSIBLE FOR THE ACCURACY OR COMPLETENESS OF SCANNED COPIES OF THIS PLAN SHEET.

TO ACCOMPANY PLANS DATED 4-28-14

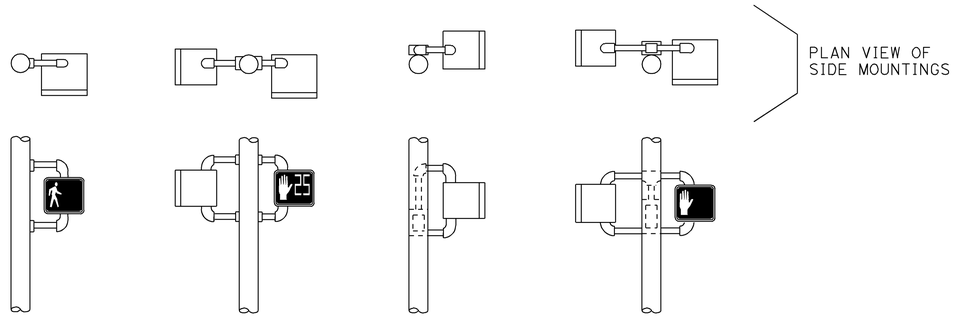

SP-1 SP-2 SP-1-T SP-2-T

SIDE MOUNTINGS

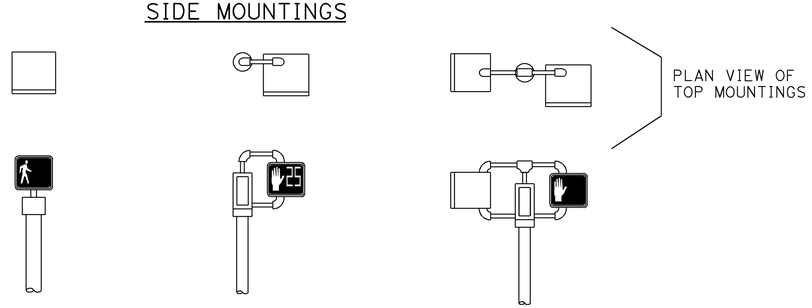

TP-1 TP-1-T TP-2-T

TOP MOUNTINGS

PEDESTRIAN SIGNALS AND MOUNTINGS

DETAIL A

PERSON WALKING INTERVAL FLASHING UPRAISED HAND INTERVAL STEADY UPRAISED HAND INTERVAL

PEDESTRIAN SIGNAL MODULE WITH COUNTDOWN

DETAIL B

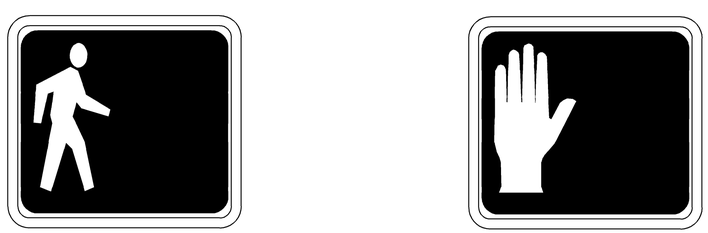

PERSON WALKING INTERVAL STEADY UPRAISED HAND INTERVAL

PEDESTRIAN SIGNAL MODULE WITHOUT COUNTDOWN

DETAIL C

NOTES:

1. Mounting shall be oriented to provide maximum horizontal clearance to adjacent roadway.
2. Bracket arms shall be long enough to permit proper alignment of signals.
3. See Standard Plan ES-4D for attachment fittings details.

ABBREVIATIONS:

1, 2	NUMBER OF SIGNAL FACES
SP	SIDE MOUNTED PEDESTRIAN SIGNAL
T	TERMINAL COMPARTMENT
TP	TOP MOUNTED PEDESTRIAN SIGNAL

RAMP METERING SIGN

DETAIL D

STATE OF CALIFORNIA
DEPARTMENT OF TRANSPORTATION

ELECTRICAL SYSTEMS (PEDESTRIAN SIGNAL AND RAMP METERING SIGN)

NO SCALE

RSP ES-4B DATED JULY 19, 2013 SUPERSEDES STANDARD PLAN ES-4B DATED MAY 20, 2011 - PAGE 444 OF THE STANDARD PLANS BOOK DATED 2010.

REVISED STANDARD PLAN RSP ES-4B

2010 REVISED STANDARD PLAN RSP ES-4B

7-9-13

Dist	COUNTY	ROUTE	POST MILES TOTAL PROJECT	SHEET No.	TOTAL SHEETS
04	SM	1,35,82,84, 109,280	Var	73	96

Theresa Gabriel
REGISTERED ELECTRICAL ENGINEER

July 19, 2013
PLANS APPROVAL DATE

REGISTERED PROFESSIONAL ENGINEER
Theresa Aziz Gabriel
No. E15129
Exp. 6-30-14
ELECTRICAL
STATE OF CALIFORNIA

THE STATE OF CALIFORNIA OR ITS OFFICERS OR AGENTS SHALL NOT BE RESPONSIBLE FOR THE ACCURACY OR COMPLETENESS OF SCANNED COPIES OF THIS PLAN SHEET.

TO ACCOMPANY PLANS DATED 4-28-14

VISORS

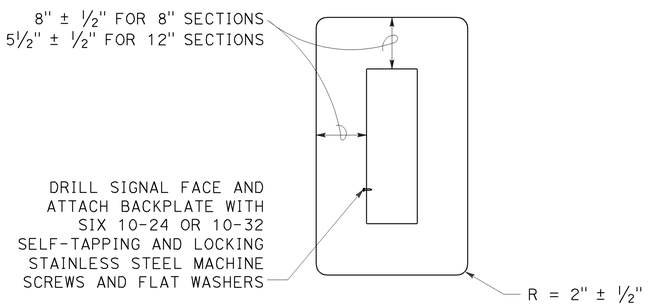

8" AND 12" SECTIONS

BACKPLATE

1/16" minimum thickness
3001-14 aluminum or plastic
when specified

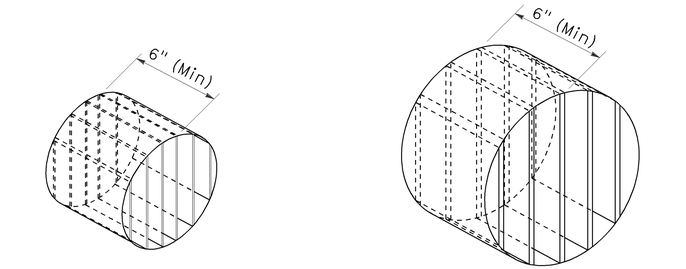

ISOMETRIC VIEW

ISOMETRIC VIEW

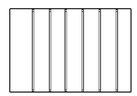

SECTION A-A

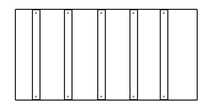

SECTION B-B

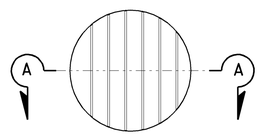

8" DIAMETER
FRONT VIEW

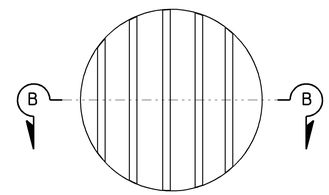

12" DIAMETER
FRONT VIEW

DIRECTIONAL LOUVER

Directional louvers shall be oriented as directed by the Engineer and secured in place with one plated brass machine screw and nut.

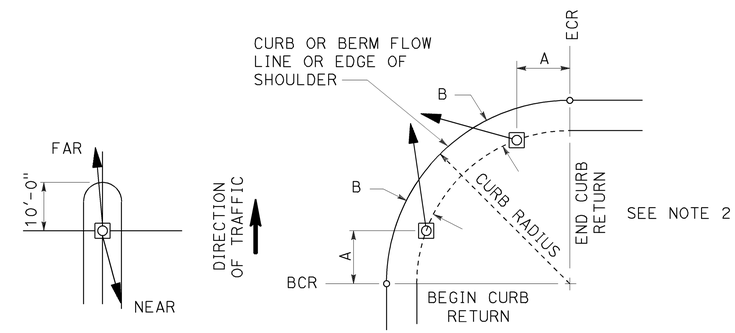

NOTES:

1. Typical signal pole placement unless dimensioned on plans.
2. For A and B dimensions, see Pole Schedule, or as directed by the Engineer.

SIGNAL STANDARD PLACEMENT DIMENSIONS AND EQUIPMENT LOCATIONS

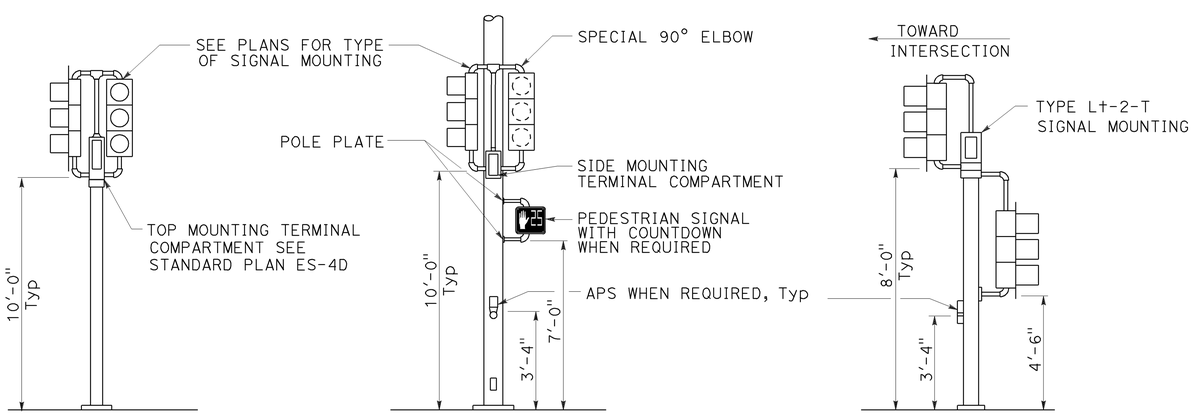

TOP MOUNTED SIGNALS (TV)

Type 1-A, 1-B, 1-C and 1-D standard as indicated on the plans

SIDE MOUNTED SIGNALS (SV AND SP)

Normally used on standards with luminaire or signal mast arm

LEFT TURN LANE SIGNAL

Type 1-A, 1-B, 1-C and 1-D standard as indicated on plans

TYPICAL SIGNAL INSTALLATIONS

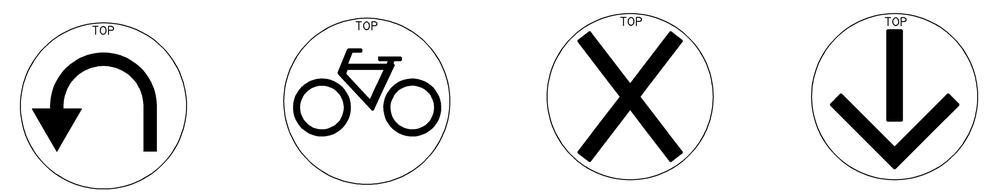

U-TURN

BICYCLE

LANE CONTROL

LANE CONTROL

SIGNAL FACES

STATE OF CALIFORNIA
DEPARTMENT OF TRANSPORTATION

ELECTRICAL SYSTEMS (VEHICULAR SIGNAL HEADS AND MOUNTINGS)

NO SCALE

RSP ES-4C DATED JULY 19, 2013 SUPERSEDES STANDARD PLAN ES-04C DATED MAY 20, 2011 - PAGE 445 OF THE STANDARD PLANS BOOK DATED 2010.

REVISED STANDARD PLAN RSP ES-4C

2010 REVISED STANDARD PLAN RSP ES-4C

7-10-13

Dist	COUNTY	ROUTE	POST MILES TOTAL PROJECT	SHEET No.	TOTAL SHEETS
04	SM	1,35,82,84, 109,280	Var	74	96

Theresa Gabriel
REGISTERED ELECTRICAL ENGINEER

July 19, 2013
PLANS APPROVAL DATE

REGISTERED PROFESSIONAL ENGINEER
Theresa Aziz Gabriel
No. E15129
Exp. 6-30-14
ELECTRICAL
STATE OF CALIFORNIA

THE STATE OF CALIFORNIA OR ITS OFFICERS OR AGENTS SHALL NOT BE RESPONSIBLE FOR THE ACCURACY OR COMPLETENESS OF SCANNED COPIES OF THIS PLAN SHEET.

TO ACCOMPANY PLANS DATED 4-28-14

2010 REVISED STANDARD PLAN RSP ES-4E

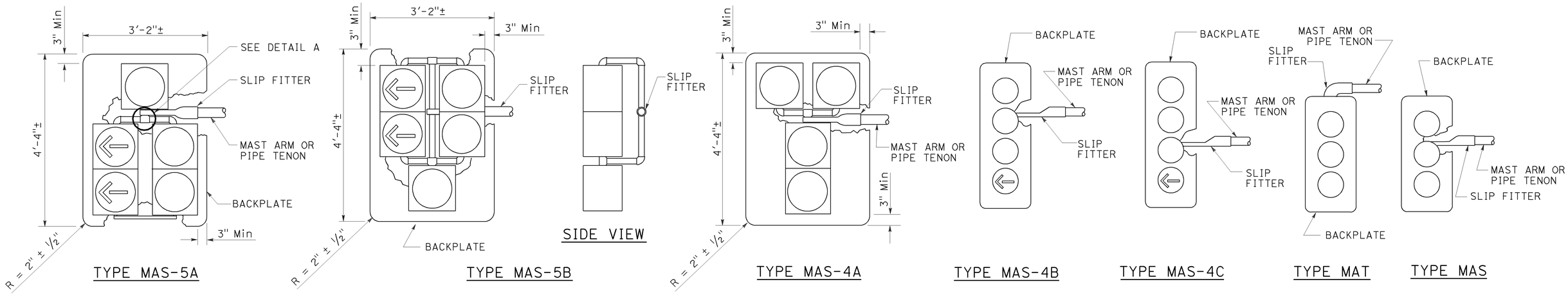

MAST ARM MOUNTINGS

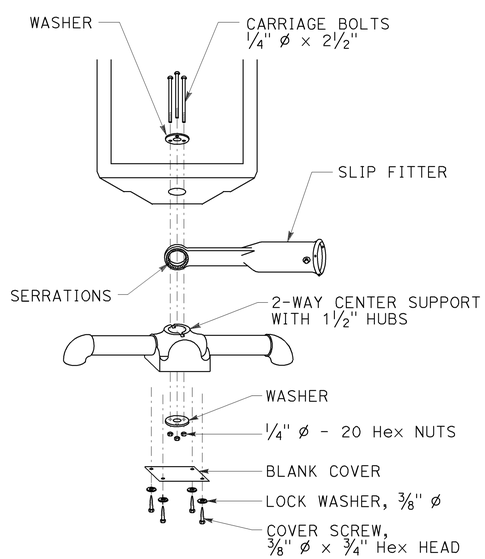

DETAIL A

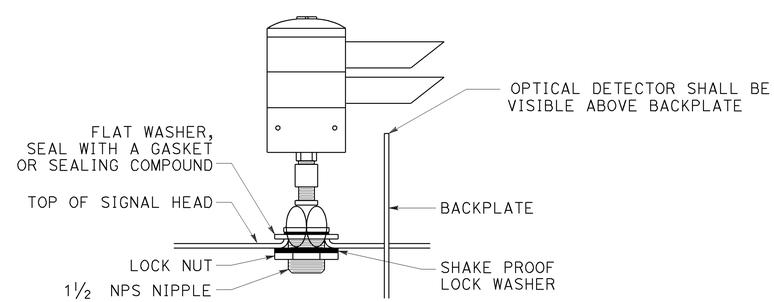

OPTICAL DETECTOR MOUNTING FOR EMERGENCY VEHICLE DETECTION SYSTEM

DETAIL B

STATE OF CALIFORNIA
DEPARTMENT OF TRANSPORTATION

ELECTRICAL SYSTEMS (VEHICULAR SIGNAL HEADS AND OPTICAL DETECTOR MOUNTING)

NO SCALE

RSP ES-4E DATED JULY 19, 2013 SUPERSEDES STANDARD PLAN ES-4E DATED MAY 20, 2011 - 447 OF THE STANDARD PLANS BOOK DATED 2010.

REVISED STANDARD PLAN RSP ES-4E

Dist	COUNTY	ROUTE	POST MILES TOTAL PROJECT	SHEET No.	TOTAL SHEETS
04	SM	1,35,82,84, 109,280	Var	75	96

Theresa Gabriel
REGISTERED ELECTRICAL ENGINEER

July 19, 2013
PLANS APPROVAL DATE

REGISTERED PROFESSIONAL ENGINEER
Theresa Aziz Gabriel
No. E15129
Exp. 6-30-14
ELECTRICAL
STATE OF CALIFORNIA

THE STATE OF CALIFORNIA OR ITS OFFICERS OR AGENTS SHALL NOT BE RESPONSIBLE FOR THE ACCURACY OR COMPLETENESS OF SCANNED COPIES OF THIS PLAN SHEET.

TO ACCOMPANY PLANS DATED 4-28-14

2010 REVISED STANDARD PLAN RSP ES-5B

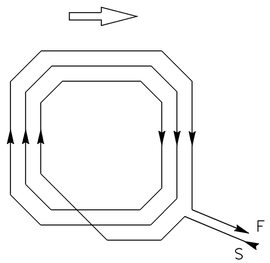

WINDING DETAIL

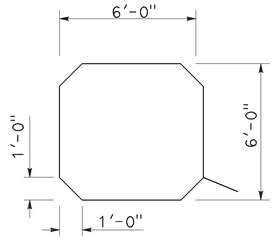

SAWCUT DETAIL

TYPE A LOOP DETECTOR CONFIGURATION

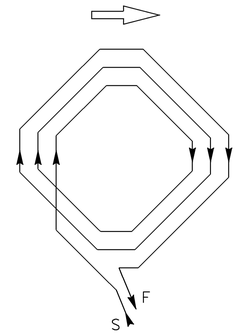

WINDING DETAIL

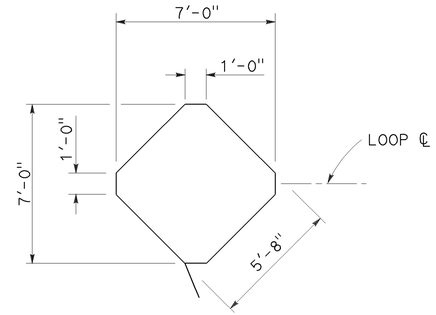

SAWCUT DETAIL

TYPE B LOOP DETECTOR CONFIGURATION

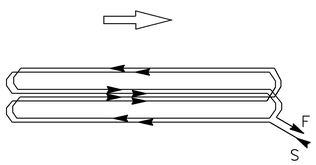

WINDING DETAIL

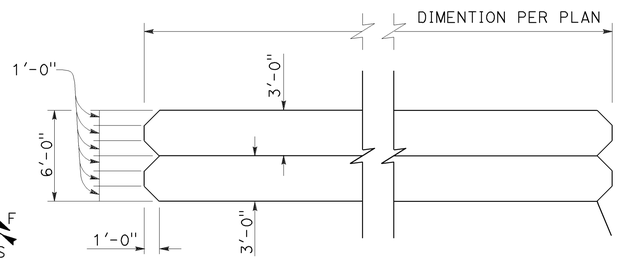

SAWCUT DETAIL

TYPE C LOOP DETECTOR CONFIGURATION

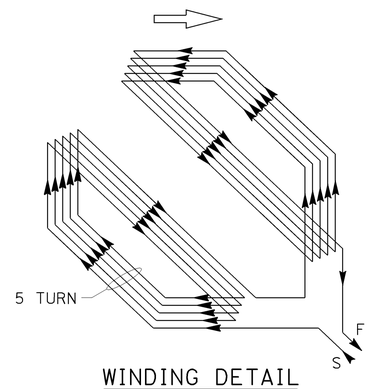

WINDING DETAIL

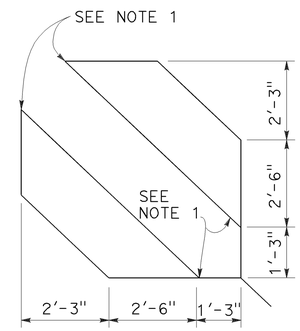

SAWCUT DETAIL

TYPE D LOOP DETECTOR CONFIGURATION

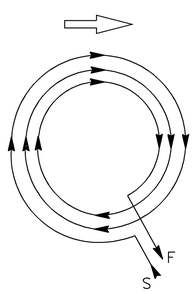

WINDING DETAIL

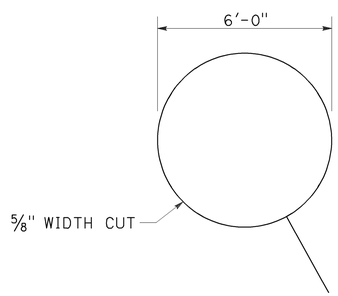

SAWCUT DETAIL

TYPE E LOOP DETECTOR CONFIGURATION

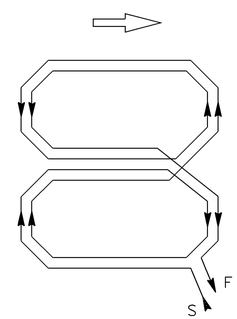

WINDING DETAIL

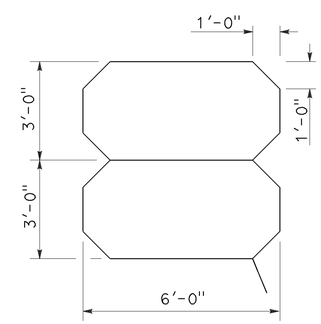

SAWCUT DETAIL

TYPE Q LOOP DETECTOR CONFIGURATION

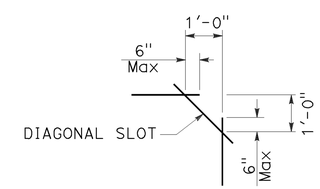

PLAN VIEW OF DIAGONAL SLOT AT CORNERS

NOTES:

1. Round corners of acute angle sawcuts to prevent damage to conductors.
2. Typical distance separating loops from edge to edge is 10' for Type A, B, D and E installation in single lane.

STATE OF CALIFORNIA
DEPARTMENT OF TRANSPORTATION

ELECTRICAL SYSTEMS (DETECTORS)

NO SCALE

RSP ES-5B DATED JULY 19, 2013 SUPERSEDES STANDARD PLAN ES-5B DATED MAY 20, 2011 - PAGE 449 OF THE STANDARD PLANS BOOK DATED 2010.

REVISED STANDARD PLAN RSP ES-5B

Dist	COUNTY	ROUTE	POST MILES TOTAL PROJECT	SHEET No.	TOTAL SHEETS
04	SM	1,35,82,84, 109,280	Var	76	96

Theresa Gabriel
REGISTERED ELECTRICAL ENGINEER

July 19, 2013
PLANS APPROVAL DATE

REGISTERED PROFESSIONAL ENGINEER
Theresa Aziz Gabriel
No. E15129
Exp. 6-30-14
ELECTRICAL
STATE OF CALIFORNIA

THE STATE OF CALIFORNIA OR ITS OFFICERS OR AGENTS SHALL NOT BE RESPONSIBLE FOR THE ACCURACY OR COMPLETENESS OF SCANNED COPIES OF THIS PLAN SHEET.

TO ACCOMPANY PLANS DATED 4-28-14

2010 REVISED STANDARD PLAN RSP ES-5C

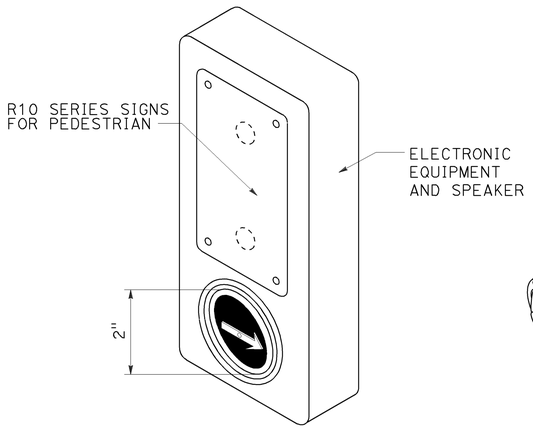

ACCESSIBLE PEDESTRIAN SIGNAL

DETAIL A
(See note 1 to 4)

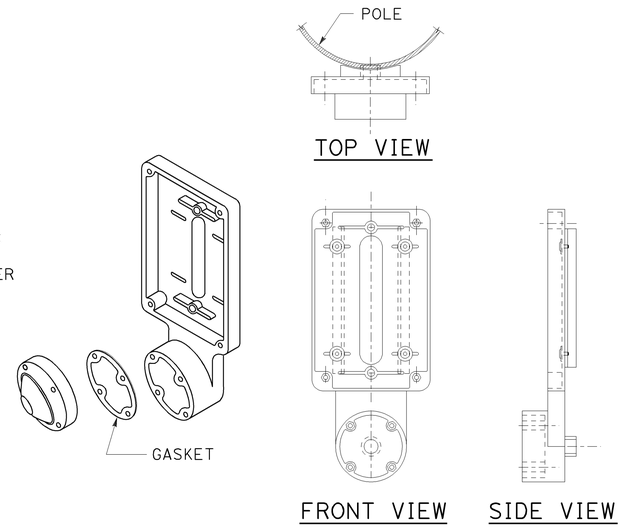

TYPE B PUSH BUTTON ASSEMBLY

DETAIL B
(See note 1 to 4)

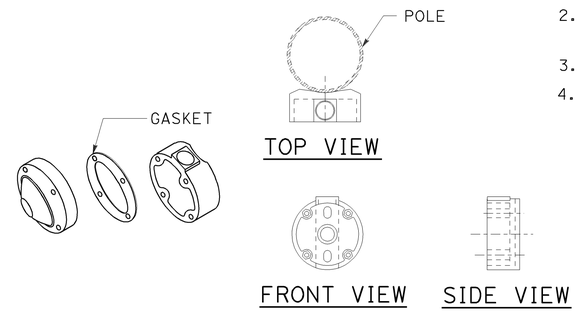

TYPE C PUSH BUTTON ASSEMBLY

DETAIL C
(See note 1 to 4)

NOTES:

1. Back casting shape to fit curvature of pole.
2. Provide cover fitting for top of post, when PBA is mounted on push button assembly post.
3. Install push button on crosswalk side of standard.
4. Use R10 series regulatory signs and plaques for pedestrian and bicycle facilities.

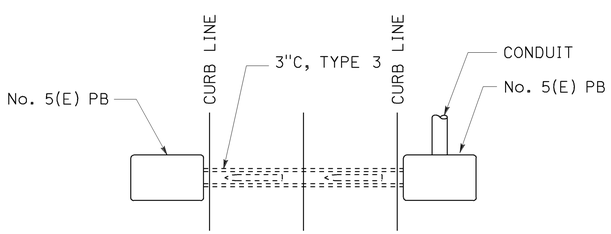

PLAN

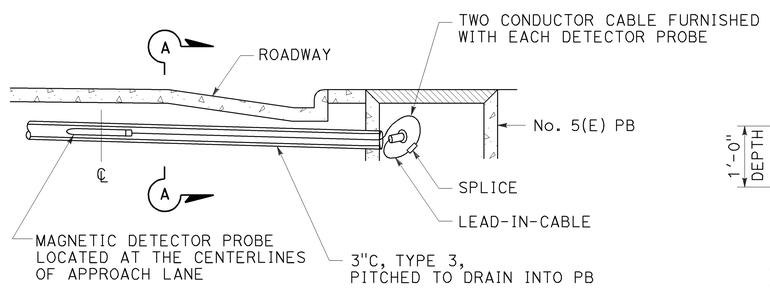

ELEVATION

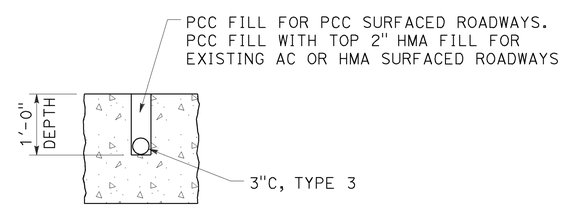

SECTION A-A

MAGNETIC VEHICLE DETECTOR INSTALLATION DETAILS

DETAIL D

STATE OF CALIFORNIA
DEPARTMENT OF TRANSPORTATION

ELECTRICAL SYSTEMS (ACCESSIBLE PEDESTRIAN SIGNAL, PUSH BUTTON ASSEMBLIES AND MAGNETIC VEHICLE DETECTOR)

NO SCALE

RSP ES-5C DATED JULY 19, 2013 SUPERSEDES STANDARD PLAN ES-5C
DATED MAY 20, 2011 - PAGE 450 OF THE STANDARD PLANS BOOK DATED 2010.

REVISED STANDARD PLAN RSP ES-5C

Dist	COUNTY	ROUTE	POST MILES TOTAL PROJECT	SHEET No.	TOTAL SHEETS
04	SM	1,35,82,84, 109,280	Var	77	96

Theresa Gabriel
REGISTERED ELECTRICAL ENGINEER

July 19, 2013
PLANS APPROVAL DATE

REGISTERED PROFESSIONAL ENGINEER Theresa Aziz Gabriel No. E15129 Exp. 6-30-14 ELECTRICAL STATE OF CALIFORNIA

THE STATE OF CALIFORNIA OR ITS OFFICERS OR AGENTS SHALL NOT BE RESPONSIBLE FOR THE ACCURACY OR COMPLETENESS OF SCANNED COPIES OF THIS PLAN SHEET.

TO ACCOMPANY PLANS DATED 4-28-14

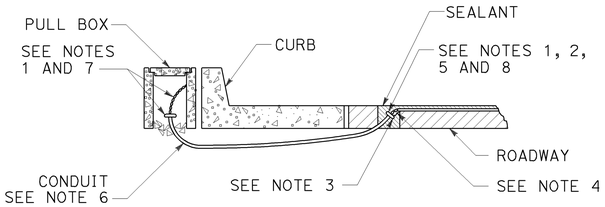

TYPE A
CURB TERMINATION DETAIL

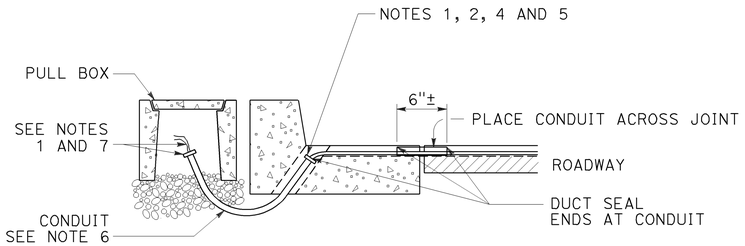

CROSS SECTION

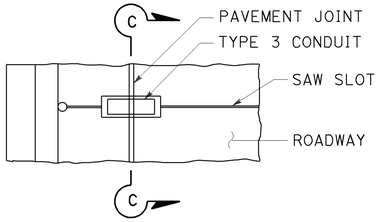

PLAN VIEW

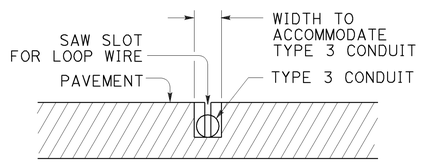

SECTION C-C

TYPE B
CURB TERMINATION DETAIL

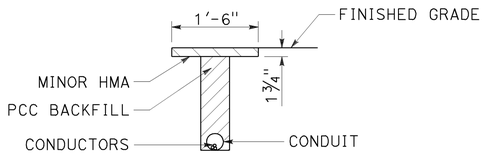

"T" TRENCH
DETAIL T

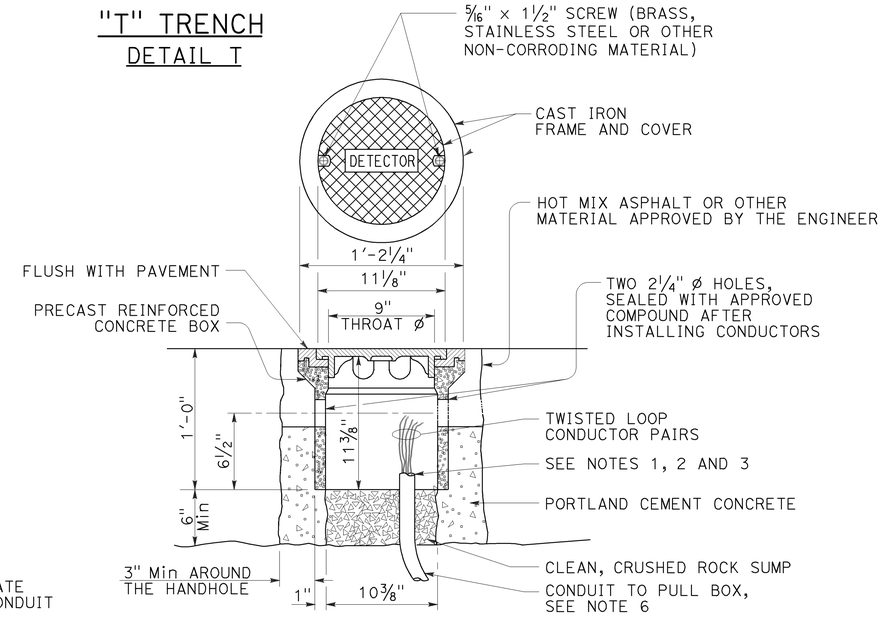

DETECTOR HANDHOLE DETAIL

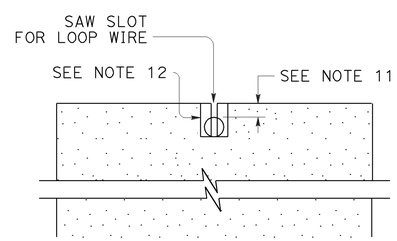

SECTION A-A

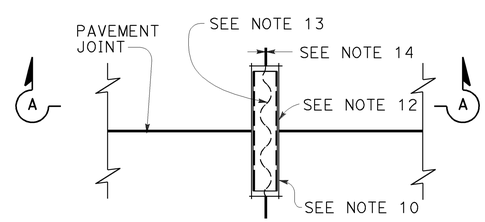

PLAN VIEW
TYPICAL LOOP LEAD-IN DETAIL AT PAVEMENT JOINT

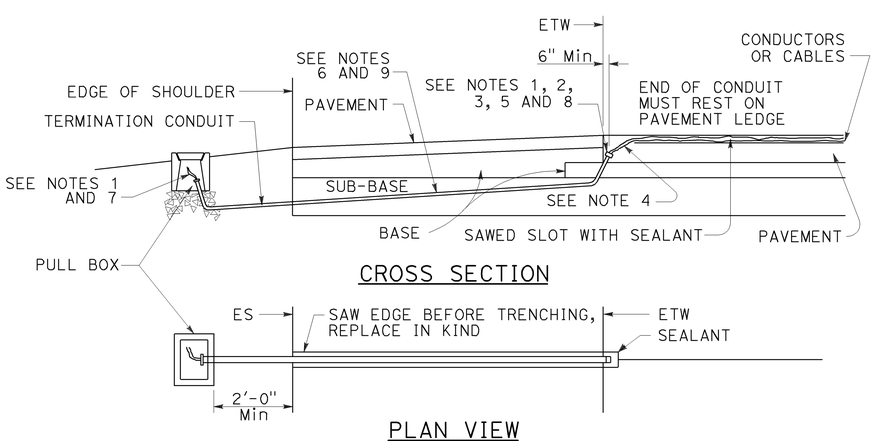

CROSS SECTION

PLAN VIEW
SHOULDER TERMINATION DETAILS

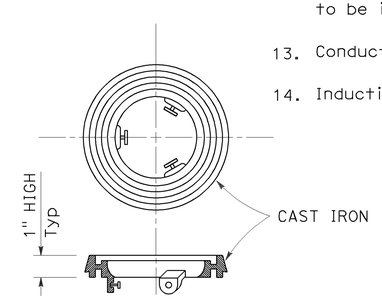

LOCKING GRADE RING

NOTES:

1. Bushing shall be used at end of conduit.
2. Tape detector conductors or cables 3" each side of bushings.
3. Install duct seal compound to each end of termination conduit before installing sealant.
4. Round all sharp edges where detector conductors or cables have to pass.
5. End of conduit shall be 3⅛" below roadway surface.
6. Conduit size / Loop conductors
   - 1"C minimum — 1 to 2 pairs
   - 1½"C minimum — 3 to 4 pairs
   - 2"C minimum — 5 or more pairs
7. Splice detector conductors or cables to detector lead-in-cable.
8. Location of detector handhole when shown on plans.
9. When the shoulder and traveled way are paved with the same material and there is no joint between them, the conduit shall extend only 2'-0" into the shoulder pavement.
10. ¾"C, Type 3 conduit 6" long minimum, plug both ends with duct compound to keep out sealant.
11. ½" Minimum between top of conduit and pavement surface.
12. Sawcut shall not exceed 1" in width and ⅛" longer than conduit to be installed.
13. Conductors with ½" minimum slack inside conduit.
14. Inductive loop detector saw slot.

STATE OF CALIFORNIA
DEPARTMENT OF TRANSPORTATION

ELECTRICAL SYSTEMS (CURB TERMINATION AND HANDHOLE)

NO SCALE

RSP ES-5D DATED JULY 19, 2013 SUPERSEDES STANDARD PLAN ES-5D DATED MAY 20, 2011 - PAGE 451 OF THE STANDARD PLANS BOOK DATED 2010.

REVISED STANDARD PLAN RSP ES-5D

2010 REVISED STANDARD PLAN RSP ES-5D

7-9-13

Dist	COUNTY	ROUTE	POST MILES TOTAL PROJECT	SHEET No.	TOTAL SHEETS
04	SM	1,35,82,84, 109,280	Var	78	96

REGISTERED CIVIL ENGINEER

July 19, 2013
PLANS APPROVAL DATE

REGISTERED PROFESSIONAL ENGINEER
Stanley P. Johnson
No. C57793
Exp. 3-31-14
CIVIL
STATE OF CALIFORNIA

THE STATE OF CALIFORNIA OR ITS OFFICERS OR AGENTS SHALL NOT BE RESPONSIBLE FOR THE ACCURACY OR COMPLETENESS OF SCANNED COPIES OF THIS PLAN SHEET.

TO ACCOMPANY PLANS DATED 4-28-14

2010 REVISED STANDARD PLAN RSP ES-7A

NOTES:

1. For additional notes, details and data for Type 15TS and Type 21TS Standards, see Standard Plan ES-6A.
2. Handhole shall be located on the downstream side of traffic.

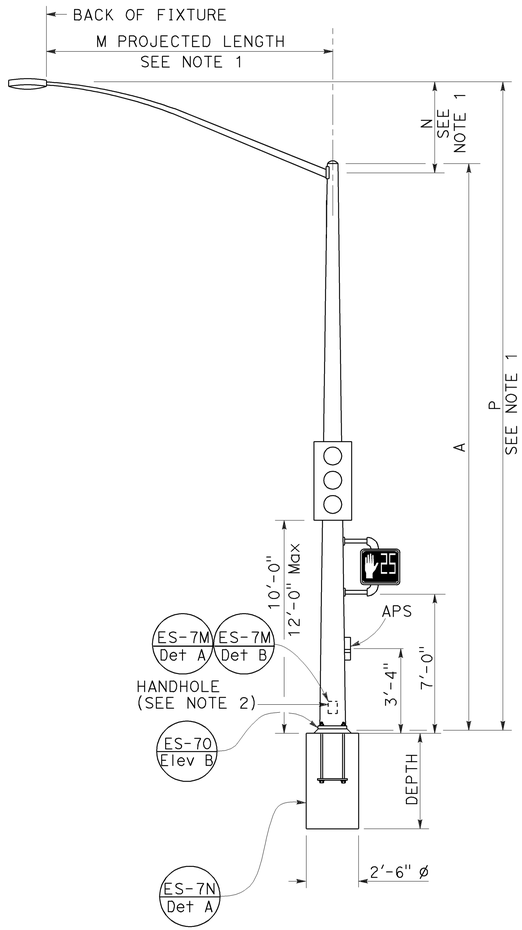

TYPE 15TS AND 21TS STANDARD
ELEVATION A
(See Note 1)

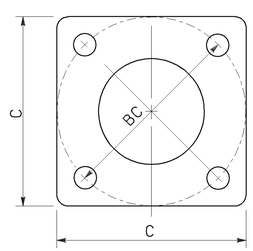

BASE PLATE
TYPE 15TS AND 21TS
DETAIL A

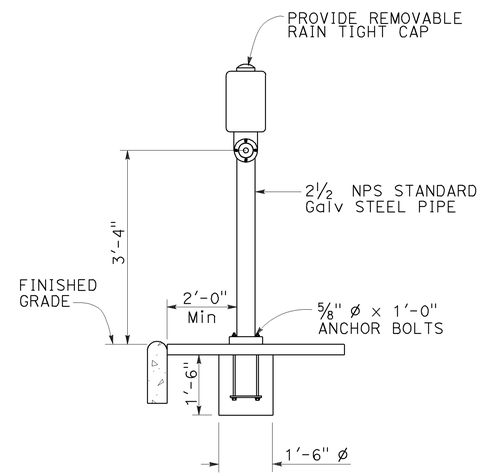

ELEVATION

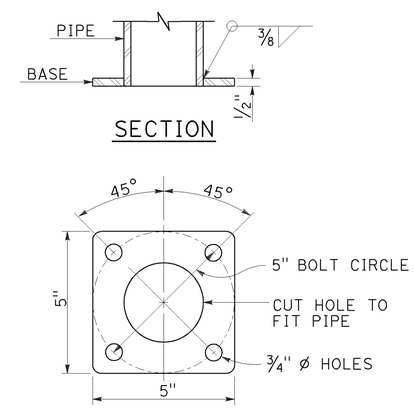

BASE PLATE
PBA POST

PUSH BUTTON ASSEMBLY POST
DETAIL B

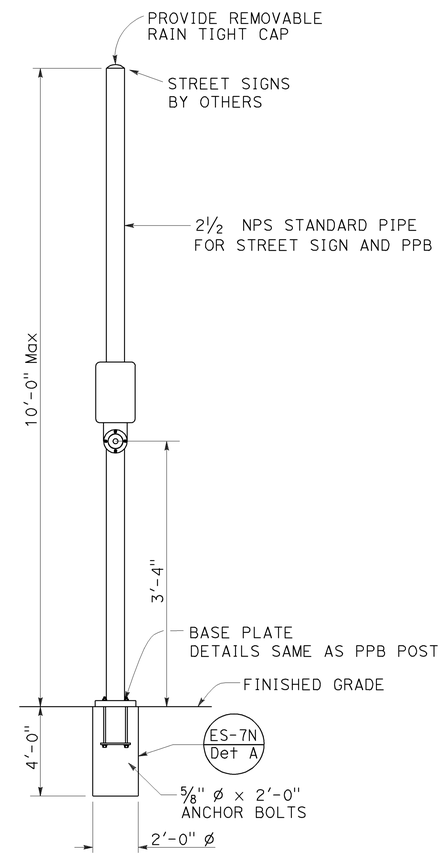

COMBINED STREET SIGN
PUSH BUTTON ASSEMBLY POST
DETAIL C

POLE TYPE	POLE DATA				BASE PLATE DATA				CIDH
	A HEIGHT	Min OD BASE	Min OD TOP	WALL THICKNESS	C	BC = BOLT CIRCLE	THICKNESS	ANCHOR BOLT SIZE	DEPTH
15TS	30'-0"	8"	3 11/16"	0.1793"	1'-1½"	1'-0"	2"	1½" ø x 42"	7'-6"
21TS	35'-0"	9⅜"	3 9/16"		1'-3"	1'-2"			8'-6"

STATE OF CALIFORNIA
DEPARTMENT OF TRANSPORTATION

ELECTRICAL SYSTEMS (SIGNAL AND LIGHTING STANDARD, TYPE TS, AND PUSH BUTTON ASSEMBLY POST)

NO SCALE

RSP ES-7A DATED JULY 19, 2013 SUPERSEDES STANDARD PLAN ES-7A DATED MAY 20, 2011 - PAGE 462 OF THE STANDARD PLANS BOOK DATED 2010.

REVISED STANDARD PLAN RSP ES-7A

Dist	COUNTY	ROUTE	POST MILES TOTAL PROJECT	SHEET No.	TOTAL SHEETS
04	SM	1,35,82,84, 109,280	Var	79	96

REGISTERED CIVIL ENGINEER

July 19, 2013
PLANS APPROVAL DATE

REGISTERED PROFESSIONAL ENGINEER Stanley P. Johnson No. C57793 Exp. 3-31-14 CIVIL STATE OF CALIFORNIA

THE STATE OF CALIFORNIA OR ITS OFFICERS OR AGENTS SHALL NOT BE RESPONSIBLE FOR THE ACCURACY OR COMPLETENESS OF SCANNED COPIES OF THIS PLAN SHEET.

TO ACCOMPANY PLANS DATED 4-28-14

2010 REVISED STANDARD PLAN RSP ES-7C

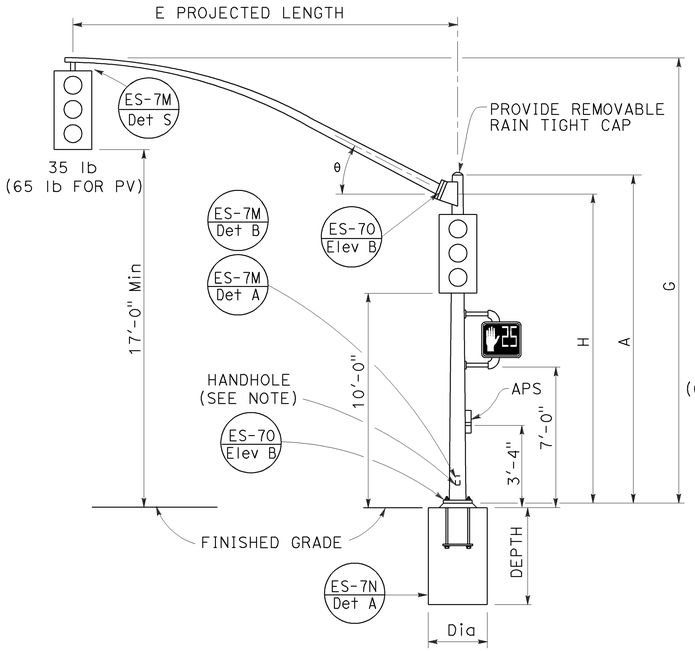

TYPE 16-1-100, 18-1-100

ELEVATION A

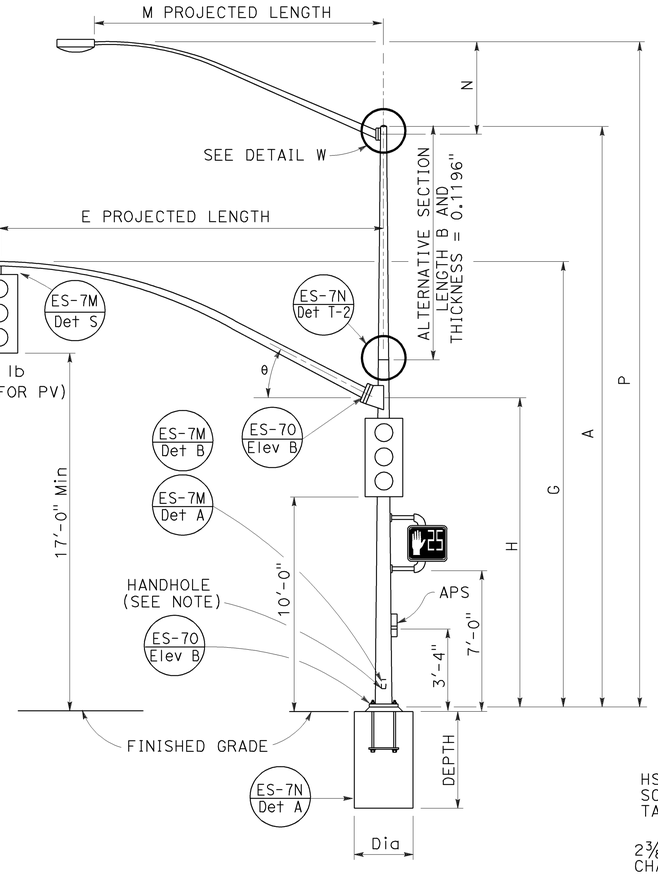

TYPE 19-1-100, 19A-1-100

ELEVATION B

Δ = LUMINAIRE MAST ARM SKEW -90° TO +90°
DEFAULT 0°

NOTE:

Handhole shall be located on the downstream side of traffic.

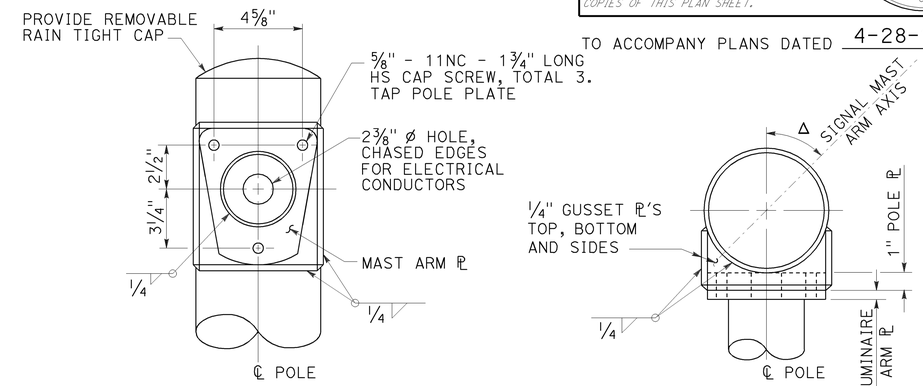

DETAIL W-1 DETAIL W-2

LUMINAIRE MAST ARM CONNECTION

DETAIL W

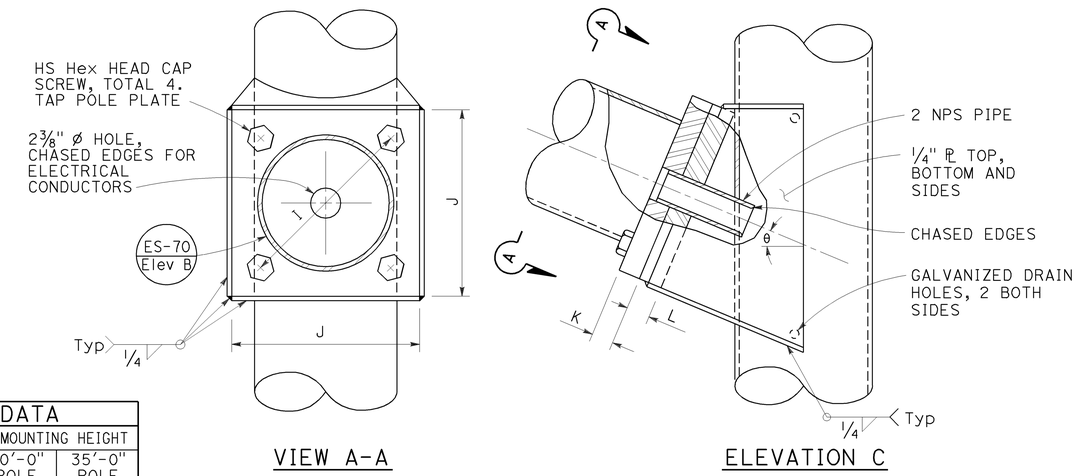

VIEW A-A ELEVATION C

SIGNAL MAST ARM CONNECTION

DETAIL C

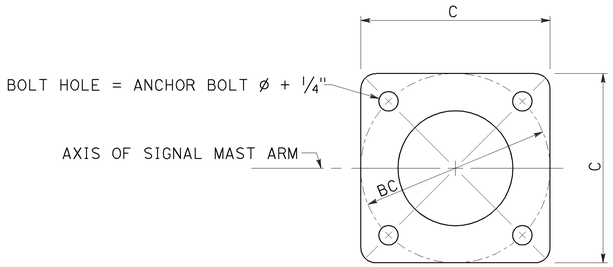

BASE PLATE

DETAIL D

SIGNAL MAST ARM DATA										
E PROJECTED LENGTH	G MOUNTING HEIGHT	H	Min OD AT POLE	THICKNESS	I BOLT CIRCLE	HS CAP SCREWS	J PLATE SIZE	K MAST ARM ℄ THICKNESS	L POLE ℄ THICKNESS	θ
15'-0"	21'-8"±	17'-6"	7⅜"	0.1196"	12"	1¼"-7NC-3"	1'-0"	1¼"	1½"	23°
20'-0"										
25'-0"	22'-8"±	16'-0"								
30'-0"	23'-0"±		8"							

LUMINAIRE MAST ARM DATA					
M PROJECTED LENGTH	N RISE	Min OD AT POLE	THICKNESS	P MOUNTING HEIGHT	
				30'-0" POLE	35'-0" POLE
6'-0"	2'-0"±	3¼"	0.1196"	31'-6"±	36'-6"±
8'-0"	2'-6"±	3½"		32'-0"±	37'-0"±
10'-0"	3'-3"±	3⅞"		32'-9"±	37'-9"±
12'-0"	4'-3"±			33'-9"±	38'-9"±
15'-0"	4'-9"±	4¼"		34'-3"±	39'-3"±

POLE TYPE	LOAD CASE	WIND VELOCITY (mph)	POLE DATA						BASE PLATE DATA				LUMINAIRE MAST ARM	SIGNAL MAST ARM	CIDH PILE FOUNDATION		
			A HEIGHT	Min OD		THICKNESS	ALTERNATIVE SECTION			C	BC = BOLT CIRCLE	THICKNESS	ANCHOR BOLT SIZE			DIAMETER	DEPTH	REINFORCED
				BASE	TOP		B LENGTH	BOTTOM	TOP									
16-1-100	1	100	18'-6"	10¾"	8 1/16"	0.1793"	None			1'-5½"	1'-5½"	3"	1½" Ø × 42"	NONE	15'-0", [20'-0"]	2'-6"	9'-0"	YES
18-1-100			17'-0"		8 5/16"		None							NONE				
19-1-100			30'-0"		6 7/16"		10'-0"	7⅞"	6 7/16"					6'-15' [12'-0"]	25'-0", [30'-0"]			
19A-1-100			35'-0"		5 11/16"		15'-0"		5 11/16"					6'-15' [15'-0"]				

[ ] INDICATES MAST ARM LENGTH TO BE USED UNLESS OTHERWISE NOTED ON PLANS.

STATE OF CALIFORNIA
DEPARTMENT OF TRANSPORTATION

ELECTRICAL SYSTEMS (SIGNAL AND LIGHTING STANDARD, CASE 1 SIGNAL MAST ARM LOADING, WIND VELOCITY = 100 MPH AND SIGNAL MAST ARM LENGTHS 15' TO 30')

NO SCALE

RSP ES-7C DATED JULY 19, 2013 SUPERSEDES STANDARD PLAN ES-7C DATED MAY 20, 2011 - PAGE 464 OF THE STANDARD PLANS BOOK DATED 2010.

REVISED STANDARD PLAN RSP ES-7C

6-18-13

Dist	COUNTY	ROUTE	POST MILES TOTAL PROJECT	SHEET No.	TOTAL SHEETS
04	SM	1,35,82,84, 109,280	Var	80	96

REGISTERED CIVIL ENGINEER

July 19, 2013
PLANS APPROVAL DATE

REGISTERED PROFESSIONAL ENGINEER Stanley P. Johnson No. C57793 Exp. 3-31-14 CIVIL STATE OF CALIFORNIA

THE STATE OF CALIFORNIA OR ITS OFFICERS OR AGENTS SHALL NOT BE RESPONSIBLE FOR THE ACCURACY OR COMPLETENESS OF SCANNED COPIES OF THIS PLAN SHEET.

TO ACCOMPANY PLANS DATED 4-28-14

NOTE:
Handhole shall be located on the downstream side of traffic.

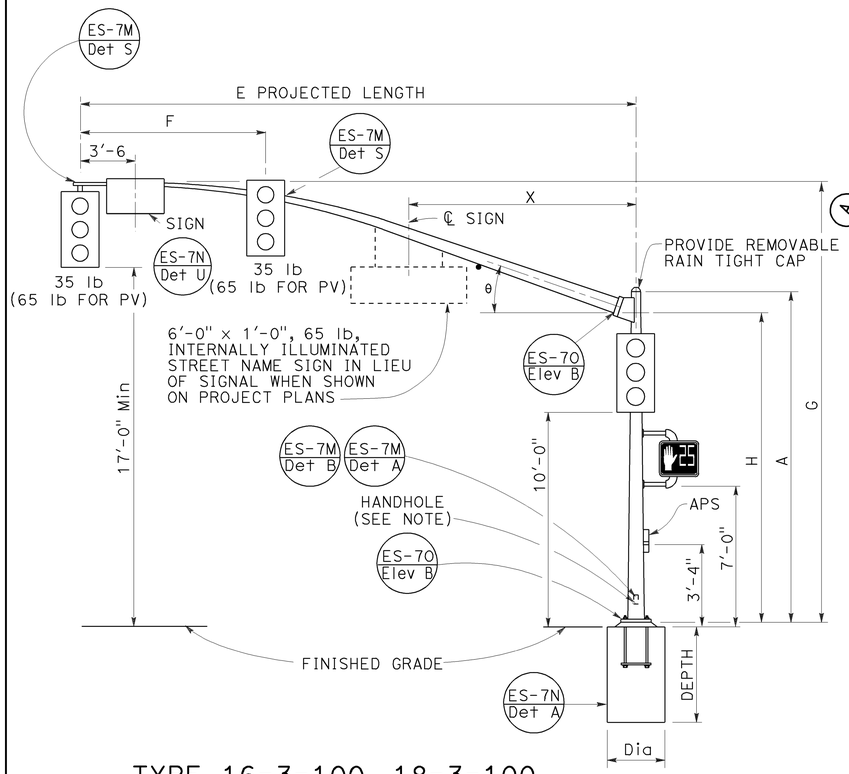

TYPE 16-3-100, 18-3-100, 23-3-100, 27-3-100
ELEVATION A

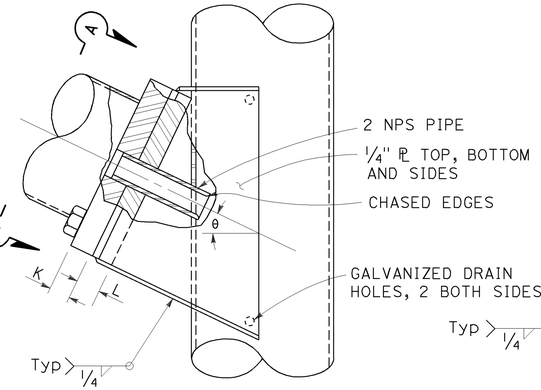

ELEVATION C

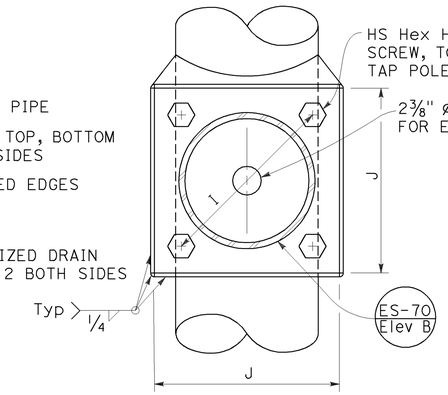

VIEW A-A

SIGNAL MAST ARM CONNECTION
DETAIL A

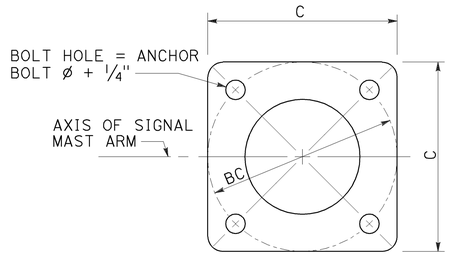

BASE PLATE
DETAIL B

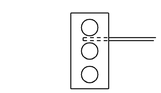

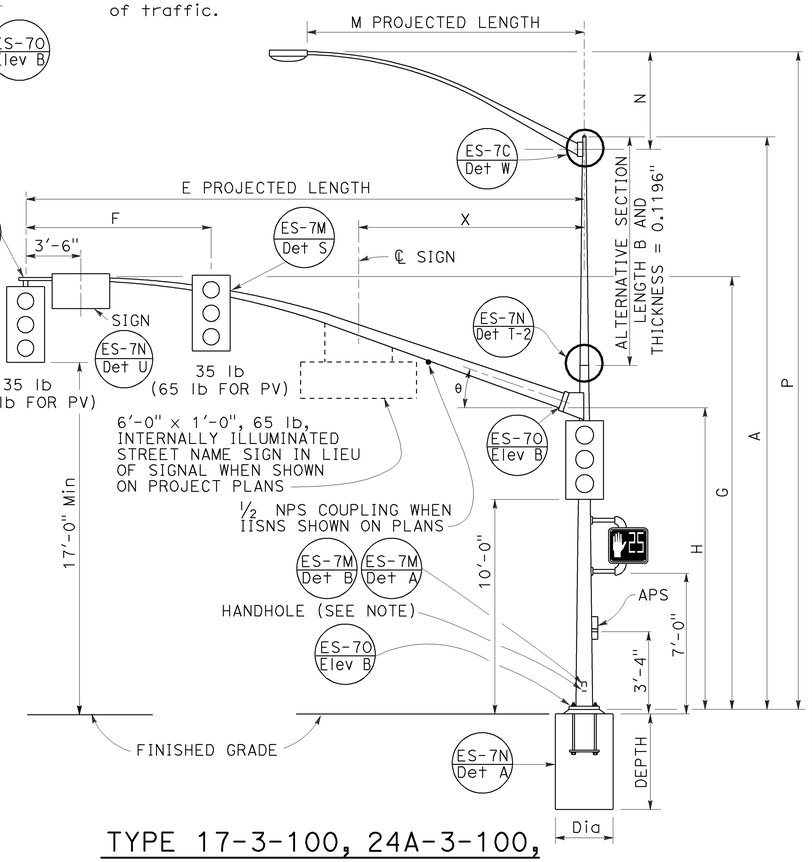

TYPE 17-3-100, 24A-3-100, 19-3-100, 26-3-100, 19A-3-100, 26A-3-100, 24-3-100
ELEVATION B

SIGNAL MAST ARM DATA

E PROJECTED LENGTH	F Min SPACING	G MOUNTING HEIGHT	H	Min OD AT POLE	THICKNESS	I BOLT CIRCLE	HS CAP SCREWS	J PLATE SIZE	K MAST ARM ℙ THICKNESS	L POLE ℙ THICKNESS	θ	X Max
15'-0"	8'-0"	21'-8"±	17'-6"	7 3/8"	0.1793"	12"	1 1/4"-7NC-3"	1'-0"	1 1/4"	1 1/2"	23°	-
20'-0"		21'-8"±		7 3/8"								
25'-0"	12'-0"	22'-8"±	16'-0"	7 3/8"	0.2391"							10'-6"
30'-0"		23'-0"±		8"								
35'-0"	14'-0"			8 3/4"		13"		1'-1"	1 1/2"	1 3/4"	21°	
40'-0"	15'-0"			9 3/8"							15°	13'-0"
45'-0"		23'-8"±		10 1/16"								

LUMINAIRE MAST ARM DATA

M PROJECTED LENGTH	N RISE	Min OD AT POLE	THICKNESS	P MOUNTING HEIGHT 30'-0" POLE	P MOUNTING HEIGHT 35'-0" POLE
6'-0"	2'-0"±	3 1/4"	0.1196"	31'-6"±	36'-6"±
8'-0"	2'-6"±	3 1/2"		32'-0"±	37'-0"±
10'-0"	3'-3"±	3 7/8"		32'-9"±	37'-9"±
12'-0"	4'-3"±			33'-9"±	38'-9"±
15'-0"	4'-9"±	4 1/4"		34'-3"±	39'-3"±

POLE TYPE	LOAD CASE	WIND VELOCITY (mph)	POLE DATA A HEIGHT	Min OD BASE	Min OD TOP	THICKNESS	ALTERNATIVE SECTION B LENGTH	BOTTOM	TOP	BASE PLATE DATA C	BC = BOLT CIRCLE	THICKNESS	ANCHOR BOLT SIZE	LUMINAIRE MAST ARM	SIGNAL MAST ARM	CIDH PILE FOUNDATION DIAMETER	DEPTH	REINFORCED
16-3-100	3	100	18'-6"	10 3/4"	8 1/16"	0.1793"	NONE			1'-5 1/2"	1'-5 1/2"	3"	1 1/2" ø x 42"	NONE	15'-0", 20'-0"	3'-0"	8'-6"	YES
17-3-100			30'-0"		6 7/16"		10'-0"	7 7/8"	6 7/16"					6'-15' 12'-0"				
18-3-100			17'-0"	1'-0"	8 5/16"	0.2391"	NONE			1'-7"			2" ø x 42"	NONE	25'-0", 30'-0"		9'-6"	
19-3-100			30'-0"		7 11/16"		10'-0"	9 1/8"	7 11/16"					6'-15' 12'-0"			11'-0"	
19A-3-100			35'-0"		6 15/16"		15'-0"		6 15/16"					6'-15' 15'-0"				
23-3-100			17'-0"		9 9/16"		NONE							NONE	35'-0"			
24-3-100			30'-0"		7 11/16"		10'-0"	9 1/8"	7 11/16"					6'-15' 12'-0"				
24A-3-100			35'-0"		6 15/16"		15'-0"		6 15/16"					6'-15' 15'-0"				
26-3-100			30'-0"	1'-2"	7 13/16"	0.3125"	10'-0"	9 1/4"	7 13/16"	1'-11"	1'-9"		2 1/2" ø x 42"	6'-15' 12'-0"	40'-0", 45'-0"	3'-6"	12'-0"	
26A-3-100			35'-0"		7 1/16"		15'-0"		7 1/16"					6'-15' 15'-0"				
27-3-100			17'-0"		9 11/16"		NONE							NONE				

☐ INDICATES MAST ARM LENGTH TO BE USED UNLESS OTHERWISE NOTED ON PLANS.

STATE OF CALIFORNIA
DEPARTMENT OF TRANSPORTATION

ELECTRICAL SYSTEMS (SIGNAL AND LIGHTING STANDARD, CASE 3 SIGNAL MAST ARM LOADING, WIND VELOCITY=100 MPH AND SIGNAL MAST ARM LENGTHS 15' TO 45')

NO SCALE

RSP 7E DATED JULY 19, 2013 SUPERSEDES STANDARD PLAN 7E
DATED MAY 20, 2011 - PAGE 466 OF THE STANDARD PLANS BOOK DATED 2010.

REVISED STANDARD PLAN RSP ES-7E

2010 REVISED STANDARD PLAN RSP ES-7E

6-17-13

Dist	COUNTY	ROUTE	POST MILES TOTAL PROJECT	SHEET No.	TOTAL SHEETS
04	SM	1,35,82,84, 109,280	Var	81	96

REGISTERED CIVIL ENGINEER

July 19, 2013

PLANS APPROVAL DATE

REGISTERED PROFESSIONAL ENGINEER Stanley P. Johnson No. C57793 Exp. 3-31-14 CIVIL STATE OF CALIFORNIA

THE STATE OF CALIFORNIA OR ITS OFFICERS OR AGENTS SHALL NOT BE RESPONSIBLE FOR THE ACCURACY OR COMPLETENESS OF SCANNED COPIES OF THIS PLAN SHEET.

NOTE:

1. Handhole shall be located on the downstream side of traffic.

TO ACCOMPANY PLANS DATED 4-28-14

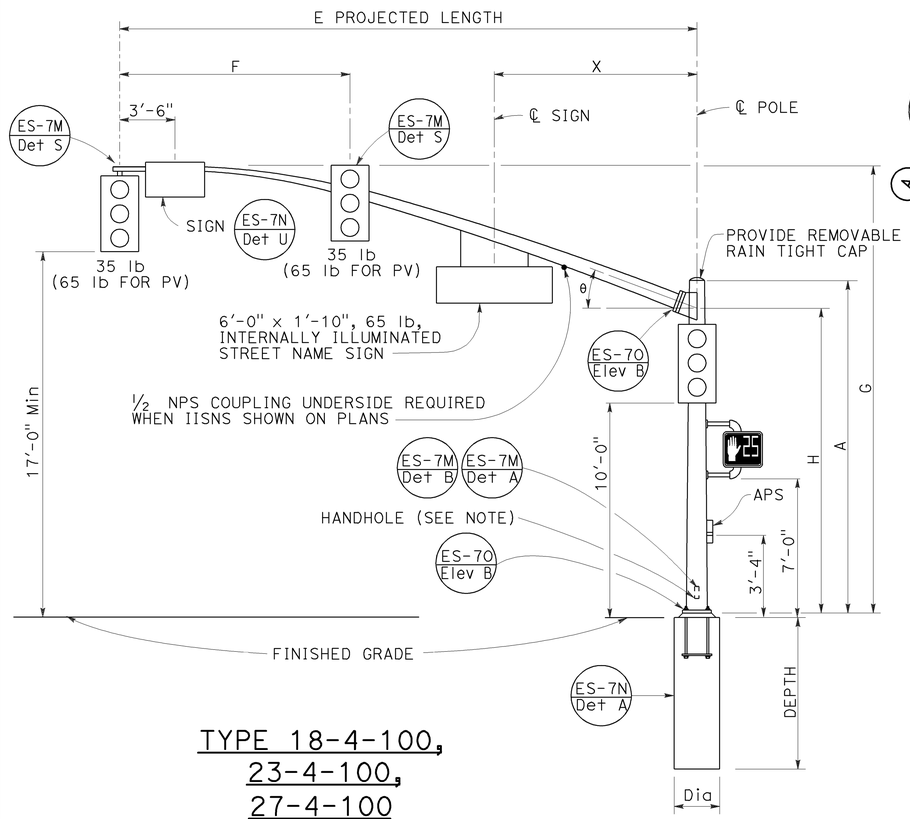

TYPE 18-4-100,
23-4-100,
27-4-100
ELEVATION A

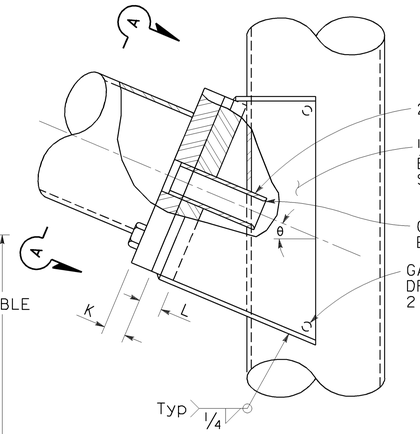

ELEVATION C

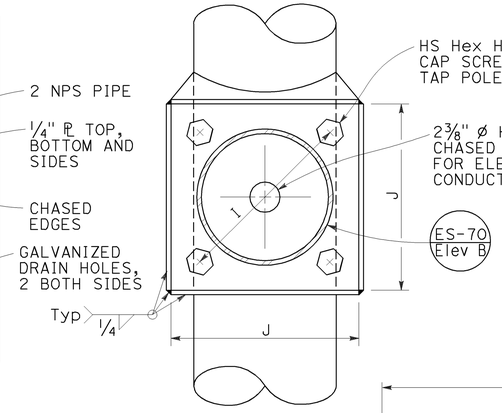

VIEW A-A

SIGNAL MAST ARM CONNECTION
DETAIL A

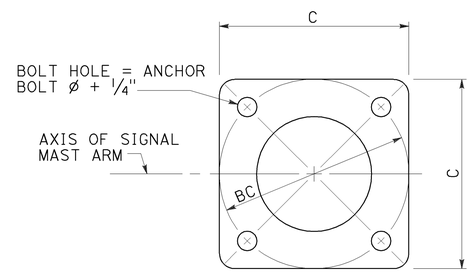

BASE PLATE
DETAIL B

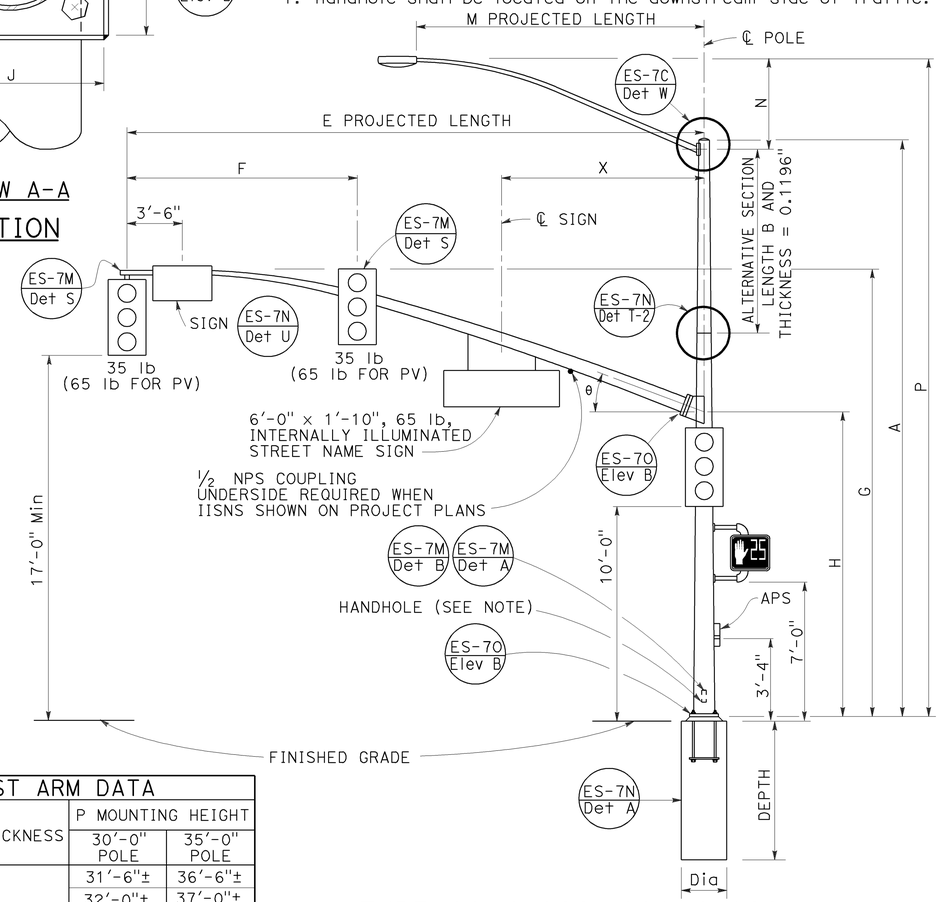

TYPE 19-4-100, 19A-4-100,
24-4-100, 24A-4-100,
26-4-100, 26A-4-100
ELEVATION B

SIGNAL MAST ARM DATA												
E PROJECTED LENGTH	F Min SPACING	G MOUNTING HEIGHT	H	Min OD AT POLE	THICKNESS	I BOLT CIRCLE	HS CAP SCREWS	J PLATE SIZE	K MAST ARM ℄ THICKNESS	L POLE ℄ THICKNESS	θ	X Max
25'-0"	10'-0"	22'-8"±	16'-0"	7⅜"	0.2391"	12"	1¼"-7NC-3"	1'-0"	1¼"	1½"	23°	10'-6"
30'-0"	12'-0"	23'-0"±		8"								
35'-0"	14'-0"			8 11/16"		13½"		1'-1½"	1½"	1¾"	21°	
40'-0"	15'-0"			9⅜"							15°	13'-0"
45'-0"		23'-8"±		10¼"								

LUMINAIRE MAST ARM DATA					
M PROJECTED LENGTH	N RISE	Min OD AT POLE	THICKNESS	P MOUNTING HEIGHT	
				30'-0" POLE	35'-0" POLE
6'-0"	2'-0"±	3¼"	0.1196"	31'-6"±	36'-6"±
8'-0"	2'-6"±	3½"		32'-0"±	37'-0"±
10'-0"	3'-3"±	3⅞"		32'-9"±	37'-9"±
12'-0"	4'-3"±			33'-9"±	38'-9"±
15'-0"	4'-9"±	4¼"		34'-3"±	39'-3"±

POLE TYPE	LOAD CASE	WIND VELOCITY (mph)	POLE DATA							BASE PLATE DATA				LUMINAIRE MAST ARM	SIGNAL MAST ARM	CIDH PILE FOUNDATION		
			A HEIGHT	Min OD BASE	Min OD TOP	THICKNESS	ALTERNATIVE SECTION B LENGTH	ALTERNATIVE SECTION BOTTOM	ALTERNATIVE SECTION TOP	C	BC = BOLT CIRCLE	THICKNESS	ANCHOR BOLT SIZE			Dia	DEPTH	REINFORCED
18-4-100	4	100	17'-0"	12⅛"	9 9/16"	0.3125"	NONE			1'-7"	1'-5½"	3"	2" Ø x 42"	NONE	25'-0", 30'-0"	3'-0"	11'-0"	YES
19-4-100			30'-0"		7 11/16"		10'-0"	9⅛"	7 11/16"					6'-15' 12'-0"				
19A-4-100			35'-0"		6 15/16"		15'-0'		6 15/16"					6'-15' 15'-0"				
23-4-100			17'-0"		9 9/16"		NONE							NONE	35'-0"			
24-4-100			30'-0"		7 11/16"		10'-0"	9⅛"	7 11/16"					6'-15' 12'-0"				
24A-4-100			35'-0"		6 15/16"		15'-0"		6 15/16"					6'-15' 15'-0"				
26-4-100			30'-0"	14"	8 3/16"		10'-0"	9⅝"	8 3/16"	23"	21"		2½" Ø x 42"	6'-15' 12'-0"	40'-0", 45'-0"	3'-6"	12'-0"	
26A-4-100			35'-0"		7 7/16"		15'-0"		7 7/16"					6'-15' 15'-0"				
27-4-100			17'-0"		10 1/16"		NONE							NONE				

INDICATES MAST ARM LENGTH TO BE USED UNLESS OTHERWISE NOTED ON PLANS.

STATE OF CALIFORNIA
DEPARTMENT OF TRANSPORTATION

ELECTRICAL SYSTEMS (SIGNAL AND LIGHTING STANDARD, CASE 4 SIGNAL MAST ARM LOADING, WIND VELOCITY=100 MPH AND SIGNAL MAST ARM LENGTHS 25' TO 45')

NO SCALE

RSP ES-7F DATED JULY 19, 2013 SUPERSEDES STANDARD PLAN ES-7F
DATED MAY 20, 2011 - PAGE 467 OF THE STANDARD PLANS BOOK DATED 2010.

REVISED STANDARD PLAN RSP ES-7F

2010 REVISED STANDARD PLAN RSP ES-7F

6-18-13

Dist	COUNTY	ROUTE	POST MILES TOTAL PROJECT	SHEET No.	TOTAL SHEETS
04	SM	1,35,82,84, 109,280	Var	82	96

REGISTERED CIVIL ENGINEER

July 19, 2013
PLANS APPROVAL DATE

REGISTERED PROFESSIONAL ENGINEER Stanley P. Johnson No. C57793 Exp. 3-31-14 CIVIL STATE OF CALIFORNIA

THE STATE OF CALIFORNIA OR ITS OFFICERS OR AGENTS SHALL NOT BE RESPONSIBLE FOR THE ACCURACY OR COMPLETENESS OF SCANNED COPIES OF THIS PLAN SHEET.

TO ACCOMPANY PLANS DATED 4-28-14

NOTE:
Handhole shall be located on the downstream side of traffic.

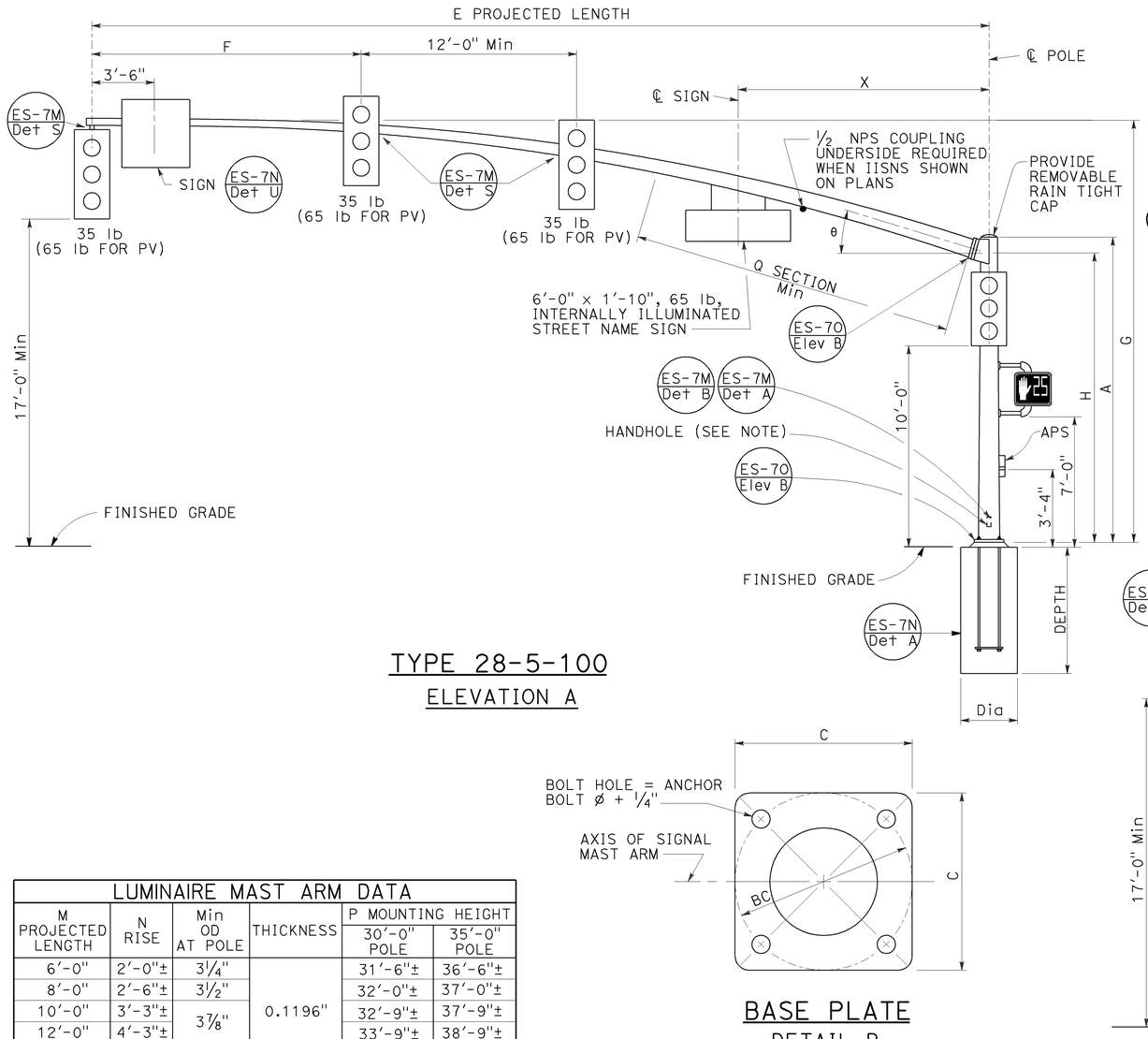

TYPE 28-5-100
ELEVATION A

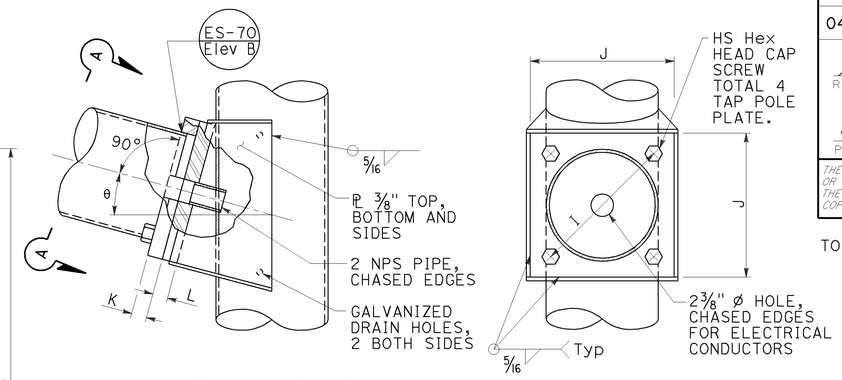

ELEVATION C

VIEW A-A

SIGNAL MAST ARM CONNECTION
DETAIL A

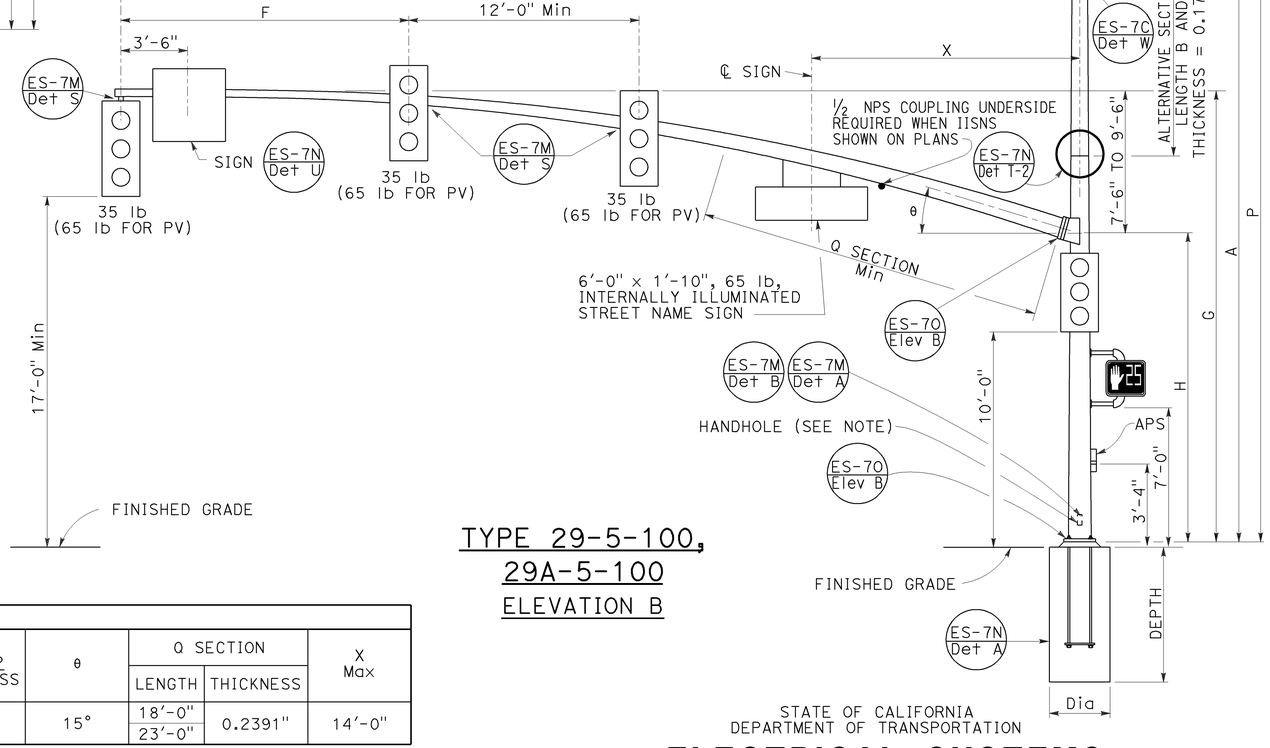

TYPE 29-5-100,
29A-5-100
ELEVATION B

BASE PLATE
DETAIL B

LUMINAIRE MAST ARM DATA					
M PROJECTED LENGTH	N RISE	Min OD AT POLE	THICKNESS	P MOUNTING HEIGHT 30'-0" POLE	P MOUNTING HEIGHT 35'-0" POLE
6'-0"	2'-0"±	3 1/4"	0.1196"	31'-6"±	36'-6"±
8'-0"	2'-6"±	3 1/2"		32'-0"±	37'-0"±
10'-0"	3'-3"±	3 7/8"		32'-9"±	37'-9"±
12'-0"	4'-3"±			33'-9"±	38'-9"±
15'-0"	4'-9"±	4 1/4"		34'-3"±	39'-3"±

SIGNAL MAST ARM DATA														
E PROJECTED LENGTH	F Min SPACING	G MOUNTING HEIGHT	H	Min OD AT POLE	THICKNESS	I BOLT CIRCLE	HS CAP SCREWS	J PLATE SIZE	K MAST ARM ℙ THICKNESS	L POLE ℙ THICKNESS	θ	Q SECTION LENGTH	Q SECTION THICKNESS	X Max
50'-0"	15'-0"	23'-7"± TO 25'-7"±	16'-0"	11 7/16"	0.1793"	16"	1 1/2"-6NC-3 1/4"	1'-4"	1 3/4"	1 3/4"	15°	18'-0"	0.2391"	14'-0"
55'-0"				1'-1 1/4"								23'-0"		

POLE TYPE	LOAD CASE	WIND VELOCITY (mph)	POLE DATA A HEIGHT	Min OD BASE	Min OD TOP	THICKNESS	ALTERNATIVE SECTION B LENGTH	ALTERNATIVE SECTION BOTTOM	ALTERNATIVE SECTION TOP	BASE PLATE DATA C	BC = BOLT CIRCLE	THICKNESS	ANCHOR BOLT SIZE	LUMINAIRE MAST ARM	SIGNAL MAST ARM	CIDH PILE FOUNDATION Dia	DEPTH	REINFORCED
28-5-100	5	100	17'-0"	14"	11 9/16"	0.3125"	NONE	11 1/8"	9 11/16"	23"	21"	3"	2 1/2" ø x 42"	NONE	50'-0", 55'-0"	3'-6"	12'-0"	YES
29-5-100			30'-0"		9 11/16"		10'-0"							6'-15' 15'-0"				
29A-5-100			35'-0"		8 15/16"		15'-0"		8 15/16"									

INDICATES MAST ARM LENGTH TO BE USED UNLESS OTHERWISE NOTED ON PLANS.

STATE OF CALIFORNIA
DEPARTMENT OF TRANSPORTATION

ELECTRICAL SYSTEMS (SIGNAL AND LIGHTING STANDARD, CASE 5 SIGNAL MAST ARM LOADING, WIND VELOCITY=100 MPH AND SIGNAL MAST ARM LENGTHS 50' TO 55')

NO SCALE

RSP ES-7G DATED JULY 19, 2013 SUPERSEDES STANDARD PLAN ES-7G DATED MAY 20, 2011 - PAGE 468 OF THE STANDARD PLANS BOOK DATED 2010.

REVISED STANDARD PLAN RSP ES-7G

2010 REVISED STANDARD PLAN RSP ES-7G

6-18-13

DIST	COUNTY	ROUTE	POST MILES TOTAL PROJECT	SHEET NO.	TOTAL SHEETS
04	SM	1,35,82,84, 109,280	Var	83	96

Theresa Gabriel
REGISTERED ELECTRICAL ENGINEER

July 19, 2013
PLANS APPROVAL DATE

REGISTERED PROFESSIONAL ENGINEER Theresa Aziz Gabriel No. E15129 Exp. 6-30-14 ELECTRICAL STATE OF CALIFORNIA

THE STATE OF CALIFORNIA OR ITS OFFICERS OR AGENTS SHALL NOT BE RESPONSIBLE FOR THE ACCURACY OR COMPLETENESS OF SCANNED COPIES OF THIS PLAN SHEET.

TO ACCOMPANY PLANS DATED 4-28-14

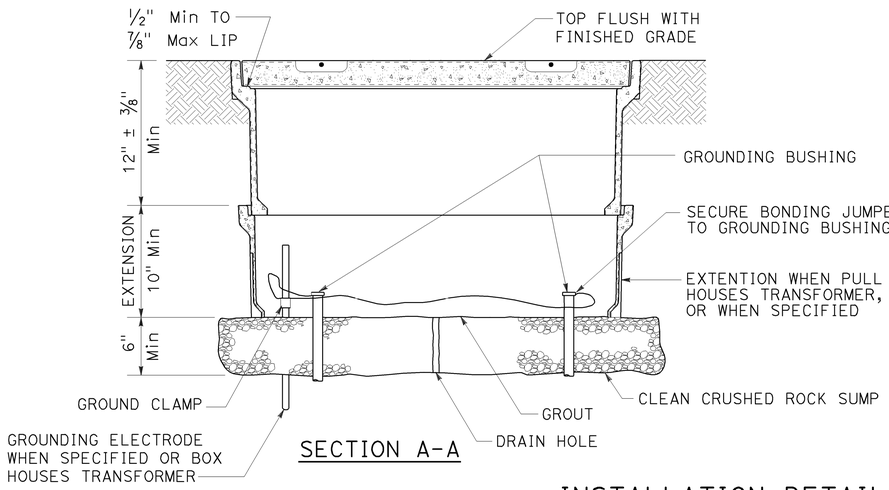

SECTION A-A

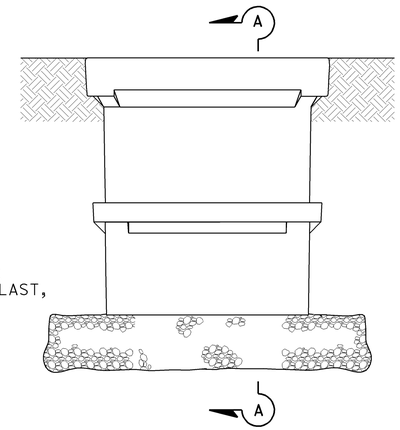

SIDE VIEW

INSTALLATION DETAILS

DETAIL A

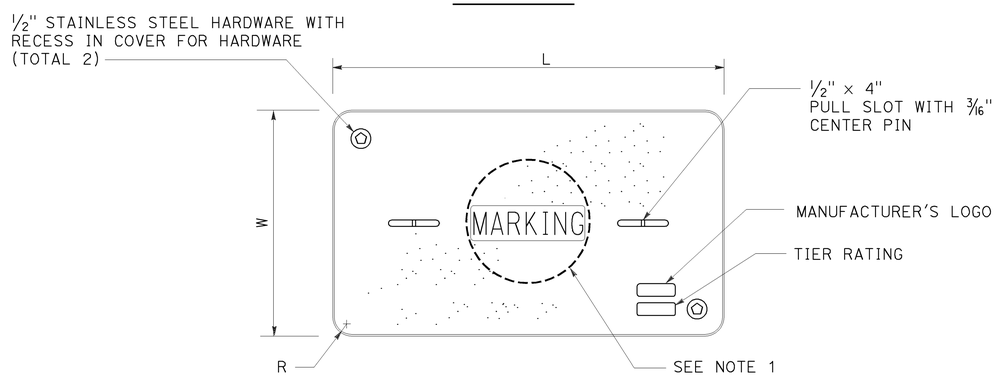

COVER TOP VIEW

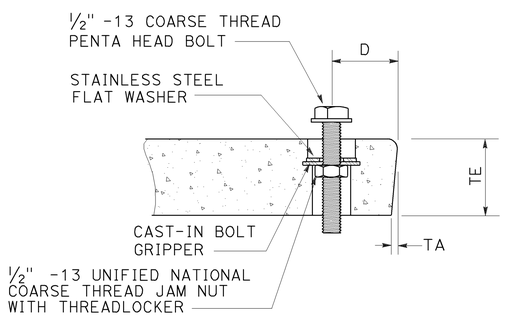

TYPICAL COVER CAPTIVE BOLT

OR SIMILAR

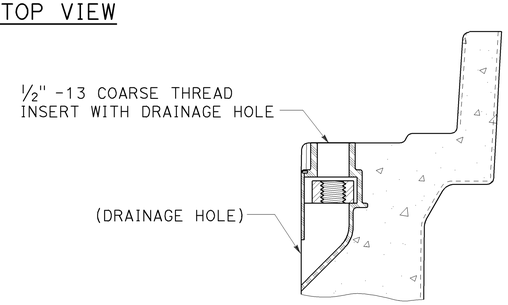

TYPICAL THREADED INSERT

OR SIMILAR

DIMENSION TABLE										
PULL BOX	PULL BOX			COVER						
	MINIMUM DEPTH BOX	MINIMUM DEPTH EXTENSION	MAXIMUM WEIGHT	L	W	R	TE	TA	D	MAXIMUM WEIGHT
No. 3½	12"	N/A	40 lb	1′ - 3⅜"	10⅛"	1⅜"	2"	⅛"	1¾"	30 lb
No. 5	12"	10"	55 lb	1′ - 11¼"	1′ - 1¾"	1⅜"	2"	⅛"	1¾"	60 lb
No. 6	12"	10"	70 lb	2′ - 6½"	1′ - 5½"	1⅜"	2"	⅛"	2"	85 lb

NOTES:

1. Pull box covers shall be marked as follows: "SERVICE" Service circuits between service point and service disconnect; "SPRINKLER-CONTROL" sprinkler control circuits, 50 V or less; "CALTRANS" on all pull boxes, except pull boxes marked "SPRINKLER-CONTROL"; and "TELEPHONE" Telephone service;

   A) No. 3½ pull box.
      1) "SIGNAL" - Traffic signal circuits with or without lighting or sign lighting circuits.
      2) "LIGHTING" - Lighting or sign lighting circuits where voltage is under 600 V.

   B) No. 5, 6, 9 or 9A pull box.
      1) "TRAFFIC SIGNAL" - Traffic signal circuits with or without lighting or sign lighting circuits.
      2) "LIGHTING" - Lighting or sign lighting circuits where voltage is under 600 V.
      3) "LIGHTING-HIGH VOLTAGE" - Lighting or sign lighting circuits where voltage is above 600 V.
      4) "IRRIGATION" - Circuits to irrigation controller 120 V or more.
      5) "RAMP METER" - Ramp meter circuits.
      6) "COUNT STATION" - Count or speed monitor circuits.
      7) "COMMUNICATIONS" - Communication circuits.
      8) "TOS COMMUNICATIONS" - TOS communication line.
      9) "TOS POWER" - TOS power.
      10) "TDC POWER" - Telephone demarcation cabinet power.
      11) "CCTV" - Closed circuit television circuits.
      12) "TMS" - Traffic monitoring station circuits.
      13) "CMS" - Changeable message sign circuits.
      14) "HAR" - Highway advisory radio circuits.
      15) "BOOSTER PUMP" - Booster pump circuit.

2. The nominal dimensions of the opening in which the cover sets shall be the same as the cover dimensions except the length and width dimensions shall be ⅛" greater.

3. Covers and boxes shall be interchangeable with California standard male and female gages. When interchanged with a standard male or female gage, the top surfaces shall be flush within ⅛". Top outside radius of covers and pull boxes shall have a ⅛" radius.

4. Pull box extension may be another pull box as long as the bottom edge of the pull box can fit into the cover opening.

5. All dimensions for the cover for non-traffic pull box are nominal values.

STATE OF CALIFORNIA
DEPARTMENT OF TRANSPORTATION

ELECTRICAL SYSTEMS (NON-TRAFFIC PULL BOX)

NO SCALE

RSP ES-8A DATED JULY 19, 2013 SUPERSEDES RSP ES-8A DATED JANUARY 20, 2012 THAT SUPPLEMENTS THE STANDARD PLANS BOOK DATED 2010.

REVISED STANDARD PLAN RSP ES-8A

2010 REVISED STANDARD PLAN RSP ES-8A

7-15-13

DIST	COUNTY	ROUTE	POST MILES TOTAL PROJECT	SHEET NO.	TOTAL SHEETS
04	SM	1,35,82,84, 109,280	Var	84	96

Theresa Gabriel
REGISTERED ELECTRICAL ENGINEER

July 19, 2013
PLANS APPROVAL DATE

REGISTERED PROFESSIONAL ENGINEER
Theresa Aziz Gabriel
No. E15129
Exp. 6-30-14
ELECTRICAL
STATE OF CALIFORNIA

THE STATE OF CALIFORNIA OR ITS OFFICERS OR AGENTS SHALL NOT BE RESPONSIBLE FOR THE ACCURACY OR COMPLETENESS OF SCANNED COPIES OF THIS PLAN SHEET.

TO ACCOMPANY PLANS DATED 4-28-14

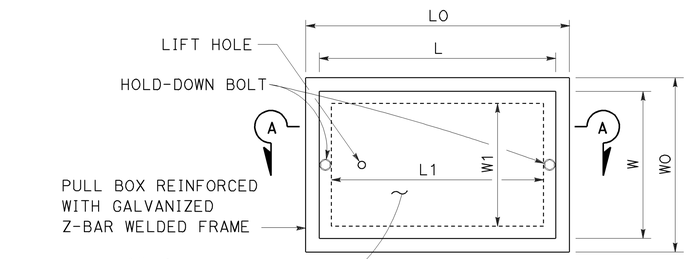

TOP VIEW

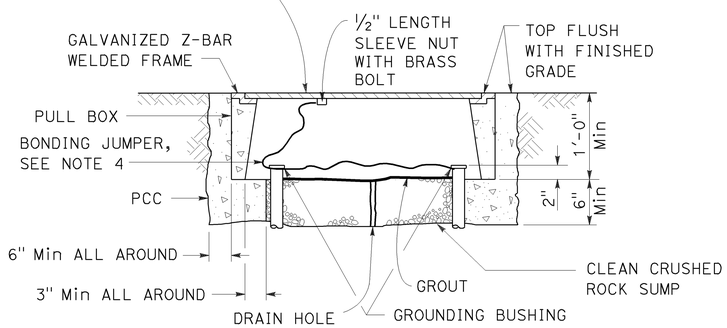

SECTION A-A

No. 3½(T), No. 5(T) AND No. 6(T) TRAFFIC PULL BOX

NOTES:

1. Traffic pull box shall be provided with steel cover and special concrete footing. Steel cover shall have embossed non-skid pattern.
2. Steel reinforcing shall be as regularly used in the standard products of the respective manufacturer.
3. Pull box covers shall be marked as follows: "SERVICE" Service circuits between service point and service disconnect; "SPRINKLER-CONTROL" Sprinkler control circuits, 50 V or less; "CALTRANS" On all pull boxes, except pull boxes marked "SPRINKLER-CONTROL"; and "TELEPHONE" Telephone service.
   - A) No. 3½(T) pull box.
     - 1) "SIGNAL" - Traffic signal circuits with or without lighting or sign lighting circuits.
     - 2) "LIGHTING" - Lighting or sign lighting circuits where voltage is under 600 V.
   - B) No. 5(T) or 6(T) pull box.
     - 1) "TRAFFIC SIGNAL" - Traffic signal circuits with or without lighting or sign lighting circuits.
     - 2) "LIGHTING" - Lighting or sign lighting circuits where voltage is under 600 V.
     - 3) "LIGHTING-HIGH VOLTAGE" - Lighting or sign lighting circuits where voltage is above 600 V.
     - 4) "IRRIGATION" - Circuits to irrigation controller 120 V or more.
     - 5) "RAMP METER" - Ramp meter circuits.
     - 6) "COUNT STATION" - Count or speed monitor circuits.
     - 7) "COMMUNICATION" - Communication circuits.
     - 8) "TOS COMMUNICATIONS" - TOS communications line.
     - 9) "TOS POWER" - TOS power.
     - 10) "TDC POWER" - Telephone demarcation cabinet power.
     - 11) "CCTV" - Closed circuit television circuits.
     - 12) "TMS" - Traffic monitoring station circuits.
     - 13) "CMS" - Changeable message sign circuits.
     - 14) "HAR" - Highway advisory radio circuits.
     - 15) "BOOSTER PUMP" - Booster pump circuit.
4. Bonding jumper for metal covers shall be 3' long, minimum.
5. The nominal dimensions of the opening in which the cover sets shall be the same as the cover dimensions except the length and width dimensions shall be ⅛" greater.
6. Covers and boxes shall be interchangeable with California standard male and female gages. When interchanged with a standard male or female gage, the top surfaces shall be flush within ⅛".

DIMENSION TABLE

PULL BOX	PULL BOX						COVER				
	MINIMUM * THICKNESS	MINIMUM DEPTH BOX AND EXTENSION	WO	LO	L1	W1	L **	W **	R	EDGE THICKNESS	EDGE TAPER
No. 3½(T)	1½"	1'-0"	1'-5"± 1"	1'-8⅞"±	1'-2½"±	10⅝"± 1"	1'-8"±	1'-1¾"±	0"	½"	NONE
No. 5(T)	1¾"	1'-0"	1'-11½"± 1"	2'-5½"±	1'-7"±	1'-1"± 1"	2'-3"±	1'-4"±	0"	½"	NONE
No. 6(T)	2"	1'-0"	2'-6"± 1"	2'-11½"±	1'-11½"±	1'-5"± 1"	2'-9"±	1'-8"±	0"	½"	NONE

* EXCLUDING CONDUIT WEB ** TOP DIMENSION

STATE OF CALIFORNIA
DEPARTMENT OF TRANSPORTATION

ELECTRICAL SYSTEMS (TRAFFIC PULL BOX)

NO SCALE

RSP ES-8B DATED JULY 19, 2013 SUPERSEDES RSP ES-8B DATED JANUARY 20, 2012 THAT SUPPLEMENTS THE STANDARD PLANS BOOK DATED 2010.

REVISED STANDARD PLAN RSP ES-8B

2010 REVISED STANDARD PLAN RSP ES-8B

Dist	COUNTY	ROUTE	POST MILES TOTAL PROJECT	SHEET No.	TOTAL SHEETS
04	SM	1,35,82,84, 109,280	Var	85	96

REGISTERED CIVIL ENGINEER

July 19, 2013
PLANS APPROVAL DATE

REGISTERED PROFESSIONAL ENGINEER
Stanley P. Johnson
No. C57793
Exp. 3-31-14
CIVIL
STATE OF CALIFORNIA

THE STATE OF CALIFORNIA OR ITS OFFICERS OR AGENTS SHALL NOT BE RESPONSIBLE FOR THE ACCURACY OR COMPLETENESS OF SCANNED COPIES OF THIS PLAN SHEET.

TO ACCOMPANY PLANS DATED 4-28-14

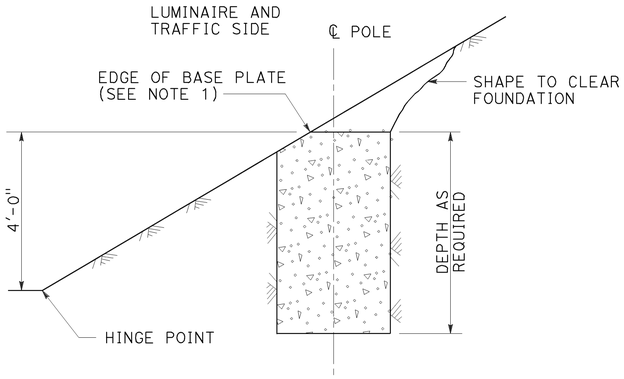

CUT SLOPES
STEEPER THAN 4:1,
LESS THAN 2:1
DETAIL A-1
See Note 2 and 3

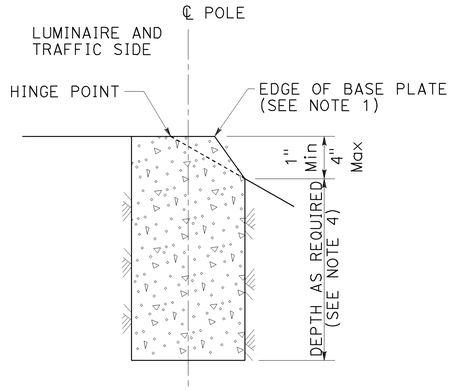

FILL SLOPES
STEEPER THAN 4:1,
LESS THAN 2:1
DETAIL A-2
See Note 2 and 3

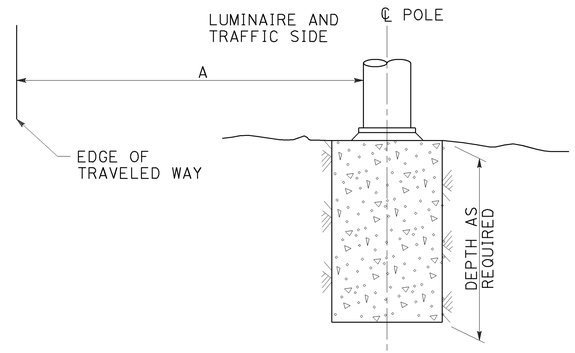

FLAT SECTIONS, CUT OR FILL SLOPES
4:1 OR FLATTER
DETAIL A-3
See Note 2

STANDARD TYPE	SETBACK (DIMENSION A)
32	30'-0" (Min)
31	20'-0" (Min)
15, 15D, 15-SB, 21, 21D, 30	ARM LENGTH (Min)

FOUNDATIONS ADJACENT TO ALL ROADWAYS EXCEPT
IN SIDEWALK, MEDIAN AND ISLAND AREAS
DETAIL A

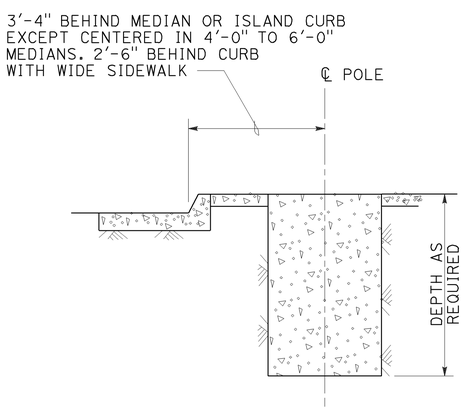

MEDIAN, ISLAND
OR WIDE SIDEWALK
DETAIL B-1
7' Wide and wider

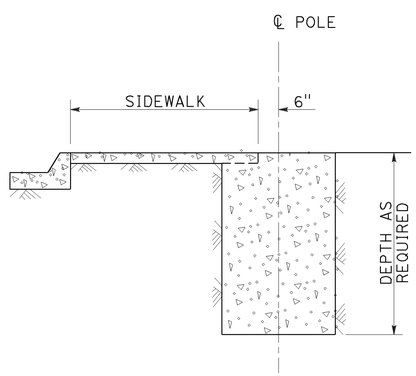

NARROW SIDEWALK
DETAIL B-2
Less than 7' wide

FOUNDATIONS IN SIDEWALK, MEDIAN AND ISLAND AREAS
DETAIL B

NOTES:

1. Where a portion of the foundation is above grade, the top edges shall have a 1" chamfer.
2. Slopes shall be horizontal to vertical ratio (Horizontal : Vertical).
3. Horizontal setbacks on cut and fill slopes steeper than 4:1 shall not exceed the distance shown for flat sections.
4. CIDH embedment depth shall be increased beyond standard depths by the diameter of the CIDH.

STATE OF CALIFORNIA
DEPARTMENT OF TRANSPORTATION

ELECTRICAL SYSTEMS (FOUNDATION INSTALLATIONS)

NO SCALE

RSP ES-11 DATED JULY 19, 2013 SUPERSEDES STANDARD PLAN ES-11
DATED MAY 20, 2011 - PAGE 488 OF THE STANDARD PLANS BOOK DATED 2010.

REVISED STANDARD PLAN RSP ES-11

2010 REVISED STANDARD PLAN RSP ES-11

7-9-13

DIST	COUNTY	ROUTE	POST MILES TOTAL PROJECT	SHEET No.	TOTAL SHEETS
04	SM	1,35,82,84, 109,280	Var	86	96

REGISTERED CIVIL ENGINEER 4-17-14 DATE

4-28-14
PLANS APPROVAL DATE

REGISTERED PROFESSIONAL ENGINEER SON THANH LY No. 72584 Exp. 6-30-14 CIVIL STATE OF CALIFORNIA

The State of California or its officers or agents shall not be responsible for the accuracy or completeness of scanned copies of this plan sheet.

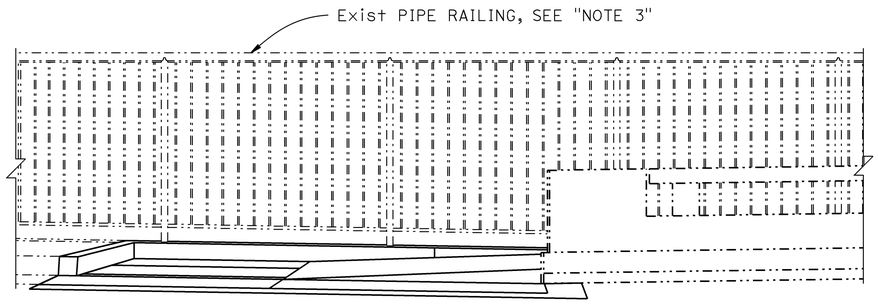

Pedestrian barricade not shown for clarity

ELEVATION

½" = 1'-0"

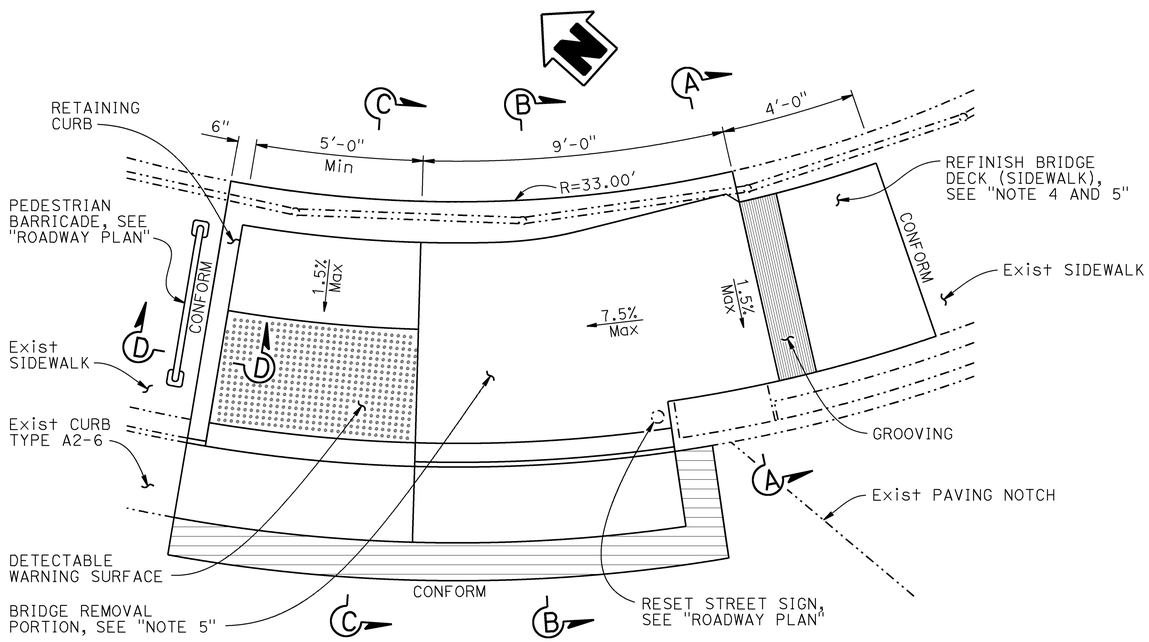

PLAN

½" = 1'-0"

RSP A88A — CURB RAMP CASE C (MODIFIED)

NOTE:
THE CONTRACTOR SHALL VERIFY ALL CONTROLLING FIELD DIMENSIONS BEFORE ORDERING OR FABRICATING ANY MATERIAL

INDEX TO PLANS

SHEET NO	TITLE
1	GENERAL PLAN
2	MISCELLANEOUS DETAILS NO. 1
3	MISCELLANEOUS DETAILS NO. 2

STANDARD PLANS DATED 2010

A10A	ABBREVIATIONS (SHEET 1 OF 2)
RSP A10B	ABBREVIATIONS (SHEET 2 OF 2)
A10C	LINES AND SYMBOLS (SHEET 1 OF 3)
A10D	LINES AND SYMBOLS (SHEET 2 OF 3)
A10E	LINES AND SYMBOLS (SHEET 3 OF 3)
RSP A87A	CURBS AND DRIVEWAYS
RSP A88A	CURB RAMP DETAILS

STANDARD PLAN SHEET NO.

DETAIL NO.

QUANTITIES

REFINISH BRIDGE DECK (SIDEWALK)	21 SQFT
BRIDGE REMOVAL (PORTION)	LUMP SUM
RESET PIPE RAILING	20 LF
MINOR HOT MIX ASPHALT	1 TON
MINOR CONCRETE (CURB, SIDEWALK AND CURB RAMP)	3 CY
DETECTABLE WARNING SURFACE	15 SQFT

LEGEND:

——— Indicates New Structure

-·-·-·- Indicates Existing Structure

▭ Indicates Hot Mix Asphalt

NOTES:

1. For "LOCATION 3 LAYOUT" see "ROADWAY PLANS"
2. For details not shown, see "STANDARD PLAN A87A AND A88A" sheets
3. Reset existing pipe rail withinin work area. Contractor to provide temporary railing as required
4. Transition existing sidewalk cross slope to new sidewalk cross slope
5. For limit of bridge removal (portion) and refinish bridge deck (sidewalk), see "MISCELLANEOUS DETAILS NO. 1" sheet
6. For "SECTION A-A", "SECTION B-B", "SECTION C-C" and "SECTION D-D", see "MISCELLANEOUS DETAILS NO. 2" sheet

Muthanna S. Omran
4-17-14 MUTHANNA OMRAN
DESIGN ENGINEER

	BY	CHECKED
DESIGN	Son Ly	Ghiath Taleb-Agha
DETAILS	Franklin Maagma	Ghiath Taleb-Agha
QUANTITIES	Ghiath Taleb-Agha	Son Ly

LOAD & RESISTANCE FACTOR DESIGN — LIVE LOADING:

	BY	CHECKED
LAYOUT	Son Ly	An Nguyen
SPECIFICATIONS	Jennifer Ramirez	PLANS AND SPECS COMPARED Jennifer Ramirez

ORIGINAL SCALE IN INCHES FOR REDUCED PLANS 0 1 2 3

STATE OF CALIFORNIA
DEPARTMENT OF TRANSPORTATION

DIVISION OF ENGINEERING SERVICES
STRUCTURE DESIGN
DESIGN BRANCH 16

BRIDGE NO. 35-0187
POST MILE 44.2

LOCATION 3 - SB OFF-RAMP TO PALOMA AVE
GENERAL PLAN

UNIT: 3617
PROJECT NUMBER & PHASE: 04130004711
CONTRACT NO.: 04-0G2221

DISREGARD PRINTS BEARING EARLIER REVISION DATES

REVISION DATES: 11-22-13 02-14-14 04-09-14 04-17-14

SHEET 1 OF 3

USERNAME = s135156 DATE PLOTTED => 28-APR-2014 TIME PLOTTED => 10:53

FILE => 35-0187-a-gp01.dgn

DIST	COUNTY	ROUTE	POST MILES TOTAL PROJECT	SHEET No.	TOTAL SHEETS
04	SM	1,35,82,84, 109,280	Var	87	96

REGISTERED CIVIL ENGINEER 4-17-14 DATE

4-28-14
PLANS APPROVAL DATE

REGISTERED PROFESSIONAL ENGINEER SON THANH LY No. 72584 Exp. 6-30-14 CIVIL STATE OF CALIFORNIA

The State of California or its officers or agents shall not be responsible for the accuracy or completeness of scanned copies of this plan sheet.

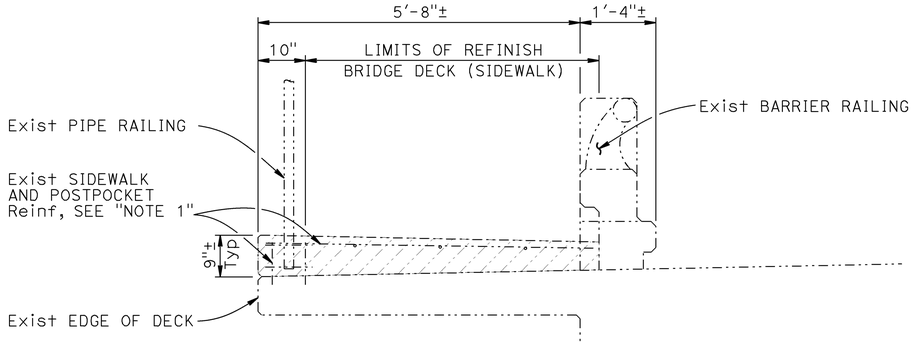

SECTION X-X

3/4" = 1'-0"

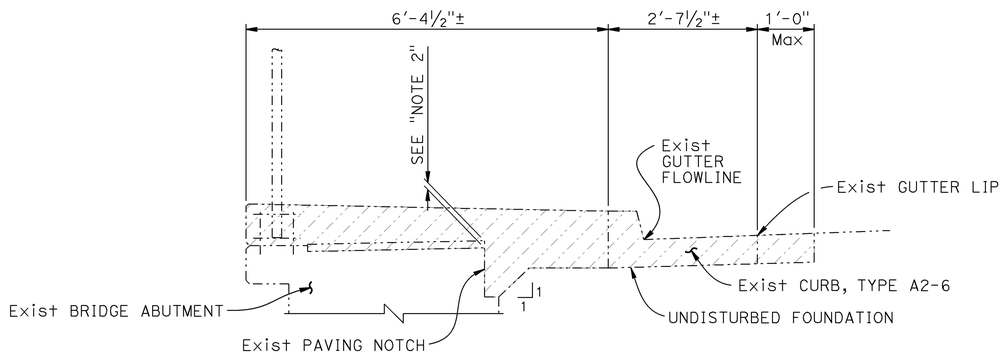

SECTION Y-Y

3/4" = 1'-0"

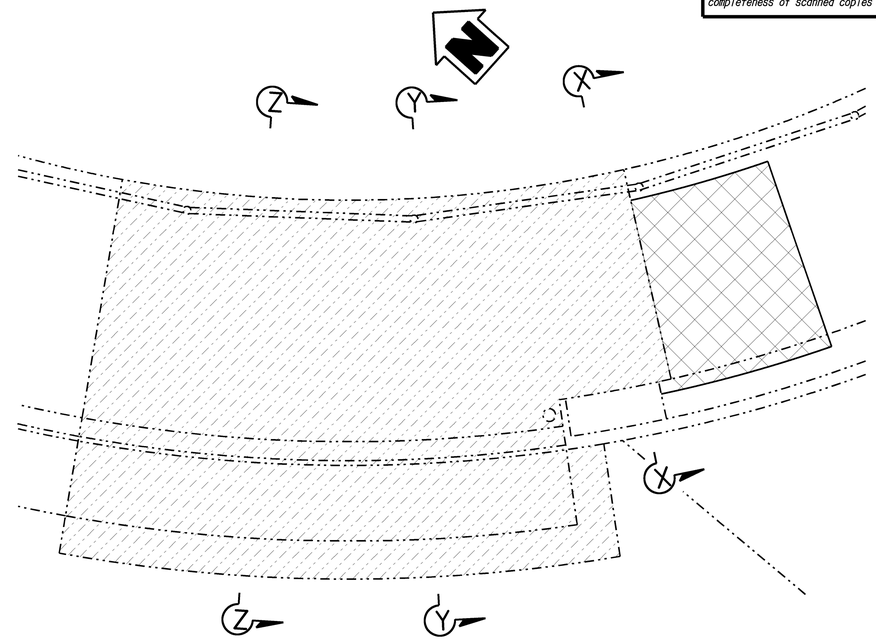

PLAN

1/2" = 1'-0"

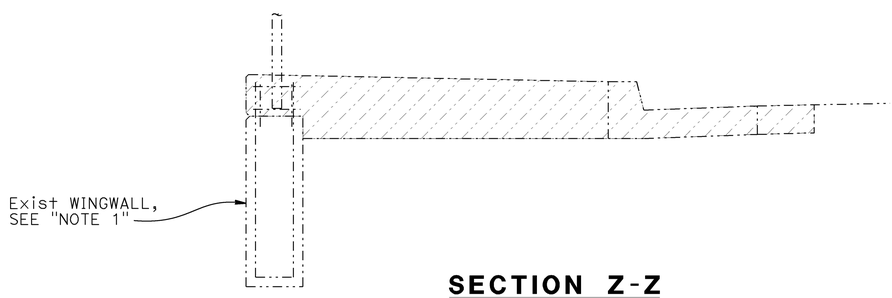

SECTION Z-Z

3/4" = 1'-0"

NOTE:
THE CONTRACTOR SHALL VERIFY ALL CONTROLLING FIELD DIMENSIONS BEFORE ORDERING OR FABRICATING ANY MATERIAL

LEGEND:

- Indicates New Structure
- Indicates Existing Structure
- Indicates Limits of Bridge Removal (Portion)
- Indicates Limits of Refinish Bridge Deck (Sidewalk)

NOTES:

1. Exist reinforcement to remain
2. Remove portion of existing bridge abutment, to provide minimum sidewalk thickness of 4". Existing bridge abutment reinforcement to remain

	BY	CHECKED
DESIGN	Son Ly	Ghiath Taleb-Agha
DETAILS	Franklin Maagma	Ghiath Taleb-Agha
QUANTITIES	Ghiath Taleb-Agha	Son Ly

STATE OF CALIFORNIA
DEPARTMENT OF TRANSPORTATION

DIVISION OF ENGINEERING SERVICES
STRUCTURE DESIGN
DESIGN BRANCH 16

BRIDGE NO. 35-0187
POST MILE 44.2

LOCATION 3 - SB OFF-RAMP TO PALOMA AVE
MISCELLANEOUS DETAILS NO. 1

STRUCTURES DESIGN DETAIL SHEET (ENGLISH) (REV. 09-01-10)

ORIGINAL SCALE IN INCHES FOR REDUCED PLANS 0 1 2 3

UNIT: 3617
PROJECT NUMBER & PHASE: 04130004711
CONTRACT NO.: 04-0G2221

DISREGARD PRINTS BEARING EARLIER REVISION DATES

REVISION DATES: 11-22-13 02-14-14 04-09-14 04-17-14

SHEET 2 OF 3

FILE => 35-0187-u-miscdt01.dgn

USERNAME => s135156 DATE PLOTTED => 28-APR-2014 TIME PLOTTED => 10:53

DIST	COUNTY	ROUTE	POST MILES TOTAL PROJECT	SHEET No.	TOTAL SHEETS
04	SM	1,35,82,84, 109,280	Var	88	96

REGISTERED CIVIL ENGINEER 4-17-14 DATE

4-28-14
PLANS APPROVAL DATE

REGISTERED PROFESSIONAL ENGINEER SON THANH LY No. 72584 Exp. 6-30-14 CIVIL STATE OF CALIFORNIA

The State of California or its officers or agents shall not be responsible for the accuracy or completeness of scanned copies of this plan sheet.

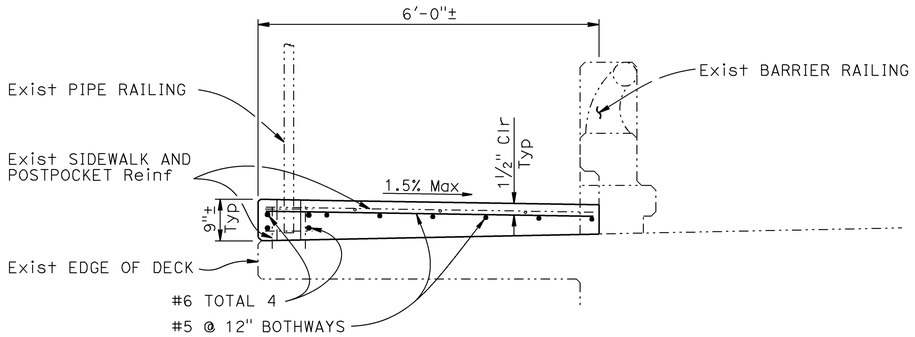

SECTION A-A

¾" = 1'-0"

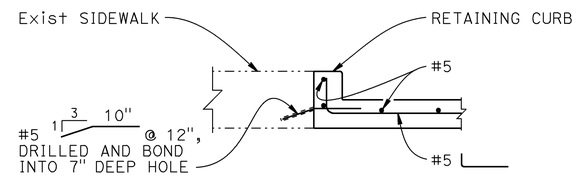

SECTION D-D

¾" = 1'-0"

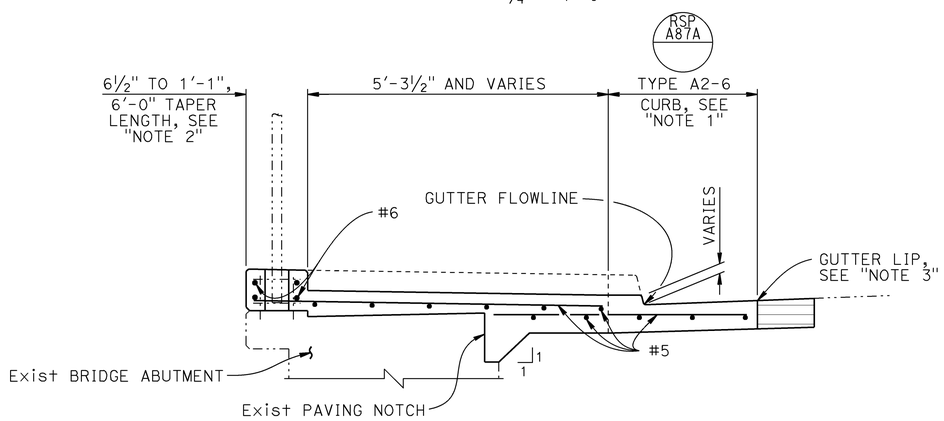

SECTION B-B

¾" = 1'-0"

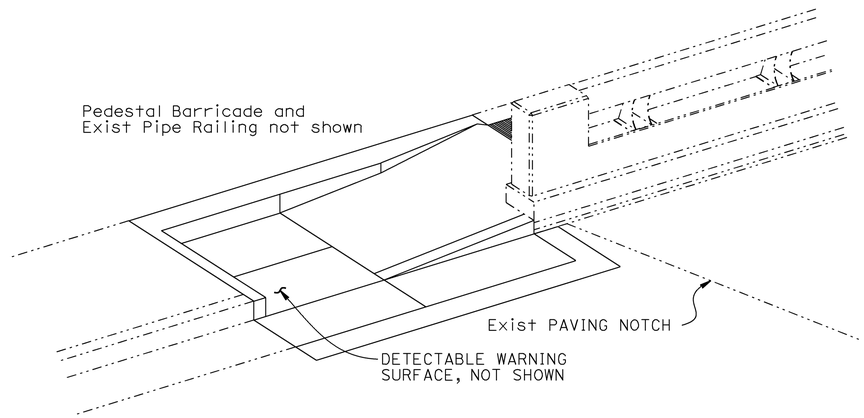

ISOMETRIC VIEW

NTS

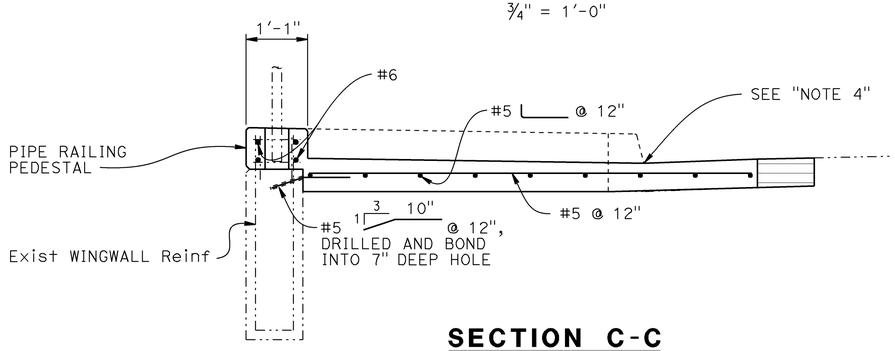

SECTION C-C

¾" = 1'-0"

LEGEND:

- Indicates New Structure
- Indicates Existing Structure
- Indicates Hot Mix Asphalt

NOTES:

1. For details not shown, see "STANDARD PLAN A87A AND A88A" sheets
2. 6½"Min @ Grooving, taper up to match Pipe Railing Pedestal in "SECTION C-C"
3. Counter slopes of adjoing gutters and road surfaces immediately adjacent to and within 24" of the curb ramp shall not to be steeper than 1:20 (5.0%). Gutter pan slope shall not exceed 1" of depth for each 24" of width
4. Transition from ramp and landing to walks, gutters or streets shall be flush (no lip) and free of abrupt changes

NOTE:
THE CONTRACTOR SHALL VERIFY ALL CONTROLLING FIELD DIMENSIONS BEFORE ORDERING OR FABRICATING ANY MATERIAL

	BY	CHECKED
DESIGN	Son Ly	Ghiath Taleb-Agha
DETAILS	Franklin Maagma	Ghiath Taleb-Agha
QUANTITIES	Ghiath Taleb-Agha	Son Ly

STATE OF CALIFORNIA
DEPARTMENT OF TRANSPORTATION

DIVISION OF ENGINEERING SERVICES
STRUCTURE DESIGN
DESIGN BRANCH 16

BRIDGE NO. 35-0187
POST MILE 44.2

LOCATION 3 - SB OFF-RAMP TO PALOMA AVE
MISCELLANEOUS DETAILS NO. 2

STRUCTURES DESIGN DETAIL SHEET (ENGLISH) (REV. 09-01-10)

ORIGINAL SCALE IN INCHES FOR REDUCED PLANS 0 1 2 3

UNIT: 3617
PROJECT NUMBER & PHASE: 04130004711
CONTRACT NO.: 04-0G2221

DISREGARD PRINTS BEARING EARLIER REVISION DATES

REVISION DATES: 11-22-13 02-14-14 04-09-14 04-17-14

SHEET 3 OF 3

FILE => 35-0187-u-miscdt02.dgn

USERNAME => s135156 DATE PLOTTED => 28-APR-2014 TIME PLOTTED => 10:53

DIST.	COUNTY	ROUTE	POST MILES TOTAL PROJECT	SHEET NO.	TOTAL SHEETS
04	SM	1,35,82,84, 109,280	Var	89	96

REGISTERED CIVIL ENGINEER — DATE 03-07-14

REGISTERED PROFESSIONAL ENGINEER — Tahir Rashid — No. 61932 — Exp. 9-30-15 — CIVIL — STATE OF CALIFORNIA

4-28-14
PLANS APPROVAL DATE

The State of California or its officers or agents shall not be responsible for the accuracy or completeness of scanned copies of this plan sheet.

ABBREVIATIONS

AAD	ADHESIVE ANCHORAGE DEVICE
AB	ANCHOR BOLT
AC	ASPHALT CONCRETE
Alt	ALTERNATE
APA	AMERICAN PLYWOOD ASSOCIATION
APC	ALTERNATIVE PIPE CULVERT
Bldg	BUILDING
Blkg	BLOCKING
BN	BOUNDARY NAILING
Btm	BOTTOM
CB	CARRIAGE BOLT
CIDH	CAST IN DRILLED HOLE
CJ	CONTROL JOINT
Clr	CLEAR
CMU	CONCRETE MASONRY UNIT
Conc	CONCRETE
Const	CONSTRUCTION
Cont	CONTINUOUS
CP	COMPLETE PENETRATION WELD
Dbl	DOUBLE
DF	DOUGLAS FIR
Dia	DIAMETER
DIP	DUSTILE IRON PIPE
DN	DIAMETER NOMINAL
do	DITTO
(E)	EXISTING
Ea	EACH
EL	ELEVATION
Elec	ELECTRICAL
Embed	EMBEDMENT
EN	EDGE NAIL
Eq	EQUAL
Exp	EXPANSION
FDGM	FREE DRAINING GRANULAR MATERIAL
FG	FINISH GRADE
FL	FLOW LINE
Flr	FLOOR
FN	FACE (FIELD) NAIL
FOC	FACE OF CONCRETE
FOM	FACE OF MASONRY
FOS	FACE OF STUD
Ftg	FOOTING
Ga	GAGE
Galv	GALVANIZED
GLM	GLUE LAMINATED MEMBER
Gyp Bd	GYPSUM BOARD
HD	HOLDOWN
Hex	HEXAGON
Horiz	HORIZONTAL
HSB	HIGH STRENGTH BOLT
HSS	HOLLOW STRUCTURAL SECTION
Jt	JOINT
LOL	LAYOUT LINE
LVL	LAMINATED VENEER LUMBER
m	METER
Max	MAXIMUM
MEA	MECHANICAL EXPANSION ANCHOR
Mech	MECHANICAL
Mfr	MANUFACTURER
mm	MILLIMETER
Min	MINIMUM
MIW	MALLEABLE IRON WASHER
OC	ON CENTER
OG	ORIGINAL GRADE
OH	OPPOSITE HAND
Opt	OPTIONAL
P	PITCH
PDF	POWER DRIVEN FASTENER
Plwd	PLYWOOD
PT	PRESSURE TREATED
PW	PUDDLE WELD
PWB	PREFABRICATED WOOD I BEAM
RCP	REINFORCED CONCRETE PIPE
Reinf	REINFORCED, REINFORCING
Req'd	REQUIRED
SDSTS	SELF DRILL, SELF TAP SCREW
Sim	SIMILAR
SPS	STRUCTURAL PLYWOOD SHEATHING
Sq	SQUARE
Stagg	STAGGERED
Std	STANDARD
SW	STUD WELD
Sym	SYMMETRICAL
T&G	TONGUE-AND-GROOVE
TN	TOE NAIL
TS	TUBE STEEL
Typ	TYPICAL
UON	UNLESS OTHERWISE NOTED
Vert	VERTICAL

SYMBOLS

BLOCKING IN SECTION OR ELEVATION

CONTINUOUS MEMBER IN SECTION

END OF MEMBER

BEARING WALL

SHEAR WALL

X XXXX — LENGTH; SHEARWALL SCHEDULE SYMBOL; REFERENCE

GLUE LAMINATED MEMBER SECTION

NORTH ARROW

X STX-X — PARTIAL SECTION CUT

X STX-X — FULL SECTION CUT

X — REVISION CALLOUT

A — GRID LINE INDICATOR

℄ CENTER LINE

$ STATION LINE

ℙ STEEL PLATE

ø DIAMETER

⌑ SQUARE

CMU WALL ON PLAN VIEWS

DROPPED SLAB ON PLAN VIEWS

REINFORCED CONCRETE

SAND

STRUCTURE BACKFILL

STRUCTURE EXCAVATION

CONCRETE REMOVAL

ORIGINAL GROUND

LIMITS OF STRUCTURE BACKFILL (SHOWN ON PLAN VIEWS)

FREE DRAINING GRANULAR MATERIAL

X — BOTTOM OF FOOTING

ELEVATION OR WORKING POINT

EXISTING FEATURES

HOLDOWN, Typ
Simpson / USP / Equal — (MANUFACTURERS ARE THOSE NOTED IN THE ORDER SHOWN)

FRAME CONNECTOR
Simpson / USP / Equal — (MANUFACTURERS ARE THOSE NOTED IN THE ORDER SHOWN)

3 5b ST-1 — DETAIL NUMBER OR NOTE NUMBER; ADDITIONAL REFERENCE (IF REQUIRED); SHEET NUMBER

NOTE: SPECIFIC DETAILS OR NOTES ON OTHER SHEETS SHALL PREVAIL OVER STANDARD DETAILS AND NOTES ON THIS SHEET

STANDARD DRAWING
FILE NO. XS-25-0 — DRAWING DATE 1-04
DESIGN BY Sean Samad — CHECKED Joe Schmidt — APPROVED R E Travis
DETAILS BY Peter F. von Sauvage, II — CHECKED Sandra Wong
SUBMITTED BY Sean Samad, DESIGN ENGINEER — DESIGN SUPERVISOR

STATE OF CALIFORNIA DEPARTMENT OF TRANSPORTATION

DIVISION OF ENGINEERING SERVICES ARCHITECTURAL AND STRUCTURAL DESIGN

BRIDGE NO. — POST MILE 9.0

ROUTE 82 & 38TH AVE

LEGEND

SHEET ST-1

TAEMWW Imperial Rev. 7/10

ORIGINAL SCALE IN INCHES FOR REDUCED PLANS 0 1 2 3

UNIT 3581
PROJECT NUMBER & PHASE 04130004711
EA 04-0G2221

DISREGARD PRINTS BEARING EARLIER REVISION DATES → 1-16-04 04-23-12 08-24-12

REVISION DATES (PRELIMINARY STAGE ONLY) — SHEET — OF

01-MAY-2014 09:38

04130004711we004.dgn

DIST.	COUNTY	ROUTE	POST MILES TOTAL PROJECT	SHEET NO.	TOTAL SHEETS
04	SM	1,35,82,84, 109,280	Var	90	96

REGISTERED CIVIL ENGINEER — DATE 03-07-14

REGISTERED PROFESSIONAL ENGINEER Tahir Rashid No. 61932 Exp. 9-30-15 CIVIL STATE OF CALIFORNIA

4-28-14
PLANS APPROVAL DATE

The State of California or its officers or agents shall not be responsible for the accuracy or completeness of scanned copies of this plan sheet.

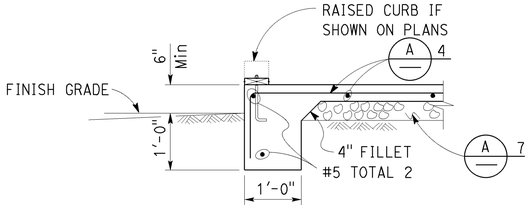

1 EXTERIOR FOOTING
NO SCALE

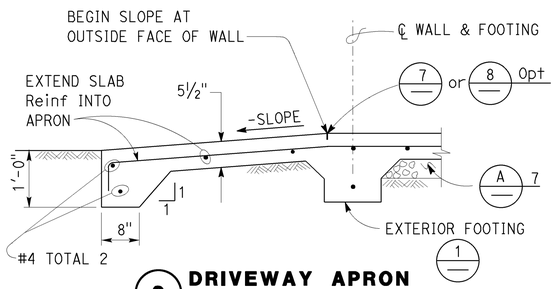

2 DRIVEWAY APRON
NO SCALE

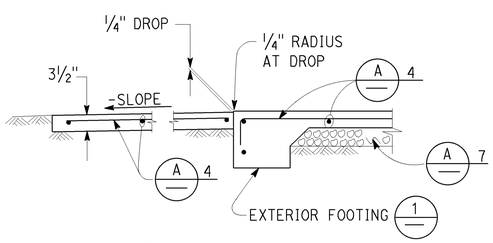

3 WALKWAY APRON
NO SCALE

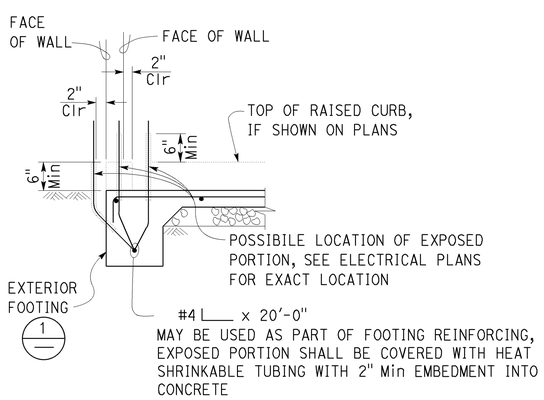

4 GROUND BAR DETAIL
NO SCALE

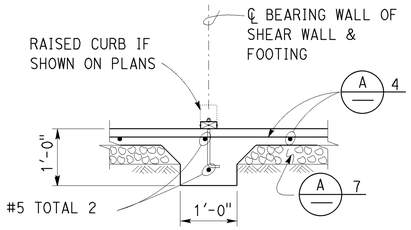

5 INTERIOR FOOTING
NO SCALE

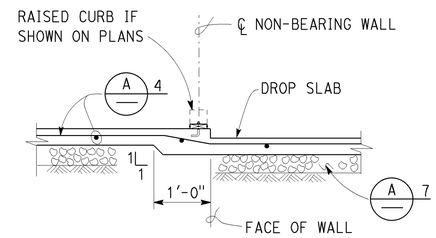

6 DROP SLAB AT NON-BEARING WALL
NO SCALE

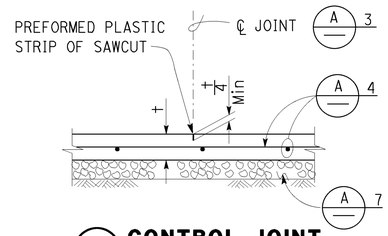

7 CONTROL JOINT
NO SCALE

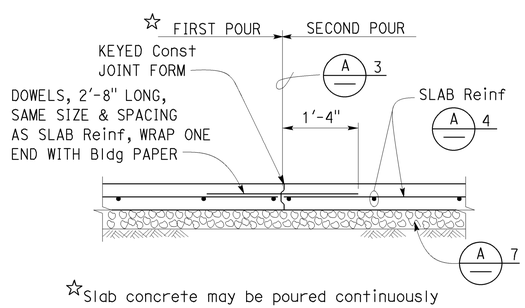

☆Slab concrete may be poured continuously across the Control Joint, to cover as large an area as practical.

8 CONTRACTION JOINT
NO SCALE

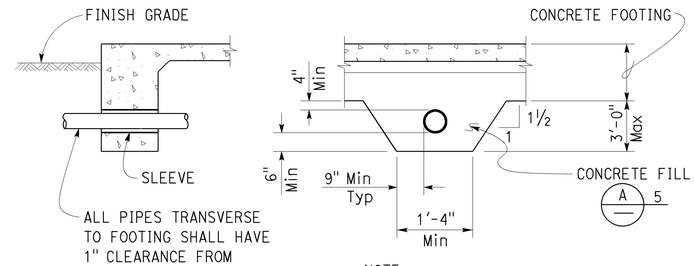

NOTE:
No Pipes Permitted beneath Interior or Exterior Isolated Footing.

9 PIPE DETAILS THROUGH FOOTING
NO SCALE

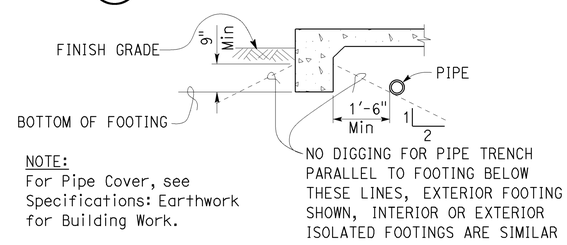

NOTE:
For Pipe Cover, see Specifications: Earthwork for Building Work.

10 PIPE DETAILS PARALLEL TO FOOTING
NO SCALE

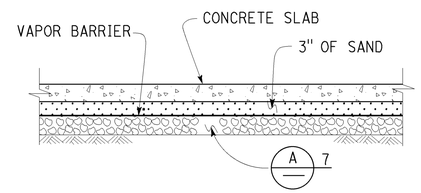

11 MOISTURE BARRIER
NO SCALE

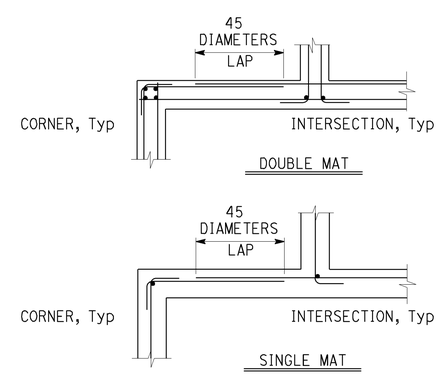

12 CORNER/INTERSECTION REINF SPLICE
NO SCALE

A CONCRETE NOTES

1. The following minimum concrete cover shall be provided for reinforcement.

	Minimum Cover
a. Concrete cast against and permanently exposed to earth	3"
b. Concrete exposed to earth or weather but cast in forms:	
#6 thru #18 bars	2"
#5 bar and smaller, W31 or D31 Wire, and smaller	1½"
c. Concrete not exposed to weather or in contact with ground: Slabs, Walls and Joists:	
#14 and #18 Bar	1½"
#11 Bar and smaller	¾"
Beams and Columns: Primary Reinforcement, Ties, Stirrups and Spirals	1½"

2. Splices in continuous reinforcement as in Walls, Wall Footings, etc. #8 or smaller shall have a lap of 45 diameters and the splices in adjacent bars shall not be less than 5'-0" apart.

   Continuous Bars in spandrels, Wall Beams, etc. shall lap Top Bars at center of span and Bottom Bars at supports.

3. Contraction Joints and Control Joints shall divide slab into areas not exceeding 25 square yards without reentrant corners and with length to width ratios not exceeding 1.5 to 1. Joint spacing shall not exceed 15'-0".

4.

Slab Thickness (t)	Reinforcement
3½"	#3 @ 18 Each way, place in center of Slab
5½"	#4 @ 18 Each way, place in center of Slab

5. Concrete fill is to be placed before Footing is poured. Make the same width as the Footing and the full width of the Pipe trench. Concrete fill not required for pipes less than 2" diameter for pipes more than 3'-0" below bottom of footing.

6. See Mechanical and Architectural Plans for size and locations of pipe, vents, ducts and other similar openings. See Electrical Plans for conduits and outlet boxes in floors, walls, etc.

7. Place 4" of free draining granular material under slabs.

NOTE: SPECIFIC DETAILS OR NOTES ON OTHER SHEETS SHALL PREVAIL OVER STANDARD DETAILS AND NOTES ON THIS SHEET

STANDARD DRAWING

FILE NO. XS-25-1	DESIGN BY Sean Samuel	CHECKED Lee Sanders	APPROVED RE Travis
DRAWING DATE 1-04	DETAILS BY Peter T. von Sauvage, III	CHECKED	DESIGN SUPERVISOR
	SUBMITTED BY Sean Samuel, DESIGN ENGINEER		

STATE OF CALIFORNIA DEPARTMENT OF TRANSPORTATION

DIVISION OF ENGINEERING SERVICES ARCHITECTURAL AND STRUCTURAL DESIGN

BRIDGE NO. — POST MILE 9.0

ROUTE 82 & 38TH AVE

CONCRETE STANDARD

SHEET ST-2

TAEMWW Imperial Rev. 7/10

SCALE: ALL DIMENSIONS ARE IN MILLIMETERS UNLESS OTHERWISE NOTED.

ORIGINAL SCALE IN INCHES FOR REDUCED PLANS 0 1 2 3

UNIT 3581
PROJECT NUMBER & PHASE 04130004711
EA 04-0G2221

DISREGARD PRINTS BEARING EARLIER REVISION DATES → 1-16-04 11-14-05 04-27-12 08-24-12

REVISION DATES (PRELIMINARY STAGE ONLY) SHEET OF

01-MAY-2014 09:51

04130004711we005.dgn

PROJECT DESIGN CRITERIA

The building work on this project has been designed to conform to the 2010 California Building Code (2009 IBC).

LOADS

LIVE LOAD: = 100 psf

WHEEL LOAD: = 10 kip

MATERIALS

REINFORCED CONCRETE: (Ultimate Strength Design) :

$f'c$ = 3,000 psi

f_y = 60,000 psi

STRUCTURAL STEEL: (Allowable Strength Design) :

Channels, Angles & Misc. Shapes F_y = 36 ksi

Hollow Structural Section (HSS) F_y = 46 ksi

FOUNDATION:

Soils report dated : N/A

DETAIL NOTES

1. For Concrete see:
   "Concrete Standard"

Dist	COUNTY	ROUTE	POST MILES TOTAL PROJECT	SHEET No.	TOTAL SHEETS
04	SM	1,35,82,84, 109,280	Var	91	96

REGISTERED CIVIL ENGINEER 03-07-14 DATE

4-28-14

PLANS APPROVAL DATE

REGISTERED PROFESSIONAL ENGINEER Tahir Rashid No. 61932 Exp. 9-30-15 CIVIL STATE OF CALIFORNIA

The State of California or its officers or agents shall not be responsible for the accuracy or completeness of scanned copies of this plan sheet.

DESIGN	BY Tahir Rashid	CHECKED Thomas Tong	
DETAILS	BY Daniel Harakh	CHECKED Tahir Rashid	
QUANTITIES	BY	CHECKED	

STATE OF CALIFORNIA DEPARTMENT OF TRANSPORTATION

DIVISION OF ENGINEERING SERVICES ARCHITECTURAL AND STRUCTURAL DESIGN

BRIDGE No.

POST MILE 9.0

ROUTE 82 & 38TH AVE

DESIGN CRITERIA AND DETAIL NOTES

SHEET ST1-0

TAEMWW Imperial - CCSC Rev. 02/13

ORIGINAL SCALE IN INCHES FOR REDUCED PLANS 0 1 2 3

UNIT: 3581 CONTRACT No.: 0G2221

PROJECT NUMBER & PHASE: 04130004711

DISREGARD PRINTS BEARING EARLIER REVISION DATES → 09-14-09 08-24-12 03-06-14

REVISION DATES (PRELIMINARY STAGE ONLY) SHEET OF

01-MAY-2014 09:52

O:\0g220\DRAFTING\DRAWING_FILES\0g2224\Change To Tiff File\0413000471we006.dgn

Dist	COUNTY	ROUTE	POST MILES TOTAL PROJECT	SHEET No.	TOTAL SHEETS
04	SM	1,35,82,84, 109,280	Var	92	96

REGISTERED CIVIL ENGINEER — DATE 03-07-14

4-28-14
PLANS APPROVAL DATE

REGISTERED PROFESSIONAL ENGINEER — Tahir Rashid — No. 61932 — Exp. 9-30-15 — CIVIL — STATE OF CALIFORNIA

The State of California or its officers or agents shall not be responsible for the accuracy or completeness of scanned copies of this plan sheet.

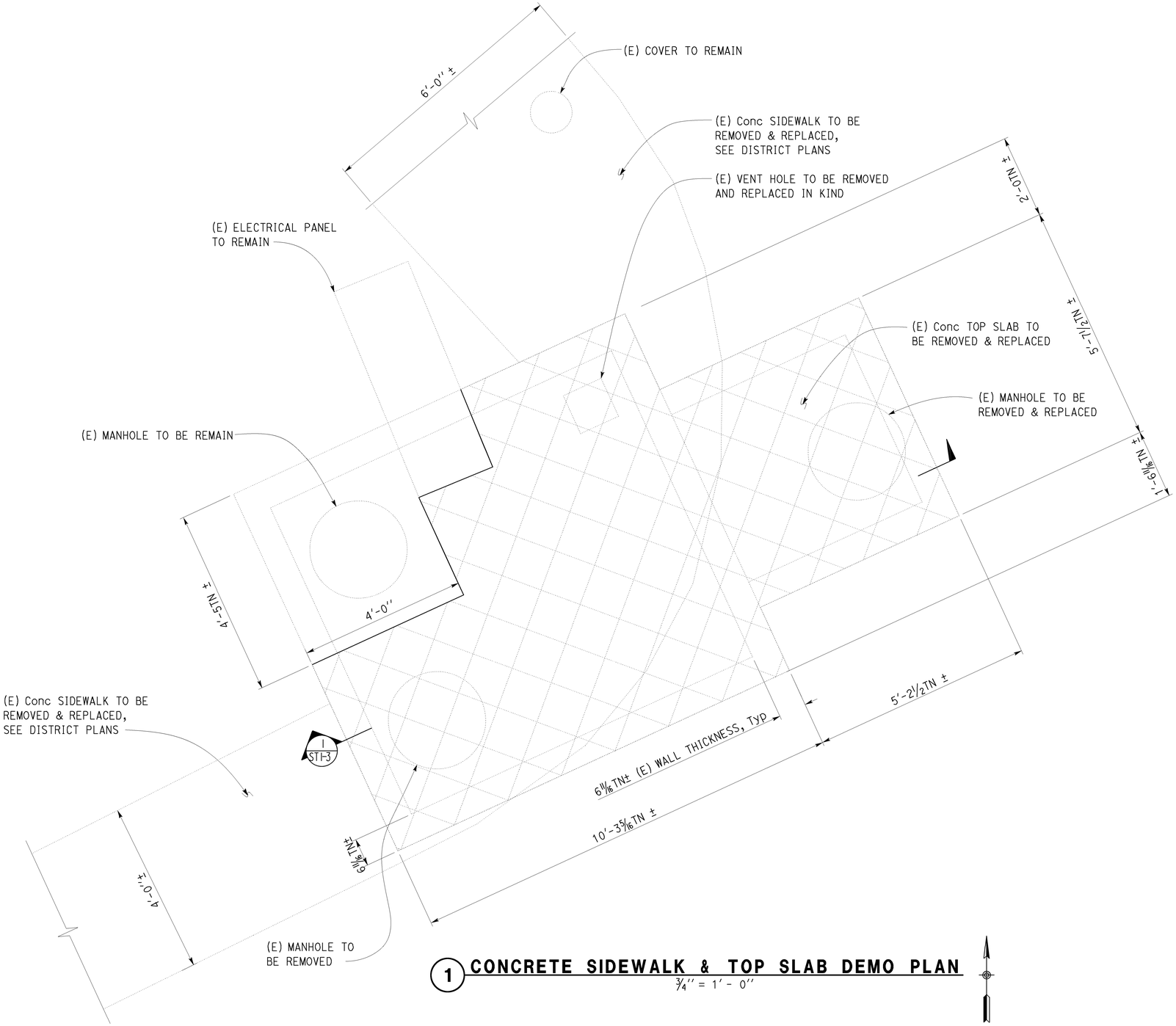

1 CONCRETE SIDEWALK & TOP SLAB DEMO PLAN

¾" = 1' - 0"

A NOTES

1. Must verify all controlling field dimensions before ordering or fabricating any material.

DESIGN	BY Tahir Rashid	CHECKED Thomas Tong	
DETAILS	BY Daniel Harakh	CHECKED Tahir Rashid	
QUANTITIES	BY	CHECKED	

DESIGN ENGINEER

STATE OF CALIFORNIA DEPARTMENT OF TRANSPORTATION

DIVISION OF ENGINEERING SERVICES ARCHITECTURAL AND STRUCTURAL DESIGN

BRIDGE No.

POST MILE 9.0

ROUTE 82 & 38TH AVE

CONCRETE DEMO PLAN

SHEET ST1-1

TAEMWW Imperial - CCSC Rev. 02/13

ORIGINAL SCALE IN INCHES FOR REDUCED PLANS 0 1 2 3

UNIT: 3581 CONTRACT No.: 0G2221
PROJECT NUMBER & PHASE: 04130004711

DISREGARD PRINTS BEARING EARLIER REVISION DATES → REVISION DATES (PRELIMINARY STAGE ONLY) 03-28-13 09-18-13 10-03-13 03-05-14 03-07-14

SHEET OF

01-MAY-2014 08:53

O:\0g220\DRAFTING\DRAWING_FILES\0g2224\Change To Tiff File\0413000471we007.dgn

Dist	COUNTY	ROUTE	POST MILES TOTAL PROJECT	SHEET No.	TOTAL SHEETS
04	SM	1,35,82,84, 109,280	Var	93	96

REGISTERED CIVIL ENGINEER — DATE 03-07-14

PLANS APPROVAL DATE 4-28-14

REGISTERED PROFESSIONAL ENGINEER — Tahir Rashid — No. 61932 — Exp. 9-30-15 — CIVIL — STATE OF CALIFORNIA

The State of California or its officers or agents shall not be responsible for the accuracy or completeness of scanned copies of this plan sheet.

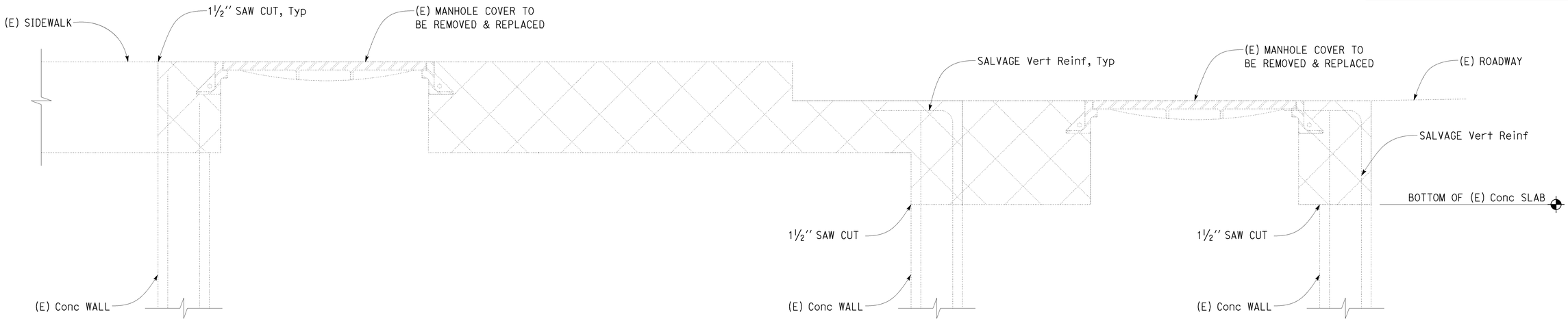

1 DEMO OF PUMP PLANT TOP SLAB

1½'' = 1' - 0''

DESIGN	BY Tahir Rashid	CHECKED Thomas Tong	
DETAILS	BY Daniel Harakh	CHECKED Tahir Rashid	
QUANTITIES	BY	CHECKED	

STATE OF CALIFORNIA
DEPARTMENT OF TRANSPORTATION

DIVISION OF ENGINEERING SERVICES
ARCHITECTURAL AND STRUCTURAL DESIGN

BRIDGE No.

POST MILE 9.0

ROUTE 82 & 38TH AVE

DEMO OF PUMP PLANT TOP SLAB

SHEET ST1-2

TAEMWW Imperial - CCSC Rev. 02/13

ORIGINAL SCALE IN INCHES FOR REDUCED PLANS 0 1 2 3

UNIT: 3581 CONTRACT No.: 0G2221
PROJECT NUMBER & PHASE: 04130004711

DISREGARD PRINTS BEARING EARLIER REVISION DATES → 03-05-14 03-07-14

REVISION DATES (PRELIMINARY STAGE ONLY) SHEET OF

01-MAY-2014 09:54

O:\0g220\DRAFTING\DRAWING_FILES\0g2224\Change To Tiff File\0413000471we008.dgn

Dist	COUNTY	ROUTE	POST MILES TOTAL PROJECT	SHEET No.	TOTAL SHEETS
04	SM	1,35,82,84, 109,280	Var	94	96

REGISTERED CIVIL ENGINEER — DATE 03-07-14

4-28-14
PLANS APPROVAL DATE

REGISTERED PROFESSIONAL ENGINEER — Tahir Rashid — No. 61932 — Exp. 9-30-15 — CIVIL — STATE OF CALIFORNIA

The State of California or its officers or agents shall not be responsible for the accuracy or completeness of scanned copies of this plan sheet.

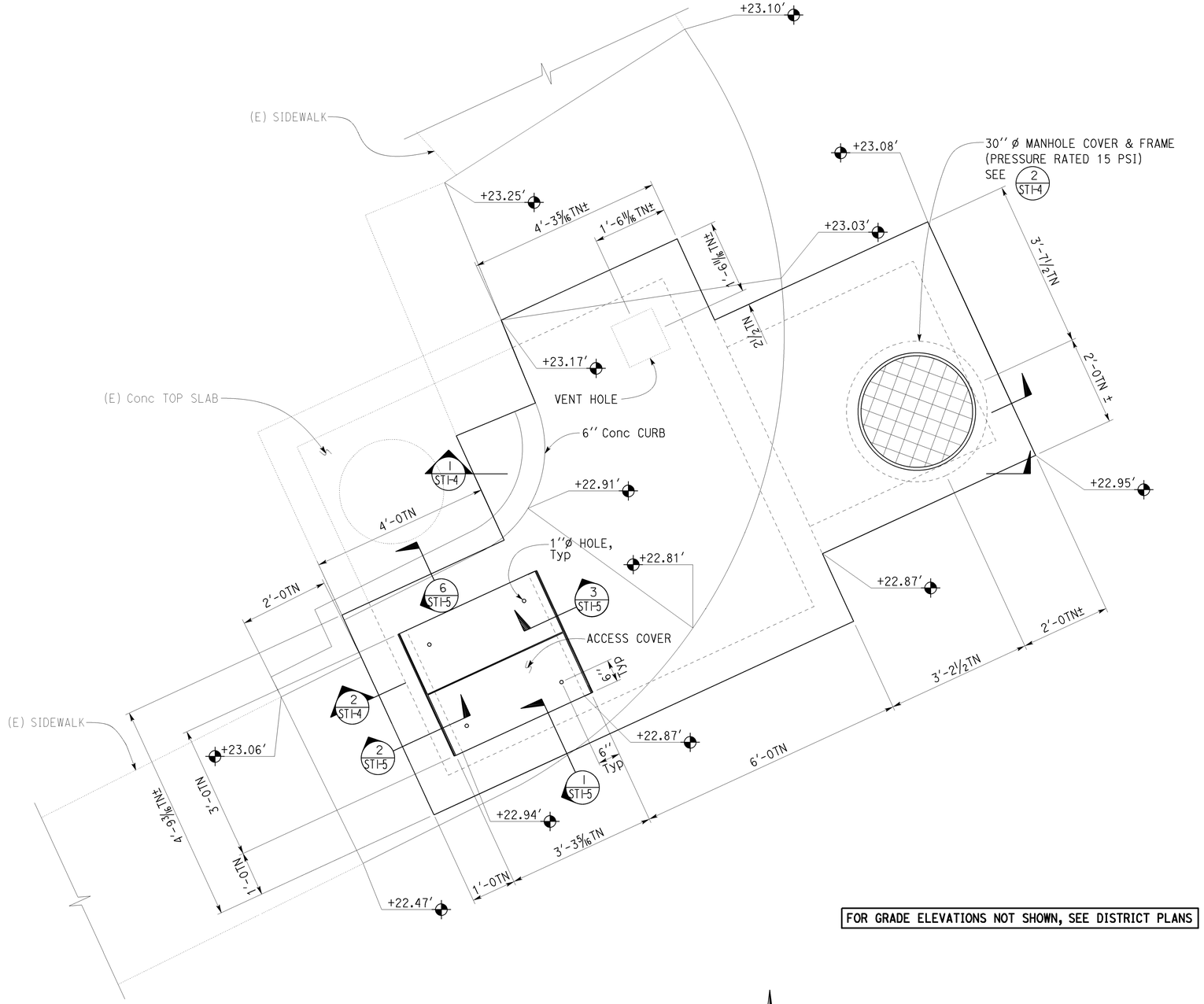

FOR GRADE ELEVATIONS NOT SHOWN, SEE DISTRICT PLANS

1 CONCRETE TOP SLAB PLAN

3/4'' = 1' - 0''

A NOTES

1. Must verify all controlling field dimensions before ordering or fabricating any material.
2. Must verify all Concrete slab elevations per District Layout Plan.
3. For Sidewalk ADA Improvement See District Plans.

	BY	CHECKED
DESIGN	Tahir Rashid	Thomas Tong
DETAILS	Daniel Harakh	Tahir Rashid
QUANTITIES		

STATE OF CALIFORNIA
DEPARTMENT OF TRANSPORTATION

DIVISION OF ENGINEERING SERVICES
ARCHITECTURAL AND STRUCTURAL DESIGN

BRIDGE No.
POST MILE 9.0

ROUTE 82 & 38TH AVE

CONCRETE TOP SLAB PLAN

SHEET ST1-3

TAEMWW Imperial - CCSC Rev. 02/13

ORIGINAL SCALE IN INCHES FOR REDUCED PLANS 0 1 2 3

UNIT: 3581 CONTRACT No.: 0G2221
PROJECT NUMBER & PHASE: 04130004711

DISREGARD PRINTS BEARING EARLIER REVISION DATES → 04-03-13 09-19-13 10-03-13 12-26-13 03-06-14 03-07-14

REVISION DATES (PRELIMINARY STAGE ONLY) SHEET OF

01-MAY-2014 09:55

O:\0g220\DRAFTING\DRAWING_FILES\0g2224\Change To Tiff File\0413000471we009.dgn

Dist	COUNTY	ROUTE	POST MILES TOTAL PROJECT	SHEET No.	TOTAL SHEETS
04	SM	1,35,82,84, 109,280	Var	95	96

REGISTERED CIVIL ENGINEER 03-07-14 DATE

4-28-14
PLANS APPROVAL DATE

REGISTERED PROFESSIONAL ENGINEER Tahir Rashid No. 61932 Exp. 9-30-15 CIVIL STATE OF CALIFORNIA

The State of California or its officers or agents shall not be responsible for the accuracy or completeness of scanned copies of this plan sheet.

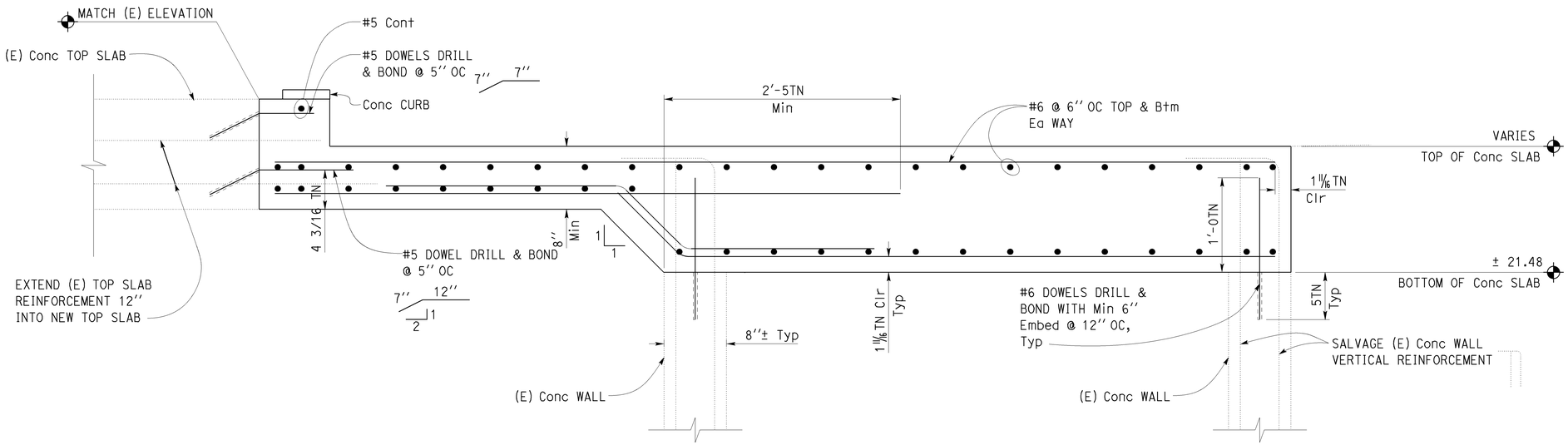

1 MODIFIED PUMP PLANT TOP SLAB

1½'' = 1' - 0''

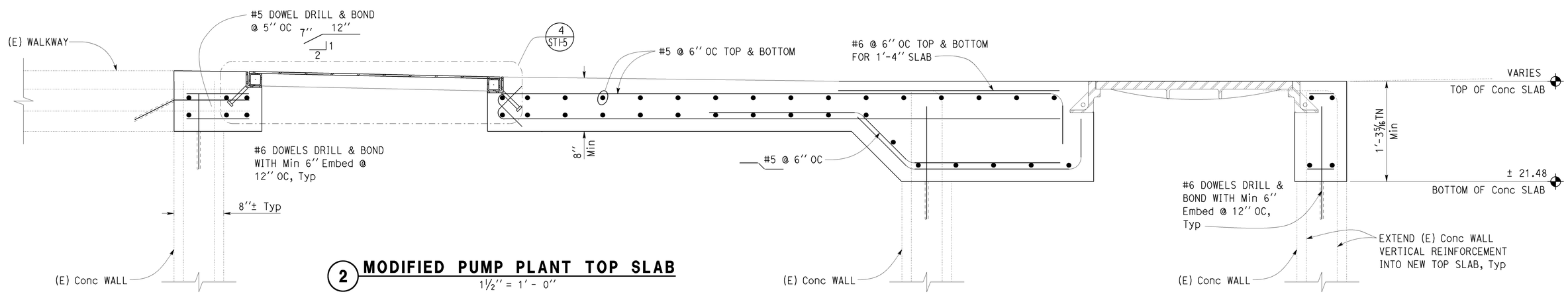

2 MODIFIED PUMP PLANT TOP SLAB

1½'' = 1' - 0''

NOTE:
Must verify all controlling field dimensions before ordering or fabricating any material.

DESIGN	BY Tahir Rashid	CHECKED Thomas Tong	
DETAILS	BY Daniel Harakh	CHECKED Tahir Rashid	
QUANTITIES	BY	CHECKED	

STATE OF CALIFORNIA DEPARTMENT OF TRANSPORTATION

DIVISION OF ENGINEERING SERVICES ARCHITECTURAL AND STRUCTURAL DESIGN

BRIDGE No.

POST MILE 9.0

ROUTE 82 & 38TH AVE

CONCRETE SIDEWALK SECTIONS

SHEET ST1-4

TAEMWW Imperial - CCSC Rev. 02/13

ORIGINAL SCALE IN INCHES FOR REDUCED PLANS 0 1 2 3

UNIT: 3581 CONTRACT No.: 0G2221
PROJECT NUMBER & PHASE: 04130004711

DISREGARD PRINTS BEARING EARLIER REVISION DATES → REVISION DATES (PRELIMINARY STAGE ONLY) 04-03-13 09-19-13 12-26-13 03-03-14 03-07-14 SHEET OF

01-MAY-2014 09:56

O:\0g220\DRAFTING\DRAWING_FILES\0g2224\Change To Tiff File\0413000471we010.dgn

Dist	COUNTY	ROUTE	POST MILES TOTAL PROJECT	SHEET No.	TOTAL SHEETS
04	SM	1,35,82,84, 109,280	Var	96	96

REGISTERED CIVIL ENGINEER — DATE 03-07-14

4-28-14
PLANS APPROVAL DATE

REGISTERED PROFESSIONAL ENGINEER — Tahir Rashid — No. 61932 — Exp. 9-30-15 — CIVIL — STATE OF CALIFORNIA

The State of California or its officers or agents shall not be responsible for the accuracy or completeness of scanned copies of this plan sheet.

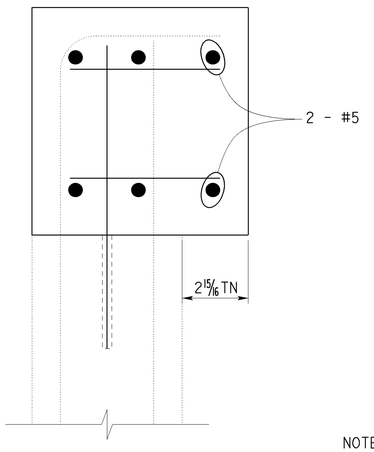

1 PUMP PLANT TOP SLAB AT OPENING
3'' = 1' - 0''

NOTE:
For Items Not Noted
See 2/STI-4

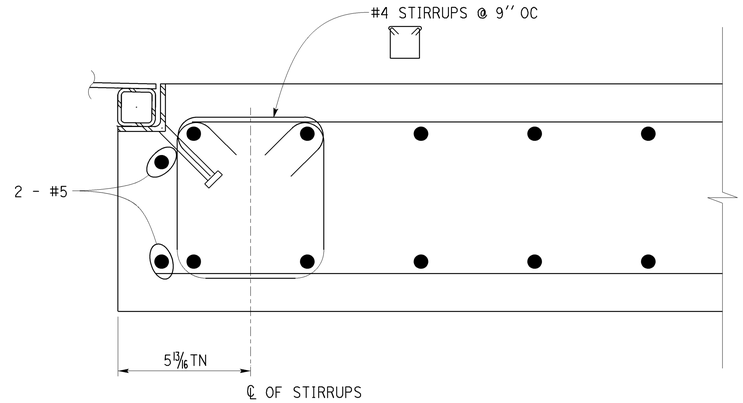

3 PUMP PLANT TOP SLAB AT OPENING
3'' = 1' - 0''

NOTE:
For Items Not Noted
See 2/STI-4 & 4/—

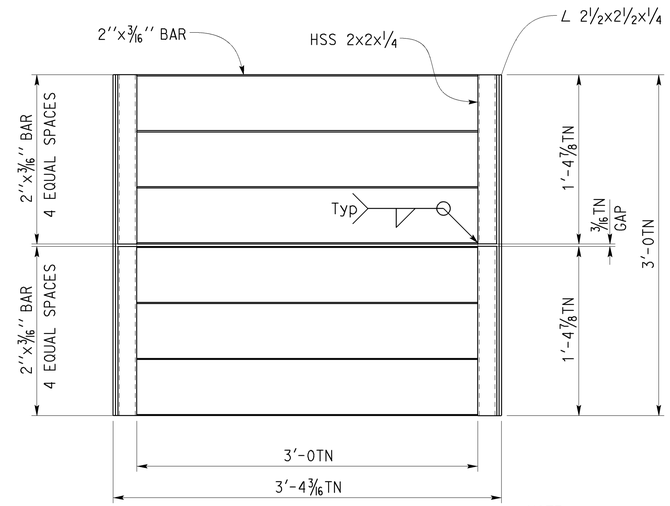

NOTE:
Diamond ℙ not shown
for clarity

5 ACCESS DOOR FRAME
1 1/2'' = 1' - 0''

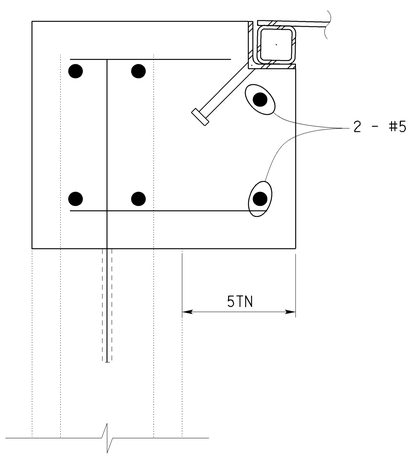

2 PUMP PLANT TOP SLAB AT OPENING
3'' = 1' - 0''

NOTE:
For Items Not Noted
See 2/STI-4 & 4/—

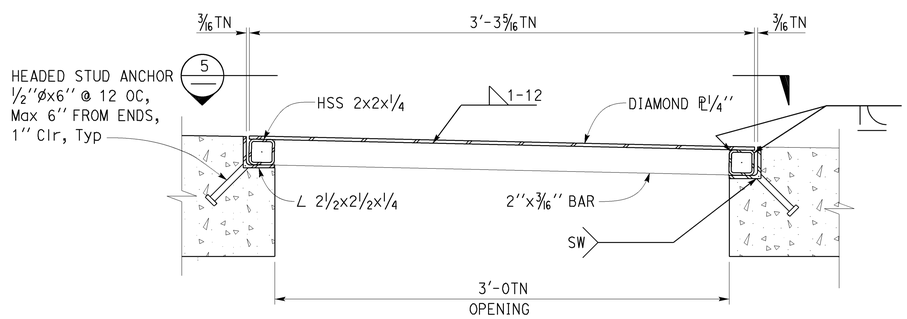

4 ACCESS DOOR & FRAME SECTION
2'' = 1' - 0''

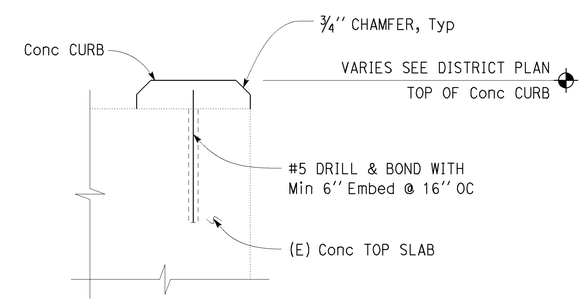

6 CONCRETE CURB
3'' = 1' - 0''

NOTE:
Must verify all controlling
field dimensions before ordering
or fabricating any material.

	BY	CHECKED
DESIGN	Tahir Rashid	Thomas Tong
DETAILS	Daniel Harakh	Tahir Rashid
QUANTITIES		

STATE OF CALIFORNIA
DEPARTMENT OF TRANSPORTATION

DIVISION OF ENGINEERING SERVICES
ARCHITECTURAL AND STRUCTURAL DESIGN

BRIDGE No.
POST MILE 9.0

ROUTE 82 & 38TH AVE

CONCRETE SIDEWALK DETAILS

SHEET ST1-5

TAEMWW Imperial - CCSC Rev. 02/13

ORIGINAL SCALE IN INCHES FOR REDUCED PLANS 0 1 2 3

UNIT: 3581 CONTRACT No.: 0G2221
PROJECT NUMBER & PHASE: 04130004711

DISREGARD PRINTS BEARING EARLIER REVISION DATES → 12-26-13 12-26-13 03-06-14 03-07-14

REVISION DATES (PRELIMINARY STAGE ONLY) SHEET OF

O:\0g220\DRAFTING\DRAWING_FILES\0g2224\Change To Tiff File\0413000471we011.dgn

01-MAY-2014 08:56