Dist	COUNTY	ROUTE	POST MILES TOTAL PROJECT	SHEET No.	TOTAL SHEETS
04	Ala	13	9.9/10.1	1	47

STATE OF CALIFORNIA

DEPARTMENT OF TRANSPORTATION

PROJECT PLANS FOR CONSTRUCTION ON

STATE HIGHWAY

IN ALAMEDA COUNTY
IN OAKLAND AND BERKELEY
BETWEEN HILLER DRIVE AND VICENTE ROAD

TO BE SUPPLEMENTED BY STANDARD PLANS DATED 2010

INDEX OF PLANS

SHEET No.	DESCRIPTION
1	TITLE SHEET AND LOCATION MAP
2 - 3	TYPICAL CROSS SECTIONS
4	LAYOUT
5 - 8	CONSTRUCTION DETAILS
9	TEMPORARY WATER POLUTION CONTROL PLAN
10	UTILITY PLAN
11 - 14	CONSTRUCTION AREA SIGNS
15 - 17	STAGE CONSTRUCTION PLAN
18 - 19	PAVEMENT DELINEATION PLAN AND QUANTITIES
20 - 21	SIGN PLAN AND QUANTITIES
22	SUMMARY OF QUANTITIES
23 - 24	EROSION CONTROL LEGEND AND QUANTITIES, AND PLAN
25 - 34	REVISED STANDARD PLANS
	STRUCTURE PLANS
35 - 47	RETAINING WALL

THE STANDARD PLANS LIST APPLICABLE TO THIS CONTRACT IS INCLUDED IN THE NOTICE TO BIDDERS AND SPECIAL PROVISIONS BOOK.

LOCATION MAP

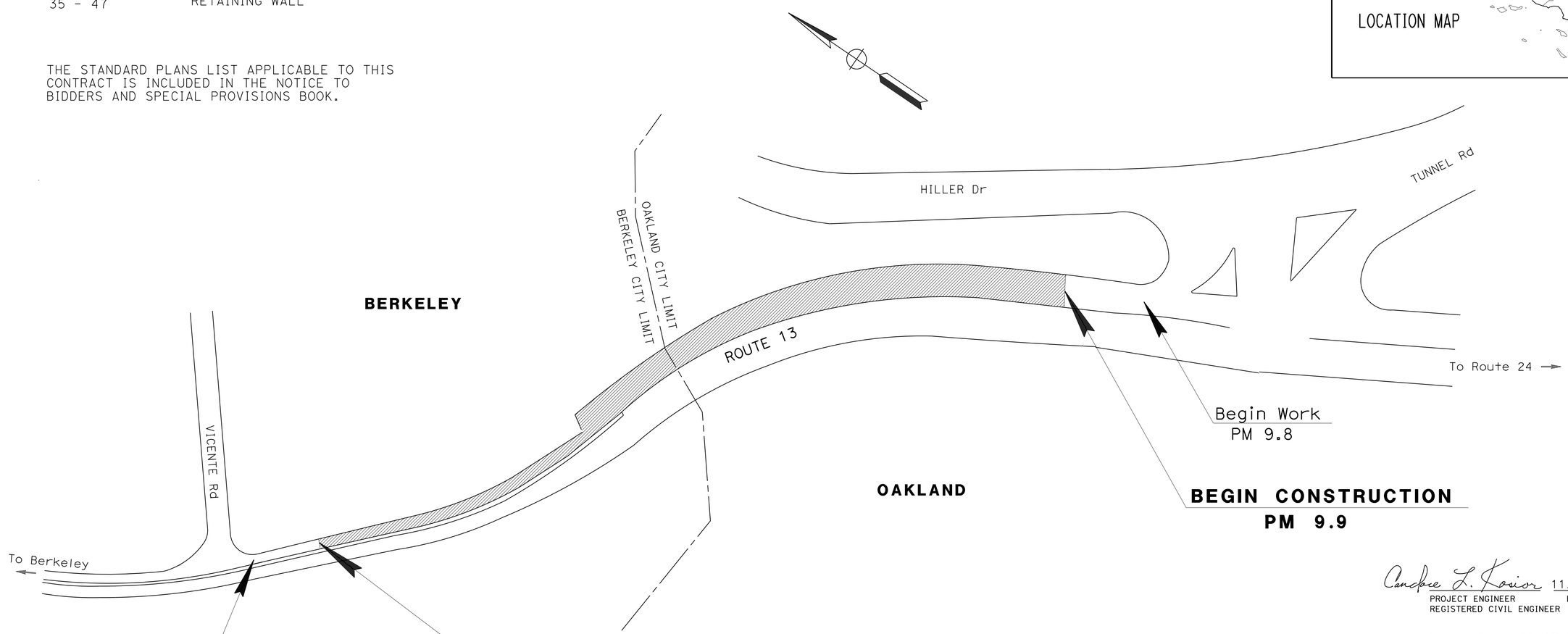

NO SCALE

THE CONTRACTOR SHALL POSSESS THE CLASS (OR CLASSES) OF LICENSE AS SPECIFIED IN THE "NOTICE TO BIDDERS."

Candace L. Kosior 11/24/14
PROJECT ENGINEER DATE
REGISTERED CIVIL ENGINEER

REGISTERED PROFESSIONAL ENGINEER
Candace L. Kosior
No. 56673
Exp. 6-30-15
CIVIL
STATE OF CALIFORNIA

December 22,2014
PLANS APPROVAL DATE

THE STATE OF CALIFORNIA OR ITS OFFICERS OR AGENTS SHALL NOT BE RESPONSIBLE FOR THE ACCURACY OR COMPLETENESS OF SCANNED COPIES OF THIS PLAN SHEET.

CONTRACT No.	04-0G2104
PROJECT ID	0400000317

PROJECT MANAGER JACK SIALUW
DESIGN MANAGER VINCE BONNER

LAST REVISION 12-18-14
DATE PLOTTED => 09-JAN-2015
TIME PLOTTED => 13:46

Dist	COUNTY	ROUTE	POST MILES TOTAL PROJECT	SHEET No.	TOTAL SHEETS
04	Ala	13	9.9/10.1	2	47

Candace L. Kosior 11/24/14
REGISTERED CIVIL ENGINEER DATE

12-22-14
PLANS APPROVAL DATE

REGISTERED PROFESSIONAL ENGINEER Candace L. Kosior No. 56673 Exp. 6-30-15 CIVIL STATE OF CALIFORNIA

THE STATE OF CALIFORNIA OR ITS OFFICERS OR AGENTS SHALL NOT BE RESPONSIBLE FOR THE ACCURACY OR COMPLETENESS OF SCANNED COPIES OF THIS PLAN SHEET.

NOTE:

1. DIMENSIONS OF THE PAVEMENT STRUCTURES (STRUCTURAL SECTIONS) ARE SUBJECT TO TOLERANCES SPECIFIED IN THE STANDARD SPECIFICATIONS.

ABBREVIATIONS:

BWC	BONDED WEARING COURSE
&	AND

ROUTE NB 13
DESIGN DESIGNATION

V = 40 mph
TI = 10.0

TYPICAL PAVEMENT STRUCTURE SECTIONS

1	0.35′ MINOR CONCRETE 0.50′ HMA (TYPE A)
2	0.10′ TO 0.35′ COLD PLANE AC PAVEMENT 0.35′ HMA (TYPE A)
3	0.25′ HMA (TYPE A) PCC SLAB (SEE STRUCTURE PLAN)
4	0.25′ HMA (TYPE A) HMA LEVELING

LEGEND:

No. STRUCTURAL SECTION NUMBER

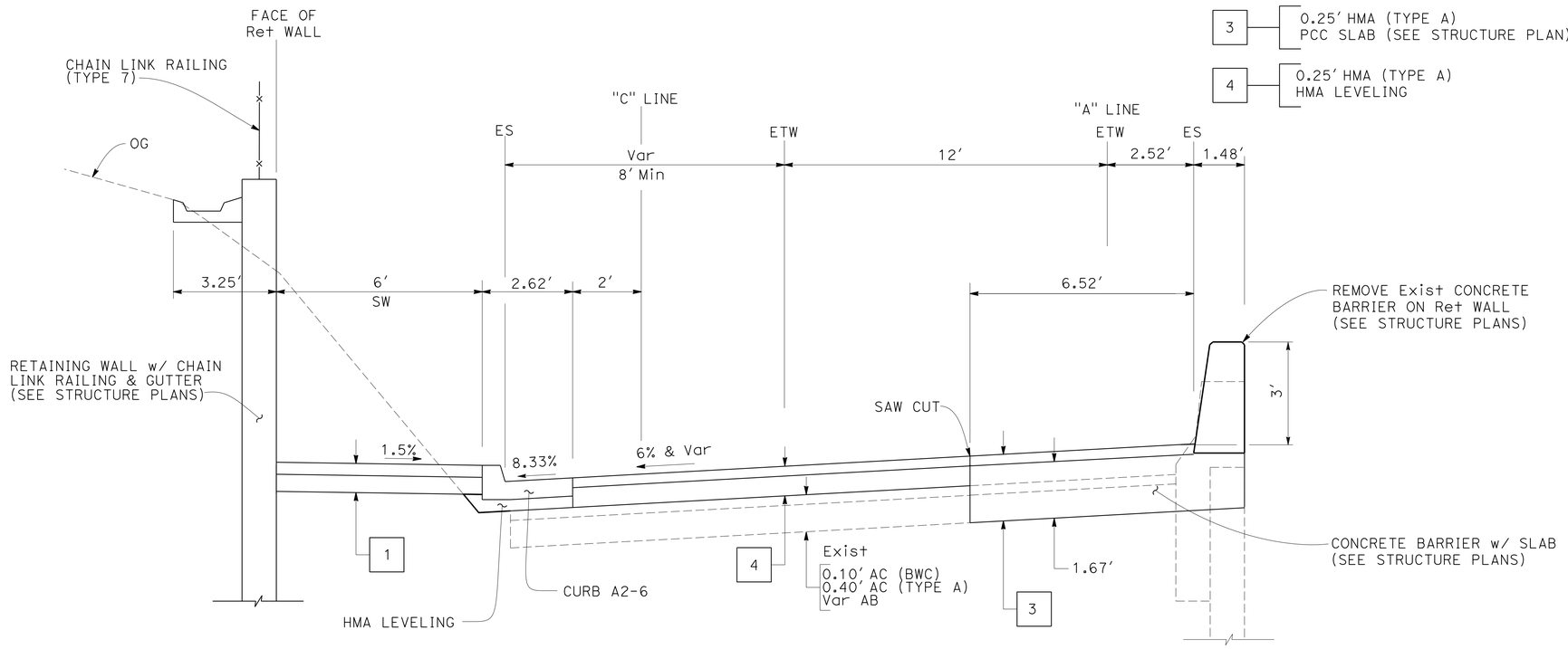

"A" 4+58.56 TO 5+41.12

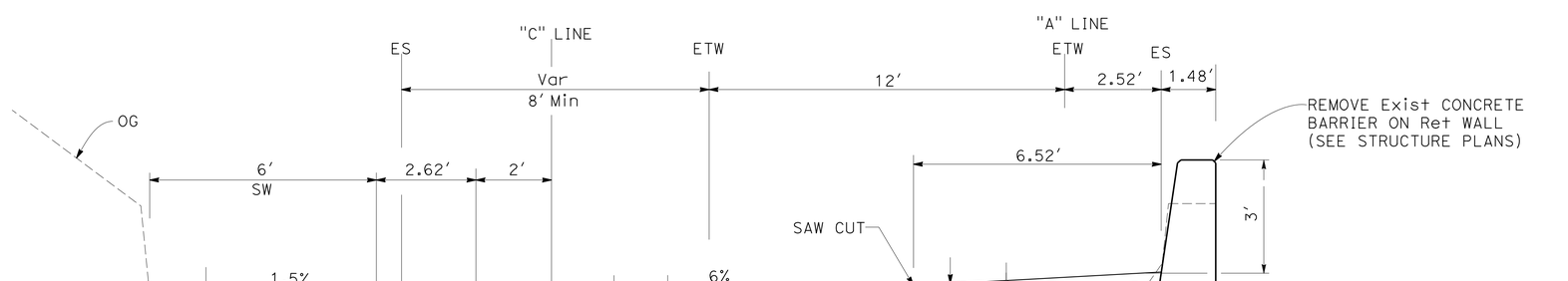

"A" 4+21.48 TO 4+58.56

ROUTE 13

TYPICAL CROSS SECTIONS

NO SCALE

X-1

STATE OF CALIFORNIA - DEPARTMENT OF TRANSPORTATION
Caltrans
DESIGN

FUNCTIONAL SUPERVISOR: RONALD TSUNG
CALCULATED-DESIGNED BY: CANDACE KOSIOR
CHECKED BY: VINCE BONNER
REVISED BY: JC
DATE REVISED: 11/19/14

LAST REVISION 12-18-14 | DATE PLOTTED => 09-JAN-2015 | TIME PLOTTED => 13:46

Dist	COUNTY	ROUTE	POST MILES TOTAL PROJECT	SHEET No.	TOTAL SHEETS
04	Ala	13	9.9/10.1	3	47

Candace L. Kosior 11/24/14
REGISTERED CIVIL ENGINEER DATE

12-22-14
PLANS APPROVAL DATE

REGISTERED PROFESSIONAL ENGINEER
Candace L. Kosior
No. 56673
Exp. 6-30-15
CIVIL
STATE OF CALIFORNIA

THE STATE OF CALIFORNIA OR ITS OFFICERS OR AGENTS SHALL NOT BE RESPONSIBLE FOR THE ACCURACY OR COMPLETENESS OF SCANNED COPIES OF THIS PLAN SHEET.

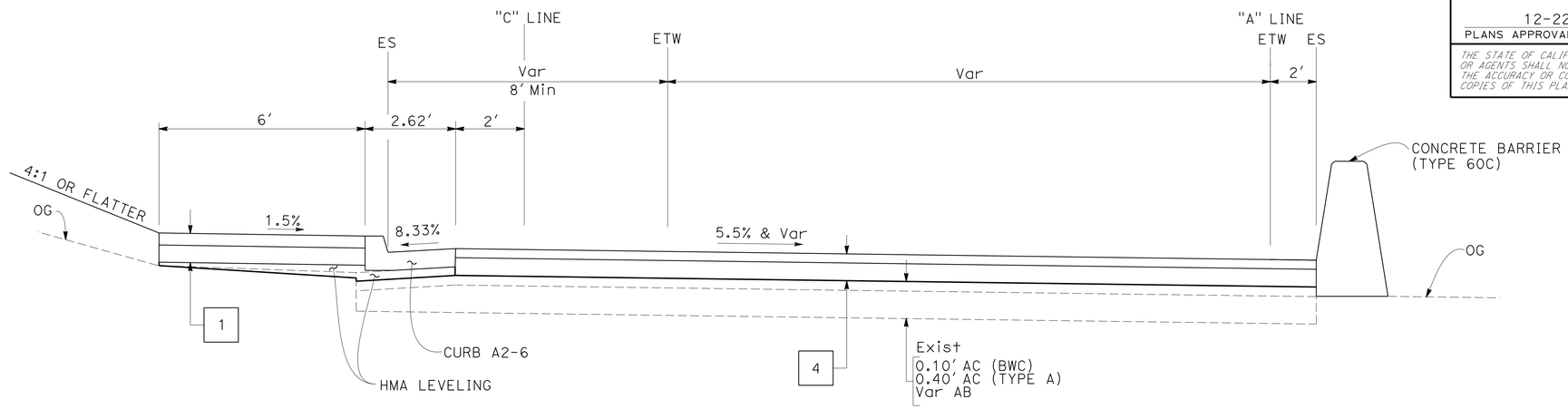

"A" 5+61.50 TO 6+81.48

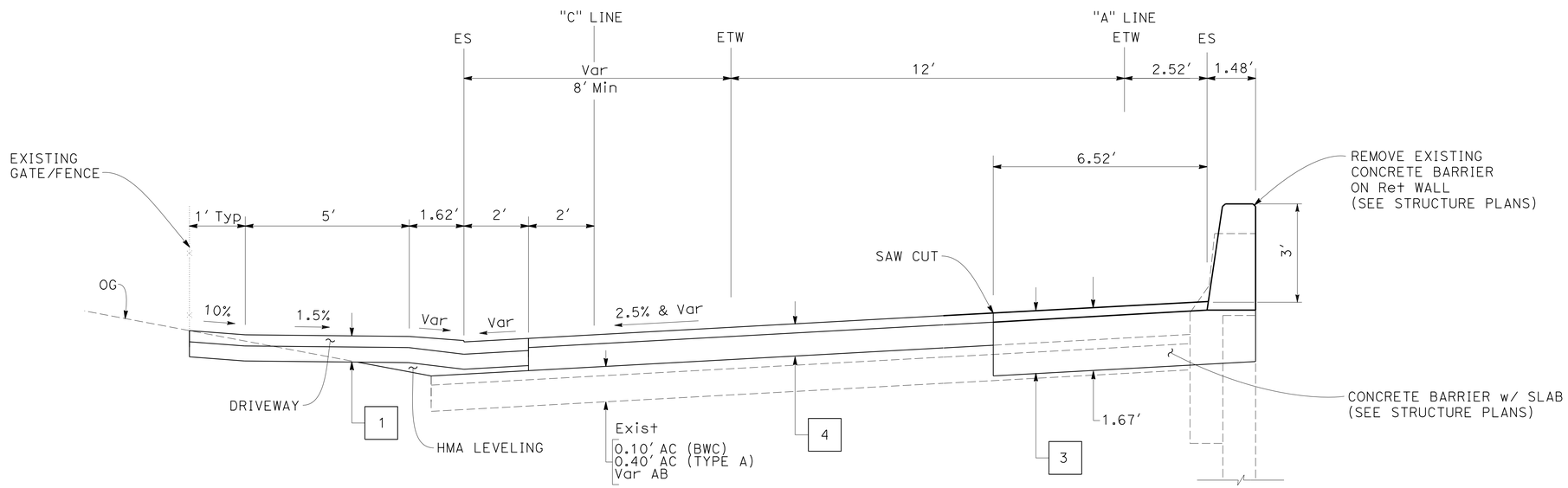

"A" 5+41.12 TO 5+61.50

ROUTE 13

TYPICAL CROSS SECTIONS

NO SCALE

FOR NOTES, ABBREVIATIONS AND LEGEND, SEE SHEET X-1

X-2

REVISED BY	DATE REVISED
JC	11/19/14

CANDACE KOSIOR — VINCE BONNER — CALCULATED-DESIGNED BY — CHECKED BY

FUNCTIONAL SUPERVISOR: RONALD TSUNG

STATE OF CALIFORNIA - DEPARTMENT OF TRANSPORTATION

Caltrans® DESIGN

LAST REVISION 12-18-14 — DATE PLOTTED => 09-JAN-2015 — TIME PLOTTED => 13:46

Dist	COUNTY	ROUTE	POST MILES TOTAL PROJECT	SHEET No.	TOTAL SHEETS
04	Ala	13	9.9/10.1	4	47

Candace L. Kosior 11/24/14
REGISTERED CIVIL ENGINEER DATE

12-22-14
PLANS APPROVAL DATE

REGISTERED PROFESSIONAL ENGINEER Candace L. Kosior No. 56673 Exp. 6-30-15 CIVIL STATE OF CALIFORNIA

THE STATE OF CALIFORNIA OR ITS OFFICERS OR AGENTS SHALL NOT BE RESPONSIBLE FOR THE ACCURACY OR COMPLETENESS OF SCANNED COPIES OF THIS PLAN SHEET.

NOTE:

FOR ACCURATE RIGHT OF WAY DATA, CONTACT RIGHT OF WAY ENGINEERING AT THE DISTRICT OFFICE.

NOTES:

1. COORDINATE VALUES SHOWN ARE CCS 83 ZONE 3.
2. 3 OAK TREES TO REMAIN.

LEGEND:

TEMPORARY REINFORCED SILT FENCE

HMA SLOPE PAVING

COLD PLANE AC PAVEMENT

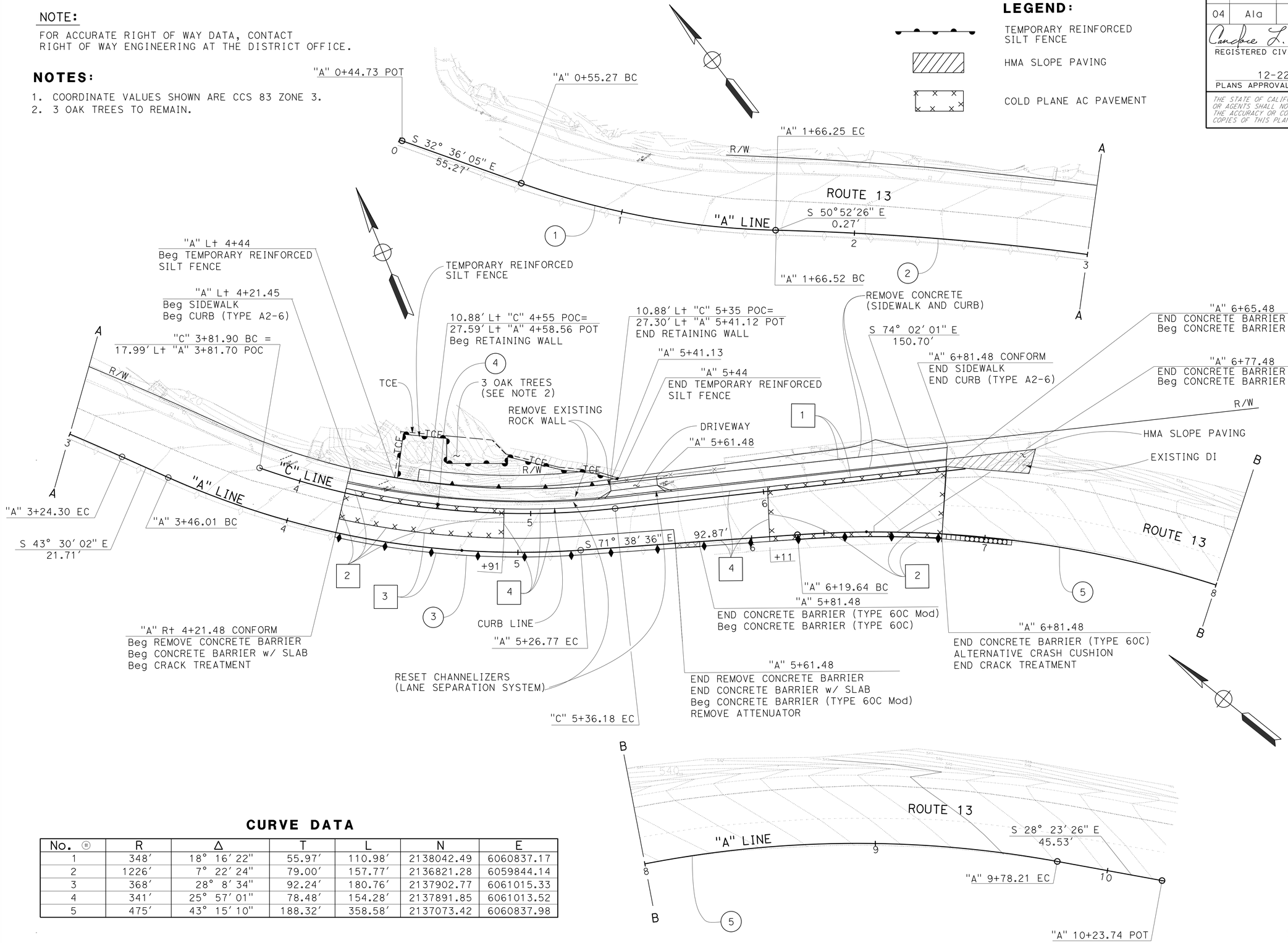

CURVE DATA

No. ⊕	R	Δ	T	L	N	E
1	348′	18° 16′ 22"	55.97′	110.98′	2138042.49	6060837.17
2	1226′	7° 22′ 24"	79.00′	157.77′	2136821.28	6059844.14
3	368′	28° 8′ 34"	92.24′	180.76′	2137902.77	6061015.33
4	341′	25° 57′ 01"	78.48′	154.28′	2137891.85	6061013.52
5	475′	43° 15′ 10"	188.32′	358.58′	2137073.42	6060837.98

LAYOUT
SCALE: 1" = 20′

L-1

CALCULATED-DESIGNED BY	CHECKED BY	REVISED BY	DATE REVISED	FUNCTIONAL SUPERVISOR
CANDACE KOSIOR	VINCE BONNER	JC	11/19/14	RONALD TSUNG

STATE OF CALIFORNIA - DEPARTMENT OF TRANSPORTATION
Caltrans
DESIGN

LAST REVISION 12-18-14 | DATE PLOTTED => 09-JAN-2015 | TIME PLOTTED => 13:46

Dist	COUNTY	ROUTE	POST MILES TOTAL PROJECT	SHEET No.	TOTAL SHEETS
04	Ala	13	9.9/10.1	5	47

Candace L. Kosior 11/24/14
REGISTERED CIVIL ENGINEER DATE

12-22-14
PLANS APPROVAL DATE

REGISTERED PROFESSIONAL ENGINEER
Candace L. Kosior
No. 56673
Exp. 6-30-15
CIVIL
STATE OF CALIFORNIA

THE STATE OF CALIFORNIA OR ITS OFFICERS OR AGENTS SHALL NOT BE RESPONSIBLE FOR THE ACCURACY OR COMPLETENESS OF SCANNED COPIES OF THIS PLAN SHEET.

NOTE:

FOR ACCURATE RIGHT OF WAY DATA, CONTACT RIGHT OF WAY ENGINEERING AT THE DISTRICT OFFICE.

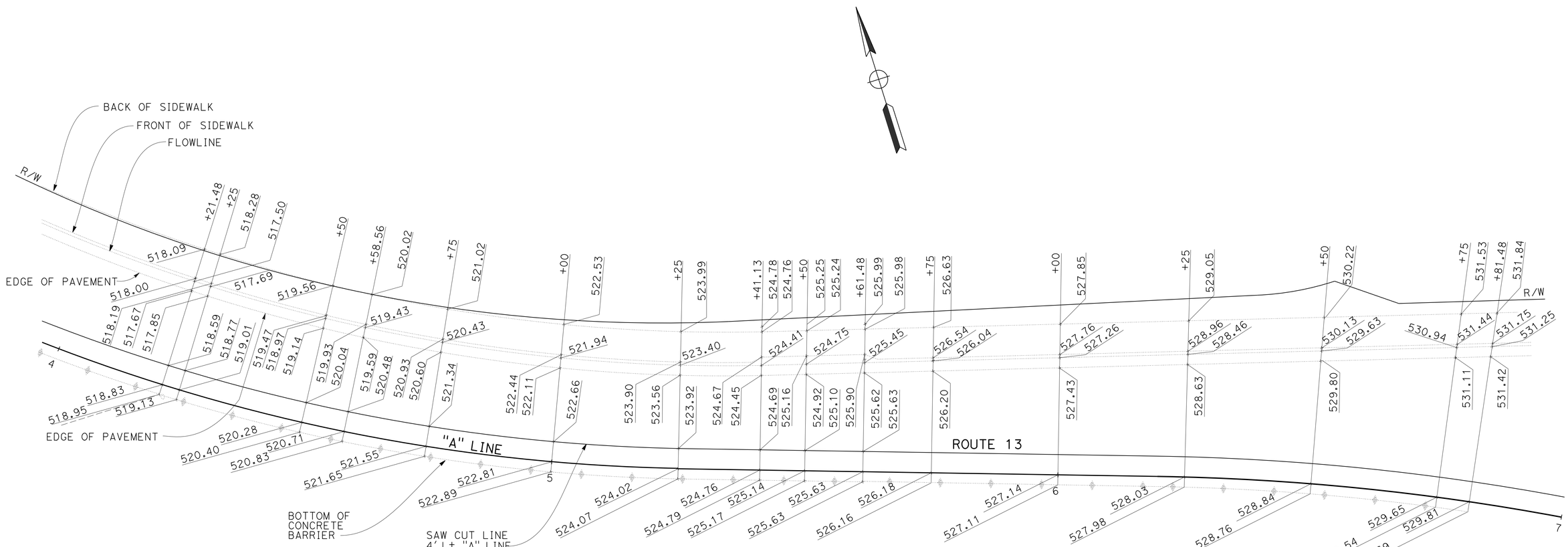

CONSTRUCTION DETAILS
PAVEMENT ELEVATION PLAN

SCALE: 1" = 10'

APPROVED FOR PAVEMENT ELEVATION WORK ONLY

C-1

STATE OF CALIFORNIA - DEPARTMENT OF TRANSPORTATION
Caltrans
DESIGN

FUNCTIONAL SUPERVISOR: RONALD TSUNG
CALCULATED-DESIGNED BY: CANDACE KOSIOR
CHECKED BY: VINCE BONNER
REVISED BY: JC
DATE REVISED: 11/19/14

LAST REVISION 12-18-14
DATE PLOTTED => 09-JAN-2015
TIME PLOTTED => 13:47

Dist	COUNTY	ROUTE	POST MILES TOTAL PROJECT	SHEET No.	TOTAL SHEETS
04	Ala	13	9.9/10.1	6	47

Candace L. Kosior 11/24/14
REGISTERED CIVIL ENGINEER DATE

12-22-14
PLANS APPROVAL DATE

REGISTERED PROFESSIONAL ENGINEER
Candace L. Kosior
No. 56673
Exp. 6-30-15
CIVIL
STATE OF CALIFORNIA

THE STATE OF CALIFORNIA OR ITS OFFICERS OR AGENTS SHALL NOT BE RESPONSIBLE FOR THE ACCURACY OR COMPLETENESS OF SCANNED COPIES OF THIS PLAN SHEET.

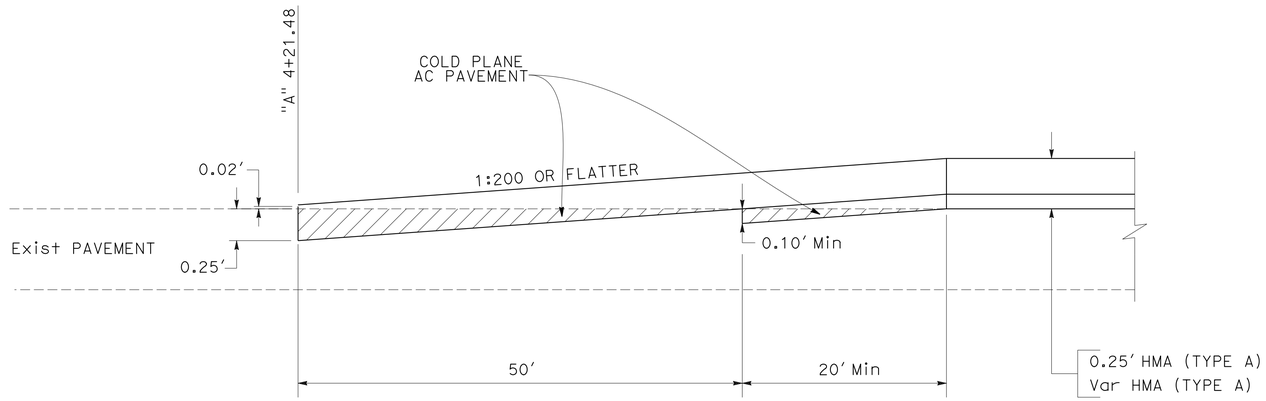

PAVEMENT TRANSITION TAPER AT "A" 4+21.48

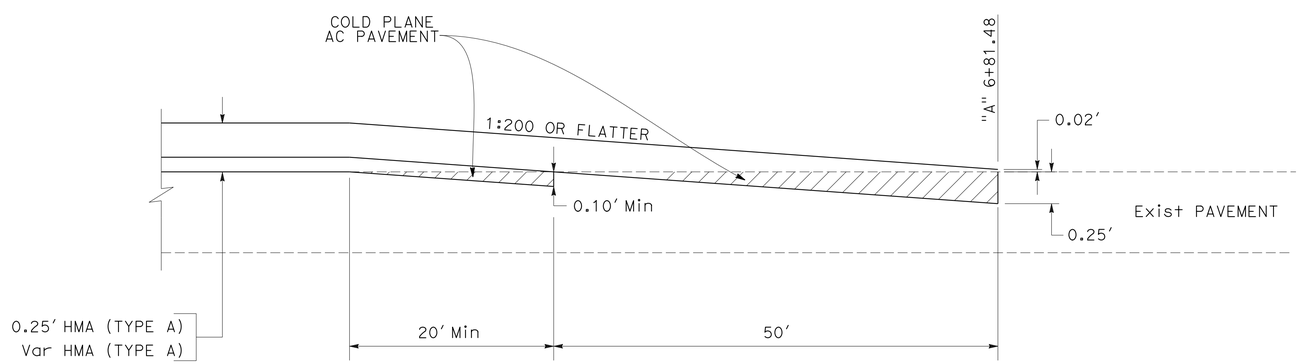

PAVEMENT TRANSITION TAPER AT "A" 6+81.48

CONSTRUCTION DETAILS

NO SCALE

C-2

REVISED BY	DATE REVISED
JC	11/19/14

CANDACE KOSIOR
VINCE BONNER
CALCULATED-DESIGNED BY
CHECKED BY
FUNCTIONAL SUPERVISOR
RONALD TSUNG

STATE OF CALIFORNIA - DEPARTMENT OF TRANSPORTATION
Caltrans®
DESIGN

LAST REVISION 12-18-14
DATE PLOTTED => 09-JAN-2015
TIME PLOTTED => 13:47

Dist	COUNTY	ROUTE	POST MILES TOTAL PROJECT	SHEET No.	TOTAL SHEETS
04	Ala	13	9.9/10.1	7	47

REGISTERED CIVIL ENGINEER 11/24/14 DATE

12-22-14
PLANS APPROVAL DATE

REGISTERED PROFESSIONAL ENGINEER David S. Wilkerson No. 53769 Exp. 6-30-15 CIVIL STATE OF CALIFORNIA

THE STATE OF CALIFORNIA OR ITS OFFICERS OR AGENTS SHALL NOT BE RESPONSIBLE FOR THE ACCURACY OR COMPLETENESS OF SCANNED COPIES OF THIS PLAN SHEET.

NOTES:

1. LAP SPLICE INTO ABUTTING BARRIER AND BARRIER SLAB SECTIONS.
2. SEE STANDARD PLAN A76A FOR CONCRETE BARRIER (TYPE 60C) DETAILS.

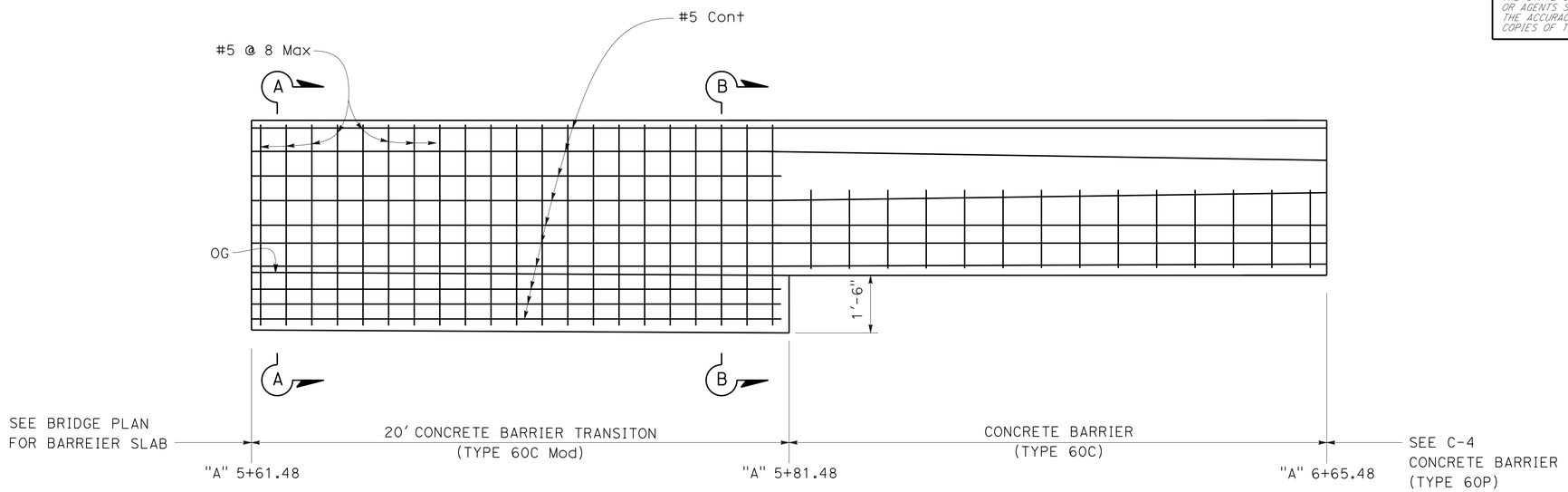

BARRIER ELEVATION

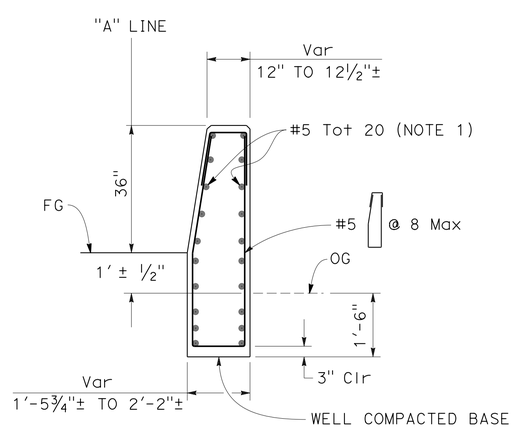

SECTION A-A

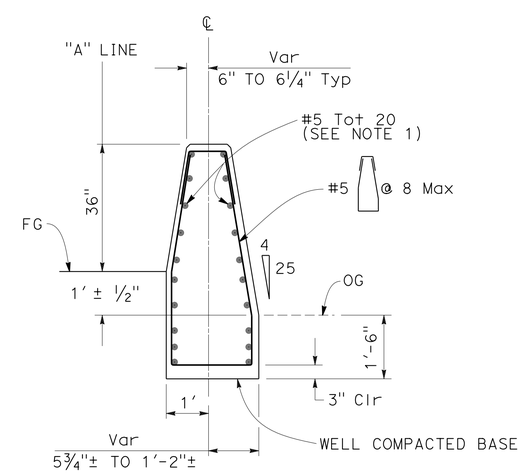

SECTION B-B

BARRIER TRANSITION DETAILS

CONSTRUCTION DETAILS

NO SCALE

C-3

STATE OF CALIFORNIA - DEPARTMENT OF TRANSPORTATION
Caltrans® DESIGN

FUNCTIONAL SUPERVISOR: RONALD TSUNG
CALCULATED-DESIGNED BY: CANDACE KOSIOR
CHECKED BY: VINCE BONNER
REVISED BY: JC
DATE REVISED: 11/24/14

LAST REVISION 12-18-14
DATE PLOTTED => 09-JAN-2015
TIME PLOTTED => 13:47

Dist	COUNTY	ROUTE	POST MILES TOTAL PROJECT	SHEET No.	TOTAL SHEETS
04	Ala	13	9.9/10.1	8	47

REGISTERED CIVIL ENGINEER 11/24/14 DATE

12-22-14
PLANS APPROVAL DATE

REGISTERED PROFESSIONAL ENGINEER David S. Wilkerson No. 53769 Exp. 6-30-15 CIVIL STATE OF CALIFORNIA

THE STATE OF CALIFORNIA OR ITS OFFICERS OR AGENTS SHALL NOT BE RESPONSIBLE FOR THE ACCURACY OR COMPLETENESS OF SCANNED COPIES OF THIS PLAN SHEET.

NOTE:

1. SEE STANDARD PLAN A76A FOR TYPE 60C CONCRETE BARRIER DETAIL.

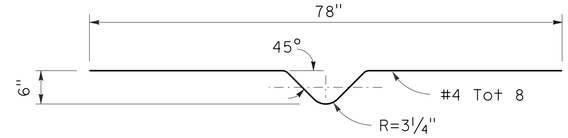

DETAIL A

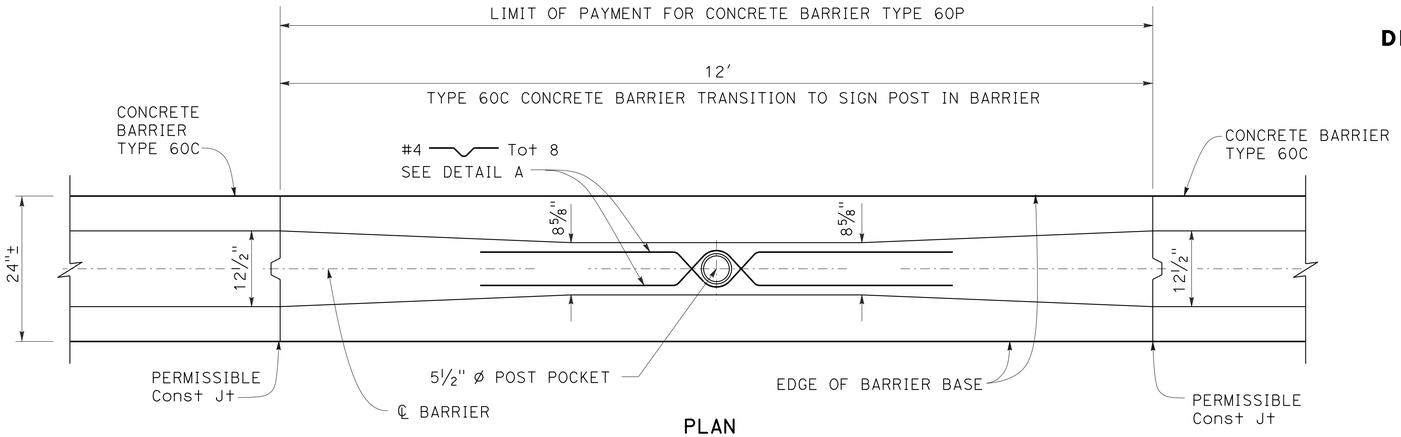

PLAN

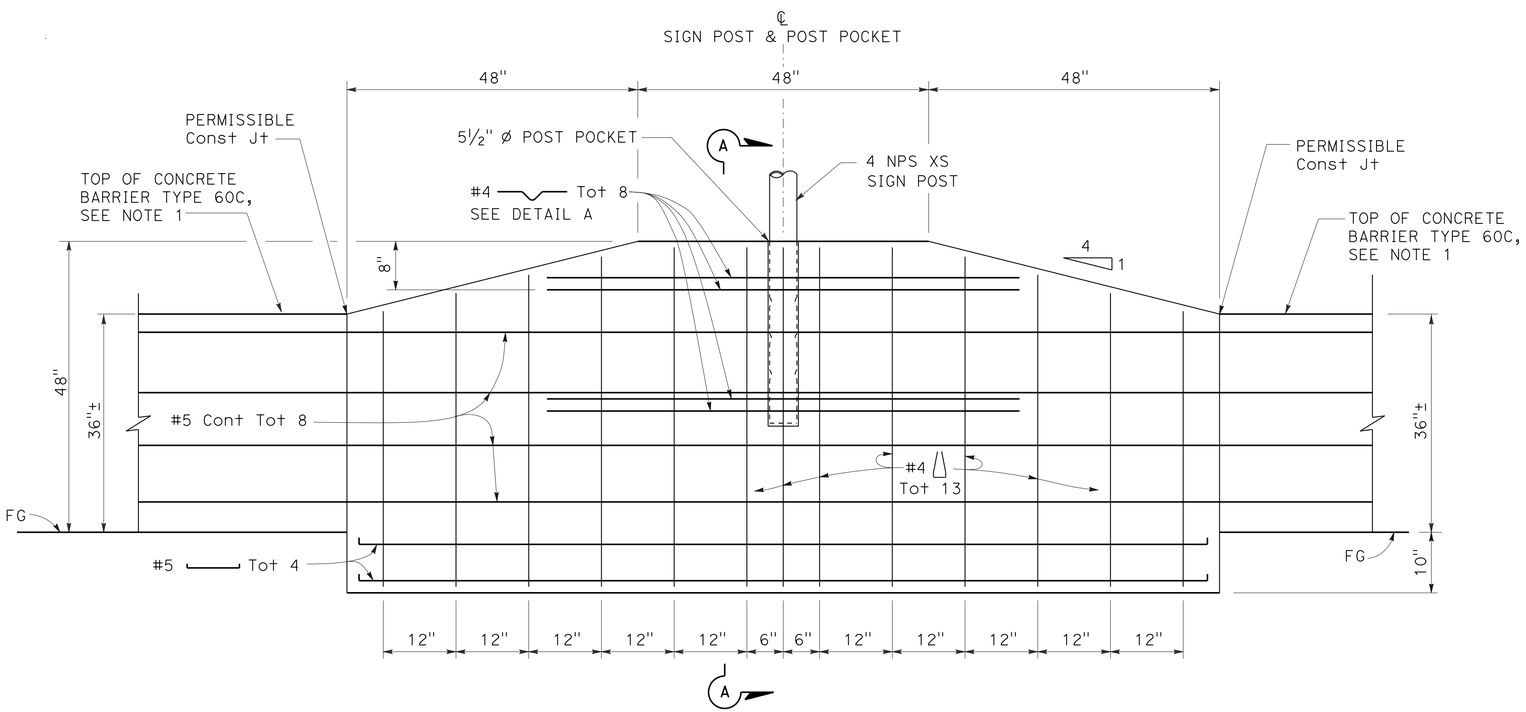

ELEVATION

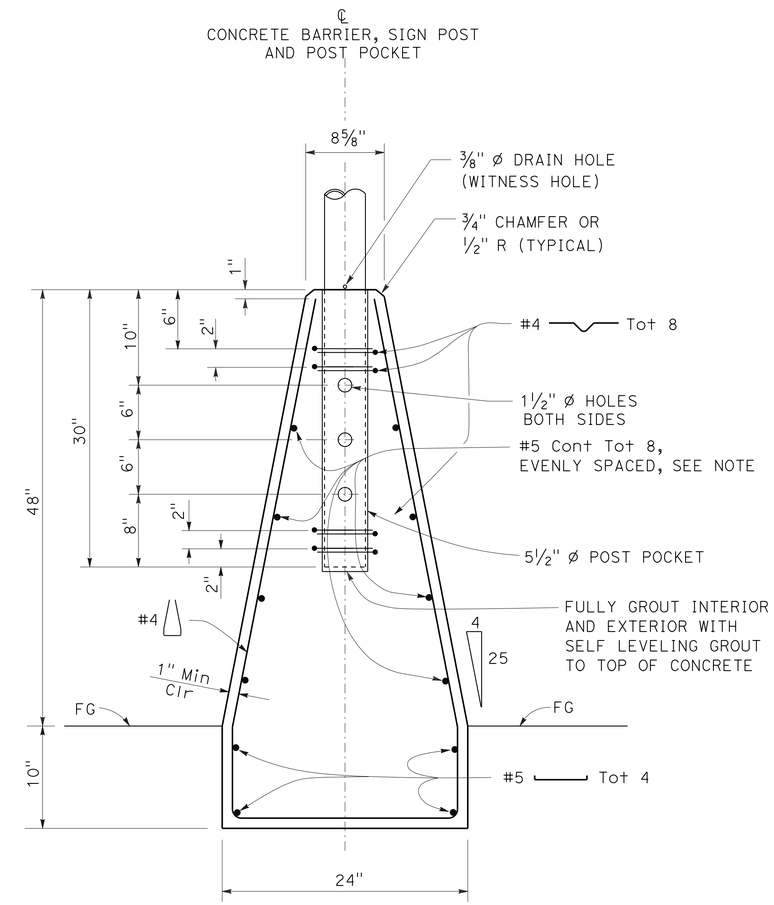

SECTION A-A

CONSTRUCTION DETAILS
CONCRETE BARRIER TYPE 60P

NO SCALE

C-4

REVISED BY	DATE REVISED
JC	11/24/14

CALCULATED-DESIGNED BY: DAVID S. WILKERSON
CHECKED BY: VINCE BONNER
FUNCTIONAL SUPERVISOR: RONALD TSUNG

STATE OF CALIFORNIA - DEPARTMENT OF TRANSPORTATION
Caltrans®
DESIGN

LAST REVISION 12-18-14 | DATE PLOTTED => 09-JAN-2015 | TIME PLOTTED => 13:47

Dist	COUNTY	ROUTE	POST MILES TOTAL PROJECT	SHEET No.	TOTAL SHEETS
04	Ala	13	9.9/10.1	9	47

REGISTERED CIVIL ENGINEER 11/24/14 DATE

12-22-14
PLANS APPROVAL DATE

REGISTERED PROFESSIONAL ENGINEER Sharon X. Yuan No. 58701 Exp. 12-31-16 CIVIL STATE OF CALIFORNIA

THE STATE OF CALIFORNIA OR ITS OFFICERS OR AGENTS SHALL NOT BE RESPONSIBLE FOR THE ACCURACY OR COMPLETENESS OF SCANNED COPIES OF THIS PLAN SHEET.

NOTE:

FOR ACCURATE RIGHT OF WAY DATA, CONTACT
RIGHT OF WAY ENGINEERING AT THE DISTRICT OFFICE.

LEGEND:

- TEMPORARY CHECK DAM
- TEMPORARY FIBER ROLL
- TEMPORARY HYDRAULIC MULCH
- TEMPORARY DRAINAGE INLET PROTECTION

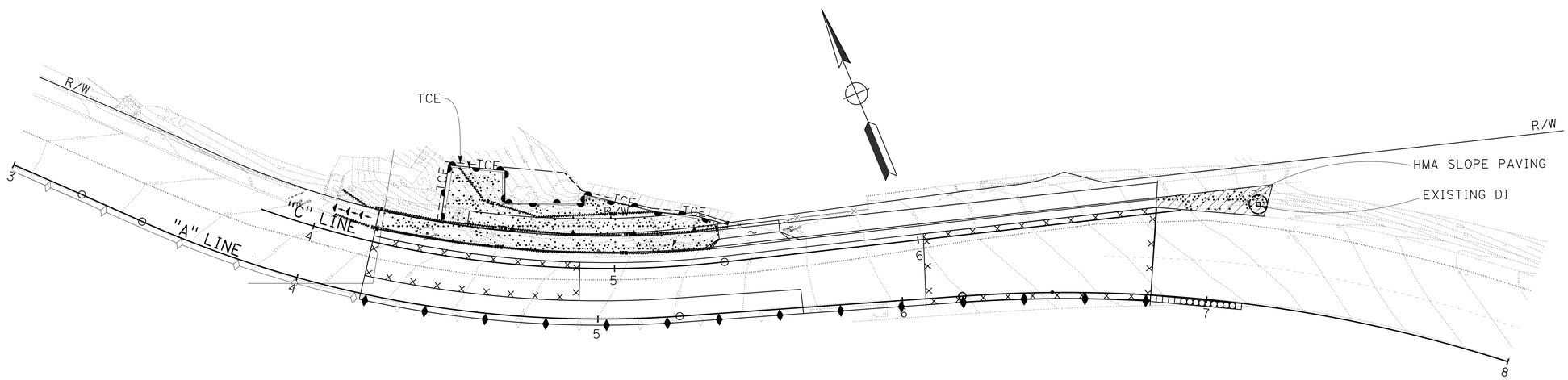

TEMPORARY WATER POLLUTION CONTROL PLAN

NO SCALE

WPC-1

STATE OF CALIFORNIA - DEPARTMENT OF TRANSPORTATION
Caltrans® **WATER QUALITY**

FUNCTIONAL SUPERVISOR: KAMRAN NAKHJIRI
CALCULATED-DESIGNED BY: SHARON YUAN
CHECKED BY: JENNIFER CHEN
REVISED BY: SY
DATE REVISED: 11/24/14

LAST REVISION 12-18-14
DATE PLOTTED => 09-JAN-2015
TIME PLOTTED => 13:47

NOTE:

FOR ACCURATE RIGHT OF WAY DATA, CONTACT
RIGHT OF WAY ENGINEERING AT THE DISTRICT OFFICE.

ABBREVIATIONS:

AT&T	AMERICAN TELEPHONE AND TELEGRAPH
EBMUD	EAST BAY MUNICIPAL UTILITY DISTRICT
PG&E	PACIFIC GAS AND ELECTRIC

Dist	COUNTY	ROUTE	POST MILES TOTAL PROJECT	SHEET No.	TOTAL SHEETS
04	Ala	13	9.9/10.1	10	47

Candace L. Kosior 11/24/14
REGISTERED CIVIL ENGINEER DATE

12-22-14
PLANS APPROVAL DATE

REGISTERED PROFESSIONAL ENGINEER
Candace L. Kosior
No. 56673
Exp. 6-30-15
CIVIL
STATE OF CALIFORNIA

THE STATE OF CALIFORNIA OR ITS OFFICERS OR AGENTS SHALL NOT BE RESPONSIBLE FOR THE ACCURACY OR COMPLETENESS OF SCANNED COPIES OF THIS PLAN SHEET.

LEGEND:

UTILITIES	EXISTING UTILITIES	OWNERSHIP
SEWER	—--s——--——--s——--—	CITY OF BERKELEY
STORM DRAIN	—-- sd —— ——-- sd —— —	CITY OF BERKELEY
ELECTRIC (OH)	-(oh)—— ——-e——Com-	PG&E AND COMCAST
GAS	--- gs —— ——--- gs —— ——	PG&E
TELEPHONE (OH)	—--- t —— ——--(oh)—— —	AT&T
WATER	- —— w —— —— —— w —— ——	EBMUD
STORM DRAIN	——-- sd —— ——-- sd —— —	CITY OF OAKLAND
SEWER	——--s——--——--s——--	CITY OF OAKLAND

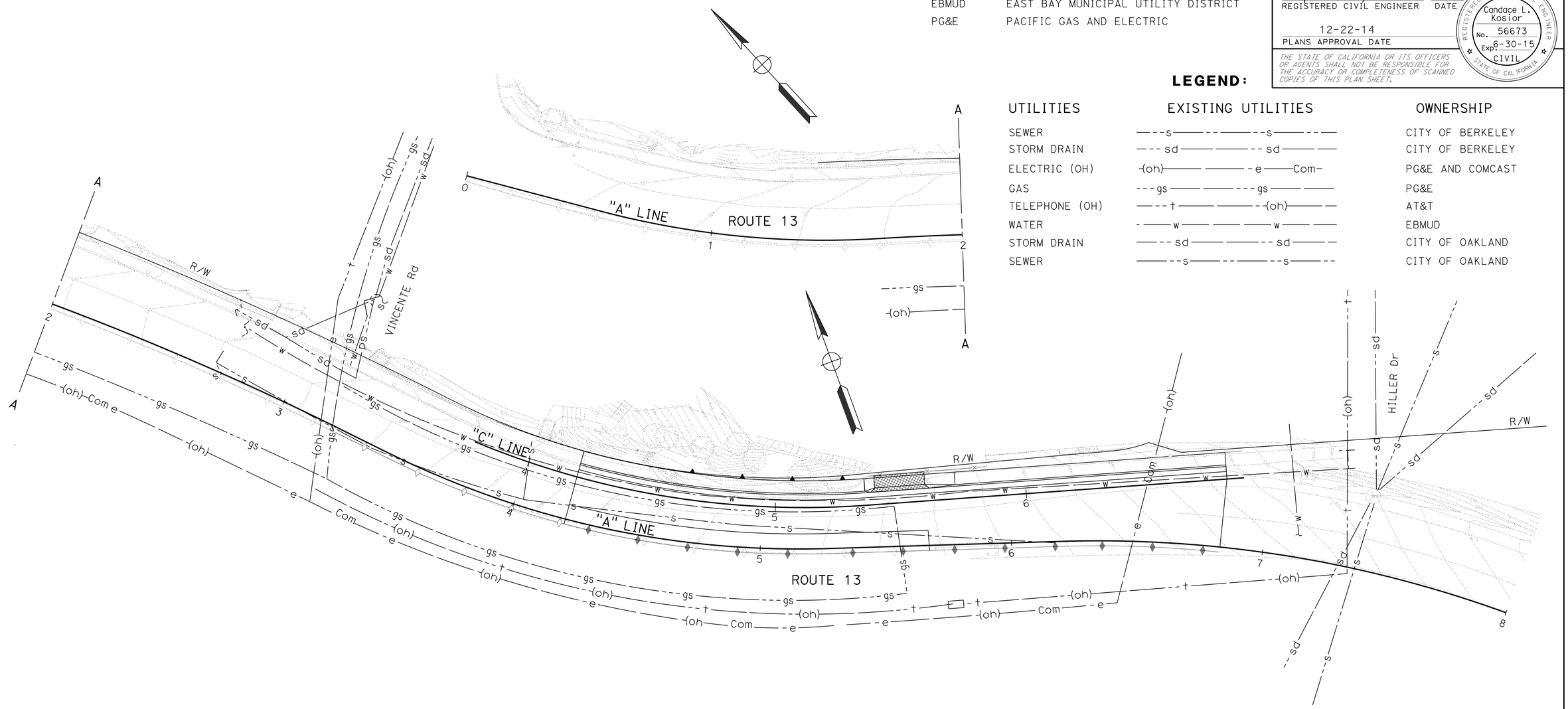

UTILITY PLAN

SCALE: 1" = 20'

U-1

THIS PLAN TO BE USED FOR UTILITY INFORMATION ONLY

STATE OF CALIFORNIA - DEPARTMENT OF TRANSPORTATION
Caltrans
DESIGN

FUNCTIONAL SUPERVISOR: RONALD TSUNG
CALCULATED-DESIGNED BY: CANDACE KOSIOR
CHECKED BY: VINCE BONNER
REVISED BY: JC
DATE REVISED: 11/19/14

LAST REVISION 12-18-14
DATE PLOTTED => 09-JAN-2015
TIME PLOTTED => 13:47

Dist	COUNTY	ROUTE	POST MILES TOTAL PROJECT	SHEET No.	TOTAL SHEETS
04	Ala	13	9.9/10.1	11	47

Parwin W. Sarwary 11/24/14
REGISTERED CIVIL ENGINEER DATE

12-22-14
PLANS APPROVAL DATE

REGISTERED PROFESSIONAL ENGINEER
Parwin W. Sarwary
No. 79545
Exp. 9-30-16
CIVIL
STATE OF CALIFORNIA

THE STATE OF CALIFORNIA OR ITS OFFICERS OR AGENTS SHALL NOT BE RESPONSIBLE FOR THE ACCURACY OR COMPLETENESS OF SCANNED COPIES OF THIS PLAN SHEET.

NOTES:

1. EXACT SIGN LOCATION TO BE DETERMINED BY THE ENGINEER.
2. LOCATION OF CONSTRUCTION AREA SIGNS SHOWN ARE APPROXIMATE.

LEGEND:

[X] CONSTRUCTION AREA SIGN LETTER

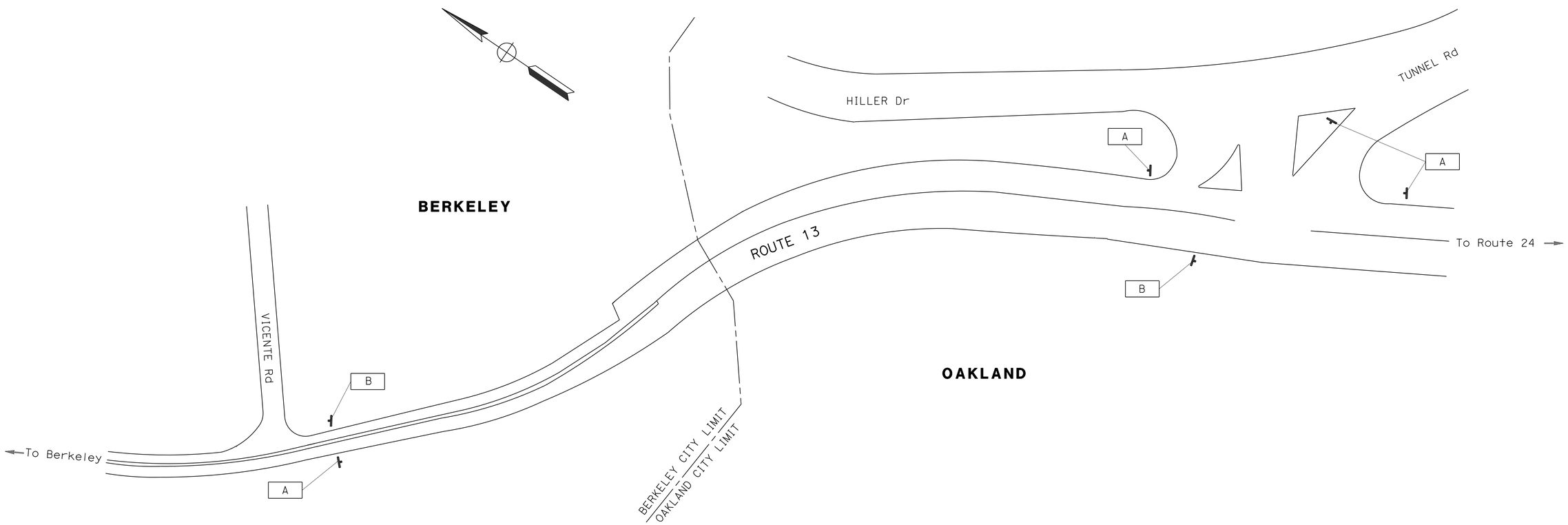

CONSTRUCTION AREA SIGNS

NO SCALE

APPROVED FOR CONSTRUCTION AREA SIGN WORK ONLY

CS-1

STATE OF CALIFORNIA - DEPARTMENT OF TRANSPORTATION
Caltrans
TRAFFIC

FUNCTIONAL SUPERVISOR: LOURDES DAVID
CALCULATED-DESIGNED BY: PARWIN W. SARWARY
CHECKED BY: CLAUDIA FANG
REVISED BY: CF
DATE REVISED: 11/24/14

LAST REVISION: 12-18-14
DATE PLOTTED => 09-JAN-2015
TIME PLOTTED => 13:47

Dist	COUNTY	ROUTE	POST MILES TOTAL PROJECT	SHEET No.	TOTAL SHEETS
04	Ala	13	9.9/10.1	12	47

Parwin W. Sarwary 11/24/14
REGISTERED CIVIL ENGINEER DATE

12-22-14
PLANS APPROVAL DATE

REGISTERED PROFESSIONAL ENGINEER Parwin W. Sarwary No. 79545 Exp. 9-30-16 CIVIL STATE OF CALIFORNIA

THE STATE OF CALIFORNIA OR ITS OFFICERS OR AGENTS SHALL NOT BE RESPONSIBLE FOR THE ACCURACY OR COMPLETENESS OF SCANNED COPIES OF THIS PLAN SHEET.

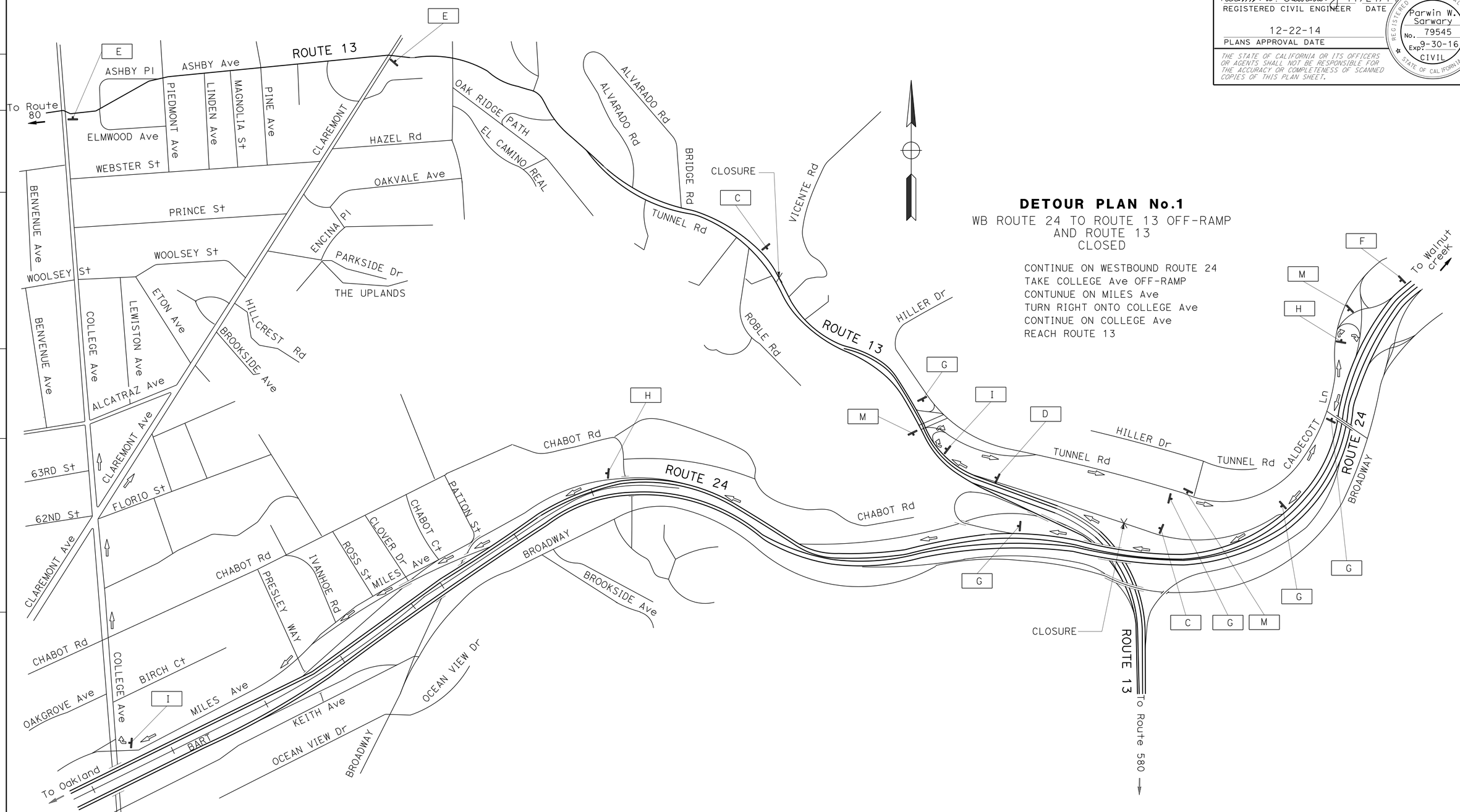

DETOUR PLAN No.1

WB ROUTE 24 TO ROUTE 13 OFF-RAMP
AND ROUTE 13
CLOSED

CONTINUE ON WESTBOUND ROUTE 24
TAKE COLLEGE Ave OFF-RAMP
CONTUNUE ON MILES Ave
TURN RIGHT ONTO COLLEGE Ave
CONTINUE ON COLLEGE Ave
REACH ROUTE 13

CONSTRUCTION AREA SIGNS

NO SCALE

APPROVED FOR CONSTRUCTION AREA SIGN WORK ONLY

FOR NOTES, ABBREVIATIONS AND LEGEND, SEE SHEET CS-1

CS-2

CF	11/24/14
REVISED BY	DATE REVISED
PARWIN W. SARWARY	CLAUDIA FANG
CALCULATED-DESIGNED BY	CHECKED BY
FUNCTIONAL SUPERVISOR	LOURDES DAVID

STATE OF CALIFORNIA - DEPARTMENT OF TRANSPORTATION
Caltrans
TRAFFIC

LAST REVISION 12-18-14 | DATE PLOTTED => 09-JAN-2015 | TIME PLOTTED => 13:47

Dist	COUNTY	ROUTE	POST MILES TOTAL PROJECT	SHEET No.	TOTAL SHEETS
04	Ala	13	9.9/10.1	13	47

Parwin W. Sarwary 11/24/14
REGISTERED CIVIL ENGINEER DATE

12-22-14
PLANS APPROVAL DATE

REGISTERED PROFESSIONAL ENGINEER Parwin W. Sarwary No. 79545 Exp. 9-30-16 CIVIL STATE OF CALIFORNIA

THE STATE OF CALIFORNIA OR ITS OFFICERS OR AGENTS SHALL NOT BE RESPONSIBLE FOR THE ACCURACY OR COMPLETENESS OF SCANNED COPIES OF THIS PLAN SHEET.

DETOUR PLAN No. 2

SB ROUTE 13 TUNNEL Rd CLOSED

USE NB ROUTE 13
TURN LEFT ONTO CLAREMONT Ave
CONTINUE ON CLAREMONT Ave
THEN
TURN RIGHT ONTO WB ROUTE 24 ON-RAMP

OR
CONTINUE ON CLAREMONT Ave
TURN RIGHT ONTO TELEGRAPH Ave

TURN RIGHT ONTO ROUTE 24 ON-RAMP
REACH SB ROUTE 13

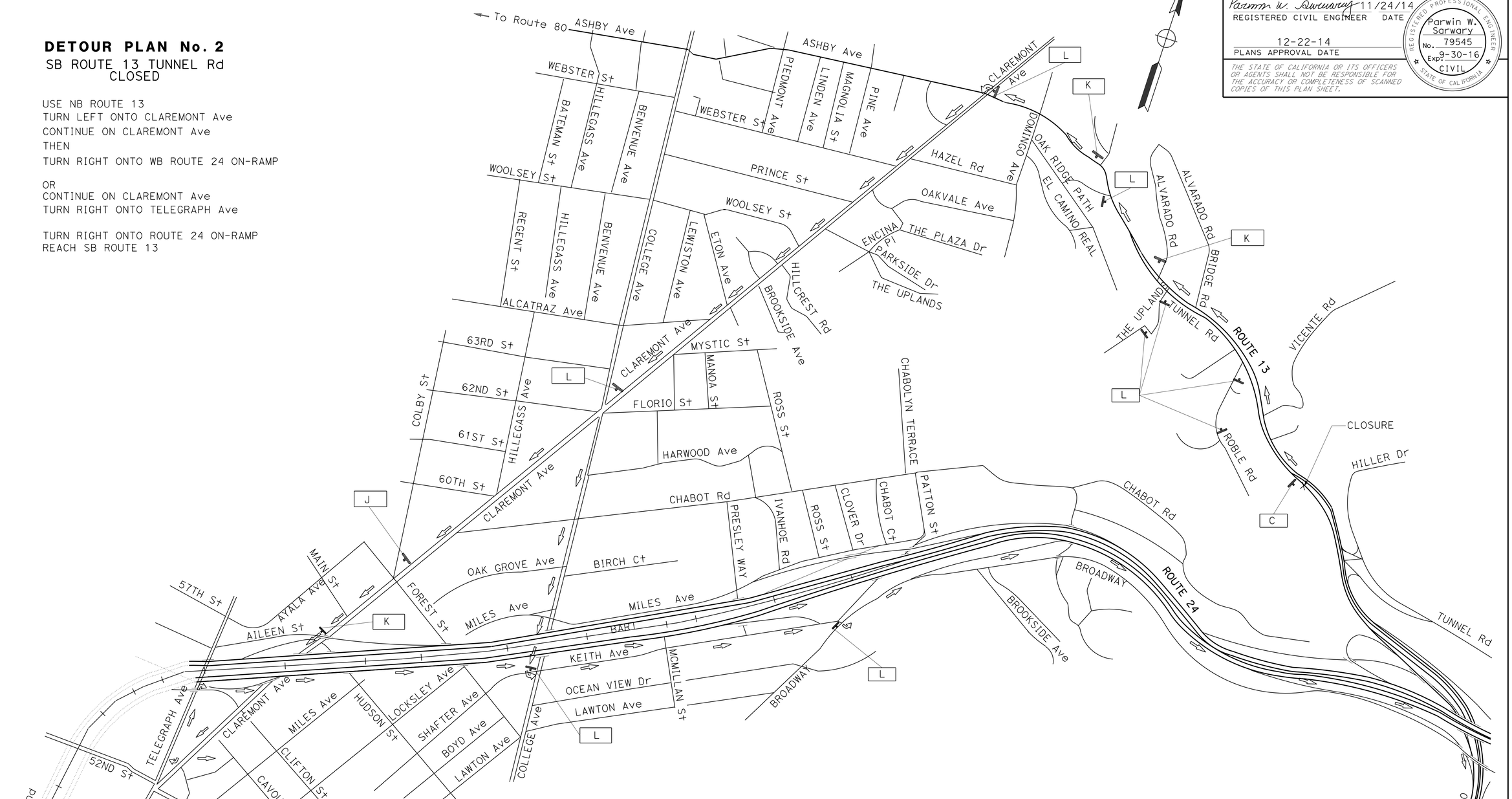

CONSTRUCTION AREA SIGNS

NO SCALE

APPROVED FOR CONSTRUCTION AREA SIGN WORK ONLY

FOR NOTES, ABBREVIATIONS AND LEGEND, SEE SHEET CS-1

CS-3

PARWIN W. SARWARY	REVISED BY	CF
CLAUDIA FANG	DATE REVISED	11/24/14
CALCULATED-DESIGNED BY	
CHECKED BY	
FUNCTIONAL SUPERVISOR	
LOURDES DAVID	

STATE OF CALIFORNIA - DEPARTMENT OF TRANSPORTATION
Caltrans®
TRAFFIC

LAST REVISION 12-18-14
DATE PLOTTED => 09-JAN-2015
TIME PLOTTED => 13:47

Dist	COUNTY	ROUTE	POST MILES TOTAL PROJECT	SHEET No.	TOTAL SHEETS
04	Ala	13	9.9/10.1	14	47

Parwin W. Sarwary 11/24/14
REGISTERED CIVIL ENGINEER DATE

12-22-14
PLANS APPROVAL DATE

REGISTERED PROFESSIONAL ENGINEER Parwin W. Sarwary No. 79545 Exp. 9-30-16 CIVIL STATE OF CALIFORNIA

THE STATE OF CALIFORNIA OR ITS OFFICERS OR AGENTS SHALL NOT BE RESPONSIBLE FOR THE ACCURACY OR COMPLETENESS OF SCANNED COPIES OF THIS PLAN SHEET.

STATIONARY MOUNTED CONSTRUCTION AREA SIGNS

SIGN NUMBER	SIGN CODE FEDERAL	SIGN CODE CALIFORNIA	PANEL SIZE	SIGN MESSAGE	NUMBER OF POSTS AND SIZE	NUMBER OF SIGNS
A	W20-1		30" x 30"	ROAD WORK AHEAD	(ONE) 4" x 4"	4
B	G20-2		36" x 18"	END ROAD WORK	(ONE) 4" x 4"	2
C		SC6-4(CA)	48" x 60"	RAMP CLOSED	(ONE) 6" x 6"	3
D	W20-2		36" x 36"	DETOUR AHEAD	(ONE) 4" x 6"	1
E	M4-8A		24" x 18"	END DETOUR	(ONE) 4" x 4"	2
F		SC7(CA)	84" x 42"	NB ROUTE 13 CLOSED USE RAMP AT COLLEGE Ave		1
G	M4-8		30" x 15"	DETOUR	(ONE) 4" x 4"	5
		G28-1(13)(CA)	24" x 25"	ROUTE 13 SHIELD		
	M3-1		30" x 15"	NORTH		
	M6-1(↑)		21" x 15"	STRAIGHT ARROW		
H	M4-8		30" x 15"	DETOUR	(ONE) 4" x 4"	2
		G26-1(13)(CA)	28" x 25"	ROUTE SHIELD		
	M3-1		30" x 15"	NORTH		
	M6-2		30" x 15"	UP RIGHT ARROW		
I	M4-8		30" x 15"	DETOUR	(ONE) 4" x 4"	2
		G26-1(13)(CA)	28" x 25"	ROUTE SHIELD		
	M3-1		30" x 15"	NORTH		
	M6-1		30" x 15"	RIGHT ARROW		
J	M4-8		30" x 15"	DETOUR	(ONE) 4" x 4"	1
		G26-1(13)(CA)	28" x 25"	ROUTE SHIELD		
	M3-3		30" x 15"	SOUTH		
	M6-1(↑)		21" x 15"	STRAIGHT ARROW		
K	M4-8		30" x 15"	DETOUR	(ONE) 4" x 4"	3
		G26-1(13)(CA)	28" x 25"	ROUTE SHIELD		
	M3-3		30" x 15"	SOUTH		
	M6-1		30" x 15"	RIGHT ARROW		
L	M4-8		30" x 15"	DETOUR	(ONE) 4" x 4"	9
		G26-1(13)(CA)	28" x 25"	ROUTE SHIELD		
	M3-3		30" x 15"	SOUTH		
	M6-3		21" x 15"	LEFT ARROW		
M	M4-8		30" x 15"	DETOUR	(ONE) 4" x 4"	3
		G26-1(13)(CA)	28" x 25"	ROUTE SHIELD		
	M3-1		30" x 15"	SOUTH		
	M6-1		30" x 15"	RIGHT ARROW		

STATE OF CALIFORNIA - DEPARTMENT OF TRANSPORTATION
Caltrans
TRAFFIC

FUNCTIONAL SUPERVISOR: LOURDES DAVID
CALCULATED-DESIGNED BY: PARWIN W. SARWARY
CHECKED BY: CLAUDIA FANG
REVISED BY: CF
DATE REVISED: 11/24/14

CONSTRUCTION AREA SIGNS

CS-4

LAST REVISION 12-18-14
DATE PLOTTED => 09-JAN-2015
TIME PLOTTED => 13:47

Dist	COUNTY	ROUTE	POST MILES TOTAL PROJECT	SHEET No.	TOTAL SHEETS
04	Ala	13	9.9/10.1	15	47

Candace L. Kosior 11/24/14
REGISTERED CIVIL ENGINEER DATE

12-22-14
PLANS APPROVAL DATE

REGISTERED PROFESSIONAL ENGINEER Candace L. Kosior No. 56673 Exp. 6-30-15 CIVIL STATE OF CALIFORNIA

THE STATE OF CALIFORNIA OR ITS OFFICERS OR AGENTS SHALL NOT BE RESPONSIBLE FOR THE ACCURACY OR COMPLETENESS OF SCANNED COPIES OF THIS PLAN SHEET.

NOTE:

FOR ACCURATE RIGHT OF WAY DATA, CONTACT RIGHT OF WAY ENGINEERING AT THE DISTRICT OFFICE.

LEGEND:

HMA LEVELING

TOP 0.25' HMA (TYPE A) AFTER COMPLETION OF SIDEWALK AND CURB

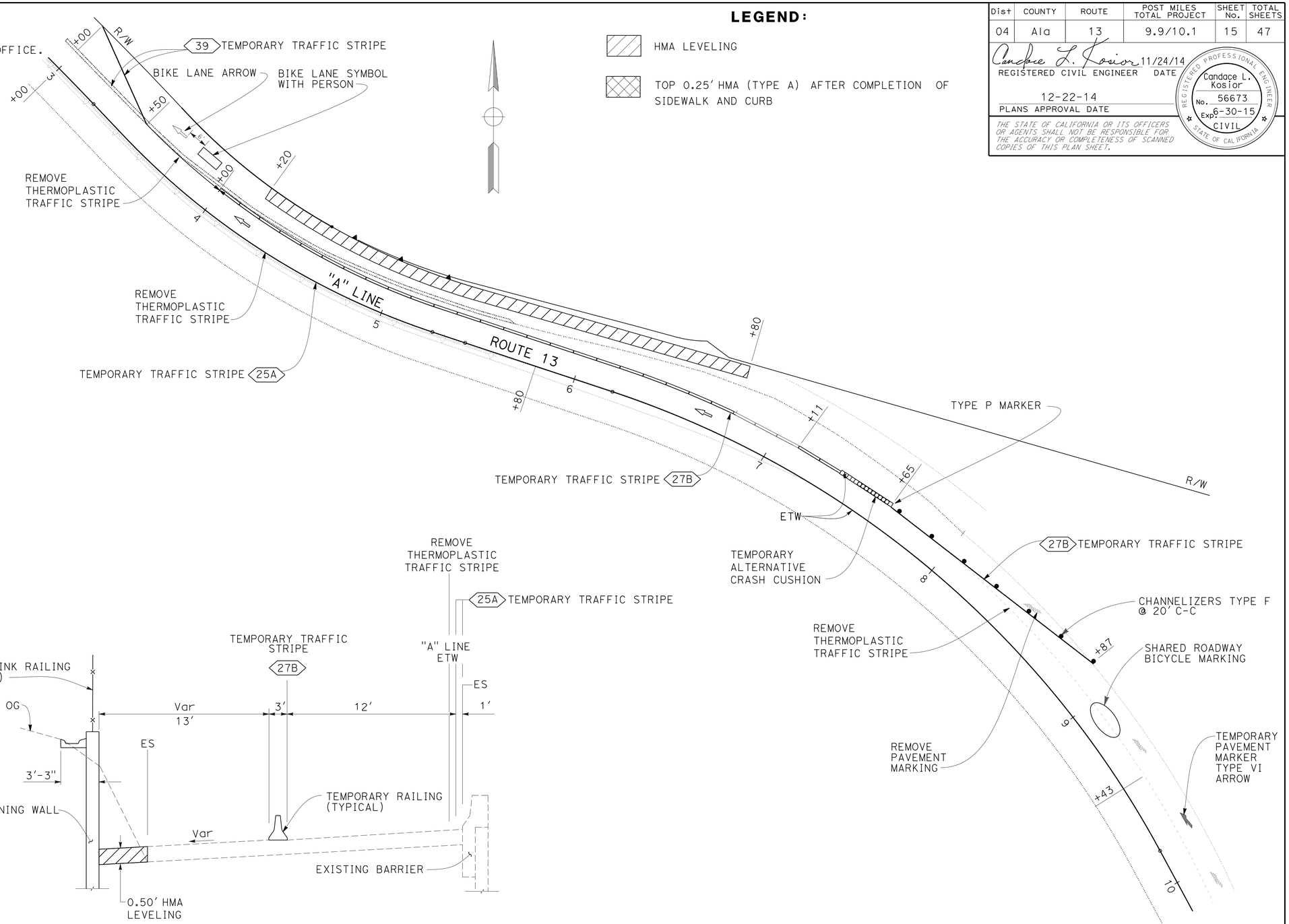

STAGE CONSTRUCTION PLAN

STAGE 1

NO SCALE

APPROVED FOR STAGE CONSTRUCTION WORK ONLY

SC-1

CALCULATED-DESIGNED BY	CANDACE KOSIOR
CHECKED BY	VINCE BONNER
FUNCTIONAL SUPERVISOR	RONALD TSUNG
REVISED BY	JC
DATE REVISED	11/19/14

STATE OF CALIFORNIA - DEPARTMENT OF TRANSPORTATION

Caltrans

DESIGN

LAST REVISION 12-18-14 | DATE PLOTTED => 09-JAN-2015 | TIME PLOTTED => 13:47

Dist	COUNTY	ROUTE	POST MILES TOTAL PROJECT	SHEET No.	TOTAL SHEETS
04	Ala	13	9.9/10.1	16	47

Candace L. Kosior 11/24/14
REGISTERED CIVIL ENGINEER DATE

12-22-14
PLANS APPROVAL DATE

REGISTERED PROFESSIONAL ENGINEER Candace L. Kosior No. 56673 Exp. 6-30-15 CIVIL STATE OF CALIFORNIA

THE STATE OF CALIFORNIA OR ITS OFFICERS OR AGENTS SHALL NOT BE RESPONSIBLE FOR THE ACCURACY OR COMPLETENESS OF SCANNED COPIES OF THIS PLAN SHEET.

NOTE:

FOR ACCURATE RIGHT OF WAY DATA, CONTACT RIGHT OF WAY ENGINEERING AT THE DISTRICT OFFICE.

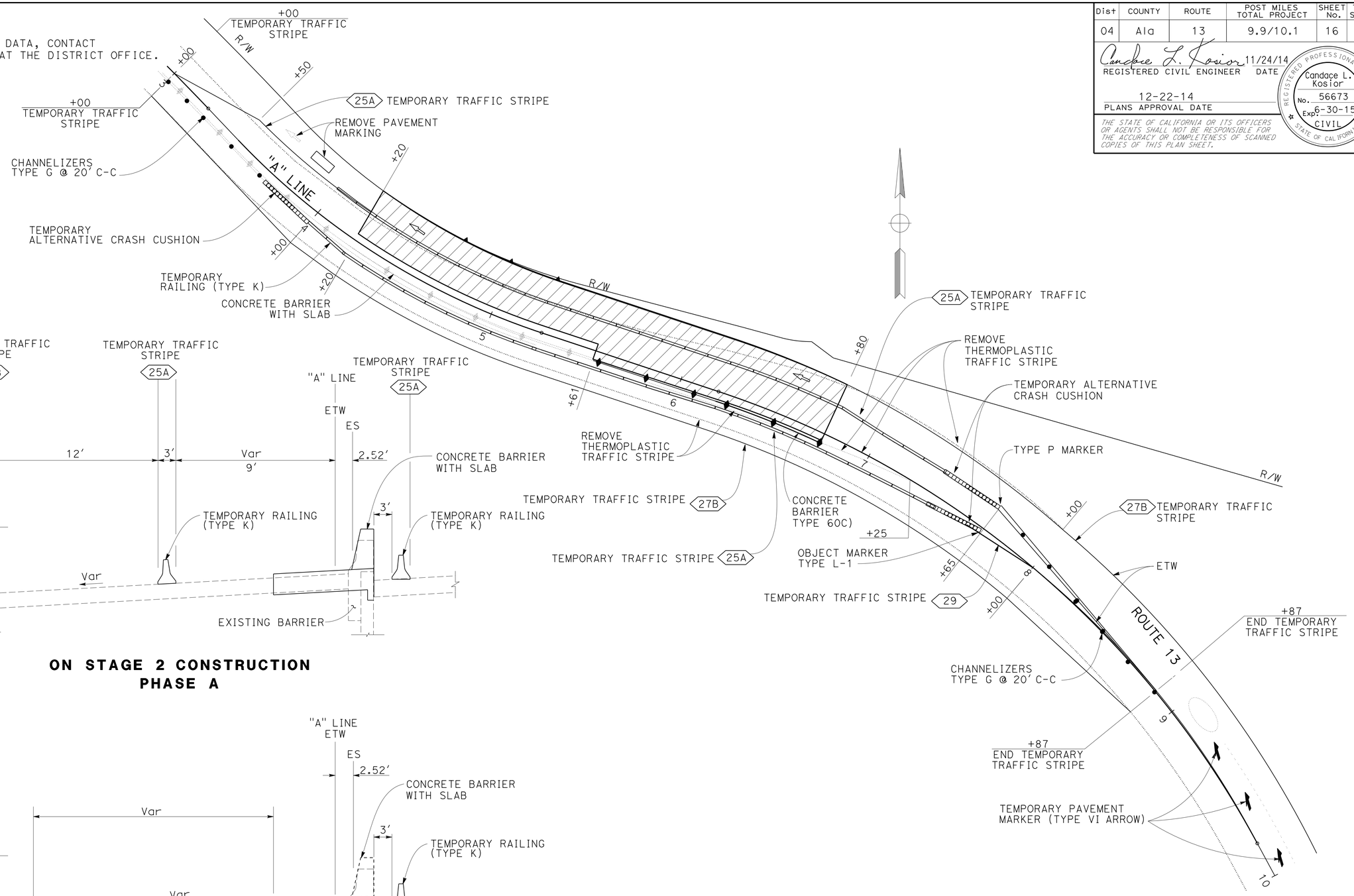

ON STAGE 2 CONSTRUCTION PHASE A

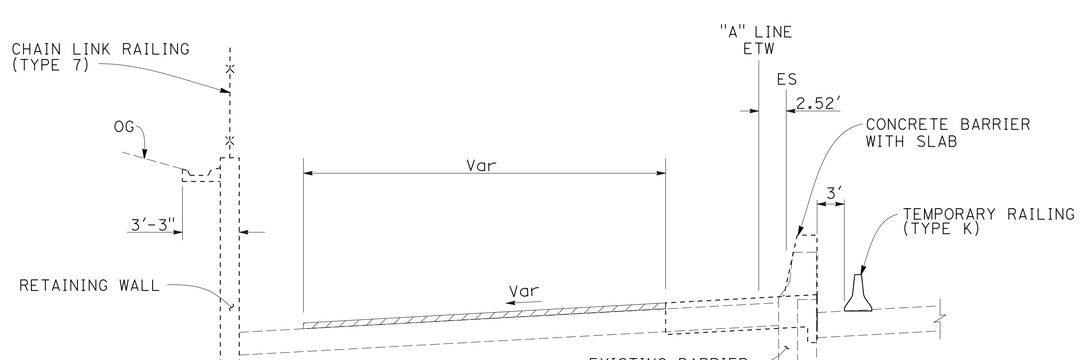

STAGE 2 CONSTRUCTION PHASE B

STAGE CONSTRUCTION PLAN
STAGE 2
(PHASE A AND B)

NO SCALE

APPROVED FOR STAGE CONSTRUCTION WORK ONLY

FOR NOTES, ABBREVIATIONS AND LEGEND, SEE SHEET SC-1

SC-2

STATE OF CALIFORNIA - DEPARTMENT OF TRANSPORTATION
Caltrans®
DESIGN

FUNCTIONAL SUPERVISOR: RONALD TSUNG
CALCULATED-DESIGNED BY: CANDACE KOSIOR
CHECKED BY: VINCE BONNER
REVISED BY: JC
DATE REVISED: 11/19/14

LAST REVISION 12-18-14 | DATE PLOTTED => 09-JAN-2015 | TIME PLOTTED => 13:47

Dist	COUNTY	ROUTE	POST MILES TOTAL PROJECT	SHEET No.	TOTAL SHEETS
04	Ala	13	9.9/10.1	17	47

Candace L. Kosior 11/24/14
REGISTERED CIVIL ENGINEER DATE

12-22-14
PLANS APPROVAL DATE

REGISTERED PROFESSIONAL ENGINEER
Candace L. Kosior
No. 56673
Exp. 6-30-15
CIVIL
STATE OF CALIFORNIA

THE STATE OF CALIFORNIA OR ITS OFFICERS OR AGENTS SHALL NOT BE RESPONSIBLE FOR THE ACCURACY OR COMPLETENESS OF SCANNED COPIES OF THIS PLAN SHEET.

NOTE:

FOR ACCURATE RIGHT OF WAY DATA, CONTACT RIGHT OF WAY ENGINEERING AT THE DISTRICT OFFICE.

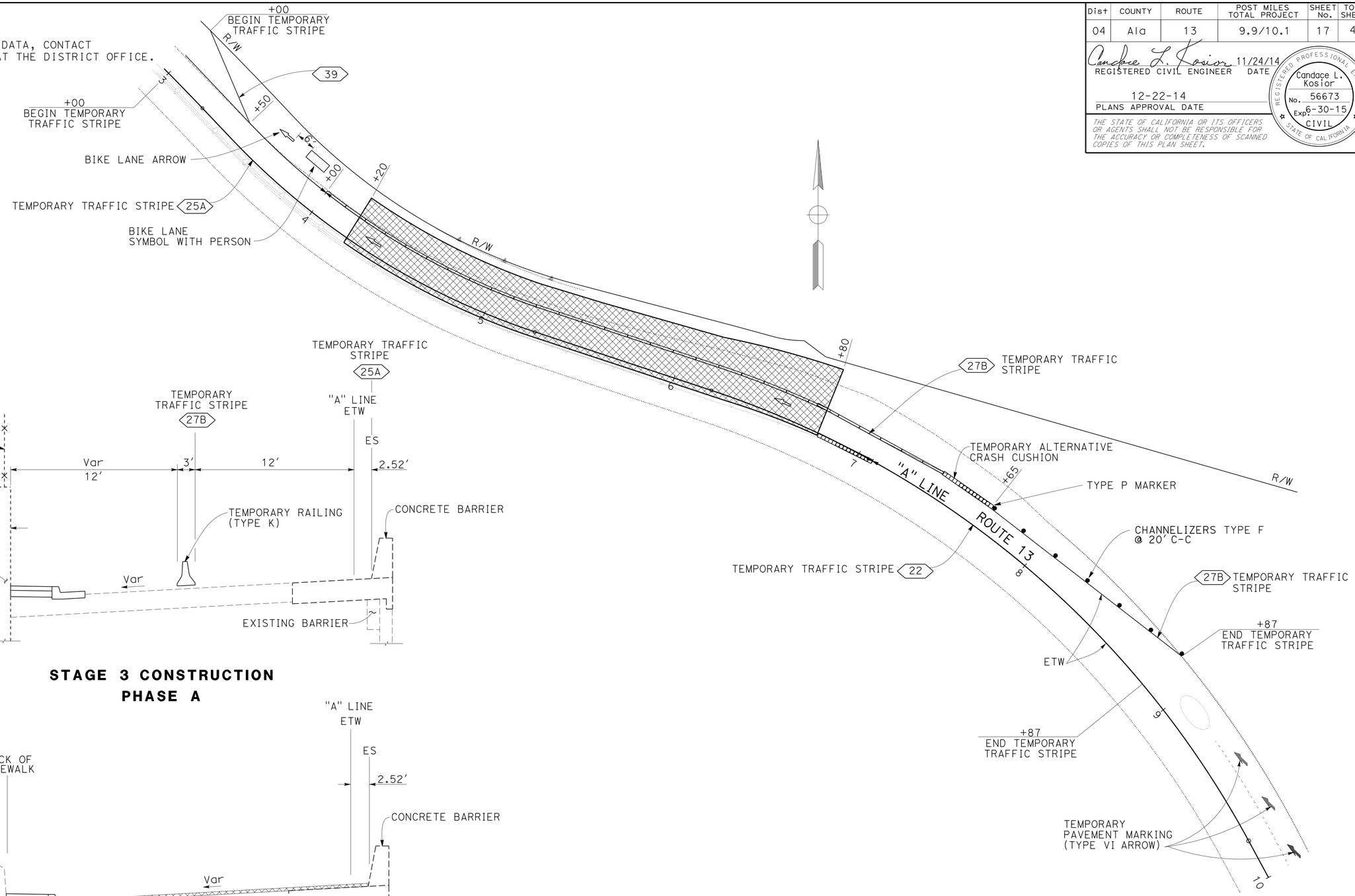

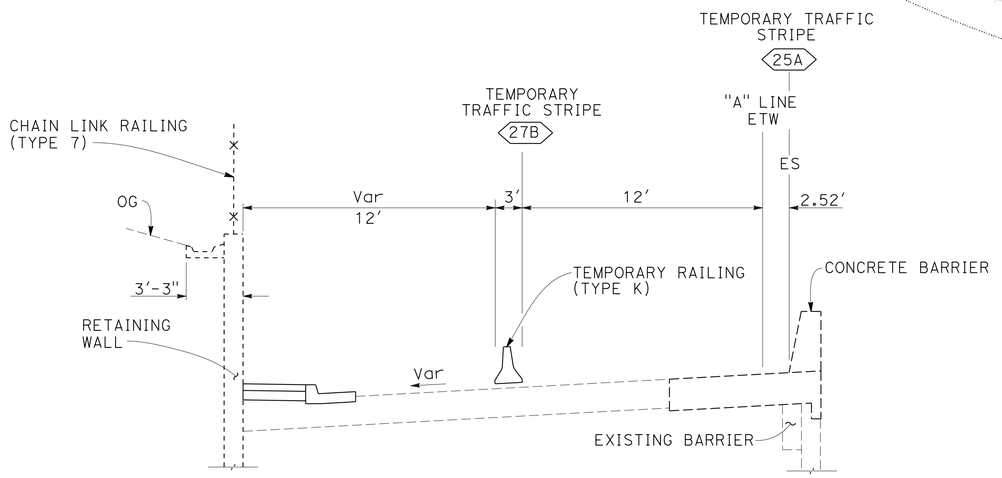

STAGE 3 CONSTRUCTION
PHASE A

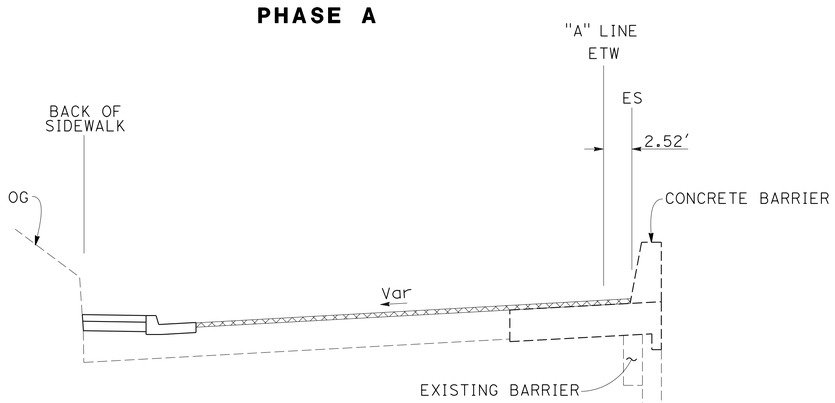

STAGE 3 CONSTRUCTION
PHASE B

STAGE CONSTRUCTION PLAN
STAGE 3
(PHASE A AND B)
NO SCALE

APPROVED FOR STAGE CONSTRUCTION WORK ONLY

FOR NOTES, ABBREVIATIONS AND LEGEND, SEE SHEET SC-1

SC-3

CALCULATED-DESIGNED BY	CANDACE KOSIOR	REVISED BY	JC
CHECKED BY	VINCE BONNER	DATE REVISED	11/19/14
FUNCTIONAL SUPERVISOR	RONALD TSUNG		

STATE OF CALIFORNIA - DEPARTMENT OF TRANSPORTATION
Caltrans®
DESIGN

LAST REVISION 12-18-14 | DATE PLOTTED => 09-JAN-2015 | TIME PLOTTED => 13:47

Dist	COUNTY	ROUTE	POST MILES TOTAL PROJECT	SHEET No.	TOTAL SHEETS
04	Ala	13	9.9/10.1	18	47

REGISTERED CIVIL ENGINEER 11/24/14 DATE

12-22-14
PLANS APPROVAL DATE

REGISTERED PROFESSIONAL ENGINEER Shi F. Lam No. 50970 Exp. 9-30-15 CIVIL STATE OF CALIFORNIA

THE STATE OF CALIFORNIA OR ITS OFFICERS OR AGENTS SHALL NOT BE RESPONSIBLE FOR THE ACCURACY OR COMPLETENESS OF SCANNED COPIES OF THIS PLAN SHEET.

NOTE:

FOR ACCURATE RIGHT OF WAY DATA, CONTACT RIGHT OF WAY ENGINEERING AT THE DISTRICT OFFICE.

LEGEND:

- CHANGE OF PAVEMENT DELINEATION DETAILS
- BG CONCRETE BARRIER MARKER - TYPE G
- BI CONCRETE BARRIER MARKER - TYPE I

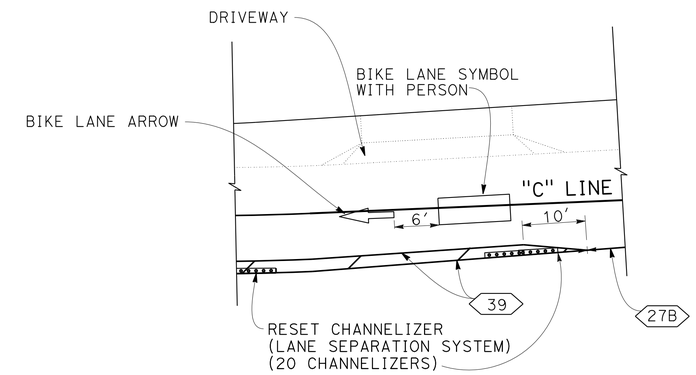

DETAIL A
NO SCALE

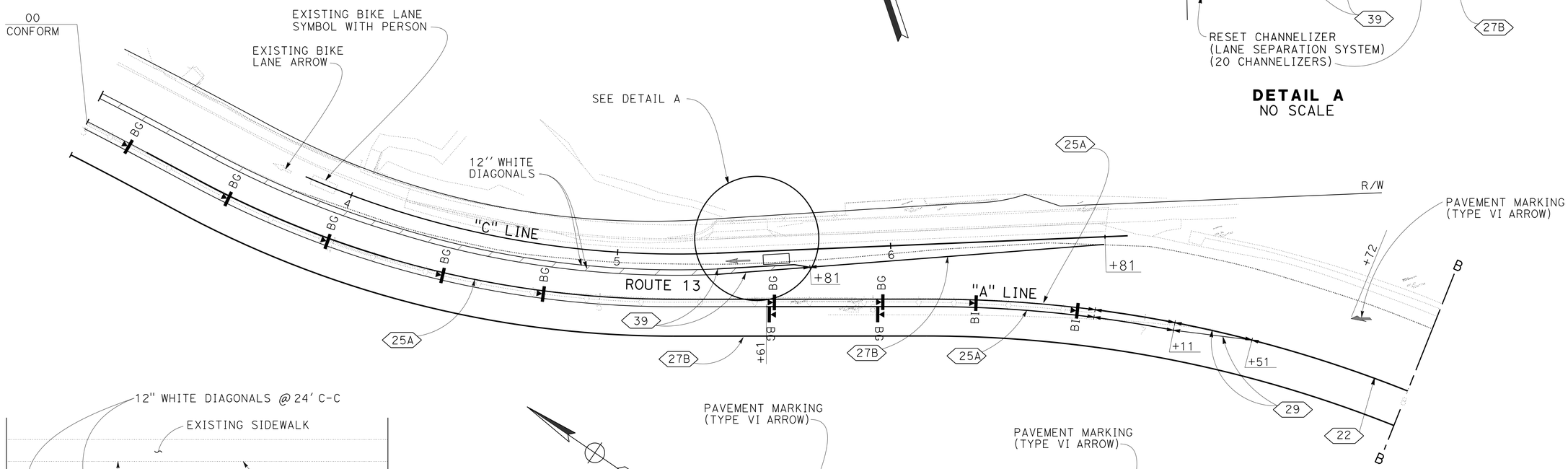

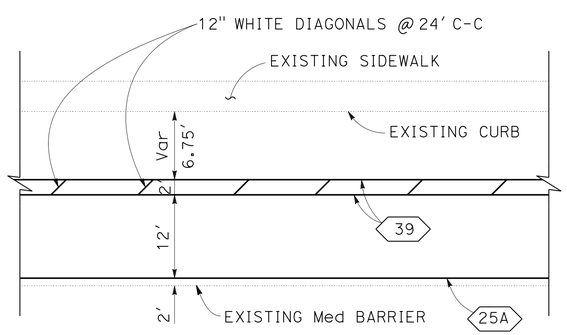

BIKE LANE STRIPING DETAIL
NO SCALE

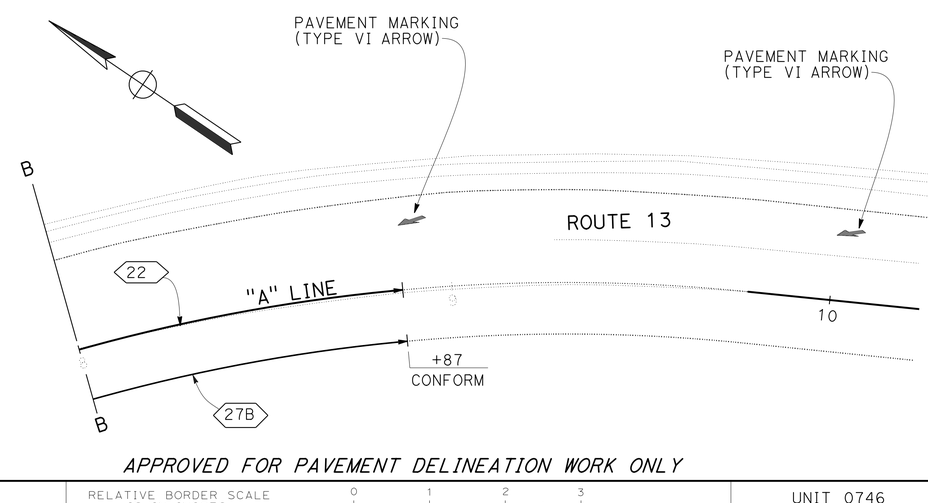

APPROVED FOR PAVEMENT DELINEATION WORK ONLY

PAVEMENT DELINEATION PLAN

SCALE: 1"= 20'

PD-1

CALCULATED-DESIGNED BY	CANDACE KOSIOR
CHECKED BY	VINCE BONNER
REVISED BY	JC
DATE REVISED	11/19/14
FUNCTIONAL SUPERVISOR	RONALD TSUNG

STATE OF CALIFORNIA - DEPARTMENT OF TRANSPORTATION
Caltrans
DESIGN

LAST REVISION 12-18-14 | DATE PLOTTED => 09-JAN-2015 | TIME PLOTTED => 13:47

Dist	COUNTY	ROUTE	POST MILES TOTAL PROJECT	SHEET No.	TOTAL SHEETS
04	Ala	13	9.9/10.1	19	47

Candace L. Kosior 11/24/14
REGISTERED CIVIL ENGINEER DATE

12-22-14
PLANS APPROVAL DATE

REGISTERED PROFESSIONAL ENGINEER
Candace L. Kosior
No. 56673
Exp. 6-30-15
CIVIL
STATE OF CALIFORNIA

THE STATE OF CALIFORNIA OR ITS OFFICERS OR AGENTS SHALL NOT BE RESPONSIBLE FOR THE ACCURACY OR COMPLETENESS OF SCANNED COPIES OF THIS PLAN SHEET.

TRAFFIC STRIPES, PAVEMENT MARKINGS AND PAVEMENT MARKERS

STATION LIMITS	DETAIL No. OR PAVEMENT MARKING	DIRECTION		THERMOPLASTIC TRAFFIC STRIPE			PAVEMENT MARKER RETROREFLECTIVE		THERMOPLASTIC PAVEMENT MARKING
				4" WHITE	4" YELLOW	6" WHITE	TYPE D	TYPE H	WHITE
		NB	SB	LF			EA		SQFT
"A" 4+21.48 TO 7+11.48	22	X			272		24		
	25A	X			411			19	
			X		411			19	
	27B	X		100					
			X	587					
	29	X			80		3		
			X		80		3		
	39	X				562			
	DIAGONAL (12'' WHITE)	X							48
	BIKE LANE SYMBOL	X							7
	BIKE LANE ARROW	X							7
	TYPE VI ARROW	X							126
TOTAL				687	1254	562	30	38	188

RESET CHANNELIZERS (LANE SEPARATION SYSTEM)

STATION LIMITS	DIRECTION	CHANNELIZERS
	NB	EA
"A" 4+21.48 TO 7+11.48	X	20
TOTAL		20

PAVEMENT DELINEATION QUANTITIES

PDQ-1

CALCULATED-DESIGNED BY	CANDACE KOSIOR	REVISED BY	JC
CHECKED BY	VINCE BONNER	DATE REVISED	11/19/14
FUNCTIONAL SUPERVISOR	RONALD TSUNG		

STATE OF CALIFORNIA - DEPARTMENT OF TRANSPORTATION
Caltrans®
DESIGN

LAST REVISION 12-18-14 | DATE PLOTTED => 09-JAN-2015 | TIME PLOTTED => 13:47

Dist	COUNTY	ROUTE	POST MILES TOTAL PROJECT	SHEET No.	TOTAL SHEETS
04	Ala	13	9.9/10.1	20	47

Parwin W. Sarwary 11/24/14
REGISTERED CIVIL ENGINEER DATE

12-22-14
PLANS APPROVAL DATE

REGISTERED PROFESSIONAL ENGINEER Parwin W. Sarwary No. 79545 Exp. 9-30-16 CIVIL STATE OF CALIFORNIA

THE STATE OF CALIFORNIA OR ITS OFFICERS OR AGENTS SHALL NOT BE RESPONSIBLE FOR THE ACCURACY OR COMPLETENESS OF SCANNED COPIES OF THIS PLAN SHEET.

NOTE:

FOR ACCURATE RIGHT OF WAY DATA, CONTACT RIGHT OF WAY ENGINEERING AT THE DISTRICT OFFICE.

LEGEND:

✳ ROADSIDE SIGN TO REMAIN

(No.) ROADSIDE SIGN NUMBER

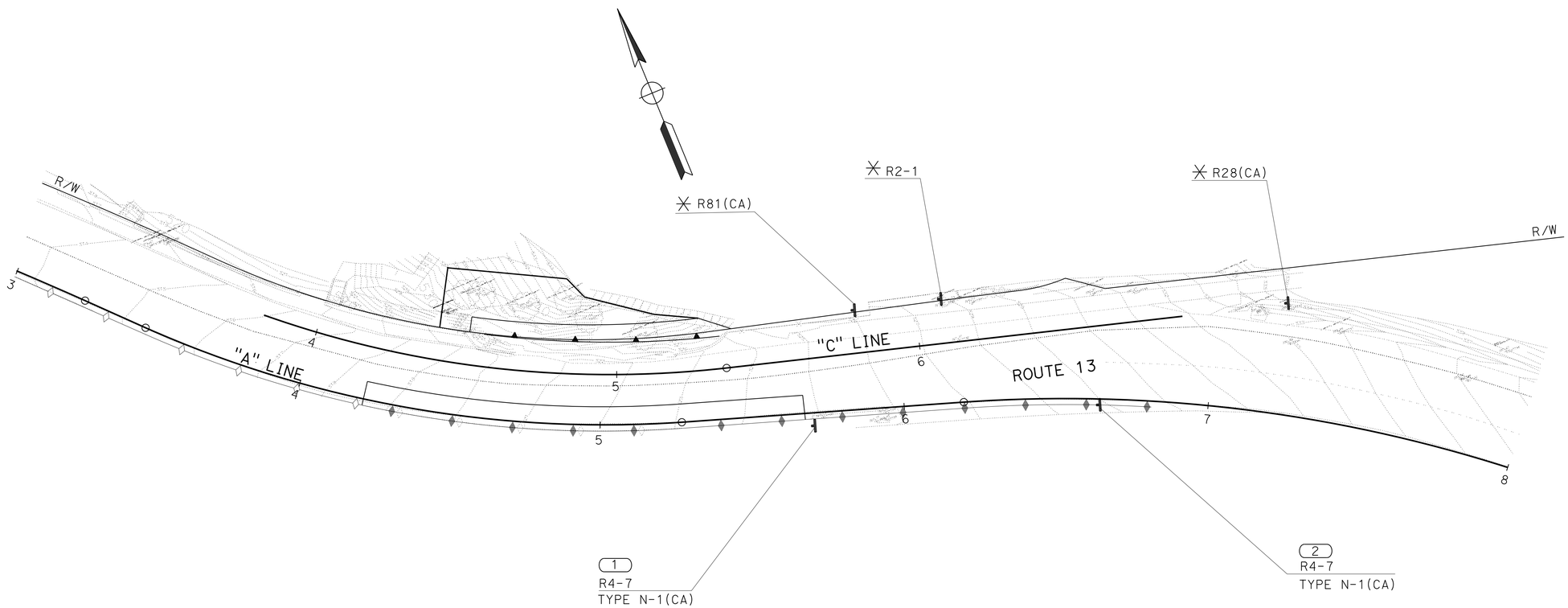

SIGN PLAN
NO SCALE

APPROVED FOR SIGN WORK ONLY

S-1

STATE OF CALIFORNIA - DEPARTMENT OF TRANSPORTATION
Caltrans
TRAFFIC

FUNCTIONAL SUPERVISOR: LOURDES DAVID
CALCULATED-DESIGNED BY: PARWIN W. SARWARY
CHECKED BY: CLAUDIA FANG
REVISED BY: CF
DATE REVISED: 11/24/14

LAST REVISION 12-18-14
DATE PLOTTED => 09-JAN-2015
TIME PLOTTED => 13:47

Dist	COUNTY	ROUTE	POST MILES TOTAL PROJECT	SHEET No.	TOTAL SHEETS
04	Ala	13	9.9/10.1	21	47

Parwin W. Sarwary 11/24/14
REGISTERED CIVIL ENGINEER DATE

12-22-14
PLANS APPROVAL DATE

REGISTERED PROFESSIONAL ENGINEER Parwin W. Sarwary No. 79545 Exp. 9-30-16 CIVIL STATE OF CALIFORNIA

THE STATE OF CALIFORNIA OR ITS OFFICERS OR AGENTS SHALL NOT BE RESPONSIBLE FOR THE ACCURACY OR COMPLETENESS OF SCANNED COPIES OF THIS PLAN SHEET.

ROADSIDE SIGN QUANTITIES AND MATERIALS SUMMARY

SHEET No.	SIGN No.	SIGN CODE	PANEL SIZE	RAIL MOUNTED SIGN (METAL)	REMOVE ROADSIDE SIGN	ROADSIDE SIGN METHOD	ROADSIDE SIGN SINGLE SHEET	SINGLE FACED	SIGN FACING MATERIAL BACKGROUND SHEETING COLOR	BACKGROUND RETROREFLECTIVE ASTM TYPE	LEGEND SHEETING COLOR	LEGEND RETROREFLECTIVE ASTM TYPE	PREMIUM PROTECTIVE FILM
						ONE POST	UNFRAMED ALUMINUM 0.063"						
				LB	EA		SQFT						
S-1	1	R4-7			1								
		TYPE N-1(CA)											
	2	R4-7	24" x 30"	114		1	5.0	X	WHITE	III	BLACK	PLAIN	X
		TYPE N-1(CA)	18" x 18"				2.25	X	YELLOW	III	BLACK	PLAIN	X
TOTAL				114	1	1	7.25						

SIGN QUANTITIES

SQ-1

STATE OF CALIFORNIA - DEPARTMENT OF TRANSPORTATION
Caltrans
TRAFFIC

FUNCTIONAL SUPERVISOR: LOURDES DAVID
CALCULATED-DESIGNED BY: PARWIN W. SARWARY
CHECKED BY: CLAUDIA FANG
REVISED BY: CF
DATE REVISED: 11/24/14

LAST REVISION 12-18-14 | DATE PLOTTED => 09-JAN-2015 | TIME PLOTTED => 13:47

Dist	COUNTY	ROUTE	POST MILES TOTAL PROJECT	SHEET No.	TOTAL SHEETS
04	Ala	13	9.9/10.1	22	47

Candace L. Kosior 11/24/14
REGISTERED CIVIL ENGINEER DATE

12-22-14
PLANS APPROVAL DATE

REGISTERED PROFESSIONAL ENGINEER Candace L. Kosior No. 56673 Exp. 6-30-15 CIVIL STATE OF CALIFORNIA

THE STATE OF CALIFORNIA OR ITS OFFICERS OR AGENTS SHALL NOT BE RESPONSIBLE FOR THE ACCURACY OR COMPLETENESS OF SCANNED COPIES OF THIS PLAN SHEET.

ABBREVIATION:

LNMI LANE MILE

CONCRETE (CURB, GUTTER, SIDEWALK, AND DRIVEWAY)

STATION LIMITS	DIRECTION	MINOR CONCRETE	REMOVE CONCRETE
		CY	
"C" 4+21.48 TO 6+81.48	NB	36.52	
			21.07
TOTAL		36.52	21.07

REMOVE ATTENUATOR

STATION LIMITS	SIDE	EA
"A" 5+61.48 TO 5+81.48	Rt	1
TOTAL		1

COLD PLANE ASPHALT CONCRETE PAVEMENT

STATION LIMITS	0.1' TO 0.35' DEPTH
	SQYD
"A" 4+21.48 TO 4+91.48	96.76
"A" 6+11.48 TO 6+81.48	209.70
TOTAL	306.46

ALTERNATIVE CRASH CUSHION (TEST LEVEL 2)

STATION LIMITS	SIDE	EA
"A" 6+81.48	Rt	1
TOTAL		1

TEMPORARY REINFORCED SILT FENCE

STATION LIMITS	SIDE	LF
"A" 4+44 TO 5+44	Lt	125
TOTAL		125

TEMPORARY TRAFFIC CONTROL

SHEET No.	STATION LIMITS	DIRECTION	TRAFFIC STRIPE DETAIL No. 22	25A	27B	29	39	REMOVE THERMOPLASTIC TRAFFIC STRIPE	REMOVE PAVEMENT MARKER	REMOVE THERMOPLASTIC PAVEMENT MARKING TYPE VI ARROW	TEMPORARY PAVEMENT MARKING (PAINT) TYPE VI ARROW	SHARED ROADWAY BICYCLE	BIKE LANE ARROW	BIKE LANE SYMBOL WITH PERSON	TEMPORARY ALTERNATIVE CRASH CUSHION	TEMPORARY RAILING (TYPE K)	CHANNELIZER (SURFACE MOUNTED)
			LF						EA	SQFT					EA	LF	EA
SC-1	"A" 3+00 TO 5+80	NB		280	180		100	380	13			11.5	7	7		180	
	"A" 5+80 TO 10+00				307			178	5	42	42				1	180	6
SC-2	"A" 3+00 TO 10+00	NB		587	500	70		707	14	84	126				2	360	6
	"A" 3+00 TO 10+00	SB		552	587	70		1012	19						1	360	6
SC-3	"A" 3+00 TO 10+00	NB	352	411	487		100				126		7	7	2	360	6
TOTAL			352	1830	2061	140	200	2277	51	126	294	12	14	14	6	1440	24

ROADWAY QUANTITIES

STATION LIMITS	DIRECTION	ROADWAY EXCAVATION	REMOVE EXISTING ROCK WALL	HMA LEVELING	HMA (TYPE A)	TACK COAT	LIQUID ASHPHALT (PRIME COAT)	CRACK TREATMENT	CONCRETE BARRIER (TYPE 60C Mod)	CONCRETE BARRIER (TYPE 60C)	CONCRETE BARRIER (TYPE 60P)
		CY		TON				LNMI	LF		
"A" 4+21.48 TO 4+58.56	NB	8.85		7.39	22.78	0.1	0.1	0.1			
"A" 4+58.56 TO 5+41.12		79.42		51.25	49.68	0.3	0.1				
"A" 5+41.12 TO 5+61.50		3.78		20.79	14.64	0.1	0.1				
"A" 5+61.50 TO 6+81.48		0.75		121.99	80.25	0.5	0.2		20	88	12
EXISTING ROCKWALL			2.22								
SLOPE PAVING					4.00						
TOTAL		92.8	2.22	201.42	171.35	1.0	0.5	0.1	20	88	12

SUMMARY OF QUANTITIES

Q-1

STATE OF CALIFORNIA - DEPARTMENT OF TRANSPORTATION
Caltrans® DESIGN

FUNCTIONAL SUPERVISOR: RONALD TSUNG
CALCULATED-DESIGNED BY: CANDACE KOSIOR
CHECKED BY: VINCE BONNER
REVISED BY: JC
DATE REVISED: 11/19/14

LAST REVISION 12-19-14
DATE PLOTTED => 09-JAN-2015
TIME PLOTTED => 13:47

Dist	COUNTY	ROUTE	POST MILES TOTAL PROJECT	SHEET No.	TOTAL SHEETS
04	Ala	13	9.9/10.1	23	47

LICENSED LANDSCAPE ARCHITECT

12-22-14
PLANS APPROVAL DATE

LICENSED LANDSCAPE ARCHITECT — DAVID WARREN YAM No. 1749 — Signature — 11-30-15 Renewal date — 11/24/14 Date — STATE OF CALIFORNIA

THE STATE OF CALIFORNIA OR ITS OFFICERS OR AGENTS SHALL NOT BE RESPONSIBLE FOR THE ACCURACY OR COMPLETENESS OF SCANNED COPIES OF THIS PLAN SHEET.

EROSION CONTROL

SEQUENCE	ITEM	MATERIAL		APPLICATION RATE
		DESCRIPTION	TYPE	
STEP 1	ROLLED EROSION CONTROL PRODUCT (NETTING)	NETTING	TYPE A	
STEP 2	HYDROSEED	SEED	MIX 1	57.4 LB/ACRE
		FIBER	COMBINATION	2,000 LB/ACRE
STEP 3	HYDROMULCH	FIBER	COMBINATION	2,000 LB/ACRE
		TACKIFIER	GUAR	200 LB/ACRE

EROSION CONTROL QUANTITY

SHEET	DESCRIPTION	ROLLED EROSION CONTROL PRODUCT (NETTING)	HYDROSEED	HYDROMULCH
		SQFT	SQFT	SQFT
EC-1	EROSION CONTROL TYPE 1	1,110	1,110	1,110
	TOTAL	1,110	1,110	1,110

SEED MIX

BOTANICAL NAME (COMMON NAME)	PERCENT GERMINATION (MINIMUM)	POUNDS PURE LIVE SEED PER ACRE (SLOPE MEASUREMENT)
NASSELLA PULCHRA (PURPLE NEEDLEGRASS)	35	12
ELYMUS GLAUCUS, BERKELEY 1 (BLUE WILD RYE, BERKELEY)	40	12
HORDEUM BRACHYANTHERUM (MEADOW BARLEY)	40	10
LUPINUS BICOLOR (PYGMY-LEAF LUPINE)	40	6
LOTUS PURSHIANUS (PURSHINGS LOTUS)	40	3
VULPIA MICROSTACHYS (THREE WEEKS FESCUE)	45	6
BACCHARIS PILULARIS (COYOTE BUSH)	15	0.1
ERIOGONUM FASCICULATUM (CALIFORNIA BUCKWHEAT)	20	1
ESCHSCHOLZIA CALIFORNICA (CALIFORNIA POPPY)	35	1.5
ERIOPHYLLUM CONFERTIFLORUM (GOLDEN YARROW)	30	2
ACHILLEA MILLEFOLIUM (WHITE YARROW)	25	0.8
ARTEMISIA CALIFORNICA (CALIFORNIA SAGEBRUSH)	25	1
SALVIA MELLIFERA (BLACK SAGE)	20	2

[1] SEED PRODUCED IN CALIFORNIA ONLY.

EROSION CONTROL LEGEND AND QUANTITIES

ECL-1

CALCULATED-DESIGNED BY	CT	REVISED BY	CALIE TSUI	SENIOR LANDSCAPE ARCHITECT	DAVID W. YAM
CHECKED BY	11/24/14	DATE REVISED	DAVID YAM		

STATE OF CALIFORNIA - DEPARTMENT OF TRANSPORTATION
Caltrans®
WATER QUALITY

LAST REVISION 12-18-14 | DATE PLOTTED => 09-JAN-2015 | TIME PLOTTED => 13:47

Dist	COUNTY	ROUTE	POST MILES TOTAL PROJECT	SHEET No.	TOTAL SHEETS
04	Ala	13	9.9/10.1	24	47

LICENSED LANDSCAPE ARCHITECT

12-22-14
PLANS APPROVAL DATE

LICENSED LANDSCAPE ARCHITECT
DAVID WARREN YAM No. 3171
Professional Engineer
11-30-15
Registration Expires
11/24/14
Date
STATE OF CALIFORNIA

THE STATE OF CALIFORNIA OR ITS OFFICERS OR AGENTS SHALL NOT BE RESPONSIBLE FOR THE ACCURACY OR COMPLETENESS OF SCANNED COPIES OF THIS PLAN SHEET.

NOTE:

FOR ACCURATE RIGHT OF WAY DATA, CONTACT
RIGHT OF WAY ENGINEERING AT THE DISTRICT OFFICE.

LEGEND:

EROSION CONTROL (TYPE 1)

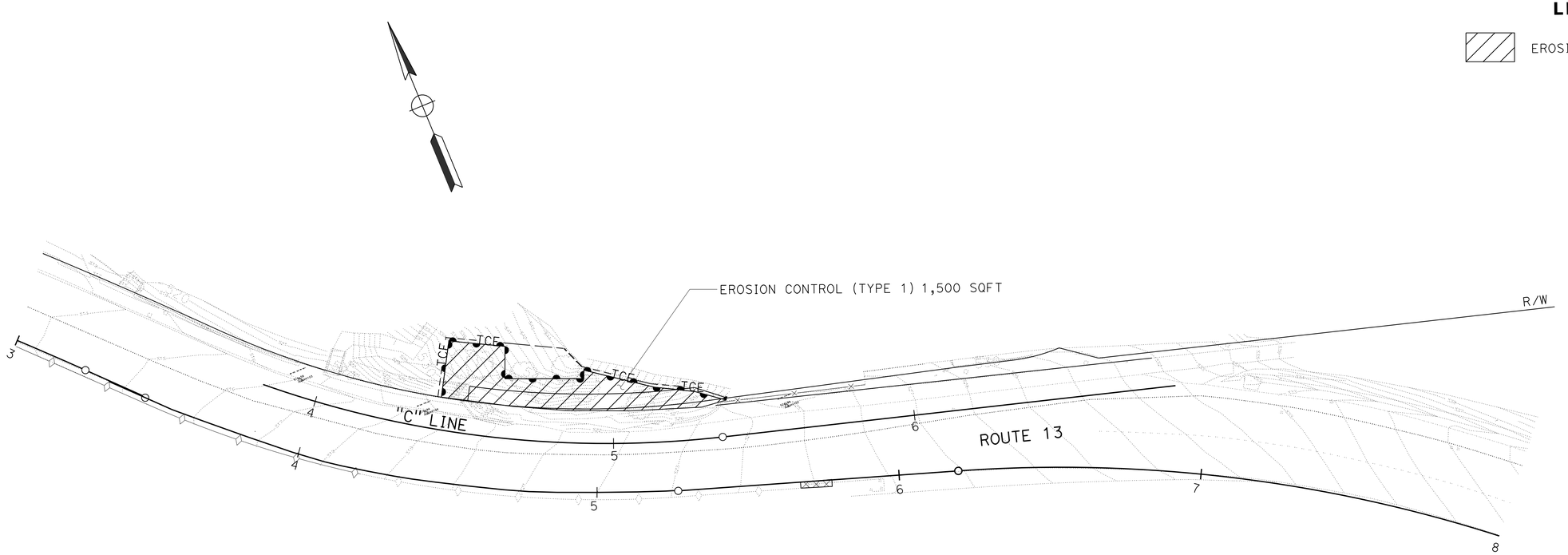

EROSION CONTROL PLAN

SCALE: 1"= 20'

EC-1

APPROVED FOR EROSION CONTROL WORK ONLY

STATE OF CALIFORNIA - DEPARTMENT OF TRANSPORTATION
Caltrans®
WATER QUALITY

SENIOR LANDSCAPE ARCHITECT: DAVID W YAM
CALCULATED-DESIGNED BY: CALIE TSUI
CHECKED BY: DAVID YAM
REVISED BY: CT
DATE REVISED: 11/24/14

LAST REVISION 12-18-14
DATE PLOTTED => 09-JAN-2015
TIME PLOTTED => 13:47

M

Maint	MAINTENANCE
Max	MAXIMUM
MB	METAL BEAM
MBB	METAL BEAM BARRIER
MBGR	METAL BEAM GUARD RAILING
Med	MEDIAN
MGS	MIDWEST GUARDRAIL SYSTEM
MH	MANHOLE
Min	MINIMUM
Misc	MISCELLANEOUS
Misc I & S	MISCELLANEOUS IRON AND STEEL
Mkr	MARKER
Mod	MODIFIED,
	MODIFY
Mon	MONUMENT
MP	METAL PLATE
MPGR	METAL PLATE GUARD RAILING
MR	MOVEMENT RATING
MSE	MECHANICALLY STABILIZED EMBANKMENT
Mt	MOUNTAIN, MOUNT
Mtl	MATERIAL
MVP	MAINTENANCE VEHICLE PULLOUT

N

N	NORTH
NB	NORTHBOUND
No.	NUMBER (MUST HAVE PERIOD)
Nos.	NUMBERS (MUST HAVE PERIOD)
NPS	NOMINAL PIPE SIZE
NS	NEAR SIDE
NSP	NEW STANDARD PLAN
NTS	NOT TO SCALE

O

Oblr	OBLITERATE
OC	OVERCROSSING
OD	OUTSIDE DIAMETER
OF	OUTSIDE FACE
OG	ORIGINAL GROUND
OGAC	OPEN GRADED ASPHALT CONCRETE
OGFC	OPEN GRADED FRICTION COURSE
OH	OVERHEAD
OHWM	ORDINARY HIGH WATER MARK
O-O	OUT TO OUT
Opp	OPPOSITE
OSD	OVERSIDE DRAIN

P

P	PAGE
PAP	PERFORATED ALUMINUM PIPE
PB	PULL BOX
PC	POINT OF CURVATURE,
	PRECAST
PCC	POINT OF COMPOUND CURVE,
	PORTLAND CEMENT CONCRETE
PCMS	PORTABLE CHANGEABLE MESSAGE SIGN
PCP	PERFORATED CONCRETE PIPE,
	PRESTRESSED CONCRETE PIPE
PCVC	POINT OF COMPOUND VERTICAL CURVE
PEC	PERMIT TO ENTER AND CONSTRUCT
Ped	PEDESTRIAN
Ped OC	PEDESTRIAN OVERCROSSING
Ped UC	PEDESTRIAN UNDERCROSSING
Perm Mtl	PERMEABLE MATERIAL

P continued

PG	PROFILE GRADE
PI	POINT OF INTERSECTION
PJP	PARTIAL JOINT PENETRATION
Pkwy	PARKWAY
ℙ,PL	PLATE
P/L	PROPERTY LINE
PM	POST MILE,
	TIME FROM NOON TO MIDNIGHT
PN	PAVING NOTCH
POC	POINT OF HORIZONTAL CURVE
POT	POINT OF TANGENT
POVC	POINT OF VERTICAL CURVE
PP	PIPE PILE,
	PLASTIC PIPE,
	POWER POLE
PPL	PREFORMED PERMEABLE LINER
PPP	PERFORATED PLASTIC PIPE
PRC	POINT OF REVERSE CURVE
PRF	PAVEMENT REINFORCING FABRIC
PRVC	POINT OF REVERSE VERTICAL CURVE
PS&E	PLANS, SPECIFICATIONS AND ESTIMATES
PS, P/S	PRESTRESSED
PSP	PERFORATED STEEL PIPE
PT	POINT OF TANGENCY
PVC	POLYVINYL CHLORIDE
Pvmt	PAVEMENT

Q

Qty	QUANTITY

R

R	RADIUS
R & D	REMOVE AND DISPOSE
R & S	REMOVE AND SALVAGE
R/C	RATE OF CHANGE
RCA	REINFORCED CONCRETE ARCH
RCB	REINFORCED CONCRETE BOX
RCP	REINFORCED CONCRETE PIPE
RCPA	REINFORCED CONCRETE PIPE ARCH
Rd	ROAD
Reinf	REINFORCED,
	REINFORCEMENT,
	REINFORCING
Rel	RELOCATE
Repl	REPLACEMENT
Ret	RETAINING
Rev	REVISED, REVISION
Rdwy	ROADWAY
RHMA	RUBBERIZED HOT MIX ASPHALT
Riv	RIVER
RM	ROAD-MIXED
RP	RADIUS POINT,
	REFERENCE POINT
RR	RAILROAD
RSP	ROCK SLOPE PROTECTION,
	REVISED STANDARD PLAN
Rt	RIGHT
Rte	ROUTE
RW	REDWOOD,
	RETAINING WALL
R/W	RIGHT OF WAY
Rwy	RAILWAY

S

S	SOUTH,
	SUPPLEMENT
SAE	STRUCTURE APPROACH EMBANKMENT
Salv	SALVAGE
SAPP	STRUCTURAL ALUMINUM PLATE PIPE
SB	SOUTHBOUND
SC	SAND CUSHION
SCSP	SLOTTED CORRUGATED STEEL PIPE
SD	STORM DRAIN
Sec	SECOND,
	SECTION
Sep	SEPARATION
SG	SUBGRADE
Shld	SHOULDER
Sht	SHEET
Sim	SIMILAR
℄	STATION LINE
SM	SELECTED MATERIAL
Spec	SPECIAL,
	SPECIFICATIONS
SPP	SLOTTED PLASTIC PIPE
SS	SLOPE STAKE
SSBM	STRAP AND SADDLE BRACKET METHOD
SSD	STRUCTURAL SECTION DRAIN
SSPA	STRUCTURAL STEEL PLATE ARCH
SSPP	STRUCTURAL STEEL PLATE PIPE
SSPPA	STRUCTURAL STEEL PLATE PIPE ARCH
SSRP	STEEL SPIRAL RIB PIPE
St	STREET
Sta	STATION
STBB	SINGLE THRIE BEAM BARRIER
Std	STANDARD
Str	STRUCTURE
Surf	SURFACING
SW	SIDEWALK,
	SOUND WALL
Swr	SEWER
Sym	SYMMETRICAL
S4S	SURFACE 4 SIDES

T

T	SEMI-TANGENT
Tan	TANGENT
TBB	THRIE BEAM BARRIER
Tbr	TIMBER
TC	TOP OF CURB
TCB	TRAFFIC CONTROL BOX
TCE	TEMPORARY CONSTRUCTION EASEMENT
Tel	TELEPHONE
Temp	TEMPORARY
TG	TOP OF GRADE
Tot	TOTAL
TP	TELEPHONE POLE
TPB	TREATED PERMEABLE BASE
TPM	TREATED PERMEABLE MATERIAL
Trans	TRANSITION

T continued

TS	TRANSVERSE,
	TRAFFIC SIGNAL,
	TUBULAR STEEL
Typ	TYPICAL

U

UC	UNDERCROSSING
UD	UNDERDRAIN
UG	UNDERGROUND
UON	UNLESS OTHERWISE NOTED
UP	UNDERPASS

V

V	VALVE,
	DESIGN SPEED
Var	VARIABLE,
	VARIES
VC	VERTICAL CURVE
VCP	VITRIFIED CLAY PIPE
Vert	VERTICAL
Via	VIADUCT
Vol	VOLUME

W

W	WEST,
	WIDTH
WB	WESTBOUND
WH	WEEP HOLE
WM	WIRE MESH
WS	WATER SURFACE
WSP	WELDED STEEL PIPE
Wt	WEIGHT
WV	WATER VALVE
WW	WINGWALL
WWLOL	WINGWALL LAYOUT LINE

X

X Sec	CROSS SECTION
Xing	CROSSING

Y

Yr	YEAR
Yrs	YEARS

Dist	COUNTY	ROUTE	POST MILES TOTAL PROJECT	SHEET No.	TOTAL SHEETS
04	Ala	13	9.9/10.1	25	47

Grace M. Tsushima
REGISTERED CIVIL ENGINEER

July 19, 2013
PLANS APPROVAL DATE

REGISTERED PROFESSIONAL ENGINEER
Grace M. Tsushima
No. C49814
Exp. 9-30-14
CIVIL
STATE OF CALIFORNIA

THE STATE OF CALIFORNIA OR ITS OFFICERS OR AGENTS SHALL NOT BE RESPONSIBLE FOR THE ACCURACY OR COMPLETENESS OF SCANNED COPIES OF THIS PLAN SHEET.

TO ACCOMPANY PLANS DATED 12-22-14

UNIT OF MEASUREMENT SYMBOLS:

Some of the symbols used in the project plan quantity tables and in the Bid Item List are:

TABLE A

SYMBOL USED	DEFINITIONS
ACRE	ACRE
CF	CUBIC FOOT
CY	CUBIC YARD
EA	EACH
GAL	GALLON
LB	POUND
LF	LINEAR FOOT
SQFT	SQUARE FOOT
SQYD	SQUARE YARD
STA	100 FEET
TAB	TABLET
TON	2,000 POUNDS

Some of the symbols used in the plans other than in the project plan quantity tables are:

TABLE B

SYMBOL USED	DEFINITIONS
ksi	KIPS PER SQUARE INCH
ksf	KIPS PER SQUARE FOOT
psi	POUNDS PER SQUARE INCH
psf	POUNDS PER SQUARE FOOT
lb/ft^3, pcf	POUNDS PER CUBIC FOOT
tsf	TONS PER SQUARE FOOT
mph, MPH *	MILES PER HOUR
ø	NOMINAL DIAMETER
oz	OUNCE
lb	POUND
kip	1,000 POUNDS
cal	CALORIE
ft	FOOT OR FEET
gal	GALLON

* For use on a sign panel only

STATE OF CALIFORNIA
DEPARTMENT OF TRANSPORTATION

ABBREVIATIONS (SHEET 2 OF 2)

NO SCALE

RSP A10B DATED JULY 19, 2013 SUPERSEDES STANDARD PLAN A10B DATED MAY 20, 2011 - PAGE 2 OF THE STANDARD PLANS BOOK DATED 2010.

REVISED STANDARD PLAN RSP A10B

2010 REVISED STANDARD PLAN RSP A10B

6-7-13

Dist	COUNTY	ROUTE	POST MILES TOTAL PROJECT	SHEET No.	TOTAL SHEETS
04	Ala	13	9.9/10.1	26	47

REGISTERED CIVIL ENGINEER

April 20, 2012
PLANS APPROVAL DATE

REGISTERED PROFESSIONAL ENGINEER
Roberta L. McLaughlin
No. C40375
Exp. 3-31-13
CIVIL
STATE OF CALIFORNIA

THE STATE OF CALIFORNIA OR ITS OFFICERS OR AGENTS SHALL NOT BE RESPONSIBLE FOR THE ACCURACY OR COMPLETENESS OF SCANNED COPIES OF THIS PLAN SHEET.

TO ACCOMPANY PLANS DATED 12-22-14

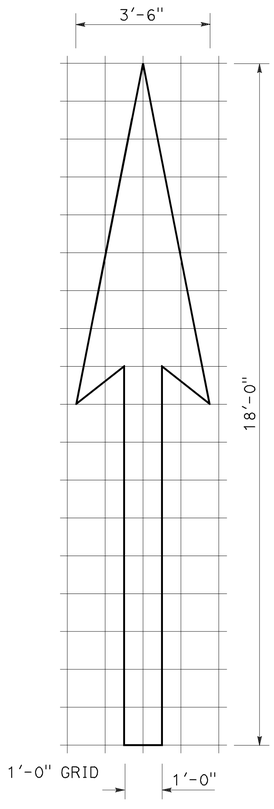

A=25 ft^2

TYPE I 18'-0" ARROW

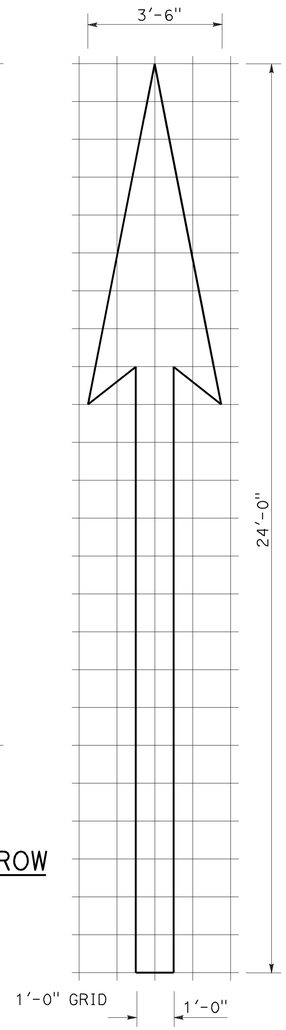

A=31 ft^2

TYPE I 24'-0" ARROW

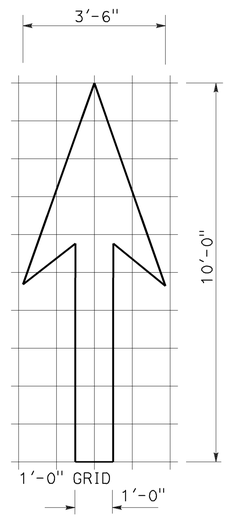

A=14 ft^2

TYPE I 10'-0" ARROW

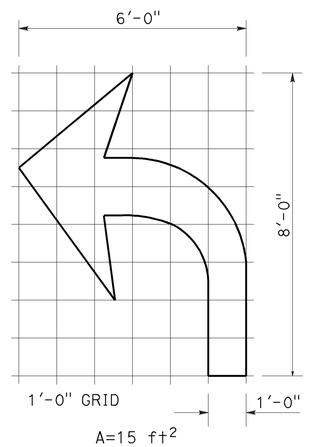

A=15 ft^2

TYPE IV (L) ARROW

(For Type IV (R) arrow, use mirror image)

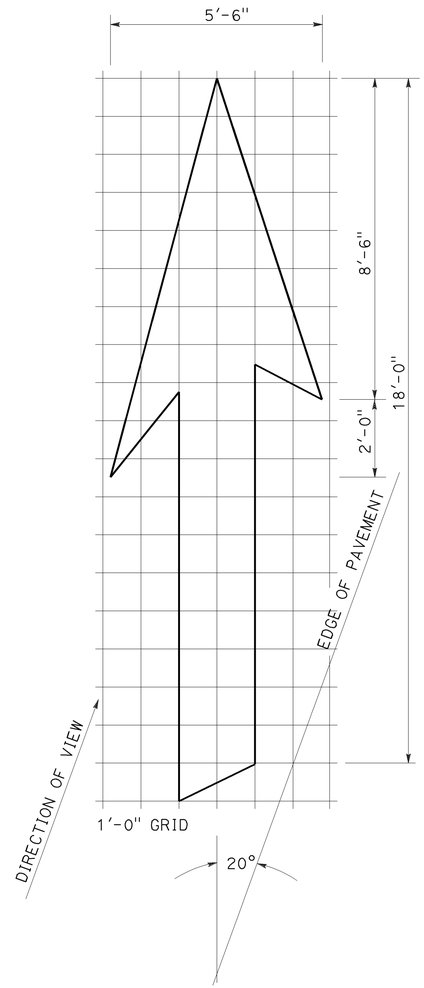

A=42 ft^2

TYPE VI ARROW

Right lane drop arrow
(For left lane, use mirror image)

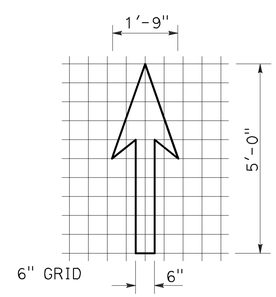

A=3.5 ft^2

BIKE LANE ARROW

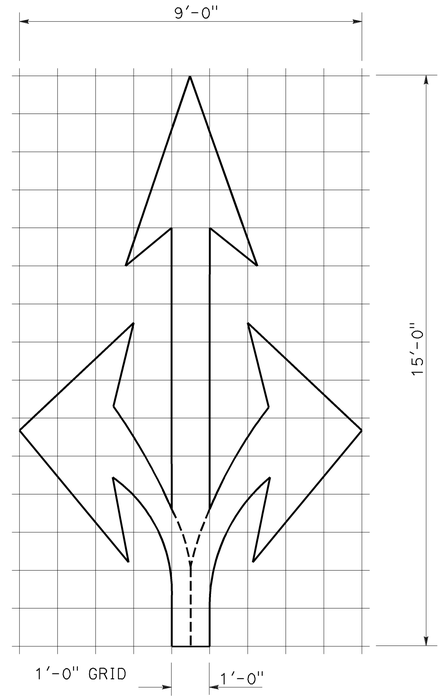

A=36 ft^2

TYPE VIII ARROW

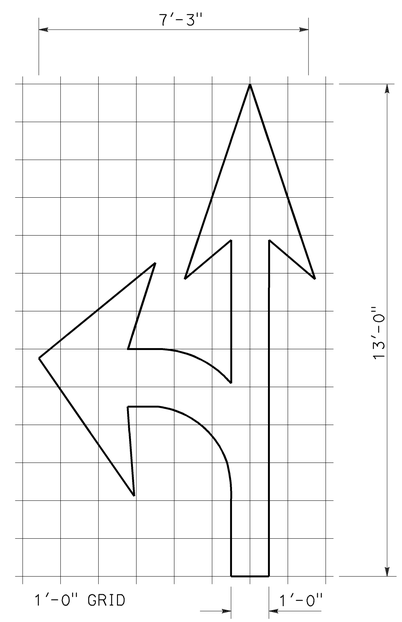

A=27 ft^2

TYPE VII (L) ARROW

(For Type VII (R) arrow, use mirror image)

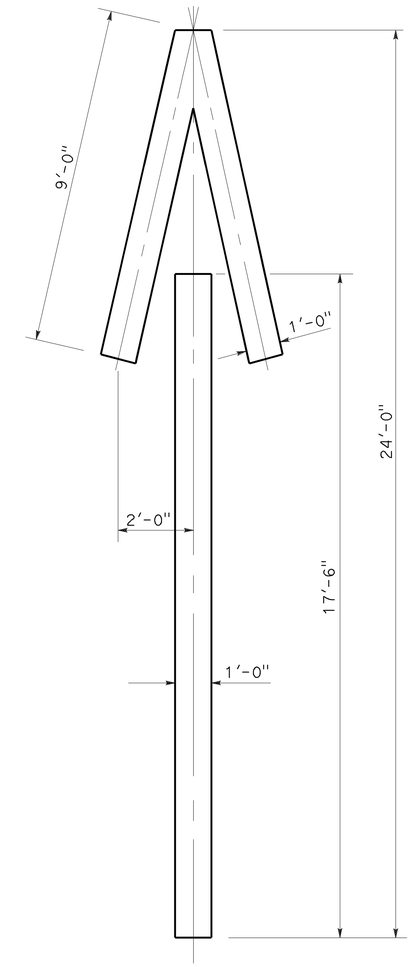

A=33 ft^2

TYPE V ARROW

NOTE:
Minor variations in dimensions may be accepted by the Engineer.

STATE OF CALIFORNIA
DEPARTMENT OF TRANSPORTATION

PAVEMENT MARKINGS ARROWS

NO SCALE

RSP A24A DATED APRIL 20, 2012 SUPERSEDES STANDARD PLAN A24A DATED MAY 20, 2011 - PAGE 13 OF THE STANDARD PLANS BOOK DATED 2010.

REVISED STANDARD PLAN RSP A24A

2010 REVISED STANDARD PLAN RSP A24A

3-14-12

Dist	COUNTY	ROUTE	POST MILES TOTAL PROJECT	SHEET No.	TOTAL SHEETS
04	Ala	13	9.9/10.1	27	47

REGISTERED CIVIL ENGINEER

October 19, 2012
PLANS APPROVAL DATE

REGISTERED PROFESSIONAL ENGINEER
Roberta L. McLaughlin
No. C40375
Exp. 3-31-13
CIVIL
STATE OF CALIFORNIA

THE STATE OF CALIFORNIA OR ITS OFFICERS OR AGENTS SHALL NOT BE RESPONSIBLE FOR THE ACCURACY OR COMPLETENESS OF SCANNED COPIES OF THIS PLAN SHEET.

NOTE: TO ACCOMPANY PLANS DATED 12-22-14

Minor variations in dimensions may be accepted by the Engineer.

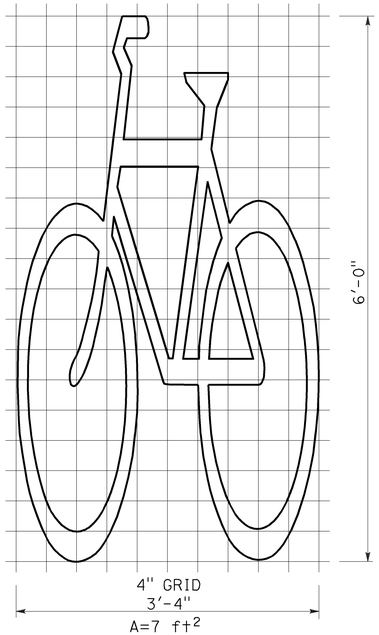

BIKE LANE SYMBOL WITHOUT PERSON

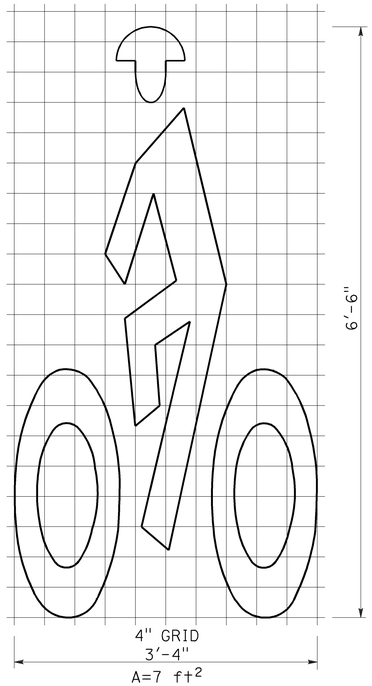

BIKE LANE SYMBOL WITH PERSON

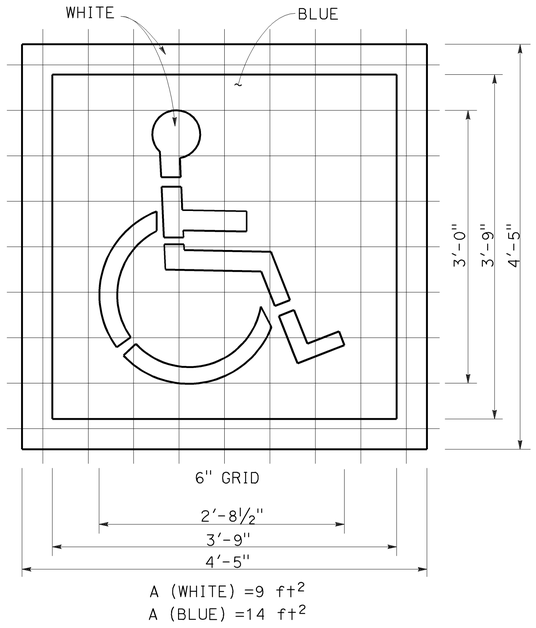

INTERNATIONAL SYMBOL OF ACCESSIBILITY (ISA) MARKING

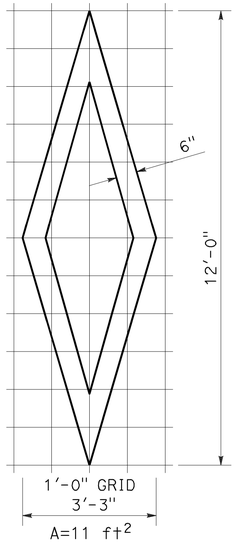

DIAMOND SYMBOL

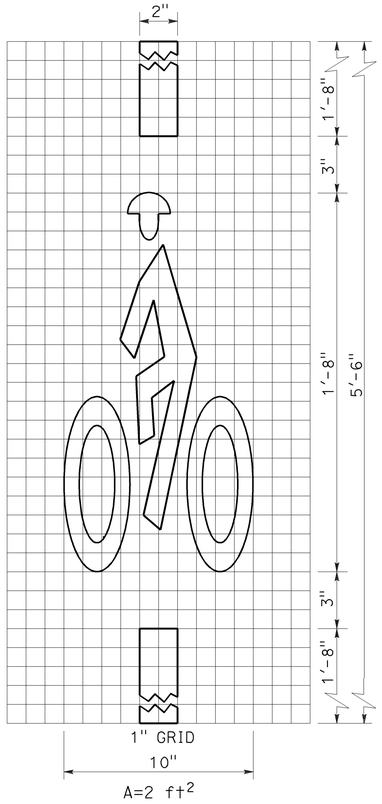

BICYCLE LOOP DETECTOR SYMBOL

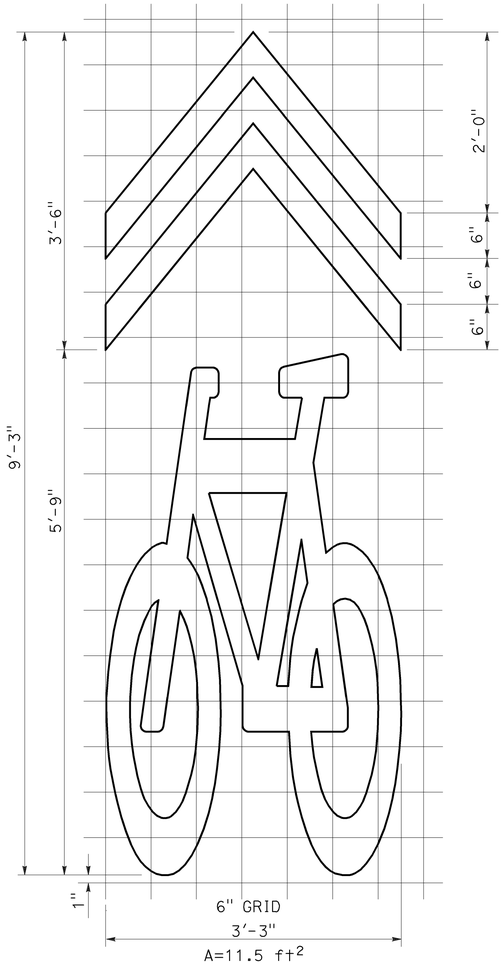

SHARED ROADWAY BICYCLE MARKING

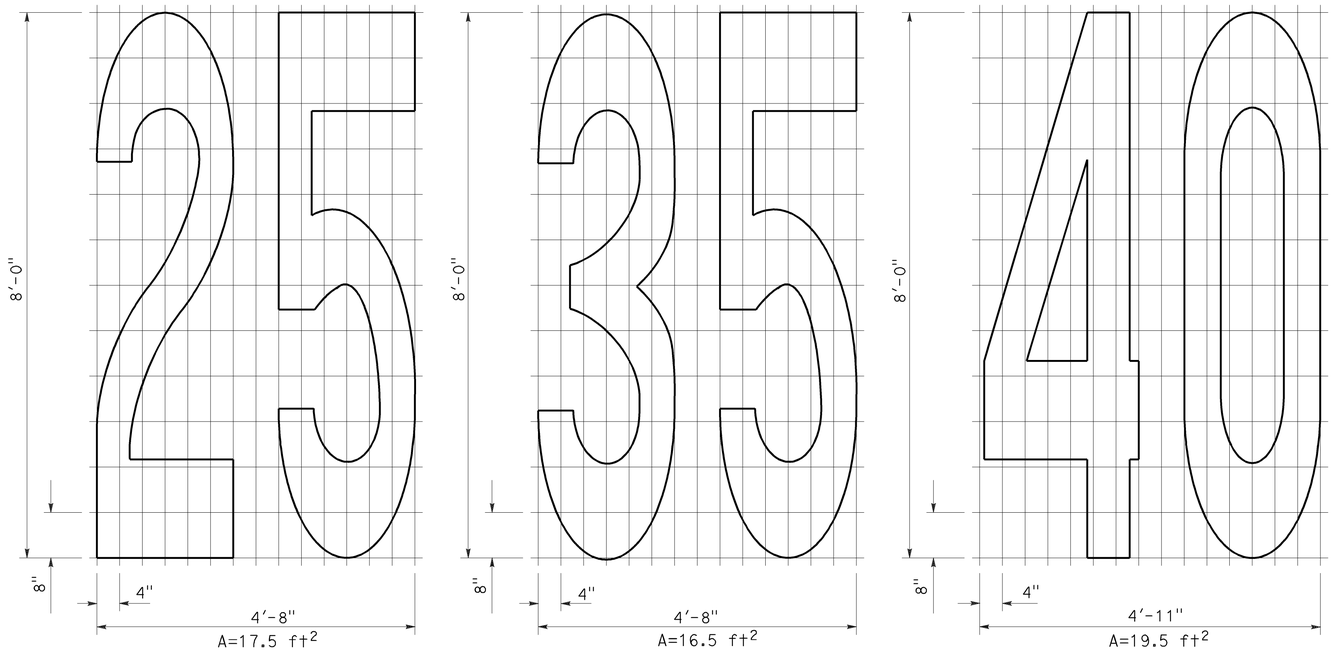

NUMERALS

STATE OF CALIFORNIA
DEPARTMENT OF TRANSPORTATION

PAVEMENT MARKINGS SYMBOLS AND NUMERALS

NO SCALE

RSP A24C DATED OCTOBER 19, 2012 SUPERSEDES STANDARD PLAN A24C DATED MAY 20, 2011 - PAGE 15 OF THE STANDARD PLANS BOOK DATED 2010.

REVISED STANDARD PLAN RSP A24C

2010 REVISED STANDARD PLAN RSP A24C

6-28-12

Dist	COUNTY	ROUTE	POST MILES TOTAL PROJECT	SHEET No.	TOTAL SHEETS
04	Ala	13	9.9/10.1	28	47

REGISTERED CIVIL ENGINEER

July 20, 2012
PLANS APPROVAL DATE

REGISTERED PROFESSIONAL ENGINEER
Roberta L. McLaughlin
No. C40375
Exp. 3-31-13
CIVIL
STATE OF CALIFORNIA

THE STATE OF CALIFORNIA OR ITS OFFICERS OR AGENTS SHALL NOT BE RESPONSIBLE FOR THE ACCURACY OR COMPLETENESS OF SCANNED COPIES OF THIS PLAN SHEET.

TO ACCOMPANY PLANS DATED 12-22-14

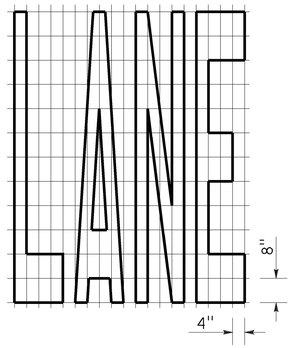

A=24 ft^2

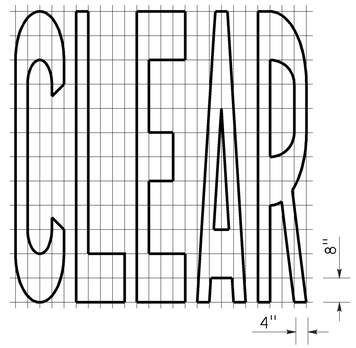

A=27 ft^2

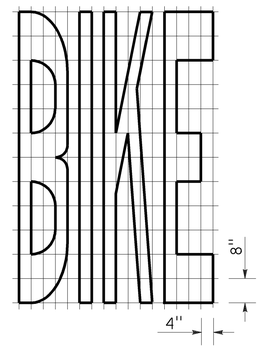

A=21 ft^2

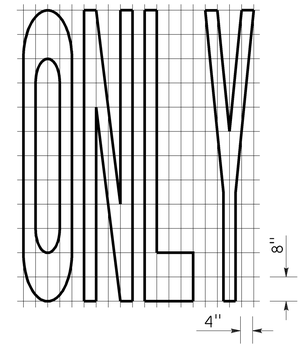

A=22 ft^2

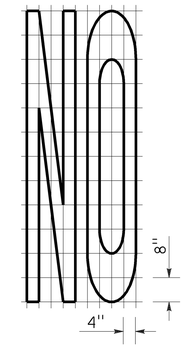

A=14 ft^2

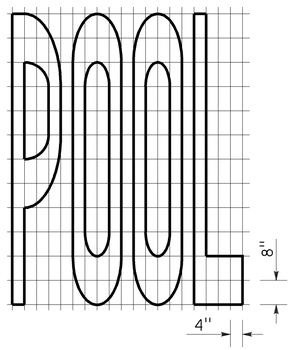

A=23 ft^2

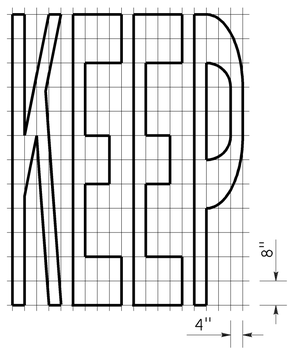

A=24 ft^2

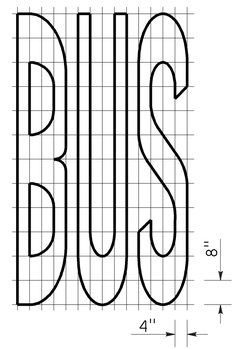

A=20 ft^2

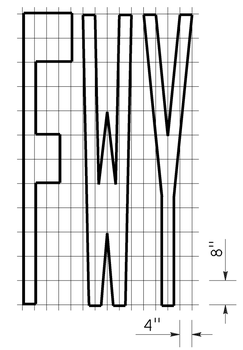

A=16 ft^2

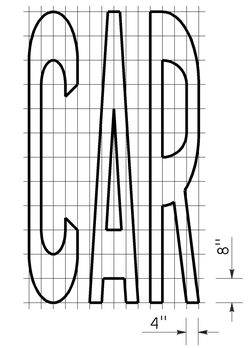

A=17 ft^2

WORD MARKINGS			
ITEM	ft^2	ITEM	ft^2
LANE	24	NO	14
POOL	23	BIKE	21
CAR	17	BUS	20
CLEAR	27	ONLY	22
KEEP	24	FWY	16

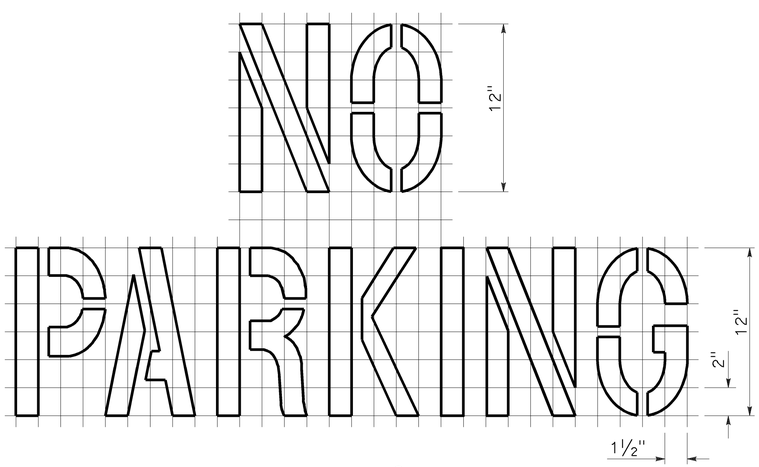

A=2 ft^2
See Notes 6 and 7

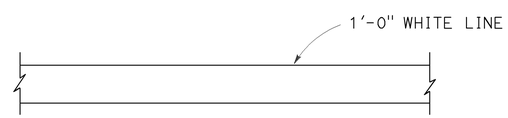

LIMIT LINE (STOP LINE)

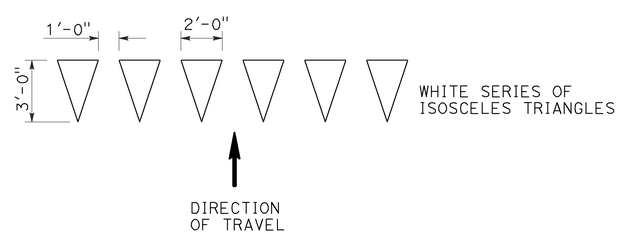

YIELD LINE

NOTES:

1. If a message consists of more than one word, it should read "UP", i.e., the first word should be nearest the driver.
2. The space between words should be at least four times the height of the characters for low speed roads, but not more than ten times the height of the characters. The space may be reduced appropriately where there is limited space because of local conditions.
3. Minor variations in dimensions may be accepted by the Engineer.
4. Portions of a letter, number or symbol may be separated by connecting segments not to exceed 2" in width.
5. The words "NO PARKING" pavement marking is to be used for parking facilities. For typical locations of markings, see Standard Plans A90A and A90B.
6. The words "NO PARKING", shall be painted in white letters no less than 1'-0" high on a contrasting background and located so that it is visible to traffic enforcement officials.

STATE OF CALIFORNIA
DEPARTMENT OF TRANSPORTATION

PAVEMENT MARKINGS WORDS, LIMIT AND YIELD LINES

NO SCALE

RSP A24E DATED JULY 20, 2012 SUPERSEDES STANDARD PLAN A24E
DATED MAY 20, 2011 - PAGE 17 OF THE STANDARD PLANS BOOK DATED 2010.

REVISED STANDARD PLAN RSP A24E

2010 REVISED STANDARD PLAN RSP A24E

6-12-12

Dist	COUNTY	ROUTE	POST MILES TOTAL PROJECT	SHEET No.	TOTAL SHEETS
04	Ala	13	9.9/10.1	29	47

REGISTERED CIVIL ENGINEER

July 19, 2013
PLANS APPROVAL DATE

REGISTERED PROFESSIONAL ENGINEER
Michael Janzen
No. 44788
Exp. 03-31-14
CIVIL
STATE OF CALIFORNIA

THE STATE OF CALIFORNIA OR ITS OFFICERS OR AGENTS SHALL NOT BE RESPONSIBLE FOR THE ACCURACY OR COMPLETENESS OF SCANNED COPIES OF THIS PLAN SHEET.

TO ACCOMPANY PLANS DATED 12-22-14

2010 REVISED STANDARD PLAN RSP A87A

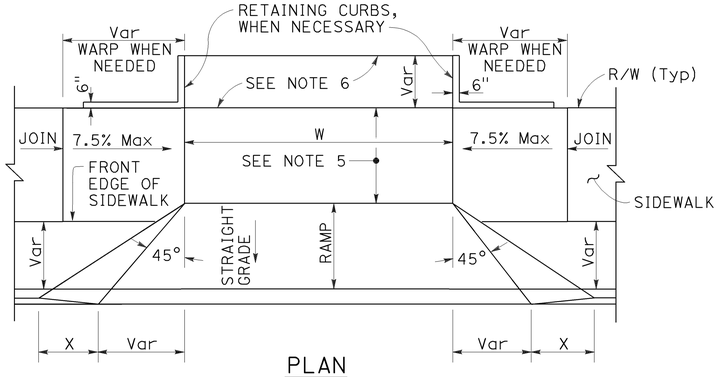

PLAN

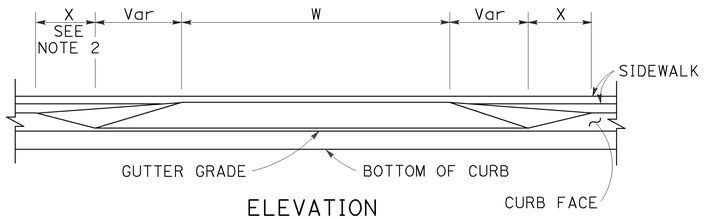

ELEVATION

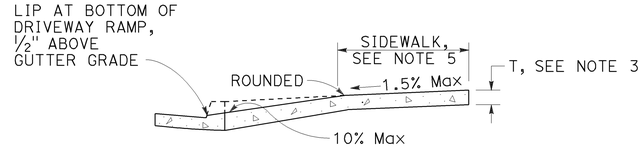

CASE A

Typical driveway, sidewalk not depressed

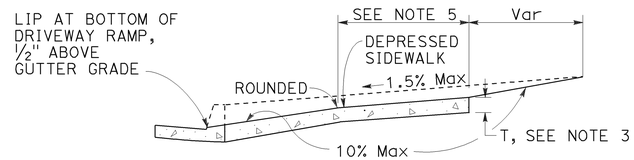

CASE B

Driveway with depressed sidewalk

SECTIONS

DRIVEWAYS

TABLE A

CURB TYPE	DIMENSIONS			
	"H1"	"H2"	"W1"	"W2"
A1-6	1'-2"	6"	7½"	1½"
A1-8	1'-4"	8"	8"	2"
A2-6	1'-0"	6"	2'-7½"	1½"
A2-8	1'-2"	8"	2'-8"	2"
A3-6	6"	5"	7¼"	1¼"
A3-8	8"	7"	7¾"	1¾"
B1-4	1'-0"	4"	7½"	2½"
B1-6	1'-2"	6"	9"	4"
B2-4	10"	4"	2'-7½"	2½"
B2-6	1'-0"	6"	2'-9"	4"
B3-4	4"	3"	7"	2"
B3-6	6"	5"	8½"	3½"
D-4	10"	4"	1'-6"	1'-1"
D-6	1'-0"	6"	2'-2"	1'-9"

CURB QUANTITIES

TYPE	CUBIC YARDS PER LINEAR FOOT
A1-6	0.02585
A1-8	0.03084
A2-6	0.05903
A2-8	0.06379
A3-6	0.01036
A3-8	0.01435
B1-4	0.02185
B1-6	0.02930
B2-4	0.05515
B2-6	0.06171
B3-4	0.00641
B3-6	0.01074
B4	0.05709
D-4	0.04083
D-6	0.06804
E	0.06661

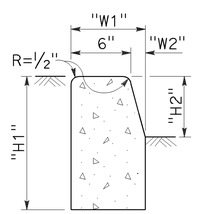

TYPE A1 CURBS

See Table A

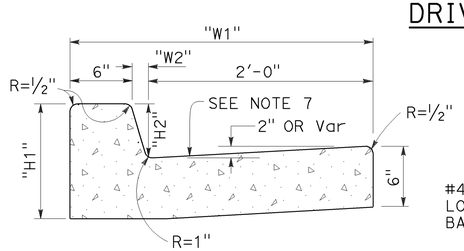

TYPE A2 CURBS

See Table A

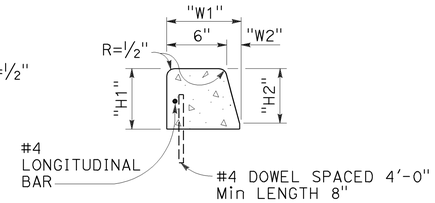

TYPE A3 CURBS

Superimposed on existing pavement
See Table A

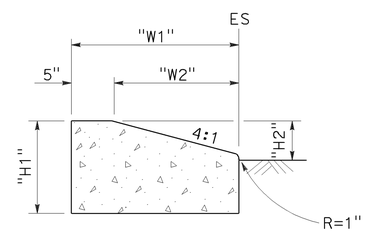

TYPE D CURBS

See Table A

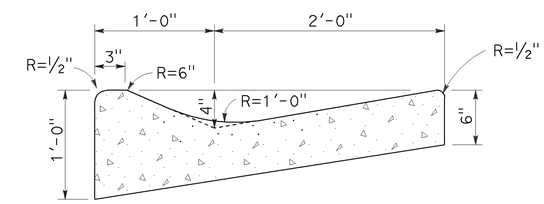

TYPE E CURB

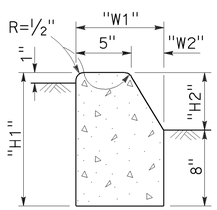

TYPE B1 CURBS

See Table A

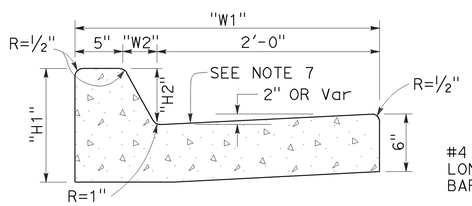

TYPE B2 CURBS

See Table A

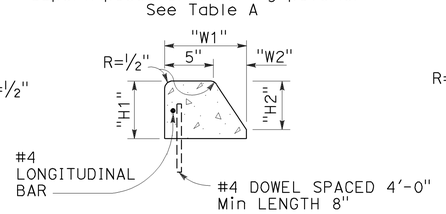

TYPE B3 CURBS

Superimposed on existing pavement
See Table A

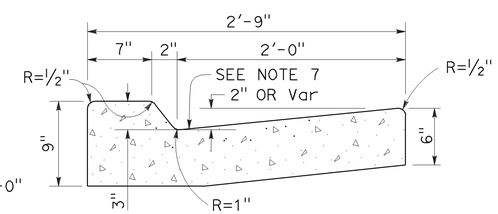

TYPE B4 CURBS

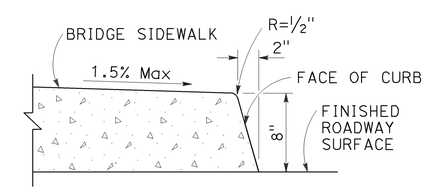

TYPE H CURB

On Bridges

CURBS

NOTES:

1. Case A driveway section typically applies.
2. X=3'-0" except for curb heights over 10" where 4:1 slopes shall be used on curb slope.
3. Sidewalk and ramp thickness "T" at driveway shall be 4" for residental and 6" for commercial.
4. Difference in slope of the driveway ramp and the slope of a line between the gutter and a point on the roadway 5'-0" from gutter line shall not exceed 15%. Reduce driveway ramp slope, not gutter slope, where required.
5. Minimum width of clear passageway for sidewalk shall be 4'-2".
6. Retaining curbs and acquisition of construction easement may be necessary for narrow sidewalks or curb heights in excess of 6".
7. Across the pedestrian route at curb ramp locations, the gutter pan slope shall not exceed 1" of depth for each 2'-0" of width.

STATE OF CALIFORNIA
DEPARTMENT OF TRANSPORTATION

CURBS AND DRIVEWAYS

NO SCALE

RSP A87A DATED JULY 19, 2013 SUPERSEDES STANDARD PLAN A87A
DATED MAY 20, 2011 - PAGE 119 OF THE STANDARD PLANS BOOK DATED 2010.

REVISED STANDARD PLAN RSP A87A

Dist	COUNTY	ROUTE	POST MILES TOTAL PROJECT	SHEET No.	TOTAL SHEETS
04	Ala	13	9.9/10.1	30	47

REGISTERED CIVIL ENGINEER

July 19, 2013
PLANS APPROVAL DATE

REGISTERED PROFESSIONAL ENGINEER
Gurinderpal Bhullar
No. C48815
Exp. 9-30-14
CIVIL
STATE OF CALIFORNIA

THE STATE OF CALIFORNIA OR ITS OFFICERS OR AGENTS SHALL NOT BE RESPONSIBLE FOR THE ACCURACY OR COMPLETENESS OF SCANNED COPIES OF THIS PLAN SHEET.

TO ACCOMPANY PLANS DATED 12-22-14

2010 REVISED STANDARD PLAN RSP T9

TABLE 1

TAPER LENGTH CRITERIA AND CHANNELIZING DEVICE SPACING

SPEED (S)	MINIMUM TAPER LENGTH * FOR WIDTH OF OFFSET 12 FEET (W)				MAXIMUM CHANNELIZING DEVICE SPACING		
					X	Y	Z **
	TANGENT 2L	MERGING L	SHIFTING L/2	SHOULDER L/3	TAPER	TANGENT	CONFLICT
mph	ft	ft	ft	ft	ft	ft	ft
20	160	80	40	27	20	40	10
25	250	125	63	42	25	50	12
30	360	180	90	60	30	60	15
35	490	245	123	82	35	70	17
40	640	320	160	107	40	80	20
45	1080	540	270	180	45	90	22
50	1200	600	300	200	50	100	25
55	1320	660	330	220	55	110	27
60	1440	720	360	240	60	120	30
65	1560	780	390	260	65	130	32
70	1680	840	420	280	70	140	35

* - For other offsets, use the following merging taper length formula for L:
For speed of 40 mph or less, $L = WS^2/60$
For speed of 45 mph or more, $L = WS$

Where: L = Taper length in feet
W = Width of offset in feet
S = Posted speed limit, off-peak 85th-percentile speed prior to work starting, or the anticipated operating speed in mph

** - Use for taper and tangent sections where there are no pavement markings or where there is a conflict between existing pavement markings and channelizers (CA).

TABLE 2

LONGITUDINAL BUFFER SPACE AND FLAGGER STATION SPACING

SPEED *	Min D **	DOWNGRADE Min D ***		
		-3%	-6%	-9%
mph	ft	ft	ft	ft
20	115	116	120	126
25	155	158	165	173
30	200	205	215	227
35	250	257	271	287
40	305	315	333	354
45	360	378	400	427
50	425	446	474	507
55	495	520	553	593
60	570	598	638	686
65	645	682	728	785
70	730	771	825	891

* - Speed is posted speed limit, off-peak 85th-percentile speed prior to work starting, or the anticipated operating speed in mph

** - Longitudinal buffer space or flagger station spacing

*** - Use on sustained downgrade steeper than -3 percent and longer than 1 mile.

TABLE 3

ADVANCE WARNING SIGN SPACING

ROAD TYPE	DISTANCE BETWEEN SIGNS *		
	A	B	C
	ft	ft	ft
URBAN - 25 mph OR LESS	100	100	100
URBAN - MORE THAN 25 mph TO 40 mph	250	250	250
URBAN - MORE THAN 40 mph	350	350	350
RURAL	500	500	500
EXPRESSWAY / FREEWAY	1000	1500	2640

* - The distances are approximate, are intended for guidance purposes only, and should be applied with engineering judgment. These distances should be adjusted by the Engineer for field conditions, if necessary, by increasing or decreasing the recommmended distances.

STATE OF CALIFORNIA
DEPARTMENT OF TRANSPORTATION

TRAFFIC CONTROL SYSTEM TABLES FOR LANE AND RAMP CLOSURES

NO SCALE

RSP T9 DATED JULY 19, 2013 SUPERSEDES RSP T9 DATED APRIL 19, 2013 THAT SUPPLEMENTS THE STANDARD PLANS BOOK DATED 2010.

REVISED STANDARD PLAN RSP T9

4-30-13

Dist	COUNTY	ROUTE	POST MILES TOTAL PROJECT	SHEET No.	TOTAL SHEETS
04	Ala	13	9.9/10.1	31	47

REGISTERED CIVIL ENGINEER

April 19, 2013
PLANS APPROVAL DATE

REGISTERED PROFESSIONAL ENGINEER
Gurinderpal Bhullar
No. C48815
Exp. 9-30-14
CIVIL
STATE OF CALIFORNIA

THE STATE OF CALIFORNIA OR ITS OFFICERS OR AGENTS SHALL NOT BE RESPONSIBLE FOR THE ACCURACY OR COMPLETENESS OF SCANNED COPIES OF THIS PLAN SHEET.

TO ACCOMPANY PLANS DATED 12-22-14

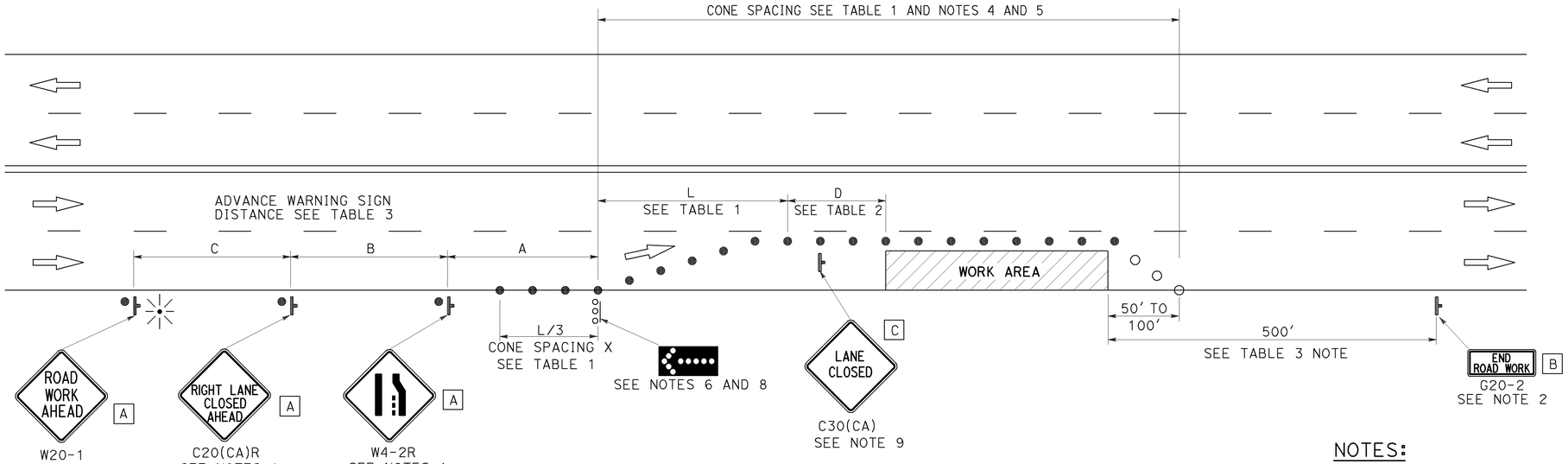

TYPICAL LANE CLOSURE

NOTES:

See Revised Standard Plan RSP T9 for tables.

Use cone spacing X for taper segment, Y for tangent segment or Z for conflict situations, as approriate, per Table 1, unless X, Y, or Z cone spacing is shown on this sheet.

Unless otherwise specified in the special provisions, all temporary warning signs shall have black legend on fluorescent orange background.

California codes are designated by (CA). Otherwise, Federal (MUTCD) codes are shown.

NOTES:

1. Each advance warning sign shall be equipped with at least two flags for daytime closure. Each flag shall be at least 16" x 16" in size and shall be orange or fluorescent red-orange in color. Flashing beacons shall be placed at the locations indicated for lane closure during hours of darkness.
2. A G20-2 "END ROAD WORK" sign, as appropriate, shall be placed at the end of the lane closure unless the end of work area is obvious, or ends within a larger project's limits.
3. If the W20-1 sign would follow within 2000' of a stationary W20-1 or G20-1 "ROAD WORK NEXT _____ MILES", use a C20(CA) sign for the first advance warning sign.
4. All cones used for lane closures during the hours of darkness shall be fitted with retroreflective bands (or sleeves) as specified in the specifications.
5. Portable delineators, placed at one-half the spacing indicated for traffic cones, may be used instead of cones for daytime closures only.
6. Flashing arrow sign shall be either Type I or Type II.
7. For approach speeds over 50 mph, use the "Traffic Control System for Lane Closure On Freeways And Expressways" plan for lane closure details and requirements.
8. A minimum 1500' of sight distance shall be provided where possible for vehicles approaching the first flashing arrow sign. Lane closures shall not begin at the top of crest vertical curve or on a horizontal curve.
9. Place a C30(CA) sign every 2000' throughout length of lane closure.
10. Median lane closures shall conform to the details as shown except that C20(CA)L and W4-2L signs shall be used.
11. At least one person shall be assigned to provide full time maintenance of traffic control devices for lane closure unless, otherwise directed by the Engineer.

LEGEND

- TRAFFIC CONE
- TRAFFIC CONE (OPTIONAL TAPER)
- TEMPORARY TRAFFIC CONTROL SIGN
- FLASHING ARROW SIGN (FAS)
- FAS SUPPORT OR TRAILER
- PORTABLE FLASHING BEACON

SIGN PANEL SIZE (Min)

A	48" x 48"
B	36" x 18"
C	30" x 30"

STATE OF CALIFORNIA
DEPARTMENT OF TRANSPORTATION

TRAFFIC CONTROL SYSTEM FOR LANE CLOSURE ON MULTILANE CONVENTIONAL HIGHWAYS

NO SCALE

RSP T11 DATED APRIL 19, 2013 SUPERSEDES STANDARD PLAN T11 DATED MAY 20, 2011 - PAGE 239 OF THE STANDARD PLANS BOOK DATED 2010.

REVISED STANDARD PLAN RSP T11

2010 REVISED STANDARD PLAN RSP T11

4-2-13

Dist	COUNTY	ROUTE	POST MILES TOTAL PROJECT	SHEET No.	TOTAL SHEETS
04	Ala	13	9.9/10.1	32	47

Devinder Singh
REGISTERED CIVIL ENGINEER

October 17, 2014
PLANS APPROVAL DATE

REGISTERED PROFESSIONAL ENGINEER
Devinder Singh
No. C50470
Exp. 6-30-15
CIVIL
STATE OF CALIFORNIA

THE STATE OF CALIFORNIA OR ITS OFFICERS OR AGENTS SHALL NOT BE RESPONSIBLE FOR THE ACCURACY OR COMPLETENESS OF SCANNED COPIES OF THIS PLAN SHEET.

TO ACCOMPANY PLANS DATED 12-22-14

2010 REVISED STANDARD PLAN RSP T13

NOTES:

See Revised Standard Plan RSP T9 for tables.

Use cone spacing X for taper segment, Y for tangent segment or Z for conflict situations, as approriate, per Table 1, unless X, Y, or Z cone spacing is shown on this sheet.

Unless otherwise specified in the special provisions, all temporary warning signs shall have black legend on fluorescent orange background.

California codes are designated by (CA). Otherwise, Federal (MUTCD) codes are shown.

TYPICAL LANE CLOSURE WITH REVERSIBLE CONTROL

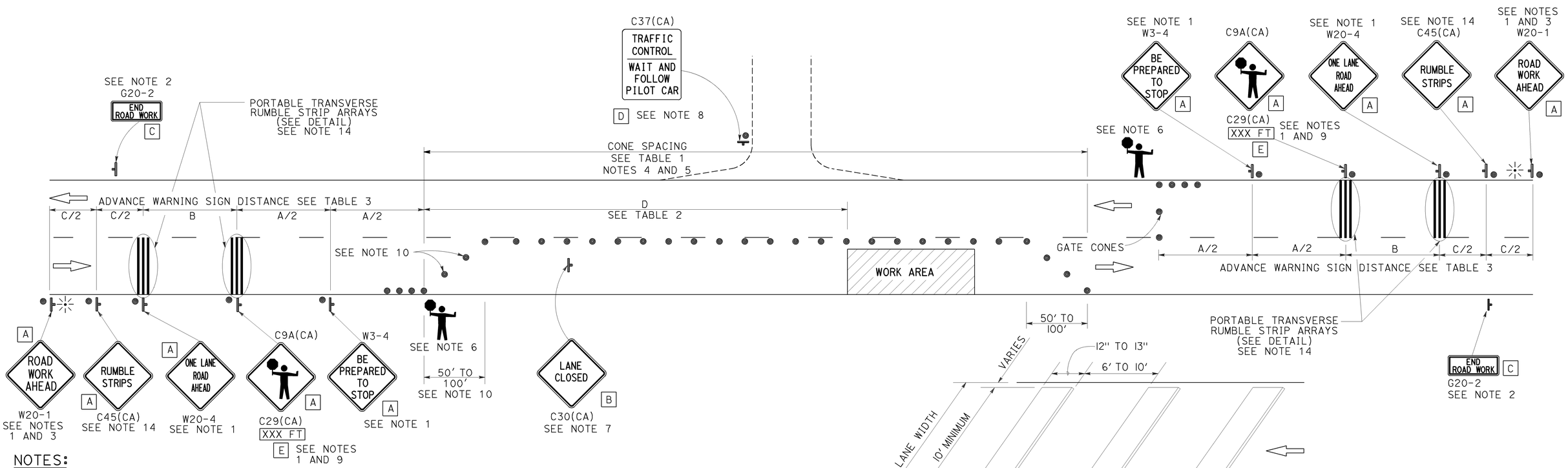

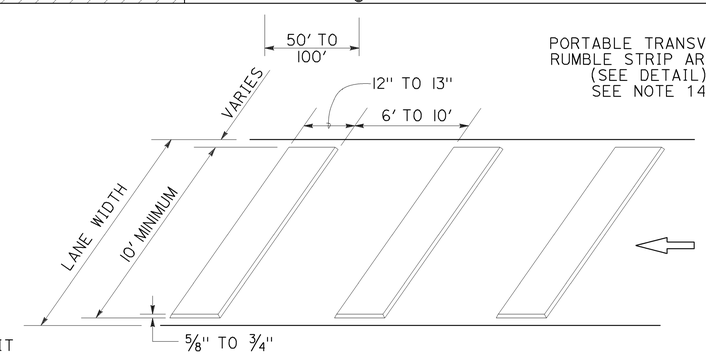

PORTABLE TRANSVERSE RUMBLE STRIP ARRAY DETAIL

NOTES:

1. Each advance warning sign in each direction of travel shall be equipped with at least two flags for daytime closure. Each flag shall be at least 16" x 16" in size and shall be orange or fluorescent red-orange in color. Flashing beacons shall be placed at the locations indicated for lane closure during hours of darkness.
2. A G20-2 "END ROAD WORK" sign, as appropriate, shall be placed at the end of the lane control unless the end of work area is obvious, or ends within a larger project's limits.
3. If the W20-1 sign would follow within 2000' of a stationary W20-1 or G20-1 "ROAD WORK NEXT _____ MILES", use a W20-4 sign for the first advance warning sign.
4. All cones used for lane closures during the hours of darkness shall be fitted with retroreflective bands (or sleeves) as specified in the specifications.
5. Portable delineators, placed at one-half the spacing indicated for traffic cones, may be used instead of cones for daytime closures only.
6. Additional advance flaggers may be required. Flagger should stand in a conspicuous place, be visible to approaching traffic as well as approaching vehicles after the first vehicle has stopped. During the hours of darkness, the flagging-station and flagger shall be illuminated and clearly visible to approaching traffic. The illumination footprint of the lighting on the ground shall be at least 20' in diameter. Place a minimum of four cones at 50' intervals in advance of flagger station as shown.
7. Place C30(CA) "LANE CLOSED" sign at 500' to 1000' intervals throughout extended work areas. They are optional if the work area is visible from the flagger station.
8. When a pilot car is used, place a C37(CA) "TRAFFIC CONTROL-WAIT AND FOLLOW PILOT CAR" sign with black legend on white background at all intersections, driveways and alleys without a flagger within traffic control area. Signs shall be clean and visible at all times. Where traffic can not be effectively self-regulated, at least one flagger shall be used at each intersection within traffic control area.
9. An optional C29(CA) sign may be placed below the C9A(CA) sign.
10. Either traffic cones or barricades shall be placed on the taper. Barricades shall be Type I, II, or III.
11. The color of the portable transverse rumble strips shall be black or orange. Use 2 arrays, each array shall consist of 3 rumble strips.
12. Portable transverse rumble strips shall not be placed on sharp horizontal or vertical curves nor shall they be placed through pedestrian crossings.
13. If the portable transverse rumble strips become out of alignment (skewed) by more than 6 inches, measured from one end to the other, they shall be readjusted to bring the placement back to the original location.
14. Portable transverse rumble strips are not required if any one of the following conditions is satisfied:
    A. Work duration occupies a location for four hours or less
    B. Posted speed limit is below 45 MPH
    C. Work is of emergency nature
    D. Work zone is in snow or icy weather conditions

LEGEND

- TRAFFIC CONE
- TEMPORARY TRAFFIC CONTROL SIGN
- PORTABLE FLASHING BEACON
- FLAGGER

SIGN PANEL SIZE (Min)

A	48" x 48"
B	30" x 30"
C	36" x 18"
D	36" x 42"
E	20" x 7"

STATE OF CALIFORNIA
DEPARTMENT OF TRANSPORTATION

TRAFFIC CONTROL SYSTEM FOR LANE CLOSURE ON TWO LANE CONVENTIONAL HIGHWAYS

NO SCALE

RSP T13 DATED OCTOBER 17, 2014 SUPERSEDES RSP T13 DATED JULY 18, 2014 AND RSP T13 DATED APRIL 19, 2013 AND STANDARD PLAN T13 DATED MAY 20, 2011 - PAGE 241 OF THE STANDARD PLANS BOOK DATED 2010.

REVISED STANDARD PLAN RSP T13

9-26-14

Dist	COUNTY	ROUTE	POST MILES TOTAL PROJECT	SHEET No.	TOTAL SHEETS
04	Ala	13	9.9/10.1	33	47

REGISTERED CIVIL ENGINEER

April 19, 2013
PLANS APPROVAL DATE

REGISTERED PROFESSIONAL ENGINEER Gurinderpal Bhullar No. C48815 Exp. 9-30-14 CIVIL STATE OF CALIFORNIA

THE STATE OF CALIFORNIA OR ITS OFFICERS OR AGENTS SHALL NOT BE RESPONSIBLE FOR THE ACCURACY OR COMPLETENESS OF SCANNED COPIES OF THIS PLAN SHEET.

TO ACCOMPANY PLANS DATED 12-22-14

TYPICAL RAMP CLOSURES

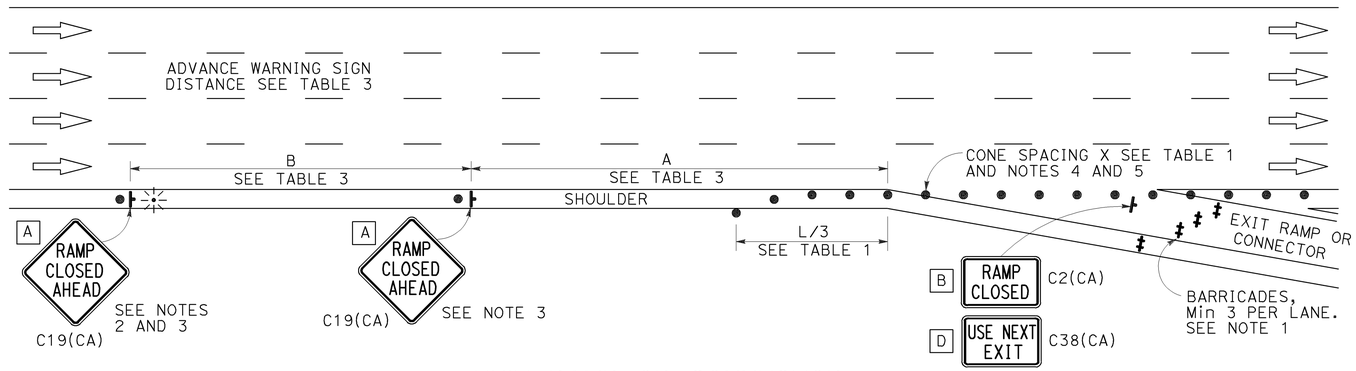

EXIT RAMP OR CONNECTOR

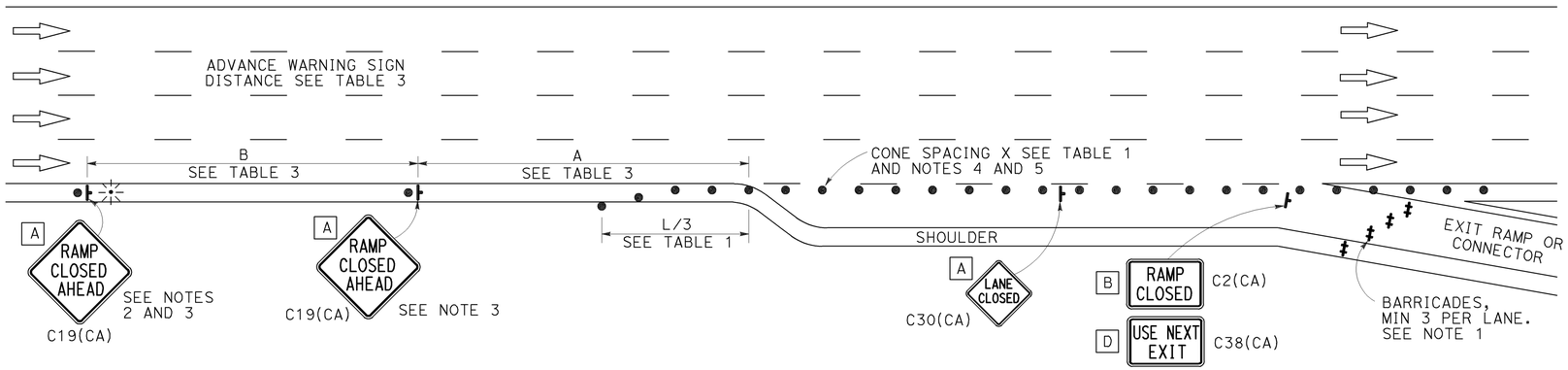

EXIT RAMP OR CONNECTOR WITH ADDITIONAL LANE

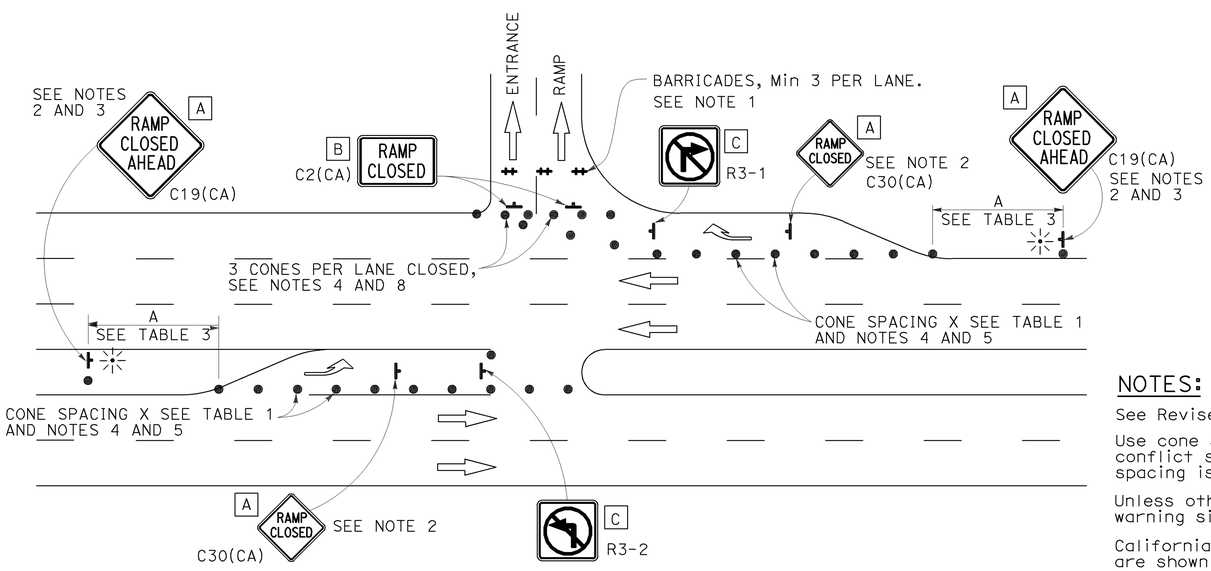

ENTRANCE RAMP WITH TURNING POCKETS

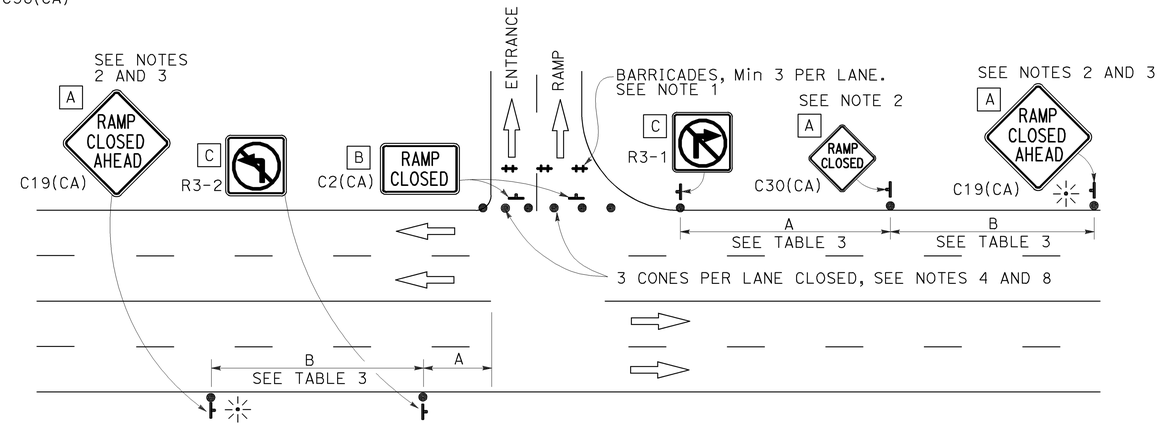

ENTRANCE RAMP WITHOUT TURNING POCKETS

SIGN PANEL SIZE (Min)

A	48" × 48"
B	48" × 30"
C	36" × 36"
D	48" × 36"

LEGEND

- ● TRAFFIC CONE
- TEMPORARY TRAFFIC CONTROL SIGN
- BARRICADES
- PORTABLE FLASHING BEACON

NOTES:

1. Barricades shall be Type I, II, or III for closures lasting one week or less and Type III for closures lasting longer than one week.
2. In addition to placing the C19(CA) "RAMP CLOSED AHEAD" and C30(CA) "RAMP CLOSED" signs, black on orange overlay plates with the word "CLOSED" may be mounted, as directed by the Engineer, on all guide signs that refer to the closed ramp. The letter size on the overlay shall be the same as the guide sign.
3. Each advance C19(CA) "RAMP CLOSED AHEAD" sign shall be equipped with at least two flags for daytime closure. Each flag shall be at least 16" × 16" in size and shall be orange or fluorescent red-orange in color. A flashing beacon shall be placed on top of the first C19(CA) sign during hours of darkness.
4. All cones used for ramp closures during the hours of darkness shall be fitted with retroreflective bands (or sleeves) as specified in the specifications.
5. Portable delineators, placed at one-half the spacing indicated for traffic cones, may be used instead of cones for daytime ramp closures only.
6. At least one person shall be assigned to provide full time maintenance of traffic control devices, unless otherwise directed by the Engineer.
7. The existing "EXIT" signs shall be covered during ramp closures.
8. A minimum of 3 cones shall be placed transversely across each closed lane and shoulder.

NOTES:

See Revised Standard Plan RSP T9 for tables.

Use cone spacing X for taper segment, Y for tangent segment or Z for conflict situations, as approriate, per Table 1, unless X, Y, or Z cone spacing is shown on this sheet.

Unless otherwise specified in the special provisions, all temporary warning signs shall have black legend on fluorescent orange background.

California codes are designated by (CA). Otherwise, Federal (MUTCD) codes are shown.

STATE OF CALIFORNIA
DEPARTMENT OF TRANSPORTATION

TRAFFIC CONTROL SYSTEM FOR RAMP CLOSURE

NO SCALE

RSP T14 DATED APRIL 19, 2013 SUPERSEDES STANDARD PLAN T14
DATED MAY 20, 2011 - PAGE 242 OF THE STANDARD PLANS BOOK DATED 2010.

REVISED STANDARD PLAN RSP T14

2010 REVISED STANDARD PLAN RSP T14

12-18-12

Dist	COUNTY	ROUTE	POST MILES TOTAL PROJECT	SHEET No.	TOTAL SHEETS
04	Ala	13	9.9/10.1	34	47

REGISTERED CIVIL ENGINEER

November 15, 2013
PLANS APPROVAL DATE

REGISTERED PROFESSIONAL ENGINEER Tillat Satter No. C42892 Exp. 3-31-14 CIVIL STATE OF CALIFORNIA

THE STATE OF CALIFORNIA OR ITS OFFICERS OR AGENTS SHALL NOT BE RESPONSIBLE FOR THE ACCURACY OR COMPLETENESS OF SCANNED COPIES OF THIS PLAN SHEET.

TO ACCOMPANY PLANS DATED 12-22-14

2010 REVISED STANDARD PLAN RSP B11-56

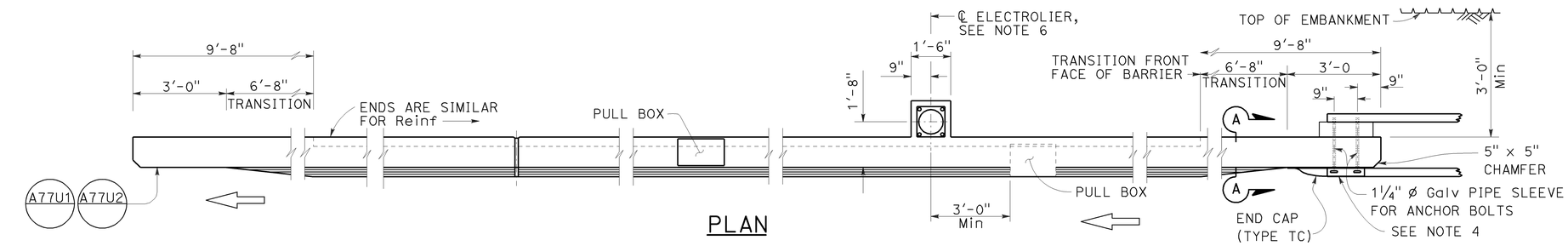

PLAN

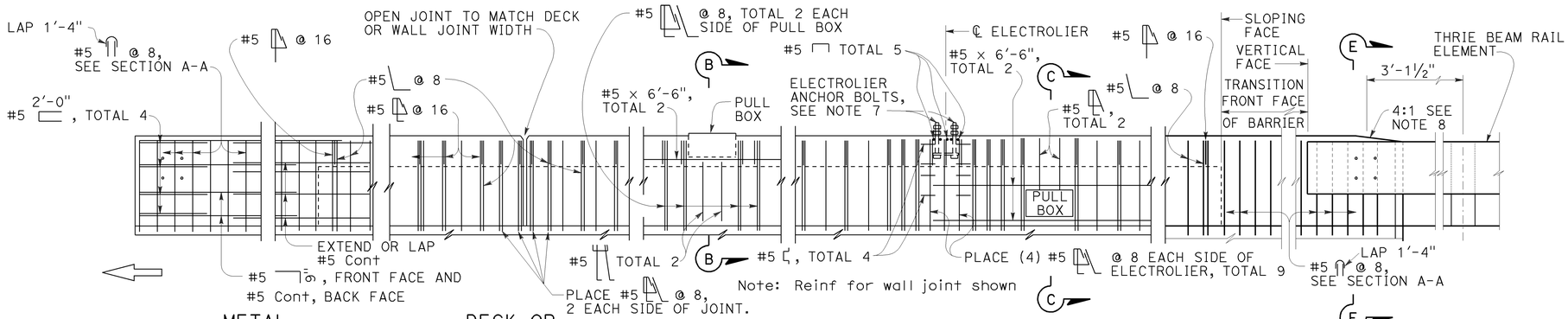

ELEVATION

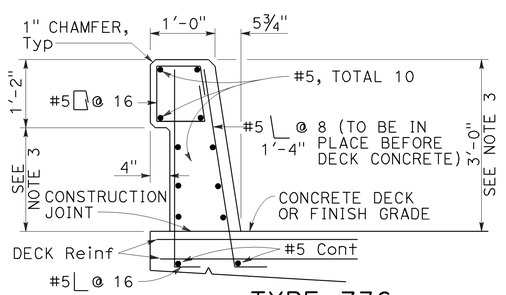

TYPE 736

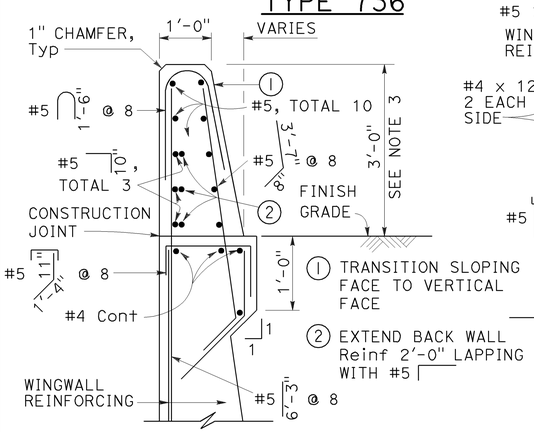

SECTION A-A

Details shown for barrier anchorage to Type 736A. Anchorgae for barrier Types 736 and 736B are similar to their respective details.

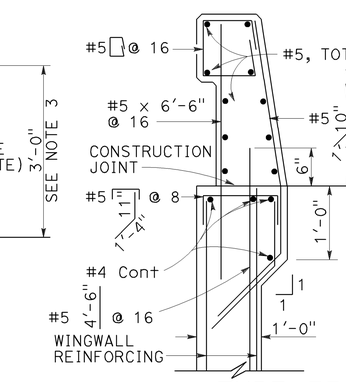

TYPE 736A

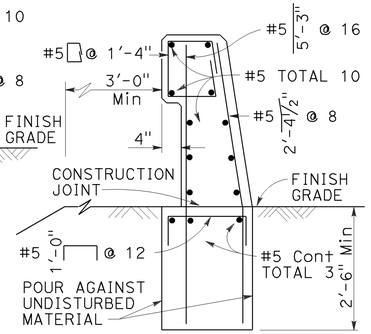

TYPE 736B

Note: Types 736A & 736B are similar to Type 736 except as noted

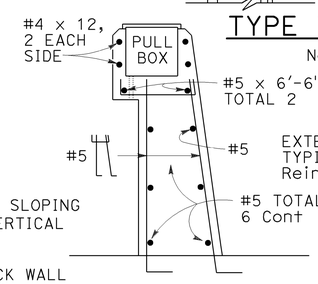

SECTION B-B

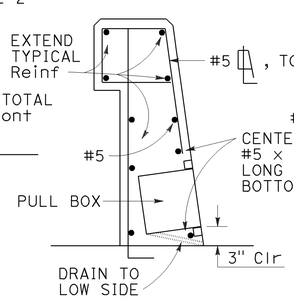

SECTION C-C

See Notes

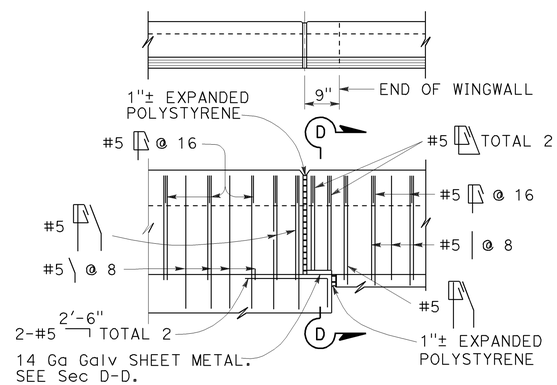

TYPE 736A TYPE 736B

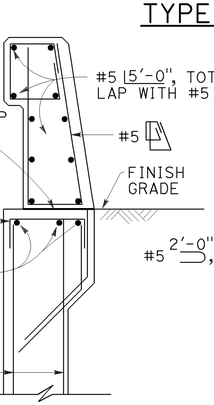

SECTION D-D

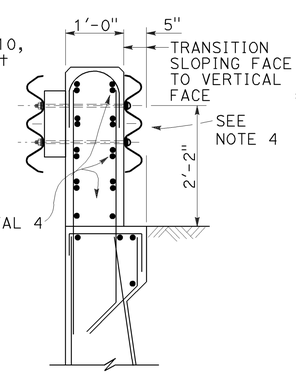

SECTION E-E

See Notes

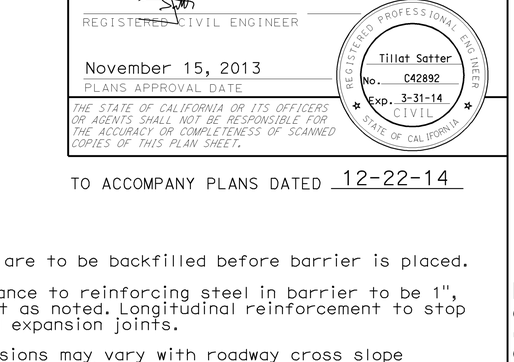

PEDESTAL ELEVATION

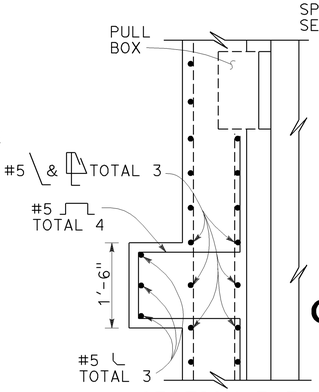

SECTION F-F

NOTES:

1. Walls are to be backfilled before barrier is placed.
2. Clearance to reinforcing steel in barrier to be 1", except as noted. Longitudinal reinforcement to stop at all expansion joints.
3. Dimensions may vary with roadway cross slope and with certain thickness of surfacing. See Project Plans.
4. For typical metal railing connection details not shown, see Revised Standard Plans RSP A77U1 and RSP A77U2.
5. See Standard Plans ES-9A, ES-9B, ES-9C, ES-9D and ES-9E for electrical details. The maximum number of conduits in the barrier is limited to two 2" conduits along with one 3" conduit. When a 3" conduit is used, it is restricted to the base of the barrier.
6. For electrolier mounting details, See Standard Plans ES-6A and ES-6B.
7. Minimum concrete edge distance, to the reinforcing shown, shall be maintained. Edge distance may be adjusted to accommodate increase in concrete cover for architectual treatment.
8. Taper the top of the end of the bridge railing at 4:1 to match the top elevation of the thrie beam rail element.

STATE OF CALIFORNIA
DEPARTMENT OF TRANSPORTATION

CONCRETE BARRIER TYPE 736

NO SCALE

RSP B11-56 DATED NOVEMBER 15, 2013 SUPERSEDES RSP B11-56 DATED JULY 19, 2013 AND STANDARD PLAN B11-56 DATED MAY 20, 2011 - PAGE 298 OF THE STANDARD PLANS BOOK DATED 2010.

REVISED STANDARD PLAN RSP B11-56

10-4-13

DIST	COUNTY	ROUTE	POST MILES TOTAL PROJECT	SHEET No.	TOTAL SHEETS
04	Ala	13	9.9/10.1	35	47

REGISTERED CIVIL ENGINEER 10-13-14 DATE

12-22-14
PLANS APPROVAL DATE

REGISTERED PROFESSIONAL ENGINEER PETER SOIN No. 37231 Exp. 6-30-16 CIVIL STATE OF CALIFORNIA

The State of California or its officers or agents shall not be responsible for the accuracy or completeness of scanned copies of this plan sheet.

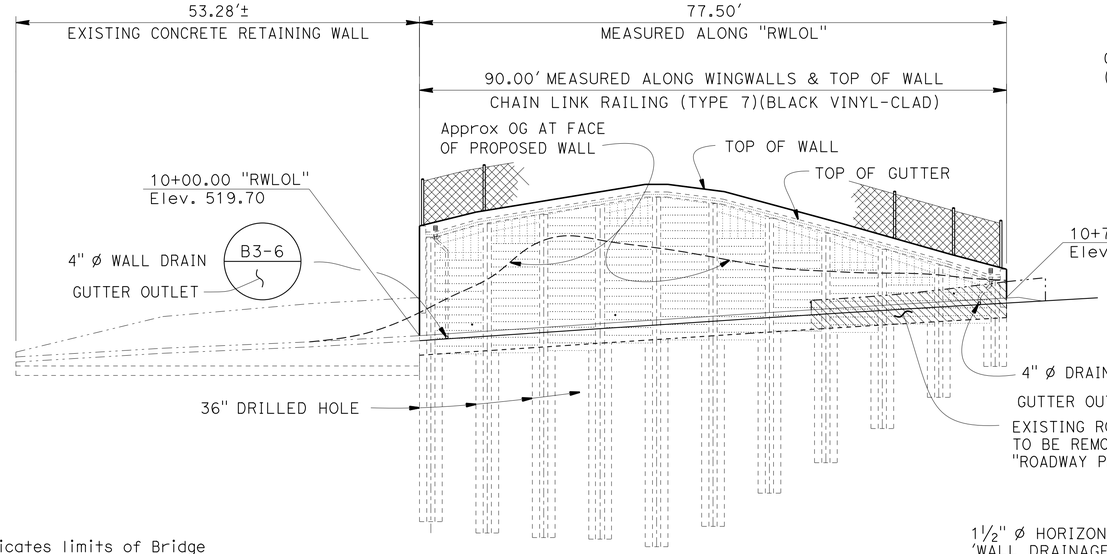

ELEVATION

1" = 10'

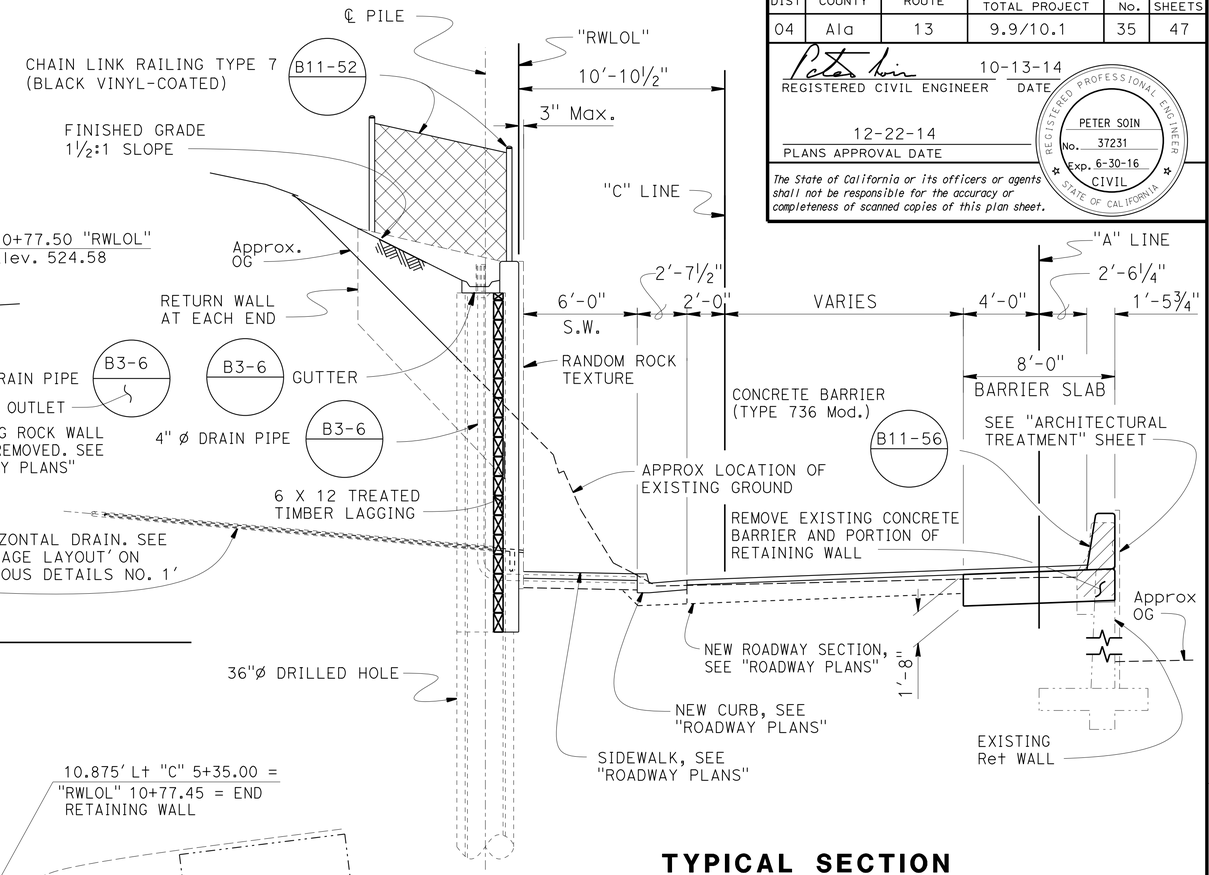

TYPICAL SECTION

¼" = 1'-0"

"A" LINE	"C" LINE	"RWLOL"
R = 368.00'	R = 340.625'	R = 330.125'
Δ = 28°08'34"	Δ = 25°57'01"	Δ = 13°27'23.8"
T = 92.24'	T = 78.48'	T = 38.95'
L = 180.76'	L = 154.28'	L = 77.45'

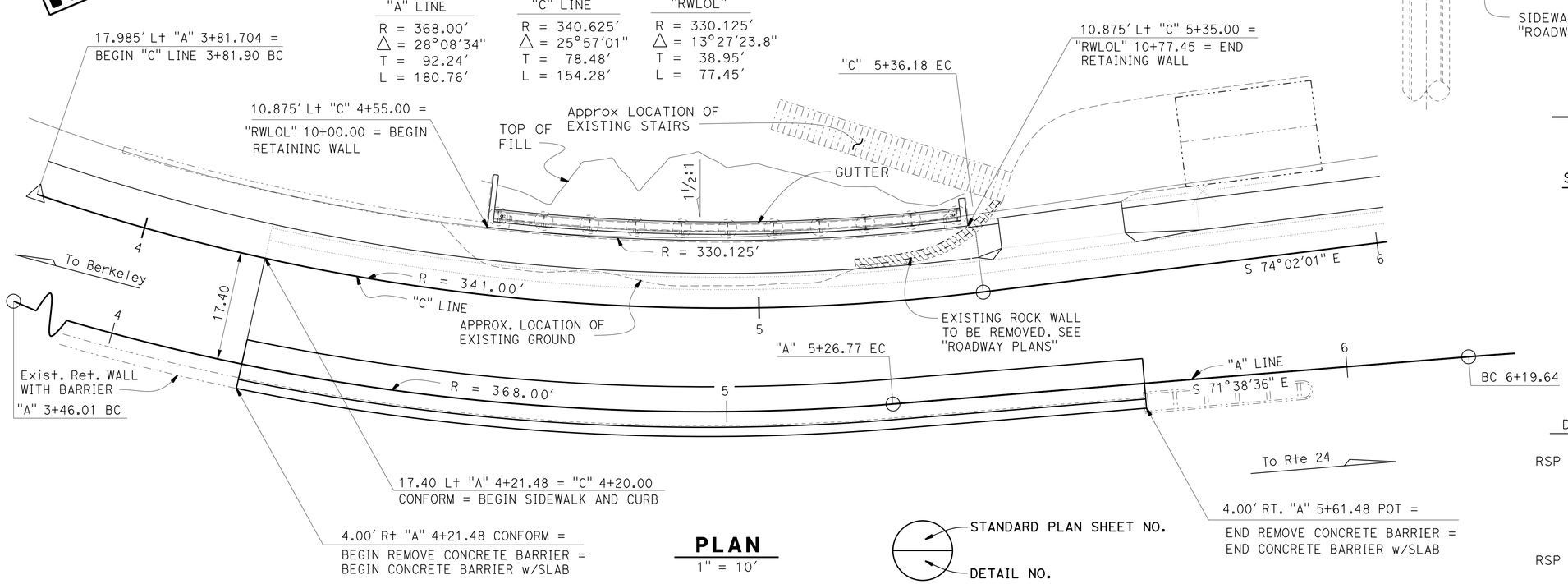

PLAN

1" = 10'

STANDARD PLAN SHEET NO.

DETAIL NO.

INDEX TO PLANS

SHEET NO.	TITLE
1	GENERAL PLAN
2	STRUCTURE PLAN
3	TABLES
4	TYPICAL SECTION
5	MISCELLANEOUS DETAILS NO. 1
6	MISCELLANEOUS DETAILS NO. 2
7	MISCELLANEOUS DETAILS NO. 3
8	CANTILEVER SOLDIER PILE WALL DETAILS
9	SOLDIER PILE WALL LAGGING DETAILS
10	CONCRETE BARRIER SLAB DETAILS
11	ARCHITECTURAL TREATMENT
12	LOG OF TEST BORINGS 1 OF 2
13	LOG OF TEST BORINGS 2 OF 2

STANDARD PLANS DATED 2010

DETAIL	DESCRIPTION
A10A	ABBREVIATIONS (SHEET 1 OF 2)
RSP A10B	ABBREVIATIONS (SHEET 2 OF 2)
A10C	LINES AND SYMBOLS (SHEET 1 OF 3)
A10D	LINES AND SYMBOLS (SHEET 2 OF 3)
A10E	LINES AND SYMBOLS (SHEET 3 OF 3)
B3-6	RETAILING WALL DETAILS No. 2
B6-21	JOINT SEALS (MAXIMUM MOVEMENT RATING = 2")
B11-52	CHAIN LINK RAILING TYPE 7
RSP B11-56	CONCRETE BARRIER TYPE 736

Minh Ha
DESIGN ENGINEER

	BY	CHECKED			
DESIGN	Peter Soin	Ben Nguyen	LOAD & RESISTANCE FACTOR DESIGN	LIVE LOADING: HL93 W/"LOW-BOY": PERMIT DESIGN VEHICLE	
DETAILS	Jeff Thorne	Peter Soin	LAYOUT	Jeff Thorne	Peter Soin
QUANTITIES	Peter Soin	Ben Nguyen	SPECIFICATIONS	Dave Klein	PLANS AND SPECS COMPARED Dave Klein

ORIGINAL SCALE IN INCHES FOR REDUCED PLANS 0 1 2 3

STATE OF CALIFORNIA
DEPARTMENT OF TRANSPORTATION

DIVISION OF ENGINEERING SERVICES
STRUCTURE DESIGN
DESIGN BRANCH 4

BRIDGE NO. 33E0125
POST MILE 10.0

RETAINING WALL AT P.M. 10.0
GENERAL PLAN

UNIT: 04
PROJECT NUMBER & PHASE: 0400000317 1 CONTRACT NO.: 04-0G2101

DISREGARD PRINTS BEARING EARLIER REVISION DATES

REVISION DATES 9-9-14 10-1-14 7-30-14 8-11-14

SHEET 1 OF 13

USERNAME => s131681 DATE PLOTTED => 09-JAN-2015 TIME PLOTTED => 13:47

STRUCTURES DESIGN GENERAL PLAN SHEET (ENGLISH) (REV.09-01-10)

FILE => 0400000317we001.dgn

DIST	COUNTY	ROUTE	POST MILES TOTAL PROJECT	SHEET No.	TOTAL SHEETS
04	Ala	13	9.9/10.1	36	47

REGISTERED CIVIL ENGINEER — DATE 10-13-14

12-22-14
PLANS APPROVAL DATE

REGISTERED PROFESSIONAL ENGINEER — PETER SOIN — No. 37231 — Exp. 6-30-16 — CIVIL — STATE OF CALIFORNIA

The State of California or its officers or agents shall not be responsible for the accuracy or completeness of scanned copies of this plan sheet.

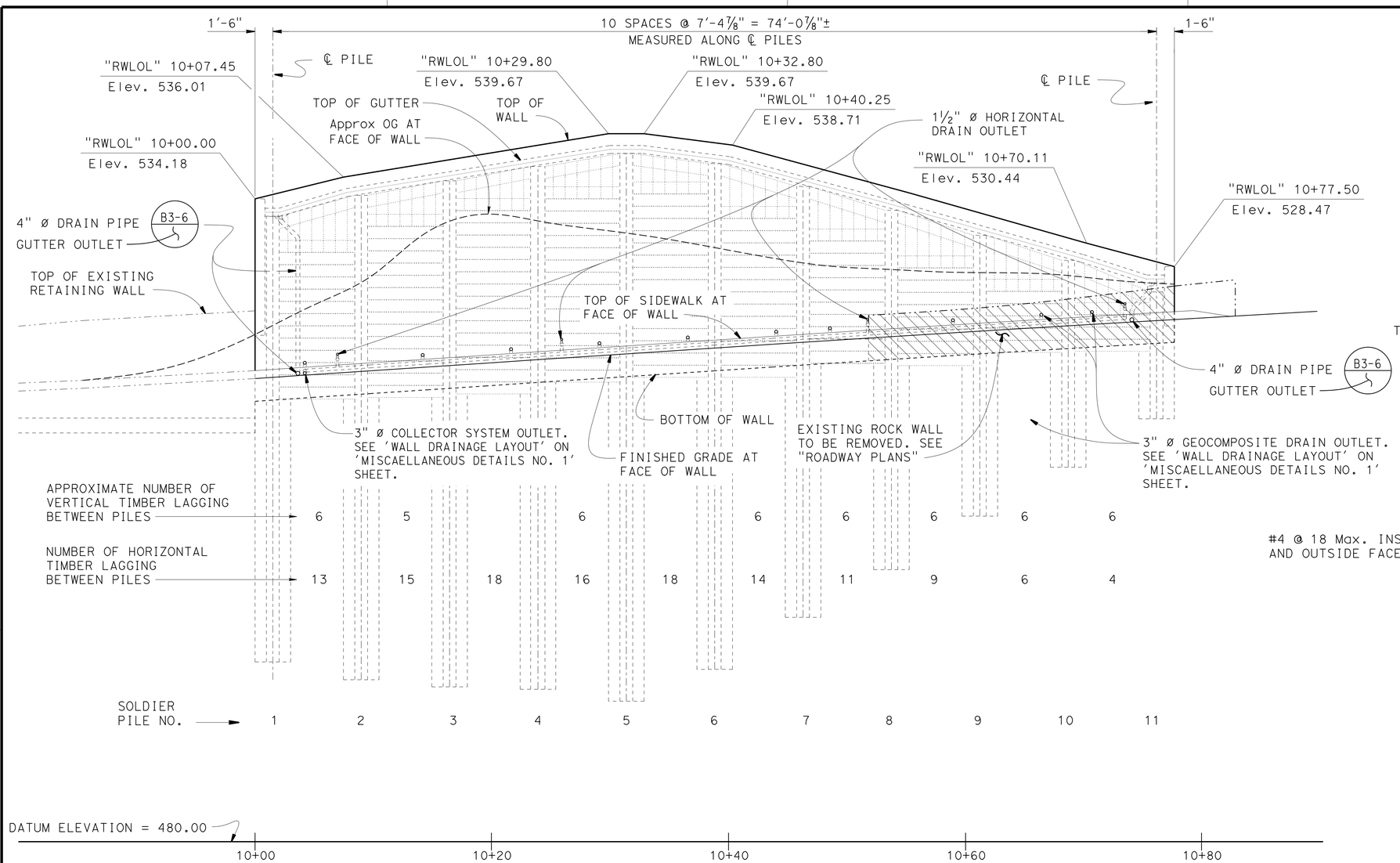

ELEVATION

1" = 5'

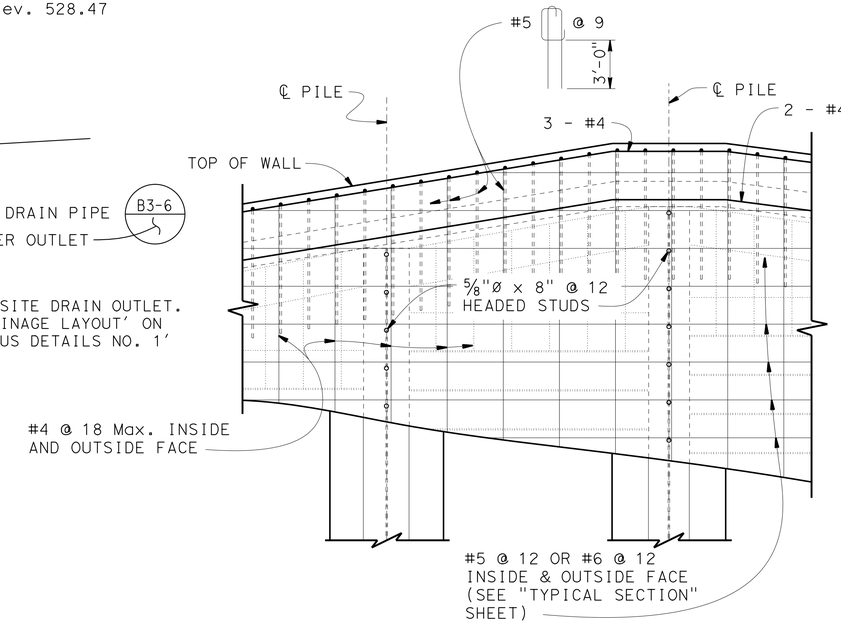

PART ELEVATION

½" = 1'-0"

QUANTITIES

MEDIAN RETAINING WALL PATCH	200	SQFT
BRIDGE REMOVAL (PORTION)	LUMP	SUM
STRUCTURE EXCAVATION (SOLDIER PILE WALL)	78	CY
STRUCTURE BACKFILL (SOLDIER PILE WALL)	21	CY
CONCRETE BACKFILL (SOLDIER PILE WALL)	58	CY
LEAN CONCRETE BACKFILL	39	CY
STEEL SOLDIER PILE (W 24 X 94)	53	LF
STEEL SOLDIER PILE (W 24 X 131)	31	LF
STEEL SOLDIER PILE (W 24 X 192)	38	LF
STEEL SOLDIER PILE (W 24 X 176)	36	LF
STEEL SOLDIER PILE (W 24 X 207)	41	LF
STEEL SOLDIER PILE (W 24 X 229)	86	LF
STEEL SOLDIER PILE (W 24 X 250)	44	LF
STEEL SOLDIER PILE (W 24 X 279)	47	LF
36" DRILLED HOLE	337	LF
STRUCTURAL CONCRETE, RETAINING WALL	39	CY
STRUCTURAL CONCRETE, BARRIER SLAB	72	CY
RANDOM ROCK TEXTURE	1,256	SQFT
ROUGH CONCRETE TEXTURE	855	SQFT
JOINT SEAL (TYPE AL)	140	LF
BAR REINFORCING STEEL (RETAINING WALL)	5,741	LB
TIMBER LAGGING	6	MFBM
CLEAN AND PAINT STEEL SOLDIER PILING	LUMP	SUM
PREPARE AND PAINT CONCRETE	1,405	SQFT
PREPARE AND STAIN CONCRETE	1,070	SQFT
GEOCOMPOSITE DRAIN	615	SQFT
FURNISH AND INSTALL DRAIN PIPE (HORIZONTAL DRAIN)	140	LF
DRILL HOLE (HORIZONTAL DRAIN)	140	LF
MINOR CONCRETE (GUTTER) (LF)	79	LF
CHAIN LINK RAILING (TYPE 7)	89	LF
CONCRETE BARRIER (TRANSITION)	20	LF
CONCRETE BARRIER (TYPE 736 MODIFIED)	120	LF

NOTES:

1. For pile sections, see "WALL SECTION" sheet.
2. The construction of soldier pile must be without adjacent open holes.
3. Remove lean concrete to bottom of laggings where it requires.

	BY	CHECKED
DESIGN	Peter Soin	Ben Nguyen
DETAILS	Jeff Thorne	Peter Soin
QUANTITIES	Peter Soin	Ben Nguyen

STATE OF CALIFORNIA
DEPARTMENT OF TRANSPORTATION

DIVISION OF ENGINEERING SERVICES
STRUCTURE DESIGN
DESIGN BRANCH 4

BRIDGE NO. 33E0125
POST MILE 10.0

RETAINING WALL AT P.M. 10.0
STRUCTURE PLAN

STRUCTURES DESIGN DETAIL SHEET (ENGLISH) (REV. 09-01-10)

ORIGINAL SCALE IN INCHES FOR REDUCED PLANS 0 1 2 3

UNIT: 04
PROJECT NUMBER & PHASE: 0400000317 1 CONTRACT NO.: 04-0G2101

DISREGARD PRINTS BEARING EARLIER REVISION DATES

REVISION DATES: 3-4-13 8-14-14 10-1-14 1-16-15

SHEET 2 OF 13

FILE => 0400000317we002.dgn

USERNAME => s131681 DATE PLOTTED => 09-JAN-2015 TIME PLOTTED => 13:48

DIST	COUNTY	ROUTE	POST MILES TOTAL PROJECT	SHEET No.	TOTAL SHEETS
04	Ala	13	9.9/10.1	37	47

REGISTERED CIVIL ENGINEER 10-13-14 DATE

12-22-14
PLANS APPROVAL DATE

REGISTERED PROFESSIONAL ENGINEER
PETER SOIN
No. 37231
Exp. 6-30-16
CIVIL
STATE OF CALIFORNIA

The State of California or its officers or agents shall not be responsible for the accuracy or completeness of scanned copies of this plan sheet.

SOLDIER PILE DATA TABLE

Pile No.	STEEL PILE DATA						
	"C" LINE STATION	"WLOL" STATION	PILE TYPE	TOP OF PILE ELEVATION (FT)	BOTTOM OF PILE ELEVATION (FT)	TOP OF WALL ELEVATION (FT)	BOTTOM OF WALL ELEVATION (FT)
1	4+56.55	10+01.50	W24 x 192	532.70	495.15	534.18	517.95
2	4+64.24	10+08.95	W24 x 207	534.48	493.65	536.01	518.45
3	4+71.93	10+16.40	W24 x 229	535.70	493.04	537.18	518.94
4	4+79.62	10+23.85	W24 x 250	536.91	492.84	538.15	519.44
5	4+87.31	10+31.30	W24 x 279	538.00	491.83	539.67	519.93
6	4+95.00	10+38.75	W24 x 229	537.15	494.52	538.71	520.42
7	5+02.69	10+46.20	W24 x 176	535.23	498.90	536.55	520.91
8	5+10.38	10+53.65	W24 x 131	533.21	502.92	534.68	521.38
9	5+18.07	10+61.10	W24 x 94	531.11	507.43	532.43	521.84
10	5+25.76	10+68.55	W24 x 94	529.00	511.55	530.44	522.29
11	5+33.45	10+76.00	W24 x 94	527.00	515.63	528.47	522.73

W Sections are to be oriented, repectively, radially to the curved portion of the wall alignment.

TIMBER LAGGING CHART

PANEL NO.	TIMBER LAGGING DATA		
	NUMBER OF 4" X 12" TIMBER LAGGING MEMBERS	NUMBER OF 6" X 12" TIMBER LAGGING MEMBERS	TOTAL NUMBER OF TIMBER LAGGING MEMBERS PER PANEL
1	6	11	17
2	5	13	18
3	5	13	18
4	5	14	19
5	5	14	19
6	5	13	18
7	7	8	15
8	7	6	13
9	7	3	10
10	8	0	8

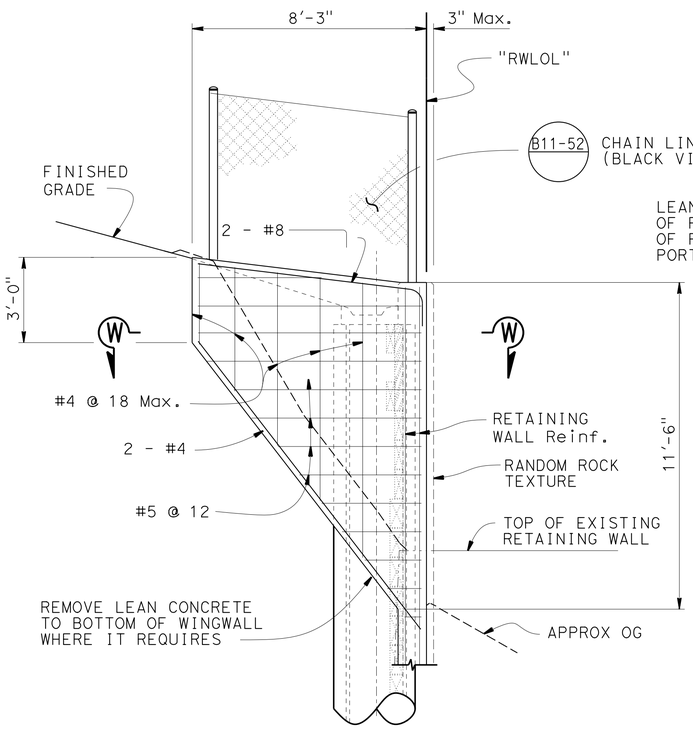

WINGWALL ELEVATION AT BEGIN WALL

3/8" = 1'-0"

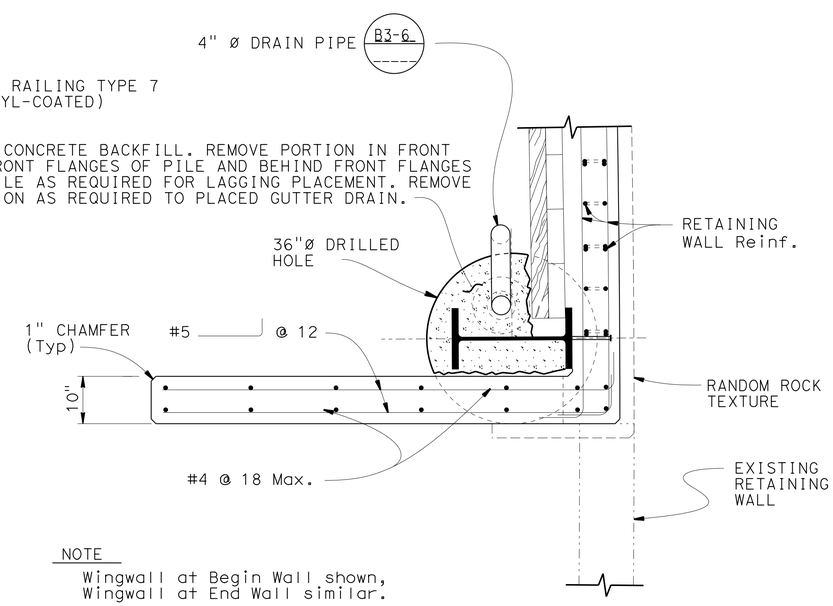

NOTE

Wingwall at Begin Wall shown,
Wingwall at End Wall similar.

SECTION W-W

3/4" = 1'-0"

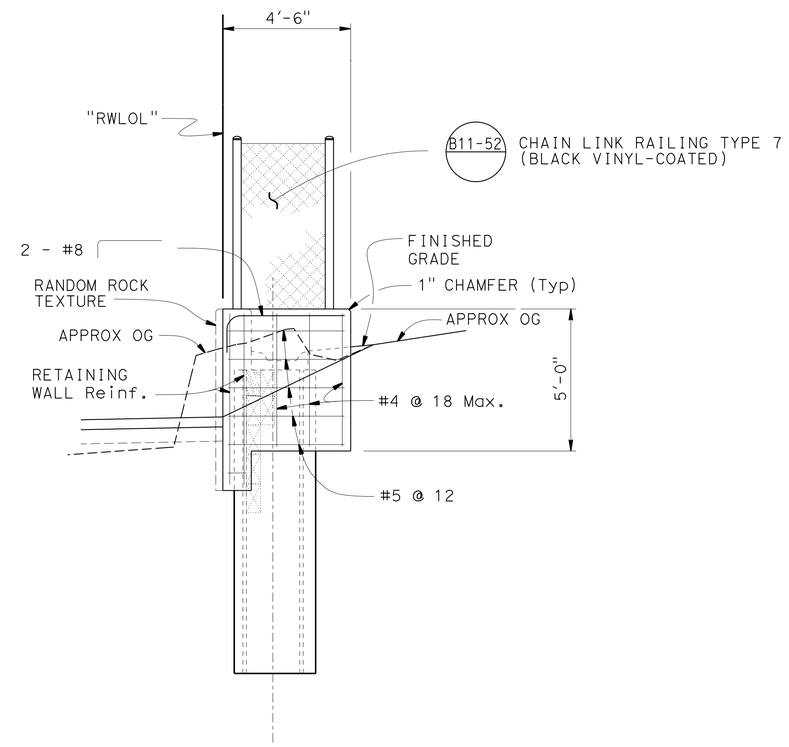

WINGWALL ELEVATION AT END WALL

3/8" = 1'-0"

	BY	CHECKED
DESIGN	Peter Soin	Ben Nguyen
DETAILS	Jeff Thorne	Peter Soin
QUANTITIES	Peter Soin	Ben Nguyen

STATE OF CALIFORNIA
DEPARTMENT OF TRANSPORTATION

DIVISION OF ENGINEERING SERVICES
STRUCTURE DESIGN
DESIGN BRANCH 4

BRIDGE NO. 33E0125
POST MILE 10.0

RETAINING WALL AT P.M. 10.0
TABLES

STRUCTURES DESIGN DETAIL SHEET (ENGLISH) (REV. 09-01-10)

ORIGINAL SCALE IN INCHES FOR REDUCED PLANS 0 1 2 3

UNIT: 04
PROJECT NUMBER & PHASE: 0400000317 1 CONTRACT NO.: 04-0G2101

DISREGARD PRINTS BEARING EARLIER REVISION DATES

REVISION DATES: 9-9-14 11-26-12 1-3-13 8-13-14

SHEET 3 OF 13

FILE => 0400000317we003.dgn

USERNAME => s131681 DATE PLOTTED => 09-JAN-2015 TIME PLOTTED => 13:48

DIST	COUNTY	ROUTE	POST MILES TOTAL PROJECT	SHEET No.	TOTAL SHEETS
04	Ala	13	9.9/10.1	38	47

REGISTERED CIVIL ENGINEER 10-13-14 DATE

12-22-14
PLANS APPROVAL DATE

REGISTERED PROFESSIONAL ENGINEER PETER SOIN No. 37231 Exp. 6-30-16 CIVIL STATE OF CALIFORNIA

The State of California or its officers or agents shall not be responsible for the accuracy or completeness of scanned copies of this plan sheet.

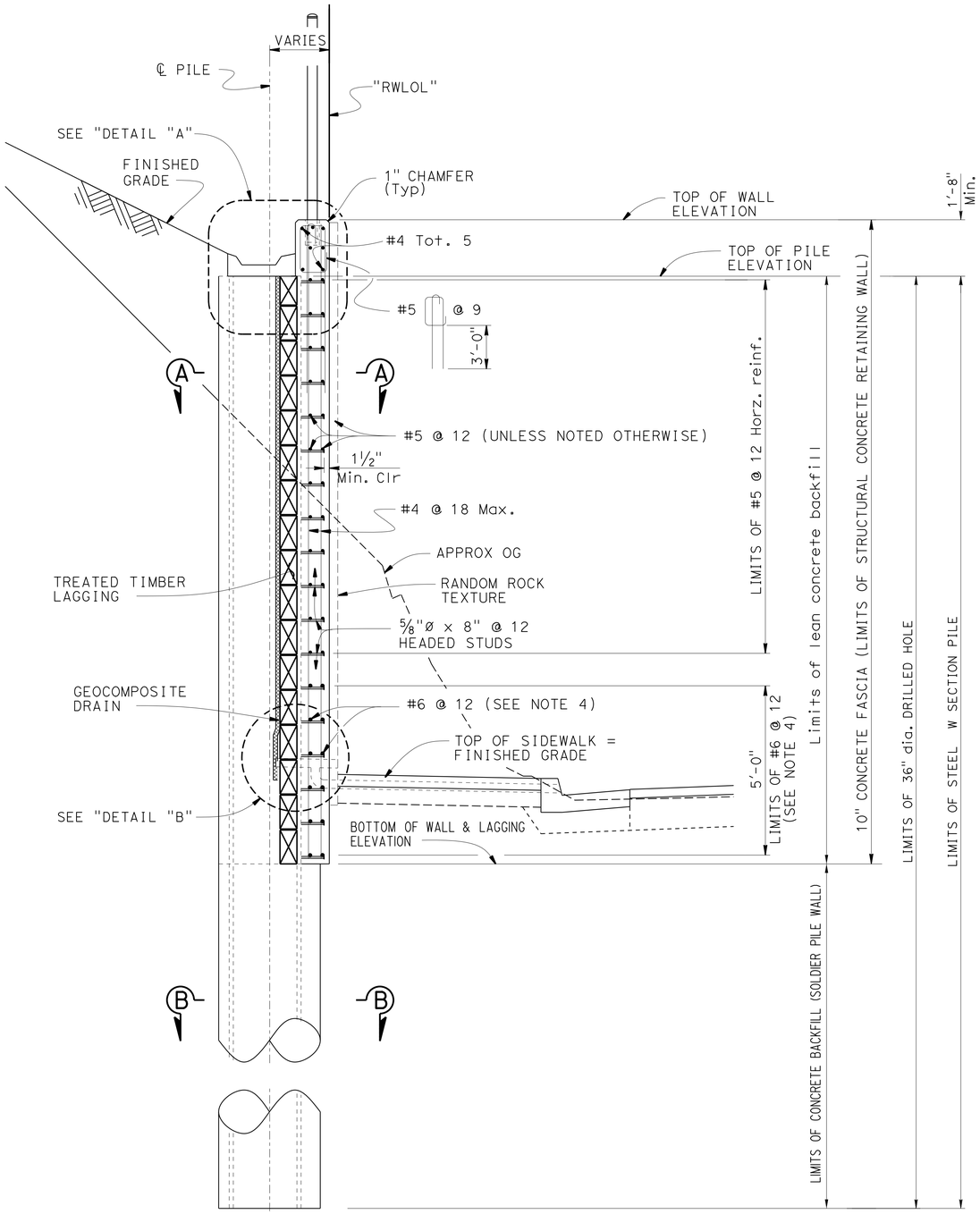

WALL SECTION

½" = 1'-0"

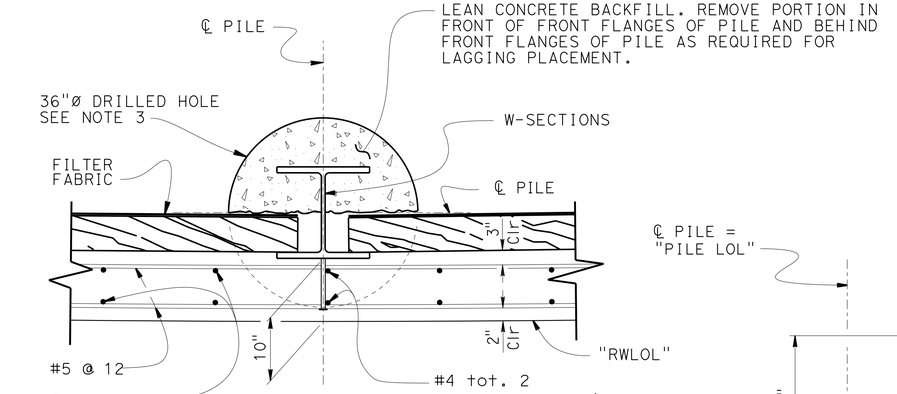

SECTION A-A

NO SCALE

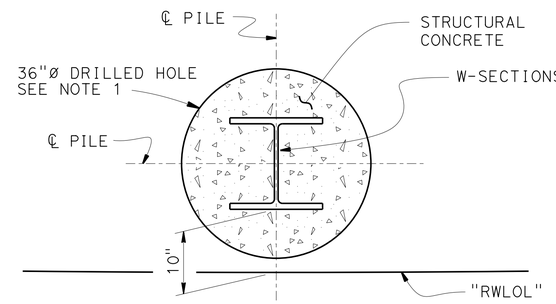

SECTION B-B

NO SCALE

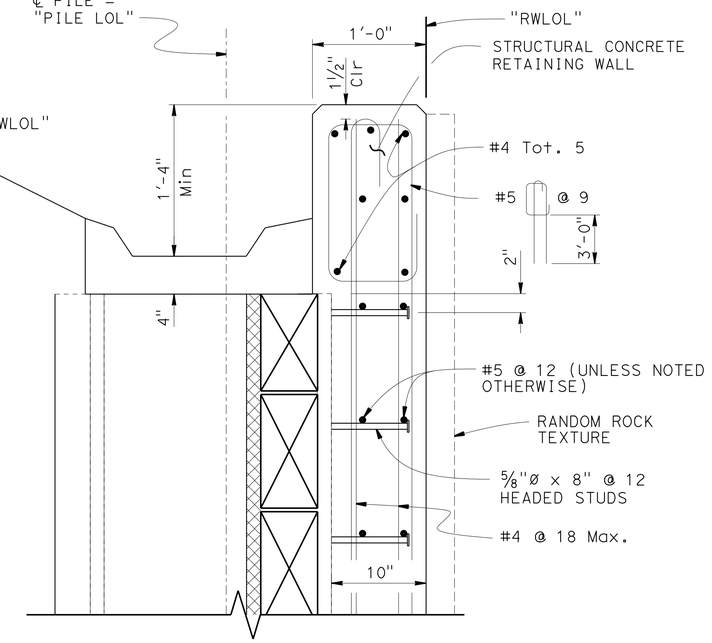

DETAIL "A"

1½" = 1'-0"

NOTES:

1. Formed surface above top of drilled hole. A minimum length of 1.0 feet at top of pile shall be formed.
2. The construction of soldier pile shall be staggered and no open holes adjacent.
3. Remove lean concrete to bottom of laggings where it requires.
4. Bottom 5 feet of concrete fascia to be reinfoced horizontally with continuous #6 rebar @ 12 O.C. along inside & outside faces of Concrete Fascia from Pile 1 to Pile 8 only.

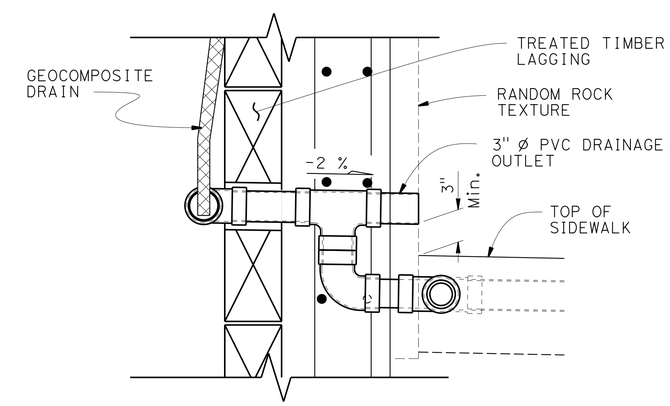

DETAIL "B"

1½" = 1'-0"

DESIGN	BY Peter Soin	CHECKED Ben Nguyen	
DETAILS	BY Jeff Thorne	CHECKED Peter Soin	
QUANTITIES	BY Peter Soin	CHECKED Ben Nguyen	

STATE OF CALIFORNIA
DEPARTMENT OF TRANSPORTATION

DIVISION OF ENGINEERING SERVICES
STRUCTURE DESIGN
DESIGN BRANCH 4

BRIDGE NO. 33E0125
POST MILE 10.0

RETAINING WALL AT P.M. 10.0
TYPICAL SECTION

STRUCTURES DESIGN DETAIL SHEET (ENGLISH) (REV. 09-01-10)

ORIGINAL SCALE IN INCHES FOR REDUCED PLANS 0 1 2 3

UNIT: 04
PROJECT NUMBER & PHASE: 0400000317 1 CONTRACT NO.: 04-0G2101

DISREGARD PRINTS BEARING EARLIER REVISION DATES

REVISION DATES 10-1-14 3-4-15 7-30-14 8-11-14

SHEET 4 OF 13

FILE => 0400000317we004.dgn

USERNAME => s131681 DATE PLOTTED => 09-JAN-2015 TIME PLOTTED => 13:48

DIST	COUNTY	ROUTE	POST MILES TOTAL PROJECT	SHEET No.	TOTAL SHEETS
04	Ala	13	9.9/10.1	39	47

REGISTERED CIVIL ENGINEER 10-13-14 DATE

12-22-14
PLANS APPROVAL DATE

REGISTERED PROFESSIONAL ENGINEER
PETER SOIN
No. 37231
Exp. 6-30-16
CIVIL
STATE OF CALIFORNIA

The State of California or its officers or agents shall not be responsible for the accuracy or completeness of scanned copies of this plan sheet.

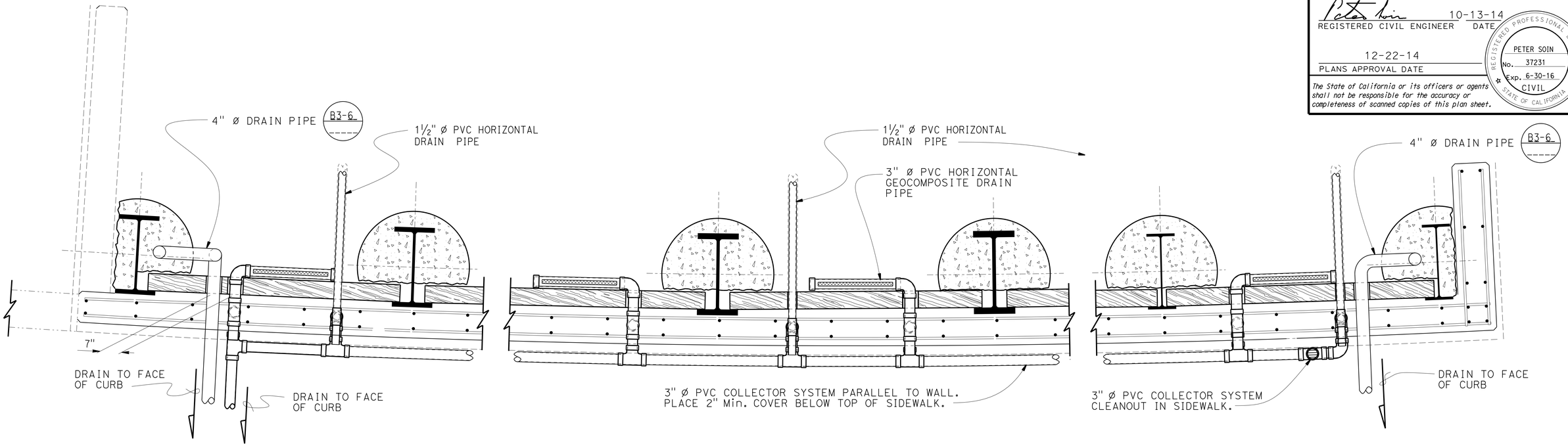

WALL DRAINAGE LAYOUT

¾" = 1'-0"

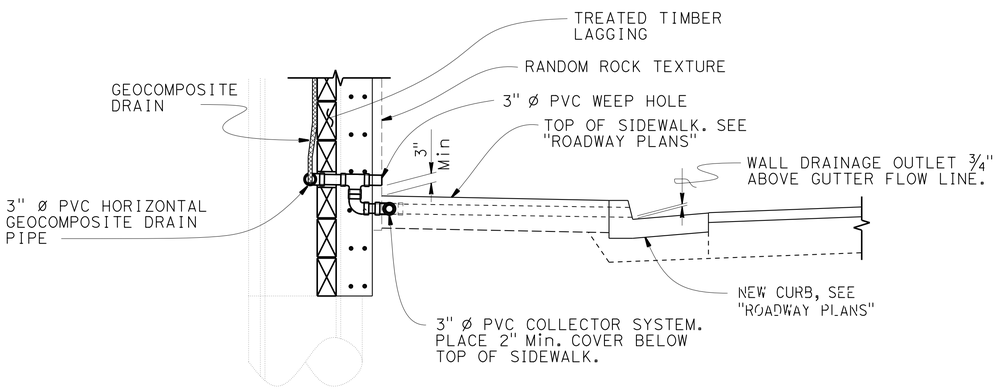

PART TYPICAL SECTION GEOCOMPOSITE DRAIN OUTLET LOCATIONS

½" = 1'-0"

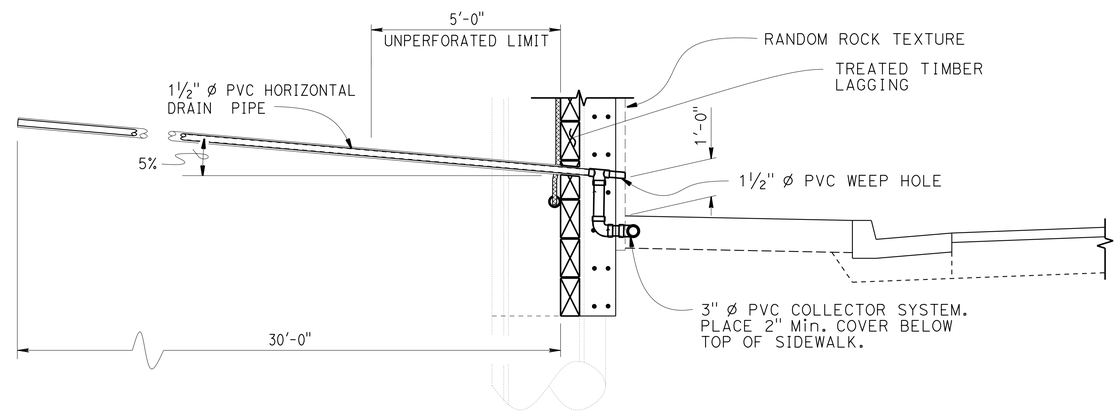

PART TYPICAL SECTION HORIZONTAL DRAIN OUTLET LOCATIONS

½" = 1'-0"

	BY	CHECKED
DESIGN	Peter Soin	Ben Nguyen
DETAILS	Jeff Thorne	Peter Soin
QUANTITIES	Peter Soin	Ben Nguyen

STATE OF CALIFORNIA
DEPARTMENT OF TRANSPORTATION

DIVISION OF ENGINEERING SERVICES
STRUCTURE DESIGN
DESIGN BRANCH 4

BRIDGE NO. 33E0125
POST MILE 10.0

RETAINING WALL AT P.M. 10.0
MISCELLANEOUS DETAILS NO. 1

STRUCTURES DESIGN DETAIL SHEET (ENGLISH) (REV. 09-01-10)

ORIGINAL SCALE IN INCHES FOR REDUCED PLANS 0 1 2 3

UNIT: 04
PROJECT NUMBER & PHASE: 0400000317 1 CONTRACT NO.: 04-0G2101

DISREGARD PRINTS BEARING EARLIER REVISION DATES

REVISION DATES: 10-1-14 ~~3-4-13~~ ~~7-30-14~~ ~~8-11-14~~

SHEET 5 OF 13

FILE => 0400000317we005.dgn

USERNAME => s131681 DATE PLOTTED => 09-JAN-2015 TIME PLOTTED => 13:48

DIST	COUNTY	ROUTE	POST MILES TOTAL PROJECT	SHEET No.	TOTAL SHEETS
04	Ala	13	9.9/10.1	40	47

REGISTERED CIVIL ENGINEER 10-13-14 DATE

12-22-14
PLANS APPROVAL DATE

REGISTERED PROFESSIONAL ENGINEER PETER SOIN No. 37231 Exp. 6-30-16 CIVIL STATE OF CALIFORNIA

The State of California or its officers or agents shall not be responsible for the accuracy or completeness of electronic copies of this plan sheet.

NOTES:

1. Center Geocomposite drain between Soldier piles.
2. 3" dia. drain pipe to be placed 3" above finished grade at face of CIP wall. (Typ.)
3. Geocomposite Drain not required for wall height less than 6 feet.

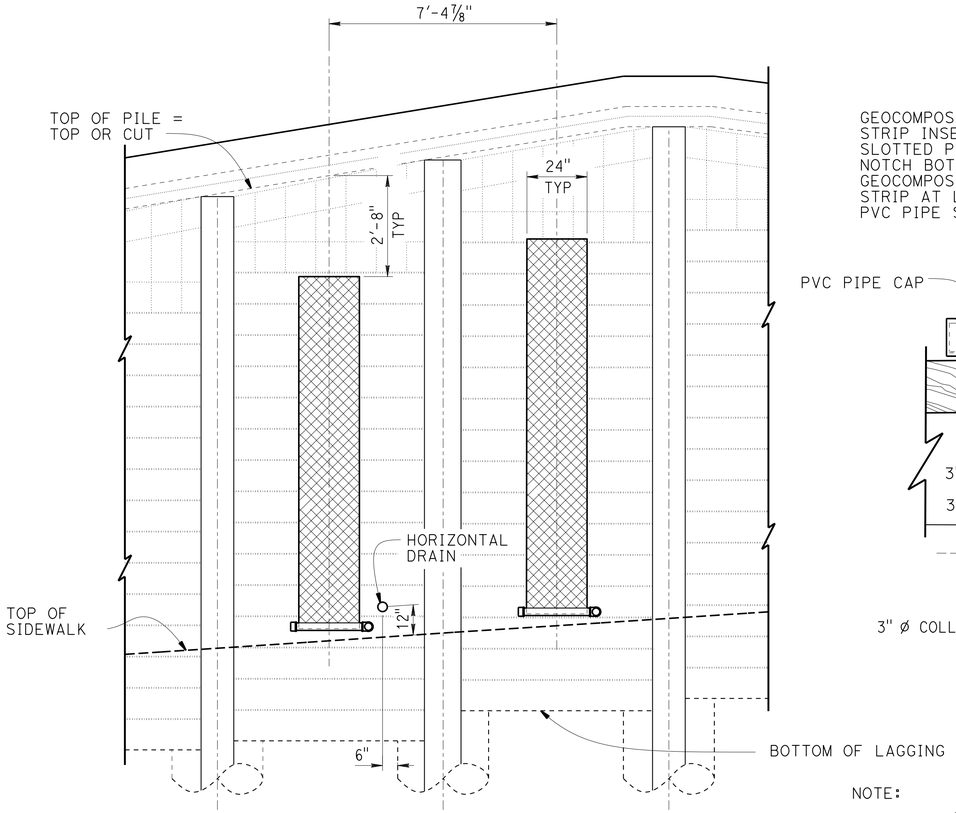

PART ELEVATION - GEOCOMPOSITE DRAIN

No Scale

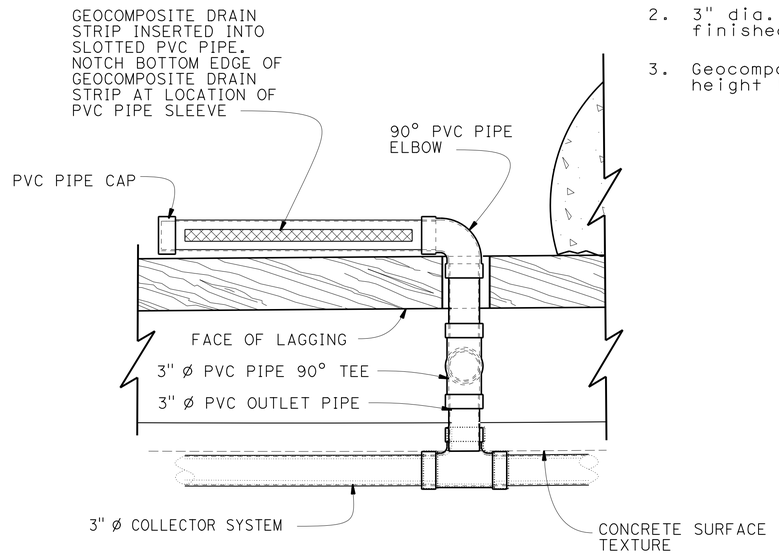

SECTION C-C

1 ½" = 1-0"

NOTE:

For details and dimensions not shown, see "TYPICAL SECTION" sheet.

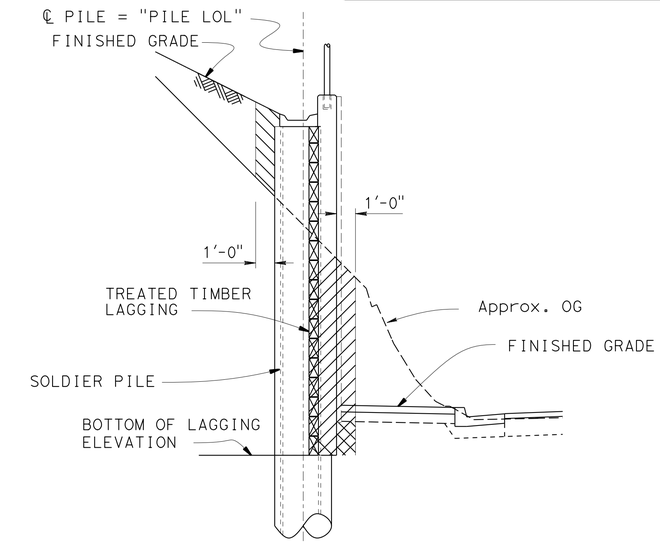

TYPICAL SECTION AT SOLDIER PILE

LEGEND :

Structure Excavation

Structure Backfill

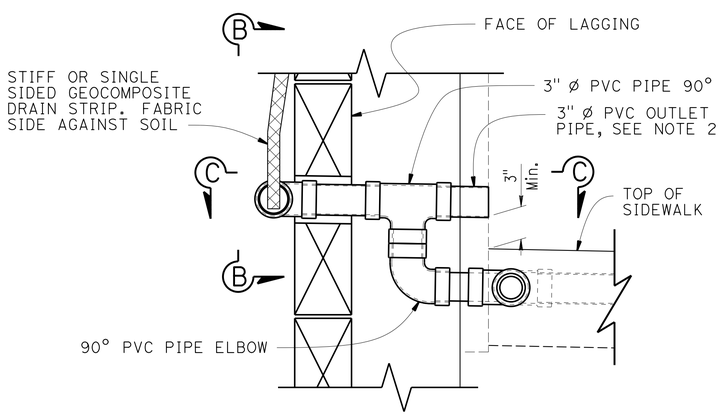

WALL DRAIN DETAIL AT WEEPHOLE

1 ½" = 1-0"

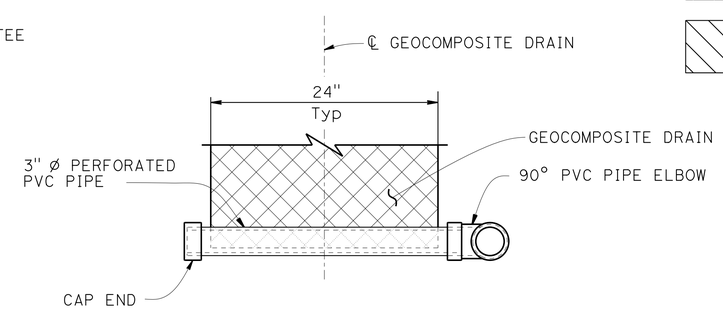

VIEW B-B

No Scale

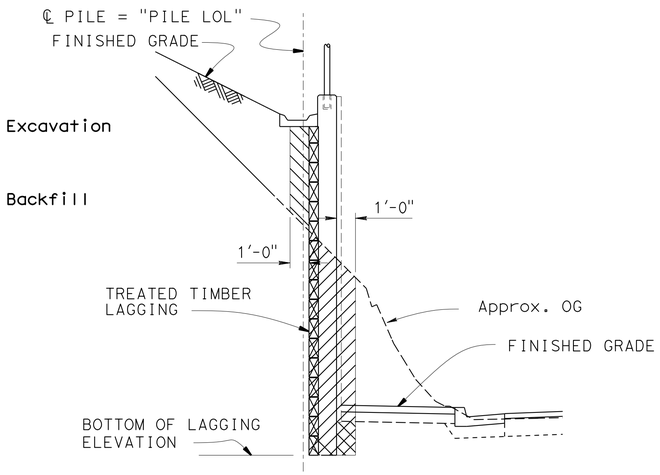

TYPICAL SECTION BETWEEN SOLDIER PILES
LIMITS OF EXCAVATION AND BACKFILL

NO SCALE

	BY	CHECKED
DESIGN	Peter Soin	Ben Nguyen
DETAILS	Jeff Thorne	Peter Soin
QUANTITIES	Peter Soin	Ben Nguyen

STATE OF CALIFORNIA
DEPARTMENT OF TRANSPORTATION

DIVISION OF ENGINEERING SERVICES
STRUCTURE DESIGN
DESIGN BRANCH 4

BRIDGE NO. 33E0125
POST MILE 10.0

RETAINING WALL AT P.M. 10.0
MISCELLANEOUS DETAILS NO. 2

STRUCTURES DESIGN DETAIL SHEET (ENGLISH) (REV. 09-01-10)

ORIGINAL SCALE IN INCHES FOR REDUCED PLANS 0 1 2 3

UNIT: 04
PROJECT NUMBER & PHASE: 0400000317 1 CONTRACT NO.: 04-0G2101

DISREGARD PRINTS BEARING EARLIER REVISION DATES

REVISION DATES 2-12-13 4-15-13 7-30-14 8-11-14

SHEET 6 OF 13

FILE => 0400000317we006.dgn

USERNAME => s131681 DATE PLOTTED => 09-JAN-2015 TIME PLOTTED => 13:48

DIST	COUNTY	ROUTE	POST MILES TOTAL PROJECT	SHEET No.	TOTAL SHEETS
04	Ala	13	9.9/10.1	41	47

REGISTERED CIVIL ENGINEER 10-13-14 DATE

12-22-14
PLANS APPROVAL DATE

REGISTERED PROFESSIONAL ENGINEER PETER SOIN No. 37231 Exp. 6-30-16 CIVIL STATE OF CALIFORNIA

The State of California or its officers or agents shall not be responsible for the accuracy or completeness of scanned copies of this plan sheet.

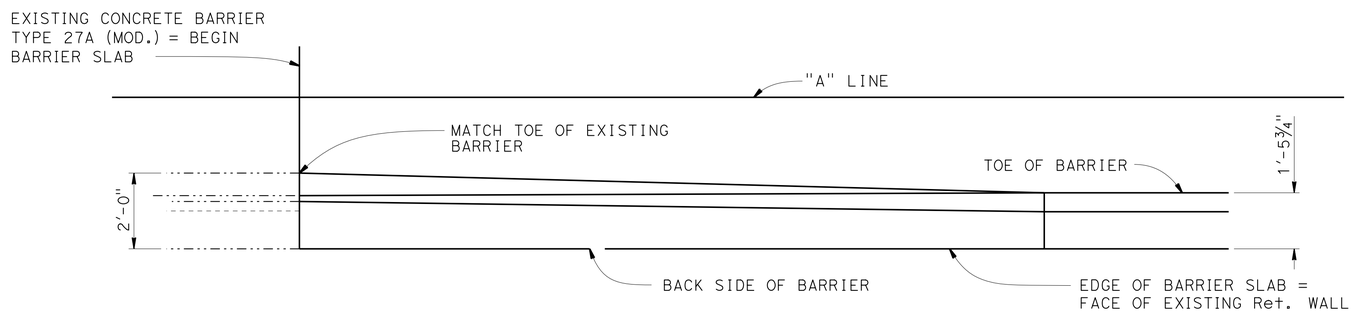

BARRIER TRANSITION PLAN
½" = 1'-0"

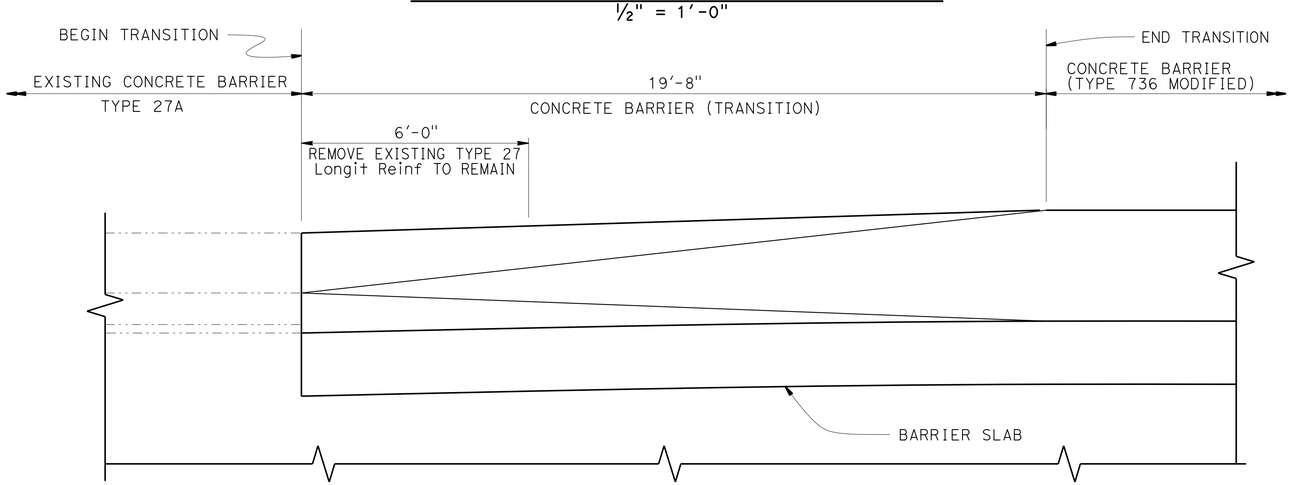

MIRROR BARRIER ELEVATION
½" = 1'-0"

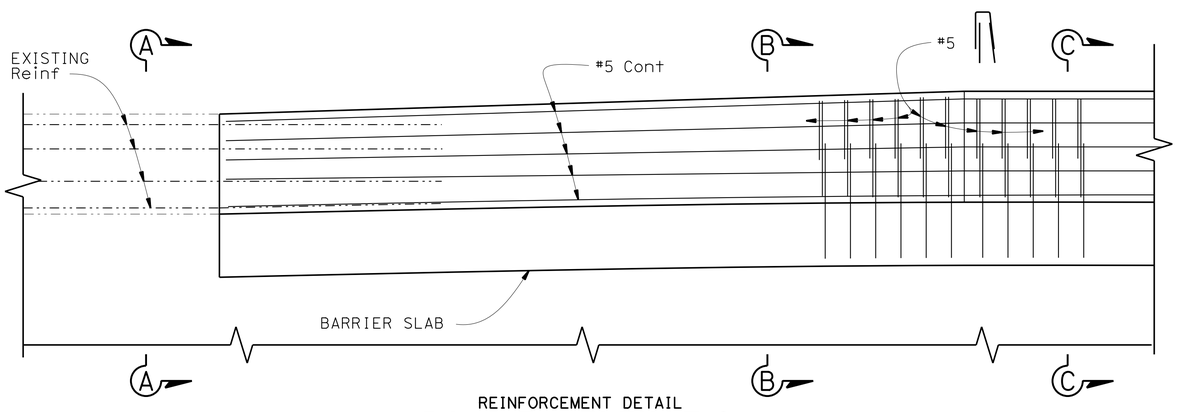

REINFORCEMENT DETAIL
BARRIER ELEVATION
½" = 1'-0"

NOTE:
VERIFY ALL CONTROLLING FIELD DIMENSIONS BEFORE ORDERING OR FABRICATING ANY MATERIAL.

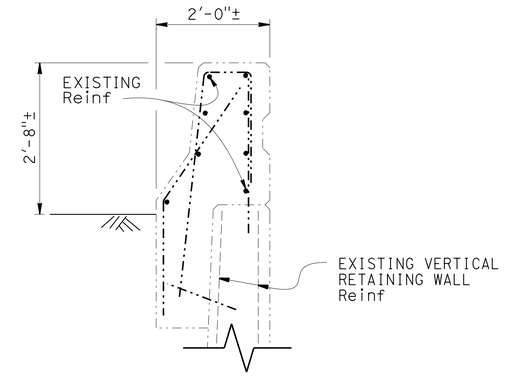

SECTION A-A
¾" = 1'-0"

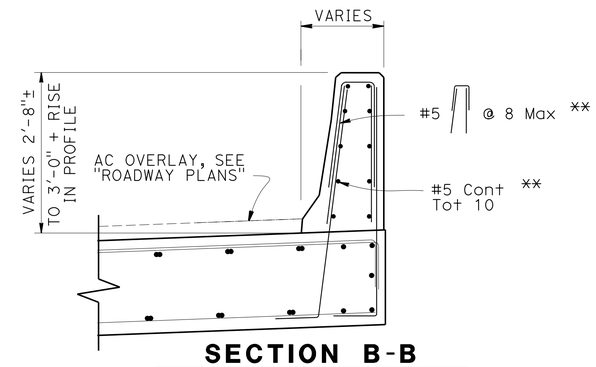

SECTION B-B
¾" = 1'-0"

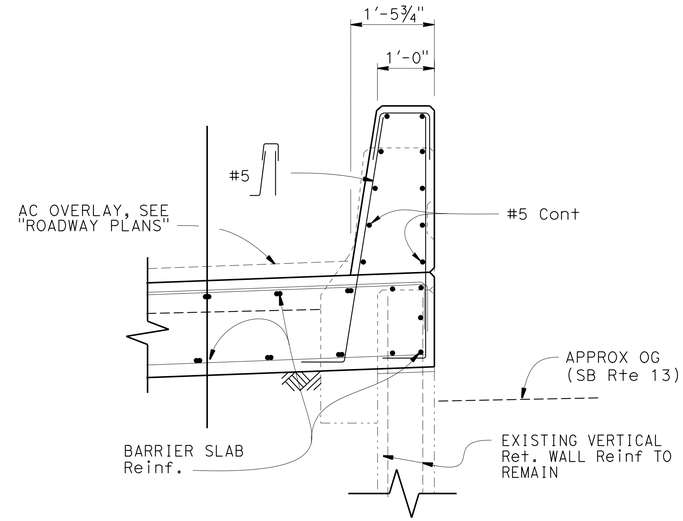

SECTION C-C
¾" = 1'-0"

	BY	CHECKED
DESIGN	Peter Soin	Ben Nguyen
DETAILS	Jeff Thorne	Peter Soin
QUANTITIES	Peter Soin	Ben Nguyen

STATE OF CALIFORNIA
DEPARTMENT OF TRANSPORTATION

DIVISION OF ENGINEERING SERVICES
STRUCTURE DESIGN
DESIGN BRANCH 4

BRIDGE NO. 33E0125
POST MILE 10.0

RETAINING WALL AT P.M. 10.0
MISCELLANEOUS DETAILS NO. 3

STRUCTURES DESIGN DETAIL SHEET (ENGLISH) (REV. 09-01-10)

ORIGINAL SCALE IN INCHES FOR REDUCED PLANS 0 1 2 3

UNIT: 04
PROJECT NUMBER & PHASE: 0400000317 1 CONTRACT NO.: 04-0G2101

DISREGARD PRINTS BEARING EARLIER REVISION DATES

REVISION DATES: 1-16-13 3-14-13 8-11-14 10-1-14

SHEET 7 OF 13

FILE => 0400000317we007.dgn

USERNAME => s131681 DATE PLOTTED => 09-JAN-2015 TIME PLOTTED => 13:48

DIST	COUNTY	ROUTE	POST MILES TOTAL PROJECT	SHEET No.	TOTAL SHEETS
04	Ala	13	9.9/10.1	42	47

REGISTERED CIVIL ENGINEER 10-13-14 DATE

12-22-14
PLANS APPROVAL DATE

The State of California or its officers or agents shall not be responsible for the accuracy or completeness of electronic copies of this plan sheet.

REGISTERED PROFESSIONAL ENGINEER
PETER SOIN
No. 37231
Exp. 6-30-16
CIVIL
STATE OF CALIFORNIA

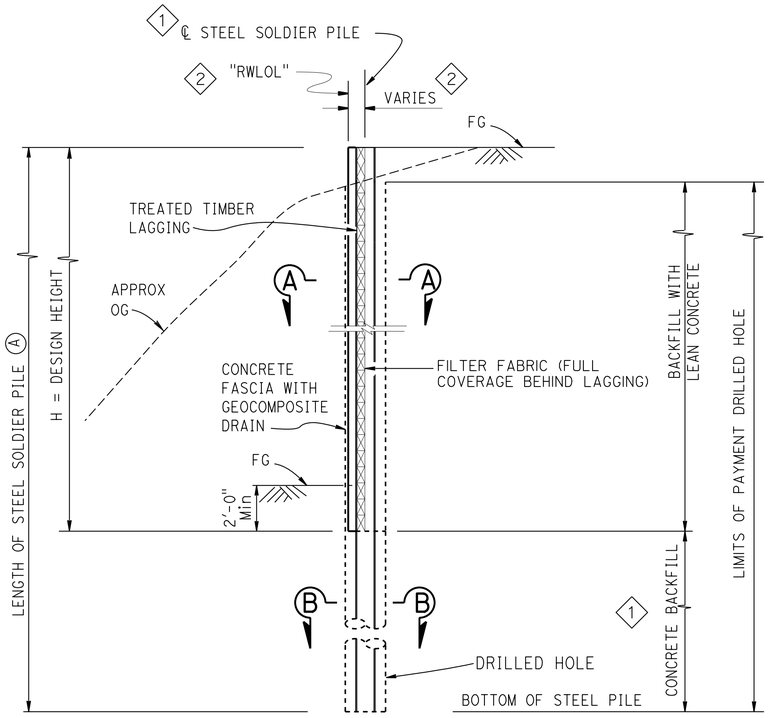

FOR DETAILS NOT SHOWN, SEE "ROADWAY PLANS"

TYPICAL SECTION

NO SCALE

NOTE:

(A) Clean and paint Steel Soldier Pile from top of pile to 5 feet, Min below bottom of lagging.

For lagging details see "SOLDIER PILE WALL LAGGING DETAILS"

LIMITS OF CLEAN & PAINT STEEL SOLDIER PILE

NO SCALE

GENERAL NOTES

DESIGN: AASHTO LRFD Bridge Design Specifications, 4th Edition with California Amendments.

SOIL PARAMETERS: (For determination of Design Lateral Earth Pressures)

Backfill soil weight = 135 lb/ft^3
Friction Angle = 36 °
Active Pressure coefficent, Ka = 0.55
Bedrock Unit Weight = N/A lb/ft^3
Slope Angle = 35 ° 2

STEEL SOLDIER PILES: ASTM A572/A, ASTM 572M Grade 50 Min,

REINFORCED CONCRETE: f'c = 3600 psi 1
fy = 60 ksi

STRUCTURAL TIMBER: Treated Douglas Fir, Grade No. 1 or better
Timber to be full sawn

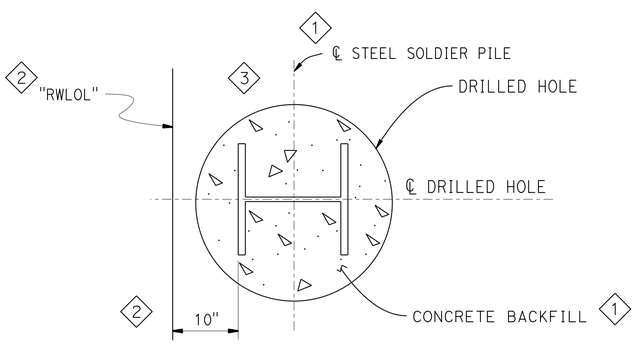

SECTION B-B

NO SCALE

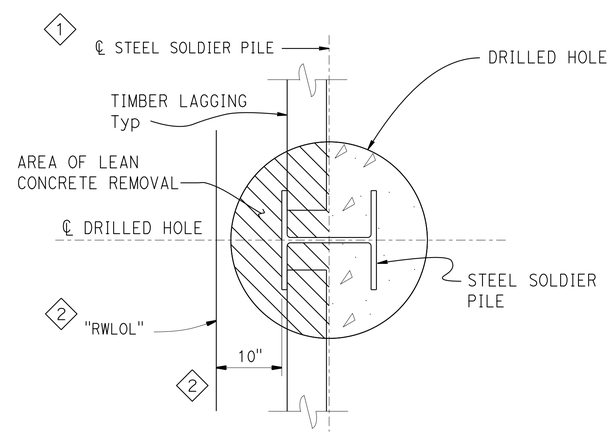

SECTION A-A

NO SCALE

REVISED STANDARD DRAWING

FILE NO. xs12-050

APPROVAL DATE January 2012

1 Revised note.
2 Added dimension & notes.
3 Deleted dimension.

STATE OF CALIFORNIA
DEPARTMENT OF TRANSPORTATION

DIVISION OF ENGINEERING SERVICES

BRIDGE NO. 33E0125
POST MILE 10.0

RETAINING WALL AT P.M. 10.0
CANTILEVER SOLDIER PILE WALL DETAILS

DS OSD 2147A (ENGLISH STANDARD DRAWING "XS" BORDER REV. (02-02-11))

ORIGINAL SCALE IN INCHES FOR REDUCED PLANS 0 1 2 3

UNIT: 04
PROJECT NUMBER & PHASE: 0400000317 1
CONTRACT NO.: 04-0G2101

DISREGARD PRINTS BEARING EARLIER REVISION DATES

REVISION DATES: 8-22-12 11-28-12 3-1-13 8-11-14

SHEET 8 OF 13

FILE => 0400000317we008.dgn

USERNAME => s131681 DATE PLOTTED => 09-JAN-2015 TIME PLOTTED => 13:48

DIST	COUNTY	ROUTE	POST MILES TOTAL PROJECT	SHEET No.	TOTAL SHEETS
04	Ala	13	9.9/10.1	43	47

REGISTERED CIVIL ENGINEER 10-13-14 DATE

12-22-14
PLANS APPROVAL DATE

REGISTERED PROFESSIONAL ENGINEER PETER SOIN No. 37231 Exp. 6-30-16 CIVIL STATE OF CALIFORNIA

The State of California or its officers or agents shall not be responsible for the accuracy or completeness of electronic copies of this plan sheet.

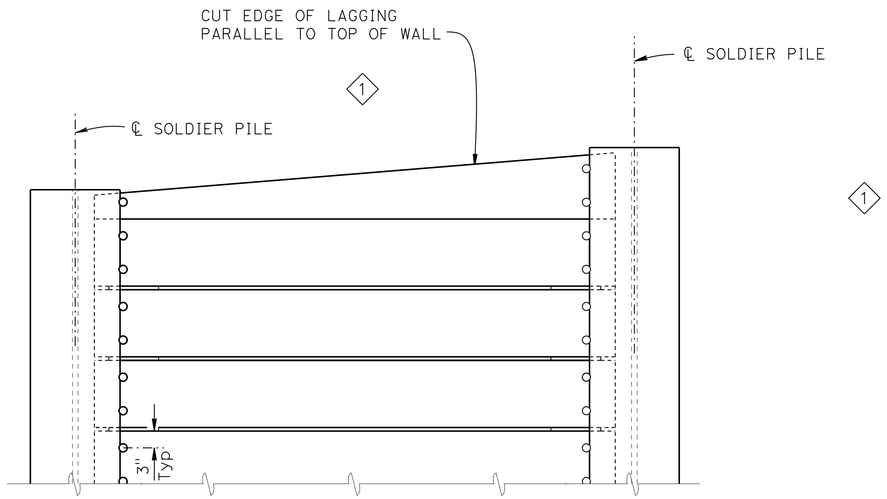

PART ELEVATION

LAGGING DETAILS (ALTERNATIVE 1)

NO SCALE

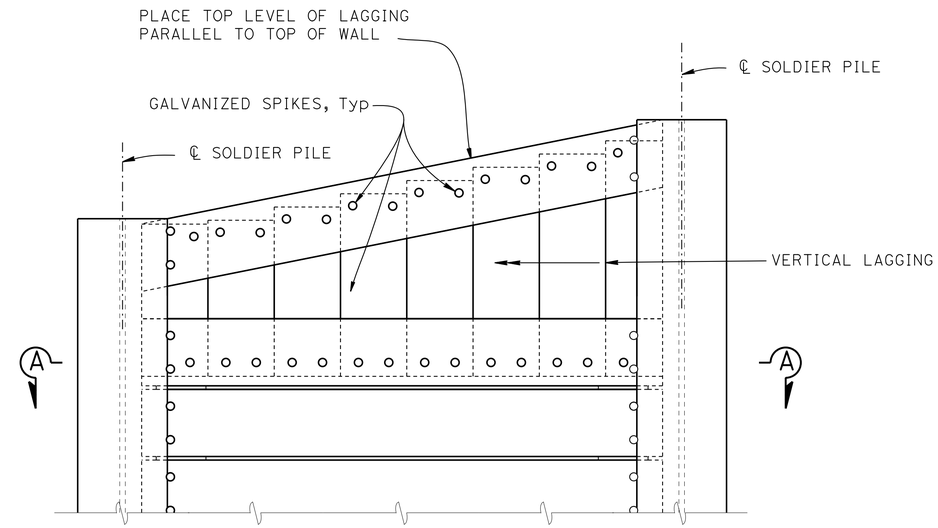

PART ELEVATION

LAGGING DETAILS (ALTERNATIVE 2)

NO SCALE

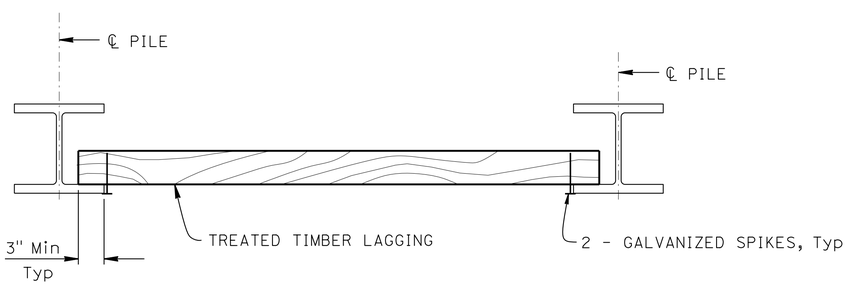

PART PLAN

NO SCALE

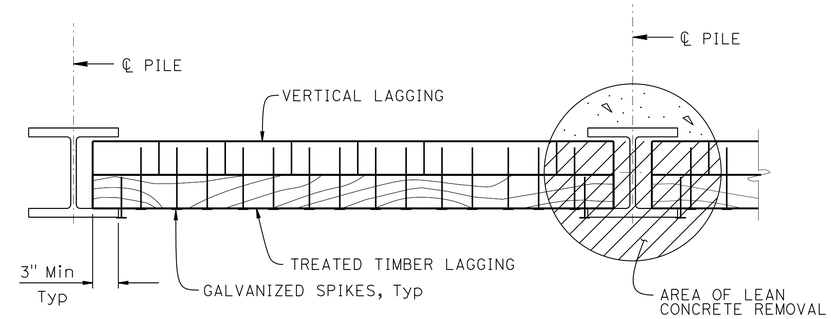

SECTION A-A

NO SCALE

NOTES:

1. No clipping of timber lagging corners allowed
2. Use 16d Galv wire spikes for 4 x 12 lagging, and 40d Galv wire spikes for 6 x 12 lagging
3. Spikes must not be bent
4. (3) Install lagging members with mortar tight joints

REVISED STANDARD DRAWING

FILE NO. xs12-080

APPROVAL DATE January 2012

(1) Deleted note. (3) Additional note.

(2) Deleted Detail.

STATE OF CALIFORNIA DEPARTMENT OF TRANSPORTATION

DIVISION OF ENGINEERING SERVICES

BRIDGE NO. 33E0125

POST MILE 10.0

RETAINING WALL AT P.M. 10.0

SOLDIER PILE WALL LAGGING DETAILS

DS OSD 2147A (ENGLISH STANDARD DRAWING "XS" BORDER REV. (02-02-11)

ORIGINAL SCALE IN INCHES FOR REDUCED PLANS 0 1 2 3

UNIT: 04
PROJECT NUMBER & PHASE: 0400000317 1 CONTRACT NO.: 04-0G2101

DISREGARD PRINTS BEARING EARLIER REVISION DATES

REVISION DATES 8-29-12 3-4-13 8-11-14

SHEET 9 OF 13

FILE => 0400000317we009.dgn

USERNAME => s136681 DATE PLOTTED => 09-JAN-2015 TIME PLOTTED => 13:48

DIST	COUNTY	ROUTE	POST MILES TOTAL PROJECT	SHEET No.	TOTAL SHEETS
04	Ala	13	9.9/10.1	44	47

REGISTERED CIVIL ENGINEER 10-13-14 DATE

12-22-14
PLANS APPROVAL DATE

The State of California or its officers or agents shall not be responsible for the accuracy or completeness of electronic copies of this plan sheet.

REGISTERED PROFESSIONAL ENGINEER PETER SOIN No. 37231 Exp. 6-30-16 CIVIL STATE OF CALIFORNIA

DESIGN DATA

DESIGN: AASHTO LRFD Bridge Design Specifications, 4th Edition with California Amendments.

WS: 33 psf on sound wall

F_t : 54 kips on barrier

EQE: $k_h = 0.2$
$k_v = 0.0$

REINFORCED CONCRETE: f'c = 3600 psi

fy = 60 ksi

n = 8

NOTES:

1. Clearance to reinforcing steel in concrete barrier to be 1".
2. Not all barrier reinforcement shown.
3. No expansion joints in concrete barrier or barrier slab within wall limits.
4. Specific concrete barrier to be used is shown elsewhere in Project Plans.

2

2

5. Minimum slab length: 40 ft

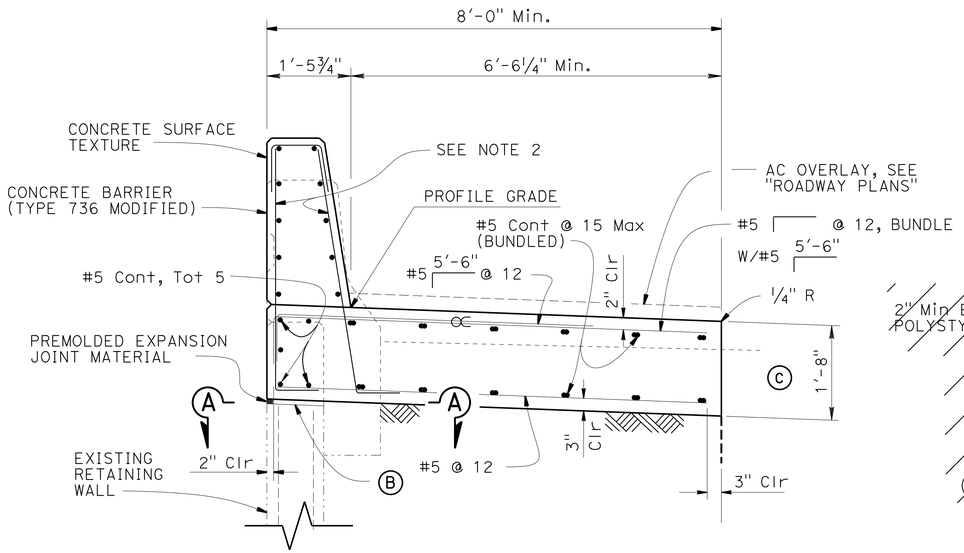

1

CONCRETE BARRIER SLAB

¾" = 1'-0"

3

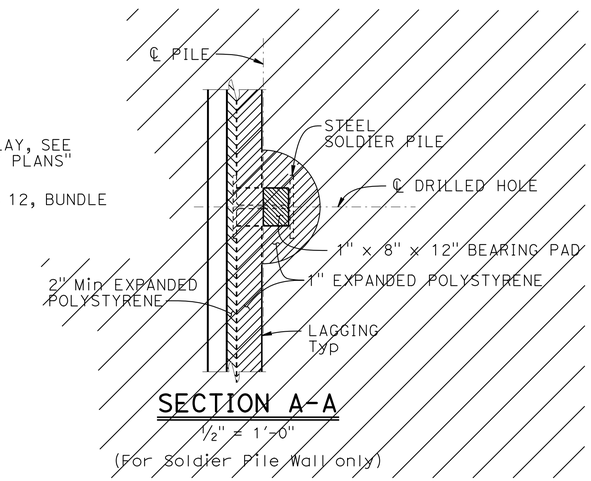

SECTION A-A

½" = 1'-0"

(For Soldier Pile Wall only)

4

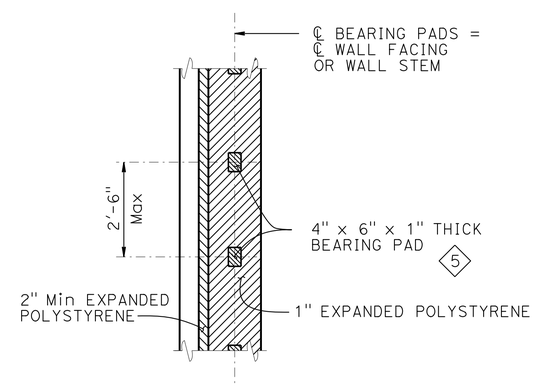

SECTION A-A

½" = 1'-0"

(For all other Earth Retaining Systems)

NOTES:

2

(B) 1" Expanded Polystyrene on MSE and concrete stem walls, See "SECTION A-A" for Soldier Pile Walls

(C) Contact joint

2

∝ Indicates bundled bars

REVISED STANDARD DRAWING

FILE NO. xs12-090

APPROVAL DATE January 2012

1 Revised detail. 3 Deleted chart. 5 Revised callout.
2 Deleted note. 4 Deleted detail.

STATE OF CALIFORNIA
DEPARTMENT OF TRANSPORTATION

DIVISION OF ENGINEERING SERVICES

BRIDGE NO. 33E0125
POST MILE 10.0

RETAINING WALL AT P.M. 10.0
CONCRETE BARRIER SLAB DETAILS

DS OSD 2147A (ENGLISH STANDARD DRAWING "XS" BORDER REV. (02-02-11)

ORIGINAL SCALE IN INCHES FOR REDUCED PLANS 0 1 2 3

UNIT: X
PROJECT NUMBER & PHASE: 0400000317 1 CONTRACT NO.: 04-0G2101

DISREGARD PRINTS BEARING EARLIER REVISION DATES

REVISION DATES: 10-1-14 3-4-13 4-18-13 8-13-14 SHEET 10 OF 13

FILE => 0400000317we010.dgn

USERNAME => s131681 DATE PLOTTED => 09-JAN-2015 TIME PLOTTED => 13:48

DIST	COUNTY	ROUTE	POST MILES TOTAL PROJECT	SHEET No.	TOTAL SHEETS
04	Ala	13	9.9/10.1	45	47

Dennis Calloway 10-7-14
LICENSED LANDSCAPE ARCHITECT DATE

12-22-14
PLANS APPROVAL DATE

LICENSED LANDSCAPE ARCHITECT DENNIS CALLOWAY No. 2509 Signature 11-30-15 Renewal Date Date STATE OF CALIFORNIA

The State of California or its officers or agents shall not be responsible for the accuracy or completeness of scanned copies of this plan sheet.

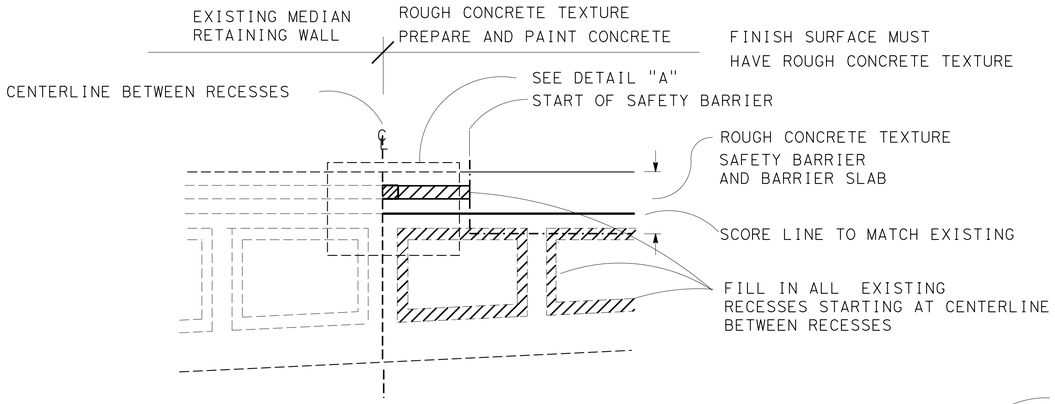

NOTE: CONCRETE SURFACE TEXTURE TO MATCH EXISTING MEDIAN RETAINING WALL

ELEVATION MEDIAN RETAINING WALL

NO SCALE

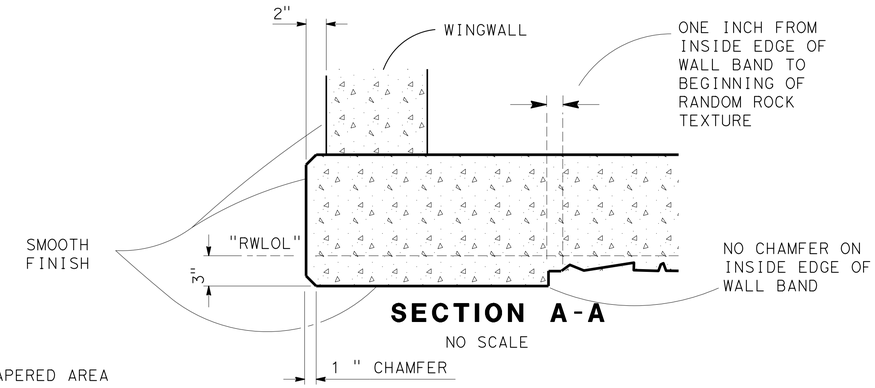

SECTION A-A

NO SCALE

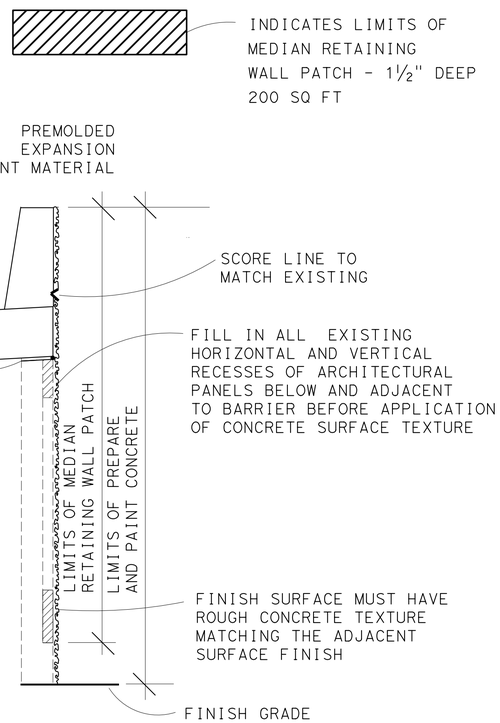

SECTION MEDIAN RETAINING WALL

NO SCALE

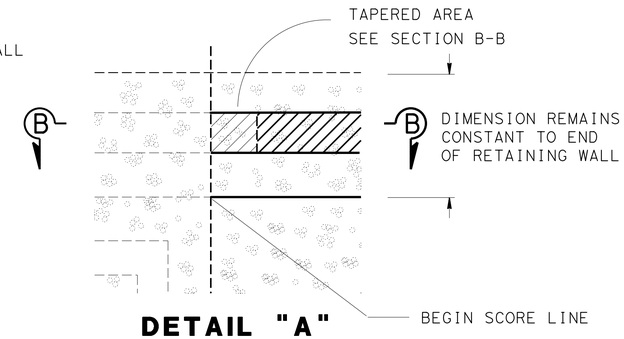

DETAIL "A"

NO SCALE

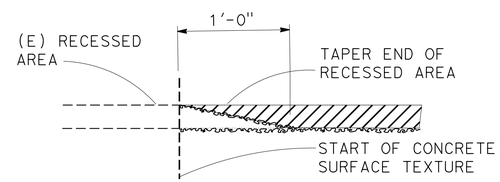

SECTION B-B

NO SCALE

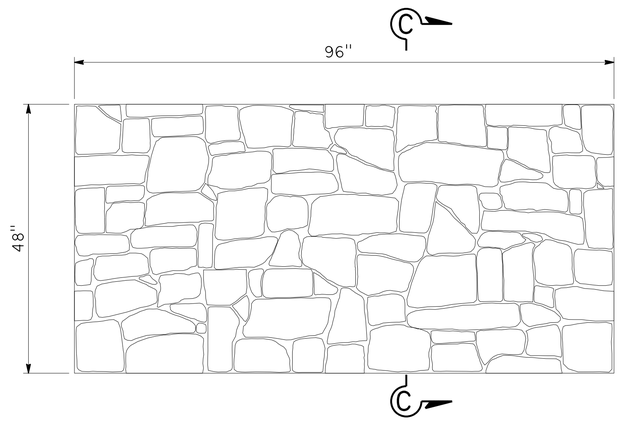

RANDOM ROCK TEXTURE DETAIL

NO SCALE

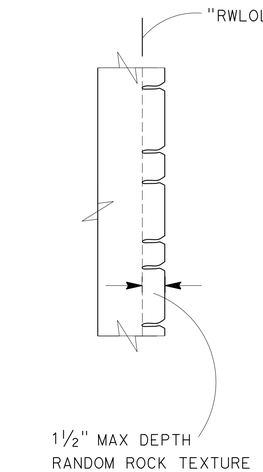

SECTION C-C

NO SCALE

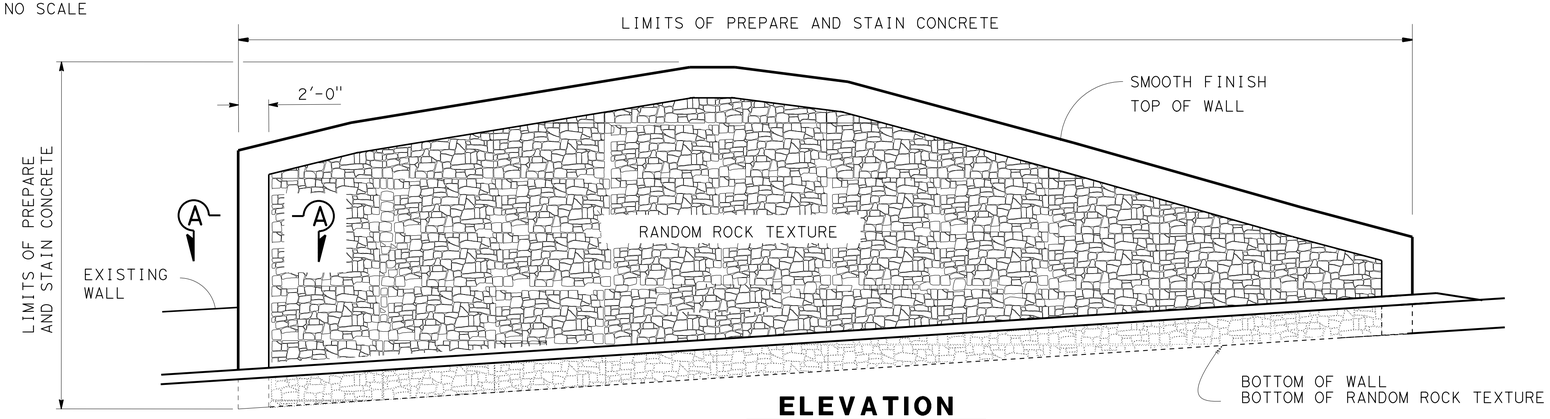

ELEVATION

NO SCALE

DESIGN	BY Dennis Calloway	CHECKED Ben Nguyen	
DETAILS	BY Jeff Thorne	CHECKED Peter Soin	
QUANTITIES	BY Peter Soin	CHECKED Ben Nguyen	

STATE OF CALIFORNIA
DEPARTMENT OF TRANSPORTATION

DIVISION OF ENGINEERING SERVICES
STRUCTURE DESIGN
DESIGN BRANCH 4

BRIDGE NO. 33E0125
POST MILE 10.0

RETAINING WALL AT P.M. 10.0
ARCHITECTURAL TREATMENT

STRUCTURES DESIGN DETAIL SHEET (ENGLISH) (REV. 09-01-10)

ORIGINAL SCALE IN INCHES FOR REDUCED PLANS 0 1 2 3

UNIT: 04
PROJECT NUMBER & PHASE: 0400000317 1 CONTRACT NO.: 04-0G2101

DISREGARD PRINTS BEARING EARLIER REVISION DATES

REVISION DATES 2-14-13 3-26-13 5-28-13

SHEET 11 OF 13

FILE => 0400000317we011.dgn

USERNAME => s131681 DATE PLOTTED => 09-JAN-2015 TIME PLOTTED => 13:48

DIST	COUNTY	ROUTE	POST MILES TOTAL PROJECT	SHEET No	TOTAL SHEETS
04	Ala	13	9.9/10.1	46	47

REGISTERED CIVIL ENGINEER 10-09-14

12-22-14
PLANS APPROVAL DATE

REGISTERED PROFESSIONAL ENGINEER Betty M. Lee No. 44824 Exp. 3-31-16 CIVIL STATE OF CALIFORNIA

The State of California or its officers or agents shall not be responsible for the accuracy or completeness of electronic copies of this plan sheet.

This LOTB sheet was prepared in accordance with the Caltrans Soil & Rock Logging, Classification, & Presentation Manual (2010 Edition).

NOTE: PP=unconfined compressive strength (tsf) as measured by pocket penetrometer.

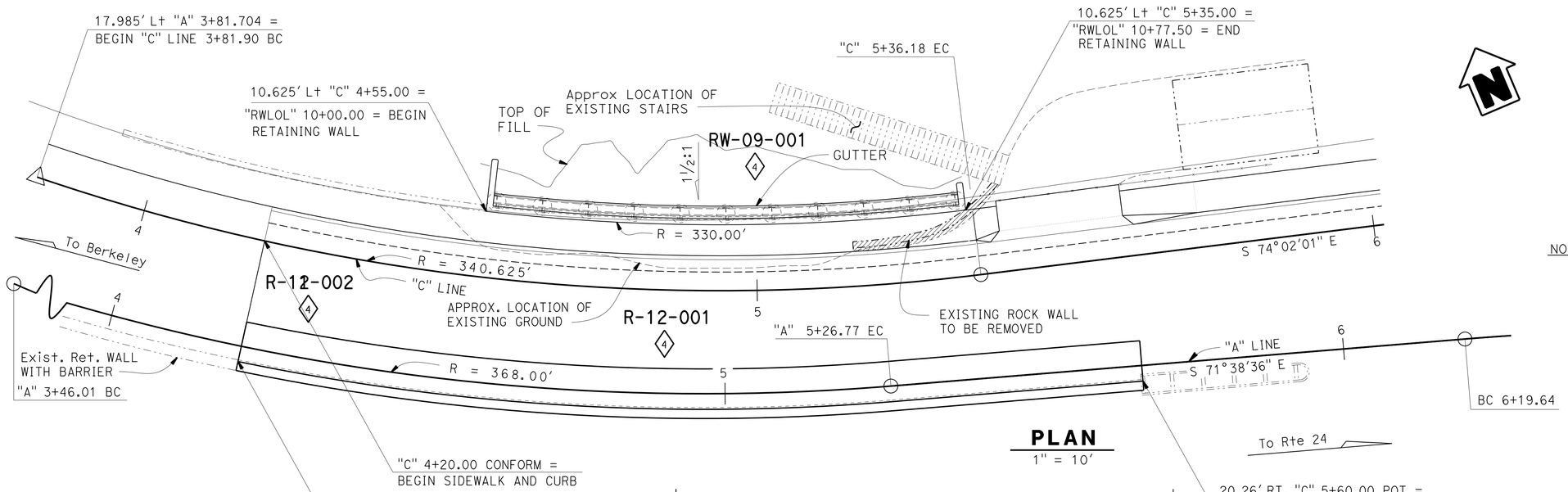

PLAN
1" = 10'

BENCH MARK

Brass Disk
Northing: 2,136,889.560
Easting: 6,061,695.265
Elevation: 560.000'

BM1 8' SW
Northing: 2,137,575.99
Easting: 6,060,886.94
Elevation: 523.0'

BM2 10' SW
Northing: 2,137,607.76
Easting: 6,060,834.78
Elevation: 522.0'

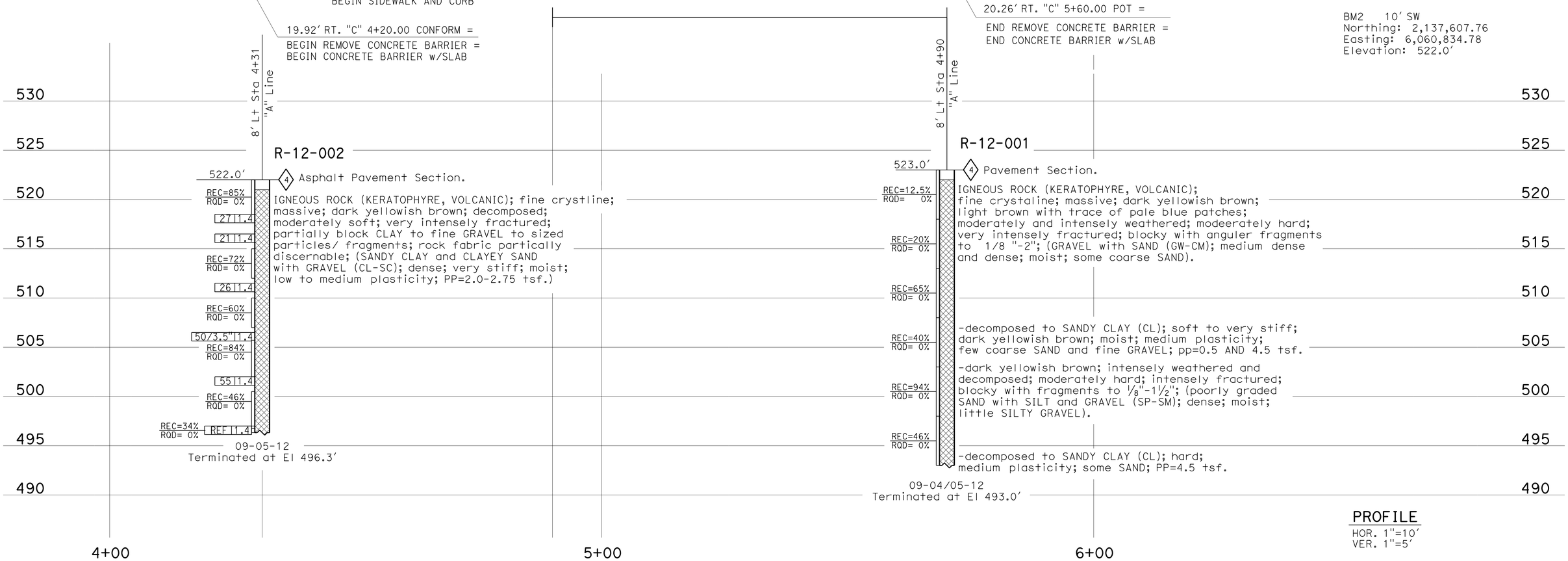

PROFILE
HOR. 1"=10'
VER. 1"=5'

ENGINEERING SERVICES		GEOTECHNICAL SERVICES	STATE OF CALIFORNIA DEPARTMENT OF TRANSPORTATION	DIVISION OF ENGINEERING SERVICES OFFICE OF GEOTECHNICAL DESIGN BRANCH	BRIDGE NO. 33E0125 / POST MILES 10.0	RETAINING WALL AT P.M. 10.0
FUNCTIONAL SUPERVISOR	DRAWN BY: M. Reynolds 12/12	FIELD INVESTIGATION BY: W. Bertucci				LOG OF TEST BORINGS 1 of 2
NAME: M. Momenzadeh	CHECKED BY: B. Lee					

OGS CIVIL LOG OF TEST BORINGS SHEET

ORIGINAL SCALE IN INCHES FOR REDUCED PLANS 0 1 2 3

UNIT: 3660
PROJECT NUMBER & PHASE: 04000003171 CONTRACT NO.: 04-0G2100

DISREGARD PRINTS BEARING EARLIER REVISION DATES

REVISION DATES

SHEET 12 OF 13

FILE => 0400000317we012.dgn

USERNAME => s13681 DATE PLOTTED => 09-JAN-2015 TIME PLOTTED => 13:48

DIST	COUNTY	ROUTE	POST MILES TOTAL PROJECT	SHEET No	TOTAL SHEETS
04	Ala	13	9.9/10.1	47	47

REGISTERED CIVIL ENGINEER 10-09-14

12-22-14
PLANS APPROVAL DATE

REGISTERED PROFESSIONAL ENGINEER Betty M. Lee No. 44824 Exp. 3-31-16 CIVIL STATE OF CALIFORNIA

The State of California or its officers or agents shall not be responsible for the accuracy or completeness of electronic copies of this plan sheet.

This LOTB sheet was prepared in accordance with the Caltrans Soil & Rock Logging, Classification, & Presentation Manual (2010 Edition).

NOTE: PP=unconfined compressive strength (tsf) as measured by pocket penetrometer.

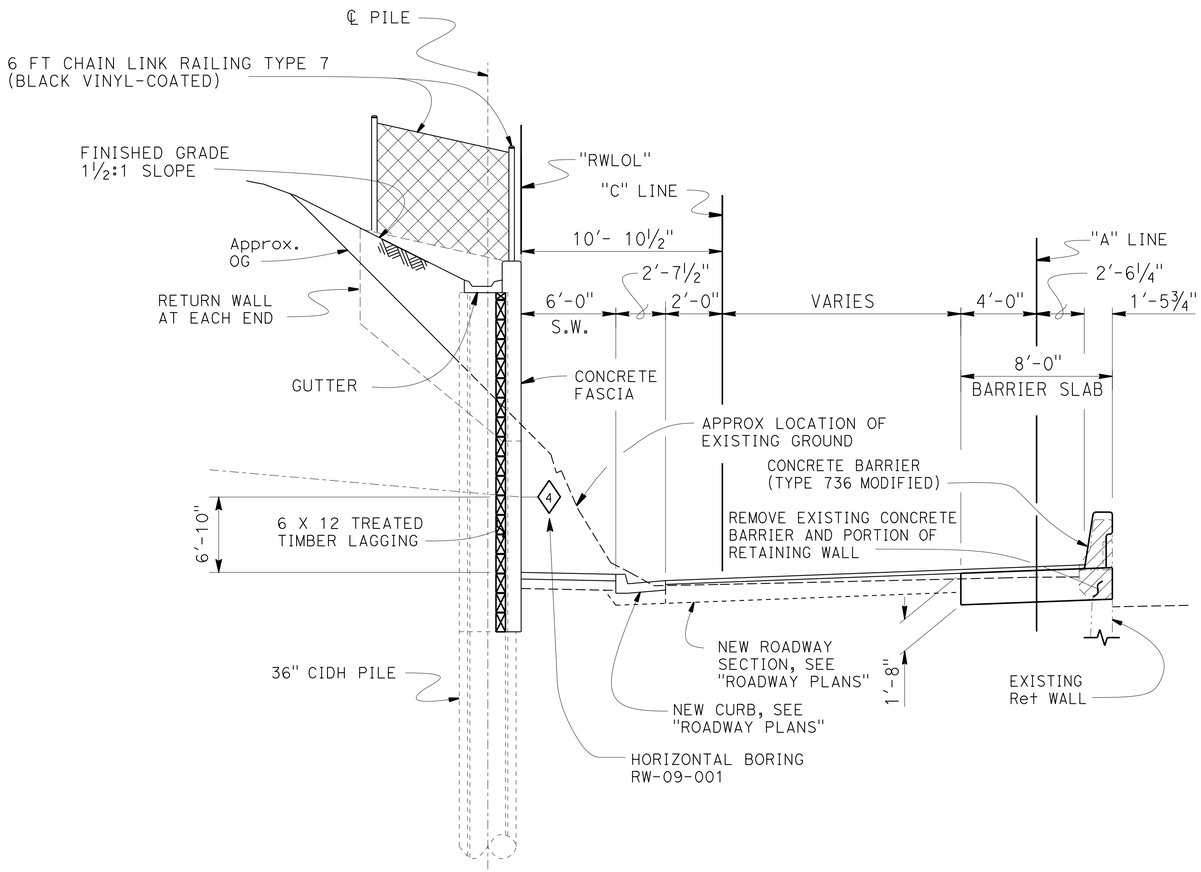

SECTION
Not to Scale

(For Boring Location See Plan, LOTB Sheet 1 of 2)

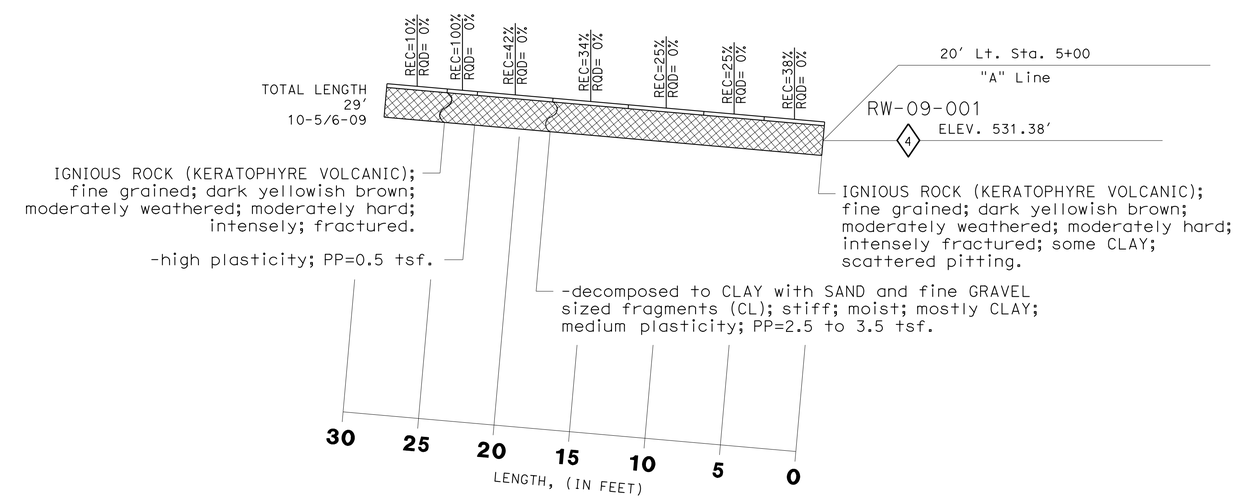

PROFILE
HOR. 1"=5'

ENGINEERING SERVICES		GEOTECHNICAL SERVICES	STATE OF CALIFORNIA DEPARTMENT OF TRANSPORTATION	DIVISION OF ENGINEERING SERVICES OFFICE OF GEOTECHNICAL DESIGN BRANCH	BRIDGE NO. 33E0125 POST MILES 10.0	RETAINING WALL AT P.M. 10.0 LOG OF TEST BORINGS 2 of 2
FUNCTIONAL SUPERVISOR NAME: M. Momenzadeh	DRAWN BY: M. Reynolds 12/12 CHECKED BY: B. Lee	FIELD INVESTIGATION BY: W. Bertucci				

OGS CIVIL LOG OF TEST BORINGS SHEET

ORIGINAL SCALE IN INCHES FOR REDUCED PLANS 0 1 2 3

UNIT: 3660
PROJECT NUMBER & PHASE: 04000003171 CONTRACT NO.: 04-0G2100

DISREGARD PRINTS BEARING EARLIER REVISION DATES

REVISION DATES

SHEET 13 OF 13

FILE => 0400000317we013.dgn

USERNAME => s136681 DATE PLOTTED => 09-JAN-2015 TIME PLOTTED => 13:48