Dist	COUNTY	ROUTE	POST MILES TOTAL PROJECT	SHEET No.	TOTAL SHEETS
04	SF, SCl SM	101, 280 880	Var	1	26

INDEX OF PLANS

SHEET No.	DESCRIPTION
1	TITLE SHEET AND LOCATION MAP
2 - 9	CONSTRUCTION AREA SIGNS
10	PAVEMENT DELINEATION DETAIL AND QUANTITIES
11 - 14	REVISED STANDARD PLANS
	STRUCTURE PLAN
15 - 20	GENERAL PLANS
21	TEMPORARY SUPPORT DETAILS
22 - 23	DRAINAGE DETAILS
24	HINGE RESTRAINER & ACCESS HOLE DETAILS
25	DECK REPAIR DETAILS
26	MISCELLANEOUS DETAILS

THE STANDARD PLANS LIST APPLICABLE TO THIS CONTRACT IS INCLUDED IN THE NOTICE TO BIDDERS AND SPECIAL PROVISIONS BOOK.

STATE OF CALIFORNIA

DEPARTMENT OF TRANSPORTATION

PROJECT PLANS FOR CONSTRUCTION ON

STATE HIGHWAY

IN SAN FRANCISCO, SANTA CLARA AND SAN MATEO COUNTIES AT VARIOUS LOCATIONS

TO BE SUPPLEMENTED BY STANDARD PLANS DATED MAY 2006

LOCATION MAP

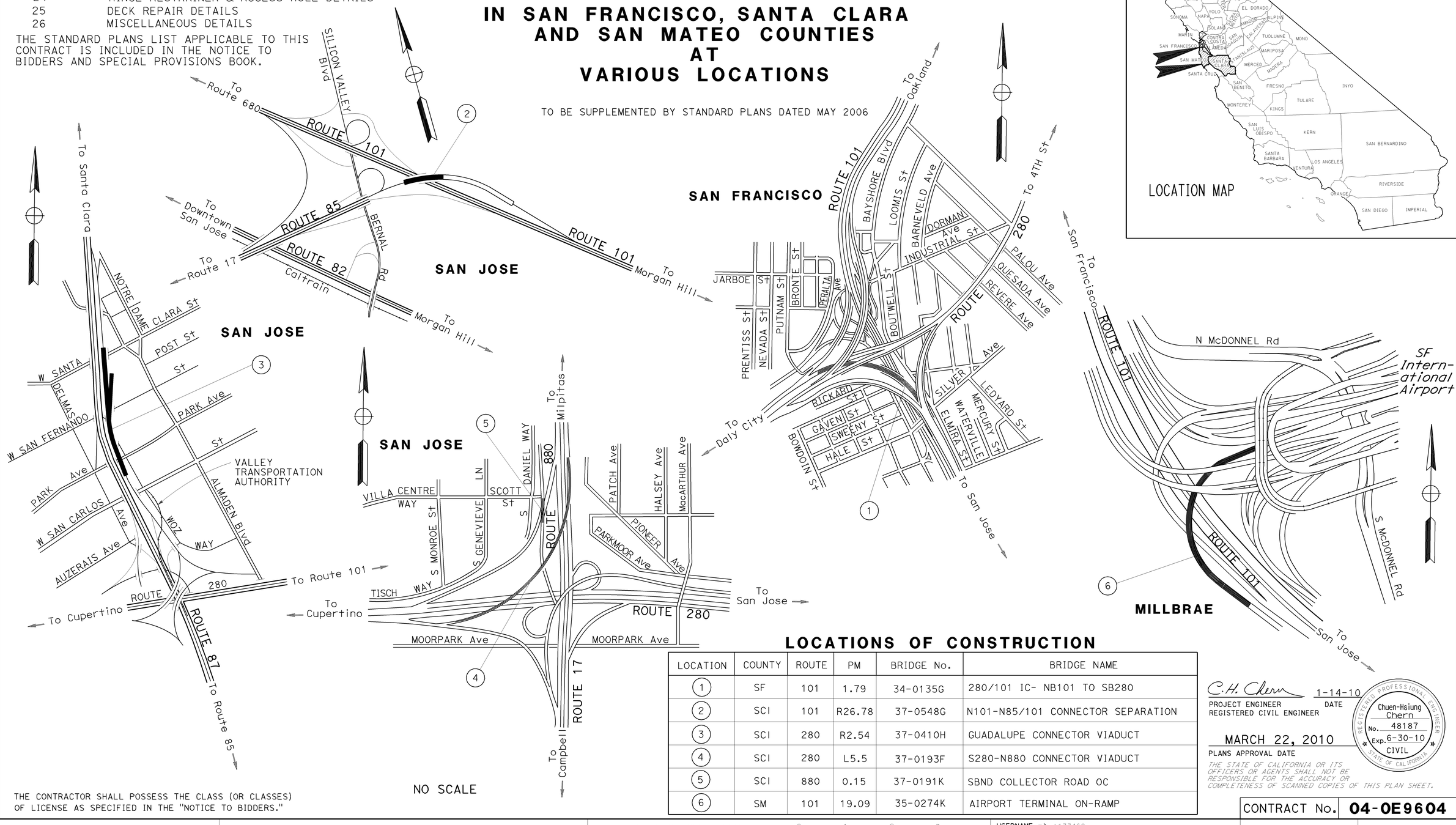

LOCATIONS OF CONSTRUCTION

LOCATION	COUNTY	ROUTE	PM	BRIDGE No.	BRIDGE NAME
1	SF	101	1.79	34-0135G	280/101 IC- NB101 TO SB280
2	SCl	101	R26.78	37-0548G	N101-N85/101 CONNECTOR SEPARATION
3	SCl	280	R2.54	37-0410H	GUADALUPE CONNECTOR VIADUCT
4	SCl	280	L5.5	37-0193F	S280-N880 CONNECTOR VIADUCT
5	SCl	880	0.15	37-0191K	SBND COLLECTOR ROAD OC
6	SM	101	19.09	35-0274K	AIRPORT TERMINAL ON-RAMP

C.H. Chern 1-14-10
PROJECT ENGINEER DATE
REGISTERED CIVIL ENGINEER

MARCH 22, 2010
PLANS APPROVAL DATE

REGISTERED PROFESSIONAL ENGINEER
Chuen-Hsiung Chern
No. 48187
Exp. 6-30-10
CIVIL
STATE OF CALIFORNIA

THE STATE OF CALIFORNIA OR ITS OFFICERS OR AGENTS SHALL NOT BE RESPONSIBLE FOR THE ACCURACY OR COMPLETENESS OF SCANNED COPIES OF THIS PLAN SHEET.

PROJECT MANAGER: RAMSES SARGISS
DESIGN ENGINEER: CHUEN-HSIUNG CHERN

THE CONTRACTOR SHALL POSSESS THE CLASS (OR CLASSES) OF LICENSE AS SPECIFIED IN THE "NOTICE TO BIDDERS."

CONTRACT No.	04-0E9604
CU 04609	EA 0E9601

LAST REVISION: DATE PLOTTED => 22-MAR-2010, TIME PLOTTED => 10:02
03-18-10

Dist	COUNTY	ROUTE	POST MILES TOTAL PROJECT	SHEET No.	TOTAL SHEETS
04	SF,SCI SM	101,280 880	Var	2	26

REGISTERED CIVIL ENGINEER — DATE: 12-23-09

PLANS APPROVAL DATE: 3-22-10

Jerilyn L. Struven — No. 49964 — Exp. 12-31-10 — CIVIL — REGISTERED PROFESSIONAL ENGINEER — STATE OF CALIFORNIA

THE STATE OF CALIFORNIA OR ITS OFFICERS OR AGENTS SHALL NOT BE RESPONSIBLE FOR THE ACCURACY OR COMPLETENESS OF SCANNED COPIES OF THIS PLAN SHEET.

LEGEND:

No.	SIGN INSTALLATION NUMBERS
A	CONSTRUCTION AREA SIGNS
→	DIRECTION OF TRAFFIC
X	RAMP OR CONNECTOR TO BE CLOSED

NOTE:

1. LOCATION OF CONSTRUCTION AREA SIGNS SHOWN ARE APPROXIMATE, EXACT LOCATION TO BE DETERMINED BY THE ENGINEER.

SAN FRANCISCO

LOCATION (1)

SAN JOSE

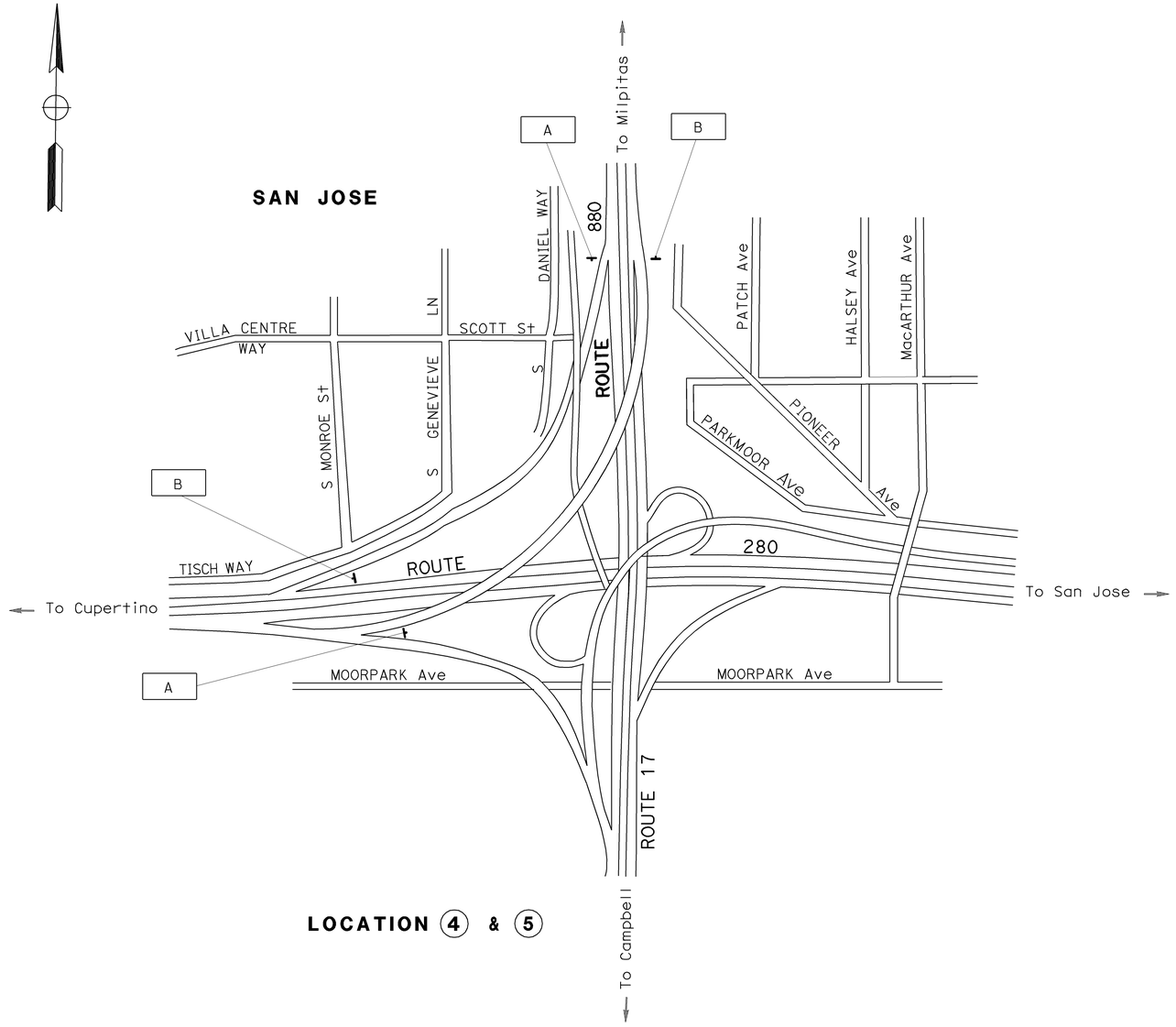

LOCATION (4) & (5)

THIS PLAN ACCURATE FOR CONSTRUCTION AREA SIGN WORK ONLY

CONSTRUCTION AREA SIGNS

NO SCALE

CS-1

CALCULATED-DESIGNED BY	SL	REVISED BY	1/13/10
CHECKED BY		DATE REVISED	
STEPHEN LAU			
JERILYN L. STRUVEN			
FUNCTIONAL SUPERVISOR			
ROLAND AU-YEUNG			

STATE OF CALIFORNIA - DEPARTMENT OF TRANSPORTATION

Caltrans® TRAFFIC

LAST REVISION DATE PLOTTED => 22-MAR-2010
TIME PLOTTED => 10:03

BORDER LAST REVISED 4/11/2008

RELATIVE BORDER SCALE IS IN INCHES 0 1 2 3

USERNAME => s133460
DGN FILE => 40e9601a001.dgn

CU 04609

EA 0E9601

Dist	COUNTY	ROUTE	POST MILES TOTAL PROJECT	SHEET No.	TOTAL SHEETS
04	SF, SCI SM	101, 280 880	Var	3	26

12-23-09
REGISTERED CIVIL ENGINEER DATE

Jerilyn L. Struven
No. 49964
Exp. 12-31-10
CIVIL
REGISTERED PROFESSIONAL ENGINEER
STATE OF CALIFORNIA

3-22-10
PLANS APPROVAL DATE

THE STATE OF CALIFORNIA OR ITS OFFICERS OR AGENTS SHALL NOT BE RESPONSIBLE FOR THE ACCURACY OR COMPLETENESS OF SCANNED COPIES OF THIS PLAN SHEET.

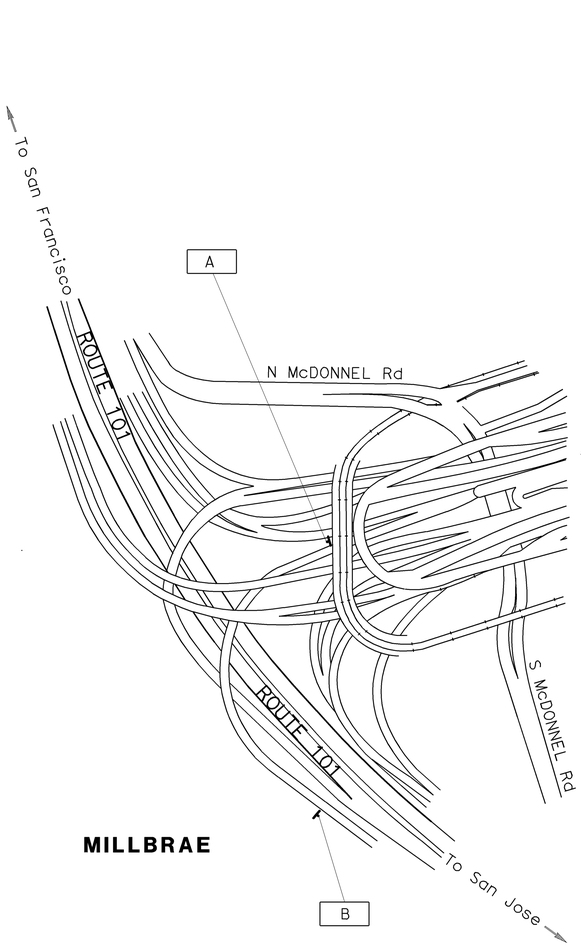

LOCATION (6)

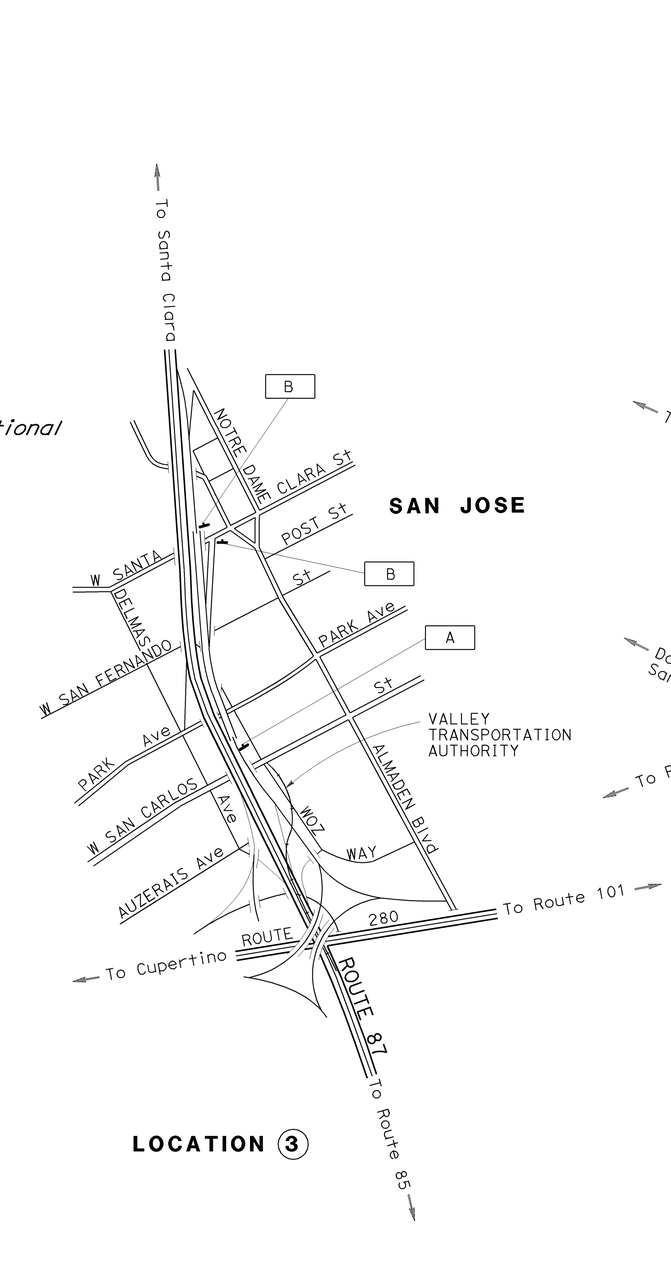

LOCATION (3)

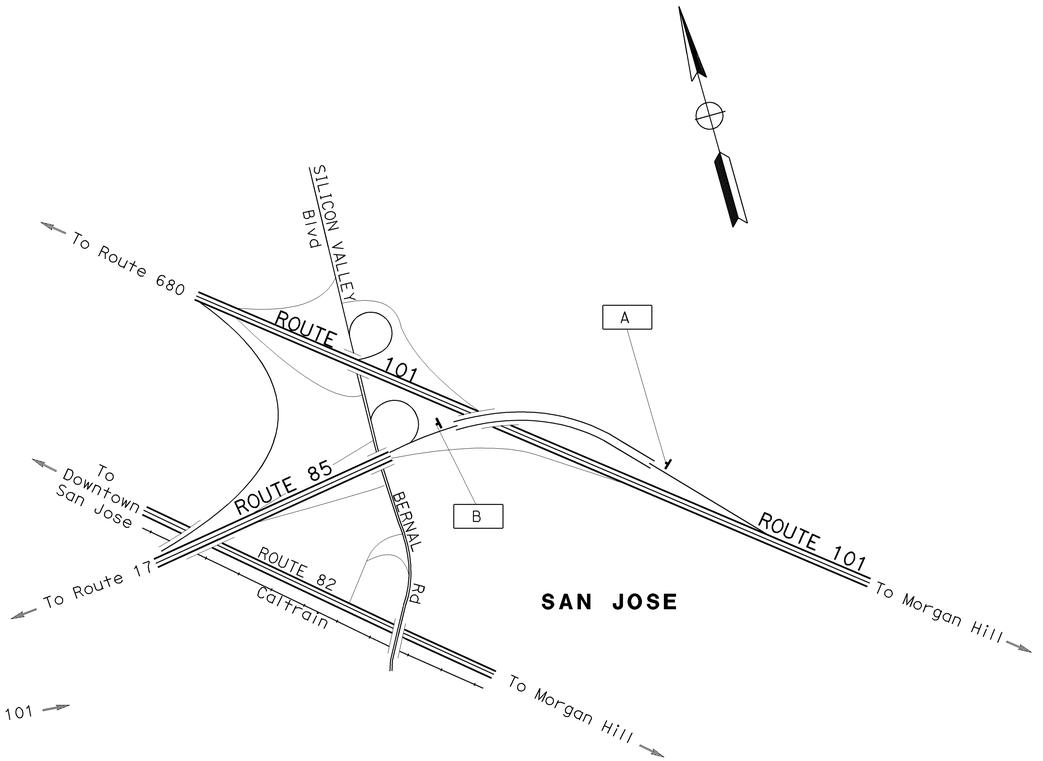

LOCATION (2)

CONSTRUCTION AREA SIGNS

NO SCALE

FOR NOTES, ABBREVIATIONS AND LEGEND, SEE SHEET CS-1

THIS PLAN ACCURATE FOR CONSTRUCTION AREA SIGN WORK ONLY

CS-2

ROY YUAN	JERILYN L. STRUVEN	RY	1/13/10
CALCULATED-DESIGNED BY	CHECKED BY	REVISED BY	DATE REVISED

FUNCTIONAL SUPERVISOR: ROLAND AU-YEUNG

STATE OF CALIFORNIA - DEPARTMENT OF TRANSPORTATION

Caltrans®

TRAFFIC

LAST REVISION 03-18-10
DATE PLOTTED => 22-MAR-2010
TIME PLOTTED => 10:03

BORDER LAST REVISED 4/11/2008

RELATIVE BORDER SCALE IS IN INCHES 0 1 2 3

USERNAME => s133460
DGN FILE => 40e9601a002.dgn

CU 04609

EA 0E9601

Dist	COUNTY	ROUTE	POST MILES TOTAL PROJECT	SHEET No.	TOTAL SHEETS
04	SF,SCI SM	101, 280 880	Var	4	26

12-23-09
REGISTERED CIVIL ENGINEER DATE

3-22-10
PLANS APPROVAL DATE

Jerilyn L. Struven No. 49964 Exp. 12-31-10 CIVIL — REGISTERED PROFESSIONAL ENGINEER — STATE OF CALIFORNIA

THE STATE OF CALIFORNIA OR ITS OFFICERS OR AGENTS SHALL NOT BE RESPONSIBLE FOR THE ACCURACY OR COMPLETENESS OF SCANNED COPIES OF THIS PLAN SHEET.

DETOUR-VIA

NB 101 TO SB 280 CONNECTOR NB ON 280, EXIT ON CESAR CHAVEZ St OFF-RAMP. NB ON PENNSYLVANIA St ON TO PENNSYLVANIA St ON-RAMP. SB ON 280.

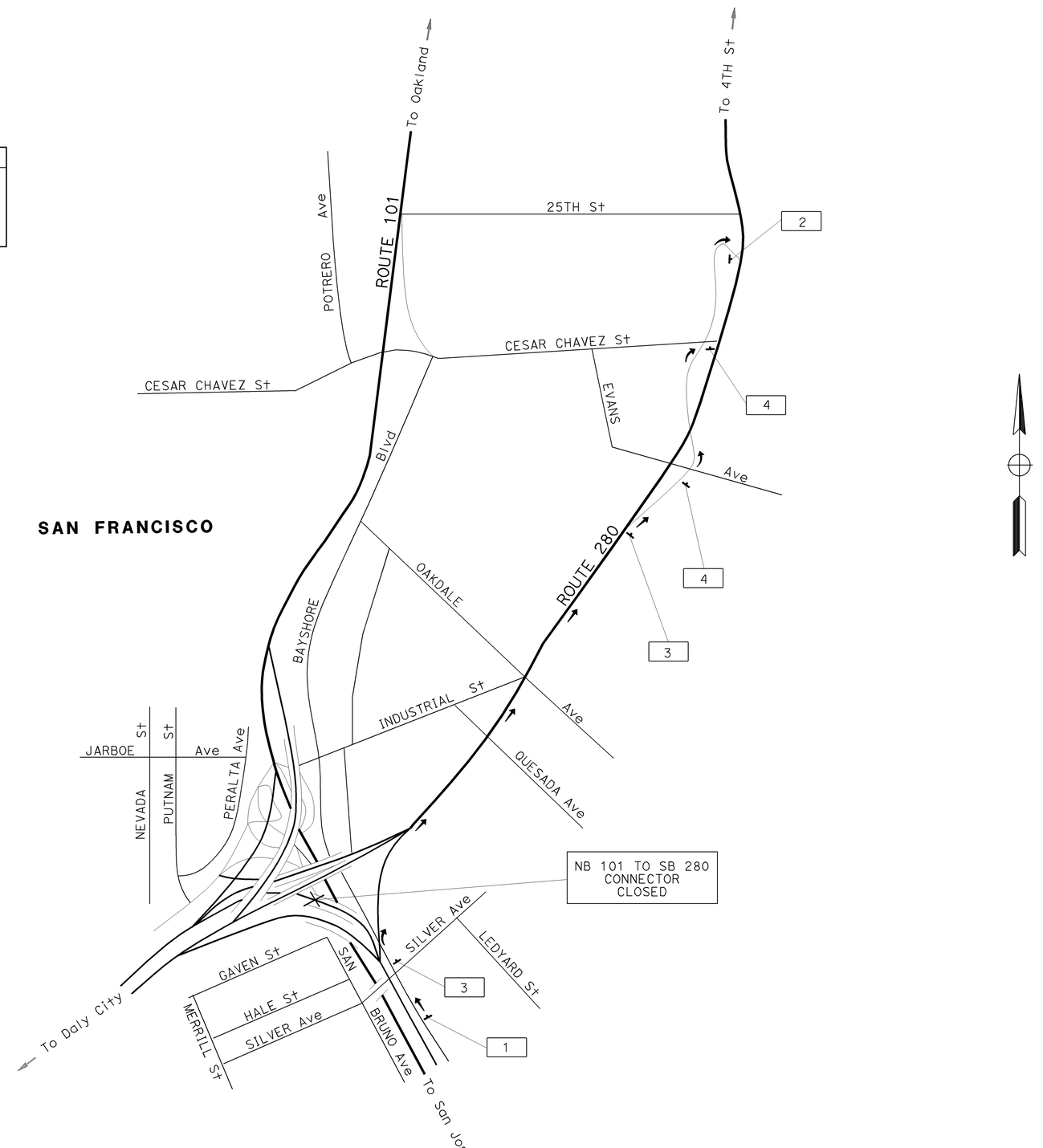

DETOUR PLAN No. 1

FOR NOTES, ABBREVIATIONS AND LEGEND, SEE SHEET CS-1

THIS PLAN ACCURATE FOR CONSTRUCTION AREA SIGN WORK ONLY

CONSTRUCTION AREA SIGNS

NO SCALE

CS-3

BY	REVISED BY	CALCULATED-DESIGNED BY	STEPHEN YAU
1/13/10	DATE REVISED	CHECKED BY	JERILYN L. STRUVEN

STATE OF CALIFORNIA - DEPARTMENT OF TRANSPORTATION
Caltrans®
TRAFFIC
FUNCTIONAL SUPERVISOR
ROLAND AU-YEUNG

LAST REVISION | DATE PLOTTED => 22-MAR-2010 | TIME PLOTTED => 10:04
03-18-10

BORDER LAST REVISED 4/11/2008

RELATIVE BORDER SCALE IS IN INCHES 0 1 2 3

USERNAME => s133460
DGN FILE => 40e9601a003.dgn

CU 04609

EA 0E9601

Dist	COUNTY	ROUTE	POST MILES TOTAL PROJECT	SHEET No.	TOTAL SHEETS
04	SF,SCI SM	101, 280 880	Var	5	26

12-23-09
REGISTERED CIVIL ENGINEER DATE

Jerilyn L. Struven No. 49964 Exp. 12-31-10 CIVIL — REGISTERED PROFESSIONAL ENGINEER — STATE OF CALIFORNIA

3-22-10
PLANS APPROVAL DATE

THE STATE OF CALIFORNIA OR ITS OFFICERS OR AGENTS SHALL NOT BE RESPONSIBLE FOR THE ACCURACY OR COMPLETENESS OF SCANNED COPIES OF THIS PLAN SHEET.

DETOUR-VIA

1. WB STEVENS CREEK Blvd; SB N WINCHESTER Blvd; ON-RAMP TO NB 280; OFF-RAMP TO SB SARATOGA Ave; ON-RAMP TO SB 280; CONNECTOR OFF TO SB 17
2. EB STEVENS CREEK Blvd; SB BASCOM Ave; EB MOORPARK Ave; TO SB 280 ON-RAMP; NB LEIGH Ave; WB PARKMOOR Ave; ON-RAMP TO NB 280; CONNECTOR OFF TO SB 17

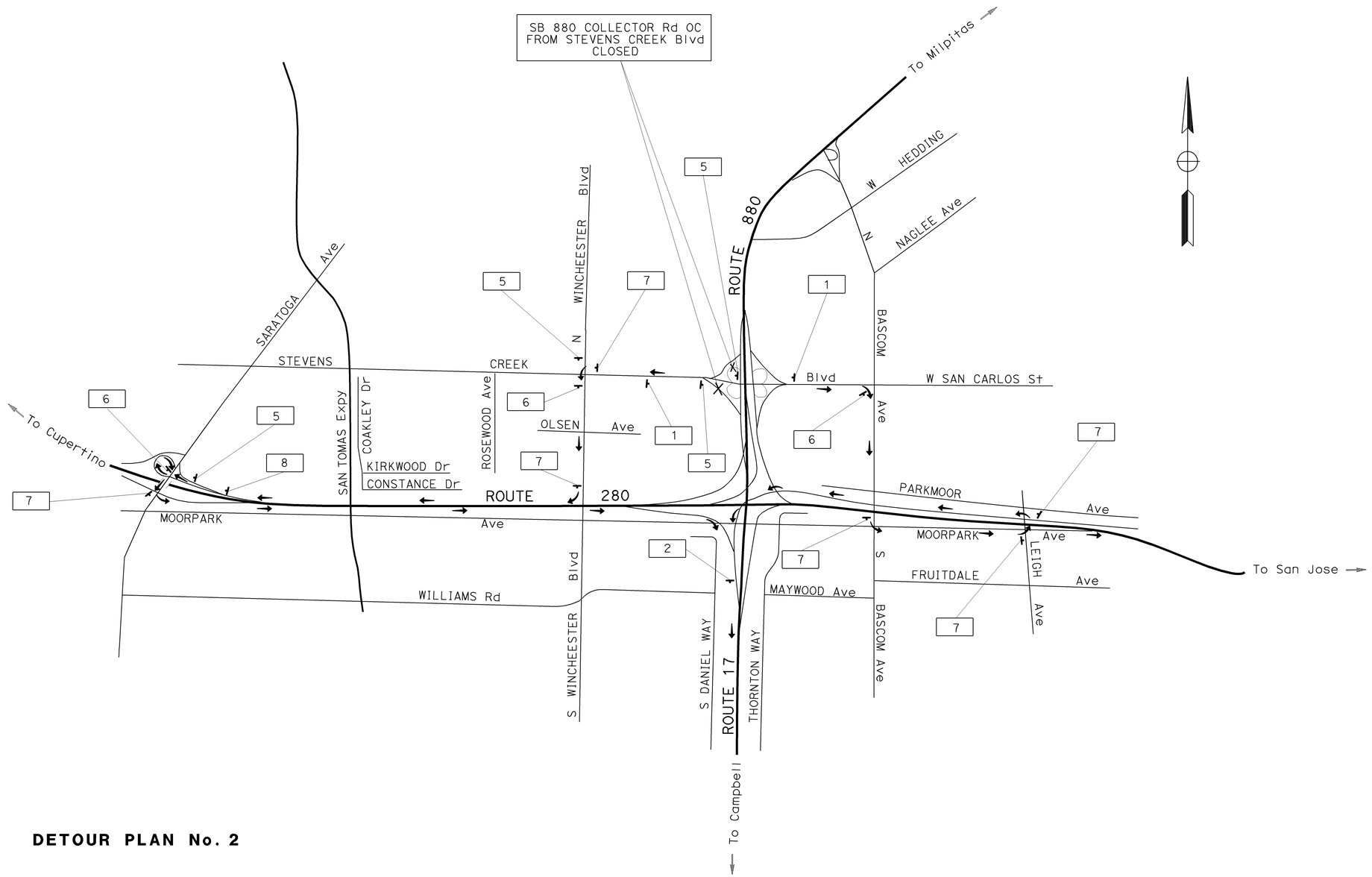

DETOUR PLAN No. 2

CONSTRUCTION AREA SIGNS

NO SCALE

CS-4

FOR NOTES, ABBREVIATIONS AND LEGEND, SEE SHEET CS-1

THIS PLAN ACCURATE FOR CONSTRUCTION AREA SIGN WORK ONLY

STATE OF CALIFORNIA - DEPARTMENT OF TRANSPORTATION
Caltrans® TRAFFIC
FUNCTIONAL SUPERVISOR: ROLAND AU-YEUNG
CALCULATED-DESIGNED BY: STEPHEN LAU
CHECKED BY: JERILYN L. STRUVEN
REVISED BY: SL
DATE REVISED: 1/13/10

LAST REVISION DATE PLOTTED => 22-MAR-2010
TIME PLOTTED => 10:05

BORDER LAST REVISED 4/11/2008
RELATIVE BORDER SCALE IS IN INCHES 0 1 2 3
USERNAME => s133460
DGN FILE => 40e9601a004.dgn
CU 04609
EA 0E9601

Dist	COUNTY	ROUTE	POST MILES TOTAL PROJECT	SHEET No.	TOTAL SHEETS
04	SF,SCI SM	101,280 880	Var	6	26

Jerilyn L. Struven 12-23-09
REGISTERED CIVIL ENGINEER DATE

3-22-10
PLANS APPROVAL DATE

REGISTERED PROFESSIONAL ENGINEER — Jerilyn L. Struven No. 49964 Exp. 12-31-10 CIVIL — STATE OF CALIFORNIA

THE STATE OF CALIFORNIA OR ITS OFFICERS OR AGENTS SHALL NOT BE RESPONSIBLE FOR THE ACCURACY OR COMPLETENESS OF SCANNED COPIES OF THIS PLAN SHEET.

DESIGNED BY	CHECKED BY	REVISED BY	DATE REVISED
STEPHEN LAU	JERILYN L. STRUVEN	SL	1/13/10

FUNCTIONAL SUPERVISOR: ROLAND AU-YEUNG

STATE OF CALIFORNIA - DEPARTMENT OF TRANSPORTATION

Caltrans

DETOUR-VIA

SB ROUTE 280 CONNECTOR TO SB ROUTE 17; SB ROUTE 17; E HAMILTON Ave OFF-RAMP; EB HAMILTON Ave TO LOOP ON-RAMP TO NB ROUTE 17; NB ROUTE 17 TO NB ROUTE 880

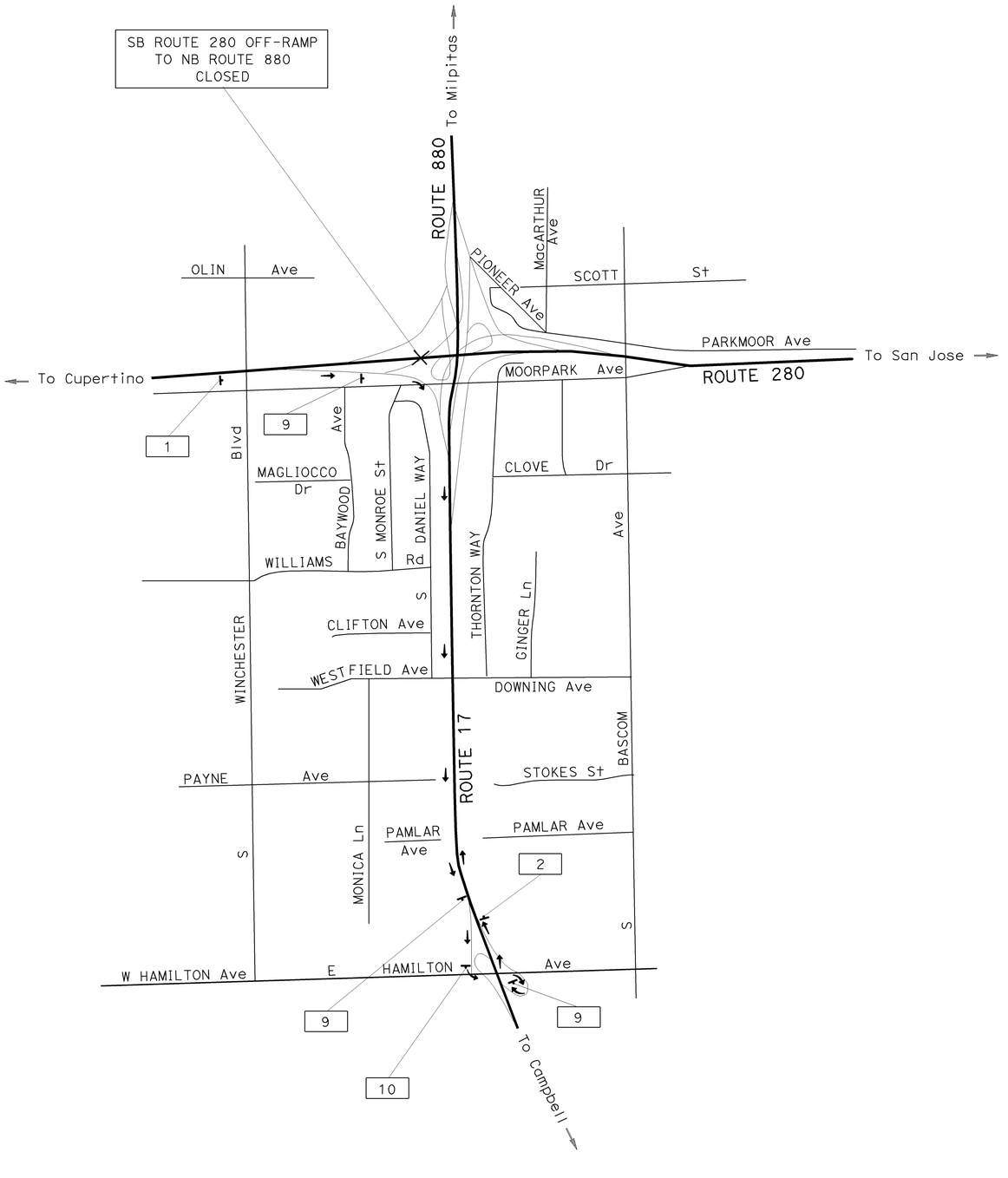

DETOUR PLAN No. 3

CONSTRUCTION AREA SIGNS

NO SCALE

FOR NOTES, ABBREVIATIONS AND LEGEND, SEE SHEET CS-1

THIS PLAN ACCURATE FOR CONSTRUCTION AREA SIGN WORK ONLY

CS-5

LAST REVISION: DATE PLOTTED => 22-MAR-2010 TIME PLOTTED => 10:07 03-18-10

BORDER LAST REVISED 4/11/2008

RELATIVE BORDER SCALE IS IN INCHES 0 1 2 3

USERNAME => s133460
DGN FILE => 40e9601a005.dgn

CU 04609

EA 0E9601

Dist	COUNTY	ROUTE	POST MILES TOTAL PROJECT	SHEET No.	TOTAL SHEETS
04	SF, SCl SM	101, 280 880	Var	7	26

12-23-09
REGISTERED CIVIL ENGINEER DATE

3-22-10
PLANS APPROVAL DATE

Jerilyn L. Struven No. 49964 Exp. 12-31-10 CIVIL — REGISTERED PROFESSIONAL ENGINEER — STATE OF CALIFORNIA

THE STATE OF CALIFORNIA OR ITS OFFICERS OR AGENTS SHALL NOT BE RESPONSIBLE FOR THE ACCURACY OR COMPLETENESS OF SCANNED COPIES OF THIS PLAN SHEET.

DETOUR-VIA

NB ROUTE 101; OFF-RAMP TO BERNAL Rd; SB BERNAL Rd TO ON-RAMP TO NB ROUTE 85

DETOUR-VIA

FOR NB ROUTE 280 CONNECTOR NB ROUTE 280 TO BIRD Ave OFF-RAMP; NB BIRD Ave; EB W SAN CARLOS St; NB WOZ WAY TO NB ROUTE 87 ON-RAMP.

FOR SB ROUTE 280 CONNECTOR SB ROUTE 280 TO SB ROUTE 87; SB ROUTE 87 TO LELONG St OFF-RAMP; U TURN TO NB ROUTE 87 ON-RAMP.

FOR CONNECTOR OFF-RAMP TO SANTA CLARA St NB ROUTE 87 TO NEXT OFF-RAMP (W TAYLOR St).

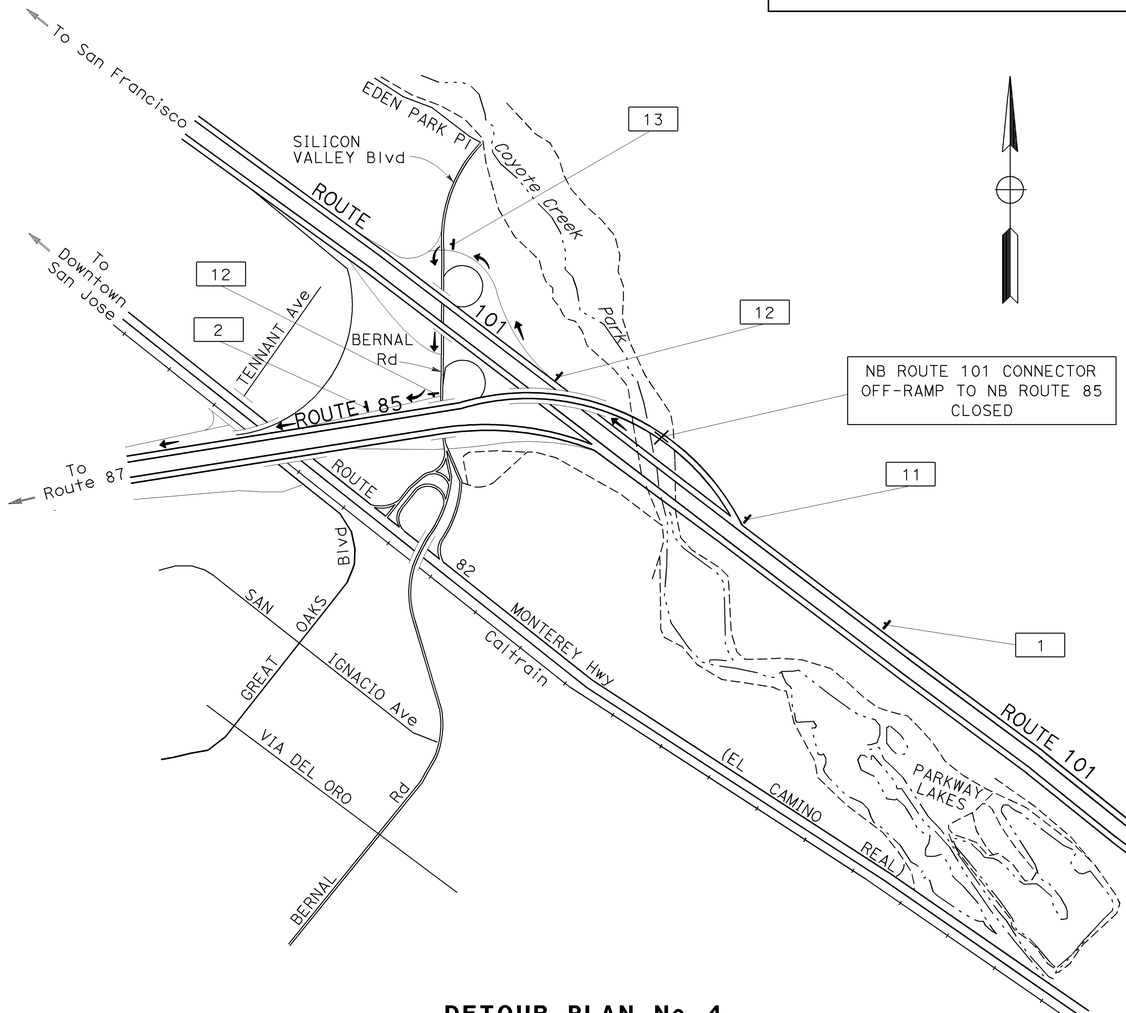

NB ROUTE 101 CONNECTOR OFF-RAMP TO NB ROUTE 85 CLOSED

DETOUR PLAN No. 4

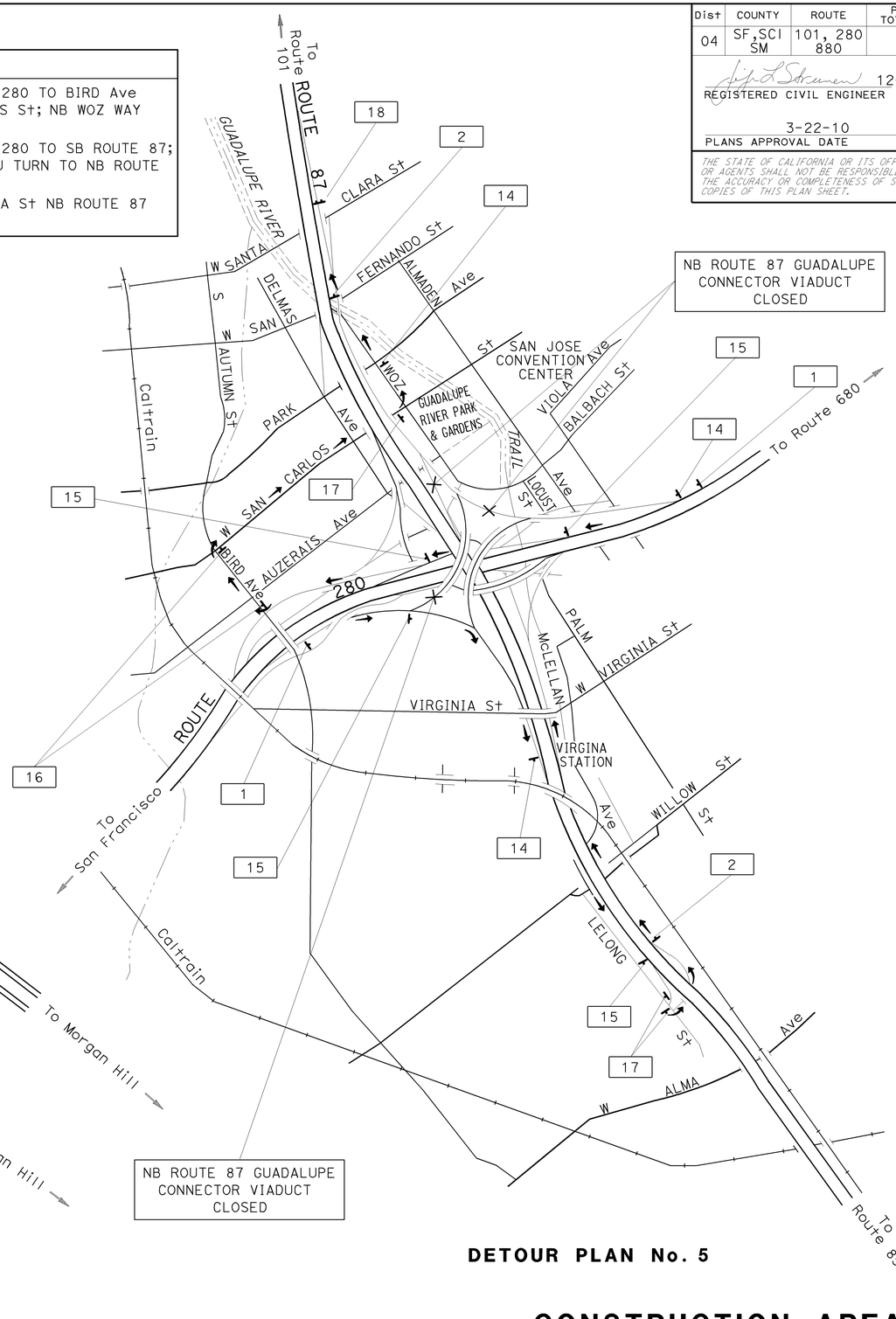

NB ROUTE 87 GUADALUPE CONNECTOR VIADUCT CLOSED

NB ROUTE 87 GUADALUPE CONNECTOR VIADUCT CLOSED

DETOUR PLAN No. 5

CONSTRUCTION AREA SIGNS

NO SCALE

CS-6

FOR NOTES, ABBREVIATIONS AND LEGEND, SEE SHEET CS-1

THIS PLAN ACCURATE FOR CONSTRUCTION AREA SIGN WORK ONLY

STATE OF CALIFORNIA - DEPARTMENT OF TRANSPORTATION
Caltrans®
TRAFFIC

CALCULATED-DESIGNED BY	CHECKED BY	REVISED BY	DATE REVISED
ROY YUAN	JERILYN L. STRUVEN	RY	1/13/10

FUNCTIONAL SUPERVISOR: ROLAND AU-YEUNG

LAST REVISION: DATE PLOTTED => 22-MAR-2010; TIME PLOTTED => 10:07; 03-18-10

BORDER LAST REVISED 4/11/2008

RELATIVE BORDER SCALE IS IN INCHES 0 1 2 3

USERNAME => s133460
DGN FILE => 40e9601a006.dgn

CU 04609

EA 0E9601

Dist	COUNTY	ROUTE	POST MILES TOTAL PROJECT	SHEET No.	TOTAL SHEETS
04	SF,SCI SM	101, 280 880	Var	8	26

12-23-09
REGISTERED CIVIL ENGINEER DATE

3-22-10
PLANS APPROVAL DATE

Jerilyn L. Struven No. 49964 Exp. 12-31-10 CIVIL — REGISTERED PROFESSIONAL ENGINEER — STATE OF CALIFORNIA

THE STATE OF CALIFORNIA OR ITS OFFICERS OR AGENTS SHALL NOT BE RESPONSIBLE FOR THE ACCURACY OR COMPLETENESS OF SCANNED COPIES OF THIS PLAN SHEET.

DETOUR-VIA

ON-RAMP TO NB ROUTE 101; NB ROUTE 101; OFF-RAMP TO SAN BRUNO Ave; WB SAN BRUNO Ave TO ON-RAMP TO SB ROUTE 101

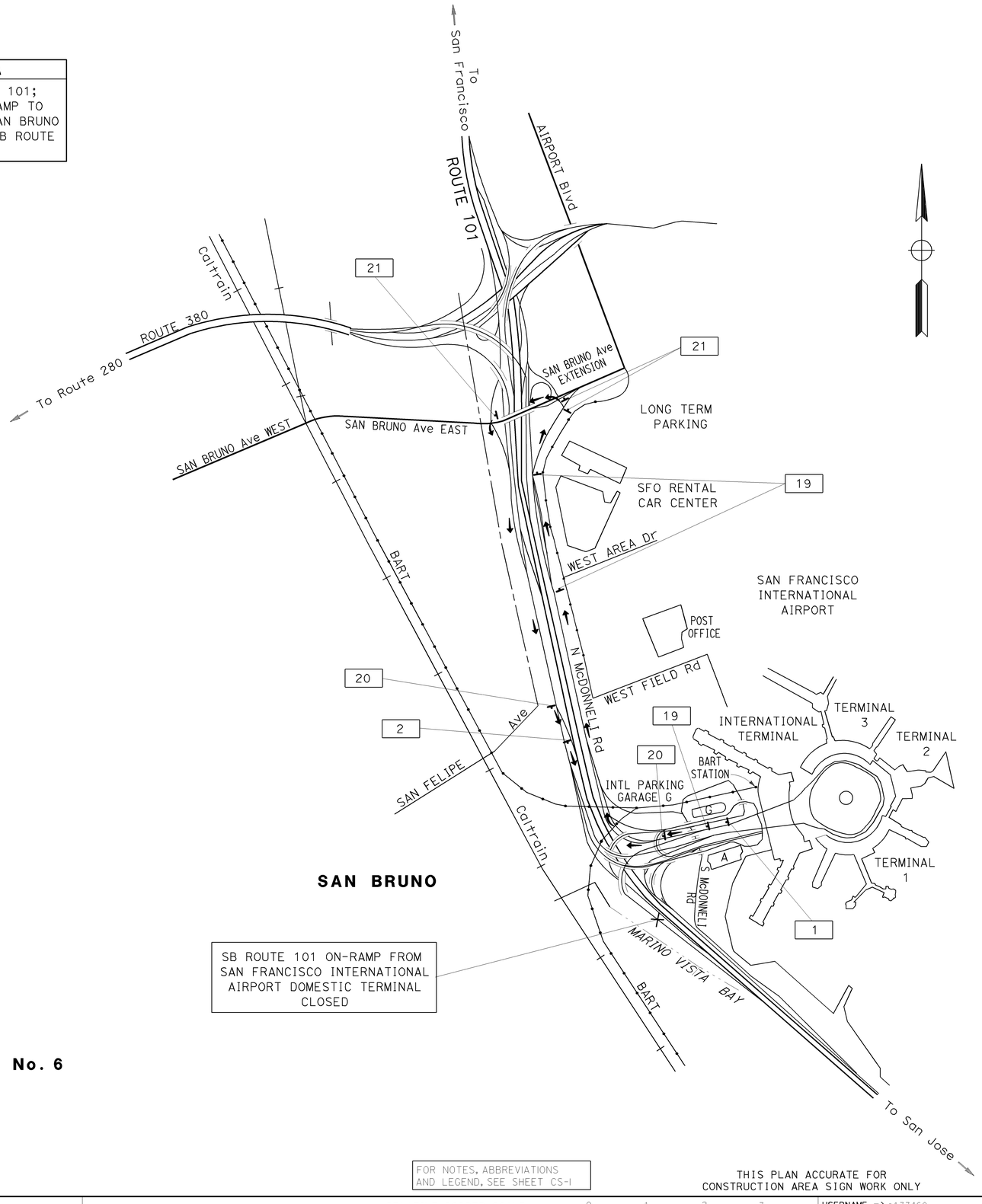

DETOUR PLAN No. 6

FOR NOTES, ABBREVIATIONS AND LEGEND, SEE SHEET CS-1

THIS PLAN ACCURATE FOR CONSTRUCTION AREA SIGN WORK ONLY

CONSTRUCTION AREA SIGNS

NO SCALE

CS-7

CALCULATED-DESIGNED BY	ROY YUAN	
CHECKED BY	JERILYN L. STRUVEN	1/13/10
FUNCTIONAL SUPERVISOR	ROLAND AU-YEUNG	

STATE OF CALIFORNIA - DEPARTMENT OF TRANSPORTATION
TRAFFIC
Caltrans

LAST REVISION DATE PLOTTED => 22-MAR-2010
TIME PLOTTED => 10:08
03-18-10

BORDER LAST REVISED 4/11/2008

RELATIVE BORDER SCALE IS IN INCHES 0 1 2 3

USERNAME => s133460
DGN FILE => 40e9601a007.dgn

CU 04609

EA 0E9601

Dist	COUNTY	ROUTE	POST MILES TOTAL PROJECT	SHEET No.	TOTAL SHEETS
04	SF,SCI SM	101, 280 880	Var	9	26

12-23-09
REGISTERED CIVIL ENGINEER DATE

Jerilyn L. Struven No. 49964 Exp. 12-31-10 CIVIL — REGISTERED PROFESSIONAL ENGINEER — STATE OF CALIFORNIA

3-22-10
PLANS APPROVAL DATE

THE STATE OF CALIFORNIA OR ITS OFFICERS OR AGENTS SHALL NOT BE RESPONSIBLE FOR THE ACCURACY OR COMPLETENESS OF SCANNED COPIES OF THIS PLAN SHEET.

84" x 48"

DETOUR
Santa Clara St
Use
Taylor St Exit

6" CAPS
6" & 4½"
6" CAPS
6" & 4½"
BLACK / ORANGE

SPECIAL 1

STATIONARY MOUNTED CONSTRUCTION AREA SIGNS

SIGN No.	SIGN CODE	SIGN MESSAGE	PANEL SIZE (INCHES)	NUMBER OF POSTS AND SIZES (EA - INCHES)	QUANTITY EA
A	W20-1	ROAD WORK AHEAD	48 x 48	1 - 4 x 6	6
B	G20-2	END ROAD WORK	48 x 24	1 - 4 x 4	7
1	W20-2	DETOUR AHEAD	48 x 48	1 - 4 x 6	8
2	M4-8a	END DETOUR	24 x 18	1 - 4 x 4	7
3	M4-8	DETOUR	21 x 9	1 - 4 x 6	2
	M3-3	SOUTH			
	G27-2(280)	ROUTE SHIELD	30 x 25		
	M6-2(↗)	DETOUR (DIAGONAL ARROW)	21 x 15		
4	SC-3(↑)	DETOUR (STRAIGHT AHEAD ARROW)	48 x 18	1 - 4 x 6	2
	M3-3	SOUTH	21 x 9		
	G27-2(280)	ROUTE SHIELD	30 x 25		
5	SC-3(↑)	DETOUR (STRAIGHT AHEAD ARROW)	21 x 15	1 - 4 x 6	4
	M3-3	SOUTH	21 x 9		
	G28-2(17)	ROUTE SHIELD	24 x 25		
6	M4-10(RT)	DETOUR (RIGHT)	48 x 18	1 - 4 x 6	3
	M3-3	SOUTH	21 x 9		
	G28-2(17)	ROUTE SHIELD	24 x 25		
7	M4-10(LT)	DETOUR (LEFT)	48 x 18	1 - 4 x 6	6
	M3-3	SOUTH	21 x 9		
	G28-2(17)	ROUTE SHIELD	24 x 25		
8	M4-8	DETOUR	21 x 9	1 - 4 x 6	1
	M3-3	SOUTH			
	G28-2(17)	ROUTE SHIELD	24 x 25		
	M6-2(↗)	DETOUR (DIAGONAL ARROW)	21 x 15		
9	M4-8	DETOUR	21 x 9	1 - 4 x 6	3
	M3-1	NORTH			
	G27-2(280)	ROUTE SHIELD	30 x 25		
	M6-2(↗)	DETOUR (DIAGONAL ARROW)	21 x 15		
10	M4-10(L†)	DETOUR (LEFT)	48 x 18	1 - 4 x 6	1
	M3-1	NORTH	21 x 9		
	G27-2(280)	ROUTE SHIELD	30 x 25		

STATIONARY MOUNTED CONSTRUCTION AREA SIGNS

SIGN No.	SIGN CODE	SIGN MESSAGE	PANEL SIZE (INCHES)	NUMBER OF POSTS AND SIZES (EA - INCHES)	QUANTITY EA
11	SC-3(↑)(CA)	DETOUR(STRAIGHT AHEAD ARROW)	48 x 18	1 - 4 x 6	1
	M3-1	NORTH	21 x 9		
	G28-2(85)(CA)	ROUTE SHIELD	24 x 25		
12	M4-8	DETOUR	21 x 9	1 - 4 x 6	2
	M3-1	NORTH	21 x 9		
	G28-2(85)(CA)	ROUTE SHIELD	24 x 25		
	M6-2(↗)	DETOUR (DIAGONAL ARROW)	21 x 15		
13	M4-10(L†)	DETOUR (LEFT)	48 x 18	1 - 4 x 6	1
	M3-1	NORTH	21 x 9		
	G28-2(85)(CA)	ROUTE SHIELD	24 x 25		
14	SC-3(↑)(CA)	DETOUR (STRAIGHT AHEAD ARROW)	48 x 18	1 - 4 x 6	3
	M3-1	NORTH	21 x 9		
	G28-2(87)(CA)	ROUTE SHIELD	24 x 25		
15	M4-8	DETOUR	21 x 9	1 - 4 x 6	4
	M3-1	NORTH	21 x 9		
	G28-2(87)(CA)	ROUTE SHIELD	24 x 25		
	M6-2(↗)	DETOUR (DIAGONAL ARROW)	21 x 15		
16	M4-10(R†)	DETOUR (RIGHT)	48 x 18	1 - 4 x 6	2
	M3-1	NORTH	21 x 9		
	G28-2(87)(CA)	ROUTE SHIELD	24 x 25		
17	M4-10(L†)	DETOUR (LEFT)	48 x 18	1 - 4 x 6	3
	M3-1	NORTH	21 x 9		
	G28-2(87)(CA)	ROUTE SHIELD	24 x 25		
18	SPECIAL	SEE SPECIAL 1	84 x 48	2 - 4 x 6	1
19	M4-8	DETOUR	21 x 9	1 - 4 x 6	3
	M3-3	SOUTH	21 x 9		
	G26-2(101)(CA)	ROUTE SHIELD	28 x 24		
	M6-2(↗)	DETOUR (DIAGONAL ARROW)	21 x 15		
20	M4-8	DETOUR	21 x 9	1 - 4 x 6	2
	M3-3	SOUTH	21 x 9		
	G26-2(101)(CA)	ROUTE SHIELD	28 x 24		
	M6-2(↖)	DETOUR (DIAGONAL ARROW)	21 x 15		
21	M4-10(L†)	DETOUR (LEFT)	48 x 18	1 - 4 x 6	3
	M3-3	SOUTH	21 x 9		
	G26-2(101)(CA)	ROUTE SHIELD	28 x 24		

FOR NOTES, ABBREVIATIONS AND LEGEND, SEE SHEET CS-1

THIS PLAN ACCURATE FOR CONSTRUCTION AREA SIGN WORK ONLY

CONSTRUCTION AREA SIGNS

NO SCALE

CS-8

REVISED BY	DATE REVISED
RY	1/13/10

CALCULATED-DESIGNED BY: ROY YUAN
CHECKED BY: JERILYN L. STRUVEN
FUNCTIONAL SUPERVISOR: ROLAND AU-YEUNG

STATE OF CALIFORNIA - DEPARTMENT OF TRANSPORTATION
Caltrans®
TRAFFIC

LAST REVISION DATE PLOTTED => 22-MAR-2010
03-18-10 TIME PLOTTED => 10:08

Dist	COUNTY	ROUTE	POST MILES TOTAL PROJECT	SHEET No.	TOTAL SHEETS
04	SF,SCI SM	101, 280 880	Var	10	26

REGISTERED CIVIL ENGINEER 12-16-09 DATE

3-22-10
PLANS APPROVAL DATE

REGISTERED PROFESSIONAL ENGINEER Mary Thao No. 70386 Exp. 9-30-10 CIVIL STATE OF CALIFORNIA

THE STATE OF CALIFORNIA OR ITS OFFICERS OR AGENTS SHALL NOT BE RESPONSIBLE FOR THE ACCURACY OR COMPLETENESS OF SCANNED COPIES OF THIS PLAN SHEET.

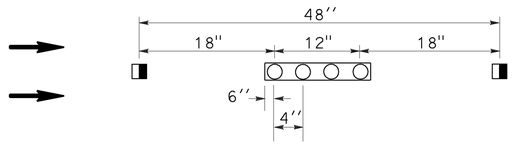

DETAIL 13M

PAVEMENT DELINEATION DETAIL

NO SCALE

LEGEND:

- TYPE A WHITE NON-REFLECTIVE MARKER
- TYPE G ONE-WAY CLEAR RETROREFLECTIVE MARKER
- 4'' WHITE
- DIRECTION OF TRAVEL

NOTE:

INSTALL 4'' WHITE LINE AFTER INSTALLING PAVEMENT MARKERS

PAVEMENT DELINEATION QUANTITIES

LOCATION	BRIDGE NAME	BRIDGE No.	DETAIL No.	THERMOPLASTIC TRAFFIC STRIPE				PAVEMENT MARKER				REMOVE		
				4'' WHITE	4'' YELLOW	4'' WHITE (BROKEN 35-13)	8'' WHITE (BROKEN 12-3)	NON-REFLECTIVE TYPE A	RETROREFLECTIVE TYPE C	RETROREFLECTIVE TYPE G	RETROREFLECTIVE TYPE H	PAVEMENT MARKER	THERMOPLASTIC TRAFFIC STRIPE (WHITE)	THERMOPLASTIC TRAFFIC STRIPE (YELLOW)
				LF				EA				EA	LF	
1	280/101 IC-NB 101 TO SB 280(WL LINE)	34-0135G	13M			1580		132		33		165	395	
			25		1580						33	33		1580
			27B	1580									1580	
5	SB COLLECTOR Rd OC	37-0191K	25A		331						14	14		331
			27B	331									331	
			37				331		24	4		28	132	
SUBTOTAL				1911	1911	1580	331	132	24	37	47	240	2438	1911
TOTAL				3822		1580	331	132	108			240	2438	1911

NOTE: ALL EXISTING PAVEMENT DELINEATION SHALL BE REMOVED AND REPLACED IN KIND OR AS DIRECTED BY THE ENGINEER

PAVEMENT DELINEATION DETAIL AND QUANTITIES

PDD-1

STATE OF CALIFORNIA - DEPARTMENT OF TRANSPORTATION
Caltrans DESIGN

FUNCTIONAL SUPERVISOR: NGOC TRAN
CALCULATED-DESIGNED BY: MARY THAO
CHECKED BY: NGOC TRAN
REVISED BY: MT
DATE REVISED: 1/13/10

LAST REVISION 03-18-10 DATE PLOTTED => 22-MAR-2010 TIME PLOTTED => 10:09

DIST	COUNTY	ROUTE	POST MILES TOTAL PROJECT	SHEET NO.	TOTAL SHEETS
04	SF, SCI SM	101, 280 880	Var	11	26

Randell D. Hiatt
REGISTERED CIVIL ENGINEER

June 6, 2008
PLANS APPROVAL DATE

Randell D. Hiatt No. C50200 Exp. 6-30-09 CIVIL — REGISTERED PROFESSIONAL ENGINEER — STATE OF CALIFORNIA

The State of California or its officers or agents shall not be responsible for the accuracy or completeness of electronic copies of this plan sheet.

To accompany plans dated 3-22-10

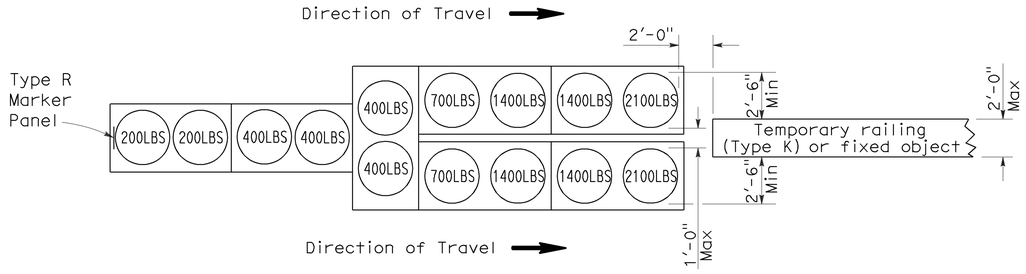

ARRAY 'TU14'

Approach speed 45 mph or more

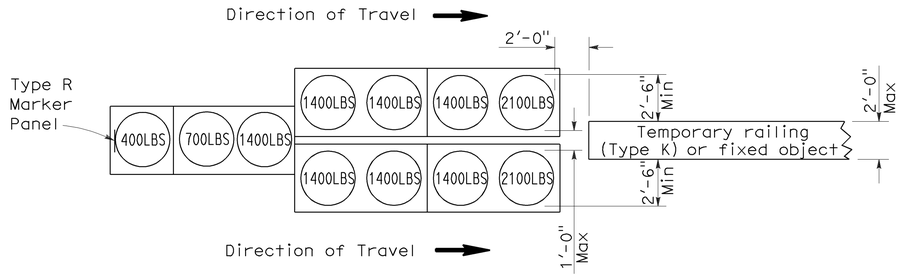

ARRAY 'TU11'

Approach speed less than 45 mph

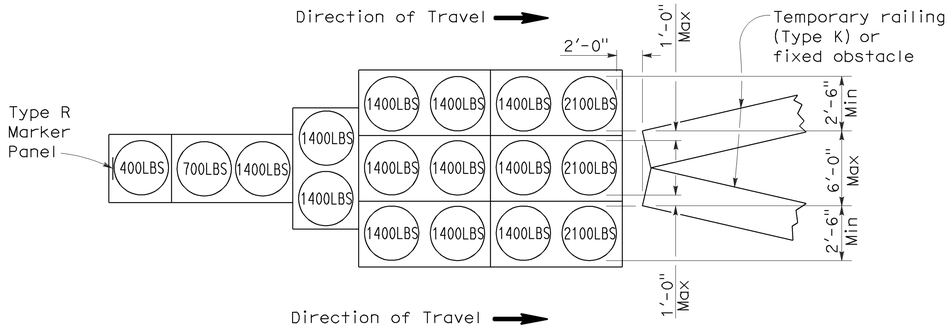

ARRAY 'TU17'

Approach speed less than 45 mph

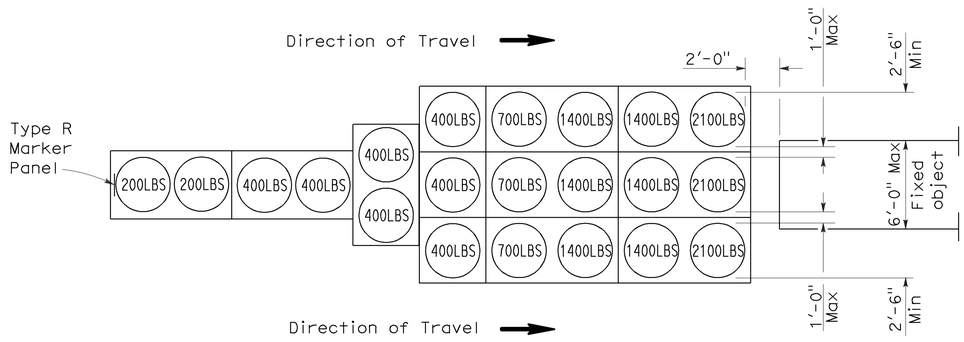

ARRAY 'TU21'

Approach speed 45 mph or more

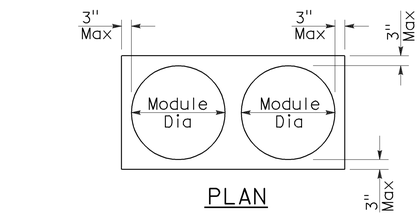

PLAN

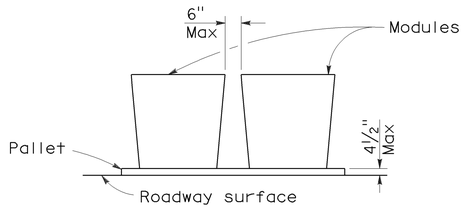

ELEVATION

CRASH CUSHION PALLET DETAIL

See Note 7

NOTES:

1. (XXX) Indicates sand filled module location and weight of sand in pounds for each module. Module spacing is based on the greater diameter of the module.
2. All sand weights are nominal.
3. Temporary crash cushion arrays shall not encroach on the traveled way.
4. Place the top of Type R marker panel 1" below the module lid.
5. Refer to Standard Plan A73B for marker details.
6. Approach speeds indicated conform to NCHRP 350 Report criteria.
7. Use of pallets is optional.

STATE OF CALIFORNIA
DEPARTMENT OF TRANSPORTATION

TEMPORARY CRASH CUSHION, SAND FILLED (UNIDIRECTIONAL)

NO SCALE

RSP T1A DATED JUNE 6, 2008 SUPERSEDES STANDARD PLAN T1A
DATED MAY 1, 2006 - PAGE 211 OF THE STANDARD PLANS BOOK DATED MAY 2006.

REVISED STANDARD PLAN RSP T1A

2006 REVISED STANDARD PLAN RSP T1A

5-15-08

DIST	COUNTY	ROUTE	POST MILES TOTAL PROJECT	SHEET NO.	TOTAL SHEETS
04	SF, SCI SM	101, 280 880	Var	12	26

Randell D. Hiatt
REGISTERED CIVIL ENGINEER

June 6, 2008
PLANS APPROVAL DATE

REGISTERED PROFESSIONAL ENGINEER — Randell D. Hiatt — No. C50200 — Exp. 6-30-09 — CIVIL — STATE OF CALIFORNIA

The State of California or its officers or agents shall not be responsible for the accuracy or completeness of electronic copies of this plan sheet.

To accompany plans dated 3-22-10

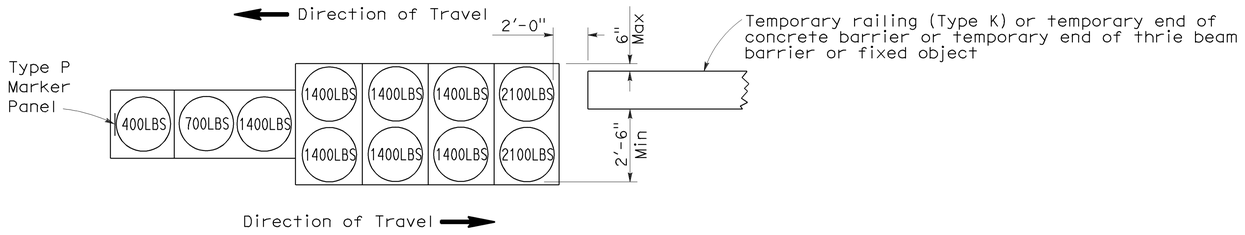

ARRAY 'TB11'

Approach speed less than 45 mph

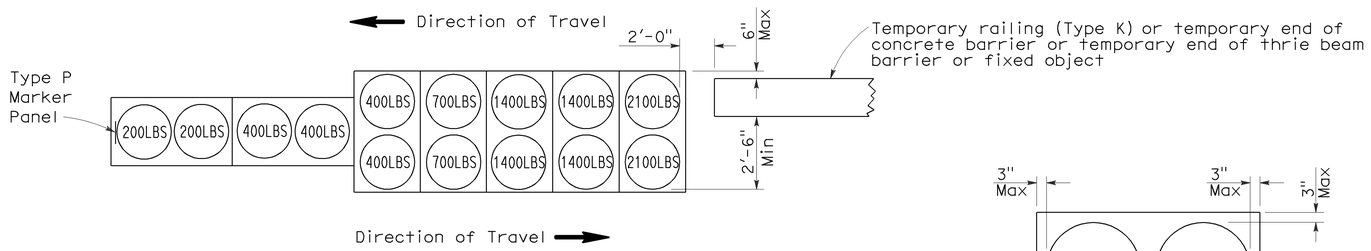

ARRAY 'TB14'

Approach speed 45 mph or more

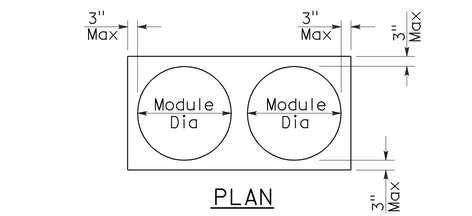

CRASH CUSHION PALLET DETAIL

See Note 7

NOTES:

1. (XXX) Indicates sand filled module location and weight of sand in pounds for each module. Module spacing is based on the greater diameter of the module.
2. All sand weights are nominal.
3. Temporary crash cushion arrays shall not encroach on the traveled way.
4. Place the Type P marker panel so that the bottom of the panel rests upon the pallet.
5. Refer to Standard Plan A73B for marker details.
6. Approach speeds indicated conform to NCHRP 350 Report criteria.
7. Use of pallets is optional.

STATE OF CALIFORNIA
DEPARTMENT OF TRANSPORTATION

TEMPORARY CRASH CUSHION, SAND FILLED (BIDIRECTIONAL)

NO SCALE

RSP T1B DATED JUNE 6, 2008 SUPERSEDES STANDARD PLAN T1B
DATED MAY 1, 2006 - PAGE 212 OF THE STANDARD PLANS BOOK DATED MAY 2006.

REVISED STANDARD PLAN RSP T1B

2006 REVISED STANDARD PLAN RSP T1B

5-15-08

DIST	COUNTY	ROUTE	POST MILES TOTAL PROJECT	SHEET NO.	TOTAL SHEETS
04	SF, SCI SM	101, 280 880	Var	13	26

Randell D. Hiatt
REGISTERED CIVIL ENGINEER

June 6, 2008
PLANS APPROVAL DATE

REGISTERED PROFESSIONAL ENGINEER — Randell D. Hiatt — No. C50200 — Exp. 6-30-09 — CIVIL — STATE OF CALIFORNIA

The State of California or its officers or agents shall not be responsible for the accuracy or completeness of electronic copies of this plan sheet.

To accompany plans dated 3-22-10

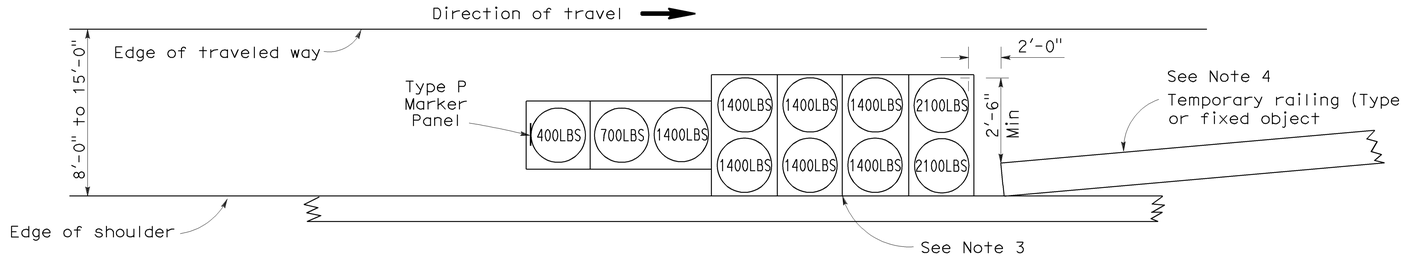

ARRAY 'TS11'

Approach speed less than 45 mph
See Note 9

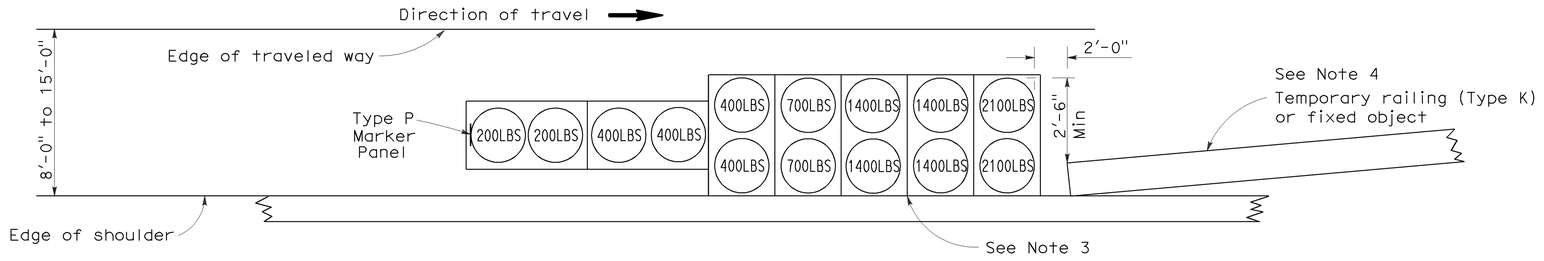

ARRAY 'TS14'

Approach speed 45 mph or more
See Note 9

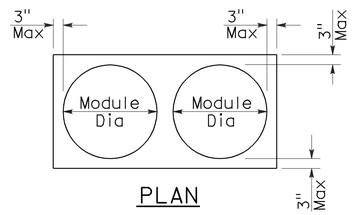

PLAN

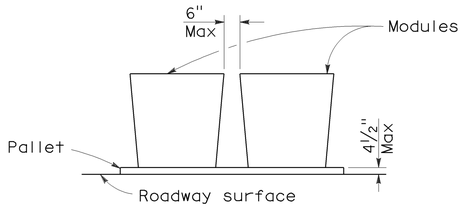

ELEVATION

CRASH CUSHION PALLET DETAIL

See Note 11

NOTES:

1. (XXX) Indicates sand filled module location and weight of sand in pounds for each module. Module spacing is based on the greater diameter of the module.
2. All sand weights are nominal.
3. The temporary crash cushion arrays shown on this plan shall be used only in locations where there will be traffic on one side of the temporary crash cushion array.
4. If the fixed object or approach end of the temporary railing is less than 15'-0" from the edge of traveled way, a temporary crash cushion is required in a construction or work zone.
5. Temporary crash cushion arrays shall not encroach on the traveled way.
6. Arrays for median shoulders shall conform to details shown on this plan for outside shoulders.
7. Place the Type P marker panel so that the bottom of the panel rests upon the pallet and faces traffic.
8. Refer to Standard Plan A73B for marker details.
9. For shoulder widths less than 8'-0", appropriate approved crash cushion protection, other than sand filled modules, shall be provided at fixed objects and at approach ends of temporary railing. The specific type of crash cushion shall be as shown on the project plans or as specified in the Special Provisions, or if not shown on the project plans or specified in the Special Provisions, shall be as approved by the Engineer.
10. Approach speeds indicated conform to NCHRP 350 Report criteria.
11. Use of pallets is optional.

STATE OF CALIFORNIA
DEPARTMENT OF TRANSPORTATION

TEMPORARY CRASH CUSHION, SAND FILLED (SHOULDER INSTALLATIONS)

NO SCALE

RSP T2 DATED JUNE 6, 2008 SUPERSEDES STANDARD PLAN T2
DATED MAY 1, 2006 - PAGE 213 OF THE STANDARD PLANS BOOK DATED MAY 2006.

REVISED STANDARD PLAN RSP T2

2006 REVISED STANDARD PLAN RSP T2

5-15-08

DIST	COUNTY	ROUTE	POST MILES TOTAL PROJECT	SHEET NO.	TOTAL SHEETS
04	SF, SCL SM	101, 280 880	Var	14	26

REGISTERED CIVIL ENGINEER

Efthymios Delis No. C51434 Exp. 6-30-08 CIVIL — REGISTERED PROFESSIONAL ENGINEER — STATE OF CALIFORNIA

October 5, 2007
PLANS APPROVAL DATE

The State of California or its officers or agents shall not be responsible for the accuracy or completeness of electronic copies of this plan sheet.

To accompany plans dated 3-22-10

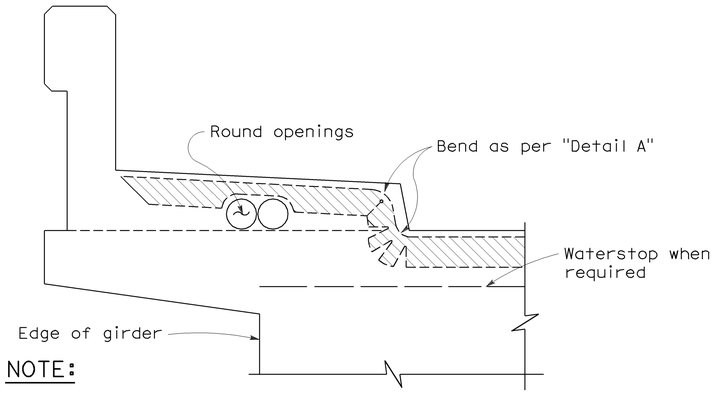

NOTE:

Type "B" seal shown. Type "A" seals to comform to the general path of seal shown, cuts for bending not required. Bend Type "A" seals 3" up into curb or barrier rail on only the low end of the seal.

CONCRETE BARRIER AND SIDEWALK

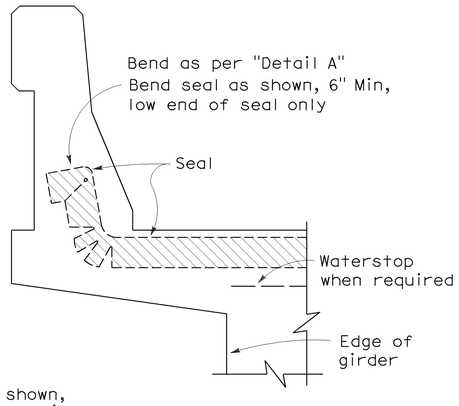

CONCRETE BARRIER

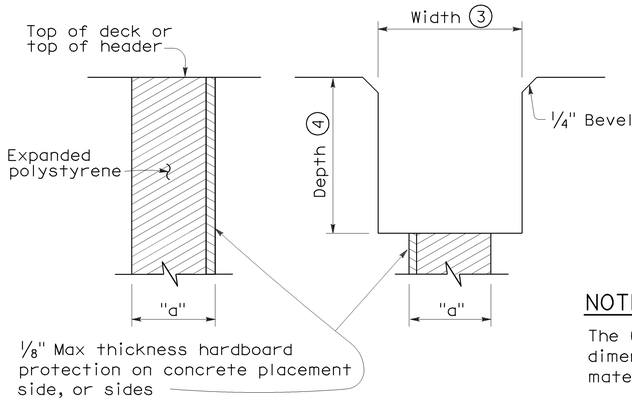

FORMING DETAIL SAWCUT DETAIL

NOTE:

The Contractor shall verify all controlling field dimensions before ordering or fabricatiing any material.

JOINT SEALS DETAILS

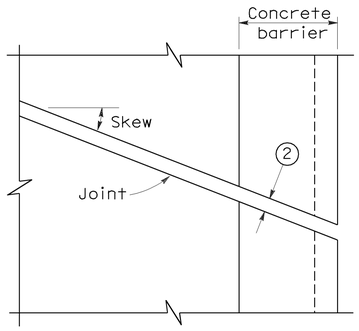

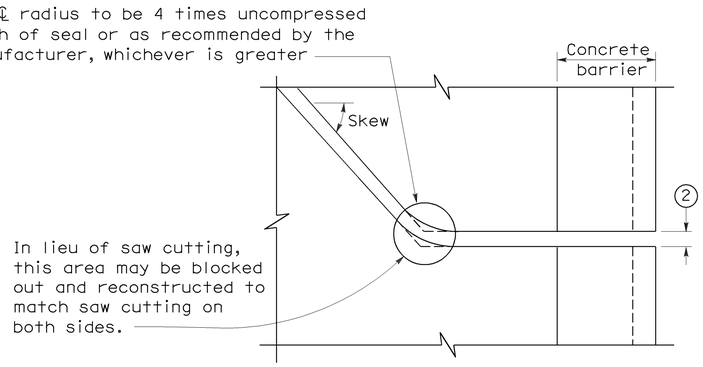

PLAN OF JOINT (SKEW ≤ 20°)

PLAN OF JOINT (SKEW > 20°)

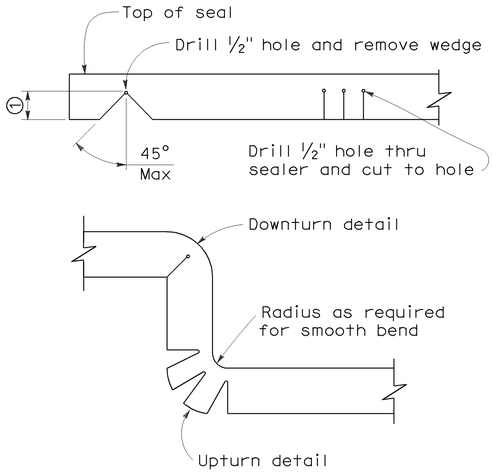

DETAIL A

NOTES:

1. Make smooth cuts from the bottom of seal to 1½" clear of top leaving at least one complete cell between the top of the cut and top of the seal. When necessary cut back of seal to clear conduit and round openings.
2. Opening in barrier to match width of sawn deck joint.
3. Sawcut groove widths shall be as ordered by the Engineer.
4. Depth of sawcut: Type A - Depth to be 2" minimum.
   Type B - Depth to be equal to or greater than the depth of seal measured along the contact surface, when compressed to minimum width position (W_2) plus dimensions shown.
5. MR (movement rating) as shown on other plan sheets.
6. Other depths must be approved by the Engineer.

DIMENSIONS "a" OF JOINT REQUIRED

Movement Rating (MR) (5)	Bridge Type	"a" Dimension Deck Concrete Placed		
		Winter	Fall-Spring	Summer
2"	All except CIP/PS	1½"	1¼"	¾"
	CIP/PS	1¼"	1"	½"
1½"	All except CIP/PS	1¼"	1"	½"
	CIP/PS	1"	¾"	½"
1"	All except CIP/PS	1"	¾"	½"
	CIP/PS	¾"	½"	½"
½"	All except CIP/PS	¾"	¾"	½"
	CIP/PS	½"	½"	½"

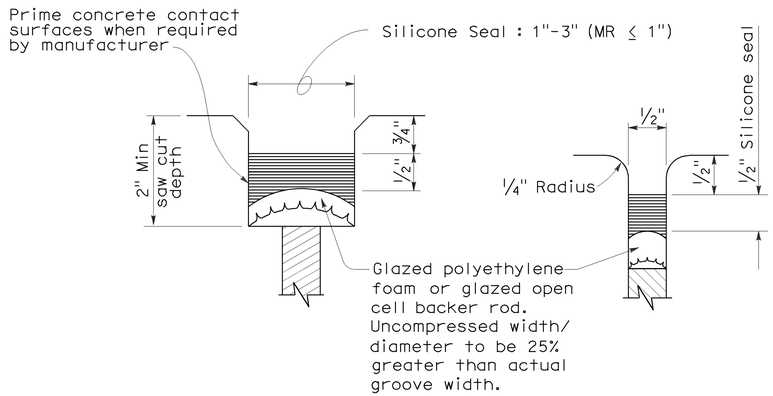

TYPE A SEAL

Movement rating : Silicone = 1" Max

TYPE AL SEAL

Longitudinal joints only

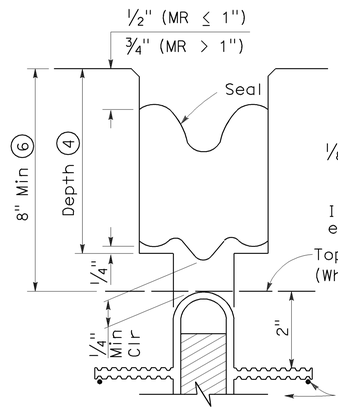

TYPE B JOINT SEAL IN MINIMUM WIDTH POSITION (W_2)

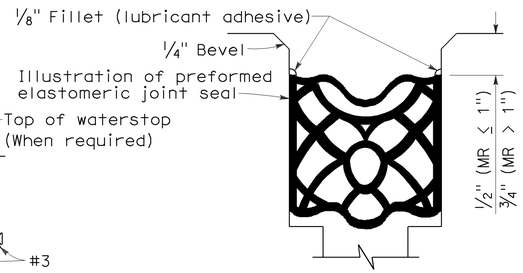

TYPE B SEAL

Movement Rating ≤ 2"

STATE OF CALIFORNIA
DEPARTMENT OF TRANSPORTATION

JOINT SEALS (MAXIMUM MOVEMENT RATING = 2")

NO SCALE

RSP B6-21 DATED OCTOBER 5, 2007 SUPERSEDES STANDARD PLAN B6-21 DATED MAY 1, 2006 - PAGE 258 OF THE STANDARD PLANS BOOK DATED MAY 2006.

REVISED STANDARD PLAN RSP B6-21

2006 REVISED STANDARD PLAN RSP B6-21

5-8-07

DIST	COUNTY	ROUTE	POST MILES TOTAL PROJECT	SHEET No	TOTAL SHEETS
04	SF, SCI SM	101, 280 880	Var	15	26

Hongyuan Su 12-07-09
REGISTERED CIVIL ENGINEER DATE

3-22-10
PLANS APPROVAL DATE

REGISTERED PROFESSIONAL ENGINEER — HONGYUAN. SU — No. C58260 — Exp. 6-30-10 — CIVIL — STATE OF CALIFORNIA

The State of California or its officers or agents shall not be responsible for the accuracy or completeness of electronic copies of this plan sheet.

To get to the Caltrans web site, go to: http://www.dot.ca.gov

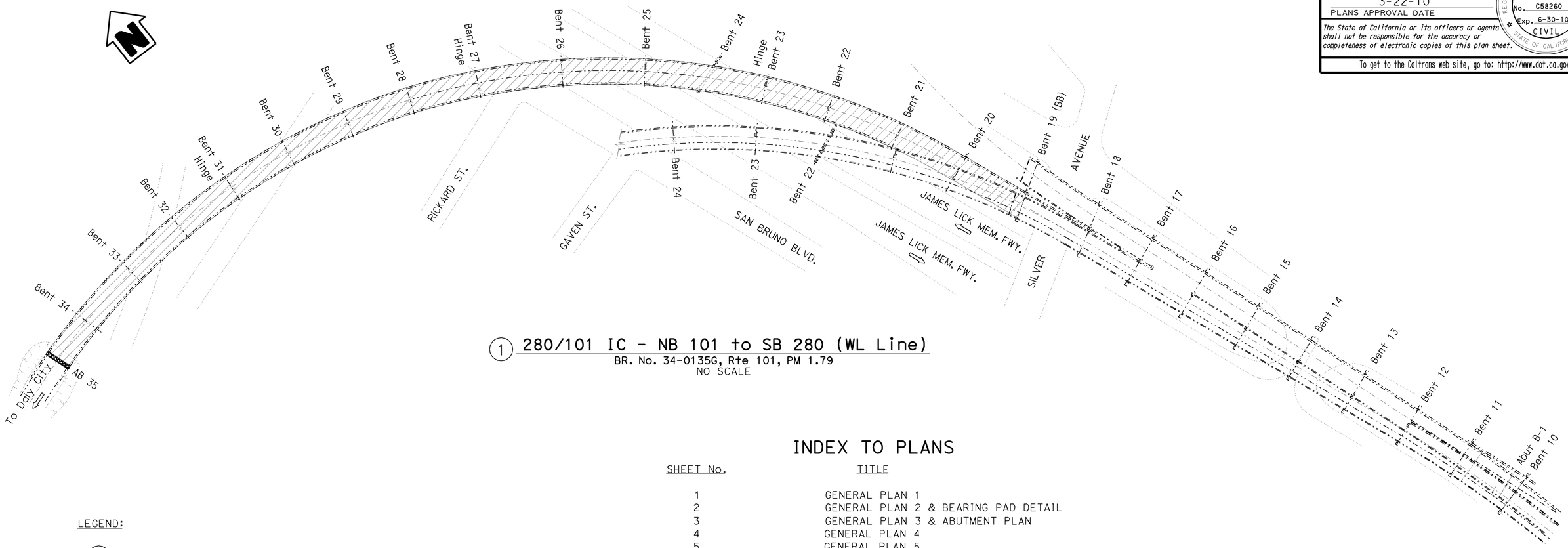

1 280/101 IC - NB 101 to SB 280 (WL Line)
BR. No. 34-0135G, Rte 101, PM 1.79
NO SCALE

LEGEND:

- Indicates bridge location, see TITLE Sheet
- Indicates existing structure
- Indicates limits of repairing spall at abutment backwall. (See "Deck Repair Details" sheet)
- Indicates limits of clean and treat bridge deck with high molecular weight methacrylate. Prior to bridge deck treatment, remove unsound concrete and patch with rapid setting concrete.

INDEX TO PLANS

SHEET No.	TITLE
1	GENERAL PLAN 1
2	GENERAL PLAN 2 & BEARING PAD DETAIL
3	GENERAL PLAN 3 & ABUTMENT PLAN
4	GENERAL PLAN 4
5	GENERAL PLAN 5
6	GENERAL PLAN 6
7	TEMPORARY SUPPORT DETAILS
8	DRAINAGE DETAILS - 1
9	DRAINAGE DETAILS - 2
10	HINGE RESTRAINER & ACCESS HOLE DETAILS
11	DECK REPAIR DETAILS
12	MISCELLANEOUS DETAILS

STANDARD PLANS DATED MAY 2006

SHEET No.	TITLE
A10A TO A10B	ACRONYMS AND ABBREVIATIONS
RSP B6-21	JOINT SEALS (MAXIMUM MR=2")
B7-6	DECK DRAINS TYPE D-1 & D-2

280/101 IC - NB 101 to SB 280 (WL Line) BR NO 34-0135G

QUANTITIES

REMOVE UNSOUND CONCRETE	179	CF
CLEAN BRIDGE DECK	53,720	SQFT
RAPID SETTING CONCRETE (PATCH)	179	CF
TREAT BRIDGE DECK	53,720	SQFT
FURNISH BRIDGE DECK TREATMENT MATERIAL	597	GAL
PUBLIC SAFETY PLAN	LUMP	SUM

THE CONTRACTOR SHALL VERIFY ALL CONTROLLING FIELD DIMENSIONS BEFORE ORDERING OR FABRICATING ANY MATERIAL.

REPLACE JOINT SEALS, REPLACE BEARINGS, TREAT BRIDGE DECKS & MODIFY DECK DRAINS

Kenneth R Brown
DESIGN ENGINEER 11-05-09

	BY	CHECKED	LOAD FACTOR DESIGN	LIVE LOADING: HS20-44 AND ALTERNATIVE AND PERMIT DESIGN LOAD	
DESIGN	H. Su	L. Ellis			
DETAILS	B. Ballesteros	H. Su	LAYOUT	B. Ballesteros	CHECKED
QUANTITIES	H. Su	L. Ellis	SPECIFICATIONS	BY	PLANS AND SPECS COMPARED

STATE OF CALIFORNIA
DEPARTMENT OF TRANSPORTATION

DIVISION OF MAINTENANCE
STRUCTURE MAINTENANCE AND INVESTIGATIONS

BRIDGE NO. 34-0135G
POST MILE 1.79

280/101 IC - NB 101 to SB 280 (WL Line)
GENERAL PLAN 1

STRUCTURES DESIGN GENERAL PLAN SHEET (ENGLISH) (REV. 10/25/05)

ORIGINAL SCALE IN INCHES FOR REDUCED PLANS 0 1 2 3

CU EA 0E9601

DISREGARD PRINTS BEARING EARLIER REVISION DATES →

REVISION DATES: 04-07-09 | 05-06-09 | 06-02-09 | 08-10-09 | 09-30-09 | 11-10-09

SHEET 1 OF 12

FILE => 40e960wc001.dgn

USERNAME => s114592 DATE PLOTTED => 18-MAR-2010 TIME PLOTTED => 10:22

DIST	COUNTY	ROUTE	POST MILES TOTAL PROJECT	SHEET No	TOTAL SHEETS
04	SF, SCl SM	101, 280 880	Var	16	26

Hongyuan Su 12-07-09
REGISTERED CIVIL ENGINEER DATE

3-22-10
PLANS APPROVAL DATE

REGISTERED PROFESSIONAL ENGINEER
HONGYUAN. SU
No. C58260
Exp. 6-30-10
CIVIL
STATE OF CALIFORNIA

The State of California or its officers or agents shall not be responsible for the accuracy or completeness of electronic copies of this plan sheet.

To get to the Caltrans web site, go to: http://www.dot.ca.gov

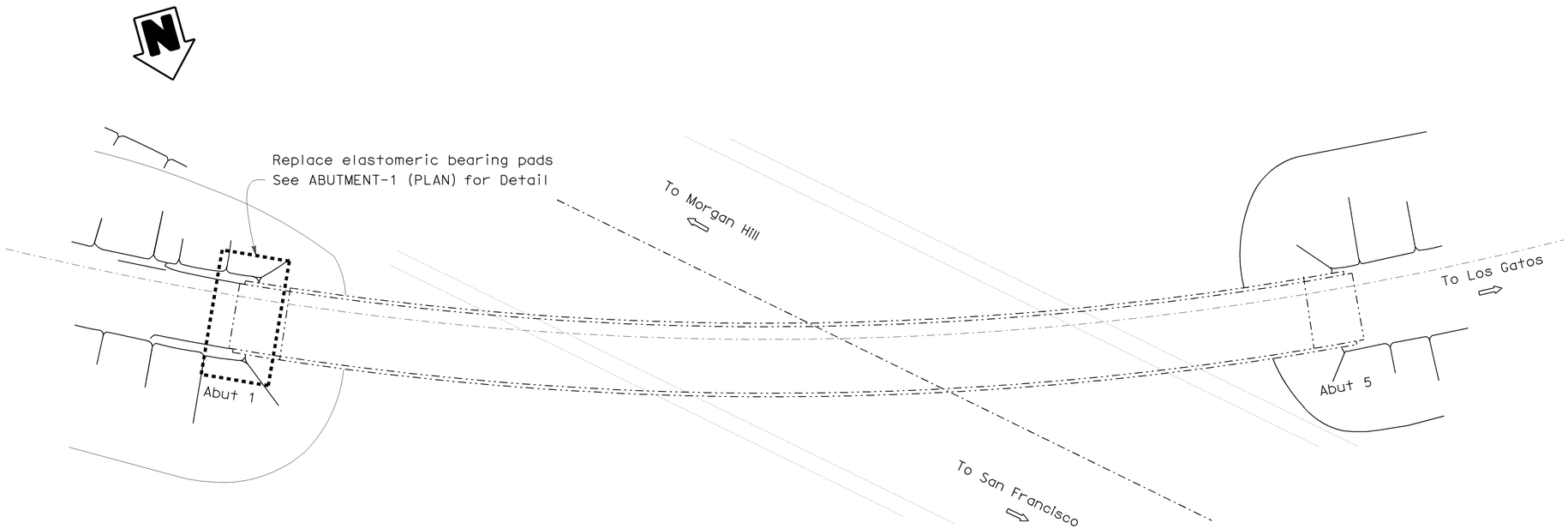

(2) N101 - N85/101 CONNECTOR
BR. No. 37-0548G, Rte 101, PM R26.78
NO SCALE

N101 - N85/101 CONNECTOR BR NO 37-0548G

QUANTITIES

REPLACE BEARING PAD	4 EA

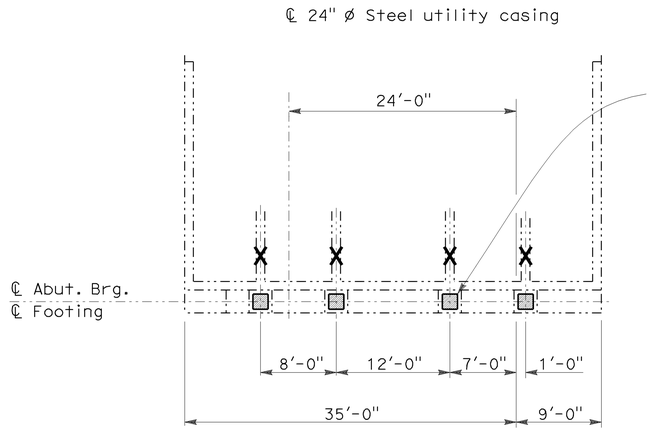

ABUTMENT - 1 (PLAN)
1/8" = 1'-0"

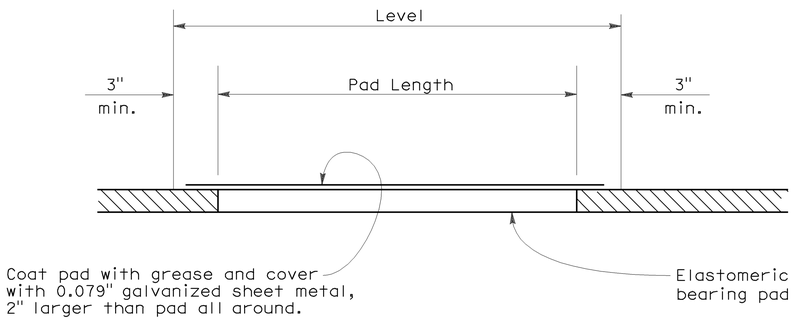

BEARING PAD DETAIL
NO SCALE

LEGEND:

- Indicates bridge location, see TITLE Sheet
- Indicates existing structure
- Remove and Replace elastomeric bearing pad
- X — Jacking location, See Sheet 7 for requirements

NOTE:
THE CONTRACTOR SHALL VERIFY ALL CONTROLLING FIELD DIMENSIONS BEFORE ORDERING OR FABRICATING ANY MATERIAL.

DESIGN	BY C. Lee	CHECKED H. Su	LOAD FACTOR DESIGN	LIVE LOADING: HS20-44 AND ALTERNATIVE AND PERMIT DESIGN LOAD		STATE OF CALIFORNIA DEPARTMENT OF TRANSPORTATION	DIVISION OF MAINTENANCE STRUCTURE MAINTENANCE AND INVESTIGATIONS
DETAILS	BY B. Ballesteros	CHECKED C. Lee	LAYOUT	BY B. Ballesteros	CHECKED C. Lee		
QUANTITIES	BY C. Lee	CHECKED H. Su	SPECIFICATIONS	BY Aiman Malak	PLANS AND SPECS COMPARED X		

Kenneth R Brown
DESIGN ENGINEER 12-14-09

STRUCTURES DESIGN GENERAL PLAN SHEET (ENGLISH) (REV. 10/25/05)

ORIGINAL SCALE IN INCHES FOR REDUCED PLANS 0 1 2 3

CU EA 0E9601

FILE => 40e960wc002.dgn

BRIDGE NO. 37-0548G
POST MILE R26.78

DISREGARD PRINTS BEARING EARLIER REVISION DATES →

REVISION DATES: 06-04-09 | 12-02-09

SHEET 2 OF 12

REPLACE JOINT SEALS, REPLACE BEARINGS, TREAT BRIDGE DECKS & MODIFY DECK DRAINS

N101 - N85/101 CONNECTOR

GENERAL PLAN 2 & BEARING PAD DETAIL

USERNAME => s1114592 DATE PLOTTED => 18-MAR-2010 TIME PLOTTED => 10:23

DIST	COUNTY	ROUTE	POST MILES TOTAL PROJECT	SHEET No	TOTAL SHEETS
04	SF, SCI SM	101, 280 880	Var	17	26

Hongyuan Su 12-07-09
REGISTERED CIVIL ENGINEER DATE

3-22-10
PLANS APPROVAL DATE

REGISTERED PROFESSIONAL ENGINEER — HONGYUAN. SU No. C58260 Exp. 6-30-10 CIVIL — STATE OF CALIFORNIA

The State of California or its officers or agents shall not be responsible for the accuracy or completeness of electronic copies of this plan sheet.

To get to the Caltrans web site, go to: http://www.dot.ca.gov

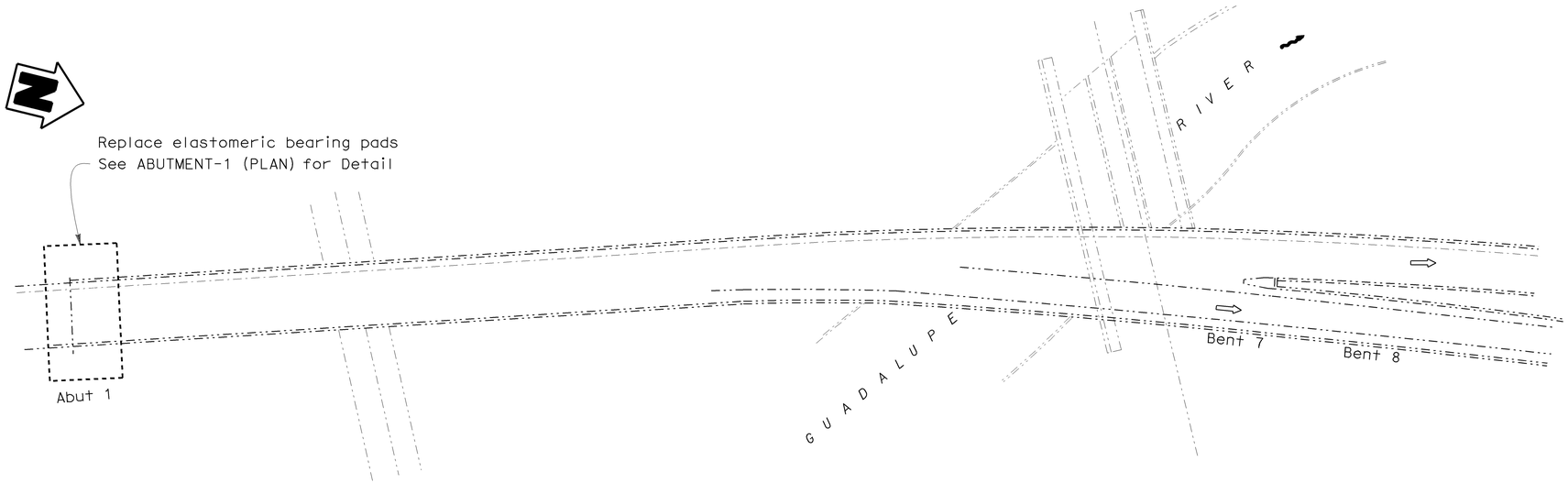

(3) GUADALUPE CONNECTOR VIADUCT

BR. No. 37-0410H, Rte 280, PM R2.54
NO SCALE

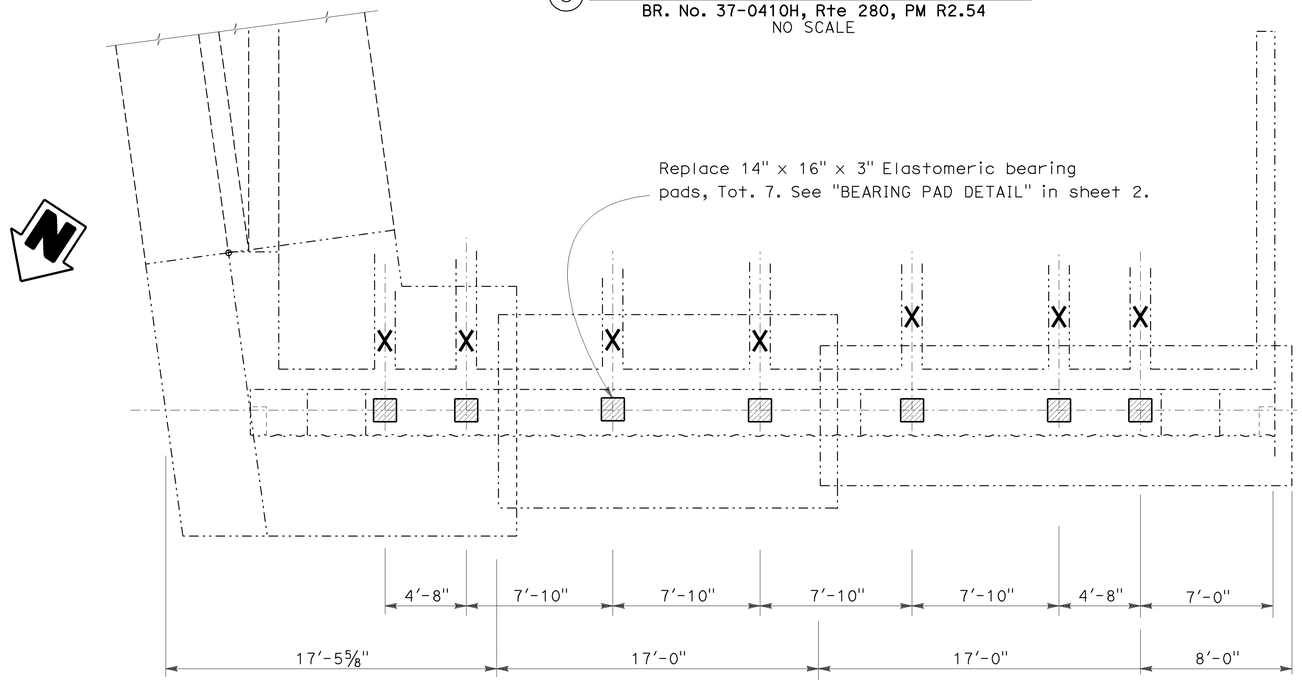

LEGEND:

- Indicates bridge location, see "TITLE" Sheet
- Indicates existing structure
- Remove and Replace elastomeric bearing pad
- X — Jacking location, See Sheet 7 for requirements

GUADALUPE CONNECTOR VIADUCT BR NO 37-0410H

QUANTITIES

REPLACE BEARING PAD	7 EA

NOTE:
THE CONTRACTOR SHALL VERIFY ALL CONTROLLING FIELD DIMENSIONS BEFORE ORDERING OR FABRICATING ANY MATERIAL.

ABUTMENT - 1 (PLAN)

1/4" = 1'-0"

REPLACE JOINT SEALS, REPLACE BEARINGS, TREAT BRIDGE DECKS & MODIFY DECK DRAINS

Kenneth R Brown
DESIGN ENGINEER 12-14-09

DESIGN	BY C. Lee	CHECKED H. Su	LOAD FACTOR DESIGN	LIVE LOADING: HS20-44 AND ALTERNATIVE AND PERMIT DESIGN LOAD	
DETAILS	BY B. Ballesteros	CHECKED C. Lee	LAYOUT	BY B. Ballesteros	CHECKED C. Lee
QUANTITIES	BY C. Lee	CHECKED H. Su	SPECIFICATIONS	BY Aiman Malak	PLANS AND SPECS COMPARED X

STATE OF CALIFORNIA
DEPARTMENT OF TRANSPORTATION

DIVISION OF MAINTENANCE
STRUCTURE MAINTENANCE AND INVESTIGATIONS

CU
EA 0E9601

BRIDGE NO. 37-0410H
POST MILE R2.54

GUADALUPE CONNECTOR VIADUCT
GENERAL PLAN 3 & ABUTMENT PLAN

STRUCTURES DESIGN GENERAL PLAN SHEET (ENGLISH) (REV. 10/25/05)

ORIGINAL SCALE IN INCHES FOR REDUCED PLANS 0 1 2 3

DISREGARD PRINTS BEARING EARLIER REVISION DATES →

REVISION DATES: 05-20-09 | 06-04-09 | 12-02-09 | 01-15-10

SHEET 3 OF 12

FILE => 40e960wc003.dgn

USERNAME => s114592 DATE PLOTTED => 18-MAR-2010 TIME PLOTTED => 10:23

DIST	COUNTY	ROUTE	POST MILES TOTAL PROJECT	SHEET No	TOTAL SHEETS
04	SF, SCI SM	101, 280 880	Var	18	26

Hongyuan Su 12-07-09
REGISTERED CIVIL ENGINEER DATE

3-22-10
PLANS APPROVAL DATE

REGISTERED PROFESSIONAL ENGINEER — HONGYUAN. SU No. C58260 Exp. 6-30-10 CIVIL — STATE OF CALIFORNIA

The State of California or its officers or agents shall not be responsible for the accuracy or completeness of electronic copies of this plan sheet.

To get to the Caltrans web site, go to: http://www.dot.ca.gov

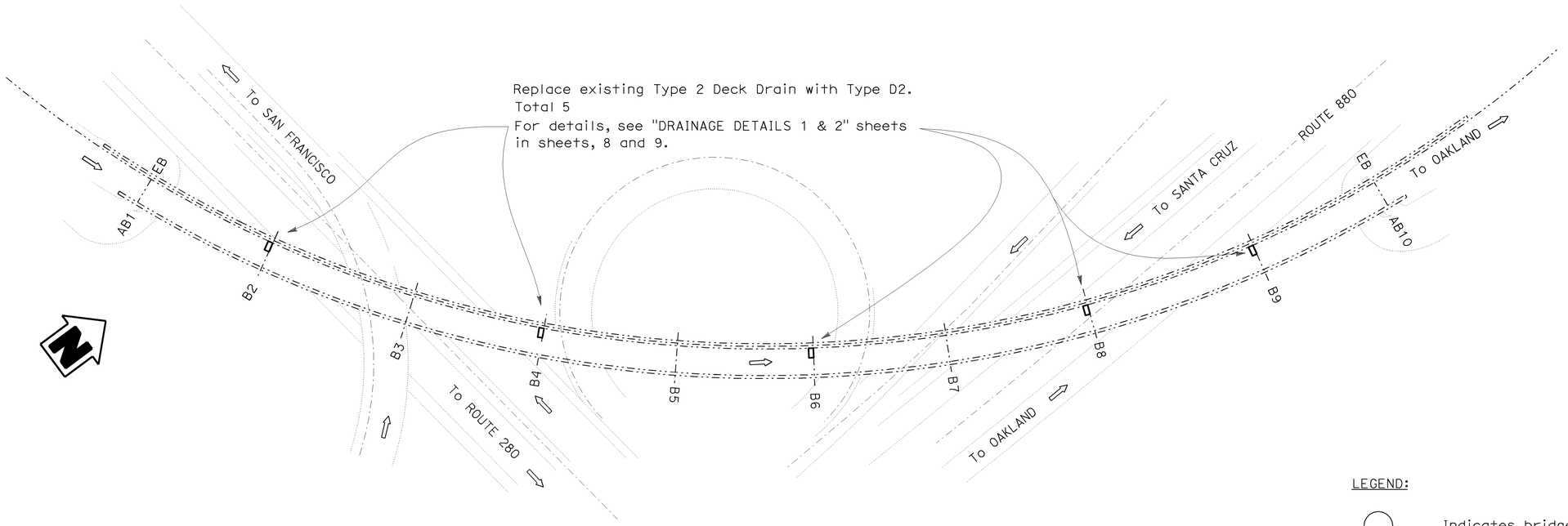

(4) S280 - N880 CONNECTOR VIADUCT

BR. No. 37-0193F, Rte 280, PM L 5.5
NO SCALE

LEGEND:

- (_) Indicates bridge location, see TITLE Sheet
- -·-·-·- Indicates existing structure
- ▭ Type D2 Deck Drain

TEMPORARY DECKING DESIGN LOAD CRITERIA		
MOMENT DEMAND/FOOT (kip-ft/ft)	BOLT SHEAR/FOOT (kip/ft)	BOLT TENSION (kip)
9.6	4.5	5.6

Plate deflection shall not exceed s/300 (s = span of plate).
Plate thickness shall be ≥ 7/8"
Anchorage washer shall be neoprene or similar.

S280/N880 CONNECTOR VIADUCT QUANTITIES	BR NO 37-0193F
BRIDGE REMOVAL (PORTION)	2 CY
TYPE D-2 DECK DRAIN	5 EA

THE CONTRACTOR SHALL VERIFY ALL CONTROLLING FIELD DIMENSIONS BEFORE ORDERING OR FABRICATING ANY MATERIAL.

REPLACE JOINT SEALS, REPLACE BEARINGS, TREAT BRIDGE DECKS & MODIFY DECK DRAINS

Kenneth R Brown
DESIGN ENGINEER 11-05-09

DESIGN	BY H. Su	CHECKED L. Ellis	LOAD FACTOR DESIGN	LIVE LOADING: HS20-44 AND ALTERNATIVE AND PERMIT DESIGN LOAD		
DETAILS	BY B. Ballesteros	CHECKED H. Su	LAYOUT	BY B. Ballesteros	CHECKED	
QUANTITIES	BY H. Su	CHECKED L. Ellis	SPECIFICATIONS	BY	PLANS AND SPECS COMPARED	

STATE OF CALIFORNIA
DEPARTMENT OF TRANSPORTATION

DIVISION OF MAINTENANCE
STRUCTURE MAINTENANCE AND INVESTIGATIONS

CU
EA 0E9601

BRIDGE NO. 37-0193F
POST MILE L5.5

S280-N880 CONNECTOR VIADUCT
GENERAL PLAN 4

STRUCTURES DESIGN GENERAL PLAN SHEET (ENGLISH) (REV. 10/25/05)

ORIGINAL SCALE IN INCHES FOR REDUCED PLANS 0 1 2 3

DISREGARD PRINTS BEARING EARLIER REVISION DATES →

REVISION DATES: 04-22-09 | 06-02-09 | 08-10-09 | 09-30-09 | 01-15-10

SHEET 4 OF 12

FILE => 40e960wc004.dgn

USERNAME => s1174592 DATE PLOTTED => 18-MAR-2010 TIME PLOTTED => 10:23

DIST	COUNTY	ROUTE	POST MILES TOTAL PROJECT	SHEET No	TOTAL SHEETS
04	SF, SCI SM	101, 280 880	Var	19	26

Hongyuan Su 12-07-09
REGISTERED CIVIL ENGINEER DATE

3-22-10
PLANS APPROVAL DATE

REGISTERED PROFESSIONAL ENGINEER
HONGYUAN. SU
No. C58260
Exp. 6-30-10
CIVIL
STATE OF CALIFORNIA

The State of California or its officers or agents shall not be responsible for the accuracy or completeness of electronic copies of this plan sheet.

To get to the Caltrans web site, go to: http://www.dot.ca.gov

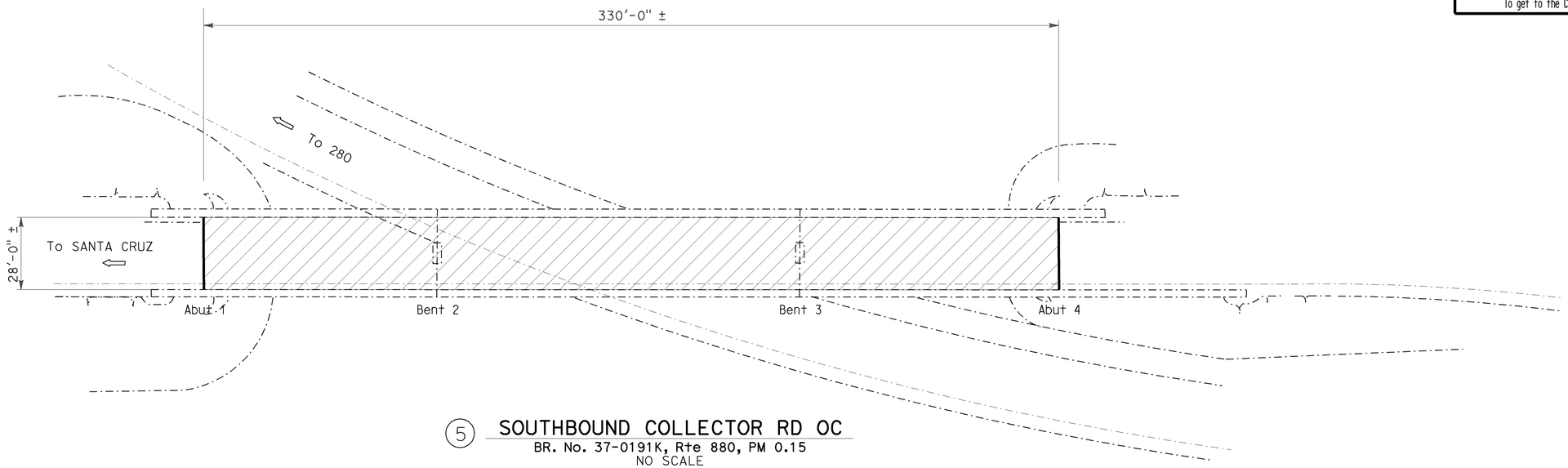

(5) SOUTHBOUND COLLECTOR RD OC

BR. No. 37-0191K, Rte 880, PM 0.15
NO SCALE

SOUTHBOUND COLLECTOR ROAD OC QUANTITIES	BR NO 37-0191K	
REMOVE UNSOUND CONCRETE	31	CF
CLEAN BRIDGE DECK	9,240	SQFT
CLEAN EXPANSION JOINT	72	LF
RAPID SETTING CONCRETE (PATCH)	31	CF
JOINT SEAL (MR 1½")	72	LF
TREAT BRIDGE DECK	9,240	SQFT
FURNISH BRIDGE DECK TREATMENT MATERIAL	103	GAL
PUBLIC SAFETY PLAN	LUMP	SUM

LEGEND:

- Indicates bridge location, see TITLE Sheet
- Indicates existing structure
- Indicates limits of existing joint seal removal and replacement of new joint seal. Prior to placement of new joint seal, repair joint spalls as directed by Engineer.
- Indicates limits of clean and treat bridge deck with high molecular weight methacrylate. Prior to bridge deck treatment, remove unsound concrete and patch with rapid setting concrete.

THE CONTRACTOR SHALL VERIFY ALL CONTROLLING FIELD DIMENSIONS BEFORE ORDERING OR FABRICATING ANY MATERIAL.

Kenneth R Brown
DESIGN ENGINEER 11-05-09

DESIGN	BY H. Su	CHECKED L. Ellis	LOAD FACTOR DESIGN	LIVE LOADING: HS20-44 AND ALTERNATIVE AND PERMIT DESIGN LOAD		
DETAILS	BY B. Ballesteros	CHECKED H. Su	LAYOUT	BY B. Ballesteros	CHECKED	
QUANTITIES	BY H. Su	CHECKED L. Ellis	SPECIFICATIONS	BY	PLANS AND SPECS COMPARED	

STRUCTURES DESIGN GENERAL PLAN SHEET (ENGLISH) (REV. 10/25/05)

ORIGINAL SCALE IN INCHES FOR REDUCED PLANS 0 1 2 3

STATE OF CALIFORNIA
DEPARTMENT OF TRANSPORTATION

DIVISION OF MAINTENANCE
STRUCTURE MAINTENANCE AND INVESTIGATIONS

CU
EA 0E9601

BRIDGE NO. 37-0191K
POST MILE 0.15

DISREGARD PRINTS BEARING EARLIER REVISION DATES →

REVISION DATES: 04-23-09 | 05-06-09 | 06-02-09 | 08-10-09 | 09-30-09 | 01-15-10

SHEET 5 OF 12

REPLACE JOINT SEALS, REPLACE BEARINGS, TREAT BRIDGE DECKS & MODIFY DECK DRAINS

SOUTHBOUND COLLECTOR RD OC

GENERAL PLAN 5

FILE => 40e960wc005.dgn

USERNAME => s1174592 DATE PLOTTED => 18-MAR-2010 TIME PLOTTED => 10:23

DIST	COUNTY	ROUTE	POST MILES TOTAL PROJECT	SHEET No	TOTAL SHEETS
04	SF, SCI SM	101, 280 880	Var	20	26

Hongyuan Su 12-07-09
REGISTERED CIVIL ENGINEER DATE

3-22-10
PLANS APPROVAL DATE

REGISTERED PROFESSIONAL ENGINEER — HONGYUAN. SU No. C58260 Exp. 6-30-10 CIVIL — STATE OF CALIFORNIA

The State of California or its officers or agents shall not be responsible for the accuracy or completeness of electronic copies of this plan sheet.

To get to the Caltrans web site, go to: http://www.dot.ca.gov

LEGEND:

- Indicates bridge location, see "TITLE" Sheet.
- Indicates existing structure
- Construct access opening at soffit of box girder and covered with steel plate.
- Remove and Replace elastomeric bearing pad
- Remove and replace restrainer unit
  Note:
  Contractor shall remove and replace one (1) unit at a time.
- X — Jacking location, See Sheet 7 for requirements

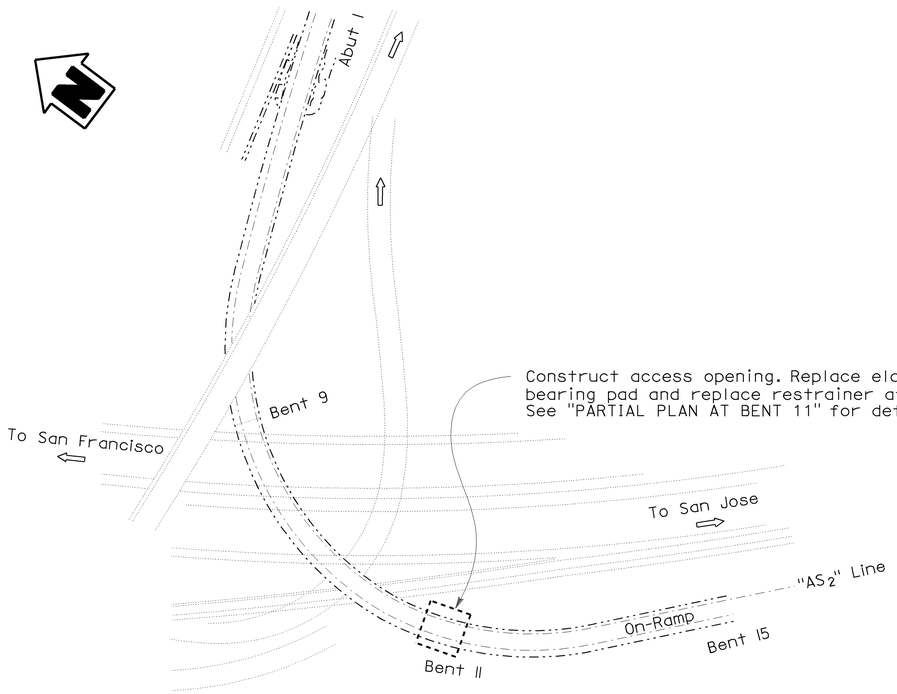

(6) AIRPORT TERMINAL ON-RAMP OVERCROSSING

BR. No. 35-0274K, Rte 101, PM 19.09
NO SCALE

AIRPORT TERMINAL ON-RAMP OC — BR NO 35-0274K

QUANTITIES

ACCESS OPENING, SOFFIT	4	EA
BRIDGE REMOVAL (PORTION)	LUMP	SUM
REPLACE BEARING PAD	1	EA
MISCELLANEOUS METAL (RESTRAINER - CABLE TYPE)	1,480	LB

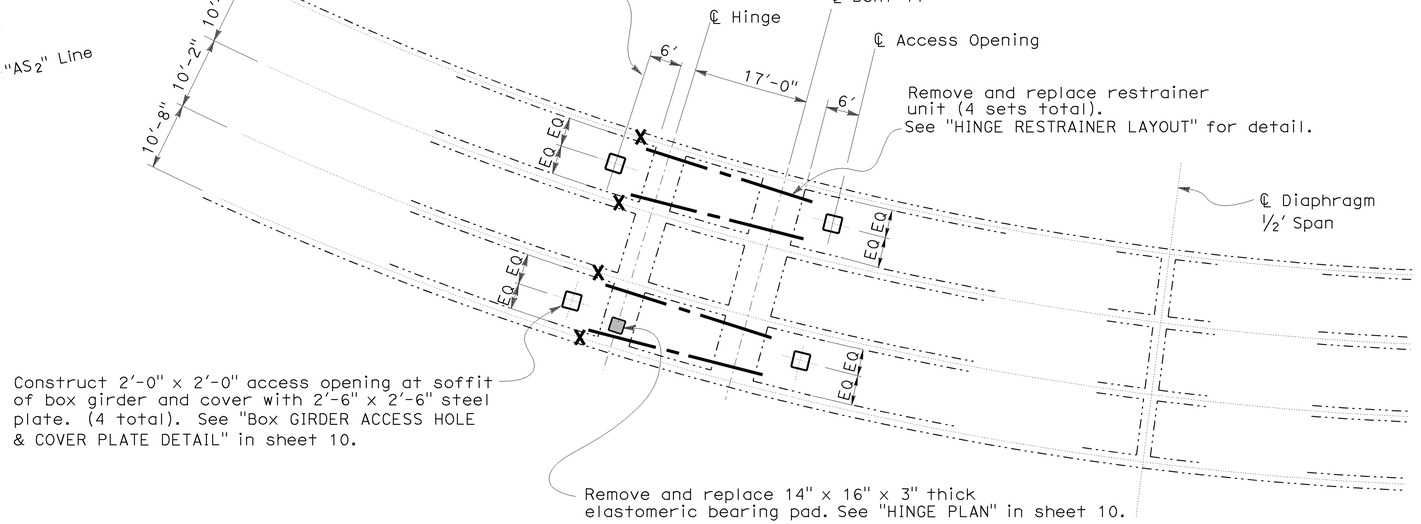

PARTIAL PLAN AT BENT 11

NO SCALE

NOTE:
THE CONTRACTOR SHALL VERIFY ALL CONTROLLING FIELD DIMENSIONS BEFORE ORDERING OR FABRICATING ANY MATERIAL.

REPLACE JOINT SEALS, REPLACE BEARINGS, TREAT BRIDGE DECKS & MODIFY DECK DRAINS

DESIGN	BY C. Lee	CHECKED H. Su	LOAD FACTOR DESIGN	LIVE LOADING: HS20-44 AND ALTERNATIVE AND PERMIT DESIGN LOAD		STATE OF CALIFORNIA DEPARTMENT OF TRANSPORTATION	DIVISION OF MAINTENANCE STRUCTURE MAINTENANCE AND INVESTIGATIONS
DETAILS	BY B. Ballesteros	CHECKED C. Lee	LAYOUT	BY B. Ballesteros	CHECKED C. Lee		
QUANTITIES	BY C. Lee	CHECKED H. Su	SPECIFICATIONS	BY Aiman Malak	PLANS AND SPECS COMPARED X		

Kenneth R Brown 12-14-09
DESIGN ENGINEER

BRIDGE NO. 35-0274K
POST MILE 19.09

AIRPORT TERMINAL ON-RAMP OC
GENERAL PLAN 6

CU EA 40E9601

STRUCTURES DESIGN GENERAL PLAN SHEET (ENGLISH) (REV. 10/25/05)

ORIGINAL SCALE IN INCHES FOR REDUCED PLANS 0 1 2 3

DISREGARD PRINTS BEARING EARLIER REVISION DATES →

REVISION DATES: 05-15-09 | 06-04-09 | 12-03-09 | 01-15-10

SHEET 6 OF 12

FILE => 40e960wc006.dgn

USERNAME => s114592 DATE PLOTTED => 18-MAR-2010 TIME PLOTTED => 10:24

DIST	COUNTY	ROUTE	POST MILES TOTAL PROJECT	SHEET No	TOTAL SHEETS
04	SF, SCI SM	101, 280 880	Var	21	26

Hongyuan Su 12-07-09
REGISTERED CIVIL ENGINEER DATE

3-22-10
PLANS APPROVAL DATE

REGISTERED PROFESSIONAL ENGINEER
HONGYUAN. SU
No. C58260
Exp. 6-30-10
CIVIL
STATE OF CALIFORNIA

The State of California or its officers or agents shall not be responsible for the accuracy or completeness of electronic copies of this plan sheet.

To get to the Caltrans web site, go to: http://www.dot.ca.gov

INITIAL JACKING LOADS AND MINIMUM TEMPORARY SUPPORT DESIGN LOADS

BR. NO.	LOCATION	INITIAL JACKING LOAD	TEMPORARY SUPPORT DEAD LOAD + LIVE LOAD + IMPACT	HORIZONTAL LOAD
37-0548G	Abutment 1	1400 kips	2500 kips	170 kips
37-0410H	Abutment 1	1250 kips	2200 kips	145 kips
35-0274K	HINGE	1150 kips	2000 kips	125 kips

General Temporary Support Notes

1. The initial jacking load and minimum temporary support load requirements shown are only applicable with the construction sequence shown.
2. The contractor shall monitor vertical and horizontal displacements of the installed temporary support and the existing structure during jacking and support operations.

General Construction Sequence

1. Install temporary support system at location as listed in the table 1.
2. Apply initial jacking load in the designated jacking location under the girder to achieve zero load condition at the bearings.
3. Remove existing bearing pad between the girder and abutment.
4. Install new bearing pad as shown in details.
5. After the bearing pads are installed, remove the temporary support system.

Temporary Support Design Notes

Jacking locations as shown on plans are for reference only. Contractor is required to submit temporary support design and drawings based on the special provisions requirements.

The Minimum Temporary Support Design Load (MTSOL) is equal to 1.5 times (Dead Load plus Live Load, including impact). MTSDL shown in the table does not include the weight of temporary support jack or loads due to friction between concrete surfaces.

The Minimum Lateral Temporary Support Design Load shall not be less than 0.1g for any Individual Temporary Support. The factor "g" shall be equal to MTSDL divided by the 1.5 factor.

Initial Jacking Loads are estimated forces to be applied to the structure at jacking points before existing elastomeric pad removal to achieved zero load condition in the bearing. Initial jacking load shown in the table is due to structure Dead Load only.

The allowable concrete bearing pressure for temporary support at the abutment seat is 1.3 ksi.
Assumed for existing abutment: f'c = 3.5 ksi; fy = 36 ksi and n = 9
Assumed for existing steel girder: Fs = 33 ksi

Support members shall evenly distribute jacking forces to superstructure jacking location.

NOTE:
THE CONTRACTOR SHALL VERIFY ALL CONTROLLING FIELD DIMENSIONS BEFORE ORDERING OR FABRICATING ANY MATERIAL.

REPLACE JOINT SEALS, REPLACE BEARINGS, TREAT BRIDGE DECKS & MODIFY DECK DRAINS

DESIGN	BY C. Lee	CHECKED H. Su	STATE OF CALIFORNIA DEPARTMENT OF TRANSPORTATION	DIVISION OF MAINTENANCE STRUCTURE MAINTENANCE AND INVESTIGATIONS	BRIDGE NO. Various
DETAILS	BY B. Ballesteros	CHECKED C. Lee			POST MILE Various
QUANTITIES	BY C. Lee	CHECKED H. Su			

Br. Nos. 35-0274K, 37-0410H & 37-0548G

TEMPORARY SUPPORT DETAILS

STRUCTURES DESIGN DETAIL SHEET (ENGLISH) (REV. 10/25/05)

ORIGINAL SCALE IN INCHES FOR REDUCED PLANS 0 1 2 3

CU EA 0E9601

DISREGARD PRINTS BEARING EARLIER REVISION DATES →

REVISION DATES										SHEET	OF
08-03-09	12-03-09									7	12

FILE => 40e960wc007.dgn

USERNAME => s1114592 DATE PLOTTED => 18-MAR-2010 TIME PLOTTED => 10:24

DIST	COUNTY	ROUTE	POST MILES TOTAL PROJECT	SHEET No	TOTAL SHEETS
04	SF, SCI SM	101, 280 880	Var	22	26

Hongyuan Su 12-07-09
REGISTERED CIVIL ENGINEER DATE

HONGYUAN. SU No. C58260 Exp. 6-30-10 CIVIL — REGISTERED PROFESSIONAL ENGINEER — STATE OF CALIFORNIA

3-22-10
PLANS APPROVAL DATE

The State of California or its officers or agents shall not be responsible for the accuracy or completeness of electronic copies of this plan sheet.

To get to the Caltrans web site, go to: http://www.dot.ca.gov

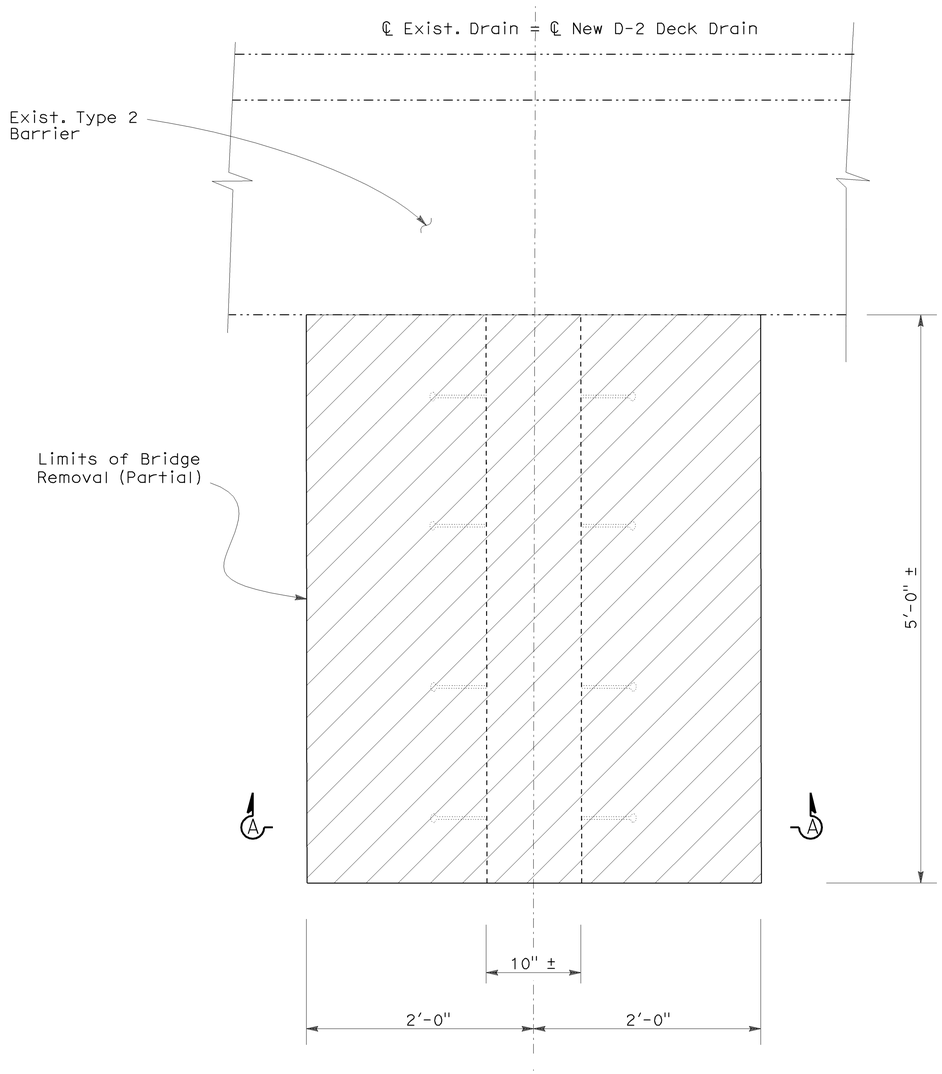

PLAN

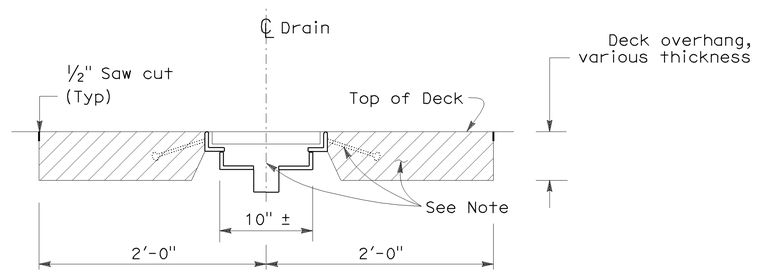

SECTION A-A

NOTE:

Remove deck concrete and existing deck drain as shown, including the top section of the down spout to the splicing coupling. Retain the existing deck reinforcing steel around the deck drains.

EXISTING DECK DRAIN REMOVAL DETAILS

1½" = 1'

THE CONTRACTOR SHALL VERIFY ALL CONTROLLING FIELD DIMENSIONS BEFORE ORDERING OR FABRICATING ANY MATERIAL.

DESIGN	BY H. Su	CHECKED L. Ellis	STATE OF CALIFORNIA DEPARTMENT OF TRANSPORTATION	DIVISION OF MAINTENANCE STRUCTURE MAINTENANCE AND INVESTIGATIONS	BRIDGE NO. 37-0193F
DETAILS	BY B. Ballesteros	CHECKED H. Su			POST MILE L5.5
QUANTITIES	BY H. Su	CHECKED L. Ellis			

REPLACE JOINT SEALS, REPLACE BEARINGS, TREAT BRIDGE DECKS & MODIFY DECK DRAINS

S280 - N880 CONNECTOR VIADUCT

DRAINAGE DETAILS - 1

STRUCTURES DESIGN DETAIL SHEET (ENGLISH) (REV. 10/25/05)

ORIGINAL SCALE IN INCHES FOR REDUCED PLANS 0 1 2 3

CU EA OE9601

DISREGARD PRINTS BEARING EARLIER REVISION DATES →

REVISION DATES										SHEET	OF
05-07-09	06-03-09	08-10-09	09-30-09							8	12

FILE => 40e960wc008.dgn

USERNAME => s1114592 DATE PLOTTED => 18-MAR-2010 TIME PLOTTED => 10:24

DIST	COUNTY	ROUTE	POST MILES TOTAL PROJECT	SHEET No	TOTAL SHEETS
04	SF, SCI SM	101, 280 880	Var	23	26

Hongyuan Su 12-07-09
REGISTERED CIVIL ENGINEER DATE

HONGYUAN. SU No. C58260 Exp. 6-30-10 CIVIL — REGISTERED PROFESSIONAL ENGINEER — STATE OF CALIFORNIA

3-22-10
PLANS APPROVAL DATE

The State of California or its officers or agents shall not be responsible for the accuracy or completeness of electronic copies of this plan sheet.

To get to the Caltrans web site, go to: http://www.dot.ca.gov

NOTES:

1. Reinforcing shown is in addition to the existing deck rebars.
2. Not all the existing deck reinforcing shown.

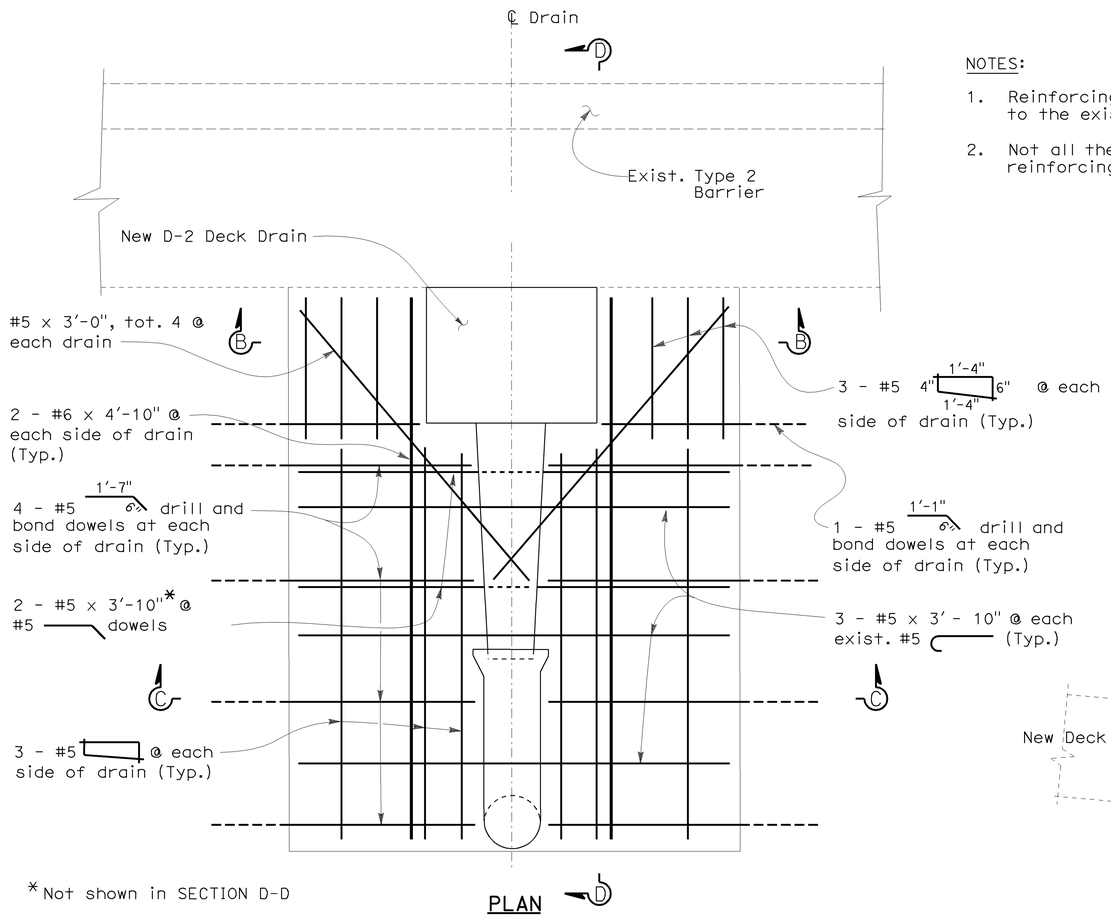

* Not shown in SECTION D-D

PLAN

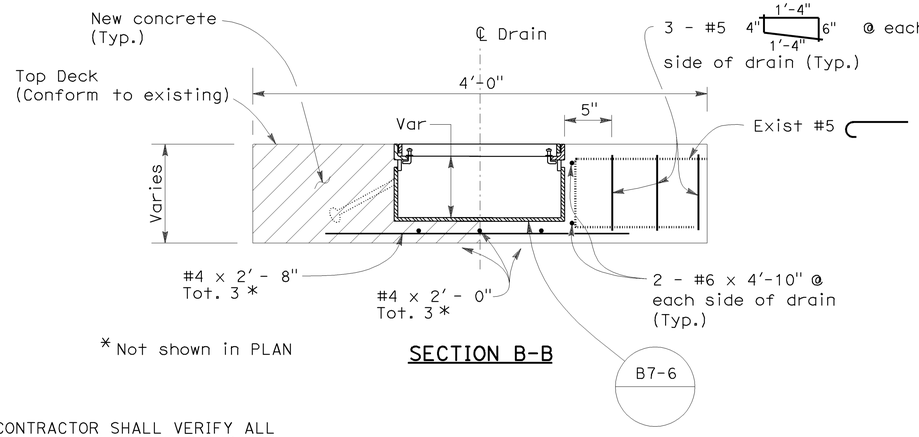

* Not shown in PLAN

SECTION B-B

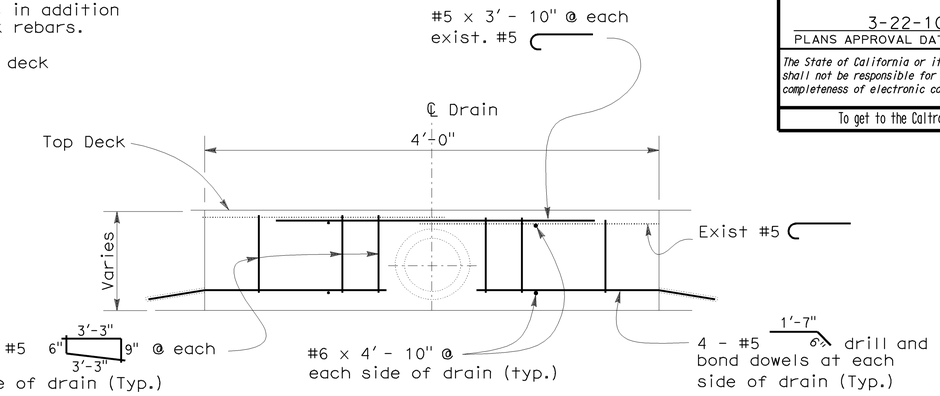

SECTION C-C

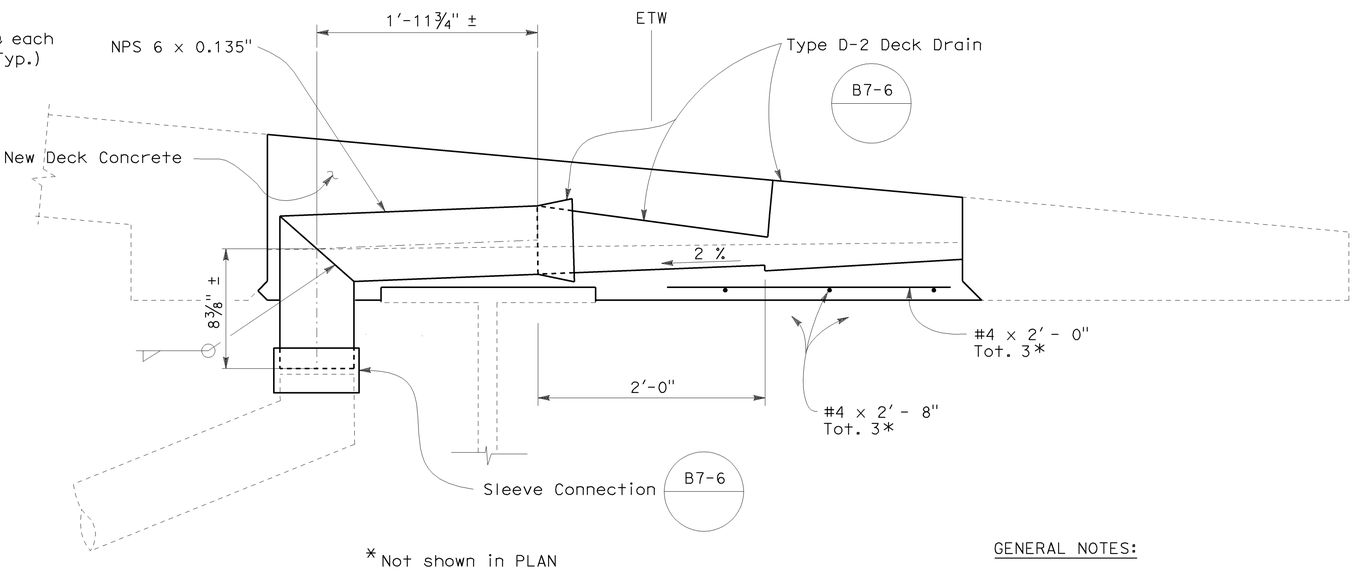

* Not shown in PLAN

SECTION D-D
(Exist. Type 2 Barrier not shown)

GENERAL NOTES:

REINFORCED CONCRETE:
f'c = 4,000 psi
fy = 60,000 psi

THE CONTRACTOR SHALL VERIFY ALL CONTROLLING FIELD DIMENSIONS BEFORE ORDERING OR FABRICATING ANY MATERIAL.

NEW DECK DRAIN DETAILS

1½" = 1'

REPLACE JOINT SEALS, REPLACE BEARINGS, TREAT BRIDGE DECKS & MODIFY DECK DRAINS

	BY	CHECKED
DESIGN	H. Su	L. Ellis
DETAILS	B. Ballesteros	H. Su
QUANTITIES	H. Su	L. Ellis

STATE OF CALIFORNIA
DEPARTMENT OF TRANSPORTATION

DIVISION OF MAINTENANCE
STRUCTURE MAINTENANCE AND INVESTIGATIONS

CU
EA 0E9601

BRIDGE NO. 37-0193F
POST MILE L5.5

S280 - N880 CONNECTOR VIADUCT

DRAINAGE DETAILS - 2

STRUCTURES DESIGN DETAIL SHEET (ENGLISH) (REV. 10/25/05)

ORIGINAL SCALE IN INCHES FOR REDUCED PLANS 0 1 2 3

DISREGARD PRINTS BEARING EARLIER REVISION DATES →

REVISION DATES: 05-13-09 | 06-03-09 | 08-10-09 | 09-30-09 | 01-15-10

SHEET 9 OF 12

FILE => 40e960wc009.dgn

USERNAME => s114592 DATE PLOTTED => 18-MAR-2010 TIME PLOTTED => 10:24

DIST	COUNTY	ROUTE	POST MILES TOTAL PROJECT	SHEET No	TOTAL SHEETS
04	SF, SCI SM	101, 280 880	Var	24	26

Hongyuan Su 12-07-09
REGISTERED CIVIL ENGINEER DATE

HONGYUAN. SU No. C58260 Exp. 6-30-10 CIVIL — REGISTERED PROFESSIONAL ENGINEER — STATE OF CALIFORNIA

3-22-10
PLANS APPROVAL DATE

The State of California or its officers or agents shall not be responsible for the accuracy or completeness of electronic copies of this plan sheet.

To get to the Caltrans web site, go to: http://www.dot.ca.gov

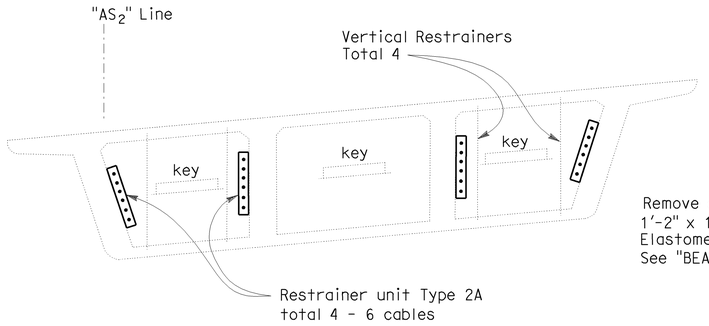

(A) HINGE RESTRAINER LAYOUT
NO SCALE

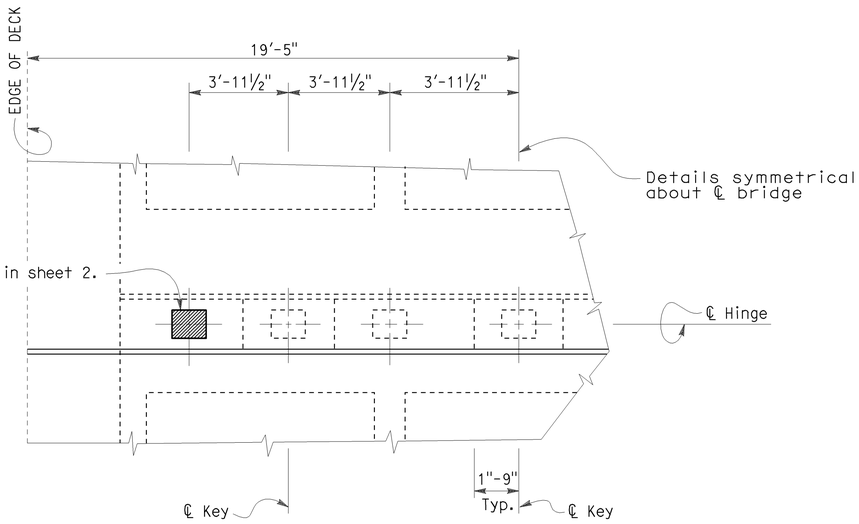

HINGE PLAN
NO SCALE

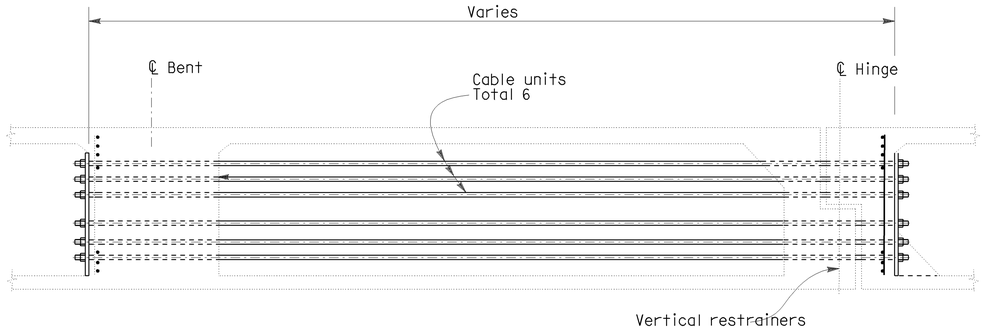

LONGITUDINAL HINGE RESTRAINER
NO SCALE

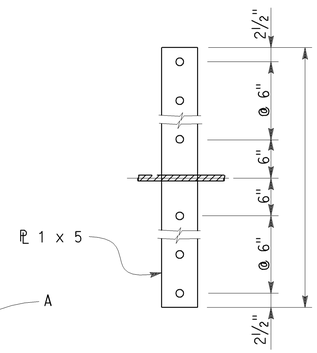

DETAIL - PLATE B
NO SCALE

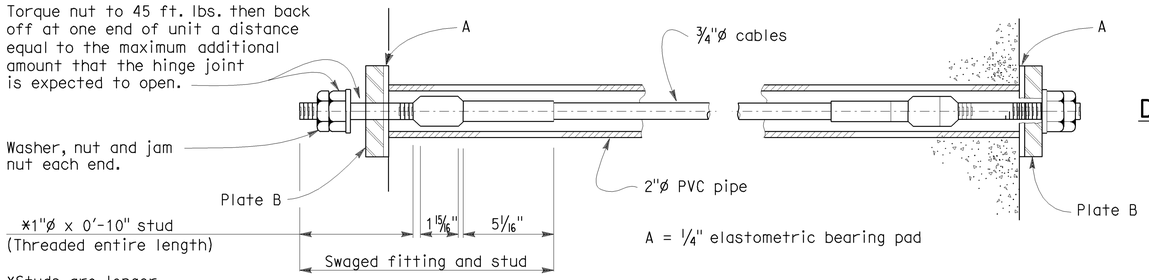

CABLE UNIT
NO SCALE

NOTE:
THE CONTRACTOR SHALL VERIFY ALL CONTROLLING FIELD DIMENSIONS BEFORE ORDERING OR FABRICATING ANY MATERIAL.

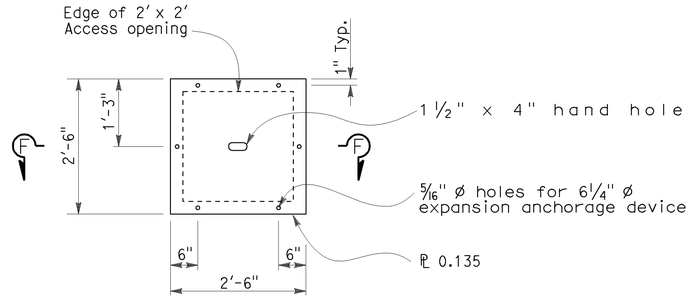

PLAN

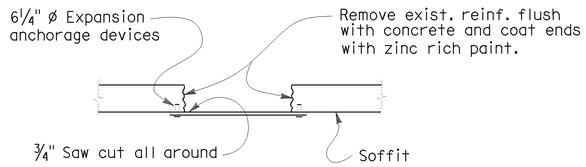

SECTION F - F

BOX GIRDER ACCESS HOLE & COVER PLATE DETAIL
NO SCALE

REPLACE JOINT SEALS, REPLACE BEARINGS, TREAT BRIDGE DECKS & MODIFY DECK DRAINS

AIRPORT TERMINAL ON-RAMP OC

HINGE RESTRAINER & ACCESS HOLE DETAILS

DESIGN	BY C. Lee	CHECKED H. Su	STATE OF CALIFORNIA DEPARTMENT OF TRANSPORTATION
DETAILS	BY B. Ballesteros	CHECKED C. Lee	DIVISION OF MAINTENANCE STRUCTURE MAINTENANCE AND INVESTIGATIONS
QUANTITIES	BY C. Lee	CHECKED H. Su	BRIDGE NO. 35-0274K; POST MILE 19.09

STRUCTURES DESIGN DETAIL SHEET (ENGLISH) (REV. 10/25/05)

ORIGINAL SCALE IN INCHES FOR REDUCED PLANS 0 1 2 3

CU EA 0E9601

DISREGARD PRINTS BEARING EARLIER REVISION DATES →

REVISION DATES: 08-03-09; 01-15-10

SHEET 10 OF 12

FILE => 40e960wc010.dgn

USERNAME => s1114592 DATE PLOTTED => 18-MAR-2010 TIME PLOTTED => 10:24

DIST	COUNTY	ROUTE	POST MILES TOTAL PROJECT	SHEET No	TOTAL SHEETS
04	SF, SCI SM	101, 280 880	Var	25	26

Hongyuan Su 12-07-09
REGISTERED CIVIL ENGINEER DATE

3-22-10
PLANS APPROVAL DATE

REGISTERED PROFESSIONAL ENGINEER
HONGYUAN. SU
No. C58260
Exp. 6-30-10
CIVIL
STATE OF CALIFORNIA

The State of California or its officers or agents shall not be responsible for the accuracy or completeness of electronic copies of this plan sheet.

To get to the Caltrans web site, go to: http://www.dot.ca.gov

DECK REPAIR DETAILS

BRIDGE NAME	BRIDGE NUMBER	TOTAL DECK AREA (SQ FT)	APPROXIMATE AREA DAMAGED (%)	APPROXIMATE DEPTH (INCHES)	REMOVE UNSOUND CONCRETE (CU FT)	RAPID SETTING CONCRETE PATCH (CU FT)
280/101 IC - NB 101 to SB 280 (WL LINE)	34-0135G	53720	2	2"	179	179
SOUTHBOUND COLLECTOR RD OC	37-0191K	9240	2	2"	31	31

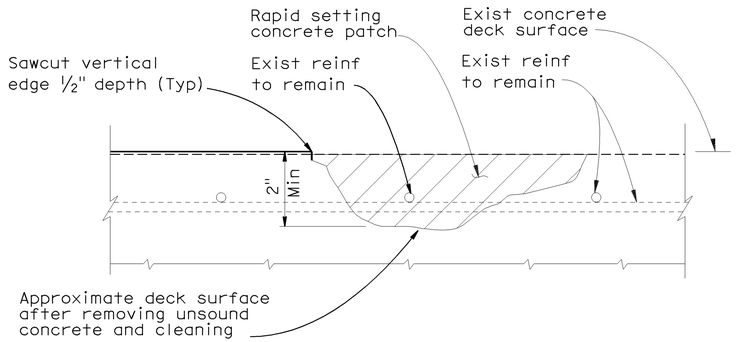

DECK DAMAGE REPAIR DETAIL

Location will be determined by the Engineer. Reinforcement may be encountered during deck concrete removal.

THE CONTRACTOR SHALL VERIFY ALL CONTROLLING FIELD DIMENSIONS BEFORE ORDERING OR FABRICATING ANY MATERIAL.

DESIGN	BY H. Su	CHECKED L. Ellis	STATE OF CALIFORNIA DEPARTMENT OF TRANSPORTATION	DIVISION OF MAINTENANCE STRUCTURE MAINTENANCE AND INVESTIGATIONS	BRIDGE NO. VARIES
DETAILS	BY B. Ballesteros	CHECKED H. Su			POST MILE VARIES
QUANTITIES	BY H. Su	CHECKED L. Ellis			

REPLACE JOINT SEALS, REPLACE BEARINGS, TREAT BRIDGE DECKS & MODIFY DECK DRAINS

NB 101 to SB 280 (WL Line) & SBND COLLECTOR RD OC

DECK REPAIR DETAILS

STRUCTURES DESIGN DETAIL SHEET (ENGLISH) (REV. 10/25/05)

ORIGINAL SCALE IN INCHES FOR REDUCED PLANS 0 1 2 3

CU EA OE9601

DISREGARD PRINTS BEARING EARLIER REVISION DATES →

REVISION DATES										SHEET	OF
06-03-09	09-30-09	11-10-09	01-15-10							11	12

FILE => 40e960wc011.dgn

USERNAME => s1114592 DATE PLOTTED => 18-MAR-2010 TIME PLOTTED => 10:25

DIST	COUNTY	ROUTE	POST MILES TOTAL PROJECT	SHEET No	TOTAL SHEETS
04	SF, SCI SM	101, 280 880	Var	26	26

Hongyuan Su 12-07-09
REGISTERED CIVIL ENGINEER DATE

3-22-10
PLANS APPROVAL DATE

REGISTERED PROFESSIONAL ENGINEER
HONGYUAN. SU
No. C58260
Exp. 6-30-10
CIVIL
STATE OF CALIFORNIA

The State of California or its officers or agents shall not be responsible for the accuracy or completeness of electronic copies of this plan sheet.

To get to the Caltrans web site, go to: http://www.dot.ca.gov

JOINT SEAL TABLE

BRIDGE NAME	BR. No.	JOINT LOCATION	EXISTING WATERSTOP	DEPTH CLEAN EXP. JOINT (FT)	TYPE OF JOINT SEAL MR=1½" (LF)	REMARKS
SOUTHBOUND COLLECTOR RD OC	37-0191K	AB 1	no	1	36	
		AB 4	no	1	36	

The following note applies to JOINT SEAL TYPE B:

1) Seal must satisfy both minimum Movement Rating (MR) and min. W1 requirements.

2) Min. W1 is the calculated maximum joint opening width at minimum temperature based on field measurement of the existing joint opening.

3) W1 shall be the smaller of the values determined as follows:

   A) 0.85 times the manufacturer's designed minimum uncompressed width of the seal.

   B) The width of the seal on the third succesive test cycle of the pressure deflection test, when compressed to an average pressure of 3 psi.

4) For details not shown see RSP B6-21 JOINT SEAL (MAXIMUM RATING=2") sheet

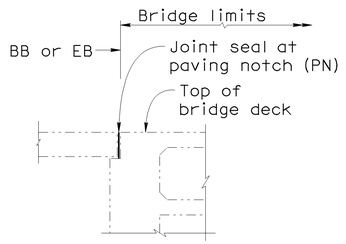

END DIAPHRAGM ABUTMENT

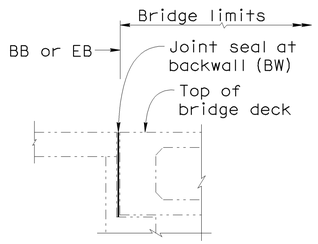

SEAT TYPE ABUTMENT

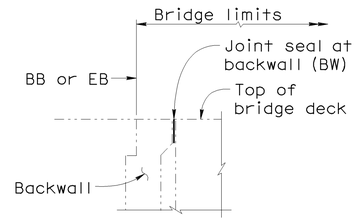

ABUTMENT WITH BACKWALL

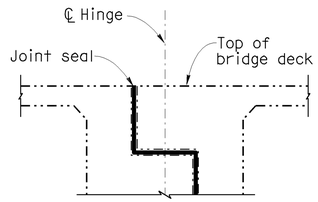

HINGE

JOINT SEAL LOCATION

No Scale

THE CONTRACTOR SHALL VERIFY ALL CONTROLLING FIELD DIMENSIONS BEFORE ORDERING OR FABRICATING ANY MATERIAL.

DESIGN	BY H. Su	CHECKED L. Ellis	
DETAILS	BY B. Ballesteros	CHECKED H. Su	
QUANTITIES	BY H. Su	CHECKED L. Ellis	

STATE OF CALIFORNIA
DEPARTMENT OF TRANSPORTATION

DIVISION OF MAINTENANCE
STRUCTURE MAINTENANCE AND INVESTIGATIONS

CU
EA 0E9601

BRIDGE NO. 37-0191K
POST MILE 0.15

REPLACE JOINT SEALS, REPLACE BEARINGS, TREAT BRIDGE DECKS & MODIFY DECK DRAINS

SBND COLLECTOR RD OC

MISCELLANEOUS DETAILS

STRUCTURES DESIGN DETAIL SHEET (ENGLISH) (REV. 10/25/05)

ORIGINAL SCALE IN INCHES FOR REDUCED PLANS 0 1 2 3

DISREGARD PRINTS BEARING EARLIER REVISION DATES →

REVISION DATES: 06-03-09 | 08-10-09 | 09-30-09 | 11-10-09

SHEET 12 OF 12

FILE => 40e960wc012.dgn

USERNAME => s1114592 DATE PLOTTED => 18-MAR-2010 TIME PLOTTED => 10:25