Dist	COUNTY	ROUTE	POST MILES TOTAL PROJECT	SHEET No.	TOTAL SHEETS
04	SCI	101	R27.6/40.2	1	173

ACNH-Q101(157)E

STATE OF CALIFORNIA
DEPARTMENT OF TRANSPORTATION

PROJECT PLANS FOR CONSTRUCTION ON
STATE HIGHWAY

IN SANTA CLARA COUNTY
IN SAN JOSE
FROM 0.6 MILE NORTH OF SILICON VALLEY BOULEVARD
TO GUADALUPE RIVER BRIDGE

TO BE SUPPLEMENTED BY STANDARD PLANS DATED MAY 2006

INDEX OF PLANS

SHEET No.	DESCRIPTION
1	TITLE AND LOCATION MAP
2	LOCATIONS OF CONSTRUCTION
3-6	TYPICAL CROSS SECTIONS
7-48	CONSTRUCTION DETAILS
49-52	TEMPORARY WATER POLLUTION CONTROL PLANS AND DETAILS
53-81	CONSTRUCTION AREA SIGNS
82-102	PAVEMENT DELINEATION PLANS, DETAILS, AND QUANTITIES
103-129	SUMMARY OF QUANTITIES
130-136	ELECTRICAL PLANS
137-171	REVISED AND NEW STANDARD PLANS

STRUCTURE PLANS

172-173 COYOTE CREEK BRIDGE Br No. 37-0102R/L

THE STANDARD PLANS LIST APPLICABLE TO THIS CONTRACT IS INCLUDED IN THE NOTICE TO BIDDERS AND SPECIAL PROVISIONS BOOK.

LOCATION MAP

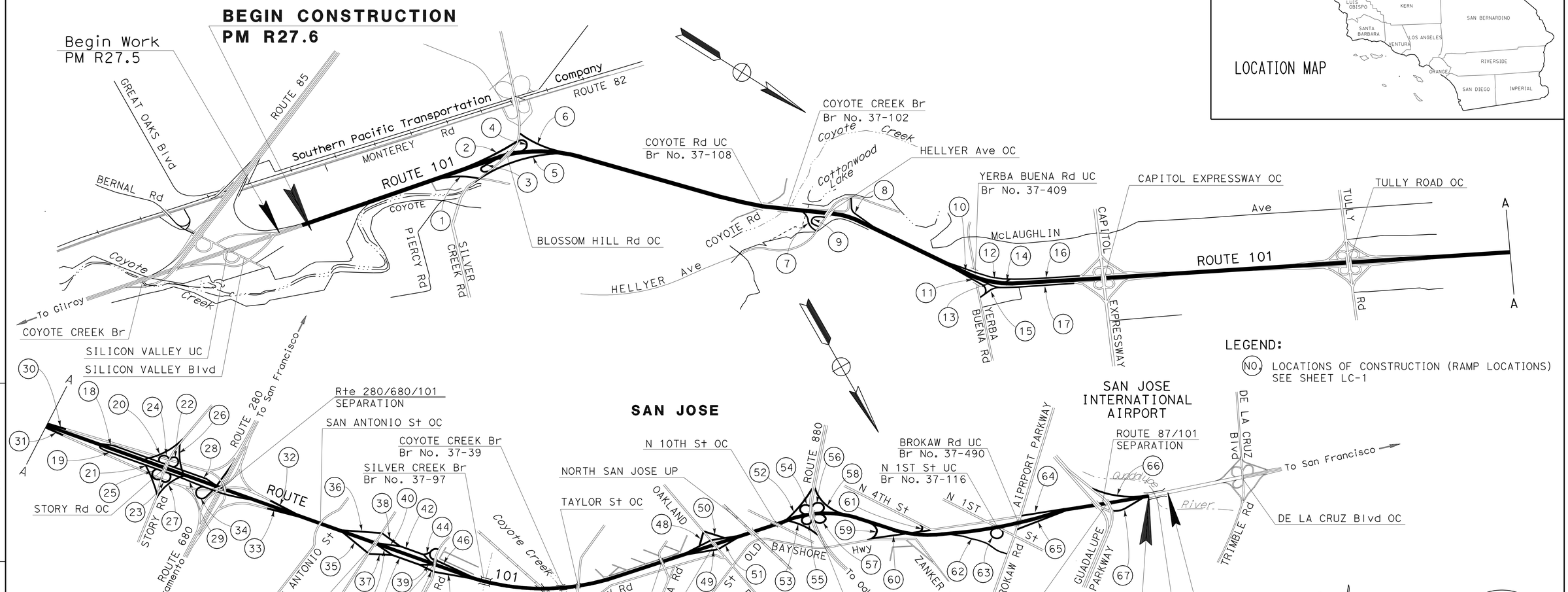

NOTE:
THE TABLE OF LOCATIONS OF CONSTRUCTIONS IS SHOWN ON THE LOCATIONS OF CONSTRUCTION SHEET.

THE CONTRACTOR SHALL POSSESS THE CLASS (OR CLASSES) OF LICENSE AS SPECIFIED IN THE "NOTICE TO BIDDERS".

PROJECT MANAGER F. MENSAH

DESIGN ENGINEER A. BHATNAGAR

11/04/08
PROJECT ENGINEER REGISTERED CIVIL ENGINEER — DATE

May 11, 2009
PLANS APPROVAL DATE

REGISTERED PROFESSIONAL ENGINEER A. Bhatnagar No. 48814 Exp. 9-30-10 CIVIL STATE OF CALIFORNIA

THE STATE OF CALIFORNIA OR ITS OFFICERS OR AGENTS SHALL NOT BE RESPONSIBLE FOR THE ACCURACY OR COMPLETENESS OF SCANNED COPIES OF THIS PLAN SHEET.

LAST REVISION 12-22-08 DATE PLOTTED => 03-SEP-2009 TIME PLOTTED => 08:54

CONTRACT No. 04-0C9014

Dist	COUNTY	ROUTE	POST MILES TOTAL PROJECT	SHEET No.	TOTAL SHEETS
04	SCI	101	R27.6/40.2	2	173

REGISTERED CIVIL ENGINEER DATE 11/04/08

5-11-09
PLANS APPROVAL DATE

REGISTERED PROFESSIONAL ENGINEER A. Bhatnagar No. 48814 Exp 9-30-10 CIVIL STATE OF CALIFORNIA

THE STATE OF CALIFORNIA OR ITS OFFICERS OR AGENTS SHALL NOT BE RESPONSIBLE FOR THE ACCURACY OR COMPLETENESS OF SCANNED COPIES OF THIS PLAN SHEET.

RAMP LOCATIONS

LOCATION No.	PM	DESCRIPTION
1	28.6	N/B OFF TO ROUTE 82/BLOSSOM HILL ROAD
2		S/B ON FROM S/B ROUTE 82
3		N/B ON FROM E/B BLOSSOM HILL ROAD
4		S/B ON FROM N/B ROUTE 82
5		N/B ON FROM W/B BLOSSOM HILL ROAD
6		S/B OFF TO ROUTE 82/BLOSSOM HILL ROAD
7	30.1	N/B OFF TO HELLYER AVENUE
8		S/B OFF TO HELLYER AVENUE
9		N/B ON FROM HELLYER AVENUE
10	30.9	S/B ON FROM YERBA BUENA ROAD
11		N/B OFF TO YERBA BUENA ROAD
12		SEGMENT S/B OFF TO YERBA BUENA ROAD
13		N/B OFF TO CAPITOL EXPRESSWAY
14		S/B ON FROM CAPITOL EXPRESSWAY
15		SEGMENT N/B ON FROM YERBA BUENA ROAD
16		S/B COLLECTOR CAPITOL EXPRESSWAY TO YERBA BUENA ROAD
17		N/B COLLECTOR YERBA BUENA ROAD TO CAPITOL EXPRESSWAY
18	34.5	S/B ON FROM STORY ROAD
19		N/B OFF TO STORY ROAD
20		SEGMENT S/B ON FROM E/B STORY ROAD
21		SEGMENT N/B OFF TO E/B STORY ROAD
22		SEGMENT S/B ON FROM W/B STORY ROAD
23		SEGMENT N/B OFF TO W/B STORY ROAD
24		SEGMENT S/B OFF TO E/B STORY ROAD
25		SEGMENT N/B ON FROM E/B STORY ROAD
26		SEGMENT S/B OFF TO W/B STORY ROAD
27		SEGMENT N/B ON FROM W/B STORY ROAD
28		S/B OFF TO STORY ROAD
29		SEGMENT N/B ON FROM STORY ROAD
30	34.8	S/B ON FROM ROUTE 280 & 680
31		N/B OFF TO ROUTE 280 & 680
32		S/B OFF TO ROUTE 280 & 680
33		N/B ON FROM S/B 680
34		N/B ON FROM S/B 280 & STORY ROAD

RAMP LOCATIONS

LOCATION No.	PM	DESCRIPTION
35	35.7	N/B OFF TO ROUTE 130/ALUM ROCK
36		S/B ON FROM ROUTE 130/ALUM ROCK
37		SEGMENT N/B ON FROM ROUTE 130
38		SEGMENT S/B OFF TO ROUTE 130
39		N/B ON FROM ROUTE 130
40	36.1	SEGMENT S/B ON FROM JULIAN/McKEE
41		SEGMENT N/B OFF TO JULIAN/McKEE
42		SEGMENT S/B COLLECTOR JULIAN/ROUTE 130
43		SEGMENT N/B COLLECTOR ROUTE 130/McKEE
44		S/B ON FROM JULIAN/McKEE
45		N/B OFF TO JULIAN/McKEE
46		S/B OFF TO JULIAN/McKEE
47		N/B ON FROM W/B McKEE
48	37.7	S/B ON FROM NORTH 13TH STREET
49		N/B OFF TO NORTH 13TH STREET
50		S/B OFF TO NORTH 13TH STREET
51		N/B ON FROM NORTH 13TH STREET
52	38.3	S/B ON FROM N/B ROUTE 880
53		N/B OFF TO N/B ROUTE 880
54		S/B OFF TO N/B ROUTE 880
55		N/B ON FROM N/B ROUTE 880
56		S/B ON FROM S/B ROUTE 880
57		N/B OFF TO S/B ROUTE 880
58		S/B OFF TO S/B ROUTE 880
59	38.8	N/B OFF TO OLD BAYSHORE ROAD
60		N/B ON FROM OLD BAYSHORE ROAD
61	38.9	S/B ON FROM NORTH FOURTH STREET
62	39.4	N/B OFF TO NORTH 1ST STREET/BROKAW ROAD
63		N/B ON FROM NORTH 1ST STREET
64		S/B OFF TO NORTH 1ST STREET
65		N/B ON FROM BROKAW ROAD
66	39.9	S/B OFF TO ROUTE 87 (GUADALUPE PARKWAY)
67		N/B ON FROM ROUTE 87 (GUADALUPE PARKWAY)

NOTE:

1. FOR CONSTRUCTION DETAILS AND TYPICAL RAMP CROSS SECTIONS, SEE SHEET C-2 TO C-40 AND X-4.

LOCATIONS OF CONSTRUCTION (RAMP LOCATIONS)

LC-1

REVISED BY	DATE REVISED
A	A
AB	MN

CALCULATED-DESIGNED BY / CHECKED BY

FUNCTIONAL SUPERVISOR: ASHOK BHATNAGAR

STATE OF CALIFORNIA - DEPARTMENT OF TRANSPORTATION

Caltrans MAINTENANCE

LAST REVISION 11-04-08 | DATE PLOTTED => 31-JUL-2009 | TIME PLOTTED => 06:50

Dist	COUNTY	ROUTE	POST MILES TOTAL PROJECT	SHEET No.	TOTAL SHEETS
04	SCI	101	R27.6/40.2	3	173

REGISTERED CIVIL ENGINEER 11/04/08 DATE

5-11-09
PLANS APPROVAL DATE

REGISTERED PROFESSIONAL ENGINEER A. Bhatnagar No. 48814 Exp 9-30-10 CIVIL STATE OF CALIFORNIA

THE STATE OF CALIFORNIA OR ITS OFFICERS OR AGENTS SHALL NOT BE RESPONSIBLE FOR THE ACCURACY OR COMPLETENESS OF SCANNED COPIES OF THIS PLAN SHEET.

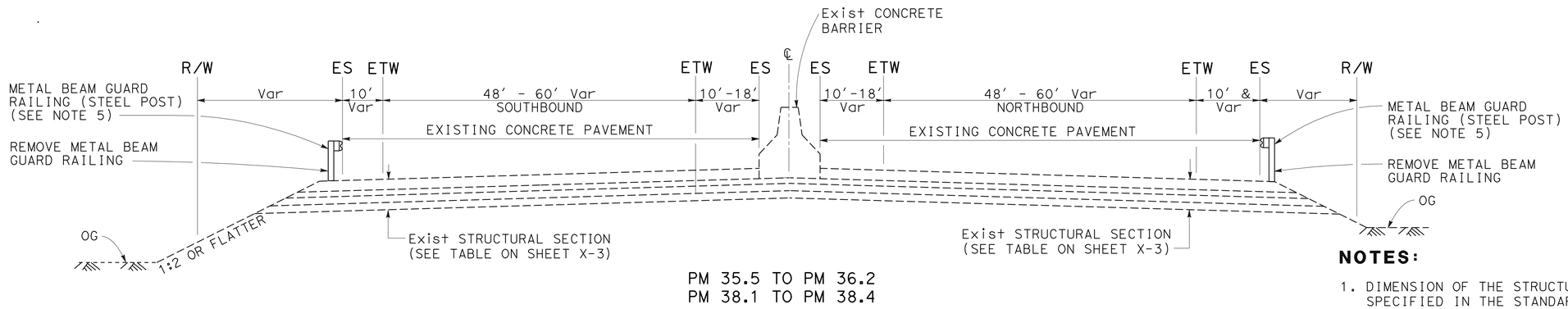

PM 35.5 TO PM 36.2
PM 38.1 TO PM 38.4

NOTES:

1. DIMENSION OF THE STRUCTURAL SECTIONS ARE SUBJECT TO TOLERANCES SPECIFIED IN THE STANDARD SPECIFICATIONS.
2. SUPERELEVATION AS SHOWN OR AS DIRECTED BY THE ENGINEER.
3. PAVEMENT DELINEATION SHALL BE REPLACED IN KIND AND PLACED ON THE SAME ALIGNMENT AND LOCATIONS AS EXISTING PAVEMENT DELINEATION.
4. ALL EXISTING STRUCTURAL SECTION SHOWN ARE BASED ON AS-BUILT AND CONSIDERED APPROXIMATE.
5. FOR LOCATIONS AND DIMENSIONS OF ADDITIONAL COLD PLANE AC PAVEMENT, SEE Q-1 TO Q-12, HMA DIKES Q-13 TO Q-18, MBGR Q-19 TO Q-24 AND SHOULDER BACKING, SEE Q-25 & Q-26.
6. EXISTING UTILITIES HAVE NOT BEEN PLOTTED ON THESE PLANS.
7. COLD PLANING SHOULD BE LIMITED WITHIN AC AND STOP COLD PLANING IF CONCRETE PAVEMENT ENCOUNTERED WITHIN COLD PLANING DEPTH AND SURFACING SAME DEPTH WITH AC TO MAINTAIN EXISTING GRADE.

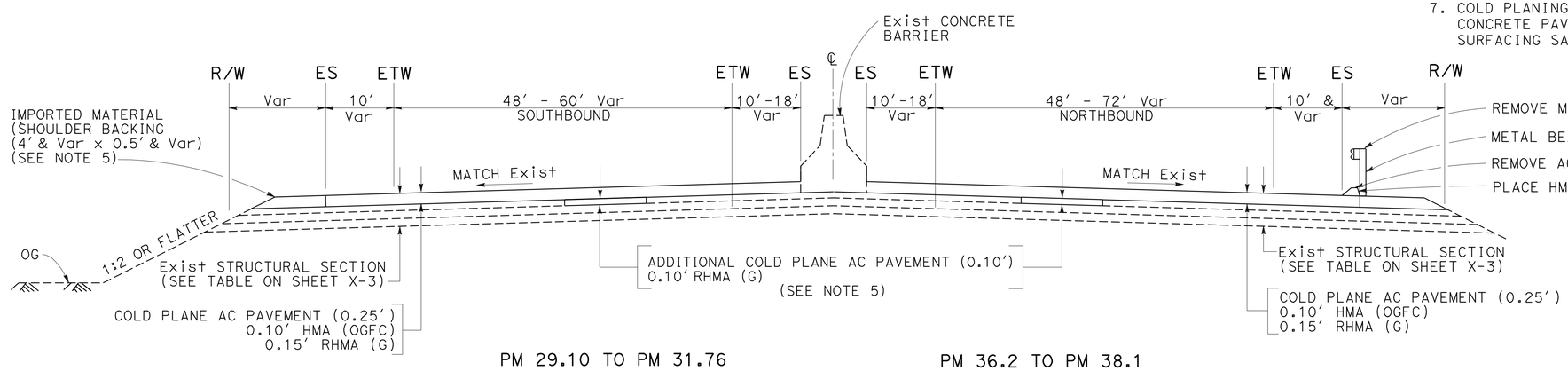

PM 29.10 TO PM 31.76
PM 34.20 TO PM 35.50

PM 36.2 TO PM 38.1
PM 38.4 TO PM 40.2

ABBREVIATION:

HMA	HOT MIX ASPHALT
RHMA (G)	RUBBERIZED HOT MIX ASPHALT (GAP GRADED)
HMA (OGFC)	HOT MIX ASPHALT (OPEN GRADED FRICTION COURSE)

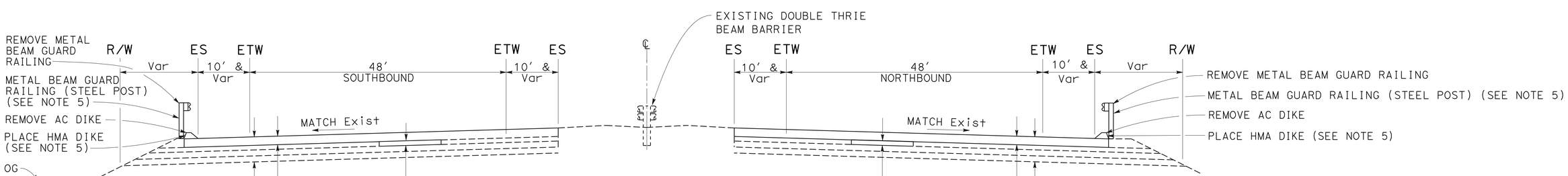

PM R27.6 TO PM 29.1

TYPICAL CROSS SECTIONS

NO SCALE

X-1

STATE OF CALIFORNIA - DEPARTMENT OF TRANSPORTATION
Caltrans MAINTENANCE

FUNCTIONAL SUPERVISOR: ASHOK BHATNAGAR
CALCULATED-DESIGNED BY: CT
CHECKED BY: MN
REVISED BY: A
DATE REVISED: A

LAST REVISION: DATE PLOTTED => 31-JUL-2009
12-26-08 TIME PLOTTED => 06:50

Dist	COUNTY	ROUTE	POST MILES TOTAL PROJECT	SHEET No.	TOTAL SHEETS
04	SCI	101	R27.6/40.2	4	173

REGISTERED CIVIL ENGINEER 11/04/08 DATE

5-11-09
PLANS APPROVAL DATE

REGISTERED PROFESSIONAL ENGINEER A. Bhatnagar No. 48814 Exp 9-30-10 CIVIL STATE OF CALIFORNIA

THE STATE OF CALIFORNIA OR ITS OFFICERS OR AGENTS SHALL NOT BE RESPONSIBLE FOR THE ACCURACY OR COMPLETENESS OF SCANNED COPIES OF THIS PLAN SHEET.

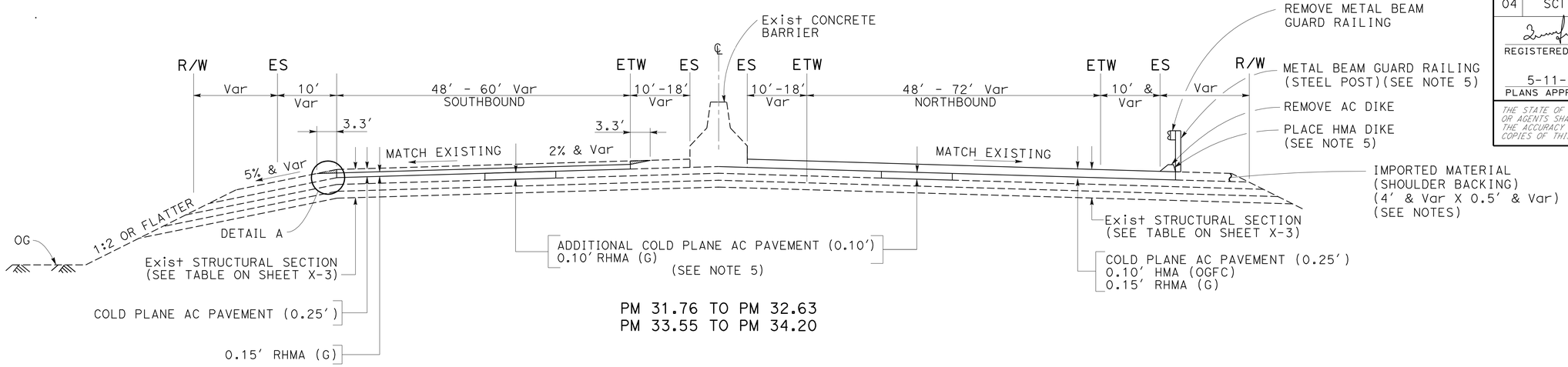

PM 31.76 TO PM 32.63
PM 33.55 TO PM 34.20

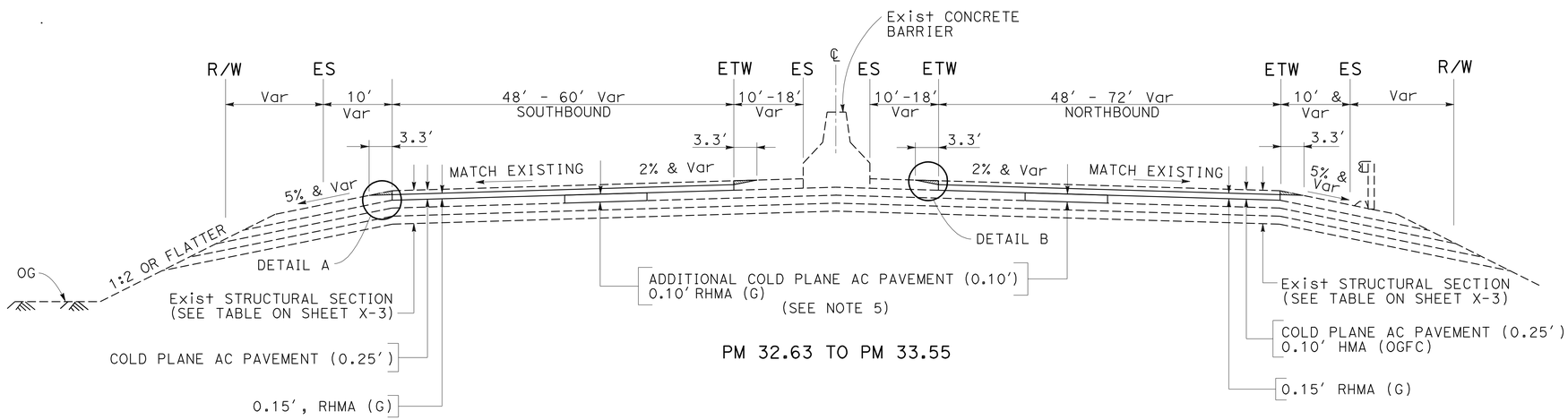

PM 32.63 TO PM 33.55

DETAIL A **DETAIL B**

TYPICAL CROSS SECTIONS
NO SCALE

X-2

REVISED BY	DATE REVISED	CALCULATED-DESIGNED BY	CHECKED BY	FUNCTIONAL SUPERVISOR
A	A	CT	MN	ASHOK BHATNAGAR

STATE OF CALIFORNIA - DEPARTMENT OF TRANSPORTATION
Caltrans MAINTENANCE

LAST REVISION 11-04-08 | DATE PLOTTED => 31-JUL-2009 | TIME PLOTTED => 06:50

Dist	COUNTY	ROUTE	POST MILES TOTAL PROJECT	SHEET No.	TOTAL SHEETS
04	SCI	101	R27.6/40.2	5	173

REGISTERED CIVIL ENGINEER 11/04/08 DATE

5-11-09
PLANS APPROVAL DATE

REGISTERED PROFESSIONAL ENGINEER A. Bhatnagar No. 48814 Exp 9-30-10 CIVIL STATE OF CALIFORNIA

THE STATE OF CALIFORNIA OR ITS OFFICERS OR AGENTS SHALL NOT BE RESPONSIBLE FOR THE ACCURACY OR COMPLETENESS OF SCANNED COPIES OF THIS PLAN SHEET.

EXISTING STRUCTURAL SECTIONS

POST MILE		DESCRIPTION			
		INSIDE SHOULDER	#1, #2 LANES	#3, #4 LANES AND ADDTIONAL LANES	OUTSIDE SHOULDER
R27.6 TO R29.0	0.62 MILE NORTH OF BERNAL ROAD OVERCROSSING TO 0.37 MILE NORTH OF BLOSSOM HILL ROAD OC NORTHBOUND & SOUTHBOUND	0.41′ AC 0.44′ AB 0.80′ AS	0.41′ AC 0.15′ ATPB 0.71′ CTB 0.81′ AS	0.10′ OGAC 0.30′ AC 0.67′ PCC 1.00′ AS	0.10′ OGAC 0.30′ AC 1.25′ AS
R29.0 TO 29.7	0.37 MILE NORTH OF BLOSSOM HILL ROAD OC TO COYOTE ROAD UC NORTHBOUND & SOUTHBOUND	0.60′ AC 1.15′ AB	0.10′ OGAC 0.15′ AC } * 0.67′ PCC 1.00′ AS	0.58′ AC 0.25′ ATPB 0.71′ CTB 1.00′ AS	Var 0.41′-0.46′ AC 0.85′ AB 1.00′ AS
29.7 TO 34.9	COYOTE ROAD UC TO 280/680/101 SEPARATION NORTHBOUND & SOUTHBOUND	0.44′ AC 0.80′ AB 0.90′ AS	Var 0.48′-0.49′AC 0.67′ PCC 1.00′ AS	0.59′ AC 0.25′ ATPB 0.71′ CTB 1.00′ AS	Var 0.41′-0.44′ AC Var 0.66′-0.84′ AB Var 0.49′-1.35′ AS
34.9 TO 35.5	280/680/101 SEPARATION TO SAN ANTONIO ST OC NORTHBOUND & SOUTHBOUND	0.08′ OGAC 0.75′ AC Var 1′-1.84′ AB	0.08′ OGAC 0.15′ AC } * 0.67′ PCC 1.00′ AS	0.08′ OGAC 0.49′ AC 0.90′ CTB 1.64′ AS	0.08′ OGAC 0.25′ AC 0.90′ CTB 1.64′ AS
35.5 TO 36.2	SAN ANTONIO ST OC TO JULIAN/McKEE ROAD OC NORTHBOUND & SOUTHBOUND	0.85′ PCC 0.25′ ATPB 0.25′ ACB 0.71′ AS	0.85′ PCC 0.25′ ATPB 0.25′ ACB 0.71′ AS	0.85′ PCC 0.25′ ATPB 0.25′ ACB 0.71′ AS	0.85′ PCC 0.25′ ATPB 0.25′ ACB 0.71′ AS
36.2 TO 38.1	JULIAN/McKEE ROAD OC TO JUNCTION 880/101 SEPARATION NORTHBOUND & SOUTHBOUND	0.08′ OGAC 0.41′ AC 0.71′ CTB 1.00′ AS	0.08′ OGAC 0.41′ AC 0.67′ PCC 0.49′ CTB 1.33′ AS	0.10′ OGAC 0.49′ AC 0.71′ CTB 0.85′ AS 1.00′ PM	0.10′ OGAC Var 0.34′-0.71′ AC 0.25′ ATPB Var 0.59′-1.00′ CTB Var 0.46′-2.4′ AS
38.1 TO 38.5	JUNCTION 880/101 SEPARATION NORTHBOUND & SOUTHBOUND	0.85′ PCC 0.25′ ATPB 0.25′ ACB Var 0.34′-0.71′AS 1.00′ PM	0.85′ PCC 0.25′ ATPB 0.25′ ACB Var 0.34′-0.71′AS 1.00′ PM	0.85′ PCC 0.25′ ATPB 0.25′ ACB Var 0.34′-0.71′AS 1.00′ PM	0.85′ PCC 0.25′ ATPB 0.25′ ACB Var 0.34′-0.44′ AS 1.00′ PM
38.5 TO 39.3	JUNCTION 880/101 SEPARATION TO NORTH FIRST STREET UC NORTHBOUND & SOUTHBOUND	0.08′ OGAC 0.41′ AC 0.71′ CTB 1.00′ AS	Var 0.25′-0.92 AC* 0.67′ PCC 0.49′ CTB 1.33′ AS	0.10′ OGAC 0.44′ AC 1.00′ CTB 1.00′ AS	0.10′ OGAC Var 0.34′-0.44′ AC Var 0.71′-1.00′ CTB 1.00′ AS
39.3 TO 39.4	NORTH FIRST STREET UC TO 1.86 MILE NORTH OF BROKAW ROAD UC NORTHBOUND & SOUTHBOUND	0.10′ OGAC 0.66′ AC 0.25′ ATPB 0.59′ CTB 0.88′ AS	0.10′ OGAC 0.66′ AC 0.25′ ATPB 0.59′ CTB 0.88′ AS	0.10′ OGAC 0.66′ AC 0.25′ ATPB 0.59′ CTB 0.88′ AS	0.10′ OGAC 0.34′ AC 0.85′ AB 0.90′ AS
39.4 TO 40.2	1.86 MILE NORTH OF BROKAW ROAD UC TO GUADALUPE RIVER BRIDGE NORTHBOUND & SOUTHBOUND	0.10′ OGAC 0.66′ AC 0.71′ CTB 1.00′ AS	Var 0-0.10′ OGAC Var 0.49′-0.66′AC 0.67′ PCC 0.49′ CTB 1.33′ AS	0.10′ OGAC 0.44′ AC 1.00′ CTB 1.00′ AS	0.10′ OGAC 0.34′ AC 0.71′ CTB 1.00′ AS

* SEE NOTE 7 ON SHEET X-1

ALL DIMENSIONS ARE IN FEET UNLESS OTHERWISE SHOWN

TYPICAL CROSS SECTIONS

NO SCALE

X-3

STATE OF CALIFORNIA - DEPARTMENT OF TRANSPORTATION
Caltrans MAINTENANCE

FUNCTIONAL SUPERVISOR: ASHOK BHATNAGAR
CALCULATED-DESIGNED BY: CT
CHECKED BY: MN
REVISED BY: A
DATE REVISED: A

LAST REVISION 11-04-08 DATE PLOTTED => 31-JUL-2009 TIME PLOTTED => 06:51

Dist	COUNTY	ROUTE	POST MILES TOTAL PROJECT	SHEET No.	TOTAL SHEETS
04	SCI	101	R27.6/40.2	6	173

REGISTERED CIVIL ENGINEER 11/04/08 DATE

5-11-09
PLANS APPROVAL DATE

REGISTERED PROFESSIONAL ENGINEER A. Bhatnagar No. 48814 Exp 9-30-10 CIVIL STATE OF CALIFORNIA

THE STATE OF CALIFORNIA OR ITS OFFICERS OR AGENTS SHALL NOT BE RESPONSIBLE FOR THE ACCURACY OR COMPLETENESS OF SCANNED COPIES OF THIS PLAN SHEET.

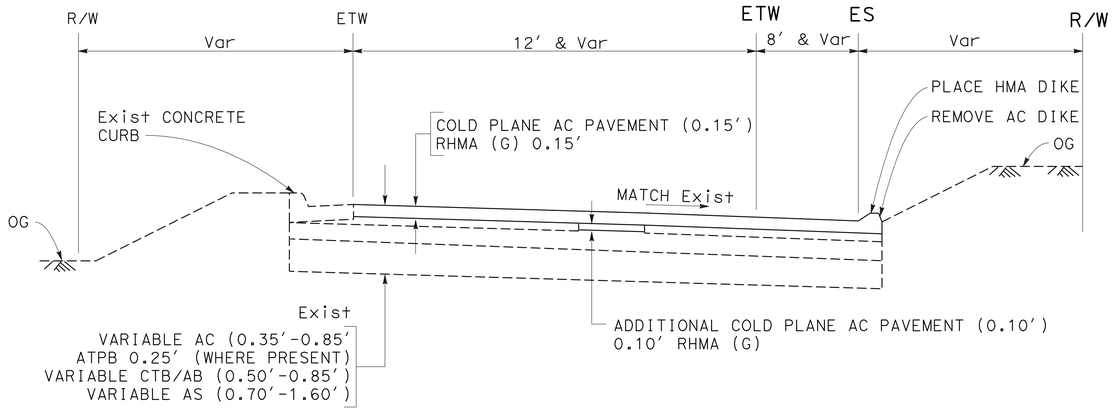

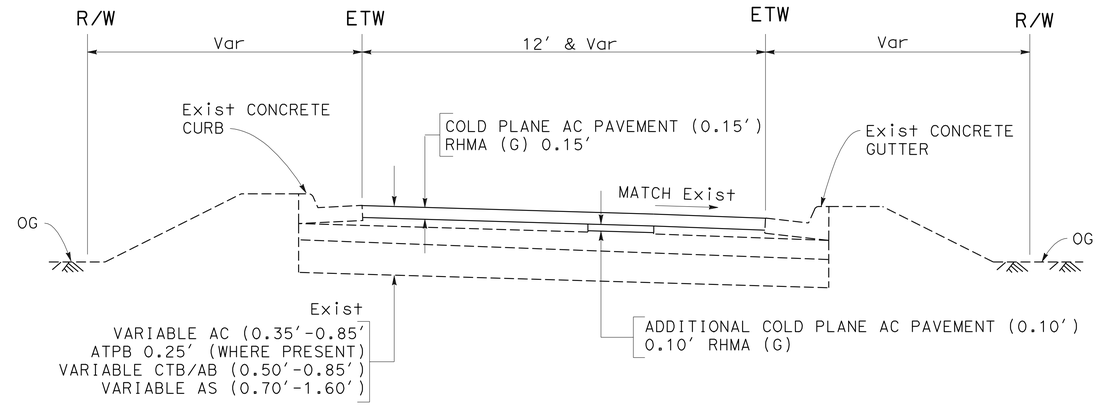

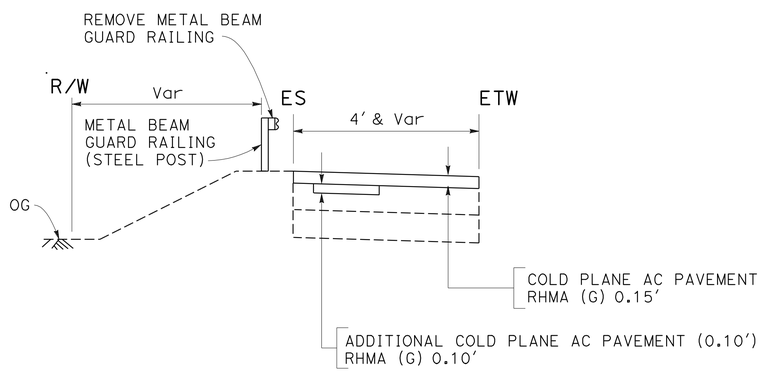

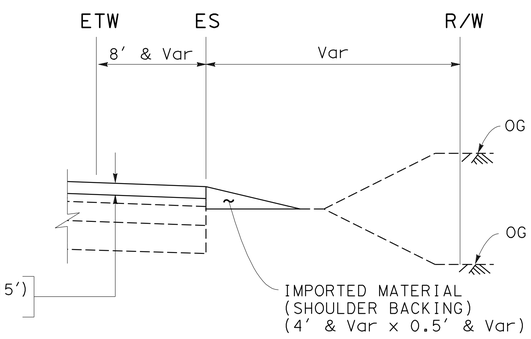

NOTE:

SEE SHEET LC-1 FOR RAMP LOCATIONS.

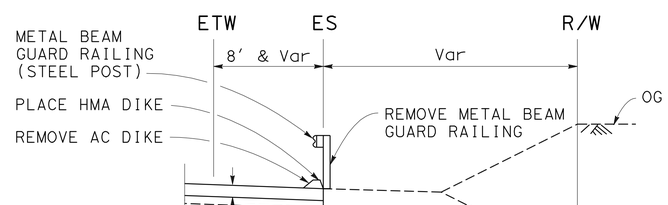

ALL DIMENSIONS ARE IN FEET UNLESS OTHERWISE SHOWN

TYPICAL CROSS SECTIONS (RAMPS)

NO SCALE

FOR NOTES, ABBREVIATIONS &/OR LEGEND, SEE SHEET X-1

X-4

STATE OF CALIFORNIA - DEPARTMENT OF TRANSPORTATION
Caltrans MAINTENANCE

FUNCTIONAL SUPERVISOR: ASHOK BHATNAGAR

CALCULATED-DESIGNED BY: CT | CHECKED BY: MN

REVISED BY | DATE REVISED: A | A

LAST REVISION 11-04-08 | DATE PLOTTED => 31-JUL-2009 | TIME PLOTTED => 06:51

Dist	COUNTY	ROUTE	POST MILES TOTAL PROJECT	SHEET No.	TOTAL SHEETS
04	SCI	101	R27.6/40.2	7	173

REGISTERED CIVIL ENGINEER 11/04/08 DATE

5-11-09
PLANS APPROVAL DATE

REGISTERED PROFESSIONAL ENGINEER A. Bhatnagar No. 48814 Exp 9-30-10 CIVIL STATE OF CALIFORNIA

THE STATE OF CALIFORNIA OR ITS OFFICERS OR AGENTS SHALL NOT BE RESPONSIBLE FOR THE ACCURACY OR COMPLETENESS OF SCANNED COPIES OF THIS PLAN SHEET.

FOR COMPLETE RIGHT OF WAY AND ACCURATE ACCESS DATA, SEE RIGHT OF WAY RECORD MAPS AT DISTRICT OFFICE.

NOTES:

1. EXISTING UTILITY FACILITIES HAVE NOT BEEN PLOTTED ON THESE PLANS.
2. EXACT LIMITS OF COLD PLANE AC PAVEMENT SHALL BE DETERMINED BY THE ENGINEER.
3. LANE AND SHOULDER WIDTHS OF MAINLINE & ADDITIONAL LANE ARE APPROXIMATE.
4. SEE SHEETS C-41 & C-42 FOR ADDITIONAL CONSTRUCTION DETAILS.
5. SEE Q-1 TO Q-12 SHEETS FOR LOCATIONS AND DIMENSIONS OF ADDITIONAL RUBBERIZED HMA (TYPE G) FOR SEVERELY DAMAGED AREA AT RAMPS AND MAINLINE.
6. SEE Q-13 TO Q-18 SHEETS FOR LOCATIONS, QUANTITIES AND TYPE OF HMA DIKES.
7. SEE Q-25 & Q-26 SHEETS FOR LOCATIONS AND QUANTITIES OF IMPORTED MATERIAL (SHOULDER BACKING).
8. SEE Q-19 TO Q-24 SHEETS FOR LOCATIONS AND QUANTITIES OF MBGR (STEEL POST).
9. SEE PDQ SHEETS FOR PAVEMENT DELINEATION DETAILS.

LEGEND:

- COLD PLANE AC PAVEMENT 0.25′ HMA (OGFC) 0.10′ & RHMA (G) 0.15′-MAINLINE
- COLD PLANE AC PAVEMENT 0.15′ RHMA (G) 0.15′ - RAMP
- ADDITIONAL COLD PLANE AC PAVEMENT 0.10′ & RHMA (G) 0.10′
- EXISTING CONCRETE PAVEMENT
- DIRECTION OF TRAFFIC

ABBREVIATION:

HMA	HOT MIX ASPHALT
RHMA (G)	RUBBERIZED HOT MIX ASPHALT (GAP GRADED)
HMA (OGFC)	HOT MIX ASPHALT (OPEN GRADED FRICTION COURSE)

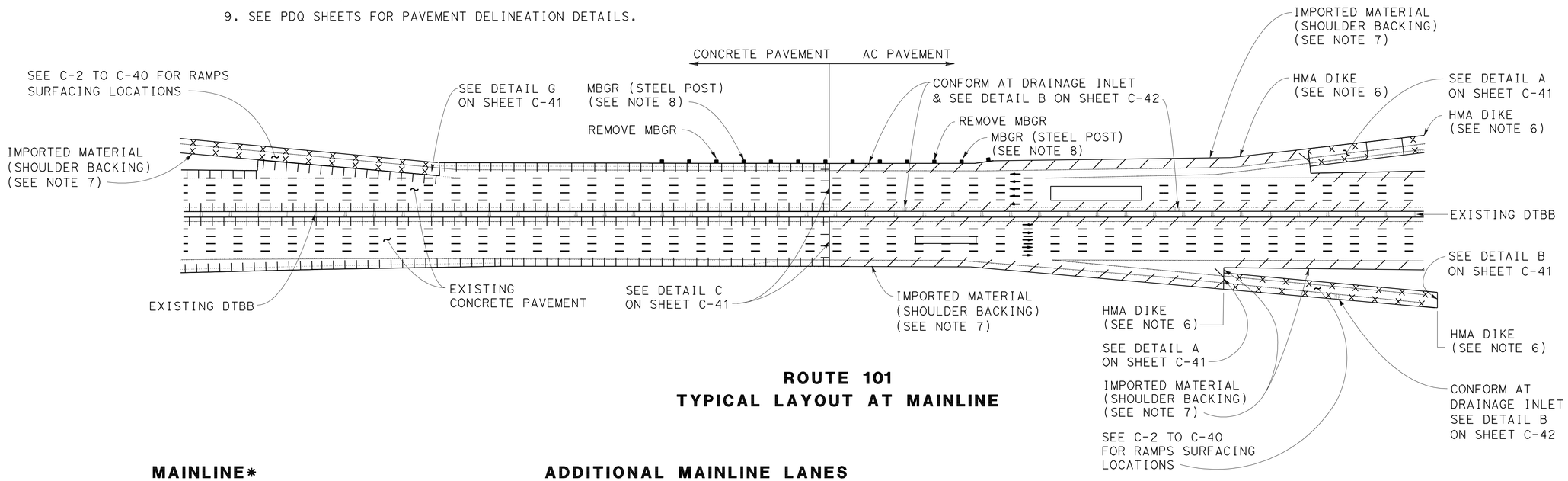

ROUTE 101
TYPICAL LAYOUT AT MAINLINE

MAINLINE*

LOCATION PM (APPROXIMATE)	DIRECTION	NUMBER OF LANES	WIDTH (FT)	SHOULDER WIDTH (FT) INSIDE	SHOULDER WIDTH (FT) OUTSIDE
27.6/29.1	NB & SB	4 (NB)	48	10	10
		4 (SB)	48	10	10
29.1/34.5	NB & SB	4 (NB)	48	17	10
		4 (SB)	48	17	10
34.5/34.9	NB & SB	4 (NB)	48	10	10
		4 (SB)	48	10	10
34.9/35.3	NB & SB	4 (NB)	48	5-8	10
		4 (SB)	48	5-8	10
35.3/36.1	NB & SB	4 (NB)	48	10	10
		4 (SB)	48	14	10
36.1/37.9	NB & SB	3-4 (NB)	36-53	2-12	10
		3-4 (SB)	36-53	2-12	10
37.9/40.2	NB & SB	4 (NB)	48	5-6	10
		4 (SB)	48	5-6	10

* SEE ADJACENT TABLES FOR ADDITIONAL LANES

ADDITIONAL MAINLINE LANES

LOCATION PM (APPROXIMATE)	DIRECTION	NUMBER OF LANES	WIDTH (FT)
33.3/33.7	NB	1	12
33.7/34.1	NB	2	24

ADDITIONAL MAINLINE LANES

LOCATION PM (APPROXIMATE)	DIRECTION	NUMBER OF LANES	WIDTH (FT)
32.0/32.3	SB	1	12
33.3/34.1	SB	1	12

ALL DIMENSIONS ARE IN FEET UNLESS OTHERWISE SHOWN

CONSTRUCTION DETAILS
(RAMP & INTERCHANGE)
NO SCALE

C-1

REVISED BY	DATE REVISED	CALCULATED-DESIGNED BY	CHECKED BY	FUNCTIONAL SUPERVISOR
A	A	MC	MN	ASHOK BHATNAGAR

STATE OF CALIFORNIA - DEPARTMENT OF TRANSPORTATION
Caltrans MAINTENANCE

LAST REVISION 12-26-08 DATE PLOTTED => 31-JUL-2009 TIME PLOTTED => 06:51

Dist	COUNTY	ROUTE	POST MILES TOTAL PROJECT	SHEET No.	TOTAL SHEETS
04	SCI	101	R27.6/40.2	8	173

REGISTERED CIVIL ENGINEER 11/04/08 DATE

5-11-09
PLANS APPROVAL DATE

REGISTERED PROFESSIONAL ENGINEER A. Bhatnagar No. 48814 Exp 9-30-10 CIVIL STATE OF CALIFORNIA

THE STATE OF CALIFORNIA OR ITS OFFICERS OR AGENTS SHALL NOT BE RESPONSIBLE FOR THE ACCURACY OR COMPLETENESS OF SCANNED COPIES OF THIS PLAN SHEET.

FOR COMPLETE RIGHT OF WAY AND ACCURATE ACCESS DATA, SEE RIGHT OF WAY RECORD MAPS AT DISTRICT OFFICE.

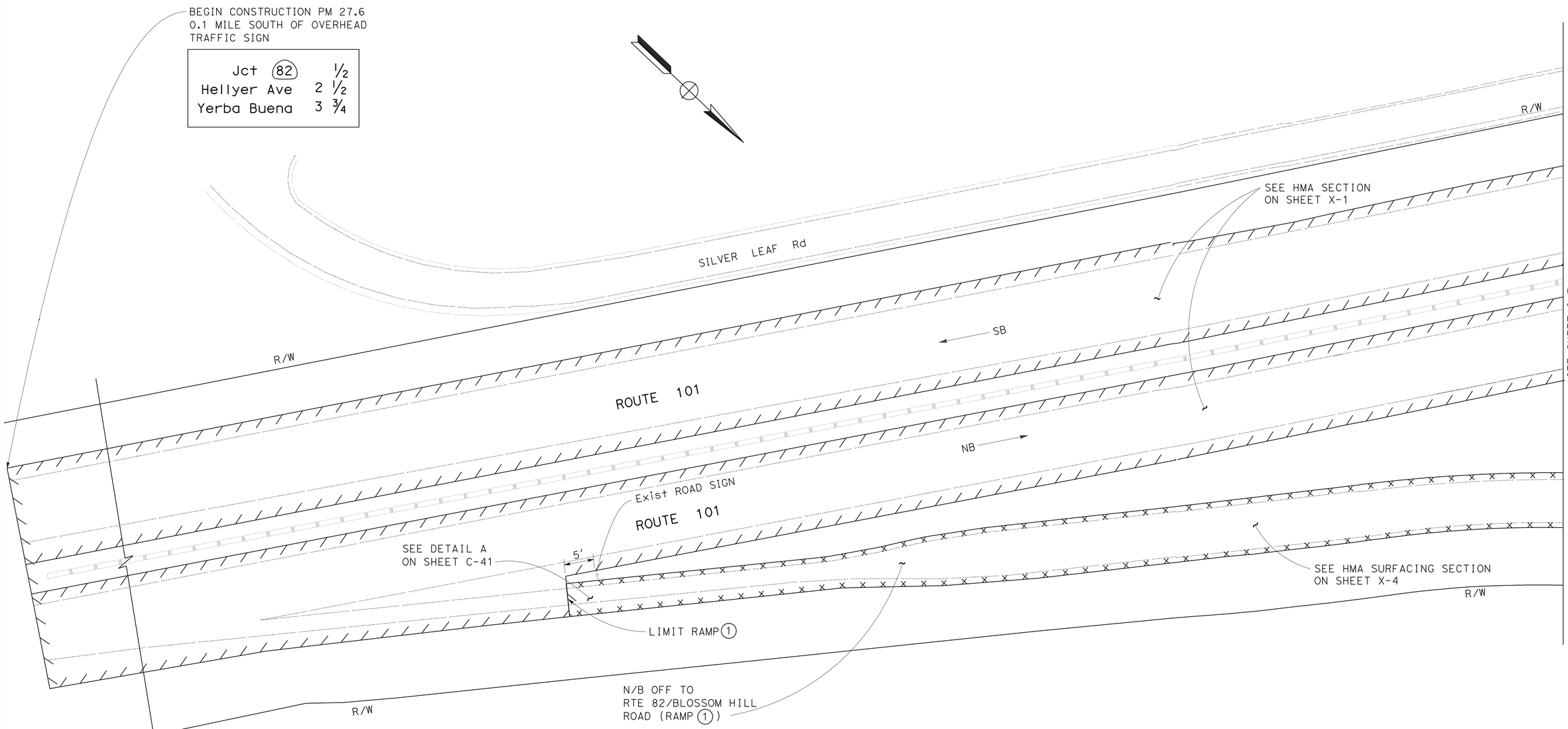

LAYOUT AT RAMP LOCATION 1

FOR NOTES, ABBREVIATIONS &/OR LEGEND, SEE SHEET C-1

ALL DIMENSIONS ARE IN FEET UNLESS OTHERWISE SHOWN

CONSTRUCTION DETAILS
(RAMP & INTERCHANGE)
NO SCALE

C-2

REVISED BY	DATE REVISED
A	A

CALCULATED-DESIGNED BY: MC
CHECKED BY: MN
FUNCTIONAL SUPERVISOR: ASHOK BHATNAGAR

STATE OF CALIFORNIA - DEPARTMENT OF TRANSPORTATION
Caltrans MAINTENANCE

LAST REVISION 12-22-08
DATE PLOTTED => 31-JUL-2009
TIME PLOTTED => 06:51

Dist	COUNTY	ROUTE	POST MILES TOTAL PROJECT	SHEET No.	TOTAL SHEETS
04	SCI	101	R27.6/40.2	9	173

REGISTERED CIVIL ENGINEER 11/04/08 DATE

5-11-09
PLANS APPROVAL DATE

REGISTERED PROFESSIONAL ENGINEER A. Bhatnagar No. 48814 Exp 9-30-10 CIVIL STATE OF CALIFORNIA

THE STATE OF CALIFORNIA OR ITS OFFICERS OR AGENTS SHALL NOT BE RESPONSIBLE FOR THE ACCURACY OR COMPLETENESS OF SCANNED COPIES OF THIS PLAN SHEET.

FOR COMPLETE RIGHT OF WAY AND ACCURATE ACCESS DATA, SEE RIGHT OF WAY RECORD MAPS AT DISTRICT OFFICE.

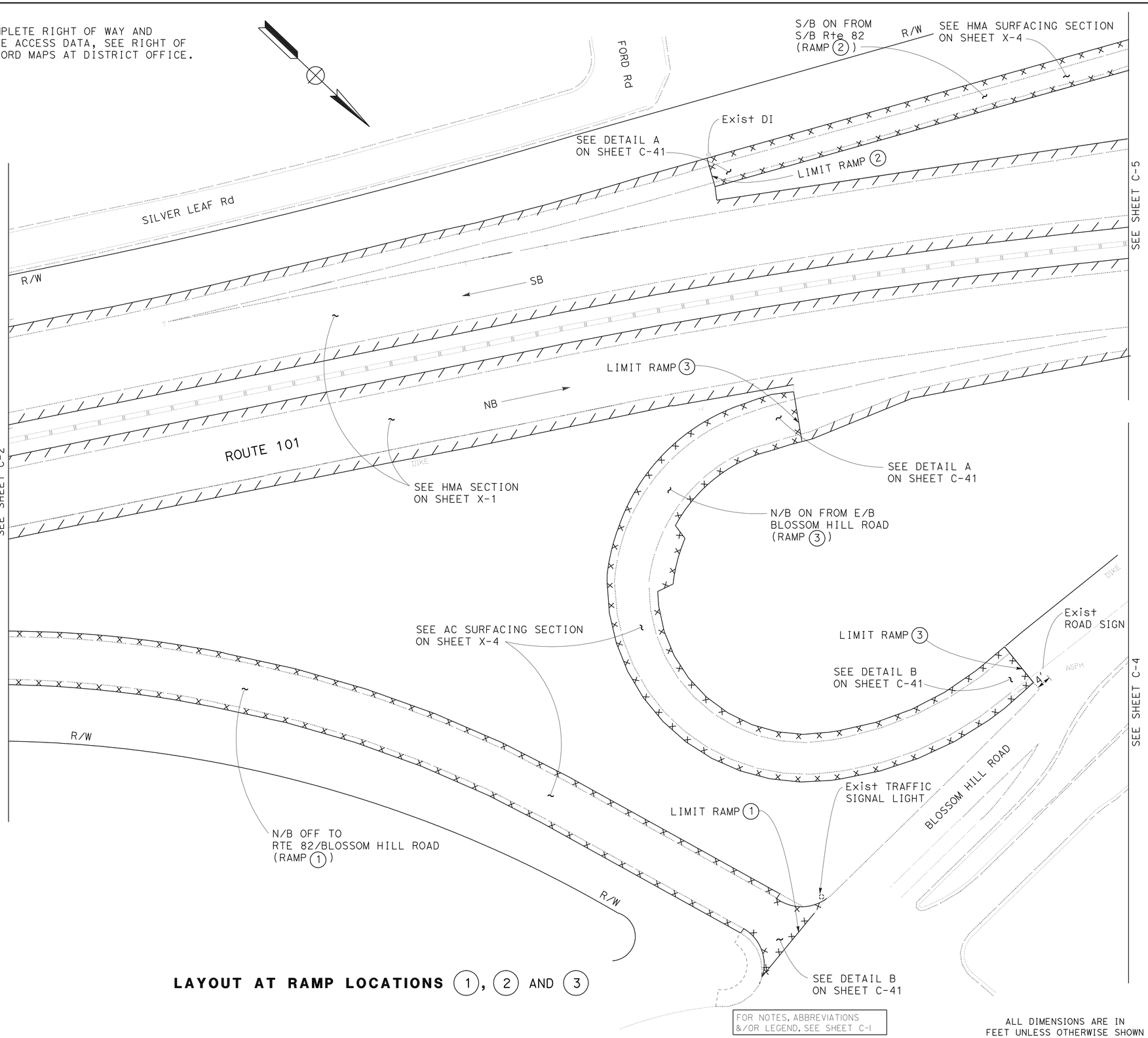

LAYOUT AT RAMP LOCATIONS (1), (2) AND (3)

FOR NOTES, ABBREVIATIONS &/OR LEGEND, SEE SHEET C-1

ALL DIMENSIONS ARE IN FEET UNLESS OTHERWISE SHOWN

CONSTRUCTION DETAILS
(RAMP & INTERCHANGE)
NO SCALE

C-3

REVISED BY	DATE REVISED
A	A

CALCULATED-DESIGNED BY: MC
CHECKED BY: MN

FUNCTIONAL SUPERVISOR: ASHOK BHATNAGAR

STATE OF CALIFORNIA - DEPARTMENT OF TRANSPORTATION
Caltrans **MAINTENANCE**

LAST REVISION 12-26-08
DATE PLOTTED => 31-JUL-2009
TIME PLOTTED => 06:51

Dist	COUNTY	ROUTE	POST MILES TOTAL PROJECT	SHEET No.	TOTAL SHEETS
04	SCI	101	R27.6/40.2	10	173

REGISTERED CIVIL ENGINEER 11/04/08 DATE

5-11-09
PLANS APPROVAL DATE

REGISTERED PROFESSIONAL ENGINEER A. Bhatnagar No. 48814 Exp 9-30-10 CIVIL STATE OF CALIFORNIA

THE STATE OF CALIFORNIA OR ITS OFFICERS OR AGENTS SHALL NOT BE RESPONSIBLE FOR THE ACCURACY OR COMPLETENESS OF SCANNED COPIES OF THIS PLAN SHEET.

FOR COMPLETE RIGHT OF WAY AND ACCURATE ACCESS DATA, SEE RIGHT OF WAY RECORD MAPS AT DISTRICT OFFICE.

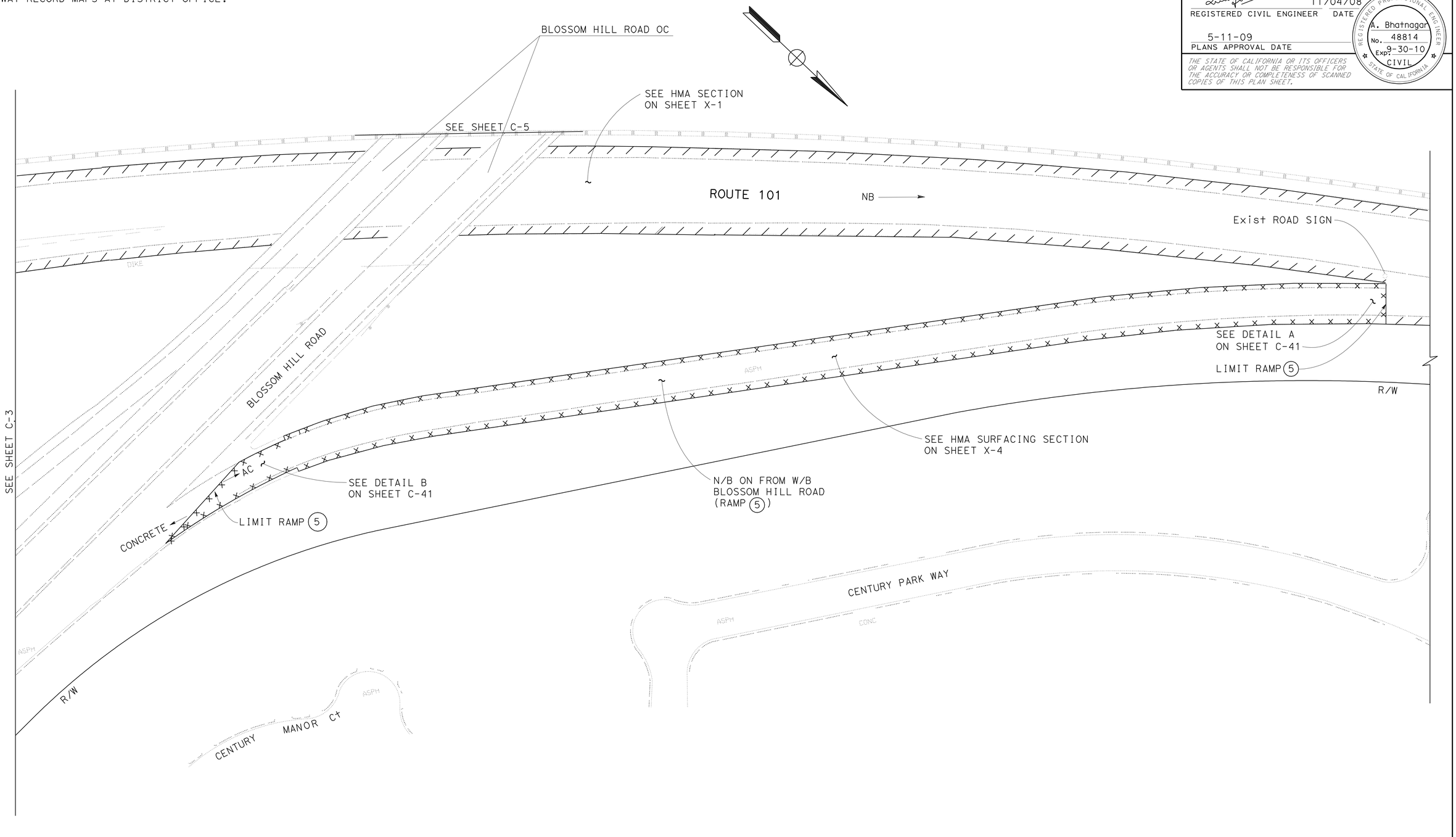

LAYOUT AT RAMP LOCATION 5

FOR NOTES, ABBREVIATIONS &/OR LEGEND, SEE SHEET C-1

ALL DIMENSIONS ARE IN FEET UNLESS OTHERWISE SHOWN

CONSTRUCTION DETAILS
(RAMP & INTERCHANGE)

NO SCALE

C-4

STATE OF CALIFORNIA - DEPARTMENT OF TRANSPORTATION
Caltrans MAINTENANCE

FUNCTIONAL SUPERVISOR: ASHOK BHATNAGAR

CALCULATED-DESIGNED BY: MC
CHECKED BY: MN

REVISED BY: A
DATE REVISED: A

LAST REVISION 12-22-08
DATE PLOTTED => 31-JUL-2009
TIME PLOTTED => 06:51

Dist	COUNTY	ROUTE	POST MILES TOTAL PROJECT	SHEET No.	TOTAL SHEETS
04	SCI	101	R27.6/40.2	11	173

REGISTERED CIVIL ENGINEER 11/04/08 DATE

5-11-09
PLANS APPROVAL DATE

REGISTERED PROFESSIONAL ENGINEER A. Bhatnagar No. 48814 Exp 9-30-10 CIVIL STATE OF CALIFORNIA

THE STATE OF CALIFORNIA OR ITS OFFICERS OR AGENTS SHALL NOT BE RESPONSIBLE FOR THE ACCURACY OR COMPLETENESS OF SCANNED COPIES OF THIS PLAN SHEET.

FOR COMPLETE RIGHT OF WAY AND ACCURATE ACCESS DATA, SEE RIGHT OF WAY RECORD MAPS AT DISTRICT OFFICE.

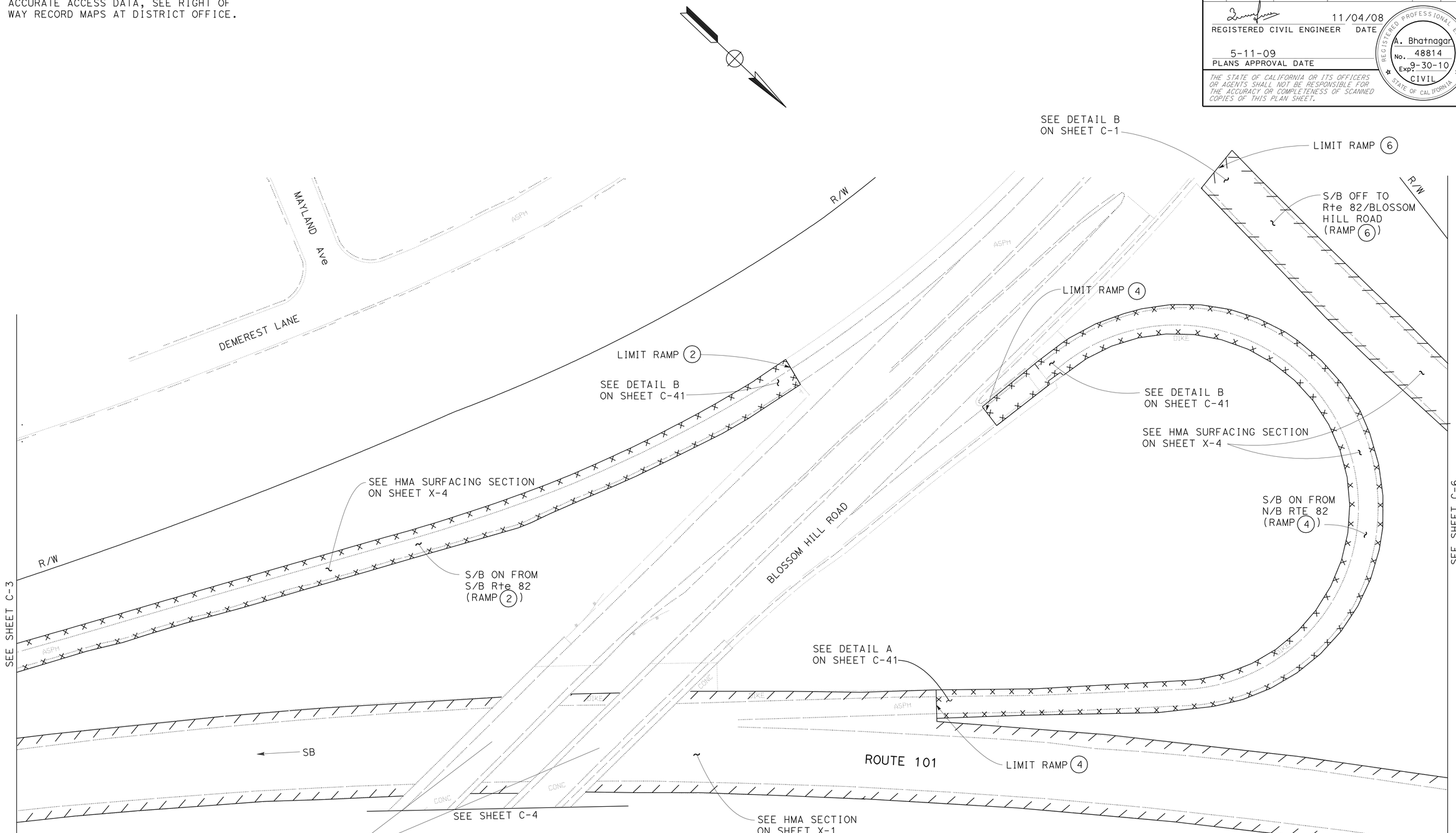

LAYOUT AT RAMP LOCATIONS 2, 4 AND 6

CONSTRUCTION DETAILS
(RAMP & INTERCHANGE)
NO SCALE

FOR NOTES, ABBREVIATIONS &/OR LEGEND, SEE SHEET C-1

ALL DIMENSIONS ARE IN FEET UNLESS OTHERWISE SHOWN

C-5

STATE OF CALIFORNIA - DEPARTMENT OF TRANSPORTATION
Caltrans MAINTENANCE

FUNCTIONAL SUPERVISOR: ASHOK BHATNAGAR

CALCULATED-DESIGNED BY: MC
CHECKED BY: MN

REVISED BY: A
DATE REVISED: A

LAST REVISION: DATE PLOTTED => 31-JUL-2009 TIME PLOTTED => 06:52 12-22-08

Dist	COUNTY	ROUTE	POST MILES TOTAL PROJECT	SHEET No.	TOTAL SHEETS
04	SCI	101	R27.6/40.2	12	173

REGISTERED CIVIL ENGINEER 11/04/08 DATE

5-11-09
PLANS APPROVAL DATE

REGISTERED PROFESSIONAL ENGINEER A. Bhatnagar No. 48814 Exp 9-30-10 CIVIL STATE OF CALIFORNIA

THE STATE OF CALIFORNIA OR ITS OFFICERS OR AGENTS SHALL NOT BE RESPONSIBLE FOR THE ACCURACY OR COMPLETENESS OF SCANNED COPIES OF THIS PLAN SHEET.

FOR COMPLETE RIGHT OF WAY AND ACCURATE ACCESS DATA, SEE RIGHT OF WAY RECORD MAPS AT DISTRICT OFFICE.

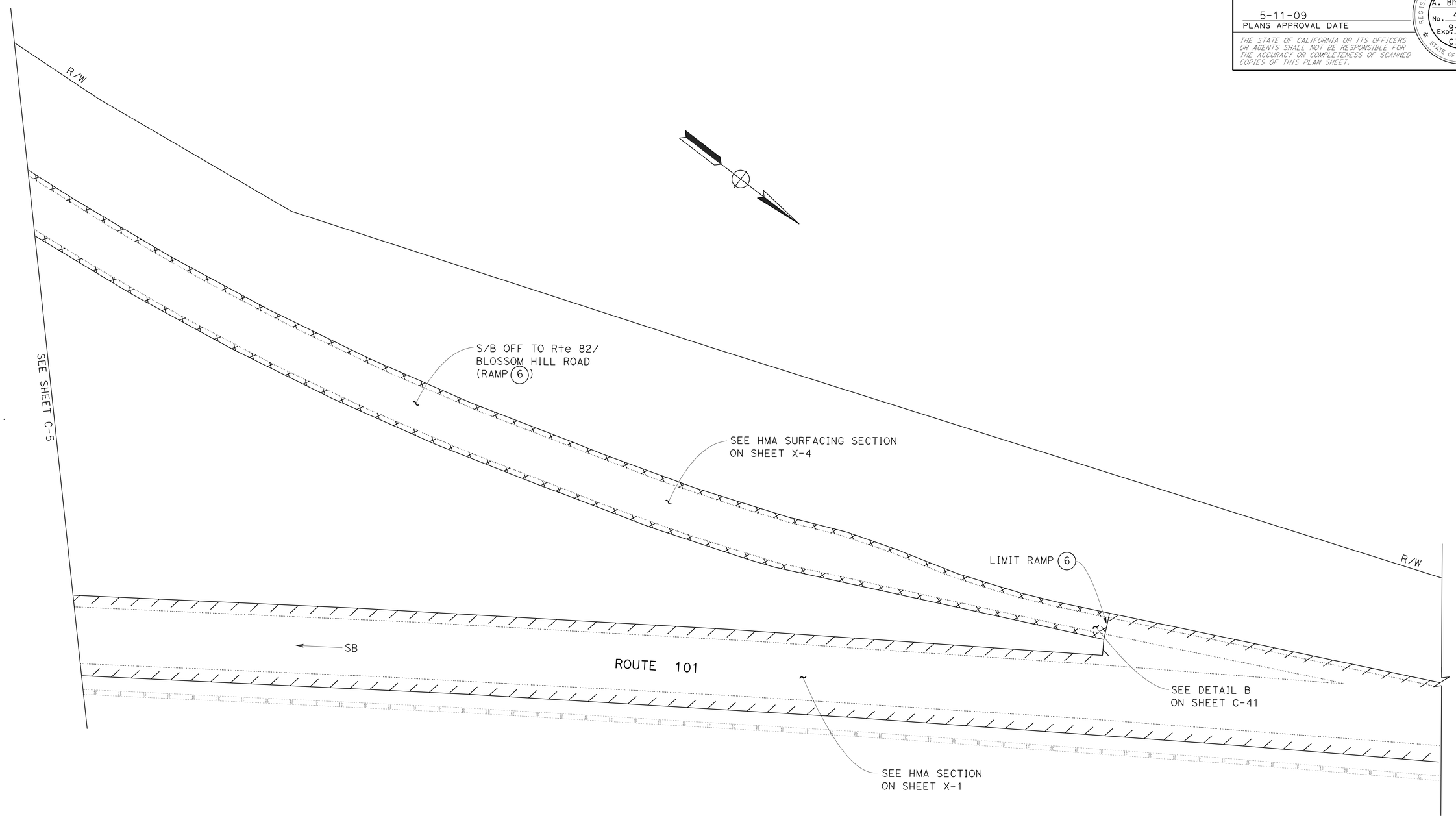

LAYOUT AT RAMP LOCATION 6

CONSTRUCTION DETAILS
(RAMP & INTERCHANGE)
NO SCALE

FOR NOTES, ABBREVIATIONS &/OR LEGEND, SEE SHEET C-1

ALL DIMENSIONS ARE IN FEET UNLESS OTHERWISE SHOWN

C-6

REVISED BY	DATE REVISED
A	A

CALCULATED-DESIGNED BY: MC
CHECKED BY: MN

FUNCTIONAL SUPERVISOR: ASHOK BHATNAGAR

STATE OF CALIFORNIA - DEPARTMENT OF TRANSPORTATION
Caltrans MAINTENANCE

LAST REVISION 12-22-08 | DATE PLOTTED => 31-JUL-2009 | TIME PLOTTED => 06:52

Dist	COUNTY	ROUTE	POST MILES TOTAL PROJECT	SHEET No.	TOTAL SHEETS
04	SCI	101	R27.6/40.2	13	173

REGISTERED CIVIL ENGINEER DATE 11/04/08

5-11-09
PLANS APPROVAL DATE

REGISTERED PROFESSIONAL ENGINEER A. Bhatnagar No. 48814 Exp 9-30-10 CIVIL STATE OF CALIFORNIA

THE STATE OF CALIFORNIA OR ITS OFFICERS OR AGENTS SHALL NOT BE RESPONSIBLE FOR THE ACCURACY OR COMPLETENESS OF SCANNED COPIES OF THIS PLAN SHEET.

FOR COMPLETE RIGHT OF WAY AND ACCURATE ACCESS DATA, SEE RIGHT OF WAY RECORD MAPS AT DISTRICT OFFICE.

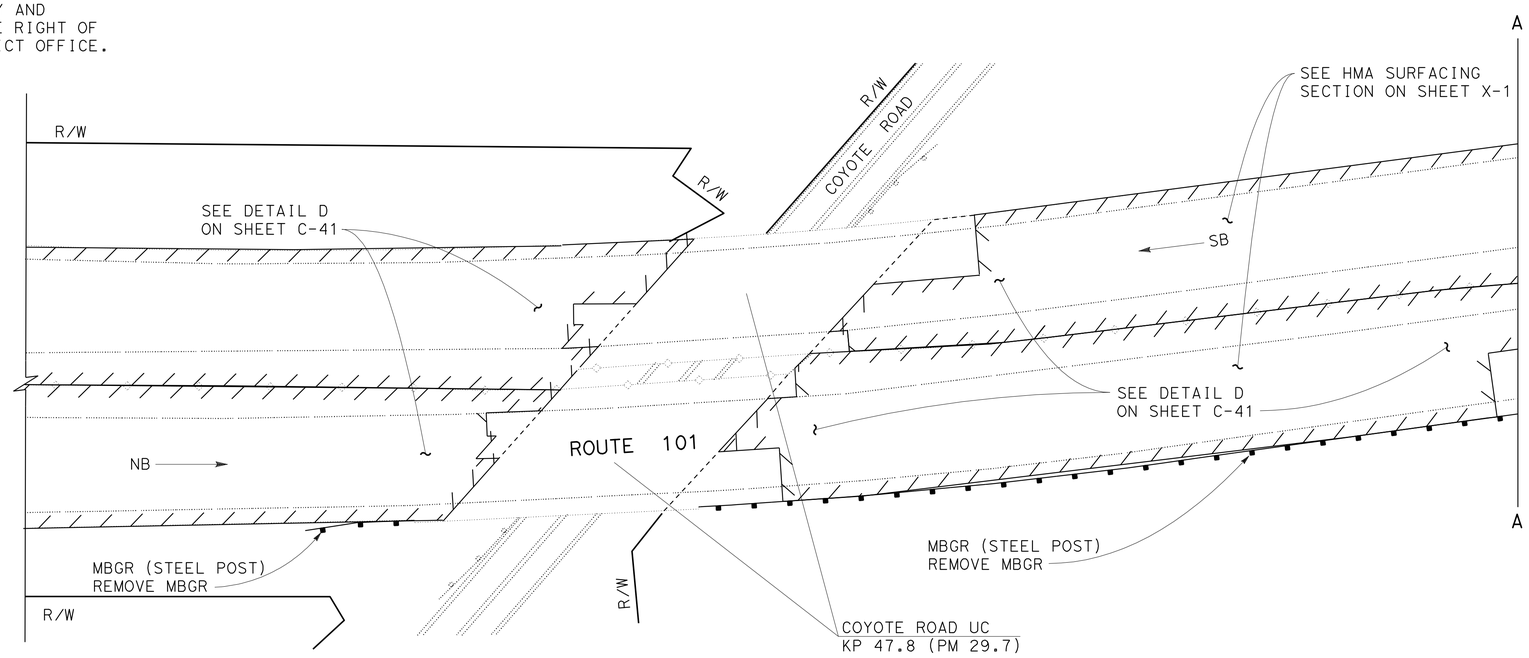

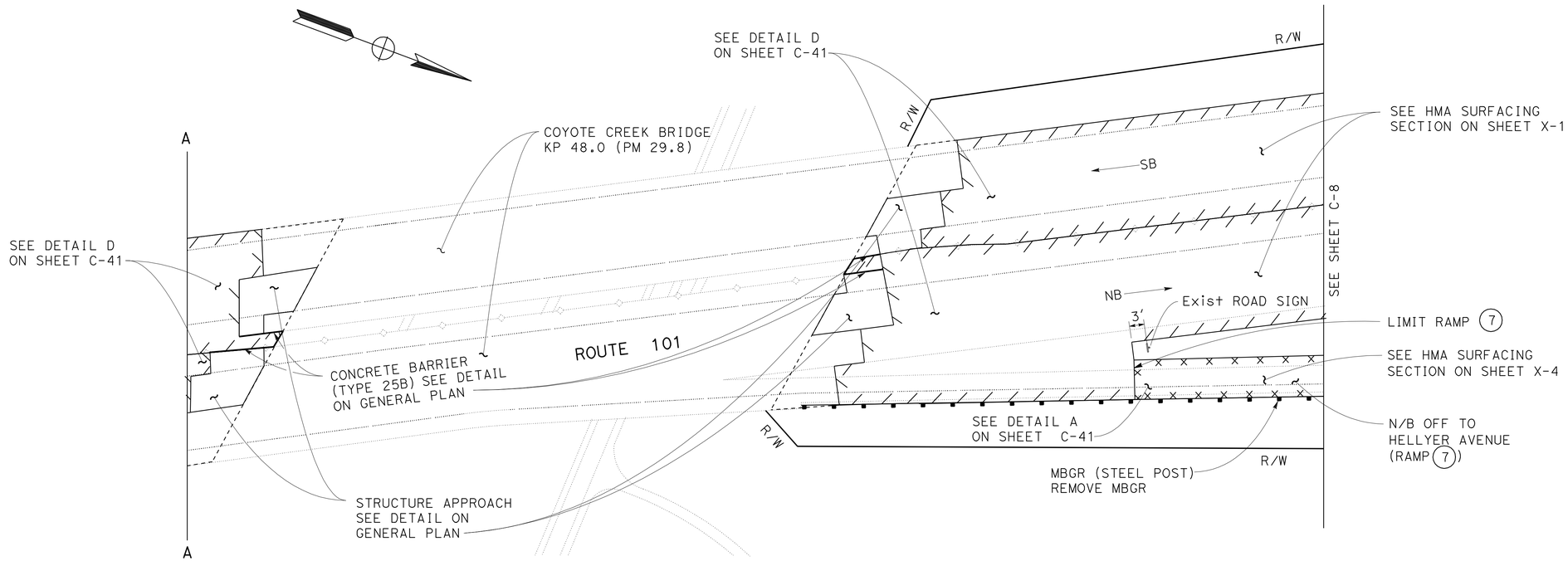

LAYOUT AT RAMP LOCATION 7

FOR NOTES, ABBREVIATIONS &/OR LEGEND, SEE SHEET C-1

ALL DIMENSIONS ARE IN FEET UNLESS OTHERWISE SHOWN

CONSTRUCTION DETAILS
(RAMP & INTERCHANGE)
NO SCALE

C-7

REVISED BY	DATE REVISED
A	A

CALCULATED-DESIGNED BY MC
CHECKED BY MN

FUNCTIONAL SUPERVISOR ASHOK BHATNAGAR

STATE OF CALIFORNIA - DEPARTMENT OF TRANSPORTATION
Caltrans MAINTENANCE

LAST REVISION 12-22-08
DATE PLOTTED => 31-JUL-2009
TIME PLOTTED => 06:52

Dist	COUNTY	ROUTE	POST MILES TOTAL PROJECT	SHEET No.	TOTAL SHEETS
04	SCI	101	R27.6/40.2	14	173

REGISTERED CIVIL ENGINEER 11/04/08 DATE

5-11-09
PLANS APPROVAL DATE

REGISTERED PROFESSIONAL ENGINEER A. Bhatnagar No. 48814 Exp 9-30-10 CIVIL STATE OF CALIFORNIA

THE STATE OF CALIFORNIA OR ITS OFFICERS OR AGENTS SHALL NOT BE RESPONSIBLE FOR THE ACCURACY OR COMPLETENESS OF SCANNED COPIES OF THIS PLAN SHEET.

FOR COMPLETE RIGHT OF WAY AND ACCURATE ACCESS DATA, SEE RIGHT OF WAY RECORD MAPS AT DISTRICT OFFICE.

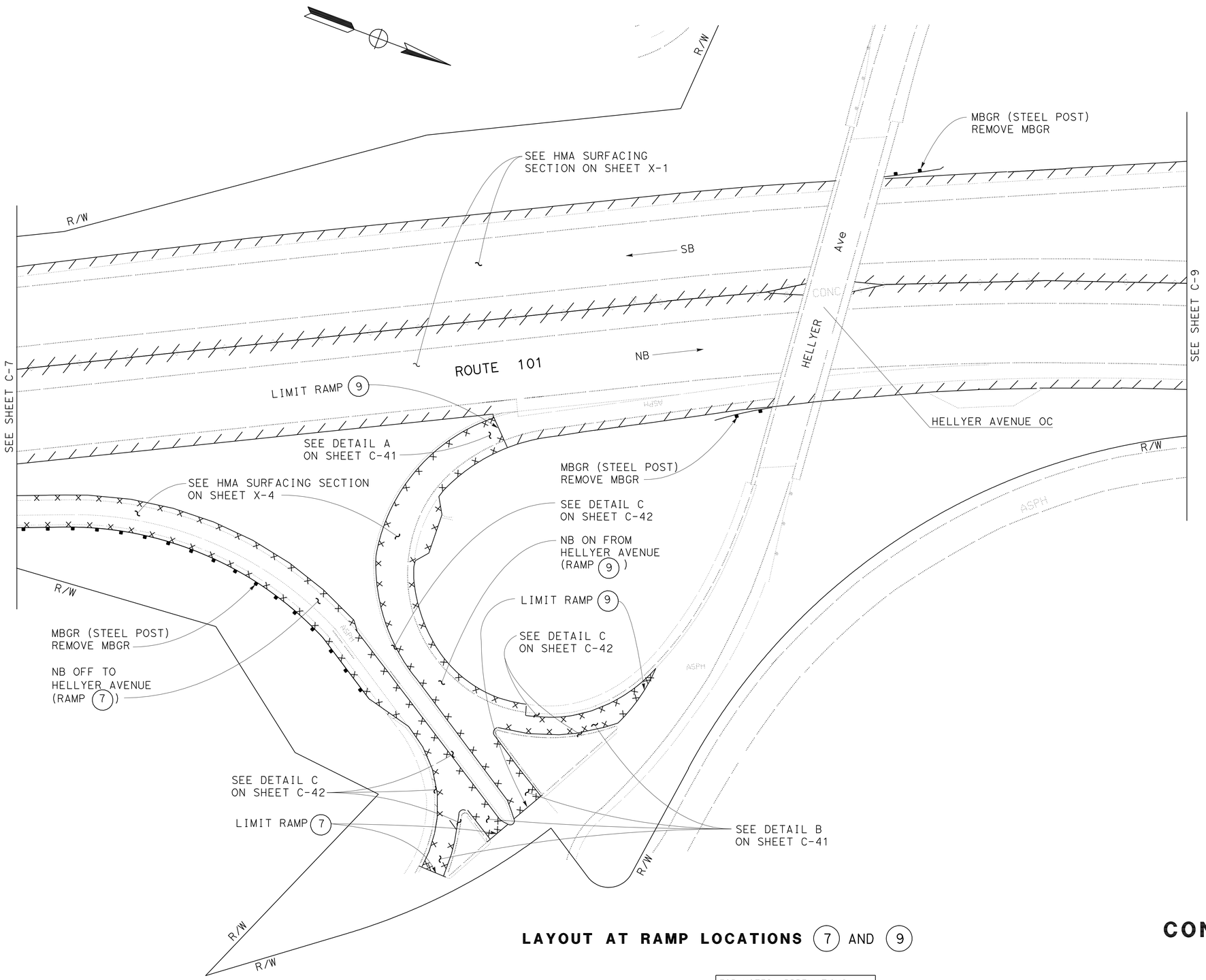

LAYOUT AT RAMP LOCATIONS 7 AND 9

FOR NOTES, ABBREVIATIONS &/OR LEGEND, SEE SHEET C-1

ALL DIMENSIONS ARE IN FEET UNLESS OTHERWISE SHOWN

CONSTRUCTION DETAILS
(RAMP & INTERCHANGE)
NO SCALE

C-8

REVISED BY	DATE REVISED
A	A

CALCULATED-DESIGNED BY: MC
CHECKED BY: MN

FUNCTIONAL SUPERVISOR: ASHOK BHATNAGAR

STATE OF CALIFORNIA - DEPARTMENT OF TRANSPORTATION
Caltrans MAINTENANCE

LAST REVISION 12-22-08
DATE PLOTTED => 31-JUL-2009
TIME PLOTTED => 06:52

Dist	COUNTY	ROUTE	POST MILES TOTAL PROJECT	SHEET No.	TOTAL SHEETS
04	SCI	101	R27.6/40.2	15	173

REGISTERED CIVIL ENGINEER 11/04/08 DATE

5-11-09
PLANS APPROVAL DATE

REGISTERED PROFESSIONAL ENGINEER A. Bhatnagar No. 48814 Exp 9-30-10 CIVIL STATE OF CALIFORNIA

THE STATE OF CALIFORNIA OR ITS OFFICERS OR AGENTS SHALL NOT BE RESPONSIBLE FOR THE ACCURACY OR COMPLETENESS OF SCANNED COPIES OF THIS PLAN SHEET.

FOR COMPLETE RIGHT OF WAY AND ACCURATE ACCESS DATA, SEE RIGHT OF WAY RECORD MAPS AT DISTRICT OFFICE.

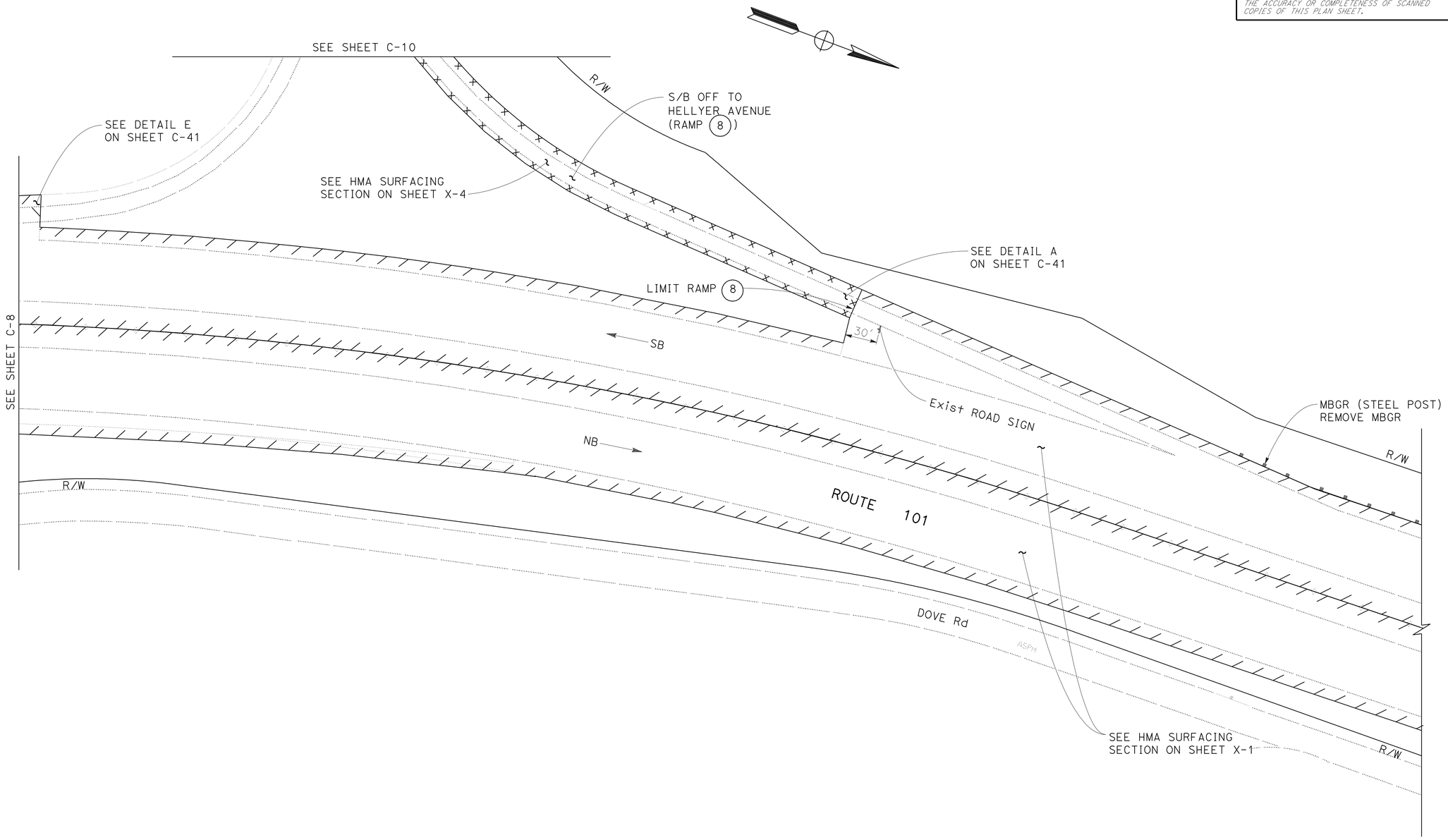

LAYOUT AT RAMP LOCATION 8

FOR NOTES, ABBREVIATIONS &/OR LEGEND, SEE SHEET C-1

ALL DIMENSIONS ARE IN FEET UNLESS OTHERWISE SHOWN

CONSTRUCTION DETAILS
(RAMP & INTERCHANGE)
NO SCALE

C-9

REVISED BY	DATE REVISED
A	A

CALCULATED-DESIGNED BY: MC
CHECKED BY: MN

FUNCTIONAL SUPERVISOR: ASHOK BHATNAGAR

STATE OF CALIFORNIA - DEPARTMENT OF TRANSPORTATION
Caltrans MAINTENANCE

LAST REVISION 04-22-09 | DATE PLOTTED => 31-JUL-2009 | TIME PLOTTED => 06:52

Dist	COUNTY	ROUTE	POST MILES TOTAL PROJECT	SHEET No.	TOTAL SHEETS
04	SCI	101	R27.6/40.2	16	173

REGISTERED CIVIL ENGINEER 11/04/08 DATE

5-11-09
PLANS APPROVAL DATE

REGISTERED PROFESSIONAL ENGINEER
A. Bhatnagar
No. 48814
Exp. 9-30-11
CIVIL
STATE OF CALIFORNIA

THE STATE OF CALIFORNIA OR ITS OFFICERS OR AGENTS SHALL NOT BE RESPONSIBLE FOR THE ACCURACY OR COMPLETENESS OF SCANNED COPIES OF THIS PLAN SHEET.

FOR COMPLETE RIGHT OF WAY AND ACCURATE ACCESS DATA, SEE RIGHT OF WAY RECORD MAPS AT DISTRICT OFFICE.

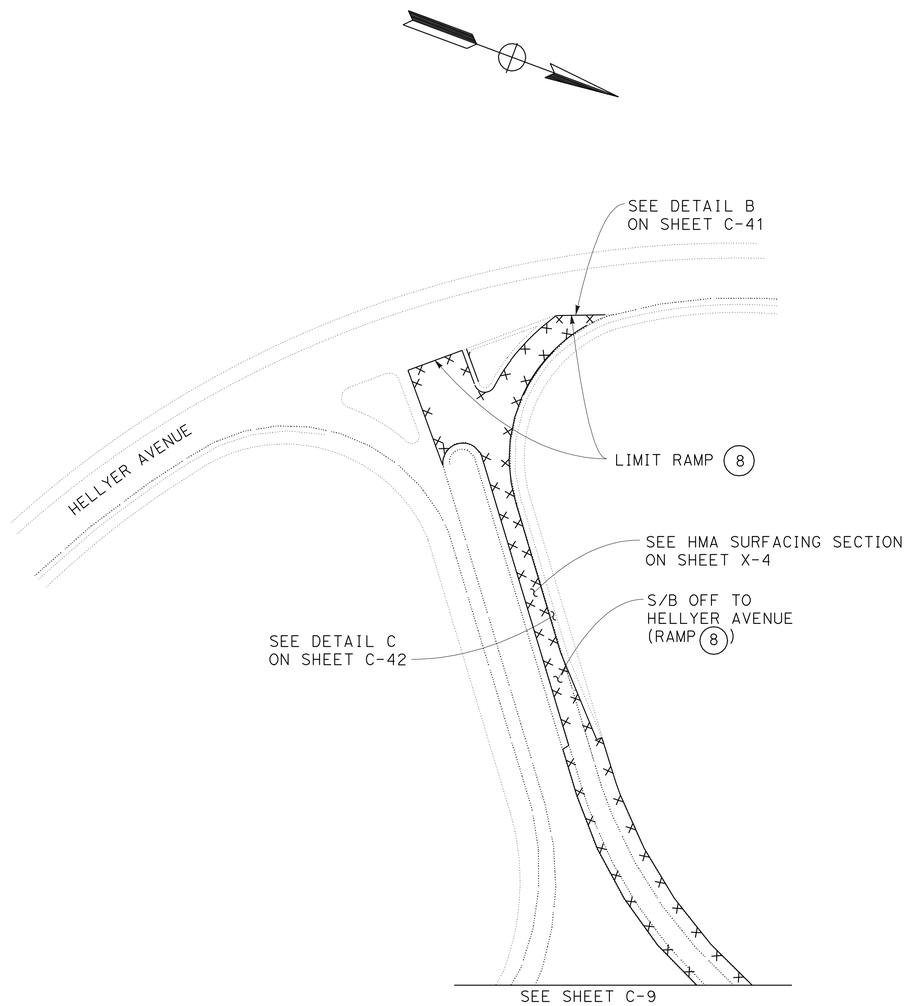

LAYOUT AT RAMP LOCATION 8

FOR NOTES, ABBREVIATIONS &/OR LEGEND, SEE SHEET C-1

ALL DIMENSIONS ARE IN FEET UNLESS OTHERWISE SHOWN

CONSTRUCTION DETAILS
(RAMP & INTERCHANGE)

NO SCALE

C-10

REVISED BY	DATE REVISED
A	A

CALCULATED-DESIGNED BY: MC
CHECKED BY: MN

FUNCTIONAL SUPERVISOR: ASHOK BHATNAGAR

STATE OF CALIFORNIA - DEPARTMENT OF TRANSPORTATION
Caltrans MAINTENANCE

LAST REVISION 12-22-08
DATE PLOTTED => 31-JUL-2009
TIME PLOTTED => 06:52

Dist	COUNTY	ROUTE	POST MILES TOTAL PROJECT	SHEET No.	TOTAL SHEETS
04	SCI	101	R27.6/40.2	17	173

REGISTERED CIVIL ENGINEER 11/04/08 DATE

5-11-09
PLANS APPROVAL DATE

REGISTERED PROFESSIONAL ENGINEER
A. Bhatnagar
No. 48814
Exp 9-30-10
CIVIL
STATE OF CALIFORNIA

THE STATE OF CALIFORNIA OR ITS OFFICERS OR AGENTS SHALL NOT BE RESPONSIBLE FOR THE ACCURACY OR COMPLETENESS OF SCANNED COPIES OF THIS PLAN SHEET.

FOR COMPLETE RIGHT OF WAY AND ACCURATE ACCESS DATA, SEE RIGHT OF WAY RECORD MAPS AT DISTRICT OFFICE.

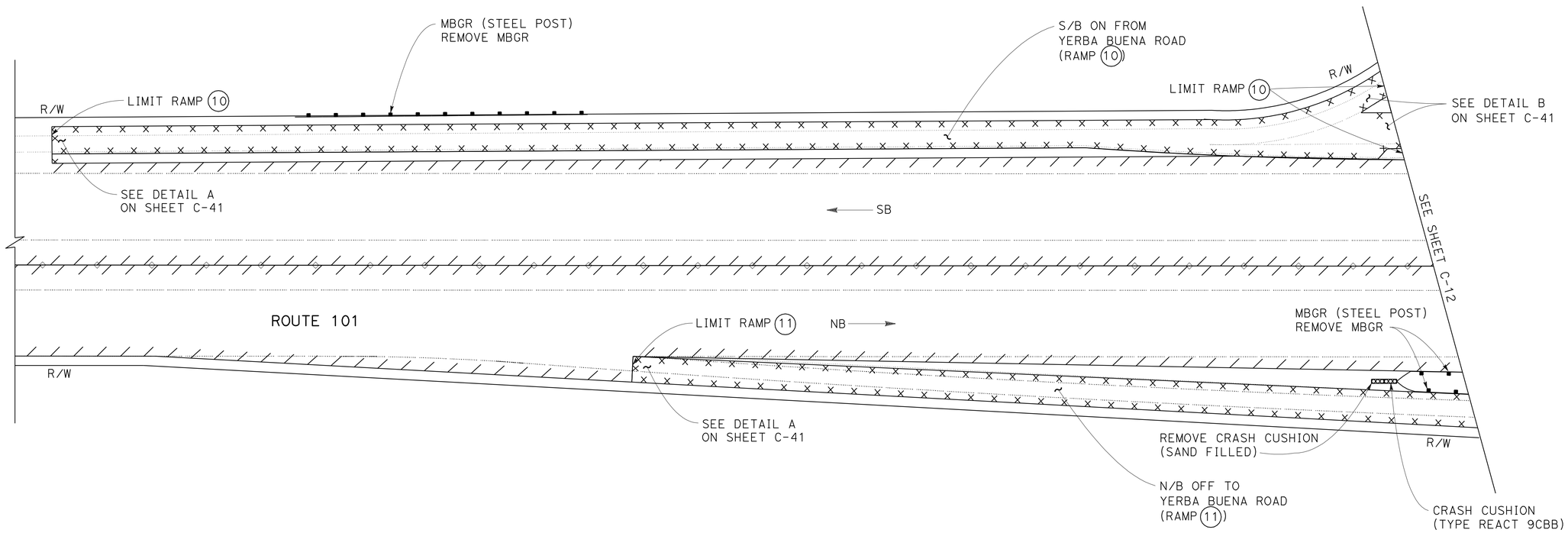

LAYOUT AT RAMP LOCATIONS 10 AND 11

CONSTRUCTION DETAILS
(RAMP & INTERCHANGE)
NO SCALE

FOR NOTES, ABBREVIATIONS &/OR LEGEND, SEE SHEET C-1

ALL DIMENSIONS ARE IN FEET UNLESS OTHERWISE SHOWN

C-11

REVISED BY	DATE REVISED
A	A

CALCULATED-DESIGNED BY: MC
CHECKED BY: MN
FUNCTIONAL SUPERVISOR: ASHOK BHATNAGAR

STATE OF CALIFORNIA - DEPARTMENT OF TRANSPORTATION
Caltrans MAINTENANCE

LAST REVISION 12-22-08
DATE PLOTTED => 31-JUL-2009
TIME PLOTTED => 06:52

Dist	COUNTY	ROUTE	POST MILES TOTAL PROJECT	SHEET No.	TOTAL SHEETS
04	SCI	101	R27.6/40.2	18	173

REGISTERED CIVIL ENGINEER 11/04/08 DATE

5-11-09
PLANS APPROVAL DATE

REGISTERED PROFESSIONAL ENGINEER A. Bhatnagar No. 48814 Exp 9-30-10 CIVIL STATE OF CALIFORNIA

THE STATE OF CALIFORNIA OR ITS OFFICERS OR AGENTS SHALL NOT BE RESPONSIBLE FOR THE ACCURACY OR COMPLETENESS OF SCANNED COPIES OF THIS PLAN SHEET.

FOR COMPLETE RIGHT OF WAY AND ACCURATE ACCESS DATA, SEE RIGHT OF WAY RECORD MAPS AT DISTRICT OFFICE.

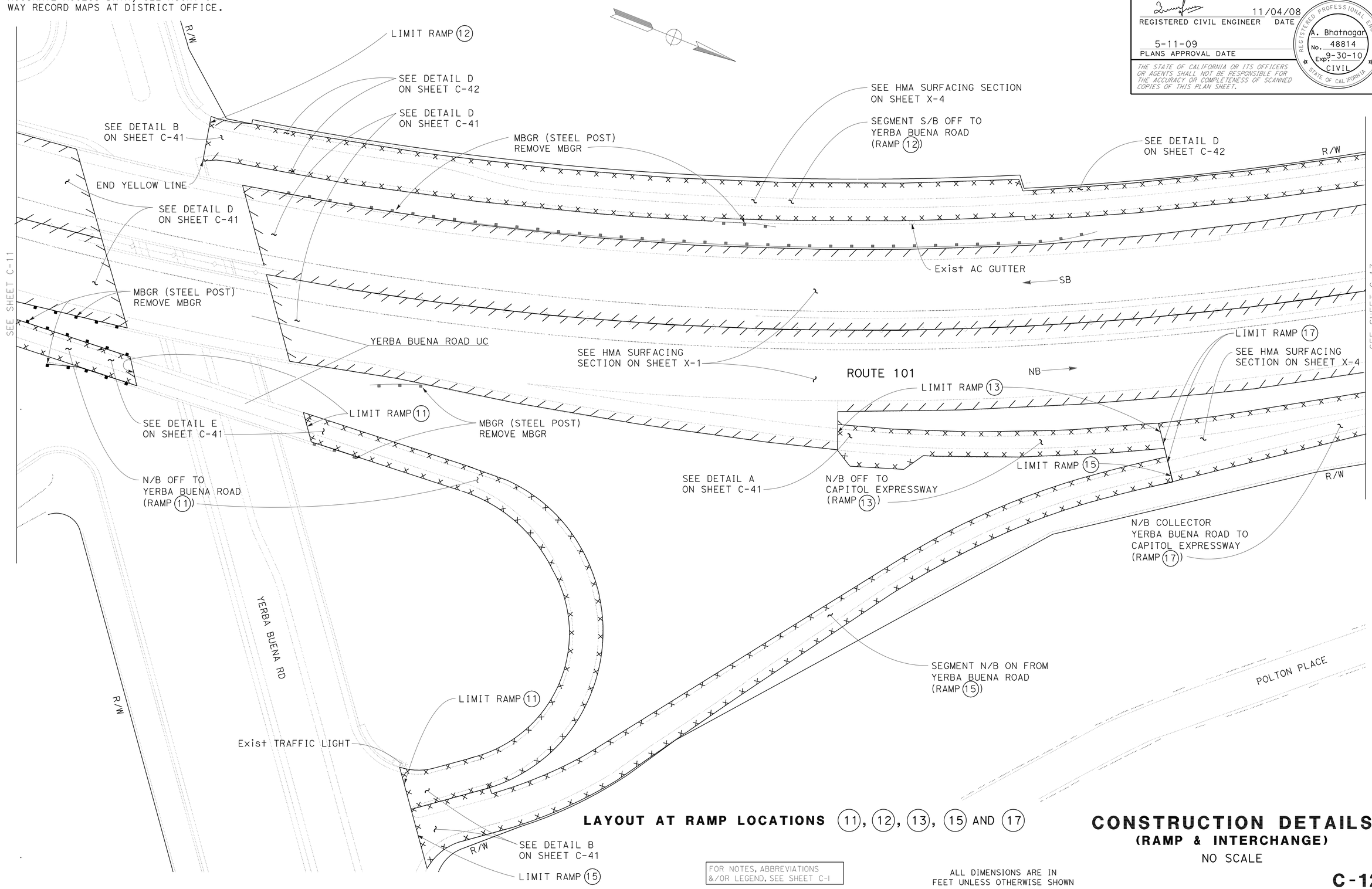

LAYOUT AT RAMP LOCATIONS (11), (12), (13), (15) AND (17)

FOR NOTES, ABBREVIATIONS &/OR LEGEND, SEE SHEET C-1

ALL DIMENSIONS ARE IN FEET UNLESS OTHERWISE SHOWN

CONSTRUCTION DETAILS
(RAMP & INTERCHANGE)
NO SCALE

C-12

REVISED BY	DATE REVISED
A	A

CALCULATED-DESIGNED BY: MC
CHECKED BY: MN

FUNCTIONAL SUPERVISOR: ASHOK BHATNAGAR

STATE OF CALIFORNIA - DEPARTMENT OF TRANSPORTATION
Caltrans MAINTENANCE

LAST REVISION 12-22-08
DATE PLOTTED => 31-JUL-2009
TIME PLOTTED => 06:53

Dist	COUNTY	ROUTE	POST MILES TOTAL PROJECT	SHEET No.	TOTAL SHEETS
04	SCI	101	R27.6/40.2	19	173

REGISTERED CIVIL ENGINEER 11/04/08 DATE

5-11-09
PLANS APPROVAL DATE

REGISTERED PROFESSIONAL ENGINEER A. Bhatnagar No. 48814 Exp 9-30-10 CIVIL STATE OF CALIFORNIA

THE STATE OF CALIFORNIA OR ITS OFFICERS OR AGENTS SHALL NOT BE RESPONSIBLE FOR THE ACCURACY OR COMPLETENESS OF SCANNED COPIES OF THIS PLAN SHEET.

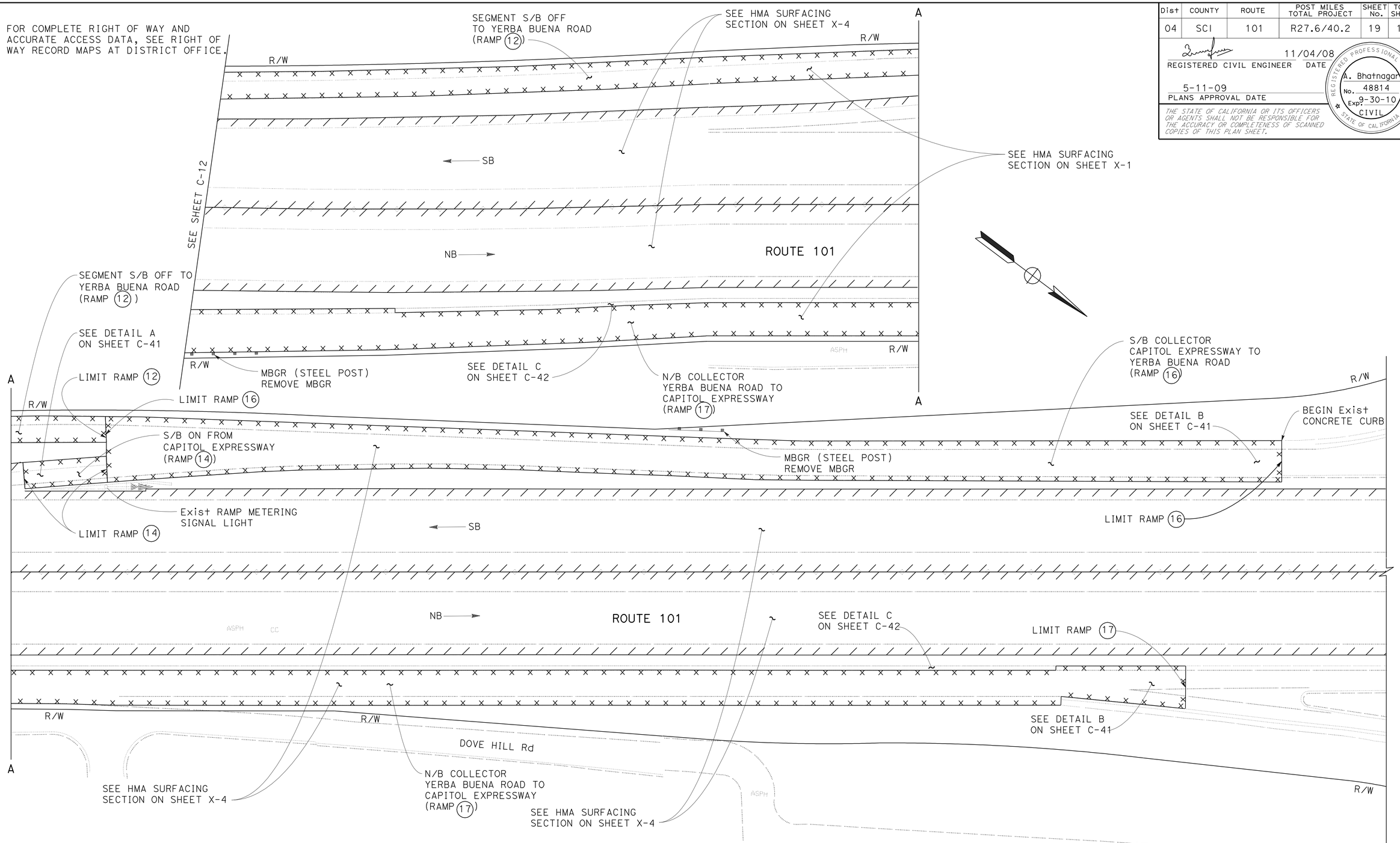

LAYOUT AT RAMP LOCATIONS (12), (14), (16) AND (17)

FOR NOTES, ABBREVIATIONS &/OR LEGEND, SEE SHEET C-1

ALL DIMENSIONS ARE IN FEET UNLESS OTHERWISE SHOWN

CONSTRUCTION DETAILS
(RAMP & INTERCHANGE)
NO SCALE

C-13

REVISED BY	DATE REVISED	CALCULATED-DESIGNED BY	CHECKED BY	FUNCTIONAL SUPERVISOR
A	A	MC	MN	ASHOK BHATNAGAR

STATE OF CALIFORNIA - DEPARTMENT OF TRANSPORTATION
Caltrans MAINTENANCE

LAST REVISION 12-22-08 | DATE PLOTTED => 31-JUL-2009 | TIME PLOTTED => 06:53

Dist	COUNTY	ROUTE	POST MILES TOTAL PROJECT	SHEET No.	TOTAL SHEETS
04	SCI	101	R27.6/40.2	20	173

REGISTERED CIVIL ENGINEER 11/04/08 DATE

5-11-09
PLANS APPROVAL DATE

REGISTERED PROFESSIONAL ENGINEER
A. Bhatnagar
No. 48814
Exp. 9-30-11
CIVIL
STATE OF CALIFORNIA

THE STATE OF CALIFORNIA OR ITS OFFICERS OR AGENTS SHALL NOT BE RESPONSIBLE FOR THE ACCURACY OR COMPLETENESS OF SCANNED COPIES OF THIS PLAN SHEET.

FOR COMPLETE RIGHT OF WAY AND ACCURATE ACCESS DATA, SEE RIGHT OF WAY RECORD MAPS AT DISTRICT OFFICE.

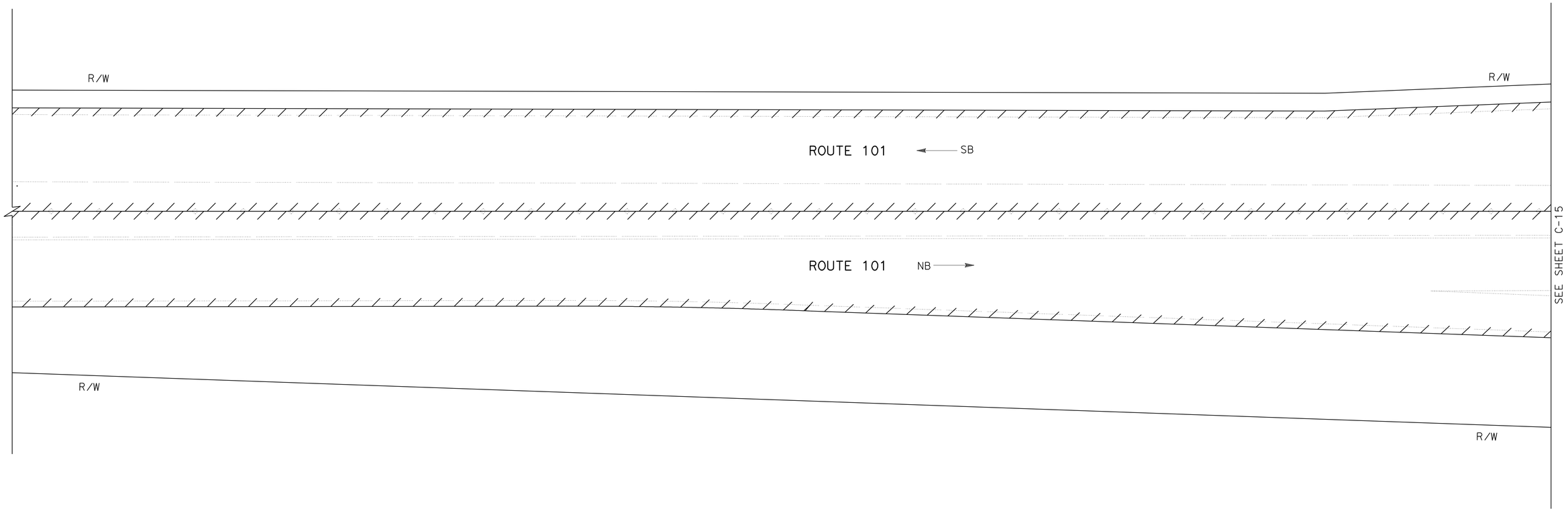

LAYOUT AT RAMP LOCATIONS

FOR NOTES, ABBREVIATIONS &/OR LEGEND, SEE SHEET C-1

ALL DIMENSIONS ARE IN FEET UNLESS OTHERWISE SHOWN

CONSTRUCTION DETAILS
(RAMP & INTERCHANGE)
NO SCALE

C-14

STATE OF CALIFORNIA - DEPARTMENT OF TRANSPORTATION
Caltrans MAINTENANCE

FUNCTIONAL SUPERVISOR: ASHOK BHATNAGAR

CALCULATED-DESIGNED BY: MC
CHECKED BY: MN

REVISED BY: A
DATE REVISED: A

LAST REVISION 12-22-08
DATE PLOTTED => 31-JUL-2009
TIME PLOTTED => 06:53

Dist	COUNTY	ROUTE	POST MILES TOTAL PROJECT	SHEET No.	TOTAL SHEETS
04	SCI	101	R27.6/40.2	21	173

REGISTERED CIVIL ENGINEER DATE 11/04/08

5-11-09
PLANS APPROVAL DATE

REGISTERED PROFESSIONAL ENGINEER A. Bhatnagar No. 48814 Exp 9-30-10 CIVIL STATE OF CALIFORNIA

THE STATE OF CALIFORNIA OR ITS OFFICERS OR AGENTS SHALL NOT BE RESPONSIBLE FOR THE ACCURACY OR COMPLETENESS OF SCANNED COPIES OF THIS PLAN SHEET.

FOR COMPLETE RIGHT OF WAY AND ACCURATE ACCESS DATA, SEE RIGHT OF WAY RECORD MAPS AT DISTRICT OFFICE.

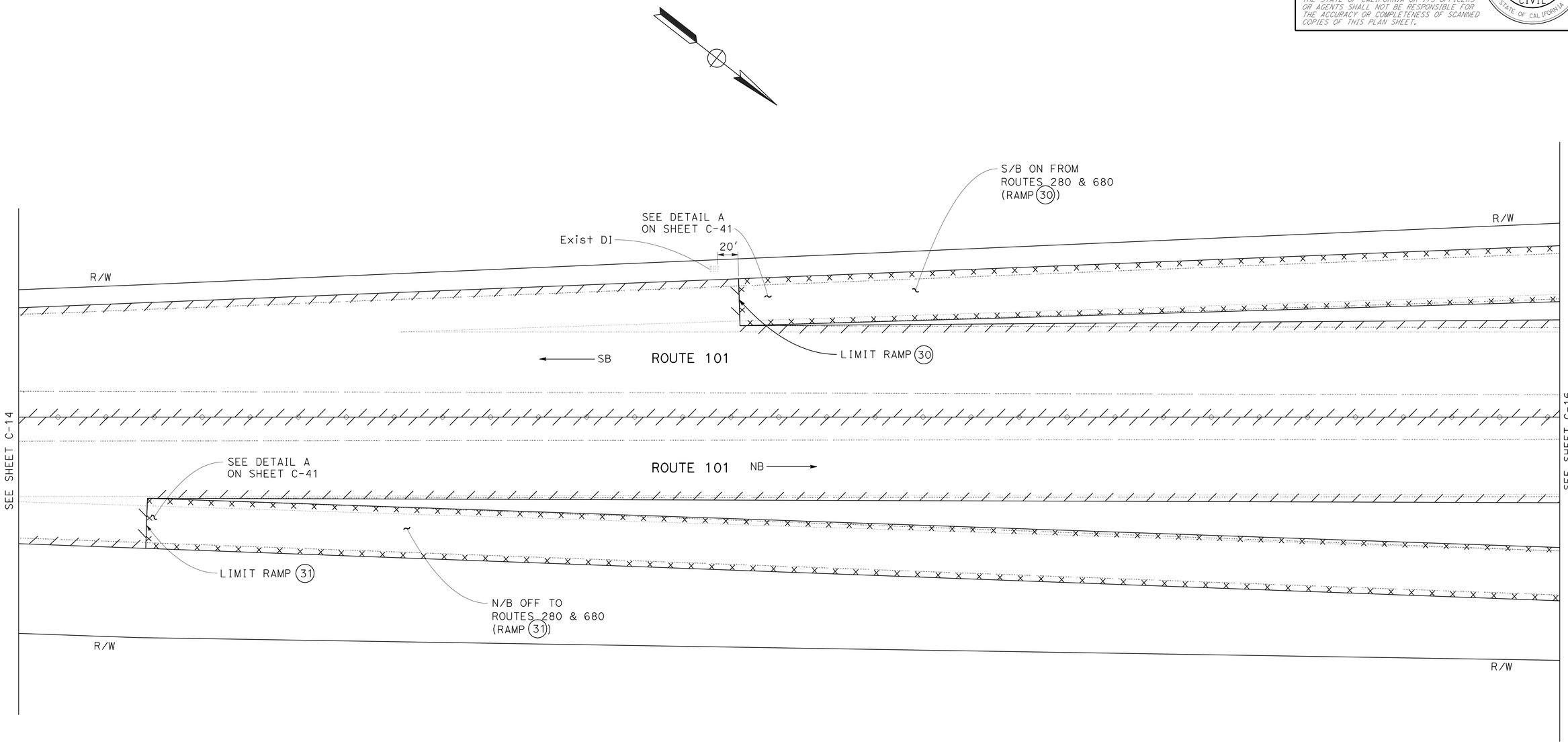

LAYOUT AT RAMP LOCATIONS 30 AND 31

CONSTRUCTION DETAILS
(RAMP & INTERCHANGE)
NO SCALE

FOR NOTES, ABBREVIATIONS &/OR LEGEND, SEE SHEET C-1

ALL DIMENSIONS ARE IN FEET UNLESS OTHERWISE SHOWN

C-15

REVISED BY	DATE REVISED
A	A

CALCULATED-DESIGNED BY: MC
CHECKED BY: MN
FUNCTIONAL SUPERVISOR: ASHOK BHATNAGAR

STATE OF CALIFORNIA - DEPARTMENT OF TRANSPORTATION
Caltrans MAINTENANCE

LAST REVISION 12-22-08
DATE PLOTTED => 31-JUL-2009
TIME PLOTTED => 06:53

Dist	COUNTY	ROUTE	POST MILES TOTAL PROJECT	SHEET No.	TOTAL SHEETS
04	SCI	101	R27.6/40.2	22	173

REGISTERED CIVIL ENGINEER 11/04/08 DATE

5-11-09
PLANS APPROVAL DATE

REGISTERED PROFESSIONAL ENGINEER A. Bhatnagar No. 48814 Exp 9-30-10 CIVIL STATE OF CALIFORNIA

THE STATE OF CALIFORNIA OR ITS OFFICERS OR AGENTS SHALL NOT BE RESPONSIBLE FOR THE ACCURACY OR COMPLETENESS OF SCANNED COPIES OF THIS PLAN SHEET.

FOR COMPLETE RIGHT OF WAY AND ACCURATE ACCESS DATA, SEE RIGHT OF WAY RECORD MAPS AT DISTRICT OFFICE.

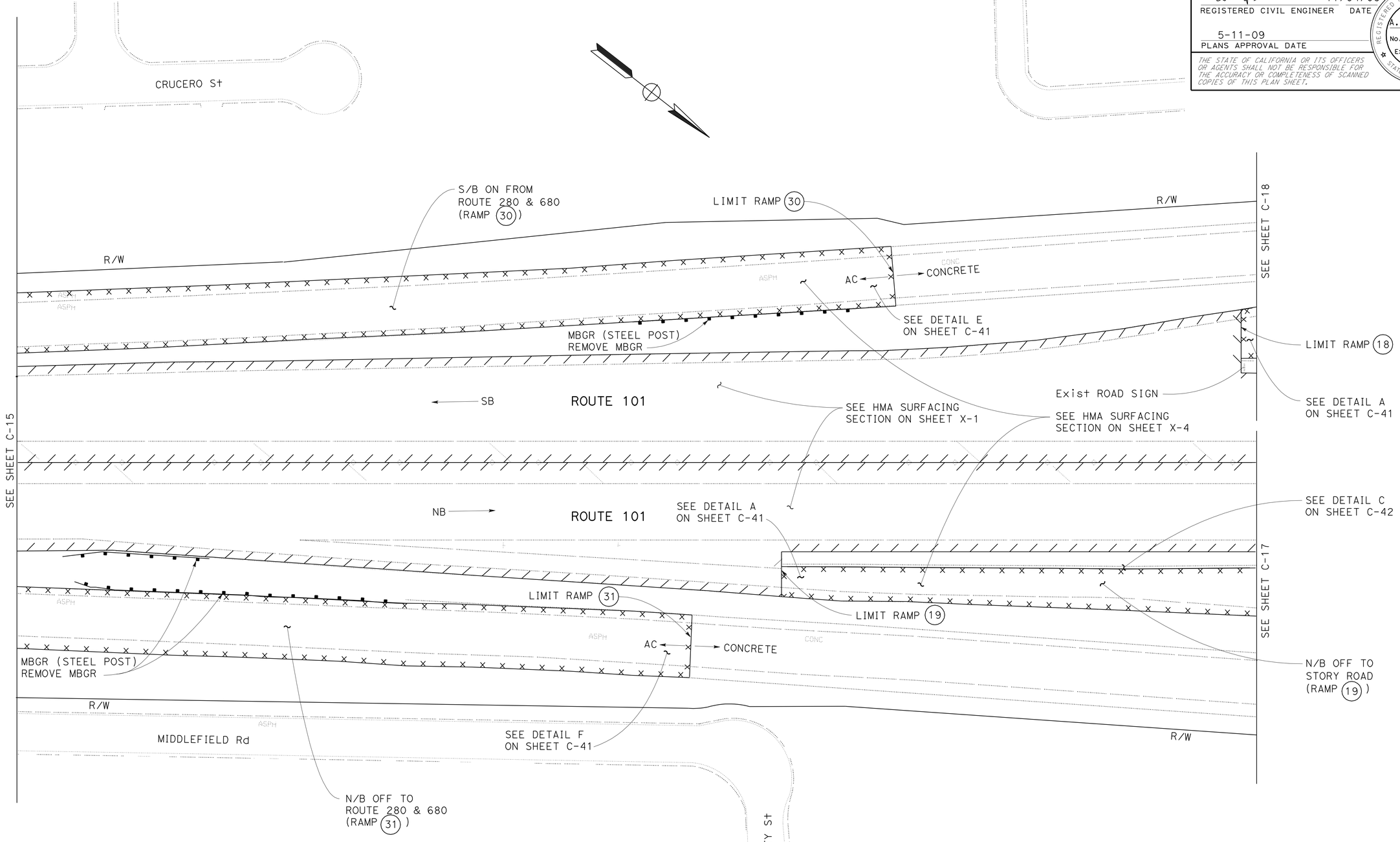

LAYOUT AT RAMP LOCATIONS 18, 19, 30 AND 31

CONSTRUCTION DETAILS
(RAMP & INTERCHANGE)

NO SCALE

FOR NOTES, ABBREVIATIONS &/OR LEGEND, SEE SHEET C-1

ALL DIMENSIONS ARE IN FEET UNLESS OTHERWISE SHOWN

C-16

REVISED BY	DATE REVISED
A	A

CALCULATED-DESIGNED BY: MC
CHECKED BY: MN

FUNCTIONAL SUPERVISOR: ASHOK BHATNAGAR

STATE OF CALIFORNIA - DEPARTMENT OF TRANSPORTATION
Caltrans MAINTENANCE

LAST REVISION 12-22-08 | DATE PLOTTED => 31-JUL-2009 | TIME PLOTTED => 06:53

Dist	COUNTY	ROUTE	POST MILES TOTAL PROJECT	SHEET No.	TOTAL SHEETS
04	SCI	101	R27.6/40.2	23	173

REGISTERED CIVIL ENGINEER 11/04/08 DATE

5-11-09
PLANS APPROVAL DATE

REGISTERED PROFESSIONAL ENGINEER A. Bhatnagar No. 48814 Exp 9-30-10 CIVIL STATE OF CALIFORNIA

THE STATE OF CALIFORNIA OR ITS OFFICERS OR AGENTS SHALL NOT BE RESPONSIBLE FOR THE ACCURACY OR COMPLETENESS OF SCANNED COPIES OF THIS PLAN SHEET.

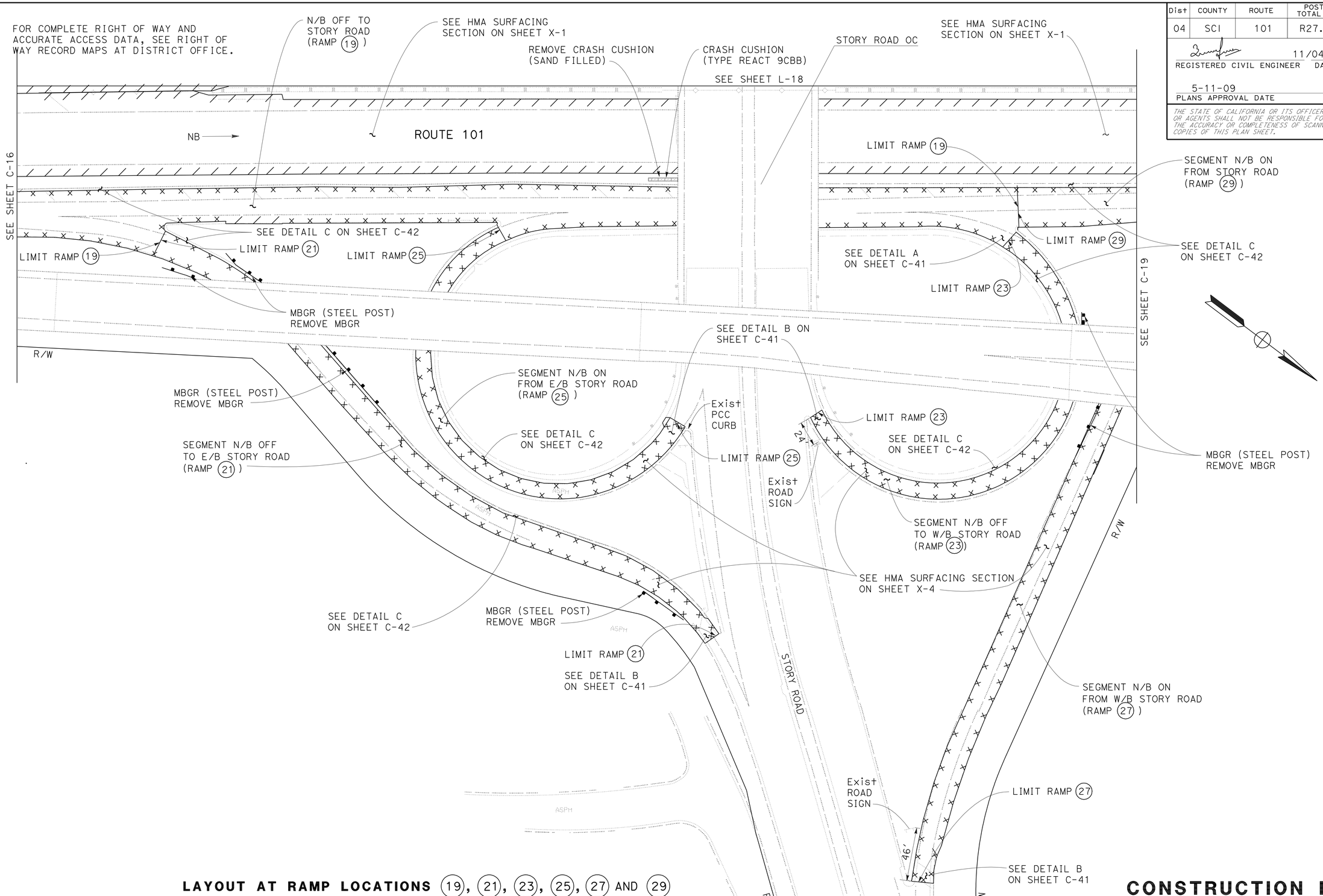

LAYOUT AT RAMP LOCATIONS (19), (21), (23), (25), (27) AND (29)

FOR NOTES, ABBREVIATIONS &/OR LEGEND, SEE SHEET C-1

ALL DIMENSIONS ARE IN FEET UNLESS OTHERWISE SHOWN

CONSTRUCTION DETAILS
(RAMP & INTERCHANGE)
NO SCALE

C-17

REVISED BY	DATE REVISED
A	A

CALCULATED-DESIGNED BY: MC
CHECKED BY: MN

FUNCTIONAL SUPERVISOR: ASHOK BHATNAGAR

STATE OF CALIFORNIA - DEPARTMENT OF TRANSPORTATION
Caltrans MAINTENANCE

LAST REVISION 12-22-08
DATE PLOTTED => 31-JUL-2009
TIME PLOTTED => 06:53

Dist	COUNTY	ROUTE	POST MILES TOTAL PROJECT	SHEET No.	TOTAL SHEETS
04	SCI	101	R27.6/40.2	24	173

REGISTERED CIVIL ENGINEER 11/04/08 DATE

5-11-09
PLANS APPROVAL DATE

REGISTERED PROFESSIONAL ENGINEER A. Bhatnagar No. 48814 Exp 9-30-10 CIVIL STATE OF CALIFORNIA

THE STATE OF CALIFORNIA OR ITS OFFICERS OR AGENTS SHALL NOT BE RESPONSIBLE FOR THE ACCURACY OR COMPLETENESS OF SCANNED COPIES OF THIS PLAN SHEET.

FOR COMPLETE RIGHT OF WAY AND ACCURATE ACCESS DATA, SEE RIGHT OF WAY RECORD MAPS AT DISTRICT OFFICE.

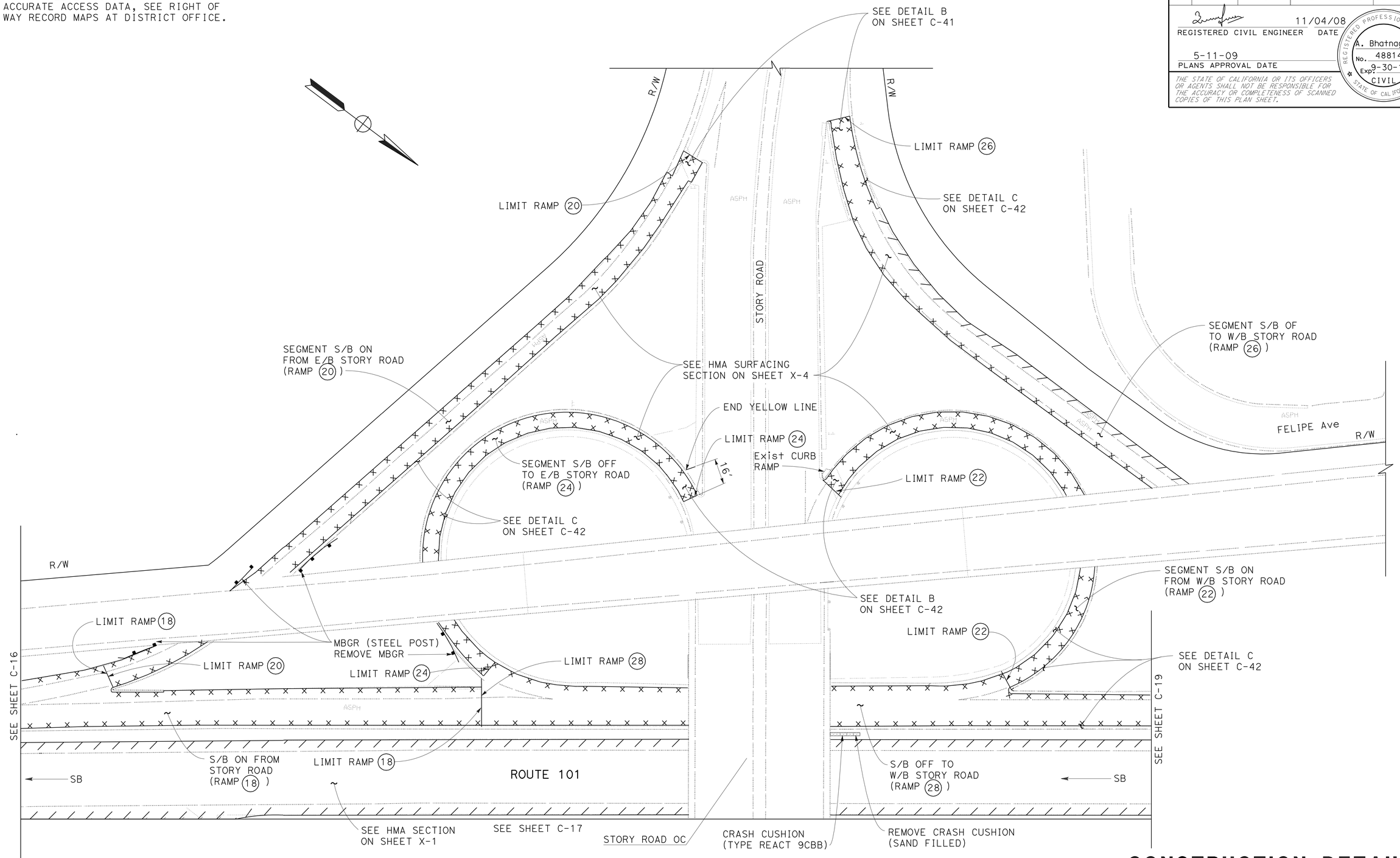

LAYOUT AT RAMP LOCATIONS (18), (20), (22), (24), (26), AND (28)

CONSTRUCTION DETAILS
(RAMP & INTERCHANGE)

NO SCALE

FOR NOTES, ABBREVIATIONS &/OR LEGEND, SEE SHEET C-1

ALL DIMENSIONS ARE IN FEET UNLESS OTHERWISE SHOWN

C-18

REVISED BY	DATE REVISED
A	A

CALCULATED-DESIGNED BY: MC
CHECKED BY: MN

FUNCTIONAL SUPERVISOR: ASHOK BHATNAGAR

STATE OF CALIFORNIA - DEPARTMENT OF TRANSPORTATION
Caltrans **MAINTENANCE**

LAST REVISION DATE PLOTTED => 31-JUL-2009
TIME PLOTTED => 06:54
12-22-08

Dist	COUNTY	ROUTE	POST MILES TOTAL PROJECT	SHEET No.	TOTAL SHEETS
04	SCI	101	R27.6/40.2	25	173

REGISTERED CIVIL ENGINEER DATE 11/04/08

PLANS APPROVAL DATE 5-11-09

REGISTERED PROFESSIONAL ENGINEER A. Bhatnagar No. 48814 Exp 9-30-10 CIVIL STATE OF CALIFORNIA

THE STATE OF CALIFORNIA OR ITS OFFICERS OR AGENTS SHALL NOT BE RESPONSIBLE FOR THE ACCURACY OR COMPLETENESS OF SCANNED COPIES OF THIS PLAN SHEET.

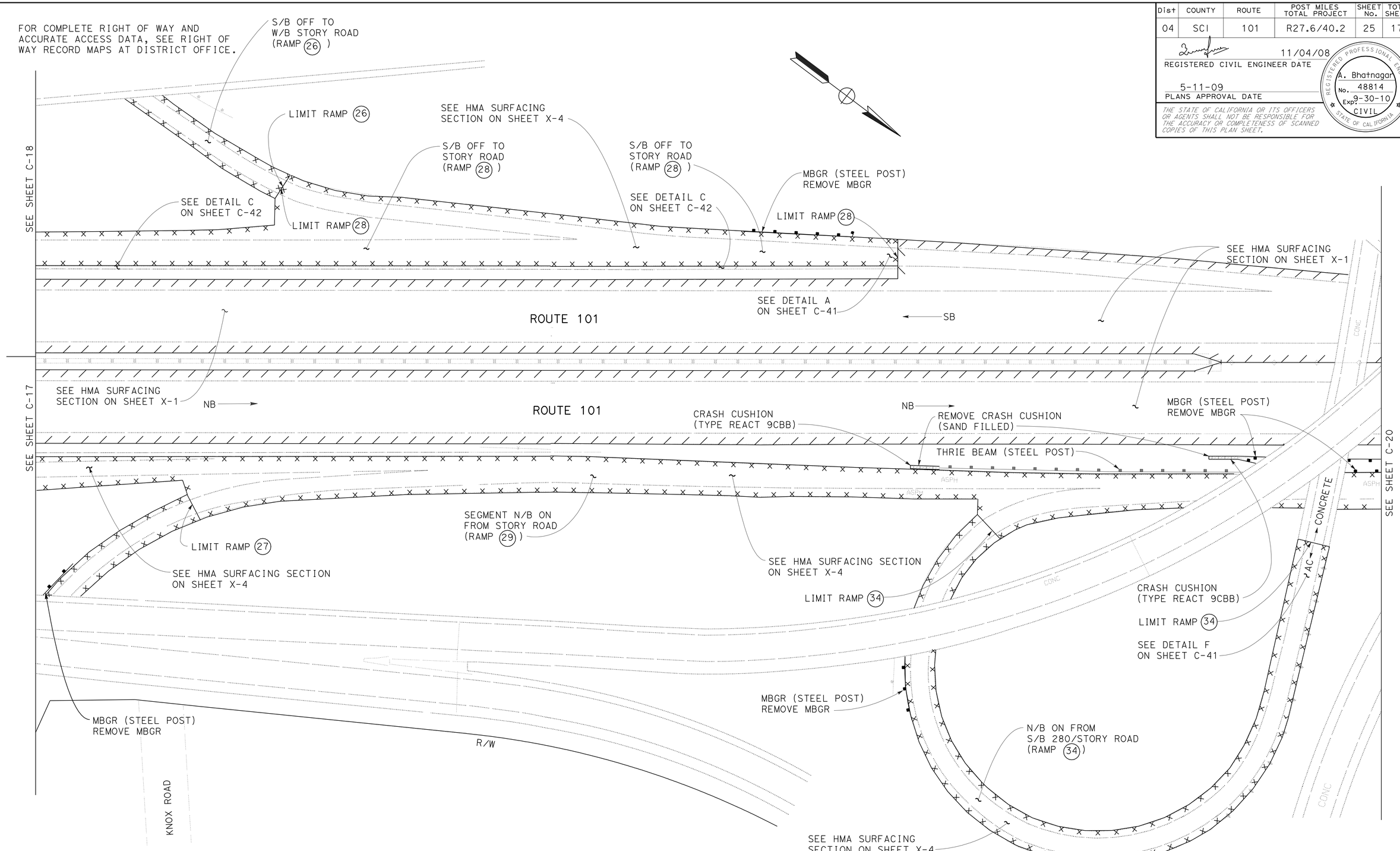

LAYOUT AT RAMP LOCATIONS (26), (27), (28), (29) AND (34)

CONSTRUCTION DETAILS
(RAMP & INTERCHANGE)

NO SCALE

FOR NOTES, ABBREVIATIONS &/OR LEGEND, SEE SHEET C-1

ALL DIMENSIONS ARE IN FEET UNLESS OTHERWISE SHOWN

C-19

STATE OF CALIFORNIA - DEPARTMENT OF TRANSPORTATION
Caltrans **MAINTENANCE**

FUNCTIONAL SUPERVISOR: ASHOK BHATNAGAR

CALCULATED-DESIGNED BY: MC
CHECKED BY: MN

REVISED BY: A
DATE REVISED: A

LAST REVISION: DATE PLOTTED => 31-JUL-2009
12-22-08 TIME PLOTTED => 06:54

Dist	COUNTY	ROUTE	POST MILES TOTAL PROJECT	SHEET No.	TOTAL SHEETS
04	SCI	101	R27.6/40.2	26	173

REGISTERED CIVIL ENGINEER 11/04/08

5-11-09
PLANS APPROVAL DATE

REGISTERED PROFESSIONAL ENGINEER A. Bhatnagar No. 48814 Exp 9-30-10 CIVIL STATE OF CALIFORNIA

THE STATE OF CALIFORNIA OR ITS OFFICERS OR AGENTS SHALL NOT BE RESPONSIBLE FOR THE ACCURACY OR COMPLETENESS OF SCANNED COPIES OF THIS PLAN SHEET.

FOR COMPLETE RIGHT OF WAY AND ACCURATE ACCESS DATA, SEE RIGHT OF WAY RECORD MAPS AT DISTRICT OFFICE.

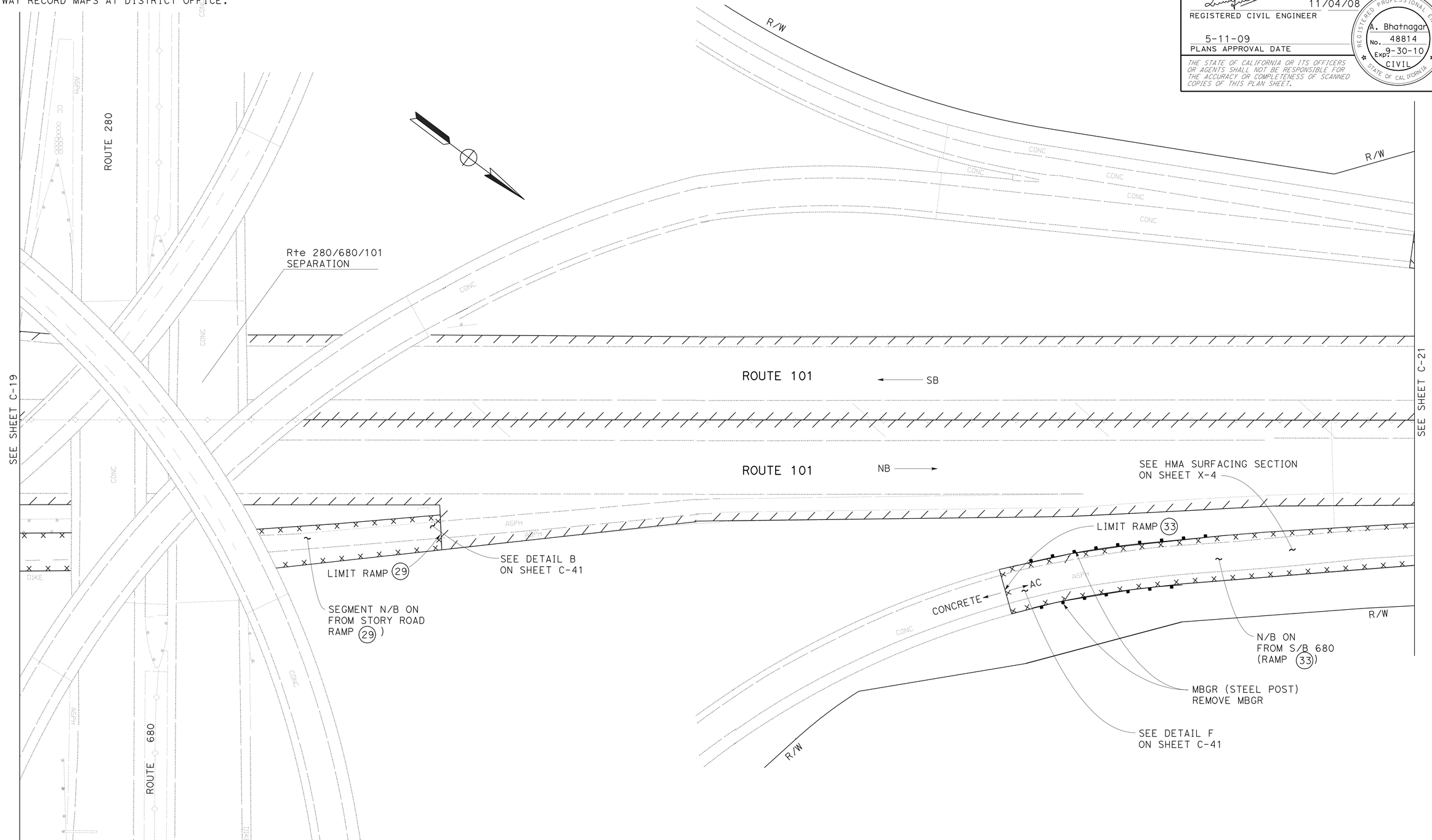

LAYOUT AT RAMP LOCATIONS 29 AND 33

CONSTRUCTION DETAILS
(RAMP & INTERCHANGE)

NO SCALE

FOR NOTES, ABBREVIATIONS &/OR LEGEND, SEE SHEET C-1

ALL DIMENSIONS ARE IN FEET UNLESS OTHERWISE SHOWN

C-20

REVISED BY	DATE REVISED
A	A

CALCULATED-DESIGNED BY: MC
CHECKED BY: MN

FUNCTIONAL SUPERVISOR: ASHOK BHATNAGAR

STATE OF CALIFORNIA - DEPARTMENT OF TRANSPORTATION
Caltrans MAINTENANCE

LAST REVISION 12-22-08 | DATE PLOTTED => 31-JUL-2009 | TIME PLOTTED => 06:54

Dist	COUNTY	ROUTE	POST MILES TOTAL PROJECT	SHEET No.	TOTAL SHEETS
04	SCI	101	R27.6/40.2	27	173

REGISTERED CIVIL ENGINEER DATE 11/04/08

PLANS APPROVAL DATE 5-11-09

REGISTERED PROFESSIONAL ENGINEER A. Bhatnagar No. 48814 Exp 9-30-10 CIVIL STATE OF CALIFORNIA

THE STATE OF CALIFORNIA OR ITS OFFICERS OR AGENTS SHALL NOT BE RESPONSIBLE FOR THE ACCURACY OR COMPLETENESS OF SCANNED COPIES OF THIS PLAN SHEET.

FOR COMPLETE RIGHT OF WAY AND ACCURATE ACCESS DATA, SEE RIGHT OF WAY RECORD MAPS AT DISTRICT OFFICE.

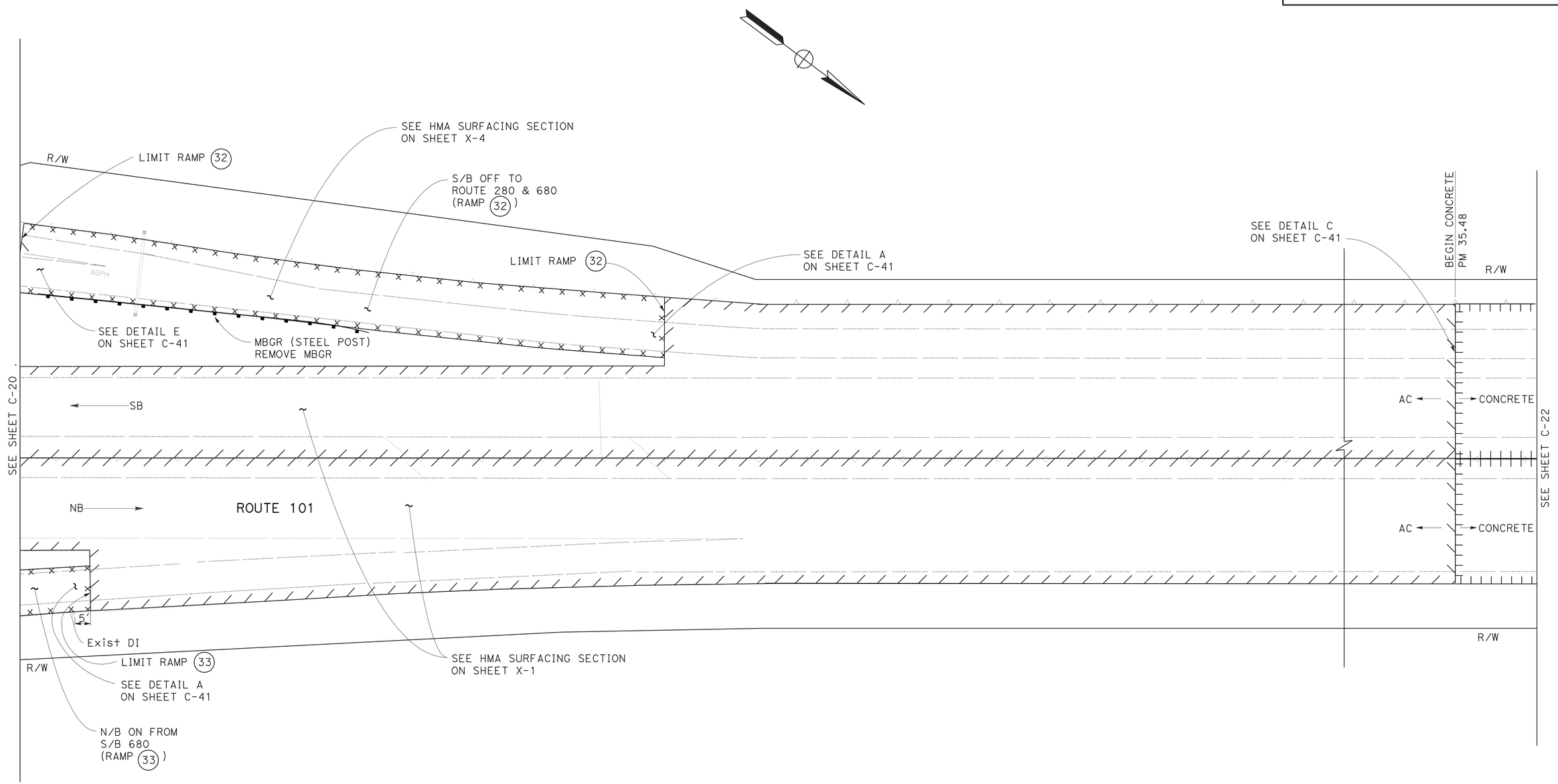

LAYOUT AT RAMP LOCATIONS 32 AND 33

FOR NOTES, ABBREVIATIONS &/OR LEGEND, SEE SHEET C-1

ALL DIMENSIONS ARE IN FEET UNLESS OTHERWISE SHOWN

CONSTRUCTION DETAILS
(RAMP & INTERCHANGE)
NOT TO SCALE

C-21

STATE OF CALIFORNIA - DEPARTMENT OF TRANSPORTATION
Caltrans MAINTENANCE

FUNCTIONAL SUPERVISOR: ASHOK BHATNAGAR

CALCULATED-DESIGNED BY: MC | CHECKED BY: MN

REVISED BY: A | DATE REVISED: A

LAST REVISION 04-22-09 | DATE PLOTTED => 31-JUL-2009 | TIME PLOTTED => 06:54

Dist	COUNTY	ROUTE	POST MILES TOTAL PROJECT	SHEET No.	TOTAL SHEETS
04	SCI	101	R27.6/40.2	28	173

REGISTERED CIVIL ENGINEER DATE 11/04/08

PLANS APPROVAL DATE 5-11-09

REGISTERED PROFESSIONAL ENGINEER A. Bhatnagar No. 48814 Exp 9-30-10 CIVIL STATE OF CALIFORNIA

THE STATE OF CALIFORNIA OR ITS OFFICERS OR AGENTS SHALL NOT BE RESPONSIBLE FOR THE ACCURACY OR COMPLETENESS OF SCANNED COPIES OF THIS PLAN SHEET.

FOR COMPLETE RIGHT OF WAY AND ACCURATE ACCESS DATA, SEE RIGHT OF WAY RECORD MAPS AT DISTRICT OFFICE.

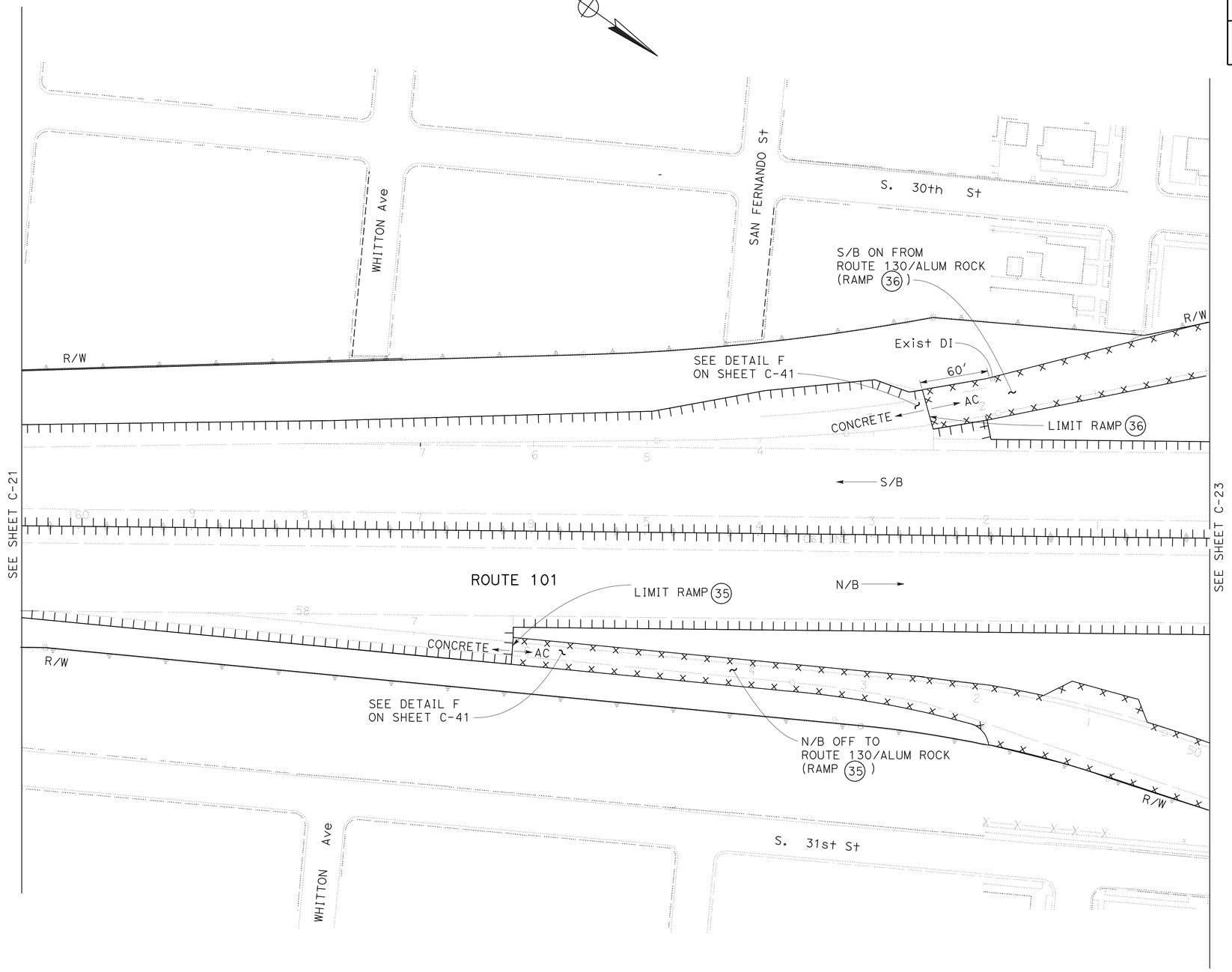

LAYOUT AT RAMP LOCATIONS (35) AND (36)

CONSTRUCTION DETAILS
(RAMP & INTERCHANGE)

NO SCALE

FOR NOTES, ABBREVIATIONS &/OR LEGEND, SEE SHEET C-1

ALL DIMENSIONS ARE IN FEET UNLESS OTHERWISE SHOWN

C-22

REVISED BY	DATE REVISED
A	A

CALCULATED-DESIGNED BY: MC
CHECKED BY: MN

FUNCTIONAL SUPERVISOR: ASHOK BHATNAGAR

STATE OF CALIFORNIA - DEPARTMENT OF TRANSPORTATION
Caltrans **MAINTENANCE**

LAST REVISION 04-22-09 | DATE PLOTTED => 31-JUL-2009 | TIME PLOTTED => 06:54

Dist	COUNTY	ROUTE	POST MILES TOTAL PROJECT	SHEET No.	TOTAL SHEETS
04	SCI	101	R27.6/40.2	29	173

REGISTERED CIVIL ENGINEER DATE 11/04/08

PLANS APPROVAL DATE 5-11-09

REGISTERED PROFESSIONAL ENGINEER A. Bhatnagar No. 48814 Exp 9-30-10 CIVIL STATE OF CALIFORNIA

THE STATE OF CALIFORNIA OR ITS OFFICERS OR AGENTS SHALL NOT BE RESPONSIBLE FOR THE ACCURACY OR COMPLETENESS OF SCANNED COPIES OF THIS PLAN SHEET.

FOR COMPLETE RIGHT OF WAY AND ACCURATE ACCESS DATA, SEE RIGHT OF WAY RECORD MAPS AT DISTRICT OFFICE.

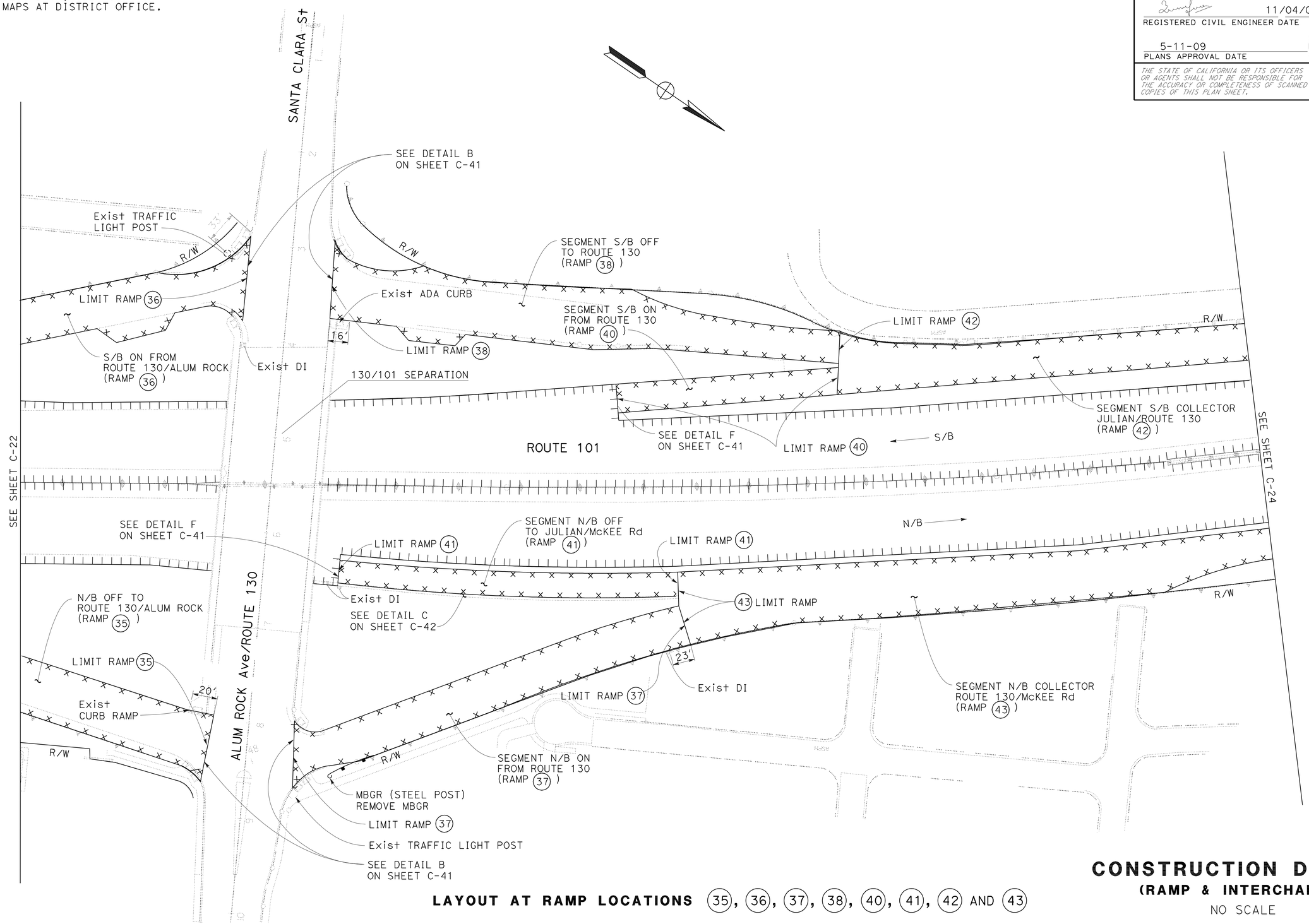

LAYOUT AT RAMP LOCATIONS (35), (36), (37), (38), (40), (41), (42) AND (43)

CONSTRUCTION DETAILS

(RAMP & INTERCHANGE)

NO SCALE

FOR NOTES, ABBREVIATIONS &/OR LEGEND, SEE SHEET C-1

ALL DIMENSIONS ARE IN FEET UNLESS OTHERWISE SHOWN

C-23

REVISED BY	DATE REVISED
A	A

CALCULATED-DESIGNED BY: MC
CHECKED BY: MN

FUNCTIONAL SUPERVISOR: ASHOK BHATNAGAR

STATE OF CALIFORNIA - DEPARTMENT OF TRANSPORTATION
Caltrans MAINTENANCE

LAST REVISION: DATE PLOTTED => 31-JUL-2009 TIME PLOTTED => 06:54
04-22-09

Dist	COUNTY	ROUTE	POST MILES TOTAL PROJECT	SHEET No.	TOTAL SHEETS
04	SCI	101	R27.6/40.2	30	173

REGISTERED CIVIL ENGINEER DATE 11/04/08

PLANS APPROVAL DATE 5-11-09

REGISTERED PROFESSIONAL ENGINEER A. Bhatnagar No. 48814 Exp 9-30-10 CIVIL STATE OF CALIFORNIA

THE STATE OF CALIFORNIA OR ITS OFFICERS OR AGENTS SHALL NOT BE RESPONSIBLE FOR THE ACCURACY OR COMPLETENESS OF SCANNED COPIES OF THIS PLAN SHEET.

FOR COMPLETE RIGHT OF WAY AND ACCURATE ACCESS DATA, SEE RIGHT OF WAY RECORD MAPS AT DISTRICT OFFICE.

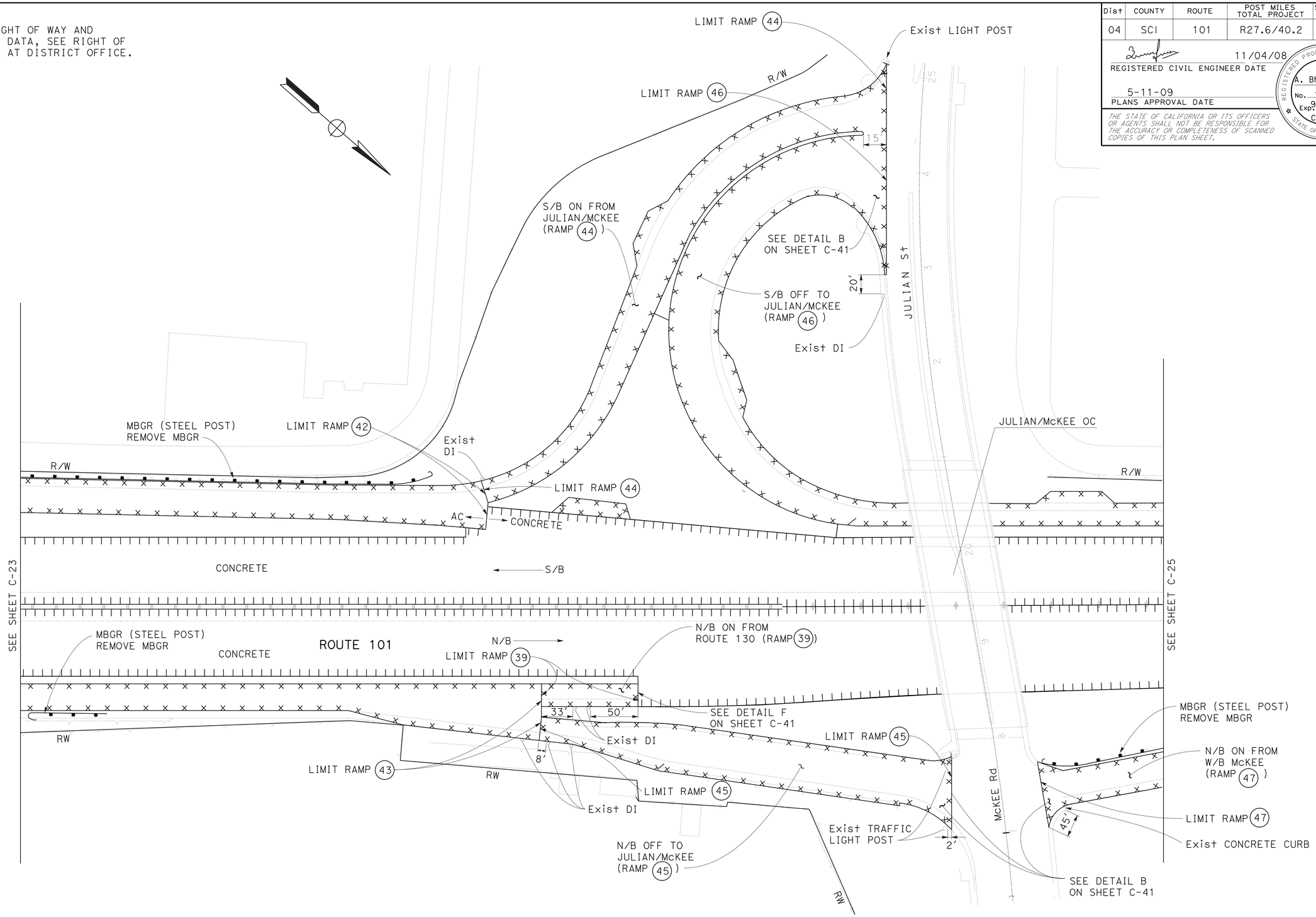

LAYOUT AT RAMP LOCATIONS (39), (42), (43), (44), (45), (46) AND (47)

CONSTRUCTION DETAILS
(RAMP & INTERCHANGE)
NO SCALE

FOR NOTES, ABBREVIATIONS &/OR LEGEND, SEE SHEET C-1

ALL DIMENSIONS ARE IN FEET UNLESS OTHERWISE SHOWN

C-24

REVISED BY	DATE REVISED
MC	MN

A

CALCULATED-DESIGNED BY / CHECKED BY

FUNCTIONAL SUPERVISOR: ASHOK BHATNAGAR

STATE OF CALIFORNIA - DEPARTMENT OF TRANSPORTATION

Caltrans MAINTENANCE

LAST REVISION 12-23-08 | DATE PLOTTED => 31-JUL-2009 | TIME PLOTTED => 06:54

Dist	COUNTY	ROUTE	POST MILES TOTAL PROJECT	SHEET No.	TOTAL SHEETS
04	SCI	101	R27.6/40.2	31	173

REGISTERED CIVIL ENGINEER DATE 11/04/08

PLANS APPROVAL DATE 5-11-09

REGISTERED PROFESSIONAL ENGINEER A. Bhatnagar No. 48814 Exp 9-30-10 CIVIL STATE OF CALIFORNIA

THE STATE OF CALIFORNIA OR ITS OFFICERS OR AGENTS SHALL NOT BE RESPONSIBLE FOR THE ACCURACY OR COMPLETENESS OF SCANNED COPIES OF THIS PLAN SHEET.

FOR COMPLETE RIGHT OF WAY AND ACCURATE ACCESS DATA, SEE RIGHT OF WAY RECORD MAPS AT DISTRICT OFFICE.

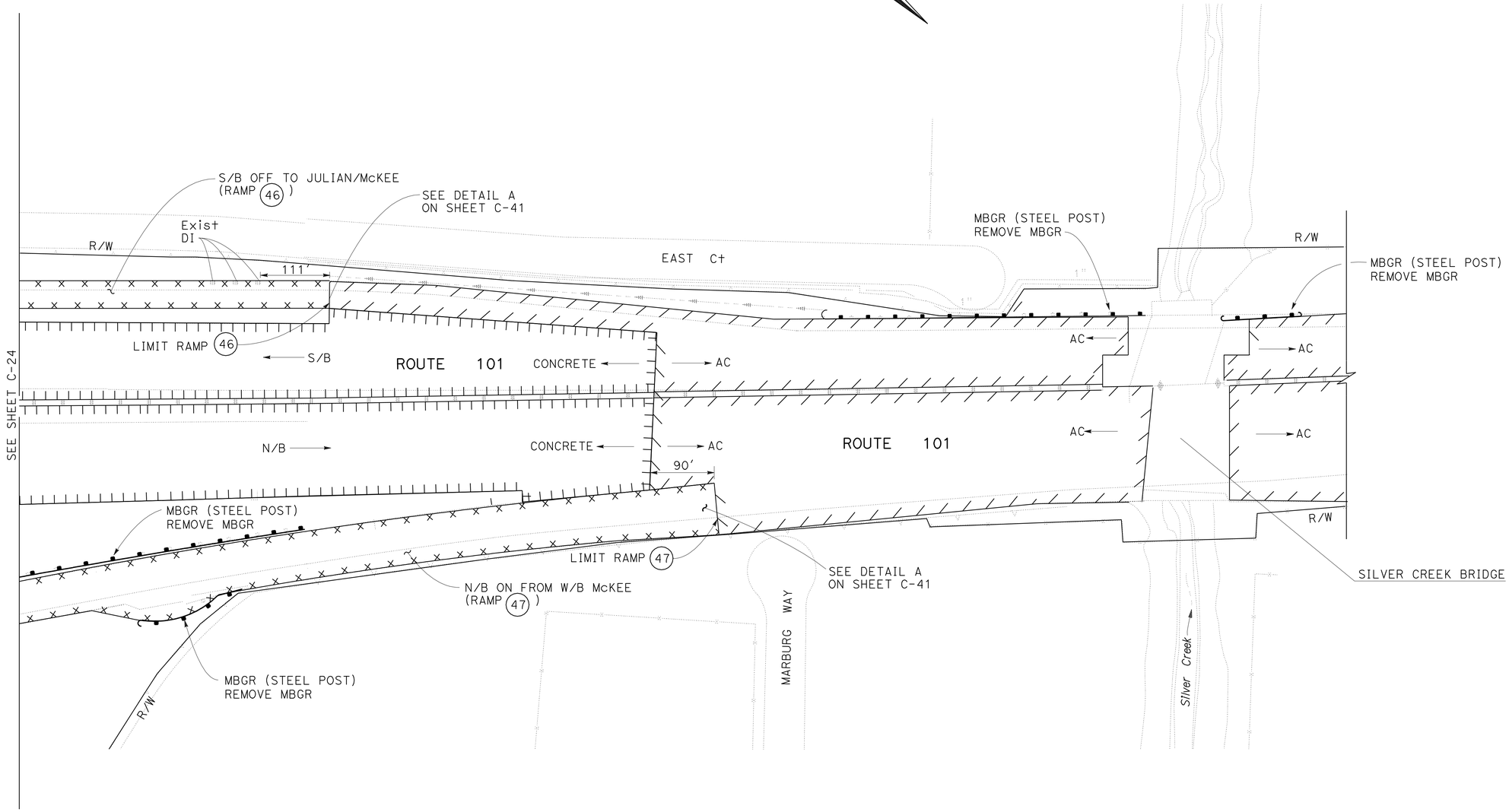

LAYOUT AT RAMP LOCATIONS 46 AND 47

CONSTRUCTION DETAILS
(RAMP & INTERCHANGE)

NO SCALE

FOR NOTES, ABBREVIATIONS &/OR LEGEND, SEE SHEET C-1

ALL DIMENSIONS ARE IN FEET UNLESS OTHERWISE SHOWN

C-25

REVISED BY	DATE REVISED
A	A

CALCULATED-DESIGNED BY: MC
CHECKED BY: MN

FUNCTIONAL SUPERVISOR: ASHOK BHATNAGAR

STATE OF CALIFORNIA - DEPARTMENT OF TRANSPORTATION
Caltrans MAINTENANCE

LAST REVISION 12-22-08
DATE PLOTTED => 31-JUL-2009
TIME PLOTTED => 06:55

Dist	COUNTY	ROUTE	POST MILES TOTAL PROJECT	SHEET No.	TOTAL SHEETS
04	SCI	101	R27.6/40.2	32	173

REGISTERED CIVIL ENGINEER DATE 11/04/08

PLANS APPROVAL DATE 5-11-09

REGISTERED PROFESSIONAL ENGINEER A. Bhatnagar No. 48814 Exp 9-30-10 CIVIL STATE OF CALIFORNIA

THE STATE OF CALIFORNIA OR ITS OFFICERS OR AGENTS SHALL NOT BE RESPONSIBLE FOR THE ACCURACY OR COMPLETENESS OF SCANNED COPIES OF THIS PLAN SHEET.

FOR COMPLETE RIGHT OF WAY AND ACCURATE ACCESS DATA, SEE RIGHT OF WAY RECORD MAPS AT DISTRICT OFFICE.

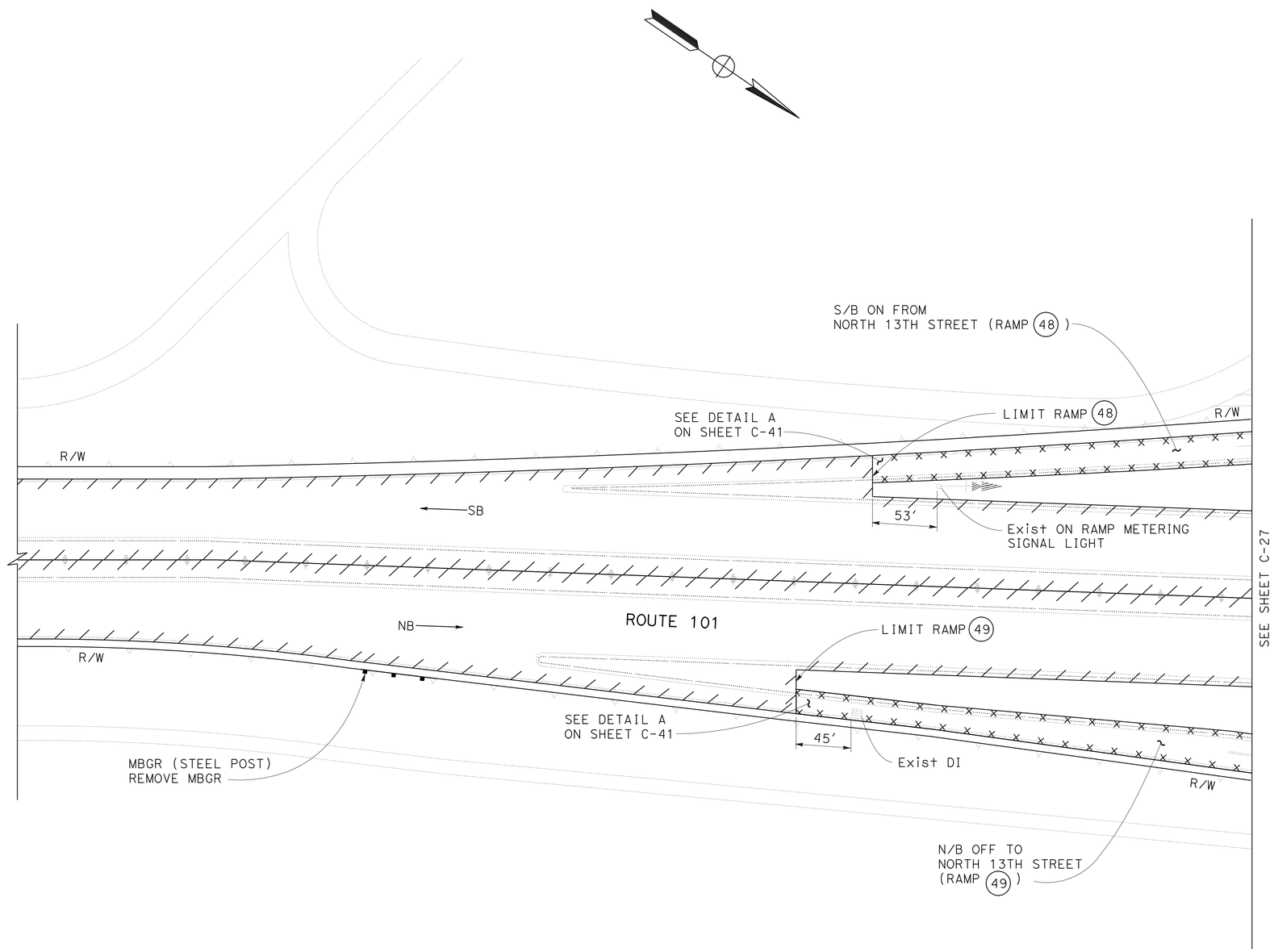

LAYOUT AT RAMP LOCATIONS (48) AND (49)

FOR NOTES, ABBREVIATIONS &/OR LEGEND, SEE SHEET C-1

ALL DIMENSIONS ARE IN FEET UNLESS OTHERWISE SHOWN

CONSTRUCTION DETAILS
(RAMP & INTERCHANGE)

NO SCALE

C-26

STATE OF CALIFORNIA - DEPARTMENT OF TRANSPORTATION
Caltrans MAINTENANCE

FUNCTIONAL SUPERVISOR ASHOK BHATNAGAR

CALCULATED-DESIGNED BY MC
CHECKED BY MN

REVISED BY A
DATE REVISED A

LAST REVISION DATE PLOTTED => 31-JUL-2009
TIME PLOTTED => 06:55
12-22-08

Dist	COUNTY	ROUTE	POST MILES TOTAL PROJECT	SHEET No.	TOTAL SHEETS
04	SCI	101	R27.6/40.2	33	173

REGISTERED CIVIL ENGINEER DATE 11/04/08

PLANS APPROVAL DATE 5-11-09

REGISTERED PROFESSIONAL ENGINEER A. Bhatnagar No. 48814 Exp 9-30-10 CIVIL STATE OF CALIFORNIA

THE STATE OF CALIFORNIA OR ITS OFFICERS OR AGENTS SHALL NOT BE RESPONSIBLE FOR THE ACCURACY OR COMPLETENESS OF SCANNED COPIES OF THIS PLAN SHEET.

FOR COMPLETE RIGHT OF WAY AND ACCURATE ACCESS DATA, SEE RIGHT OF WAY RECORD MAPS AT DISTRICT OFFICE.

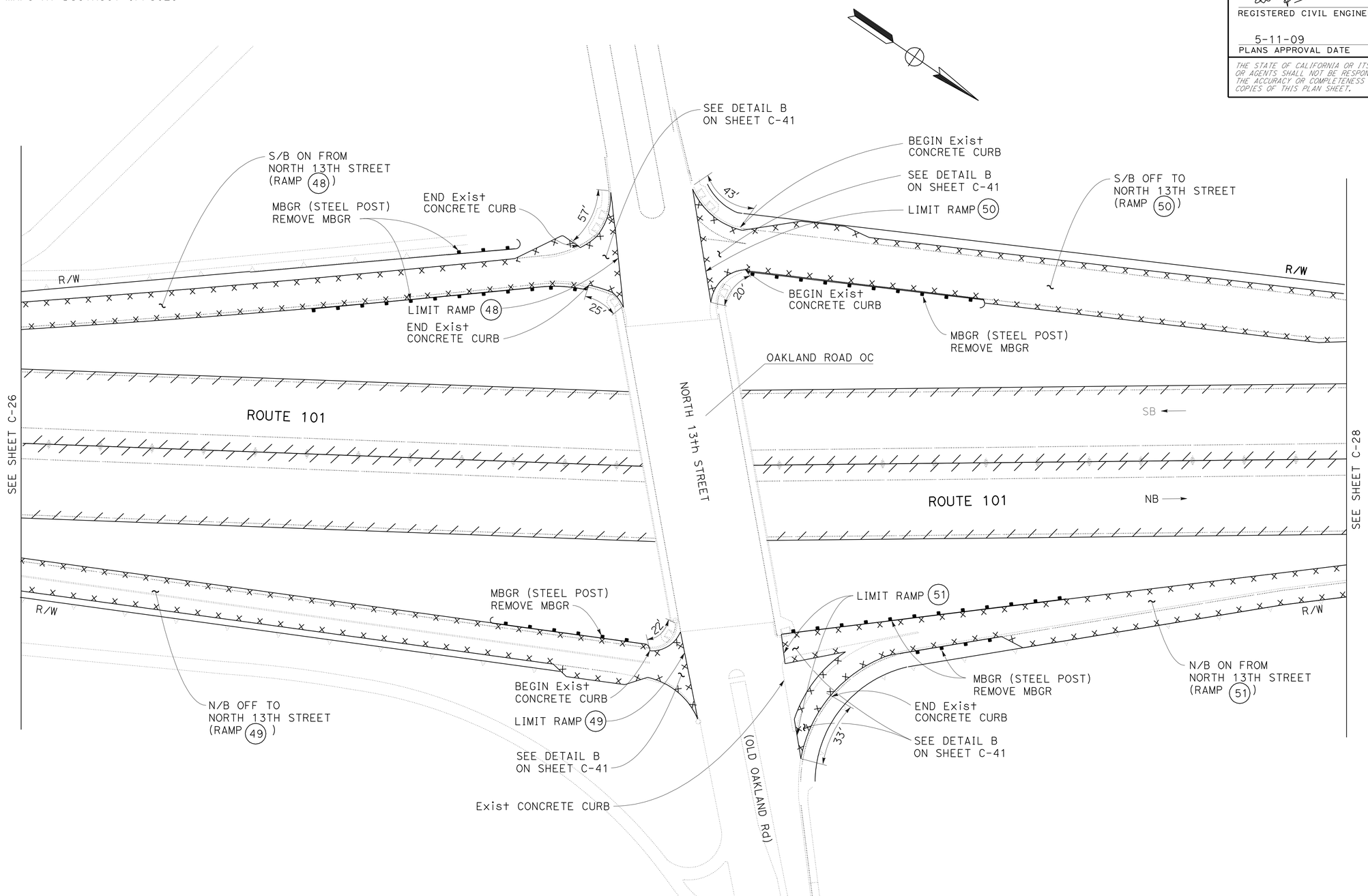

LAYOUT AT RAMP LOCATIONS 48, 49, 50, AND 51

FOR NOTES, ABBREVIATIONS &/OR LEGEND, SEE SHEET C-1

ALL DIMENSIONS ARE IN FEET UNLESS OTHERWISE SHOWN

CONSTRUCTION DETAILS
(RAMP & INTERCHANGE)

NO SCALE

C-27

REVISED BY	DATE REVISED
A	A

CALCULATED-DESIGNED BY: MC — CHECKED BY: MN

FUNCTIONAL SUPERVISOR: ASHOK BHATNAGAR

STATE OF CALIFORNIA - DEPARTMENT OF TRANSPORTATION

Caltrans MAINTENANCE

LAST REVISION 11-10-08 — DATE PLOTTED => 31-JUL-2009 — TIME PLOTTED => 06:55

Dist	COUNTY	ROUTE	POST MILES TOTAL PROJECT	SHEET No.	TOTAL SHEETS
04	SCI	101	R27.6/40.2	34	173

REGISTERED CIVIL ENGINEER DATE 11/04/08

PLANS APPROVAL DATE 5-11-09

REGISTERED PROFESSIONAL ENGINEER A. Bhatnagar No. 48814 Exp 9-30-10 CIVIL STATE OF CALIFORNIA

THE STATE OF CALIFORNIA OR ITS OFFICERS OR AGENTS SHALL NOT BE RESPONSIBLE FOR THE ACCURACY OR COMPLETENESS OF SCANNED COPIES OF THIS PLAN SHEET.

FOR COMPLETE RIGHT OF WAY AND ACCURATE ACCESS DATA, SEE RIGHT OF WAY RECORD MAPS AT DISTRICT OFFICE.

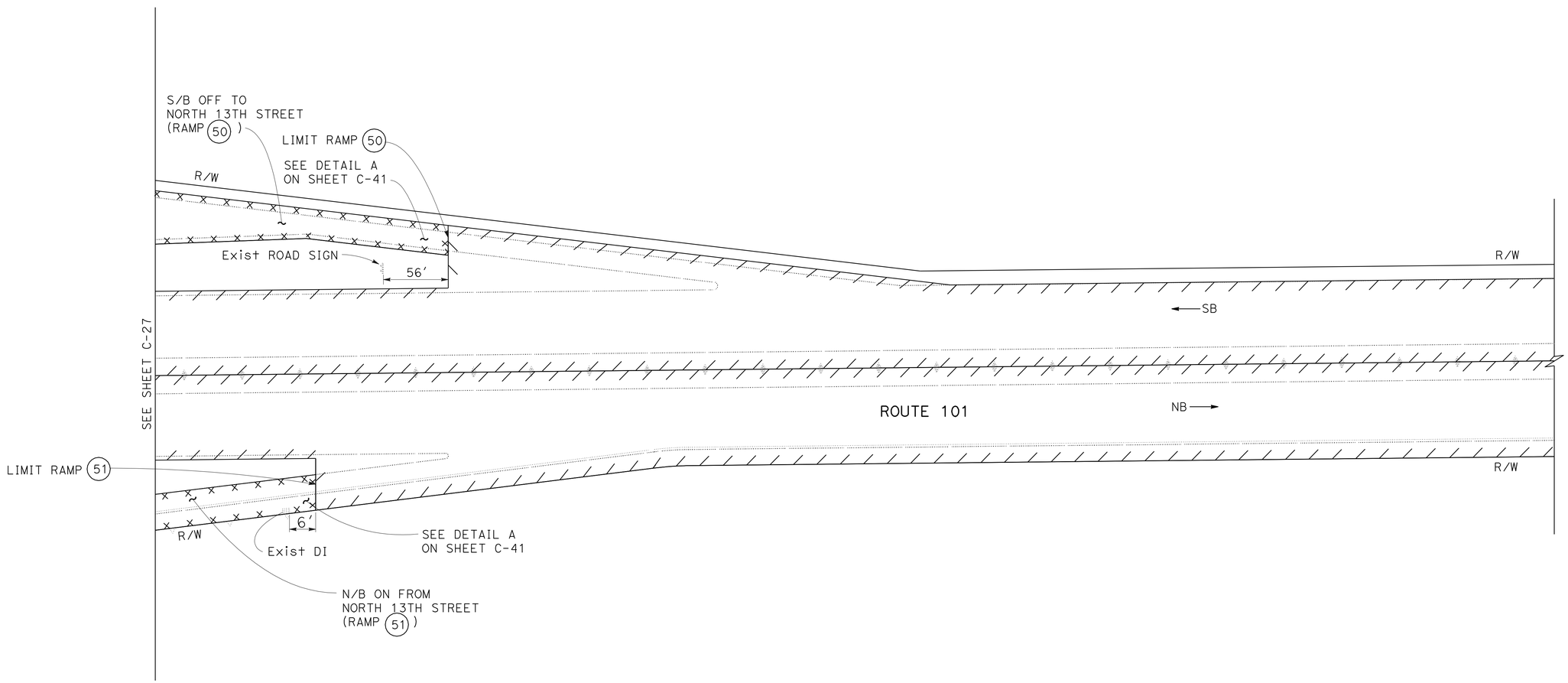

LAYOUT AT RAMP LOCATIONS 50 AND 51

FOR NOTES, ABBREVIATIONS &/OR LEGEND, SEE SHEET C-1

ALL DIMENSIONS ARE IN FEET UNLESS OTHERWISE SHOWN

CONSTRUCTION DETAILS
(RAMP & INTERCHANGE)

NO SCALE

C-28

STATE OF CALIFORNIA - DEPARTMENT OF TRANSPORTATION
Caltrans MAINTENANCE

FUNCTIONAL SUPERVISOR: ASHOK BHATNAGAR

CALCULATED-DESIGNED BY: MC
CHECKED BY: MN

REVISED BY: A
DATE REVISED: A

LAST REVISION 12-22-08
DATE PLOTTED => 31-JUL-2009
TIME PLOTTED => 06:55

Dist	COUNTY	ROUTE	POST MILES TOTAL PROJECT	SHEET No.	TOTAL SHEETS
04	SCI	101	R27.6/40.2	35	173

11/04/08
REGISTERED CIVIL ENGINEER DATE

5-11-09
PLANS APPROVAL DATE

REGISTERED PROFESSIONAL ENGINEER
A. Bhatnagar
No. 48814
Exp 9-30-10
CIVIL
STATE OF CALIFORNIA

THE STATE OF CALIFORNIA OR ITS OFFICERS OR AGENTS SHALL NOT BE RESPONSIBLE FOR THE ACCURACY OR COMPLETENESS OF SCANNED COPIES OF THIS PLAN SHEET.

FOR COMPLETE RIGHT OF WAY AND ACCURATE ACCESS DATA, SEE RIGHT OF WAY RECORD MAPS AT DISTRICT OFFICE.

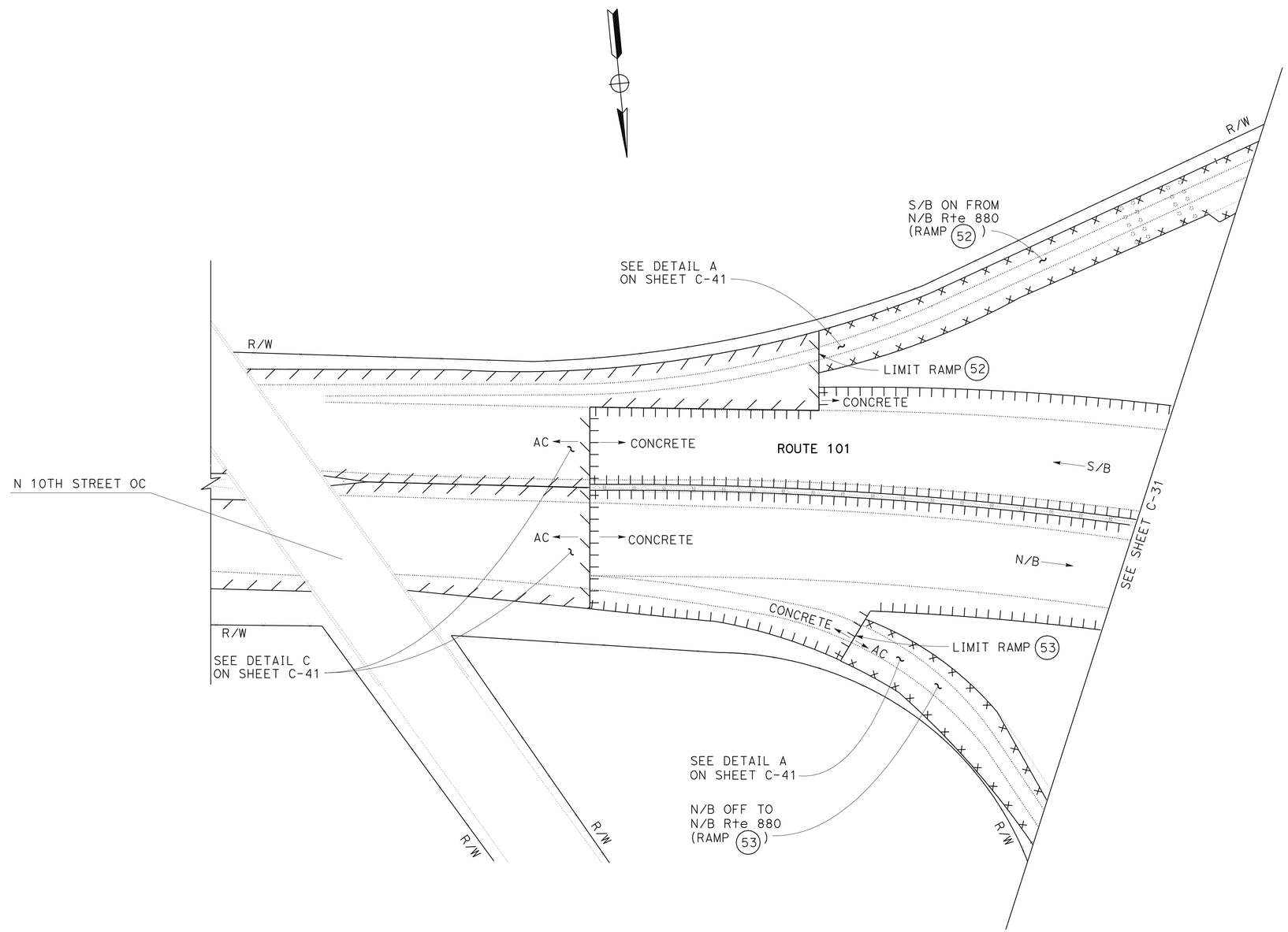

LAYOUT AT RAMP LOCATIONS (52) AND (53)

FOR NOTES, ABBREVIATIONS &/OR LEGEND, SEE SHEET C-1

ALL DIMENSIONS ARE IN FEET UNLESS OTHERWISE SHOWN

CONSTRUCTION DETAILS
(RAMP & INTERCHANGE)

NO SCALE

C-29

REVISED BY	DATE REVISED
A	A

CALCULATED-DESIGNED BY: MC
CHECKED BY: MN

FUNCTIONAL SUPERVISOR: ASHOK BHATNAGAR

STATE OF CALIFORNIA - DEPARTMENT OF TRANSPORTATION
Caltrans MAINTENANCE

LAST REVISION 12-22-08
DATE PLOTTED => 31-JUL-2009
TIME PLOTTED => 06:55

Dist	COUNTY	ROUTE	POST MILES TOTAL PROJECT	SHEET No.	TOTAL SHEETS
04	SCI	101	R27.6/40.2	36	173

11/04/08
REGISTERED CIVIL ENGINEER DATE

5-11-09
PLANS APPROVAL DATE

REGISTERED PROFESSIONAL ENGINEER
A. Bhatnagar
No. 48814
Exp 9-30-10
CIVIL
STATE OF CALIFORNIA

THE STATE OF CALIFORNIA OR ITS OFFICERS OR AGENTS SHALL NOT BE RESPONSIBLE FOR THE ACCURACY OR COMPLETENESS OF SCANNED COPIES OF THIS PLAN SHEET.

FOR COMPLETE RIGHT OF WAY AND ACCURATE ACCESS DATA, SEE RIGHT OF WAY RECORD MAPS AT DISTRICT OFFICE.

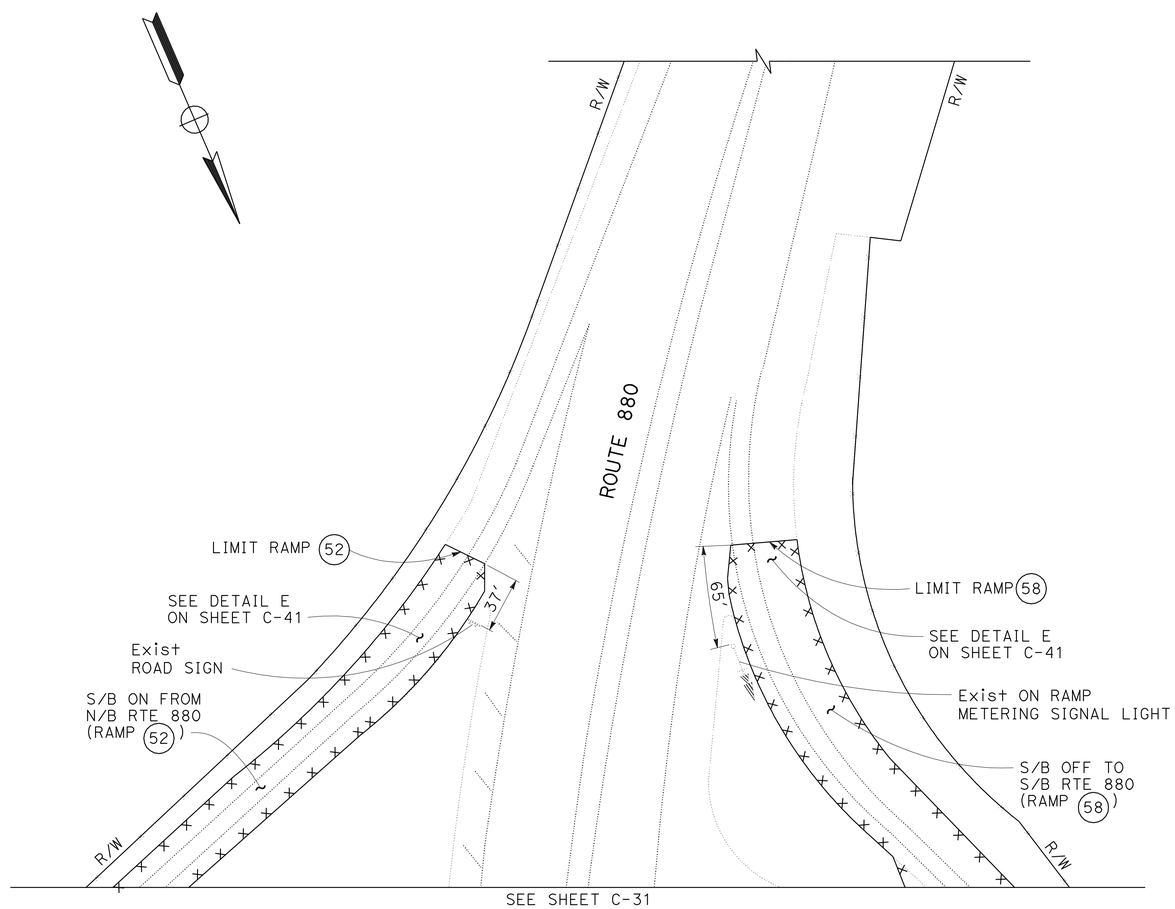

LAYOUT AT RAMP LOCATIONS 52 AND 58

FOR NOTES, ABBREVIATIONS &/OR LEGEND, SEE SHEET C-1

ALL DIMENSIONS ARE IN FEET UNLESS OTHERWISE SHOWN

CONSTRUCTION DETAILS
(RAMP & INTERCHANGE)

NO SCALE

C-30

REVISED BY	DATE REVISED
A	A

CALCULATED-DESIGNED BY: MC
CHECKED BY: MN

FUNCTIONAL SUPERVISOR: ASHOK BHATNAGAR

STATE OF CALIFORNIA - DEPARTMENT OF TRANSPORTATION
Caltrans MAINTENANCE

LAST REVISION 12-22-08
DATE PLOTTED => 31-JUL-2009
TIME PLOTTED => 06:55

Dist	COUNTY	ROUTE	POST MILES TOTAL PROJECT	SHEET No.	TOTAL SHEETS
04	SCI	101	R27.6/40.2	37	173

REGISTERED CIVIL ENGINEER DATE 11/04/08

PLANS APPROVAL DATE 5-11-09

REGISTERED PROFESSIONAL ENGINEER A. Bhatnagar No. 48814 Exp 9-30-10 CIVIL STATE OF CALIFORNIA

THE STATE OF CALIFORNIA OR ITS OFFICERS OR AGENTS SHALL NOT BE RESPONSIBLE FOR THE ACCURACY OR COMPLETENESS OF SCANNED COPIES OF THIS PLAN SHEET.

FOR COMPLETE RIGHT OF WAY AND ACCURATE ACCESS DATA, SEE RIGHT OF WAY RECORD MAPS AT DISTRICT OFFICE.

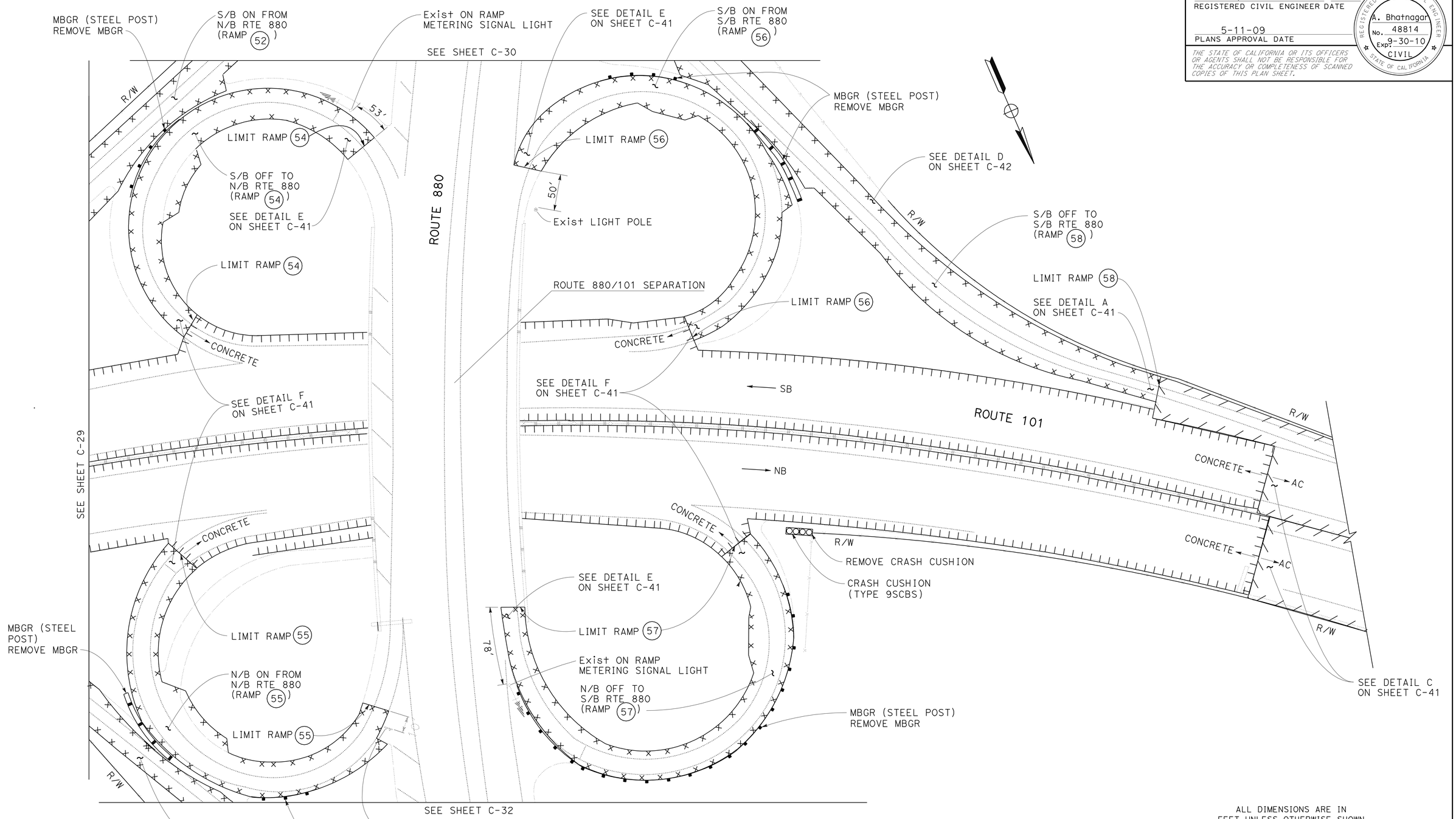

LAYOUT AT RAMP LOCATIONS 52, 53, 54, 55, 56, 57 AND 58

ALL DIMENSIONS ARE IN FEET UNLESS OTHERWISE SHOWN

CONSTRUCTION DETAILS
(RAMP & INTERCHANGE)

NO SCALE

FOR NOTES, ABBREVIATIONS &/OR LEGEND, SEE SHEET C-1

C-31

REVISED BY	DATE REVISED
A	A

CALCULATED-DESIGNED BY: MC
CHECKED BY: MN

FUNCTIONAL SUPERVISOR: ASHOK BHATNAGAR

STATE OF CALIFORNIA - DEPARTMENT OF TRANSPORTATION
Caltrans MAINTENANCE

LAST REVISION 12-23-08
DATE PLOTTED => 31-JUL-2009
TIME PLOTTED => 06:56

Dist	COUNTY	ROUTE	POST MILES TOTAL PROJECT	SHEET No.	TOTAL SHEETS
04	SCI	101	R27.6/40.2	38	173

REGISTERED CIVIL ENGINEER 11/04/08 DATE

5-11-09
PLANS APPROVAL DATE

REGISTERED PROFESSIONAL ENGINEER
A. Bhatnagar
No. 48814
Exp 9-30-10
CIVIL
STATE OF CALIFORNIA

THE STATE OF CALIFORNIA OR ITS OFFICERS OR AGENTS SHALL NOT BE RESPONSIBLE FOR THE ACCURACY OR COMPLETENESS OF SCANNED COPIES OF THIS PLAN SHEET.

FOR COMPLETE RIGHT OF WAY AND ACCURATE ACCESS DATA, SEE RIGHT OF WAY RECORD MAPS AT DISTRICT OFFICE.

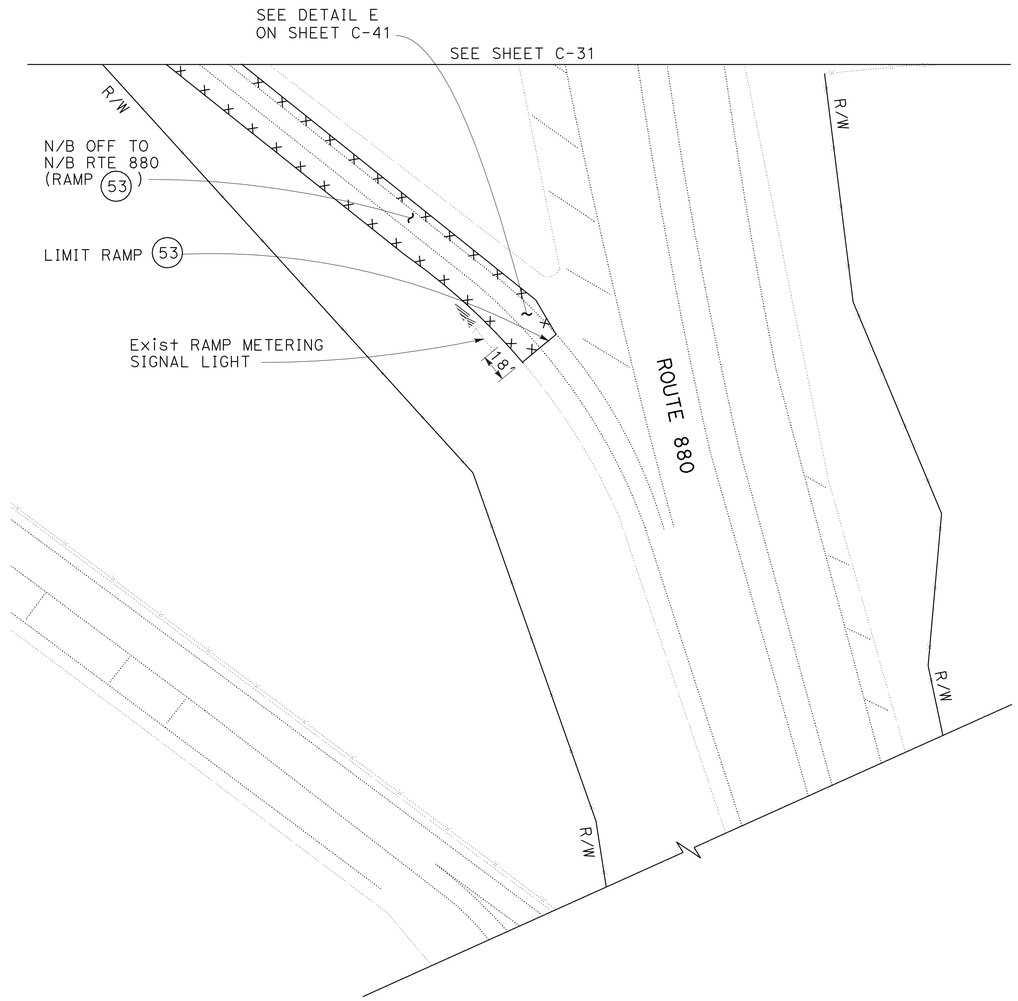

LAYOUT AT RAMP LOCATION 53

FOR NOTES, ABBREVIATIONS &/OR LEGEND, SEE SHEET C-1

ALL DIMENSIONS ARE IN FEET UNLESS OTHERWISE SHOWN

CONSTRUCTION DETAILS
(RAMP & INTERCHANGE)

NO SCALE

C-32

REVISED BY	DATE REVISED
A	A

CALCULATED-DESIGNED BY: MC
CHECKED BY: MN

FUNCTIONAL SUPERVISOR: ASHOK BHATNAGAR

STATE OF CALIFORNIA - DEPARTMENT OF TRANSPORTATION
Caltrans **MAINTENANCE**

LAST REVISION 01-08-09 | DATE PLOTTED => 31-JUL-2009 | TIME PLOTTED => 06:56

Dist	COUNTY	ROUTE	POST MILES TOTAL PROJECT	SHEET No.	TOTAL SHEETS
04	SCI	101	R27.6/40.2	39	173

REGISTERED CIVIL ENGINEER DATE 11/04/08

PLANS APPROVAL DATE 5-11-09

REGISTERED PROFESSIONAL ENGINEER A. Bhatnagar No. 48814 Exp 9-30-10 CIVIL STATE OF CALIFORNIA

THE STATE OF CALIFORNIA OR ITS OFFICERS OR AGENTS SHALL NOT BE RESPONSIBLE FOR THE ACCURACY OR COMPLETENESS OF SCANNED COPIES OF THIS PLAN SHEET.

FOR COMPLETE RIGHT OF WAY AND ACCURATE ACCESS DATA, SEE RIGHT OF WAY RECORD MAPS AT DISTRICT OFFICE.

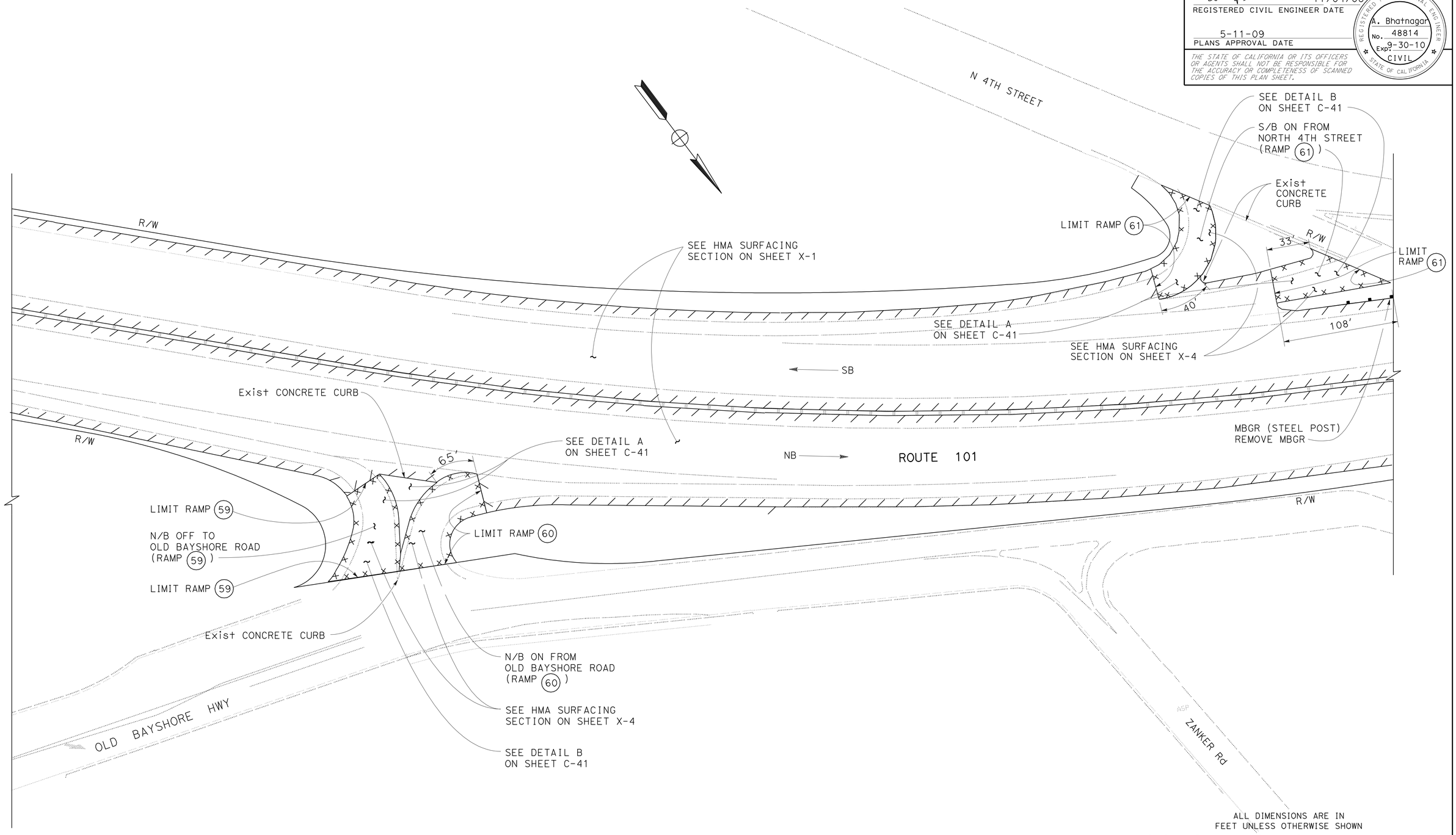

ALL DIMENSIONS ARE IN FEET UNLESS OTHERWISE SHOWN

LAYOUT AT RAMP LOCATIONS (59), (60), AND (61)

CONSTRUCTION DETAILS
(RAMP & INTERCHANGE)

NO SCALE

FOR NOTES, ABBREVIATIONS &/OR LEGEND, SEE SHEET C-1

C-33

REVISED BY	DATE REVISED
A	A

CALCULATED-DESIGNED BY: MC
CHECKED BY: MN
FUNCTIONAL SUPERVISOR: ASHOK BHATNAGAR

STATE OF CALIFORNIA - DEPARTMENT OF TRANSPORTATION
Caltrans MAINTENANCE

LAST REVISION 12-23-08 | DATE PLOTTED => 31-JUL-2009 | TIME PLOTTED => 06:56

Dist	COUNTY	ROUTE	POST MILES TOTAL PROJECT	SHEET No.	TOTAL SHEETS
04	SCI	101	R27.6/40.2	40	173

11/04/08
REGISTERED CIVIL ENGINEER DATE

5-11-09
PLANS APPROVAL DATE

REGISTERED PROFESSIONAL ENGINEER
A. Bhatnagar
No. 48814
Exp 9-30-10
CIVIL
STATE OF CALIFORNIA

THE STATE OF CALIFORNIA OR ITS OFFICERS OR AGENTS SHALL NOT BE RESPONSIBLE FOR THE ACCURACY OR COMPLETENESS OF SCANNED COPIES OF THIS PLAN SHEET.

FOR COMPLETE RIGHT OF WAY AND ACCURATE ACCESS DATA, SEE RIGHT OF WAY RECORD MAPS AT DISTRICT OFFICE.

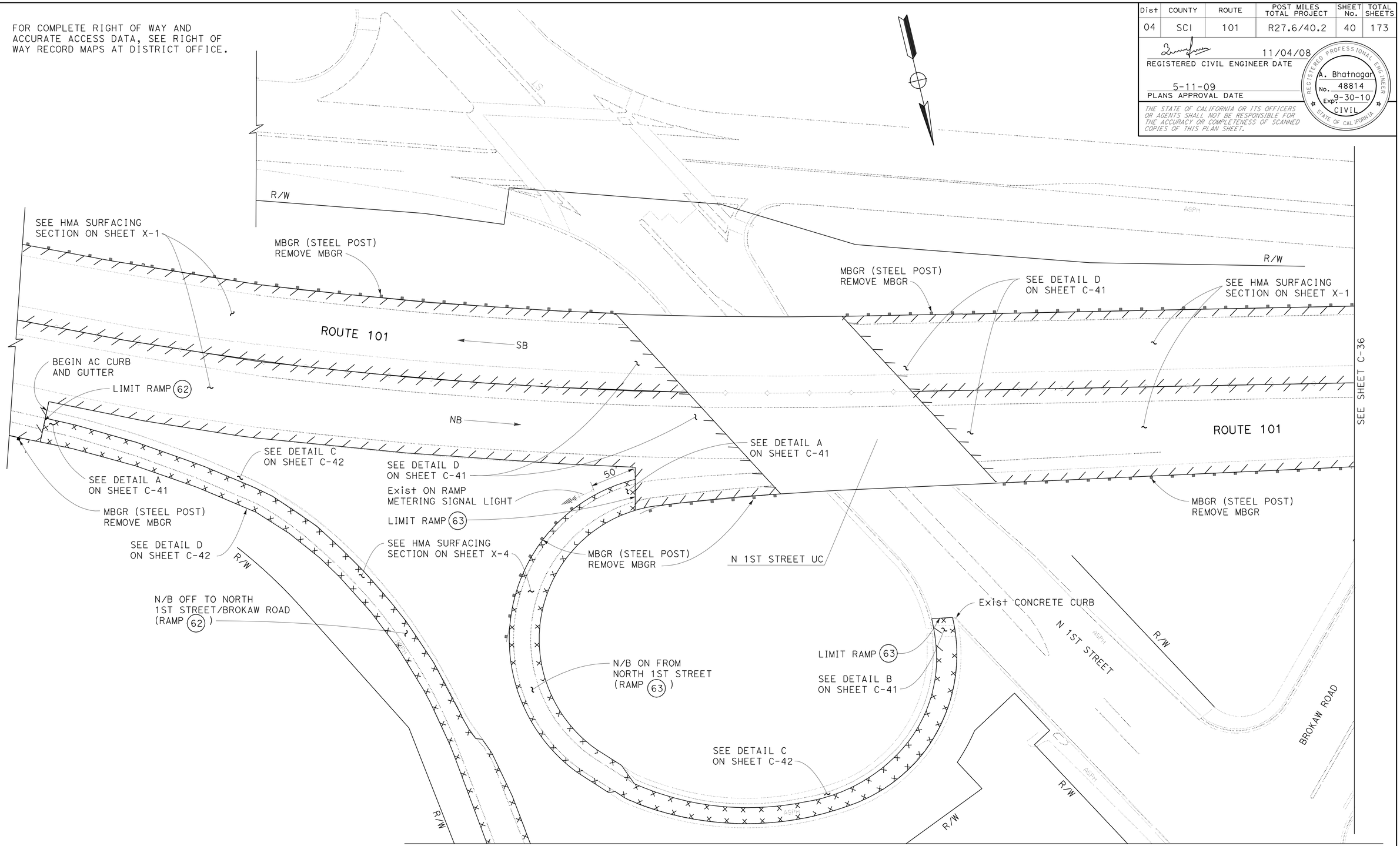

LAYOUT AT RAMP LOCATIONS (62) AND (63)

CONSTRUCTION DETAILS
(RAMP & INTERCHANGE)

NO SCALE

FOR NOTES, ABBREVIATIONS &/OR LEGEND, SEE SHEET C-1

ALL DIMENSIONS ARE IN FEET UNLESS OTHERWISE SHOWN

C-34

REVISED BY	DATE REVISED
MC	A
MN	A

CALCULATED-DESIGNED BY / CHECKED BY

FUNCTIONAL SUPERVISOR: ASHOK BHATNAGAR

STATE OF CALIFORNIA - DEPARTMENT OF TRANSPORTATION
Caltrans MAINTENANCE

LAST REVISION 12-23-08 | DATE PLOTTED => 31-JUL-2009 | TIME PLOTTED => 06:56

Dist	COUNTY	ROUTE	POST MILES TOTAL PROJECT	SHEET No.	TOTAL SHEETS
04	SCI	101	R27.6/40.2	41	173

11/04/08
REGISTERED CIVIL ENGINEER DATE

5-11-09
PLANS APPROVAL DATE

REGISTERED PROFESSIONAL ENGINEER
A. Bhatnagar
No. 48814
Exp 9-30-10
CIVIL
STATE OF CALIFORNIA

THE STATE OF CALIFORNIA OR ITS OFFICERS OR AGENTS SHALL NOT BE RESPONSIBLE FOR THE ACCURACY OR COMPLETENESS OF SCANNED COPIES OF THIS PLAN SHEET.

FOR COMPLETE RIGHT OF WAY AND ACCURATE ACCESS DATA, SEE RIGHT OF WAY RECORD MAPS AT DISTRICT OFFICE.

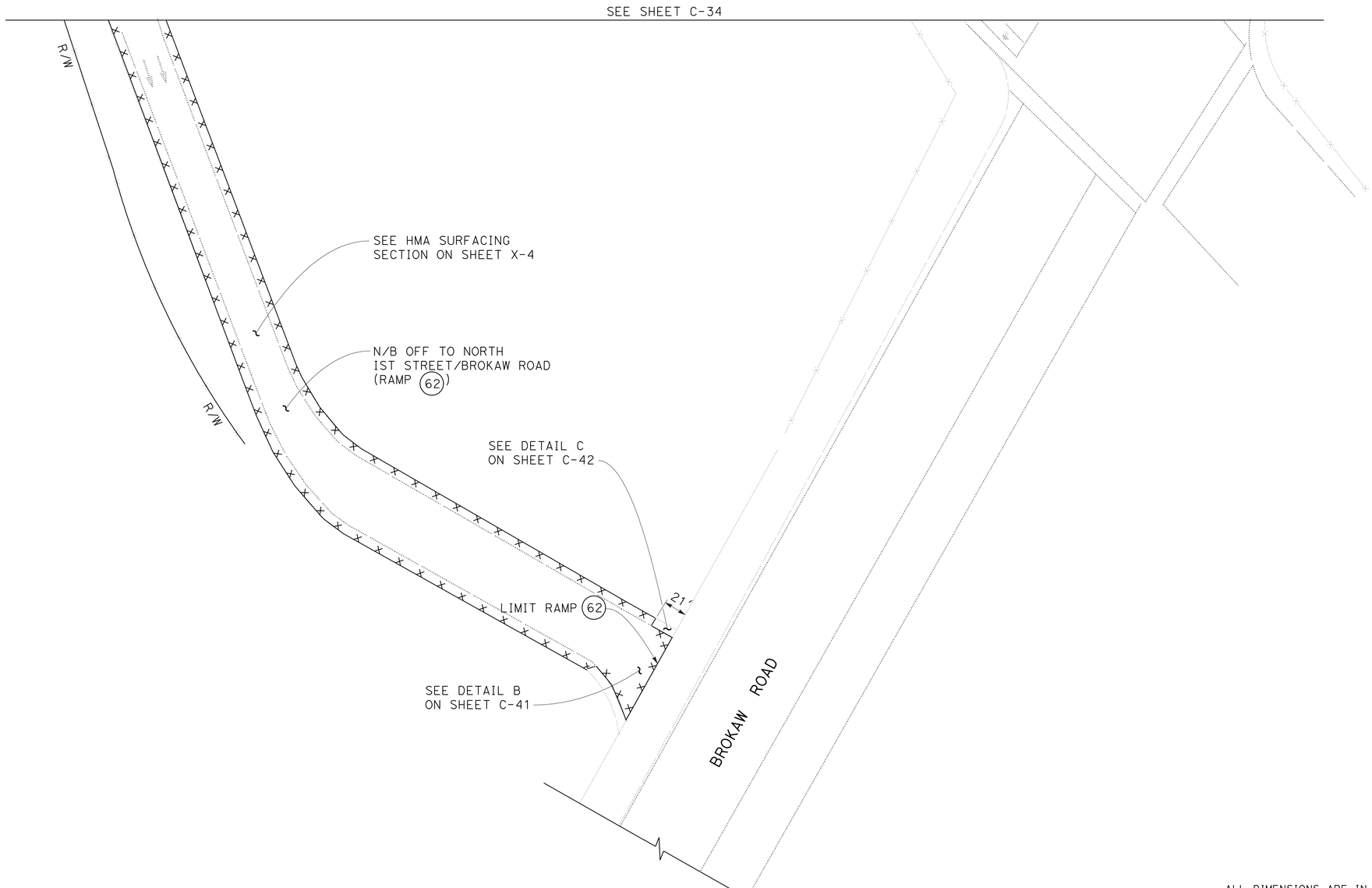

LAYOUT AT RAMP LOCATIONS 62

FOR NOTES, ABBREVIATIONS &/OR LEGEND, SEE SHEET C-1

ALL DIMENSIONS ARE IN FEET UNLESS OTHERWISE SHOWN

CONSTRUCTION DETAILS
(RAMP & INTERCHANGE)

NO SCALE

C-35

REVISED BY	DATE REVISED
A	A

CALCULATED-DESIGNED BY: MC
CHECKED BY: MN

FUNCTIONAL SUPERVISOR: ASHOK BHATNAGAR

STATE OF CALIFORNIA - DEPARTMENT OF TRANSPORTATION
Caltrans **MAINTENANCE**

LAST REVISION 12-23-08 | DATE PLOTTED => 31-JUL-2009 | TIME PLOTTED => 06:56

Dist	COUNTY	ROUTE	POST MILES TOTAL PROJECT	SHEET No.	TOTAL SHEETS
04	SCI	101	R27.6/40.2	42	173

REGISTERED CIVIL ENGINEER DATE 11/04/08

PLANS APPROVAL DATE 5-11-09

REGISTERED PROFESSIONAL ENGINEER A. Bhatnagar No. 48814 Exp 9-30-10 CIVIL STATE OF CALIFORNIA

THE STATE OF CALIFORNIA OR ITS OFFICERS OR AGENTS SHALL NOT BE RESPONSIBLE FOR THE ACCURACY OR COMPLETENESS OF SCANNED COPIES OF THIS PLAN SHEET.

FOR COMPLETE RIGHT OF WAY AND ACCURATE ACCESS DATA, SEE RIGHT OF WAY RECORD MAPS AT DISTRICT OFFICE.

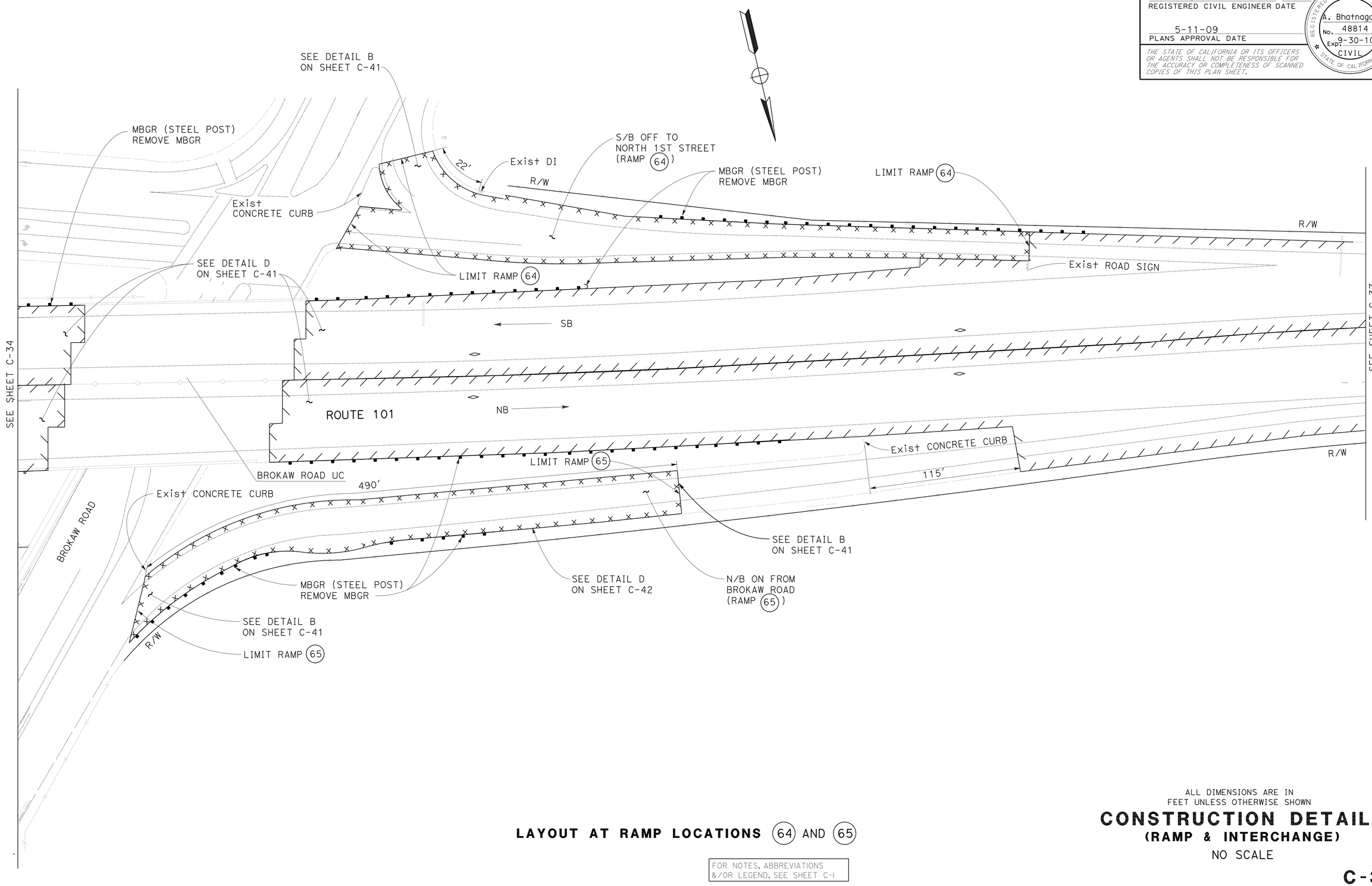

LAYOUT AT RAMP LOCATIONS 64 AND 65

FOR NOTES, ABBREVIATIONS &/OR LEGEND, SEE SHEET C-1

ALL DIMENSIONS ARE IN FEET UNLESS OTHERWISE SHOWN

CONSTRUCTION DETAILS
(RAMP & INTERCHANGE)

NO SCALE

C-36

REVISED BY	DATE REVISED
A	A

CALCULATED-DESIGNED BY: MC
CHECKED BY: MN

FUNCTIONAL SUPERVISOR: ASHOK BHATNAGAR

STATE OF CALIFORNIA - DEPARTMENT OF TRANSPORTATION
Caltrans MAINTENANCE

LAST REVISION 12-23-08 DATE PLOTTED => 31-JUL-2009 TIME PLOTTED => 06:56

Dist	COUNTY	ROUTE	POST MILES TOTAL PROJECT	SHEET No.	TOTAL SHEETS
04	SCI	101	R27.6/40.2	43	173

REGISTERED CIVIL ENGINEER DATE 11/04/08

PLANS APPROVAL DATE 5-11-09

REGISTERED PROFESSIONAL ENGINEER A. Bhatnagar No. 48814 Exp 9-30-10 CIVIL STATE OF CALIFORNIA

THE STATE OF CALIFORNIA OR ITS OFFICERS OR AGENTS SHALL NOT BE RESPONSIBLE FOR THE ACCURACY OR COMPLETENESS OF SCANNED COPIES OF THIS PLAN SHEET.

FOR COMPLETE RIGHT OF WAY AND ACCURATE ACCESS DATA, SEE RIGHT OF WAY RECORD MAPS AT DISTRICT OFFICE.

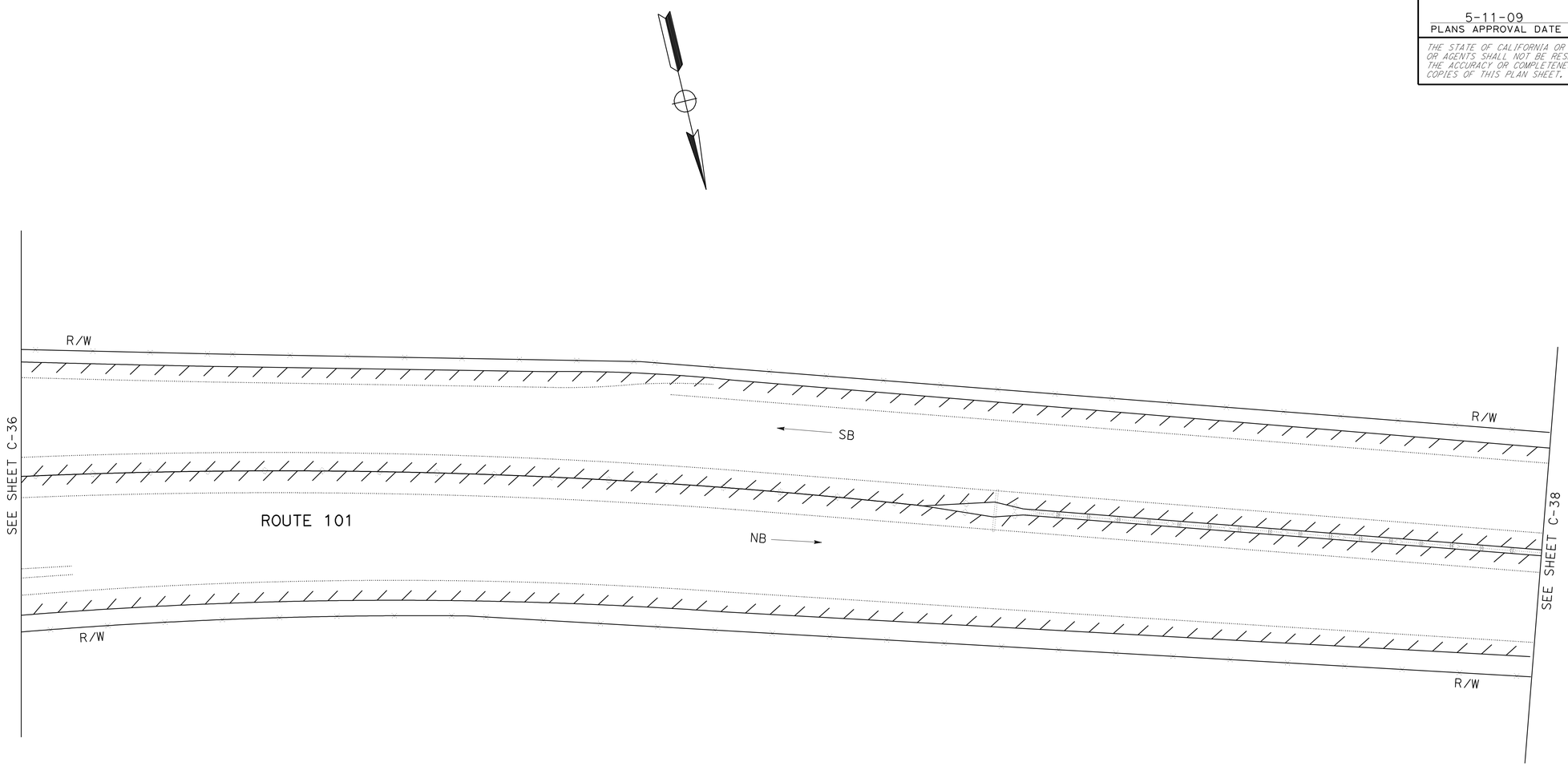

LAYOUT AT RAMP LOCATIONS

FOR NOTES, ABBREVIATIONS &/OR LEGEND, SEE SHEET C-1

ALL DIMENSIONS ARE IN FEET UNLESS OTHERWISE SHOWN

CONSTRUCTION DETAILS
(RAMP & INTERCHANGE)

NO SCALE

C-37

REVISED BY	DATE REVISED
A	A

CALCULATED-DESIGNED BY: MC
CHECKED BY: MN

FUNCTIONAL SUPERVISOR: ASHOK BHATNAGAR

STATE OF CALIFORNIA - DEPARTMENT OF TRANSPORTATION
Caltrans MAINTENANCE

LAST REVISION 12-23-08 | DATE PLOTTED => 31-JUL-2009 | TIME PLOTTED => 06:56

Dist	COUNTY	ROUTE	POST MILES TOTAL PROJECT	SHEET No.	TOTAL SHEETS
04	SCI	101	R27.6/40.2	44	173

REGISTERED CIVIL ENGINEER 11/04/08 DATE

5-11-09
PLANS APPROVAL DATE

REGISTERED PROFESSIONAL ENGINEER A. Bhatnagar No. 48814 Exp 9-30-10 CIVIL STATE OF CALIFORNIA

THE STATE OF CALIFORNIA OR ITS OFFICERS OR AGENTS SHALL NOT BE RESPONSIBLE FOR THE ACCURACY OR COMPLETENESS OF SCANNED COPIES OF THIS PLAN SHEET.

FOR COMPLETE RIGHT OF WAY AND ACCURATE ACCESS DATA, SEE RIGHT OF WAY RECORD MAPS AT DISTRICT OFFICE.

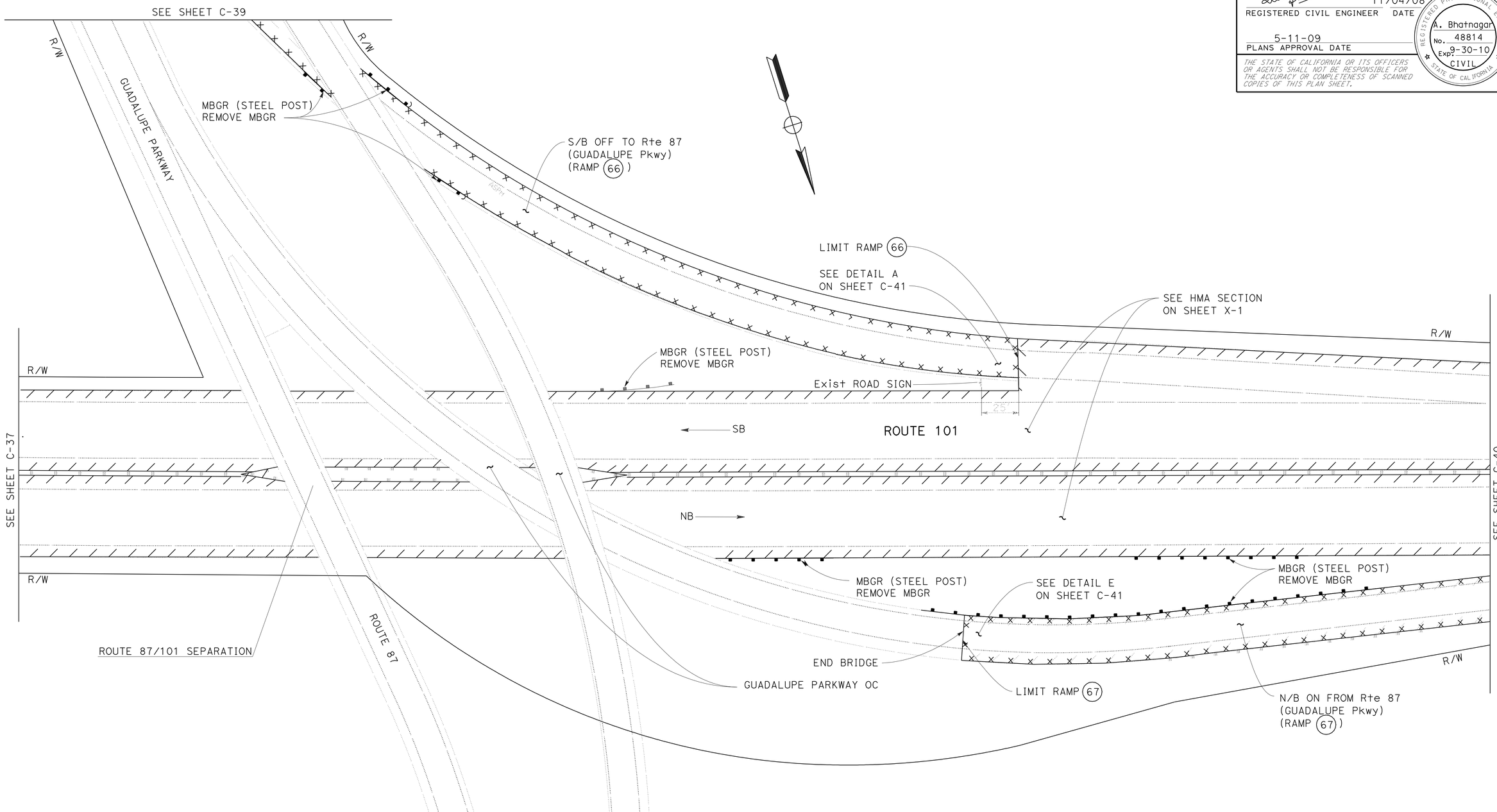

LAYOUT AT RAMP LOCATIONS 66 AND 67

FOR NOTES, ABBREVIATIONS &/OR LEGEND, SEE SHEET C-1

ALL DIMENSIONS ARE IN FEET UNLESS OTHERWISE SHOWN

CONSTRUCTION DETAILS
(RAMP & INTERCHANGE)

NO SCALE

C-38

REVISED BY	DATE REVISED
A	A

CALCULATED-DESIGNED BY: MC
CHECKED BY: MN

FUNCTIONAL SUPERVISOR: ASHOK BHATNAGAR

STATE OF CALIFORNIA - DEPARTMENT OF TRANSPORTATION
Caltrans MAINTENANCE

LAST REVISION 12-23-08
DATE PLOTTED => 31-JUL-2009
TIME PLOTTED => 06:57

Dist	COUNTY	ROUTE	POST MILES TOTAL PROJECT	SHEET No.	TOTAL SHEETS
04	SCI	101	R27.6/40.2	45	173

REGISTERED CIVIL ENGINEER DATE 11/04/08

PLANS APPROVAL DATE 5-11-09

REGISTERED PROFESSIONAL ENGINEER A. Bhatnagar No. 48814 Exp 9-30-10 CIVIL STATE OF CALIFORNIA

THE STATE OF CALIFORNIA OR ITS OFFICERS OR AGENTS SHALL NOT BE RESPONSIBLE FOR THE ACCURACY OR COMPLETENESS OF SCANNED COPIES OF THIS PLAN SHEET.

FOR COMPLETE RIGHT OF WAY AND ACCURATE ACCESS DATA, SEE RIGHT OF WAY RECORD MAPS AT DISTRICT OFFICE.

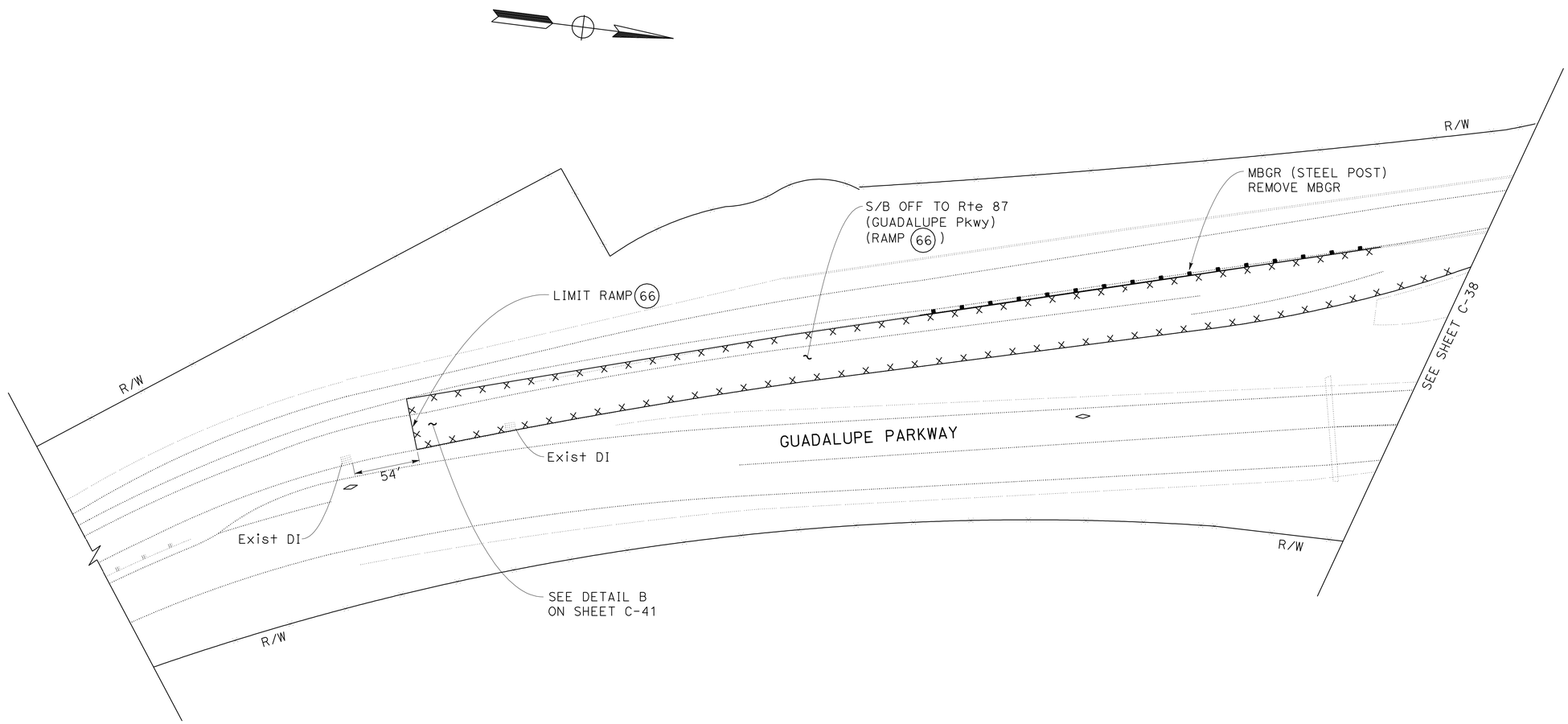

LAYOUT AT RAMP LOCATION 66

FOR NOTES, ABBREVIATIONS &/OR LEGEND, SEE SHEET C-1

ALL DIMENSIONS ARE IN FEET UNLESS OTHERWISE SHOWN

CONSTRUCTION DETAILS
(RAMP & INTERCHANGE)

NO SCALE

C-39

STATE OF CALIFORNIA - DEPARTMENT OF TRANSPORTATION

Caltrans MAINTENANCE

FUNCTIONAL SUPERVISOR ASHOK BHATNAGAR

CALCULATED-DESIGNED BY MC

CHECKED BY MN

REVISED BY A

DATE REVISED A

LAST REVISION DATE PLOTTED => 31-JUL-2009 TIME PLOTTED => 06:57

12-26-08

Dist	COUNTY	ROUTE	POST MILES TOTAL PROJECT	SHEET No.	TOTAL SHEETS
04	SCI	101	R27.6/40.2	46	173

11/04/08
REGISTERED CIVIL ENGINEER DATE

5-11-09
PLANS APPROVAL DATE

REGISTERED PROFESSIONAL ENGINEER
A. Bhatnagar
No. 48814
Exp 9-30-10
CIVIL
STATE OF CALIFORNIA

THE STATE OF CALIFORNIA OR ITS OFFICERS OR AGENTS SHALL NOT BE RESPONSIBLE FOR THE ACCURACY OR COMPLETENESS OF SCANNED COPIES OF THIS PLAN SHEET.

FOR COMPLETE RIGHT OF WAY AND ACCURATE ACCESS DATA, SEE RIGHT OF WAY RECORD MAPS AT DISTRICT OFFICE.

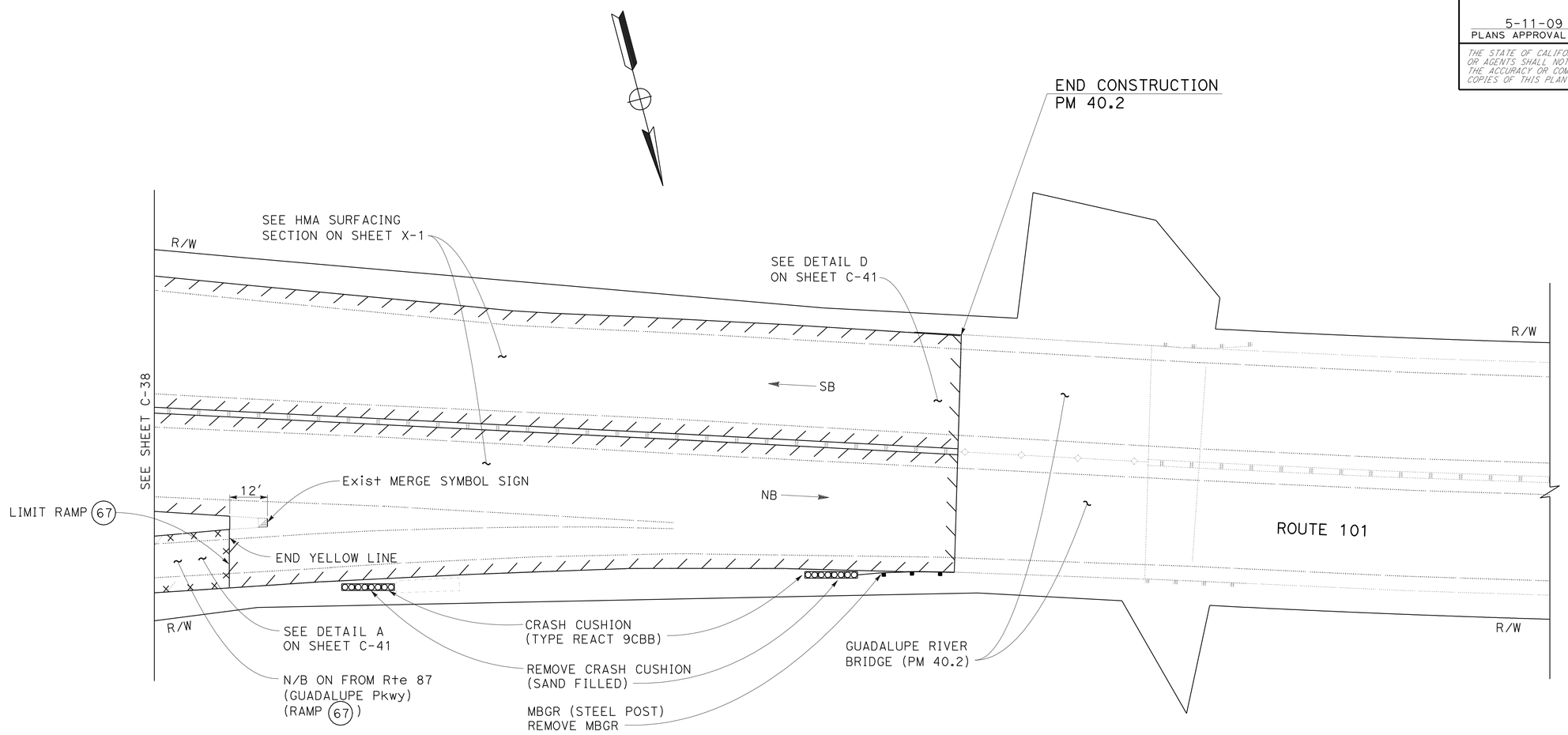

LAYOUT AT RAMP LOCATION 67

FOR NOTES, ABBREVIATIONS &/OR LEGEND, SEE SHEET C-1

ALL DIMENSIONS ARE IN FEET UNLESS OTHERWISE SHOWN

CONSTRUCTION DETAILS
(RAMP & INTERCHANGE)

NO SCALE

C-40

REVISED BY	DATE REVISED
A	A

CALCULATED-DESIGNED BY: MC
CHECKED BY: MN
FUNCTIONAL SUPERVISOR: ASHOK BHATNAGAR

STATE OF CALIFORNIA - DEPARTMENT OF TRANSPORTATION
Caltrans MAINTENANCE

LAST REVISION 12-23-08 | DATE PLOTTED => 31-JUL-2009 | TIME PLOTTED => 06:57

Dist	COUNTY	ROUTE	POST MILES TOTAL PROJECT	SHEET No.	TOTAL SHEETS
04	SCI	101	R27.6/40.2	47	173

REGISTERED CIVIL ENGINEER 11/04/08 DATE

5-11-09
PLANS APPROVAL DATE

REGISTERED PROFESSIONAL ENGINEER A. Bhatnagar No. 48814 Exp 9-30-10 CIVIL STATE OF CALIFORNIA

THE STATE OF CALIFORNIA OR ITS OFFICERS OR AGENTS SHALL NOT BE RESPONSIBLE FOR THE ACCURACY OR COMPLETENESS OF SCANNED COPIES OF THIS PLAN SHEET.

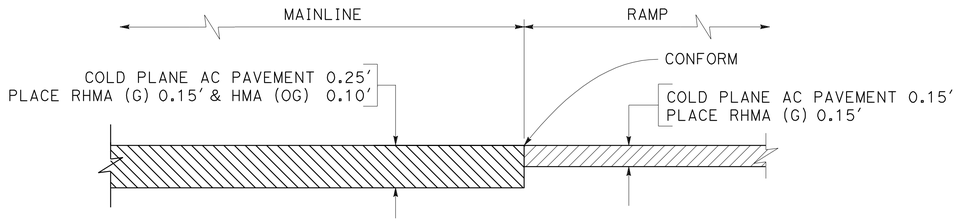

DETAIL A

CONFORM DETAIL BETWEEN MAINLINE AND RAMPS

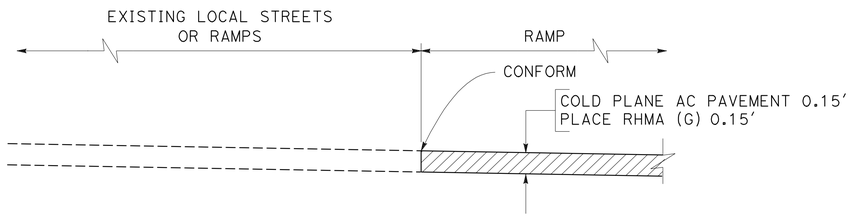

DETAIL B

CONFORM DETAIL BETWEEN RAMPS AND LOCAL STREETS

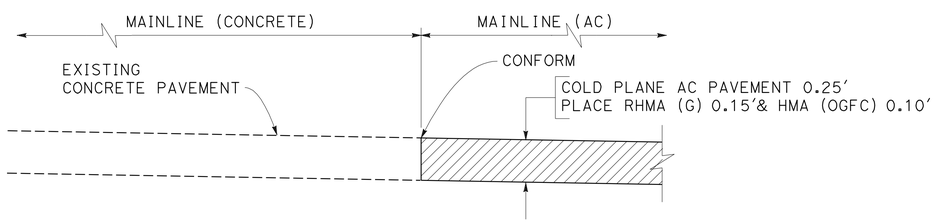

DETAIL C

CONFORM DETAIL IN MAINLINE AT AC AND PCC TRANSITION

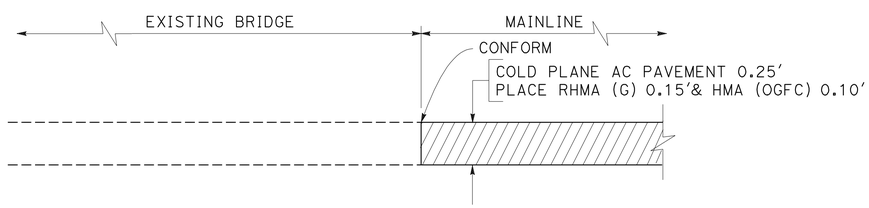

DETAIL D

CONFORM DETAIL BETWEEN MAINLINE AND BRIDGES

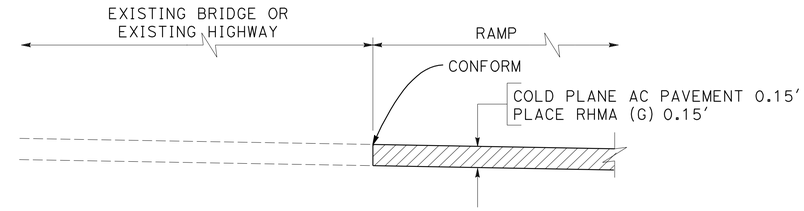

DETAIL E

CONFORM DETAIL BETWEEN RAMPS AND BRIDGES OR EXISTING HIGHWAY

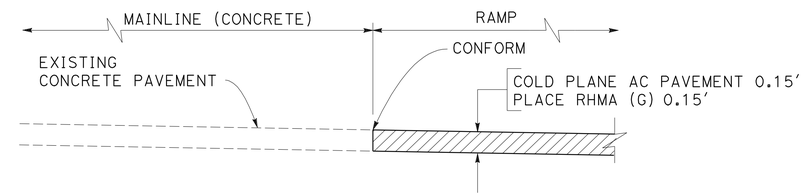

DETAIL F

CONFORM DETAIL BETWEEN RAMP AND MAINLINE (PCC)

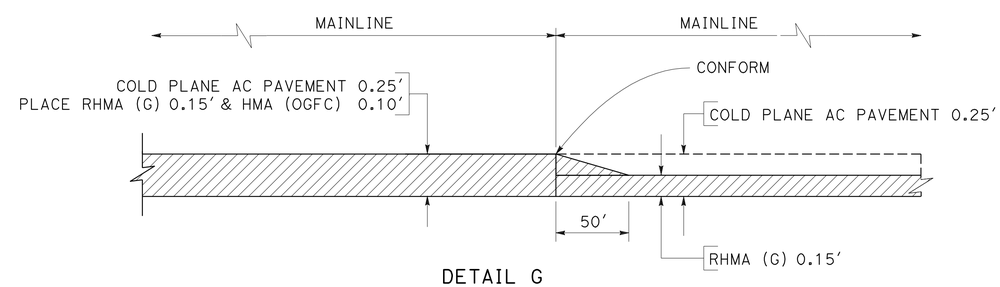

DETAIL G

CONFORM DETAIL

PM 31.76 & 34.20 (MAINLINE SOUTHBOUND)
PM 32.63 & 33.55 (MAINLINE NORTHBOUND)

ALL DIMENSIONS ARE IN FEET UNLESS OTHERWISE SHOWN

CONSTRUCTION DETAILS

NO SCALE

C-41

STATE OF CALIFORNIA - DEPARTMENT OF TRANSPORTATION
Caltrans MAINTENANCE

FUNCTIONAL SUPERVISOR: ASHOK BHATNAGAR

CALCULATED-DESIGNED BY: MC | CHECKED BY: MN

REVISED BY | DATE REVISED: A | A

LAST REVISION 12-23-08 | DATE PLOTTED => 31-JUL-2009 | TIME PLOTTED => 06:57

Dist	COUNTY	ROUTE	POST MILES TOTAL PROJECT	SHEET No.	TOTAL SHEETS
04	SCI	101	R27.6/40.2	48	173

REGISTERED CIVIL ENGINEER 11/04/08 DATE

5-11-09
PLANS APPROVAL DATE

REGISTERED PROFESSIONAL ENGINEER
A. Bhatnagar
No. 48814
Exp 9-30-10
CIVIL
STATE OF CALIFORNIA

THE STATE OF CALIFORNIA OR ITS OFFICERS OR AGENTS SHALL NOT BE RESPONSIBLE FOR THE ACCURACY OR COMPLETENESS OF SCANNED COPIES OF THIS PLAN SHEET.

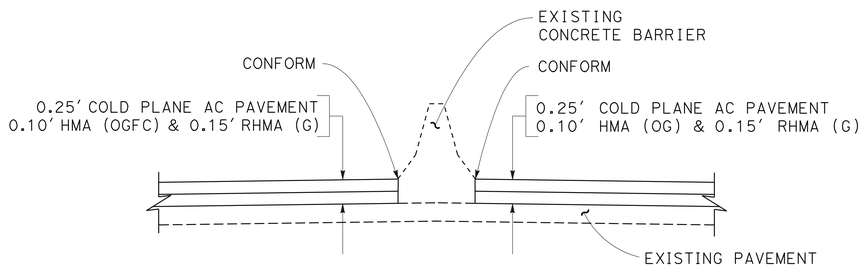

DETAIL A

CONFORM DETAIL
AT CONCRETE BARRIER (MAINLINE)

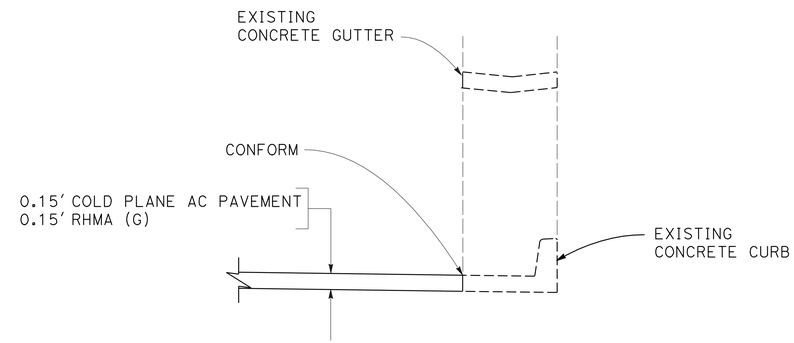

DETAIL C

CONFORM DETAIL
AT CONCRETE CURB AND GUTTER

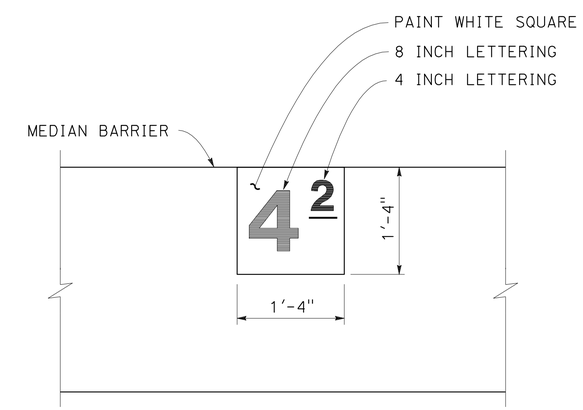

NOTE: CONTRACTOR TO PAINT MILEPOST DESIGNATION AS DIRECTED BY ENGINEER

DETAIL E

1/10 MILEPOST PAINTING
ON MEDIAN BARRIER

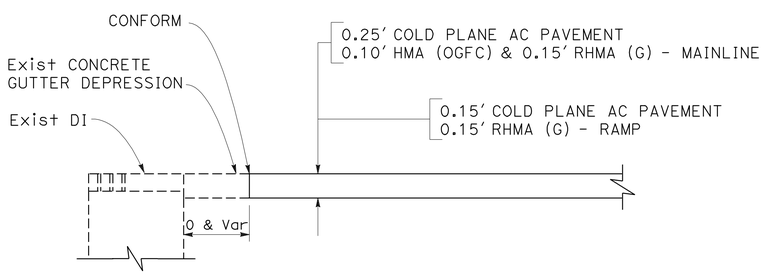

DETAIL B

CONFORM DETAIL
AT DRAINAGE INLET

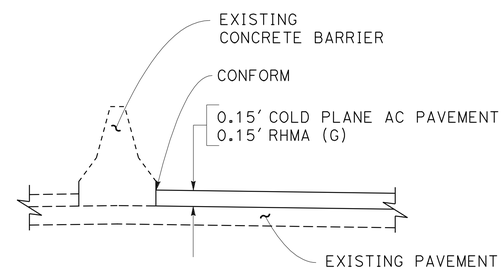

DETAIL D

CONFORM DETAIL
AT CONCRETE BARRIER (RAMP)

ALL DIMENSIONS ARE IN
FEET UNLESS OTHERWISE SHOWN

CONSTRUCTION DETAILS

NO SCALE

C-42

REVISED BY	A
DATE REVISED	A
MC	
MN	
CALCULATED-DESIGNED BY	
CHECKED BY	
FUNCTIONAL SUPERVISOR	
ASHOK BHATNAGAR	

STATE OF CALIFORNIA - DEPARTMENT OF TRANSPORTATION
Caltrans **MAINTENANCE**

LAST REVISION 11-10-08
DATE PLOTTED => 31-JUL-2009
TIME PLOTTED => 06:57

DIST	COUNTY	ROUTE	POST MILES TOTAL PROJECT	SHEET NO.	TOTAL SHEETS
04	SCI	101	R27.6/40.2	49	173

REGISTERED CIVIL ENGINEER 10/15/08 DATE

5-11-09
PLANS APPROVAL DATE

REGISTERED PROFESSIONAL ENGINEER F. Farahani No. 45671 Exp. 12-31-10 CIVIL STATE OF CALIFORNIA

THE STATE OF CALIFORNIA OR ITS OFFICERS OR AGENTS SHALL NOT BE RESPONSIBLE FOR THE ACCURACY OR COMPLETENESS OF SCANNED COPIES OF THIS PLAN SHEET.

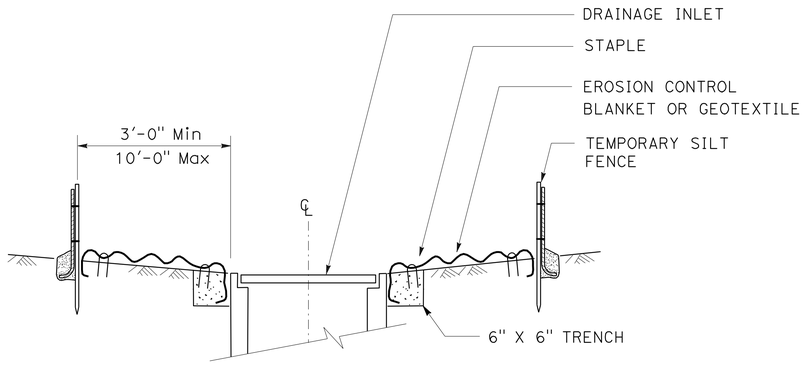

SECTION A-A

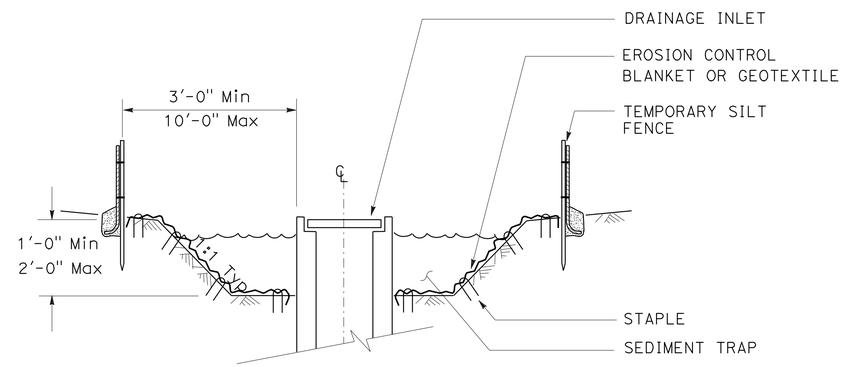

SECTION B-B

NOTES:

1. FOR TEMPORARY SILT FENCE SEE 2006 STANDARD PLAN T51.
2. DIMENSIONS MAY VARY TO FIT FIELD CONDITIONS.

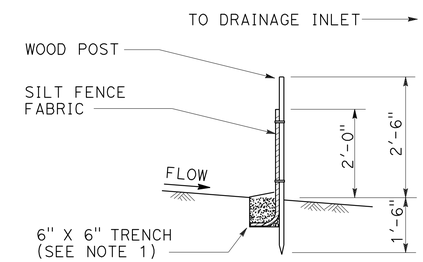

SECTION

TEMPORARY SILT FENCE DETAIL

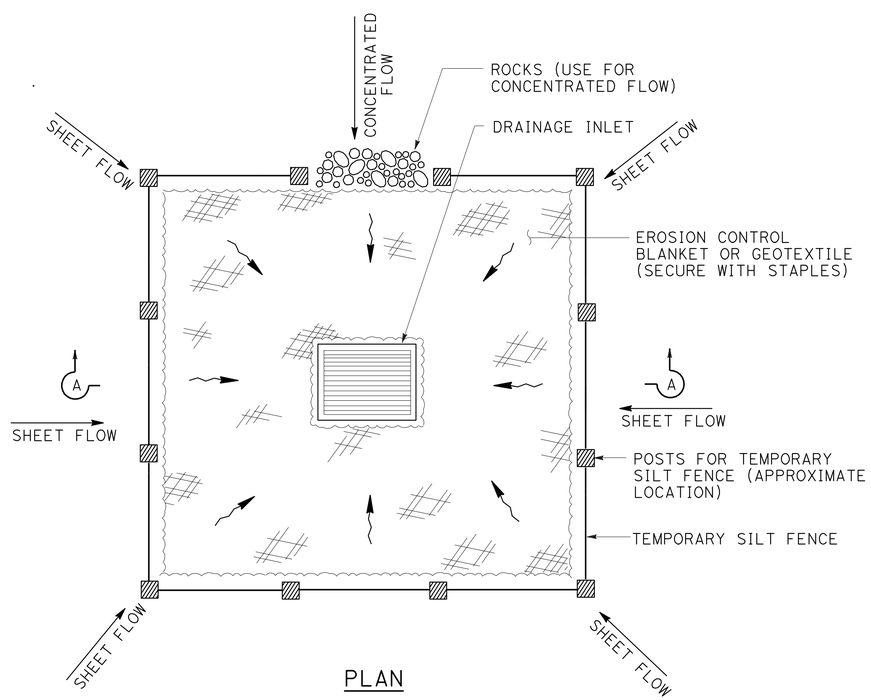

PLAN

TEMPORARY DRAINAGE INLET PROTECTION (TYPE 1) (TEMPORARY SILT FENCE)

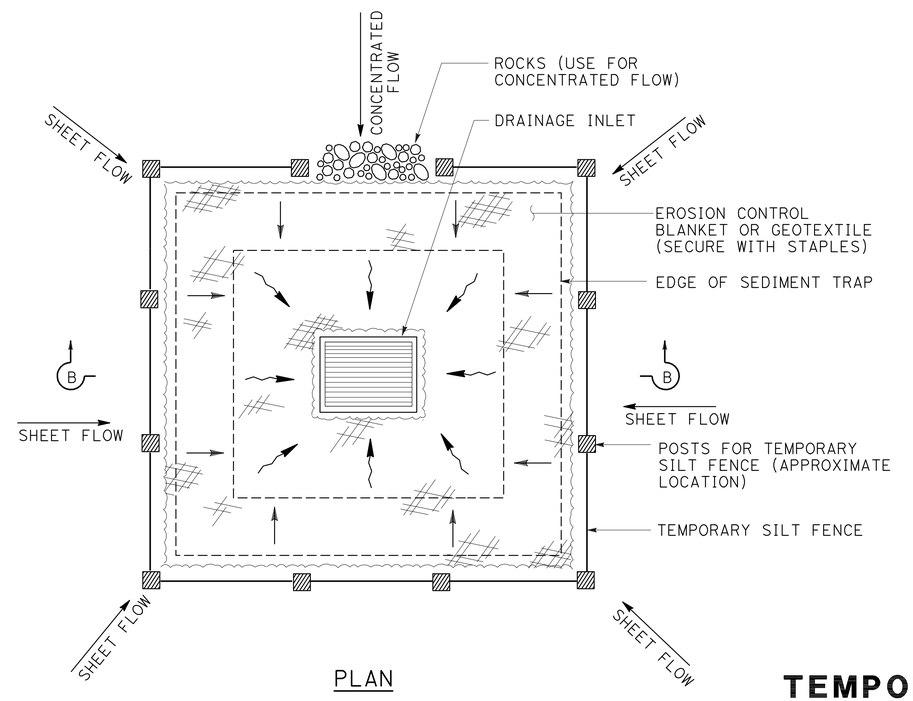

PLAN

TEMPORARY DRAINAGE INLET PROTECTION (TYPE 2) (EXCAVATED SEDIMENT TRAP)

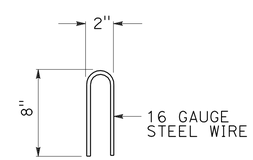

STAPLE DETAIL

TEMPORARY WATER POLLUTION CONTROL DETAILS (TEMPORARY DRAINAGE INLET PROTECTION)

NO SCALE

WPCD-1

STATE OF CALIFORNIA - DEPARTMENT OF TRANSPORTATION
OFFICE OF WATER QUALITY
SENIOR LANDSCAPE ARCHITECT
FARAMARZ FARAHANI
CALCULATED-DESIGNED BY FF
CHECKED BY FF
REVISED BY
DATE REVISED

LAST REVISION 01-09-09
DATE PLOTTED => 03-SEP-2009
TIME PLOTTED => 09:41

DIST	COUNTY	ROUTE	POST MILES TOTAL PROJECT	SHEET NO.	TOTAL SHEETS
04	SCI	101	R27.6/40.2	50	173

REGISTERED CIVIL ENGINEER 10/15/08 DATE

5-11-09
PLANS APPROVAL DATE

REGISTERED PROFESSIONAL ENGINEER F. Farahani No. 45671 Exp. 12-31-10 CIVIL STATE OF CALIFORNIA

THE STATE OF CALIFORNIA OR ITS OFFICERS OR AGENTS SHALL NOT BE RESPONSIBLE FOR THE ACCURACY OR COMPLETENESS OF SCANNED COPIES OF THIS PLAN SHEET.

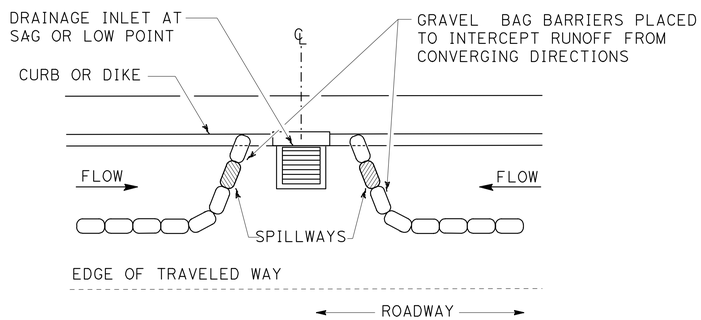

PLAN

CONFIGURATION FOR SAG POINT INLET (GRAVEL BAG BARRIER)

GRAVEL BAG BARRIER (TYPE 3A) SPACING TABLE

SLOPE OF ROADWAY (PERCENT)	1 TO 4	4 TO 6	6 TO 8	8 TO 10	10+
INTERVAL BETWEEN BARRIERS (FT)	100′	75′	50′	25′	12′

FOR SLOPE OF LESS THAN 1%, INSTALL BARRIERS ONLY IF EROSION/SEDIMENT IS PREVALENT

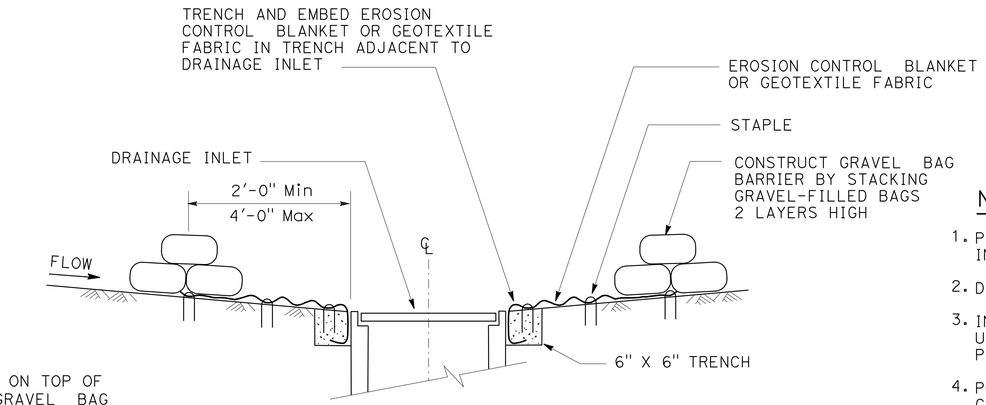

SECTION A-A

NOTES

1. PLACE SAFETY CONES ADJACENT TO DRAINAGE INLET PROTECTION.
2. DIMENSIONS MAY VARY TO FIT FIELD CONDITIONS.
3. INSTALL A MINIMUM OF 3 GRAVEL BAG BARRIERS UPSTREAM OF EACH DRAINAGE INLET TO BE PROTECTED.
4. POSITION EROSION CONTROL BLANKET OR GEOTEXTILE FABRIC AT EDGE OF CONCRETE APRON AND SECURE IN TRENCH.
5. EROSION CONTROL BLANKET/GEOTEXTILE FABRIC IS NOT REQUIRED IF THE AREA ADJACENT TO THE DRAINAGE INLET IS VEGETATED OR PAVED.

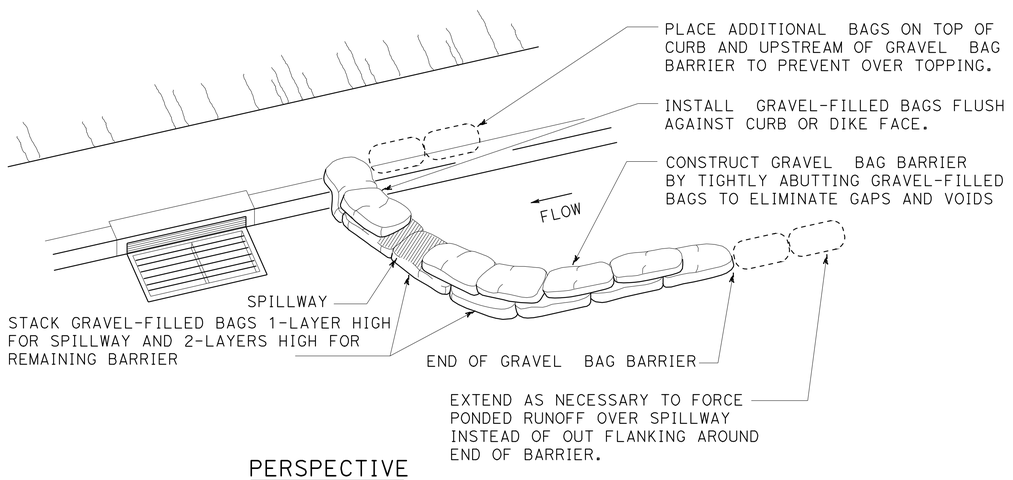

PERSPECTIVE

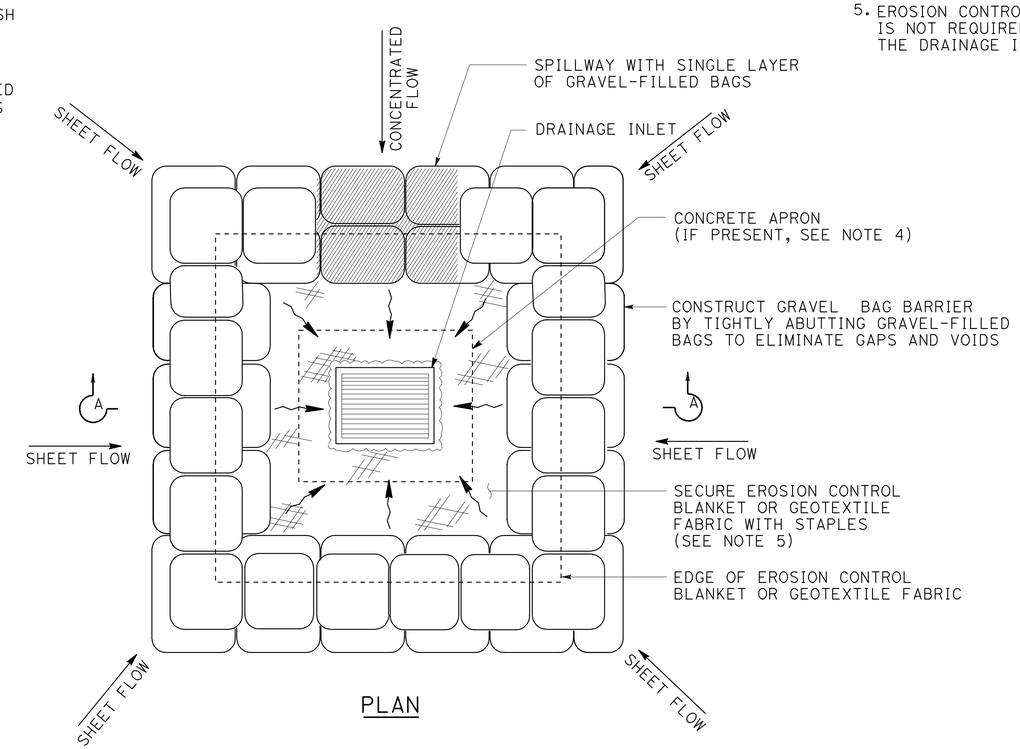

PLAN

TEMPORARY DRAINAGE INLET PROTECTION (TYPE 3B) (GRAVEL BAG BARRIER)

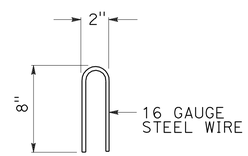

STAPLE DETAIL

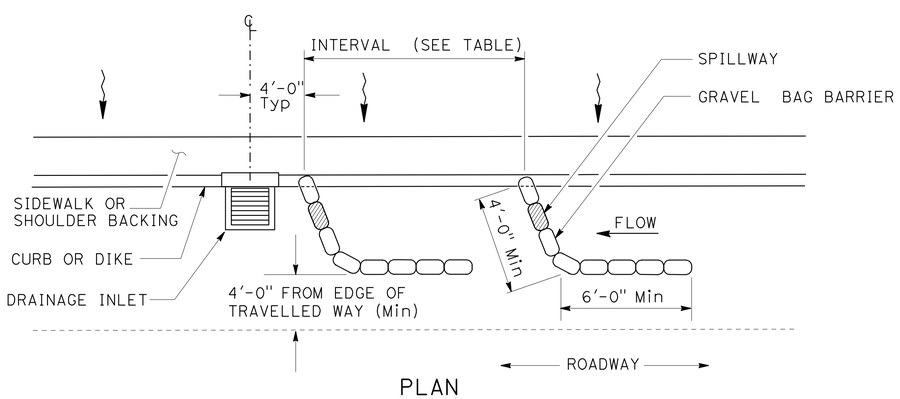

PLAN

TEMPORARY DRAINAGE INLET PROTECTION (TYPE 3A) (GRAVEL BAG BARRIER)

TEMPORARY WATER POLLUTION CONTROL DETAILS (TEMPORARY DRAINAGE INLET PROTECTION)

NO SCALE

WPCD-2

STATE OF CALIFORNIA - DEPARTMENT OF TRANSPORTATION
Caltrans OFFICE OF WATER QUALITY

SENIOR LANDSCAPE ARCHITECT FARAMARZ FARAHANI

CALCULATED-DESIGNED BY FF
CHECKED BY FF
REVISED BY
DATE REVISED

LAST REVISION 01-09-09
DATE PLOTTED => 31-JUL-2009
TIME PLOTTED => 06:58

DIST	COUNTY	ROUTE	POST MILES TOTAL PROJECT	SHEET NO.	TOTAL SHEETS
04	SCI	101	R27.6/40.2	51	173

REGISTERED CIVIL ENGINEER 10/15/08 DATE

5-11-09
PLANS APPROVAL DATE

REGISTERED PROFESSIONAL ENGINEER F. Farahani No. 45671 Exp 12-31-10 CIVIL STATE OF CALIFORNIA

THE STATE OF CALIFORNIA OR ITS OFFICERS OR AGENTS SHALL NOT BE RESPONSIBLE FOR THE ACCURACY OR COMPLETENESS OF SCANNED COPIES OF THIS PLAN SHEET.

FOAM BARRIER SPACING TABLE

SLOPE OF ROADWAY (PERCENT)	0 to 1	1 to 2	2 to 3	3 to 4	5+
INTERVAL BETWEEN BARRIERS (FT)	50	35	30	25	20
ANGLE FROM FACE OF CURB (DEGREES)	70°	70°	70°	45°	45°
SUGGESTED BARRIER LENGTH (FT)	6	6	6	6	6

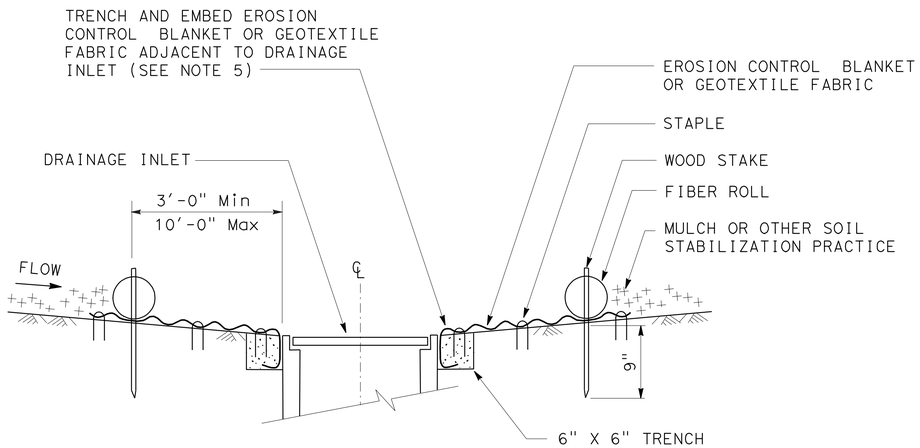

SECTION A-A

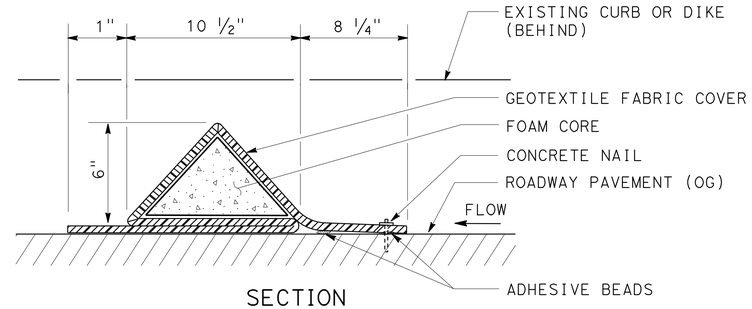

SECTION

FOAM BARRIER DETAIL

NOTES

1. TEMPORARY LINEAR SEDIMENT BARRIER SHALL BE SILT FENCE, FIBER ROLL, GRAVEL BAG BARRIER, OR OTHER.
2. FOR TEMPORARY SILT FENCE SEE 2006 STANDARD PLAN T51.
3. DIMENSIONS MAY VARY TO FIT FIELD CONDITIONS.
4. INSTALL A MINIMUM OF 3 FOAM BARRIERS UPSTREAM OF EACH DRAINAGE INLET TO BE PROTECTED.
5. POSITION EROSION CONTROL BLANKET OR GEOTEXTILE FABRIC AT EDGE OF CONCRETE APRON AND SECURE IN TRENCH.
6. EROSION CONTROL BLANKET/GEOTEXTILE FABRIC IS NOT REQUIRED IF THE AREA ADJACENT TO THE DRAINAGE INLET IS VEGETATED.

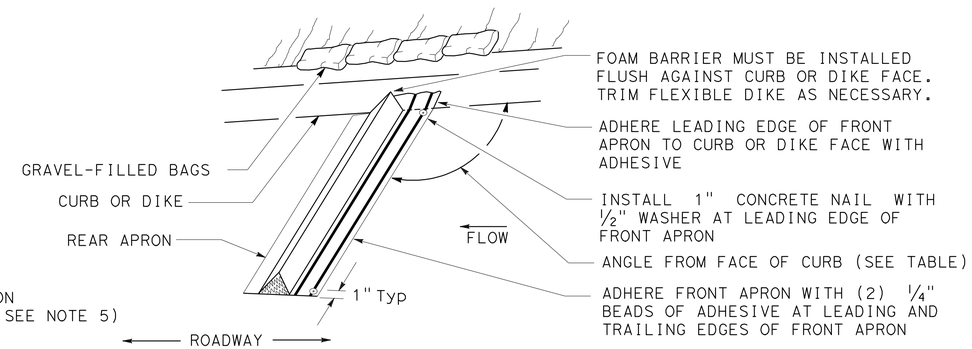

PERSPECTIVE

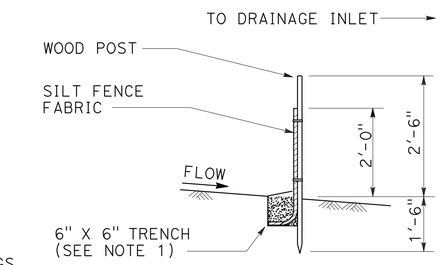

SECTION

TEMPORARY SILT FENCE DETAIL

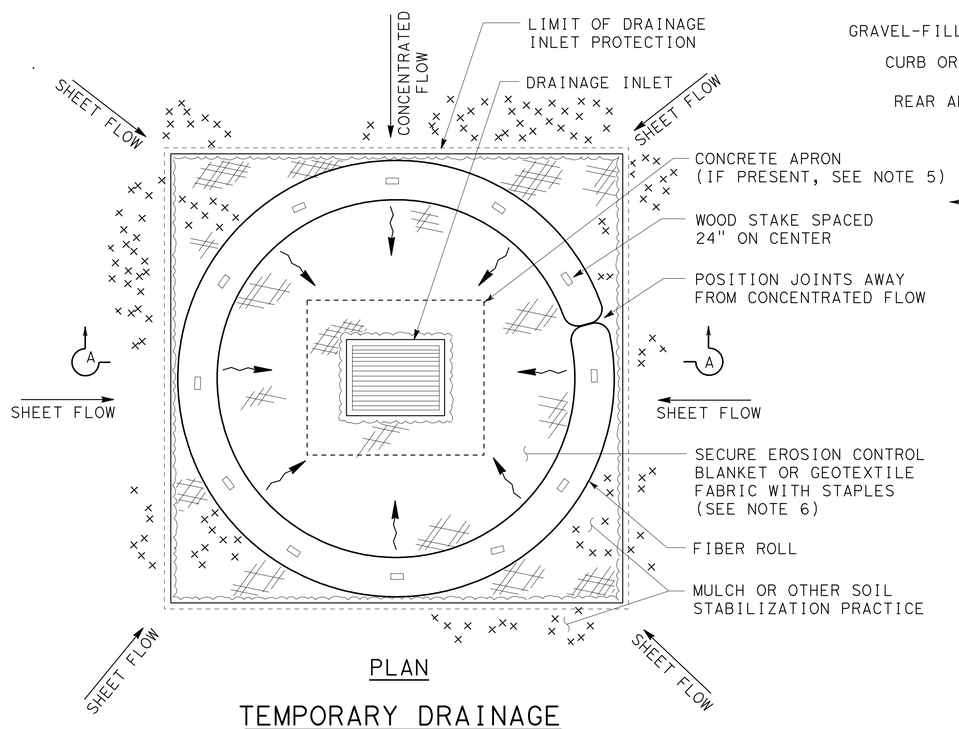

PLAN

TEMPORARY DRAINAGE INLET PROTECTION (TYPE 4A) (FIBER ROLLS)

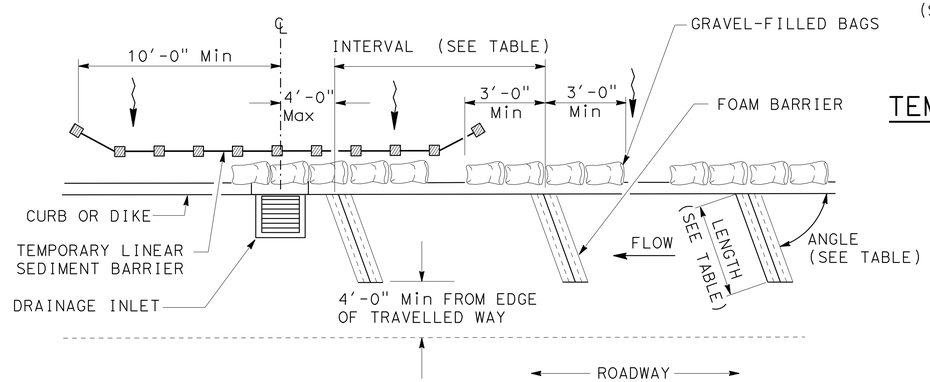

PLAN

TEMPORARY DRAINAGE INLET PROTECTION (TYPE 4B) (FOAM BARRIER)

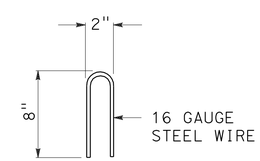

STAPLE DETAIL

TEMPORARY WATER POLLUTION CONTROL DETAILS (TEMPORARY DRAINAGE INLET PROTECTION)

NO SCALE

WPCD-3

STATE OF CALIFORNIA - DEPARTMENT OF TRANSPORTATION
OFFICE OF WATER QUALITY
SENIOR LANDSCAPE ARCHITECT
FARAMARZ FARAHANI
CALCULATED-DESIGNED BY FF
CHECKED BY FF
REVISED BY
DATE REVISED

LAST REVISION 01-09-09
DATE PLOTTED => 31-JUL-2009
TIME PLOTTED => 06:58

DIST	COUNTY	ROUTE	POST MILES TOTAL PROJECT	SHEET NO.	TOTAL SHEETS
04	SCI	101	R27.6/40.2	52	173

REGISTERED CIVIL ENGINEER 10/15/08 DATE

5-11-09
PLANS APPROVAL DATE

REGISTERED PROFESSIONAL ENGINEER F. Farahani No. 45671 Exp. 12-31-10 CIVIL STATE OF CALIFORNIA

THE STATE OF CALIFORNIA OR ITS OFFICERS OR AGENTS SHALL NOT BE RESPONSIBLE FOR THE ACCURACY OR COMPLETENESS OF SCANNED COPIES OF THIS PLAN SHEET.

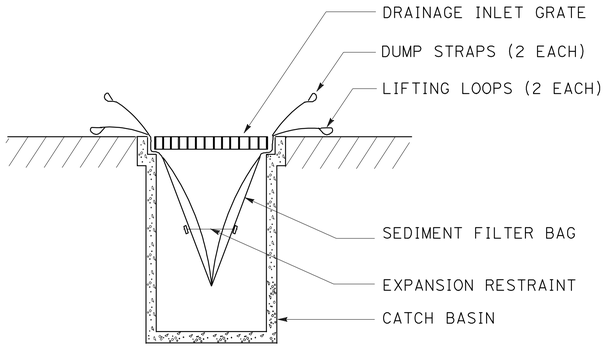

SECTION B-B

SEDIMENT FILTER BAG DETAIL

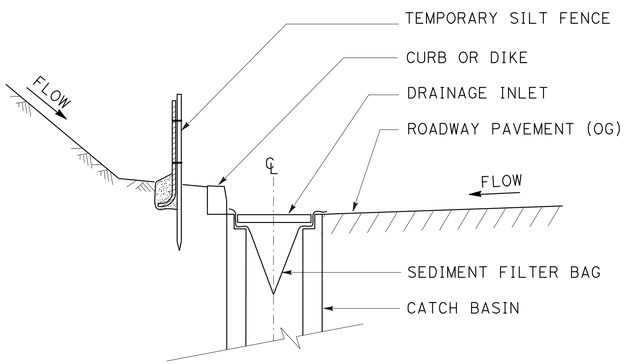

SECTION A-A

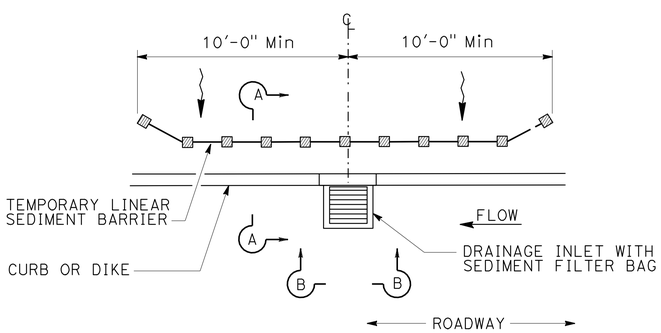

PLAN

TEMPORARY DRAINAGE INLET PROTECTION (TYPE 5) (SEDIMENT FILTER BAG)

NOTES

1. TEMPORARY LINEAR SEDIMENT BARRIER SHALL BE SILT FENCE, FIBER ROLL, GRAVEL BAG BARRIER, OR OTHER.
2. FOR TEMPORARY SILT FENCE SEE 2006 STANDARD PLAN T51.
3. DIMENSIONS MAY VARY TO FIT FIELD CONDITIONS.

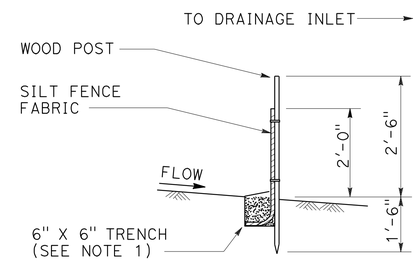

SECTION

TEMPORARY SILT FENCE DETAIL

TEMPORARY WATER POLLUTION CONTROL DETAILS (TEMPORARY DRAINAGE INLET PROTECTION)

NO SCALE

WPCD-4

STATE OF CALIFORNIA - DEPARTMENT OF TRANSPORTATION
Caltrans OFFICE OF WATER QUALITY

SENIOR LANDSCAPE ARCHITECT FARAMARZ FARAHANI

CALCULATED-DESIGNED BY FF
CHECKED BY FF
REVISED BY
DATE REVISED

LAST REVISION 01-09-09
DATE PLOTTED => 31-JUL-2009
TIME PLOTTED => 06:58

Dist	COUNTY	ROUTE	POST MILES TOTAL PROJECT	SHEET No.	TOTAL SHEETS
04	SCI	101	R27.6/40.2	53	173

REGISTERED CIVIL ENGINEER 10/24/08 DATE

5-11-09
PLANS APPROVAL DATE

REGISTERED PROFESSIONAL ENGINEER Jerilyn L. Struven No. 49964 Exp. 12-31-10 CIVIL STATE OF CALIFORNIA

THE STATE OF CALIFORNIA OR ITS OFFICERS OR AGENTS SHALL NOT BE RESPONSIBLE FOR THE ACCURACY OR COMPLETENESS OF SCANNED COPIES OF THIS PLAN SHEET.

LEGEND

No. CONSTRUCTION AREA SIGN NUMBER

→ DIRECTION OF TRAFFIC

NOTE:

1. EXACT LOCATON AND POSITION OF SIGNS TO BE DETERMINED BY THE ENGINEER.

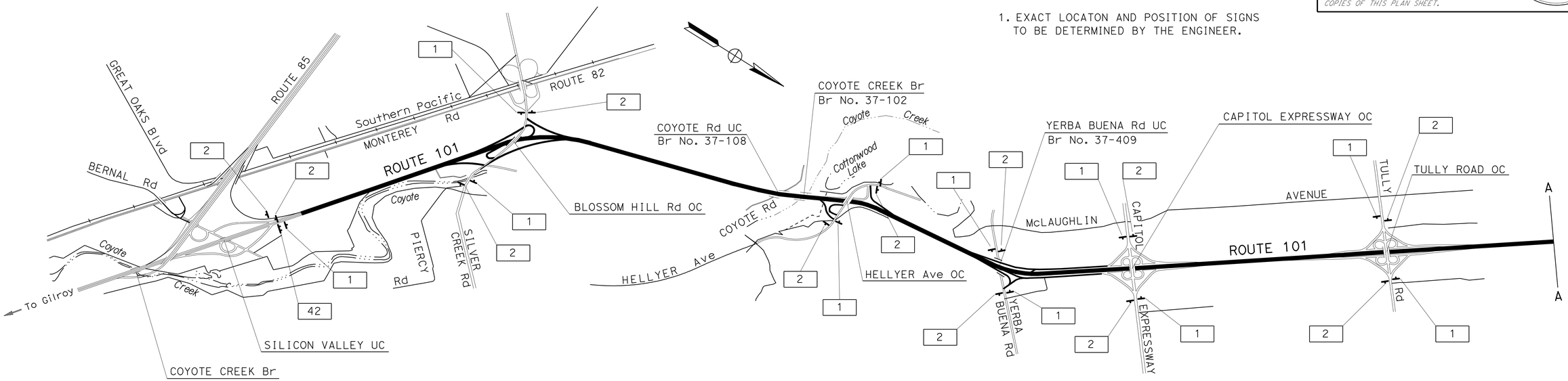

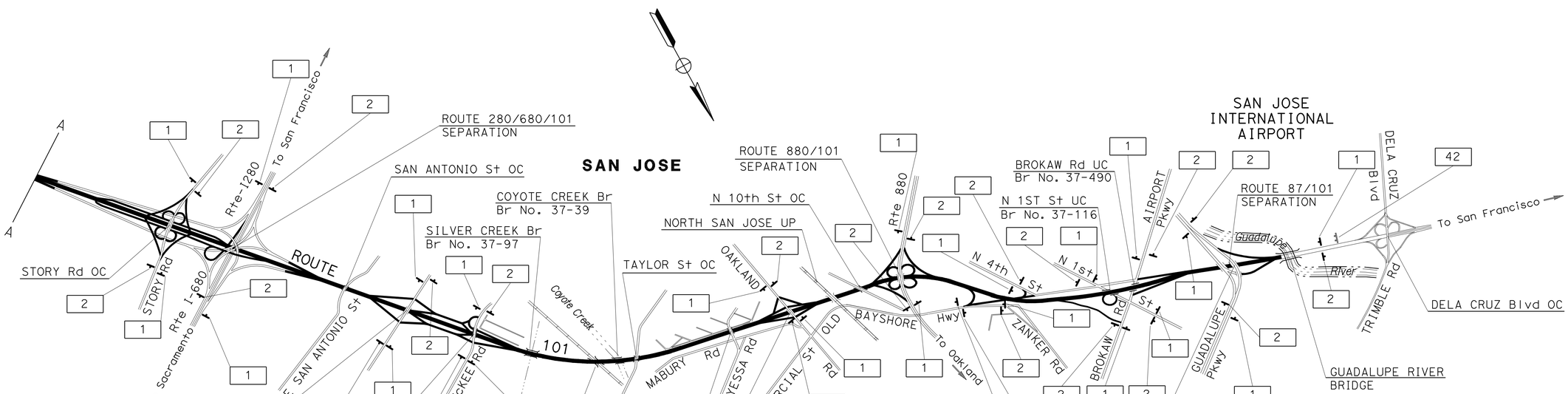

CONSTRUCTION AREA SIGNS

NO SCALE

THIS PLAN ACCURATE FOR CONSTRUCTION AREA SIGN WORK ONLY

CS-1

REVISED BY	DATE REVISED
A	A

CALCULATED-DESIGNED BY: SL & RY
CHECKED BY: JS

FUNCTIONAL SUPERVISOR: Jerilyn L. Struven

STATE OF CALIFORNIA - DEPARTMENT OF TRANSPORTATION
Caltrans
TRAFFIC

LAST REVISION 01-08-09 | DATE PLOTTED => 31-JUL-2009 | TIME PLOTTED => 06:58

Dist	COUNTY	ROUTE	POST MILES TOTAL PROJECT	SHEET No.	TOTAL SHEETS
04	SCI	101	R27.6/40.2	54	173

REGISTERED CIVIL ENGINEER 10/24/08 DATE

5-11-09
PLANS APPROVAL DATE

REGISTERED PROFESSIONAL ENGINEER Jerilyn L. Struven No. 49964 Exp. 12-31-10 CIVIL STATE OF CALIFORNIA

THE STATE OF CALIFORNIA OR ITS OFFICERS OR AGENTS SHALL NOT BE RESPONSIBLE FOR THE ACCURACY OR COMPLETENESS OF SCANNED COPIES OF THIS PLAN SHEET.

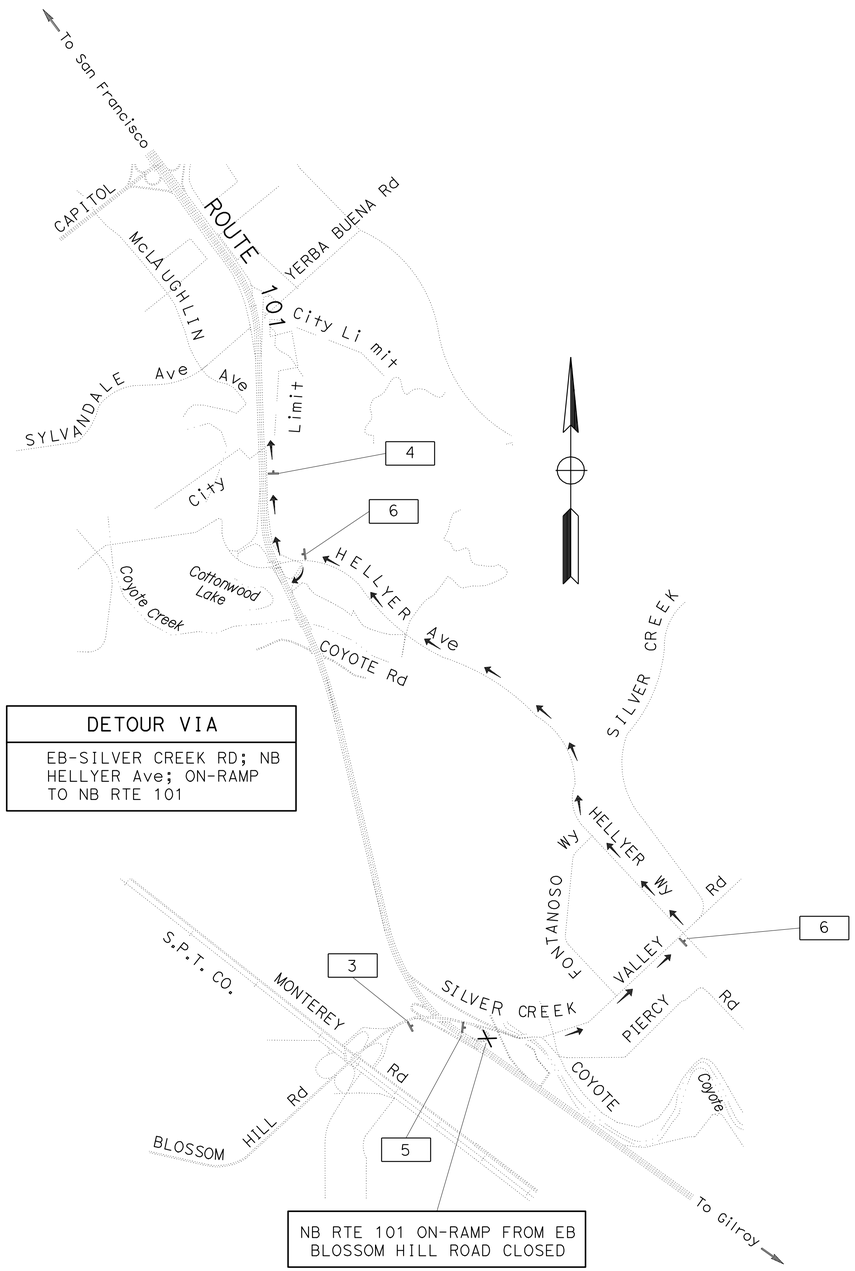

DETOUR VIA

EB-SILVER CREEK RD; NB HELLYER Ave; ON-RAMP TO NB RTE 101

NB RTE 101 ON-RAMP FROM EB BLOSSOM HILL ROAD CLOSED

DETOUR PLAN No. 1

NB ROUTE 101 ON-RAMP FROM EB BLOSSOM HILL ROAD CLOSURE

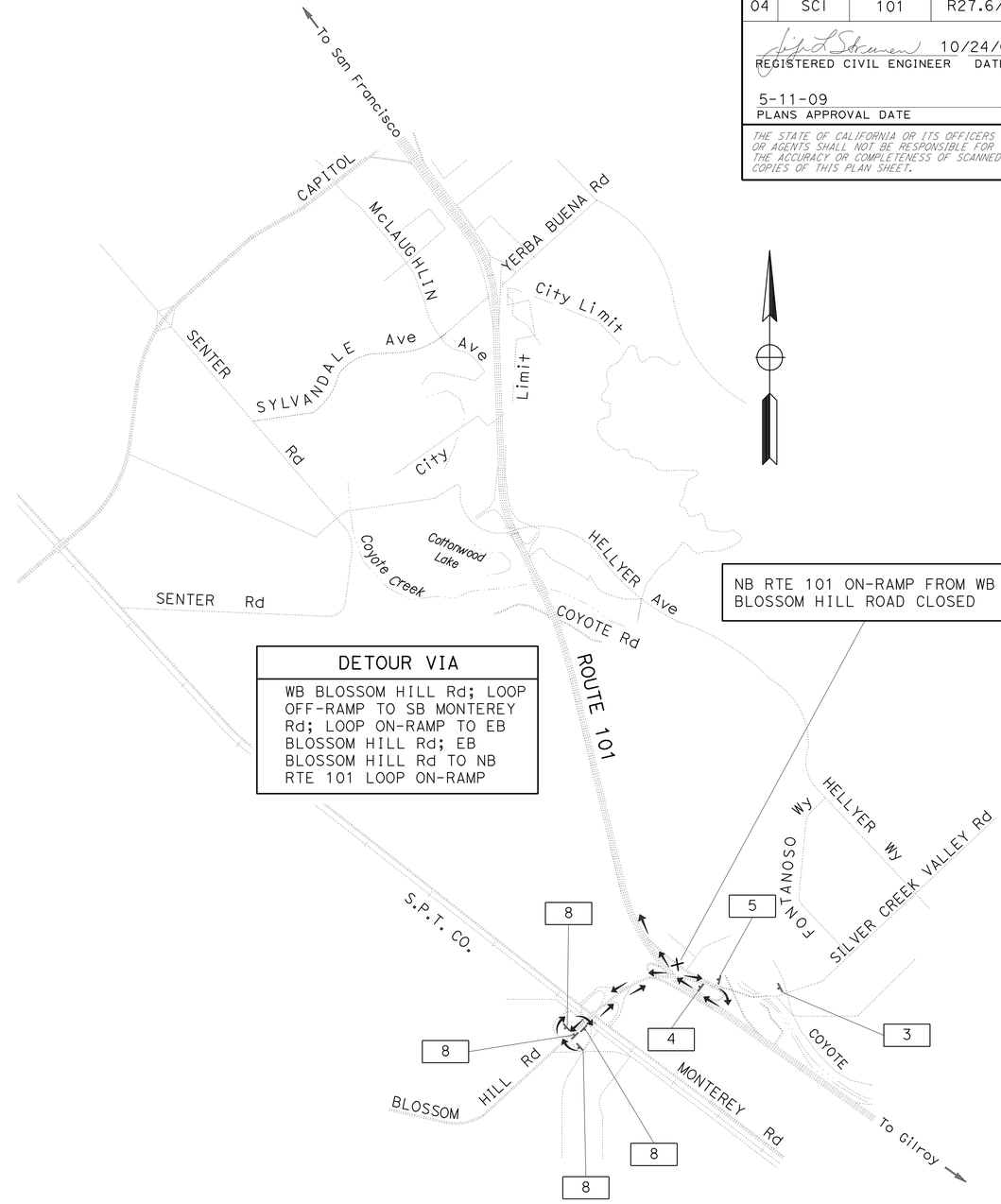

DETOUR VIA

WB BLOSSOM HILL Rd; LOOP OFF-RAMP TO SB MONTEREY Rd; LOOP ON-RAMP TO EB BLOSSOM HILL Rd; EB BLOSSOM HILL Rd TO NB RTE 101 LOOP ON-RAMP

NB RTE 101 ON-RAMP FROM WB BLOSSOM HILL ROAD CLOSED

DETOUR PLAN No. 2

NB ROUTE 101 ON-RAMP FROM WB BLOSSOM HILL ROAD CLOSURE

CONSTRUCTION AREA SIGNS

NO SCALE

FOR NOTES, ABBREVIATIONS &/OR LEGEND, SEE SHEET CS-1

THIS PLAN ACCURATE FOR CONSTRUCTION AREA SIGN WORK ONLY

CS-2

STATE OF CALIFORNIA - DEPARTMENT OF TRANSPORTATION
Caltrans **TRAFFIC**

FUNCTIONAL SUPERVISOR: Jerilyn L. Struven
CALCULATED-DESIGNED BY: SL & RY
CHECKED BY: JS
REVISED BY
DATE REVISED

LAST REVISION 01-08-09
DATE PLOTTED => 31-JUL-2009
TIME PLOTTED => 06:58

Dist	COUNTY	ROUTE	POST MILES TOTAL PROJECT	SHEET No.	TOTAL SHEETS
04	SCI	101	R27.6/40.2	55	173

REGISTERED CIVIL ENGINEER 10/24/08 DATE

5-11-09
PLANS APPROVAL DATE

REGISTERED PROFESSIONAL ENGINEER Jerilyn L. Struven No. 49964 Exp. 12-31-10 CIVIL STATE OF CALIFORNIA

THE STATE OF CALIFORNIA OR ITS OFFICERS OR AGENTS SHALL NOT BE RESPONSIBLE FOR THE ACCURACY OR COMPLETENESS OF SCANNED COPIES OF THIS PLAN SHEET.

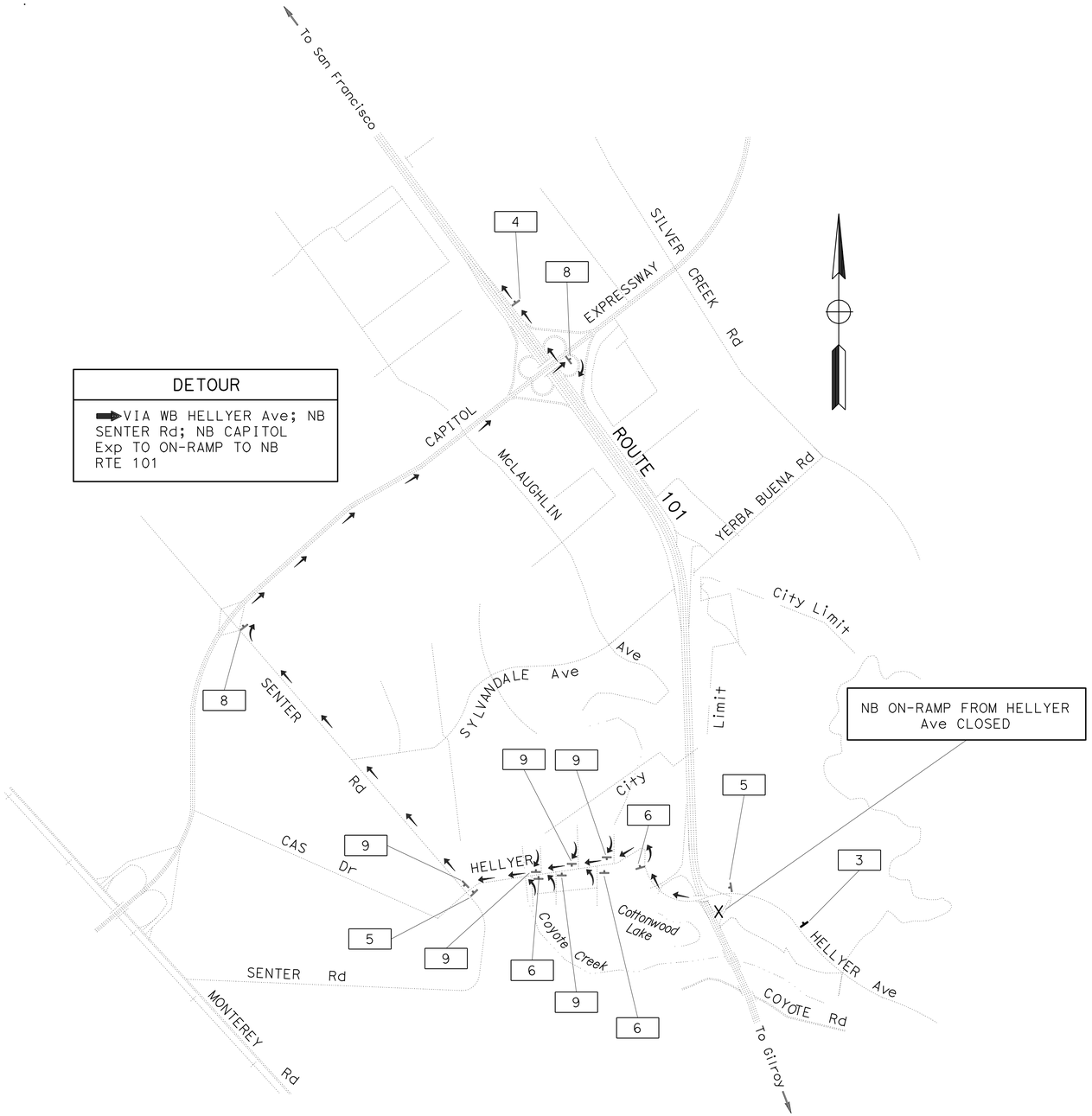

DETOUR PLAN No. 3

NB ROUTE 101 ON-RAMP FROM HELLYER AVENUE CLOSURE

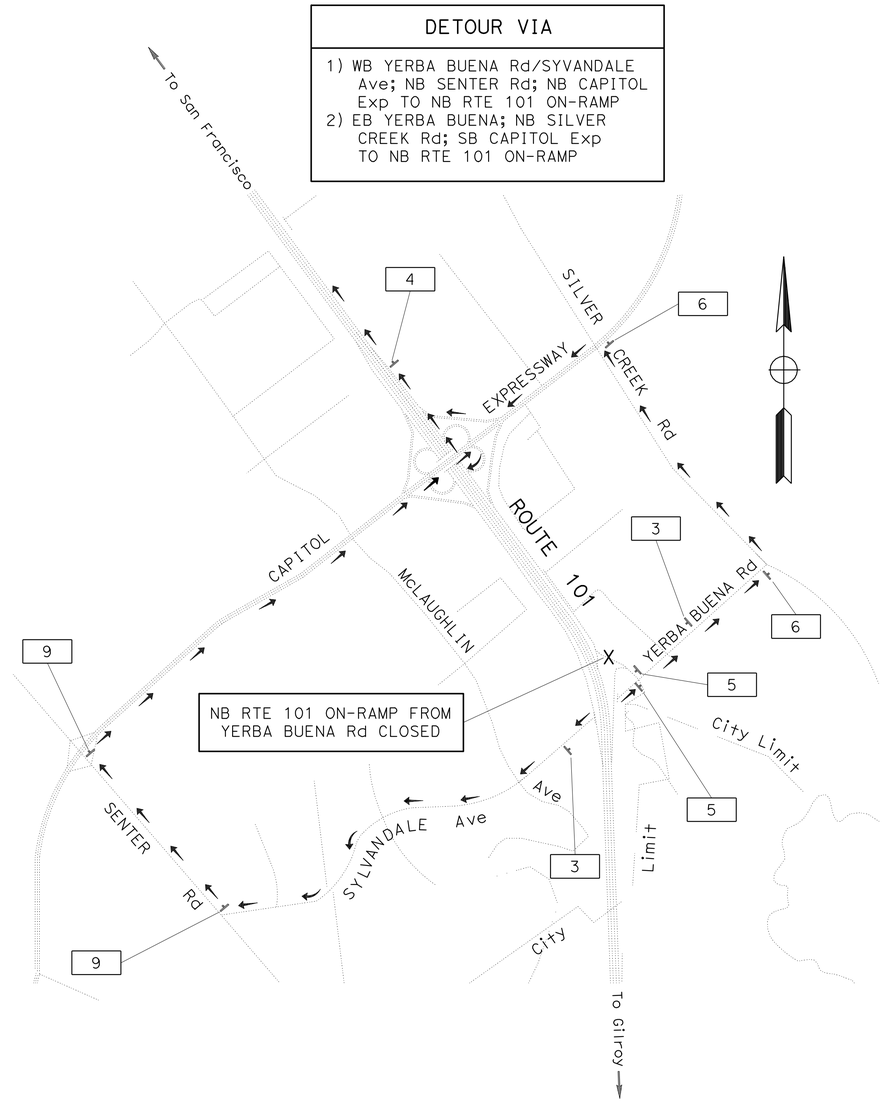

DETOUR PLAN No. 4

NB ROUTE 101 ON-RAMP FROM YERBA BUENA ROAD CLOSURE

CONSTRUCTION AREA SIGNS

NO SCALE

FOR NOTES, ABBREVIATIONS &/OR LEGEND, SEE SHEET CS-1

THIS PLAN ACCURATE FOR CONSTRUCTION AREA SIGN WORK ONLY

CS-3

STATE OF CALIFORNIA - DEPARTMENT OF TRANSPORTATION
Caltrans **TRAFFIC**

FUNCTIONAL SUPERVISOR: Jerilyn L. Struven
CALCULATED-DESIGNED BY: SL & RY
CHECKED BY: JS
REVISED BY
DATE REVISED

LAST REVISION 01-08-09 DATE PLOTTED => 31-JUL-2009 TIME PLOTTED => 06:58

Dist	COUNTY	ROUTE	POST MILES TOTAL PROJECT	SHEET No.	TOTAL SHEETS
04	SCI	101	R27.6/40.2	56	173

REGISTERED CIVIL ENGINEER 10/24/08 DATE

5-11-09
PLANS APPROVAL DATE

REGISTERED PROFESSIONAL ENGINEER Jerilyn L. Struven No. 49964 Exp. 12-31-10 CIVIL STATE OF CALIFORNIA

THE STATE OF CALIFORNIA OR ITS OFFICERS OR AGENTS SHALL NOT BE RESPONSIBLE FOR THE ACCURACY OR COMPLETENESS OF SCANNED COPIES OF THIS PLAN SHEET.

DETOUR

➡ VIA EB STORY Rd; NB S JACKSON Ave; ON-RAMP TO SB RTE 680; SB RTE 680; CONNECTOR SB RTE 680 TO NB RTE 101

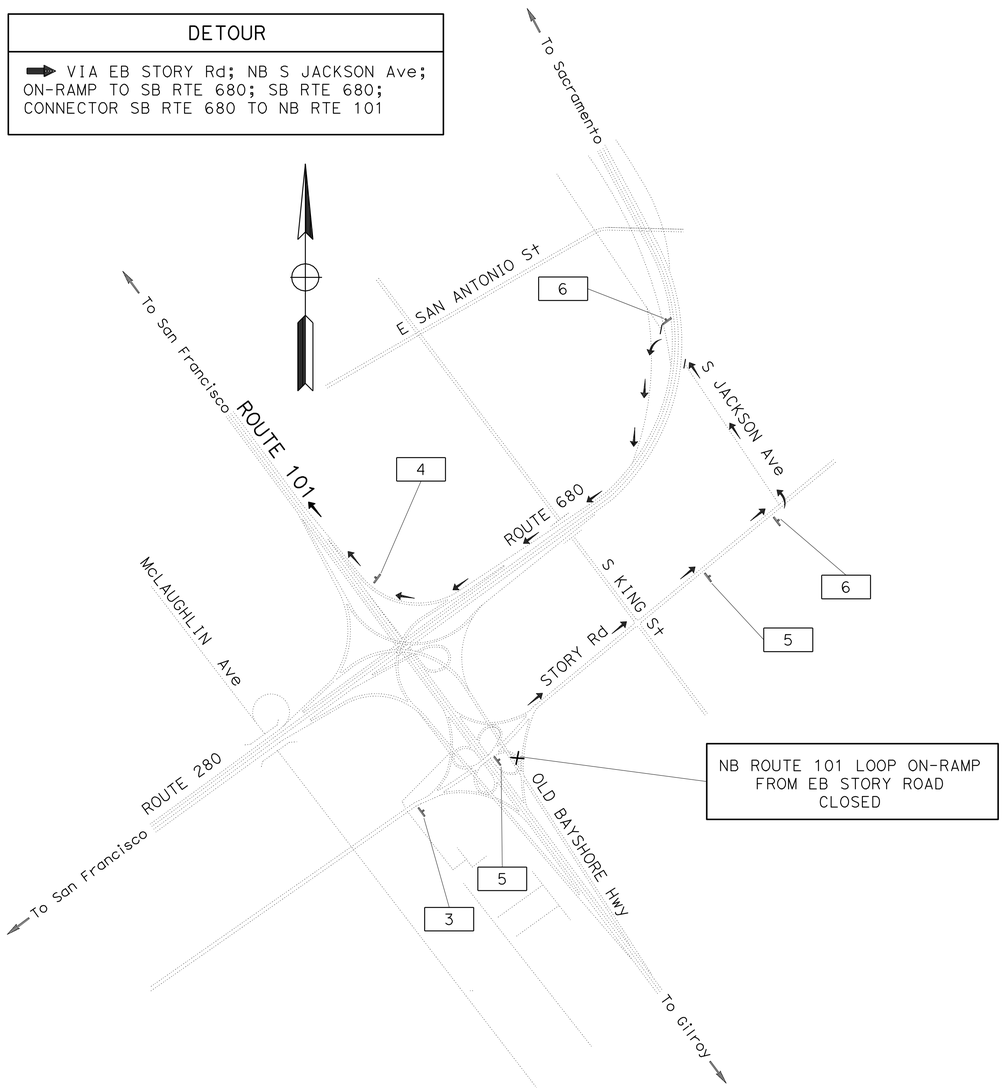

DETOUR PLAN No. 5

NB ROUTE 101 ON-RAMP FROM EB STORY ROAD CLOSURE

DETOUR

➡ VIA WB STORY Rd; LOOP ON-RAMP TO SB 101; LOOP OFF-RAMP TO EB STORY Rd; NB JACKSON Ave; ON-RAMP TO SB RTE 680; CONNECTOR TO NB ROUTE 101

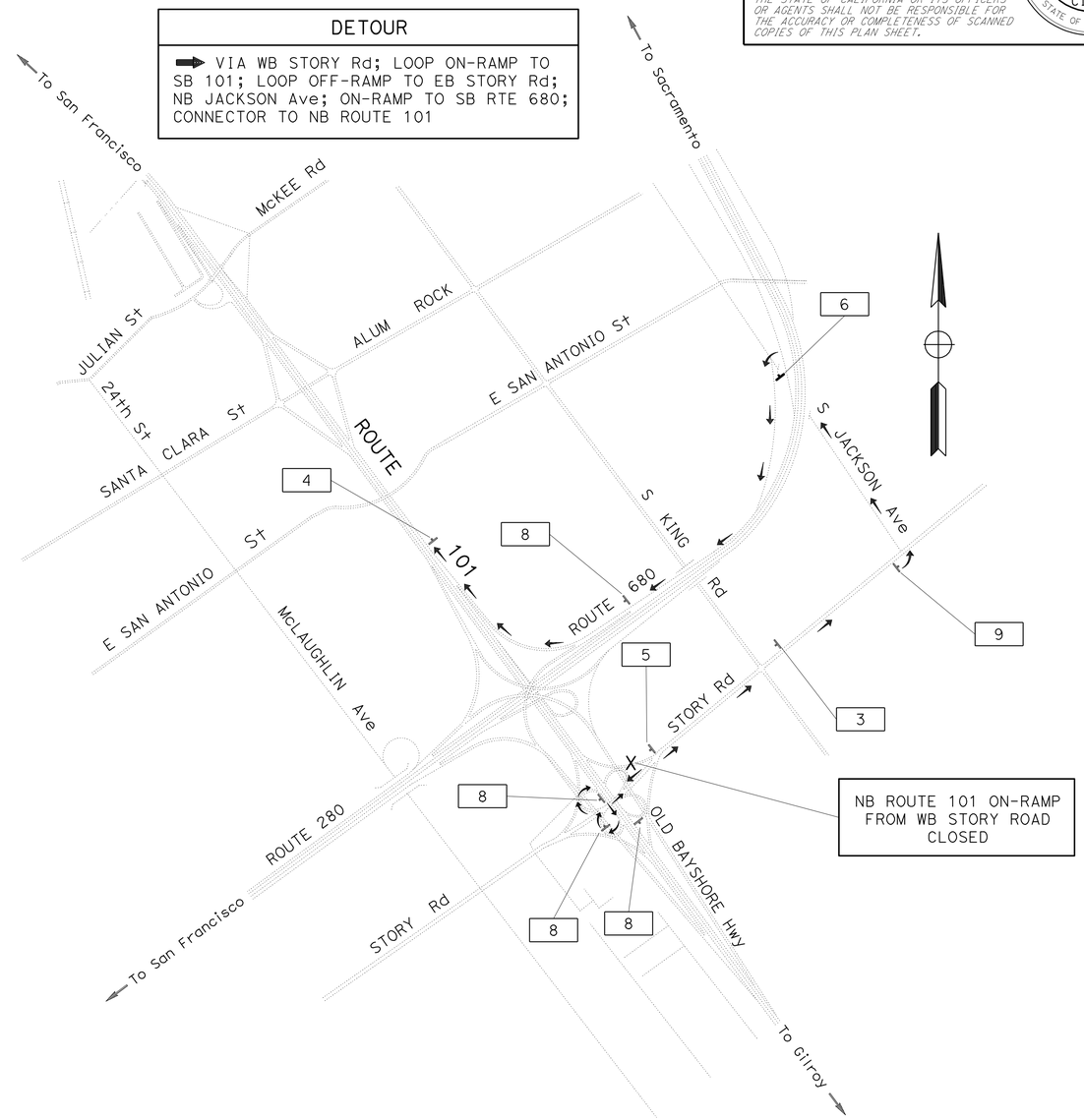

DETOUR PLAN No. 6

NB ROUTE 101 ON-RAMP FROM WB STORY ROAD CLOSURE

CONSTRUCTION AREA SIGNS

NO SCALE

FOR NOTES, ABBREVIATIONS &/OR LEGEND, SEE SHEET CS-1

THIS PLAN ACCURATE FOR CONSTRUCTION AREA SIGN WORK ONLY

CS-4

STATE OF CALIFORNIA - DEPARTMENT OF TRANSPORTATION

Caltrans **TRAFFIC**

FUNCTIONAL SUPERVISOR: Jerilyn L. Struven

CALCULATED-DESIGNED BY: SL & RY

CHECKED BY: JS

REVISED BY

DATE REVISED

LAST REVISION 01-08-09

DATE PLOTTED => 31-JUL-2009

TIME PLOTTED => 06:59

Dist	COUNTY	ROUTE	POST MILES TOTAL PROJECT	SHEET No.	TOTAL SHEETS
04	SCI	101	R27.6/40.2	57	173

REGISTERED CIVIL ENGINEER 10/24/08 DATE

5-11-09
PLANS APPROVAL DATE

REGISTERED PROFESSIONAL ENGINEER Jerilyn L. Struven No. 49964 Exp. 12-31-10 CIVIL STATE OF CALIFORNIA

THE STATE OF CALIFORNIA OR ITS OFFICERS OR AGENTS SHALL NOT BE RESPONSIBLE FOR THE ACCURACY OR COMPLETENESS OF SCANNED COPIES OF THIS PLAN SHEET.

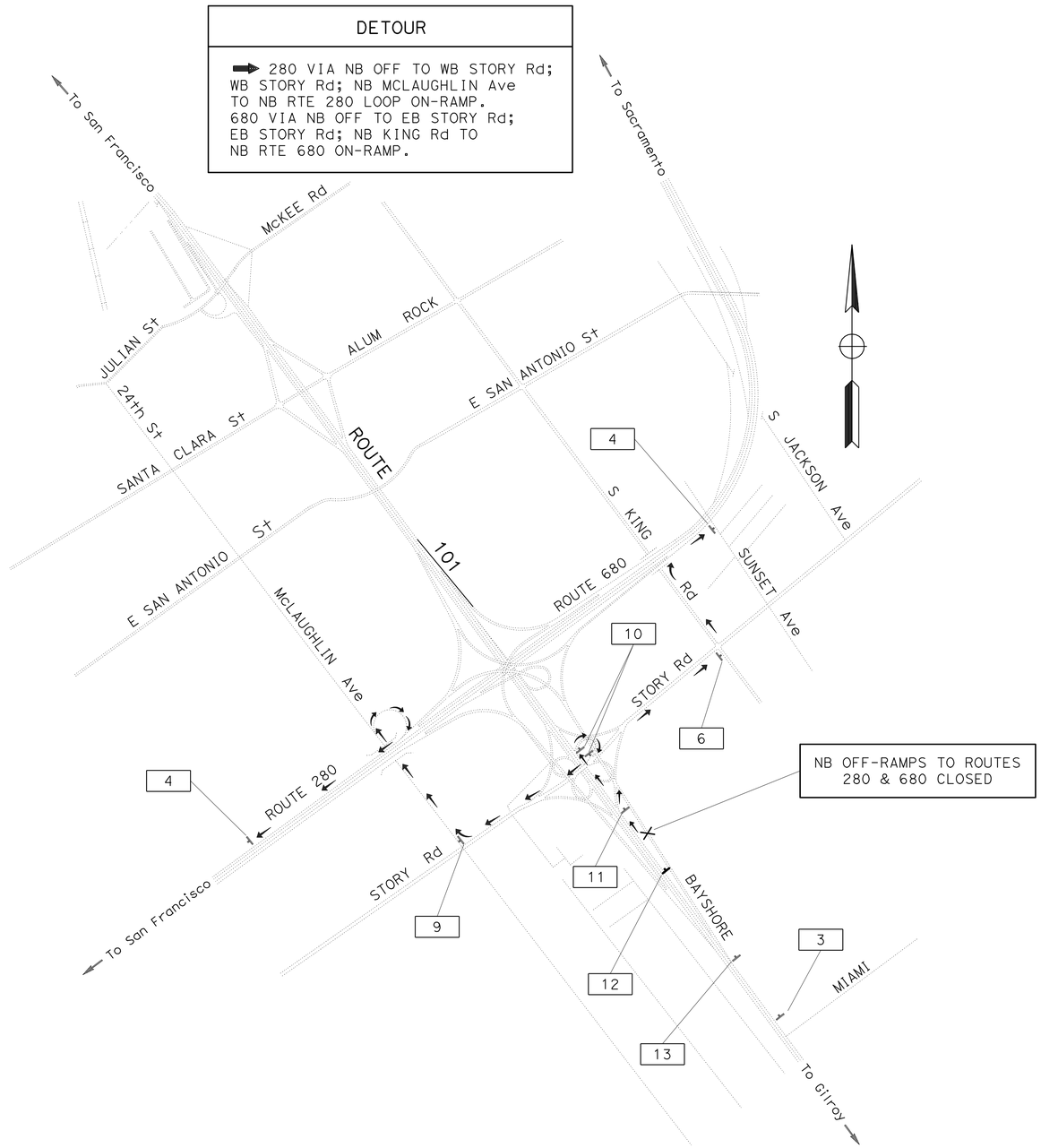

DETOUR PLAN No. 7

NB ROUTE OFF-RAMP TO ROUTE 280 & 680 CLOSURE

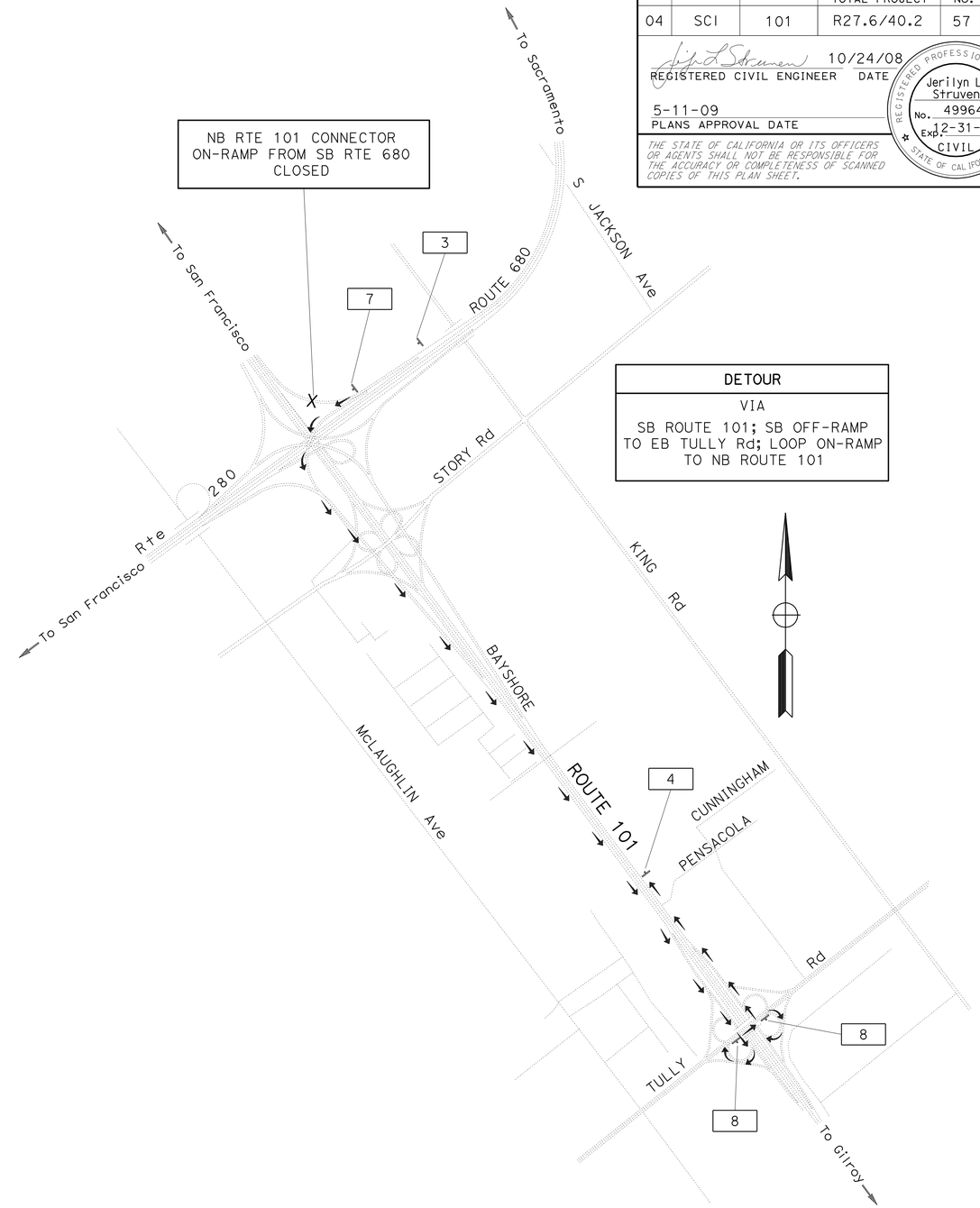

DETOUR PLAN No. 8

NB ROUTE 101 CONNECTOR ON-RAMP FROM SB ROUTE 680 CLOSURE

CONSTRUCTION AREA SIGNS

NO SCALE

FOR NOTES, ABBREVIATIONS &/OR LEGEND, SEE SHEET CS-1

THIS PLAN ACCURATE FOR CONSTRUCTION AREA SIGN WORK ONLY

CS-5

STATE OF CALIFORNIA - DEPARTMENT OF TRANSPORTATION
Caltrans
TRAFFIC

FUNCTIONAL SUPERVISOR: Jerilyn L. Struven
CALCULATED-DESIGNED BY: SL & RY
CHECKED BY: JS
REVISED BY
DATE REVISED

LAST REVISION DATE PLOTTED => 31-JUL-2009
01-09-09 TIME PLOTTED => 06:59

Dist	COUNTY	ROUTE	POST MILES TOTAL PROJECT	SHEET No.	TOTAL SHEETS
04	SCI	101	R27.6/40.2	58	173

REGISTERED CIVIL ENGINEER DATE 10/24/08

5-11-09
PLANS APPROVAL DATE

REGISTERED PROFESSIONAL ENGINEER Jerilyn L. Struven No. 49964 Exp. 12-31-10 CIVIL STATE OF CALIFORNIA

THE STATE OF CALIFORNIA OR ITS OFFICERS OR AGENTS SHALL NOT BE RESPONSIBLE FOR THE ACCURACY OR COMPLETENESS OF SCANNED COPIES OF THIS PLAN SHEET.

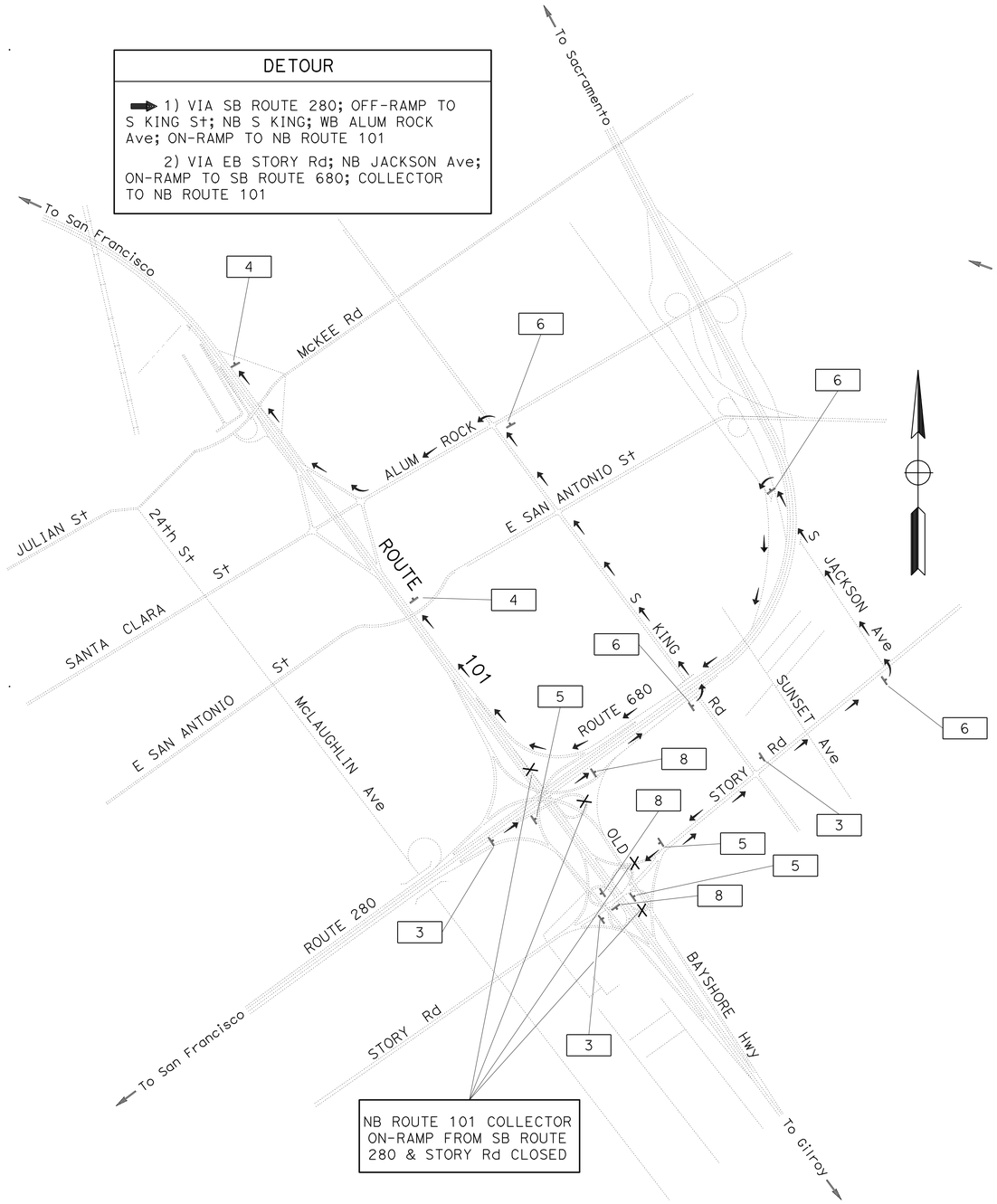

DETOUR PLAN No. 9

NB ROUTE 101 COLLECTOR ON-RAMP FROM SB ROUTE 280 & STORY ROAD CLOSURE

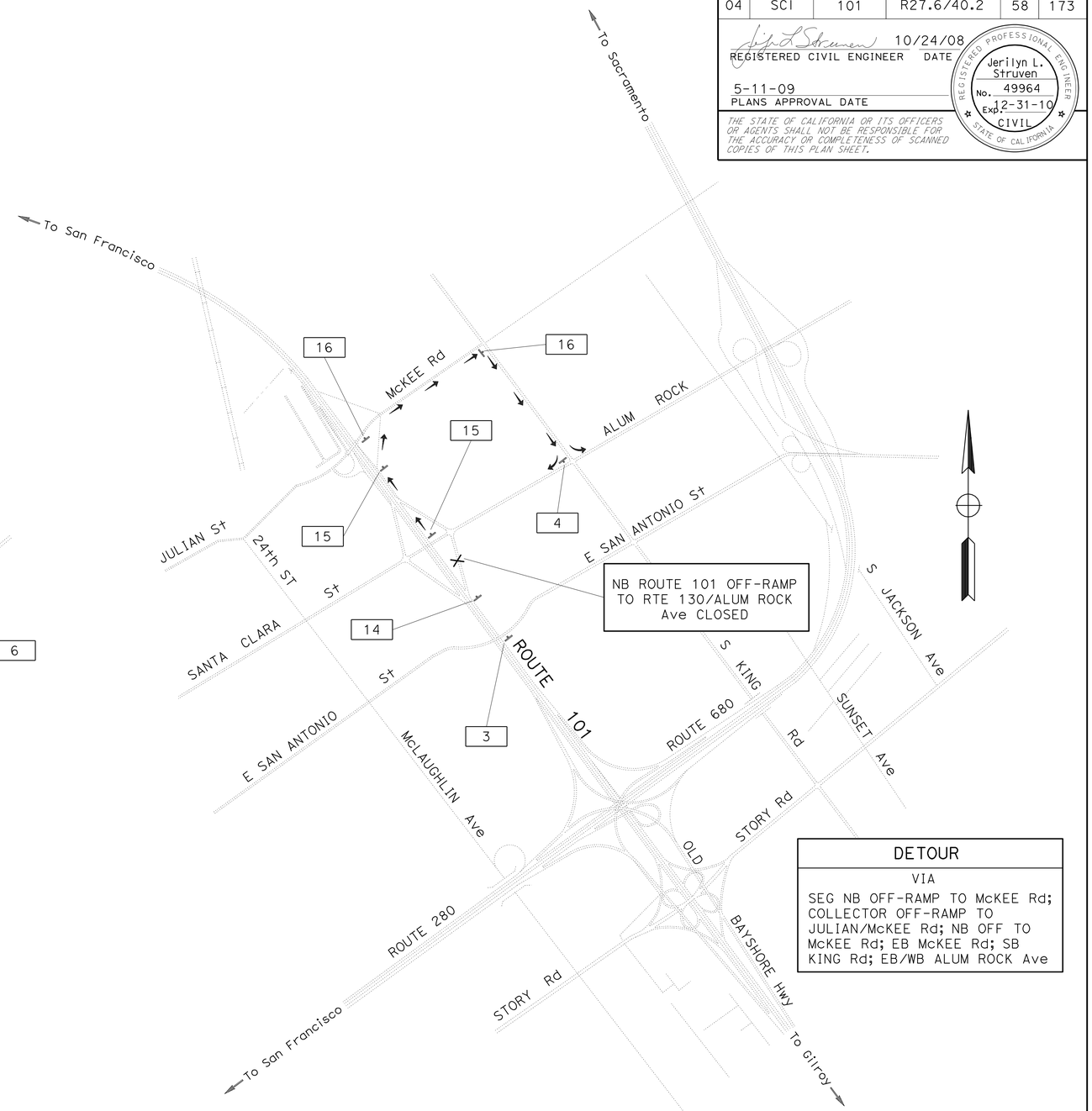

DETOUR PLAN No. 10

NB ROUTE 101 OFF-RAMP TO ROUTE 130/ALUM ROCK AVENUE CLOSURE

CONSTRUCTION AREA SIGNS

NO SCALE

FOR NOTES, ABBREVIATIONS &/OR LEGEND, SEE SHEET CS-1

THIS PLAN ACCURATE FOR CONSTRUCTION AREA SIGN WORK ONLY

CS-6

STATE OF CALIFORNIA - DEPARTMENT OF TRANSPORTATION
Caltrans TRAFFIC

FUNCTIONAL SUPERVISOR: Jerilyn L. Struven
CALCULATED-DESIGNED BY: SL & RY
CHECKED BY: JS
REVISED BY
DATE REVISED

LAST REVISION 01-09-09 DATE PLOTTED => 31-JUL-2009 TIME PLOTTED => 06:59

Dist	COUNTY	ROUTE	POST MILES TOTAL PROJECT	SHEET No.	TOTAL SHEETS
04	SCI	101	R27.6/40.2	59	173

REGISTERED CIVIL ENGINEER 10/24/08 DATE

5-11-09
PLANS APPROVAL DATE

REGISTERED PROFESSIONAL ENGINEER Jerilyn L. Struven No. 49964 Exp. 12-31-10 CIVIL STATE OF CALIFORNIA

THE STATE OF CALIFORNIA OR ITS OFFICERS OR AGENTS SHALL NOT BE RESPONSIBLE FOR THE ACCURACY OR COMPLETENESS OF SCANNED COPIES OF THIS PLAN SHEET.

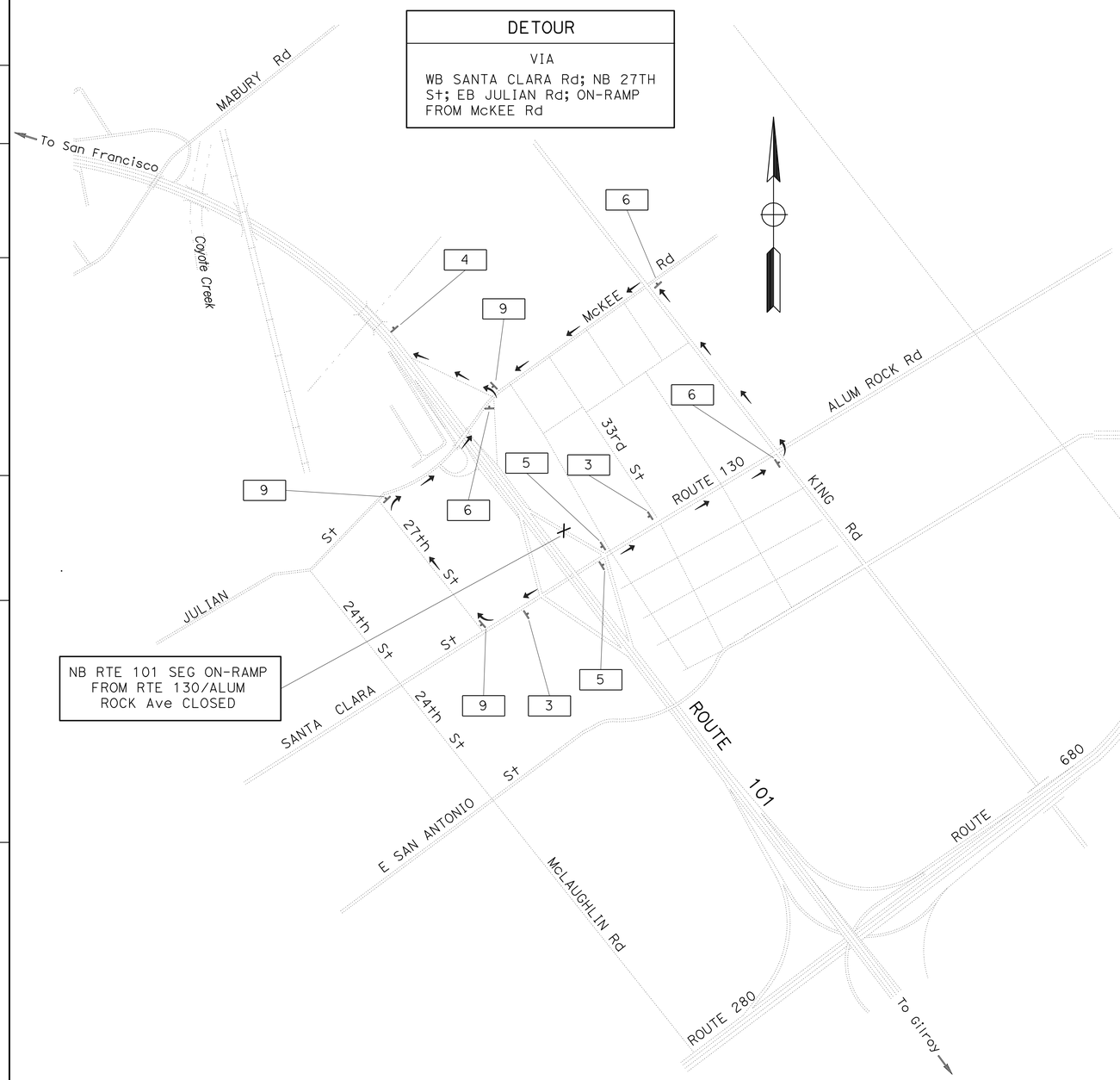

DETOUR PLAN No. 11

NB ROUTE 101 SEGMENT ON-RAMP FROM ROUTE 130/ALUM ROCK AVENUE CLOSURE

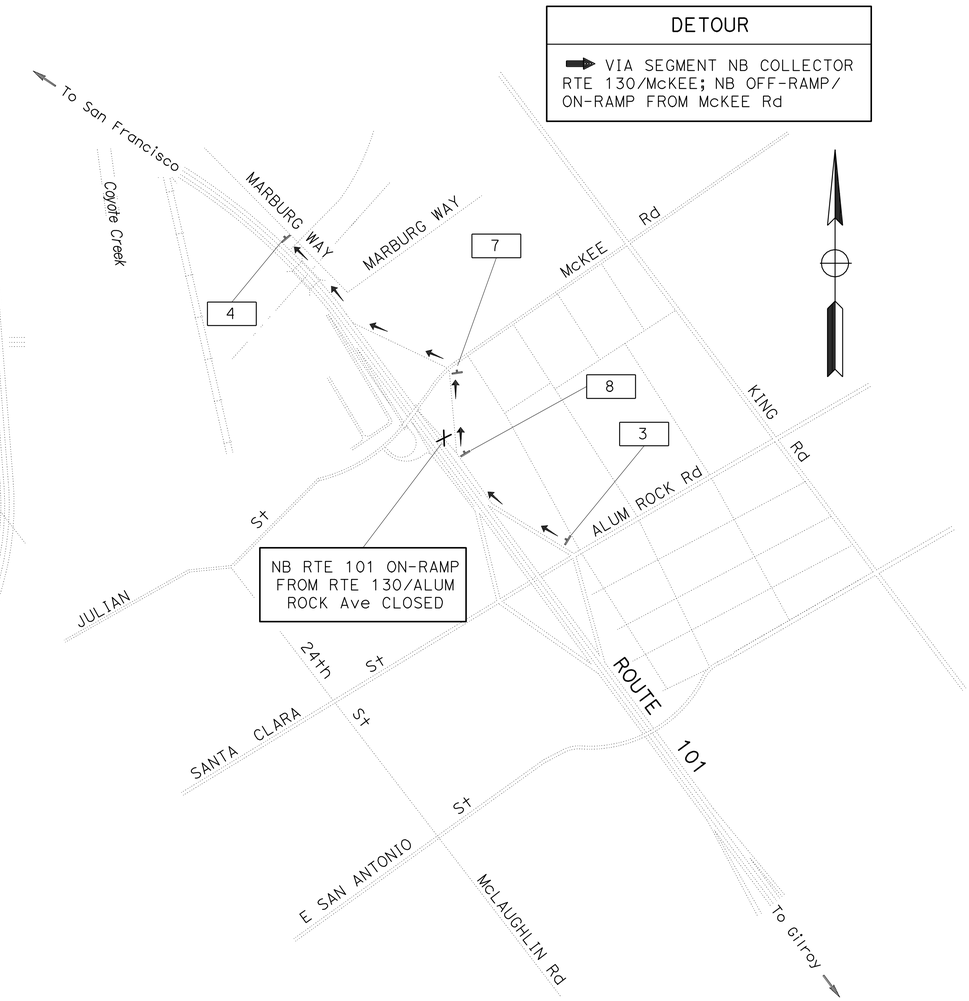

DETOUR PLAN No. 12

NB ROUTE 101 ON-RAMP FROM ROUTE 130/ALUM ROCK AVENUE CLOSURE

CONSTRUCTION AREA SIGNS

NO SCALE

FOR NOTES, ABBREVIATIONS &/OR LEGEND, SEE SHEET CS-1

THIS PLAN ACCURATE FOR CONSTRUCTION AREA SIGN WORK ONLY

CS-7

STATE OF CALIFORNIA - DEPARTMENT OF TRANSPORTATION
Caltrans
TRAFFIC

FUNCTIONAL SUPERVISOR: Jerilyn L. Struven
CALCULATED-DESIGNED BY: SL & RY
CHECKED BY: JS
REVISED BY
DATE REVISED

LAST REVISION 01-09-09
DATE PLOTTED => 31-JUL-2009
TIME PLOTTED => 06:59

Dist	COUNTY	ROUTE	POST MILES TOTAL PROJECT	SHEET No.	TOTAL SHEETS
04	SCI	101	R27.6/40.2	60	173

REGISTERED CIVIL ENGINEER 10/24/08 DATE

5-11-09
PLANS APPROVAL DATE

REGISTERED PROFESSIONAL ENGINEER Jerilyn L. Struven No. 49964 Exp. 12-31-10 CIVIL STATE OF CALIFORNIA

THE STATE OF CALIFORNIA OR ITS OFFICERS OR AGENTS SHALL NOT BE RESPONSIBLE FOR THE ACCURACY OR COMPLETENESS OF SCANNED COPIES OF THIS PLAN SHEET.

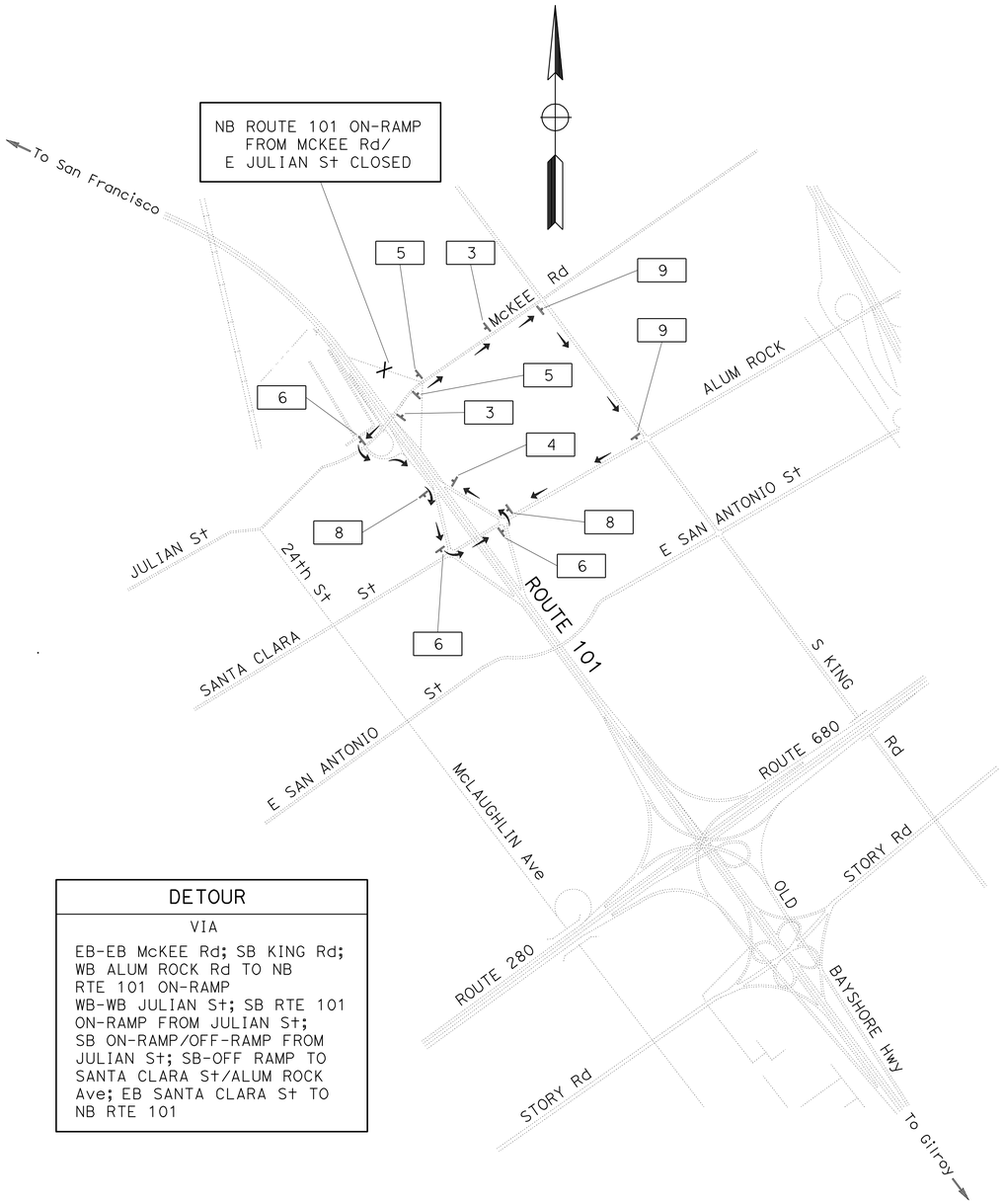

DETOUR

VIA

EB-EB McKEE Rd; SB KING Rd; WB ALUM ROCK Rd TO NB RTE 101 ON-RAMP
WB-WB JULIAN St; SB RTE 101 ON-RAMP FROM JULIAN St; SB ON-RAMP/OFF-RAMP FROM JULIAN St; SB-OFF RAMP TO SANTA CLARA St/ALUM ROCK Ave; EB SANTA CLARA St TO NB RTE 101

DETOUR PLAN No. 13

NB ROUTE 101 ON-RAMP FROM MCKEE ROAD/E JULIAN STREET CLOSURE

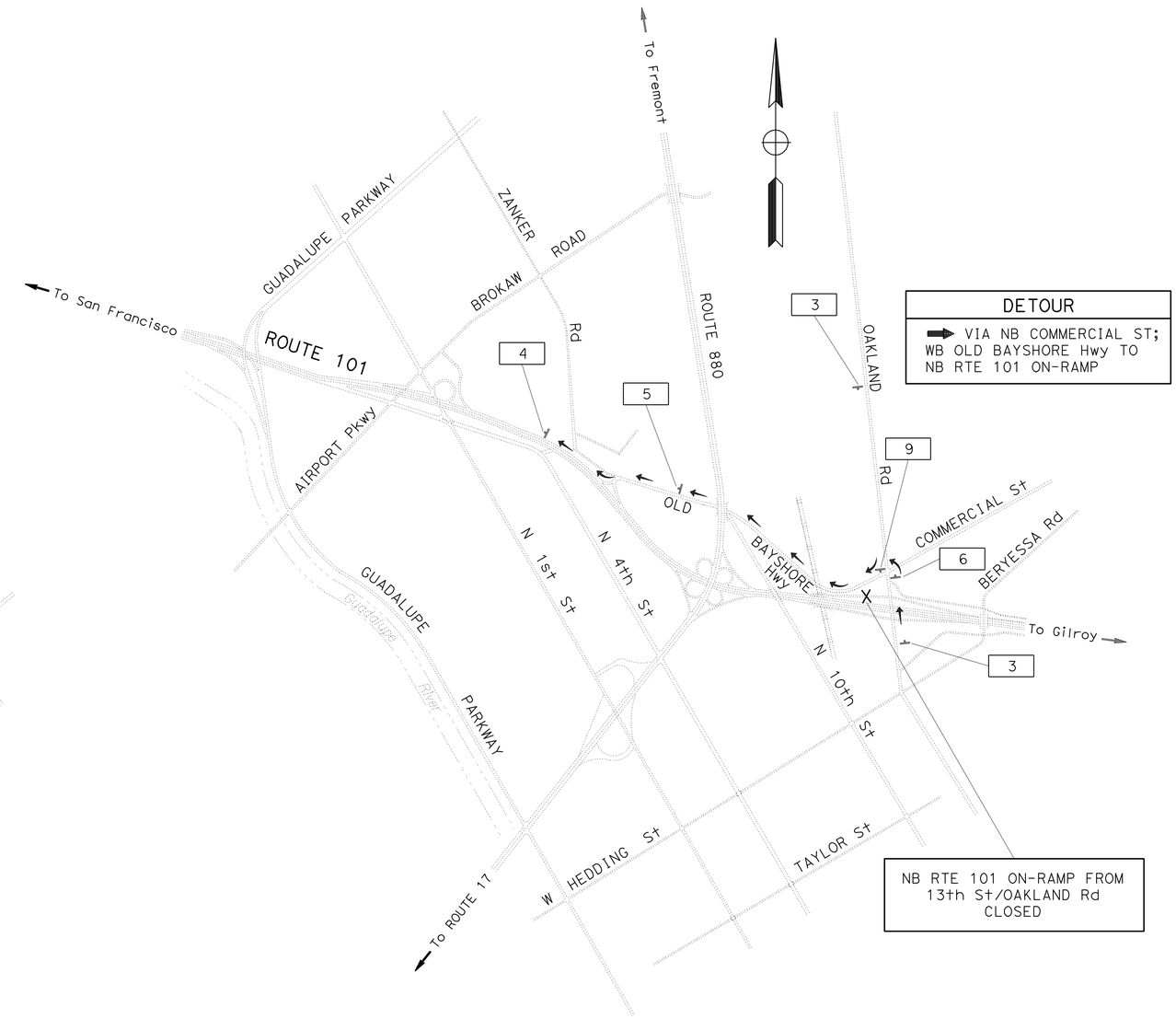

DETOUR

➡ VIA NB COMMERCIAL ST; WB OLD BAYSHORE Hwy TO NB RTE 101 ON-RAMP

NB RTE 101 ON-RAMP FROM 13th St/OAKLAND Rd CLOSED

DETOUR PLAN No. 14

NB ROUTE 101 ON-RAMP FROM OAKLAND ROAD CLOSURE

CONSTRUCTION AREA SIGNS

NO SCALE

CS-8

FOR NOTES, ABBREVIATIONS &/OR LEGEND, SEE SHEET CS-1

THIS PLAN ACCURATE FOR CONSTRUCTION AREA SIGN WORK ONLY

STATE OF CALIFORNIA - DEPARTMENT OF TRANSPORTATION
Caltrans TRAFFIC
FUNCTIONAL SUPERVISOR: Jerilyn L. Struven
CALCULATED-DESIGNED BY: SL & RY
CHECKED BY: JS
REVISED BY
DATE REVISED

LAST REVISION 01-09-09
DATE PLOTTED => 31-JUL-2009
TIME PLOTTED => 06:59

Dist	COUNTY	ROUTE	POST MILES TOTAL PROJECT	SHEET No.	TOTAL SHEETS
04	SCI	101	R27.6/40.2	61	173

REGISTERED CIVIL ENGINEER 10/24/08 DATE

5-11-09
PLANS APPROVAL DATE

REGISTERED PROFESSIONAL ENGINEER Jerilyn L. Struven No. 49964 Exp. 12-31-10 CIVIL STATE OF CALIFORNIA

THE STATE OF CALIFORNIA OR ITS OFFICERS OR AGENTS SHALL NOT BE RESPONSIBLE FOR THE ACCURACY OR COMPLETENESS OF SCANNED COPIES OF THIS PLAN SHEET.

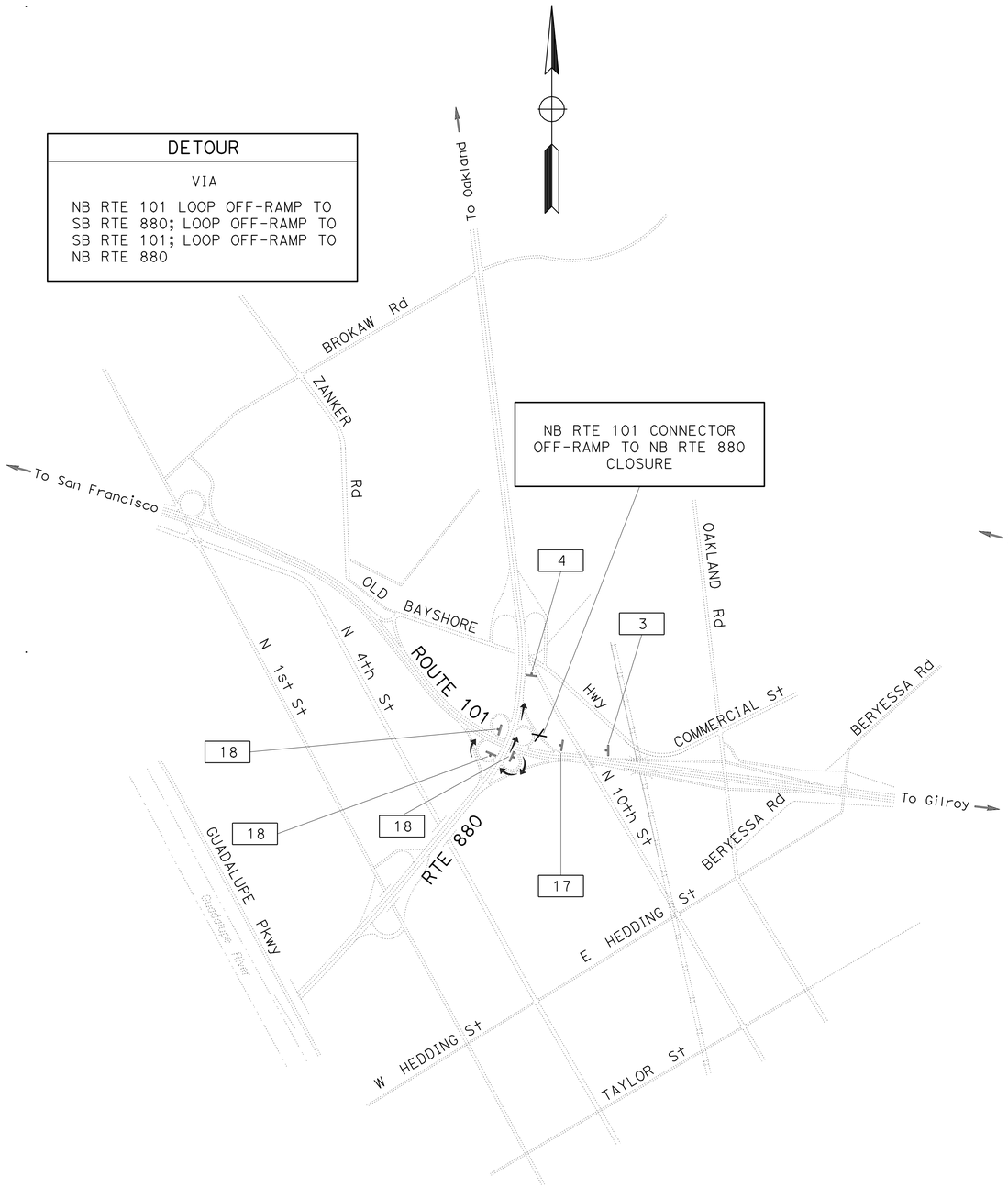

DETOUR PLAN No. 15

NB ROUTE 101 CONNECTOR OFF-RAMP TO NB ROUTE 880 CLOSURE

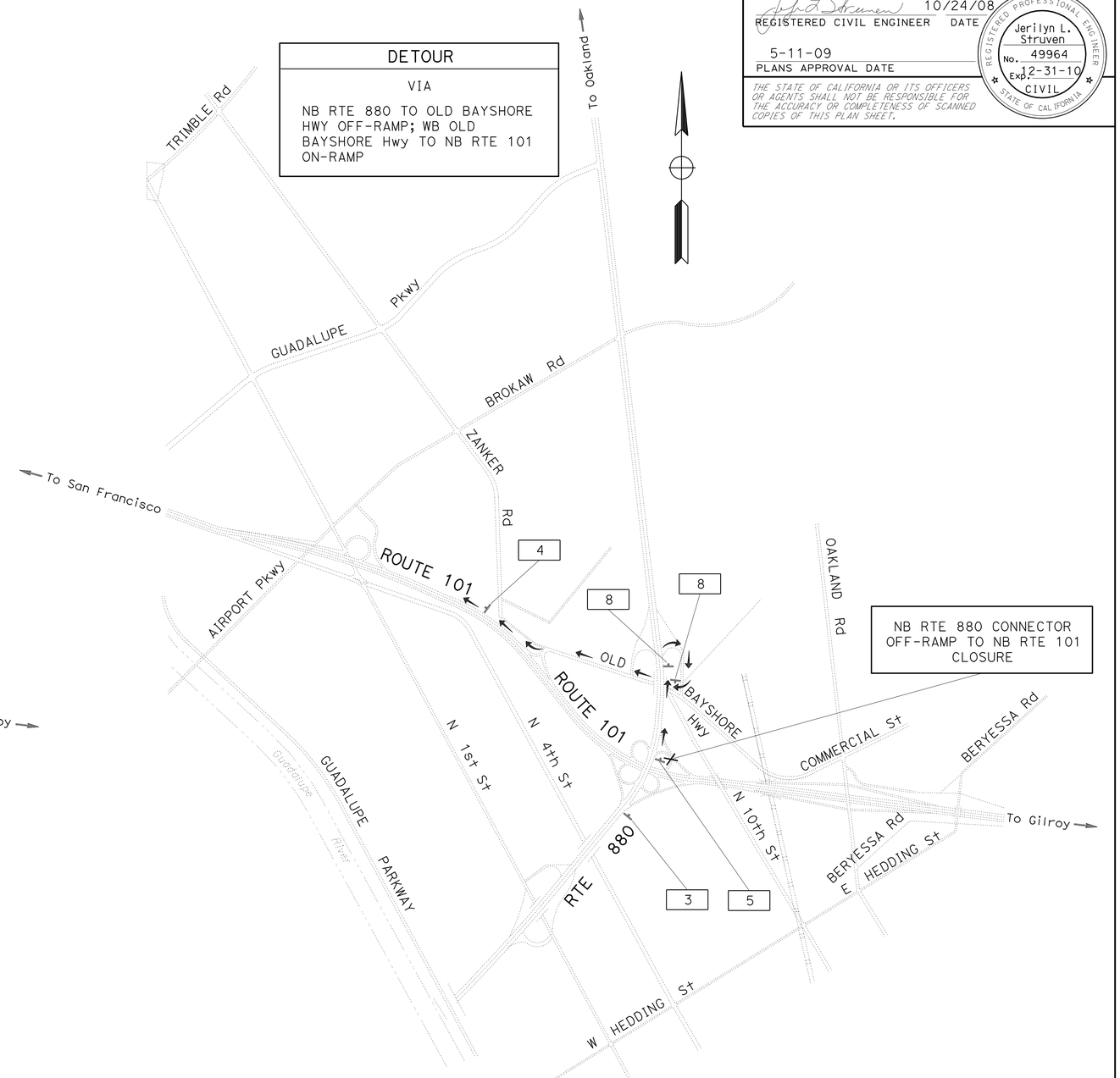

DETOUR PLAN No. 16

NB ROUTE 880 CONNECTOR OFF-RAMP TO NB ROUTE 101 CLOSURE

CONSTRUCTION AREA SIGNS

NO SCALE

FOR NOTES, ABBREVIATIONS &/OR LEGEND, SEE SHEET CS-1

THIS PLAN ACCURATE FOR CONSTRUCTION AREA SIGN WORK ONLY

CS-9

STATE OF CALIFORNIA - DEPARTMENT OF TRANSPORTATION
Caltrans
TRAFFIC

FUNCTIONAL SUPERVISOR: Jerilyn L. Struven
CALCULATED-DESIGNED BY: SL & RY
CHECKED BY: JS
REVISED BY
DATE REVISED

LAST REVISION 01-09-09
DATE PLOTTED => 31-JUL-2009
TIME PLOTTED => 06:59

Dist	COUNTY	ROUTE	POST MILES TOTAL PROJECT	SHEET No.	TOTAL SHEETS
04	SCI	101	R27.6/40.2	62	173

REGISTERED CIVIL ENGINEER 10/24/08 DATE

5-11-09
PLANS APPROVAL DATE

REGISTERED PROFESSIONAL ENGINEER Jerilyn L. Struven No. 49964 Exp. 12-31-10 CIVIL STATE OF CALIFORNIA

THE STATE OF CALIFORNIA OR ITS OFFICERS OR AGENTS SHALL NOT BE RESPONSIBLE FOR THE ACCURACY OR COMPLETENESS OF SCANNED COPIES OF THIS PLAN SHEET.

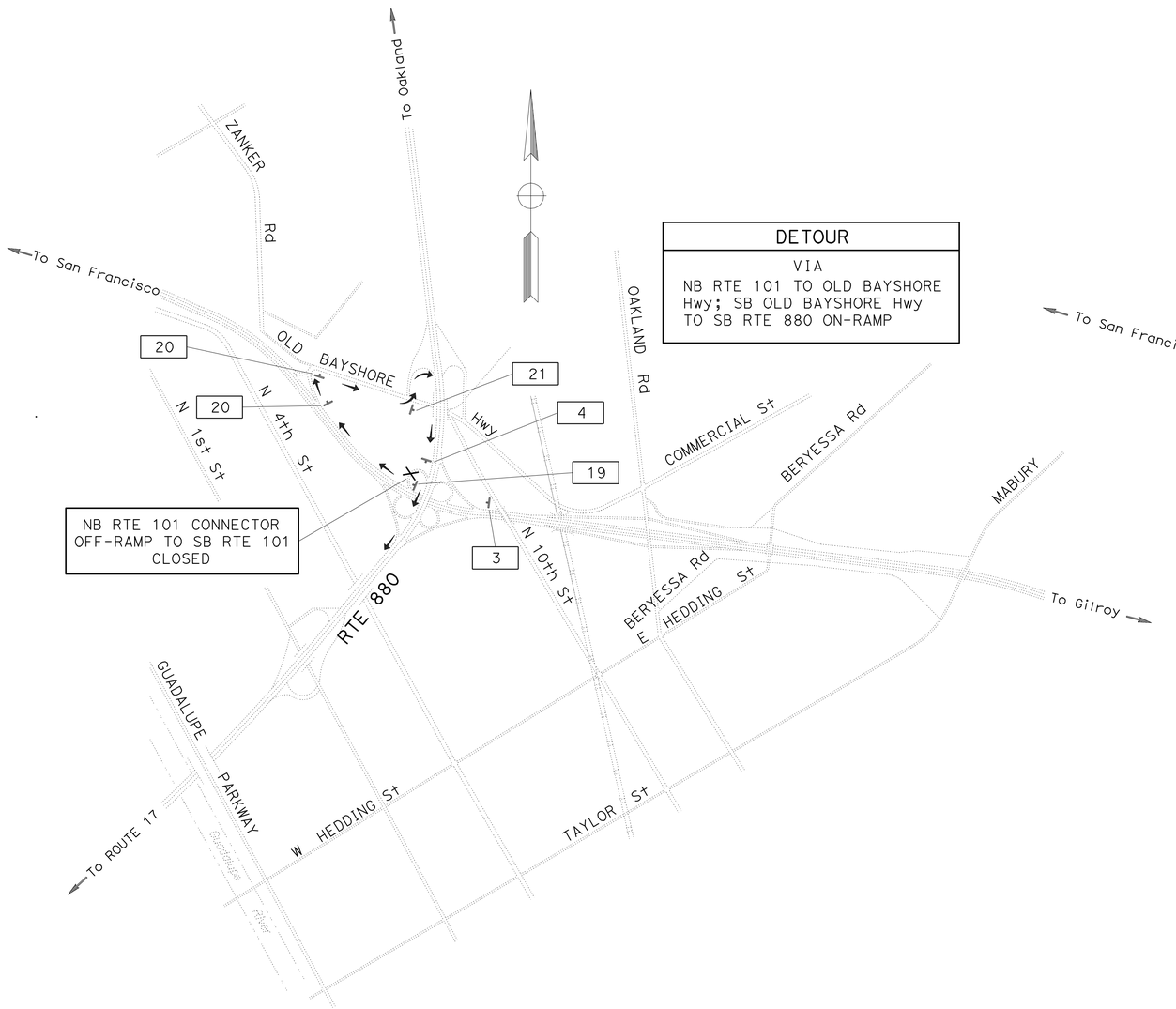

DETOUR PLAN No. 17

NB ROUTE 101 CONNECTOR OFF-RAMP TO SB ROUTE 880 CLOSURE

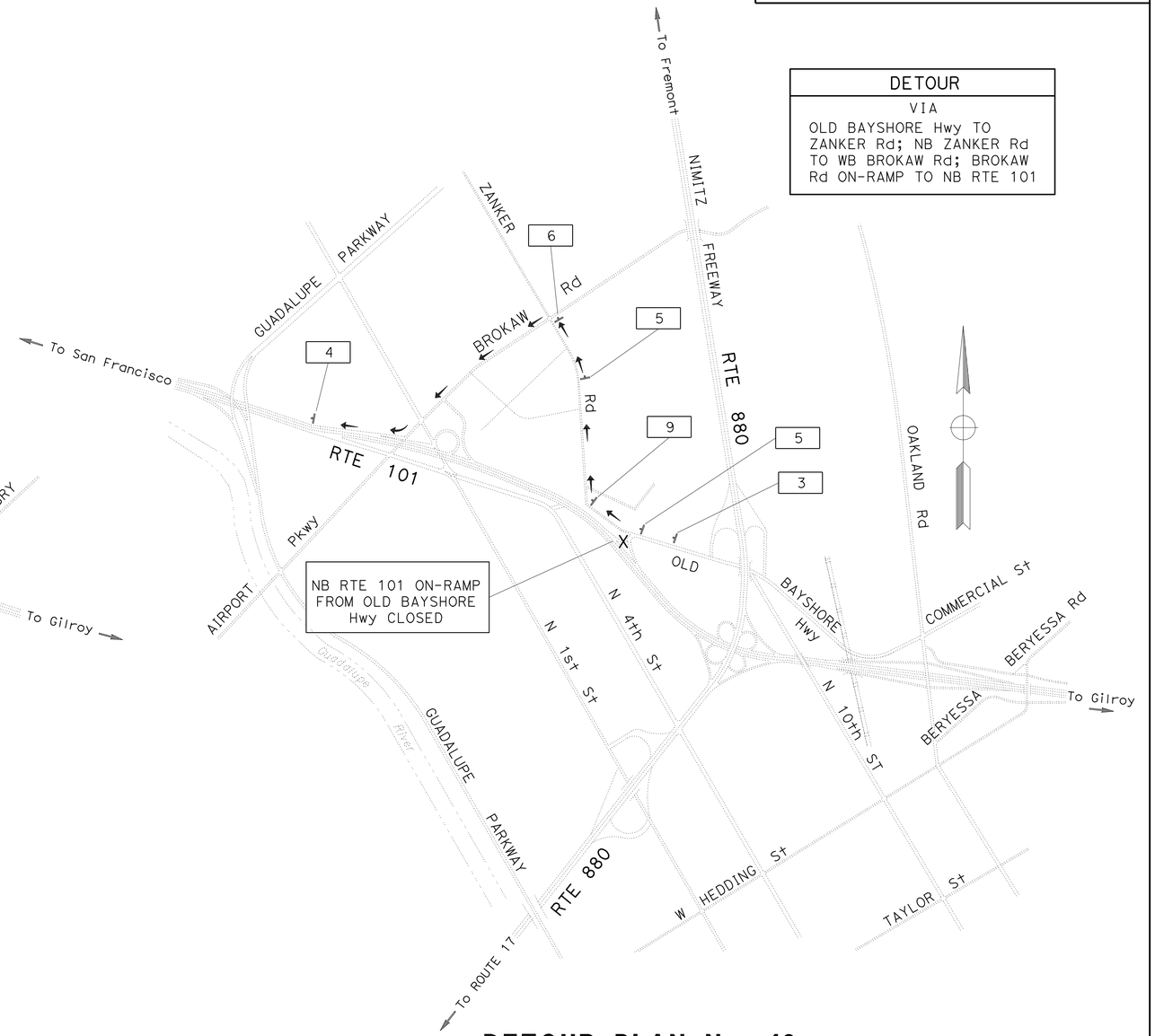

DETOUR PLAN No. 18

NB ROUTE 101 ON-RAMP FROM OLD BAYSHORE HWY CLOSURE

CONSTRUCTION AREA SIGNS

NO SCALE

FOR NOTES, ABBREVIATIONS &/OR LEGEND, SEE SHEET CS-1

THIS PLAN ACCURATE FOR CONSTRUCTION AREA SIGN WORK ONLY

CS-10

STATE OF CALIFORNIA - DEPARTMENT OF TRANSPORTATION
Caltrans TRAFFIC

FUNCTIONAL SUPERVISOR: Jerilyn L. Struven
CALCULATED-DESIGNED BY: SL & RY
CHECKED BY: JS
REVISED BY
DATE REVISED

LAST REVISION 01-09-09
DATE PLOTTED => 31-JUL-2009
TIME PLOTTED => 07:00

Dist	COUNTY	ROUTE	POST MILES TOTAL PROJECT	SHEET No.	TOTAL SHEETS
04	SCI	101	R27.6/40.2	63	173

REGISTERED CIVIL ENGINEER 10/24/08 DATE

5-11-09
PLANS APPROVAL DATE

REGISTERED PROFESSIONAL ENGINEER Jerilyn L. Struven No. 49964 Exp. 12-31-10 CIVIL STATE OF CALIFORNIA

THE STATE OF CALIFORNIA OR ITS OFFICERS OR AGENTS SHALL NOT BE RESPONSIBLE FOR THE ACCURACY OR COMPLETENESS OF SCANNED COPIES OF THIS PLAN SHEET.

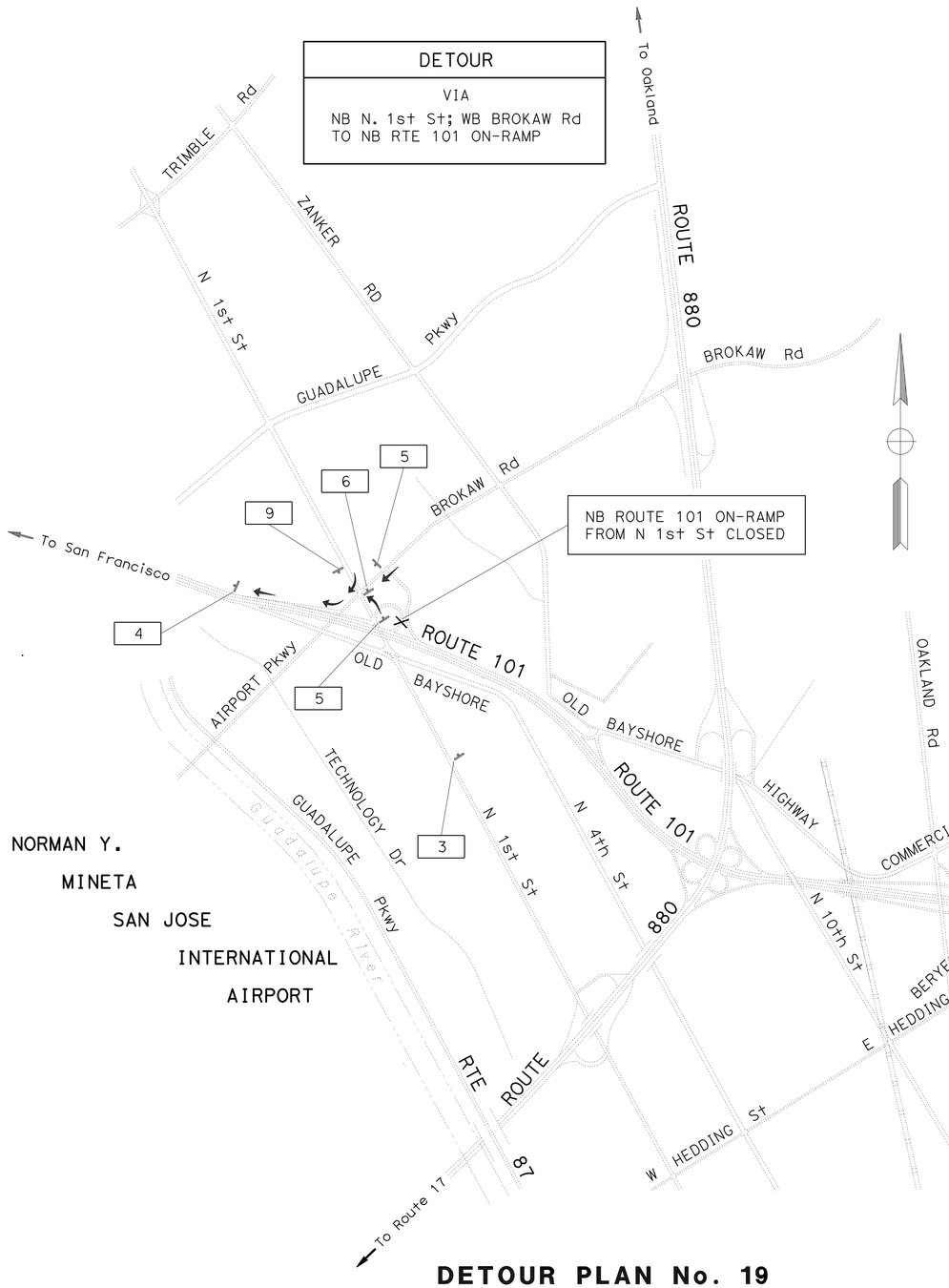

DETOUR PLAN No. 19

NB ROUTE 101 ON-RAMP FROM N. 1st ST CLOSURE

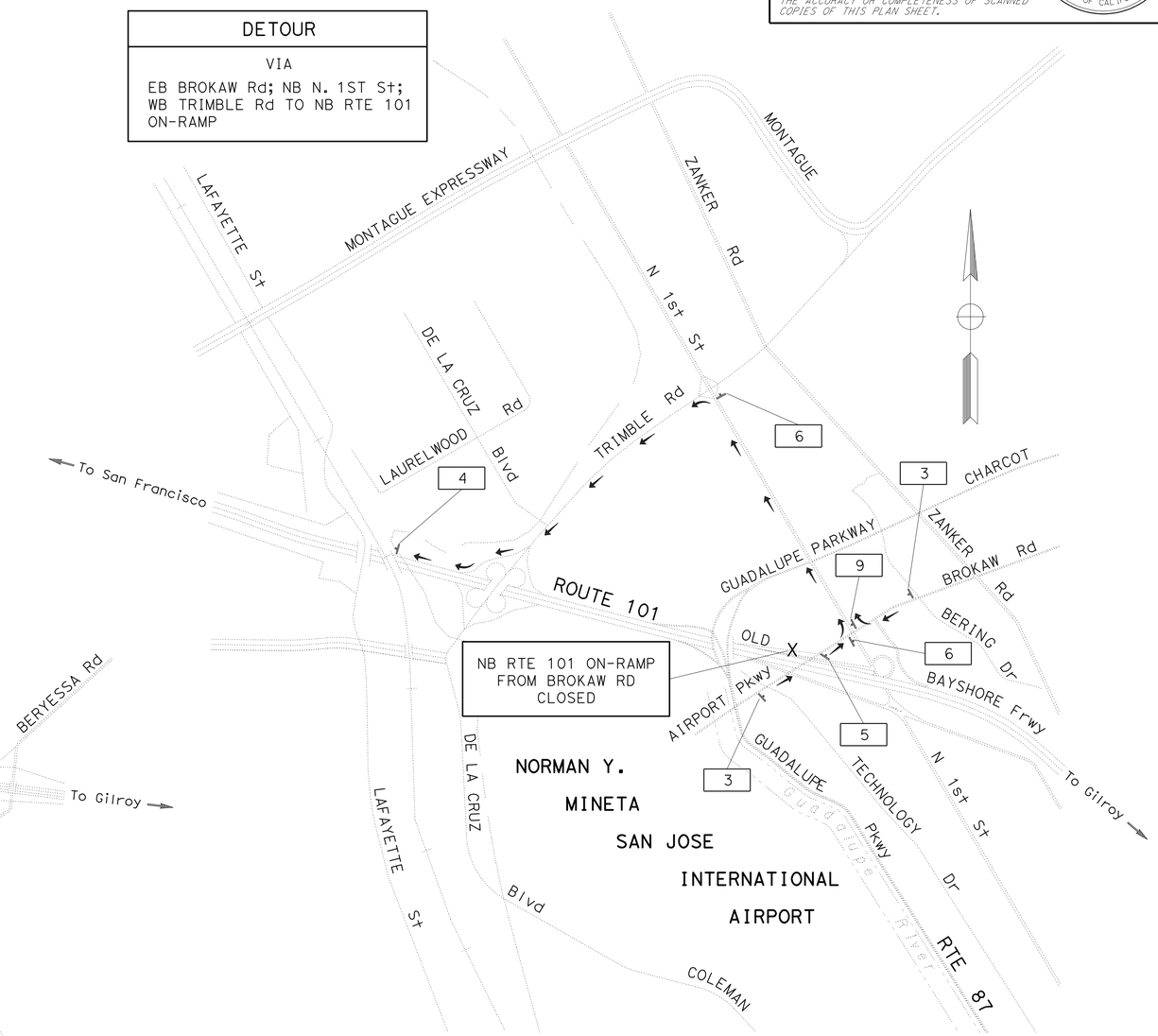

DETOUR PLAN No. 20

NB ROUTE 101 ON-RAMP FROM BROKAW ROAD CLOSURE

CONSTRUCTION AREA SIGNS

NO SCALE

FOR NOTES, ABBREVIATIONS &/OR LEGEND, SEE SHEET CS-1

THIS PLAN ACCURATE FOR CONSTRUCTION AREA SIGN WORK ONLY

CS-11

STATE OF CALIFORNIA - DEPARTMENT OF TRANSPORTATION
Caltrans TRAFFIC

FUNCTIONAL SUPERVISOR: Jerilyn L. Struven
CALCULATED-DESIGNED BY: SL & RY
CHECKED BY: JS
REVISED BY
DATE REVISED

LAST REVISION 01-09-09 | DATE PLOTTED => 31-JUL-2009 | TIME PLOTTED => 07:00

Dist	COUNTY	ROUTE	POST MILES TOTAL PROJECT	SHEET No.	TOTAL SHEETS
04	SCI	101	R27.6/40.2	64	173

REGISTERED CIVIL ENGINEER 10/24/08 DATE

5-11-09
PLANS APPROVAL DATE

REGISTERED PROFESSIONAL ENGINEER Jerilyn L. Struven No. 49964 Exp. 12-31-10 CIVIL STATE OF CALIFORNIA

THE STATE OF CALIFORNIA OR ITS OFFICERS OR AGENTS SHALL NOT BE RESPONSIBLE FOR THE ACCURACY OR COMPLETENESS OF SCANNED COPIES OF THIS PLAN SHEET.

DETOUR

VIA

NB GUADALUPE Pkwy; NB N. 1st St; WB TRIMBLE Rd TO NB RTE 101 ON-RAMP

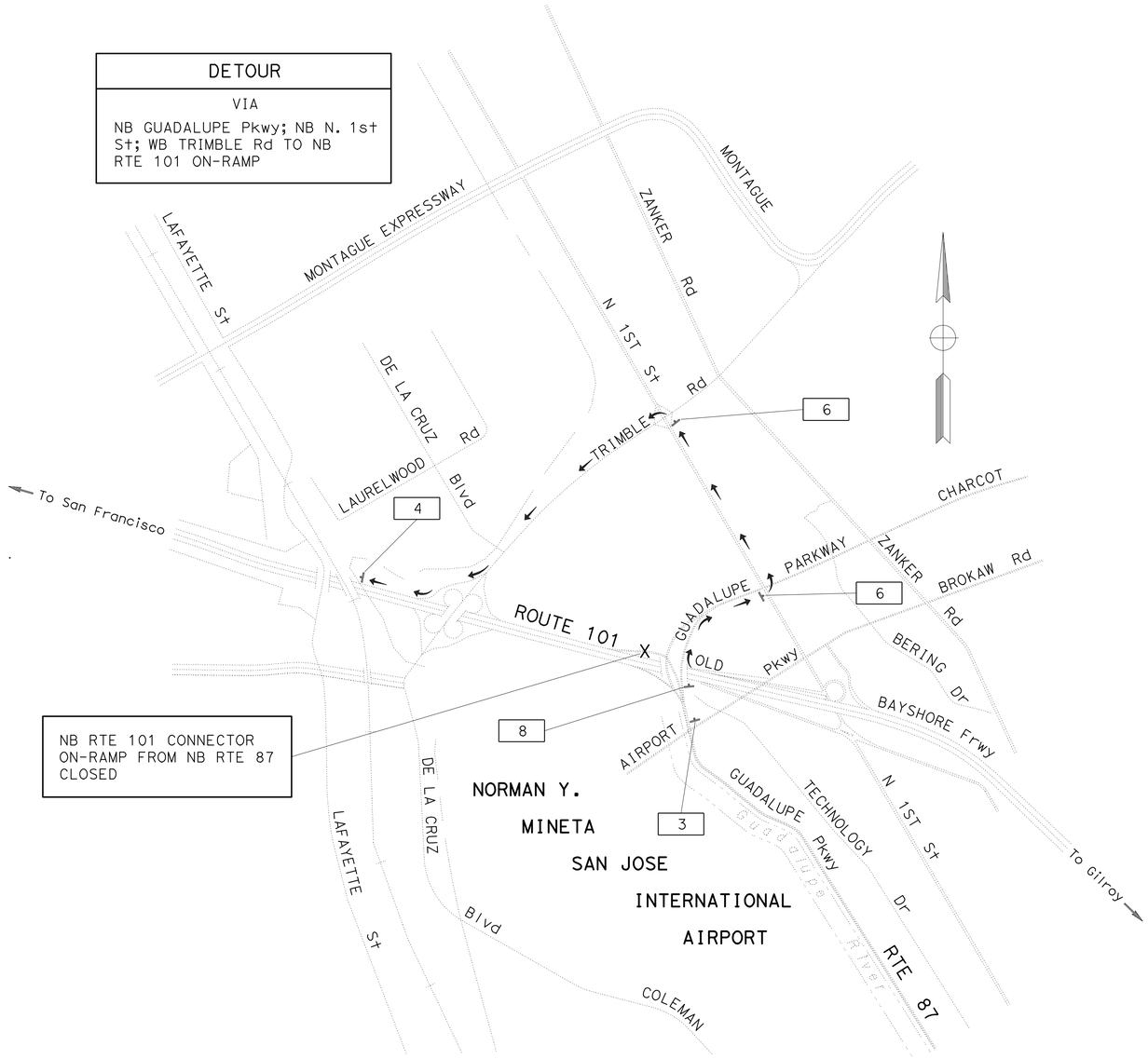

DETOUR PLAN No. 21

NB ROUTE 101 CONNECTOR ON-RAMP FROM NB ROUTE 87 CLOSURE

FOR NOTES, ABBREVIATIONS &/OR LEGEND, SEE SHEET CS-1

THIS PLAN ACCURATE FOR CONSTRUCTION AREA SIGN WORK ONLY

CONSTRUCTION AREA SIGNS

NO SCALE

CS-12

REVISED BY	DATE REVISED

CALCULATED-DESIGNED BY	CHECKED BY
SL & RY	JS

FUNCTIONAL SUPERVISOR: Jerilyn L. Struven

STATE OF CALIFORNIA - DEPARTMENT OF TRANSPORTATION

Caltrans **TRAFFIC**

LAST REVISION 01-09-09 | DATE PLOTTED => 31-JUL-2009 | TIME PLOTTED => 07:00

Dist	COUNTY	ROUTE	POST MILES TOTAL PROJECT	SHEET No.	TOTAL SHEETS
04	SCI	101	R27.6/40.2	65	173

REGISTERED CIVIL ENGINEER 10/24/08 DATE

5-11-09
PLANS APPROVAL DATE

REGISTERED PROFESSIONAL ENGINEER Jerilyn L. Struven No. 49964 Exp. 12-31-10 CIVIL STATE OF CALIFORNIA

THE STATE OF CALIFORNIA OR ITS OFFICERS OR AGENTS SHALL NOT BE RESPONSIBLE FOR THE ACCURACY OR COMPLETENESS OF SCANNED COPIES OF THIS PLAN SHEET.

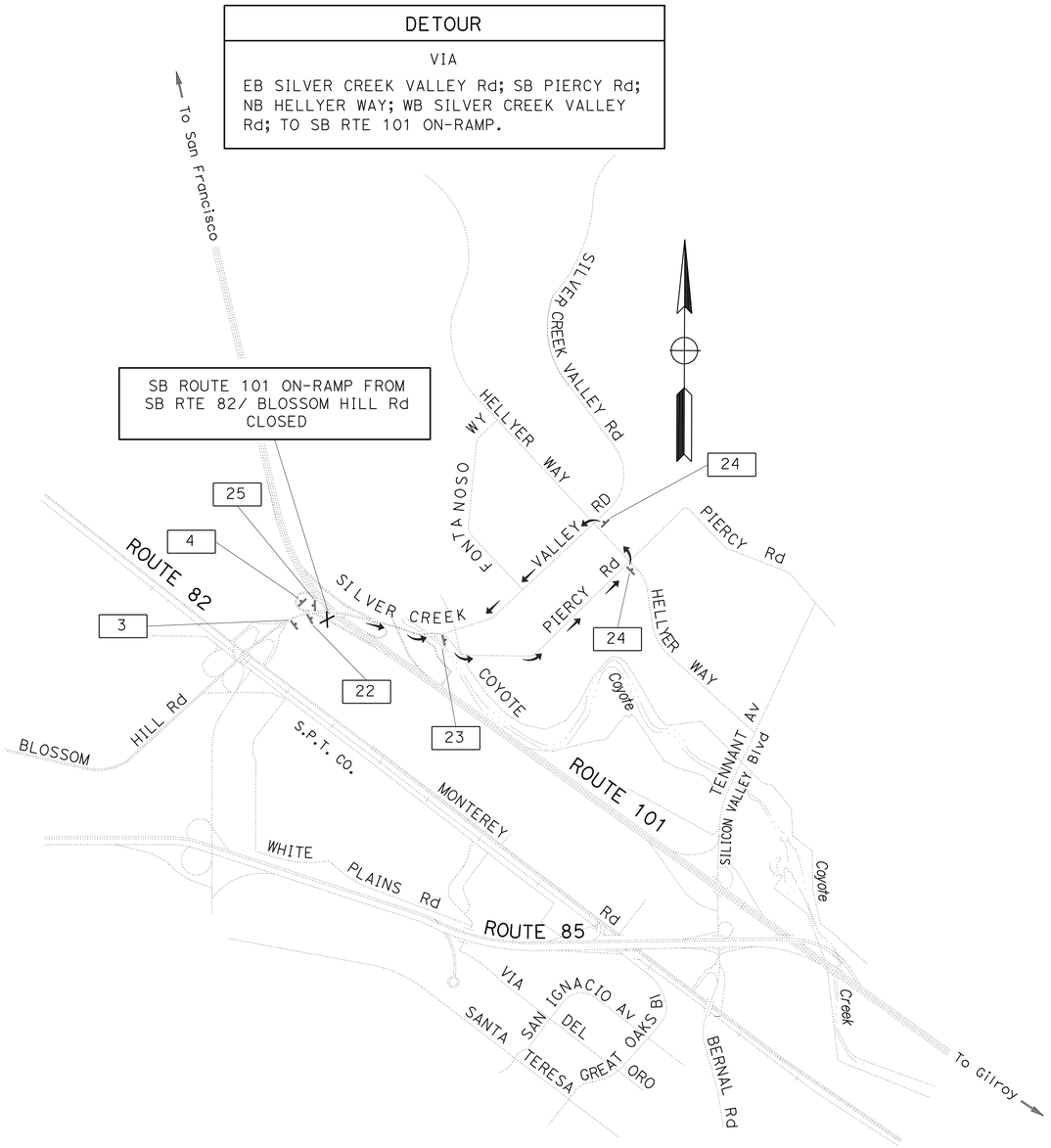

DETOUR PLAN No. 22

SB ROUTE 101 ON-RAMP FROM SB RTE 82/ BLOSSOM HILL ROAD CLOSURE

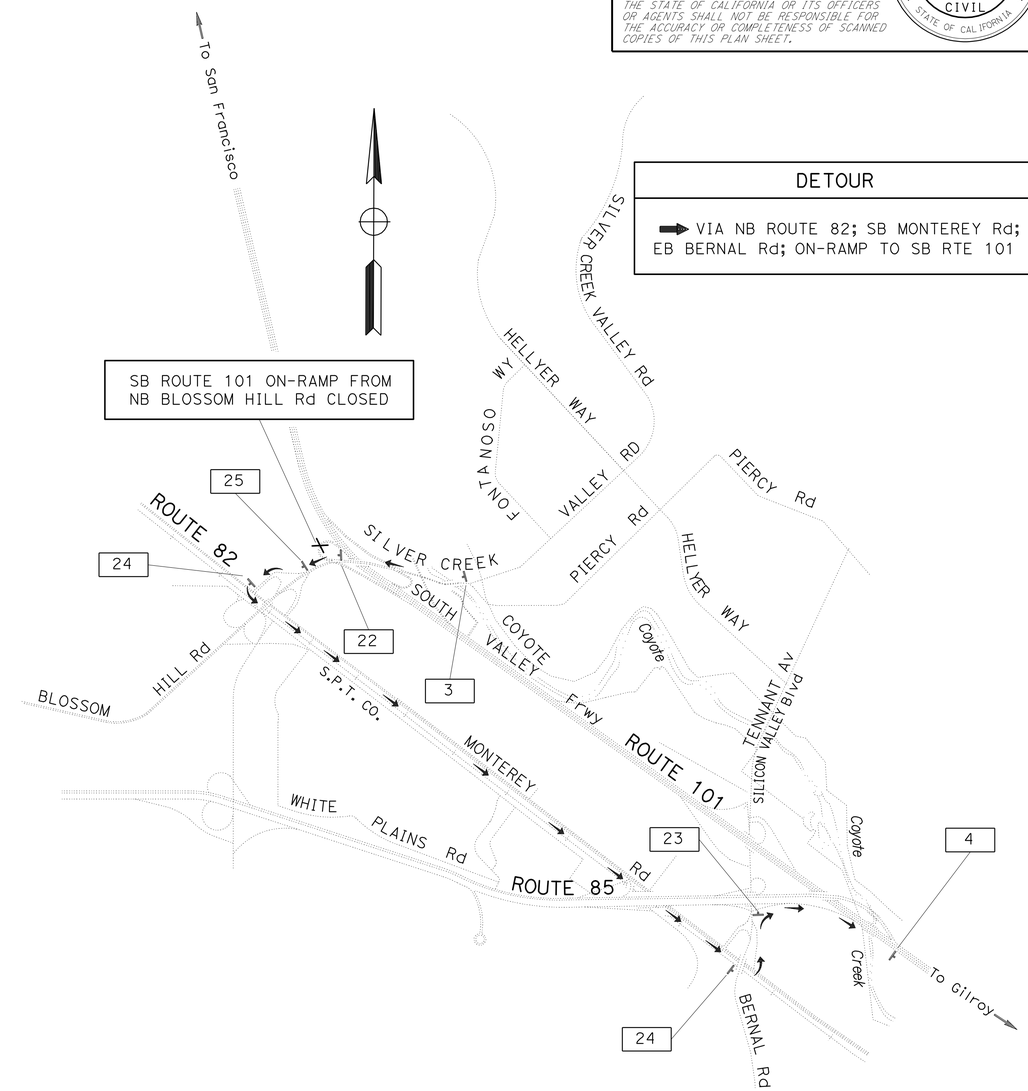

DETOUR PLAN No. 23

SB ROUTE 101 ON-RAMP FROM NB BLOSSOM HILL ROAD CLOSURE

CONSTRUCTION AREA SIGNS

NO SCALE

FOR NOTES, ABBREVIATIONS &/OR LEGEND, SEE SHEET CS-1

THIS PLAN ACCURATE FOR CONSTRUCTION AREA SIGN WORK ONLY

CS-13

STATE OF CALIFORNIA - DEPARTMENT OF TRANSPORTATION
Caltrans
TRAFFIC

FUNCTIONAL SUPERVISOR: Jerilyn L. Struven
CALCULATED-DESIGNED BY: RY
CHECKED BY: JS
REVISED BY
DATE REVISED

LAST REVISION 01-09-09
DATE PLOTTED => 31-JUL-2009
TIME PLOTTED => 07:00

Dist	COUNTY	ROUTE	POST MILES TOTAL PROJECT	SHEET No.	TOTAL SHEETS
04	SCI	101	R27.6/40.2	66	173

REGISTERED CIVIL ENGINEER 10/24/08 DATE

5-11-09
PLANS APPROVAL DATE

REGISTERED PROFESSIONAL ENGINEER Jerilyn L. Struven No. 49964 Exp. 12-31-10 CIVIL STATE OF CALIFORNIA

THE STATE OF CALIFORNIA OR ITS OFFICERS OR AGENTS SHALL NOT BE RESPONSIBLE FOR THE ACCURACY OR COMPLETENESS OF SCANNED COPIES OF THIS PLAN SHEET.

DETOUR

➡ VIA NB YERBA BUENA RD; ON-RAMP TO NB ROUTE 101; OFF TO WB CAPITOL EXPWY LOOP RAMP; WB CAPITOL EXPWY TO LOOP ON-RAMP TO SB ROUTE 101

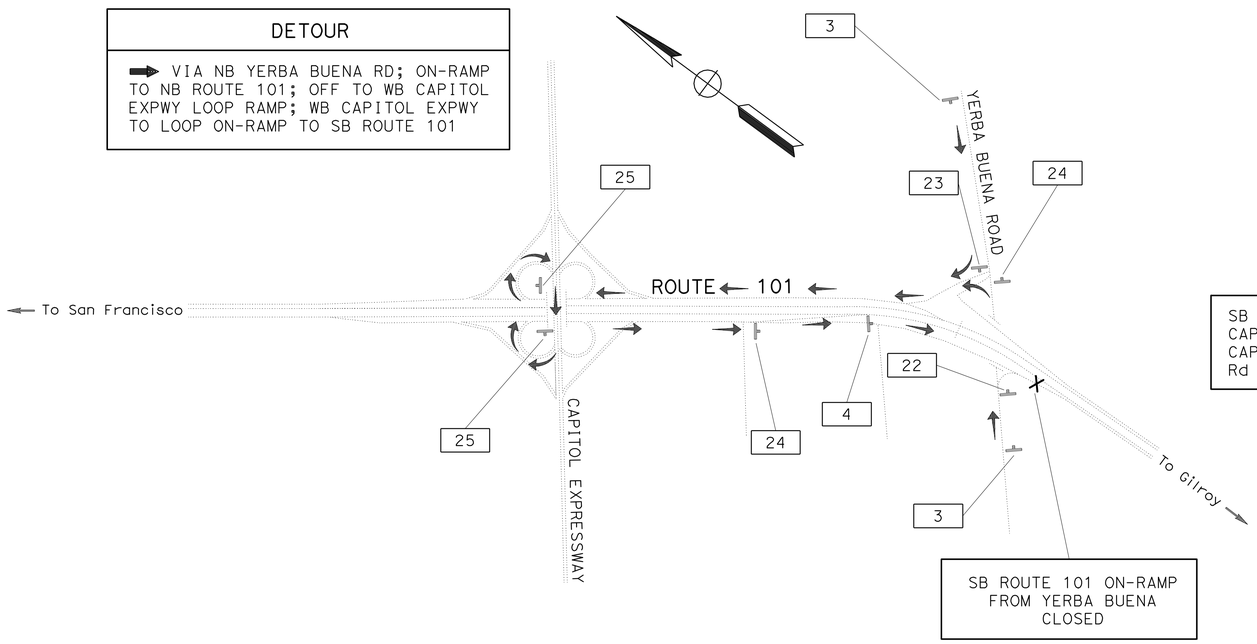

DETOUR

➡ VIA WB CAPITOL Expwy; LOOP ON-RAMP TO SB 101; LOOP OFF-RAMP TO EB CAPITOL Expwy; EB CAPITOL Expwy; SB SILVER CREEK Rd; WB YERBA BUENA Rd; ON-RAMP TO SB 101

* WHEN CLOSING THE COLLECTOR, PLACE DETOUR SIGN FOR YERBA BUENA Rd OFF-RAMP TO HELLYER Ave OFF-RAMP AT UPSTREAM LOCATION

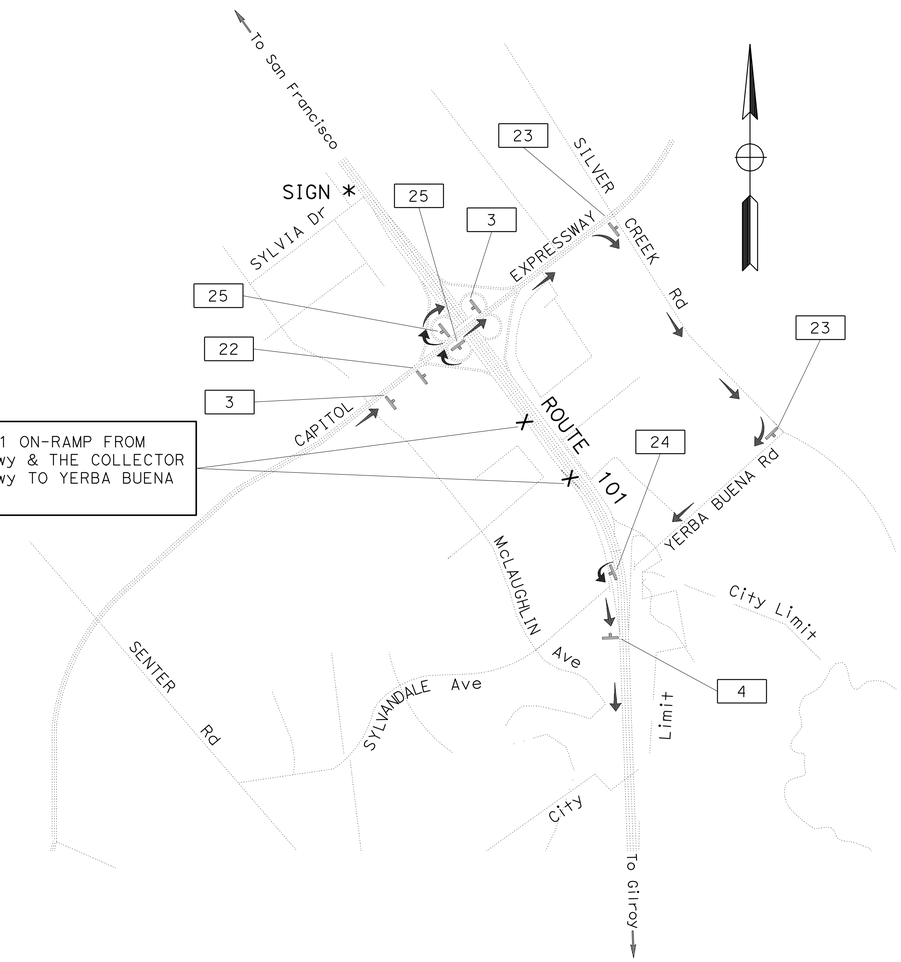

DETOUR PLAN No. 24

SB ROUTE 101 ON-RAMP FROM YERBA BUENA ROAD CLOSED

DETOUR PLAN No. 25

SB ROUTE 101 ON-RAMP FROM CAPITOL EXPWY & THE COLLECTOR CAPITOL EXPWY TO YERBA BUENA RD CLOSURE

CONSTRUCTION AREA SIGNS

NO SCALE

FOR NOTES, ABBREVIATIONS &/OR LEGEND, SEE SHEET CS-1

THIS PLAN ACCURATE FOR CONSTRUCTION AREA SIGN WORK ONLY

CS-14

REVISED BY	DATE REVISED
RY	JS

CALCULATED-DESIGNED BY
CHECKED BY

FUNCTIONAL SUPERVISOR
Jerilyn L. Struven

STATE OF CALIFORNIA - DEPARTMENT OF TRANSPORTATION
Caltrans
TRAFFIC

LAST REVISION 01-08-09
DATE PLOTTED => 31-JUL-2009
TIME PLOTTED => 07:00

Dist	COUNTY	ROUTE	POST MILES TOTAL PROJECT	SHEET No.	TOTAL SHEETS
04	SCI	101	R27.6/40.2	67	173

REGISTERED CIVIL ENGINEER 10/24/08 DATE

5-11-09
PLANS APPROVAL DATE

REGISTERED PROFESSIONAL ENGINEER Jerilyn L. Struven No. 49964 Exp. 12-31-10 CIVIL STATE OF CALIFORNIA

THE STATE OF CALIFORNIA OR ITS OFFICERS OR AGENTS SHALL NOT BE RESPONSIBLE FOR THE ACCURACY OR COMPLETENESS OF SCANNED COPIES OF THIS PLAN SHEET.

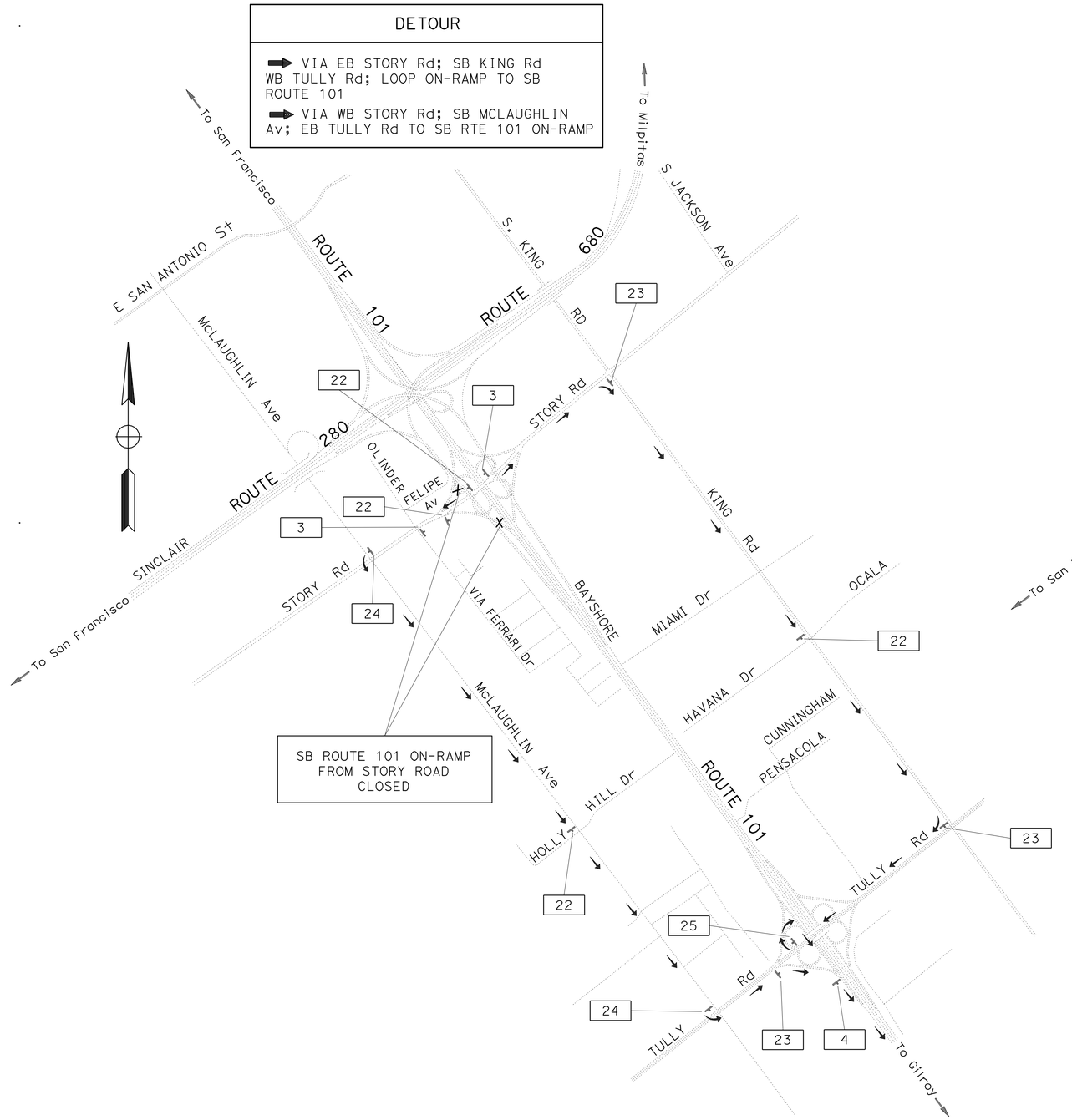

DETOUR PLAN No. 26
SB ROUTE 101 ON-RAMP FROM STORY ROAD CLOSURE

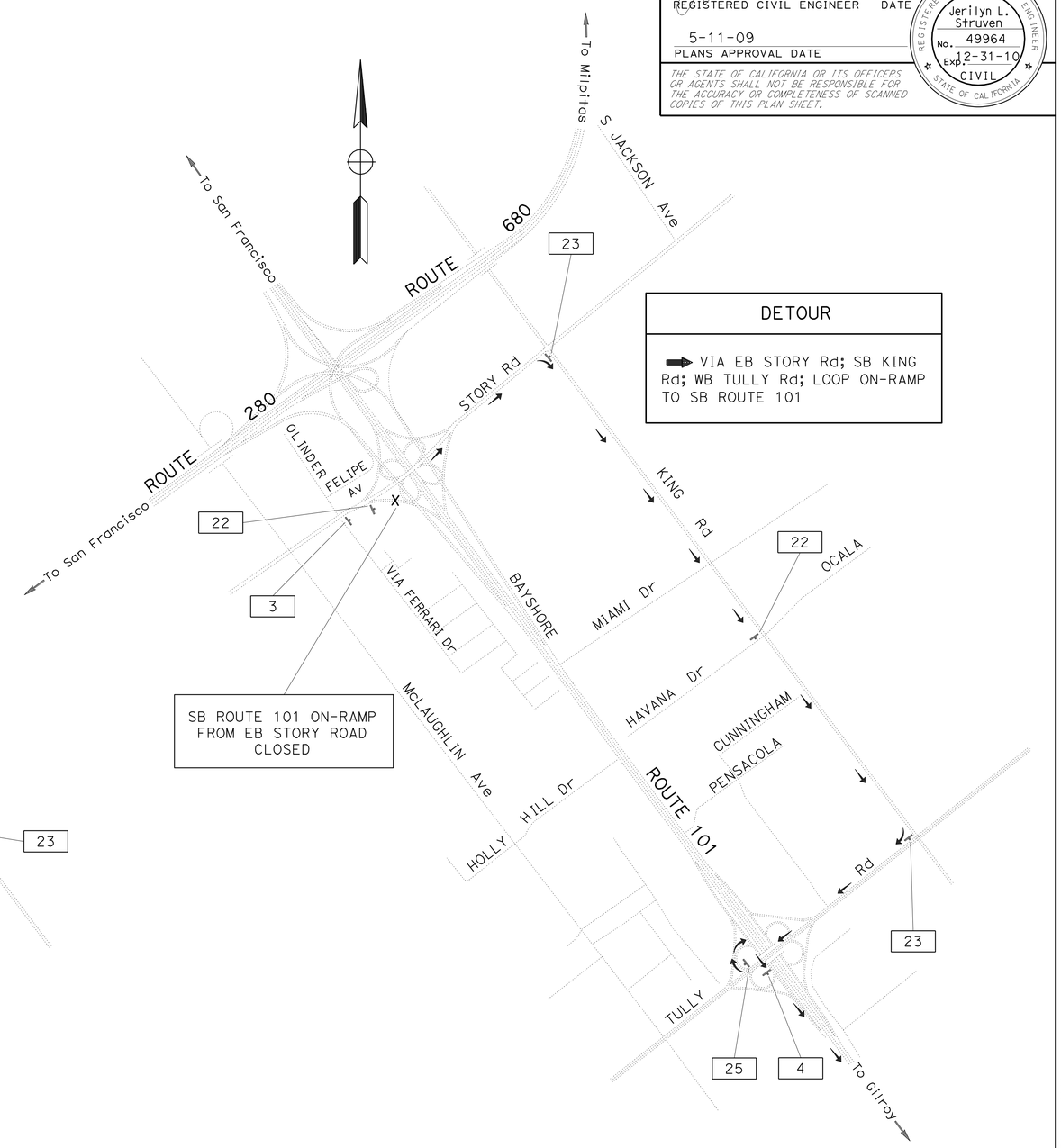

DETOUR PLAN No. 27
SB ROUTE 101 ON-RAMP FROM EB STORY ROAD CLOSURE

CONSTRUCTION AREA SIGNS

NO SCALE

FOR NOTES, ABBREVIATIONS &/OR LEGEND, SEE SHEET CS-1

THIS PLAN ACCURATE FOR CONSTRUCTION AREA SIGN WORK ONLY

CS-15

STATE OF CALIFORNIA - DEPARTMENT OF TRANSPORTATION
Caltrans
TRAFFIC

FUNCTIONAL SUPERVISOR: Jerilyn L. Struven
CALCULATED-DESIGNED BY: RY
CHECKED BY: JS
REVISED BY
DATE REVISED

LAST REVISION 01-08-09 | DATE PLOTTED => 31-JUL-2009 | TIME PLOTTED => 07:00

Dist	COUNTY	ROUTE	POST MILES TOTAL PROJECT	SHEET No.	TOTAL SHEETS
04	SCI	101	R27.6/40.2	68	173

REGISTERED CIVIL ENGINEER 10/24/08 DATE

5-11-09
PLANS APPROVAL DATE

REGISTERED PROFESSIONAL ENGINEER Jerilyn L. Struven No. 49964 Exp. 12-31-10 CIVIL STATE OF CALIFORNIA

THE STATE OF CALIFORNIA OR ITS OFFICERS OR AGENTS SHALL NOT BE RESPONSIBLE FOR THE ACCURACY OR COMPLETENESS OF SCANNED COPIES OF THIS PLAN SHEET.

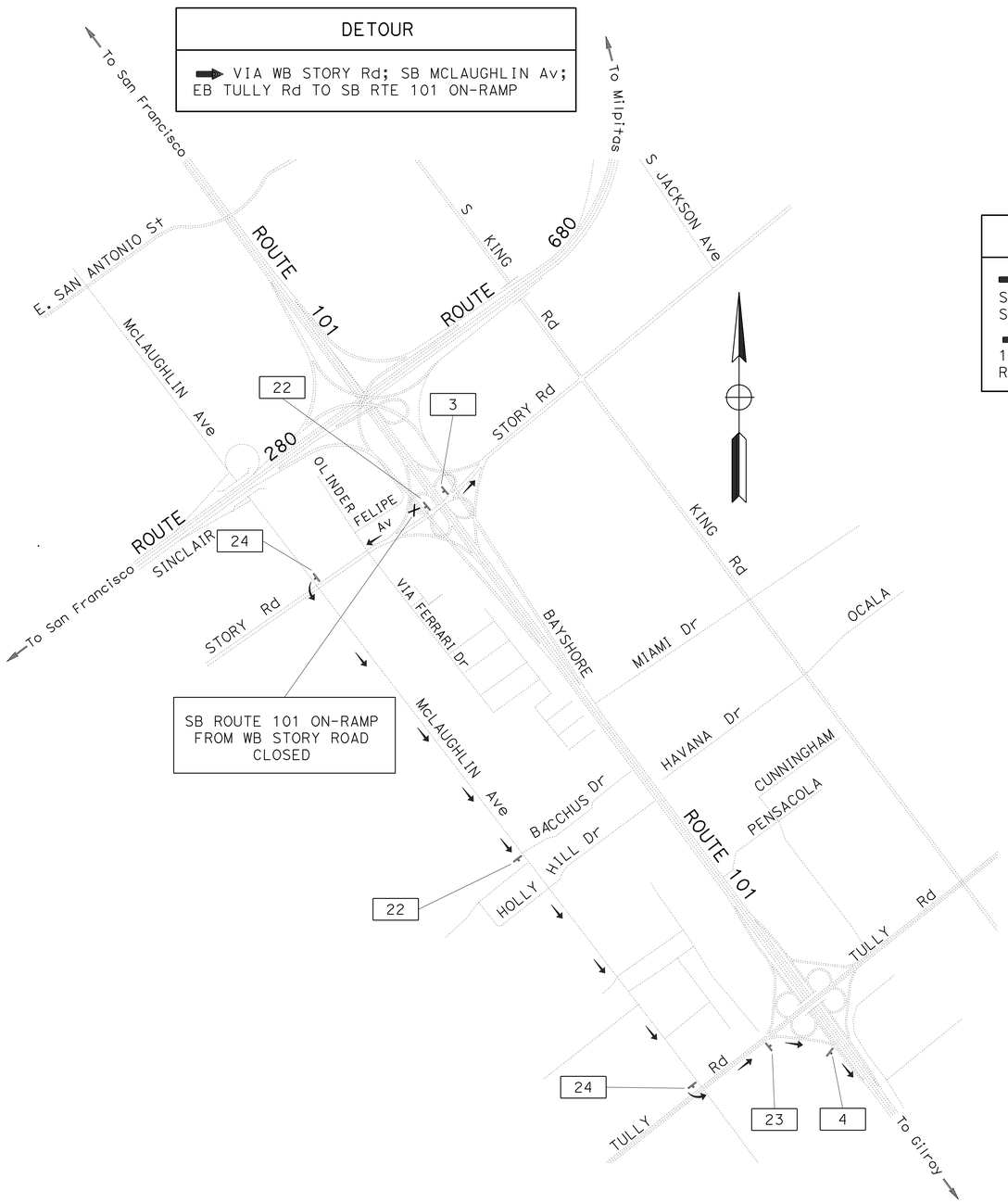

DETOUR PLAN No. 28

SB ROUTE 101 ON-RAMP FROM WB STORY ROAD CLOSURE

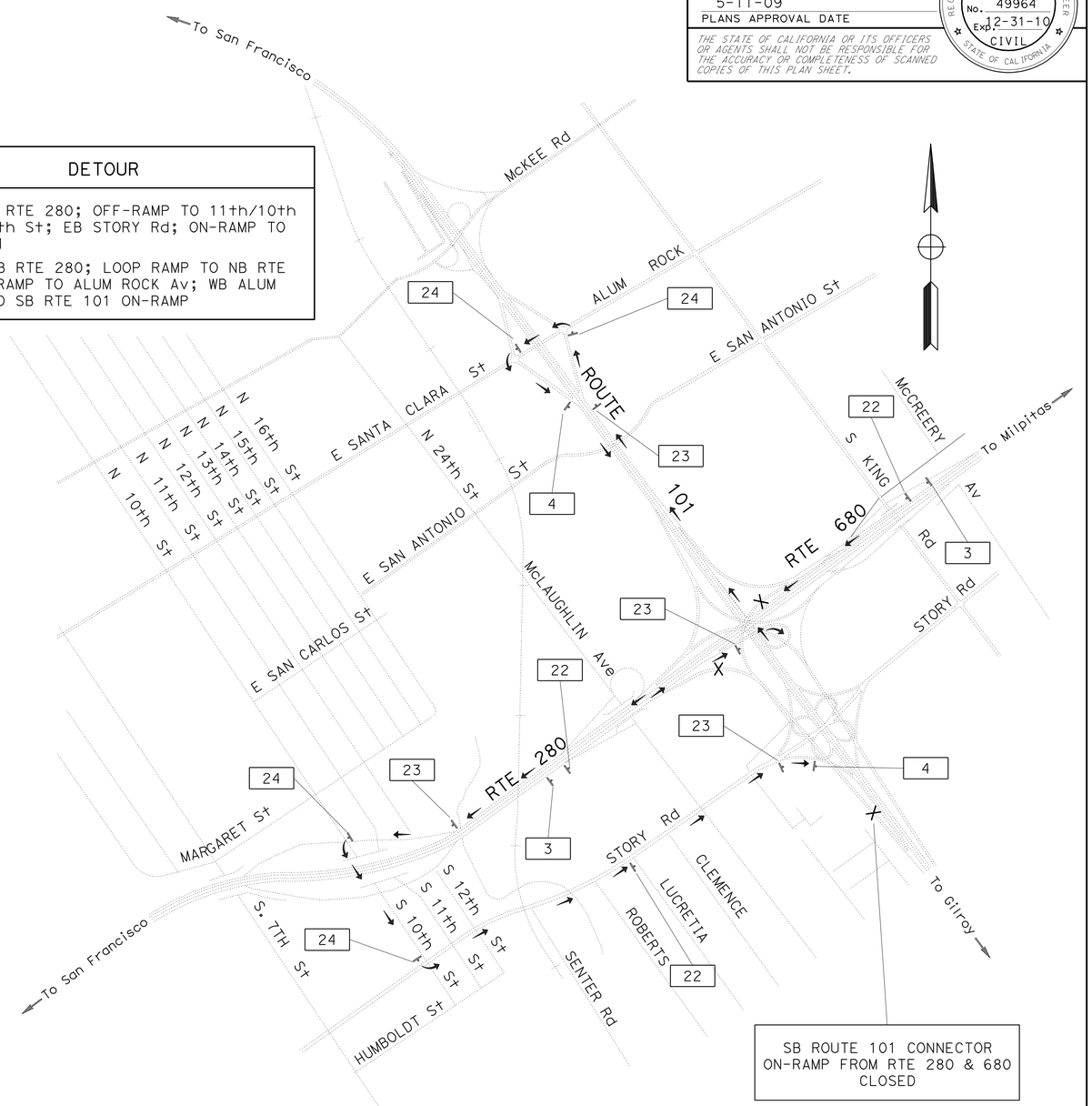

DETOUR PLAN No. 29

SB ROUTE 101 CONNECTOR ON-RAMP FRPM ROUTE 280 & 680 CLOSURE

CONSTRUCTION AREA SIGNS

NO SCALE

FOR NOTES, ABBREVIATIONS &/OR LEGEND, SEE SHEET CS-1

THIS PLAN ACCURATE FOR CONSTRUCTION AREA SIGN WORK ONLY

CS-16

STATE OF CALIFORNIA - DEPARTMENT OF TRANSPORTATION
Caltrans TRAFFIC
FUNCTIONAL SUPERVISOR Jerilyn L. Struven
CALCULATED-DESIGNED BY RY
CHECKED BY JS
REVISED BY
DATE REVISED

LAST REVISION 01-08-09
DATE PLOTTED => 31-JUL-2009
TIME PLOTTED => 07:01

Dist	COUNTY	ROUTE	POST MILES TOTAL PROJECT	SHEET No.	TOTAL SHEETS
04	SCI	101	R27.6/40.2	69	173

REGISTERED CIVIL ENGINEER 10/24/08 DATE

5-11-09
PLANS APPROVAL DATE

REGISTERED PROFESSIONAL ENGINEER Jerilyn L. Struven No. 49964 Exp. 12-31-10 CIVIL STATE OF CALIFORNIA

THE STATE OF CALIFORNIA OR ITS OFFICERS OR AGENTS SHALL NOT BE RESPONSIBLE FOR THE ACCURACY OR COMPLETENESS OF SCANNED COPIES OF THIS PLAN SHEET.

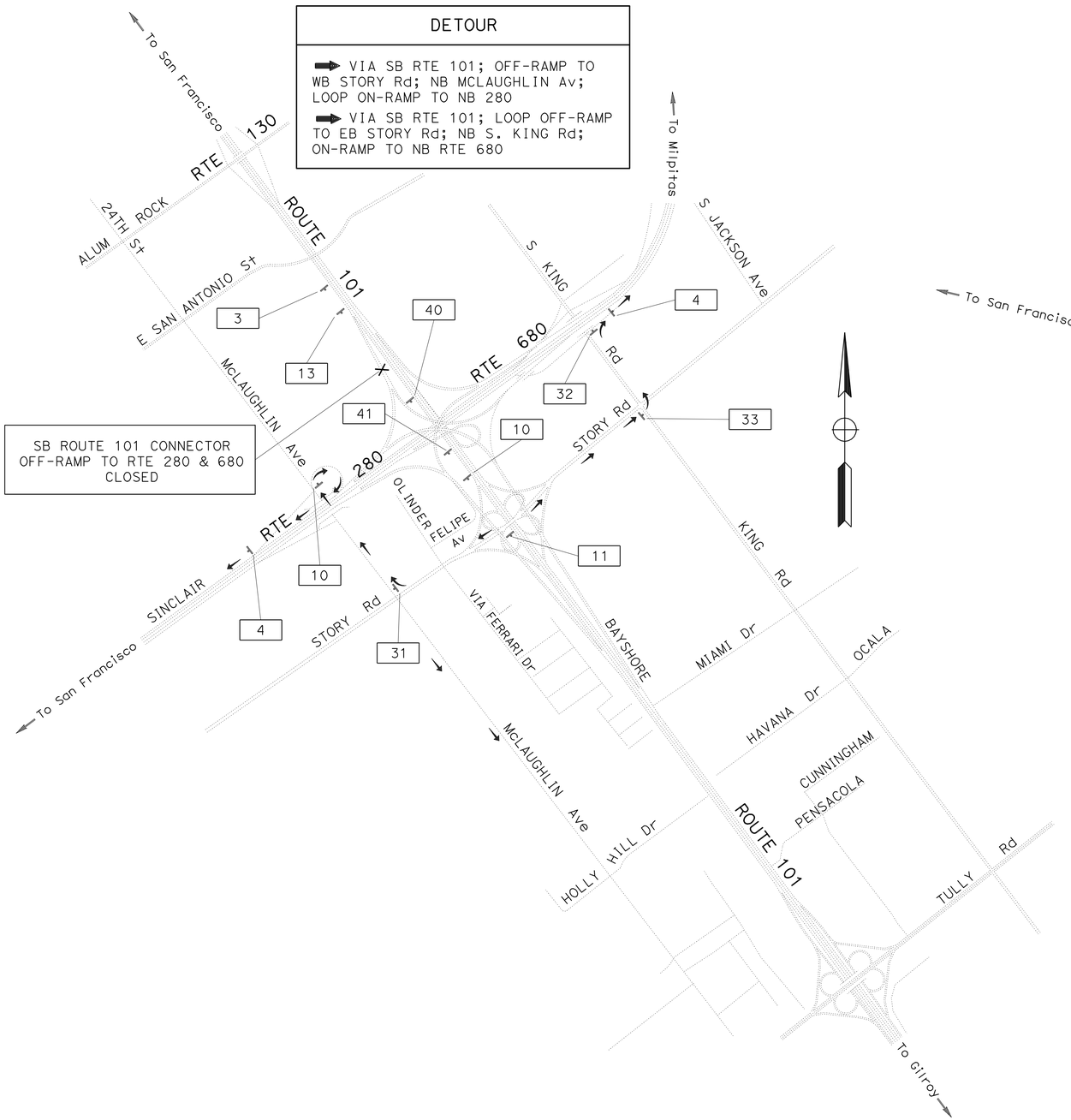

DETOUR PLAN No. 30

SB ROUTE 101 CONNECTOR OFF-RAMP TO RTE 280 & 680 CLOSURE

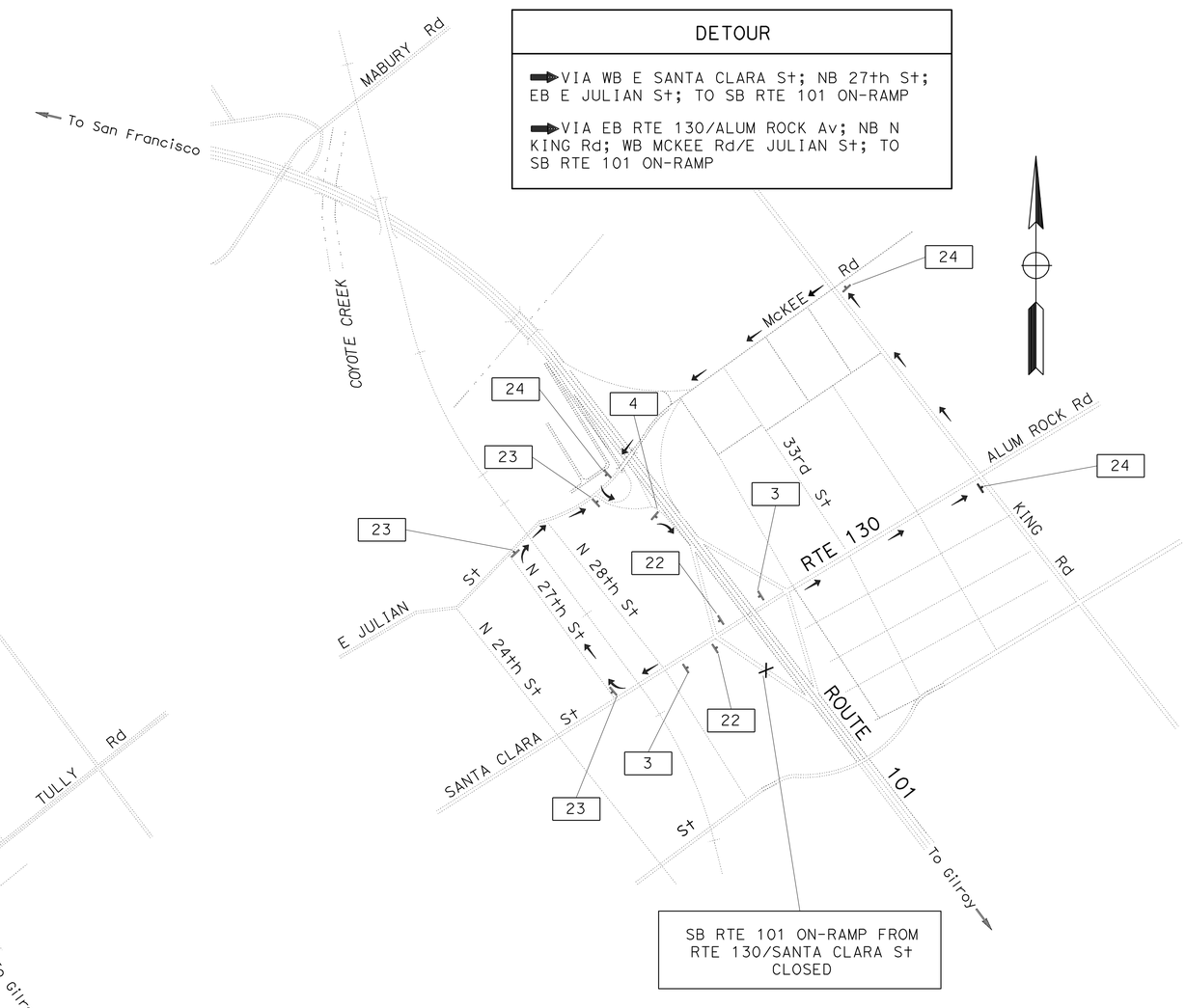

DETOUR PLAN No. 31

SB ROUTE 101 ON-RAMP FROM RTE 130/ALUM ROCK AVE CLOSURE

CONSTRUCTION AREA SIGNS

NO SCALE

FOR NOTES, ABBREVIATIONS &/OR LEGEND, SEE SHEET CS-1

THIS PLAN ACCURATE FOR CONSTRUCTION AREA SIGN WORK ONLY

CS-17

STATE OF CALIFORNIA - DEPARTMENT OF TRANSPORTATION
Caltrans TRAFFIC
FUNCTIONAL SUPERVISOR: Jerilyn L. Struven
CALCULATED-DESIGNED BY: RY
CHECKED BY: JS
REVISED BY
DATE REVISED

LAST REVISION 01-09-09 | DATE PLOTTED => 31-JUL-2009 | TIME PLOTTED => 07:01

Dist	COUNTY	ROUTE	POST MILES TOTAL PROJECT	SHEET No.	TOTAL SHEETS
04	SCI	101	R27.6/40.2	70	173

REGISTERED CIVIL ENGINEER 10/24/08 DATE

5-11-09
PLANS APPROVAL DATE

REGISTERED PROFESSIONAL ENGINEER Jerilyn L. Struven No. 49964 Exp. 12-31-08 CIVIL STATE OF CALIFORNIA

THE STATE OF CALIFORNIA OR ITS OFFICERS OR AGENTS SHALL NOT BE RESPONSIBLE FOR THE ACCURACY OR COMPLETENESS OF SCANNED COPIES OF THIS PLAN SHEET.

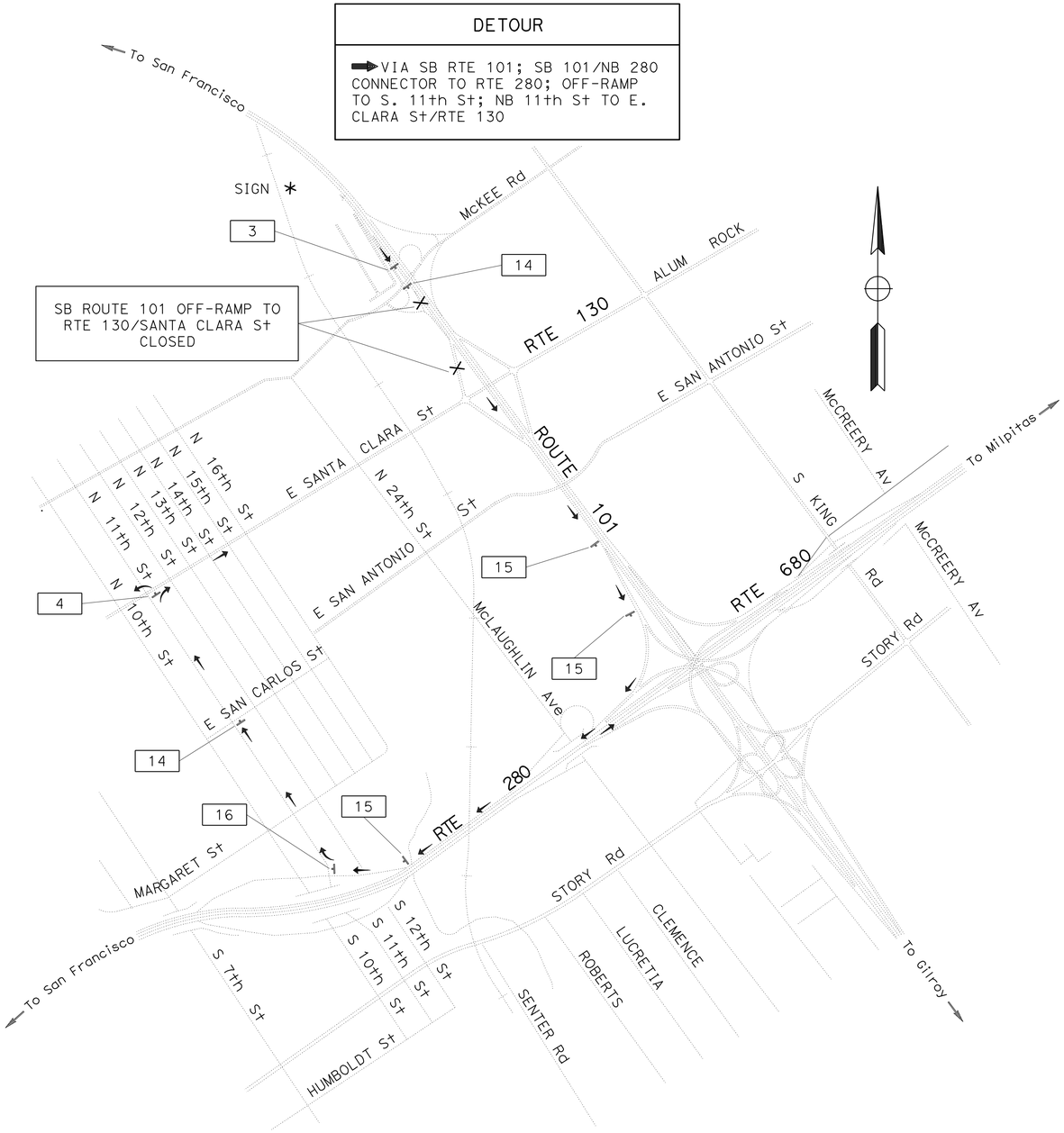

DETOUR PLAN No. 32

SB ROUTE 101 OFF-RAMP TO RTE 130/SANTA CLARA ST CLOSURE

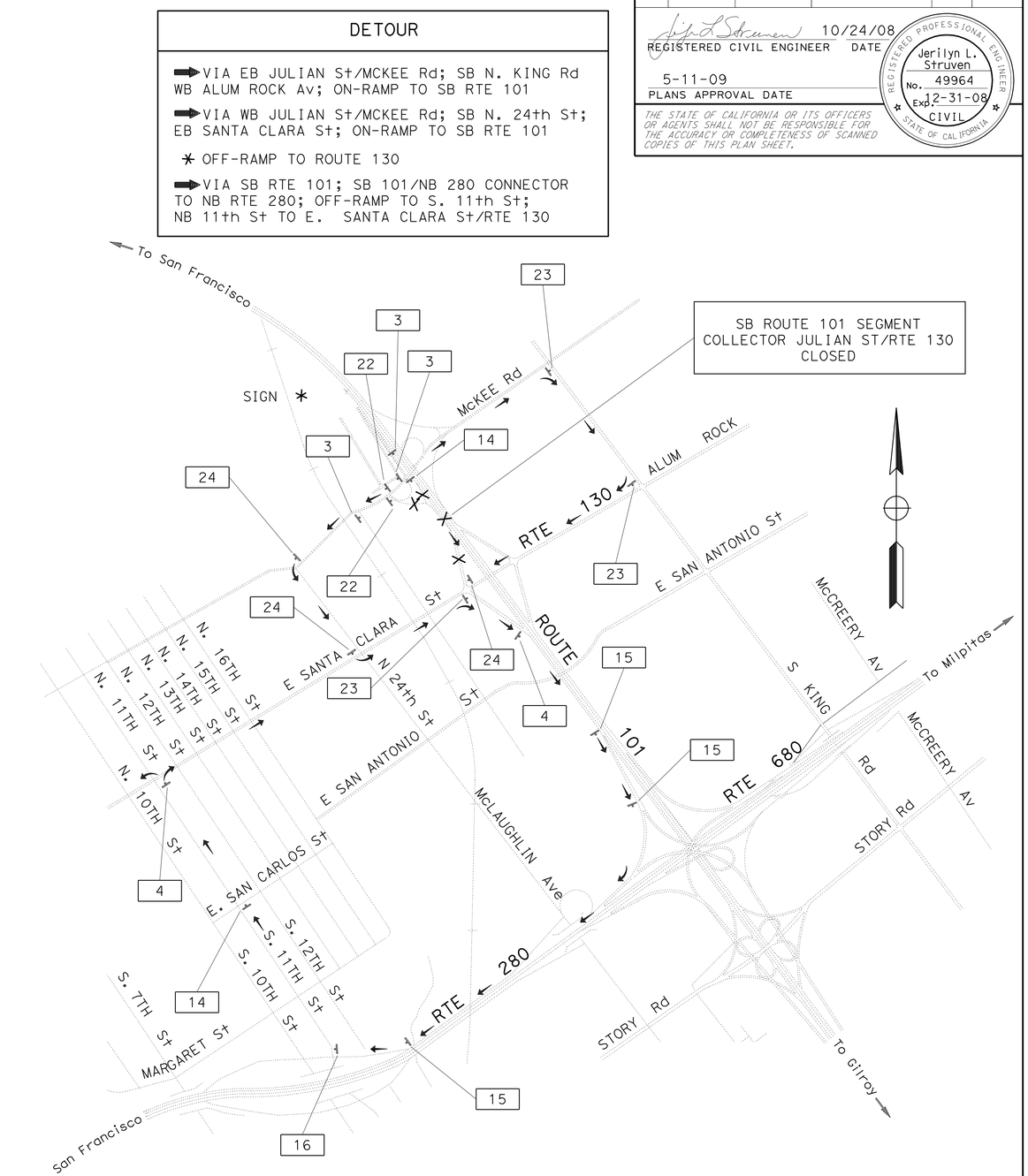

DETOUR PLAN No. 33

SB ROUTE 101 SEGMENT COLLECTOR JULIAN ST/RTE 130 CLOSURE

CONSTRUCTION AREA SIGNS

NO SCALE

FOR NOTES, ABBREVIATIONS &/OR LEGEND, SEE SHEET CS-1

THIS PLAN ACCURATE FOR CONSTRUCTION AREA SIGN WORK ONLY

CS-18

STATE OF CALIFORNIA - DEPARTMENT OF TRANSPORTATION
Caltrans
TRAFFIC

FUNCTIONAL SUPERVISOR: Jerilyn L. Struven
CALCULATED-DESIGNED BY: RY
CHECKED BY: JS
REVISED BY
DATE REVISED

LAST REVISION 10-30-08
DATE PLOTTED => 31-JUL-2009
TIME PLOTTED => 07:01

Dist	COUNTY	ROUTE	POST MILES TOTAL PROJECT	SHEET No.	TOTAL SHEETS
04	SCI	101	R27.6/40.2	71	173

REGISTERED CIVIL ENGINEER 10/24/08 DATE

5-11-09
PLANS APPROVAL DATE

REGISTERED PROFESSIONAL ENGINEER Jerilyn L. Struven No. 49964 Exp. 12-31-10 CIVIL STATE OF CALIFORNIA

THE STATE OF CALIFORNIA OR ITS OFFICERS OR AGENTS SHALL NOT BE RESPONSIBLE FOR THE ACCURACY OR COMPLETENESS OF SCANNED COPIES OF THIS PLAN SHEET.

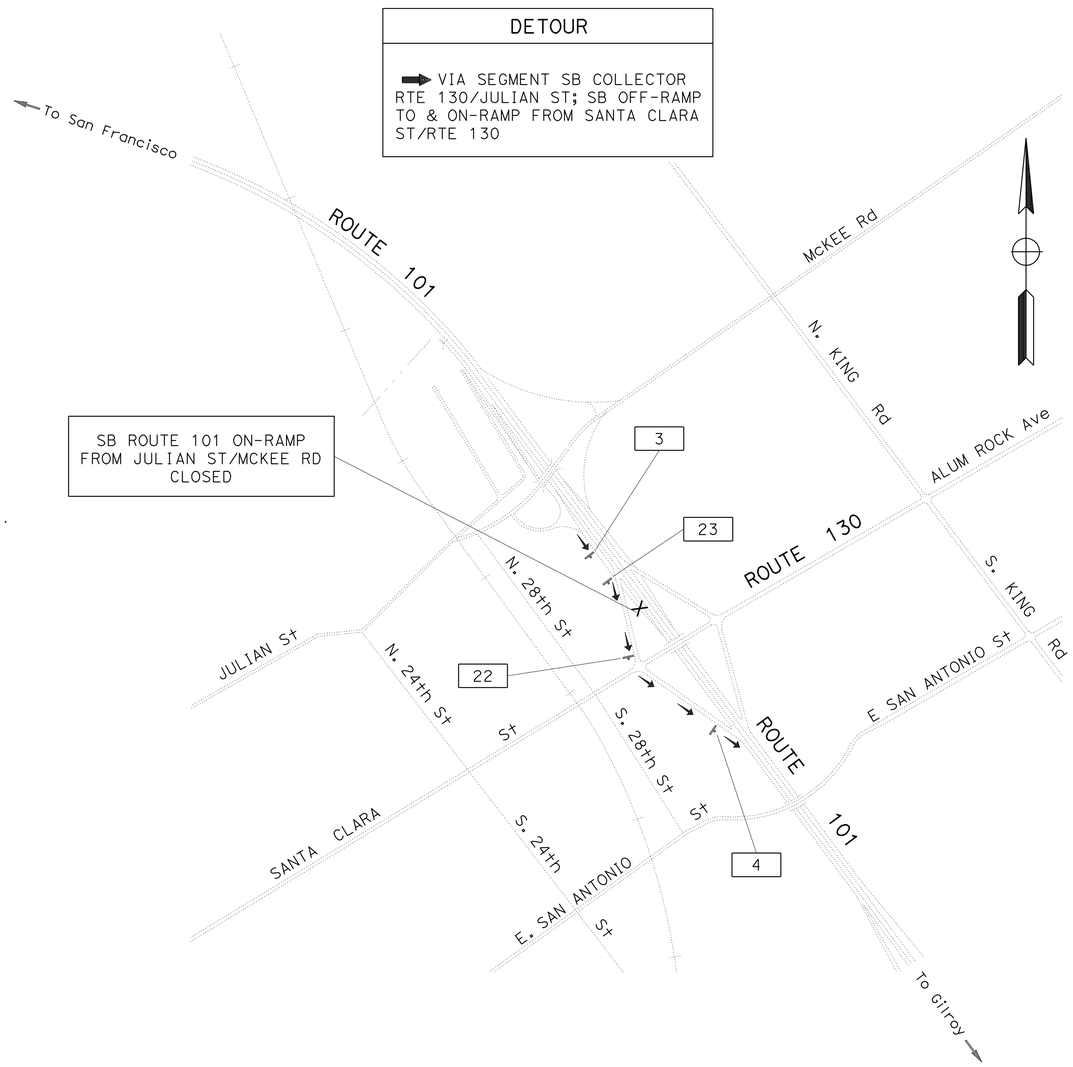

DETOUR PLAN No. 34

SB ROUTE 101 ON-RAMP FROM JULIAN ST/MCKEE RD CLOSURE

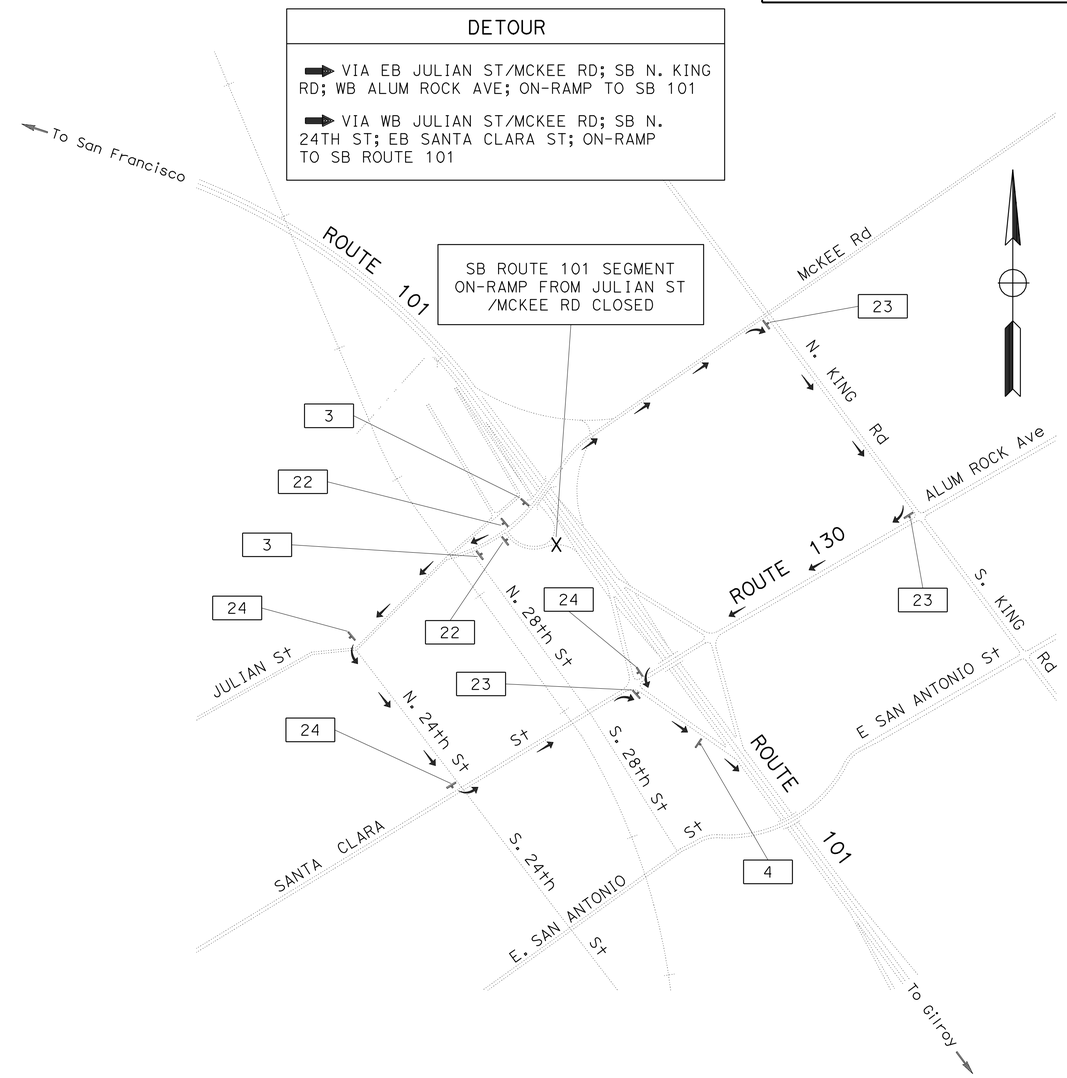

DETOUR PLAN No. 35

SB ROUTE 101 SEGMENT ON-RAMP FROM JULIAN ST/MCKEE RD CLOSURE

CONSTRUCTION AREA SIGNS

NO SCALE

FOR NOTES, ABBREVIATIONS &/OR LEGEND, SEE SHEET CS-1

THIS PLAN ACCURATE FOR CONSTRUCTION AREA SIGN WORK ONLY

CS-19

STATE OF CALIFORNIA - DEPARTMENT OF TRANSPORTATION
Caltrans TRAFFIC

FUNCTIONAL SUPERVISOR: Jerilyn L. Struven
CALCULATED-DESIGNED BY: RY
CHECKED BY: JS
REVISED BY
DATE REVISED

LAST REVISION 01-09-09 | DATE PLOTTED => 31-JUL-2009 | TIME PLOTTED => 07:01

Dist	COUNTY	ROUTE	POST MILES TOTAL PROJECT	SHEET No.	TOTAL SHEETS
04	SCI	101	R27.6/40.2	72	173

REGISTERED CIVIL ENGINEER DATE 10/24/08

PLANS APPROVAL DATE 5-11-09

REGISTERED PROFESSIONAL ENGINEER Jerilyn L. Struven No. 49964 Exp. 12-31-10 CIVIL STATE OF CALIFORNIA

THE STATE OF CALIFORNIA OR ITS OFFICERS OR AGENTS SHALL NOT BE RESPONSIBLE FOR THE ACCURACY OR COMPLETENESS OF SCANNED COPIES OF THIS PLAN SHEET.

DETOUR

➡ VIA NB RTE 101 ON-RAMP; NB RTE 101 TO SB RTE 880 LOOP OFF-RAMP; SB RTE 880 LOOP ON-RAMP TO SB RTE 101

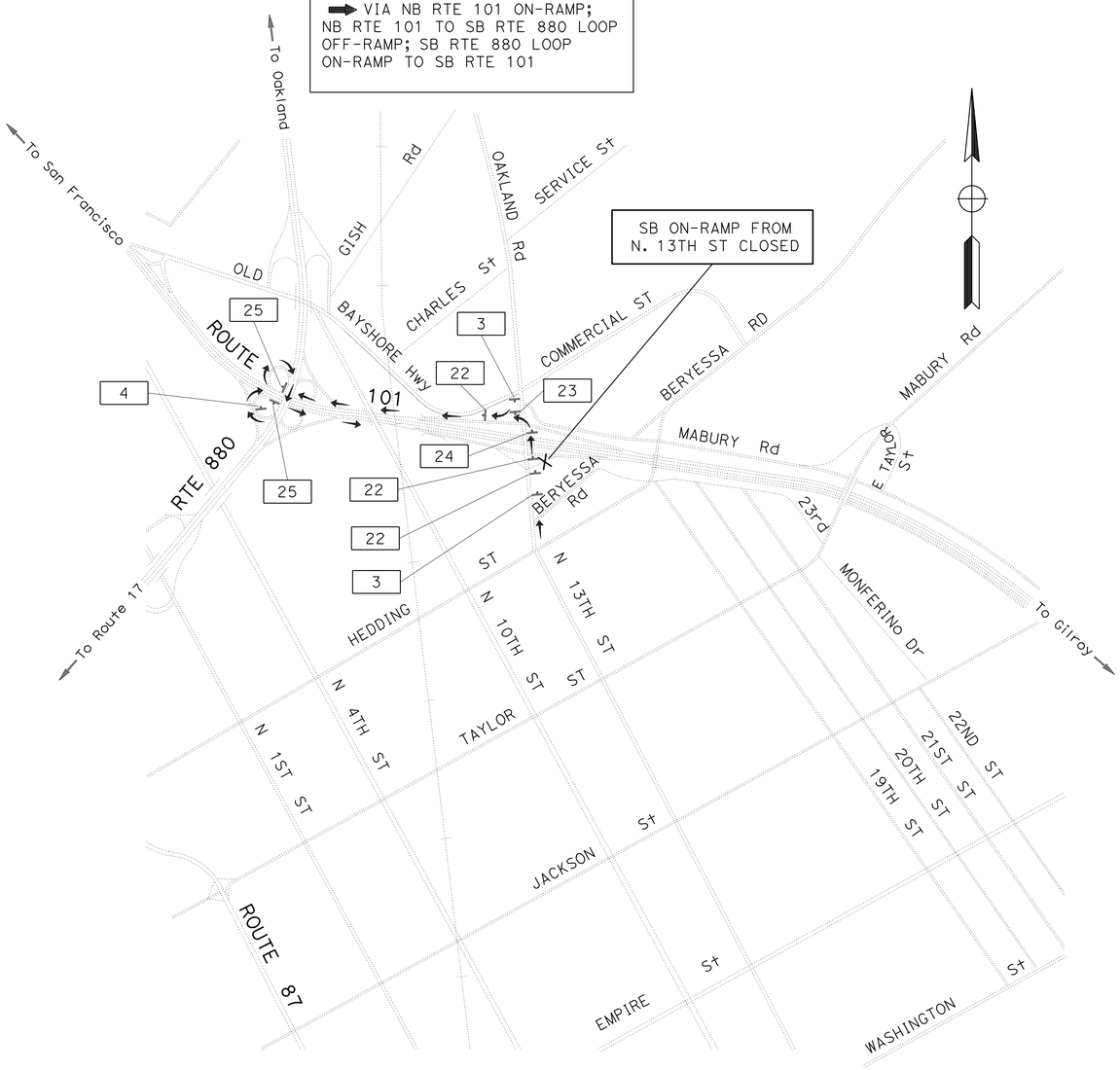

DETOUR PLAN No. 36

SB ROUTE 101 ON-RAMP FROM N. 13TH ST CLOSURE

DETOUR

➡ VIA NB RTE 880 LOOP OFF-RAMP TO NB RTE 101; LOOP OFF-RAMP TO SB RTE 880; LOOP OFF-RAMP TO SB RTE 101

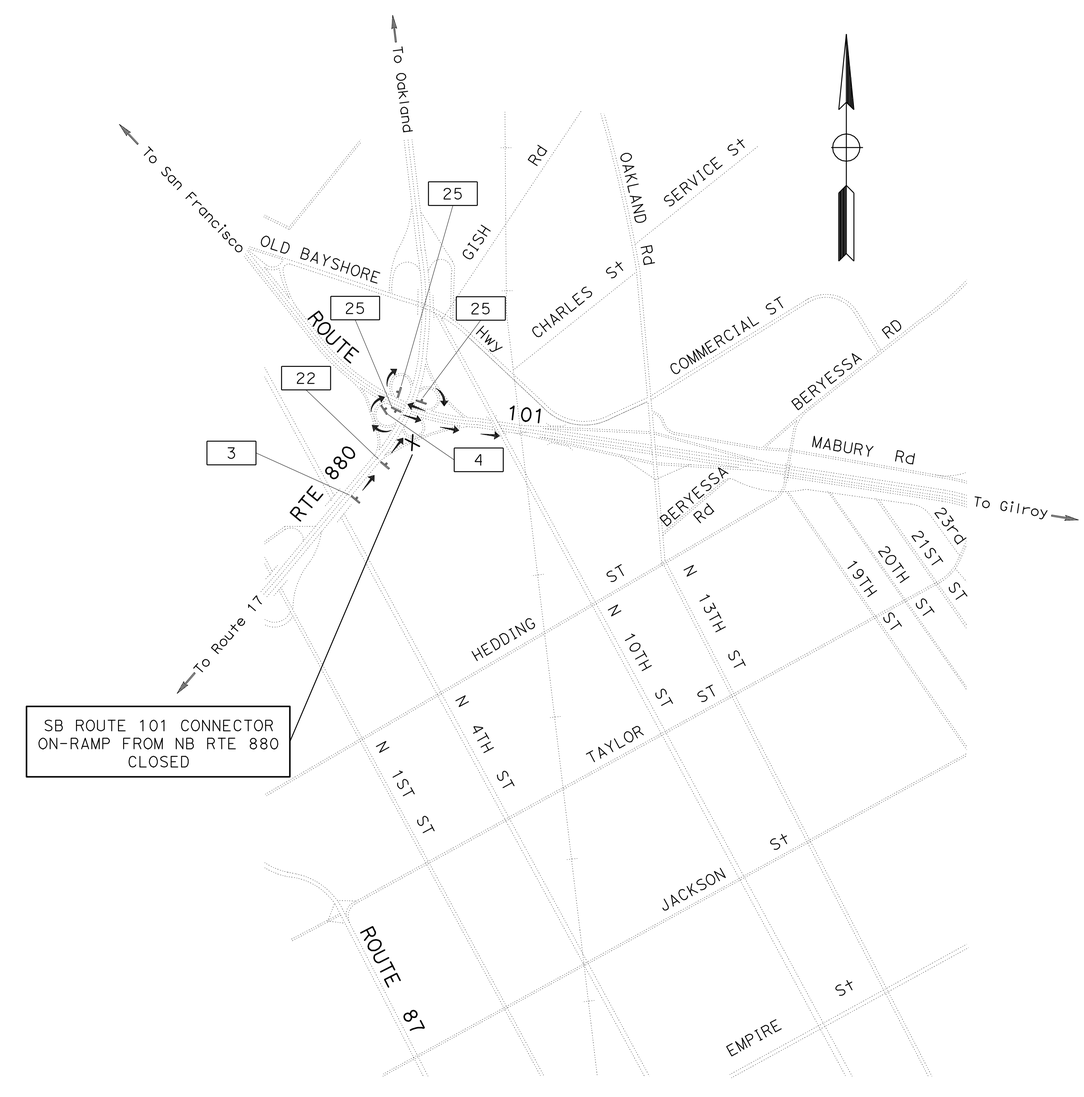

DETOUR PLAN No. 37

SB ROUTE 101 CONNECTOR ON-RAMP FROM NB ROUTE 880 CLOSURE

CONSTRUCTION AREA SIGNS

NO SCALE

FOR NOTES, ABBREVIATIONS &/OR LEGEND, SEE SHEET CS-1

THIS PLAN ACCURATE FOR CONSTRUCTION AREA SIGN WORK ONLY

CS-20

STATE OF CALIFORNIA - DEPARTMENT OF TRANSPORTATION

Caltrans **TRAFFIC**

FUNCTIONAL SUPERVISOR: Jerilyn L. Struven

CALCULATED-DESIGNED BY: RY | CHECKED BY: JS | REVISED BY | DATE REVISED

LAST REVISION 01-09-09 | DATE PLOTTED => 31-JUL-2009 | TIME PLOTTED => 07:01

Dist	COUNTY	ROUTE	POST MILES TOTAL PROJECT	SHEET No.	TOTAL SHEETS
04	SCI	101	R27.6/40.2	73	173

REGISTERED CIVIL ENGINEER 10/24/08 DATE

5-11-09
PLANS APPROVAL DATE

REGISTERED PROFESSIONAL ENGINEER Jerilyn L. Struven No. 49964 Exp. 12-31-10 CIVIL STATE OF CALIFORNIA

THE STATE OF CALIFORNIA OR ITS OFFICERS OR AGENTS SHALL NOT BE RESPONSIBLE FOR THE ACCURACY OR COMPLETENESS OF SCANNED COPIES OF THIS PLAN SHEET.

DETOUR

VIA

SB RTE 101 TO SB OFF-RAMP TO OAKLAND RD; NB OAKLAND RD; ON-RAMP TO NB RTE 101; NB RTE 101 TO NB RTE 880 CONNECTOR

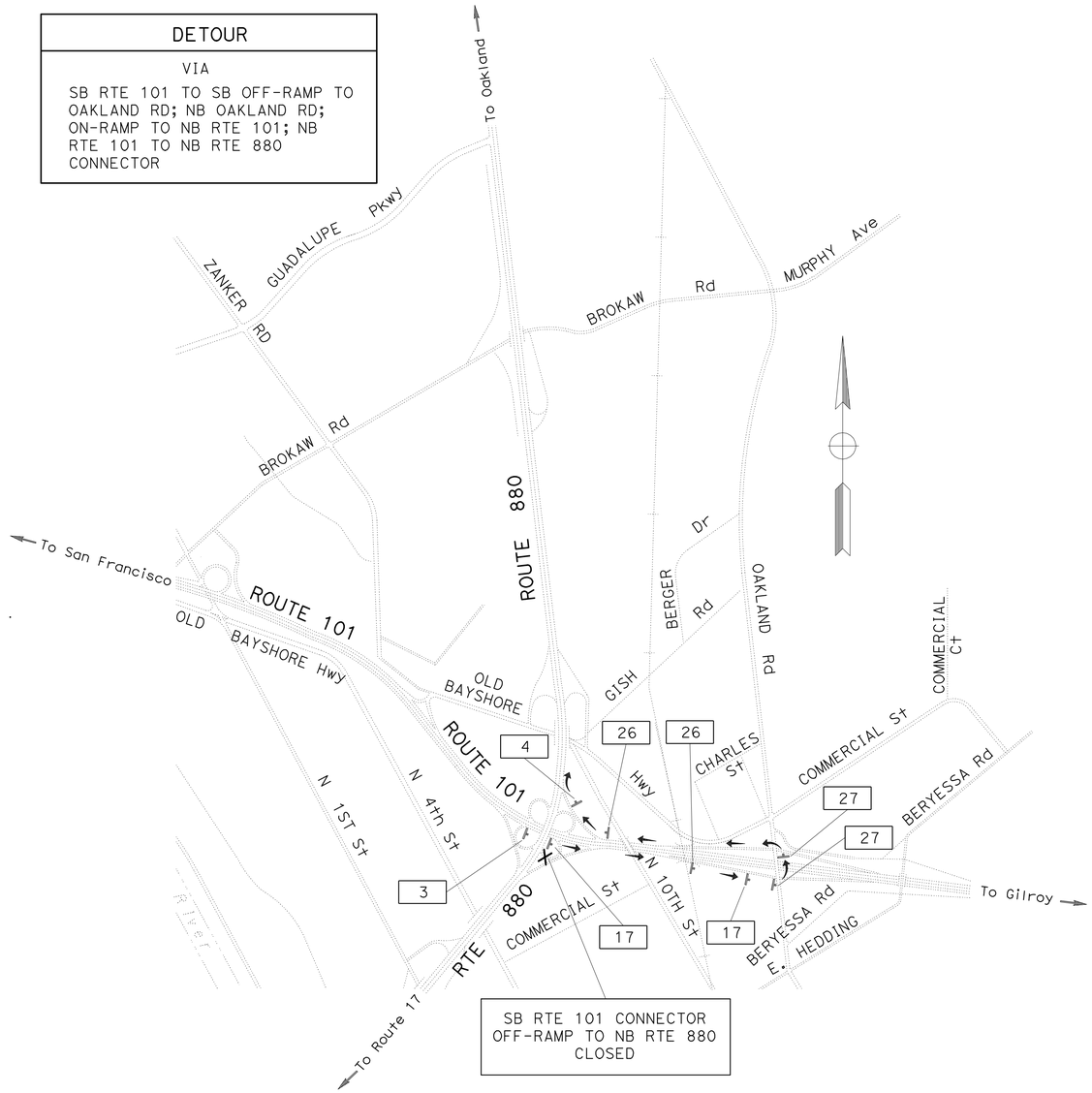

DETOUR PLAN No. 38

SB ROUTE 101 CONNECTOR OFF-RAMP TO NB RTE 880 CLOSURE

DETOUR

VIA

SB RTE 880 TO N. 1ST ST OFF-RAMP; SB N. 1ST ST TO NB 880 LOOP ON-RAMP; NB RTE 880 TO CONNECTOR OFF-RAMP TO SB RTE 101

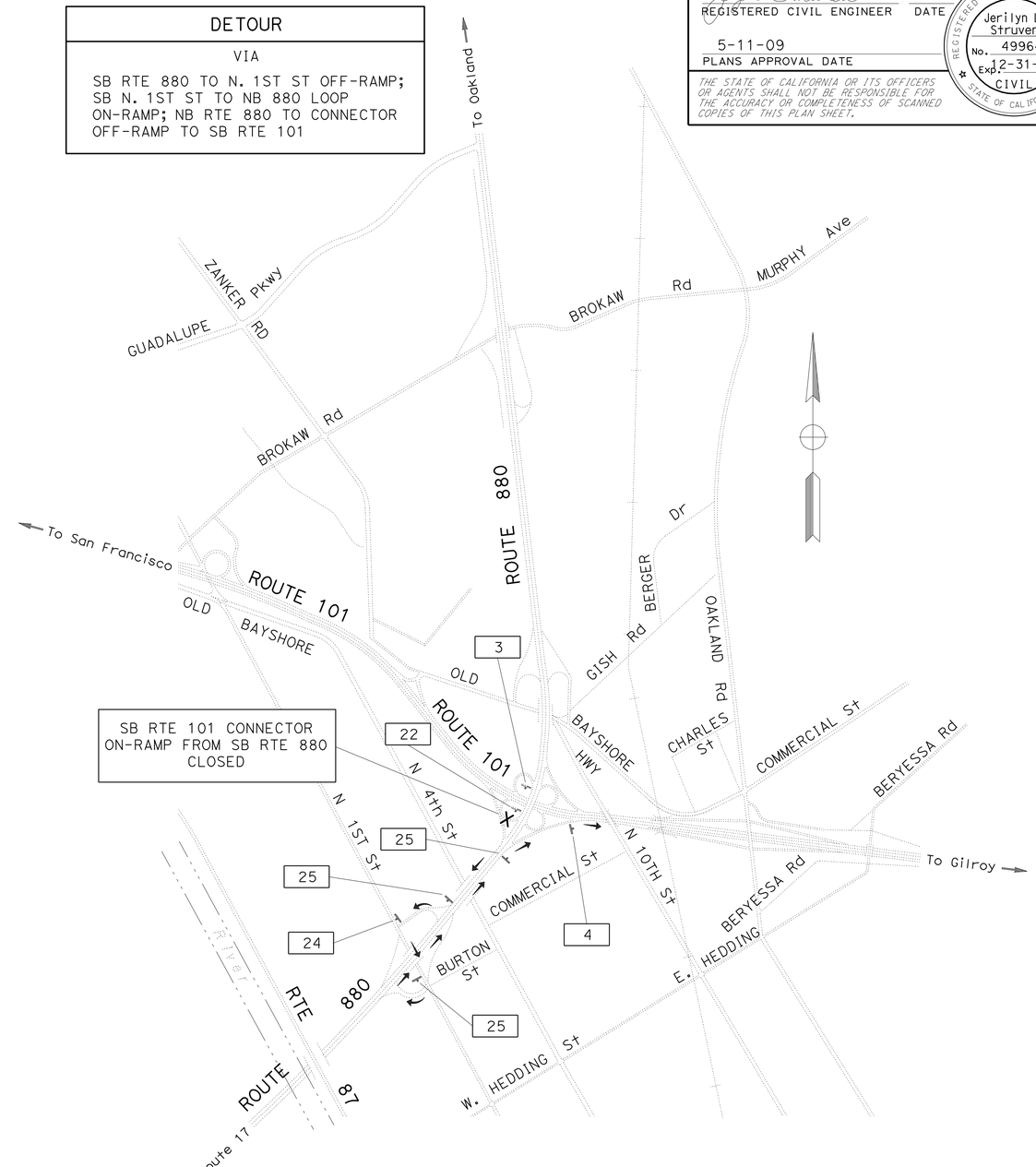

DETOUR PLAN No. 39

SB ROUTE 101 CONNECTOR ON-RAMP FROM SB RTE 880 CLOSURE

CONSTRUCTION AREA SIGNS

NO SCALE

FOR NOTES, ABBREVIATIONS &/OR LEGEND, SEE SHEET CS-1

THIS PLAN ACCURATE FOR CONSTRUCTION AREA SIGN WORK ONLY

CS-21

STATE OF CALIFORNIA - DEPARTMENT OF TRANSPORTATION
Caltrans TRAFFIC

FUNCTIONAL SUPERVISOR: Jerilyn L. Struven

CALCULATED-DESIGNED BY	RY
CHECKED BY	JS
REVISED BY	
DATE REVISED	

LAST REVISION 01-09-09 DATE PLOTTED => 31-JUL-2009 TIME PLOTTED => 07:01

Dist	COUNTY	ROUTE	POST MILES TOTAL PROJECT	SHEET No.	TOTAL SHEETS
04	SCI	101	R27.6/40.2	74	173

REGISTERED CIVIL ENGINEER 10/24/08 DATE

5-11-09
PLANS APPROVAL DATE

REGISTERED PROFESSIONAL ENGINEER Jerilyn L. Struven No. 49964 Exp. 12-31-10 CIVIL STATE OF CALIFORNIA

THE STATE OF CALIFORNIA OR ITS OFFICERS OR AGENTS SHALL NOT BE RESPONSIBLE FOR THE ACCURACY OR COMPLETENESS OF SCANNED COPIES OF THIS PLAN SHEET.

DETOUR

VIA

SB RTE 101 LOOP OFF-RAMP TO NB RTE 880; LOOP OFF-RAMP TO NB RTE 101; LOOP OFF-RAMP TO SB RTE 880

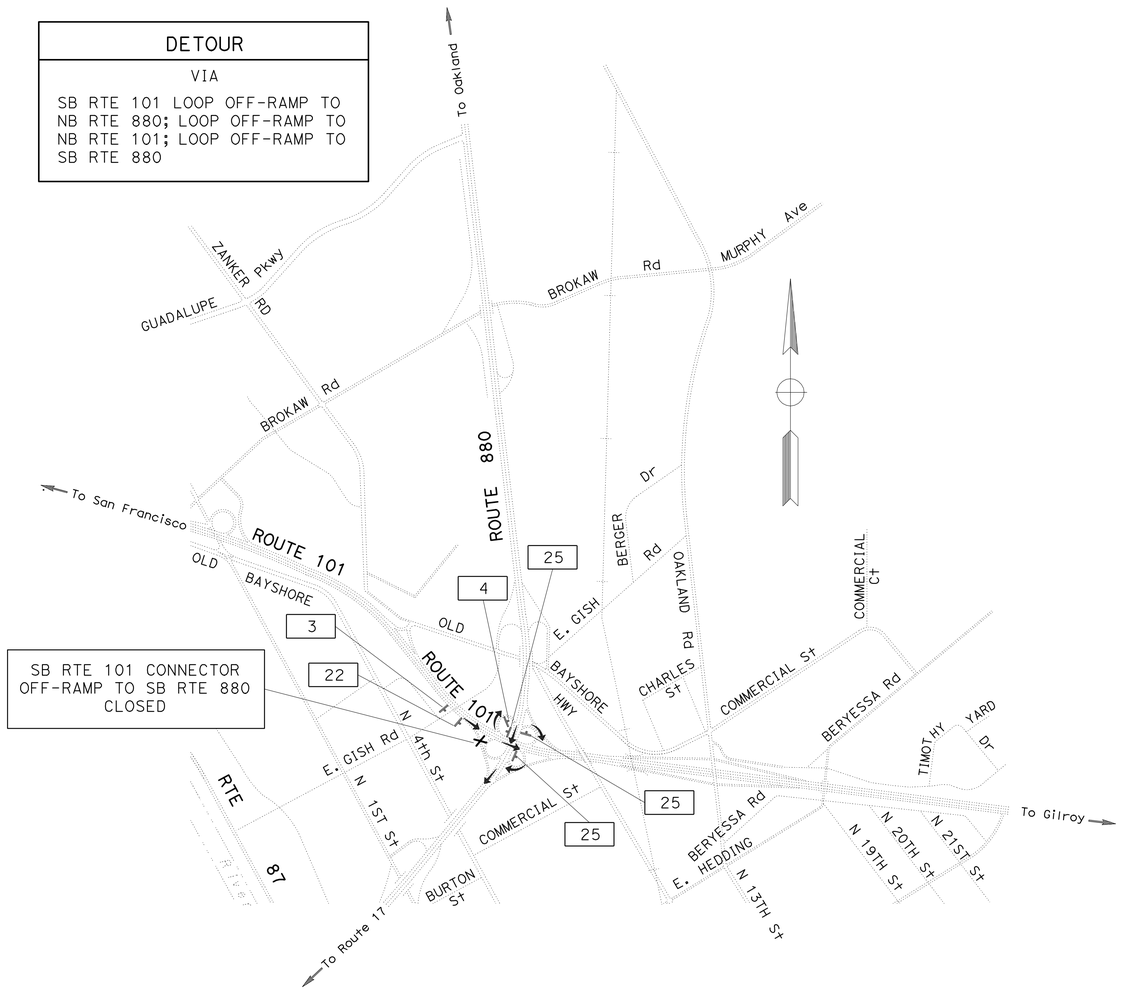

DETOUR PLAN No. 40

SB ROUTE 101 CONNECTOR OFF-RAMP TO SB RTE 880 CLOSURE

DETOUR

VIA

VIA WB OLD BAYSHORE HWY; NB N. 1ST ST; EB BROKAW RD; ON-RAMP TO SB RTE 880; LOOP CONNECTOR OFF-RAMP TO SB RTE 101

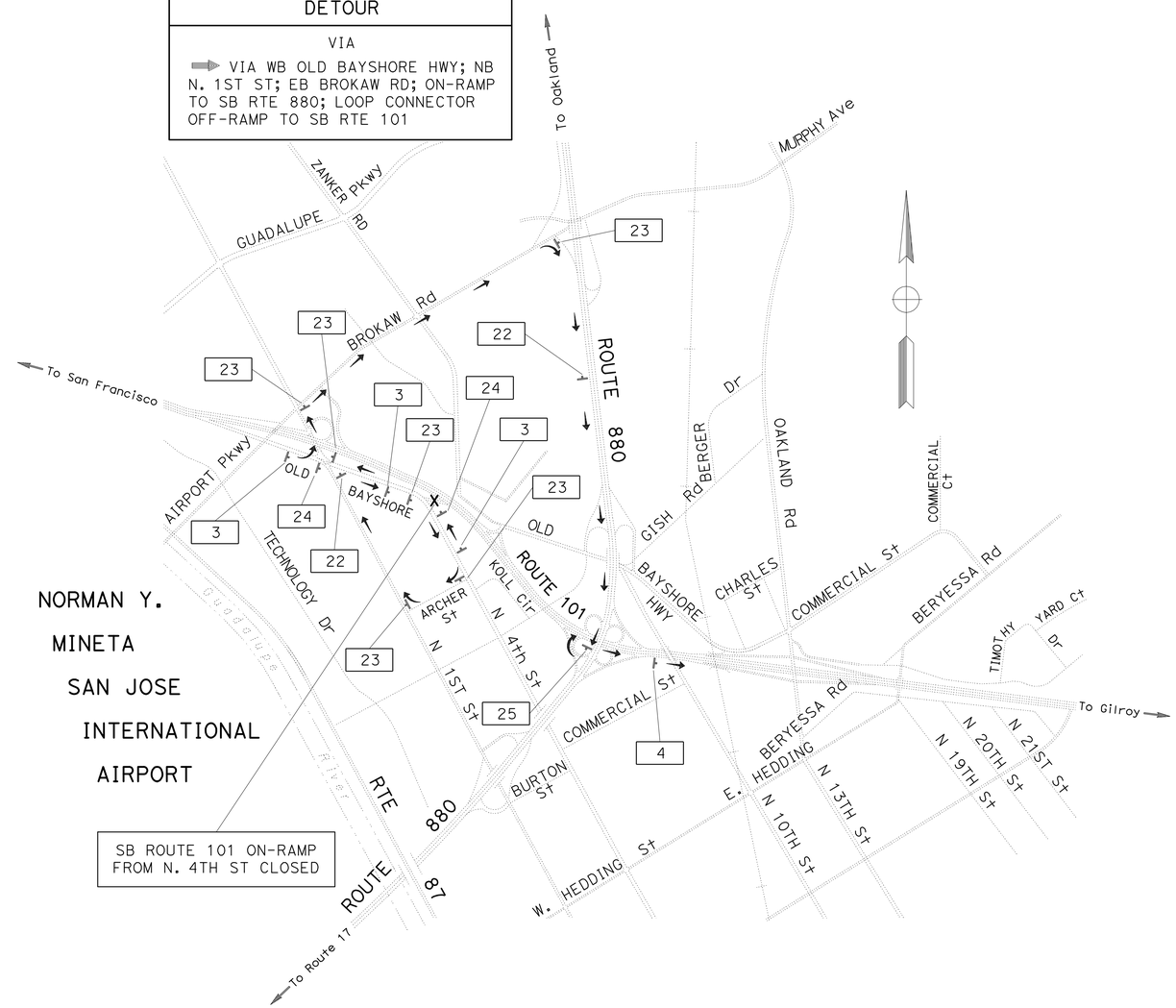

DETOUR PLAN No. 41

SB ROUTE 101 ON-RAMP FROM N. 4TH ST CLOSURE

CONSTRUCTION AREA SIGNS

NO SCALE

FOR NOTES, ABBREVIATIONS &/OR LEGEND, SEE SHEET CS-1

THIS PLAN ACCURATE FOR CONSTRUCTION AREA SIGN WORK ONLY

CS-22

REVISED BY	DATE REVISED
RY	JS

CALCULATED-DESIGNED BY / CHECKED BY

FUNCTIONAL SUPERVISOR: Jerilyn L. Struven

STATE OF CALIFORNIA - DEPARTMENT OF TRANSPORTATION

Caltrans **TRAFFIC**

LAST REVISION 01-09-09 | DATE PLOTTED => 31-JUL-2009 | TIME PLOTTED => 07:01

Dist	COUNTY	ROUTE	POST MILES TOTAL PROJECT	SHEET No.	TOTAL SHEETS
04	SCI	101	R27.6/40.2	75	173

REGISTERED CIVIL ENGINEER 10/24/08 DATE

5-11-09
PLANS APPROVAL DATE

REGISTERED PROFESSIONAL ENGINEER
Jerilyn L. Struven
No. 49964
Exp. 12-31-10
CIVIL
STATE OF CALIFORNIA

THE STATE OF CALIFORNIA OR ITS OFFICERS OR AGENTS SHALL NOT BE RESPONSIBLE FOR THE ACCURACY OR COMPLETENESS OF SCANNED COPIES OF THIS PLAN SHEET.

DETOUR

VIA SB RTE 101; OFF-RAMP TO N. 1ST ST; SB FRONTAGE RD; SB N. 1ST ST; WB SKYPORT DR; ON-RAMP TO SB RTE 87

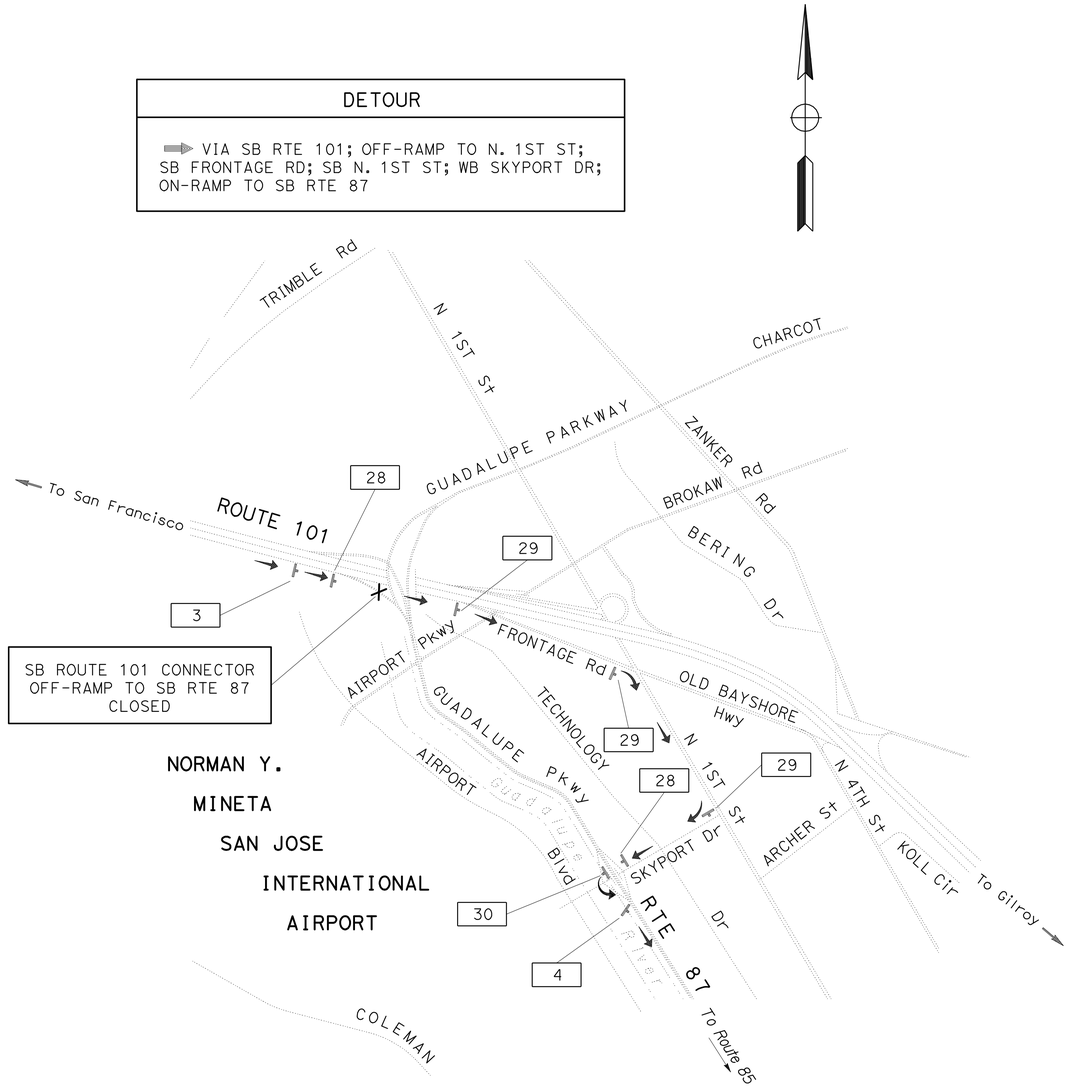

DETOUR PLAN No. 42

SB ROUTE 101 CONNECTOR OFF-RAMP TO SB ROUTE 87 CLOSURE

FOR NOTES, ABBREVIATIONS &/OR LEGEND, SEE SHEET CS-1

THIS PLAN ACCURATE FOR CONSTRUCTION AREA SIGN WORK ONLY

CONSTRUCTION AREA SIGNS

NO SCALE

CS-23

STATE OF CALIFORNIA - DEPARTMENT OF TRANSPORTATION
Caltrans
TRAFFIC

FUNCTIONAL SUPERVISOR: Jerilyn L. Struven

CALCULATED-DESIGNED BY: RY
CHECKED BY: JS
REVISED BY
DATE REVISED

LAST REVISION 01-09-09
DATE PLOTTED => 31-JUL-2009
TIME PLOTTED => 07:02

Dist	COUNTY	ROUTE	POST MILES TOTAL PROJECT	SHEET No.	TOTAL SHEETS
04	SCI	101	R27.6/40.2	76	173

REGISTERED CIVIL ENGINEER 10/24/08 DATE

5-11-09
PLANS APPROVAL DATE

REGISTERED PROFESSIONAL ENGINEER Jerilyn L. Struven No. 49964 Exp. 12-31-10 CIVIL STATE OF CALIFORNIA

THE STATE OF CALIFORNIA OR ITS OFFICERS OR AGENTS SHALL NOT BE RESPONSIBLE FOR THE ACCURACY OR COMPLETENESS OF SCANNED COPIES OF THIS PLAN SHEET.

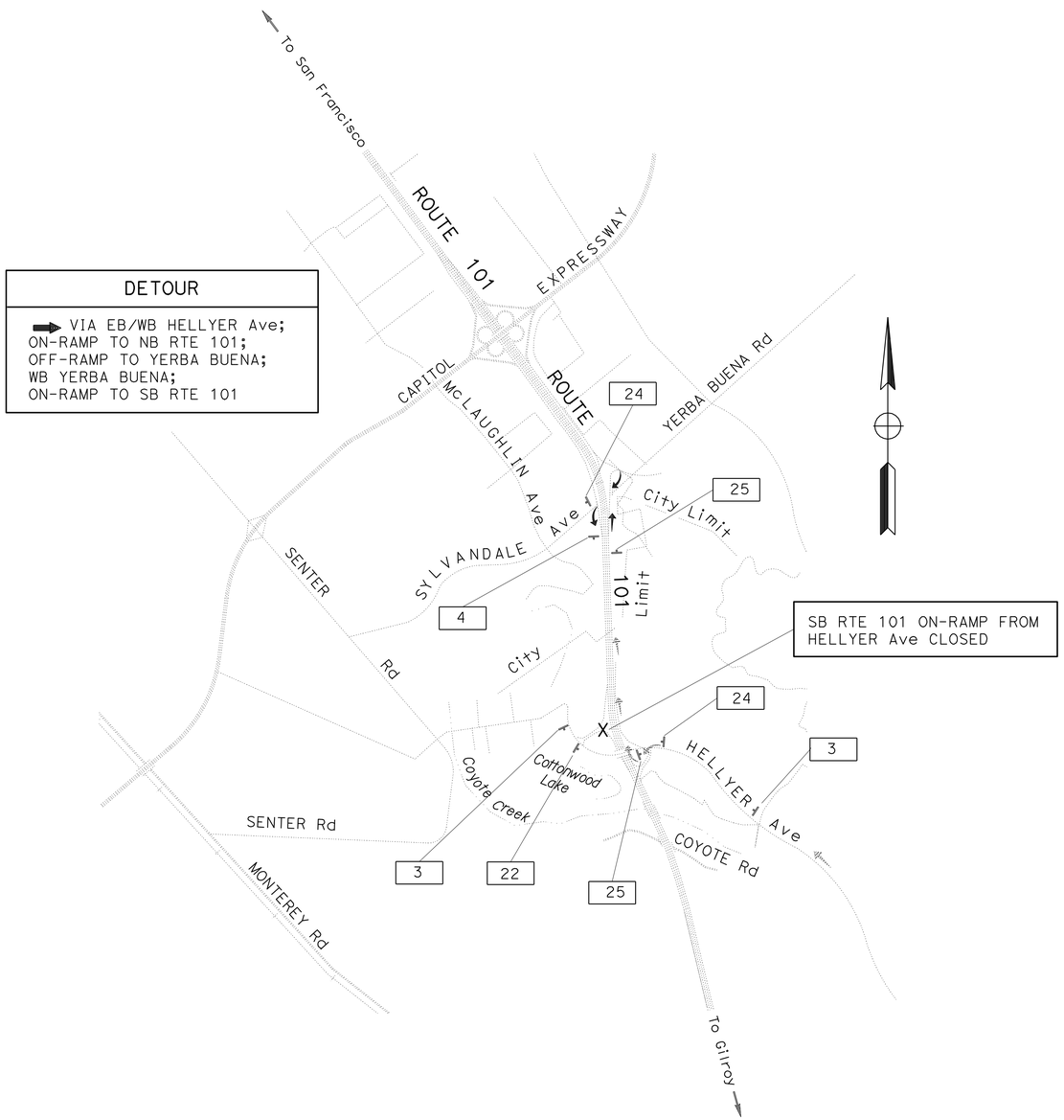

DETOUR PLAN NO. 43

SB ROUTE 101 ON-RAMP FROM HELLYER Ave CLOSURE

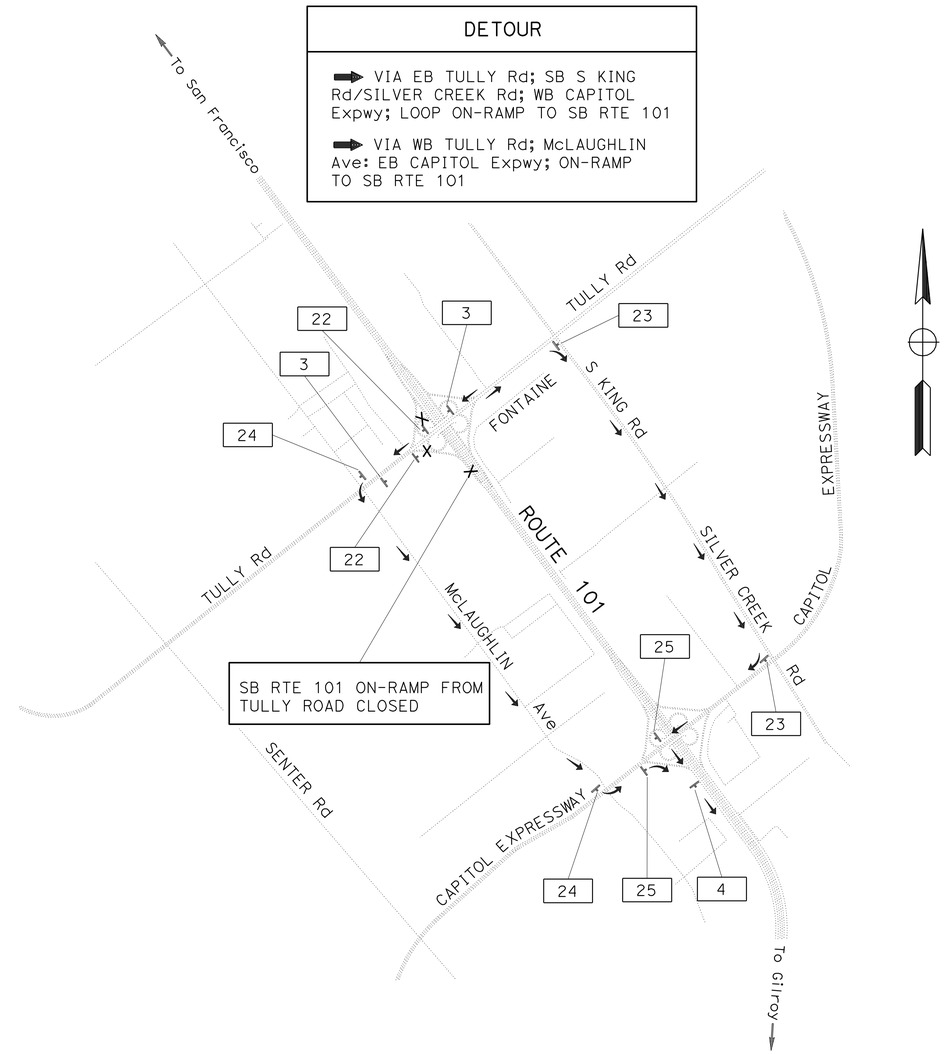

DETOUR PLAN NO. 44

SB ROUTE 101 ON-RAMP FROM TULLY ROAD CLOSURE

CONSTRUCTION AREA SIGNS

NO SCALE

FOR NOTES, ABBREVIATIONS &/OR LEGEND, SEE SHEET CS-1

THIS PLAN ACCURATE FOR CONSTRUCTION AREA SIGN WORK ONLY

CS-24

STATE OF CALIFORNIA - DEPARTMENT OF TRANSPORTATION
Caltrans
TRAFFIC

FUNCTIONAL SUPERVISOR: Jerilyn L. Struven
CALCULATED-DESIGNED BY: RY
CHECKED BY: JS
REVISED BY
DATE REVISED

LAST REVISION 01-09-09 DATE PLOTTED => 31-JUL-2009 TIME PLOTTED => 07:02

Dist	COUNTY	ROUTE	POST MILES TOTAL PROJECT	SHEET No.	TOTAL SHEETS
04	SCI	101	R27.6/40.2	77	173

REGISTERED CIVIL ENGINEER 10/24/08 DATE

5-11-09
PLANS APPROVAL DATE

REGISTERED PROFESSIONAL ENGINEER Jerilyn L. Struven No. 49964 Exp. 12-31-10 CIVIL STATE OF CALIFORNIA

THE STATE OF CALIFORNIA OR ITS OFFICERS OR AGENTS SHALL NOT BE RESPONSIBLE FOR THE ACCURACY OR COMPLETENESS OF SCANNED COPIES OF THIS PLAN SHEET.

DETOUR

➡ VIA EB CAPITOL Expwy; NB SILVER CREEK Rd/S KING Rd; WB TULLY Rd; ON-RAMP TO NB RTE 101

➡ VIA WB CAPITOL Expwy; NB McLAUGHLIN Ave; EB TULLY Rd; LOOP ON-RAMP TO NB RTE 101

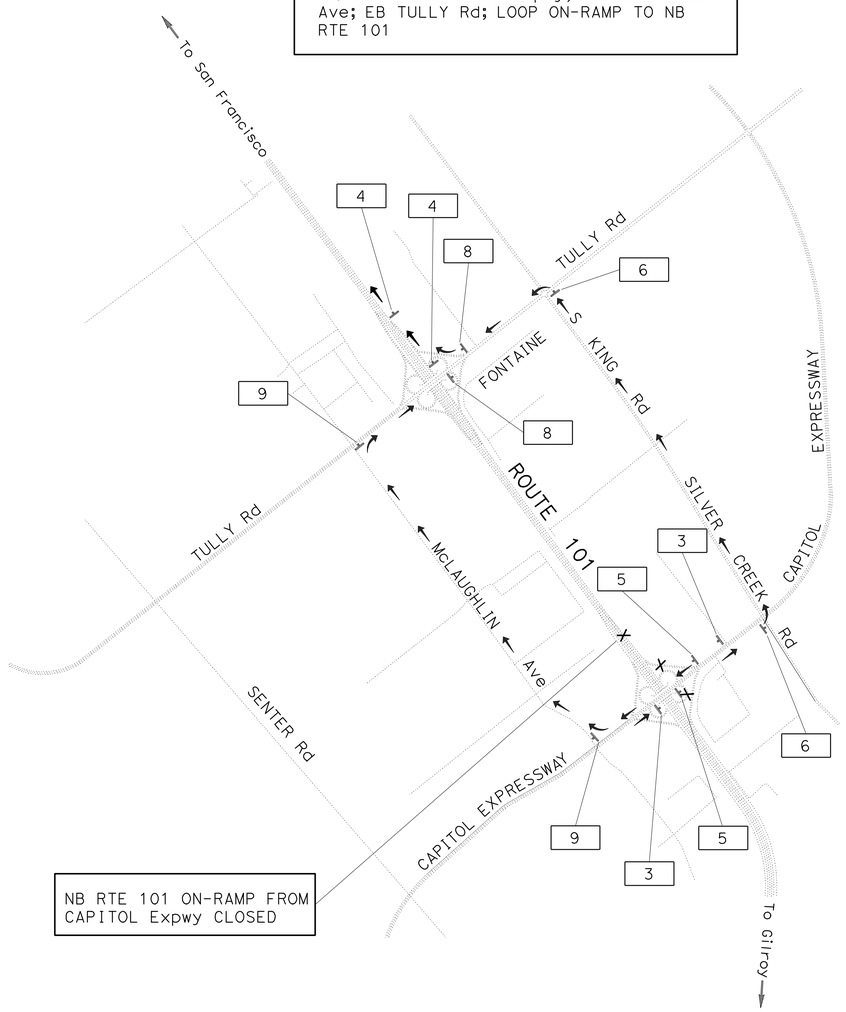

DETOUR PLAN NO. 45

NB ROUTE 101 ON-RAMP FROM CAPITOL EXPRESSWAY CLOSURE

DETOUR

➡ VIA EB TULLY Rd; SB S KING/ SILVER CREEK Rd; WB CAPITOL Expwy; ON-RAMP TO NB RTE 101

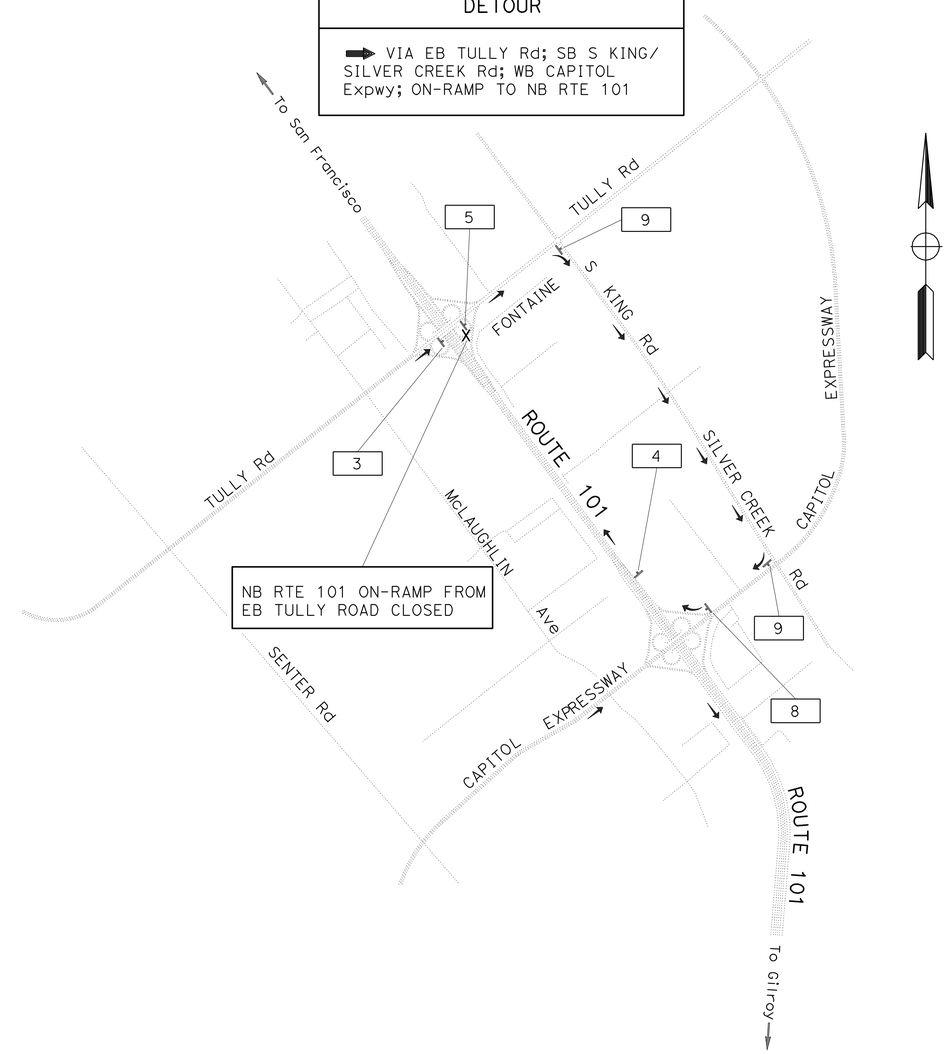

DETOUR PLAN NO. 46

NB ROUTE 101 ON-RAMP FROM EB TULLY ROAD CLOSURE

CONSTRUCTION AREA SIGNS

NO SCALE

FOR NOTES, ABBREVIATIONS &/OR LEGEND, SEE SHEET CS-1

THIS PLAN ACCURATE FOR CONSTRUCTION AREA SIGN WORK ONLY

CS-25

STATE OF CALIFORNIA - DEPARTMENT OF TRANSPORTATION
Caltrans **TRAFFIC**

FUNCTIONAL SUPERVISOR: Jerilyn L. Struven
CALCULATED-DESIGNED BY: RY
CHECKED BY: JS
REVISED BY
DATE REVISED

LAST REVISION 01-09-09 | DATE PLOTTED => 31-JUL-2009 | TIME PLOTTED => 07:02

Dist	COUNTY	ROUTE	POST MILES TOTAL PROJECT	SHEET No.	TOTAL SHEETS
04	SCI	101	R27.6/40.2	78	173

REGISTERED CIVIL ENGINEER 10/24/08 DATE

5-11-09
PLANS APPROVAL DATE

REGISTERED PROFESSIONAL ENGINEER Jerilyn L. Struven No. 49964 Exp. 12-31-10 CIVIL STATE OF CALIFORNIA

THE STATE OF CALIFORNIA OR ITS OFFICERS OR AGENTS SHALL NOT BE RESPONSIBLE FOR THE ACCURACY OR COMPLETENESS OF SCANNED COPIES OF THIS PLAN SHEET.

DETOUR

VIA WB TULLY Rd; LOOP ON TO SB 101; LOOP OFF TO EB TULLY Rd; LOOP ON TO NB ROUTE 101

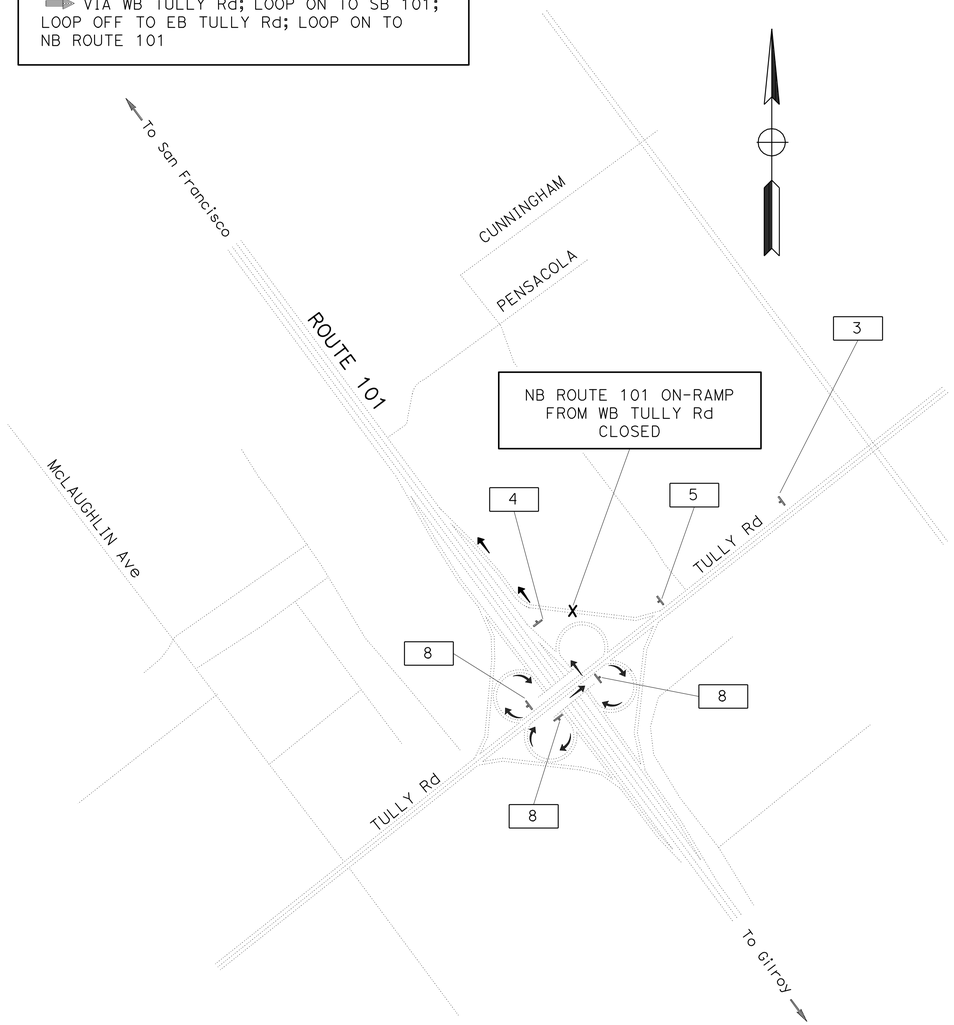

DETOUR PLAN No. 47

NB ROUTE 101 ON-RAMP FROM WB TULLY ROAD CLOSURE

DETOUR

VIA SB RTE 101; OFF-RAMP TO BROKAW Rd; SB FRONTAGE Rd/N 1st St; WB SKYPORT Dr TO SB RTE 87 ON-RAMP

VIA EB GUADALUPE Pkwy; SB N 1st St; WB SKYPORT Dr TO SB RTE 87 ON-RAMP

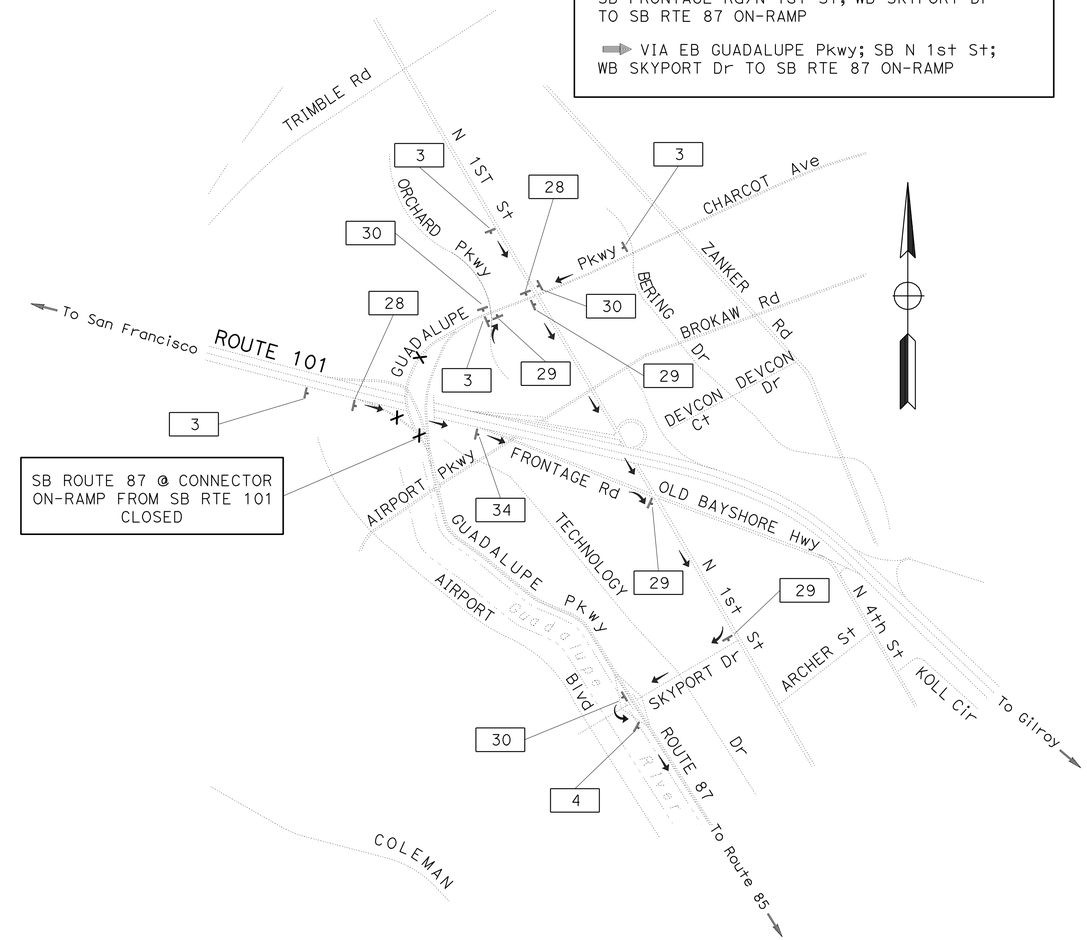

DETOUR PLAN No. 48

SB ROUTE 87 @ CONNECTOR ON-RAMP FROM SB ROUTE 101 CLOSURE

FOR NOTES, ABBREVIATIONS &/OR LEGEND, SEE SHEET CS-1

THIS PLAN ACCURATE FOR CONSTRUCTION AREA SIGN WORK ONLY

CONSTRUCTION AREA SIGNS

NO SCALE

CS-26

STATE OF CALIFORNIA - DEPARTMENT OF TRANSPORTATION
Caltrans TRAFFIC

FUNCTIONAL SUPERVISOR: Jerilyn L. Struven
CALCULATED-DESIGNED BY: RY
CHECKED BY: JS
REVISED BY
DATE REVISED

LAST REVISION 01-09-09
DATE PLOTTED => 31-JUL-2009
TIME PLOTTED => 07:02

Dist	COUNTY	ROUTE	POST MILES TOTAL PROJECT	SHEET No.	TOTAL SHEETS
04	SCI	101	R27.6/40.2	79	173

REGISTERED CIVIL ENGINEER 10/24/08 DATE

5-11-09
PLANS APPROVAL DATE

REGISTERED PROFESSIONAL ENGINEER Jerilyn L. Struven No. 49964 Exp. 12-31-10 CIVIL STATE OF CALIFORNIA

THE STATE OF CALIFORNIA OR ITS OFFICERS OR AGENTS SHALL NOT BE RESPONSIBLE FOR THE ACCURACY OR COMPLETENESS OF SCANNED COPIES OF THIS PLAN SHEET.

DETOUR

➔ VIA SB 101/NB RTE 85 CONNECTOR; NB RTE 85; OFF-RAMP TO COTTLE Rd; NB COTTLE Rd TO NB RTE 82; WB POUGHKEEPSIE Rd TO NB/SB RTE 82

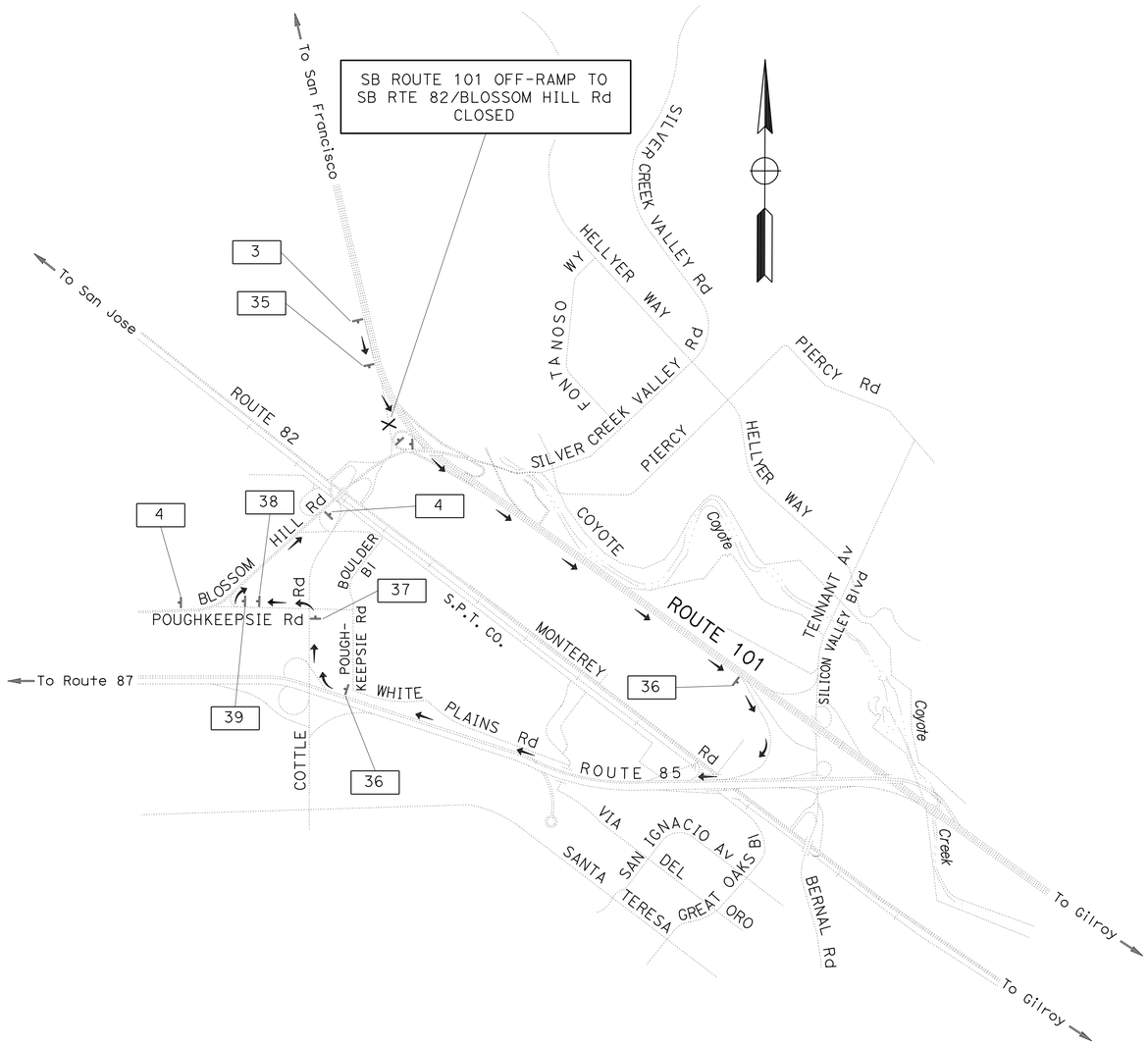

DETOUR PLAN No. 49

SB ROUTE 101 OFF-RAMP TO RTE 82/ BLOSSOM HILL ROAD CLOSURE

FOR NOTES, ABBREVIATIONS &/OR LEGEND, SEE SHEET CS-1

THIS PLAN ACCURATE FOR CONSTRUCTION AREA SIGN WORK ONLY

CONSTRUCTION AREA SIGNS

NO SCALE

CS-27

REVISED BY	DATE REVISED
RY	JS

CALCULATED-DESIGNED BY / CHECKED BY

FUNCTIONAL SUPERVISOR: Jerilyn L. Struven

STATE OF CALIFORNIA - DEPARTMENT OF TRANSPORTATION

Caltrans **TRAFFIC**

LAST REVISION 01-09-09 | DATE PLOTTED => 31-JUL-2009 | TIME PLOTTED => 07:02

Dist	COUNTY	ROUTE	POST MILES TOTAL PROJECT	SHEET No.	TOTAL SHEETS
04	SCI	101	R27.6/40.2	80	173

REGISTERED CIVIL ENGINEER DATE 10/24/08

5-11-09
PLANS APPROVAL DATE

REGISTERED PROFESSIONAL ENGINEER Jerilyn L. Struven No. 49964 Exp. 12-31-10 CIVIL STATE OF CALIFORNIA

THE STATE OF CALIFORNIA OR ITS OFFICERS OR AGENTS SHALL NOT BE RESPONSIBLE FOR THE ACCURACY OR COMPLETENESS OF SCANNED COPIES OF THIS PLAN SHEET.

STATIONARY MOUNTED CONSTRUCTION AREA SIGNS

SIGN No.	CODE (MUTCD)	MESSAGE	PANEL SIZE (INCH X INCH)	No. OF POSTS & SIZE (EA-INCH X INCH)	QUANTITY (EA)
1	W20-1	ROAD WORK AHEAD	48 x 48	1 - 4 x 6	33
2	G20-2	END ROAD WORK	48 x 24	1 - 4 x 4	34
3	W20-2	DETOUR AHEAD	48 x 48	1 - 4 x 4	72
4	M4-8a	END DETOUR	30 x 18	1 - 4 x 4	57
5	SC3 (↑)(CA)	DETOUR (STRAIGHT ARROW)	48 x 18	1 - 4 x 6	27
	M3-1	NORTH	21 x 9		
	G26-2(101)(CA)	ROUTE SHIELD	28 x 24		
6	M4-10 (L↑)	DETOUR (LEFT)	48 x 18	1 - 4 x 6	30
	M3-1	NORTH	21 x 9		
	G26-2(101)(CA)	ROUTE SHIELD	28 x 24		
7	M4-8	DETOUR	21 x 9	1 - 4 x 6	2
	M3-1	NORTH	21 x 9		
	G26-2(101)(CA)	ROUTE SHIELD	28 x 24		
	M6-2 (↖)	DETOUR (DIAGONAL ARROW)	21 x 15		
8	M4-8	DETOUR	21 x 9	1 - 4 x 6	27
	M3-1	NORTH	21 x 9		
	G26-2(101)(CA)	ROUTE SHIELD	28 x 24		
	M6-2 (↗)	DETOUR (DIAGONAL ARROW)	21 x 15		
9	M4-10 (R↑)	DETOUR (RIGHT)	48 x 18	1 - 4 x 6	22
	M3-1	NORTH	21 x 9		
	G26-2(101)(CA)	ROUTE SHIELD	28 x 24		
10	M4-8	DETOUR	21 x 9	1 - 4 x 6	4
	M3-1	NORTH	21 x 9		
	G27-2 (280)	ROUTE SHIELD	30 x 25		
	M6-2 (↗)	DETOUR (DIAGONAL ARROW)	21 x 15		
11	M4-8	DETOUR	21 x 9	1 - 4 x 6	2
	M3-1	NORTH	21 x 9		
	G27-2(680)(CA)	ROUTE SHIELD	30 x 25		
	M6-2 (↗)	DETOUR (DIAGONAL ARROW)	21 x 15		
12	SC3 (↑)(CA)	DETOUR (STRAIGHT ARROW)	48 x 18	1 - 4 x 6	1
	G27-2(680)(CA)	ROUTE SHIELD	30 x 25		
	M4-10 (R↑)	DETOUR (RIGHT)	48 x 18		
	G27-2(280)(CA)	ROUTE SHIELD	30 x 25		
13	SC3 (↑)(CA)	DETOUR (STRAIGHT ARROW)	48 x 18	1 - 4 x 6	2
	G27-2(680)(CA)	ROUTE SHIELD	30 x 25		
	G27-2(280)(CA)	ROUTE SHIELD	30 x 25		
14	SC3 (↑)(CA)	DETOUR (STRAIGHT ARROW)	48 x 18	1 - 4 x 4	5
	G28-2(130)(CA)	ROUTE SHIELD	28 x 25		
15	M4-8	DETOUR	21 x 9	1 - 4 x 6	8
	G28-2(130)(CA)	ROUTE SHIELD	28 x 25		
	M6-2 (↗)	DETOUR (DIAGONAL ARROW)	21 x 15		
16	M4-10 (R↑)	DETOUR (RIGHT)	48 x 18	1 - 4 x 4	2
	G28-2(130)(CA)	ROUTE SHIELD	28 x 25		
17	SC3 (↑)(CA)	DETOUR (STRAIGHT ARROW)	48 x 18	1 - 4 x 6	3
	M3-1	NORTH	21 x 9		
	G27-2(880)(CA)	ROUTE SHIELD	30 x 25		
18	M4-8	DETOUR	21 x 9	1 - 4 x 6	3
	M3-1	NORTH	21 x 9		
	G27-2(880)(CA)	ROUTE SHIELD	30 x 25		
	M6-2 (↗)	DETOUR (DIAGONAL ARROW)	21 x 15		

STATIONARY MOUNTED CONSTRUCTION AREA SIGNS

SIGN No.	CODE (MUTCD)	MESSAGE	PANEL SIZE (INCH X INCH)	No. OF POSTS & SIZE (EA-INCH X INCH)	QUANTITY (EA)
19	SC3 (↑)(CA)	DETOUR (STRAIGHT ARROW)	48 x 18	1 - 4 x 6	1
	M3-3	SOUTH	21 x 9		
	G27-2(880)(CA)	ROUTE SHIELD	30 x 25		
20	M4-8	DETOUR	21 x 9	1 - 4 x 6	2
	M3-3	SOUTH	21 x 9		
	G27-2(880)(CA)	ROUTE SHIELD	30 x 25		
	M6-2 (↗)	DETOUR (DIAGONAL ARROW)	21 x 15		
21	M4-10 (L↑)	DETOUR (LEFT)	48 x 18	1 - 4 x 6	1
	M3-3	SOUTH	21 x 9		
	G27-2(880)(CA)	ROUTE SHIELD	30 x 25		
22	SC3 (↑)(CA)	DETOUR (STRAIGHT ARROW)	48 x 18	1 - 4 x 6	32
	M3-3	SOUTH	21 x 9		
	G26-2(101)(CA)	ROUTE SHIELD	28 x 24		
23	M4-10 (R↑)	DETOUR (RIGHT)	48 x 18	1 - 4 x 6	34
	M3-3	SOUTH	21 x 9		
	G26-2(101)(CA)	ROUTE SHIELD	28 x 24		
24	M4-10 (L↑)	DETOUR (LEFT)	48 x 18	1 - 4 x 6	32
	M3-3	SOUTH	21 x 9		
	G26-2(101)(CA)	ROUTE SHIELD	28 x 24		
25	M4-8	DETOUR	21 x 9	1 - 4 x 6	24
	M3-3	SOUTH	21 x 9		
	G26-2(101)(CA)	ROUTE SHIELD	28 x 24		
	M6-2 (↗)	DETOUR (DIAGONAL ARROW)	21 x 15		
26	M4-10 (R↑)	DETOUR (RIGHT)	48 x 18	1 - 4 x 6	2
	M3-1	NORTH	21 x 9		
	G27-2(880)(CA)	ROUTE SHIELD	30 x 25		
27	M4-10 (L↑)	DETOUR (LEFT)	48 x 18	1 - 4 x 6	2
	M3-1	NORTH	21 x 9		
	G27-2(880)(CA)	ROUTE SHIELD	30 x 25		
28	SC3 (↑)(CA)	DETOUR (STRAIGHT ARROW)	48 x 18	1 - 4 x 6	4
	M3-3	SOUTH	21 x 9		
	G28-2(87)(CA)	ROUTE SHIELD	24 x 25		
29	M4-10 (R↑)	DETOUR (RIGHT)	48 x 18	1 - 4 x 6	7
	M3-3	SOUTH	21 x 9		
	G28-2(87)(CA)	ROUTE SHIELD	24 x 25		
30	M4-10 (L↑)	DETOUR (LEFT)	48 x 18	1 - 4 x 6	4
	M3-3	SOUTH	21 x 9		
	G27-2(87)(CA)	ROUTE SHIELD	24 x 25		

FOR NOTES, ABBREVIATIONS &/OR LEGEND, SEE SHEET CS-1

CONSTRUCTION AREA SIGNS

CS-28

REVISED BY	DATE REVISED
SL & RY	JS

CALCULATED-DESIGNED BY	CHECKED BY

FUNCTIONAL SUPERVISOR: Jerilyn L. Struven

STATE OF CALIFORNIA - DEPARTMENT OF TRANSPORTATION

Caltrans TRAFFIC

LAST REVISION 01-09-09 | DATE PLOTTED => 31-JUL-2009 | TIME PLOTTED => 07:02

Dist	COUNTY	ROUTE	POST MILES TOTAL PROJECT	SHEET No.	TOTAL SHEETS
04	SCI	101	R27.6/40.2	81	173

REGISTERED CIVIL ENGINEER 10/24/08 DATE

5-11-09
PLANS APPROVAL DATE

REGISTERED PROFESSIONAL ENGINEER Jerilyn L. Struven No. 49964 Exp. 12-31-10 CIVIL STATE OF CALIFORNIA

THE STATE OF CALIFORNIA OR ITS OFFICERS OR AGENTS SHALL NOT BE RESPONSIBLE FOR THE ACCURACY OR COMPLETENESS OF SCANNED COPIES OF THIS PLAN SHEET.

STATIONARY MOUNTED CONSTRUCTION AREA SIGNS

SIGN No.	CODE (MUTCD)	MESSAGE	PANEL SIZE (INCH X INCH)	No. OF POSTS & SIZE (EA-INCH X INCH)	QUANTITY (EA)
31	M4-10 (R+)	DETOUR (RIGHT)	48 x 18	1 - 4 x 6	1
	M3-1	NORTH	21 x 9		
	G27-2(280)(CA)	ROUTE SHIELD	30 x 25		
32	M4-10 (R+)	DETOUR (RIGHT)	48 x 18	1 - 4 x 6	1
	M3-1	NORTH	21 x 9		
	G27-2(680)(CA)	ROUTE SHIELD	30 x 25		
33	M4-10 (L+)	DETOUR (LEFT)	48 x 18	1 - 4 x 6	1
	M3-1	NORTH	21 x 9		
	G27-2(680)(CA)	ROUTE SHIELD	30 x 25		
34	M4-8	DETOUR	21 x 9	1 - 4 x 6	1
	M3-3	SOUTH	21 x 9		
	G28-2(87)(CA)	ROUTE SHIELD	24 x 25		
	M6-2 (↗)	DETOUR (DIAGONAL ARROW)	21 x 15		
35	SPECIAL	SEE SPECIAL 1	78 x 48	2 - 4 x 6	1
36	SPECIAL	SEE SPECIAL 2	78 x 48	2 - 4 x 6	2
37	SPECIAL	SEE SPECIAL 3	78 x 48	2 - 4 x 6	1
38	SPECIAL	SEE SPECIAL 4	78 x 48	2 - 4 x 6	1
39	M4-8	DETOUR	21 x 9	1 - 4 x 6	1
	G28-2(82)(CA)	ROUTE SHIELD	24 x 25		
	M6-2 (↗)	DETOUR (DIAGONAL ARROW)	21 x 15		
40	M4-8	DETOUR	21 x 9	1 - 4 x 6	1
	G27-2(680)(CA)	ROUTE SHIELD	30 x 25		
	G27-2(280)(CA)	ROUTE SHIELD	30 x 25		
	M6-2 (↗)	DETOUR (DIAGONAL ARROW)	21 x 15		
41	M4-8	DETOUR	21 x 9	1 - 4 x 6	1
	M3-1	NORTH	21 x 9		
	G27-2(680)(CA)	ROUTE SHIELD	30 x 25		
	G58(CA)(Mod)	SECOND RIGHT	36 x 24		
42	G20-1	ROAD WORK NEXT 13 MILES	60 x 24	2 - 4 x 4	2

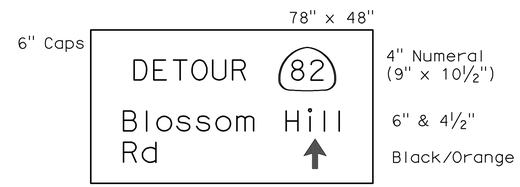

SPECIAL 1

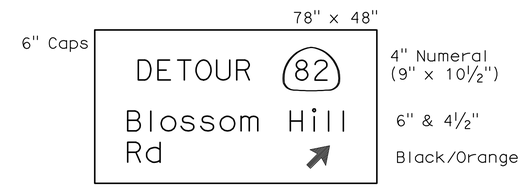

SPECIAL 2

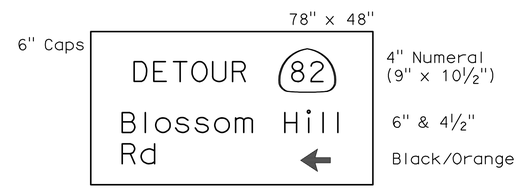

SPECIAL 3

SPECIAL 4

FOR NOTES, ABBREVIATIONS &/OR LEGEND, SEE SHEET CS-1

CONSTRUCTION AREA SIGNS

NO SCALE

CS-29

STATE OF CALIFORNIA - DEPARTMENT OF TRANSPORTATION
Caltrans TRAFFIC

FUNCTIONAL SUPERVISOR: Jerilyn L. Struven
CALCULATED-DESIGNED BY: SL & RY
CHECKED BY: JS
REVISED BY
DATE REVISED

LAST REVISION 01-09-09
DATE PLOTTED => 31-JUL-2009
TIME PLOTTED => 07:03

Dist	COUNTY	ROUTE	POST MILES TOTAL PROJECT	SHEET No.	TOTAL SHEETS
04	SCI	101	R27.6/40.2	82	173

REGISTERED CIVIL ENGINEER 11/04/08 DATE

5-11-09
PLANS APPROVAL DATE

REGISTERED PROFESSIONAL ENGINEER
Ashok K. Bhatnagar
No. 48814
Exp 9-30-10
CIVIL
STATE OF CALIFORNIA

THE STATE OF CALIFORNIA OR ITS OFFICERS OR AGENTS SHALL NOT BE RESPONSIBLE FOR THE ACCURACY OR COMPLETENESS OF SCANNED COPIES OF THIS PLAN SHEET.

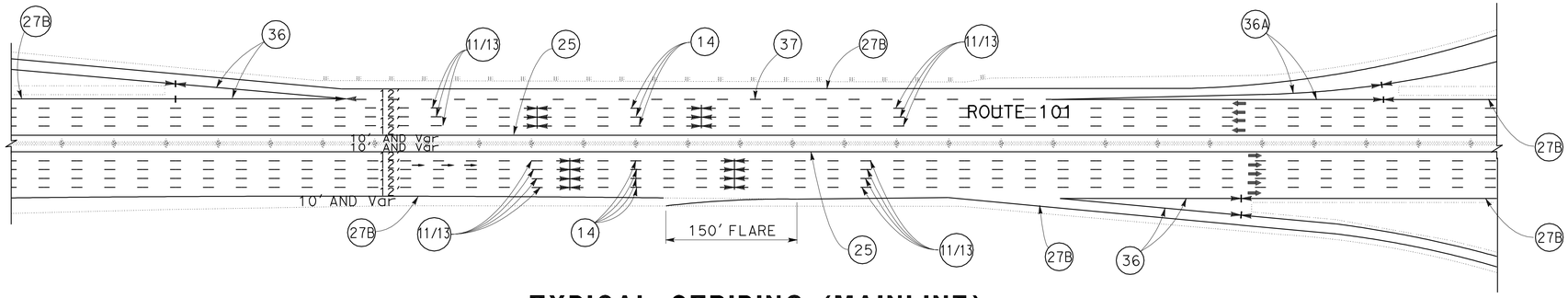

TYPICAL STRIPING (MAINLINE)

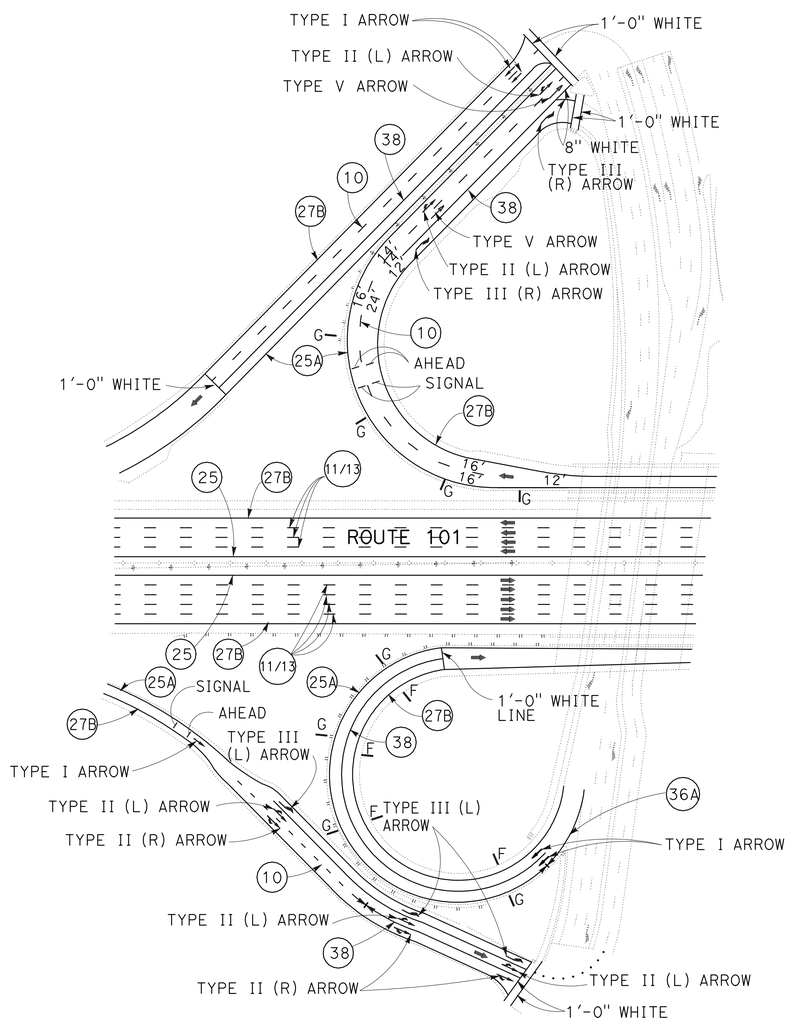

TYPICAL STRIPING (ON-RAMP AND OFF-RAMP)

LEGEND

(No.)	PAVEMENT DELINEATION DETAIL
	CHANGE OF PAVEMENT DETAILS
	PAVEMENT DIRECTION OF TRAFFIC
G	DELINEATOR (CLASS 1) TYPE G
F	DELINEATOR (CLASS 1) TYPE F

NOTE

ALL PAVEMENT DELINEATION SHALL BE PLACED ON THE SAME ALIGNMENT AND LOCATIONS AS EXISTING PAVEMENT DELINEATION

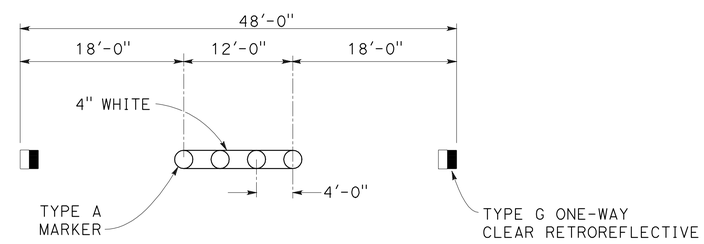

DETAIL 11/13

THIS PLAN ACCURATE FOR PAVEMENT DELINEATION WORK ONLY

PAVEMENT DELINEATION PLAN

NO SCALE

PD-1

REVISED BY	DATE REVISED	CALCULATED-DESIGNED BY	CHECKED BY	FUNCTIONAL SUPERVISOR
A	A	MN	AB	ASHOK BHATNAGAR

STATE OF CALIFORNIA - DEPARTMENT OF TRANSPORTATION
Caltrans MAINTENANCE

LAST REVISION 11-10-08 | DATE PLOTTED => 31-JUL-2009 | TIME PLOTTED => 07:03

Dist	COUNTY	ROUTE	POST MILES TOTAL PROJECT	SHEET No.	TOTAL SHEETS
04	SCI	101	R27.6/40.2	83	173

REGISTERED CIVIL ENGINEER DATE 11/04/08

5-11-09
PLANS APPROVAL DATE

REGISTERED PROFESSIONAL ENGINEER
A. Bhatnagar
No. 48814
Exp 9-30-10
CIVIL
STATE OF CALIFORNIA

THE STATE OF CALIFORNIA OR ITS OFFICERS OR AGENTS SHALL NOT BE RESPONSIBLE FOR THE ACCURACY OR COMPLETENESS OF SCANNED COPIES OF THIS PLAN SHEET.

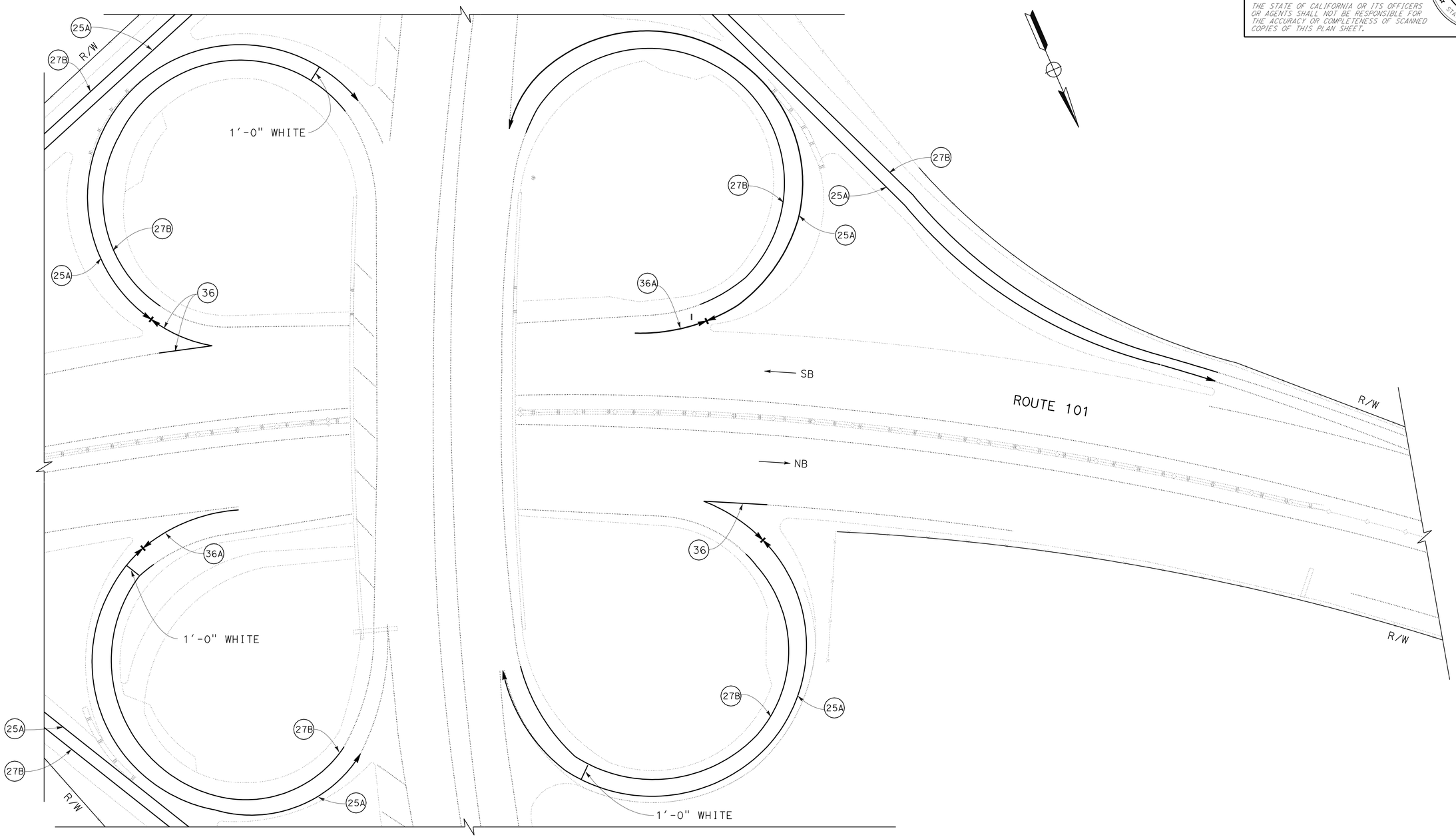

TYPICAL STRIPING (ON-RAMP AND OFF-RAMP)

PAVEMENT DELINEATION PLAN

NO SCALE

FOR NOTES, ABBREVIATIONS &/OR LEGEND, SEE SHEET PD-1

THIS PLAN ACCURATE FOR PAVEMENT DELINEATION WORK ONLY

PD-2

REVISED BY	DATE REVISED
MN	AB
A	A

CALCULATED-DESIGNED BY
CHECKED BY

FUNCTIONAL SUPERVISOR
ASHOK BHATNAGAR

STATE OF CALIFORNIA - DEPARTMENT OF TRANSPORTATION
Caltrans MAINTENANCE

LAST REVISION 01-05-09
DATE PLOTTED => 31-JUL-2009
TIME PLOTTED => 07:03

Dist	COUNTY	ROUTE	POST MILES TOTAL PROJECT	SHEET No.	TOTAL SHEETS
04	SCI	101	R27.6/40.2	84	173

REGISTERED CIVIL ENGINEER DATE 11/04/08

PLANS APPROVAL DATE 5-11-09

REGISTERED PROFESSIONAL ENGINEER A. Bhatnagar No. 48814 Exp 9-30-10 CIVIL STATE OF CALIFORNIA

THE STATE OF CALIFORNIA OR ITS OFFICERS OR AGENTS SHALL NOT BE RESPONSIBLE FOR THE ACCURACY OR COMPLETENESS OF SCANNED COPIES OF THIS PLAN SHEET.

PAVEMENT DELINEATION QUANTITIES (MAINLINE-NORTHBOUND)*

DESCRIPTION	PM	DETAIL NO. OR PAVEMENT MARKING	REMOVE: PAVEMENT MARKER	REMOVE: THERMOPLASTIC TRAFFIC STRIPE: PAVEMENT MARKING	REMOVE: THERMOPLASTIC TRAFFIC STRIPE: YELLOW 4 INCH SOLID	REMOVE: THERMOPLASTIC TRAFFIC STRIPE: WHITE 4 INCH SOLID	PAVEMENT MARKER: NON-REFLECTIVE TYPE A	PAVEMENT MARKER: RETROREFLECTIVE TYPE C	PAVEMENT MARKER: RETROREFLECTIVE TYPE D	PAVEMENT MARKER: RETROREFLECTIVE TYPE G	PAVEMENT MARKER: RETROREFLECTIVE TYPE H	THERMO-PLASTIC PAVEMENT MARKING WHITE	THERMOPLASTIC TRAFFIC STRIPE: YELLOW 4 INCH SOLID	THERMOPLASTIC TRAFFIC STRIPE: WHITE 4" WHITE (BROKEN 17-7)	THERMOPLASTIC TRAFFIC STRIPE: WHITE 4" WHITE (BROKEN 36-12)	THERMOPLASTIC TRAFFIC STRIPE: WHITE 8" WHITE (BROKEN 12-3)	THERMOPLASTIC TRAFFIC STRIPE: WHITE 4 INCH SOLID	THERMOPLASTIC TRAFFIC STRIPE: WHITE 8 INCH SOLID
			EA	SQ FT	LF		EA					SQ FT	LF					
BEGIN CONSTRUCTION TO BLOSSOM HILL ROAD OC	27.60 - 28.61	8												300				
		11													15990			
		13	1579				1268			311								
		14	96				72	24										
		25	113								113		5330					
		27B															5330	
		36	24							24								530
		36A	16							16								350
		◇										88						
BLOSSOM HILL ROAD OC TO YERBA BUENA ROAD UC 28.61 - 30.98	28.61 - 30.98	8												600				
		11													37930			
		13	3915				3132			783								
		14	240				180	60										
		25	262								262		12510					
		27B															12510	
		36	46							46								1060
		36A	31							31								700
		◇										286						
YERBA BUENA ROAD UC TO TULLY ROAD OC	30.98 - 33.03	8												300				
		11													32400			
		13	3187				2560			627								
		14	192				144	48										
		25	225								225		10800					
		27B															10800	
		36	24							24								530
		36A	16							16								350
		37	390					388		2					2900			
		38B	28							28								300
		◇										88						
SUB TOTAL PDQ-1			10384				7356	520		1908	600	462	28640	1200	89220		28640	3820

* INCLUDES GORE AREAS

STATE OF CALIFORNIA - DEPARTMENT OF TRANSPORTATION

Caltrans MAINTENANCE

FUNCTIONAL SUPERVISOR: ASHOK BHATNAGAR

CALCULATED-DESIGNED BY: AB

CHECKED BY: MN

REVISED BY: A

DATE REVISED: A

PAVEMENT DELINEATION QUANTITIES

PDQ-1

LAST REVISION 11-10-08

DATE PLOTTED => 31-JUL-2009

TIME PLOTTED => 07:03

Dist	COUNTY	ROUTE	POST MILES TOTAL PROJECT	SHEET No.	TOTAL SHEETS
04	SCI	101	R27.6/40.2	85	173

11/04/08
REGISTERED CIVIL ENGINEER DATE

5-11-09
PLANS APPROVAL DATE

REGISTERED PROFESSIONAL ENGINEER
A. Bhatnagar
No. 48814
Exp 9-30-10
CIVIL
STATE OF CALIFORNIA

THE STATE OF CALIFORNIA OR ITS OFFICERS OR AGENTS SHALL NOT BE RESPONSIBLE FOR THE ACCURACY OR COMPLETENESS OF SCANNED COPIES OF THIS PLAN SHEET.

PAVEMENT DELINEATION QUANTITIES (MAINLINE-NORTHBOUND)*

DESCRIPTION	PM	DETAIL NO. OR PAVEMENT MARKING	REMOVE: PAVEMENT MARKER	REMOVE: THERMOPLASTIC TRAFFIC STRIPE: PAVEMENT MARKING	REMOVE: THERMOPLASTIC TRAFFIC STRIPE: YELLOW 4 INCH SOLID	REMOVE: THERMOPLASTIC TRAFFIC STRIPE: WHITE 4 INCH SOLID	PAVEMENT MARKER: NON-REFLECTIVE TYPE A	PAVEMENT MARKER: RETROREFLECTIVE TYPE C	PAVEMENT MARKER: RETROREFLECTIVE TYPE D	PAVEMENT MARKER: RETROREFLECTIVE TYPE G	PAVEMENT MARKER: RETROREFLECTIVE TYPE H	THERMO-PLASTIC PAVEMENT MARKING WHITE	THERMOPLASTIC TRAFFIC STRIPE: YELLOW 4 INCH SOLID	THERMOPLASTIC TRAFFIC STRIPE: WHITE: 4" WHITE (BROKEN 17-7)	THERMOPLASTIC TRAFFIC STRIPE: WHITE: 4" WHITE (BROKEN 36-12)	THERMOPLASTIC TRAFFIC STRIPE: WHITE: 8" WHITE (BROKEN 12-3)	THERMOPLASTIC TRAFFIC STRIPE: WHITE: 4 INCH SOLID	THERMOPLASTIC TRAFFIC STRIPE: WHITE: 8 INCH SOLID
			EA	SQ FT	LF		EA					SQ FT	LF					
TULLY ROAD OC TO STORY ROAD OC	33.03 - 34.55	8												300				
		11													24075			
		13	2323				1868			455								
		14	192				144	48										
		25	169								169		8025					
		27B															8025	
		36	32							32								700
		36A	16							16								350
		37	202					200		2						1500		
		38B	28							28								300
		◇										198						
STORY ROAD OC TO BEGIN PCC PART 1	34.55 - 35.48	8												660				
		11													14730			
		13	1406				1124			282								
		14	144				108	36										
		25	14								14		4910					
		27B															4910	
		36	24							24								530
		36A	30							30								700
		TYPE VI ARROW										126						
		◇										88						
BEGIN PCC PART11 TO END PCC PART 1	35.48 - 36.27	8				180								600				
		11				7406									29622			
		13	1262				1012			250								
		14	48				36	12										
		25	88		4170						88		4170					
		27B				4170											4170	
		36	24			530				24								530
		36A	16			350				16								350
		37	122			180		120		2						900		
		38B	28			300				28								300
		◇		22								22						
		SUB TOTAL PDQ-2	6168	22	4170	13116	4292	416		1189	271	434	17105	1560	68427	2400	17105	3760

* INCLUDES GORE AREAS

REVISED BY	DATE REVISED
A	A

CALCULATED-DESIGNED BY: AB
CHECKED BY: MN
FUNCTIONAL SUPERVISOR: ASHOK BHATNAGAR

STATE OF CALIFORNIA - DEPARTMENT OF TRANSPORTATION
Caltrans MAINTENANCE

PAVEMENT DELINEATION QUANTITIES

PDQ-2

LAST REVISION 11-10-08
DATE PLOTTED => 31-JUL-2009
TIME PLOTTED => 07:03

Dist	COUNTY	ROUTE	POST MILES TOTAL PROJECT	SHEET No.	TOTAL SHEETS
04	SCI	101	R27.6/40.2	86	173

REGISTERED CIVIL ENGINEER DATE 11/04/08

PLANS APPROVAL DATE 5-11-09

REGISTERED PROFESSIONAL ENGINEER A. Bhatnagar No. 48814 Exp 9-30-10 CIVIL STATE OF CALIFORNIA

THE STATE OF CALIFORNIA OR ITS OFFICERS OR AGENTS SHALL NOT BE RESPONSIBLE FOR THE ACCURACY OR COMPLETENESS OF SCANNED COPIES OF THIS PLAN SHEET.

PAVEMENT DELINEATION QUANTITIES (MAINLINE-NORTHBOUND)*

DESCRIPTION	PM	DETAIL NO. OR PAVEMENT MARKING	REMOVE: PAVEMENT MARKER	REMOVE: THERMOPLASTIC TRAFFIC STRIPE: PAVEMENT MARKING	REMOVE: THERMOPLASTIC TRAFFIC STRIPE: YELLOW 4 INCH SOLID	REMOVE: THERMOPLASTIC TRAFFIC STRIPE: WHITE 4 INCH SOLID	PAVEMENT MARKER: NON-REFLECTIVE TYPE A	PAVEMENT MARKER: RETROREFLECTIVE TYPE C	PAVEMENT MARKER: RETROREFLECTIVE TYPE D	PAVEMENT MARKER: RETROREFLECTIVE TYPE G	PAVEMENT MARKER: RETROREFLECTIVE TYPE H	THERMO-PLASTIC PAVEMENT MARKING WHITE	THERMOPLASTIC TRAFFIC STRIPE: YELLOW 4 INCH SOLID	THERMOPLASTIC TRAFFIC STRIPE: WHITE: 4" WHITE (BROKEN 17-7)	THERMOPLASTIC TRAFFIC STRIPE: WHITE: 4" WHITE (BROKEN 36-12)	THERMOPLASTIC TRAFFIC STRIPE: WHITE: 8" WHITE (BROKEN 12-3)	THERMOPLASTIC TRAFFIC STRIPE: WHITE: 4 INCH SOLID	THERMOPLASTIC TRAFFIC STRIPE: WHITE: 8 INCH SOLID
			EA	SQ FT	LF		EA					SQ FT	LF					
END PCC PART 1 TO BEGIN PCC PART 2	36.27 - 38.14	8												600				
		11													39622			
		13	2855				2296			559								
		14	240				180	60										
		25	207								207		9874					
		27B															9874	
		36	46							46								1060
		36A	31							31								760
		◇										166						
BEGIN PCC PART 2 TO END PCC PART 2	38.14 - 38.47	8				60								200				
		11				2048									8190			
		13	812				652			160								
		14	48				36	12										
		25	58		2730						58		2730					
		27B				2730											2730	
		36	18			800				18								400
		36A	12			500				12								250
		◇		22								22						
END PCC PART 2 TO END CONSTRUCTION	38.47 - 40.20	8												1200				
		11													27390			
		13	2776				2216			560								
		14	84				72	12										
		25	192								192		9130					
		27B															9130	
		36	46							46								1060
		36A	60							60								1400
		37	80				80									600		
		38B	28							28								300
		◇										171						
SUBTOTAL PDQ-3			7593	22	2730	6138	5532	84		1520	457	359	21734	2000	75202	600	21734	5230
SUBTOTAL PDQ-2			6168	22	4170	13116	4292	416		1189	271	434	17105	1560	68427	2400	17105	3760
SUBTOTAL PDQ-1			10384				7356	520		1908	600	462	28640	1200	89220		28640	3820
GRAND TOTAL (NORTHBOUND)			24145	44	6900	19254	17180	1020		4617	1328	1255	67479	4760	232849	3000	67479	12810

* INCLUDES GORE AREAS

STATE OF CALIFORNIA - DEPARTMENT OF TRANSPORTATION

Caltrans MAINTENANCE

FUNCTIONAL SUPERVISOR: ASHOK BHATNAGAR

CALCULATED-DESIGNED BY: AB

CHECKED BY: MN

REVISED BY: A

DATE REVISED: A

PAVEMENT DELINEATION QUANTITIES

PDQ-3

LAST REVISION 11-10-08 | DATE PLOTTED => 31-JUL-2009 | TIME PLOTTED => 07:03

Dist	COUNTY	ROUTE	POST MILES TOTAL PROJECT	SHEET No.	TOTAL SHEETS
04	SCI	101	R27.6/40.2	87	173

11/04/08
REGISTERED CIVIL ENGINEER DATE

5-11-09
PLANS APPROVAL DATE

REGISTERED PROFESSIONAL ENGINEER A. Bhatnagar No. 48814 Exp 9-30-10 CIVIL STATE OF CALIFORNIA

THE STATE OF CALIFORNIA OR ITS OFFICERS OR AGENTS SHALL NOT BE RESPONSIBLE FOR THE ACCURACY OR COMPLETENESS OF SCANNED COPIES OF THIS PLAN SHEET.

PAVEMENT DELINEATION QUANTITIES (MAINLINE SOUTHBOUND)

DESCRIPTION	PM	DETAIL No. OR PAVEMENT MARKING	REMOVE: PAVEMENT MARKER	REMOVE: THERMOPLASTIC: PAVEMENT MARKING	REMOVE: THERMOPLASTIC: YELLOW 4 INCH SOLID	REMOVE: THERMOPLASTIC: WHITE 4 INCH SOLID	PAVEMENT MARKER: NON-RETRO-REFLECTIVE: TYPE A	PAVEMENT MARKER: RETROREFLECTIVE: TYPE C	PAVEMENT MARKER: RETROREFLECTIVE: TYPE D	PAVEMENT MARKER: RETROREFLECTIVE: TYPE G	PAVEMENT MARKER: RETROREFLECTIVE: TYPE H	THERMO-PLASTIC PAVEMENT MARKING: WHITE	THERMOPLASTIC TRAFFIC STRIPE: YELLOW 4 INCH SOLID	THERMOPLASTIC TRAFFIC STRIPE: WHITE: 4 INCH WHITE (BROKEN 17-7)	THERMOPLASTIC TRAFFIC STRIPE: WHITE: 4 INCH WHITE (BROKEN 36-12)	THERMOPLASTIC TRAFFIC STRIPE: WHITE: 8 INCH WHITE (BROKEN 12-3)	THERMOPLASTIC TRAFFIC STRIPE: WHITE: 4 INCH SOLID	THERMOPLASTIC TRAFFIC STRIPE: WHITE: 8 INCH SOLID
			EA	SQ FT	LF		EA					SQ FT	LF					
BEGIN CONSTRUCTION TO BLOSSOM HILL ROAD UC	27.60/28.61	25	111								111		5333					
		27B															5333	
		11													17007			
		13	1645				1320			325								
		14	144				108	36										
		8												2880				
		36	30							30								672
		36B	27							27							624	624
		◇										121						
		TYPE VI ARROW (3)										126						
BLOSSOM HILL ROAD UC TO YERBA BUENA ROAD UC	28.61/30.98	25	261								261		12514					
		27B															12514	
		11													37542			
		13	3638				2925			713								
		14	288				216	72										
		8												1008				
		36	52							52								1152
		36A	35							35							768	768
		◇										286						
YERBA BUENA ROAD UC TO TULLY ROAD OC	30.98/33.03	25	226								226		10824					
		27B															10824	
		11													44160			
		13	3300				2640			660								
		14	144				108	36										
		8												480				
		37	90					90								660		
		38B	46							46								528
		36	26							26								576
		36A	36							36							816	816
		◇										242						
TOTAL SHEET PDQ-4			10099				7317	234		1950	598	533	28671	4368	98709	660	30879	5136

STATE OF CALIFORNIA - DEPARTMENT OF TRANSPORTATION
Caltrans MAINTENANCE

FUNCTIONAL SUPERVISOR: ASHOK BHATNAGAR
CALCULATED-DESIGNED BY: SL
CHECKED BY: CT
REVISED BY: A
DATE REVISED: A

PAVEMENT DELINEATION QUANTITIES

PDQ-4

LAST REVISION 11-10-08 DATE PLOTTED => 31-JUL-2009 TIME PLOTTED => 07:04

Dist	COUNTY	ROUTE	POST MILES TOTAL PROJECT	SHEET No.	TOTAL SHEETS
04	SCI	101	R27.6/40.2	88	173

11/04/08
REGISTERED CIVIL ENGINEER DATE

5-11-09
PLANS APPROVAL DATE

REGISTERED PROFESSIONAL ENGINEER
A. Bhatnagar
No. 48814
Exp 9-30-10
CIVIL
STATE OF CALIFORNIA

THE STATE OF CALIFORNIA OR ITS OFFICERS OR AGENTS SHALL NOT BE RESPONSIBLE FOR THE ACCURACY OR COMPLETENESS OF SCANNED COPIES OF THIS PLAN SHEET.

PAVEMENT DELINEATION QUANTITIES (MAINLINE SOUTHBOUND)

DESCRIPTION	PM	DETAIL No. OR PAVEMENT MARKING	REMOVE: PAVEMENT MARKER	REMOVE: THERMOPLASTIC: PAVEMENT MARKING	REMOVE: THERMOPLASTIC: YELLOW 4 INCH SOLID	REMOVE: THERMOPLASTIC: WHITE 4 INCH SOLID	PAVEMENT MARKER: NON-RETRO-REFLECTIVE: TYPE A	PAVEMENT MARKER: RETROREFLECTIVE: TYPE C	PAVEMENT MARKER: RETROREFLECTIVE: TYPE D	PAVEMENT MARKER: RETROREFLECTIVE: TYPE G	PAVEMENT MARKER: RETROREFLECTIVE: TYPE H	THERMO-PLASTIC PAVEMENT MARKING: WHITE	THERMOPLASTIC TRAFFIC STRIPE: YELLOW 4 INCH SOLID	THERMOPLASTIC TRAFFIC STRIPE: WHITE: 4 INCH WHITE (BROKEN 17-7)	THERMOPLASTIC TRAFFIC STRIPE: WHITE: 4 INCH WHITE (BROKEN 36-12)	THERMOPLASTIC TRAFFIC STRIPE: WHITE: 8 INCH WHITE (BROKEN 12-3)	THERMOPLASTIC TRAFFIC STRIPE: WHITE: 4 INCH SOLID	THERMOPLASTIC TRAFFIC STRIPE: WHITE: 8 INCH SOLID
			EA	SQ FT	LF		EA					SQ FT	LF					
TULLY ROAD OC TO STORY ROAD OC	33.03/34.55	25	168								168		8026					
		27B															8026	
		11													24076			
		13	1642				1320			322								
		14	144				108	36										
		8												288				
		37	174					174								1290		
		38B	42							42								480
		36	22							22								480
		36A	60							60							1392	1392
		◇										187						
		TYPE VI ARROW (3)										126						
STORY ROAD OC TO BEGIN PCC PART 1	34.55/35.48	25	103								103		4911					
		27B															4911	
		11													14733			
		13	1248				1012			236								
		14	288				216	72										
		37	22					22								150		
		38B	62							62								720
		36	56							56								1008
		◇										110						
BEGIN PCC PART 1 TO END PCC PART 1	35.48/36.27	25	88		4172						88		4172					
		27B				4172											4172	
		11				3552									12912			
		13	1337				1076			261								
		14	144				108	36										
		8				91								312				
		37	108			636		108								795		
		36	22			960				22								480
		36A	30			2016				30							672	672
		◇		99								99						
END PCC PART 1 TO BEGIN PCC PART 2	36.27/38.14	25	207								207		9874					
		27B															9874	
		11													29622			
		13	2893				2328			565								
		14	288				216	72										
		8												816				
		38B	42							42								480
		36	52							52								1152
		36A	28							28							624	624
		◇										220						
TOTAL SHEET PDQ-5			9270	99	4172	11427	6384	520		1800	566	742	26983	1416	81343	2235	29671	7488

PAVEMENT DELINEATION QUANTITIES

PDQ-5

STATE OF CALIFORNIA - DEPARTMENT OF TRANSPORTATION
Caltrans MAINTENANCE

FUNCTIONAL SUPERVISOR: ASHOK BHATNAGAR
CALCULATED-DESIGNED BY: SL
CHECKED BY: CT
REVISED BY: A
DATE REVISED: A

LAST REVISION 11-10-08 DATE PLOTTED => 31-JUL-2009 TIME PLOTTED => 07:04

Dist	COUNTY	ROUTE	POST MILES TOTAL PROJECT	SHEET No.	TOTAL SHEETS
04	SCI	101	R27.6/40.2	89	173

REGISTERED CIVIL ENGINEER DATE 11/04/08

PLANS APPROVAL DATE 5-11-09

REGISTERED PROFESSIONAL ENGINEER A. Bhatnagar No. 48814 Exp 9-30-10 CIVIL STATE OF CALIFORNIA

THE STATE OF CALIFORNIA OR ITS OFFICERS OR AGENTS SHALL NOT BE RESPONSIBLE FOR THE ACCURACY OR COMPLETENESS OF SCANNED COPIES OF THIS PLAN SHEET.

PAVEMENT DELINEATION QUANTITIES (MAINLINE SOUTHBOUND)

DESCRIPTION	PM	DETAIL No. OR PAVEMENT MARKING	REMOVE: PAVEMENT MARKER	REMOVE: THERMOPLASTIC: PAVEMENT MARKING	REMOVE: THERMOPLASTIC: YELLOW 4 INCH SOLID	REMOVE: THERMOPLASTIC: WHITE 4 INCH SOLID	PAVEMENT MARKER: NON-RETRO-REFLECTIVE: TYPE A	PAVEMENT MARKER: RETROREFLECTIVE: TYPE C	PAVEMENT MARKER: RETROREFLECTIVE: TYPE D	PAVEMENT MARKER: RETROREFLECTIVE: TYPE G	PAVEMENT MARKER: RETROREFLECTIVE: TYPE H	THERMO-PLASTIC PAVEMENT MARKING: WHITE	THERMOPLASTIC TRAFFIC STRIPE: YELLOW 4 INCH SOLID	THERMOPLASTIC TRAFFIC STRIPE: WHITE: 4 INCH WHITE (BROKEN 17-7)	THERMOPLASTIC TRAFFIC STRIPE: WHITE: 4 INCH WHITE (BROKEN 36-12)	THERMOPLASTIC TRAFFIC STRIPE: WHITE: 8 INCH WHITE (BROKEN 12-3)	THERMOPLASTIC TRAFFIC STRIPE: WHITE: 4 INCH SOLID	THERMOPLASTIC TRAFFIC STRIPE: WHITE: 8 INCH SOLID
			EA	SQ FT	LF		EA					SQ FT	LF					
BEGIN PCC PART 2 TO END PCC PART 2	38.14/38.47	25	37		1743						37		1743					
		27B				1743											1743	
		11				2508									7497			
		13	903				728			175								
		14	144				108	36										
		8				322								1104				
		36	14			576				14								288
		36A	7			432				7							144	144
		<>		44								44						
END PCC PART 2 TO END CONSTRUCTION	38.47/40.20	25	191								191		9135					
		27B															9135	
		11													28917			
		13	2999				2412			587								
		14	288				216	72										
		37	26					26								458		
		38B	26							26								300
		36	98							98								2208
		36A	21							21							480	480
		<>										209						
TOTAL SHEET PDQ-6			4754	44	1743	5581	3464	134		928	228	253	10878	1104	36414	458	11502	3420
TOTAL SHEET PDQ-5			9270	99	4172	11427	6384	520		1800	566	742	26983	1416	81343	2235	29671	7488
TOTAL SHEET PDQ-4			10099				7317	234		1950	598	533	28671	4368	98709	660	30879	5136
GRAND TOTAL			24123	143	5915	17008	17165	6958				1770	66532	6888	216466	3353	72052	16044

REVISED BY	DATE REVISED
SL	CT
A	A

CALCULATED-DESIGNED BY | CHECKED BY

FUNCTIONAL SUPERVISOR: ASHOK BHATNAGAR

STATE OF CALIFORNIA - DEPARTMENT OF TRANSPORTATION

Caltrans MAINTENANCE

PAVEMENT DELINEATION QUANTITIES

PDQ-6

LAST REVISION 11-12-08 | DATE PLOTTED => 31-JUL-2009 | TIME PLOTTED => 07:04

Dist	COUNTY	ROUTE	POST MILES TOTAL PROJECT	SHEET No.	TOTAL SHEETS
04	SCI	101	R27.6/40.2	90	173

REGISTERED CIVIL ENGINEER DATE 11/04/08

5-11-09
PLANS APPROVAL DATE

REGISTERED PROFESSIONAL ENGINEER A. Bhatnagar No. 48814 Exp 9-30-10 CIVIL STATE OF CALIFORNIA

THE STATE OF CALIFORNIA OR ITS OFFICERS OR AGENTS SHALL NOT BE RESPONSIBLE FOR THE ACCURACY OR COMPLETENESS OF SCANNED COPIES OF THIS PLAN SHEET.

PAVEMENT DELINEATION QUANTITIES (RAMPS)

LOCATION No.	DESCRIPTION	DETAIL No. OR PAVEMENT MARKING	REMOVE: PAVEMENT MARKERS	REMOVE: THERMOPLASTIC PAVEMENT MARKING WHITE	REMOVE: THERMOPLASTIC TRAFFIC STRIPE YELLOW 4INCH SOLID	PAVEMENT MARKER: NON-REFLECTIVE TYPE A	PAVEMENT MARKER: RETROREFLECTIVE TYPE C	PAVEMENT MARKER: RETROREFLECTIVE TYPE D	PAVEMENT MARKER: RETROREFLECTIVE TYPE G	PAVEMENT MARKER: RETROREFLECTIVE TYPE H	THERMOPLASTIC PAVEMENT MARKING WHITE	THERMOPLASTIC TRAFFIC STRIPE: YELLOW 4 INCH SOLID	THERMOPLASTIC TRAFFIC STRIPE: WHITE 4 INCH WHITE (BROKEN 17-7)	THERMOPLASTIC TRAFFIC STRIPE: WHITE 4 INCH WHITE (BROKEN 36-12)	THERMOPLASTIC TRAFFIC STRIPE: WHITE 8 INCH WHITE (BROKEN 12-3)	THERMOPLASTIC TRAFFIC STRIPE: WHITE 4 INCH SOLID	THERMOPLASTIC TRAFFIC STRIPE: WHITE 8 INCH SOLID
			EA		FT	EA					SQ FT	FT					
1	N/B OFF TO ROUTE 82/BLOSSOM HILL ROAD	25A	62							62		1480					
		27B														1480	
		TYPE I (24') ARROW									93						
		TYPE III (L) ARROW									126						
		TYPE III (R) ARROW									168						
		TYPE II (R) ARROW									90						
		SIGNAL									96						
		AHEAD									93						
2	S/B ON FROM S/B ROUTE 82	25A	49							49		1170					
		27B														1170	
		38A															1170
		◇									55						
3	N/B ON FROM E/B BLOSSOM HILL ROAD	9	12						12				580				
		25A	24							24		580					
		27B														790	
		38	9						9								210
		TYPE I (18') ARROW									25						
		TYPE VI ARROW									126						
		LL									50						
4	S/B ON FROM N/B ROUTE 82	25A	35							35		880					
		27B														930	
		LL									42						
5	N/B ON FROM W/B BLOSSOM HILL ROAD	8											220				
		25A	35							35		880					
		27B														1290	
		38	9						9								210
		TYPE I (18') ARROW									25						
		LL & CW									176						
	TOTAL SHEET PDQ-7		235						30	205	1165	4990	800			5660	1590

PAVEMENT DELINEATION QUANTITIES

PDQ-7

REVISED BY	DATE REVISED
A	A
A	A

CALCULATED-DESIGNED BY
CHECKED BY
FUNCTIONAL SUPERVISOR ASHOK BHATNAGAR

STATE OF CALIFORNIA - DEPARTMENT OF TRANSPORTATION
Caltrans MAINTENANCE

LAST REVISION 11-12-08 | DATE PLOTTED => 31-JUL-2009 | TIME PLOTTED => 07:04

Dist	COUNTY	ROUTE	POST MILES TOTAL PROJECT	SHEET No.	TOTAL SHEETS
04	SCI	101	R27.6/40.2	91	173

REGISTERED CIVIL ENGINEER DATE 11/04/08

PLANS APPROVAL DATE 5-11-09

REGISTERED PROFESSIONAL ENGINEER A. Bhatnagar No. 48814 Exp 9-30-10 CIVIL STATE OF CALIFORNIA

THE STATE OF CALIFORNIA OR ITS OFFICERS OR AGENTS SHALL NOT BE RESPONSIBLE FOR THE ACCURACY OR COMPLETENESS OF SCANNED COPIES OF THIS PLAN SHEET.

PAVEMENT DELINEATION QUANTITIES (RAMPS)

LOCATION No.	DESCRIPTION	DETAIL No. OR PAVEMENT MARKING	REMOVE: PAVEMENT MARKERS (EA)	REMOVE: THERMOPLASTIC PAVEMENT MARKING WHITE SQ FT	REMOVE: THERMOPLASTIC TRAFFIC STRIPE YELLOW 4INCH SOLID (FT)	PAVEMENT MARKER: NON-REFLECTIVE TYPE A (EA)	PAVEMENT MARKER: RETROREFLECTIVE TYPE C (EA)	PAVEMENT MARKER: RETROREFLECTIVE TYPE D (EA)	PAVEMENT MARKER: RETROREFLECTIVE TYPE G (EA)	PAVEMENT MARKER: RETROREFLECTIVE TYPE H (EA)	THERMOPLASTIC PAVEMENT MARKING WHITE (SQ FT)	THERMOPLASTIC TRAFFIC STRIPE: YELLOW 4 INCH SOLID (FT)	THERMOPLASTIC TRAFFIC STRIPE: WHITE 4 INCH WHITE (BROKEN 17-7) (FT)	THERMOPLASTIC TRAFFIC STRIPE: WHITE 4 INCH WHITE (BROKEN 36-12) (FT)	THERMOPLASTIC TRAFFIC STRIPE: WHITE 8 INCH WHITE (BROKEN 12-3) (FT)	THERMOPLASTIC TRAFFIC STRIPE: WHITE 4 INCH SOLID (FT)	THERMOPLASTIC TRAFFIC STRIPE: WHITE 8 INCH SOLID (FT)
6	S/B OFF TO ROUTE 82/BLOSSOM HILL ROAD	13	165			132			33								
		25A	48							48		1150					
		27B														1185	
		38	5						5								115
		38B	28						28								450
		SIGNAL									96						
		AHEAD									93						
		TYPE III (L) ARROW									126						
		TYPE VI (R) ARROW									252						
7	N/B OFF TO HELLYER AVENUE	25A	30							30		735					
		27B														735	
		TYPE I (24') ARROW									93						
		STOP									22						
		AHEAD									31						
8	S/B OFF TO HELLYER AVENUE	25A	36							36		890					
		27B														1110	
		TYPE I ARROW									93						
		AHEAD									31						
		STOP									66						
		LL									28						
9	N/B ON FROM HELLYER AVENUE	25A	30							30		510					
		27B														460	
10	S/B ON FROM YERBA BUENA ROAD	10	29			24			5								
		25A	42							42		998					
		27B														998	
		38	3						3								162
		LIMIT LINE									175						
		TYPE I (18') ARROW									50						
		TYPE VI ARROW									84						
	TOTAL SHEET PDQ-8		416			156			74	186	1240	4283				4488	727

PAVEMENT DELINEATION QUANTITIES

PDQ-8

STATE OF CALIFORNIA - DEPARTMENT OF TRANSPORTATION
Caltrans MAINTENANCE

FUNCTIONAL SUPERVISOR: ASHOK BHATNAGAR

CALCULATED-DESIGNED BY: SL | CHECKED BY: CT

REVISED BY: A | DATE REVISED: A

LAST REVISION 12-24-08 | DATE PLOTTED => 31-JUL-2009 | TIME PLOTTED => 07:04

Dist	COUNTY	ROUTE	POST MILES TOTAL PROJECT	SHEET No.	TOTAL SHEETS
04	SCI	101	R27.6/40.2	92	173

REGISTERED CIVIL ENGINEER DATE 11/04/08

PLANS APPROVAL DATE 5-11-09

REGISTERED PROFESSIONAL ENGINEER A. Bhatnagar No. 48814 Exp 9-30-10 CIVIL STATE OF CALIFORNIA

THE STATE OF CALIFORNIA OR ITS OFFICERS OR AGENTS SHALL NOT BE RESPONSIBLE FOR THE ACCURACY OR COMPLETENESS OF SCANNED COPIES OF THIS PLAN SHEET.

PAVEMENT DELINEATION QUANTITIES (RAMPS)

LOCATION No.	DESCRIPTION	DETAIL No. OR PAVEMENT MARKING	REMOVE: PAVEMENT MARKERS (EA)	REMOVE: THERMOPLASTIC PAVEMENT MARKING WHITE SQ FT	REMOVE: THERMOPLASTIC TRAFFIC STRIPE YELLOW 4INCH SOLID (FT)	PAVEMENT MARKER: NON-REFLECTIVE TYPE A (EA)	PAVEMENT MARKER: RETROREFLECTIVE TYPE C (EA)	PAVEMENT MARKER: RETROREFLECTIVE TYPE D (EA)	PAVEMENT MARKER: RETROREFLECTIVE TYPE G (EA)	PAVEMENT MARKER: RETROREFLECTIVE TYPE H (EA)	THERMOPLASTIC PAVEMENT MARKING WHITE (SQ FT)	THERMOPLASTIC TRAFFIC STRIPE: YELLOW 4 INCH SOLID (FT)	THERMOPLASTIC TRAFFIC STRIPE: WHITE 4 INCH WHITE (BROKEN 17-7) (FT)	THERMOPLASTIC TRAFFIC STRIPE: WHITE 4 INCH WHITE (BROKEN 36-12) (FT)	THERMOPLASTIC TRAFFIC STRIPE: WHITE 8 INCH WHITE (BROKEN 12-3) (FT)	THERMOPLASTIC TRAFFIC STRIPE: WHITE 4 INCH SOLID (FT)	THERMOPLASTIC TRAFFIC STRIPE: WHITE 8 INCH SOLID (FT)
11	N/B OFF TO YERBA BUENA ROAD	10	29			24			5								
		25A	41							41		958					
		27B														3360	
		29	16					16				263					
		38	9						9								614
		LIMIT LINE									108						
		TYPE I (18') ARROW									25						
		TYPE II (B) ARROW									177						
		TYPE III (L) ARROW									126						
12	SEGMENT S/B OFF TO YERBA BUENA ROAD	25A	38							38		1811					
		27B														1811	
		38	7						7								807
		LIMIT LINE									80						
		TYPE I (18')ARROW									25						
		TYPE III (L) ARROW									84						
		TYPE II (B) ARROW									119						
13	N/B OFF TO CAPITOL EXPRESSWAY	25A	14							14		308					
		27B														308	
14	S/B ON FROM CAPITOL EXPRESSWAY	25A	3							3		69					
		27B														69	
		LIMIT LINE									12						
15	SEGMENT N/B ON FROM YERBA BUENA ROAD	10	29			24			5								
		25A	34							34		788					
		27B														854	
		LIMIT LINE									26						
		TYPE I (18') ARROW									50						
		TYPE VI ARROW									84						
	TOTAL SHEET PDQ-9		220			48		16	26	130	916	4197				6402	1421

PAVEMENT DELINEATION QUANTITIES

PDQ-9

REVISED BY | DATE REVISED: A | A

CALCULATED-DESIGNED BY: AB | CHECKED BY: MN

FUNCTIONAL SUPERVISOR: ASHOK BHATNAGAR

STATE OF CALIFORNIA - DEPARTMENT OF TRANSPORTATION

Caltrans **MAINTENANCE**

LAST REVISION 11-12-08 | DATE PLOTTED => 31-JUL-2009 | TIME PLOTTED => 07:04

Dist	COUNTY	ROUTE	POST MILES TOTAL PROJECT	SHEET No.	TOTAL SHEETS
04	SCI	101	R27.6/40.2	93	173

REGISTERED CIVIL ENGINEER DATE 11/04/08

5-11-09
PLANS APPROVAL DATE

REGISTERED PROFESSIONAL ENGINEER A. Bhatnagar No. 48814 Exp 9-30-10 CIVIL STATE OF CALIFORNIA

THE STATE OF CALIFORNIA OR ITS OFFICERS OR AGENTS SHALL NOT BE RESPONSIBLE FOR THE ACCURACY OR COMPLETENESS OF SCANNED COPIES OF THIS PLAN SHEET.

PAVEMENT DELINEATION QUANTITIES (RAMPS)

LOCATION No.	DESCRIPTION	DETAIL No. OR PAVEMENT MARKING	REMOVE: PAVEMENT MARKERS	REMOVE: THERMOPLASTIC PAVEMENT MARKING WHITE	REMOVE: THERMOPLASTIC TRAFFIC STRIPE YELLOW 4INCH SOLID	PAVEMENT MARKER: NON-REFLECTIVE TYPE A	PAVEMENT MARKER: RETROREFLECTIVE TYPE C	PAVEMENT MARKER: RETROREFLECTIVE TYPE D	PAVEMENT MARKER: RETROREFLECTIVE TYPE G	PAVEMENT MARKER: RETROREFLECTIVE TYPE H	THERMOPLASTIC PAVEMENT MARKING WHITE	THERMOPLASTIC TRAFFIC STRIPE: YELLOW 4 INCH SOLID	THERMOPLASTIC TRAFFIC STRIPE: WHITE 4 INCH WHITE (BROKEN 17-7)	THERMOPLASTIC TRAFFIC STRIPE: WHITE 4 INCH WHITE (BROKEN 36-12)	THERMOPLASTIC TRAFFIC STRIPE: WHITE 8 INCH WHITE (BROKEN 12-3)	THERMOPLASTIC TRAFFIC STRIPE: WHITE 4 INCH SOLID	THERMOPLASTIC TRAFFIC STRIPE: WHITE 8 INCH SOLID
			EA		FT	EA					SQ FT	FT					
16	S/B COLLECTOR CAPITOL EXPRESSWAY TO YERBA BUENA ROAD	25A	45							45		1057					
		27B														1057	
		36	42						42								965
		37B	140						140						410		
		38B	16						16								164
17	N/B COLLECTOR YERBA BUENA ROAD TO CAPITOL EXPRESSWAY	25A	71							71		1673					
		27B														1673	
		37	94				90		4						1312		
		38B	34						34								361
		38	14						14								295
18	S/B ON FROM STORY ROAD	25A	20							20		433					
		27B														433	
		36A	6						6								99
19	N/B OFF TO STORY ROAD	25A	57							57		1330					
		27B														1330	
		36	25						25								599
		36A	7						7								131
		37	18				18								263		
20	SEGMENT S/B ON FROM E/B STORY ROAD	25A	32							32		738					
		27B														2420	
		LIMIT LINE									38						
		TYPE I (10') ARROW									14						
21	SEGMENT N/B OFF TO E/B STORY ROAD	25A	30							30		673					
		27B														673	
		LIMIT LINE									33						
		TYPE I (24') ARROW									62						
		TOTAL SHEET PDQ-10	651				108		288	255	147	5904			2248	7586	2614

PAVEMENT DELINEATION QUANTITIES

PDQ-10

REVISED BY	DATE REVISED
A	A

CALCULATED-DESIGNED BY: AB
CHECKED BY: MN
FUNCTIONAL SUPERVISOR: ASHOK BHATNAGAR

STATE OF CALIFORNIA - DEPARTMENT OF TRANSPORTATION
Caltrans MAINTENANCE

LAST REVISION 11-12-08
DATE PLOTTED => 31-JUL-2009
TIME PLOTTED => 07:04

Dist	COUNTY	ROUTE	POST MILES TOTAL PROJECT	SHEET No.	TOTAL SHEETS
04	SCI	101	R27.6/40.2	94	173

REGISTERED CIVIL ENGINEER DATE 11/04/08

5-11-09
PLANS APPROVAL DATE

REGISTERED PROFESSIONAL ENGINEER A. Bhatnagar No. 48814 Exp 9-30-10 CIVIL STATE OF CALIFORNIA

THE STATE OF CALIFORNIA OR ITS OFFICERS OR AGENTS SHALL NOT BE RESPONSIBLE FOR THE ACCURACY OR COMPLETENESS OF SCANNED COPIES OF THIS PLAN SHEET.

PAVEMENT DELINEATION QUANTITIES (RAMPS)

LOCATION No.	DESCRIPTION	DETAIL No. OR PAVEMENT MARKING	REMOVE: PAVEMENT MARKERS (EA)	REMOVE: THERMOPLASTIC PAVEMENT MARKING WHITE SQ FT	REMOVE: THERMOPLASTIC TRAFFIC STRIPE YELLOW 4INCH SOLID (FT)	PAVEMENT MARKER: NON-REFLECTIVE TYPE A (EA)	PAVEMENT MARKER: RETROREFLECTIVE TYPE C (EA)	PAVEMENT MARKER: RETROREFLECTIVE TYPE D (EA)	PAVEMENT MARKER: RETROREFLECTIVE TYPE G (EA)	PAVEMENT MARKER: RETROREFLECTIVE TYPE H (EA)	THERMOPLASTIC PAVEMENT MARKING WHITE (SQ FT)	THERMOPLASTIC TRAFFIC STRIPE: YELLOW 4 INCH SOLID (FT)	THERMOPLASTIC TRAFFIC STRIPE: WHITE 4 INCH WHITE (BROKEN 17-7) (FT)	THERMOPLASTIC TRAFFIC STRIPE: WHITE 4 INCH WHITE (BROKEN 36-12) (FT)	THERMOPLASTIC TRAFFIC STRIPE: WHITE 8 INCH WHITE (BROKEN 12-3) (FT)	THERMOPLASTIC TRAFFIC STRIPE: WHITE 4 INCH SOLID (FT)	THERMOPLASTIC TRAFFIC STRIPE: WHITE 8 INCH SOLID (FT)
22	SEGMENT S/B ON FROM W/B STORY ROAD	25A	21							21		460					
		27B														460	
		LIMIT LINE									36						
		TYPE I 10' ARROW									14						
23	SEGMENT N/B OFF TO W/B STORY ROAD	25A	21							21		460					
		27B														460	
		LIMIT LINE									43						
		TYPE I 24' ARROW									62						
24	SEGMENT S/B OFF TO E/B STORY ROAD	25A	19							19		443					
		27B														443	
		LIMIT LINE									34						
25	SEGMENT N/B ON FROM E/B STORY ROAD	25A	21							21		473					
		27B														473	
		LIMIT LINE									45						
		TYPE I 10' ARROW									14						
26	SEGMENT S/B OFF TO W/B STORY ROAD	25A	32							32		738					
		27B														738	
		LIMIT LINE									45						
		TYPE I 24' ARROW									62						
27	SEGMENT N/B ON FROM W/B STORY ROAD	25A	35							35		788					
		27B														788	
		LIMIT LINE									32						
		TYPE I 18' ARROW									25						
28	S/B OFF TO STORY ROAD	13	151			120			31								
		25A	60							60		1400					
		27B														1400	
		36	26						26								578
		36A	15						15								328
	TOTAL SHEET PDQ-11		401			120			72	209	412	6162				4762	906

PAVEMENT DELINEATION QUANTITIES

PDQ-11

REVISED BY	DATE REVISED
AB	MN

CALCULATED-DESIGNED BY: A
CHECKED BY: A

FUNCTIONAL SUPERVISOR: ASHOK BHATNAGAR

STATE OF CALIFORNIA - DEPARTMENT OF TRANSPORTATION
Caltrans MAINTENANCE

LAST REVISION 11-12-08 | DATE PLOTTED => 31-JUL-2009 | TIME PLOTTED => 07:05

Dist	COUNTY	ROUTE	POST MILES TOTAL PROJECT	SHEET No.	TOTAL SHEETS
04	SCI	101	R27.6/40.2	95	173

REGISTERED CIVIL ENGINEER DATE 11/04/08

PLANS APPROVAL DATE 5-11-09

REGISTERED PROFESSIONAL ENGINEER A. Bhatnagar No. 48814 Exp 9-30-10 CIVIL STATE OF CALIFORNIA

THE STATE OF CALIFORNIA OR ITS OFFICERS OR AGENTS SHALL NOT BE RESPONSIBLE FOR THE ACCURACY OR COMPLETENESS OF SCANNED COPIES OF THIS PLAN SHEET.

PAVEMENT DELINEATION QUANTITIES (RAMPS)

LOCATION No.	DESCRIPTION	DETAIL No. OR PAVEMENT MARKING	REMOVE: PAVEMENT MARKERS	REMOVE: THERMOPLASTIC PAVEMENT MARKING WHITE SQ FT	REMOVE: THERMOPLASTIC TRAFFIC STRIPE YELLOW 4INCH SOLID	PAVEMENT MARKER: NON-REFLECTIVE TYPE A	PAVEMENT MARKER: RETROREFLECTIVE TYPE C	PAVEMENT MARKER: RETROREFLECTIVE TYPE D	PAVEMENT MARKER: RETROREFLECTIVE TYPE G	PAVEMENT MARKER: RETROREFLECTIVE TYPE H	THERMOPLASTIC PAVEMENT MARKING WHITE	THERMOPLASTIC TRAFFIC STRIPE: YELLOW 4 INCH SOLID	THERMOPLASTIC TRAFFIC STRIPE: WHITE 4 INCH WHITE (BROKEN 17-7)	THERMOPLASTIC TRAFFIC STRIPE: WHITE 4 INCH WHITE (BROKEN 36-12)	THERMOPLASTIC TRAFFIC STRIPE: WHITE 8 INCH WHITE (BROKEN 12-3)	THERMOPLASTIC TRAFFIC STRIPE: WHITE 4 INCH SOLID	THERMOPLASTIC TRAFFIC STRIPE: WHITE 8 INCH SOLID
			EA		FT	EA					SQ FT	FT					
29	SEGMENT N/B ON FROM STORY ROAD	25A	92							92		2165					
		27B														2165	
		36	7						7								131
		36A	12						12								262
30	S/B ON FROM ROUTE 280 & 680	11												1830			
		13	200			160			40								
		25A	46							46		1066					
		27B														1066	
		LIMIT LINE									140						
		TYPE VI ARROW									136						
31	N/B OFF TO ROUTE 280 & 680	11												2296			
		13	245			196			49								
		25A	49							49		1150					
		27B														1150	
32	S/B OFF TO ROUTE 280 & 680	11												988			
		13	109			88			21								
		25A	22							22		492					
		27B														988	
		36	22						22								492
33	N/B ON FROM S/B 680	11												433			
		13	55			44			11								
		25A	20							20		433					
		27B														433	
		TYPE VI ARROW									84						
		◇									11						
		LL									15						
34	N/B ON FROM S/B 280 & STORY ROAD	25A	36							36		820					
		27B														820	
	TOTAL SHEET PDQ-12		915			488			162	265	386	6126		5547		6622	885

PAVEMENT DELINEATION QUANTITIES

PDQ-12

REVISED BY	DATE REVISED
A	A
AB	MN

CALCULATED-DESIGNED BY / CHECKED BY

FUNCTIONAL SUPERVISOR: ASHOK BHATNAGAR

STATE OF CALIFORNIA - DEPARTMENT OF TRANSPORTATION

Caltrans MAINTENANCE

LAST REVISION 12-24-08 | DATE PLOTTED => 31-JUL-2009 | TIME PLOTTED => 07:05

Dist	COUNTY	ROUTE	POST MILES TOTAL PROJECT	SHEET No.	TOTAL SHEETS
04	SCI	101	R27.6/40.2	96	173

11/04/08
REGISTERED CIVIL ENGINEER DATE

5-11-09
PLANS APPROVAL DATE

REGISTERED PROFESSIONAL ENGINEER
A. Bhatnagar
No. 48814
Exp 9-30-10
CIVIL
STATE OF CALIFORNIA

THE STATE OF CALIFORNIA OR ITS OFFICERS OR AGENTS SHALL NOT BE RESPONSIBLE FOR THE ACCURACY OR COMPLETENESS OF SCANNED COPIES OF THIS PLAN SHEET.

PAVEMENT DELINEATION QUANTITIES (RAMPS)

LOCATION No.	DESCRIPTION	DETAIL No. OR PAVEMENT MARKING	REMOVE: PAVEMENT MARKERS	REMOVE: THERMOPLASTIC PAVEMENT MARKING WHITE SQ FT	REMOVE: THERMOPLASTIC TRAFFIC STRIPE YELLOW 4INCH SOLID	PAVEMENT MARKER: NON-REFLECTIVE TYPE A	PAVEMENT MARKER: RETROREFLECTIVE TYPE C	PAVEMENT MARKER: RETROREFLECTIVE TYPE D	PAVEMENT MARKER: RETROREFLECTIVE TYPE G	PAVEMENT MARKER: RETROREFLECTIVE TYPE H	THERMOPLASTIC PAVEMENT MARKING WHITE	THERMOPLASTIC TRAFFIC STRIPE: YELLOW 4 INCH SOLID	THERMOPLASTIC TRAFFIC STRIPE: WHITE 4 INCH WHITE (BROKEN 17-7)	THERMOPLASTIC TRAFFIC STRIPE: WHITE 4 INCH WHITE (BROKEN 36-12)	THERMOPLASTIC TRAFFIC STRIPE: WHITE 8 INCH WHITE (BROKEN 12-3)	THERMOPLASTIC TRAFFIC STRIPE: WHITE 4 INCH SOLID	THERMOPLASTIC TRAFFIC STRIPE: WHITE 8 INCH SOLID
			EA		FT	EA					SQ FT	FT					
35	N/B OFF TO ROUTE 130/ALUM ROCK	10	43			36			7								
		11												246			
		25A	36							36		820					
		27B														820	
		38	7						7								246
		TYPE V ARROW									33						
		TYPE III (L) ARROW									84						
		TYPE III (R) ARROW									84						
		TYPE II (L) ARROW									90						
		LL									104						
36	S/B ON FROM ROUTE 130/ALUM ROCK	10	64			54			10								
		11												426			
		25A	21							21		472					
		27B														472	
		TYPE I (18') ARROW									50						
		LL									150						
37	SEGMENT N/B ON FROM ROUTE 130	10	64			54			10								
		11												394			
		25A	21							21		475					
		27B														475	
		TYPE I (18') ARROW									50						
		LL									101						
38	SEGMENT S/B OFF TO ROUTE 130	10	43			36			7								
		11												252			
		25A	22							22		492					
		27B														492	
		38	12						12								152
		TYPE V ARROW									33						
		TYPE IV (L) ARROW									15						
		TYPE IV (R) ARROW									15						
		TYPE VII ( ) ARROW									27						
		LL									116						
	TOTAL SHEET PDQ-13		333			180			53	100	952	2751		1318		2259	398

PAVEMENT DELINEATION QUANTITIES

PDQ-13

REVISED BY	DATE REVISED
AB	MN
A	A

CALCULATED-DESIGNED BY
CHECKED BY

FUNCTIONAL SUPERVISOR: ASHOK BHATNAGAR

STATE OF CALIFORNIA - DEPARTMENT OF TRANSPORTATION
Caltrans MAINTENANCE

LAST REVISION 12-24-08 | DATE PLOTTED => 31-JUL-2009 | TIME PLOTTED => 07:05

Dist	COUNTY	ROUTE	POST MILES TOTAL PROJECT	SHEET No.	TOTAL SHEETS
04	SCI	101	R27.6/40.2	97	173

REGISTERED CIVIL ENGINEER DATE 11/04/08

PLANS APPROVAL DATE 5-11-09

REGISTERED PROFESSIONAL ENGINEER A. Bhatnagar No. 48814 Exp 9-30-10 CIVIL STATE OF CALIFORNIA

THE STATE OF CALIFORNIA OR ITS OFFICERS OR AGENTS SHALL NOT BE RESPONSIBLE FOR THE ACCURACY OR COMPLETENESS OF SCANNED COPIES OF THIS PLAN SHEET.

PAVEMENT DELINEATION QUANTITIES (RAMPS)

LOCATION No.	DESCRIPTION	DETAIL No. OR PAVEMENT MARKING	REMOVE: PAVEMENT MARKERS (EA)	REMOVE: THERMOPLASTIC PAVEMENT MARKING WHITE (SQ FT)	REMOVE: THERMOPLASTIC TRAFFIC STRIPE YELLOW 4INCH SOLID (FT)	PAVEMENT MARKER (EA): NON-REFLECTIVE TYPE A	RETROREFLECTIVE: TYPE C	RETROREFLECTIVE: TYPE D	RETROREFLECTIVE: TYPE G	RETROREFLECTIVE: TYPE H	THERMOPLASTIC PAVEMENT MARKING WHITE (SQ FT)	THERMOPLASTIC TRAFFIC STRIPE (FT): YELLOW 4 INCH SOLID	WHITE: 4 INCH WHITE (BROKEN 17-7)	WHITE: 4 INCH WHITE (BROKEN 36-12)	WHITE: 8 INCH WHITE (BROKEN 12-3)	WHITE: 4 INCH SOLID	WHITE: 8 INCH SOLID
39	N/B ON FROM ROUTE 130	25A	6							6		104					
		27B														104	
40	SEGMENT S/B ON FROM JULIAN/McKEE	25A	10							10		213					
		27B														213	
41	SEGMENT N/B OFF TO JULIAN/McKEE	25A	18							18		385					
		27B														395	
42	SEGMENT S/B COLLECTOR JULIAN/ ROUTE 130	10	22			18			4								
		11												115			
		25A	42							42		985					
		27B														985	
		36	25						25								558
		36A	4						4								55
		37	38				34		4								475
43	SEGMENT N/B COLLECTOR ROUTE 130/ McKEE	25A	47							47		1090					
		27B														1417	
		36	29						29								656
		36A	14						14								328
		37B	32						32								475
		38B	10						10								98
		SIGNAL									32						
		AHEAD									31						
44	S/B ON FROM JULIAN/McKEE	10	43			36			7								
		11												270			
		25A	26							26		590					
		27B														590	
		TYPE I (18') ARROW									50						
		TYPE VI ARROW									126						
		LL									107						
	TOTAL SHEET PDQ-14		366			54	34		129	149	346	3367		385		3704	2645

PAVEMENT DELINEATION QUANTITIES

PDQ-14

REVISED BY	DATE REVISED
A	A
AB	MN

CALCULATED-DESIGNED BY / CHECKED BY

FUNCTIONAL SUPERVISOR: ASHOK BHATNAGAR

STATE OF CALIFORNIA - DEPARTMENT OF TRANSPORTATION

Caltrans MAINTENANCE

LAST REVISION 11-13-08 | DATE PLOTTED => 31-JUL-2009 | TIME PLOTTED => 07:05

Dist	COUNTY	ROUTE	POST MILES TOTAL PROJECT	SHEET No.	TOTAL SHEETS
04	SCI	101	R27.6/40.2	98	173

REGISTERED CIVIL ENGINEER DATE 11/04/08

PLANS APPROVAL DATE 5-11-09

REGISTERED PROFESSIONAL ENGINEER A. Bhatnagar No. 48814 Exp 9-30-10 CIVIL STATE OF CALIFORNIA

THE STATE OF CALIFORNIA OR ITS OFFICERS OR AGENTS SHALL NOT BE RESPONSIBLE FOR THE ACCURACY OR COMPLETENESS OF SCANNED COPIES OF THIS PLAN SHEET.

PAVEMENT DELINEATION QUANTITIES (RAMPS)

LOCATION No.	DESCRIPTION	DETAIL No. OR PAVEMENT MARKING	REMOVE: PAVEMENT MARKERS	REMOVE: THERMOPLASTIC PAVEMENT MARKING WHITE M2	REMOVE: THERMOPLASTIC TRAFFIC STRIPE YELLOW 4INCH SOLID	PAVEMENT MARKER: NON-REFLECTIVE TYPE A	PAVEMENT MARKER: RETROREFLECTIVE TYPE C	PAVEMENT MARKER: RETROREFLECTIVE TYPE D	PAVEMENT MARKER: RETROREFLECTIVE TYPE G	PAVEMENT MARKER: RETROREFLECTIVE TYPE H	THERMOPLASTIC PAVEMENT MARKING WHITE	THERMOPLASTIC TRAFFIC STRIPE: YELLOW 4 INCH SOLID	THERMOPLASTIC TRAFFIC STRIPE: WHITE 4 INCH WHITE (BROKEN 17'-7")	THERMOPLASTIC TRAFFIC STRIPE: WHITE 4 INCH WHITE (BROKEN 36-12)	THERMOPLASTIC TRAFFIC STRIPE: WHITE 8 INCH WHITE (BROKEN 12'-3")	THERMOPLASTIC TRAFFIC STRIPE: WHITE 4 INCH SOLID	THERMOPLASTIC TRAFFIC STRIPE: WHITE 8 INCH SOLID
			EA		FT	EA					SQ FT	FT					
45	N/B OFF TO JULIAN/McKEE	25A	20							20		446					
		27B														445	
		38	26						26								585
		TYPE II (R) ARROW									45						
		TYPE III (R) ARROW									42						
		TYPE III (L) ARROW									42						
		TYPE IV (R) ARROW									15						
		TYPE IV (L) ARROW									15						
		TYPE V ARROW									33						
		TYPE VII (R) ARROW									27						
		LL									142						
46	S/B OFF TO JULIAN/McKEE	10	56			48			8								
		11												302			
		25A	49							49		1150					
		27B														1100	
		38B	42						42								475
		TYPE III (L) ARROW									126						
		TYPE III (R) ARROW									210						
		TYPE V ARROW									33						
		LL									191						
47	N/B ON FROM W/B McKEE	10	92			78			14								
		11												610			
		25A	28							28		657					
		27B														655	
		TYPE (24') ARROW									62						
		LL									32						
48	S/B ON FROM NORTH 13th STREET	10	78			66			12								
		25A	22						22			151					
		27B														495	
		LL									88						
		TOTAL SHEET PDQ-15	413			192			124	97	1103	2404		912		2695	1060

PAVEMENT DELINEATION QUANTITIES

PDQ-15

REVISED BY	DATE REVISED
A	A
AB	MN

CALCULATED-DESIGNED BY / CHECKED BY

FUNCTIONAL SUPERVISOR: ASHOK BHATNAGAR

STATE OF CALIFORNIA - DEPARTMENT OF TRANSPORTATION

Caltrans MAINTENANCE

LAST REVISION 04-22-09 | DATE PLOTTED => 31-JUL-2009 | TIME PLOTTED => 07:05

Dist	COUNTY	ROUTE	POST MILES TOTAL PROJECT	SHEET No.	TOTAL SHEETS
04	SCI	101	R27.6/40.2	99	173

11/04/08
REGISTERED CIVIL ENGINEER DATE

5-11-09
PLANS APPROVAL DATE

REGISTERED PROFESSIONAL ENGINEER A. Bhatnagar No. 48814 Exp 9-30-10 CIVIL STATE OF CALIFORNIA

THE STATE OF CALIFORNIA OR ITS OFFICERS OR AGENTS SHALL NOT BE RESPONSIBLE FOR THE ACCURACY OR COMPLETENESS OF SCANNED COPIES OF THIS PLAN SHEET.

PAVEMENT DELINEATION QUANTITIES (RAMPS)

LOCATION No.	DESCRIPTION	DETAIL No. OR PAVEMENT MARKING	REMOVE: PAVEMENT MARKERS (EA)	REMOVE: THERMOPLASTIC PAVEMENT MARKING WHITE SQ FT	REMOVE: THERMOPLASTIC TRAFFIC STRIPE YELLOW 4INCH SOLID (FT)	PAVEMENT MARKER: NON-REFLECTIVE TYPE A (EA)	PAVEMENT MARKER: RETROREFLECTIVE TYPE C (EA)	PAVEMENT MARKER: RETROREFLECTIVE TYPE D (EA)	PAVEMENT MARKER: RETROREFLECTIVE TYPE G (EA)	PAVEMENT MARKER: RETROREFLECTIVE TYPE H (EA)	THERMOPLASTIC PAVEMENT MARKING WHITE (SQ FT)	THERMOPLASTIC TRAFFIC STRIPE: YELLOW 4 INCH SOLID (FT)	THERMOPLASTIC TRAFFIC STRIPE: WHITE 4 INCH WHITE (BROKEN 17-7) (FT)	THERMOPLASTIC TRAFFIC STRIPE: WHITE 4 INCH WHITE (BROKEN 36-12) (FT)	THERMOPLASTIC TRAFFIC STRIPE: WHITE 8 INCH WHITE (BROKEN 12-3) (FT)	THERMOPLASTIC TRAFFIC STRIPE: WHITE 4 INCH SOLID (FT)	THERMOPLASTIC TRAFFIC STRIPE: WHITE 8 INCH SOLID (FT)
49	N/B OFF TO NORTH 13th STREET	25A	15							15		192					
		27B														630	
		38A															485
		TYPE I (24') ARROW									31						
		TYPE III (B) ARROW									146						
		TYPE II (L) ARROW									90						
50	S/B OFF TO NORTH 13th STREET	10	71			60			11								
		25A	30							30		700					
		27B														700	
		38	21						21								470
		TYPE I (24') ARROW									31						
		TYPE II (L) ARROW									90						
		TYPE III (L) ARROW									84						
		TYPE III (R) ARROW									84						
		LL									75						
51	N/B ON FROM NORTH 13th STREET	13	61			48			13								
		25A	14							14		600					
		27B														600	
		38A															150
		TYPE VI ARROW									126						
		TYPE I (24') ARROW									31						
52	S/B ON FROM NORTH 13th STREET	25A	47							47		1092					
		27B														1092	
		40A	32			32											
53	N/B OFF TO N/B ROUTE 880	25A	34							34		788					
		27B														788	
		LL									12						
		TOTAL SHEET PDQ-16	325			140			45	140	800	3372				3810	1105

PAVEMENT DELINEATION QUANTITIES

PDQ-16

STATE OF CALIFORNIA - DEPARTMENT OF TRANSPORTATION
Caltrans MAINTENANCE

FUNCTIONAL SUPERVISOR: ASHOK BHATNAGAR
CALCULATED-DESIGNED BY: AB
CHECKED BY: MN
REVISED BY: A
DATE REVISED: A

LAST REVISION 11-13-08 DATE PLOTTED => 31-JUL-2009 TIME PLOTTED => 07:05

Dist	COUNTY	ROUTE	POST MILES TOTAL PROJECT	SHEET No.	TOTAL SHEETS
04	SCI	101	R27.6/40.2	100	173

REGISTERED CIVIL ENGINEER DATE 11/04/08

PLANS APPROVAL DATE 5-11-09

REGISTERED PROFESSIONAL ENGINEER A. Bhatnagar No. 48814 Exp 9-30-10 CIVIL STATE OF CALIFORNIA

THE STATE OF CALIFORNIA OR ITS OFFICERS OR AGENTS SHALL NOT BE RESPONSIBLE FOR THE ACCURACY OR COMPLETENESS OF SCANNED COPIES OF THIS PLAN SHEET.

PAVEMENT DELINEATION QUANTITIES (RAMPS)

LOCATION No.	DESCRIPTION	DETAIL No. OR PAVEMENT MARKING	REMOVE: PAVEMENT MARKERS (EA)	REMOVE: THERMOPLASTIC PAVEMENT MARKING WHITE (SQ FT)	REMOVE: THERMOPLASTIC TRAFFIC STRIPE YELLOW 4INCH SOLID (FT)	PAVEMENT MARKER: NON-REFLECTIVE TYPE A (EA)	PAVEMENT MARKER: RETROREFLECTIVE TYPE C (EA)	PAVEMENT MARKER: RETROREFLECTIVE TYPE D (EA)	PAVEMENT MARKER: RETROREFLECTIVE TYPE G (EA)	PAVEMENT MARKER: RETROREFLECTIVE TYPE H (EA)	THERMOPLASTIC PAVEMENT MARKING WHITE (SQ FT)	THERMOPLASTIC TRAFFIC STRIPE: YELLOW 4 INCH SOLID (FT)	THERMOPLASTIC TRAFFIC STRIPE: WHITE 4 INCH WHITE (BROKEN 17-7) (FT)	THERMOPLASTIC TRAFFIC STRIPE: WHITE 4 INCH WHITE (BROKEN 36-12) (FT)	THERMOPLASTIC TRAFFIC STRIPE: WHITE 8 INCH WHITE (BROKEN 12-3) (FT)	THERMOPLASTIC TRAFFIC STRIPE: WHITE 4 INCH SOLID (FT)	THERMOPLASTIC TRAFFIC STRIPE: WHITE 8 INCH SOLID (FT)
54	S/B OFF TO N/B ROUTE 880	25A	21							21		480					
		27B														480	
		LL									12						
		36	3						3								40
55	N/B ON FROM N/B ROUTE 880	25A	20							20		440					
		27B														475	
		LL									14						
56	S/B ON FROM S/B ROUTE 880	25A	19							19		420					
		27B														420	
57	N/B OFF TO S/B ROUTE 880	25A	19							19		410					
		27B														410	
		LL									16						
58	S/B OFF TO SB ROUTE 880	25A	40							40		920					
		27B														920	
		LL									12						
59	N/B OFF TO OLD BAYSHORE ROAD	27	3							3		130					
		27B														35	
60	N/B ON FROM OLD BAYSHORE ROAD	27	4							4		260					
		27B														72	
61	S/B ON FROM NORTH FOURTH STREET	25A	8							8		165					
		27B														112	
		LL									58						
		TYPE I (18') ARROW									25						
	TOTAL SHEET PDQ-17		137						3	134	137	3225				2964	40

PAVEMENT DELINEATION QUANTITIES

PDQ-17

STATE OF CALIFORNIA - DEPARTMENT OF TRANSPORTATION

Caltrans MAINTENANCE

FUNCTIONAL SUPERVISOR: ASHOK BHATNAGAR

CALCULATED-DESIGNED BY: AB

CHECKED BY: MN

REVISED BY: A

DATE REVISED: A

LAST REVISION 12-24-08 | DATE PLOTTED => 31-JUL-2009 | TIME PLOTTED => 07:06

Dist	COUNTY	ROUTE	POST MILES TOTAL PROJECT	SHEET No.	TOTAL SHEETS
04	SCI	101	R27.6/40.2	101	173

REGISTERED CIVIL ENGINEER DATE 11/04/08

PLANS APPROVAL DATE 5-11-09

REGISTERED PROFESSIONAL ENGINEER A. Bhatnagar No. 48814 Exp 9-30-10 CIVIL STATE OF CALIFORNIA

THE STATE OF CALIFORNIA OR ITS OFFICERS OR AGENTS SHALL NOT BE RESPONSIBLE FOR THE ACCURACY OR COMPLETENESS OF SCANNED COPIES OF THIS PLAN SHEET.

PAVEMENT DELINEATION QUANTITIES (RAMPS)

LOCATION No.	DESCRIPTION	DETAIL No. OR PAVEMENT MARKING	REMOVE: PAVEMENT MARKERS (EA)	REMOVE: THERMOPLASTIC PAVEMENT MARKING WHITE SQ FT	REMOVE: THERMOPLASTIC TRAFFIC STRIPE YELLOW 4INCH SOLID (FT)	PAVEMENT MARKER (EA): NON-REFLECTIVE TYPE A	RETROREFLECTIVE: TYPE C	RETROREFLECTIVE: TYPE D	RETROREFLECTIVE: TYPE G	RETROREFLECTIVE: TYPE H	THERMOPLASTIC PAVEMENT MARKING WHITE (SQ FT)	THERMOPLASTIC TRAFFIC STRIPE (FT): YELLOW 4 INCH SOLID	WHITE: 4 INCH WHITE (BROKEN 17-7)	WHITE: 4 INCH WHITE (BROKEN 36-12)	WHITE: 8 INCH WHITE (BROKEN 12-3)	WHITE: 4 INCH SOLID	WHITE: 8 INCH SOLID
62	N/B OFF TO NORTH 1st STREET/ BROKAW ROAD	10													445		
		11	71				60		11								
		25A	57							57		1330					
		27B														1330	
		38	7						7								475
		TYPE III (L) ARROW									168						
		TYPE II (R) ARROW									90						
		TYPE V ARROW									33						
		LL									160						
63	N/B ON FROM FROM NORTH 1st STREET	25A	34							34		780					
		27B															780
		LL									16						
64	S/B OFF TO NORTH 1st STREET	9	5						5				170				
		25A	28							28		645					
		27B														540	
		36	6						6								100
		38	9						9								170
		TYPE I (10') ARROW									14						
		TYPE IV (L) ARROW									30						
		TYPE VII (L) ARROW									54						
		TYPE VII (R) ARROW									27						
		LL									42						
65	N/B ON FROM BROKAW ROAD	25A	21							21		480					
		27B														480	
		38	15						15								330
		◇									22						
		TYPE I (18') ARROW									25						
66	S/B OFF TO ROUTE 87 (GUADALUPE PARKWAY)	10												610			
		11	92			78			14								
		25A	92							92		2165					
		27B														1545	
		TYPE V ARROW									165						
	TOTAL SHEET PDQ-18		437			78	60		67	232	846	5400	170	610	445	3895	1855

REVISED BY | DATE REVISED: A | A

CALCULATED-DESIGNED BY: AB | CHECKED BY: MN

FUNCTIONAL SUPERVISOR: ASHOK BHATNAGAR

STATE OF CALIFORNIA - DEPARTMENT OF TRANSPORTATION

Caltrans MAINTENANCE

PAVEMENT DELINEATION QUANTITIES

PDQ-18

LAST REVISION 11-13-08 | DATE PLOTTED => 31-JUL-2009 | TIME PLOTTED => 07:06

Dist	COUNTY	ROUTE	POST MILES TOTAL PROJECT	SHEET No.	TOTAL SHEETS
04	SCI	101	R27.6/40.2	102	173

REGISTERED CIVIL ENGINEER DATE 11/04/08

PLANS APPROVAL DATE 5-11-09

REGISTERED PROFESSIONAL ENGINEER A. Bhatnagar No. 48814 Exp 9-30-10 CIVIL STATE OF CALIFORNIA

THE STATE OF CALIFORNIA OR ITS OFFICERS OR AGENTS SHALL NOT BE RESPONSIBLE FOR THE ACCURACY OR COMPLETENESS OF SCANNED COPIES OF THIS PLAN SHEET.

PAVEMENT DELINEATION QUANTITIES (RAMPS)

LOCATION No.	DESCRIPTION	DETAIL No. OR PAVEMENT MARKING	REMOVE: PAVEMENT MARKERS	REMOVE: THERMOPLASTIC PAVEMENT MARKING WHITE SQ FT	REMOVE: THERMOPLASTIC TRAFFIC STRIPE YELLOW 4 INCH SOLID	PAVEMENT MARKER: NON-REFLECTIVE TYPE A	PAVEMENT MARKER: RETROREFLECTIVE TYPE C	PAVEMENT MARKER: RETROREFLECTIVE TYPE D	PAVEMENT MARKER: RETROREFLECTIVE TYPE G	PAVEMENT MARKER: RETROREFLECTIVE TYPE H	THERMOPLASTIC PAVEMENT MARKING WHITE	THERMOPLASTIC TRAFFIC STRIPE: YELLOW 4 INCH SOLID	THERMOPLASTIC TRAFFIC STRIPE: WHITE 4 INCH WHITE (BROKEN 17-7)	THERMOPLASTIC TRAFFIC STRIPE: WHITE 4 INCH WHITE (BROKEN 36-12)	THERMOPLASTIC TRAFFIC STRIPE: WHITE 8 INCH WHITE (BROKEN 12-3)	THERMOPLASTIC TRAFFIC STRIPE: WHITE 4 INCH SOLID	THERMOPLASTIC TRAFFIC STRIPE: WHITE 8 INCH SOLID
			EA		FT	EA					SQ FT	FT					
67	N/B ON FROM ROUTE 87 (GUADALUPE PARKWAY)	10	92			78			14								
		11												585			
		25A	24							24		545					
		27B														585	
		36	31						31								695
		38	28						28								630
		◇									11						
		LL									36						
	TOTAL SHEET PDQ-19		175			78			73	24	47	545		585		585	1325
	TOTAL SHEET PDQ-18		437			78	60		67	232	846	5400	170	610	445	3895	1855
	TOTAL SHEET PDQ-17		137						3	134	137	3225				2964	40
	TOTAL SHEET PDQ-16		325			140			45	140	800	3372				3810	1105
	TOTAL SHEET PDQ-15		413			192			124	97	1103	2404		912		2695	1060
	TOTAL SHEET PDQ-14		366			54	34		129	149	346	3367		385		3704	2645
	TOTAL SHEET PDQ-13		333			180			53	100	952	2751		1318		2259	398
	TOTAL SHEET PDQ-12		915			488			162	265	386	6126		5547		6622	885
	TOTAL SHEET PDQ-11		401			120			72	209	412	6162				4762	906
	TOTAL SHEET PDQ-10		651				108		288	255	147	5904			2248	7586	2614
	TOTAL SHEET PDQ-9		220			48		16	26	130	916	4197				6402	1421
	TOTAL SHEET PDQ-8		416			156			74	186	1240	4283				4488	727
	TOTAL SHEET PDQ-7		235						30	205	1165	4990	800			5660	1590
	GRAND TOTAL		5024			1534	202	16	1146	2126	8497	52726	970	9357	2693	55432	16571

PAVEMENT DELINEATION QUANTITIES (MAINLINE & RAMPS)

DESCRIPTION	REMOVE: PAVEMENT MARKERS	REMOVE: THERMOPLASTIC TRAFFIC STRIPE: PAVEMENT MARKING	REMOVE: THERMOPLASTIC TRAFFIC STRIPE: YELLOW 4 INCH SOLID	REMOVE: THERMOPLASTIC TRAFFIC STRIPE: WHITE 4 INCH SOLID	PAVEMENT MARKER: NON-REFLECTIVE TYPE A	PAVEMENT MARKER: RETROREFLECTIVE TYPE C	PAVEMENT MARKER: RETROREFLECTIVE TYPE D	PAVEMENT MARKER: RETROREFLECTIVE TYPE G	PAVEMENT MARKER: RETROREFLECTIVE TYPE H	THERMOPLASTIC PAVEMENT MARKING WHITE	THERMOPLASTIC TRAFFIC STRIPE: YELLOW 4 INCH SOLID	THERMOPLASTIC TRAFFIC STRIPE: WHITE 4 INCH SOLID	THERMOPLASTIC TRAFFIC STRIPE: WHITE 4 INCH WHITE (BROKEN 17-7)	THERMOPLASTIC TRAFFIC STRIPE: WHITE 4 INCH WHITE (BROKEN 36-12)	THERMOPLASTIC TRAFFIC STRIPE: WHITE 8 INCH WHITE (BROKEN 12-3)	THERMOPLASTIC TRAFFIC STRIPE: WHITE 8 INCH SOLID
	EA	SQ FT	FT		EA					SQ FT	FT					
TOTAL NORTHBOUND	24145	44	6900	19254	17180	1020		4617	1328	1233	67479	67479	4760	232849	3000	12180
TOTAL SOUTHBOUND	24075	143	5915	23068	17129	444		5110	1392	1770	66532	72052	6888	216072	3353	16044
TOTAL FOR RAMPS	5024				1534	202	16	1146	2126	8497	52726	55432	970	9357	2693	16571
GRAND TOTAL	53244	187	12815	42322	35843	1666	16	10873	4846	11500	381700		12618	458278	9046	44795
						17401										

PAVEMENT DELINEATION QUANTITIES

PDQ-19

STATE OF CALIFORNIA - DEPARTMENT OF TRANSPORTATION

Caltrans MAINTENANCE

FUNCTIONAL SUPERVISOR ASHOK BHATNAGAR

CALCULATED-DESIGNED BY | CHECKED BY

REVISED BY | DATE REVISED

A | A

A | A

LAST REVISION 12-24-08 | DATE PLOTTED => 31-JUL-2009 | TIME PLOTTED => 07:06

Dist	COUNTY	ROUTE	POST MILES TOTAL PROJECT	SHEET No.	TOTAL SHEETS
04	SCI	101	R27.6/40.2	103	173

REGISTERED CIVIL ENGINEER DATE 11/04/08

PLANS APPROVAL DATE 5-11-09

REGISTERED PROFESSIONAL ENGINEER A. Bhatnagar No. 48814 Exp 9-30-10 CIVIL STATE OF CALIFORNIA

THE STATE OF CALIFORNIA OR ITS OFFICERS OR AGENTS SHALL NOT BE RESPONSIBLE FOR THE ACCURACY OR COMPLETENESS OF SCANNED COPIES OF THIS PLAN SHEET.

ADDITIONAL RUBBERIZED HMA (TYPE G) AT RAMPS

LOCATION No.	PM	DESCRIPTION	LOCATION No. OF SEVERELY DAMAGED AREA *	LANE No.	LENGTH	WIDTH	ADDITIONAL COLD PLANE (0.10 FT)	SUBTOTAL	ADDITIONAL RHMA (G) (0.10 FT)
					FT		SQ FT		TON
5	28.6	N/B ON FROM W/B BLOSSOM HILL ROAD	1	1	460	13	5980	7280	55
			2	2	100	13	1300		
6	28.6	S/B OFF TO ROUTE 82/BLOSSOM HILL ROAD	1	1	400	12	4800	13200	99
			2	2	400	12	4800		
			3	3	300	12	4800		
7	30.1	N/B OFF TO HELLYER AVENUE	1	1	75	12	900	900	7
8	30.1	S/B OFF TO HELLYER AVENUE	1	1	140	30	4200	4200	32
9	30.1	N/B ON FROM HELLYER AVENUE	1	1	100	12	1200	2004	15
			2	1	67	12	804		
18	34.5	S/B ON FROM STORY ROAD	1	1 & 2	62	24	1488	2280	17
			2	1	66	12	792		
19	34.5	N/B OFF TO STORY ROAD	1	1	140	18	2520	8580	64
			2	1	50	12	600		
			3	2	150	12	180		
			4	1	230	12	2760		
			5	1	210	12	2520		
20	34.5	SEGMENT S/B ON FROM E/B STORY ROAD	WHOLE RAMP	1	735	19	13965	13965	105
21	34.5	SEGMENT N/B OFF TO E/B STORY ROAD	1	1	165	15	2475	5925	44
			2	1	230	15	3450		
22	34.5	SEGMENT S/B ON FROM W/B STORY ROAD	WHOLE RAMP	1	470	15	7050	7050	53
23	34.5	SEGMENT N/B OFF TO W/B STORY ROAD	WHOLE RAMP	1	460	15	6900	6900	52
27	34.5	SEGMENT N/B ON FROM W/B STORY ROAD	WHOLE RAMP	1	790	20	15800	15800	119
		SUB-TOTAL Q-1						88084	662

NOTES:

1. * NUMBERS ARE IN NUMERICAL ORDER FROM ENTRANCE/EXIT OF THE RAMP.
2. EXACT LOCATION AND DIMENSIONS WILL BE DETERMINED BY THE ENGINEER.
3. FOR TOTAL SEE Q-3

ABBREVIATION:

RHMA (G) RUBBERIZED HOT MIX ASPHALT (GAP GRADED)

SUMMARY OF QUANTITIES

Q-1

REVISED BY	DATE REVISED
A	A

SL

MN & CT

CALCULATED-DESIGNED BY

CHECKED BY

FUNCTIONAL SUPERVISOR

ASHOK BHATNAGAR

STATE OF CALIFORNIA - DEPARTMENT OF TRANSPORTATION

Caltrans MAINTENANCE

LAST REVISION 02-02-09 DATE PLOTTED => 31-JUL-2009 TIME PLOTTED => 07:06

Dist	COUNTY	ROUTE	POST MILES TOTAL PROJECT	SHEET No.	TOTAL SHEETS
04	SCI	101	R27.6/40.2	104	173

11/04/08
REGISTERED CIVIL ENGINEER DATE

5-11-09
PLANS APPROVAL DATE

REGISTERED PROFESSIONAL ENGINEER A. Bhatnagar No. 48814 Exp 9-30-10 CIVIL STATE OF CALIFORNIA

THE STATE OF CALIFORNIA OR ITS OFFICERS OR AGENTS SHALL NOT BE RESPONSIBLE FOR THE ACCURACY OR COMPLETENESS OF SCANNED COPIES OF THIS PLAN SHEET.

ADDITIONAL RUBBERIZED HMA (TYPE G) AT RAMPS

LOCATION No.	PM	DESCRIPTION	LOCATION No. OF SEVERELY DAMAGED AREA *	LANE No.	LENGTH	WIDTH	ADDITIONAL COLD PLANE (0.10 FT)	SUBTOTAL	ADDITIONAL RHMA (G) (0.10 FT)
					FT		SQ FT		TON
28	34.5	S/B OFF TO STORY ROAD	1	3	100	12	1260	7560	57
			2	1 & 2	80	24	1920		
			3	2	60	6	360		
			4	1 & 2	65	24	1560		
			5	1	110	12	1320		
			6	1 & 2	50	24	1200		
29	34.5	SEGMENT N/B ON FROM STORY ROAD	1	1	72	12	864	5772	43
			2	1	32	12	384		
			3	1	90	12	1080		
			4	1	32	12	384		
			5	1	50	12	600		
			6	1 & 2	75	24	1800		
			7	1	20	12	240		
			8	1	35	12	420		
30	34.8	S/B ON FROM ROUTE 280 & 680	1	2 & 3	655	24	15720	15720	118
31	34.8	N/B OFF TO ROUTE 280 & 680	1	1 & 2	655	36	23580	23580	177
34	34.8	N/B ON FROM S/B ROUTE 280 & STORY ROAD	1	1	15	12	180	570	4
			2	1	30	13	390		
37	35.7	SEGMENT N/B ON FROM ROUTE 130	1	1	55	12	660	660	5
38	35.7	SEGMENT S/B OFF TO ROUTE 130	1	1	50	24	1200	1200	9
43	36.1	SEGMENT N/B COLLECTOR ROUTE 130/McKEE	1	1	65	12	780	780	6
45	36.1	N/B OFF TO JULIAN/McKEE	1	1	25	12	300	1140	9
			2	1	40	12	480		
			3	1	30	12	360		
		SUB-TOTAL Q-2						56982	428

SEE SHEET Q-1 FOR NOTES

SUMMARY OF QUANTITIES

Q-2

REVISED BY	DATE REVISED
A	A

CALCULATED-DESIGNED BY: AB
CHECKED BY: MN
FUNCTIONAL SUPERVISOR: ASHOK BHATNAGAR

STATE OF CALIFORNIA - DEPARTMENT OF TRANSPORTATION
Caltrans MAINTENANCE

LAST REVISION 12-24-08 | DATE PLOTTED => 31-JUL-2009 | TIME PLOTTED => 07:06

Dist	COUNTY	ROUTE	POST MILES TOTAL PROJECT	SHEET No.	TOTAL SHEETS
04	SCI	101	R27.6/40.2	105	173

REGISTERED CIVIL ENGINEER DATE 11/04/08

PLANS APPROVAL DATE 5-11-09

REGISTERED PROFESSIONAL ENGINEER A. Bhatnagar No. 48814 Exp. 9-30-10 CIVIL STATE OF CALIFORNIA

THE STATE OF CALIFORNIA OR ITS OFFICERS OR AGENTS SHALL NOT BE RESPONSIBLE FOR THE ACCURACY OR COMPLETENESS OF SCANNED COPIES OF THIS PLAN SHEET.

ADDITIONAL RUBBERIZED HMA (TYPE G) AT RAMPS

LOCATION No.	PM	DESCRIPTION	LOCATION No. OF SEVERELY DAMAGED AREA *	LANE No.	LENGTH	WIDTH	ADDITIONAL COLD PLANE (0.10 FT)	SUBTOTAL	ADDITIONAL RHMA (G) (0.10 FT)
					FT		SQ FT		TON
47	36.1	N/B ON FROM N/B McKEE	1	1	220	12	2640	7200	54
			2	1	220	12	2640		
			3	1 & 2	40	24	960		
			4	1 & 2	40	24	960		
50	37.7	S/B OFF TO NORTH 13TH STREET	1	2	85	12	1020	1020	8
62	39.4	N/B OFF TO NORTH 1ST STREET/BROKAW ROAD	1	1	35	12	420	6480	49
			2	1	255	12	3060		
			3	1 & 2	125	24	3000		
63	39.4	N/B ON FROM NORTH 1ST STREET	1	1	50	13	650	3835	29
			2	1	165	13	2145		
			3	1	80	13	1040		
64	39.4	S/B OFF TO NORTH 1ST STREET	1	1 & 2	130	44	5720	7970	60
			2	3,4&5	75	30	2250		
66	39.9	S/B OFF TO ROUTE 87 (GUADALUPE PARKWAY)	1	1	65	12	780	3780	28
			2	1	50	12	600		
			3	1	200	12	2400		
		SUB-TOTAL Q-3						30285	228
		SUB-TOTAL Q-2						56982	428
		SUB-TOTAL Q-1						88084	662
		GRAND TOTAL						175351	1318

SEE SHEET Q-1 FOR NOTES

SUMMARY OF QUANTITIES

Q-3

STATE OF CALIFORNIA - DEPARTMENT OF TRANSPORTATION
Caltrans MAINTENANCE

FUNCTIONAL SUPERVISOR: ASHOK BHATNAGAR
CALCULATED-DESIGNED BY: AB
CHECKED BY: MN
REVISED BY: A
DATE REVISED: A

LAST REVISION 12-24-08 | DATE PLOTTED => 31-JUL-2009 | TIME PLOTTED => 07:06

Dist	COUNTY	ROUTE	POST MILES TOTAL PROJECT	SHEET No.	TOTAL SHEETS
04	SCI	101	R27.6/40.2	106	173

11/04/08
REGISTERED CIVIL ENGINEER DATE

5-11-09
PLANS APPROVAL DATE

REGISTERED PROFESSIONAL ENGINEER
A. Bhatnagar
No. 48814
Exp 9-30-10
CIVIL
STATE OF CALIFORNIA

THE STATE OF CALIFORNIA OR ITS OFFICERS OR AGENTS SHALL NOT BE RESPONSIBLE FOR THE ACCURACY OR COMPLETENESS OF SCANNED COPIES OF THIS PLAN SHEET.

ROADWAY QUANTITY SUMMARY (RAMPS)

LOCATION No.	PM	DESCRIPTION (RAMP LOCATION)	RHMA (TYPE G)	TACK COAT	COLD PLANE AC PAVEMENT 0.15'	ADDITIONAL COLD PLANE AC PAVEMENT 0.10'	ADDITIONAL RHMA (TYPE G)	TOTAL RHMA (TYPE G)	DELINEATOR CLASS 1		IMPORTED MATERIAL (SHOULDER BACKING)
									TYPE G	TYPE F	
			TON		Sq Ft		TON		EA		TON
1	28.6	N/B OFF TO ROUTE 82/BLOSSOM HILL ROAD	684	2.8	60768			684			23
2	28.6	S/B ON FROM S/B ROUTE 82	440	1.8	39100			440		5	24
3	28.6	N/B ON FROM E/B BLOSSOM HILL ROAD	230	0.9	20400			230	5	7	
4	28.6	S/B ON FROM N/B ROUTE 82	221	0.9	19610			221	12		
5	28.6	N/B ON FROM W/B BLOSSOM HILL ROAD	320	1.3	28480	7280	55	375			90
6	28.6	S/B OFF TO ROUTE 82/BLOSSOM HILL ROAD	453	1.9	40280	13200	99	552			
7	30.1	N/B OFF TO HELLYER AVENUE	102	0.4	9060	900	7	109			29
8	30.1	S/B OFF TO HELLYER AVENUE	260	1.1	23140	4200	32	292			57
9	30.1	N/B ON FROM HELLYER AVENUE	77	0.3	6840	2004	15	92	5	5	
10	30.9	S/B ON FROM YERBA BUENA ROAD	388	1.6	34520			388	7	7	
11	30.9	N/B OFF TO YERBA BUENA ROAD	411	1.7	36470			411			52
12	30.9	SEGMENT S/B OFF TO YERBA BUENA ROAD	586	2.4	52045			586			9
		SUB-TOTAL Q-4	4172	17.1	370713	27584	208	4380	29	24	284

SEE NOTE 2 IN SHEET Q-1

SUMMARY OF QUANTITIES

Q-4

REVISED BY	DATE REVISED
A	A
AB	MN

CALCULATED-DESIGNED BY
CHECKED BY

FUNCTIONAL SUPERVISOR
ASHOK BHATNAGAR

STATE OF CALIFORNIA - DEPARTMENT OF TRANSPORTATION
Caltrans MAINTENANCE

LAST REVISION 11-13-08
DATE PLOTTED => 31-JUL-2009
TIME PLOTTED => 07:06

Dist	COUNTY	ROUTE	POST MILES TOTAL PROJECT	SHEET No.	TOTAL SHEETS
04	SCI	101	R27.6/40.2	107	173

11/04/08
REGISTERED CIVIL ENGINEER DATE

5-11-09
PLANS APPROVAL DATE

REGISTERED PROFESSIONAL ENGINEER A. Bhatnagar No. 48814 Exp 9-30-10 CIVIL STATE OF CALIFORNIA

THE STATE OF CALIFORNIA OR ITS OFFICERS OR AGENTS SHALL NOT BE RESPONSIBLE FOR THE ACCURACY OR COMPLETENESS OF SCANNED COPIES OF THIS PLAN SHEET.

ROADWAY QUANTITY SUMMARY (RAMPS)

LOCATION No.	PM	DESCRIPTION (RAMP LOCATION)	RHMA (TYPE G)	TACK COAT	COLD PLANE AC PAVEMENT 0.15′	ADDITIONAL COLD PLANE AC PAVEMENT 0.10′	ADDITIONAL RHMA (TYPE G)	TOTAL RHMA (TYPE G)	DELINEATOR CLASS 1		IMPORTED MATERIAL (SHOULDER BACKING)
									TYPE G	TYPE F	
			TON		Sq Ft		TON		EA		TON
13	30.9	N/B OFF TO CAPITOL EXPRESSWAY	157	0.6	13975			157			25
14	30.9	S/B ON FROM CAPITOL EXPRESSWAY	16	0.1	1410			16			
15	30.9	SEGMENT N/B ON FROM YERBA BUENA ROAD	300	1.2	26640			300			54
16	30.9	S/B COLLECTOR CAPITOL Expwy TO YERBA BUENA Rd	553	2.3	49100			553			21
17	30.9	N/B COLLECTOR YERBA BUENA Rd TO CAPITOL Expwy	959	3.9	85250			959			25
18	34.5	S/B ON FROM STORY ROAD	182	0.7	16190	2280	17	199		4	20
19	34.5	N/B OFF TO STORY ROAD	567	2.3	50375	8580	64	631			37
20	34.5	SEGMENT S/B ON FROM E/B STORY ROAD	157	0.6	13965	13965	105	262	5	5	36
21	34.5	SEGMENT N/B OFF TO E/B STORY ROAD	164	0.7	14565	5925	44	208		12	10
22	34.5	SEGMENT S/B ON FROM W/B STORY ROAD	79	0.3	6990	7050	53	132	9	9	
23	34.5	SEGMENT N/B OFF TO W/B STORY ROAD	78	0.3	6900	6900	52	130	10		
24	34.5	SEGMENT S/B OFF TO E/B STORY ROAD	75	0.3	6620			75	3	3	
		SUB-TOTAL Q-5	3287	13.3	291980	44700	335	3622	27	33	228

SEE NOTE 2 IN SHEET Q-1

SUMMARY OF QUANTITIES

Q-5

STATE OF CALIFORNIA - DEPARTMENT OF TRANSPORTATION
Caltrans MAINTENANCE

FUNCTIONAL SUPERVISOR: ASHOK BHATNAGAR
CALCULATED-DESIGNED BY: AB
CHECKED BY: MN
REVISED BY: A
DATE REVISED: A

LAST REVISION 11-14-08 DATE PLOTTED => 31-JUL-2009 TIME PLOTTED => 07:07

Dist	COUNTY	ROUTE	POST MILES TOTAL PROJECT	SHEET No.	TOTAL SHEETS
04	SCI	101	R27.6/40.2	108	173

11/04/08
REGISTERED CIVIL ENGINEER DATE

5-11-09
PLANS APPROVAL DATE

REGISTERED PROFESSIONAL ENGINEER A. Bhatnagar No. 48814 Exp 9-30-10 CIVIL STATE OF CALIFORNIA

THE STATE OF CALIFORNIA OR ITS OFFICERS OR AGENTS SHALL NOT BE RESPONSIBLE FOR THE ACCURACY OR COMPLETENESS OF SCANNED COPIES OF THIS PLAN SHEET.

ROADWAY QUANTITY SUMMARY (RAMPS)

LOCATION No.	PM	DESCRIPTION (RAMP LOCATION)	RHMA (TYPE G)	TACK COAT	COLD PLANE AC PAVEMENT 0.15′	ADDITIONAL COLD PLANE AC PAVEMENT 0.10′	ADDITIONAL RHMA (TYPE G)	TOTAL RHMA (TYPE G)	DELINEATOR CLASS 1		IMPORTED MATERIAL (SHOULDER BACKING)
									TYPE G	TYPE F	
			TON		Sq Ft		TON		EA		TON
25	34.5	SEGMENT N/B ON FROM E/B STORY ROAD	79	0.3	7050			79			
26	34.5	SEGMENT S/B OFF TO W/B STORY ROAD	204	0.8	18170			204			33
27	34.5	SEGMENT N/B ON FROM W/B STORY ROAD	178	0.7	15800	15800	119	297	5		39
28	34.5	S/B OFF TO STORY ROAD	716	2.9	63636	7560	57	772	2	6	46
29	34.5	SEGMENT N/B ON FROM STORY ROAD	838	3.4	74454	5772	43	881			55
30	34.8	S/B ON FROM ROUTE 280 & 680	447	1.8	39697	15720	118	565			
31	34.8	N/B OFF TO ROUTE 280 & 680	665	2.7	59148	23580	177	842			
32	34.8	S/B OFF TO ROUTE 280 & 680	525	2.1	46650			525	24		
33	34.8	N/B ON FROM S/B 680	176	0.7	15630			176			
34	34.8	N/B ON FROM S/B 280 & STORY ROAD	259	1.1	23013	570	4	263	24		
35	35.7	N/B OFF TO ROUTE 130/ALUM ROCK	424	1.7	37685			424			
36	35.7	S/B ON FROM ROUTE 130/ALUM ROCK	231	0.9	20495			231			
		SUB-TOTAL Q-6	4742	19.1	421428	69002	518	5259	55	6	173

SEE NOTE 2 IN SHEET Q-1

SUMMARY OF QUANTITIES

Q-6

REVISED BY	DATE REVISED
A	A

CALCULATED-DESIGNED BY: AB
CHECKED BY: MN
FUNCTIONAL SUPERVISOR: ASHOK BHATNAGAR

STATE OF CALIFORNIA - DEPARTMENT OF TRANSPORTATION
Caltrans MAINTENANCE

LAST REVISION 11-14-08 | DATE PLOTTED => 31-JUL-2009 | TIME PLOTTED => 07:07

Dist	COUNTY	ROUTE	POST MILES TOTAL PROJECT	SHEET No.	TOTAL SHEETS
04	SCI	101	R27.6/40.2	109	173

REGISTERED CIVIL ENGINEER DATE 11/14/08

PLANS APPROVAL DATE 5-11-09

REGISTERED PROFESSIONAL ENGINEER A. Bhatnagar No. 48814 Exp 9-30-10 CIVIL STATE OF CALIFORNIA

THE STATE OF CALIFORNIA OR ITS OFFICERS OR AGENTS SHALL NOT BE RESPONSIBLE FOR THE ACCURACY OR COMPLETENESS OF SCANNED COPIES OF THIS PLAN SHEET.

ROADWAY QUANTITY SUMMARY (RAMPS)

LOCATION No.	PM	DESCRIPTION (RAMP LOCATION)	RHMA (TYPE G)	TACK COAT	COLD PLANE AC PAVEMENT 0.15′	ADDITIONAL COLD PLANE AC PAVEMENT 0.10′	ADDITIONAL RHMA (TYPE G)	TOTAL RHMA (TYPE G)	DELINEATOR CLASS 1		IMPORTED MATERIAL (SHOULDER BACKING)
									TYPE G	TYPE F	
			TON		Sq Ft		TON		EA		TON
37	35.7	SEGMENT N/B ON FROM ROUTE 130	249	1.0	22140	600	5	254	5		
38	35.7	SEGMENT S/B OFF TO ROUTE 130	234	1.0	20820	1200	9	243	2	2	
39	35.7	N/B ON FROM ROUTE 130	29	0.1	2585			29			
40	36.1	SEGMENT S/B ON FROM JULIAN/McKEE	74	0.3	6220			74	2	2	
41	36.1	SEGMENT N/B OFF TO JULIAN/McKEE	125	0.5	11140			125			
42	36.1	SEGMENT S/B COLLECTOR JULIAN/ROUTE 130	565	2.3	50180			565		20	
43	36.1	SEGMENT N/B COLLECTOR ROUTE 130/McKEE	610	2.5	54250	780	6	616			
44	36.1	S/B ON FROM JULIAN/McKEE	261	1.1	23250			261	6	6	32
45	36.1	N/B OFF TO JULIAN/McKEE	256	1.0	22755	1140	9	265			
46	36.1	S/B OFF TO JULIAN/McKEE	636	2.6	56565			636	6	6	31
47	36.1	N/B ON FROM W/B McKEE	290	1.2	25736	7200	54	344			
48	37.7	S/B ON FROM NORTH 13th STREET	212	0.9	18815			212	5	2	
		SUB-TOTAL Q-7	3541	14.5	314456	10920	83	3624	26	38	63

SEE NOTE 2 IN SHEET Q-1

SUMMARY OF QUANTITIES

Q-7

REVISED BY	DATE REVISED
A	A
AB	MN

CALCULATED-DESIGNED BY / CHECKED BY

FUNCTIONAL SUPERVISOR: ASHOK BHATNAGAR

STATE OF CALIFORNIA - DEPARTMENT OF TRANSPORTATION

Caltrans MAINTENANCE

LAST REVISION 11-14-08 | DATE PLOTTED => 31-JUL-2009 | TIME PLOTTED => 07:07

Dist	COUNTY	ROUTE	POST MILES TOTAL PROJECT	SHEET No.	TOTAL SHEETS
04	SCI	101	R27.6/40.2	110	173

11/04/08
REGISTERED CIVIL ENGINEER DATE

5-11-09
PLANS APPROVAL DATE

REGISTERED PROFESSIONAL ENGINEER
A. Bhatnagar
No. 48814
Exp 9-30-10
CIVIL
STATE OF CALIFORNIA

THE STATE OF CALIFORNIA OR ITS OFFICERS OR AGENTS SHALL NOT BE RESPONSIBLE FOR THE ACCURACY OR COMPLETENESS OF SCANNED COPIES OF THIS PLAN SHEET.

ROADWAY QUANTITY SUMMARY (RAMPS)

LOCATION No.	PM	DESCRIPTION (RAMP LOCATION)	RHMA (TYPE G)	TACK COAT	COLD PLANE AC PAVEMENT 0.15′	ADDITIONAL COLD PLANE AC PAVEMENT 0.10′	ADDITIONAL RHMA (TYPE G)	TOTAL RHMA (TYPE G)	DELINEATOR CLASS 1		IMPORTED MATERIAL (SHOULDER BACKING)
									TYPE G	TYPE F	
			TON		Sq Ft		TON		EA		TON
49	37.7	N/B OFF TO NORTH 13th STREET	153	0.6	13560			153		2	
50	37.7	S/B OFF TO NORTH 13th STREET	333	1.4	29600	1020	8	341	5	5	
51	37.7	N/B ON FROM NORTH 13th STREET	231	0.9	20561			231		2	
52	38.3	S/B ON FROM N/B ROUTE 880	323	1.3	28707			323	15	15	
53	38.3	N/B OFF TO N/B ROUTE 880	268	1.1	23790			268	12	12	7
54	38.3	S/B OFF TO N/B ROUTE 880	195	0.8	17360			195	10	7	5
55	38.3	N/B ON FROM N/B ROUTE 880	183	0.7	16240			183	6	10	
56	38.3	S/B ON FROM S/B ROUTE 880	258	1.1	22905			258	7	5	12
57	38.3	N/B OFF TO S/B ROUTE 880	158	0.6	14005			158	4	10	
58	38.3	S/B OFF TO S/B ROUTE 880	338	1.4	30075			338	10		
59	38.8	N/B OFF TO OLD BAYSHORE ROAD	25	0.1	2260			25		5	
60	38.8	N/B ON FROM OLD BAYSHORE ROAD	44	0.2	3875			44	10		
		SUB-TOTAL Q-8	2509	10.2	222938	1020	8	2517	79	73	24

SEE NOTE 2 IN SHEET Q-1

SUMMARY OF QUANTITIES

Q-8

REVISED BY	A	AB
DATE REVISED	A	MN

CALCULATED-DESIGNED BY
CHECKED BY

FUNCTIONAL SUPERVISOR
ASHOK BHATNAGAR

STATE OF CALIFORNIA - DEPARTMENT OF TRANSPORTATION
Caltrans MAINTENANCE

LAST REVISION 11-14-08
DATE PLOTTED => 31-JUL-2009
TIME PLOTTED => 07:07

Dist	COUNTY	ROUTE	POST MILES TOTAL PROJECT	SHEET No.	TOTAL SHEETS
04	SCI	101	R27.6/40.2	111	173

REGISTERED CIVIL ENGINEER DATE 11/04/08

PLANS APPROVAL DATE 5-11-09

REGISTERED PROFESSIONAL ENGINEER A. Bhatnagar No. 48814 Exp 9-30-10 CIVIL STATE OF CALIFORNIA

THE STATE OF CALIFORNIA OR ITS OFFICERS OR AGENTS SHALL NOT BE RESPONSIBLE FOR THE ACCURACY OR COMPLETENESS OF SCANNED COPIES OF THIS PLAN SHEET.

ROADWAY QUANTITY SUMMARY (RAMPS)

LOCATION No.	PM	DESCRIPTION (RAMP LOCATION)	RHMA (TYPE G)	TACK COAT	COLD PLANE AC PAVEMENT 0.15′	ADDITIONAL COLD PLANE AC PAVEMENT 0.10′	ADDITIONAL RHMA (TYPE G)	TOTAL RHMA (TYPE G)	DELINEATOR CLASS 1		IMPORTED MATERIAL (SHOULDER BACKING)
									TYPE G	TYPE F	
			TON		Sq Ft		TON		EA		TON
61	38.9	S/B ON FROM NORTH FOURTH STREET	51	0.2	4520			51	6		
62	39.4	N/B OFF TPO NORTH 1st STREET/BROKAW ROAD	529	2.2	46995	6480	49	578	23	12	47
63	39.4	N/B ON FROM NORTH 1st STREET	176	0.7	15660	3250	24	200	5	5	
64	39.4	S/B OFF TO NORTH 1st STREET	318	1.3	28245	7970	60	378			
65	39.4	N/B ON FROM BROKAW ROAD	200	0.8	17792			200			
66	39.9	S/B OFF TO ROUTE 87 (GUADALUPE PARKWAY)	666	2.7	59158	3780	28	694			
67	39.9	N/B ON FROM ROUTE 87 (GUADALUPE PARKWAY)	375	1.5	33335			375			
		SUB-TOTAL Q-9	2315	9.4	205705	21480	161	2476	34	17	47
		SUB-TOTAL Q-8	2509	10.2	222938	1020	8	2517	79	73	24
		SUB-TOTAL Q-7	3541	14.5	314456	10920	83	3624	26	38	63
		SUB-TOTAL Q-6	4742	19.1	421428	69002	518	5259	55	6	173
		SUB-TOTAL Q-5	3287	13.3	291980	44700	335	3622	27	33	228
		SUB-TOTAL Q-4	4172	17.1	370713	27584	208	4380	29	24	284
		GRAND TOTAL*	20566*	83.6	1827220	174706	1313*	21878	250	191	819

NOTES:

1. SEE NOTE 2 IN SHEET Q-1
2. * SEE SHEET Q-27

SUMMARY OF QUANTITIES

Q-9

REVISED BY	DATE REVISED
A	A
AB	MN

CALCULATED-DESIGNED BY
CHECKED BY

FUNCTIONAL SUPERVISOR ASHOK BHATNAGAR

STATE OF CALIFORNIA - DEPARTMENT OF TRANSPORTATION
Caltrans MAINTENANCE

LAST REVISION 02-02-09 DATE PLOTTED => 31-JUL-2009 TIME PLOTTED => 07:07

Dist	COUNTY	ROUTE	POST MILES TOTAL PROJECT	SHEET No.	TOTAL SHEETS
04	SCI	101	R27.6/40.2	112	173

REGISTERED CIVIL ENGINEER DATE 11/04/08

PLANS APPROVAL DATE 5-11-09

REGISTERED PROFESSIONAL ENGINEER A. Bhatnagar No. 48814 Exp 9-30-10 CIVIL STATE OF CALIFORNIA

THE STATE OF CALIFORNIA OR ITS OFFICERS OR AGENTS SHALL NOT BE RESPONSIBLE FOR THE ACCURACY OR COMPLETENESS OF SCANNED COPIES OF THIS PLAN SHEET.

ADDITIONAL RUBBERIZED HMA (TYPE G) AT MAINLINE (SOUTHBOUND)

SOUTHBOUND

DESCRIPTION (FROM PM TP PM)	PM	LANE 1 LENGTH	LANE 1 WIDTH	LANE 2 LENGTH	LANE 2 WIDTH	LANE 3 LENGTH	LANE 3 WIDTH	LANE 4 LENGTH	LANE 4 WIDTH	LANE 5 LENGTH	LANE 5 WIDTH	ADDITIONAL COLD PLANE AC (0.10 Ft)	ADDITIONAL RHMA (G) (0.10 Ft)	REMARK
		FT										SQ FT	TON	
BEGIN CONSTRUCTION TO BLOSSOM HILL ROAD OC 27.60 - 28.61	27.6			1600	12							19200	144	
	27.8					550	12			1600	12	25800	194	
	27.9							150	12			1800	14	
	28.0							150	12			1800	14	
	28.1							550	12			6600	50	
	28.4							100	12			1200	9	
	28.5			525	12							6300	47	
	28.6			4200	12							50400	378	
BLOSSOM HILL ROAD OC TO YERBA BUENA ROAD UC 28.61 - 30.98	28.7	110	12									1320	10	
	28.9	110	12			200	12	200	12			6120	46	
	29.7			60	12							720	5	
	30.1	160	12	160	12							3840	29	
	30.3					60	12					720	5	
	30.5							80	12			960	7	
	30.6					100	12	100	12			2400	18	
	30.8	2650	12	2650	12							63600	477	
YERBA BUENA ROAD UC TO TULLY ROAD OC 30.98 - 33.03	31.7	200	12	200	12							4800	36	
	31.8	8448	12	8448	12	500	12					208752	1566	
	32.1					100	12	100	12			2400	18	
	32.3					100	12					1200	9	
	32.5					4224	12					50688	380	
	32.7							3168	12	1584	12	57024	428	
TULLY ROAD OC TO STORY ROAD OC 33.03 - 34.55	33.3			2640	12			2640	12	2640	12	95040	713	
	34.0	1056	12	1056	12							25344	190	
	34.2									150	12	1800	14	
	34.4					500	12					6000	45	
	34.5	2100	12	2100	12							50400	378	
STORY ROAD OC TO BEGIN PCC PART 1 34.55 - 35.48	34.8					1050	12	1050	12			25200	189	
	35.0					500	12					6000	45	
	35.3							500	12			6000	45	
END PCC PART 2 TO END CONSTRUCTION 38.47 - 40.20	38.5			3700	12	3180	12					82560	619	
	38.7	2150	12									25800	194	
	39.8	2150	12	2150	12	2150	12					77400	581	
	40.1							250	12			3000	23	
SUB-TOTAL Q-10 (SOUTHBOUND)												922188	6920	

SEE NOTE 2 IN SHEET Q-1

SUMMARY OF QUANTITIES

Q-10

REVISED BY	DATE REVISED
A	A

CALCULATED-DESIGNED BY	CHECKED BY
SL	CT

FUNCTIONAL SUPERVISOR: ASHOK BHATNAGAR

STATE OF CALIFORNIA - DEPARTMENT OF TRANSPORTATION

Caltrans MAINTENANCE

LAST REVISION 12-24-08 | DATE PLOTTED => 31-JUL-2009 | TIME PLOTTED => 07:07

Dist	COUNTY	ROUTE	POST MILES TOTAL PROJECT	SHEET No.	TOTAL SHEETS
04	SCI	101	R27.6/40.2	113	173

11/04/08
REGISTERED CIVIL ENGINEER DATE

5-11-09
PLANS APPROVAL DATE

REGISTERED PROFESSIONAL ENGINEER A. Bhatnagar No. 48814 Exp 9-30-10 CIVIL STATE OF CALIFORNIA

THE STATE OF CALIFORNIA OR ITS OFFICERS OR AGENTS SHALL NOT BE RESPONSIBLE FOR THE ACCURACY OR COMPLETENESS OF SCANNED COPIES OF THIS PLAN SHEET.

ADDITIONAL RUBBERIZED HMA (TYPE G) AT MAINLINE (NORTHBOUND)

NORTHBOUND

DESCRIPTION (FROM PM TP PM)	PM	LANE 1 LENGTH	LANE 1 WIDTH	LANE 2 LENGTH	LANE 2 WIDTH	LANE 3 LENGTH	LANE 3 WIDTH	LANE 4 LENGTH	LANE 4 WIDTH	LANE 5 LENGTH	LANE 5 WIDTH	ADDITIONAL COLD PLANE AC	ADDITIONAL RHMA (G) (0.10 FT)	REMARKS
		FT										SQFT	TON	
BEGIN CONSTRUCTION TO BLOSSOM HILL ROAD OC 27.60 - 28.61	27.6			1800	12							21600	162	
	28.4							110	12			1320	10	
	28.5					50	12	50	12			1200	9	
	28.6							200	18			3600	27	
BLOSSOM HILL ROAD OC TO YERBA BUENA ROAD UC 28.61 - 30.98	28.7					85	12					1020	8	
	28.8					200	12	100	12	300	12	7200	54	
	28.9			300	12	300	12	300	12			10800	81	
	29.1							1000	12			12000	90	
	29.2					500	12					6000	45	
	29.4							250	12			3000	23	
	29.5							100	12			1200	9	
	29.6							200	12			2400	18	
	29.8	180	12	180	12	280	12	280	12			11040	83	
	29.9	100	12	100	12	200	12	200	12			7200	54	
	30.0									100	12	1200	9	
	30.1	1000	12	1000	12	300	12			200	12	30000	225	
	30.5					200	12	200	12			4800	36	
	30.9	300	12	300	12							7200	54	
YERBA BUENA ROAD UC TO TULLY ROAD OC 30.98 - 33.03	31.0	1500	12	1500	12	200	12	200	12	200	12	43200	324	
	31.1					500	12					6000	45	
	31.4							200	12			2400	18	
	31.7					200	12	200	12			4800	36	
	31.8	350	12	350	12	200	12					10800	81	
	31.9									200	12	2400	18	
	32.0	100	12	100	12	100	12	100	12			4800	36	
	32.1					100	12					1200	9	
	32.3	200	12	200	12							4800	36	
	32.7	100	12									1200	9	
	32.9					200	12	200	12			4800	36	
SUB-TOTAL Q-11 (NORTHBOUND)												219180	1645	

SEE NOTE 2 IN SHEET Q-1

SUMMARY OF QUANTITIES

Q-11

REVISED BY	DATE REVISED
A	A

CALCULATED-DESIGNED BY: AB
CHECKED BY: MN
FUNCTIONAL SUPERVISOR: ASHOK BHATNAGAR

STATE OF CALIFORNIA - DEPARTMENT OF TRANSPORTATION
Caltrans MAINTENANCE

LAST REVISION 12-24-08
DATE PLOTTED => 31-JUL-2009
TIME PLOTTED => 07:07

Dist	COUNTY	ROUTE	POST MILES TOTAL PROJECT	SHEET No.	TOTAL SHEETS
04	SCI	101	R27.6/40.2	114	173

11/04/08
REGISTERED CIVIL ENGINEER DATE

5-11-09
PLANS APPROVAL DATE

REGISTERED PROFESSIONAL ENGINEER A. Bhatnagar No. 48814 Exp 9-30-10 CIVIL STATE OF CALIFORNIA

THE STATE OF CALIFORNIA OR ITS OFFICERS OR AGENTS SHALL NOT BE RESPONSIBLE FOR THE ACCURACY OR COMPLETENESS OF SCANNED COPIES OF THIS PLAN SHEET.

ADDITIONAL RUBBERIZED HMA (TYPE G) AT MAINLINE (NORTHBOUND)

NORTHBOUND

DESCRIPTION (FROM PM TP PM)	PM	LANE 1 LENGTH	LANE 1 WIDTH	LANE 2 LENGTH	LANE 2 WIDTH	LANE 3 LENGTH	LANE 3 WIDTH	LANE 4 LENGTH	LANE 4 WIDTH	LANE 5 LENGTH	LANE 5 WIDTH	ADDITIONAL COLD PLANE AC	ADDITIONAL RHMA (G) (0.10 FT)	REMARK
		FT										SQFT	TON	
TULLY ROAD OC TO STORY ROAD OC 33.03 - 34.55	33.1					200	12	200	18			6000	45	
	33.4							300	12	300	12	7200	54	
	34.1							400	12			4800	36	
	34.5	1700	12	1700	12							40800	306	
	33.9							400	12			4800	36	
STORY ROAD OC TO BEGIN PCC PART 1 34.55 - 35.48	34.6							100	12			1200	9	
	34.9					100	12	100	12	100	18	4200	32	
	35.2					100	12	100	12			2400	18	
	35.4					350	12	350	12			8400	63	
END PCC PART 1 TO BEGIN PCC PART 2 36.27 - 38.14	36.3	250	12	250	12							6000	45	
	36.4							650	12			7800	59	
	36.6	300	12	300	12	200	12	200	12			12000	90	
	36.7					1200	12	1200	12			28800	216	
	37.0	200	12	200	12							4800	36	
	37.1	500	12	500	12	300	12	300	12			19200	144	
	37.2	500	12	500	12							12000	90	
	37.3	700	12	700	12							16800	126	
	37.5	500	12	500	12	300	12					15600	117	
	37.6							100	12			1200	9	
	37.8	1000	12	1000	12	600	12	200	12			33600	252	
	38.1	200	12	200	12	100	12	100	12			7200	54	
END PCC PART 2 TO END CONSTRUCTION 38.47 - 40.20	38.4			200	12							2400	18	
	38.5			1500	12							18000	135	
	38.8					100	12					1200	9	
	39.0			300	12	300	12					7200	54	
	39.1	200	12									2400	18	
	39.8			100	12	400	12					6000	45	
	40.0	1000	12	1000	12	1000	12					36000	270	
SUB-TOTAL Q-12 (NORTHBOUND)												318000	2386	
SUB-TOTAL Q-11 (NORTHBOUND)												219180	1645	
TOTAL (NORTHBOUND)												537180	4031	

SEE NOTE 2 IN SHEET Q-1

SUMMARY OF QUANTITIES

Q-12

REVISED BY	DATE REVISED
A	A
AB	MN

CALCULATED-DESIGNED BY / CHECKED BY

FUNCTIONAL SUPERVISOR: ASHOK BHATNAGAR

STATE OF CALIFORNIA - DEPARTMENT OF TRANSPORTATION
Caltrans MAINTENANCE

LAST REVISION 11-14-08 | DATE PLOTTED => 31-JUL-2009 | TIME PLOTTED => 07:08

Dist	COUNTY	ROUTE	POST MILES TOTAL PROJECT	SHEET No.	TOTAL SHEETS
04	SCI	101	R27.6/40.2	115	173

Han-Bin Liang 11/04/08
REGISTERED CIVIL ENGINEER DATE

5-11-09
PLANS APPROVAL DATE

REGISTERED PROFESSIONAL ENGINEER
HAN-BIN LIANG
No. C 48404
Exp. 6/30/10
CIVIL
STATE OF CALIFORNIA

THE STATE OF CALIFORNIA OR ITS OFFICERS OR AGENTS SHALL NOT BE RESPONSIBLE FOR THE ACCURACY OR COMPLETENESS OF SCANNED COPIES OF THIS PLAN SHEET.

WRECO
1243 Alpine Road, Suite 108
Walnut Creek, CA 94596

CALTRANS
111 Grand AVE
Oakland, CA 94612

NOTES:

1. THE LIMITS OF AC DIKES ARE APPROXIMATE.
2. THE CONTRACTOR NEEDS TO IDENTIFY / REFERENCE THE LIMITS OF EXISTING AC DIKE PRIOR TO REMOVAL FOR ACCURATE REINSTALLATION.

ABBREVIATION:

OS OUTSIDE SHOULDER

HMA DIKES (MAINLINE NB)

LOCATION	BEGIN	PM	END	PM	REMOVE AC DIKE (TYPE A)	REMOVE AC DIKE (TYPE E)	REMOVE AC DIKE (TYPE F)	PLACE HOT MIX ASPHALT DIKE (TYPE E)	PLACE HOT MIX ASPHALT DIKE (TYPE F)	MINOR HOT MIX ASPHALT
					LF					TON
OS	NORTH OF SILICON VALLEY Blvd OC	27.95	SOUTH OF SILVER CREEK VALLEY ROAD UC	28.03		422		422		11.10
OS	SOUTH OF BLOSSOM HILL ROAD	28.14	SOUTH OF BLOSSOM HILL ROAD	28.16		106		106		2.79
OS	NORTH OF SILVER CREEK VALLEY ROAD UC	29.24	SOUTH OF COYOTE ROAD OC	29.46	1160			1160		30.51
OS	NORTH OF HELLYER AVENUE UC	30.03	SOUTH OF YERBA BUENA ROAD OC	30.20	898			898		23.62
OS	NORTH OF HELLYER AVENUE UC	30.48	SOUTH OF YERBA BUENA ROAD OC	30.58		528		528		13.89
OS	NORTH OF HELLYER AVENUE UC	30.58	SOUTH OF YERBA BUENA ROAD OC	30.76	950			950		24.98
OS	NORTH OF YERBA BUENA ROAD OC	31.03	SOUTH OF TULLY ROAD UC	31.82	4171			4171		109.70
OS	NORTH OF YERBA BUENA ROAD OC	31.89	SOUTH OF TULLY ROAD UC	32.07	960			960		25.25
OS	NORTH OF YERBA BUENA ROAD OC	32.07	SOUTH OF TULLY ROAD UC	32.63			2957		2957	77.77
OS	NORTH OF E SAN ANTONIO St UC	35.58	SOUTH OF ALUM ROCK AVENUE UC	35.75	898			898		24.20
OS	NORTH OF ALUM ROCK AVENUE UC	35.76	SOUTH OF McKEE ROAD UC (PARALLEL DIKES)	36.07	3165			3165		83.24
OS	NORTH OF ALUM ROCK AVENUE UC	36.07	NORTH OF McKEE ROAD UC	36.23	844			844		22.20
OS	NORTH OF McKEE ROAD UC	36.50	SOUTH OF TAYLOR ROAD	36.56	317			317		8.33
OS	NORTH OF McKEE ROAD UC	36.57	SOUTH OF TAYLOR ROAD	36.62	264			264		6.94
OS	NORTH OF TAYLOR ROAD	37.38	SOUTH OF OAKLAND ROAD UC	37.53	792			792		20.83
OS	NORTH OF HEDDING St UC	37.54	SOUTH OF OAKLAND ROAD UC	37.59	264			264		6.94
OS	NORTH OF HEDDING St UC	37.59	SOUTH OF OAKLAND ROAD UC	37.72	686			686		18.04
OS	NORTH OF OAKLAND ROAD UC	37.74	SOUTH OF N 10TH St UC	37.82	422			422		11.10
OS	NORTH OF OAKLAND ROAD UC	37.84	SOUTH OF N 10TH St UC	38.12	1478			1478		38.87
OS	NORTH OF N 10TH St UC	38.13	SOUTH OF RTE 880/101 SEPARATION UC	38.18	264			264		6.94
OS	NORTH OF N 10TH St UC	38.25	SOUTH OF RTE 880/101 SEPARATION UC	38.30	264			264		6.94
OS	NORTH OF RTE 880/101 SEPARATION UC	38.52	SOUTH OF N 1ST St OC	38.63		580		580		15.25
OS	NORTH OF RTE 880/101 SEPARATION UC	38.64	SOUTH OF N 1ST St OC	38.70		317		317		8.34
OS	NORTH OF RTE 880/101 SEPARATION UC	39.05	SOUTH OF N 1ST St OC	39.08		158		158		4.16
OS	NORTH OF BROKAW ROAD OC	39.66	SOUTH OF GUADALUPE PARKWAY UC	39.79		686		686		18.05
				SUBTOTAL NB	17797	2797	2957	20594	2957	619.98

SUMMARY OF QUANTITIES
(RAMP & INTERCHANGE)

Q-13

STATE OF CALIFORNIA - DEPARTMENT OF TRANSPORTATION
Caltrans MAINTENANCE

CONSULTANT FUNCTIONAL SUPERVISOR: HAN-BIN LIANG
CALCULATED-DESIGNED BY: SYED PASHA
CHECKED BY: HAN-BIN LIANG
REVISED BY
DATE REVISED

LAST REVISION 12-24-08
DATE PLOTTED => 31-JUL-2009
TIME PLOTTED => 07:08

Dist	COUNTY	ROUTE	POST MILES TOTAL PROJECT	SHEET No.	TOTAL SHEETS
04	SCI	101	R27.6/40.2	116	173

Han-Bin Liang 11/04/08
REGISTERED CIVIL ENGINEER DATE

5-11-09
PLANS APPROVAL DATE

REGISTERED PROFESSIONAL ENGINEER
HAN-BIN LIANG
No. C 48404
Exp. 6/30/10
CIVIL
STATE OF CALIFORNIA

THE STATE OF CALIFORNIA OR ITS OFFICERS OR AGENTS SHALL NOT BE RESPONSIBLE FOR THE ACCURACY OR COMPLETENESS OF SCANNED COPIES OF THIS PLAN SHEET.

WRECO
1243 Alpine Road, Suite 108
Walnut Creek, CA 94596

CALTRANS
111 Grand AVE
Oakland, CA 94612

NOTES:

1. THE LIMITS OF AC DIKES ARE APPROXIMATE.
2. THE CONTRACTOR NEEDS TO IDENTIFY / REFERENCE THE LIMITS OF EXISTING AC DIKE PRIOR TO REMOVAL FOR ACCURATE REINSTALLATION.

ABBREVIATION:

OS OUTSIDE SHOULDER

HMA DIKES (MAINLINE SB)

LOCATION	BEGIN	PM	END	PM	REMOVE AC DIKE (TYPE A)	REMOVE AC DIKE (TYPE E)	REMOVE AC DIKE (TYPE F)	PLACE HOT MIX ASPHALT DIKE (TYPE E)	PLACE HOT MIX ASPHALT DIKE (TYPE F)	MINOR HOT MIX ASPHALT
					LF					TON
OS	NORTH OF SILICON VALLEY Blvd OC	27.60	SOUTH OF SILVER CREEK VALLEY ROAD UC	27.78		950		950		24.98
OS	SOUTH OF BLOSSOM HILL ROAD	28.18	SOUTH OF BLOSSOM HILL ROAD	28.21		158		158		4.16
OS	NORTH OF SILICON VALLEY Blvd OC	29.04	SOUTH OF SILVER CREEK VALLEY ROAD UC	29.28		1267		1267		33.33
OS	NORTH OF SILVER CREEK VALLEY ROAD UC	29.32	SOUTH OF COYOTE ROAD OC	29.46	739			739		19.43
OS	NORTH OF SILVER CREEK VALLEY ROAD UC	29.46	SOUTH OF COYOTE ROAD OC	29.53		370		370		9.73
OS	NORTH OF HELLYER AVENUE UC	30.26	SOUTH OF YERBA BUENA ROAD OC	30.33	370			370		9.73
OS	NORTH OF HELLYER AVENUE UC	30.34	SOUTH OF YERBA BUENA ROAD OC	30.45		581		581		15.28
OS	NORTH OF HELLYER AVENUE UC	30.52	SOUTH OF YERBA BUENA ROAD OC	30.70	950			950		24.98
OS	NORTH OF YERBA BUENA ROAD OC	31.29	SOUTH OF TULLY ROAD UC (PARALLEL DIKES)	31.76	4973			4973		130.78
OS	SOUTH OF 680-280/101 SEPARATION OC	34.84	SOUTH OF 680-280/101 SEPARATION OC	34.87	160			160		4.21
OS	NORTH OF 680-280/101 SEPARATION OC	34.99	SOUTH OF E SAN ANTONIO STREET	35.19		1056		1056		27.77
OS	NORTH OF E SAN ANTONIO St UC	35.66	NORTH OF ALUM ROCK AVENUE UC	35.74	422			422		11.10
OS	NORTH OF ALUM ROCK AVENUE UC	35.83	SOUTH OF McKEE ROAD UC	36.03	1056			1056		27.77
OS	NORTH OF McKEE ROAD UC	36.27	SOUTH OF TAYLOR ROAD	36.30		158		158		4.17
OS	NORTH OF McKEE ROAD UC	36.43	SOUTH OF TAYLOR ROAD	36.51	420			420		11.05
OS	NORTH OF McKEE ROAD UC	36.56	SOUTH OF TAYLOR ROAD	36.72	845			845		22.22
OS	NORTH OF McKEE ROAD UC	36.74	SOUTH OF TAYLOR ROAD	36.88		780		780		20.51
OS	NORTH OF TAYLOR ROAD	37.28	SOUTH OF HEDDING St UC	37.40	633			633		16.65
OS	NORTH OF HEDDING St UC	37.42	SOUTH OF OAKLAND ROAD UC	37.59	898			898		22.30
OS	NORTH OF HEDDING St UC	37.63	SOUTH OF OAKLAND ROAD UC	37.71	422			422		11.10
OS	NORTH OF OAKLAND ROAD UC	37.73	SOUTH OF N 10TH St UC	37.84	581			581		15.28
OS	NORTH OF OAKLAND ROAD UC	37.85	SOUTH OF N 10TH St UC	37.92	370			370		9.73
OS	NORTH OF OAKLAND ROAD UC	37.93	SOUTH OF N 10TH St UC	38.16	1209			1209		31.80
OS	SOUTH OF N 10TH St UC	38.16	SOUTH OF N 10TH St UC	38.21	264			264		6.94
OS	NORTH OF Rte 880/101 SEPARATION UC	38.79	NORTH OF N 1ST St OC	38.92			686		686	18.04
OS	NORTH OF BROKAW ROAD OC	39.52	SOUTH OF GUADALUPE PARKWAY UC	39.58		317		317		8.34
OS	NORTH OF GUADALUPE PARKWAY UC	40.01	SOUTH OF GUADALUPE CREEK	40.20		1003		1003		26.38
				SUBTOTAL SB	14312	6640	686	20952	686	567.76

SUMMARY OF QUANTITIES
(RAMP & INTERCHANGE)

Q-14

STATE OF CALIFORNIA - DEPARTMENT OF TRANSPORTATION
Caltrans MAINTENANCE

CONSULTANT FUNCTIONAL SUPERVISOR: HAN-BIN LIANG
CALCULATED-DESIGNED BY: HAN-BIN LIANG
CHECKED BY
REVISED BY
DATE REVISED
SYED PASHA

LAST REVISION 12-24-08
DATE PLOTTED => 31-JUL-2009
TIME PLOTTED => 07:08

Dist	COUNTY	ROUTE	POST MILES TOTAL PROJECT	SHEET No.	TOTAL SHEETS
04	SCI	101	R27.6/40.2	117	173

Han-Bin Liang 11/04/08
REGISTERED CIVIL ENGINEER DATE

5-11-09
PLANS APPROVAL DATE

REGISTERED PROFESSIONAL ENGINEER HAN-BIN LIANG No. C 48404 Exp. 6/30/10 CIVIL STATE OF CALIFORNIA

THE STATE OF CALIFORNIA OR ITS OFFICERS OR AGENTS SHALL NOT BE RESPONSIBLE FOR THE ACCURACY OR COMPLETENESS OF SCANNED COPIES OF THIS PLAN SHEET.

WRECO
1243 Alpine Road, Suite 108
Walnut Creek, CA 94596

CALTRANS
111 Grand AVE
Oakland, CA 94612

NOTES:

1. THE LIMITS OF AC DIKES ARE APPROXIMATE.
2. THE CONTRACTOR NEEDS TO IDENTIFY / REFERENCE THE LIMITS OF EXISTING AC DIKE PRIOR TO REMOVAL FOR ACCURATE REINSTALLATION.

ABBREVIATION:

OS OUTSIDE SHOULDER

HMA DIKES BELOW MBGR (MAINLINE NB)

LOCATION	BEGIN	PM	END	PM	REMOVE AC DIKE (TYPE A)	PLACE HOT MIX ASPHALT DIKE (TYPE F)	MINOR HOT MIX ASPHALT
					LF		TON
OS	NORTH OF SILICON VALLEY Blvd	27.22	NORTH OF SILICON VALLEY Blvd	27.23	66	66	0.88
OS	NORTH OF SILVER CREEK VALLEY ROAD OC	29.71	SOUTH OF HELLYER AVENUE UC	29.76	250	250	3.35
OS	NORTH OF HELLYER AVENUE UC	30.43	SOUTH OF YERBA BUENA ROAD OC	30.48	264	264	3.54
OS	NORTH OF TULLY ROAD UC	33.66	SOUTH OF STORY ROAD UC	33.67	74	74	0.99
OS	SOUTH OF EAST BROKAW ROAD	39.35	SOUTH OF EAST BROKAW ROAD	39.42	333	333	4.46
OS	NORTH OF EAST BROKAW ROAD	39.46	NORTH OF EAST BROKAW ROAD	39.58	651	651	8.72
OS	NORTH OF EAST BROKAW ROAD	39.79	NORTH OF EAST BROKAW ROAD	39.82	120	120	1.61
				SUBTOTAL NB	1758	1758	23.55

HMA DIKES BELOW MBGR (MAINLINE SB)

LOCATION	BEGIN	PM	END	PM	REMOVE AC DIKE (TYPE A)	PLACE HOT MIX ASPHALT DIKE (TYPE F)	MINOR HOT MIX ASPHALT
					LF		TON
OS	NORTH OF YERBA BUENA ROAD OC	30.95	SOUTH OF CAPITOL EXPRESSWAY UC	31.10	792	792	10.61
OS	NORTH OF McKEE ROAD UC	36.51	SOUTH OF TAYLOR ROAD	36.56	264	264	3.54
OS	SOUTH OF N 1ST STREET OC	38.96	SOUTH OF N 1ST ST OC	39.05	440	440	5.90
OS	NORTH OF RTE 880/101 SEPARATION UC	39.08	SOUTH OF N 1ST ST OC	39.29	1130	1130	15.14
OS	NORTH OF N 1ST STREET OC	39.33	SOUTH OF BROKAW ROAD OC	39.43	560	560	7.50
OS	NORTH OF BROKAW ROAD OC	39.47	SOUTH OF GUADALUPE PARKWAY UC	39.52	260	260	3.48
OS	SOUTH OF GUADALUPE PARKWAY UC	39.80	SOUTH OF GUADALUPE PARKWAY UC	39.83	50	50	0.67
				SUBTOTAL SB	3496	3496	46.84

HMA DIKES BELOW MBGR RAMPS (NB)

DIRECTION	L†/R† IN DIRECTION OF TRAVEL	DESCRIPTION	RAMP No.	REMOVE AC DIKE (TYPE A)	REMOVE AC DIKE (TYPE E)	REMOVE AC DIKE (TYPE F)	PLACE HOT MIX ASPHALT DIKE (TYPE F)	MINOR HOT MIX ASPHALT
				LF				TON
NB	R†	N/B OFF TO HELLYER AVENUE	7	720			720	9.65
NB	R†	N/B ON FROM S/B 680	33	165			165	2.21
NB	R†	N/B ON FROM BROKAW ROAD	65		32		32	0.43
NB	R†	N/B ON FROM BROKAW ROAD	65	30			30	0.40
		SUBTOTAL RAMPS		915	32		947	12.69

HMA DIKES BELOW MBGR RAMPS (SB)

DIRECTION	L†/R† IN DIRECTION OF TRAVEL	DESCRIPTION	RAMP No.	REMOVE AC DIKE (TYPE A)	REMOVE AC DIKE (TYPE F)	PLACE HOT MIX ASPHALT DIKE (TYPE F)	MINOR HOT MIX ASPHALT
				LF			TON
SB	L†	S/B ON FROM YERBA BUENA ROAD	10	338		338	4.53
SB	L†	S/B OFF TO N 1ST STREET	64	410		410	5.49
		SUBTOTAL RAMPS		748		748	10.02

SUMMARY OF QUANTITIES
(RAMP & INTERCHANGE)

Q-15

STATE OF CALIFORNIA - DEPARTMENT OF TRANSPORTATION
Caltrans MAINTENANCE
CONSULTANT FUNCTIONAL SUPERVISOR: HAN-BIN LIANG
CALCULATED-DESIGNED BY: SYED PASHA
CHECKED BY: HAN-BIN LIANG
REVISED BY
DATE REVISED

LAST REVISION 12-24-08
DATE PLOTTED => 31-JUL-2009
TIME PLOTTED => 07:08

Dist	COUNTY	ROUTE	POST MILES TOTAL PROJECT	SHEET No.	TOTAL SHEETS
04	SCI	101	R27.6/40.2	118	173

Han-Bin Liang 11/04/08
REGISTERED CIVIL ENGINEER DATE

5-11-09
PLANS APPROVAL DATE

REGISTERED PROFESSIONAL ENGINEER
HAN-BIN LIANG
No. C 48404
Exp. 6/30/10
CIVIL
STATE OF CALIFORNIA

THE STATE OF CALIFORNIA OR ITS OFFICERS OR AGENTS SHALL NOT BE RESPONSIBLE FOR THE ACCURACY OR COMPLETENESS OF SCANNED COPIES OF THIS PLAN SHEET.

WRECO
1243 Alpine Road, Suite 108
Walnut Creek, CA 94596

CALTRANS
111 Grand AVE
Oakland, CA 94612

NOTES:

1. THE LIMITS OF DIKES ARE APPROXIMATE.
2. THE CONTRACTOR NEEDS TO IDENTIFY / REFERENCE THE LIMITS OF EXISTING DIKE PRIOR TO REMOVAL FOR ACCURATE REINSTALLATION.

ABBREVIATION:

OS OUTSIDE SHOULDER

HMA DIKES NORTHBOUND RAMPS

DIRECTION	L+/R+ IN DIRECTION OF TRAVEL	DESCRIPTION	RAMP No.	REMOVE AC DIKE (TYPE A)	REMOVE AC DIKE (TYPE D)	REMOVE AC DIKE (TYPE E)	REMOVE AC DIKE (TYPE F)	PLACE HOT MIX ASPHALT DIKE (TYPE D)	PLACE HOT MIX ASPHALT DIKE (TYPE E)	MINOR HOT MIX ASPHALT
				LF						TON
NB	L+	N/B ON FROM E/B BLOSSOM HILL ROAD	3			320			320	8.42
NB	L+	N/B ON FROM W/B BLOSSOM HILL ROAD	5	70					70	1.84
NB	R+	N/B ON FROM W/B BLOSSOM HILL ROAD	5			165			165	4.34
NB	R+	N/B ON FROM HELLYER AVENUE	9			227			227	5.97
NB	L+	N/B OFF TO YERBA BUENA ROAD	11			160	270		430	11.31
NB	R+	N/B OFF TO CAPITOL EXPRESSWAY	13			264			264	6.95
NB	R+	N/B CONNECTOR YERBA BUENA ROAD TO CAPITOL EXPRESSWAY	17	250					250	6.57
NB	L+	N/B CONNECTOR YERBA BUENA ROAD TO CAPITOL EXPRESSWAY	17			350			350	9.20
NB	R+	SEGMENT N/B ON FROM STORY ROAD	29	290					290	7.63
NB	R+	N/B ON FROM S/B 280 & STORY ROAD	34			832			832	21.89
NB	R+	N/B OFF TO ROUTE 130/ALUM ROCK	35	612					612	16.10
NB	R+	SEGMENT N/B COLLECTOR ROUTE 130/McKEE	43			1028			1028	27.04
NB	R+	N/B OFF TO JULIAN/McKEE	45	100					100	2.63
NB	R+	N/B ON FROM W/B McKEE	47			199			199	5.24
NB	R+	N/B OFF TO NORTH 13TH STREET	49	691					691	18.18
NB	R+	N/B ON FROM NORTH 13TH STREET	51	398					398	10.46
NB	R+	N/B OFF TO N/B ROUTE 880	53	366					366	9.63
NB	R+	N/B ON FROM N/B ROUTE 880	55	447					447	11.75
NB	L+	N/B OFF TO S/B ROUTE 880	57	449					449	11.81
NB	L+	N/B OFF TO NORTH 1ST STREET/BROKAW ROAD	62	569					569	14.96
NB	R+	N/B OFF TO NORTH 1ST STREET/BROKAW ROAD	62			180			180	4.73
NB	R+	N/B ON FROM NORTH 1ST STREET	63			290			290	7.63
NB	L+	N/B ON FROM BROKAW ROAD	65	465					465	12.23
NB	L+	N/B ON FROM ROUTE 87 (GUADALUPE PARKWAY)	67	422					422	11.10
		SUBTOTAL RAMPS		5129		4015	270		9414	247.61

SUMMARY OF QUANTITIES
(RAMP & INTERCHANGE)

Q-16

STATE OF CALIFORNIA - DEPARTMENT OF TRANSPORTATION
Caltrans MAINTENANCE
CONSULTANT FUNCTIONAL SUPERVISOR: HAN-BIN LIANG
CALCULATED-DESIGNED BY: SYED PASHA
CHECKED BY: HAN-BIN LIANG
REVISED BY
DATE REVISED

LAST REVISION 12-24-08
DATE PLOTTED => 31-JUL-2009
TIME PLOTTED => 07:08

Dist	COUNTY	ROUTE	POST MILES TOTAL PROJECT	SHEET No.	TOTAL SHEETS
04	SCI	101	R27.6/40.2	119	173

Han-Bin Liang 11/04/08
REGISTERED CIVIL ENGINEER DATE

5-11-09
PLANS APPROVAL DATE

REGISTERED PROFESSIONAL ENGINEER
HAN-BIN LIANG
No. C 48404
Exp. 6/30/10
CIVIL
STATE OF CALIFORNIA

THE STATE OF CALIFORNIA OR ITS OFFICERS OR AGENTS SHALL NOT BE RESPONSIBLE FOR THE ACCURACY OR COMPLETENESS OF SCANNED COPIES OF THIS PLAN SHEET.

WRECO
1243 Alpine Road, Suite 108
Walnut Creek, CA 94596

CALTRANS
111 Grand AVE
Oakland, CA 94612

NOTES:

1. THE LIMITS OF AC DIKES ARE APPROXIMATE.
2. THE CONTRACTOR NEEDS TO IDENTIFY / REFERENCE THE LIMITS OF EXISTING AC DIKE PRIOR TO REMOVAL FOR ACCURATE REINSTALLATION.

ABBREVIATION:

OS OUTSIDE SHOULDER

HMA DIKES SOUTHBOUND RAMPS

DIRECTION	L+/R+ IN DIRECTION OF TRAVEL	DESCRIPTION	RAMP No.	REMOVE AC DIKE (TYPE A)	REMOVE AC DIKE (TYPE D)	REMOVE AC DIKE (TYPE E)	REMOVE AC DIKE (TYPE F)	PLACE HOT MIX ASPHALT DIKE (TYPE D)	PLACE HOT MIX ASPHALT DIKE (TYPE E)	MINOR HOT MIX ASPHALT
				LF						TON
SB	R+	S/B ON FROM S/B ROUTE 82	2			1137			1137	29.91
SB	R+	S/B ON FROM N/B ROUTE 82	4			637			637	16.76
SB	L+	S/B OFF TO ROUTE 82/BLOSSOM HILL ROAD	6			1049			1049	27.59
SB	R+	S/B OFF TO HELLYER AVENUE	8			780			780	20.51
SB	R+	S/B ON FROM ROUTE 130/ALUM ROCK	36	310					310	8.15
SB	L+	SEGMENT S/B OFF TO ROUTE 130	38			100			100	2.63
SB	R+	SEGMENT S/B OFF TO ROUTE 131	38			280			280	7.36
SB	L+	SEGMENT S/B ON FROM JULIAN/MCKEE	40	410					410	10.78
SB	R+	SEGMENT S/B COLLECTOR JULIAN/ROUTE 130	42	760					760	19.99
SB	R+	S/B ON FROM JULIAN/MCKEE	44		90			90		5.34
SB	L+	S/B OFF TO JULIAN/MCKEE	46			711			711	18.71
SB	L+	S/B ON FROM NORTH 13TH STREET	48	592					592	15.56
SB	L+	S/B OFF TO NORTH 13TH STREET	50	608					608	15.98
SB	L+	S/B ON FROM N/B ROUTE 880	52	980					980	25.77
SB	R+	S/B OFF TO N/B ROUTE 880	54	467					467	12.27
SB	L+	S/B ON FROM S/B ROUTE 880	56	487					487	12.82
SB	L+	S/B OFF TO NORTH 1ST STREET	64		531			531		31.49
SB	R+	S/B OFF TO ROUTE 87 (GUADALUPE PARKWAY)	66	150					150	8.90
		SUBTOTAL RAMPS		4764	621	4694		621	9458	290.52

SUMMARY OF QUANTITIES
(RAMP & INTERCHANGE)

Q-17

REVISED BY | DATE REVISED
SYED PASHA | HAN-BIN LIANG
CALCULATED-DESIGNED BY | CHECKED BY
CONSULTANT FUNCTIONAL SUPERVISOR
HAN-BIN LIANG
STATE OF CALIFORNIA - DEPARTMENT OF TRANSPORTATION
Caltrans MAINTENANCE

LAST REVISION 12-24-08 | DATE PLOTTED => 31-JUL-2009 | TIME PLOTTED => 07:09

Dist	COUNTY	ROUTE	POST MILES TOTAL PROJECT	SHEET No.	TOTAL SHEETS
04	SCI	101	R27.6/40.2	120	173

Han-Bin Liang 11/04/08
REGISTERED CIVIL ENGINEER DATE

5-11-09
PLANS APPROVAL DATE

REGISTERED PROFESSIONAL ENGINEER
HAN-BIN LIANG
No. C 48404
Exp. 6/30/10
CIVIL
STATE OF CALIFORNIA

THE STATE OF CALIFORNIA OR ITS OFFICERS OR AGENTS SHALL NOT BE RESPONSIBLE FOR THE ACCURACY OR COMPLETENESS OF SCANNED COPIES OF THIS PLAN SHEET.

WRECO
1243 Alpine Road, Suite 108
Walnut Creek, CA 94596

CALTRANS
111 Grand AVE
Oakland, CA 94612

NOTES:

1. THE LIMITS OF AC DIKES ARE APPROXIMATE.
2. THE CONTRACTOR NEEDS TO IDENTIFY / REFERENCE THE LIMITS OF EXISTING AC DIKE PRIOR TO REMOVAL FOR ACCURATE REINSTALLATION.

ABBREVIATION:

OS OUTSIDE SHOULDER

SUMMARY OF HMA DIKES

LOCATION	REMOVE AC DIKE (TYPE A)	REMOVE AC DIKE (TYPE D)	REMOVE AC DIKE (TYPE E)	REMOVE AC DIKE (TYPE F)	PLACE HOT MIX ASPHALT DIKE (TYPE D)	PLACE HOT MIX ASPHALT DIKE (TYPE E)	PLACE HOT MIX ASPHALT DIKE (TYPE F)	MINOR HOT MIX ASPHALT
	LF							TON
SUBTOTAL NB (MAIN LINE)	17797		2797	2957		20594	2957	619.98
SUBTOTAL SB (MAIN LINE)	14312		6640	686		20952	686	567.76
SUBTOTAL NB (RAMPS)	5129		4016	270		9415		247.61
SUBTOTAL SB (RAMPS)	4763	621	4695		621	9458		290.51
SUBTOTAL BELOW MBGR NB (MAIN LINE)	1758						1758	23.56
SUBTOTAL BELOW MBGR SB (MAIN LINE)	3496						3496	46.85
SUBTOTAL BELOW MBGR NB (RAMPS)	915		32				947	12.69
SUBTOTAL BELOW MBGR SB (RAMPS)	748						748	10.03
TOTAL	48918	621	18180	3913	621	60419	10592	1818.99
	71632							

SUMMARY OF QUANTITIES
(RAMP & INTERCHANGE)

Q-18

STATE OF CALIFORNIA - DEPARTMENT OF TRANSPORTATION
Caltrans MAINTENANCE

CONSULTANT FUNCTIONAL SUPERVISOR: HAN-BIN LIANG
CALCULATED-DESIGNED BY: SYED PASHA
CHECKED BY: HAN-BIN LIANG
REVISED BY
DATE REVISED

LAST REVISION 01-05-09
DATE PLOTTED => 31-JUL-2009
TIME PLOTTED => 07:09

Dist	COUNTY	ROUTE	POST MILES TOTAL PROJECT	SHEET No.	TOTAL SHEETS
04	SCI	101	R27.6/40.2	121	173

11/04/08
REGISTERED CIVIL ENGINEER DATE

5-11-09
PLANS APPROVAL DATE

REGISTERED PROFESSIONAL ENGINEER A. Bhatnagar No. 48814 Exp 9-30-10 CIVIL STATE OF CALIFORNIA

THE STATE OF CALIFORNIA OR ITS OFFICERS OR AGENTS SHALL NOT BE RESPONSIBLE FOR THE ACCURACY OR COMPLETENESS OF SCANNED COPIES OF THIS PLAN SHEET.

METAL BEAM GUARD RAILING MAINLINE - SOUTHBOUND (OUTSIDE SHOULDER)

DESCRIPTION (FROM PM TO PM))	PM	REMOVE MBGR	INSTALL MBGR						OBJECT MARKER
			MBGR	ALTERNATIVE FLARED TERMINAL SYSTEM	ALTERNATIVE IN-LINE TERMINAL SYSTEM	END ANCHOR ASSEMBLY (TYPE SFT)	GUARD RAILING LAYOUT (N)	TRANSITION RAILING (TYPE WB)	(TYPE L-1)
		LF	LF	EA					
END COSTRUCTION TO END OF PCC PART 2 (40.2 TO 38.47)	39.9	62.5		1			12B	1	1
	39.6	325.0	262.5	1			12B	1	1
	39.5	550.0	525.0				12D	1	
	39.3	1000.0	1000.0			1	12DD		
	39.1	375.0	337.5	1		1	11B		1
	38.8	62.5		1			12B	1	1
END PCC PART 2 TO BEGIN PCC PART 2 (38.47 TO 38.14)	38.1	62.5	25.0	1		1	16B		1
BEGIN PCC PART 2 TO END PCC PART 1 (38.14 TO 36.27)	36.8	62.5		1			12B	1	1
	36.6	300.0	262.5	1		1	16B		1
	36.4	62.5		1			12B	1	1
	36.3	125.0	100.0				12D	1	
	36.3	112.5	112.5			1	12DD		
END PCC PART 1 TO BEGIN PCC PART 1 (36.27 TO 35.48))	35.5	187.5	150.0	1		1	16B		1
BEGIN PCC PART 1 TO STORY ROAD OC (35.48 TO 34.55)	35.3	62.5		1			12B	1	1
	34.9	75.0	37.5	1		1	16B		1
TULLY ROAD OC TO YERBA BUENA ROAD UC (33.03 TO 30.98)	31.2	762.5	700.0	1			12B	1	1
YERBA BUENA ROAD UC TO BLOSSOM HILL ROAD OC (30.98 TO 28.61)	30.2	337.5	300.0	1		1	11B		1
	30.1	62.5		1			12B	1	1
	29.6	75.0	37.5	1		1	16B		1
	29.2	212.5	175.0	1		1	16B		1
	29.0	62.5	25.0	1		1	16B		1
	28.9	1550.0	1512.5	1		1	11B		1
BLOSSOM HILL ROAD OC TO BEGIN CONSTRUCTION (28.61 TO 27.6)	28.6	50.0	12.5	1		1	16B		1
	27.9	50.0	12.5	1		1	16B		1
	27.7	75.0	37.5	1		1	16B		1
SUBTOTAL FOR SOUTHBOUND		6663	5625	21		15		10	21

SUMMARY OF QUANTITIES

REVISED BY	DATE REVISED
MN	AB

A A

CALCULATED-DESIGNED BY / CHECKED BY

FUNCTIONAL SUPERVISOR: ASHOK BHATNAGAR

STATE OF CALIFORNIA - DEPARTMENT OF TRANSPORTATION
Caltrans MAINTENANCE

LAST REVISION 11-14-08 | DATE PLOTTED => 31-JUL-2009 | TIME PLOTTED => 07:09

Dist	COUNTY	ROUTE	POST MILES TOTAL PROJECT	SHEET No.	TOTAL SHEETS
04	SCI	101	R27.6/40.2	122	173

11/04/08
REGISTERED CIVIL ENGINEER DATE

5-11-09
PLANS APPROVAL DATE

REGISTERED PROFESSIONAL ENGINEER A. Bhatnagar No. 48814 Exp 9-30-10 CIVIL STATE OF CALIFORNIA

THE STATE OF CALIFORNIA OR ITS OFFICERS OR AGENTS SHALL NOT BE RESPONSIBLE FOR THE ACCURACY OR COMPLETENESS OF SCANNED COPIES OF THIS PLAN SHEET.

METAL BEAM GUARD RAILING MAINLINE - NORTHBOUND (OUTSIDE SHOULDER)

DESCRIPTION (FROM PM TO PM)	PM	REMOVE MBGR	INSTALL MBGR						OBJECT MARKERS	
			MBGR	ALTERNATIVE FLARED TERMINAL SYSTEM	ALTERNATIVE IN-LINE TERMINAL SYSTEM	END ANCHOR ASSEMBLY (TYPE SFT)	GUARD RAILING LAYOUT (N)	TRANSITION RAILING (TYPE WB)	(TYPE L-1)	(TYPE P)
		LF	LF	Ea						
BEGIN CONSTRUCTION TO BLOSSOM HILL ROAD OC (27.6 TO 28.61)	27.6	62.5	25.0	1		1	16B		1	
	28.1	62.5	25.0	1		1	16B		1	
BLOSSOM HILL ROAD OC TO YERBA BUENA ROAD UC (28.61 TO 30.98)	28.8	50.0	12.5	1		1	11B		1	
	28.9	75.0	37.5	1		1	16B		1	
	29.0	62.5	25.0	1		1	16B		1	
	29.7	75.0			1		12A	1		1
	29.8	450.0	425.0				12D	1		
	30.1	62.5		1			12B	1	1	
	30.6	62.5		1			12B	1	1	
	30.7	250.0	250.0			1	12DD			
	30.8	62.5	25.0	1		1	16B		1	
	30.9	62.5		1			12B	1	1	
YERBA BUENA ROAD UC TO TULLY ROAD OC (30.98 TO 33.03)	31.0	87.5	25.0	1			12B	1	1	
	31.03	75.0	37.5	1		1	16B		1	
	32.3	75.0	37.5	1		1	16B		1	
	32.6	75.0	37.5	1		1	16B		1	
TULLY ROAD OC TO STORY ROAD OC (33.03 TO 34.55)	33.9	175.0	137.5	1		1	11B		1	
	34.3	75.0	37.5	1		1	16B		1	
	34.4	137.5	100.0	1		1	16B		1	
STORY ROAD OC TO BEGIN PCC PART 1 (34.55 TO 35.48)	34.84	675.0	675.0			2	15A			
SUBTOTAL FOR NORTHBOUND Q-20		2712.5	1912.5	16	1	15		6	16	1

SUMMARY OF QUANTITIES

Q-20

STATE OF CALIFORNIA - DEPARTMENT OF TRANSPORTATION
Caltrans MAINTENANCE

FUNCTIONAL SUPERVISOR: ASHOK BHATNAGAR
CALCULATED-DESIGNED BY: MN
CHECKED BY: AB
REVISED BY: A
DATE REVISED: A

LAST REVISION 11-14-08 DATE PLOTTED => 31-JUL-2009 TIME PLOTTED => 07:09

Dist	COUNTY	ROUTE	POST MILES TOTAL PROJECT	SHEET No.	TOTAL SHEETS
04	SCI	101	R27.6/40.2	123	173

11/04/08
REGISTERED CIVIL ENGINEER DATE

5-11-09
PLANS APPROVAL DATE

REGISTERED PROFESSIONAL ENGINEER A. Bhatnagar No. 48814 Exp 9-30-10 CIVIL STATE OF CALIFORNIA

THE STATE OF CALIFORNIA OR ITS OFFICERS OR AGENTS SHALL NOT BE RESPONSIBLE FOR THE ACCURACY OR COMPLETENESS OF SCANNED COPIES OF THIS PLAN SHEET.

METAL BEAM GUARD RAILING MAINLINE - NORTHBOUND (OUTSIDE SHOULDER)

DESCRIPTION (FROM PM TO PM)	PM	REMOVE MBGR	INSTALL MBGR						OBJECT MARKERS	
			MBGR	ALTERNATIVE FLARED TERMINAL SYSTEM	ALTERNATIVE IN-LINE TERMINAL SYSTEM	END ANCHOR ASSEMBLY (TYPE SFT)	GUARD RAILING LAYOUT (N)	TRANSITION RAILING (TYPE WB)	(TYPE L-1)	(TYPE P)
		LF	LF	EA						
BEGIN PCC PART 1 TO END PART PCC PART 1 (35.48 TO 36.27)	35.5	462.5	425.0	1			16B		1	
	35.54	75.0	37.5	1		1	16B		1	
END PCC PART 1 TO BEGIN PCC PART 2 (36.27 TO 38.14)	36.7	337.5	275.0	1			12B	1	1	
	37.0	62.5		1			12B	1	1	
	37.5	62.5	25.0	1		1	16B		1	
	37.9	50.0	50.0			1	16C			
	38.1	112.5	75.0	1		1	16B		1	
END PCC PART 2 TO END CONSTRUCTION (38.47 TO 40.2)	38.6	62.5	25.0	1		1	16B		1	
	38.7	62.5		1			12B	1	1	
	39.0	75.0	37.5	1		1	16B		1	
	39.1	75.0	12.5	1			12B	1	1	
	39.2	125.0	62.5	1			12B	1	1	
	39.3	325.0	300.0				12D	1		
	39.4	650.0	650.0			1	12DD			
	39.6	125.0	75.0		1	1	16A			1
	39.9	212.5	175.0	1		1	16B		1	
	40.1	75.0	37.5	1		1	16B		1	
	40.2	137.5	112.5				12B	1		
SUBTOTAL FOR NORTHBOUND Q-21		3087.5	2375.0	13	1	10		7	13	1
SUBTOTAL FOR NORTHBOUND Q-20		2712.5	1912.5	16	1	15		6	16	1
GRAND TOTAL FOR NORTHBOUND		5800	4288	29	2	25		13	29	2

SUMMARY OF QUANTITIES

Q-21

REVISED BY	DATE REVISED
A	A
MN	AB
CALCULATED-DESIGNED BY	CHECKED BY
FUNCTIONAL SUPERVISOR	ASHOK BHATNAGAR

STATE OF CALIFORNIA - DEPARTMENT OF TRANSPORTATION
Caltrans MAINTENANCE

LAST REVISION 11-17-08 | DATE PLOTTED => 31-JUL-2009 | TIME PLOTTED => 07:09

Dist	COUNTY	ROUTE	POST MILES TOTAL PROJECT	SHEET No.	TOTAL SHEETS
04	SCI	101	R27.6/40.2	124	173

11/04/08
REGISTERED CIVIL ENGINEER DATE

5-11-09
PLANS APPROVAL DATE

REGISTERED PROFESSIONAL ENGINEER
A. Bhatnagar
No. 48814
Exp 9-30-10
CIVIL
STATE OF CALIFORNIA

THE STATE OF CALIFORNIA OR ITS OFFICERS OR AGENTS SHALL NOT BE RESPONSIBLE FOR THE ACCURACY OR COMPLETENESS OF SCANNED COPIES OF THIS PLAN SHEET.

MBGR ON RAMPS (NORTHBOUND AND SOUTHBOUND)

RAMPS LOCATION No.	PM	DESCRIPTION	MBGR's LOCATION		REMOVE MBGR	INSTALL MBGR							OBJECT MARKERS	
						MBGR	ALTERNATIVE FLARED TERMINAL SYSTEM	ALTERNATIVE IN-LINE TERMINAL SYSTEM	END ANCHOR ASSEMBLY (TYPE SFT)	BURIED POST ANCHOR (N)	GUARD RAILING LAYOUT (N)	TRANSITION RAILING (TYPE WB)	(TYPE L-1)	(TYPE P)
			LEFT	RIGHT	LF	LF	EA							
7	30.1	N/B OFF TO HELLYER AVENUE		X	687.5	687.5			1		12DD			
10		S/B ON FROM YERBA BUENA ROAD		X	87.5	87.5			1		12DD			
				X	125.0	62.5	1				12B	1	1	
11		N/B OFF TO YERBA BUENA ROAD	X		87.5	12.5		1			12A	1		1
				X	75.0			1			12A	1		1
				X	62.5	62.5			1		12DD			
12	30.9	SEGMENT S/B OFF TO YERBA BUENA ROAD	X		75.0	50.0				1	12CC	1		
16		S/B COLLECTOR CAPITOL Expwy YERBA BUENA ROAD		X	75.0			1			12A	1		1
17		N/B COLLECTOR YERBA BUENA Rd TO CAPITOL Expwy		X	62.5		1				12B	1	1	
20		SEGMENT S/B ON FROM E/B STORY ROAD		X	75.0	37.5	1		1		16B		1	
			X		75.0	37.5	1		1		16B		1	
21	34.5	SEGMENT N/B OFF TO E/B STORY ROAD	X		200.0	162.5	1		1		16B		1	
				X	75.0	37.5	1		1		16B		1	
				X	50.0			1						1
23		SEGMENT N/B OFF TO W/B STORY ROAD	X		87.5	37.5		1	1		16A			1
SUBTOTAL FOR Q-22					1900.0	1275.0	6	5	8	1		6	6	5

SUMMARY OF QUANTITIES

Q-22

STATE OF CALIFORNIA - DEPARTMENT OF TRANSPORTATION
Caltrans MAINTENANCE

FUNCTIONAL SUPERVISOR: ASHOK BHATNAGAR

CALCULATED-DESIGNED BY: MN
CHECKED BY: AB

REVISED BY: A
DATE REVISED: A

LAST REVISION 11-17-08 | DATE PLOTTED => 31-JUL-2009 | TIME PLOTTED => 07:09

Dist	COUNTY	ROUTE	POST MILES TOTAL PROJECT	SHEET No.	TOTAL SHEETS
04	SCI	101	R27.6/40.2	125	173

11/04/08
REGISTERED CIVIL ENGINEER DATE

5-11-09
PLANS APPROVAL DATE

REGISTERED PROFESSIONAL ENGINEER
A. Bhatnagar
No. 48814
Exp 9-30-10
CIVIL
STATE OF CALIFORNIA

THE STATE OF CALIFORNIA OR ITS OFFICERS OR AGENTS SHALL NOT BE RESPONSIBLE FOR THE ACCURACY OR COMPLETENESS OF SCANNED COPIES OF THIS PLAN SHEET.

MBGR ON RAMPS (NORTHBOUND AND SOUTHBOUND)

RAMPS LOCATION No.	PM	DESCRIPTION	MBGR's LOCATION		REMOVE MBGR	INSTALL MBGR							OBJECT MARKERS	
						MBGR	ALTERNATIVE FLARED TERMINAL SYSTEM	ALTERNATIVE IN-LINE TERMINAL SYSTEM	END ANCHOR ASSEMBLY (TYPE SFT)	BURIED POST ANCHOR (N)	GUARD RAILING LAYOUT (N)	TRANSITION RAILING (TYPE WB)	(TYPE L-1)	(TYPE P)
			LEFT	RIGHT	LF	LF	EA							
24	34.5	SEGMENT S/B OFF TO E/B STORY ROAD	X		100.0	62.5	1		1		16B		1	
26		SEGMENT S/B OFF TO W/B STORY ROAD	X		75.0	37.5	1		1		16B		1	
				X	75.0	37.5	1		1		16B		1	
27		SEGMENT N/B ON FROM W/B STORY ROAD	X		175.0	125.0		1	1		11A			1
28		S/B OFF TO STORY ROAD		X	75.0	37.5	1		1		16B		1	
30	34.8	S/B ON FROM ROUTE 280 & 680	X		225.0	225.0			1		12DD			
31		N/B OFF TO ROUTE 280 & 680	X		337.5	275.0	1				12B	1	1	
				X	75.0			1			12A	1		1
32		S/B OFF TO ROUTE 280 & 680	X		350.0	275.0		1			12A	1		1
33		N/B ON FROM S/B 680	X		187.5	187.5			1		12DD			
				X	137.5	137.5			1		12DD			
34		N/B ON FROM S/B 280 & STORY ROAD	X		75.0	37.5	1		1		16B		1	
37	35.7	SEGMENT N/B ON FROM ROUTE 130		X	37.5		1						1	
42	36.1	SEGMENT S/B COLLECTOR JULIAN/ROUTE 130		X	712.5	650.0	1				12B	1	1	
43		SEGMENT N/B COLLECTOR ROUTE 130/McKEE		X	75.0	12.5	1				12B	1	1	
47		N/B ON FROM W/B McKEE	X		450.0	400.0		1	1		11A			1
				X	87.5	12.5		1			12B	1		1
SUBTOTAL FOR NORTHBOUND Q-23					3250.0	2512.5	9	5	10			6	9	5

SUMMARY OF QUANTITIES

Q-23

STATE OF CALIFORNIA - DEPARTMENT OF TRANSPORTATION
Caltrans MAINTENANCE

FUNCTIONAL SUPERVISOR: ASHOK BHATNAGAR

CALCULATED-DESIGNED BY: MN
CHECKED BY: AB
REVISED BY: A
DATE REVISED: A

LAST REVISION 11-17-08
DATE PLOTTED => 31-JUL-2009
TIME PLOTTED => 07:10

Dist	COUNTY	ROUTE	POST MILES TOTAL PROJECT	SHEET No.	TOTAL SHEETS
04	SCI	101	R27.6/40.2	126	173

REGISTERED CIVIL ENGINEER DATE 11/04/08

PLANS APPROVAL DATE 5-11-09

REGISTERED PROFESSIONAL ENGINEER A. Bhatnagar No. 48814 Exp 9-30-10 CIVIL STATE OF CALIFORNIA

THE STATE OF CALIFORNIA OR ITS OFFICERS OR AGENTS SHALL NOT BE RESPONSIBLE FOR THE ACCURACY OR COMPLETENESS OF SCANNED COPIES OF THIS PLAN SHEET.

MBGR ON RAMPS (NORTHBOUND AND SOUTHBOUND)

RAMPS LOCATION No.	PM	DESCRIPTION	MBGR's LOCATION		REMOVE MBGR	INSTALL MBGR							OBJECT MARKERS	
						MBGR	ALTERNATIVE FLARED TERMINAL SYSTEM	ALTERNATIVE IN-LINE TERMINAL SYSTEM	END ANCHOR ASSEMBLY (TYPE SFT)	BURIED POST ANCHOR (N)	GUARD RAILING LAYOUT (N)	TRANSITION RAILING (TYPE WB)	(TYPE L-1)	(TYPE P)
			LEFT	RIGHT	LF	LF	EA							
48	37.7	S/B ON FROM NORTH 13TH STREET	X		200.0	150.0		1	1		11A			1
				X	62.5		1				12B	1	1	
49		N/B OFF TO NORTH 13TH STREET	X		250.0	212.5	1		1		11B		1	
50		S/B OFF TO NORTH 13TH STREET	X		225.0	175.0		1	1		11A			1
51		N/B ON FROM NORTH 13TH STREET	X		175.0	125.0		1	1		11A			1
				X	62.5		1				12B	1	1	
54	38.3	S/B OFF TO N/B ROUTE 880	X		62.5		1				12B	1	1	
55		N/B ON FROM N/B ROUTE 880	X		62.5		1				12B	1	1	
			X		125.0	75.0						2		
56		S/B ON FROM S/B ROUTE 880	X		62.5		1				12B	1	1	
			X		125.0	75.0						2		
57		N/B OFF TO S/B ROUTE 880	X		375.0	325.0		1	1		11A			1
63	39.4	N/B ON FROM NORTH 1ST STREET	X		150.0	112.5	1		1		11B		1	
64		S/B OFF TO NORTH 1ST STREET		X	425.0	425.0			1		12DD			
65		N/B ON FROM BROKAW ROAD		X	62.5	25.0	1		1		16B		1	
				X	62.5		1				12B	1	1	
66	39.9	S/B OFF TO ROUTE 87 (GUADALUPE PARKWAY)		X	500.0	437.5	1				12B	1	1	
			X		112.5	75.0	1		1		16B		1	
67		N/B ON FROM ROUTE 87 (GUADALUPE PARKWAY)	X		450.0	425.0					12DD	1		
SUBTOTAL FOR Q-24					3550.0	2637.5	11	4	9			12	11	4
SUBTOTAL FOR Q-23					3250.0	2512.5	9	5	10			6	9	5
SUBTOTAL FOR Q-22					1900.0	1275.0	6	5	8	1		6	6	5
GRAND TOTAL					8700.0	6425.0	26	14	27	1		24	26	14

SUMMARY OF QUANTITIES

Q-24

REVISED BY	DATE REVISED
MN	AB
A	A

CALCULATED-DESIGNED BY / CHECKED BY

FUNCTIONAL SUPERVISOR: ASHOK BHATNAGAR

STATE OF CALIFORNIA - DEPARTMENT OF TRANSPORTATION

Caltrans MAINTENANCE

LAST REVISION 11-17-08 DATE PLOTTED => 31-JUL-2009 TIME PLOTTED => 07:10

Dist	COUNTY	ROUTE	POST MILES TOTAL PROJECT	SHEET No.	TOTAL SHEETS
04	SCI	101	R27.6/40.2	127	173

11/04/08
REGISTERED CIVIL ENGINEER DATE

5-11-09
PLANS APPROVAL DATE

REGISTERED PROFESSIONAL ENGINEER
A. Bhatnagar
No. 48814
Exp 9-30-10
CIVIL
STATE OF CALIFORNIA

THE STATE OF CALIFORNIA OR ITS OFFICERS OR AGENTS SHALL NOT BE RESPONSIBLE FOR THE ACCURACY OR COMPLETENESS OF SCANNED COPIES OF THIS PLAN SHEET.

ROADWAY QUANTITY SUMMARY (MAINLINE - NORTHBOUND)

DESCRIPTION (FROM PM TO PM)	OGFC	RHMA (TYPE G)	TACK COAT	COLD PLANE AC PAVEMENT 0.25'	ADDITIONAL COLD PLANE AC PAVEMENT 0.10'	ADDITIONAL RHMA (TYPE G)	TOTAL RHMA (TYPE G)	IMPORTED MATERIAL (SHOULDER BACKING) *
	TON			SQFT		TON		
BEGIN CONSTRUCTION TO BLOSSOM HILL ROAD OC 27.6 /28.61	2814	4523	18.5	382970	27720	208	4731	60
BLOSSOM HILL ROAD OC TO YERBA BUENA ROAD UC 28.61/30.98	7054	11338	46.4	959830	105060	789	12127	190
YERBA BUENA ROAD UC TO TULLY ROAD OC 30.98/33.03	4911	9130	37.4	772930	86400	648	9778	30
TULLY ROAD OC TO STORY ROAD OC 33.03/34.55	2958	6412	26.2	542766	63600	477	6889	40
STORY OC TO BEGIN PCC PART 1 34.55/35.48	2702	4344	17.7	367720	16200	122	4466	20
END PCC PART 1 TO BEGIN PCC PART 2 36.27/38.14	4914	7898	32.3	668610	165000	1238	9136	20
END PCC PART 2 TO END CONSTRUCTION 38.47/40.2	4592	7374	30.2	624790	73200	549	7923	20
SUBTOTAL FOR NORTHBOUND	29945	51019	208.7	4319616	537180	4031	55050	380

* SEE NOTE 2 IN SHEET Q-1

SUMMARY OF QUANTITIES

Q-25

STATE OF CALIFORNIA - DEPARTMENT OF TRANSPORTATION
Caltrans MAINTENANCE

FUNCTIONAL SUPERVISOR: ASHOK BHATNAGAR
CALCULATED-DESIGNED BY: AB
CHECKED BY: MN
REVISED BY: A
DATE REVISED: A

LAST REVISION 11-07-08 DATE PLOTTED => 31-JUL-2009 TIME PLOTTED => 07:10

Dist	COUNTY	ROUTE	POST MILES TOTAL PROJECT	SHEET No.	TOTAL SHEETS
04	SCI	101	R27.6/40.2	128	173

REGISTERED CIVIL ENGINEER DATE 11/04/08

5-11-09
PLANS APPROVAL DATE

REGISTERED PROFESSIONAL ENGINEER A. Bhatnagar No. 48814 Exp 9-30-10 CIVIL STATE OF CALIFORNIA

THE STATE OF CALIFORNIA OR ITS OFFICERS OR AGENTS SHALL NOT BE RESPONSIBLE FOR THE ACCURACY OR COMPLETENESS OF SCANNED COPIES OF THIS PLAN SHEET.

ROADWAY QUANTITY SUMMARY (MAINLINE - SOUTHBOUND)

DESCRIPTION (FROM PM TO PM)	OGFC	RHMA (TYPE G)	TACK COAT	COLD PLANE AC PAVEMENT 0.25′	ADDITIONAL COLD PLANE AC PAVEMENT 0.10′	ADDITIONAL RHMA (TYPE G)	TOTAL RHMA (TYPE G)	IMPORTED MATERIAL (SHOULDER BACKING)*
	TON			SQFT		TON		
BEGIN CONSTRUCTION TO BLOSSOM HILL ROAD OC 27.6 /28.61	3390	5446	22.3	461110	113100	850	6296	40
BLOSSOM HILL ROAD OC TO YERBA BUENA ROAD UC 28.61/30.98	6964	11192	45.8	947495	79680	597	11789	150
YERBA BUENA ROAD UC TO TULLY ROAD OC 30.98/33.03	2389	8220	33.7	696010	324864	2437	10657	200
TULLY ROAD OC TO STORY ROAD OC 33.03/34.55	1208	5370	18.6	525550	178584	1340	6710	25
STORY OC TO BEGIN PCC PART 1 34.55/35.48	2689	4322	17.7	365895	37200	279	4601	20
END PCC PART 1 TO BEGIN PCC PART 2 36.27/38.14	5521	8874	36.3	751210			8874	30
END PCC PART 2 TO END CONSTRUCTION 38.47/40.2	4785	7697	31.4	651075	188760	1415	9164	20
SUBTOTAL FOR SOUTHBOUND	26946	51121	205.8	4398345	922188	6920	58041	485

ROADWAY QUANTITY SUMMARY (MAINLINE - NORTHBOUND & SOUTHBOUND)

DESCRIPTION	OGFC	RHMA (TYPE G)	TACK COAT	COLD PLANE AC PAVEMENT 0.25′	ADDITIONAL COLD PLANE AC PAVEMENT 0.10′	ADDITIONAL RHMA (TYPE G)	IMPORTED MATERIAL (SHOULDER BACKING)*
	TON			SQFT			
SUBTOTAL FOR NORTHBOUND	29945	51019	208.7	4319616	537180	4031	380
SUBTOTAL FOR SOUTHBOUND	26946	51121	205.8	4398345	922188	6920	485
GRAND TOTAL FOR MAINLINE (N/B & S/B)	56891	102140 **	414.5	8717961	1459368	10951**	865

* SEE NOTE 2 IN SHEET Q-1
** SEE SHEET Q-27 FOR TOTAL

SUMMARY OF QUANTITIES

Q-26

REVISED BY	DATE REVISED
A	A

CALCULATED-DESIGNED BY: AB
CHECKED BY: MN
FUNCTIONAL SUPERVISOR: ASHOK BHATNAGAR

STATE OF CALIFORNIA - DEPARTMENT OF TRANSPORTATION
Caltrans MAINTENANCE

LAST REVISION 02-02-09
DATE PLOTTED => 31-JUL-2009
TIME PLOTTED => 07:10

Dist	COUNTY	ROUTE	POST MILES TOTAL PROJECT	SHEET No.	TOTAL SHEETS
04	SCI	101	R27.6/40.2	129	173

11/04/08
REGISTERED CIVIL ENGINEER DATE

5-11-09
PLANS APPROVAL DATE

REGISTERED PROFESSIONAL ENGINEER
A. Bhatnagar
No. 48814
Exp 9-30-10
CIVIL
STATE OF CALIFORNIA

THE STATE OF CALIFORNIA OR ITS OFFICERS OR AGENTS SHALL NOT BE RESPONSIBLE FOR THE ACCURACY OR COMPLETENESS OF SCANNED COPIES OF THIS PLAN SHEET.

SUMMARY OF METAL BEAM GUARD RAILING REMOVE AND INSTALL

LOCATION	REMOVE MBGR	MBGR	ALTERNATIVE FLARED TERMINAL SYSTEM	ALTERNATIVE IN-LINE TERMINAL SYSTEM	END ANCHOR ASSEMBLY (TYPE SFT)	BURIED POST ANCHOR (N)	TRANSITION RAILING (TYPE WB)	OBJECT MARKERS (TYPE L-1)	OBJECT MARKERS (TYPE P)
	LF		EA						
MAINLINE NORTHBOUND	5800	4288	29	2	25		13	29	2
MAINLINE SOUTHBOUND	6663	5625	21		15		10	21	0
RAMPS NORTHBOUND & SOUTHBOUND	8700	6425	26	14	27	1	24	26	14
TOTAL	21163	16338	76	16	67	1	47	76	16

CRASH CUSHIONS

PM	LOCATION	REMOVE CRASH CUSHION (SAND FILLED)	REMOVE CRASH CUSHION	CRASH CUSHION REACT 9SCBS	CRASH CUSHION REACT 9CBB
		EA			
NORTHBOUND					
30.90	N/B OFF TO YERBA BUENA ROAD	19			1
31.70	CAPITOL EXPRESSWAY OC	14			1*
34.55	STORY ROAD OC	12			1
34.85	ROUTE 280/680 SEPARATION	12			1
34.85	ROUTE 280/680 SEPARATION	8			1
34.40	S/B ON FROM N/B ROUTE 880		1	1	
40.10	W/B ON FROM ROUYE 87	14			1
40.20	GUADALUPE RIVER BRIDGE	14			1
SOUTHBOUND					
34.55	STORY ROAD OC	15			1
31.70	CAPITOL EXPRESSWAY OC	12			1*
	TOTAL (NORTHBOUND & SOUTHBOUND)	120	1	1	9

* NOT SHOWN ON THE PLAN

DELINEATORS

LOCATION	DELINEATORS (CLASS 1) TYPE G	DELINEATORS (CLASS 1) TYPE F	GUARD RAILING DELINEATORS
	EA		
RAMPS	250	190	180
MAINLINE (NB & SB)		100	290
TOTAL	540		470

SINGLE THRIE BEAM BARRIER RAILING (STEEL POST)

LOCATION	LENGTH
	LF
SEGMENT N/B ON FROM STORY ROAD (RAMP #29) *	240

* SEE CONSTRUCTION DETAIL PLAN (C-19)

ROADWAY QUANTITY SUMMARY

DESCRIPTION (FROM PM TO PM)	OGFC	RHMA (TYPE G)	ADDITIONAL RHMA (TYPE G)	TACK COAT	COLD PLANE AC PAVEMENT 0.25'	COLD PLANE AC PAVEMENT 0.15'	ADDITIONAL COLD PLANE AC PAVEMENT 0.10'	IMPORTED MATERIAL (SHOULDER BACKING)
	TON				SQFT			TON
GRAND TOTAL FOR MAINLINE	56891	102140 *	10951 *	414.5	8717961		1459368	865
GRAND TOTAL FOR RAMPS		20566 **	1313**	83.6		1827220	174706	819
GRAND TOTAL	56891	134970		498.1	12179255 SQ FT 1353251 SQ YD			1684

* FROM SHEET Q-26
** FROM SHEET Q-9

PREPARE AND PAINT POST MILE ON CONCRETE BARRIER

LOCATION	QUANTITY
	SQFT
MAINLINE	300

SUMMARY OF QUANTITIES

Q-27

STATE OF CALIFORNIA - DEPARTMENT OF TRANSPORTATION
Caltrans MAINTENANCE

FUNCTIONAL SUPERVISOR: ASHOK BHATNAGAR
CALCULATED-DESIGNED BY: AB
CHECKED BY: MN
REVISED BY: A
DATE REVISED: A

LAST REVISION 04-23-09
DATE PLOTTED => 31-JUL-2009
TIME PLOTTED => 07:10

Dist	COUNTY	ROUTE	POST MILES TOTAL PROJECT	SHEET No.	TOTAL SHEETS
04	SCI	101	R27.6/40.2	130	173

Kenneth Y. Xu 03-12-09
REGISTERED ELECTRICAL ENGINEER DATE

5-11-09
PLANS APPROVAL DATE

REGISTERED PROFESSIONAL ENGINEER Kenneth Y. Xu No. 15219 Exp 6-30-10 ELECT STATE OF CALIFORNIA

THE STATE OF CALIFORNIA OR ITS OFFICERS OR AGENTS SHALL NOT BE RESPONSIBLE FOR THE ACCURACY OR COMPLETENESS OF SCANNED COPIES OF THIS PLAN SHEET.

ELECTRICAL INDEX

E-1 THRU E-2 MODIFY INDUCTIVE LOOP DETECTOR AND MODIFY WIRELESS MAGNETOMETER VEHICLE DETECTOR STATION (REPLACE) (ELECTRICAL NOTES, INDEX AND DETAILS)

E-3 THRU E-6 MODIFY INDUCTIVE LOOP DETECTOR AND MODIFY WIRELESS MAGNETOMETER VEHICLE DETECTOR STATION (REPLACE)

E-7 MODIFY WIRELESS MAGNETOMETER VEHICLE DETECTOR STATION (ELECTRICAL DETAILS)

PROJECT NOTES

1 PULL BOX REPLACEMENT SHALL BE AT THE EXACT LOCATION OF THE EXISTING DETECTOR TERMINATION PULL BOX.

ELECTRICAL LEGEND

WMVDS	WIRELESS MAGNETOMETER VEHICLE DETECTOR STATION
◎	Exist VEHICLE SENSOR NODE (VSN)
○ AP	Exist ACCESS POINT
○ RP	Exist REPEATER
- - - - -	WIRELESS CONMMUNICATION LINK
→	DIRECTION OF TRAVEL
(N)	NOT A SEPARATE PAY ITEM, FOR INFORMATION ONLY.

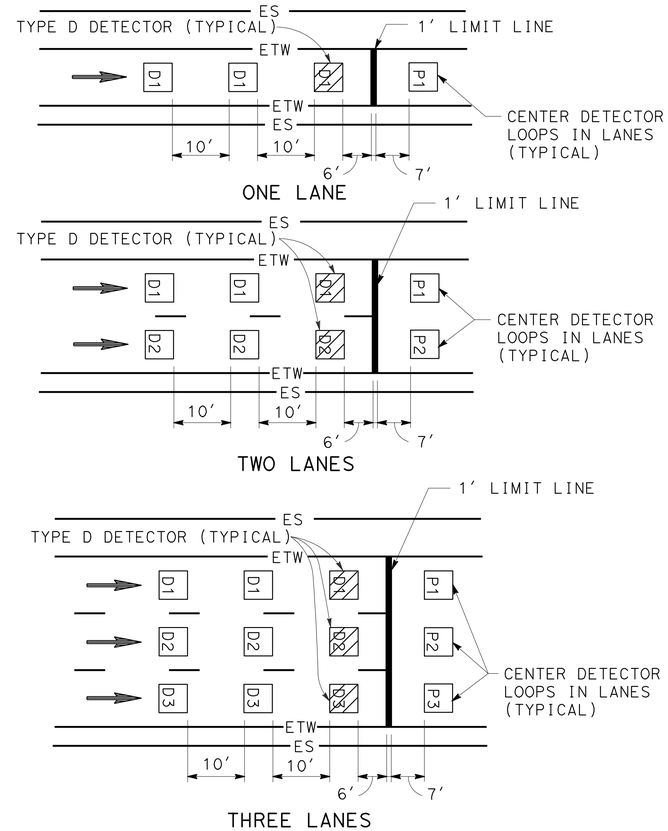

DETAIL "RM"
RAMP METERING STATION

RAMP METERING STATION NOTES

1. SEE RSP ES-5A, ES-5B, AND ES-13A FOR ADDITIONAL DETAILS.
2. dlc CONDUCTORS SHALL BE SPLICED TO THE LOOP CONDUCTORS IN THE NEAREST PULL BOX.
3. ALL SPLICES SHALL BE TYPE "S" OR TYPE "ST" AS REQUIRED.

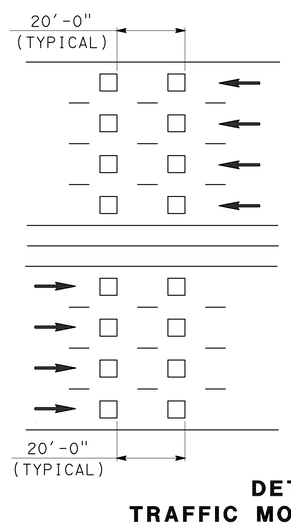

TRAFFIC MONITORING STATION NOTES

FREEWAY MAINLINE DETECTOR DESIGNATION:

N=NORTHBOUND LANES (NB)
S=SOUTHBOUND LANES (SB)
E=EASTBOUND LANES (EB)
W=WESTBOUND LANES (WB)

NUMBER OF LANES FROM LEFT WITH RESPECT TO DIRECTION OF TRAFFIC:

1=FIRST LANE FROM LEFT
2=SECOND LANE FROM LEFT
3=THIRD LANE FROM LEFT
4=FOURTH LANE FROM LEFT

NUMBER OF DETECTOR IN THE SAME LANE:

1=ENTERING DETECTOR
2=LEAVING DETECTOR

N 3-2

DETAIL "TM"
TRAFFIC MONITORING STATION

RAMP DETECTOR DESIGNATION:

D=DEMAND DETECTOR
P=PASSAGE DETECTOR
Q=QUEUE DETECTOR
F=OFFRAMP DETECTOR

1=FIRST LANE FROM LEFT
2=SECOND LANE FROM LEFT

D-2

ALL DIMENSIONS ARE IN FEET UNLESS OTHERWISE SHOWN

MODIFY INDUCTIVE LOOP DETECTOR
MODIFY WIRELESS MAGNETOMETER VEHICLE DETECTOR STATION (REPLACE)
(ELECTRICAL NOTES, INDEX AND DETAILS)

NO SCALE

E-1

LAST REVISION 04-20-09 | DATE PLOTTED => 31-JUL-2009 | TIME PLOTTED => 07:10

STATE OF CALIFORNIA - DEPARTMENT OF TRANSPORTATION
Caltrans
ELECTRICAL

FUNCTIONAL SUPERVISOR: KENNETH XU
CALCULATED-DESIGNED BY: DORIS YANG
CHECKED BY: KENNETH XU
REVISED BY
DATE REVISED

Dist	COUNTY	ROUTE	POST MILES TOTAL PROJECT	SHEET No.	TOTAL SHEETS
04	SCI	101	R27.6/40.2	131	173

Kenneth Y. Xu 03-12-09
REGISTERED ELECTRICAL ENGINEER DATE

5-11-09
PLANS APPROVAL DATE

REGISTERED PROFESSIONAL ENGINEER
Kenneth Y. Xu
No. 15219
Exp 6-30-10
ELECT
STATE OF CALIFORNIA

THE STATE OF CALIFORNIA OR ITS OFFICERS OR AGENTS SHALL NOT BE RESPONSIBLE FOR THE ACCURACY OR COMPLETENESS OF SCANNED COPIES OF THIS PLAN SHEET.

GENERAL NOTES:

1. LOOP OR VSN REPLACEMENT SHALL BE AT THE VICINITY OF THE EXISTING LOOP OR VSN LOCATION.
2. ABANDON EXISTING LOOPS IN PLACE WHEN CUTTING NEW LOOPS TO REPLACE THEM. SPLICE NEW DETECTOR CONDUCTORS TO CORRESPONDING dlc IN TERMINATION PULL BOX. VERIFY IDENTIFICATION OF dlc BEFORE CONNECTING TO THE CORRESPONDING LOOP DETECTORS.
3. INSTALL LOCKING GRADE RING FOR EXISTING DETECTOR HANDHOLE AS NEEDED.
4. POST MILE (PM) SHALL NOT BE USED TO DETERMINE DETECTOR LOOP AND WMVDS LOCATION. EXACT LOCATIONS SHALL BE DETERMINED BY THE CONTRACTOR.
5. ALL LOOP DETECTORS AT EACH LOCATION SHALL BE REPLACED AND TESTED WITHIN THE TIME ALLOTTED FOR TRAFFIC SIGNAL SYSTEM SHUTDOWN AT THAT LOCATION.
6. AT LEAST 2 WORKING DAYS PRIOR TO PERFORMING ANY WORK ON EACH EXISTING RAMP METERING SYSTEM, THE CONTRACTOR SHALL NOTIFY THE DEPARTMENT OF TRANSPORTATION, SAN JOSE RAMP METERING OFFICE, PHONE (408) 254-5814.
7. TRAFFIC SIGNAL AT THE FOLLOWING LOCATIONS OPERATED BY THE CITY OF SAN JOSE:
    1. ROUTE 101 NORTHBOUND OFF-RAMP AT JULIAN STREET / MCKEE ROAD.
    2. ROUTE 101 SOUTHBOUND OFF-RAMP AT JULIAN STREET / MCKEE ROAD.
    3. ROUTE 101 NORTHBOUND OFF-RAMP AT AIRPORT PARKWAY / BROKAW ROAD.
    4. ROUTE 101 SOUTHBOUND OFF-RAMP AT AIRPORT PARKWAY / BROKAW ROAD.

MODIFY INDUCTIVE LOOP DETECTOR
MODIFY WIRELESS MAGNETOMETER VEHICLE DETECTOR STATION (REPLACE)
(GENERAL NOTES)

NO SCALE

E-2

STATE OF CALIFORNIA - DEPARTMENT OF TRANSPORTATION
Caltrans
ELECTRICAL

FUNCTIONAL SUPERVISOR: KENNETH XU
CALCULATED-DESIGNED BY: DORIS YANG
CHECKED BY: KENNETH XU
REVISED BY
DATE REVISED

LAST REVISION 04-20-09
DATE PLOTTED => 31-JUL-2009
TIME PLOTTED => 07:11

Dist	COUNTY	ROUTE	POST MILES TOTAL PROJECT	SHEET No.	TOTAL SHEETS
04	SCI	101	R27.6/40.2	132	173

Kenneth Y. Xu 3-12-09
REGISTERED ELECTRICAL ENGINEER DATE

5-11-09
PLANS APPROVAL DATE

REGISTERED PROFESSIONAL ENGINEER Kenneth Y. Xu No. 15219 Exp 6-30-10 ELECT STATE OF CALIFORNIA

THE STATE OF CALIFORNIA OR ITS OFFICERS OR AGENTS SHALL NOT BE RESPONSIBLE FOR THE ACCURACY OR COMPLETENESS OF SCANNED COPIES OF THIS PLAN SHEET.

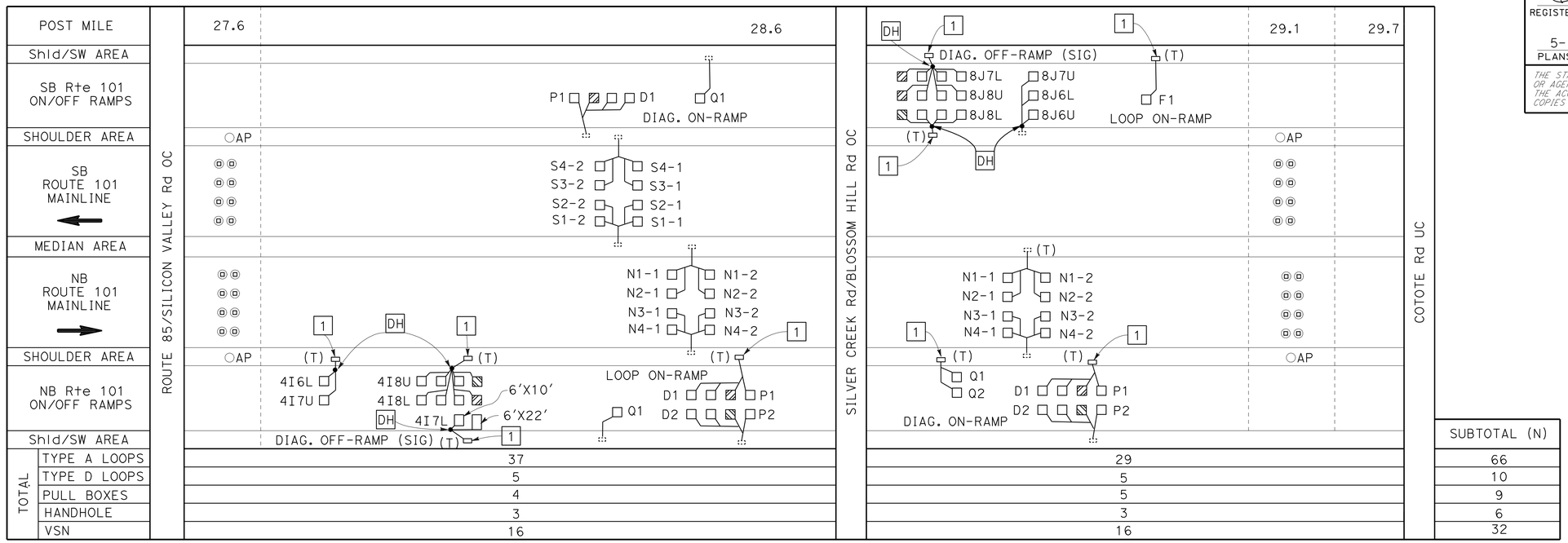

					SUBTOTAL (N)
TOTAL	TYPE A LOOPS	37	29		66
	TYPE D LOOPS	5	5		10
	PULL BOXES	4	5		9
	HANDHOLE	3	3		6
	VSN	16	16		32

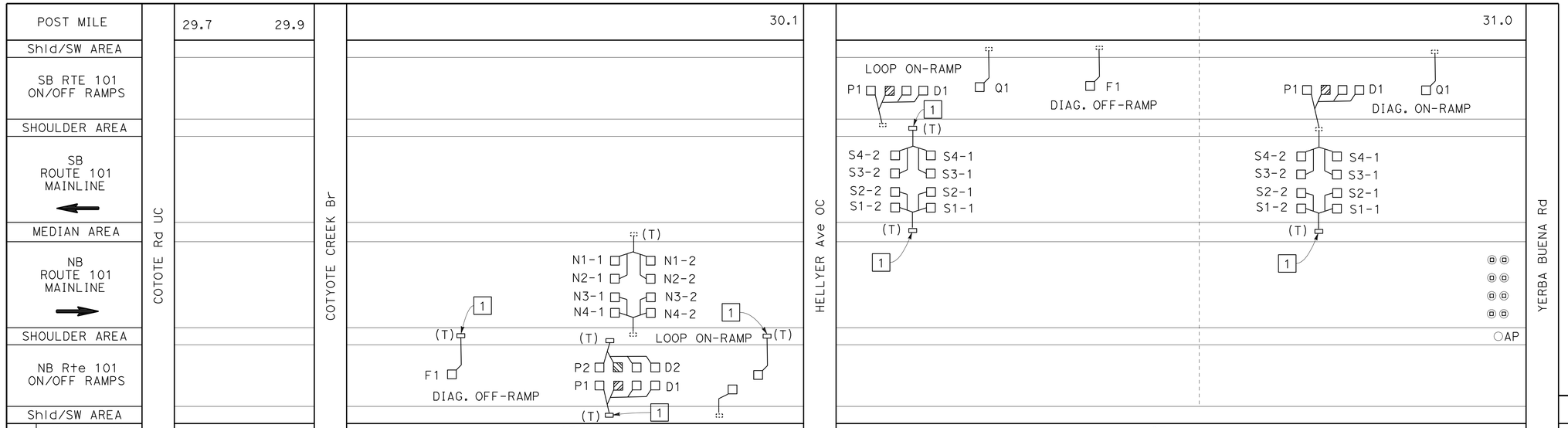

					SUBTOTAL (N)
TOTAL	TYPE A LOOP	17	25		42
	TYPE D LOOP	2	2		4
	PULL BOX	4	3		7
	HANDHOLE				
	VSN		8		8

MODIFY INDUCTIVE LOOP DETECTOR
MODIFY WIRELESS MAGNETOMETER VEHICLE DETECTOR STATION
(REPLACE)

ALL DIMENSIONS ARE IN FEET UNLESS OTHERWISE SHOWN

NO SCALE

E-3

STATE OF CALIFORNIA - DEPARTMENT OF TRANSPORTATION
Caltrans **ELECTRICAL**

FUNCTIONAL SUPERVISOR: KENNETH XU
CALCULATED-DESIGNED BY: DORIS YANG
CHECKED BY: KENNETH XU
REVISED BY
DATE REVISED

LAST REVISION 04-20-09
DATE PLOTTED => 31-JUL-2009
TIME PLOTTED => 07:11

Dist	COUNTY	ROUTE	POST MILES TOTAL PROJECT	SHEET No.	TOTAL SHEETS
04	SCI	101	R27.6/40.2	133	173

REGISTERED ELECTRICAL ENGINEER 3-12-09 DATE

5-11-09
PLANS APPROVAL DATE

REGISTERED PROFESSIONAL ENGINEER Kenneth Y. Xu No. 15219 Exp 6-30-10 ELECT STATE OF CALIFORNIA

THE STATE OF CALIFORNIA OR ITS OFFICERS OR AGENTS SHALL NOT BE RESPONSIBLE FOR THE ACCURACY OR COMPLETENESS OF SCANNED COPIES OF THIS PLAN SHEET.

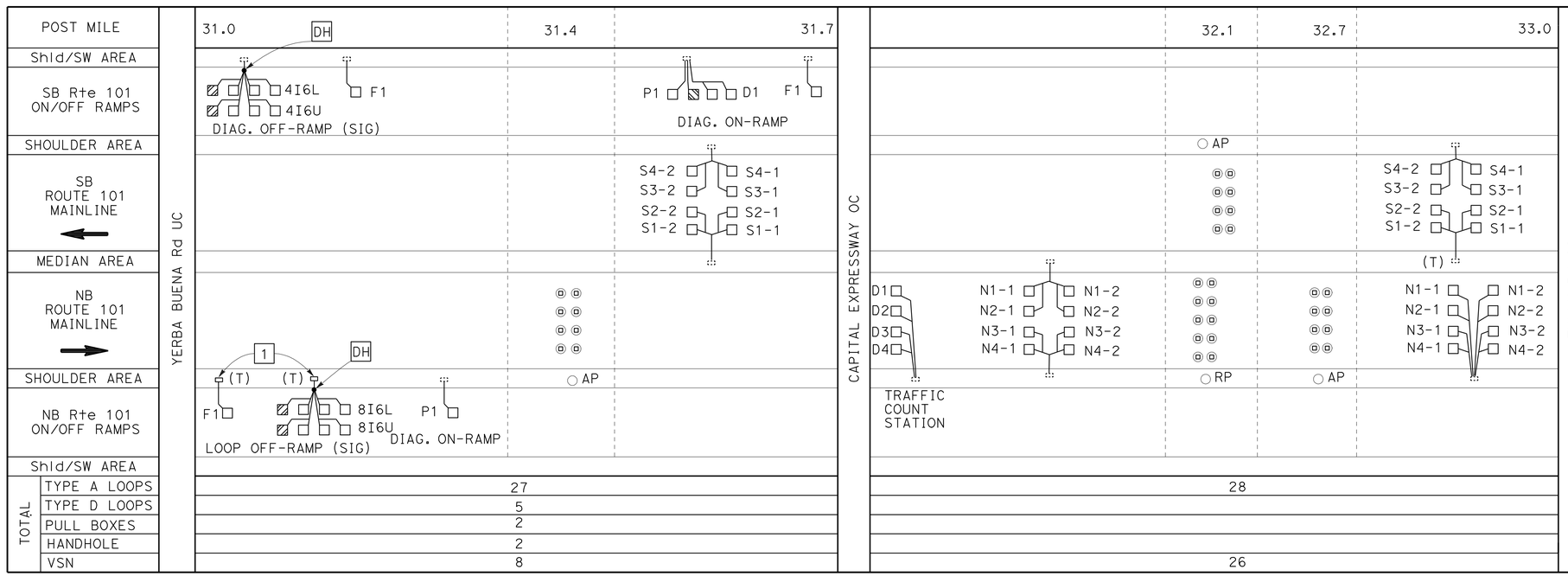

TOTAL					SUBTOTAL (N)
TYPE A LOOPS	27		28		55
TYPE D LOOPS	5				5
PULL BOXES	2				2
HANDHOLE	2				2
VSN	8		26		34

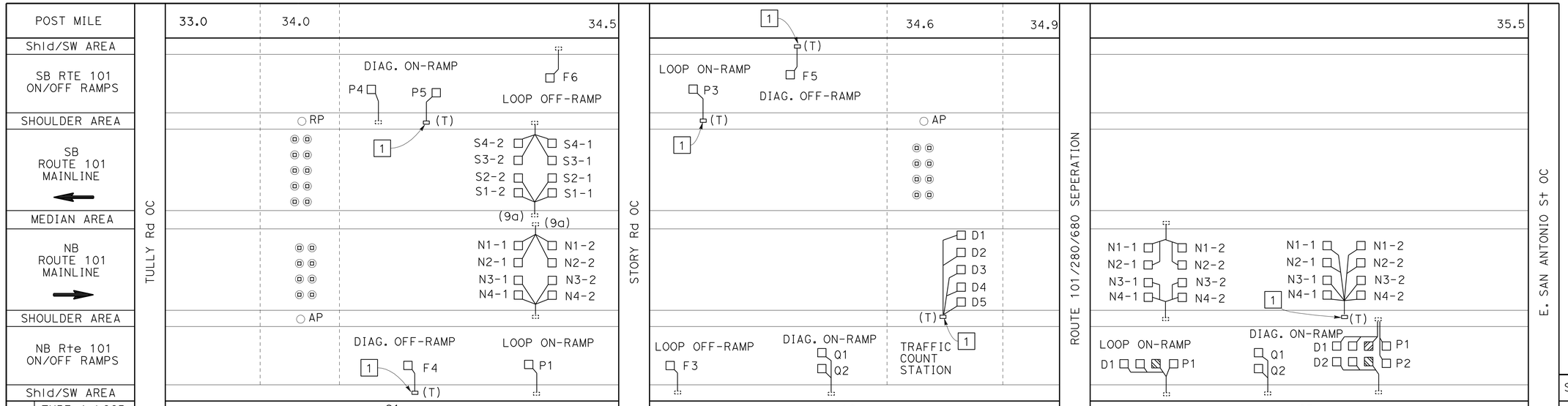

TOTAL					SUBTOTAL (N)
TYPE A LOOP	21		10		58
TYPE D LOOP					3
PULL BOX	2		3		6
HANDHOLE					
VSN	18		8		26

MODIFY INDUCTIVE LOOP DETECTOR
MODIFY WIRELESS MAGNETOMETER
VEHICLE DETECTOR STATION
(REPLACE)

NO SCALE

ALL DIMENSIONS ARE IN FEET UNLESS OTHERWISE SHOWN

E-4

REVISED BY	DATE REVISED

CALCULATED-DESIGNED BY	CHECKED BY
DORIS YANG	KENNETH XU

FUNCTIONAL SUPERVISOR: KENNETH XU

STATE OF CALIFORNIA - DEPARTMENT OF TRANSPORTATION

Caltrans **ELECTRICAL**

LAST REVISION 04-27-09 | DATE PLOTTED => 31-JUL-2009 | TIME PLOTTED => 07:11

Dist	COUNTY	ROUTE	POST MILES TOTAL PROJECT	SHEET No.	TOTAL SHEETS
04	SCI	101	R27.6/40.2	134	173

REGISTERED ELECTRICAL ENGINEER 3-12-09 DATE

5-11-09
PLANS APPROVAL DATE

REGISTERED PROFESSIONAL ENGINEER Kenneth Y. Xu No. 15219 Exp 6-30-10 ELECT STATE OF CALIFORNIA

THE STATE OF CALIFORNIA OR ITS OFFICERS OR AGENTS SHALL NOT BE RESPONSIBLE FOR THE ACCURACY OR COMPLETENESS OF SCANNED COPIES OF THIS PLAN SHEET.

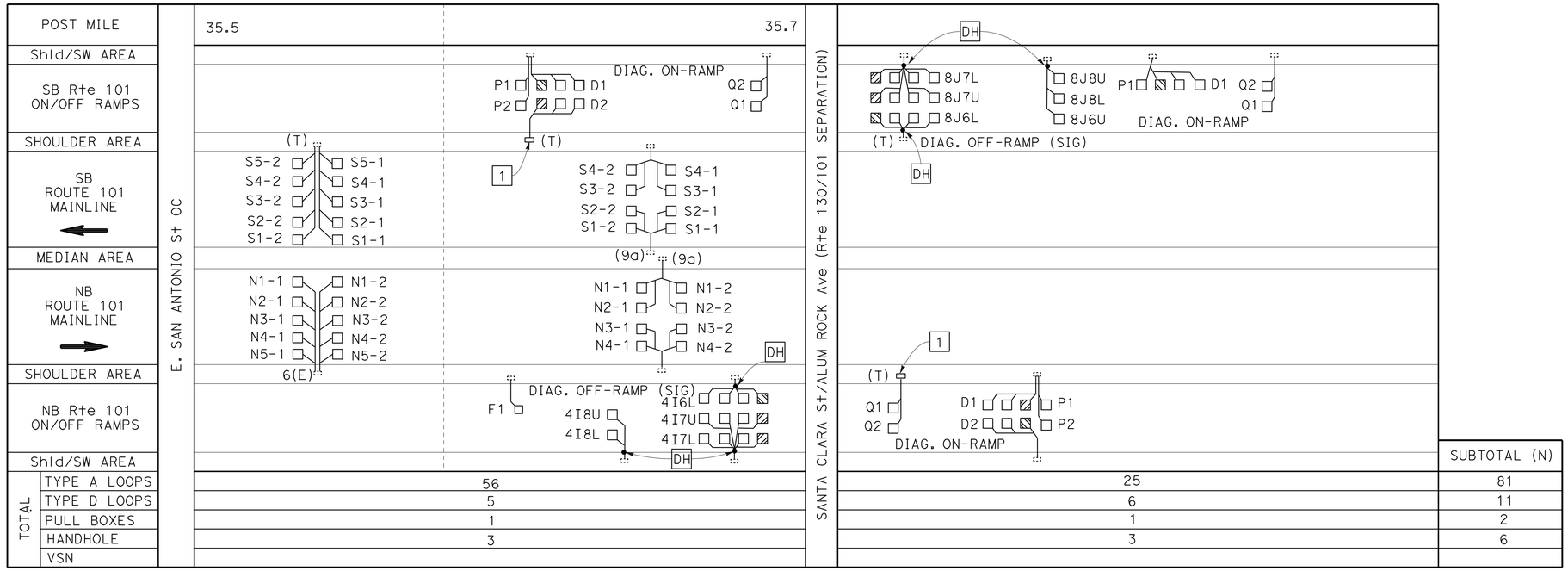

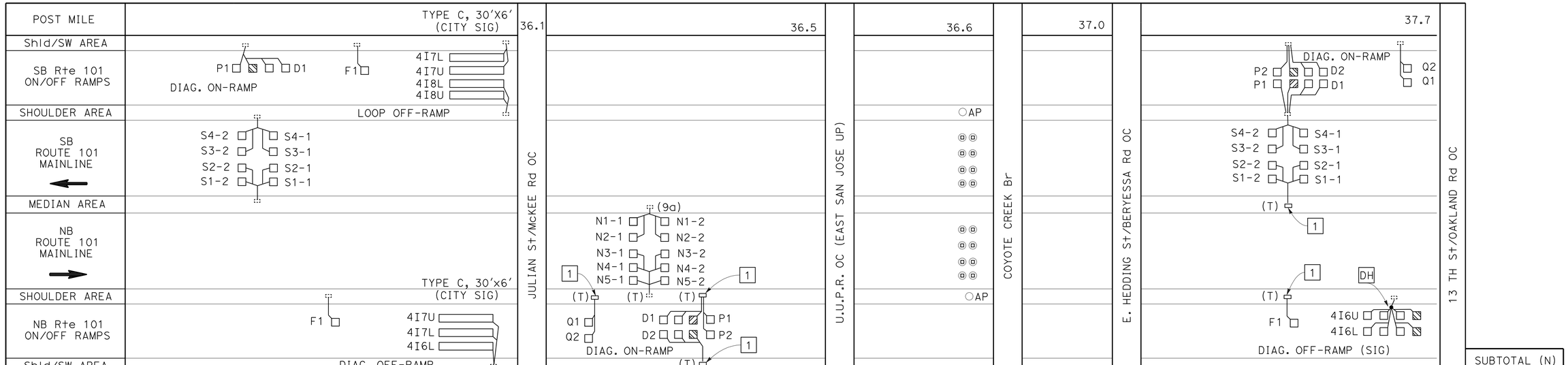

MODIFY INDUCTIVE LOOP DETECTOR
MODIFY WIRELESS MAGNETOMETER VEHICLE DETECTOR STATION
(REPLACE)

NO SCALE

ALL DIMENSIONS ARE IN FEET UNLESS OTHERWISE SHOWN

E-5

STATE OF CALIFORNIA - DEPARTMENT OF TRANSPORTATION
Caltrans ELECTRICAL

FUNCTIONAL SUPERVISOR: KENNETH XU
CALCULATED-DESIGNED BY: DORIS YANG
CHECKED BY: KENNETH XU
REVISED BY / DATE REVISED

LAST REVISION 04-20-09
DATE PLOTTED => 31-JUL-2009
TIME PLOTTED => 07:11

Dist	COUNTY	ROUTE	POST MILES TOTAL PROJECT	SHEET No.	TOTAL SHEETS
04	SCI	101	R27.6/40.2	135	173

REGISTERED ELECTRICAL ENGINEER Kenneth Y. Xu 3-12-09 DATE

PLANS APPROVAL DATE 5-11-09

REGISTERED PROFESSIONAL ENGINEER Kenneth Y. Xu No. 15219 Exp 6-30-10 ELECT STATE OF CALIFORNIA

THE STATE OF CALIFORNIA OR ITS OFFICERS OR AGENTS SHALL NOT BE RESPONSIBLE FOR THE ACCURACY OR COMPLETENESS OF SCANNED COPIES OF THIS PLAN SHEET.

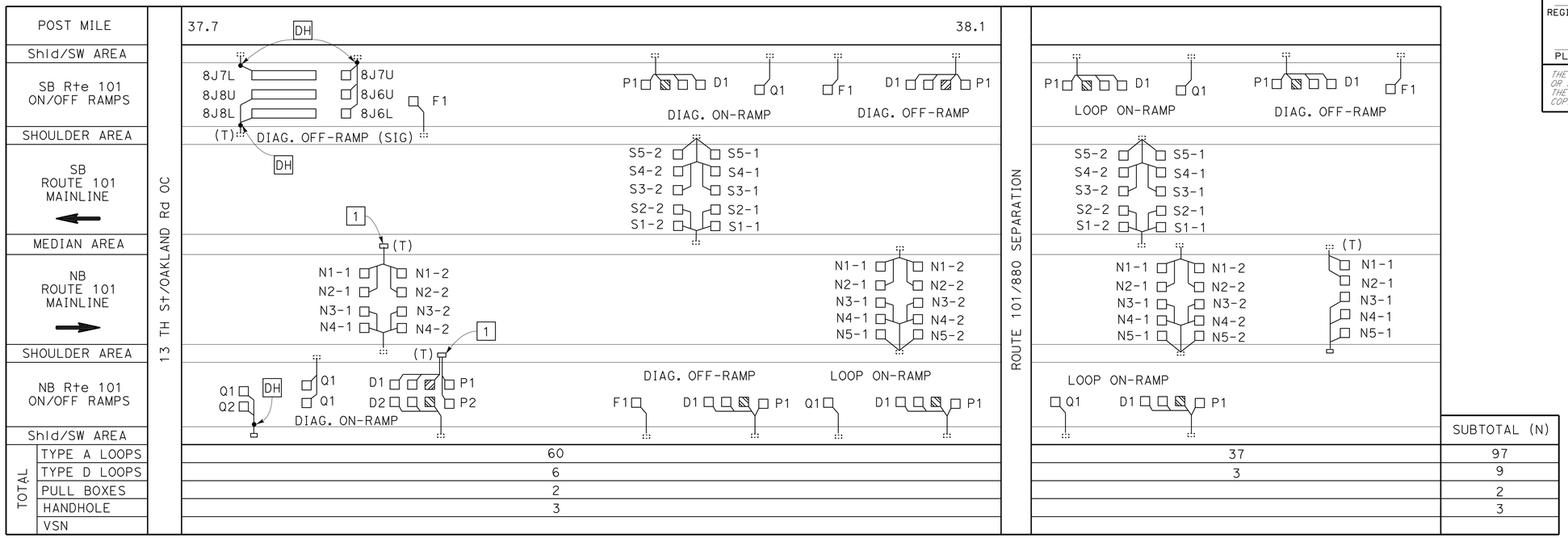

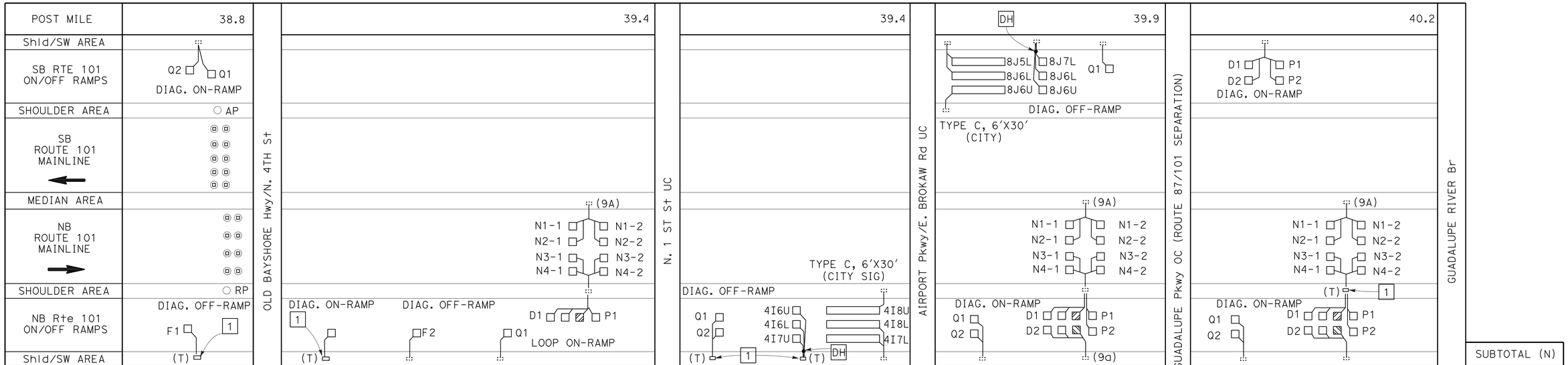

MODIFY INDUCTIVE LOOP DETECTOR
MODIFY WIRELESS MAGNETOMETER VEHICLE DETECTOR STATION
(REPLACE)

NO SCALE

ALL DIMENSIONS ARE IN FEET UNLESS OTHERWISE SHOWN

E-6

STATE OF CALIFORNIA - DEPARTMENT OF TRANSPORTATION

Caltrans **ELECTRICAL**

FUNCTIONAL SUPERVISOR: KENNETH XU

CALCULATED-DESIGNED BY: DORIS YANG

CHECKED BY: KENNETH XU

REVISED BY / DATE REVISED

LAST REVISION 04-20-09

DATE PLOTTED => 31-JUL-2009

TIME PLOTTED => 07:11

Dist	COUNTY	ROUTE	POST MILES TOTAL PROJECT	SHEET No.	TOTAL SHEETS
04	SCI	101	R27.6/40.2	136	173

REGISTERED ELECTRICAL ENGINEER — DATE: 3-12-09

PLANS APPROVAL DATE: 5-11-09

REGISTERED PROFESSIONAL ENGINEER — Kenneth Y. Xu — No. 15219 — Exp 6-30-10 — ELECT — STATE OF CALIFORNIA

THE STATE OF CALIFORNIA OR ITS OFFICERS OR AGENTS SHALL NOT BE RESPONSIBLE FOR THE ACCURACY OR COMPLETENESS OF SCANNED COPIES OF THIS PLAN SHEET.

VEHICLE SENSOR NODE INSTALLATION PROCEDURE

1. PRIOR TO INSTALLATION, IDENTIFY VEHICLE SENSOR NODE'S ID, LANE NUMBER, AND LOCATION IN LANE.
2. MAKE SURE THE VEHICLE SENSOR NODE IS INSTALLED FLAT IN THE CORED HOLE AND IS NOT TILTED.
3. USE HEAT-GUN OR HOT COMPRESSED AIR TO DRY THE INSIDE OF THE CORED HOLE. THERE MUST BE ABSOLUTELY NO MOISTURE ON THE APPLIED SURFACE.
4. FILL THE HOLE ABOUT 1/4 FULL OF SEALANT.
5. PLACE VEHICLE SENSOR NODE IN THE HOLE WITH ARROW POINTING IN THE DIRECTION OF TRAFFIC. THE SEALANT SHOULD STILL HAVE WORK TIME, SO THE VEHICLE SENSOR NODE CAN BE ROTATED TO THE CORRECT ORIENTATION. PUSH VEHICLE SENSOR NODE DOWN SO IT LAYS FLAT ON THE BOTTOM OF THE HOLE.
6. FILL THE HOLE WITH THE REMAINING SEALANT TO COVER THE VEHICLE SENSOR NODE. LEVEL SEALANT WITH THE SURFACE OF ROAD.
7. IMMEDIATELY AFTER PROCEDURE #4, COMPLETE PROCEDURE #5 AND #6 WITHIN 30 SECONDS.
8. DEPENDING ON AMBIENT TEMPERATURE AND HUMIDITY, SEALANT DRYING TIME WILL VARY FROM 5 MINUTES TO 15 MINUTES. VERIFY HARDNESS OF SEALANT BEFORE REOPENING THE LANE FOR TRAFFIC.
9. RECORD DISTANCES BETWEEN EACH VEHICLE SENSOR NODE PAIR.

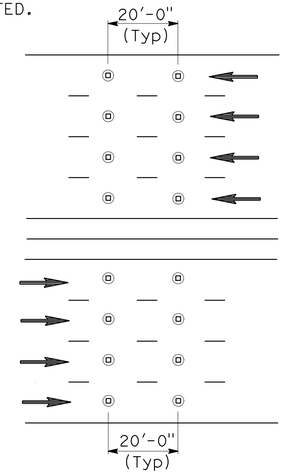

VSN NOTES

FREEWAY MAINLINE DETECTOR DESIGNATION:

- N=NORTHBOUND LANES (NB)
- S=SOUTHBOUND LANES (SB)
- E=EASTBOUND LANES (EB)
- W=WESTBOUND LANES (WB)

NUMBER OF LANES FROM LEFT WITH RESPECT TO DIRECTION OF TRAFFIC:

- 1=FIRST LANE FROM LEFT
- 2=SECOND LANE FROM LEFT
- 3=THIRD LANE FROM LEFT
- 4=FOURTH LANE FROM LEFT

NUMBER OF VSN IN THE SAME LANE:

- 1=ENTERING DETECTOR
- 2=LEAVING DETECTOR

N 3-2

DETAIL C

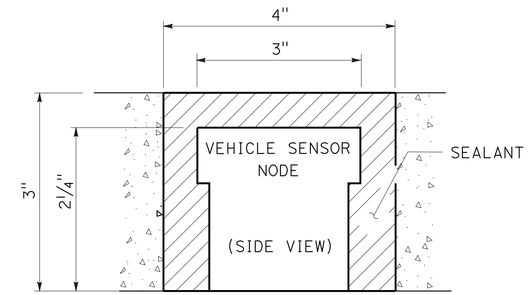

DETAIL B

VEHICLE SENSOR NODE INSTALLED IN ROADWAY

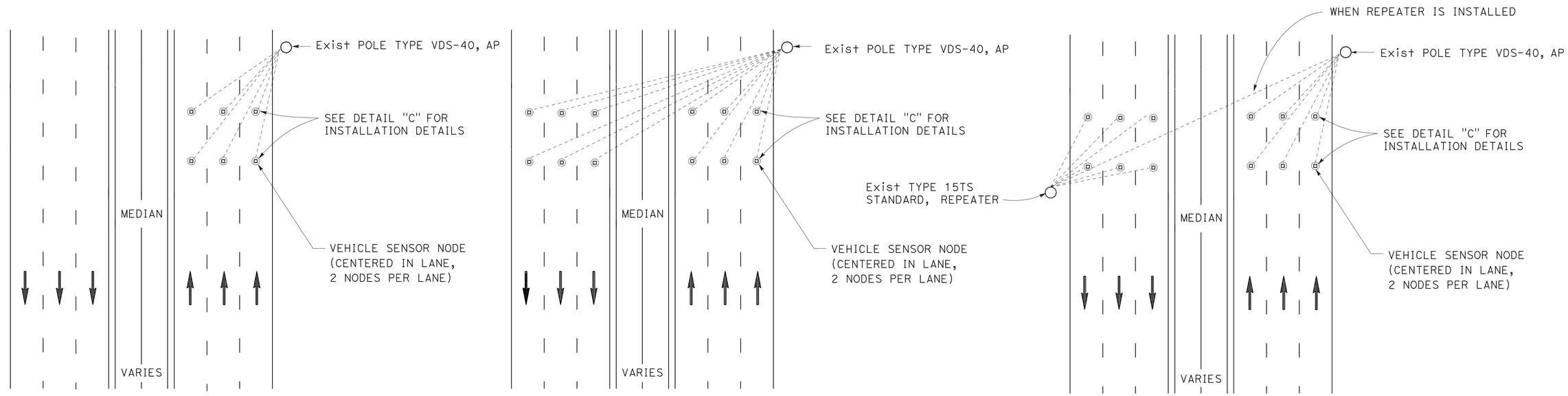

DETAIL A

VEHICLE SENSOR NODE PLACEMENT DETAIL

MODIFY WIRELESS MAGNETOMETER VEHICLE DETECTOR STATION (REPLACE) (ELECTRICAL DETAILS)

ALL DIMENSIONS ARE IN FEET UNLESS OTHERWISE SHOWN

NO SCALE

E-7

STATE OF CALIFORNIA - DEPARTMENT OF TRANSPORTATION — Caltrans — ELECTRICAL

FUNCTIONAL SUPERVISOR: KENNETH XU

CALCULATED-DESIGNED BY: DORIS YANG — CHECKED BY: KENNETH XU

REVISED BY — DATE REVISED

LAST REVISION 04-20-09 — DATE PLOTTED => 31-JUL-2009 — TIME PLOTTED => 07:11

DIST	COUNTY	ROUTE	POST MILES TOTAL PROJECT	SHEET NO.	TOTAL SHEETS
04	SCI	101	R27.6/40.2	137	173

Randell D. Hiatt
REGISTERED CIVIL ENGINEER

June 6, 2008
PLANS APPROVAL DATE

REGISTERED PROFESSIONAL ENGINEER Randell D. Hiatt No. C50200 Exp. 6-30-09 CIVIL STATE OF CALIFORNIA

The State of California or its officers or agents shall not be responsible for the accuracy or completeness of electronic copies of this plan sheet.

To accompany plans dated 5-11-09

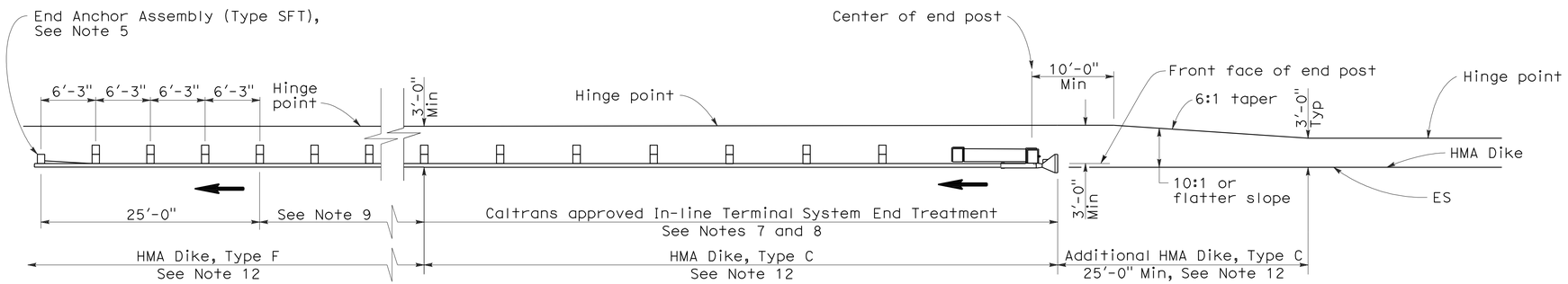

TYPE 11A LAYOUT

(EMBANKMENT GUARD INSTALLATION WITH IN-LINE END TREATMENT AT TRAFFIC APPROACH END OF RAILING)
See Note 6

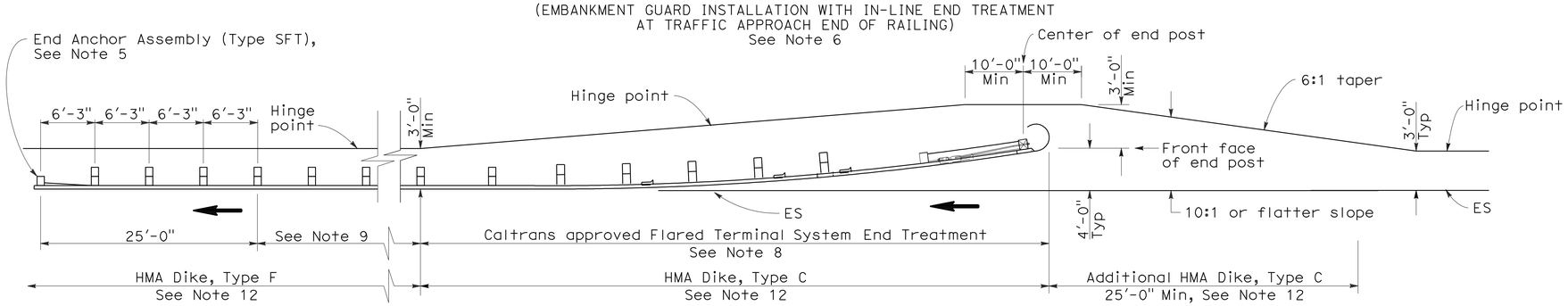

TYPE 11B LAYOUT

(EMBANKMENT GUARD RAILING INSTALLATION WITH FLARED END TREATMENT AT TRAFFIC APPROACH END OF RAILING)
See Note 6

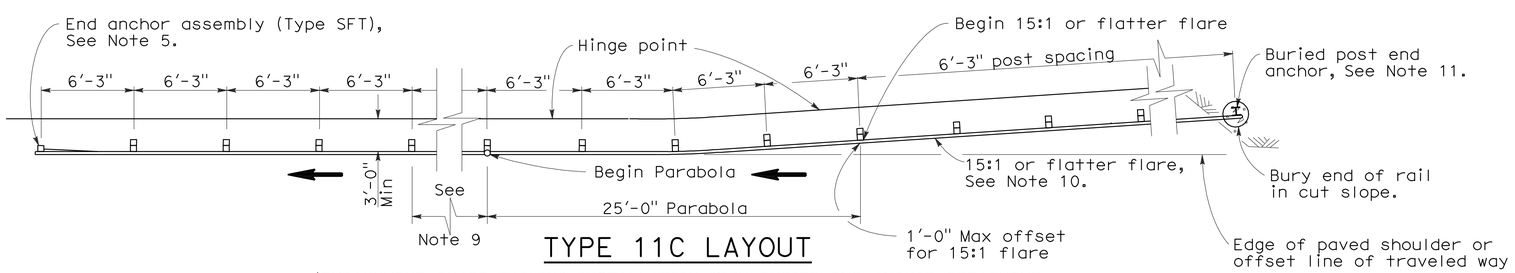

TYPE 11C LAYOUT

(EMBANKMENT GUARD RAILING INSTALLATION WITH BURIED END ANCHOR TREATMENT AT TRAFFIC APPROACH END OF RAILING)
See Notes 6 and 12

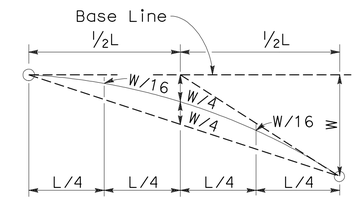

TYPICAL PARABOLIC LAYOUT

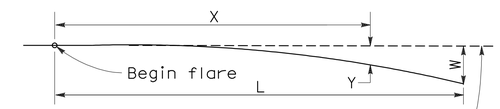

Base Line (Edge of paved shoulder or offset line of edge of traveled way)

$$Y = \frac{WX^2}{L^2}$$

Y = Offset from base line
W = Maximum offset
X = Distance along base line
L = Length of flare

PARABOLIC FLARE OFFSETS

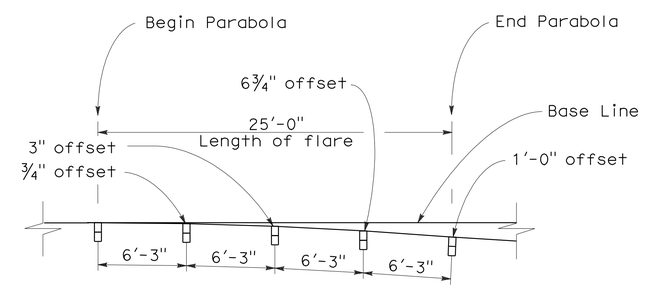

TYPICAL FLARE OFFSETS FOR 1 FOOT MAX END OFFSET

NOTES:

1. Line post, blocks and hardware to be used are shown on Standard Plans A77A1, A77A2, A77B1, A77C1, and A77C2.
2. Guard rail post spacing to be 6'-3" center to center, except as otherwise noted.
3. Except as noted, line posts are 6" x 8" x 6'-0" wood with 6" x 8" x 1'-2" wood blocks. W6 x 9 steel posts, 6'-0" in length, with 6" x 8" x 1'-2" notched wood blocks or recycled plastic blocks may be used for 6" x 8" x 6'-0" wood post with 6" x 8" x 1'-2" wood blocks where applicable and when specified.
4. Direction of adjacent traffic indicated by ⟶.
5. For End Anchor Assembly (Type SFT) details, see Standard Plan A77H1.
6. Layout Types 11A, 11B or 11C are typically used where guard railing is recommended to shield embankment slopes and a crashworthy end treatment is required for only one direction of traffic.
7. In-line Terminal System End Treatments are used where site conditions will not accommodate a flared end treatment.
8. The type of terminal system end treatment to be used will be shown on the Project Plans.
9. Dependent on site conditions (embankment height and side slope), construction of additional guard railing (length equal to multiples of 12'-6" with 6'-3" post spacing) may be advisable.
10. The 15:1 or flatter flare used with buried end anchors is based on the edge of the paved shoulder or offset line of edge of the traveled way. The length of guard railing within the 15:1 or flatter flare is based on site conditions and should be a length equal to multiples of 12'-6".
11. For details of the buried post end anchor used with Type 11C Layout, see Standard Plan A77I2.
12. Where placement of dike is required with guard railing installations, see Revised Standard Plan RSP A77C4 for dike positioning details.

STATE OF CALIFORNIA
DEPARTMENT OF TRANSPORTATION

METAL BEAM GUARD RAILING TYPICAL LAYOUTS FOR EMBANKMENTS

NO SCALE

RSP A77E1 DATED JUNE 6, 2008 SUPERSEDES STANDARD PLAN A77E1 DATED MAY 1, 2006 - PAGE 48 OF THE STANDARD PLANS BOOK DATED MAY 2006.

REVISED STANDARD PLAN RSP A77E1

2006 REVISED STANDARD PLAN RSP A77E1

12-10-07

DIST	COUNTY	ROUTE	POST MILES TOTAL PROJECT	SHEET NO.	TOTAL SHEETS
04	SCI	101	R27.6/40.2	138	173

Randell D. Hiatt
REGISTERED CIVIL ENGINEER

June 6, 2008
PLANS APPROVAL DATE

REGISTERED PROFESSIONAL ENGINEER
Randell D. Hiatt
No. C50200
Exp. 6-30-09
CIVIL
STATE OF CALIFORNIA

The State of California or its officers or agents shall not be responsible for the accuracy or completeness of electronic copies of this plan sheet.

To accompany plans dated 5-11-09

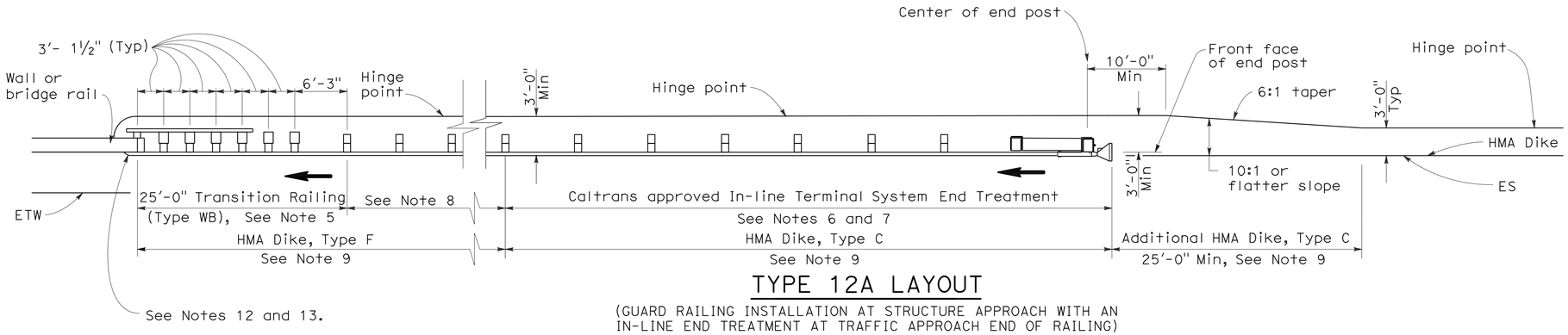

TYPE 12A LAYOUT

(GUARD RAILING INSTALLATION AT STRUCTURE APPROACH WITH AN IN-LINE END TREATMENT AT TRAFFIC APPROACH END OF RAILING)
See Notes 10

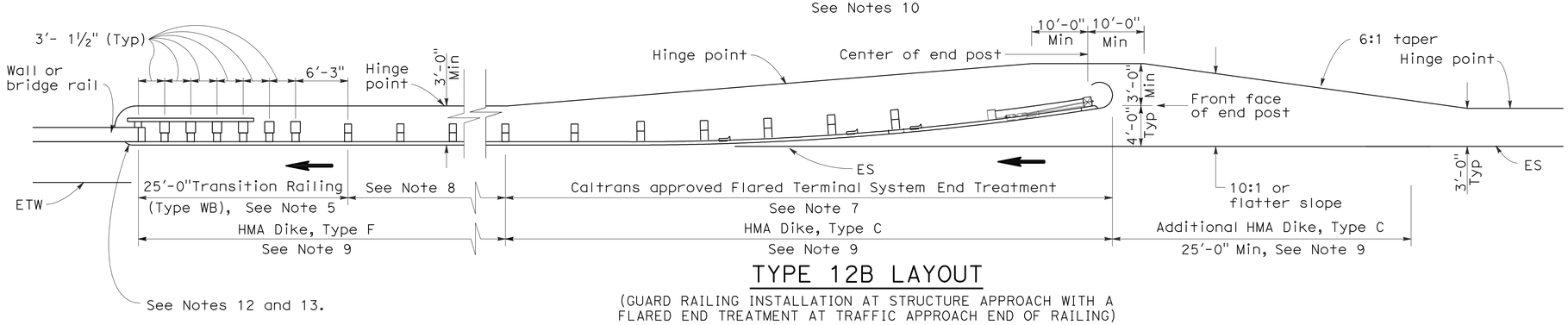

TYPE 12B LAYOUT

(GUARD RAILING INSTALLATION AT STRUCTURE APPROACH WITH A FLARED END TREATMENT AT TRAFFIC APPROACH END OF RAILING)
See Notes 10

NOTES:

1. Line post, blocks and hardware to be used are shown on Standard Plans A77A1, A77A2, A77B1, A77C1 and A77C2.
2. Guard rail post spacing to be 6'-3" center to center, except as otherwise noted.
3. Except as noted, line posts are 6" x 8" x 6'-0" wood with 6" x 8" x 1'-2" wood blocks. W6 x 9 steel posts, 6'-0" in length, with 6" x 8" x 1'-2" notched wood blocks or plastic blocks may be used for 6" x 8" x 6'-0" wood posts with 6" x 8" x 1'-2" wood blocks where applicable and when specified.
4. Direction of adjacent traffic indicated by ➡.
5. For Transition Railing (Type WB) details for Types 12A and 12B Layouts, see Standard Plan A77J4.
6. In-line Terminal System End Treatments are used where site conditions will not accommodate a flared end treatment.
7. The type of terminal system end treatment to be used will be shown on the Project Plans.
8. Dependent on site conditions (embankment height, side slopes, or other fixed objects), it may be advisable to construct additional guard railing (a length equal to multiples of 12'-6" with 6'-3" post spacing) between the transition railing and end treatment.
9. Where placement of dike is required with guard railing installations, see Revised Standard Plan RSP A77C4 for dike positioning details.
10. Type 12A or Type 12B Layouts are typically used:
    a. To the right of approaching traffic, at the end of a structure, on two-lane conventional highway where the roadbed width across the structure is less than 40 feet.
    b. To the left of approaching traffic, at the end of a structure, on two-lane conventional highway where the roadbed width across the structure is less than 40 feet.
    c. To the right of approaching traffic at the end of each structure on multilane freeways or expressways with separate adjacent or parallel bridges.
    d. To the right of approaching traffic at the end of the structure on multilane freeways or expressways with decked median on the bridge.
11. See Revised Standard Plan RSP A77F3 for typical layout used left of approaching traffic at the ends of each structure on multilane freeways or expressways with separate adjacent or parallel bridges.
12. For additional details of typical connections to bridge rail, see Connection Detail AA on Revised Standard Plans RSP A77J1 and RSP A77J2 and Connection Detail FF on Standard Plans A77K1 and A77K2.
13. For additional details of a typical connection to walls or abutments, see Standard Plan A77J3.

STATE OF CALIFORNIA
DEPARTMENT OF TRANSPORTATION

METAL BEAM GUARD RAILING TYPICAL LAYOUTS FOR STRUCTURE APPROACH

NO SCALE

RSP A77F1 DATED JUNE 6, 2008 SUPERSEDES STANDARD PLAN A77F1
DATED MAY 1, 2006 - PAGE 54 OF THE STANDARD PLANS BOOK DATED MAY 2006.

REVISED STANDARD PLAN RSP A77F1

2006 REVISED STANDARD PLAN RSP A77F1

DIST	COUNTY	ROUTE	POST MILES TOTAL PROJECT	SHEET NO.	TOTAL SHEETS
04	SCI	101	R27.6/40.2	139	173

Randell D. Hiatt
REGISTERED CIVIL ENGINEER

June 6, 2008
PLANS APPROVAL DATE

REGISTERED PROFESSIONAL ENGINEER
Randell D. Hiatt
No. C50200
Exp. 6-30-09
CIVIL
STATE OF CALIFORNIA

The State of California or its officers or agents shall not be responsible for the accuracy or completeness of electronic copies of this plan sheet.

To accompany plans dated 5-11-09

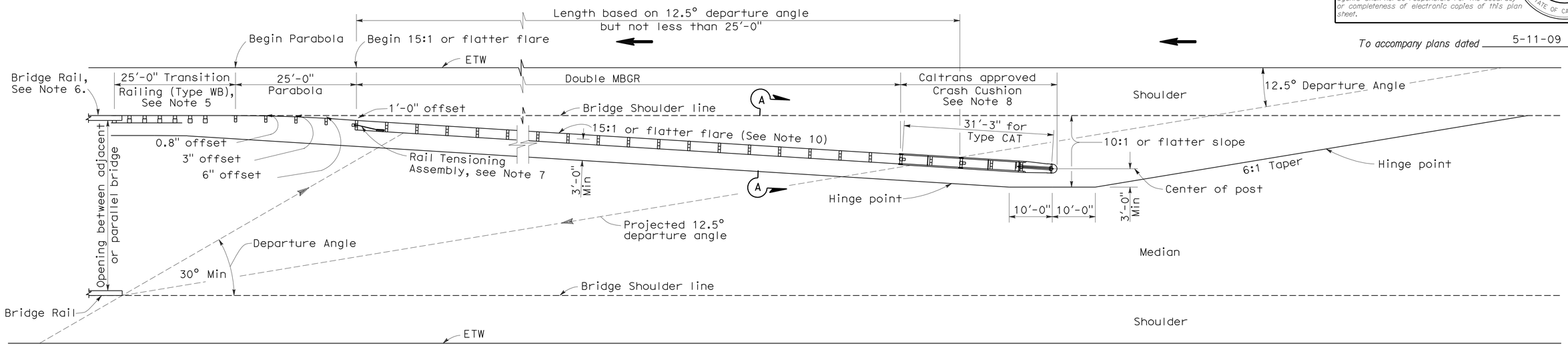

TYPE 12E LAYOUT

See Note 10

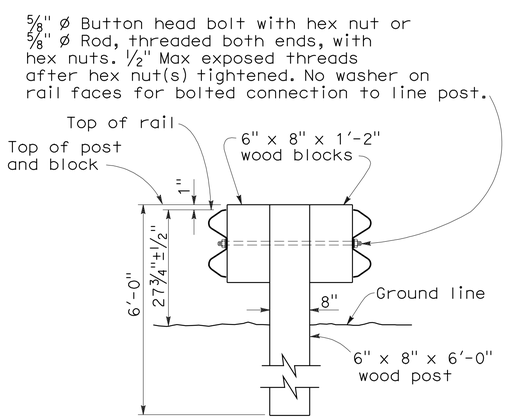

SECTION A-A

TYPICAL DOUBLE METAL BEAM GUARD RAILING

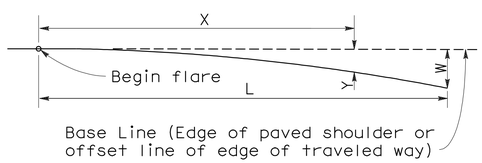

$$Y = \frac{WX^2}{L^2}$$

Y = Offset from base line
W = Maximum offset
X = Distance along base line
L = Length of flare

PARABOLIC FLARE OFFSETS

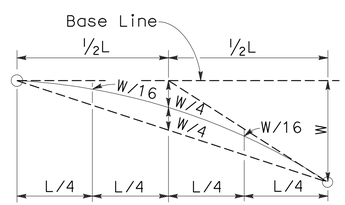

TYPICAL PARABOLIC LAYOUT

NOTES:

1. Line post, blocks and hardware to be used are shown on Standard Plans A77A1, A77A2, A77B1, A77C1 and A77C2.
2. Guard railing post spacing to be 6'-3" center to center, except as otherwise noted.
3. Except as noted, line posts are 6" x 8" x 6'-0" wood with 6" x 8" x 1'-2" wood blocks. W6 x 9 steel posts, 6'-0" in length, with 6" x 8" x 1'-2" notched wood blocks or notched recycled plastic blocks may be used for 6" x 8" x 6'-0" wood line posts with 6" x 8" x 1'-2" wood blocks where applicable and when specified.
4. Direction of adjacent traffic indicated by ⟶.
5. For Transition Railing (Type WB) details, see Standard Plan A77J4.
6. For additional details of a typical connection to bridge rail, see Connection Detail AA on Revised Standard Plan RSP A77J1.
7. For Rail Tensioning Assembly details, see Standard Plan A77H2.
8. The type of Crash Cushion to be used will be shown on the Project Plans.
9. Type 12E Layout is typically used left of approaching traffic at the end of each structure on multilane freeways or expressways where a median type barrier is not constructed between separated roadbeds.
10. The 15:1 or flatter flare is measured off of the edge of traveled way.

STATE OF CALIFORNIA
DEPARTMENT OF TRANSPORTATION

METAL BEAM GUARD RAILING TYPICAL LAYOUTS FOR STRUCTURE APPROACH

NO SCALE

RSP A77F3 DATED JUNE 6, 2008 SUPERSEDES STANDARD PLAN A77F3
DATED MAY 1, 2006 - PAGE 56 OF THE STANDARD PLANS BOOK DATED MAY 2006.

REVISED STANDARD PLAN RSP A77F3

2006 REVISED STANDARD PLAN RSP A77F3

12-10-07

DIST	COUNTY	ROUTE	POST MILES TOTAL PROJECT	SHEET NO.	TOTAL SHEETS
04	SCI	101	R27.6/40.2	140	173

Randell D. Hiatt
REGISTERED CIVIL ENGINEER

June 6, 2008
PLANS APPROVAL DATE

REGISTERED PROFESSIONAL ENGINEER
Randell D. Hiatt
No. C50200
Exp. 6-30-09
CIVIL
STATE OF CALIFORNIA

The State of California or its officers or agents shall not be responsible for the accuracy or completeness of electronic copies of this plan sheet.

To accompany plans dated 5-11-09

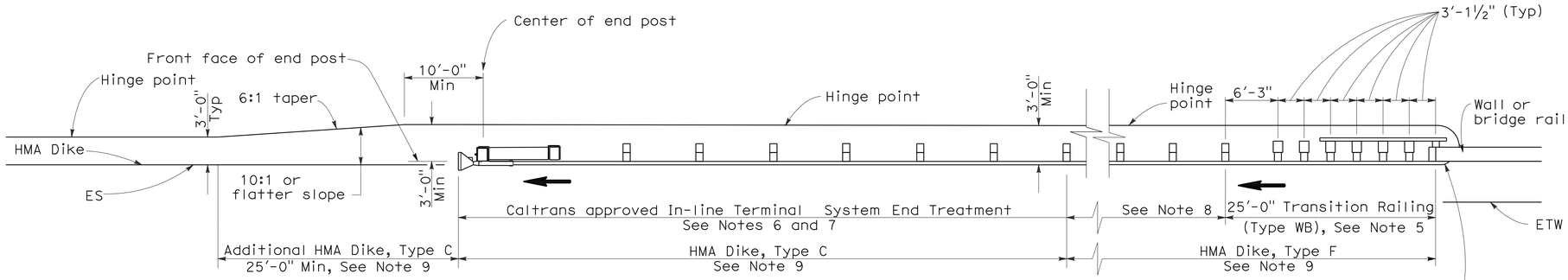

TYPE 12AA LAYOUT

(GUARD RAILING INSTALLATION AT STRUCTURE DEPARTURE WITH AN IN-LINE END TREATMENT AT TRAILING END OF RAILING)
See Notes 9 and 10

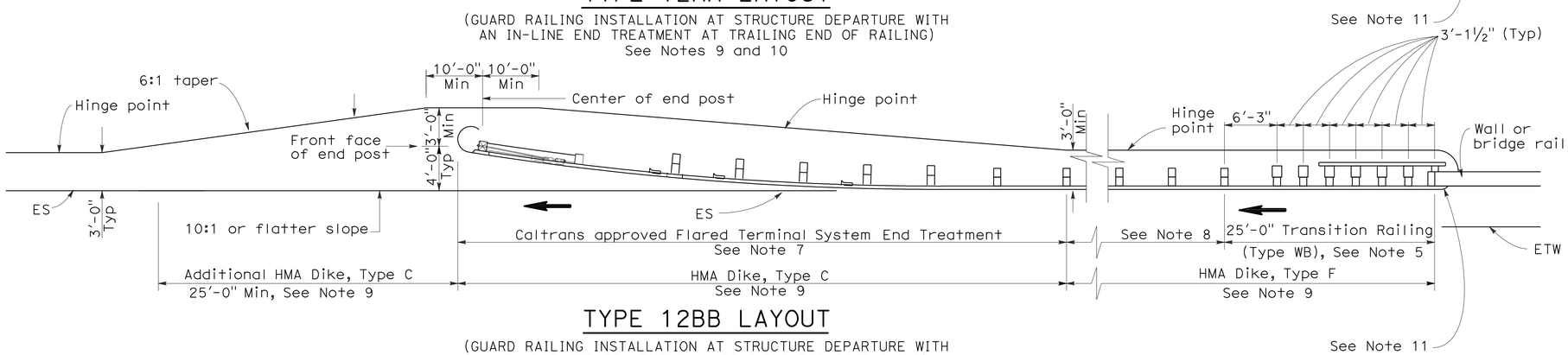

TYPE 12BB LAYOUT

(GUARD RAILING INSTALLATION AT STRUCTURE DEPARTURE WITH A FLARED END TREATMENT AT TRAILING END OF RAILING)
See Notes 9 and 10

NOTES:

1. Line post, blocks and hardware to be used are shown on Standard Plans A77A1, A77A2, A77B1, A77C1 and A77C2.
2. Guard rail post spacing to be 6'-3" center to center, except as otherwise noted.
3. Except as noted, line posts are 6" x 8" x 6'-0" wood with 6" x 8" x 1'-2" wood blocks. W6 x 9 steel posts, 6'-0" in length, with 6" x 8" x 1-2" notched wood blocks or notched recycled plastic blocks may be used for 6" x 8" x 6'-0" wood posts with 6" x 8" x 1'-2" wood blocks where applicable and when specified.
4. Direction of adjacent traffic indicated by ➡.
5. For Transition Railing (Type WB) details for Types 12AA and 12BB Layouts, see Standard Plan A77J4.
6. In-line Terminal System Treatments are used where site conditions will not accommodate a flared end treatment.
7. The type of terminal system to be used will be shown on the Project Plans.
8. Dependent on site conditions (embankment height, side slopes, other fixed objects), it may be advisable to construct additional guard railing (a length equal to multiples of 12'-6" with 6'-3" post spacing) between the transition railing and end treatments.
9. Where placement of dike is required with guard railing installations, see Revised Standard Plan RSP A77C4 for dike positioning details.
10. Type 12AA or Type 12BB Layouts are typically used to the right of traffic departing a structure on two-way conventional highways where the roadbed width across the structure is less than 40 feet.
11. For additional details of typical connections to bridge rail, see Connection Detail CC on Revised Standard Plan RSP A77J2 and Connection Detail HH on Standard Plans A77k2.

STATE OF CALIFORNIA
DEPARTMENT OF TRANSPORTATION

METAL BEAM GUARD RAILING TYPICAL LAYOUTS FOR STRUCTURE DEPARTURE

NO SCALE

RSP A77F4 DATED JUNE 6, 2008 SUPERSEDES STANDARD PLAN A77F4
DATED MAY 1, 2006 - PAGE 57 OF THE STANDARD PLANS BOOK DATED MAY 2006.

REVISED STANDARD PLAN RSP A77F4

2006 REVISED STANDARD PLAN RSP A77F4

12-10-07

DIST	COUNTY	ROUTE	POST MILES TOTAL PROJECT	SHEET NO.	TOTAL SHEETS
04	SCI	101	R27.6/40.2	141	173

Randell D. Hiatt
REGISTERED CIVIL ENGINEER

June 6, 2008
PLANS APPROVAL DATE

REGISTERED PROFESSIONAL ENGINEER Randell D. Hiatt No. C50200 Exp. 6-30-09 CIVIL STATE OF CALIFORNIA

The State of California or its officers or agents shall not be responsible for the accuracy or completeness of electronic copies of this plan sheet.

To accompany plans dated 5-11-09

NOTES:

1. Line post, blocks and hardware to be used are shown on Standard Plans A77A1, A77A2, A77B1, A77C1 and A77C2.
2. Guard railing post spacing to be 6′-3″ center to center, except as otherwise noted.
3. Except as noted, line posts are 6″ x 8″ x 6′-0″ wood with 6″ x 8″ x 1′-2″ wood blocks. W6 x 9 steel posts, 6′-0″ in length, with 6″ x 8″ x 1′-2″ notched wood blocks or notched recycled plastic blocks may be used for 6″ x 8″ x 6′-0″ wood line posts with 6″ x 8″ x 1′-2″ wood blocks where applicable and when specified.
4. A 4′-0″ minimum clearance is required between the face of the railing and the face of a fixed object located directly behind standard guard railing sections with post spacing of 6′-3″. Construct guard railing as shown in the detail "Strengthened Railing Sections for Fixed Objects" on this plan, where the clearance between the face of the railing and the face of a fixed object is less than 4′-0″, but not less than 2′-3″. Where the clearance is less than 2′-3″, a concrete wall or barrier should be constructed to shield the fixed object(s).
5. Direction of adjacent traffic indicated by ➡.
6. For End Anchor Assembly (Type SFT) details, see Standard Plan A77H1.
7. For details of Rail Tensioning Assembly, see Standard Plan A77H2.
8. The type of crash cushion to be used will be shown on the Project Plans.
9. Type 14A layout is typically used on multilane freeways or expressways to shield fixed objects where a median type barrier is not constructed between the separated roadbeds.
10. For typical flare offsets for 25′-0″ length parabola with maximum offset of 1′-0″, see Revised Standard Plan RSP A77E1.
11. The 15:1 or flatter flare is measured off of the edge of traveled way.
12. W6 x 15 steel post, 8′-0″ in length, with 8″ x 8″ x 1′-2″ notched wood block or notched recycled plastic block may be used in place of the 10″ x 10″ x 8′-0″ wood post with 8″ x 8″ x 1′-2″ wood block shown in the "Strengthened Railing Sections Detail".

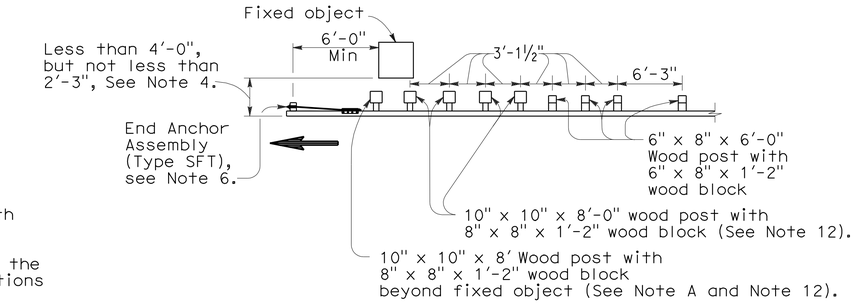

NOTE A: For a series of fixed objects (bridge columns, overhead sign supports, etc.) additional 10″ x 10″ x 8′-0″ wood post with 8″ x 8″ x 1′-2″ wood blocks at 3′-1½″ center to center spacing are to be used between fixed objects.

STRENGTHENED RAILING SECTIONS FOR FIXED OBJECT

Use strengthened railing sections with Type 14A layout where minimum clearance between the face of the guard railing and fixed object(s) is less than 4′-0″, but not less than 2′-3″, See Note 4.

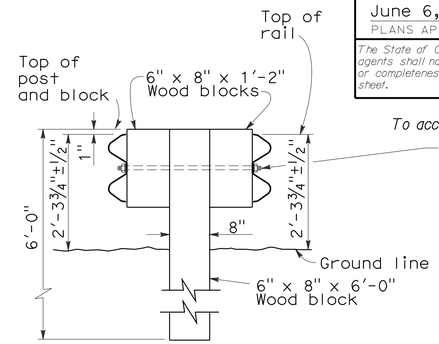

⅝″ ø button head bolt with hex nut or ⅝″ ø Rod, threaded both ends, with hex nuts. ½″ Max exposed threads after hex nut(s) tightened. No washer on rail faces for bolted connection to line post.

SECTION A-A
TYPICAL DOUBLE METAL BEAM GUARD RAILING

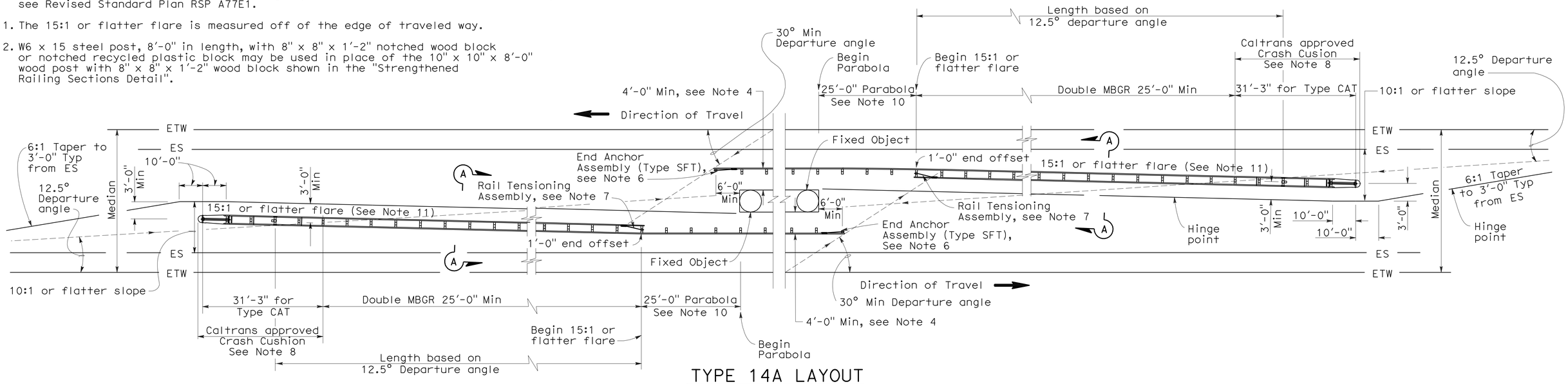

TYPE 14A LAYOUT

See Note 9

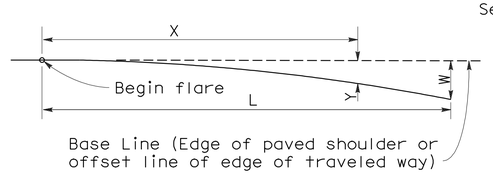

Base Line (Edge of paved shoulder or offset line of edge of traveled way)

$$Y = \frac{WX^2}{L^2}$$

Y = Offset from base line
W = Maximum offset
X = Distance along base line
L = Length of flare

PARABOLIC FLARE OFFSETS

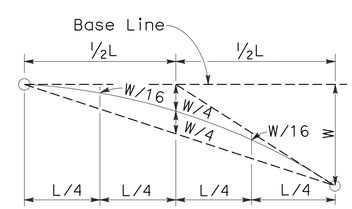

TYPICAL PARABOLIC LAYOUT

STATE OF CALIFORNIA
DEPARTMENT OF TRANSPORTATION

METAL BEAM GUARD RAILING TYPICAL LAYOUTS FOR FIXED OBJECTS BETWEEN SEPARATE ROADBEDS (TWO-WAY TRAFFIC)

NO SCALE

RSP A77G1 DATED JUNE 6, 2008 SUPERSEDES STANDARD PLAN A77G1 DATED MAY 1, 2006 - PAGE 59 OF THE STANDARD PLANS BOOK DATED MAY 2006.

REVISED STANDARD PLAN RSP A77G1

2006 REVISED STANDARD PLAN RSP A77G1

12-10-07

DIST	COUNTY	ROUTE	POST MILES TOTAL PROJECT	SHEET NO.	TOTAL SHEETS
04	SCI	101	R27.6/40.2	142	173

Randell D. Hiatt
REGISTERED CIVIL ENGINEER

June 6, 2008
PLANS APPROVAL DATE

REGISTERED PROFESSIONAL ENGINEER Randell D. Hiatt No. C50200 Exp. 6-30-09 CIVIL STATE OF CALIFORNIA

The State of California or its officers or agents shall not be responsible for the accuracy or completeness of electronic copies of this plan sheet.

To accompany plans dated 5-11-09

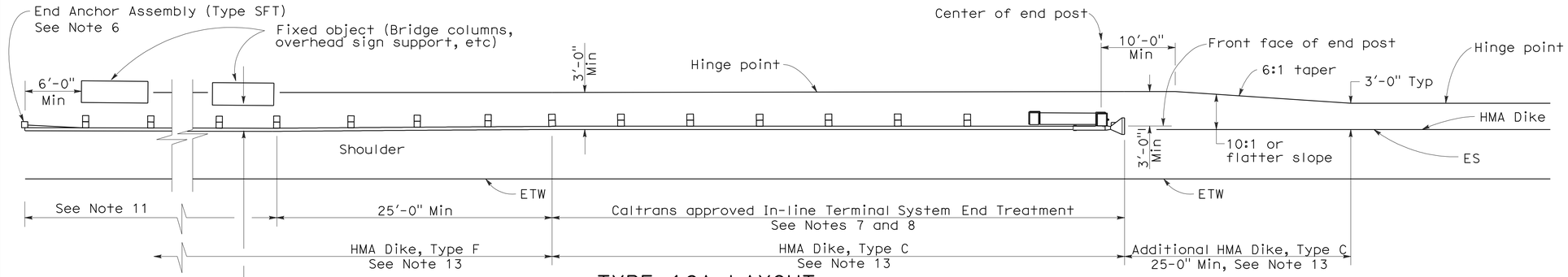

TYPE 16A LAYOUT

(GUARD RAILING INSTALLATION AT ROADSIDE FIXED OBJECT OR OBJECTS WITH AN IN-LINE END TREATMENT AT TRAFFIC APPROACH END OF RAILING)
See Notes 12 and 13

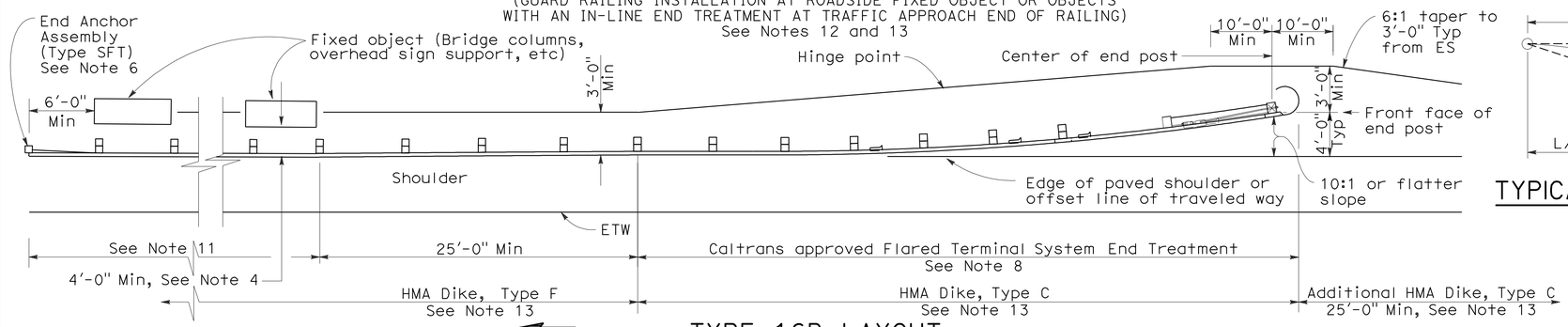

TYPE 16B LAYOUT

(GUARD RAILING INSTALLATION AT ROADSIDE FIXED OBJECT OR OBJECTS WITH A FLARED END TREATMENT AT TRAFFIC APPROACH END OF RAILING)
See Notes 12 and 13

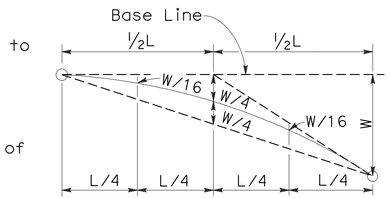

TYPICAL PARABOLIC LAYOUT

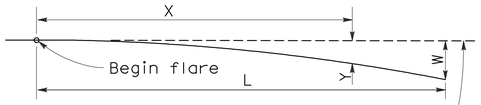

Base Line (Edge of paved shoulder or offset line of edge of traveled way)

$$Y = \frac{WX^2}{L^2}$$

Y = Offset from base line
W = Maximum offset
X = Distance along base line
L = Length of flare

PARABOLIC FLARE OFFSETS

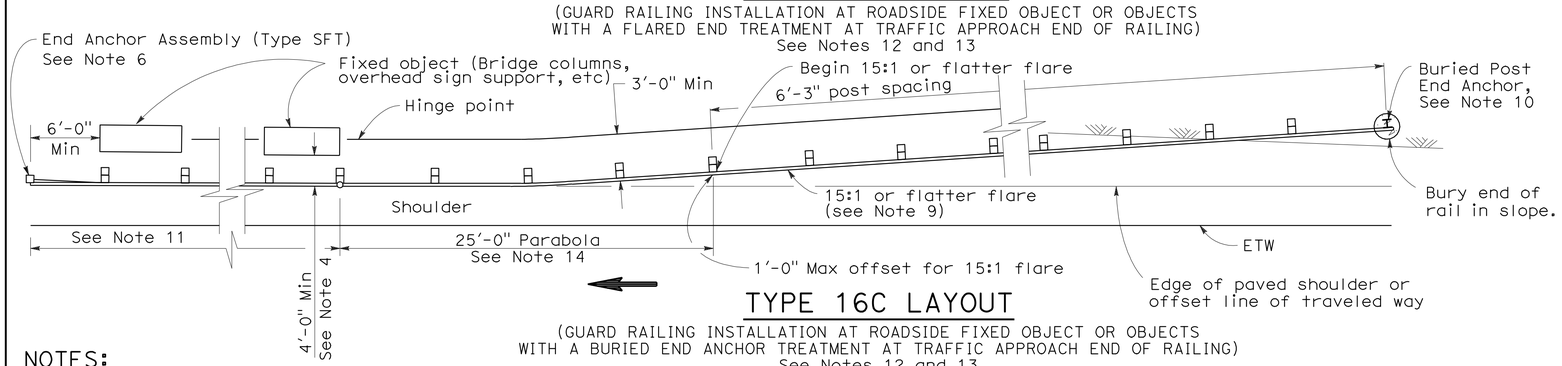

TYPE 16C LAYOUT

(GUARD RAILING INSTALLATION AT ROADSIDE FIXED OBJECT OR OBJECTS WITH A BURIED END ANCHOR TREATMENT AT TRAFFIC APPROACH END OF RAILING)
See Notes 12 and 13

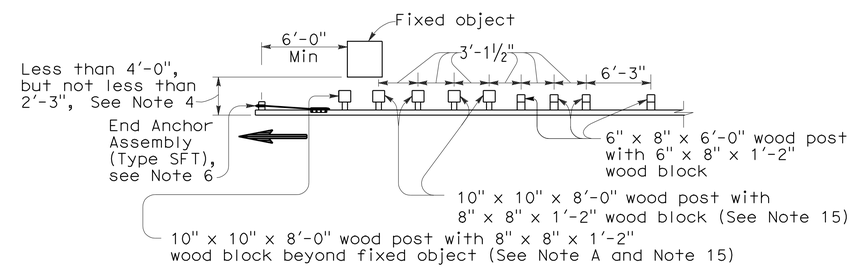

NOTE A: For a series of fixed objects (bridge columns, overhead sign supports, etc.) additional 10" x 10" x 8'-0" wood post with 8" x 8" x 1'-2" wood blocks at 3'-1½" center to center spacing are to be used between fixed objects.

STRENGTHENED RAILING SECTIONS FOR FIXED OBJECT

Use strengthened railing sections with Types 16A, 16B or 16C Layouts where minimum clearance between the face of the guard railing and fixed object(s) is less than 4'-0", but not less than 2'-3". See Note 4

NOTES:

1. Line post, blocks and hardware to be used are shown on Revised Standard Plans A77A1, A77A2, A77B1, A77C1 and A77C2.
2. Guard railing post spacing to be 6'-3" center to center, except as otherwise noted.
3. Except as noted, line posts are 6" x 8" x 6'-0" wood with 6" x 8" x 1'-2" wood blocks. W6 x 9 steel posts, 6'-0" in length, with 6" x 8" x 1'-2" notched wood blocks or notched recycled plastic blocks may be used for 6" x 8" x 6'-0" wood line posts with 6" x 8" x 1'-2" wood blocks where applicable and when specified.
4. A 4'-0" minimum clearance is required between the face of the railing and the face of a fixed object located directly behind standard guard railing sections with post spacing of 6'-3". Construct guard railing as shown in the detail "Strengthened Railing Sections for Fixed Objects" on this plan, where the clearance between the face of the railing and the face of a fixed object is less than 4'-0", but not less than 2'-3". Where the clearance is less than 2'-3", a concrete wall or barrier should be constructed to shield the fixed object(s).
5. Direction of adjacent traffic indicated by ⟶.
6. For End Anchor Assembly (Type SFT) details, see Standard Plan A77H1.
7. In-line Terminal System End Treatments are used where site conditions will not accommodate a flared end treatment.
8. The type of terminal system to be used will be shown on the Project Plans.
9. The 15:1 or flatter flare used with Type 16C Layout is based on the edge of the paved shoulder or offset line of edge of the traveled way. The length of guard railing within the 15:1 or flatter flare is based on site conditions and should be a length equal to multiples of 12'-6".
10. For details of the Buried Post End Anchor used with Type 16C Layout, see Standard Plan A77I2.
11. As site conditions dictate, construct additional guard railing to shield fixed object(s). Additional guard railing length equal to multiples of 12'-6". Post spacing at 6'-3" except as specified in Note 4.
12. Layout Types 16A, 16B or 16C are typically used where guard railing is recommended to shield roadside fixed object(s) and a crashworthy end treatment is required for only one direction of traffic.
13. Where placement of dike is required with guard railing, see Revised Standard Plan RSP A77C4 for dike positioning details.
14. For typical flare offsets for 25'-0" length parabola with maximum offset of 1'-0", see Revised Standard Plan RSP A77E1.
15. W6 x 15 steel post, 8'-0" in length, with 8" x 8" x 1'-2" notched wood block or notched recycled plastic blocks may be used in place of the 10" x 10" x 8'-0" wood post with 8" x 8" x 1'-2" wood block shown in the "Strengthened Railing Sections Detail".

STATE OF CALIFORNIA
DEPARTMENT OF TRANSPORTATION

METAL BEAM GUARD RAILING TYPICAL LAYOUTS FOR ROADSIDE FIXED OBJECTS

NO SCALE

RSP A77G3 DATED JUNE 6, 2008 SUPERSEDES STANDARD PLAN A77G3 DATED MAY 1, 2006 - PAGE 61 OF THE STANDARD PLANS BOOK DATED MAY 2006.

REVISED STANDARD PLAN RSP A77G3

2006 REVISED STANDARD PLAN RSP A77G3

12-10-07

DIST	COUNTY	ROUTE	POST MILES TOTAL PROJECT	SHEET NO.	TOTAL SHEETS
04	SCI	101	R27.6/40.2	143	173

Randell D. Hiatt
REGISTERED CIVIL ENGINEER

June 6, 2008
PLANS APPROVAL DATE

REGISTERED PROFESSIONAL ENGINEER Randell D. Hiatt No. C50200 Exp. 6-30-09 CIVIL STATE OF CALIFORNIA

The State of California or its officers or agents shall not be responsible for the accuracy or completeness of electronic copies of this plan sheet.

To accompany plans dated 5-11-09

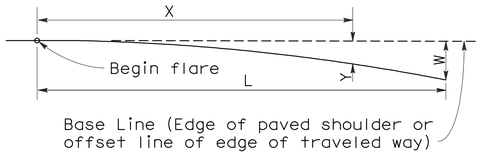

$$Y = \frac{WX^2}{L^2}$$

Y = Offset from base line
W = Maximum offset
X = Distance along base line
L = Length of flare

PARABOLIC FLARE OFFSETS

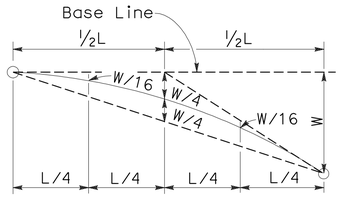

TYPICAL PARABOLIC LAYOUT

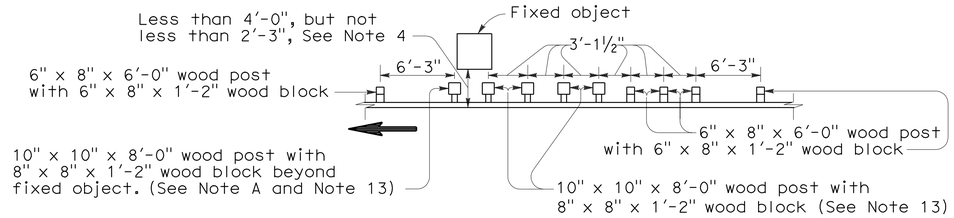

NOTE A: For a series of fixed objects (bridge columns, overhead sign supports, etc.) additional 10" x 10" x 8'-0" wood post with 8" x 8" x 1'-2" wood blocks at 3'-1½" center to center spacing are to be used between fixed object(s).

STRENGTHENED RAILING SECTIONS FOR FIXED OBJECT

Use strengthened railing sections with Layout Types 16F or 16G where minimum clearance between the face of the guard railing and fixed object(s) is less than 4'-0", but not less than 2'-3". See Note 4.

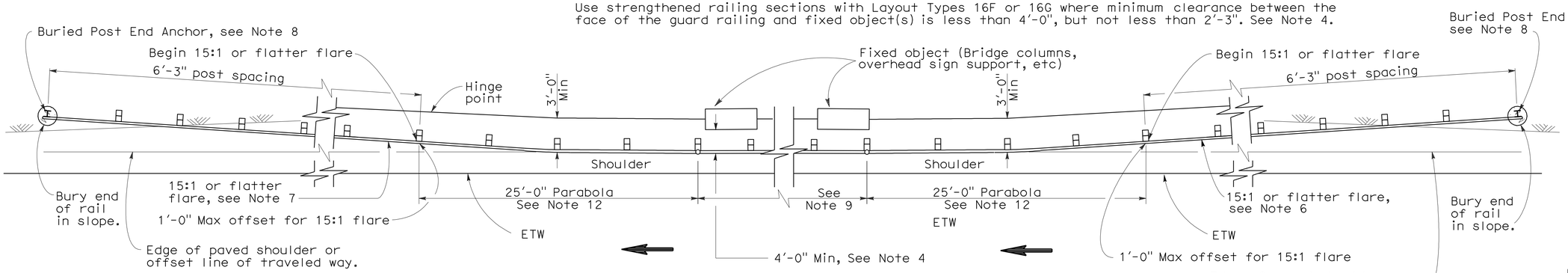

TYPE 16F LAYOUT

(GUARD RAILING INSTALLATION AT ROADSIDE FIXED OBJECT OR OBJECTS WITH A BURIED END ANCHOR TREATMENT AT EACH END OF RAILING)
See Notes 10 and 11

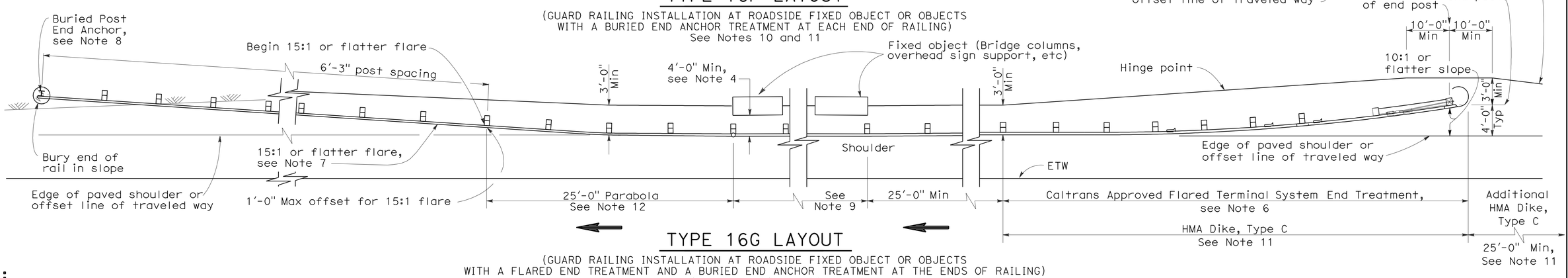

TYPE 16G LAYOUT

(GUARD RAILING INSTALLATION AT ROADSIDE FIXED OBJECT OR OBJECTS WITH A FLARED END TREATMENT AND A BURIED END ANCHOR TREATMENT AT THE ENDS OF RAILING)
See Notes 10 and 11

NOTES:

1. Line post, blocks and hardware to be used are shown on Standard Plans A77A1, A77A2, A77B1, A77C1 and A77C2.
2. Guard railing post spacing to be 6'-3" center to center, except as otherwise noted.
3. Except as noted, line posts are 6" x 8" x 6'-0" wood with 6" x 8" x 1'-2" wood blocks. W6 x 9 steel posts, 6'-0" in length, with 8" x 8" x 1'-2" notched wood blocks or notched recycled plastic blocks may be used for 6" x 8" x 6'-0" wood posts with 6" x 8" x 1'-2" wood blocks where applicable and when specified.
4. A 4'-0" minimum clearance is required between the face of the railing and the face of a fixed object located directly behind standard guard railing sections with post spacing at 6'-3". Construct guard railing as shown in the detail "Strengthened Railing Sections for Fixed Objects" on this plan, where the clearance between the face of the railing and the face of a fixed object is less than 4'-0", but not less than 2'-3". Where the clearance is less than 2'-3", a concrete wall or barrier should be constructed to shield the fixed object(s).
5. Direction of adjacent traffic indicated by ➡.
6. The type of terminal system to be used will be shown on the Project Plans.
7. The 15:1 or flatter flare for the buried post anchor is based on the edge of the paved shoulder or offset line of edge of the traveled way. The length of guard railing within the 15:1 or flatter flare is based on site conditions and should be a length equal to multiples of 12'-6".
8. For details of the Buried Post End Anchor details, see Standard Plan A77I2.
9. As site conditions dictate, construct additional guard railing to shield fixed object(s). Additional guard railing length equal to multiples of 12'-6". Post spacing at 6'-3", except as specified in Note 4.
10. Layout Types 16D through 16L, shown on the A77G Series of Revised Standard Plans, are typically used on highways where guard railing is recommended to shield roadside fixed object(s) and a crashworthy end treatment is required for both directions of traffic.
11. Where placement of dike is required with guard railing, see Revised Standard Plan RSP A77C4 for dike positioning details.
12. For typical flare offsets for 25'-0" length parabola with maximum offset of 1'-0", see Revised Standard Plan RSP A77E1.
13. W6 x 15 steel post, 8'-0" in length, with 8" x 8" x 1'-2" notched wood block or notched recycled plastic blocks may be used in place of the 10" x 10" x 8'-0" wood post with 8" x 8" x 1'-2" wood block shown in the "Strengthened Railing Sections Detail".

STATE OF CALIFORNIA
DEPARTMENT OF TRANSPORTATION

METAL BEAM GUARD RAILING TYPICAL LAYOUTS FOR ROADSIDE FIXED OBJECTS

NO SCALE

RSP A77G5 DATED JUNE 6, 2008 SUPERSEDES STANDARD PLAN A77G5
DATED MAY 1, 2006 - PAGE 63 OF THE STANDARD PLANS BOOK DATED MAY 2006.

REVISED STANDARD PLAN RSP A77G5

2006 REVISED STANDARD PLAN RSP A77G5

12-10-07

DIST	COUNTY	ROUTE	POST MILES TOTAL PROJECT	SHEET NO.	TOTAL SHEETS
04	SCI	101	R27.6/40.2	144	173

Randell D. Hiatt
REGISTERED CIVIL ENGINEER

June 6, 2008
PLANS APPROVAL DATE

REGISTERED PROFESSIONAL ENGINEER
Randell D. Hiatt
No. C50200
Exp. 6-30-09
CIVIL
STATE OF CALIFORNIA

The State of California or its officers or agents shall not be responsible for the accuracy or completeness of electronic copies of this plan sheet.

To accompany plans dated 5-11-09

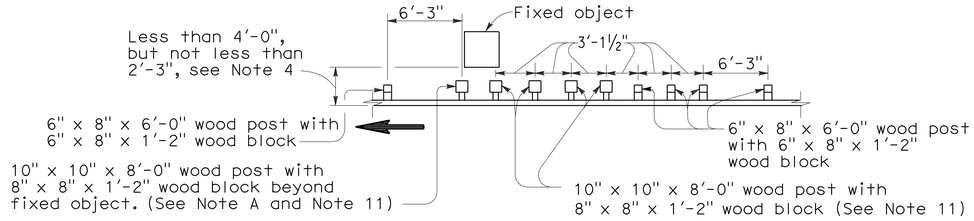

Note A. For a series of fixed objects (bridge columns, overhead sign supports, etc.) additional 10" x 10" x 8'-0" wood post with 8" x 8" x 1'-2" wood blocks at 3'-1½" center to center spacing are to be used between fixed object(s).

STRENGTHENED RAILING SECTIONS FOR FIXED OBJECT

Use strengthened railing sections with Layout Type 16H where minimum clearance between the face of the guard railing and fixed object(s) is less than 4'-0", but not less than 2'-3". See Note 4.

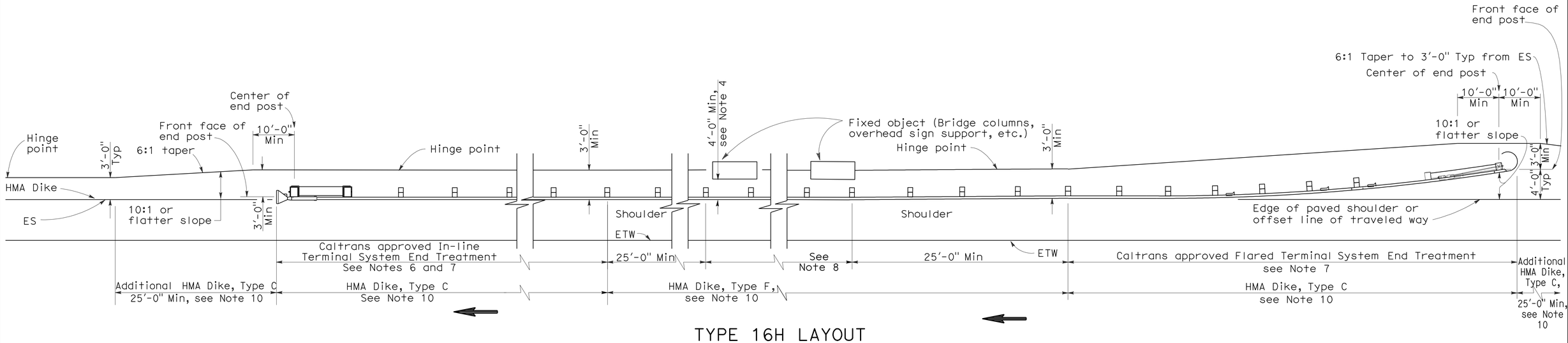

TYPE 16H LAYOUT

(GUARD RAILING INSTALLATION AT ROADSIDE FIXED OBJECT OR OBJECTS WITH A FLARED END TREATMENT AND AN IN-LINE TREATMENT AT THE ENDS OF RAILING)
See Note 9

NOTES:

1. Line post, blocks and hardware to be used are shown on Standard Plans A77A1, A77A2, A77B1, A77C1 and A77C2.
2. Guard railing post spacing to be 6'-3" center to center, except as otherwise noted.
3. Except as noted, line posts are 6" x 8" x 6'-0" wood with 6" x 8" x 1'-2" wood blocks. W6 x 9 steel posts, 6'-0" in length, with 6" x 8" x 1'-2" notched wood blocks or notched recycled plastic blocks may be used for 6" x 8" x 6'-0" wood posts with 6" x 8" x 1'-2" wood blocks where applicable and when specified.
4. A 4'-0" minimum clearance is required between the face of the railing and the face of a fixed object located directly behind standard guard railing sections with post spacing at 6'-3". Construct guard railing as shown in the detail "Strengthened Railing Sections for Fixed Objects" on this plan, where the clearance between the face of the railing and the face of a fixed object is less than 4'-0", but not less than 2'-3". Where the clearance is less than 2'-3", a concrete wall or barrier should be constructed to shield the fixed object(s).
5. Direction of adjacent traffic indicated by ⟶ .
6. In-line Terminal System End Treatments are used where site conditions will not accommodate a flared end treatment.
7. The type of terminal system to be used will be shown on the Project Plans.
8. As site conditions dictate, construct additional guard railing to shield fixed object(s). Additional guard railing length equal to multiples of 12'-6". Post spacing at 6'-3", except as specified in Note 4.
9. Layout Types 16D through 16L, shown on the A77G Series of Revised Standard PLans, typically used where guard railing is recommended to shield roadside fixed object(s) and a crashworthy end treatment is required for both directions of traffic.
10. Where placement of dike is required with guard railing, see Revised Standard Plan RSP A77C4 for dike positioning details.
11. W6 x 15 steel post, 8'-0" in length, with 8" x 8" x 1'-2" notched wood block or notched recycled plastic blocks may be used in place of the 10" x 10" x 8'-0" wood post with 8" x 8" x 1'-2" wood block shown in the "Strengthened Railing Sections Detail".

STATE OF CALIFORNIA
DEPARTMENT OF TRANSPORTATION

METAL BEAM GUARD RAILING TYPICAL LAYOUTS FOR ROADSIDE FIXED OBJECTS

NO SCALE

RSP A77G6 DATED JUNE 6, 2008 SUPERSEDES STANDARD PLAN A77G6
DATED MAY 1, 2006 - PAGE 64 OF THE STANDARD PLANS BOOK DATED MAY 2006.

REVISED STANDARD PLAN RSP A77G6

2006 REVISED STANDARD PLAN RSP A77G6

12-10-07

DIST	COUNTY	ROUTE	POST MILES TOTAL PROJECT	SHEET NO.	TOTAL SHEETS
04	SCI	101	R27.6/40.2	145	173

Randell D. Hiatt
REGISTERED CIVIL ENGINEER

June 6, 2008
PLANS APPROVAL DATE

REGISTERED PROFESSIONAL ENGINEER Randell D. Hiatt No. C50200 Exp. 6-30-09 CIVIL STATE OF CALIFORNIA

The State of California or its officers or agents shall not be responsible for the accuracy or completeness of electronic copies of this plan sheet.

To accompany plans dated 5-11-09

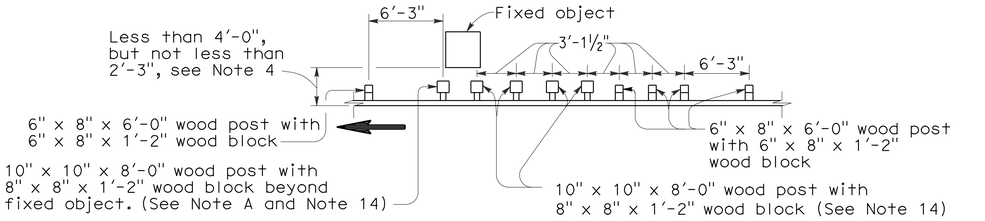

Note A. For a series of fixed objects (bridge columns, overhead sign supports, etc.) additional 10" x 10" x 8'-0" wood post with 8" x 8" x 1'-2" wood blocks at 3'-1½" center to center spacing are to be used between fixed object(s).

STRENGTHENED RAILING SECTIONS FOR FIXED OBJECT

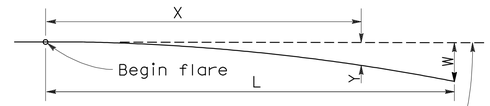

Base Line (Edge of paved shoulder or offset line of edge of traveled way)

$$Y = \frac{WX^2}{L^2}$$

Y = Offset from base line
W = Maximum offset
X = Distance along base line
L = Length of flare

PARABOLIC FLARE OFFSETS

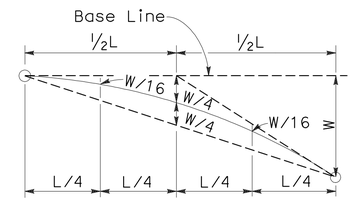

TYPICAL PARABOLIC LAYOUT

Use strengthened railing sections with Layout Types 16I or 16J Layouts where minimum clearance between the face of the guard railing and fixed object(s) is less than 4'-0", but not less than 2'-3". See Note 4.

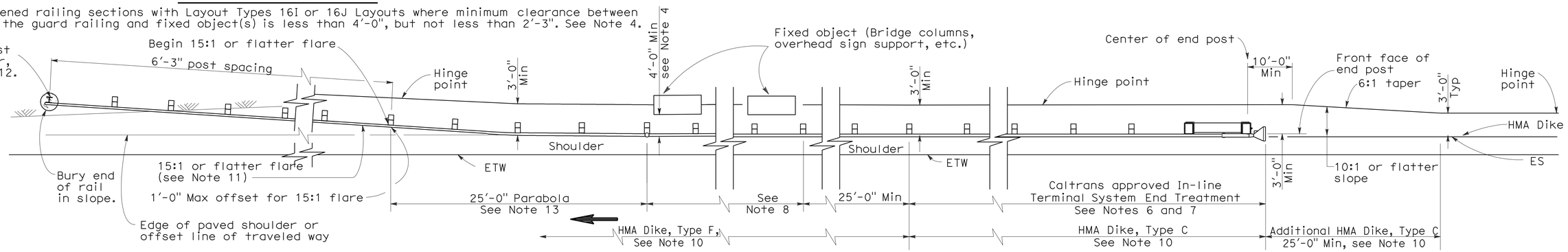

TYPE 16I LAYOUT

(GUARD RAILING INSTALLATION AT ROADSIDE FIXED OBJECT OR OBJECTS WITH AN IN-LINE END TREATMENT AND A BURIED END ANCHOR TREATMENT AT THE ENDS OF RAILING) See Note 9

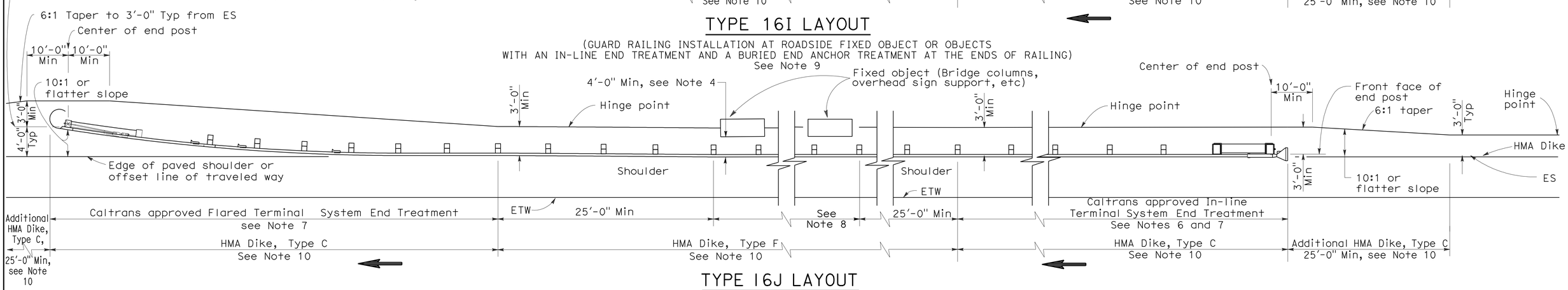

TYPE 16J LAYOUT

(GUARD RAILING INSTALLATION AT ROADSIDE FIXED OBJECT OR OBJECTS WITH AN IN-LINE END TREATMENT AND A FLARED END TREATMENT AT THE ENDS OF RAILING) See Note 9

NOTES:

1. Line post, blocks and hardware to be used are shown on Standard Plans A77A1, A77A2, A77B1, A77C1 and A77C2.
2. Guard railing post spacing to be 6'-3" center to center, except as otherwise noted.
3. Except as noted, line posts are 6" x 8" x 6'-0" wood with 6" x 8" x 1'-2" wood blocks. W6 x 9 steel posts, 6'-0" in length, with 6" x 8" x 1'-2" notched wood blocks or notched recycled plastic blocks may be used for 6" x 8" x 6'-0" wood posts with 6" x 8" x 1'-2" wood blocks where applicable and when specified.
4. A 4'-0" minimum clearance is required between the face of the railing and the face of a fixed object located directly behind standard guard railing sections with post spacing at 6'-3". Construct guard railing as shown in the detail "Strengthened Railing Sections for Fixed Objects" on this plan, where the clearance between the face of the railing and the face of a fixed object is less than 4'-0", but not less than 2'-3". Where the clearance is less than 2'-3", a concrete wall or barrier should be constructed to shield the fixed object(s).
5. Direction of adjacent traffic indicated by ➡.
6. In-line Terminal System End Treatments are used where site conditions will not accommodate a flared end treatment.
7. The type of terminal system to be used will be shown on the Project Plans.
8. As site conditions dictate, construct additional guard railing to shield fixed object(s). Additional guard railing length equal to multiples of 12'-6". Post spacing at 6'-3", except as specified in Note 4.
9. Layout Types 16D through 16L, shown on the A77G Series of Revised Standard Plans, are typically used where guard railing is recommended to shield roadside fixed object(s) and a crashworthy end treatment is required for both directions of traffic.
10. Where placement of dike is required with guard railing, see Revised Standard Plan RSP A77C4 for dike positioning details.
11. The 15:1 or flatter flare for the buried post anchor is based on the edge of the paved shoulder or offset line of edge of the traveled way. The length of guard railing within the 15:1 or flatter flare is based on site conditions and should be a length equal to multiples of 12'-6".
12. For details of Buried Post End Anchor details, see Standard Plan A77I2.
13. For typical flare offsets for 25'-0" length parabola with maximum offset of 1'-0", see Revised Standard RSP Plan A77E1.
14. W6 x 15 steel post, 8'-0" in length, with 8" x 8" x 1'-2" notched wood block or notched recycled plastic blocks may be used in place of the 10" x 10" x 8'-0" wood post with 8" x 8" x 1'-2" wood block shown in the "Strengthened Railing Sections Detail".

STATE OF CALIFORNIA
DEPARTMENT OF TRANSPORTATION

METAL BEAM GUARD RAILING TYPICAL LAYOUTS FOR ROADSIDE FIXED OBJECTS

NO SCALE

RSP A77G7 DATED JUNE 6, 2008 SUPERSEDES STANDARD PLAN A77G7 DATED MAY 1, 2006 - PAGE 65 OF THE STANDARD PLANS BOOK DATED MAY 2006.

REVISED STANDARD PLAN RSP A77G7

2006 REVISED STANDARD PLAN RSP A77G7

12-10-07

DIST	COUNTY	ROUTE	POST MILES TOTAL PROJECT	SHEET NO.	TOTAL SHEETS
04	SCI	101	R27.6/40.2	146	173

Randell D. Hiatt
REGISTERED CIVIL ENGINEER

June 6, 2008
PLANS APPROVAL DATE

REGISTERED PROFESSIONAL ENGINEER Randell D. Hiatt No. C50200 Exp. 6-30-09 CIVIL STATE OF CALIFORNIA

The State of California or its officers or agents shall not be responsible for the accuracy or completeness of electronic copies of this plan sheet.

To accompany plans dated 5-11-09

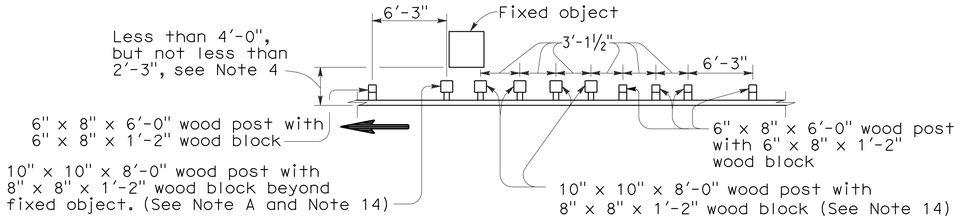

Note A. For a series of fixed objects (bridge columns, overhead sign supports, etc.) additional 10" x 10" x 8'-0" wood post with 8" x 8" x 1'-2" wood blocks at 3'-1½" center to center spacing are to be used between fixed object(s).

STRENGTHENED RAILING SECTIONS FOR FIXED OBJECT

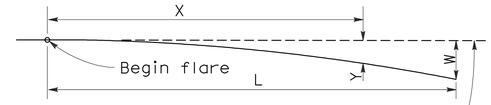

Base Line (Edge of paved shoulder or offset line of edge of traveled way)

$$Y = \frac{WX^2}{L^2}$$

Y = Offset from base line
W = Maximum offset
X = Distance along base line
L = Length of flare

PARABOLIC FLARE OFFSETS

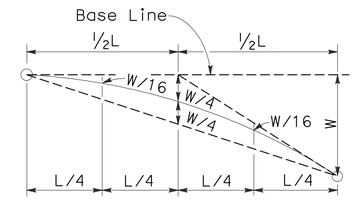

TYPICAL PARABOLIC LAYOUT

Use strengthened railing sections with Layout Types 16K or 16L Layouts where minimum clearance between the face of the guard railing and fixed object(s) is less than 4'-0", but not less than 2'-3". See Note 4.

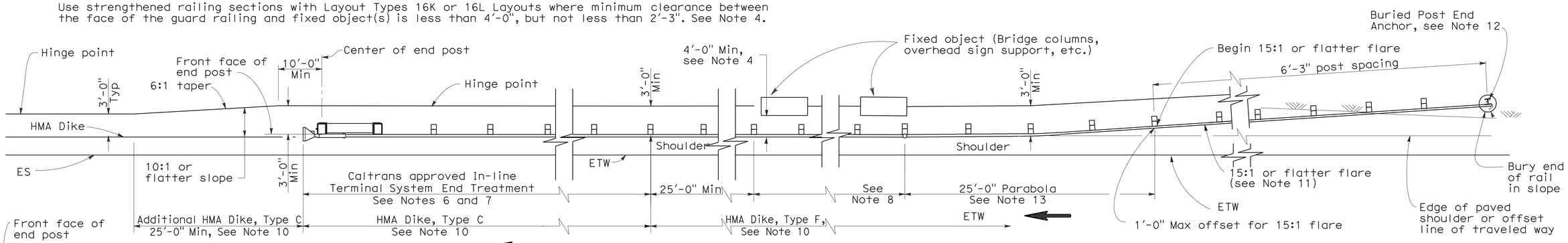

TYPE 16K LAYOUT

(GUARD RAILING INSTALLATION AT ROADSIDE FIXED OBJECT OR OBJECTS WITH A BURIED END ANCHOR TREATMENT AND AN IN-LINE END TREATMENT AT THE ENDS OF RAILING) See Note 9

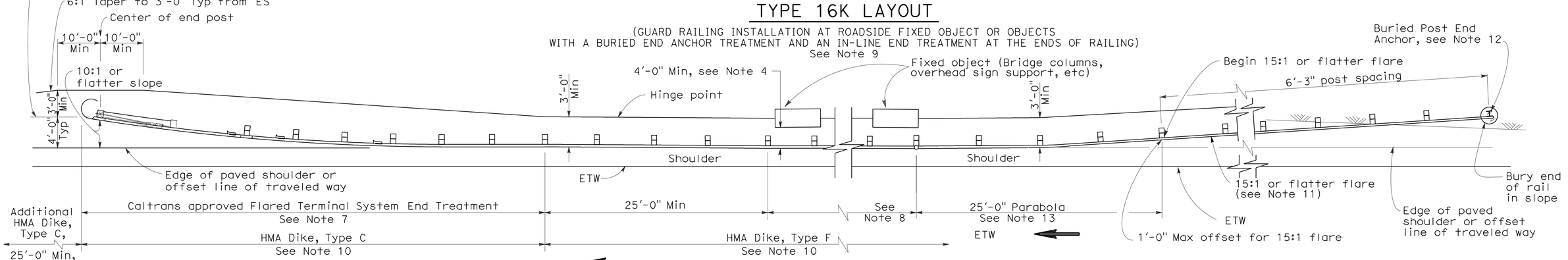

TYPE 16L LAYOUT

(GUARD RAILING INSTALLATION AT ROADSIDE FIXED OBJECT OR OBJECTS WITH A BURIED END ANCHOR TREATMENT AND A FLARED END TREATMENT AT THE ENDS OF RAILING) See Note 9

NOTES:

1. Line post, blocks and hardware to be used are shown on Standard Plans A77A1, A77A2, A77B1, A77C1 and A77C2.
2. Guard railing post spacing to be 6'-3" center to center, except as otherwise noted.
3. Except as noted, line posts are 6" x 8" x 6'-0" wood with 6" x 8" x 1'-2" wood blocks. W6 x 9 steel posts, 6'-0" in length, with 6" x 8" x 1'-2" notched wood blocks or notched recycled plastic blocks may be used for 6" x 8" x 6'-0" wood posts with 6" x 8" x 1'-2" wood blocks where applicable and when specified.
4. A 4'-0" minimum clearance is required between the face of the railing and the face of a fixed object located directly behind standard guard railing sections with post spacing at 6'-3". Construct guard railing as shown in the detail "Strengthened Railing Sections for Fixed Objects" on this plan, where the clearance between the face of the railing and the face of a fixed object is less than 4'-0", but not less than 2'-3". Where the clearance is less than 2'-3", a concrete wall or barrier should be constructed to shield the fixed object(s).
5. Direction of adjacent traffic indicated by ⟶.
6. In-line Terminal System End Treatments are used where site conditions will not accommodate a flared end treatment.
7. The type of terminal system to be used will be shown on the Project Plans.
8. As site conditions dictate, construct additional guard railing to shield fixed object(s). Additional guard railing length equal to multiples of 12'-6". Post spacing at 6'-3", except as specified in Note 4.
9. Layout Types 16D through 16L, shown on the A77G Series of Revised Standard Plans are typically used where guard railing is recommended to shield roadside fixed object(s) and a crashworthy end treatment is required for both directions of traffic.
10. Where placement of dike is required with guard railing, see Revised Standard Plan RSP A77C4 for dike positioning details.
11. The 15:1 or flatter flare for the buried post anchor is based on the edge of the paved shoulder or offset line of edge of the traveled way. The length of guard railing within the 15:1 or flatter flare is based on site conditions and should be a length equal to multiples of 12'-6".
12. For details of Buried Post End Anchor details, see Standard Plan A77I2.
13. For typical flare offsets for 25'-0" length parabola with maximum offset of 1'-0", see Revised Standard RSP Plan A77E1.
14. W6 x 15 steel post, 8'-0" in length, with 8" x 8" x 1'-2" notched wood block or notched recycled plastic blocks may be used in place of the 10" x 10" x 8'-0" wood post with 8" x 8" x 1'-2" wood block shown in the "Strengthened Railing Sections Detail".

STATE OF CALIFORNIA
DEPARTMENT OF TRANSPORTATION

METAL BEAM GUARD RAILING TYPICAL LAYOUTS FOR ROADSIDE FIXED OBJECTS

NO SCALE

RSP A77G8 DATED JUNE 6, 2008 SUPERSEDES STANDARD PLAN A77G8
DATED MAY 1, 2006 - PAGE 66 OF THE STANDARD PLANS BOOK DATED MAY 2006.

REVISED STANDARD PLAN RSP A77G8

2006 REVISED STANDARD PLAN RSP A77G8

12-10-07

DIST	COUNTY	ROUTE	POST MILES TOTAL PROJECT	SHEET NO.	TOTAL SHEETS
04	SCI	101	R27.6/40.2	147	173

Randell D. Hiatt
REGISTERED CIVIL ENGINEER

June 6, 2008
PLANS APPROVAL DATE

REGISTERED PROFESSIONAL ENGINEER
Randell D. Hiatt
No. C50200
Exp. 6-30-09
CIVIL
STATE OF CALIFORNIA

The State of California or its officers or agents shall not be responsible for the accuracy or completeness of electronic copies of this plan sheet.

To accompany plans dated 5-11-09

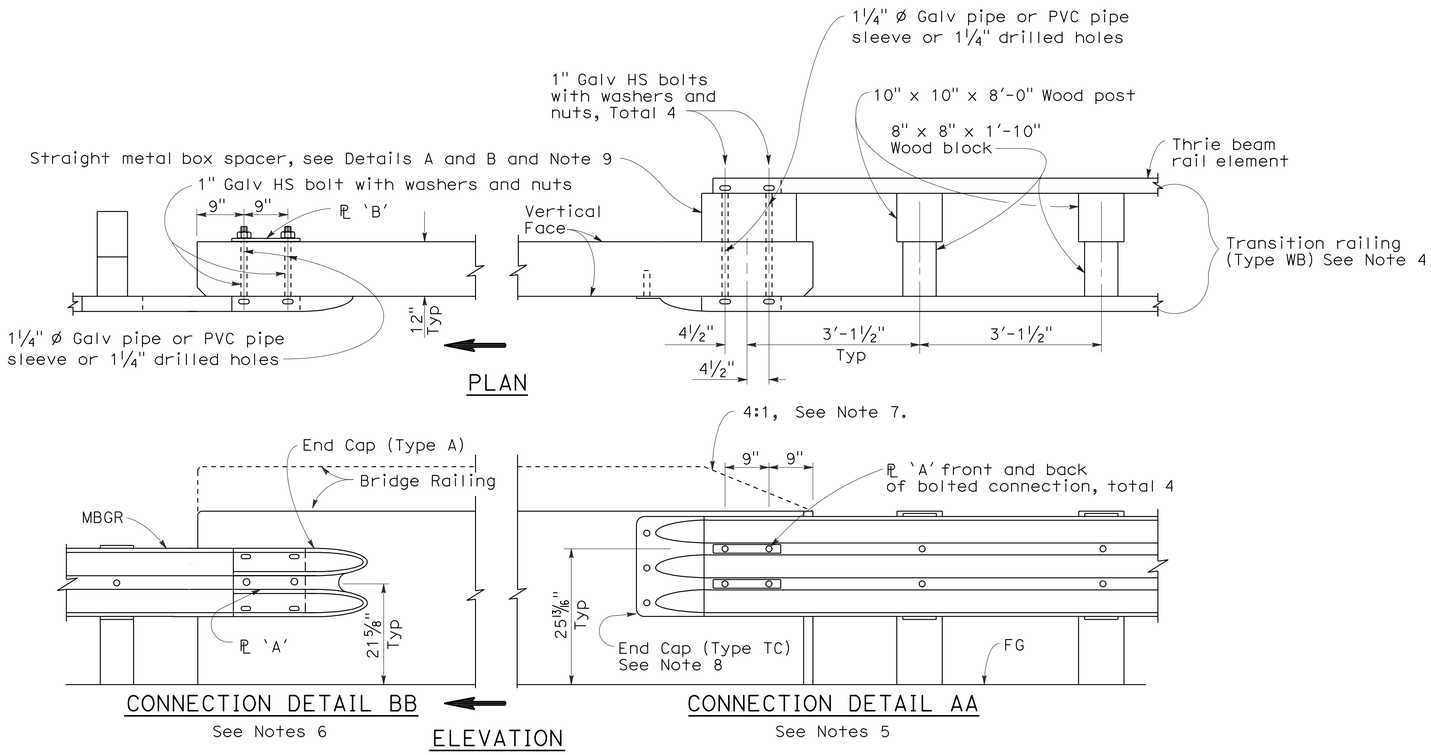

GUARD RAILING CONNECTION TO BRIDGE RAILING WITHOUT SIDEWALK

NOTES:

1. See Revised Standard Plan RSP A77J2 for additional connection details to bridges without sidewalks.
2. Additional details of posts, blocks and hardware are shown on Standard Plan A77B1, A77C1 and A77C2.
3. Direction of adjacent traffic indicated by ➡.
4. For additional details of Transition Railing (Type WB), see Standard Plan A77J4. Transition Railing (Type WB) transitions the 12 gage w-beam standard railing section of guard railing to a heavier gage nested thrie beam railing section which is connected to the concrete bridge railing.
5. For typical use of Connection Detail AA, see Layout Types 12A and 12B on Revised Standard Plan RSP A77F1, Layout Types 12C and 12D on Standard Plan A77F2, and Layout Type 12E on Revised Standard Plan RSP A77F3.
6. For typical use of Connection Detail BB, see Layout Type 12D (structure departure railing connection) on Standard Plan A77F2 and Layout Type 12DD on Standard Plan A77F5.
7. Where the height of the bridge railing exceeds the height of the thrie beam railing by more than 1" at Connection Detail AA, taper the top of the end of the bridge railing at 4:1 to match the top elevation of the thrie beam rail.
8. For details of End Cap (Type TC), see Standard Plan A77J4.
9. See Standard Plan A77J4 for additional details regarding depth dimension for straight metal box spacer.

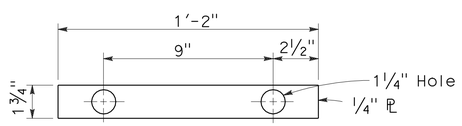

PLATE 'A'

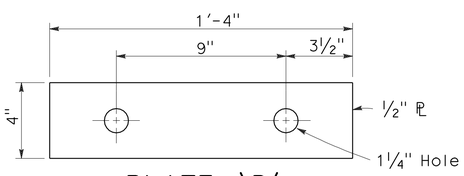

PLATE 'B'
(For backside of connection BB)

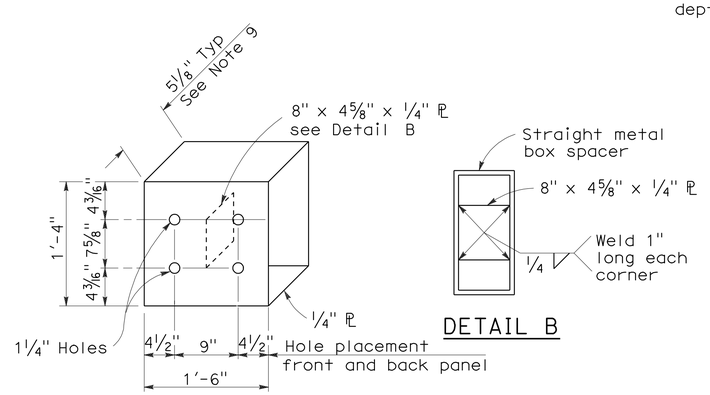

DETAIL A

DETAIL B

STRAIGHT METAL BOX SPACER

STATE OF CALIFORNIA
DEPARTMENT OF TRANSPORTATION

METAL BEAM GUARD RAILING CONNECTIONS TO BRIDGE RAILINGS WITHOUT SIDEWALKS DETAILS No.1

NO SCALE

RSP A77J1 DATED JUNE 6, 2008 SUPERSEDES STANDARD PLAN A77J1 DATED MAY 1, 2006 - PAGE 72 OF THE STANDARD PLANS BOOK DATED MAY 2006.

REVISED STANDARD PLAN RSP A77J1

2006 REVISED STANDARD PLAN RSP A77J1

12-10-07

DIST	COUNTY	ROUTE	POST MILES TOTAL PROJECT	SHEET NO.	TOTAL SHEETS
04	SCI	101	R27.6/40.2	148	173

Randell D. Hiatt
REGISTERED CIVIL ENGINEER

June 6, 2008
PLANS APPROVAL DATE

REGISTERED PROFESSIONAL ENGINEER
Randell D. Hiatt
No. C50200
Exp. 6-30-09
CIVIL
STATE OF CALIFORNIA

The State of California or its officers or agents shall not be responsible for the accuracy or completeness of electronic copies of this plan sheet.

To accompany plans dated 5-11-09

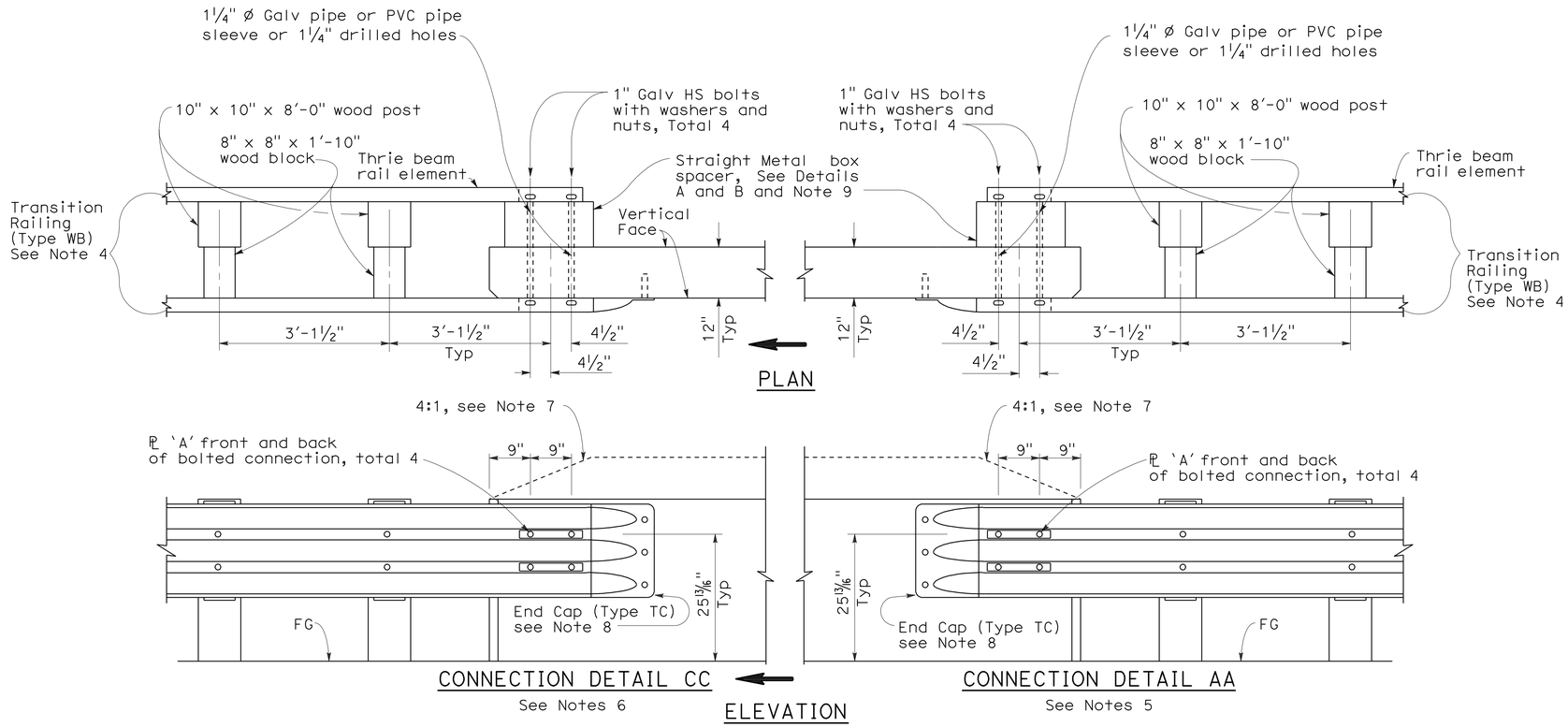

GUARD RAILING CONNECTION TO BRIDGE RAILING WITHOUT SIDEWALK

NOTES:

1. See Revised Standard Plan RSP A77J1 for additional connection details to bridges without sidewalks.
2. Additional details of posts, blocks and hardware are shown on Standard Plan A77B1, A77C1 and A77C2.
3. Direction of adjacent traffic indicated by ⟹.
4. For additional details of Transition Railing (Type WB), see Standard Plan A77J4. Transition Railing (Type WB) transitions the 12 gage w-beam standard railing section of guard railing to a heavier gage nested thrie beam railing section which is connected to the concrete bridge railing.
5. For typical use of Connection Detail AA, see Layout Types 12A and 12B on Revised Standard Plan RSP A77F1, Layout Types 12C and 12D on Standard Plan A77F2, and Layout Type 12E on Revised Standard Plan RSP A77F3.
6. For typical use of Connection Detail CC, see Layout Types 12AA and 12BB on Standard Plan A77F4 and Layout Type 12CC on Standard Plan A77F5.
7. Where the height of the bridge railing exceeds the height of the thrie beam railing by more than 1" at Connection Detail AA and connection Detail CC, taper the top of the end of the bridge railing at 4:1 to match the top elevation of the thrie beam railing.
8. For details of End Cap (Type TC), see Standard Plans A77J4.
9. See Standard Plans A77J4 for additional details regarding depth dimension for straight metal box spacer.

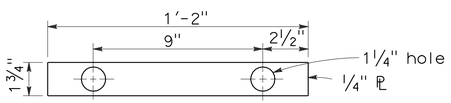

PLATE 'A'

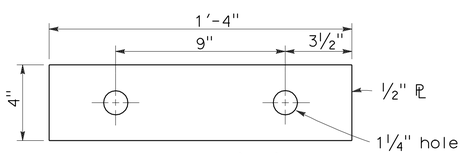

PLATE 'B'
(For backside of connection BB)

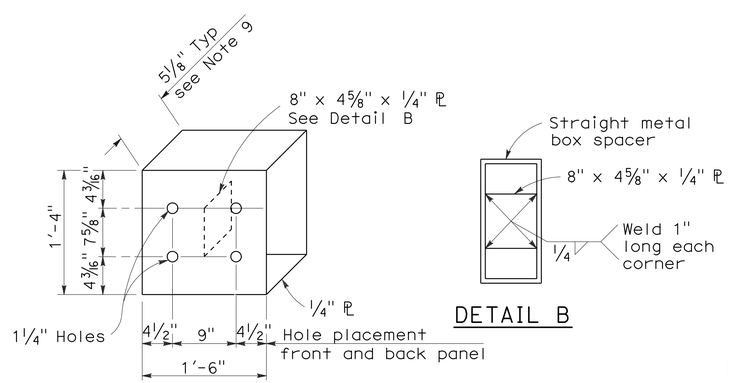

DETAIL A

DETAIL B

STRAIGHT METAL BOX SPACER

STATE OF CALIFORNIA
DEPARTMENT OF TRANSPORTATION

METAL BEAM GUARD RAILING CONNECTIONS TO BRIDGE RAILINGS WITHOUT SIDEWALKS DETAILS No.2

NO SCALE

RSP A77J2 DATED JUNE 6, 2008 SUPERSEDES STANDARD PLAN A77J2 DATED MAY 1, 2006 - PAGE 73 OF THE STANDARD PLANS BOOK DATED MAY 2006.

REVISED STANDARD PLAN RSP A77J2

2006 REVISED STANDARD PLAN RSP A77J2

12-10-07

DIST	COUNTY	ROUTE	POST MILES TOTAL PROJECT	SHEET NO.	TOTAL SHEETS
04	SCI	101	R27.6/40.2	149	173

Randell D. Hiatt
REGISTERED CIVIL ENGINEER

June 6, 2008
PLANS APPROVAL DATE

REGISTERED PROFESSIONAL ENGINEER
Randell D. Hiatt
No. C50200
Exp. 6-30-09
CIVIL
STATE OF CALIFORNIA

The State of California or its officers or agents shall not be responsible for the accuracy or completeness of electronic copies of this plan sheet.

To accompany plans dated 5-11-09

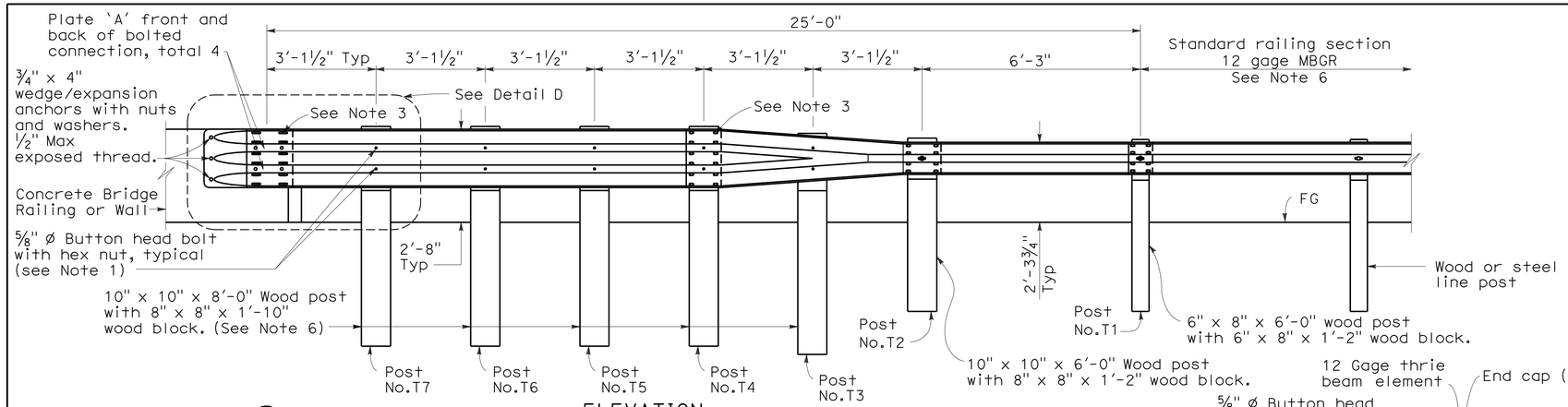

ELEVATION

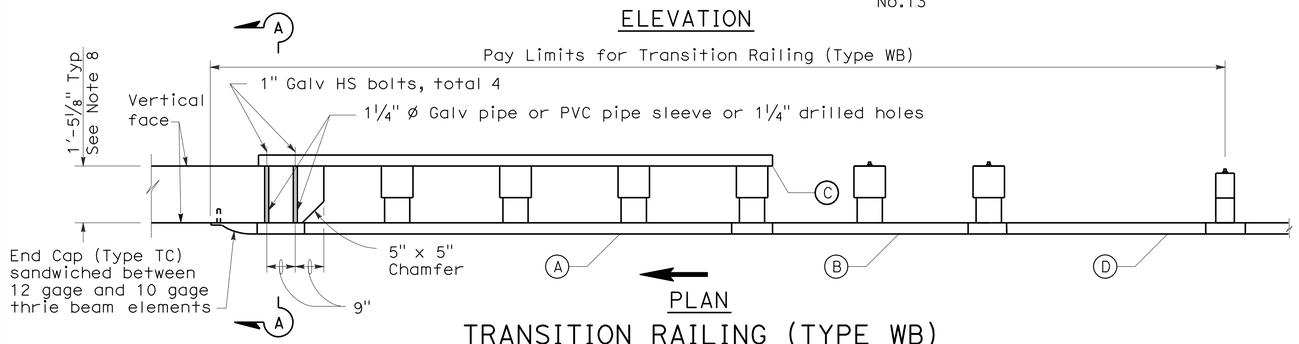

PLAN

TRANSITION RAILING (TYPE WB)

(No Blockout Attachment)

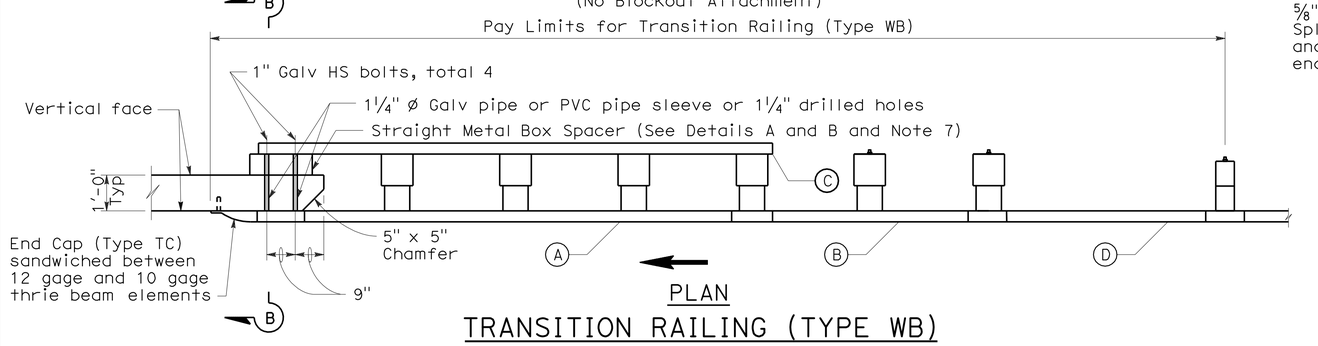

PLAN

TRANSITION RAILING (TYPE WB)

(Blockout Attachment)

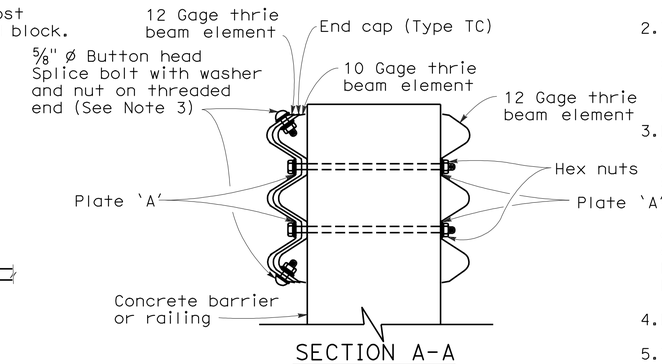

SECTION A-A

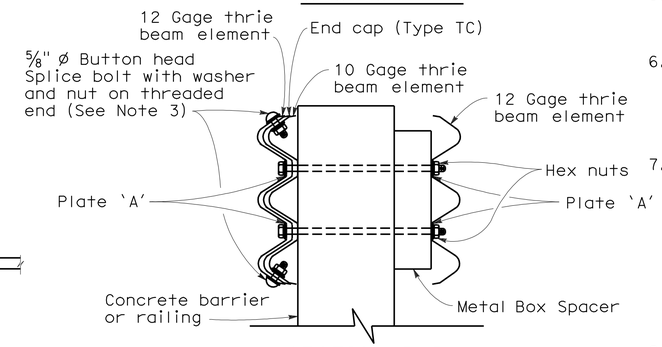

SECTION B-B

NOTES:

1. Use ⅝" Ø Button head bolts and hex nuts for connections to posts. No washer on rail face for bolted connections to post.
2. The nested rail elements, end cap, and 'W' beam to thrie beam element may be spliced together prior to bolting the elements to the wood post and concrete barrier or railing.
3. Exterior splice bolt holes for rail element splices at Post No.T4 and the connection to the concrete barrier or railing shall be the standard 29/32" x 1⅛" slot size. Interior splice bolt holes at these locations may be increased up to 1¼" Ø. Only the top 2 and the bottom 2 splice bolts with washers and nuts are required for rail splices at Post No.T4 and the connection to the concrete barrier or railing.
4. Direction of adjacent traffic indicated by →.
5. The top elevation of Post Nos.T2 through T7 shall not project more than 1" above the top elevation of the rail element.
6. Typically, the railing connected to Transition Railing (Type WB) will be either standard railing section of metal beam guard railing or an approved Caltrans end treatment attached to Post No.T1.
7. The depth of the metal box spacer varies from the 5⅛" to 1½" and is dependent on the width of the concrete railing or wall. The combined dimension for the depth of the metal box spacer plus the width of railing or wall is typically 17⅛". Where the space between the backside of the concrete railing or wall and the rear thrie beam element is less than 1½", metal plates similar to Plate 'A' are to be used as spacers.
8. Where the width of the concrete railing or wall is greater than 17⅛", wood blocks are to be used to fill the space created between the backside of Posts No.4 through No.7 and the rear thrie beam element. These wood blocks shall be 8" in width and 1'-2" in length. The dimension between the front thrie beam element and the rear thrie beam element is to match the width of the concrete railing or wall.

LEGEND

(A) Nested thrie beam elements (one 12 gage element nested over one 10 gage element).

(B) One 10 gage "W" beam to thrie beam element.

(C) One 12 gage thrie beam element.

(D) One 10 gage "W" beam rail element (7'-3½" length)

10 gage = 0.135" thick

12 gage = 0.108" thick

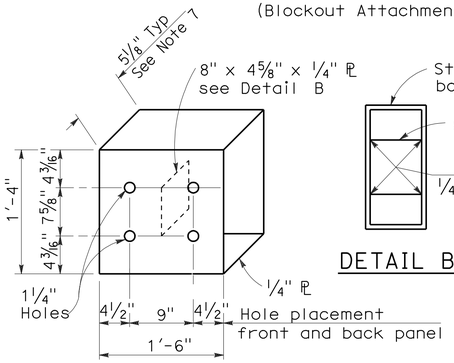

DETAIL A

STRAIGHT METAL BOX SPACER

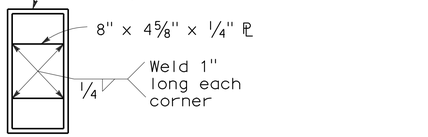

DETAIL B

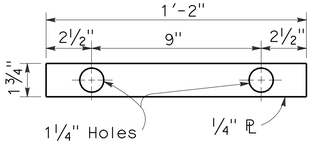

DETAIL C

PLATE 'A'

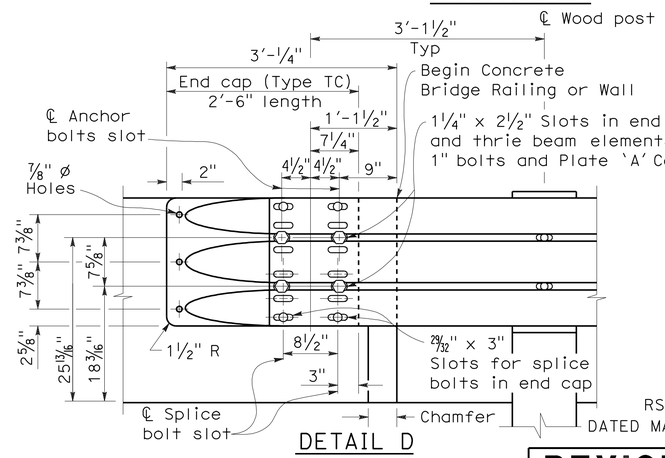

DETAIL D

STATE OF CALIFORNIA
DEPARTMENT OF TRANSPORTATION

METAL BEAM GUARD RAILING TRANSITION RAILING (TYPE WB)

NO SCALE

RSP A77J4 DATED JUNE 6, 2008 SUPERSEDES STANDARD PLAN A77J4 DATED MAY 1, 2006 - PAGE 75 OF THE STANDARD PLANS BOOK DATED MAY 2006.

REVISED STANDARD PLAN RSP A77J4

2006 REVISED STANDARD PLAN RSP A77J4

4-21-08

DIST	COUNTY	ROUTE	POST MILES TOTAL PROJECT	SHEET NO.	TOTAL SHEETS
04	SCI	101	R27.6/40.2	150	173

Randell D. Hiatt
REGISTERED CIVIL ENGINEER

June 6, 2008
PLANS APPROVAL DATE

REGISTERED PROFESSIONAL ENGINEER
Randell D. Hiatt
No. C50200
Exp. 6-30-09
CIVIL
STATE OF CALIFORNIA

The State of California or its officers or agents shall not be responsible for the accuracy or completeness of electronic copies of this plan sheet.

To accompany plans dated 5-11-09

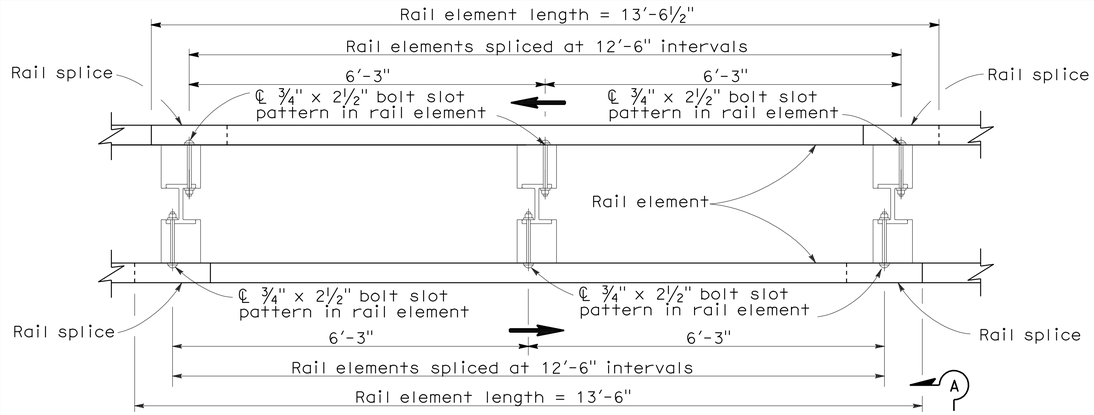

PLAN

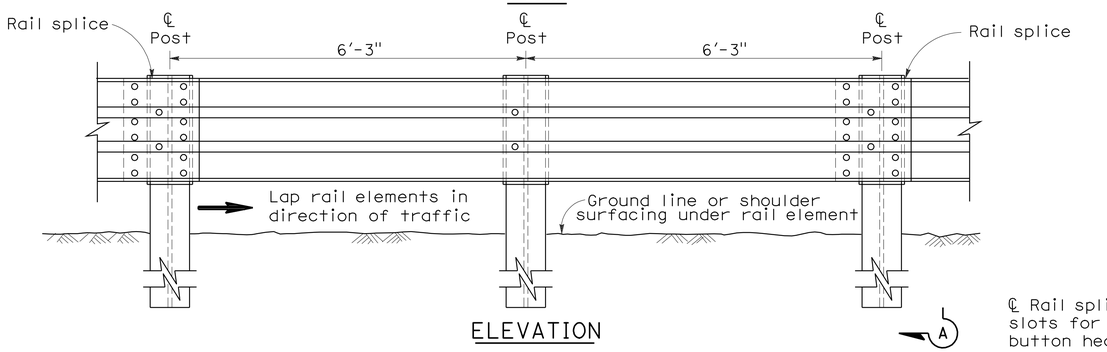

ELEVATION

DOUBLE THRIE BEAM BARRIER

(Steel post with notched wood or notched plastic blocks)
See Note 1

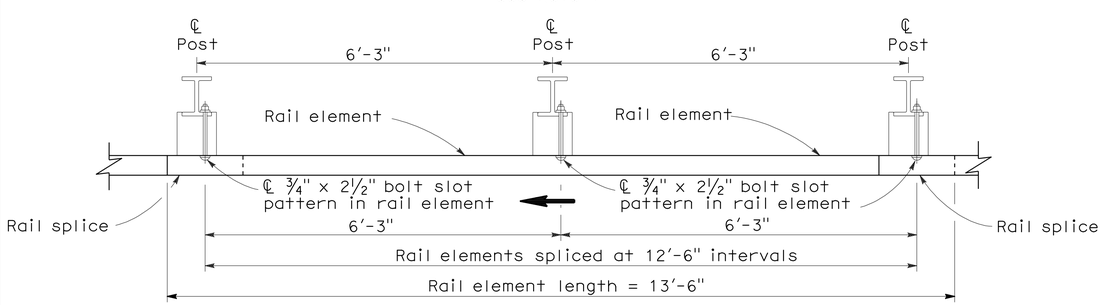

PLAN

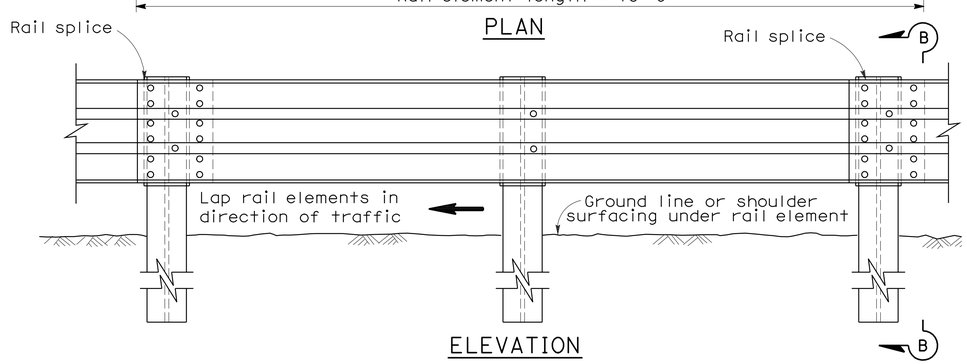

ELEVATION

SINGLE THRIE BEAM BARRIER

(Steel post with notched wood or notched plastic blocks)
See Note 1

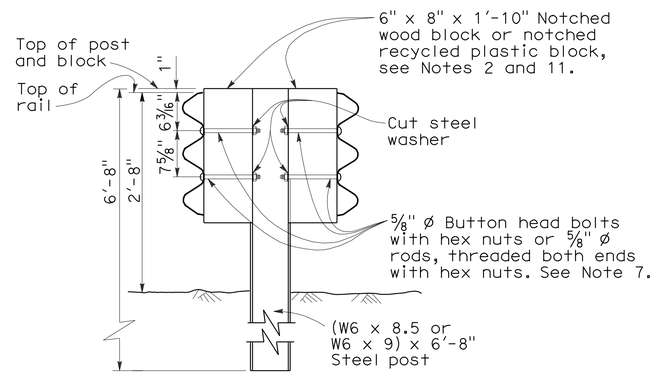

SECTION A-A

TYPICAL STEEL LINE POST INSTALLATION

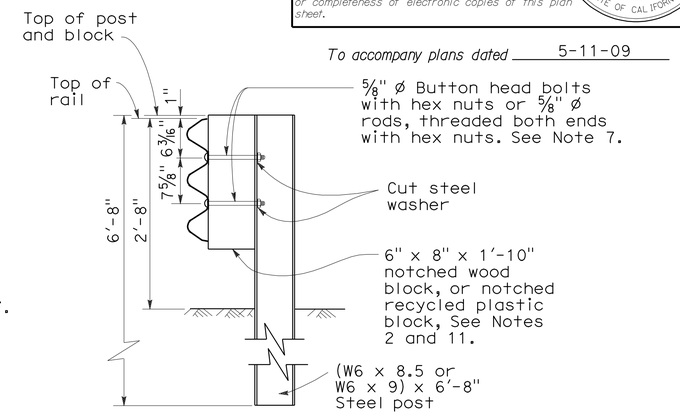

SECTION B-B

TYPICAL STEEL LINE POST INSTALLATION

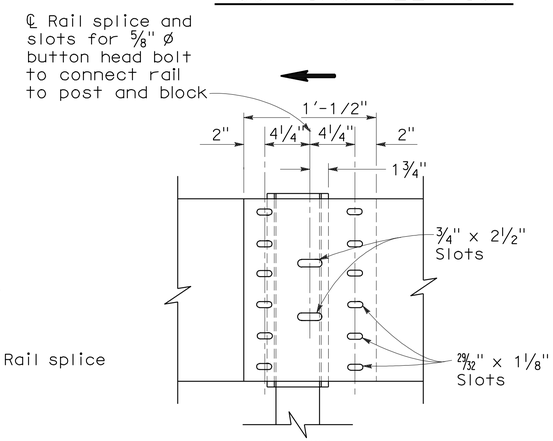

ELEVATION

RAIL ELEMENT SPLICE DETAIL

a) Connect the overlapped ends of the thrie beam rail elements with ⅝" ø x 1⅛" button head oval shoulder bolts inserted into the 29/32" x 1⅛" slots and bolted together with ⅝" ø x 1⅛" recessed hex nuts. Recess of hex nut points toward rail element. A total of 12 bolts and nuts are to be used at each rail splice connection.

b) The ends of the rail elements are to be overlapped in the direction of traffic (see details).

c) Where end cap is to be attached to the end of a rail element, a total of 4 of the above described splice bolts and nuts are to be used. Where a return cap is to be attached to the ends of rail elements, a total of 8 of the above described splice bolts and nuts are to be used.

NOTES:

1. For details of the cross section of the thrie beam rail element and details for wood post with wood block installations, see Standard Plan A78A.
2. For details of standard hardware, posts and blocks used to construct thrie beam barrier, see Revised Standard Plan RSP A78C1 and Standard Plan A78C2.
3. Thrie beam barrier post spacing to be 6'-3" center to center, except as otherwise noted.
4. Top of barrier rail to be 2'-8" above ground line or shoulder surfacing under the rail element.
5. For barrier end treatments and barrier connections, see Standard Plans A78E1, A78E2 and A78E3, Revised Standard Plans RSPs A78F1 and A78F2, Standard Plan A78G and Revised Standard Plan RSP A78H.
6. For connection to Concrete Barrier, see Revised Standard Plan RSP A78I.
7. Attach rail element to block and steel post with 2 bolts or rods on approaching traffic side of block and post web. No washer on rail face for rod or bolted connections to line post.
8. For details of thrie beam barrier on bridges, see Standard Plan A78D2. For details of thrie beam barrier at fixed objects, see Standard Plan A78D1.
9. Direction of traffic indicated by ⟶.
10. Notched face of block faces steel post.

STATE OF CALIFORNIA
DEPARTMENT OF TRANSPORTATION

THRIE BEAM BARRIER STANDARD BARRIER RAILING SECTION (STEEL POST WITH NOTCHED WOOD BLOCK OR NOTCHED RECYCLED PLASTIC BLOCK)

NO SCALE

RSP A78B DATED JUNE 6, 2008 SUPERSEDES STANDARD PLAN A78B DATED MAY 1, 2006 - PAGE 84 OF THE STANDARD PLANS BOOK DATED MAY 2006.

REVISED STANDARD PLAN RSP A78B

2006 REVISED STANDARD PLAN RSP A78B

5-14-08

DIST	COUNTY	ROUTE	POST MILES TOTAL PROJECT	SHEET No.	TOTAL SHEETS
04	SCI	101	R27.6/40.2	151	173

Randell D. Hiatt
REGISTERED CIVIL ENGINEER

June 6, 2008
PLANS APPROVAL DATE

REGISTERED PROFESSIONAL ENGINEER
Randell D. Hiatt
No. C50200
Exp. 6-30-09
CIVIL
STATE OF CALIFORNIA

The State of California or its officers or agents shall not be responsible for the accuracy or completeness of electronic copies of this plan sheet.

To accompany plans dated 5-11-09

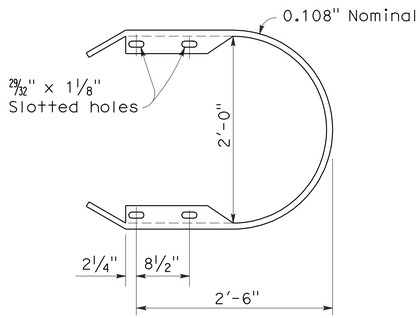

RETURN CAP
(TYPE TA)

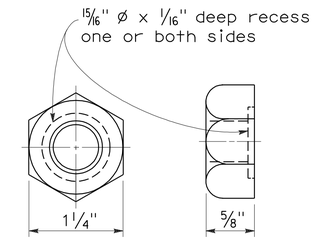

5/8" ø RECESS NUT

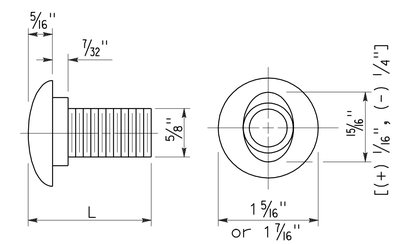

5/8" ø BUTTON HEAD BOLT

L	THREAD LENGTH
1 1/4"	full thread length
2"	full thread length
9 1/2"	4" Min thread length
18"	4" Min thread length

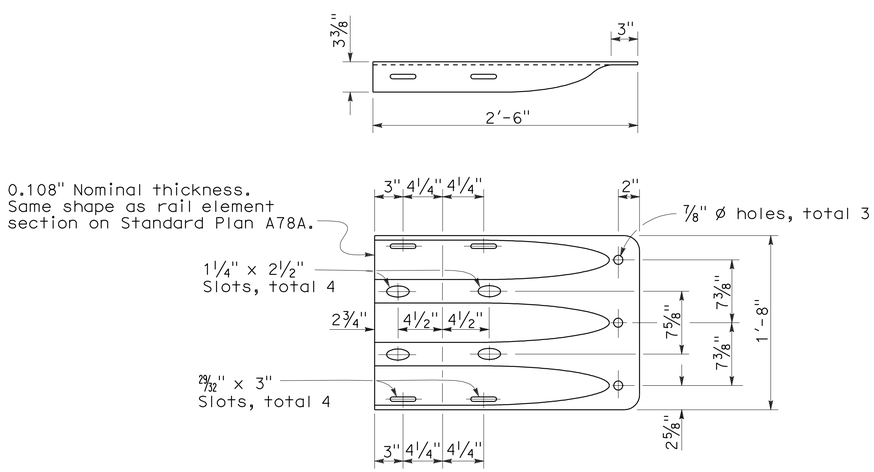

END CAP
(TYPE TC)

STATE OF CALIFORNIA
DEPARTMENT OF TRANSPORTATION

THRIE BEAM BARRIER STANDARD HARDWARE DETAILS

NO SCALE

RSP A78C1 DATED JUNE 6, 2008 SUPERSEDES STANDARD PLAN A78C1
DATED MAY 1, 2006 - PAGE 85 OF THE STANDARD PLANS BOOK DATED MAY 2006.

REVISED STANDARD PLAN RSP A78C1

2006 REVISED STANDARD PLAN RSP A78C1

4-21-08

DIST	COUNTY	ROUTE	POST MILES TOTAL PROJECT	SHEET NO.	TOTAL SHEETS
04	SCI	101	R27.6/40.2	152	173

Randell D. Hiatt
REGISTERED CIVIL ENGINEER

October 20, 2006
PLANS APPROVAL DATE

REGISTERED PROFESSIONAL ENGINEER
Randell D. Hiatt
No. C50200
Exp. 6-30-07
CIVIL
STATE OF CALIFORNIA

The State of California or its officers or agents shall not be responsible for the accuracy or completeness of electronic copies of this plan sheet.

To accompany plans dated 5-11-09

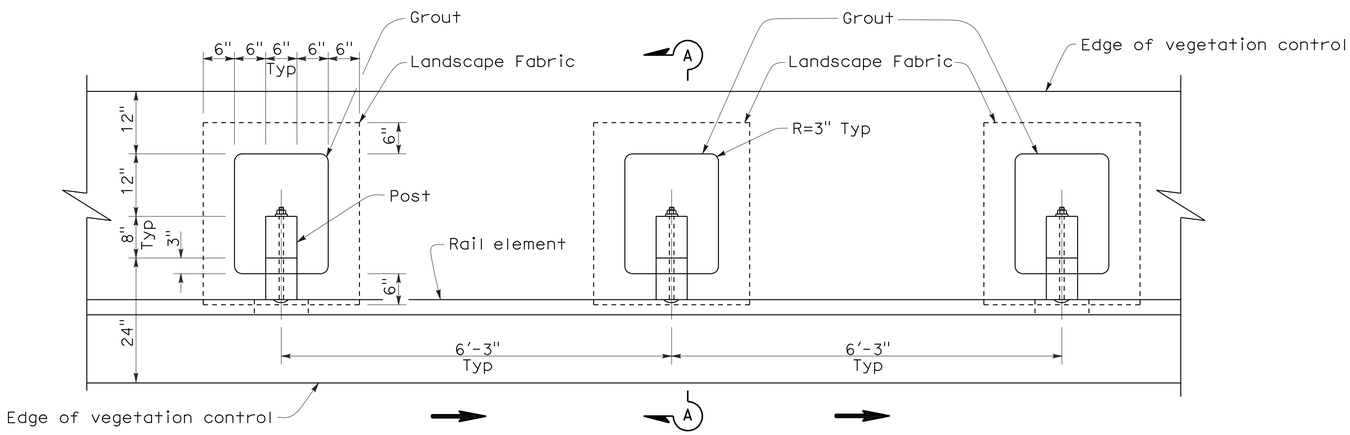

PLAN

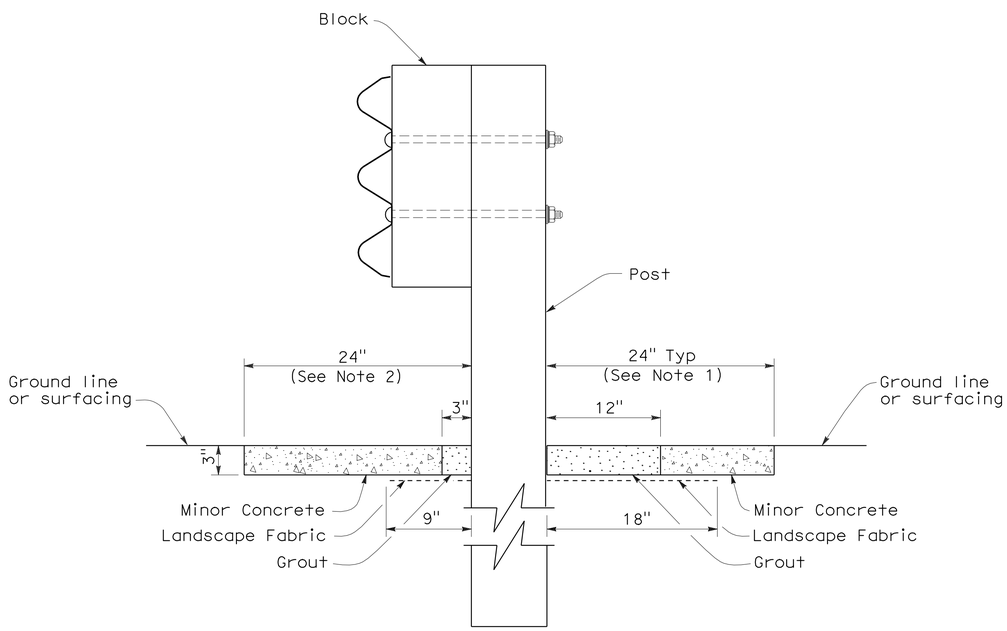

SECTION A-A

NOTES:

1. Where the distance between back of post and hinge point is less than 24", vegetation control to be constructed flush with the back edge of the post.
2. Where dike is constructed under barrier, construct vegetation control to back edge of dike. Where paved shoulder is constructed within 24" in front of the post, construct vegetation control to the edge of paved shoulder.
3. Direction of adjacent traffic indicated by ⟶.

STATE OF CALIFORNIA
DEPARTMENT OF TRANSPORTATION

SINGLE THRIE BEAM BARRIER TYPICAL VEGETATION CONTROL STANDARD BARRIER RAILING SECTION

NO SCALE

NSP A78C3 DATED OCTOBER 20, 2006 SUPPLEMENTS THE STANDARD PLANS BOOK DATED MAY 2006.

NEW STANDARD PLAN NSP A78C3

2006 NEW STANDARD PLAN NSP A78C3

7-17-06

DIST	COUNTY	ROUTE	POST MILES TOTAL PROJECT	SHEET NO.	TOTAL SHEETS
04	SCI	101	R27.6/40.2	153	173

Randell D. Hiatt
REGISTERED CIVIL ENGINEER

October 20, 2006
PLANS APPROVAL DATE

REGISTERED PROFESSIONAL ENGINEER
Randell D. Hiatt
No. C50200
Exp. 6-30-07
CIVIL
STATE OF CALIFORNIA

The State of California or its officers or agents shall not be responsible for the accuracy or completeness of electronic copies of this plan sheet.

To accompany plans dated 5-11-09

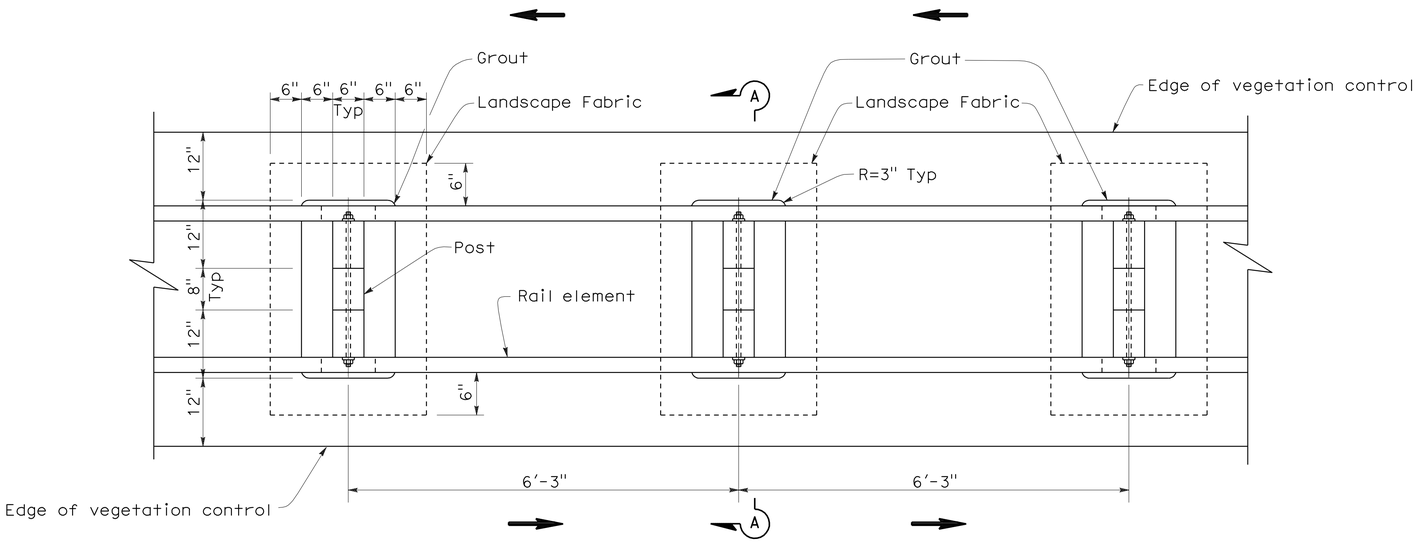

PLAN

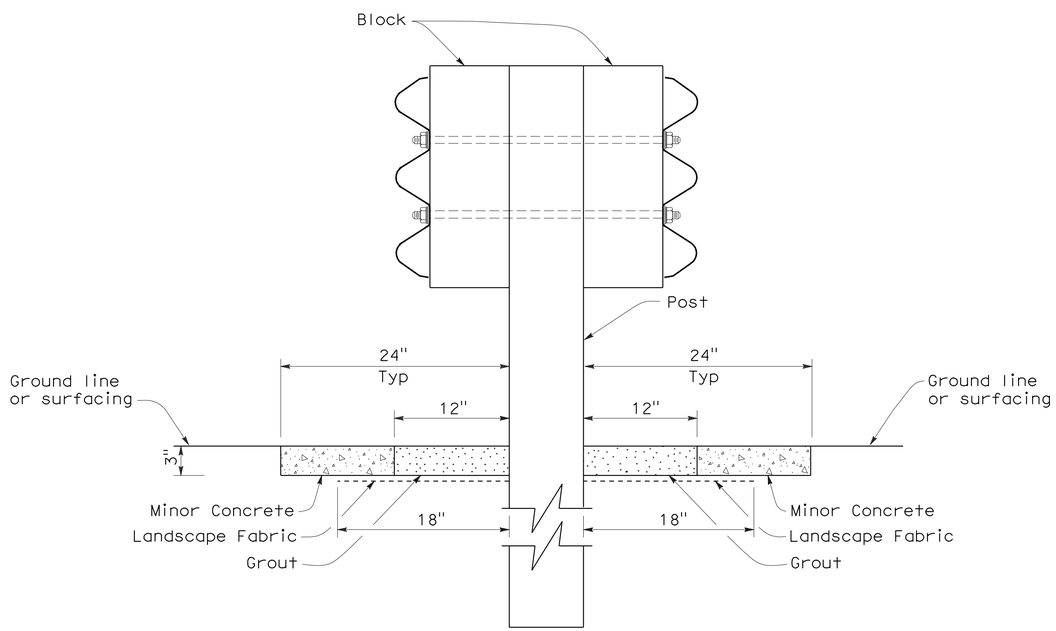

SECTION A-A

NOTE:

1. Direction of adjacent traffic indicated by ⟶.

STATE OF CALIFORNIA
DEPARTMENT OF TRANSPORTATION

DOUBLE THRIE BEAM BARRIER
TYPICAL VEGETATION CONTROL
STANDARD BARRIER RAILING SECTION

NO SCALE

NSP A78C4 DATED OCTOBER 20, 2006 SUPPLEMENTS THE STANDARD PLANS BOOK DATED MAY 2006.

NEW STANDARD PLAN NSP A78C4

2006 NEW STANDARD PLAN NSP A78C4

7-17-06

DIST	COUNTY	ROUTE	POST MILES TOTAL PROJECT	SHEET NO.	TOTAL SHEETS
04	SCI	101	R27.6/40.2	154	173

Randell D. Hiatt
REGISTERED CIVIL ENGINEER

October 20, 2006
PLANS APPROVAL DATE

REGISTERED PROFESSIONAL ENGINEER
Randell D. Hiatt
No. C50200
Exp. 6-30-07
CIVIL
STATE OF CALIFORNIA

The State of California or its officers or agents shall not be responsible for the accuracy or completeness of electronic copies of this plan sheet.

To accompany plans dated 5-11-09

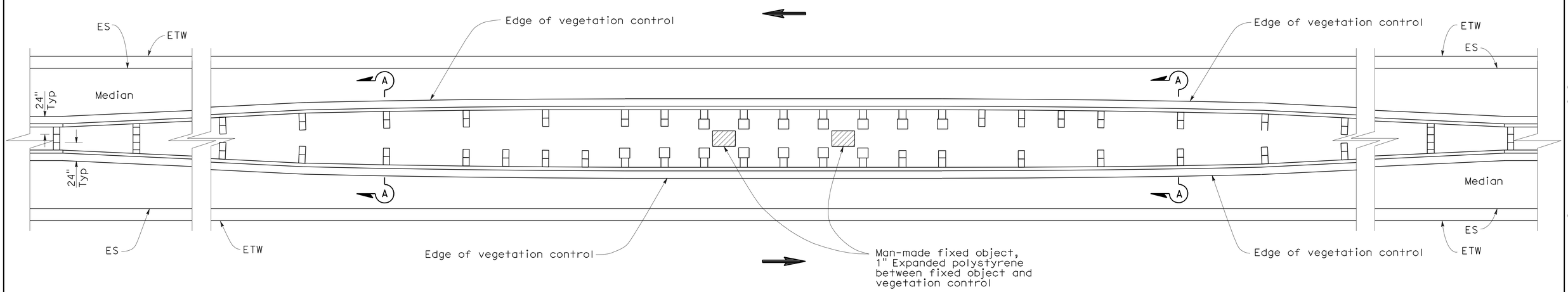

PLAN

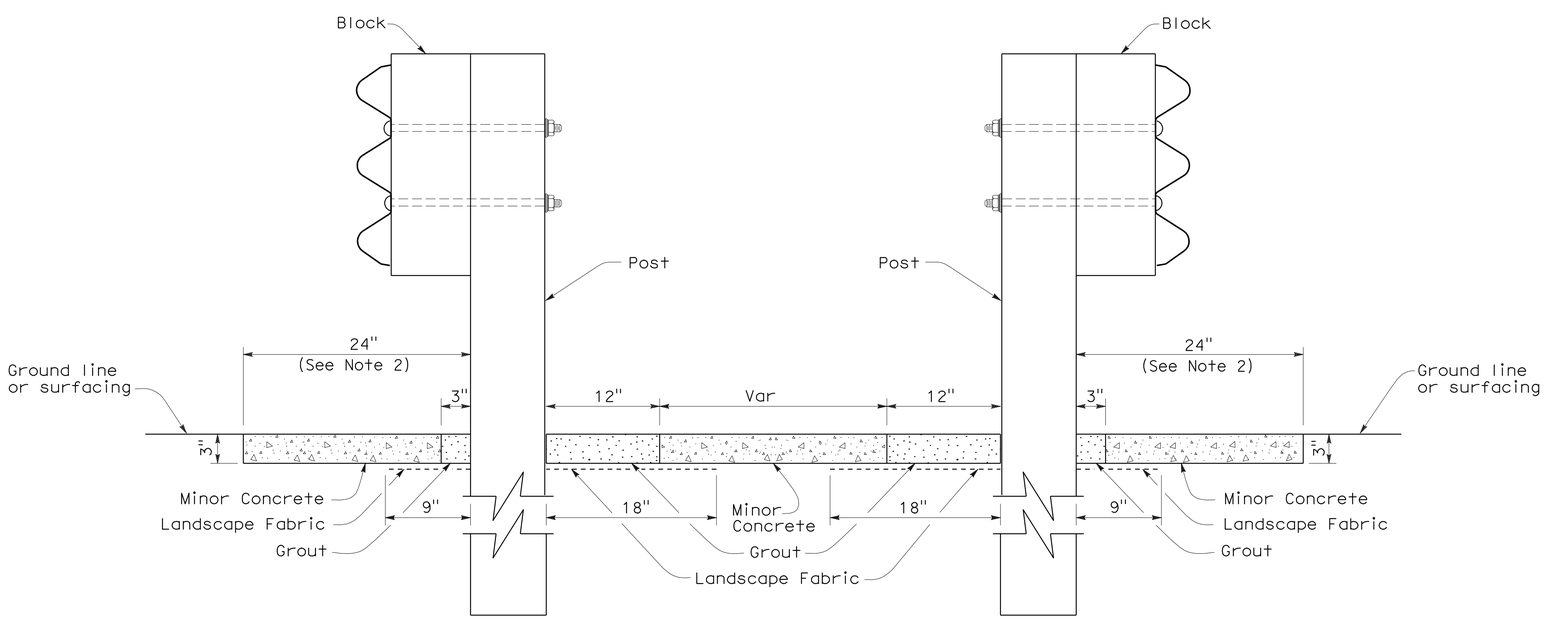

SECTION A-A

NOTES:

1. See New Standard Plan NSP A78C3 for additional vegetation control.
2. Where dike is constructed under barrier, construct vegetation control to back edge of dike. Where paved shoulder is constructed within 24" in front of the post, construct vegetation control to the edge of paved shoulder.
3. Direction of adjacent traffic indicated by ←.

STATE OF CALIFORNIA
DEPARTMENT OF TRANSPORTATION

THRIE BEAM BARRIER TYPICAL VEGETATION CONTROL AT FIXED OBJECTS IN MEDIAN

NO SCALE

NSP A78C5 DATED OCTOBER 20, 2006 SUPPLEMENTS THE STANDARD PLANS BOOK DATED MAY 2006.

NEW STANDARD PLAN NSP A78C5

2006 NEW STANDARD PLAN NSP A78C5

7-17-06

DIST	COUNTY	ROUTE	POST MILES TOTAL PROJECT	SHEET NO.	TOTAL SHEETS
04	SCI	101	R27.6/40.2	155	173

Randell D. Hiatt
REGISTERED CIVIL ENGINEER

October 20, 2006
PLANS APPROVAL DATE

REGISTERED PROFESSIONAL ENGINEER
Randell D. Hiatt
No. C50200
Exp. 6-30-07
CIVIL
STATE OF CALIFORNIA

The State of California or its officers or agents shall not be responsible for the accuracy or completeness of electronic copies of this plan sheet.

To accompany plans dated 5-11-09

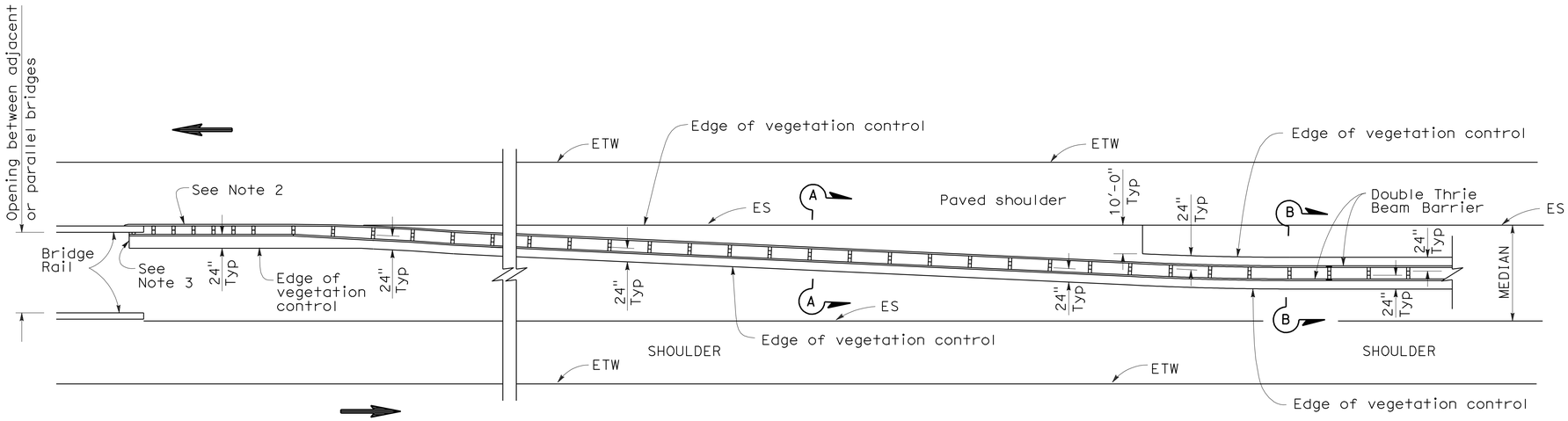

PLAN

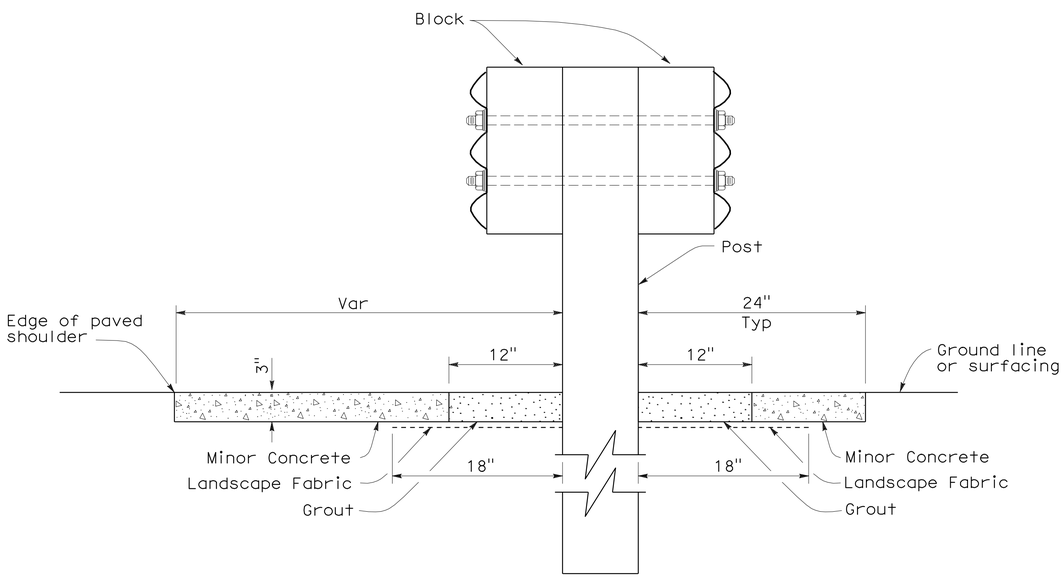

SECTION A-A

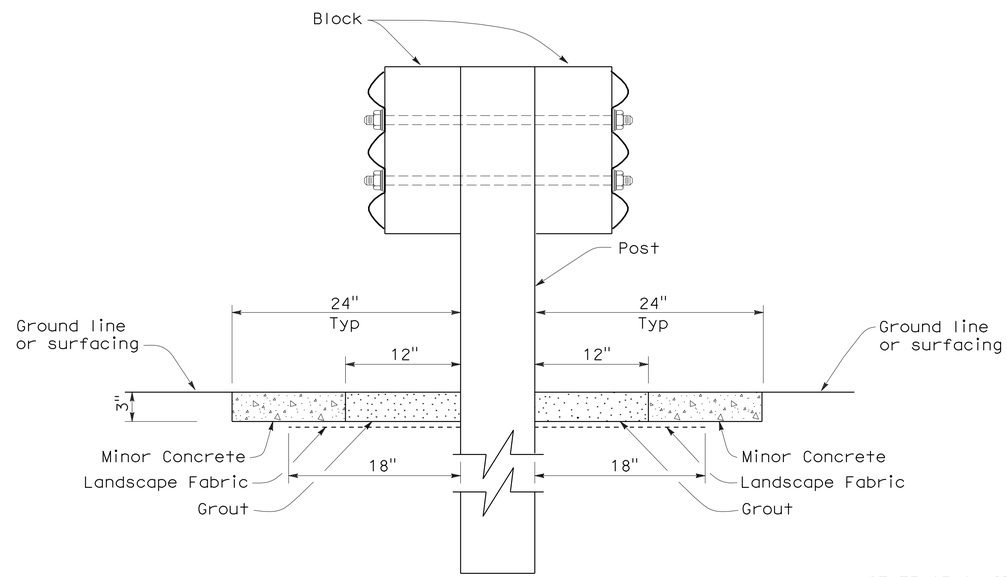

SECTION B-B

NOTES:

1. See New Standard Plan NSP A78C4 for additional vegetation control details.
2. Where dike is constructed under barrier, construct vegetation control to back edge of dike. Where paved shoulder is constructed within 24" in front of the post, construct vegetation control to the edge of paved shoulder.
3. End vegetation control at end of backside rail element attached to bridge railing.
4. Direction of adjacent traffic indicated by ←.

STATE OF CALIFORNIA
DEPARTMENT OF TRANSPORTATION

THRIE BEAM BARRIER TYPICAL VEGETATION CONTROL AT STRUCTURE APPROACH

NO SCALE

NSP A78C6 DATED OCTOBER 20, 2006 SUPPLEMENTS THE STANDARD PLANS BOOK DATED MAY 2006.

NEW STANDARD PLAN NSP A78C6

2006 NEW STANDARD PLAN NSP A78C6

7-17-06

DIST	COUNTY	ROUTE	POST MILES TOTAL PROJECT	SHEET NO.	TOTAL SHEETS
04	SCI	101	R27.6/40.2	156	173

Randell D. Hiatt
REGISTERED CIVIL ENGINEER

June 6, 2008
PLANS APPROVAL DATE

REGISTERED PROFESSIONAL ENGINEER
Randell D. Hiatt
No. C50200
Exp. 6-30-09
CIVIL
STATE OF CALIFORNIA

The State of California or its officers or agents shall not be responsible for the accuracy or completeness of electronic copies of this plan sheet.

To accompany plans dated 5-11-09

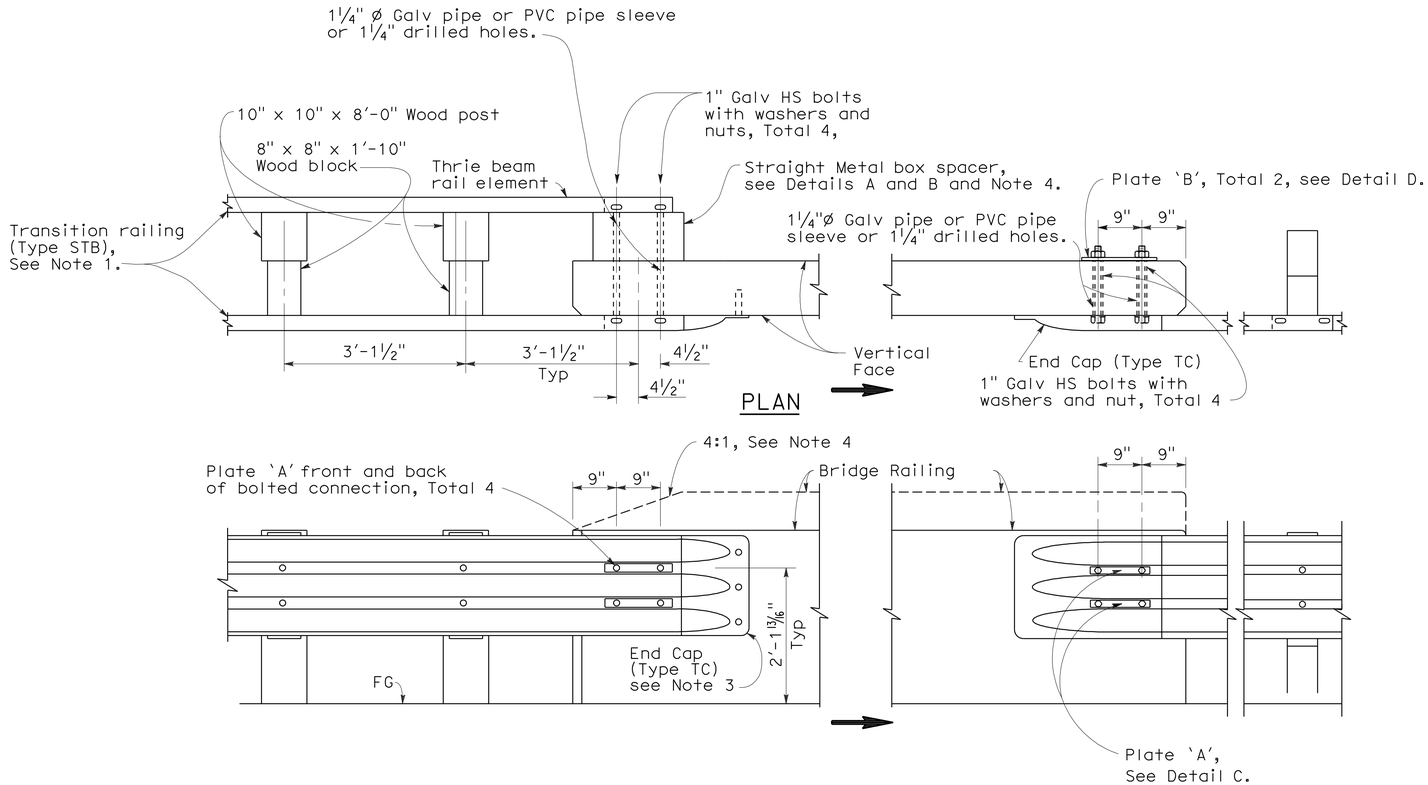

SINGLE THRIE BEAM BARRIER CONNECTION TO BRIDGE RAILING WITHOUT SIDEWALK

NOTES:

1. For additional details of Transition Railing (Type STB), see Standard Plans A78J. Transition Railing (Type STB) transitions the standard 12 gage single thrie beam barrier to a heavier gage single thrie beam railing section then to a heavier gage nested double thrie beam barrier section which then is connected to the concrete bridge railing.
2. Where the height of the bridge railing exceeds the height of the thrie beam railing by more than 1" at Connection Detail 2A, taper the top of the end of the bridge railing at 4:1 to match the top elevation of the thrie beam railing.
3. For details of End Cap (Type TC), see Standard Plan A78C1.
4. See Standard Plan A78J for additional details regarding depth dimension for straight metal box spacer.
5. Direction of adjacent traffic indicated by ⟹.

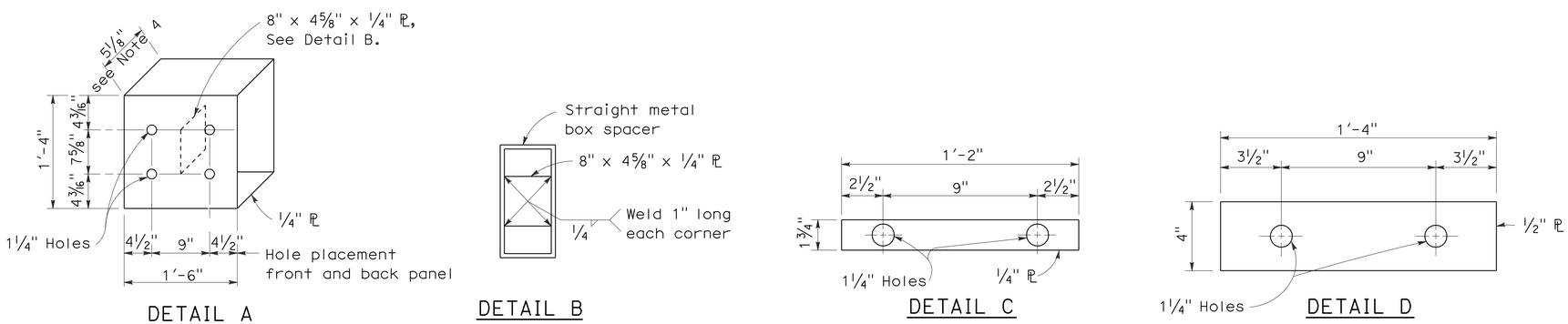

DETAIL A

DETAIL B

DETAIL C

DETAIL D

STRAIGHT METAL BOX SPACER

PLATE 'A'

PLATE 'B'

STATE OF CALIFORNIA
DEPARTMENT OF TRANSPORTATION

SINGLE THRIE BEAM BARRIER CONNECTIONS TO BRIDGE RAILINGS WITHOUT SIDEWALKS

NO SCALE

RSP A78F2 DATED JUNE 6, 2008 SUPERSEDES STANDARD PLAN A78F2
DATED MAY 1, 2006 - PAGE 93 OF THE STANDARD PLANS BOOK DATED MAY 2006.

REVISED STANDARD PLAN RSP A78F2

2006 REVISED STANDARD PLAN RSP A78F2

12-10-07

DIST	COUNTY	ROUTE	POST MILES TOTAL PROJECT	SHEET NO.	TOTAL SHEETS
04	SCI	101	R27.6/40.2	157	173

Randell D. Hiatt
REGISTERED CIVIL ENGINEER

June 6, 2008
PLANS APPROVAL DATE

REGISTERED PROFESSIONAL ENGINEER
Randell D. Hiatt
No. C50200
Exp. 6-30-09
CIVIL
STATE OF CALIFORNIA

The State of California or its officers or agents shall not be responsible for the accuracy or completeness of electronic copies of this plan sheet.

To accompany plans dated 5-11-09

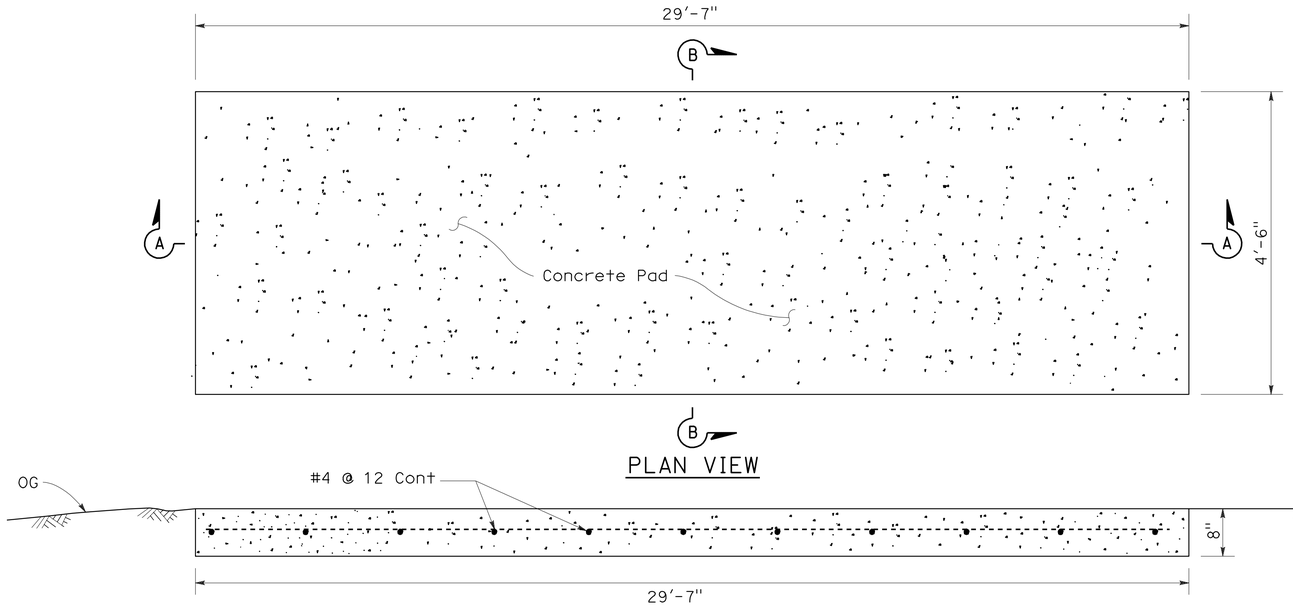

PLAN VIEW

SECTION A-A

CONCRETE ANCHOR SLAB

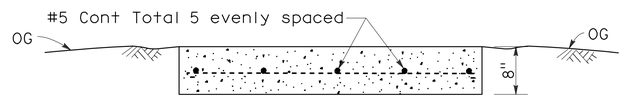

SECTION B-B

NOTES:

1. For additional details of this crash cushion, refer to manufacturer's installation instructions.
2. For details of the REACT Crash Cushion with self contained backup support (no concrete backup block), see Standard Plan A82D1.
3. The base track frame with cylinders attached comes from the manufacturer as a completely pre-assembled unit.
4. Place the crash cushion unit on the cured concrete anchor slab and use the base track frame of the crash cushion as a template for drilling anchor bolt holes. Drill holes in slab and attach crash cushion with wedge anchor bolts supplied by the manufacturer.
5. Attach last cylinder to concrete backup block with manufacturer supplied fastener in such manner as recommended by the manufacturer.
6. Attach the manufacturer supplied side cable anchor plates to the cured concrete backup block with the manufacturer supplied bolts in such manner as recommended by the manufacturer.
7. Place manufacturer supplied cover over cylinders and attach cover to cylinders with manufacturer supplied fasteners.

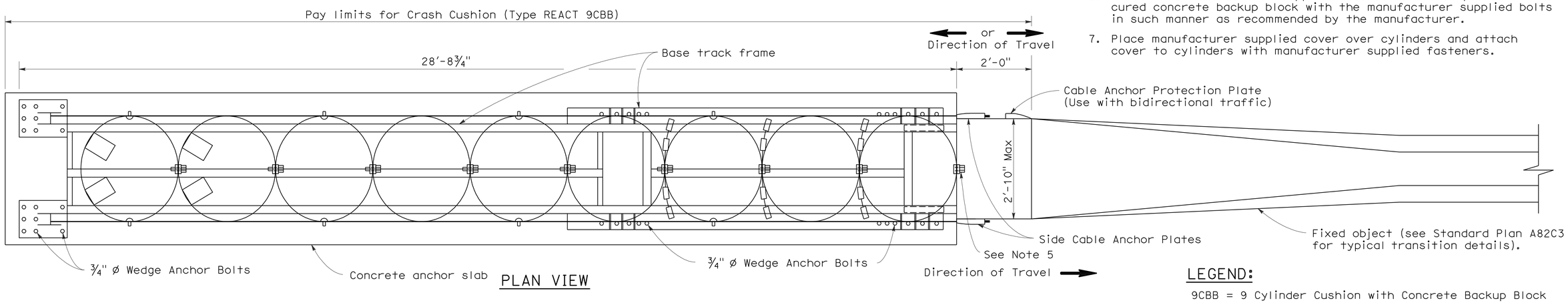

PLAN VIEW

LEGEND:

9CBB = 9 Cylinder Cushion with Concrete Backup Block

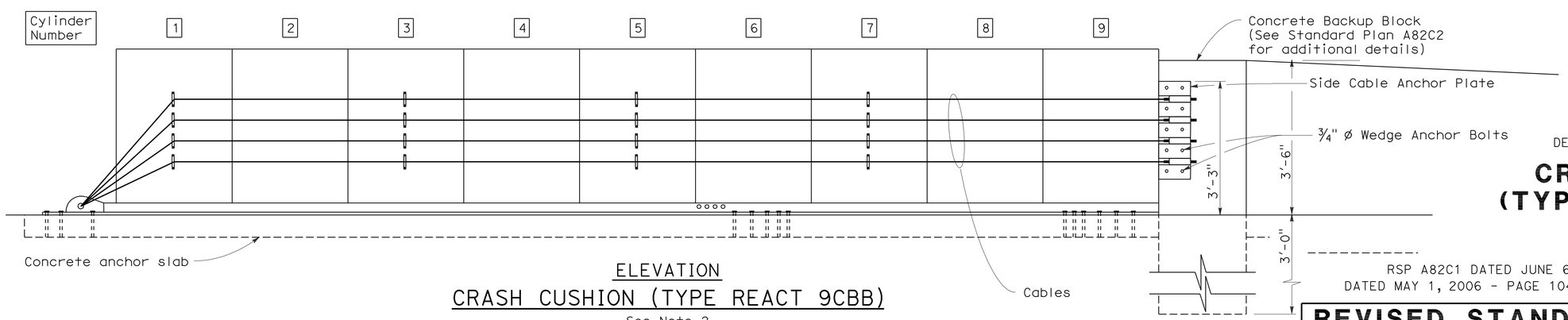

ELEVATION

CRASH CUSHION (TYPE REACT 9CBB)

See Note 2

STATE OF CALIFORNIA
DEPARTMENT OF TRANSPORTATION

CRASH CUSHION (TYPE REACT 9CBB)

NO SCALE

RSP A82C1 DATED JUNE 6, 2008 SUPERSEDES STANDARD PLAN A82C1
DATED MAY 1, 2006 - PAGE 104 OF THE STANDARD PLANS BOOK DATED MAY 2006.

REVISED STANDARD PLAN RSP A82C1

2006 REVISED STANDARD PLAN RSP A82C1

4-21-08

DIST	COUNTY	ROUTE	POST MILES TOTAL PROJECT	SHEET NO.	TOTAL SHEETS
04	SCI	101	R27.6/40.2	158	173

REGISTERED CIVIL ENGINEER

November 17, 2006
PLANS APPROVAL DATE

REGISTERED PROFESSIONAL ENGINEER Michael Janzen No. 44788 Exp. 03-31-08 CIVIL STATE OF CALIFORNIA

The State of California or its officers or agents shall not be responsible for the accuracy or completeness of electronic copies of this plan sheet.

To accompany plans dated 5-11-09

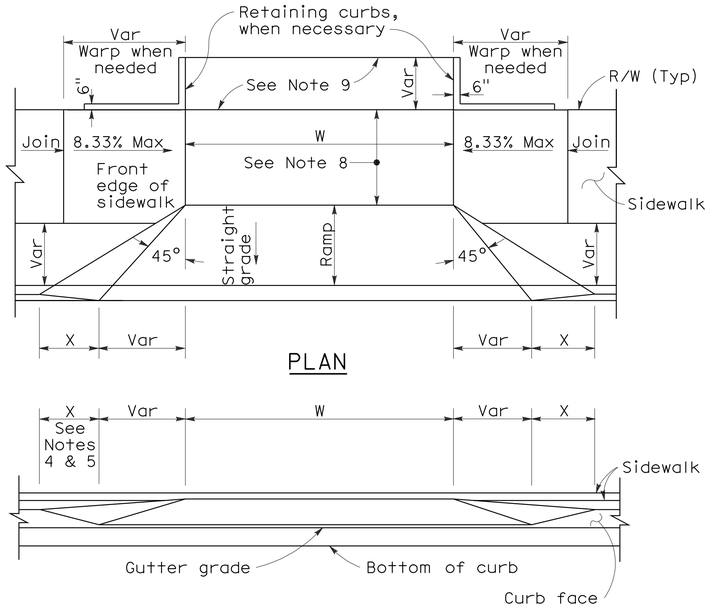

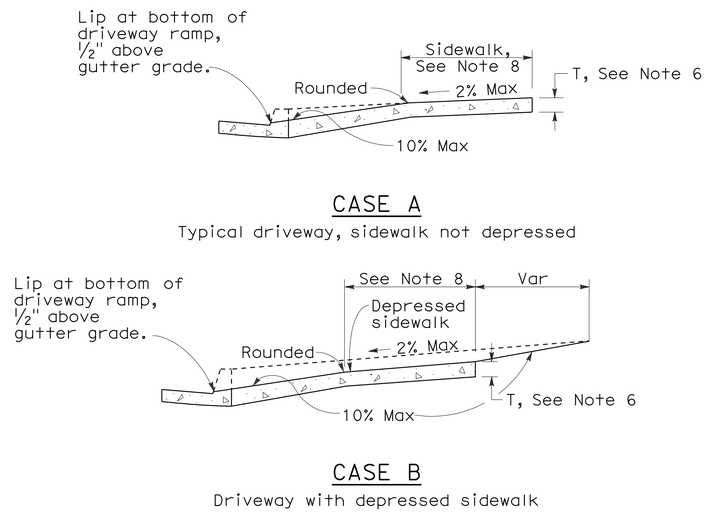

CURB QUANTITIES

TYPE	CUBIC YARDS PER LINEAR FOOT
A1-6	0.02585
A1-8	0.03084
A2-6	0.05903
A2-8	0.06379
A3-6	0.01036
A3-8	0.01435
B1-4	0.02185
B1-6	0.02930
B2-4	0.05515
B2-6	0.06171
B3-4	0.00641
B3-6	0.01074
B4	0.05709
D-4	0.04083
D-6	0.06804
E	0.06661

TABLE A

CURB TYPE	DIMENSIONS "H1"	"H2"	"W1"	"W2"
A1-6	1'-2"	6"	7½"	1½"
A1-8	1'-4"	8"	8"	2"
A2-6	1'-0"	6"	2'-7½"	1½"
A2-8	1'-2"	8"	2'-8"	2"
A3-6	6"	5"	7¼"	1¼"
A3-8	8"	7"	7¾"	1¾"
B1-4	1'-0"	4"	7½"	2½"
B1-6	1'-2"	6"	9"	4"
B2-4	10"	4"	2'-7½"	2½"
B2-6	1'-0"	6"	2'-9"	4"
B3-4	4"	3"	7"	2"
B3-6	6"	5"	8½"	3½"
D-4	10"	4"	1'-6"	1'-1"
D-6	1'-0"	6"	2'-2"	1'-8"

DRIVEWAYS

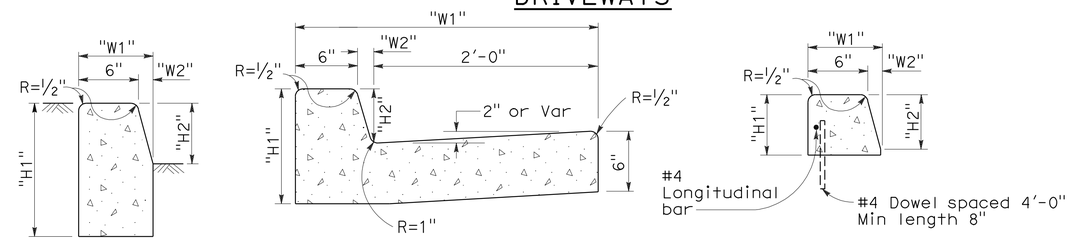

TYPE A1 CURBS
See Table A

TYPE A2 CURBS
See Table A

TYPE A3 CURBS
Superimposed on existing pavement
See Table A

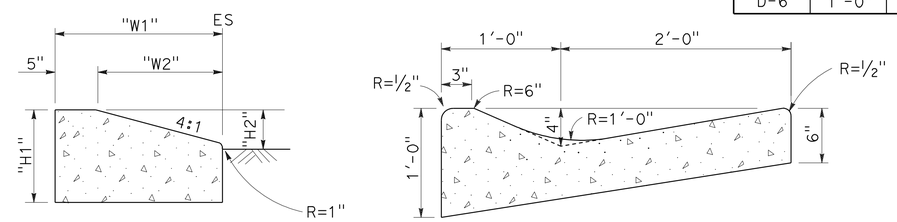

TYPE D CURBS
See Table A

TYPE E CURB

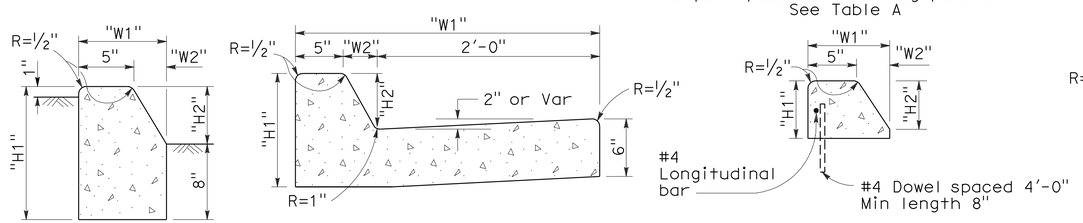

TYPE B1 CURBS
See Table A

TYPE B2 CURBS
See Table A

TYPE B3 CURBS
Superimposed on existing pavement
See Table A

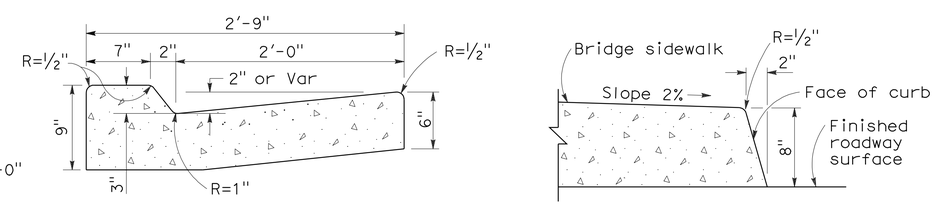

TYPE B4 CURBS

TYPE H CURB
On Bridges

CURBS

NOTES:

1. Case A driveway section typically applies.
2. Use Case B driveway section when ramp slopes would exceed 10% in Case A.
3. Use Case B driveway section when sidewalk cross slope would exceed 2% in Case A.
4. X=3'-0" except for curb heights over 10" where 4:1 slopes shall be used on curb slope.
5. X is a variable when sidewalk is located where wheelchairs may traverse the surface. Slopes shall not exceed 8.33%.
6. Sidewalk and ramp thickness "T" at driveway shall be 4" for residental and 6" for commercial.
7. Difference in slope of the driveway ramp and the slope of a line between the gutter and a point on the roadway 5'-0" from gutter line shall not exceed 15%. Reduce driveway ramp slope, not gutter slope, where required.
8. Minimum width of clear passageway for sidewalk shall be 4'-0".
9. Retaining curbs and acquisition of construction easement may be necessary for narrow sidewalks or curb heights in excess of 6".
10. Across the pedestrian route at curb ramp locations, the gutter pan slope shall not exceed 1" of depth for each 2'-0" of width.

STATE OF CALIFORNIA
DEPARTMENT OF TRANSPORTATION

CURBS AND DRIVEWAYS

NO SCALE

RSP A87A DATED NOVEMBER 17, 2006 SUPERSEDES STANDARD PLAN A87A DATED MAY 1, 2006 - PAGE 113 OF THE STANDARD PLANS BOOK DATED MAY 2006.

REVISED STANDARD PLAN RSP A87A

2006 REVISED STANDARD PLAN RSP A87A

10-25-06

DIST	COUNTY	ROUTE	POST MILES TOTAL PROJECT	SHEET NO.	TOTAL SHEETS
04	SCI	101	R27.6/40.2	159	173

Randell D. Hiatt
REGISTERED CIVIL ENGINEER

June 6, 2008
PLANS APPROVAL DATE

REGISTERED PROFESSIONAL ENGINEER
Randell D. Hiatt
No. C50200
Exp. 6-30-09
CIVIL
STATE OF CALIFORNIA

The State of California or its officers or agents shall not be responsible for the accuracy or completeness of electronic copies of this plan sheet.

To accompany plans dated 5-11-09

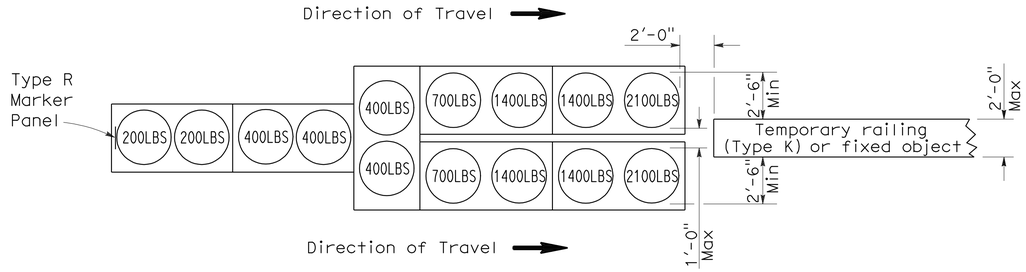

ARRAY 'TU14'

Approach speed 45 mph or more

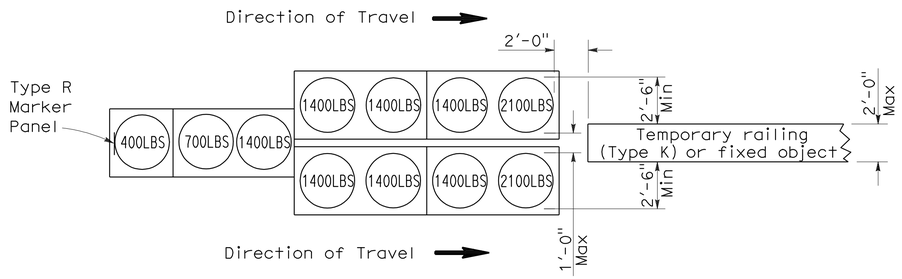

ARRAY 'TU11'

Approach speed less than 45 mph

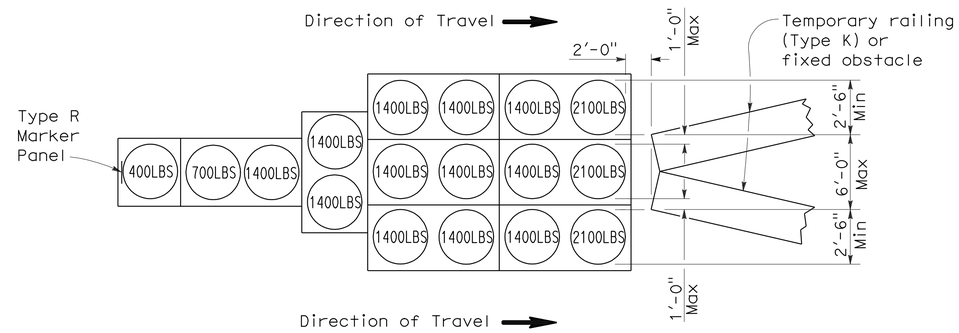

ARRAY 'TU17'

Approach speed less than 45 mph

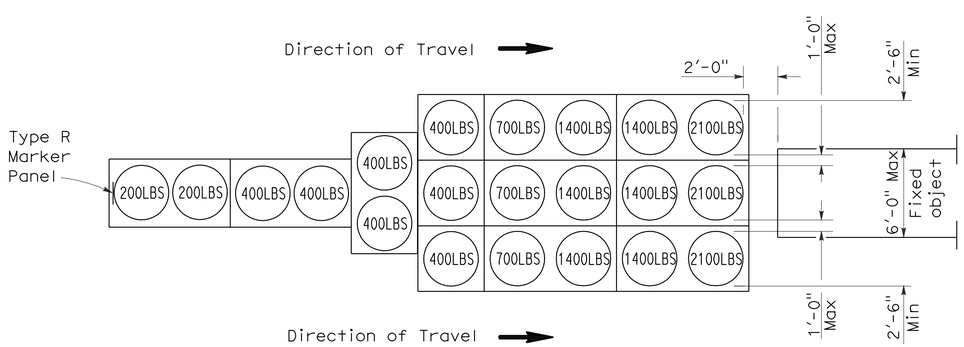

ARRAY 'TU21'

Approach speed 45 mph or more

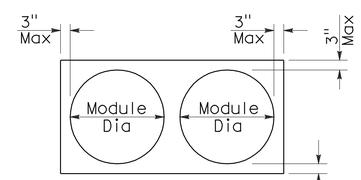

PLAN

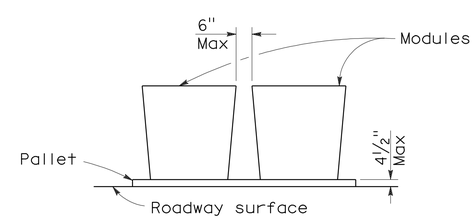

ELEVATION

CRASH CUSHION PALLET DETAIL

See Note 7

NOTES:

1. (XXX) Indicates sand filled module location and weight of sand in pounds for each module. Module spacing is based on the greater diameter of the module.
2. All sand weights are nominal.
3. Temporary crash cushion arrays shall not encroach on the traveled way.
4. Place the top of Type R marker panel 1" below the module lid.
5. Refer to Standard Plan A73B for marker details.
6. Approach speeds indicated conform to NCHRP 350 Report criteria.
7. Use of pallets is optional.

STATE OF CALIFORNIA
DEPARTMENT OF TRANSPORTATION

TEMPORARY CRASH CUSHION, SAND FILLED (UNIDIRECTIONAL)

NO SCALE

RSP T1A DATED JUNE 6, 2008 SUPERSEDES STANDARD PLAN T1A
DATED MAY 1, 2006 - PAGE 211 OF THE STANDARD PLANS BOOK DATED MAY 2006.

REVISED STANDARD PLAN RSP T1A

2006 REVISED STANDARD PLAN RSP T1A

5-15-08

DIST	COUNTY	ROUTE	POST MILES TOTAL PROJECT	SHEET NO.	TOTAL SHEETS
04	SCI	101	R27.6/40.2	160	173

Randell D. Hiatt
REGISTERED CIVIL ENGINEER

June 6, 2008
PLANS APPROVAL DATE

REGISTERED PROFESSIONAL ENGINEER
Randell D. Hiatt
No. C50200
Exp. 6-30-09
CIVIL
STATE OF CALIFORNIA

The State of California or its officers or agents shall not be responsible for the accuracy or completeness of electronic copies of this plan sheet.

To accompany plans dated 5-11-09

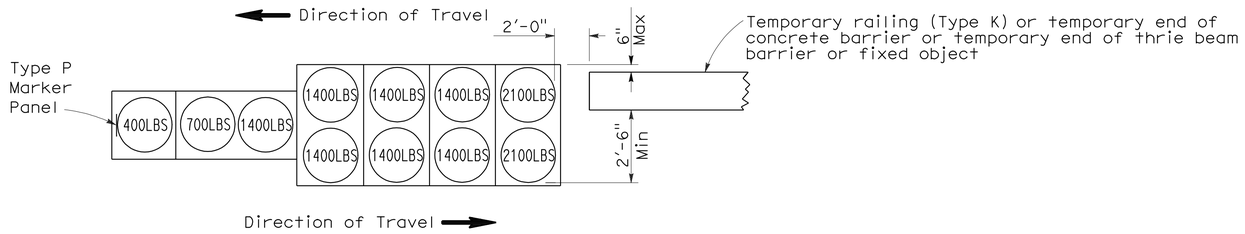

ARRAY 'TB11'

Approach speed less than 45 mph

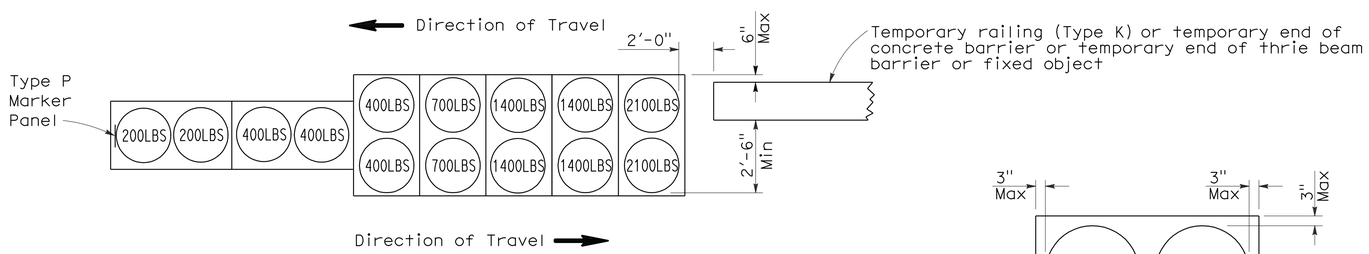

ARRAY 'TB14'

Approach speed 45 mph or more

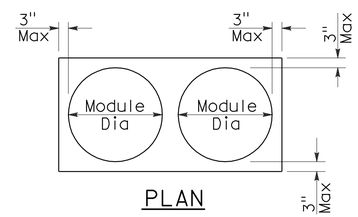

PLAN

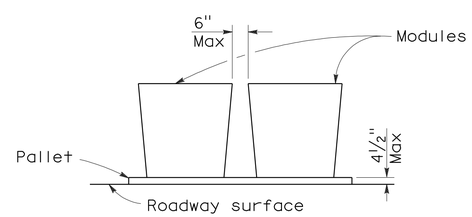

ELEVATION

CRASH CUSHION PALLET DETAIL

See Note 7

NOTES:

1. (XXX) Indicates sand filled module location and weight of sand in pounds for each module. Module spacing is based on the greater diameter of the module.
2. All sand weights are nominal.
3. Temporary crash cushion arrays shall not encroach on the traveled way.
4. Place the Type P marker panel so that the bottom of the panel rests upon the pallet.
5. Refer to Standard Plan A73B for marker details.
6. Approach speeds indicated conform to NCHRP 350 Report criteria.
7. Use of pallets is optional.

STATE OF CALIFORNIA
DEPARTMENT OF TRANSPORTATION

TEMPORARY CRASH CUSHION, SAND FILLED (BIDIRECTIONAL)

NO SCALE

RSP T1B DATED JUNE 6, 2008 SUPERSEDES STANDARD PLAN T1B
DATED MAY 1, 2006 - PAGE 212 OF THE STANDARD PLANS BOOK DATED MAY 2006.

REVISED STANDARD PLAN RSP T1B

2006 REVISED STANDARD PLAN RSP T1B

5-15-08

DIST	COUNTY	ROUTE	POST MILES TOTAL PROJECT	SHEET NO.	TOTAL SHEETS
04	SCI	101	R27.6/40.2	161	173

Randell D. Hiatt
REGISTERED CIVIL ENGINEER

June 6, 2008
PLANS APPROVAL DATE

REGISTERED PROFESSIONAL ENGINEER
Randell D. Hiatt
No. C50200
Exp. 6-30-09
CIVIL
STATE OF CALIFORNIA

The State of California or its officers or agents shall not be responsible for the accuracy or completeness of electronic copies of this plan sheet.

To accompany plans dated 5-11-09

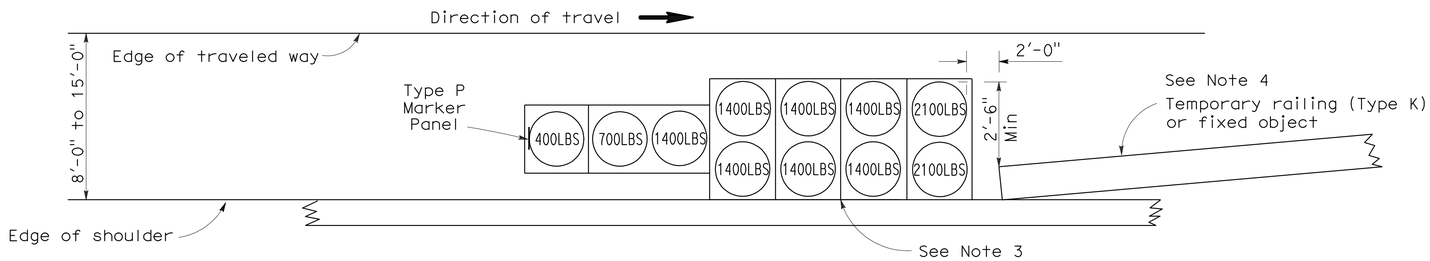

ARRAY 'TS11'

Approach speed less than 45 mph
See Note 9

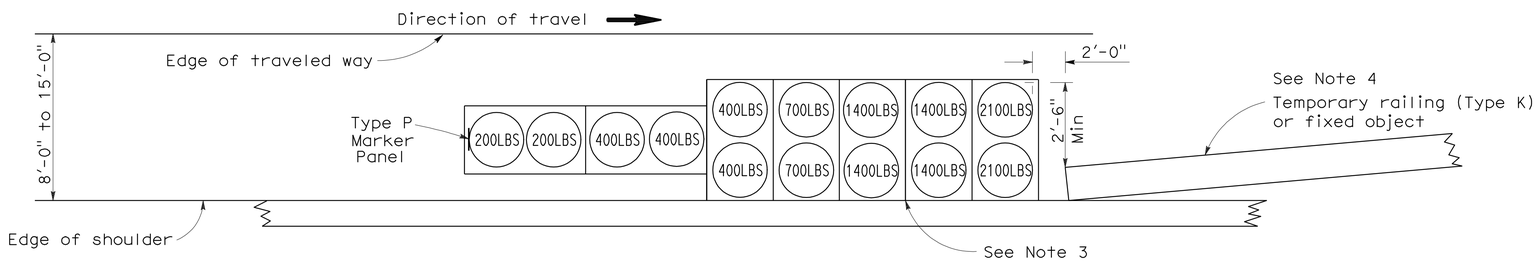

ARRAY 'TS14'

Approach speed 45 mph or more
See Note 9

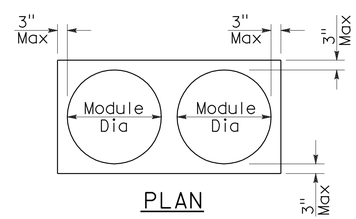

PLAN

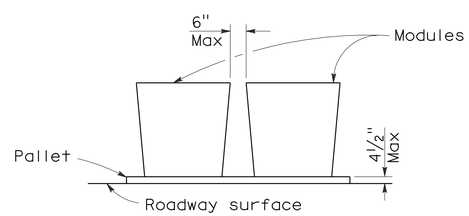

ELEVATION

CRASH CUSHION PALLET DETAIL

See Note 11

NOTES:

1. (XXX) Indicates sand filled module location and weight of sand in pounds for each module. Module spacing is based on the greater diameter of the module.
2. All sand weights are nominal.
3. The temporary crash cushion arrays shown on this plan shall be used only in locations where there will be traffic on one side of the temporary crash cushion array.
4. If the fixed object or approach end of the temporary railing is less than 15'-0" from the edge of traveled way, a temporary crash cushion is required in a construction or work zone.
5. Temporary crash cushion arrays shall not encroach on the traveled way.
6. Arrays for median shoulders shall conform to details shown on this plan for outside shoulders.
7. Place the Type P marker panel so that the bottom of the panel rests upon the pallet and faces traffic.
8. Refer to Standard Plan A73B for marker details.
9. For shoulder widths less than 8'-0", appropriate approved crash cushion protection, other than sand filled modules, shall be provided at fixed objects and at approach ends of temporary railing. The specific type of crash cushion shall be as shown on the project plans or as specified in the Special Provisions, or if not shown on the project plans or specified in the Special Provisions, shall be as approved by the Engineer.
10. Approach speeds indicated conform to NCHRP 350 Report criteria.
11. Use of pallets is optional.

STATE OF CALIFORNIA
DEPARTMENT OF TRANSPORTATION

TEMPORARY CRASH CUSHION, SAND FILLED (SHOULDER INSTALLATIONS)

NO SCALE

RSP T2 DATED JUNE 6, 2008 SUPERSEDES STANDARD PLAN T2
DATED MAY 1, 2006 - PAGE 213 OF THE STANDARD PLANS BOOK DATED MAY 2006.

REVISED STANDARD PLAN RSP T2

2006 REVISED STANDARD PLAN RSP T2

5-15-08

DIST	COUNTY	ROUTE	POST MILES TOTAL PROJECT	SHEET NO.	TOTAL SHEETS
04	SCI	101	R27.6/40.2	162	173

REGISTERED CIVIL ENGINEER

November 17, 2006
PLANS APPROVAL DATE

REGISTERED PROFESSIONAL ENGINEER
Greg W. Edwards
No. C36386
Exp. 6-30-08
CIVIL
STATE OF CALIFORNIA

The State of California or its officers or agents shall not be responsible for the accuracy or completeness of electronic copies of this plan sheet.

To accompany plans dated 5-11-09

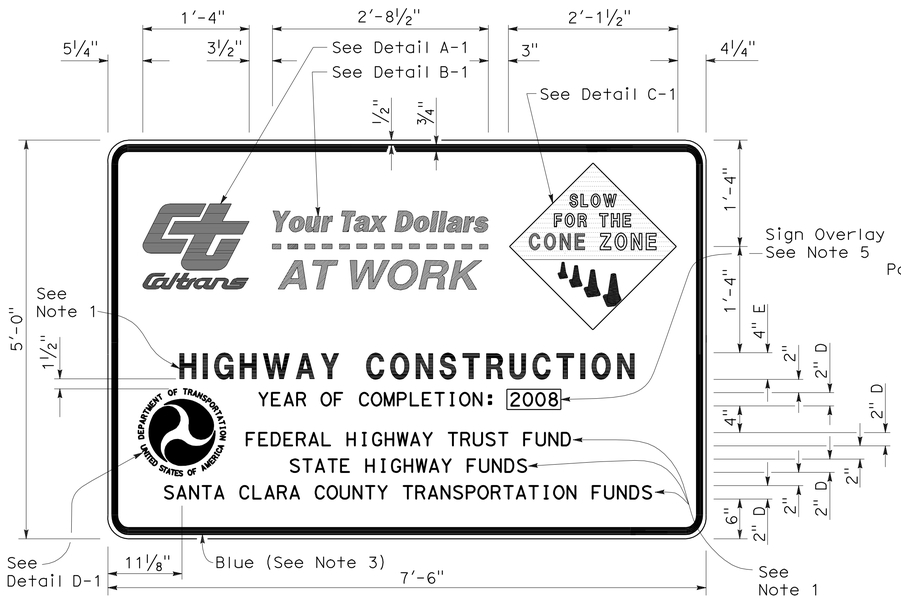

TYPE 1

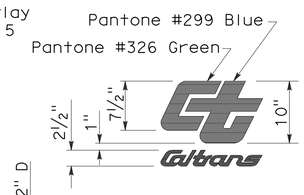

DETAIL A-1

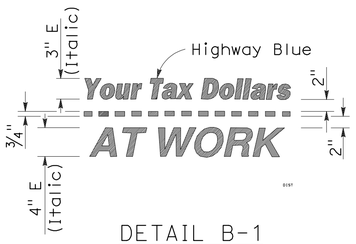

DETAIL B-1
(See Note 3)

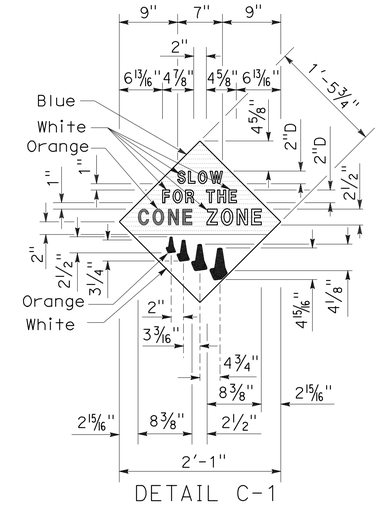

DETAIL C-1
(See Note 4)

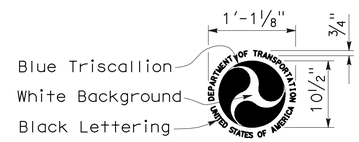

DETAIL D-1
(See Note 6)

NOTES:

1. The sign messages shown for type of project and fund types are examples only. See the Special Provisions for the applicable type of project and fund type messages to be used.
2. Except as otherwise shown, the legend of sign shall be black on a white background (non-reflective).
3. The border of the signs and details "B-1" and "B-2" shall be blue (non-reflective).
4. The diamond in details "C-1" and "C-2" shall be blue for the background of message, " SLOW FOR THE CONE ZONE", and white background for the orange cones. The color and type of font for the "SLOW FOR THE CONE ZONE" message shall be: "SLOW" white D; "FOR THE" white D; "CONE" orange Arial font; "ZONE" white Arial font.
5. Year of completion of project construction shown on the overlay is an example only. See the Special Provisions.
6. Use when the Project involves Federal Highway Trust Fund.

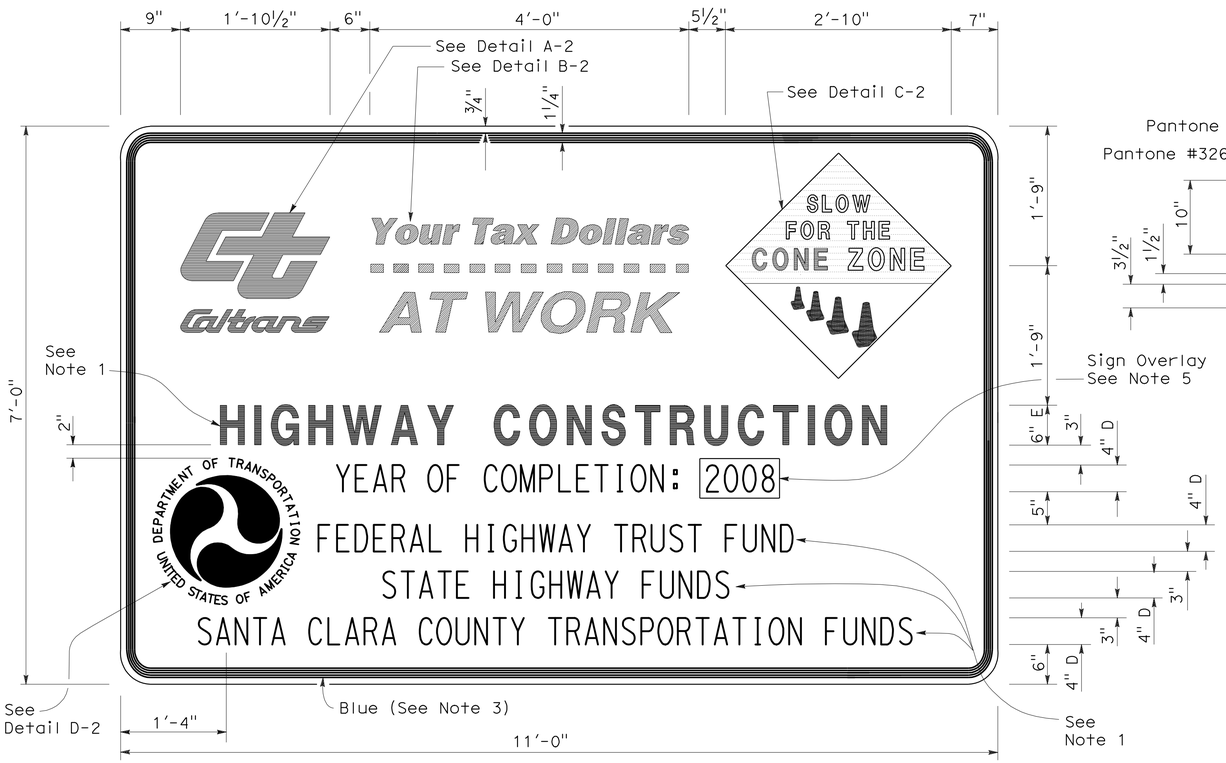

TYPE 2

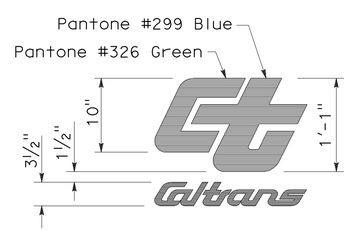

DETAIL A-2

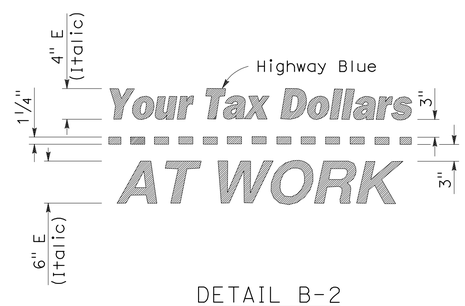

DETAIL B-2
(See Note 3)

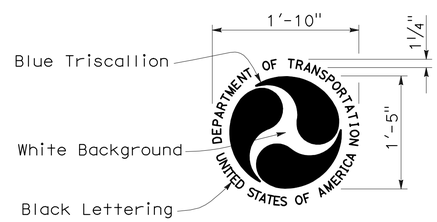

DETAIL D-2
(See Note 6)

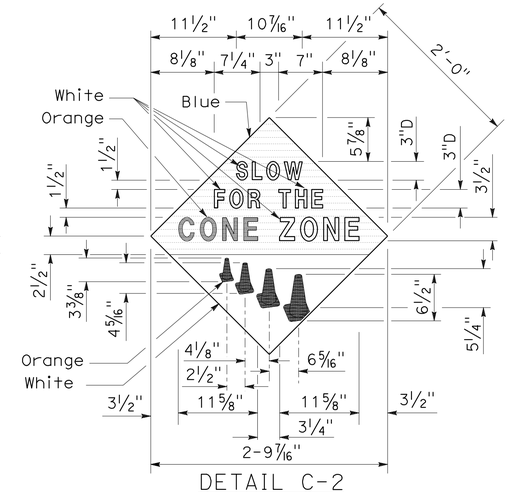

DETAIL C-2
(See Note 4)

STATE OF CALIFORNIA
DEPARTMENT OF TRANSPORTATION

CONSTRUCTION PROJECT FUNDING IDENTIFICATION SIGNS

NO SCALE

RSP T7 DATED NOVEMBER 17, 2006 SUPERSEDES STANDARD PLAN T7
DATED MAY 1, 2006 - PAGE 217 OF THE STANDARD PLANS BOOK DATED MAY 2006.

REVISED STANDARD PLAN RSP T7

2006 REVISED STANDARD PLAN RSP T7

9-7-06

DIST	COUNTY	ROUTE	POST MILES TOTAL PROJECT	SHEET NO.	TOTAL SHEETS
04	SCI	101	R27.6/40.2	163	173

LICENSED LANDSCAPE ARCHITECT

April 3, 2009
PLANS APPROVAL DATE

The State of California or its officers or agents shall not be responsible for the accuracy or completeness of electronic copies of this plan sheet.

LICENSED LANDSCAPE ARCHITECT — Robert B. Schott 3025 — Signature — 11-30-10 Renewal Date — 2-25-09 Date — STATE OF CALIFORNIA

To accompany plans dated 5-11-09

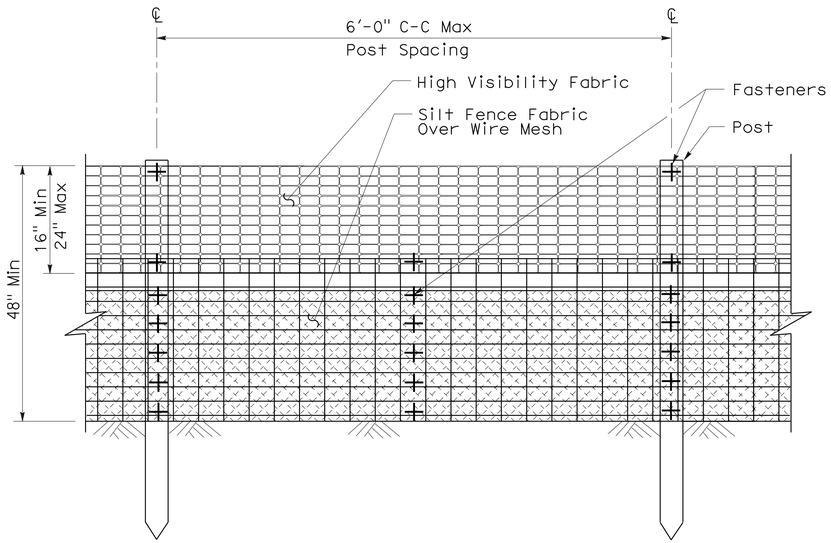

ELEVATION

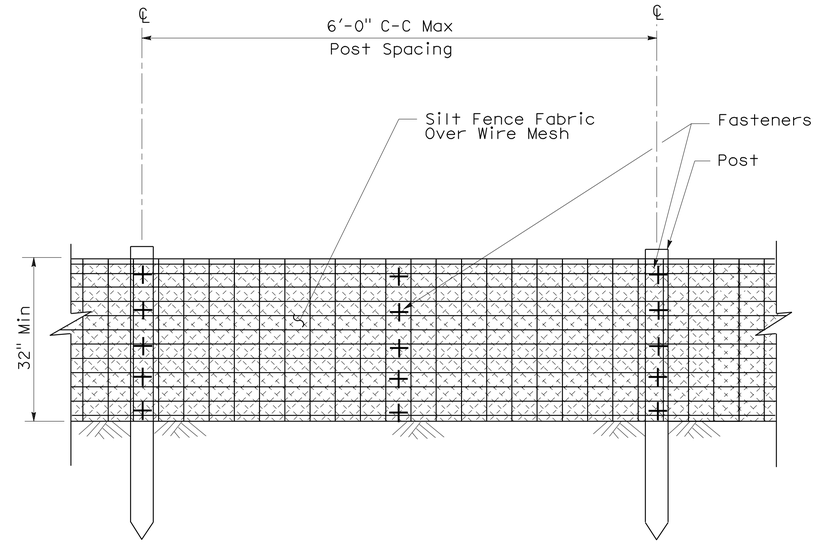

ELEVATION

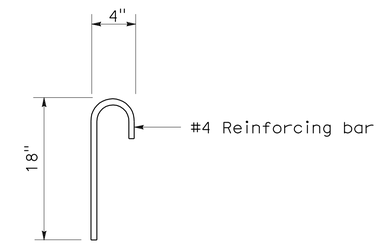

ANCHOR

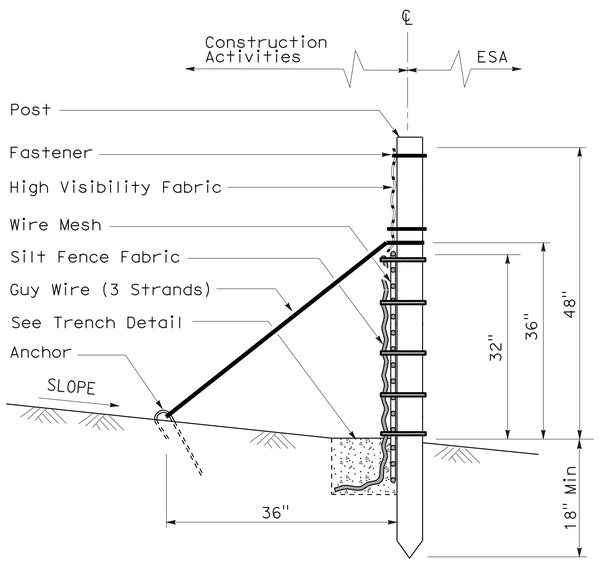

SECTION

TEMPORARY REINFORCED SILT FENCE (TYPE 1)

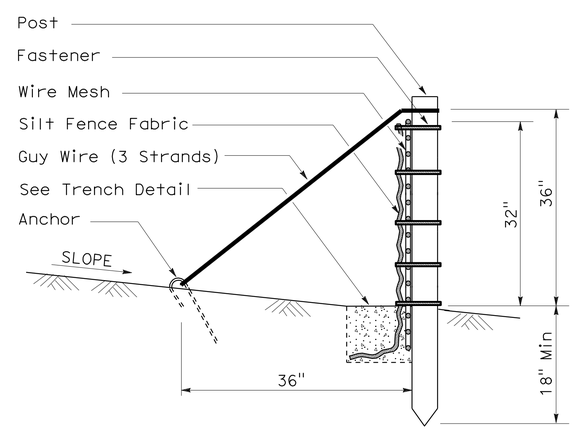

SECTION

TEMPORARY REINFORCED SILT FENCE (TYPE 2)

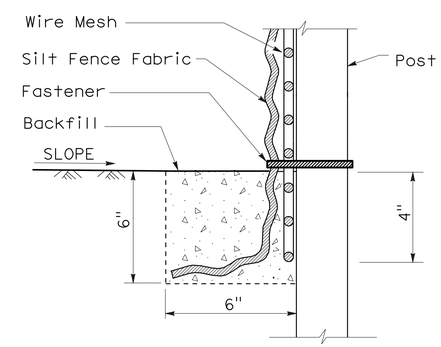

SECTION

TRENCH DETAIL

STATE OF CALIFORNIA
DEPARTMENT OF TRANSPORTATION

TEMPORARY WATER POLLUTION CONTROL DETAILS (TEMPORARY REINFORCED SILT FENCE)

NO SCALE

NSP T60 DATED APRIL 3, 2009 SUPPLEMENTS
THE STANDARD PLANS BOOK DATED MAY 2006.

NEW STANDARD PLAN NSP T60

2006 NEW STANDARD PLAN NSP T60

1-7-09

DIST	COUNTY	ROUTE	POST MILES TOTAL PROJECT	SHEET NO.	TOTAL SHEETS
04	SCI	101	R27.6/40.2	164	173

LICENSED LANDSCAPE ARCHITECT

August 15, 2008
PLANS Approval DATE

LICENSED LANDSCAPE ARCHITECT
Robert B. Schott 3625
Signature
11-04-08
Renewal Date
08-11-08
Date
STATE OF CALIFORNIA

The State of California or its officers or agents shall not be responsible for the accuracy or completeness of electronic copies of this plan sheet.

To accompany plans dated 5-11-09

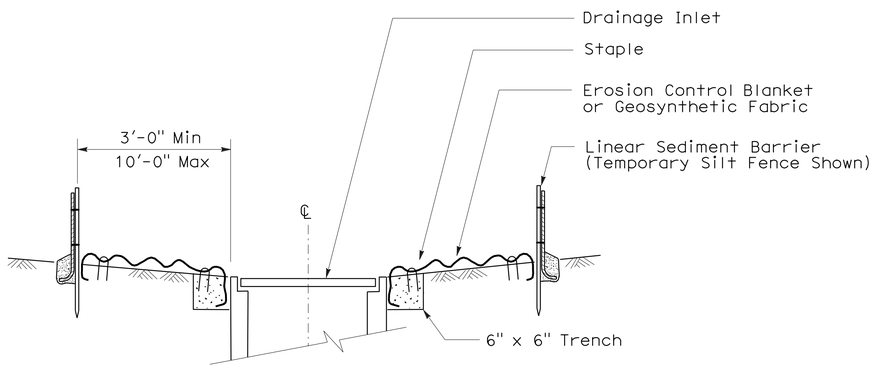

SECTION A-A

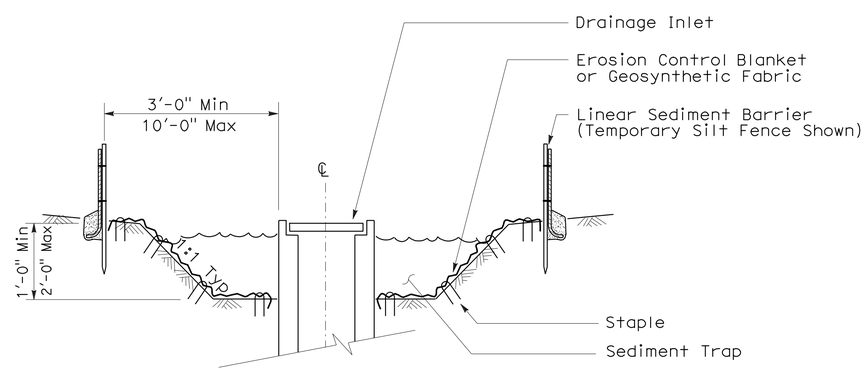

SECTION B-B

NOTES:

1. See Standard Plan T51 for Temporary Silt Fence.
2. Dimensions may vary to fit field conditions.

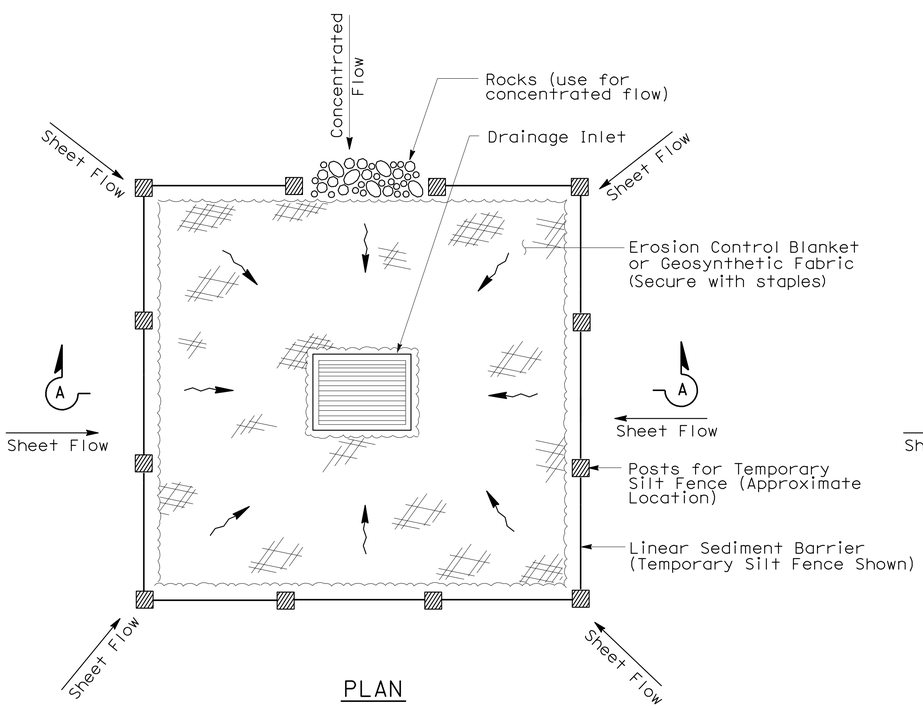

PLAN

TEMPORARY DRAINAGE INLET PROTECTION (TYPE 1)

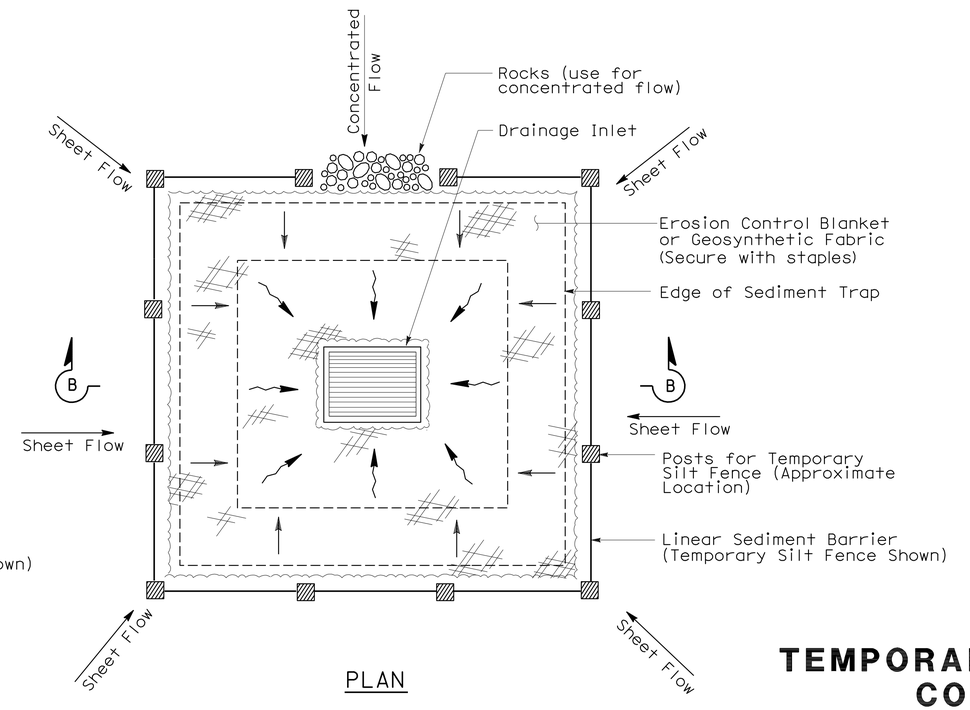

PLAN

TEMPORARY DRAINAGE INLET PROTECTION (TYPE 2) (EXCAVATED SEDIMENT TRAP)

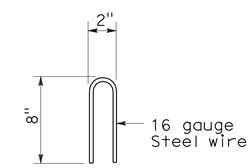

STAPLE DETAIL

STATE OF CALIFORNIA
DEPARTMENT OF TRANSPORTATION

TEMPORARY WATER POLLUTION CONTROL DETAILS (TEMPORARY DRAINAGE INLET PROTECTION)

NO SCALE

NSP T61 DATED AUGUST 15, 2008 SUPPLEMENTS THE STANDARD PLANS BOOK DATED MAY 2006.

NEW STANDARD PLAN NSP T61

2006 NEW STANDARD PLAN NSP T61

7-11-08

DIST	COUNTY	ROUTE	POST MILES TOTAL PROJECT	SHEET NO.	TOTAL SHEETS
04	SCI	101	R27.6/40.2	165	173

LICENSED LANDSCAPE ARCHITECT

August 15, 2008
PLANS APPROVAL DATE

The State of California or its officers or agents shall not be responsible for the accuracy or completeness of electronic copies of this plan sheet.

LICENSED LANDSCAPE ARCHITECT — Robert B. Schott — Signature — 11-04-08 Renewal Date — 08-11-08 Date — STATE OF CALIFORNIA

To accompany plans dated 5-11-09

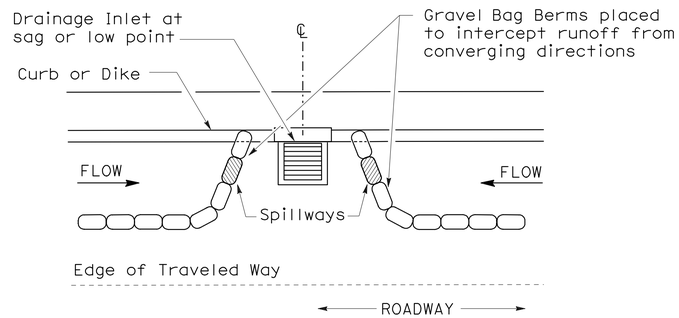

PLAN

CONFIGURATION FOR SAG POINT INLET (GRAVEL BAG BERM)

GRAVEL BAG BERM (TYPE 3A) SPACING TABLE

SLOPE OF ROADWAY (PERCENT)	1 to 3.9	4 to 5.9	6 to 7.9	8 to 10	10+
INTERVAL BETWEEN BERM	100′	75′	50′	25′	12′

For slope of less than 1%, install barriers only if erosion/sediment is prevalent

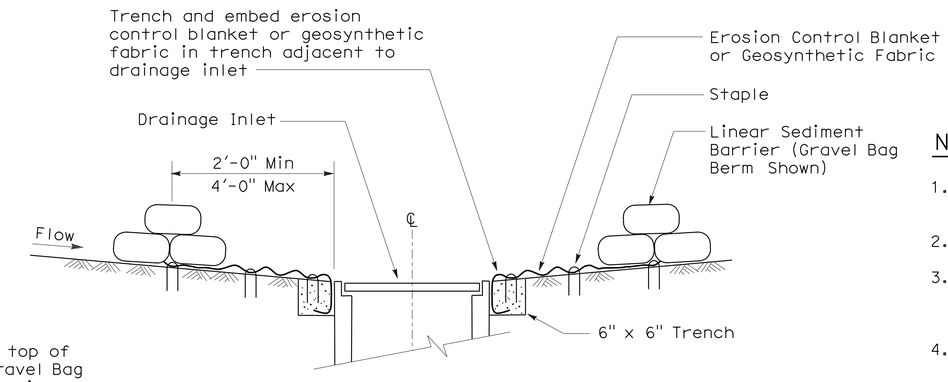

SECTION A-A

NOTES:

1. Place safety cones adjacent to drainage inlet protection.
2. Dimensions may vary to fit field conditions.
3. Install a minimum of 3 gravel bag berms upstream of each drainage inlet to be protected.
4. Position erosion control blanket or geosynthetic fabric at edge of concrete apron and secure in trench.
5. Erosion control blanket or geosynthetic fabric is not required if the area adjacent to the drainage inlet is vegetated or paved.

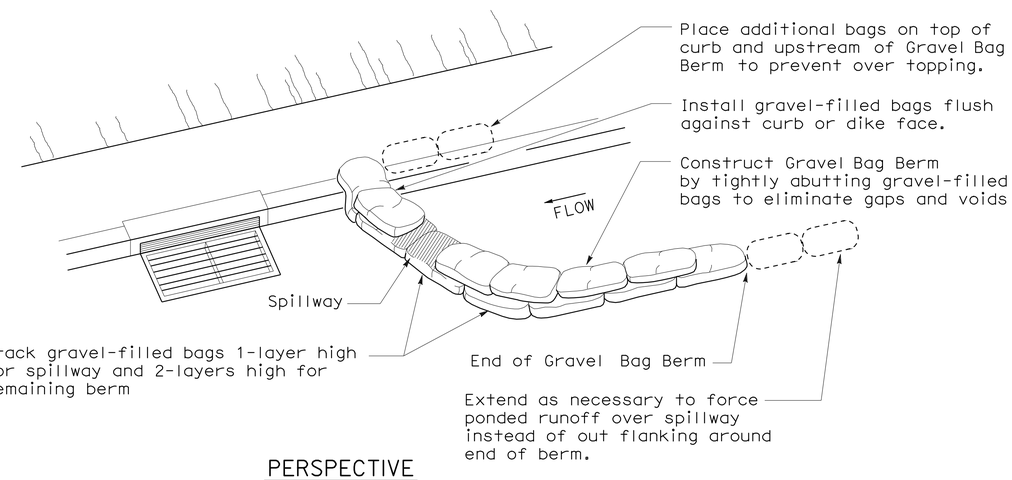

PERSPECTIVE

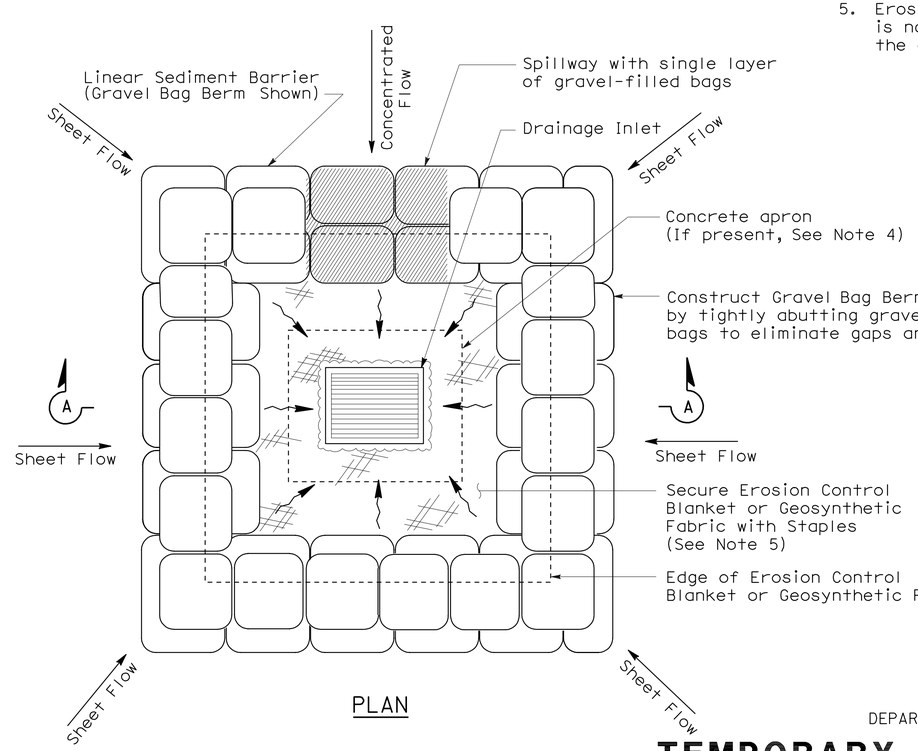

PLAN

TEMPORARY DRAINAGE INLET PROTECTION (TYPE 3B)

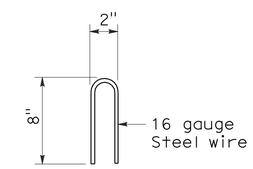

STAPLE DETAIL

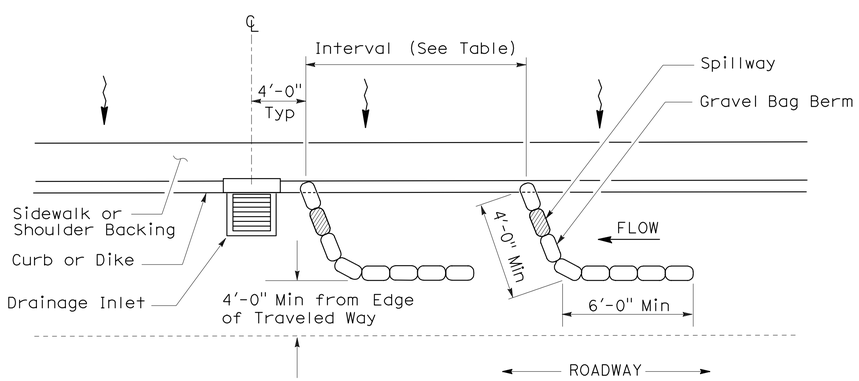

PLAN

TEMPORARY DRAINAGE INLET PROTECTION (TYPE 3A) (GRAVEL BAG BERM)

STATE OF CALIFORNIA
DEPARTMENT OF TRANSPORTATION

TEMPORARY WATER POLLUTION CONTROL DETAILS (TEMPORARY DRAINAGE INLET PROTECTION)

NO SCALE

NSP T62 DATED AUGUST 15, 2008 SUPPLEMENTS THE STANDARD PLANS BOOK DATED MAY 2006.

NEW STANDARD PLAN NSP T62

2006 NEW STANDARD PLAN NSP T62

7-11-08

DIST	COUNTY	ROUTE	POST MILES TOTAL PROJECT	SHEET NO.	TOTAL SHEETS
04	SCI	101	R27.6/40.2	166	173

LICENSED LANDSCAPE ARCHITECT

August 15, 2008
PLANS APPROVAL DATE

The State of California or its officers or agents shall not be responsible for the accuracy or completeness of electronic copies of this plan sheet.

LICENSED LANDSCAPE ARCHITECT — Robert B. Schott — Signature — 11-04-08 Renewal Date — 08-11-08 Date — STATE OF CALIFORNIA

To accompany plans dated 5-11-09

FLEXIBLE SEDIMENT BARRIER SPACING TABLE

SLOPE OF ROADWAY (PERCENT)	0 to 0.9	1 to 1.9	2 to 2.9	3 to 4	5+
INTERVAL BETWEEN BARRIERS	50′	35′	30′	25′	20′
ANGLE FROM FACE OF CURB	70°	70°	70°	45°	45°
SUGGESTED BARRIER LENGTH	6′	6′	6′	6′	6′

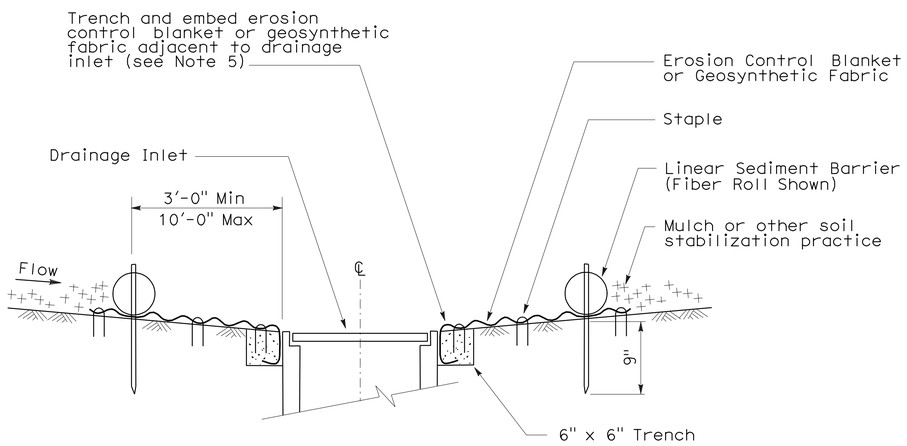

SECTION A-A

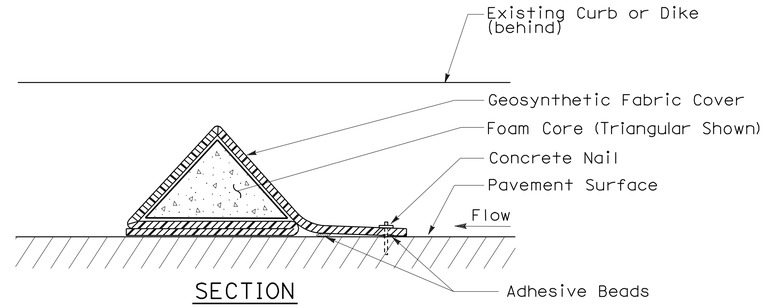

SECTION

FLEXIBLE SEDIMENT BARRIER DETAIL (FOAM BARRIER SHOWN)

NOTES:

1. See Standard Plan T51 for Temporary Silt Fence.
2. Dimensions may vary to fit field conditions.
3. Install a minimum of 3 flexible sediment barriers upstream of each drainage inlet to be protected.
4. Position erosion control blanket or geosynthetic fabric at edge of concrete apron and secure in trench.
5. Erosion control blanket or geosynthetic fabric is not required if the area adjacent to the drainage inlet is vegetated.

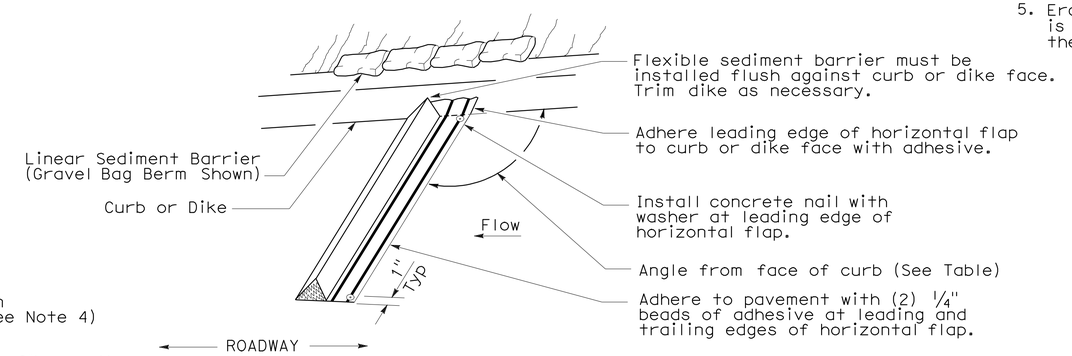

PERSPECTIVE

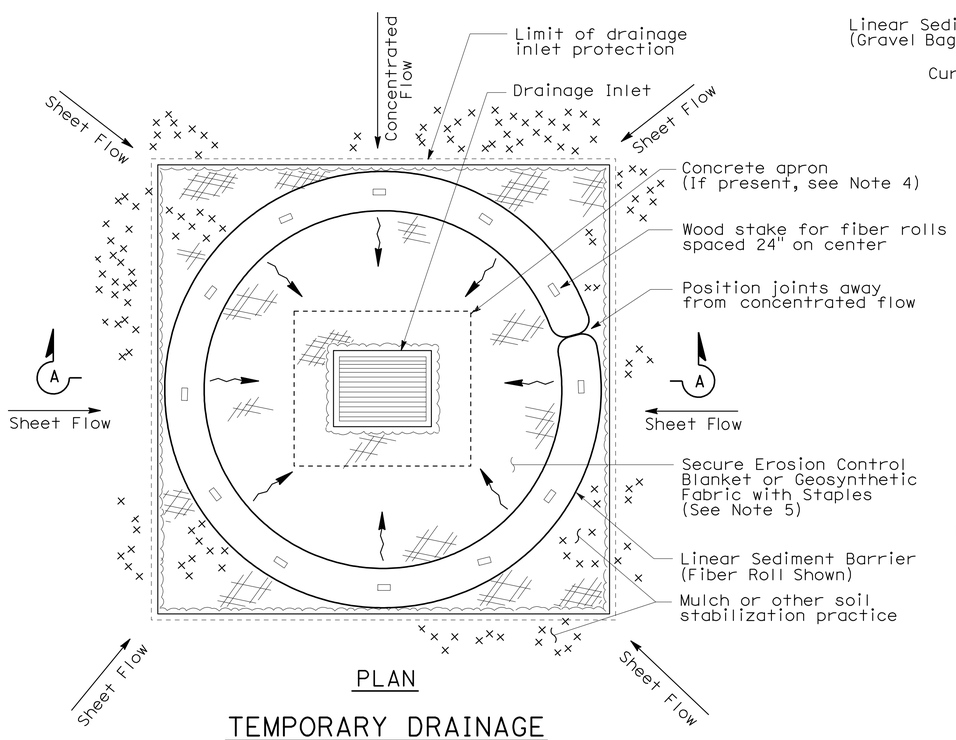

PLAN

TEMPORARY DRAINAGE INLET PROTECTION (TYPE 4A)

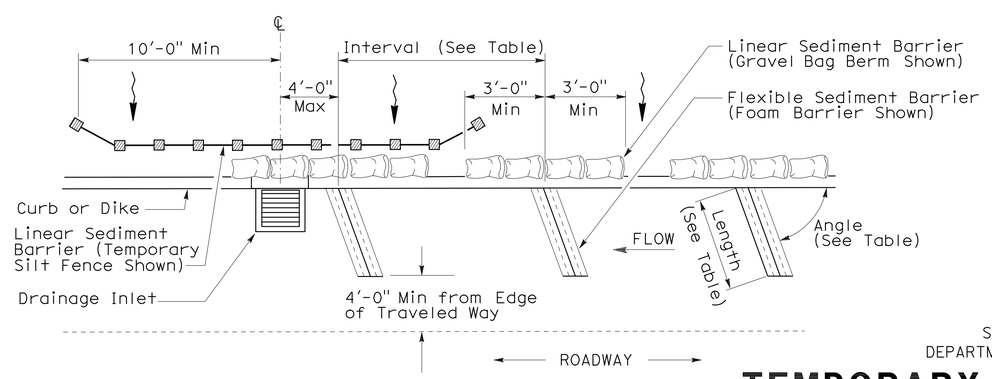

PLAN

TEMPORARY DRAINAGE INLET PROTECTION (TYPE 4B) FLEXIBLE SEDIMENT BARRIER

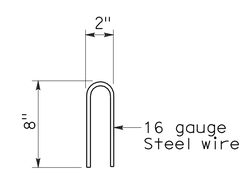

STAPLE DETAIL

STATE OF CALIFORNIA
DEPARTMENT OF TRANSPORTATION

TEMPORARY WATER POLLUTION CONTROL DETAILS (TEMPORARY DRAINAGE INLET PROTECTION)

NO SCALE

NSP T63 DATED AUGUST 15, 2008 SUPPLEMENTS THE STANDARD PLANS BOOK DATED MAY 2006.

NEW STANDARD PLAN NSP T63

2006 NEW STANDARD PLAN NSP T63

DIST	COUNTY	ROUTE	POST MILES TOTAL PROJECT	SHEET NO.	TOTAL SHEETS
04	SCI	101	R27.6/40.2	167	173

Robert B Schott
LICENSED LANDSCAPE ARCHITECT

August 15, 2008
PLANS APPROVAL DATE

LICENSED LANDSCAPE ARCHITECT
Robert B. Schott 3625
Robert B Schott
Signature
11-04-08
Renewal Date
08-11-08
Date
STATE OF CALIFORNIA

The State of California or its officers or agents shall not be responsible for the accuracy or completeness of electronic copies of this plan sheet.

To accompany plans dated 5-11-09

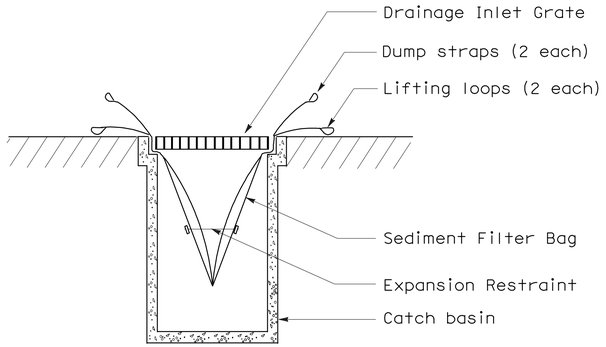

SECTION B-B

SEDIMENT FILTER BAG DETAIL

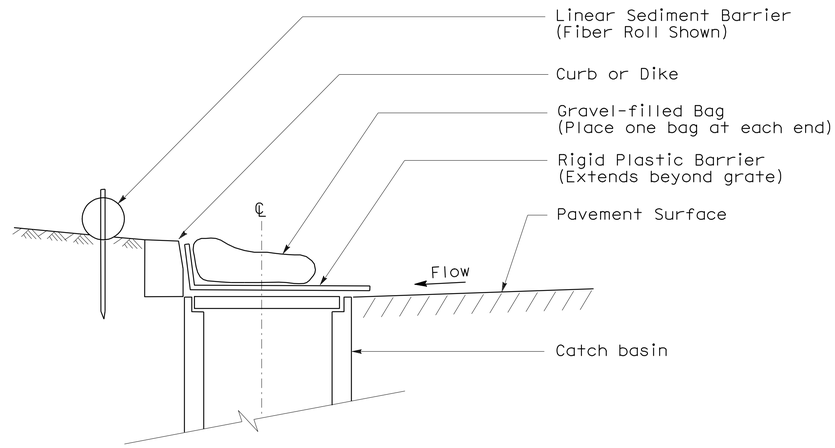

SECTION

TEMPORARY DRAINAGE INLET PROTECTION (TYPE 6A) (CATCH BASIN WITH GRATE)

NOTES:

1. See Standard Plan T51 for Temporary Silt Fence.
2. Dimensions may vary to fit field conditions.

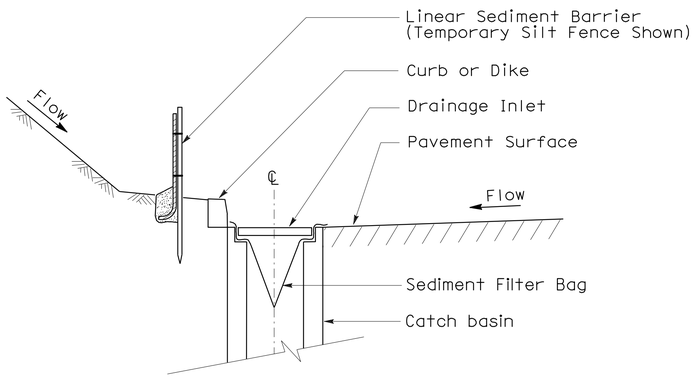

SECTION A-A

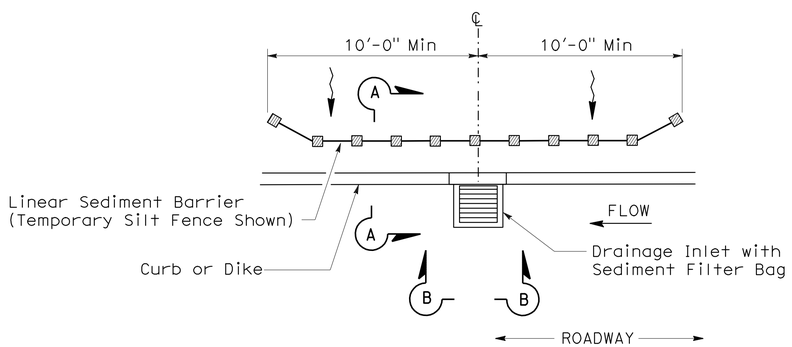

PLAN

TEMPORARY DRAINAGE INLET PROTECTION (TYPE 5) (SEDIMENT FILTER BAG)

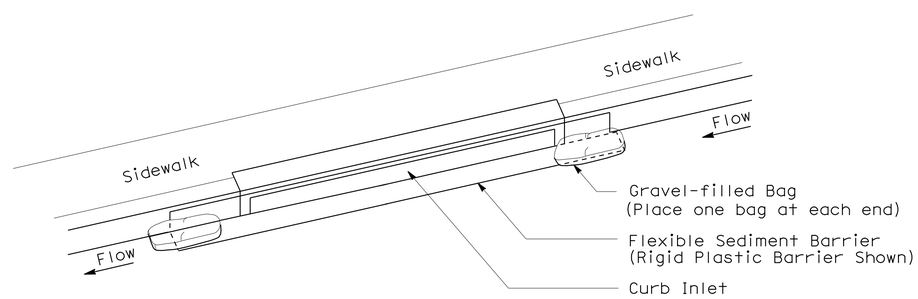

PERSPECTIVE

TEMPORARY DRAINAGE INLET PROTECTION (TYPE 6B) (CURB INLET WITHOUT GRATE)

STATE OF CALIFORNIA
DEPARTMENT OF TRANSPORTATION

TEMPORARY WATER POLLUTION CONTROL DETAILS (TEMPORARY DRAINAGE INLET PROTECTION)

NO SCALE

NSP T64 DATED AUGUST 15, 2008 SUPPLEMENTS
THE STANDARD PLANS BOOK DATED MAY 2006.

NEW STANDARD PLAN NSP T64

2006 NEW STANDARD PLAN NSP T64

7-11-08

DIST	COUNTY	ROUTE	POST MILES TOTAL PROJECT	SHEET NO.	TOTAL SHEETS
04	SCI	101	R27.6/40.2	168	173

REGISTERED ELECTRICAL ENGINEER

October 5, 2007
PLANS APPROVAL DATE

REGISTERED PROFESSIONAL ENGINEER Jeffery G. McRae No. E14512 Exp. 6-30-08 ELECTRICAL STATE OF CALIFORNIA

The State of California or its officers or agents shall not be responsible for the accuracy or completeness of electronic copies of this plan sheet.

To accompany plans dated 5-11-09

ELECTROLIERS

STANDARD TYPES
15, 15D
15 STRUCTURE
21, 21D STRUCTURE
30
31
32
35
36-20A

High mast light pole

Double Arm lighting standard

Existing electrolier

Electrolier foundation (Future installation)

NOTES:

1. Luminaires shall be 310 W HPS when installed on Type 21, 21D, 30, 31, 32, 35 and 36-20A Standards, unless otherwise specified. Luminaires shall be 200 W HPS when installed on other type standards or poles, unless otherwise specified.
2. Luminaires shall be the cutoff type, ANSI Type III medium cutoff lighting distribution, unless otherwise specified.
3. Variations noted adjacent to symbol on project plans.

Electrolier (see project notes or project plans)

Luminaire on wood pole

STANDARD NOTES:

- AB — Abandon. If applied to conduit, remove conductors.
- BC — Install pull box in existing conduit run.
- BP — Pedestrian barricade, type as indicated on plan.
- CB — Install conduit into existing pull box.
- CC — Connect new and existing conduit. Remove existing conductors and install conductors as indicated.
- CF — Conduit to remain for future use. Remove conductors. Install pull wire or rope.
- DH — Detector handhole.
- FA — Foundation to be abandoned.
- IS — Install sign on signal mast arm.
- NS — No slip base on standard.
- PEC — Photoelectric control.
- PEU — Photoelectric unit.
- RC — Equipment or material to be removed and become the property of the Contractor.
- RE — Remove electrolier, fuses and ballast. Tape ends of conductors.
- RL — Relocate equipment.
- RR — Remove and reuse equipment.
- RS — Remove and salvage equipment.
- SC — Splice new to existing conductors.
- SD — Service disconnect.
- SF — Standard to remain for future use. Remove luminaire, pole conductors, fuses and ballast.
- TSP — Telephone service point.

ABBREVIATIONS AND EQUIPMENT DESIGNATIONS

PROPOSED	EXISTING	
BBS	bbs	Battery backup system
BC	bc	Bolt circle
C	C	Conduit
CCTV	cctv	Closed circuit television
CKT	ckt	Circuit
CMS	cms	Changeable message sign
DLC	dlc	Loop detector lead-in cable
EMS	ems	Extinguishable message sign
EVC	evc	Emergency vehicle cable
EVD	evd	Emergency vehicle detector
FB	fb	Flashing beacon
FBCA	fbca	Flashing beacon control assembly
FBS	fbs	Flashing beacon with slip base
FO	fo	Fiber optic
G	G	Ground (Equipment Grounding Conductor)
GFCI	GFCI	Ground fault circuit interrupt
HAR	har	Highway advisory radio
HEX	hex	Hexagonal
HPS	hps	High pressure sodium
IISNS	iisns	Internally illuminated street name sign
ISL	isl	Induction sign lighting
LED	led	Light emitting diode
LMA	lma	Luminaire mast arm
LPS	lps	Low pressure sodium
LTG	ltg	Lighting
LUM	lum	Luminaire
MAT	mat	Mast arm mounting vehicle signal faces, top attachment
MAS	mas	Mast arm mounting vehicle signal faces, side attachment
MAS-4A	mas-4A	Mast arm mounting vehicle signal faces, side attachment - 4 signal section
MAS-4B	mas-4B	
MAS-4C	mas-4C	
MAS-5A	mas-5A	Mast arm mounting vehicle signal faces, side attachment - 5 signal section
MAS-5B	mas-5B	
MC	mc	Mercury contactor
M/M	m/m	Multiple to multiple transformer
MT	mt	Conduit with pull wire or rope only
MTG	mtg	Mounting
	mv	Mercury vapor lighting fixture
N	N	Neutral (Grounded Conductor)
NC	NC	Normally closed
NO	NO	Normally open
PB	pb	Pull box
PEC	pec	Photoelectric control (Type I, II, III, IV or V as shown)
PED	ped	Pedestrian
PEU	peu	Photoelectric unit
PPB	ppb	Pedestrian push button
RL		Relocated equipment
RM	rm	Ramp metering
SB	sb	Slip base
SIC	sic	Signal interconnect cable
SIG	sig	Signal
SMA	sma	Signal mast arm
SNS	sns	Street name sign
SP	sp	Service point
TDC	tdc	Telephone demarcation cabinet
TMS	tms	Traffic monitoring station
TOS	tos	Traffic Operations System
VEH	veh	Vehicle
XFMR	xfmr	Transformer
COMM	comm	Communication
RWIS	rwis	Roadway weather information system

SOFFIT AND WALL MOUNTED LUMINAIRES

Pendant, 70 W HPS unless otherwise specified.

Flush, 70 W HPS unless otherwise specified.

Wall surface, 70 W HPS unless otherwise specified.

Existing soffit or wall luminaire to remain unmodified.

Existing soffit or wall luminaire to be modified as specified.

NOTE:

Arrow indicates "street side" of luminaire.

STATE OF CALIFORNIA
DEPARTMENT OF TRANSPORTATION

ELECTRICAL SYSTEMS (SYMBOLS AND ABBREVIATIONS)

NO SCALE

RSP ES-1A DATED OCTOBER 5, 2007 SUPERSEDES STANDARD PLAN ES-1A DATED MAY 1, 2006 - PAGE 400 OF THE STANDARD PLANS BOOK DATED MAY 2006.

REVISED STANDARD PLAN RSP ES-1A

2006 REVISED STANDARD PLAN RSP ES-1A

DIST	COUNTY	ROUTE	POST MILES TOTAL PROJECT	SHEET NO.	TOTAL SHEETS
04	SCI	101	R27.6/40.2	169	173

REGISTERED ELECTRICAL ENGINEER

October 5, 2007
PLANS APPROVAL DATE

REGISTERED PROFESSIONAL ENGINEER Jeffery G. McRae No. E14512 Exp. 6-30-08 ELECTRICAL STATE OF CALIFORNIA

The State of California or its officers or agents shall not be responsible for the accuracy or completeness of electronic copies of this plan sheet.

To accompany plans dated 5-11-09

CONDUIT

PROPOSED	EXISTING	
		Lighting Conduit, unless otherwise indicated or noted
		Traffic signal conduit
C	c	Communication conduit
T	t	Telephone conduit
F	f	Fire alarm conduit
FO	fo	Fiber optic conduit
		Conduit termination (RSP ES-9A C)
R	r	Conduit riser in/on structure or service pole

SERVICE EQUIPMENT

PROPOSED	EXISTING	
OH	oh	Overhead lines
U	U	Wood pole "U" indicates utility owned
		Pole guy with anchor
		Utility transformer - ground mounted
III		Service equipment enclosure type
		Service equipment enclosure door indicates front of enclosure
T	t	Telephone demarcation cabinet

POLE-MOUNTED SERVICE DESIGNATION

Type of installation

TYPE H SERVICE - 28'-10" ← Pole height above grade

ILLUMINATED OVERHEAD SIGN

PROPOSED	EXISTING	
		Overhead sign - Single post
		Overhead sign - Two post
		Overhead sign - Mounted on structure
		Overhead sign with electrolier

SIGNAL EQUIPMENT

PROPOSED	EXISTING	
		Pedestrian signal face
		Pedestrian push button post
		Pedestrian barricade
		Vehicle signal face (with backplate, 3-Section: red, yellow and green)
		Vehicle signal face with angle visors
PV	PV	Modifications of basic symbols: "L" indicates all non-arrow sections louvered "LG" indicates louvered green section only "PV" indicates 12" programmed visibility sections "8" indicates all 8" sections (only when specified)
		Type 15TS and Vehicle signal face
		Vehicle signal face with red, yellow and green left arrow sections
		Vehicle signal face with red and yellow sections and up green arrow
		Vehicle signal face (5 Section) with red, yellow and green sections and yellow and green right arrows
		Type 1 Standard and attached vehicle signal faces
		Standard with signal mast arm only and attached vehicle signal faces and internally illuminated street name sign
		Type 33 Standard, Left-turn vehicle signal face and sign
		Standard with luminaire and signal mast arms and attached vehicle signal faces
		Cantilever flashing beacon Type 9 Frame, with a sign unless otherwise specified or indicated
		Type 15-FBS Standard with two vehicle signal face sections with lens, backplate and visor with a sign
R	Y	Flashing beacon. One vehicle signal face section with lens, backplate and visor. "R" indicates red indication, "Y" indicates yellow indication
		Controller assembly. Door indicates front of cabinet

SIGNAL EQUIPMENT Cont

PROPOSED	EXISTING	
		Guard post
		Type 1 Standard with "Meter On" sign
		Emergency Vehicle detector

NOTES:

1. All signal sections shall be 12" unless shown otherwise.
2. Signal heads shall be provided with backplates unless shown otherwise.
3. Signal indication shall be LED.

STATE OF CALIFORNIA
DEPARTMENT OF TRANSPORTATION

ELECTRICAL SYSTEMS (SYMBOLS AND ABBREVIATIONS)

NO SCALE

RSP ES-1B DATED OCTOBER 5, 2007 SUPERCEDES STANDARD PLAN ES-1B DATED MAY 1, 2006 - PAGE 401 OF THE STANDARD PLANS BOOK DATED MAY 2006.

REVISED STANDARD PLAN RSP ES-1B

2006 REVISED STANDARD PLAN RSP ES-1B

7-10-07

DIST	COUNTY	ROUTE	POST MILES TOTAL PROJECT	SHEET NO.	TOTAL SHEETS
04	SCI	101	R27.6/40.2	170	173

REGISTERED ELECTRICAL ENGINEER

October 5, 2007
PLANS APPROVAL DATE

REGISTERED PROFESSIONAL ENGINEER Jeffery G. McRae No. E14512 Exp. 6-30-08 ELECTRICAL STATE OF CALIFORNIA

The State of California or its officers or agents shall not be responsible for the accuracy or completeness of electronic copies of this plan sheet.

To accompany plans dated 5-11-09

EQUIPMENT IDENTIFICATION

ILLUMINATED SIGN IDENTIFICATION NUMBER:

Sign No. 12345

10 ISL SCI 1.0

- Sign number - Place on post or structure
- Transformer rating (kVA)
- Lighting control type
- Number and type of fixtures

Do NOT place on standard or structure

ELECTROLIER OR EQUIPMENT IDENTIFICATION NUMBER:

12345 - 15'-0"

- Mast arm length, if shown. Do not place on standard or structure.
- Equipment number - Place on standard or structure. Existing equipment numbers are shown in parenthesis

CONDUIT AND CONDUCTOR IDENTIFICATION:

1½"C, 2#10, 15#14, 2 DLC

- Number and size of conductors and cables
- Size of conduit in inches

Ø1, Ø2, Ø2P, etc.	Traffic phase identification for signal faces, detectors and phase diagrams
1 2 3	Project note numbers
A B C	Equipment description, installation or item numbers
1 2 3	Conduit run numbers

SIGNAL AND LIGHTING STANDARD (TYPICAL DESIGNATION):

19A - 3 - 100

- Wind velocity = 100 mph
- Case 3 arm loading
- Standard type
- Standard Plan sheet number
- Detail number or letter

MISCELLANEOUS EQUIPMENT

PROPOSED	EXISTING	
CMS	cms	Changeable message sign
		Closed circuit television camera
		Highway advisory radio pole and antenna
EMS	ems	Extinguishable message sign
M V	m v	Detection device M = Microwave sensor V = Video image sensor

WIRING DIAGRAM LEGEND

P	Pole
CB	Circuit breaker
A	Ampere
V	Volt
M	Metered
UM	Unmetered
NB	Neutral bus
GB	Ground bus
G	Equipment grounding conductor
N	Grounded conductor (Neutral)

- External conductor
- Conductor or bus
- Tie point
- Contactor coil
- Contactor, Contact NO
- Terminal blocks
- Contactor, Contact NC
- Enclosure bond
- Grounding electrode
- Circuit breaker
- Receptacle

PULL BOXES

PROPOSED	EXISTING	
		Pull box-No. 5 unless otherwise indicated or noted.
3	9A(21)	Pull box-Additional designations or descriptions

3 = No. 3½ pull box
5 = No. 5 pull box
6 = No. 6 pull box
7 = No. 7 (Ceiling pull box)
8 = No. 8 (Pendant soffit pull box)
9 = No. 9 pull box
9A = No. 9A pull box

(C) = Communications pull box
(E) = Pull box with extension
(S) = Sprinkler control pull box
(21) = Anchor bolts and conduit for future installation of Type 21 Standard
(T) = Traffic pull box

VEHICLE DETECTORS

5 J 9 U

- Vehicle detector designation
- U = Upper
  L = Lower
- Slot number in input file
- Input file (I or J)
- Phase

PROPOSED	EXISTING	
		Type A detector loop. Outline of sawcut shown.
		Type B detector loop. Outline of sawcut shown.
		Type C detector loop. Outline of sawcut shown.
		Type D detector loop. Outline of sawcut shown.
		Type E detector loop. Outline of sawcut shown.
		Type Q detector loop. Outline of sawcut shown.
		Magnetic detector
DH	dh	Detector handhole
		Microwave or video detection zone

STATE OF CALIFORNIA
DEPARTMENT OF TRANSPORTATION

ELECTRICAL SYSTEMS (SYMBOLS AND ABBREVIATIONS)

NO SCALE

RSP ES-1C DATED OCTOBER 5, 2007 SUPERCEDES STANDARD PLAN ES-1C DATED MAY 1, 2006 - PAGE 402 OF THE STANDARD PLANS BOOK DATED MAY 2006.

REVISED STANDARD PLAN RSP ES-1C

2006 REVISED STANDARD PLAN RSP ES-1C

7-10-07

DIST	COUNTY	ROUTE	POST MILES TOTAL PROJECT	SHEET NO.	TOTAL SHEETS
04	SCI	101	R27.6/40.2	171	173

REGISTERED ELECTRICAL ENGINEER

October 5, 2007
PLANS APPROVAL DATE

REGISTERED PROFESSIONAL ENGINEER Jeffery G. McRae No. E14512 Exp. 6-30-08 ELECTRICAL STATE OF CALIFORNIA

The State of California or its officers or agents shall not be responsible for the accuracy or completeness of electronic copies of this plan sheet.

To accompany plans dated 5-11-09

LOOP INSTALLATION PROCEDURE

1. Loops shall be centered in lanes.
2. Saw slots in pavement for loop conductors as shown in details.
3. Distance between side of loop and a lead-in saw cut from adjacent detectors shall be 2'-0" minimum. Distance between lead-in saw cuts shall be 6" minimum.
4. Bottom of saw slot shall be smooth with no sharp edges.
5. Slots shall be washed until clean, blown out and thoroughly dried before installing loop conductors.
6. Adjacent loops on the same sensor unit channel shall be wound in opposite directions.
7. Identify and tag loop circuit pairs in the pull box with loop number, start (S) and finish (F) of conductor. Identify and tag lead-in-cable with sensor number and phase.
8. Install loop conductor in slot using a 3/16" to 1/4" thick wood paddle. Hold loop conductors with wood paddles (at the bottom of the sawed slot) during sealant placement.
9. No more than 2 twisted pairs shall be installed in one sawed slot.
10. Allow additional 5'-0" of slack length of conductor for the lead-in run to pull box.
11. The additional length of each conductor for each loop shall be twisted together into a pair (6 turns per 3'-4" minimum) before being placed in the slot and conduit leading to pull box.
12. Test each loop circuit for continuity, circuit resistance and insulation resistance at the pull box before filling slots.
13. Fill slots as shown in details.
14. Splice loop conductors to lead-in-cable. Splices shall be soldered.
15. End of lead-in-cable and Type 2 loop conductor shall be waterproofed prior to installing in conduit to prevent moisture from entering the cable.
16. Lead-in-cable shall not be spliced between the pull box and the controller cabinet terminals.
17. Test each loop circuit for continuity, circuit resistance and insulation resistance at the controller cabinet location.
18. Where loop conductors are not to be spliced to a lead-in-cable, the ends of the conductors shall be taped and waterproofed with electrical insulating coating.

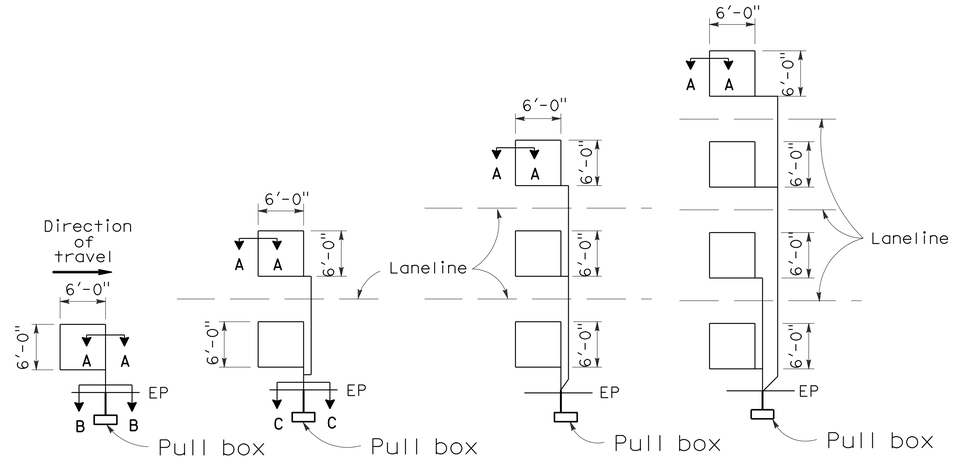

TYPE 1A INSTALLATION | TYPE 2A INSTALLATION | TYPE 3A INSTALLATION | TYPE 4A INSTALLATION

SAWCUT DETAILS

(Type A loop detector configurations illustrated)

1. 1A thru 4A = 1 Type A loop configuration in each lane.
2. 1B thru 4B = 1 Type B loop configuration in each lane.
3. 1C = 1 Type C loop configuration entering lanes as required.
4. 1D thru 4D = 1 Type D loop configuration in each lane.
5. 1E thru 4E = 1 Type E loop configuration in each lane.
6. 1Q thru 4Q = 1 Type Q loop configuration in each lane. (Use Type A, B, C, D, E or Q loop detector configurations only when specified or shown on plans)

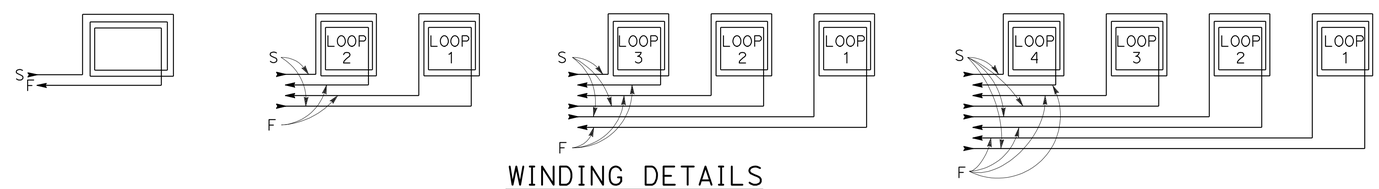

WINDING DETAILS

See Notes 6 and 7

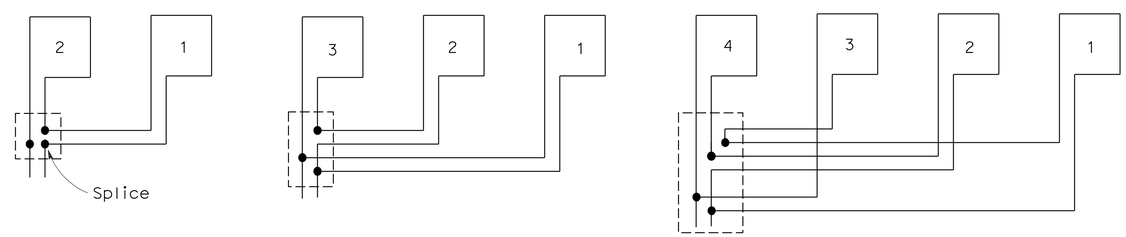

TYPICAL LOOP CONNECTIONS

(Dashed lines represent the pull box)

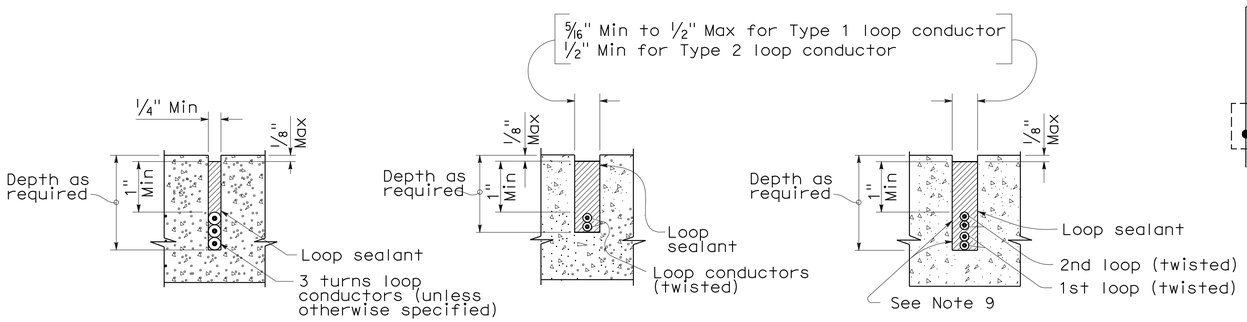

SECTION A-A | SECTION B-B | SECTION C-C

SLOT DETAILS - TYPE 1 AND TYPE 2 LOOP CONDUCTOR

STATE OF CALIFORNIA
DEPARTMENT OF TRANSPORTATION

ELECTRICAL SYSTEMS (DETECTORS)

NO SCALE

RSP ES-5A DATED OCTOBER 5, 2007 SUPERCEDES STANDARD PLAN ES-5A DATED MAY 1, 2006 - PAGE 423 OF THE STANDARD PLANS BOOK DATED MAY 2006.

REVISED STANDARD PLAN RSP ES-5A

2006 REVISED STANDARD PLAN RSP ES-5A

8-17-07

DIST	COUNTY	ROUTE	POST MILES TOTAL PROJECT	SHEET No	TOTAL SHEETS
04	SCI	101	R27.6/40.2	172	173

Kishwar 6-11-08
REGISTERED CIVIL ENGINEER DATE

5-11-09
PLANS APPROVAL DATE

REGISTERED PROFESSIONAL ENGINEER Tanzeeba Kishwar No. 72668 Exp. 6-30-10 CIVIL STATE OF CALIFORNIA

The State of California or its officers or agents shall not be responsible for the accuracy or completeness of electronic copies of this plan sheet.

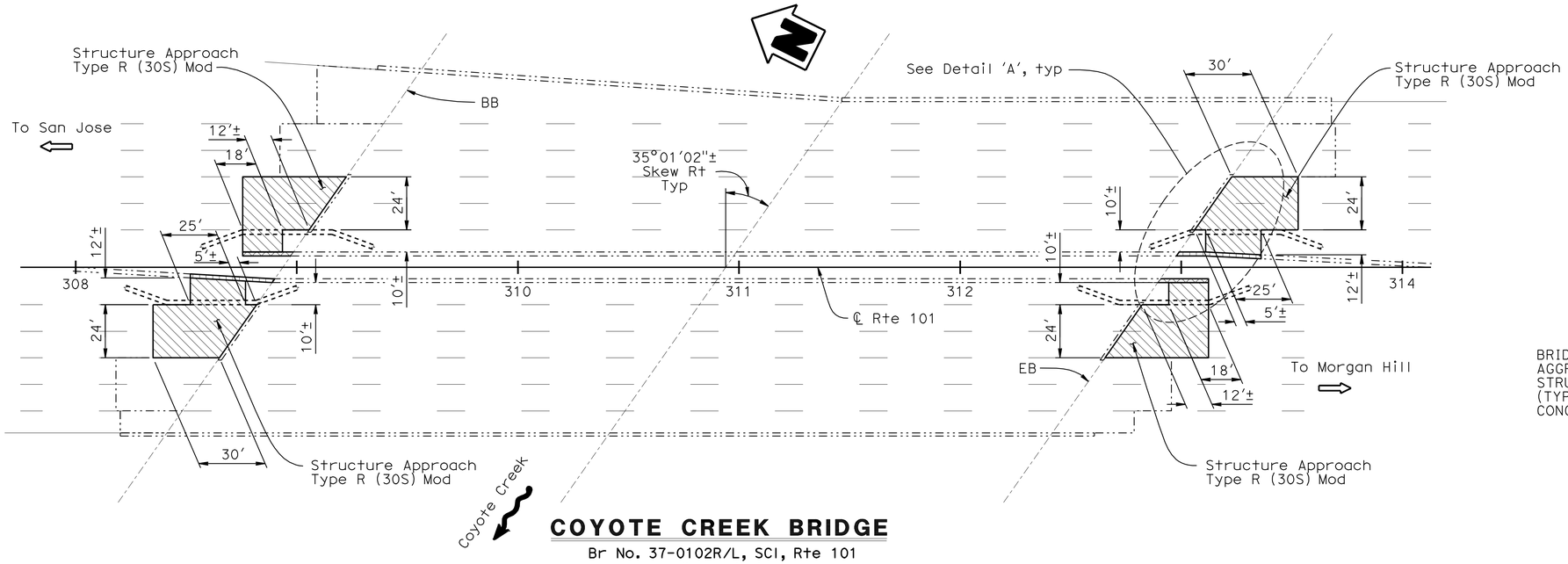

COYOTE CREEK BRIDGE

Br No. 37-0102R/L, SCI, Rte 101
1" = 30'-0"

QUANTITIES

BRIDGE REMOVAL (PORTION)	LUMP	SUM
AGGREGATE BASE (APPROACH SLAB)	19	CY
STRUCTURAL CONCRETE APPROACH SLAB (TYPE R MODIFIED)	188	CY
CONCRETE BARRIER (TYPE 25B)	120	LF

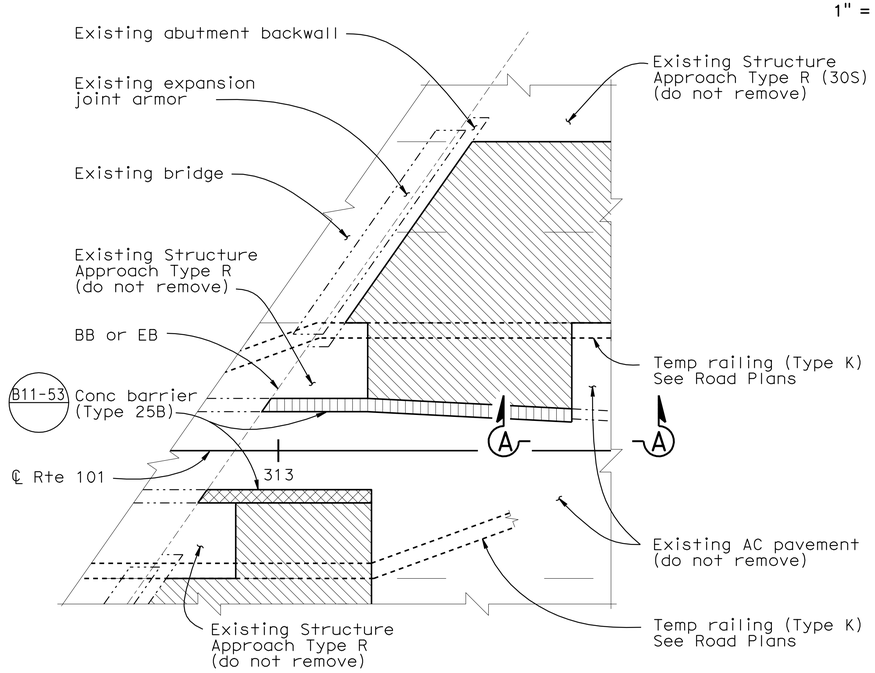

DETAIL 'A'

No scale

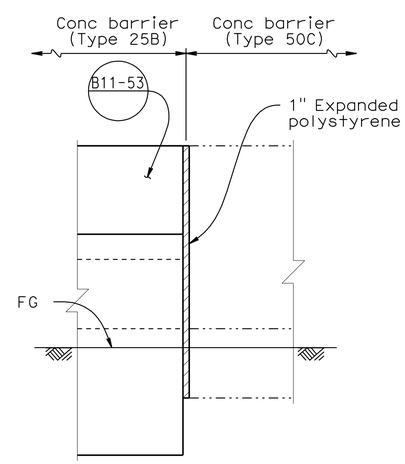

SECTION A-A

No scale

LEGEND:

- Indicates existing structure.
- Indicates limits of removal of existing AC pavement and replace with Structure Approach Type R (30S) Modified.
- Indicates limits of removal of existing concrete barrier (Type 50C) and replace with new conc barrier (Type 25B)
- Indicates new concrete barrier (Type 25B)

INDEX TO PLANS

SHEET NO.	TITLE
1.	GENERAL PLAN
2.	STRUCTURE APPROACH TYPE R (30S) MODIFIED

STANDARD PLANS DATED MAY 2006

SHEET NO.	TITLE
A10A	ACRONYMS AND ABBREVIATIONS (A-L)
A10B	ACRONYMS AND ABBREVIATIONS (M-Z)
A10C	SYMBOLS
A10D	SYMBOLS
B11-53	CONCRETE BARRIER TYPE 25

STANDARD PLAN SHEET NO.

DETAIL NO.

NOTES:

1. For BB or EB, see "SECTION A-A", of "STRUCTURE APPROACH TYPE R (30S) MODIFIED" Sheet.
2. The Contractor shall verify all controling field dimensions before ordering or fabricating any material.

6-11-08 Samad Hamoud
DESIGN ENGINEER

	BY	CHECKED			
DESIGN	T. Kishwar	S. Hamoud	LOAD & RESISTANCE FACTOR DESIGN	LIVE LOADING: HL93 W/"LOW-BOY"; PERMIT DESIGN VEHICLE	
DETAILS	F. Maagma	T. Kishwar	LAYOUT	T. Kishwar	S. Hamoud
QUANTITIES	T. Kishwar	H. Singh	SPECIFICATIONS	M. Kopsa	PLANS AND SPECS COMPARED M. Kopsa

ORIGINAL SCALE IN INCHES FOR REDUCED PLANS 0 1 2 3

STATE OF CALIFORNIA
DEPARTMENT OF TRANSPORTATION

DIVISION OF ENGINEERING SERVICES
STRUCTURE DESIGN
DESIGN BRANCH 16

CU 04609
EA 0C9011

BRIDGE NO. 37-0102R/L
POST MILE 29.8

COYOTE CREEK BRIDGE
GENERAL PLAN

DISREGARD PRINTS BEARING EARLIER REVISION DATES

REVISION DATES: 3-7-08 4-4-08 4-28-08 5-6-08 5-8-08 5-13-08 6-11-08

SHEET 1 OF 2

STRUCTURES DESIGN GENERAL PLAN SHEET (ENGLISH) (REV.07-24-06)

FILE => 37-0102rl-a-gp01.dgn

USERNAME => trmikesi DATE PLOTTED => 31-JUL-2009 TIME PLOTTED => 07:20

DIST.	COUNTY	ROUTE	MILE POST TOTAL PROJECT	SHEET NO.	TOTAL SHEETS
04	SCI	101	R27.6/40.2	173	173

Kishwar 6-11-08
REGISTERED ENGINEER - CIVIL

5-11-09
PLANS APPROVAL DATE

REGISTERED PROFESSIONAL ENGINEER Tanzeeba Kishwar No. 72668 Exp. 6-30-10 CIVIL STATE OF CALIFORNIA

The State of California or its officers or agents shall not be responsible for the accuracy or completeness of electronic copies of this plan sheet.

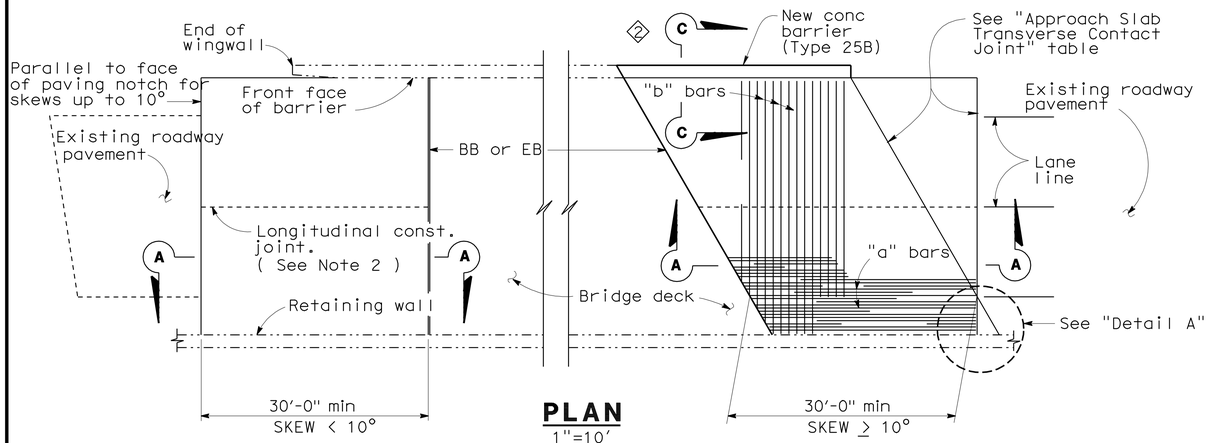

PLAN
1"=10'

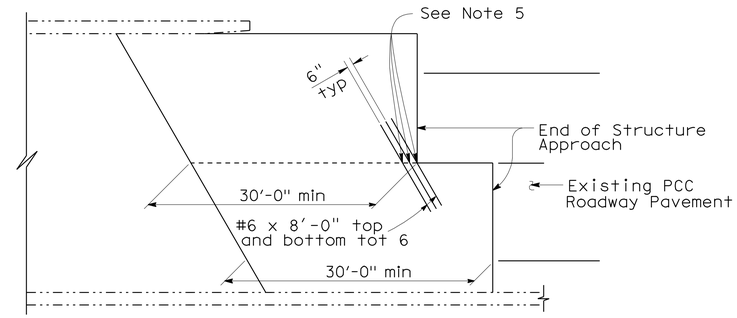

STRUCTURE APPROACH - END STAGGER DETAIL
No Scale

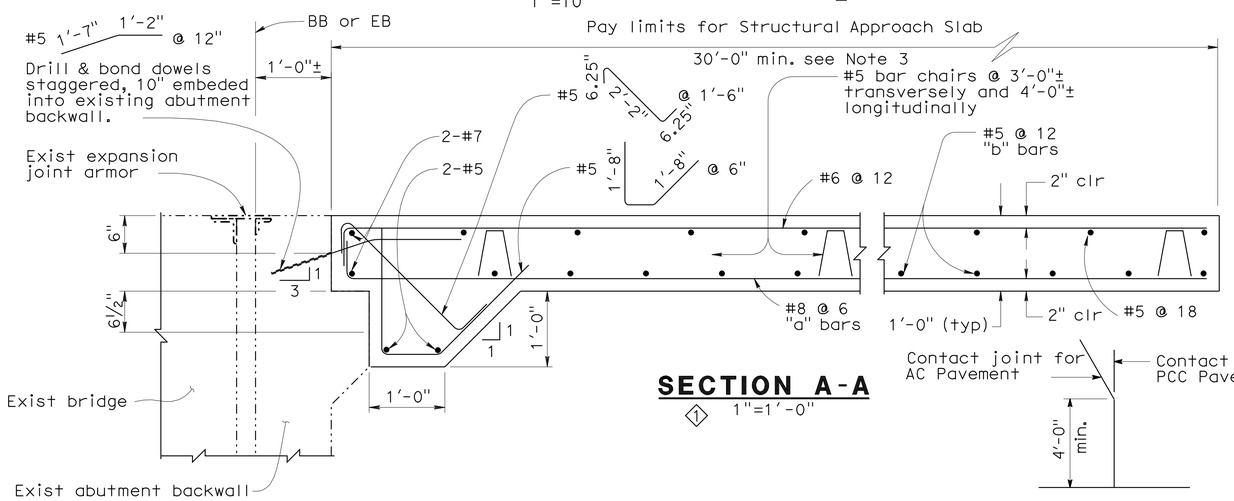

SECTION A-A
1 1"=1'-0"

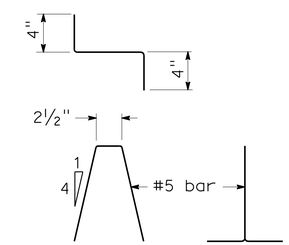

BAR CHAIR DETAIL
1½"=1'-0"

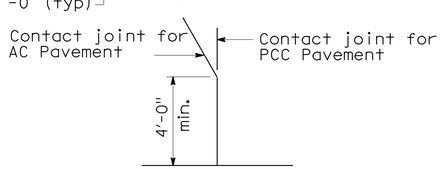

DETAIL A
No Scale

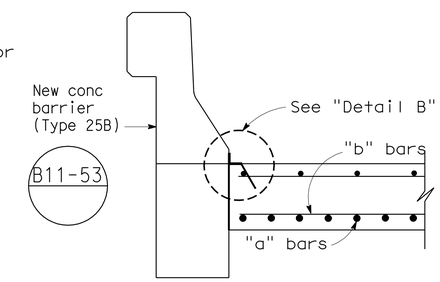

2

SECTION C-C
¾"=1'-0"

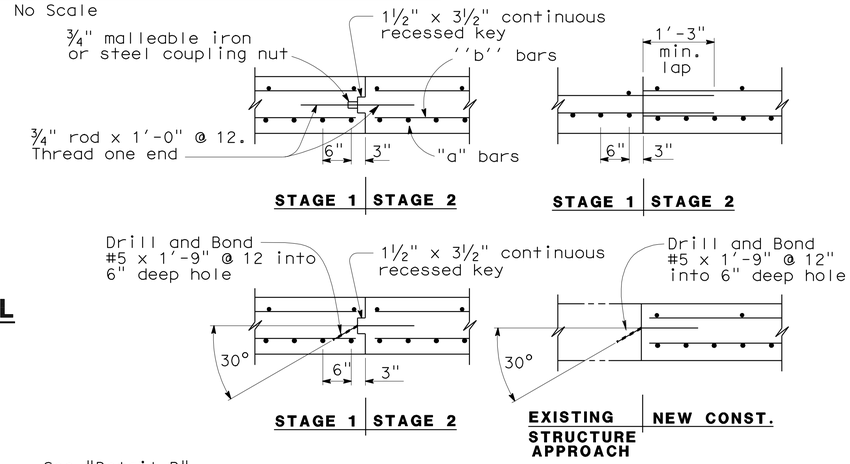

LONGITUDINAL CONSTRUCTION JOINT ALTERNATIVES
¾"=1'-0"

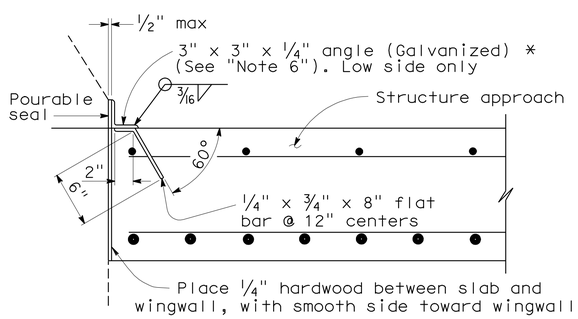

*(TO BE USED WITH TYPE 25 OR TYPE 27 CONCRETE BARRIER)

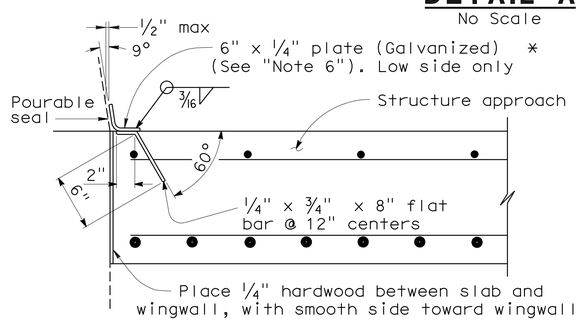

*(TO BE USED WITH TYPE 732 OR TYPE 736 CONCRETE BARRIER)

DETAIL B
1½"=1'-0"

APPROACH SLAB TRANSVERSE CONTACT JOINT		
APPROACH SKEW	WITH AC ROADWAY PAVEMENT	WITH PCC ROADWAY PAVEMENT
< 10°	Parallel to face of paving notch	Parallel to face of paving notch
10°- 45°	Parallel to face of P N use (Detail A)	Stagger lines 24' to 36' apart
> 45°	Parallel to face of P N use (Detail A)	Stagger at each lane line

NOTES:

1. Sealed joint,for M.R.see Structure Plans. Adjust bar reinforcement to clear a sawcut for sealed joint,when required.
2. Longitudinal construction joints,when permitted by Engineer,shall be located on lane lines.
3. Transverse contact joint shall be a minimum of 5'-0" from an existing or constructed weakened plane joint.
4. For transverse contact joint with new PCC paving, refer to Standard Plan P10.
5. Couplers are required for stage construction.
6. End angle or plate at beginning of barrier transition, end of wingwall or end of structure approach as applicable.

NOTE:
THE CONTRACTOR SHALL VERIFY ALL CONTROLLING FIELD DIMENSIONS BEFORE ORDERING OR FABRICATING ANY MATERIAL.

1 Modified connection at "Section A-A".
2 Modified "Section C-C".

DESIGN	BY T. Kishwar	CHECKED S. Hamoud	
DETAILS	BY F. Maagma	CHECKED T. Kishwar	
QUANTITIES	BY T. Kishwar	CHECKED H. Singh	

STATE OF CALIFORNIA
DEPARTMENT OF TRANSPORTATION

DIVISION OF ENGINEERING SERVICES
STRUCTURE DESIGN
DESIGN BRANCH 16

BRIDGE NO. 37-0102R/L
MILE POST 29.8

COYOTE CREEK BRIDGE
STRUCTURE APPROACH TYPE R(30S) MODIFIED

STRUCTURES DESIGN DETAIL SHEET (ENGLISH) (REV. 10/25/05)

ORIGINAL SCALE IN INCHES FOR REDUCED PLANS 0 1 2 3

CU 04609
EA 0C9011

DISREGARD PRINTS BEARING EARLIER REVISION DATES

REVISION DATES (PRELIMINARY STAGE ONLY) 3-7-08 4-4-08 4-28-08 5-6-08 5-8-08 6-11-08

SHEET 2 OF 2

FILE => 37-0102rl-q-jntdt01.dgn

37-0102rl-q-jntdt0

DATE PLOTTED => 31-JUL-2009 TIME PLOTTED => 07:20