Dist	COUNTY	ROUTE	POST MILES TOTAL PROJECT	SHEET No.	TOTAL SHEETS
04	Mrn	101	0.0/8.5	1	129

INDEX OF PLANS

SHEET No.	DESCRIPTION
1	TITLE SHEET AND LOCATION MAP
2 - 3	TYPICAL CROSS SECTIONS
4 - 63	CONSTRUCTION DETAILS
64 - 77	CONSTRUCTION AREA SIGNS
78 - 86	PAVEMENT DELINEATION PLAN, DETAILS AND QUANTITIES
87 - 92	SUMMARY OF QUANTITIES
93 - 100	ELECTRICAL PLANS
101- 129	REVISED AND NEW STANDARD PLANS

THE STANDARD PLANS LIST APPLICABLE TO THIS CONTRACT IS INCLUDED IN THE NOTICE TO BIDDERS AND SPECIAL PROVISIONS BOOK.

STATE OF CALIFORNIA

DEPARTMENT OF TRANSPORTATION

PROJECT PLANS FOR CONSTRUCTION ON

STATE HIGHWAY

IN MARIN COUNTY

IN AND NEAR SAUSALITO, MILL VALLEY, CORTE MADERA, AND LARKSPUR AND AT MARIN CITY FROM THE GOLDEN GATE BRIDGE TO CORTE MADERA CREEK

TO BE SUPPLEMENTED BY STANDARD PLANS DATED MAY 2006

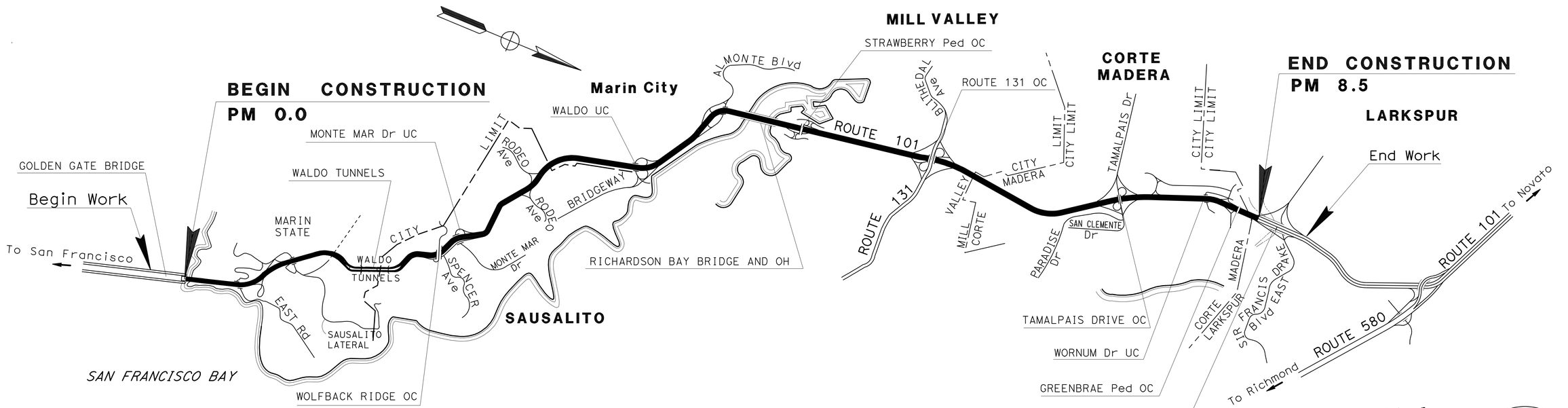

NO SCALE

THE CONTRACTOR SHALL POSSESS THE CLASS (OR CLASSES) OF LICENSE AS SPECIFIED IN THE "NOTICE TO BIDDERS."

PROJECT MANAGER: BETCY JOSEPH

DESIGN ENGINEER: GHULAM POPAL

6/8/11
PROJECT ENGINEER REGISTERED CIVIL ENGINEER — DATE

REGISTERED PROFESSIONAL ENGINEER — Tam A. Ly — No. 69254 — Exp. 6-30-12 — CIVIL — STATE OF CALIFORNIA

June 20, 2011
PLANS APPROVAL DATE

THE STATE OF CALIFORNIA OR ITS OFFICERS OR AGENTS SHALL NOT BE RESPONSIBLE FOR THE ACCURACY OR COMPLETENESS OF SCANNED COPIES OF THIS PLAN SHEET.

CONTRACT No.	04-0C7404
PROJECT ID	0400020590

LAST REVISION 06-20-11
DATE PLOTTED => 30-SEP-2011
TIME PLOTTED => 13:03

TYPICAL PAVEMENT STRUCTURE SECTIONS

1 — Exist (PM 0.0/3.6)
0.06′ TO 0.10′ OGAC
0.25′ TO 0.90′ AC (TYPE A)
1.00′ SUBBASE

2 — Exist (PM 0.9/1.1)
0.70′ PCC
0.30′ CTB
1.00′ SUBBASE

3 — Exist (PM 2.5/8.5)
0.15′ RAC-G
0.25′ TO 0.90′ AC (TYPE A)
1.00′ SUBBASE

DESIGN DESIGNATION (ROUTE 101)

2010	AADT	176,147
2032	AADT	237,762
2032	DHV	16,895
	D	57
20	YEAR YEAR TI	11.5
20	YEAR ESAL	8,272,000

ABBREVIATIONS

HMA OGFC	HOT MIX ASPHALT OPEN GRADED FRICTION COURSE
HMA-A	HOT MIX ASPHALT (TYPE A)
APP	ALTERNATIVE PLASTIC PIPE

NOTES

1. DIMENSIONS OF THE PAVEMENT STRUCTURES (STRUCTURAL SECTIONS) ARE SUBJECT TO TOLERANCES SPECIFIED IN THE STANDARD SPECIFICATIONS.
2. FABRIC AT 0.15′ BELOW AC (TYPE A) AT:
   SB OFF-RAMP TO FRONTAGE Rd
   NB OFF-RAMP TO ROUTE 131
   SB ON-RAMP TO ROUTE 131

Dist	COUNTY	ROUTE	POST MILES TOTAL PROJECT	SHEET No.	TOTAL SHEETS
04	Mrn	101	0.0/8.5	2	129

Tam Ly 6/9/11
REGISTERED CIVIL ENGINEER DATE

6-20-11
PLANS APPROVAL DATE

REGISTERED PROFESSIONAL ENGINEER — Tam A. Ly — No. 69254 — Exp 6-30-12 — CIVIL — STATE OF CALIFORNIA

THE STATE OF CALIFORNIA OR ITS OFFICERS OR AGENTS SHALL NOT BE RESPONSIBLE FOR THE ACCURACY OR COMPLETENESS OF SCANNED COPIES OF THIS PLAN SHEET.

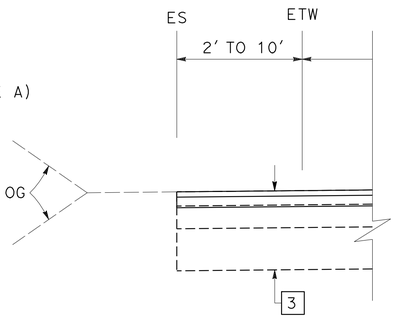

SOUTHBOUND
FROM PM 7.9 TO 8.5

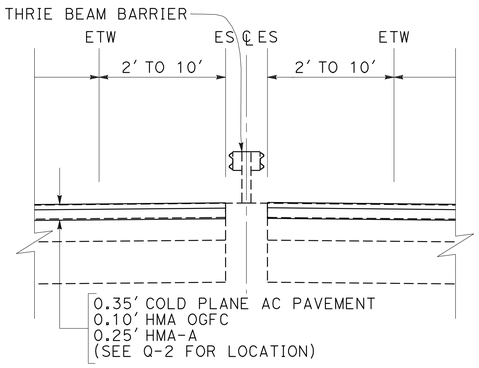

NORTHBOUND
FROM PM 7.9 TO 8.5

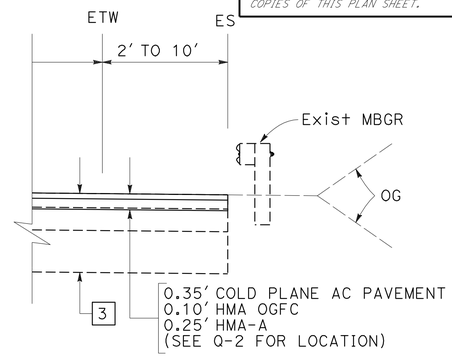

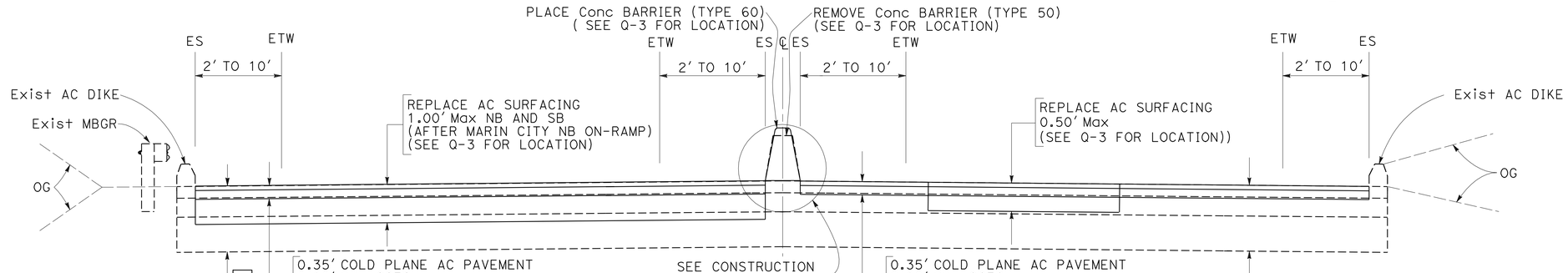

SOUTHBOUND
FROM PM 3.3 TO 7.9

NORTHBOUND
FROM PM 3.3 TO 7.9

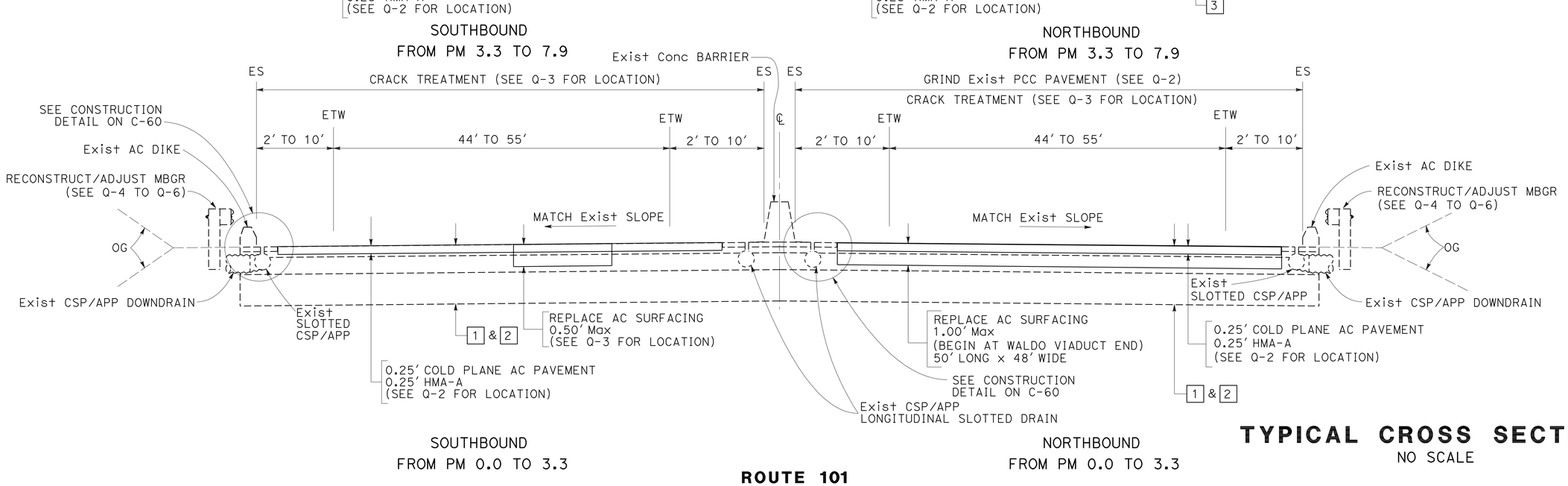

SOUTHBOUND
FROM PM 0.0 TO 3.3

NORTHBOUND
FROM PM 0.0 TO 3.3

TYPICAL CROSS SECTIONS

NO SCALE

ROUTE 101

X-1

STATE OF CALIFORNIA - DEPARTMENT OF TRANSPORTATION
DESIGN
FUNCTIONAL SUPERVISOR: GHULAM POPAL
CALCULATED-DESIGNED BY: T. L
CHECKED BY: GHULAM POPAL
REVISED BY: TAM LY
DATE REVISED: 06/20/11

LAST REVISION | DATE PLOTTED => 30-SEP-2011 | TIME PLOTTED => 13:04
05-10-11

BORDER LAST REVISED 7/2/2010
USERNAME => s131681
DGN FILE => 0400020590ca001.dgn
RELATIVE BORDER SCALE IS IN INCHES 0 1 2 3
UNIT 0976
PROJECT NUMBER & PHASE 04000205901

Dist	COUNTY	ROUTE	POST MILES TOTAL PROJECT	SHEET No.	TOTAL SHEETS
04	Mrn	101	0.0/8.5	3	129

REGISTERED CIVIL ENGINEER 6/9/11 DATE

6-20-11
PLANS APPROVAL DATE

REGISTERED PROFESSIONAL ENGINEER Tam A. Ly No. 69254 Exp. 6-30-12 CIVIL STATE OF CALIFORNIA

THE STATE OF CALIFORNIA OR ITS OFFICERS OR AGENTS SHALL NOT BE RESPONSIBLE FOR THE ACCURACY OR COMPLETENESS OF SCANNED COPIES OF THIS PLAN SHEET.

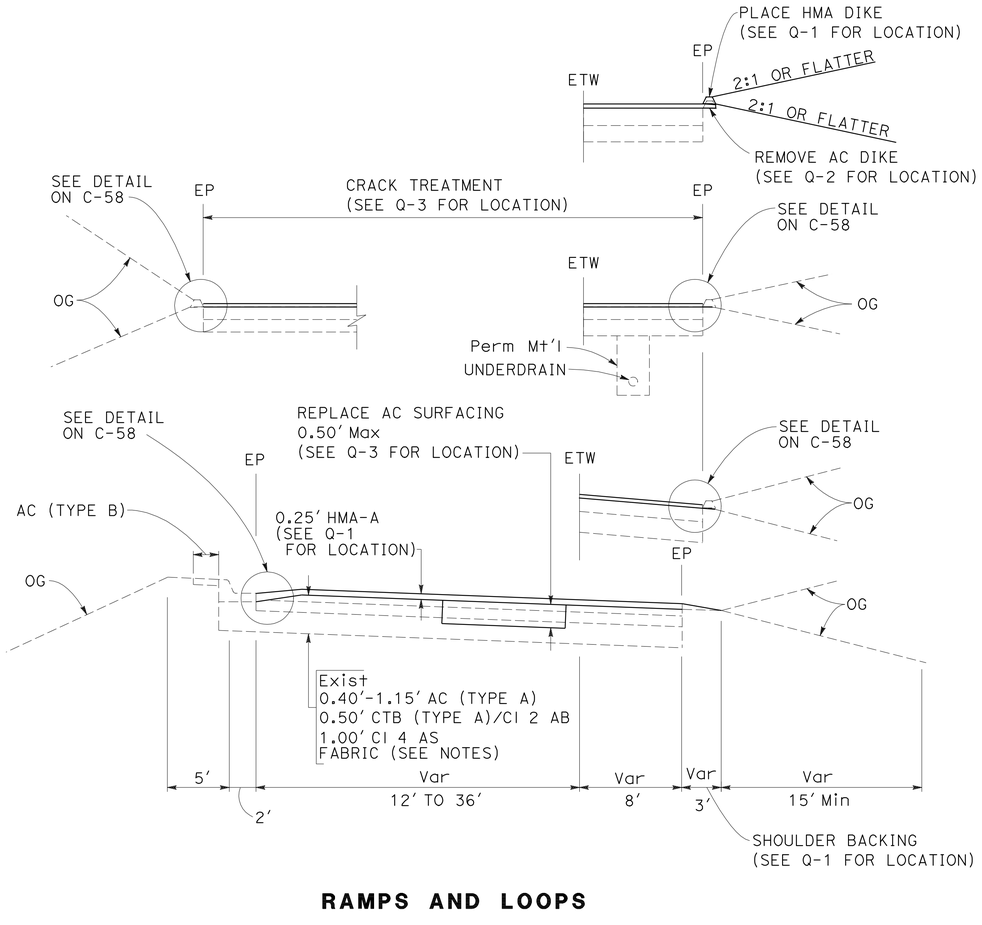

RAMPS AND LOOPS

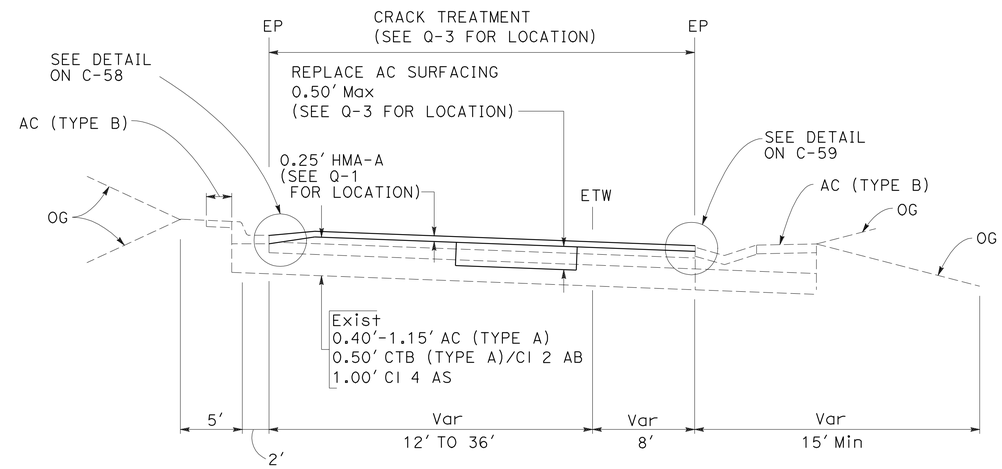

TYPICAL RAMP WITH EXISTING CONCRETE DITCH

TYPICAL CROSS SECTIONS

NO SCALE

FOR NOTES, ABBREVIATIONS AND LEGEND, SEE SHEET X-1

X-2

STATE OF CALIFORNIA - DEPARTMENT OF TRANSPORTATION
Caltrans
DESIGN

FUNCTIONAL SUPERVISOR: GHULAM POPAL
CALCULATED-DESIGNED BY: TAM LY
CHECKED BY: GHULAM POPAL
REVISED BY: T. L
DATE REVISED: 06/20/11

LAST REVISION 05-10-11
DATE PLOTTED => 30-SEP-2011
TIME PLOTTED => 13:04

Dist	COUNTY	ROUTE	POST MILES TOTAL PROJECT	SHEET No.	TOTAL SHEETS
04	Mrn	101	0.0/8.5	4	129

REGISTERED CIVIL ENGINEER — DATE 6/9/11

PLANS APPROVAL DATE 6-20-11

REGISTERED PROFESSIONAL ENGINEER — Tam A. Ly — No. 69254 — Exp 6-30-12 — CIVIL — STATE OF CALIFORNIA

THE STATE OF CALIFORNIA OR ITS OFFICERS OR AGENTS SHALL NOT BE RESPONSIBLE FOR THE ACCURACY OR COMPLETENESS OF SCANNED COPIES OF THIS PLAN SHEET.

LEGEND

- COLD PLANE AC PAVEMENT AND OVERLAY AT CONFORM
- COLD PLANE AC PAVEMENT AND OVERLAY ON MAINLINE
- PCC GRINDING
- AC OVERLAY ON RAMPS
- ⊗ REPLACE PYLON MOUNTING HOLE

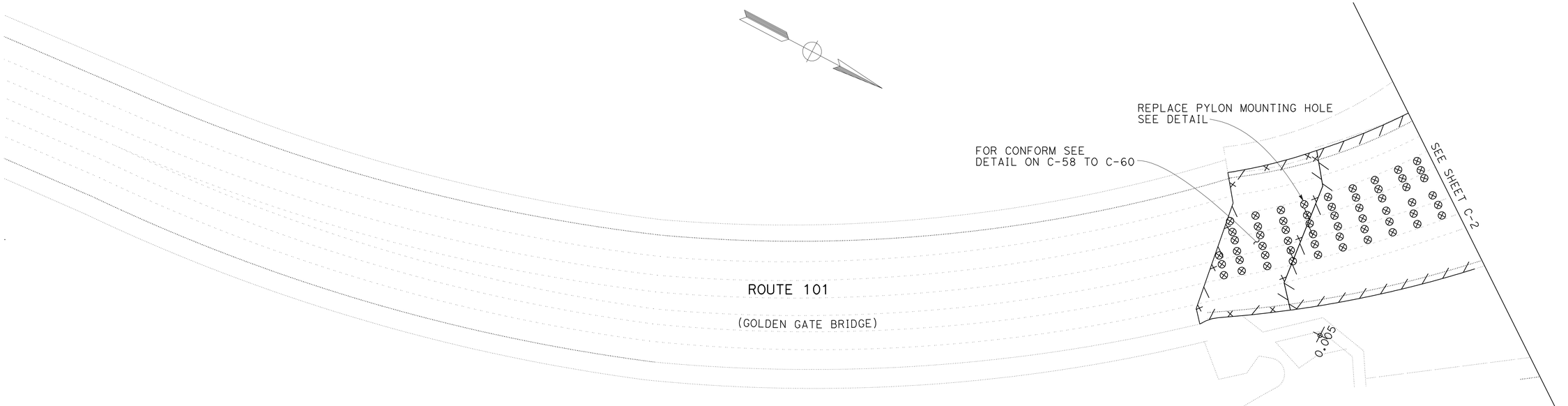

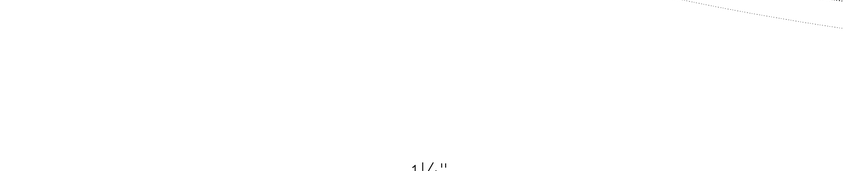

PYLON MOUNTING HOLE DETAIL

EXISTING PYLON MOUNTING HOLE REMOVAL AND SLURRY FILL DETAIL

CONSTRUCTION DETAILS

NO SCALE

C-1

STATE OF CALIFORNIA - DEPARTMENT OF TRANSPORTATION — DESIGN — Caltrans®

FUNCTIONAL SUPERVISOR: GHULAM POPAL

CALCULATED-DESIGNED BY: TAM LY

CHECKED BY: GHULAM POPAL

REVISED BY	DATE REVISED
T. L	06/20/11

LAST REVISION — DATE PLOTTED => 30-SEP-2011 — TIME PLOTTED => 13:04

BORDER LAST REVISED 7/2/2010

USERNAME => s131681
DGN FILE => 0400020590ga001.dgn

RELATIVE BORDER SCALE IS IN INCHES 0 1 2 3

UNIT 0976 | PROJECT NUMBER & PHASE 04000205901

Dist	COUNTY	ROUTE	POST MILES TOTAL PROJECT	SHEET No.	TOTAL SHEETS
04	Mrn	101	0.0/8.5	5	129

6/9/11
REGISTERED CIVIL ENGINEER DATE

6-20-11
PLANS APPROVAL DATE

REGISTERED PROFESSIONAL ENGINEER
Tam A. Ly
No. 69254
Exp 6-30-12
CIVIL
STATE OF CALIFORNIA

THE STATE OF CALIFORNIA OR ITS OFFICERS OR AGENTS SHALL NOT BE RESPONSIBLE FOR THE ACCURACY OR COMPLETENESS OF SCANNED COPIES OF THIS PLAN SHEET.

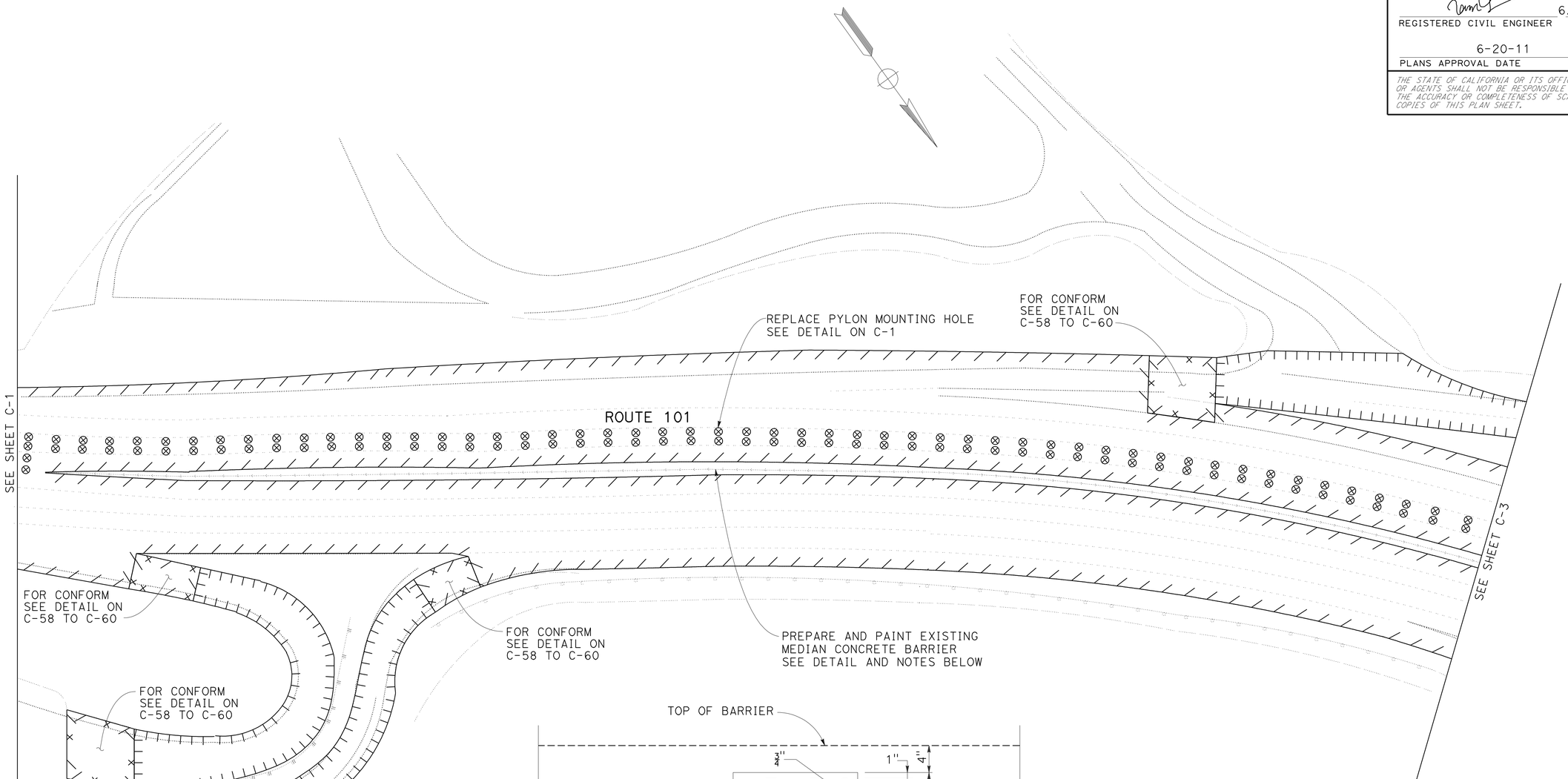

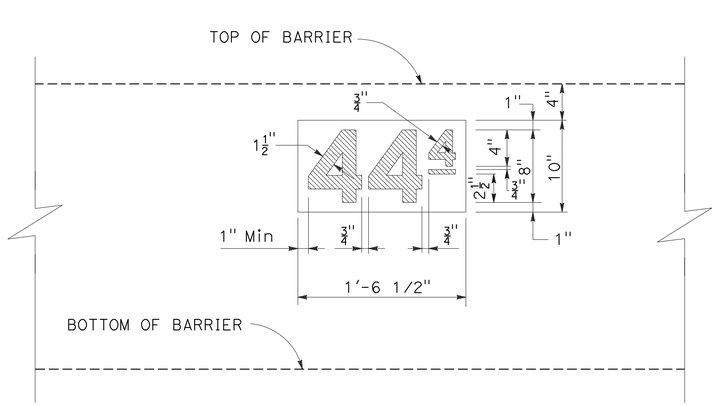

POSTMILE PAINTING DETAIL

NOTES:

1. POSTMILE MARKING SHALL BE PAINTED ON BOTH SIDES OF BARRIER.
2. WHOLE NUMBERS SHALL BE PAINTED BLACK USING A STENCIL SIZE DESIGNATION OF "8D" AND TENTHS SHALL BE PAINTED BLACK USING A STENCIL SIZE DESIGNATION OF "4D"
3. THE POSTMILE TENTH NUMERAL SHOULD BE STENCILED ON THE Conc BARRIER EVERY ONE-TENTH OF A MILE WITH ¾" BLACK UNDERLINE.
4. CENTER BLACK NUMBERS ON WHITE RECTANGLE BACKGROUND.

CONSTRUCTION DETAILS

NO SCALE

C-2

FOR NOTES, ABBREVIATIONS AND LEGEND, SEE SHEET C-1

CALCULATED-DESIGNED BY: TAM LY
CHECKED BY: GHULAM POPAL
REVISED BY: T. L
DATE REVISED: 06/20/11
FUNCTIONAL SUPERVISOR: GHULAM POPAL
STATE OF CALIFORNIA - DEPARTMENT OF TRANSPORTATION
DESIGN

LAST REVISION DATE PLOTTED => 30-SEP-2011
TIME PLOTTED => 13:04

BORDER LAST REVISED 7/2/2010
USERNAME => s131681
DGN FILE => 0400020590ga002.dgn
RELATIVE BORDER SCALE IS IN INCHES 0 1 2 3
UNIT 0976
PROJECT NUMBER & PHASE 04000205901

Dist	COUNTY	ROUTE	POST MILES TOTAL PROJECT	SHEET No.	TOTAL SHEETS
04	Mrn	101	0.0/8.5	6	129

6/9/11
REGISTERED CIVIL ENGINEER DATE

6-20-11
PLANS APPROVAL DATE

REGISTERED PROFESSIONAL ENGINEER
Tam A. Ly
No. 69254
Exp 6-30-12
CIVIL
STATE OF CALIFORNIA

THE STATE OF CALIFORNIA OR ITS OFFICERS OR AGENTS SHALL NOT BE RESPONSIBLE FOR THE ACCURACY OR COMPLETENESS OF SCANNED COPIES OF THIS PLAN SHEET.

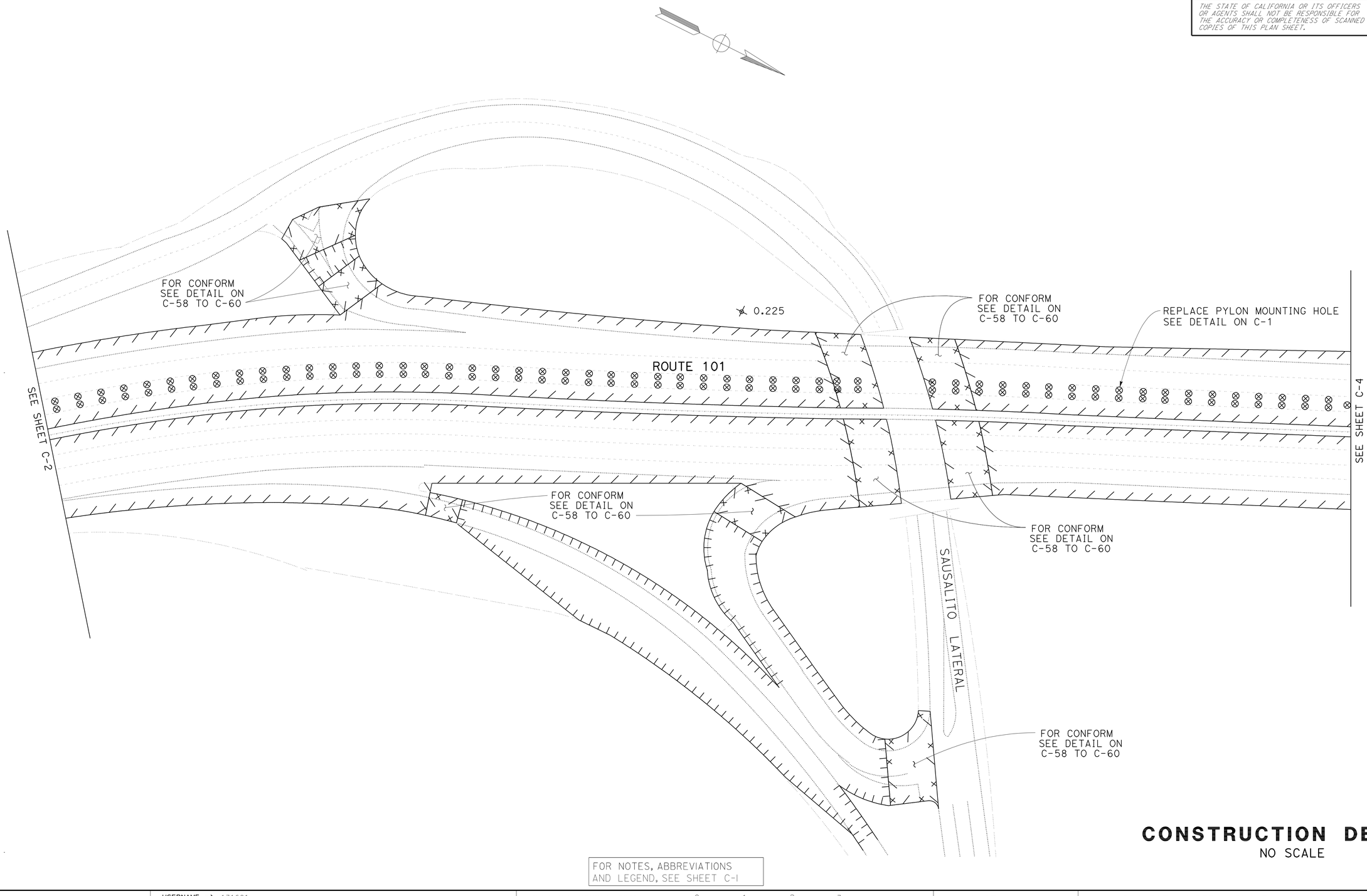

FOR NOTES, ABBREVIATIONS AND LEGEND, SEE SHEET C-1

CONSTRUCTION DETAILS

NO SCALE

C-3

CALCULATED-DESIGNED BY
CHECKED BY
TAM LY
GHULAM POPAL
REVISED BY
DATE REVISED
T. L
06/20/11
FUNCTIONAL SUPERVISOR
GHULAM POPAL
STATE OF CALIFORNIA - DEPARTMENT OF TRANSPORTATION
DESIGN

LAST REVISION | DATE PLOTTED => 30-SEP-2011
04-14-11 | TIME PLOTTED => 13:05

BORDER LAST REVISED 7/2/2010

USERNAME => s131681
DGN FILE => 0400020590ga003.dgn

RELATIVE BORDER SCALE IS IN INCHES 0 1 2 3

UNIT 0976

PROJECT NUMBER & PHASE 04000205901

Dist	COUNTY	ROUTE	POST MILES TOTAL PROJECT	SHEET No.	TOTAL SHEETS
04	Mrn	101	0.0/8.5	7	129

6/9/11
REGISTERED CIVIL ENGINEER DATE

6-20-11
PLANS APPROVAL DATE

REGISTERED PROFESSIONAL ENGINEER
Tam A. Ly
No. 69254
Exp 6-30-12
CIVIL
STATE OF CALIFORNIA

THE STATE OF CALIFORNIA OR ITS OFFICERS OR AGENTS SHALL NOT BE RESPONSIBLE FOR THE ACCURACY OR COMPLETENESS OF SCANNED COPIES OF THIS PLAN SHEET.

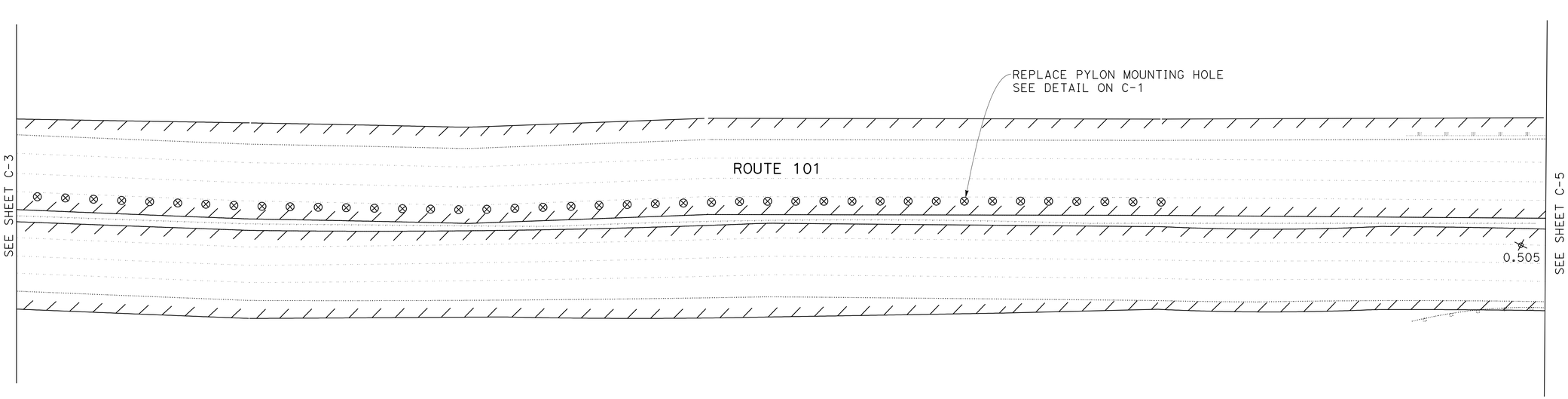

FOR NOTES, ABBREVIATIONS AND LEGEND, SEE SHEET C-1

CONSTRUCTION DETAILS

NO SCALE

C-4

CALCULATED-DESIGNED BY		
CHECKED BY	T. L	06/20/11
	REVISED BY	DATE REVISED
TAM LY		
GHULAM POPAL		
FUNCTIONAL SUPERVISOR		
GHULAM POPAL		

STATE OF CALIFORNIA - DEPARTMENT OF TRANSPORTATION
DESIGN

LAST REVISION 04-14-11
DATE PLOTTED => 30-SEP-2011
TIME PLOTTED => 13:05

BORDER LAST REVISED 7/2/2010
USERNAME => s131681
DGN FILE => 0400020590ga004.dgn
RELATIVE BORDER SCALE IS IN INCHES 0 1 2 3
UNIT 0976
PROJECT NUMBER & PHASE 04000205901

NOTE:

FOR ACCURATE RIGHT OF WAY DATA, CONTACT
RIGHT OF WAY ENGINEERING AT THE DISTRICT OFFICE.

Dist	COUNTY	ROUTE	POST MILES TOTAL PROJECT	SHEET No.	TOTAL SHEETS
04	Mrn	101	0.0/8.5	8	129

REGISTERED CIVIL ENGINEER — DATE: 6/9/11

PLANS APPROVAL DATE: 6-20-11

REGISTERED PROFESSIONAL ENGINEER
Tam A. Ly
No. 69254
Exp 6-30-12
CIVIL
STATE OF CALIFORNIA

THE STATE OF CALIFORNIA OR ITS OFFICERS OR AGENTS SHALL NOT BE RESPONSIBLE FOR THE ACCURACY OR COMPLETENESS OF SCANNED COPIES OF THIS PLAN SHEET.

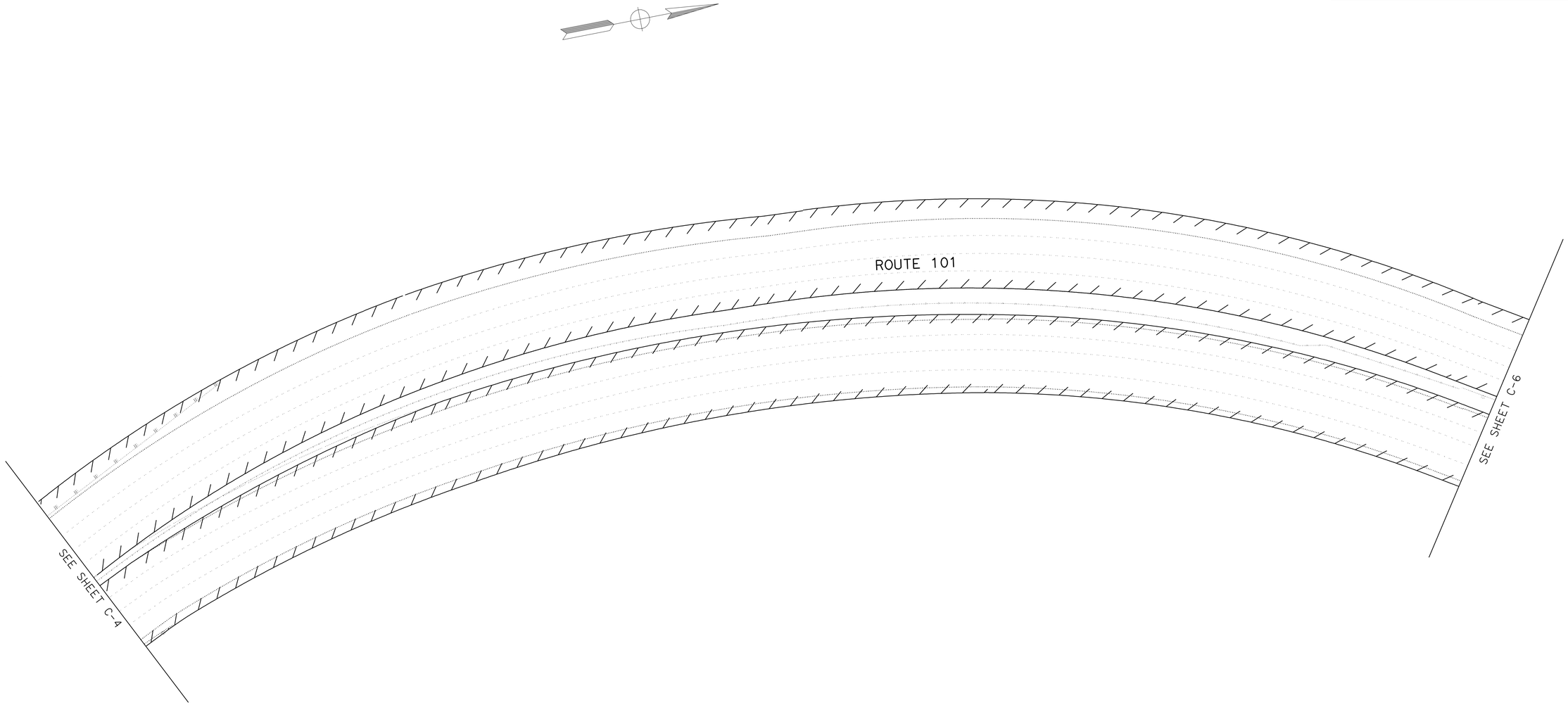

FOR NOTES, ABBREVIATIONS AND LEGEND, SEE SHEET C-1

CONSTRUCTION DETAILS

NO SCALE

C-5

REVISED BY	DATE REVISED
T. L	06/20/11

CALCULATED-DESIGNED BY: TAM LY
CHECKED BY: GHULAM POPAL
FUNCTIONAL SUPERVISOR: GHULAM POPAL

STATE OF CALIFORNIA - DEPARTMENT OF TRANSPORTATION
Caltrans®
DESIGN

LAST REVISION | DATE PLOTTED => 30-SEP-2011
01-21-11 | TIME PLOTTED => 13:05

BORDER LAST REVISED 7/2/2010

USERNAME => s131681
DGN FILE => 0400020590ga005.dgn

RELATIVE BORDER SCALE IS IN INCHES 0 1 2 3

UNIT 0976

PROJECT NUMBER & PHASE 04000205901

NOTE:

FOR ACCURATE RIGHT OF WAY DATA, CONTACT
RIGHT OF WAY ENGINEERING AT THE DISTRICT OFFICE.

Dist	COUNTY	ROUTE	POST MILES TOTAL PROJECT	SHEET No.	TOTAL SHEETS
04	Mrn	101	0.0/8.5	9	129

REGISTERED CIVIL ENGINEER — DATE: 6/9/11

PLANS APPROVAL DATE: 6-20-11

REGISTERED PROFESSIONAL ENGINEER
Tam A. Ly
No. 69254
Exp 6-30-12
CIVIL
STATE OF CALIFORNIA

THE STATE OF CALIFORNIA OR ITS OFFICERS OR AGENTS SHALL NOT BE RESPONSIBLE FOR THE ACCURACY OR COMPLETENESS OF SCANNED COPIES OF THIS PLAN SHEET.

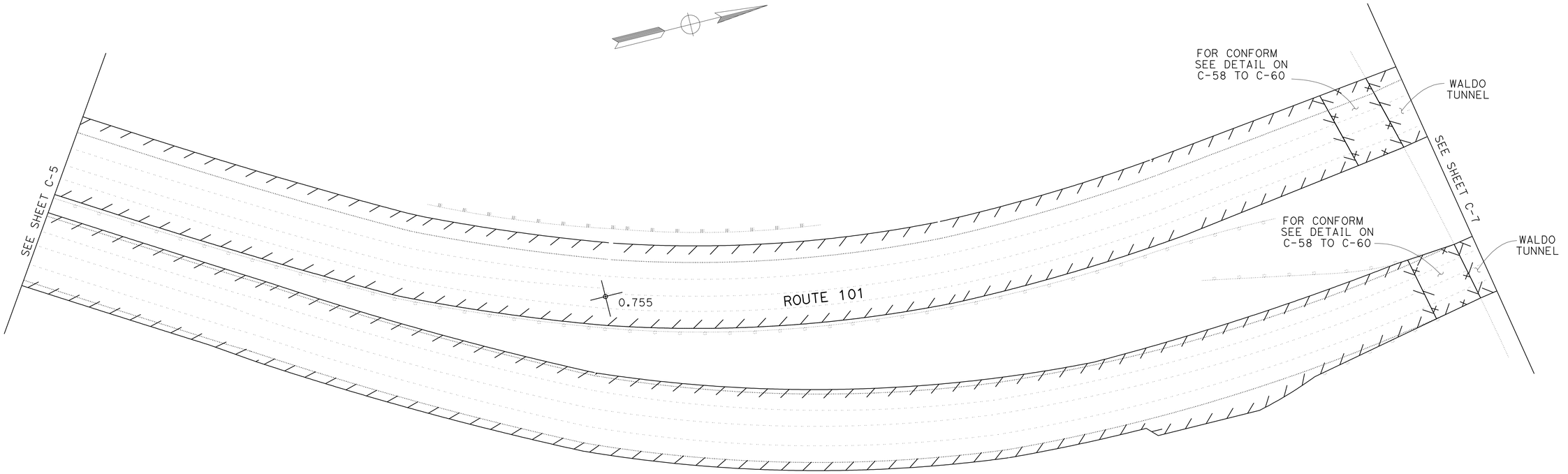

FOR NOTES, ABBREVIATIONS
AND LEGEND, SEE SHEET C-1

CONSTRUCTION DETAILS

NO SCALE

C-6

REVISED BY	T. L	
DATE REVISED	06/20/11	
CALCULATED-DESIGNED BY	TAM LY	
CHECKED BY	GHULAM POPAL	
FUNCTIONAL SUPERVISOR	GHULAM POPAL	

STATE OF CALIFORNIA - DEPARTMENT OF TRANSPORTATION
DESIGN

LAST REVISION 02-23-11 | DATE PLOTTED => 30-SEP-2011 | TIME PLOTTED => 13:05

BORDER LAST REVISED 7/2/2010 | USERNAME => s131681 | DGN FILE => 0400020590ga006.dgn | RELATIVE BORDER SCALE IS IN INCHES 0 1 2 3 | UNIT 0976 | PROJECT NUMBER & PHASE 04000205901

NOTE:

FOR ACCURATE RIGHT OF WAY DATA, CONTACT
RIGHT OF WAY ENGINEERING AT THE DISTRICT OFFICE.

Dist	COUNTY	ROUTE	POST MILES TOTAL PROJECT	SHEET No.	TOTAL SHEETS
04	Mrn	101	0.0/8.5	10	129

6/9/11
REGISTERED CIVIL ENGINEER DATE

6-20-11
PLANS APPROVAL DATE

REGISTERED PROFESSIONAL ENGINEER
Tam A. Ly
No. 69254
Exp 6-30-12
CIVIL
STATE OF CALIFORNIA

THE STATE OF CALIFORNIA OR ITS OFFICERS OR AGENTS SHALL NOT BE RESPONSIBLE FOR THE ACCURACY OR COMPLETENESS OF SCANNED COPIES OF THIS PLAN SHEET.

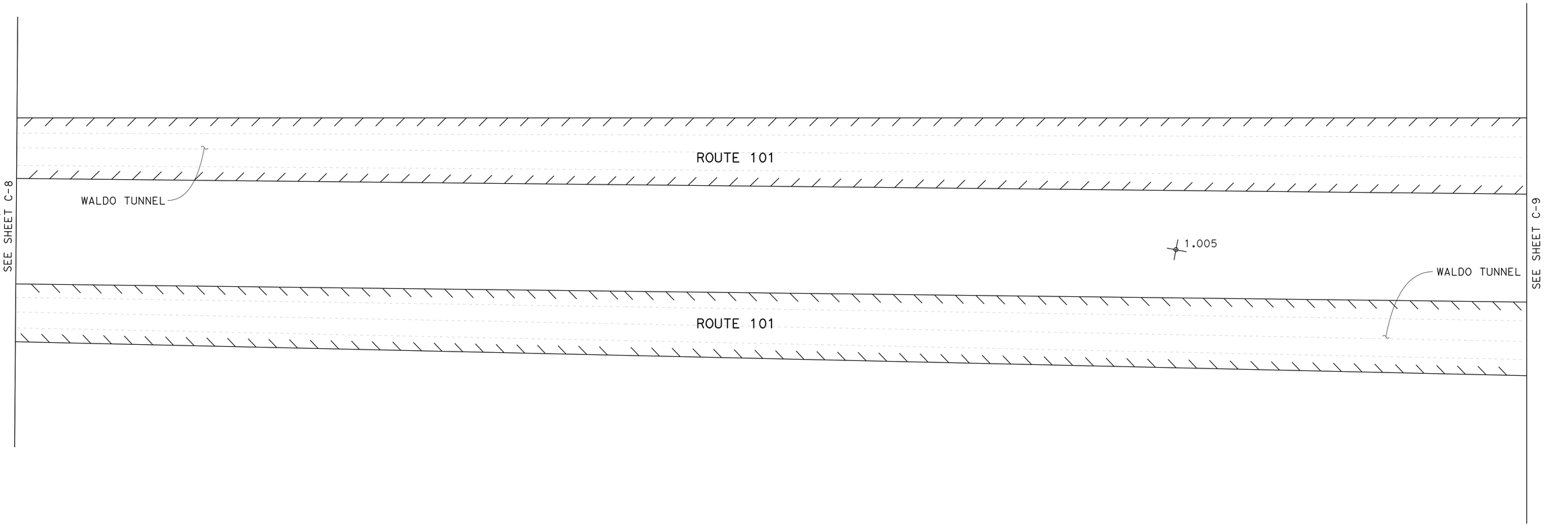

CONSTRUCTION DETAILS

NO SCALE

FOR NOTES, ABBREVIATIONS AND LEGEND, SEE SHEET C-1

C-7

REVISED BY	T. L
DATE REVISED	06/20/11
CALCULATED-DESIGNED BY	TAM LY
CHECKED BY	GHULAM POPAL
FUNCTIONAL SUPERVISOR	GHULAM POPAL

STATE OF CALIFORNIA - DEPARTMENT OF TRANSPORTATION
DESIGN

LAST REVISION | DATE PLOTTED => 30-SEP-2011
01-27-11 | TIME PLOTTED => 13:06

BORDER LAST REVISED 7/2/2010

USERNAME => s131681
DGN FILE => 0400020590ga007.dgn

RELATIVE BORDER SCALE IS IN INCHES 0 1 2 3

UNIT 0976

PROJECT NUMBER & PHASE 04000205901

NOTE:

FOR ACCURATE RIGHT OF WAY DATA, CONTACT
RIGHT OF WAY ENGINEERING AT THE DISTRICT OFFICE.

Dist	COUNTY	ROUTE	POST MILES TOTAL PROJECT	SHEET No.	TOTAL SHEETS
04	Mrn	101	0.0/8.5	11	129

6/9/11
REGISTERED CIVIL ENGINEER DATE

6-20-11
PLANS APPROVAL DATE

REGISTERED PROFESSIONAL ENGINEER
Tam A. Ly
No. 69254
Exp 6-30-12
CIVIL
STATE OF CALIFORNIA

THE STATE OF CALIFORNIA OR ITS OFFICERS OR AGENTS SHALL NOT BE RESPONSIBLE FOR THE ACCURACY OR COMPLETENESS OF SCANNED COPIES OF THIS PLAN SHEET.

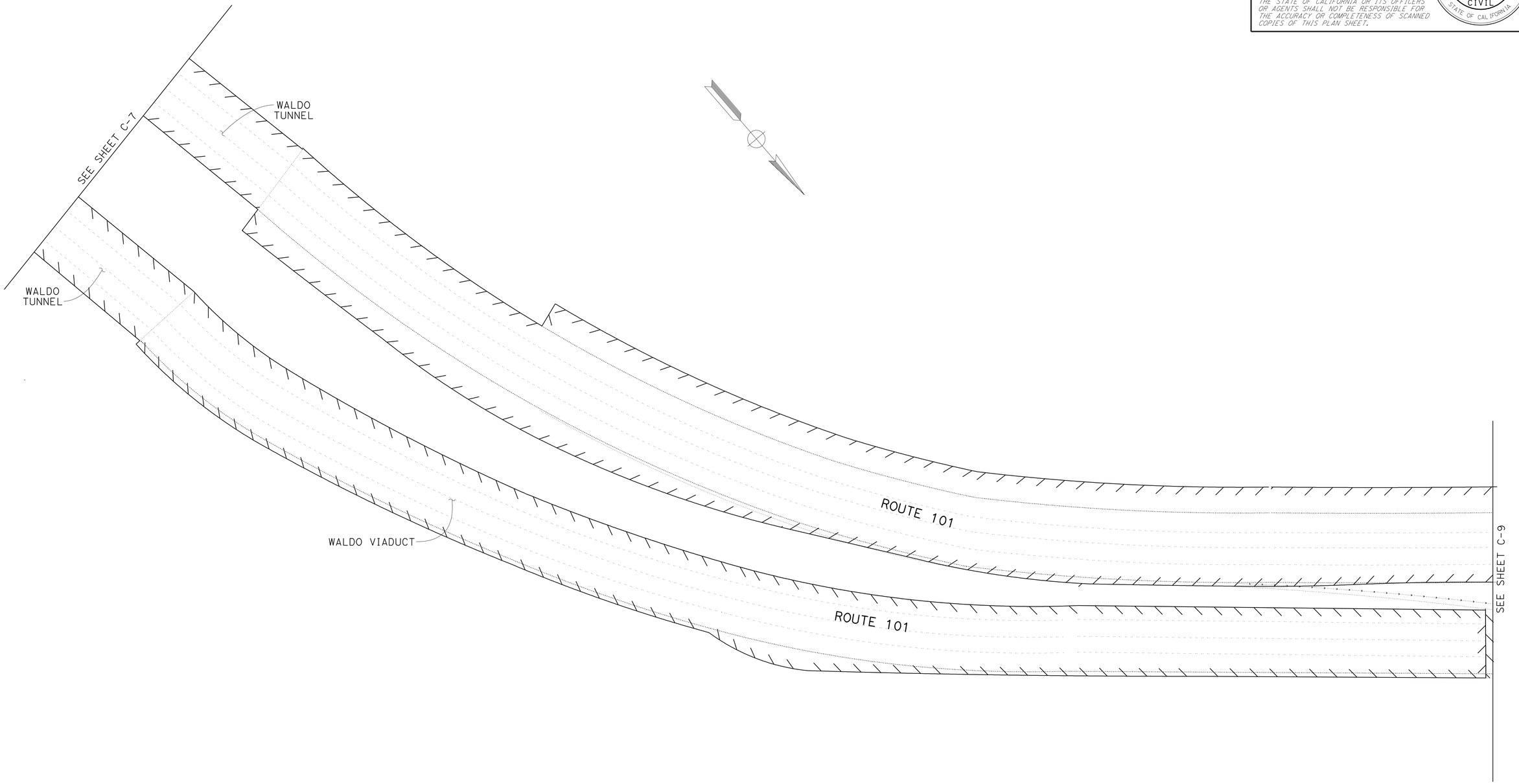

FOR NOTES, ABBREVIATIONS AND LEGEND, SEE SHEET C-1

CONSTRUCTION DETAILS

NO SCALE

C-8

REVISED BY	DATE REVISED
T. L	06/20/11

CALCULATED-DESIGNED BY: TAM LY
CHECKED BY: GHULAM POPAL
FUNCTIONAL SUPERVISOR: GHULAM POPAL

STATE OF CALIFORNIA - DEPARTMENT OF TRANSPORTATION
DESIGN

LAST REVISION | DATE PLOTTED => 30-SEP-2011
01-27-11 | TIME PLOTTED => 13:06

BORDER LAST REVISED 7/2/2010

USERNAME => s131681
DGN FILE => 0400020590ga008.dgn

RELATIVE BORDER SCALE IS IN INCHES 0 1 2 3

UNIT 0976

PROJECT NUMBER & PHASE 04000205901

NOTE:

FOR ACCURATE RIGHT OF WAY DATA, CONTACT
RIGHT OF WAY ENGINEERING AT THE DISTRICT OFFICE.

Dist	COUNTY	ROUTE	POST MILES TOTAL PROJECT	SHEET No.	TOTAL SHEETS
04	Mrn	101	0.0/8.5	12	129

6/9/11
REGISTERED CIVIL ENGINEER DATE

6-20-11
PLANS APPROVAL DATE

REGISTERED PROFESSIONAL ENGINEER
Tam A. Ly
No. 69254
Exp 6-30-12
CIVIL
STATE OF CALIFORNIA

THE STATE OF CALIFORNIA OR ITS OFFICERS OR AGENTS SHALL NOT BE RESPONSIBLE FOR THE ACCURACY OR COMPLETENESS OF SCANNED COPIES OF THIS PLAN SHEET.

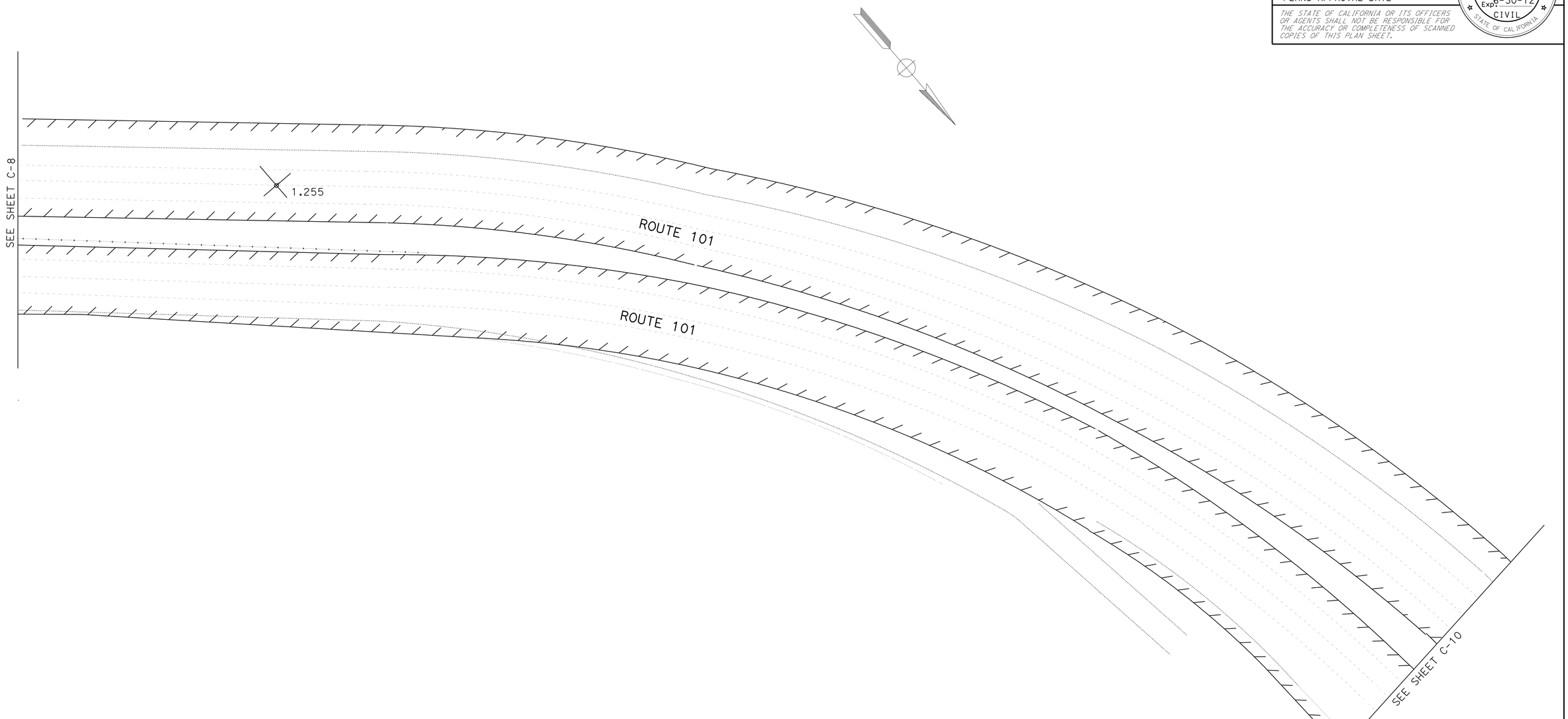

FOR NOTES, ABBREVIATIONS AND LEGEND, SEE SHEET C-1

CONSTRUCTION DETAILS

NO SCALE

C-9

REVISED BY	DATE REVISED
T. L	06/20/11

TAM LY
GHULAM POPAL

CALCULATED-DESIGNED BY
CHECKED BY

FUNCTIONAL SUPERVISOR
GHULAM POPAL

STATE OF CALIFORNIA - DEPARTMENT OF TRANSPORTATION
DESIGN

LAST REVISION | DATE PLOTTED => 30-SEP-2011
01-27-11 | TIME PLOTTED => 13:06

BORDER LAST REVISED 7/2/2010

USERNAME => s131681
DGN FILE => 0400020590ga009.dgn

RELATIVE BORDER SCALE IS IN INCHES 0 1 2 3

UNIT 0976

PROJECT NUMBER & PHASE 04000205901

NOTE:

FOR ACCURATE RIGHT OF WAY DATA, CONTACT
RIGHT OF WAY ENGINEERING AT THE DISTRICT OFFICE.

Dist	COUNTY	ROUTE	POST MILES TOTAL PROJECT	SHEET No.	TOTAL SHEETS
04	Mrn	101	0.0/8.5	13	129

6/9/11
REGISTERED CIVIL ENGINEER DATE

6-20-11
PLANS APPROVAL DATE

REGISTERED PROFESSIONAL ENGINEER
Tam A. Ly
No. 69254
Exp 6-30-12
CIVIL
STATE OF CALIFORNIA

THE STATE OF CALIFORNIA OR ITS OFFICERS OR AGENTS SHALL NOT BE RESPONSIBLE FOR THE ACCURACY OR COMPLETENESS OF SCANNED COPIES OF THIS PLAN SHEET.

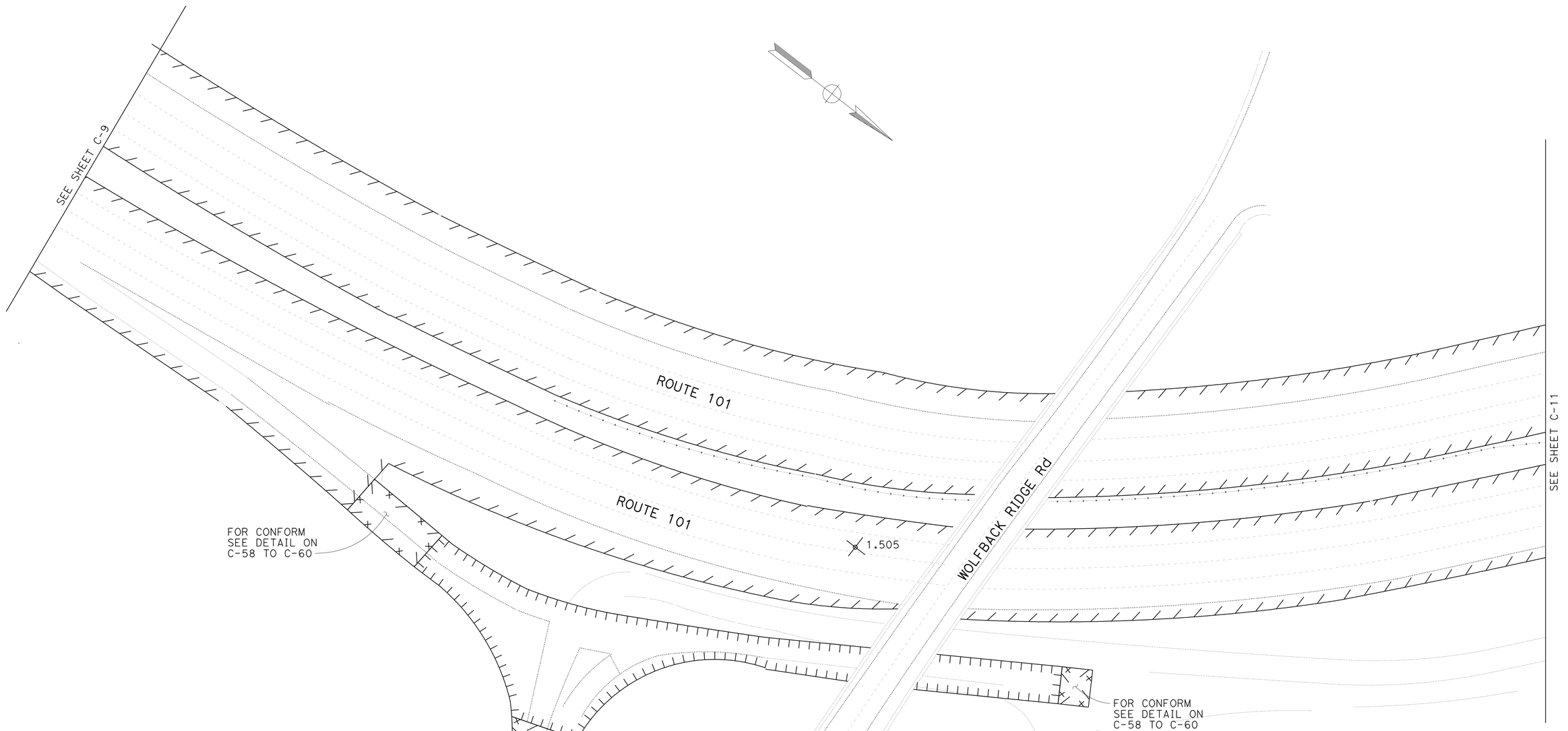

FOR NOTES, ABBREVIATIONS AND LEGEND, SEE SHEET C-1

CONSTRUCTION DETAILS

NO SCALE

C-10

CALCULATED-
DESIGNED BY TAM LY

CHECKED BY GHULAM POPAL

FUNCTIONAL SUPERVISOR GHULAM POPAL

STATE OF CALIFORNIA - DEPARTMENT OF TRANSPORTATION
Caltrans® DESIGN

REVISED BY T. L
DATE REVISED 06/20/11

LAST REVISION | DATE PLOTTED => 30-SEP-2011
02-24-11 | TIME PLOTTED => 13:06

BORDER LAST REVISED 7/2/2010

USERNAME => s131681
DGN FILE => 0400020590ga010.dgn

RELATIVE BORDER SCALE IS IN INCHES 0 1 2 3

UNIT 0976

PROJECT NUMBER & PHASE 04000205901

Dist	COUNTY	ROUTE	POST MILES TOTAL PROJECT	SHEET No.	TOTAL SHEETS
04	Mrn	101	0.0/8.5	14	129

REGISTERED CIVIL ENGINEER 6/9/11 DATE

6-20-11
PLANS APPROVAL DATE

REGISTERED PROFESSIONAL ENGINEER Tam A. Ly No. 69254 Exp. 6-30-12 CIVIL STATE OF CALIFORNIA

THE STATE OF CALIFORNIA OR ITS OFFICERS OR AGENTS SHALL NOT BE RESPONSIBLE FOR THE ACCURACY OR COMPLETENESS OF SCANNED COPIES OF THIS PLAN SHEET.

NOTE:

FOR ACCURATE RIGHT OF WAY DATA, CONTACT RIGHT OF WAY ENGINEERING AT THE DISTRICT OFFICE.

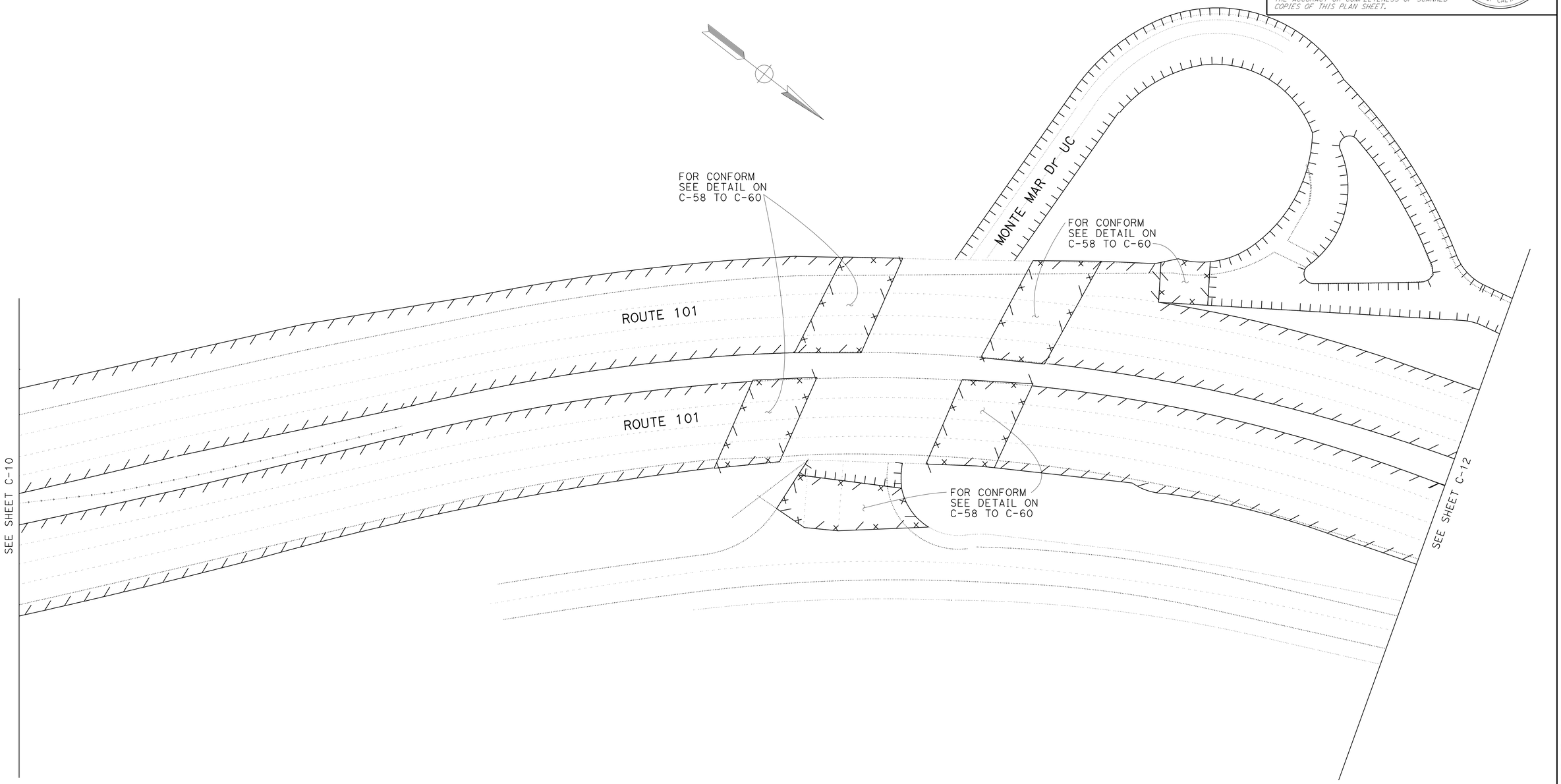

CONSTRUCTION DETAILS

NO SCALE

FOR NOTES, ABBREVIATIONS AND LEGEND, SEE SHEET C-1

C-11

STATE OF CALIFORNIA - DEPARTMENT OF TRANSPORTATION

Caltrans DESIGN

FUNCTIONAL SUPERVISOR: GHULAM POPAL

CALCULATED-DESIGNED BY: TAM LY

CHECKED BY: GHULAM POPAL

REVISED BY: T. L

DATE REVISED: 06/20/11

LAST REVISION 02-24-11

DATE PLOTTED => 30-SEP-2011

TIME PLOTTED => 13:06

Dist	COUNTY	ROUTE	POST MILES TOTAL PROJECT	SHEET No.	TOTAL SHEETS
04	Mrn	101	0.0/8.5	15	129

REGISTERED CIVIL ENGINEER 6/9/11 DATE

PLANS APPROVAL DATE 6-20-11

REGISTERED PROFESSIONAL ENGINEER Tam A. Ly No. 69254 Exp. 6-30-12 CIVIL STATE OF CALIFORNIA

THE STATE OF CALIFORNIA OR ITS OFFICERS OR AGENTS SHALL NOT BE RESPONSIBLE FOR THE ACCURACY OR COMPLETENESS OF SCANNED COPIES OF THIS PLAN SHEET.

NOTE:

FOR ACCURATE RIGHT OF WAY DATA, CONTACT RIGHT OF WAY ENGINEERING AT THE DISTRICT OFFICE.

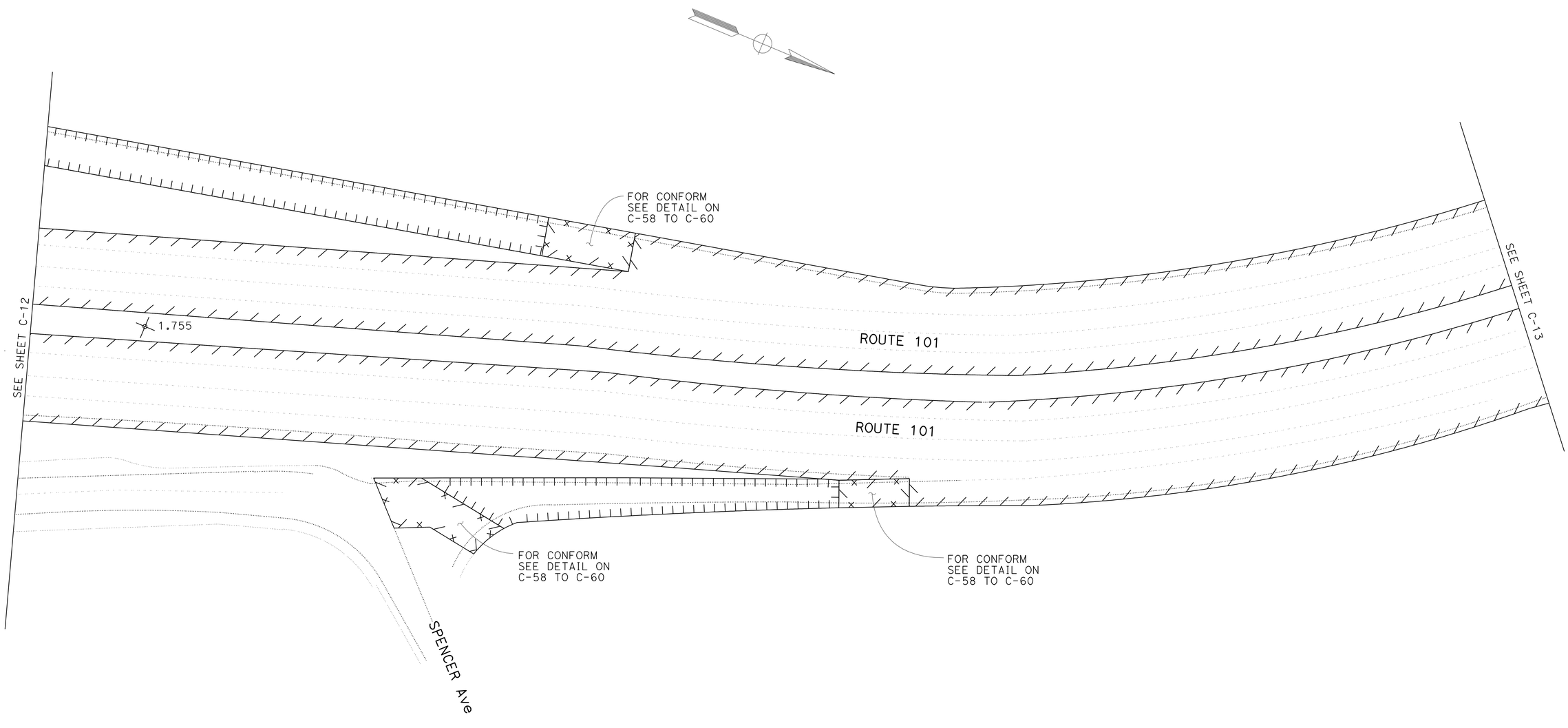

CONSTRUCTION DETAILS

NO SCALE

FOR NOTES, ABBREVIATIONS AND LEGEND, SEE SHEET C-1

C-12

STATE OF CALIFORNIA - DEPARTMENT OF TRANSPORTATION

Caltrans® DESIGN

FUNCTIONAL SUPERVISOR: GHULAM POPAL

CALCULATED-DESIGNED BY: TAM LY

CHECKED BY: GHULAM POPAL

REVISED BY: T. L

DATE REVISED: 06/20/11

LAST REVISION 02-24-11

DATE PLOTTED => 30-SEP-2011

TIME PLOTTED => 13:06

Dist	COUNTY	ROUTE	POST MILES TOTAL PROJECT	SHEET No.	TOTAL SHEETS
04	Mrn	101	0.0/8.5	16	129

REGISTERED CIVIL ENGINEER 6/9/11 DATE

6-20-11
PLANS APPROVAL DATE

REGISTERED PROFESSIONAL ENGINEER
Tam A. Ly
No. 69254
Exp. 6-30-12
CIVIL
STATE OF CALIFORNIA

THE STATE OF CALIFORNIA OR ITS OFFICERS OR AGENTS SHALL NOT BE RESPONSIBLE FOR THE ACCURACY OR COMPLETENESS OF SCANNED COPIES OF THIS PLAN SHEET.

NOTE:

FOR ACCURATE RIGHT OF WAY DATA, CONTACT RIGHT OF WAY ENGINEERING AT THE DISTRICT OFFICE.

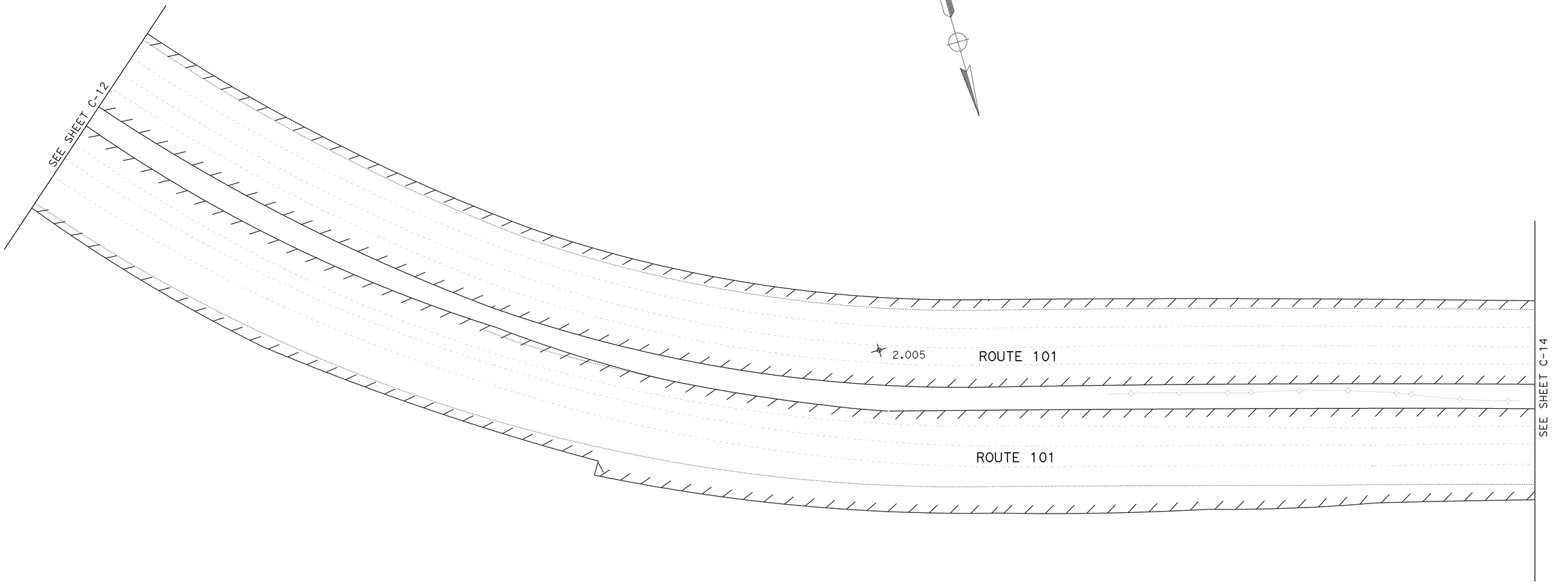

CONSTRUCTION DETAILS

NO SCALE

FOR NOTES, ABBREVIATIONS AND LEGEND, SEE SHEET C-1

C-13

STATE OF CALIFORNIA - DEPARTMENT OF TRANSPORTATION
Caltrans
DESIGN

FUNCTIONAL SUPERVISOR: GHULAM POPAL
CALCULATED-DESIGNED BY: TAM LY
CHECKED BY: GHULAM POPAL
REVISED BY: T. L
DATE REVISED: 06/20/11

LAST REVISION 01-21-11
DATE PLOTTED => 30-SEP-2011
TIME PLOTTED => 13:07

NOTE:

FOR ACCURATE RIGHT OF WAY DATA, CONTACT
RIGHT OF WAY ENGINEERING AT THE DISTRICT OFFICE.

Dist	COUNTY	ROUTE	POST MILES TOTAL PROJECT	SHEET No.	TOTAL SHEETS
04	Mrn	101	0.0/8.5	17	129

REGISTERED CIVIL ENGINEER — DATE: 6/9/11

PLANS APPROVAL DATE: 6-20-11

REGISTERED PROFESSIONAL ENGINEER — Tam A. Ly — No. 69254 — Exp 6-30-12 — CIVIL — STATE OF CALIFORNIA

THE STATE OF CALIFORNIA OR ITS OFFICERS OR AGENTS SHALL NOT BE RESPONSIBLE FOR THE ACCURACY OR COMPLETENESS OF SCANNED COPIES OF THIS PLAN SHEET.

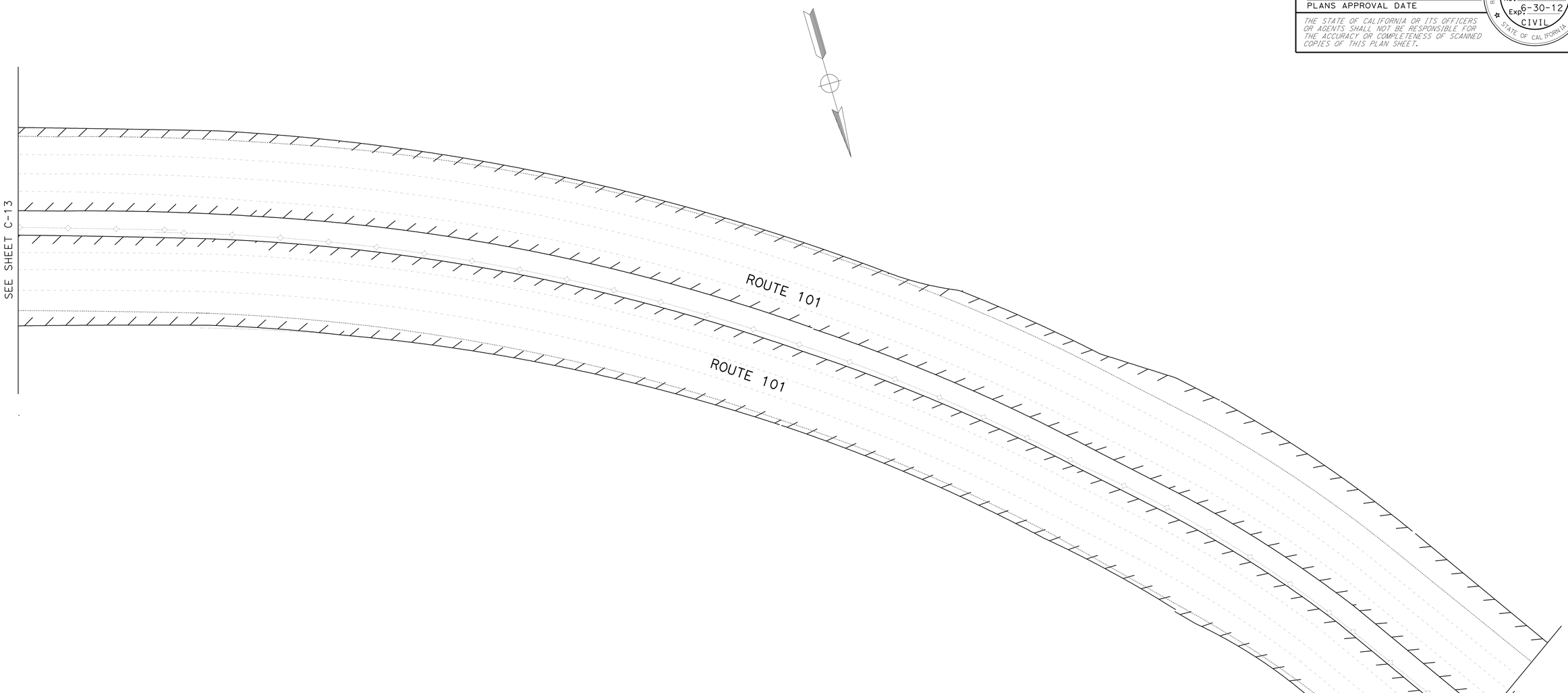

FOR NOTES, ABBREVIATIONS AND LEGEND, SEE SHEET C-1

CONSTRUCTION DETAILS

NO SCALE

C-14

REVISED BY	T. L
DATE REVISED	06/20/11
CALCULATED-DESIGNED BY	TAM LY
CHECKED BY	GHULAM POPAL
FUNCTIONAL SUPERVISOR	GHULAM POPAL

STATE OF CALIFORNIA - DEPARTMENT OF TRANSPORTATION
Caltrans®
DESIGN

LAST REVISION — DATE PLOTTED => 30-SEP-2011
TIME PLOTTED => 13:07

BORDER LAST REVISED 7/2/2010

USERNAME => s131681
DGN FILE => 0400020590ga014.dgn

RELATIVE BORDER SCALE IS IN INCHES 0 1 2 3

UNIT 0976

PROJECT NUMBER & PHASE 04000205901

NOTE:

FOR ACCURATE RIGHT OF WAY DATA, CONTACT
RIGHT OF WAY ENGINEERING AT THE DISTRICT OFFICE.

Dist	COUNTY	ROUTE	POST MILES TOTAL PROJECT	SHEET No.	TOTAL SHEETS
04	Mrn	101	0.0/8.5	18	129

6/9/11
REGISTERED CIVIL ENGINEER DATE

6-20-11
PLANS APPROVAL DATE

REGISTERED PROFESSIONAL ENGINEER
Tam A. Ly
No. 69254
Exp 6-30-12
CIVIL
STATE OF CALIFORNIA

THE STATE OF CALIFORNIA OR ITS OFFICERS OR AGENTS SHALL NOT BE RESPONSIBLE FOR THE ACCURACY OR COMPLETENESS OF SCANNED COPIES OF THIS PLAN SHEET.

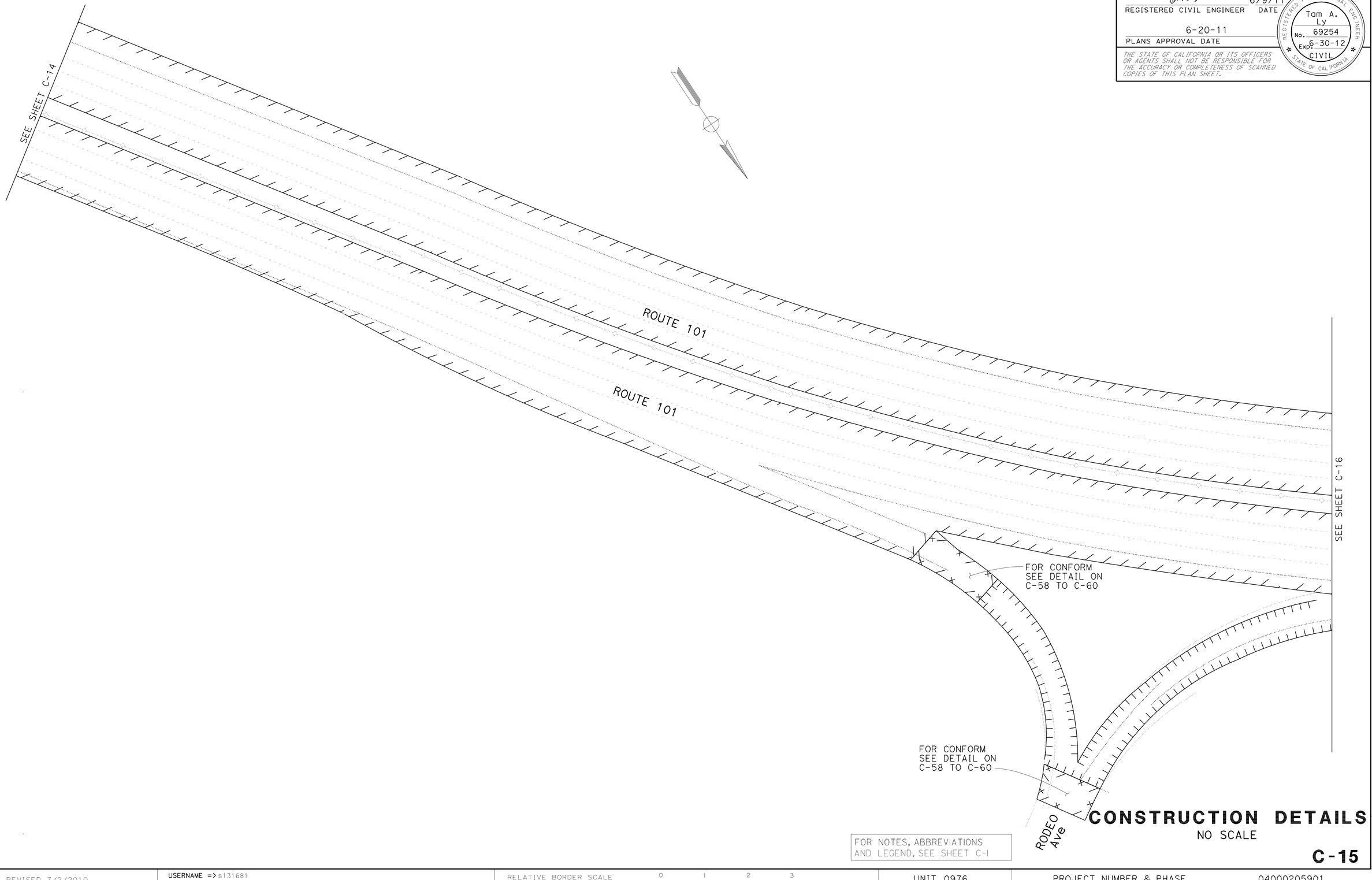

FOR NOTES, ABBREVIATIONS AND LEGEND, SEE SHEET C-1

CONSTRUCTION DETAILS

NO SCALE

C-15

REVISED BY | T. L
DATE REVISED | 06/20/11
CALCULATED-DESIGNED BY | TAM LY
CHECKED BY | GHULAM POPAL
FUNCTIONAL SUPERVISOR | GHULAM POPAL

STATE OF CALIFORNIA - DEPARTMENT OF TRANSPORTATION
Caltrans®
DESIGN

LAST REVISION | DATE PLOTTED => 30-SEP-2011
02-24-11 | TIME PLOTTED => 13:07

BORDER LAST REVISED 7/2/2010

USERNAME => s131681
DGN FILE => 0400020590ga015.dgn

RELATIVE BORDER SCALE IS IN INCHES
0 1 2 3

UNIT 0976

PROJECT NUMBER & PHASE 04000205901

Dist	COUNTY	ROUTE	POST MILES TOTAL PROJECT	SHEET No.	TOTAL SHEETS
04	Mrn	101	0.0/8.5	19	129

REGISTERED CIVIL ENGINEER 6/9/11 DATE

6-20-11
PLANS APPROVAL DATE

REGISTERED PROFESSIONAL ENGINEER Tam A. Ly No. 69254 Exp. 6-30-12 CIVIL STATE OF CALIFORNIA

THE STATE OF CALIFORNIA OR ITS OFFICERS OR AGENTS SHALL NOT BE RESPONSIBLE FOR THE ACCURACY OR COMPLETENESS OF SCANNED COPIES OF THIS PLAN SHEET.

NOTE:

FOR ACCURATE RIGHT OF WAY DATA, CONTACT RIGHT OF WAY ENGINEERING AT THE DISTRICT OFFICE.

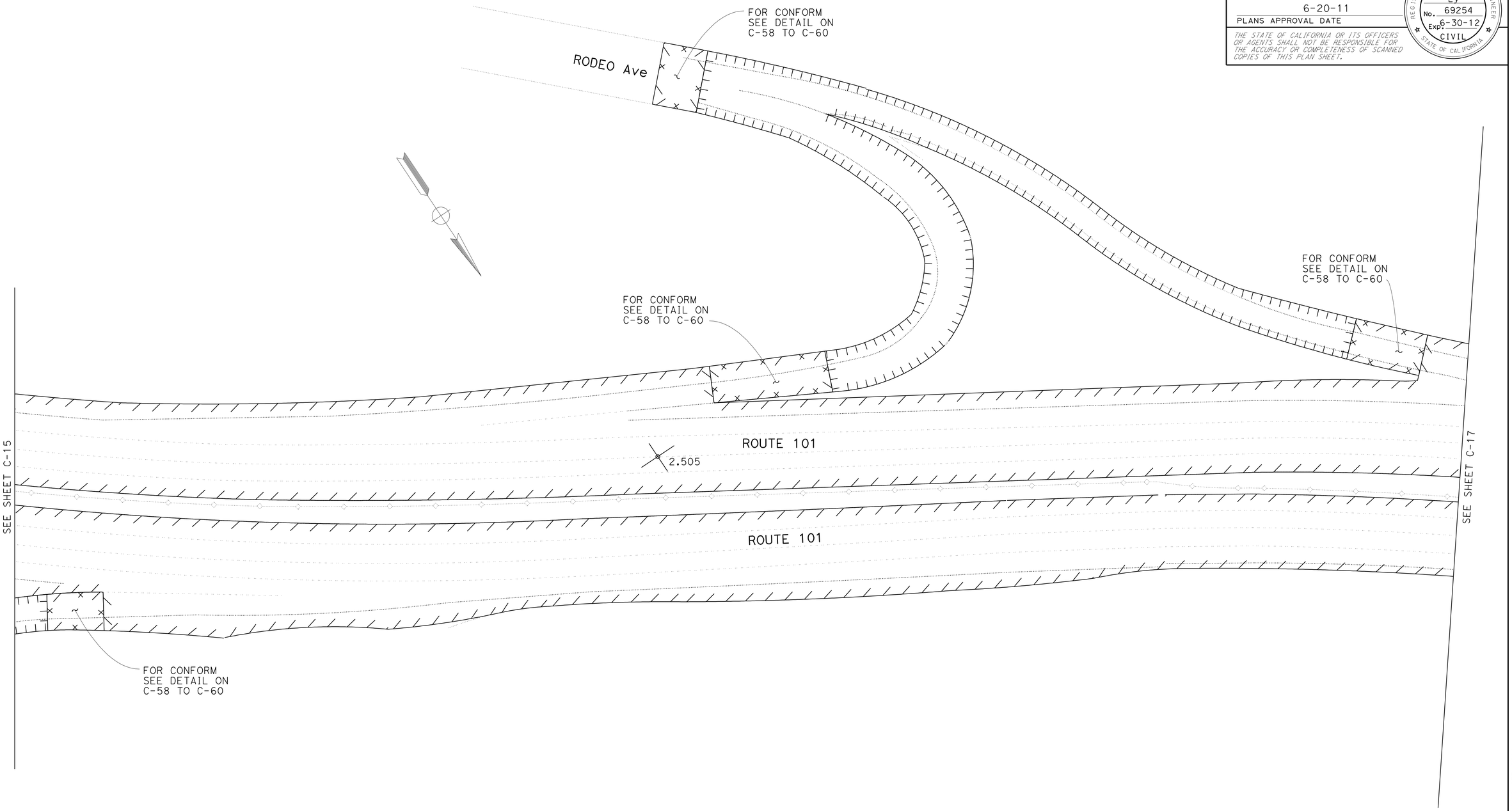

CONSTRUCTION DETAILS

NO SCALE

FOR NOTES, ABBREVIATIONS AND LEGEND, SEE SHEET C-1

C-16

STATE OF CALIFORNIA - DEPARTMENT OF TRANSPORTATION

Caltrans® **DESIGN**

FUNCTIONAL SUPERVISOR: GHULAM POPAL

CALCULATED-DESIGNED BY: TAM LY

CHECKED BY: GHULAM POPAL

REVISED BY: T. L

DATE REVISED: 06/20/11

LAST REVISION 02-24-11

DATE PLOTTED => 30-SEP-2011

TIME PLOTTED => 13:07

Dist	COUNTY	ROUTE	POST MILES TOTAL PROJECT	SHEET No.	TOTAL SHEETS
04	Mrn	101	0.0/8.5	20	129

REGISTERED CIVIL ENGINEER 6/9/11 DATE

6-20-11
PLANS APPROVAL DATE

REGISTERED PROFESSIONAL ENGINEER
Tam A. Ly
No. 69254
Exp. 6-30-12
CIVIL
STATE OF CALIFORNIA

THE STATE OF CALIFORNIA OR ITS OFFICERS OR AGENTS SHALL NOT BE RESPONSIBLE FOR THE ACCURACY OR COMPLETENESS OF SCANNED COPIES OF THIS PLAN SHEET.

NOTE:

FOR ACCURATE RIGHT OF WAY DATA, CONTACT RIGHT OF WAY ENGINEERING AT THE DISTRICT OFFICE.

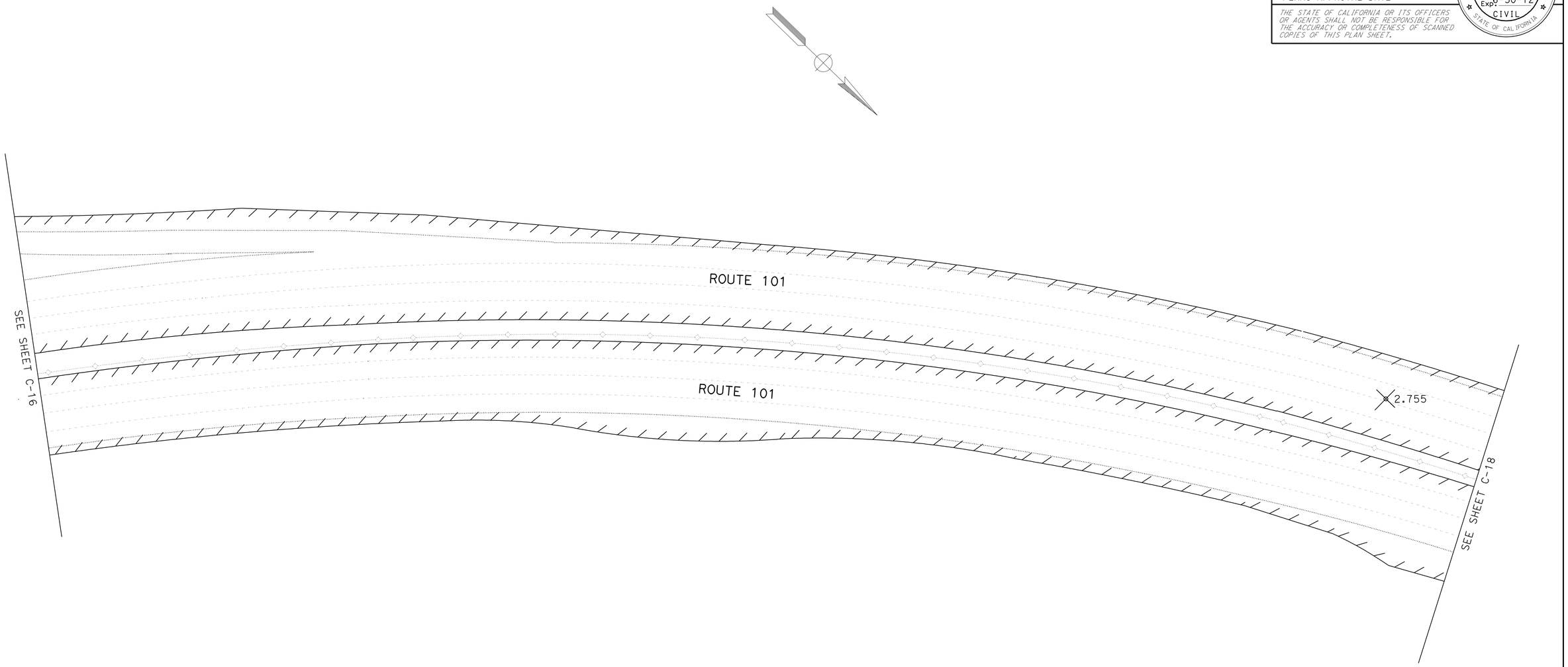

FOR NOTES, ABBREVIATIONS AND LEGEND, SEE SHEET C-1

CONSTRUCTION DETAILS

NO SCALE

C-17

STATE OF CALIFORNIA - DEPARTMENT OF TRANSPORTATION
Caltrans
DESIGN

FUNCTIONAL SUPERVISOR: GHULAM POPAL
CALCULATED-DESIGNED BY: TAM LY
CHECKED BY: GHULAM POPAL
REVISED BY: T. L
DATE REVISED: 06/20/11

LAST REVISION 01-21-11
DATE PLOTTED => 30-SEP-2011
TIME PLOTTED => 13:07

NOTE:

FOR ACCURATE RIGHT OF WAY DATA, CONTACT
RIGHT OF WAY ENGINEERING AT THE DISTRICT OFFICE.

Dist	COUNTY	ROUTE	POST MILES TOTAL PROJECT	SHEET No.	TOTAL SHEETS
04	Mrn	101	0.0/8.5	21	129

6/9/11
REGISTERED CIVIL ENGINEER DATE

6-20-11
PLANS APPROVAL DATE

REGISTERED PROFESSIONAL ENGINEER
Tam A. Ly
No. 69254
Exp 6-30-12
CIVIL
STATE OF CALIFORNIA

THE STATE OF CALIFORNIA OR ITS OFFICERS OR AGENTS SHALL NOT BE RESPONSIBLE FOR THE ACCURACY OR COMPLETENESS OF SCANNED COPIES OF THIS PLAN SHEET.

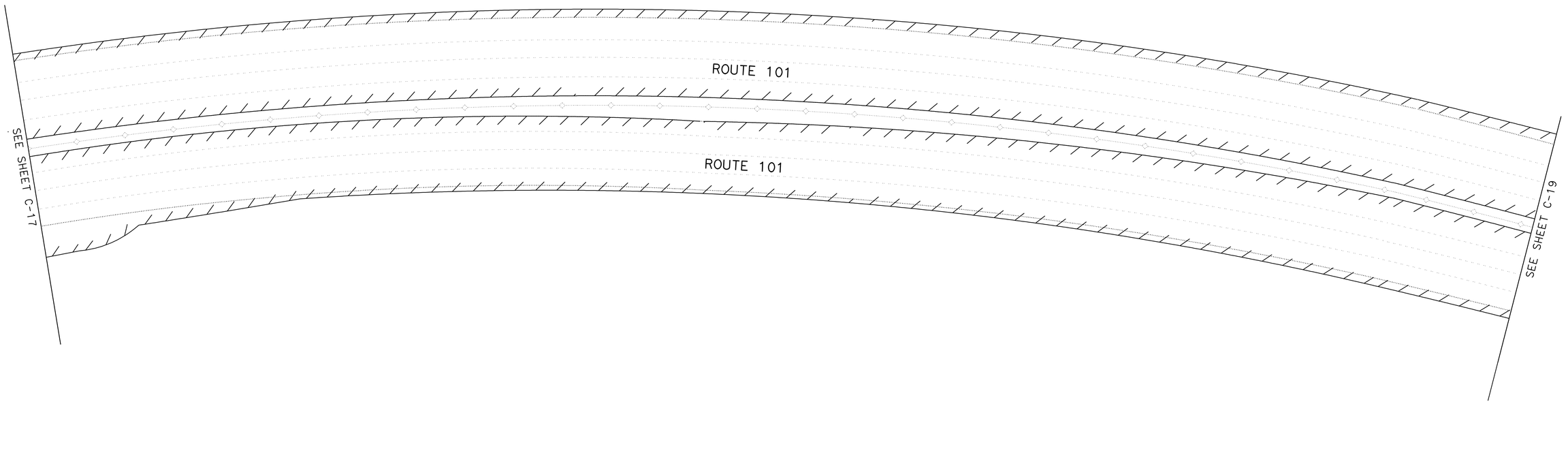

FOR NOTES, ABBREVIATIONS AND LEGEND, SEE SHEET C-1

CONSTRUCTION DETAILS

NO SCALE

C-18

REVISED BY	DATE REVISED
T. L	06/20/11

CALCULATED-DESIGNED BY: TAM LY
CHECKED BY: GHULAM POPAL
FUNCTIONAL SUPERVISOR: GHULAM POPAL

STATE OF CALIFORNIA - DEPARTMENT OF TRANSPORTATION
Caltrans
DESIGN

LAST REVISION | DATE PLOTTED => 30-SEP-2011
01-21-11 | TIME PLOTTED => 13:07

BORDER LAST REVISED 7/2/2010

USERNAME => s131681
DGN FILE => 0400020590ga018.dgn

RELATIVE BORDER SCALE IS IN INCHES 0 1 2 3

UNIT 0976

PROJECT NUMBER & PHASE 04000205901

NOTE:

FOR ACCURATE RIGHT OF WAY DATA, CONTACT
RIGHT OF WAY ENGINEERING AT THE DISTRICT OFFICE.

Dist	COUNTY	ROUTE	POST MILES TOTAL PROJECT	SHEET No.	TOTAL SHEETS
04	Mrn	101	0.0/8.5	22	129

6/9/11
REGISTERED CIVIL ENGINEER DATE

6-20-11
PLANS APPROVAL DATE

REGISTERED PROFESSIONAL ENGINEER
Tam A. Ly
No. 69254
Exp 6-30-12
CIVIL
STATE OF CALIFORNIA

THE STATE OF CALIFORNIA OR ITS OFFICERS OR AGENTS SHALL NOT BE RESPONSIBLE FOR THE ACCURACY OR COMPLETENESS OF SCANNED COPIES OF THIS PLAN SHEET.

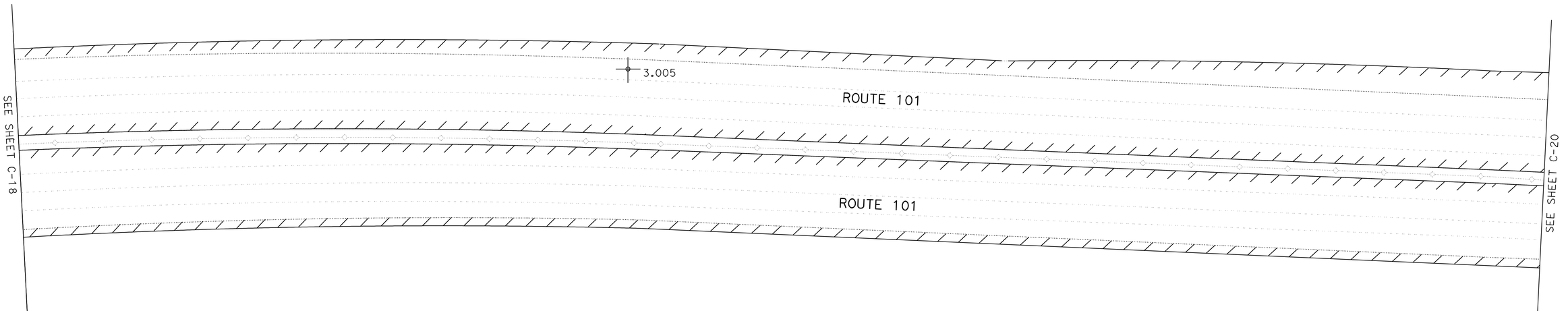

FOR NOTES, ABBREVIATIONS AND LEGEND, SEE SHEET C-1

CONSTRUCTION DETAILS

NO SCALE

C-19

REVISED BY	T. L	
DATE REVISED	06/20/11	
CALCULATED-DESIGNED BY	TAM LY	
CHECKED BY	GHULAM POPAL	
FUNCTIONAL SUPERVISOR	GHULAM POPAL	

STATE OF CALIFORNIA - DEPARTMENT OF TRANSPORTATION
Caltrans®
DESIGN

LAST REVISION | DATE PLOTTED => 30-SEP-2011
01-21-11 | TIME PLOTTED => 13:08

BORDER LAST REVISED 7/2/2010

USERNAME => s131681
DGN FILE => 0400020590ga019.dgn

RELATIVE BORDER SCALE IS IN INCHES 0 1 2 3

UNIT 0976

PROJECT NUMBER & PHASE 04000205901

NOTE:

FOR ACCURATE RIGHT OF WAY DATA, CONTACT
RIGHT OF WAY ENGINEERING AT THE DISTRICT OFFICE.

Dist	COUNTY	ROUTE	POST MILES TOTAL PROJECT	SHEET No.	TOTAL SHEETS
04	Mrn	101	0.0/8.5	23	129

REGISTERED CIVIL ENGINEER — DATE: 6/9/11

PLANS APPROVAL DATE: 6-20-11

REGISTERED PROFESSIONAL ENGINEER
Tam A. Ly
No. 69254
Exp 6-30-12
CIVIL
STATE OF CALIFORNIA

THE STATE OF CALIFORNIA OR ITS OFFICERS OR AGENTS SHALL NOT BE RESPONSIBLE FOR THE ACCURACY OR COMPLETENESS OF SCANNED COPIES OF THIS PLAN SHEET.

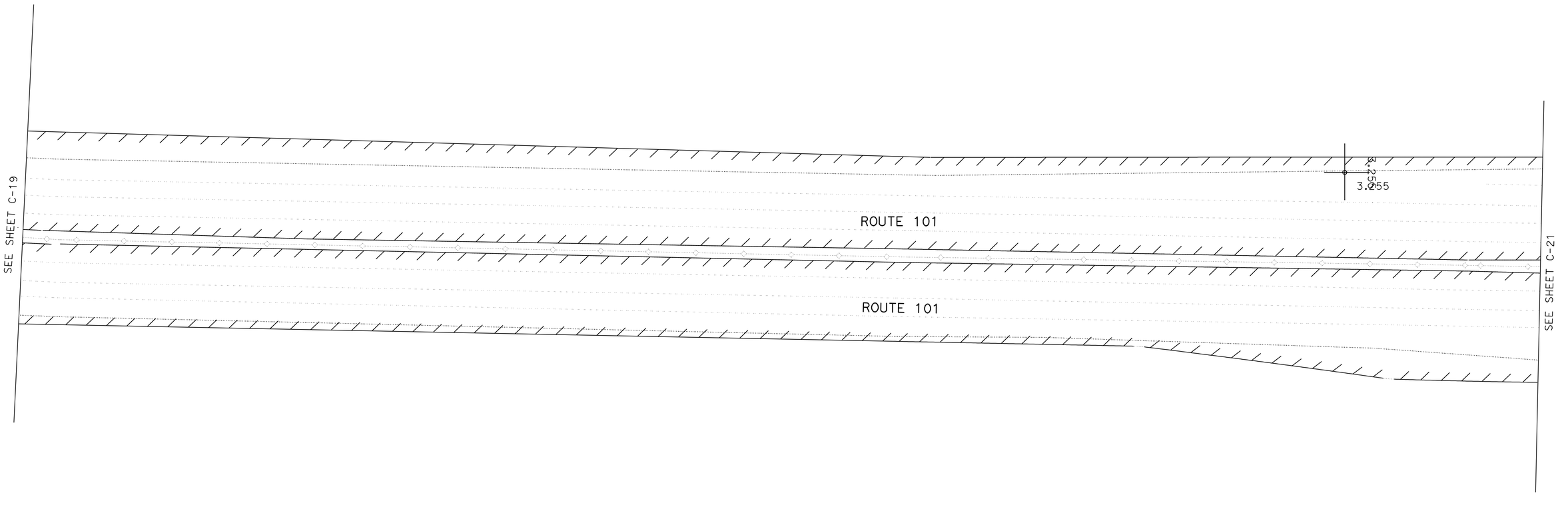

FOR NOTES, ABBREVIATIONS AND LEGEND, SEE SHEET C-1

CONSTRUCTION DETAILS

NO SCALE

C-20

REVISED BY	DATE REVISED
T. L	06/20/11

CALCULATED-DESIGNED BY: TAM LY
CHECKED BY: GHULAM POPAL
FUNCTIONAL SUPERVISOR: GHULAM POPAL

STATE OF CALIFORNIA - DEPARTMENT OF TRANSPORTATION
DESIGN

LAST REVISION | DATE PLOTTED => 30-SEP-2011
02-24-11 | TIME PLOTTED => 13:08

BORDER LAST REVISED 7/2/2010

USERNAME => s131681
DGN FILE => 0400020590ga020.dgn

RELATIVE BORDER SCALE IS IN INCHES 0 1 2 3

UNIT 0976

PROJECT NUMBER & PHASE 04000205901

NOTE:

FOR ACCURATE RIGHT OF WAY DATA, CONTACT
RIGHT OF WAY ENGINEERING AT THE DISTRICT OFFICE.

Dist	COUNTY	ROUTE	POST MILES TOTAL PROJECT	SHEET No.	TOTAL SHEETS
04	Mrn	101	0.0/8.5	24	129

REGISTERED CIVIL ENGINEER — DATE: 6/9/11

PLANS APPROVAL DATE: 6-20-11

REGISTERED PROFESSIONAL ENGINEER — Tam A. Ly — No. 69254 — Exp 6-30-12 — CIVIL — STATE OF CALIFORNIA

THE STATE OF CALIFORNIA OR ITS OFFICERS OR AGENTS SHALL NOT BE RESPONSIBLE FOR THE ACCURACY OR COMPLETENESS OF SCANNED COPIES OF THIS PLAN SHEET.

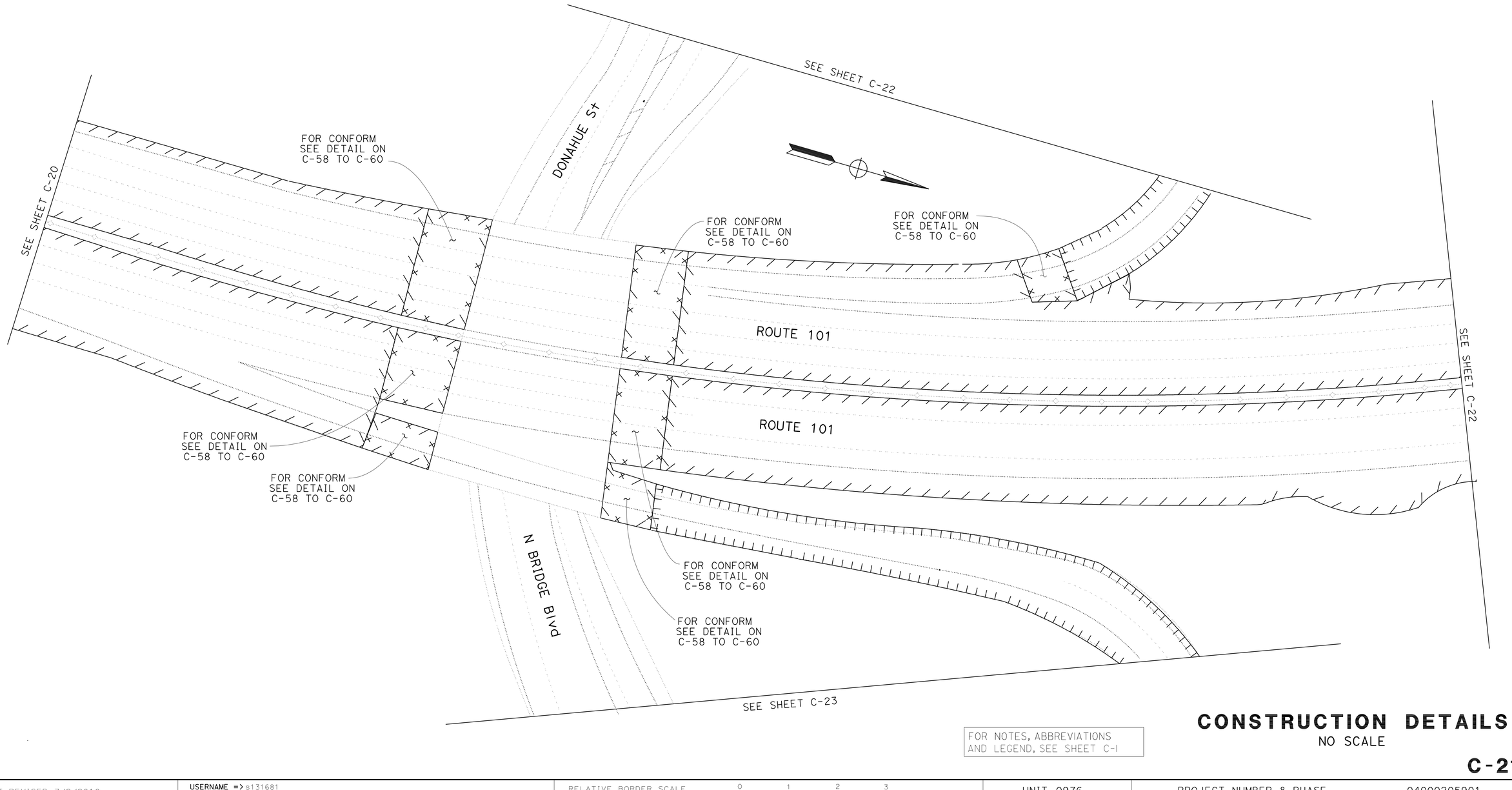

FOR NOTES, ABBREVIATIONS AND LEGEND, SEE SHEET C-1

CONSTRUCTION DETAILS

NO SCALE

C-21

CALCULATED-DESIGNED BY: T. L
CHECKED BY: TAM LY
REVISED BY: GHULAM POPAL
DATE REVISED: 06/20/11

FUNCTIONAL SUPERVISOR: GHULAM POPAL

STATE OF CALIFORNIA - DEPARTMENT OF TRANSPORTATION
DESIGN

LAST REVISION | DATE PLOTTED => 30-SEP-2011
02-24-11 | TIME PLOTTED => 13:08

BORDER LAST REVISED 7/2/2010

USERNAME => s131681
DGN FILE => 0400020590ga021.dgn

RELATIVE BORDER SCALE IS IN INCHES 0 1 2 3

UNIT 0976

PROJECT NUMBER & PHASE 04000205901

Dist	COUNTY	ROUTE	POST MILES TOTAL PROJECT	SHEET No.	TOTAL SHEETS
04	Mrn	101	0.0/8.5	25	129

REGISTERED CIVIL ENGINEER 6/9/11 DATE

PLANS APPROVAL DATE 6-20-11

REGISTERED PROFESSIONAL ENGINEER Tam A. Ly No. 69254 Exp. 6-30-12 CIVIL STATE OF CALIFORNIA

THE STATE OF CALIFORNIA OR ITS OFFICERS OR AGENTS SHALL NOT BE RESPONSIBLE FOR THE ACCURACY OR COMPLETENESS OF SCANNED COPIES OF THIS PLAN SHEET.

NOTE:

FOR ACCURATE RIGHT OF WAY DATA, CONTACT RIGHT OF WAY ENGINEERING AT THE DISTRICT OFFICE.

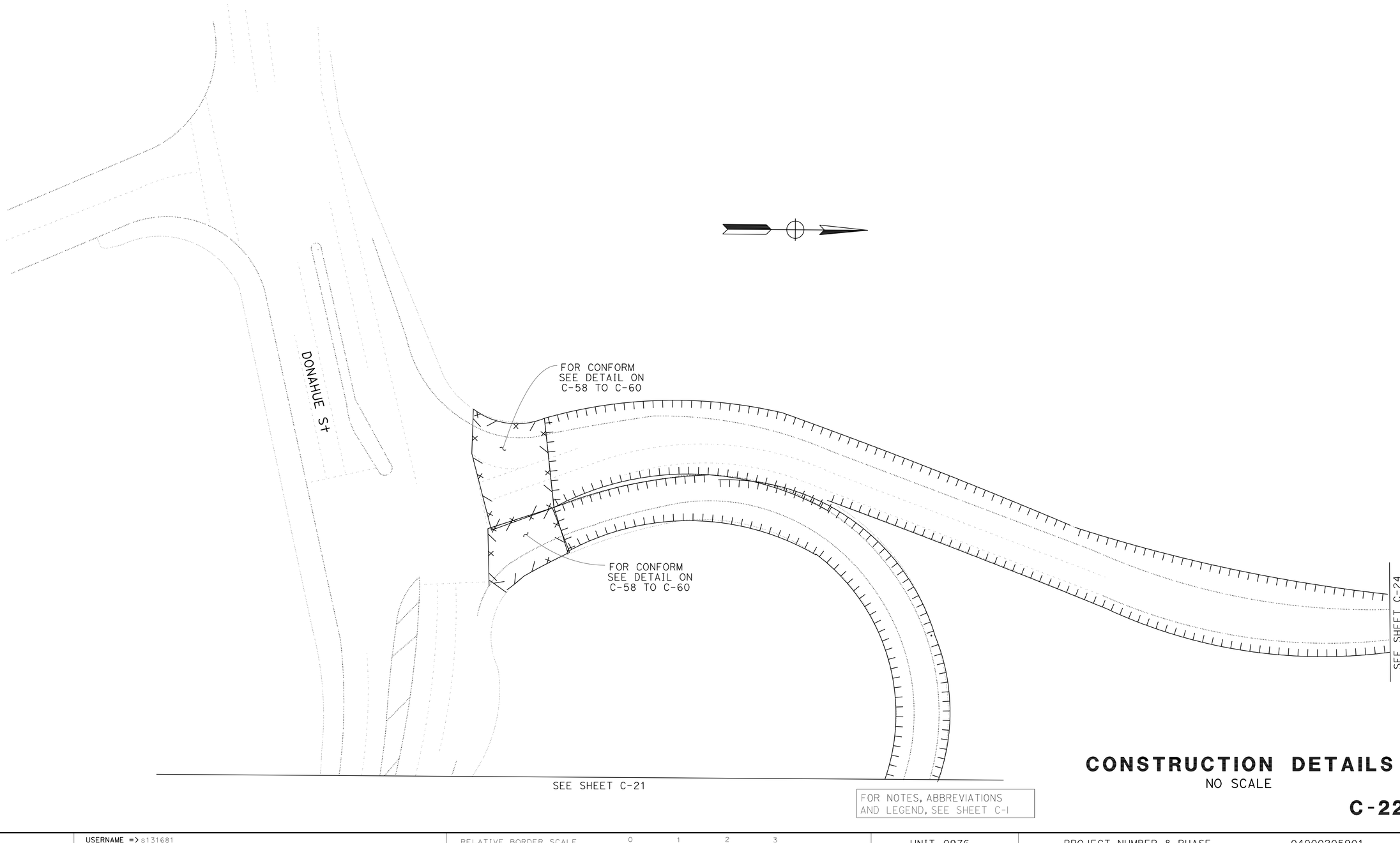

FOR NOTES, ABBREVIATIONS AND LEGEND, SEE SHEET C-1

CONSTRUCTION DETAILS

NO SCALE

C-22

STATE OF CALIFORNIA - DEPARTMENT OF TRANSPORTATION

Caltrans DESIGN

FUNCTIONAL SUPERVISOR: GHULAM POPAL

CALCULATED-DESIGNED BY: TAM LY

CHECKED BY: GHULAM POPAL

REVISED BY: T. L

DATE REVISED: 06/20/11

LAST REVISION 02-24-11

DATE PLOTTED => 30-SEP-2011

TIME PLOTTED => 13:08

NOTE:

FOR ACCURATE RIGHT OF WAY DATA, CONTACT
RIGHT OF WAY ENGINEERING AT THE DISTRICT OFFICE.

Dist	COUNTY	ROUTE	POST MILES TOTAL PROJECT	SHEET No.	TOTAL SHEETS
04	Mrn	101	0.0/8.5	26	129

REGISTERED CIVIL ENGINEER — DATE: 6/9/11

PLANS APPROVAL DATE: 6-20-11

REGISTERED PROFESSIONAL ENGINEER — Tam A. Ly — No. 69254 — Exp 6-30-12 — CIVIL — STATE OF CALIFORNIA

THE STATE OF CALIFORNIA OR ITS OFFICERS OR AGENTS SHALL NOT BE RESPONSIBLE FOR THE ACCURACY OR COMPLETENESS OF SCANNED COPIES OF THIS PLAN SHEET.

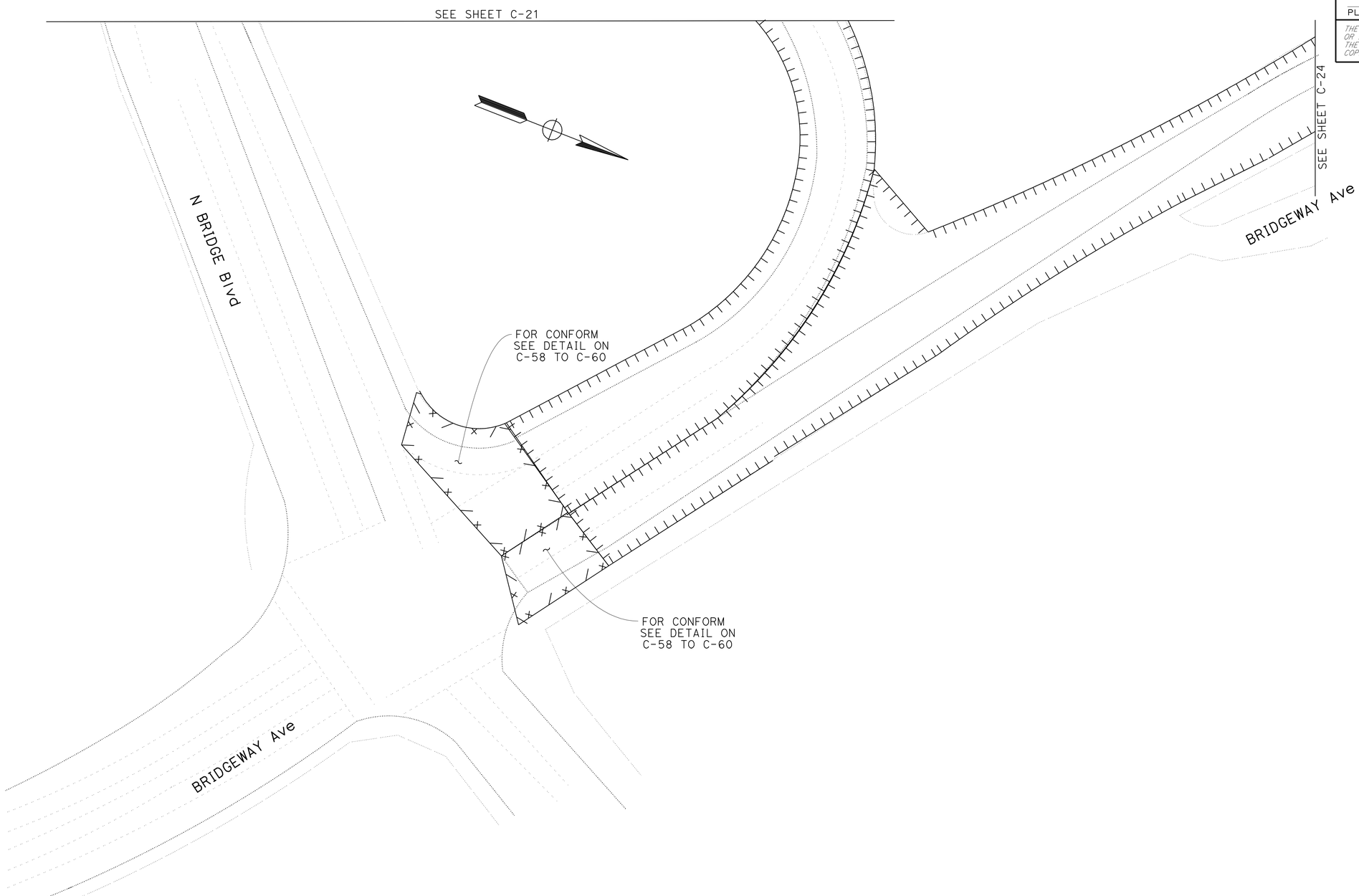

FOR NOTES, ABBREVIATIONS AND LEGEND, SEE SHEET C-1

CONSTRUCTION DETAILS

NO SCALE

C-23

REVISED BY	T. L
DATE REVISED	06/20/11
CALCULATED-DESIGNED BY	TAM LY
CHECKED BY	GHULAM POPAL
FUNCTIONAL SUPERVISOR	GHULAM POPAL

STATE OF CALIFORNIA - DEPARTMENT OF TRANSPORTATION
Caltrans
DESIGN

LAST REVISION | DATE PLOTTED => 30-SEP-2011
TIME PLOTTED => 13:08

BORDER LAST REVISED 7/2/2010

USERNAME => s131681
DGN FILE => 0400020590ga023.dgn

RELATIVE BORDER SCALE IS IN INCHES 0 1 2 3

UNIT 0976

PROJECT NUMBER & PHASE 04000205901

NOTE:

FOR ACCURATE RIGHT OF WAY DATA, CONTACT
RIGHT OF WAY ENGINEERING AT THE DISTRICT OFFICE.

Dist	COUNTY	ROUTE	POST MILES TOTAL PROJECT	SHEET No.	TOTAL SHEETS
04	Mrn	101	0.0/8.5	27	129

REGISTERED CIVIL ENGINEER — DATE: 6/9/11

PLANS APPROVAL DATE: 6-20-11

REGISTERED PROFESSIONAL ENGINEER
Tam A. Ly
No. 69254
Exp 6-30-12
CIVIL
STATE OF CALIFORNIA

THE STATE OF CALIFORNIA OR ITS OFFICERS OR AGENTS SHALL NOT BE RESPONSIBLE FOR THE ACCURACY OR COMPLETENESS OF SCANNED COPIES OF THIS PLAN SHEET.

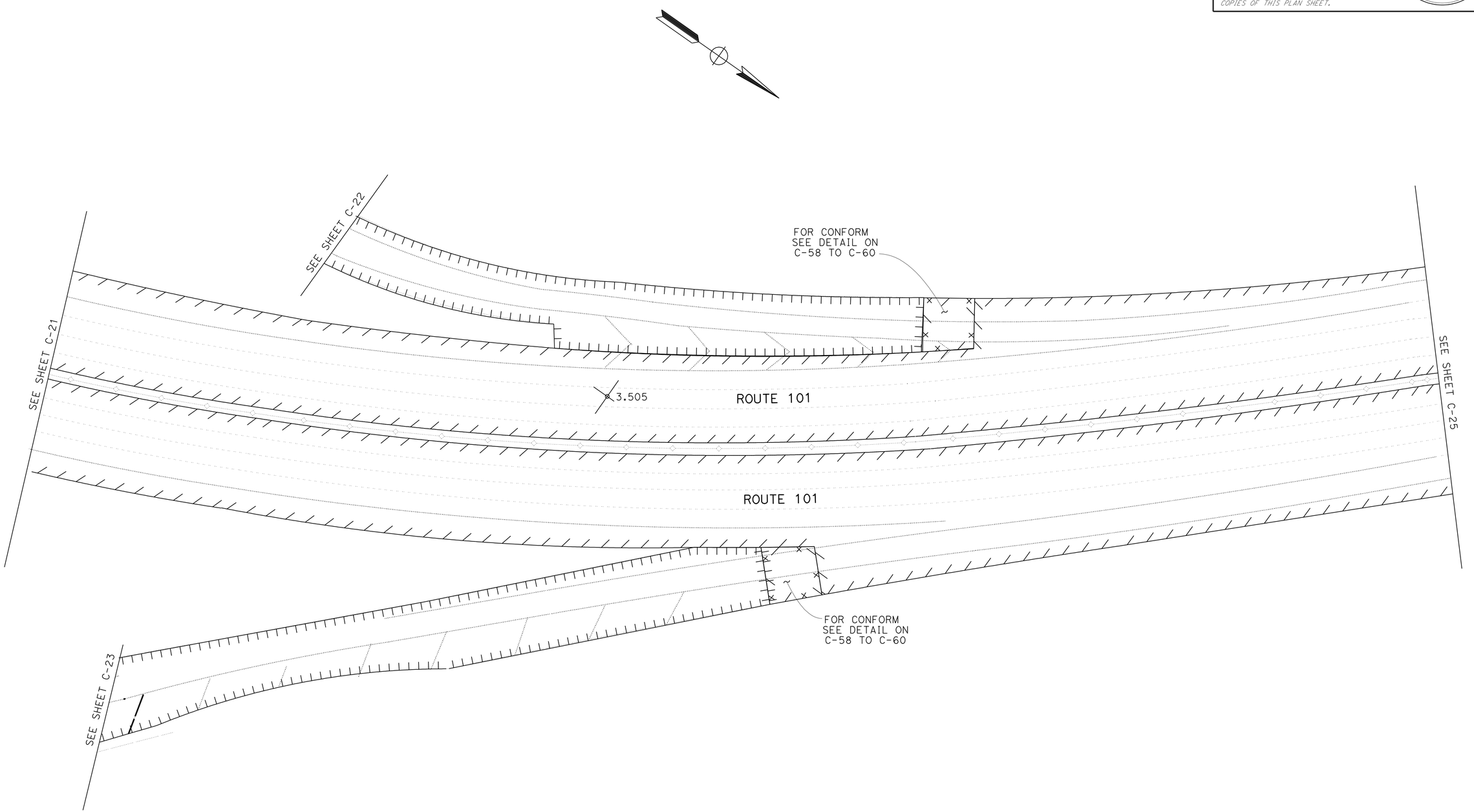

FOR NOTES, ABBREVIATIONS AND LEGEND, SEE SHEET C-1

CONSTRUCTION DETAILS

NO SCALE

C-24

STATE OF CALIFORNIA - DEPARTMENT OF TRANSPORTATION
DESIGN

FUNCTIONAL SUPERVISOR: GHULAM POPAL

CALCULATED-DESIGNED BY: TAM LY
CHECKED BY: GHULAM POPAL

REVISED BY: T. L
DATE REVISED: 06/20/11

LAST REVISION
DATE PLOTTED => 30-SEP-2011
TIME PLOTTED => 13:08
02-24-11

BORDER LAST REVISED 7/2/2010

USERNAME => s131681
DGN FILE => 0400020590ga024.dgn

RELATIVE BORDER SCALE IS IN INCHES 0 1 2 3

UNIT 0976

PROJECT NUMBER & PHASE 04000205901

NOTE:

FOR ACCURATE RIGHT OF WAY DATA, CONTACT
RIGHT OF WAY ENGINEERING AT THE DISTRICT OFFICE.

Dist	COUNTY	ROUTE	POST MILES TOTAL PROJECT	SHEET No.	TOTAL SHEETS
04	Mrn	101	0.0/8.5	28	129

6/9/11
REGISTERED CIVIL ENGINEER DATE

6-20-11
PLANS APPROVAL DATE

REGISTERED PROFESSIONAL ENGINEER
Tam A. Ly
No. 69254
Exp 6-30-12
CIVIL
STATE OF CALIFORNIA

THE STATE OF CALIFORNIA OR ITS OFFICERS OR AGENTS SHALL NOT BE RESPONSIBLE FOR THE ACCURACY OR COMPLETENESS OF SCANNED COPIES OF THIS PLAN SHEET.

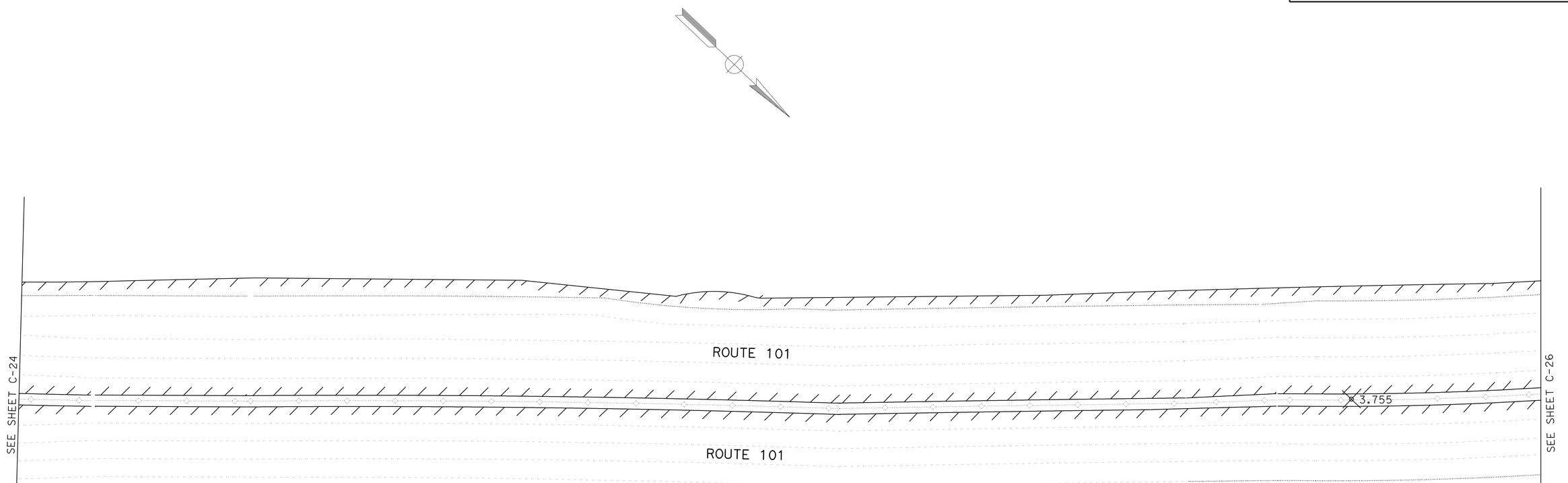

FOR NOTES, ABBREVIATIONS AND LEGEND, SEE SHEET C-1

CONSTRUCTION DETAILS

NO SCALE

C-25

CALCULATED-DESIGNED BY		
CHECKED BY	T. L	06/20/11
TAM LY	REVISED BY	DATE REVISED
GHULAM POPAL		
FUNCTIONAL SUPERVISOR		
GHULAM POPAL		

STATE OF CALIFORNIA - DEPARTMENT OF TRANSPORTATION
Caltrans®
DESIGN

LAST REVISION | DATE PLOTTED => 30-SEP-2011
01-21-11 | TIME PLOTTED => 13:09

BORDER LAST REVISED 7/2/2010

USERNAME => s131681
DGN FILE => 0400020590ga025.dgn

RELATIVE BORDER SCALE IS IN INCHES 0 1 2 3

UNIT 0976

PROJECT NUMBER & PHASE 04000205901

NOTE:

FOR ACCURATE RIGHT OF WAY DATA, CONTACT
RIGHT OF WAY ENGINEERING AT THE DISTRICT OFFICE.

Dist	COUNTY	ROUTE	POST MILES TOTAL PROJECT	SHEET No.	TOTAL SHEETS
04	Mrn	101	0.0/8.5	29	129

REGISTERED CIVIL ENGINEER 6/9/11 DATE

6-20-11
PLANS APPROVAL DATE

REGISTERED PROFESSIONAL ENGINEER
Tam A. Ly
No. 69254
Exp. 6-30-12
CIVIL
STATE OF CALIFORNIA

THE STATE OF CALIFORNIA OR ITS OFFICERS OR AGENTS SHALL NOT BE RESPONSIBLE FOR THE ACCURACY OR COMPLETENESS OF SCANNED COPIES OF THIS PLAN SHEET.

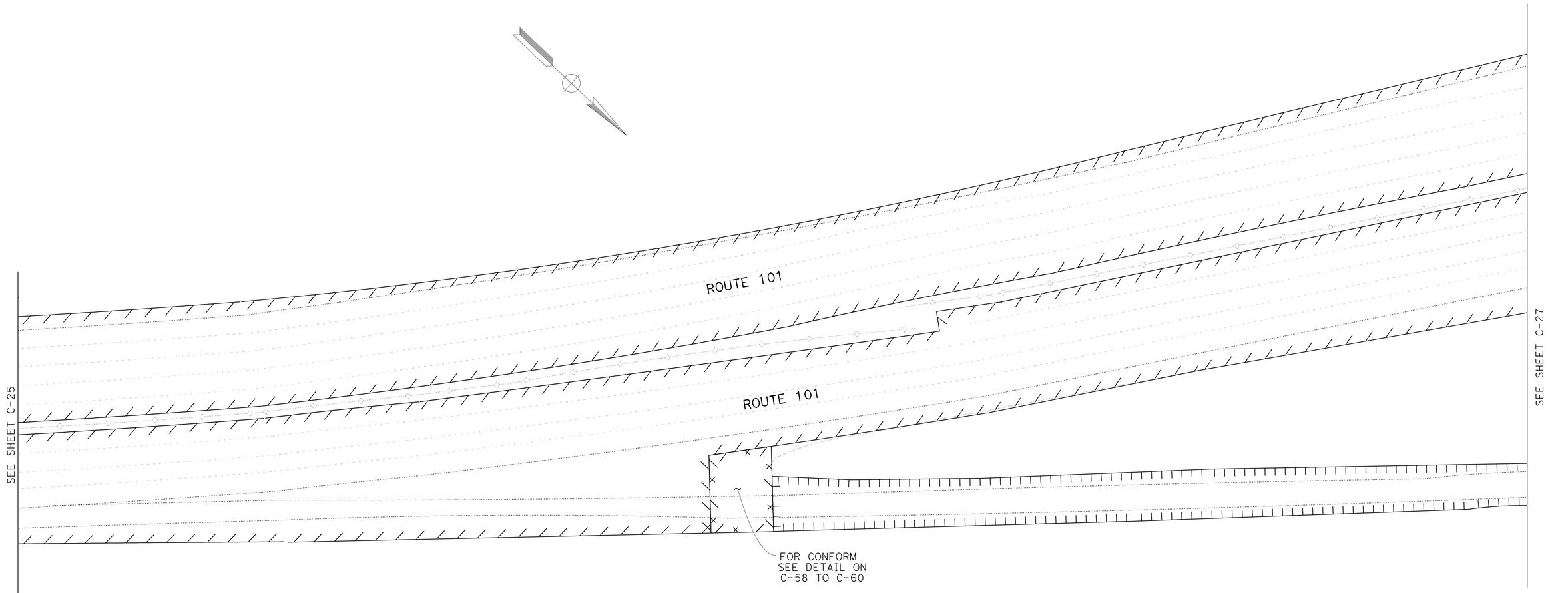

CONSTRUCTION DETAILS

NO SCALE

FOR NOTES, ABBREVIATIONS AND LEGEND, SEE SHEET C-1

C-26

STATE OF CALIFORNIA - DEPARTMENT OF TRANSPORTATION
Caltrans
DESIGN

FUNCTIONAL SUPERVISOR: GHULAM POPAL
CALCULATED-DESIGNED BY: TAM LY
CHECKED BY: GHULAM POPAL
REVISED BY: T. L
DATE REVISED: 06/20/11

LAST REVISION 02-24-11
DATE PLOTTED => 30-SEP-2011
TIME PLOTTED => 13:09

NOTE:

FOR ACCURATE RIGHT OF WAY DATA, CONTACT
RIGHT OF WAY ENGINEERING AT THE DISTRICT OFFICE.

Dist	COUNTY	ROUTE	POST MILES TOTAL PROJECT	SHEET No.	TOTAL SHEETS
04	Mrn	101	0.0/8.5	30	129

REGISTERED CIVIL ENGINEER — DATE: 6/9/11

PLANS APPROVAL DATE: 6-20-11

REGISTERED PROFESSIONAL ENGINEER — Tam A. Ly — No. 69254 — Exp 6-30-12 — CIVIL — STATE OF CALIFORNIA

THE STATE OF CALIFORNIA OR ITS OFFICERS OR AGENTS SHALL NOT BE RESPONSIBLE FOR THE ACCURACY OR COMPLETENESS OF SCANNED COPIES OF THIS PLAN SHEET.

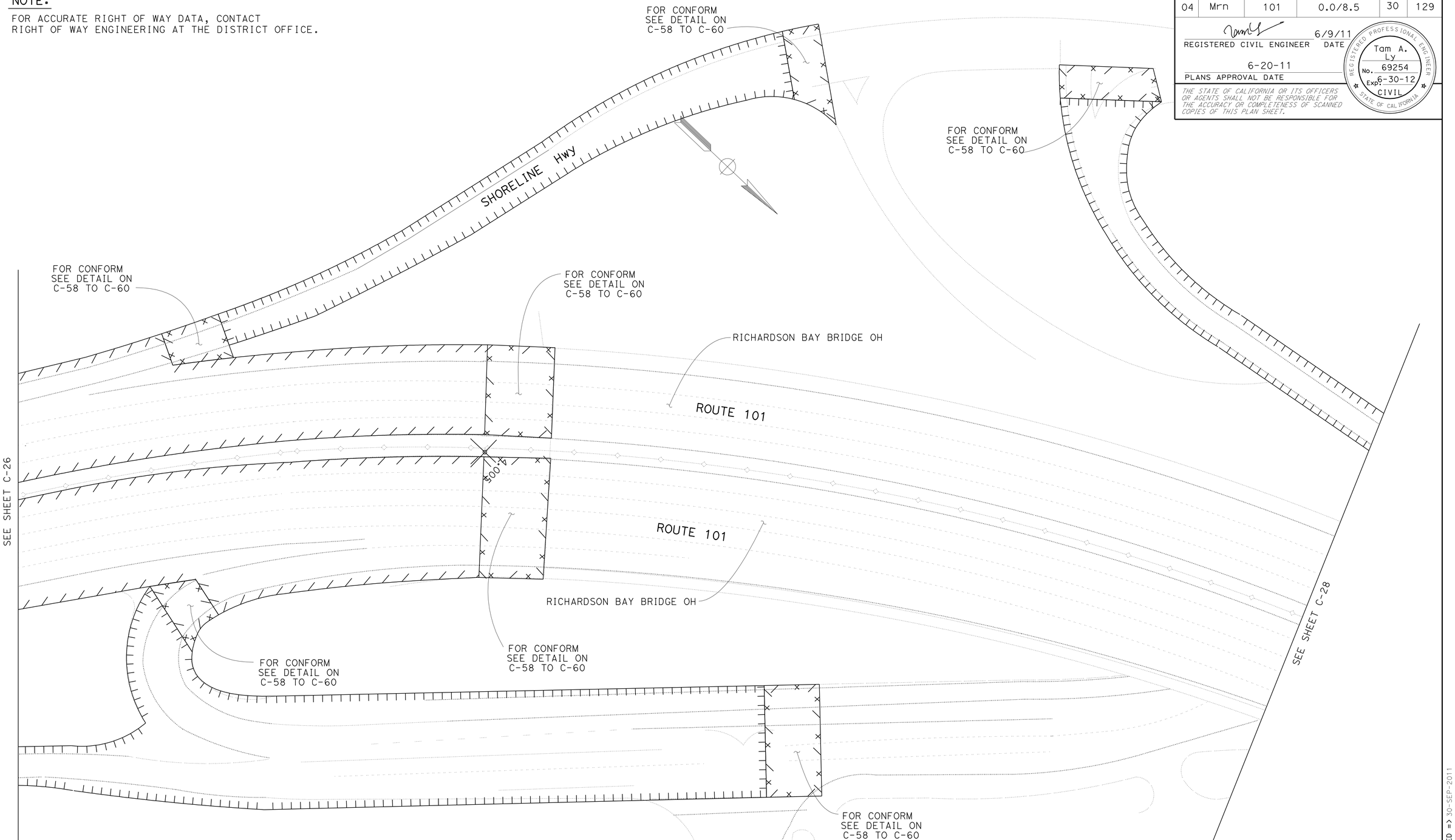

FOR NOTES, ABBREVIATIONS AND LEGEND, SEE SHEET C-1

CONSTRUCTION DETAILS

NO SCALE

C-27

STATE OF CALIFORNIA - DEPARTMENT OF TRANSPORTATION
DESIGN
Caltrans

FUNCTIONAL SUPERVISOR: GHULAM POPAL
CALCULATED-DESIGNED BY: TAM LY
CHECKED BY: GHULAM POPAL
REVISED BY: T.L
DATE REVISED: 06/20/11

LAST REVISION — DATE PLOTTED => 30-SEP-2011 — TIME PLOTTED => 13:09

BORDER LAST REVISED 7/2/2010

USERNAME => s131681
DGN FILE => 0400020590ga027.dgn

RELATIVE BORDER SCALE IS IN INCHES: 0 1 2 3

UNIT 0976

PROJECT NUMBER & PHASE: 04000205901

NOTE:

FOR ACCURATE RIGHT OF WAY DATA, CONTACT
RIGHT OF WAY ENGINEERING AT THE DISTRICT OFFICE.

Dist	COUNTY	ROUTE	POST MILES TOTAL PROJECT	SHEET No.	TOTAL SHEETS
04	Mrn	101	0.0/8.5	31	129

6/9/11
REGISTERED CIVIL ENGINEER DATE

6-20-11
PLANS APPROVAL DATE

REGISTERED PROFESSIONAL ENGINEER
Tam A. Ly
No. 69254
Exp 6-30-12
CIVIL
STATE OF CALIFORNIA

THE STATE OF CALIFORNIA OR ITS OFFICERS OR AGENTS SHALL NOT BE RESPONSIBLE FOR THE ACCURACY OR COMPLETENESS OF SCANNED COPIES OF THIS PLAN SHEET.

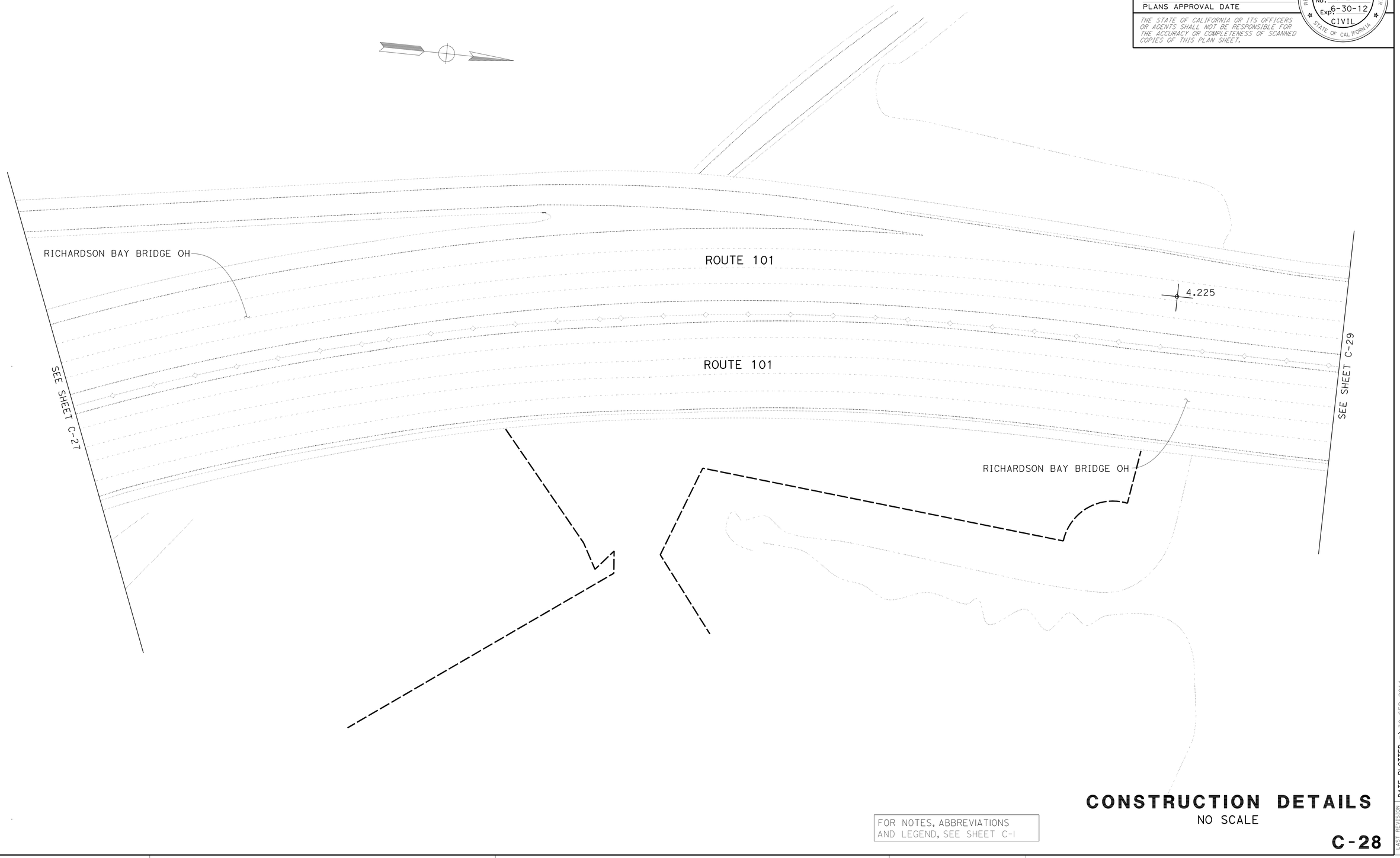

FOR NOTES, ABBREVIATIONS AND LEGEND, SEE SHEET C-1

CONSTRUCTION DETAILS

NO SCALE

C-28

REVISED BY	T. L	
DATE REVISED	06/20/11	
CALCULATED-DESIGNED BY	TAM LY	
CHECKED BY	GHULAM POPAL	
FUNCTIONAL SUPERVISOR	GHULAM POPAL	
STATE OF CALIFORNIA - DEPARTMENT OF TRANSPORTATION	DESIGN	

LAST REVISION | DATE PLOTTED => 30-SEP-2011
02-24-11 | TIME PLOTTED => 13:09

BORDER LAST REVISED 7/2/2010

USERNAME => s131681
DGN FILE => 0400020590ga028.dgn

RELATIVE BORDER SCALE IS IN INCHES 0 1 2 3

UNIT 0976

PROJECT NUMBER & PHASE 04000205901

Dist	COUNTY	ROUTE	POST MILES TOTAL PROJECT	SHEET No.	TOTAL SHEETS
04	Mrn	101	0.0/8.5	32	129

REGISTERED CIVIL ENGINEER 6/9/11 DATE

6-20-11
PLANS APPROVAL DATE

REGISTERED PROFESSIONAL ENGINEER
Tam A. Ly
No. 69254
Exp. 6-30-12
CIVIL
STATE OF CALIFORNIA

THE STATE OF CALIFORNIA OR ITS OFFICERS OR AGENTS SHALL NOT BE RESPONSIBLE FOR THE ACCURACY OR COMPLETENESS OF SCANNED COPIES OF THIS PLAN SHEET.

NOTE:

FOR ACCURATE RIGHT OF WAY DATA, CONTACT RIGHT OF WAY ENGINEERING AT THE DISTRICT OFFICE.

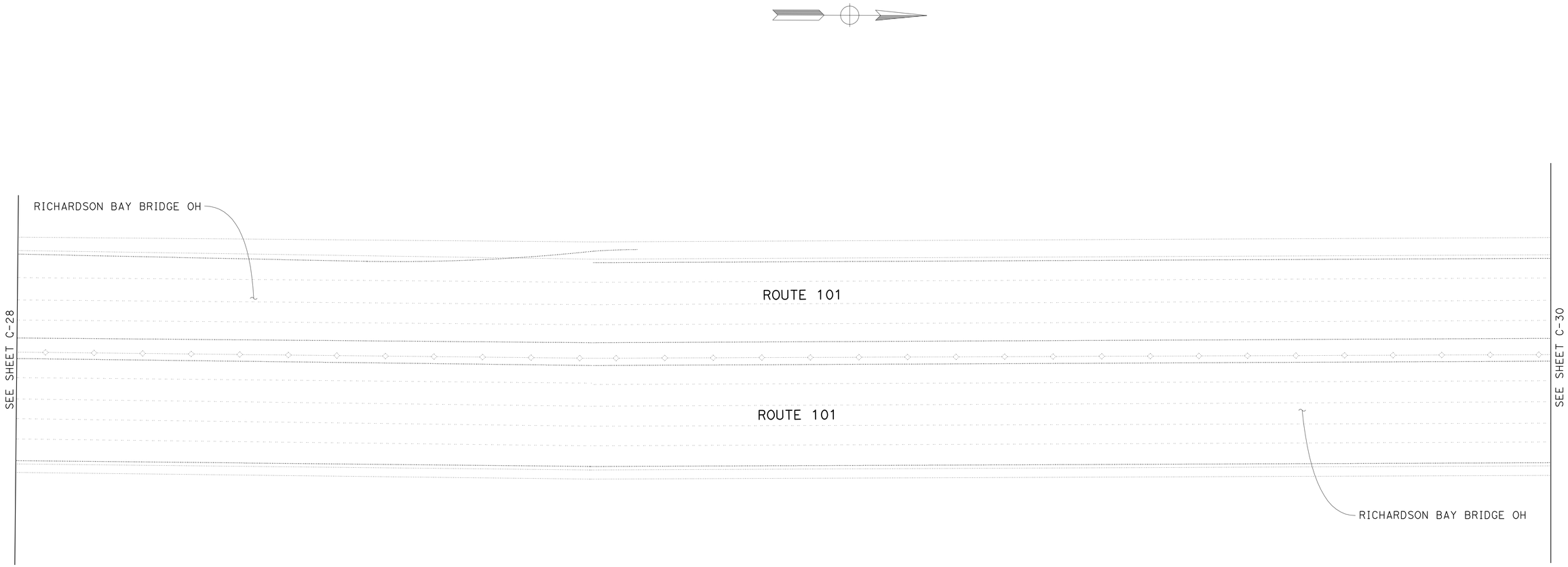

FOR NOTES, ABBREVIATIONS AND LEGEND, SEE SHEET C-1

CONSTRUCTION DETAILS

NO SCALE

C-29

STATE OF CALIFORNIA - DEPARTMENT OF TRANSPORTATION
Caltrans
DESIGN

FUNCTIONAL SUPERVISOR: GHULAM POPAL
CALCULATED-DESIGNED BY: TAM LY
CHECKED BY: GHULAM POPAL
REVISED BY: T. L
DATE REVISED: 06/20/11

LAST REVISION 01-28-11
DATE PLOTTED => 30-SEP-2011
TIME PLOTTED => 13:09

NOTE:

FOR ACCURATE RIGHT OF WAY DATA, CONTACT
RIGHT OF WAY ENGINEERING AT THE DISTRICT OFFICE.

Dist	COUNTY	ROUTE	POST MILES TOTAL PROJECT	SHEET No.	TOTAL SHEETS
04	Mrn	101	0.0/8.5	33	129

6/9/11
REGISTERED CIVIL ENGINEER DATE

6-20-11
PLANS APPROVAL DATE

THE STATE OF CALIFORNIA OR ITS OFFICERS OR AGENTS SHALL NOT BE RESPONSIBLE FOR THE ACCURACY OR COMPLETENESS OF SCANNED COPIES OF THIS PLAN SHEET.

REGISTERED PROFESSIONAL ENGINEER
Tam A. Ly
No. 69254
Exp 6-30-12
CIVIL
STATE OF CALIFORNIA

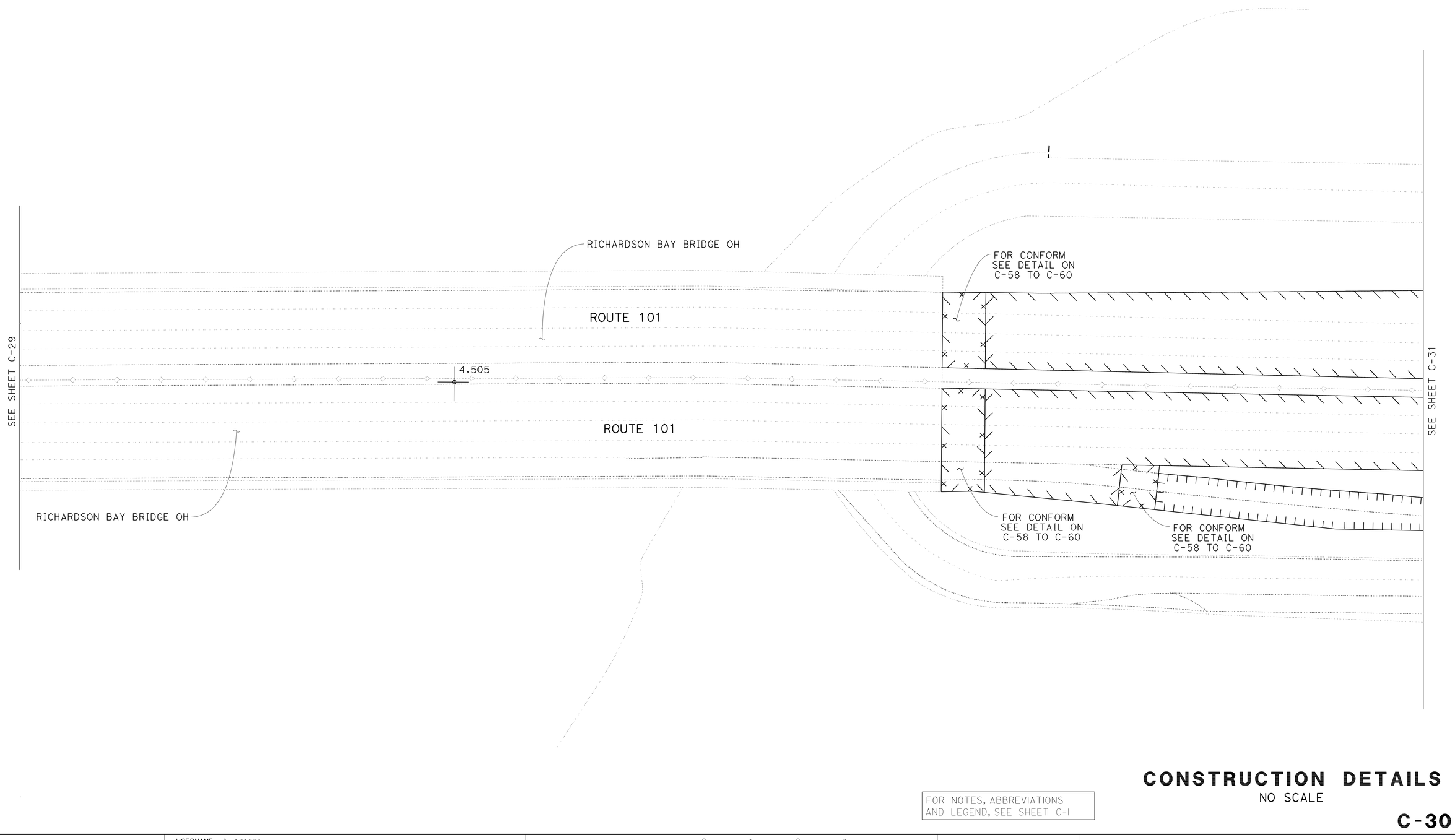

FOR NOTES, ABBREVIATIONS
AND LEGEND, SEE SHEET C-1

CONSTRUCTION DETAILS

NO SCALE

C-30

CALCULATED-DESIGNED BY	T. L
CHECKED BY	TAM LY
FUNCTIONAL SUPERVISOR	GHULAM POPAL
REVISED BY	GHULAM POPAL
DATE REVISED	06/20/11

STATE OF CALIFORNIA - DEPARTMENT OF TRANSPORTATION
DESIGN

LAST REVISION 02-24-11
DATE PLOTTED => 30-SEP-2011
TIME PLOTTED => 13:09

BORDER LAST REVISED 7/2/2010
USERNAME => s131681
DGN FILE => 0400020590ga030.dgn
RELATIVE BORDER SCALE IS IN INCHES 0 1 2 3
UNIT 0976
PROJECT NUMBER & PHASE 04000205901

Dist	COUNTY	ROUTE	POST MILES TOTAL PROJECT	SHEET No.	TOTAL SHEETS
04	Mrn	101	0.0/8.5	34	129

REGISTERED CIVIL ENGINEER 6/9/11 DATE

6-20-11
PLANS APPROVAL DATE

REGISTERED PROFESSIONAL ENGINEER Tam A. Ly No. 69254 Exp. 6-30-12 CIVIL STATE OF CALIFORNIA

THE STATE OF CALIFORNIA OR ITS OFFICERS OR AGENTS SHALL NOT BE RESPONSIBLE FOR THE ACCURACY OR COMPLETENESS OF SCANNED COPIES OF THIS PLAN SHEET.

NOTE:

FOR ACCURATE RIGHT OF WAY DATA, CONTACT RIGHT OF WAY ENGINEERING AT THE DISTRICT OFFICE.

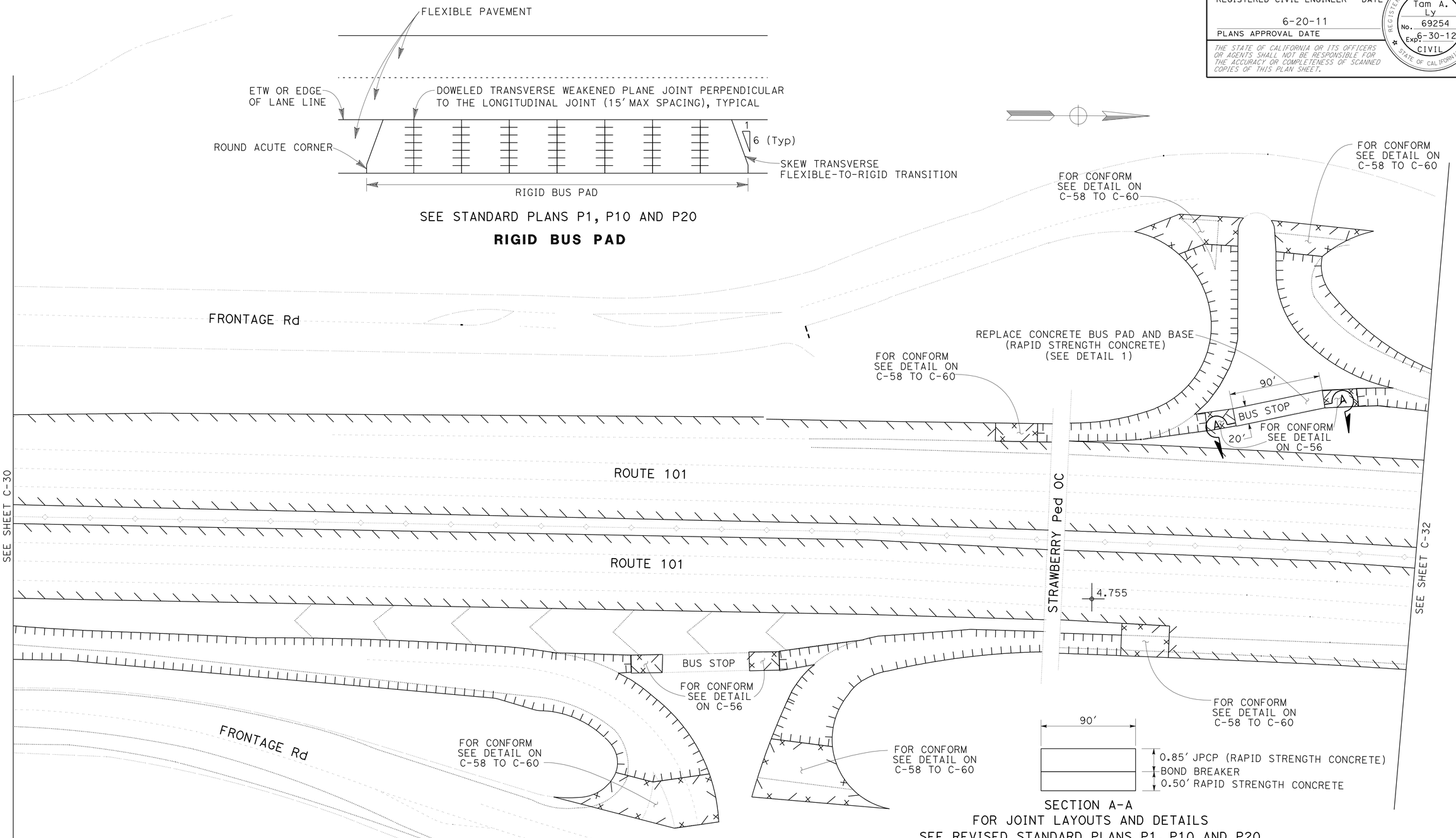

SEE STANDARD PLANS P1, P10 AND P20

RIGID BUS PAD

SECTION A-A
FOR JOINT LAYOUTS AND DETAILS
SEE REVISED STANDARD PLANS P1, P10 AND P20

DETAIL 1

FOR NOTES, ABBREVIATIONS AND LEGEND, SEE SHEET C-1

CONSTRUCTION DETAILS

NO SCALE

C-31

STATE OF CALIFORNIA - DEPARTMENT OF TRANSPORTATION
Caltrans
DESIGN

FUNCTIONAL SUPERVISOR: GHULAM POPAL
CALCULATED-DESIGNED BY: TAM LY
CHECKED BY: GHULAM POPAL
REVISED BY: T. L
DATE REVISED: 06/20/11

LAST REVISION 02-24-11
DATE PLOTTED => 30-SEP-2011
TIME PLOTTED => 13:10

NOTE:

FOR ACCURATE RIGHT OF WAY DATA, CONTACT
RIGHT OF WAY ENGINEERING AT THE DISTRICT OFFICE.

Dist	COUNTY	ROUTE	POST MILES TOTAL PROJECT	SHEET No.	TOTAL SHEETS
04	Mrn	101	0.0/8.5	35	129

6/9/11
REGISTERED CIVIL ENGINEER DATE

6-20-11
PLANS APPROVAL DATE

REGISTERED PROFESSIONAL ENGINEER
Tam A. Ly
No. 69254
Exp 6-30-12
CIVIL
STATE OF CALIFORNIA

THE STATE OF CALIFORNIA OR ITS OFFICERS OR AGENTS SHALL NOT BE RESPONSIBLE FOR THE ACCURACY OR COMPLETENESS OF SCANNED COPIES OF THIS PLAN SHEET.

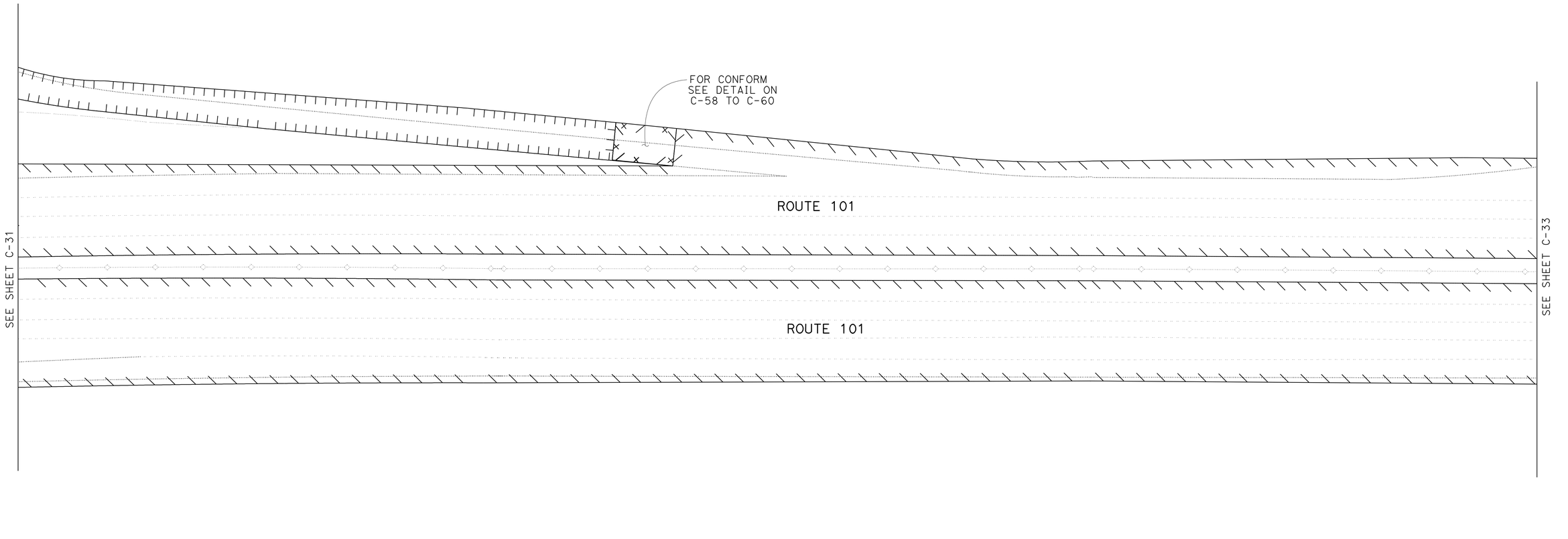

FOR NOTES, ABBREVIATIONS
AND LEGEND, SEE SHEET C-1

CONSTRUCTION DETAILS

NO SCALE

C-32

REVISED BY	DATE REVISED
T. L	06/20/11

CALCULATED-DESIGNED BY: TAM LY
CHECKED BY: GHULAM POPAL
FUNCTIONAL SUPERVISOR: GHULAM POPAL

STATE OF CALIFORNIA - DEPARTMENT OF TRANSPORTATION
DESIGN

LAST REVISION DATE PLOTTED => 30-SEP-2011
TIME PLOTTED => 13:10

NOTE:

FOR ACCURATE RIGHT OF WAY DATA, CONTACT
RIGHT OF WAY ENGINEERING AT THE DISTRICT OFFICE.

Dist	COUNTY	ROUTE	POST MILES TOTAL PROJECT	SHEET No.	TOTAL SHEETS
04	Mrn	101	0.0/8.5	36	129

6/9/11
REGISTERED CIVIL ENGINEER DATE

6-20-11
PLANS APPROVAL DATE

REGISTERED PROFESSIONAL ENGINEER
Tam A. Ly
No. 69254
Exp 6-30-12
CIVIL
STATE OF CALIFORNIA

THE STATE OF CALIFORNIA OR ITS OFFICERS OR AGENTS SHALL NOT BE RESPONSIBLE FOR THE ACCURACY OR COMPLETENESS OF SCANNED COPIES OF THIS PLAN SHEET.

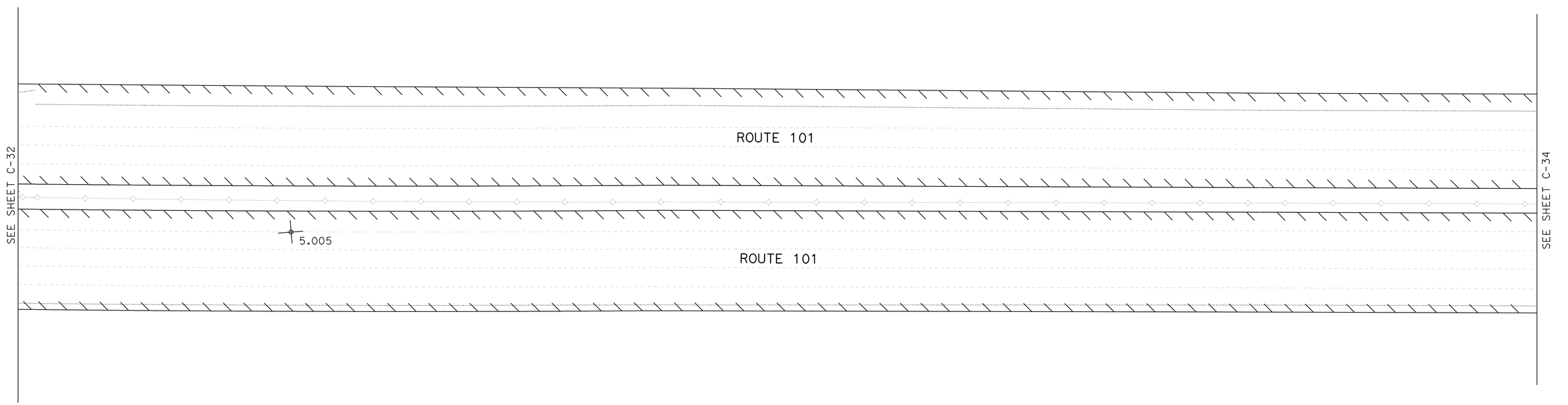

FOR NOTES, ABBREVIATIONS AND LEGEND, SEE SHEET C-1

CONSTRUCTION DETAILS

NO SCALE

C-33

CALCULATED-DESIGNED BY			
CHECKED BY	T. L	06/20/11	
TAM LY	REVISED BY	DATE REVISED	
GHULAM POPAL			
FUNCTIONAL SUPERVISOR			
GHULAM POPAL			

STATE OF CALIFORNIA - DEPARTMENT OF TRANSPORTATION
Caltrans®
DESIGN

LAST REVISION DATE PLOTTED => 30-SEP-2011
TIME PLOTTED => 13:10

BORDER LAST REVISED 7/2/2010

USERNAME => s131681
DGN FILE => 0400020590ga033.dgn

RELATIVE BORDER SCALE IS IN INCHES 0 1 2 3

UNIT 0976

PROJECT NUMBER & PHASE 04000205901

NOTE:

FOR ACCURATE RIGHT OF WAY DATA, CONTACT
RIGHT OF WAY ENGINEERING AT THE DISTRICT OFFICE.

Dist	COUNTY	ROUTE	POST MILES TOTAL PROJECT	SHEET No.	TOTAL SHEETS
04	Mrn	101	0.0/8.5	37	129

6/9/11
REGISTERED CIVIL ENGINEER DATE

6-20-11
PLANS APPROVAL DATE

REGISTERED PROFESSIONAL ENGINEER
Tam A. Ly
No. 69254
Exp 6-30-12
CIVIL
STATE OF CALIFORNIA

THE STATE OF CALIFORNIA OR ITS OFFICERS OR AGENTS SHALL NOT BE RESPONSIBLE FOR THE ACCURACY OR COMPLETENESS OF SCANNED COPIES OF THIS PLAN SHEET.

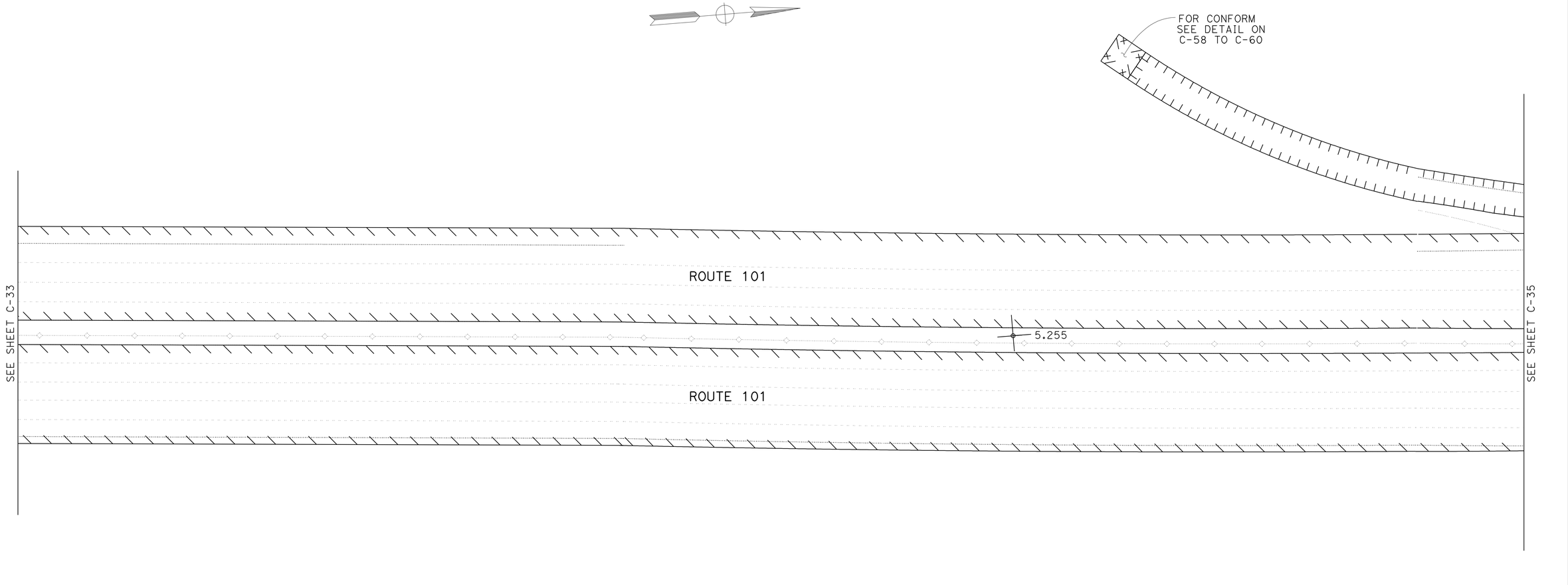

FOR NOTES, ABBREVIATIONS AND LEGEND, SEE SHEET C-1

CONSTRUCTION DETAILS

NO SCALE

C-34

REVISED BY	T. L	
DATE REVISED	06/20/11	
CALCULATED-DESIGNED BY	TAM LY	
CHECKED BY	GHULAM POPAL	
FUNCTIONAL SUPERVISOR	GHULAM POPAL	

STATE OF CALIFORNIA - DEPARTMENT OF TRANSPORTATION
Caltrans®
DESIGN

LAST REVISION | DATE PLOTTED => 30-SEP-2011
TIME PLOTTED => 13:10

BORDER LAST REVISED 7/2/2010

USERNAME => s131681
DGN FILE => 0400020590ga034.dgn

RELATIVE BORDER SCALE IS IN INCHES 0 1 2 3

UNIT 0976

PROJECT NUMBER & PHASE 04000205901

NOTE:

FOR ACCURATE RIGHT OF WAY DATA, CONTACT
RIGHT OF WAY ENGINEERING AT THE DISTRICT OFFICE.

Dist	COUNTY	ROUTE	POST MILES TOTAL PROJECT	SHEET No.	TOTAL SHEETS
04	Mrn	101	0.0/8.5	38	129

6/9/11
REGISTERED CIVIL ENGINEER DATE

6-20-11
PLANS APPROVAL DATE

REGISTERED PROFESSIONAL ENGINEER
Tam A. Ly
No. 69254
Exp 6-30-12
CIVIL
STATE OF CALIFORNIA

THE STATE OF CALIFORNIA OR ITS OFFICERS OR AGENTS SHALL NOT BE RESPONSIBLE FOR THE ACCURACY OR COMPLETENESS OF SCANNED COPIES OF THIS PLAN SHEET.

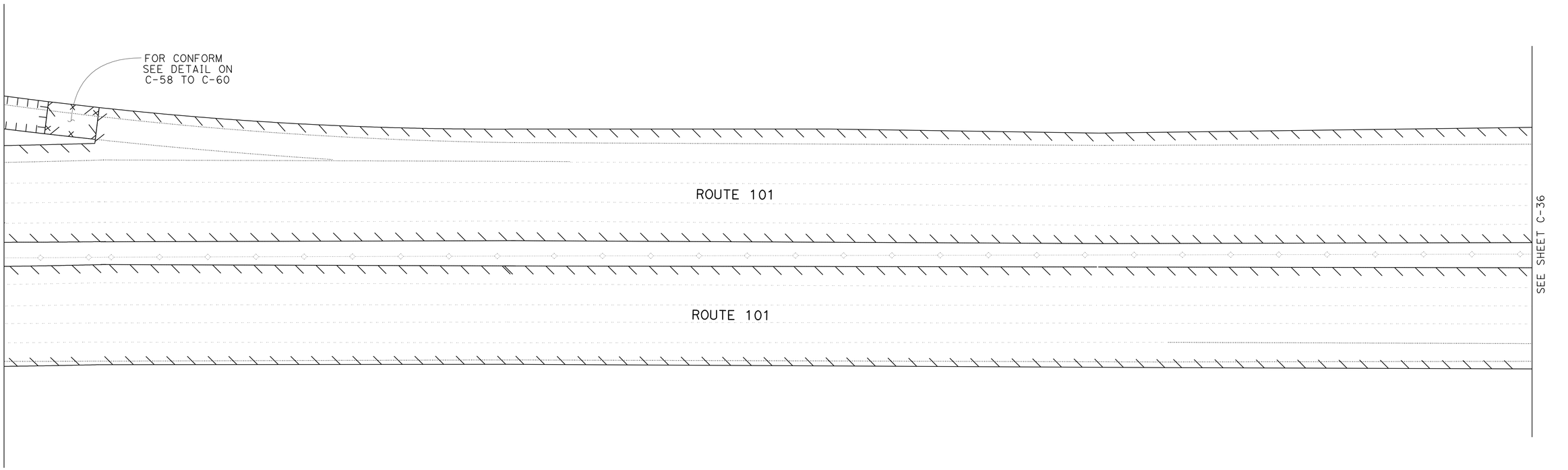

FOR NOTES, ABBREVIATIONS
AND LEGEND, SEE SHEET C-1

CONSTRUCTION DETAILS

NO SCALE

C-35

REVISED BY	T. L
DATE REVISED	06/20/11
CALCULATED-DESIGNED BY	TAM LY
CHECKED BY	GHULAM POPAL
FUNCTIONAL SUPERVISOR	GHULAM POPAL

STATE OF CALIFORNIA - DEPARTMENT OF TRANSPORTATION
Caltrans
DESIGN

LAST REVISION
DATE PLOTTED => 30-SEP-2011
TIME PLOTTED => 13:10

BORDER LAST REVISED 7/2/2010

USERNAME => s131681
DGN FILE => 0400020590ga035.dgn

RELATIVE BORDER SCALE IS IN INCHES 0 1 2 3

UNIT 0976

PROJECT NUMBER & PHASE 04000205901

NOTE:

FOR ACCURATE RIGHT OF WAY DATA, CONTACT
RIGHT OF WAY ENGINEERING AT THE DISTRICT OFFICE.

Dist	COUNTY	ROUTE	POST MILES TOTAL PROJECT	SHEET No.	TOTAL SHEETS
04	Mrn	101	0.0/8.5	39	129

6/9/11
REGISTERED CIVIL ENGINEER DATE

6-20-11
PLANS APPROVAL DATE

REGISTERED PROFESSIONAL ENGINEER
Tam A. Ly
No. 69254
Exp 6-30-12
CIVIL
STATE OF CALIFORNIA

THE STATE OF CALIFORNIA OR ITS OFFICERS OR AGENTS SHALL NOT BE RESPONSIBLE FOR THE ACCURACY OR COMPLETENESS OF SCANNED COPIES OF THIS PLAN SHEET.

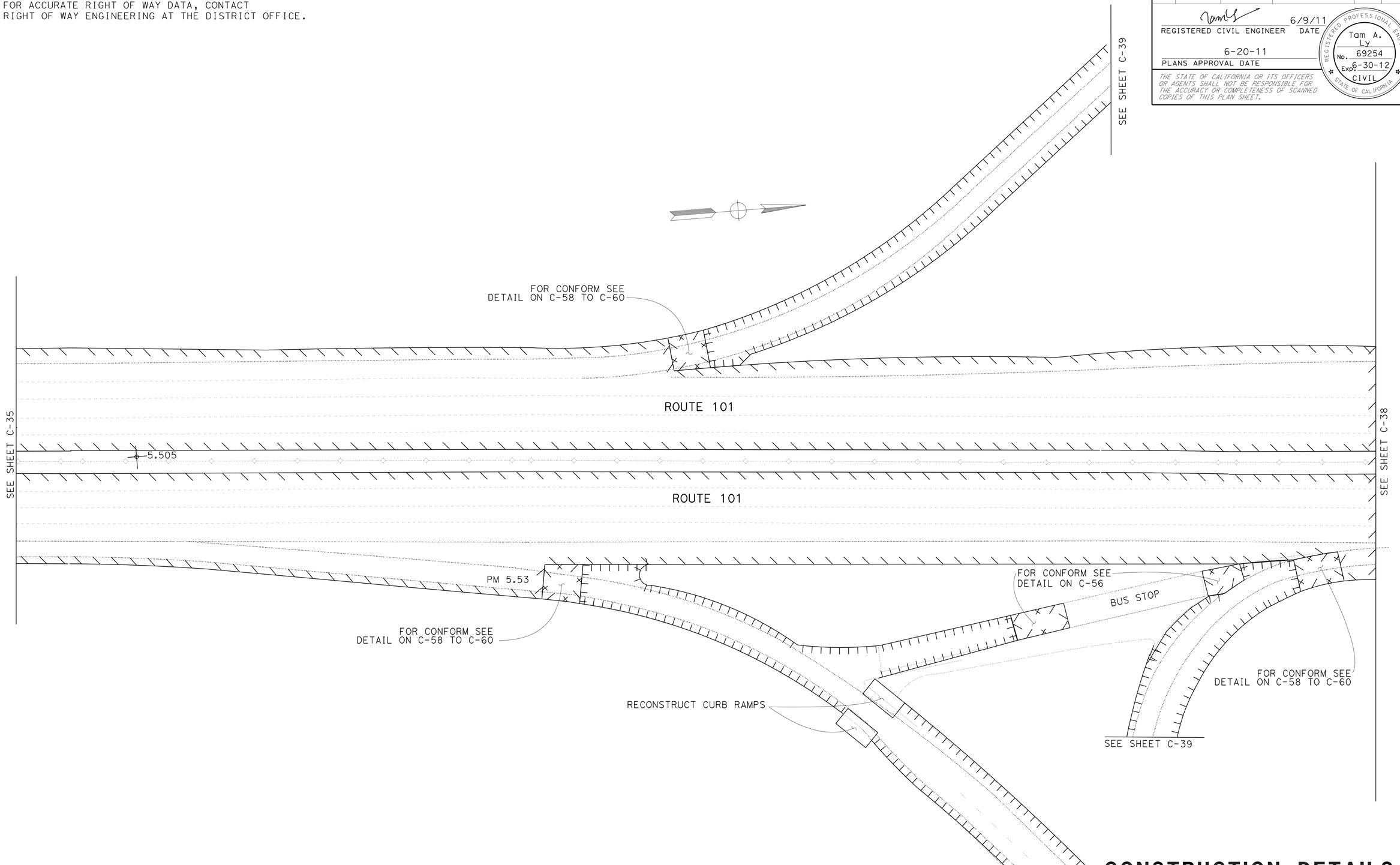

FOR NOTES, ABBREVIATIONS AND LEGEND, SEE SHEET C-1

CONSTRUCTION DETAILS

NO SCALE

C-36

CALCULATED-DESIGNED BY		
CHECKED BY	T. L	06/20/11
	REVISED BY	DATE REVISED
TAM LY		
GHULAM POPAL		
FUNCTIONAL SUPERVISOR		
GHULAM POPAL		

STATE OF CALIFORNIA - DEPARTMENT OF TRANSPORTATION
DESIGN

Caltrans

LAST REVISION DATE PLOTTED => 30-SEP-2011
04-25-11 TIME PLOTTED => 13:10

BORDER LAST REVISED 7/2/2010

USERNAME => s131681
DGN FILE => 0400020590ga036.dgn

RELATIVE BORDER SCALE IS IN INCHES 0 1 2 3

UNIT 0976

PROJECT NUMBER & PHASE 04000205901

Dist	COUNTY	ROUTE	POST MILES TOTAL PROJECT	SHEET No.	TOTAL SHEETS
04	Mrn	101	0.0/8.5	40	129

REGISTERED CIVIL ENGINEER 6/9/11 DATE

6-20-11
PLANS APPROVAL DATE

REGISTERED PROFESSIONAL ENGINEER
Tam A. Ly
No. 69254
Exp. 6-30-12
CIVIL
STATE OF CALIFORNIA

THE STATE OF CALIFORNIA OR ITS OFFICERS OR AGENTS SHALL NOT BE RESPONSIBLE FOR THE ACCURACY OR COMPLETENESS OF SCANNED COPIES OF THIS PLAN SHEET.

NOTE:

FOR ACCURATE RIGHT OF WAY DATA, CONTACT RIGHT OF WAY ENGINEERING AT THE DISTRICT OFFICE.

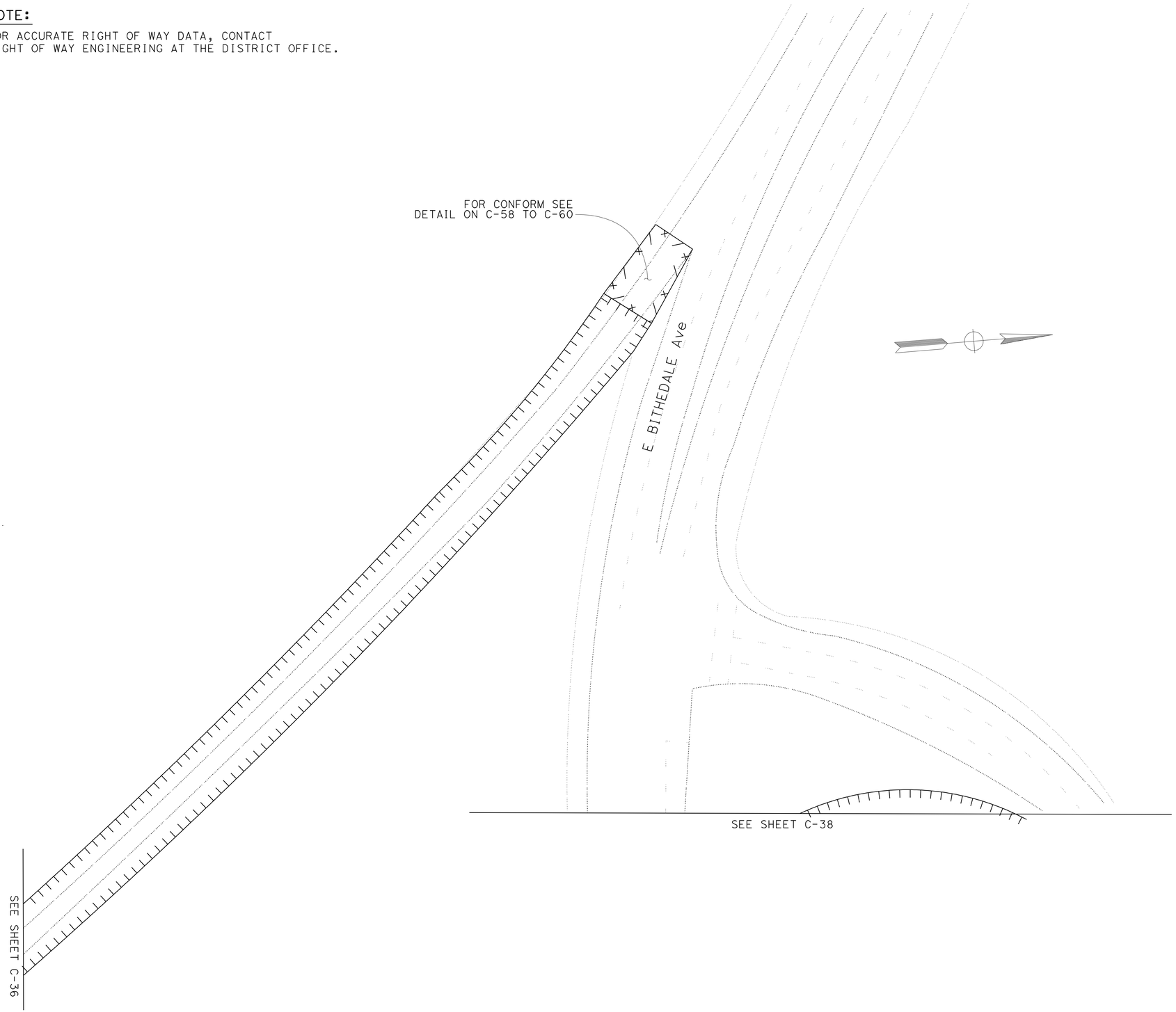

FOR NOTES, ABBREVIATIONS AND LEGEND, SEE SHEET C-1

CONSTRUCTION DETAILS

NO SCALE

C-37

STATE OF CALIFORNIA - DEPARTMENT OF TRANSPORTATION
Caltrans
DESIGN

FUNCTIONAL SUPERVISOR: GHULAM POPAL
CALCULATED-DESIGNED BY: TAM LY
CHECKED BY: GHULAM POPAL
REVISED BY: T. L
DATE REVISED: 06/20/11

LAST REVISION 02-23-11
DATE PLOTTED => 30-SEP-2011
TIME PLOTTED => 13:11

Dist	COUNTY	ROUTE	POST MILES TOTAL PROJECT	SHEET No.	TOTAL SHEETS
04	Mrn	101	0.0/8.5	41	129

REGISTERED CIVIL ENGINEER 6/9/11 DATE

6-20-11
PLANS APPROVAL DATE

REGISTERED PROFESSIONAL ENGINEER Tam A. Ly No. 69254 Exp. 6-30-12 CIVIL STATE OF CALIFORNIA

THE STATE OF CALIFORNIA OR ITS OFFICERS OR AGENTS SHALL NOT BE RESPONSIBLE FOR THE ACCURACY OR COMPLETENESS OF SCANNED COPIES OF THIS PLAN SHEET.

NOTE:

FOR ACCURATE RIGHT OF WAY DATA, CONTACT RIGHT OF WAY ENGINEERING AT THE DISTRICT OFFICE.

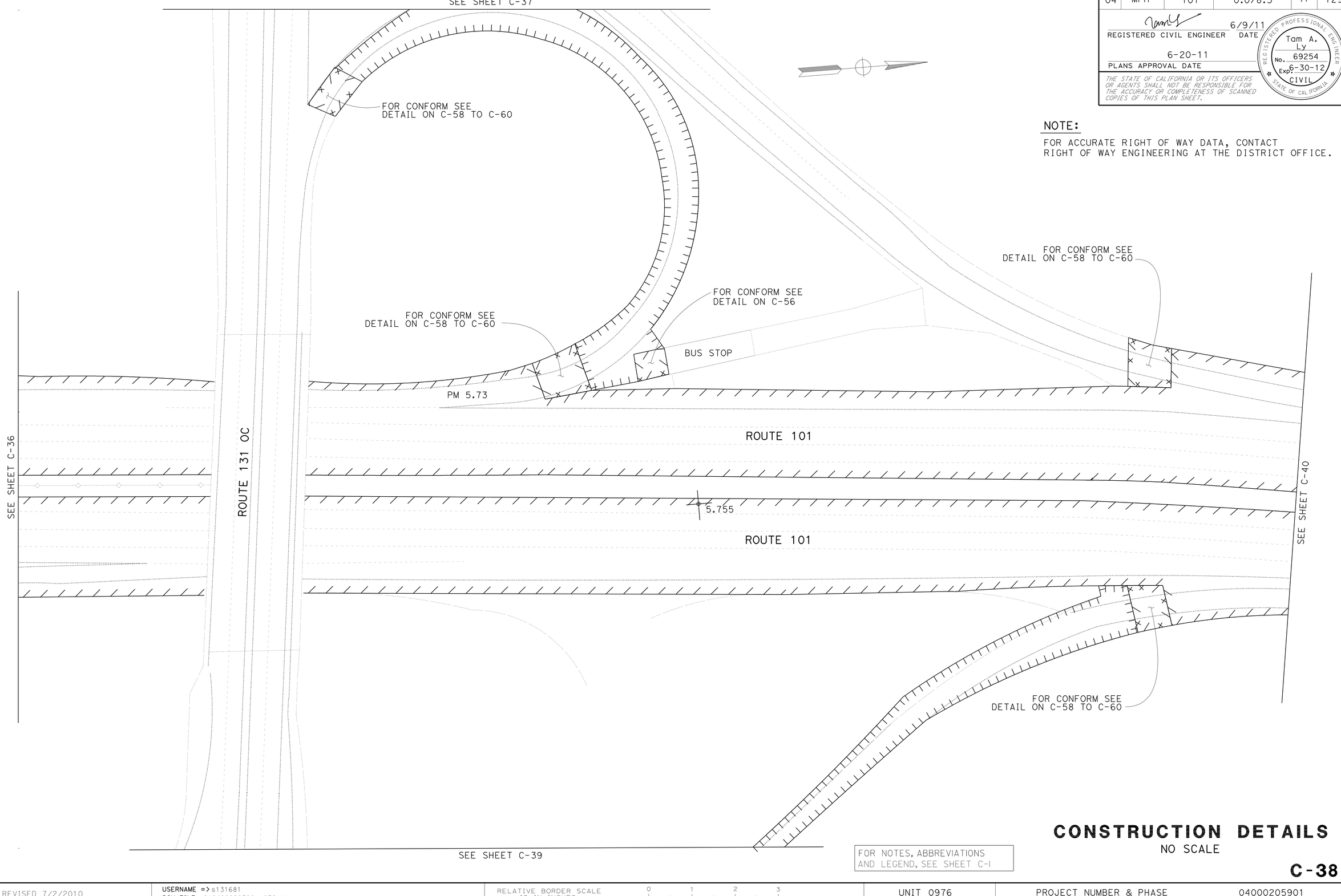

FOR NOTES, ABBREVIATIONS AND LEGEND, SEE SHEET C-1

CONSTRUCTION DETAILS

NO SCALE

C-38

STATE OF CALIFORNIA - DEPARTMENT OF TRANSPORTATION

Caltrans® DESIGN

FUNCTIONAL SUPERVISOR: GHULAM POPAL

CALCULATED-DESIGNED BY: TAM LY

CHECKED BY: GHULAM POPAL

REVISED BY: T. L

DATE REVISED: 06/20/11

LAST REVISION 02-23-11

DATE PLOTTED => 30-SEP-2011

TIME PLOTTED => 13:11

Dist	COUNTY	ROUTE	POST MILES TOTAL PROJECT	SHEET No.	TOTAL SHEETS
04	Mrn	101	0.0/8.5	42	129

REGISTERED CIVIL ENGINEER 6/9/11 DATE

6-20-11
PLANS APPROVAL DATE

REGISTERED PROFESSIONAL ENGINEER Tam A. Ly No. 69254 Exp. 6-30-12 CIVIL STATE OF CALIFORNIA

THE STATE OF CALIFORNIA OR ITS OFFICERS OR AGENTS SHALL NOT BE RESPONSIBLE FOR THE ACCURACY OR COMPLETENESS OF SCANNED COPIES OF THIS PLAN SHEET.

NOTE:
FOR ACCURATE RIGHT OF WAY DATA, CONTACT RIGHT OF WAY ENGINEERING AT THE DISTRICT OFFICE.

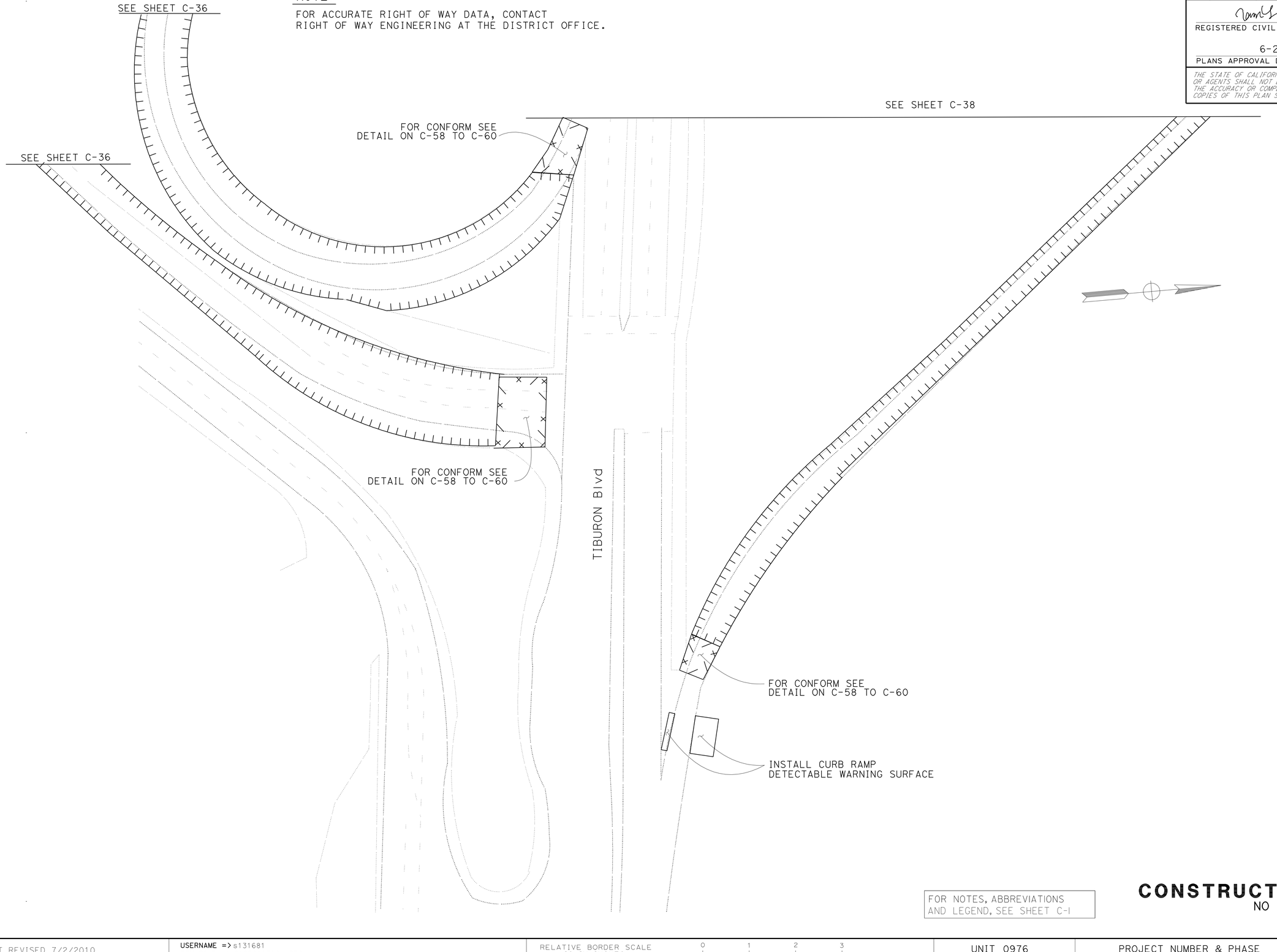

FOR NOTES, ABBREVIATIONS AND LEGEND, SEE SHEET C-1

CONSTRUCTION DETAILS
NO SCALE

C-39

STATE OF CALIFORNIA - DEPARTMENT OF TRANSPORTATION
Caltrans DESIGN

FUNCTIONAL SUPERVISOR: GHULAM POPAL
CALCULATED-DESIGNED BY: TAM LY
CHECKED BY: GHULAM POPAL
REVISED BY: T. L
DATE REVISED: 06/20/11

LAST REVISION 04-25-11
DATE PLOTTED => 30-SEP-2011
TIME PLOTTED => 13:11

NOTE:

FOR ACCURATE RIGHT OF WAY DATA, CONTACT
RIGHT OF WAY ENGINEERING AT THE DISTRICT OFFICE.

Dist	COUNTY	ROUTE	POST MILES TOTAL PROJECT	SHEET No.	TOTAL SHEETS
04	Mrn	101	0.0/8.5	43	129

REGISTERED CIVIL ENGINEER — DATE: 6/9/11

PLANS APPROVAL DATE: 6-20-11

REGISTERED PROFESSIONAL ENGINEER
Tam A. Ly
No. 69254
Exp 6-30-12
CIVIL
STATE OF CALIFORNIA

THE STATE OF CALIFORNIA OR ITS OFFICERS OR AGENTS SHALL NOT BE RESPONSIBLE FOR THE ACCURACY OR COMPLETENESS OF SCANNED COPIES OF THIS PLAN SHEET.

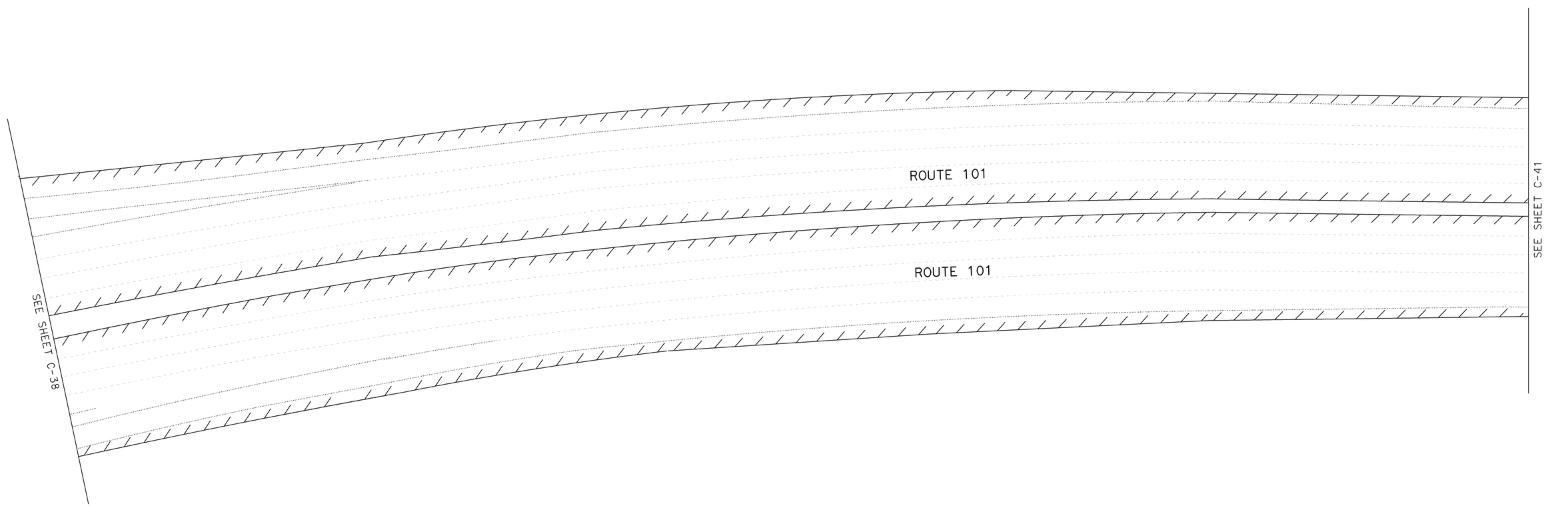

FOR NOTES, ABBREVIATIONS AND LEGEND, SEE SHEET C-1

CONSTRUCTION DETAILS

NO SCALE

C-40

REVISED BY	DATE REVISED
T. L	06/20/11

CALCULATED-DESIGNED BY: TAM LY
CHECKED BY: GHULAM POPAL
FUNCTIONAL SUPERVISOR: GHULAM POPAL

STATE OF CALIFORNIA - DEPARTMENT OF TRANSPORTATION
Caltrans®
DESIGN

LAST REVISION
DATE PLOTTED => 30-SEP-2011
TIME PLOTTED => 13:11

BORDER LAST REVISED 7/2/2010

USERNAME => s131681
DGN FILE => 0400020590ga040.dgn

RELATIVE BORDER SCALE IS IN INCHES 0 1 2 3

UNIT 0976

PROJECT NUMBER & PHASE 04000205901

NOTE:

FOR ACCURATE RIGHT OF WAY DATA, CONTACT
RIGHT OF WAY ENGINEERING AT THE DISTRICT OFFICE.

Dist	COUNTY	ROUTE	POST MILES TOTAL PROJECT	SHEET No.	TOTAL SHEETS
04	Mrn	101	0.0/8.5	44	129

REGISTERED CIVIL ENGINEER — DATE: 6/9/11

PLANS APPROVAL DATE: 6-20-11

REGISTERED PROFESSIONAL ENGINEER
Tam A. Ly
No. 69254
Exp 6-30-12
CIVIL
STATE OF CALIFORNIA

THE STATE OF CALIFORNIA OR ITS OFFICERS OR AGENTS SHALL NOT BE RESPONSIBLE FOR THE ACCURACY OR COMPLETENESS OF SCANNED COPIES OF THIS PLAN SHEET.

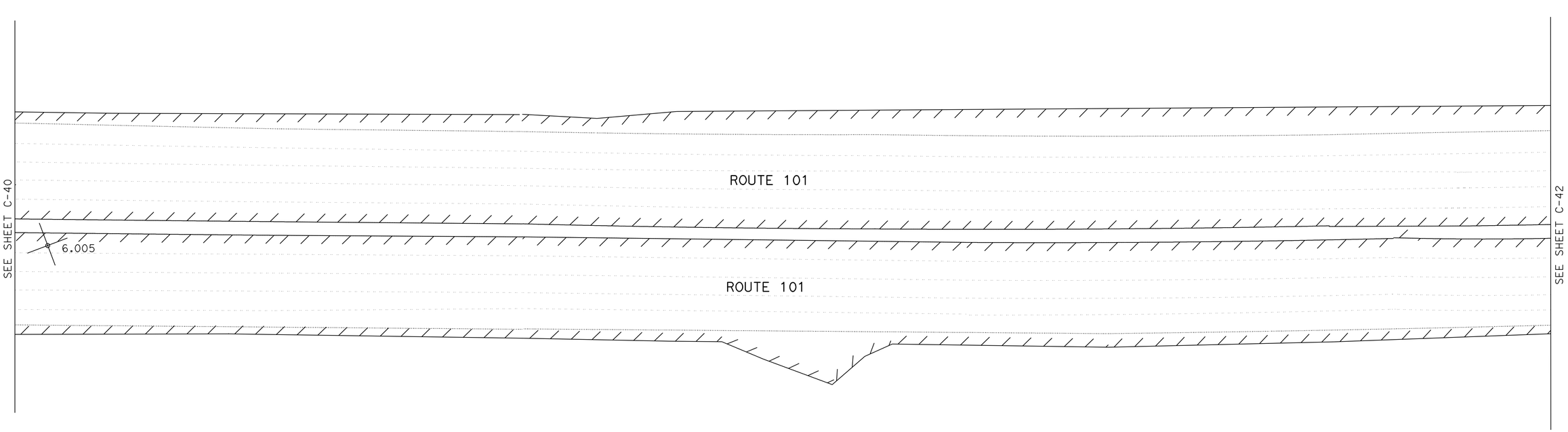

FOR NOTES, ABBREVIATIONS AND LEGEND, SEE SHEET C-1

CONSTRUCTION DETAILS

NO SCALE

C-41

REVISED BY	DATE REVISED
T. L	06/20/11

CALCULATED-DESIGNED BY: TAM LY
CHECKED BY: GHULAM POPAL
FUNCTIONAL SUPERVISOR: GHULAM POPAL

STATE OF CALIFORNIA - DEPARTMENT OF TRANSPORTATION
DESIGN

LAST REVISION | DATE PLOTTED => 30-SEP-2011
TIME PLOTTED => 13:11

BORDER LAST REVISED 7/2/2010

USERNAME => s131681
DGN FILE => 0400020590ga041.dgn

RELATIVE BORDER SCALE IS IN INCHES 0 1 2 3

UNIT 0976

PROJECT NUMBER & PHASE 04000205901

Dist	COUNTY	ROUTE	POST MILES TOTAL PROJECT	SHEET No.	TOTAL SHEETS
04	Mrn	101	0.0/8.5	45	129

REGISTERED CIVIL ENGINEER 6/9/11 DATE

6-20-11
PLANS APPROVAL DATE

REGISTERED PROFESSIONAL ENGINEER
Tam A. Ly
No. 69254
Exp. 6-30-12
CIVIL
STATE OF CALIFORNIA

THE STATE OF CALIFORNIA OR ITS OFFICERS OR AGENTS SHALL NOT BE RESPONSIBLE FOR THE ACCURACY OR COMPLETENESS OF SCANNED COPIES OF THIS PLAN SHEET.

NOTE:

FOR ACCURATE RIGHT OF WAY DATA, CONTACT RIGHT OF WAY ENGINEERING AT THE DISTRICT OFFICE.

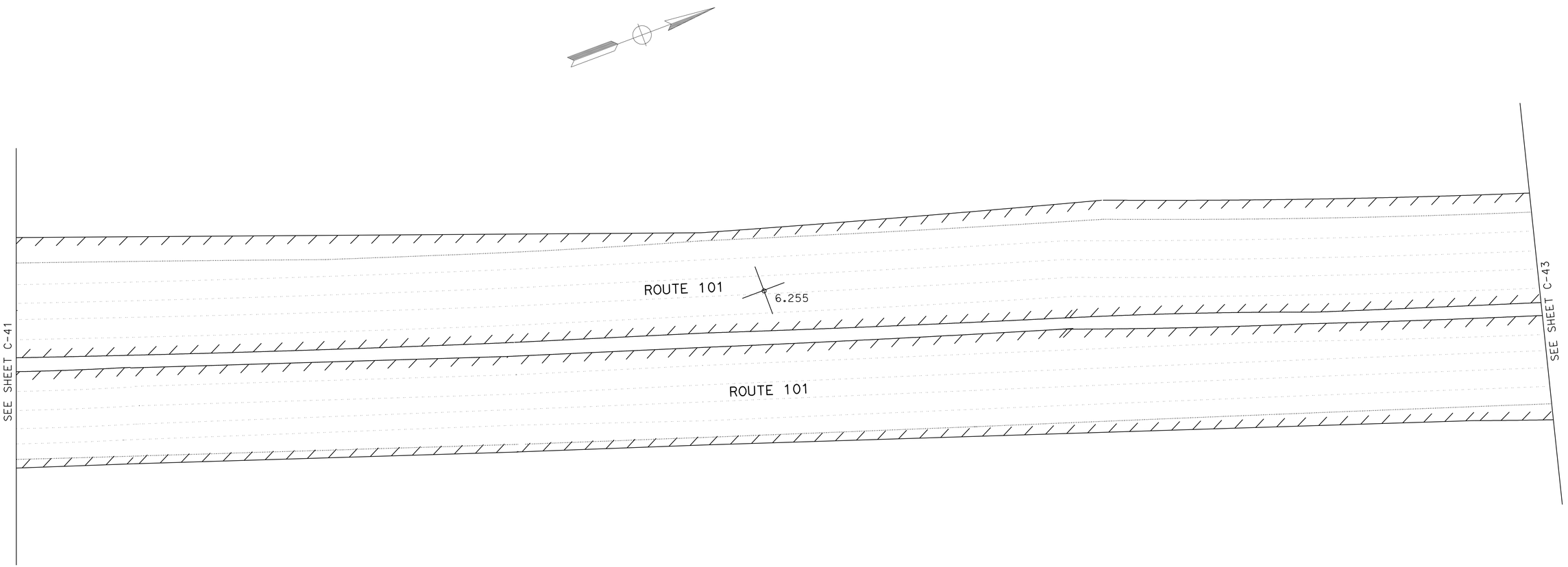

CONSTRUCTION DETAILS

NO SCALE

C-42

STATE OF CALIFORNIA - DEPARTMENT OF TRANSPORTATION
Caltrans
DESIGN

FUNCTIONAL SUPERVISOR: GHULAM POPAL
CALCULATED-DESIGNED BY: TAM LY
CHECKED BY: GHULAM POPAL
REVISED BY: T. L
DATE REVISED: 06/20/11

LAST REVISION 01-24-11
DATE PLOTTED => 30-SEP-2011
TIME PLOTTED => 13:11

Dist	COUNTY	ROUTE	POST MILES TOTAL PROJECT	SHEET No.	TOTAL SHEETS
04	Mrn	101	0.0/8.5	46	129

REGISTERED CIVIL ENGINEER 6/9/11 DATE

6-20-11
PLANS APPROVAL DATE

REGISTERED PROFESSIONAL ENGINEER
Tam A. Ly
No. 69254
Exp. 6-30-12
CIVIL
STATE OF CALIFORNIA

THE STATE OF CALIFORNIA OR ITS OFFICERS OR AGENTS SHALL NOT BE RESPONSIBLE FOR THE ACCURACY OR COMPLETENESS OF SCANNED COPIES OF THIS PLAN SHEET.

NOTE:

FOR ACCURATE RIGHT OF WAY DATA, CONTACT RIGHT OF WAY ENGINEERING AT THE DISTRICT OFFICE.

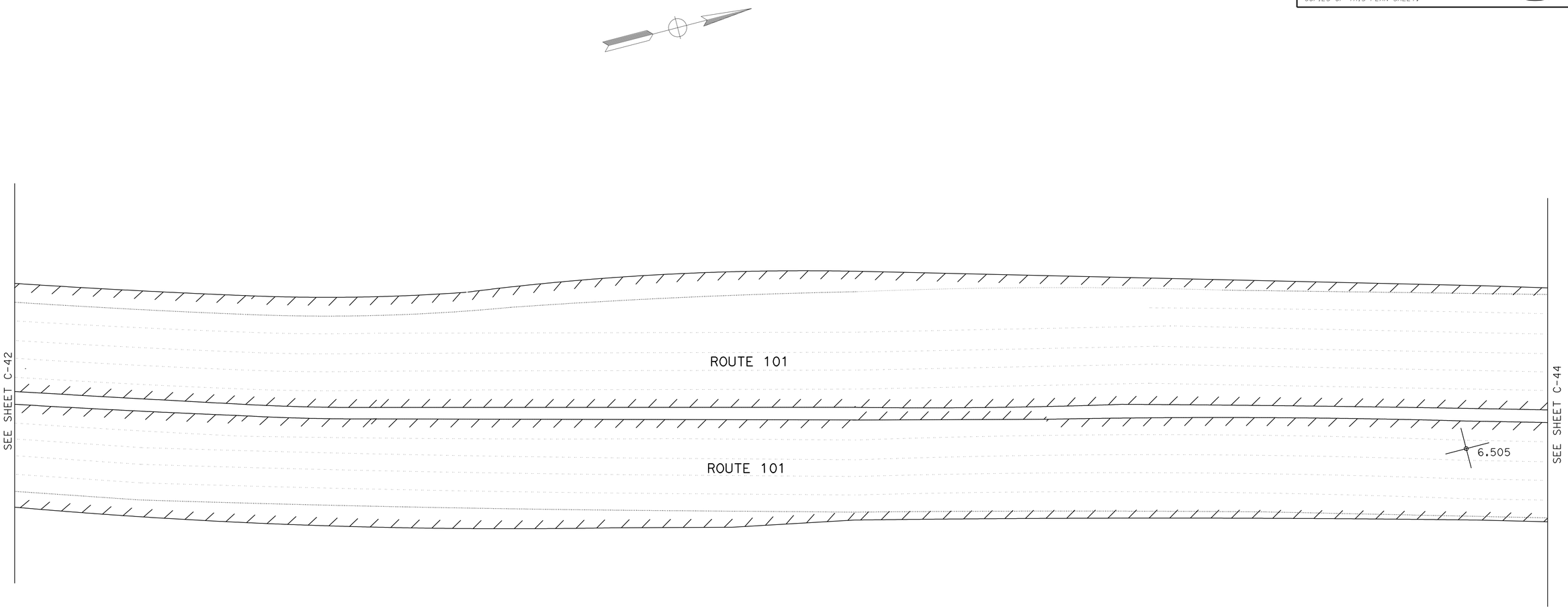

FOR NOTES, ABBREVIATIONS AND LEGEND, SEE SHEET C-1

CONSTRUCTION DETAILS

NO SCALE

C-43

STATE OF CALIFORNIA - DEPARTMENT OF TRANSPORTATION

Caltrans DESIGN

FUNCTIONAL SUPERVISOR: GHULAM POPAL

CALCULATED-DESIGNED BY: TAM LY

CHECKED BY: GHULAM POPAL

REVISED BY: T. L

DATE REVISED: 06/20/11

LAST REVISION 01-24-11

DATE PLOTTED => 30-SEP-2011

TIME PLOTTED => 13:12

NOTE:

FOR ACCURATE RIGHT OF WAY DATA, CONTACT
RIGHT OF WAY ENGINEERING AT THE DISTRICT OFFICE.

Dist	COUNTY	ROUTE	POST MILES TOTAL PROJECT	SHEET No.	TOTAL SHEETS
04	Mrn	101	0.0/8.5	47	129

REGISTERED CIVIL ENGINEER — DATE: 6/9/11

PLANS APPROVAL DATE: 6-20-11

REGISTERED PROFESSIONAL ENGINEER
Tam A. Ly
No. 69254
Exp 6-30-12
CIVIL
STATE OF CALIFORNIA

THE STATE OF CALIFORNIA OR ITS OFFICERS OR AGENTS SHALL NOT BE RESPONSIBLE FOR THE ACCURACY OR COMPLETENESS OF SCANNED COPIES OF THIS PLAN SHEET.

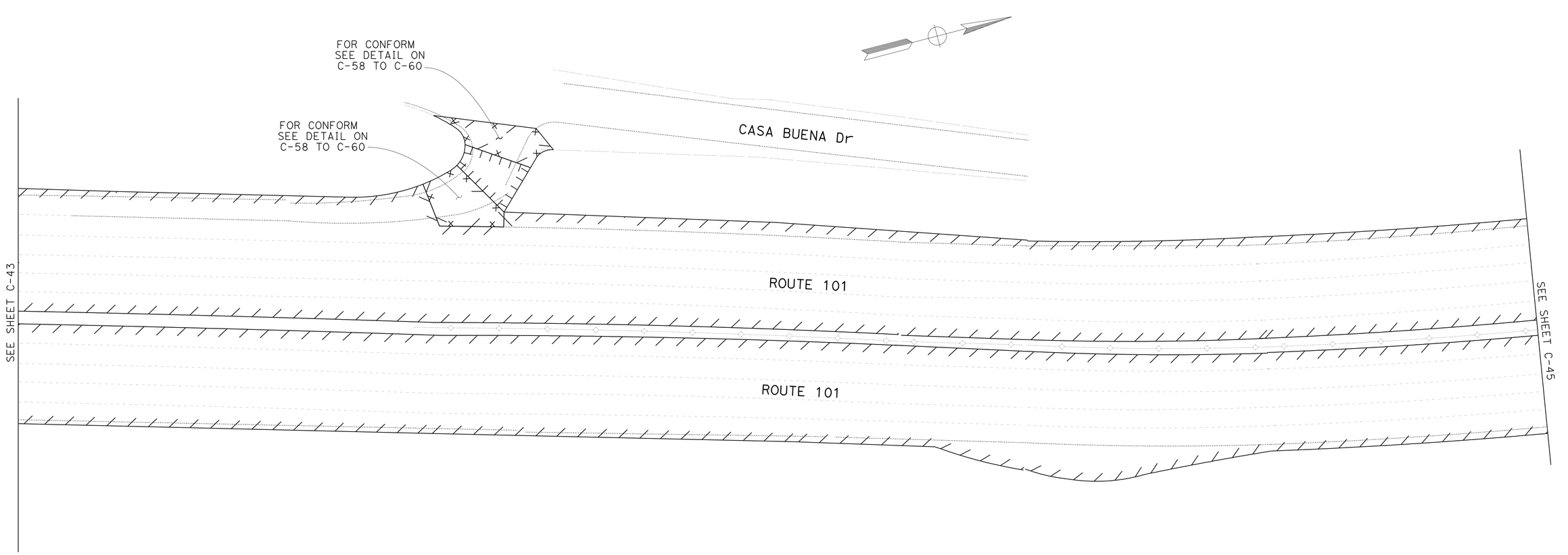

FOR NOTES, ABBREVIATIONS AND LEGEND, SEE SHEET C-1

CONSTRUCTION DETAILS

NO SCALE

C-44

CALCULATED-DESIGNED BY	
CHECKED BY	
REVISED BY	T. L
DATE REVISED	06/20/11
TAM LY	
GHULAM POPAL	
FUNCTIONAL SUPERVISOR	GHULAM POPAL

STATE OF CALIFORNIA - DEPARTMENT OF TRANSPORTATION
DESIGN

LAST REVISION | DATE PLOTTED => 30-SEP-2011
02-25-11 | TIME PLOTTED => 13:12

BORDER LAST REVISED 7/2/2010

USERNAME => s131681
DGN FILE => 0400020590ga044.dgn

RELATIVE BORDER SCALE IS IN INCHES 0 1 2 3

UNIT 0976

PROJECT NUMBER & PHASE 04000205901

NOTE:

FOR ACCURATE RIGHT OF WAY DATA, CONTACT
RIGHT OF WAY ENGINEERING AT THE DISTRICT OFFICE.

Dist	COUNTY	ROUTE	POST MILES TOTAL PROJECT	SHEET No.	TOTAL SHEETS
04	Mrn	101	0.0/8.5	48	129

REGISTERED CIVIL ENGINEER 6/9/11 DATE

6-20-11
PLANS APPROVAL DATE

REGISTERED PROFESSIONAL ENGINEER
Tam A. Ly
No. 69254
Exp. 6-30-12
CIVIL
STATE OF CALIFORNIA

THE STATE OF CALIFORNIA OR ITS OFFICERS OR AGENTS SHALL NOT BE RESPONSIBLE FOR THE ACCURACY OR COMPLETENESS OF SCANNED COPIES OF THIS PLAN SHEET.

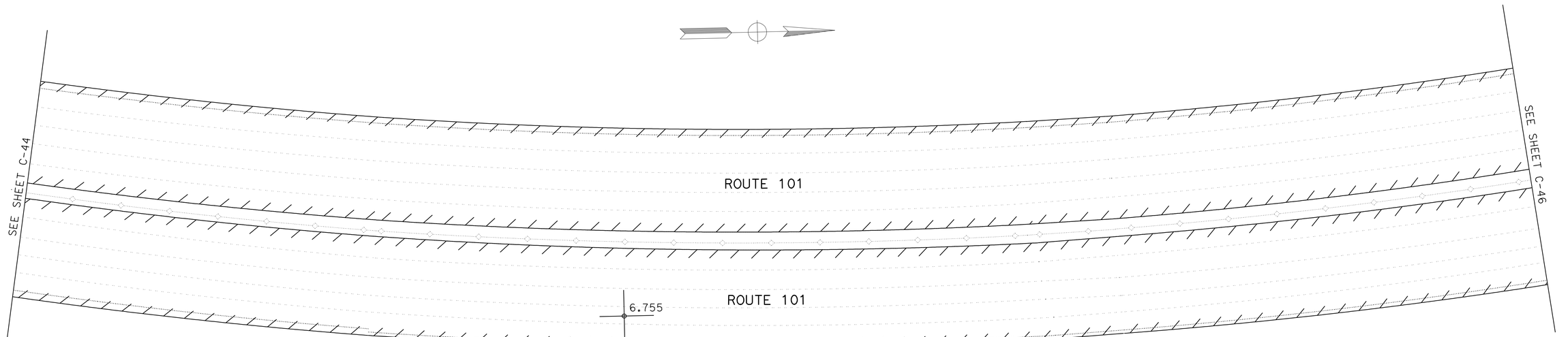

FOR NOTES, ABBREVIATIONS AND LEGEND, SEE SHEET C-1

CONSTRUCTION DETAILS

NO SCALE

C-45

STATE OF CALIFORNIA - DEPARTMENT OF TRANSPORTATION
Caltrans
DESIGN

FUNCTIONAL SUPERVISOR: GHULAM POPAL
CALCULATED-DESIGNED BY: TAM LY
CHECKED BY: GHULAM POPAL
REVISED BY: T. L
DATE REVISED: 06/20/11

LAST REVISION 01-24-11
DATE PLOTTED => 30-SEP-2011
TIME PLOTTED => 13:12

NOTE:

FOR ACCURATE RIGHT OF WAY DATA, CONTACT
RIGHT OF WAY ENGINEERING AT THE DISTRICT OFFICE.

Dist	COUNTY	ROUTE	POST MILES TOTAL PROJECT	SHEET No.	TOTAL SHEETS
04	Mrn	101	0.0/8.5	49	129

6/9/11
REGISTERED CIVIL ENGINEER DATE

6-20-11
PLANS APPROVAL DATE

REGISTERED PROFESSIONAL ENGINEER
Tam A. Ly
No. 69254
Exp. 6-30-12
CIVIL
STATE OF CALIFORNIA

THE STATE OF CALIFORNIA OR ITS OFFICERS OR AGENTS SHALL NOT BE RESPONSIBLE FOR THE ACCURACY OR COMPLETENESS OF SCANNED COPIES OF THIS PLAN SHEET.

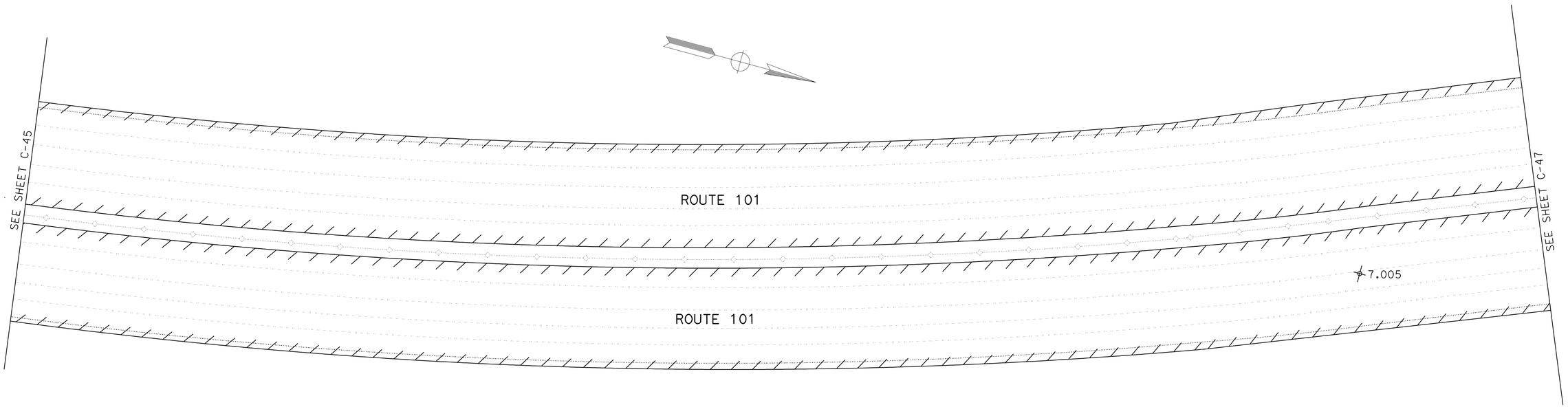

FOR NOTES, ABBREVIATIONS AND LEGEND, SEE SHEET C-1

CONSTRUCTION DETAILS

NO SCALE

C-46

CALCULATED-DESIGNED BY	
CHECKED BY	
TAM LY	T. L
GHULAM POPAL	06/20/11
REVISED BY	DATE REVISED
FUNCTIONAL SUPERVISOR	
GHULAM POPAL	

STATE OF CALIFORNIA - DEPARTMENT OF TRANSPORTATION
DESIGN

LAST REVISION | DATE PLOTTED => 30-SEP-2011
01-24-11 | TIME PLOTTED => 13:12

BORDER LAST REVISED 7/2/2010

USERNAME => s131681
DGN FILE => 0400020590ga046.dgn

RELATIVE BORDER SCALE IS IN INCHES 0 1 2 3

UNIT 0976

PROJECT NUMBER & PHASE 04000205901

NOTE:

FOR ACCURATE RIGHT OF WAY DATA, CONTACT
RIGHT OF WAY ENGINEERING AT THE DISTRICT OFFICE.

Dist	COUNTY	ROUTE	POST MILES TOTAL PROJECT	SHEET No.	TOTAL SHEETS
04	Mrn	101	0.0/8.5	50	129

REGISTERED CIVIL ENGINEER — DATE: 6/9/11

PLANS APPROVAL DATE: 6-20-11

REGISTERED PROFESSIONAL ENGINEER
Tam A. Ly
No. 69254
Exp 6-30-12
CIVIL
STATE OF CALIFORNIA

THE STATE OF CALIFORNIA OR ITS OFFICERS OR AGENTS SHALL NOT BE RESPONSIBLE FOR THE ACCURACY OR COMPLETENESS OF SCANNED COPIES OF THIS PLAN SHEET.

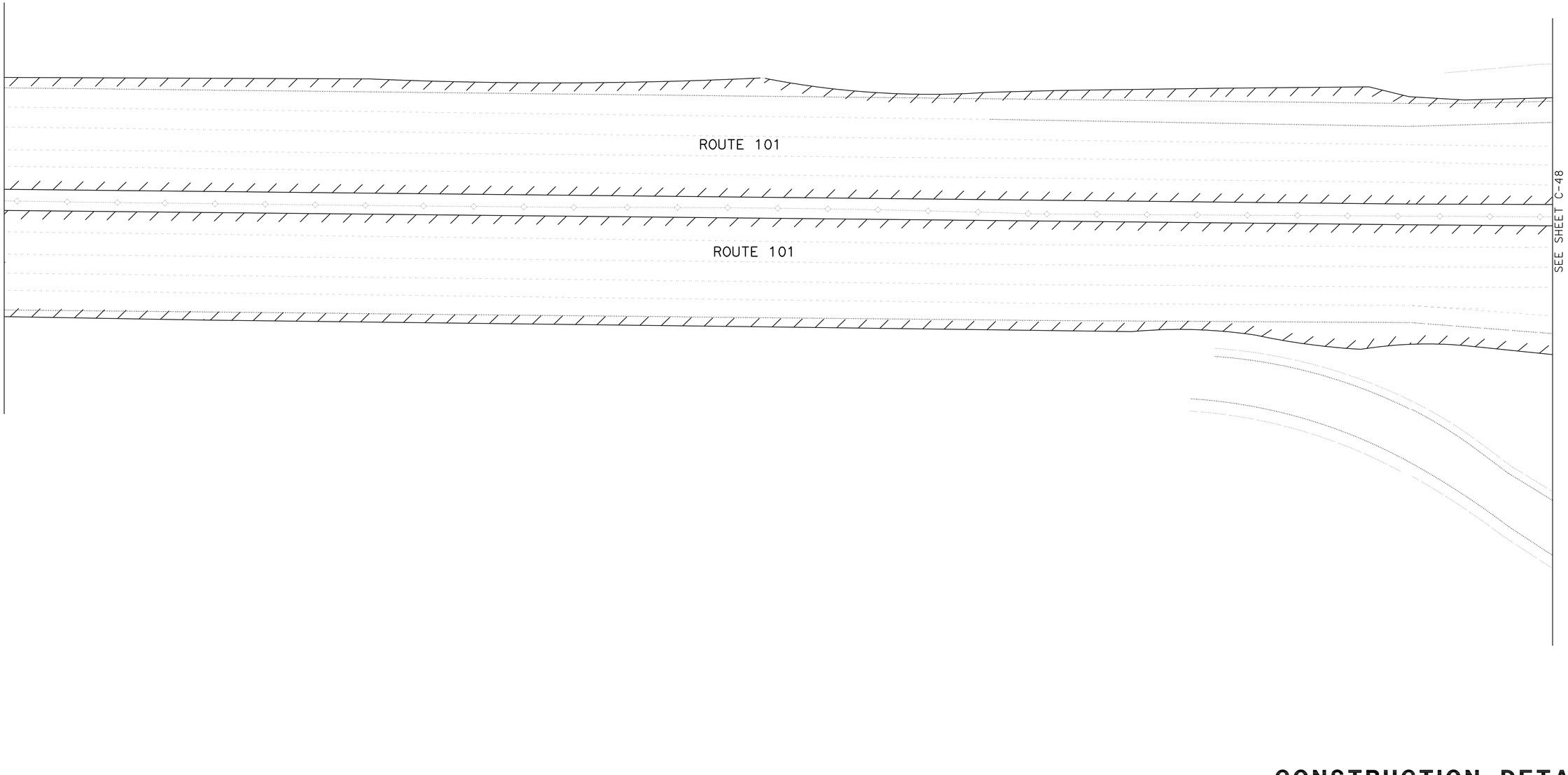

FOR NOTES, ABBREVIATIONS AND LEGEND, SEE SHEET C-1

CONSTRUCTION DETAILS

NO SCALE

C-47

REVISED BY	T. L
DATE REVISED	06/20/11
CALCULATED-DESIGNED BY	TAM LY
CHECKED BY	GHULAM POPAL
FUNCTIONAL SUPERVISOR	GHULAM POPAL

STATE OF CALIFORNIA - DEPARTMENT OF TRANSPORTATION
Caltrans
DESIGN

LAST REVISION | DATE PLOTTED => 30-SEP-2011
TIME PLOTTED => 13:12

BORDER LAST REVISED 7/2/2010

USERNAME => s131681
DGN FILE => 0400020590ga047.dgn

RELATIVE BORDER SCALE IS IN INCHES 0 1 2 3

UNIT 0976

PROJECT NUMBER & PHASE 04000205901

Dist	COUNTY	ROUTE	POST MILES TOTAL PROJECT	SHEET No.	TOTAL SHEETS
04	Mrn	101	0.0/8.5	51	129

REGISTERED CIVIL ENGINEER 6/9/11 DATE

6-20-11
PLANS APPROVAL DATE

REGISTERED PROFESSIONAL ENGINEER Tam A. Ly No. 69254 Exp. 6-30-12 CIVIL STATE OF CALIFORNIA

THE STATE OF CALIFORNIA OR ITS OFFICERS OR AGENTS SHALL NOT BE RESPONSIBLE FOR THE ACCURACY OR COMPLETENESS OF SCANNED COPIES OF THIS PLAN SHEET.

NOTE:

FOR ACCURATE RIGHT OF WAY DATA, CONTACT RIGHT OF WAY ENGINEERING AT THE DISTRICT OFFICE.

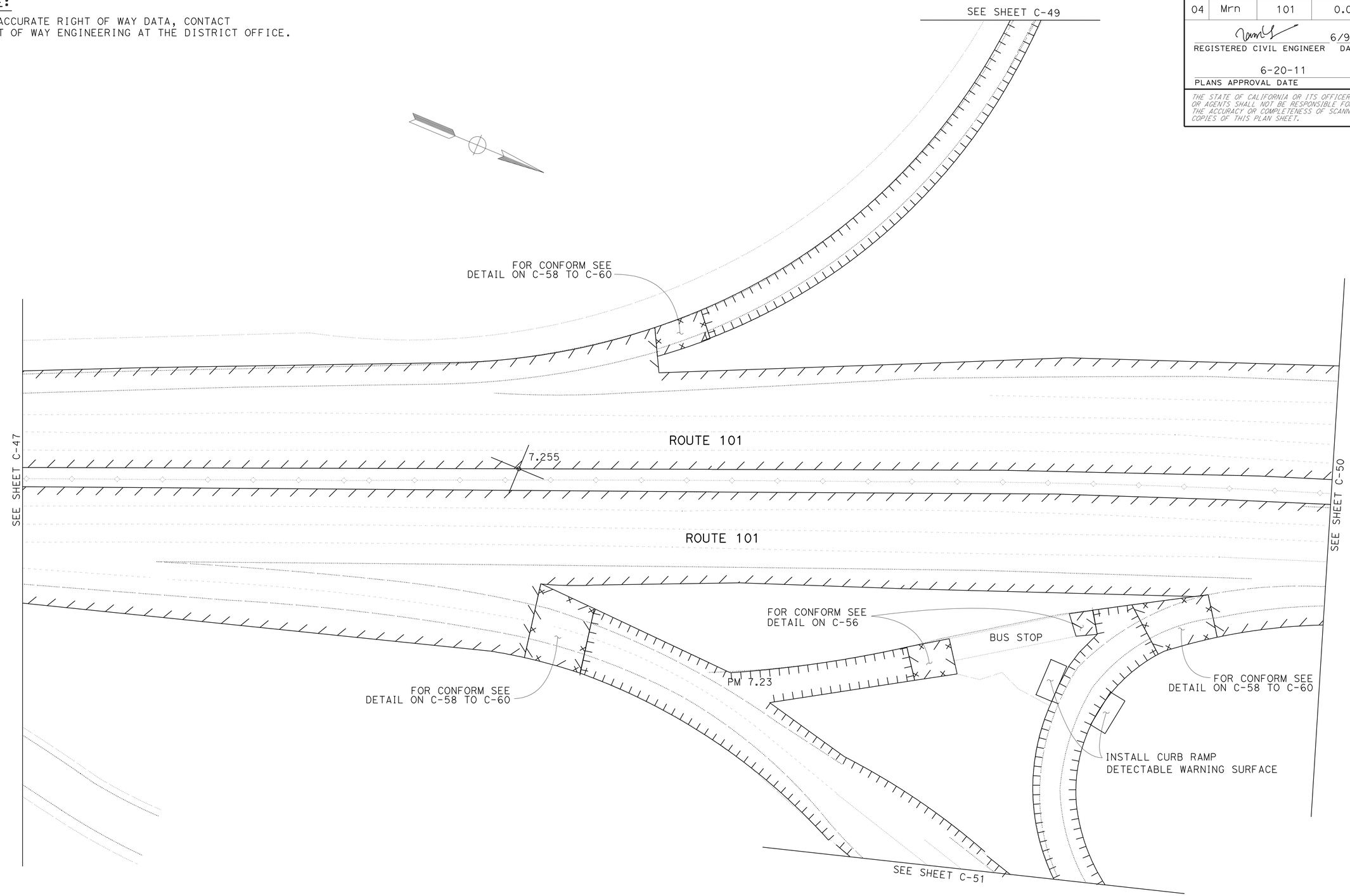

FOR NOTES, ABBREVIATIONS AND LEGEND, SEE SHEET C-1

CONSTRUCTION DETAILS

NO SCALE

C-48

STATE OF CALIFORNIA - DEPARTMENT OF TRANSPORTATION

Caltrans® DESIGN

FUNCTIONAL SUPERVISOR: GHULAM POPAL

CALCULATED-DESIGNED BY: TAM LY

CHECKED BY: GHULAM POPAL

REVISED BY: T. L

DATE REVISED: 06/20/11

LAST REVISION 02-27-11

DATE PLOTTED => 30-SEP-2011

TIME PLOTTED => 13:12

NOTE:

FOR ACCURATE RIGHT OF WAY DATA, CONTACT
RIGHT OF WAY ENGINEERING AT THE DISTRICT OFFICE.

FOR NOTES, ABBREVIATIONS
AND LEGEND, SEE SHEET C-1

CONSTRUCTION DETAILS

NO SCALE

C-49

Dist	COUNTY	ROUTE	POST MILES TOTAL PROJECT	SHEET No.	TOTAL SHEETS
04	Mrn	101	0.0/8.5	52	129

REGISTERED CIVIL ENGINEER — DATE: 6/9/11

PLANS APPROVAL DATE: 6-20-11

REGISTERED PROFESSIONAL ENGINEER — Tam A. Ly — No. 69254 — Exp 6-30-12 — CIVIL — STATE OF CALIFORNIA

THE STATE OF CALIFORNIA OR ITS OFFICERS OR AGENTS SHALL NOT BE RESPONSIBLE FOR THE ACCURACY OR COMPLETENESS OF SCANNED COPIES OF THIS PLAN SHEET.

REVISED BY	DATE REVISED
T. L	06/20/11

CALCULATED-DESIGNED BY: TAM LY

CHECKED BY: GHULAM POPAL

FUNCTIONAL SUPERVISOR: GHULAM POPAL

STATE OF CALIFORNIA - DEPARTMENT OF TRANSPORTATION

Caltrans® DESIGN

LAST REVISION | DATE PLOTTED => 30-SEP-2011
TIME PLOTTED => 13:13

BORDER LAST REVISED 7/2/2010

USERNAME => s131681
DGN FILE => 0400020590ga049.dgn

RELATIVE BORDER SCALE IS IN INCHES 0 1 2 3

UNIT 0976

PROJECT NUMBER & PHASE 04000205901

NOTE:

FOR ACCURATE RIGHT OF WAY DATA, CONTACT
RIGHT OF WAY ENGINEERING AT THE DISTRICT OFFICE.

Dist	COUNTY	ROUTE	POST MILES TOTAL PROJECT	SHEET No.	TOTAL SHEETS
04	Mrn	101	0.0/8.5	53	129

REGISTERED CIVIL ENGINEER — DATE 6/9/11

PLANS APPROVAL DATE 6-20-11

REGISTERED PROFESSIONAL ENGINEER — Tam A. Ly — No. 69254 — Exp 6-30-12 — CIVIL — STATE OF CALIFORNIA

THE STATE OF CALIFORNIA OR ITS OFFICERS OR AGENTS SHALL NOT BE RESPONSIBLE FOR THE ACCURACY OR COMPLETENESS OF SCANNED COPIES OF THIS PLAN SHEET.

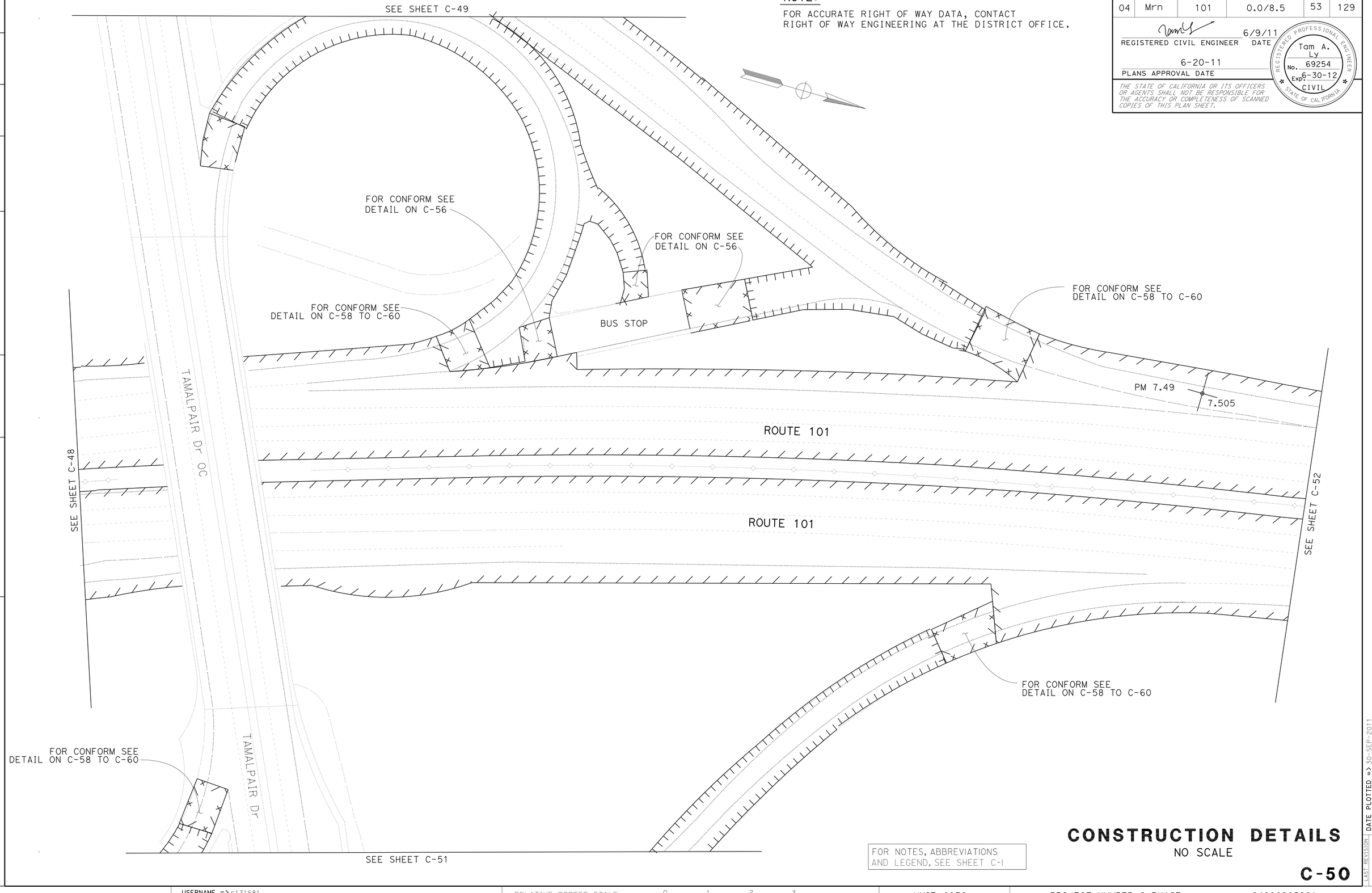

FOR NOTES, ABBREVIATIONS AND LEGEND, SEE SHEET C-1

CONSTRUCTION DETAILS

NO SCALE

C-50

CALCULATED-DESIGNED BY			
CHECKED BY			
FUNCTIONAL SUPERVISOR	GHULAM POPAL		
REVISED BY	T. L		
DATE REVISED	06/20/11		
TAM LY	GHULAM POPAL		

STATE OF CALIFORNIA - DEPARTMENT OF TRANSPORTATION
DESIGN

LAST REVISION 02-23-11 | DATE PLOTTED => 30-SEP-2011 | TIME PLOTTED => 13:13

BORDER LAST REVISED 7/2/2010 | USERNAME => s131681 | DGN FILE => 0400020590ga050.dgn | RELATIVE BORDER SCALE IS IN INCHES 0 1 2 3 | UNIT 0976 | PROJECT NUMBER & PHASE 04000205901

Dist	COUNTY	ROUTE	POST MILES TOTAL PROJECT	SHEET No.	TOTAL SHEETS
04	Mrn	101	0.0/8.5	54	129

REGISTERED CIVIL ENGINEER — DATE 6/9/11

PLANS APPROVAL DATE 6-20-11

REGISTERED PROFESSIONAL ENGINEER — Tam A. Ly — No. 69254 — Exp 6-30-12 — CIVIL — STATE OF CALIFORNIA

THE STATE OF CALIFORNIA OR ITS OFFICERS OR AGENTS SHALL NOT BE RESPONSIBLE FOR THE ACCURACY OR COMPLETENESS OF SCANNED COPIES OF THIS PLAN SHEET.

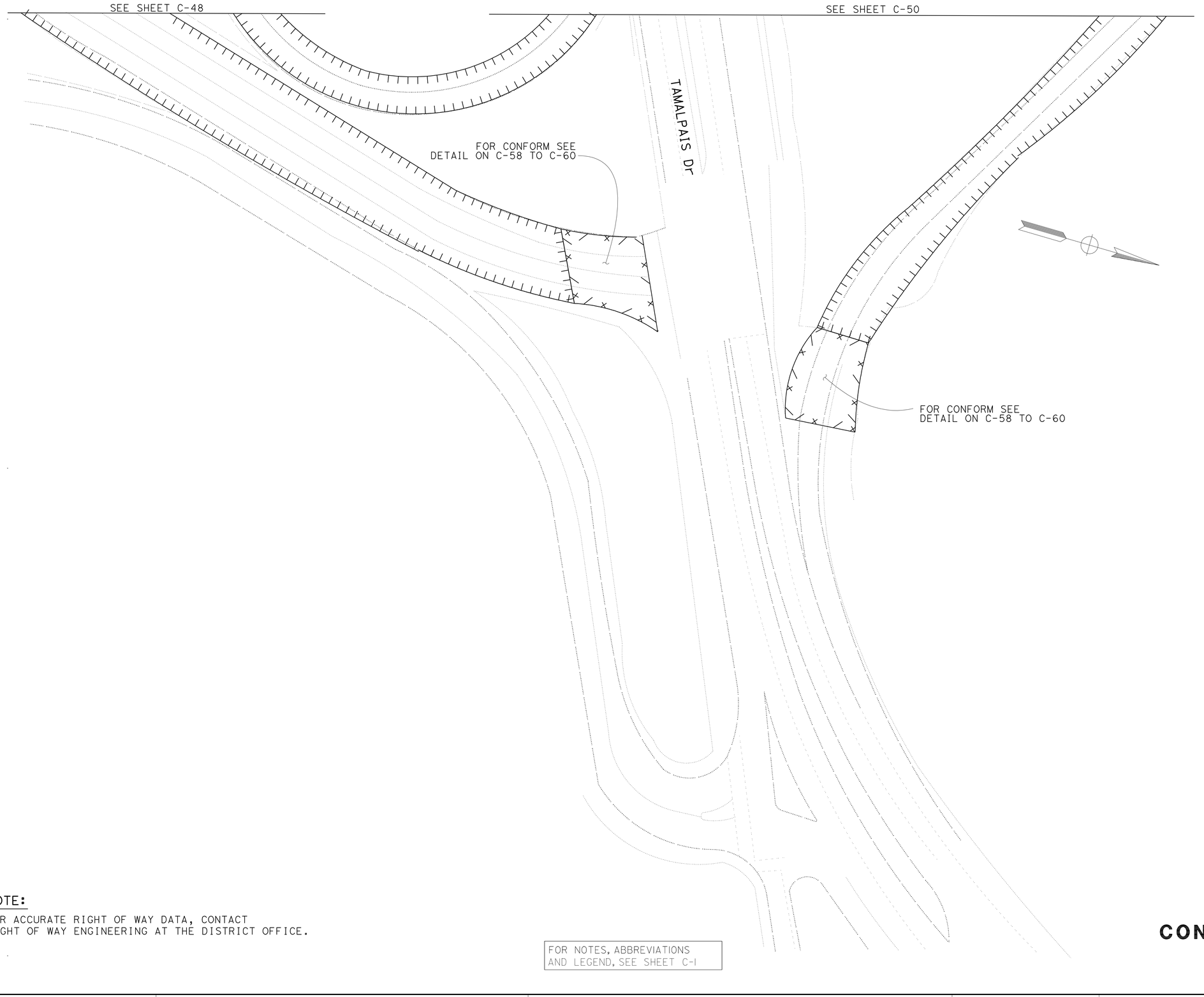

NOTE:

FOR ACCURATE RIGHT OF WAY DATA, CONTACT RIGHT OF WAY ENGINEERING AT THE DISTRICT OFFICE.

FOR NOTES, ABBREVIATIONS AND LEGEND, SEE SHEET C-1

CONSTRUCTION DETAILS

NO SCALE

C-51

STATE OF CALIFORNIA - DEPARTMENT OF TRANSPORTATION — DESIGN

FUNCTIONAL SUPERVISOR: GHULAM POPAL

CALCULATED-DESIGNED BY: TAM LY

CHECKED BY: GHULAM POPAL

REVISED BY	DATE REVISED
T. L	06/20/11

LAST REVISION | DATE PLOTTED => 30-SEP-2011 | TIME PLOTTED => 13:13

BORDER LAST REVISED 7/2/2010

USERNAME => s131681

DGN FILE => 0400020590ga051.dgn

RELATIVE BORDER SCALE IS IN INCHES 0 1 2 3

UNIT 0976

PROJECT NUMBER & PHASE 04000205901

NOTE:

FOR ACCURATE RIGHT OF WAY DATA, CONTACT
RIGHT OF WAY ENGINEERING AT THE DISTRICT OFFICE.

Dist	COUNTY	ROUTE	POST MILES TOTAL PROJECT	SHEET No.	TOTAL SHEETS
04	Mrn	101	0.0/8.5	55	129

REGISTERED CIVIL ENGINEER — 6/9/11 DATE

Tam A. Ly
No. 69254
Exp 6-30-12
CIVIL
REGISTERED PROFESSIONAL ENGINEER
STATE OF CALIFORNIA

6-20-11
PLANS APPROVAL DATE

THE STATE OF CALIFORNIA OR ITS OFFICERS OR AGENTS SHALL NOT BE RESPONSIBLE FOR THE ACCURACY OR COMPLETENESS OF SCANNED COPIES OF THIS PLAN SHEET.

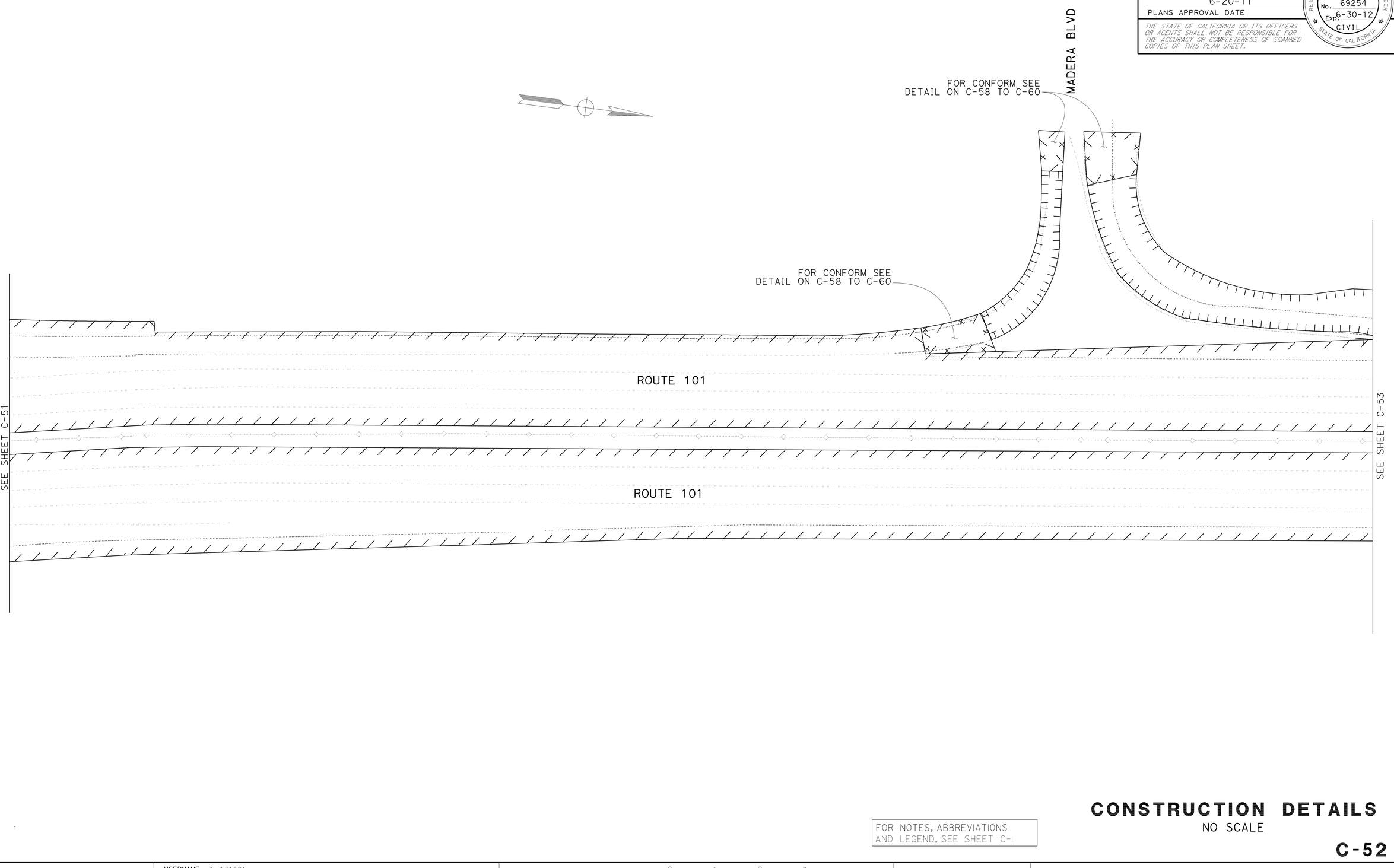

FOR NOTES, ABBREVIATIONS AND LEGEND, SEE SHEET C-1

CONSTRUCTION DETAILS

NO SCALE

C-52

REVISED BY	T. L
DATE REVISED	06/20/11
CALCULATED-DESIGNED BY	TAM LY
CHECKED BY	GHULAM POPAL
FUNCTIONAL SUPERVISOR	GHULAM POPAL

STATE OF CALIFORNIA - DEPARTMENT OF TRANSPORTATION
Caltrans®
DESIGN

LAST REVISION | DATE PLOTTED => 30-SEP-2011
02-23-11 | TIME PLOTTED => 13:13

BORDER LAST REVISED 7/2/2010

USERNAME => s131681
DGN FILE => 0400020590ga052.dgn

RELATIVE BORDER SCALE IS IN INCHES 0 1 2 3

UNIT 0976

PROJECT NUMBER & PHASE 04000205901

NOTE:

FOR ACCURATE RIGHT OF WAY DATA, CONTACT
RIGHT OF WAY ENGINEERING AT THE DISTRICT OFFICE.

Dist	COUNTY	ROUTE	POST MILES TOTAL PROJECT	SHEET No.	TOTAL SHEETS
04	Mrn	101	0.0/8.5	56	129

REGISTERED CIVIL ENGINEER — DATE: 6/9/11

PLANS APPROVAL DATE: 6-20-11

REGISTERED PROFESSIONAL ENGINEER
Tam A. Ly
No. 69254
Exp 6-30-12
CIVIL
STATE OF CALIFORNIA

THE STATE OF CALIFORNIA OR ITS OFFICERS OR AGENTS SHALL NOT BE RESPONSIBLE FOR THE ACCURACY OR COMPLETENESS OF SCANNED COPIES OF THIS PLAN SHEET.

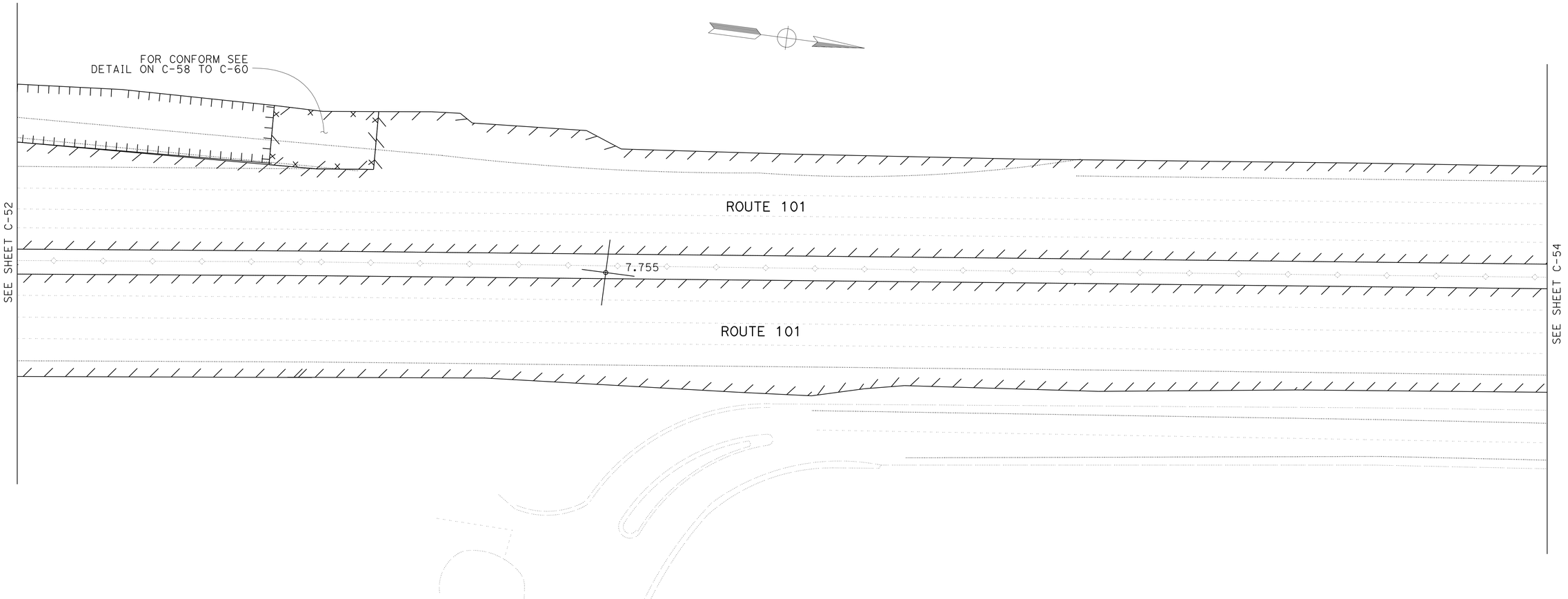

FOR NOTES, ABBREVIATIONS
AND LEGEND, SEE SHEET C-1

CONSTRUCTION DETAILS

NO SCALE

C-53

REVISED BY	T. L
DATE REVISED	06/20/11
CALCULATED-DESIGNED BY	TAM LY
CHECKED BY	GHULAM POPAL
FUNCTIONAL SUPERVISOR	GHULAM POPAL

STATE OF CALIFORNIA - DEPARTMENT OF TRANSPORTATION
DESIGN

LAST REVISION 02-23-11
DATE PLOTTED => 30-SEP-2011
TIME PLOTTED => 13:13

BORDER LAST REVISED 7/2/2010

USERNAME => s131681
DGN FILE => 0400020590ga053.dgn

RELATIVE BORDER SCALE IS IN INCHES 0 1 2 3

UNIT 0976

PROJECT NUMBER & PHASE 04000205901

NOTE:

FOR ACCURATE RIGHT OF WAY DATA, CONTACT
RIGHT OF WAY ENGINEERING AT THE DISTRICT OFFICE.

Dist	COUNTY	ROUTE	POST MILES TOTAL PROJECT	SHEET No.	TOTAL SHEETS
04	Mrn	101	0.0/8.5	57	129

REGISTERED CIVIL ENGINEER — DATE: 6/9/11

PLANS APPROVAL DATE: 6-20-11

REGISTERED PROFESSIONAL ENGINEER — Tam A. Ly — No. 69254 — Exp 6-30-12 — CIVIL — STATE OF CALIFORNIA

THE STATE OF CALIFORNIA OR ITS OFFICERS OR AGENTS SHALL NOT BE RESPONSIBLE FOR THE ACCURACY OR COMPLETENESS OF SCANNED COPIES OF THIS PLAN SHEET.

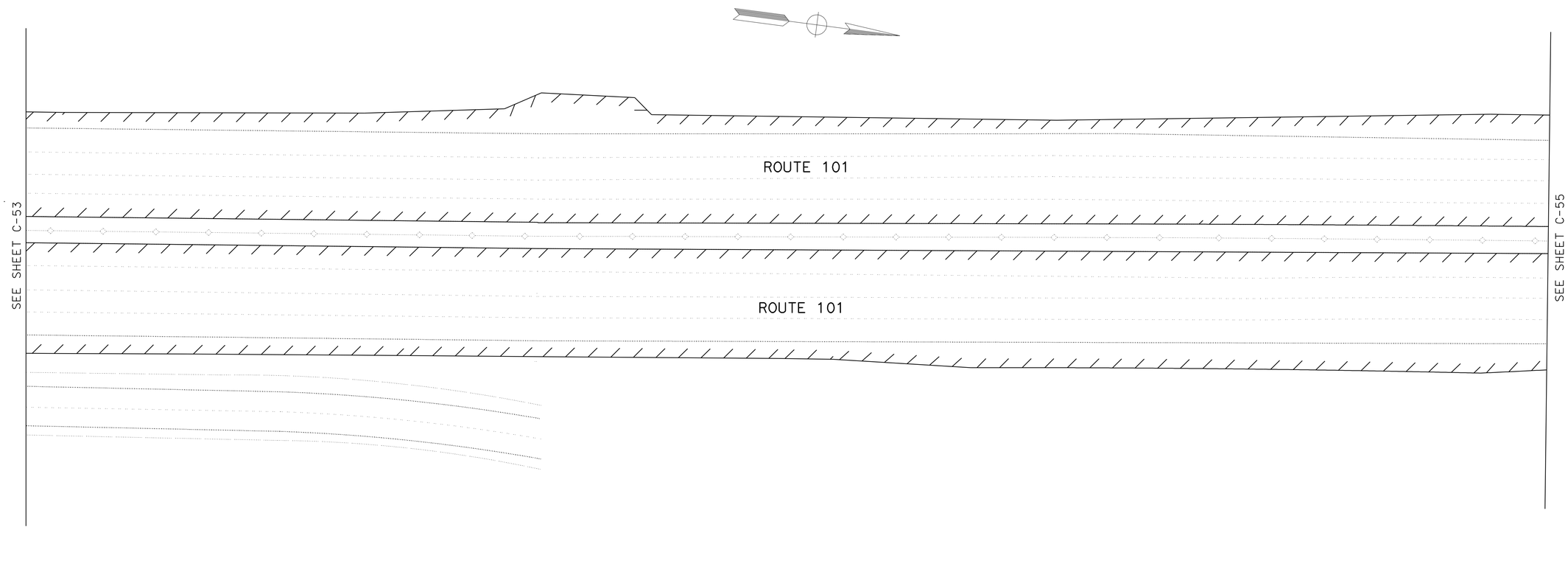

FOR NOTES, ABBREVIATIONS AND LEGEND, SEE SHEET C-1

CONSTRUCTION DETAILS

NO SCALE

C-54

REVISED BY	DATE REVISED
T. L	06/20/11

CALCULATED-DESIGNED BY: TAM LY
CHECKED BY: GHULAM POPAL
FUNCTIONAL SUPERVISOR: GHULAM POPAL

STATE OF CALIFORNIA - DEPARTMENT OF TRANSPORTATION
Caltrans® DESIGN

LAST REVISION — DATE PLOTTED => 30-SEP-2011 — TIME PLOTTED => 13:13

BORDER LAST REVISED 7/2/2010 | USERNAME => s131681 | DGN FILE => 0400020590ga054.dgn | RELATIVE BORDER SCALE IS IN INCHES 0 1 2 3 | UNIT 0976 | PROJECT NUMBER & PHASE 04000205901

Dist	COUNTY	ROUTE	POST MILES TOTAL PROJECT	SHEET No.	TOTAL SHEETS
04	Mrn	101	0.0/8.5	58	129

REGISTERED CIVIL ENGINEER 6/9/11 DATE

6-20-11
PLANS APPROVAL DATE

REGISTERED PROFESSIONAL ENGINEER
Tam A. Ly
No. 69254
Exp. 6-30-12
CIVIL
STATE OF CALIFORNIA

THE STATE OF CALIFORNIA OR ITS OFFICERS OR AGENTS SHALL NOT BE RESPONSIBLE FOR THE ACCURACY OR COMPLETENESS OF SCANNED COPIES OF THIS PLAN SHEET.

NOTE:

FOR ACCURATE RIGHT OF WAY DATA, CONTACT RIGHT OF WAY ENGINEERING AT THE DISTRICT OFFICE.

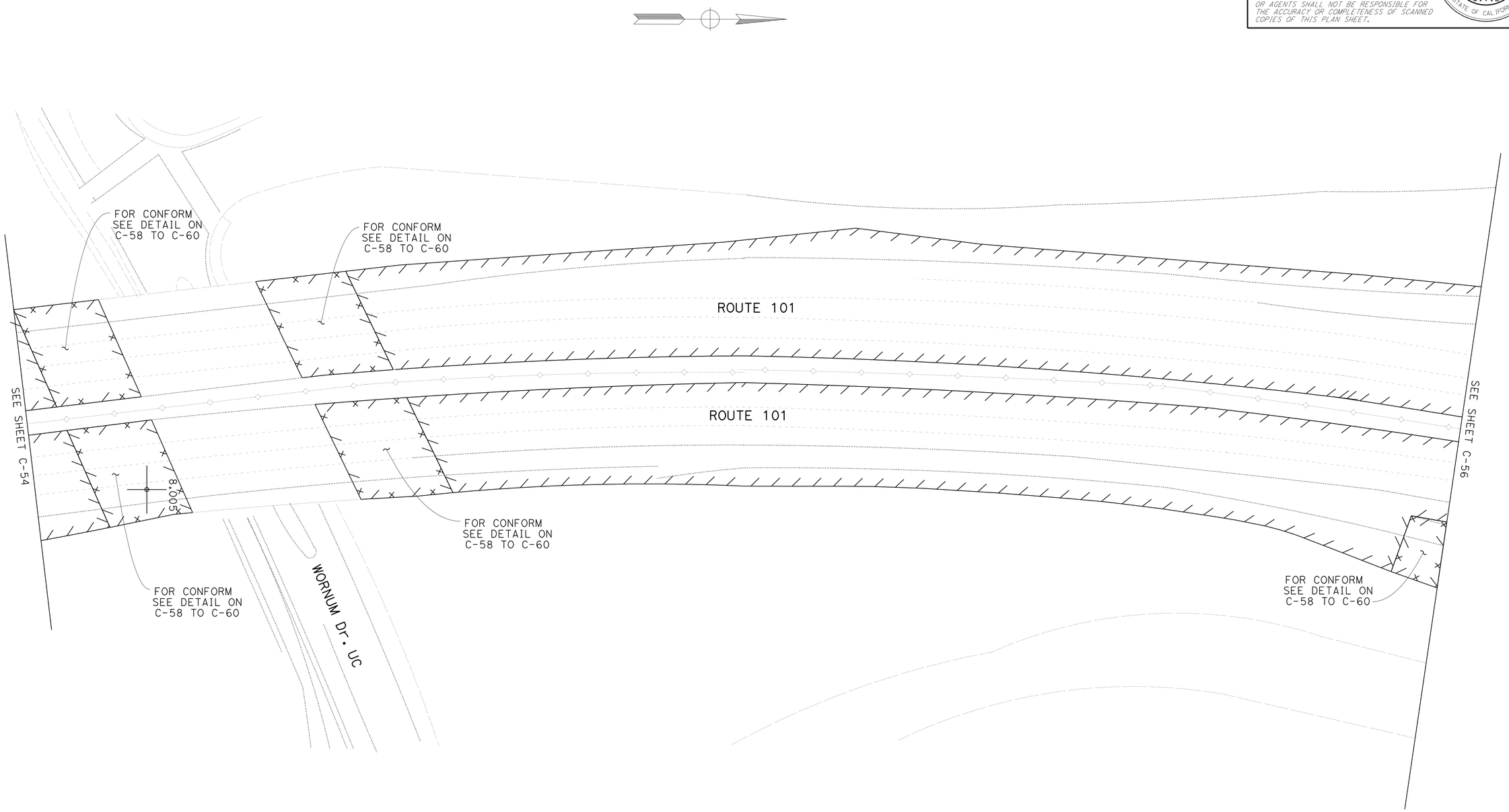

FOR NOTES, ABBREVIATIONS AND LEGEND, SEE SHEET C-1

CONSTRUCTION DETAILS

NO SCALE

C-55

STATE OF CALIFORNIA - DEPARTMENT OF TRANSPORTATION
Caltrans
DESIGN

FUNCTIONAL SUPERVISOR: GHULAM POPAL
CALCULATED-DESIGNED BY: TAM LY
CHECKED BY: GHULAM POPAL
REVISED BY: T. L
DATE REVISED: 06/20/11

LAST REVISION 02-25-11
DATE PLOTTED => 30-SEP-2011
TIME PLOTTED => 13:14

Dist	COUNTY	ROUTE	POST MILES TOTAL PROJECT	SHEET No.	TOTAL SHEETS
04	Mrn	101	0.0/8.5	59	129

REGISTERED CIVIL ENGINEER — DATE: 6/9/11

PLANS APPROVAL DATE: 6-20-11

REGISTERED PROFESSIONAL ENGINEER — Tam A. Ly — No. 69254 — Exp 6-30-12 — CIVIL — STATE OF CALIFORNIA

THE STATE OF CALIFORNIA OR ITS OFFICERS OR AGENTS SHALL NOT BE RESPONSIBLE FOR THE ACCURACY OR COMPLETENESS OF SCANNED COPIES OF THIS PLAN SHEET.

NOTE:

FOR ACCURATE RIGHT OF WAY DATA, CONTACT RIGHT OF WAY ENGINEERING AT THE DISTRICT OFFICE.

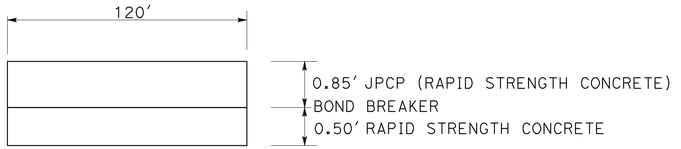

SECTION B-B
FOR JOINT LAYOUTS AND DETAILS
SEE REVISED STANDARD PLANS P1, P10 AND P20

DETAIL 2

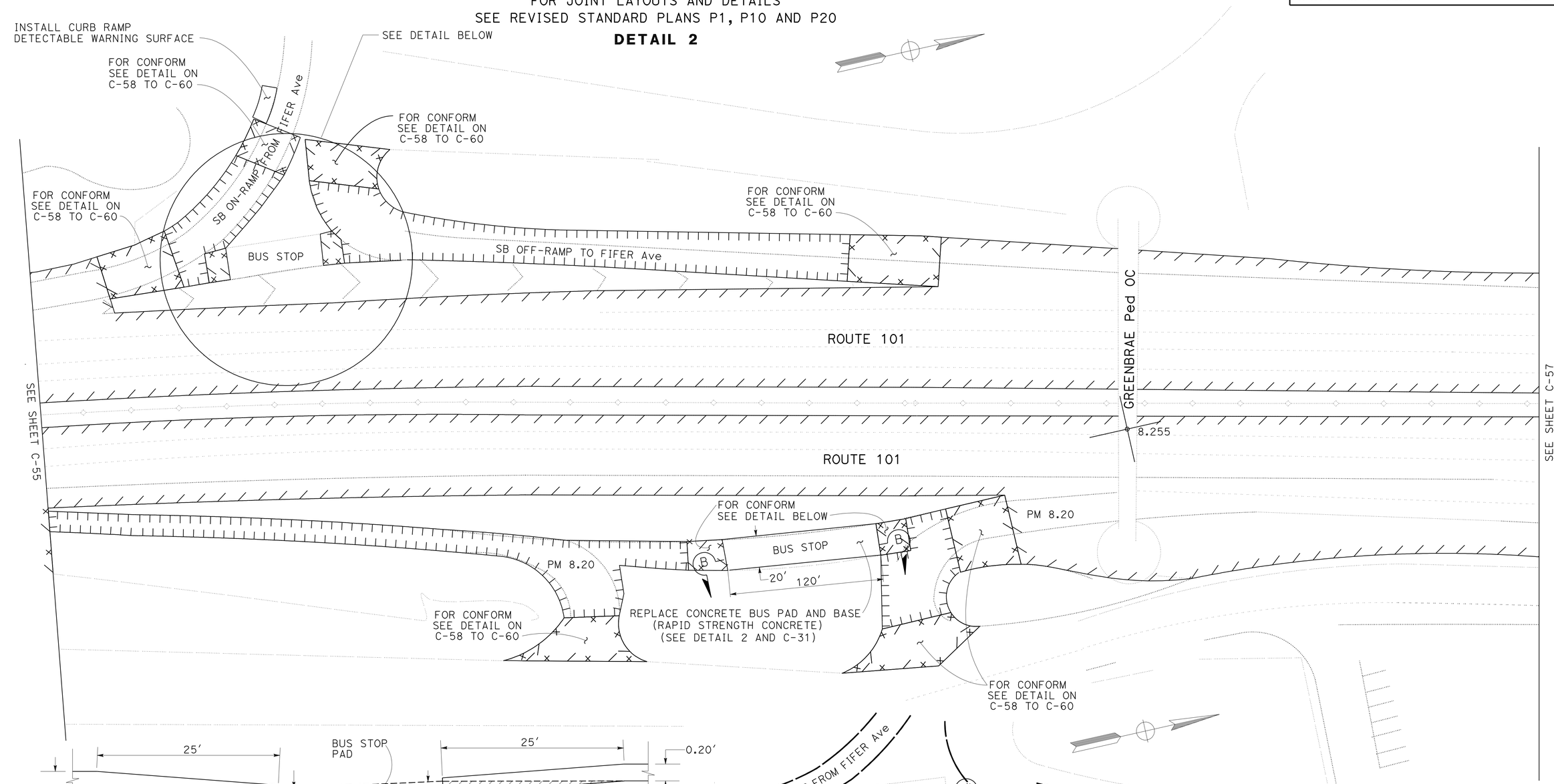

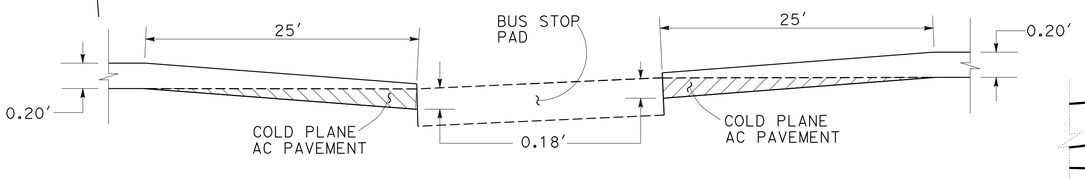

SECTION A-A

PAVEMENT CONFORM AT RAMPS WITH BUS STOP PAD

PLAN

FOR NOTES, ABBREVIATIONS AND LEGEND, SEE SHEET C-1

CONSTRUCTION DETAILS
NO SCALE

C-56

REVISED BY	DATE REVISED
T. L	06/20/11

CALCULATED-DESIGNED BY: TAM LY
CHECKED BY: GHULAM POPAL
FUNCTIONAL SUPERVISOR: GHULAM POPAL

STATE OF CALIFORNIA - DEPARTMENT OF TRANSPORTATION
DESIGN

LAST REVISION — DATE PLOTTED => 30-SEP-2011 — TIME PLOTTED => 13:14 — 04-25-11

BORDER LAST REVISED 7/2/2010 | USERNAME => s131681 | DGN FILE => 0400020590ga056.dgn | RELATIVE BORDER SCALE IS IN INCHES 0 1 2 3 | UNIT 0976 | PROJECT NUMBER & PHASE 04000205901

Dist	COUNTY	ROUTE	POST MILES TOTAL PROJECT	SHEET No.	TOTAL SHEETS
04	Mrn	101	0.0/8.5	60	129

REGISTERED CIVIL ENGINEER 6/9/11 DATE

PLANS APPROVAL DATE 6-20-11

REGISTERED PROFESSIONAL ENGINEER Tam A. Ly No. 69254 Exp. 6-30-12 CIVIL STATE OF CALIFORNIA

THE STATE OF CALIFORNIA OR ITS OFFICERS OR AGENTS SHALL NOT BE RESPONSIBLE FOR THE ACCURACY OR COMPLETENESS OF SCANNED COPIES OF THIS PLAN SHEET.

NOTE:

FOR ACCURATE RIGHT OF WAY DATA, CONTACT RIGHT OF WAY ENGINEERING AT THE DISTRICT OFFICE.

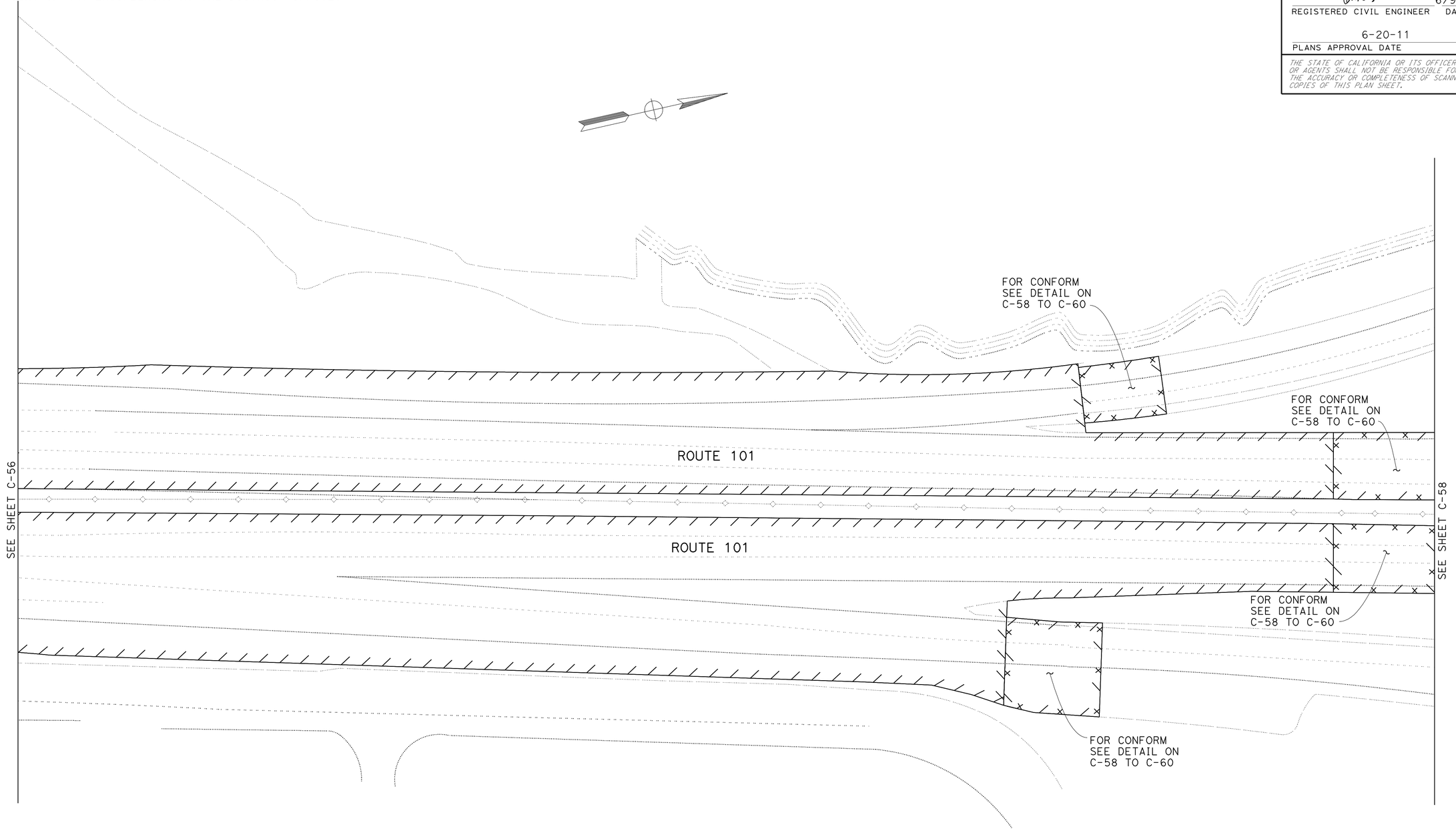

FOR NOTES, ABBREVIATIONS AND LEGEND, SEE SHEET C-1

CONSTRUCTION DETAILS

NO SCALE

C-57

STATE OF CALIFORNIA - DEPARTMENT OF TRANSPORTATION

Caltrans DESIGN

FUNCTIONAL SUPERVISOR: GHULAM POPAL

CALCULATED-DESIGNED BY: TAM LY

CHECKED BY: GHULAM POPAL

REVISED BY: T. L

DATE REVISED: 06/20/11

LAST REVISION 02-25-11

DATE PLOTTED => 30-SEP-2011

TIME PLOTTED => 13:14

Dist	COUNTY	ROUTE	POST MILES TOTAL PROJECT	SHEET No.	TOTAL SHEETS
04	Mrn	101	0.0/8.5	61	129

REGISTERED CIVIL ENGINEER — DATE: 6/9/11

PLANS APPROVAL DATE: 6-20-11

REGISTERED PROFESSIONAL ENGINEER — Tam A. Ly — No. 69254 — Exp 6-30-12 — CIVIL — STATE OF CALIFORNIA

THE STATE OF CALIFORNIA OR ITS OFFICERS OR AGENTS SHALL NOT BE RESPONSIBLE FOR THE ACCURACY OR COMPLETENESS OF SCANNED COPIES OF THIS PLAN SHEET.

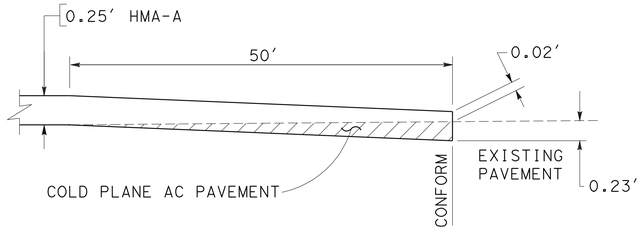

PAVEMENT CONFORM ON RAMPS

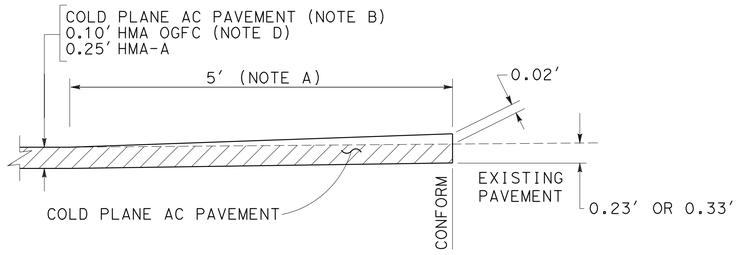

PAVEMENT CONFORM ON MAINLINE

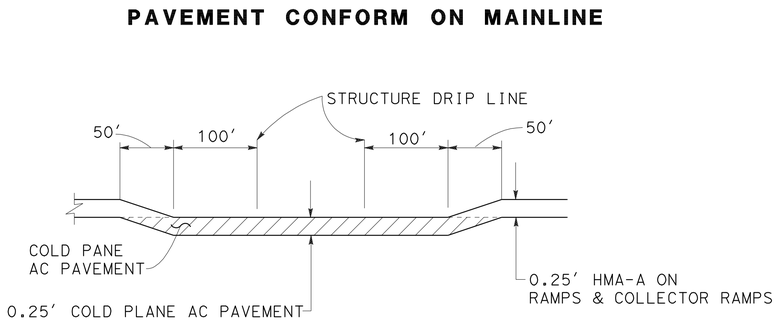

PAVEMENT CONFORM UNDER OC

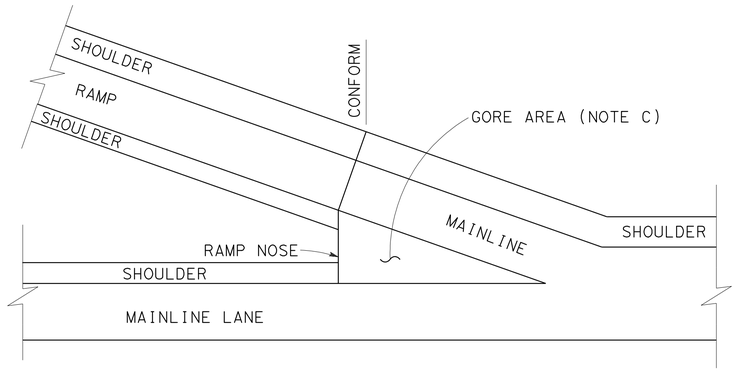

PAVING AT GORE AREA

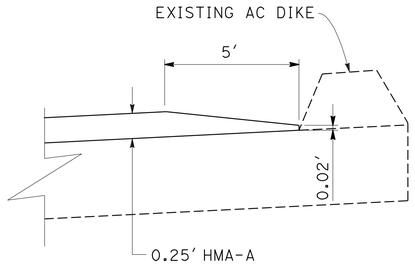

PAVEMENT CONFORM AT AC DIKE ON RAMPS/COLLECTOR RAMPS

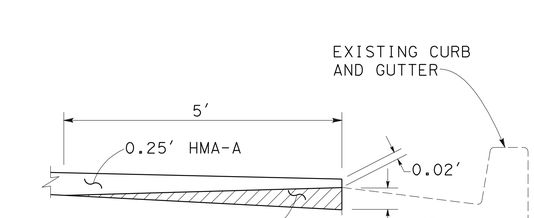

PAVING ON RAMPS

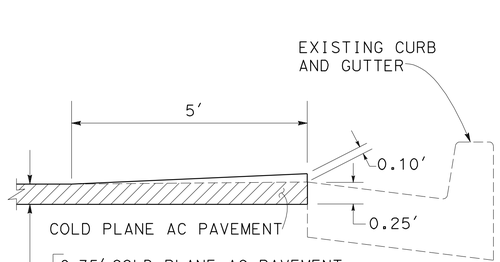

PAVING ON MAINLINE

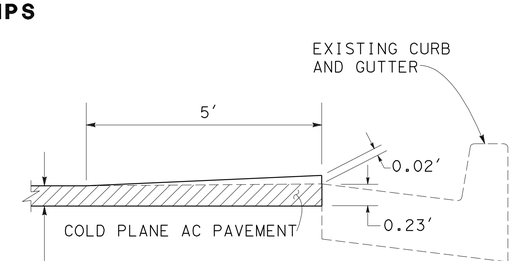

PAVING ON MAINLINE

NOTES:

A. FOR CONFORM ON MAINLINE AT PROJECT ENDS, BB, EB, BRIDGE APPROACHES, BRIDGE APPROACH SLABS, AND PCC PAVEMENT.

B. ON MAINLINE: COLD PLANE AC PAVEMENT 0.25' WITHIN SECTION FROM GOLDEN GATE BRIDGE END (PM 0.00) TO WALDO UNDERCROSSING (PM 3.33) AND 0.35' WITHIN THE SECTION FROM WALDO UNDERCROSSING (PM 3.33) TO CORTE MADERA CREEK (PM 8.50).

C. GORE AREA PAVING IS PART OF COLD PLANE AC PAVEMENT & OVERLAY ON MAINLINE WORK.

D. NO HMA OGFC PAVING ON RAMPS AND FROM GOLDEN GATE BRIDGE END (PM 0.00) TO WALDO UNDERCROSSING (PM 3.33).

FOR NOTES, ABBREVIATIONS AND LEGEND, SEE SHEET C-1

CONSTRUCTION DETAILS

NO SCALE

C-58

CALCULATED-DESIGNED BY
CHECKED BY
T. L — 06/20/11
REVISED BY — DATE REVISED
TAM LY — GHULAM POPAL
FUNCTIONAL SUPERVISOR — GHULAM POPAL
STATE OF CALIFORNIA - DEPARTMENT OF TRANSPORTATION — DESIGN
Caltrans

LAST REVISION — DATE PLOTTED => 30-SEP-2011 — 05-13-11 — TIME PLOTTED => 13:14

Dist	COUNTY	ROUTE	POST MILES TOTAL PROJECT	SHEET No.	TOTAL SHEETS
04	Mrn	101	0.0/8.5	62	129

REGISTERED CIVIL ENGINEER — DATE 6/9/11

PLANS APPROVAL DATE 6-20-11

REGISTERED PROFESSIONAL ENGINEER — Tam A. Ly — No. 69254 — Exp 6-30-12 — CIVIL — STATE OF CALIFORNIA

THE STATE OF CALIFORNIA OR ITS OFFICERS OR AGENTS SHALL NOT BE RESPONSIBLE FOR THE ACCURACY OR COMPLETENESS OF SCANNED COPIES OF THIS PLAN SHEET.

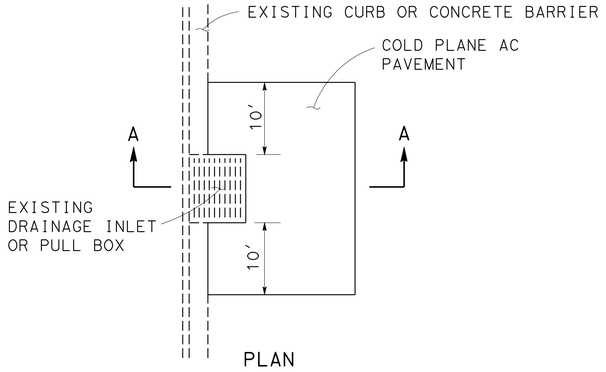

PLAN

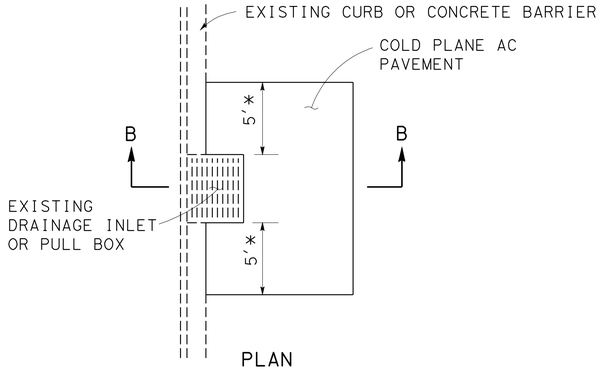

PLAN

* IF EXISTING DRAINAGE INLET IS INSTALLED ON CONCRETE CURB, NO COLD PLANE AC ON THESE SIDES.

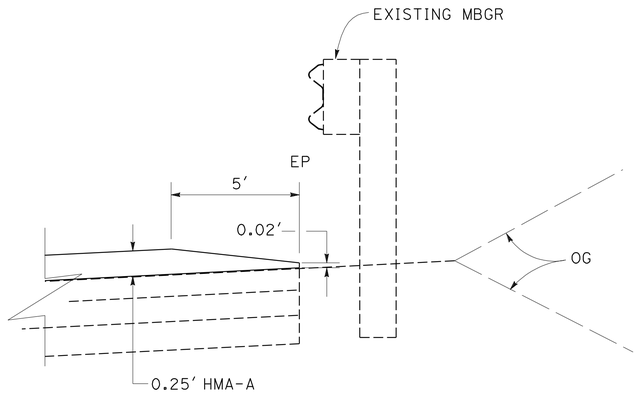

PAVEMENT AT METAL BEAM GUARD RAILING ON RAMPS

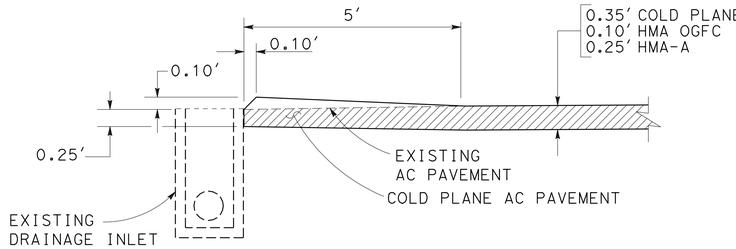

SECTION A-A
PAVING ON MAINLINE

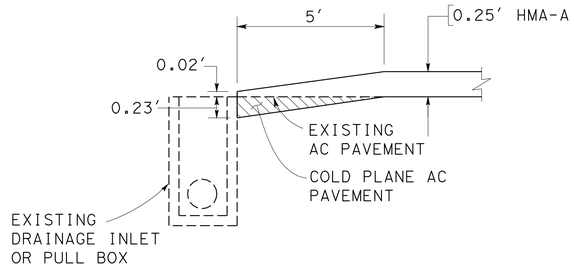

SECTION B-B
PAVING ON RAMPS

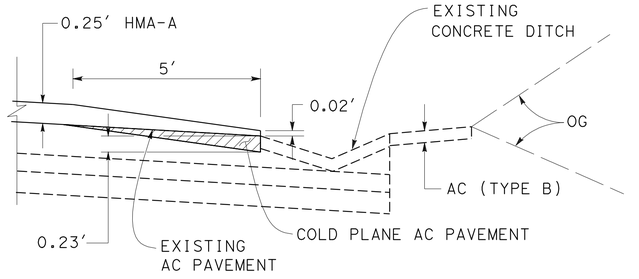

PAVING ON RAMPS

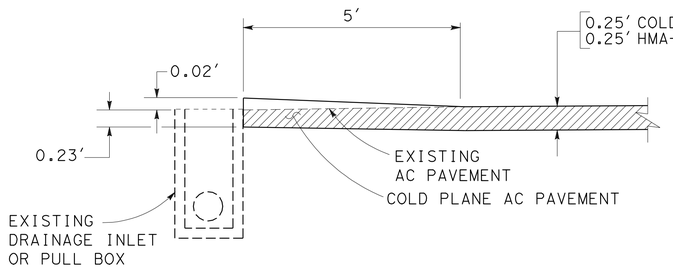

SECTION A-A
PAVING ON MAINLINE

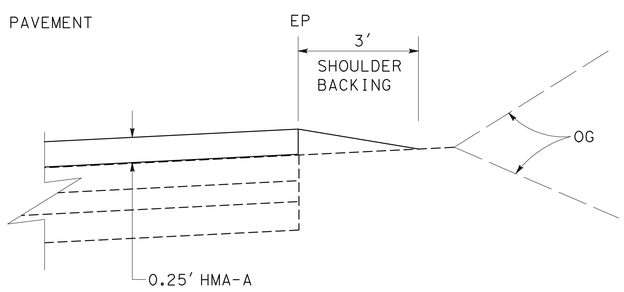

PAVEMENT WITH SHOULDER BACKING ON RAMPS

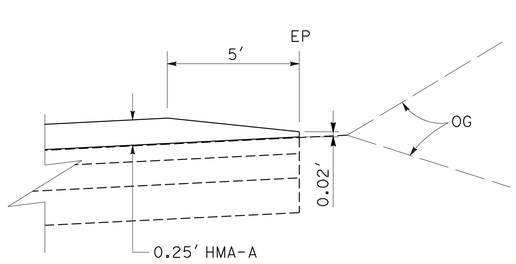

PAVEMENT WITH NO SHOULDER BACKING ON RAMPS

CONSTRUCTION DETAILS

NO SCALE

C-59

FOR NOTES, ABBREVIATIONS AND LEGEND, SEE SHEET C-1

CALCULATED-DESIGNED BY	CHECKED BY	REVISED BY	DATE REVISED
TAM LY	GHULAM POPAL	T. L	06/20/11

FUNCTIONAL SUPERVISOR: GHULAM POPAL

STATE OF CALIFORNIA - DEPARTMENT OF TRANSPORTATION — DESIGN

Caltrans

LAST REVISION — DATE PLOTTED => 30-SEP-2011 — TIME PLOTTED => 13:15 — 05-10-11

Dist	COUNTY	ROUTE	POST MILES TOTAL PROJECT	SHEET No.	TOTAL SHEETS
04	Mrn	101	0.0/8.5	63	129

REGISTERED CIVIL ENGINEER 6/9/11 DATE

PLANS APPROVAL DATE 6-20-11

REGISTERED PROFESSIONAL ENGINEER Tam A. Ly No. 69254 Exp. 6-30-12 CIVIL STATE OF CALIFORNIA

THE STATE OF CALIFORNIA OR ITS OFFICERS OR AGENTS SHALL NOT BE RESPONSIBLE FOR THE ACCURACY OR COMPLETENESS OF SCANNED COPIES OF THIS PLAN SHEET.

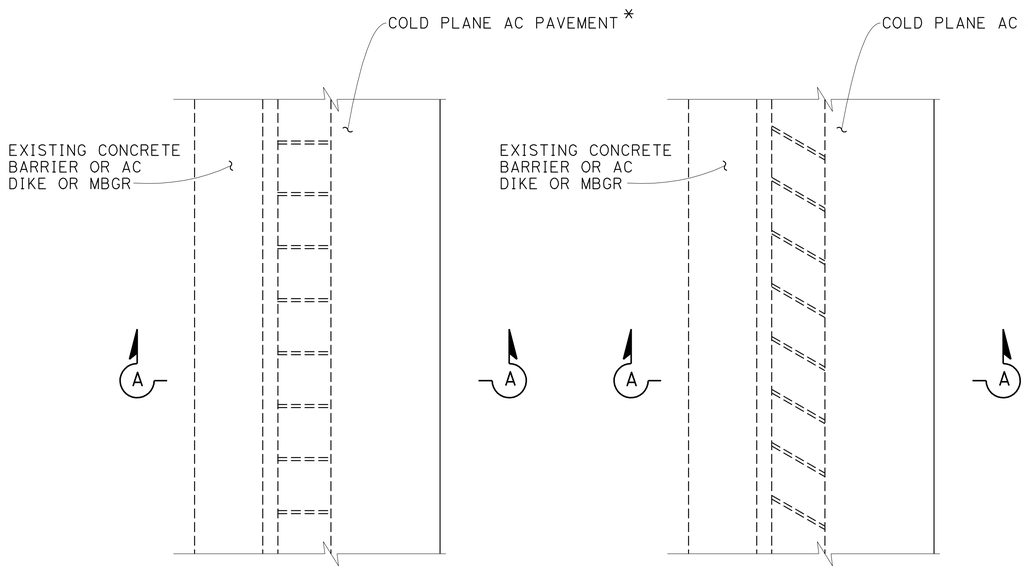

SLOTTED DRAINAGE INLET

* IF EXISTING DRAINAGE INLET IS INSTALLED ON CONCRETE (PCC) NO COLD PLANE AC PAVEMENT ON THESE SIDES.

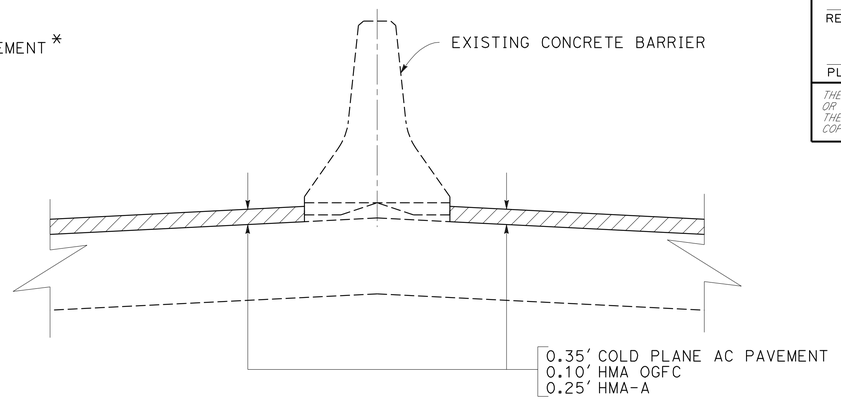

PAVING ON MAINLINE

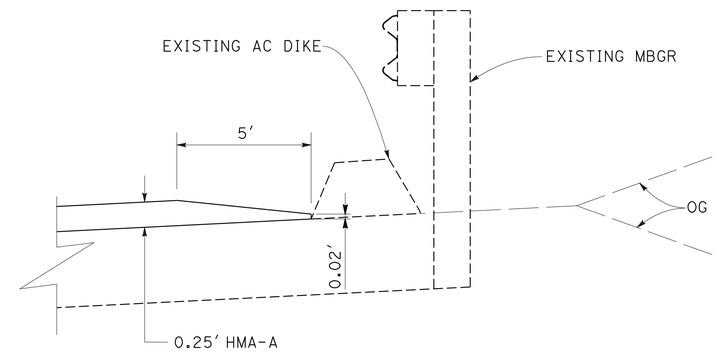

PAVEMENT CONFORM AT MBGR WITH AC DIKE ON RAMPS

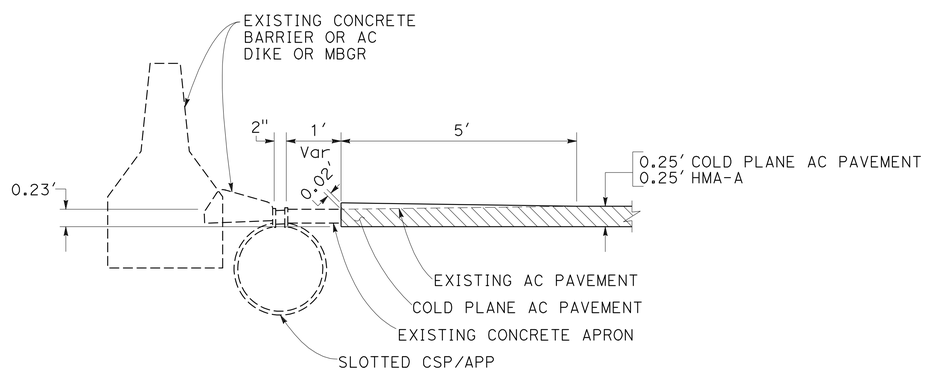

SECTION A-A

PAVING ON MAINLINE

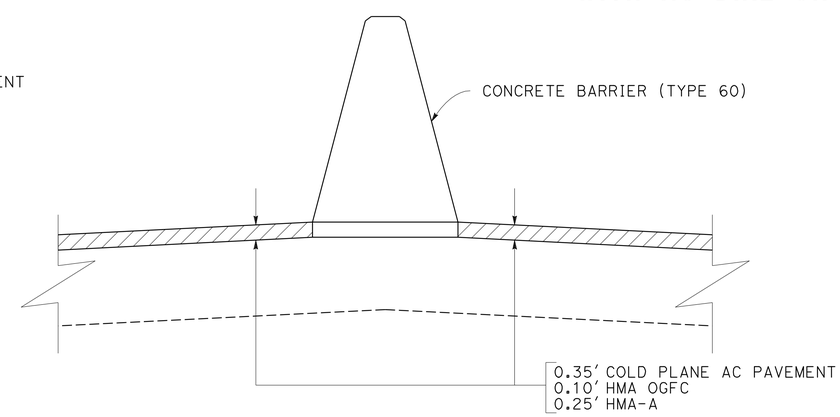

PAVING ON MAINLINE

CONSTRUCTION DETAILS

NO SCALE

FOR NOTES, ABBREVIATIONS AND LEGEND, SEE SHEET C-1

C-60

STATE OF CALIFORNIA - DEPARTMENT OF TRANSPORTATION

Caltrans® DESIGN

FUNCTIONAL SUPERVISOR: GHULAM POPAL

CALCULATED-DESIGNED BY: TAM LY

CHECKED BY: GHULAM POPAL

REVISED BY: T. L

DATE REVISED: 06/20/11

LAST REVISION 05-10-11

DATE PLOTTED => 30-SEP-2011

TIME PLOTTED => 13:15

Dist	COUNTY	ROUTE	POST MILES TOTAL PROJECT	SHEET No.	TOTAL SHEETS
04	Mrn	101	0.0/8.5	64	129

REGISTERED CIVIL ENGINEER — DATE: 6/8/11

PLANS APPROVAL DATE: 6-20-11

REGISTERED PROFESSIONAL ENGINEER — Jerilyn L. Struven — No. 49964 — Exp. 12-31-12 — CIVIL — STATE OF CALIFORNIA

THE STATE OF CALIFORNIA OR ITS OFFICERS OR AGENTS SHALL NOT BE RESPONSIBLE FOR THE ACCURACY OR COMPLETENESS OF SCANNED COPIES OF THIS PLAN SHEET.

LEGEND:

- No. CONSTRUCTION AREA SIGN DESIGNATION
- → DIRECTION OF TRAFFIC
- X ROAD CLOSURE

NOTES:

1. EXACT LOCATION AND POSITION OF SIGN TO BE DETERMINED BT THE ENGINEER.
2. CONSTRUCTION AREA SIGNS TO BE STATIONARY MOUNTED.

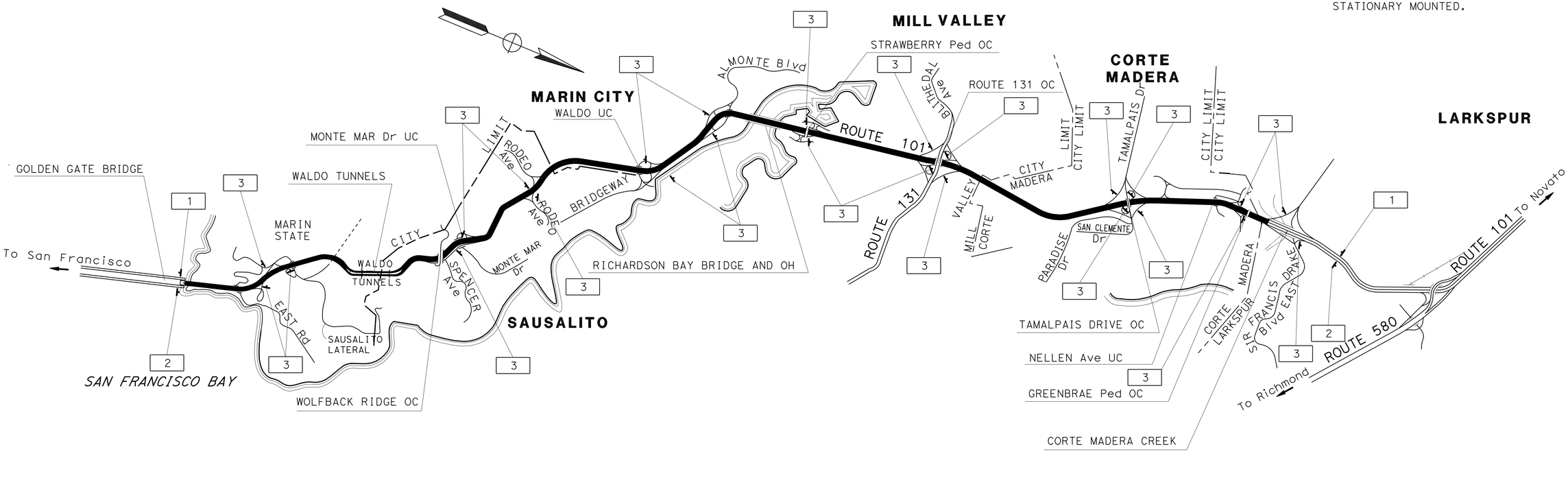

CONSTRUCTION AREA SIGNS

NO SCALE

THIS PLAN ACCURATE FOR CONSTRUCTION AREA SIGN WORK ONLY

CS-1

STATE OF CALIFORNIA - DEPARTMENT OF TRANSPORTATION — TRAFFIC

FUNCTIONAL SUPERVISOR: ROLAND AU-YEUNG

CALCULATED-DESIGNED BY: HERMINIO S. RUIDERA

CHECKED BY: JERILYN L. STRUVEN

REVISED BY	DATE REVISED
HS.R	06/20/11

LAST REVISION — DATE PLOTTED => 30-SEP-2011 — TIME PLOTTED => 13:15

BORDER LAST REVISED 7/2/2010

USERNAME => s131681

DGN FILE => 04000205901a001.dgn

RELATIVE BORDER SCALE IS IN INCHES 0 1 2 3

UNIT 0976

PROJECT NUMBER & PHASE 04000205901

Dist	COUNTY	ROUTE	POST MILES TOTAL PROJECT	SHEET No.	TOTAL SHEETS
04	Mrn	101	0.0/8.5	65	129

REGISTERED CIVIL ENGINEER — 6/8/11 DATE

Jerilyn L. Struven No. 49964 Exp. 12-31-12 CIVIL — REGISTERED PROFESSIONAL ENGINEER — STATE OF CALIFORNIA

6-20-11
PLANS APPROVAL DATE

THE STATE OF CALIFORNIA OR ITS OFFICERS OR AGENTS SHALL NOT BE RESPONSIBLE FOR THE ACCURACY OR COMPLETENESS OF SCANNED COPIES OF THIS PLAN SHEET.

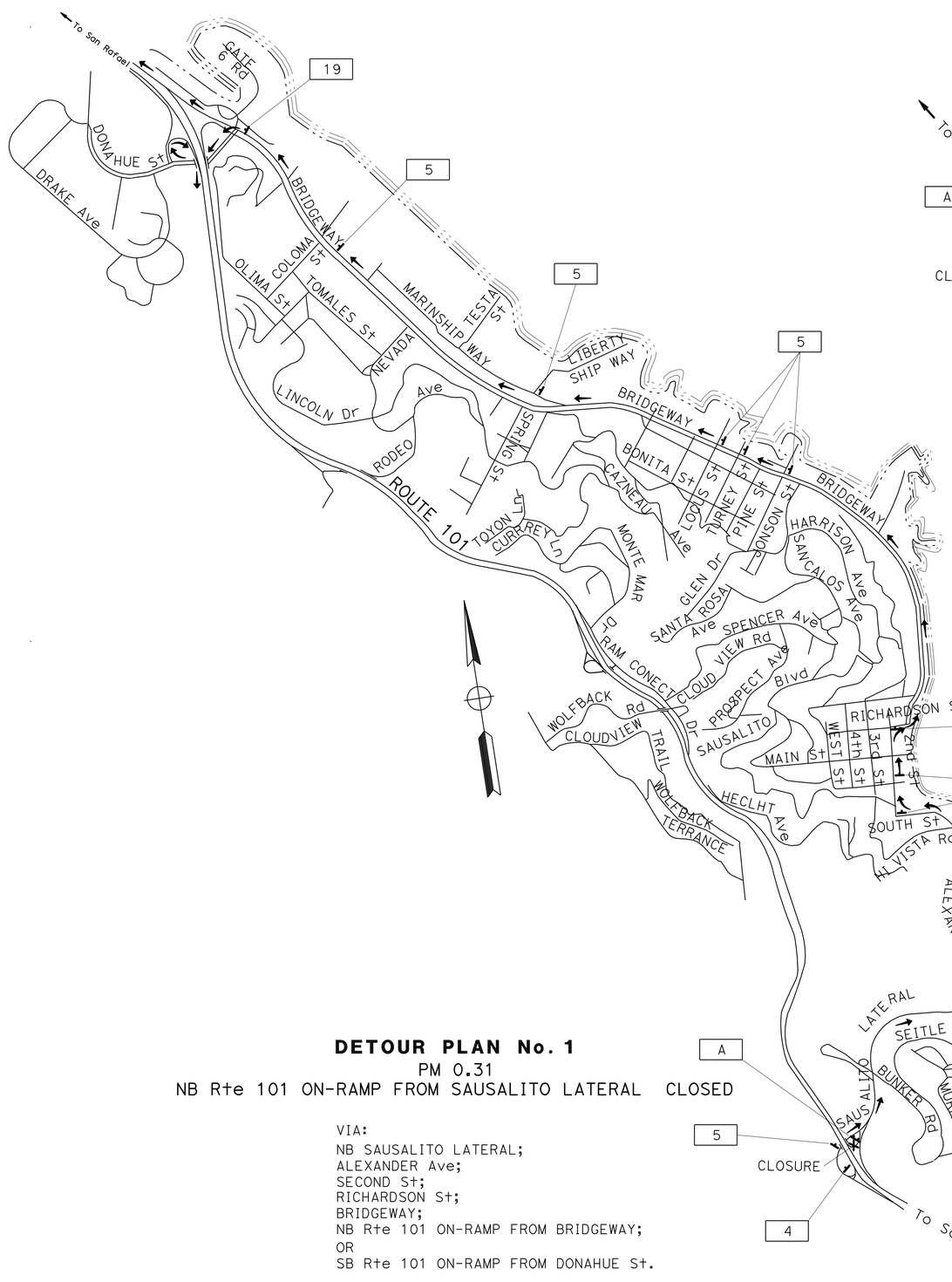

DETOUR PLAN No. 1

PM 0.31

NB Rte 101 ON-RAMP FROM SAUSALITO LATERAL CLOSED

VIA:
NB SAUSALITO LATERAL;
ALEXANDER Ave;
SECOND St;
RICHARDSON St;
BRIDGEWAY;
NB Rte 101 ON-RAMP FROM BRIDGEWAY;
OR
SB Rte 101 ON-RAMP FROM DONAHUE St.

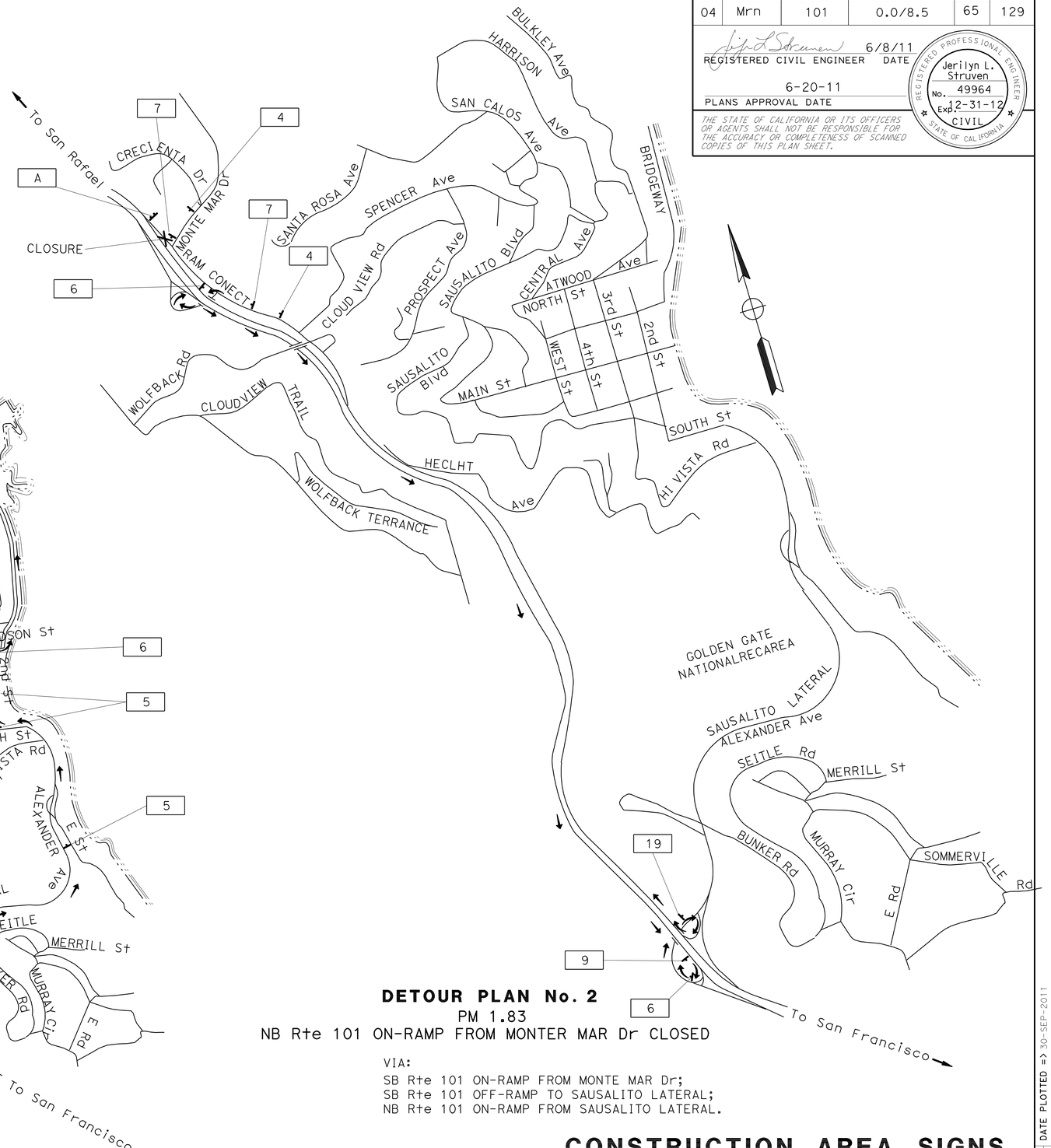

DETOUR PLAN No. 2

PM 1.83

NB Rte 101 ON-RAMP FROM MONTER MAR Dr CLOSED

VIA:
SB Rte 101 ON-RAMP FROM MONTE MAR Dr;
SB Rte 101 OFF-RAMP TO SAUSALITO LATERAL;
NB Rte 101 ON-RAMP FROM SAUSALITO LATERAL.

CONSTRUCTION AREA SIGNS

NO SCALE

FOR NOTES, ABBREVIATIONS AND LEGEND, SEE SHEET CS-1

THIS PLAN ACCURATE FOR CONSTRUCTION AREA SIGN WORK ONLY

CS-2

STATE OF CALIFORNIA - DEPARTMENT OF TRANSPORTATION
TRAFFIC
Caltrans®

FUNCTIONAL SUPERVISOR: ROLAND AU-YUENG

CALCULATED-DESIGNED BY: HERMINIO S. RUIDERA
CHECKED BY: JERILYN L. STRUVEN

REVISED BY: HS.R
DATE REVISED: 06/20/11

LAST REVISION | DATE PLOTTED => 30-SEP-2011
03-09-11 | TIME PLOTTED => 13:15

Dist	COUNTY	ROUTE	POST MILES TOTAL PROJECT	SHEET No.	TOTAL SHEETS
04	Mrn	101	0.0/8.5	66	129

REGISTERED CIVIL ENGINEER — 6/8/11 DATE

Jerilyn L. Struven, No. 49964, Exp. 12-31-12, CIVIL, REGISTERED PROFESSIONAL ENGINEER, STATE OF CALIFORNIA

6-20-11
PLANS APPROVAL DATE

THE STATE OF CALIFORNIA OR ITS OFFICERS OR AGENTS SHALL NOT BE RESPONSIBLE FOR THE ACCURACY OR COMPLETENESS OF SCANNED COPIES OF THIS PLAN SHEET.

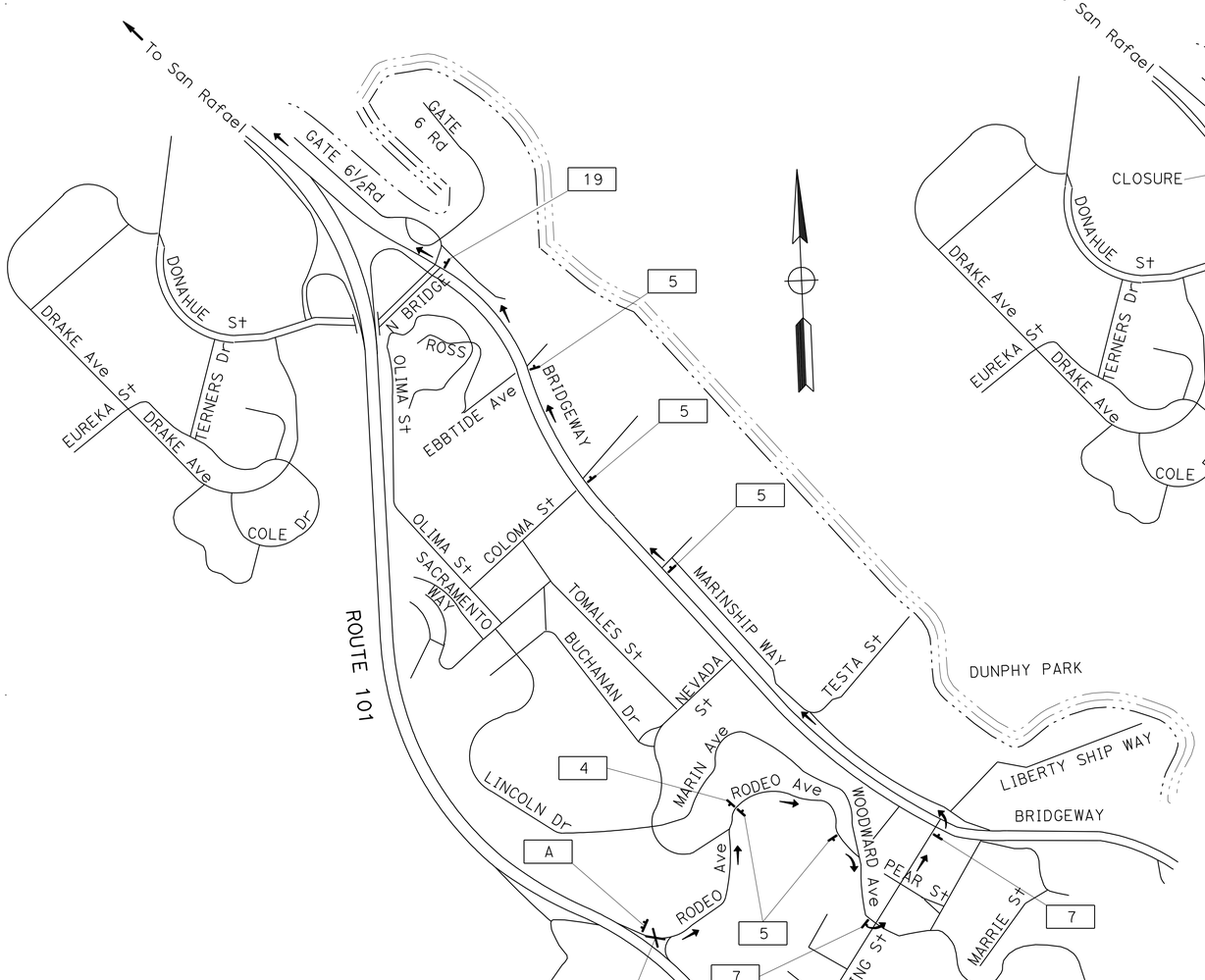

DETOUR PLAN No. 3
PM 2.40
NB Rte 101 ON-RAMP FROM RODEO Ave CLOSED

VIA:
EB RODEO Ave;
SB WOODWARD Ave;
EB SPRING St;
NB BRIDGEWAY;
NB Rte 101 ON-RAMP FROM BRIDGEWAY.

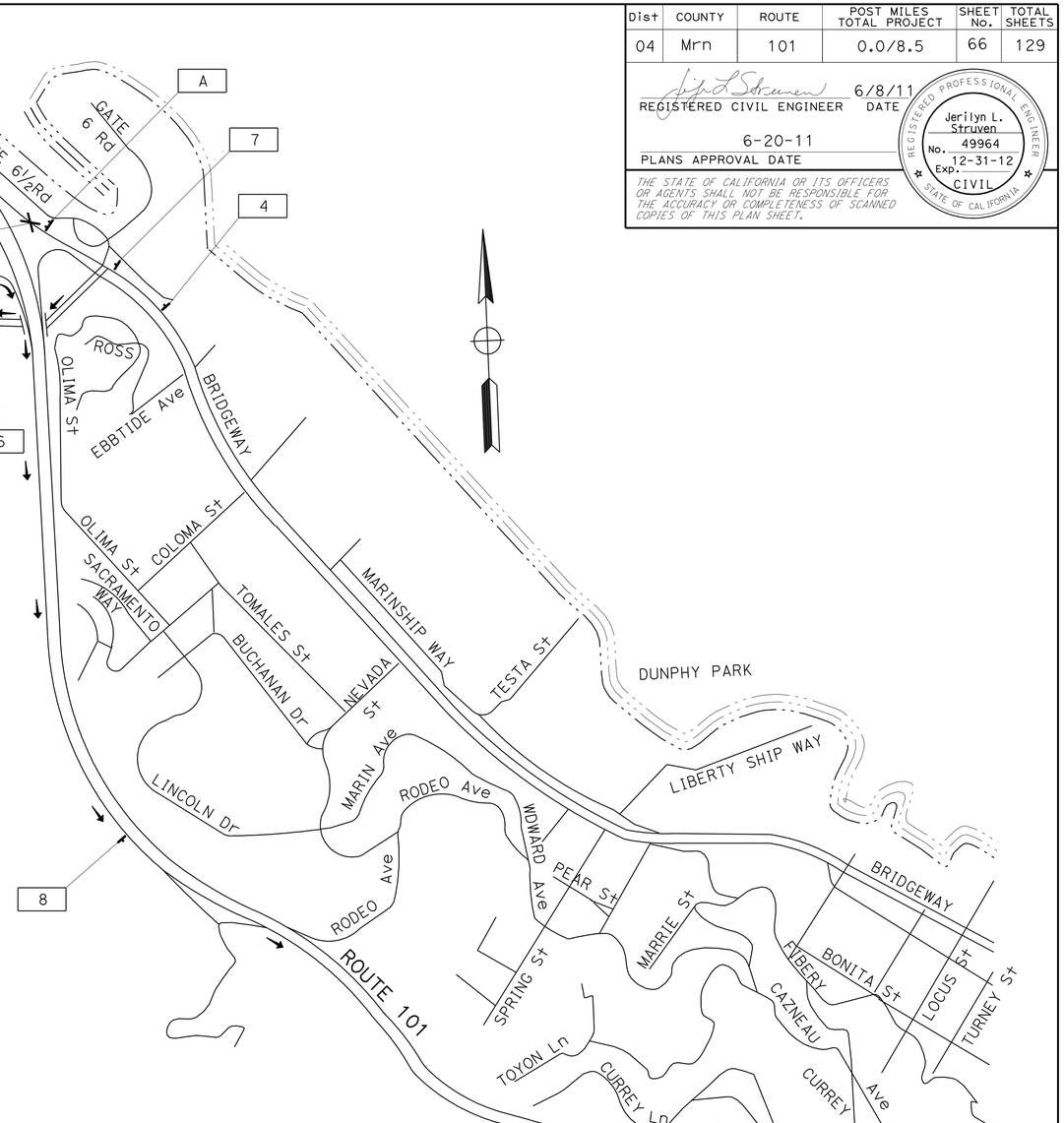

DETOUR PLAN No. 4
PM 3.57
NB Rte 101 ON-RAMP FROM MARIN CITY CLOSED

VIA:
SB Rte 101 ON-RAMP FROM DONAHUE St.
SB Rte 101 OFF-RAMP TO MONTE MAR Dr;
NB Rte 101 ON-RAMP FROM MONTE MAR Dr.

CONSTRUCTION AREA SIGNS
NO SCALE

FOR NOTES, ABBREVIATIONS AND LEGEND, SEE SHEET CS-1

THIS PLAN ACCURATE FOR CONSTRUCTION AREA SIGN WORK ONLY

CS-3

CALCULATED-DESIGNED BY
CHECKED BY
HERMINIO S. RUIDERA
JERILYN L. STRUVEN
REVISED BY: HS.R
DATE REVISED: 06/20/11
FUNCTIONAL SUPERVISOR: ROLAND AU-YUENG
STATE OF CALIFORNIA - DEPARTMENT OF TRANSPORTATION
TRAFFIC

LAST REVISION — DATE PLOTTED => 30-SEP-2011, TIME PLOTTED => 13:16, 03-28-11

BORDER LAST REVISED 7/2/2010
USERNAME => s131681
DGN FILE => 04000205901a003.dgn
RELATIVE BORDER SCALE IS IN INCHES 0 1 2 3
UNIT 0976
PROJECT NUMBER & PHASE 04000205901

Dist	COUNTY	ROUTE	POST MILES TOTAL PROJECT	SHEET No.	TOTAL SHEETS
04	Mrn	101	0.0/8.5	67	129

Jerilyn L. Struven 6/8/11
REGISTERED CIVIL ENGINEER DATE

6-20-11
PLANS APPROVAL DATE

REGISTERED PROFESSIONAL ENGINEER — Jerilyn L. Struven — No. 49964 — Exp. 12-31-12 — CIVIL — STATE OF CALIFORNIA

THE STATE OF CALIFORNIA OR ITS OFFICERS OR AGENTS SHALL NOT BE RESPONSIBLE FOR THE ACCURACY OR COMPLETENESS OF SCANNED COPIES OF THIS PLAN SHEET.

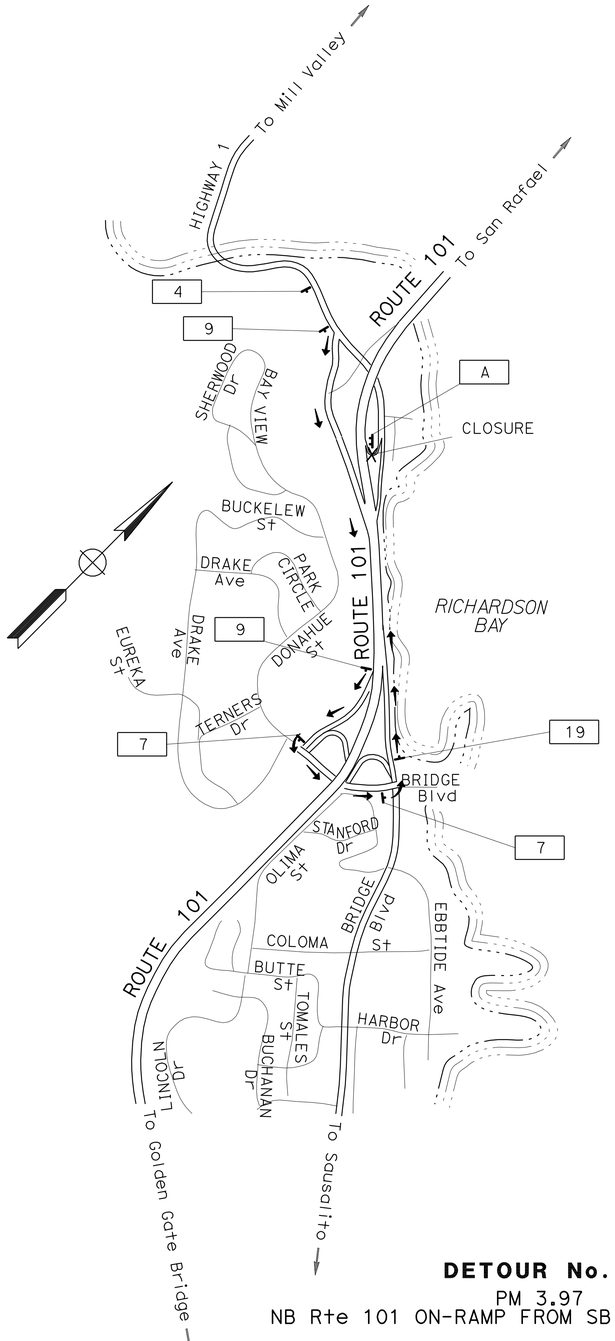

DETOUR No. 5

PM 3.97
NB Rte 101 ON-RAMP FROM SB ROUTE 1 CLOSED

VIA:

SB 101 ON-RAMP FROM SB ROUTE 1;
SB 101 OFF-RAMP TO MARIN CITY/ DONAHUE St;
EB DONAHUE St;
NB 101 ON-RAMP FROM DONAHUE St.

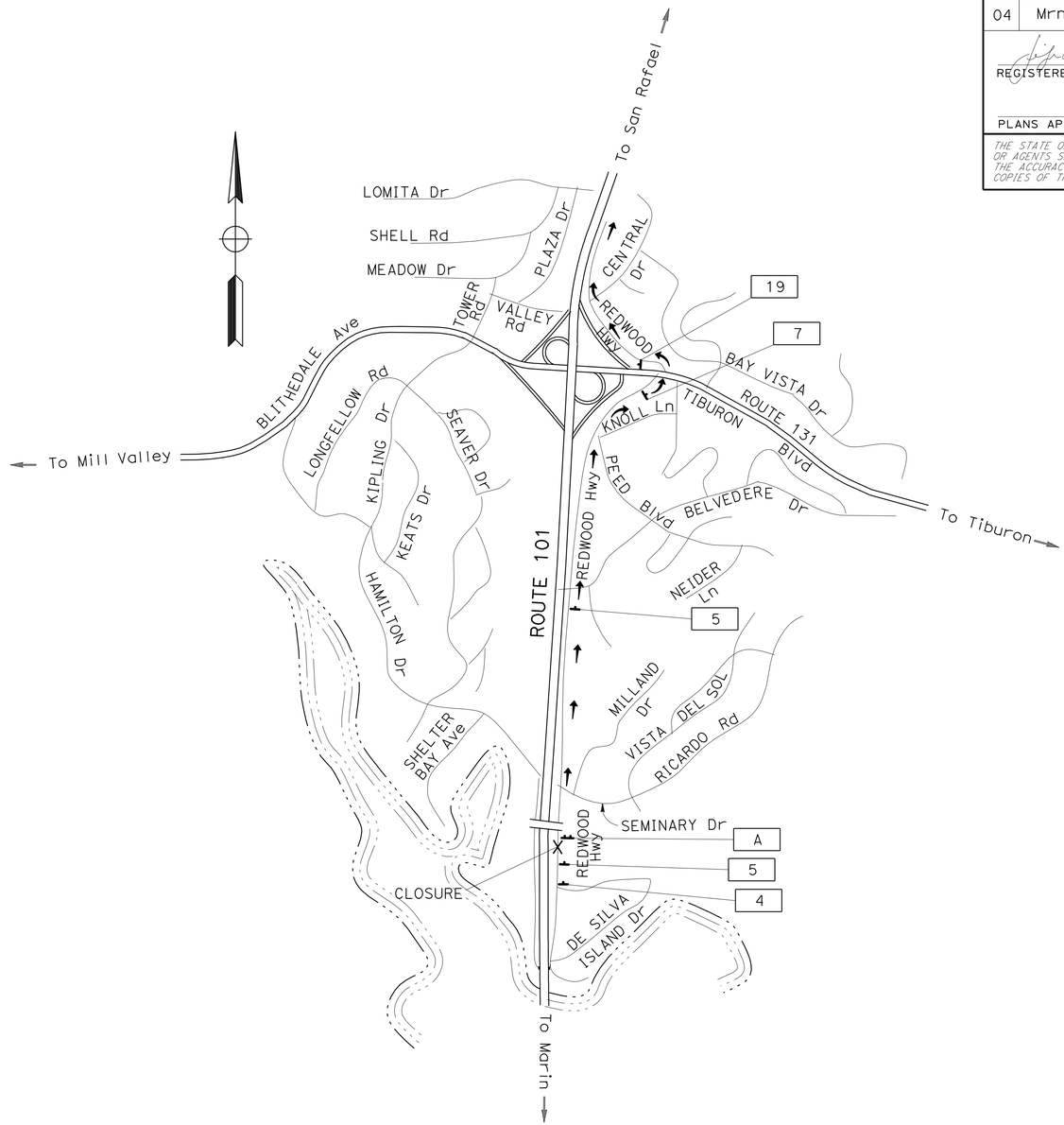

DETOUR No. 6

PM 4.75
NB Rte 101 ON-RAMP FROM FRONTAGE Rd CLOSED

VIA:

NB FRONTAGE Rd;
WB ROUTE 131;
NB 101 ON-RAMP FROM ROUTE 131.

CONSTRUCTION AREA SIGNS

NO SCALE

FOR NOTES, ABBREVIATIONS AND LEGEND, SEE SHEET CS-1

THIS PLAN ACCURATE FOR CONSTRUCTION AREA SIGN WORK ONLY

CS-4

STATE OF CALIFORNIA - DEPARTMENT OF TRANSPORTATION
TRAFFIC
FUNCTIONAL SUPERVISOR: ROLAND AU-YUENG
CALCULATED-DESIGNED BY: HERMINIO S. RUIDERA
CHECKED BY: JERILYN L. STRUVEN
REVISED BY: HS.R
DATE REVISED: 06/20/11

LAST REVISION | DATE PLOTTED => 30-SEP-2011
TIME PLOTTED => 13:16

BORDER LAST REVISED 7/2/2010
USERNAME => s131681
DGN FILE => 04000205901a004.dgn
RELATIVE BORDER SCALE IS IN INCHES 0 1 2 3
UNIT 0976
PROJECT NUMBER & PHASE 04000205901

Dist	COUNTY	ROUTE	POST MILES TOTAL PROJECT	SHEET No.	TOTAL SHEETS
04	Mrn	101	0.0/8.5	68	129

6/8/11
REGISTERED CIVIL ENGINEER DATE

Jerilyn L. Struven
No. 49964
Exp. 12-31-12
CIVIL
REGISTERED PROFESSIONAL ENGINEER
STATE OF CALIFORNIA

6-20-11
PLANS APPROVAL DATE

THE STATE OF CALIFORNIA OR ITS OFFICERS OR AGENTS SHALL NOT BE RESPONSIBLE FOR THE ACCURACY OR COMPLETENESS OF SCANNED COPIES OF THIS PLAN SHEET.

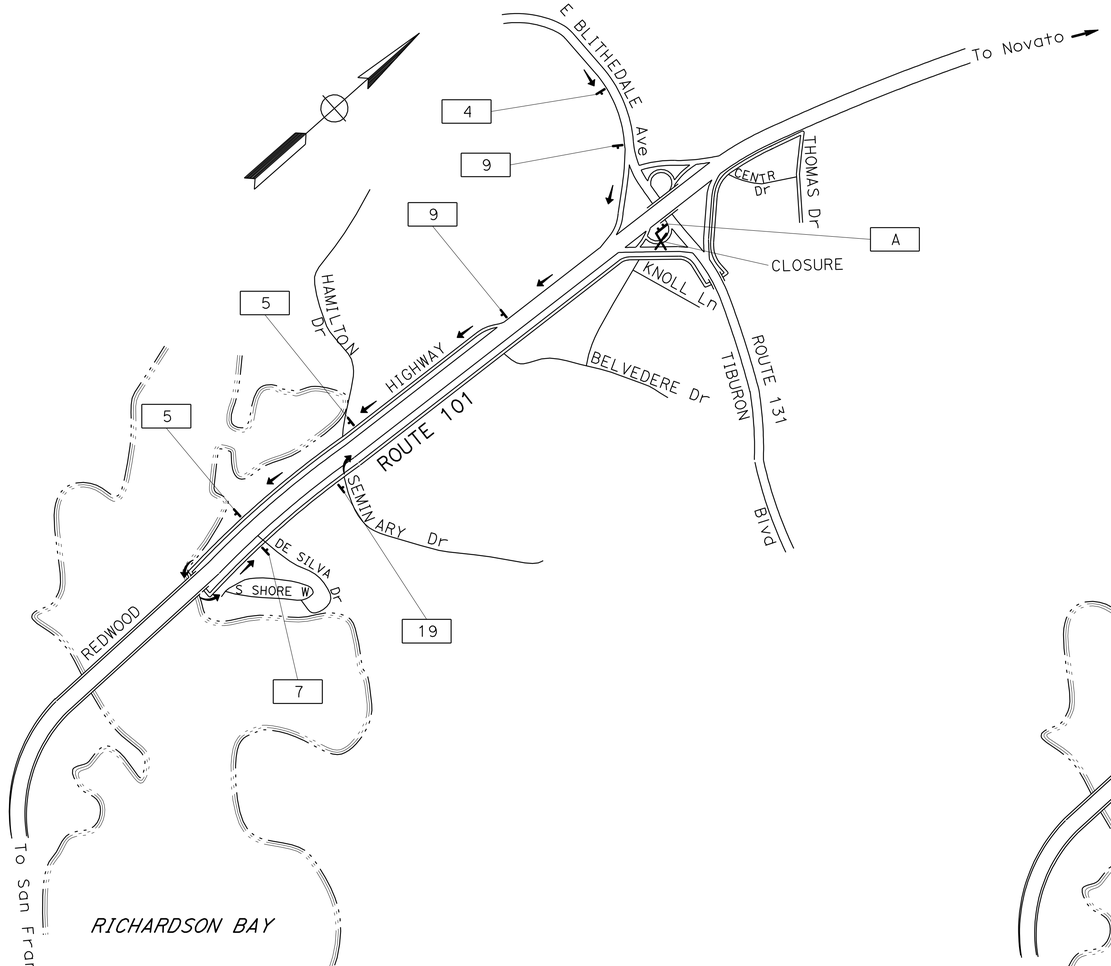

DETOUR PLAN No. 7

PM 5.66

NB Rte 101 ON-RAMP FROM EB BLITHEDALE Ave/ROUTE 131 CLOSED

VIA:

SB Rte 101 ON-RAMP FROM EB BLITHEDALE Ave;
SB Rte 101 OFF-RAMP TO FRONTAGE Rd;
SB FRONTAGE Rd;
NB FRONTAGE Rd;
NB Rte 101 ON-RAMP FROM FRONTAGE Rd.

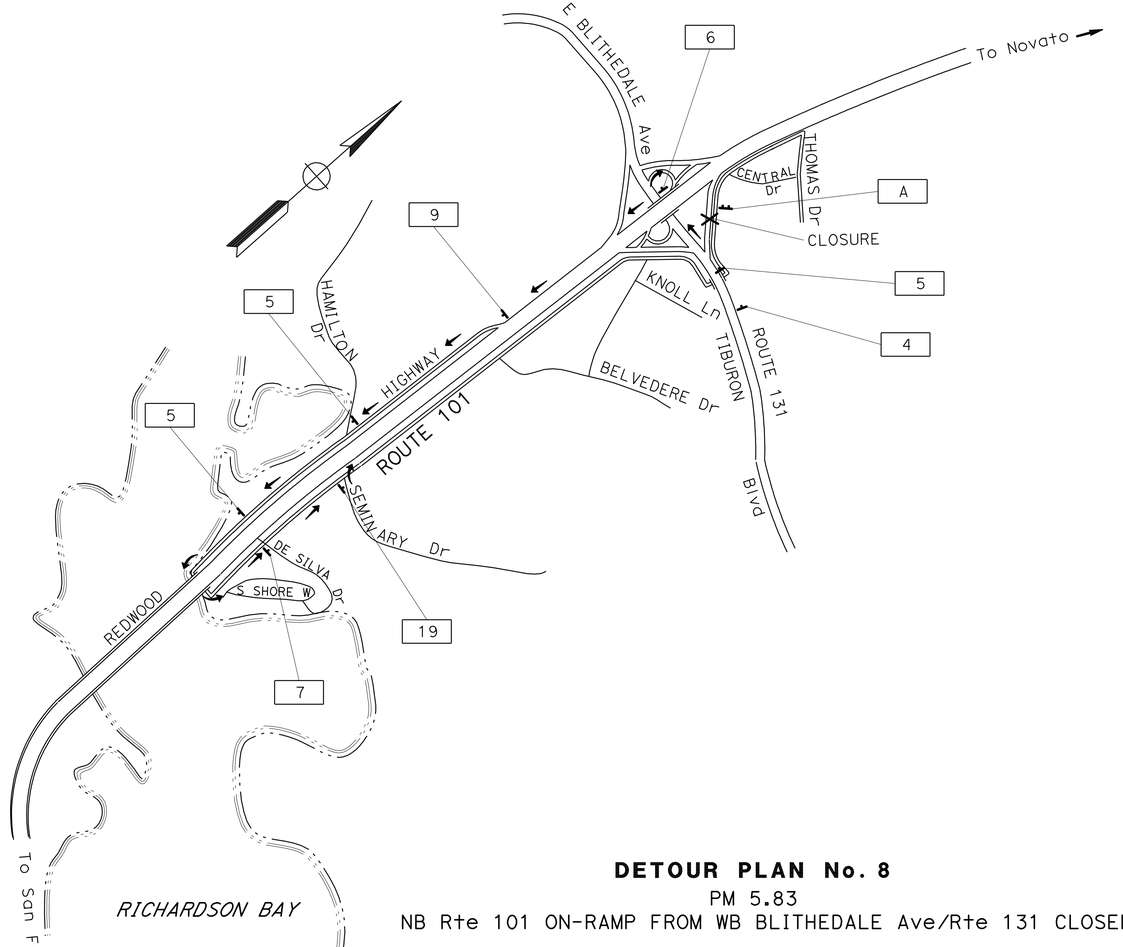

DETOUR PLAN No. 8

PM 5.83

NB Rte 101 ON-RAMP FROM WB BLITHEDALE Ave/Rte 131 CLOSED

VIA:

SB Rte 101 ON-RAMP FROM WB Rte 131;
SB OFF-RAMP TO SB FRONTAGE Rd;
NB FRONTAGE Rd;
NB Rte 101 ON-RAMP FROM FRONTAGE Rd.

CONSTRUCTION AREA SIGNS

NO SCALE

FOR NOTES, ABBREVIATIONS AND LEGEND, SEE SHEET CS-1

THIS PLAN ACCURATE FOR CONSTRUCTION AREA SIGN WORK ONLY

CS-5

STATE OF CALIFORNIA - DEPARTMENT OF TRANSPORTATION
Caltrans
TRAFFIC

FUNCTIONAL SUPERVISOR: ROLAND AU-YUENG
CALCULATED-DESIGNED BY: HERMINIO S. RUIDERA
CHECKED BY: JERILYN L. STRUVEN
REVISED BY: HS.R
DATE REVISED: 06/20/11

LAST REVISION | DATE PLOTTED => 30-SEP-2011 | 03-28-11 | TIME PLOTTED => 13:16

BORDER LAST REVISED 7/2/2010 | USERNAME => s131681 | DGN FILE => 04000205901a005.dgn | RELATIVE BORDER SCALE IS IN INCHES 0 1 2 3 | UNIT 0976 | PROJECT NUMBER & PHASE 04000205901

Dist	COUNTY	ROUTE	POST MILES TOTAL PROJECT	SHEET No.	TOTAL SHEETS
04	Mrn	101	0.0/8.5	69	129

REGISTERED CIVIL ENGINEER — 6/8/11 DATE

Jerilyn L. Struven No. 49964 Exp. 12-31-12 CIVIL — REGISTERED PROFESSIONAL ENGINEER — STATE OF CALIFORNIA

6-20-11
PLANS APPROVAL DATE

THE STATE OF CALIFORNIA OR ITS OFFICERS OR AGENTS SHALL NOT BE RESPONSIBLE FOR THE ACCURACY OR COMPLETENESS OF SCANNED COPIES OF THIS PLAN SHEET.

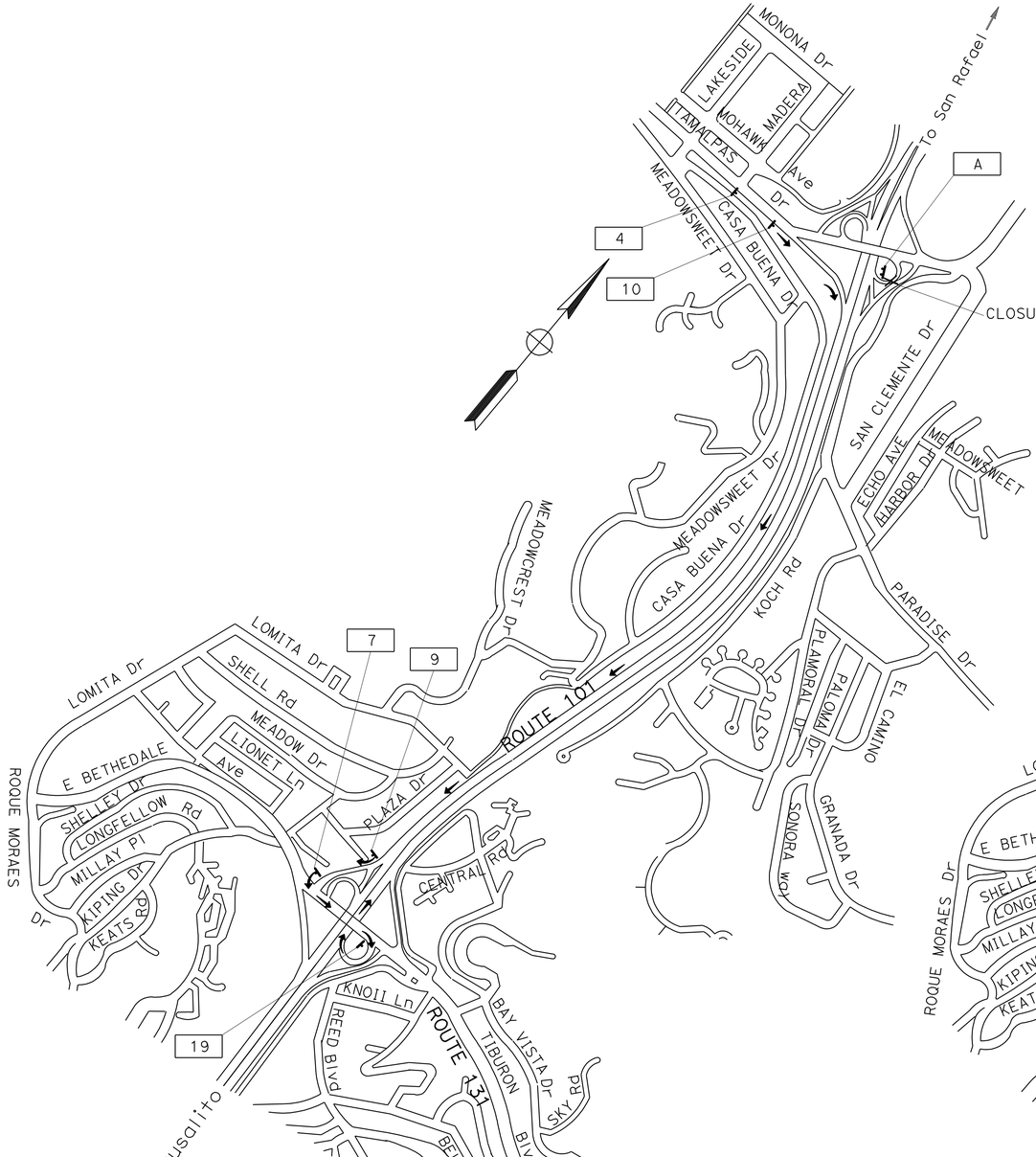

DETOUR No. 9

PM 7.33

NB Rte 101 ON-RAMP FROM EB TAMALPAIS Dr CLOSED.

VIA:

SB Rte 101 ON-RAMP FROM EB TAMALPAIS Dr;
SB Rte 101 OFF-RAMP TO EB Rte 131;
NB Rte 101 ON-RAMP FROM EB Rte 131.

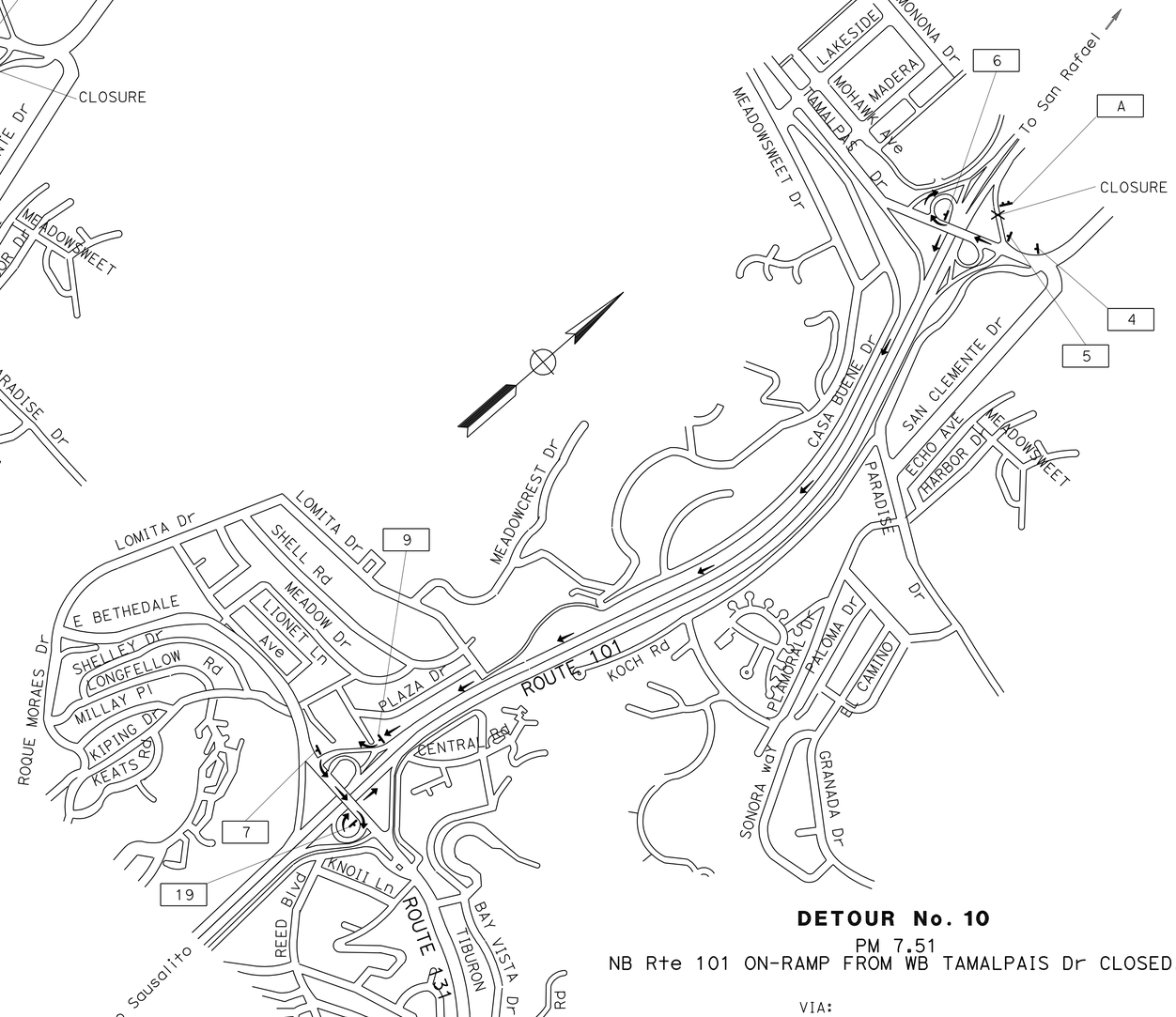

DETOUR No. 10

PM 7.51

NB Rte 101 ON-RAMP FROM WB TAMALPAIS Dr CLOSED.

VIA:

SB Rte 101 ON-RAMP FROM WB TAMALPAIS Dr;
SB Rte 101 OFF-RAMP TO EB Rte 131;
NB Rte 101 ON-RAMP FROM EB Rte 131.

CONSTRUCTION AREA SIGNS

NO SCALE

FOR NOTES, ABBREVIATIONS AND LEGEND, SEE SHEET CS-1

THIS PLAN ACCURATE FOR CONSTRUCTION AREA SIGN WORK ONLY

CS-6

STATE OF CALIFORNIA - DEPARTMENT OF TRANSPORTATION
TRAFFIC

CALCULATED-DESIGNED BY: HERMINIO S. RUIDERA
CHECKED BY: JERILYN L. STRUVEN
FUNCTIONAL SUPERVISOR: ROLAND AU-YUENG
REVISED BY: HS.R
DATE REVISED: 06/20/11

LAST REVISION | DATE PLOTTED => 30-SEP-2011
02-03-11 | TIME PLOTTED => 13:16

BORDER LAST REVISED 7/2/2010
USERNAME => s131681
DGN FILE => 04000205901a006.dgn
RELATIVE BORDER SCALE IS IN INCHES 0 1 2 3
UNIT 0976
PROJECT NUMBER & PHASE 04000205901

Dist	COUNTY	ROUTE	POST MILES TOTAL PROJECT	SHEET No.	TOTAL SHEETS
04	Mrn	101	0.0/8.5	70	129

REGISTERED CIVIL ENGINEER 6/8/11 DATE

6-20-11
PLANS APPROVAL DATE

REGISTERED PROFESSIONAL ENGINEER Jerilyn L. Struven No. 49964 Exp. 12-31-12 CIVIL STATE OF CALIFORNIA

THE STATE OF CALIFORNIA OR ITS OFFICERS OR AGENTS SHALL NOT BE RESPONSIBLE FOR THE ACCURACY OR COMPLETENESS OF SCANNED COPIES OF THIS PLAN SHEET.

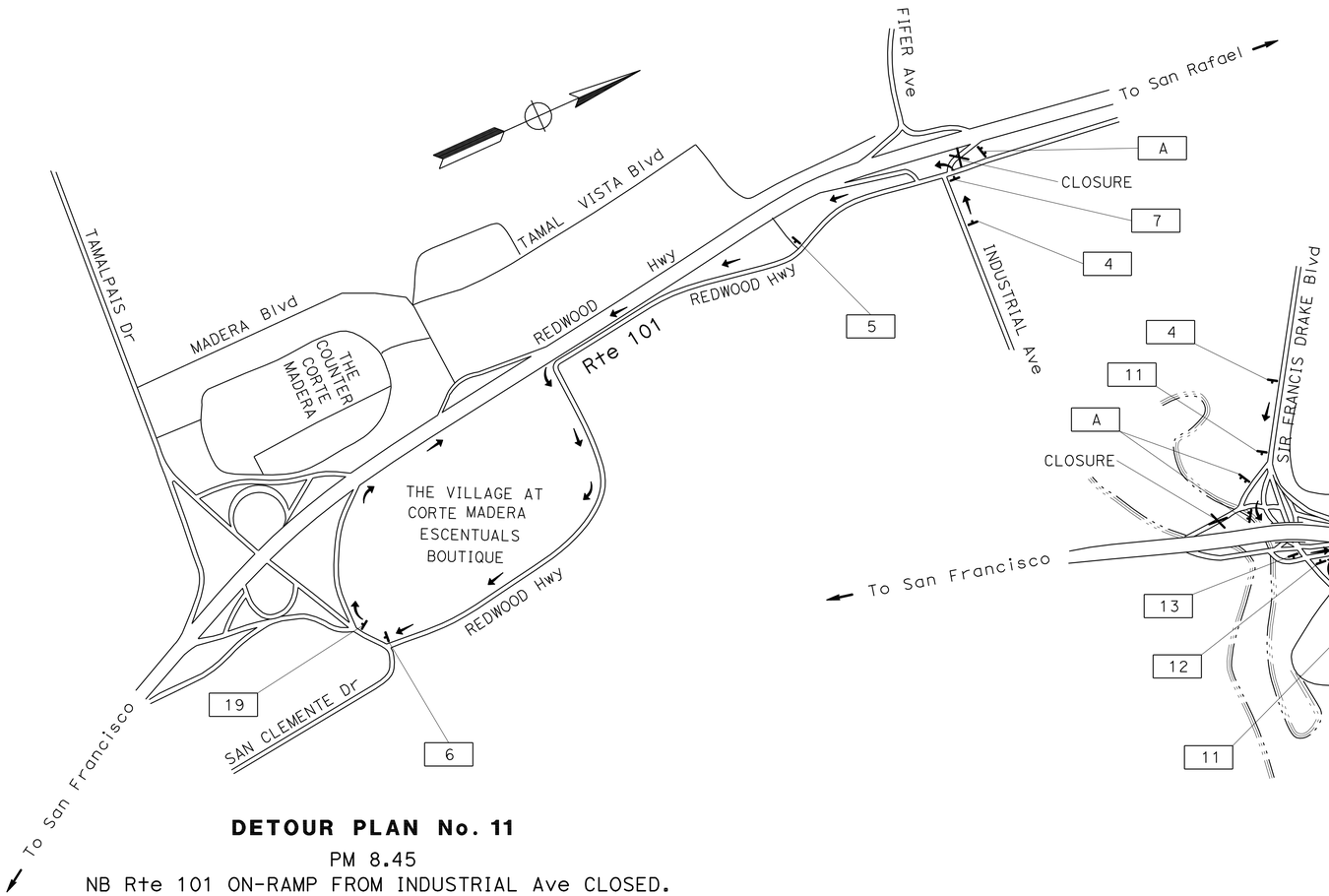

DETOUR PLAN No. 11

PM 8.45

NB Rte 101 ON-RAMP FROM INDUSTRIAL Ave CLOSED.

VIA:
SB REDWOOD HIGHWAY,
WB TAMALPAIS Dr;
NB Rte 101 ON-RAMP FROM WB TAMALPAIS Dr.

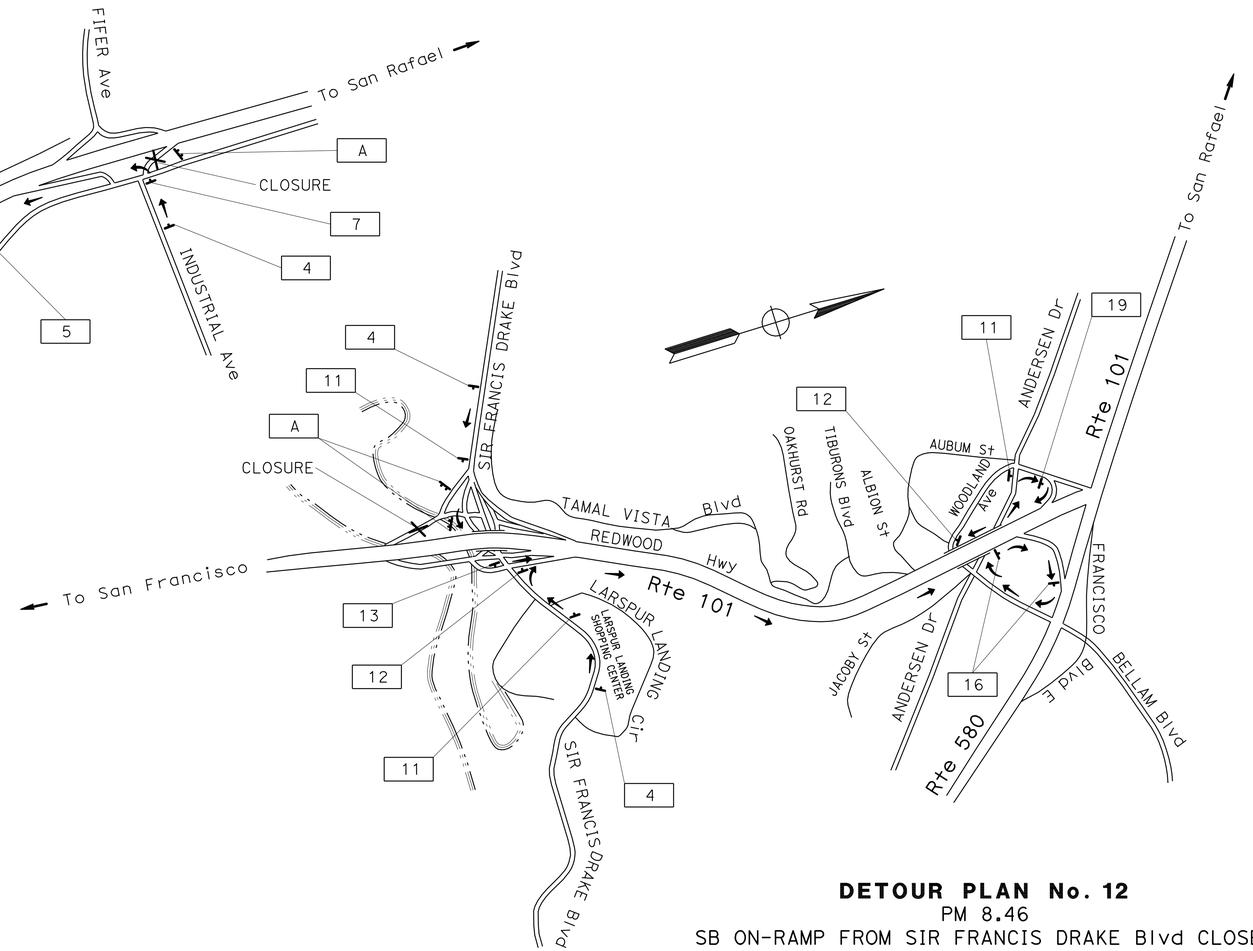

DETOUR PLAN No. 12

PM 8.46

SB ON-RAMP FROM SIR FRANCIS DRAKE Blvd CLOSED.

VIA:
NB Rte 101 ON-RAMP FROM SIR FRANCIS DRAKE Blvd;
NB Rte 101 OFF-RAMP TO EB 580;
EB Rte 580 OFF-RAMP TO WB BELLAM Blvd;
NB ANDERSON Dr;
SB Rte 101 ON-RAMP FROM ANDERSON Dr.

CONSTRUCTION AREA SIGNS

NO SCALE

FOR NOTES, ABBREVIATIONS AND LEGEND, SEE SHEET CS-1

THIS PLAN ACCURATE FOR CONSTRUCTION AREA SIGN WORK ONLY

CS-7

STATE OF CALIFORNIA - DEPARTMENT OF TRANSPORTATION
Caltrans
TRAFFIC

FUNCTIONAL SUPERVISOR: ROLAND AU-YUENG
CALCULATED-DESIGNED BY: HERMINIO S. RUIDERA
CHECKED BY: JERILYN L. STRUVEN
REVISED BY: HS.R
DATE REVISED: 06/20/11

LAST REVISION 03-28-11
DATE PLOTTED => 30-SEP-2011
TIME PLOTTED => 13:16

Dist	COUNTY	ROUTE	POST MILES TOTAL PROJECT	SHEET No.	TOTAL SHEETS
04	Mrn	101	0.0/8.5	71	129

6/8/11
REGISTERED CIVIL ENGINEER DATE

Jerilyn L. Struven
No. 49964
Exp. 12-31-12
CIVIL
REGISTERED PROFESSIONAL ENGINEER
STATE OF CALIFORNIA

6-20-11
PLANS APPROVAL DATE

THE STATE OF CALIFORNIA OR ITS OFFICERS OR AGENTS SHALL NOT BE RESPONSIBLE FOR THE ACCURACY OR COMPLETENESS OF SCANNED COPIES OF THIS PLAN SHEET.

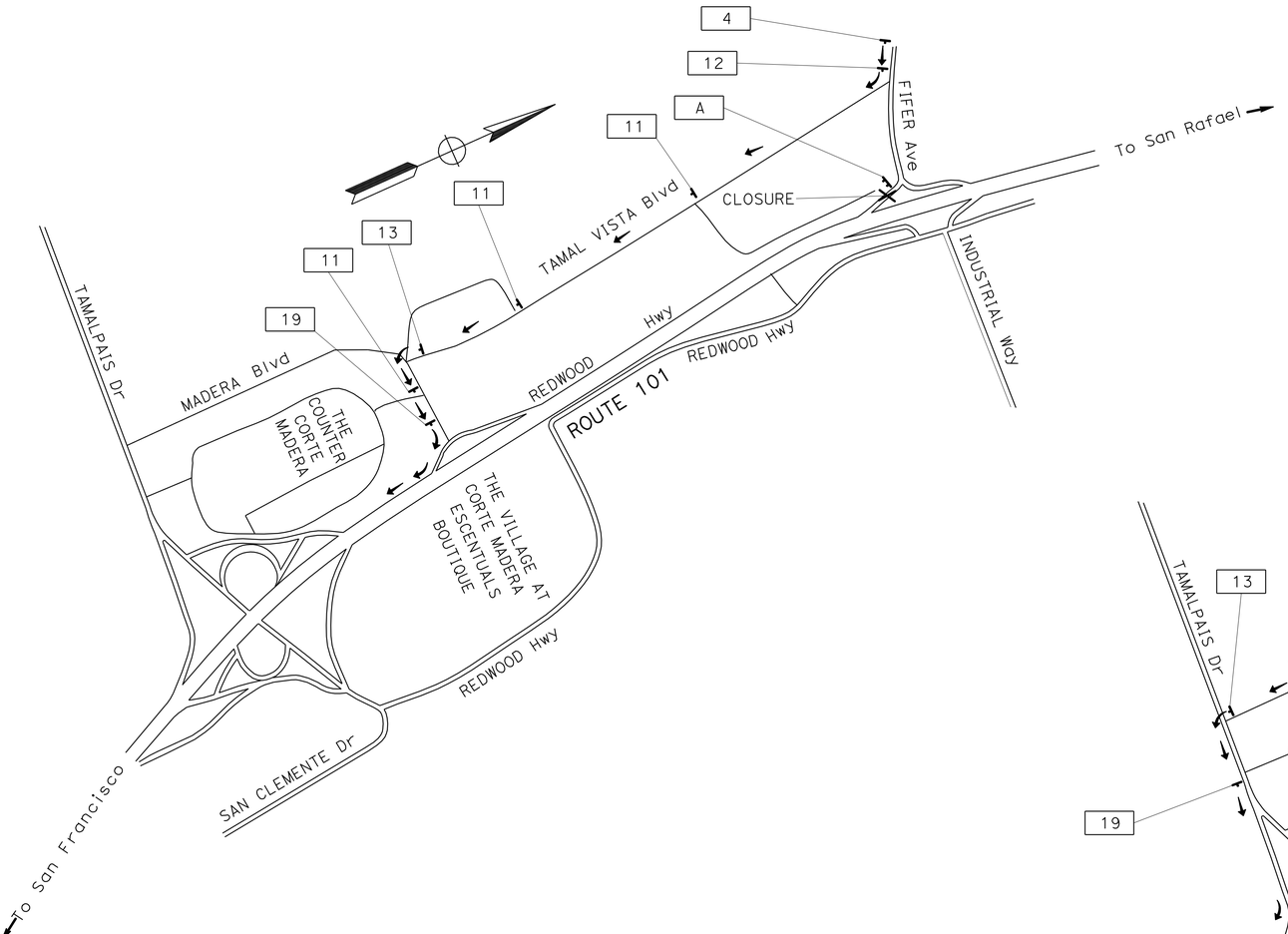

DETOUR PLAN No. 13
PM 8.17
SB Rte 101 ON-RAMP FROM EB FIFER Ave CLOSED

VIA:
SB TAMAL VISTA Blvd;
EB MADERA Blvd;
SB Rte 101 ON-RAMP FROM MADERA Blvd.

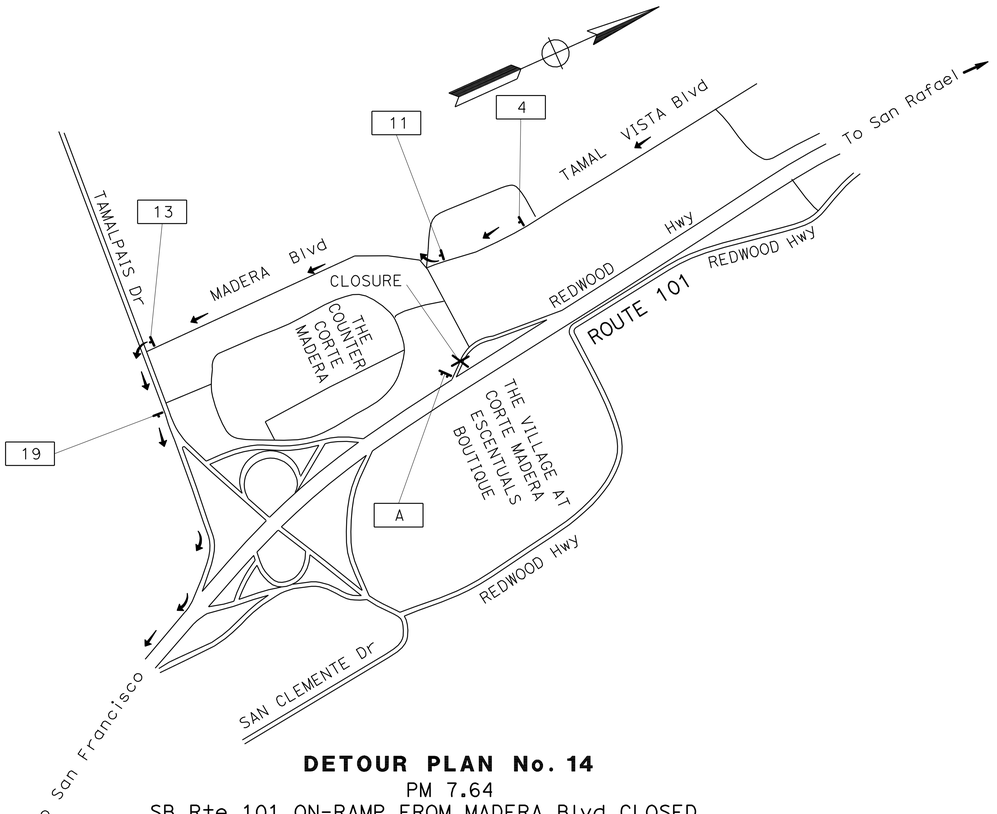

DETOUR PLAN No. 14
PM 7.64
SB Rte 101 ON-RAMP FROM MADERA Blvd CLOSED

VIA:
SB MADERA Blvd;
EB TAMALPAIS Blvd;
SB Rte 101 ON-RAMP FROM EB TAMALPAIS Blvd.

CONSTRUCTION AREA SIGNS
NO SCALE

CS-8

FOR NOTES, ABBREVIATIONS AND LEGEND, SEE SHEET CS-1

THIS PLAN ACCURATE FOR CONSTRUCTION AREA SIGN WORK ONLY

STATE OF CALIFORNIA - DEPARTMENT OF TRANSPORTATION
Caltrans
TRAFFIC

FUNCTIONAL SUPERVISOR: ROLAND AU-YUENG

CALCULATED-DESIGNED BY: HERMINIO S. RUIDERA
CHECKED BY: JERILYN L. STRUVEN

REVISED BY: HS.R
DATE REVISED: 06/20/11

LAST REVISION | DATE PLOTTED => 30-SEP-2011
02-03-11 | TIME PLOTTED => 13:17

BORDER LAST REVISED 7/2/2010

USERNAME => s131681
DGN FILE => 04000205901a008.dgn

RELATIVE BORDER SCALE IS IN INCHES 0 1 2 3

UNIT 0976

PROJECT NUMBER & PHASE 04000205901

Dist	COUNTY	ROUTE	POST MILES TOTAL PROJECT	SHEET No.	TOTAL SHEETS
04	Mrn	101	0.0/8.5	72	129

REGISTERED CIVIL ENGINEER — 6/8/11 DATE

Jerilyn L. Struven, No. 49964, Exp. 12-31-12, CIVIL, REGISTERED PROFESSIONAL ENGINEER, STATE OF CALIFORNIA

6-20-11
PLANS APPROVAL DATE

THE STATE OF CALIFORNIA OR ITS OFFICERS OR AGENTS SHALL NOT BE RESPONSIBLE FOR THE ACCURACY OR COMPLETENESS OF SCANNED COPIES OF THIS PLAN SHEET.

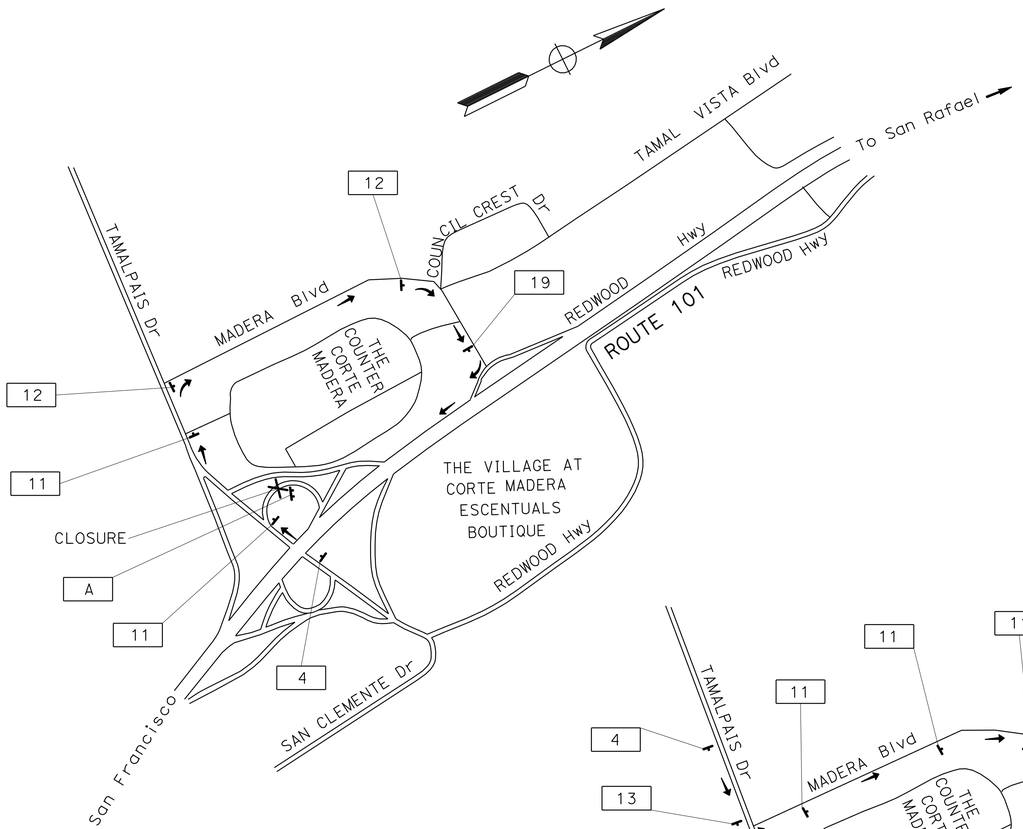

DETOUR PLAN No. 15
PM 7.40
SB Rte 101 ON-RAMP FROM WB TAMALPAIS Dr CLOSED

VIA:
NB MADERA Blvd;
SB Rte 101 ON-RAMP FROM MADERA Blvd.

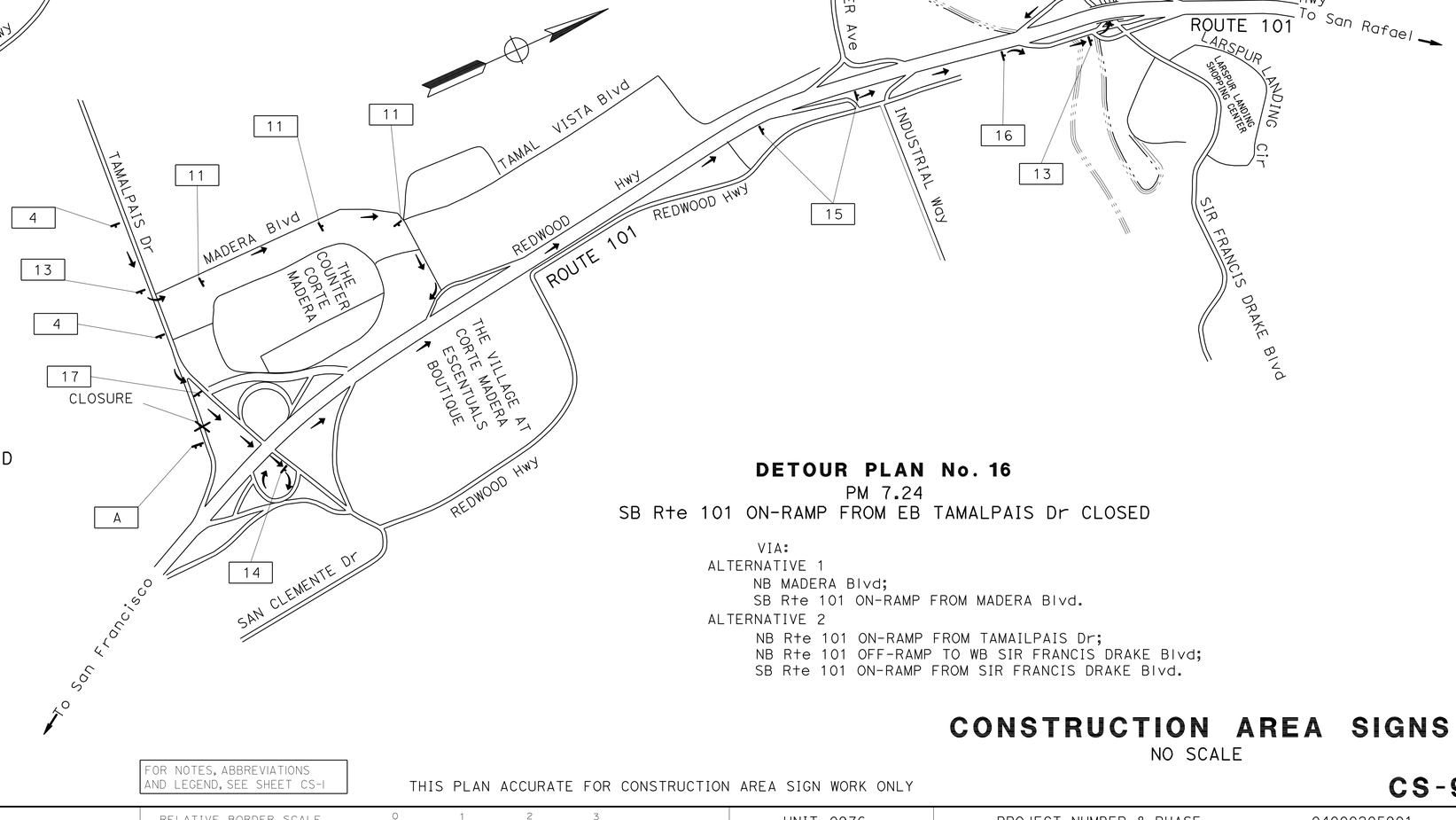

DETOUR PLAN No. 16
PM 7.24
SB Rte 101 ON-RAMP FROM EB TAMALPAIS Dr CLOSED

VIA:
ALTERNATIVE 1
NB MADERA Blvd;
SB Rte 101 ON-RAMP FROM MADERA Blvd.
ALTERNATIVE 2
NB Rte 101 ON-RAMP FROM TAMAILPAIS Dr;
NB Rte 101 OFF-RAMP TO WB SIR FRANCIS DRAKE Blvd;
SB Rte 101 ON-RAMP FROM SIR FRANCIS DRAKE Blvd.

CONSTRUCTION AREA SIGNS
NO SCALE

FOR NOTES, ABBREVIATIONS AND LEGEND, SEE SHEET CS-1

THIS PLAN ACCURATE FOR CONSTRUCTION AREA SIGN WORK ONLY

CS-9

STATE OF CALIFORNIA - DEPARTMENT OF TRANSPORTATION
Caltrans
TRAFFIC
FUNCTIONAL SUPERVISOR: ROLAND AU-YUENG
CALCULATED-DESIGNED BY: HERMINIO S. RUIDERA
CHECKED BY: JERILYN L. STRUVEN
REVISED BY: HS.R
DATE REVISED: 06/20/11

LAST REVISION | DATE PLOTTED => 30-SEP-2011 | TIME PLOTTED => 13:17 | 03-30-11

BORDER LAST REVISED 7/2/2010 | USERNAME => s131681 | DGN FILE => 04000205901a009.dgn | RELATIVE BORDER SCALE IS IN INCHES 0 1 2 3 | UNIT 0976 | PROJECT NUMBER & PHASE 04000205901

Dist	COUNTY	ROUTE	POST MILES TOTAL PROJECT	SHEET No.	TOTAL SHEETS
04	Mrn	101	0.0/8.5	73	129

REGISTERED CIVIL ENGINEER — 6/8/11 DATE

Jerilyn L. Struven No. 49964 Exp. 12-31-12 CIVIL — REGISTERED PROFESSIONAL ENGINEER — STATE OF CALIFORNIA

6-20-11
PLANS APPROVAL DATE

THE STATE OF CALIFORNIA OR ITS OFFICERS OR AGENTS SHALL NOT BE RESPONSIBLE FOR THE ACCURACY OR COMPLETENESS OF SCANNED COPIES OF THIS PLAN SHEET.

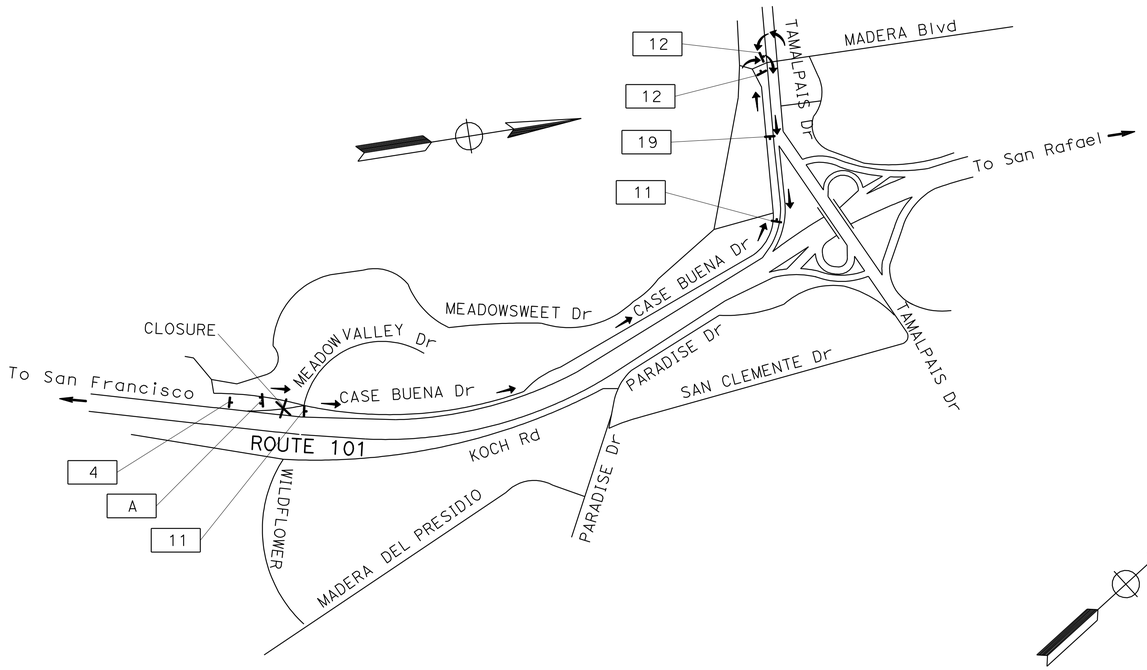

DETOUR PLAN No. 17

PM 6.54

SB Rte 101 ON-RAMP FROM CASA BUENA Dr CLOSED

VIA:
NB CASA BUENA Dr;
NB MADERA Blvd;
EB TAMALPAIS Dr;
SB Rte 101 ON-RAMP FROM TAMALPAIS Dr.

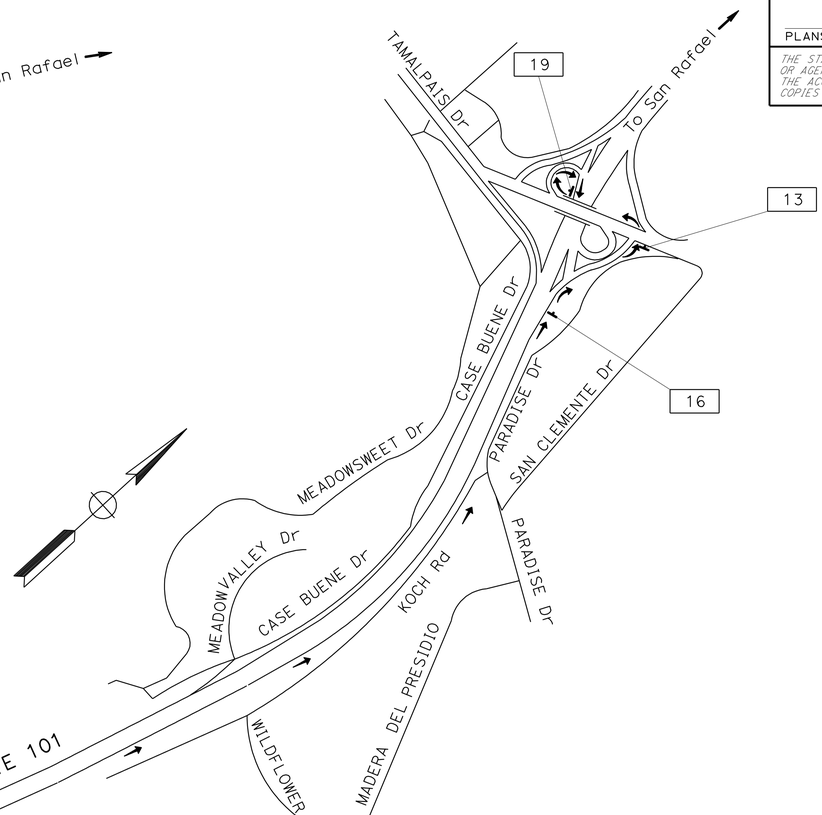

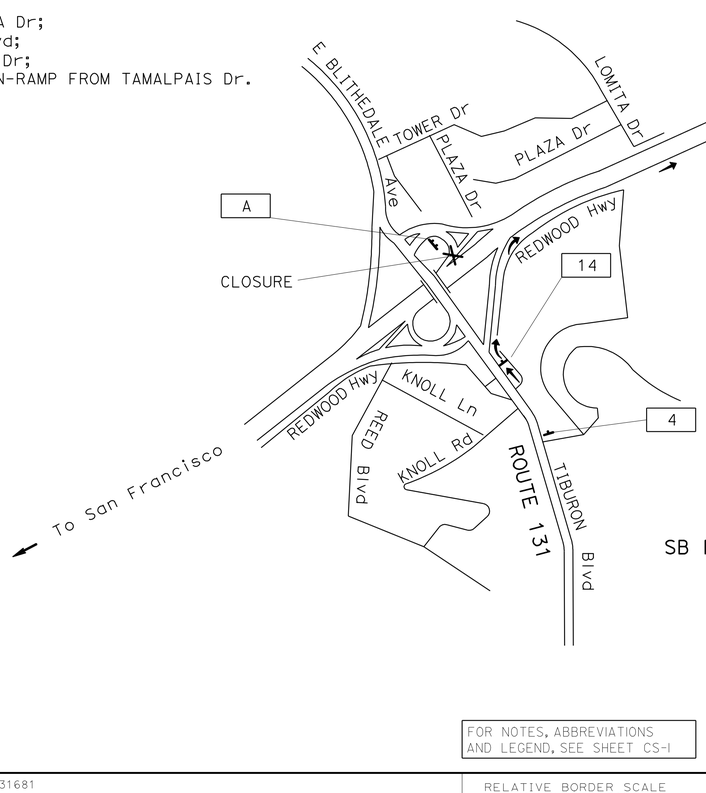

DETOUR PLAN No. 18

PM 5.73

SB Rte 101 ON-RAMP FROM WB BLITHEDALE Ave/Rte 131 CLOSED

VIA:
NB Rte 101 ON-RAMP FROM WB Rte 131;
NB Rte 101 OFF-RAMP TO WB TAMALPAIS Dr;
SB Rte 101 ON-RAMP FROM TAMALPAIS Dr.

FOR NOTES, ABBREVIATIONS AND LEGEND, SEE SHEET CS-1

THIS PLAN ACCURATE FOR CONSTRUCTION AREA SIGN WORK ONLY

CONSTRUCTION AREA SIGNS

NO SCALE

CS-10

STATE OF CALIFORNIA - DEPARTMENT OF TRANSPORTATION
TRAFFIC
FUNCTIONAL SUPERVISOR: ROLAND AU-YUENG
CALCULATED-DESIGNED BY: HERMINIO S. RUIDERA
CHECKED BY: JERILYN L. STRUVEN
REVISED BY: HS,R
DATE REVISED: 06/20/11

LAST REVISION — DATE PLOTTED => 30-SEP-2011 — TIME PLOTTED => 13:17

BORDER LAST REVISED 7/2/2010 | USERNAME => s131681 | DGN FILE => 04000205901a010.dgn | RELATIVE BORDER SCALE IS IN INCHES 0 1 2 3 | UNIT 0976 | PROJECT NUMBER & PHASE 04000205901

Dist	COUNTY	ROUTE	POST MILES TOTAL PROJECT	SHEET No.	TOTAL SHEETS
04	Mrn	101	0.0/8.5	74	129

REGISTERED CIVIL ENGINEER — 6/8/11 DATE

Jerilyn L. Struven, No. 49964, Exp. 12-31-12, CIVIL — REGISTERED PROFESSIONAL ENGINEER — STATE OF CALIFORNIA

6-20-11
PLANS APPROVAL DATE

THE STATE OF CALIFORNIA OR ITS OFFICERS OR AGENTS SHALL NOT BE RESPONSIBLE FOR THE ACCURACY OR COMPLETENESS OF SCANNED COPIES OF THIS PLAN SHEET.

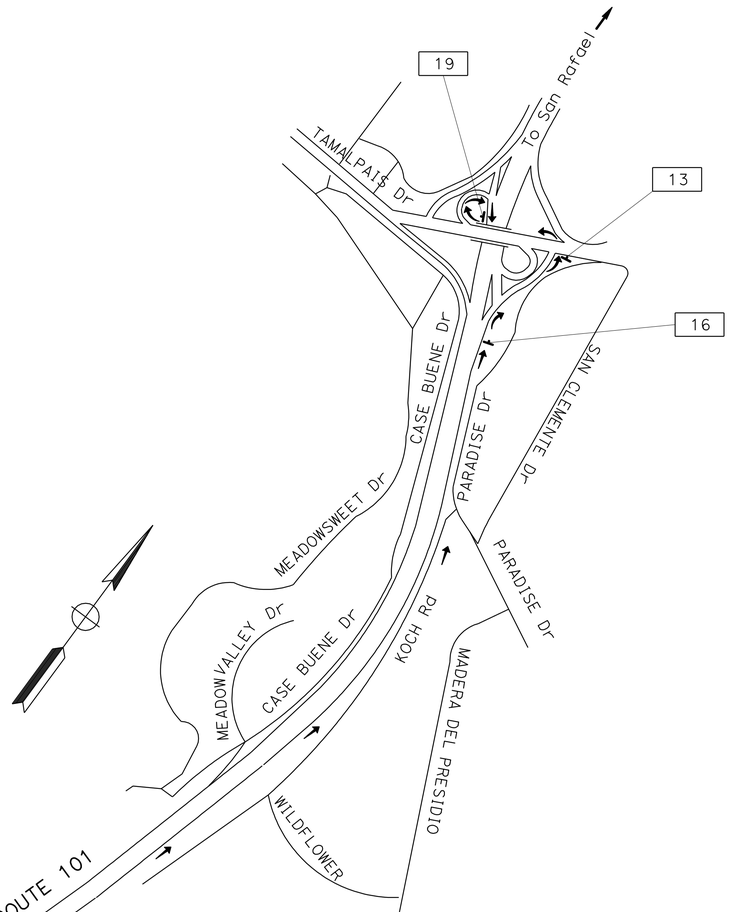

DETOUR PLAN No. 19
PM 5.56
SB Rte 101 ON-RAMP FROM EB BLITHEDALE Dr / Rte 131 CLOSED

VIA:
NB Rte 101 ON-RAMP FROM EB BILTHEDALE Ave;
NB Rte 101 OFF-RAMP TO WB TAMALPAIS Dr;
SB Rte 101 ON-RAMP FROM TAMALPAIS Dr.

DETOUR PLAN No. 20
PM 4.75
SB Rte 101 ON-RAMP FROM FRONTAGE Rd CLOSED

VIA:
SB FRONTAGE Rd;
NB FRONTAGE Rd;
NB Rte 101 ON-RAMP FROM FRONTAGE Rd;
NB Rte 101 OFF-RAMP TO WB BLITHEDALE Ave;
SB Rte 101 ON-RAMP FROM BLITHEDALE Ave.

FOR NOTES, ABBREVIATIONS AND LEGEND, SEE SHEET CS-1

THIS PLAN ACCURATE FOR CONSTRUCTION AREA SIGN WORK ONLY

CONSTRUCTION AREA SIGNS
NO SCALE

CS-11

STATE OF CALIFORNIA - DEPARTMENT OF TRANSPORTATION
TRAFFIC
Caltrans
FUNCTIONAL SUPERVISOR: ROLAND AU-YUENG
CALCULATED-DESIGNED BY: HERMINIO S. RUIDERA
CHECKED BY: JERILYN L. STRUVEN
REVISED BY: HS.R
DATE REVISED: 06/20/11

LAST REVISION — DATE PLOTTED => 30-SEP-2011, TIME PLOTTED => 13:17
03-28-11

BORDER LAST REVISED 7/2/2010
USERNAME => s131681
DGN FILE => 04000205901a011.dgn
RELATIVE BORDER SCALE IS IN INCHES 0 1 2 3
UNIT 0976
PROJECT NUMBER & PHASE 04000205901

Dist	COUNTY	ROUTE	POST MILES TOTAL PROJECT	SHEET No.	TOTAL SHEETS
04	Mrn	101	0.0/8.5	75	129

REGISTERED CIVIL ENGINEER — DATE: 6/8/11

Jerilyn L. Struven No. 49964 Exp. 12-31-12 CIVIL — REGISTERED PROFESSIONAL ENGINEER — STATE OF CALIFORNIA

6-20-11
PLANS APPROVAL DATE

THE STATE OF CALIFORNIA OR ITS OFFICERS OR AGENTS SHALL NOT BE RESPONSIBLE FOR THE ACCURACY OR COMPLETENESS OF SCANNED COPIES OF THIS PLAN SHEET.

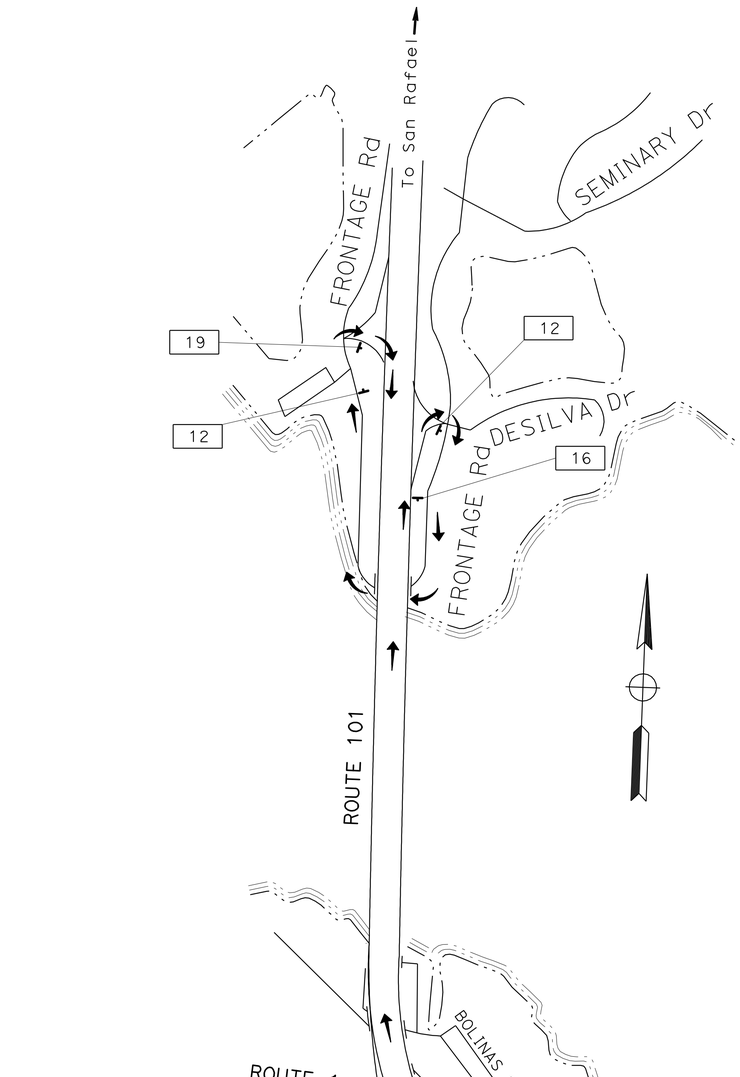

DETOUR PLAN No. 21
PM 3.99
SB Rte 101 ON-RAMP FROM SB Rte 1 CLOSED

VIA:
NB Rte 101 ON-RAMP FROM SB Rte 1;
NB Rte 101 OFF-RAMP TO FRONTAGE Rd;
SB FRONTAGE Rd;
NB FRONTAGE Rd;
SB Rte 101 ON-RAM FROM FRONTAGE Rd.

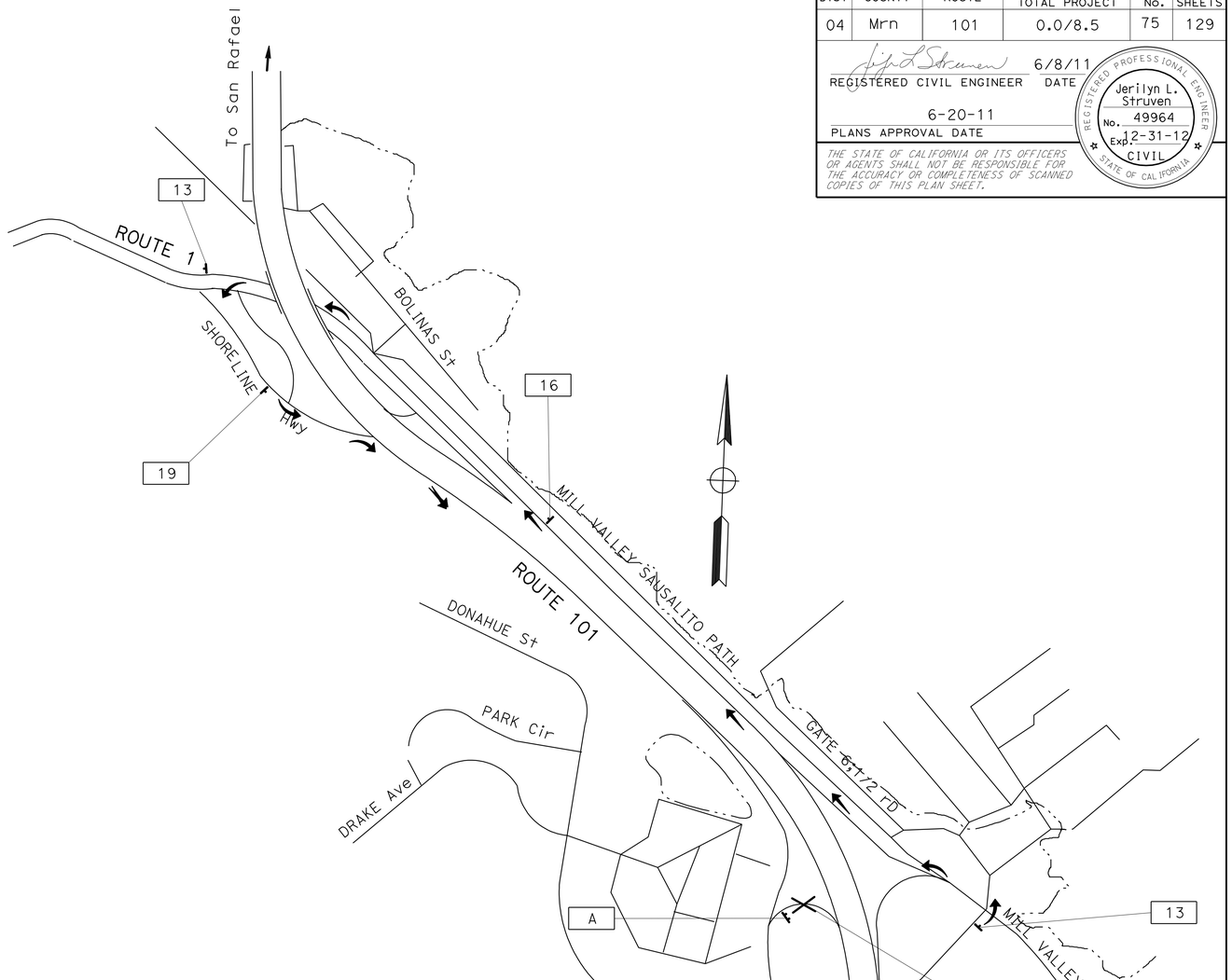

DETOUR PLAN No. 22
PM 3.42
SB Rte 101 ON-RAMP FROM MARIN CITY CLOSED

VIA:
NB Rte 101 ON-RAMP FROM DONAHUE St;
NB Rte 101 OFF-RAMP TO Rte 1;
SB Rte 101 ON-RAMP FROM Rte 1.

CONSTRUCTION AREA SIGNS
NO SCALE

CS-12

FOR NOTES, ABBREVIATIONS AND LEGEND, SEE SHEET CS-1

THIS PLAN ACCURATE FOR CONSTRUCTION AREA SIGN WORK ONLY

STATE OF CALIFORNIA - DEPARTMENT OF TRANSPORTATION
TRAFFIC
FUNCTIONAL SUPERVISOR: ROLAND AU-YUENG
CALCULATED-DESIGNED BY: HERMINIO S. RUIDERA
CHECKED BY: JERILYN L. STRUVEN
REVISED BY: HS.R
DATE REVISED: 06/20/11

LAST REVISION | DATE PLOTTED => 30-SEP-2011
TIME PLOTTED => 13:18

BORDER LAST REVISED 7/2/2010
USERNAME => s131681
DGN FILE => 04000205901a012.dgn
RELATIVE BORDER SCALE IS IN INCHES 0 1 2 3
UNIT 0976
PROJECT NUMBER & PHASE 04000205901

Dist	COUNTY	ROUTE	POST MILES TOTAL PROJECT	SHEET No.	TOTAL SHEETS
04	Mrn	101	0.0/8.5	76	129

REGISTERED CIVIL ENGINEER — 6/8/11 DATE

Jerilyn L. Struven No. 49964 Exp. 12-31-12 CIVIL — REGISTERED PROFESSIONAL ENGINEER — STATE OF CALIFORNIA

6-20-11
PLANS APPROVAL DATE

THE STATE OF CALIFORNIA OR ITS OFFICERS OR AGENTS SHALL NOT BE RESPONSIBLE FOR THE ACCURACY OR COMPLETENESS OF SCANNED COPIES OF THIS PLAN SHEET.

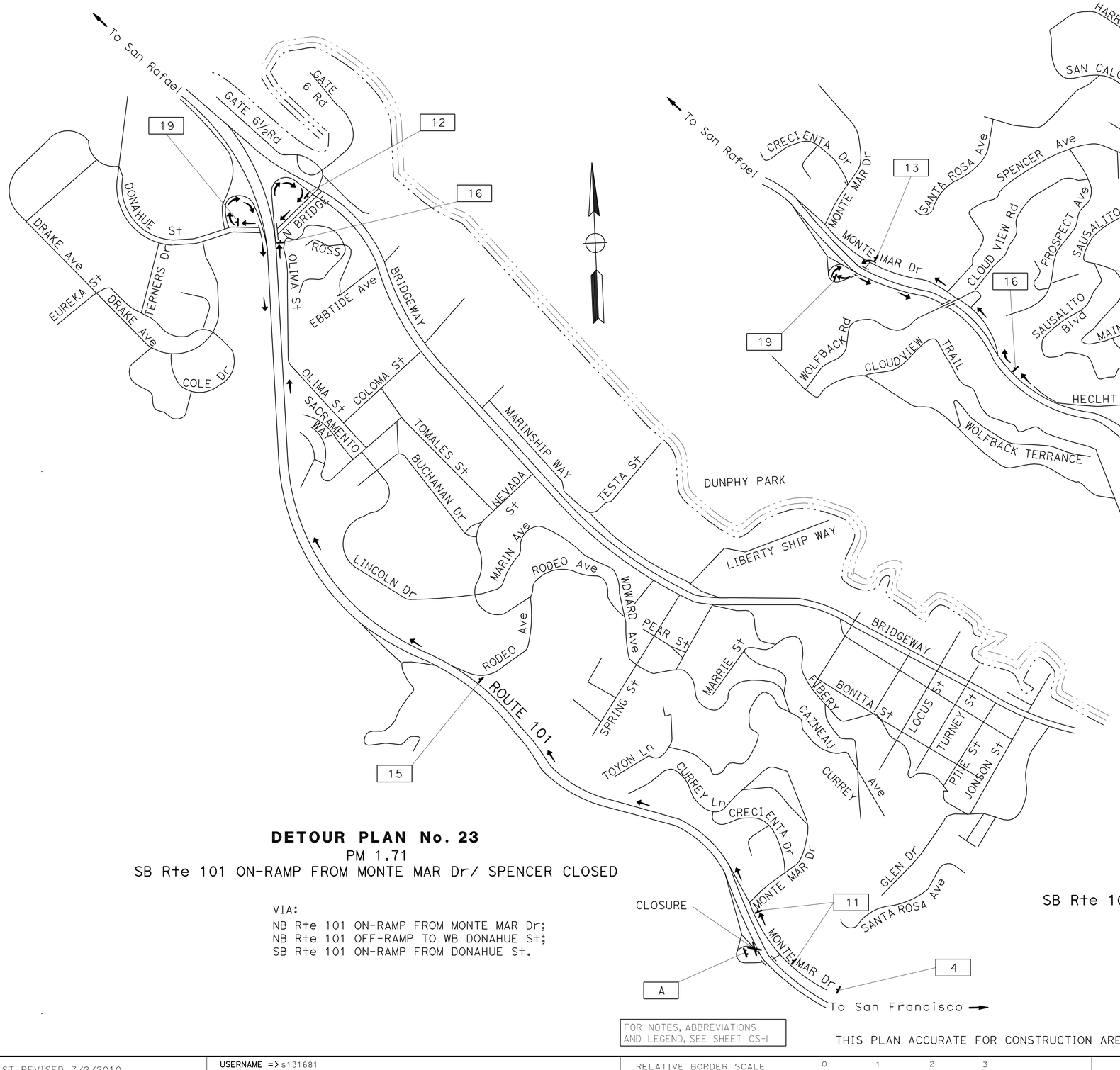

DETOUR PLAN No. 23
PM 1.71
SB Rte 101 ON-RAMP FROM MONTE MAR Dr/ SPENCER CLOSED

VIA:
NB Rte 101 ON-RAMP FROM MONTE MAR Dr;
NB Rte 101 OFF-RAMP TO WB DONAHUE St;
SB Rte 101 ON-RAMP FROM DONAHUE St.

DETOUR PLAN No. 24
PM 0.17
SB Rte 101 ON-RAMP FROM SAUSALITO LATERAL CLOSED

VIA:
NB Rte 101 ON-RAMP FROM SAUSALITO LATERAL;
NB Rte 101 OFF-RAMP TO MONTE MAR Dr;
SB Rte 101 ON-RAMP FROM MONTE MAR Dr.

FOR NOTES, ABBREVIATIONS AND LEGEND, SEE SHEET CS-1

THIS PLAN ACCURATE FOR CONSTRUCTION AREA SIGN WORK ONLY

CONSTRUCTION AREA SIGNS
NO SCALE

CS-13

STATE OF CALIFORNIA - DEPARTMENT OF TRANSPORTATION
Caltrans®
TRAFFIC

FUNCTIONAL SUPERVISOR: ROLAND AU-YUENG
CALCULATED-DESIGNED BY: HERMINIO S. RUIDERA
CHECKED BY: JERILYN L. STRUVEN
DETAILED BY:
REVISED BY: HS.R
DATE REVISED: 06/20/11

LAST REVISION: DATE PLOTTED => 30-SEP-2011
02-02-11 TIME PLOTTED => 13:18

BORDER LAST REVISED 7/2/2010

USERNAME => s131681
DGN FILE => 04000205901a013.dgn

RELATIVE BORDER SCALE IS IN INCHES 0 1 2 3

UNIT 0976

PROJECT NUMBER & PHASE 04000205901

Dist	COUNTY	ROUTE	POST MILES TOTAL PROJECT	SHEET No.	TOTAL SHEETS
04	Mrn	101	0.0/8.5	77	129

Jerilyn L. Struven 6/8/11
REGISTERED CIVIL ENGINEER DATE

6-20-11
PLANS APPROVAL DATE

REGISTERED PROFESSIONAL ENGINEER
Jerilyn L. Struven
No. 49964
Exp. 12-31-12
CIVIL
STATE OF CALIFORNIA

THE STATE OF CALIFORNIA OR ITS OFFICERS OR AGENTS SHALL NOT BE RESPONSIBLE FOR THE ACCURACY OR COMPLETENESS OF SCANNED COPIES OF THIS PLAN SHEET.

STATIONARY MOUNTED CONSTRUCTION AREA SIGNS

SIGN No.	MUTCD CODE	MESSAGE	PANEL SIZE	NUMBER OF POSTS AND SIZE	No. OF SIGNS
1	W20-1	ROAD WORK AHEAD	60'' x 60''	(TWO) 4'' x 6''	2
2	G20-2	END ROAD WORK	36'' x 18''	(ONE) 4'' x 6''	2
3	W20-1	ROAD WORK AHEAD	36'' x 36''	(ONE) 4'' x 6''	24
4	W20-2	DETOUR AHEAD	36'' x 36''	(ONE) 4'' x 6''	27
5	M4-8	DETOUR	24'' x 12''	(ONE) 4'' x 6''	24
	G26-2	101	28'' x 24''		
	M3-1	NORTH	24'' x 12''		
	M6-3	↑	21'' x 15''		
6	M4-8	DETOUR	24'' x 12''	(ONE) 4'' x 6''	6
	G26-2	101	28'' x 24''		
	M3-1	NORTH	24'' x 12''		
	M6-1	→	21'' x 15''		
7	M4-8	DETOUR	24'' x 12''	(ONE) 4'' x 6''	14
	G26-2	101	28'' x 24''		
	M3-1	NORTH	24'' x 12''		
	M6-1	←	21'' x 15''		
8	M4-8	DETOUR	30'' x 15''	(ONE) 4'' x 6''	1
	G26-2	101	35'' x 30''		
	M3-1	NORTH	30'' x 15''		
	M6-1	↑	21'' x 15''		
9	M4-8	DETOUR	30'' x 15''	(ONE) 4'' x 6''	8
	G26-2	101	35'' x 30''		
	M3-1	NORTH	30'' x 15''		
	M6-2	↗	21'' x 15''		
10	M4-8	DETOUR	24'' x 12''	(ONE) 4'' x 6''	1
	G26-2	101	28'' x 24''		
	M6-1	NORTH	24'' x 12''		
	M6-2	↗	21'' x 15''		
11	M4-8	DETOUR	24'' x 12''	(ONE) 4'' x 6''	20
	G26-2	101	28'' x 24''		
	M3-3	SOUTH	24'' x 12''		
	M6-3	↑	21'' x 15''		
12	M4-8	DETOUR	24'' x 12''	(ONE) 4'' x 6''	11
	G26-2	101	28'' x 24''		
	M3-3	SOUTH	24'' x 12''		
	M6-1	→	21'' x 15''		
13	M4-8	DETOUR	24'' x 12''	(ONE) 4'' x 6''	14
	G26-2	101	28'' x 24''		
	M3-3	SOUTH	24'' x 12''		
	M6-1	←	21'' x 15''		
14	M4-8	DETOUR	24'' x 12''	(ONE) 4'' x 6''	4
	G26-2	101	28'' x 24''		
	M3-3	SOUTH	24'' x 12''		
	M6-2	↗	21'' x 15''		
15	M4-8	DETOUR	30'' x 15''	(ONE) 4'' x 6''	1
	G26-2	101	35'' x 30''		
	M3-3	SOUTH	30'' x 15''		
	M6-3	↑	21'' x 15''		
16	M4-8	DETOUR	30'' x 15''	(ONE) 4'' x 6''	8
	G26-2	101	35'' x 30''		
	M3-3	SOUTH	30'' x 15''		
	M6-2	↗	21'' x 15''		
17	M4-8	DETOUR	30'' x 15''	(ONE) 4'' x 6''	1
	G26-2	101	35'' x 30''		
	M3-3	SOUTH	30'' x 15''		
	M6-2	↖	21'' x 15''		
18	M4-8a	END DETOUR	24'' x 18''	(ONE) 4'' x 4''	24
19		RAMP CLOSED DATE__ TIME__	48'' x 60''	(ONE) 6'' x 6''	24

CONSTRUCTION AREA SIGNS

NO SCALE

CS-14

CALCULATED-DESIGNED BY		REVISED BY	HS.R
CHECKED BY	JERILYN L. STRUVEN	DATE REVISED	06/20/11
FUNCTIONAL SUPERVISOR	ROLAND AU-YEUNG		

STATE OF CALIFORNIA - DEPARTMENT OF TRANSPORTATION
Caltrans®
TRAFFIC

LAST REVISION 03-28-11
DATE PLOTTED => 30-SEP-2011
TIME PLOTTED => 13:18

BORDER LAST REVISED 7/2/2010
USERNAME => s131681
DGN FILE => 04000205901a014.dgn
RELATIVE BORDER SCALE IS IN INCHES 0 1 2 3
UNIT 0976
PROJECT NUMBER & PHASE 04000205901

Dist	COUNTY	ROUTE	POST MILES TOTAL PROJECT	SHEET No.	TOTAL SHEETS
04	Mrn	101	0.0/8.5	78	129

REGISTERED CIVIL ENGINEER — DATE 6/9/11

PLANS APPROVAL DATE 6-20-11

REGISTERED PROFESSIONAL ENGINEER — Tam A. Ly — No. 69254 — Exp. 6-30-12 — CIVIL — STATE OF CALIFORNIA

THE STATE OF CALIFORNIA OR ITS OFFICERS OR AGENTS SHALL NOT BE RESPONSIBLE FOR THE ACCURACY OR COMPLETENESS OF SCANNED COPIES OF THIS PLAN SHEET.

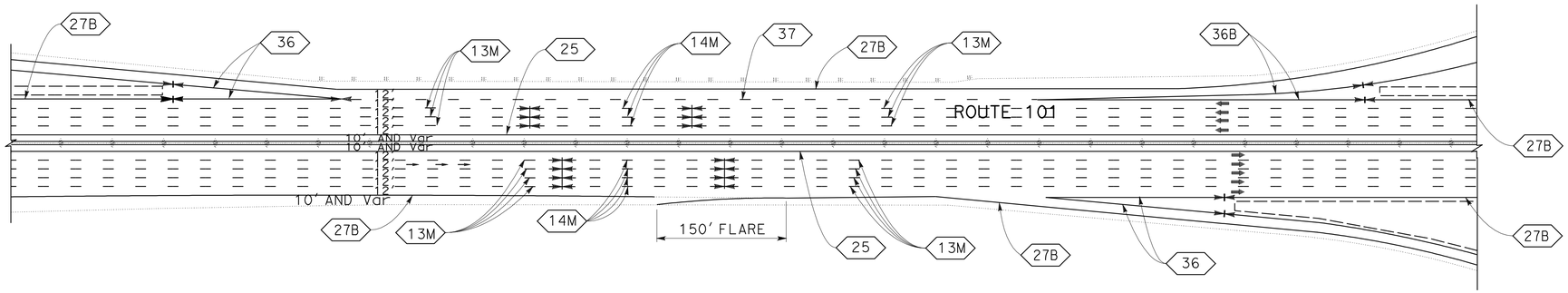

TYPICAL STRIPING (MAINLINE)

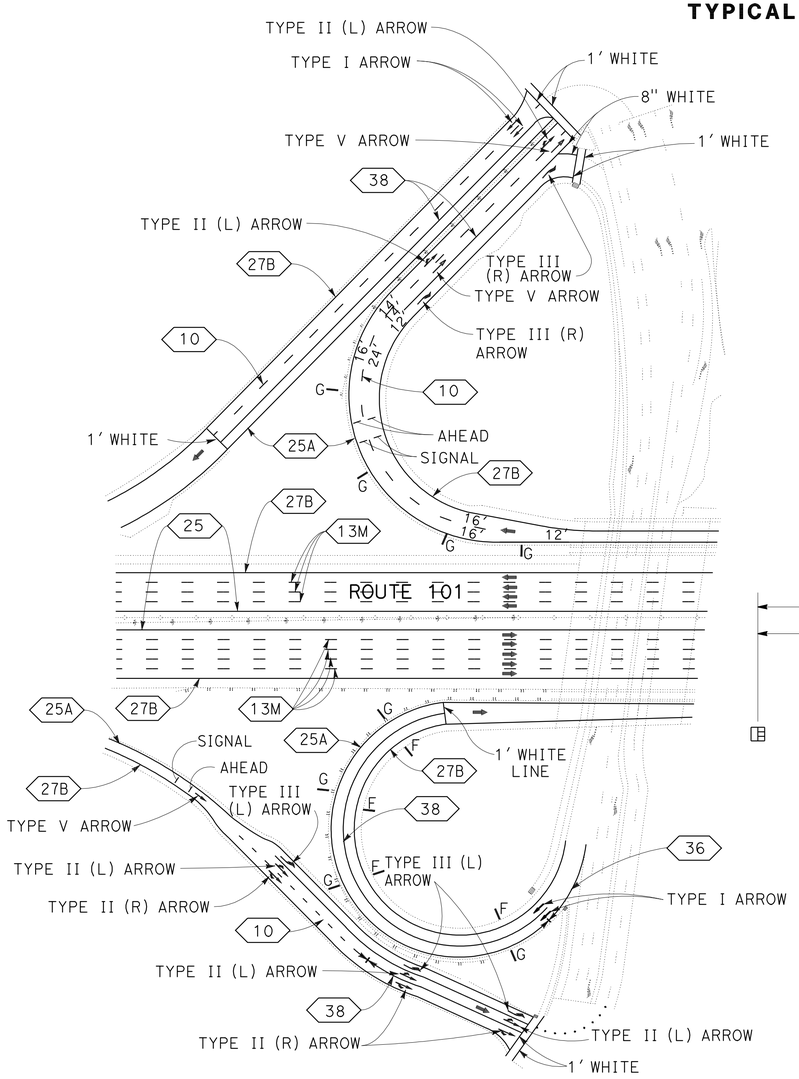

TYPICAL STRIPING (ON-RAMP AND OFF-RAMP)

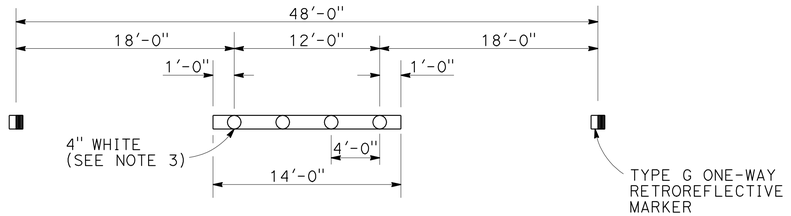

DETAIL 13M

NOTES:

1. DETAIL 13M IS MODIFIED PAVEMENT DELINEATION DETAIL 13.
2. FOR DETAILS NOT SHOWN, SEE STANDARD PLAN A20A.
3. INSTALL 4" WHITE AFTER INSTALLING PAVEMENT MARKERS.

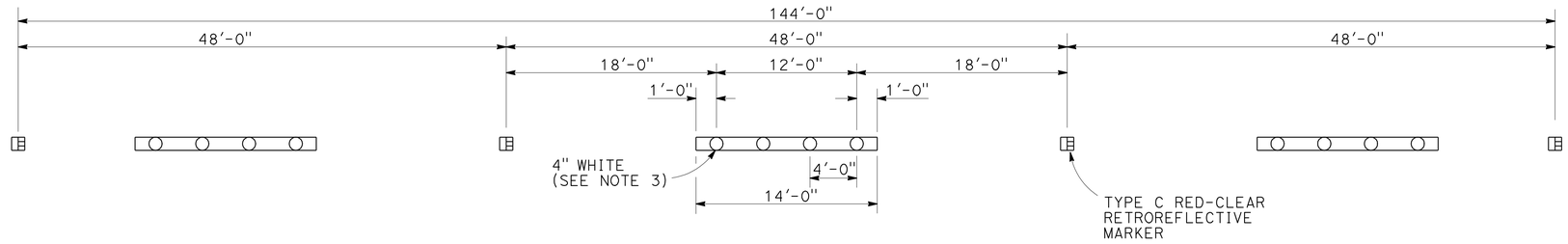

DETAIL 14M

NOTES:

1. DETAIL 14M IS MODIFIED PAVEMENT DELINEATION DETAIL 14.
2. FOR DETAILS NOT SHOWN, SEE STANDARD PLAN A20A.
3. INSTALL 4" WHITE AFTER INSTALLING PAVEMENT MARKERS.

LEGEND:

- No. — PAVEMENT DELINEATION DETAIL
- CHANGE OF PAVEMENT DELINEATION DETAILS
- DIRECTION OF TRAFFIC
- G — DELINEATOR (CLASS 1) TYPE G
- F — DELINEATOR (CLASS 1) TYPE F

NOTE:

ALL PAVEMENT DELINEATION SHALL BE PLACED ON THE SAME ALIGNMENT AND LOCATIONS AS EXISTING PAVEMENT DELINEATION

PAVEMENT DELINEATION PLAN

SCALE: 1'' = 50'

THIS PLAN ACCURATE FOR PAVEMENT DELINEATION WORK ONLY

PD-1

REVISED BY	DATE REVISED
T. L	06/20/11

CALCULATED-DESIGNED BY: TAM LY
CHECKED BY: GHULAM POPAL
FUNCTIONAL SUPERVISOR: GHULAM POPAL

STATE OF CALIFORNIA - DEPARTMENT OF TRANSPORTATION — DESIGN

Caltrans

LAST REVISION | DATE PLOTTED => 30-SEP-2011 | TIME PLOTTED => 13:18

BORDER LAST REVISED 7/2/2010 | USERNAME => s131681 | DGN FILE => 0400020590na001.dgn | RELATIVE BORDER SCALE IS IN INCHES 0 1 2 3 | UNIT 0976 | PROJECT NUMBER & PHASE 04000205901

Dist	COUNTY	ROUTE	POST MILES TOTAL PROJECT	SHEET No.	TOTAL SHEETS
04	Mrn	101	0.0/8.5	79	129

REGISTERED CIVIL ENGINEER — DATE 6/9/11

PLANS APPROVAL DATE 6-20-11

REGISTERED PROFESSIONAL ENGINEER — Tam A. Ly — No. 69254 — Exp. 6-30-12 — CIVIL — STATE OF CALIFORNIA

THE STATE OF CALIFORNIA OR ITS OFFICERS OR AGENTS SHALL NOT BE RESPONSIBLE FOR THE ACCURACY OR COMPLETENESS OF SCANNED COPIES OF THIS PLAN SHEET.

TRAFFIC STRIPES, PAVEMENT MARKINGS AND PAVEMENT MARKERS (MAINLINE)

LOCATION (POST MILE)	DIRECTION	DESCRIPTION	DETAIL No. OR PAVEMENT MARKING	THERMOPLASTIC TRAFFIC STRIPE					THERMOPLASTIC PAVEMENT MARKING							PAVEMENT MARKER				REMOVE THERMO-PLASTIC PAVEMENT MARKING	REMOVE PAVEMENT MARKER	REMOVE THERMOPLASTIC TRAFFIC STRIPE	
				4'' YELLOW	4'' WHITE	4'' WHITE (BROKEN 36-12)	8'' WHITE (BROKEN 12-3)	8'' WHITE	TYPE II	TYPE III	TYPE V	SIGNAL AHEAD	SIGNAL STOP	LIMIT LINE	WHITE	NON-REFLECTIVE	RETROREFLECTIVE						
																TYPE A	TYPE C	TYPE G	TYPE H			YELLOW (HAZARDOUS WASTE)	WHITE
				LF					SQFT							EA				SQFT	EA	LF	
0.00 TO 0.32	NB	GOLDEN GATE Br EB TO SAUSALITO Rd UC	13M			5069										446		112					
			25	1690															37		37	1690	
			27B		1690																546		
			36					1260										54					
			36B					420										18					
			37				640											6					
0.32 TO 0.89	NB	SAUSALITO Rd UC TO WALDO TUNNEL BEGIN	13M			9029										776		194					
			25	3010															65		65	3010	
			27B		3010																959		
0.89 TO 1.68	NB	WALDO TUNNEL BEGIN TO MONTE MAR Dr UC	13M			9662										8269		207					
			25	3221															69		69	4171	
			27B		3221																1025		
			36					1200										52					
1.68 TO 3.33	NB	MONTE MAR Dr UC TO WALDO UC	13M			26136										2202		551					
			25	8712															184		184	8712	
			27B		8712																2741		
			36					1725										73					
			36B					575										25					
3.33 TO 4.03	NB	WALDO UC TO RICHARDSON BAY Br BB	13M			14784										1264		316					
			25	3696															79		79	3696	
			27B		3696																1564		
			36					3375										142					
			36B					1125										48					
			37				730											7					
			DIAMOND SYMBOL												181								
4.13 TO 8.02	NB	RICHARDSON BAY Br EB TO NELLEN Ave UC	13M			72328										6070			1522		7600		
			25	20539															428		440	20540	
			27B		20539																		
			36					1270										57					
			36B					1740										73					
			37				13869											116					
			DIAMOND SYMBOL												1004								
8.02 TO 8.47	NB	NELLEN Ave UC TO CORTE MADERA Cr	13M			7278										620		170			800		
			25	2376															50		50	2376	
			27B		3146																		
			36					960										42					
			36B					250										10					
			37				770											7					
			DIAMOND SYMBOL												124								
8.47 TO 8.02	SB	CORTE MADERA Cr TO NELLEN Ave UC	13M			7828										620		215			840		
			25	2376															50		50	2376	
			27B		2776																		
			36					320										14					
			36B					160										7					
			DIAMOND SYMBOL												124								
SHEET TOTAL				45620	46790	152114	16009	14380							1433	20267		2516	2484		17049	46571	

PAVEMENT DELINEATION QUANTITIES

PDQ-1

CALCULATED-DESIGNED BY	CHECKED BY	REVISED BY	DATE REVISED
TAM LY	GHULAM POPAL	TAM LY	06/20/11

FUNCTIONAL SUPERVISOR: GHULAM POPAL

STATE OF CALIFORNIA - DEPARTMENT OF TRANSPORTATION — DESIGN

LAST REVISION | DATE PLOTTED => 30-SEP-2011 | TIME PLOTTED => 13:19 | 02-16-11

BORDER LAST REVISED 7/2/2010

USERNAME => s131681
DGN FILE => 0400020590nc001.dgn

RELATIVE BORDER SCALE IS IN INCHES 0 1 2 3

UNIT 0976

PROJECT NUMBER & PHASE 04000205901

Dist	COUNTY	ROUTE	POST MILES TOTAL PROJECT	SHEET No.	TOTAL SHEETS
04	Mrn	101	0.0/8.5	80	129

6/9/11
REGISTERED CIVIL ENGINEER DATE

6-20-11
PLANS APPROVAL DATE

REGISTERED PROFESSIONAL ENGINEER — Tam A. Ly — No. 69254 — Exp. 6-30-12 — CIVIL — STATE OF CALIFORNIA

THE STATE OF CALIFORNIA OR ITS OFFICERS OR AGENTS SHALL NOT BE RESPONSIBLE FOR THE ACCURACY OR COMPLETENESS OF SCANNED COPIES OF THIS PLAN SHEET.

TRAFFIC STRIPES, PAVEMENT MARKINGS AND PAVEMENT MARKERS (MAINLINE)

LOCATION (POST MILE)	DIRECTION	DESCRIPTION	DETAIL No. OR PAVEMENT MARKING	THERMOPLASTIC TRAFFIC STRIPE					THERMOPLASTIC PAVEMENT MARKING							PAVEMENT MARKER				REMOVE THERMO-PLASTIC PAVEMENT MARKING	REMOVE PAVEMENT MARKER	REMOVE THERMOPLASTIC TRAFFIC STRIPE	
				4'' YELLOW	4'' WHITE	4'' WHITE (BROKEN 36-12)	8'' WHITE (BROKEN 12-3)	8'' WHITE	TYPE II	TYPE III	TYPE V	SIGNAL AHEAD	SIGNAL STOP	LIMIT LINE	WHITE	NON-REFLECTIVE	RETROREFLECTIVE					YELLOW (HAZARDOUS WASTE)	WHITE
																TYPE A	TYPE C	TYPE G	TYPE H				
				LF					SQFT							EA				SQFT	EA	LF	
8.02 TO 4.13	SB	NELLEN Ave UC TO RICHARDSON BAY Br BB	13M			80258										6727		1685			8420		
			25	20539															420		428	20540	
			27B		20539																		
			36					1710										27					
			36B					160										7					
			37				9371										626	78					
			DIAMOND SYMBOL												1004								
4.03 TO 3.33	SB	RICHARDSON BAY Br EB TO WALDO UC	13M			14784										1264		316					
			25	3696															79		79	3696	
			27B		3696																1564		
			36					2250										95					
			36B					750										32					
			37				1908																
			DIAMOND SYMBOL												181								
3.33 TO 1.68	SB	WALDO UC TO MONTE MAR Dr UC	13M			26136										2202	129	951					
			25	8712															184		184	8712	
			27B		8712																2741		
			36					2700										114					
			36B					900										38					
1.68 TO 0.89	SB	MONTE MAR Dr UC TO WALDO TUNNEL	13M			9662										829		207					
			25	3221															69		69	4171	
			27B		3221																1025		
			36																				
			36B																				
0.89 TO 0.32	SB	WALDO TUNNEL TO SAUSALITO Dr UC	13M			9029										776		194					
			25	3010															65		65	3010	
			27B		3010																959		
			36																				
			36B																				
0.32 TO 0.00	SB	SAUSALITO Dr UC TO GOLDEN GATE Br EB	13M			5069										446		112					
			25	1690															37		37	1690	
			27B		1690																546		
			36					1275										55					
			36B					425										18					
SHEET TOTAL				40868	40868	144938	11279	10170							1185	12244	755	3546	854		16117	41819	

PAVEMENT DELINEATION QUANTITIES

PDQ-2

REVISED BY	DATE REVISED
TAM LY	06/20/11
GHULAM POPAL	

CALCULATED-DESIGNED BY: TAM LY
CHECKED BY: GHULAM POPAL
FUNCTIONAL SUPERVISOR: GHULAM POPAL
STATE OF CALIFORNIA - DEPARTMENT OF TRANSPORTATION
DESIGN

LAST REVISION DATE PLOTTED => 30-SEP-2011
02-17-11 TIME PLOTTED => 13:19

BORDER LAST REVISED 7/2/2010

USERNAME => s131681
DGN FILE => 0400020590nc002.dgn

RELATIVE BORDER SCALE IS IN INCHES 0 1 2 3

UNIT 0976

PROJECT NUMBER & PHASE 04000205901

Dist	COUNTY	ROUTE	POST MILES TOTAL PROJECT	SHEET No.	TOTAL SHEETS
04	Mrn	101	0.0/8.5	81	129

REGISTERED CIVIL ENGINEER — DATE: 6/9/11

PLANS APPROVAL DATE: 6-20-11

REGISTERED PROFESSIONAL ENGINEER — Tam A. Ly — No. 69254 — Exp. 6-30-12 — CIVIL — STATE OF CALIFORNIA

THE STATE OF CALIFORNIA OR ITS OFFICERS OR AGENTS SHALL NOT BE RESPONSIBLE FOR THE ACCURACY OR COMPLETENESS OF SCANNED COPIES OF THIS PLAN SHEET.

TRAFFIC STRIPES, PAVEMENT MARKINGS AND PAVEMENT MARKERS (RAMPS)

LOCATION (POST MILE)	DIRECTION	DESCRIPTION	DETAIL No. OR PAVEMENT MARKING	THERMOPLASTIC TRAFFIC STRIPE					THERMOPLASTIC PAVEMENT MARKING								PAVEMENT MARKER				REMOVE THERMO-PLASTIC PAVEMENT MARKING	REMOVE PAVEMENT MARKER	REMOVE THERMOPLASTIC TRAFFIC STRIPE	
				4'' YELLOW	4'' WHITE	4'' WHITE (BROKEN 36-12)	8'' WHITE (BROKEN 12-3)	8'' WHITE	TYPE I	TYPE II	TYPE III	TYPE V	TYPE VI	SIGNAL AHEAD	SIGNAL STOP	LIMIT LINE	NON-REFLECTIVE TYPE A	RETROREFLECTIVE TYPE C	RETROREFLECTIVE TYPE G	RETROREFLECTIVE TYPE H			YELLOW (HAZARDOUS WASTE)	WHITE
				LF					SQFT								EA				SQFT	EA	LF	
0.065	NB	OFF-RAMP TO VISTA POINT	25	282																141		141	282	
			27B		220																			220
			36					100																100
			TYPE V ARROW									99									99			
0.084	NB	ON-RAMP FROM VISTA POINT	25	280																140		140	280	
			27B		683																			683
			36B					100																100
			TYPE I ARROW						25												25			
0.264	NB	OFF-RAMP TO SAUSALITO LIGHT RAIL	25	590																295		295	590	
			27B		600																			600
			36					300																300
			38					100																100
			TYPE V ARROW									132									132			
0.312	NB	ON-RAMP FROM SAUSALITO LIGHT RAIL	25	366																183		183	366	
			27B		233																			233
			36B					20																20
			TYPE I ARROW						75												75			
			STOP												22						22			
1.440	NB	OFF-RAMP TO MONTE MAR/SPENCER	21	100																50		50	100	
			25	475																238		238	475	
			27B		537																			537
			36					150																150
			TYPE V ARROW									66									66			
			STOP												22						22			
1.830	NB	FROM MONTE MAR/SPENCER	21	50																		25	50	
			25	225																113		113	225	
			27B		243																			243
			36B					100																100
			LIMIT LINE													70					70			
			TYPE I ARROW						25												25			
2.350	NB	OFF-RAMP TO RODEO Ave	21	100																50		50	100	
			25	220																110		110	220	
			27B		187																			187
			36					100																
			TYPE V ARROW									99									99			
2.400	NB	ON-RAMP FROM RODEO Ave	25	222																111		111	222	
			27B		203																			203
			36B					50													50			
			TYPE I ARROW						50															
SHEET TOTAL				2910	2906			1020	175			396			44	70				1431	685	1456	2910	3776

PAVEMENT DELINEATION QUANTITIES

PDQ-3

LAST REVISION | DATE PLOTTED => 30-SEP-2011 | TIME PLOTTED => 13:19 | 02-28-11

STATE OF CALIFORNIA - DEPARTMENT OF TRANSPORTATION | DESIGN | Caltrans

FUNCTIONAL SUPERVISOR: GHULAM POPAL

CALCULATED-DESIGNED BY: TAM LY | CHECKED BY: GHULAM POPAL | REVISED BY: TAM LY | DATE REVISED: 06/20/11

BORDER LAST REVISED 7/2/2010 | USERNAME => s131681 | DGN FILE => 0400020590nc003.dgn | RELATIVE BORDER SCALE IS IN INCHES 0 1 2 3 | UNIT 0976 | PROJECT NUMBER & PHASE 04000205901

Dist	COUNTY	ROUTE	POST MILES TOTAL PROJECT	SHEET No.	TOTAL SHEETS
04	Mrn	101	0.0/8.5	82	129

REGISTERED CIVIL ENGINEER — DATE: 6/9/11

PLANS APPROVAL DATE: 6-20-11

Tam A. Ly, No. 69254, Exp. 6-30-12, CIVIL — REGISTERED PROFESSIONAL ENGINEER — STATE OF CALIFORNIA

THE STATE OF CALIFORNIA OR ITS OFFICERS OR AGENTS SHALL NOT BE RESPONSIBLE FOR THE ACCURACY OR COMPLETENESS OF SCANNED COPIES OF THIS PLAN SHEET.

TRAFFIC STRIPES, PAVEMENT MARKINGS AND PAVEMENT MARKERS (RAMPS)

LOCATION (POST MILE)	DIRECTION	DESCRIPTION	DETAIL No. OR PAVEMENT MARKING	THERMOPLASTIC TRAFFIC STRIPE					THERMOPLASTIC PAVEMENT MARKING								PAVEMENT MARKER				REMOVE THERMO-PLASTIC PAVEMENT MARKING	REMOVE PAVEMENT MARKER	REMOVE THERMOPLASTIC TRAFFIC STRIPE	
				4'' YELLOW	4'' WHITE	4'' WHITE (BROKEN 36-12)	8'' WHITE (BROKEN 12-3)	8'' WHITE	TYPE I	TYPE II	TYPE III	TYPE V	TYPE VI	SIGNAL AHEAD	STOP	LIMIT LINE	NON-REFLECTIVE	RETROREFLECTIVE					YELLOW (HAZARDOUS WASTE)	WHITE
																	TYPE A	TYPE C	TYPE G	TYPE H				
				LF					SQFT								EA				SQFT	EA	LF	
3.400	NB	OFF-RAMP TO MARIN CITY	10			80																		80
			25	738																369		369	738	
			27B		668																			668
			36					400																400
			38					150																150
			TYPE II (L) ARROW							90											90			
			TYPE II (R) ARROW							90											90			
			TYPE III (L) ARROW								84										84			
			TYPE III (R) ARROW								42										42			
			TYPE V ARROW									132									132			
			SIGNAL AHEAD											63							63			
3.570	NB	ON-RAMP FROM MARIN CITY	10			300																		300
			25	875																438		438	875	
			27B		871																			871
			36B					200																200
			LIMIT LINE													500					500			
			TYPE VI ARROW											126							126			
3.860	NB	OFF-RAMP TO NB ROUTE 1	10																					
			25	966					25											483	25	483	966	
			27B		965			507																1472
			36																					
			38																					
			TYPE III (R) ARROW								42										42			
			TYPE V ARROW									99									99			
3.970	NB	ON-RAMP FROM SB ROUTE 1	10			300																		300
			25	150																75		75	150	
			27B		462																			462
			36B					180																180
			38					400																400
			TYPE VI ARROW										84								84			
			TYPE III (L) ARROW								84										84			
			TYPE I ARROW						50												50			
4.660	NB	OFF-RAMP TO FRONTAGE Rd	10			150																		150
			25	720																360		360	720	
			27B		661		100	1565																2326
			36					100																100
			38					200																200
			LIMIT LINE													100					100			
			TYPE II (L) ARROW																					
			TYPE III (L) ARROW								42										42			
			TYPE III (R) ARROW								126										126			
			TYPE V ARROW									66									66			
4.750	NB	ON-RAMP FROM FRONTAGE Rd	25	378																189		189	378	
			27B		300								99								99			300
			36B					100																100
			LIMIT LINE													200					200			
			TYPE I ARROW																					
SHEET TOTAL				3827	3927	830	100	3802	75	180	420	297	183	189		800				1914	2144	1914	3827	8659

PAVEMENT DELINEATION QUANTITIES

PDQ-4

STATE OF CALIFORNIA - DEPARTMENT OF TRANSPORTATION — DESIGN

FUNCTIONAL SUPERVISOR: GHULAM POPAL

CALCULATED-DESIGNED BY: TAM LY

CHECKED BY: GHULAM POPAL

REVISED BY: TAM LY — DATE REVISED: 06/20/11

LAST REVISION | DATE PLOTTED => 30-SEP-2011 | TIME PLOTTED => 13:19 | 02-28-11

BORDER LAST REVISED 7/2/2010

USERNAME => s131681
DGN FILE => 0400020590nc004.dgn

RELATIVE BORDER SCALE IS IN INCHES 0 1 2 3

UNIT 0976

PROJECT NUMBER & PHASE 04000205901

Dist	COUNTY	ROUTE	POST MILES TOTAL PROJECT	SHEET No.	TOTAL SHEETS
04	Mrn	101	0.0/8.5	83	129

REGISTERED CIVIL ENGINEER — DATE 6/9/11

PLANS APPROVAL DATE 6-20-11

REGISTERED PROFESSIONAL ENGINEER — Tam A. Ly — No. 69254 — Exp 6-30-12 — CIVIL — STATE OF CALIFORNIA

THE STATE OF CALIFORNIA OR ITS OFFICERS OR AGENTS SHALL NOT BE RESPONSIBLE FOR THE ACCURACY OR COMPLETENESS OF SCANNED COPIES OF THIS PLAN SHEET.

TRAFFIC STRIPES, PAVEMENT MARKINGS AND PAVEMENT MARKERS (RAMPS)

LOCATION (POST MILE)	DIRECTION	DESCRIPTION	DETAIL No. OR PAVEMENT MARKING	THERMOPLASTIC TRAFFIC STRIPE					THERMOPLASTIC PAVEMENT MARKING								PAVEMENT MARKER				REMOVE THERMO-PLASTIC PAVEMENT MARKING	REMOVE PAVEMENT MARKER	REMOVE THERMOPLASTIC TRAFFIC STRIPE	
				4'' YELLOW	4'' WHITE	4'' WHITE (BROKEN 36-12)	8'' WHITE (BROKEN 12-3)	8'' WHITE	TYPE I	TYPE II	TYPE III	TYPE V	TYPE VI	SIGNAL AHEAD	STOP	LIMIT LINE	NON-REFLECTIVE	RETROREFLECTIVE					YELLOW (HAZARDOUS WASTE)	WHITE
																	TYPE A	TYPE C	TYPE G	TYPE H				
				LF					SQFT								EA				SQFT	EA	LF	
5.530	NB	OFF-RAMP TO 131/TIBURON Blvd	10			500																		500
			25	560																				80
			27B		707		840													280		280	560	
			36					500																1547
			38					100																500
			LIMIT LINE													250				250				200
			TYPE III (L) ARROW								126									126				
			TYPE III (R) ARROW								126									126				
			TYPE III (B) ARROW								146									146				
			SIGNAL AHEAD											63						63				
5.660	NB	ON-RAMP FROM EB BLITHDALE/131	25	715																358		358	715	
			27B		500																			500
			36B				200																	200
			TYPE I ARROW						75												75			
5.830	NB	ON-RAMP FROM WB BLITHDALE/131	25	850																425		425	850	
			27B		830																			830
			36B					100																100
			TYPE I ARROW						75												75			
7.230	NB	OFF-RAMP TO TAMALPAIS Dr	10			2000																		2000
			25	675																338		338	675	
			27B		695																			695
			36					180																180
			38					200																200
			LIMIT LINE													220					220			
			TYPE III (L) ARROW								210										210			
			TYPE III (R) ARROW								210										210			
			SIGNAL AHEAD											252							252			
7.330	NB	ON-RAMP FROM EB TAMALPAIS Dr	25	343																172		172	343	
			27B		390																			390
			36B					100																100
			TYPE I ARROW						50												50			
7.510	NB	ON-RAMP FROM WB TAMALPAIS Dr	25	715																358		358	715	
			27B		700																			700
			36B					100																100
			TYPE I ARROW						25												25			
8.200	NB	OFF-RAMP TO INDUSTRIAL Ave	25	645																323		323	645	
			27B		351																			351
			36					400																400
			LIMIT LINE													100					100			
			TYPE V ARROW									66									66			
			STOP												44						44			
8.450	NB	ON-RAMP FROM INDUSTRIAL Ave	25	132																66		66	132	
			27		92																			92
			36B					100																100
			LIMIT LINE													100					100			
			TYPE I ARROW						75												75			
SHEET TOTAL				4635	4265	2500	1040	1780	300		818	66		315	44	670				3031	1502	2320	4635	9765

PAVEMENT DELINEATION QUANTITIES

PDQ-5

LAST REVISION | DATE PLOTTED => 30-SEP-2011 | TIME PLOTTED => 13:20 | 02-28-11

STATE OF CALIFORNIA - DEPARTMENT OF TRANSPORTATION — DESIGN — Caltrans

FUNCTIONAL SUPERVISOR: GHULAM POPAL

CALCULATED-DESIGNED BY: TAM LY

CHECKED BY: GHULAM POPAL

REVISED BY: TAM LY — DATE REVISED: 06/20/11

BORDER LAST REVISED 7/2/2010

USERNAME => s131681
DGN FILE => 0400020590nc005.dgn

RELATIVE BORDER SCALE IS IN INCHES 0 1 2 3

UNIT 0976

PROJECT NUMBER & PHASE 04000205901

Dist	COUNTY	ROUTE	POST MILES TOTAL PROJECT	SHEET No.	TOTAL SHEETS
04	Mrn	101	0.0/8.5	84	129

6/9/11
REGISTERED CIVIL ENGINEER DATE

6-20-11
PLANS APPROVAL DATE

REGISTERED PROFESSIONAL ENGINEER
Tam A. Ly
No. 69254
Exp. 6-30-12
CIVIL
STATE OF CALIFORNIA

THE STATE OF CALIFORNIA OR ITS OFFICERS OR AGENTS SHALL NOT BE RESPONSIBLE FOR THE ACCURACY OR COMPLETENESS OF SCANNED COPIES OF THIS PLAN SHEET.

TRAFFIC STRIPES, PAVEMENT MARKINGS AND PAVEMENT MARKERS (RAMPS)

LOCATION (POST MILE)	DIRECTION	DESCRIPTION	DETAIL No. OR PAVEMENT MARKING	THERMOPLASTIC TRAFFIC STRIPE					THERMOPLASTIC PAVEMENT MARKING								PAVEMENT MARKER				REMOVE THERMO-PLASTIC PAVEMENT MARKING	REMOVE PAVEMENT MARKER	REMOVE THERMOPLASTIC TRAFFIC STRIPE	
				4'' YELLOW	4'' WHITE	4'' WHITE (BROKEN 36-12)	8'' WHITE (BROKEN 12-3)	8'' WHITE	→ TYPE I	⇢ TYPE II	↗ TYPE III	→ TYPE V	➔ TYPE VI	SIGNAL AHEAD	STOP	LIMIT LINE	NON-REFLECTIVE	RETROREFLECTIVE					YELLOW (HAZARDOUS WASTE)	WHITE
																	TYPE A	TYPE C	TYPE G	TYPE H				
				LF					SQFT								EA				SQFT	EA	LF	
8.500	NB	END	25	180																90		90	180	
			27B		360																			360
			36					500																500
8.500	SB	ON-RAMP FROM CORTE MADERA Cr	25	100																50		50	100	
			27B		150																			150
			36					100																100
8.250	SB	OFF-RAMP TO FIFER Ave	25	97																49		49	97	
			27B		63																			63
			36						100															100
			TYPE V ARROW									99									99			
8.170	SB	ON-RAMP FROM FIFER Ave	25	65																33		33	65	
			27B		60																			60
			36B					50																50
			LIMIT LINE													40					40			
			TYPE I ARROW						50												50			
7.690	SB	OFF-RAMP TO MADERA Blvd	25	276																138		138	276	
			27B		250																			250
			36					200																200
			TYPE V ARROW									66									66			
7.640	SB	ON-RAMP FROM MADERA Blvd	25	185																93		93	185	
			27B		121																			121
			36B					100																100
			TYPE I ARROW						50												50			
7.490	SB	OFF-RAMP TO TAMALPAIS Dr	10			900																		900
			25	710																355		355	710	
			27B		740		1070	1070																2880
			36					100																100
			38					100																100
			LIMIT LINE													130					130			
			TYPE III (L) ARROW								252										252			
			TYPE III (R) ARROW								219										219			
			SIGNAL AHEAD											189							189			
7.400	SB	ON-RAMP FROM WB TAMALPAIS Dr	25	276																138		138	276	
			27B		250																			250
			36B					100																100
			TYPE I ARROW						50												50			
7.240	SB	ON-RAMP FROM EB TAMALPAIS Dr	25	885																443		443	885	
			27B		868																			868
			36B					50																50
			TYPE I ARROW						50												50			
SHEET TOTAL				2774	2862	900	1070	2370	300		471	165		189		170				1389	1195	1389	2774	7302

PAVEMENT DELINEATION QUANTITIES

PDQ-6

STATE OF CALIFORNIA - DEPARTMENT OF TRANSPORTATION
DESIGN
FUNCTIONAL SUPERVISOR: GHULAM POPAL
CALCULATED-DESIGNED BY: TAM LY
CHECKED BY:
REVISED BY: TAM LY
DATE REVISED: 06/20/11

LAST REVISION DATE PLOTTED => 30-SEP-2011
TIME PLOTTED => 13:20

BORDER LAST REVISED 7/2/2010
USERNAME => s131681
DGN FILE => 0400020590nc006.dgn
RELATIVE BORDER SCALE IS IN INCHES 0 1 2 3
UNIT 0976
PROJECT NUMBER & PHASE 04000205901

Dist	COUNTY	ROUTE	POST MILES TOTAL PROJECT	SHEET No.	TOTAL SHEETS
04	Mrn	101	0.0/8.5	85	129

6/9/11
REGISTERED CIVIL ENGINEER DATE

6-20-11
PLANS APPROVAL DATE

REGISTERED PROFESSIONAL ENGINEER
Tam A. Ly
No. 69254
Exp. 6-30-12
CIVIL
STATE OF CALIFORNIA

THE STATE OF CALIFORNIA OR ITS OFFICERS OR AGENTS SHALL NOT BE RESPONSIBLE FOR THE ACCURACY OR COMPLETENESS OF SCANNED COPIES OF THIS PLAN SHEET.

TRAFFIC STRIPES, PAVEMENT MARKINGS AND PAVEMENT MARKERS (RAMPS)

LOCATION (POST MILE)	DIRECTION	DESCRIPTION	DETAIL No. OR PAVEMENT MARKING	THERMOPLASTIC TRAFFIC STRIPE					THERMOPLASTIC PAVEMENT MARKING								PAVEMENT MARKER				REMOVE THERMO-PLASTIC PAVEMENT MARKING	REMOVE PAVEMENT MARKER	REMOVE THERMOPLASTIC TRAFFIC STRIPE	
				4'' YELLOW	4'' WHITE	4'' WHITE (BROKEN 36-12)	8'' WHITE (BROKEN 12-3)	8'' WHITE	→ TYPE I	⇢ TYPE II	↗ TYPE III	→ TYPE V	↗ TYPE VI	SIGNAL AHEAD	STOP	LIMIT LINE	NON-REFLECTIVE	RETROREFLECTIVE					YELLOW (HAZARDOUS WASTE)	WHITE
																	TYPE A	TYPE C	TYPE G	TYPE H				
				LF					SQFT								EA				SQFT	EA	LF	
6.540	SB	ON-RAMP FROM CASA BUENA Dr	25	106																53		53	106	
			27B		117																			117
			36B					100																100
			TYPE VI ARROW										126								126			
5.840	SB	OFF-RAMP TO BLITHDALE Ave	10			400																		400
			25	670																335		335	670	
			27B		692		285	660																1637
			36					100																100
			38					100																100
			TYPE III (L) ARROW								336										336			
			TYPE III (R) ARROW																					
			TYPE V ARROW									66									66			
			SIGNAL AHEAD											63							63			
5.730	SB	ON-RAMP FROM WB BLITHDALE/131	25	520																260		260	520	
			27B		447																			447
			36B					100																100
			TYPE I ARROW						25												25			
5.560	SB	ON-RAMP FROM EB BLITHDALE/131	25	872																436		436	872	
			27B		862																			862
			36B					100																100
			TYPE I ARROW						25												25			
5.360	SB	OFF-RAMP TO FRONTAGE Rd	25	370																185		185	370	
			27B		368																			368
			36					100																100
			TYPE V ARROW									33									33			
4.840	SB	OFF-RAMP TO FRONTAGE Rd	25	630																315		315	630	
			27B		605																			605
			36					100																100
			LIMIT LINE													50					50			
			TYPE V ARROW									66									66			
			STOP												22						22			
4.750	SB	ON-RAMP FROM FRONTAGE Rd	25	270																135		135	270	
			27B		268																			268
			36B					100																100
			LIMIT LINE																					
			TYPE I ARROW						75												75			
4.180	SB	OFF-RAMP TO NB ROUTE 1	25	90																45		45	90	
			27B		80			617																80
			LIMIT LINE													200					200			617
			TYPE V ARROW									66									66			
			STOP												22						22			
3.990	SB	ON-RAMP FROM SB ROUTE 1	25	438																219		219	438	
			27B		445																			405
			36B					200																200
			TYPE I ARROW						50												50			
		SHEET TOTAL		3966	3884	400	285	2277	175		336	231	126	63	44	250				1983	1225	1983	3966	6806

PAVEMENT DELINEATION QUANTITIES

PDQ-7

STATE OF CALIFORNIA - DEPARTMENT OF TRANSPORTATION
DESIGN
FUNCTIONAL SUPERVISOR: GHULAM POPAL
CALCULATED-DESIGNED BY: TAM LY
CHECKED BY: GHULAM POPAL
REVISED BY: TAM LY
DATE REVISED: 06/20/11

LAST REVISION 02-28-11 | DATE PLOTTED => 30-SEP-2011 | TIME PLOTTED => 13:20

Dist	COUNTY	ROUTE	POST MILES TOTAL PROJECT	SHEET No.	TOTAL SHEETS
04	Mrn	101	0.0/8.5	86	129

6/9/11
REGISTERED CIVIL ENGINEER DATE

6-20-11
PLANS APPROVAL DATE

REGISTERED PROFESSIONAL ENGINEER
Tam A. Ly
No. 69254
Exp 6-30-12
CIVIL
STATE OF CALIFORNIA

THE STATE OF CALIFORNIA OR ITS OFFICERS OR AGENTS SHALL NOT BE RESPONSIBLE FOR THE ACCURACY OR COMPLETENESS OF SCANNED COPIES OF THIS PLAN SHEET.

TRAFFIC STRIPES, PAVEMENT MARKINGS AND PAVEMENT MARKERS (RAMPS)

LOCATION (POST MILE)	DIRECTION	DESCRIPTION	DETAIL No. OR PAVEMENT MARKING	THERMOPLASTIC TRAFFIC STRIPE					THERMOPLASTIC PAVEMENT MARKING								PAVEMENT MARKER				REMOVE THERMO-PLASTIC PAVEMENT MARKING	REMOVE PAVEMENT MARKER	REMOVE THERMOPLASTIC TRAFFIC STRIPE	
				4'' YELLOW	4'' WHITE	4'' WHITE (BROKEN 36-12)	8'' WHITE (BROKEN 12-3)	8'' WHITE	→ TYPE I	⇢ TYPE II	↗ TYPE III	→ TYPE V	⇢ TYPE VI	SIGNAL AHEAD	STOP	LIMIT LINE	NON-REFLECTIVE	RETROREFLECTIVE					YELLOW (HAZARDOUS WASTE)	WHITE
																	TYPE A	TYPE C	TYPE G	TYPE H				
				LF					SQFT								EA				SQFT	EA	LF	
3.530	SB	OFF-RAMP TO MARIN CITY	25	740																370		370	740	
			27B		740																			740
			36					500																500
			TYPE III (L) ARROW								210										210			
			TYPE III (R) ARROW								42										42			
			TYPE III (B) ARROW								146										146			
			TYPE V ARROW									66									66			
			SIGNAL AHEAD											63							63			
3.420	SB	ON-RAMP FROM MARIN CITY	25	713																357		357	713	
			27B		651																			681
			36B					200																200
2.560	SB	OFF-RAMP TO RODEO Ave	25	400																200		200	400	
			27B		395																			395
			36					200																200
			TYPE V ARROW									66									66			
2.490	SB	ON-RAMP FROM RODEO Ave	25	337																169		169	337	
			27B		280																			280
			36B					200																200
			TYPE I ARROW						50												50			
1.776	SB	OFF-RAMP TO MONTE MAR/SPENCER	25	700																50		50	700	
			27B		900																			900
			36					300																300
			TYPE V ARROW									66									66			
1.714	SB	ON-RAMP FROM MONTE MAR/SPENC	25	750																325		325	750	
			27B		700																			700
			36B					100																100
			LIMIT LINE													40					40			
0.253	SB	OFF-RAMP TO SAUSALITO LIGHT RAIL	25	300																150		150	300	
			27B		350																			350
			36					50																50
			LIMIT LINE													60					60			
			TYPE V ARROW									66									66			
			STOP												44						44			
0.170	SB	ON-RAMP FROM SAUSALITO LIGHT RAIL	25	200																100		100	200	
			27B		200																			200
			36B					50																50
SHEET TOTAL (PDQ-8)				4140	4216			1600				919								1721	919	1721	4140	5846
SHEET TOTAL (PDQ-1)				45620	46790	152114	16009	14380				1433					20267		2516	2484		17049	46571	
SHEET TOTAL (PDQ-2)				40868	40868	144938	11279	10170				1185					12244	755	3546	854		16117	41819	
SHEET TOTAL (PDQ-3)				2910	2906			1020				685								1431	685	1456	2910	3776
SHEET TOTAL (PDQ-4)				3827	3927	830	100	3802				2144								1914	2144	1914	3827	8659
SHEET TOTAL (PDQ-5)				4635	4265	2500	1040	1780				2213								3031	1502	2320	4635	9765
SHEET TOTAL (PDQ-6)				2774	2862	900	1070	2370				1295								1389	1195	1389	2774	7302
SHEET TOTAL (PDQ-7)				3966	3884	400	285	2277				1225								1983	1225	1983	3966	6806
GRAND TOTAL				218458		301682	29783	37399				11099					32511	755	6062	14807	7670	43949	110642	42154

PAVEMENT DELINEATION QUANTITIES

PDQ-8

TAM LY | 06/20/11
REVISED BY | DATE REVISED
TAM LY | GHULAM POPAL
CALCULATED-DESIGNED BY | CHECKED BY
FUNCTIONAL SUPERVISOR | GHULAM POPAL
STATE OF CALIFORNIA - DEPARTMENT OF TRANSPORTATION | DESIGN
Caltrans

LAST REVISION | DATE PLOTTED => 30-SEP-2011
02-28-11 | TIME PLOTTED => 13:21

BORDER LAST REVISED 7/2/2010
USERNAME => s131681
DGN FILE => 0400020590nc008.dgn
RELATIVE BORDER SCALE IS IN INCHES 0 1 2 3
UNIT 0976
PROJECT NUMBER & PHASE 04000205901

Dist	COUNTY	ROUTE	POST MILES TOTAL PROJECT	SHEET No.	TOTAL SHEETS
04	Mrn	101	0.0/8.5	87	129

6/9/11
REGISTERED CIVIL ENGINEER DATE

6-20-11
PLANS APPROVAL DATE

REGISTERED PROFESSIONAL ENGINEER
Tam A. Ly
No. 69254
Exp 6-30-12
CIVIL
STATE OF CALIFORNIA

THE STATE OF CALIFORNIA OR ITS OFFICERS OR AGENTS SHALL NOT BE RESPONSIBLE FOR THE ACCURACY OR COMPLETENESS OF SCANNED COPIES OF THIS PLAN SHEET.

ROADWAY SUMMARY QUANTITIES (RAMPS)

LOCATION PM	DESCRIPTION	TACK COAT	COLD PLANE ASPHALT CONCRETE PAVEMENT (0.25' Max)	REMOVE AC DIKE	PLACE HOT MIX ASPHALT DIKE (TYPE E)	HOT MIX ASPHALT (TYPE A)	SHOULDER BACKING	REMARKS
		TON	SQYD	LF		TON		
0.065	NB OFF-RAMP TO VISTA POINT	1.69	390.00			137.00		
0.084	NB ON-RAMP FROM VISTA POINT	2.49	835.28			202.56		
0.264	NB OFF-RAMP TO SAUSALITO LIGHT RAIL	4.25	316.94			345.33		
0.312	NB ON-RAMP FROM SAUSALITO LIGHT RAIL	2.98	535.92	279	279	249.23		
1.440	NB OFF-RAMP TO MONTE MAR/SPENC	4.78	819.64			388.38		
1.830	NB FROM MONTE MAR/SPENC	1.52	651.78			123.28		
2.350	NB OFF-RAMP TO RODEO Ave	1.48	311.52			120.09		
2.400	NB ON-RAMP FROM RODEO Ave	1.24	287.24			101.05	9.01	
3.400	NB OFF-RAMP TO MARIN CITY	6.51	534.66			528.96		
3.570	NB ON-RAMP FROM MARIN CITY	8.47	432.08			688.43		
3.860	NB OFF-RAMP TO NB Rte 1	7.76	413.84			630.25	9.01	
3.970	NB ON-RAMP FROM SB Rte 1	4.57	465.02			371.31		
4.660	NB OFF-RAMP TO FRONTAGE Rd	6.47	606.40			525.88	20.26	
4.750	NB ON-RAMP FROM FRONTAGE Rd	2.83	571.22	230	230	235.85	9.01	
5.530	NB OFF-RAMP TO 131/TIBURON Blvd	7.13	1151.04			579.05	4.50	
5.660	NB ON-RAMP FROM EB BLITHDALE/131	3.77	799.30	255	255	313.23		
5.830	NB ON-RAMP FROM WB BLITHDALE/131	5.25	301.36			426.79		
7.230	NB OFF-RAMP TO TAMALPAIS Dr	9.18	675.56			746.03		
7.330	NB ON-RAMP FROM EB TAMALPAIS Dr	2.34	424.08			189.94		
7.510	NB ON-RAMP FROM WB TAMALPAIS Dr	5.57	1038.76	594	594	468.54		
8.200	NB OFF-RAMP TO INDUSTRIAL Ave	4.40	415.34			357.19		
8.450	NB ON-RAMP FROM INDUSTRIAL Ave	1.19	481.64			96.59		
8.500	END NB OFF-RAMP	1.39	190.72			112.78		
8.250	SB OFF-RAMP TO FIFER Ave	0.81	564.14			65.96	9.46	
8.170	SB ON-RAMP FROM FIFER Ave	0.43	390.04			34.76		
7.690	SB OFF-RAMP TO MADERA Blvd	2.10	842.58			170.41	14.41	
7.640	SB ON-RAMP FROM MADERA Blvd	1.26	476.36			102.68		
7.490	SB OFF-RAMP TO TAMALPAIS Dr	9.48	634.90			770.75	20.26	
7.400	SB ON-RAMP FROM WB TAMALPAIS Dr	2.60	307.62			211.59		
7.240	SB ON-RAMP FROM EB TAMALPAIS Dr	7.28	367.94			591.84		
6.540	SB ON-RAMP FROM CASA BUENA Dr	0.70	405.34			56.91		
5.730	SB ON-RAMP FROM WB BLITHDALE/131	3.04	789.76			246.66		
5.560	SB ON-RAMP FROM EB BLITHDALE/131	6.16	337.26			500.89		
5.360	SB OFF-RAMP TO FRONTAGE Rd	2.20	302.48			178.46		
4.840	SB OFF-RAMP TO FRONTAGE Rd	4.75	387.74			385.73	18.01	
4.750	SB ON-RAMP FROM FRONTAGE Rd	1.98	682.94			160.59	22.51	
4.180	SB OFF-RAMP TO NB Rte 1	1.12	657.88			91.14		
3.990	SB ON-RAMP FROM SB Rte 1	4.06	474.04			329.99		
3.530	SB OFF-RAMP TO MARIN CITY	7.66	568.94			622.30		
3.420	SB ON-RAMP FROM MARIN CITY	5.08	375.48			412.53	47.73	
2.560	SB OFF-RAMP TO RODEO Ave	2.55	312.68			207.53		
2.490	SB ON-RAMP FROM RODEO Ave	2.40	335.38			194.79		
1.776	SB OFF-RAMP TO MONTE MAR/SPENC	1.75	222.24			142.06		
1.714	SB ON-RAMP FROM MONTE MAR/SPENC	0.71	249.78			57.51		
0.253	SB OFF-RAMP TO SAUSALITO LIGHT RAIL	1.29	536.36			105.06		
0.170	SB ON-RAMP FROM SAUSALITO LIGHT RAIL	1.31	349.44			106.66		
SUBTOTAL		167.98	23220.66	1358	1358	13684.54	184.17	

SUMMARY OF QUANTITIES

Q-1

REVISED BY	DATE REVISED
T.L	06/10/11

CALCULATED-DESIGNED BY: TAM LY
CHECKED BY: GHULAM POPAL
FUNCTIONAL SUPERVISOR: GHULAM POPAL

STATE OF CALIFORNIA - DEPARTMENT OF TRANSPORTATION
DESIGN

LAST REVISION 05-12-11
DATE PLOTTED => 30-SEP-2011
TIME PLOTTED => 13:21

Dist	COUNTY	ROUTE	POST MILES TOTAL PROJECT	SHEET No.	TOTAL SHEETS
04	Mrn	101	0.0/8.5	88	129

6/9/11
REGISTERED CIVIL ENGINEER DATE

6-20-11
PLANS APPROVAL DATE

REGISTERED PROFESSIONAL ENGINEER
Tam A. Ly
No. 69254
Exp. 6-30-12
CIVIL
STATE OF CALIFORNIA

THE STATE OF CALIFORNIA OR ITS OFFICERS OR AGENTS SHALL NOT BE RESPONSIBLE FOR THE ACCURACY OR COMPLETENESS OF SCANNED COPIES OF THIS PLAN SHEET.

ROADWAY SUMMARY QUANTITIES (MAINLINE)

LOCATION PM	DIRECTION	DESCRIPTION	TACK COAT	COLD PLANE ASPHALT CONCRETE PAVEMENT		GRIND EXISTING CONCRETE PAVEMENT	REMOVE AC DIKE	PLACE HOT MIX ASPHALT DIKE (TYPE E)	HOT MIX ASPHALT (TYPE A)	SHOULDER BACKING	HOT MIX ASPHALT (OPEN GRADED)	REMARKS
				(0.35' Max)	(0.25' Max)							
			TON	SQYD				LF	TON			
0.00 TO 0.32	NB	GOLDEN GATE Br EB TO SAUSALITO Rd UC	45.42		14510.38				1845.79			
0.32 TO 0.89	NB	SAUSALITO Rd UC TO WALDO TUNNEL	73.70		21652.13				3095.23	37.15		
1.07 TO 1.68	NB	WALDO TUNNEL TO MONTE MAR Dr UC	53.45		20108.20	8971.00			2843.19			
1.68 TO 3.33	NB	MONTE MAR Dr UC TO WALDO UC	244.01		62524.05				9915.10			
3.33 TO 4.03	NB	WALDO UC TO RICHARDSON BAY Br BB	111.67	30834.51					4537.76	30.40	1815.11	
4.13 TO 8.02	NB	RICHARDSON BAY Br EB TO NELLEN Ave UC	584.06	144430.49					29476.33		9493.17	
8.02 TO 8.47	NB	NELLEN Ave UC TO CORTE MADERA Cr	76.34	22007.90					3101.89		1240.76	
8.47 TO 8.02	SB	CORTE MADERA Cr TO NELLEN Ave UC	79.75	22927.49					3425.28	27.02	1370.11	
8.02 TO 4.13	SB	NELLEN Ave UC TO RICHARDSON BAY Br BB	583.91	143596.42					29470.04	33.77	9490.65	
4.03 TO 3.33	SB	RICHARDSON BAY Br EB TO WALDO UC	109.45	29526.89					4447.45		1778.98	
3.33 TO 1.68	SB	WALDO UC TO MONTE MAR Dr UC	231.86		58828.47				9421.28	40.53		
1.68 TO 1.07	SB	MONTE MAR Dr UC TO WALDO TUNNEL END	79.27		21730.41				3221.25			
0.89 TO 0.32	SB	WALDO TUNNEL TO SAUSALITO Rd UC	78.21		25245.72				3859.56			
0.32 TO 0.00	SB	SAUSALITO Rd UC TO GOLDEN Br EB	43.14		12964.21				1753.01			
		SUBTOTAL (MAINLINE)	2394.25	630887.27		8971.00			110413.16	168.87	25188.78	
		SUBTOTAL (RAMPS)	167.98	23220.66			1358	1358	13684.54	184.17		
		GRAND TOTAL	2562.23	654107.93		8971.00	1358	1358	124097.70	353.04	25188.78	

REPLACE BUS PAD

LOCATION PM	DESCRIPTION	DOWELL BAR (DRILL AND BOND)	REPLACE CONCRETE BUS PAD (RAPID STRENGTH CONCRETE)
		EA	CY
8.26	NB ROUTE 101 BUS PAD AT LUCKY DRIVE	132	132
4.84	SB ROUTE 101 BUS PAD AT FRONTAGE ROAD	176	99
	TOTAL	308	231

PYLON MOUNTING HOLES

LOCATION PM	DESCRIPTION	PYLON MOUNTING HOLES
		EA
0.32 TO 0.00	ON SB 200' BEFORE SAUSALITO ROAD UC TO GOLDEN GATE BRIDGE BB	200
	TOTAL	200

RECONSTRUCT CURB RAMP

LOCATION PM	DESCRIPTION	REMOVE CONCRETE	MINOR CONCRETE (CURB RAMP)
		CY	
5.51	NB TIBURON Blvd OFF RAMP (LEFT-SIDE)	0.9	0.9
5.51	NB TIBURON Blvd OFF-RAMP (RIGH SIDE)	0.9	0.9
	TOTAL	1.8	1.8

CURB RAMP DETECTABLE WARNING SURFACE

LOCATION PM	DESCRIPTION	CURB RAMP DETECTABLE WARNING SURFACE
		SQFT
5.83	NB TIBURON Blvd ON-RAMP (BOTH SIDES)	300
7.38	NB TAMALPAIS Dr LOOP ON RAMP (BOTH SIDES)	360
8.13	SB FIPER Ave ON-RAMP (RIGHT SIDE)	150
	TOTAL	810

POSTMILE PAINTING

LOCATION PM	DESCRIPTION	PREPARE AND PAINT CONCRETE
		SQFT
0.00 TO 8.50	NB GOLDEN GATE Br EB TO CORTE MADERA Cr	109.2
8.50 TO 0.00	SB CORTE MADERA Cr TO GOLDEN GATE Br EB	109.2
	TOTAL	218.4

SUMMARY OF QUANTITIES

Q-2

REVISED BY	DATE REVISED
T.L	06/20/11

CALCULATED-DESIGNED BY: TAM LY
CHECKED BY: GHULAM POPAL
FUNCTIONAL SUPERVISOR: GHULAM POPAL
STATE OF CALIFORNIA - DEPARTMENT OF TRANSPORTATION
DESIGN

LAST REVISION 06-20-11
DATE PLOTTED => 30-SEP-2011
TIME PLOTTED => 13:21

Dist	COUNTY	ROUTE	POST MILES TOTAL PROJECT	SHEET No.	TOTAL SHEETS
04	Mrn	101	0.0/8.5	89	129

6/9/11
REGISTERED CIVIL ENGINEER DATE

6-20-11
PLANS APPROVAL DATE

REGISTERED PROFESSIONAL ENGINEER
Tam A. Ly
No. 69254
Exp. 6-30-12
CIVIL
STATE OF CALIFORNIA

THE STATE OF CALIFORNIA OR ITS OFFICERS OR AGENTS SHALL NOT BE RESPONSIBLE FOR THE ACCURACY OR COMPLETENESS OF SCANNED COPIES OF THIS PLAN SHEET.

REPLACE ASPHALT CONCRETE SURFACING (RAMPS)

LOCATION PM	DESCRIPTION	LENGTH	AVERAGE WIDTH	DIGOUT
		LF		CY
0.065	NB OFF-RAMP TO VISTA POINT	20	10	3.70
0.084	NB ON-RAMP FROM VISTA POINT	150	10	27.78
0.264	NB OFF-RAMP TO SAUSALITO LIGHT RAIL	250	10	46.30
1.440	NB OFF-RAMP TO MONTE MAR/SPENCER Ave	300	12	66.67
1.830	NB ON-RAMP FROM MONTE MAR/SPENCER Ave	50	10	9.26
3.570	NB ON-RAMP FROM MARIN CITY	150	10	27.78
3.970	NB ON-RAMP FROM SB ROUTE 1	100	20	37.04
7.230	NB OFF-RAMP TO TAMALPAIS Dr	400	10	74.07
8.200	NB OFF-RAMPTO INDUSTRIAL Ave	50	10	9.26
8.290	GREENBRAE POC	100	10	18.52
8.450	NB ON-RAMP FROM INDUSTRIAL Ave	150	12	33.33
8.250	SB OFF-RAMP TO FIFER Ave	30	20	11.11
7.690	SB OFF-RAMP TO MADERA Blvd	50	10	9.26
7.490	SB OFF-RAMP TO TAMALPAIS Dr	260	12	57.78
7.240	SB ON-RAMP FROM EB TAMALPAIS Dr	700	12	155.56
6.540	SB ON-RAMP FROM CASA BUENA Dr	50	10	9.26
5.560	SB ON-RAMP FROM EB BLITHDALE/131	200	12	44.44
5.360	SB OFF-RAMP TO FRONTAGE Rd	100	20	37.04
4.840	SB OFF-RAMP TO FRONTAGE Rd	200	12	44.44
4.180	SB OFF-RAMP TO NB ROUTE 1	250	20	92.60
3.990	SB ON-RAMP FROM SB ROUTE 1	300	10	55.56
3.530	SB OFF-RAMP TO MARIN CITY	1000	12	222.22
3.420	SB ON-RAMP FROM MARIN CITY	300	10	55.56
1.714	SB ON-RAMP FROM MONTE MAR/SPENC	200	20	74.07
SUBTOTAL		5360	12.32	1222.61

CONCRETE BARRIER

LOCATION PM	DESCRIPTION	REMOVE CONCRETE BARRIER (TYPE 50)	CONCRETE BARRIER (TYPE 60)
		LF	
5.694 TO 7.904	MEDIAN CONCRETE BARRIER (TYPE 50) FROM ROUTE 131 TO END OF TYPE 50 CONCRETE BARRIER	11670	11670
TOTAL		11670	11670

CRACK TREATMENT

LOCATION PM	DESCRIPTION	CRACK TREATMENT
		LNMI
0.00 TO 8.50	NB FROM GOLDEN GATE BRIDGE END TO CORTE MADERA CREEK	34
8.50 TO 0.00	SB FROM CORTE MADERA CREEK TO GOLDEN GATE BRIDGE BEGIN	20
TOTAL		54

REPLACE ASPHALT CONCRETE SURFACING (MAINLINE)

LOCATION PM	DIRECTION	DESCRIPTION	DIGOUT				AUXILIARY LANE	SHOULDER		DIGOUT
			LANE No. 1	LANE No. 2	LANE No. 3	LANE No. 4		OUTSIDE	INSIDE	
			LF					LF		CY
0.084 TO 0.885	NB	POINT VISTA TO WALDO TUNNEL				4250		4250		1888.89
1.296 TO 1.438	NB	END WALDO TUNNEL TO SPENCER Ave	50	50	50	750				244.45
2.402 TO 2.591	NB	RODEO Ave				1000				222.22
3.398 TO 3.500	NB	AFTER RODEO Ave TO WALDO UC	530	530	530	530				471.11
3.667 TO 3.724	NB	WALDO UC TO ROUTE 1	400	400	400	700	700			1022.24
3.965 TO 3.981	NB	FRONTAGE Rd						200		44.44
3.981 TO 7.234	NB	FRONTAGE Rd TO TAMALPAIS Dr			100					22.22
7.234 TO 7.291	NB	TAMALPAIS Dr				300				66.67
7.350	NB	TAMALPAIS Dr			100					22.22
7.800 TO 7.500	SB	WORNUM Ave TO TAMALPAIS Dr			1600	1600				711.11
7.300 TO 7.200	SB	TAMALPAIS Dr				500	500			222.22
6.700 TO 6.500	SB	CASA BUENA Dr				1600	1600			471.11
5.900 TO 5.800	SB	ROUTE 131				530				117.78
5.500 TO 4.800	SB	ROUTE 131 ON-RAMP			3700	3700				1644.44
3.724 TO 3.667	SB	ROUTE 1 TO WALDO UC	400	400	400	400	400			888.90
SUBTOTAL (MAINLINE)			1380	1380	6880	15860	3200	4450		8060.02
SUBTOTAL (RAMPS)										1222.61
GRAND TOTAL										9282.63

SUMMARY OF QUANTITIES

Q-3

TAM LY	06/20/11	CALCULATED-DESIGNED BY	
REVISED BY	DATE REVISED		
TAM LY	GHULAM POPAL	CHECKED BY	
FUNCTIONAL SUPERVISOR	GHULAM POPAL		

STATE OF CALIFORNIA - DEPARTMENT OF TRANSPORTATION
DESIGN

LAST REVISION 04-12-11
DATE PLOTTED => 30-SEP-2011
TIME PLOTTED => 13:22

Dist	COUNTY	ROUTE	POST MILES TOTAL PROJECT	SHEET No.	TOTAL SHEETS
04	Mrn	101	0.0/8.5	90	129

6/9/11
REGISTERED CIVIL ENGINEER DATE

6-20-11
PLANS APPROVAL DATE

REGISTERED PROFESSIONAL ENGINEER
Tam A. Ly
No. 69254
Exp 6-30-12
CIVIL
STATE OF CALIFORNIA

THE STATE OF CALIFORNIA OR ITS OFFICERS OR AGENTS SHALL NOT BE RESPONSIBLE FOR THE ACCURACY OR COMPLETENESS OF SCANNED COPIES OF THIS PLAN SHEET.

METAL BEAM GUARD RAILING

LOCATION PM	DIRECTION	DESCRIPTION	LAYOUT TYPE (N)	REMOVE METAL BEAM GUARD RAILING	ADJUST METAL BEAM GUARD RAILING	INSTALL					
						METAL BEAM GUARD RAILING	ALTERNATIVE FLARED TERMINAL SYSTEM	ALTERNATIVE IN-LINE TERMINAL SYSTEM	END ANCHOR ASSEMBLY (TYPE SFT)	BURIED POST END ANCHOR (N)	OBJECT MARKER (TYPE L-1)	GUARD RAILING DELINEATOR
				LF		EA						
0.250	SB	AT GG BRIDGE	12B	212.5		175.0	1				1	4
0.251	SB	UNDER CMS SIGN	16B	37.5		50.0		1	1			2
0.255	SB	SOUTH OF OFF-RAMP TO ALEXANDER Ave			75.0							
0.255	SB	UNDER OH SAUSALITO SIGN			62.5							
1.100	SB	UNDER OH SAUSALITO EXIT SIGN			62.5							
1.540	SB	NORTH END OF WALDO TUNNEL (R†)			150.0							
1.540	SB	NORTH END OF WALDO TUNNEL (L†)	11B	100.0		50.0		1	1			2
1.780	SB	UNDER CMS SIGN	16C	100.0		100.0				1		2
1.950	SB	UNDER WOLFBACK RIDGE Rd OC	16A	162.5		112.5		1	1			3
2.020	SB	0.05 MILE FROM WOLFBACK RIDGE Rd OC	11B	62.5		25.0	1		1		1	1
2.126	SB	ON-RAMP FROM MONTE MAR Dr	12A	50.0				1				1
2.290	SB	UNDER OH SPENCER Ave, MONTE MAR Dr, SIGN	16C	62.5		62.5				1		1
2.620	SB	0.3 MILE SOUTH OF RODEO Ave	11B	562.5		525.0	1		1		1	11
2.800	SB	UNDER OH SPENCER Ave, MONTE MAR Dr, ½MILE SIGN	16A	25.0		37.5		1	1			1
2.940	SB	ON-RAMP FROM RODEO Ave	11A	162.5		112.5		1	1			3
2.940	SB	ON RODEO Ave	11A	137.5		87.5		1	1			3
3.100	SB	0.1 MILE NORTH OF RODEO Ave			62.5							
3.200	SB	0.2 MILE NORTH OF RODEO Ave			62.5							
3.380	SB	200' SOUTH OF CMS SIGN			75.0							
3.400	SB	UNDER CMS SIGN			62.5							
3.700	SB	AT DONAHUE St Br TRAILING END	12DD	750.0		750.0			1			15
SHEET TOTAL				2425.0	612.5	2087.5	3	7	9	2	3	49

(N) = NOT A SEPARATE PAY ITEM, FOR INFORMATION ONLY.

SUMMARY OF QUANTITIES

Q-4

CALCULATED-DESIGNED BY: TAM LY
CHECKED BY: GHULAM POPAL
REVISED BY: TAM LY
DATE REVISED: 06/20/11
FUNCTIONAL SUPERVISOR: GHULAM POPAL
STATE OF CALIFORNIA - DEPARTMENT OF TRANSPORTATION
DESIGN

LAST REVISION DATE PLOTTED => 30-SEP-2011
TIME PLOTTED => 13:22
02-24-11

BORDER LAST REVISED 7/2/2010
USERNAME => s131681
DGN FILE => 0400020590pa004.dgn
RELATIVE BORDER SCALE IS IN INCHES 0 1 2 3
UNIT 0976
PROJECT NUMBER & PHASE 04000205901

Dist	COUNTY	ROUTE	POST MILES TOTAL PROJECT	SHEET No.	TOTAL SHEETS
04	Mrn	101	0.0/8.5	91	129

6/9/11
REGISTERED CIVIL ENGINEER DATE

6-20-11
PLANS APPROVAL DATE

REGISTERED PROFESSIONAL ENGINEER
Tam A. Ly
No. 69254
Exp 6-30-12
CIVIL
STATE OF CALIFORNIA

THE STATE OF CALIFORNIA OR ITS OFFICERS OR AGENTS SHALL NOT BE RESPONSIBLE FOR THE ACCURACY OR COMPLETENESS OF SCANNED COPIES OF THIS PLAN SHEET.

METAL BEAM GUARD RAILING

LOCATION PM	DIRECTION	DESCRIPTION	LAYOUT TYPE (N)	REMOVE METAL BEAM GUARD RAILING	ADJUST METAL BEAM GUARD RAILING	INSTALL						GUARD RAILING DELINEATOR	RETURN CAP
						METAL BEAM GUARD RAILING	ALTERNATIVE FLARED TERMINAL SYSTEM	ALTERNATIVE IN-LINE TERMINAL SYSTEM	END ANCHOR ASSEMBLY (TYPE SFT)	BURIED POST END ANCHOR (N)	OBJECT MARKER (TYPE L-1)		
				LF		EA							
3.700	SB	DONAHUE St Br APPROACH END	12B	37.5		12.5	1				1	1	
4.090	SB	AT OH SIGN MARIN CITY, SAUSALITO			62.5								
4.900	SB	CONNECTED TO BRIDGE & SIGN MUIR BEACH, Mt TAMALPAIS NEXT EXIT			87.5								
5.200	SB	UNDER PEDESTRIAN CROSSING	12B	50.0		12.5		1				1	
5.200	SB	SEMINARY Dr ON-RAMP	11A	75.0		25.0		1	1			1	
5.200	SB	SEMINARY Dr OFF-RAMP	11A	87.5		37.5		1	1			1	
5.300	SB	UNDER OH SIGN SEMINARY DRIVE EXIT			62.5								
6.100	SB	LOOP ON-RAMP FROM ROUTE 131	12B	100.0		62.5	1					1	
6.550	SB	0.4 MILE NORTH OF ROUTE 131	11A	1900.0		1850.0		1	1			39	
6.550	SB	AT OH SIGN TIBURON Blvd (131), E BLITHEDULLE Ave EXIT	11C	62.5		62.5			1	1		1	
6.700	SB	0.2 MILE SOUTH OF MEADOW VALLEY Rd ON-RAMP	11C	350.0		350.0			1	1		7	
7.800	SB	UNDER TAMALPAIS Dr OC	11B	125.0		87.5	1		1			2	
7.800	SB	LOOP ON-RAMP FROM TAMALPAIS Dr	12DD	50.0		50.0			1			1	
7.900	SB	TAMALPAIS Dr OFF-RAMP AT OH SIGN PARADISE Dr, TAMALPAIS Dr EXIT	16A	50.0		37.5		1	1			1	
8.100	SB	MADERA Blvd OFF-RAMP	16A	50.0		37.5		1	1			1	
8.200	SB	0.1 MILE NORTH OF MADERA Blvd OFF-RAMP	11A	75.0		25.0		1	1			1	
8.400	SB	UNDER OH SIGN MADERA Blvd 1/4 MILE			150.0								
8.500	SB	FIFER Ave ON-RAMP		50.0		50.0			2				2
8.500	SB	FIFER Ave OFF-RAMP		50.0		50.0		1	2				2
8.600	SB	UNDER PEDESTRIAN CROSSING	16A	75.0		50.0		1	1			1	
0.070	NB	ON-RAMP @ GG BRIDGE VISTA POINT OVERLOOK			625.0								
0.300	NB	ON-RAMP FROM ALEXANDER Ave			137.5								
0.510	NB	0.2 MILE NORTH OF ALEXANDER Ave ON-RAMP			1700.0								
0.860	NB	SOUTH END OF WALDO TUNNEL			87.5 (Rt)								
0.860	NB	SOUTH END OF WALDO TUNNEL	12B	100.0		62.5	1					2	
1.250	NB	0.2 MILE FROM WALDO TUNNEL			825.0								
1.500	NB	100' FROM MONTE MAR Dr OFF-RAMP			1150.0								
1.650	NB	AT MONTE MAR BRIDGE NORTH END			700.0								
1.900	NB	0.3 MILE NORTH OF MONTE MAR Dr ON-RAMP	11A	387.5		337.5		1	1			7	
2.050	NB	0.4 MILE NORTH OF MONTE MAR Dr ON-RAMP			1000.0								
2.500	NB	300' FROM RODEO Ave ON-RAMP			1412.5								
2.800	NB	0.3 MILE NORTH OF RODEO Ave ON-RAMP			700.0								
2.950	NB	0.5 MILE NORTH OF RODEO Ave ON-RAMP			812.5								
3.230	NB	UNDER OH SIGN MILL VALLEY, STINSON BEACH	12C	37.5		50.0				1		1	
3.350	NB	OFF-RAMP TO NORTH BRIDGE Blvd (Br TRAILING END)		50.0		50.0			1			1	
3.500	NB	ON-RAMP FROM NORTH BRIDGE Blvd	11A	62.5		25.0		1	1			1	
3.500	NB	ON-RAMP FROM NORTH BRIDGE Blvd	11A	62.5		25.0		1	1			1	
3.500	NB	ON-RAMP FROM NORTH BRIDGE Blvd	11A	62.5		25.0		1	1			1	
3.640	NB	UNDER OH SIGN MILL VALLEY, STINSON BEACH	16A	75.0		37.5		1	1				
4.000	NB	ON-RAMP FROM SHORELINE Hwy			100.0								
4.700	NB	OFF-RAMP TO REDWOOD Hwy FRONTAGE Rd		75.0		75.0			2			1	2
4.700	NB	ON-RAMP FROM REDWOOD Hwy FRONTAGE Rd		50.0		50.0			2			1	2
4.750	NB	UNDER PEDESTRIAN OC	12B	37.5				1				1	
SHEET TOTAL				4187.5	9612.5	3537.5	4	15	25	3	1	76	8

(N) = NOT A SEPARATE PAY ITEM, FOR INFORMATION ONLY.

SUMMARY OF QUANTITIES

Q-5

REVISED BY	TAM LY		
DATE REVISED	06/20/11		
CALCULATED-DESIGNED BY	TAM LY		
CHECKED BY	GHULAM POPAL		
FUNCTIONAL SUPERVISOR	GHULAM POPAL		
STATE OF CALIFORNIA - DEPARTMENT OF TRANSPORTATION	DESIGN	Caltrans	

LAST REVISION 02-24-11
DATE PLOTTED => 30-SEP-2011
TIME PLOTTED => 13:22

Dist	COUNTY	ROUTE	POST MILES TOTAL PROJECT	SHEET No.	TOTAL SHEETS
04	Mrn	101	0.0/8.5	92	129

REGISTERED CIVIL ENGINEER 6/9/11 DATE

PLANS APPROVAL DATE 6-20-11

REGISTERED PROFESSIONAL ENGINEER Tam A. Ly No. 69254 Exp. 6-30-12 CIVIL STATE OF CALIFORNIA

THE STATE OF CALIFORNIA OR ITS OFFICERS OR AGENTS SHALL NOT BE RESPONSIBLE FOR THE ACCURACY OR COMPLETENESS OF SCANNED COPIES OF THIS PLAN SHEET.

METAL BEAM GUARD RAILING

LOCATION PM	DIRECTION	DESCRIPTION	LAYOUT TYPE (N)	REMOVE METAL BEAM GUARD RAILING	ADJUST METAL BEAM GUARD RAILING	INSTALL: METAL BEAM GUARD RAILING	INSTALL: ALTERNATIVE FLARED TERMINAL SYSTEM	INSTALL: ALTERNATIVE IN-LINE TERMINAL SYSTEM	INSTALL: END ANCHOR ASSEMBLY (TYPE SFT)	INSTALL: BURIED POST END ANCHOR (N)	INSTALL: OBJECT MARKER (TYPE L-1)	GUARD RAILING DELINEATOR	RETURN CAP
				LF			EA						
5.400	NB	0.1 MILE FROM TIBURON Blvd EXIT	11A	75.0		25.0		1	1			2	
5.500	NB	UNDER OH SIGN TIBURON Blvd EXIT, E. BLITHEDALE Ave	16A	75.0		37.5		1	1			2	
5.700	NB	LOOP ON-RAMP FROM ROUTE 131	12B	112.5		75.0		1				2	
6.270	NB	UNDER OH SIGN PARADISE Dr, TAMALPAIS Dr, LUCKY Dr	11A	2900.0		2850.0		1	1			57	
7.000	NB	0.1 MILE SOUTH OF PARADISE Dr OFF- RAMP	11A	75.0		25.0		1	1			2	
7.100	NB	UNDER OH SIGN PARADISE Dr, TAMALPAIS Dr EXIT	16A	75.0		37.5		1	1			2	
7.120	NB	OFF-RAMP TO TAMALPAIS Dr/PARADISE Dr			150 (Lt)								
7.120	NB	OFF-RAMP TO TAMALPAIS Dr/PARADISE Dr			75 (Rt)								
7.120	NB	OFF-RAMP TO TAMALPAIS Dr/PARADISE Dr			37.5								
7.150	NB	UNDER TAMALPAIS Dr OC	16A	125.0		75.0		1	1			2	
7.750	NB	UNDER CMS SIGN	16A	100.0		50.0		1	1			2	
7.850	NB	400' SOUTH OF OH SIGN RICHMOND Br	11A	87.5		37.5		1	1				
7.950	NB	UNDER OH SIGN RICHMOND Br			100.0								
8.000	NB	OFF-RAMP TO REDWOOD Hwy FRONTAGE Rd		62.5		62.5			2			1	2
8.000	NB	ON-RAMP FROM REDWOOD Hwy FRONTAGE Rd		37.5		37.5			2				2
8.000	NB	UNDER PEDESTRIAN OC											
8.020	NB	50' NORTH OF POC			900.0								
8.020	NB	MEDIAN ISLAND AT OFF-RAMP TO RICHMOND Br	12A	300.0		200.0		2				4	
		SHEET TOTAL (Q-6)		4025.0	1262.5	3512.5		11	12			76	4
		SHEET TOTAL (Q-4)		2425.0	612.5	2087.5	3	7	9	2	3	49	
		SHEET TOTAL (Q-5)		4187.5	9612.5	3537.5	4	15	25	3	1	76	8
		GRAND TOTAL		10637.5	11487.5	9137.5	7	33	46	5	4	201	12

(N) = NOT A SEPARATE PAY ITEM, FOR INFORMATION ONLY.

SUMMARY OF QUANTITIES

Q-6

STATE OF CALIFORNIA - DEPARTMENT OF TRANSPORTATION

Caltrans DESIGN

FUNCTIONAL SUPERVISOR: GHULAM POPAL

CALCULATED-DESIGNED BY: TAM LY

CHECKED BY: GHULAM POPAL

REVISED BY: TAM LY

DATE REVISED: 06/20/11

DATE PLOTTED => 30-SEP-2011

TIME PLOTTED => 13:23

LAST REVISION 02-24-11

Dist	COUNTY	ROUTE	POST MILES TOTAL PROJECT	SHEET No.	TOTAL SHEETS
04	Mrn	101	0.0/8.5	93	129

m nau 6/13/11
REGISTERED ELECTRICAL ENGINEER DATE

6-20-11
PLANS APPROVAL DATE

REGISTERED PROFESSIONAL ENGINEER
Mahmood Noii
No. 13717
Exp 6-30-13
ELECTRICAL
STATE OF CALIFORNIA

THE STATE OF CALIFORNIA OR ITS OFFICERS OR AGENTS SHALL NOT BE RESPONSIBLE FOR THE ACCURACY OR COMPLETENESS OF SCANNED COPIES OF THIS PLAN SHEET.

ELECTRICAL INDEX

E-1	ELECTRICAL INDEX, NOTES, LEGEND, ABBREVIATION AND DETAILS.
E-2 AND E-3	LOOP DETECTOR REPLACEMENT
E-4	WVDS VEHICLE SENSOR NODE REPLACEMENTELECTRICAL
E-5 TO E-8	ELECTRICAL DETAILS

LEGEND

○ EXISTING VSN
● NEW VSN

ABBREVIATIONS

WVDS	WIRELESS VEHICLE DETECTION SYSTEMS
AP	ACCESS POINT
VSN	VEHICLE SENSOR NODE

GENERAL NOTES

1. NO ABOVE GROUND ELECTRICAL WORK SHALL BE PERFORMED ON ANY SYSTEM WITHIN THE PROJECT SITE UNTIL ALL CONTRACTOR-FURNISHED ELECTRICAL MATERIALS FOR THAT INDIVIDUAL SYSTEM HAVE BEEN TESTED AND DELIVERED TO CONTRACTOR.

2. THE CONTRACTOR SHALL VERIFY THE LOCATION OF THE LOOP DETECTORS TO BE REPLACED PRIOR TO REPAVING.

3. ALL LOOP DETECTORS AT EACH LOCATION SHALL BE REPLACED AND TESTED WITHIN THE TIME ALLOTTED FOR TRAFFIC SIGNAL SYSTEM SHUTDOWN AT THAT LOCATION.

4. THE CONTRACTOR SHALL PROVIDE TWO REPORTS PER LOCATION ON THE STATUS OF EACH DETECTOR LOOP REPLACEMENT SHOWING CONTINUITY AND INSULATION RESISTANCE READINGS. DETECTOR LOOP REPLACEMENT SHOWING CONTINUITY AND INSULATION RESISTANCE READINGS. THE REPORTS SHALL BE SUBMITTED TO THE ENGINEER, ONE BEFORE STARTING WORK AND THE OTHER AFTER WORK HAS BEEN COMPLETED AT EACH LOCATION.

5. THE FIRST ORDER OF WORK SHALL BE FOR THE CONTRACTOR TO VERIFY THE LOCATION OF THE EXISTING VEHICLE SENSOR NODES TO BE REPLACED.

6. RC THE EXISTING VEHICLE SENSOR NODES INDICATED IN THE CHART ON E-3.THEY SHALL BE REMOVED PRIOR TO GRINDING OF THE EXISTING PAVEMENT AS PER THE MANUFACTURER'S (SENSYS NETWORKS INC.) DIRECTIONS. CARE SHALL BE TAKEN NOT TO PUNCTURE OR DAMAGE THE VSN CASING. INSTALL NEW VEHICLE SENSOR NODES PER DETAIL B ON THIS SHEET AND ON E-8.

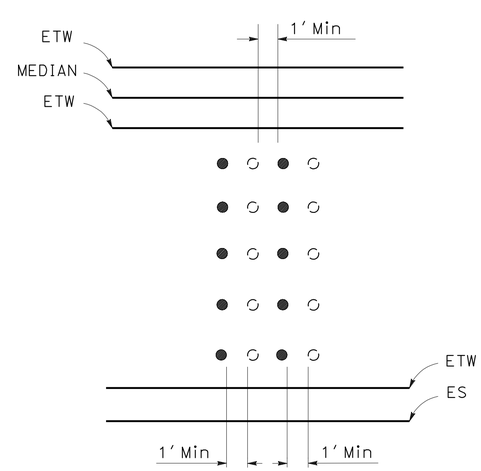

DETAIL B
VSN PLACEMENT

APPROVED FOR ELECTRICAL WORK ONLY

ELECTRICAL INDEX, NOTES AND ABBREVIATIONS

NO SCALE

E-1

REVISED BY: HG | DATE REVISED: 06/20/11
CALCULATED-DESIGNED BY: HAWA GARDIZI | CHECKED BY: MAHMOOD NOII
FUNCTIONAL SUPERVISOR: LAI HONG CHIU
STATE OF CALIFORNIA - DEPARTMENT OF TRANSPORTATION
Caltrans
ELECTRICAL

LAST REVISION DATE PLOTTED => 30-SEP-2011
TIME PLOTTED => 13:23

BORDER LAST REVISED 7/2/2010 | USERNAME => s131681 | DGN FILE => 0400020590tt001.dgn | RELATIVE BORDER SCALE IS IN INCHES 0 1 2 3 | UNIT 0976 | PROJECT NUMBER & PHASE 04000205901

Dist	COUNTY	ROUTE	POST MILES TOTAL PROJECT	SHEET No.	TOTAL SHEETS
04	Mrn	101	0.0/8.5	94	129

REGISTERED ELECTRICAL ENGINEER — DATE 6/13/11

PLANS APPROVAL DATE 6-20-11

REGISTERED PROFESSIONAL ENGINEER — Mahmood Noii — No. 13717 — Exp 6-30-13 — ELECTRICAL — STATE OF CALIFORNIA

THE STATE OF CALIFORNIA OR ITS OFFICERS OR AGENTS SHALL NOT BE RESPONSIBLE FOR THE ACCURACY OR COMPLETENESS OF SCANNED COPIES OF THIS PLAN SHEET.

	ROUTE 101 NB OFF-RAMP TO BRIDGEWAY Blvd								ROUTE 101 SB OFF-RAMP TO BRIDGEWAY Blvd								ROUTE 101 NB OFF-RAMP TO FRONTRAGE Rd								ROUTE 101 NB OFF-RAMP TO TIBURON Blvd (ROUTE 131)								ROUTE 101 NB OFF-RAMP TO TIBURON Blvd (ROUTE 131)							
COUNTY - ROUTE - PM	Mar 101 3.4 (LOCATION 1)								Mar 101 3.4 (LOCATION 2)								Mar 101 4.7 (LOCATION 2)								Mar 101 5.6								Mar 101 5.7							
	QUEUE DETECTOR		ADVANCE DETECTOR		INTERSECTION DETECTOR				QUEUE DETECTOR		ADVANCE DETECTOR		INTERSECTION DETECTOR				QUEUE DETECTOR		ADVANCE DETECTOR		INTERSECTION DETECTOR				ADVANCE DETECTOR		INTERSECTION DETECTOR						ADVANCE DETECTOR		INTERSECTION DETECTOR					
(FROM LEFT WITH RESPECT TO DIRECTION OF LANE NUMBER TRAFFIC. SEE E-12 FOR LANE DESCRIPTION)	Q1	Q2	1T	2T	1L	2T	3T	4R	Q1	Q2	1T	2T	1L	2L	3R	–	Q1	Q1	1T	–	1T	2L	–	–	1L	2L	3R	4R	1L	2L	3R	4R	–	–	1L	2LR	3R	–	–
DISTANCE FROM LIMIT LINE AND CROSS WALK (FEET)	585	585	185	185	–	–	–	–	685	685	185	185	–	–	–	–	650	650	400	–	–	–	–	–	164	164	164	164	–	–	–	–	–	–	–	–	–	–	–
DETECTORS A. FRONT DETECTOR B. QUEUE DETECTOR C. ADVANCE DETECTOR D. INTERMEDIATE DETECTOR	B	B	C	C	A	A	A	A	B	B	C	C	A	A	A	–	B	B	C	–	A	A	–	–	C	C	C	C	A	A	A	A	–	–			–	–
PULL BOX LOCATION: A. RIGHT SHOULDER B. RIGHT SIDEWALK C. MEDIAN D. LEFT SHOULDER E. LEFT SIDEWALK	A		A		C	A		A	A		A		C	A		–	A		A	–	A		–	–	A				D		A		–		D		–	–
HANDHOLE LOCATION: A. RIGHT SHOULDER OR RIGHT ETW B. LEFT SHOULDER OR LEFT ETW C. MEDIAN D. PAINTED MEDIAN	A		A		C	A		A	A		A		C	A		–	A		A	–	A		–	–	A				B		A		–		B		–	–
QUANTITY TYPE AND DETECTOR — TYPE A LOOP DETECTOR	1	1	1	1	3	3	3	3	1	1	1	1	3	3	3	–	1	1	1	–	3	3	–	–	1	1	1	1	3	3	3	3	–	–	3	3	3	–	–
TYPE C LOOP DETECTOR																–				–			–	–									–	–				–	–
TYPE D LOOP DETECTOR					1	1	1	1					1	1	1	–				–	1	1	–	–					1	1	1	1	–	–	1	1	1	–	–
DETECTOR CONFIGURATION (SEE DETAIL A ON E-12)	m		b		d	e		n	m		b		d	f		–	m		a	–	e		–	–	c				e		e		–		i		–	–
DETECTOR HANDHOLE REPLACEMENT (Y=YES N=NO)	Y		Y		Y	Y		Y	Y		Y		Y	Y		–	Y			–	Y		–	–	Y				Y		Y		–		Y		–	–
LOOP DETECTOR SUBTOTAL	1	1	1	1	4	4	4	4	1	1	1	1	4	4	4	–	1	1	1	–	4	4	–	–	1	1	1	1	4	4	4	4	–	–	4	4	4	–	–
COMMENTS																																							

TOTAL
15
79

	ROUTE 101 NB OFF-RAMP TO TAMAPAIS Dr												ROUTE 101 SB OFF-RAMP TO TAMAPAIS Dr											
COUNTY - ROUTE - PM	Mar 101 7.3												Mar 101 7.3											
	QUEUE DETECTOR				ADVANCE DETECTOR				INTERSECTION				QUEUE DETECTOR				ADVANCE DETECTOR				INTERSECTION DETECTOR			
LANE NUMBER (FROM LEFT WITH RESPECT TO DIRECTION OF TRAFFIC. SEE E-12 FOR LANE DESCRIPTION)	1L	2L	3R	4R	1L	2L	3R	4R	1L	2L	3R	4R	1L	2L R	3R	–	1L	2L R	3R	–	1L	2L R	3R	–
DISTANCE FROM LIMIT LINE AND CROSS WALK (FEET)	300	300	300	300	160	160	160	160	–	–	–	–	400	400	400	–	160	160	160	–	–	–	–	–
DETECTORS A. FRONT DETECTOR B. QUEUE DETECTOR C. ADVANCE DETECTOR D. INTERMEDIATE DETECTOR	B	B	B	B	C	C	C	C	A	A	A	A	B	B	B	–	C	C	C	–	A	A	A	–
PULL BOX LOCATION: A. RIGHT SHOULDER B. RIGHT SIDEWALK C. MEDIAN D. LEFT SHOULDER E. LEFT SIDEWALK	D				D		A		D		A		D		A	–	D		A	–	D		A	–
HANDHOLE LOCATION: A. RIGHT SHOULDER OR RIGHT ETW B. LEFT SHOULDER OR LEFT ETW C. MEDIAN D. PAINTED MEDIAN	B				–		A		B		A		B		A	–	B		A	–	B		A	–
QUANTITY TYPE AND DETECTOR — TYPE A LOOP DETECTOR	1	1	1	1	1	1	1	1	3	3	3	3	1	1	1	–	1	1	1	–	3	3	3	–
TYPE C LOOP DETECTOR																–				–				–
TYPE D LOOP DETECTOR									1	1	1	1				–				–	1	1	1	–
DETECTOR CONFIGURATION (SEE DETAIL A ON E-12)	o				b		b		g		h		q		p	–	b		a	–	g		j	–
DETECTOR HANDHOLE REPLACEMENT (Y=YES N=NO)	Y				–		Y		Y		Y		Y		Y	–	Y		Y	–	Y		Y	–
LOOP DETECTOR SUBTOTAL	1	1	1	1	1	1	1	1	4	4	4	4	1	1	1	–	1	1	1	–	4	4	4	–
COMMENTS																								

TOTAL
10
42

APPROVED FOR ELECTRICAL WORK ONLY

FOR NOTES, ABBREVIATIONS AND LEGEND, SEE SHEET E-1

LOOP DETECTOR REPLACEMENT

E-2

STATE OF CALIFORNIA - DEPARTMENT OF TRANSPORTATION — ELECTRICAL

FUNCTIONAL SUPERVISOR: LAI HONG CHIU

CALCULATED-DESIGNED BY: HAWA GARDIZI

CHECKED BY: MAHMOOD NOII

REVISED BY: HG — DATE REVISED: 06/20/11

LAST REVISION — DATE PLOTTED => 30-SEP-2011 — TIME PLOTTED => 13:23 — 06-18-11

BORDER LAST REVISED 7/2/2010

USERNAME => s131681
DGN FILE => 0400020590tt002.dgn

RELATIVE BORDER SCALE IS IN INCHES 0 1 2 3

UNIT 0976

PROJECT NUMBER & PHASE 04000205901

Dist	COUNTY	ROUTE	POST MILES TOTAL PROJECT	SHEET No.	TOTAL SHEETS
04	Mrn	101	0.0/8.5	95	129

REGISTERED ELECTRICAL ENGINEER — DATE: 6/13/11

Mahmood Noii
No. 13717
Exp 6-30-13
ELECTRICAL
REGISTERED PROFESSIONAL ENGINEER
STATE OF CALIFORNIA

PLANS APPROVAL DATE: 6-20-11

THE STATE OF CALIFORNIA OR ITS OFFICERS OR AGENTS SHALL NOT BE RESPONSIBLE FOR THE ACCURACY OR COMPLETENESS OF SCANNED COPIES OF THIS PLAN SHEET.

NOTE:

FOR ACCURATE RIGHT OF WAY DATA, CONTACT
RIGHT OF WAY ENGINEERING AT THE DISTRICT OFFICE.

TYPE III-AF SERVICE EQUIPMENT ENCLOSURE No. 06211

SYSTEM No. 27-101-06211 (PG&E)
TYPE H SERVICE (120/ 240 V)

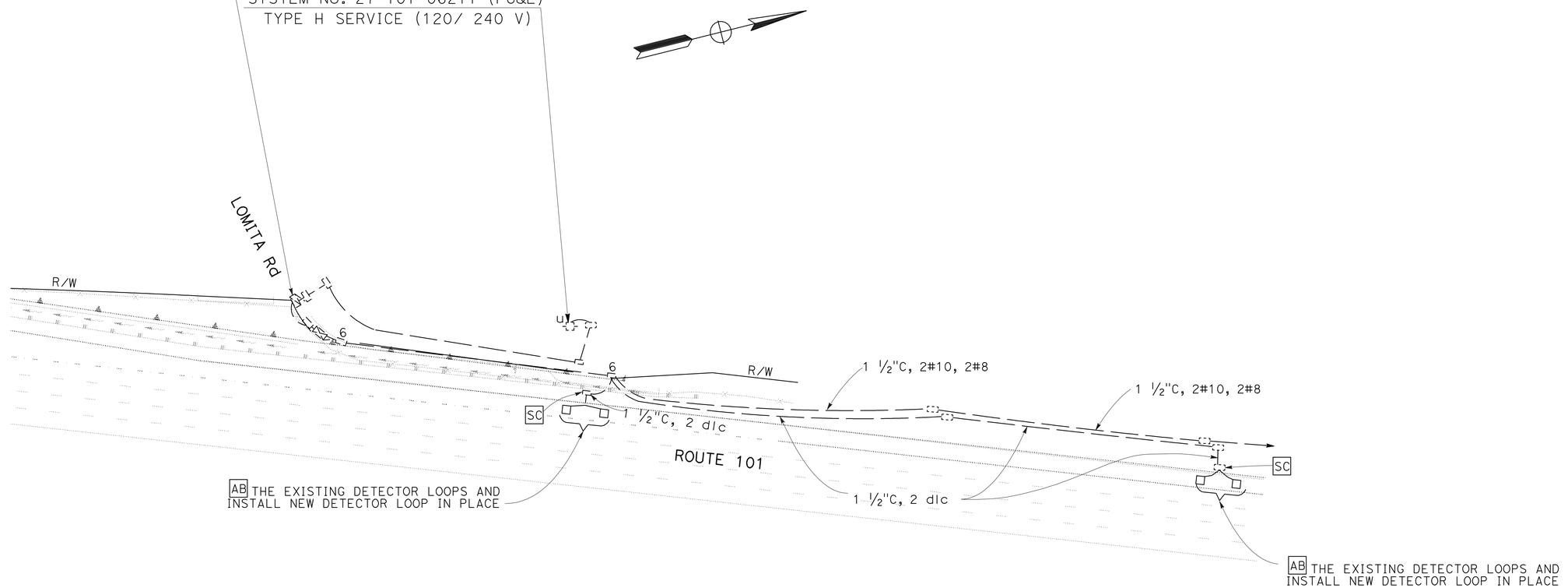

APPROVED FOR ELECTRICAL WORK ONLY

FOR NOTES, ABBREVIATIONS AND LEGEND, SEE SHEET E-1

LOOP DETECTOR REPLACEMENT

NO SCALE

E-3

REVISED BY	HG		
DATE REVISED	06/20/11		
CALCULATED-DESIGNED BY	HAWA GARDIZI		
CHECKED BY	MAHMOOD NOII		
FUNCTIONAL SUPERVISOR	LAI HONG CHIU		
STATE OF CALIFORNIA - DEPARTMENT OF TRANSPORTATION	ELECTRICAL		

LAST REVISION 06-09-11
DATE PLOTTED => 30-SEP-2011
TIME PLOTTED => 13:23

BORDER LAST REVISED 7/2/2010
USERNAME => s131681
DGN FILE => 0400020590tt003.dgn
RELATIVE BORDER SCALE IS IN INCHES 0 1 2 3
UNIT 0976
PROJECT NUMBER & PHASE 04000205901

Dist	COUNTY	ROUTE	POST MILES TOTAL PROJECT	SHEET No.	TOTAL SHEETS
04	Mrn	101	0.0/8.5	96	129

6/13/11
REGISTERED ELECTRICAL ENGINEER DATE

6-20-11
PLANS APPROVAL DATE

REGISTERED PROFESSIONAL ENGINEER
Mahmood Noii
No. 13717
Exp 6-30-13
ELECTRICAL
STATE OF CALIFORNIA

THE STATE OF CALIFORNIA OR ITS OFFICERS OR AGENTS SHALL NOT BE RESPONSIBLE FOR THE ACCURACY OR COMPLETENESS OF SCANNED COPIES OF THIS PLAN SHEET.

MARIN 101 LOCATIONS

LOCATION No.	WVDS POLE SETBACK	DIRECTION	APROXIMATE POST MILE	NUMBER OF LANES		WVDS POLE COORDINATES		VEHICLE SENSOR NODES (SEE E-4)		VSN CONFIGURATION TYPE	VSN TALK TO AP OR REPEATER AT LOCATION NUMBER	REPEATER TALK TO AP AT LOCATION NUMBER	
				NB	SB	N F+	E	NB	SB				
1	19' FROM ETW (Exist MBGR)	SB	0.30	5	4	2132299.9639	5988751.4246	10	8	II	1		
2	14' FROM ETW (Exit MBRG)	SB	0.80	4	4	2134687.0367	5988072.9120	8	8	II	2		
3	9' FROM ETW (Exit MBRG)	NB	1.26	4	4	2137765.8440	5987360.0582	8	8	II	3		
4	> 4' FROM ES (CUT SLOPE)	SB	2.10	4	4	2140401.4197	5985617.0579	8	8	II	4		
5	31' FROM ETW	NB	2.39	4		2141816.4125	5984024.4450	8		III	5	6	
6	31' FROM ETW	SB	2.60		4	2141973.8323	5983517.5838		8	III	6		
7	16' FROM ETW (Exist MBGR)	NB	2.90	4	4	2143783.2478	5982376.9384	8	8	II	7		
8	31' FROM ETW	SB	3.50	4	4	2146595.3060	5982117.0495	8	8	II	8		
9	31' FROM ETW	NB	4.00	4	4	2148608.6874	5980383.6836	8	8	II	9		
10	17' FROM ETW (Exist MBGR)	SB	4.58		4	2151616.6951	5979648.3230		8	III	10		
11	70' FROM ETW	NB	4.75	4		2152277.1258	5979855.1664	8		III	11	10	
12	11' FROM ETW (Exist MBGR)	NB	5.20	4	4	2155507.1518	5980059.8403	8	8	II	12		
13	31' FROM ETW	NB	5.70	4		2157237.2506	5980231.8514	8		III	13		
14	31' FROM ETW	SB	5.73		4	2157651.1063	5980048.5867		8	III	14	13	
15	> 4' FROM ES (CUT SLOPE)	NB	6.10	5	5	2159487.4566	5980717.8450	10	10	II	15		
16	6' FROM ETW (Exist MBGR)	NB	6.50	5	5	2161586.9517	5981369.3343	10	10	II	16		
17	31' FROM ETW	NB	7.00	5	5	2164099.6613	5981450.9252	10	10	II	17		
18	31' FROM ETW	NB	7.35	4		2165822.5808	5980767.0443	8		I	18		
19	31' FROM ETW	SB	7.50		4	2166856.7861	5980332.5865		8	I	19		
20	31' FROM ETW	SB	8.00	4	4	2169550.3292	5980000.0588	8	8	II	20		
21	8' FROM ETW (Exist MBGR)	NB	8.40	4		2171640.8274	5980523.6057	8		I	21		
	TOTAL												

FOR NOTES, ABBREVIATIONS AND LEGEND, SEE SHEET E-1

APPROVED FOR ELECTRICAL WORK ONLY

VEHICLE SENSOR NODE REPLACEMENT

E-4

CALCULATED-DESIGNED BY			
CHECKED BY			
HAWA GARDIZI	REVISED BY	HG	
MAHMOOD NOII	DATE REVISED	06/20/11	
FUNCTIONAL SUPERVISOR			
LAI HONG CHIU			

STATE OF CALIFORNIA - DEPARTMENT OF TRANSPORTATION
ELECTRICAL
Caltrans

LAST REVISION 06-09-11
DATE PLOTTED => 30-SEP-2011
TIME PLOTTED => 13:24

Dist	COUNTY	ROUTE	POST MILES TOTAL PROJECT	SHEET No.	TOTAL SHEETS
04	Mrn	101	0.0/8.5	97	129

m Noii 6/13/11
REGISTERED ELECTRICAL ENGINEER DATE

6-20-11
PLANS APPROVAL DATE

REGISTERED PROFESSIONAL ENGINEER
Mahmood Noii
No. 13717
Exp 6-30-13
ELECTRICAL
STATE OF CALIFORNIA

THE STATE OF CALIFORNIA OR ITS OFFICERS OR AGENTS SHALL NOT BE RESPONSIBLE FOR THE ACCURACY OR COMPLETENESS OF SCANNED COPIES OF THIS PLAN SHEET.

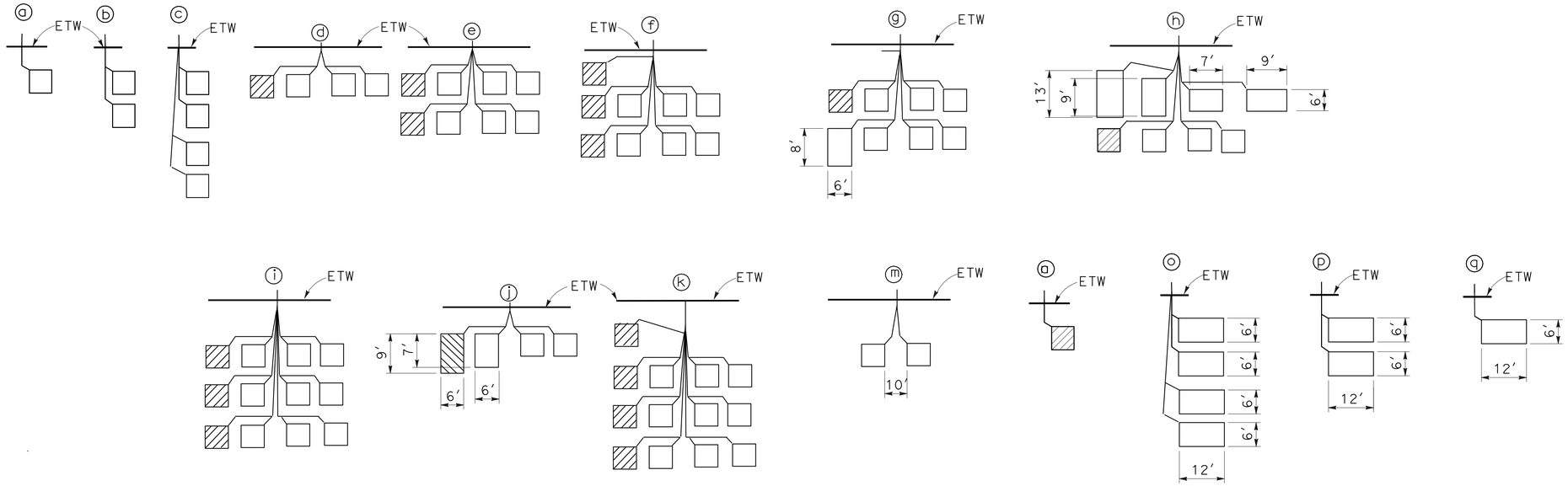

DETAIL A
TYPICAL DETECTOR CONFIGURATIONS

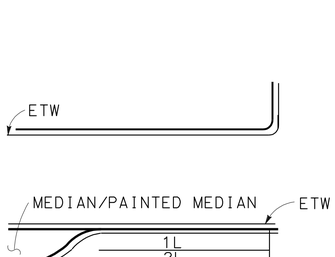

LANE CONFIGURATION (TYPICAL)
TRAFFIC SIGNAL

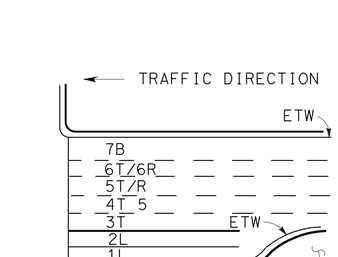

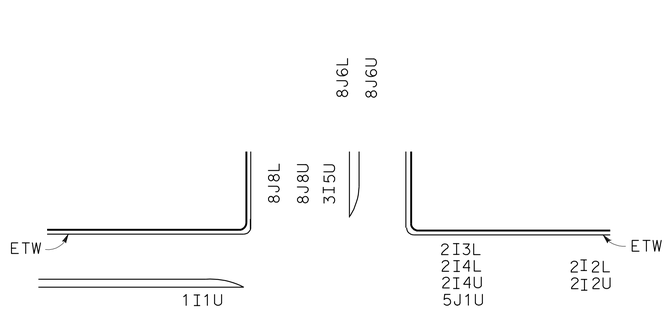

DETECTOR IDENTIFICATION (TYPICAL)

LANE DESCRIPTION

NUMBER OF LANE FROM LEFT WITH RESPECT TO TRAFFIC DIRECTION

1= FIRST LANE FROM LEFT
2= SECOND LANE FROM LEFT
3= THIRD LANE FROM LEFT
4= FOURTH LANE FROM LEFT
5= FIFTH LANE FROM LEFT
T=THROUGH TRAFFIC MOVEMENT
L=LEFT TURN TRAFFIC MOVEMENT
R=RIGHT TURN TRAFFIC MOVEMENT
B= BICYCLE LANE

SIGNAL AND LIGHTING ELECTRICAL DETAILS
(LOOP DETECTOR REPLACEMENT)
NO SCALE

APPROVED FOR ELECTRICAL WORK ONLY

FOR NOTES, ABBREVIATIONS AND LEGEND, SEE SHEET E-1

E-5

STATE OF CALIFORNIA - DEPARTMENT OF TRANSPORTATION
ELECTRICAL
Caltrans
FUNCTIONAL SUPERVISOR: LAI HONG CHIU
CALCULATED-DESIGNED BY: HAWA GARDIZI
CHECKED BY: MAHMOOD NOII
REVISED BY: HG
DATE REVISED: 06/20/11

LAST REVISION DATE PLOTTED => 30-SEP-2011
06-18-11 TIME PLOTTED => 13:24

Dist	COUNTY	ROUTE	POST MILES TOTAL PROJECT	SHEET No.	TOTAL SHEETS
04	Mrn	101	0.0/8.5	98	129

Sea Coghlin 6/13/11
REGISTERED ELECTRICAL ENGINEER DATE

6-20-11
PLANS APPROVAL DATE

REGISTERED PROFESSIONAL ENGINEER
Sean F. Coughlin
No. 12227
Exp. 9-30-12
ELECTRICAL
STATE OF CALIFORNIA

THE STATE OF CALIFORNIA OR ITS OFFICERS OR AGENTS SHALL NOT BE RESPONSIBLE FOR THE ACCURACY OR COMPLETENESS OF SCANNED COPIES OF THIS PLAN SHEET.

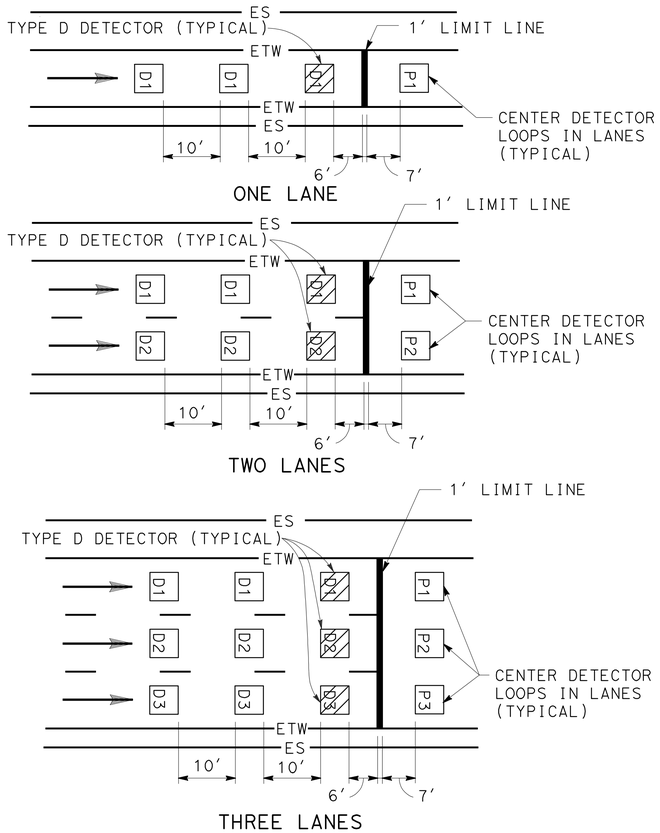

DETAIL "RM"
RAMP METERING STATION

RAMP METERING STATION NOTES

1. SEE ES-5A, ES-5B, AND ES-13A FOR ADDITIONAL DETAILS.
2. DLC CONDUCTORS SHALL BE SPLICED TO THE LOOP CONDUCTORS IN THE NEAREST PULLBOX.
3. ALL SPLICES SHALL BE TYPE "S" OR TYPE "ST" AS REQUIRED.

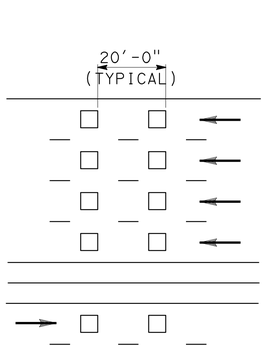

DETAIL "TM"
TRAFFIC MONITORING STATION

TRAFFIC MONITORING STATION NOTES

FREEWAY MAINLINE DETECTOR DESIGNATION:

- N=NORTHBOUND LANES (NB)
- S=SOUTHBOUND LANES (SB)
- E=EASTBOUND LANES (EB)
- W=WESTBOUND LANES (WB)

NUMBER OF LANES FROM LEFT WITH RESPECT TO DIRECTION OF TRAFFIC:

- 1=FIRST LANE FROM LEFT
- 2=SECOND LANE FROM LEFT
- 3=THIRD LANE FROM LEFT
- 4=FOURTH LANE FROM LEFT

NUMBER OF DETECTOR IN THE SAME LANE:

- 1=ENTERING DETECTOR
- 2=LEAVING DETECTOR

N 3-2

RAMP DETECTOR DESIGNATION:

D=DEMAND DETECTOR
P=PASSAGE DETECTOR
Q=QUEUE DETECTOR
F=OFFRAMP DETECTOR

1=FIRST LANE FROM LEFT
2=SECOND LANE FROM LEFT

D-2

ELECTRICAL DETAILS

(RAMP METERING AND TRAFFIC MONITORING DETECTOR SPACING AND DESIGNATION)

NO SCALE

APPROVED FOR ELECTRICAL WORK ONLY

FOR NOTES, ABBREVIATIONS AND LEGEND, SEE SHEET E-1

E-6

STATE OF CALIFORNIA - DEPARTMENT OF TRANSPORTATION
ELECTRICAL
Caltrans
FUNCTIONAL SUPERVISOR: CHARLES PRICE
CALCULATED-DESIGNED BY: SEAN F. COUGHLIN
CHECKED BY: SFC
REVISED BY
DATE REVISED: 06/20/11

LAST REVISION | DATE PLOTTED => 30-SEP-2011
06-09-11 | TIME PLOTTED => 13:24

BORDER LAST REVISED 7/2/2010
USERNAME => s131681
DGN FILE => 0400020590tt006.dgn
RELATIVE BORDER SCALE IS IN INCHES 0 1 2 3
UNIT 0976
PROJECT NUMBER & PHASE 04000205901

Dist	COUNTY	ROUTE	POST MILES TOTAL PROJECT	SHEET No.	TOTAL SHEETS
04	Mrn	101	0.0/8.5	99	129

m Nau 6/13/11
REGISTERED ELECTRICAL ENGINEER DATE

6-20-11
PLANS APPROVAL DATE

REGISTERED PROFESSIONAL ENGINEER
Mahmood Noii
No. 13717
Exp 6-30-13
ELECTRICAL
STATE OF CALIFORNIA

THE STATE OF CALIFORNIA OR ITS OFFICERS OR AGENTS SHALL NOT BE RESPONSIBLE FOR THE ACCURACY OR COMPLETENESS OF SCANNED COPIES OF THIS PLAN SHEET.

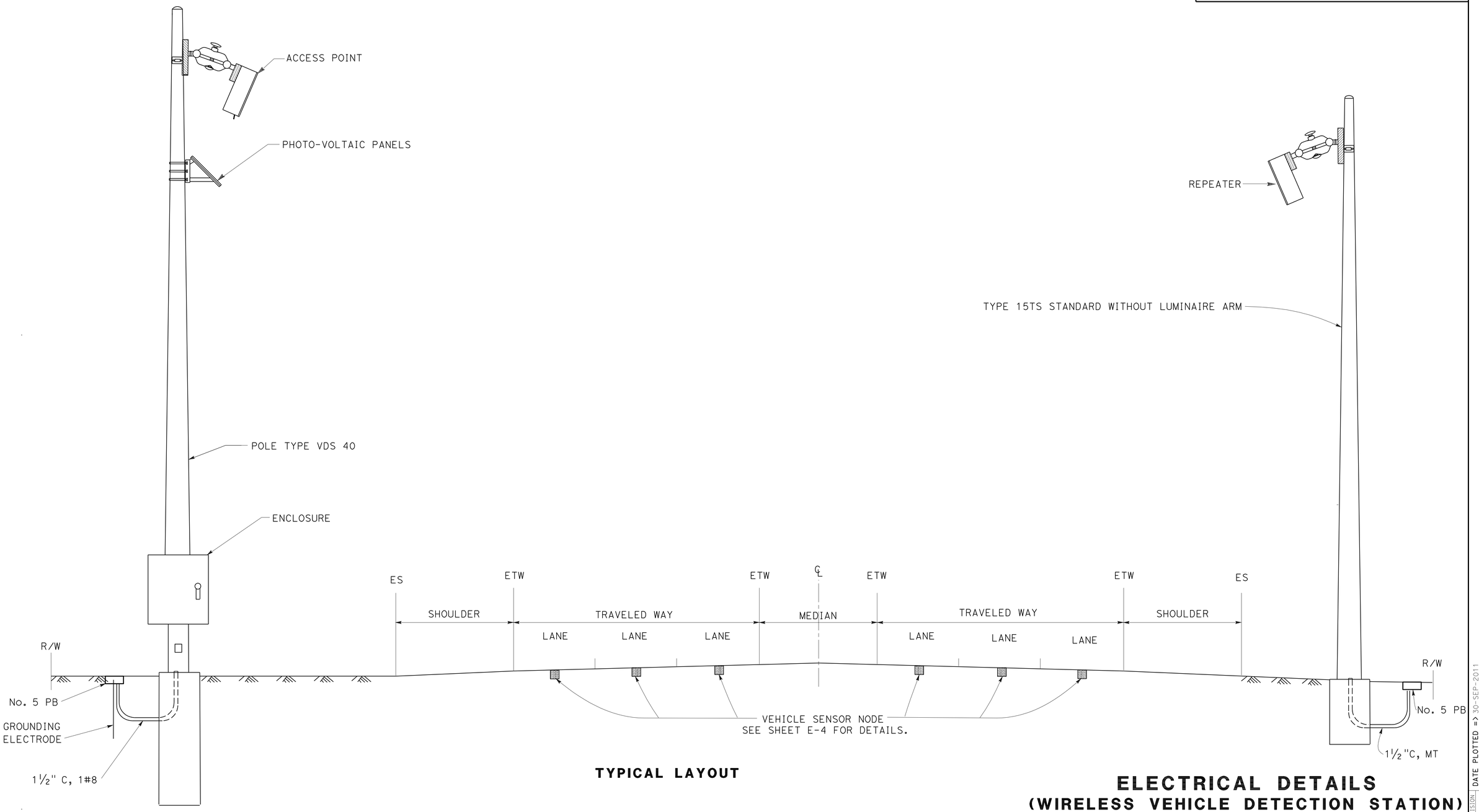

TYPICAL LAYOUT

ELECTRICAL DETAILS
(WIRELESS VEHICLE DETECTION STATION)

NO SCALE

APPROVED FOR ELECTRICAL WORK ONLY

FOR NOTES, ABBREVIATIONS AND LEGEND, SEE SHEET E-1

E-7

STATE OF CALIFORNIA - DEPARTMENT OF TRANSPORTATION
ELECTRICAL
Caltrans®

FUNCTIONAL SUPERVISOR: LAI HONG CHIU

CALCULATED-DESIGNED BY: HAWA GARDIZI
CHECKED BY: MAHMOOD NOII

REVISED BY: HG
DATE REVISED: 06/20/11

LAST REVISION DATE PLOTTED => 30-SEP-2011
06-09-11 TIME PLOTTED => 13:24

BORDER LAST REVISED 7/2/2010

USERNAME => s131681
DGN FILE => 0400020590tt007.dgn

RELATIVE BORDER SCALE IS IN INCHES 0 1 2 3

UNIT 0976

PROJECT NUMBER & PHASE 04000205901

Dist	COUNTY	ROUTE	POST MILES TOTAL PROJECT	SHEET No.	TOTAL SHEETS
04	Mrn	101	0.0/8.5	100	129

m Nau 6/13/11
REGISTERED ELECTRICAL ENGINEER DATE

6-20-11
PLANS APPROVAL DATE

REGISTERED PROFESSIONAL ENGINEER — Mahmood Noii — No. 13717 — Exp 6-30-13 — ELECTRICAL — STATE OF CALIFORNIA

THE STATE OF CALIFORNIA OR ITS OFFICERS OR AGENTS SHALL NOT BE RESPONSIBLE FOR THE ACCURACY OR COMPLETENESS OF SCANNED COPIES OF THIS PLAN SHEET.

VEHICLE SENSOR NODE INSTALLATION PROCEDURE

1. PRIOR TO INSTALLATION, IDENTIFY VEHICLE SENSOR NODE'S ID, LANE NUMBER, AND LOCATION IN LANE.
2. MAKE SURE THE VEHICLE SENSOR NODE INSTALLS FLAT IN THE CORED HOLED AND IS NOT TILTED.
3. USE THE HEAT-GUN OR HOT COMPRESSED AIR TO DRY THE INSIDE OF THE CORED HOLE. THERE MUST BE ABSOLUTELY NO MOISTURE ON THE APPLIED SURFACE.
4. FILL THE HOLE ABOUT 1/4 FULL OF THE SEALANT.
5. PLACE VEHICLE SENSOR NODE IN THE HOLE WITH ARROW POINTING IN THE DIRECTION OF TRAFFIC. THE SEALANT SHOULD STILL HAVE WORK TIME, SO THE VEHICLE SENSOR NODE CAN BE ROTATED TO THE CORRECT ORIENTATION. PUSH VEHICLE SENSOR NODE DOWN SO IT LAYS FLAT ON THE BOTTOM OF THE HOLE.
6. FILL THE HOLE WITH THE REMAINING SEALANT TO COVER THE VEHICLE SENSOR NODE. LEVEL SEALANT WITH THE SURFACE OF THE ROAD.
7. AFTER THE FIRST APPLICATION, DO NOT LET THE SEALANT SIT FOR MORE THAN 30 SECONDS BEFORE THE NEXT APPLICATION.
8. DEPENDING ON AMBIENT TEMPERATURE AND HUMIDITY, SEALANT DRYING TIME WILL VARY FROM 5 MINUTES TO 15 MINUTES. VERIFY HARDNESS OF SEALANT BEFORE REOPENING THE LANE FOR TRAFFIC.
9. RECORD DISTANCES BETWEEN EACH VEHICLE SENSOR NODE PAIR.

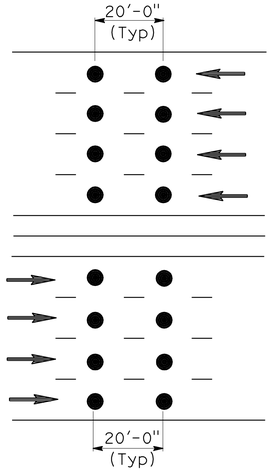

WVDS NOTES

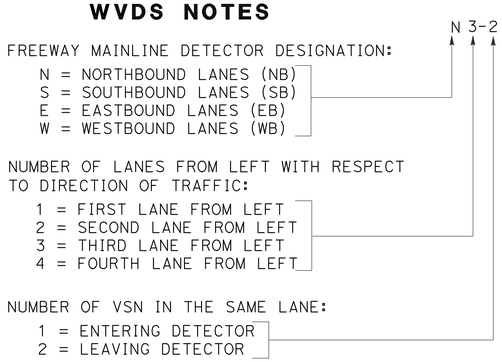

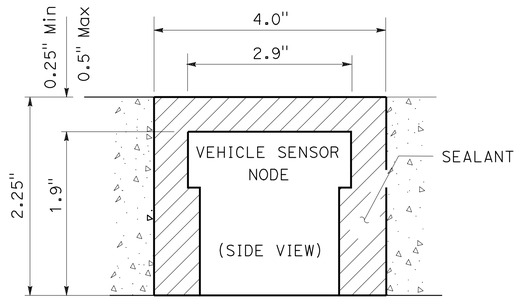

DETAIL D
VEHICLE SENSOR NODE INSTALLED IN ROADWAY

DETAIL "WTM"

LEGEND:

DIRECTION OF TRAFFIC

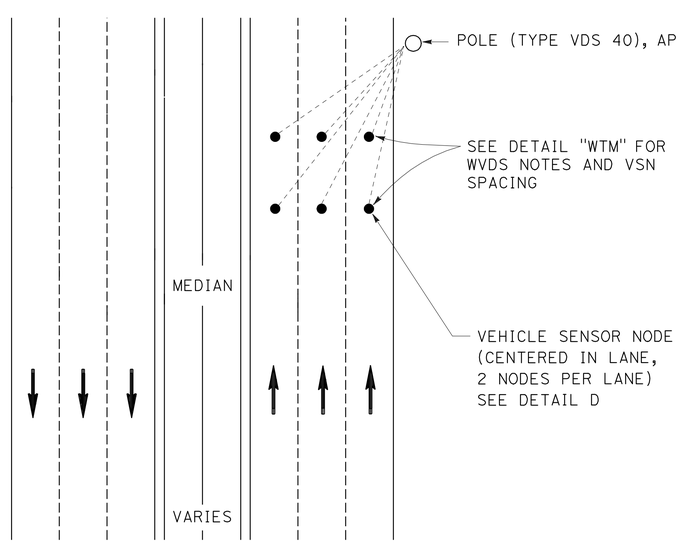

TYPE I

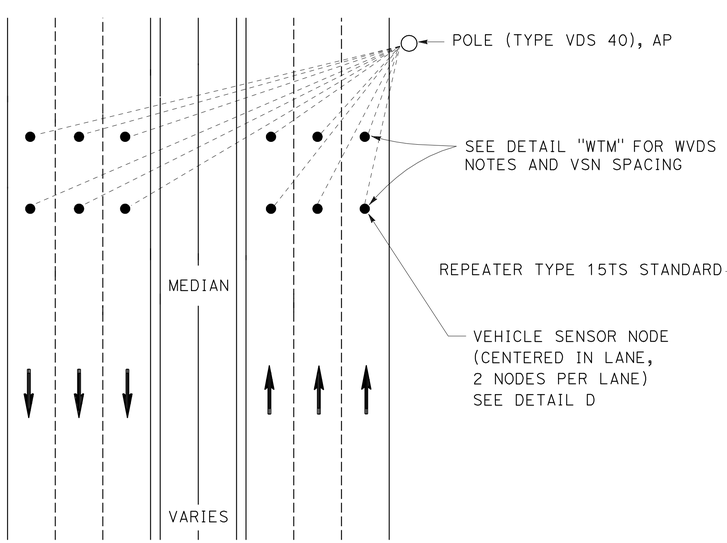

TYPE II

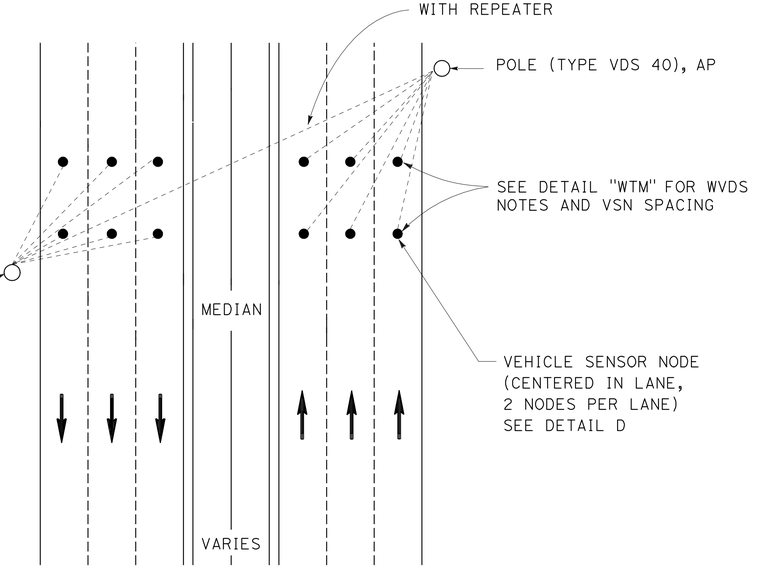

TYPE III

DETAIL C
VEHICLE SENSOR NODE INSTALLATION

ELECTRICAL DETAILS
(WIRELESS VEHICLE DETECTION STATION)

NO SCALE

APPROVED FOR ELECTRICAL WORK ONLY

FOR NOTES, ABBREVIATIONS AND LEGEND, SEE SHEET E-1

E-8

CALCULATED-DESIGNED BY	CHECKED BY	REVISED BY	DATE REVISED
HAWA GARDIZI	MAHMOOD NOII	HG	06/20/11

FUNCTIONAL SUPERVISOR: LAI HONG CHIU

STATE OF CALIFORNIA - DEPARTMENT OF TRANSPORTATION
ELECTRICAL

LAST REVISION | DATE PLOTTED => 30-SEP-2011
06-09-11 | TIME PLOTTED => 13:25