ACHSSTPG-P097(035)E

| Dist | COUNTY | ROUTE | POST MILES TOTAL PROJECT | SHEET No. | TOTAL SHEETS |
|---|---|---|---|---|---|
| 04 | Son | 1,12,116 | Var | 1 | 49 |

STATE OF CALIFORNIA
# DEPARTMENT OF TRANSPORTATION

# PROJECT PLANS FOR CONSTRUCTION ON
# STATE HIGHWAY

## IN SONOMA COUNTY
## AT VARIOUS LOCATIONS

TO BE SUPPLEMENTED BY STANDARD PLANS DATED MAY 2006

INDEX OF PLANS


| SHEET No. | DESCRIPTION |
|---|---|
| 1 | TITLE AND LOCATION MAP |
| 2-4 | LOCATIONS OF CONSTRUCTION |
| 5-21 | CONSTRUCTION DETAILS |
| 22 | TEMPORARY WATER POLLUTION CONTROL DETAILS |
| 23 | EROSION CONTROL DETAILS AND QUANTITIES |
| 24-28 | CONSTRUCTION AREA SIGNS |
| 29-37 | SUMMARY OF QUANTITIES |
| 38-49 | REVISED AND NEW STANDARD PLANS |


THE STANDARD PLANS LIST APPLICABLE TO THIS CONTRACT IS INCLUDED IN THE NOTICE TO BIDDERS AND SPECIAL PROVISIONS BOOK.

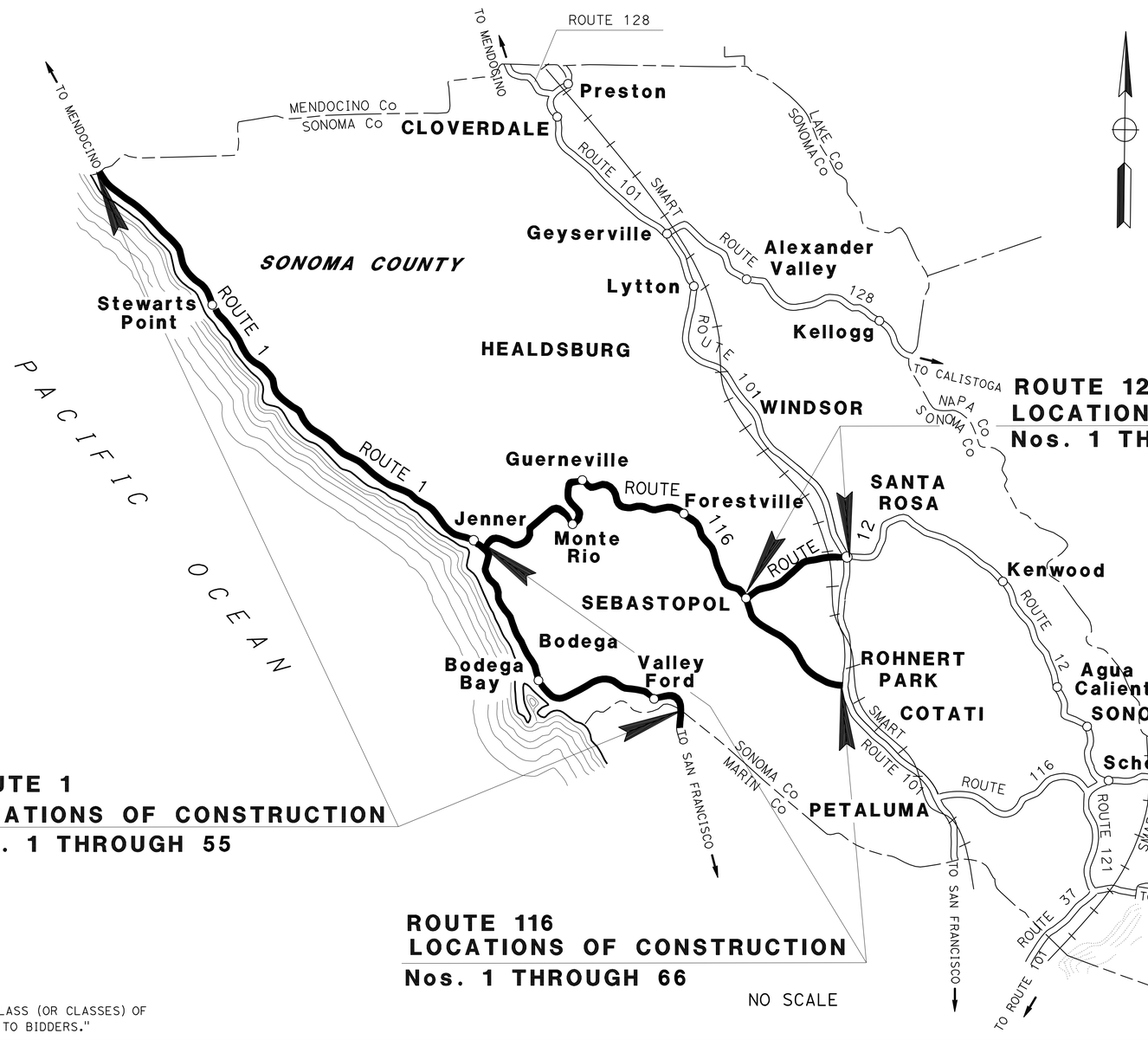


## ROUTE 12
## LOCATIONS OF CONSTRUCTION
## Nos. 1 THROUGH 25

## ROUTE 1
## LOCATIONS OF CONSTRUCTION
## Nos. 1 THROUGH 55

## ROUTE 116
## LOCATIONS OF CONSTRUCTION
## Nos. 1 THROUGH 66

NO SCALE

LOCATION MAP

NOTE:
THE TABLE OF LOCATIONS OF CONSTRUCTION IS SHOWN ON THE LOCATIONS OF CONSTRUCTION SHEET.

**ABBREVIATION:**
SMART- SONOMA MARIN AREA RAIL TRANSIT

PROJECT ENGINEER REGISTERED CIVIL ENGINEER — DATE 09-19-08

REGISTERED PROFESSIONAL ENGINEER — Tam Ly — No. 69254 — Exp. 6-30-10 — CIVIL — STATE OF CALIFORNIA

November 17, 2008
PLANS APPROVAL DATE

*THE STATE OF CALIFORNIA OR ITS OFFICERS OR AGENTS SHALL NOT BE RESPONSIBLE FOR THE ACCURACY OR COMPLETENESS OF ELECTRONIC COPIES OF THIS PLAN SHEET.*

PROJECT MANAGER: LILIAN ACORDA
DESIGN ENGINEER: GHULAM POPAL

THE CONTRACTOR SHALL POSSESS THE CLASS (OR CLASSES) OF LICENSE AS SPECIFIED IN THE "NOTICE TO BIDDERS."

LAST REVISION 10-20-08 — DATE PLOTTED => 09-JUN-2009 — TIME PLOTTED => 12:48

CONTRACT No. 04-0A9114

| Dist | COUNTY | ROUTE | POST MILES TOTAL PROJECT | SHEET No. | TOTAL SHEETS |
|---|---|---|---|---|---|
| 04 | Son | 1,12,116 | Var | 2 | 49 |

REGISTERED CIVIL ENGINEER DATE

11-17-08
PLANS APPROVAL DATE

REGISTERED PROFESSIONAL ENGINEER
Tam Ly
No. 69254
Exp 6-30-10
CIVIL
STATE OF CALIFORNIA

*THE STATE OF CALIFORNIA OR ITS OFFICERS OR AGENTS SHALL NOT BE RESPONSIBLE FOR THE ACCURACY OR COMPLETENESS OF ELECTRONIC COPIES OF THIS PLAN SHEET.*

EXISTING UTILITY FACILITIES HAVE NOT BEEN POSITIVELY LOCATED.

## LOCATIONS OF CONSTRUCTION

| ROUTE-LOCATION No. | DESCRIPTION | DIRECTION | PM |
|---|---|---|---|
| | ROUTE 1 | | |
| 1-1 | NB, @ COUNTY LINE @ AMERICAN Cr Br | NB | 0.03 |
| 1-2 | SB, @ COUNTY LINE @ AMERICAN Cr Br | SB | 0.03 |
| 1-3 | SB, N OF A QUARRY ON NB Rte 1 SIDE | SB | 7.49 |
| 1-4 | NB, S OF S HARBOR Dr | NB | 8.63 |
| 1-5 | SB, S OF S HARBOR Dr | SB | 8.63 |
| 1-6 | SB, S OF S HARBOR Dr, N & S OF A RETAINING WALL | SB | 8.71 |
| 1-7 | NB, Btwn DORAN PARK Rd & N HARBOR WAY | NB | 9.16 |
| 1-8 | SB, Btwn DORAN PARK Rd & N HARBOR WAY | SB | 9.16 |
| 1-9 | SB, S OF WINDY LANE | SB | 10.22 |
| 1-10 | SB, ACROSS BAY FLAT Rd | SB | 10.49 |
| 1-11 | SB, N OF BAY FLAT Rd | SB | 10.5 |
| 1-12 | NB, N OF WINDY Ln, LEFT-TURN CURVE WITH 15 MPH CURVE SIGN | NB | 10.66 |
| 1-13 | NB, SALMON Crk Br | NB | 12.34 |
| 1-14 | SB, SALMON Crk Br | SB | 12.34 |
| 1-15 | SB, S OF PORTUGUESE BEACH | SB | 14.63 |
| 1-16 | SB, S OF CARLEVARDO WAY | SB | 17.48 |
| 1-17 | SB, A LEFT-TURN CURVE WITH 20 MPH SIGN | SB | 17.96 |
| 1-18 | NB, A LEFT-TURN CURVE, S OF WILLOW Cr Rd | NB | 19.66 |
| 1-19 | NB, RUSSIAN RIVER Br | NB | 19.8 |

## LOCATIONS OF CONSTRUCTION

| ROUTE-LOCATION No. | DESCRIPTION | DIRECTION | PM |
|---|---|---|---|
| | ROUTE 1 | | |
| 1-20 | SB, RUSSIAN RIVER Br | SB | 19.8 |
| 1-21 | SB, ACROSS THE LAPORT Dr | SB | 21.5 |
| 1-22 | SB, BETWEEN LAPORT Dr & BURKE AVE, Conc Struct | SB | 21.6 |
| 1-23 | SB, CLIFF W PULLOUT AREA | SB | 22.08 |
| 1-24 | SB, N OF A LEFT-TURN CURVE WITH LEFT ARROW SIGN. Conc Struct | SB | 22.41 |
| 1-25 | SB, A LEFT-TURN CURVE AND CLIFF | SB | 22.57 |
| 1-26 | SB, S OF PULLOUT AREA, WITH COMPOUND CURVE, RIGHT ARROW SIGN | SB | 24.17 |
| 1-27 | SB, BETWEEN DIRT PULLOUT AREA, S OF RUSSIAN GULCH Br | SB | 24.3 |
| 1-28 | NB, RUSSIAN GULCH Br | NB | 24.5 |
| 1-29 | SB, RUSSIAN GULCH Br | SB | 24.5 |
| 1-30 | SB, N OF CATTLE GUARD, WINDING Rd | SB | 25.17 |
| 1-31 | SB, A LEFT-TURN THEN A RIGHT-TURN CURVES | SB | 25.41 |
| 1-32 | SB, N OF A LEFT-TURN CURVE | SB | 27.13 |
| 1-33 | SB, CLOSE TO PREVIOUS MBGR WITH SHORT PULLOUT BETWEEN | SB | 27.15 |
| 1-34 | SB, WINDING Rd WITH Conc RAIL IN MIDDLE, N END IS CATTLE GUARD | SB | 27.63 |
| 1-35 | SB, WINDING Rd | SB | 28.2 |
| 1-36 | SB, WINDING Rd S OF A CATTLE GUARD | SB | 28.64 |
| 1-37 | NB, ACROSS THE SB MBGR | NB | 28.78 |
| 1-38 | SB, JUST N OF A CATTLE GUARD | SB | 28.8 |

## LOCATIONS OF CONSTRUCTION

| ROUTE-LOCATION No. | DESCRIPTION | DIRECTION | PM |
|---|---|---|---|
| | ROUTE 1 | | |
| 1-39 | SB, A LEFT-TURN CURVE | SB | 28.86 |
| 1-40 | SB, WINDY Rd, N OF A GRN RTE 1 SIGN | SB | 29.54 |
| 1-41 | SB, @ A SHARP LEFT-TURN LANE | SB | 29.74 |
| 1-42 | NB, N OF CLOSURE GATE, S OF BARNS @ SB | NB | 30.65 |
| 1-43 | SB, N OF CLOSURE GATE, S OF BARNS @ SB | SB | 30.8 |
| 1-44 | SB, S OF CATTLE GUARD, S OF LEFT-TURN, REVERSE, 15 MPH SIGN | SB | 31.81 |
| 1-45 | SB, S OF A ROAD TO FORT ROSS | SB | 32.62 |
| 1-46 | SB, N OF A ROAD TO FORT ROSS | SB | 32.74 |
| 1-47 | SB, A LEFT-TURN CURVE, BETWEEN 2 SMALL HILLS | SB | 34 |
| 1-48 | NB, S OF 20 MPH LEFT-TURN CURVE SIGN | NB | 34.26 |
| 1-49 | SB, S OF FORT ROSS LODGE, A LEFT-TURN CURVE | SB | 34.61 |
| 1-50 | SB, STILLWATER COVE PARK & 15 MPH, REVERSE CURVE SIGNS, ETC | SB | 37.29 |
| 1-51 | SB, N OF OCEAN COVE STORE, WITH A LEFT-TURN CURVE SIGN | SB | 38.46 |
| 1-52 | SB, LEADING END TO Conc BARRIER, WITH A LEFT-TURN SIGN | SB | 40.95 |
| 1-53 | SB, A LEFT-TURN CURVE WITH 15 MPH SIGN, S OF STUMP BEACH | SB | 41.18 |
| 1-54 | BOTH DIRECTIONS, S END OF GUALALA RIVER Br | NB | 58.54 |
| 1-55 | GUALALA RIVER Br | SB | 58.54 |

## LOCATIONS OF CONSTRUCTION

LC-1

REVISED BY | DATE REVISED
K. Chounramany | Tam Ly
CALCULATED-DESIGNED BY | CHECKED BY
FUNCTIONAL SUPERVISOR: Ghulam Popal

STATE OF CALIFORNIA - DEPARTMENT OF TRANSPORTATION
Caltrans DESIGN

J:\thermie\0a9111\working_files\clippedSheets\40a911ba001.dgn

LAST REVISION 09-19-08 | DATE PLOTTED => 09-JUN-2009 | TIME PLOTTED => 12:49

| Dist | COUNTY | ROUTE | POST MILES TOTAL PROJECT | SHEET No. | TOTAL SHEETS |
|---|---|---|---|---|---|
| 04 | Son | 1,12,116 | Var | 3 | 49 |

09-19-08
REGISTERED CIVIL ENGINEER DATE

11-17-08
PLANS APPROVAL DATE

REGISTERED PROFESSIONAL ENGINEER
Tam Ly
No. 69254
Exp 6-30-10
CIVIL
STATE OF CALIFORNIA

*THE STATE OF CALIFORNIA OR ITS OFFICERS OR AGENTS SHALL NOT BE RESPONSIBLE FOR THE ACCURACY OR COMPLETENESS OF ELECTRONIC COPIES OF THIS PLAN SHEET.*

EXISTING UTILITY FACILITIES HAVE NOT BEEN POSITIVELY LOCATED.

## LOCATIONS OF CONSTRUCTION

| ROUTE-LOCATION No. | DESCRIPTION | DIRECTION | PM |
|---|---|---|---|
| | ROUTE 12 | | |
| 12-1 | EB, LAGUNA DE SANTA ROSA Br | EB | 9.63 |
| 12-2 | WB, LAGUNA DE SANTA ROSA Br | WB | 9.63 |
| 12-3 | EB, PURPLE DRAW Br | EB | 9.84 |
| 12-4 | WB, PURPLE DRAW Br | WB | 9.84 |
| 12-5 | EB (200' EAST OF OZONE Dr) | EB | 10.82 |
| 12-6 | WB (AT LLANO ROAD) | WB | 11.04 |
| 12-7 | EB AT "STONY POINT Rd" SIGN | EB | R13.2 |
| 12-8 | EB AT "STONY POINT Rd" SIGN | EB | R13.7 |
| 12-9 | EB AT "STONY POINT Rd" SIGN | EB | R14.2 |
| 12-10 | WB ON-RAMP FROM STONY POINT Rd | WB | R14.26 |
| 12-11 | STONY POINT Rd OC SB | SB | R14.45 |
| 12-12 | STONY POINT Rd OC NB | NB | R14.45 |
| 12-13 | EB ON-RAMP FROM STONY POINT Rd | EB | R14.57 |
| 12-14 | WB OFF-RAMP TO STONY POINT Rd | WB | R14.63 |
| 12-15 | WB AT "STONY POINT Rd" SIGN | WB | R14.72 |
| 12-16 | EB AT "DUTTON Rd" SIGN | EB | R14.95 |
| 12-17 | WB AT "STONY POINT Rd" SIGN | WB | R15.02 |
| 12-18 | EB ON-RAMP FROM DUTTON Ave | EB | R15.44 |
| 12-19 | WB OFF-RAMP TO DUTTON Ave | WB | R15.47 |
| 12-20 | WB ON-RAMP FROM SB 101/3RD St | WB | R15.67 |

## LOCATIONS OF CONSTRUCTION

| ROUTE-LOCATION No. | DESCRIPTION | DIRECTION | PM |
|---|---|---|---|
| | ROUTE 12 | | |
| 12-21 | EB ON-RAMP FROM SB 101/3RD St | EB | R15.67 |
| 12-22 | EB (BRIDGE ABOVE SB 101 TO EB 12) | EB | R15.86 |
| 12-23 | EB (UNDER BRIDGE EB 12 TO NB 101) | EB | R15.92 |
| 12-24 | WB (NB 101 TO WB 12) | WB | R16 |
| 12-25 | EB MAINLINE | EB | R16.12 |

## LOCATIONS OF CONSTRUCTION

| ROUTE-LOCATION No. | DESCRIPTION | DIRECTION | PM |
|---|---|---|---|
| | ROUTE 116 | | |
| 116-1 | 1ST MBGR, W OF SHEEPHOUSE Cr | EB | 0.56 |
| 116-2 | NEXT TO 1ST MBGR, WITH Conc Struc | EB | 0.63 |
| 116-3 | LEFT-TURN CURVE, W OF SHEEPHOUSE Cr | EB | 0.71 |
| 116-4 | E OF SHEEPHOUSE Cr | EB | 1.14 |
| 116-5 | AFTER RANCH ON LEFT | EB | 1.62 |
| 116-6 | ACROSS THE EB MBGR | WB | 1.64 |
| 116-7 | FOR A LEFT-TURN CURVE | EB | 2.04 |
| 116-8 | SERIES OF LEFT-RIGHT-LEFT CURVE | EB | 3.08 |
| 116-9 | UPSTREAM OF MOSCOW Rd. | EB | 3.34 |
| 116-10 | DOWNSTREAM OF MOSCOW Rd. | EB | 3.95 |
| 116-11 | FOR A LEFT-TURN CURVE | EB | 4.2 |
| 116-12 | FOR A RIGHT-TURN CURVE | EB | 4.31 |
| 116-13 | W OF DRIVEWAY, W OF CAZADERO Hwy | WB | 4.67 |
| 116-14 | BETWEEN DRIVEWAY AND CAZADERO Hwy | WB | 4.84 |
| 116-15 | AUSTIN Cr Br | EB | 4.93 |
| 116-16 | AUSTIN Cr Br | WB | 4.93 |
| 116-17 | E OF AUSTIN Cr Rd | EB | 5.18 |
| 116-18 | E OF LAUREL DELL Ave | EB | 5.58 |
| 116-19 | EB, 1ST MBGR E OF BOHEMAIN Hwy | EB | 8.15 |
| 116-20 | WB, ACROSS THE EB MBGR | WB | 8.16 |

# LOCATIONS OF CONSTRUCTION
# LC-2

REVISED BY | DATE REVISED
K. Chounramany | Tam Ly
CALCULATED-DESIGNED BY | CHECKED BY
FUNCTIONAL SUPERVISOR: Ghulam Popal

STATE OF CALIFORNIA - DEPARTMENT OF TRANSPORTATION
Caltrans
DESIGN

J:\thermie\0a9111\working_files\clippedSheets\40a9111ba002.dgn

LAST REVISION 09-19-08 | DATE PLOTTED => 09-JUN-2009 | TIME PLOTTED => 12:49

| Dist | COUNTY | ROUTE | POST MILES TOTAL PROJECT | SHEET No. | TOTAL SHEETS |
|---|---|---|---|---|---|
| 04 | Son | 1,12,116 | Var | 4 | 49 |

09-19-08
REGISTERED CIVIL ENGINEER DATE

11-17-08
PLANS APPROVAL DATE

REGISTERED PROFESSIONAL ENGINEER
Tam Ly
No. 69254
Exp 6-30-10
CIVIL
STATE OF CALIFORNIA

*THE STATE OF CALIFORNIA OR ITS OFFICERS OR AGENTS SHALL NOT BE RESPONSIBLE FOR THE ACCURACY OR COMPLETENESS OF ELECTRONIC COPIES OF THIS PLAN SHEET.*

EXISTING UTILITY FACILITIES HAVE NOT BEEN POSITIVELY LOCATED.

## LOCATIONS OF CONSTRUCTION

| ROUTE-LOCATION No. | DESCRIPTION | DIRECTION | PM |
|---|---|---|---|
| | ROUTE 116 | | |
| 116-21 | EB, | EB | 8.22 |
| 116-22 | EB, BEFORE A SHARP RIGHT-TURN CURVE | EB | 8.4 |
| 116-23 | EB, E OF BEACH Ave | EB | 10.3 |
| 116-24 | WB, ACROSS THE EB Conc STRUCTURE | WB | 10.4 |
| 116-25 | EB, HULBERT Cr Br | EB | 11.16 |
| 116-26 | EB, Btwn HULBERT Cr Br & FERN Rd | EB | 11.24 |
| 116-27 | EB, ACROSS GABES ROCK Rd | EB | 11.63 |
| 116-28 | WB, DRAKE Rd UC | WB | 12.44 |
| 116-29 | EB, ON WB NEELEY Rd | EB | 12.48 |
| 116-30 | FROM EB NEELEY Rd TO SB MAYS CANYON Rd | EB | 12.48 |
| 116-31 | WB, GUERNE HILL Rd | WB | 12.48 |
| 116-32 | EB, FROM EB MAYS CANYON Rd TO EB 116 | EB | 12.49 |
| 116-33 | EB, E OF MAYS CANYON Rd | EB | 12.7 |
| 116-34 | EB, E OF SCHOOL BUS SIGN | EB | 13.7 |
| 116-35 | EB, 25 MPH ADVISORY SIGN | EB | 13.78 |
| 116-36 | EB, A LEFT-TURN CURVE | EB | 13.9 |
| 116-37 | EB, Btwn CANYON Rd & POCKET Dr | EB | 14.48 |
| 116-38 | EB, BEFORE A LEFT-TURN CURVE, E OF POCKET Rd | EB | 14.63 |
| 116-39 | EB, AFTER A LEFT-TURN CURVE, E OF POCKET Rd | EB | 14.70 |
| 116-40 | EB, W OF MAYS CANYON Rd | EB | 14.9 |
| | | | |

## LOCATIONS OF CONSTRUCTION

| ROUTE-LOCATION No. | DESCRIPTION | DIRECTION | PM |
|---|---|---|---|
| | ROUTE 116 | | |
| 116-41 | EB, E OF MAYS CANYON Rd | EB | 15.0 |
| 116-42 | EB, SCHOOL BUS SIGN @ A LEFT-TURN CURVE | EB | 15.2 |
| 116-43 | EB, W OF A RIGHT-TURN CURVE | EB | 15.25 |
| 116-44 | EB, RIGHT-TURN CURVE TO A PRIVATE DRIVEWAY | EB | 15.43 |
| 116-45 | EB, RIGHT-TURN CURVE TO "SLIPPERY WHEN WET" SIGN | EB | 15.52 |
| 116-46 | WB, ACROSS THE EB MBGR | WB | 15.53 |
| 116-47 | EB, W OF GREEN VALLEY Rd | EB | 15.94 |
| 116-48 | EB, REDWOODS ON EB & FENCES ON WB | EB | 16.49 |
| 116-49 | WB, ACROSS THE EB MBGR | WB | 16.49 |
| 116-50 | EB, FIREWOOD SIGN, 45 MPH SIGN & TREE | EB | 16.72 |
| 116-51 | WB, ACROSS THE EB MBGR | WB | 16.72 |
| 116-52 | WB, Btwn TRAVIS Rd & SCHOOL ENTRANCE | WB | 19.57 |
| 116-53 | EB Btwn APPIANS Wy & GUERNVILLE Rd, CULVERT STRUCTURE | EB | 21.39 |
| 116-54 | WB, ACROSS THE EB MBGR | WB | 21.39 |
| 116-55 | EB, GREEN VALLEY Rd. | EB | 22.14 |
| 116-56 | EB, Bt SONOMA Wy & OAK GROVE Ave | EB | 23.26 |
| 116-57 | EB, @ OAK GROVE Ave | EB | 23.39 |
| 116-58 | EB, E OF OCCIDENTAL Rd | EB | 24.15 |
| 116-59 | EB, BLUCHER Cr Br E OF STONE Sta Rd | EB | 29.83 |
| 116-60 | WB, BLUCHER Cr Br E OF STONE Sta Rd | WB | 29.83 |
| | | | |

## LOCATIONS OF CONSTRUCTION

| ROUTE-LOCATION No. | DESCRIPTION | DIRECTION | PM |
|---|---|---|---|
| | ROUTE 116 | | |
| 116-61 | WB, WEST OF BARTLESON Rd | WB | 31.27 |
| 116-62 | EB, W OF STONEY POINT Rd, OH SIGNAL | EB | 33.37 |
| 116-63 | EB, @ STONY POINT Rd INTERSECTION | EB | 33.61 |
| 116-64 | WB, E OF STONY POINT Rd, OH SIGNAL SIGN | WB | 33.81 |
| 116-65 | EB, UNDER Rte 101 UC | EB | 35.0 |
| 116-66 | WB, UNDER Rte 101 UC | WB | 35.0 |
| | | | |

## LOCATIONS OF CONSTRUCTION

## LC-3

REVISED BY | DATE REVISED
K. Chounramany | Tam Ly
CALCULATED-DESIGNED BY | CHECKED BY
FUNCTIONAL SUPERVISOR: Ghulam Popal

STATE OF CALIFORNIA - DEPARTMENT OF TRANSPORTATION
Caltrans
DESIGN

J:\1hermie\0a9111\working_files\clippedSheets\40a911ba003.dgn

LAST REVISION 09-19-08 | DATE PLOTTED => 09-JUN-2009 | TIME PLOTTED => 12:49

| Dist | COUNTY | ROUTE | POST MILES TOTAL PROJECT | SHEET No. | TOTAL SHEETS |
|---|---|---|---|---|---|
| 04 | Son | 1,12,116 | Var | 5 | 49 |

09-19-08
REGISTERED CIVIL ENGINEER DATE

11-17-08
PLANS APPROVAL DATE

REGISTERED PROFESSIONAL ENGINEER
Tam Ly
No. 69254
Exp. 6-30-10
CIVIL
STATE OF CALIFORNIA

*THE STATE OF CALIFORNIA OR ITS OFFICERS OR AGENTS SHALL NOT BE RESPONSIBLE FOR THE ACCURACY OR COMPLETENESS OF ELECTRONIC COPIES OF THIS PLAN SHEET.*

**NOTE:**

1. EXISTING UTILITY FACILITIES HAVE NOT BEEN POSITIVELY LOCATED.

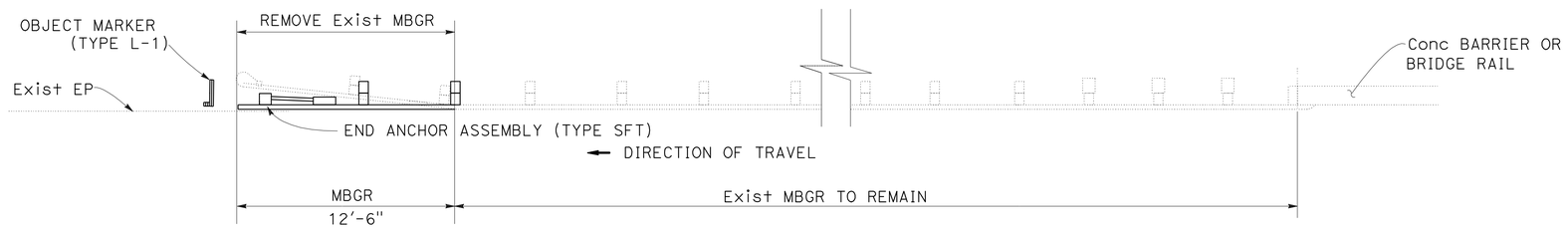


**DETAIL C**

Loc.12-6, 12-19, 12-25

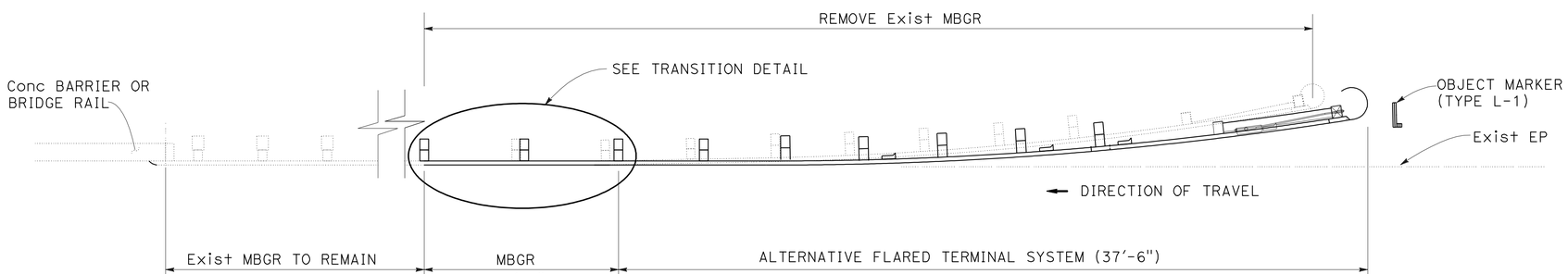


**DETAIL D**

Loc. 1-52, 1-54, 12-11, 12-12, 12-18, 12-20

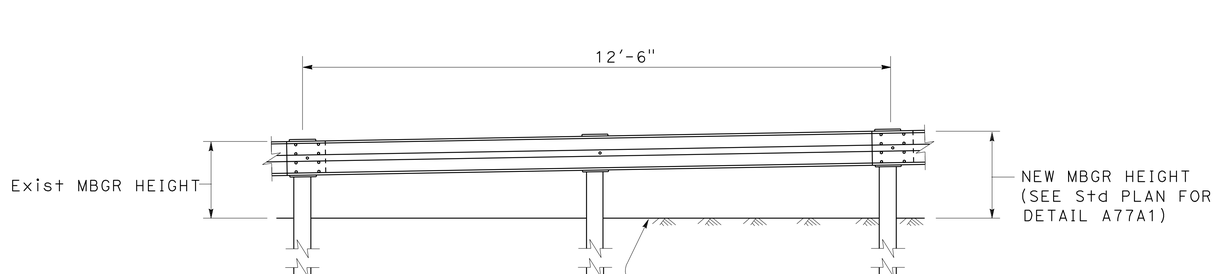


**TRANSITION DETAIL**

# CONSTRUCTION DETAILS

NO SCALE

**C-1**

| REVISED BY | DATE REVISED |
|---|---|
| K. Chounramany | Tam Ly |

| CALCULATED-DESIGNED BY | CHECKED BY |
|---|---|

FUNCTIONAL SUPERVISOR: Ghulam Popal

STATE OF CALIFORNIA - DEPARTMENT OF TRANSPORTATION
Caltrans **DESIGN**

J:\thermie\0a9111\working_files\clippedSheets\40a911ga001.dgn

LAST REVISION 09-19-08 | DATE PLOTTED => 09-JUN-2009 | TIME PLOTTED => 12:50

| Dist | COUNTY | ROUTE | POST MILES TOTAL PROJECT | SHEET No. | TOTAL SHEETS |
|---|---|---|---|---|---|
| 04 | Son | 1,12,116 | Var | 6 | 49 |

09-19-08
REGISTERED CIVIL ENGINEER DATE

11-17-08
PLANS APPROVAL DATE

REGISTERED PROFESSIONAL ENGINEER
Tam Ly
No. 69254
Exp. 6-30-10
CIVIL
STATE OF CALIFORNIA

*THE STATE OF CALIFORNIA OR ITS OFFICERS OR AGENTS SHALL NOT BE RESPONSIBLE FOR THE ACCURACY OR COMPLETENESS OF ELECTRONIC COPIES OF THIS PLAN SHEET.*

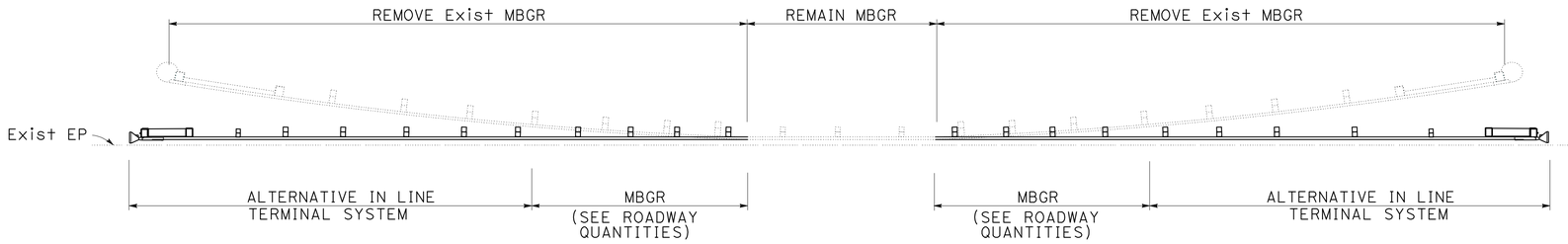


← DIRECTION OF TRAVEL

**DETAIL E**

Loc. 116-9

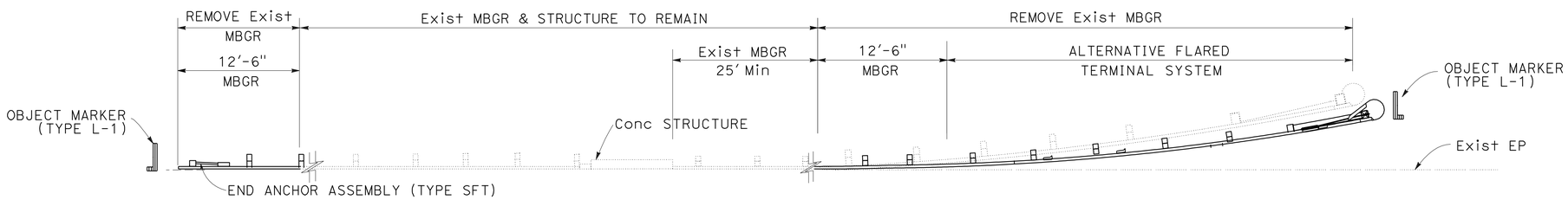


← DIRECTION OF TRAVEL

**DETAIL F**

Loc. 12-2

FOR NOTES, ABBREVIATIONS &/OR LEGEND, SEE SHEET C-1

# CONSTRUCTION DETAILS

NO SCALE

C-2

STATE OF CALIFORNIA - DEPARTMENT OF TRANSPORTATION
Caltrans DESIGN

FUNCTIONAL SUPERVISOR: Ghulam Popal
CALCULATED-DESIGNED BY: K. Chounramany
CHECKED BY: Tam Ly
REVISED BY
DATE REVISED

J:\thermie\0a9111\working_files\clippedSheets\40a911ga002.dgn

LAST REVISION 09-19-08 | DATE PLOTTED => 09-JUN-2009 | TIME PLOTTED => 12:50

| Dist | COUNTY | ROUTE | POST MILES TOTAL PROJECT | SHEET No. | TOTAL SHEETS |
|---|---|---|---|---|---|
| 04 | Son | 1,12,116 | Var | 7 | 49 |

09-19-08
REGISTERED CIVIL ENGINEER DATE

11-17-08
PLANS APPROVAL DATE

REGISTERED PROFESSIONAL ENGINEER
Tam Ly
No. 69254
Exp. 6-30-10
CIVIL
STATE OF CALIFORNIA

*THE STATE OF CALIFORNIA OR ITS OFFICERS OR AGENTS SHALL NOT BE RESPONSIBLE FOR THE ACCURACY OR COMPLETENESS OF ELECTRONIC COPIES OF THIS PLAN SHEET.*

**NOTES:**

1. USE CASE 1 OR CASE 2 WHEN ONE POST IS OMITTED.
2. USE CASE 3 WHEN TWO POSTS ARE OMITTED.
3. FOR OTHER DETAILS, SEE STANDARD PLANS A77A, A77B AND A77C.
4. USE AT LOCATION WHERE THERE ARE UNDERGROUND UTILITY CONFLICTS.

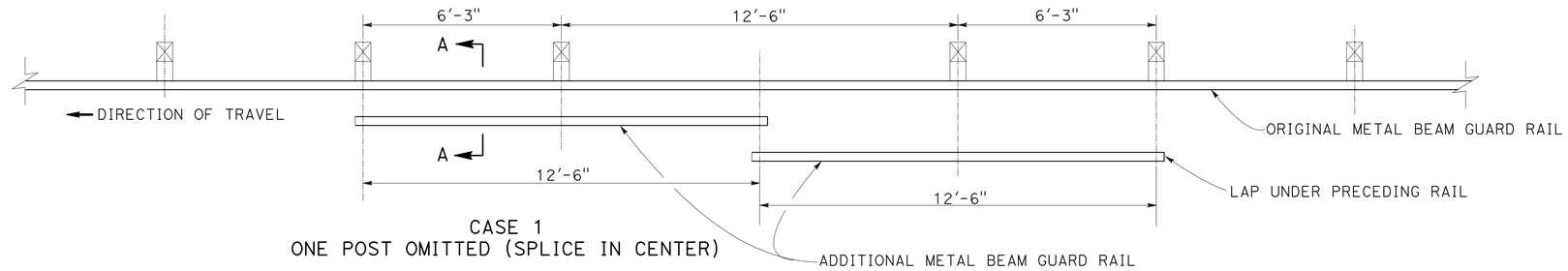


CASE 1
ONE POST OMITTED (SPLICE IN CENTER)

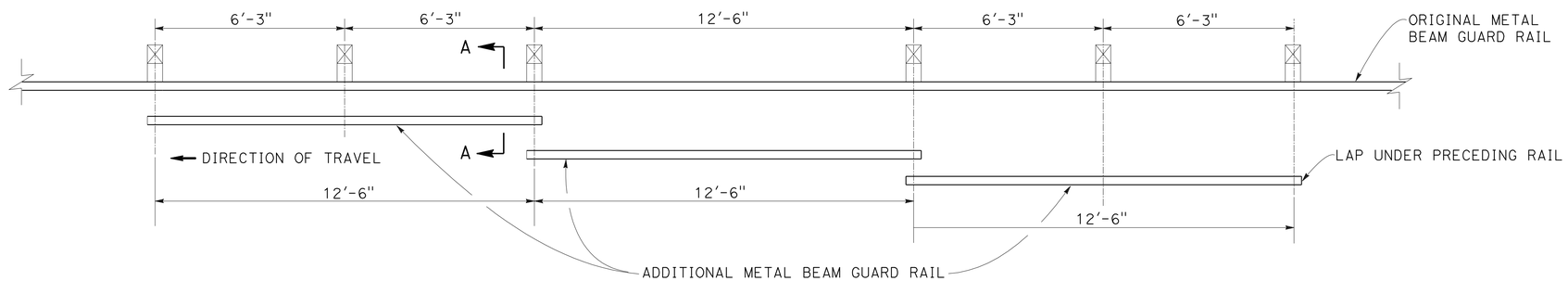


CASE 2
ONE POST OMITTED (SPLICE AT POSTS)

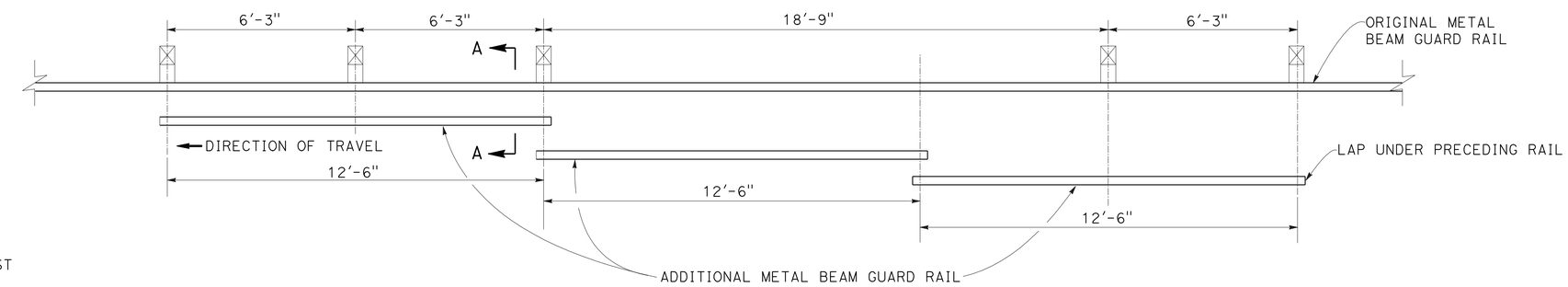


CASE 3
TWO POST OMITTED

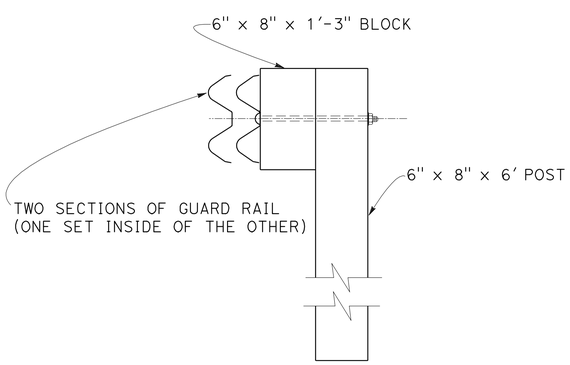


SECTION A-A

**DETAIL G**
**LONG SPAN NESTED GUARD RAIL**

FOR NOTES, ABBREVIATIONS &/OR LEGEND, SEE SHEET C-1

# CONSTRUCTION DETAILS

NO SCALE

**C-3**

| REVISED BY | DATE REVISED |
|---|---|
| | |

| CALCULATED-DESIGNED BY | CHECKED BY |
|---|---|
| K. Chounramany | Tam Ly |

FUNCTIONAL SUPERVISOR: Ghulam Popal

STATE OF CALIFORNIA - DEPARTMENT OF TRANSPORTATION
Caltrans **DESIGN**

J:\thermie\0a9111\working_files\clippedSheets\40a911ga003.dgn

LAST REVISION 09-19-08 | DATE PLOTTED => 09-JUN-2009 | TIME PLOTTED => 12:50

| Dist | COUNTY | ROUTE | POST MILES TOTAL PROJECT | SHEET No. | TOTAL SHEETS |
|---|---|---|---|---|---|
| 04 | Son | 1,12,116 | Var | 8 | 49 |

REGISTERED CIVIL ENGINEER DATE 09-19-08

PLANS APPROVAL DATE 11-17-08

REGISTERED PROFESSIONAL ENGINEER Tam Ly No. 69254 Exp. 6-30-10 CIVIL STATE OF CALIFORNIA

*THE STATE OF CALIFORNIA OR ITS OFFICERS OR AGENTS SHALL NOT BE RESPONSIBLE FOR THE ACCURACY OR COMPLETENESS OF ELECTRONIC COPIES OF THIS PLAN SHEET.*

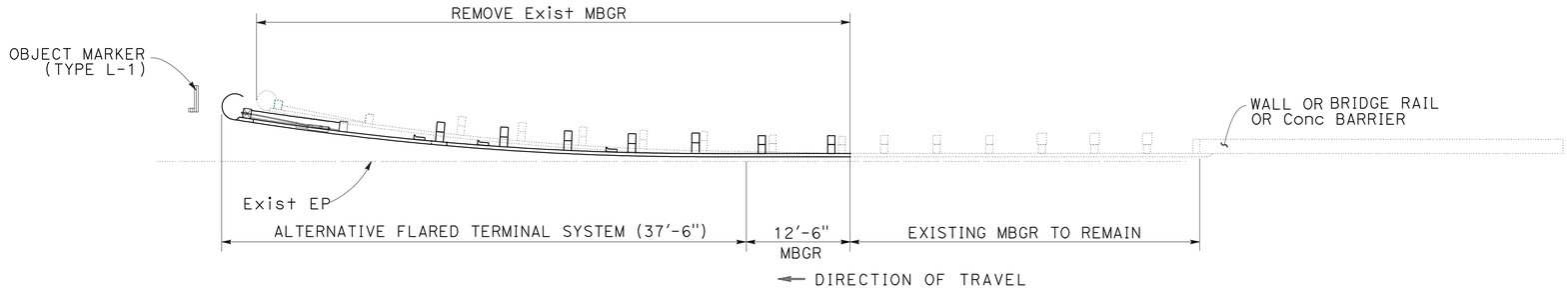


**DETAIL H**

Loc. 1-55, 116-31

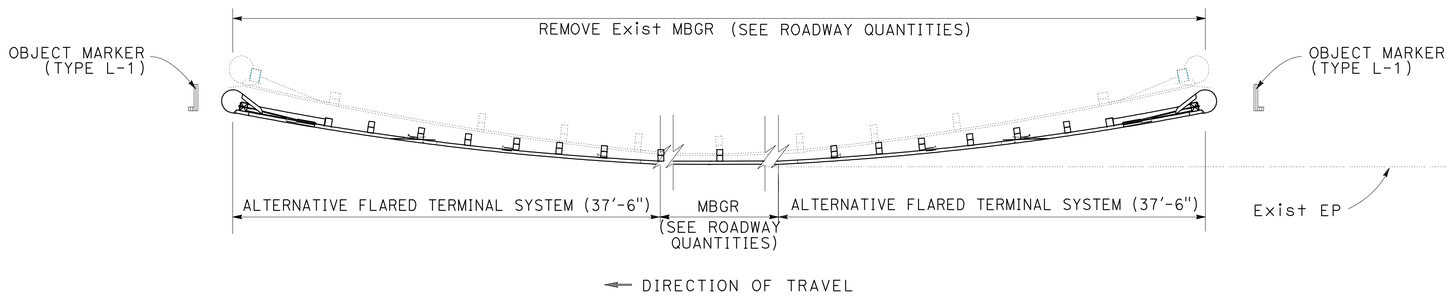


**DETAIL I**

Loc. 1-12, 1-32, 1-37, 1-45, 1-46, 1-47, 1-48, 116-38, 116-55, 116-56, 116-57, 116-61

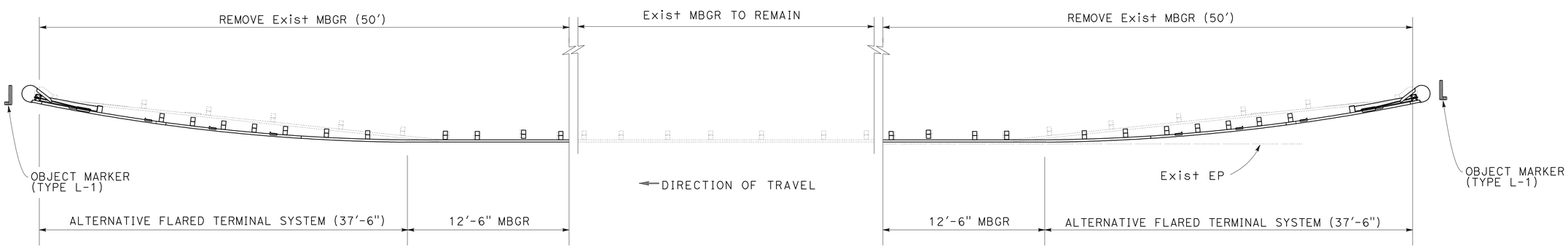


**DETAIL J**

Loc. 1-3, 1-4, 1-5, 1-8, 1-10, 1-15, 1-16, 1-17, 1-18, 1-23, 1-25, 1-26, 1-31, 1-33, 1-36, 1-39, 1-40, 1-41, 1-42, 1-43, 1-44, 1-49, 12-5, 116-1, 116-4, 116-10, 116-11, 116-13, 116-17, 116-20, 116-22, 116-26, 116-27, 116-29, 116-32, 116-34, 116-36, 116-37, 116-39, 116-40, 116-41, 116-42, 116-43, 116-44, 116-62, 116-63, 116-64,

FOR NOTES, ABBREVIATIONS &/OR LEGEND, SEE SHEET C-1

# CONSTRUCTION DETAILS

NO SCALE

C-4

REVISED BY | DATE REVISED

K. Chounramany | Tam Ly

CALCULATED-DESIGNED BY | CHECKED BY

FUNCTIONAL SUPERVISOR: Ghulam Popal

STATE OF CALIFORNIA - DEPARTMENT OF TRANSPORTATION

Caltrans **DESIGN**

J:\thermie\0a9111\working_files\clippedSheets\40a911ga004.dgn

LAST REVISION 09-19-08 | DATE PLOTTED => 09-JUN-2009 | TIME PLOTTED => 12:50

| Dist | COUNTY | ROUTE | POST MILES TOTAL PROJECT | SHEET No. | TOTAL SHEETS |
|---|---|---|---|---|---|
| 04 | Son | 1,12,116 | Var | 9 | 49 |

09-19-08
REGISTERED CIVIL ENGINEER DATE

11-17-08
PLANS APPROVAL DATE

REGISTERED PROFESSIONAL ENGINEER
Tam Ly
No. 69254
Exp. 6-30-10
CIVIL
STATE OF CALIFORNIA

*THE STATE OF CALIFORNIA OR ITS OFFICERS OR AGENTS SHALL NOT BE RESPONSIBLE FOR THE ACCURACY OR COMPLETENESS OF ELECTRONIC COPIES OF THIS PLAN SHEET.*

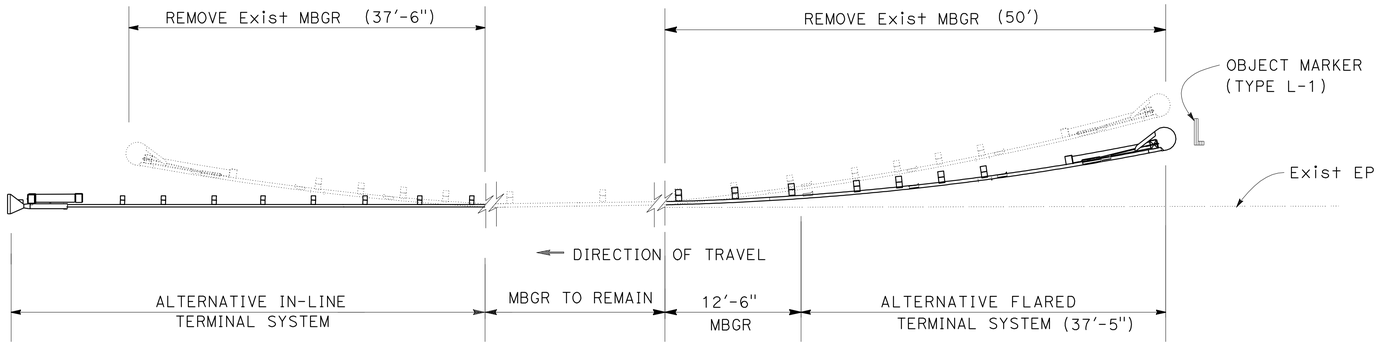


**DETAIL K**

Loc. 116-21

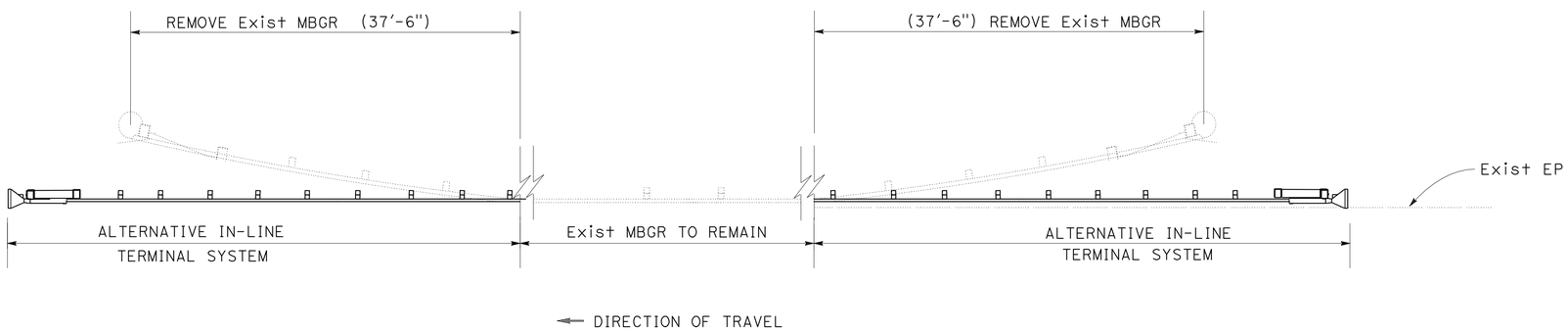


**DETAIL L**

Loc. 1-9, 116-33

FOR NOTES, ABBREVIATIONS &/OR LEGEND, SEE SHEET C-1

# CONSTRUCTION DETAILS

NO SCALE

C-5

STATE OF CALIFORNIA - DEPARTMENT OF TRANSPORTATION
Caltrans DESIGN

FUNCTIONAL SUPERVISOR: Ghulam Popal

CALCULATED-DESIGNED BY: K. Chounramany
CHECKED BY: Tam Ly

REVISED BY
DATE REVISED

J:\thermie\0a9111\working_files\clippedSheets\40a911ga005.dgn

LAST REVISION 09-19-08 DATE PLOTTED => 09-JUN-2009 TIME PLOTTED => 12:50

| Dist | COUNTY | ROUTE | POST MILES TOTAL PROJECT | SHEET No. | TOTAL SHEETS |
|---|---|---|---|---|---|
| 04 | Son | 1,12,116 | Var | 10 | 49 |

09-19-08
REGISTERED CIVIL ENGINEER DATE

11-17-08
PLANS APPROVAL DATE

REGISTERED PROFESSIONAL ENGINEER
Tam Ly
No. 69254
Exp. 6-30-10
CIVIL
STATE OF CALIFORNIA

*THE STATE OF CALIFORNIA OR ITS OFFICERS OR AGENTS SHALL NOT BE RESPONSIBLE FOR THE ACCURACY OR COMPLETENESS OF ELECTRONIC COPIES OF THIS PLAN SHEET.*

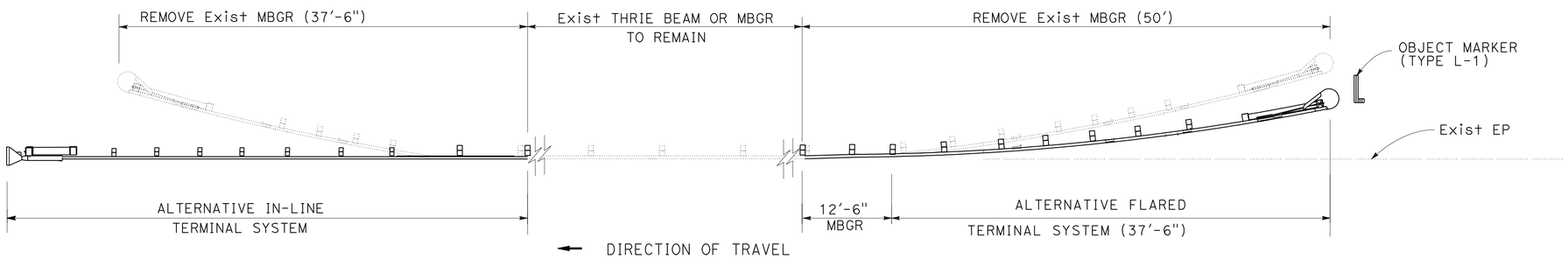


**DETAIL M**

Loc. 1-50, 1-51, 1-53, 116-5, 116-6, 116-7, 116-51,116-58

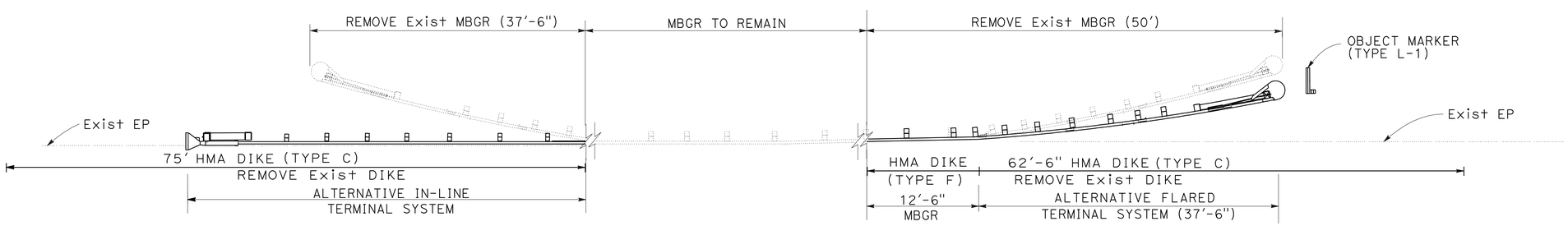


**DETAIL N**

Loc. 116-52

FOR NOTES, ABBREVIATIONS &/OR LEGEND, SEE SHEET C-1

# CONSTRUCTION DETAILS

NO SCALE

C-6

REVISED BY | DATE REVISED
K. Chounramany | Tam Ly
CALCULATED-DESIGNED BY | CHECKED BY
FUNCTIONAL SUPERVISOR: Ghulam Popal

STATE OF CALIFORNIA - DEPARTMENT OF TRANSPORTATION
Caltrans
DESIGN

J:\thermie\0a9111\working_files\clippedSheets\40a911ga006.dgn

LAST REVISION 09-19-08 | DATE PLOTTED => 09-JUN-2009 | TIME PLOTTED => 12:50

| Dist | COUNTY | ROUTE | POST MILES TOTAL PROJECT | SHEET No. | TOTAL SHEETS |
|---|---|---|---|---|---|
| 04 | Son | 1,12,116 | Var | 11 | 49 |

09-19-08
REGISTERED CIVIL ENGINEER DATE

11-17-08
PLANS APPROVAL DATE

REGISTERED PROFESSIONAL ENGINEER
Tam Ly
No. 69254
Exp. 6-30-10
CIVIL
STATE OF CALIFORNIA

*THE STATE OF CALIFORNIA OR ITS OFFICERS OR AGENTS SHALL NOT BE RESPONSIBLE FOR THE ACCURACY OR COMPLETENESS OF ELECTRONIC COPIES OF THIS PLAN SHEET.*

**DETAIL O**
Loc. 116-30

FOR NOTES, ABBREVIATIONS &/OR LEGEND, SEE SHEET C-1

# CONSTRUCTION DETAILS

NO SCALE

C-7

STATE OF CALIFORNIA - DEPARTMENT OF TRANSPORTATION
Caltrans DESIGN

FUNCTIONAL SUPERVISOR: Ghulam Popal
CALCULATED-DESIGNED BY: K. Chounramany
CHECKED BY: Tam Ly
REVISED BY
DATE REVISED

J:\thermie\0a9111\working_files\clippedSheets\40a911ga007.dgn

LAST REVISION 09-19-08 | DATE PLOTTED => 09-JUN-2009 | TIME PLOTTED => 12:51

BORDER LAST REVISED 3/1/2007 | RELATIVE BORDER SCALE IS IN INCHES 0 1 2 3 | USERNAME => trmikesl | DGN FILE => 40a911ga007.dgn | CU 04231 | EA 0A9111

| Dist | COUNTY | ROUTE | POST MILES TOTAL PROJECT | SHEET No. | TOTAL SHEETS |
|---|---|---|---|---|---|
| 04 | Son | 1,12,116 | Var | 12 | 49 |

09-19-08
REGISTERED CIVIL ENGINEER DATE

11-17-08
PLANS APPROVAL DATE

REGISTERED PROFESSIONAL ENGINEER
Tam Ly
No. 69254
Exp. 6-30-10
CIVIL
STATE OF CALIFORNIA

*THE STATE OF CALIFORNIA OR ITS OFFICERS OR AGENTS SHALL NOT BE RESPONSIBLE FOR THE ACCURACY OR COMPLETENESS OF ELECTRONIC COPIES OF THIS PLAN SHEET.*

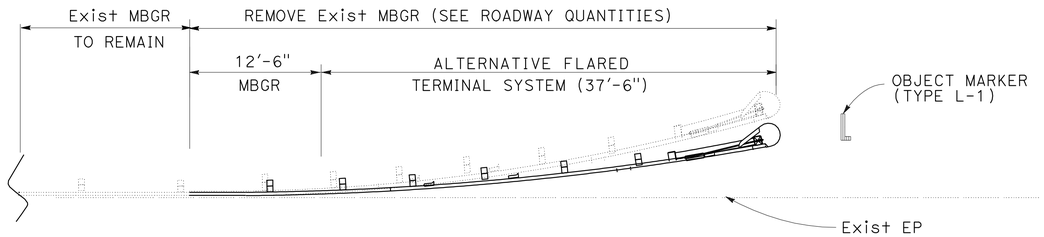


DIRECTION OF TRAVEL

**DETAIL S**

Loc. 1-22, 1-35, 1-38, 12-21

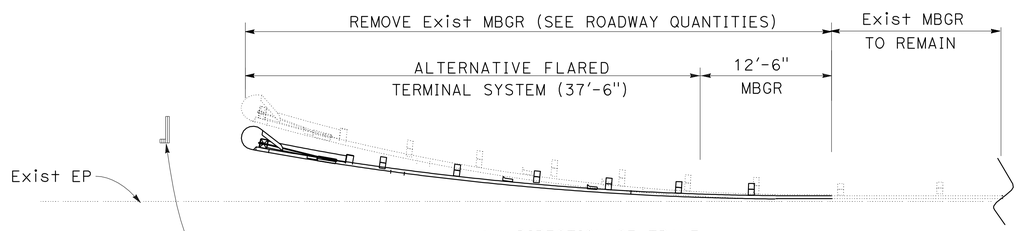


DIRECTION OF TRAVEL

**DETAIL T**

Loc. 1-11, 1-34

FOR NOTES, ABBREVIATIONS &/OR LEGEND, SEE SHEET C-1

# CONSTRUCTION DETAILS

NO SCALE

C-8

STATE OF CALIFORNIA - DEPARTMENT OF TRANSPORTATION
Caltrans DESIGN

FUNCTIONAL SUPERVISOR: Ghulam Popal

CALCULATED-DESIGNED BY: K. Chounramany
CHECKED BY: Tam Ly
REVISED BY
DATE REVISED

J:\thermie\0a9111\working_files\clippedSheets\40a911ga008.dgn

LAST REVISION 09-19-08 | DATE PLOTTED => 09-JUN-2009 | TIME PLOTTED => 12:51

| Dist | COUNTY | ROUTE | POST MILES TOTAL PROJECT | SHEET No. | TOTAL SHEETS |
|---|---|---|---|---|---|
| 04 | Son | 1,12,116 | Var | 13 | 49 |

09-19-08
REGISTERED CIVIL ENGINEER DATE

11-17-08
PLANS APPROVAL DATE

REGISTERED PROFESSIONAL ENGINEER
Tam Ly
No. 69254
Exp. 6-30-10
CIVIL
STATE OF CALIFORNIA

*THE STATE OF CALIFORNIA OR ITS OFFICERS OR AGENTS SHALL NOT BE RESPONSIBLE FOR THE ACCURACY OR COMPLETENESS OF ELECTRONIC COPIES OF THIS PLAN SHEET.*

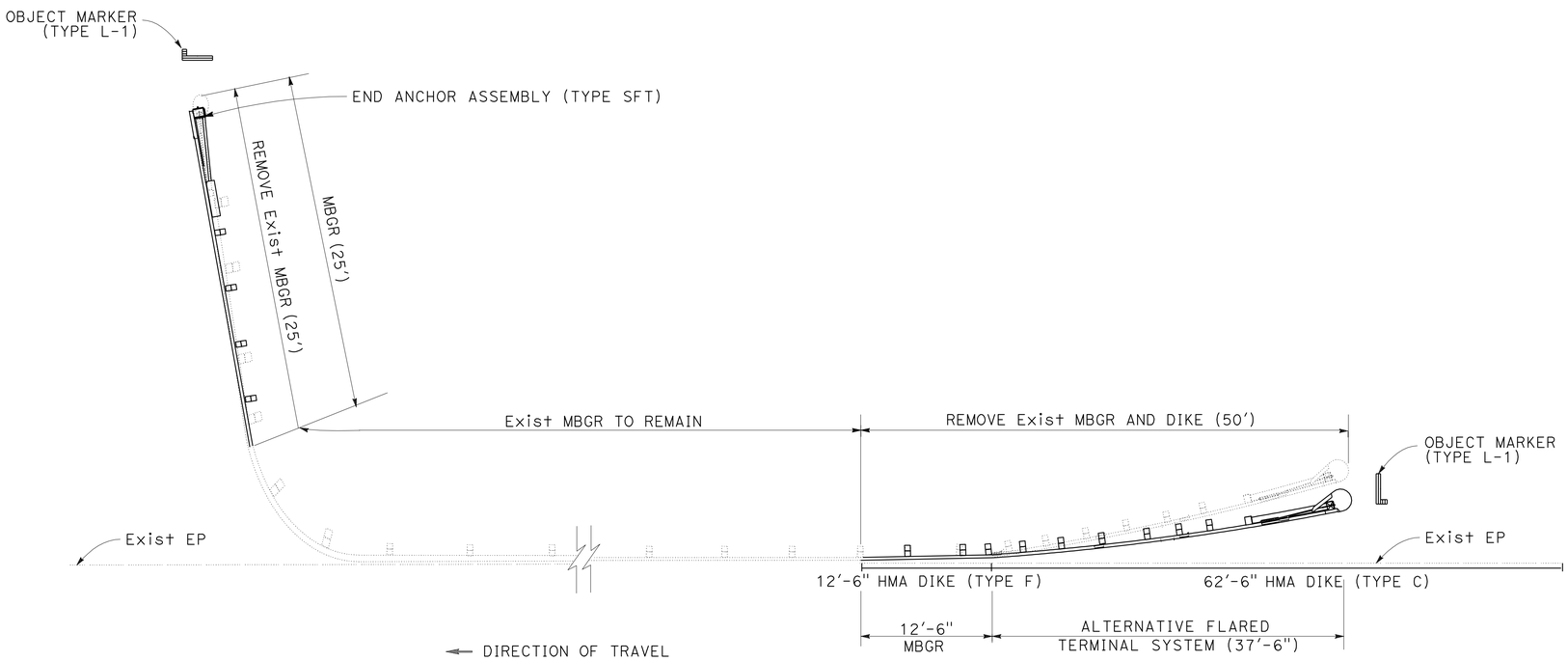


**DETAIL U**
Loc. 1-27

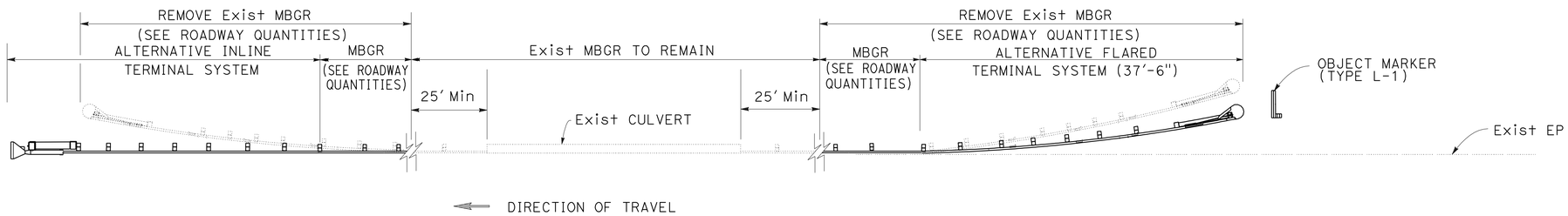


**DETAIL BG**
Loc. 116-54

FOR NOTES, ABBREVIATIONS &/OR LEGEND, SEE SHEET C-1

# CONSTRUCTION DETAILS

NO SCALE

C-9

REVISED BY | DATE REVISED
K. Chounramany | Tam Ly
CALCULATED-DESIGNED BY | CHECKED BY
FUNCTIONAL SUPERVISOR: Ghulam Popal

STATE OF CALIFORNIA - DEPARTMENT OF TRANSPORTATION
Caltrans **DESIGN**

J:\thermie\0a9111\working_files\clippedSheets\40a911ga009.dgn

LAST REVISION 09-19-08 | DATE PLOTTED => 09-JUN-2009 | TIME PLOTTED => 12:51

| Dist | COUNTY | ROUTE | POST MILES TOTAL PROJECT | SHEET No. | TOTAL SHEETS |
|---|---|---|---|---|---|
| 04 | Son | 1,12,116 | Var | 14 | 49 |

09-19-08
REGISTERED CIVIL ENGINEER DATE

11-17-08
PLANS APPROVAL DATE

REGISTERED PROFESSIONAL ENGINEER
Tam Ly
No. 69254
Exp. 6-30-10
CIVIL
STATE OF CALIFORNIA

*THE STATE OF CALIFORNIA OR ITS OFFICERS OR AGENTS SHALL NOT BE RESPONSIBLE FOR THE ACCURACY OR COMPLETENESS OF ELECTRONIC COPIES OF THIS PLAN SHEET.*

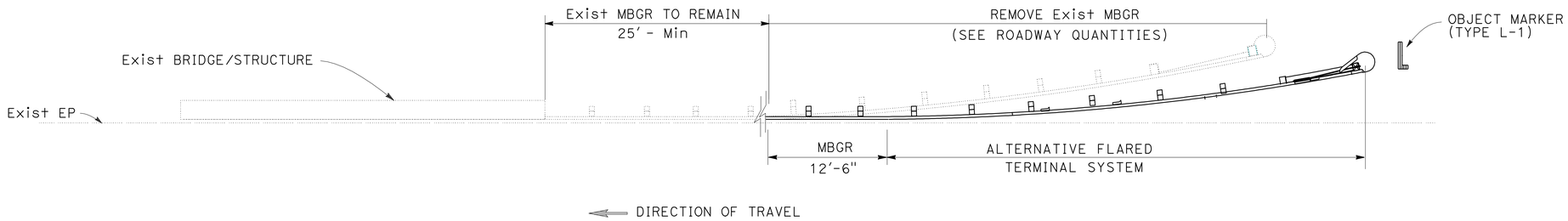


**DETAIL X**

Loc. 1-2, 12-1, 12-22, 12-24
116-24, 116-25

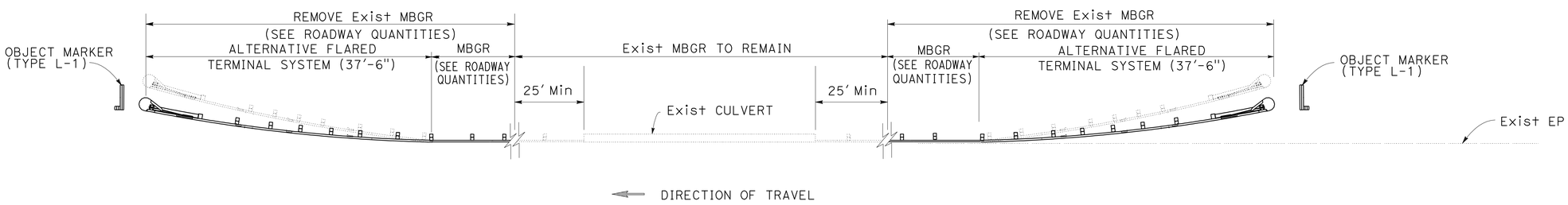


**DETAIL BF**

Loc. 116-53

FOR NOTES, ABBREVIATIONS &/OR LEGEND, SEE SHEET C-1

# CONSTRUCTION DETAILS

NO SCALE

C-10

STATE OF CALIFORNIA - DEPARTMENT OF TRANSPORTATION
Caltrans DESIGN

FUNCTIONAL SUPERVISOR: Ghulam Popal
CALCULATED-DESIGNED BY: K. Chounramany
CHECKED BY: Tam Ly
REVISED BY
DATE REVISED

J:\thermie\0a9111\working_files\clippedSheets\40a911ga010.dgn

LAST REVISION 09-19-08 | DATE PLOTTED => 09-JUN-2009 | TIME PLOTTED => 12:51

| Dist | COUNTY | ROUTE | POST MILES TOTAL PROJECT | SHEET No. | TOTAL SHEETS |
|---|---|---|---|---|---|
| 04 | Son | 1,12,116 | Var | 15 | 49 |

09-19-08
REGISTERED CIVIL ENGINEER DATE

11-17-08
PLANS APPROVAL DATE

REGISTERED PROFESSIONAL ENGINEER
Tam Ly
No. 69254
Exp. 6-30-10
CIVIL
STATE OF CALIFORNIA

*THE STATE OF CALIFORNIA OR ITS OFFICERS OR AGENTS SHALL NOT BE RESPONSIBLE FOR THE ACCURACY OR COMPLETENESS OF ELECTRONIC COPIES OF THIS PLAN SHEET.*

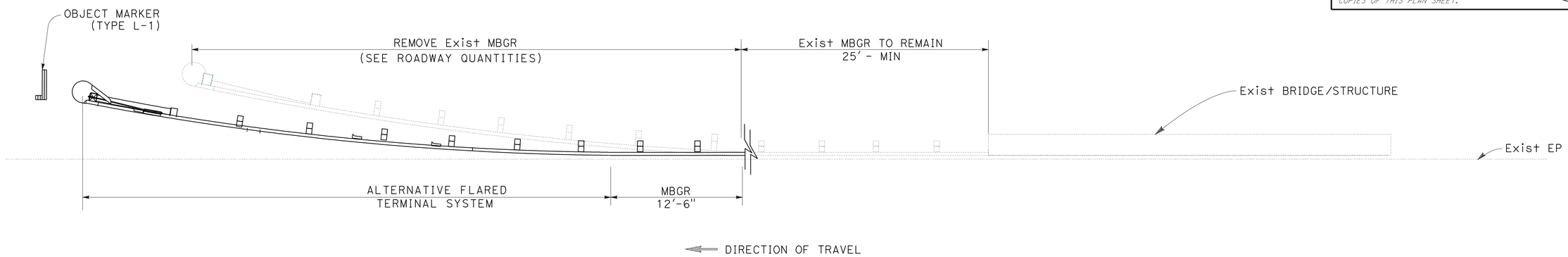


**DETAIL Z**

Loc. 1-1, 12-3

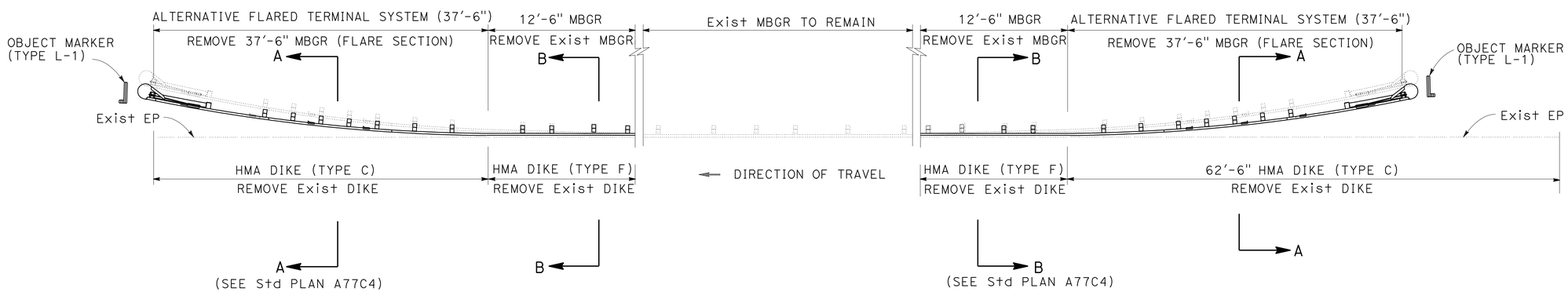


**DETAIL BE**

Loc. 1-7, 1-21, 1-30, 116-12

FOR NOTES, ABBREVIATIONS &/OR LEGEND, SEE SHEET C-1

# CONSTRUCTION DETAILS

NO SCALE

C- 11

STATE OF CALIFORNIA - DEPARTMENT OF TRANSPORTATION
Caltrans
DESIGN

FUNCTIONAL SUPERVISOR: Ghulam Popal
CALCULATED-DESIGNED BY: K. Chounramany
CHECKED BY: Tam Ly
REVISED BY
DATE REVISED

J:\thermie\0a9111\working_files\clippedSheets\40a911ga011.dgn

LAST REVISION 09-19-08 | DATE PLOTTED => 09-JUN-2009 | TIME PLOTTED => 12:51

| Dist | COUNTY | ROUTE | POST MILES TOTAL PROJECT | SHEET No. | TOTAL SHEETS |
|---|---|---|---|---|---|
| 04 | Son | 1,12,116 | Var | 16 | 49 |

09-19-08
REGISTERED CIVIL ENGINEER DATE

11-17-08
PLANS APPROVAL DATE

REGISTERED PROFESSIONAL ENGINEER
Tam Ly
No. 69254
Exp. 6-30-10
CIVIL
STATE OF CALIFORNIA

*THE STATE OF CALIFORNIA OR ITS OFFICERS OR AGENTS SHALL NOT BE RESPONSIBLE FOR THE ACCURACY OR COMPLETENESS OF ELECTRONIC COPIES OF THIS PLAN SHEET.*

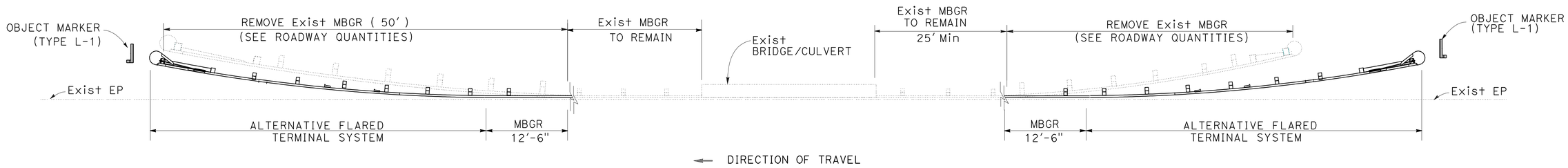


← DIRECTION OF TRAVEL

**DETAIL AF**

Loc 116-3, 116-28

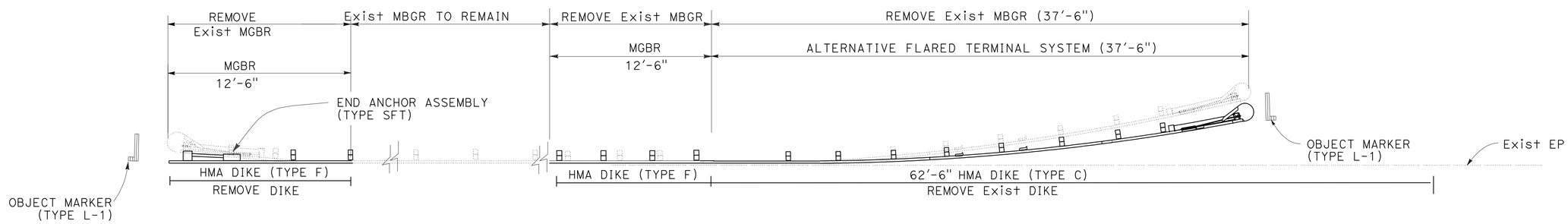


← DIRECTION OF TRAVEL

**DETAIL BA**

Loc 12-17

FOR NOTES, ABBREVIATIONS &/OR LEGEND, SEE SHEET C-1

# CONSTRUCTION DETAILS

NO SCALE

C-12

STATE OF CALIFORNIA - DEPARTMENT OF TRANSPORTATION
Caltrans DESIGN

FUNCTIONAL SUPERVISOR: Ghulam Popal

CALCULATED-DESIGNED BY: K. Chounramany
CHECKED BY: Tam Ly

REVISED BY
DATE REVISED

J:\thermie\0a9111\working_files\clippedSheets\40a911ga012.dgn

LAST REVISION 09-19-08 | DATE PLOTTED => 09-JUN-2009 | TIME PLOTTED => 12:51

BORDER LAST REVISED 3/1/2007 | RELATIVE BORDER SCALE IS IN INCHES 0 1 2 3 | USERNAME => trmikesl | DGN FILE => 40a911ga012.dgn | CU 04231 | EA 0A9111

| Dist | COUNTY | ROUTE | POST MILES TOTAL PROJECT | SHEET No. | TOTAL SHEETS |
|---|---|---|---|---|---|
| 04 | Son | 1,12,116 | Var | 17 | 49 |

09-19-08
REGISTERED CIVIL ENGINEER DATE

11-17-08
PLANS APPROVAL DATE

REGISTERED PROFESSIONAL ENGINEER
Tam Ly
No. 69254
Exp. 6-30-10
CIVIL
STATE OF CALIFORNIA

*THE STATE OF CALIFORNIA OR ITS OFFICERS OR AGENTS SHALL NOT BE RESPONSIBLE FOR THE ACCURACY OR COMPLETENESS OF ELECTRONIC COPIES OF THIS PLAN SHEET.*

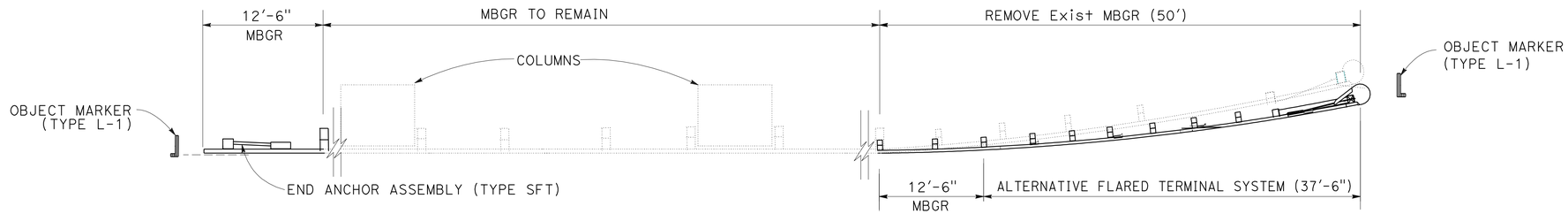


← DIRECTION OF TRAVEL

**DETAIL AH**

Loc 116-65, 116-66

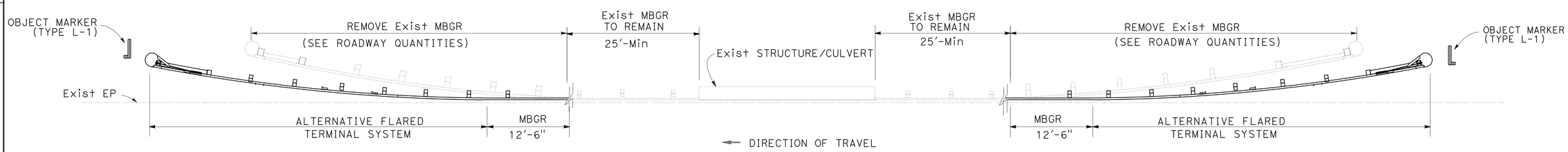


← DIRECTION OF TRAVEL

**DETAIL AI**

Loc 1-28, 1-29, 12-4, 116-2, 116-15, 116-45, 116-46, 116-49

FOR NOTES, ABBREVIATIONS &/OR LEGEND, SEE SHEET C-1

# CONSTRUCTION DETAILS

NO SCALE

C-13

STATE OF CALIFORNIA - DEPARTMENT OF TRANSPORTATION
Caltrans
DESIGN

FUNCTIONAL SUPERVISOR: Ghulam Popal
CALCULATED-DESIGNED BY: K. Chounramany
CHECKED BY: Tam Ly
REVISED BY
DATE REVISED

J:\thermie\0a9111\working_files\clippedSheets\40a911ga013.dgn

LAST REVISION 09-19-08 | DATE PLOTTED => 09-JUN-2009 | TIME PLOTTED => 12:52

| Dist | COUNTY | ROUTE | POST MILES TOTAL PROJECT | SHEET No. | TOTAL SHEETS |
|---|---|---|---|---|---|
| 04 | Son | 1,12,116 | Var | 18 | 49 |

REGISTERED CIVIL ENGINEER DATE 09-19-08

PLANS APPROVAL DATE 11-17-08

REGISTERED PROFESSIONAL ENGINEER Tam Ly No. 69254 Exp. 6-30-10 CIVIL STATE OF CALIFORNIA

*THE STATE OF CALIFORNIA OR ITS OFFICERS OR AGENTS SHALL NOT BE RESPONSIBLE FOR THE ACCURACY OR COMPLETENESS OF ELECTRONIC COPIES OF THIS PLAN SHEET.*

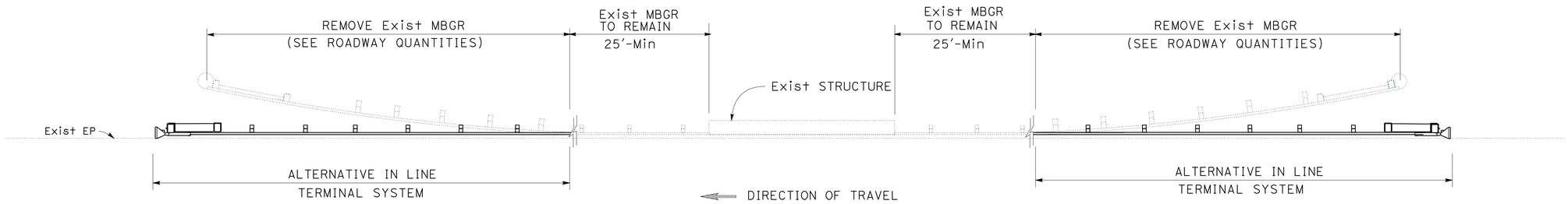


**DETAIL AK**

Loc 1-6, 116-8

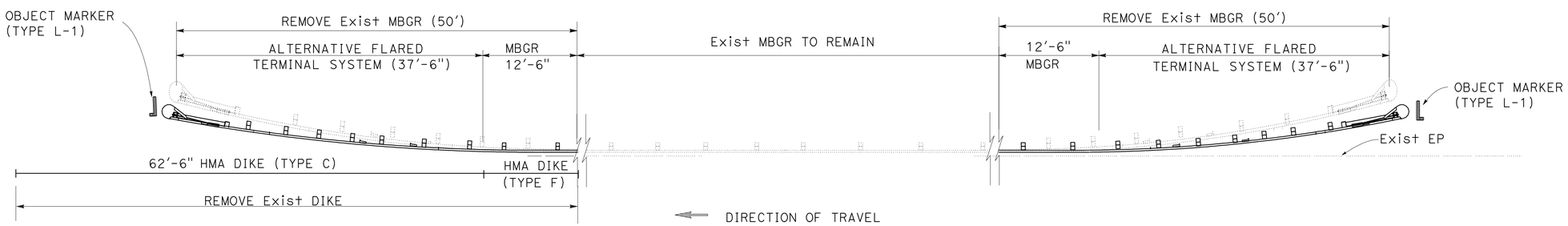


**DETAIL AW**

Loc 116-19

FOR NOTES, ABBREVIATIONS &/OR LEGEND, SEE SHEET C-1

# CONSTRUCTION DETAILS

NO SCALE

C-14

STATE OF CALIFORNIA - DEPARTMENT OF TRANSPORTATION

Caltrans **DESIGN**

FUNCTIONAL SUPERVISOR: Ghulam Popal

CALCULATED-DESIGNED BY: K. Chounramany

CHECKED BY: Tam Ly

REVISED BY

DATE REVISED

J:\thermie\0a9111\working_files\clippedSheets\40a911ga014.dgn

LAST REVISION 09-19-08 DATE PLOTTED => 09-JUN-2009 TIME PLOTTED => 12:52

| Dist | COUNTY | ROUTE | POST MILES TOTAL PROJECT | SHEET No. | TOTAL SHEETS |
|---|---|---|---|---|---|
| 04 | Son | 1,12,116 | Var | 19 | 49 |

09-19-08
REGISTERED CIVIL ENGINEER DATE

11-17-08
PLANS APPROVAL DATE

REGISTERED PROFESSIONAL ENGINEER
Tam Ly
No. 69254
Exp. 6-30-10
CIVIL
STATE OF CALIFORNIA

*THE STATE OF CALIFORNIA OR ITS OFFICERS OR AGENTS SHALL NOT BE RESPONSIBLE FOR THE ACCURACY OR COMPLETENESS OF ELECTRONIC COPIES OF THIS PLAN SHEET.*

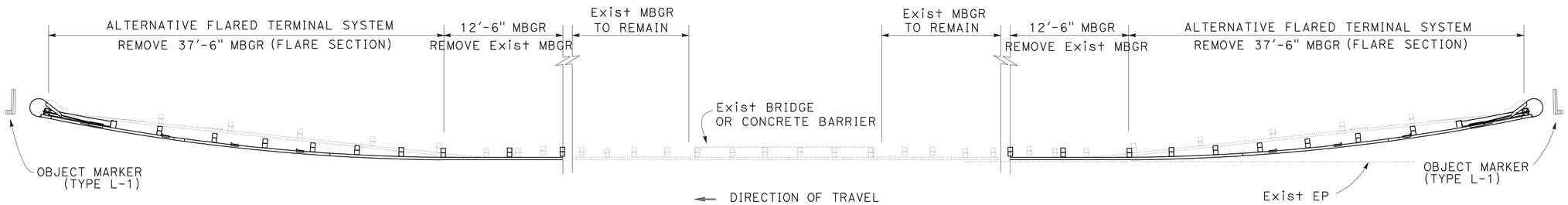


## DETAIL AL

Loc 1-13, 1-14, 1-19, 1-20, 1-24, 116-16, 116-18, 116-23, 116-48
116-59, 116-60

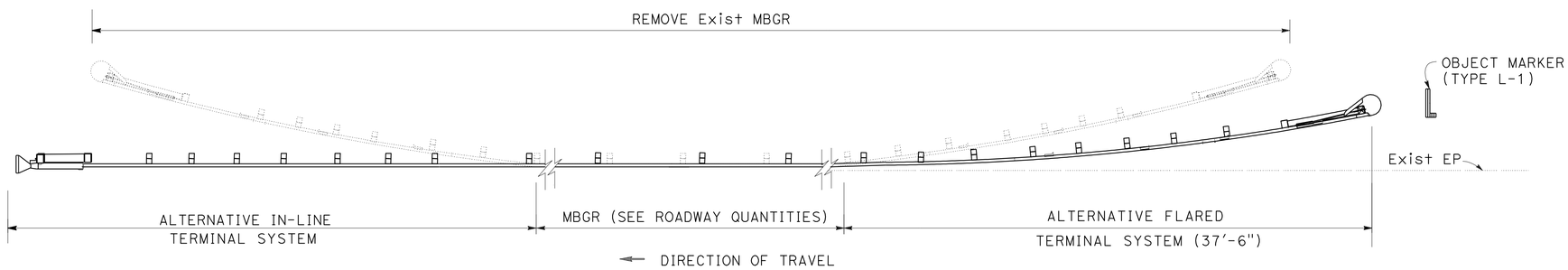


## DETAIL AO

Loc 116-35, 116-47

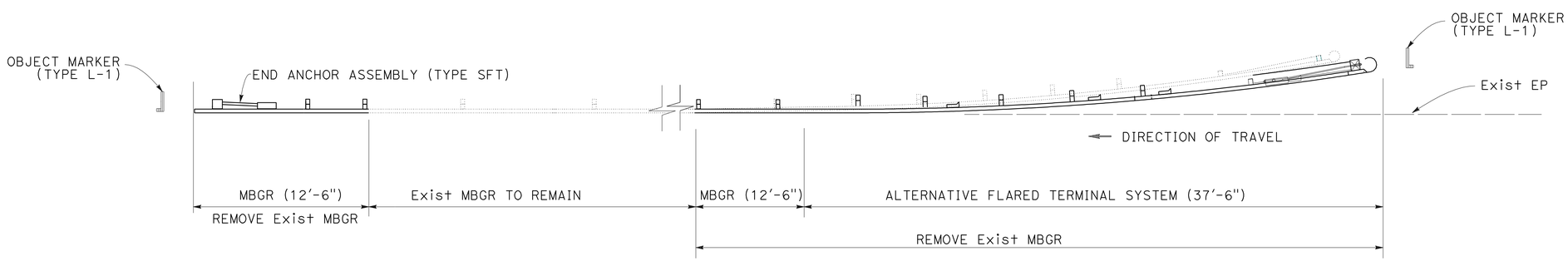


## DETAIL AR

Loc 12-7, 12-8, 12-9, 12-10, 12-13, 12-14, 12-15, 12-16, 12-23

FOR NOTES, ABBREVIATIONS &/OR LEGEND, SEE SHEET C-1

# CONSTRUCTION DETAILS

NO SCALE

C-15

REVISED BY | DATE REVISED
K. Chounramany | Tam Ly
CALCULATED-DESIGNED BY | CHECKED BY
FUNCTIONAL SUPERVISOR: Ghulam Popal

STATE OF CALIFORNIA - DEPARTMENT OF TRANSPORTATION
Caltrans
DESIGN

J:\thermie\0a9111\working_files\clippedSheets\40a911ga015.dgn

LAST REVISION 09-19-08 | DATE PLOTTED => 09-JUN-2009 | TIME PLOTTED => 12:52

| Dist | COUNTY | ROUTE | POST MILES TOTAL PROJECT | SHEET No. | TOTAL SHEETS |
|---|---|---|---|---|---|
| 04 | Son | 1,12,116 | Var | 20 | 49 |

REGISTERED CIVIL ENGINEER DATE 09-19-08

PLANS APPROVAL DATE 11-17-08

REGISTERED PROFESSIONAL ENGINEER Tam Ly No. 69254 Exp. 6-30-10 CIVIL STATE OF CALIFORNIA

*THE STATE OF CALIFORNIA OR ITS OFFICERS OR AGENTS SHALL NOT BE RESPONSIBLE FOR THE ACCURACY OR COMPLETENESS OF ELECTRONIC COPIES OF THIS PLAN SHEET.*

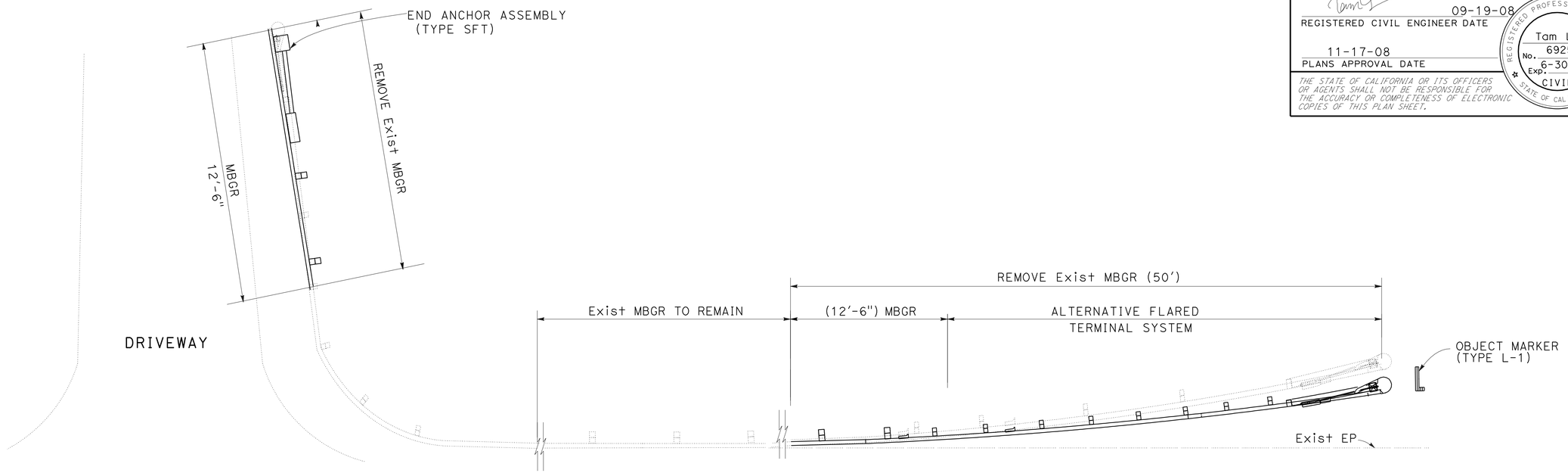


← DIRECTION OF TRAVEL

**DETAIL AT**

Loc 116-14

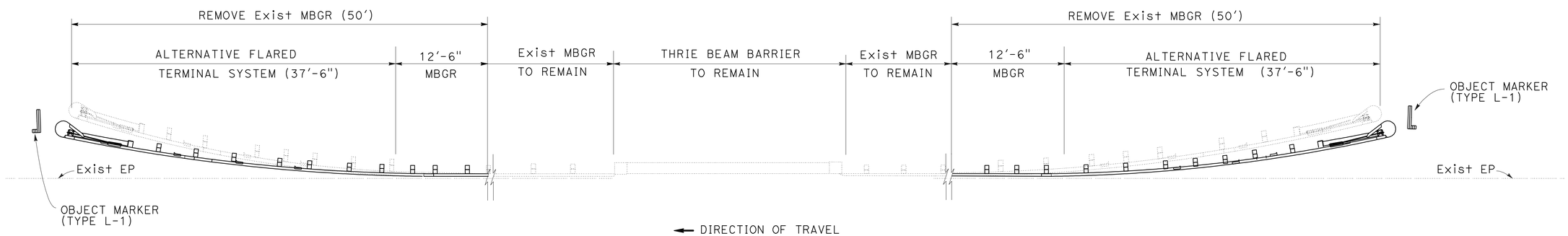


← DIRECTION OF TRAVEL

**DETAIL AU**

Loc 116-50

FOR NOTES, ABBREVIATIONS &/OR LEGEND, SEE SHEET C-1

# CONSTRUCTION DETAILS

NO SCALE

C-16

STATE OF CALIFORNIA - DEPARTMENT OF TRANSPORTATION

Caltrans DESIGN

FUNCTIONAL SUPERVISOR: Ghulam Popal

CALCULATED-DESIGNED BY: K. Chounramany

CHECKED BY: Tam Ly

REVISED BY | DATE REVISED

D:\tmp\40a911ga016.dgn

LAST REVISION 09-19-08 | DATE PLOTTED => 09-JUN-2009 | TIME PLOTTED => 12:52

| Dist | COUNTY | ROUTE | POST MILES TOTAL PROJECT | SHEET No. | TOTAL SHEETS |
|---|---|---|---|---|---|
| 04 | Son | 1,12,116 | Var | 21 | 49 |

REGISTERED CIVIL ENGINEER DATE 09-19-08

PLANS APPROVAL DATE 11-17-08

REGISTERED PROFESSIONAL ENGINEER Tam Ly No. 69254 Exp. 6-30-10 CIVIL STATE OF CALIFORNIA

*THE STATE OF CALIFORNIA OR ITS OFFICERS OR AGENTS SHALL NOT BE RESPONSIBLE FOR THE ACCURACY OR COMPLETENESS OF ELECTRONIC COPIES OF THIS PLAN SHEET.*

NOTE:

EXACT LOCATION AND DISTANCE WILL BE DETERMINED BY AN ENGINEER.

LEGEND:

WORK AREA

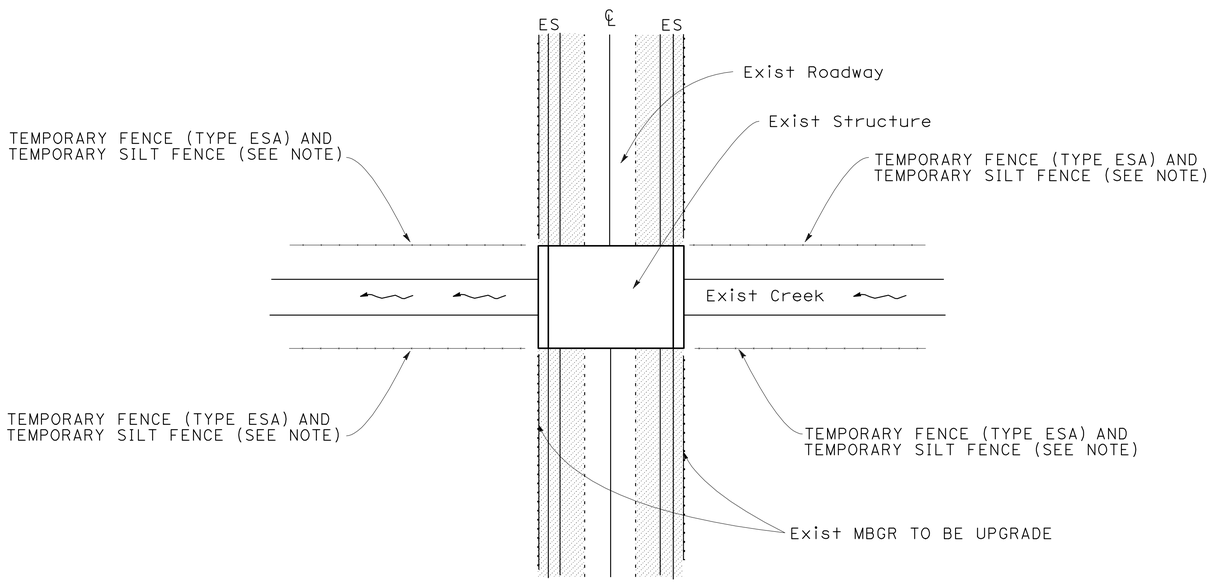


**TYPICAL LAYOUT FOR TEMPORARY FENCE (TYPE ESA) AND TEMPORARY SILT FENCE**

**LOCATION OF TEMPORARY FENCE (TYPE ESA) AND TEMPORARY SILT FENCE**

| ROUTE | PM | DESCRIPTION |
|---|---|---|
| 1 | 12.34 | SALMON Cr |
| 1 | 19.80 | RUSSIAN RIVER |
| 1 | 24.50 | RUSSIAN GULCH |
| 1 | 24.30 | RUSSIAN GULCH |
| 1 | 58.54 | GUALALA RIVER |
| 12 | 9.63 | LAGUNA DE SANTA ROSA |
| 116 | 1.14 | SHEEPHOUSE Cr |
| 116 | 4.93 | AUSTIN Cr |
| 116 | 11.16 | HULBERT Cr |
| 116 | 11.24 | HULBERT Cr |
| 116 | 11.82 | FIFE Cr |
| 116 | 29.83 | BLUCHER Cr |
| | | |

FOR NOTES, ABBREVIATIONS &/OR LEGEND, SEE SHEET C-1

# CONSTRUCTION DETAILS

NO SCALE

C-17

REVISED BY | DATE REVISED

K. Chounramany | Tam Ly

CALCULATED-DESIGNED BY | CHECKED BY

FUNCTIONAL SUPERVISOR: Ghulam Popal

STATE OF CALIFORNIA - DEPARTMENT OF TRANSPORTATION

Caltrans DESIGN

D:\tmp\40a911ga017.dgn

LAST REVISION 09-19-08 | DATE PLOTTED => 09-JUN-2009 | TIME PLOTTED => 12:52

| Dist | COUNTY | ROUTE | POST MILES TOTAL PROJECT | SHEET No. | TOTAL SHEETS |
|---|---|---|---|---|---|
| 04 | Son | 1,12,116 | Var | 22 | 49 |

09-19-08
REGISTERED CIVIL ENGINEER DATE

11-17-08
PLANS APPROVAL DATE

REGISTERED PROFESSIONAL ENGINEER
Tam Ly
No. 69254
Exp. 6-30-10
CIVIL
STATE OF CALIFORNIA

*THE STATE OF CALIFORNIA OR ITS OFFICERS OR AGENTS SHALL NOT BE RESPONSIBLE FOR THE ACCURACY OR COMPLETENESS OF ELECTRONIC COPIES OF THIS PLAN SHEET.*

## NOTE

1. TEMPORARY SILT FENCE SHOWN FOR REFERENCE PURPOSES ONLY.

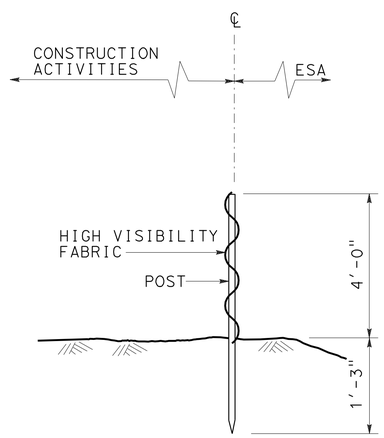


SECTION

**TEMPORARY FENCE (TYPE ESA)**

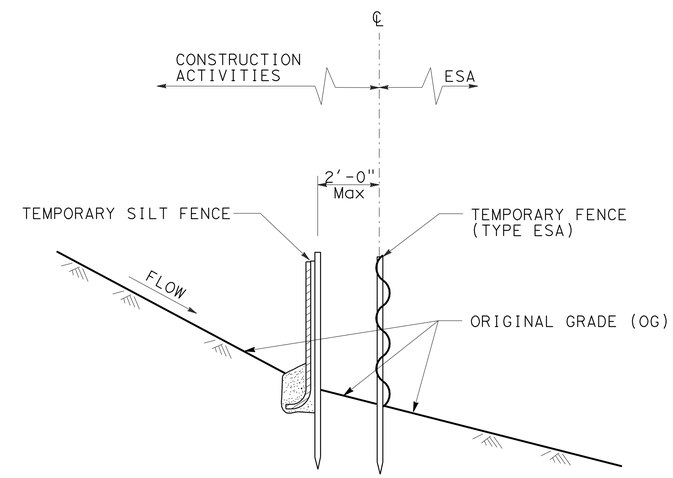


SECTION

**PLACEMENT DETAIL FOR TEMPORARY SILT FENCE USED WITH TEMPORARY FENCE (TYPE ESA)**

(SEE NOTE 1 )

# TEMPORARY WATER POLLUTION CONTROL DETAILS

NO SCALE

**WPCD-1**

STATE OF CALIFORNIA - DEPARTMENT OF TRANSPORTATION
Caltrans **DESIGN**

FUNCTIONAL SUPERVISOR: Ghulam Popal
CALCULATED-DESIGNED BY: K. Chounramany
CHECKED BY: Tam Ly
REVISED BY
DATE REVISED

LAST REVISION 07-21-08
DATE PLOTTED => 09-JUN-2009
TIME PLOTTED => 12:53

J:\thermie\0a9111\working_files\clippedSheets\40a911gc001.dgn

| Dist | COUNTY | ROUTE | POST MILES TOTAL PROJECT | SHEET No. | TOTAL SHEETS |
|---|---|---|---|---|---|
| 04 | Son | 1,12,116 | Var | 23 | 49 |

LICENSED LANDSCAPE ARCHITECT

11-17-08
PLANS APPROVAL DATE

LICENSED LANDSCAPE ARCHITECT
Name & License No.
Signature
11-30-09
Renewal Date
Date
STATE OF CALIFORNIA

*THE STATE OF CALIFORNIA OR ITS OFFICERS OR AGENTS SHALL NOT BE RESPONSIBLE FOR THE ACCURACY OR COMPLETENESS OF SCANNED COPIES OF THIS PLAN SHEET.*

## NOTES:

1. FOR COMPLETE RIGHT OF WAY AND ACCURATE ACCESS DATA, SEE RIGHT OF WAY RECORD MAPS AT DISTRICT OFFICE.
2. EXACT LIMITS OF WORK OR DEPLOYMENT OF EROSION CONTROL MATERIALS SHALL BE DETERMINED BY THE ENGINEER.
3. SEE STD PLAN NSP H51 FOR FIBER ROLLS INSTALLATION DETAILS.

## EROSION CONTROL QUANTITIES

| ROUTE | POST MILE | DIRECTION | MULCH | FIBER ROLLS |
|---|---|---|---|---|
| | | | CY | LF |
| 1 | 0.03 | NORTH BOUND | 4 | 38 |
| 1 | 0.03 | SOUTH BOUND | 4 | 38 |
| 1 | 12.34 | NORTH BOUND | 10 | 100 |
| 1 | 12.34 | SOUTH BOUND | 10 | 100 |
| 1 | 19.8 | NORTH BOUND | 10 | 100 |
| 1 | 19.8 | SOUTH BOUND | 10 | 100 |
| 1 | 24.3 | SOUTH BOUND | 7 | 75 |
| 1 | 24.5 | NORTH BOUND | 7 | 75 |
| 1 | 24.5 | SOUTH BOUND | 7 | 75 |
| 1 | 58.54 | NORTH BOUND | 4 | 38 |
| 1 | 58.54 | SOUTH BOUND | 4 | 38 |
| 12 | 9.63 | EAST BOUND | 4 | 38 |
| 12 | 9.63 | WEST BOUND | 5 | 50 |
| 116 | 1.14 | EAST BOUND | 10 | 100 |
| 116 | 4.93 | EAST BOUND | 7 | 75 |
| 116 | 4.93 | WEST BOUND | 10 | 100 |
| 116 | 11.16 | EAST BOUND | 4 | 38 |
| 116 | 11.24 | EAST BOUND | 10 | 100 |
| 116 | 29.83 | EAST BOUND | 10 | 100 |
| 116 | 29.83 | WEST BOUND | 10 | 100 |
| | | TOTALS | 147 | 1478 |

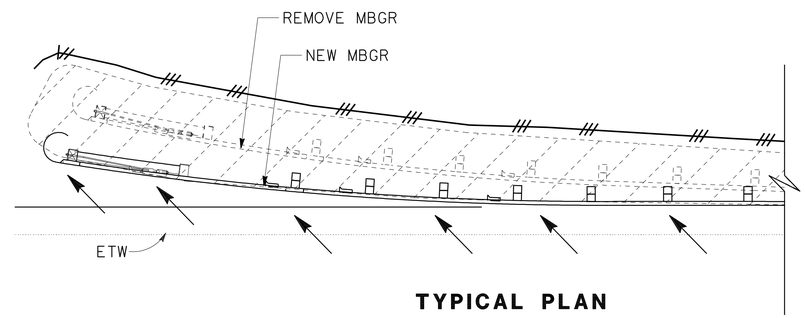


**TYPICAL PLAN**

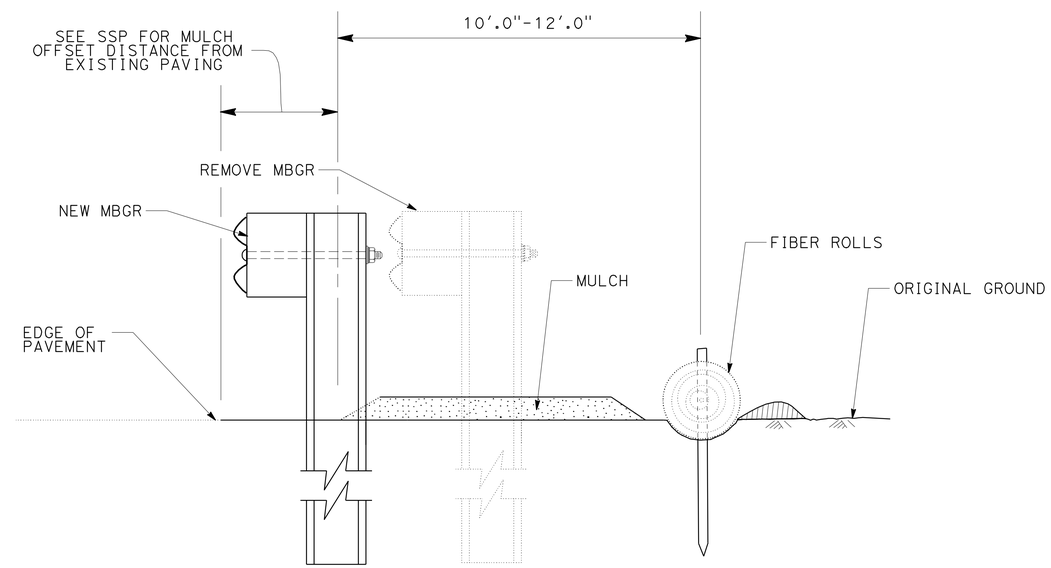


**TYPICAL SECTION**

## LEGEND

MULCH

FIBER ROLLS

AREA FLOW

# EROSION CONTROL DETAILS AND QUANTITIES

NO SCALE

**ECD-1**

STATE OF CALIFORNIA - DEPARTMENT OF TRANSPORTATION
Caltrans OFFICE OF WATER QUALITY

SENIOR LANDSCAPE ARCHITECT: DAVID W. YAM

CALCULATED-DESIGNED BY: JENNIFER EGAWA
CHECKED BY: ALEX MCDONALD

REVISED BY: JSE
DATE REVISED: 9-08

LAST REVISION: 09-09-08
DATE PLOTTED => 09-JUN-2009
TIME PLOTTED => 12:53

| Dist | COUNTY | ROUTE | POST MILES TOTAL PROJECT | SHEET No. | TOTAL SHEETS |
|---|---|---|---|---|---|
| 04 | Son | 1,12,116 | Var | 24 | 49 |

09-11-08
REGISTERED CIVIL ENGINEER DATE

11-17-08
PLANS APPROVAL DATE

REGISTERED PROFESSIONAL ENGINEER
Jerilyn L. Struven
No. 49964
Exp. 12-31-08
CIVIL
STATE OF CALIFORNIA

*THE STATE OF CALIFORNIA OR ITS OFFICERS OR AGENTS SHALL NOT BE RESPONSIBLE FOR THE ACCURACY OR COMPLETENESS OF ELECTRONIC COPIES OF THIS PLAN SHEET.*

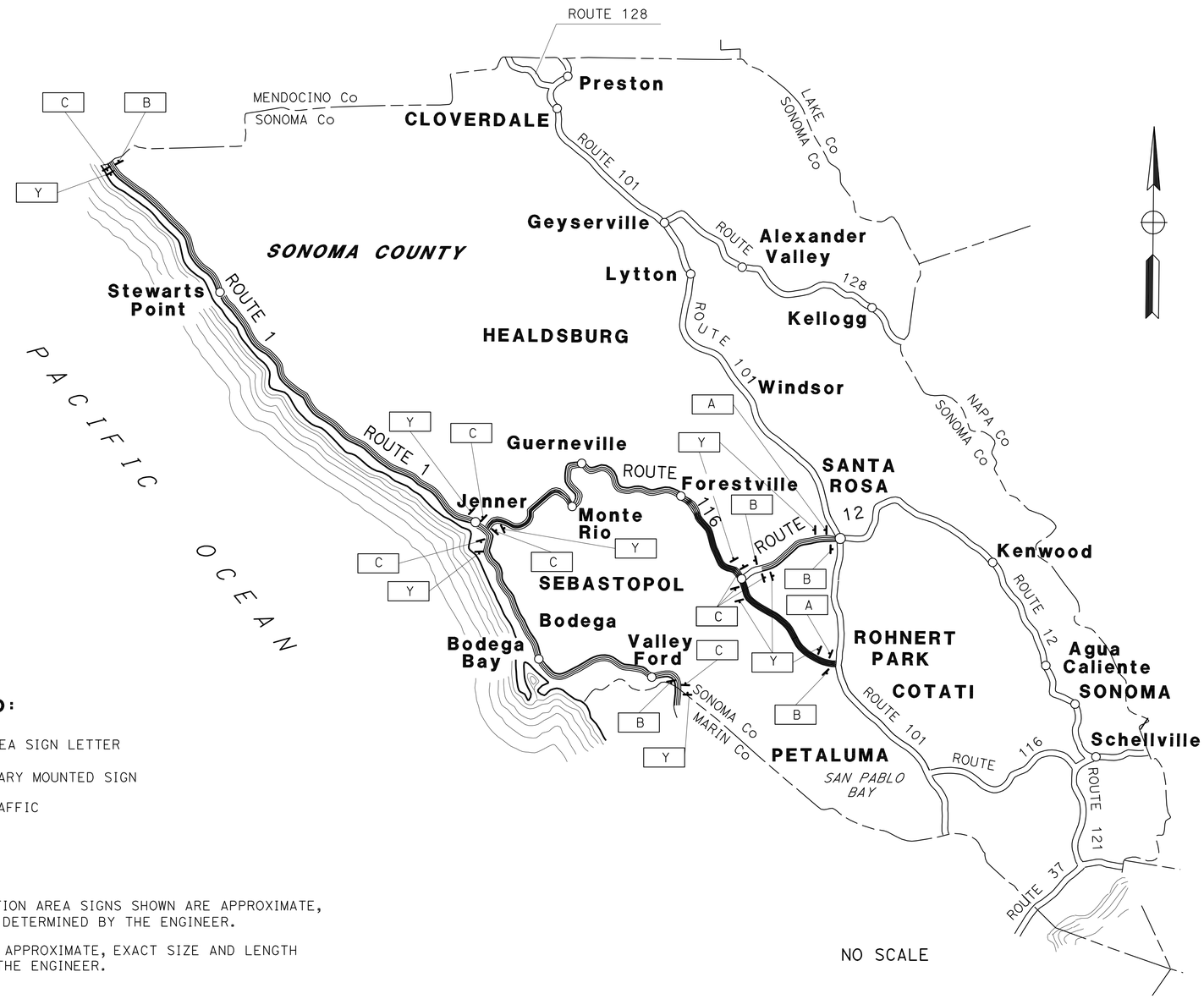


## LEGEND:

| | |
|---|---|
| X | CONSTRUCTION AREA SIGN LETTER |
| (S) | DENOTES STATIONARY MOUNTED SIGN |
| → | DIRECTION OF TRAFFIC |

## NOTES:

1. LOCATION OF CONSTRUCTION AREA SIGNS SHOWN ARE APPROXIMATE, EXACT LOCATION TO BE DETERMINED BY THE ENGINEER.
2. SIGN POST LENGTH ARE APPROXIMATE, EXACT SIZE AND LENGTH TO BE DETERMINED BY THE ENGINEER.

NO SCALE

THIS PLAN ACCURATE FOR CONSTRUCTION AREA SIGN WORK ONLY

# CONSTRUCTION AREA SIGNS

NO SCALE

CS- 1

| REVISED BY | DATE REVISED |
|---|---|
| | |
| | |
| | |
| Henry Tam | Henry Tam |
| CALCULATED-DESIGNED BY | CHECKED BY |
| FUNCTIONAL SUPERVISOR | Jerilyn Struven |

STATE OF CALIFORNIA - DEPARTMENT OF TRANSPORTATION
Caltrans
DESIGN

J:\thermie\0a9111\working_files\clippedSheets\40a9111a001.dgn

LAST REVISION 10-26-08 | DATE PLOTTED => 09-JUN-2009 | TIME PLOTTED => 12:53

| Dist | COUNTY | ROUTE | POST MILES TOTAL PROJECT | SHEET No. | TOTAL SHEETS |
|---|---|---|---|---|---|
| 04 | Son | 1,12,116 | Var | 25 | 49 |

09-11-08
REGISTERED CIVIL ENGINEER DATE

11-17-08
PLANS APPROVAL DATE

REGISTERED PROFESSIONAL ENGINEER
Jerilyn L. Struven
No. 49964
Exp. 12-31-08
CIVIL
STATE OF CALIFORNIA

*THE STATE OF CALIFORNIA OR ITS OFFICERS OR AGENTS SHALL NOT BE RESPONSIBLE FOR THE ACCURACY OR COMPLETENESS OF ELECTRONIC COPIES OF THIS PLAN SHEET.*

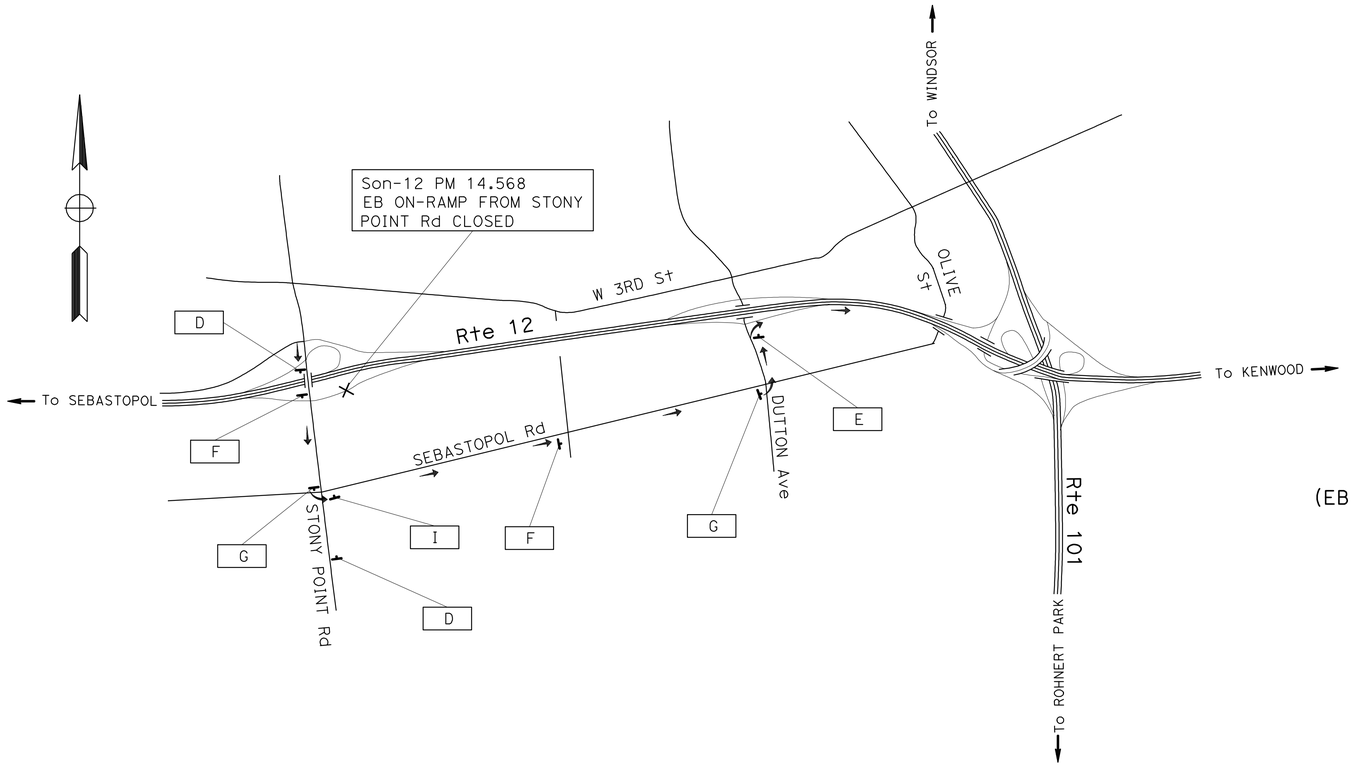


| DETOUR-VIA |
|---|
| CONTINUE ON SB STONY POINT Rd,<br>LEFT SEBASTOPOL Rd,<br>LEFT DUTTON Ave,<br>EB Rte 12 ON-RAMP FROM DUTTON Ave. |

**DETOUR PLAN No. 1**

(EB Rte 12 ON-RAMP FROM STONY POINT Rd CLOSED)

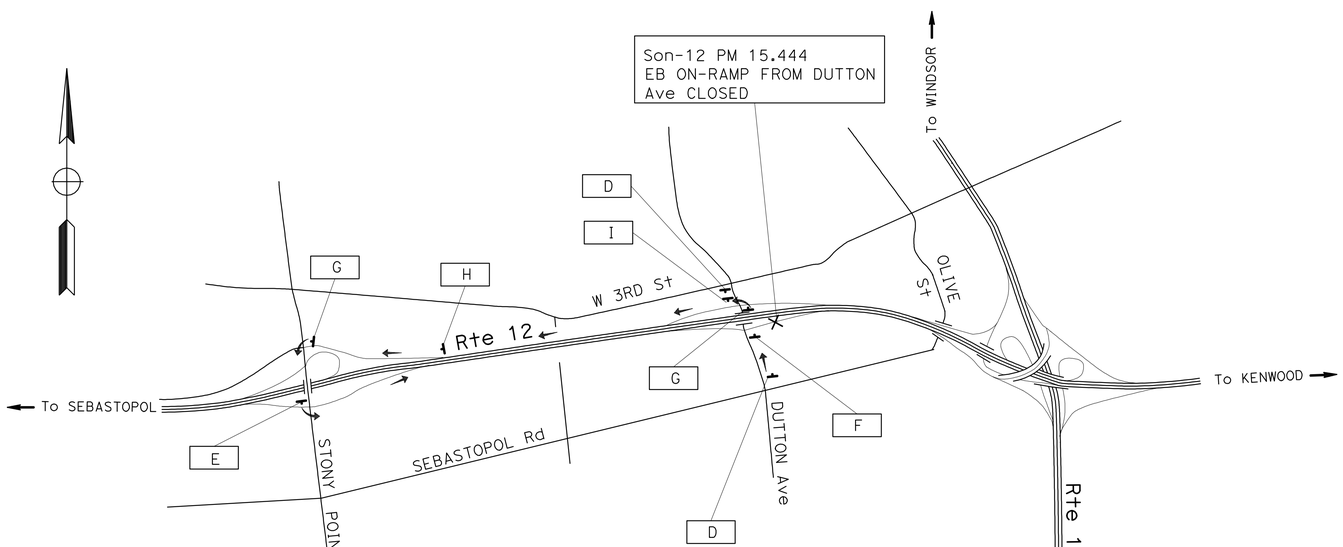


| DETOUR-VIA |
|---|
| WB Rte 12 ON-RAMP FROM DUTTON Ave,<br>CONTINUE ON WB Rte 12,<br>WB Rte 12 OFF-RAMP TO STONY POINT Rd,<br>LEFT STONY POINT Rd,<br>EB Rte 12 ON-RAMP FROM STONY POINT Rd. |

**DETOUR PLAN No. 2**

(EB Rte 12 ON-RAMP FROM DUTTON Ave CLOSED)

FOR NOTES, ABBREVIATIONS &/OR LEGEND, SEE SHEET CS-1

THIS PLAN ACCURATE FOR CONSTRUCTION AREA SIGN WORK ONLY

# CONSTRUCTION AREA SIGNS
## DETOUR PLAN

NO SCALE

**CS-2**

| REVISED BY | DATE REVISED |
|---|---|
| | |

| CALCULATED-DESIGNED BY | Henry Tam |
|---|---|
| CHECKED BY | Henry Tam |

FUNCTIONAL SUPERVISOR: Jerilyn Struven

STATE OF CALIFORNIA - DEPARTMENT OF TRANSPORTATION
Caltrans **DESIGN**

J:\thermie\0a9111\working_files\clippedSheets\40a9111a002.dgn

LAST REVISION 09-23-08 | DATE PLOTTED => 09-JUN-2009 | TIME PLOTTED => 12:53

| Dist | COUNTY | ROUTE | POST MILES TOTAL PROJECT | SHEET No. | TOTAL SHEETS |
|---|---|---|---|---|---|
| 04 | Son | 1,12,116 | Var | 26 | 49 |

09-11-08
REGISTERED CIVIL ENGINEER DATE

11-17-08
PLANS APPROVAL DATE

REGISTERED PROFESSIONAL ENGINEER
Jerilyn L. Struven
No. 49964
Exp. 12-31-08
CIVIL
STATE OF CALIFORNIA

*THE STATE OF CALIFORNIA OR ITS OFFICERS OR AGENTS SHALL NOT BE RESPONSIBLE FOR THE ACCURACY OR COMPLETENESS OF ELECTRONIC COPIES OF THIS PLAN SHEET.*

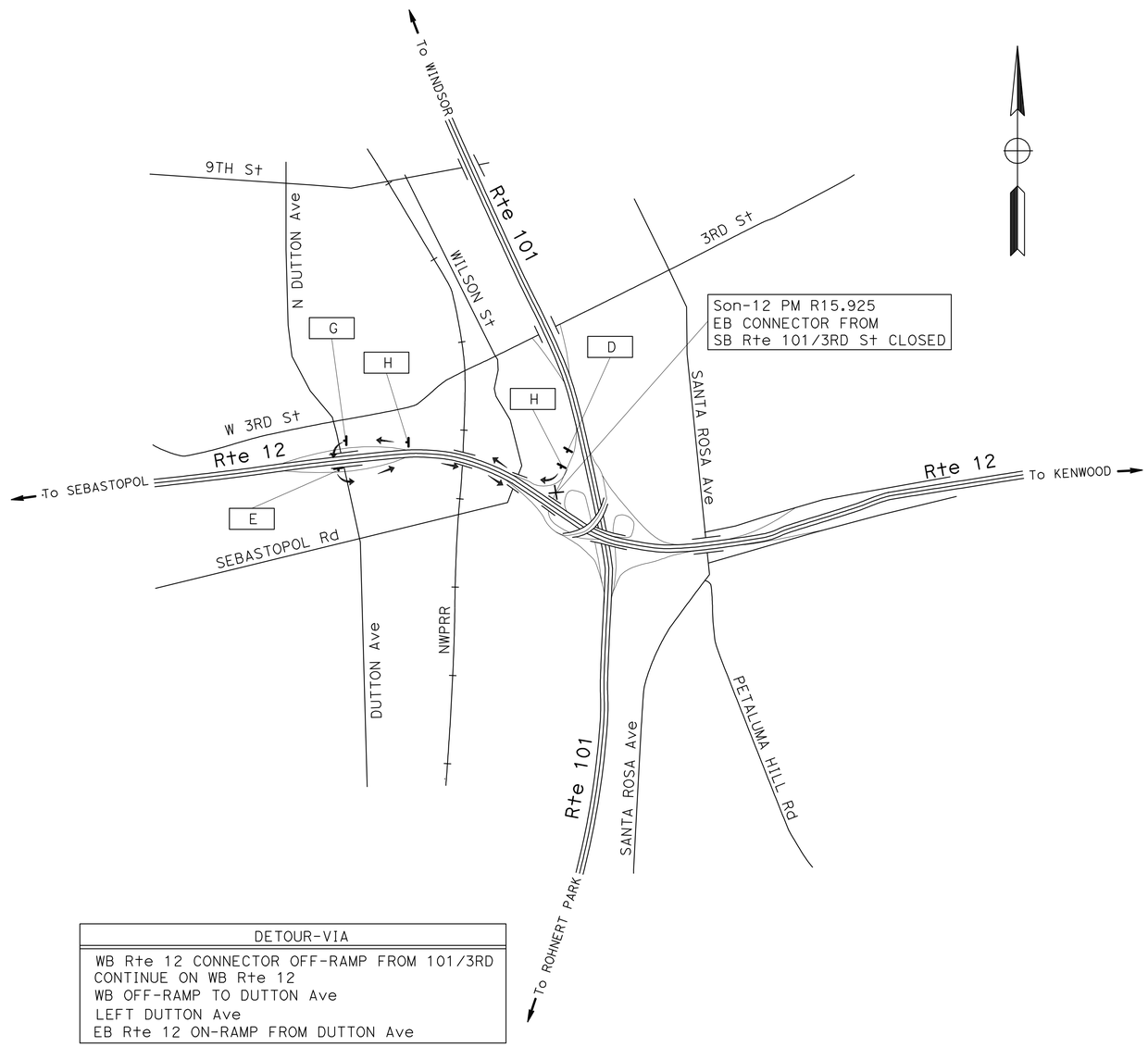


| DETOUR-VIA |
|---|
| WB Rte 12 CONNECTOR OFF-RAMP FROM 101/3RD |
| CONTINUE ON WB Rte 12 |
| WB OFF-RAMP TO DUTTON Ave |
| LEFT DUTTON Ave |
| EB Rte 12 ON-RAMP FROM DUTTON Ave |

**DETOUR PLAN No. 3**

(EB Rte 12 CONNECTOR FROM SB Rte 101/3RD St CLOSED)

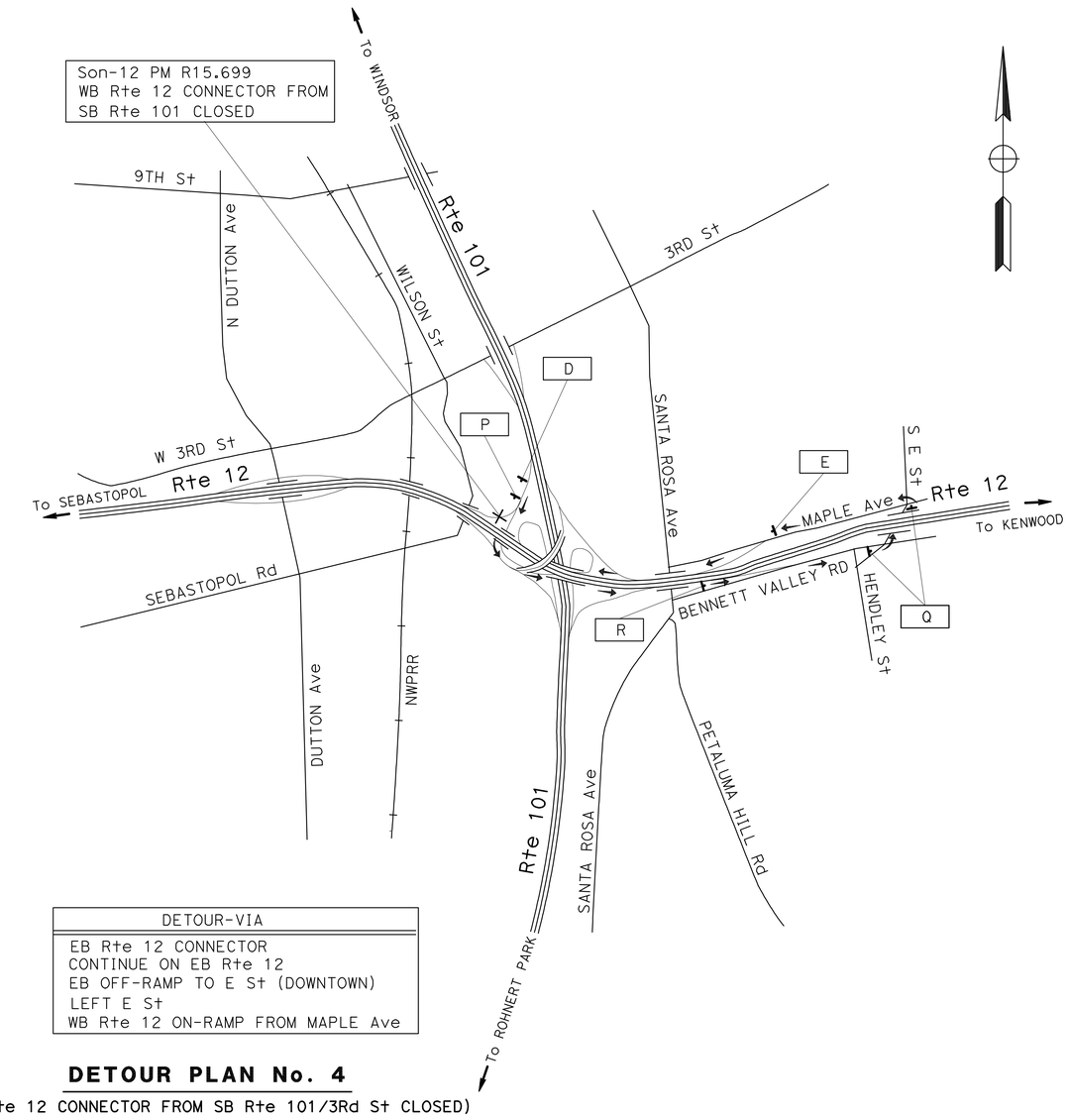


| DETOUR-VIA |
|---|
| EB Rte 12 CONNECTOR |
| CONTINUE ON EB Rte 12 |
| EB OFF-RAMP TO E St (DOWNTOWN) |
| LEFT E St |
| WB Rte 12 ON-RAMP FROM MAPLE Ave |

**DETOUR PLAN No. 4**

(WB Rte 12 CONNECTOR FROM SB Rte 101/3Rd St CLOSED)

FOR NOTES, ABBREVIATIONS &/OR LEGEND, SEE SHEET CS-1

THIS PLAN ACCURATE FOR CONSTRUCTION AREA SIGN WORK ONLY

# CONSTRUCTION AREA SIGNS
## DETOUR PLAN

NO SCALE

**CS-3**

REVISED BY | DATE REVISED
Henry Tam | Henry Tam
CALCULATED-DESIGNED BY | CHECKED BY
FUNCTIONAL SUPERVISOR
Jerilyn Struven

STATE OF CALIFORNIA - DEPARTMENT OF TRANSPORTATION
Caltrans
DESIGN

LAST REVISION 09-23-08 | DATE PLOTTED => 09-JUN-2009 | TIME PLOTTED => 12:53

J:\thermie\0a9111\working_files\clippedSheets\40a9111a003.dgn

| Dist | COUNTY | ROUTE | POST MILES TOTAL PROJECT | SHEET No. | TOTAL SHEETS |
|---|---|---|---|---|---|
| 04 | Son | 1,12,116 | Var | 27 | 49 |

REGISTERED CIVIL ENGINEER DATE 09-11-08

PLANS APPROVAL DATE 11-17-08

REGISTERED PROFESSIONAL ENGINEER Jerilyn L. Struven No. 49964 Exp. 12-31-08 CIVIL STATE OF CALIFORNIA

*THE STATE OF CALIFORNIA OR ITS OFFICERS OR AGENTS SHALL NOT BE RESPONSIBLE FOR THE ACCURACY OR COMPLETENESS OF ELECTRONIC COPIES OF THIS PLAN SHEET.*

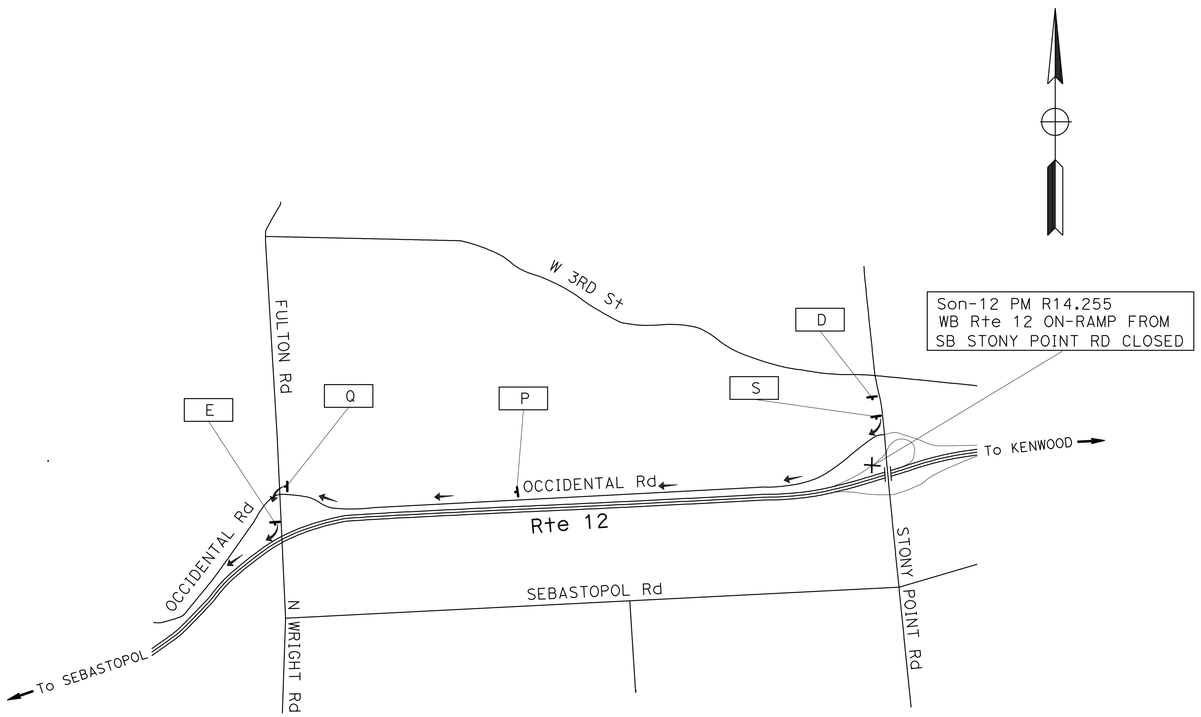


| DETOUR-VIA |
|---|
| RIGHT OCCIDENTAL RD<br>LEFT FULTON RD<br>RIGHT Rte 12 (CONVENTIONAL HWY) |

## DETOUR PLAN No. 5

(WB Rte 12 ON-RAMP FROM SB STONY POINT RD CLOSED)

FOR NOTES, ABBREVIATIONS &/OR LEGEND, SEE SHEET CS-1

THIS PLAN ACCURATE FOR CONSTRUCTION AREA SIGN WORK ONLY

# CONSTRUCTION AREA SIGNS
## DETOUR PLAN

NO SCALE

**CS-4**

STATE OF CALIFORNIA - DEPARTMENT OF TRANSPORTATION

Caltrans **DESIGN**

FUNCTIONAL SUPERVISOR: Jerilyn Struven

CALCULATED-DESIGNED BY: Henry Tam

CHECKED BY: Henry Tam

REVISED BY

DATE REVISED

LAST REVISION 09-23-08

DATE PLOTTED => 09-JUN-2009

TIME PLOTTED => 12:53

J:\thermie\0a9111\working_files\clippedSheets\40a9111a004.dgn

BORDER LAST REVISED 3/1/2007

RELATIVE BORDER SCALE IS IN INCHES 0 1 2 3

USERNAME => trmikesl

DGN FILE => 40a9111a004.dgn

CU 04231

EA 0A9111

| Dist | COUNTY | ROUTE | POST MILES TOTAL PROJECT | SHEET No. | TOTAL SHEETS |
|---|---|---|---|---|---|
| 04 | Son | 1,12,116 | Var | 28 | 49 |

REGISTERED CIVIL ENGINEER DATE 09-11-08

PLANS APPROVAL DATE 11-17-08

REGISTERED PROFESSIONAL ENGINEER Jerilyn L. Struven No. 49964 Exp. 12-31-08 CIVIL STATE OF CALIFORNIA

*THE STATE OF CALIFORNIA OR ITS OFFICERS OR AGENTS SHALL NOT BE RESPONSIBLE FOR THE ACCURACY OR COMPLETENESS OF ELECTRONIC COPIES OF THIS PLAN SHEET.*

## STATIONARY MOUNTED CONSTRUCTION AREA SIGNS

| SIGN No. | MUTCD CODE | MESSAGE | PANEL SIZE | NUMBER OF POST AND SIZE | QUANTITY (EA) |
|---|---|---|---|---|---|
| A | W20-1 | ROAD WORK AHEAD | 48''x 48'' | 1- 4''x 6'' | 2 |
| B | G20-2 | END ROAD WORK | 36''x 18'' | 1- 4''x 4'' | 5 |
| C | W20-1 | ROAD WORK AHEAD | 36''x 36'' | 1- 4''x 4'' | 8 |
| D | W20-2 | DETOUR AHEAD | 48''x 48'' | 1- 4''x 6'' | 7 |
| E | M4-8a | END DETOUR | 24''x 18'' | 1- 4''x 4'' | 5 |
| F | M4-8 | DETOUR | 24''x 12'' | 1- 4''x 6'' | 3 |
| | G28-2(12)(CA) | ROUTE SHIELD 12 | 24''x 25'' | | |
| | M3-2 | EAST | 24''x 12'' | | |
| | M6-3 (↑) | UP ARROW | 21''x 15'' | | |
| G | M4-8 | DETOUR | 24''x 12'' | 1- 4''x 6'' | 5 |
| | G28-2(12)(CA) | ROUTE SHIELD 12 | 24''x 25'' | | |
| | M3-2 | EAST | 24''x 12'' | | |
| | M6-1 (←) | LEFT ARROW | 21''x 15'' | | |
| H | M4-8 | DETOUR | 24''x 12'' | 1- 4''x 6'' | 3 |
| | G28-2(12)(CA) | ROUTE SHIELD 12 | 24''x 25'' | | |
| | M3-2 | EAST | 24''x 12'' | | |
| | M6-2 (↗) | UP RIGHT ARROW | 21''x 15'' | | |
| I | M4-8 | DETOUR | 24''x 12'' | 1- 4''x 6'' | 2 |
| | G28-2(12)(CA) | ROUTE SHIELD 12 | 24''x 25'' | | |
| | M3-2 | EAST | 24''x 12'' | | |
| | M6-1 (→) | RIGHT ARROW | 21''x 15'' | | |

## STATIONARY MOUNTED CONSTRUCTION AREA SIGNS

| SIGN No. | MUTCD CODE | MESSAGE | PANEL SIZE | NUMBER OF POST AND SIZE | QUANTITY (EA) |
|---|---|---|---|---|---|
| P | M4-8 | DETOUR | 24''x 12'' | 1- 4''x 6'' | 2 |
| | G28-2(12)(CA) | ROUTE SHIELD 12 | 24''x 25'' | | |
| | M3-4 | WEST | 24''x 12'' | | |
| | M6-3 (↑) | UP ARROW | 21''x 15'' | | |
| Q | M4-8 | DETOUR | 24''x 12'' | 1- 4''x 6'' | 3 |
| | G28-2(12)(CA) | ROUTE SHIELD 12 | 24''x 25'' | | |
| | M3-4 | WEST | 24''x 12'' | | |
| | M6-1 (←) | LEFT ARROW | 21''x 15'' | | |
| R | M4-8 | DETOUR | 24''x 12'' | 1- 4''x 6'' | 1 |
| | G28-2(12)(CA) | ROUTE SHIELD 12 | 24''x 25'' | | |
| | M3-4 | WEST | 24''x 12'' | | |
| | M6-3 (↗) | UP RIGHT ARROW | 21''x 15'' | | |
| S | M4-8 | DETOUR | 24''x 12'' | 1- 4''x 6'' | 1 |
| | G28-2(12)(CA) | ROUTE SHIELD 12 | 24''x 25'' | | |
| | M3-4 | WEST | 24''x 12'' | | |
| | M6-1 (→) | RIGHT ARROW | 21''x 15'' | | |
| Y | C40(CA) | TRAFFIC FINES DOUBLED IN CONSTRUCTION ZONE | 72''x 30'' | 2- 4''x 6'' | 10 |
| | | | | TOTAL | 57 |

NOTE: CALIFORNIA SIGN CODES ARE DESIGNATED BY (CA). OTHERWISE, FEDERAL MUTCD CODES ARE SHOWN.

THIS PLAN ACCURATE FOR CONSTRUCTION AREA SIGN WORK ONLY

# CONSTRUCTION AREA SIGNS
## SIGN QUANTITIES

CS- 5

STATE OF CALIFORNIA - DEPARTMENT OF TRANSPORTATION
Caltrans DESIGN

FUNCTIONAL SUPERVISOR: Jerilyn Struven
CALCULATED-DESIGNED BY: Henry Tam
CHECKED BY: Henry Tam
REVISED BY
DATE REVISED

J:\thermie\0a9111\working_files\clippedSheets\40a9111a005.dgn

LAST REVISION 09-26-08 | DATE PLOTTED => 09-JUN-2009 | TIME PLOTTED => 12:54

BORDER LAST REVISED 3/1/2007 | RELATIVE BORDER SCALE IS IN INCHES 0 1 2 3 | USERNAME => trmikesl | DGN FILE => 40a9111a005.dgn | CU 04231 | EA 0A9111

| Dist | COUNTY | ROUTE | POST MILES TOTAL PROJECT | SHEET No. | TOTAL SHEETS |
|---|---|---|---|---|---|
| 04 | Son | 1,12,116 | Var | 29 | 49 |

REGISTERED CIVIL ENGINEER 09-19-08 DATE

PLANS APPROVAL DATE 11-17-08

REGISTERED PROFESSIONAL ENGINEER Tam Ly No. 69254 Exp. 6-30-10 CIVIL STATE OF CALIFORNIA

*THE STATE OF CALIFORNIA OR ITS OFFICERS OR AGENTS SHALL NOT BE RESPONSIBLE FOR THE ACCURACY OR COMPLETENESS OF ELECTRONIC COPIES OF THIS PLAN SHEET.*

EXISTING UTILITY FACILITIES HAVE NOT BEEN POSITIVELY LOCATED.

**ABBREVIATION:**

Btwn BETWEEN

# ROADWAY QUANTITIES

| ROUTE-LOCATION No. | DESCRIPTION | DIRECTION | PM | REMOVE AC DIKE (LF) | METAL BEAM GUARDRAILING LAYOUT TYPE | (N) REMOVE MARKER (EA) | REMOVE MBGR (LF) | MINOR HMA (TON) | PLACE HMA DIKE (TYPE C) (LF) | PLACE HMA DIKE (TYPE F) (LF) | OBJECT MARKER (TYPE L-1) (EA) | GUARD RAILING DELINEATOR (TYPE E) (EA) | GUARD RAILING DELINEATOR (TYPE F) (EA) | MBGR (WOOD POST) (LF) | ALTERNATIVE FLARED TERMINAL SYSTEM (EA) | ALTERNATIVE IN-LINE TERMINAL SYSTEM (EA) | END ANCHOR ASSEMBLY (TYPE SFT) (EA) | RESET ROADSIDE SIGN (EA) | COMMENTS |
|---|---|---|---|---|---|---|---|---|---|---|---|---|---|---|---|---|---|---|---|
| | ROUTE 1 | | | | | | | | | | | | | | | | | | |
| | FROM COUNTY LINE TO S. OF RUSSIAN GULCH BRIDGE | | | | | | | | | | | | | | | | | | |
| 1-1 | NB, @ COUNTY LINE @ AMERICAN Cr Br | NB | 0.03 | | 12BB | 1 | 37.5 | | | | 1 | 2 | | 12.5 | 1 | | | 1 | SEE DETAIL Z , SHEET C-11 |
| 1-2 | SB, @ COUNTY LINE @ AMERICAN Cr Br | SB | 0.03 | | 12B | 1 | 37.5 | | | | 1 | 2 | | 12.5 | 1 | | | 2 | SEE DETAIL X, SHEET C-10 |
| 1-3 | SB, N OF A QUARRY ON NB Rte 1 SIDE | SB | 7.49 | | 11E | 1 | 100 | | | | 2 | 4 | | 25 | 2 | | | 1 | SEE DETAIL J , SHEET C-4 |
| 1-4 | NB, S OF S HARBOR Dr | NB | 8.63 | | 11E | 1 | 100 | | | | 2 | 4 | | 25 | 2 | | | 1 | SEE DETAIL J, SHEET C-4 |
| 1-5 | SB, S OF S HARBOR Dr | SB | 8.63 | | 11E | 1 | 100 | | | | 2 | 4 | | 25 | 2 | | | | SEE DETAIL J, SHEET C-4 |
| 1-6 | SB, S OF S HARBOR Dr., N & S OF A RETAINING WALL | SB | 8.71 | | 12A | 1 | 12.5 | | | | | 4 | | | | 2 | | | SEE DETAIL AK, SHEET C-14 |
| 1-7 | NB, Btwn DORAN PARK Rd & N HARBOR WAY | NB | 9.16 | 150 | 11E | | 100 | 0.8 | 125 | 25 | 2 | 4 | | 25 | 2 | | | 1 | SEE DETAIL BE, SHEET C-11 |
| 1-8 | SB, Btwn DORAN PARK Rd & N HARBOR WAY | SB | 9.16 | | 11E | 1 | 100 | | | | 2 | 4 | | 25 | 2 | | | | SEE DETAIL J, SHEET C-4 |
| 1-9 | SB, S OF WINDY LANE | SB | 10.22 | | 11E | 1 | 75 | | | | | 4 | | | | 2 | | | SEE DETAIL L, SHEET C-5 |
| 1-10 | SB, ACROSS BAY FLAT Rd | SB | 10.49 | | 11E | 1 | 100 | | | | 2 | 4 | | 25 | 2 | | | 2 | SEE DETAIL J, SHEET C-4 |
| 1-11 | SB, N OF BAY FLAT Rd | SB | 10.5 | | 11E | 1 | 50 | | | | 1 | 2 | | 12.5 | 1 | | | | SEE DETAIL T, SHEET C-8 |
| 1-12 | NB, N OF WINDY Ln, LEFT-TURN CURVE W/15MPH CURVE SIGN | NB | 10.66 | | 11E | 1 | 148 | | | | 2 | 6 | | 75 | 2 | | | 2 | SEE DETAIL I, SHEET C-4 |
| 1-13 | NB, SALMON Cr Br | NB | 12.34 | | 12B | 1 | 100 | | | | 2 | 4 | | 25 | 2 | | | 2 | SEE DETAIL AL, SHEET C-15 |
| 1-14 | SB, SALMON Cr Br | SB | 12.34 | | 12B | 1 | 100 | | | | 2 | 4 | | 25 | 2 | | | | SEE DETAIL AL, SHEET C-15 |
| 1-15 | SB, S OF PORTUGUESE BEACH | SB | 14.63 | | 11E | 1 | 100 | | | | 2 | 4 | | 25 | 2 | | | | SEE DETAIL J, SHEET C-4 |
| 1-16 | SB, S OF CARLEVARDO WAY | SB | 17.48 | | 11E | 1 | 100 | | | | 2 | 4 | | 25 | 2 | | | | SEE DETAIL J, SHEET C-4 |
| 1-17 | SB, A LEFT-TURN CURVE W/20MPH SIGN | SB | 17.96 | | 11E | 1 | 100 | | | | 2 | 4 | | 25 | 2 | | | 1 | SEE DETAIL J, SHEET C-4 |
| 1-18 | NB, A LEFT-TURN CURVE, S OF WILLOW Cr Rd | NB | 19.66 | | 11E | 1 | 100 | | | | 2 | 4 | | 25 | 2 | | | 1 | SEE DETAIL J, SHEET C-4 |
| 1-19 | NB, RUSSIAN RIVER Br | NB | 19.8 | | 12B | 1 | 100 | | | | 2 | 4 | | 25 | 2 | | | | SEE DETAIL AL, SHEET C-15 |
| | | | | | | | | | | | | | | | | | | | |

(N) NOT A SEPARATE PAY ITEM, FOR INFORMATION ONLY.

## SUMMARY OF QUANTITIES

Q-1

REVISED BY | DATE REVISED

K. Chounramany | Tam Ly

CALCULATED-DESIGNED BY | CHECKED BY

FUNCTIONAL SUPERVISOR: Ghulam Popal

STATE OF CALIFORNIA - DEPARTMENT OF TRANSPORTATION

Caltrans DESIGN

J:\thermie\0a9111\working_files\clippedSheets\40a9111pa001.dgn

LAST REVISION 09-26-08 | DATE PLOTTED => 09-JUN-2009 | TIME PLOTTED => 12:54

| Dist | COUNTY | ROUTE | POST MILES TOTAL PROJECT | SHEET No. | TOTAL SHEETS |
|---|---|---|---|---|---|
| 04 | Son | 1,12,116 | Var | 30 | 49 |

REGISTERED CIVIL ENGINEER DATE 09-19-08

PLANS APPROVAL DATE 11-17-08

REGISTERED PROFESSIONAL ENGINEER Tam Ly No. 69254 Exp. 6-30-10 CIVIL STATE OF CALIFORNIA

*THE STATE OF CALIFORNIA OR ITS OFFICERS OR AGENTS SHALL NOT BE RESPONSIBLE FOR THE ACCURACY OR COMPLETENESS OF ELECTRONIC COPIES OF THIS PLAN SHEET.*

# ROADWAY QUANTITIES

| ROUTE-LOCATION No. | DESCRIPTION | DIRECTION | PM | REMOVE AC DIKE | METAL BEAM GUARDRAILING LAYOUT TYPE | (N) REMOVE MARKER | REMOVE MBGR | MINOR HMA | PLACE HMA DIKE (TYPE C) | PLACE HMA DIKE (TYPE F) | OBJECT MARKER (TYPE L-1) | GUARD RAILING DELINEATOR (TYPE E) | GUARD RAILING DELINEATOR (TYPE F) | MBGR (WOOD POST) | ALTERNATIVE FLARED TERMINAL SYSTEM | ALTERNATIVE IN-LINE TERMINAL SYSTEM | END ANCHOR ASSEMBLY (TYPE SFT) | RESET ROADSIDE SIGN | COMMENTS |
|---|---|---|---|---|---|---|---|---|---|---|---|---|---|---|---|---|---|---|---|
| | | | | LF | | EA | LF | TON | LF | | EA | | | LF | EA | | | | |
| | ROUTE 1 | | | | | | | | | | | | | | | | | | |
| | FROM COUNTY LINE TO S. OF RUSSIAN GULCH BRIDGE | | | | | | | | | | | | | | | | | | |
| 1-20 | SB, RUSSIAN RIVER Br | SB | 19.8 | | 12B | 1 | 100 | | | | 2 | 4 | | 25 | 2 | | | | SEE DETAIL AL, SHEET C-15 |
| 1-21 | SB, ACROSS THE LAPORT Dr | SB | 21.5 | 150 | 11E | 1 | 100 | 0.5 | 125 | 25 | 2 | 4 | | 25 | 2 | | | 1 | SEE DETAIL BE , SHEET C-11 |
| 1-22 | SB, BETWEEN LAPORT Dr & BURKE AVE, Conc Struct | SB | 21.6 | | 11E | 1 | 50 | | | | 1 | 2 | | 12.5 | 1 | | | | SEE DETAIL S, SHEET C-8 |
| 1-23 | SB, CLIFF W PULLOUT AREA | SB | 22.08 | | 11E | 1 | 100 | | | | 2 | 4 | | 25 | 2 | | | | SEE DETAIL J , SHEET C-4 |
| 1-24 | SB, N OF A LEFT-TURN CURVE WITH LEFT ARROW SIGN, Conc Struct | SB | 22.41 | | 12B | 1 | 100 | | | | 2 | 4 | | 25 | 2 | | | | SEE DETAIL AL , SHEET C-15 |
| 1-25 | SB, A LEFT-TURN CURVE AND CLIFF | SB | 22.57 | | 11E | 1 | 100 | | | | 2 | 4 | | 25 | 2 | | | 1 | SEE DETAIL J, SHEET C-4 |
| 1-26 | SB, S OF PULLOUT AREA, WITH COMPOUND CURVE, RIGHT ARROW SIGN | SB | 24.17 | | 11E | 1 | 100 | | | | 2 | 4 | | 25 | 2 | | | 1 | SEE DETAIL J , SHEET C-4 |
| 1-27 | SB, BETWEEN DIRT PULLOUT AREA, S OF RUSSIAN GULCH Br | SB | 24.3 | 75 | 11B | 1 | 75 | 0.6 | 62.5 | 12.5 | 2 | 4 | | 37.5 | 1 | | 1 | | SEE DETAIL U, SHEET C-9 |
| 1-28 | NB, RUSSIAN GULCH Br | NB | 24.5 | | 12B | 1 | 75 | | | | 2 | 4 | | 25 | 2 | | | | SEE DETAIL AI , SHEET C-13 |
| 1-29 | SB, RUSSIAN GULCH Br | SB | 24.5 | | 12B | 1 | 75 | | | | 2 | 4 | | 25 | 2 | | | | SEE DETAIL AI , SHEET C-13 |
| 1-30 | SB, N OF CATTLE GUARD, WINDING Rd | SB | 25.17 | 150 | 11E | 1 | 100 | 0.8 | 125 | 25 | 2 | 4 | | 25 | 2 | | | | SEE DETAIL BE, SHEET C-11 |
| 1-31 | SB, A LEFT-TURN THEN A RIGHT-TURN CURVES | SB | 25.41 | | 11E | 1 | 100 | | | | 2 | 4 | | 25 | 2 | | | | SEE DETAIL J, SHEET C-4 |
| 1-32 | SB, N OF A LEFT-TURN CURVE | SB | 27.13 | | 11E | 1 | 196 | | | | 2 | 8 | | 125 | 2 | | | | SEE DETAIL I , SHEET C-4 |
| 1-33 | SB, CLOSE TO PREVIOUS MBGR WITH SHORT PULLOUT BETWEEN | SB | 27.15 | | 11E | 1 | 100 | | | | 2 | 4 | | 25 | 2 | | | | SEE DETAIL J, SHEET C-4 |
| 1-34 | SB, WINDING Rd. W/Conc RAIL IN MIDDLE, N END IS CATTLE GUARD | SB | 27.63 | | 11E | 1 | 50 | | | | 1 | 2 | | 12.5 | 1 | | | | SEE DETAIL T, SHEET C-8 |
| 1-35 | SB, WINDING Rd | SB | 28.2 | | 11E | 1 | 50 | | | | 1 | 2 | | 12.5 | 1 | | | | SEE DETAIL S, SHEET C-8 |
| 1-36 | SB, WINDING Rd S OF A CATTLE GUARD | SB | 28.64 | | 11E | 1 | 100 | | | | 2 | 4 | | 25 | 2 | | | | SEE DETAIL J, SHEET C-4 |
| 1-37 | NB, ACROSS THE SB MBGR | NB | 28.78 | | 11E | 1 | 85 | | | | 2 | 3 | | 25 | 2 | | | | SEE DETAIL I, SHEET C-4 |
| 1-38 | SB, JUST N OF A CATTLE GUARD | SB | 28.8 | | 11E | 1 | 50 | | | | 1 | 2 | | 12.5 | 1 | | | | SEE DETAIL S, SHEET C-8 |

(N) NOT A SEPARATE PAY ITEM, FOR INFORMATION ONLY.

FOR NOTES, ABBREVIATIONS &/OR LEGEND, SEE SHEET Q-1

## SUMMARY OF QUANTITIES

Q-2

REVISED BY | DATE REVISED

K. Chounramany | Tam Ly

CALCULATED-DESIGNED BY | CHECKED BY

FUNCTIONAL SUPERVISOR: Ghulam Popal

STATE OF CALIFORNIA - DEPARTMENT OF TRANSPORTATION

Caltrans DESIGN

J:\thermie\0a9111\working_files\clippedSheets\40a9111pa002.dgn

LAST REVISION 09-26-08 | DATE PLOTTED => 09-JUN-2009 | TIME PLOTTED => 12:54

| Dist | COUNTY | ROUTE | POST MILES TOTAL PROJECT | SHEET No. | TOTAL SHEETS |
|---|---|---|---|---|---|
| 04 | Son | 1,12,116 | Var | 31 | 49 |

REGISTERED CIVIL ENGINEER DATE 09-19-08

PLANS APPROVAL DATE 11-17-08

REGISTERED PROFESSIONAL ENGINEER Tam Ly No. 69254 Exp. 6-30-10 CIVIL STATE OF CALIFORNIA

THE STATE OF CALIFORNIA OR ITS OFFICERS OR AGENTS SHALL NOT BE RESPONSIBLE FOR THE ACCURACY OR COMPLETENESS OF ELECTRONIC COPIES OF THIS PLAN SHEET.

# ROADWAY QUANTITIES

| ROUTE-LOCATION No. | DESCRIPTION | DIRECTION | PM | REMOVE AC DIKE | METAL BEAM GUARDRAILING LAYOUT TYPE | (N) REMOVE MARKER | REMOVE MBGR | MINOR HMA | PLACE HMA DIKE (TYPE C) | PLACE HMA DIKE (TYPE F) | OBJECT MARKER (TYPE L-1) | GUARD RAILING DELINEATOR (TYPE E) | GUARD RAILING DELINEATOR (TYPE F) | MBGR (WOOD POST) | ALTERNATIVE FLARED TERMINAL SYSTEM | ALTERNATIVE IN-LINE TERMINAL SYSTEM | END ANCHOR ASSEMBLY (TYPE SFT) | RESET ROADSIDE SIGN | COMMENTS |
|---|---|---|---|---|---|---|---|---|---|---|---|---|---|---|---|---|---|---|---|
| | | | | LF | | EA | LF | TON | LF | | EA | | | LF | EA | | | | |
| | ROUTE 1 | | | | | | | | | | | | | | | | | | |
| | FROM COUNTY LINE TO S. OF RUSSIAN GULCH BRIDGE | | | | | | | | | | | | | | | | | | |
| 1-39 | SB, A LEFT-TURN CURVE | SB | 28.86 | | 11E | 1 | 100 | | | | 2 | 4 | | 25 | 2 | | | | SEE DETAIL J, SHEET C-4 |
| 1-40 | SB, WINDY Rd, N OF A GRN RTE 1 SIGN | SB | 29.54 | | 11E | 1 | 100 | | | | 2 | 4 | | 25 | 2 | | | | SEE DETAIL J, SHEET C-4 |
| 1-41 | SB, @ A SHARP LEFT-TURN LANE | SB | 29.74 | | 11E | 1 | 100 | | | | 2 | 4 | | 25 | 2 | | | | SEE DETAIL J, SHEET C-4 |
| 1-42 | NB, N OF CLOSURE GATE, S OF BARNS @ SB | NB | 30.65 | | 11E | 1 | 100 | | | | 2 | 4 | | 25 | 2 | | | | SEE DETAIL J, SHEET C-4 |
| 1-43 | SB, N OF CLOSURE GATE, S OF BARNS @ SB | SB | 30.8 | | 11E | 1 | 100 | | | | 2 | 4 | | 25 | 2 | | | | SEE DETAIL J, SHEET C-4 |
| 1-44 | SB, S OF CATTLE GUARD, S OF LEFT-TURN, REVERSE, 15 MPH SIGN | SB | 31.81 | | 11E | 1 | 100 | | | | 2 | 4 | | 25 | 2 | | | | SEE DETAIL J, SHEET C-4 |
| 1-45 | SB, S OF A ROAD TO FORT ROSS | SB | 32.62 | | 11E | 1 | 138 | | | | 2 | 6 | | 62.5 | 2 | | | 1 | SEE DETAIL I, SHEET C-4 |
| 1-46 | SB, N OF A ROAD TO FORT ROSS | SB | 32.74 | | 11E | 1 | 312 | | | | 2 | 12 | | 237.5 | 2 | | | 2 | SEE DETAIL I , SHEET C-4 |
| 1-47 | SB, A LEFT-TURN CURVE, BETWEEN 2 SMALL HILLS | SB | 34 | | 11E | 1 | 100 | | | | 2 | 4 | | 25 | 2 | | | 1 | SEE DETAIL I , SHEET C-4 |
| 1-48 | NB, S OF 20 MPH LEFT-TURN CURVE SIGN | NB | 34.26 | | 11E | 1 | 108 | | | | 2 | 4 | | 37.5 | 2 | | | 1 | SEE DETAIL I , SHEET C-4 |
| 1-49 | SB, S OF FORT ROSS LODGE, A LEFT-TURN CURVE | SB | 34.61 | | 11E | 1 | 100 | | | | 2 | 4 | | 25 | 2 | | | | SEE DETAIL J, SHEET C-4 |
| 1-50 | SB, STILLWATER COVE PARK & 15MPH, REVERSE CURVE SIGNS, ETC | SB | 37.29 | | 11E | 1 | 87.5 | | | | 1 | 2 | | 12.5 | 1 | 1 | | 1 | SEE DETAIL M , SHEET C-6 |
| 1-51 | SB, N OF OCEAN COVE STORE, WITH A LEFT-TURN CURVE SIGN | SB | 38.46 | | 11H | 1 | 87.5 | | | | 1 | 4 | | 12.5 | 1 | 1 | | | SEE DETAIL M, SHEET C-6 |
| 1-52 | SB, LEADING END TO Conc BARRIER, WITH A LEFT-TURN SIGN | SB | 40.95 | | 12B | 1 | 50 | | | | 1 | 2 | | 12.5 | 1 | | | | SEE DETAIL D, SHEET C-1 |
| 1-53 | SB, A LEFT-TURN CURVE WITH 15 MPH SIGN, S OF STUMP BEACH | SB | 41.18 | | 11H | 1 | 87.5 | | | | 1 | 4 | | 12.5 | 1 | 1 | | 1 | SEE DETAIL M, SHEET C-6 |
| 1-54 | BOTH DIRECTIONS, S END OF GUALALA RIVER Br | NB | 58.54 | | 12B | 1 | 37.5 | | | | 1 | 2 | | 12.5 | 1 | | | 1 | SEE DETAIL D, SHEET C-1 |
| 1-55 | GUALALA RIVER Br | SB | 58.54 | | 12BB | 1 | 37.5 | | | | 1 | 2 | | 12.5 | 1 | | | 1 | SEE DETAIL H, SHEET C-4 |
| | | | | | | | | | | | | | | | | | | | |
| | | | | | | | | | | | | | | | | | | | |
| | SUBTOTAL Rte 1 | | | 525 | | 54 | 5112 | 2.7 | 437.5 | 87.5 | 93 | 213 | | 1587.5 | 92 | 7 | 1 | 26 | |

(N) NOT A SEPARATE PAY ITEM, FOR INFORMATION ONLY.

FOR NOTES, ABBREVIATIONS &/OR LEGEND, SEE SHEET Q-1

## SUMMARY OF QUANTITIES

Q-3

REVISED BY | DATE REVISED

K. Chounramany | Tam Ly

CALCULATED-DESIGNED BY | CHECKED BY

FUNCTIONAL SUPERVISOR: Ghulam Popal

STATE OF CALIFORNIA - DEPARTMENT OF TRANSPORTATION

Caltrans DESIGN

J:\thermie\0a9111\working_files\clippedSheets\40a9111pa003.dgn

LAST REVISION: 09-26-08 | DATE PLOTTED => 09-JUN-2009 | TIME PLOTTED => 12:54

| Dist | COUNTY | ROUTE | POST MILES TOTAL PROJECT | SHEET No. | TOTAL SHEETS |
|---|---|---|---|---|---|
| 04 | Son | 1,12,116 | Var | 32 | 49 |

09-19-08
REGISTERED CIVIL ENGINEER DATE

11-17-08
PLANS APPROVAL DATE

REGISTERED PROFESSIONAL ENGINEER
Tam Ly
No. 69254
Exp. 6-30-10
CIVIL
STATE OF CALIFORNIA

*THE STATE OF CALIFORNIA OR ITS OFFICERS OR AGENTS SHALL NOT BE RESPONSIBLE FOR THE ACCURACY OR COMPLETENESS OF ELECTRONIC COPIES OF THIS PLAN SHEET.*

# ROADWAY QUANTITIES

| ROUTE-LOCATION No. | DESCRIPTION | DIRECTION | PM | REMOVE AC DIKE | METAL BEAM GUARDRAILING LAYOUT TYPE | (N) REMOVE MARKER | REMOVE MBGR | MINOR HMA | PLACE HMA DIKE (TYPE C) | PLACE HMA DIKE (TYPE F) | OBJECT MARKER (TYPE L-1) | GUARD RAILING DELINEATOR (TYPE E) | GUARD RAILING DELINEATOR (TYPE F) | MBGR (WOOD POST) | ALTERNATIVE FLARED TERMINAL SYSTEM | ALTERNATIVE IN-LINE TERMINAL SYSTEM | END ANCHOR ASSEMBLY (TYPE SFT) | RESET ROADSIDE SIGN | COMMENTS |
|---|---|---|---|---|---|---|---|---|---|---|---|---|---|---|---|---|---|---|---|
| | | | | LF | | EA | LF | TON | LF | | EA | | | LF | EA | | | | |
| | ROUTE 12 | | | | | | | | | | | | | | | | | | |
| | FROM LAGUNA DE SANTA ROSA Br TO 500' WEST OF madrone Rd | | | | | | | | | | | | | | | | | | |
| 12-1 | EB, LAGUNA DE SANTA ROSA Br | EB | 9.63 | | 12B | 1 | 37.5 | | | | 1 | 2 | | 12.5 | 1 | | | 1 | SEE DETAIL X, SHEET C-10 |
| 12-2 | WB, LAGUNA DE SANTA ROSA Br | WB | 9.63 | | 12B | 1 | 50 | | | | 2 | 4 | | 25 | 1 | | 1 | 1 | SEE DETAIL F, SHEET C-2 |
| 12-3 | EB, PURPLE DRAW Br | EB | 9.84 | | 12BB | | 37.5 | | | | 1 | 2 | | 12.5 | 1 | | | | SEE DETAIL Z, SHEET C-11 |
| 12-4 | WB, PURPLE DRAW Br | WB | 9.84 | | 12B | 1 | 75 | | | | 2 | 4 | | 25 | 2 | | | | SEE DETAIL AI, SHEET C-13 |
| 12-5 | EB (200' EAST OF OZONE Dr) | EB | 10.82 | | 11E | 1 | 100 | | | | 2 | 4 | | 25 | 2 | | | | SEE DETAIL J, SHEET C-4 |
| 12-6 | WB (AT LLANO ROAD) | WB | 11.04 | | 11B | | 12.5 | | | | 1 | 1 | | 12.5 | | | 1 | | SEE DETAIL C, SHEET C-1 |
| 12-7 | EB AT "STONY POINT Rd" SIGN | EB | R13.2 | | 11B | | 56 | | | | 2 | | 2 | 25 | 1 | | 1 | | SEE DETAIL AR, SHEET C-15 |
| 12-8 | EB AT "STONY POINT Rd" SIGN | EB | R13.7 | | 11B | | 56 | | | | 2 | | 2 | 25 | 1 | | 1 | | SEE DETAIL AR, SHEET C-15 |
| 12-9 | EB AT "STONY POINT Rd" SIGN | EB | R14.2 | | 11B | | 56 | | | | 2 | | 2 | 25 | 1 | | 1 | | SEE DETAIL AR, SHEET C-15 |
| 12-10 | WB ON-RAMP FROM STONY POINT Rd | WB | R14.26 | | 11B | | 56 | | | | 2 | | 2 | 25 | 1 | | 1 | | SEE DETAIL AR, SHEET C-15 |
| 12-11 | STONY POINT Rd OC SB | SB | R14.45 | | 12B | | 50 | | | | 1 | 2 | | 12.5 | 1 | | | | SEE DETAIL D, SHEET C-1 |
| 12-12 | STONY POINT Rd OC NB | NB | R14.45 | | 12B | | 50 | | | | 1 | 2 | | 12.5 | 1 | | | | SEE DETAIL D, SHEET C-1 |
| 12-13 | EB ON-RAMP FROM STONY POINT Rd | EB | R14.57 | | 11B | | 56 | | | | 2 | | 2 | 25 | 1 | | 1 | | SEE DETAIL AR, SHEET C-15 |
| 12-14 | WB OFF-RAMP TO STONY POINT Rd | WB | R14.63 | | 11B | | 56 | | | | 2 | | 2 | 25 | 1 | | 1 | | SEE DETAIL AR, SHEET C-15 |
| 12-15 | WB AT "STONY POINT Rd" SIGN | WB | R14.72 | | 11B | | 56 | | | | 2 | | 2 | 25 | 1 | | 1 | | SEE DETAIL AR, SHEET C-15 |
| 12-16 | EB AT "DUTTON Rd" SIGN | EB | R14.95 | | 11B | 1 | 56 | | | | 2 | | 2 | 25 | 1 | | 1 | | SEE DETAIL AR, SHEET C-15 |
| 12-17 | WB AT "STONY POINT Rd" SIGN | WB | R15.02 | 87.5 | 11B | 1 | 62.5 | 0.6 | 62.5 | 25 | 2 | | 2 | 25 | 1 | | 1 | | SEE DETAIL BA, SHEET C-12 |
| 12-18 | EB ON-RAMP FROM DUTTON Ave | EB | R15.44 | | 12B | 1 | 50 | | | | 1 | | 2 | 12.5 | 1 | | | 1 | SEE DETAIL D, SHEET C-1 |
| 12-19 | WB OFF-RAMP TO DUTTON Ave | WB | R15.47 | | 11B | | 12.5 | | | | 1 | | 1 | 12.5 | | | 1 | | SEE DETAIL C, SHEET C-1 |
| 12-20 | WB ON-RAMP FROM SB 101/3RD St | WB | R15.67 | | 12B | | 100 | | | | 2 | | 4 | 25 | 2 | | | | SEE DETAIL D, SHEET C-1, ON BOTH SIDES OF RAMP |

(N) NOT A SEPARATE PAY ITEM, FOR INFORMATION ONLY.

FOR NOTES, ABBREVIATIONS &/OR LEGEND, SEE SHEET Q-1

## SUMMARY OF QUANTITIES

Q-4

REVISED BY | DATE REVISED
K. Chounramany | Tam Ly
CALCULATED-DESIGNED BY | CHECKED BY
FUNCTIONAL SUPERVISOR: Ghulam Popal

STATE OF CALIFORNIA - DEPARTMENT OF TRANSPORTATION
Caltrans DESIGN

J:\thermie\0a9111\working_files\clippedSheets\40a911pa004.dgn

LAST REVISION 09-26-08 | DATE PLOTTED => 09-JUN-2009 | TIME PLOTTED => 12:54

| Dist | COUNTY | ROUTE | POST MILES TOTAL PROJECT | SHEET No. | TOTAL SHEETS |
|---|---|---|---|---|---|
| 04 | Son | 1,12,116 | Var | 33 | 49 |

09-19-08
REGISTERED CIVIL ENGINEER DATE

11-17-08
PLANS APPROVAL DATE

REGISTERED PROFESSIONAL ENGINEER
Tam Ly
No. 69254
Exp. 6-30-10
CIVIL
STATE OF CALIFORNIA

*THE STATE OF CALIFORNIA OR ITS OFFICERS OR AGENTS SHALL NOT BE RESPONSIBLE FOR THE ACCURACY OR COMPLETENESS OF ELECTRONIC COPIES OF THIS PLAN SHEET.*

# ROADWAY QUANTITIES

| ROUTE-LOCATION No. | DESCRIPTION | DIRECTION | PM | REMOVE AC DIKE | METAL BEAM GUARDRAILING LAYOUT TYPE | (N) REMOVE MARKER | REMOVE MBGR | MINOR HMA | PLACE HMA DIKE (TYPE C) | PLACE HMA DIKE (TYPE F) | OBJECT MARKER (TYPE L-1) | GUARD RAILING DELINEATOR (TYPE E) | GUARD RAILING DELINEATOR (TYPE F) | MBGR (WOOD POST) | ALTERNATIVE FLARED TERMINAL SYSTEM | ALTERNATIVE IN-LINE TERMINAL SYSTEM | END ANCHOR ASSEMBLY (TYPE SFT) | RESET ROADSIDE SIGN | COMMENTS |
|---|---|---|---|---|---|---|---|---|---|---|---|---|---|---|---|---|---|---|---|
| | | | | LF | | EA | LF | TON | LF | | EA | | | LF | EA | | | | |
| | ROUTE 12 | | | | | | | | | | | | | | | | | | |
| | FROM LAGUNA DE SANTA ROSA Br TO 500' WEST OF MADRONE Rd | | | | | | | | | | | | | | | | | | |
| 12-21 | EB ON-RAMP FROM SB 101/3RD St | EB | R15.67 | | 11E | | 50 | | | | 1 | | 2 | 12.5 | 1 | | | | SEE DETAIL S , SHEET C-8 |
| 12-22 | EB (BRIDGE ABOVE SB 101 TO EB 12) | EB | R15.86 | | 12B | | 37.5 | | | | 1 | | 2 | 12.5 | 1 | | | | SEE DETAIL X, SHEET C-10 |
| 12-23 | EB (UNDER BRIDGE EB 12 TO NB 101) | EB | R15.92 | | 11B | | 62.5 | | | | 2 | | 2 | 25 | 1 | | 1 | | SEE DETAIL AR, SHEET C-15 |
| 12-24 | WB (NB 101 TO WB 12) | WB | R16 | | 12B | | 37.5 | | | | 1 | | 2 | 12.5 | 1 | | | | SEE DETAIL X, SHEET C-10 |
| 12-25 | EB MAINLINE | EB | R16.12 | | 11B | | 12.5 | | | | 1 | | 1 | 12.5 | | | 1 | | SEE DETAIL C , SHEET C-1 |
| | SUBTOTAL Rte 12 | | | 87.5 | | 7 | 1285.5 | 0.6 | 62.5 | 25 | 39 | 21 | 34 | 487.5 | 25 | | 14 | 3 | |

(N) NOT A SEPARATE PAY ITEM, FOR INFORMATION ONLY.

FOR NOTES, ABBREVIATIONS &/OR LEGEND, SEE SHEET Q-1

## SUMMARY OF QUANTITIES

Q-5

REVISED BY | DATE REVISED
K. Chounramany | Tam Ly
CALCULATED-DESIGNED BY | CHECKED BY
FUNCTIONAL SUPERVISOR: Ghulam Popal
STATE OF CALIFORNIA - DEPARTMENT OF TRANSPORTATION
Caltrans DESIGN

J:\thermie\0a9111\working_files\clippedSheets\40a9111pa005.dgn

LAST REVISION 09-19-08 | DATE PLOTTED => 09-JUN-2009 | TIME PLOTTED => 12:55

| Dist | COUNTY | ROUTE | POST MILES TOTAL PROJECT | SHEET No. | TOTAL SHEETS |
|---|---|---|---|---|---|
| 04 | Son | 1,12,116 | Var | 34 | 49 |

09-19-08
REGISTERED CIVIL ENGINEER DATE

11-17-08
PLANS APPROVAL DATE

REGISTERED PROFESSIONAL ENGINEER Tam Ly No. 69254 Exp. 6-30-10 CIVIL STATE OF CALIFORNIA

*THE STATE OF CALIFORNIA OR ITS OFFICERS OR AGENTS SHALL NOT BE RESPONSIBLE FOR THE ACCURACY OR COMPLETENESS OF ELECTRONIC COPIES OF THIS PLAN SHEET.*

# ROADWAY QUANTITIES

| ROUTE-LOCATION No. | DESCRIPTION | DIRECTION | PM | REMOVE AC DIKE | METAL BEAM GUARDRAILING LAYOUT TYPE | (N) REMOVE MARKER | REMOVE MBGR | MINOR HMA | PLACE HMA DIKE (TYPE C) | PLACE HMA DIKE (TYPE F) | OBJECT MARKER (TYPE L-1) | GUARD RAILING DELINEATOR (TYPE E) | GUARD RAILING DELINEATOR (TYPE F) | MBGR (WOOD POST) | ALTERNATIVE FLARED TERMINAL SYSTEM | ALTERNATIVE IN-LINE TERMINAL SYSTEM | END ANCHOR ASSEMBLY (TYPE SFT) | RESET ROADSIDE SIGN | COMMENTS |
|---|---|---|---|---|---|---|---|---|---|---|---|---|---|---|---|---|---|---|---|
| | | | | LF | | EA | LF | TON | LF | | EA | | | LF | EA | | | | |
| | ROUTE 116 | | | | | | | | | | | | | | | | | | |
| | FROM Rte 1 TO Rte 12 | | | | | | | | | | | | | | | | | | |
| 116-1 | 1ST MBGR, W OF SHEEPHOUSE Cr | EB | 0.56 | | 11E | 1 | 100 | | | | 2 | 4 | | 25 | 2 | | | | SEE DETAIL J, SHEET C-4 |
| 116-2 | NEXT TO 1ST MBGR, W/Conc Str | EB | 0.63 | | 12B | 1 | 75 | | | | 2 | 4 | | 25 | 2 | | | | SEE DETAIL AI, SHEET C-13 |
| 116-3 | LEFT-TURN CURVE, W OF SHEEPHOUSE Cr | EB | 0.71 | | 12B | 1 | 62.5 | | | | 2 | 4 | | 25 | 2 | | | | SEE DETAIL AF, SHEET C-12 |
| 116-4 | E OF SHEEPHOUSE Cr | EB | 1.14 | | 11E | 1 | 100 | | | | 2 | 4 | | 25 | 2 | | | | SEE DETAIL J, SHEET C-4 |
| 116-5 | AFTER RANCH ON LEFT | EB | 1.62 | | 11H | 1 | 100 | | | | 2 | 4 | | 12.5 | 1 | 1 | | | SEE DETAIL M, SHEET C-6 |
| 116-6 | ACROSS THE EB MBGR | WB | 1.64 | | 11H | 1 | 100 | | | | 2 | 4 | | 12.5 | 1 | 1 | | | SEE DETAIL M, SHEET C-6 |
| 116-7 | FOR A LEFT-TURN CURVE | EB | 2.04 | | 11H | 1 | 100 | | | | 2 | 4 | | 12.5 | 1 | 1 | | 1 | SEE DETAIL M, SHEET C-6 |
| 116-8 | SERIES OF LEFT-RIGHT-LEFT CURVE | EB | 3.08 | | 12A | 1 | 75 | | | | 2 | 4 | | | | 2 | | | SEE DETAIL AK, SHEET C-14 |
| 116-9 | UPSTREAM OF MOSCOW Rd. | EB | 3.34 | | 11D | 1 | 375 | | | | | 4 | | 300 | | 2 | | | SEE DETAIL E, SHEET C-2 |
| 116-10 | DOWNSTREAM OF MOSCOW Rd. | EB | 3.95 | | 11E | 1 | 100 | | | | 2 | 4 | | 25 | 2 | | | 1 | SEE DETAIL J, SHEET C-4 |
| 116-11 | FOR A LEFT-TURN CURVE | EB | 4.2 | | 11E | 1 | 100 | | | | 2 | 4 | | 25 | 2 | | | | SEE DETAIL J, SHEET C-4 |
| 116-12 | FOR A RIGHT-TURN CURVE | EB | 4.31 | 150 | 11E | 1 | 100 | 0.8 | 125 | 25 | 2 | 4 | | 25 | 2 | | | | SEE DETAIL BE, SHEET C-11 |
| 116-13 | W OF DRIVEWAY, W OF CAZADERO Hwy | WB | 4.67 | 25 | 11E | 1 | 100 | | | | 2 | 4 | | 25 | 2 | | | | SEE DETAIL J, SHEET C-4 |
| 116-14 | BETWEEN DRIVEWAY AND CAZADERO Hwy | WB | 4.84 | | 11B | 1 | 62.5 | | | | 1 | 4 | | 25 | 1 | | 1 | | SEE DETAIL AT, SHEET C-16 |
| 116-15 | AUSTIN Cr Br | EB | 4.93 | | 12B | 1 | 75 | | | | 2 | 4 | | 25 | 2 | | | | SEE DETAIL AI, SHEET C-13 |
| 116-16 | AUSTIN Cr Br | WB | 4.93 | | 12B | 1 | 100 | | | | 2 | 4 | | 25 | 2 | | | | SEE DETAIL AL, SHEET C-15 |
| 116-17 | E OF AUSTIN Cr Rd | EB | 5.18 | | 11E | 1 | 100 | | | | 2 | 4 | | 25 | 2 | | | 2 | SEE DETAIL J, SHEET C-4 |
| 116-18 | E OF LAUREL DELL Ave | EB | 5.58 | | 12B | 1 | 100 | | | | 2 | 4 | | 25 | 2 | | | 1 | SEE DETAIL AL , SHEET C-15 |
| 116-19 | EB, 1St MBGR E OF BOHEMAIN Hwy | EB | 8.15 | 75 | 11E | 1 | 100 | 0.2 | 62.5 | 12.5 | 2 | 4 | | 25 | 2 | | | | SEE DETAIL AW, SHEET C-14 |
| 116-20 | WB, ACROSS THE EB MBGR | WB | 8.16 | | 11E | 1 | 100 | | | | 2 | 4 | | 25 | 2 | | | | SEE DETAIL J, SHEET C-4 |

(N) NOT A SEPARATE PAY ITEM, FOR INFORMATION ONLY.

FOR NOTES, ABBREVIATIONS &/OR LEGEND, SEE SHEET Q-1

## SUMMARY OF QUANTITIES

Q- 6

REVISED BY | DATE REVISED
K. Chounramany | Tam Ly
CALCULATED-DESIGNED BY | CHECKED BY
FUNCTIONAL SUPERVISOR: Ghulam Popal
STATE OF CALIFORNIA - DEPARTMENT OF TRANSPORTATION
Caltrans DESIGN

J:\thermie\0a9111\working_files\clippedSheets\40a9111pa006.dgn

LAST REVISION 09-29-08 | DATE PLOTTED => 09-JUN-2009 | TIME PLOTTED => 12:55

| Dist | COUNTY | ROUTE | POST MILES TOTAL PROJECT | SHEET No. | TOTAL SHEETS |
|---|---|---|---|---|---|
| 04 | Son | 1,12,116 | Var | 35 | 49 |

09-19-08
REGISTERED CIVIL ENGINEER DATE

11-17-08
PLANS APPROVAL DATE

REGISTERED PROFESSIONAL ENGINEER
Tam Ly
No. 69254
Exp. 6-30-10
CIVIL
STATE OF CALIFORNIA

*THE STATE OF CALIFORNIA OR ITS OFFICERS OR AGENTS SHALL NOT BE RESPONSIBLE FOR THE ACCURACY OR COMPLETENESS OF ELECTRONIC COPIES OF THIS PLAN SHEET.*

# ROADWAY QUANTITIES

| ROUTE-LOCATION No. | DESCRIPTION | DIRECTION | PM | REMOVE AC DIKE (LF) | METAL BEAM GUARDRAILING LAYOUT TYPE | (N) REMOVE MARKER (EA) | REMOVE MBGR (LF) | MINOR HMA (TON) | PLACE HMA DIKE (TYPE C) (LF) | PLACE HMA DIKE (TYPE F) (LF) | OBJECT MARKER (TYPE L-1) (EA) | GUARD RAILING DELINEATOR (TYPE E) (EA) | GUARD RAILING DELINEATOR (TYPE F) (EA) | MBGR (WOOD POST) (LF) | ALTERNATIVE FLARED TERMINAL SYSTEM (EA) | ALTERNATIVE IN-LINE TERMINAL SYSTEM (EA) | END ANCHOR ASSEMBLY (TYPE SFT) (EA) | RESET ROADSIDE SIGN (EA) | COMMENTS |
|---|---|---|---|---|---|---|---|---|---|---|---|---|---|---|---|---|---|---|---|
| | ROUTE 116 | | | | | | | | | | | | | | | | | | |
| | FROM RTE 1 TO RTE 12 | | | | | | | | | | | | | | | | | | |
| 116-21 | EB, | EB | 8.22 | | 11H | 1 | 87.5 | | | | 1 | 4 | | 12.5 | 1 | 1 | | | SEE DETAIL K, SHEET C-5 |
| 116-22 | EB, BEFORE A SHARP RIGHT-TURN CURVE | EB | 8.4 | | 11E | 1 | 100 | | | | 2 | 4 | | 25 | 2 | | | | SEE DETAIL J, SHEET C-4 |
| 116-23 | EB, E OF BEACH Ave | EB | 10.3 | | 12B | 1 | 1275 | | | | 2 | 4 | | 1200 | 2 | | | 1 | SEE DETAIL AL, SHEET C-15 |
| 116-24 | WB, ACROSS THE EB Conc. STRUCTURE | WB | 10.4 | | 12A | 1 | 37.5 | | | | 1 | 2 | | 12.5 | 1 | | | | SEE DETAIL X, SHEET C-10 |
| 116-25 | EB, HULBERT Cr Br | EB | 11.16 | | 12B | 1 | 37.5 | | | | 1 | 2 | | 12.5 | 1 | | | | SEE DETAIL X, SHEET C-10 |
| 116-26 | EB, Btwn HULBERT Cr Br & FERN Rd | EB | 11.24 | | 11E | 1 | 100 | | | | 2 | 4 | | 25 | 2 | | | | SEE DETAIL J, SHEET C-4 |
| 116-27 | EB, ACROSS GABES ROCK Rd | EB | 11.63 | | 11E | 1 | 100 | | | | 2 | 4 | | 25 | 2 | | | 1 | SEE DETAIL J , SHEET C-4 |
| 116-28 | WB, DRAKE Rd UC | WB | 12.44 | | 12B | 1 | 87.5 | | | | 2 | 4 | | 25 | 2 | | | 1 | SEE DETAIL AF , SHEET C-12 |
| 116-29 | EB, ON WB NEELEY Rd | EB | 12.48 | | 11E | 1 | 100 | | | | 2 | 4 | | 25 | 2 | | | | SEE DETAIL J , SHEET C-4 |
| 116-30 | FROM EB NEELEY Rd TO SB MAYS CANYON Rd | EB | 12.48 | | 11E | 1 | 100 | | | | 2 | 4 | | 25 | 2 | | | | SEE DETAIL O , SHEET C-7 |
| 116-31 | WB, GUERNE HILL Rd | WB | 12.48 | | 12BB | 1 | 50 | | | | 1 | 2 | | 12.5 | 1 | | | | SEE DETAIL H, SHEET C-4 |
| 116-32 | EB, FROM EB MAYS CANYON Rd TO EB 116 | EB | 12.49 | | 11E | 1 | 100 | | | | 2 | 4 | | 25 | 2 | | | | SEE DETAIL J, SHEET C-4 |
| 116-33 | EB, E OF MAYS CANYON Rd | EB | 12.7 | | 11D | 1 | 75 | | | | | 4 | | | | 2 | | | SEE DETAIL L, SHEET C-5 |
| 116-34 | EB, E OF SCHOOL BUS SIGN | EB | 13.7 | | 11E | 1 | 100 | | | | 2 | 4 | | 25 | 2 | | | | SEE DETAIL J, SHEET C-4 |
| 116-35 | EB, 25 MPH ADVISORY SIGN | EB | 13.78 | | 11H | 1 | 101 | | | | 1 | 4 | | 12.5 | 1 | 1 | | | SEE DETAIL AO, SHEET C-15 |
| 116-36 | EB, A LEFT-TURN CURVE | EB | 13.9 | | 11E | 1 | 100 | | | | 2 | 4 | | 25 | 2 | | | | SEE DETAIL J, SHEET C-4 |
| 116-37 | EB, Btwn CANYON Rd & POCKET Dr | EB | 14.48 | | 11E | 1 | 100 | | | | 2 | 4 | | 25 | 2 | | | | SEE DETAIL J, SHEET C-4 |
| 116-38 | EB, BEFORE A LEFT-TURN CURVE, E OF POCKET Rd | EB | 14.63 | | 11E | 1 | 105 | | | | 2 | 4 | | 25 | 2 | | | 1 | SEE DETAIL I , SHEET C-4 |
| 116-39 | EB, AFTER A LEFT-TURN CURVE, E OF POCKET Rd | EB | 14.70 | | 11E | 1 | 100 | | | | 2 | 4 | | 25 | 2 | | | | SEE DETAIL J, SHEET C-4 |
| 116-40 | EB, W OF MAYS CANYON Rd | EB | 14.9 | | 11E | 1 | 100 | | | | 2 | 4 | | 25 | 2 | | | | SEE DETAIL J, SHEET C-4 |

(N) NOT A SEPARATE PAY ITEM, FOR INFORMATION ONLY.

FOR NOTES, ABBREVIATIONS &/OR LEGEND, SEE SHEET Q-1

## SUMMARY OF QUANTITIES



STATE OF CALIFORNIA - DEPARTMENT OF TRANSPORTATION
Caltrans DESIGN
FUNCTIONAL SUPERVISOR Ghulam Popal
CALCULATED-DESIGNED BY K. Chounramany
CHECKED BY Tam Ly
REVISED BY
DATE REVISED
J:\thermie\0a9111\working_files\clippedSheets\40a9111pa007.dgn
LAST REVISION 09-29-08
DATE PLOTTED => 09-JUN-2009
TIME PLOTTED => 12:55
BORDER LAST REVISED 3/1/2007
RELATIVE BORDER SCALE IS IN INCHES 0 1 2 3
USERNAME => trmikesl
DGN FILE => 40a9111pa007.dgn
CU 04231
EA 0A9111

| Dist | COUNTY | ROUTE | POST MILES TOTAL PROJECT | SHEET No. | TOTAL SHEETS |
|---|---|---|---|---|---|
| 04 | Son | 1,12,116 | Var | 36 | 49 |

REGISTERED CIVIL ENGINEER DATE 09-19-08

PLANS APPROVAL DATE 11-17-08

REGISTERED PROFESSIONAL ENGINEER Tam Ly No. 69254 Exp. 6-30-10 CIVIL STATE OF CALIFORNIA

THE STATE OF CALIFORNIA OR ITS OFFICERS OR AGENTS SHALL NOT BE RESPONSIBLE FOR THE ACCURACY OR COMPLETENESS OF ELECTRONIC COPIES OF THIS PLAN SHEET.

# ROADWAY QUANTITIES

| ROUTE-LOCATION No. | DESCRIPTION | DIRECTION | PM | REMOVE AC DIKE (LF) | METAL BEAM GUARDRAILING LAYOUT TYPE | (N) REMOVE MARKER (EA) | REMOVE MBGR (LF) | MINOR HMA (TON) | PLACE HMA DIKE (TYPE C) (LF) | PLACE HMA DIKE (TYPE F) (LF) | OBJECT MARKER (TYPE L-1) | GUARD RAILING DELINEATOR (TYPE E) | GUARD RAILING DELINEATOR (TYPE F) | MBGR (WOOD POST) (LF) | ALTERNATIVE FLARED TERMINAL SYSTEM (EA) | ALTERNATIVE IN-LINE TERMINAL SYSTEM (EA) | END ANCHOR ASSEMBLY (TYPE SFT) (EA) | RESET ROADSIDE SIGN (EA) | COMMENTS |
|---|---|---|---|---|---|---|---|---|---|---|---|---|---|---|---|---|---|---|---|
| | ROUTE 116 | | | | | | | | | | | | | | | | | | |
| | From Rte 1 to Rte 12 | | | | | | | | | | | | | | | | | | |
| 116-41 | EB, E OF MAYS CANYON Rd | EB | 15.0 | | 11E | 1 | 100 | | | | 2 | 4 | | 25 | 2 | | | | SEE DETAIL J, SHEET C-4 |
| 116-42 | EB, SCHOOL BUS SIGN @ A LEFT-TURN CURVE | EB | 15.2 | | 11E | | 100 | | | | 2 | 4 | | 25 | 2 | | | 1 | SEE DETAIL J, SHEET C-4 |
| 116-43 | EB, W OF A RIGHT-TURN CURVE | EB | 15.25 | | 11E | | 100 | | | | 2 | 4 | | 25 | 2 | | | | SEE DETAIL J, SHEET C-4 |
| 116-44 | EB, RIGHT-TURN CURVE TO A PRIVATE DRIVEWAY | EB | 15.43 | | 11E | | 100 | | | | 2 | 4 | | 25 | 2 | | | 1 | SEE DETAIL J, SHEET C-4 |
| 116-45 | EB, RIGHT-TURN CURVE TO "SLIPPERY WHEN WET" SIGN | EB | 15.52 | | 12B | | 75 | | | | 2 | 4 | | 25 | 2 | | | 1 | SEE DETAIL AI, SHEET C-13 |
| 116-46 | WB, ACROSS THE EB MBGR | WB | 15.53 | | 12B | | 50 | | | | 2 | 4 | | 25 | 2 | | | | SEE DETAIL AI, SHEET C-13 |
| 116-47 | EB, W OF GREEN VALLEY Rd | EB | 15.94 | | 11H | | 108 | | | | 1 | 4 | | 25 | 1 | 1 | | | SEE DETAIL AO, SHEET C-15 |
| 116-48 | EB, REDWOODS ON EB & FENCES ON WB | EB | 16.49 | | 12B | 1 | 100 | | | | 2 | 4 | | 25 | 2 | | | | SEE DETAIL AL, SHEET C-15 |
| 116-49 | WB, ACROSS THE EB MBGR | WB | 16.49 | | 12B | | 75 | | | | 2 | 4 | | 25 | 2 | | | 1 | SEE DETAIL AI, SHEET C-13 |
| 116-50 | EB, FIREWOOD SIGN, 45 MPH SIGN & TREE | EB | 16.72 | | 12E | | 100 | | | | 2 | 4 | | 25 | 2 | | | | SEE DETAIL AU, SHEET C-16 |
| 116-51 | WB, ACROSS THE EB MBGR | WB | 16.72 | | 11H | | 100 | | | | 1 | 4 | | 12.5 | 1 | 1 | | 1 | SEE DETAIL M, SHEET C-6 |
| 116-52 | WB, Btwn TRAVIS Rd & SCHOOL ENTRANCE | WB | 19.57 | 150 | 11H | | 87.5 | 0.8 | 137.5 | 12.5 | 1 | 4 | | 12.5 | 1 | 1 | | 1 | SEE DETAIL N, SHEET C-6 |
| 116-53 | EB Btwn APPIAN Wy & GUERNVILLE Rd, CULVERT STRUCTURE | EB | 21.39 | | 12B | | 541 | | | | 2 | 22 | | 462.5 | 2 | | | | SEE DETAIL BF, SHEET C-10 |
| 116-54 | WB, ACROSS THE EB MBGR | WB | 21.39 | | 12B | | 384 | | | | 1 | 16 | | 300 | 1 | 1 | | | SEE DETAIL BG, SHEET C-9 |
| 116-55 | EB, GREEN VALLEY Rd. | EB | 22.14 | | 11E | | 433 | | | | 2 | 18 | | 350 | 2 | | | | SEE DETAIL I, SHEET C-4 |
| 116-56 | EB, BTWN SONOMA Wy & OAK GROVE Ave | EB | 23.26 | | 11E | | 102 | | | | 2 | 4 | | 25 | 2 | | | | SEE DETAIL I, SHEET C-4 |
| 116-57 | EB, @ OAK GROVE Ave | EB | 23.39 | | 11E | | 161 | | | | 2 | 6 | | 87.5 | 2 | | | | SEE DETAIL I, SHEET C-4 |
| 116-58 | EB, E OF OCCIDENTAL Rd | EB | 24.15 | | 11D | | 87.5 | | | | 1 | 1 | | 12.5 | 1 | 1 | | 1 | SEE DETAIL M, SHEET C-6 |
| 116-59 | EB, BLUCHER Cr Br E OF STONE Sta Rd | EB | 29.83 | | 12B | | 100 | | | | 2 | 4 | | 25 | 2 | | | | SEE DETAIL AL, SHEET C-15 |
| 116-60 | WB, BLUCHER Cr Br E OF STONE Sta Rd | WB | 29.83 | | 12B | | 100 | | | | 2 | 4 | | 25 | 2 | | | | SEE DETAIL AL, SHEET C-15 |

(N) NOT A SEPARATE PAY ITEM, FOR INFORMATION ONLY.

FOR NOTES, ABBREVIATIONS &/OR LEGEND, SEE SHEET Q-1

## SUMMARY OF QUANTITIES

Q- 8

REVISED BY | DATE REVISED

K. Chounramany | Tam Ly

CALCULATED-DESIGNED BY | CHECKED BY

FUNCTIONAL SUPERVISOR: Ghulam Popal

STATE OF CALIFORNIA - DEPARTMENT OF TRANSPORTATION

Caltrans DESIGN

J:\1hermie\0a9111\working_files\clippedSheets\40a9111pa008.dgn

LAST REVISION 09-29-08 | DATE PLOTTED => 09-JUN-2009 | TIME PLOTTED => 12:55

| Dist | COUNTY | ROUTE | POST MILES TOTAL PROJECT | SHEET No. | TOTAL SHEETS |
|---|---|---|---|---|---|
| 04 | Son | 1,12,116 | Var | 37 | 49 |

09-19-08
REGISTERED CIVIL ENGINEER DATE

11-17-08
PLANS APPROVAL DATE

REGISTERED PROFESSIONAL ENGINEER Tam Ly No. 69254 Exp. 6-30-10 CIVIL STATE OF CALIFORNIA

*THE STATE OF CALIFORNIA OR ITS OFFICERS OR AGENTS SHALL NOT BE RESPONSIBLE FOR THE ACCURACY OR COMPLETENESS OF ELECTRONIC COPIES OF THIS PLAN SHEET.*

# ROADWAY QUANTITIES

| ROUTE-LOCATION No. | DESCRIPTION | DIRECTION | PM | REMOVE AC DIKE | MBGR LAYOUT TYPE | (N) REMOVE MARKER | REMOVE MBGR | MINOR HMA | PLACE HMA DIKE (TYPE C) | PLACE HMA DIKE (TYPE F) | OBJECT MARKER (TYPE L-1) | GUARD RAILING DELINEATOR (TYPE E) | GUARD RAILING DELINEATOR (TYPE F) | MBGR (WOOD POST) | ALTERNATIVE FLARED TERMINAL SYSTEM | ALTERNATIVE IN-LINE TERMINAL SYSTEM | END ANCHOR ASSEMBLY (TYPE SFT) | RESET ROADSIDE SIGN | COMMENTS |
|---|---|---|---|---|---|---|---|---|---|---|---|---|---|---|---|---|---|---|---|
| | | | | LF | | EA | LF | TON | LF | | EA | | | LF | EA | | | | |
| | ROUTE 116 | | | | | | | | | | | | | | | | | | |
| | FROM Rte 1 to Rte 12 | | | | | | | | | | | | | | | | | | |
| 116-61 | WB, WEST OF BARTLESON Rd | WB | 31.27 | | 11E | 1 | 75 | | | | 2 | 3 | | | 2 | | | 1 | SEE DETAIL I, SHEET C-4 |
| 116-62 | EB, W OF STONY POINT Rd, OH SIGNAL | EB | 33.37 | | 11E | 1 | 100 | | | | 2 | 4 | | 25 | 2 | | | | SEE DETAIL J, SHEET C-4 |
| 116-63 | EB, AT STONY POINT Rd INTERSECTION | EB | 33.61 | | 11E | 1 | 100 | | | | 2 | 4 | | 25 | 2 | | | 1 | SEE DETAIL J, SHEET C-4 |
| 116-64 | WB, E OF STONY POINT Rd, OH SIGNAL SIGN | WB | 33.81 | | 11E | 1 | 100 | | | | 2 | 4 | | 25 | 2 | | | | SEE DETAIL J, SHEET C-4 |
| 116-65 | EB, UNDER Rte 101 UC | EB | 35.0 | | 16B | | 50 | | | | 2 | 2 | | 25 | 1 | | 1 | 1 | SEE DETAIL AH, SHEET C-13 |
| 116-66 | WB, UNDER Rte 101 UC | WB | 35.0 | | 16B | | 50 | | | | 2 | 2 | | 25 | 1 | | 1 | 2 | SEE DETAIL AH, SHEET C-13 |
| | SUBTOTAL Rte 116 | | | 400 | | 46 | 8560 | 1.8 | 325 | 50 | 117 | 296 | | 3987.5 | 110 | 16 | 3 | 21 | |
| | SUBTOTAL Rte 1 | | | 525 | | 54 | 5112 | 2.7 | 437.5 | 87.5 | 93 | 213 | | 1587.5 | 92 | 7 | 1 | 26 | |
| | SUBTOTAL Rte 12 | | | 87.5 | | 7 | 1285.5 | 0.6 | 62.5 | 25 | 39 | 21 | 34 | 487.5 | 25 | | 14 | 3 | |
| | GRAND TOTAL | | | 1012.5 | | 107 | 14,957.5 | 5.1 | 825 | 162.5 | 249 | 564 | | 6062.5 | 227 | 23 | 18 | 50 | |

(N) NOT A SEPARATE PAY ITEM, FOR INFORMATION ONLY.

FOR NOTES, ABBREVIATIONS &/OR LEGEND, SEE SHEET Q-1

## SUMMARY OF QUANTITIES

Q- 9

STATE OF CALIFORNIA - DEPARTMENT OF TRANSPORTATION
Caltrans DESIGN
FUNCTIONAL SUPERVISOR: Ghulam Popal
CALCULATED-DESIGNED BY: K. Chounramany
CHECKED BY: Tam Ly
REVISED BY
DATE REVISED

J:\thermie\0a9111\working_files\clippedSheets\40a9111pa009.dgn

LAST REVISION 11-03-08 DATE PLOTTED => 09-JUN-2009 TIME PLOTTED => 12:55

| DIST | COUNTY | ROUTE | POST MILES TOTAL PROJECT | SHEET NO. | TOTAL SHEETS |
|---|---|---|---|---|---|
| 04 | Son | 1,12,116 | Var | 38 | 49 |

Randell D. Hiatt
REGISTERED CIVIL ENGINEER

June 6, 2008
PLANS APPROVAL DATE

REGISTERED PROFESSIONAL ENGINEER
Randell D. Hiatt
No. C50200
Exp. 6-30-09
CIVIL
STATE OF CALIFORNIA

*The State of California or its officers or agents shall not be responsible for the accuracy or completeness of electronic copies of this plan sheet.*

*To accompany plans dated* 11-17-08

## NOTES:

1. When necessary to place dike in front of face of guard railing, only Type C dike may be used. For dike details, see Standard Plan A87B.
2. For standard railing post embedment, see Standard Plans A77C3.
3. Guard railing delineation to be used where shown on the Project Plans.
4. When dike or curb is placed under guard railing, the maximum height of the dike or curb shall be 4". Mountable dike should not be used. For dike and curb details, see Revised Standard Plans RSP A87A and Standard Plan A87B.
5. For details of typical distance between the face of rail and hinge point, see Standard Plan A77C3.

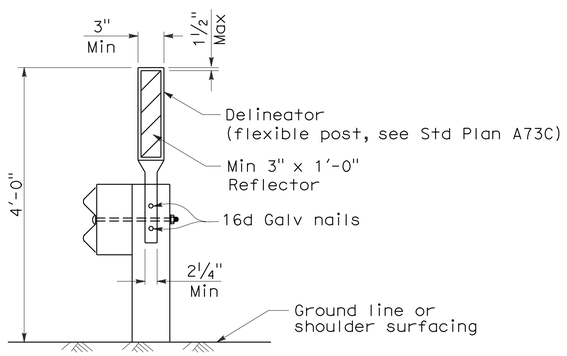


GUARD RAILING DELINEATION

See Note 3

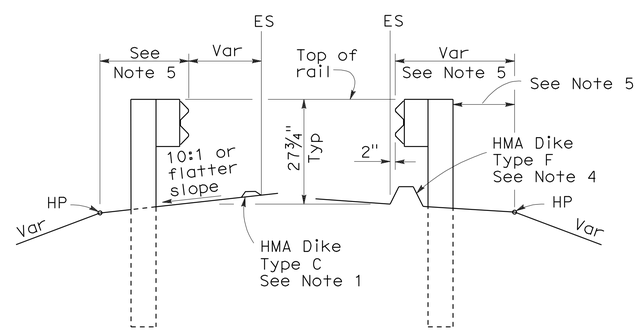


DIKE POSITIONING

See Note 1

STATE OF CALIFORNIA
DEPARTMENT OF TRANSPORTATION

# METAL BEAM GUARD RAILING TYPICAL RAILING DELINEATION AND DIKE POSITIONING DETAILS

NO SCALE

RSP A77C4 DATED JUNE 6, 2008 SUPERSEDES STANDARD PLAN A77C4
DATED MAY 1, 2006 - PAGE 47 OF THE STANDARD PLANS BOOK DATED MAY 2006.

**REVISED STANDARD PLAN RSP A77C4**

**2006 REVISED STANDARD PLAN RSP A77C4**

12-10-07

| DIST | COUNTY | ROUTE | POST MILES TOTAL PROJECT | SHEET NO. | TOTAL SHEETS |
|---|---|---|---|---|---|
| 04 | Son | 1,12,116 | Var | 39 | 49 |

Randell D. Hiatt
REGISTERED CIVIL ENGINEER

June 6, 2008
PLANS APPROVAL DATE

REGISTERED PROFESSIONAL ENGINEER
Randell D. Hiatt
No. C50200
Exp. 6-30-09
CIVIL
STATE OF CALIFORNIA

*The State of California or its officers or agents shall not be responsible for the accuracy or completeness of electronic copies of this plan sheet.*

*To accompany plans dated* 11-17-08

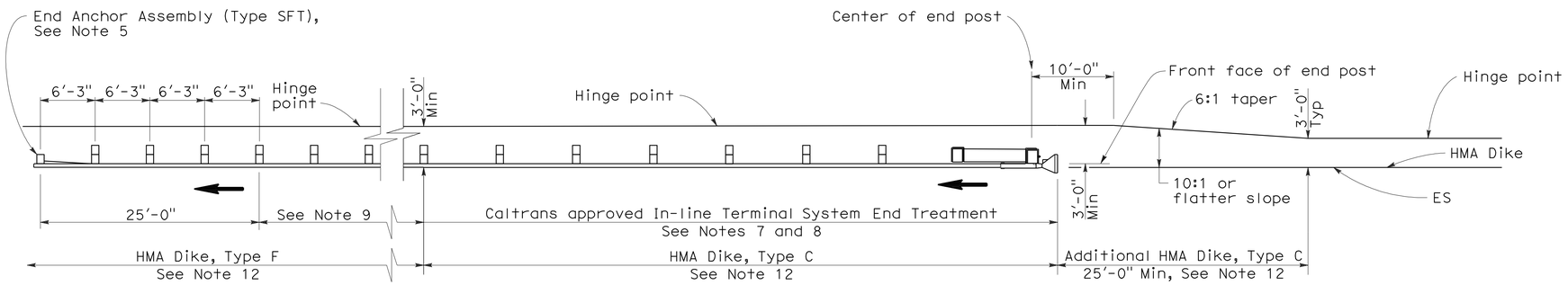


## TYPE 11A LAYOUT

(EMBANKMENT GUARD INSTALLATION WITH IN-LINE END TREATMENT AT TRAFFIC APPROACH END OF RAILING)
See Note 6

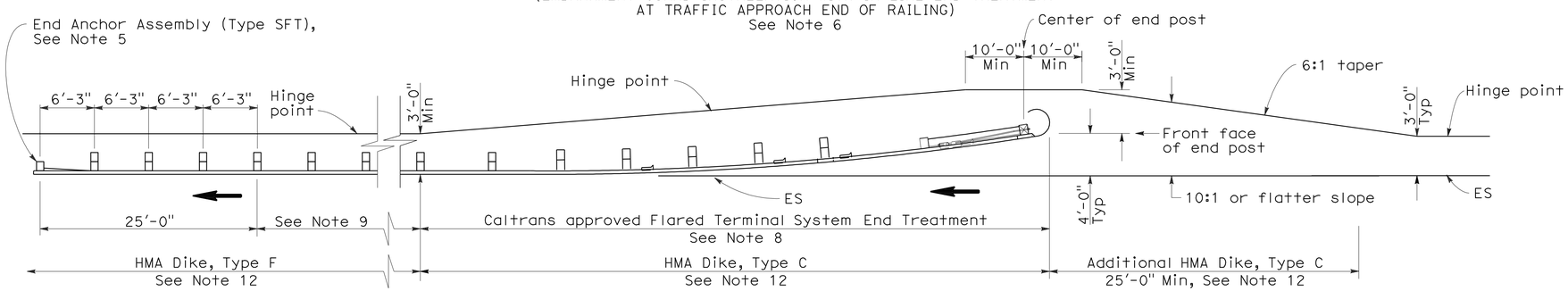


## TYPE 11B LAYOUT

(EMBANKMENT GUARD RAILING INSTALLATION WITH FLARED END TREATMENT AT TRAFFIC APPROACH END OF RAILING)
See Note 6

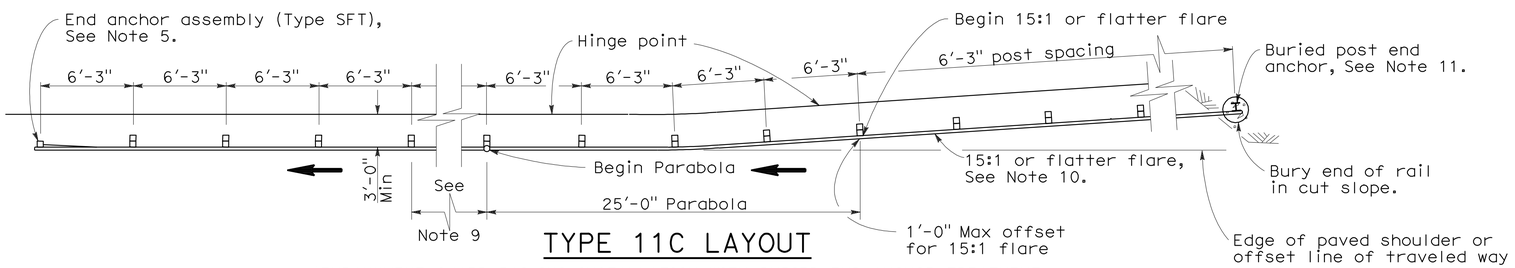


## TYPE 11C LAYOUT

(EMBANKMENT GUARD RAILING INSTALLATION WITH BURIED END ANCHOR TREATMENT AT TRAFFIC APPROACH END OF RAILING)
See Notes 6 and 12

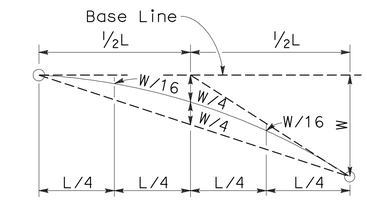


## TYPICAL PARABOLIC LAYOUT

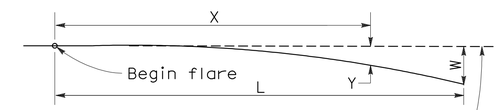


Base Line (Edge of paved shoulder or offset line of edge of traveled way)

$$Y = \frac{WX^2}{L^2}$$

Y = Offset from base line
W = Maximum offset
X = Distance along base line
L = Length of flare

## PARABOLIC FLARE OFFSETS

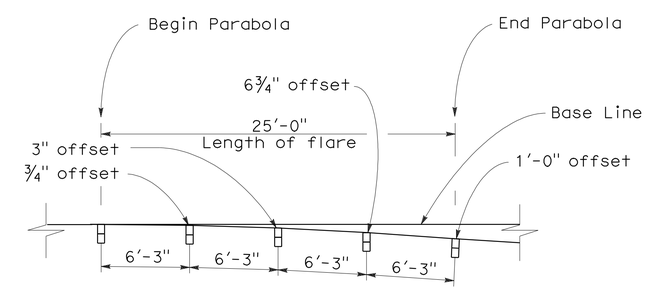


## TYPICAL FLARE OFFSETS FOR 1 FOOT MAX END OFFSET

## NOTES:

1. Line post, blocks and hardware to be used are shown on Standard Plans A77A1, A77A2, A77B1, A77C1, and A77C2.
2. Guard rail post spacing to be 6'-3" center to center, except as otherwise noted.
3. Except as noted, line posts are 6" x 8" x 6'-0" wood with 6" x 8" x 1'-2" wood blocks. W6 x 9 steel posts, 6'-0" in length, with 6" x 8" x 1'-2" notched wood blocks or recycled plastic blocks may be used for 6" x 8" x 6'-0" wood post with 6" x 8" x 1'-2" wood blocks where applicable and when specified.
4. Direction of adjacent traffic indicated by ⟶.
5. For End Anchor Assembly (Type SFT) details, see Standard Plan A77H1.
6. Layout Types 11A, 11B or 11C are typically used where guard railing is recommended to shield embankment slopes and a crashworthy end treatment is required for only one direction of traffic.
7. In-line Terminal System End Treatments are used where site conditions will not accommodate a flared end treatment.
8. The type of terminal system end treatment to be used will be shown on the Project Plans.
9. Dependent on site conditions (embankment height and side slope), construction of additional guard railing (length equal to multiples of 12'-6" with 6'-3" post spacing) may be advisable.
10. The 15:1 or flatter flare used with buried end anchors is based on the edge of the paved shoulder or offset line of edge of the traveled way. The length of guard railing within the 15:1 or flatter flare is based on site conditions and should be a length equal to multiples of 12'-6".
11. For details of the buried post end anchor used with Type 11C Layout, see Standard Plan A77I2.
12. Where placement of dike is required with guard railing installations, see Revised Standard Plan RSP A77C4 for dike positioning details.

STATE OF CALIFORNIA
DEPARTMENT OF TRANSPORTATION

# METAL BEAM GUARD RAILING TYPICAL LAYOUTS FOR EMBANKMENTS

NO SCALE

RSP A77E1 DATED JUNE 6, 2008 SUPERSEDES STANDARD PLAN A77E1
DATED MAY 1, 2006 - PAGE 48 OF THE STANDARD PLANS BOOK DATED MAY 2006.

**REVISED STANDARD PLAN RSP A77E1**

**2006 REVISED STANDARD PLAN RSP A77E1**

12-10-07

| DIST | COUNTY | ROUTE | POST MILES TOTAL PROJECT | SHEET NO. | TOTAL SHEETS |
|---|---|---|---|---|---|
| 04 | Son | 1,12,116 | Var | 40 | 49 |

Randell D. Hiatt
REGISTERED CIVIL ENGINEER

June 6, 2008
PLANS APPROVAL DATE

REGISTERED PROFESSIONAL ENGINEER
Randell D. Hiatt
No. C50200
Exp. 6-30-09
CIVIL
STATE OF CALIFORNIA

*The State of California or its officers or agents shall not be responsible for the accuracy or completeness of electronic copies of this plan sheet.*

*To accompany plans dated* 11-17-08

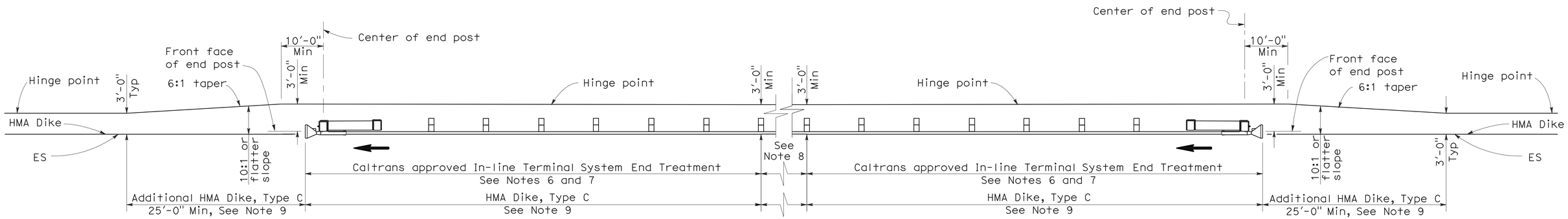


## TYPE 11D LAYOUT

(EMBANKMENT GUARD RAILING INSTALLATION WITH IN-LINE END TREATMENT AT EACH END OF RAILING)
See Note 5

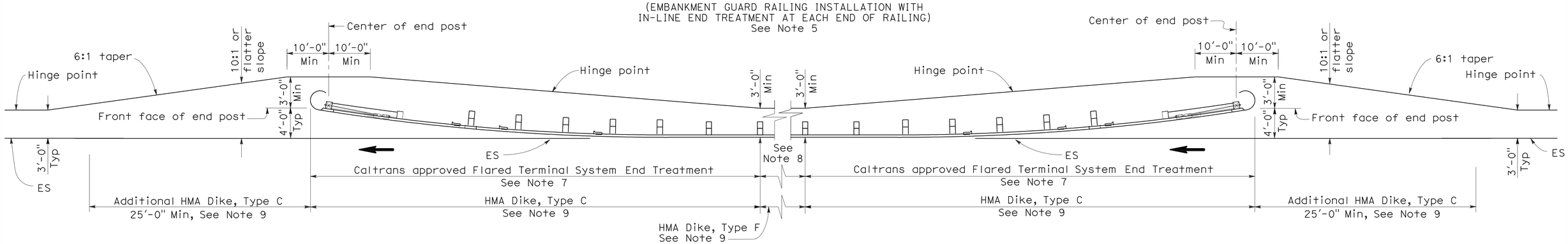


## TYPE 11E LAYOUT

(EMBANKMENT GUARD RAILING INSTALLATION WITH FLARED END TREATMENT AT EACH END OF RAILING)
See Note 5

## NOTES:

1. Line post, blocks and hardware to be used are shown on Standard Plans A77A1, A77A2, A77B1, A77C1 and A77C2.
2. Guard rail post spacing to be 6'-3" center to center, except as otherwise noted.
3. Except as noted, line posts are 6" x 8" x 6'-0" wood with 6" x 8" x 1'-2" wood blocks. W6 x 9 steel posts, 6'-0" in length, with 6" x 8" x 1'-2" notched wood blocks or plastic blocks may be used for 6" x 8" x 6'-0" wood post with 6" x 8" x 1'-2" wood blocks where applicable and when specified.
4. Direction of adjacent traffic indicated by ⟶.
5. Layout Types 11D through 11L, shown on the A77E Series of Revised Standard Plans, are typically used where guard railing is recommended to shield embankment slopes and a crashworthy end treatment is required for both directions of traffic.
6. In-line Terminal System End Treatments are used where site conditions will not accommodate a flared end treatment.
7. The type of terminal system end treatment to be used will be shown on the Project Plans.
8. Dependent on site conditions (embankment height and side slope), construction of additional guard railing (length equal to multiples of 12'-6" with 6'-3" post spacing) may be advisable.
9. Where placement of dike is required with guard railing installations, see Revised Standard Plan RSP A77C4 for dike positioning details.

STATE OF CALIFORNIA
DEPARTMENT OF TRANSPORTATION

# METAL BEAM GUARD RAILING TYPICAL LAYOUTS FOR EMBANKMENTS

NO SCALE

RSP A77E2 DATED JUNE 6, 2008 SUPERSEDES STANDARD PLAN A77E2
DATED MAY 1, 2006 - PAGE 49 OF THE STANDARD PLANS BOOK DATED MAY 2006.

**REVISED STANDARD PLAN RSP A77E2**

**2006 REVISED STANDARD PLAN RSP A77E2**

12-10-07

| DIST | COUNTY | ROUTE | POST MILES TOTAL PROJECT | SHEET NO. | TOTAL SHEETS |
|---|---|---|---|---|---|
| 04 | Son | 1,12,116 | Var | 41 | 49 |

Randell D. Hiatt
REGISTERED CIVIL ENGINEER

June 6, 2008
PLANS APPROVAL DATE

REGISTERED PROFESSIONAL ENGINEER
Randell D. Hiatt
No. C50200
Exp. 6-30-09
CIVIL
STATE OF CALIFORNIA

*The State of California or its officers or agents shall not be responsible for the accuracy or completeness of electronic copies of this plan sheet.*

*To accompany plans dated* 11-17-08

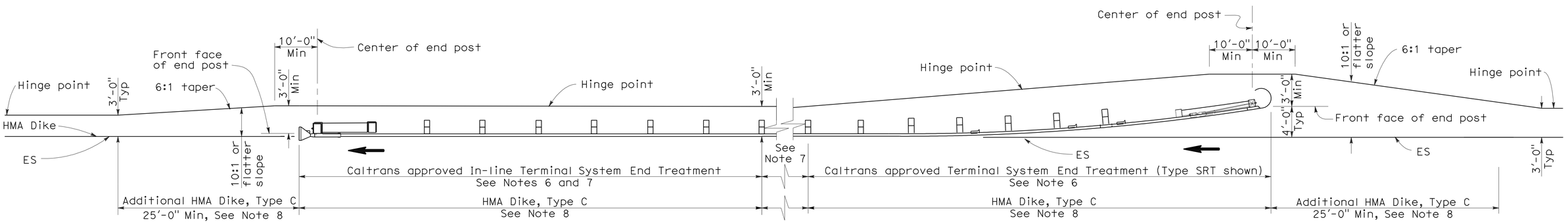


## TYPE 11H LAYOUT

(EMBANKMENT GUARD RAILING INSTALLATION WITH FLARED END TREATMENT
AND AN IN-LINE TREATMENT AT THE ENDS OF RAILING)
See Notes 5 and 8

## NOTES:

1. Line post, blocks and hardware to be used are shown on Standard Plans A77A1, A77A2, A77B1, A77C1 and A77C2.
2. Guard rail post spacing to be 6'-3" center to center, except as otherwise noted.
3. Except as noted, line posts are 6" x 8" x 6'-0" wood with 6" x 8" x 1'-2" wood blocks. W6 x 9 steel posts, 6'-0" in length, with 6" x 8" x 1'-2" notched wood blocks or plastic blocks may be used for 6" x 8" x 6'-0" wood post with 6" x 8" x 1'-2" wood blocks where applicable and when specified.
4. Direction of adjacent traffic indicated by ⟶.
5. Layout Types 11D through 11L, shown on the A77E Series of Revised Standard Plans, are typically used where guard railing is recommended to shield embankment slopes and a crashworthy end treatment is required for both directions of traffic.
6. The type of terminal system end treatment to be used will be shown on the Project Plans.
7. Dependent on site conditions (embankment height and side slope), construction of additional guard railing (length equal to multiples of 12'-6" with 6'-3" post spacing) may be advisable.
8. Where placement of dike is required with guard railing installations, see Revised Standard Plan RSP A77C4 for dike positioning details.

STATE OF CALIFORNIA
DEPARTMENT OF TRANSPORTATION

# METAL BEAM GUARD RAILING TYPICAL LAYOUTS FOR EMBANKMENTS

NO SCALE

RSP A77E4 DATED JUNE 6, 2008 SUPERSEDES STANDARD PLAN A77E4
DATED MAY 1, 2006 - PAGE 51 OF THE STANDARD PLANS BOOK DATED MAY 2006.

**REVISED STANDARD PLAN RSP A77E4**

**2006 REVISED STANDARD PLAN RSP A77E4**

| DIST | COUNTY | ROUTE | POST MILES TOTAL PROJECT | SHEET NO. | TOTAL SHEETS |
|---|---|---|---|---|---|
| 04 | Son | 1,12,116 | Var | 42 | 49 |

Randell D. Hiatt
REGISTERED CIVIL ENGINEER

June 6, 2008
PLANS APPROVAL DATE

REGISTERED PROFESSIONAL ENGINEER
Randell D. Hiatt
No. C50200
Exp. 6-30-09
CIVIL
STATE OF CALIFORNIA

*The State of California or its officers or agents shall not be responsible for the accuracy or completeness of electronic copies of this plan sheet.*

*To accompany plans dated* 11-17-08

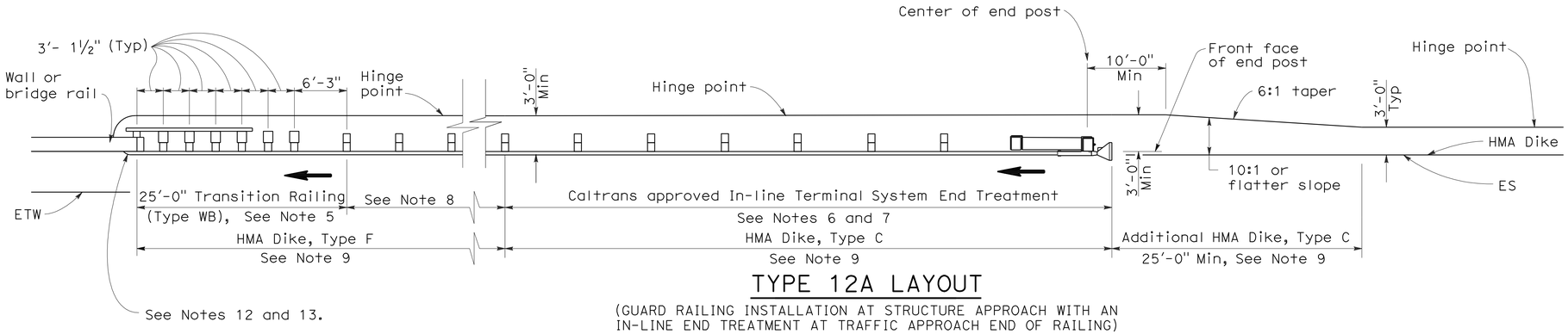


## TYPE 12A LAYOUT

(GUARD RAILING INSTALLATION AT STRUCTURE APPROACH WITH AN IN-LINE END TREATMENT AT TRAFFIC APPROACH END OF RAILING)
See Notes 10

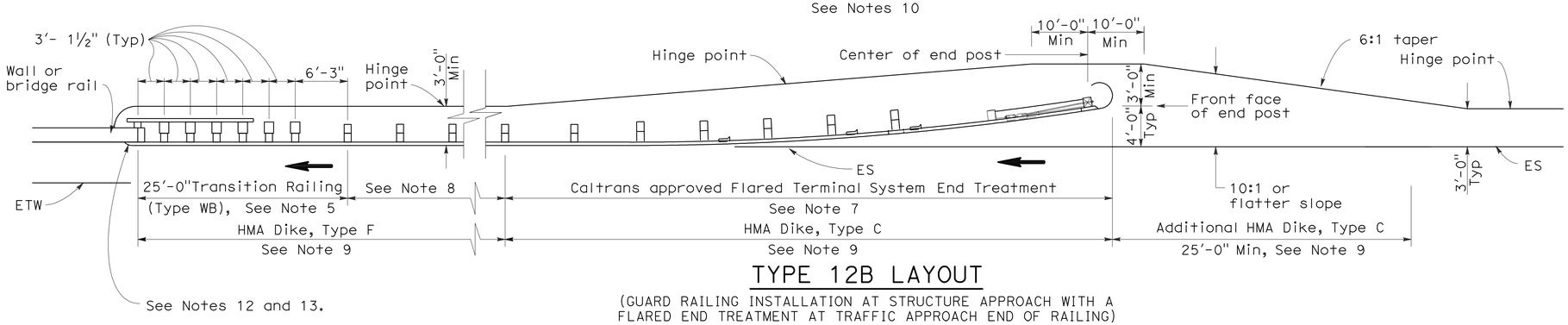


## TYPE 12B LAYOUT

(GUARD RAILING INSTALLATION AT STRUCTURE APPROACH WITH A FLARED END TREATMENT AT TRAFFIC APPROACH END OF RAILING)
See Notes 10

## NOTES:

1. Line post, blocks and hardware to be used are shown on Standard Plans A77A1, A77A2, A77B1, A77C1 and A77C2.
2. Guard rail post spacing to be 6'-3" center to center, except as otherwise noted.
3. Except as noted, line posts are 6" x 8" x 6'-0" wood with 6" x 8" x 1'-2" wood blocks. W6 x 9 steel posts, 6'-0" in length, with 6" x 8" x 1'-2" notched wood blocks or plastic blocks may be used for 6" x 8" x 6'-0" wood posts with 6" x 8" x 1'-2" wood blocks where applicable and when specified.
4. Direction of adjacent traffic indicated by ➡.
5. For Transition Railing (Type WB) details for Types 12A and 12B Layouts, see Standard Plan A77J4.
6. In-line Terminal System End Treatments are used where site conditions will not accommodate a flared end treatment.
7. The type of terminal system end treatment to be used will be shown on the Project Plans.
8. Dependent on site conditions (embankment height, side slopes, or other fixed objects), it may be advisable to construct additional guard railing (a length equal to multiples of 12'-6" with 6'-3" post spacing) between the transition railing and end treatment.
9. Where placement of dike is required with guard railing installations, see Revised Standard Plan RSP A77C4 for dike positioning details.
10. Type 12A or Type 12B Layouts are typically used:
    a. To the right of approaching traffic, at the end of a structure, on two-lane conventional highway where the roadbed width across the structure is less than 40 feet.
    b. To the left of approaching traffic, at the end of a structure, on two-lane conventional highway where the roadbed width across the structure is less than 40 feet.
    c. To the right of approaching traffic at the end of each structure on multilane freeways or expressways with separate adjacent or parallel bridges.
    d. To the right of approaching traffic at the end of the structure on multilane freeways or expressways with decked median on the bridge.
11. See Revised Standard Plan RSP A77F3 for typical layout used left of approaching traffic at the ends of each structure on multilane freeways or expressways with separate adjacent or parallel bridges.
12. For additional details of typical connections to bridge rail, see Connection Detail AA on Revised Standard Plans RSP A77J1 and RSP A77J2 and Connection Detail FF on Standard Plans A77K1 and A77K2.
13. For additional details of a typical connection to walls or abutments, see Standard Plan A77J3.

STATE OF CALIFORNIA
DEPARTMENT OF TRANSPORTATION

# METAL BEAM GUARD RAILING TYPICAL LAYOUTS FOR STRUCTURE APPROACH

NO SCALE

RSP A77F1 DATED JUNE 6, 2008 SUPERSEDES STANDARD PLAN A77F1
DATED MAY 1, 2006 - PAGE 54 OF THE STANDARD PLANS BOOK DATED MAY 2006.

**REVISED STANDARD PLAN RSP A77F1**

**2006 REVISED STANDARD PLAN RSP A77F1**

12-10-07

| DIST | COUNTY | ROUTE | POST MILES TOTAL PROJECT | SHEET NO. | TOTAL SHEETS |
|---|---|---|---|---|---|
| 04 | Son | 1,12,116 | Var | 43 | 49 |

Randell D. Hiatt
REGISTERED CIVIL ENGINEER

June 6, 2008
PLANS APPROVAL DATE

REGISTERED PROFESSIONAL ENGINEER
Randell D. Hiatt
No. C50200
Exp. 6-30-09
CIVIL
STATE OF CALIFORNIA

*The State of California or its officers or agents shall not be responsible for the accuracy or completeness of electronic copies of this plan sheet.*

*To accompany plans dated* 11-17-08

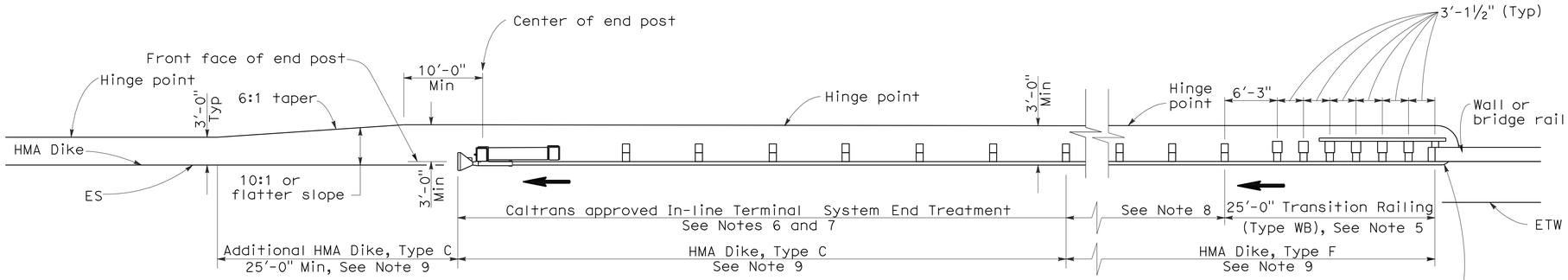


## TYPE 12AA LAYOUT

(GUARD RAILING INSTALLATION AT STRUCTURE DEPARTURE WITH AN IN-LINE END TREATMENT AT TRAILING END OF RAILING)
See Notes 9 and 10

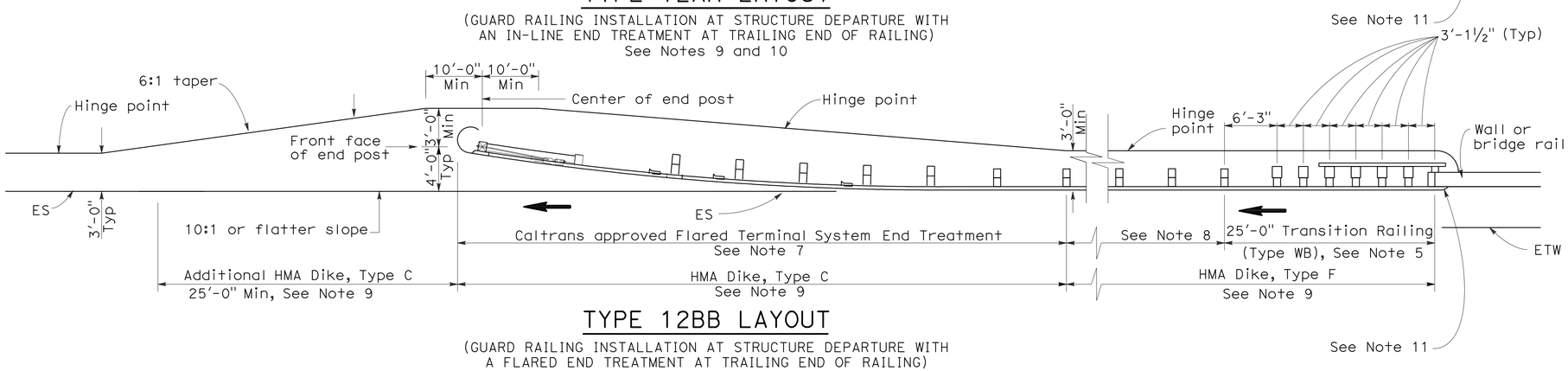


## TYPE 12BB LAYOUT

(GUARD RAILING INSTALLATION AT STRUCTURE DEPARTURE WITH A FLARED END TREATMENT AT TRAILING END OF RAILING)
See Notes 9 and 10

## NOTES:

1. Line post, blocks and hardware to be used are shown on Standard Plans A77A1, A77A2, A77B1, A77C1 and A77C2.
2. Guard rail post spacing to be 6'-3" center to center, except as otherwise noted.
3. Except as noted, line posts are 6" x 8" x 6'-0" wood with 6" x 8" x 1'-2" wood blocks. W6 x 9 steel posts, 6'-0" in length, with 6" x 8" x 1-2" notched wood blocks or notched recycled plastic blocks may be used for 6" x 8" x 6'-0" wood posts with 6" x 8" x 1'-2" wood blocks where applicable and when specified.
4. Direction of adjacent traffic indicated by ➡.
5. For Transition Railing (Type WB) details for Types 12AA and 12BB Layouts, see Standard Plan A77J4.
6. In-line Terminal System Treatments are used where site conditions will not accommodate a flared end treatment.
7. The type of terminal system to be used will be shown on the Project Plans.
8. Dependent on site conditions (embankment height, side slopes, other fixed objects), it may be advisable to construct additional guard railing (a length equal to multiples of 12'-6" with 6'-3" post spacing) between the transition railing and end treatments.
9. Where placement of dike is required with guard railing installations, see Revised Standard Plan RSP A77C4 for dike positioning details.
10. Type 12AA or Type 12BB Layouts are typically used to the right of traffic departing a structure on two-way conventional highways where the roadbed width across the structure is less than 40 feet.
11. For additional details of typical connections to bridge rail, see Connection Detail CC on Revised Standard Plan RSP A77J2 and Connection Detail HH on Standard Plans A77k2.

STATE OF CALIFORNIA
DEPARTMENT OF TRANSPORTATION

# METAL BEAM GUARD RAILING TYPICAL LAYOUTS FOR STRUCTURE DEPARTURE

NO SCALE

RSP A77F4 DATED JUNE 6, 2008 SUPERSEDES STANDARD PLAN A77F4
DATED MAY 1, 2006 - PAGE 57 OF THE STANDARD PLANS BOOK DATED MAY 2006.

**REVISED STANDARD PLAN RSP A77F4**

**2006 REVISED STANDARD PLAN RSP A77F4**

12-10-07

| DIST | COUNTY | ROUTE | POST MILES TOTAL PROJECT | SHEET NO. | TOTAL SHEETS |
|---|---|---|---|---|---|
| 04 | Son | 1,12,116 | Var | 44 | 49 |

LICENSED LANDSCAPE ARCHITECT

December 1, 2006
PLANS APPROVAL DATE

*The State of California or its officers or agents shall not be responsible for the accuracy or completeness of electronic copies of this plan sheet.*

Gregory A. Balzer 2006
04-04 Registration
02-28-07
Renewal Date
11-27-06
Date
LICENSED LANDSCAPE ARCHITECT
STATE OF CALIFORNIA

*To accompany plans dated* 11-17-08

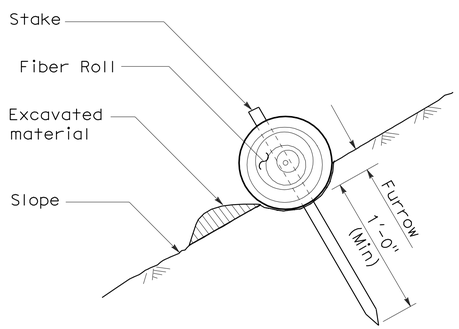


SECTION

FIBER ROLL (TYPE 1)

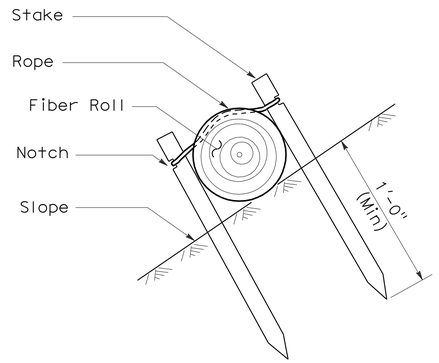


SECTION

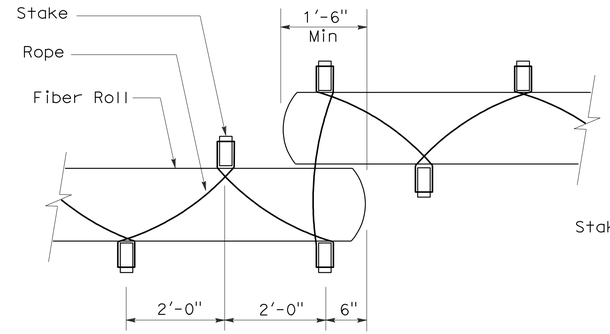


PLAN

FIBER ROLL (TYPE 2)

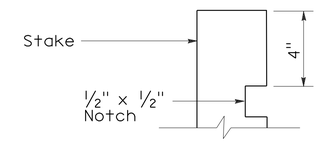


ELEVATION

STAKE NOTCH DETAIL

NOTES:

1. Fiber roll spacing varies depending upon slope inclination.
2. Installations shown in the perspectives are for slope inclination of 10:1 and steeper.

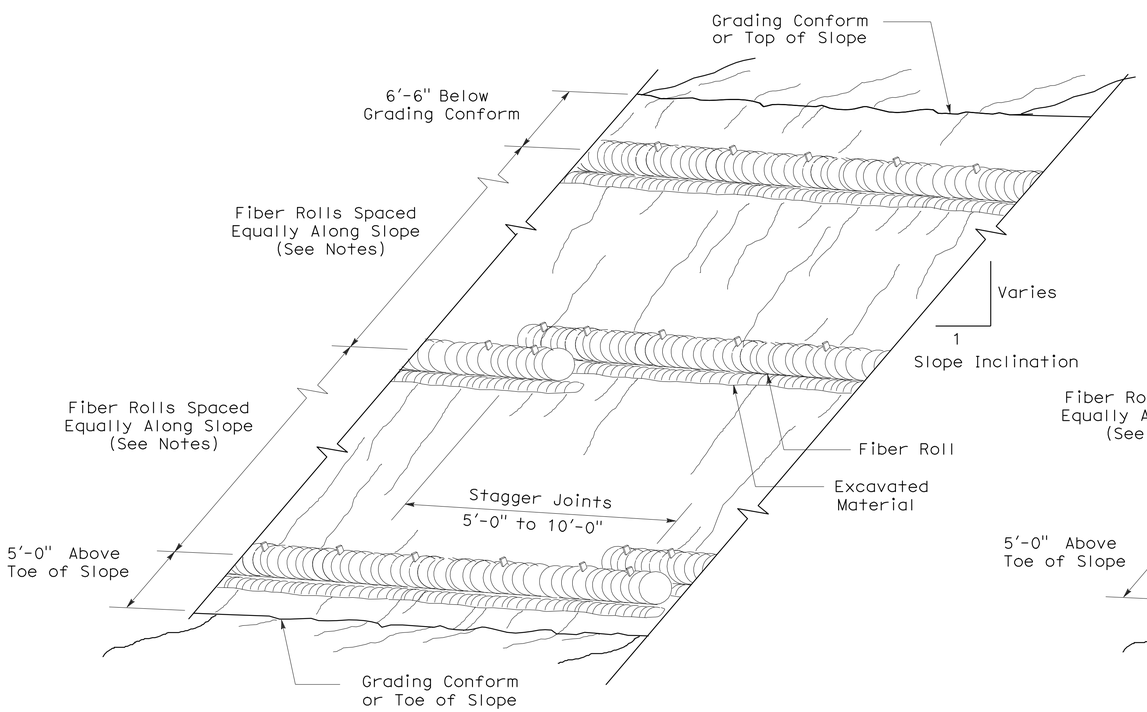


PERSPECTIVE

FIBER ROLL (TYPE 1)

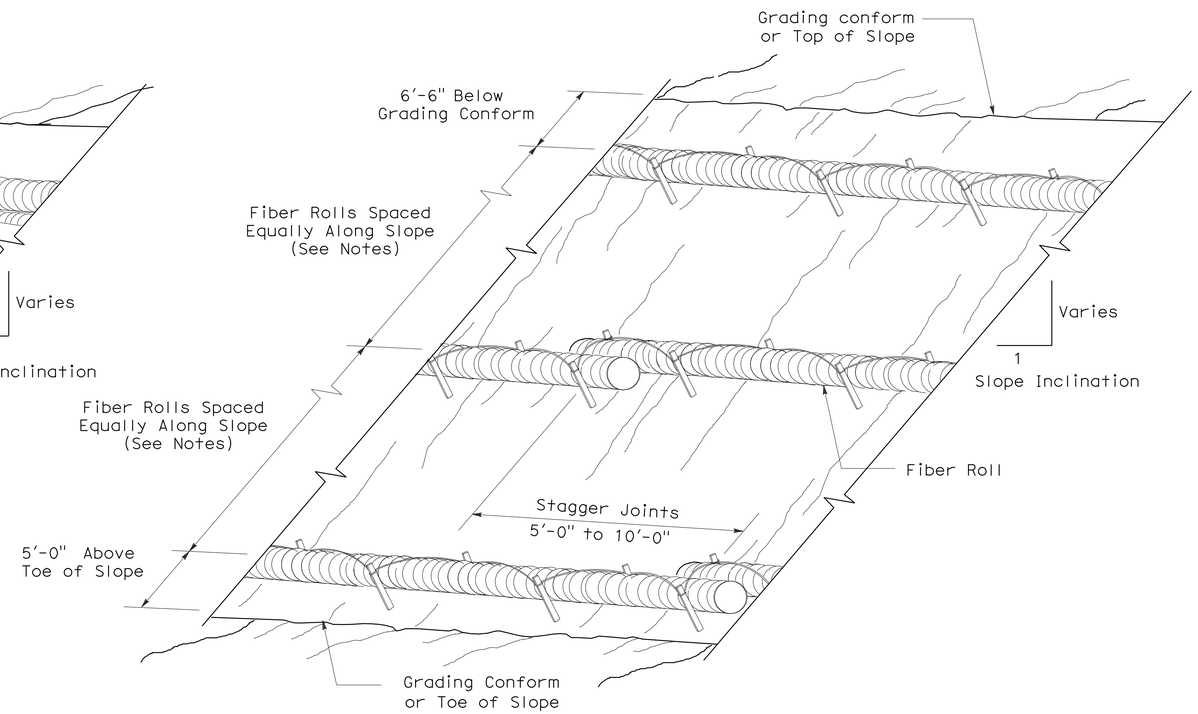


PERSPECTIVE

FIBER ROLL (TYPE 2)

STATE OF CALIFORNIA
DEPARTMENT OF TRANSPORTATION

# EROSION CONTROL DETAILS (FIBER ROLL)

NO SCALE

NSP H51 DATED DECEMBER 1, 2006 SUPPLEMENTS
THE STANDARD PLANS BOOK DATED MAY 2006

**NEW STANDARD PLAN NSP H51**

**2006 NEW STANDARD PLAN NSP H51**

10-05-06

| DIST | COUNTY | ROUTE | POST MILES TOTAL PROJECT | SHEET NO. | TOTAL SHEETS |
|---|---|---|---|---|---|
| 04 | Son | 1,12,116 | Var | 45 | 49 |

Randell D. Hiatt
REGISTERED CIVIL ENGINEER

June 6, 2008
PLANS APPROVAL DATE

REGISTERED PROFESSIONAL ENGINEER
Randell D. Hiatt
No. C50200
Exp. 6-30-09
CIVIL
STATE OF CALIFORNIA

*The State of California or its officers or agents shall not be responsible for the accuracy or completeness of electronic copies of this plan sheet.*

*To accompany plans dated* 11-17-08

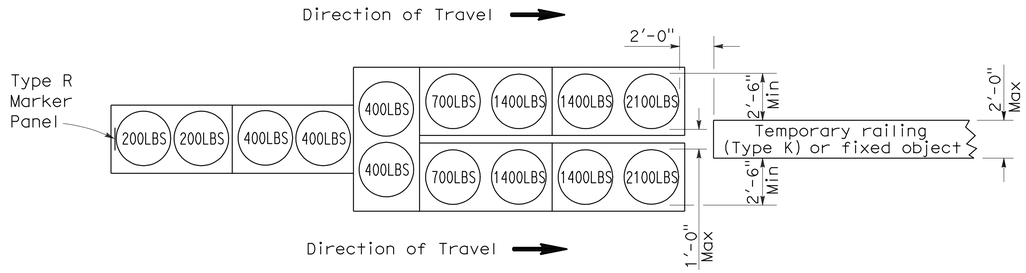


## ARRAY 'TU14'

Approach speed 45 mph or more

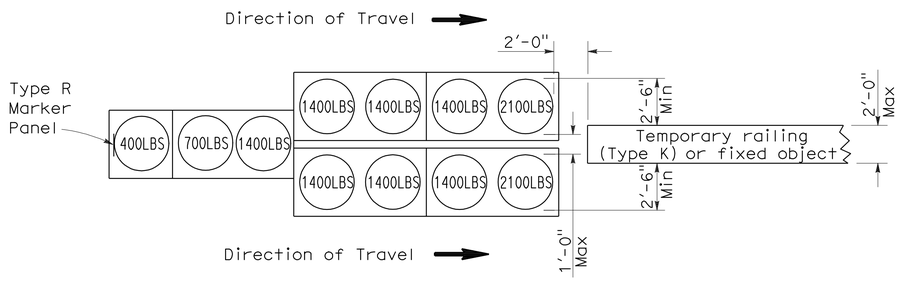


## ARRAY 'TU11'

Approach speed less than 45 mph

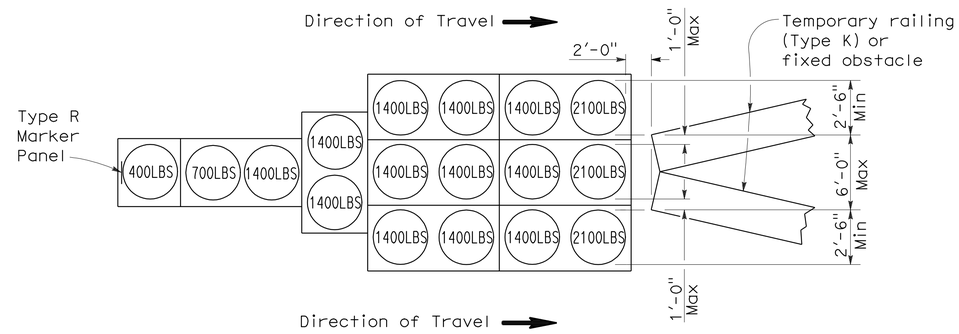


## ARRAY 'TU17'

Approach speed less than 45 mph

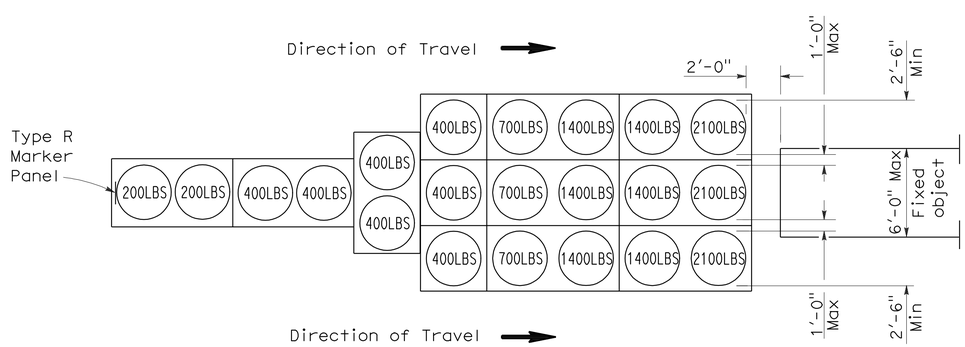


## ARRAY 'TU21'

Approach speed 45 mph or more

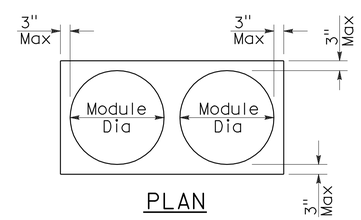


PLAN

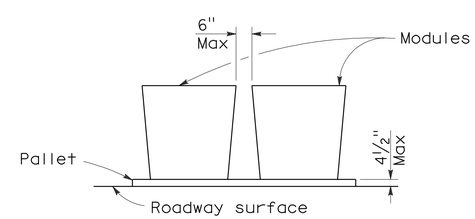


ELEVATION

## CRASH CUSHION PALLET DETAIL

See Note 7

## NOTES:

1. (XXX) Indicates sand filled module location and weight of sand in pounds for each module. Module spacing is based on the greater diameter of the module.
2. All sand weights are nominal.
3. Temporary crash cushion arrays shall not encroach on the traveled way.
4. Place the top of Type R marker panel 1" below the module lid.
5. Refer to Standard Plan A73B for marker details.
6. Approach speeds indicated conform to NCHRP 350 Report criteria.
7. Use of pallets is optional.

STATE OF CALIFORNIA
DEPARTMENT OF TRANSPORTATION

# TEMPORARY CRASH CUSHION, SAND FILLED (UNIDIRECTIONAL)

NO SCALE

RSP T1A DATED JUNE 6, 2008 SUPERSEDES STANDARD PLAN T1A
DATED MAY 1, 2006 - PAGE 211 OF THE STANDARD PLANS BOOK DATED MAY 2006.

**REVISED STANDARD PLAN RSP T1A**

**2006 REVISED STANDARD PLAN RSP T1A**

| DIST | COUNTY | ROUTE | POST MILES TOTAL PROJECT | SHEET NO. | TOTAL SHEETS |
|---|---|---|---|---|---|
| 04 | Son | 1,12,116 | Var | 46 | 49 |

Randell D. Hiatt
REGISTERED CIVIL ENGINEER

June 6, 2008
PLANS APPROVAL DATE

REGISTERED PROFESSIONAL ENGINEER
Randell D. Hiatt
No. C50200
Exp. 6-30-09
CIVIL
STATE OF CALIFORNIA

*The State of California or its officers or agents shall not be responsible for the accuracy or completeness of electronic copies of this plan sheet.*

*To accompany plans dated* 11-17-08

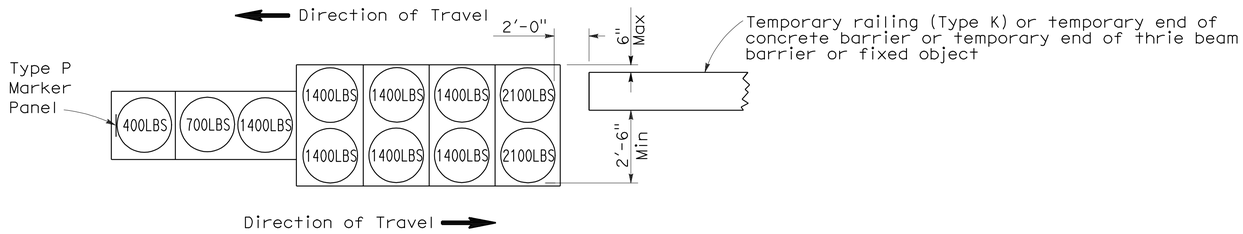


ARRAY 'TB11'

Approach speed less than 45 mph

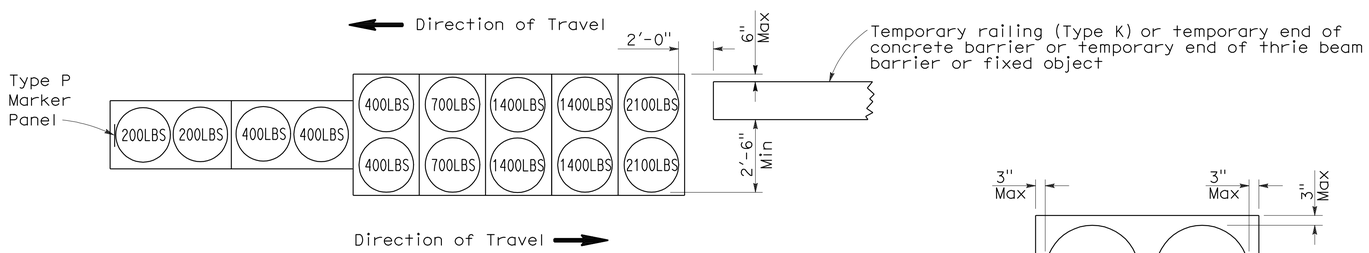


ARRAY 'TB14'

Approach speed 45 mph or more

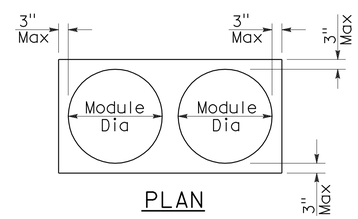


PLAN

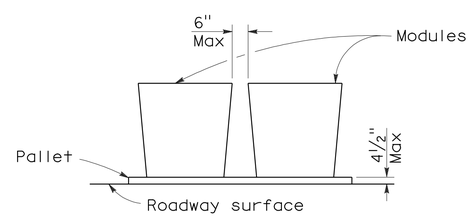


ELEVATION

CRASH CUSHION PALLET DETAIL

See Note 7

NOTES:

1. (XXX) Indicates sand filled module location and weight of sand in pounds for each module. Module spacing is based on the greater diameter of the module.
2. All sand weights are nominal.
3. Temporary crash cushion arrays shall not encroach on the traveled way.
4. Place the Type P marker panel so that the bottom of the panel rests upon the pallet.
5. Refer to Standard Plan A73B for marker details.
6. Approach speeds indicated conform to NCHRP 350 Report criteria.
7. Use of pallets is optional.

STATE OF CALIFORNIA
DEPARTMENT OF TRANSPORTATION

# TEMPORARY CRASH CUSHION, SAND FILLED (BIDIRECTIONAL)

NO SCALE

RSP T1B DATED JUNE 6, 2008 SUPERSEDES STANDARD PLAN T1B
DATED MAY 1, 2006 - PAGE 212 OF THE STANDARD PLANS BOOK DATED MAY 2006.

**REVISED STANDARD PLAN RSP T1B**

**2006 REVISED STANDARD PLAN RSP T1B**

| DIST | COUNTY | ROUTE | POST MILES TOTAL PROJECT | SHEET NO. | TOTAL SHEETS |
|---|---|---|---|---|---|
| 04 | Son | 1,12,116 | Var | 47 | 49 |

Randell D. Hiatt
REGISTERED CIVIL ENGINEER

June 6, 2008
PLANS APPROVAL DATE

REGISTERED PROFESSIONAL ENGINEER
Randell D. Hiatt
No. C50200
Exp. 6-30-09
CIVIL
STATE OF CALIFORNIA

*The State of California or its officers or agents shall not be responsible for the accuracy or completeness of electronic copies of this plan sheet.*

*To accompany plans dated* 11-17-08

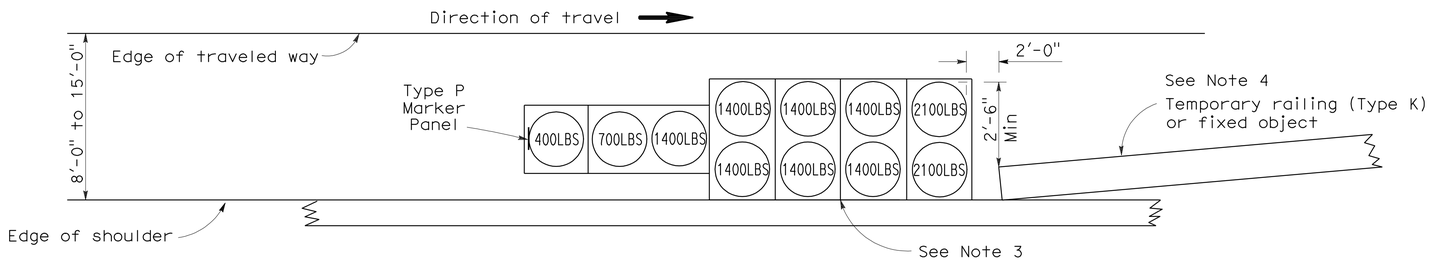


## ARRAY 'TS11'

Approach speed less than 45 mph
See Note 9

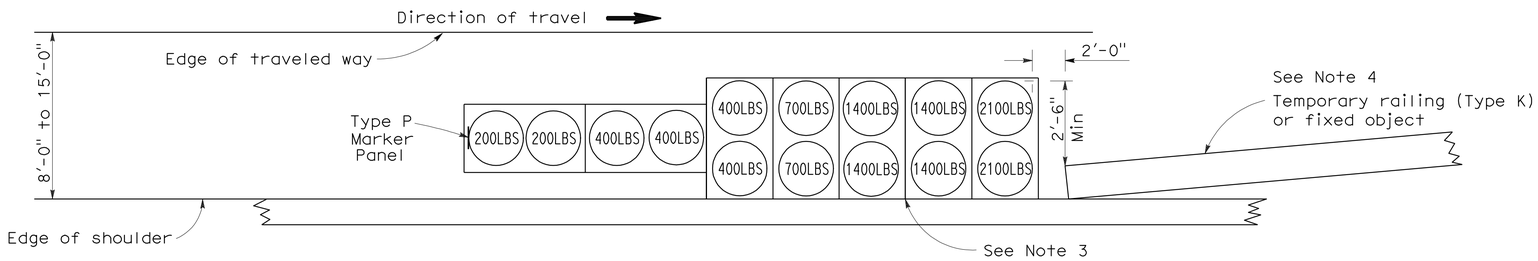


## ARRAY 'TS14'

Approach speed 45 mph or more
See Note 9

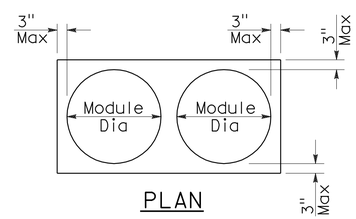


PLAN

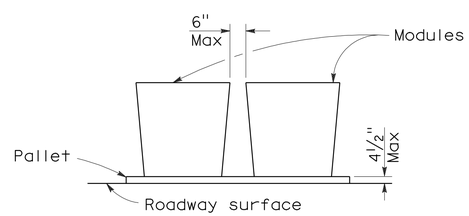


ELEVATION

## CRASH CUSHION PALLET DETAIL

See Note 11

## NOTES:

1. (XXX) Indicates sand filled module location and weight of sand in pounds for each module. Module spacing is based on the greater diameter of the module.
2. All sand weights are nominal.
3. The temporary crash cushion arrays shown on this plan shall be used only in locations where there will be traffic on one side of the temporary crash cushion array.
4. If the fixed object or approach end of the temporary railing is less than 15'-0" from the edge of traveled way, a temporary crash cushion is required in a construction or work zone.
5. Temporary crash cushion arrays shall not encroach on the traveled way.
6. Arrays for median shoulders shall conform to details shown on this plan for outside shoulders.
7. Place the Type P marker panel so that the bottom of the panel rests upon the pallet and faces traffic.
8. Refer to Standard Plan A73B for marker details.
9. For shoulder widths less than 8'-0", appropriate approved crash cushion protection, other than sand filled modules, shall be provided at fixed objects and at approach ends of temporary railing. The specific type of crash cushion shall be as shown on the project plans or as specified in the Special Provisions, or if not shown on the project plans or specified in the Special Provisions, shall be as approved by the Engineer.
10. Approach speeds indicated conform to NCHRP 350 Report criteria.
11. Use of pallets is optional.

STATE OF CALIFORNIA
DEPARTMENT OF TRANSPORTATION

# TEMPORARY CRASH CUSHION, SAND FILLED (SHOULDER INSTALLATIONS)

NO SCALE

RSP T2 DATED JUNE 6, 2008 SUPERSEDES STANDARD PLAN T2
DATED MAY 1, 2006 - PAGE 213 OF THE STANDARD PLANS BOOK DATED MAY 2006.

**REVISED STANDARD PLAN RSP T2**

**2006 REVISED STANDARD PLAN RSP T2**

5-15-08

| DIST | COUNTY | ROUTE | POST MILES TOTAL PROJECT | SHEET NO. | TOTAL SHEETS |
|---|---|---|---|---|---|
| 04 | Son | 1,12,116 | Var | 48 | 49 |

LICENSED LANDSCAPE ARCHITECT

August 15, 2008
PLANS APPROVAL DATE

*The State of California or its officers or agents shall not be responsible for the accuracy or completeness of electronic copies of this plan sheet.*

LICENSED LANDSCAPE ARCHITECT — Robert B. Schott — Signature 11-04-08 Renewal Date — 08-11-08 Date — STATE OF CALIFORNIA

*To accompany plans dated* 11-17-08

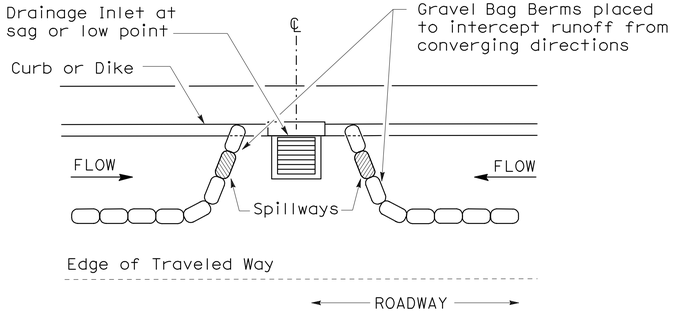


PLAN

## CONFIGURATION FOR SAG POINT INLET (GRAVEL BAG BERM)

## GRAVEL BAG BERM (TYPE 3A) SPACING TABLE

| SLOPE OF ROADWAY (PERCENT) | 1 to 3.9 | 4 to 5.9 | 6 to 7.9 | 8 to 10 | 10+ |
|---|---|---|---|---|---|
| INTERVAL BETWEEN BERM | 100′ | 75′ | 50′ | 25′ | 12′ |

For slope of less than 1%, install barriers only if erosion/sediment is prevalent

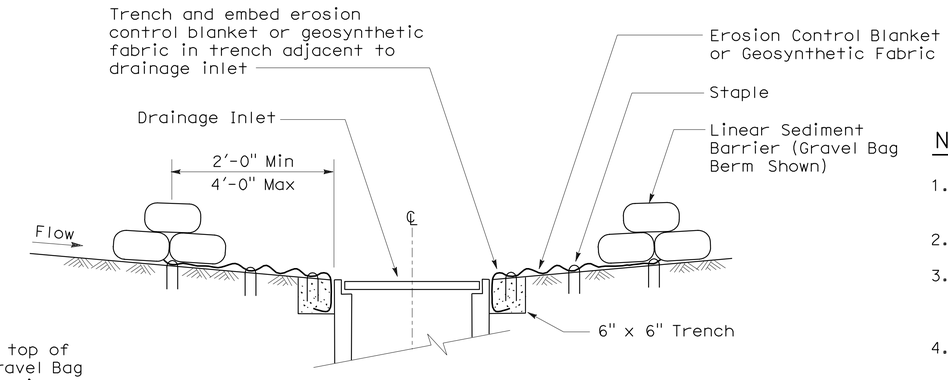


SECTION A-A

## NOTES:

1. Place safety cones adjacent to drainage inlet protection.
2. Dimensions may vary to fit field conditions.
3. Install a minimum of 3 gravel bag berms upstream of each drainage inlet to be protected.
4. Position erosion control blanket or geosynthetic fabric at edge of concrete apron and secure in trench.
5. Erosion control blanket or geosynthetic fabric is not required if the area adjacent to the drainage inlet is vegetated or paved.

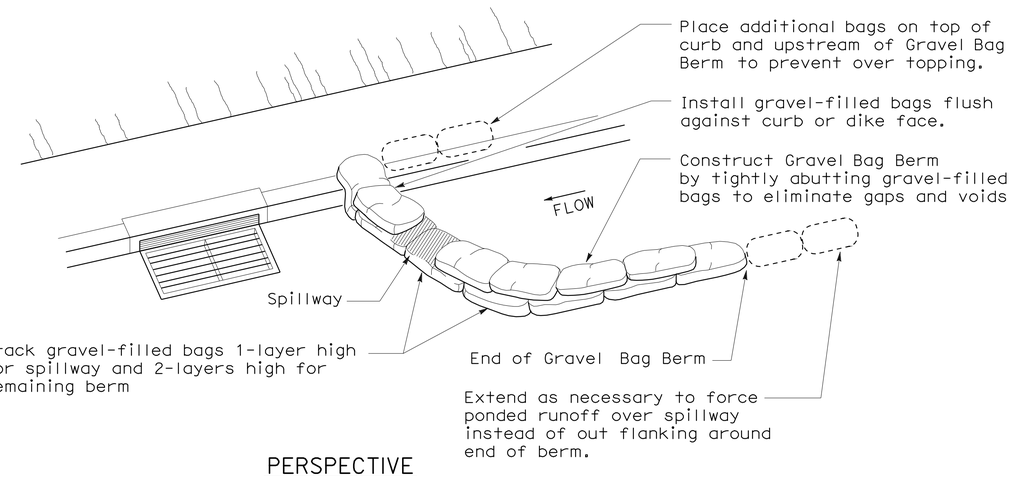


PERSPECTIVE

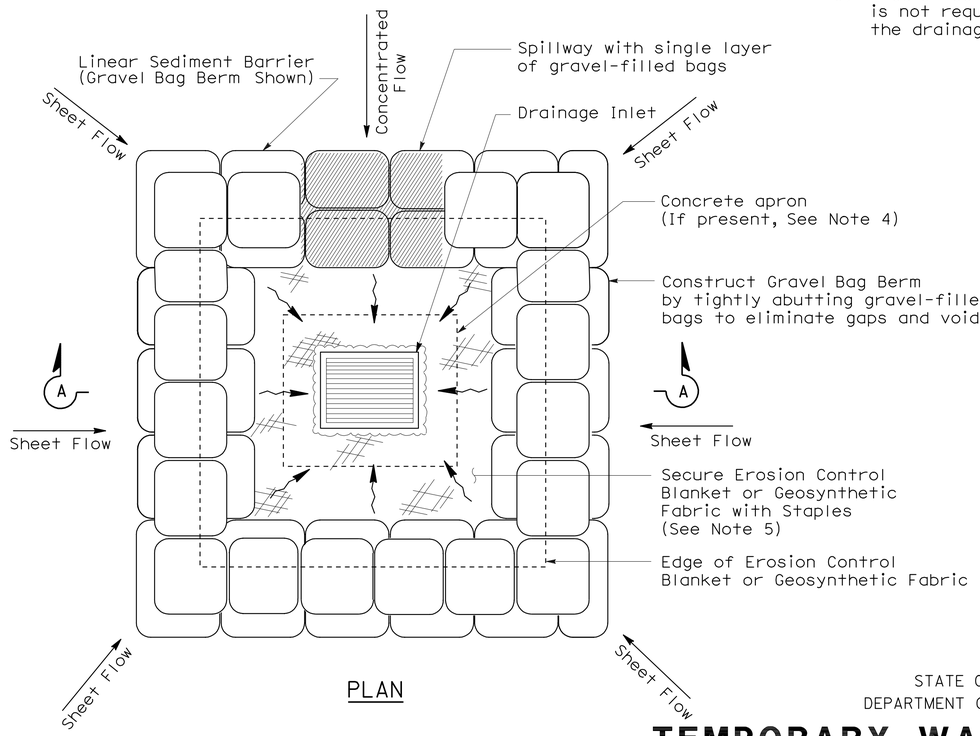


PLAN

## TEMPORARY DRAINAGE INLET PROTECTION (TYPE 3B)

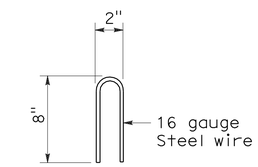


STAPLE DETAIL

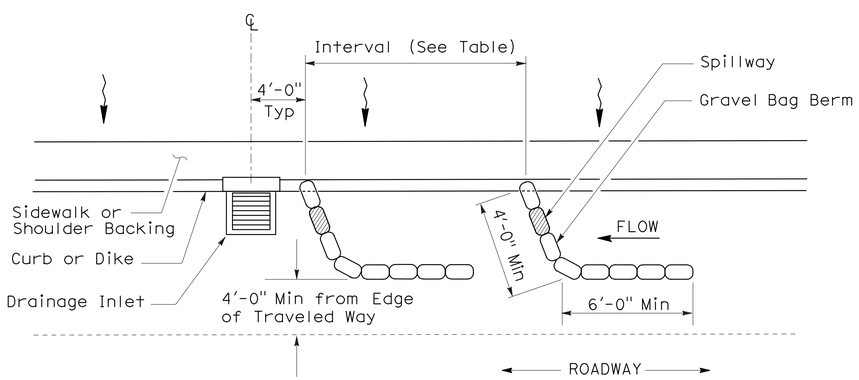


PLAN

## TEMPORARY DRAINAGE INLET PROTECTION (TYPE 3A) (GRAVEL BAG BERM)

STATE OF CALIFORNIA
DEPARTMENT OF TRANSPORTATION

# TEMPORARY WATER POLLUTION CONTROL DETAILS (TEMPORARY DRAINAGE INLET PROTECTION)

NO SCALE

NSP T62 DATED AUGUST 15, 2008 SUPPLEMENTS THE STANDARD PLANS BOOK DATED MAY 2006.

**NEW STANDARD PLAN NSP T62**

**2006 NEW STANDARD PLAN NSP T62**

7-11-08

| DIST | COUNTY | ROUTE | POST MILES TOTAL PROJECT | SHEET NO. | TOTAL SHEETS |
|---|---|---|---|---|---|
| 04 | Son | 1,12,116 | Var | 49 | 49 |

LICENSED LANDSCAPE ARCHITECT

August 15, 2008
PLANS APPROVAL DATE

*The State of California or its officers or agents shall not be responsible for the accuracy or completeness of electronic copies of this plan sheet.*

LICENSED LANDSCAPE ARCHITECT — Robert B. Schott — Signature — 11-04-08 Renewal Date — 08-11-08 Date — STATE OF CALIFORNIA

*To accompany plans dated* 11-17-08

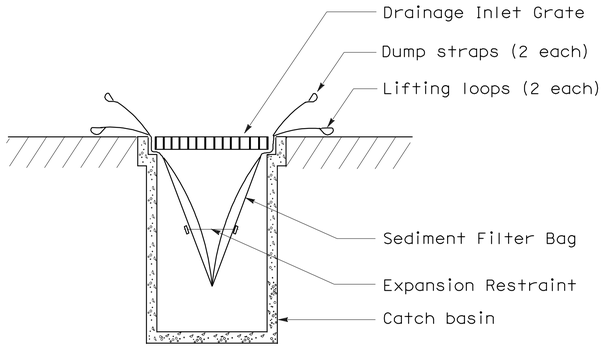


SECTION B-B

## SEDIMENT FILTER BAG DETAIL

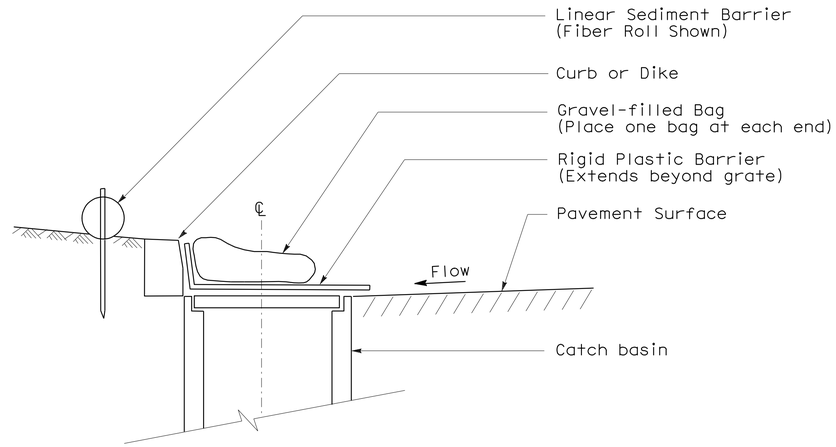


SECTION

## TEMPORARY DRAINAGE INLET PROTECTION (TYPE 6A) (CATCH BASIN WITH GRATE)

NOTES:

1. See Standard Plan T51 for Temporary Silt Fence.
2. Dimensions may vary to fit field conditions.

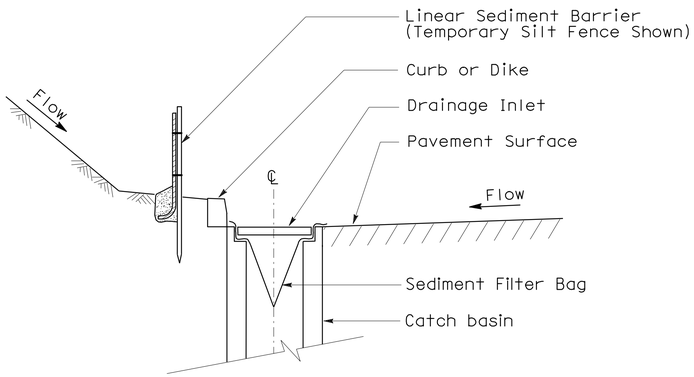


SECTION A-A

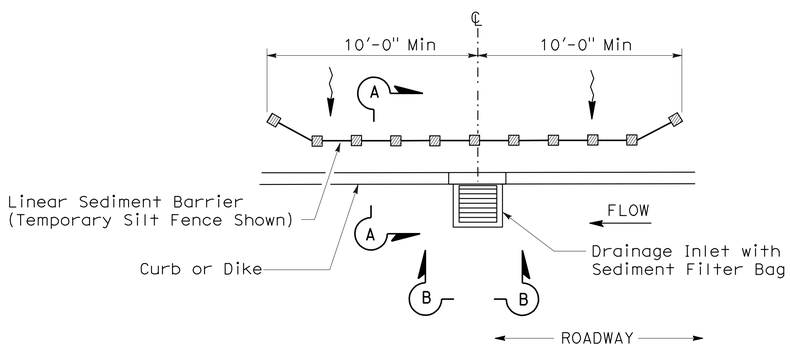


PLAN

## TEMPORARY DRAINAGE INLET PROTECTION (TYPE 5) (SEDIMENT FILTER BAG)

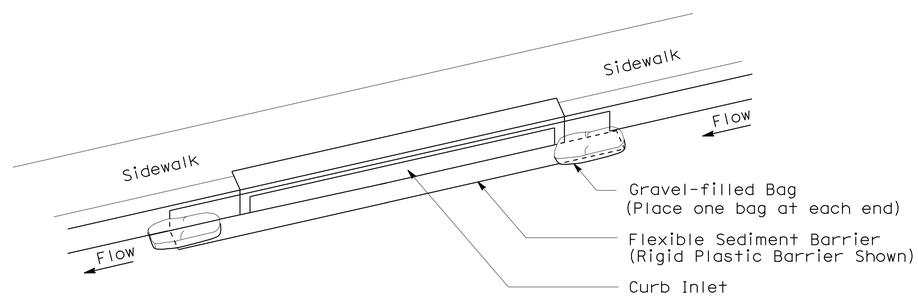


PERSPECTIVE

## TEMPORARY DRAINAGE INLET PROTECTION (TYPE 6B) (CURB INLET WITHOUT GRATE)

STATE OF CALIFORNIA
DEPARTMENT OF TRANSPORTATION

# TEMPORARY WATER POLLUTION CONTROL DETAILS (TEMPORARY DRAINAGE INLET PROTECTION)

NO SCALE

NSP T64 DATED AUGUST 15, 2008 SUPPLEMENTS THE STANDARD PLANS BOOK DATED MAY 2006.

**NEW STANDARD PLAN NSP T64**

**2006 NEW STANDARD PLAN NSP T64**

7-11-08