Dist	COUNTY	ROUTE	POST MILES TOTAL PROJECT	SHEET No.	TOTAL SHEETS
04	Sol	12,80	2.1/2.8, 12.0/13.1	401	597

REGISTERED CIVIL ENGINEER 1-7-13 DATE

5-6-13
PLANS APPROVAL DATE

REGISTERED PROFESSIONAL ENGINEER S. LUCKJIFF No. 63058 Exp. 6-30-14 CIVIL STATE OF CALIFORNIA

THE STATE OF CALIFORNIA OR ITS OFFICERS OR AGENTS SHALL NOT BE RESPONSIBLE FOR THE ACCURACY OR COMPLETENESS OF SCANNED COPIES OF THIS PLAN SHEET.

FEHR & PEERS
160 W SANTA CLARA ST., SUITE 675
SAN JOSE, CA 95113

SOLANO TRANSPORTATION AUTHORITY
ONE HARBOR CENTER, SUITE 130
SUISUN CITY, CA 94585

NOTE:

FOR ACCURATE RIGHT OF WAY DATA, CONTACT RIGHT OF WAY ENGINEERING AT THE DISTRICT OFFICE.

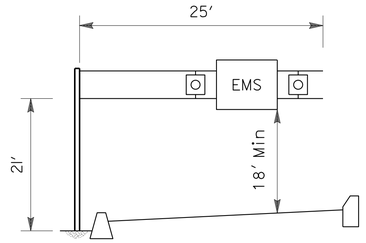

SECTION 'B'
SIGN STRUCTURE DIMENSIONS
NO SCALE

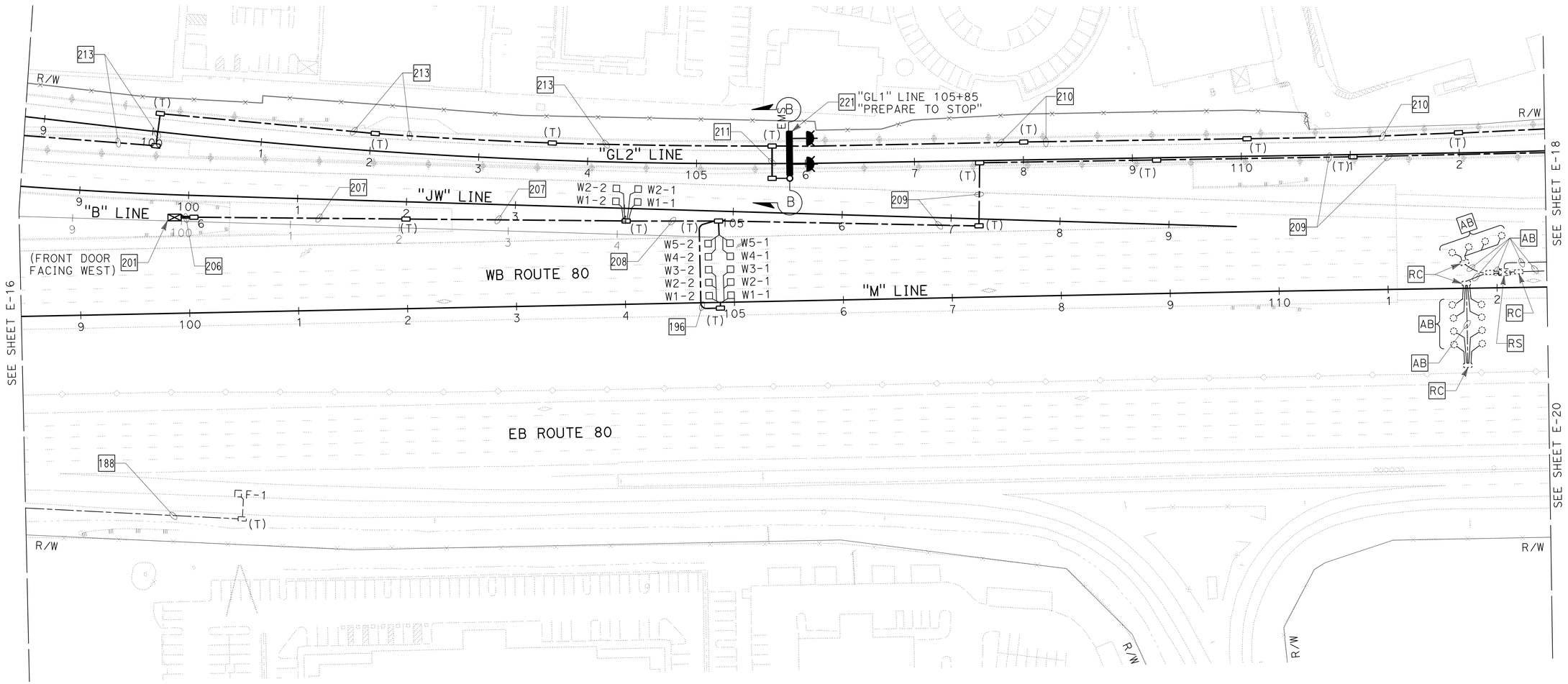

TRAFFIC MONITORING STATION (LOCATION 2)

SCALE: 1" = 50'

E-17

APPROVED FOR ELECTRICAL WORK ONLY

STATE OF CALIFORNIA - DEPARTMENT OF TRANSPORTATION
Caltrans

CONSULTANT FUNCTIONAL SUPERVISOR: ROBERT REES
CALCULATED-DESIGNED BY: LISA LANGENFELD
CHECKED BY: KRISTIN CALIA
REVISED BY
DATE REVISED

LAST REVISION 01-07-13
DATE PLOTTED => 08-MAY-2013
TIME PLOTTED => 12:00

Dist	COUNTY	ROUTE	POST MILES TOTAL PROJECT	SHEET No.	TOTAL SHEETS
04	Sol	12,80	2.1/2.8, 12.0/13.1	402	597

REGISTERED CIVIL ENGINEER 1-7-13 DATE

5-6-13
PLANS APPROVAL DATE

REGISTERED PROFESSIONAL ENGINEER S. LUCKJIFF No. 63058 Exp. 6-30-14 CIVIL STATE OF CALIFORNIA

THE STATE OF CALIFORNIA OR ITS OFFICERS OR AGENTS SHALL NOT BE RESPONSIBLE FOR THE ACCURACY OR COMPLETENESS OF SCANNED COPIES OF THIS PLAN SHEET.

FEHR & PEERS
160 W SANTA CLARA ST., SUITE 675
SAN JOSE, CA 95113

SOLANO TRANSPORTATION AUTHORITY
ONE HARBOR CENTER, SUITE 130
SUISUN CITY, CA 94585

NOTE:
FOR ACCURATE RIGHT OF WAY DATA, CONTACT RIGHT OF WAY ENGINEERING AT THE DISTRICT OFFICE.

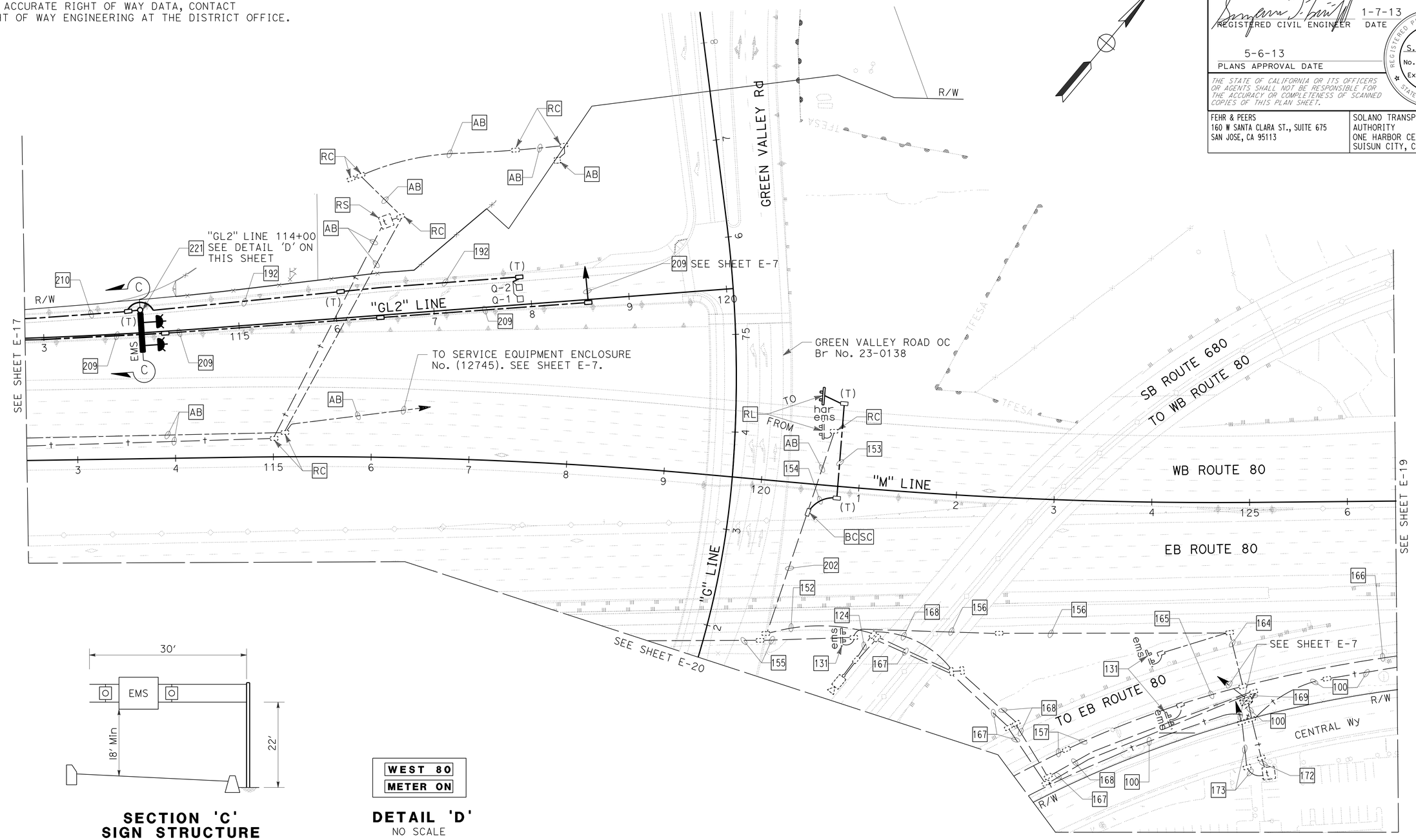

SECTION 'C'
SIGN STRUCTURE DIMENSIONS
NO SCALE

NOTE:
EMS MESSAGE PER DETAIL 'D'.

WEST 80
METER ON

DETAIL 'D'
NO SCALE

TRAFFIC MONITORING STATION (LOCATION 3)

SCALE: 1" = 50'

E-18

APPROVED FOR ELECTRICAL WORK ONLY

STATE OF CALIFORNIA - DEPARTMENT OF TRANSPORTATION
Caltrans

CONSULTANT FUNCTIONAL SUPERVISOR: ROBERT REES
CALCULATED-DESIGNED BY: LISA LANGENFELD
CHECKED BY: KRISTIN CALIA
REVISED BY
DATE REVISED

LAST REVISION 01-07-13
DATE PLOTTED => 08-MAY-2013
TIME PLOTTED => 12:00

Dist	COUNTY	ROUTE	POST MILES TOTAL PROJECT	SHEET No.	TOTAL SHEETS
04	Sol	12,80	2.1/2.8, 12.0/13.1	403	597

REGISTERED CIVIL ENGINEER 1-7-13 DATE

5-6-13
PLANS APPROVAL DATE

REGISTERED PROFESSIONAL ENGINEER S. LUCKJIFF No. 63058 Exp. 6-30-14 CIVIL STATE OF CALIFORNIA

THE STATE OF CALIFORNIA OR ITS OFFICERS OR AGENTS SHALL NOT BE RESPONSIBLE FOR THE ACCURACY OR COMPLETENESS OF SCANNED COPIES OF THIS PLAN SHEET.

FEHR & PEERS
160 W SANTA CLARA ST., SUITE 675
SAN JOSE, CA 95113

SOLANO TRANSPORTATION AUTHORITY
ONE HARBOR CENTER, SUITE 130
SUISUN CITY, CA 94585

NOTE:

FOR ACCURATE RIGHT OF WAY DATA, CONTACT RIGHT OF WAY ENGINEERING AT THE DISTRICT OFFICE.

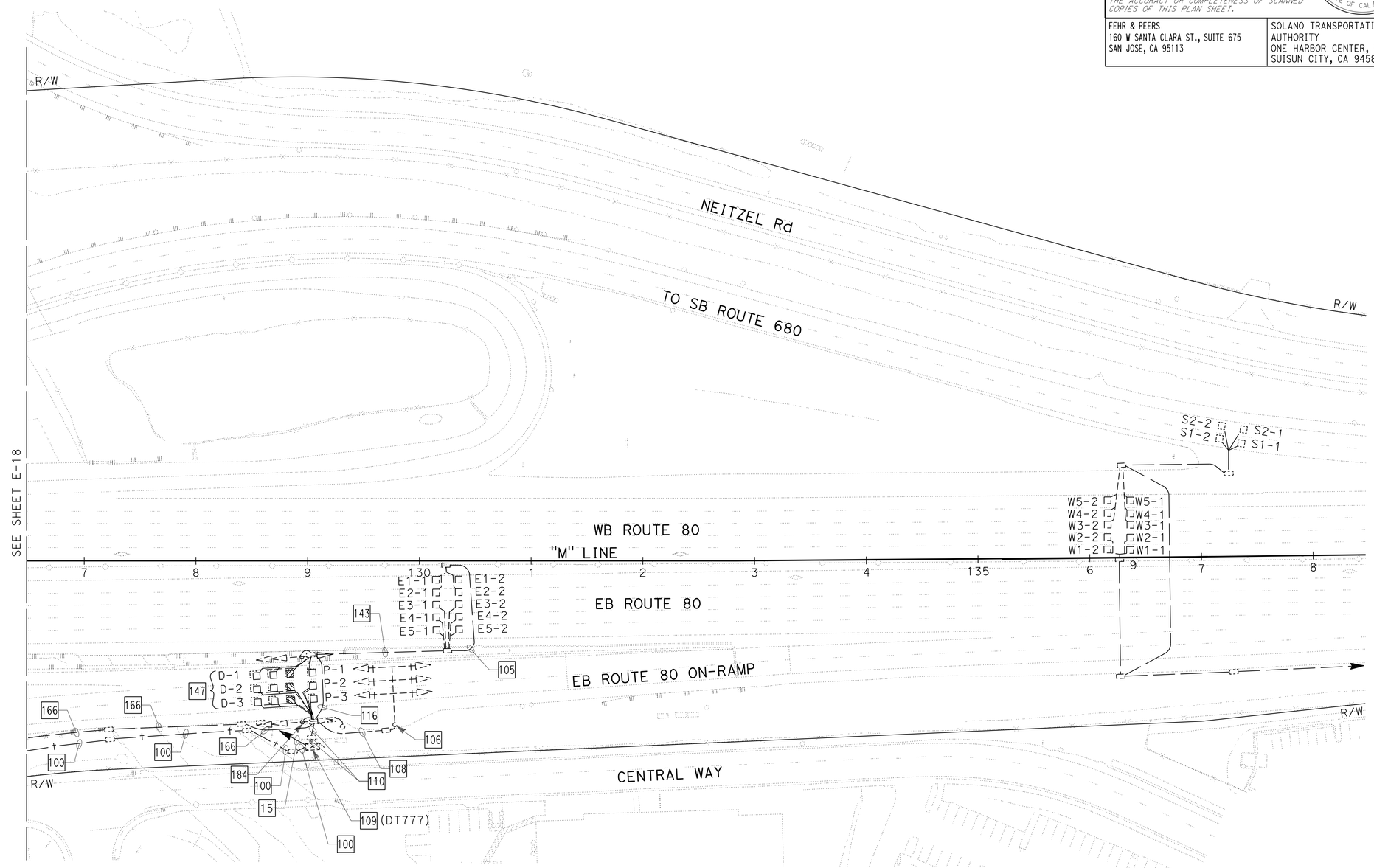

TRAFFIC MONITORING STATION (LOCATION 3)

SCALE: 1" = 50'

E-19

APPROVED FOR ELECTRICAL WORK ONLY

STATE OF CALIFORNIA - DEPARTMENT OF TRANSPORTATION
Caltrans

CONSULTANT FUNCTIONAL SUPERVISOR: ROBERT REES

CALCULATED-DESIGNED BY: LISA LANGENFELD
CHECKED BY: KRISTIN CALIA

REVISED BY
DATE REVISED

LAST REVISION DATE PLOTTED => 08-MAY-2013
01-07-13 TIME PLOTTED => 12:00

Dist	COUNTY	ROUTE	POST MILES TOTAL PROJECT	SHEET No.	TOTAL SHEETS
04	Sol	12,80	2.1/2.8, 12.0/13.1	404	597

REGISTERED CIVIL ENGINEER — DATE 1-7-13

5-6-13
PLANS APPROVAL DATE

REGISTERED PROFESSIONAL ENGINEER S. LUCKJIFF No. 63058 Exp. 6-30-14 CIVIL STATE OF CALIFORNIA

THE STATE OF CALIFORNIA OR ITS OFFICERS OR AGENTS SHALL NOT BE RESPONSIBLE FOR THE ACCURACY OR COMPLETENESS OF SCANNED COPIES OF THIS PLAN SHEET.

FEHR & PEERS
160 W SANTA CLARA ST., SUITE 675
SAN JOSE, CA 95113

SOLANO TRANSPORTATION AUTHORITY
ONE HARBOR CENTER, SUITE 130
SUISUN CITY, CA 94585

NOTE:

FOR ACCURATE RIGHT OF WAY DATA, CONTACT RIGHT OF WAY ENGINEERING AT THE DISTRICT OFFICE.

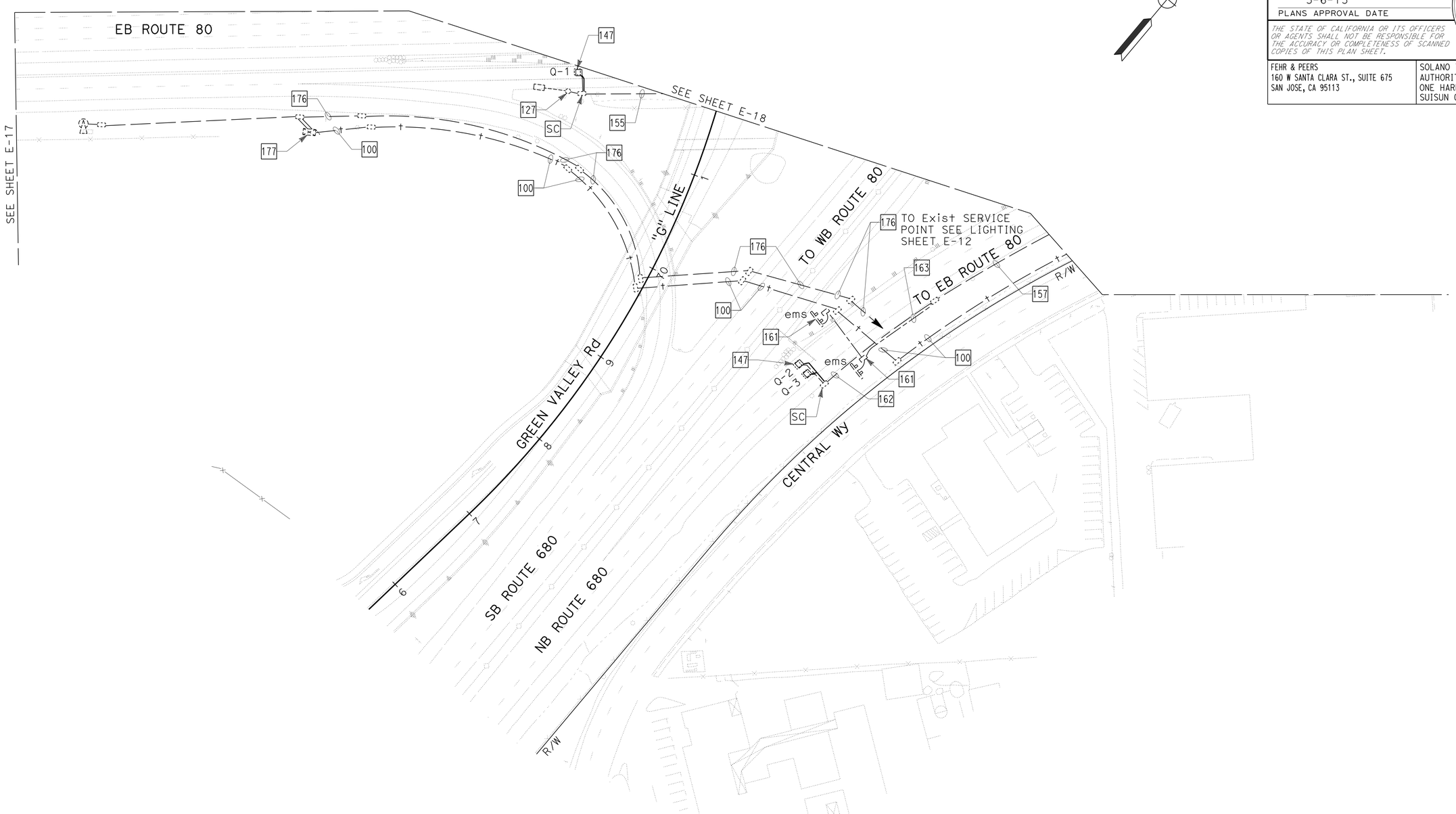

TRAFFIC MONITORING STATION (LOCATION 3)

SCALE: 1" = 50'

E-20

APPROVED FOR ELECTRICAL WORK ONLY

STATE OF CALIFORNIA - DEPARTMENT OF TRANSPORTATION
Caltrans

CONSULTANT FUNCTIONAL SUPERVISOR: ROBERT REES
CALCULATED-DESIGNED BY: LISA LANGENFELD
CHECKED BY: KRISTIN CALIA
REVISED BY
DATE REVISED

LAST REVISION DATE PLOTTED => 08-MAY-2013
01-07-13 TIME PLOTTED => 12:00

Dist	COUNTY	ROUTE	POST MILES TOTAL PROJECT	SHEET No.	TOTAL SHEETS
04	Sol	12,80	2.1/2.8, 12.0/13.1	405	597

REGISTERED CIVIL ENGINEER 1-7-13 DATE

5-6-13
PLANS APPROVAL DATE

REGISTERED PROFESSIONAL ENGINEER S. LUCKJIFF No. 63058 Exp. 6-30-14 CIVIL STATE OF CALIFORNIA

THE STATE OF CALIFORNIA OR ITS OFFICERS OR AGENTS SHALL NOT BE RESPONSIBLE FOR THE ACCURACY OR COMPLETENESS OF SCANNED COPIES OF THIS PLAN SHEET.

FEHR & PEERS
160 W SANTA CLARA ST., SUITE 675
SAN JOSE, CA 95113

SOLANO TRANSPORTATION AUTHORITY
ONE HARBOR CENTER, SUITE 130
SUISUN CITY, CA 94585

NOTE:

FOR ACCURATE RIGHT OF WAY DATA, CONTACT RIGHT OF WAY ENGINEERING AT THE DISTRICT OFFICE.

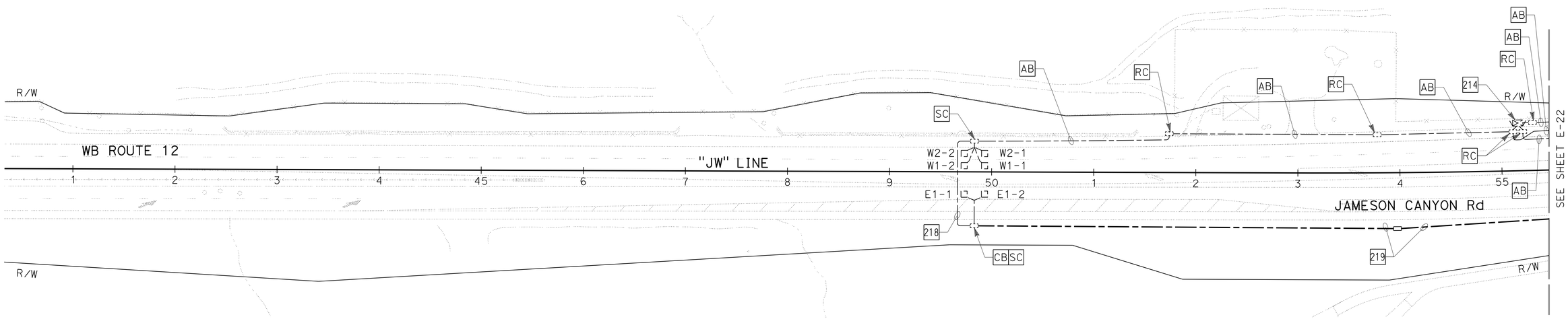

TRAFFIC MONITORING STATION (LOCATION 4)

SCALE: 1" = 50'

E-21

APPROVED FOR ELECTRICAL WORK ONLY

STATE OF CALIFORNIA - DEPARTMENT OF TRANSPORTATION
Caltrans

CONSULTANT FUNCTIONAL SUPERVISOR: ROBERT REES
CALCULATED-DESIGNED BY: LISA LANGENFELD
CHECKED BY: KRISTIN CALIA
REVISED BY
DATE REVISED

LAST REVISION 01-07-13
DATE PLOTTED => 08-MAY-2013
TIME PLOTTED => 12:00

Dist	COUNTY	ROUTE	POST MILES TOTAL PROJECT	SHEET No.	TOTAL SHEETS
04	Sol	12,80	2.1/2.8, 12.0/13.1	406	597

REGISTERED CIVIL ENGINEER 1-7-13 DATE

5-6-13
PLANS APPROVAL DATE

REGISTERED PROFESSIONAL ENGINEER S. LUCKJIFF No. 63058 Exp. 6-30-14 CIVIL STATE OF CALIFORNIA

THE STATE OF CALIFORNIA OR ITS OFFICERS OR AGENTS SHALL NOT BE RESPONSIBLE FOR THE ACCURACY OR COMPLETENESS OF SCANNED COPIES OF THIS PLAN SHEET.

FEHR & PEERS
160 W SANTA CLARA ST., SUITE 675
SAN JOSE, CA 95113

SOLANO TRANSPORTATION AUTHORITY
ONE HARBOR CENTER, SUITE 130
SUISUN CITY, CA 94585

NOTE:

FOR ACCURATE RIGHT OF WAY DATA, CONTACT RIGHT OF WAY ENGINEERING AT THE DISTRICT OFFICE.

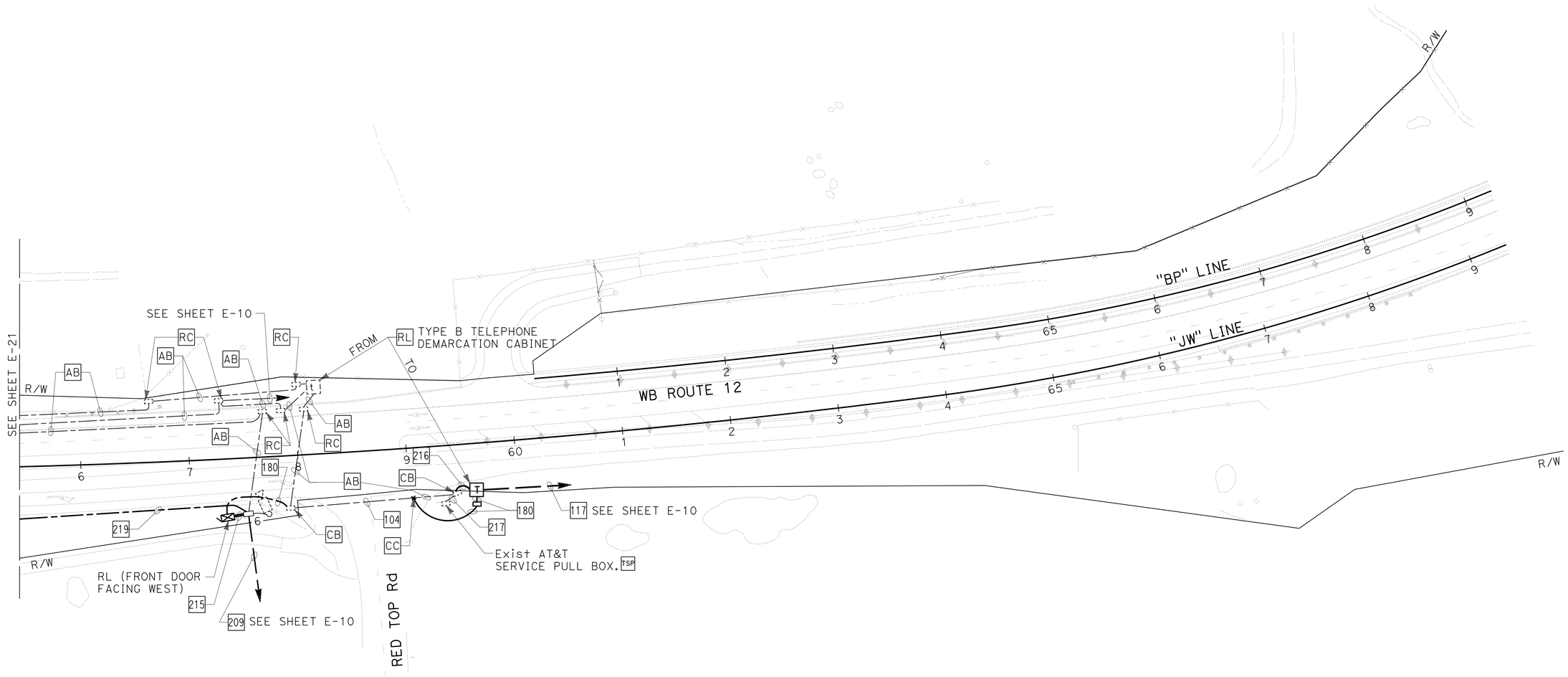

TRAFFIC MONITORING STATION (LOCATION 4)

SCALE: 1" = 50'

E-22

APPROVED FOR ELECTRICAL WORK ONLY

STATE OF CALIFORNIA - DEPARTMENT OF TRANSPORTATION
Caltrans

CONSULTANT FUNCTIONAL SUPERVISOR: ROBERT REES
CALCULATED-DESIGNED BY: LISA LANGENFELD
CHECKED BY: KRISTIN CALIA
REVISED BY
DATE REVISED

LAST REVISION 01-07-13 | DATE PLOTTED => 08-MAY-2013 | TIME PLOTTED => 12:00

Dist	COUNTY	ROUTE	POST MILES TOTAL PROJECT	SHEET No.	TOTAL SHEETS
04	Sol	12,80	2.1/2.8, 12.0/13.1	407	597

REGISTERED CIVIL ENGINEER — DATE 1-7-13

5-6-13
PLANS APPROVAL DATE

REGISTERED PROFESSIONAL ENGINEER S. LUCKJIFF No. 63058 Exp.6-30-14 CIVIL STATE OF CALIFORNIA

THE STATE OF CALIFORNIA OR ITS OFFICERS OR AGENTS SHALL NOT BE RESPONSIBLE FOR THE ACCURACY OR COMPLETENESS OF SCANNED COPIES OF THIS PLAN SHEET.

FEHR & PEERS
160 W SANTA CLARA ST., SUITE 675
SAN JOSE, CA 95113

SOLANO TRANSPORTATION AUTHORITY
ONE HARBOR CENTER, SUITE 130
SUISUN CITY, CA 94585

NOTE:

FOR ACCURATE RIGHT OF WAY DATA, CONTACT RIGHT OF WAY ENGINEERING AT THE DISTRICT OFFICE.

LEGEND: (THIS SHEET ONLY)

1A INSTALL DEPARTMENT-FURNISHED MODEL 2070 CONTROLLER ASSEMBLY (TYPE 332 CABINET). FRONT DOOR SHALL FACE SOUTH.

2A FRONT DOOR SHALL FACE NORTH. INCLUDE ITEMS (1) THROUGH (14), (21) AND (22) PER DETAIL ON SHEET E-32.

3A INSTALL R3-18 SIGN ON SIGNAL MAST ARM.

4A INSTALL R73-3(CA) ON SIGNAL MAST ARM.

5A INSTALL 5' x 20' CONCRETE PAD FOR CONTROLLER, SIGNAL SERVICE ENCLOSURE AND LIGHTING ENCLOSURE No.10780 (SEE SHEET E-13).

6A INSTALL TYPE C 3' X 20' BIKE DETECTOR LOOP.

REMOVED ELECTRICAL EQUIPMENT

4 - TYPE 1-B
1 - TYPE 15
1 - 19A-4-161
2 - 24A-3-161
1 - MODEL 332 WITH 170E CONTROLLER
1 - TYPE III-AF SERVICE ENCLOSURE

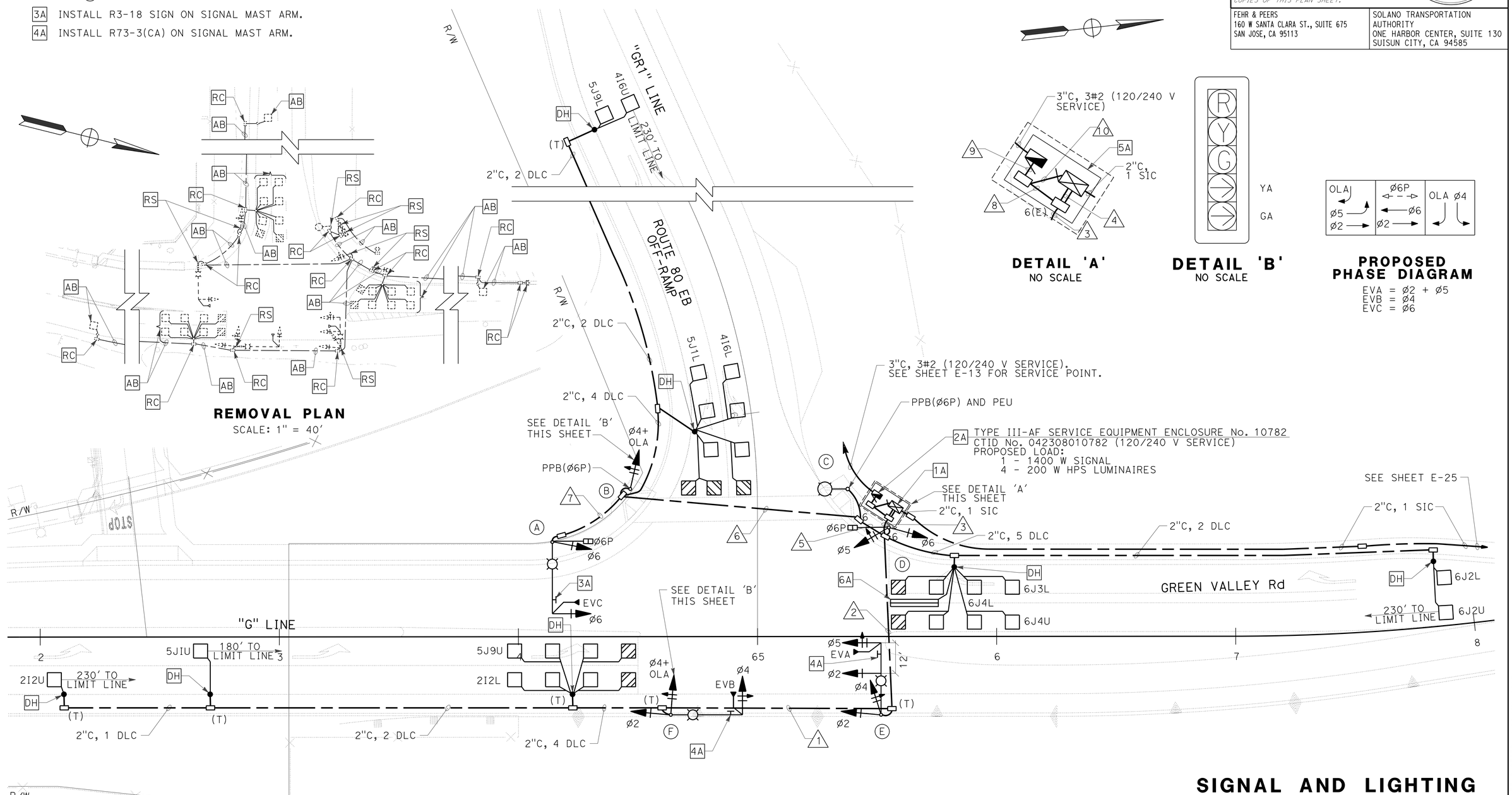

SIGNAL AND LIGHTING (LOCATION 1)

SCALE: 1" = 20'

E-23

APPROVED FOR ELECTRICAL WORK ONLY

STATE OF CALIFORNIA - DEPARTMENT OF TRANSPORTATION
Caltrans

CONSULTANT FUNCTIONAL SUPERVISOR: ROBERT REES
CALCULATED-DESIGNED BY: LISA LANGENFELD
CHECKED BY: KRISTIN CALIA
REVISED BY / DATE REVISED

LAST REVISION 01-07-13 | DATE PLOTTED => 08-MAY-2013 | TIME PLOTTED => 12:50

Dist	COUNTY	ROUTE	POST MILES TOTAL PROJECT	SHEET No.	TOTAL SHEETS
04	Sol	12,80	2.1/2.8, 12.0/13.1	408	597

REGISTERED CIVIL ENGINEER 1-7-13 DATE

5-6-13
PLANS APPROVAL DATE

REGISTERED PROFESSIONAL ENGINEER S. LUCKJIFF No. 63058 Exp. 6-30-14 CIVIL STATE OF CALIFORNIA

THE STATE OF CALIFORNIA OR ITS OFFICERS OR AGENTS SHALL NOT BE RESPONSIBLE FOR THE ACCURACY OR COMPLETENESS OF SCANNED COPIES OF THIS PLAN SHEET.

FEHR & PEERS
160 W SANTA CLARA ST., SUITE 675
SAN JOSE, CA 95113

SOLANO TRANSPORTATION AUTHORITY
ONE HARBOR CENTER, SUITE 130
SUISUN CITY, CA 94585

CONDUCTOR AND CONDUIT SCHEDULE

AWG	CIRCUIT	1	2	3	4	5	6	7	8	9	10
#14	Ø2 SIGNALS	3	3	3	3						
	Ø4 SIGNALS	3	3	3	3	3					
	Ø5 SIGNALS		3	3	3						
	Ø6 SIGNALS			3	3	3	3	3			
	OLA	2	2	2	2	2	2				
	Ø6 PED			2	2	2	2	2			
	Ø6 PPB			1	1	1	1				
	PPB COMMON			1	1	1	1				
	SPARES	3	3	6	6	3	3	3			
	PEU			3		3			3	3	
	TOTAL No. 14	11	14	27	24	18	12	8	3	3	
#10	SIGNAL NEUTRAL (120 V)	1	1	2	2	1	1	1			
#8	LIGHTING (240 V)	2	2	2		2	2	2	2	2	
#6	CONTROLLER (120 V)									2	2
EVC	CHANNEL A		1	1	1						
	CHANNEL B	1	1	1	1						
	CHANNEL C			1	1	1	1	1			
	TOTAL EVC	1	2	3	3	1	1	1			
DLC	2I2U	1	1	1	1						
	2I2L	1	1	1	1						
	4I6L			1	1	1	1				
	4I6U			1	1	1	1				
	5J1L			1	1	1	1				
	5J1U	1	1	1	1						
	5J9U	1	1	1	1						
	5J9L			1	1	1	1				
	6J2U			1	1						
	6J2L			1	1						
	6J3L			1	1						
	6J4U			1	1						
	6J4L			1	1						
	TOTAL	4	4	13	13	4	4				
CONDUIT SIZE		2"	3"	3"	2-3"	3"	3"	2"	2"	2"	2"

STANDARD AND EQUIPMENT SCHEDULE

STANDARD				VEH SIG MTG		PED SIGNAL MTG	PPB Ø	HPS LUM (WATTS)	SPECIAL REQUIREMENTS
(X)	TYPE	SMA	LMA	MAST ARM	POLE				
(A)	19-3-100	30′	15′	MAS	SV-1-T	SP-1-T	-	200	INSTALL EVC ON SIGNAL HEAD.
(B)	1-B	-	-	-	TV-1	-	6 →	-	
(C)	15TS	-	15′	-	-	-	6 ←	200	
(D)	1-B	-	-	-	TV-2-T	SP-1-T	-	-	
(E)	19-4-100	30′	15′	MAS MAS	SV-2-TA	-	-	200	INSTALL EVA ON SIGNAL HEAD.
(F)	19-3-100	30′	15′	MAS	SV-2-TA	-	-	200	INSTALL EVB ON SIGNAL HEAD.

SIGNAL AND LIGHTING (LOCATION 1)

E-24

APPROVED FOR ELECTRICAL WORK ONLY

STATE OF CALIFORNIA - DEPARTMENT OF TRANSPORTATION
Caltrans

CONSULTANT FUNCTIONAL SUPERVISOR: ROBERT REES
CALCULATED-DESIGNED BY: LISA LANGENFELD
CHECKED BY: KRISTIN CALIA
REVISED BY
DATE REVISED

LAST REVISION 01-07-13
DATE PLOTTED => 08-MAY-2013
TIME PLOTTED => 12:00

Dist	COUNTY	ROUTE	POST MILES TOTAL PROJECT	SHEET No.	TOTAL SHEETS
04	Sol	12,80	2.1/2.8, 12.0/13.1	409	597

REGISTERED CIVIL ENGINEER 1-7-13 DATE

5-6-13
PLANS APPROVAL DATE

REGISTERED PROFESSIONAL ENGINEER S. LUCKJIFF No. 63058 Exp. 6-30-14 CIVIL STATE OF CALIFORNIA

THE STATE OF CALIFORNIA OR ITS OFFICERS OR AGENTS SHALL NOT BE RESPONSIBLE FOR THE ACCURACY OR COMPLETENESS OF SCANNED COPIES OF THIS PLAN SHEET.

FEHR & PEERS
160 W SANTA CLARA ST., SUITE 675
SAN JOSE, CA 95113

SOLANO TRANSPORTATION AUTHORITY
ONE HARBOR CENTER, SUITE 130
SUISUN CITY, CA 94585

NOTE:

FOR ACCURATE RIGHT OF WAY DATA, CONTACT RIGHT OF WAY ENGINEERING AT THE DISTRICT OFFICE.

LEGEND (THIS SHEET ONLY):

- 1B INSTALL DEPARTMENT-FURNISHED MODEL 2070 CONTROLLER ASSEMBLY (TYPE 332 CABINET). FRONT DOOR SHALL FACE SOUTH.
- 2B FRONT DOOR SHALL FACE NORTH. INCLUDE ITEMS 1 THROUGH 14, AND 21 PER DETAIL ON SHEET E-32.
- 3B INSTALL R3-18 SIGN ON SIGNAL MAST ARM.
- 4B INSTALL R73-6(CA) ON SIGNAL MAST ARM.
- 5B INSTALL PREFORMED LOOPS.
- 6B INSTALL 3′ x 20′ CONCRETE PAD FOR CONTROLLER, SIGNAL SERVICE ENCLOSURE AND LIGHTING ENCLOSURE No. 12811 (SEE SHEET E-7).
- 7B INSTALL TYPE C 3′ X 20′ BIKE DETECTOR LOOP.

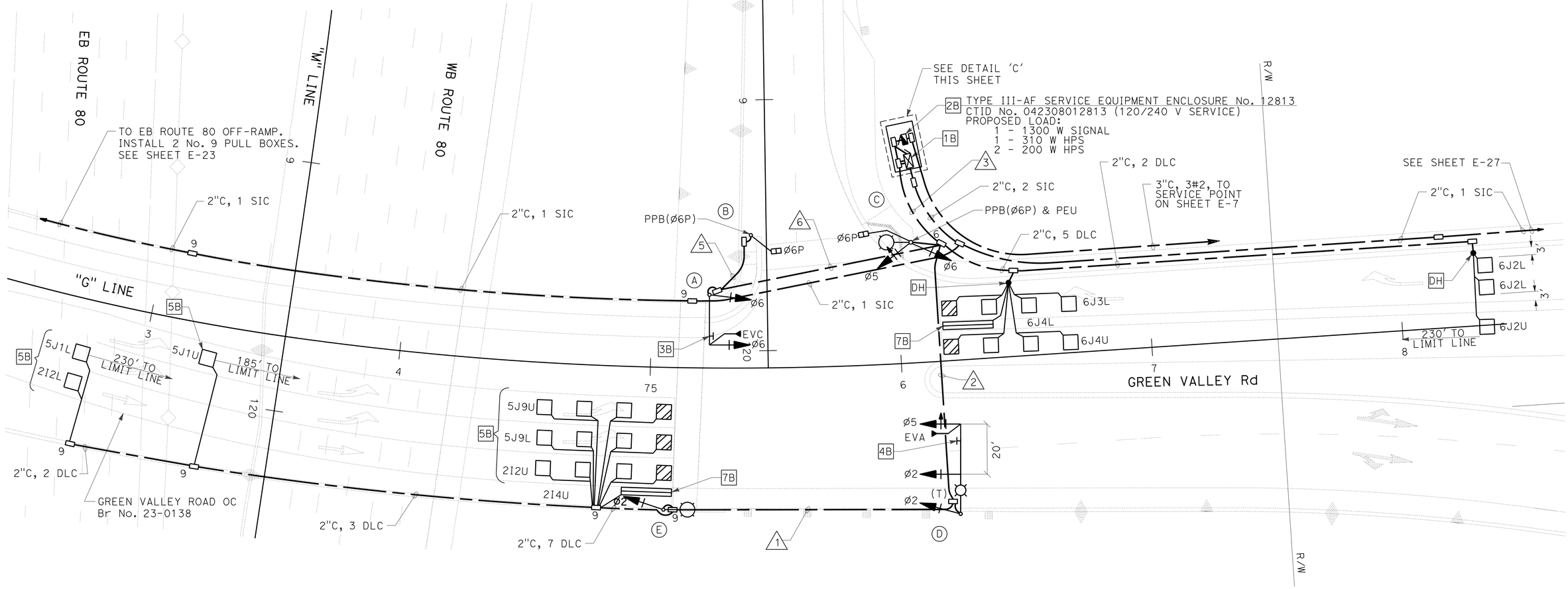

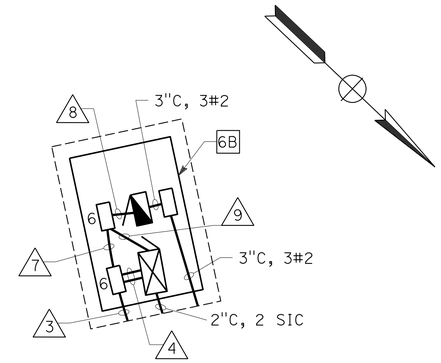

DETAIL 'C'

NO SCALE

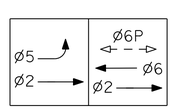

PROPOSED PHASE DIAGRAM

EVA = Ø2 + Ø5
EVC = Ø6

APPROVED FOR ELECTRICAL WORK ONLY

SIGNAL AND LIGHTING (LOCATION 2)

SCALE: 1" = 20′

E-25

STATE OF CALIFORNIA - DEPARTMENT OF TRANSPORTATION
Caltrans

CONSULTANT FUNCTIONAL SUPERVISOR: ROBERT REES
CALCULATED-DESIGNED BY: LISA LANGENFELD
CHECKED BY: KRISTIN CALIA
REVISED BY / DATE REVISED

LAST REVISION 01-07-13 | DATE PLOTTED => 08-MAY-2013 | TIME PLOTTED => 12:51

Dist	COUNTY	ROUTE	POST MILES TOTAL PROJECT	SHEET No.	TOTAL SHEETS
04	Sol	12,80	2.1/2.8, 12.0/13.1	410	597

REGISTERED CIVIL ENGINEER 1-7-13 DATE

5-6-13
PLANS APPROVAL DATE

REGISTERED PROFESSIONAL ENGINEER S. LUCKJIFF No. 63058 Exp. 6-30-14 CIVIL STATE OF CALIFORNIA

THE STATE OF CALIFORNIA OR ITS OFFICERS OR AGENTS SHALL NOT BE RESPONSIBLE FOR THE ACCURACY OR COMPLETENESS OF SCANNED COPIES OF THIS PLAN SHEET.

FEHR & PEERS
160 W SANTA CLARA ST., SUITE 675
SAN JOSE, CA 95113

SOLANO TRANSPORTATION AUTHORITY
ONE HARBOR CENTER, SUITE 130
SUISUN CITY, CA 94585

CONDUCTOR AND CONDUIT SCHEDULE

AWG	CIRCUIT	1	2	3	4	5	6	7	8	9
#14	Ø2 SIGNALS	3	3	3	3					
	Ø5 SIGNALS		3	3	3					
	Ø6 SIGNALS			3	3		3			
	Ø6 PED			2	2	2	2			
	Ø6 PPB			1	1	1	1			
	PPB COMMON			1	1	1	1			
	SPARES	3	3	6	6	2	3			
	PEU			3				3	3	
	TOTAL No. 14	6	9	22	19	6	10	3	3	
#10	SIGNAL NEUTRAL (120 V)	1	1	2	2	1	1			
#8	LIGHTING (240 V)	2	2	2				2	2	
#6	CONTROLLER (120 V)								2	2
EVC	CHANNEL A		1	1	1					
	CHANNEL C			1	1		1			
	TOTAL EVC		1	2	2		1			
DLC	2I2L	1	1	1	1					
	2I2U	1	1	1	1					
	2I4U	1	1	1	1					
	5J1L	1	1	1	1					
	5J1U	1	1	1	1					
	5J9L	1	1	1	1					
	5J9U	1	1	1	1					
	6J2L			1	1					
	6J2U			1	1					
	6J3L			1	1					
	6J4L			1	1					
	6J4U			1	1					
	TOTAL	7	7	12	12					
CONDUIT SIZE		3"	3"	3"	2-3"	2"	3"	2"	2"	2"

STANDARD AND EQUIPMENT SCHEDULE

STANDARD				VEH SIG MTG		PED SIGNAL MTG	PPB Ø	HPS LUM (WATTS)	SPECIAL REQUIREMENTS
(X)	TYPE	SMA	LMA	MAST ARM	POLE				
(A)	18-3-100	20′	-	MAS	SV-1-T	-	-	-	INSTALL EVC ON SIGNAL HEAD. NOTE: CUSTOM SIGNAL ARM LENGTH.
(B)	1-B(7′)	-	-	-	-	TP-1-T	6 →	-	
(C)	15TS	-	15′	-	SV-2-T	SP-1-T	6 ←	200	
(D)	24A-3-100	35′	15′	MAS MAS	SV-1-T	-	-	310	INSTALL EVA ON SIGNAL HEAD.
(E)	15TS	-	15′	-	SV-1-T	-	-	200	

SIGNAL AND LIGHTING (LOCATION 2)

E-26

APPROVED FOR ELECTRICAL WORK ONLY

REVISED BY | DATE REVISED
LISA LANGENFELD | KRISTIN CALIA
CALCULATED-DESIGNED BY | CHECKED BY
CONSULTANT FUNCTIONAL SUPERVISOR
ROBERT REES
STATE OF CALIFORNIA - DEPARTMENT OF TRANSPORTATION
Caltrans

LAST REVISION 01-07-13 | DATE PLOTTED => 08-MAY-2013 | TIME PLOTTED => 12:00

Dist	COUNTY	ROUTE	POST MILES TOTAL PROJECT	SHEET No.	TOTAL SHEETS
04	Sol	12,80	2.1/2.8, 12.0/13.1	411	597

REGISTERED CIVIL ENGINEER 3-13-13 DATE

5-6-13
PLANS APPROVAL DATE

REGISTERED PROFESSIONAL ENGINEER S. LUCKJIFF No. 63058 Exp. 6-30-14 CIVIL STATE OF CALIFORNIA

THE STATE OF CALIFORNIA OR ITS OFFICERS OR AGENTS SHALL NOT BE RESPONSIBLE FOR THE ACCURACY OR COMPLETENESS OF SCANNED COPIES OF THIS PLAN SHEET.

FEHR & PEERS
160 W SANTA CLARA ST., SUITE 675
SAN JOSE, CA 95113

SOLANO TRANSPORTATION AUTHORITY
ONE HARBOR CENTER, SUITE 130
SUISUN CITY, CA 94585

NOTE:

FOR ACCURATE RIGHT OF WAY DATA, CONTACT RIGHT OF WAY ENGINEERING AT THE DISTRICT OFFICE.

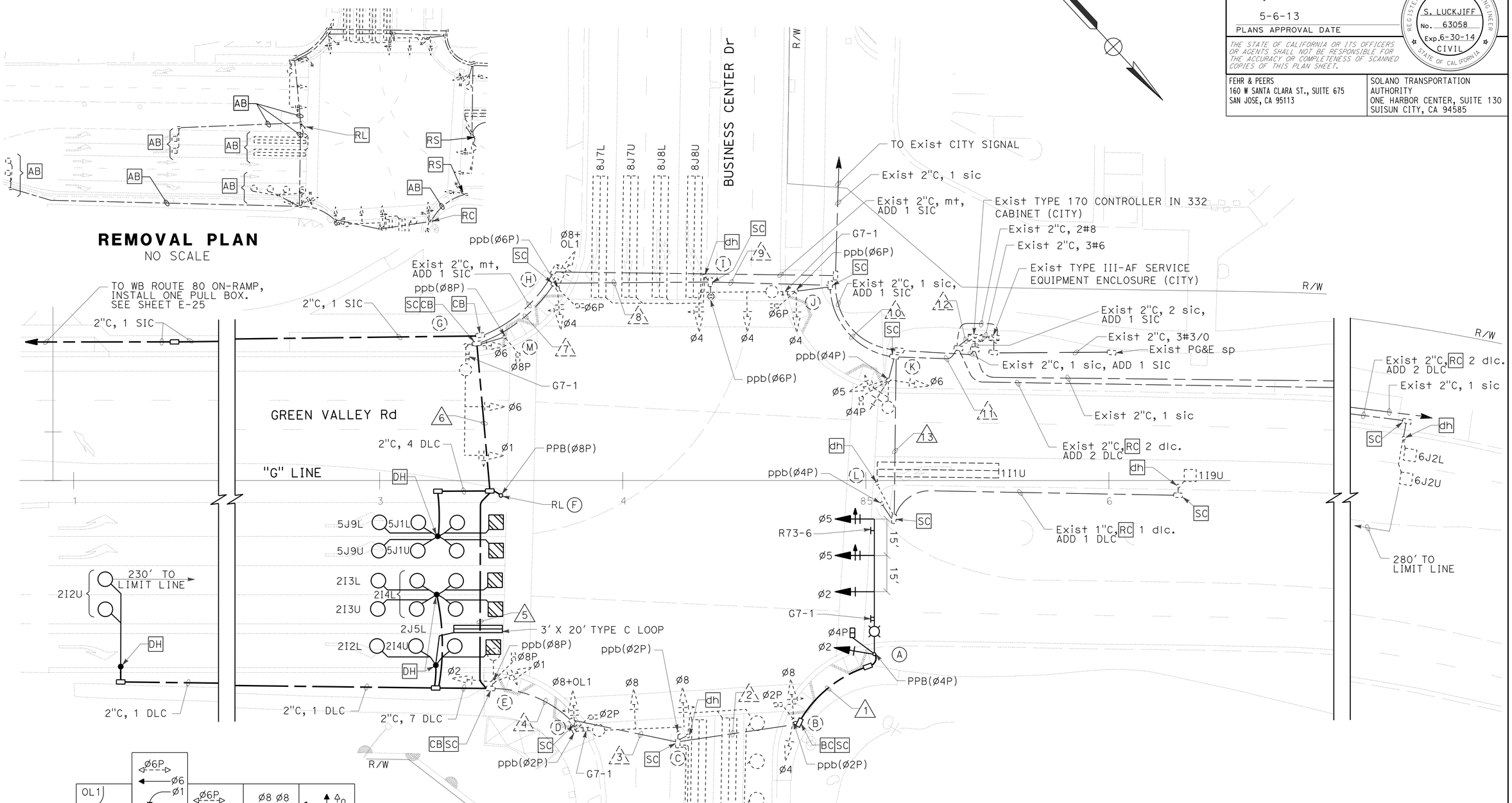

PHASE DIAGRAM

* PHASE 4 AND PHASE 8 SHALL NOT OPERATE CONCURRENTLY

APPROVED FOR ELECTRICAL WORK ONLY

SIGNAL AND LIGHTING (CITY)

SCALE: 1" = 20'

E-27

STATE OF CALIFORNIA - DEPARTMENT OF TRANSPORTATION
Caltrans

CONSULTANT FUNCTIONAL SUPERVISOR: ROBERT REES
CALCULATED-DESIGNED BY: LISA LANGENFELD
CHECKED BY: KRISTIN CALIA
REVISED BY
DATE REVISED

LAST REVISION 04-30-13
DATE PLOTTED => 08-MAY-2013
TIME PLOTTED => 12:00

Dist	COUNTY	ROUTE	POST MILES TOTAL PROJECT	SHEET No.	TOTAL SHEETS
04	Sol	12,80	2.1/2.8, 12.0/13.1	412	597

REGISTERED CIVIL ENGINEER 3-13-13 DATE

5-6-13
PLANS APPROVAL DATE

REGISTERED PROFESSIONAL ENGINEER S. LUCKJIFF No. 63058 Exp.6-30-14 CIVIL STATE OF CALIFORNIA

THE STATE OF CALIFORNIA OR ITS OFFICERS OR AGENTS SHALL NOT BE RESPONSIBLE FOR THE ACCURACY OR COMPLETENESS OF SCANNED COPIES OF THIS PLAN SHEET.

FEHR & PEERS
160 W SANTA CLARA ST., SUITE 675
SAN JOSE, CA 95113

SOLANO TRANSPORTATION AUTHORITY
ONE HARBOR CENTER, SUITE 130
SUISUN CITY, CA 94585

CONDUCTOR AND CONDUIT SCHEDULE

AWG	CIRCUIT	1	2	3	4	5	6	7	8	9	10	11	12	13
#14	Ø1 SIGNALS					3	3	3	3	3	3	3	3	
	Ø2 SIGNALS	3	3	3	3	3	3	3	3	3	3	3	3	
	OL1 SIGNALS				3	3	3	3	3	3	3	3	3	
	Ø4 SIGNALS		3	3	3	3	3	3	3	3	3	3	3	
	Ø5 SIGNALS	3	3	3	3	3	3	3	3	3	3	3	3	
	Ø6 SIGNALS							3	3	3	3	3	3	
	Ø8 SIGNALS		3	3	3	3	3	3	3	3	3	3	3	
	Ø2 PED		2	2	2	2	2	2	2	2	2	2	2	
	Ø4 PED	2	2	2	2	2	2	2	2	2	2	2	2	
	Ø6 PED								2	2	2	2	2	
	Ø8 PED					2	2	2	2	2	2	2	2	
	Ø2 PPB		1	1	1	1	1	1	1	1	1	1	1	
	Ø4 PPB	1	1	1	1	1	1	1	1	1	1	1	1	1
	Ø6 PPB								1	1	1	1	1	
	Ø8 PPB					1	1	1	1	1	1	1	1	
	PPB COMMON	1	1	1	1	1	1	1	1	1	1	1	1	1
	SPARES	3	3	3	3	3	3	3	3	3	3	3	3	
	TOTAL No. 14	13	22	22	25	31	31	34	37	37	37	37	37	2
#8	SIGNAL NEUTRAL (120 V)	1	1	1	1	1	1	1	1	1	1	1	1	1
	LIGHTING (240 V)	2	2	2	2	2	2	2	2	2	2	2		
#6	CONTROLLER (120 V)													
DLC	1I1U											1	1	1
	1I9U											1	1	1
	2I2U					1	1	1	1	1	1	1	1	
	2I2L					1	1	1	1	1	1	1	1	
	2I3L					1	1	1	1	1	1	1	1	
	2I3U					1	1	1	1	1	1	1	1	
	2I4U					1	1	1	1	1	1	1	1	
	2I4L					1	1	1	1	1	1	1	1	
	2J5L					1	1	1	1	1	1	1	1	
	4I7L			1	1	1	1	1	1	1	1	1	1	
	4I8U			1	1	1	1	1	1	1	1	1	1	
	4I8L			1	1	1	1	1	1	1	1	1	1	
	4J5U			1	1	1	1	1	1	1	1	1	1	
	5JIU						1	1	1	1	1	1	1	
	5JIL						1	1	1	1	1	1	1	
	5J9U						1	1	1	1	1	1	1	
	5J9L						1	1	1	1	1	1	1	
	6J2U												1	
	6J2L												1	
	8J7U									1	1	1	1	
	8J7L									1	1	1	1	
	8J8U									1	1	1	1	
	8J8L									1	1	1	1	
	TOTAL DLC	-	-	4	4	11	15	15	15	19	19	21	23	2
CONDUIT SIZE		2"	2"	2"	2-2"	3"	4"	4"	2-3"	2-3"	2-3"	2-3"	2-3"	3"

INSTALL NEW CONDUIT.

INSTALL NEW CONDUCTORS.

STANDARD AND EQUIPMENT SCHEDULE

	STANDARD			VEH SIG MTG		PED SIGNAL MOUNTING	PPB Ø	HPS LUM (WATTS)	SPECIAL REQUIREMENTS
X	TYPE	SMA	LMA	MAST ARM	POLE				
A	29-5-100	55′	15′	MAS MAS MAS	SV-1-T	SP-1-T	4 ←	200	FURNISH AND INSTALL R73-6 AND G7-1 SIGN (Business Center Dr) ON SMA.
B	1-A	-	-	-	TV-2-T	SP-1-T	2 →	-	
C	COMBINED STREET SIGN/PPB	-	-	-	-	-	2 ↔	-	
D	26-4-70	45′	15′	MAS MAS	SV-1-T	SP-1-T	2 ←	200	EXISTING G7-1 SIGN (Green Valley Rd) ON SMA.
E	TYPE 15	-	15′	-	SV-2-TA	SP-1-T	8 →	200	
F	COMBINED STREET SIGN/PPB	-	-	-	-	-	8 ↔	-	
G	26-4-70	40′	15′	MAS MAS	SV-1-T	-	-	200	
H	1-A	-	-	-	TV-2-T	SP-1-T	6 →	-	
I	PPB POST	-	-	-	-	-	6 ↔	-	
J	26-4-70	40′	15′	MAS MAS	SV-1-T	SP-1-T	6 ←	200	EXISTING G7-1 SIGN (Green Valley Rd) ON SMA.
K	TYPE 15	-	15′	-	SV-2-TA	SP-1-T	4 →	200	
L	COMBINED STREET SIGN/PPB	-	-	-	-	-	4 ↔	-	
M	1-A (7′)	-	-	-	-	TP-1-T	8 ←	-	

APPROVED FOR ELECTRICAL WORK ONLY

SIGNAL AND LIGHTING (CITY)

E-28

REVISED BY | DATE REVISED
LISA LANGENFELD | KRISTIN CALIA
CALCULATED-DESIGNED BY | CHECKED BY
CONSULTANT FUNCTIONAL SUPERVISOR
ROBERT REES
STATE OF CALIFORNIA - DEPARTMENT OF TRANSPORTATION
Caltrans

LAST REVISION 04-30-13 | DATE PLOTTED => 08-MAY-2013 | TIME PLOTTED => 12:01

Dist	COUNTY	ROUTE	POST MILES TOTAL PROJECT	SHEET No.	TOTAL SHEETS
04	Sol	12,80	2.1/2.8, 12.0/13.1	413	597

REGISTERED CIVIL ENGINEER 1-7-13 DATE

5-6-13
PLANS APPROVAL DATE

REGISTERED PROFESSIONAL ENGINEER S. LUCKJIFF No. 63058 Exp. 6-30-14 CIVIL STATE OF CALIFORNIA

THE STATE OF CALIFORNIA OR ITS OFFICERS OR AGENTS SHALL NOT BE RESPONSIBLE FOR THE ACCURACY OR COMPLETENESS OF SCANNED COPIES OF THIS PLAN SHEET.

FEHR & PEERS
160 W SANTA CLARA ST., SUITE 675
SAN JOSE, CA 95113

SOLANO TRANSPORTATION AUTHORITY
ONE HARBOR CENTER, SUITE 130
SUISUN CITY, CA 94585

NOTE:

FOR ACCURATE RIGHT OF WAY DATA, CONTACT RIGHT OF WAY ENGINEERING AT THE DISTRICT OFFICE.

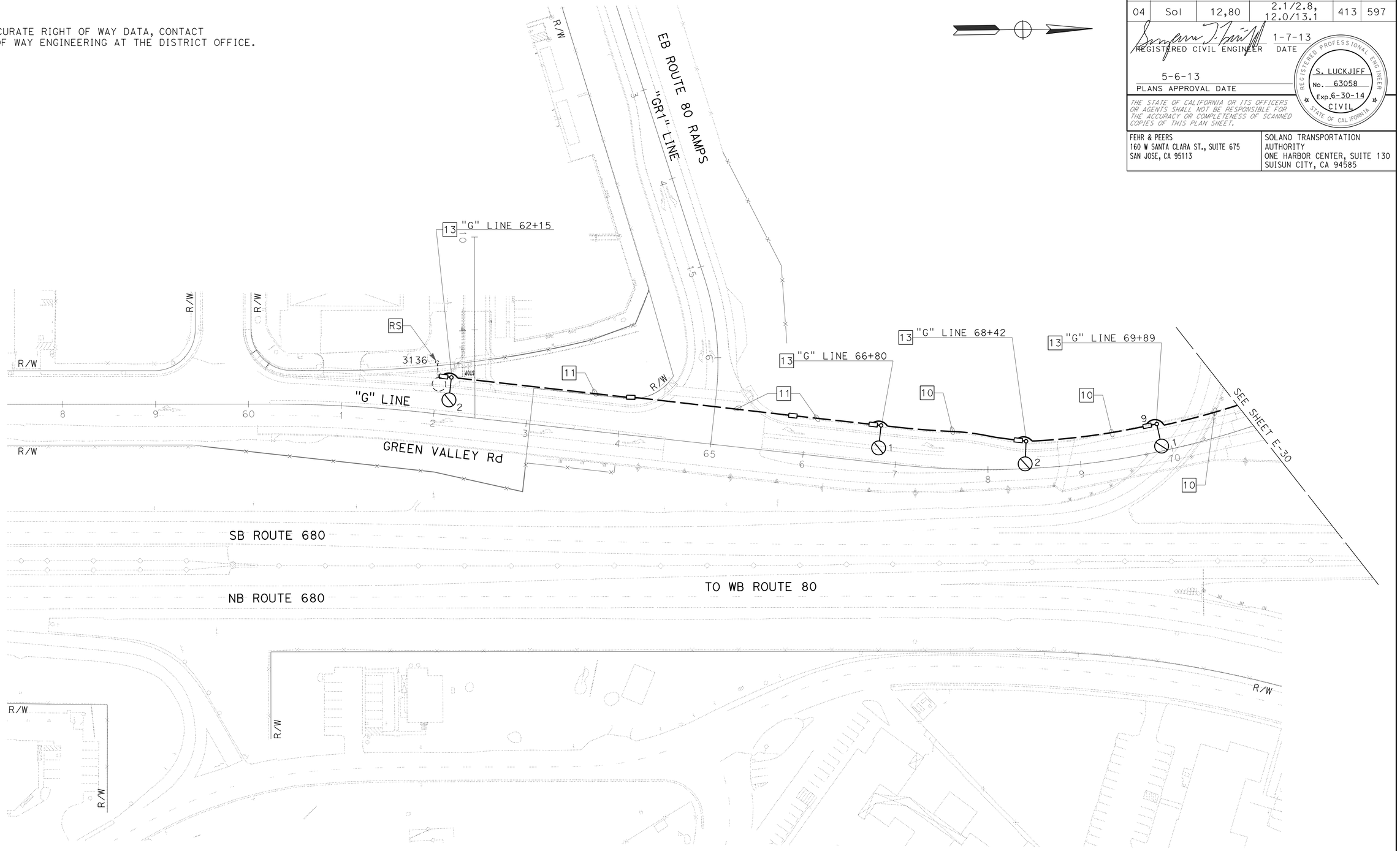

CITY STREET LIGHTING

SCALE: 1" = 50'

APPROVED FOR ELECTRICAL WORK ONLY

E-29

STATE OF CALIFORNIA - DEPARTMENT OF TRANSPORTATION
Caltrans

CONSULTANT FUNCTIONAL SUPERVISOR: ROBERT REES
CALCULATED-DESIGNED BY: LISA LANGENFELD
CHECKED BY: KRISTIN CALIA
REVISED BY
DATE REVISED

LAST REVISION DATE PLOTTED => 09-MAY-2013
01-07-13 TIME PLOTTED => 11:45

Dist	COUNTY	ROUTE	POST MILES TOTAL PROJECT	SHEET No.	TOTAL SHEETS
04	Sol	12,80	2.1/2.8, 12.0/13.1	414	597

REGISTERED CIVIL ENGINEER 1-7-13 DATE

5-6-13
PLANS APPROVAL DATE

REGISTERED PROFESSIONAL ENGINEER S. LUCKJIFF No. 63058 Exp. 6-30-14 CIVIL STATE OF CALIFORNIA

THE STATE OF CALIFORNIA OR ITS OFFICERS OR AGENTS SHALL NOT BE RESPONSIBLE FOR THE ACCURACY OR COMPLETENESS OF SCANNED COPIES OF THIS PLAN SHEET.

FEHR & PEERS
160 W SANTA CLARA ST., SUITE 675
SAN JOSE, CA 95113

SOLANO TRANSPORTATION AUTHORITY
ONE HARBOR CENTER, SUITE 130
SUISUN CITY, CA 94585

NOTE:
FOR ACCURATE RIGHT OF WAY DATA, CONTACT RIGHT OF WAY ENGINEERING AT THE DISTRICT OFFICE.

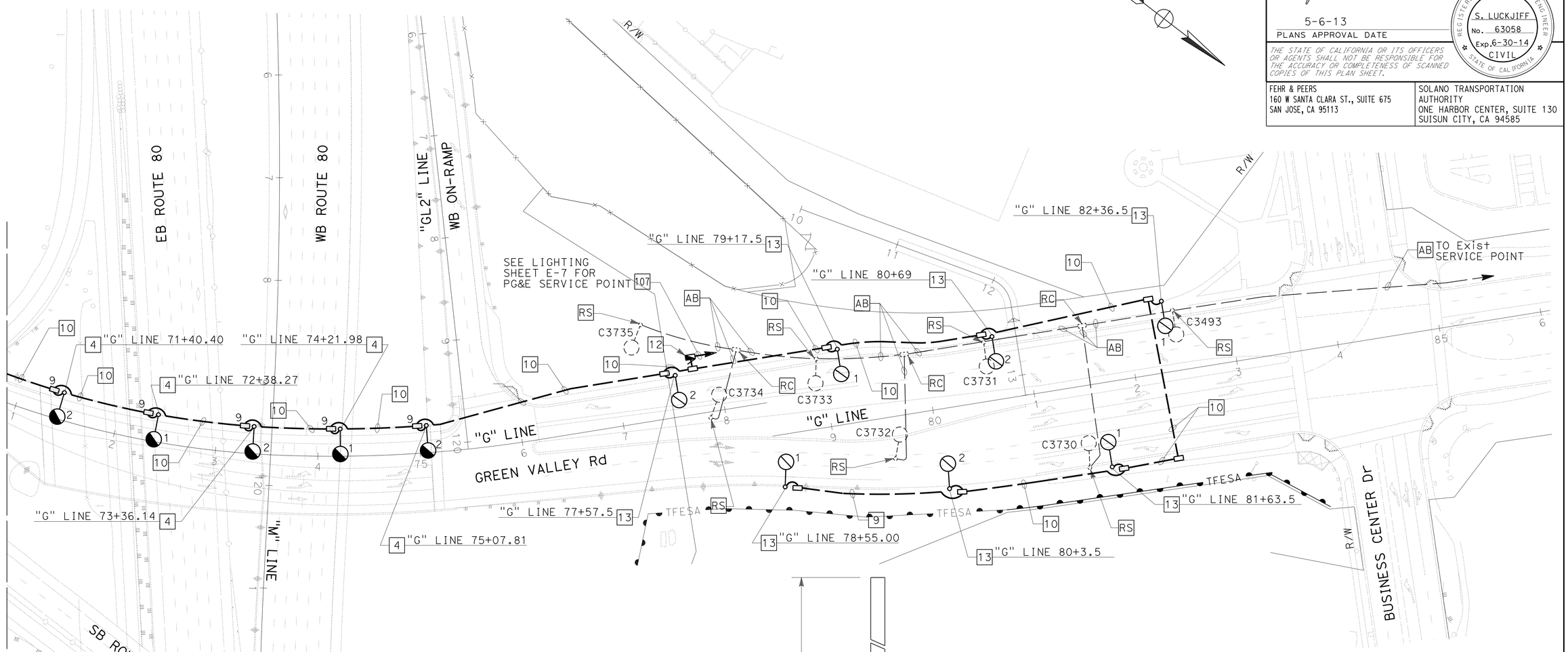

NOTE:
BC: 12"

BOLT CIRCLE ALLOWED: 11½" TO 13"

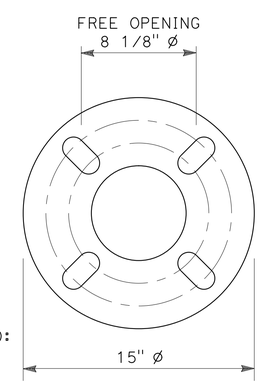

ANCHOR PLATE
NO SCALE

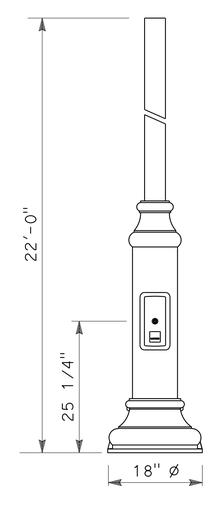

STANDARD
NO SCALE

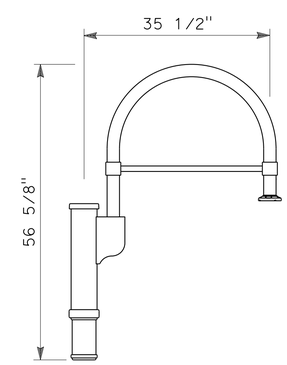

BRACKET
NO SCALE

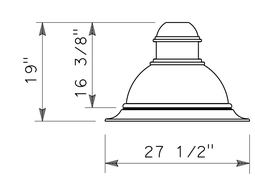

LED LUMINAIRE
NO SCALE

CITY STREET LIGHTING

SCALE: 1" = 50'

APPROVED FOR ELECTRICAL WORK ONLY

E-30

STATE OF CALIFORNIA - DEPARTMENT OF TRANSPORTATION
Caltrans

CONSULTANT FUNCTIONAL SUPERVISOR: ROBERT REES
CALCULATED-DESIGNED BY: LISA LANGENFELD
CHECKED BY: KRISTIN CALIA
REVISED BY
DATE REVISED

LAST REVISION DATE PLOTTED => 09-MAY-2013
01-07-13 TIME PLOTTED => 11:45

Dist	COUNTY	ROUTE	POST MILES TOTAL PROJECT	SHEET No.	TOTAL SHEETS
04	Sol	12,80	2.1/2.8, 12.0/13.1	415	597

REGISTERED CIVIL ENGINEER 1-7-13 DATE

5-6-13
PLANS APPROVAL DATE

REGISTERED PROFESSIONAL ENGINEER S. LUCKJIFF No. 63058 Exp. 6-30-14 CIVIL STATE OF CALIFORNIA

THE STATE OF CALIFORNIA OR ITS OFFICERS OR AGENTS SHALL NOT BE RESPONSIBLE FOR THE ACCURACY OR COMPLETENESS OF SCANNED COPIES OF THIS PLAN SHEET.

FEHR & PEERS
160 W SANTA CLARA ST., SUITE 675
SAN JOSE, CA 95113

SOLANO TRANSPORTATION AUTHORITY
ONE HARBOR CENTER, SUITE 130
SUISUN CITY, CA 94585

ABBREVIATIONS:

COM - COMMON
RIS - RADIO INTERFERENCE SUPPRESSOR

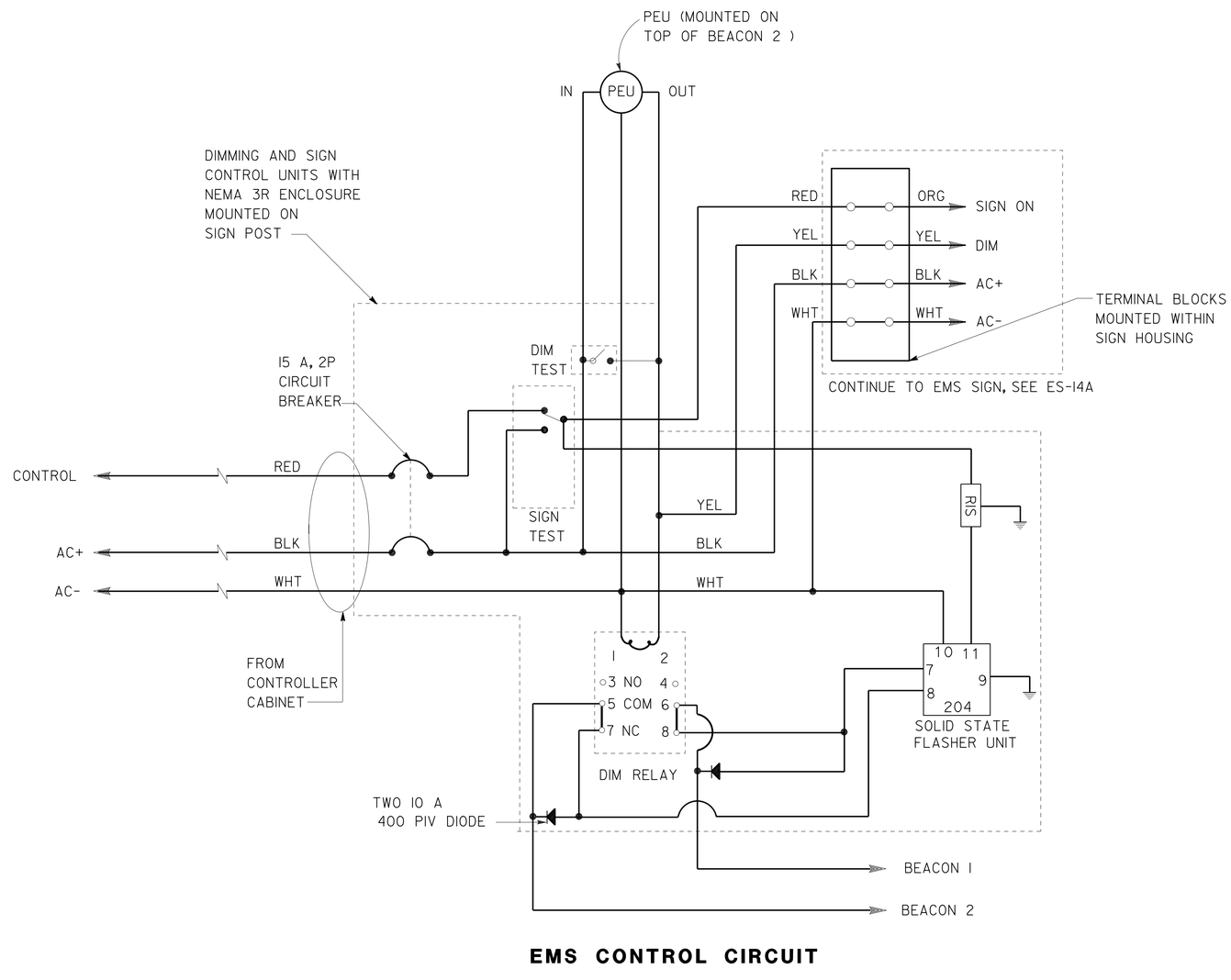

EMS CONTROL CIRCUIT

ELECTRICAL DETAILS

NO SCALE

E-31

APPROVED FOR ELECTRICAL WORK ONLY

STATE OF CALIFORNIA - DEPARTMENT OF TRANSPORTATION
Caltrans

CONSULTANT FUNCTIONAL SUPERVISOR: ROBERT REES
CALCULATED-DESIGNED BY: LISA LANGENFELD
CHECKED BY: KRISTIN CALIA
REVISED BY
DATE REVISED

LAST REVISION 01-07-13
DATE PLOTTED => 09-MAY-2013
TIME PLOTTED => 08:20

Dist	COUNTY	ROUTE	POST MILES TOTAL PROJECT	SHEET No.	TOTAL SHEETS
04	Sol	12,80	2.1/2.8, 12.0/13.1	416	597

REGISTERED CIVIL ENGINEER 1-7-13 DATE

5-6-13
PLANS APPROVAL DATE

REGISTERED PROFESSIONAL ENGINEER S. LUCKJIFF No. 63058 Exp. 6-30-14 CIVIL STATE OF CALIFORNIA

THE STATE OF CALIFORNIA OR ITS OFFICERS OR AGENTS SHALL NOT BE RESPONSIBLE FOR THE ACCURACY OR COMPLETENESS OF SCANNED COPIES OF THIS PLAN SHEET.

FEHR & PEERS
160 W SANTA CLARA ST., SUITE 675
SAN JOSE, CA 95113

SOLANO TRANSPORTATION AUTHORITY
ONE HARBOR CENTER, SUITE 130
SUISUN CITY, CA 94585

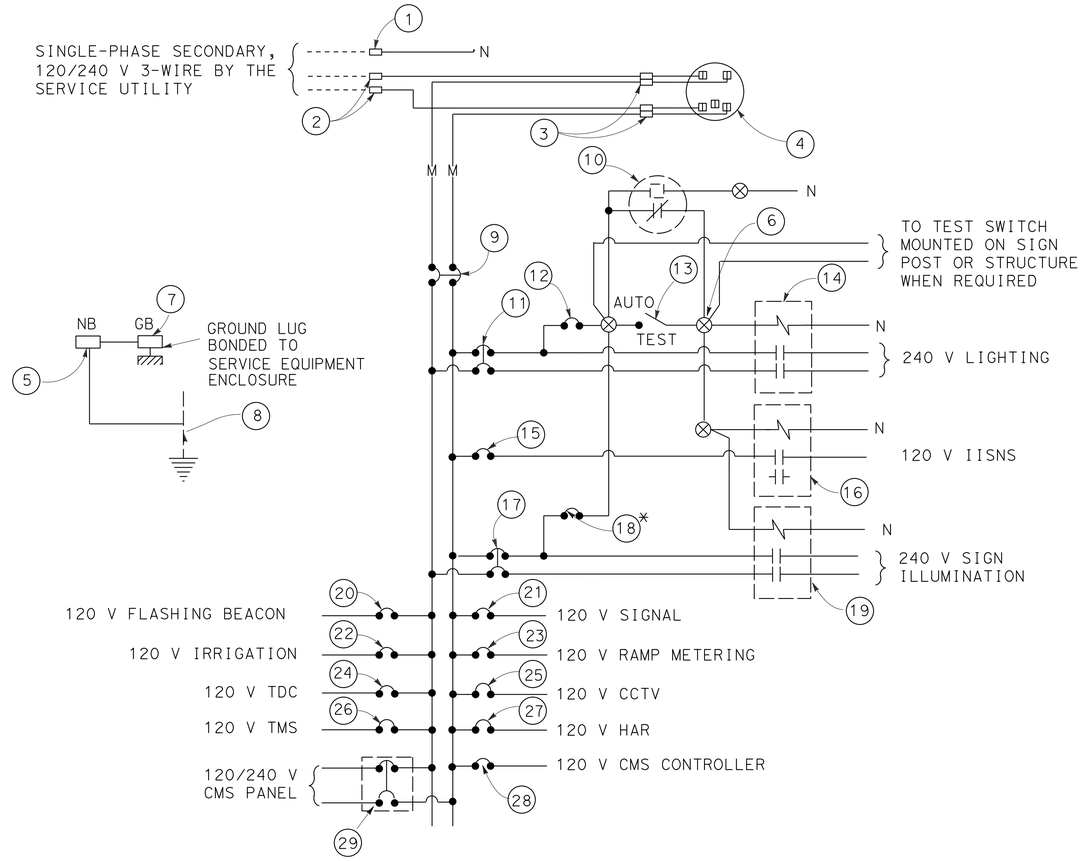

120/240 V SERVICE WIRING DIAGRAM (TYPICAL)

TYPE III-A SERVICE (120/240 V) EQUIPMENT LEGEND

ITEM No.	COMPONENT	NAMEPLATE DESCRIPTION
1	NEUTRAL LUG	
2	LANDING LUG	
3	TEST BYPASS FACILITY	
4	METER SOCKET AND SUPPORT	
5	NEUTRAL BUS	
6	TERMINAL BLOCK	
7	GROUND BUS	
8	GROUNDING ELECTRODE	
9	100 A, 240 V, 2P, CB	MAIN BREAKER
10	PHOTOELECTRIC UNIT (NOTE 7)	
11	30 A, 240 V, 2P, CB	LIGHTING
12	15 A, 120 V, 1P, CB	LIGHTING CONTROL
13	15 A, 1P, TEST SWITCH	TEST SWITCH
14	30 A, 2PNO, CONTACTOR	
15	15 A, 120 V, 1P, CB	IISNS
16	30 A, 2PNO, CONTACTOR	

ITEM No.	COMPONENT	NAMEPLATE DESCRIPTION
17	30 A, 240 V, 2P, CB	SIGN ILLUMINATION
18*	15 A, 120 V, 1P, CB	SIGN ILLUMINATION CONTROL
19	30 A, 2PNO, CONTACTOR	
20	15 A, 120 V, 1P, CB	FLASHING BEACON
21	50 A, 120 V, 1P, CB	SIGNALS
22	20 A, 120 V, 1P, CB	IRRIGATION
23	30 A, 120 V, 1P, CB	RAMP METERING
24	15 A, 120 V, 1P, CB	TELEPHONE DEMARCATION CABINET
25	30 A, 120 V, 1P, CB	CCTV
26	30 A, 120 V, 1P, CB	TMS
27	30 A, 120 V, 1P, CB	HAR
28	30 A, 120 V, 1P, CB	CMS CONTROLLER
29	30 A, 240 V, 2P, CB	CMS PANEL

* PROVIDE ITEM 12 WHEN BOTH CIRCUITS OF SIGN ILLUMINATION AND LIGHTING ARE USED. ITEM 18 IS NOT REQUIRED.

LEGEND:

(SEE ES-1A & ES-1C)

NOTES: (FOR SERVICE EQUIPMENT)

1. VOLTAGE RATINGS OF SERVICE EQUIPMENT SHALL CONFORM TO THE SERVICE VOLTAGES INDICATED ON THE PLANS.
2. UNLESS OTHERWISE INDICATED ON THE PLANS, ALL SERVICE EQUIPMENT ITEMS SHALL BE PROVIDED FOR EACH SERVICE EQUIPMENT ENCLOSURE AS SHOWN.
3. ITEM No. 1 AND 5 SHALL BE ISOLATED FROM THE CABINET.
4. METER SOCKETS SHALL BE 5 CLIP TYPE.
5. SERVICE UTILITY WILL INSTALL THE TIME-OF-USE METER IF APPLICABLE.
6. UNLESS OTHERWISE NOTED, THE MAXIMUM NUMBER OF SINGLE-POLE CB SPACES IN THE ENCLOSURE IS FOURTEEN.
7. PHOTOELECTRIC CONTROL SHALL BE TYPE II.

ELECTRICAL DETAILS

NO SCALE

E-32

APPROVED FOR ELECTRICAL WORK ONLY

REVISED BY | DATE REVISED
LISA LANGENFELD | KRISTIN CALIA
CALCULATED-DESIGNED BY | CHECKED BY
CONSULTANT FUNCTIONAL SUPERVISOR
ROBERT REES
STATE OF CALIFORNIA - DEPARTMENT OF TRANSPORTATION
Caltrans

LAST REVISION 01-07-13 | DATE PLOTTED => 09-MAY-2013 | TIME PLOTTED => 08:20

Dist	COUNTY	ROUTE	POST MILES TOTAL PROJECT	SHEET No.	TOTAL SHEETS
04	Sol	12,80	2.1/2.8, 12.0/13.1	417	597

REGISTERED CIVIL ENGINEER 1-7-13 DATE

5-6-13
PLANS APPROVAL DATE

REGISTERED PROFESSIONAL ENGINEER S. LUCKJIFF No. 63058 Exp. 6-30-14 CIVIL STATE OF CALIFORNIA

THE STATE OF CALIFORNIA OR ITS OFFICERS OR AGENTS SHALL NOT BE RESPONSIBLE FOR THE ACCURACY OR COMPLETENESS OF SCANNED COPIES OF THIS PLAN SHEET.

FEHR & PEERS
160 W SANTA CLARA ST., SUITE 675
SAN JOSE, CA 95113

SOLANO TRANSPORTATION AUTHORITY
ONE HARBOR CENTER, SUITE 130
SUISUN CITY, CA 94585

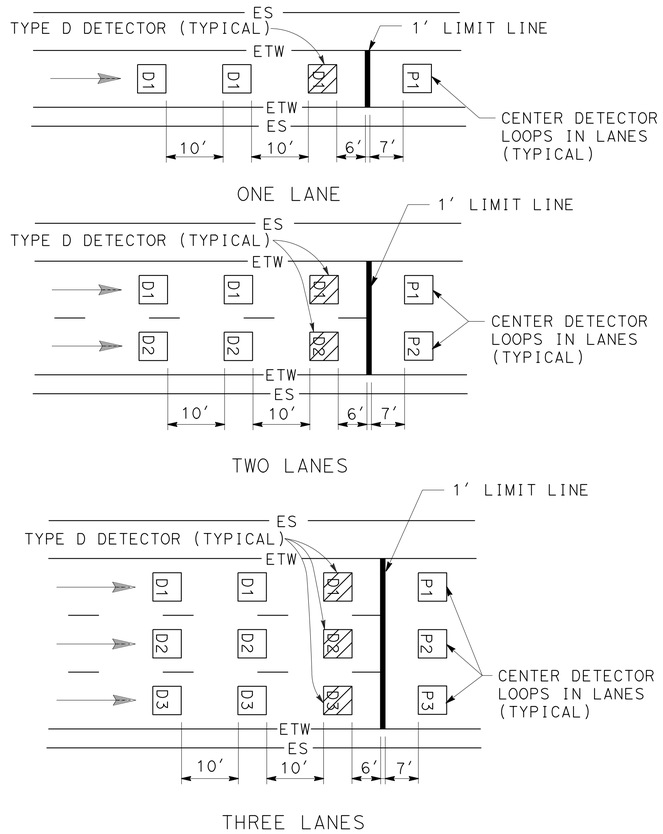

DETAIL "RM"
RAMP METERING DETECTOR

RAMP METERING STATION NOTES:

1. SEE ES-5A, ES-5B, AND ES-13A FOR ADDITIONAL DETAILS.
2. DLC CONDUCTORS SHALL BE SPLICED TO THE LOOP CONDUCTORS IN THE NEAREST PULL BOX.
3. ALL SPLICES SHALL BE TYPE "S" OR TYPE "ST" AS REQUIRED.

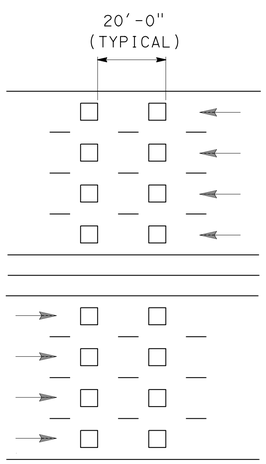

TRAFFIC MONITORING STATION NOTES

FREEWAY MAINLINE DETECTOR DESIGNATION:

N=NORTHBOUND LANES (NB)
S=SOUTHBOUND LANES (SB)
E=EASTBOUND LANES (EB)
W=WESTBOUND LANES (WB)

NUMBER OF LANES FROM LEFT WITH RESPECT TO DIRECTION OF TRAFFIC:

1=FIRST LANE FROM LEFT
2=SECOND LANE FROM LEFT
3=THIRD LANE FROM LEFT
4=FOURTH LANE FROM LEFT

NUMBER OF DETECTOR IN THE SAME LANE:

1=ENTERING DETECTOR
2=LEAVING DETECTOR

N 3-2

DETAIL "TM"
FREEWAY MAINLINE DETECTOR

RAMP DETECTOR DESIGNATION:

D=DEMAND DETECTOR
P=PASSAGE DETECTOR
Q=QUEUE DETECTOR
F=OFF-RAMP DETECTOR

1=FIRST LANE FROM LEFT
2=SECOND LANE FROM LEFT

D-2

ELECTRICAL DETAILS

NO SCALE

APPROVED FOR ELECTRICAL WORK ONLY

E-33

STATE OF CALIFORNIA - DEPARTMENT OF TRANSPORTATION
Caltrans

CONSULTANT FUNCTIONAL SUPERVISOR: ROBERT REES
CALCULATED-DESIGNED BY: LISA LANGENFELD
CHECKED BY: KRISTIN CALIA
REVISED BY
DATE REVISED

LAST REVISION 01-07-13 | DATE PLOTTED => 09-MAY-2013 | TIME PLOTTED => 08:20

Dist	COUNTY	ROUTE	POST MILES TOTAL PROJECT	SHEET No.	TOTAL SHEETS
04	Sol	12,80	2.1/2.8, 12.0/13.1	418	597

REGISTERED CIVIL ENGINEER 1-7-13 DATE

5-6-13
PLANS APPROVAL DATE

REGISTERED PROFESSIONAL ENGINEER S. LUCKJIFF No. 63058 Exp. 6-30-14 CIVIL STATE OF CALIFORNIA

THE STATE OF CALIFORNIA OR ITS OFFICERS OR AGENTS SHALL NOT BE RESPONSIBLE FOR THE ACCURACY OR COMPLETENESS OF SCANNED COPIES OF THIS PLAN SHEET.

FEHR & PEERS
160 W SANTA CLARA ST., SUITE 675
SAN JOSE, CA 95113

SOLANO TRANSPORTATION AUTHORITY
ONE HARBOR CENTER, SUITE 130
SUISUN CITY, CA 94585

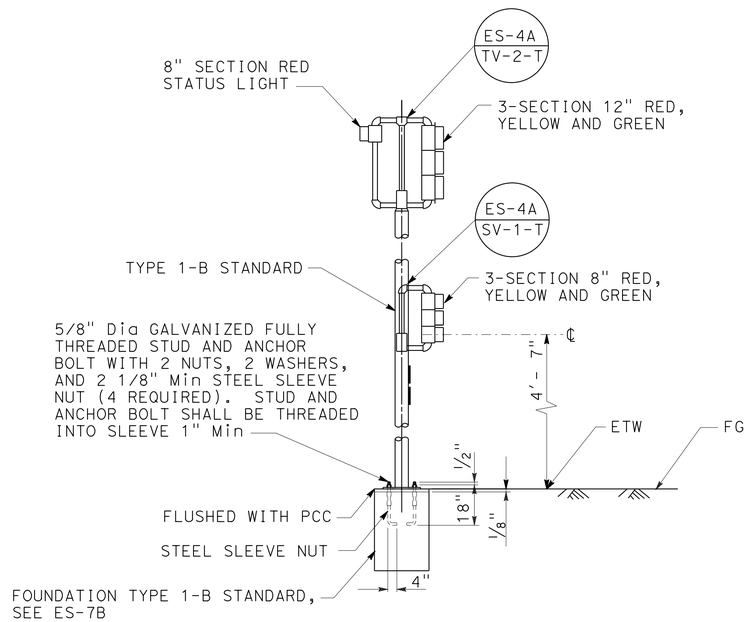

DETAIL "SIG"
RAMP METER SIGNAL, POLE MOUNTED

SIGNAL CONDUCTORS FOR RAMP METERS SHALL BE COLOR CODED AS FOLLOWS:

PHASE	BASE	STRIPE	BAND SYMBOLS
1	RE,YE,BRN	NONE	1
2	RE,YE,BRN	BLACK	2
3	RE,YE,BRN	PURPLE	3
4	RE,YE,BRN	ORANGE	4

DETAIL "CONDUCTOR COLOR CODING"

ELECTRICAL DETAILS

NO SCALE

APPROVED FOR ELECTRICAL WORK ONLY

E-34

STATE OF CALIFORNIA - DEPARTMENT OF TRANSPORTATION
Caltrans

CONSULTANT FUNCTIONAL SUPERVISOR: ROBERT REES
CALCULATED-DESIGNED BY: LISA LANGENFELD
CHECKED BY: KRISTIN CALIA
REVISED BY
DATE REVISED

LAST REVISION 01-07-13
DATE PLOTTED => 09-MAY-2013
TIME PLOTTED => 08:20

Dist	COUNTY	ROUTE	POST MILES TOTAL PROJECT	SHEET No.	TOTAL SHEETS
04	Sol	12,80	2.1/2.8, 12.0/13.1	419	597

REGISTERED CIVIL ENGINEER 1-7-13 DATE

5-6-13
PLANS APPROVAL DATE

REGISTERED PROFESSIONAL ENGINEER S. LUCKJIFF No. 63058 Exp. 6-30-14 CIVIL STATE OF CALIFORNIA

THE STATE OF CALIFORNIA OR ITS OFFICERS OR AGENTS SHALL NOT BE RESPONSIBLE FOR THE ACCURACY OR COMPLETENESS OF SCANNED COPIES OF THIS PLAN SHEET.

FEHR & PEERS
160 W SANTA CLARA ST., SUITE 675
SAN JOSE, CA 95113

SOLANO TRANSPORTATION AUTHORITY
ONE HARBOR CENTER, SUITE 130
SUISUN CITY, CA 94585

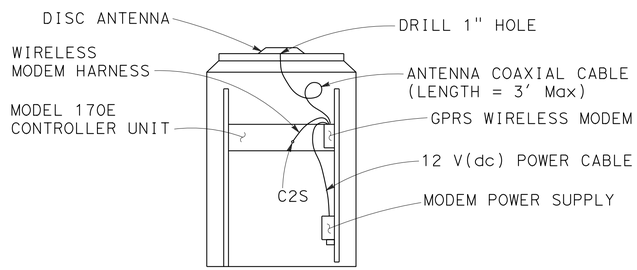

REAR VIEW OF THE MODEL 334 CONTROLLER CABINET

GPRS WIRELESS MODEM AND ANTENNA INSTALLATION DETAIL

CONTRACTOR'S WORK IN THE CONTROLLER CABINET

1. PROVIDE THE GPRS MODEM AND WIRELESS MODEM HARNESS TO THE ENGINEER 30 WORKING DAYS BEFORE INSTALLATION. THE ENGINEER WILL RETURN THE PROGRAMMED MODEM, WITH PDP CONTEXT AND APN, AND HARNESS WITHIN 15 WORKING DAYS.
2. DRILL 1" HOLE THROUGH THE TOP OF THE CABINET. ATTACH THE ANTENNA ON THE CABINET AS DIRECTED BY THE MANUFACTURER.
3. MOUNT THE MODEM UNIT ON THE CABINET REAR MOUNTING RAIL WITH MOUNTING BRACKET PROVIDED BY THE MANUFACTURER.
4. MOUNT THE MODEM 12 V(dc) POWER SUPPLY DIRECTLY TO CABINET.
5. CONNECT POWER CABLE TO 12 V(dc) POWER ADAPTER.
6. CONNECT THE ANTENNA COAXIAL CABLE TO THE MODEM.
7. CONNECT MODEM HARNESS BETWEEN THE MODEM AND THE MODEL 170E CONTROLLER UNIT AS SHOWN.
8. RECORD THE SERIAL NUMBER OF THE MODEM ON THE CHECK LIST SHEET.

ABBREVIATIONS:

APN = ACCESS POINT NAME

PDP = PACKET DATA PROTOCOL

COMMUNICATION SERIAL CABLE TYPE D

1. PIN OUT DIAGRAM

AMP 201360-2-ND DB9-P

L ——— 2
K ——— 3
N ——— 5
D, H, J, M — 1,4,6,7,8,9 N/C

2. CONSTRUCT AND INSTALL COMMUNICATION CABLE.

ELECTRICAL DETAILS

NO SCALE

E-35

APPROVED FOR ELECTRICAL WORK ONLY

STATE OF CALIFORNIA - DEPARTMENT OF TRANSPORTATION
Caltrans

CONSULTANT FUNCTIONAL SUPERVISOR: ROBERT REES
CALCULATED-DESIGNED BY: LISA LANGENFELD
CHECKED BY: KRISTIN CALIA
REVISED BY
DATE REVISED

LAST REVISION 01-07-13
DATE PLOTTED => 09-MAY-2013
TIME PLOTTED => 08:20

Dist	COUNTY	ROUTE	POST MILES TOTAL PROJECT	SHEET No.	TOTAL SHEETS
04	Sol	12,80	2.1/2.8, 12.0/13.1	420	597

REGISTERED CIVIL ENGINEER 1-7-13 DATE

5-6-13
PLANS APPROVAL DATE

REGISTERED PROFESSIONAL ENGINEER S. LUCKJIFF No. 63058 Exp.6-30-14 CIVIL STATE OF CALIFORNIA

THE STATE OF CALIFORNIA OR ITS OFFICERS OR AGENTS SHALL NOT BE RESPONSIBLE FOR THE ACCURACY OR COMPLETENESS OF SCANNED COPIES OF THIS PLAN SHEET.

FEHR & PEERS
160 W SANTA CLARA ST., SUITE 675
SAN JOSE, CA 95113

SOLANO TRANSPORTATION AUTHORITY
ONE HARBOR CENTER, SUITE 130
SUISUN CITY, CA 94585

8-POSITION CONNECTING BLOCK		No. 18 AWG SOLID CONDUCTOR COLOR	TBO POSITION ASSIGNMENT
CIRCUIT 1	GREEN TERMINAL	WHITE	7
	RED TERMINAL	BROWN	8
CIRCUIT 2	GREEN TERMINAL	WHITE	9
	RED TERMINAL	GRAY	10
CIRCUIT 3	GREEN TERMINAL	RED	11
	RED TERMINAL	BLUE	12

NOTES:
1. USE ONE CONNECTING BLOCK FOR EACH REQUIRED CIRCUIT FOR EACH LOCATION.
2. N/C - NO CONNECTION.

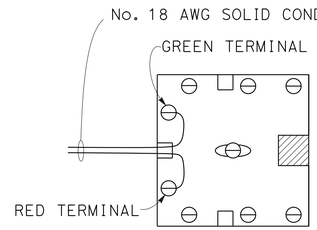

8-POSITION CONNECTING BLOCK

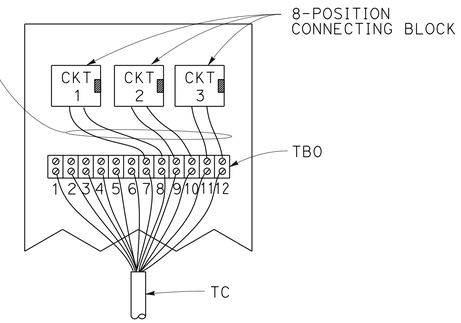

SERVICE PANEL FOR MODEL 334 CABINET

WIRING DETAIL FOR TELEPHONE CABLE INSIDE CONTROLLER CABINET

ABBREVIATIONS:
TC - TELEPHONE CABLE
HCC - HYBRID CAMERA CABLE
TBO - TERMINAL BLOCK O
PDA - POWER DISTRIBUTION ASSEMBLY
CCU - CAMERA CONTROL UNIT
VEU - VIDEO ENCODER UNIT

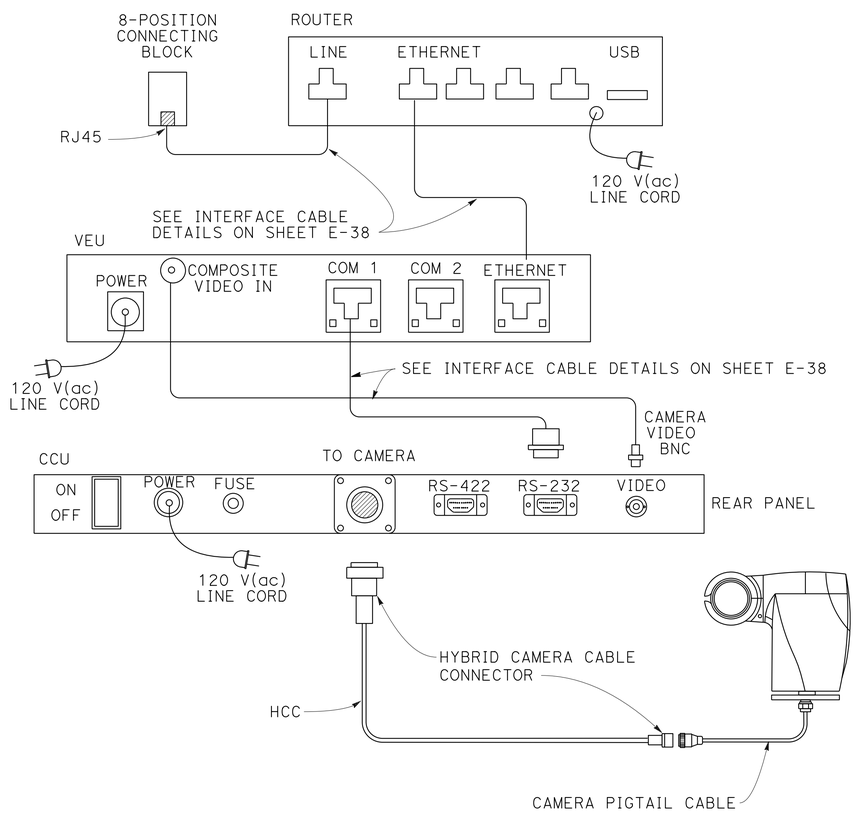

CCTV SYSTEM LAYOUT

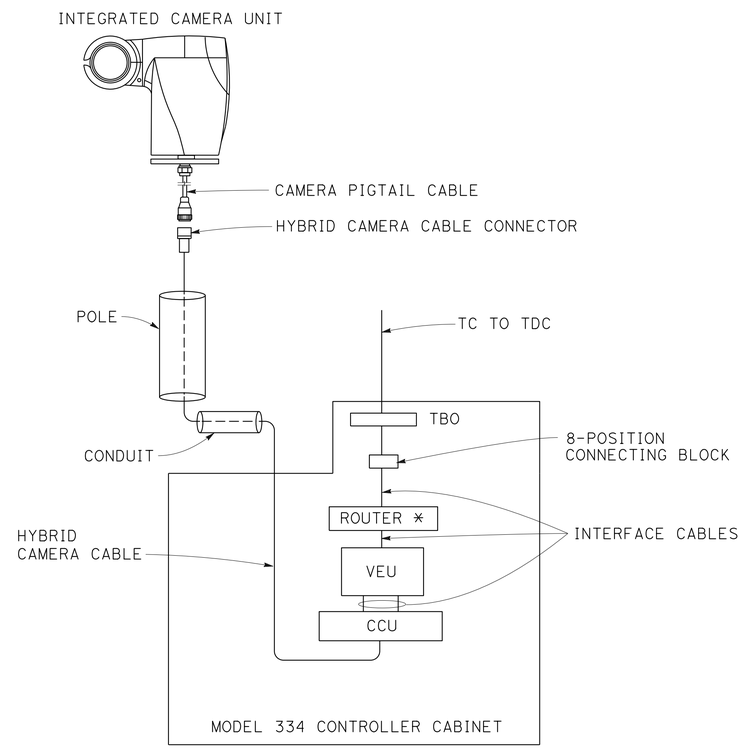

CCTV SYSTEM BLOCK DIAGRAM

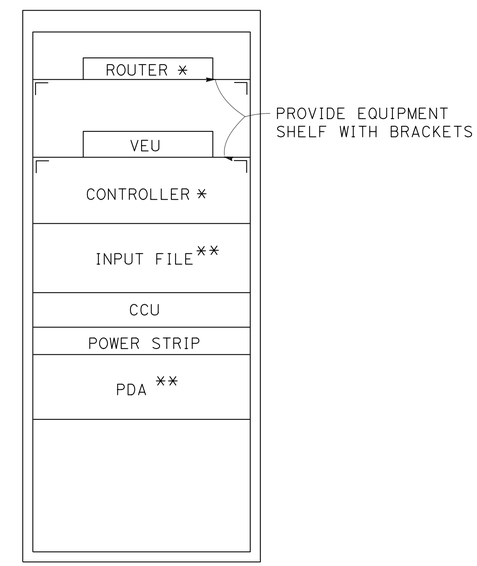

MODEL 334 CONTROLLER CABINET LAYOUT (FRONT VIEW)

* DEPARTMENT-FURNISHED
** PDA AND INPUT FILE WILL BE INCLUDED ONLY WITH DEPARTMENT-FURNISHED CONTROLLER CABINET.

ELECTRICAL DETAILS

NO SCALE **E-36**

APPROVED FOR ELECTRICAL WORK ONLY

STATE OF CALIFORNIA - DEPARTMENT OF TRANSPORTATION
Caltrans
CONSULTANT FUNCTIONAL SUPERVISOR: ROBERT REES
CALCULATED-DESIGNED BY: LISA LANGENFELD
CHECKED BY: KRISTIN CALIA
REVISED BY
DATE REVISED

LAST REVISION 01-07-13
DATE PLOTTED => 09-MAY-2013
TIME PLOTTED => 08:20

Dist	COUNTY	ROUTE	POST MILES TOTAL PROJECT	SHEET No.	TOTAL SHEETS
04	Sol	12,80	2.1/2.8, 12.0/13.1	421	597

REGISTERED CIVIL ENGINEER 4-29-13 DATE

5-6-13
PLANS APPROVAL DATE

REGISTERED PROFESSIONAL ENGINEER S. LUCKJIFF No. 63058 Exp. 6-30-14 CIVIL STATE OF CALIFORNIA

THE STATE OF CALIFORNIA OR ITS OFFICERS OR AGENTS SHALL NOT BE RESPONSIBLE FOR THE ACCURACY OR COMPLETENESS OF SCANNED COPIES OF THIS PLAN SHEET.

FEHR & PEERS
160 W SANTA CLARA ST., SUITE 675
SAN JOSE, CA 95113

SOLANO TRANSPORTATION AUTHORITY
ONE HARBOR CENTER, SUITE 130
SUISUN CITY, CA 94585

LEFT RIGHT BOTH

PEDESTRIAN PUSH BUTTON SIGNS (R10-3)

DETAIL A

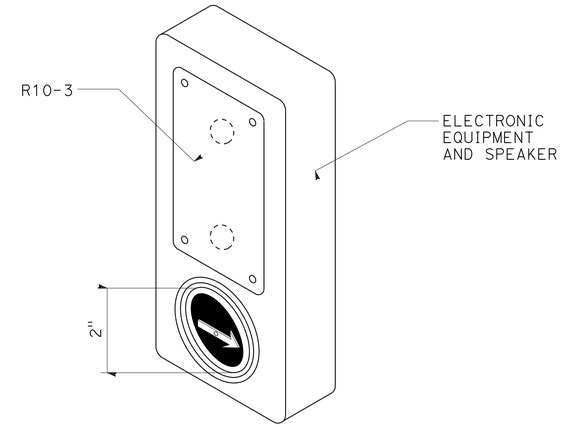

ACCESSIBLE PEDESTRIAN SIGNAL

DETAIL B

PERSON WALKING INTERVAL

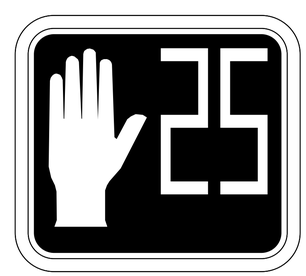

FLASHING UPRAISED HAND INTERVAL

STEADY UPRAISED HAND INTERVAL

PEDESTRIAN SIGNAL FACE

DETAIL C

ELECTRICAL DETAILS

NO SCALE

E-37

STATE OF CALIFORNIA - DEPARTMENT OF TRANSPORTATION
Caltrans

CONSULTANT FUNCTIONAL SUPERVISOR: ROBERT REES
CALCULATED-DESIGNED BY: LISA LANGENFELD
CHECKED BY: KRISTIN CALIA
REVISED BY
DATE REVISED

LAST REVISION 01-07-13 | DATE PLOTTED => 08-MAY-2013 | TIME PLOTTED => 10:53

Dist	COUNTY	ROUTE	POST MILES TOTAL PROJECT	SHEET No.	TOTAL SHEETS
04	Sol	12,80	2.1/2.8, 12.0/13.1	422	597

REGISTERED CIVIL ENGINEER 1-7-13 DATE

5-6-13
PLANS APPROVAL DATE

REGISTERED PROFESSIONAL ENGINEER S. LUCKJIFF No. 63058 Exp. 6-30-14 CIVIL STATE OF CALIFORNIA

THE STATE OF CALIFORNIA OR ITS OFFICERS OR AGENTS SHALL NOT BE RESPONSIBLE FOR THE ACCURACY OR COMPLETENESS OF SCANNED COPIES OF THIS PLAN SHEET.

FEHR & PEERS
160 W SANTA CLARA ST., SUITE 675
SAN JOSE, CA 95113

SOLANO TRANSPORTATION AUTHORITY
ONE HARBOR CENTER, SUITE 130
SUISUN CITY, CA 94585

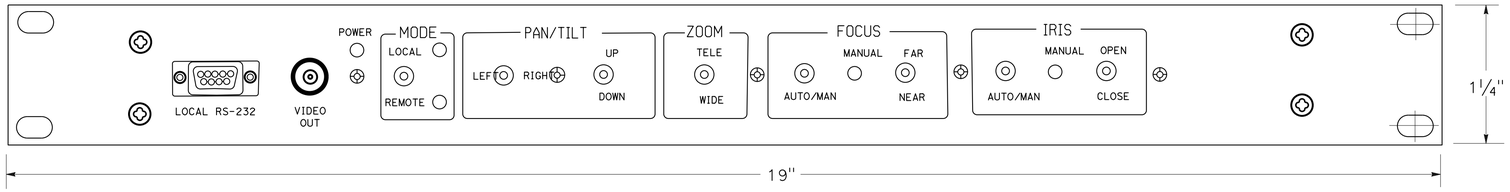

CCU FRONT PANEL LAYOUT

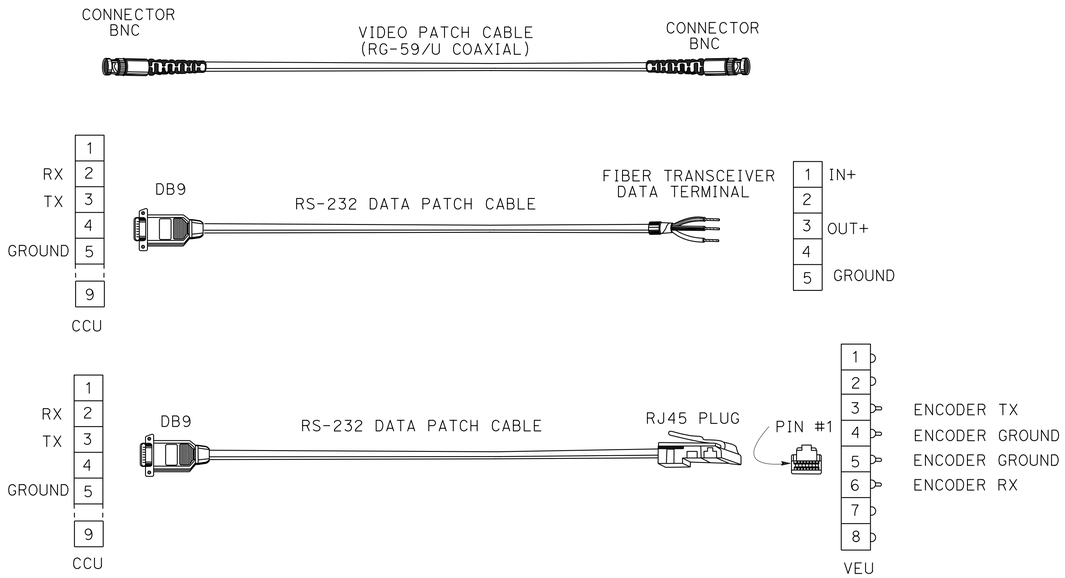

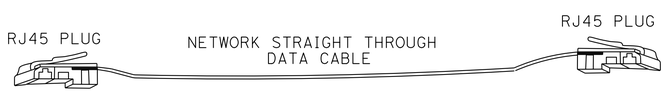

INTERFACE CABLE DETAILS

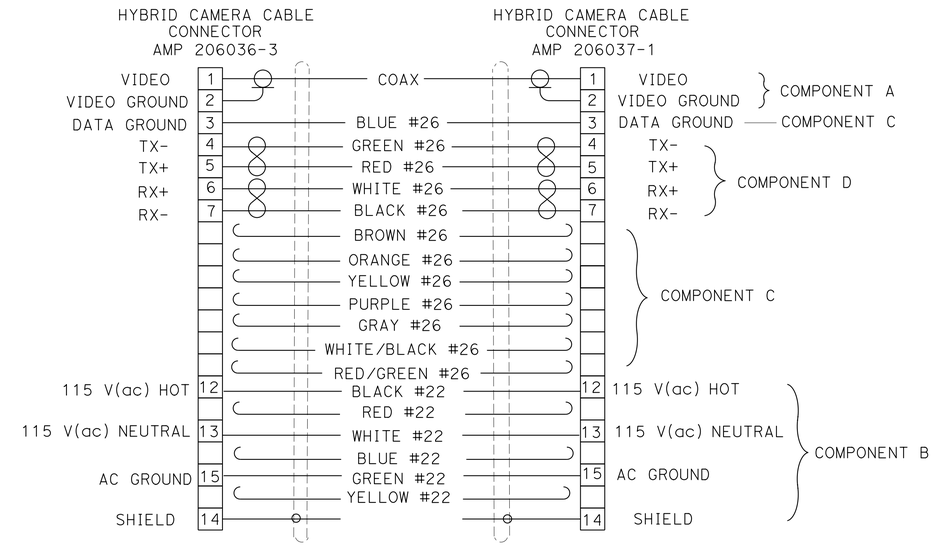

COMPONENT	CONDUCTOR	DESCRIPTION
A	COAXIAL	75 OHM, RG-59/U TYPE, STANDARD ANALOG VIDEO CABLE, 0.242" NOMINAL DIAMETER
B	6 CONDUCTOR	22 AWG, COPPER INSULATED CONDUCTOR, 0.048" NOMINAL DIAMETER, COLOR CODED: B1-BLACK, B2-RED, B3-GREEN, B4-WHITE, B5-BLUE, B6-YELLOW
C	8 CONDUCTOR	26 AWG, COPPER INSULATED CONDUCTOR, 0.037" NOMINAL DIAMETER, COLOR CODED: C1-BROWN, C2-BLUE, C3-ORANGE, C4-YELLOW, C5-PURPLE, C6-GRAY, C7-WHITE/BLACK, C8-RED/GREEN
D	4 CONDUCTOR	26 AWG, COPPER INSULATED CONDUCTOR, 0.037" NOMINAL DIAMETER, COLOR CODED: D1-BLACK & WHITE, D2-RED & GREEN

HYBRID CAMERA CABLE AND CONNECTORS DETAIL

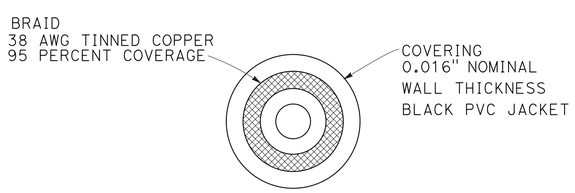

COMPONENT A

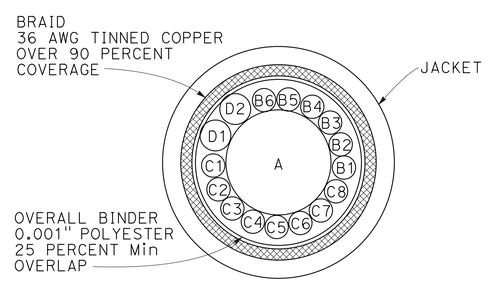

HYBRID CAMERA CABLE CROSS SECTION

APPROVED FOR ELECTRICAL WORK ONLY

ELECTRICAL DETAILS

NO SCALE

E-38

STATE OF CALIFORNIA - DEPARTMENT OF TRANSPORTATION
Caltrans

CONSULTANT FUNCTIONAL SUPERVISOR: ROBERT REES
CALCULATED-DESIGNED BY: LISA LANGENFELD
CHECKED BY: KRISTIN CALIA
REVISED BY
DATE REVISED

LAST REVISION 01-07-13
DATE PLOTTED => 09-MAY-2013
TIME PLOTTED => 08:26

Dist	COUNTY	ROUTE	POST MILES TOTAL PROJECT	SHEET No.	TOTAL SHEETS
04	Sol	12,80	2.1/2.8, 12.0/13.1	423	597

REGISTERED CIVIL ENGINEER 1-7-13 DATE

5-6-13
PLANS APPROVAL DATE

REGISTERED PROFESSIONAL ENGINEER S. LUCKJIFF No. 63058 Exp. 6-30-14 CIVIL STATE OF CALIFORNIA

THE STATE OF CALIFORNIA OR ITS OFFICERS OR AGENTS SHALL NOT BE RESPONSIBLE FOR THE ACCURACY OR COMPLETENESS OF SCANNED COPIES OF THIS PLAN SHEET.

FEHR & PEERS
160 W SANTA CLARA ST., SUITE 675
SAN JOSE, CA 95113

SOLANO TRANSPORTATION AUTHORITY
ONE HARBOR CENTER, SUITE 130
SUISUN CITY, CA 94585

NOTE:

FOR ACCURATE RIGHT OF WAY DATA, CONTACT RIGHT OF WAY ENGINEERING AT THE DISTRICT OFFICE.

LEGEND:

(APPLICABLE TO SHEETS E-39 THROUGH E-43)

- 1A INSTALL WOOD POLE AND SIGNAL EQUIPMENT AS INDICATED.
- 2A INSTALL MESSENGER WIRE WITH CONDUCTORS/CABLES AS NOTED.
- 3A INSTALL VIDEO DETECTION CAMERA ON WOOD POLE.
- 4A COVER/BAG SIGNAL HEAD DURING THIS STAGE.
- 5A INSTALL RISER ON WOOD POLE.
- 10A INSTALL VIDEO DETECTION CAMERA ON LUMINAIRE ARM.
- 11A ADD 1 VIDEO COAXIAL AND 1 VIDEO POWER CABLE.
- TEMPORARY 30' WOOD POLE WITH POLE GUY, CONDUCTORS, CONDUIT, RISERS AND OTHER EQUIPMENT AS INDICATED
- OH MESSENGER (SPAN) WIRE

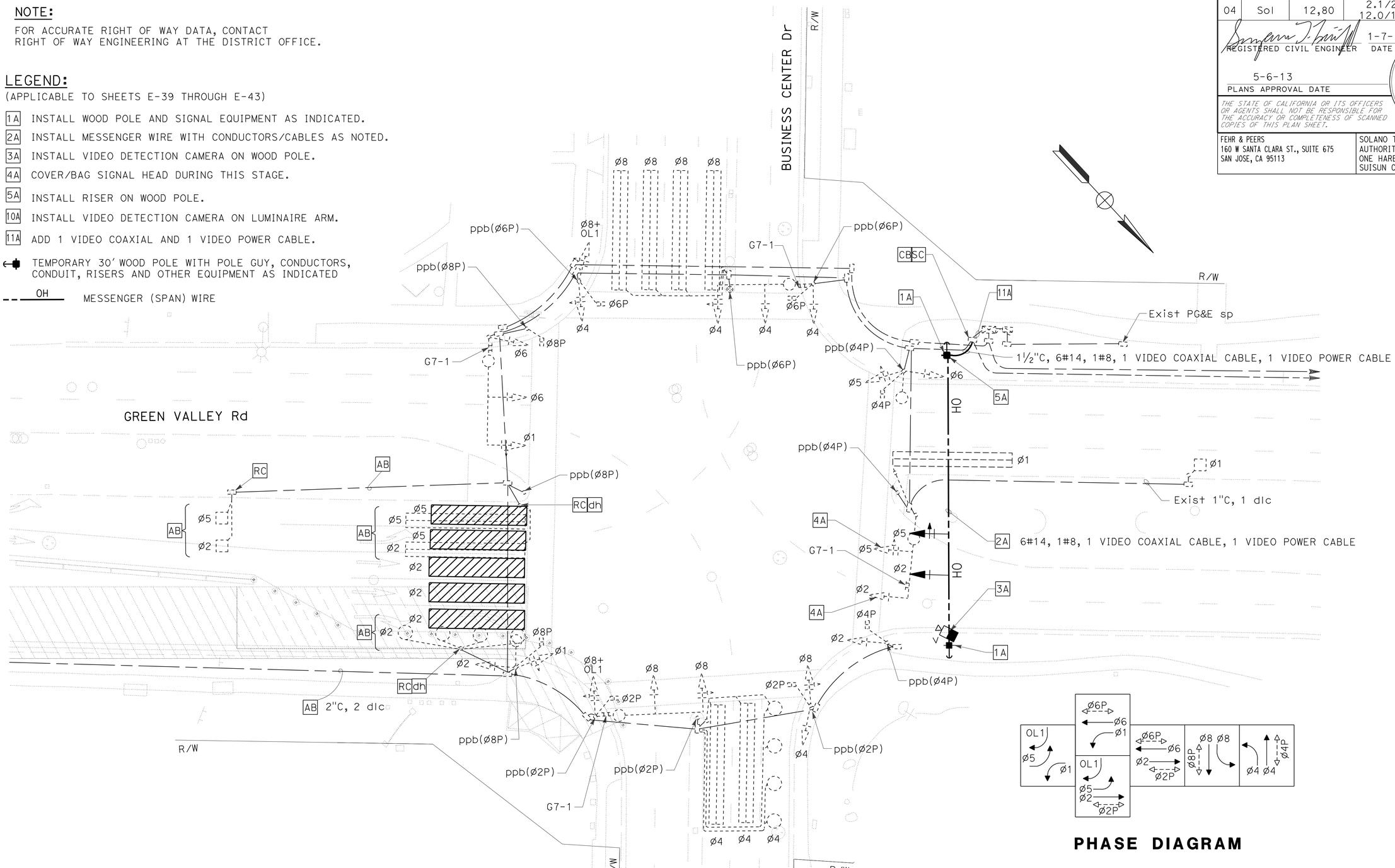

PHASE DIAGRAM

STAGE 1B

APPROVED FOR ELECTRICAL WORK ONLY

SIGNAL AND LIGHTING (TEMPORARY) (CITY)

SCALE: 1" = 20'

E-39

STATE OF CALIFORNIA - DEPARTMENT OF TRANSPORTATION
Caltrans

CONSULTANT FUNCTIONAL SUPERVISOR: ROBERT REES
CALCULATED-DESIGNED BY: LISA LANGENFELD
CHECKED BY: KRISTIN CALIA
REVISED BY
DATE REVISED

LAST REVISION 01-07-13 | DATE PLOTTED => 09-MAY-2013 | TIME PLOTTED => 08:26

Dist	COUNTY	ROUTE	POST MILES TOTAL PROJECT	SHEET No.	TOTAL SHEETS
04	Sol	12,80	2.1/2.8, 12.0/13.1	424	597

REGISTERED CIVIL ENGINEER 1-7-13 DATE

5-6-13
PLANS APPROVAL DATE

REGISTERED PROFESSIONAL ENGINEER S. LUCKJIFF No. 63058 Exp. 6-30-14 CIVIL STATE OF CALIFORNIA

THE STATE OF CALIFORNIA OR ITS OFFICERS OR AGENTS SHALL NOT BE RESPONSIBLE FOR THE ACCURACY OR COMPLETENESS OF SCANNED COPIES OF THIS PLAN SHEET.

FEHR & PEERS
160 W SANTA CLARA ST., SUITE 675
SAN JOSE, CA 95113

SOLANO TRANSPORTATION AUTHORITY
ONE HARBOR CENTER, SUITE 130
SUISUN CITY, CA 94585

NOTES:

1. FOR ACCURATE RIGHT OF WAY DATA, CONTACT RIGHT OF WAY ENGINEERING AT THE DISTRICT OFFICE.
2. FOR LEGEND, SEE SHEET E-39.

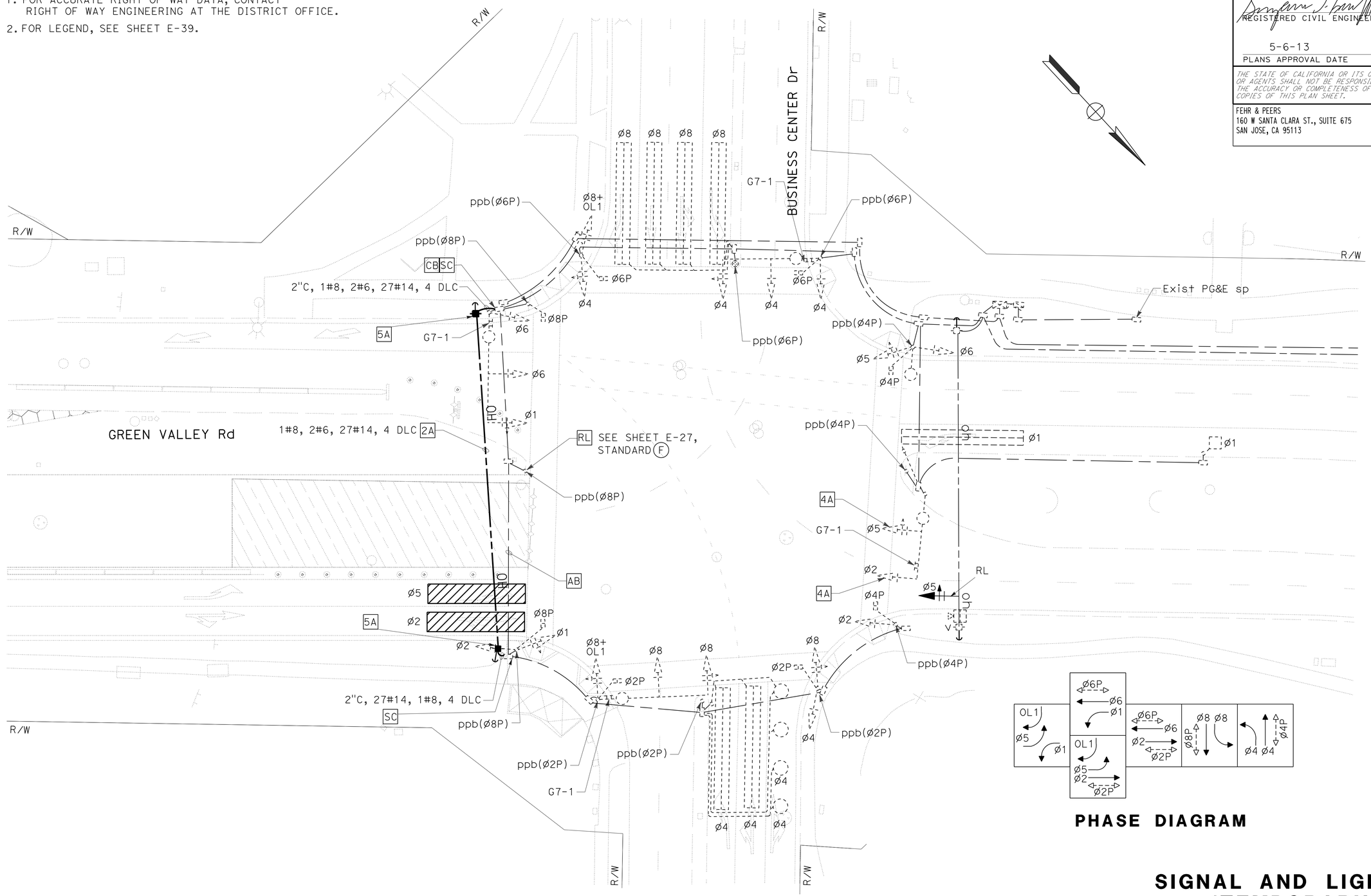

PHASE DIAGRAM

STAGE 2

APPROVED FOR ELECTRICAL WORK ONLY

SIGNAL AND LIGHTING (TEMPORARY) (CITY)

SCALE: 1" = 20'

E-40

STATE OF CALIFORNIA - DEPARTMENT OF TRANSPORTATION
Caltrans

CONSULTANT FUNCTIONAL SUPERVISOR: ROBERT REES
CALCULATED-DESIGNED BY: LISA LANGENFELD
CHECKED BY: KRISTIN CALIA
REVISED BY
DATE REVISED

LAST REVISION 01-07-13
DATE PLOTTED => 09-MAY-2013
TIME PLOTTED => 08:26

Dist	COUNTY	ROUTE	POST MILES TOTAL PROJECT	SHEET No.	TOTAL SHEETS
04	Sol	12,80	2.1/2.8, 12.0/13.1	425	597

REGISTERED CIVIL ENGINEER 1-7-13 DATE

5-6-13
PLANS APPROVAL DATE

REGISTERED PROFESSIONAL ENGINEER S. LUCKJIFF No. 63058 Exp. 6-30-14 CIVIL STATE OF CALIFORNIA

THE STATE OF CALIFORNIA OR ITS OFFICERS OR AGENTS SHALL NOT BE RESPONSIBLE FOR THE ACCURACY OR COMPLETENESS OF SCANNED COPIES OF THIS PLAN SHEET.

FEHR & PEERS
160 W SANTA CLARA ST., SUITE 675
SAN JOSE, CA 95113

SOLANO TRANSPORTATION AUTHORITY
ONE HARBOR CENTER, SUITE 130
SUISUN CITY, CA 94585

NOTES:

1. FOR ACCURATE RIGHT OF WAY DATA, CONTACT RIGHT OF WAY ENGINEERING AT THE DISTRICT OFFICE.
2. FOR LEGEND, SEE SHEET E-39.

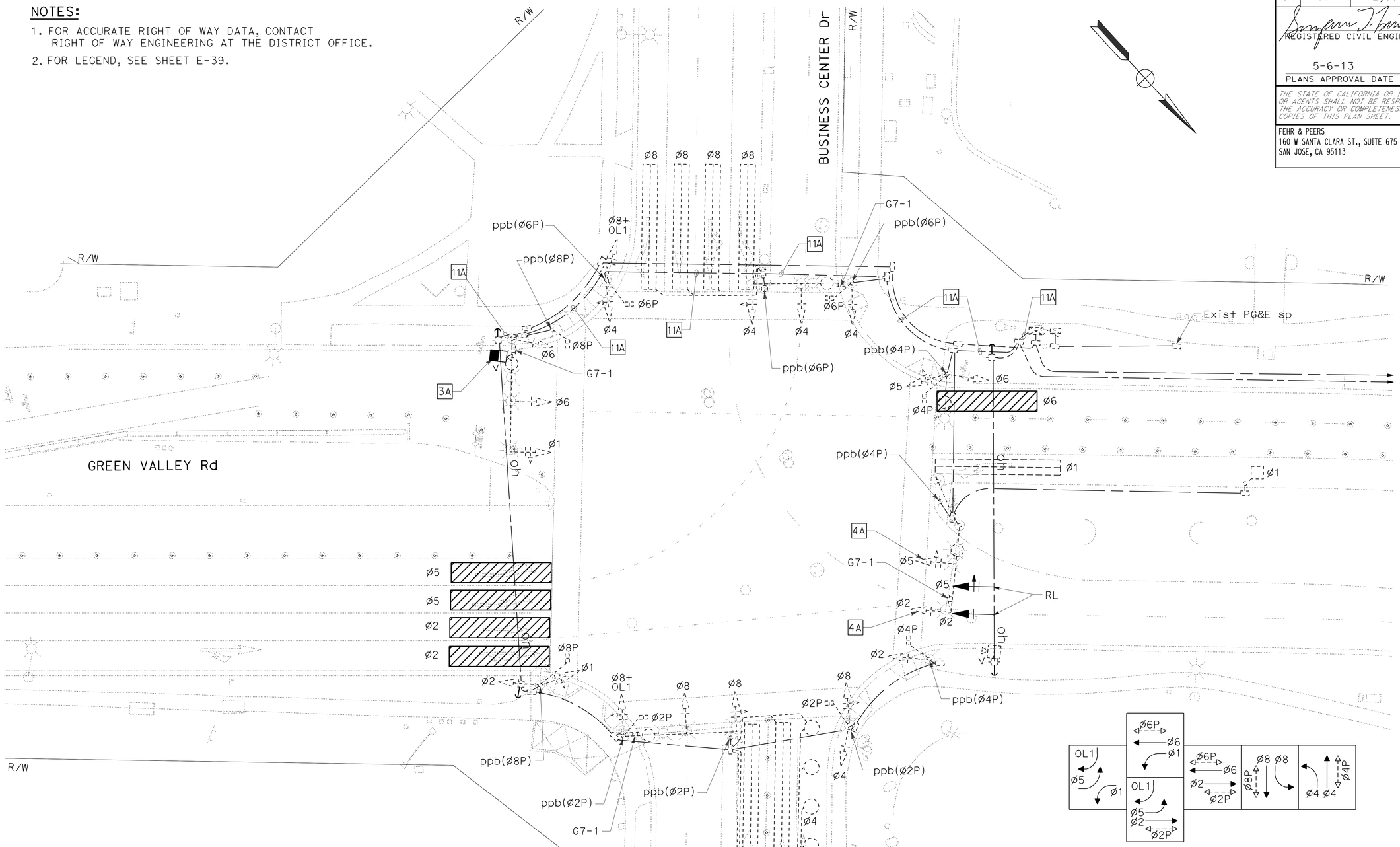

STAGE 3

APPROVED FOR ELECTRICAL WORK ONLY

PHASE DIAGRAM

SIGNAL AND LIGHTING (TEMPORARY) (CITY)

SCALE: 1" = 20'

E-41

STATE OF CALIFORNIA - DEPARTMENT OF TRANSPORTATION
Caltrans

CONSULTANT FUNCTIONAL SUPERVISOR: ROBERT REES
CALCULATED-DESIGNED BY: LISA LANGENFELD
CHECKED BY: KRISTIN CALIA
REVISED BY
DATE REVISED

LAST REVISION 01-07-13
DATE PLOTTED => 09-MAY-2013
TIME PLOTTED => 08:26

Dist	COUNTY	ROUTE	POST MILES TOTAL PROJECT	SHEET No.	TOTAL SHEETS
04	Sol	12,80	2.1/2.8, 12.0/13.1	426	597

REGISTERED CIVIL ENGINEER 1-7-13 DATE

5-6-13
PLANS APPROVAL DATE

REGISTERED PROFESSIONAL ENGINEER S. LUCKJIFF No. 63058 Exp. 6-30-14 CIVIL STATE OF CALIFORNIA

THE STATE OF CALIFORNIA OR ITS OFFICERS OR AGENTS SHALL NOT BE RESPONSIBLE FOR THE ACCURACY OR COMPLETENESS OF SCANNED COPIES OF THIS PLAN SHEET.

FEHR & PEERS
160 W SANTA CLARA ST., SUITE 675
SAN JOSE, CA 95113

SOLANO TRANSPORTATION AUTHORITY
ONE HARBOR CENTER, SUITE 130
SUISUN CITY, CA 94585

NOTES:

1. FOR ACCURATE RIGHT OF WAY DATA, CONTACT RIGHT OF WAY ENGINEERING AT THE DISTRICT OFFICE.
2. FOR LEGEND SEE SHEET E-39.

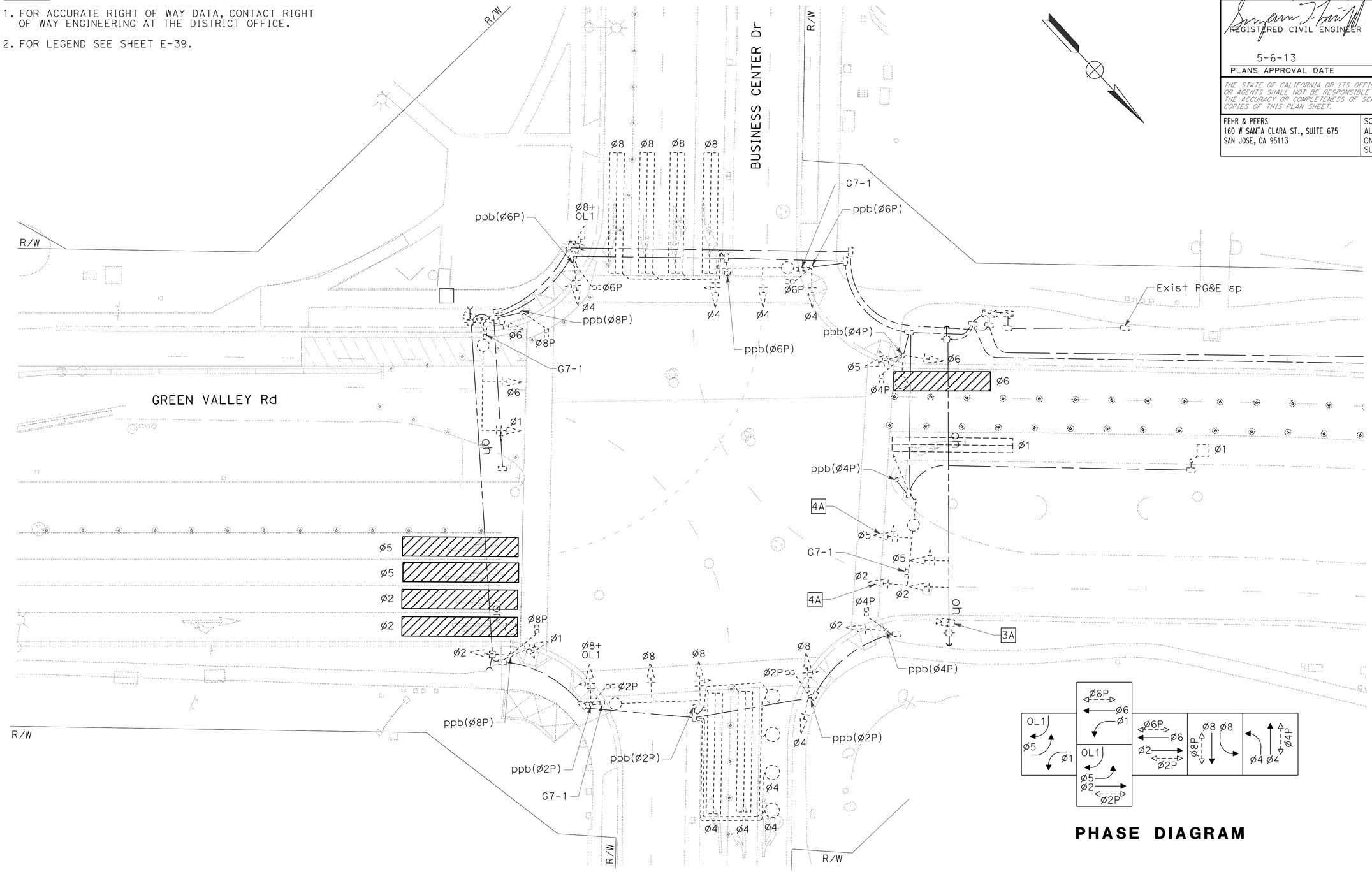

PHASE DIAGRAM

STAGE 6A

SIGNAL AND LIGHTING (TEMPORARY) (CITY)

SCALE: 1" = 20'

E-42

APPROVED FOR ELECTRICAL WORK ONLY

STATE OF CALIFORNIA - DEPARTMENT OF TRANSPORTATION
Caltrans

CONSULTANT FUNCTIONAL SUPERVISOR: ROBERT REES
CALCULATED-DESIGNED BY: LISA LANGENFELD
CHECKED BY: KRISTIN CALIA
REVISED BY
DATE REVISED

LAST REVISION 01-07-13
DATE PLOTTED => 09-MAY-2013
TIME PLOTTED => 08:26

Dist	COUNTY	ROUTE	POST MILES TOTAL PROJECT	SHEET No.	TOTAL SHEETS
04	Sol	12,80	2.1/2.8, 12.0/13.1	427	597

REGISTERED CIVIL ENGINEER 1-7-13 DATE

5-6-13
PLANS APPROVAL DATE

REGISTERED PROFESSIONAL ENGINEER S. LUCKJIFF No. 63058 Exp. 6-30-14 CIVIL STATE OF CALIFORNIA

THE STATE OF CALIFORNIA OR ITS OFFICERS OR AGENTS SHALL NOT BE RESPONSIBLE FOR THE ACCURACY OR COMPLETENESS OF SCANNED COPIES OF THIS PLAN SHEET.

FEHR & PEERS
160 W SANTA CLARA ST., SUITE 675
SAN JOSE, CA 95113

SOLANO TRANSPORTATION AUTHORITY
ONE HARBOR CENTER, SUITE 130
SUISUN CITY, CA 94585

NOTES:

1. FOR ACCURATE RIGHT OF WAY DATA, CONTACT RIGHT OF WAY ENGINEERING AT THE DISTRICT OFFICE.
2. FOR LEGEND SEE SHEET E-39.

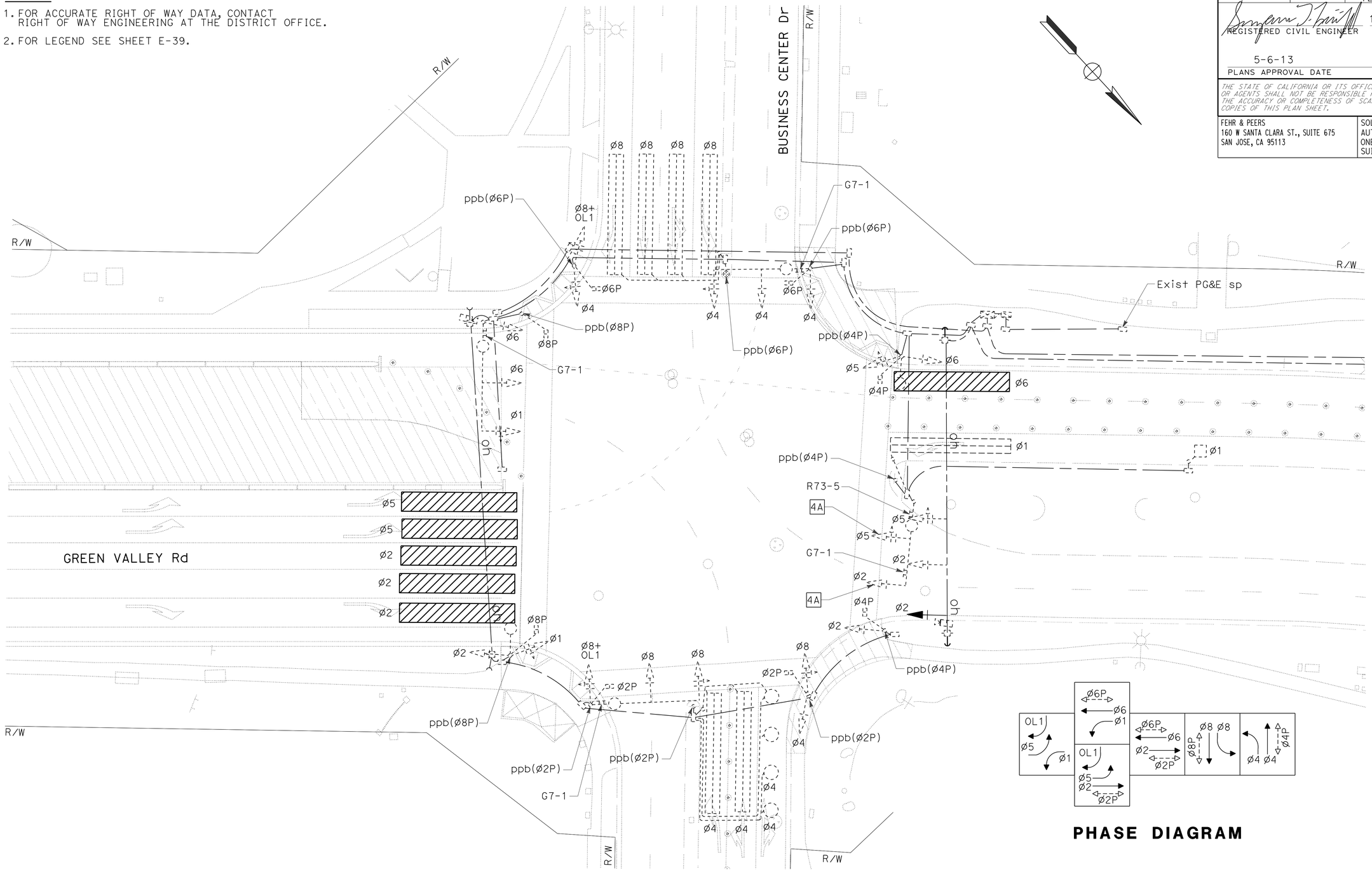

PHASE DIAGRAM

STAGE 6B

APPROVED FOR ELECTRICAL WORK ONLY

SIGNAL AND LIGHTING (TEMPORARY) (CITY)

SCALE: 1" = 20'

E-43

STATE OF CALIFORNIA - DEPARTMENT OF TRANSPORTATION
Caltrans

CONSULTANT FUNCTIONAL SUPERVISOR: ROBERT REES
CALCULATED-DESIGNED BY: LISA LANGENFELD
CHECKED BY: KRISTIN CALIA
REVISED BY
DATE REVISED

LAST REVISION 01-07-13
DATE PLOTTED => 09-MAY-2013
TIME PLOTTED => 08:26

Dist	COUNTY	ROUTE	POST MILES TOTAL PROJECT	SHEET No.	TOTAL SHEETS
04	Sol	12,80	2.1/2.8, 12.0/13.1	428	597

REGISTERED CIVIL ENGINEER 1-7-13 DATE

5-6-13
PLANS APPROVAL DATE

REGISTERED PROFESSIONAL ENGINEER S. LUCKJIFF No. 63058 Exp. 6-30-14 CIVIL STATE OF CALIFORNIA

THE STATE OF CALIFORNIA OR ITS OFFICERS OR AGENTS SHALL NOT BE RESPONSIBLE FOR THE ACCURACY OR COMPLETENESS OF SCANNED COPIES OF THIS PLAN SHEET.

FEHR & PEERS
160 W SANTA CLARA ST., SUITE 675
SAN JOSE, CA 95113

SOLANO TRANSPORTATION AUTHORITY
ONE HARBOR CENTER, SUITE 130
SUISUN CITY, CA 94585

NOTE:

FOR ACCURATE RIGHT OF WAY DATA, CONTACT RIGHT OF WAY ENGINEERING AT THE DISTRICT OFFICE.

LEGEND:

(APPLICABLE TO SHEETS E-44 THROUGH E-48)

- 1A INSTALL TEMPORARY WOOD POLE AND LIGHTING EQUIPMENT AS INDICATED.
- 2A INSTALL OVERHEAD MESSENGER WIRE, 2#6 (240 V LIGHTING).
- 3A REMOVAL OF THIS LIGHT IS PART OF PERMANENT ELECTRICAL WORK, SHOWN ON PLANS E-4 THROUGH E-6.
- 4A 2"C, 2#6 (240 V LIGHTING). ABANDON AFTER STAGE CONSTRUCTION.
- 5A INSTALL OVERHEAD MESSENGER WIRE, 2#6 (240 V LTG), 2#6 (240 V SIGN ILLUMINATION).
- 6A 2"C, 2#6 (240 V LTG), 2#6 (240 V SIGN ILLUMINATION). ABANDON AFTER STAGE CONSTRUCTION.
- 7A 1½"C, 2#6 (240 V SIGN ILLUMINATION). ABANDON AFTER STAGE CONSTRUCTION.

WOOD POLE WITH 310 W HPS LUMINAIRE ON 12' MAST ARM. SEE LUMINAIRE MOUNTING DETAIL ON E-49

TEMPORARY WOOD POLE WITH POLE GUY, CONDUCTORS, CONDUIT, RISERS AND OTHER EQUIPMENT AS INDICATED

OH — OVERHEAD MESSENGER WIRE (⅜", 7 STRAND)

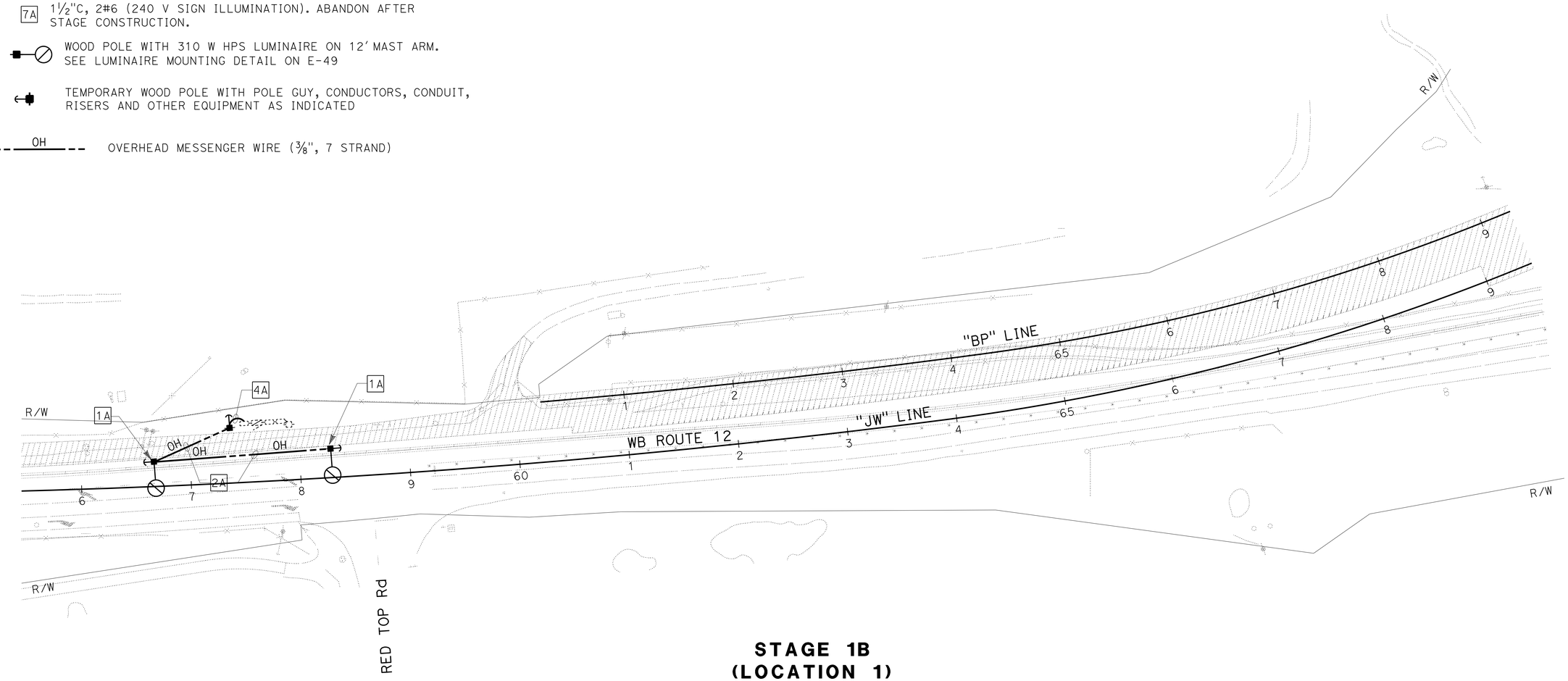

STAGE 1B
(LOCATION 1)

LIGHTING (TEMPORARY)

SCALE: 1" = 50'

E-44

APPROVED FOR ELECTRICAL WORK ONLY

STATE OF CALIFORNIA - DEPARTMENT OF TRANSPORTATION
Caltrans

CONSULTANT FUNCTIONAL SUPERVISOR: ROBERT REES
CALCULATED-DESIGNED BY: LISA LANGENFELD
CHECKED BY: KRISTIN CALIA
REVISED BY
DATE REVISED

LAST REVISION 01-07-13
DATE PLOTTED => 09-MAY-2013
TIME PLOTTED => 08:26

Dist	COUNTY	ROUTE	POST MILES TOTAL PROJECT	SHEET No.	TOTAL SHEETS
04	Sol	12,80	2.1/2.8, 12.0/13.1	429	597

REGISTERED CIVIL ENGINEER 1-7-13 DATE

5-6-13
PLANS APPROVAL DATE

REGISTERED PROFESSIONAL ENGINEER S. LUCKJIFF No. 63058 Exp. 6-30-14 CIVIL STATE OF CALIFORNIA

THE STATE OF CALIFORNIA OR ITS OFFICERS OR AGENTS SHALL NOT BE RESPONSIBLE FOR THE ACCURACY OR COMPLETENESS OF SCANNED COPIES OF THIS PLAN SHEET.

FEHR & PEERS
160 W SANTA CLARA ST., SUITE 675
SAN JOSE, CA 95113

SOLANO TRANSPORTATION AUTHORITY
ONE HARBOR CENTER, SUITE 130
SUISUN CITY, CA 94585

NOTES:

1. FOR ACCURATE RIGHT OF WAY DATA, CONTACT RIGHT OF WAY ENGINEERING AT THE DISTRICT OFFICE.
2. FOR LEGEND SEE SHEET E-44.

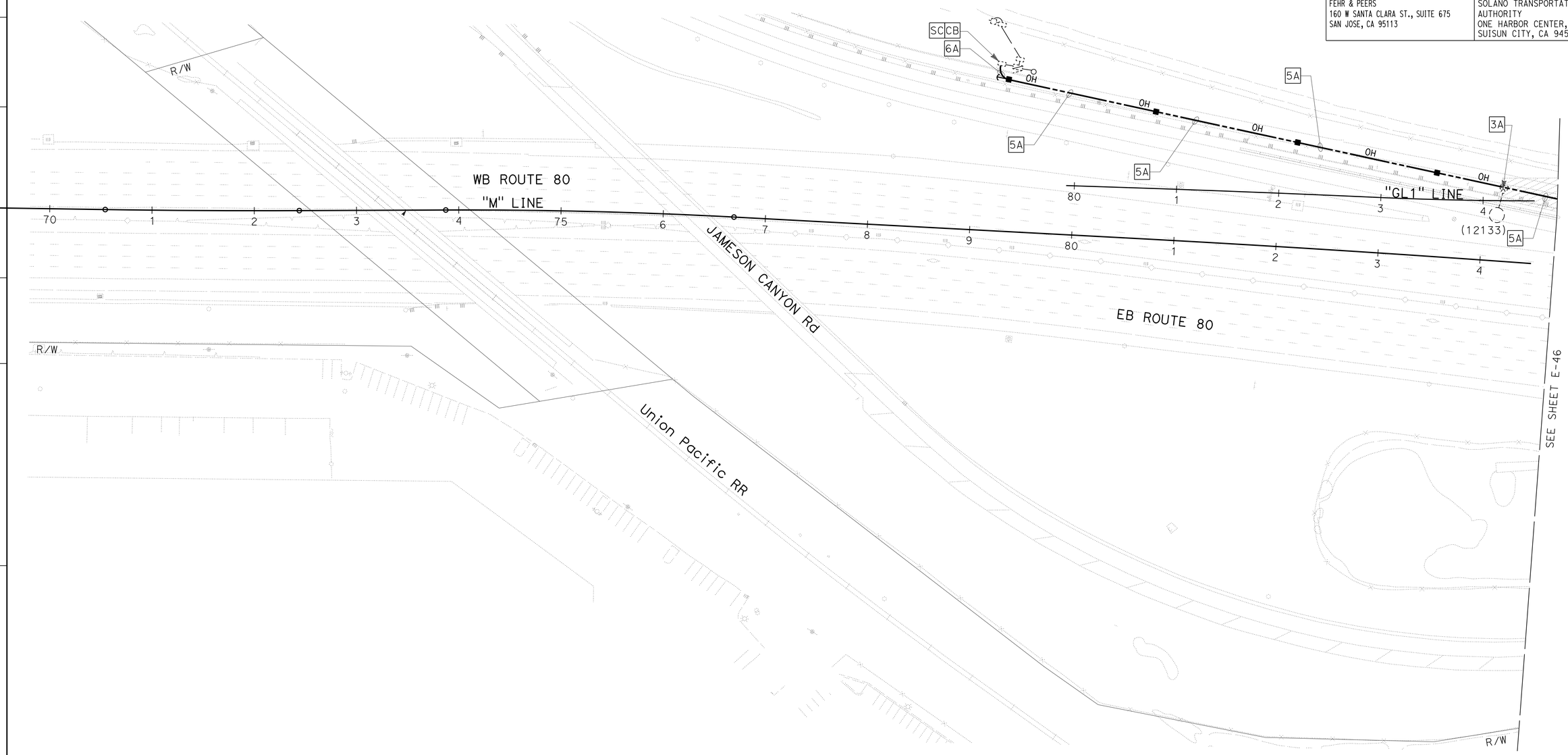

STAGE 1B
(LOCATION 2)

LIGHTING (TEMPORARY)

SCALE: 1" = 50'

E-45

APPROVED FOR ELECTRICAL WORK ONLY

STATE OF CALIFORNIA - DEPARTMENT OF TRANSPORTATION
Caltrans

CONSULTANT FUNCTIONAL SUPERVISOR: ROBERT REES
CALCULATED-DESIGNED BY: LISA LANGENFELD
CHECKED BY: KRISTIN CALIA
REVISED BY
DATE REVISED

LAST REVISION 01-07-13
DATE PLOTTED => 09-MAY-2013
TIME PLOTTED => 11:45

Dist	COUNTY	ROUTE	POST MILES TOTAL PROJECT	SHEET No.	TOTAL SHEETS
04	Sol	12,80	2.1/2.8, 12.0/13.1	430	597

REGISTERED CIVIL ENGINEER 1-7-13 DATE

5-6-13
PLANS APPROVAL DATE

REGISTERED PROFESSIONAL ENGINEER S. LUCKJIFF No. 63058 Exp. 6-30-14 CIVIL STATE OF CALIFORNIA

THE STATE OF CALIFORNIA OR ITS OFFICERS OR AGENTS SHALL NOT BE RESPONSIBLE FOR THE ACCURACY OR COMPLETENESS OF SCANNED COPIES OF THIS PLAN SHEET.

FEHR & PEERS
160 W SANTA CLARA ST., SUITE 675
SAN JOSE, CA 95113

SOLANO TRANSPORTATION AUTHORITY
ONE HARBOR CENTER, SUITE 130
SUISUN CITY, CA 94585

NOTES:

1. FOR ACCURATE RIGHT OF WAY DATA, CONTACT RIGHT OF WAY ENGINEERING AT THE DISTRICT OFFICE.

2. FOR LEGEND, SEE SHEET E-44

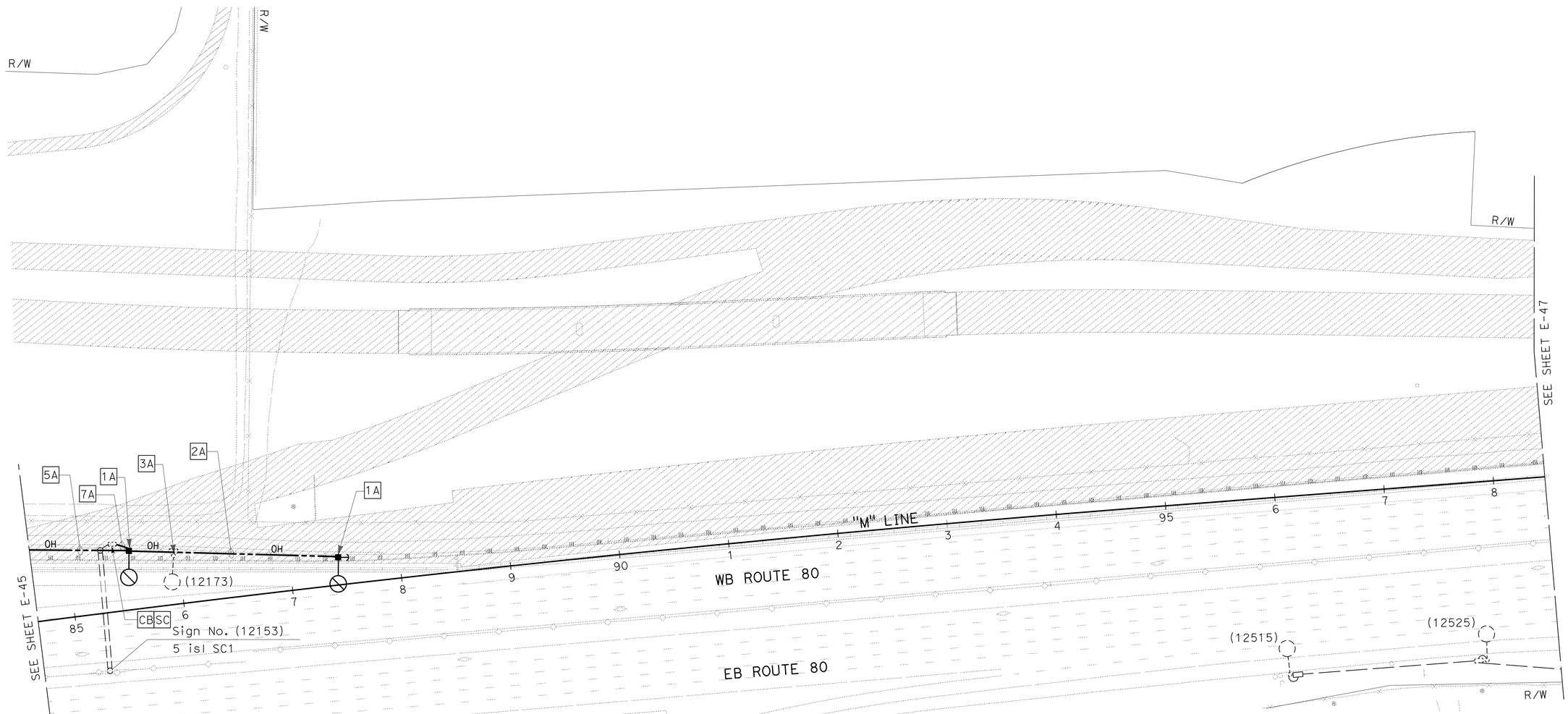

STAGE 1B (LOCATION 2)

LIGHTING (TEMPORARY)

SCALE: 1" = 50'

E-46

APPROVED FOR ELECTRICAL WORK ONLY

STATE OF CALIFORNIA - DEPARTMENT OF TRANSPORTATION
Caltrans

CONSULTANT FUNCTIONAL SUPERVISOR: ROBERT REES
CALCULATED-DESIGNED BY: LISA LANGENFELD
CHECKED BY: KRISTIN CALIA
REVISED BY
DATE REVISED

LAST REVISION 01-07-13
DATE PLOTTED => 09-MAY-2013
TIME PLOTTED => 11:45

Dist	COUNTY	ROUTE	POST MILES TOTAL PROJECT	SHEET No.	TOTAL SHEETS
04	Sol	12,80	2.1/2.8, 12.0/13.1	431	597

REGISTERED CIVIL ENGINEER 1-7-13 DATE

5-6-13
PLANS APPROVAL DATE

REGISTERED PROFESSIONAL ENGINEER S. LUCKJIFF No. 63058 Exp. 6-30-14 CIVIL STATE OF CALIFORNIA

THE STATE OF CALIFORNIA OR ITS OFFICERS OR AGENTS SHALL NOT BE RESPONSIBLE FOR THE ACCURACY OR COMPLETENESS OF SCANNED COPIES OF THIS PLAN SHEET.

FEHR & PEERS
160 W SANTA CLARA ST., SUITE 675
SAN JOSE, CA 95113

SOLANO TRANSPORTATION AUTHORITY
ONE HARBOR CENTER, SUITE 130
SUISUN CITY, CA 94585

NOTES:

1. FOR ACCURATE RIGHT OF WAY DATA, CONTACT RIGHT OF WAY ENGINEERING AT THE DISTRICT OFFICE.
2. FOR LEGEND, SEE SHEET E-44.

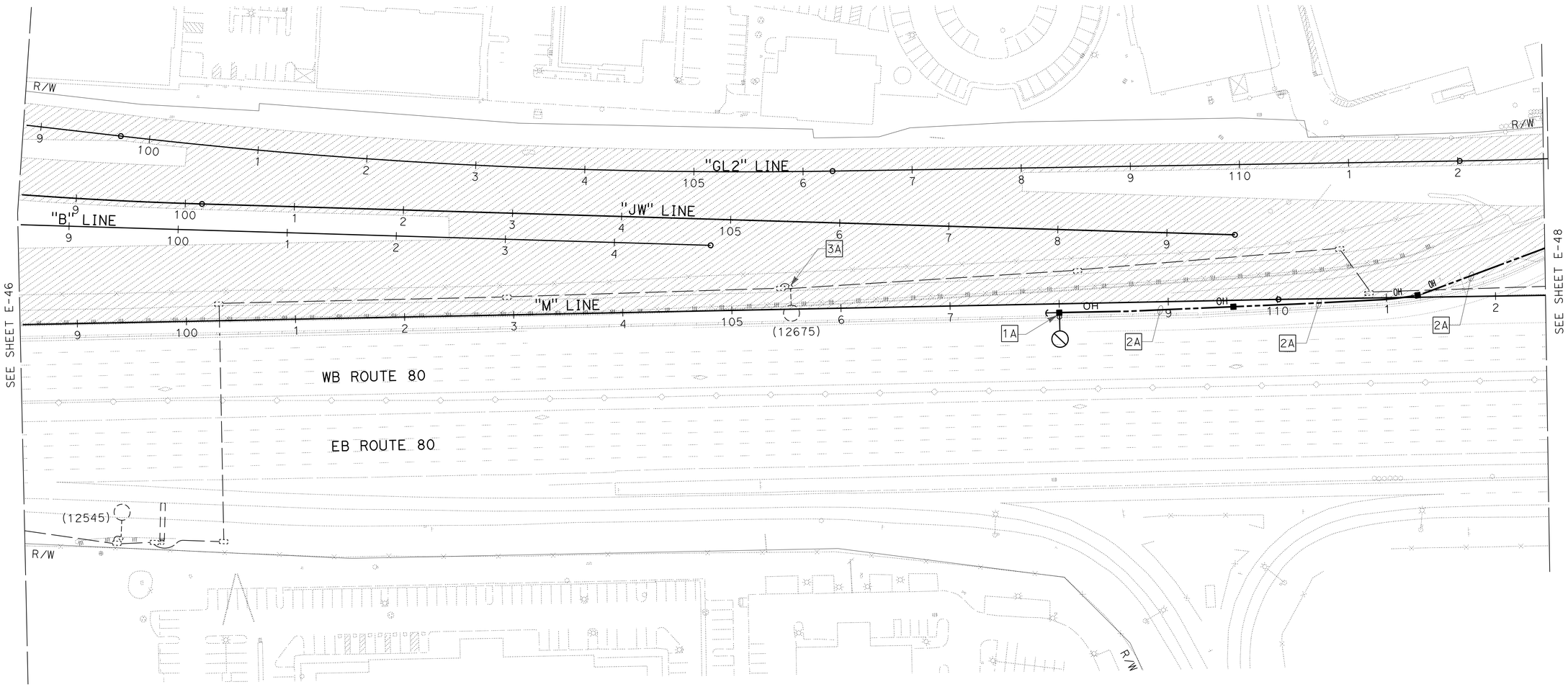

STAGE 1B
(LOCATION 3)

LIGHTING (TEMPORARY)
SCALE: 1" = 50'

E-47

APPROVED FOR ELECTRICAL WORK ONLY

STATE OF CALIFORNIA - DEPARTMENT OF TRANSPORTATION
Caltrans

CONSULTANT FUNCTIONAL SUPERVISOR: ROBERT REES
CALCULATED-DESIGNED BY: LISA LANGENFELD
CHECKED BY: KRISTIN CALIA
REVISED BY
DATE REVISED

LAST REVISION DATE PLOTTED => 08-MAY-2013
01-07-13 TIME PLOTTED => 11:14

Dist	COUNTY	ROUTE	POST MILES TOTAL PROJECT	SHEET No.	TOTAL SHEETS
04	Sol	12,80	2.1/2.8, 12.0/13.1	432	597

REGISTERED CIVIL ENGINEER 1-7-13 DATE

5-6-13
PLANS APPROVAL DATE

REGISTERED PROFESSIONAL ENGINEER S. LUCKJIFF No. 63058 Exp. 6-30-14 CIVIL STATE OF CALIFORNIA

THE STATE OF CALIFORNIA OR ITS OFFICERS OR AGENTS SHALL NOT BE RESPONSIBLE FOR THE ACCURACY OR COMPLETENESS OF SCANNED COPIES OF THIS PLAN SHEET.

FEHR & PEERS
160 W SANTA CLARA ST., SUITE 675
SAN JOSE, CA 95113

SOLANO TRANSPORTATION AUTHORITY
ONE HARBOR CENTER, SUITE 130
SUISUN CITY, CA 94585

NOTES:

1. FOR ACCURATE RIGHT OF WAY DATA, CONTACT RIGHT OF WAY ENGINEERING AT THE DISTRICT OFFICE.
2. FOR LEGEND, SEE SHEET E-44.

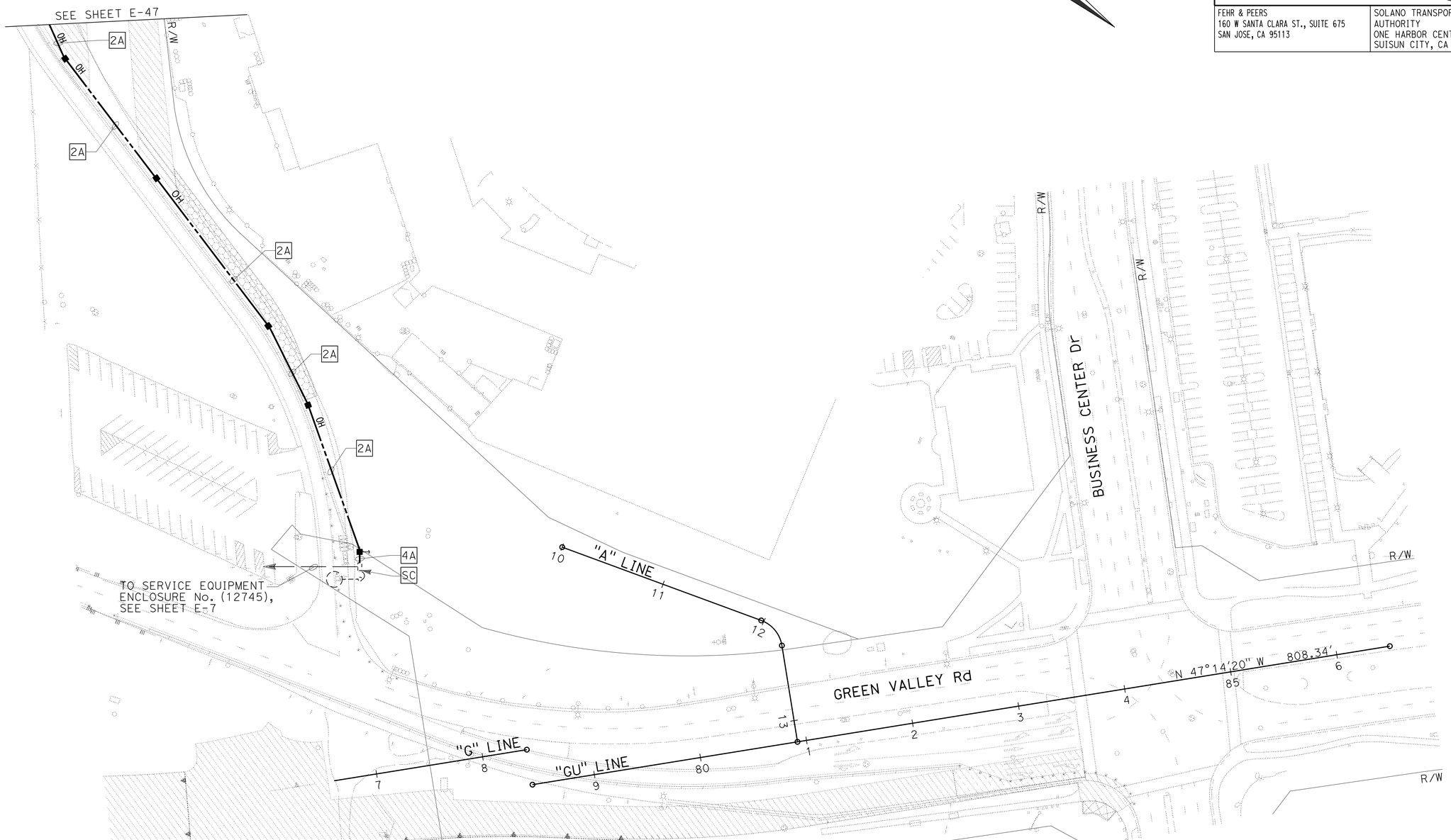

STAGE 1B (LOCATION 3)

LIGHTING (TEMPORARY)

SCALE: 1" = 50'

E-48

APPROVED FOR ELECTRICAL WORK ONLY

STATE OF CALIFORNIA - DEPARTMENT OF TRANSPORTATION
Caltrans

CONSULTANT FUNCTIONAL SUPERVISOR: ROBERT REES
CALCULATED-DESIGNED BY: LISA LANGENFELD
CHECKED BY: KRISTIN CALIA
REVISED BY
DATE REVISED

LAST REVISION 01-07-13 | DATE PLOTTED => 09-MAY-2013 | TIME PLOTTED => 08:31

Dist	COUNTY	ROUTE	POST MILES TOTAL PROJECT	SHEET No.	TOTAL SHEETS
04	Sol	12,80	2.1/2.8, 12.0/13.1	433	597

REGISTERED CIVIL ENGINEER 3-13-13 DATE

5-6-13
PLANS APPROVAL DATE

REGISTERED PROFESSIONAL ENGINEER S. LUCKJIFF No. 63058 Exp.6-30-14 CIVIL STATE OF CALIFORNIA

THE STATE OF CALIFORNIA OR ITS OFFICERS OR AGENTS SHALL NOT BE RESPONSIBLE FOR THE ACCURACY OR COMPLETENESS OF SCANNED COPIES OF THIS PLAN SHEET.

FEHR & PEERS
160 W SANTA CLARA ST., SUITE 675
SAN JOSE, CA 95113

SOLANO TRANSPORTATION AUTHORITY
ONE HARBOR CENTER, SUITE 130
SUISUN CITY, CA 94585

POLE TABLES

STAGE IB

SELECTION TABLE FOR TYPE A POLES AND ALTERNATIVE TYPE B POLES

Max SPAN	MAXIMUM OH CONDUCTORS CARRIED	POLE TYPE	CLASS	LUMINAIRE ARM *	POLE EMBEDMENT	GUY ** ANCHOR CALLOUT
85′	PER PLANS	A B	40′ CLASS 1 40′ CLASS H2	12′ LMA	8′-0" 11′-0"	A -
85′	PER PLANS	A B	45′ CLASS 1 45′ CLASS H3	12′ LMA	10′-0" 11′-0"	A -

POLES (X)(Y)(Z) MINIMUM DESIGN REQUIREMENTS

Max SPAN	MAXIMUM OH CONDUCTORS CARRIED	POLE TYPE	CLASS	LUMINAIRE ARM *	POLE EMBEDMENT	GUY ** ANCHOR CALLOUT
110′	13#14, 3#8 6 DLC	(X)	45′ CLASS H4	-	14′-0"	B
	SEE ELEC-TRICAL PLANS	(Y)	45′ CLASS H2	12′ LMA	12′-0"	B
90′	13#14, 1#8 2#6	(Z)	45′ CLASS H3	-	11′-0"	-

STAGE 1B, 2, 3, 6A & 6B

SELECTION TABLE FOR TYPE A POLES AND ALTERNATIVE TYPE B POLES

Max SPAN	MAXIMUM OH CONDUCTORS CARRIED	POLE TYPE	CLASS	LUMINAIRE ARM *	POLE EMBEDMENT	GUY ** ANCHOR CALLOUT
80′	SEE ELECTRICAL PLANS	A B	40′ CLASS 1 40′ CLASS H2	12′ LMA	10′-0" 11′-0"	A -
180′	SEE ELECTRICAL PLANS	A	45′ CLASS 1	-	10′-0"	A

* POLE CLASS SELECTION APPLICABLE WITHOUT USE OF LMA PER TABLE.
** REFER TO SHEET E-53.

TYPE A POLE LAYOUT I.D.

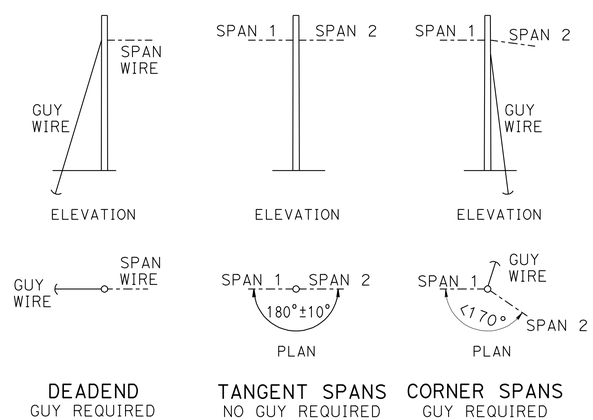

DEADEND
GUY REQUIRED

TANGENT SPANS
NO GUY REQUIRED

CORNER SPANS
GUY REQUIRED

LEGEND:
GUY WIRE
SPAN WIRE

NO SCALE

GENERAL NOTES:

1. TYPE A, AND POLES (X) AND (Y) SHALL BE STABILIZED USING GUY WIRES, BREAST BLOCKS OR RAKES AT EACH DEAD END, CORNER, DROP OR LINE DEVIATION MORE THAN 10° FROM STRAIGHT LINE AND SHALL BE ATTACHED TO POLE AS NEARLY AS PRACTICAL TO THE CENTER OF CONDUCTORS LOAD, 3′-0" MAXIMUM. THE DIRECTION OF THE GUY SHALL COUNTERACT THE RESULTANT OF UNBALANCED FORCE APPLIED TO POLE. SEE POLE LAYOUT I.D., OTHERWISE SEE NOTE 2.
2. WHERE SPACE OR CONFLICT PREVENT GUY INSTALLATION, TYPE B POLES MAY BE USED IN PLACE OF TYPE A POLES WITH SPECIFIED EMBEDMENT DEPTH. (SEE POLE TABLES THIS SHEET).
3. OVERHEAD LINE CONSTRUCTION NOT SPECIFICALLY COVERED HERE SHALL CONFORM TO THE PROVISIONS OF GENERAL ORDER No. 95 OF PUBLIC UTILITIES COMMISSION.
4. ALL OVERHEAD CABLES SHALL BE SAGGED WITH 20′ +0.5% OF SPAN LENGTH MINIMUM OVERHEAD CLEARANCE AND SAG OF 5.5% ± 0.5%, UON.
5. USE 1/4" TETHER WIRE WITH 5.5% ± 0.5% SAG WHERE REQUIRED.
6. CONDUCTORS SHALL BE SUSPENDED FROM 3/8" Ø 7 STRAND MESSENGER SPAN-WIRE AS FOLLOWS: CONTINUOUS LASHING WIRE, NO SPARE WIRE CONDUCTORS ALLOWED EXCEPT AT NOTED. BUNDLED VERTICAL DIMENSION SHALL NOT EXCEED 2" FOR SPANS 100′ OR LESS, OR 1" FOR SPANS 200′ OR LESS. MAXIMUM OH SPAN SHALL NOT EXCEED Max SPANS ON "POLE TABLES".
7. INSTALL ATTACHMENTS SHOWN IF INDICATED ON THE PLANS. WHEN SPECIFIC CONNECTION DETAIL IS NOT SHOWN, MOUNT ATTACHMENTS PER MANUFACTURER RECOMMENDED METHODS THAT DO NOT REQUIRE LOSS OF POLE CROSS SECTION.
8. ATTACH LUMINAIRE ARM OR COMBINATION OF ATTACHMENTS AS SPECIFIED AT LOCATIONS WHERE INDICATED ON PLANS.
9. ALL ATTACHMENTS SHALL BE MOUNTED WITH STAINLESS STEEL STRAPS OR OTHER MANUFACTURERS METHODS WITHOUT DRILLING HOLES IN POLE, EXCEPT AS SHOWN ON THESE SES SHEETS. ANY OTHER DRILLING INTO POLE WILL REQUIRE ENGINEER'S APPROVAL.
10. FOR ADDITIONAL DETAILS, SEE SHEETS E-50, E-51, E-52, E-53.

DESIGN NOTES:

DESIGN: AASHTO STANDARD SPECIFICATIONS FOR STRUCTURAL SUPPORTS FOR HIGHWAY SIGNS, LUMINAIRES AND TRAFFIC SIGNALS, FITH EDITION. (LTS-5).

GROUP LOADING COMBINATIONS

I DEAD LOAD
II DEAD LOAD + WIND LOAD
III DEAD LOAD + 0.5 (WIND LOAD) + ICE LOAD
IV FATIGUE: NOT USED

LOADING

WIND LOADINGS: 85 MPH (3-SECOND GUST)
WIND RECURRENCE INTERVAL: 10 YEARS
COMBINED HEIGHT, EXPOSURE, AND ELEVATED TERRAIN FACTOR = 1.05 (EXPOSURE C, STRUCTURE IS LOCATED ON OR OVER THE TOP HALF OF A 30′ MAXIMUM TALL RIDGE, HILL OR ESCARPMENT)

BASIC DESIGN VALUES

TIMBER POLES:
FB = 1850
FV = 110 PSI
FCP = 230 PS1
FC = 950 PSI
E = 1500 X 10^3 PSI

TREATMENT

TO CONFORM WITH SECTION 86 STANDARD SPECIFICATIONS.

SPECIFICATIONS

CALTRANS STANDARD SPECIFICATIONS 2010
ANSI WOOD POLES
ASTM A475, UTILITY GRADE
TERMINATION EFFICIENCY FACTOR 0.80

FOUNDATION DESIGN NOTES:

1. POLE EMBEDMENT DEPTH DESIGN IS BASED ON BROMS′ APPROXIMATE PROCEDURE AS DESCRIBED IN ARTICLE 13.6 OF AASHTO LTS-5.
2. STANDARD EMBEDMENT DEPTH IS CALCULATED BASED ON LEVEL GROUND ASSUMPTION (SLOPE INCLINATION IS FLATTER THAN 4H:1V).
3. EMBEDMENT DEPTH IS CALCULATED BASED ON FOLLOWING: COHESIONLESS SOIL: Ø = 30 DEG, = 120 PCF
4. AN OVERLOAD FACTOR OF 2.0 AND AN UNDERCAPACITY FACTOR OF 0.7 WERE USED FOR SAFETY FACTOR OF 2.86.
5. IF POLE IS LOCATED ON OR NEAR A STEEP SLOPE (UP TO 2H:1V) ADD 2 FEET EXTRA EMBEDMENT.
6. ALLOWABLE VERTICAL BEARING PRESSURE AT THE END BEARING OF POLES IS 3,000 PSF AT 6 FEET OR MORE EMBEDMENT.
7. VERIFY THE SOIL CONDITIONS INDICATED ON FOUNDATION DESIGN NOTES 3 AND 6.

NOTE:
THE CONTRACTOR SHALL VERIFY ALL CONTROLLING FIELD DIMENSIONS BEFORE ORDERING OR FABRICATING ANY MATERIAL.

APPROVED FOR ELECTRICAL WORK ONLY

ELECTRICAL DETAILS

NO SCALE

E-49

REVISED BY | DATE REVISED
LISA LANGENFELD | KRISTIN CALIA
CALCULATED-DESIGNED BY | CHECKED BY
CONSULTANT FUNCTIONAL SUPERVISOR | ROBERT REES
STATE OF CALIFORNIA - DEPARTMENT OF TRANSPORTATION
Caltrans

LAST REVISION 03-15-13 | DATE PLOTTED => 08-MAY-2013 | TIME PLOTTED => 11:14

Dist	COUNTY	ROUTE	POST MILES TOTAL PROJECT	SHEET No.	TOTAL SHEETS
04	Sol	12,80	2.1/2.8, 12.0/13.1	434	597

REGISTERED CIVIL ENGINEER 3-13-13 DATE

5-6-13
PLANS APPROVAL DATE

REGISTERED PROFESSIONAL ENGINEER S. LUCKJIFF No. 63058 Exp.6-30-14 CIVIL STATE OF CALIFORNIA

THE STATE OF CALIFORNIA OR ITS OFFICERS OR AGENTS SHALL NOT BE RESPONSIBLE FOR THE ACCURACY OR COMPLETENESS OF SCANNED COPIES OF THIS PLAN SHEET.

FEHR & PEERS
160 W SANTA CLARA ST., SUITE 675
SAN JOSE, CA 95113

SOLANO TRANSPORTATION AUTHORITY
ONE HARBOR CENTER, SUITE 130
SUISUN CITY, CA 94585

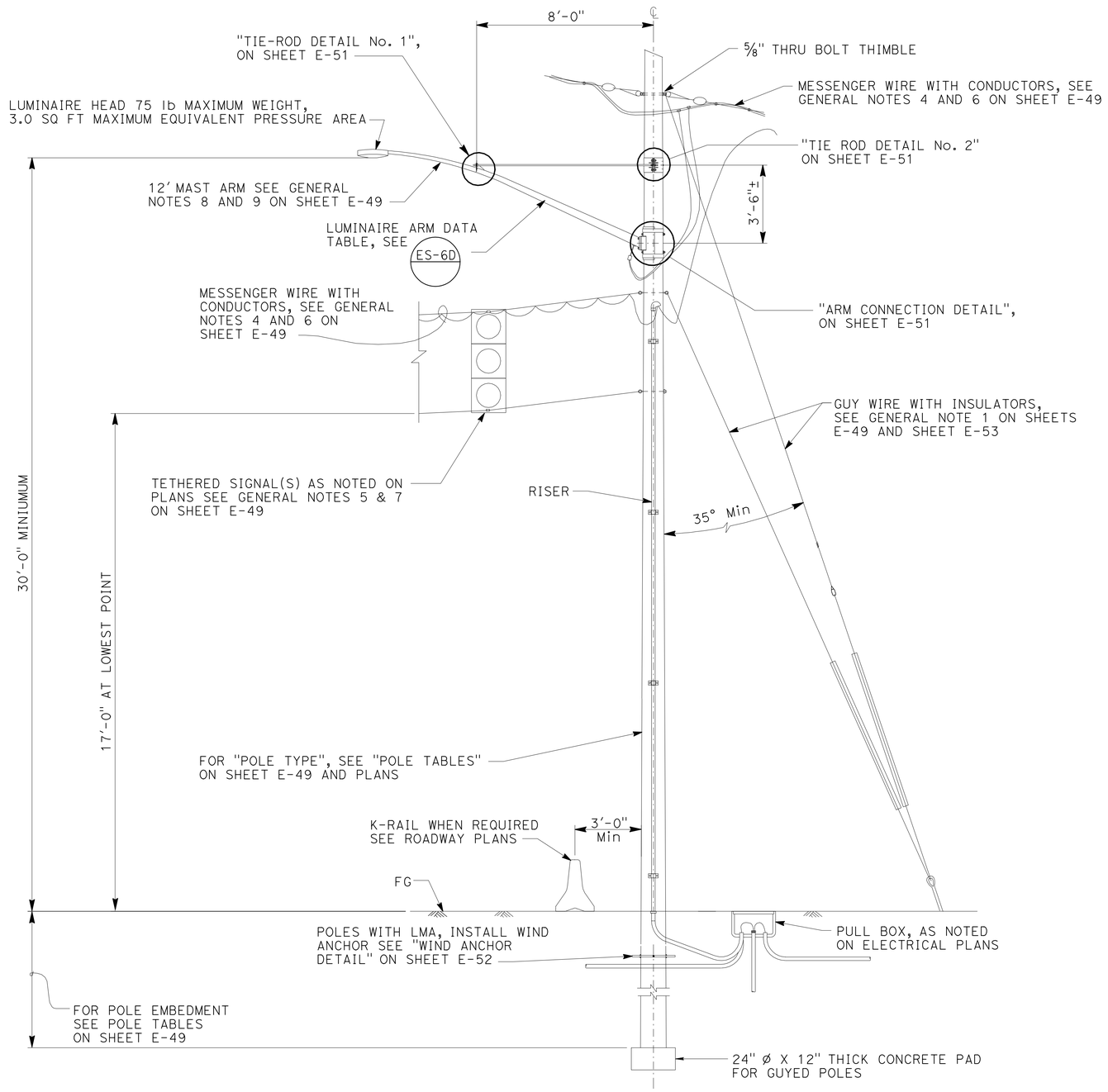

TYPICAL WOOD POLE SUPPORT WITH OPTIONAL ATTATCHMENTS

TEMPORARY

APPROVED FOR ELECTRICAL WORK ONLY

NOTE:
THE CONTRACTOR SHALL VERIFY ALL CONTROLLING FIELD DIMENSIONS BEFORE ORDERING OR FABRICATING ANY MATERIAL.

ELECTRICAL DETAILS

NO SCALE

E-50

STATE OF CALIFORNIA - DEPARTMENT OF TRANSPORTATION
Caltrans

CONSULTANT FUNCTIONAL SUPERVISOR: ROBERT REES
CALCULATED-DESIGNED BY: LISA LANGENFELD
CHECKED BY: KRISTIN CALIA
REVISED BY
DATE REVISED

LAST REVISION 03-13-13
DATE PLOTTED => 08-MAY-2013
TIME PLOTTED => 11:15

Dist	COUNTY	ROUTE	POST MILES TOTAL PROJECT	SHEET No.	TOTAL SHEETS
04	Sol	12,80	2.1/2.8, 12.0/13.1	435	597

REGISTERED CIVIL ENGINEER 3-13-13 DATE

5-6-13
PLANS APPROVAL DATE

REGISTERED PROFESSIONAL ENGINEER S. LUCKJIFF No. 63058 Exp.6-30-14 CIVIL STATE OF CALIFORNIA

THE STATE OF CALIFORNIA OR ITS OFFICERS OR AGENTS SHALL NOT BE RESPONSIBLE FOR THE ACCURACY OR COMPLETENESS OF SCANNED COPIES OF THIS PLAN SHEET.

FEHR & PEERS
160 W SANTA CLARA ST., SUITE 675
SAN JOSE, CA 95113

SOLANO TRANSPORTATION AUTHORITY
ONE HARBOR CENTER, SUITE 130
SUISUN CITY, CA 94585

NOTES:

1. ALL HARDWARE AND STEEL SHALL BE GALVANIZED AFTER FABRICATION.
2. ARM BASE CONNECTION DETAILS SHALL BE IN COMPLIANCE WITH STANDARD PLAN DETAIL SHEET ES-6D WITH NOTED MODIFICATIONS.
3. 2000 LB MIN CAPACITY STRAP SYSTEM SHALL BE USED FOR TOP AND BOTTOM OF PLATE.
4. VERIFY POLE DIMENSIONS AT TIE-ROD ATTACHMENT HEIGHT. FABRICATE 8" FLAT BAR WITH "L" DIMENSION TO MAINTAIN AN OPEN GAP BETWEEN FLANGES IN FINISHED INSTALLATION.

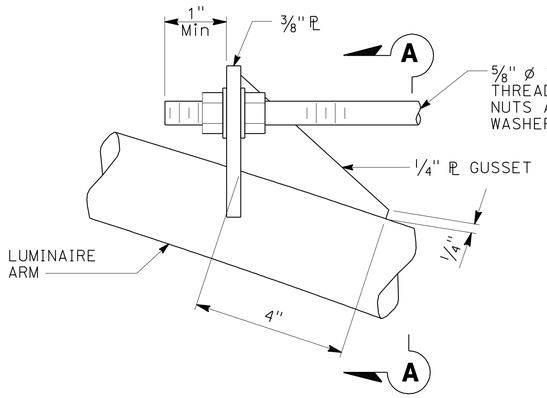

ELEVATION

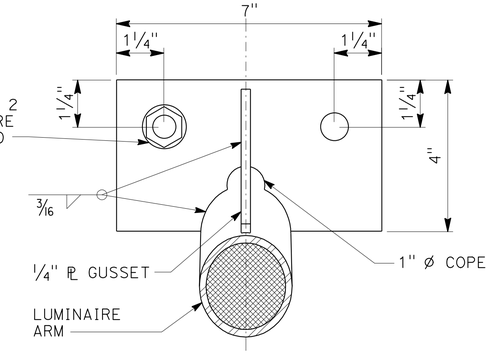

SECTION A-A

TIE-ROD DETAIL No. 1

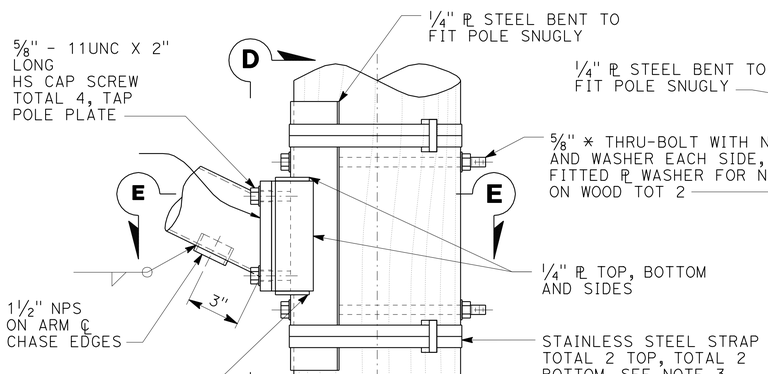

ELEVATION

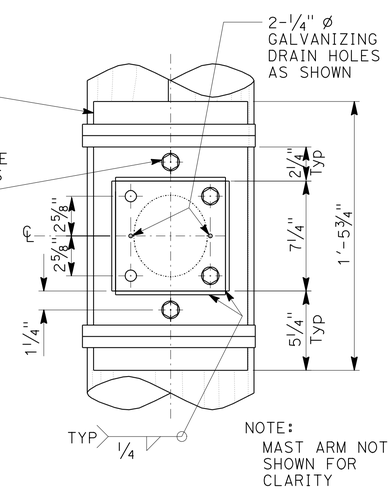

VIEW D-D

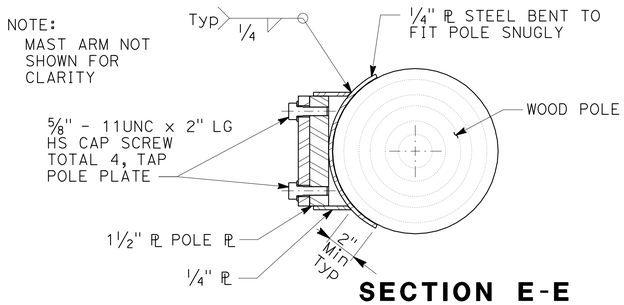

SECTION E-E

ARM CONNECTION DETAILS

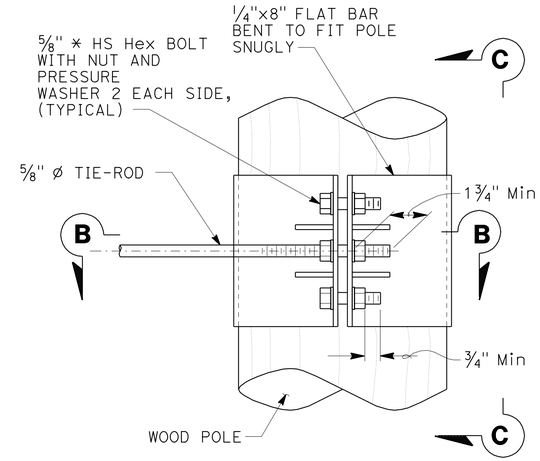

ELEVATION

NOTE: ALL SCREW AND BOLT HEADS SHOWN FOR CLAIRITY.

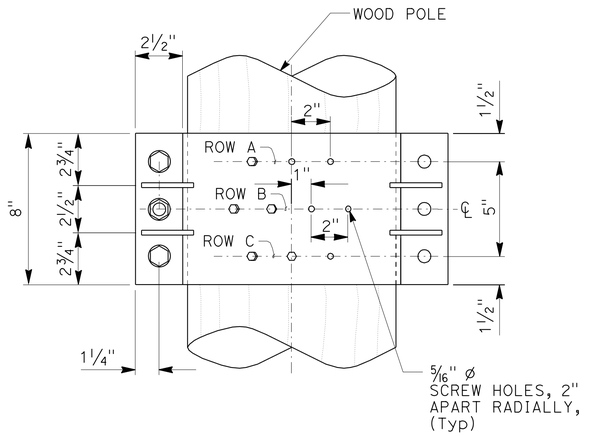

VIEW C-C

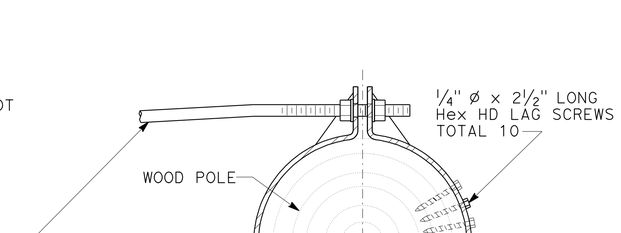

SECTION B-B

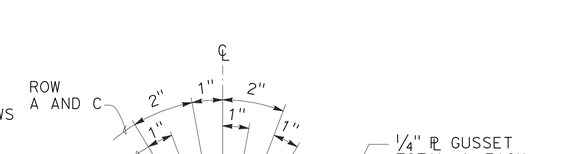

LAG SCREW AND GUSSET PLATE LAYOUT

TIE-ROD DETAILS No. 2

NOTE:
THE CONTRACTOR SHALL VERIFY ALL CONTROLLING FIELD DIMENSIONS BEFORE ORDERING OR FABRICATING ANY MATERIAL.

TEMPORARY

APPROVED FOR ELECTRICAL WORK ONLY

ELECTRICAL DETAILS

NO SCALE

E-51

STATE OF CALIFORNIA - DEPARTMENT OF TRANSPORTATION
Caltrans®

CONSULTANT FUNCTIONAL SUPERVISOR: ROBERT REES
CALCULATED-DESIGNED BY: LISA LANGENFELD
CHECKED BY: KRISTIN CALIA
REVISED BY
DATE REVISED

LAST REVISION 03-13-13
DATE PLOTTED => 08-MAY-2013
TIME PLOTTED => 11:15

Dist	COUNTY	ROUTE	POST MILES TOTAL PROJECT	SHEET No.	TOTAL SHEETS
04	Sol	12,80	2.1/2.8, 12.0/13.1	436	597

REGISTERED CIVIL ENGINEER 3-13-13 DATE

5-6-13
PLANS APPROVAL DATE

REGISTERED PROFESSIONAL ENGINEER S. LUCKJIFF No. 63058 Exp. 6-30-14 CIVIL STATE OF CALIFORNIA

THE STATE OF CALIFORNIA OR ITS OFFICERS OR AGENTS SHALL NOT BE RESPONSIBLE FOR THE ACCURACY OR COMPLETENESS OF SCANNED COPIES OF THIS PLAN SHEET.

FEHR & PEERS
160 W SANTA CLARA ST., SUITE 675
SAN JOSE, CA 95113

SOLANO TRANSPORTATION AUTHORITY
ONE HARBOR CENTER, SUITE 130
SUISUN CITY, CA 94585

NOTES:

1. VERIFY POLE DIMENSIONS AT TERMINAL COMPARTMENT FOR FABRICATION OF BACKPLATE AND CURVED WASHER.
2. GALVANIZE BACKPLATE AFTER FABRICATION.
3. ¾" X 0.044" MINIMUM, ROUNDED EDGE STAINLESS STEEL STRAPS, DOUBLE WRAPPED WITH 2" LONG BEND UNDER STAINLESS STEEL STRAP BUCKLE.
4. FOR DETAILS NOT SHOWN SEE STANDARD PLAN ES-4D

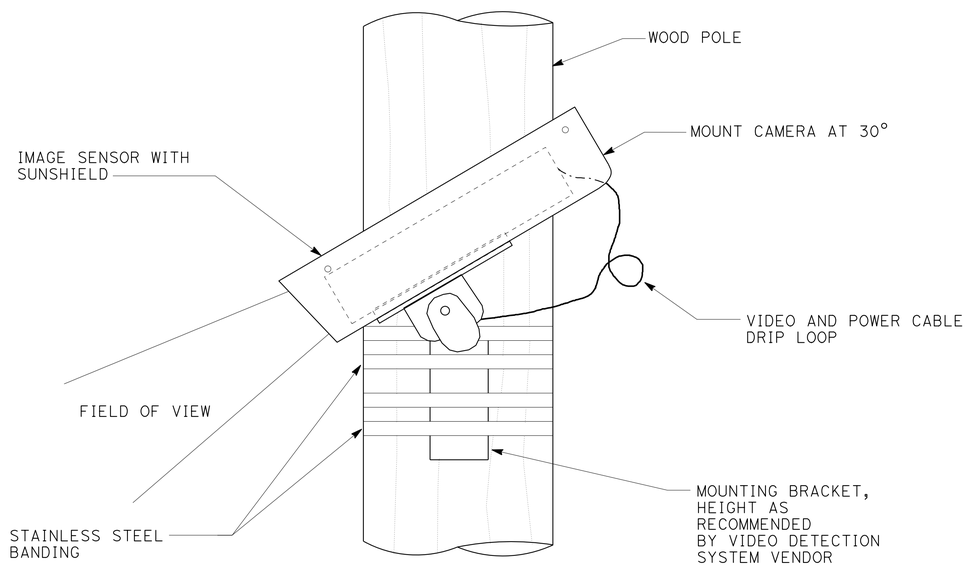

VIDEO DETECTION CAMERA ASSEMBLY MOUNTING DETAIL

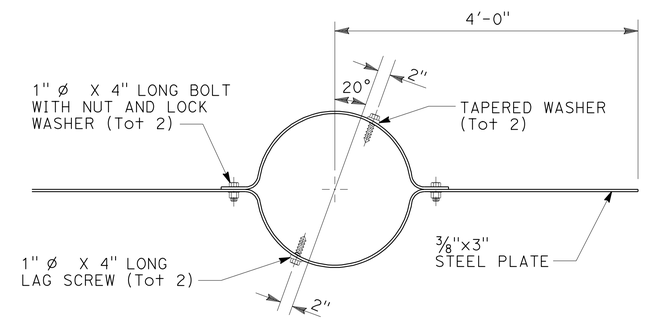

WIND ANCHOR

INSTALL WIND ANCHOR PERPENDICULAR TO MAST ARMS AND 2'-0" Min BELOW GRADE

NOTE:
THE CONTRACTOR SHALL VERIFY ALL CONTROLLING FIELD DIMENSIONS BEFORE ORDERING OR FABRICATING ANY MATERIAL.

TEMPORARY

APPROVED FOR ELECTRICAL WORK ONLY

ELECTRICAL DETAILS

NO SCALE **E-52**

STATE OF CALIFORNIA - DEPARTMENT OF TRANSPORTATION
Caltrans

CONSULTANT FUNCTIONAL SUPERVISOR: ROBERT REES
CALCULATED-DESIGNED BY: LISA LANGENFELD
CHECKED BY: KRISTIN CALIA
REVISED BY
DATE REVISED

LAST REVISION 03-13-13
DATE PLOTTED => 08-MAY-2013
TIME PLOTTED => 11:15

Dist	COUNTY	ROUTE	POST MILES TOTAL PROJECT	SHEET No.	TOTAL SHEETS
04	Sol	12,80	2.1/2.8, 12.0/13.1	437	597

REGISTERED CIVIL ENGINEER 3-13-13 DATE

5-6-13
PLANS APPROVAL DATE

REGISTERED PROFESSIONAL ENGINEER S. LUCKJIFF No. 63058 Exp. 6-30-14 CIVIL STATE OF CALIFORNIA

THE STATE OF CALIFORNIA OR ITS OFFICERS OR AGENTS SHALL NOT BE RESPONSIBLE FOR THE ACCURACY OR COMPLETENESS OF SCANNED COPIES OF THIS PLAN SHEET.

FEHR & PEERS
160 W SANTA CLARA ST., SUITE 675
SAN JOSE, CA 95113

SOLANO TRANSPORTATION AUTHORITY
ONE HARBOR CENTER, SUITE 130
SUISUN CITY, CA 94585

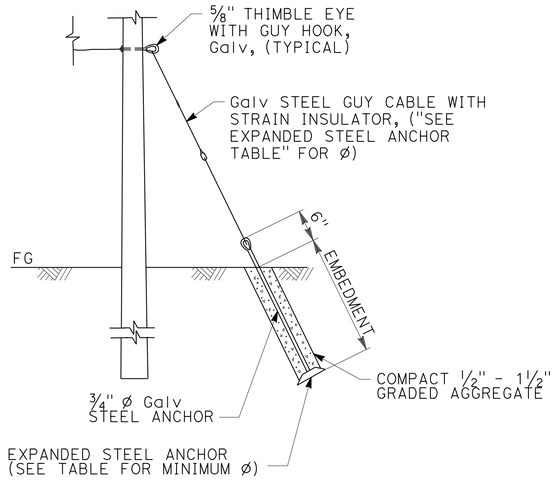

EXPANSION ANCHOR DETAIL

EXPANDED STEEL ANCHOR TABLE			
ANCHOR CALL OUT	ANCHOR DIAMETER	EMBEDMENT (MINIMUM)	GUY WIRE DIAMETER
A	10"	8'-0"	3/8"
B	14"	9'-0"	7/16"

LEGEND:
GUY WIRE
SPAN WIRE

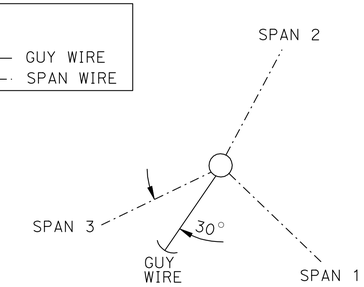

PLAN

POLE (Y) GUY LAYOUT

NOTE:
FOR GUY CABLE ø SEE "EXPANDED STEEL ANCHOR TABLE"

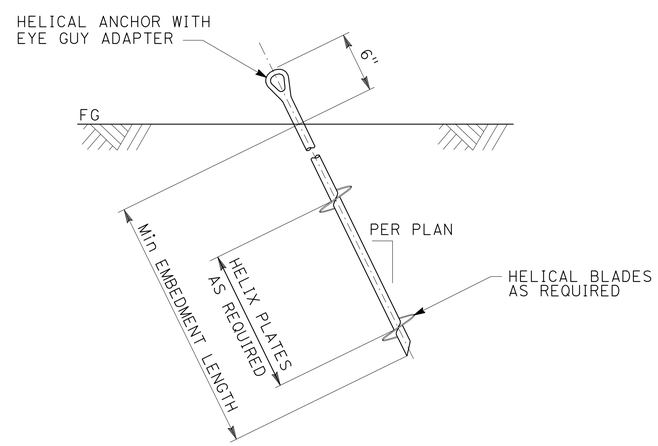

ALTERNATIVE HELICAL ANCHOR INSTALLATION DETAIL

(SEE HELICAL ANCHOR SPECIFICATIONS TABLE)

HELICAL ANCHOR SPECIFICATIONS TABLE					
ANCHOR CALL OUT	TYPE	HELIX PLATE DIAMETER*	ALLOWABLE Min TENSION CAP., "Qa"	EMBEDMENT (MINIMUM)	INSTALLATION TORQUE (Min)**,"T"
A	TENSION	10"	2700 lb	8'-0"	810 ft-lb
B	TENSION	14"	5500 lb	9'-0"	1670 ft-lb

SPECIFICATION NOTES:

1. DURING INSTALLATION THE TORQUE WILL BE CONTINUOSLY MONITORED AND RECORDED. IF A DROP IN TORQUE IS RECORDED, THE ANCHOR MUST THEN CONTINUE TO BE INSERTED PAST THE SOFT SOIL LAYER UNTIL MINIMUM INSTALLATION TORQUE IS ACHIEVED.
2. ANCHORS AND HARDWARE TO BE INSTALLED PER THE MANUFACTURERS SPECIFICATIONS.

* NUMBER OF HELICAL PLATES IS NOT SPECIFIED; CONTRACTORS CHOICE.

** ADJUST ACCORDINGLY IF REQUIRED, SEE NOTE 3.

NOTES:

1. VERIFY SOIL CONDITION, SLOPE, AND ADJUST ANCHORING TO SATISFY BASIC DESIGN REQUIREMENTS PER NOTE 7 ON E-49 SHEET.
2. USE OF ALTERNATIVE GUY WIRE INSTALLATION DETAIL REQUIRES THAT THE SOIL BEARING CAPACITY BE VERIFIED BY THE INSTALLATION CONTRACTOR.
3. DETERMINE THE MOST APPROPRIATE VALUE FOR K_t BASED ON SOIL CONDITIONS AND SHALL ADJUST THE Min INSTALLATION TORQUE BASED ON THE REVISED K_t . A K_t* VALUE OF 10 WAS ASSUMED FOR THE Min INSTALLATION TORQUE SHOWN IN THE TABLE.
4. THE HELICAL INSTALLATION TORQUE FORMULA IS $Q_u = K_t * T$ WHERE,

   $Q_u = Q_a * FS$ = ULTIMATE HELICAL ANCHOR CAPACITY (lb)
   FS = FACTOR OF SAFETY = 3.0
   Q_a = ALLOWABLE HELICAL ANCHOR CAPACITY (lb)
   K_t = EMPIRICAL TORQUE FACTOR (ft^{-1})
   T = Min INSTALLATION TORQUE (ft-lb)

   REQUESTS MADE BY HELICAL ANCHOR INSTALLATION CONTRACTOR TO REDUCE THE MINIMUM EMBEDMENT LENGTH HELIX ℄ DIAMETER OR BOTH REQUIRE ENGINEER'S APPROVAL.
5. LOCATE AND MARK ALL OF THE SUBSTRUCTURES AND UTILITIES. INSTALLATION OF ANCHORS UNDERNEATH UTILITIES OR SUBSURFACE STRUCTURES IS PROHIBITED. HORIZONTAL CLEARANCES OF ANCHORS SHALL BE DETERMINED BY ENGINEER DURING CONSTRUCTION.

NOTE:
THE CONTRACTOR SHALL VERIFY ALL CONTROLLING FIELD DIMENSIONS BEFORE ORDERING OR FABRICATING ANY MATERIAL.

TEMPORARY

APPROVED FOR ELECTRICAL WORK ONLY

ELECTRICAL DETAILS

NO SCALE

E-53

STATE OF CALIFORNIA - DEPARTMENT OF TRANSPORTATION
Caltrans
CONSULTANT FUNCTIONAL SUPERVISOR: ROBERT REES
CALCULATED-DESIGNED BY: LISA LANGENFELD
CHECKED BY: KRISTIN CALIA
REVISED BY
DATE REVISED

LAST REVISION 03-13-13
DATE PLOTTED => 08-MAY-2013
TIME PLOTTED => 11:15

Dist	COUNTY	ROUTE	POST MILES TOTAL PROJECT	SHEET No.	TOTAL SHEETS
04	Sol	12,80	2.1/2.8, 12.0/13.1	438	597

REGISTERED CIVIL ENGINEER 3-13-13 DATE

5-6-13
PLANS APPROVAL DATE

REGISTERED PROFESSIONAL ENGINEER S. LUCKJIFF No. 63058 Exp. 6-30-14 CIVIL STATE OF CALIFORNIA

THE STATE OF CALIFORNIA OR ITS OFFICERS OR AGENTS SHALL NOT BE RESPONSIBLE FOR THE ACCURACY OR COMPLETENESS OF SCANNED COPIES OF THIS PLAN SHEET.

FEHR & PEERS
160 W SANTA CLARA ST., SUITE 675
SAN JOSE, CA 95113

SOLANO TRANSPORTATION AUTHORITY
ONE HARBOR CENTER, SUITE 130
SUISUN CITY, CA 94585

NOTE:

THE QUANTITIES ON THIS SHEET ARE NOT A SEPARATE PAY ITEM AND ARE FOR INFORMATION ONLY.

SIGNAL AND LIGHTING (TEMPORARY) (CITY)

LOCATION	WOOD POLE	VIDEO DETECTION	MESSENGER WIRE	CONDUIT 1½"	CONDUIT 2"	CONDUCTOR
	EA		FT			
E-39	2	1	120	20	-	1000
E-40	2	1	140	-	20	12000
E-41	-	2	-	-	-	3000
E-42	-	2	-	-	-	-
E-43	-	2	-	-	-	-

LIGHTING (CITY STREET)

SHEET No.	PB No. 5	PB No. 9	SERVICE ENCLOSURE	CITY TYPE 15 Std	80 W LUMINAIRE	CITY DECORATIVE Std	90 W LUMINAIRE	CONDUIT 2"	CONDUCTOR
	EA							FT	
E-29	5	1	-	4	4	-	-	900	5500
E-30	14	-	1	7	7	5	5	1800	8400

LIGHTING (TEMPORARY)

LOCATION	WOOD POLE	LUMINAIRE	MESSENGER WIRE	CONDUIT 2"	CONDUCTOR
	EA		FT		
E-44	3	2	250	30	500
E-45	4	-	550	20	2000
E-46	2	2	300	-	800
E-47	3	1	450	-	900
E-48	5	-	600	20	1200

LIGHTING AND SIGN ILLUMINATION

LOCATION	PB No. 5	PB No. 6	PB No. 9	SERVICE ENCLOSURE	SIGN CONTROL	PEU	LUMINAIRE	INDUCTION LIGHTING	POLE STANDARD	POLE FOUNDATIONS Dia x DEPTH	CONDUIT 2"	CONDUIT 3"	CONDUCTOR
	EA								TYPE (QUANTITY)		FT		
1	18	2	-	1	-	1	6	-	30 (2) 31 (4) 1-B (1)	CIDH 2.5' x 5' (2) CIDH 2.5' x 5' (4) 1-B 2' x 5' (1)	3000	700	13000
2	15	-	2	-	-	-	7	-	30 (3) 31 (2) 32 (2)	CIDH 2.5' x 5' (3) CIDH 2.5' x 5' (2) CIDH 2.5' x 5' (2)	2000	600	9000
3	25	2	2	1	1	1	4	12	31 (4)	CIDH 2.5' x 5' (4)	3800	500	15000
4	7	1	1	1	-	1	-	-	-	-	1300	300	8000
5	-	-	-	-	-	-	-	-	-	-	-	-	-

TRAFFIC MONITORING STATION

LOCATION	PB No. 5	PB No. 6	CONTROLLER CABINET FOUNDATION	GPRS MODEM	EMS SIGN	CCTV	DETECTOR LOOPS	POLE STANDARD	POLE FOUNDATIONS Dia x DEPTH	DLC	CONDUIT 2"	CONDUIT 3"	CONDUCTOR	TELEPHONE CABLE
	EA							TYPE (QUANTITY)		FT				
1	3	1	1	1	-	-	4	-	-	300	700	50	1500	-
2	35	4	2	2	2	1	37	1-B (2) CCTV 40 (1)	1-B 2' x 5' (2) CIDH 2.5' x 8.5' (1)	14500	3500	4000	24000	600
3	9	-	-	-	1	-	17	-	-	1000	1600	100	3000	-
4	2	1	1	-	-	-	-	-	-	5000	1100	50	1600	250

SIGNAL AND LIGHTING

LOCATION	PB No. 5	PB No. 6	PB No. 9	SERVICE ENCLOSURE	CONTROLLER CABINET FOUNDATION	LUMINAIRE	DETECTOR LOOPS	EVD	PPB	PED SIGNAL MTG	SIGNAL STANDARD	POLE FOUNDATIONS DIA x DEPTH	CONDUIT 2"	CONDUIT 3"	CONDUIT 4"	DLC	CONDUCTOR
	EA										TYPE (QUANTITY)		FT				
1	13	4	-	1	1	4	32	3	2	2	19-3-100 (2) 19-4-100 (1) 15TS (1) 1-B (2	CIDH 3' X 11' (2) CIDH 3' X 11' (1) CIDH 2.5' X 7.5' (1) 1-B 2' X 5' (2)	3800	1100	-	2800	5000
2	8	3	8	1	1	3	28	2	2	2	18-3-100 (1) 24A-3-100 (1) 15TS (2) 1-B, 7' (1)	CIDH 3' X 9.5' (1) CIDH 3' X 11' (1) CIDH 2.5' X 7.5' (2) 1-B 2' X 5' (1)	1500	400	-	4500	7200
CITY	8	-	-	-	-	-	23	-	1	1	29-5-100 (1)	CIDH 3.5' X 12' (1)	600	100	100	7000	17000

ELECTRICAL QUANTITIES

E-54

APPROVED FOR ELECTRICAL WORK ONLY

REVISED BY | DATE REVISED
LISA LANGENFELD | KRISTIN CALIA
CALCULATED-DESIGNED BY | CHECKED BY
CONSULTANT FUNCTIONAL SUPERVISOR
ROBERT REES

STATE OF CALIFORNIA - DEPARTMENT OF TRANSPORTATION
Caltrans

LAST REVISION 04-30-13 | DATE PLOTTED => 09-MAY-2013 | TIME PLOTTED => 11:45

Dist	COUNTY	ROUTE	POST MILES TOTAL PROJECT	SHEET No.	TOTAL SHEETS
04	Sol	12,80	2.1/2.8, 12.0/13.1	439	597

REGISTERED CIVIL ENGINEER

April 20, 2012
PLANS APPROVAL DATE

REGISTERED PROFESSIONAL ENGINEER
Roberta L. McLaughlin
No. C40375
Exp. 3-31-13
CIVIL
STATE OF CALIFORNIA

THE STATE OF CALIFORNIA OR ITS OFFICERS OR AGENTS SHALL NOT BE RESPONSIBLE FOR THE ACCURACY OR COMPLETENESS OF SCANNED COPIES OF THIS PLAN SHEET.

TO ACCOMPANY PLANS DATED 5-6-13

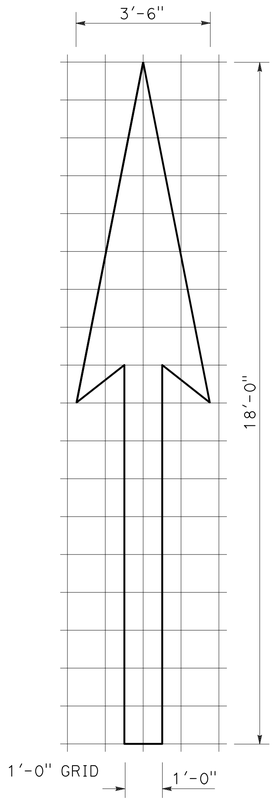

A=25 ft^2

TYPE I 18'-0" ARROW

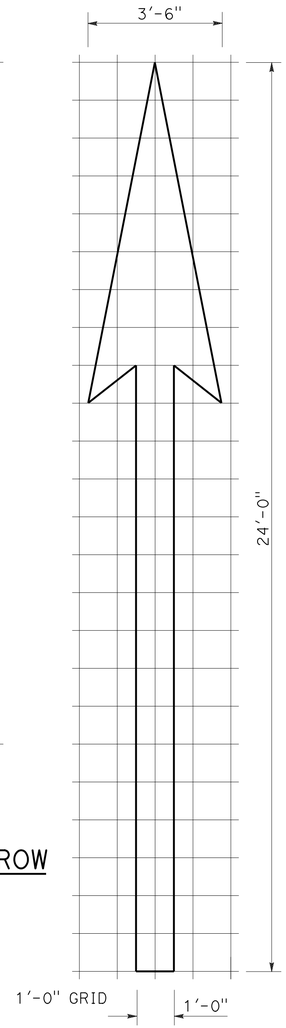

A=31 ft^2

TYPE I 24'-0" ARROW

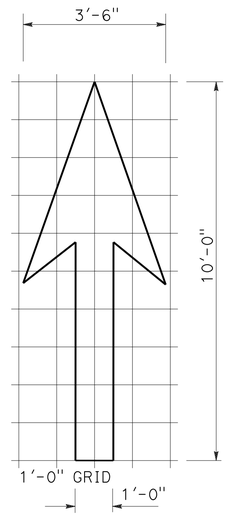

A=14 ft^2

TYPE I 10'-0" ARROW

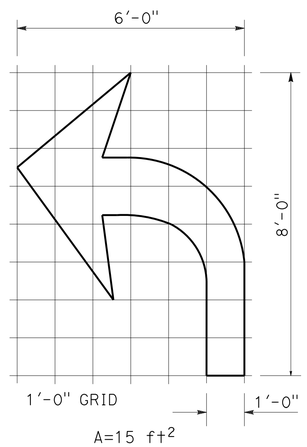

A=15 ft^2

TYPE IV (L) ARROW

(For Type IV (R) arrow, use mirror image)

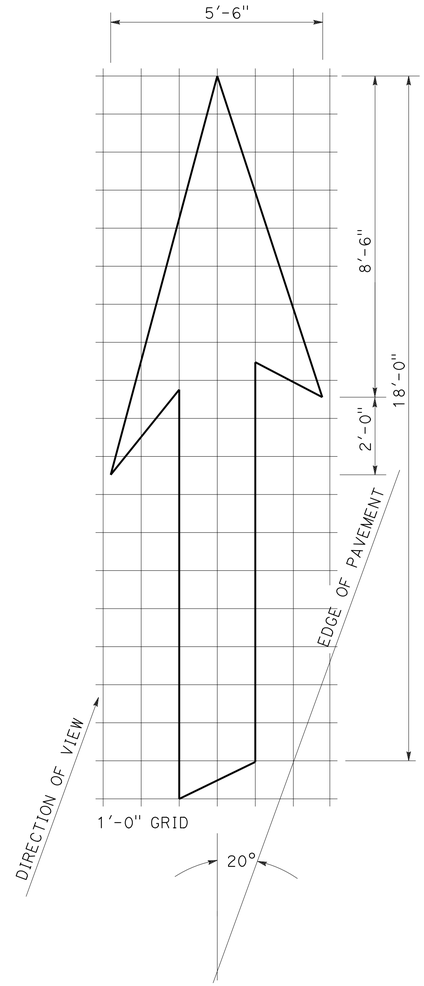

A=42 ft^2

TYPE VI ARROW

Right lane drop arrow
(For left lane, use mirror image)

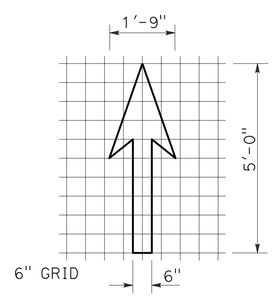

A=3.5 ft^2

BIKE LANE ARROW

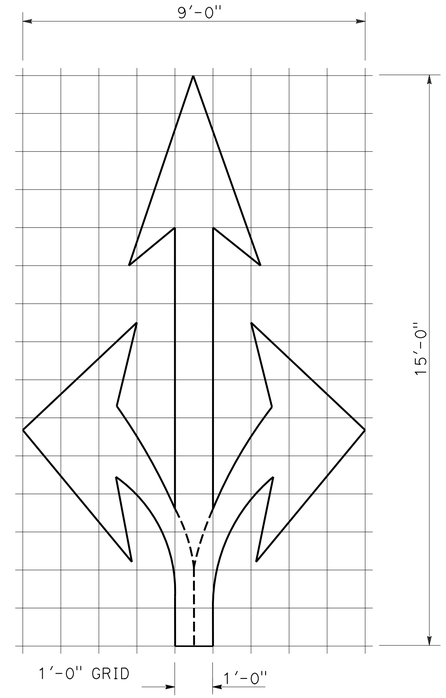

A=36 ft^2

TYPE VIII ARROW

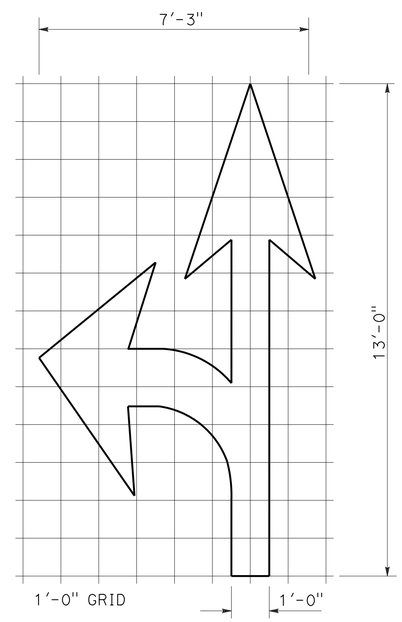

A=27 ft^2

TYPE VII (L) ARROW

(For Type VII (R) arrow, use mirror image)

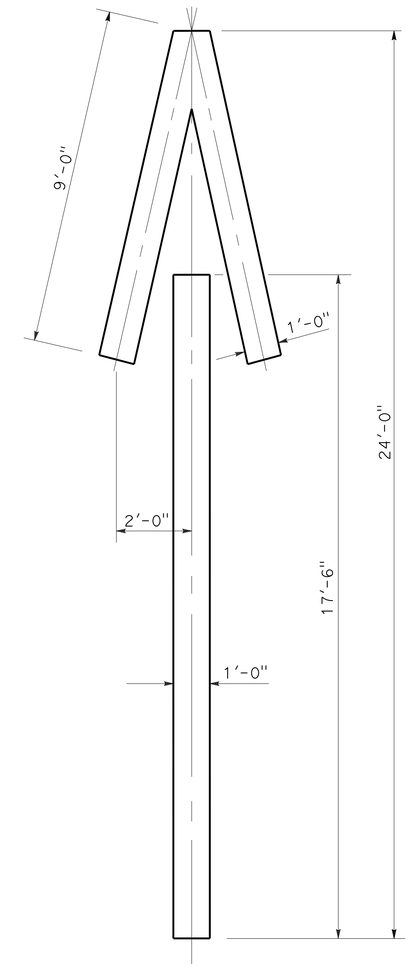

A=33 ft^2

TYPE V ARROW

NOTE:
Minor variations in dimensions may be accepted by the Engineer.

STATE OF CALIFORNIA
DEPARTMENT OF TRANSPORTATION

PAVEMENT MARKINGS ARROWS

NO SCALE

RSP A24A DATED APRIL 20, 2012 SUPERSEDES STANDARD PLAN A24A DATED MAY 20, 2011 - PAGE 13 OF THE STANDARD PLANS BOOK DATED 2010.

REVISED STANDARD PLAN RSP A24A

2010 REVISED STANDARD PLAN RSP A24A

3-14-12

Dist	COUNTY	ROUTE	POST MILES TOTAL PROJECT	SHEET No.	TOTAL SHEETS
04	Sol	12,80	2.1/2.8, 12.0/13.1	440	597

REGISTERED CIVIL ENGINEER

October 19, 2012
PLANS APPROVAL DATE

REGISTERED PROFESSIONAL ENGINEER Roberta L. McLaughlin No. C40375 Exp. 3-31-13 CIVIL STATE OF CALIFORNIA

THE STATE OF CALIFORNIA OR ITS OFFICERS OR AGENTS SHALL NOT BE RESPONSIBLE FOR THE ACCURACY OR COMPLETENESS OF SCANNED COPIES OF THIS PLAN SHEET.

NOTE: TO ACCOMPANY PLANS DATED 5-6-13

Minor variations in dimensions may be accepted by the Engineer.

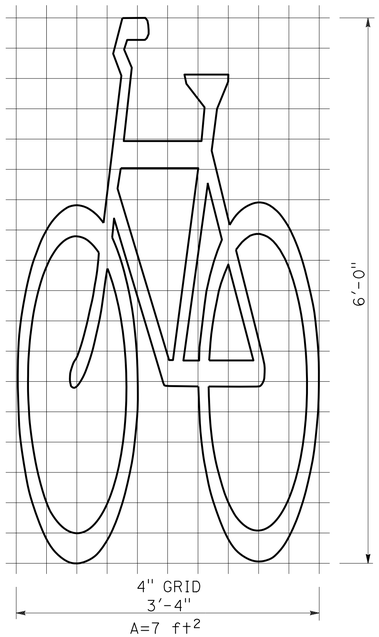

BIKE LANE SYMBOL WITHOUT PERSON

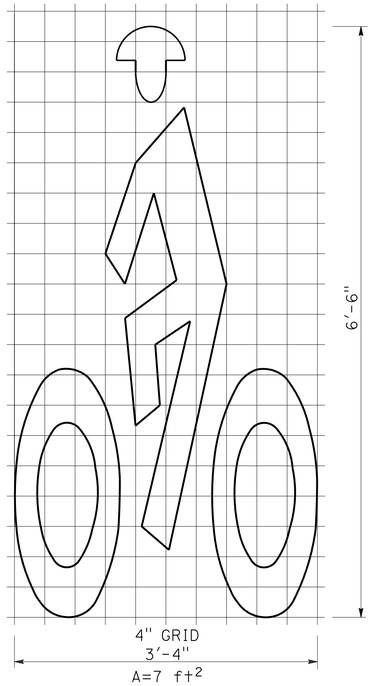

BIKE LANE SYMBOL WITH PERSON

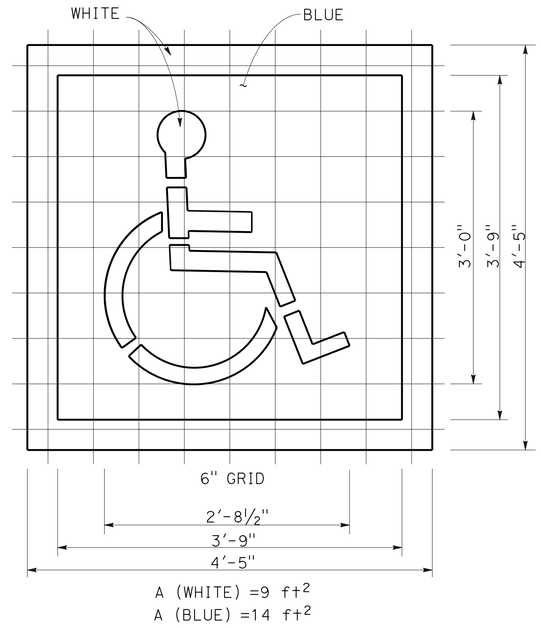

INTERNATIONAL SYMBOL OF ACCESSIBILITY (ISA) MARKING

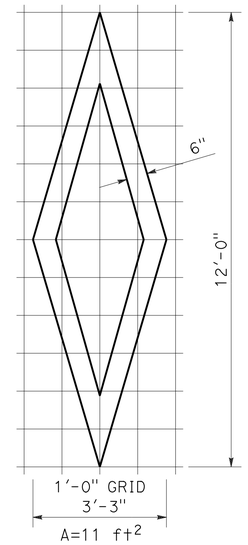

DIAMOND SYMBOL

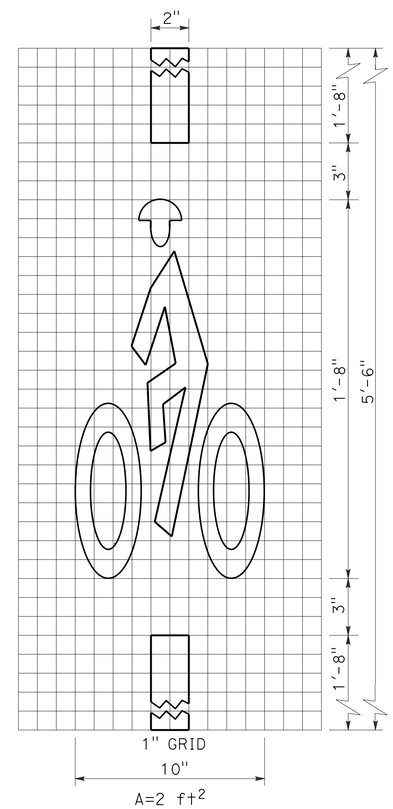

BICYCLE LOOP DETECTOR SYMBOL

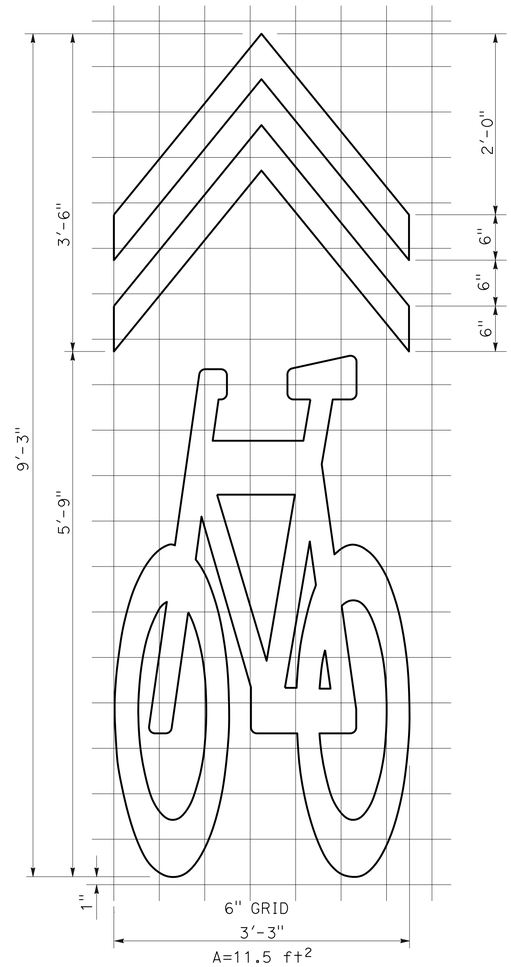

SHARED ROADWAY BICYCLE MARKING

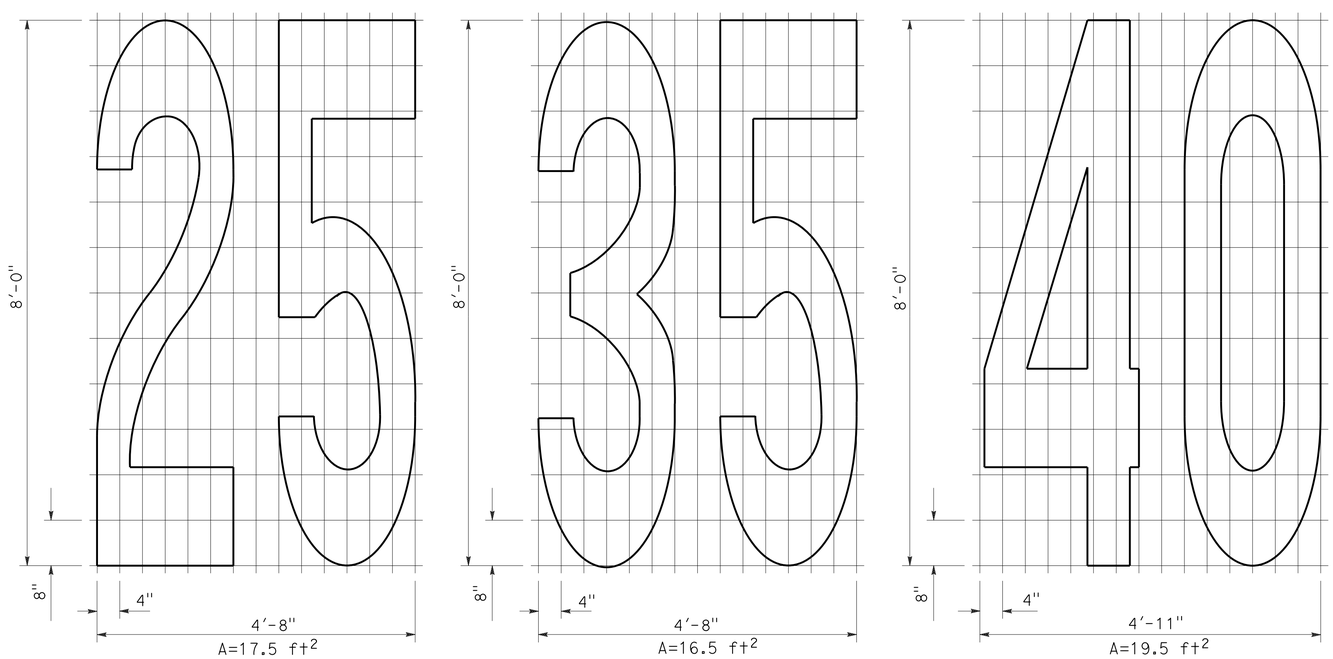

NUMERALS

STATE OF CALIFORNIA
DEPARTMENT OF TRANSPORTATION

PAVEMENT MARKINGS SYMBOLS AND NUMERALS

NO SCALE

RSP A24C DATED OCTOBER 19, 2012 SUPERSEDES STANDARD PLAN A24C DATED MAY 20, 2011 - PAGE 15 OF THE STANDARD PLANS BOOK DATED 2010.

REVISED STANDARD PLAN RSP A24C

2010 REVISED STANDARD PLAN RSP A24C

6-28-12

Dist	COUNTY	ROUTE	POST MILES TOTAL PROJECT	SHEET No.	TOTAL SHEETS
04	Sol	12,80	2.1/2.8, 12.0/13.1	441	597

REGISTERED CIVIL ENGINEER

July 20, 2012
PLANS APPROVAL DATE

REGISTERED PROFESSIONAL ENGINEER
Roberta L. McLaughlin
No. C40375
Exp. 3-31-13
CIVIL
STATE OF CALIFORNIA

THE STATE OF CALIFORNIA OR ITS OFFICERS OR AGENTS SHALL NOT BE RESPONSIBLE FOR THE ACCURACY OR COMPLETENESS OF SCANNED COPIES OF THIS PLAN SHEET.

TO ACCOMPANY PLANS DATED 5-6-13

2010 REVISED STANDARD PLAN RSP A24E

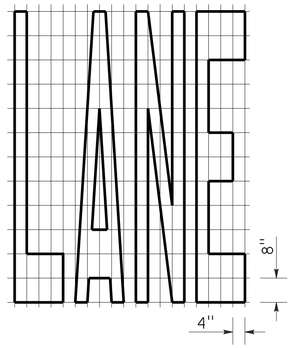

A=24 ft^2

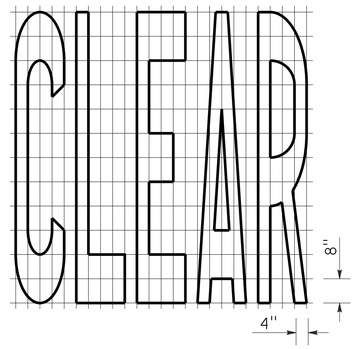

A=27 ft^2

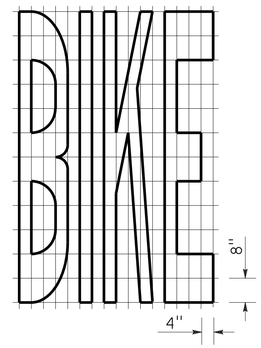

A=21 ft^2

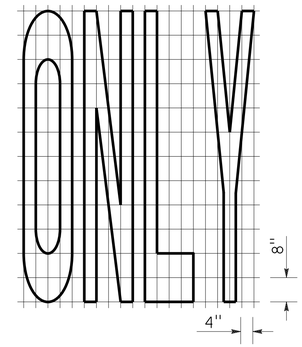

A=22 ft^2

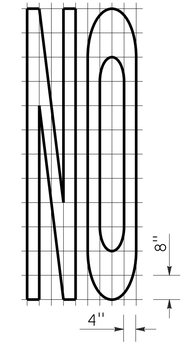

A=14 ft^2

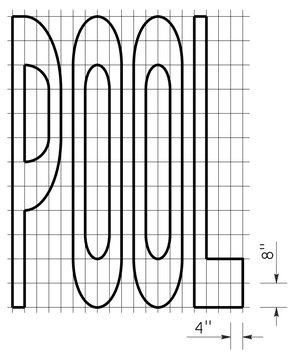

A=23 ft^2

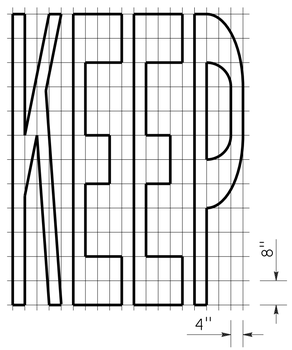

A=24 ft^2

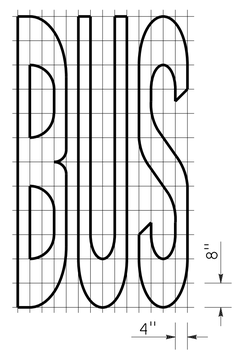

A=20 ft^2

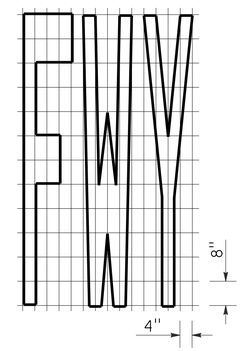

A=16 ft^2

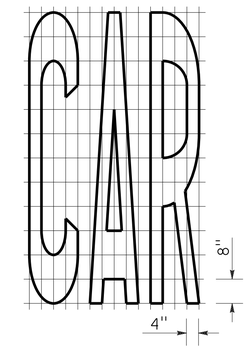

A=17 ft^2

WORD MARKINGS			
ITEM	ft^2	ITEM	ft^2
LANE	24	NO	14
POOL	23	BIKE	21
CAR	17	BUS	20
CLEAR	27	ONLY	22
KEEP	24	FWY	16

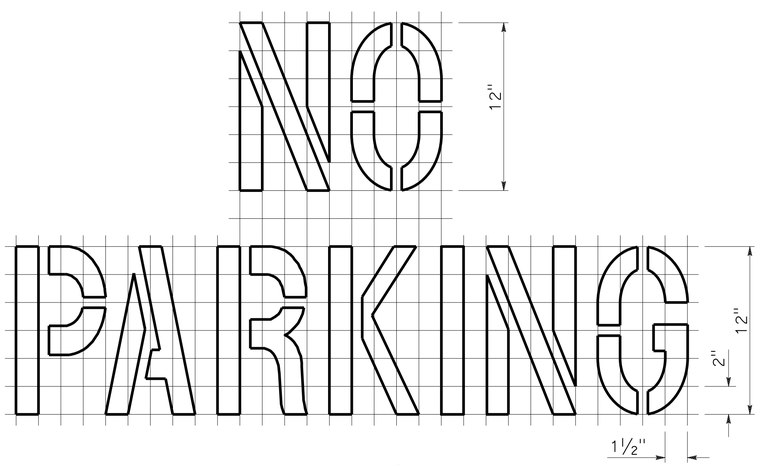

A=2 ft^2

See Notes 6 and 7

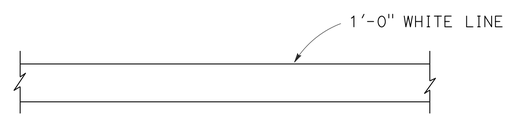

LIMIT LINE (STOP LINE)

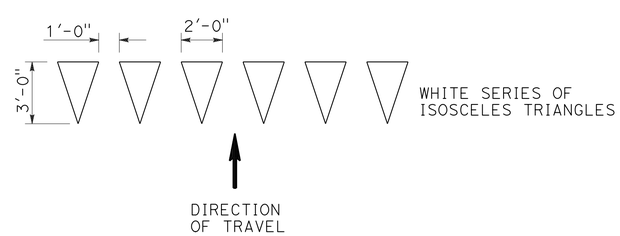

YIELD LINE

NOTES:

1. If a message consists of more than one word, it should read "UP", i.e., the first word should be nearest the driver.
2. The space between words should be at least four times the height of the characters for low speed roads, but not more than ten times the height of the characters. The space may be reduced appropriately where there is limited space because of local conditions.
3. Minor variations in dimensions may be accepted by the Engineer.
4. Portions of a letter, number or symbol may be separated by connecting segments not to exceed 2" in width.
5. The words "NO PARKING" pavement marking is to be used for parking facilities. For typical locations of markings, see Standard Plans A90A and A90B.
6. The words "NO PARKING", shall be painted in white letters no less than 1'-0" high on a contrasting background and located so that it is visible to traffic enforcement officials.

STATE OF CALIFORNIA
DEPARTMENT OF TRANSPORTATION

PAVEMENT MARKINGS WORDS, LIMIT AND YIELD LINES

NO SCALE

RSP A24E DATED JULY 20, 2012 SUPERSEDES STANDARD PLAN A24E
DATED MAY 20, 2011 - PAGE 17 OF THE STANDARD PLANS BOOK DATED 2010.

REVISED STANDARD PLAN RSP A24E

6-12-12

Dist	COUNTY	ROUTE	POST MILES TOTAL PROJECT	SHEET No.	TOTAL SHEETS
04	Sol	12,80	2.1/2.8, 12.0/13.1	442	597

REGISTERED CIVIL ENGINEER

July 20, 2012
PLANS APPROVAL DATE

REGISTERED PROFESSIONAL ENGINEER
Roberta L. McLaughlin
No. C40375
Exp. 3-31-13
CIVIL
STATE OF CALIFORNIA

THE STATE OF CALIFORNIA OR ITS OFFICERS OR AGENTS SHALL NOT BE RESPONSIBLE FOR THE ACCURACY OR COMPLETENESS OF SCANNED COPIES OF THIS PLAN SHEET.

TO ACCOMPANY PLANS DATED 5-6-13

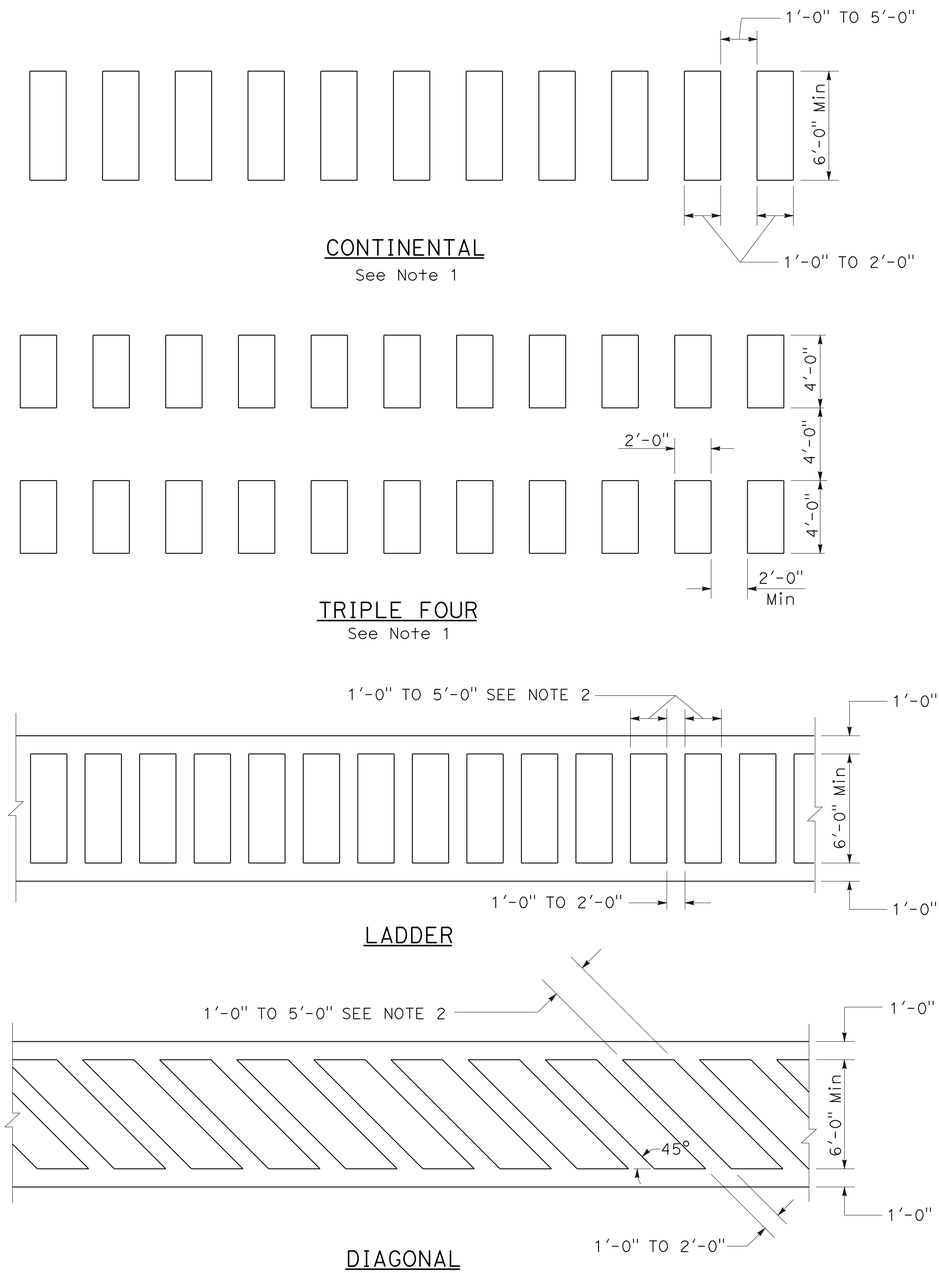

HIGHER VISIBILITY CROSSWALKS

NOTES:

1. Spaces between markings should be placed in wheel tracks of each lane.
2. Spacings not to exceed 2.5 times width of longitudinal line.
3. All crosswalk markings must be white except for those near schools must be yellow.

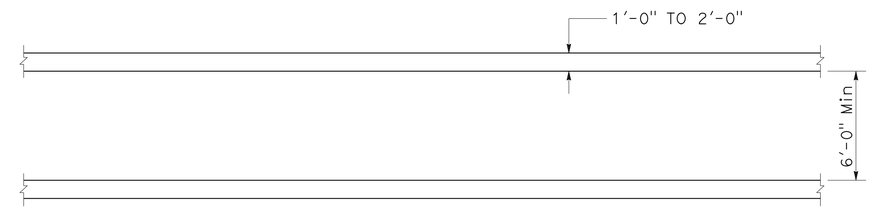

BASIC

STATE OF CALIFORNIA
DEPARTMENT OF TRANSPORTATION

PAVEMENT MARKINGS CROSSWALKS

NO SCALE

RSP A24F DATED JULY 20, 2012 SUPPLEMENTS THE STANDARD PLANS BOOK DATED 2010.

REVISED STANDARD PLAN RSP A24F

2010 REVISED STANDARD PLAN RSP A24F

6-28-12

Dist	COUNTY	ROUTE	POST MILES TOTAL PROJECT	SHEET No.	TOTAL SHEETS
04	Sol	12,80	2.1/2.8, 12.0/13.1	443	597

Randell D. Hiatt
REGISTERED CIVIL ENGINEER

October 19, 2012
PLANS APPROVAL DATE

REGISTERED PROFESSIONAL ENGINEER
Randell D. Hiatt
No. C50200
Exp. 6-30-13
CIVIL
STATE OF CALIFORNIA

THE STATE OF CALIFORNIA OR ITS OFFICERS OR AGENTS SHALL NOT BE RESPONSIBLE FOR THE ACCURACY OR COMPLETENESS OF SCANNED COPIES OF THIS PLAN SHEET.

TO ACCOMPANY PLANS DATED 5-6-13

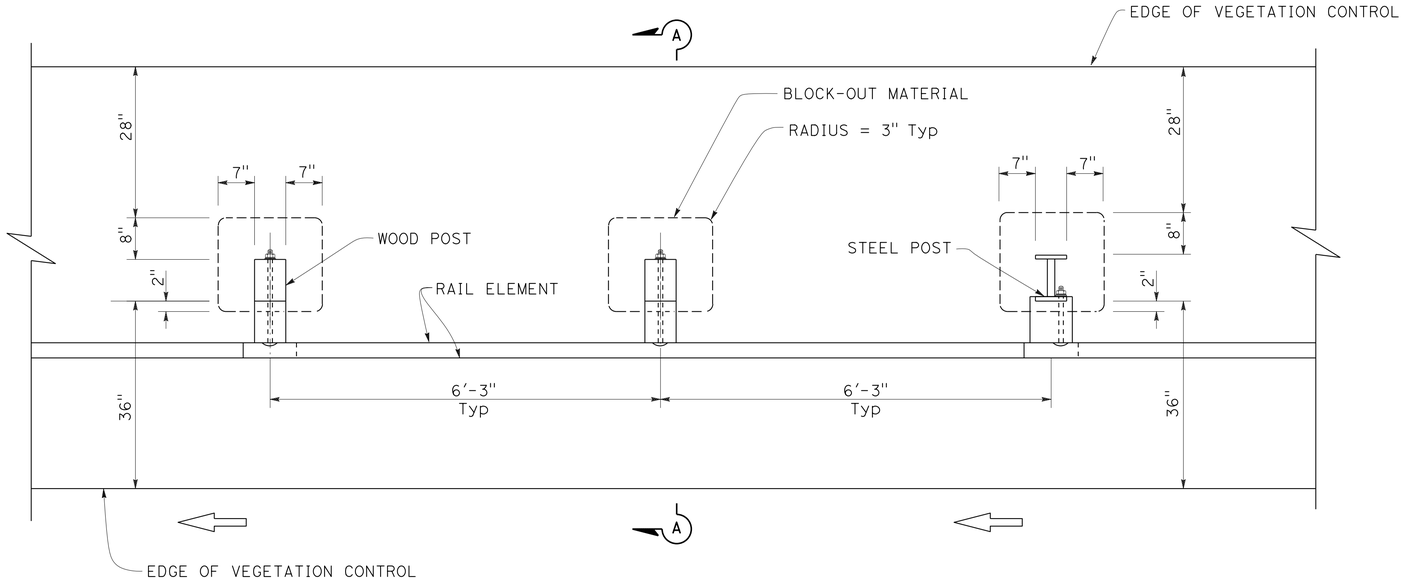

PLAN

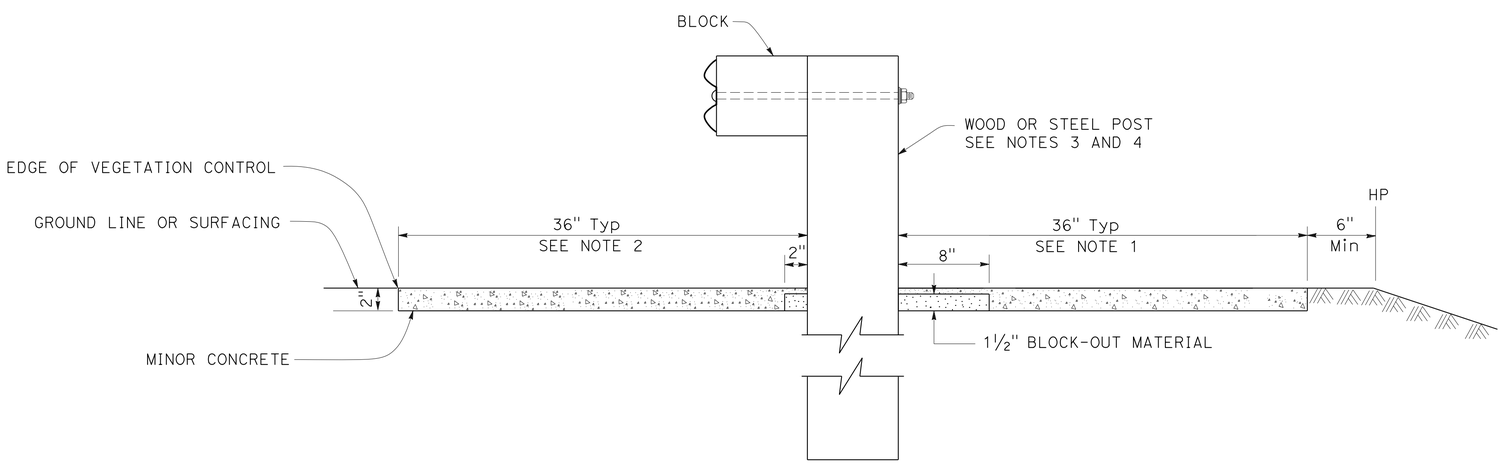

SECTION A-A

NOTES:

1. Where the distance between back of post and hinge point is less than 42", construct vegetation control to 6" from hinge point while maintaining the 8" block-out at back of post. If the 8" block-out at back of post can not be maintained, construct vegetation control flush with the back edge of post.
2. Where dike is constructed under railing, construct vegetation control to back edge of dike. Where paved shoulder is constructed within 36" in front of the post, construct vegetation control to the edge of paved shoulder.
3. For wood post sizes, see Standard Plan A77C1.
4. For steel post sizes, see Standard Plan A77C2.
5. For details not shown, see Standard Plans A77A1 and A77A2.

STATE OF CALIFORNIA
DEPARTMENT OF TRANSPORTATION

METAL BEAM GUARD RAILING TYPICAL VEGETATION CONTROL STANDARD RAILING SECTION

NO SCALE

RSP A77C5 DATED OCTOBER 19, 2012 SUPERSEDES STANDARD PLAN A77C5 DATED MAY 20, 2011 - PAGE 53 OF THE STANDARD PLANS BOOK DATED 2010.

REVISED STANDARD PLAN RSP A77C5

2010 REVISED STANDARD PLAN RSP A77C5

9-26-12

Dist	COUNTY	ROUTE	POST MILES TOTAL PROJECT	SHEET No.	TOTAL SHEETS
04	Sol	12,80	2.1/2.8, 12.0/13.1	444	597

Randell D. Hiatt
REGISTERED CIVIL ENGINEER

October 19, 2012
PLANS APPROVAL DATE

REGISTERED PROFESSIONAL ENGINEER
Randell D. Hiatt
No. C50200
Exp. 6-30-13
CIVIL
STATE OF CALIFORNIA

THE STATE OF CALIFORNIA OR ITS OFFICERS OR AGENTS SHALL NOT BE RESPONSIBLE FOR THE ACCURACY OR COMPLETENESS OF SCANNED COPIES OF THIS PLAN SHEET.

TO ACCOMPANY PLANS DATED 5-6-13

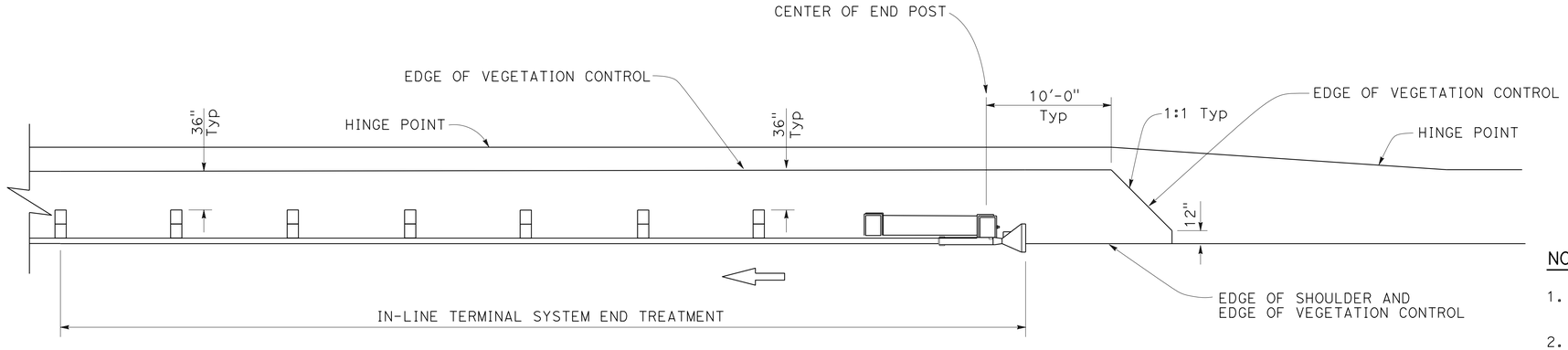

PLAN

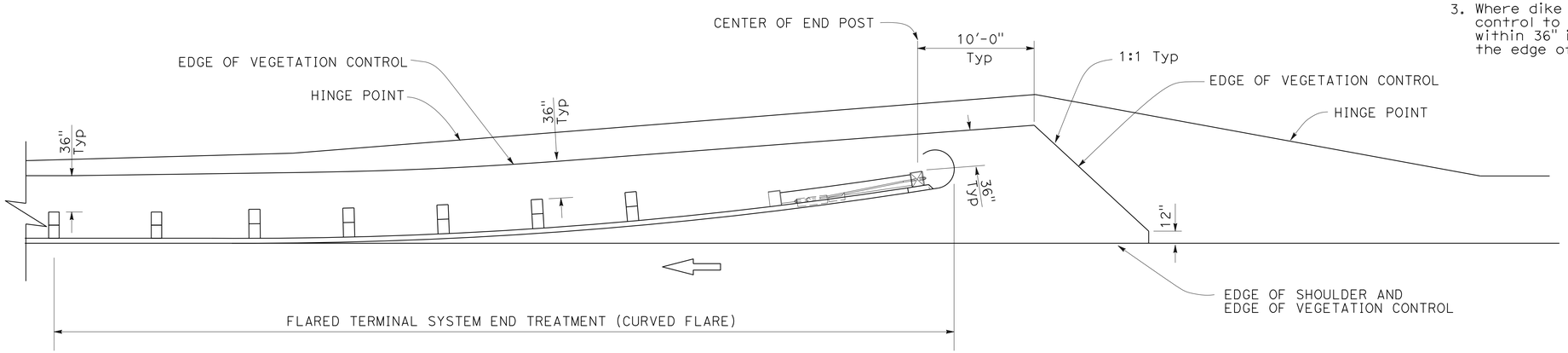

PLAN

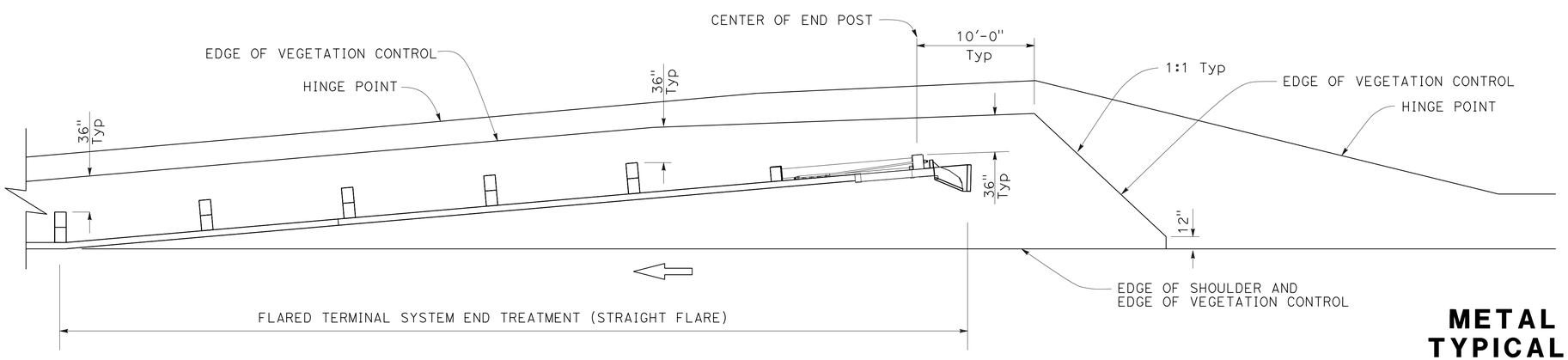

PLAN

NOTES:

1. See Revised Standard Plan RSP A77C5 for additional vegetation control details.
2. Where the distance between back of post and hinge point is less than 42", construct vegetation control to 6" from hinge point while maintaining the 8" block-out at back of post. If the 8" block-out at back of post can not be maintained, construct vegetation control flush with the back edge of post.
3. Where dike is constructed under railing, construct vegetation control to back edge of dike. Where paved shoulder is constructed within 36" in front of the post, construct vegetation control to the edge of paved shoulder.

STATE OF CALIFORNIA
DEPARTMENT OF TRANSPORTATION

METAL BEAM GUARD RAILING TYPICAL VEGETATION CONTROL FOR TERMINAL SYSTEM END TREATMENTS

NO SCALE

RSP A77C6 DATED OCTOBER 19, 2012 SUPERSEDES STANDARD PLAN A77C6 DATED MAY 20, 2011 - PAGE 54 OF THE STANDARD PLANS BOOK DATED 2010.

REVISED STANDARD PLAN RSP A77C6

2010 REVISED STANDARD PLAN RSP A77C6

9-26-12

Dist	COUNTY	ROUTE	POST MILES TOTAL PROJECT	SHEET No.	TOTAL SHEETS
04	Sol	12,80	2.1/2.8, 12.0/13.1	445	597

Randell D. Hiatt
REGISTERED CIVIL ENGINEER

October 19, 2012
PLANS APPROVAL DATE

REGISTERED PROFESSIONAL ENGINEER
Randell D. Hiatt
No. C50200
Exp. 6-30-13
CIVIL
STATE OF CALIFORNIA

THE STATE OF CALIFORNIA OR ITS OFFICERS OR AGENTS SHALL NOT BE RESPONSIBLE FOR THE ACCURACY OR COMPLETENESS OF SCANNED COPIES OF THIS PLAN SHEET.

TO ACCOMPANY PLANS DATED 5-6-13

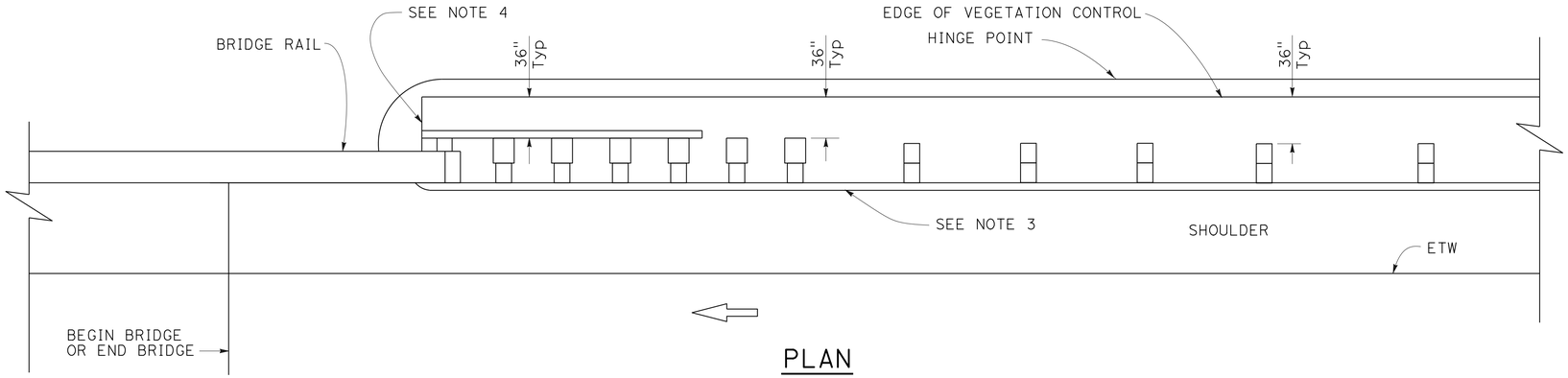

PLAN

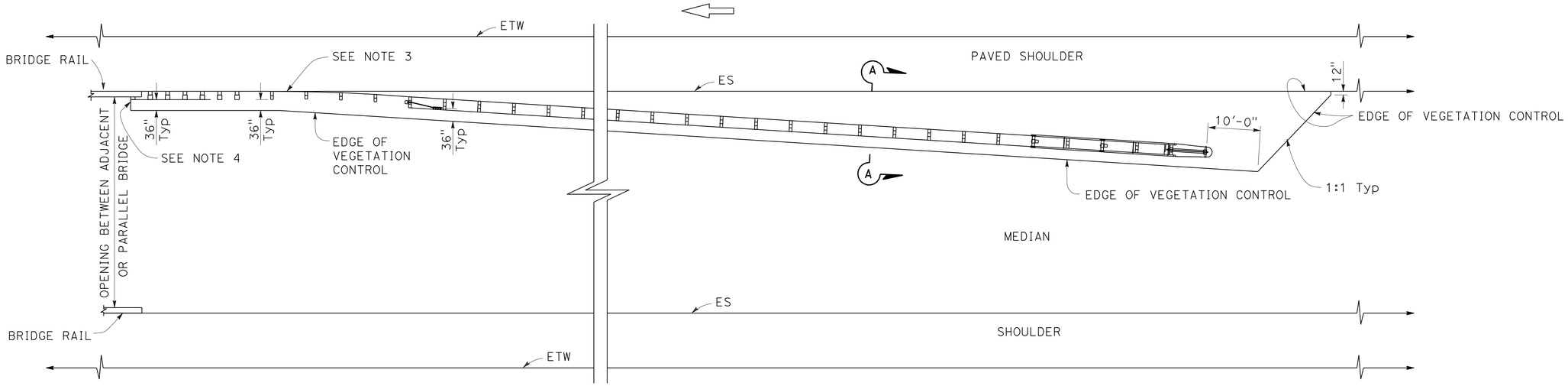

PLAN

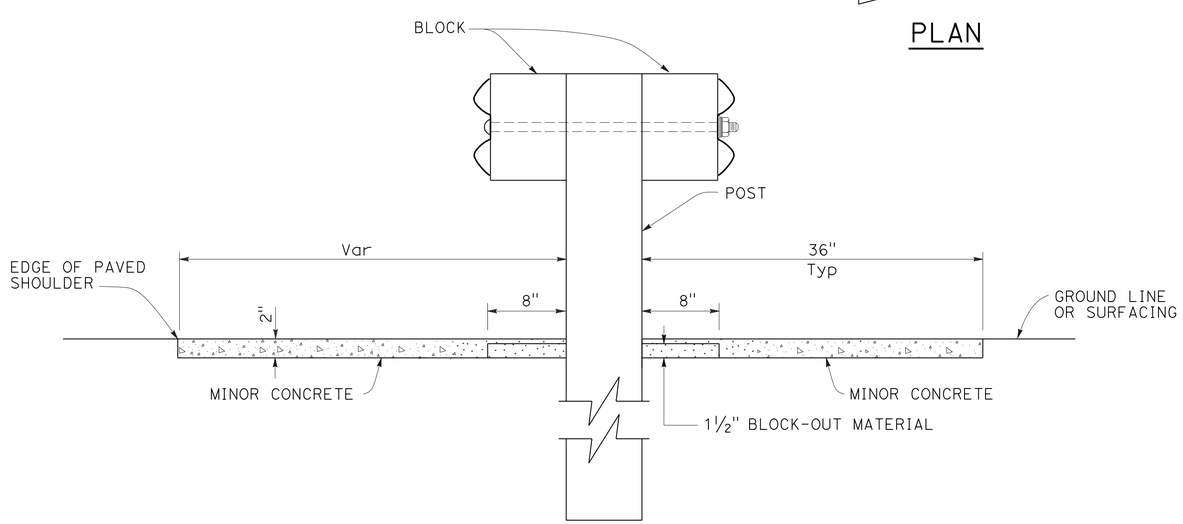

SECTION A-A

NOTES:

1. See Revised Standard Plan RSP A77C5 for additional vegetation control details.
2. Where the distance between back of post and hinge point is less than 42", construct vegetation control to 6" from hinge point while maintaining the 8" block-out at back of post. If the 8" block-out at back of post can not be maintained, construct vegetation control flush with the back edge of post.
3. Where dike is constructed under railing, construct vegetation control to back edge of dike. Where paved shoulder is constructed within 36" in front of the post, construct vegetation control to the edge of paved shoulder.
4. End vegetation control at end of backside rail element.

STATE OF CALIFORNIA
DEPARTMENT OF TRANSPORTATION

METAL BEAM GUARD RAILING TYPICAL VEGETATION CONTROL AT STRUCTURE APPROACH

NO SCALE

RSP A77C7 DATED OCTOBER 19, 2012 SUPERSEDES STANDARD PLAN A77C7 DATED MAY 20, 2011 - PAGE 55 OF THE STANDARD PLANS BOOK DATED 2010.

REVISED STANDARD PLAN RSP A77C7

2010 REVISED STANDARD PLAN RSP A77C7

9-26-12

Dist	COUNTY	ROUTE	POST MILES TOTAL PROJECT	SHEET No.	TOTAL SHEETS
04	Sol	12,80	2.1/2.8, 12.0/13.1	446	597

Randell D. Hiatt
REGISTERED CIVIL ENGINEER

October 19, 2012
PLANS APPROVAL DATE

REGISTERED PROFESSIONAL ENGINEER
Randell D. Hiatt
No. C50200
Exp. 6-30-13
CIVIL
STATE OF CALIFORNIA

THE STATE OF CALIFORNIA OR ITS OFFICERS OR AGENTS SHALL NOT BE RESPONSIBLE FOR THE ACCURACY OR COMPLETENESS OF SCANNED COPIES OF THIS PLAN SHEET.

TO ACCOMPANY PLANS DATED 5-6-13

2010 REVISED STANDARD PLAN RSP A77C8

NOTES:

1. See Revised Standard Plan RSP A77C5 for additional vegetation control details.
2. Where the distance between back of post and hinge point is less than 42", construct vegetation control to 6" from hinge point while maintaining the 8" block-out at back of post. If the 8" block-out at back of post can not be maintained, construct vegetation control flush with the back edge of post.
3. Where dike is constructed under railing, construct vegetation control to back edge of dike. Where paved shoulder is constructed within 36" in front of the post, construct vegetation control to the edge of paved shoulder.

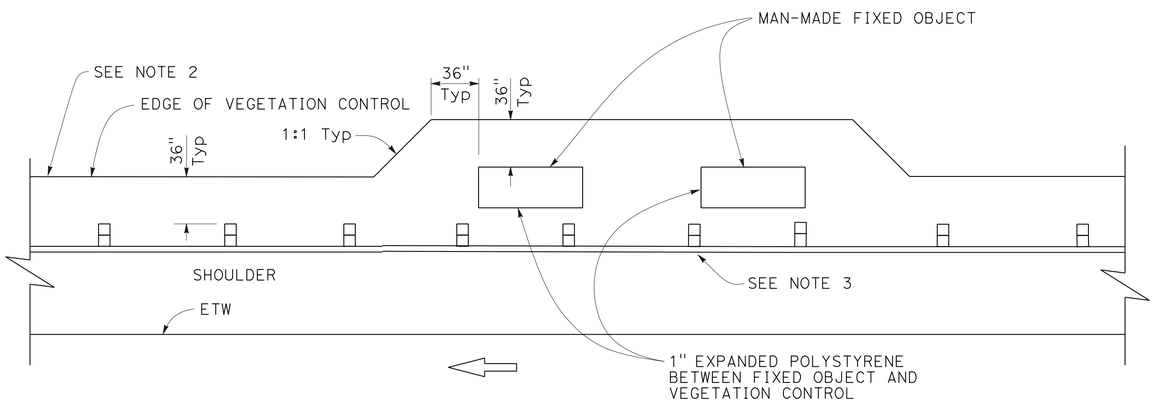

PLAN

Fixed object(s) on shoulder

STATE OF CALIFORNIA
DEPARTMENT OF TRANSPORTATION

METAL BEAM GUARD RAILING TYPICAL VEGETATION CONTROL AT FIXED OBJECT

NO SCALE

RSP A77C8 DATED OCTOBER 19, 2012 SUPERSEDES STANDARD PLAN A77C8 DATED MAY 20, 2011 - PAGE 56 OF THE STANDARD PLANS BOOK DATED 2010.

REVISED STANDARD PLAN RSP A77C8

Dist	COUNTY	ROUTE	POST MILES TOTAL PROJECT	SHEET No.	TOTAL SHEETS
04	Sol	12,80	2.1/2.8, 12.0/13.1	447	597

Randell D. Hiatt
REGISTERED CIVIL ENGINEER

October 19, 2012
PLANS APPROVAL DATE

REGISTERED PROFESSIONAL ENGINEER
Randell D. Hiatt
No. C50200
Exp. 6-30-13
CIVIL
STATE OF CALIFORNIA

THE STATE OF CALIFORNIA OR ITS OFFICERS OR AGENTS SHALL NOT BE RESPONSIBLE FOR THE ACCURACY OR COMPLETENESS OF SCANNED COPIES OF THIS PLAN SHEET.

TO ACCOMPANY PLANS DATED 5-6-13

2010 REVISED STANDARD PLAN RSP A77C9

NOTES:

1. See Revised Standard Plan RSP A77C5 for additional vegetation control details.
2. Where dike is constructed under railing, construct vegetation control to back edge of dike. Where paved shoulder is constructed within 36" in front of the post, construct vegetation control to the edge of paved shoulder.

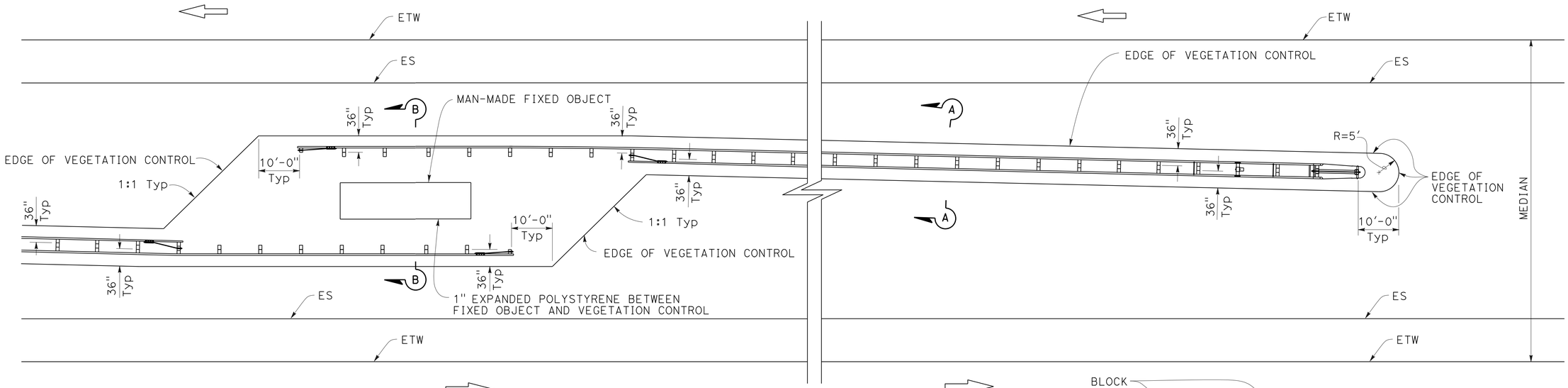

PLAN

Fixed object(s) in median

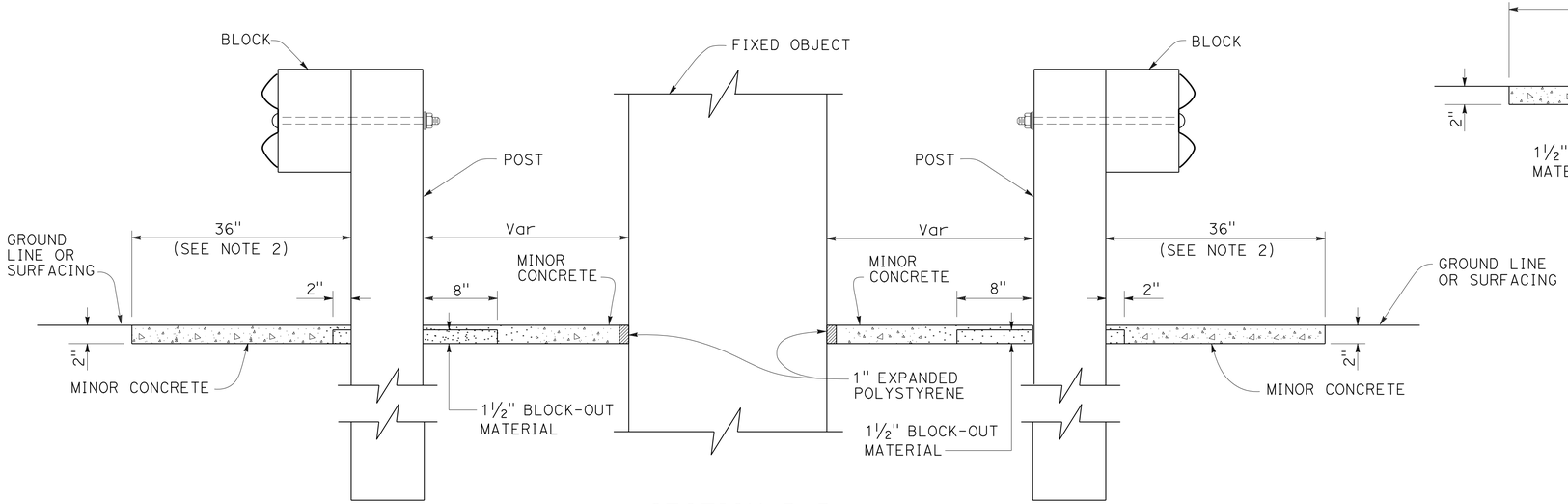

SECTION B-B

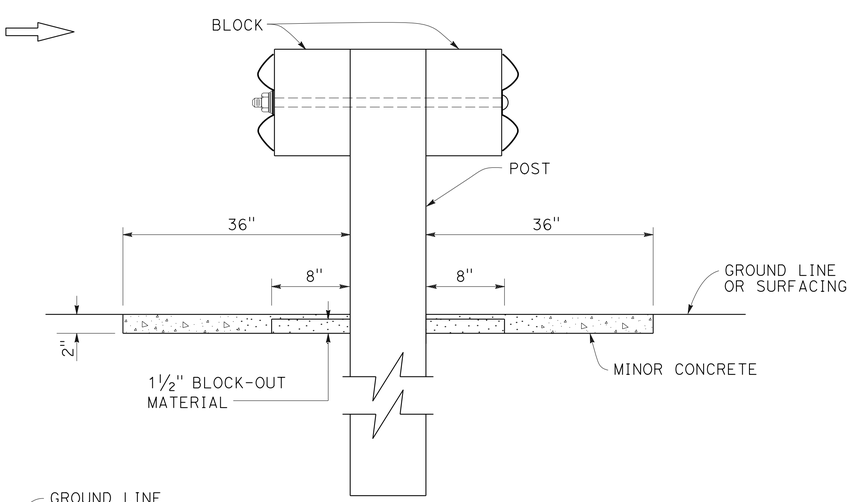

SECTION A-A

STATE OF CALIFORNIA
DEPARTMENT OF TRANSPORTATION

METAL BEAM GUARD RAILING TYPICAL VEGETATION CONTROL AT FIXED OBJECT

NO SCALE

RSP A77C9 DATED OCTOBER 19, 2012 SUPERSEDES STANDARD PLAN A77C9 DATED MAY 20, 2011 - PAGE 57 OF THE STANDARD PLANS BOOK DATED 2010.

REVISED STANDARD PLAN RSP A77C9

9-26-12

Dist	COUNTY	ROUTE	POST MILES TOTAL PROJECT	SHEET No.	TOTAL SHEETS
04	Sol	12,80	2.1/2.8, 12.0/13.1	448	597

Randell D. Hiatt
REGISTERED CIVIL ENGINEER

October 19, 2012
PLANS APPROVAL DATE

REGISTERED PROFESSIONAL ENGINEER
Randell D. Hiatt
No. C50200
Exp. 6-30-13
CIVIL
STATE OF CALIFORNIA

THE STATE OF CALIFORNIA OR ITS OFFICERS OR AGENTS SHALL NOT BE RESPONSIBLE FOR THE ACCURACY OR COMPLETENESS OF SCANNED COPIES OF THIS PLAN SHEET.

TO ACCOMPANY PLANS DATED 5-6-13

2010 REVISED STANDARD PLAN RSP A77C10

NOTES:

1. See Revised Standard Plan RSP A77C5 for additional vegetation control details.
2. Where dike is constructed under railing, construct vegetation control to back edge of dike. Where paved shoulder is constructed within 36" in front of the post, construct vegetation control to the edge of paved shoulder.

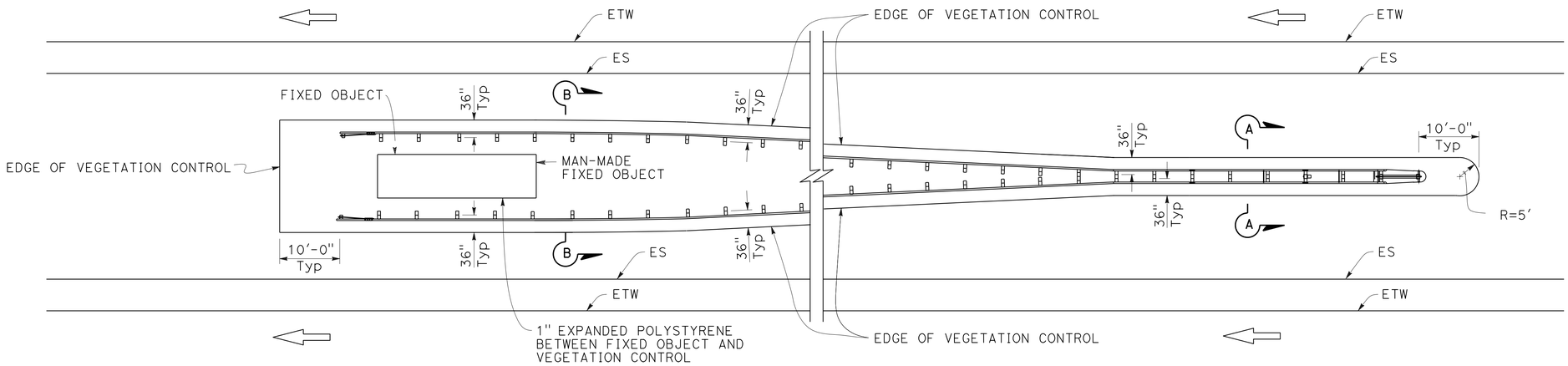

PLAN

Fixed object(s) between separate roadbeds (One-Way Traffic)

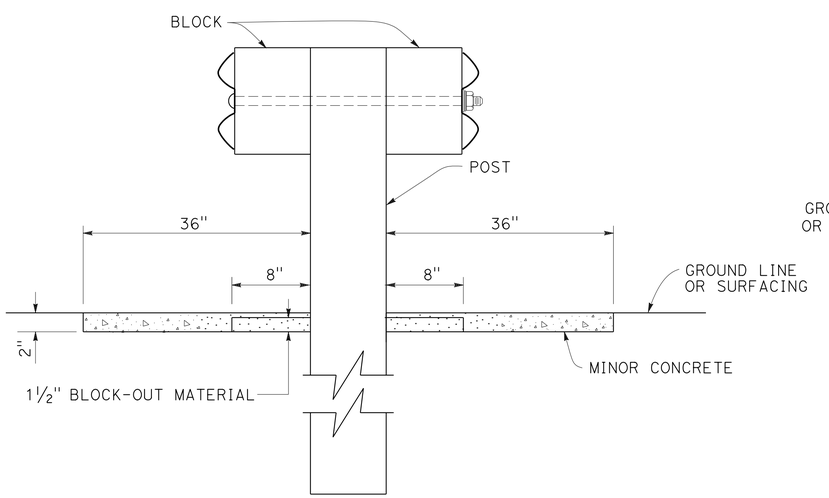

SECTION A-A

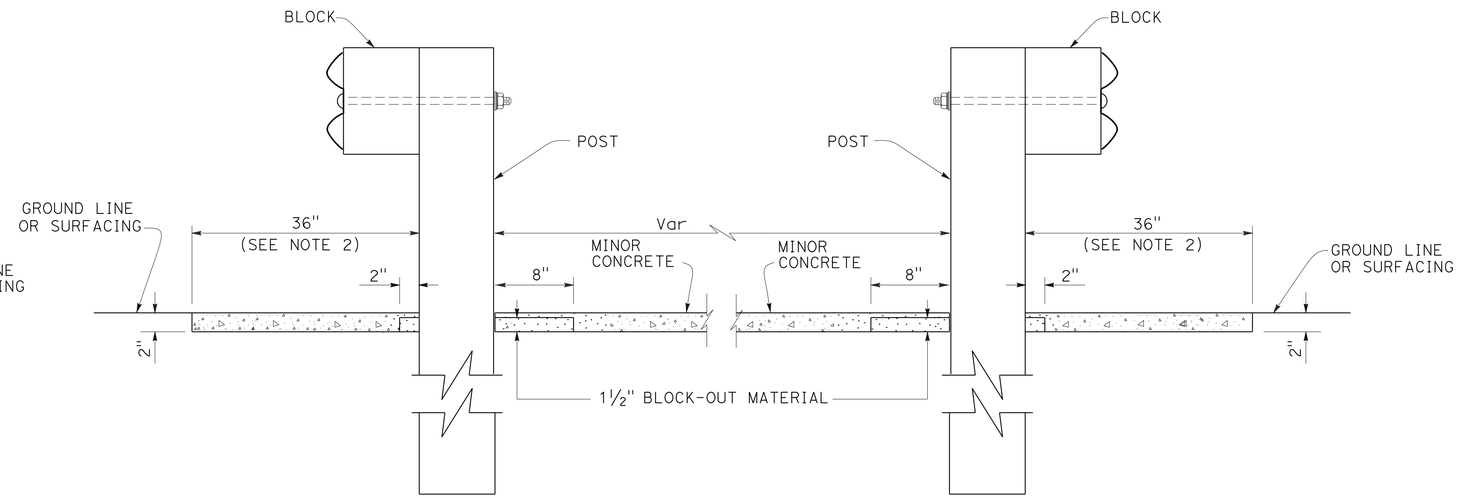

SECTION B-B

STATE OF CALIFORNIA
DEPARTMENT OF TRANSPORTATION

METAL BEAM GUARD RAILING TYPICAL VEGETATION CONTROL AT FIXED OBJECT

NO SCALE

RSP A77C10 DATED OCTOBER 19, 2012 SUPERSEDES STANDARD PLAN A77C10 DATED MAY 20, 2011 - PAGE 58 OF THE STANDARD PLANS BOOK DATED 2010.

REVISED STANDARD PLAN RSP A77C10

9-26-12

TO ACCOMPANY PLANS DATED 5-6-13

Dist	COUNTY	ROUTE	POST MILES TOTAL PROJECT	SHEET No.	TOTAL SHEETS
04	Sol	12,80	2.1/2.8, 12.0/13.1	449	597

REGISTERED CIVIL ENGINEER

October 19, 2012
PLANS APPROVAL DATE

REGISTERED PROFESSIONAL ENGINEER Glenn DeCou No. C34547 Exp. 9-30-13 CIVIL STATE OF CALIFORNIA

THE STATE OF CALIFORNIA OR ITS OFFICERS OR AGENTS SHALL NOT BE RESPONSIBLE FOR THE ACCURACY OR COMPLETENESS OF SCANNED COPIES OF THIS PLAN SHEET.

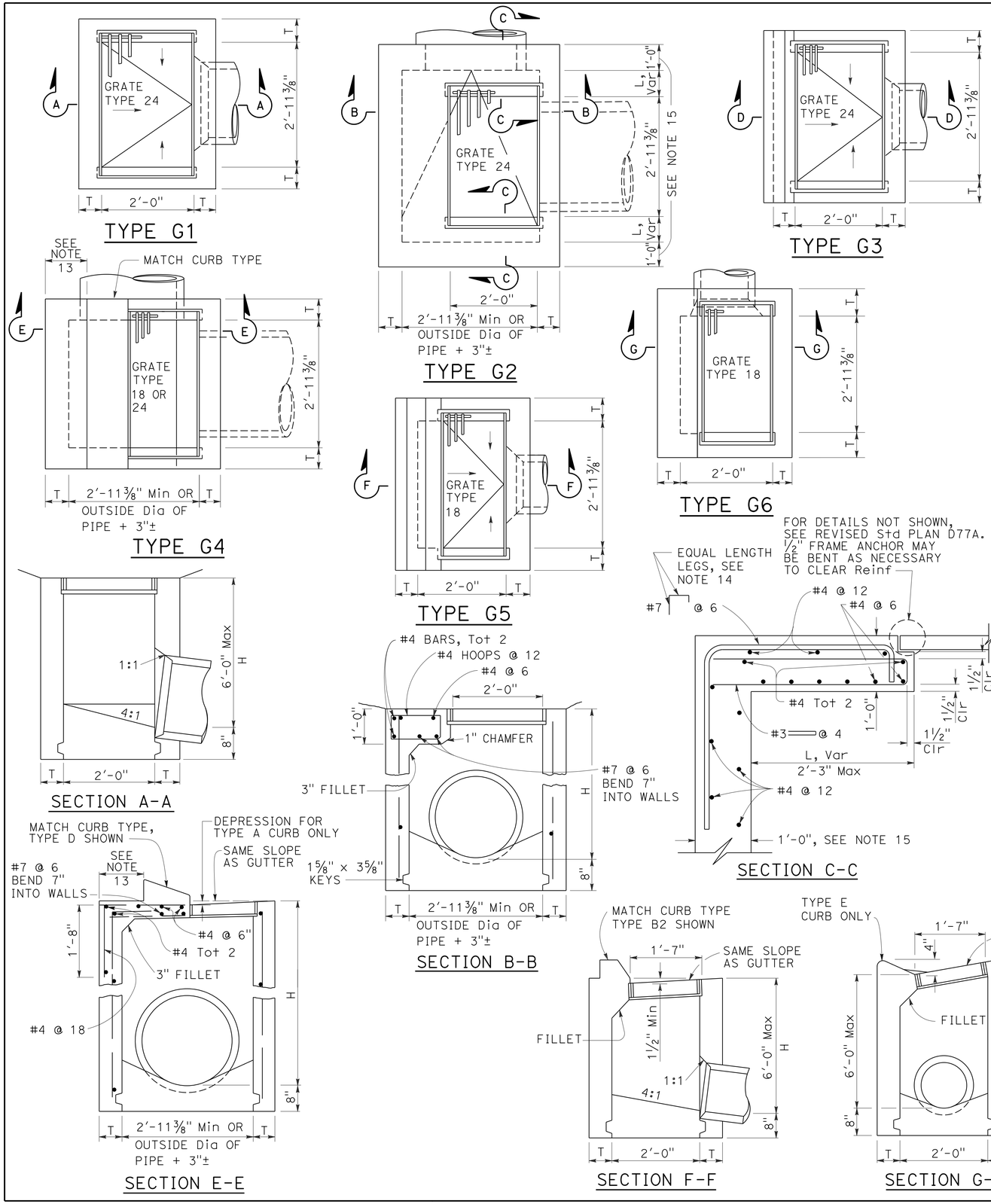

NOTES:

1. "H" is the difference in elevation between the outlet pipe flow line and the normal gutter grade line undepressed.
2. For "T" wall thickness, see Table A below.
3. Wall reinforcing not required when "H" is 8'-0" or less and the unsupported width or length is 7'-0" or less. Walls exceeding these limits shall be reinforced with #4 bars @ 1'-6" ± centers placed 1½" clear to inside of box unless otherwise shown.
4. Inlet bottom reinforcing not required. See Standard Plan D74C for alternative reinforced bottom and alternative half round bottom.
5. Steps-None required where "H" is less than 2'-6". Where "H" is 2'-6" or more, install steps with lowest rung 1'-0" above the floor and highest rung not more than 6" below top of inlet. The distance between steps shall not exceed 1'-0" and shall be uniform throughout the length of the wall. Place steps in the wall without an opening. Steps inserts may be substituted for the bar steps. Step inserts shall comply with State Industrial Safety requirements. See Standard Plan D74C for step details.
6. Details shown apply to both metal and concrete pipe.
7. Pipe(s) can be placed in any wall.
8. Curb section shall match adjacent curb.
9. Basin floors shall have wood trowel finish and a minimum slope of 12:3 from all directions toward outlet pipe.
10. Set inlet so that grate bars are parallel to direction of principal surface flow.
11. See Revised Standard Plans D77A and D77B for grate and frame details and weights of miscellaneous iron and steel.
12. See Standard Plan D78A for gutter depression details.
13. This dimenison will vary with different grates, curbs types, box width and wall thickness.
14. Bar may be rotated as necessary to clear opening. Where "L" is 6" or less, bar may be omitted.
15. Where "L" is 6" or less, wall thickness shall be as shown in Table A.
16. Cast-in-place inlets to be formed around all pipes/stubs intersecting the inlet, and concrete poured in one continuous operation. Precast inlets shall have mortared connections conforming to details for Type GCP Inlet shown on Standard Plan D75B. See Standard Specifications for mortar composition.

TABLE A

CONCRETE QUANTITIES				
TYPE	H=3'-0" TO 8'-0" (T=6")		H=8'-1" TO 20'-0" (T=8")	
	H=3'-0" (CY)	ADDITIONAL PCC PER FOOT (CY)	H=8'-1" (CY)	ADDITIONAL PCC PER FOOT (CY)
G-1	0.95	0.220	See Note A	SEE NOTE A
G-2*	1.31	0.255	3.50	0.357
G-3	1.03	0.220	See Note A	SEE NOTE A
G-4* (TYPE 24)	1.27	0.255	3.48	0.357
G-4* (TYPE 18)	1.30	0.255	3.50	0.357
G-5	1.02	0.220	SEE NOTE A	SEE NOTE A
G-6	1.04	0.220	SEE NOTE A	SEE NOTE A

TABLE BASED ON 8" FLOOR SLAB. NO DEDUCTIONS ARE TO BE MADE TO THESE QUANTITIES BECAUSE OF PIPE OPENINGS, DIFFERENT FLOOR ALTERNATIVES OR DIFFERENT CURB TYPES. * QUANTITIES FOR TYPE G-2 AND G-4 INLETS BASED ON THE MINIMUM INTERIOR DIMENSIONS.

NOTE A:

Maximum allowable height 6'-0".

STATE OF CALIFORNIA
DEPARTMENT OF TRANSPORTATION

DRAINAGE INLETS

NO SCALE

RSP D73 DATED OCTOBER 19, 2012 SUPERSEDES STANDARD PLAN D73 DATED MAY 20, 2011 - PAGE 156 OF THE STANDARD PLANS BOOK DATED 2010.

REVISED STANDARD PLAN RSP D73

2010 REVISED STANDARD PLAN RSP D73

7-19-12

Dist	COUNTY	ROUTE	POST MILES TOTAL PROJECT	SHEET No.	TOTAL SHEETS
04	Sol	12,80	2.1/2.8, 12.0/13.1	450	597

Raymond Don Tsztoo
REGISTERED CIVIL ENGINEER

April 19, 2013
PLANS APPROVAL DATE

REGISTERED PROFESSIONAL ENGINEER Raymond Don Tsztoo No. C37332 Exp. 6-30-14 CIVIL STATE OF CALIFORNIA

THE STATE OF CALIFORNIA OR ITS OFFICERS OR AGENTS SHALL NOT BE RESPONSIBLE FOR THE ACCURACY OR COMPLETENESS OF SCANNED COPIES OF THIS PLAN SHEET.

TO ACCOMPANY PLANS DATED 5-6-13

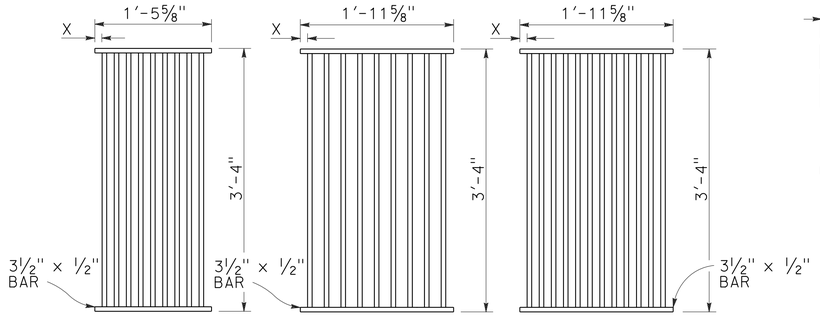

TYPE 18-9

1⅜" Clear spacing. Use within the roadbed on highways where bicycles and pedestrians are excluded.

TYPE 24-9

2" Clear spacing. Use in locations off the roadbed on all types of highways.

TYPE 24-12

1⅜" Clear spacing. Use within the roadbed on highways where bicycles and pedestrians are excluded.

RECTANGULAR GRATE DETAILS

(See table below)

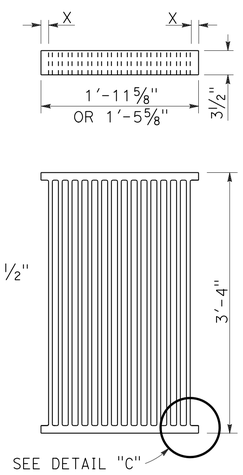

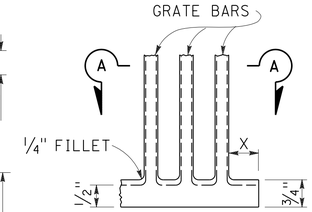

DETAIL "C"

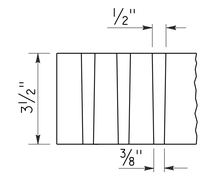

SECTION A-A

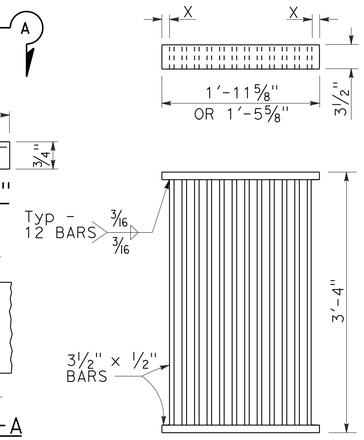

ALTERNATIVE CAST DUCTILE IRON GRATE OR CAST CARBON STEEL GRATE

ALTERNATIVE WELDED GRATE

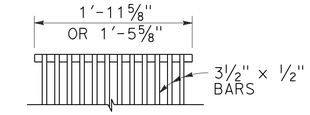

CAST END BLOCK

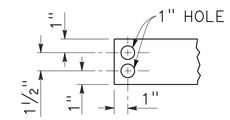

END OF BAR

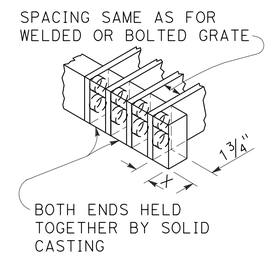

ALTERNATIVE CAST DUCTILE IRON OR CAST CARBON STEEL END BLOCK GRATE

NOTES:

1. Grate type numbers refer to approximate width of grate in inches and number of bars, respectively.
2. Contractor has the option of using cast ductile iron, cast carbon steel, welded, bolted, or cast end block grate.
3. Rounded top of bars optional on all grates.
4. Pipe inlets with a grate shall be placed so that bars parallel direction of principle surface flow.
5. Complete joint penetration butt welds may be substituted for the fillet welds on all anchors.
6. Standard square, hexagon, round or equivalent headed anchors may be substituted for the right angle hooks on the anchors shown on this plan.
7. Grate and frame weights are based on welded grates (weights of face angles, steps, protection bars, etc. are not included).
8. Connect chain to grate and frame only at locations shown on the plans. When chain is required, do not use cast ductile iron grates.

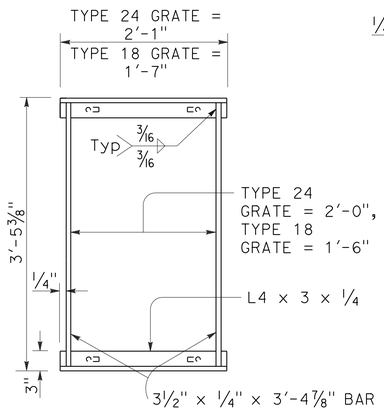

TYPICAL FRAME

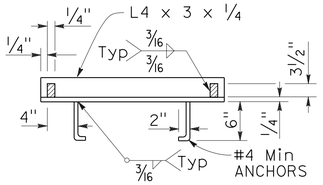

CROSS SECTION

(Thru frame)

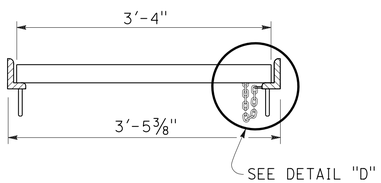

LONGITUDINAL SECTION

(Thru frame and grate)

RECTANGULAR FRAME DETAILS

(For all rectangular grates)

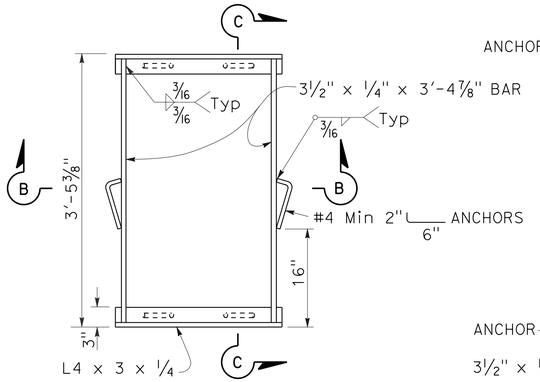

TYPICAL FRAME

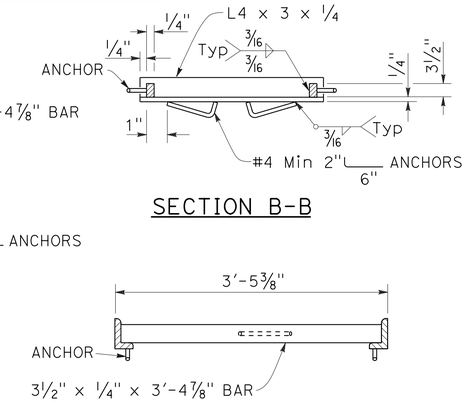

SECTION B-B

SECTION C-C

ALTERNATIVE ANCHOR FOR RECTANGULAR FRAME

(For details not shown, See Rectangular Frame Details)

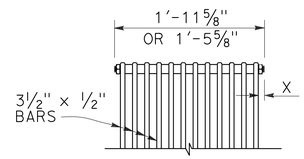

BOLTED END BLOCK

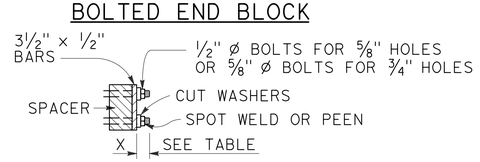

BOLTING DETAIL

ALTERNATIVE BOLTED GRATE

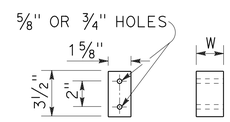

BAR SPACER

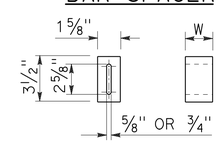

ALTERNATIVE SPACER

W = 1⅜" or 2"

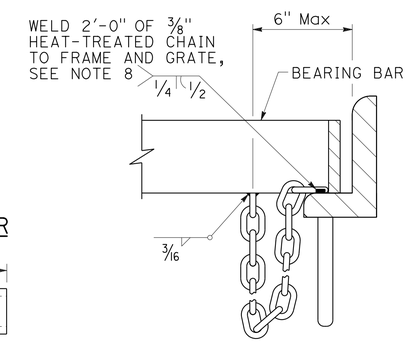

DETAIL "D"

(Steel grates only)

GRATE BAR SPACING TABLE

TYPE	No. OF BARS	CLEAR BAR SPACING	X
18-9	9	1⅜"	1 1/16"
24-9	9	2"	1 9/16"
24-12	12	1⅜"	1¼"

INLET TYPE	COVER TYPE	WEIGHT LB
OS	PLATE	174
OL-7	PLATE	170
OL-10	PLATE	170
OL-14	PLATE	170
OL-21	PLATE	170
OCP	PLATE	112
OCPI	PLATE	112
OCPI	REDWOOD	42
OMP	PLATE	177
OMPI	PLATE	177

INLET TYPE	GRATE TYPE	No. OF GRATES	WEIGHT LB
GDO	24-12	2	634
GOL-7	24-12	1	326
GOL-10	24-12	1	326
GO,G1,G2,G3,G4 (TYPE 24)	24-9	1	263
	24-12	1	326
G4 (TYPE 18),G5,G6	18-9	1	249
GT1	18-9	2	498
GT2	18-9	2	498
GT3	24-12	2	652
GT4	24-12	2	652
TRASH RACK			22
GRATE CHAIN			3

BASIS FOR Misc IRON & STEEL FINAL PAY WEIGHTS FOR DRAINAGE INLETS

(See Note 7)

STATE OF CALIFORNIA
DEPARTMENT OF TRANSPORTATION

GRATE DETAILS No. 1

NO SCALE

RSP D77A DATED APRIL 19, 2013 SUPERSEDES RSP D77A DATED JULY 20, 2012 AND STANDARD PLAN D77A DATED MAY 20, 2011 - PAGE 164 OF THE STANDARD PLANS BOOK DATED 2010.

REVISED STANDARD PLAN RSP D77A

2010 REVISED STANDARD PLAN RSP D77A

4-4-13

Dist	COUNTY	ROUTE	POST MILES TOTAL PROJECT	SHEET No.	TOTAL SHEETS
04	Sol	12,80	2.1/2.8, 12.0/13.1	451	597

Raymond Don Tsztoo
REGISTERED CIVIL ENGINEER

April 19, 2013
PLANS APPROVAL DATE

REGISTERED PROFESSIONAL ENGINEER Raymond Don Tsztoo No. C37332 Exp. 6-30-14 CIVIL STATE OF CALIFORNIA

THE STATE OF CALIFORNIA OR ITS OFFICERS OR AGENTS SHALL NOT BE RESPONSIBLE FOR THE ACCURACY OR COMPLETENESS OF SCANNED COPIES OF THIS PLAN SHEET.

TO ACCOMPANY PLANS DATED 5-6-13

2010 REVISED STANDARD PLAN RSP D77B

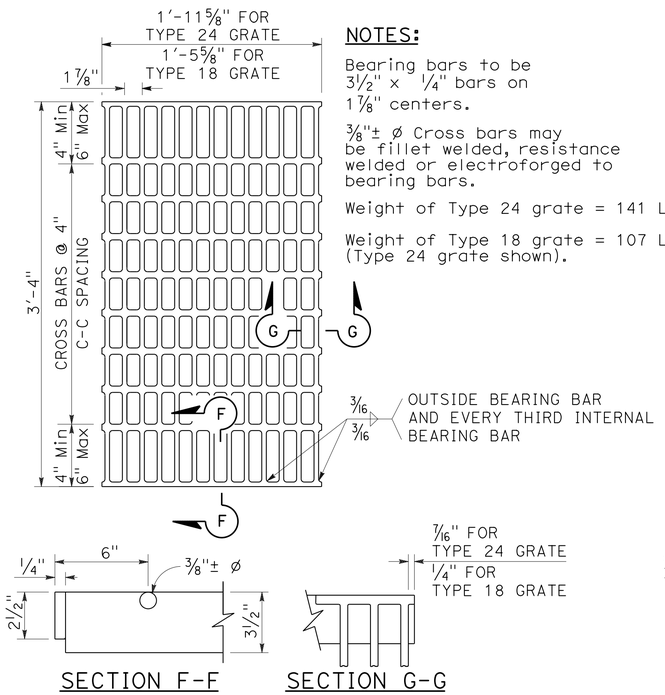

SECTION F-F SECTION G-G

TYPE 18-10 AND 24-13 GRATE

(Welded Steel)

NOTES:

Bearing bars to be 3½" x ¼" bars on 1⅞" centers.

⅜"± ø Cross bars may be fillet welded, resistance welded or electroforged to bearing bars.

Weight of Type 24 grate = 141 LBS.

Weight of Type 18 grate = 107 LBS. (Type 24 grate shown).

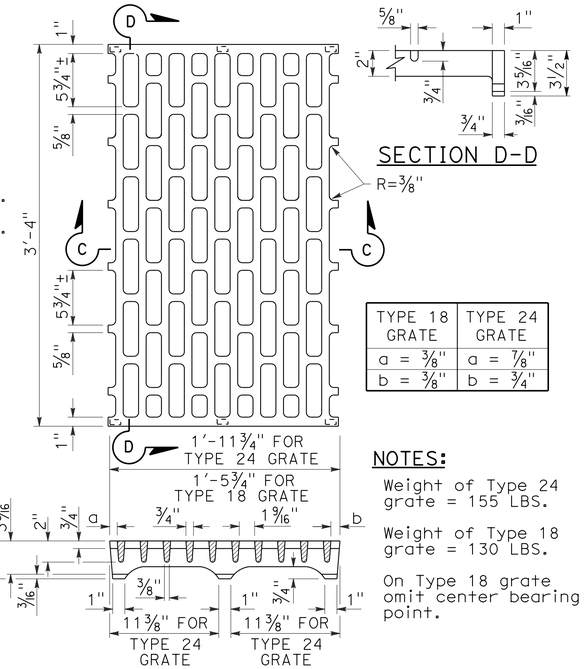

TYPE 18 GRATE	TYPE 24 GRATE
a = ⅜"	a = ⅞"
b = ⅜"	b = ¾"

SECTION C-C

NOTES:

Weight of Type 24 grate = 155 LBS.

Weight of Type 18 grate = 130 LBS.

On Type 18 grate omit center bearing point.

TYPE 18-8C AND 24-10C GRATE

(Cast ductile iron)

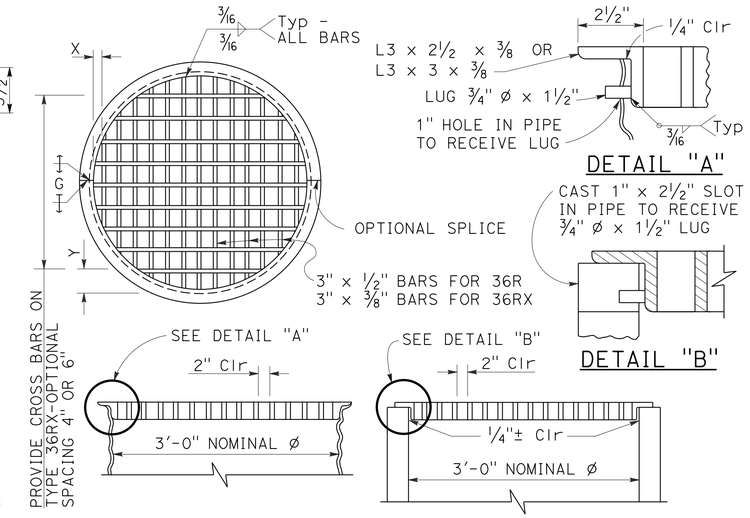

DETAIL "A"

DETAIL "B"

TYPE 36R AND 36RX GRATE DETAILS

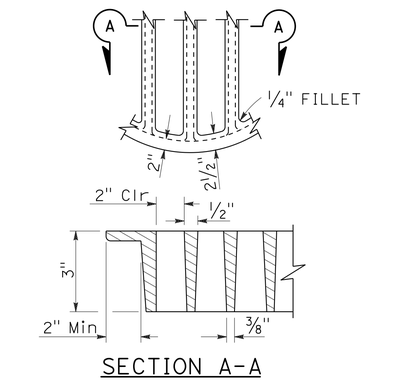

SECTION A-A

ALTERNATIVE CAST DUCTILE IRON GRATE OR CAST CARBON STEEL GRATE TYPE 36R AND 36RX

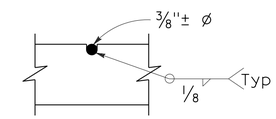

⅜"± ø Cross bars may be fillet welded, resistance welded or electroforged to bearing bars.

CROSS BAR DETAIL TYPE 36RX GRATE (WELDED STEEL)

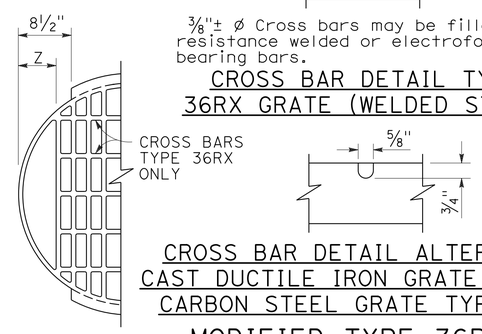

CROSS BAR DETAIL ALTERNATIVE CAST DUCTILE IRON GRATE OR CAST CARBON STEEL GRATE TYPE 36RX

MODIFIED TYPE 36R AND 36RX GRATE FOR ODI INLET

NOTES:

1. When alternative grates are allowed - Final pay based on alternative with the lesser weight.
2. Use frame shown on Standard Plan D74A, D74B or RSP D77A as appropriate.
3. When Type 24-10S, 24-12X or 24-13 grates are used with GDO Inlets, a ¼" x 3½" x 3'-4⅞" steel bar shall be welded across the center of inlet frame to separate the individual grates.
4. See Revised Standard Plan RSP D77A for connecting chain to welded grate and frame. When chain is required, do not use cast ductile iron grate.

BASIS FOR Misc IRON AND STEEL FINAL PAY WEIGHTS FOR DRAINAGE INLETS

INLET TYPE	GRATE TYPE	No. OF GRATES	WEIGHT LB
GDO (SEE NOTE 4)	24-10C	2	391
	24-10S	2	456
	24-12X	2	473
	24-13	2	374
GO,GOL,G1,G2, G3,G4 (TYPE 24)	24-10C	1	202
	24-10S	1	229
	24-12X	1	239
	24-13	1	188
G4 (TYPE 18) G5,G6	18-8S	1	187
	18-9X	1	187
	18-10	1	149
GT1,GT2	18-8S	2	374
	18-9X	2	374
	18-10	2	298
GT3,GT4	24-10C	2	404
	24-10S	2	458
	24-12X	2	478
	24-13	2	376
ODI	36RX (Mod)	1	196
GMP,GCP,GCPI	36RX	1	215
ODI	36R (Mod)	1	220
GMP,GCP,GCPI	36R	1	236
TRASH RACK			22
GRATE CHAIN			3

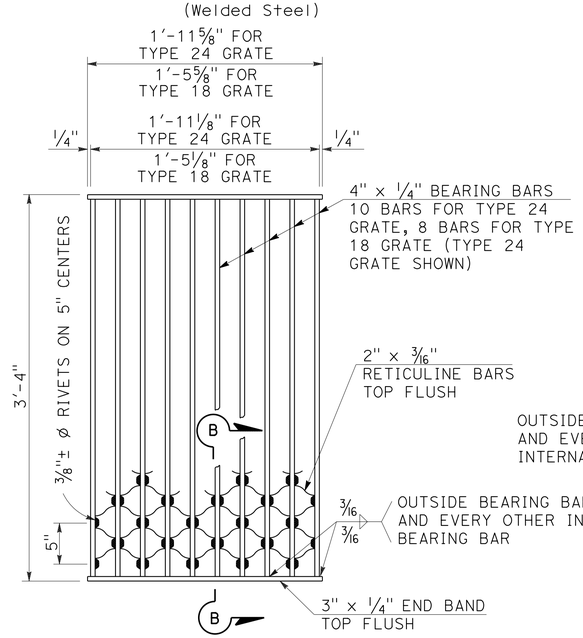

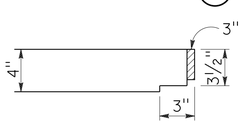

SECTION B-B

NOTES:

Weight of Type 24 grate = 182 LBS.
Weight of Type 18 grate = 145 LBS.

TYPE 18-8S AND 24-10S GRATE

(Welded Steel) Reticuline type

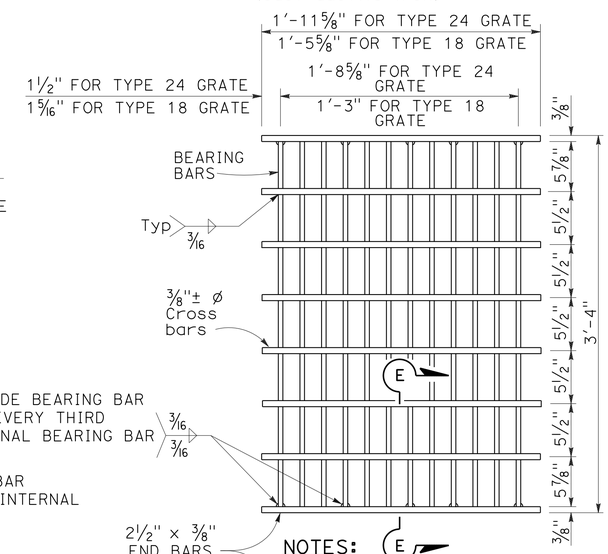

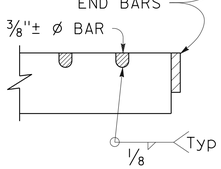

SECTION E-E

NOTES:

Bearing bars to be 3½" x ⅜" bars on 1⅞" centers.

12 Bars for Type 24 grate - 9 bars for Type 18 grates. (Type 24 grate shown).

Weight of Type 24 grate = 192 LBS.

Weight of Type 18 grate = 145 LBS.

⅜"± ø Cross bars may be fillet welded, resistance welded or electroforged to bearing bars.

TYPE 18-9X AND 24-12X GRATE

(Welded Steel)

GRATE BAR SPACING TABLE

TYPE	No. OF BARS	CLEAR BAR SPACING	X	Y 4" SPACING	Y 6" SPACING	Z
36R	13	2"	2⅛"	-	-	-
36RX (STEEL)	15	2"	9/16"	3¾"	5¾"	-
36RX (CAST)	13	2"	2⅛"	3¾"	5¾"	-
36R Mod	12	2"	2⅛"	-	-	5"
36RX Mod (STEEL)	13	2"	9/16"	3¾"	5¾"	5 11/16"
36RX Mod (CAST)	12	2"	2⅛"	3¾"	5¾"	5"

STATE OF CALIFORNIA
DEPARTMENT OF TRANSPORTATION

GRATE DETAILS No. 2

NO SCALE

RSP D77B DATED APRIL 19, 2013 SUPERSEDES RSP D77B DATED JULY 20, 2012 AND STANDARD PLAN D77B DATED MAY 20, 2011 - PAGE 165 OF THE STANDARD PLANS BOOK DATED 2010.

REVISED STANDARD PLAN RSP D77B

4-4-13

Dist	COUNTY	ROUTE	POST MILES TOTAL PROJECT	SHEET No.	TOTAL SHEETS
04	Sol	12,80	2.1/2.8, 12.0/13.1	452	597

Gary Wang
REGISTERED CIVIL ENGINEER

April 20, 2012
PLANS APPROVAL DATE

REGISTERED PROFESSIONAL ENGINEER
Gary Wang
No. C58298
Exp. 6-30-12
CIVIL
STATE OF CALIFORNIA

THE STATE OF CALIFORNIA OR ITS OFFICERS OR AGENTS SHALL NOT BE RESPONSIBLE FOR THE ACCURACY OR COMPLETENESS OF SCANNED COPIES OF THIS PLAN SHEET.

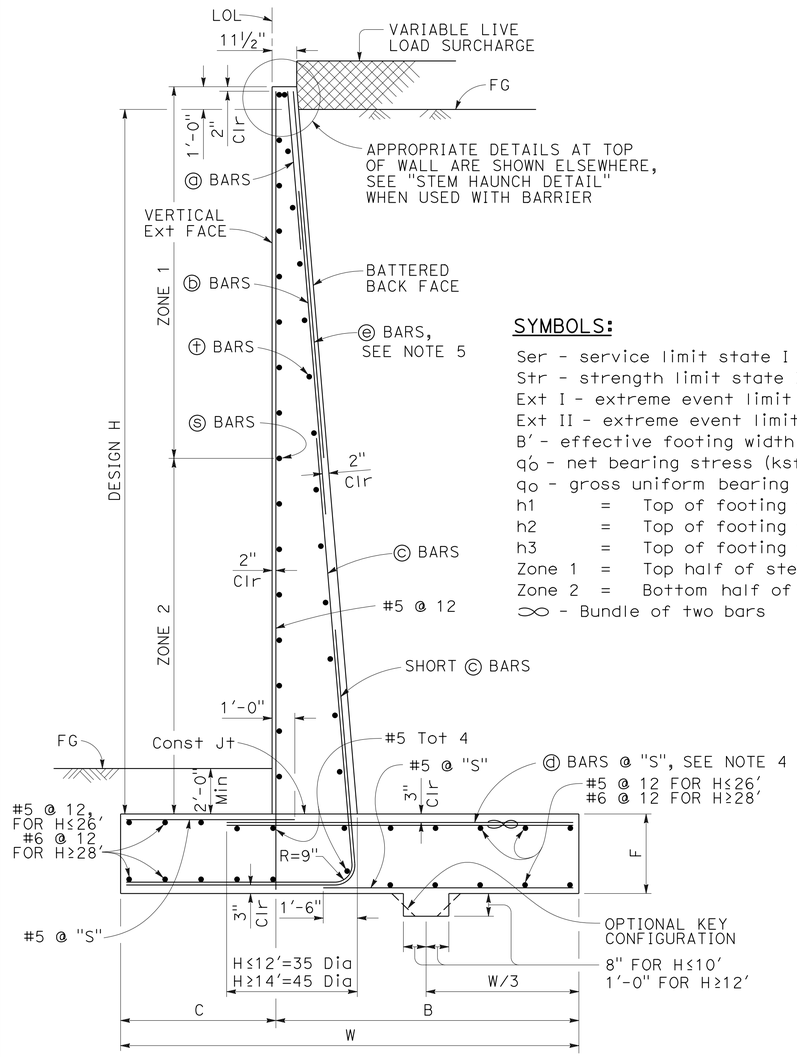

TYPICAL SECTION

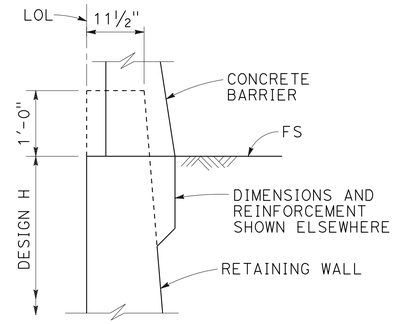

STEM HAUNCH DETAIL

SYMBOLS:

Ser - service limit state I
Str - strength limit state I
Ext I - extreme event limit state I
Ext II - extreme event limit state II
B' - effective footing width (ft)
q_o' - net bearing stress (ksf), OG assumed to be FG at toe
q_o - gross uniform bearing stress (ksf)
h1 = Top of footing to top of short ⓒ bar
h2 = Top of footing to top of ⓒ bar
h3 = Top of footing to top of ⓑ bar
Zone 1 = Top half of stem height
Zone 2 = Bottom half of stem height
∞ - Bundle of two bars

DESIGN CONDITIONS:

Design H may be exceeded by 6" before going to the next size. Special footing design is required where foundation material is incapable of supporting bearing stress listed in the table.

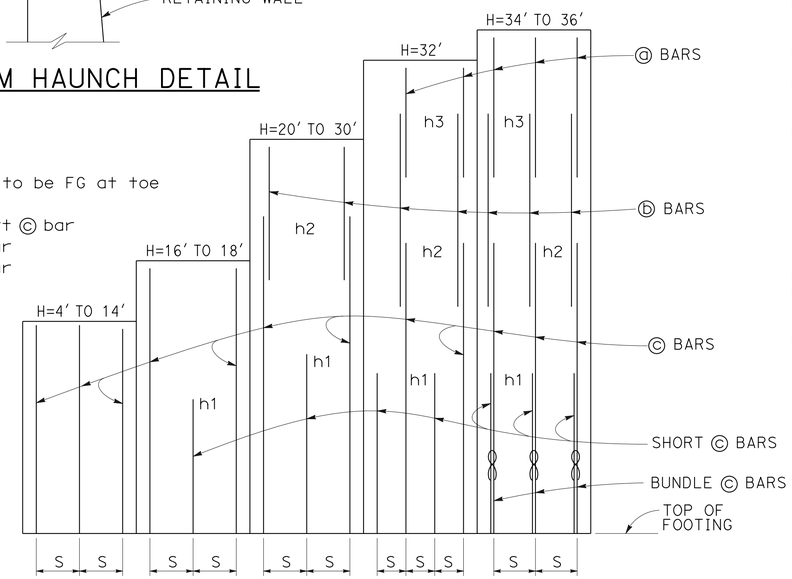

ELEVATION

DESIGN NOTES:

TO ACCOMPANY PLANS DATED 5-6-13

DESIGN: AASHTO LRFD Bridge Design Specifications, 4th Edition with California Amendments

LS: Varied surcharge on level ground surface

DC: Stem Architectural Treatment of thickness up to 6" of concrete (75 psf) considered

CT: 54 kip transverse force applied at He = 32", distributed over 10 feet at the top of wall and 1 : 1 distribution down and outward. Distribution below footing taken no less than 40'.

SEISMIC: $k_h = 0.2$, $k_v = 0.0$

SOIL: $\phi = 34°$, $\gamma = 120$ pcf

REINFORCED CONCRETE: f'c = 3,600 psi
fy = 60,000 psi

LOAD COMBINATIONS AND LIMIT STATES:

Service I	Q = 1.00DC+1.00EV+1.00EH+1.00LS
Strength I	Q = αDC+β̂EV+ηEH+1.75LS
Extreme I	Q = 1.00DC+1.00EV+1.00EH+1.00EQD+1.00EQE
Extreme II	Q = 1.00DC+1.00EV+1.00EH+1.00CT

Where:

Q:	Force Effects
α:	1.25 or 0.90, Whichever Controls Design
β̂:	1.35 or 1.00, Whichever Controls Design
η:	1.50 or 0.90, Whichever Controls Design
DC:	Dead Load of Structure Components
EH:	Horizontal Earth Fill Pressure
EV:	Vertical Earth Pressure from Earth Fill Weight
LS:	Live Load Surcharge
EQE:	Seismic Earth Pressure
EQD:	Soil and Structural and Nonstructural Components Inertia
CT:	Vehicular Collision Force

TABLE OF REINFORCING STEEL, DIMENSIONS AND DATA

DESIGN H	4'	6'	8'	10'	12'	14'	16'	18'	20'	22'	24'	26'	28'	30'	32'	34'	36'
W	6'-10"	7'-0"	7'-3"	7'-7"	8'-4"	9'-7"	10'-9"	12'-0"	13'-3"	14'-6"	15'-9"	17'-1"	18'-5"	19'-10"	21'-2"	22'-7"	24'-0"
C	2'-2"	2'-3"	2'-3"	2'-4"	2'-6"	3'-0"	3'-6"	4'-0"	4'-6"	5'-0"	5'-5"	6'-0"	6'-6"	7'-2"	7'-8"	8'-2"	9'-0"
B	4'-8"	4'-9"	5'-0"	5'-3"	5'-10"	6'-7"	7'-3"	8'-0"	8'-9"	9'-6"	10'-4"	11'-1"	11'-11"	12'-8"	13'-6"	14'-5"	15'-0"
F	1'-4"	1'-4"	1'-4"	1'-4"	1'-6"	1'-8"	1'-8"	1'-9"	1'-9"	1'-11"	2'-2"	2'-5"	2'-10"	3'-3"	3'-6"	4'-0"	4'-3"
BATTER	½: 12	½: 12	½: 12	½: 12	½: 12	½: 12	½: 12	½: 12	½: 12	½: 12	⅝: 12	⅝: 12	¾: 12	⅞: 12	1 : 12	1 : 12	1 : 12
SPACING "S"	9"	9"	9"	9"	9"	7"	6"	5"	6"	6"	6"	6"	6"	6"	6"	10"	8"
ⓐ BARS	-	-	-	-	-	-	-	-	-	-	-	-	-	-	#7	#7	#6
ⓑ BARS	-	-	-	-	-	-	-	-	#7	#7	#7	#7	#7	#7	#9	#9	#8
ⓒ BARS	#6	#6	#6	#6	#6	#6	#7	#7	#8	#9	#9	#10	#10	#10	#11	#11	#11
ⓓ BARS	#5	#5	#6	#6	#6	#6	#9	#8	#8	#9	#9	#10	#10	#10	#11	#11	#11
h1	-	-	-	-	-	-	5'-9"	5'-10"	8'-0"	9'-0"	10'-1"	11'-0"	12'-1"	13'-0"	13'-0"	12'-7"	11'-6"
h2	-	-	-	-	-	-	-	-	10'-5"	13'-0"	14'-7"	17'-6"	19'-0"	20'-5"	19'-0"	18'-0"	20'-2"
h3	-	-	-	-	-	-	-	-	-	-	-	-	-	-	21'-2"	21'-10"	24'-0"
ZONE 1 ⓢ BARS	#5 @ 18	#5 @ 18	#5 @ 18	#5 @ 18	#5 @ 18	#5 @ 18	#5 @ 18	#5 @ 18	#5 @ 18	#5 @ 18	#5 @ 12	#5 @ 12	#5 @ 12	#5 @ 12	#5 @ 12	#5 @ 12	#5 @ 12
ZONE 2 ⓢ BARS	#5 @ 18	#5 @ 18	#5 @ 18	#5 @ 18	#5 @ 18	#5 @ 18	#5 @ 12	#5 @ 12	#5 @ 12	#5 @ 12	#5 @ 12	#5 @ 12	#6 @ 12	#6 @ 12	#6 @ 12	#7 @ 12	#7 @ 12
ZONE 1 ⓣ BARS	#4 @ 18	#4 @ 18	#4 @ 18	#4 @ 18	#4 @ 18	#4 @ 18	#4 @ 18	#4 @ 18	#4 @ 18	#4 @ 18	#4 @ 12	#4 @ 12	#4 @ 18	#4 @ 12	#4 @ 12	#4 @ 12	#4 @ 12
ZONE 2 ⓣ BARS	#4 @ 18	#4 @ 18	#4 @ 18	#4 @ 18	#4 @ 18	#4 @ 18	#4 @ 18	#4 @ 18	#4 @ 18	#4 @ 18	#4 @ 12	#4 @ 12	#4 @ 12	#4 @ 12	#5 @ 12	#5 @ 12	#5 @ 12
Ser: B', q_o'	6.8, 0.7	6.5, 1.0	6.2, 1.3	6.0, 1.6	6.3, 2.0	7.5, 2.1	8.6, 2.2	9.8, 2.3	11.0, 2.4	12.1, 2.5	13.2, 2.8	14.4, 2.9	15.5, 3.1	16.8, 3.3	18.0, 3.5	19.2, 3.7	20.6, 3.7
Str: B', q_o	6.6, 1.6	5.0, 1.8	3.6, 2.3	3.0, 3.3	3.2, 4.0	4.3, 3.8	5.3, 3.7	6.4, 3.7	7.4, 3.8	8.2, 4.1	9.0, 4.4	9.9, 4.6	10.7, 4.9	11.7, 5.2	12.6, 5.4	13.6, 5.8	14.6, 5.9
Ext I: B', q_o	5.2, 1.1	4.7, 1.5	3.9, 2.2	3.1, 3.4	2.8, 4.8	3.2, 5.3	3.6, 5.7	4.1, 6.1	4.6, 6.4	5.0, 6.9	5.3, 7.6	5.8, 8.1	6.1, 8.9	6.7, 9.4	7.1, 10.0	7.5, 10.7	8.2, 10.9
Ext II: B', q_o	2.6, 2.2	2.7, 2.6	2.8, 3.1	2.9, 3.6	3.7, 3.6	5.2, 3.3	6.7, 3.1	8.3, 3.0	9.8, 3.0	11.2, 3.1	12.5, 3.2	13.9, 3.4	15.2, 3.6	16.7, 3.8	18.0, 4.0	19.3, 4.2	20.8, 4.3

NOTES:

1. For details not shown and drainage notes see RSP B3-5
2. For wall stem joint details see B0-3 3-3 and B0-3 3-4
3. At ⓒ bars:
   H ≤ 6', no splices are allowed within 1'-8" above the top of footing.
   H > 6', no splices are allowed within H/4 above the top of footing.
4. Bundle ⓓ bars for H = 34' & 36'.
5. Provide #6 @ 10" x 15'-0" ⓔ bars over a distance of 8'-0" measured from all expansion joints, begin wall and end wall locations. For H ≤ 14', hook ⓔ bar into footing and reduce bar length as needed to maintain Min Clr cover.

STATE OF CALIFORNIA
DEPARTMENT OF TRANSPORTATION

RETAINING WALL TYPE 1 (CASE 1)

NO SCALE

RSP B3-1A DATED APRIL 20, 2012 SUPPLEMENTS THE STANDARD PLANS BOOK DATED 2010.

REVISED STANDARD PLAN RSP B3-1A

2010 REVISED STANDARD PLAN RSP B3-1A

2-22-12

Dist	COUNTY	ROUTE	POST MILES TOTAL PROJECT	SHEET No.	TOTAL SHEETS
04	Sol	12,80	2.1/2.8, 12.0/13.1	453	597

REGISTERED CIVIL ENGINEER

April 20, 2012
PLANS APPROVAL DATE

REGISTERED PROFESSIONAL ENGINEER Gary Wang No. C58298 Exp. 6-30-12 CIVIL STATE OF CALIFORNIA

THE STATE OF CALIFORNIA OR ITS OFFICERS OR AGENTS SHALL NOT BE RESPONSIBLE FOR THE ACCURACY OR COMPLETENESS OF SCANNED COPIES OF THIS PLAN SHEET.

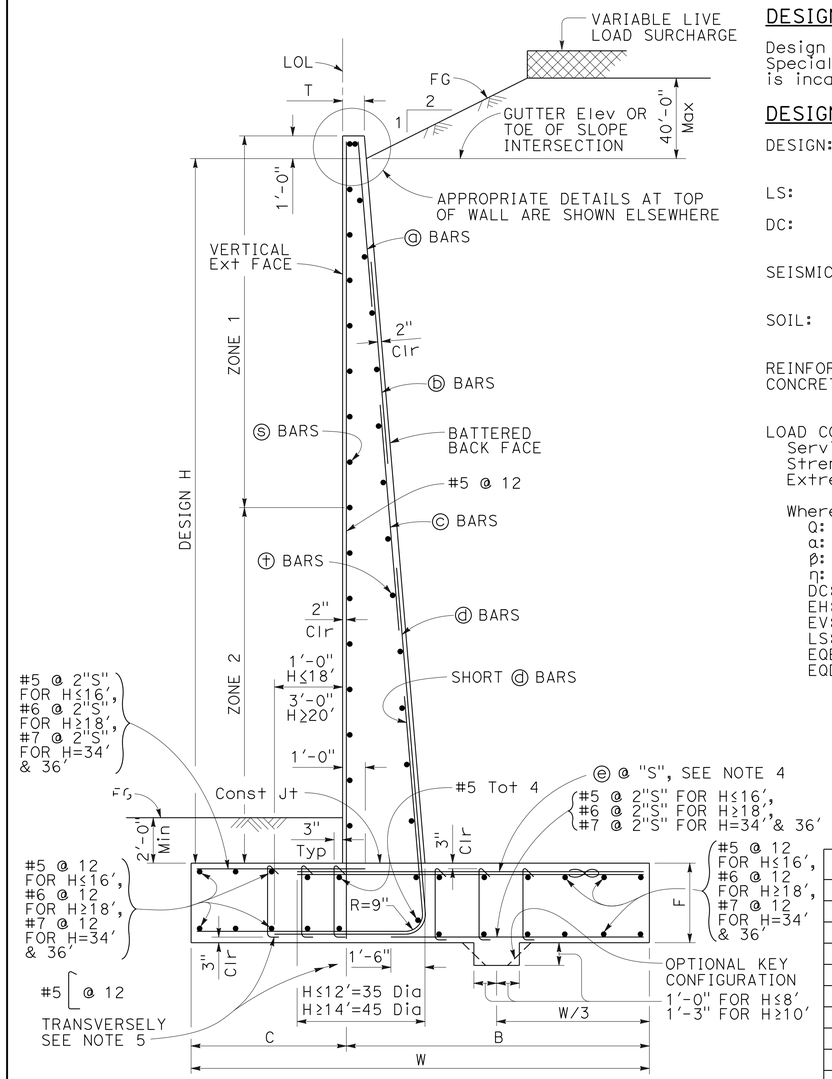

TYPICAL SECTION

DESIGN CONDITIONS:

Design H may be exceeded by 6" before going to the next size. Special footing design is required where foundation material is incapable of supporting bearing stress listed in the table.

DESIGN NOTES:

DESIGN: AASHTO LRFD Bridge Design Specifications, 4th Edition with California Amendments

LS: Varied surcharge on level ground surface

DC: Stem Architectural Treatment of thickness up to 6" of concrete (75 psf) considered

SEISMIC: $k_h = 0.2$
$k_v = 0.0$

SOIL: $\phi = 34°$
$\gamma = 120$ pcf

REINFORCED CONCRETE: $f'c = 3{,}600$ psi
$fy = 60{,}000$ psi

LOAD COMBINATIONS AND LIMIT STATES:

Service I	$Q = 1.00DC+1.00EV+1.00EH+1.00LS$
Strength I	$Q = \alpha DC+\phi EV+\eta EH+1.75LS$
Extreme I	$Q = 1.00DC+1.00EV+1.00EH+1.00EQD+1.00EQE$

Where:

Q:	Force Effects
α:	1.25 or 0.90, Whichever Controls Design
ϕ:	1.35 or 1.00, Whichever Controls Design
η:	1.50 or 0.90, Whichever Controls Design
DC:	Dead Load of Structure Components
EH:	Horizontal Earth Fill Pressure
EV:	Vertical Earth Pressure from Earth Fill Weight
LS:	Live Load Surcharge
EQE:	Seismic Earth Pressure
EQD:	Soil and Structural and Nonstructural Components Inertia

SYMBOLS:

TO ACCOMPANY PLANS DATED 5-6-13

Ser - service limit state I
Str - strength limit state I
Ext - extreme event limit state I
B′ - effective footing width (ft)
q'_o - net bearing stress (ksf), OG assumed to be FG at toe
q_o - gross uniform bearing stress (ksf)
h1 = Top of footing to top of short ⓓ bar
h2 = Top of footing to top of ⓓ bar
h3 = Top of footing to top of ⓒ bar
h4 = Top of footing to top of ⓑ bar
Zone 1 = Top half of stem height
Zone 2 = Bottom half of stem height
∞ - Bundle of two bars

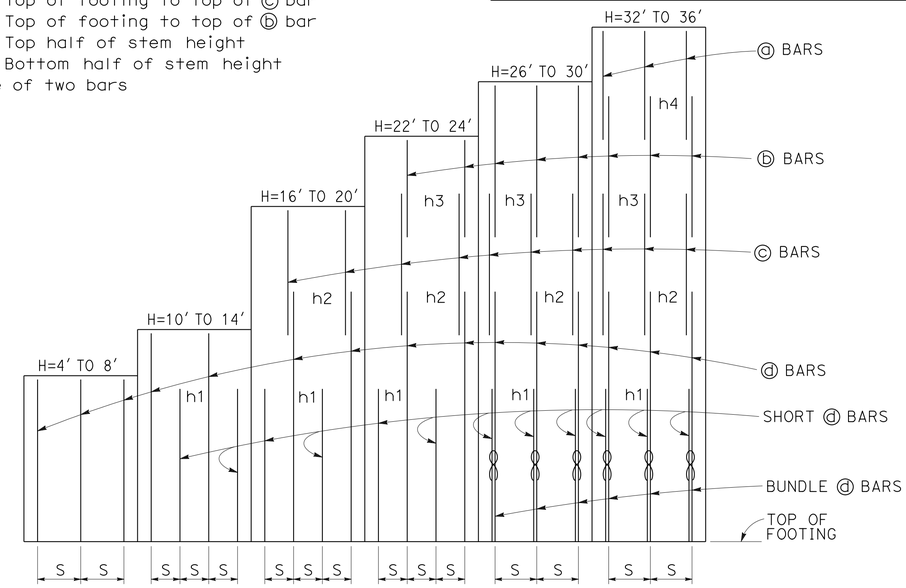

ELEVATION

TABLE OF REINFORCING STEEL, DIMENSIONS AND DATA

DESIGN H	4′	6′	8′	10′	12′	14′	16′	18′	20′	22′	24′	26′	28′	30′	32′	34′	36′
W	6′-0"	7′-6"	9′-6"	11′-0"	12′-6"	15′-6"	17′-3"	19′-6"	21′-9"	23′-6"	26′-0"	28′-1"	30′-3"	31′-6"	33′-0"	34′-8"	35′-11"
C	2′-0"	2′-6"	3′-3"	3′-6"	4′-3"	5′-0"	5′-3"	5′-9"	6′-9"	7′-3"	8′-3"	8′-9"	9′-0"	9′-6"	10′-0"	10′-10"	11′-3"
B	4′-0"	5′-0"	6′-3"	7′-6"	8′-3"	10′-6"	12′-0"	13′-9"	15′-0"	16′-3"	17′-9"	19′-4"	21′-3"	22′-0"	23′-0"	23′-10"	24′-8"
F	1′-6"	1′-6"	2′-0"	2′-3"	2′-6"	2′-8"	2′-10"	3′-0"	3′-4"	3′-6"	3′-6"	3′-7"	3′-7"	3′-9"	3′-9"	4′-0"	4′-4"
T	11½"	11½"	11½"	11½"	11½"	11½"	11½"	11½"	11½"	11½"	11½"	11½"	1′-2"	1′-5"	1′-10"	2′-3"	2′-9"
BATTER	½: 12	½: 12	½: 12	½: 12	½: 12	⅝: 12	⅝: 12	¾: 12	⅞: 12	1 : 12	1⅛: 12	1⅛: 12	1⅛: 12	1⅛: 12	1⅛: 12	1⅛: 12	1⅛: 12
SPACING "S"	16"	12"	10"	7"	7"	7"	7"	7"	7"	6"	6"	10"	8"	7"	7"	7"	7"
ⓐ BARS	-	-	-	-	-	-	-	-	-	-	-	-	-	-	#5	#5	#5
ⓑ BARS	-	-	-	-	-	-	-	-	-	#5	#5	#5	#5	#5	#7	#7	#7
ⓒ BARS	-	-	-	-	-	-	#6	#6	#6	#7	#8	#8	#8	#8	#9	#9	#9
ⓓ BARS	#5	#5	#6	#6	#7	#8	#9	#10	#10	#10	#11	#11	#11	#11	#11	#11	#11
ⓔ BARS	#5	#5	#6	#6	#7	#8	#9	#10	#10	#10	#11	#11	#11	#11	#11	#11	#11
h1	-	-	-	5′-3"	6′-4"	7′-6"	8′-9"	9′-9"	11′-0"	11′-3"	11′-6"	10′-3"	11′-9"	12′-3"	12′-6"	13′-3"	13′-8"
h2	-	-	-	-	-	-	12′-8"	15′-6"	17′-0"	16′-6"	17′-3"	18′-0"	17′-6"	17′-4"	14′-10"	15′-9"	16′-4"
h3	-	-	-	-	-	-	-	-	-	18′-9"	21′-3"	21′-3"	22′-4"	22′-8"	18′-0"	18′-6"	19′-6"
h4	-	-	-	-	-	-	-	-	-	-	-	-	-	-	26′-3"	27′-4"	28′-6"
No. of Toe Stirrups	0	0	0	0	0	0	0	0	0	0	0	5	5	6	7	8	9
No. of Heel Stirrups	0	0	0	0	0	0	0	0	4	6	7	8	10	10	11	11	11
ZONE 1 ⓢ BARS	#5 @ 18	#5 @ 18	#5 @ 18	#5 @ 18	#5 @ 18	#5 @ 18	#5 @ 18	#5 @ 18	#5 @ 12	#5 @ 12	#5 @ 12	#5 @ 12	#5 @ 12	#6 @ 12	#6 @ 12	#6 @ 10	#6 @ 10
ZONE 2 ⓢ BARS	#5 @ 18	#5 @ 18	#5 @ 18	#5 @ 18	#5 @ 18	#5 @ 12	#5 @ 12	#5 @ 12	#5 @ 12	#6 @ 12	#6 @ 12	#7 @ 12	#7 @ 12	#7 @ 12	#7 @ 12	#7 @ 10	#7 @ 10
ZONE 1 ⓣ BARS	#4 @ 18	#4 @ 18	#4 @ 18	#4 @ 18	#4 @ 18	#4 @ 18	#4 @ 18	#4 @ 18	#4 @ 18	#4 @ 18	#4 @ 18	#4 @ 12	#4 @ 12	#4 @ 12	#5 @ 12	#5 @ 12	#5 @ 12
ZONE 2 ⓣ BARS	#4 @ 18	#4 @ 18	#4 @ 18	#4 @ 18	#4 @ 18	#4 @ 12	#4 @ 12	#4 @ 12	#4 @ 12	#4 @ 12	#4 @ 12	#5 @ 12	#5 @ 12	#5 @ 12	#6 @ 12	#6 @ 12	#6 @ 12
Ser: B′, q'_o	4.0, 0.9	5.5, 1.0	9.3, 1.0	10.9, 1.3	12.3, 1.5	14.8, 1.9	16.6, 2.1	18.7, 2.4	20.6, 2.7	22.3, 3.0	24.2, 3.3	26.1, 3.5	28.2, 3.9	29.6, 4.0	31.1, 4.2	32.7, 4.4	34.1, 4.6
Str: B′, q_o	2.2, 2.2	3.5, 2.2	5.1, 2.3	6.3, 2.6	7.6, 2.7	12.9, 3.1	14.3, 3.6	16.5, 3.9	19.4, 4.5	20.7, 4.8	22.5, 5.2	24.3, 5.6	26.2, 6.0	27.5, 6.3	28.8, 6.6	30.3, 6.9	31.8, 7.2
Ext: B′, q_o	2.3, 3.4	2.7, 4.4	3.6, 5.0	3.8, 6.5	4.5, 7.0	7.0, 6.1	7.6, 6.9	9.3, 7.0	11.0, 7.1	11.8, 7.6	14.1, 7.4	15.6, 7.7	17.1, 8.0	17.2, 8.7	18.1, 9.0	19.0, 9.4	19.4, 10.0

NOTES:

1. For details not shown and drainage notes see RSP B3-5
2. For wall stem joint details see B0-3 3-3 and B0-3 3-4
3. At ⓓ and short ⓓ bars:
   H ≤ 6′, no splices are allowed within 1′-8" above the top of footing.
   H > 6′, no splices are allowed within H/4 above the top of footing.
4. Bundle ⓔ bars for H ≥ 26′.
5. Hook stirrups around & space with alternating transverse reinforcement at 2 x "S".

RSP B3-1B DATED APRIL 20, 2012 SUPPLEMENTS THE STANDARD PLANS BOOK DATED 2010.

STATE OF CALIFORNIA
DEPARTMENT OF TRANSPORTATION

RETAINING WALL TYPE 1 (CASE 2)

NO SCALE

REVISED STANDARD PLAN RSP B3-1B

2010 REVISED STANDARD PLAN RSP B3-1B

3-30-12

Dist	COUNTY	ROUTE	POST MILES TOTAL PROJECT	SHEET No.	TOTAL SHEETS
04	Sol	12,80	2.1/2.8, 12.0/13.1	454	597

REGISTERED CIVIL ENGINEER

April 20, 2012
PLANS APPROVAL DATE

REGISTERED PROFESSIONAL ENGINEER Gary Wang No. C58298 Exp. 6-30-12 CIVIL STATE OF CALIFORNIA

THE STATE OF CALIFORNIA OR ITS OFFICERS OR AGENTS SHALL NOT BE RESPONSIBLE FOR THE ACCURACY OR COMPLETENESS OF SCANNED COPIES OF THIS PLAN SHEET.

TO ACCOMPANY PLANS DATED 5-6-13

2010 REVISED STANDARD PLAN RSP B3-3B

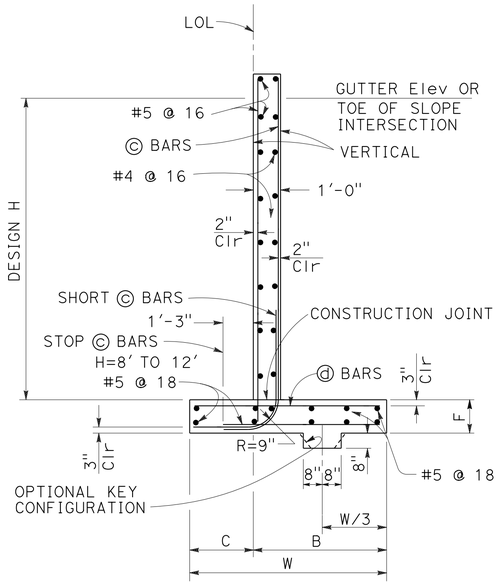

SPREAD FOOTING SECTION

Place concrete in toe against undisturbed material, except as permitted by the Engineer.

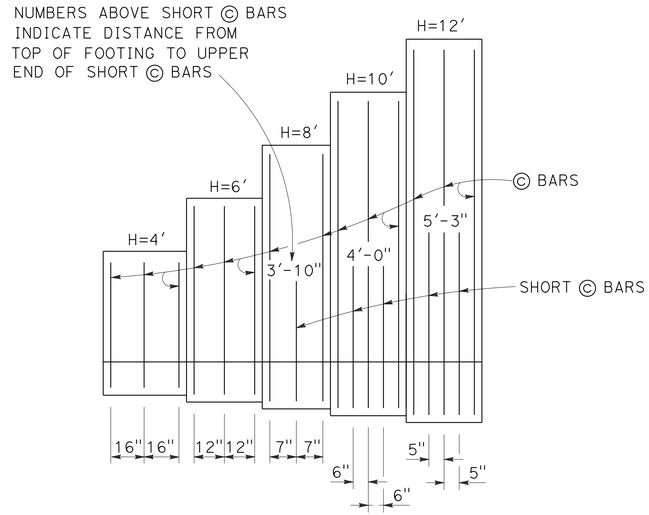

ELEVATION

DESIGN CONDITIONS:

Design H may be exceeded by 6" before going to the next size. Special footing design is required where foundation material is incapable of supporting bearing stress listed in the table.

DESIGN NOTES:

DESIGN: AASHTO LRFD Bridge Design Specifications, 4th Edition with California Amendments

LS: Varied surcharge on level ground surface

DC: Stem Architectural Treatment of thickness up to 6" of concrete (75 psf) considered

SEISMIC: $k_h = 0.2$
$k_v = 0.0$

SOIL: $\phi = 34°$
$\gamma = 120$ pcf

REINFORCED CONCRETE: $f'c = 3{,}600$ psi
$fy = 60{,}000$ psi

LOAD COMBINATIONS AND LIMIT STATES:

Service I	$Q = 1.00DC+1.00EV+1.00EH+1.00LS$
Strength I	$Q = \alpha DC+\phi EV+\eta EH+1.75LS$
Extreme I	$Q = 1.00DC+1.00EV+1.00EH+1.00EQD+1.00EQE$

Where:

Q:	Force Effects
α:	1.25 or 0.90, Whichever Controls Design
ϕ:	1.35 or 1.00, Whichever Controls Design
η:	1.50 or 0.90, Whichever Controls Design
DC:	Dead Load of Structure Components
EH:	Horizontal Earth Fill Pressure
EV:	Vertical Earth Pressure from Earth Fill Weight
LS:	Live Load Surcharge
EQE:	Seismic Earth Pressure
EQD:	Soil and Structural and Nonstructural Components Inertia

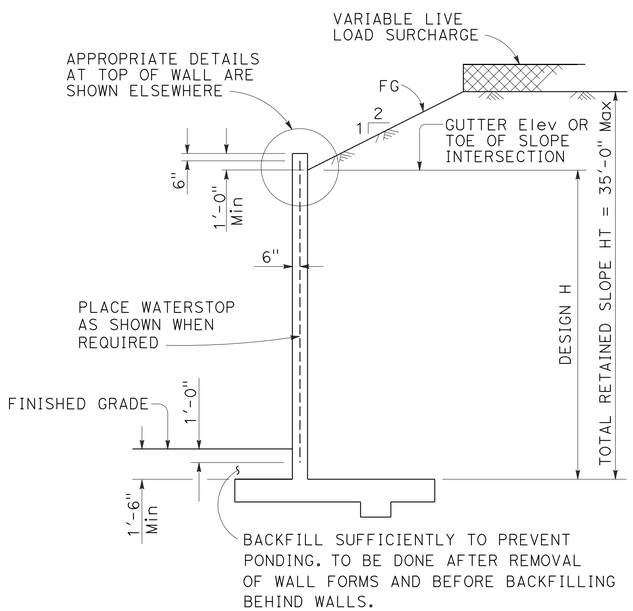

DESIGN SECTION

SYMBOLS:

Ser - service limit state I
Str - strength limit state I
Ext - extreme event limit state I
B' - effective footing width (ft)
q'_o - net bearing stress (ksf), OG assumed to be FG at toe
q_o - gross uniform bearing stress (ksf)

TABLE OF REINFORCING STEEL, DIMENSIONS AND DATA

DESIGN H	4'	6'	8'	10'	12'
W	5'-10"	7'-7"	9'-0"	11'-0"	12'-5"
C	2'-4"	2'-7"	3'-0"	3'-6"	4'-0"
B	3'-6"	5'-0"	6'-0"	7'-6"	8'-5"
F	1'-4"	1'-7"	1'-7"	1'-9"	1'-9"
ⓒ BARS	#5 @ 16	#5 @ 12	#5 @ 7	#6 @ 6	#7 @ 5
ⓓ BARS	#5 @ 16	#5 @ 12	#5 @ 7	#6 @ 6	#7 @ 5
Ser: B', q'_o	4.0, 0.8	5.6, 1.0	8.8, 1.1	10.6, 1.3	12.0, 1.6
Str: B', q_o	1.9, 2.0	3.5, 2.1	4.5, 2.3	6.5, 2.3	7.7, 2.5
Ext: B', q_o	2.8, 2.3	3.3, 3.3	3.9, 3.9	5.3, 4.1	5.9, 4.5

NOTES:

1. For details not shown and drainage notes see RSP B3-5
2. For wall stem joint details see B0-3 3-3 and B0-3 3-4
3. At ⓒ and short ⓒ bars:
   H ≤ 6', no splices are allowed within 1'-8" above the top of footing.
   H > 6', no splices are allowed within H/4 above the top of footing.

STATE OF CALIFORNIA
DEPARTMENT OF TRANSPORTATION

RETAINING WALL TYPE 1A (CASE 2)

NO SCALE

RSP B3-3B DATED APRIL 20, 2012 SUPPLEMENTS THE STANDARD PLANS BOOK DATED 2010.

REVISED STANDARD PLAN RSP B3-3B

2-22-12

Dist	COUNTY	ROUTE	POST MILES TOTAL PROJECT	SHEET No.	TOTAL SHEETS
04	Sol	12,80	2.1/2.8, 12.0/13.1	455	597

REGISTERED CIVIL ENGINEER

April 20, 2012
PLANS APPROVAL DATE

REGISTERED PROFESSIONAL ENGINEER Gary Wang No. C58298 Exp. 6-30-12 CIVIL STATE OF CALIFORNIA

THE STATE OF CALIFORNIA OR ITS OFFICERS OR AGENTS SHALL NOT BE RESPONSIBLE FOR THE ACCURACY OR COMPLETENESS OF SCANNED COPIES OF THIS PLAN SHEET.

TO ACCOMPANY PLANS DATED 5-6-13

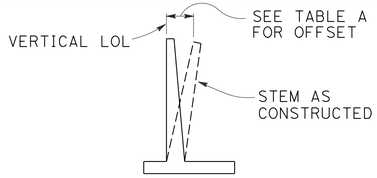

APPROXIMATE WALL OFFSET VALUES

Values for offseting forms to be determined by the Engineer.

TABLE A

H	OFFSET
4'-12'	H/200
14'-16'	H/160
18'-20'	H/140
22'-24'	H/130
26'-36'	2½"

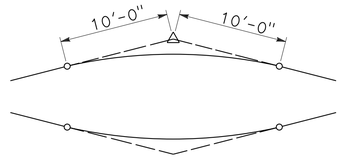

20'-0" VC AT TOP OF WALL SLOPE CHANGE

Where shown on the plans

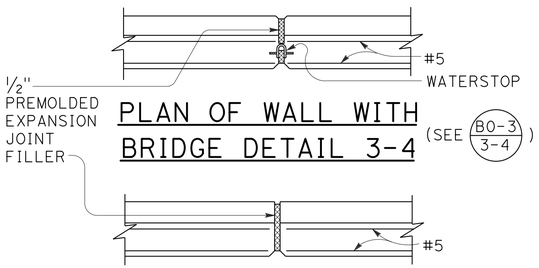

PLAN OF WALL WITH BRIDGE DETAIL 3-4

(SEE B0-3 / 3-4)

PLAN OF WALL WITH EXPANSION JOINT ONLY

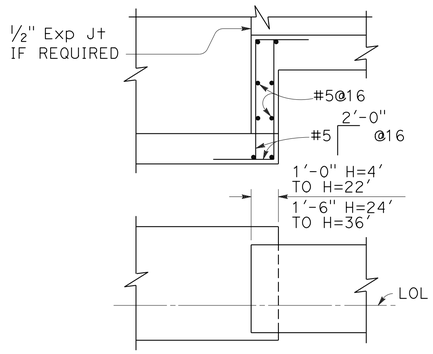

FOOTING STEP

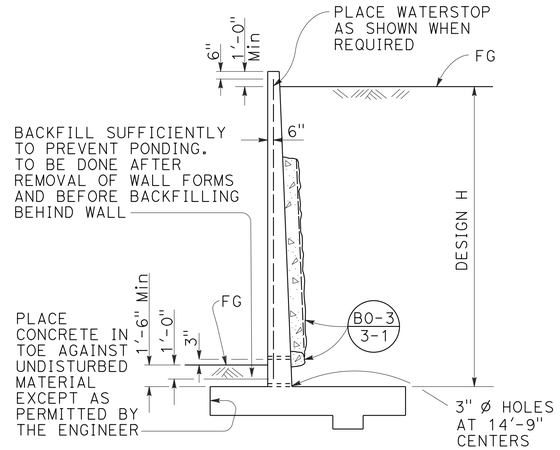

DESIGN AND DRAINAGE

DESIGN CONDITIONS:

Design "H" may be exceeded by 6" before going to the next size. Special footing design is required where foundation material is incapable of supporting bearing stress listed in table

Return wall not required unless shown elsewhere

DESIGN NOTES:

DESIGN: AASHTO LRFD Bridge Design Specifications, 4th edition with California Amendments

LIVE LOAD: Surcharge on level ground surface

SOIL: ϕ = 34°
γ = 120 pcf

REINFORCED CONCRETE: fy = 60,000 psi
fc' = 3,600 psi

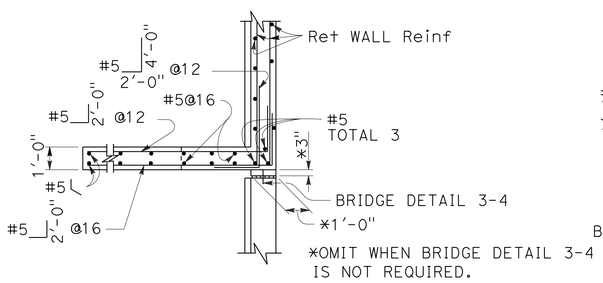

PLAN

(For return wall Type "A")

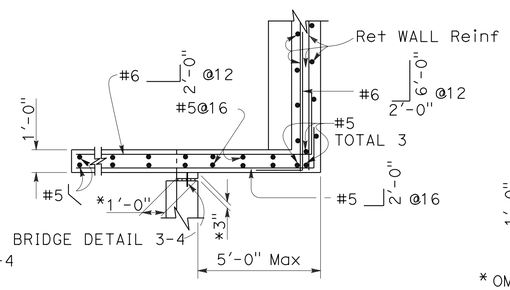

PLAN

(For return wall Type "B")

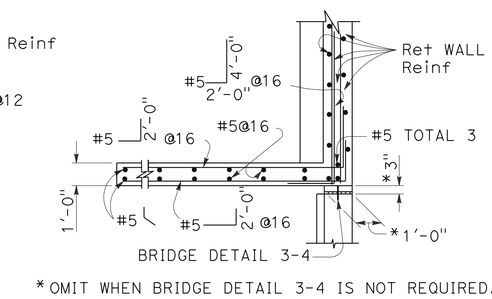

PLAN

(For return wall Type "C")

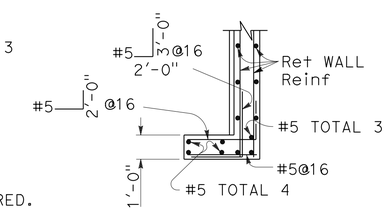

PLAN

(For return wall Type "D")

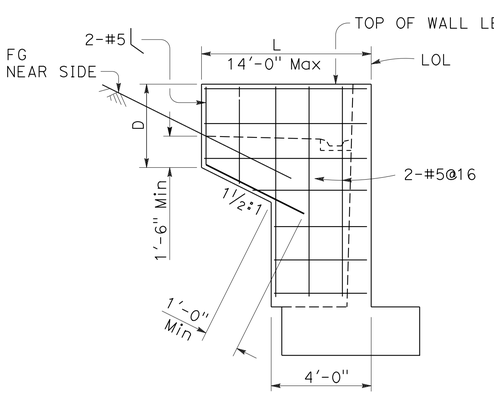

ELEVATION

RETURN WALL TYPE "A"

Use where H=8' or less

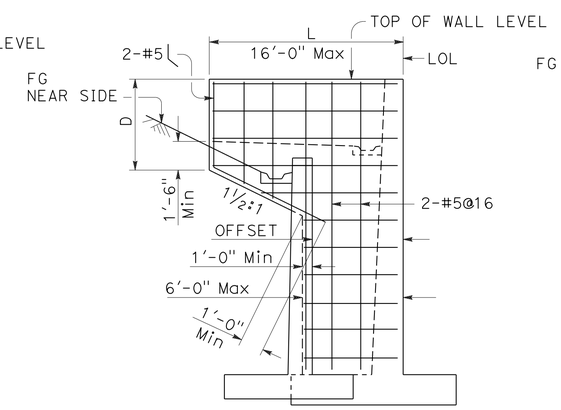

ELEVATION

RETURN WALL TYPE "B"

Use where H=10' or more on offset walls

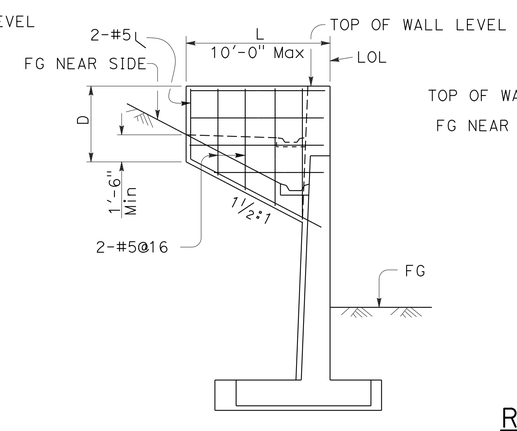

ELEVATION

RETURN WALL TYPE "C"

Use where H=10' or more on straight walls

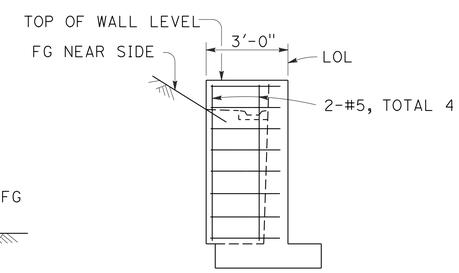

ELEVATION

RETURN WALL TYPE "D"

Use where H=6' or less

STATE OF CALIFORNIA
DEPARTMENT OF TRANSPORTATION

RETAINING WALL DETAILS No. 1

NO SCALE

RSP B3-5 DATED APRIL 20, 2012 SUPERSEDES STANDARD PLAN B3-5
DATED MAY 20, 2011 - PAGE 277 OF THE STANDARD PLANS BOOK DATED 2010.

REVISED STANDARD PLAN RSP B3-5

2010 REVISED STANDARD PLAN RSP B3-5

2-22-12

Dist	COUNTY	ROUTE	POST MILES TOTAL PROJECT	SHEET No.	TOTAL SHEETS
04	Sol	12,80	2.1/2.8, 12.0/13.1	456	597

REGISTERED CIVIL ENGINEER

October 21, 2011
PLANS APPROVAL DATE

REGISTERED PROFESSIONAL ENGINEER
Tillat Satter
No. C42892
Exp. 3-31-12
CIVIL
STATE OF CALIFORNIA

THE STATE OF CALIFORNIA OR ITS OFFICERS OR AGENTS SHALL NOT BE RESPONSIBLE FOR THE ACCURACY OR COMPLETENESS OF SCANNED COPIES OF THIS PLAN SHEET.

TO ACCOMPANY PLANS DATED 5-6-13

2010 REVISED STANDARD PLAN RSP B11-47

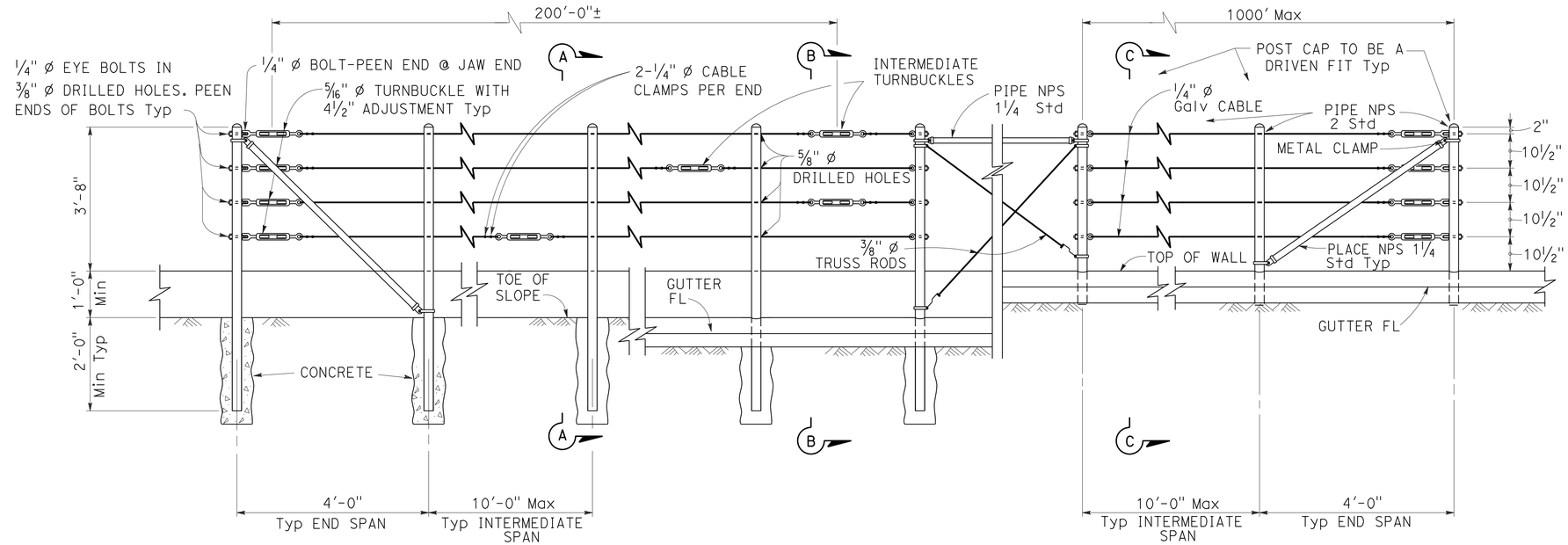

EXISTING WALL (WITHOUT GUTTER)
Existing

RETAINING WALL (WITH GUTTER)
Existing

RETAINING WALL (WITH GUTTER)
New construction

ELEVATION

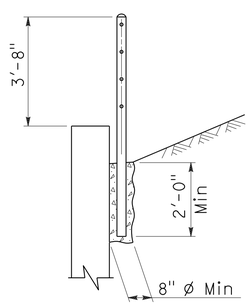

SECTION A-A
Existing

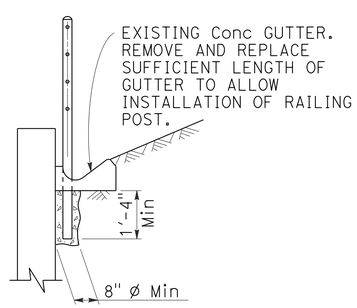

SECTION B-B
Existing

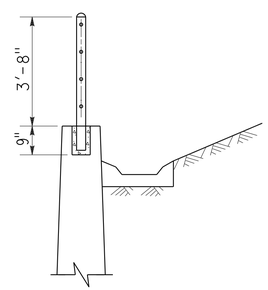

SECTION C-C
New construction

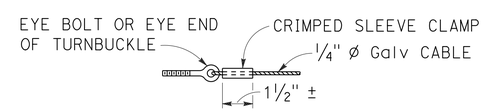

ALTERNATIVE CABLE CONNECTION

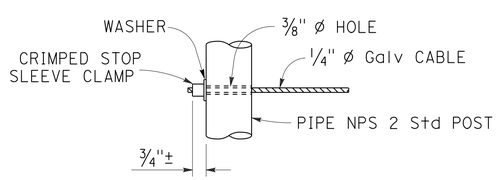

ALTERNATIVE DEAD END ANCHORAGE

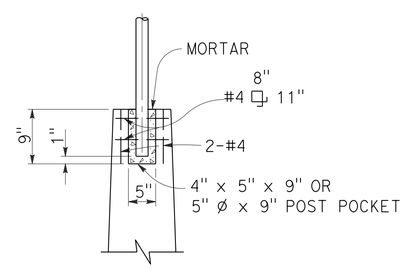

POST POCKET

NOTES:

1. Maximum distance between turnbuckles shall be 200'-0"±.
2. Intermediate turnbuckles to be placed in adjacent spans.
3. Cable shall not be spliced between intermediate turnbuckles and end posts.
4. Posts to be vertical.
5. Alignment of holes in posts may vary to conform to slope of top of retaining wall.
6. The Contractor shall verify all dependent dimensions in the field before ordering or fabricating any material.
7. Line posts shall be braced horizontally and trussed diagonally in both directions at intervals not to exceed 1000'.
8. Post pockets to be centered in top of wall.
9. Typical end spans, braced in both directions, shall be constructed at changes in line where the angle of deflection is 15° or more.
10. Provide thimbles at all cable loops.

STATE OF CALIFORNIA
DEPARTMENT OF TRANSPORTATION

CABLE RAILING

NO SCALE

RSP B11-47 DATED OCTOBER 21, 2011 SUPERSEDES STANDARD PLAN B11-47 DATED MAY 20, 2011 - PAGE 293 OF THE STANDARD PLANS BOOK DATED 2010.

REVISED STANDARD PLAN RSP B11-47

DIST	COUNTY	ROUTE	POST MILES TOTAL PROJECT	SHEET NO.	TOTAL SHEETS
04	Sol	12,80	2.1/2.8, 12.0/13.1	457	597

REGISTERED ELECTRICAL ENGINEER

January 20, 2012
PLANS APPROVAL DATE

REGISTERED PROFESSIONAL ENGINEER
Jeffery G. McRae
No. E14512
Exp. 6-30-12
ELECTRICAL
STATE OF CALIFORNIA

THE STATE OF CALIFORNIA OR ITS OFFICERS OR AGENTS SHALL NOT BE RESPONSIBLE FOR THE ACCURACY OR COMPLETENESS OF SCANNED COPIES OF THIS PLAN SHEET.

TO ACCOMPANY PLANS DATED 5-6-13

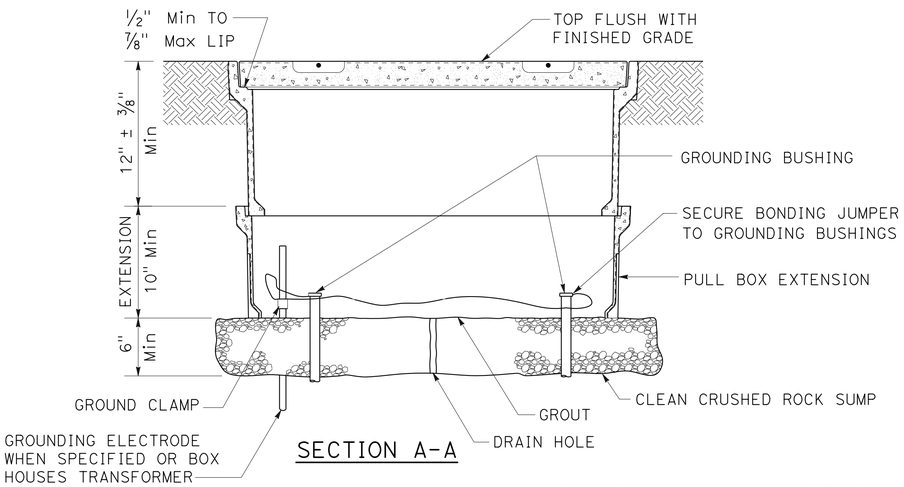

SECTION A-A

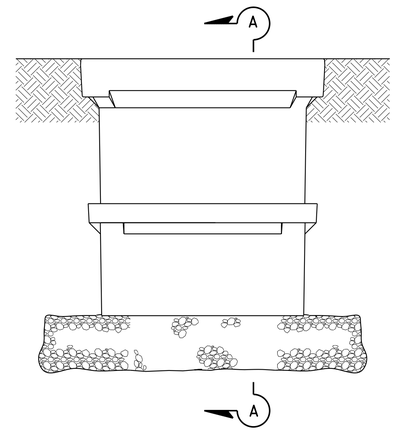

SIDE VIEW

INSTALLATION DETAILS

DETAIL A

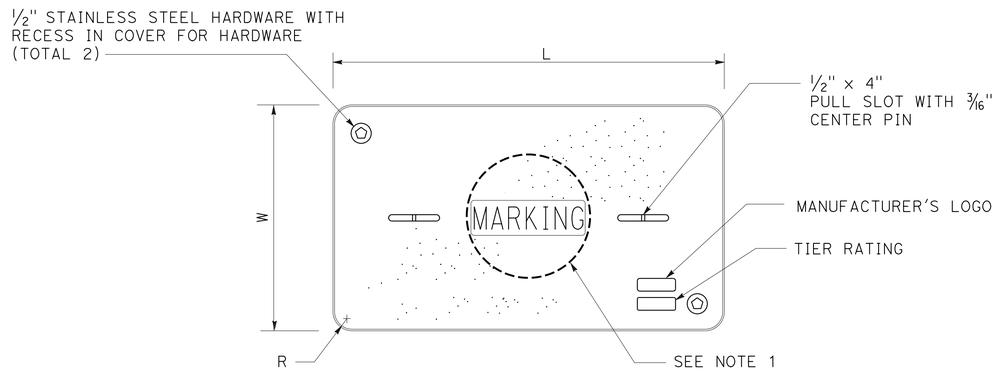

COVER TOP VIEW

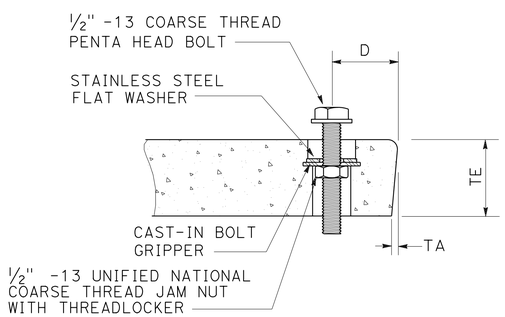

TYPICAL COVER CAPTIVE BOLT

OR SIMILAR

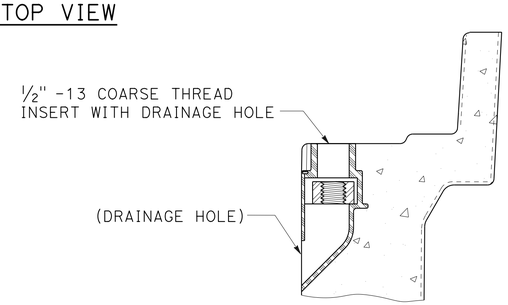

TYPICAL THREADED INSERT

OR SIMILAR

DIMENSION TABLE										
PULL BOX	PULL BOX			COVER						
	MINIMUM DEPTH BOX	MINIMUM DEPTH EXTENSION	MAXIMUM WEIGHT	L	W	R	TE	TA	D	MAXIMUM WEIGHT
No. 3 1/2	12"	N/A	40 lb	1' - 3 3/8"	10 1/8"	1 3/8"	2"	1/8"	1 3/4"	30 lb
No. 5	12"	10"	55 lb	1' - 11 1/4"	1' - 1 3/4"	1 3/8"	2"	1/8"	1 3/4"	60 lb
No. 6	12"	10"	70 lb	2' - 6 1/2"	1' - 5 1/2"	1 3/8"	2"	1/8"	2"	85 lb

NOTES ON PULL BOXES:

1. Pull box covers must be marked as follows: "SERVICE" Service circuits between service point and service disconnect; "SPRINKLER-CONTROL" sprinkler control circuits, 50 V or less; "CALTRANS" on all pull boxes, except pull boxes marked "SPRINKLER-CONTROL"; and "TELEPHONE" Telephone service;

   A) No. 3 1/2 pull box.
      1) "SIGNAL" - Traffic signal circuits with or without street or sign lighting circuits.
      2) "ST LIGHTING" - Street or sign lighting circuits where voltage is under 600 V.

   B) No. 5, 6, 9 or 9A pull box.
      1) "TRAFFIC SIGNAL" - Traffic signal circuits with or without street or sign lighting circuits.
      2) "STREET LIGHTING" - Street or sign lighting circuits where voltage is under 600 V.
      3) "STREET LIGHTING-HIGH VOLTAGE" - Street or sign lighting circuits where voltage is above 600 V.
      4) "IRRIGATION" - Circuits to irrigation controller 120 V or more.
      5) "RAMP METER" - Ramp meter circuits.
      6) "COUNT STATION" - Count or speed monitor circuits.
      7) "COMMUNICATIONS" - Communication circuits.
      8) "TOS COMMUNICATIONS" - TOS communication line.
      9) "TOS POWER" - TOS power.
      10) "TDC POWER" - Telephone demarcation cabinet power.
      11) "CCTV" - Closed circuit television circuits.
      12) "TMS" - Traffic monitoring station circuits.
      13) "CMS" - Changeable message sign circuits.
      14) "HAR" - Highway advisory radio circuits.

2. The nominal dimensions of the opening in which the cover sets must be the same as the cover dimensions (L and W) plus 1/8" or greater.

3. Covers and boxes must be interchangeable with California Standard. When interchanged with a standard, the top surfaces must be flush within 1/8". Top outside radius of covers and pull boxes must have a 1/8" radius.

4. Pull box extension may be another pull box as long as the bottom edge of the pull box can fit into the cover opening.

STATE OF CALIFORNIA
DEPARTMENT OF TRANSPORTATION

ELECTRICAL SYSTEMS (PULL BOX)

NO SCALE

RSP ES-8A DATED JANUARY 20, 2012 SUPPLEMENTS THE STANDARD PLANS BOOK DATED 2010.

REVISED STANDARD PLAN RSP ES-8A

2010 REVISED STANDARD PLAN RSP ES-8A

01-09-12

DIST	COUNTY	ROUTE	POST MILES TOTAL PROJECT	SHEET NO.	TOTAL SHEETS
04	Sol	12,80	2.1/2.8, 12.0/13.1	458	597

REGISTERED ELECTRICAL ENGINEER

January 20, 2012
PLANS APPROVAL DATE

REGISTERED PROFESSIONAL ENGINEER Jeffery G. McRae No. E14512 Exp. 6-30-12 ELECTRICAL STATE OF CALIFORNIA

THE STATE OF CALIFORNIA OR ITS OFFICERS OR AGENTS SHALL NOT BE RESPONSIBLE FOR THE ACCURACY OR COMPLETENESS OF SCANNED COPIES OF THIS PLAN SHEET.

TO ACCOMPANY PLANS DATED 5-6-13

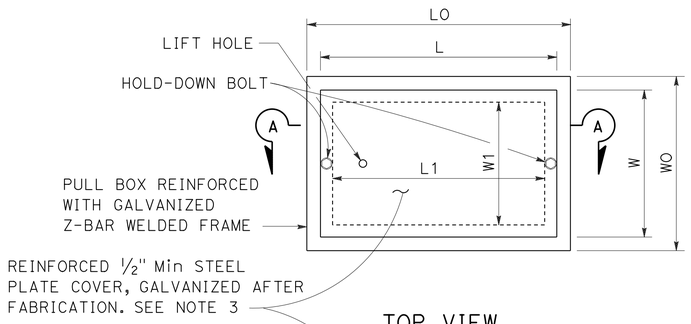

TOP VIEW

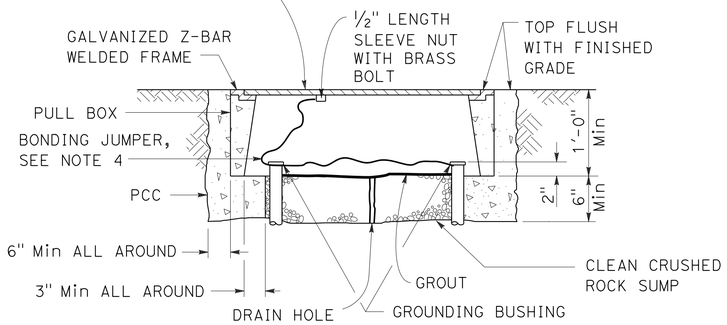

SECTION A-A

No. 3½(T), No. 5(T) AND No. 6(T) TRAFFIC PULL BOX

NOTES ON PULL BOXES:

1. Traffic pull box shall be provided with steel cover and special concrete footing. Steel cover shall have embossed non-skid pattern.
2. Steel reinforcing shall be as regularly used in the standard products of the respective manufacturer.
3. Pull box covers must be marked as follows: "SERVICE" Service circuits between service point and service disconnect; "SPRINKLER-CONTROL" Sprinkler control circuits, 50 V or less; "CALTRANS" On all pull boxes, except pull boxes marked "SPRINKLER-CONTROL"; and "TELEPHONE" Telephone service.
   A) No. 3½(T) pull box.
      1) "SIGNAL" - Traffic signal circuits with or without street or sign lighting circuits.
      2) "ST LIGHTING" - Street or sign lighting circuits where voltage is under 600 V.
   B) No. 5(T) or 6(T) pull box.
      1) "TRAFFIC SIGNAL" - Traffic signal circuits with or without street or sign lighting circuits.
      2) "STREET LIGHTING" - Street or sign lighting circuits where voltage is under 600 V.
      3) "STREET LIGHTING-HIGH VOLTAGE" - Street or sign lighting circuits where voltage is above 600 V.
      4) "IRRIGATION" - Circuits to irrigation controller 120 V or more.
      5) "RAMP METER" - Ramp meter circuits.
      6) "COUNT STATION" - Count or speed monitor circuits.
      7) "COMMUNICATION" - Communication circuits.
      8) "TOS COMMUNICATIONS" - TOS communications line.
      9) "TOS POWER" - TOS power.
      10) "TDC POWER" - Telephone demarcation cabinet power.
      11) "CCTV" - Closed circuit television circuits.
      12) "TMS" - Traffic monitoring station circuits.
      13) "CMS" - Changeable message sign circuits.
      14) "HAR" - Highway advisory radio circuits.
4. Bonding jumper for metal covers shall be 3' long, minimum.
5. The nominal dimensions of the opening in which the cover sets must be the same as the cover dimensions except the length and width dimensions shall be ⅛" greater.
6. Covers and boxes must be interchangeable with California standard male and female gages. When interchanged with a standard male or female gage, the top surfaces must be flush within ⅛".

DIMENSION TABLE

PULL BOX	BOX						COVER				
	MINIMUM * THICKNESS	MINIMUM DEPTH BOX AND EXTENSION	WO	LO	L1	W1	L **	W **	R	EDGE THICKNESS	EDGE TAPER
No. 3½(T)	1½"	1'-0"	1'-5"± 1"	1'-8⅞"±	1'-2½"±	10⅝"± 1"	1'-8"±	1'-1¾"±	0"	½"	NONE
No. 5(T)	1¾"	1'-0"	1'-11½"± 1"	2'-5½"±	1'-7"±	1'-1"± 1"	2'-3"±	1'-4"±	0"	½"	NONE
No. 6(T)	2"	1'-0"	2'-6"± 1"	2'-11½"±	1'-11½"±	1'-5"± 1"	2'-9"±	1'-8"±	0"	½"	NONE

* EXCLUDING CONDUIT WEB ** TOP DIMENSION

STATE OF CALIFORNIA
DEPARTMENT OF TRANSPORTATION

ELECTRICAL SYSTEMS (TRAFFIC RATED PULL BOX)

NO SCALE

RSP ES-8B DATED JANUARY 20, 2012 SUPPLEMENTS THE STANDARD PLANS BOOK DATED 2010.

REVISED STANDARD PLAN RSP ES-8B

2010 REVISED STANDARD PLAN RSP ES-8B

Dist	COUNTY	ROUTE	POST MILES TOTAL PROJECT	SHEET No.	TOTAL SHEETS
04	Sol	12,80	2.1/2.8, 12.0/13.1	459	597

REGISTERED ELECTRICAL ENGINEER

July 20, 2012
PLANS APPROVAL DATE

REGISTERED PROFESSIONAL ENGINEER
Jeffery G. McRae
No. E14512
Exp. 6-30-14
ELECTRICAL
STATE OF CALIFORNIA

THE STATE OF CALIFORNIA OR ITS OFFICERS OR AGENTS SHALL NOT BE RESPONSIBLE FOR THE ACCURACY OR COMPLETENESS OF SCANNED COPIES OF THIS PLAN SHEET.

TO ACCOMPANY PLANS DATED 5-6-13

ISOFOOTCANDLE CURVE - MINIMUM

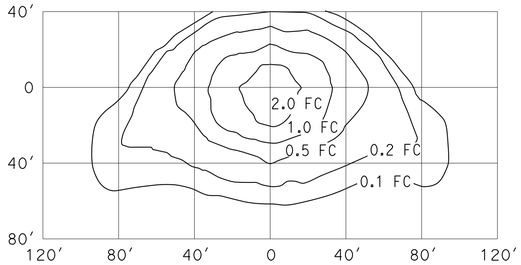

TYPE III MEDIUM CUTOFF

Cutoff Luminaire
34′ Mounting Height
Lamp operated at 22,000 lm
200-W high pressure sodium lamp
ANSI Designation S66

ISOFOOTCANDLE CURVE - MINIMUM

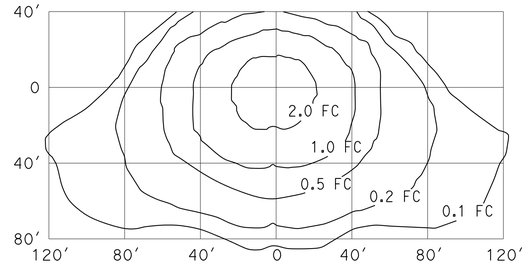

TYPE III MEDIUM CUTOFF

Cutoff Luminaire
40′ Mounting Height
Lamp operated at 37,000 lm
310-W high pressure sodium lamp
ANSI Designation S67

ISOFOOTCANDLE CURVE - MINIMUM

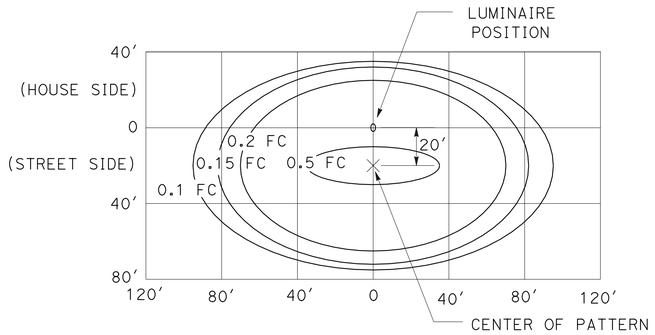

LED LUMINAIRE ROADWAY 1

200-W HPS Equivalent at 34′ Mounting Height

ISOFOOTCANDLE CURVE - MINIMUM

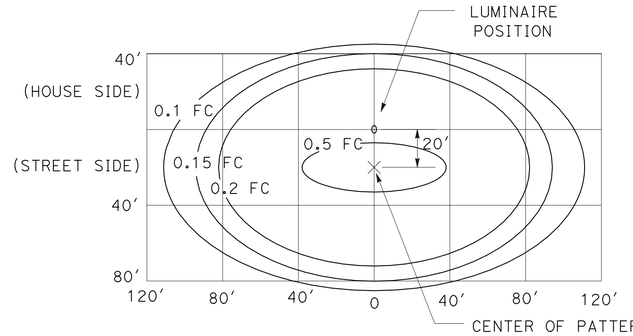

LED LUMINAIRE ROADWAY 2

310-W HPS Equivalent at 40′ Mounting Height

ISOFOOTCANDLE CURVE - MINIMUM

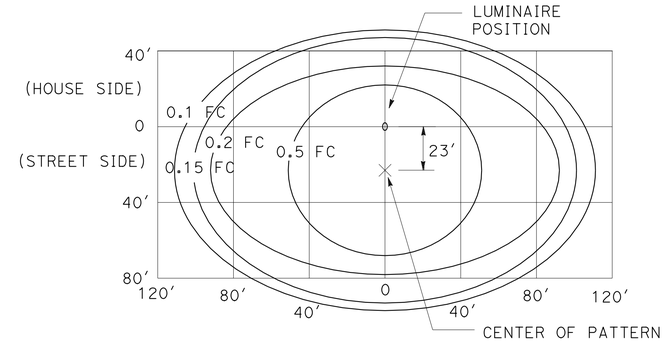

LED LUMINAIRE ROADWAY 4

400-W HPS Equivalent at 40′ Mounting Height

ISOFOOTCANDLE CURVE - MINIMUM

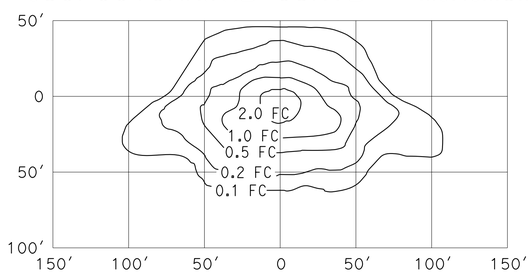

TYPE III MEDIUM CUTOFF

Cutoff Luminaire
30′ Mounting Height
Lamp operated at 16,000 lm
150-W high pressure sodium lamp
ANSI Designation S55

ISOFOOTCANDLE CURVE - MINIMUM

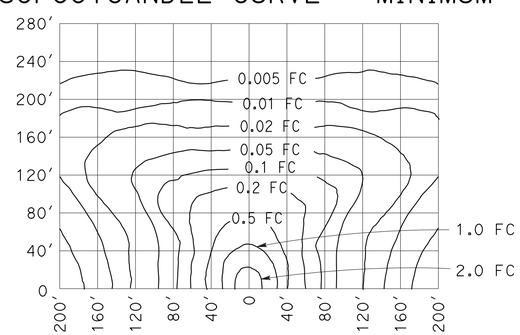

LOW PRESSURE SODIUM LUMINAIRE

40′ Mounting Height
Lamp operated at 33,000 lm
180-W low pressure sodium lamp

STATE OF CALIFORNIA
DEPARTMENT OF TRANSPORTATION

ELECTRICAL SYSTEMS (ISOFOOTCANDLE DIAGRAMS)

NO SCALE

RSP ES-10A DATED JULY 20, 2012 SUPPLEMENTS THE STANDARD PLANS BOOK DATED 2010.

REVISED STANDARD PLAN RSP ES-10A

2010 REVISED STANDARD PLAN RSP ES-10A

2-16-12

Dist	COUNTY	ROUTE	POST MILES TOTAL PROJECT	SHEET No.	TOTAL SHEETS
04	Sol	12,80	2.1/2.8, 12.0/13.1	460	597

REGISTERED ELECTRICAL ENGINEER

July 20, 2012
PLANS APPROVAL DATE

REGISTERED PROFESSIONAL ENGINEER
Jeffery G. McRae
No. E14512
Exp. 6-30-14
ELECTRICAL
STATE OF CALIFORNIA

THE STATE OF CALIFORNIA OR ITS OFFICERS OR AGENTS SHALL NOT BE RESPONSIBLE FOR THE ACCURACY OR COMPLETENESS OF SCANNED COPIES OF THIS PLAN SHEET.

TO ACCOMPANY PLANS DATED 5-6-13

ISOFOOTCANDLE CURVE - MINIMUM

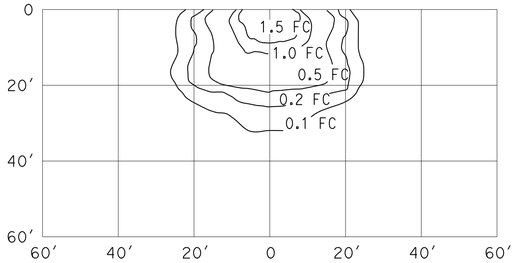

WALL LUMINAIRE
15′ Mounting Height
Lamp operated at 5,800 lm
70-W high pressure sodium lamp
ANSI Designation S62

ISOFOOTCANDLE CURVE - MINIMUM

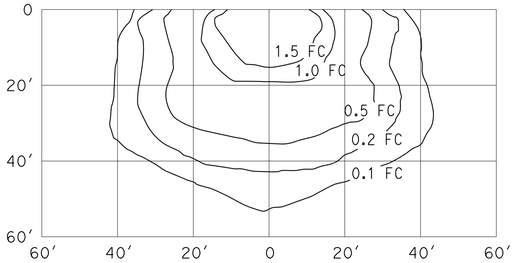

WALL LUMINAIRE
15′ Mounting Height
Lamp operated at 9,500 lm
100-W high pressure sodium lamp
ANSI Designation S54

ISOFOOTCANDLE CURVE - MINIMUM

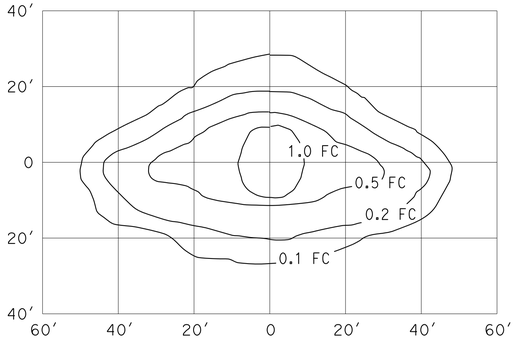

PENDANT SOFFIT LUMINAIRE
TYPE III SHORT
17′ Mounting Height
Lamp operated at 5,800 lm
70-W high pressure sodium lamp
ANSI Designation S62

ISOFOOTCANDLE CURVE - MINIMUM

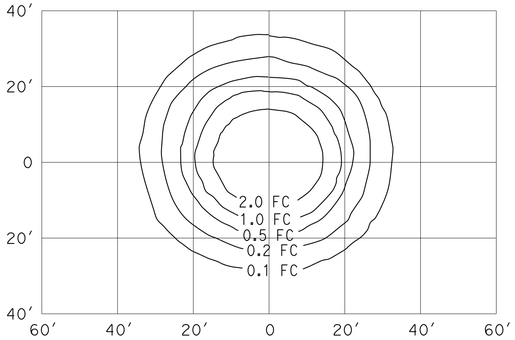

PENDANT SOFFIT LUMINAIRE
17′ Mounting Height
Lamp operated at 5,800 lm
70-W high pressure sodium lamp
ANSI Designation S62

ISOFOOTCANDLE CURVE - MINIMUM

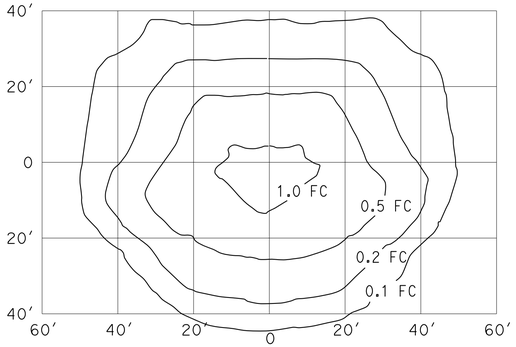

FLUSH SOFFIT LUMINAIRE
17′ Mounting Height
Lamp operated at 5,800 lm
70-W high pressure sodium lamp
ANSI Designation S62

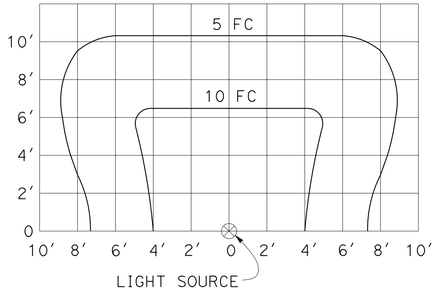

SIGN LIGHTING FIXTURE
ISOFOOTCANDLE DIAGRAM

NOTES:

1. Curves represent the minimum footcandle (FC) of initial illumination on a 10′-0" x 20′-0" panel.
2. The FC shown are with the fixture attached to the light fixture mounting channel which places the center of the source 4′-8" in front of panel and 1′-0" below the bottom edge.
3. Applicable lamp: 85-W fluorescent phosphor coated induction lamp.

STATE OF CALIFORNIA
DEPARTMENT OF TRANSPORTATION

ELECTRICAL SYSTEMS (ISOFOOTCANDLE DIAGRAMS)

NO SCALE

RSP ES-10B DATED JULY 20, 2012 SUPPLEMENTS THE STANDARD PLANS BOOK DATED 2010.

REVISED STANDARD PLAN RSP ES-10B

2010 REVISED STANDARD PLAN RSP ES-10B

DIST	COUNTY	ROUTE	POST MILES TOTAL PROJECT	SHEET NO	TOTAL SHEETS
04	Sol	12,80	2.1/2.8, 12.0/13.1	461	597

Chandu Shenoy 9/12/12
REGISTERED CIVIL ENGINEER DATE

5-6-13
PLANS APPROVAL DATE

REGISTERED PROFESSIONAL ENGINEER CHANDU V. SHENOY NO. C-53636 EXP. 6/30/13 CIVIL STATE OF CALIFORNIA

THE STATE OF CALIFORNIA OR ITS OFFICERS OR AGENTS SHALL NOT BE RESPONSIBLE FOR THE ACCURACY OR COMPLETENESS OF ELECTRONIC COPIES OF THIS PLAN SHEET.

SOLANO TRANSPORTATION AUTHORITY
ONE HARBOR CENTER, SUITE 130
SUISUN CITY, CA 94585

MARK THOMAS & COMPANY, INC. + NOLTE ASSOCIATES, INC.
3000 OAK ROAD, SUITE 650
WALNUT CREEK, CA 94597

STANDARD PLANS 2010

A10A	ABBREVIATIONS (SHEET 1 OF 2)
A10B	ABBREVIATIONS (SHEET 2 OF 2)
A10C	LINES AND SYMBOLS (SHEET 1 OF 3)
A10D	LINES AND SYMBOLS (SHEET 2 OF 3)
A10E	LINES AND SYMBOLS (SHEET 3 OF 3)
A10F	LEGEND - SOIL (SHEET 1 OF 2)
A10G	LEGEND - SOIL (SHEET 1 OF 2)
A62B	LIMITS OF PAYMENT FOR EXCAVATION AND BACKFILL BRIDGE SURCHARGE AND WALL
A85	CHAIN LINK FENCE
B0-3	BRIDGE DETAILS
B2-5	PILE DETAILS - CLASS 90 AND CLASS 140
RSP-B3-1A	RETAINING WALL TYPE 1 (CASE 1)
RSP-B3-1B	RETAINING WALL TYPE 1 (CASE 2)
RSP-B3-3B	RETAINING WALL TYPE 1A (CASE 2)
RSP-B3-5	RETAINING WALL DETAILS NO. 1
B3-6	RETAINING WALL DETAILS NO. 2
B11-7	CHAIN LINK RAILING
RSP-B11-47	CABLE RAILING
B11-52	CHAIN LINK RAILING TYPE 7
B11-54	CONCRETE BARRIER TYPE 26
B11-55	CONCRETE BARRIER TYPE 732
D102	UNDERDRAINS

STANDARD PLAN SHEET NO.

DETAIL NO.

INDEX TO PLANS

SHEET NO.	TITLE
1	RETAINING WALL NO. 1 (TYPE 1A) - GENERAL PLAN
2	RETAINING WALL NO. 2 (MSE WALL) - GENERAL PLAN NO. 1
3	RETAINING WALL NO. 2 (MSE WALL) - GENERAL PLAN NO. 2
4	RETAINING WALL NO. 2 (MSE WALL) - DETAILS
5	RETAINING WALL NO. 3 (TYPE 1A) - GENERAL PLAN
6	RETAINING WALL NO. 4 (MSE WALL) - GENERAL PLAN
7	RETAINING WALL NO. 4 (MSE WALL) - DETAILS
8	RETAINING WALL NO. 5 (TYPE 1) - GENERAL PLAN
9	RETAINING WALL NO. 6 (MSE WALL) - GENERAL PLAN
10	RETAINING WALL NO. 6 (MSE WALL) - STRUCTURES PLAN NO. 1
11	RETAINING WALL NO. 6 (MSE WALL) - STRUCTURES PLAN NO. 2
12	RETAINING WALL NO. 6 (MSE WALL) - DETAILS
13	RETAINING WALL NO. 7 (MSE WALL) - GENERAL PLAN
14	RETAINING WALL NO. 7 (MSE WALL) - STRUCTURES PLAN NO. 1
15	RETAINING WALL NO. 7 (MSE WALL) - STRUCTURES PLAN NO. 2
16	RETAINING WALL NO. 7 (MSE WALL) - STRUCTURES PLAN NO. 3
17	RETAINING WALL NO. 8 (MSE WALL) - GENERAL PLAN
18	RETAINING WALL NO. 9 (TYPE 1) - GENERAL PLAN
19	RETAINING WALL NO. 10 (TYPE 1-P) - GENERAL PLAN NO. 1
20	RETAINING WALL NO. 10 (TYPE 1-P) - GENERAL PLAN NO. 2
21	RETAINING WALL NO. 10 (TYPE 1-P) - FOOTING AND PILE LAYOUT NO. 1
22	RETAINING WALL NO. 10 (TYPE 1-P) - FOOTING AND PILE LAYOUT NO. 2
23	MSE DETAILS NO. 1
24	MSE DETAILS NO. 2
25	MSE DETAILS NO. 3
26	MSE DETAILS NO. 4
27	MSE DETAILS NO. 5
28	MSE DETAILS NO. 6
29	CHAIN LINK RAILING (TYPE 7 MODIFIED)
30	AESTHETIC TREATMENT - RETAINING WALL NO. 1
31	AESTHETIC TREATMENT - RETAINING WALL NO. 2 (MSE)
32	AESTHETIC TREATMENT - RETAINING WALL NO. 3 (TYPE 1A)
33	AESTHETIC TREATMENT - RETAINING WALL NO. 4 (MSE)
34	AESTHETIC TREATMENT - RETAINING WALL NO. 5
35	AESTHETIC TREATMENT - RETAINING WALL NO. 6
36	AESTHETIC TREATMENT - RETAINING WALL NO. 7 (MSE)
37	AESTHETIC TREATMENT - RETAINING WALL NO. 8 AND 9
38	AESTHETIC TREATMENT - RETAINING WALL NO. 10
39	AESTHETIC TREATMENT - DETAILS NO. 1
40	AESTHETIC TREATMENT - DETAILS NO. 2
41	AESTHETIC TREATMENT - DETAILS NO. 3
42	LOG OF TEST BORINGS 1 OF 10
43	LOG OF TEST BORINGS 2 OF 10
44	LOG OF TEST BORINGS 3 OF 10
45	LOG OF TEST BORINGS 4 OF 10
46	LOG OF TEST BORINGS 5 OF 10
47	LOG OF TEST BORINGS 6 OF 10
48	LOG OF TEST BORINGS 7 OF 10
49	LOG OF TEST BORINGS 8 OF 10
50	LOG OF TEST BORINGS 9 OF 10
51	LOG OF TEST BORINGS 10 OF 10

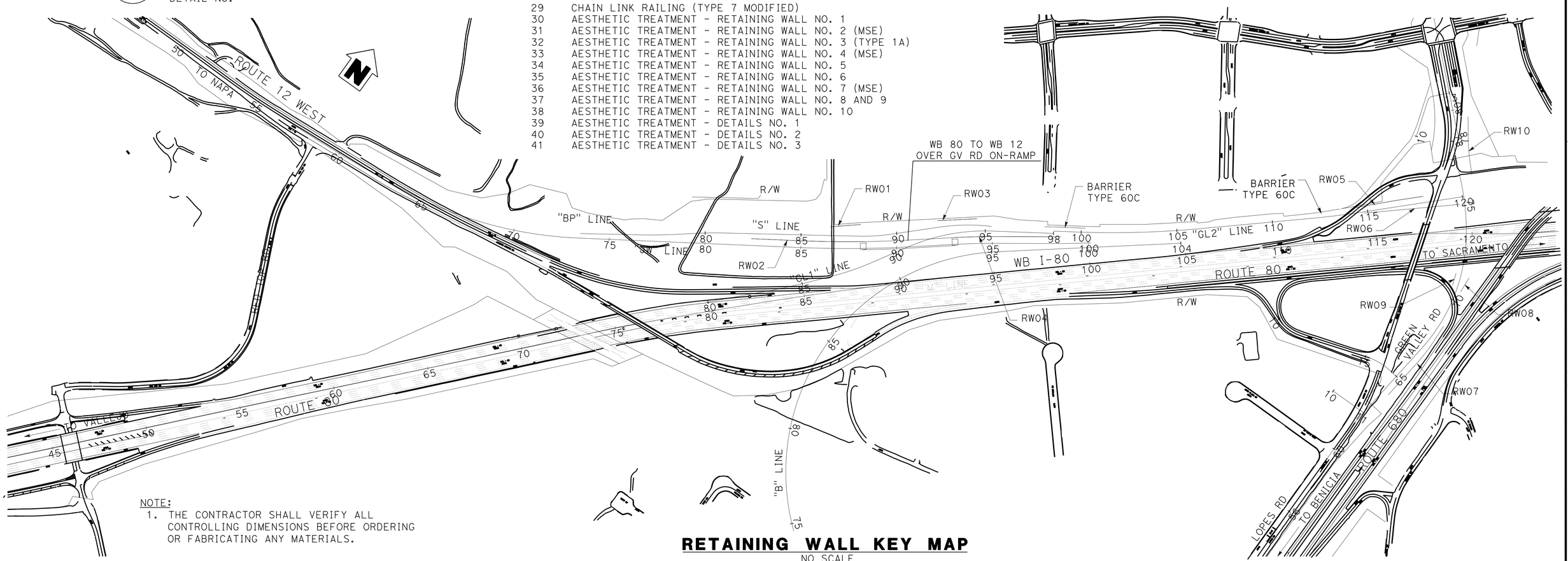

NOTE:
1. THE CONTRACTOR SHALL VERIFY ALL CONTROLLING DIMENSIONS BEFORE ORDERING OR FABRICATING ANY MATERIALS.

RETAINING WALL KEY MAP

NO SCALE

Tracy L Bertram — DESIGN OVERSIGHT Tracy L Bertram; 1-7-13 SIGN OFF DATE	DESIGN	BY L. KINNEBREW	CHECKED C. SHENOY	LOAD & RESISTANCE FACTOR DESIGN	LIVE LOADING: HL93 W/"LOW-BOY"; PERMIT DESIGN VEHICLE
	DETAILS	BY L. KINNEBREW	CHECKED C. SHENOY	LAYOUT	BY B. ROCK — CHECKED C. SHENOY
	QUANTITIES	BY L. KINNEBREW	CHECKED C. SHENOY	SPECIFICATIONS	BY T. WALKER — PLANS AND SPECS COMPARED C. SHENOY

PREPARED FOR THE STATE OF CALIFORNIA DEPARTMENT OF TRANSPORTATION

C. SHENOY
PROJECT ENGINEER

BRIDGE NO.
POST MILES

I-80/I-680/SR-12 ICP
RETAINING WALL KEY MAP

DESIGN GENERAL PLAN SHEET (ENGLISH) (REV.3/14/12)

ORIGINAL SCALE IN INCHES FOR REDUCED PLANS 0 1 2 3

UNIT: 0741
PROJECT NUMBER & PHASE: 04000211311 CONTRACT NO.: 04-0A5341

DISREGARD PRINTS BEARING EARLIER REVISION DATES

REVISION DATES 7/8/11 10/9/11 1/19/12 9/12/12 SHEET 1 OF 1

FILE => 04-0a5341-rw00-km.dgn

USERNAME => s121614 DATE PLOTTED => 10-MAY-2013 TIME PLOTTED => 06:22

DIST	COUNTY	ROUTE	POST MILES TOTAL PROJECT	SHEET NO	TOTAL SHEETS
04	Sol	12,80	2.1/2.8, 12.0/13.1	462	597

Chandu Shenoy 9/12/12
REGISTERED CIVIL ENGINEER DATE

5-6-13
PLANS APPROVAL DATE

REGISTERED PROFESSIONAL ENGINEER CHANDU V. SHENOY NO. C-53636 EXP. 6/30/13 CIVIL STATE OF CALIFORNIA

THE STATE OF CALIFORNIA OR ITS OFFICERS OR AGENTS SHALL NOT BE RESPONSIBLE FOR THE ACCURACY OR COMPLETENESS OF ELECTRONIC COPIES OF THIS PLAN SHEET.

SOLANO TRANSPORTATION AUTHORITY
ONE HARBOR CENTER, SUITE 130
SUISUN CITY, CA 94585

MARK THOMAS & COMPANY, INC. + NOLTE ASSOCIATES, INC.
3000 OAK ROAD, SUITE 650
WALNUT CREEK, CA 94597

RETAINING WALL NO.1 #23-RW01
QUANTITIES

STRUCTURE EXCAVATION (RETAINING WALL)	388	CY
STRUCTURE BACKFILL (RETAINING WALL)	510	CY
PERVIOUS BACKFILL MATERIAL (RETAINING WALL)	17	CY
CLASS 2 AGGREGATE BASE (CY)	94	CY
STRUCTURAL CONCRETE, RETAINING WALL	154	CY
ARCHITECTURAL TREATMENT	1,030	SQFT
BAR REINFORCING STEEL (RETAINING WALL)	17,200	LB
MINOR CONCRETE (GUTTER) (LF)	157	LF
CHAIN LINK FENCE (TYPE CL-4)	157	LF

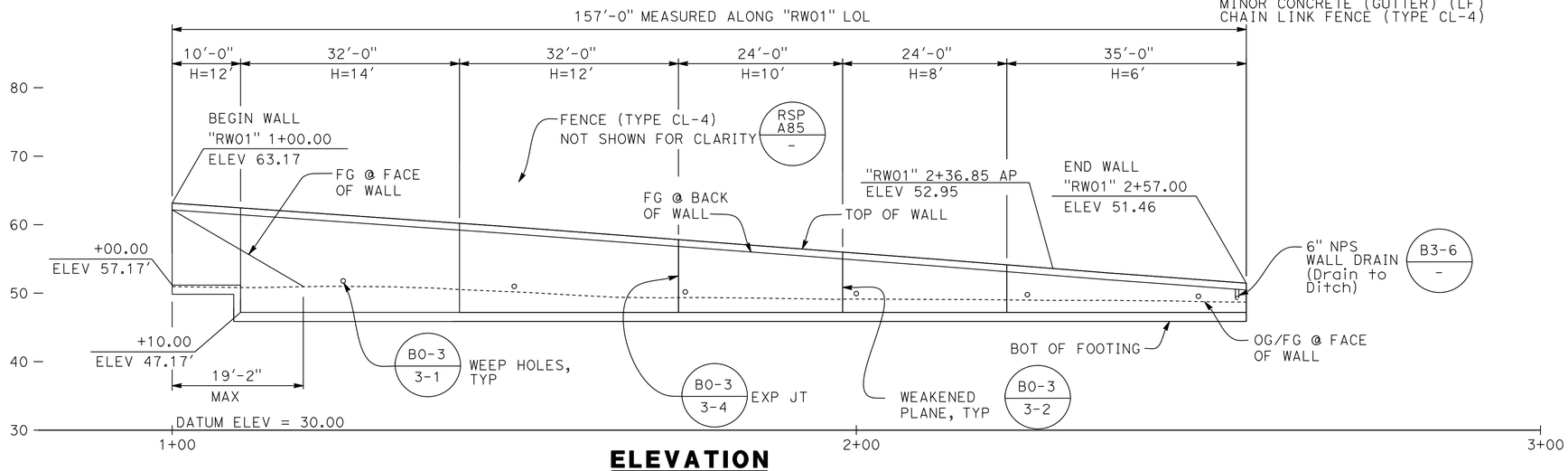

ELEVATION
1"=10'

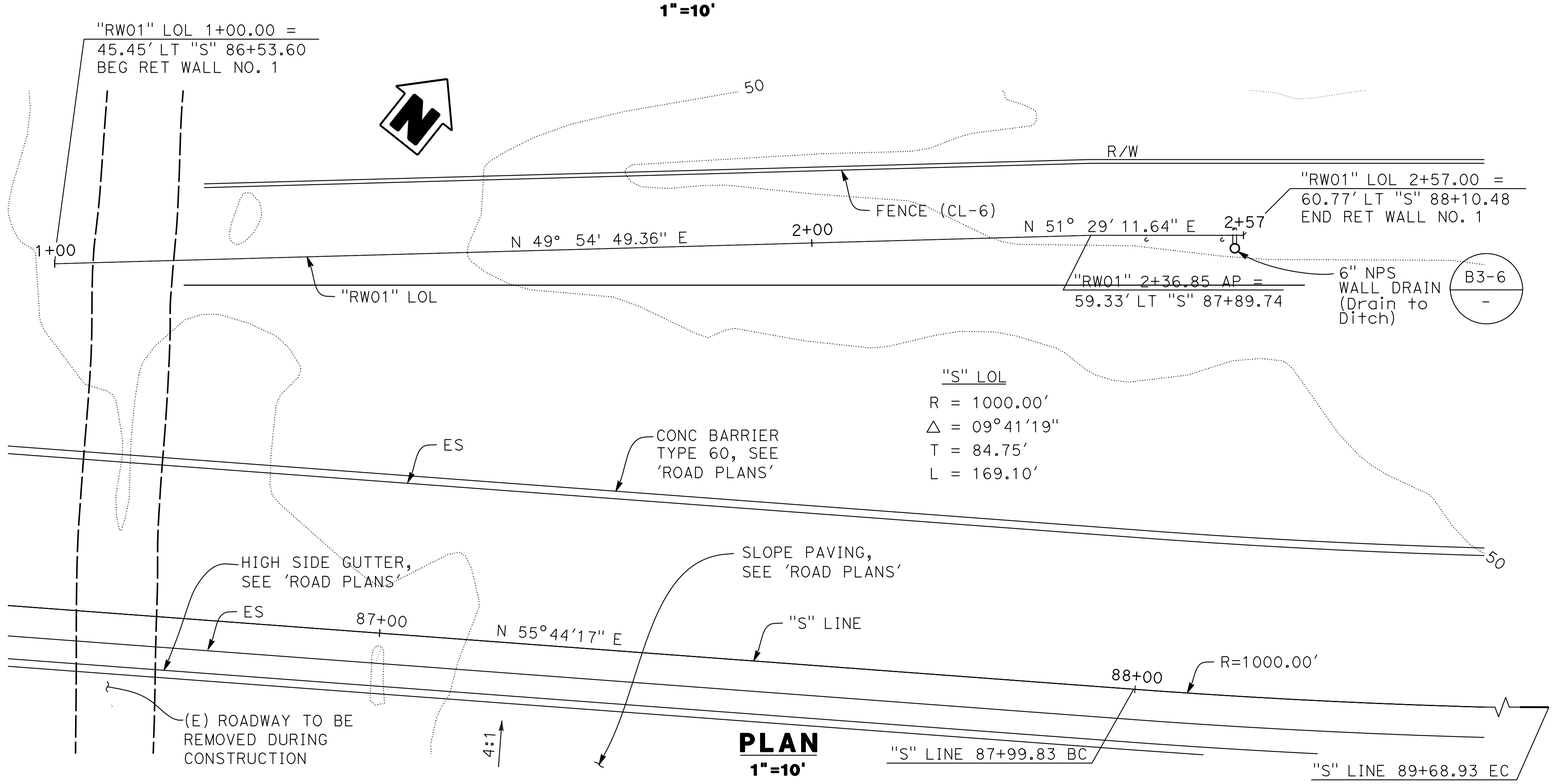

PLAN
1"=10'

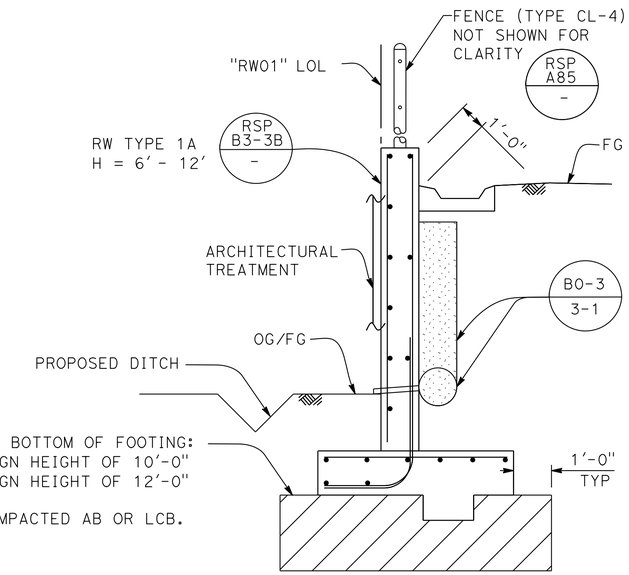

TYPICAL SECTION WALL TYPE 1A
NO SCALE

STANDARD PLAN SHEET NO.
DETAIL NO.

NOTES:

1. SEE CIVIL LAYOUT SHEETS FOR "S LINE" INFORMATION.
2. FOR RETAINING WALL DIMENSIONS, FOOTING DIMENSIONS & REINFORCEMENT, SEE CALTRANS RSP-STANDARD PLAN B3-3B.
3. SEE DRAINAGE PLANS FOR DRAINAGE INFORMATION.
4. FOR RETAINING WALL FOUNDATION STEP DETAILS, CALTRANS RSP-STANDARD PLAN B3-5 "FOOTING STEP".
5. FOR RETAINING WALL EXCAVATION AND BACKFILL LIMITS NOT SHOWN ABOVE, SEE CALTRANS STANDARD PLAN A62B.
6. FOR EXCAVATION & COMPACTION REQUIREMENTS, SEE "GEOTECHNICAL REPORT" BY PARIKH CONSULTANTS.
7. FOR 'ARCHITECTUTURAL TREATMENT' DETAILS, SEE "AESTHETIC TREATMENT" PLANS.
8. FOR GUTTER DETAILS, SEE "TYPICAL GUTTER DETAIL" ON CALTRANS STANDARD PLAN B3-6.

Tracy L. Bertram
DESIGN OVERSIGHT Tracy L Bertram
1-7-13
SIGN OFF DATE

	BY	CHECKED		
DESIGN	L. KINNEBREW	C. SHENOY	LOAD FACTOR DESIGN	LIVE LOADING: HL93 W/ "LOW-BOY" AND PERMIT DESIGN VEHICLE
DETAILS	L. KINNEBREW	C. SHENOY	LAYOUT	B. ROCK / C. SHENOY
QUANTITIES	L. KINNEBREW	C. SHENOY	SPECIFICATIONS	C. SHENOY / PLANS AND SPECS COMPARED X

PREPARED FOR THE STATE OF CALIFORNIA DEPARTMENT OF TRANSPORTATION

C. SHENOY
PROJECT ENGINEER

BRIDGE NO. 23-RW01
POST MILES 2.9

RETAINING WALL NO. 1 (TYPE 1A)
GENERAL PLAN

DESIGN GENERAL PLAN SHEET (ENGLISH) (REV.3/14/12)

ORIGINAL SCALE IN INCHES FOR REDUCED PLANS 0 1 2 3

UNIT: 0741
PROJECT NUMBER & PHASE: 04000211311 CONTRACT NO.: 04-0A5341

DISREGARD PRINTS BEARING EARLIER REVISION DATES

REVISION DATES 09/12/12 SHEET 1 OF 51

FILE => 04-0a5341-rw01-a-gp01.dgn

CONTRACT NO.: 04-0A5341 PROJECT ID: 1234567890

USERNAME => s124496 DATE PLOTTED => 08-MAY-2013 TIME PLOTTED => 06:53

DIST	COUNTY	ROUTE	POST MILES TOTAL PROJECT	SHEET NO	TOTAL SHEETS
04	Sol	12,80	2.1/2.8, 12.0/13.1	463	597

Chandu Shenoy 9/12/12
REGISTERED CIVIL ENGINEER DATE

5-6-13
PLANS APPROVAL DATE

REGISTERED PROFESSIONAL ENGINEER CHANDU V. SHENOY NO. C-53636 EXP. 6/30/13 CIVIL STATE OF CALIFORNIA

THE STATE OF CALIFORNIA OR ITS OFFICERS OR AGENTS SHALL NOT BE RESPONSIBLE FOR THE ACCURACY OR COMPLETENESS OF ELECTRONIC COPIES OF THIS PLAN SHEET.

SOLANO TRANSPORTATION AUTHORITY
ONE HARBOR CENTER, SUITE 130
SUISUN CITY, CA 94585

MARK THOMAS & COMPANY, INC. + NOLTE ASSOCIATES, INC.
3000 OAK ROAD, SUITE 650
WALNUT CREEK, CA 94597

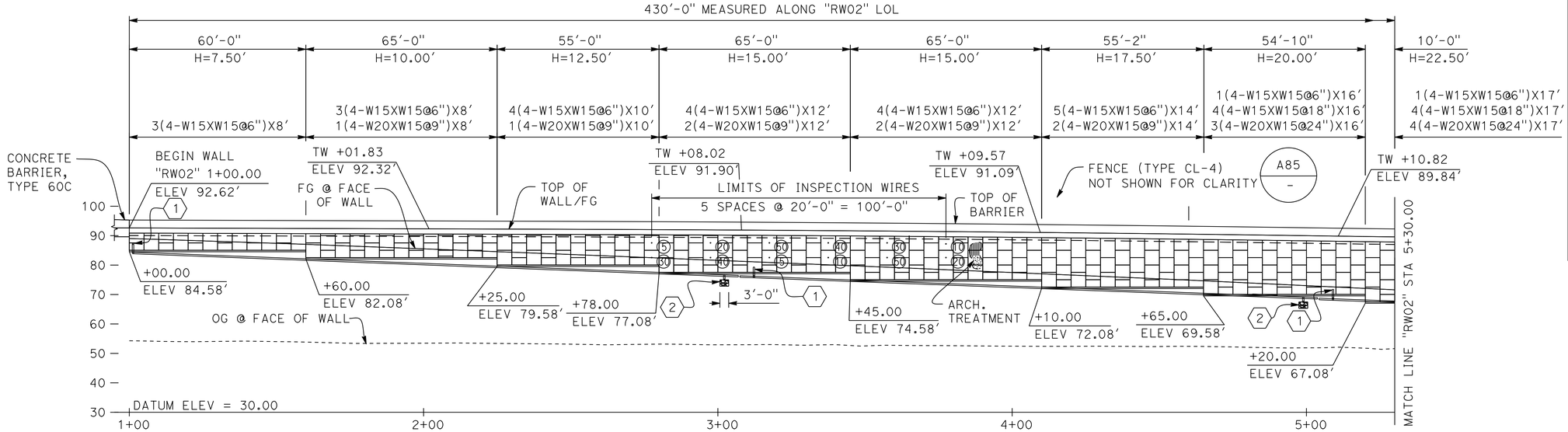

DEVELOPED ELEVATION

1"=20'

NOTES:

1. FOR MSE WALL GENERAL NOTES, SEE "RETAINING WALL NO. 2 (MSE WALL) - DETAILS" SHEET.
2. SEE CIVIL LAYOUT SHEETS FOR "JW" LINE AND "S" LINE INFORMATION.

RETAINING WALL NO.2 #23E0020

QUANTITIES

MECHANICALLY STABILIZED EMBANKMENT, LOCATION A	8,980	SQFT
STRUCTURAL CONCRETE, BARRIER SLAB	283	CY
CHAIN LINK FENCE (TYPE CL-4)	565	LF
CONCRETE BARRIER (TYPE 732 MODIFIED)	565	LF

LEGEND

4(4-W15XW15@18")X14'

NUMBER OF LEVELS
NUMBER OF LONGITUDINAL WIRES
LONGITUDINAL WIRE SIZE
MAT LENGTH
TRANSVERSE WIRE SPACING
TRANSVERSE WIRE SIZE

(40) INSPECTION WIRE LOCATION
INTERVAL IN YEARS FROM THE TIME OF CONSTRUCTION TO THE TIME OF REMOVAL OF WIRE INSPECTION

(1) CLEAN-OUT PIPE, SEE "CLEAN-OUT PIPE DETAIL "ON" MECH. STABILIZED EMBANKMENT DETAILS NO. 6 SHEET.

(2) OUTLET PIPE AND BACKING, SEE "OUTLET PIPE DETAIL" ON "MECH. STABILIZED EMBANKMENT DETAILS NO. 6 SHEET.

"RW02" LOL	"JW" LINE
R = 5914.58'	R = 5950.00
Δ = 03°21'08"	Δ = 05°39'45"
T = 173.08'	T = 294.26'
L = 346.05'	L = 588.04'

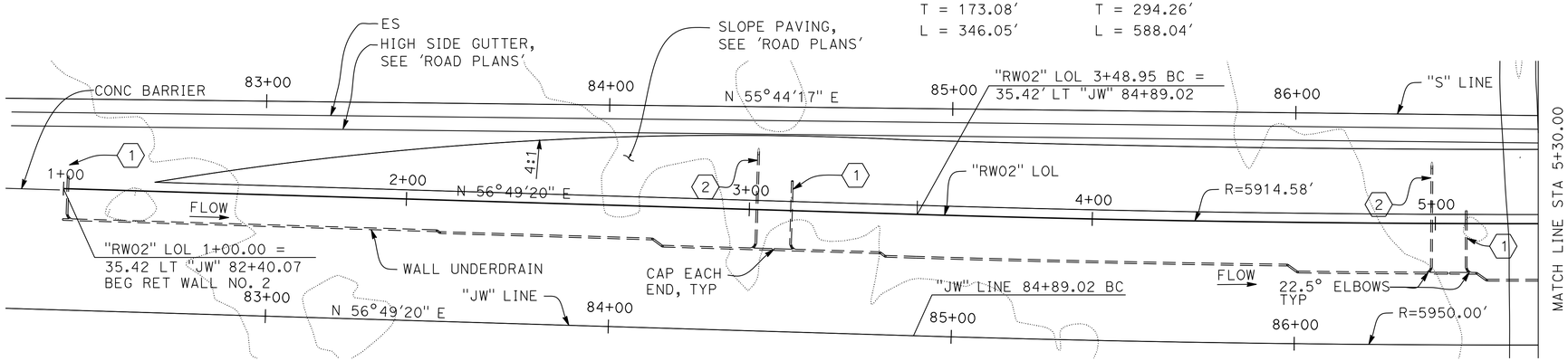

PLAN

1"=20'

DESIGN OVERSIGHT Tracy L Bertram	DESIGN	BY L. KINNEBREW	CHECKED C. SHENOY	LOAD FACTOR DESIGN	LIVE LOADING: HL93 W/ "LOW-BOY" AND PERMIT DESIGN VEHICLE	
1-7-13 SIGN OFF DATE	DETAILS	BY L. KINNEBREW	CHECKED C. SHENOY	LAYOUT	BY B. ROCK	CHECKED C. SHENOY
	QUANTITIES	BY L. KINNEBREW	CHECKED C. SHENOY	SPECIFICATIONS	BY T. WALKER	PLANS AND SPECS COMPARED C. SHANOY

PREPARED FOR THE STATE OF CALIFORNIA DEPARTMENT OF TRANSPORTATION

C. SHENOY
PROJECT ENGINEER

BRIDGE NO. 23E0020
POST MILES 2.9

RETAINING WALL NO. 2 (MSE WALL)

GENERAL PLAN NO. 1

DESIGN GENERAL PLAN SHEET (ENGLISH) (REV.3/14/12)

ORIGINAL SCALE IN INCHES FOR REDUCED PLANS 0 1 2 3

UNIT: 0741
PROJECT NUMBER & PHASE: 04000211311 CONTRACT NO.: 04-0A5341

DISREGARD PRINTS BEARING EARLIER REVISION DATES 09/12/12

REVISION DATES | SHEET 2 | OF 51

FILE => 04-0a5341-rw02-a-gp01.dgn

CONTRACT NO.: 04-0A5341 PROJECT ID: 1234567890

USERNAME => s121614 DATE PLOTTED => 10-MAY-2013 TIME PLOTTED => 06:22

DIST	COUNTY	ROUTE	POST MILES TOTAL PROJECT	SHEET NO	TOTAL SHEETS
04	Sol	12,80	2.1/2.8, 12.0/13.1	464	597

Chandu Shenoy
REGISTERED CIVIL ENGINEER 9/12/12 DATE

5-6-13
PLANS APPROVAL DATE

REGISTERED PROFESSIONAL ENGINEER CHANDU V. SHENOY NO. C-53636 EXP. 6/30/13 CIVIL STATE OF CALIFORNIA

THE STATE OF CALIFORNIA OR ITS OFFICERS OR AGENTS SHALL NOT BE RESPONSIBLE FOR THE ACCURACY OR COMPLETENESS OF ELECTRONIC COPIES OF THIS PLAN SHEET.

SOLANO TRANSPORTATION AUTHORITY
ONE HARBOR CENTER, SUITE 130
SUISUN CITY, CA 94585

MARK THOMAS & COMPANY, INC. + NOLTE ASSOCIATES, INC.
3000 OAK ROAD, SUITE 650
WALNUT CREEK, CA 94597

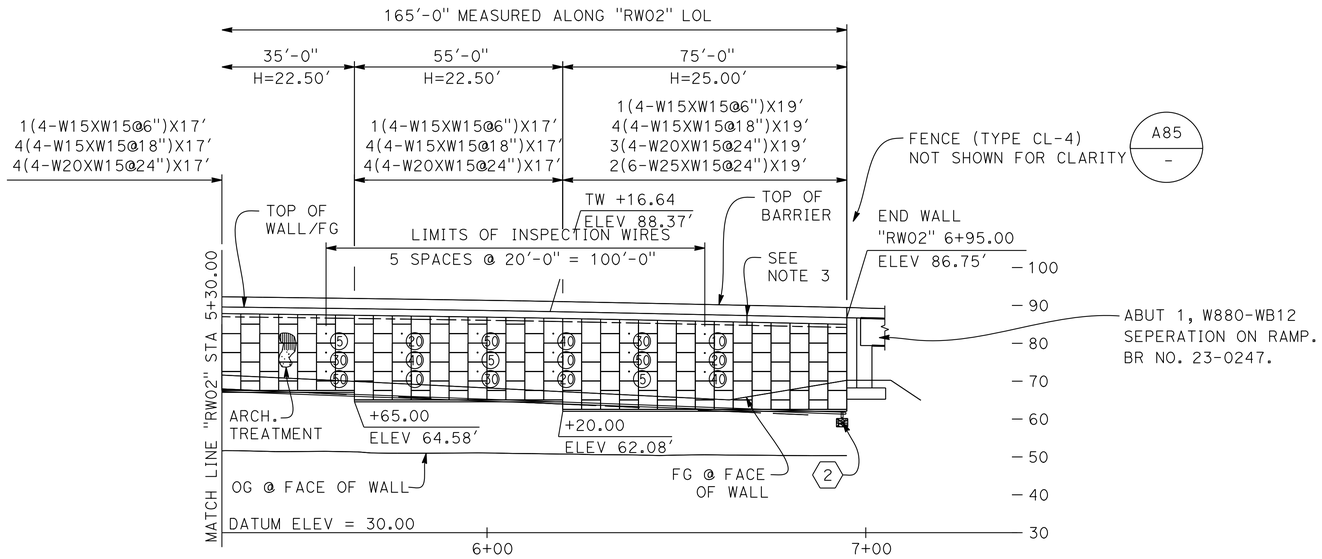

DEVELOPED ELEVATION

1"=20'

"RW02" LOL	"JW" LINE	"S" LOL
R = 5914.58'	R = 5950.00	R = 1000.00'
Δ = 03°21'08"	Δ = 05°39'45"	Δ = 09°41'19"
T = 173.08'	T = 294.26'	T = 84.75'
L = 346.05'	L = 588.04'	L = 169.10'

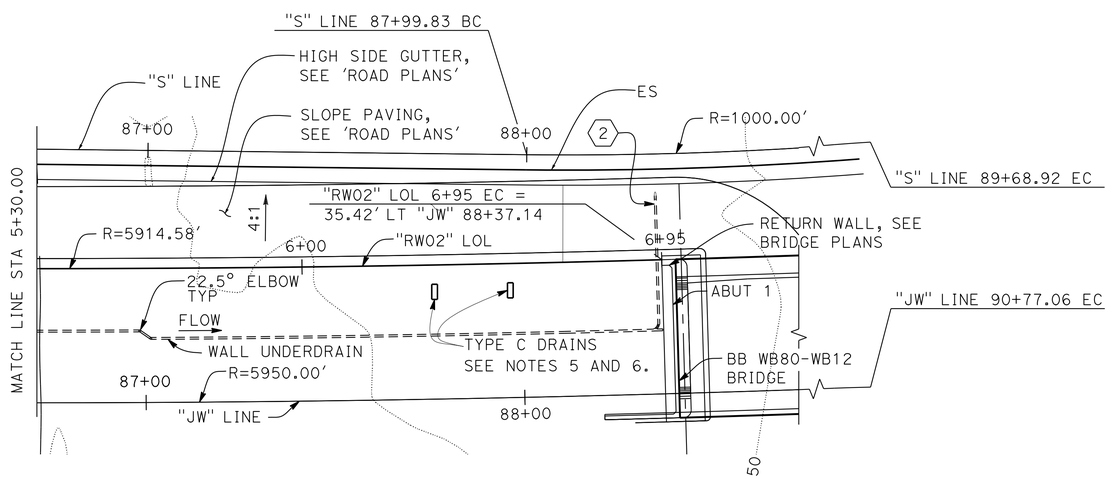

PLAN

1"=20'

NOTES:

1. FOR MSE WALL GENERAL NOTES, SEE "RETAINING WALL NO. 2 (MSE WALL) - DETAILS" SHEET.
2. SEE CIVIL LAYOUT SHEETS FOR "JW" LINE AND "S" LINE INFORMATION.
3. LIMITS OF BARRIER SLAB @ ROADWAY SECTION, FROM END OF APPROACH SLAB TO END OF WALL.
4. FOR BRIDGE ABUTMENT DETAILS, SEE "WB 80 TO WB 12 SEPERATION (OVER WB 80 ON-RAMP)" PLANS.
5. CONTRACTOR TO VERIFY TYPE C DRAIN LOCATIONS ARE CENTERED BETWEEN MSE SOIL REINFORCING MATS.
6. FOR TYPE C DRAIN DETAILS SEE "WB80 TO WB12 SEPERATION (OVER WB80 ON-RAMP), " DECK DRAIN-TYPE C" AND DRAINAGE PLANS.

LEGEND

4(4-W15XW15@18")X14'

- NUMBER OF LEVELS
- NUMBER OF LONGITUDINAL WIRES
- LONGITUDINAL WIRE SIZE
- MAT LENGTH
- TRANSVERSE WIRE SPACING
- TRANSVERSE WIRE SIZE

∘ (40) INSPECTION WIRE LOCATION
INTERVAL IN YEARS FROM THE TIME OF CONSTRUCTION TO THE TIME OF REMOVAL OF WIRE INSPECTION

(1) CLEAN-OUT PIPE, SEE CLEAN-OUT PIPE DETAIL" ON "MECH. STABILIZED EMBANKMENT DETAIL NO. 6 SHEET.

(2) OUTLET PIPE AND BACKING, SEE "OUTLET PIPE DETAIL" ON "MECH. STABILIZED EMBANKMENT DETAIL NO. 6 SHEET.

Tracy L. Bertram
DESIGN OVERSIGHT Tracy L Bertram
1-7-13
SIGN OFF DATE

DESIGN	BY L. KINNEBREW	CHECKED C. SHENOY	LOAD FACTOR DESIGN	LIVE LOADING: HL93 W/ "LOW-BOY" AND PERMIT DESIGN VEHICLE	
DETAILS	BY L. KINNEBREW	CHECKED C. SHENOY	LAYOUT	BY B. ROCK	CHECKED C. SHENOY
QUANTITIES	BY L. KINNEBREW	CHECKED C. SHENOY	SPECIFICATIONS	BY T. WALKER	PLANS AND SPECS COMPARED C. SHENOY

PREPARED FOR THE STATE OF CALIFORNIA DEPARTMENT OF TRANSPORTATION

C. SHENOY
PROJECT ENGINEER

BRIDGE NO. 23E0020
POST MILES 2.9

RETAINING WALL NO. 2 (MSE WALL)

GENERAL PLAN NO. 2

DESIGN GENERAL PLAN SHEET (ENGLISH) (REV.3/14/12)

ORIGINAL SCALE IN INCHES FOR REDUCED PLANS 0 1 2 3

UNIT: 0741
PROJECT NUMBER & PHASE: 04000211311 CONTRACT NO.: 04-0A5341

DISREGARD PRINTS BEARING EARLIER REVISION DATES 09/12/12

REVISION DATES			SHEET	OF
			3	51

FILE => 04-0a5341-rw02-a-gp02.dgn

CONTRACT NO.: 04-0A5341 PROJECT ID: 1234567890

USERNAME => s121614 DATE PLOTTED => 10-MAY-2013 TIME PLOTTED => 06:22

DIST	COUNTY	ROUTE	POST MILES TOTAL PROJECT	SHEET NO	TOTAL SHEETS
04	Sol	12,80	2.1/2.8, 12.0/13.1	465	597

Chandu Shenoy 9/12/12
REGISTERED CIVIL ENGINEER DATE

5-6-13
PLANS APPROVAL DATE

REGISTERED PROFESSIONAL ENGINEER CHANDU V. SHENOY NO. C-53636 EXP. 6/30/13 CIVIL STATE OF CALIFORNIA

THE STATE OF CALIFORNIA OR ITS OFFICERS OR AGENTS SHALL NOT BE RESPONSIBLE FOR THE ACCURACY OR COMPLETENESS OF ELECTRONIC COPIES OF THIS PLAN SHEET.

SOLANO TRANSPORTATION AUTHORITY
ONE HARBOR CENTER, SUITE 130
SUISUN CITY, CA 94585

MARK THOMAS & COMPANY, INC. + NOLTE ASSOCIATES, INC.
3000 OAK ROAD, SUITE 650
WALNUT CREEK, CA 94597

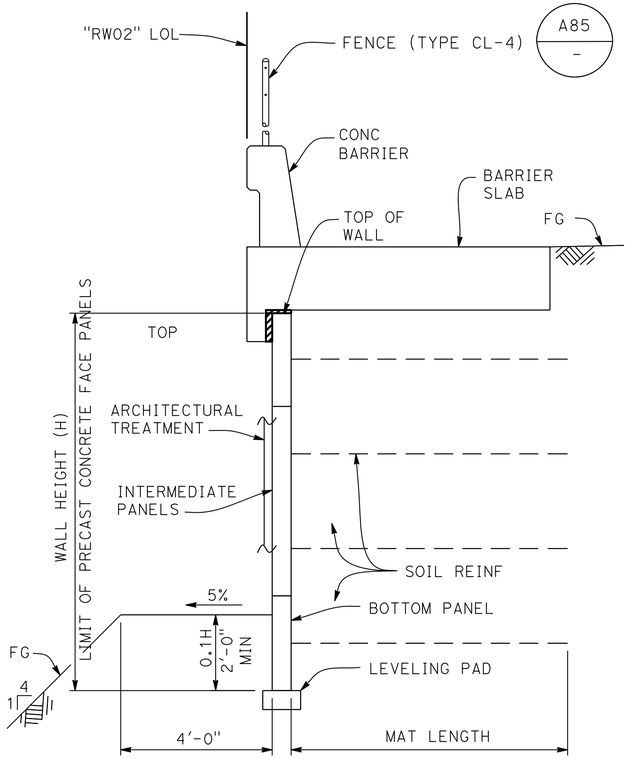

TYPICAL SECTION
NO SCALE

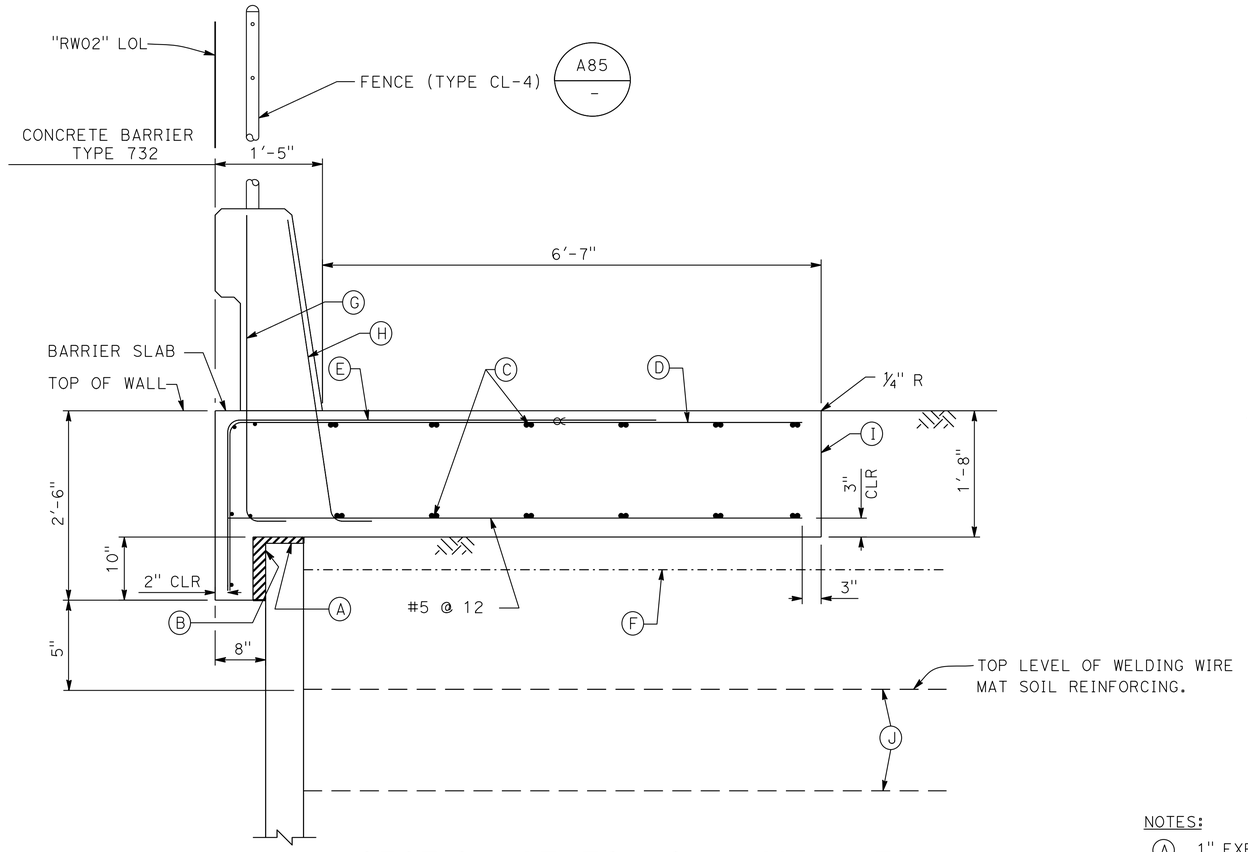

SECTION AT TOP OF WALL WITH BARRIER SLAB AND CONCRETE BARRIER
NO SCALE

NOTES:

1. CLEARANCE TO REINFORCING STEEL IN CONCRETE BARRIER TO BE 1".
2. NOT ALL BARRIER REINFORCEMENT SHOWN.
3. NO EXPANSION JOINTS IN CONCRETE BARRIER OR BARRIER SLAB WITHIN MSE WALL LIMITS.

NOTES:

1. FOR MSE PANEL TO CONCRETE WALL CONNECTION, SEE "ABUTMENT DETAILS NO. 3" SHEET ON "WB 80 TO WB 12 SEPARATION (OVER WB 80 ON-RAMP)" PLANS.
2. THE BOTTOM PANELS OF THE MSE WILL SWITCH FROM FULL HEIGHT TO HALF HEIGHT EVERY OTHER COLUMN OF PANELS.
3. WHERE LAYOUTS INCUR LESS HEIGHT AVAILABLE AT THE TOP PANEL THEN THE MINIMUM DIMENSIONS PROVIDED ON "MECH. STABILIZED EMBANKMENT DETAIL NO. 1" SHEET, THE ADDITIONAL FACING HEIGHT NEEDS TO BE ADDED TO THE TOP OF THE NEXT LOWER PANEL.
4. THE TOP ROW OF PANELS TO MEET FG SLOPE.
5. FOR PANEL REINFORCEMENT LOCATION, JOINT DETAILS, AND LEVELING PAD, SEE "MECH. STABILIZED EMBANKMENT DETAIL NO. 1" SHEET.
6. FOR GENERAL NOTES, WELDED WIRE MATS PANEL LOCATIONS AND CONNECTION DETAILS, SEE "MECH. STABILIZED EMBANKMENT DETAIL NO. 2" SHEET.
7. FOR INSPECTION WIRE DETAILS, SEE "MECH. STABILIZED EMBANKMENT DETAIL NO. 3" SHEET.
8. FOR SECTION AT TOP OF WALL WITH BARRIER SLAB AND CONCRETE BARRIER AT APPROACH SLAB, SEE "MECH. STABILIZED EMBANKMENT DETAIL NO. 4" SHEET.
9. FOR LIMITS OF EXCAVATION, BACKFILL AND PERMEABLE MATERIAL, SEE "MECH. STABILIZED EMBANKMENT DETAIL NO. 5" SHEET.
10. THE CONTRACTOR SHALL VERIFY ALL CONTROLLING DIMENSIONS BEFORE ORDERING OR FABRICATING ANY MATERIAL.
11. FOR EXCAVATION AND COMPACTION REQUIREMENTS, SEE SPECIAL PROVISIONS.
12. FOR OUTLET, CLEANOUT AND UNDERDRAIN DETAILS AND NOTES, SEE "MECH. STABILIZED EMBANKMENT DETAIL NO. 5" SHEET AND "MECH. STABILIZED EMBANKMENT DETAIL NO. 6" SHEET. FOR ADDITIONAL DETAILS SEE D102
13. FOR 'ARCHITECTURAL TREATMENT' DETAILS, SEE "AESTHETIC TREATMENT" PLANS.

NOTES:

(A) 1" EXPANDED POLYSTYRENE
(B) 2" EXPANDED POLYSTYRENE RECESSED 2" INTO BARRIER SLAB AT FRONT OF MSE FACING PANEL
(C) #5 CONT @ 15 MAX (BUNDLED)
(D) #5 ┌──┐ @ 12
(E) #5 5'-6" @ 12 BUNDLED WITH (D) BARS
(F) FILTER FABRIC
(G) #5 └ 6¼" @ 16 (TO BE IN PLACE PRIOR TO APPROACH SLAB CONCRETE)
(H) #5 └ 6¼" @ 8 (TO BE IN PLACE PRIOR TO APPROACH SLAB CONCRETE)
(I) CONTACT JOINT
(J) WELDED WIRE MAT SOIL REINFORCEMENT

Tracy L Bertram
DESIGN OVERSIGHT Tracy L Bertram
1-7-13
SIGN OFF DATE

	BY	CHECKED
DESIGN	L. KINNEBREW	C. SHENOY
DETAILS	L. KINNEBREW	C. SHENOY
QUANTITIES	L. KINNEBREW	C. SHENOY

PREPARED FOR THE STATE OF CALIFORNIA DEPARTMENT OF TRANSPORTATION

C. SHENOY
PROJECT ENGINEER

BRIDGE NO. 23E0020
POST MILES 2.9

RETAINING WALL NO.2 (MSE WALL)
DETAILS

DESIGN DETAIL SHEET (ENGLISH) (REV.3/14/12)

ORIGINAL SCALE IN INCHES FOR REDUCED PLANS 0 1 2 3

UNIT: 0741
PROJECT NUMBER & PHASE: 04000211311 CONTRACT NO.: 04-0A5341

DISREGARD PRINTS BEARING EARLIER REVISION DATES

REVISION DATES 09/12/12 SHEET 4 OF 51

FILE => 04-0a5341-rw02-c-det.dgn CONTRACT NO.: 04-0A5341 PROJECT ID: 1234567890

USERNAME => s121614 DATE PLOTTED => 10-MAY-2013 TIME PLOTTED => 06:22

DIST	COUNTY	ROUTE	POST MILES TOTAL PROJECT	SHEET NO	TOTAL SHEETS
04	Sol	12,80	2.1/2.8, 12.0/13.1	466	597

Chandu Shenoy 9/12/12
REGISTERED CIVIL ENGINEER DATE

5-6-13
PLANS APPROVAL DATE

REGISTERED PROFESSIONAL ENGINEER CHANDU V. SHENOY NO. C-53636 EXP. 6/30/13 CIVIL STATE OF CALIFORNIA

THE STATE OF CALIFORNIA OR ITS OFFICERS OR AGENTS SHALL NOT BE RESPONSIBLE FOR THE ACCURACY OR COMPLETENESS OF ELECTRONIC COPIES OF THIS PLAN SHEET.

SOLANO TRANSPORTATION AUTHORITY
ONE HARBOR CENTER, SUITE 130
SUISUN CITY, CA 94585

MARK THOMAS & COMPANY, INC. + NOLTE ASSOCIATES, INC.
3000 OAK ROAD, SUITE 650
WALNUT CREEK, CA 94597

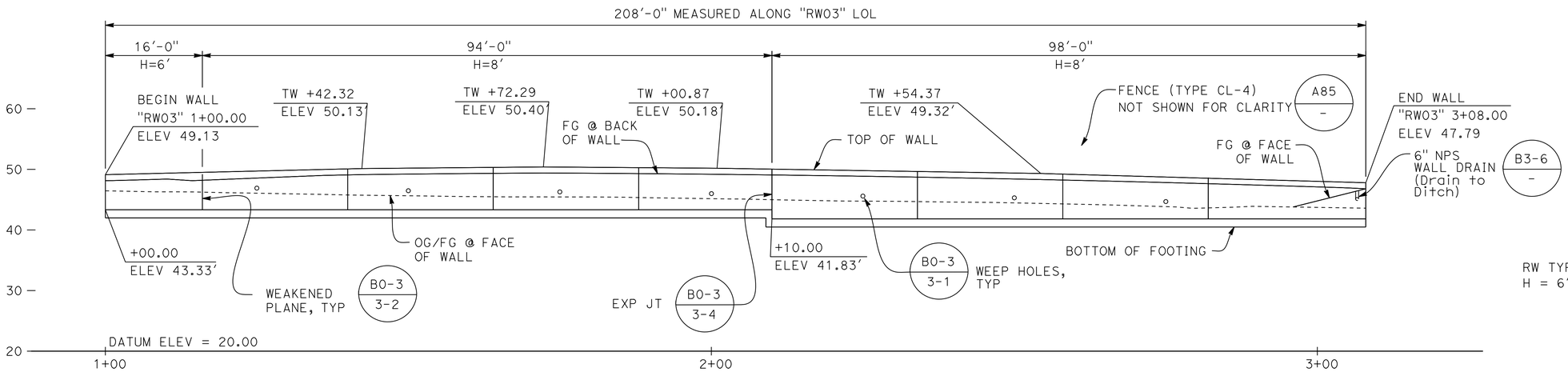

ELEVATION
1"=10'

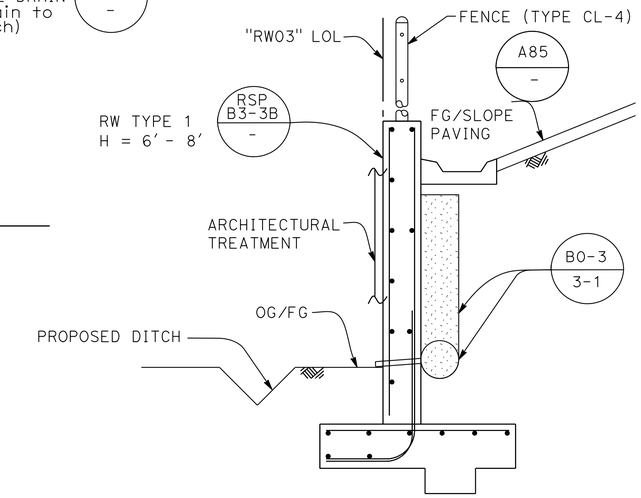

TYPICAL SECTION WALL TYPE 1A
NO SCALE

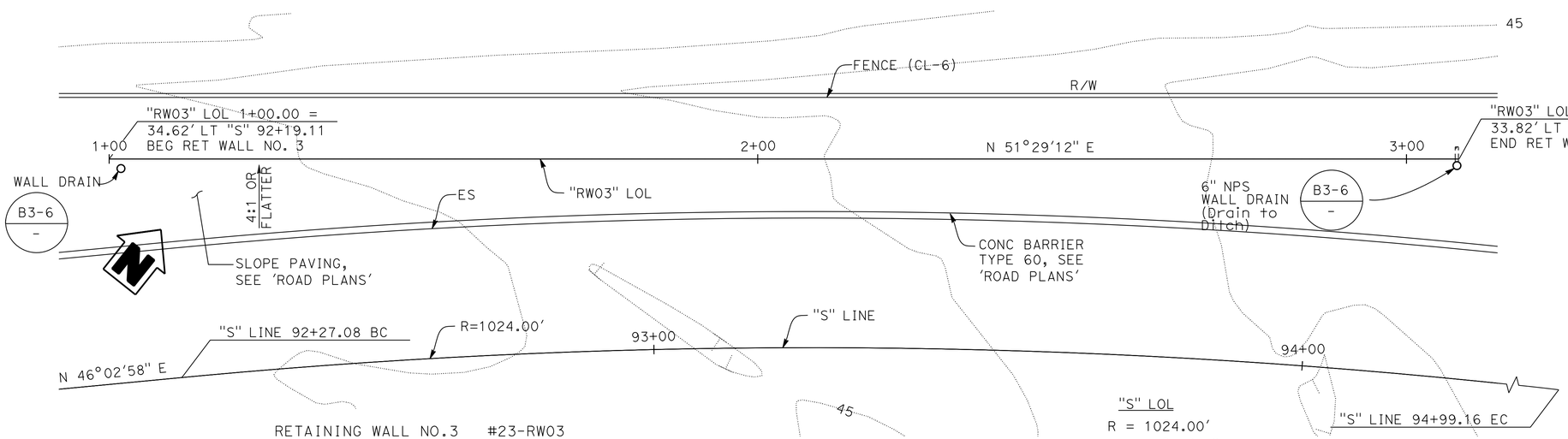

PLAN
1"=10'

"S" LOL
R = 1024.00'
Δ = 15°13'24"
T = 136.84'
L = 272.08'

RETAINING WALL NO.3 #23-RW03

QUANTITIES

STRUCTURE EXCAVATION (RETAINING WALL)	342	CY
STRUCTURE BACKFILL (RETAINING WALL)	401	CY
PERVIOUS BACKFILL MATERIAL (RETAINING WALL)	21	CY
STRUCTURAL CONCRETE, RETAINING WALL	170	CY
ARCHITECTURAL TREATMENT	1,030	SQFT
BAR REINFORCING STEEL (RETAINING WALL)	14,600	LB
MINOR CONCRETE (GUTTER) (LF)	208	LF
CHAIN LINK FENCE (TYPE CL-4)	208	LF

STANDARD PLAN SHEET NO.
DETAIL NO.

NOTES:
1. SEE CIVIL LAYOUT SHEETS FOR "S"LINEO INFORMATION.
2. FOR RETAINING WALL DIMENSIONS, FOOTING DIMENSIONS & REINFORCEMENT, SEE CALTRANS RSP-STANDARD PLAN B3-3B.
3. SEE DRAINAGE PLANS FOR DRAINAGE INFORMATION.
4. FOR RETAINING WALL FOUNDATION STEP DETAILS, CALTRANS RSP-STANDARD PLAN B3-5 "FOOTING STEP".
5. FOR RETAINING WALL EXCAVATION AND BACKFILL LIMITS NOT SHOWN ABOVE, SEE CALTRANS STANDARD PLAN A62B.
6. FOR EXCAVATION & COMPACTION REQUIREMENTS, SEE "GEOTECHNICAL REPORT" BY PARIKH CONSULTANTS.
7. FOR 'ARCHITECTUTURAL TREATMENT' DETAILS, SEE "AESTHETIC TREATMENT" PLANS.
8. FOR GUTTER DETAILS, SEE "TYPICAL GUTTER DETAIL" ON CALTRANS STANDARD PLAN B3-6.

Tracy L. Bertram
DESIGN OVERSIGHT Tracy L Bertram
1-7-13
SIGN OFF DATE

	BY	CHECKED		
DESIGN	L. KINNEBREW	C. SHENOY	LOAD FACTOR DESIGN	LIVE LOADING: HL93 W/ "LOW-BOY" AND PERMIT DESIGN VEHICLE
DETAILS	L. KINNEBREW	C. SHENOY	LAYOUT	BY B. ROCK; CHECKED C. SHENOY
QUANTITIES	L. KINNEBREW	C. SHENOY	SPECIFICATIONS	BY T. WALKER; PLANS AND SPECS COMPARED C. SHENOY

PREPARED FOR THE STATE OF CALIFORNIA DEPARTMENT OF TRANSPORTATION

C. SHENOY
PROJECT ENGINEER

BRIDGE NO. 23-RW03
POST MILES 3.0

RETAINING WALL NO. 3 (TYPE 1A)
GENERAL PLAN

DESIGN GENERAL PLAN SHEET (ENGLISH) (REV.3/14/12)

ORIGINAL SCALE IN INCHES FOR REDUCED PLANS 0 1 2 3

UNIT: 0741
PROJECT NUMBER & PHASE: 04000211311 CONTRACT NO.: 04-0A5341

DISREGARD PRINTS BEARING EARLIER REVISION DATES

REVISION DATES			SHEET	OF
09/12/12			5	51

FILE => 04-0a5341-rw03-a-gp01.dgn
CONTRACT NO.: 04-0A5341 PROJECT ID: 1234567890

USERNAME => s121614 DATE PLOTTED => 10-MAY-2013 TIME PLOTTED => 08:59

DIST	COUNTY	ROUTE	POST MILES TOTAL PROJECT	SHEET NO	TOTAL SHEETS
04	Sol	12,80	2.1/2.8, 12.0/13.1	467	597

Chandu Shenoy 9/12/12
REGISTERED CIVIL ENGINEER DATE

5-6-13
PLANS APPROVAL DATE

REGISTERED PROFESSIONAL ENGINEER CHANDU V. SHENOY NO. C-53636 EXP. 6/30/13 CIVIL STATE OF CALIFORNIA

THE STATE OF CALIFORNIA OR ITS OFFICERS OR AGENTS SHALL NOT BE RESPONSIBLE FOR THE ACCURACY OR COMPLETENESS OF ELECTRONIC COPIES OF THIS PLAN SHEET.

SOLANO TRANSPORTATION AUTHORITY
ONE HARBOR CENTER, SUITE 130
SUISUN CITY, CA 94585

MARK THOMAS & COMPANY, INC. + NOLTE ASSOCIATES, INC.
3000 OAK ROAD, SUITE 650
WALNUT CREEK, CA 94597

NOTES:
1. FOR MSE WALL MAT SCHEDULE AND GENERAL NOTES, SEE "RETAINING WALL NO. 4 (MSE WALL) - DETAILS" SHEET.
2. SEE CIVIL LAYOUT SHEETS FOR "JW" LINE, "GL1" LINE AND "GL2 LINE" INFORMATION.
3. LIMITS OF BARRIER SLAB @ ROADWAY SECTION, FROM END OF APPROACH SLAB TO END OF WALL.
4. FOR BRIDGE ABUTMENT DETAILS, SEE "WB 80 TO WB 12 SEPERATION (OVER WB 80 ON-RAMP)" PLANS.

RETAINING WALL NO.4 #23E0021

QUANTITIES

MECHANICALLY STABILIZED EMBANKMENT, LOCATION B	10,170	SQFT
STRUCTURAL CONCRETE, BARRIER SLAB	269	CY
CHAIN LINK FENCE (TYPE CL-4)	535	LF
CONCRETE BARRIER (TYPE 732 MODIFIED)	535	LF

(1) CLEAN-OUT PIPE, SEE "CLEAN-OUT PIPE DETAIL" ON "MECH. STABILIZED EMBANKMENT DETAIL NO. 6 SHEET.

(2) OUTLET PIPE AND BACKING, SEE "OUTLET PIPE DETAIL" ON "MECH. STABILIZED EMBANKMENT DETAIL NO. 6 SHEET.

(40) INSPECTION WIRE LOCATION
INTERVAL IN YEARS FROM THE TIME OF CONSTRUCTION TO THE TIME OF REMOVAL OF WIRE INSPECTION

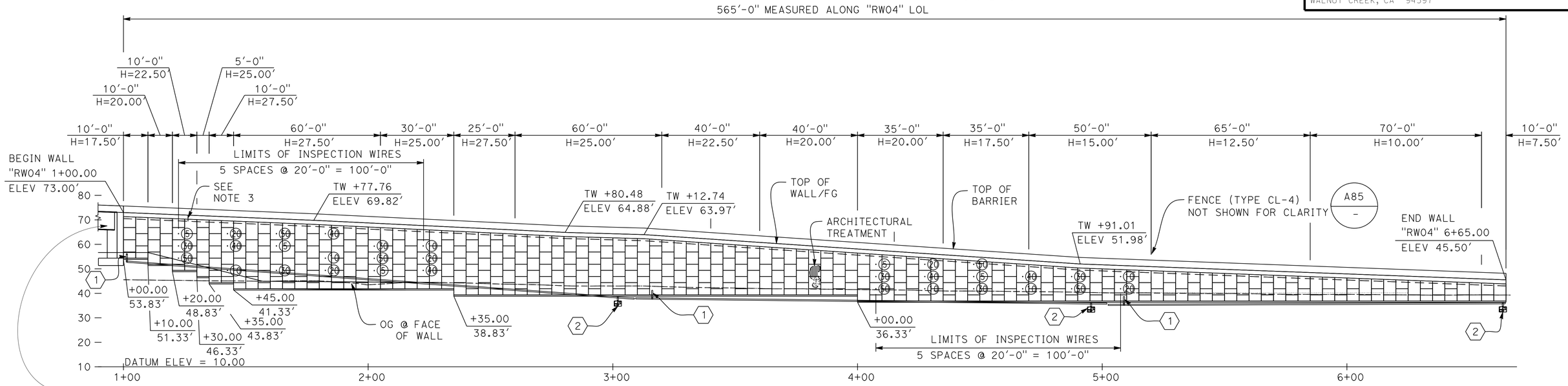

DEVELOPED ELEVATION
1"=20'

"GL1" LINE
R = 1000.00'
Δ = 25°25'00"
T = 225.51'
L = 443.60'

"RW04" LOL CURVE 1
R = 3935.42'
Δ = 03°15'18"
T = 111.81'
L = 223.56'

"JW" LINE CURVE 1
R = 3900.00'
Δ = 03°24'47"
T = 116.19'
L = 232.31'

"RW04" LOL CURVE 2
R = 1932.31'
Δ = 01°05'35"
T = 18.43'
L = 36.86'

"JW" LINE CURVE 2
R = 3900.00'
Δ = 02°51'45"
T = 97.44'
L = 194.84'

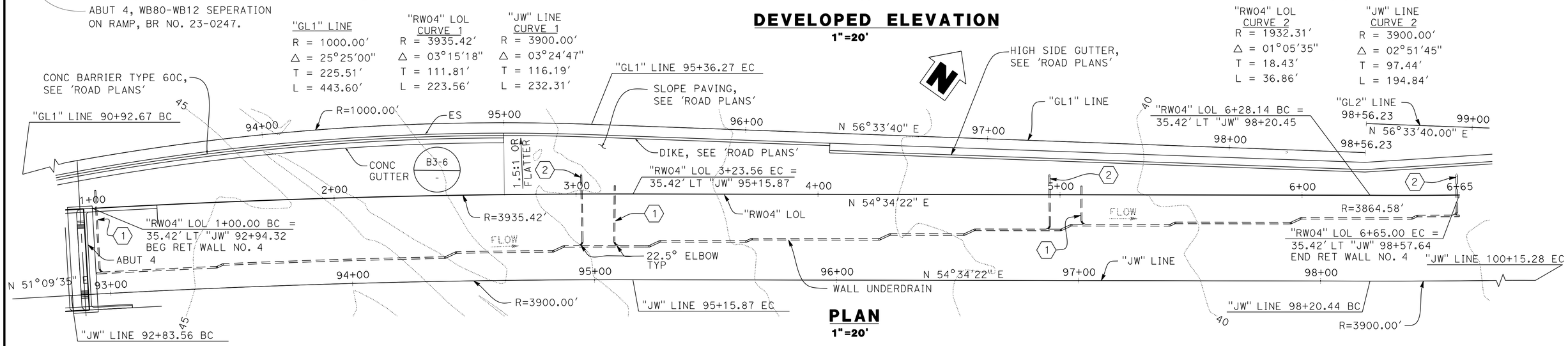

PLAN
1"=20'

DESIGN OVERSIGHT Tracy L Bertram 1-7-13 SIGN OFF DATE	DESIGN	BY L. KINNEBREW	CHECKED C. SHENOY	LOAD FACTOR DESIGN	LIVE LOADING: HL93 W/ "LOW-BOY" AND PERMIT DESIGN VEHICLE	
	DETAILS	BY L. KINNEBREW	CHECKED C. SHENOY	LAYOUT	BY B. ROCK	CHECKED C. SHENOY
	QUANTITIES	BY L. KINNEBREW	CHECKED C. SHENOY	SPECIFICATIONS	BY T. WALKER	PLANS AND SPECS COMPARED C. SHENOY

PREPARED FOR THE STATE OF CALIFORNIA DEPARTMENT OF TRANSPORTATION

C. SHENOY
PROJECT ENGINEER

BRIDGE NO. 23E0021
POST MILES 3.0

RETAINING WALL NO. 4 (MSE WALL)
GENERAL PLAN

DESIGN GENERAL PLAN SHEET (ENGLISH) (REV.3/14/12)

ORIGINAL SCALE IN INCHES FOR REDUCED PLANS 0 1 2 3

UNIT: 0741
PROJECT NUMBER & PHASE: 04000211311 CONTRACT NO.: 04-0A5341

DISREGARD PRINTS BEARING EARLIER REVISION DATES → REVISION DATES 09/12/12 SHEET 6 OF 51

FILE => 04-0a5341-rw04-a-gp01.dgn CONTRACT NO.: 04-0A5341 PROJECT ID: 1234567890

USERNAME => s121614 DATE PLOTTED => 10-MAY-2013 TIME PLOTTED => 06:22

DIST	COUNTY	ROUTE	POST MILES TOTAL PROJECT	SHEET NO	TOTAL SHEETS
04	Sol	12,80	2.1/2.8, 12.0/13.1	468	597

Chandu Shenoy 9/12/12
REGISTERED CIVIL ENGINEER DATE

5-6-13
PLANS APPROVAL DATE

REGISTERED PROFESSIONAL ENGINEER CHANDU V. SHENOY NO. C-53636 EXP. 6/30/13 CIVIL STATE OF CALIFORNIA

THE STATE OF CALIFORNIA OR ITS OFFICERS OR AGENTS SHALL NOT BE RESPONSIBLE FOR THE ACCURACY OR COMPLETENESS OF ELECTRONIC COPIES OF THIS PLAN SHEET.

SOLANO TRANSPORTATION AUTHORITY
ONE HARBOR CENTER, SUITE 130
SUISUN CITY, CA 94585

MARK THOMAS & COMPANY, INC. + NOLTE ASSOCIATES, INC.
3000 OAK ROAD, SUITE 650
WALNUT CREEK, CA 94597

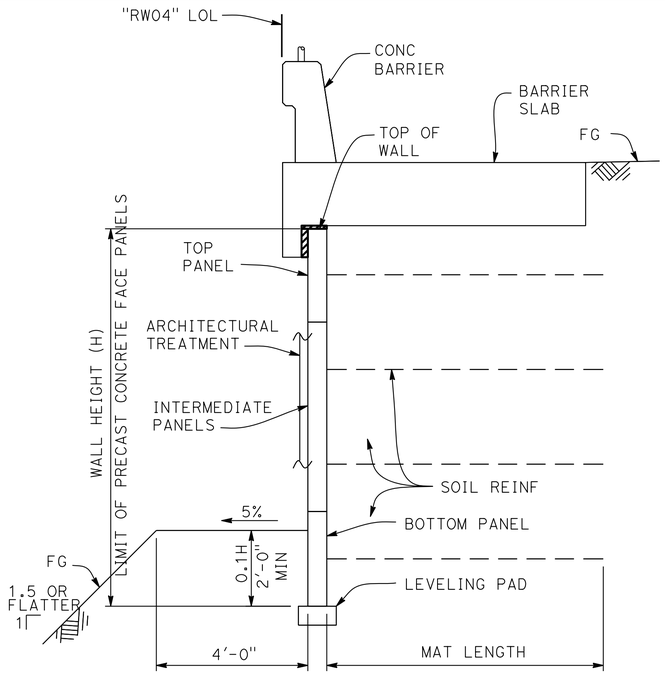

TYPICAL SECTION
NO SCALE

LEGEND

4(4-W15XW15@18")X14'

- NUMBER OF LEVELS
- NUMBER OF LONGITUDINAL WIRES
- LONGITUDINAL WIRE SIZE
- TRANSVERSE WIRE SIZE
- TRANSVERSE WIRE SPACING
- MAT LENGTH

MSE WALL NO. 4 TABLE

DESIGN WALL HEIGHT (FT)	WELDED WIRE MAT SCHEDULE
7.50	3(4-W15XW15@9")X8'
10.00	3(4-W15XW15@6")X8' 1(4-W20XW15@9")X8'
12.50	4(4-W15XW15@6")X10' 1(4-W20XW15@9")X10'
15.00	4(4-W15XW15@6")X12' 2(4-W20XW15@9")X12'
17.50	5(4-W15XW15@6")X14' 2(4-W20XW15@9")X14'
20.00	1(4-W15XW15@6")X16' 4(4-W15XW15@18")X16' 3(4-W20XW15@24")X16'
22.50	1(4-W15XW15@6")X17' 4(4-W15XW15@18")X17' 4(4-W20XW15@24")X17'
25.00	1(4-W15XW15@6")X19' 4(4-W15XW15@18")X19' 3(4-W20XW15@24")X19' 2(6-W25XW15@24")X19'
27.50	1(4-W15XW15@6")X20' 4(4-W15XW15@18")X20' 3(4-W20XW15@24")X20' 3(6-W25XW15@24")X20'

NOTES:

1. FOR MSE PANEL TO CONCRETE WALL CONNECTION, SEE "ABUTMENT DETAILS NO. 3" SHEET ON "WB 80 TO WB 12 SEPARATION (OVER WB 80 ON-RAMP)" PLANS.
2. THE BOTTOM PANELS OF THE MSE WILL SWITCH FROM FULL HEIGHT TO HALF HEIGHT EVERY OTHER COLUMN OF PANELS.
3. WHERE LAYOUTS INCUR LESS HEIGHT AVAILABLE AT THE TOP PANEL THEN THE MINIMUM DIMENSIONS PROVIDED ON "MECH. STABILIZED EMBANKMENT DETAIL NO. 1" SHEET, THE ADDITIONAL FACING HEIGHT NEEDS TO BE ADDED TO THE TOP OF THE NEXT LOWER PANEL.
4. THE TOP ROW OF PANELS TO MEET FG SLOPE.
5. FOR PANEL REINFORCEMENT LOCATION, JOINT DETAILS, AND LEVELING PAD, SEE "MECH. STABILIZED EMBANKMENT DETAIL NO. 1" SHEET.
6. FOR GENERAL NOTES, WELDED WIRE MATS PANEL LOCATIONS AND CONNECTION DETAILS, SEE "MECH. STABILIZED EMBANKMENT DETAIL NO. 2" SHEET.
7. FOR INSPECTION WIRE DETAILS, SEE "MECH. STABILIZED EMBANKMENT DETAIL NO. 3" SHEET.
8. FOR SECTION AT TOP OF WALL WITH BARRIER SLAB AND CONCRETE BARRIER AT APPROACH SLAB, SEE "MECH. STABILIZED EMBANKMENT DETAIL NO. 4" SHEET.
9. FOR LIMITS OF EXCAVATION, BACKFILL AND PERMEABLE MATERIAL, SEE "MECH. STABILIZED EMBANKMENT DETAIL NO. 5" SHEET.
10. THE CONTRACTOR SHALL VERIFY ALL CONTROLLING DIMENSIONS BEFORE ORDERING OR FABRICATING ANY MATERIAL.
11. FOR EXCAVATION AND COMPACTION REQUIREMENTS, SEE SPECIAL PROVISIONS.
12. FOR OUTLET, CLEANOUT AND UNDERDRAIN DETAILS AND NOTES, SEE "MECH. STABILIZED EMBANKMENT DETAIL NO. 5" SHEET AND STABILIZED EMBANKMENT DETAIL NO. 6" SHEET. FOR ADDITIONAL "MECH. DETAILS SEE D102 / -
13. FOR 'ARCHITECTURAL TREATMENT' DETAILS, SEE "AESTHETIC TREATMENT" PLANS.

NOTES:

- (A) 1" EXPANDED POLYSTYRENE
- (B) 2" EXPANDED POLYSTYRENE RECESSED 2" INTO BARRIER SLAB AT FRONT OF MSE FACING PANEL
- (C) #5 CONT @ 15 MAX (BUNDLED)
- (D) #5 ┌ @ 12
- (E) #5 ┌ 5'-6" @ 12 BUNDLED WITH BARS
- (F) FILTER FABRIC
- (G) #5 └ 6¼" @ 16 (TO BE IN PLACE PRIOR TO APPROACH SLAB CONCRETE)
- (H) #5 └ 6¼" @ 8 (TO BE IN PLACE PRIOR TO APPROACH SLAB CONCRETE)
- (I) CONTACT JOINT
- (J) WELDED WIRE MAT SOIL REINFORCEMENT

NOTES:

1. CLEARANCE TO REINFORCING STEEL IN CONCRETE BARRIER TO BE 1".
2. NOT ALL BARRIER REINFORCEMENT SHOWN.
3. NO EXPANSION JOINTS IN CONCRETE BARRIER OR BARRIER SLAB WITHIN MSE WALL LIMITS.

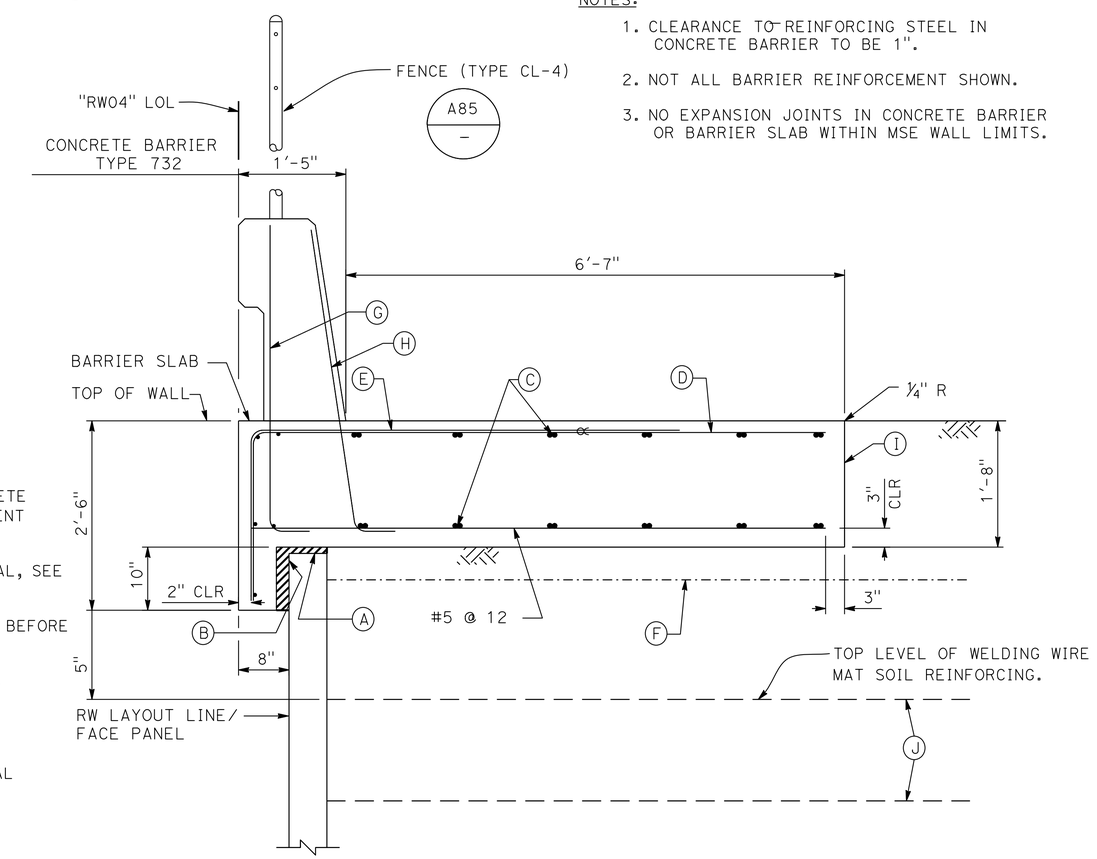

SECTION AT TOP OF WALL WITH BARRIER SLAB AND CONCRETE BARRIER
NO SCALE

Tracy L. Bertram
DESIGN OVERSIGHT Tracy L Bertram
1-7-13
SIGN OFF DATE

	BY	CHECKED
DESIGN	L. KINNEBREW	C. SHENOY
DETAILS	L. KINNEBREW	C. SHENOY
QUANTITIES	L. KINNEBREW	C. SHENOY

PREPARED FOR THE STATE OF CALIFORNIA DEPARTMENT OF TRANSPORTATION

C. SHENOY
PROJECT ENGINEER

BRIDGE NO. 23E0021
POST MILES 3.0

RETAINING WALL NO. 4 (MSE WALL) DETAILS

DESIGN DETAIL SHEET (ENGLISH) (REV.3/14/12)

ORIGINAL SCALE IN INCHES FOR REDUCED PLANS 0 1 2 3

UNIT: 0741
PROJECT NUMBER & PHASE: 04000211311 CONTRACT NO.: 04-0A5341

DISREGARD PRINTS BEARING EARLIER REVISION DATES 09/12/12

REVISION DATES | SHEET 7 | OF 51

USERNAME => s121614 DATE PLOTTED => 10-MAY-2013 TIME PLOTTED => 06:22

FILE => 04-0a5341-rw04-c-det.dgn CONTRACT NO.: 04-0A5341 PROJECT ID: 1234567890

DIST	COUNTY	ROUTE	POST MILES TOTAL PROJECT	SHEET NO	TOTAL SHEETS
04	Sol	12,80	2.1/2.8, 12.0/13.1	469	597

Chandu Shenoy 9/12/12
REGISTERED CIVIL ENGINEER DATE

5-6-13
PLANS APPROVAL DATE

REGISTERED PROFESSIONAL ENGINEER CHANDU V. SHENOY NO. C-53636 EXP. 6/30/13 CIVIL STATE OF CALIFORNIA

THE STATE OF CALIFORNIA OR ITS OFFICERS OR AGENTS SHALL NOT BE RESPONSIBLE FOR THE ACCURACY OR COMPLETENESS OF ELECTRONIC COPIES OF THIS PLAN SHEET.

SOLANO TRANSPORTATION AUTHORITY
ONE HARBOR CENTER, SUITE 130
SUISUN CITY, CA 94585

MARK THOMAS & COMPANY, INC. + NOLTE ASSOCIATES, INC.
3000 OAK ROAD, SUITE 650
WALNUT CREEK, CA 94597

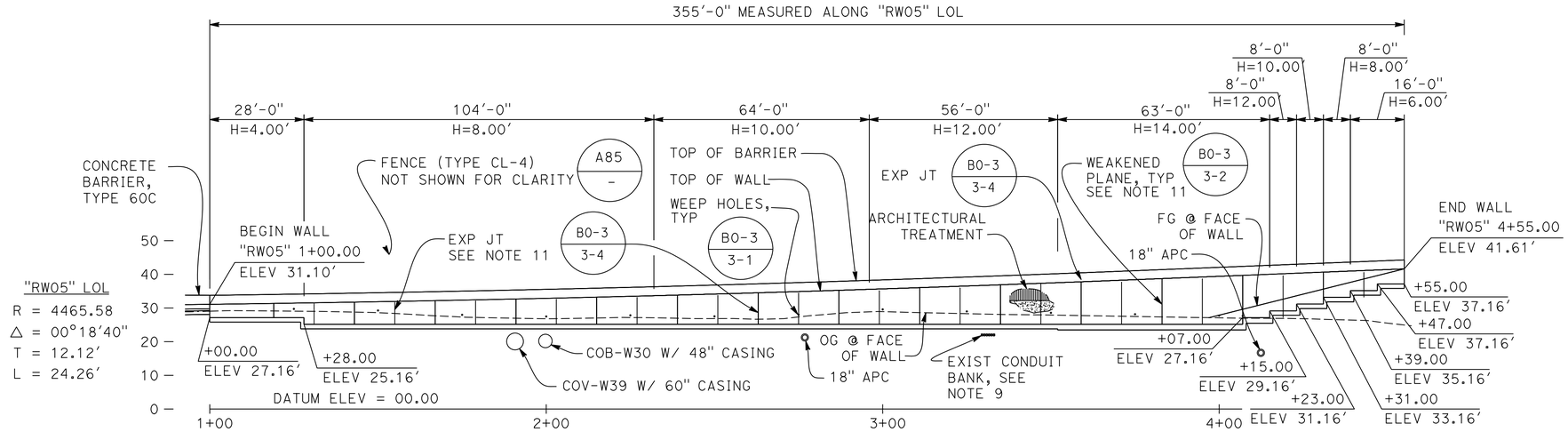

DEVELOPED ELEVATION
1"=20'

NOTES:

1. SEE CIVIL LAYOUT SHEETS FOR "GL2 LINE" INFORMATION.
2. FOR RETAINING WALL 5 DIMENSIONS, FOOTING DIMENSIONS & REINFORCEMENT, SEE CALTRANS RSP-STANDARD PLAN B3-1A.
3. FOR POST POCKET DETAIL, SEE CALTRANS RSP-STANDARD PLAN B11-47 "POST POCKET"
4. SEE DRAINAGE PLANS FOR DRAINAGE INFORMATION.
5. SEE UTILITY PLANS FOR UTILITY INFORMATION.
6. FOR RETAINING WALL FOUNDATION STEP DETAILS SEE, CALTRANS RSP-STANDARD PLAN B3-5 "FOOTING STEP".
7. FOR RETAINING WALL EXCAVATION AND BACKFILL LIMITS NOT SHOWN, SEE CALTRANS STANDARD PLAN A62B.
8. FOR EXCAVATION & COMPACTION REQUIREMENTS, SEE "GEOTECHNICAL REPORT" BY PARIKH CONSULTANTS.
9. FOR 'ARCHITECTURAL TREATMENT' DETAILS, SEE "AESTHETIC TREATMENT" PLANS.
10. SEE DRAINAGE PLANS FOR CONDUIT BANK INFORMATION. DURING FOUNDATION EXCAVATION, PROBE AREA FOR POSSIBLE CONDUIT BANK CONFLICT.
11. WEAKEND PLANES TO BE LOCATED @ 12'-0" MAX, AND WALL EXPANSION JOINTS TO BE LOCATED @ 48'-0" MAX.

RETAINING WALL NO.5 #23-RW05

QUANTITIES

STRUCTURE EXCAVATION (RETAINING WALL)	745	CY
STRUCTURE BACKFILL (RETAINING WALL)	1,030	CY
PERVIOUS BACKFILL MATERIAL (RETAINING WALL)	87	CY
CLASS 2 AGGREGATE BASE (CY)	194	CY
STRUCTURAL CONCRETE, RETAINING WALL	311	CY
ARCHITECTURAL TREATMENT	2,560	SQFT
BAR REINFORCING STEEL (RETAINING WALL)	38,100	LB
CHAIN LINK FENCE (TYPE CL-4)	355	LF
CONCRETE BARRIER (TYPE 732A MODIFIED)	355	LF

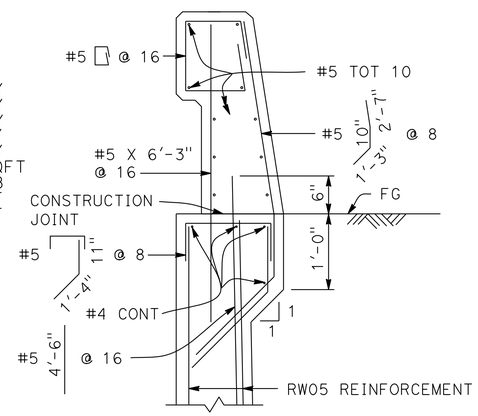

DETAIL 'A'
NO SCALE

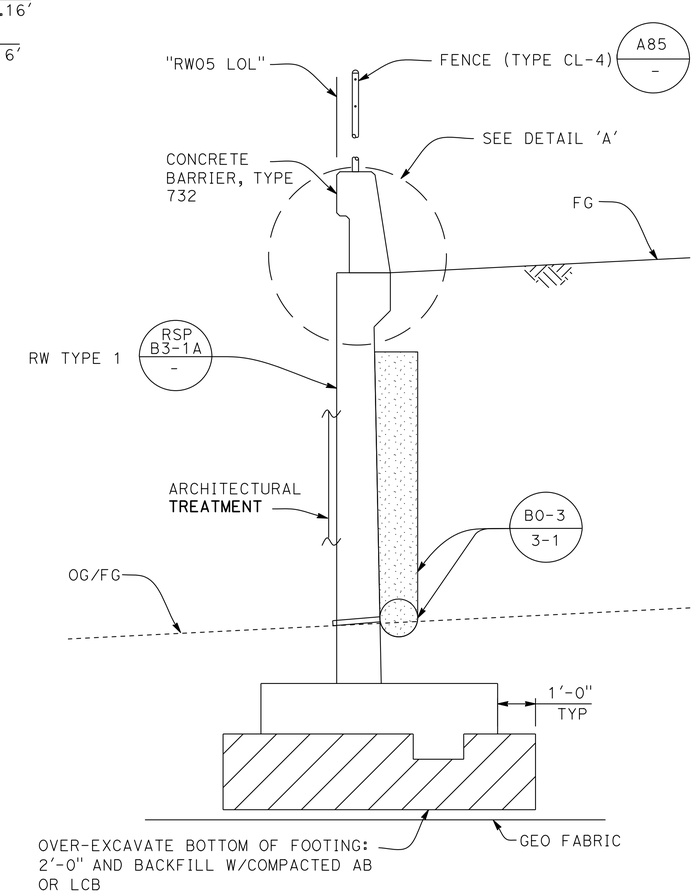

TYPICAL SECTION
NO SCALE

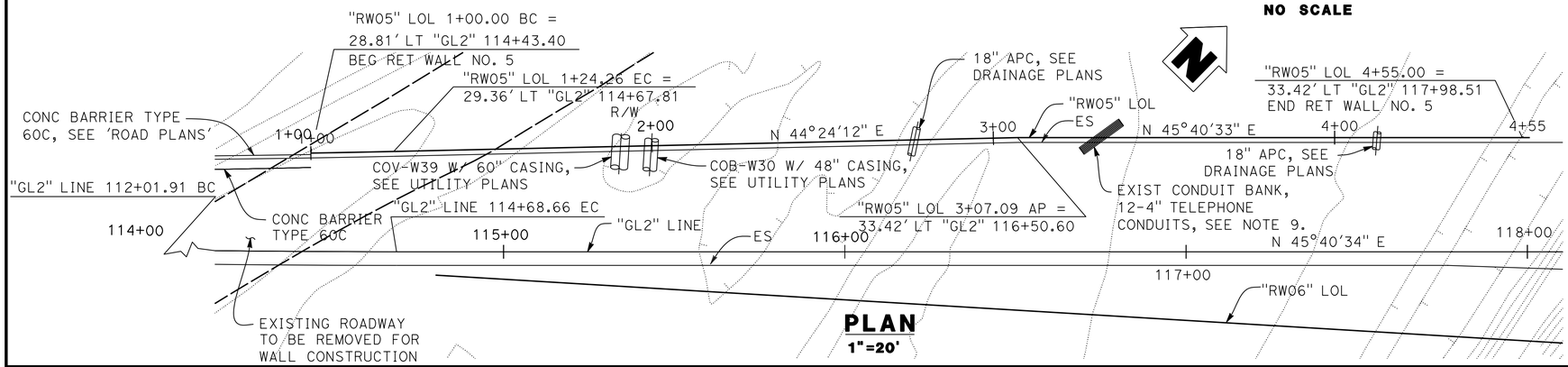

PLAN
1"=20'

Tracy L. Bertram DESIGN OVERSIGHT Tracy L Bertram	DESIGN	BY L. KINNEBREW	CHECKED C. SHENOY	LOAD FACTOR DESIGN	LIVE LOADING: HL93 W/ "LOW-BOY" AND PERMIT DESIGN VEHICLE	
1-7-13 SIGN OFF DATE	DETAILS	BY L. KINNEBREW	CHECKED C. SHENOY	LAYOUT	BY B. ROCK	CHECKED C. SHENOY
	QUANTITIES	BY L. KINNEBREW	CHECKED C. SHENOY	SPECIFICATIONS	BY T. WALKER	PLANS AND SPECS COMPARED C. SHENOY

PREPARED FOR THE STATE OF CALIFORNIA DEPARTMENT OF TRANSPORTATION

C. SHENOY
PROJECT ENGINEER

BRIDGE NO. 23-RW05
POST MILES 12.7

RETAINING WALL NO. 5 (TYPE 1)
GENERAL PLAN

DESIGN GENERAL PLAN SHEET (ENGLISH) (REV.3/14/12)

ORIGINAL SCALE IN INCHES FOR REDUCED PLANS 0 1 2 3

UNIT: 0741
PROJECT NUMBER & PHASE: 04000211311 CONTRACT NO.: 04-0A5341

DISREGARD PRINTS BEARING EARLIER REVISION DATES

REVISION DATES 09/12/12 SHEET 8 OF 51

FILE => 04-0a5341-rw05-a-gp01.dgn CONTRACT NO.: 04-0A5341 PROJECT ID: 1234567890

USERNAME => s121614 DATE PLOTTED => 10-MAY-2013 TIME PLOTTED => 08:59

DIST	COUNTY	ROUTE	POST MILES TOTAL PROJECT	SHEET No	TOTAL SHEETS
04	Sol	12,80	2.1/2.8, 12.0/13.1	470	597

P.K. Chen 9/12/12
REGISTERED STRUCTURAL ENGINEER DATE

5-6-13
PLANS APPROVAL DATE

REGISTERED PROFESSIONAL ENGINEER PO-KANG CHEN No. S 3112 Exp. 9/30/13 STRUCTURAL STATE OF CALIFORNIA

The State of California or its officers or agents shall not be responsible for the accuracy or completeness of electronic copies of this plan sheet.

SOLANO TRANSPORTATION AUTHORITY
ONE HARBOR CENTER, SUITE 130
SUISUN CITY, CA 94585

MARK THOMAS & COMPANY, INC. + NOLTE ASSOCIATES, INC.
3000 OAK ROAD, SUITE 650
WALNUT CREEK, CA 94597

NOTES:

1. This plan accurate for retaining wall work only.
2. For panel reinforcement location, joint details, and leveling pad, see "MECHANICALLY STABILIZED EMBANKMENT - DETAILS No. 1" sheet.
3. For General Notes, welded wire mats panel locations and connection details, see "MECHANICALLY STABILIZED EMBANKMENT - DETAILS No. 2" sheet.
4. For inspection wire details, see "MECHANICALLY STABILIZED EMBANKMENT - DETAILS No. 3" sheet.
5. For limit of excavation and backfill, see "MECHANICALLY STABILIZED EMBANKMENT - DETAILS No. 5" sheet.
6. For 'ARCHITECTURAL TREATMENT' details, see "AESTHETIC TREATMENT" plans.
7. For Utilities, see 'ROAD PLANS'.
8. For accurate Right of Way and Access Data, contact Right of Way Engineering at District Office.
9. The Contractor shall verify all controlling field dimensions before ordering or fabricating any materials.

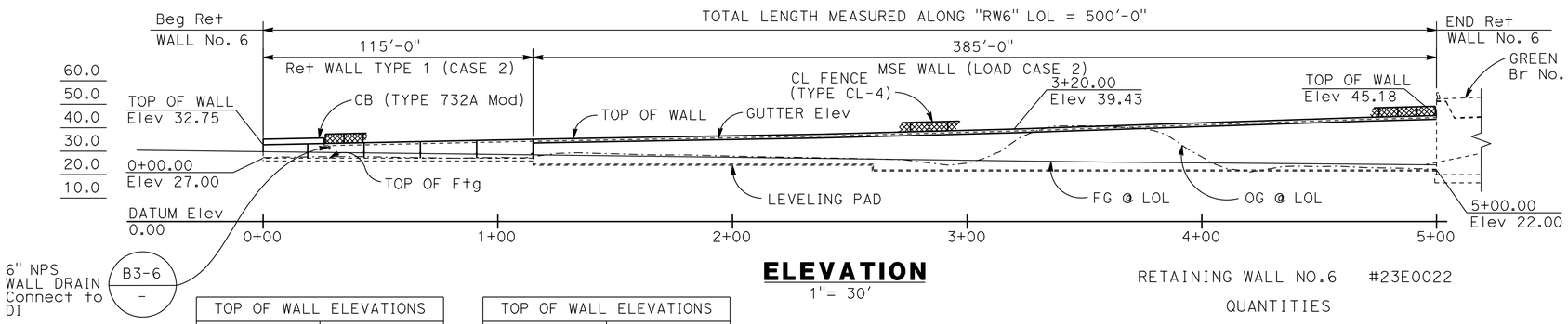

ELEVATION

1"= 30'

TOP OF WALL ELEVATIONS	
Sta	Elev
0+10.00	32.86
0+20.00	33.07
0+30.00	33.29
0+40.00	33.50
0+50.00	33.71
0+60.00	33.92
0+70.00	34.13
0+80.00	34.34
0+90.00	34.56
1+00.00	34.77

TOP OF WALL ELEVATIONS	
Sta	Elev
1+10.00	34.98
1+20.00	35.19
1+30.00	35.37
1+40.00	35.54
1+50.00	35.72
1+60.00	35.89
1+70.00	36.06
1+80.00	36.24
1+90.00	36.41
2+00.00	36.58

RETAINING WALL NO.6 #23E0022

QUANTITIES

STRUCTURE EXCAVATION (RETAINING WALL)	389	CY
STRUCTURE BACKFILL (RETAINING WALL)	325	CY
PERVIOUS BACKFILL MATERIAL (RETAINING WALL)	12	CY
AGGREGATE BASE (APPROACH SLAB) (CY)	121	CY
MECHANICALLY STABILIZED EMBANKMENT, LOCATION C	6,690	SQFT
STRUCTURAL CONCRETE, RETAINING WALL	120	CY
ARCHITECTURAL TREATMENT	680	SQFT
BAR REINFORCING STEEL (RETAINING WALL)	9,900	LB
MINOR CONCRETE (GUTTER) (LF)	429	LF
CHAIN LINK FENCE (TYPE CL-4)	474	LF
CONCRETE BARRIER (TYPE 732A MODIFIED)	26	LF

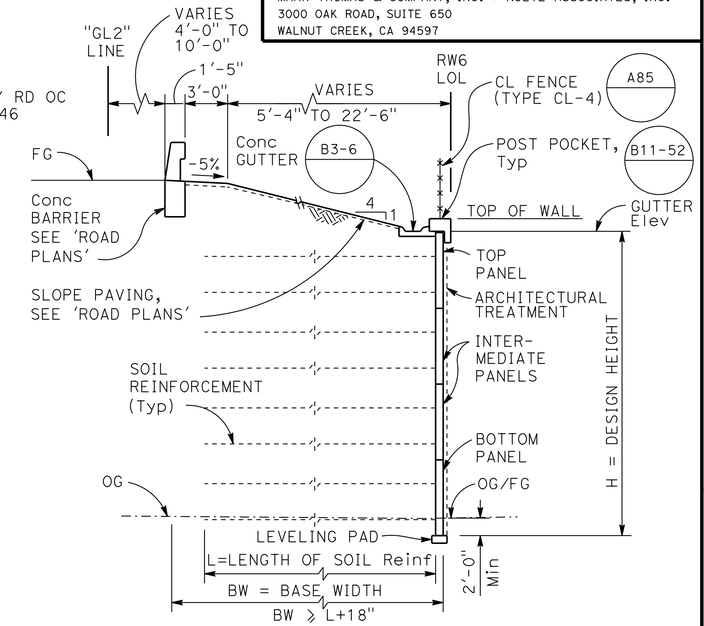

NOTE: For Length of Soil Reinf, see "STRUCTURE PLAN No. 1 & 2" sheets.

TYPICAL SECTION - MSE WALL

1" = 5'-0"

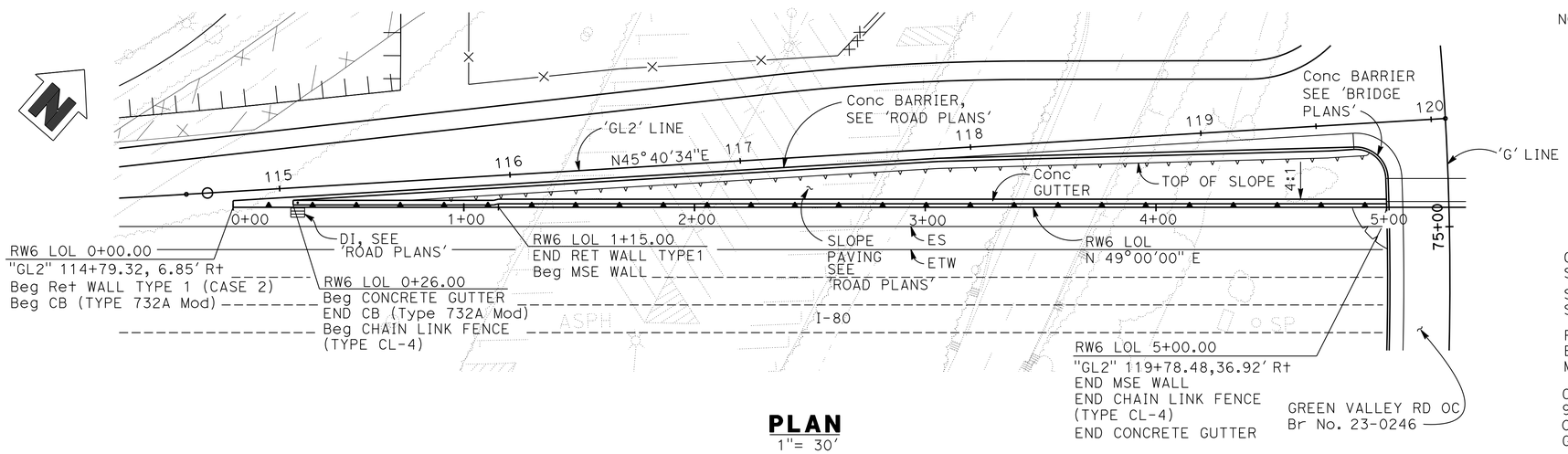

PLAN

1"= 30'

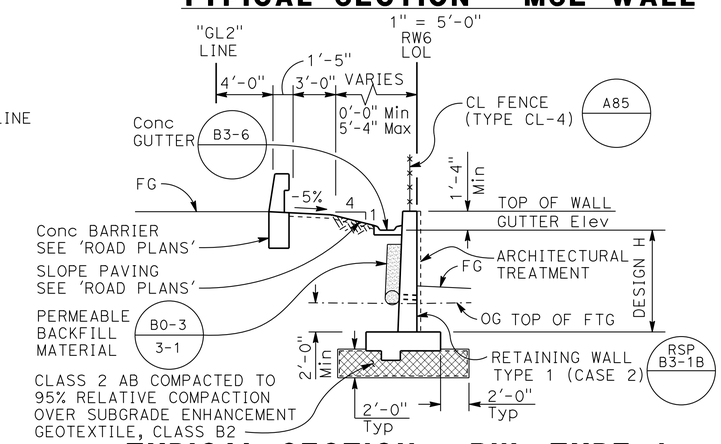

TYPICAL SECTION - RW TYPE 1

3/16" = 1'-0"

DESIGN OVERSIGHT Tracy L Bertram	DESIGN	BY P. PARK	CHECKED T. WALKER		
1-7-13 SIGN OFF DATE	DETAILS	BY P. PARK	CHECKED T. WALKER	LAYOUT BY P. PARK	CHECKED T. WALKER
	QUANTITIES	BY P. PARK	CHECKED T. WALKER	SPECIFICATIONS BY T. WALKER	PLANS AND SPECS COMPARED P. CHEN

PREPARED FOR THE STATE OF CALIFORNIA DEPARTMENT OF TRANSPORTATION

PO-KANG CHEN
PROJECT ENGINEER

BRIDGE NO. 23E0022
POST MILES 12.71

RETAINING WALL No. 6 (MSE WALL)
GENERAL PLAN

DESIGN GENERAL PLAN SHEET (ENGLISH) (REV. 03/14/12)

ORIGINAL SCALE IN INCHES FOR REDUCED PLANS 0 1 2 3

UNIT: 0741
PROJECT NUMBER & PHASE: 04000211311 CONTRACT NO.: 04-0A5341

DISREGARD PRINTS BEARING EARLIER REVISION DATES

REVISION DATES ~~10/27/11~~ ~~5/4/12~~ ~~9/12/12~~ 10/19/12 SHEET 9 OF 51

FILE => 04-0a5341-rw06-a-gp01.dgn

USERNAME => s124436 DATE PLOTTED => 08-MAY-2013 TIME PLOTTED => 06:53

DIST	COUNTY	ROUTE	POST MILES TOTAL PROJECT	SHEET No	TOTAL SHEETS
04	Sol	12,80	2.1/2.8, 12.0/13.1	471	597

P.K. Chen 9/12/12
REGISTERED STRUCTURAL ENGINEER DATE

5-6-13
PLANS APPROVAL DATE

REGISTERED PROFESSIONAL ENGINEER PO-KANG CHEN No. S 3112 Exp. 9/30/13 STRUCTURAL STATE OF CALIFORNIA

The State of California or its officers or agents shall not be responsible for the accuracy or completeness of electronic copies of this plan sheet.

SOLANO TRANSPORTATION AUTHORITY
ONE HARBOR CENTER, SUITE 130
SUISUN CITY, CA 94585

MARK THOMAS & COMPANY, INC. + NOLTE ASSOCIATES, INC.
3000 OAK ROAD, SUITE 650
WALNUT CREEK, CA 94597

LEGEND:

3 of 4-W15xW15@18
3 of = 3 levels of reinforcement mats with
4-W15x = 4 longitudinal wires W15 sized by
W15@18 = W15 sized transverse wires at 18-inch spacing

*(40) Inspection Wire Location

Interval in years from the time of construction to the time of removal of wire inspection.

(1) Clean-out pipe, see 'CLEAN-OUTPIPE DETAIL' on "MSE DETAILS No. 6" sheet.

(2) Outlet pipe and Backing, see 'OUTLET PIPE DETAIL' on "MSE DETAILS No. 6" sheet.

NOTE:

1. For 'ARCHITECTURAL TREATMENT details, see "AESTHETIC TREATMENT" sheets.
2. For 'SECTION A-A', see "RETAINING WALL 6 - DETAILS" sheet.

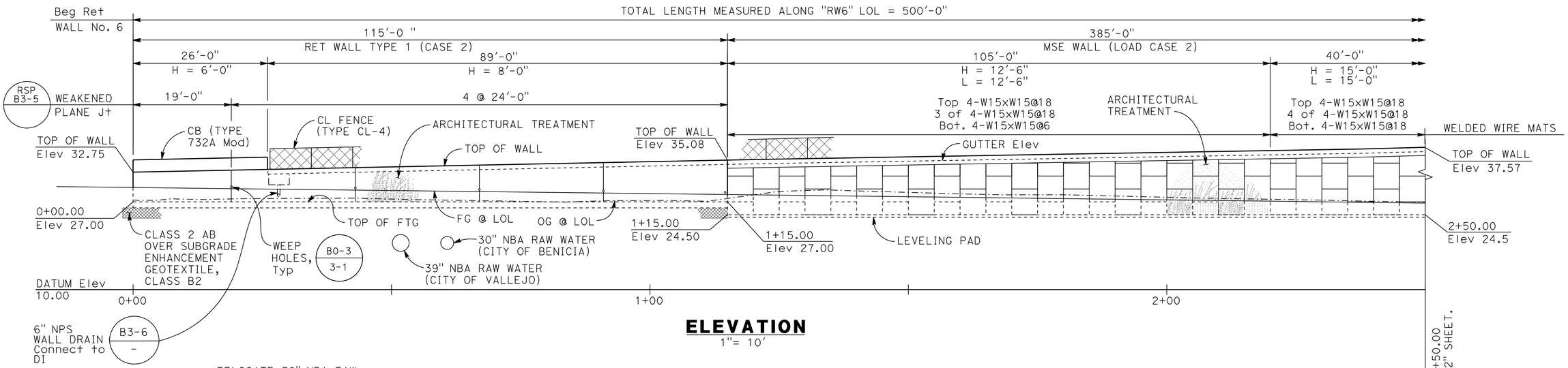

ELEVATION
1"= 10'

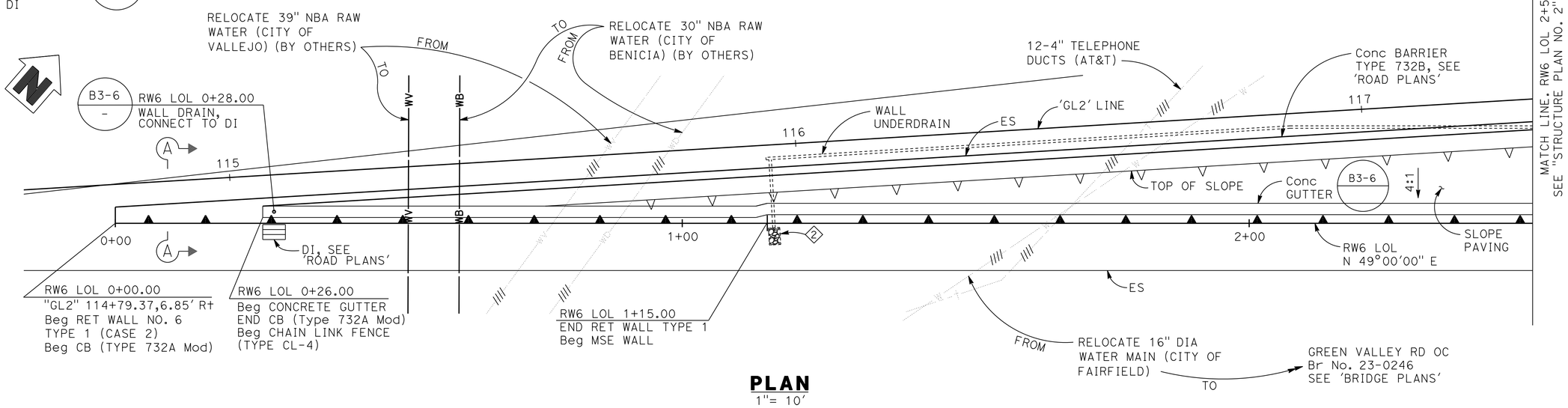

PLAN
1"= 10'

Tracy L Bertram
DESIGN OVERSIGHT Tracy L Bertram
1-7-13
SIGN OFF DATE

	BY	CHECKED
DESIGN	P. PARK	T. WALKER
DETAILS	P. PARK	T. WALKER
QUANTITIES	P. PARK	T. WALKER

PREPARED FOR THE STATE OF CALIFORNIA DEPARTMENT OF TRANSPORTATION

PO-KANG CHEN
PROJECT ENGINEER

BRIDGE NO. 23E0022
POST MILES 12.71

RETAINING WALL No. 6 (MSE WALL)
STRUCTURE PLAN No. 1

DESIGN DETAIL SHEET (ENGLISH) (REV. 03/14/12)

ORIGINAL SCALE IN INCHES FOR REDUCED PLANS 0 1 2 3

UNIT: 0741
PROJECT NUMBER & PHASE: 04000211311 CONTRACT NO.: 04-0A5341

DISREGARD PRINTS BEARING EARLIER REVISION DATES

REVISION DATES 10/27/11 5/4/12 9/12/12 10/19/12

SHEET 10 OF 51

FILE => 04-0a5341-rw06-b-sp01.dgn

USERNAME => s124496 DATE PLOTTED => 08-MAY-2013 TIME PLOTTED => 06:53

DIST	COUNTY	ROUTE	POST MILES TOTAL PROJECT	SHEET No	TOTAL SHEETS
04	Sol	12,80	2.1/2.8, 12.0/13.1	472	597

P.K. Chen 9/12/12
REGISTERED STRUCTURAL ENGINEER DATE

5-6-13
PLANS APPROVAL DATE

REGISTERED PROFESSIONAL ENGINEER PO-KANG CHEN No. S 3112 Exp. 9/30/13 STRUCTURAL STATE OF CALIFORNIA

The State of California or its officers or agents shall not be responsible for the accuracy or completeness of electronic copies of this plan sheet.

SOLANO TRANSPORTATION AUTHORITY
ONE HARBOR CENTER, SUITE 130
SUISUN CITY, CA 94585

MARK THOMAS & COMPANY, INC. + NOLTE ASSOCIATES, INC.
3000 OAK ROAD, SUITE 650
WALNUT CREEK, CA 94597

LEGEND:

4 of 4-W15xW15@18
4 of = 4 levels of reinforcement mats with
4-W15x = 4 longitudinal wires W15 sized by
W15@18 = W15 sized transverse wires at 18-inch spacing

(40) Inspection Wire Location
Interval in years from the time of construction to the time of removal of wire inspection.

(1) Clean-out pipe, see 'CLEAN-OUTPIPE DETAIL' on "MSE DETAILS No. 6" sheet.
(2) Outlet pipe and Backing, see 'OUTLET PIPE DETAIL' on "MSE DETAILS No. 6" sheet.

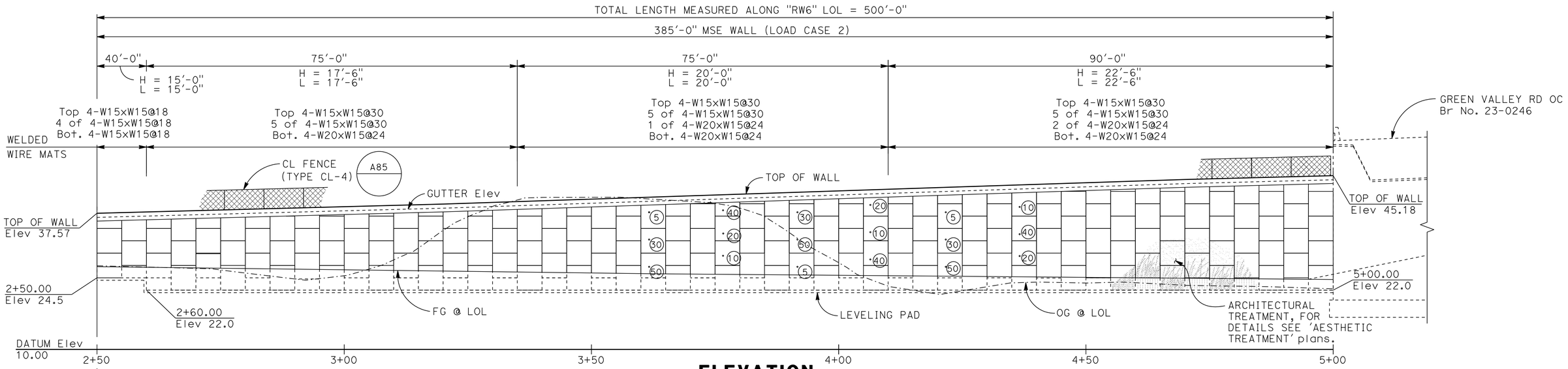

ELEVATION
1"= 10'

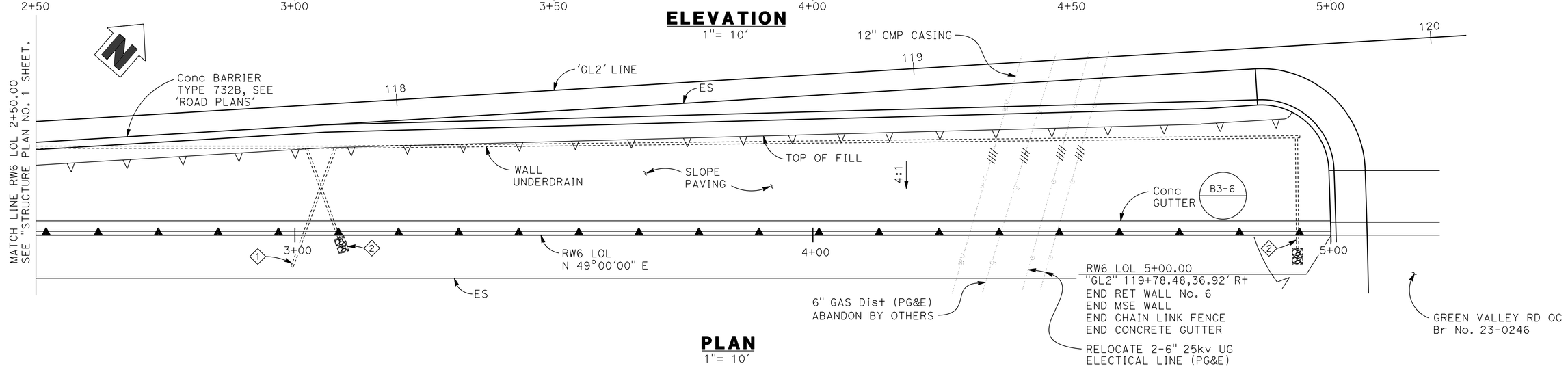

PLAN
1"= 10'

Tracy L. Bertram
DESIGN OVERSIGHT Tracy L Bertram
1-7-13
SIGN OFF DATE

	BY	CHECKED
DESIGN	P. PARK	T. WALKER
DETAILS	P. PARK	T. WALKER
QUANTITIES	P. PARK	T. WALKER

PREPARED FOR THE STATE OF CALIFORNIA DEPARTMENT OF TRANSPORTATION

PO-KANG CHEN
PROJECT ENGINEER

BRIDGE NO. 23E0022
POST MILES 12.71

RETAINING WALL No. 6 (MSE WALL)
STRUCTURE PLAN No. 2

DESIGN DETAIL SHEET (ENGLISH) (REV. 03/14/12)

ORIGINAL SCALE IN INCHES FOR REDUCED PLANS 0 1 2 3

UNIT: 0741
PROJECT NUMBER & PHASE: 04000211311 CONTRACT NO.: 04-0A5341

DISREGARD PRINTS BEARING EARLIER REVISION DATES → 10/27/11 5/3/12 9/12/12 10/19/12

SHEET 11 OF 51

FILE => 04-0a5341-rw06-b-sp02.dgn

USERNAME => s124496 DATE PLOTTED => 08-MAY-2013 TIME PLOTTED => 06:54

DIST	COUNTY	ROUTE	POST MILES TOTAL PROJECT	SHEET No	TOTAL SHEETS
04	Sol	12,80	2.1/2.8, 12.0/13.1	473	597

P.K. Chen 9/12/12
REGISTERED STRUCTURAL ENGINEER DATE

5-6-13
PLANS APPROVAL DATE

REGISTERED PROFESSIONAL ENGINEER
PO-KANG CHEN
No. S 3112
Exp. 9/30/13
STRUCTURAL
STATE OF CALIFORNIA

The State of California or its officers or agents shall not be responsible for the accuracy or completeness of electronic copies of this plan sheet.

SOLANO TRANSPORTATION AUTHORITY
ONE HARBOR CENTER, SUITE 130
SUISUN CITY, CA 94585

MARK THOMAS & COMPANY, INC. + NOLTE ASSOCIATES, INC.
3000 OAK ROAD, SUITE 650
WALNUT CREEK, CA 94597

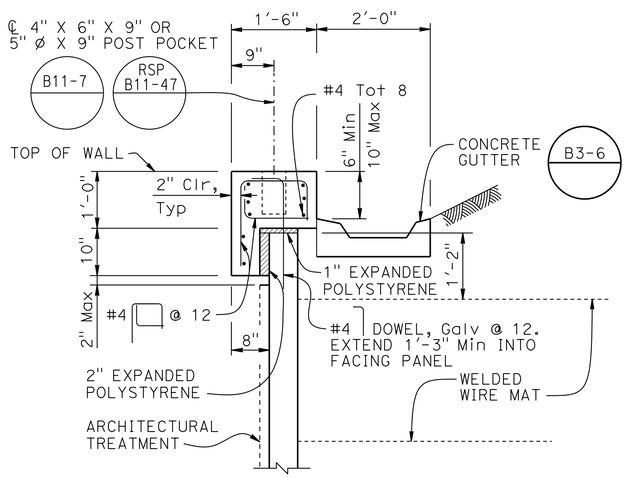

STANDARD COPING

¾" = 1'-0"

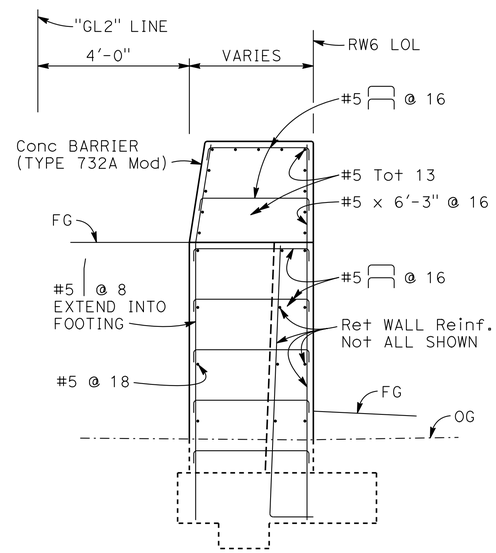

SECTION A-A

½" = 1'-0"

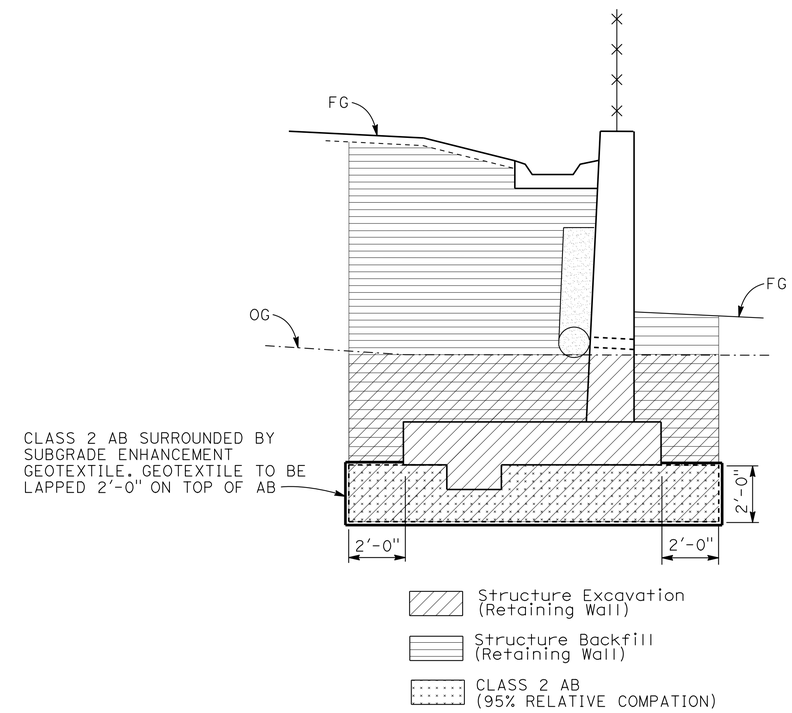

LIMITS OF PAYMENT FOR STRUCTURE EXCAVATION AND BACKFILL

NO SCALE

Tracy L. Bertram
DESIGN OVERSIGHT Tracy L Bertram
1-7-13
SIGN OFF DATE

	BY	CHECKED
DESIGN	P. PARK	T. WALKER
DETAILS	P. PARK	T. WALKER
QUANTITIES	P. PARK	T. WALKER

PREPARED FOR THE STATE OF CALIFORNIA DEPARTMENT OF TRANSPORTATION

PO-KANG CHEN
PROJECT ENGINEER

BRIDGE NO. 23E0022
POST MILES 12.71

RETAINING WALL No. 6 (MSE WALL) DETAILS

DESIGN DETAIL SHEET (ENGLISH) (REV. 03/14/12)

ORIGINAL SCALE IN INCHES FOR REDUCED PLANS 0 1 2 3

UNIT: 0741
PROJECT NUMBER & PHASE: 04000211311 CONTRACT NO.: 04-0A5341

DISREGARD PRINTS BEARING EARLIER REVISION DATES
REVISION DATES 09/12/12 10/19/12

SHEET 12 OF 51

FILE => 04-0a5341-rw06-c-det.dgn

USERNAME => s124496 DATE PLOTTED => 08-MAY-2013 TIME PLOTTED => 06:54

DIST	COUNTY	ROUTE	POST MILES TOTAL PROJECT	SHEET No	TOTAL SHEETS
04	Sol	12,80	2.1/2.8, 12.0/13.1	474	597

P.K. Chen 9/12/12
REGISTERED STRUCTURAL ENGINEER DATE

5-6-13
PLANS APPROVAL DATE

REGISTERED PROFESSIONAL ENGINEER PO-KANG CHEN No. S 3112 Exp. 9/30/13 STRUCTURAL STATE OF CALIFORNIA

The State of California or its officers or agents shall not be responsible for the accuracy or completeness of electronic copies of this plan sheet.

SOLANO TRANSPORTATION AUTHORITY
ONE HARBOR CENTER, SUITE 130
SUISUN CITY, CA 94585

MARK THOMAS & COMPANY, INC. + NOLTE ASSOCIATES, INC.
3000 OAK ROAD, SUITE 650
WALNUT CREEK, CA 94597

NOTES:

1. This plan accurate for retaining wall work only.
2. For panel reinforcement location, joint details, and leveling pad, see "MECHANICALLY STABILIZED EMBANKMENT - DETAILS No. 1" sheet.
3. For General Notes, welded wire mats panel locations and connection details, see "MECHANICALLY STABILIZED EMBANKMENT - DETAILS No. 2" sheet.
4. For inspection wire details, see "MECHANICALLY STABILIZED EMBANKMENT - DETAILS No. 3" sheet.
5. For concrete barrier slab details, see "STRUCTURE PLAN No. 3" sheet.
6. For limit of excavation and backfill, see "MECHANICALLY STABILIZED EMBANKMENT - DETAILS No. 5" sheet.
7. For 'ARCHITECTURAL TREATMENT' details, see "AESTHETIC TREATMENT" plans.
8. For Utilities, see 'ROAD PLANS'.
9. For accurate Right of Way and Access Data, contact Right of Way Engineering at District Office.
10. The Contractor shall verify all controlling field dimensions before ordering or fabricating any materials.

RETAINING WALL NO.7 #23E0023

QUANTITIES

MECHANICALLY STABILIZED EMBANKMENT, LOCATION D	10,570	SQFT
STRUCTURAL CONCRETE, BARRIER SLAB	242	CY
CHAIN LINK RAILING (TYPE 7 MODIFIED)	475	LF
CONCRETE BARRIER (TYPE 732 MODIFIED)	475	LF

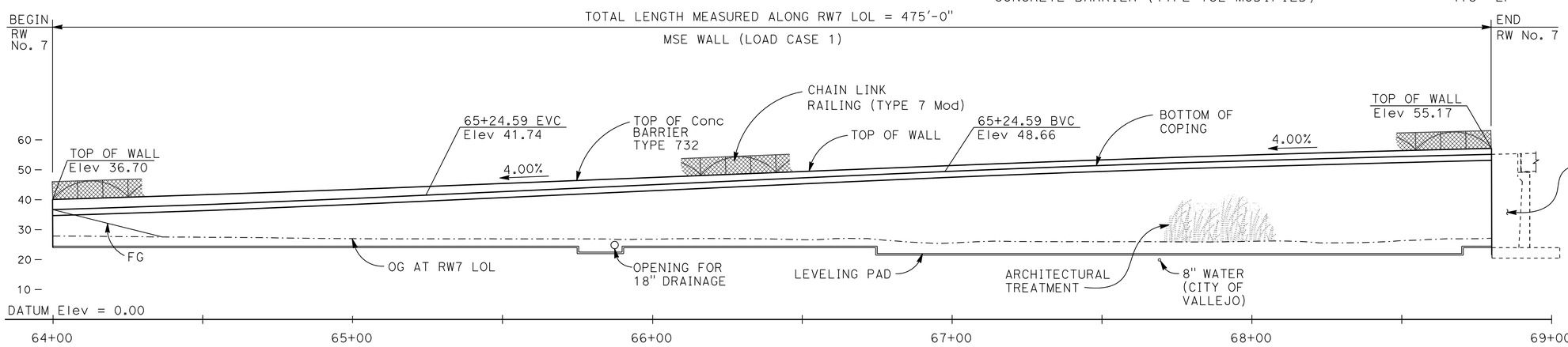

DEVELOPED ELEVATION

1" = 20'

NOTE: For 'ARCHITECTURAL TREATMENT' details see 'AESTHETIC TREATMENT' plans.

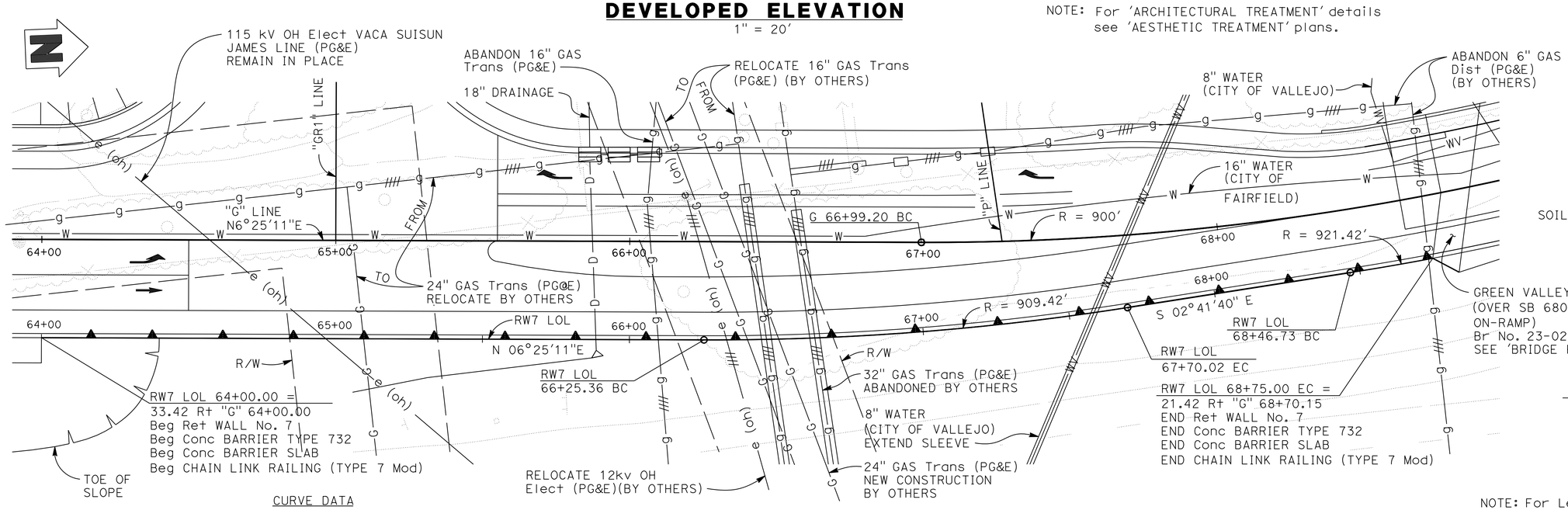

CURVE DATA

R = 900.00'	R = 909.42'	R = 921.42'
Δ = 42°1'1"	Δ = 9°06'51"	Δ = 2°03'43"
T = 345.63'	T = 72.49'	T = 16.58'
L = 660.00'	L = 144.66'	L = 33.16'

PLAN

1" = 20'

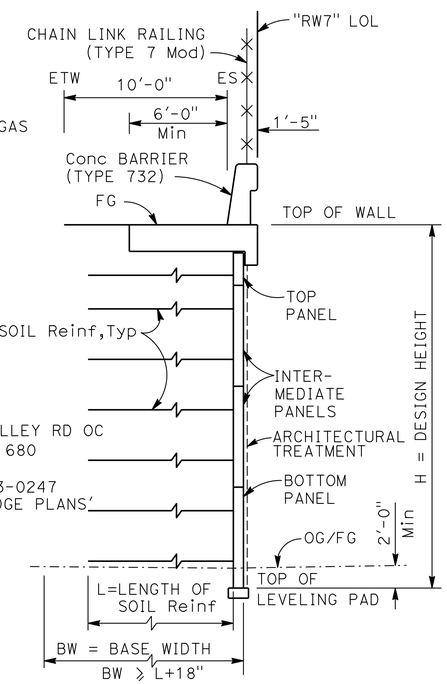

NOTE: For Length of Soil Reinf, see "STRUCTURE PLAN No. 1 & 3" sheets.

TYPICAL SECTION - MSE WALL

NO SCALE

DESIGN OVERSIGHT Tracy L Bertram	DESIGN	BY P. PARK	CHECKED T. WALKER		
1-7-13 SIGN OFF DATE	DETAILS	BY T. TRAN	CHECKED P. PARK	LAYOUT BY A. CROSKEY	CHECKED P. PARK
	QUANTITIES	BY P. PARK	CHECKED T. WALKER	SPECIFICATIONS BY T. WALKER	PLANS AND SPECS COMPARED P. CHEN

PREPARED FOR THE STATE OF CALIFORNIA DEPARTMENT OF TRANSPORTATION

PO-KANG CHEN
PROJECT ENGINEER

BRIDGE NO. 23E0023
POST MILES 12.7

RETAINING WALL No. 7 (MSE WALL)
GENERAL PLAN

DESIGN GENERAL PLAN SHEET (ENGLISH) (REV. 03/14/12)

ORIGINAL SCALE IN INCHES FOR REDUCED PLANS 0 1 2 3

UNIT: 0741
PROJECT NUMBER & PHASE: 04000211311 CONTRACT NO.: 04-0A5341

DISREGARD PRINTS BEARING EARLIER REVISION DATES

REVISION DATES 10/7/11 5/4/12 9/12/12 10/19/12

SHEET 13 OF 51

FILE => 04-0a5341-rw07-a-gp01.dgn

USERNAME => s124396 DATE PLOTTED => 08-MAY-2013 TIME PLOTTED => 06:54

DIST	COUNTY	ROUTE	POST MILES TOTAL PROJECT	SHEET No	TOTAL SHEETS
04	Sol	12,80	2.1/2.8, 12.0/13.1	475	597

P.K. Chen 9/12/12
REGISTERED STRUCTURAL ENGINEER DATE

5-6-13
PLANS APPROVAL DATE

REGISTERED PROFESSIONAL ENGINEER PO-KANG CHEN No. S 3112 Exp. 9/30/13 STRUCTURAL STATE OF CALIFORNIA

The State of California or its officers or agents shall not be responsible for the accuracy or completeness of electronic copies of this plan sheet.

SOLANO TRANSPORTATION AUTHORITY
ONE HARBOR CENTER, SUITE 130
SUISUN CITY, CA 94585

MARK THOMAS & COMPANY, INC. + NOLTE ASSOCIATES, INC.
3000 OAK ROAD, SUITE 650
WALNUT CREEK, CA 94597

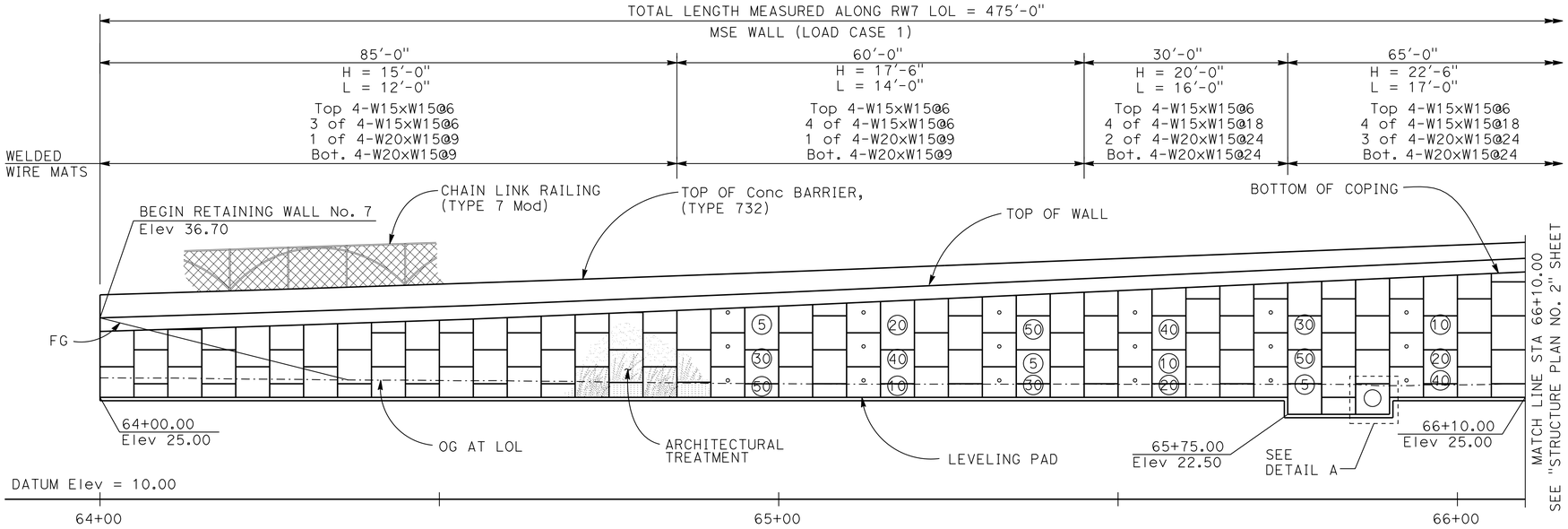

TOP OF WALL ELEVATIONS	
Sta	Elev
64+00.00	36.70
64+10.00	37.02
64+20.00	37.34
64+30.00	37.67
64+40.00	38.01
64+50.00	38.35
64+60.00	37.74
64+70.00	39.16
64+80.00	39.58
64+90.00	40.00
65+00.00	40.42
65+10.00	40.88

TOP OF WALL ELEVATIONS	
Sta	Elev
65+20.00	41.33
65+30.00	41.79
65+40.00	42.25
65+50.00	42.70
65+60.00	43.16
65+70.00	43.62
65+80.00	44.08
65+90.00	44.54
66+00.00	45.00
66+10.00	45.47

ELEVATION
1" = 10'

LEGEND:

3 of 4-W20xW15@24
3 of = 3 levels of reinforcement mats with
4-W20x = 4 longitudinal wires W20 sized by
W15@24 = W15 sized transverse wires at 24-inch spacing

°40 Inspection Wire Location

Interval in years from the time of construction to the time of removal of wire inspection.

1 Clean-out pipe, see 'Clean-outpipe Detail' on "MSE DETAILS No. 6" sheet.

2 Outlet pipe and Backing, see 'Outlet Pipe Detail' on "MSE DETAILS No. 6" sheet.

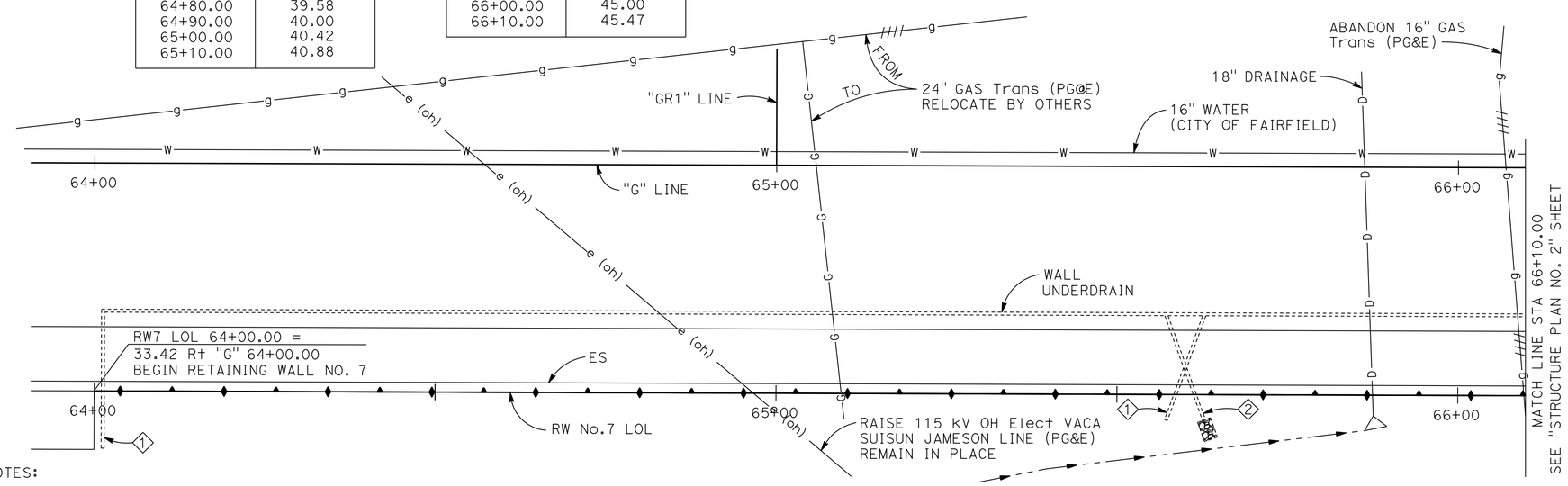

NOTES:
1. All station callouts are to the corresponding Retaining Wall LOL unless otherwise noted.
2. All Vertical Curve information corresponding to the top of walls.
3. For utilities, see 'ROAD PLANS'.
4. For 'ARCHITECTURAL TREATMENT' details, see "AESTHETIC TREATMENT" plans.

PLAN
1" = 10'

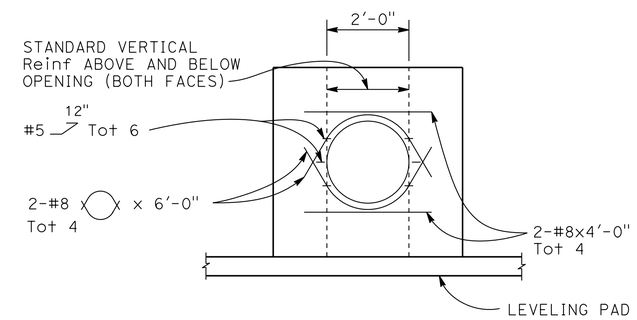

NOTES:
1 Contractor to adjust wire mesh layout at utility opening panel as needed to accomodate the opening as shown.
2. Horizontal Reinf to be standard except as shown.
3. All Reinf to clear opening by 2" minimum.

DETAIL A - UTILITY OPENING PANEL
1/2" = 1'-0"

Tracy L Bertram
DESIGN OVERSIGHT Tracy L Bertram
1-7-13
SIGN OFF DATE

	BY	CHECKED
DESIGN	P. PARK	T. WALKER
DETAILS	P. PARK	T. WALKER
QUANTITIES	P. PARK	T. WALKER

PREPARED FOR THE STATE OF CALIFORNIA DEPARTMENT OF TRANSPORTATION

PO-KANG CHEN
PROJECT ENGINEER

BRIDGE NO. 23E0023
POST MILES 12.7

RETAINING WALL No. 7 (MSE WALL)
STRUCTURE PLAN No. 1

DESIGN DETAIL SHEET (ENGLISH) (REV. 03/14/12)

ORIGINAL SCALE IN INCHES FOR REDUCED PLANS 0 1 2 3

UNIT: 0741
PROJECT NUMBER & PHASE: 04000211311 CONTRACT NO.: 04-0A5341

DISREGARD PRINTS BEARING EARLIER REVISION DATES

REVISION DATES 10/27/11 5/14/12 9/12/12 10/19/12

SHEET 14 OF 51

FILE => 04-0a5341-rw07-b-sp01.dgn

USERNAME => s124496 DATE PLOTTED => 08-MAY-2013 TIME PLOTTED => 06:54

DIST	COUNTY	ROUTE	POST MILES TOTAL PROJECT	SHEET NO	TOTAL SHEETS
04	Sol	12,80	2.1/2.8, 12.0/13.1	476	597

P.K. Chen 9/12/12
REGISTERED STRUCTURAL ENGINEER DATE

5-6-13
PLANS APPROVAL DATE

REGISTERED PROFESSIONAL ENGINEER PO-KANG CHEN NO. S 3112 EXP. 9/30/13 STRUCTURAL STATE OF CALIFORNIA

THE STATE OF CALIFORNIA OR ITS OFFICERS OR AGENTS SHALL NOT BE RESPONSIBLE FOR THE ACCURACY OR COMPLETENESS OF ELECTRONIC COPIES OF THIS PLAN SHEET.

SOLANO TRANSPORTATION AUTHORITY
ONE HARBOR CENTER, SUITE 130
SUISUN CITY, CA 94585

MARK THOMAS & COMPANY, INC. + NOLTE ASSOCIATES, INC.
3000 OAK ROAD, SUITE 650
WALNUT CREEK, CA 94597

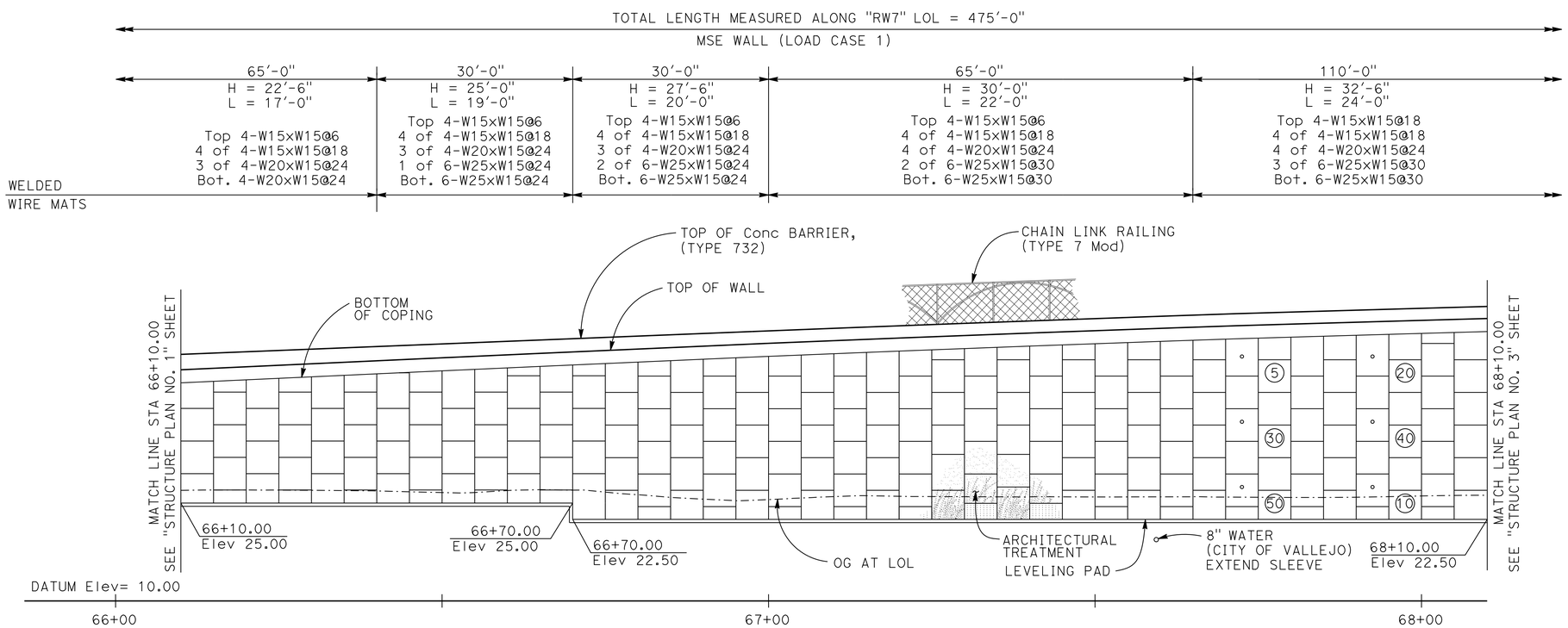

ELEVATION
1" = 10'

NOTE: For 'ARCHITECTURAL TREATMENT' details, see "AESTHETIC TREATMENT" sheets.

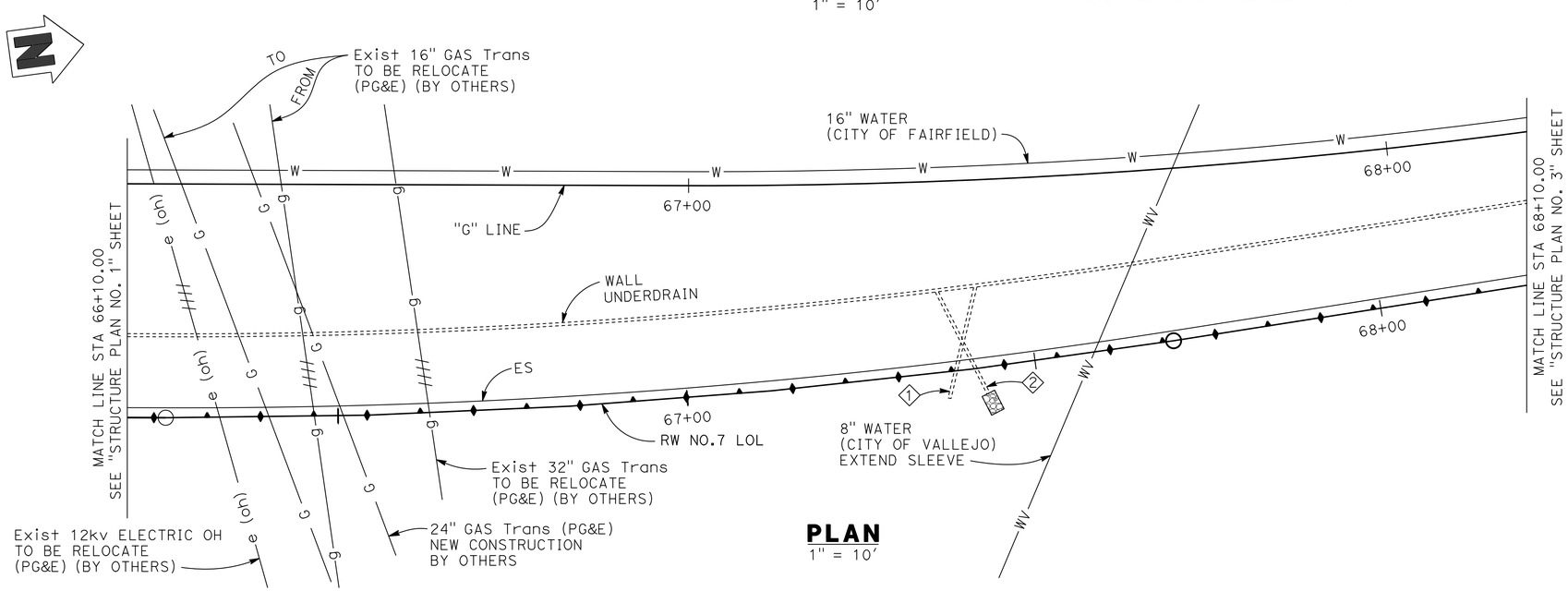

PLAN
1" = 10'

LEGEND:

4 of 4-W20xW15@24
4 of = 4 levels of reinforcement mats with
4-W20x = 4 longitudinal wires W20 sized by
W15@24 = W15 sized transverse wires at 24-inch spacing

(40) Inspection wire location

Interval in years from the time of construction to the time of removal of wire inspection.

(1) Clean-out pipe, see 'CLEAN-OUTPIPE DETAIL' on "MSE DETAILS No. 6" sheet.

(2) Outlet pipe and backing, see 'OUTLET PIPE DETAIL' on "MSE DETAILS No. 6" sheet.

NOTES:

1. All station callouts are to the corresponding retaining wall lol unless otherwise noted.
2. All vertical curve information corresponding to the top of walls.
3. For utilities, see 'ROAD PLANS'.

TOP OF WALL ELEVATIONS	
Sta	Elev
66+20.00	45.88
66+30.00	46.34
66+40.00	46.80
66+50.00	47.26
66+60.00	47.71
66+70.00	48.16
66+80.00	48.60
66+90.00	49.04
67+00.00	49.48
67+10.00	49.88
67+20.00	50.29
67+30.00	50.67
67+40.00	51.05
67+50.00	51.41
67+60.00	51.77
67+70.00	52.11
67+80.00	52.42
67+90.00	52.71
68+00.00	53.00
68+10.00	53.28

Tracy L. Bertram
DESIGN OVERSIGHT Tracy L Bertram
1-7-13
SIGN OFF DATE

	BY	CHECKED
DESIGN	P. PARK	T. WALKER
DETAILS	N. PHAM	P. PARK
QUANTITIES	P. PARK	T. WALKER

PREPARED FOR THE STATE OF CALIFORNIA DEPARTMENT OF TRANSPORTATION

PO-KANG CHEN
PROJECT ENGINEER

BRIDGE NO. 23E0023
POST MILES 12.7

RETAINING WALL NO. 7 (MSE WALL)
STRUCTURE PLAN NO. 2

DESIGN DETAIL SHEET (ENGLISH) (REV. 03/14/12)

ORIGINAL SCALE IN INCHES FOR REDUCED PLANS 0 1 2 3

UNIT: 0741
PROJECT NUMBER & PHASE: 04000211311 CONTRACT NO.: 04-0A5341

DISREGARD PRINTS BEARING EARLIER REVISION DATES
REVISION DATES 10/27/11 5/24/12 9/27/12 10/19/12
SHEET 15 OF 51

FILE => 04-0a5341-rw07-b-sp02.dgn

USERNAME => s124496 DATE PLOTTED => 08-MAY-2013 TIME PLOTTED => 06:54

DIST	COUNTY	ROUTE	POST MILES TOTAL PROJECT	SHEET No	TOTAL SHEETS
04	Sol	12,80	2.1/2.8, 12.0/13.1	477	597

P.K. Chen 9/12/12
REGISTERED STRUCTURAL ENGINEER DATE

5-6-13
PLANS APPROVAL DATE

REGISTERED PROFESSIONAL ENGINEER PO-KANG CHEN No. S 3112 Exp. 9/30/13 STRUCTURAL STATE OF CALIFORNIA

The State of California or its officers or agents shall not be responsible for the accuracy or completeness of electronic copies of this plan sheet.

SOLANO TRANSPORTATION AUTHORITY
ONE HARBOR CENTER, SUITE 130
SUISUN CITY, CA 94585

MARK THOMAS & COMPANY, INC. + NOLTE ASSOCIATES, INC.
3000 OAK ROAD, SUITE 650
WALNUT CREEK, CA 94597

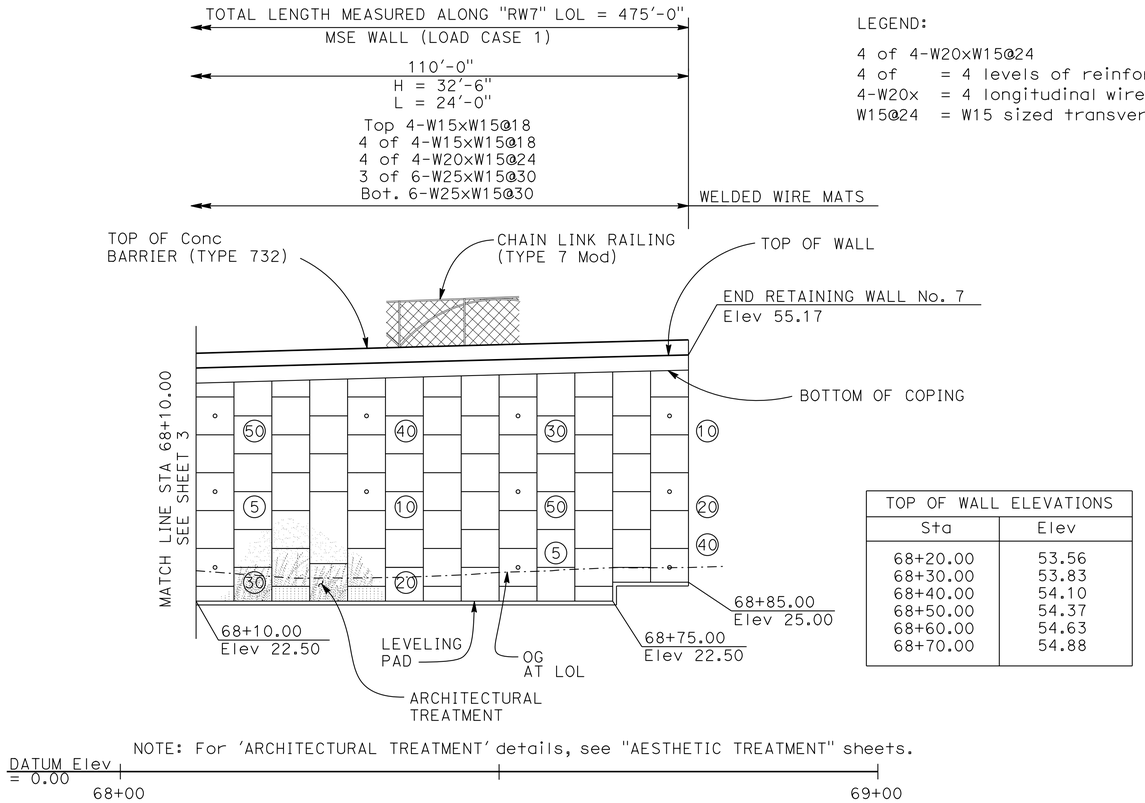

ELEVATION
1" = 10'

TOP OF WALL ELEVATIONS	
Sta	Elev
68+20.00	53.56
68+30.00	53.83
68+40.00	54.10
68+50.00	54.37
68+60.00	54.63
68+70.00	54.88

LEGEND:

4 of 4-W20xW15@24
4 of = 4 levels of reinforcement mats with
4-W20x = 4 longitudinal wires W20 sized by
W15@24 = W15 sized transverse wires at 24-inch spacing

(40) Inspection Wire Location
Interval in years from the time of construction to the time of removal of wire inspection.

(2) Outlet pipe and Backing, see 'OUTLET PIPE DETAIL' on "MSE DETAILS No. 6" sheet.

NOTES:

1. Clearance to reinforcing steel in concrete barrier to be 1".
2. Not all barrier reinforcement shown.
3. No expansion joints in concrete barrier or barrier slab within wall limits.
4. Minimum slab length: 40 ft.
5. All station callouts are to the corresponding Retaining Wall LOL unless otherwise noted.
6. For utilities, see 'ROAD PLANS'.
7. For 'ARCHITECTURAL TREATMENT' details, see "AESTHETIC TREATMENT' sheets.

DESIGN DATA - CONCRETE BARRIER SLAB

DESIGN: AASHTO LRFD Bridge Design Specifications, 4th Edition with California Amendments.
WS: 33 psf on sound wall
F_t : 54 kips on barrier
EQE: k_h = 0.2
k_v = 0.0

REINFORCED CONCRETE: f'c = 3600 psi
fy = 60 ksi
n = 8

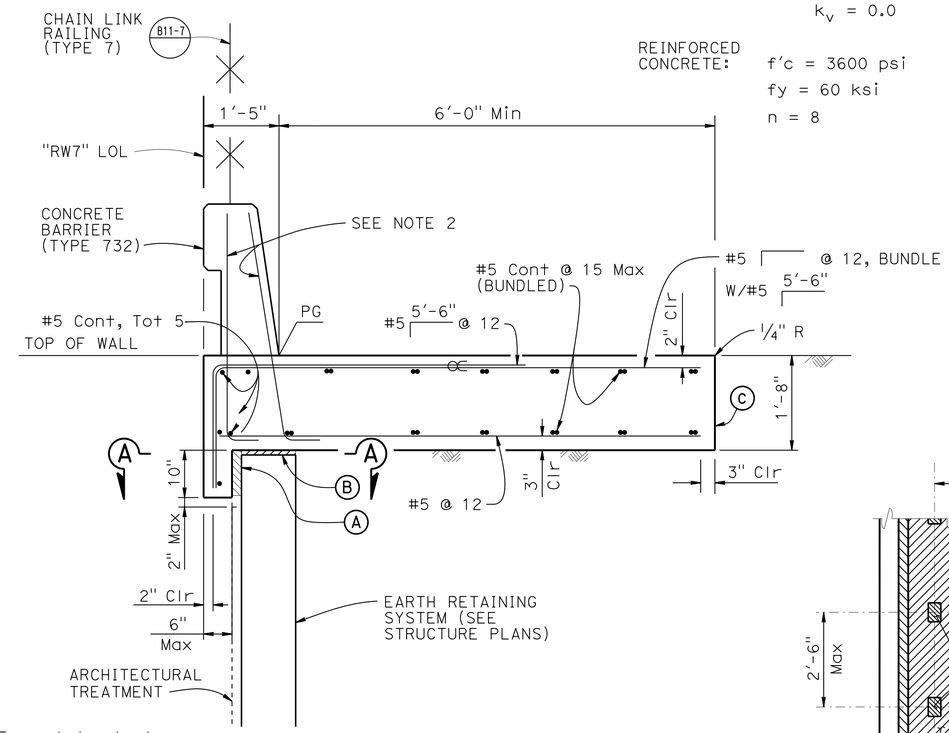

NOTES:

(A) 2" Min Expanded polystyrene
(B) 1" Expanded Polystyrene on MSE and concrete stem walls, See "SECTION A-A" for Soldier PIle Walls
(C) Contact joint
(D) 4'-0" wide pavement reinforcing fabric
∝ Indicates bundled bars

CONCRETE BARRIER SLAB
3/4" = 1'-0"

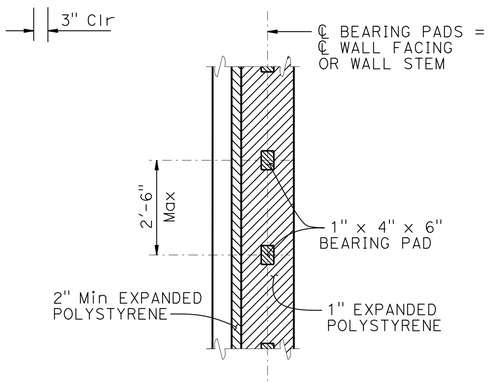

SECTION A-A
1/2" = 1'-0"

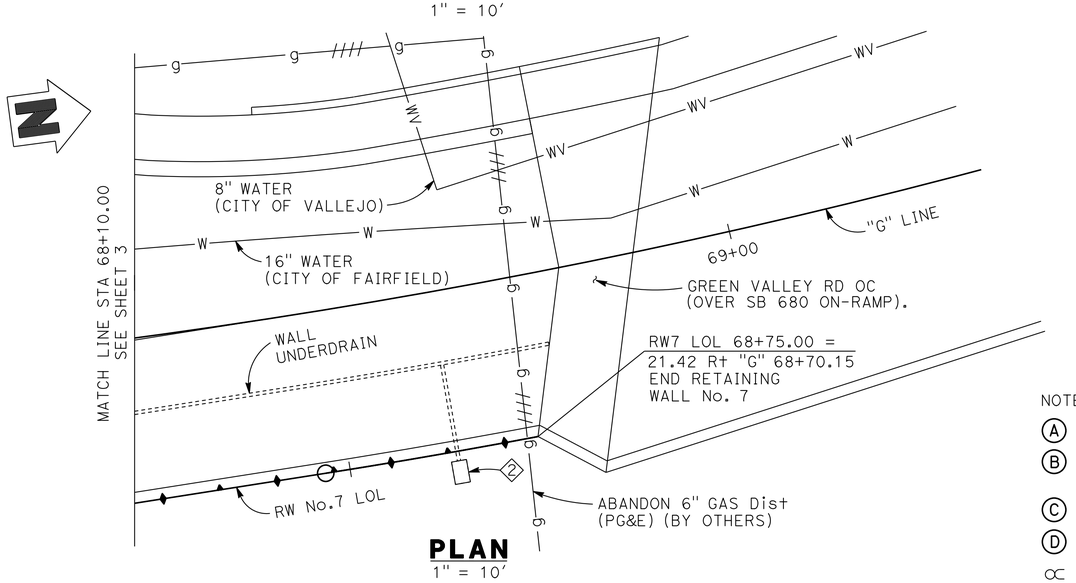

PLAN
1" = 10'

Tracy L. Bertram
DESIGN OVERSIGHT Tracy L Bertram
1-7-13
SIGN OFF DATE

	BY	CHECKED
DESIGN	P. PARK	T. WALKER
DETAILS	N. PHAM	P. PARK
QUANTITIES	P. PARK	T. WALKER

PREPARED FOR THE STATE OF CALIFORNIA DEPARTMENT OF TRANSPORTATION

PO-KANG CHEN
PROJECT ENGINEER

BRIDGE NO. 23E0023
POST MILES 12.7

RETAINING WALL No. 7 (MSE WALL)
STRUCTURE PLAN No. 3

DESIGN DETAIL SHEET (ENGLISH) (REV. 03/14/12)

ORIGINAL SCALE IN INCHES FOR REDUCED PLANS 0 1 2 3

UNIT: 0741
PROJECT NUMBER & PHASE: 04000211311 CONTRACT NO.: 04-0A5341

DISREGARD PRINTS BEARING EARLIER REVISION DATES

REVISION DATES 10/17/11 5/14/12 9/12/12 10/19/12

SHEET 16 OF 51

FILE => 04-0a5341-rw07-b-sp03.dgn

USERNAME => s124496 DATE PLOTTED => 08-MAY-2013 TIME PLOTTED => 06:54

DIST	COUNTY	ROUTE	POST MILES TOTAL PROJECT	SHEET No	TOTAL SHEETS
04	Sol	12,80	2.1/2.8, 12.0/13.1	478	597

P.K. Chen 9/12/12
REGISTERED STRUCTURAL ENGINEER DATE

5-6-13
PLANS APPROVAL DATE

REGISTERED PROFESSIONAL ENGINEER PO-KANG CHEN No. S 3112 Exp. 9/30/13 STRUCTURAL STATE OF CALIFORNIA

The State of California or its officers or agents shall not be responsible for the accuracy or completeness of electronic copies of this plan sheet.

SOLANO TRANSPORTATION AUTHORITY
ONE HARBOR CENTER, SUITE 130
SUISUN CITY, CA 94585

MARK THOMAS & COMPANY, INC. + NOLTE ASSOCIATES, INC.
3000 OAK ROAD, SUITE 650
WALNUT CREEK, CA 94597

TOP OF WALL ELEVATIONS	
Sta	Elev
0+00.00	58.26
0+10.00	58.46
0+20.00	58.66
0+30.00	58.85
0+40.00	59.04
0+50.00	59.23
0+60.00	59.41
0+70.00	59.59
0+80.00	59.76
0+90.00	59.93

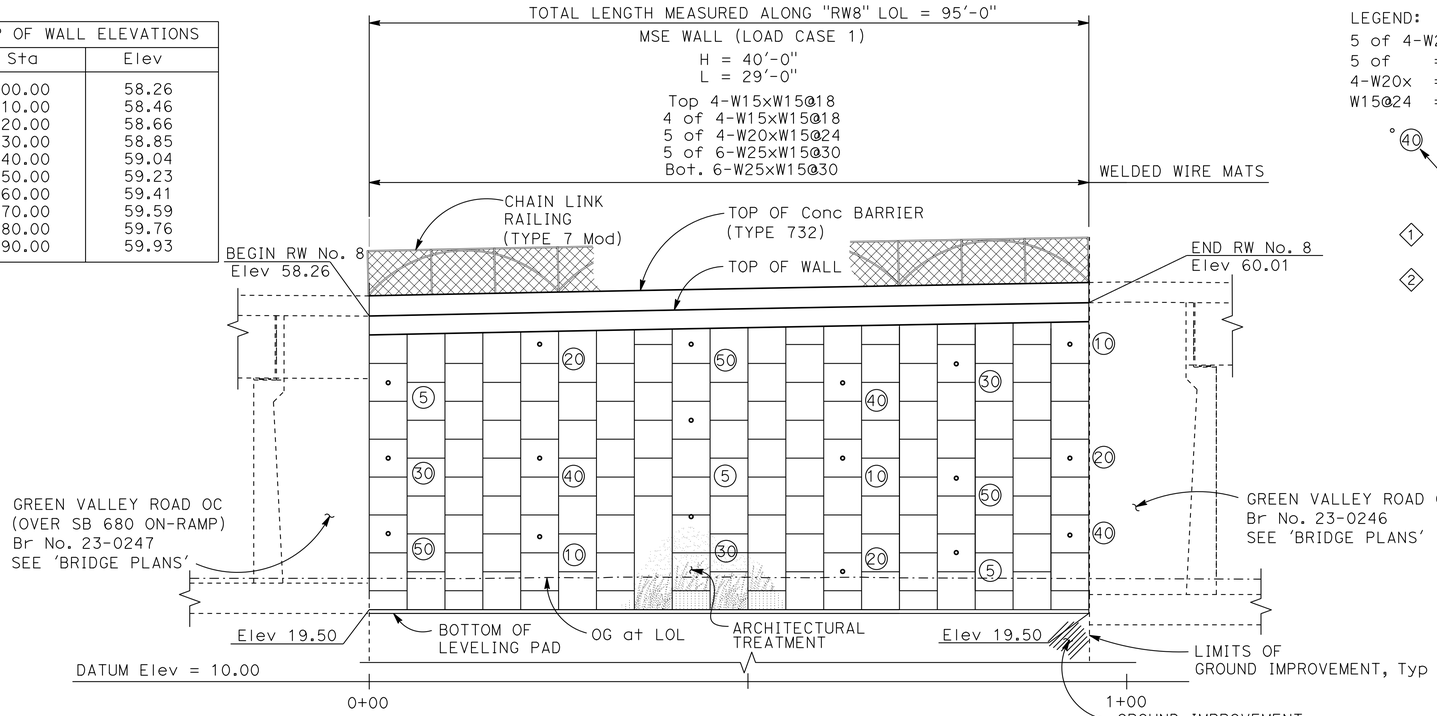

ELEVATION
1" = 10'

LEGEND:
5 of 4-W20xW15@24
5 of = 5 levels of reinforcement mats with
4-W20x = 4 longitudinal wires W20 sized by
W15@24 = W15 sized transverse wires at 24-inch spacing

°40 Inspection Wire Location
Interval in years from the time of construction to the time of removal of wire inspection.

1 Clean-out pipe, see 'Clean-outpipe Detail' on "MSE DETAILS No. 6" sheet.

2 Outlet pipe and Backing, see 'Outlet Pipe Detail' on "MSE DETAILS No. 6" sheet.

NOTES:
1. This plan accurate for retaining wall work only.
2. For panel reinforcement location, joint details, and leveling pad, see "MECHANICALLY STABILIZED EMBANKMENT - DETAILS No. 1" sheet.
3. For General Notes, welded wire mats panel locations and connection details, see "MECHANICALLY STABILIZED EMBANKMENT - DETAILS No. 2" sheet.
4. For inspection wire details, see "MECHANICALLY STABILIZED EMBANKMENT - DETAILS No. 3" sheet.
5. For concrete barrier slab details, see 'CONCRETE BARRIER SLAB' detail on "RW No. 7 (MSE WALL) - STRUCTURE PLAN No. 3" sheet.
6. For limit of excavation and backfill, see "MECHANICALLY STABILIZED EMBANKMENT - DETAILS No. 5" sheet.
7. For 'ARCHITECTURAL TREATMENT' details, see "AESTHETIC TREATMENT" plans.
8. For Utilities, see 'ROAD PLANS'.
9. For accurate Right of Way and Access Data, contact Right of Way Engineering at District Office.
10. The Contractor shall verify all controlling field dimensions before ordering or fabricating any materials.

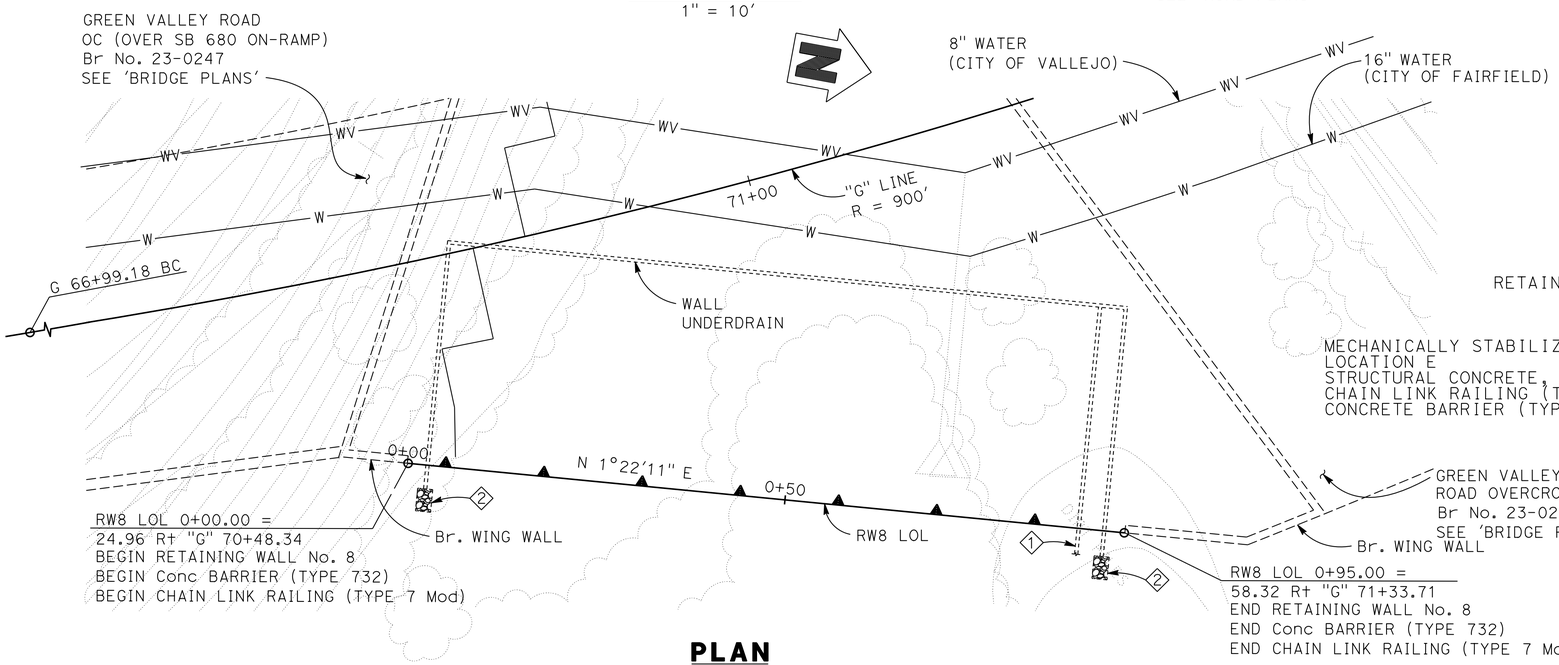

PLAN
1" = 10'

RETAINING WALL NO.8 #23E0024

QUANTITIES

MECHANICALLY STABILIZED EMBANKMENT, LOCATION E	3,800	SQFT
STRUCTURAL CONCRETE, BARRIER SLAB	50	CY
CHAIN LINK RAILING (TYPE 7 MODIFIED)	95	LF
CONCRETE BARRIER (TYPE 732 MODIFIED)	95	LF

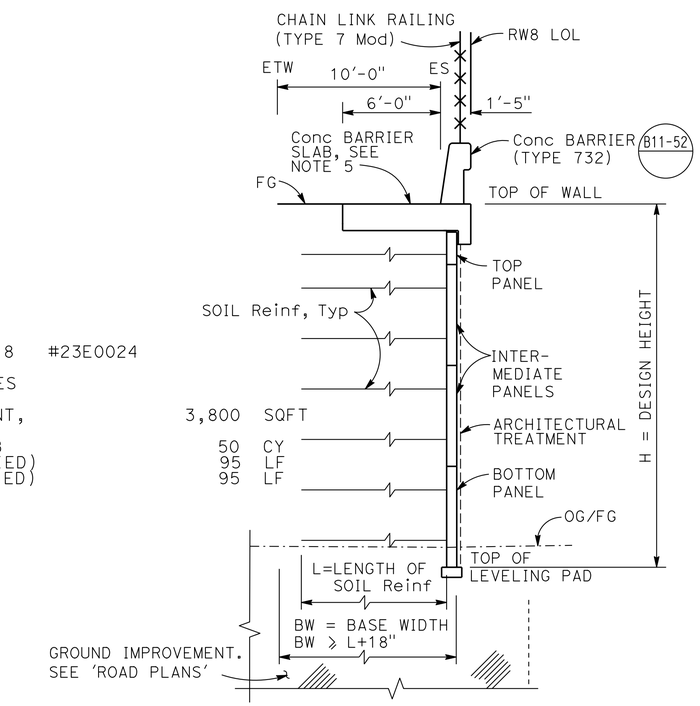

TYPICAL SECTION - MSE WALL
NO SCALE

NOTE: For Length of Soil Reinf, see "ELEVATION"

Tracy L. Bertram
DESIGN OVERSIGHT Tracy L Bertram
1-7-13
SIGN OFF DATE

	BY	CHECKED		BY	CHECKED
DESIGN	P. PARK	T. WALKER			
DETAILS	T. TRAN	T. WALKER	LAYOUT	A. CROSKEY	P. PARK
QUANTITIES	P. PARK	T. WALKER	SPECIFICATIONS	T. WALKER	PLANS AND SPECS COMPARED P. CHEN

PREPARED FOR THE STATE OF CALIFORNIA DEPARTMENT OF TRANSPORTATION

PO-KANG CHEN
PROJECT ENGINEER

BRIDGE NO. 23E0024
POST MILES 12.8

RETAINING WALL No. 8 (MSE WALL)
GENERAL PLAN

DESIGN GENERAL PLAN SHEET (ENGLISH) (REV. 03/14/12)

ORIGINAL SCALE IN INCHES FOR REDUCED PLANS 0 1 2 3

UNIT: 0741
PROJECT NUMBER & PHASE: 04000211311 CONTRACT NO.: 04-0A5341

DISREGARD PRINTS BEARING EARLIER REVISION DATES

REVISION DATES 10/27/11 5/4/12 9/12/12 10/19/12

SHEET 17 OF 51

FILE => 04-0a5341-rw08-a-gp01.dgn

USERNAME => s124496 DATE PLOTTED => 08-MAY-2013 TIME PLOTTED => 06:54

DIST	COUNTY	ROUTE	POST MILES TOTAL PROJECT	SHEET No	TOTAL SHEETS
04	Sol	12,80	2.1/2.8, 12.0/13.1	479	597

P.K. Chen 9/12/12
REGISTERED STRUCTURAL ENGINEER DATE

5-6-13
PLANS APPROVAL DATE

REGISTERED PROFESSIONAL ENGINEER PO-KANG CHEN No. S 3112 Exp. 9/30/13 STRUCTURAL STATE OF CALIFORNIA

The State of California or its officers or agents shall not be responsible for the accuracy or completeness of electronic copies of this plan sheet.

SOLANO TRANSPORTATION AUTHORITY
ONE HARBOR CENTER, SUITE 130
SUISUN CITY, CA 94585

MARK THOMAS & COMPANY, INC. + NOLTE ASSOCIATES, INC.
3000 OAK ROAD, SUITE 650
WALNUT CREEK, CA 94597

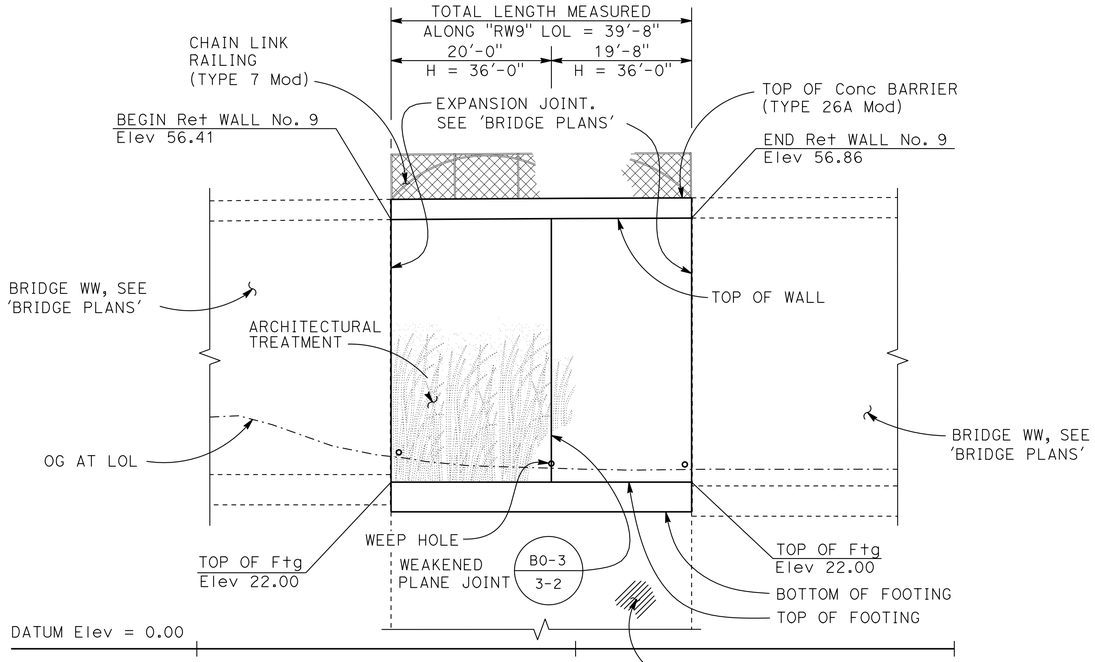

MIRRORED ELEVATION
1" = 10'

NOTES:

1. For 'ARCHITECTURAL TREATMENT' details, see 'AESTHETIC TREATMENT' plans.
2. This plan accurate for retaining wall work only.
3. For Utilities, see 'ROAD PLANS'.
4. For accurate Right of Way and Access Data, contact Right of Way Engineering at District Office.
5. The Contractor shall verify all controlling field dimensions before ordering or fabricating any materials.

TOP OF WALL ELEVATIONS	
Sta	Elev
70+75.64	56.66
70+80.00	56.69
70+90.00	56.74
71+00.00	56.80
71+10.00	56.86

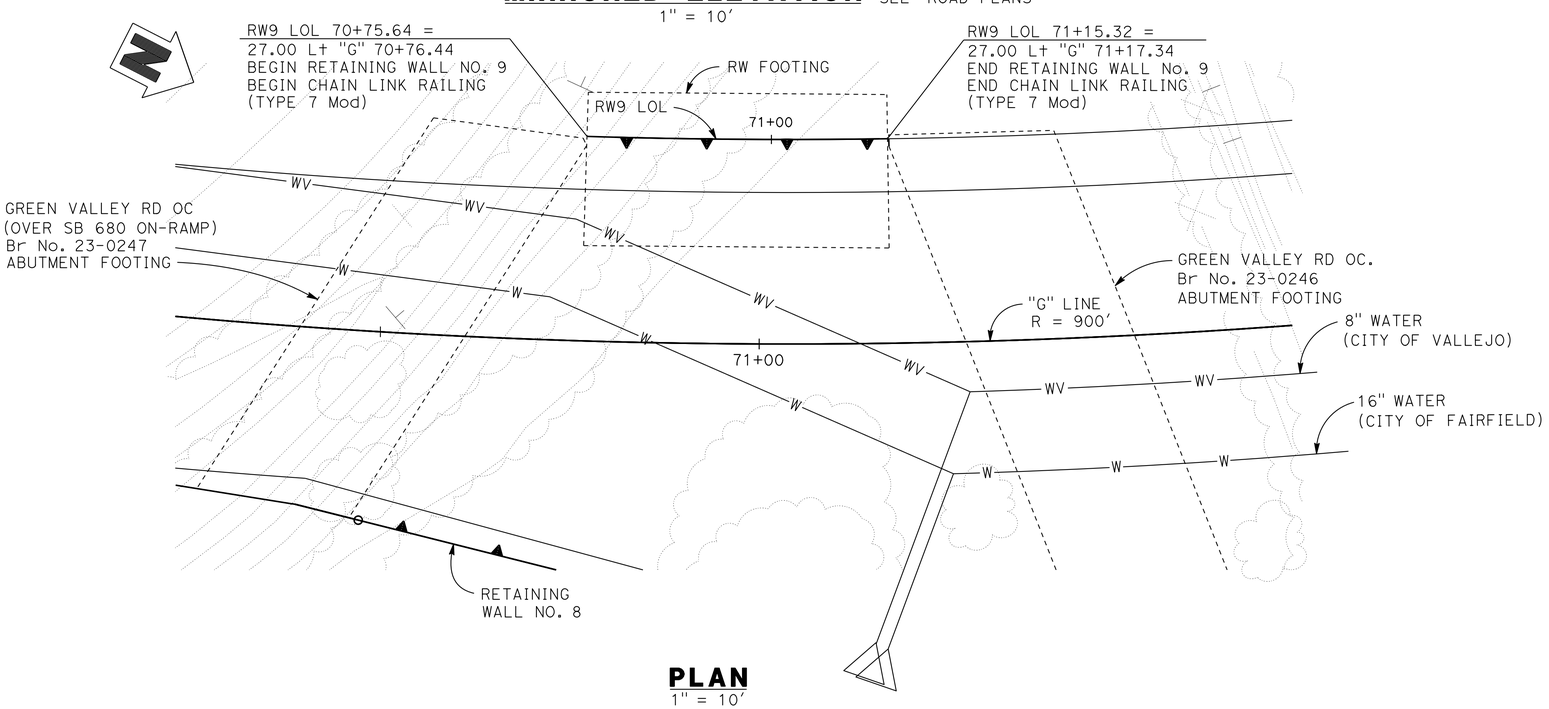

PLAN
1" = 10'

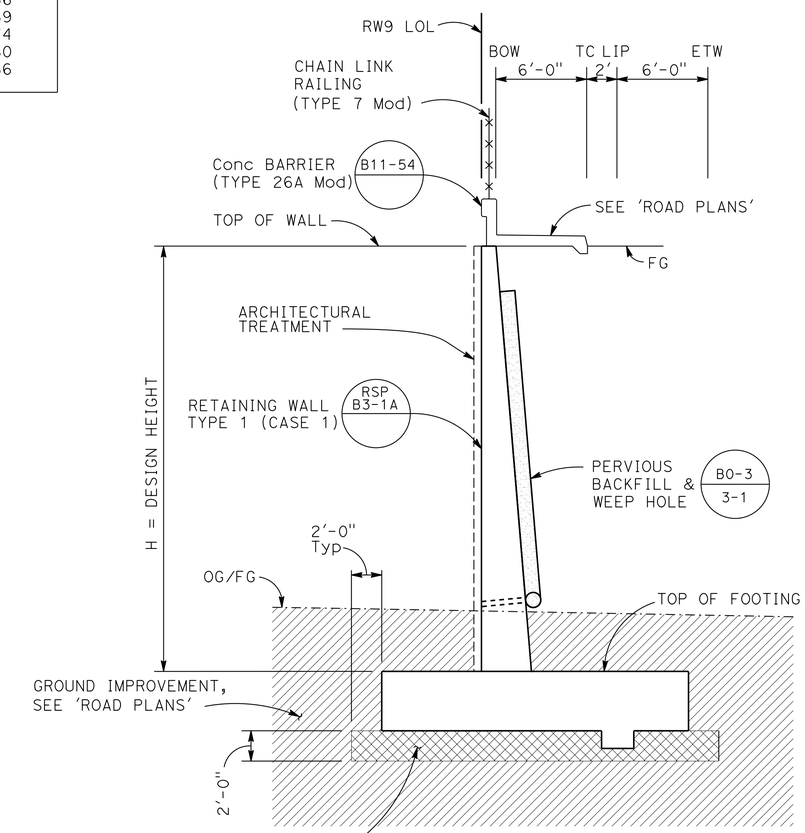

TYPICAL SECTION
NO SCALE

RETAINING WALL NO.9 #23-RW09
QUANTITIES

STRUCTURE EXCAVATION (RETAINING WALL)	397	CY
STRUCTURE BACKFILL (RETAINING WALL)	918	CY
PERVIOUS BACKFILL MATERIAL (RETAININGWALL)	50	CY
CLASS 2 AGGREGATE BASE (CY)	91	CY
STRUCTURAL CONCRETE, RETAINING WALL	285	CY
ARCHITECTURAL TREATMENT	1,350	SQFT
BAR REINFORCING STEEL (RETAINING WALL)	40,600	LB
CHAIN LINK RAILING (TYPE 7 MODIFIED)	40	LF
CONCRETE BARRIER (TYPE 26A MODIFIED)	40	LF

Tracy L. Bertram
DESIGN OVERSIGHT Tracy L Bertram
1-7-13
SIGN OFF DATE

	BY	CHECKED			
DESIGN	P. PARK	T. WALKER	LOAD & RESISTANCE FACTOR DESIGN	LIVE LOADING: HL93 W/"LOW-BOY"; PERMIT DESIGN VEHICLE	
DETAILS	T. TRAN	P. PARK	LAYOUT	A. CROSKEY	P. PARK
QUANTITIES	P. PARK	T. WALKER	SPECIFICATIONS	T. WALKER	PLANS AND SPECS COMPARED P. CHEN

PREPARED FOR THE STATE OF CALIFORNIA DEPARTMENT OF TRANSPORTATION

PO-KANG CHEN
PROJECT ENGINEER

BRIDGE NO. 23-RW09
POST MILES 12.8

RETAINING WALL No. 9 (TYPE 1)
GENERAL PLAN

DESIGN GENERAL PLAN SHEET (ENGLISH) (REV. 03/14/12)

ORIGINAL SCALE IN INCHES FOR REDUCED PLANS 0 1 2 3

UNIT: 0741
PROJECT NUMBER & PHASE: 04000211311 CONTRACT NO.: 04-0A5341

DISREGARD PRINTS BEARING EARLIER REVISION DATES

REVISION DATES 10/27/11 5/4/12 9/12/12 10/19/12

SHEET 18 OF 51

FILE => 04-0a5341-rw09-a-gp01.dgn

USERNAME => s124936 DATE PLOTTED => 08-MAY-2013 TIME PLOTTED => 06:54

DIST	COUNTY	ROUTE	POST MILES TOTAL PROJECT	SHEET No	TOTAL SHEETS
04	Sol	12,80	2.1/2.8, 12.0/13.1	480	597

P.K. Chen — REGISTERED STRUCTURAL ENGINEER — DATE 9/12/12

5-6-13 — PLANS APPROVAL DATE

The State of California or its officers or agents shall not be responsible for the accuracy or completeness of electronic copies of this plan sheet.

REGISTERED PROFESSIONAL ENGINEER — PO-KANG CHEN — No. S3112 — Exp. 9/30/13 — STRUCTURAL — STATE OF CALIFORNIA

SOLANO TRANSPORTATION AUTHORITY
ONE HARBOR CENTER, SUITE 130
SUISUN CITY, CA 94585

MARK THOMAS & COMPANY, INC.
1960 ZANKER ROAD
SAN JOSE, CA 95112

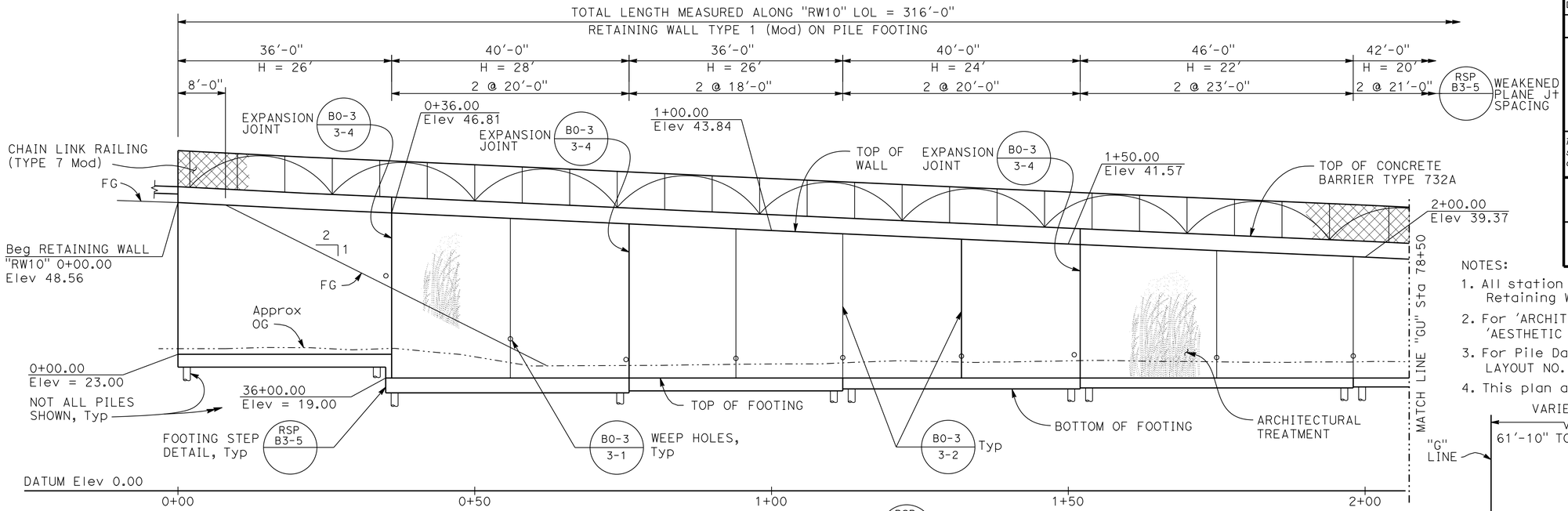

DEVELOPED ELEVATION (RSP B3-1A (Mod))

1" = 10'

NOTES:

1. All station callouts are to the corresponding Retaining Wall LOL unless otherwise noted.
2. For 'ARCHITECTURAL TREATMENT' details, see 'AESTHETIC TREATMENT' plans.
3. For Pile Data Table, see "FOOTING AND PILE LAYOUT NO. 1" sheet.
4. This plan accurate for retaining wall work only.

LEGEND:

⇨ Indicates direction of traffic

TOP OF WALL ELEVATIONS	
Sta "RW10"	Elev
0+10	48.04
0+20	47.54
0+30	47.07
0+40	46.62
0+50	46.17
0+60	45.70

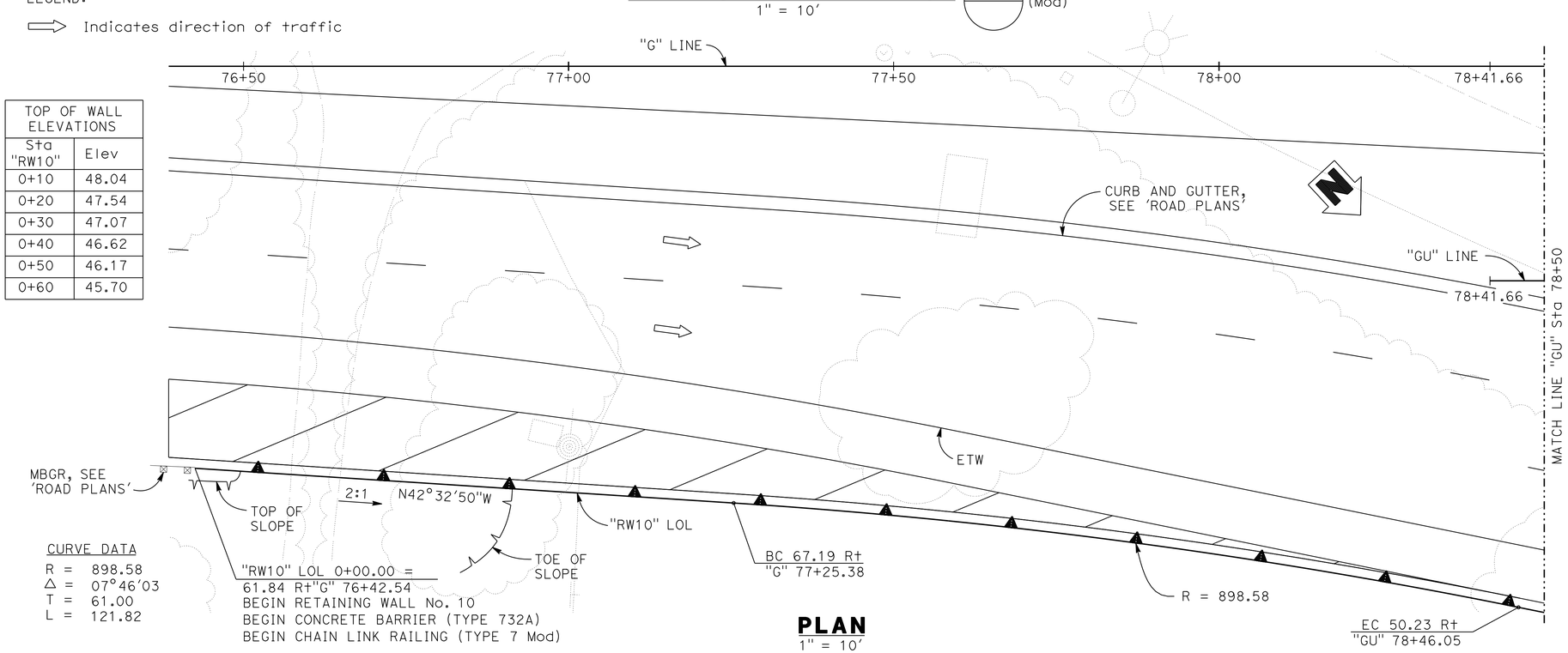

CURVE DATA

R = 898.58
Δ = 07°46'03
T = 61.00
L = 121.82

PLAN

1" = 10'

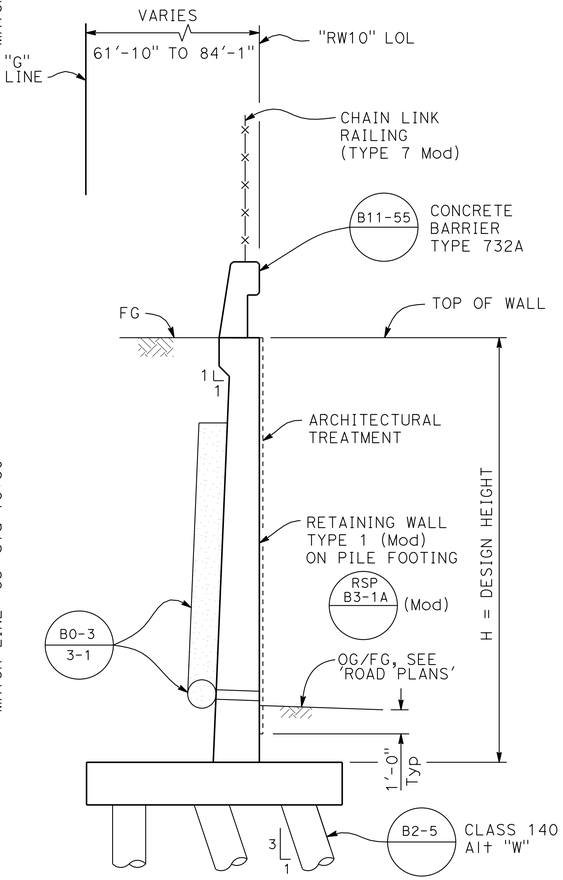

TYPICAL SECTION

NO SCALE

Tracy L. Bertram — DESIGN OVERSIGHT — Tracy L Bertram — 1-7-13 SIGN OFF DATE	DESIGN	BY J. HICKEY	CHECKED V. SHERBY	LOAD & RESISTANCE FACTOR DESIGN	AASHTO LRFD BRIDGE DESIGN SPECIFICATIONS, 4TH EDITION WITH CALIFORNIA AMENDMENTS
	DETAILS	BY G. BOYKO	CHECKED V. SHERBY	LAYOUT	BY J. HICKEY — CHECKED V. SHERBY
	QUANTITIES	BY J. HICKEY	CHECKED V. SHERBY	SPECIFICATIONS	BY T. WALKER — PLANS AND SPECS COMPARED P. CHEN

PREPARED FOR THE STATE OF CALIFORNIA DEPARTMENT OF TRANSPORTATION

PO-KANG CHEN — PROJECT ENGINEER

BRIDGE NO. 23E0025 — POST MILES 12.81

RETAINING WALL No. 10 (TYPE 1-P)
GENERAL PLAN No. 1

DESIGN GENERAL PLAN SHEET (ENGLISH) (REV. 03/14/12)

ORIGINAL SCALE IN INCHES FOR REDUCED PLANS 0 1 2 3

UNIT: 0471
PROJECT NUMBER & PHASE: 04000211311 CONTRACT NO.: 04-0A5344

DISREGARD PRINTS BEARING EARLIER REVISION DATES — REVISION DATES 01/04/12 01/06/12 9/12/12 10/19/12 — SHEET 19 OF 51

FILE => D:\Con_CADD_\D4\0A5341\4th_pse_12-26-12__\dgn_\04_Retaining Walls\04-0a5341-rw10-a-gp01.dgn

USERNAME => s124496 DATE PLOTTED => 08-MAY-2013 TIME PLOTTED => 06:54

DIST	COUNTY	ROUTE	POST MILES TOTAL PROJECT	SHEET No	TOTAL SHEETS
04	Sol	12,80	2.1/2.8, 12.0/13.1	481	597

P.K. Chen 9/12/12
REGISTERED STRUCTURAL ENGINEER DATE

5-6-13
PLANS APPROVAL DATE

REGISTERED PROFESSIONAL ENGINEER PO-KANG CHEN No. S3112 Exp. 9/30/13 STRUCTURAL STATE OF CALIFORNIA

The State of California or its officers or agents shall not be responsible for the accuracy or completeness of electronic copies of this plan sheet.

SOLANO TRANSPORTATION AUTHORITY
ONE HARBOR CENTER, SUITE 130
SUISUN CITY, CA 94585

MARK THOMAS & COMPANY, INC.
1960 ZANKER ROAD
SAN JOSE, CA 95112

RETAINING WALL NO.10 #23E0025

QUANTITIES

STRUCTURE EXCAVATION (RETAINING WALL)	962	CY
STRUCTURE BACKFILL (RETAINING WALL)	2,810	CY
PERVIOUS BACKFILL MATERIAL (RETAININGWALL)	152	CY
FURNISH PILING (CLASS 140) (ALTERNATIVE W)	9,745	LF
DRIVE PILE (CLASS 140) (ALTERNATIVE W)	170	EA
STRUCTURAL CONCRETE, RETAINING WALL	814	CY
ARCHITECTURAL TREATMENT	5,350	SQFT
BAR REINFORCING STEEL (RETAINING WALL)	124,200	LB
CHAIN LINK RAILING (TYPE 7 MODIFIED)	316	LF
CONCRETE BARRIER (TYPE 732A MODIFIED)	316	LF

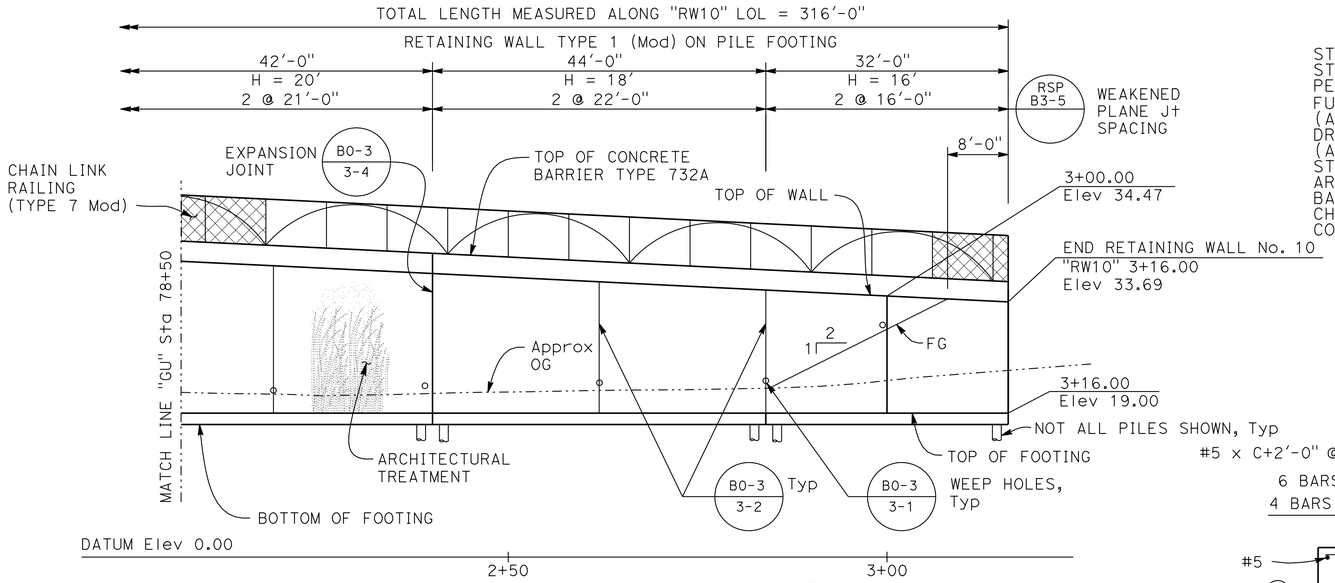

DEVELOPED ELEVATION

RSP B3-1A (Mod)

1" = 10'

LEGEND:

⇨ Indicates direction of traffic

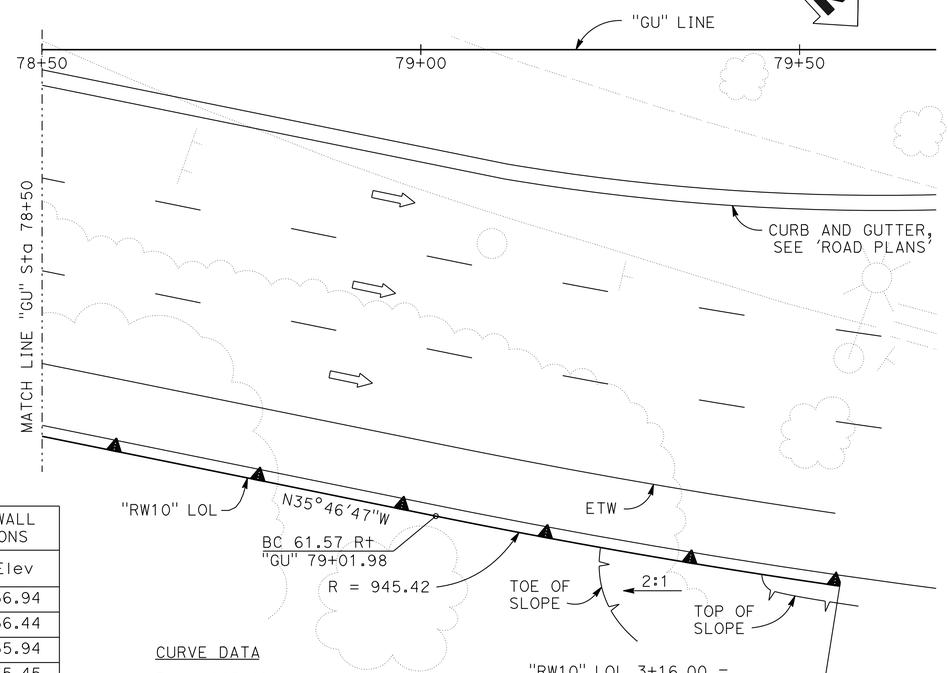

TOP OF WALL ELEVATIONS	
Sta "RW10"	Elev
2+50	36.94
2+60	36.44
2+70	35.94
2+80	35.45
2+90	34.96
3+00	34.47
3+10	33.98

CURVE DATA

R = 945.42
Δ = 03°16'43"
T = 27.06
L = 52.10

PLAN

1" = 10'

"RW10" LOL 3+16.00 =
70.80 Lt "GU" 79+55.28
END RETAINING WALL No. 10
END CONCRETE BARRIER (TYPE 732A)
END CHAIN LINK RAILING (TYPE 7 Mod)

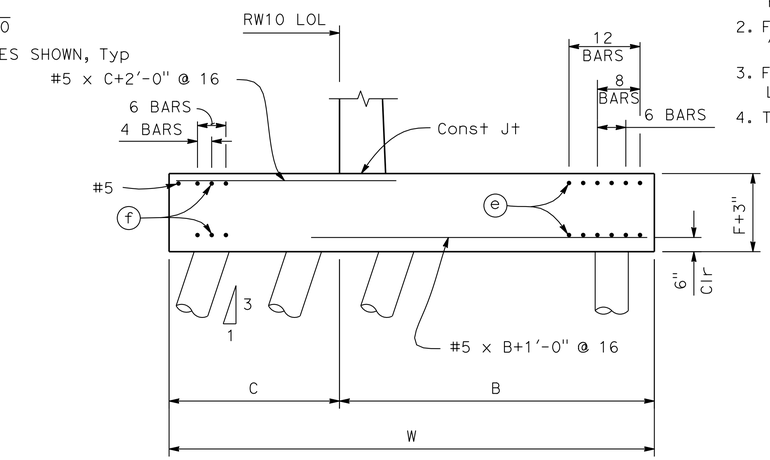

FOOTING SECTION

No Scale

NOTES:

1. All station callouts are to the corresponding Retaining Wall LOL unless otherwise noted.
2. For 'ARCHITECTURAL TREATMENT' details, see 'AESTHETIC TREATMENT' plans.
3. For Pile Data Table, see "FOOTING AND PILE LAYOUT NO. 1" sheet.
4. This plan accurate for retaining wall work only.

Design H	Total (e) bars	Total (f) bars
16	12 - #6	6 - #6
18	8 - #6	6 - #6
20	8 - #6	6 - #6
22	8 - #6	6 - #6
24	6 - #6	4 - #5
26	6 - #6	4 - #5
28	6 - #6	4 - #5

Reinforcement detailed is to be placed in addition to that shown for spread footing. All piles not shown, see pile layout on other sheets.

DESIGN NOTES:

DESIGN: AASHTO LRFD Bridge Design Specifications, 4th Edition with California Amendments

LS: Varied surcharge on level ground surface

DC: Stem Architectural Treatment of thickness up to 6" of concrete (75 psf) considered

CT: 54 kip transverse force applied at He = 32", distributed over 10 feet at the top of wall and 1 : 1 distribution down and outward. Distribution below footing taken no less than 40'.

SEISMIC: kh = 0.23, kv = 0.0

SOIL: ø = 34°, γ = 120 pcf

REINFORCED CONCRETE: f'c = 3,600 psi
fy = 60,000 psi

LOAD COMBINATIONS AND LIMIT STATES:

Service I Q = 1.00DC+1.00EV+1.00EH+1.00LS
Strength I Q = aDC+bEV+nEH+1.75LS
Extreme I Q = 1.00DC+1.00EV+1.00EH+1.00EQG+1.00EQE
Extreme II Q = 1.00DC+1.00EV+1.00EH+1.00CT

Where:
Q: Force Effects
a: 1.25 or 0.90, Whichever Controls Design
b: 1.35 or 1.00, Whichever Controls Design
n: 1.50 or 0.90, Whichever Controls Design
DC: Dead Load of Structure Components
EH: Horizontal Earth Fill Pressure
EV: Vertical Earth Pressure from Earth Fill Weight
LS: Live Load Structure
EQE: Seismic Earth Pressure
EQD: Soil and Structural and Nonstructural Components Inertia
CT: Vehicular Collision Force

Tracy L. Bertram
DESIGN OVERSIGHT Tracy L Bertram
1-7-13
SIGN OFF DATE

	BY	CHECKED			
DESIGN	J. HICKEY	V. SHERBY	LOAD & RESISTANCE FACTOR DESIGN	AASHTO LRFD BRIDGE DESIGN SPECIFICATIONS, 4TH EDITION WITH CALIFORNIA AMENDMENTS	
DETAILS	G. BOYKO	V. SHERBY	LAYOUT	J. HICKEY	V. SHERBY
QUANTITIES	J. HICKEY	V. SHERBY	SPECIFICATIONS	T. WALKER	PLANS AND SPECS COMPARED P. CHEN

PREPARED FOR THE STATE OF CALIFORNIA DEPARTMENT OF TRANSPORTATION

PO-KANG CHEN
PROJECT ENGINEER

BRIDGE NO. 23E0025
POST MILES 12.81

RETAINING WALL No. 10 (TYPE 1-P)

GENERAL PLAN NO. 2

DESIGN GENERAL PLAN SHEET (ENGLISH) (REV. 03/14/12)

ORIGINAL SCALE IN INCHES FOR REDUCED PLANS 0 1 2 3

UNIT: 0471
PROJECT NUMBER & PHASE: 04000211311 CONTRACT NO.: 04-0A5344

DISREGARD PRINTS BEARING EARLIER REVISION DATES → 01/04/12 01/06/12 9/12/12 10/19/12

SHEET 20 OF 51

FILE => D:\Con_CADD_\D4\0A5341\4th_pse_12-26-12__\dgn_\04_Retaining Walls\04-0a5341-rw10-a-gp02.dgn

USERNAME => s124436 DATE PLOTTED => 08-MAY-2013 TIME PLOTTED => 06:54

DIST	COUNTY	ROUTE	POST MILES TOTAL PROJECT	SHEET No	TOTAL SHEETS
04	Sol	12,80	2.1/2.8, 12.0/13.1	482	597

P.K. Chen 9/12/12
REGISTERED STRUCTURAL ENGINEER DATE

5-6-13
PLANS APPROVAL DATE

REGISTERED PROFESSIONAL ENGINEER PO-KANG CHEN No. S3112 Exp. 9/30/13 STRUCTURAL STATE OF CALIFORNIA

The State of California or its officers or agents shall not be responsible for the accuracy or completeness of electronic copies of this plan sheet.

SOLANO TRANSPORTATION AUTHORITY
ONE HARBOR CENTER, SUITE 130
SUISUN CITY, CA 94585

MARK THOMAS & COMPANY, INC.
1960 ZANKER ROAD
SAN JOSE, CA 95112

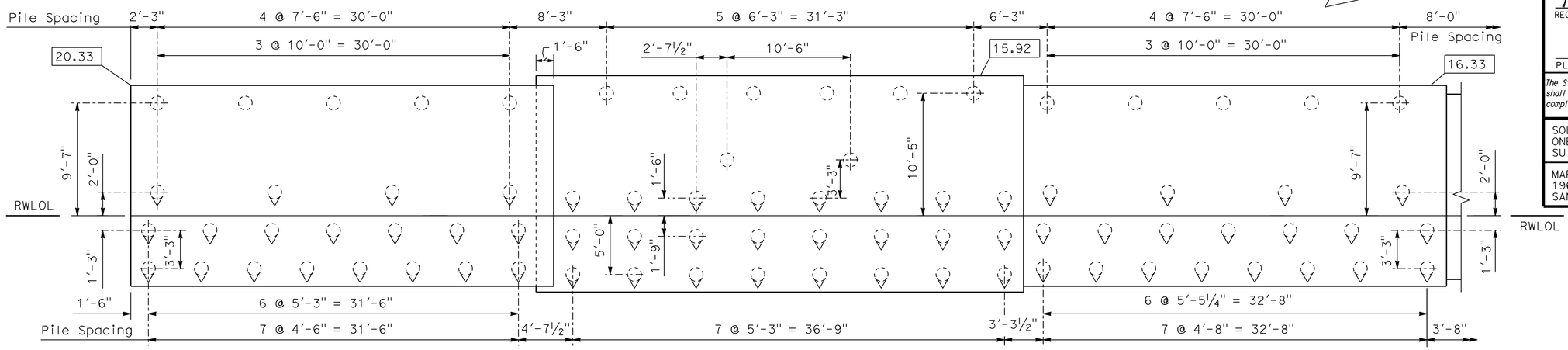

FOOTING AND PILE LAYOUT

1" = 5'-0"

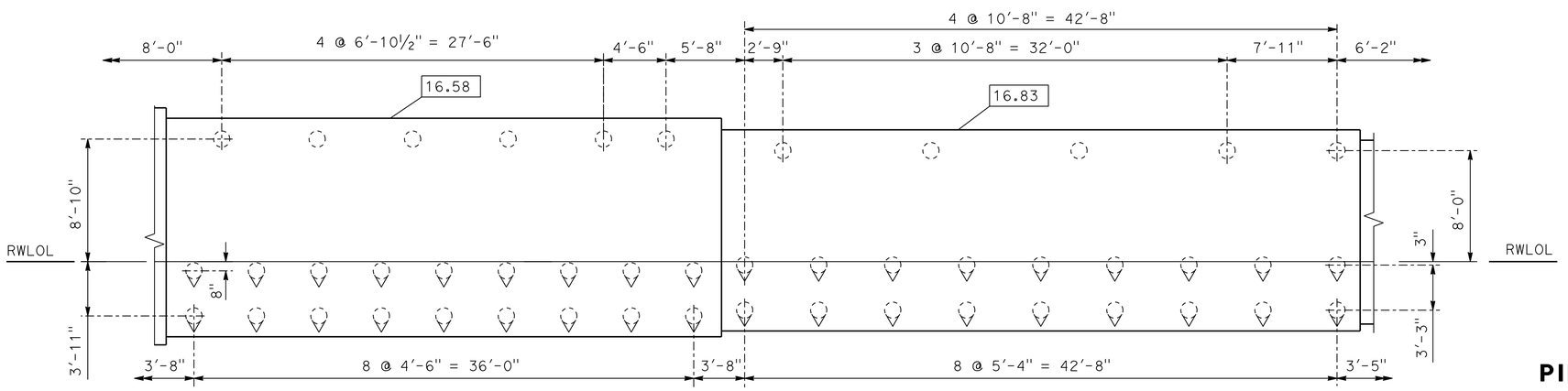

FOOTING AND PILE LAYOUT

1" = 5'-0"

LEGEND:

- Indicates vertical pile
- Indicates battered pile 3:1
- Indicates bottom of footing elevation

DATUM:

North American Vertical Datum of 1988 (NGVD 88)
North American Datum of 1983 (NAD 83)

PILE DATA TABLE

Location RW10	Pile Type	Design Loading	Nominal Resistance		Design Tip Elevation	Specified Tip Elevation
			Compression	Tension		
Sta 0+00 to Sta 0+36	Class 140 Alt. "W"	90 kips	220 kips	40 kips	-35.3(a), -1.8(b), -9.3(c), -9.3(d)	-35.3
Sta 0+36 to Sta 0+76	Class 140 Alt. "W"	90 kip	200 kips	80 kips	-35.7(a), -21.2(b), -13.7(c), -13.7(d)	-35.7
Sta 0+76 to Sta 1+12	Class 140 Alt. "W"	90 kip	220 kips	40 kips	-39.3(a), -5.8(b), -13.3(c), -13.3(d)	-39.3
Sta 1+12 to Sta 1+52	Class 140 Alt. "W"	90 kip	240 kips	50 kips	-43.0(a), -13.0(b), -13.0(c), -13.0(d)	-43.0
Sta 1+58 to Sta 1+98	Class 140 Alt. "W"	90 kip	230 kips	60 kips	-40.8(a), -15.3(b), -12.8(c), -12.8(d)	-40.8
Sta 1+98 to Sta 2+40	Class 140 Alt. "W"	90 kip	220 kips	50 kips	-38.6(a), -7.6(b), -12.6(c), -12.6(d)	-38.6
Sta 2+40 to Sta 2+84	Class 140 Alt. "W"	90 kip	200 kips	40 kips	-34.6(a), -5.1(b), -12.6(c), -12.6(d)	-34.6
Sta 2+84 to Sta 3+16	Class 140 Alt. "W"	90 kip	150 kips	10 kips	-27.5(a), 5.0(b), -12.5(c), -12.5(d)	-27.5

Design Tip Elevations are controlled by: (a) Compression, (b) tension, (c) settlement, (d) lateral

BENCHMARKS:

BENCHMARK NO. A 1393 (NGS PID JT9519)

Brass disc set vertically in the east face of the first concrete pier east of the west abutment of the Union Pacific (formerly Southern Pacific) Railroad overcrossing of Interstate Highway 80, 21.7 feet northwest of the center of the most northwesterly westbound lane of the highway. The disc is stamped "A 1393 1987"
Northing: 1837422 Easting: 6518256
(NAD83, CCSII)
Elevation: 67.07 (NAVD88) Stability: B

HPGN D CA 10 LC (NGS PID AC9890)

Survey disc set on aluminum alloy rod encased in a PVC pipe with access cover set in concrete flush with the parking lot pavement in the Park and Ride Lot, 92 feet west of the centerline of Green Valley Road and 48 feet southeast of the Green Valley Road onramp to westbound Interstate Highway 80.
The disc is stamped "CADT 10 LC"
Northing: 1840653.06 Easting: 6521452.79
(HPGN 1991.35, CCSII)
Elevation: 26.35 (NAVD 88) Stability: B

Tracy L. Bertram
DESIGN OVERSIGHT Tracy L Bertram
1-7-13
SIGN OFF DATE

	BY	CHECKED
DESIGN	J. HICKEY	V. SHERBY
DETAILS	G. BOYKO	V. SHERBY
QUANTITIES	J. HICKEY	V. SHERBY

PREPARED FOR THE STATE OF CALIFORNIA DEPARTMENT OF TRANSPORTATION

PO-KANG CHEN
PROJECT ENGINEER

BRIDGE NO. 23E0025
POST MILES 12.81

RETAINING WALL No. 10 (TYPE 1-P)
FOOTING AND PILE LAYOUT NO. 1

DESIGN DETAIL SHEET (ENGLISH) (REV. 03/14/12)

ORIGINAL SCALE IN INCHES FOR REDUCED PLANS 0 1 2 3

UNIT: 0471
PROJECT NUMBER & PHASE: 04000211311 CONTRACT NO.: 04-0A5344

DISREGARD PRINTS BEARING EARLIER REVISION DATES

REVISION DATES 01/04/12 11/15/12 10/29/12 SHEET 21 OF 51

FILE => D:\Con_CADD_\D4\0A5341\4th_pse_12-26-12__\dgn_\04_Retaining Walls\04-0a5341-rw10-b-fp101.dgn

USERNAME => s124496 DATE PLOTTED => 08-MAY-2013 TIME PLOTTED => 06:54

DIST	COUNTY	ROUTE	POST MILES TOTAL PROJECT	SHEET No	TOTAL SHEETS
04	Sol	12,80	2.1/2.8, 12.0/13.1	483	597

P.K. Chen 9/12/12
REGISTERED STRUCTURAL ENGINEER DATE

5-6-13
PLANS APPROVAL DATE

REGISTERED PROFESSIONAL ENGINEER
PO-KANG CHEN
No. S3112
Exp. 9/30/13
STRUCTURAL
STATE OF CALIFORNIA

The State of California or its officers or agents shall not be responsible for the accuracy or completeness of electronic copies of this plan sheet.

SOLANO TRANSPORTATION AUTHORITY
ONE HARBOR CENTER, SUITE 130
SUISUN CITY, CA 94585

MARK THOMAS & COMPANY, INC.
1960 ZANKER ROAD
SAN JOSE, CA 95112

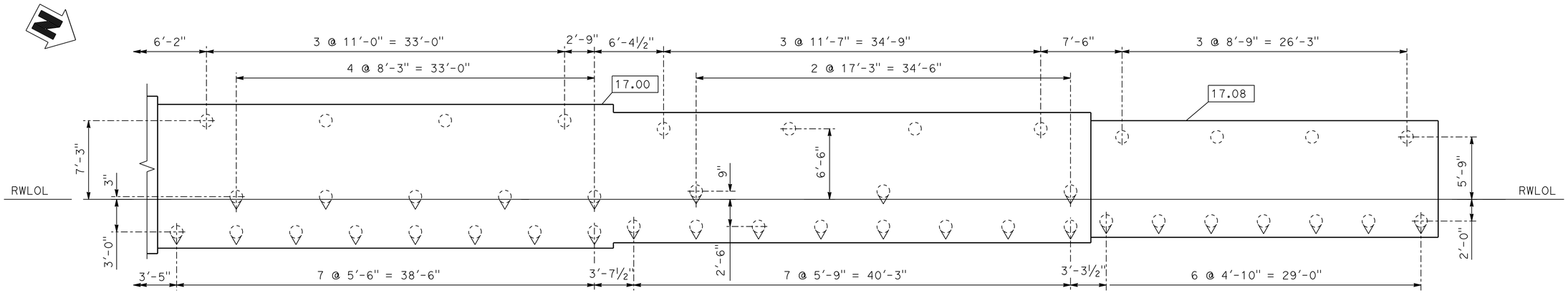

FOOTING AND PILE LAYOUT

1" = 5'-0"

NOTE:

For Pile Data Table, Datum, and Bench Marks infomation, see "FOOTING AND PILE LAYOUT NO. 1" sheet.

LEGEND:

- Indicates vertical pile
- Indicates battered pile 3:1
- Indicates bottom of footing elevation

Tracy L. Bertram
DESIGN OVERSIGHT Tracy L Bertram

1-7-13
SIGN OFF DATE

	BY	CHECKED
DESIGN	J. HICKEY	V. SHERBY
DETAILS	G. BOYKO	V. SHERBY
QUANTITIES	J. HICKEY	V. SHERBY

PREPARED FOR THE STATE OF CALIFORNIA DEPARTMENT OF TRANSPORTATION

PO-KANG CHEN
PROJECT ENGINEER

BRIDGE NO. 23E0025
POST MILES 12.81

RETAINING WALL No. 10 (TYPE 1-P)
FOOTING AND PILE LAYOUT NO. 2

DESIGN DETAIL SHEET (ENGLISH) (REV. 03/14/120)

ORIGINAL SCALE IN INCHES FOR REDUCED PLANS 0 1 2 3

UNIT: 0471
PROJECT NUMBER & PHASE: 04000211311 CONTRACT NO.: 04-0A5344

DISREGARD PRINTS BEARING EARLIER REVISION DATES

REVISION DATES 01/04/12 01/16/12 9/12/12 10/19/12

SHEET 22 OF 51

FILE => D:\Con_CADD_\D4\0A5341\4th_pse_12-26-12__\dgn_\04_Retaining Walls\04-0a5341-rw10-b-fpl02.dgn

USERNAME => s124496 DATE PLOTTED => 08-MAY-2013 TIME PLOTTED => 06:54

DIST	COUNTY	ROUTE	POST MILES TOTAL PROJECT	SHEET NO.	TOTAL SHEETS
04	Sol	12,80	2.1/2.8, 12.0/13.1	484	597

Chandu Shenoy 9/12/12
REGISTERED CIVIL ENGINEER DATE

5-6-13
PLANS APPROVAL DATE

REGISTERED PROFESSIONAL ENGINEER CHANDU V. SHENOY NO. C-53636 EXP. 6/30/13 CIVIL STATE OF CALIFORNIA

THE STATE OF CALIFORNIA OR ITS OFFICERS OR AGENTS SHALL NOT BE RESPONSIBLE FOR THE ACCURACY OR COMPLETENESS OF ELECTRONIC COPIES OF THIS PLAN SHEET.

SOLANO TRANSPORTATION AUTHORITY
ONE HARBOR CENTER, SUITE 130
SUISUN CITY, CA 94585

MARK THOMAS & COMPANY, INC. + NOLTE ASSOCIATES, INC.
3000 OAK ROAD, SUITE 650
WALNUT CREEK, CA 94597

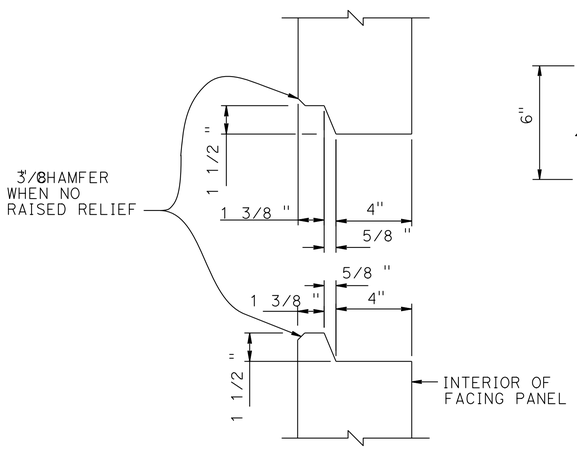

HORIZONTAL JOINT DETAIL
3" = 1'-0"

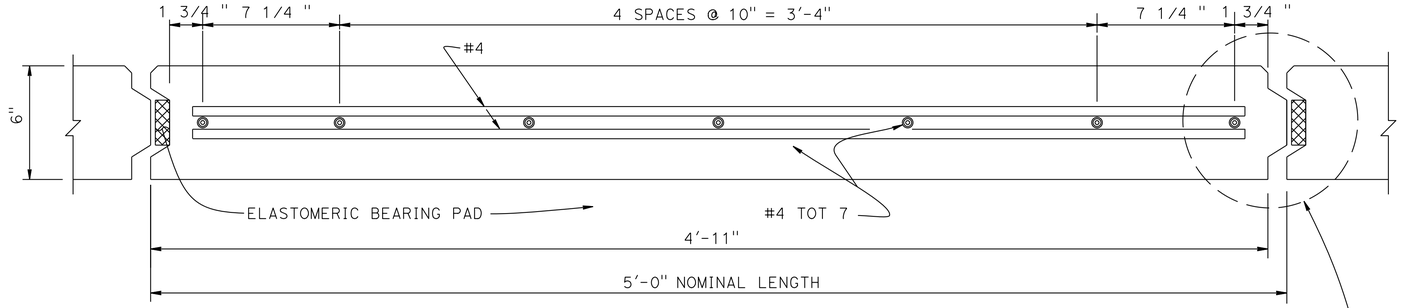

PLAN - FACING PANEL
3" = 1'-0"

NOTES:
1. ARCHITECTURAL TREATMENT NOT SHOWN
2. PLACE REINFORCED ELASTOMERIC BEARING PADS IN ALL OF THE PANEL JOINTS BETWEEN THE PANELS. PLACE ONE IN EACH VERTICAL JOINT WHERE THE HORIZONTAL JOINTS INTERSECT. PLACE TWO PER PANEL IN EACH HORIZONTAL JOINT:
   3/4 X 2 3/8 6" FOR VERTICAL JOINTS
   3/4 X 4" X 6" FOR HORIZONTAL JOINTS
3. BOND A STRIP OF FILTER FABRIC, 1'-0" WIDE, OVER THE FULL LENGTH OF ALL PANEL JOINTS
4. TOP LAYER OF WELDED WIRE MATS ATTACHED PARALLEL TO TOP OF PANEL WHEN TOP OF WALL IS ANGLED OR CURVED AS SHOWN ELSEWHERE IN "STRUCTURE PLANS"
5. ELIMINATE MID LEVEL MAT WHEN CLOSER THAN 6" TO TOP MAT, CONTINUE VARIABLE DIMENSION BETWEEN REMAINING MATS

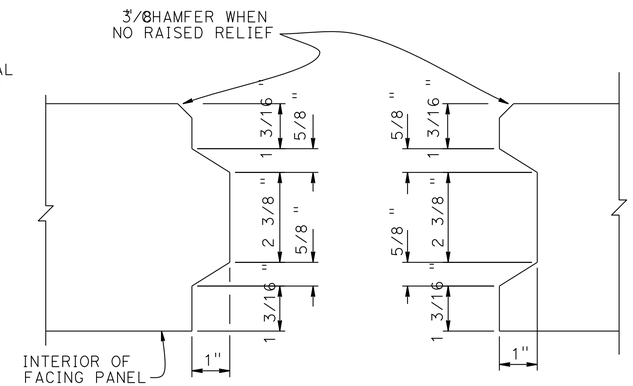

VERTICAL JOINT DETAIL
6" = 1'-0"

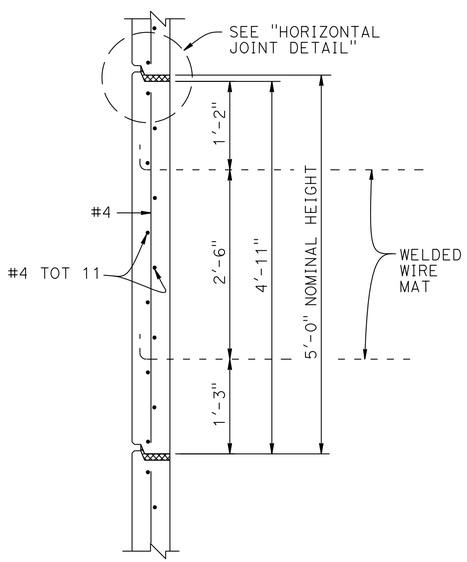

INTERMEDIATE PANEL
1" = 1'-0"

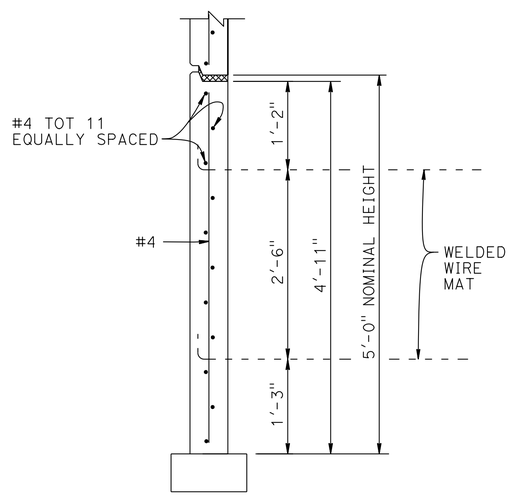

BOTTOM PANEL
1" = 1'-0"

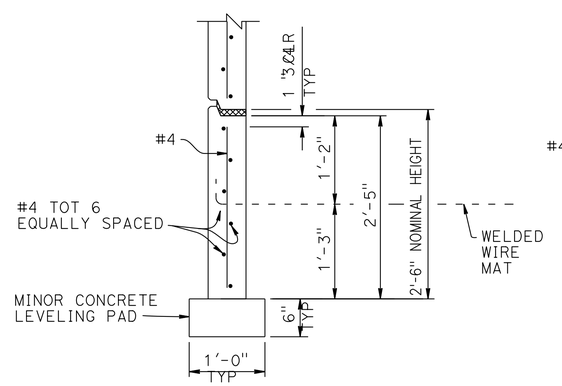

BOTTOM HALF PANEL
1" = 1'-0"

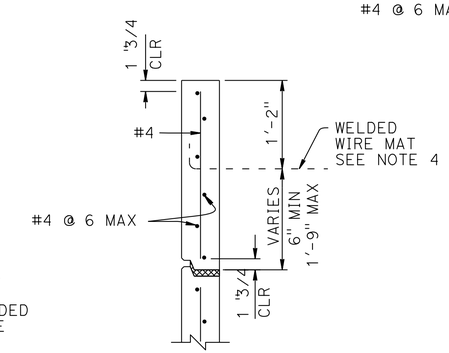

TOP HALF PANEL
1" = 1'-0"

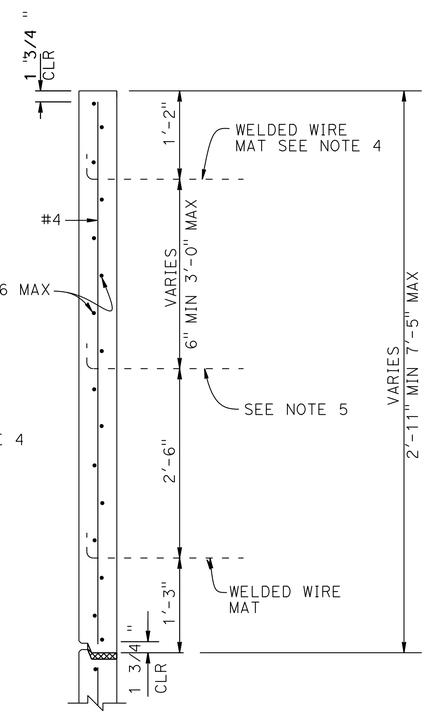

TOP PANEL WITH MULTIPLE MATS
1" = 1'-0"

STANDARD DRAWING
FILE NO. XS13-020-1
APPROVAL DATE JANUARY 2012

STATE OF CALIFORNIA
DEPARTMENT OF TRANSPORTATION

DIVISION OF ENGINEERING SERVICES

BRIDGE NO.
POST MILE

I-80 / I-680 / SR-12 ICP
MECHANICALLY STABILIZED EMBANKMENT
DETAILS NO. 1

DS OSD 2147A (ENGLISH STANDARD DRAWING "XS" BORDER REV. (02-02-11)

ORIGINAL SCALE IN INCHES FOR REDUCED PLANS 0 1 2 3

UNIT: 0741
PROJECT NUMBER & PHASE: 04000211311 CONTRACT NO.: 04-0A5341

DISREGARD PRINTS BEARING EARLIER REVISION DATES

REVISION DATES				SHEET	OF
09/12/12				23	51

FILE => 04-0a5341-rwall-d-mse01.dgn

USERNAME => s124496 DATE PLOTTED => 08-MAY-2013 TIME PLOTTED => 06:54

DIST	COUNTY	ROUTE	POST MILES TOTAL PROJECT	SHEET NO.	TOTAL SHEETS
04	Sol	12,80	2.1/2.8, 12.0/13.1	485	597

Chandu Shenoy 9/12/12
REGISTERED CIVIL ENGINEER DATE

5-6-13
PLANS APPROVAL DATE

REGISTERED PROFESSIONAL ENGINEER CHANDU V. SHENOY NO. C-53636 EXP. 6/30/13 CIVIL STATE OF CALIFORNIA

THE STATE OF CALIFORNIA OR ITS OFFICERS OR AGENTS SHALL NOT BE RESPONSIBLE FOR THE ACCURACY OR COMPLETENESS OF ELECTRONIC COPIES OF THIS PLAN SHEET.

SOLANO TRANSPORTATION AUTHORITY
ONE HARBOR CENTER, SUITE 130
SUISUN CITY, CA 94585

MARK THOMAS & COMPANY, INC. + NOLTE ASSOCIATES, INC.
3000 OAK ROAD, SUITE 650
WALNUT CREEK, CA 94597

GENERAL NOTES
LOAD & RESISTANCE FACTOR DESIGN

DESIGN: AASHTO LRFD BRIDGE DESIGN SPECIFICATIONS, 4TH EDITION WITH CALIFORNIA AMENDMENTS

LIVE LOAD: SURCHARGE = 240 LB/FT^3

SOIL PARAMETERS:

INTERNAL DESIGN ϕ = 34°, G = 120 LB/FT^3

EXTERNAL DESIGN ϕ (RETAINED BACKFILL) = 340, G = 120 LB/FT^3
ϕ (FOUNDATION) = 30°
K_H = 0.2

PRECAST CONCRETE PANELS:

F'C = 4,000 PSI (CONCRETE COMPRESSIVE STRENGTH AT 28 DAYS)
FY = 60,000 PSI (YIELD STRENGTH OF REINFORCEMENT)

SOIL REINFORCEMENT:

WELDED WIRE MATS: FY = 65,000 PSI (YIELD STRENGTH)
COUPLER: FY = 36,000 PSI (YIELD STRENGTH)
CORROSION RATE = 1.1 MILS/YEAR

REINFORCED CONCRETE:

F'C = 3,600 PSI, EXCEPT AS NOTED
(CONCRETE COMPRESSIVE STRENGTH AT 28 DAYS)
FY = 60,000 PSI (YIELD STRENGTH OF REINFORCEMENT)

MSE = MECHANICALLY STABILIZED EMBANKMENT

NOTES:

(A) DISTANCE AS REQUIRED TO PERMIT COUPLER TO BE SWAGED

(B) PLACE #4 X 3'-2", CENTERED ON CONNECTOR MAT, BUT NOT WELDED TO IT

(C) ALL TRANSVERSE WIRES SIZE W15 AT VARIOUS SPACING AS SHOWN ELSEWHERE IN PLANS

(D) SIZE OF LONGITUDINAL WIRES SHOWN ELSEWHERE IN PLANS

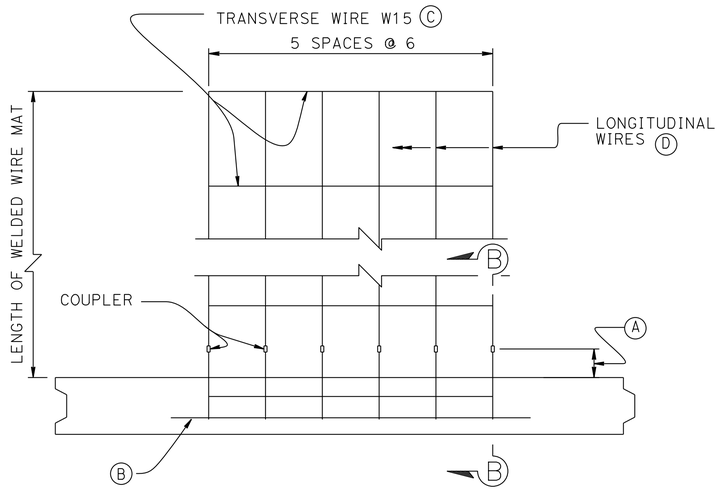

PLAN OF PANEL WITH SIX WIRE MAT
1½" = 1'-0"

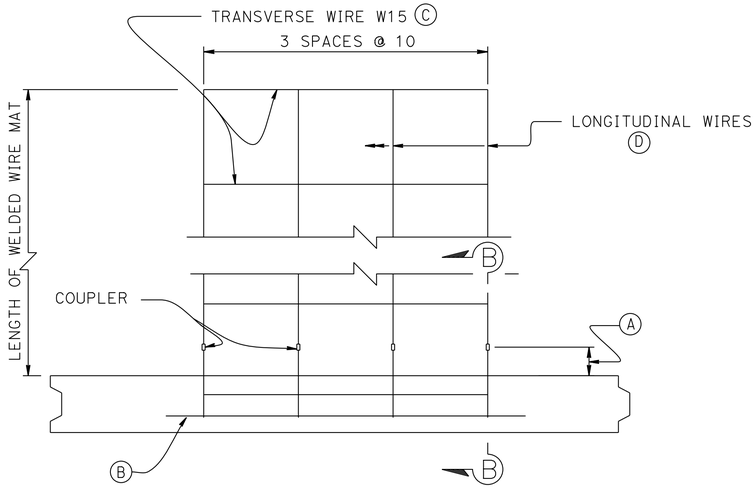

PLAN OF PANEL WITH FOUR WIRE MAT
1½" = 1'-0"

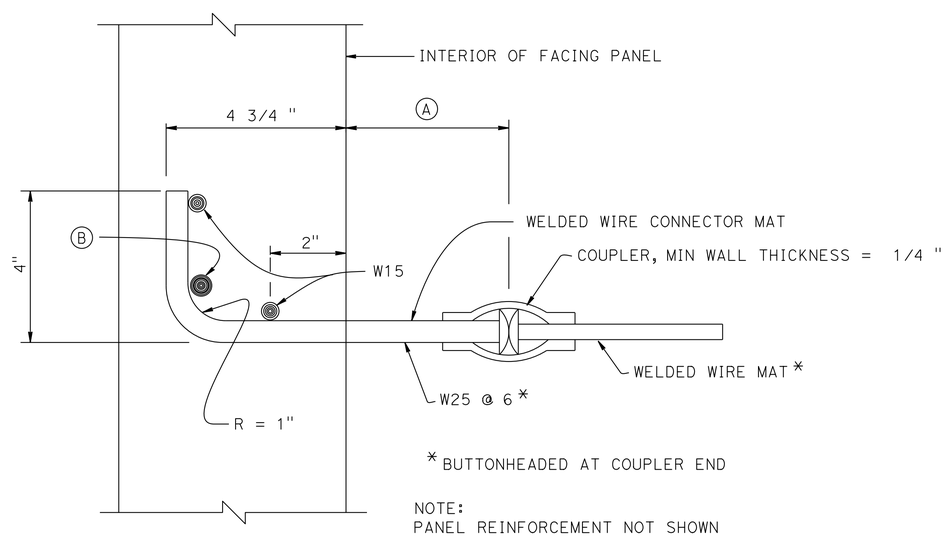

* BUTTONHEADED AT COUPLER END

NOTE:
PANEL REINFORCEMENT NOT SHOWN

SECTION B-B
6" = 1'-0"

STANDARD DRAWING
FILE NO. XS13-020-2
APPROVAL DATE JANUARY 2012

STATE OF CALIFORNIA
DEPARTMENT OF TRANSPORTATION

DIVISION OF ENGINEERING SERVICES

BRIDGE NO.
POST MILE

I-80 / I-680 / SR-12 ICP
MECHANICALLY STABILIZED EMBANKMENT
DETAILS NO. 2

DS OSD 2147A (ENGLISH STANDARD DRAWING "XS" BORDER REV. (02-02-11)

ORIGINAL SCALE IN INCHES FOR REDUCED PLANS 0 1 2 3

UNIT: 0741
PROJECT NUMBER & PHASE: 04000211311 CONTRACT NO.: 04-0A5341

DISREGARD PRINTS BEARING EARLIER REVISION DATES → 09/12/12

REVISION DATES | SHEET 24 | OF 51

FILE => 04-0a5341-rwall-d-mse02.dgn

USERNAME => s124496 DATE PLOTTED => 08-MAY-2013 TIME PLOTTED => 06:54

DIST	COUNTY	ROUTE	POST MILES TOTAL PROJECT	SHEET NO.	TOTAL SHEETS
04	Sol	12,80	2.1/2.8, 12.0/13.1	486	597

Chandu Shenoy 9/12/12
REGISTERED CIVIL ENGINEER DATE

5-6-13
PLANS APPROVAL DATE

REGISTERED PROFESSIONAL ENGINEER CHANDU V. SHENOY NO. C-53636 EXP. 6/30/13 CIVIL STATE OF CALIFORNIA

THE STATE OF CALIFORNIA OR ITS OFFICERS OR AGENTS SHALL NOT BE RESPONSIBLE FOR THE ACCURACY OR COMPLETENESS OF ELECTRONIC COPIES OF THIS PLAN SHEET.

SOLANO TRANSPORTATION AUTHORITY
ONE HARBOR CENTER, SUITE 130
SUISUN CITY, CA 94585

MARK THOMAS & COMPANY, INC. + NOLTE ASSOCIATES, INC.
3000 OAK ROAD, SUITE 650
WALNUT CREEK, CA 94597

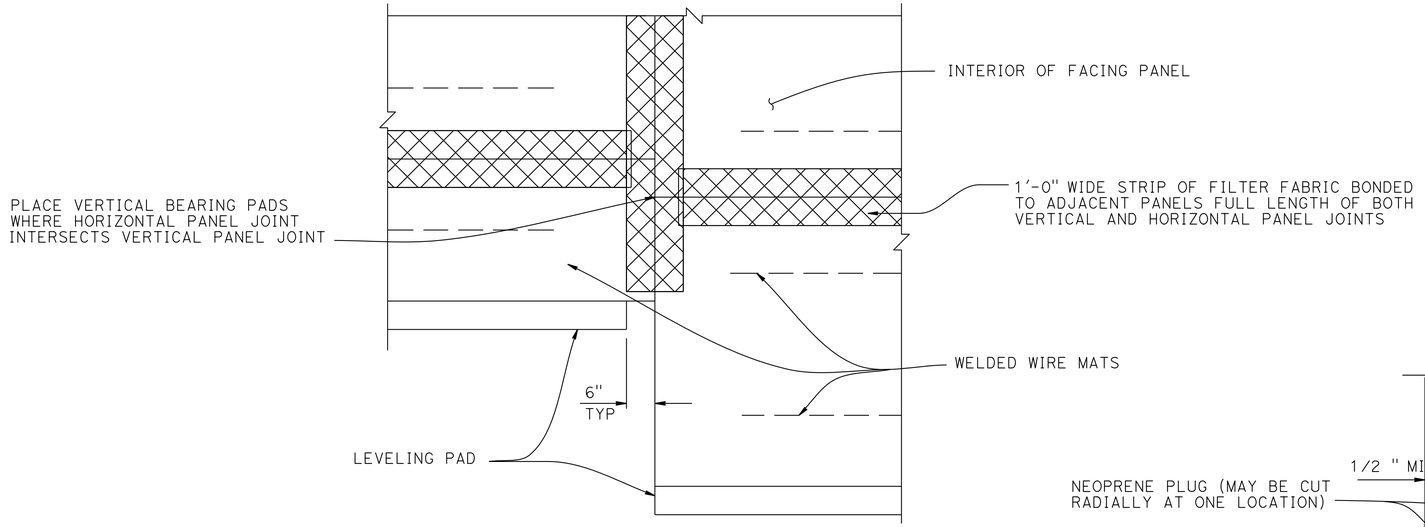

PART ELEVATION

3/4 " = 1'-0"

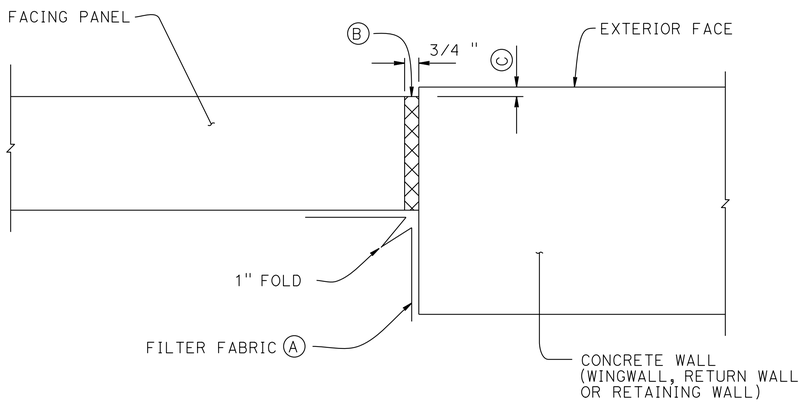

MSE FACING PANEL-TO-CONCRETE WALL JOINT DETAIL

3" = 1'-0"

NOTES:

(A) BOND A STRIP OF FILTER FABRIC, 1'-6" WIDE, TO BACK OF MSE PANELS AND THE ADJACENT CONCRETE WALL FOR ENTIRE LENGTH OF VERTICAL JOINT

(B) BOND EXPANSION JOINT MATERIAL TO THE CONCRETE WALL

(C) OFFSET BETWEEN FACE OF MSE FACING PANEL AND FACE OF THE CONCRETE WALL AS DICTATED BY LOCATION OF LAYOUT LINES SHOWN ELSEWHERE IN "STRUCTURE PLANS"

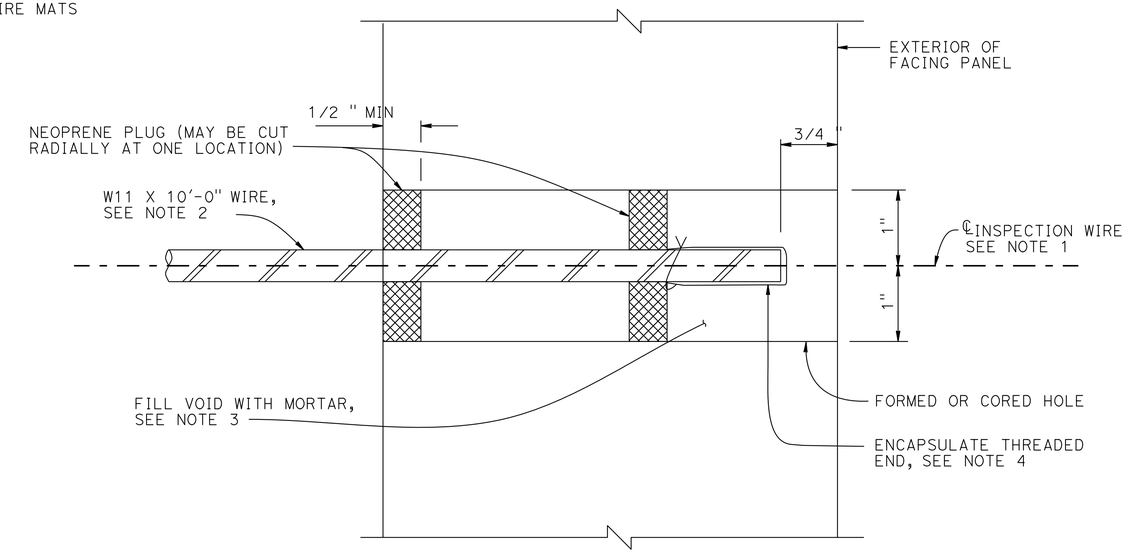

SECTION THRU INSPECTION WIRE

NO SCALE

NOTES:

1. CENTER INSPECTION WIRE IN FACING PANEL.
2. FABRICATED INSPECTION WIRE FROM W11 WIRE REPRESENTATIVE OF THE WELDED WIRE MATS, WITH 3/8Ø 16 UNC THREADS FOR AT LEAST 1½" OF ONE END.
3. PLACE INSPECTION WIRE HORIZONTAL AND PERPENDICULAR TO THE WALL PANEL PRIOR TO BACKFILLING.
4. ENCAPSULATE THREADED END WITH CORROSION INHIBITING MASTIC, VINYL COVERING, AND SECURE WITH PLASTIC TIE.

UNC = UNIFIED COARSE THREADS

STANDARD DRAWING
FILE NO. XS13-020-3
APPROVAL DATE JANUARY 2012

STATE OF CALIFORNIA
DEPARTMENT OF TRANSPORTATION

DIVISION OF ENGINEERING SERVICES

BRIDGE NO.
POST MILE

I-80 / I-680 / SR-12 ICP
MECHANICALLY STABILIZED EMBANKMENT
DETAILS NO. 3

DS OSD 2147A (ENGLISH STANDARD DRAWING "XS" BORDER REV. (02-02-11)

ORIGINAL SCALE IN INCHES FOR REDUCED PLANS 0 1 2 3

UNIT: 0741
PROJECT NUMBER & PHASE: 04000211311 CONTRACT NO.: 04-0A5341

DISREGARD PRINTS BEARING EARLIER REVISION DATES

REVISION DATES 09/12/12 SHEET 25 OF 51

FILE => 04-0a5341-rwall-d-mse03.dgn

USERNAME => s124496 DATE PLOTTED => 08-MAY-2013 TIME PLOTTED => 06:54

DIST	COUNTY	ROUTE	POST MILES TOTAL PROJECT	SHEET NO.	TOTAL SHEETS
04	Sol	12,80	2.1/2.8, 12.0/13.1	487	597

Chandu Shenoy 9/12/12
REGISTERED CIVIL ENGINEER DATE

5-6-13
PLANS APPROVAL DATE

REGISTERED PROFESSIONAL ENGINEER CHANDU V. SHENOY NO. C-53636 EXP. 6/30/13 CIVIL STATE OF CALIFORNIA

THE STATE OF CALIFORNIA OR ITS OFFICERS OR AGENTS SHALL NOT BE RESPONSIBLE FOR THE ACCURACY OR COMPLETENESS OF ELECTRONIC COPIES OF THIS PLAN SHEET.

SOLANO TRANSPORTATION AUTHORITY
ONE HARBOR CENTER, SUITE 130
SUISUN CITY, CA 94585

MARK THOMAS & COMPANY, INC. + NOLTE ASSOCIATES, INC.
3000 OAK ROAD, SUITE 650
WALNUT CREEK, CA 94597

NOTES:

3 ~~1. LOW END OF SUBGRADE DRAIN SHOWN, AT HIGH END INSTALL CAP AT END OF 3" SLOTTED PIPE. SUBGRADE DRAIN LOCATED AT END OF STRUCTURE APPROACH SLAB, SEE "STRUCTURE PLANS"~~

2. NOT ALL BARRIER REINFORCEMENT SHOWN

3. FOR OUTLET DETAILS, SEE "STRUCTURE PLANS"

4. AT ACUTE CORNERS OF APPROACH SLAB, BEND REINFORCEMENT AS REQUIRED TO CLEAR EXPANSION JOINT

5. SPECIFIC CONCRETE BARRIER TO BE UTILIZED AS SHOWN ON "TYPICAL SECTION" ELSEWHERE IN "STRUCTURE PLANS". FOR BARRIER ON SLAB WITHOUT SOUNDWALL SEE "CONCRETE BARRIER SLAB DETAILS" XS12-090

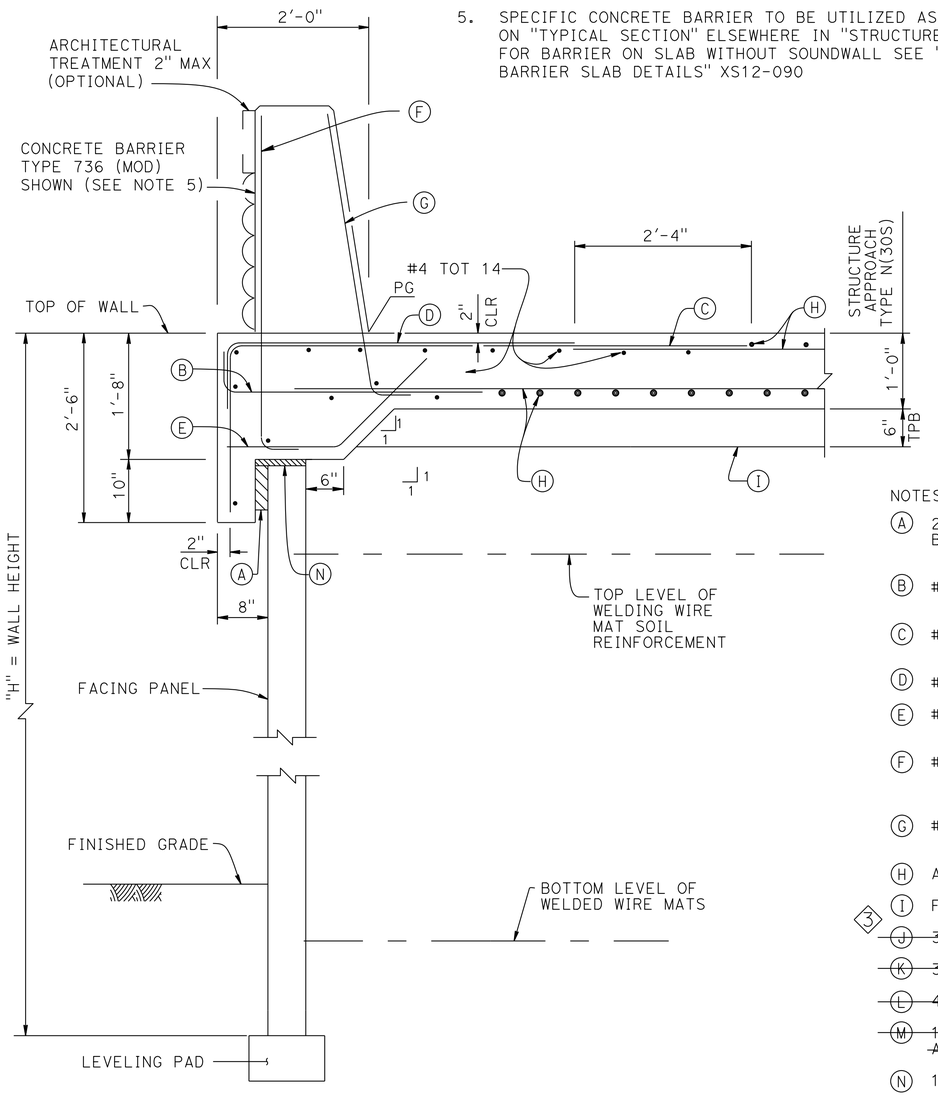

SECTION AT TOP OF MSE WITH STRUCTURE APPROACH SLAB AND CONCRETE BARRIER

1" = 1'-0"

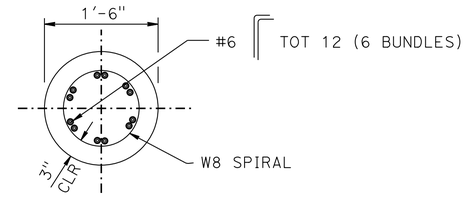

SECTION A-A

1" = 1'-0"

NOTES:

A 2" EXPANDED POLYSTYRENE RECESSED 2" INTO BARRIER SLAB AT FRONT OF MSE FACING PANEL

B #5 6 1/4 3'-4" @ 12

C #5 6'-10 5/8" @ 12

D #5 4'-7" @ 12 BUNDLED WITH C BARS

E #5 @ 12

F #5 6 1/4 @ 16 (TO BE IN PLACE PRIOR TO APPROACH SLAB CONCRETE)

G #5 6 1/4 @ 8 (TO BE IN PLACE PRIOR TO APPROACH SLAB CONCRETE)

H APPROACH SLAB REINFORCEMENT

I FILTER FABRIC

3 ~~J 3" PLASTIC PIPE (SLOTTED)~~

~~K 3" PLASTIC PIPE AND FITTING (UNSLOTTED)~~

~~L 4" SCHEDULE 80 PVC OUTLET PIPE AND FITTINGS (UNSLOTTED)~~

~~M 1' 0" WIDE X 2' 0" FILTER FABRIC WRAPPED AROUND PIPE AND SECURED WITH NYLON TIES~~

N 1" EXPANDED POLYSTYRENE

O PLACE ELASTOMERIC BEARING PADS 3 1/4" X 4" X 6" EVERY 1'-8" MIN BONDED TO TOP OF MSE FACING PANEL

P 3/4" EXPANDED POLYSTYRENE

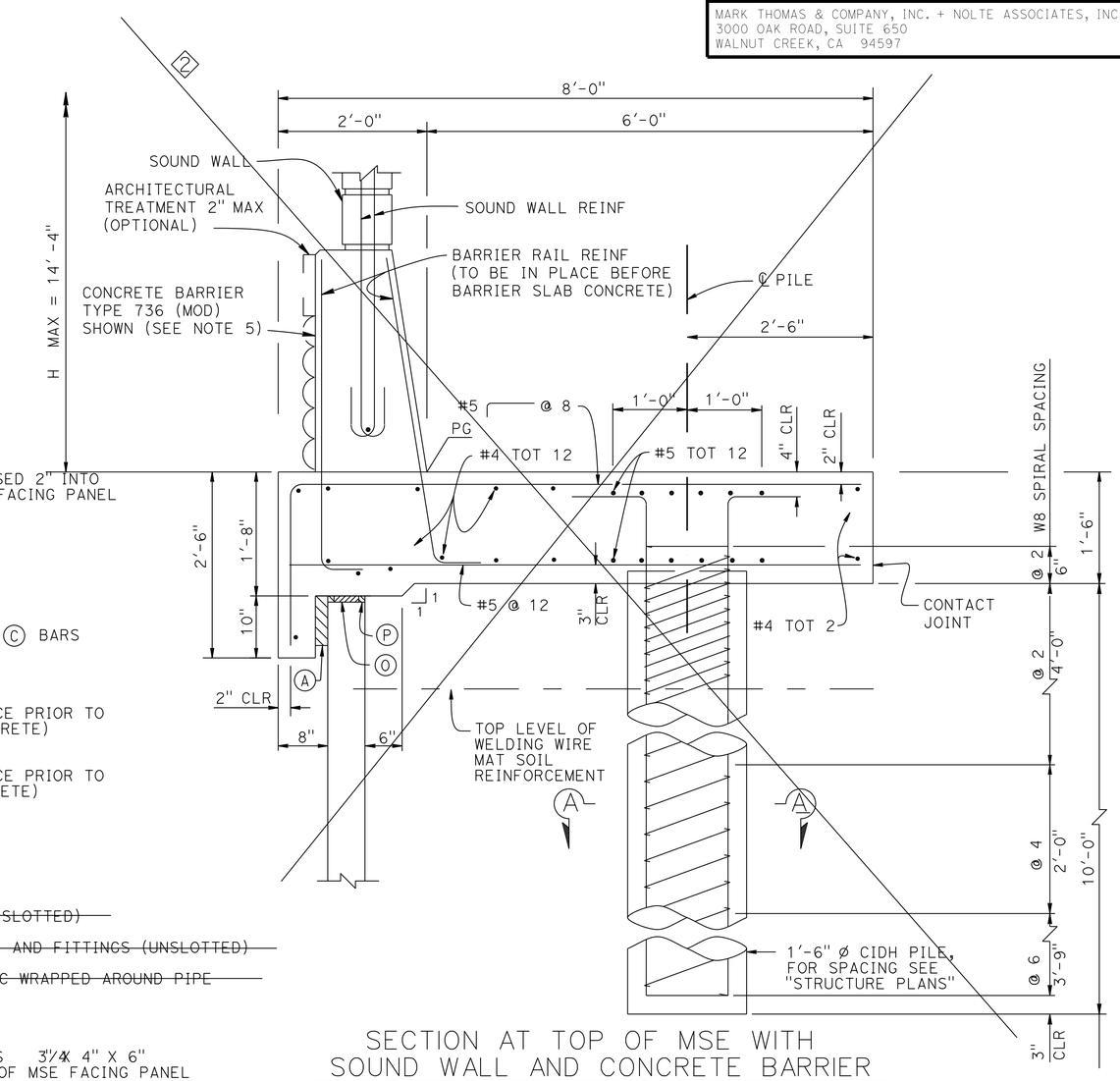

SECTION AT TOP OF MSE WITH SOUND WALL AND CONCRETE BARRIER

1" = 1'-0"

REVISED STANDARD DRAWING

FILE NO. XS13-020-5

APPROVAL DATE JANUARY 2012

1 DETAIL NUMBER CHANGED ORDER IN PLAN SET
2 SECTION CROSSED OUT AS NOT APPLICABLE TO PROJECT
3 NON-APLLICABLE NOTES STRUCT OUT

STATE OF CALIFORNIA
DEPARTMENT OF TRANSPORTATION

DIVISION OF ENGINEERING SERVICES

BRIDGE NO.

POST MILE

I-80 / I-680 / SR-12 ICP

MECHANICALLY STABILIZED EMBANKMENT

DETAILS NO. 4

DS OSD 2147A (ENGLISH STANDARD DRAWING "XS" BORDER REV. (02-02-11)

ORIGINAL SCALE IN INCHES FOR REDUCED PLANS 0 1 2 3

UNIT: 0741
PROJECT NUMBER & PHASE: 04000211311 CONTRACT NO.: 04-0A5341

DISREGARD PRINTS BEARING EARLIER REVISION DATES 09/12/12

REVISION DATES

SHEET 26 OF 51

FILE => 04-0a5341-rwall-d-mse04.dgn

USERNAME => s124496 DATE PLOTTED => 08-MAY-2013 TIME PLOTTED => 06:54

DIST	COUNTY	ROUTE	POST MILES TOTAL PROJECT	SHEET NO.	TOTAL SHEETS
04	Sol	12,80	2.1/2.8, 12.0/13.1	488	597

Chandu Shenoy 9/12/12
REGISTERED CIVIL ENGINEER DATE

5-6-13
PLANS APPROVAL DATE

REGISTERED PROFESSIONAL ENGINEER CHANDU V. SHENOY NO. C-53636 EXP. 6/30/13 CIVIL STATE OF CALIFORNIA

THE STATE OF CALIFORNIA OR ITS OFFICERS OR AGENTS SHALL NOT BE RESPONSIBLE FOR THE ACCURACY OR COMPLETENESS OF ELECTRONIC COPIES OF THIS PLAN SHEET.

SOLANO TRANSPORTATION AUTHORITY
ONE HARBOR CENTER, SUITE 130
SUISUN CITY, CA 94585

MARK THOMAS & COMPANY, INC. + NOLTE ASSOCIATES, INC.
3000 OAK ROAD, SUITE 650
WALNUT CREEK, CA 94597

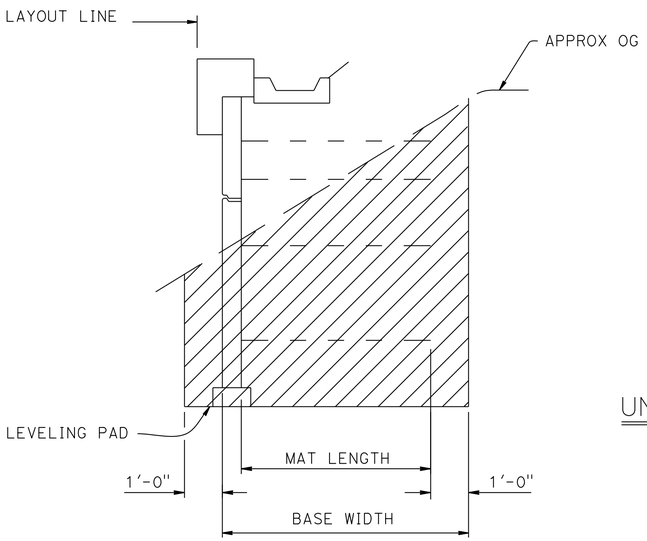

LIMITS OF EXCAVTION
1/2" = 1'-0"

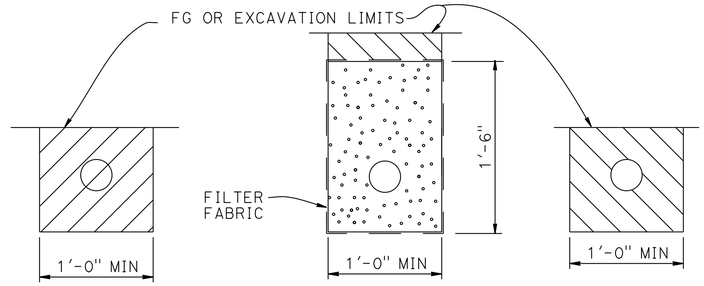

OUTLET PIPE CLEANOUT PIPE

EXCAVATION BACKFILL

UNPERFORATED OUTLET OR CLEAN OUT PIPE FOR UNDERDRAIN
NO SCALE

NOTES:

1. LIMITS TO FG EXCEPT TO GP WHEN IN ROADWAY SECTION
2. LOCATE UNDERDRAIN BEHIND BOTTOM LEVEL OF WELDED WIRE MATS WHEREVER POSSIBLE, OR AT ELEVATION NEEDED TO DRAIN, AS SHOWN ELSEWHERE ON PLANS
3. PLACE PERFORATED PIPE UNDERDRAIN OF DIAMETER SHOWN ELSEWHERE ON PLANS OR MINIMUM 4" * SMOOTHED WALL PVC OR MINIMUM 8" * CORRUGATED HDPE
4. MAXIMUM SPACING OF OUTLET PIPE IS 200 FEET
5. AT SAGS IN PROFILE OF UNDERDRAIN, INSTALL OUTLET PIPE FOR EACH DIRECTION OF FLOW

LEGEND:

- LIMITS OF STRUCTURE EXCAVATION
- LIMITS OF STRUCTURE BACKFILL
- LIMITS OF PERMEABLE MATERIAL

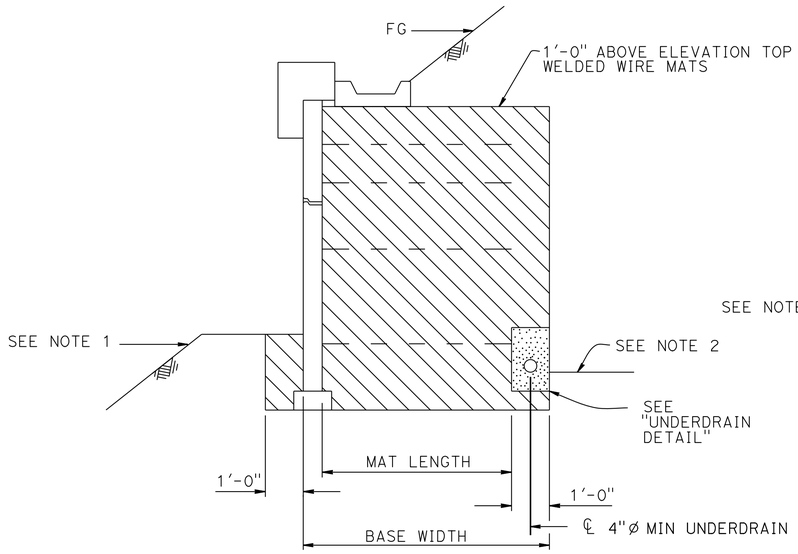

SLOPING FINISHED SURFACE
1/2" = 1'-0"

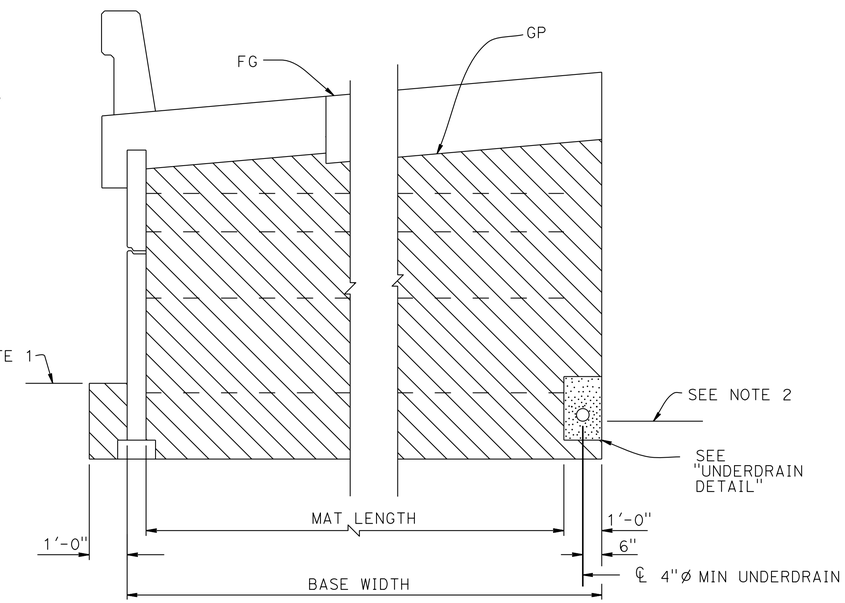

ROADWAY SECTION
1/2" = 1'-0"

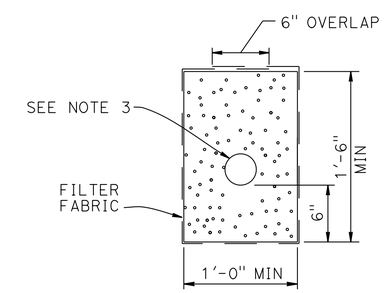

UNDERDRAIN DETAIL

LIMITS OF BACKFILL

STANDARD DRAWING

FILE NO. XS13-020-6

APPROVAL DATE JANUARY 2012

1 DETAIL NUMBER CHANGED ORDER IN PLAN SET

STATE OF CALIFORNIA
DEPARTMENT OF TRANSPORTATION

DIVISION OF ENGINEERING SERVICES

BRIDGE NO.

POST MILE

I-80 / I-680 / SR-12 ICP

MECHANICALLY STABILIZED EMBANKMENT

DETAILS NO. 1

DS OSD 2147A (ENGLISH STANDARD DRAWING "XS" BORDER REV. (02-02-11)

ORIGINAL SCALE IN INCHES FOR REDUCED PLANS 0 1 2 3

UNIT: 0741
PROJECT NUMBER & PHASE: 04000211311 CONTRACT NO.: 04-0A5341

DISREGARD PRINTS BEARING EARLIER REVISION DATES 09/12/12

REVISION DATES

SHEET 27 OF 51

FILE => 04-0a5341-rwall-d-mse05.dgn

USERNAME => s124496 DATE PLOTTED => 08-MAY-2013 TIME PLOTTED => 06:54

DIST	COUNTY	ROUTE	POST MILES TOTAL PROJECT	SHEET NO	TOTAL SHEETS
04	Sol	12,80	2.1/2.8, 12.0/13.1	489	597

Chandu Shenoy 9/12/12
REGISTERED CIVIL ENGINEER DATE

5-6-13
PLANS APPROVAL DATE

REGISTERED PROFESSIONAL ENGINEER
CHANDU V. SHENOY
NO. C-53636
EXP. 6/30/13
CIVIL
STATE OF CALIFORNIA

THE STATE OF CALIFORNIA OR ITS OFFICERS OR AGENTS SHALL NOT BE RESPONSIBLE FOR THE ACCURACY OR COMPLETENESS OF ELECTRONIC COPIES OF THIS PLAN SHEET.

SOLANO TRANSPORTATION AUTHORITY
ONE HARBOR CENTER, SUITE 130
SUISUN CITY, CA 94585

MARK THOMAS & COMPANY, INC. + NOLTE ASSOCIATES, INC.
3000 OAK ROAD, SUITE 650
WALNUT CREEK, CA 94597

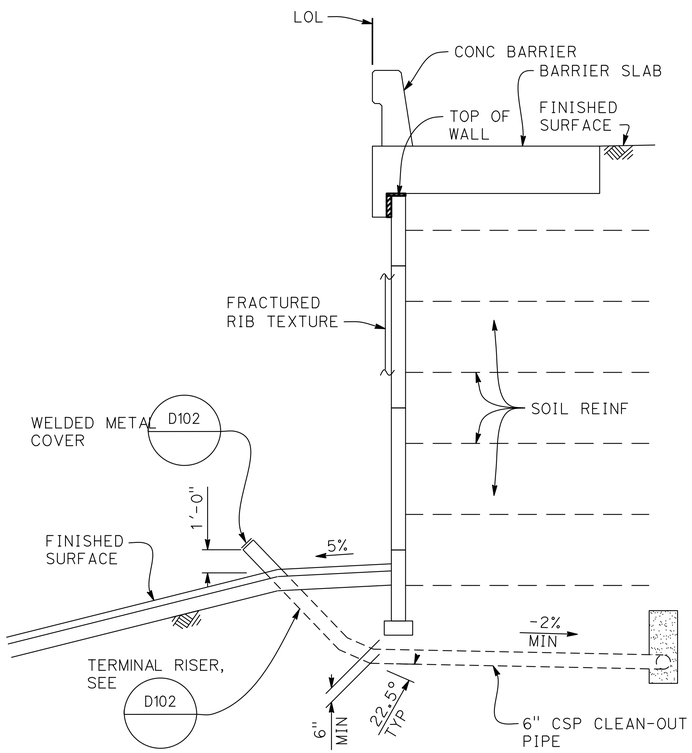

CLEAN-OUT PIPE DETAIL
NO SCALE

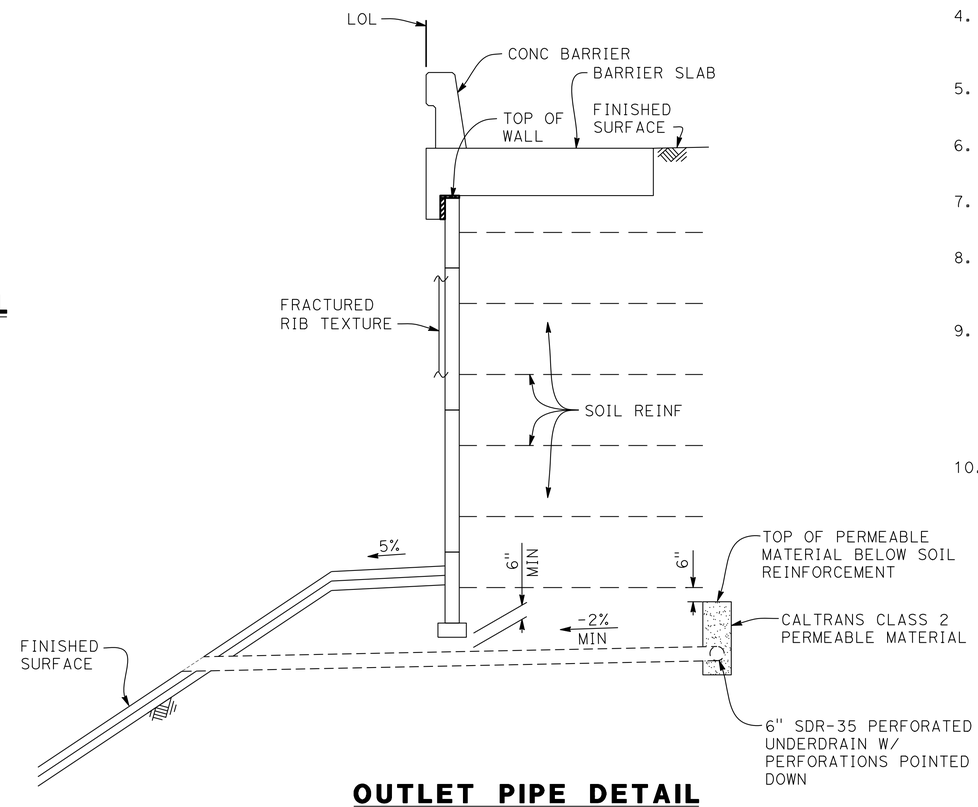

OUTLET PIPE DETAIL
NO SCALE

NOTES:

1. FOR PANEL REINFORCEMENT LOCATION, JOINT DETAILS, AND LEVELING PAD, SEE "MECH. STABILIZED EMBANKMENT DETAIL NO. 1" SHEET.
2. FOR GENERAL NOTES, WELDED WIRE MATS PANEL LOCATIONS AND CONNECTION DETAILS, SEE "MECH. STABILIZED EMBANKMENT DETAIL NO. 2" SHEET.
3. FOR INSPECTION WIRE DETAILS, SEE "MECH. STABILIZED EMBANKMENT DETAIL NO. 3" SHEET.
4. FOR SECTION AT TOP OF WALL WITH BARRIER SLAB AND CONCRETE BARRIER SEE "MECH. STABILIZED EMBANKMENT DETAIL NO. 4" SHEET.
5. FOR LIMITS OF EXCAVATION, BACKFILL AND PERMEABLE MATERIAL, SEE "MECH. STABILIZED EMBANKMENT DETAIL NO. 5" SHEET.
6. FOR GEOLOGY INFORMATION, SEE "RETAINING WALL LOG OF TEST BORINGS" SHEET.
7. FOR EXCAVATION AND COMPACTION REQUIREMENTS, SEE "CONTRACT SPECIFICATIONS".
8. THE CONTRACTOR SHALL VERIFY ALL CONTROLLING DIMENSIONS BEFORE ORDERING OR FABRICATING ANY MATERIAL.
9. FOR OUTLET, CLEANOUT AND UNDERDRAIN DETAILS AND NOTES, SEE "MECH. STABILIZED EMBANKMENT DETAIL NO. 5" SHEET. FOR ADDITIONAL DETAILS SEE D102
10. CLEANOUT PIPE DETAIL AND OUTLET PIPE DETAIL APPLY TO MSC RETAINING WALL: RW02, RW03, RW04, RW06, RW07, RW08.

Tracy L. Bertram
DESIGN OVERSIGHT Tracy L Bertram
1-7-13
SIGN OFF DATE

	BY	CHECKED
DESIGN	L. KINNEBREW	C. SHENOY
DETAILS	L. KINNEBREW	C. SHENOY
QUANTITIES	L. KINNEBREW	C. SHENOY

PREPARED FOR THE STATE OF CALIFORNIA DEPARTMENT OF TRANSPORTATION

C. SHENOY
PROJECT ENGINEER

BRIDGE NO.
POST MILES

MECHANICALLY STABILIZED EMBANKMENT DETAILS NO. 6

DESIGN DETAIL SHEET (ENGLISH) (REV.3/14/12)

ORIGINAL SCALE IN INCHES FOR REDUCED PLANS 0 1 2 3

UNIT: 0741
PROJECT NUMBER & PHASE: 04000211311 CONTRACT NO.: 04-0A5341

DISREGARD PRINTS BEARING EARLIER REVISION DATES 09/12/12

REVISION DATES | SHEET 28 | OF 51

FILE => 04-0a5341-rwall-d-mse06.dgn

CONTRACT NO.: 04-0A5341 PROJECT ID: 1234567890

USERNAME => s124496 DATE PLOTTED => 08-MAY-2013 TIME PLOTTED => 06:54

DIST	COUNTY	ROUTE	POST MILES TOTAL PROJECT	SHEET No	TOTAL SHEETS
04	Sol	12,80	2.1/2.8, 12.0/13.1	490	597

P.K. Chen 9/12/12
REGISTERED STRUCTURAL ENGINEER DATE

5-6-13
PLANS APPROVAL DATE

REGISTERED PROFESSIONAL ENGINEER PO-KANG CHEN No. S 3112 Exp. 9/30/13 STRUCTURAL STATE OF CALIFORNIA

The State of California or its officers or agents shall not be responsible for the accuracy or completeness of electronic copies of this plan sheet.

SOLANO TRANSPORTATION AUTHORITY
ONE HARBOR CENTER, SUITE 130
SUISUN CITY, CA 94585

MARK THOMAS & COMPANY, INC. + NOLTE ASSOCIATES, INC.
3000 OAK ROAD, SUITE 650
WALNUT CREEK, CA 94597

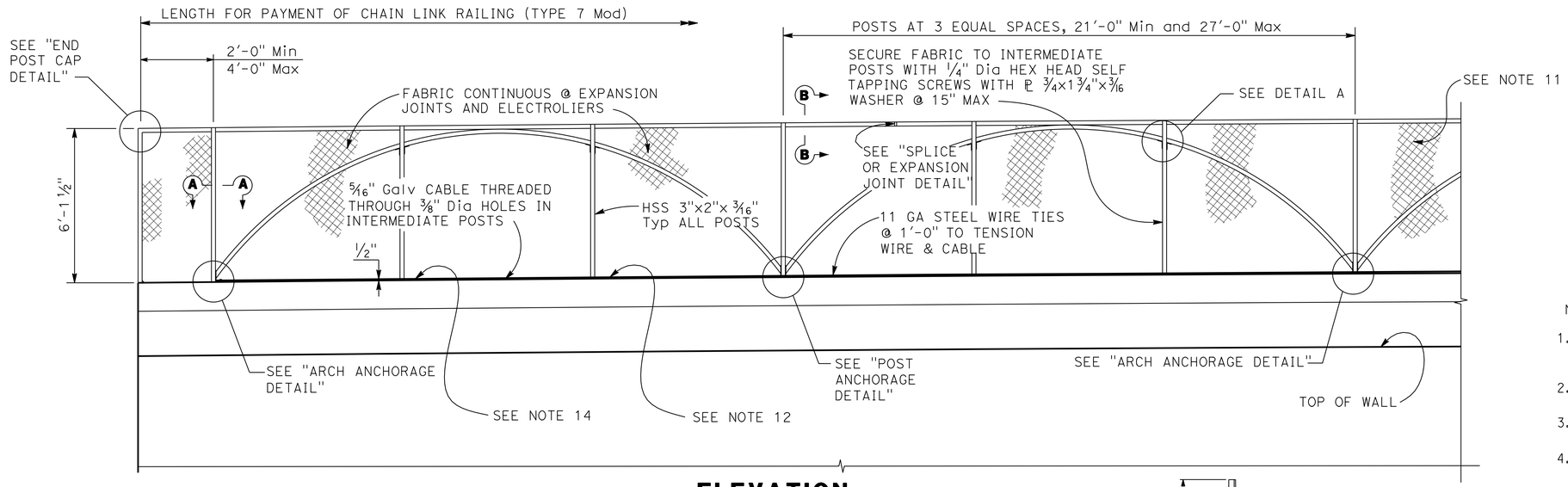

ELEVATION
3/8"=1'-0"

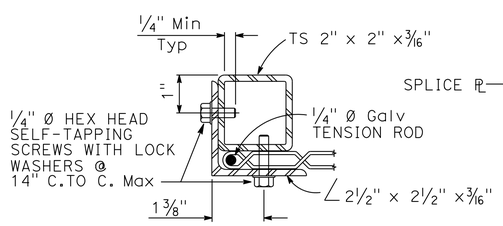

SECTION A-A

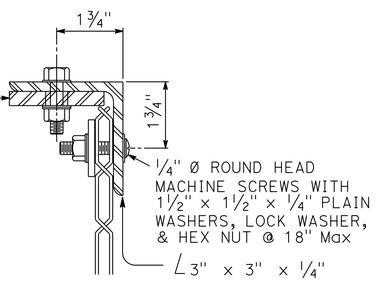

SECTION B-B

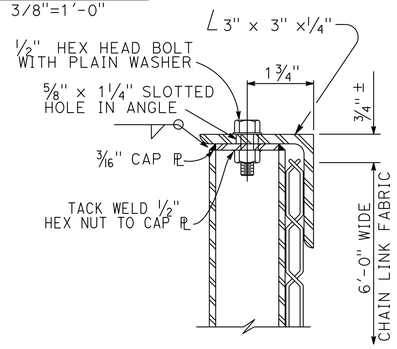

SECTION C-C

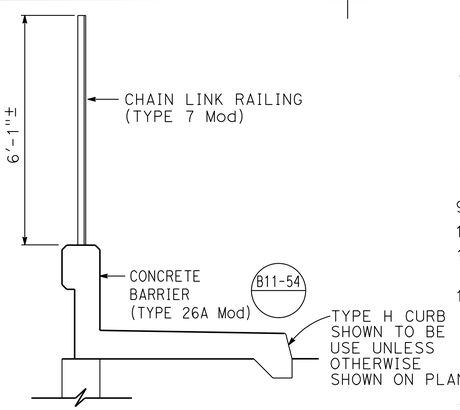

NOTE: Concrete Barrier Type 26A shown, Barrier Type 732A similar.

TYPICAL SECTION

NOTES:

1. Horizontal angle shall be continuous over not less than two intermediate posts except that a shorter length is permitted at expansion joints,electroliers and other rail discontinuities.
2. One post may be embedded 6" minimum to accomodate grade changes, otherwise fabricate post lengths as required.
3. Curved posts may be rotated in plan within its post pocket to accomodate curved horizontal alignment.
4. Straight posts and straight portions of curved posts shall be installed normal to bridge profile grade.
5. Top horizontal angle shall be parallel to bridge profile grade and shall be shop bent to fit horizontal curves.
6. When railing is on slope, fabric shall be placed parallel to slope.
7. Alternative details may be submitted by Contractor for Engineer's approval.
8. Railing assembly except chain link fabric shall be galvanized after fabrication.
9. See 'Retaining Wall Plans' for limits of Chain Link Railing Type 7
10. Provide thimbles at all cable loops.
11. Chain link fabric to be 6'-0" wide with 1" mesh and with knuckled selvage top and bottom.
12. When railing is placed on a horizontal alignment with a radius of 150'-0" or less, thread 5/16" cable through 3/8" Ø welded eye rods embedded 4" into the top of the concrete parapet and equally spaced to limit the middle ordinate distance between the 5/16" cable and the curve to 1" max.
13. Splices and expansion joints shall be located at ℄ panel.
14. Holes in posts for 5/16" cable and its anchorage may be field drilled and painted with zinc rich paint.

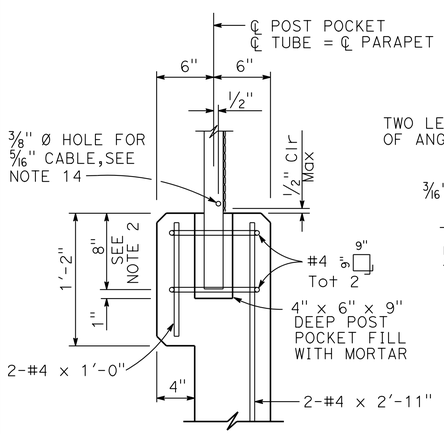

NOTE: Concrete Barrier Type 26A shown, Barrier Type 732A similar.

POST ANCHORAGE DETAIL

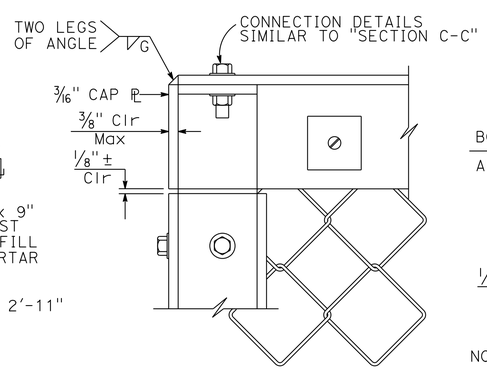

END POST CAP DETAIL

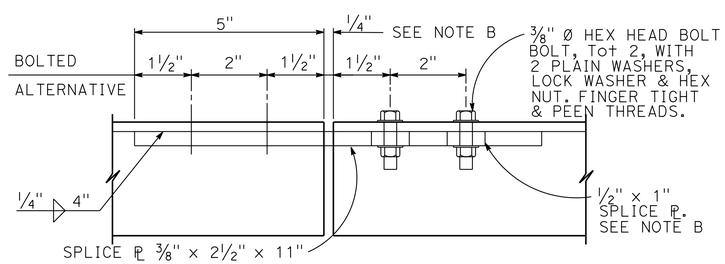

NOTE B: Expansion joint same dimension as expansion joint in deck or wall. Increase slotted hole length and splice PL length correspondingly.

SPLICE OR EXPANSION JOINT DETAIL

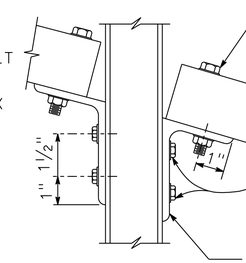

DETAIL A

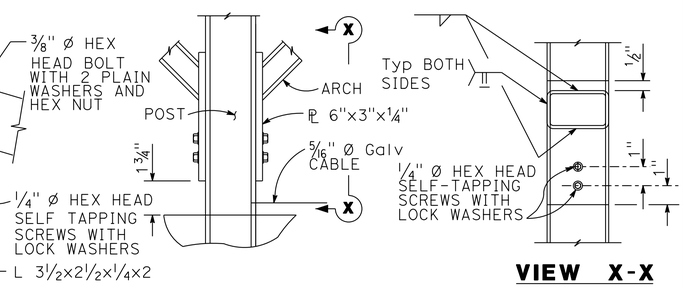

VIEW X-X

ARCH ANCHORAGE DETAIL
NO SCALE

Tracy L Bertram
DESIGN OVERSIGHT Tracy L Bertram
1-7-13
SIGN OFF DATE

	BY	CHECKED
DESIGN	P. PARK	T. WALKER
DETAILS	N. PHAM	P. PARK
QUANTITIES	P. PARK	T. WALKER

PREPARED FOR THE STATE OF CALIFORNIA DEPARTMENT OF TRANSPORTATION

PO-KANG CHEN
PROJECT ENGINEER

BRIDGE NO.
POST MILES

I-80/I-680/SR-12 ICP
CHAIN LINK RAILING (TYPE 7 MOD)

DESIGN DETAIL SHEET (ENGLISH) (REV. 03/14/12)

ORIGINAL SCALE IN INCHES FOR REDUCED PLANS 0 1 2 3

UNIT: 0741
PROJECT NUMBER & PHASE: 04000211311 CONTRACT NO.: 04-0A5341

DISREGARD PRINTS BEARING EARLIER REVISION DATES → 1/12/12 5/3/12 8/12/12 10/19/12

SHEET 29 OF 51

FILE => 04-0a5341-rwall-e-clr.dgn

USERNAME => s124496 DATE PLOTTED => 08-MAY-2013 TIME PLOTTED => 12:37

DIST	COUNTY	ROUTE	POST MILES TOTAL PROJECT	SHEET No	TOTAL SHEETS
04	Sol	12,80	2.1/2.8, 12.0/13.1	491	597

Michael Painter 11/9/12
DATE

5-6-13
PLANS APPROVAL DATE

REGISTERED LANDSCAPE ARCHITECT
MICHAEL R. PAINTER
C 3837
Signature
1/31/13
Renewal Date
11/9/12
Date
STATE OF CALIFORNIA

The State of California or its officers or agents shall not be responsible for the accuracy or completeness of electronic copies of this plan sheet.

SOLANO TRANSPORTATION AUTHORITY
ONE HARBOR CENTER, SUITE 130
SUISUN CITY, CA 94585

MPA DESIGN
1801 OAKLAND BOULEVARD SUITE 315
WALNUT CREEK CA 94596

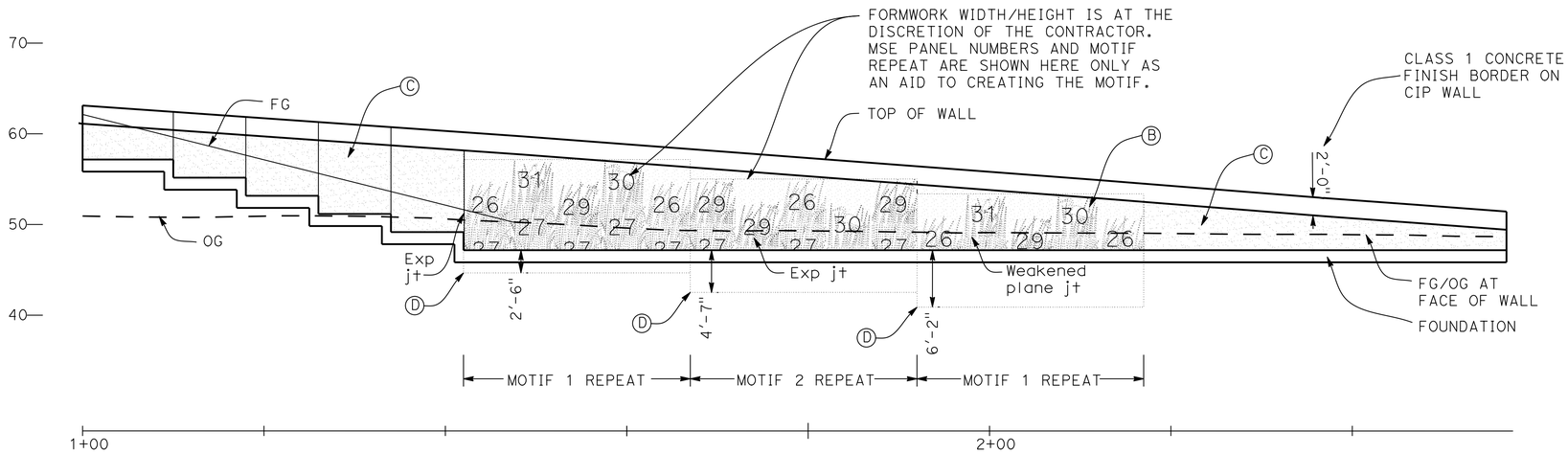

DEVELOPED ELEVATION

1 1/2"= 1'-0"

KEYED NOTES

(A) not used

(B) MSE panel number: Refer to "Details No.1,2 and 3" sheets in AESTHETIC TREATMENT PLANS.

(C) Light sand finish: Refer to details on "Details No.3" sheet in AESTHETIC TREATMENT PLANS.

(D) Bottom LH corner of motif repeat 1 or 2. Refer to MOTIF 1 REPEAT and MOTIF 2 REPEAT below.

NOTES

1. This drawing shall be used for structural aesthetic treatment only. All other structural elements are shown here for reference only and are specified else where in this drawing set.
2. All CIP wall surfaces not shown as receiving aesthetic treatment shall be class 1 concrete finish.
3. For CIP surface relief details refer to "Details No.1,2 and 3" sheets in AESTHETIC TREATMENT PLANS.

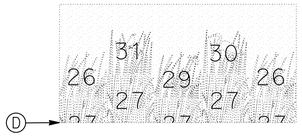

MOTIF 1 REPEAT

11/2"= 1'-0"

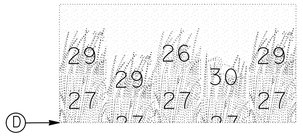

MOTIF 2 REPEAT

11/2"= 1'-0"

NOTES

Motif is arranged in the same way as 5'x5' MSE panel units in an MSE wall.

The gap that exists between MSE wall panels shall be infilled on CIP walls by extending the grass motif smoothly and continuously to meet it's neighbor above or below.

Motif 1 repeat and motif 2 repeat are similar to motif 1 repeat and motif 2 repeat on retaining wall 5.

Tracy L Bertram
DESIGN OVERSIGHT
1-7-13
SIGN OFF DATE

	BY	CHECKED
DESIGN	L KINNEBREW	C SHENOY
DETAILS	S KENNEY	R ALCINA
QUANTITIES	L KINNEBREW	C SHENOY

PREPARED FOR THE STATE OF CALIFORNIA DEPARTMENT OF TRANSPORTATION

MICHAEL PAINTER
PROJECT LANDSCAPE ARCHITECT

BRIDGE NO. 23_RW01
POST MILES 2.9

AESTHETIC TREATMENT RETAINING WALL No. 1

DESIGN GENERAL PLAN SHEET (ENGLISH) (REV. 3-14-12)

ORIGINAL SCALE IN INCHES FOR REDUCED PLANS 0 1 2 3

UNIT: 0741
PROJECT NUMBER & PHASE: 04000211311 CONTRACT NO.: 04-0A5341

DISREGARD PRINTS BEARING EARLIER REVISION DATES

REVISION DATES: 09/07/12 10/19/12

SHEET 30 OF 51

FILE => 04-0a5341-rwall-f-atl01.dgn

USERNAME => s124496 DATE PLOTTED => 08-MAY-2013 TIME PLOTTED => 06:54

DIST	COUNTY	ROUTE	POST MILES TOTAL PROJECT	SHEET No	TOTAL SHEETS
04	Sol	12,80	2.1/2.8, 12.0/13.1	492	597

Michael Painter 11/9/12
DATE

5-6-13
PLANS APPROVAL DATE

REGISTERED LANDSCAPE ARCHITECT
MICHAEL R. PAINTER
C. 2822
Signature
1/31/13
Renewal Date
11/9/12
Date
STATE OF CALIFORNIA

The State of California or its officers or agents shall not be responsible for the accuracy or completeness of electronic copies of this plan sheet.

SOLANO TRANSPORTATION AUTHORITY
ONE HARBOR CENTER, SUITE 130
SUISUN CITY, CA 94585

MPA DESIGN
1801 OAKLAND BOULEVARD SUITE 315
WALNUT CREEK CA 94596

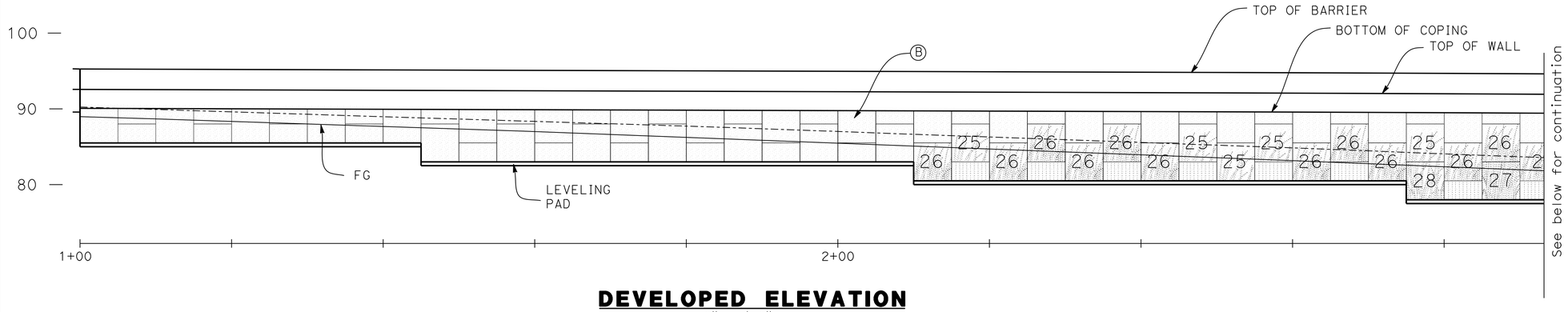

DEVELOPED ELEVATION
1 1/2"= 1'-0"

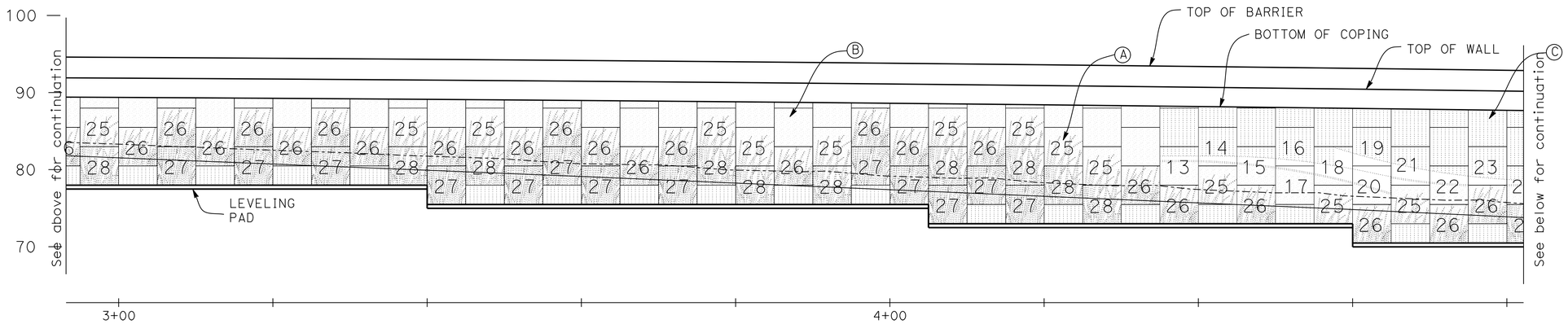

DEVELOPED ELEVATION
1 1/2"= 1'-0"

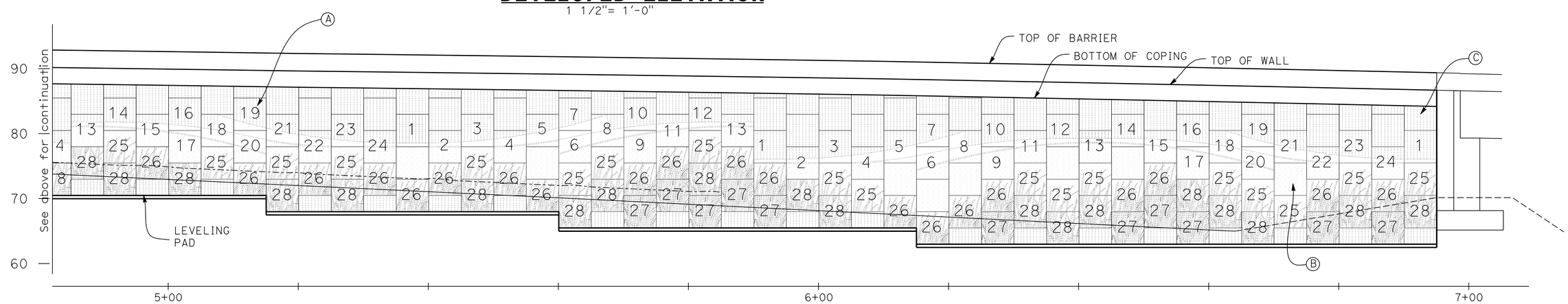

DEVELOPED ELEVATION
1 1/2"= 1'-0"

KEYED NOTES

Ⓐ MSE panel number: Refer to "Details No.1,2 and 3" sheets in AESTHETIC TREATMENT PLANS.

Ⓑ Background panel (Light sand finish): Refer to "Details No.1,2 and 3" sheets in AESTHETIC TREATMENT PLANS.

Ⓒ Sky motif panel (1" Smooth fluted finish): Refer to "Details No.1,2 and 3" sheets in AESTHETIC TREATMENT PLANS.

NOTES

1. This drawing shall be used for structural aesthetic treatment only. All other structural elements are shown here for reference only and are specified else where in this drawing set.

2. All CIP wall surfaces not shown as receiving aesthetic treatment shall be class 1 concrete finish.

Tracy L. Bertram
DESIGN OVERSIGHT Tracy L Bertram
1-7-13
SIGN OFF DATE

DESIGN GENERAL PLAN SHEET (ENGLISH) (REV. 3-14-12)

	BY	CHECKED
DESIGN	L KINNEBREW	C SHENOY
DETAILS	S KENNEY	R ALCINA
QUANTITIES	L KINNEBREW	C SHENOY

ORIGINAL SCALE IN INCHES FOR REDUCED PLANS 0 1 2 3

PREPARED FOR THE STATE OF CALIFORNIA DEPARTMENT OF TRANSPORTATION

MICHAEL PAINTER
PROJECT LANDSCAPE ARCHITECT

BRIDGE NO. 23E0020
POST MILES 2.9

AESTHETIC TREATMENT RETAINING WALL No. 2(MSE)

UNIT: 0741
PROJECT NUMBER & PHASE: 04000211311 CONTRACT NO.: 04-0A5341

DISREGARD PRINTS BEARING EARLIER REVISION DATES

REVISION DATES: 09/18/12 10/19/12

SHEET 31 OF 51

FILE => 04-0a5341-rwall-f-at102.dgn

USERNAME => s124496 DATE PLOTTED => 08-MAY-2013 TIME PLOTTED => 06:54

DIST	COUNTY	ROUTE	POST MILES TOTAL PROJECT	SHEET No	TOTAL SHEETS
04	Sol	12,80	2.1/2.8, 12.0/13.1	493	597

Michael Painter 11/9/12
DATE

5-6-13
PLANS APPROVAL DATE

REGISTERED LANDSCAPE ARCHITECT
MICHAEL R. PAINTER
No. 2822
Signature
1/31/13
Renewal Date
11/9/12
Date
STATE OF CALIFORNIA

The State of California or its officers or agents shall not be responsible for the accuracy or completeness of electronic copies of this plan sheet.

SOLANO TRANSPORTATION AUTHORITY
ONE HARBOR CENTER, SUITE 130
SUISUN CITY, CA 94585

MPA DESIGN
1801 OAKLAND BOULEVARD SUITE 315
WALNUT CREEK CA 94596

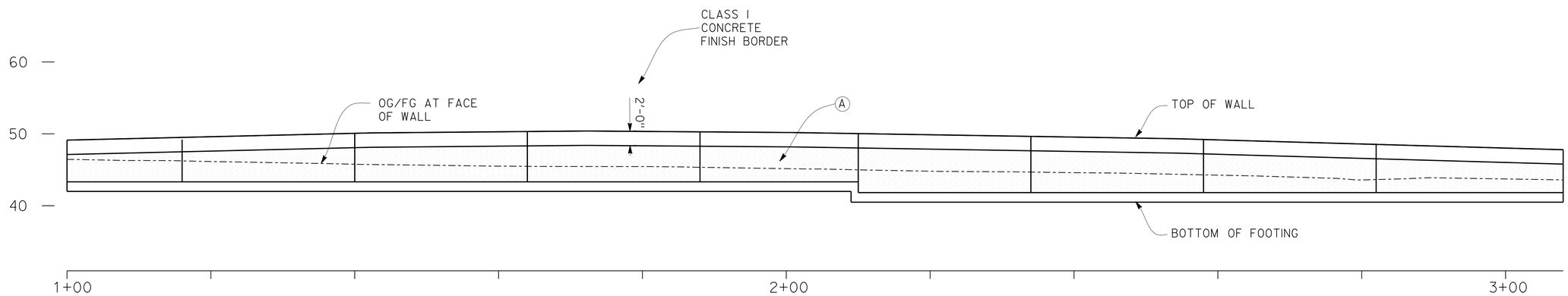

DEVELOPED ELEVATION

1 1/2" = 1'-0"

KEYED NOTES

(A) Light sand finish: Refer to details on "Details No.3" sheet in AESTHETIC TREATMENT PLANS.

NOTES

1. This drawing shall be used for structural aesthetic treatment only. All other structural elements are shown here for reference only and are specified else where in this drawing set.

2. All CIP wall surfaces not shown as receiving aesthetic treatment shall be class I concrete finish.

Tracy L. Bertram
DESIGN OVERSIGHT Tracy L Bertram
1-7-13
SIGN OFF DATE

	BY	CHECKED
DESIGN	L KINNEBREW	C SHENOY
DETAILS	S KENNEY	R ALCINA
QUANTITIES	L KINNEBREW	C SHENOY

PREPARED FOR THE STATE OF CALIFORNIA DEPARTMENT OF TRANSPORTATION

MICHAEL PAINTER
PROJECT LANDSCAPE ARCHITECT

BRIDGE NO. 23E0020
POST MILES 2.9

AESTHETIC TREATMENT
RETAINING WALL No. 3 (TYPE 1A)

DESIGN GENERAL PLAN SHEET (ENGLISH) (REV. 3-14-12)

ORIGINAL SCALE IN INCHES FOR REDUCED PLANS 0 1 2 3

UNIT: 0741
PROJECT NUMBER & PHASE: 04000211311 CONTRACT NO.: 04-0A5341

DISREGARD PRINTS BEARING EARLIER REVISION DATES

REVISION DATES				SHEET	OF
09/13/12	10/19/12			32	51

FILE => 04-0a5341-rwall-f-at103.dgn

USERNAME => s124496 DATE PLOTTED => 08-MAY-2013 TIME PLOTTED => 06:54

DIST	COUNTY	ROUTE	POST MILES TOTAL PROJECT	SHEET No	TOTAL SHEETS
04	Sol	12,80	2.1/2.8, 12.0/13.1	494	597

Michael Painter 11/9/12
DATE

5-6-13
PLANS APPROVAL DATE

REGISTERED LANDSCAPE ARCHITECT
MICHAEL R. PAINTER
No. 2322
Signature
1/31/13
Renewal Date
11/9/12
Date
STATE OF CALIFORNIA

The State of California or its officers or agents shall not be responsible for the accuracy or completeness of electronic copies of this plan sheet.

SOLANO TRANSPORTATION AUTHORITY
ONE HARBOR CENTER, SUITE 130
SUISUN CITY, CA 94585

MPA DESIGN
1801 OAKLAND BOULEVARD SUITE 315
WALNUT CREEK CA 94596

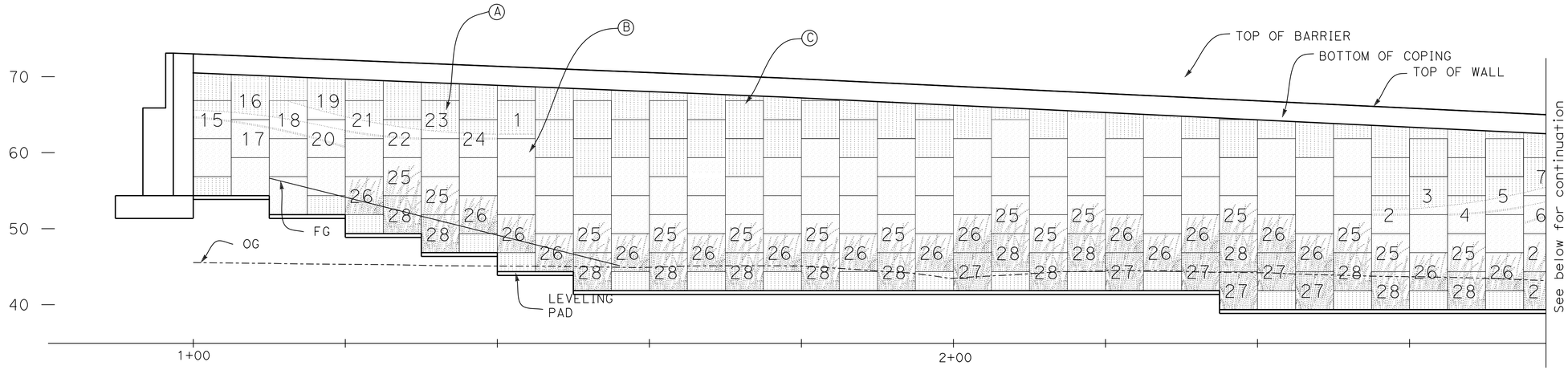

DEVELOPED ELEVATION
1 1/2"= 1'-0"

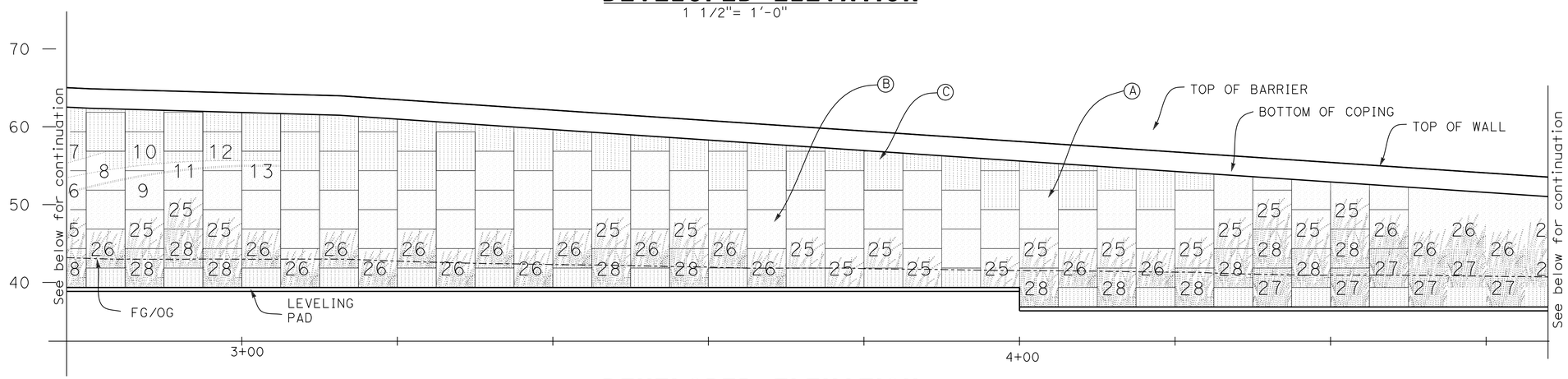

DEVELOPED ELEVATION
1 1/2"= 1'-0"

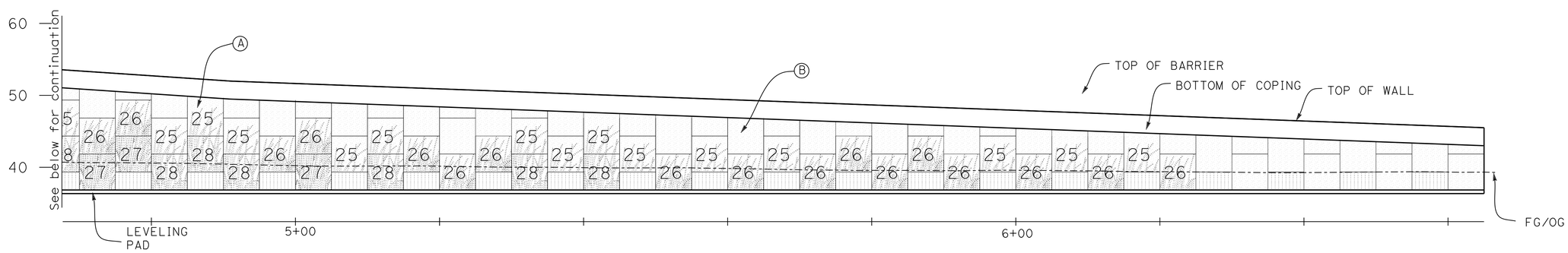

DEVELOPED ELEVATION
1 1/2"= 1'-0"

KEYED NOTES

Ⓐ MSE panel number: Refer to "Details No.1,2 and 3" sheets in AESTHETIC TREATMENT PLANS.

Ⓑ Background panel (Light sand finish): Refer to "Details No.1,2 and 3" sheets in AESTHETIC TREATMENT PLANS.

Ⓒ Sky motif panel (1" smooth fluted finish): Refer to "Details No.1,2 and 3" sheets in AESTHETIC TREATMENT PLANS.

NOTES

1. This drawing shall be used for structural aesthetic treatment only. All other structural elements are shown here for reference only and are specified else where in this drawing set.
2. All CIP wall surfaces not shown as receiving aesthetic treatment shall be class 1 concrete finish.

Tracy L Bertram
DESIGN OVERSIGHT Tracy L Bertram
1-7-13
SIGN OFF DATE

	BY	CHECKED
DESIGN	L KINNEBREW	C SHENOY
DETAILS		
QUANTITIES	L KINNEBREW	C SHENOY

PREPARED FOR THE STATE OF CALIFORNIA DEPARTMENT OF TRANSPORTATION

MICHAEL PAINTER
PROJECT LANDSCAPE ARCHITECT

BRIDGE NO. 23E0021
POST MILES 3.0

AESTHETIC TREATMENT RETAINING WALL No.4 (MSE)

DESIGN GENERAL PLAN SHEET (ENGLISH) (REV. 3-14-12)

ORIGINAL SCALE IN INCHES FOR REDUCED PLANS 0 1 2 3

UNIT: 0741
PROJECT NUMBER & PHASE: 04000211311 CONTRACT NO.: 04-0A5341

DISREGARD PRINTS BEARING EARLIER REVISION DATES

REVISION DATES: 09/18/12 10/19/12

SHEET 33 OF 51

FILE => 04-0a5341-rwall-f-at104.dgn

USERNAME => s124496 DATE PLOTTED => 08-MAY-2013 TIME PLOTTED => 06:54

DIST	COUNTY	ROUTE	POST MILES TOTAL PROJECT	SHEET No	TOTAL SHEETS
04	Sol	12,80	2.1/2.8, 12.0/13.1	495	597

Michael Painter 11/9/12
DATE

5-6-13
PLANS APPROVAL DATE

REGISTERED LANDSCAPE ARCHITECT
MICHAEL R. PAINTER
C 3837
Signature
1/31/13
Renewal Date
11/9/12
Date
STATE OF CALIFORNIA

The State of California or its officers or agents shall not be responsible for the accuracy or completeness of electronic copies of this plan sheet.

SOLANO TRANSPORTATION AUTHORITY
ONE HARBOR CENTER, SUITE 130
SUISUN CITY, CA 94585

MPA DESIGN
1801 OAKLAND BOULEVARD SUITE 315
WALNUT CREEK CA 94596

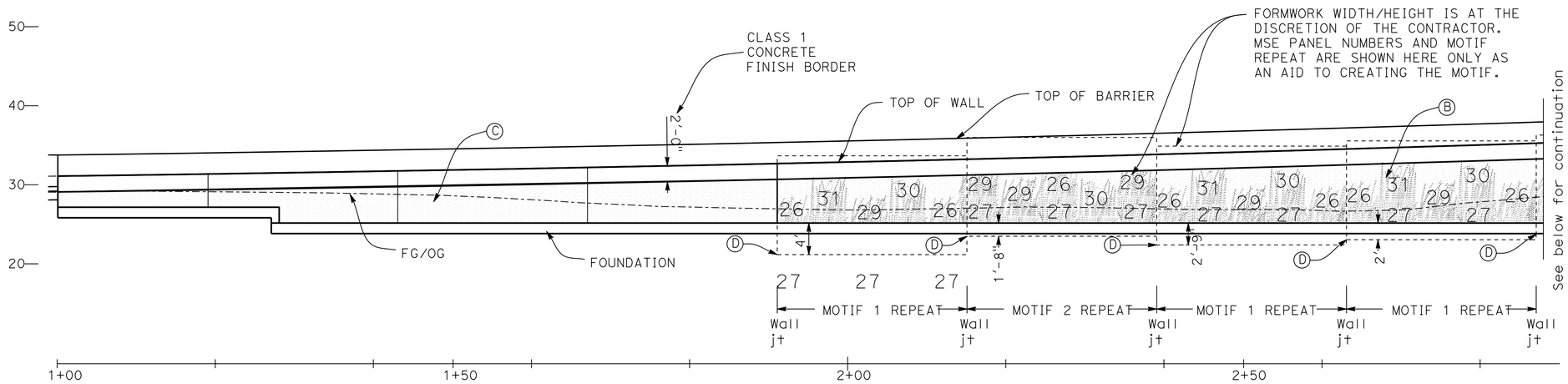

DEVELOPED ELEVATION

$1\frac{1}{2}$"= 1'-0"

KEYED NOTES

Ⓐ not used

Ⓑ MSE panel number: Refer to "Details No.1,2 and 3" sheets in AESTHETIC TREATMENT PLANS.

Ⓒ Light sand finish: Refer to details on "Details No.3" sheet in AESTHETIC TREATMENT PLANS.

Ⓓ Bottom LH corner of motif repeat 1 or 2. Refer to MOTIF 1 REPEAT and MOTIF 2 REPEAT below.

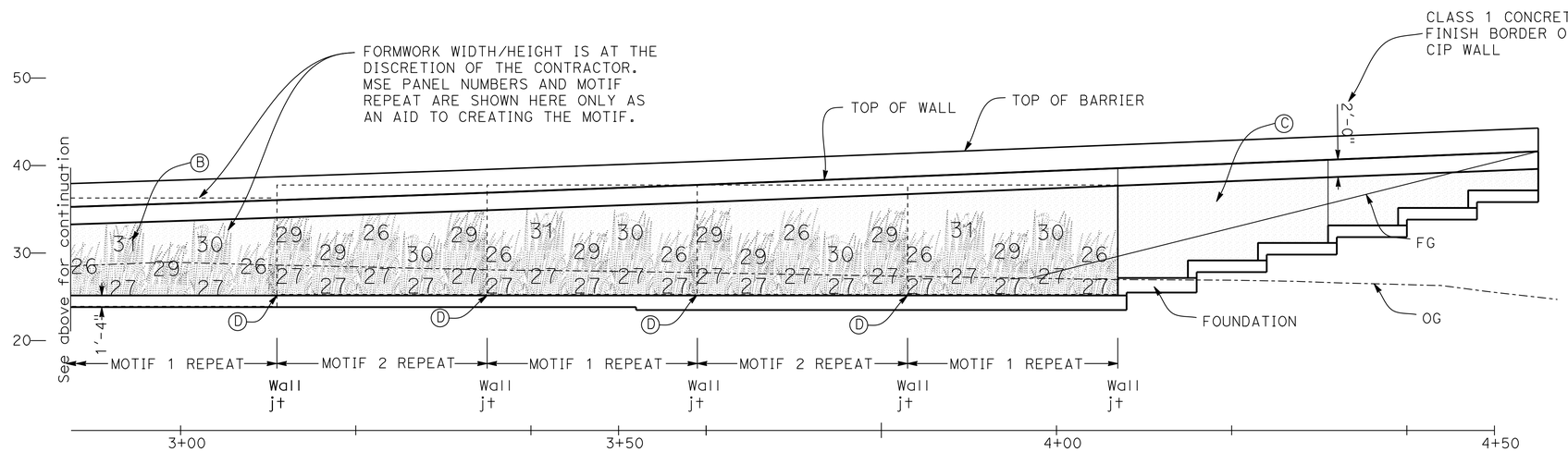

DEVELOPED ELEVATION

$1\frac{1}{2}$"= 1'-0"

NOTES

1. This drawing shall be used for structural aesthetic treatment only. All other structural elements are shown here for reference only and are specified else where in this drawing set.
2. All CIP wall surfaces not shown as receiving aesthetic treatment shall be class 1 concrete finish.
3. For CIP surface relief details refer to "Details No.1,2 and 3" sheets in AESTHETIC TREATMENT PLANS.

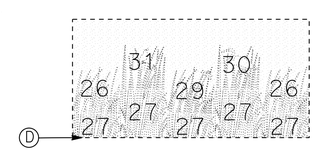

MOTIF 1 REPEAT

$1\frac{1}{2}$"= 1'-0"

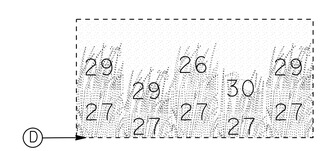

MOTIF 2 REPEAT

$1\frac{1}{2}$"= 1'-0"

NOTES

Motif is arranged in the same way as 5'x5' MSE panel units in an MSE wall.

The gap that exists between MSE wall panels shall be infilled on CIP walls by extending the grass motif smoothly and continuously to meet it's neighbor above or below.

Motif 1 repeat and motif 2 repeat are similar to motif 1 repeat and motif 2 repeat on retaining wall 1.

Tracy L. Bertram
DESIGN OVERSIGHT Tracy L Bertram
1-7-13
SIGN OFF DATE

	BY	CHECKED
DESIGN	L KINNEBREW	C SHENOY
DETAILS	S KENNEY	R ALCINA
QUANTITIES	L KINNEBREW	C SHENOY

PREPARED FOR THE STATE OF CALIFORNIA DEPARTMENT OF TRANSPORTATION

MICHAEL PAINTER
PROJECT LANDSCAPE ARCHITECT

BRIDGE NO. 23_RW05
POST MILES 12.7

AESTHETIC TREATMENT RETAINING WALL No. 5

DESIGN GENERAL PLAN SHEET (ENGLISH) (REV. 3-14-12)

ORIGINAL SCALE IN INCHES FOR REDUCED PLANS 0 1 2 3

UNIT: 0741
PROJECT NUMBER & PHASE: 04000211311 CONTRACT NO.: 04-0A5341

DISREGARD PRINTS BEARING EARLIER REVISION DATES
REVISION DATES 09/6/12 10/19/12
SHEET 34 OF 51

FILE => 04-0a5341-rwall-f-at105.dgn

USERNAME => s124496 DATE PLOTTED => 08-MAY-2013 TIME PLOTTED => 06:54

DIST	COUNTY	ROUTE	POST MILES TOTAL PROJECT	SHEET No	TOTAL SHEETS
04	Sol	12,80	2.1/2.8, 12.0/13.1	496	597

Michael Painter 11/9/12
DATE

5-6-13
PLANS APPROVAL DATE

REGISTERED LANDSCAPE ARCHITECT
MICHAEL R. PAINTER
No. 2342
Signature
1/31/13
Renewal Date
11/9/12
Date
STATE OF CALIFORNIA

The State of California or its officers or agents shall not be responsible for the accuracy or completeness of electronic copies of this plan sheet.

SOLANO TRANSPORTATION AUTHORITY
ONE HARBOR CENTER, SUITE 130
SUISUN CITY, CA 94585

MPA DESIGN
1801 OAKLAND BOULEVARD SUITE 315
WALNUT CREEK CA 94596

FORMWORK WIDTH/HEIGHT IS AT THE DISCRETION OF THE CONTRACTOR. MSE PANEL NUMBERS AND MOTIF REPEATS ARE SHOWN HERE ONLY AS AN AID TO CREATING THE MOTIF.

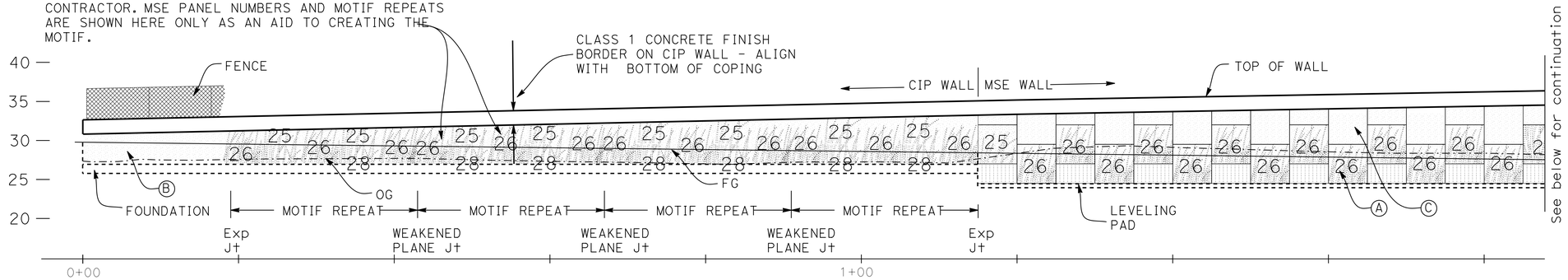

DEVELOPED ELEVATION

$1\frac{1}{2}$"= 1'-0"

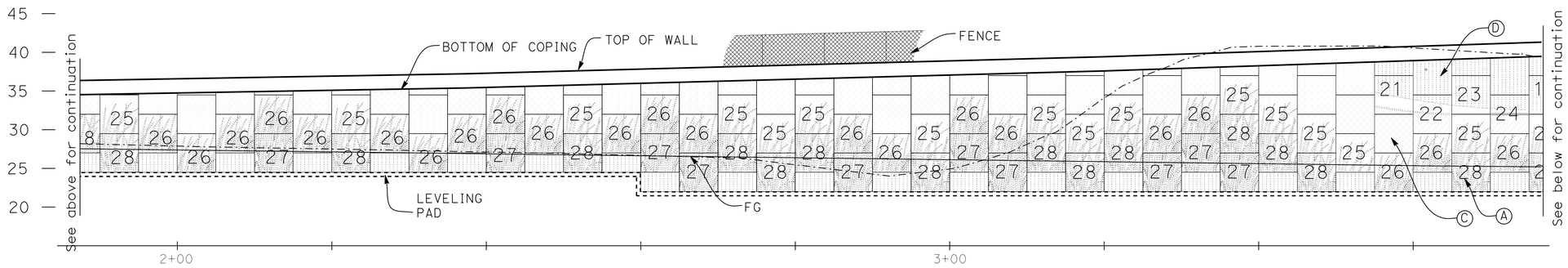

DEVELOPED ELEVATION

$1\frac{1}{2}$"= 1'-0"

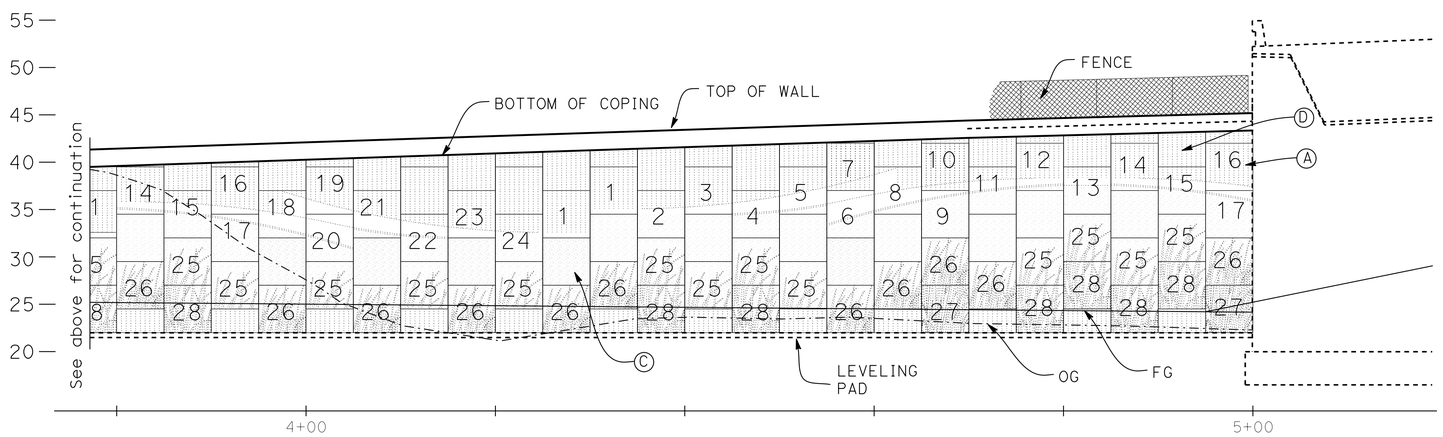

DEVELOPED ELEVATION

$1\frac{1}{2}$"= 1'-0"

KEYED NOTES

(A) MSE panel number: Refer to"Details No.1,2 and 3" sheets in AESTHETIC TREATMENT PLANS.

(B) Light sand finish: Refer to details on "Details No.3" sheet in AESTHETIC TREATMENT PLANS.

(C) Background panel (Light sand finish): Refer to "Details No.1,2 and 3" sheets in AESTHETIC TREATMENT PLANS.

(D) Sky motif panel (1" smooth fluted finish): Refer to "Details No.1,2 and 3" sheets in AESTHETIC TREATMENT PLANS.

NOTES

1. This drawing shall be used for structural aesthetic treatment only. All other structural elements are shown here for reference only and are specified else where in this drawing set.

2. All CIP wall surfaces not shown as receiving aesthetic treatment shall be class 1 concrete finish.

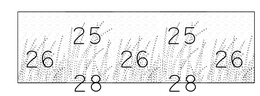

MOTIF REPEAT FOR CIP WALL

$1\frac{1}{2}$"= 1'-0"

NOTES

Motif is arranged in the same way as 5'x5' MSE panel units in an MSE wall.

The gap that exists between MSE wall panels shall be infilled on CIP walls by extending the grass motif smoothly and continuously to meet it's neighbor above or below.

Tracy L. Bertram
DESIGN OVERSIGHT Tracy L Bertram
1-7-13
SIGN OFF DATE

	BY	CHECKED
DESIGN	P PARK	T WALKER
DETAILS	S KENNEY	R ALCINA
QUANTITIES	P PARK	T WALKER

PREPARED FOR THE STATE OF CALIFORNIA DEPARTMENT OF TRANSPORTATION

MICHAEL PAINTER
PROJECT LANDSCAPE ARCHITECT

BRIDGE NO. 23E0022
POST MILES 12.7

AESTHETIC TREATMENT RETAINING WALL No. 6

DESIGN GENERAL PLAN SHEET (ENGLISH) (REV. 3-14-12)

ORIGINAL SCALE IN INCHES FOR REDUCED PLANS 0 1 2 3

UNIT: 0741
PROJECT NUMBER & PHASE: 04000211311 CONTRACT NO.: 04-0A5341

DISREGARD PRINTS BEARING EARLIER REVISION DATES

REVISION DATES 09/18/12 10/19/12

SHEET 35 OF 51

FILE => 04-0a5341-rwall-f-at106.dgn

USERNAME => s124496 DATE PLOTTED => 08-MAY-2013 TIME PLOTTED => 06:54

DIST	COUNTY	ROUTE	POST MILES TOTAL PROJECT	SHEET No	TOTAL SHEETS
04	Sol	12,80	2.1/2.8, 12.0/13.1	497	597

Michael Painter 11/9/12
DATE

5-6-13
PLANS APPROVAL DATE

The State of California or its officers or agents shall not be responsible for the accuracy or completeness of electronic copies of this plan sheet.

REGISTERED LANDSCAPE ARCHITECT — MICHAEL R. PAINTER — STATE OF CALIFORNIA
Signature 1/31/13 Renewal Date 11/9/12 Date

SOLANO TRANSPORTATION AUTHORITY
ONE HARBOR CENTER, SUITE 130
SUISUN CITY, CA 94585

MPA DESIGN
1801 OAKLAND BOULEVARD SUITE 315
WALNUT CREEK CA 94596

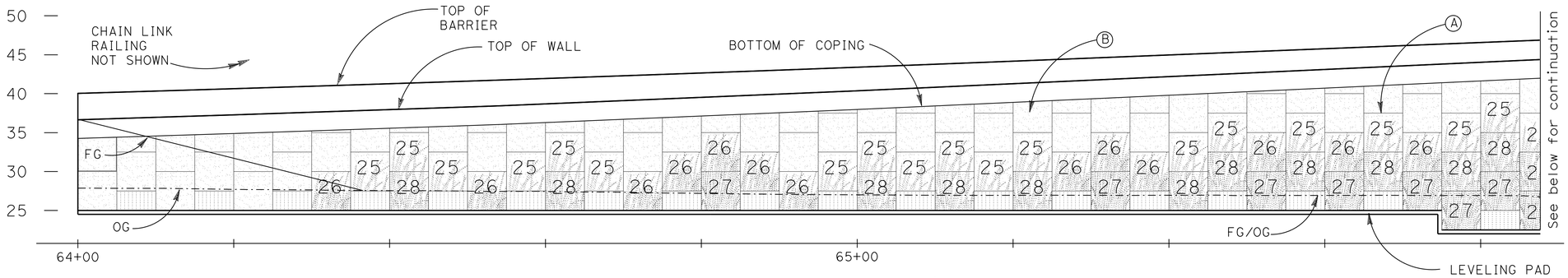

DEVELOPED ELEVATION

1 1/2"= 1'-0"

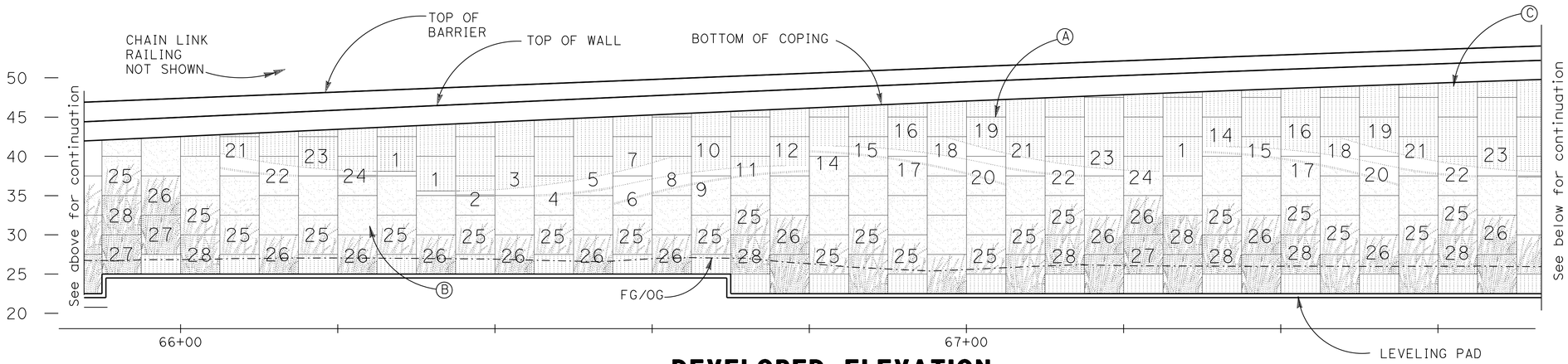

DEVELOPED ELEVATION

1 1/2"= 1'-0"

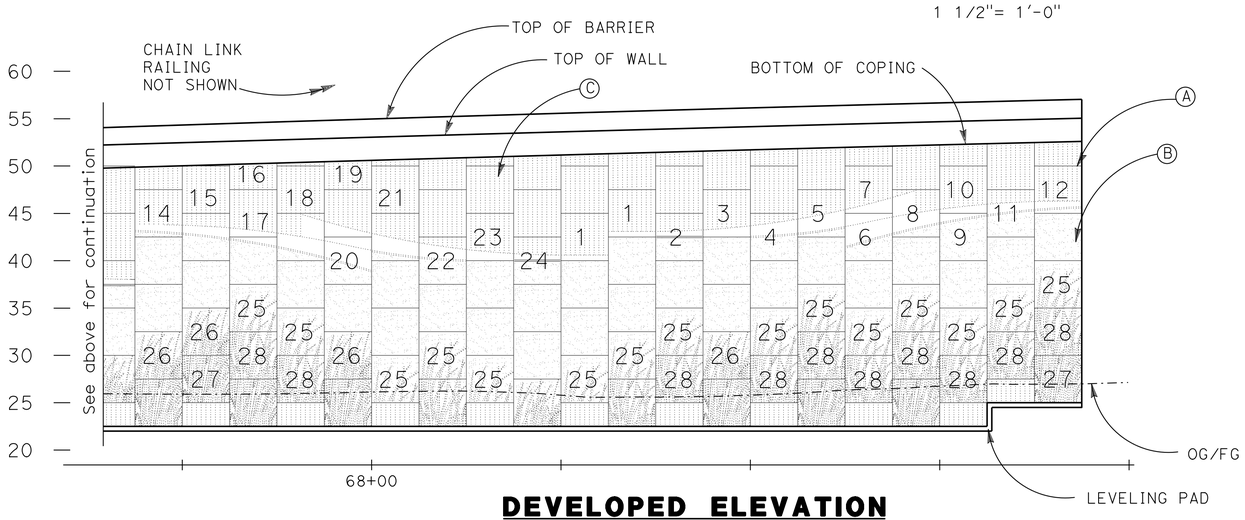

DEVELOPED ELEVATION

1 1/2"= 1'-0"

KEYED NOTES*

Ⓐ MSE panel number: Refer to "Details No.1,2 and 3" sheets in AESTHETIC TREATMENT PLANS.

Ⓑ Background panel (Light sand finish): Refer to "Details No.1,2 and 3" sheets in AESTHETIC TREATMENT PLANS.

Ⓒ Sky motif panel (1" smooth fluted finish): Refer to "Details No.1,2 and 3" sheets in AESTHETIC TREATMENT PLANS.

NOTES*

1. This drawing shall be used for structural aesthetic treatment only. All other structural elements are shown here for reference only and are specified else where in this drawing set.
2. All CIP wall surfaces not shown as receiving aesthetic treatment shall be class 1 concrete finish.

Tracy L. Bertram
DESIGN OVERSIGHT Tracy L Bertram
1-7-13
SIGN OFF DATE

DESIGN GENERAL PLAN SHEET (ENGLISH) (REV. 3-14-12)

	BY	CHECKED
DESIGN	P PARK	T WALKER
DETAILS	S KENNEY	R ALCINA
QUANTITIES	P PARK	T WALKER

ORIGINAL SCALE IN INCHES FOR REDUCED PLANS 0 1 2 3

PREPARED FOR THE STATE OF CALIFORNIA DEPARTMENT OF TRANSPORTATION

MICHAEL PAINTER
PROJECT LANDSCAPE ARCHITECT

BRIDGE NO. 23E0023
POST MILES 12.7

AESTHETIC TREATMENT
RETAINING WALL NO. 7 (MSE)

UNIT: 0741
PROJECT NUMBER & PHASE: 04000211311 CONTRACT NO.: 04-0A5341

DISREGARD PRINTS BEARING EARLIER REVISION DATES → 09/5/12 10/19/12

REVISION DATES | SHEET 36 | OF 51

FILE => 04-0a5341-rwall-f-at107.dgn

USERNAME => s124496 DATE PLOTTED => 08-MAY-2013 TIME PLOTTED => 06:54

DIST	COUNTY	ROUTE	POST MILES TOTAL PROJECT	SHEET No	TOTAL SHEETS
04	Sol	12,80	2.1/2.8, 12.0/13.1	498	597

Michael Painter 11/9/12
DATE

5-6-13
PLANS APPROVAL DATE

REGISTERED LANDSCAPE ARCHITECT
MICHAEL R. PAINTER
M. Painter
Signature
1/31/13
Renewal Date
11/9/12
Date
STATE OF CALIFORNIA

The State of California or its officers or agents shall not be responsible for the accuracy or completeness of electronic copies of this plan sheet.

SOLANO TRANSPORTATION AUTHORITY
ONE HARBOR CENTER, SUITE 130
SUISUN CITY, CA 94585

MPA DESIGN
1801 OAKLAND BOULEVARD SUITE 315
WALNUT CREEK CA 94596

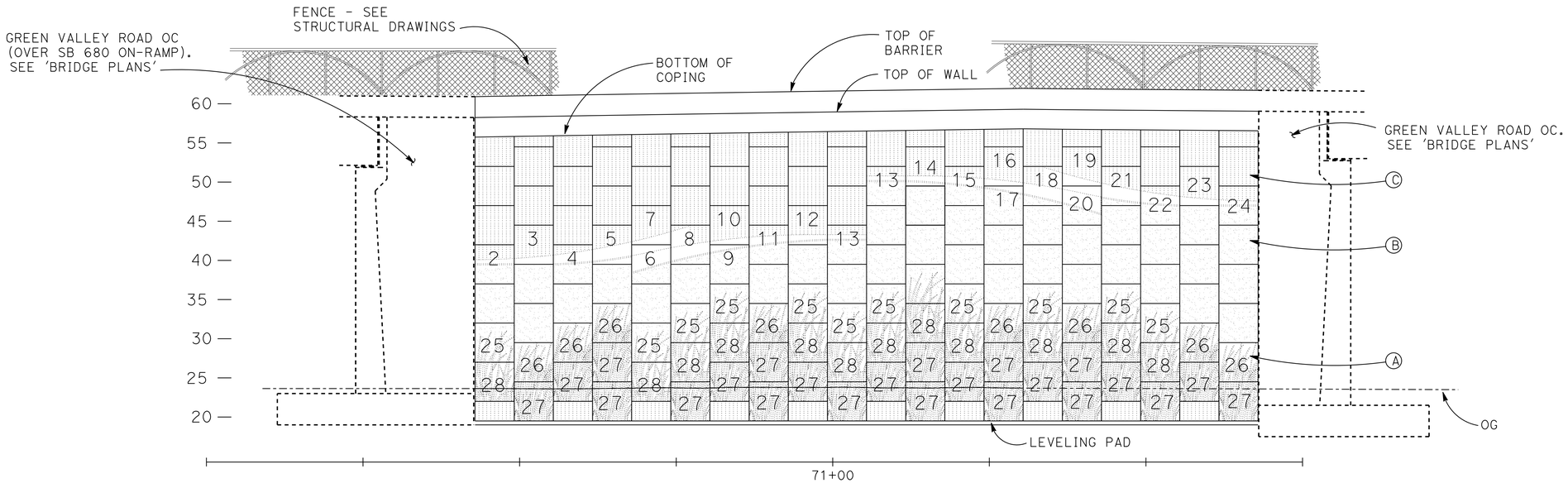

RETAINING WALL No 8 (MSE WALL) - ELEVATION

1 1/2"= 1'-0"

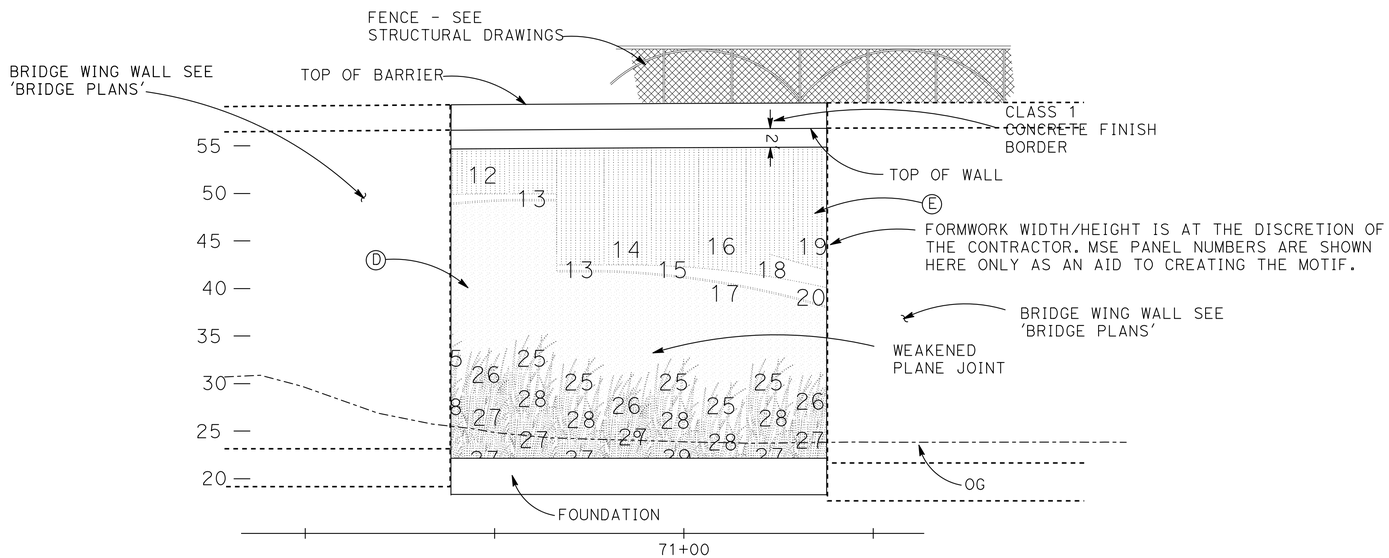

RETAINING WALL No. 9 (CIP WALL) - ELEVATION

1 1/2"= 1'-0"

KEYED NOTES*

Ⓐ MSE panel number: Refer to "Details No.1,2 and 3" sheets in AESTHETIC TREATMENT PLANS.

Ⓑ Background panel (Light sand finish): Refer to drawing: AESTHETIC TREATMENT - DETAIL SHEET 1 through 3

Ⓒ Sky motif panel (1" smooth flutedfinish): Refer to details on "Details No.3" sheet in AESTHETIC TREATMENT PLANS

Ⓓ Light sand finish: Refer to details on "Details No.3" sheet in AESTHETIC TREATMENT PLANS.

Ⓔ Smooth fluted finish: Refer to details on "Details No.3" sheet in AESTHETIC TREATMENT PLANS.

NOTES*

1. For CIP walls the motif is arranged in the same way as 5'x5' MSE panel units in an MSE wall.
2. The gap that exists between MSE wall panels shall be infilled on CIP walls by extending the motif smoothly and continuously to join with it's neighbor.

*3. This drawing shall be used for structural aesthetic treatment only. All other structural elements are shown here for reference only and are specified else where in this drawing set.

4. All CIP wall surfaces not shown as receiving aesthetic treatment shall be class 1 concrete finish.
5. For surface relief details refer to "Details No.1,2 and 3" sheets in AESTHETIC TREATMENT PLANS.

Tracy L. Bertram
DESIGN OVERSIGHT Tracy L Bertram
1-7-13
SIGN OFF DATE

	BY	CHECKED
DESIGN	P PARK	T WALKER
DETAILS	BY	CHECKED
QUANTITIES	BY	CHECKED T WALKER

PREPARED FOR THE STATE OF CALIFORNIA DEPARTMENT OF TRANSPORTATION

MICHAEL PAINTER
PROJECT LANDSCAPE ARCHITECT

BRIDGE NO. 23E0024/23_RW09
POST MILES 12.8

AESTHETIC TREATMENT
RETAINING WALL No. 8 AND 9

DESIGN GENERAL PLAN SHEET (ENGLISH) (REV. 3-14-12)

ORIGINAL SCALE IN INCHES FOR REDUCED PLANS 0 1 2 3

UNIT: 0741
PROJECT NUMBER & PHASE: 04000211311 CONTRACT NO.: 04-0A5341

DISREGARD PRINTS BEARING EARLIER REVISION DATES

REVISION DATES 09/8/12 10/19/12

SHEET 37 OF 51

FILE => 04-0a5341-rwall-f-atl08-09.dgn

USERNAME => s124496 DATE PLOTTED => 08-MAY-2013 TIME PLOTTED => 06:55

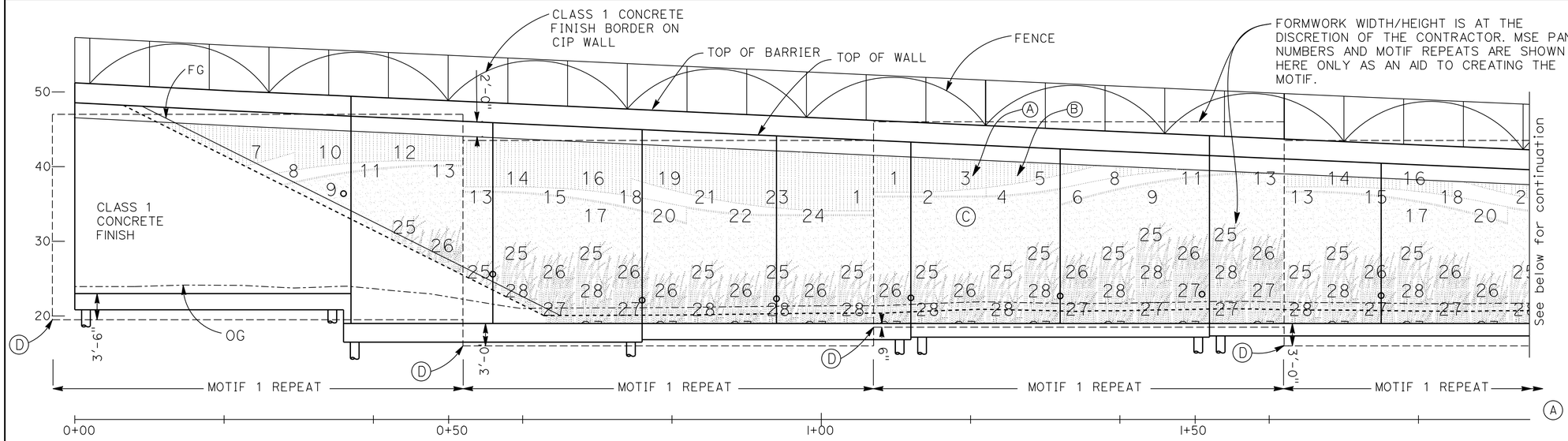

DEVELOPED ELEVATION

1 1/2"= 1'-0"

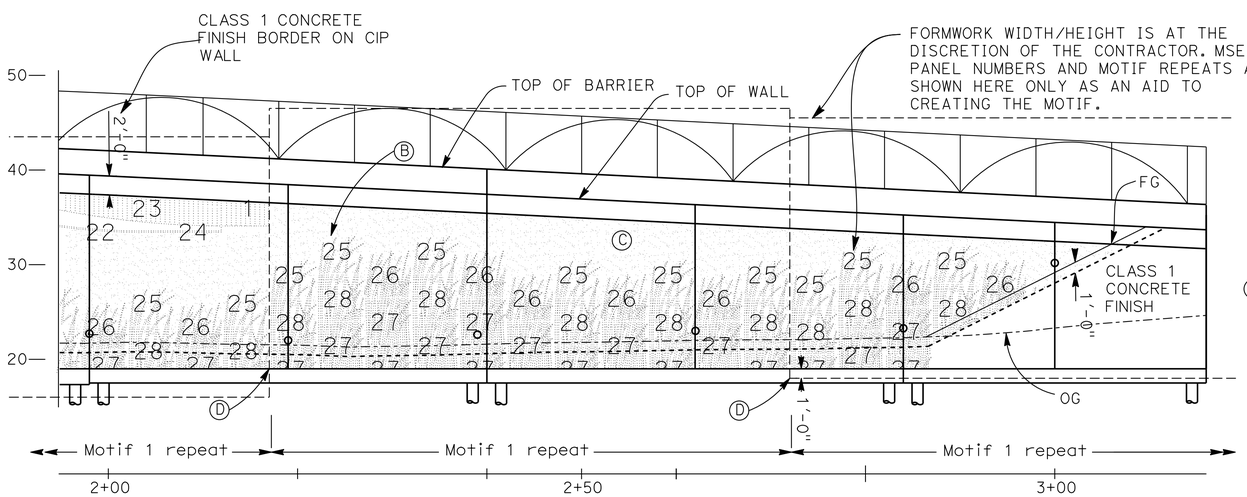

DEVELOPED ELEVATION

1 1/2"= 1'-0"

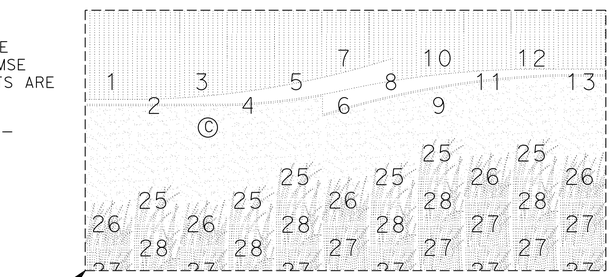

MOTIF 1 REPEAT

1 1/2"= 1'-0"

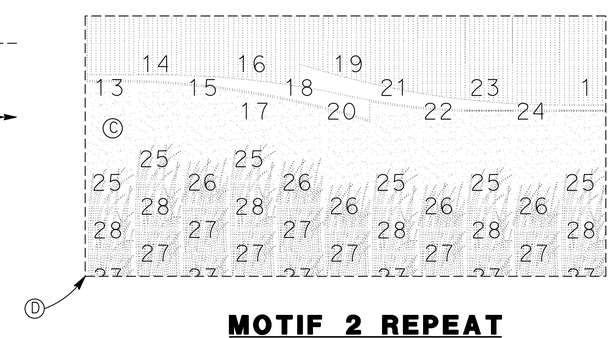

MOTIF 2 REPEAT

1 1/2"= 1'-0"

DIST	COUNTY	ROUTE	POST MILES TOTAL PROJECT	SHEET No	TOTAL SHEETS
04	Sol	12,80	2.1/2.8, 12.0/13.1	499	597

Michael Painter 11/9/12
DATE

5-6-13
PLANS APPROVAL DATE

REGISTERED LANDSCAPE ARCHITECT MICHAEL R. PAINTER M. Painter Signature 1/31/13 Renewal Date 11/9/12 Date STATE OF CALIFORNIA

The State of California or its officers or agents shall not be responsible for the accuracy or completeness of electronic copies of this plan sheet.

SOLANO TRANSPORTATION AUTHORITY
ONE HARBOR CENTER, SUITE 130
SUISUN CITY, CA 94585

MPA DESIGN
1801 OAKLAND BOULEVARD SUITE 315
WALNUT CREEK CA 94596

KEYED NOTES

(A) MSE panel number: Refer to "Details No.1,2 and 3" sheets in AESTHETIC TREATMENT PLANS.

(B) Smooth fluted finish: Refer to details on "Details No.3" sheet in AESTHETIC TREATMENT PLANS.

(C) Light sand finish: Refer to details on "Details No.3" sheet in AESTHETIC TREATMENT PLANS.

(D) Bottom left hand corner of motif repeat 1 or 2. Refer to MOTIF 1 REPEAT and MOTIF 2 REPEAT below.

NOTES

1. This drawing shall be used for structural aesthetic treatment only. All other structural elements are shown here for reference only and are specified else where in this drawing set.
2. All CIP wall surfaces not shown as receiving aesthetic treatment shall be class 1 concrete finish.
3. For CIP surface relief details refer to "Details No.1,2 and 3" sheets in AESTHETIC TREATMENT PLANS.

NOTES ON MOTIF REPEAT

Motif is arranged in the same way as 5'x5' MSE panel units in an MSE wall.

The gap that exists between MSE wall panels shall be infilled on CIP walls by extending the motif smoothly and continuously to meet it's neighbor.

Tracy L. Bertram
DESIGN OVERSIGHT Tracy L Bertram
1-7-13
SIGN OFF DATE

	BY	CHECKED
DESIGN	J HICKEY	V SHERBY
DETAILS	S KENNEY	R ALCINA
QUANTITIES	J HICKEY	V SHERBY

PREPARED FOR THE STATE OF CALIFORNIA DEPARTMENT OF TRANSPORTATION

MICHAEL PAINTER
PROJECT LANDSCAPE ARCHITECT

BRIDGE NO. 23E0025
POST MILES 12.8

AESTHETIC TREATMENT RETAINING WALL No. 10

DESIGN GENERAL PLAN SHEET (ENGLISH) (REV. 3-14-12)

ORIGINAL SCALE IN INCHES FOR REDUCED PLANS 0 1 2 3

UNIT: 0741
PROJECT NUMBER & PHASE: 04000211311 CONTRACT NO.: 04-0A5341

DISREGARD PRINTS BEARING EARLIER REVISION DATES

REVISION DATES 09/5/12 10/19/12

SHEET 38 OF 51

FILE => 04-0a5341-rwall-f-atl10.dgn

USERNAME => s124496 DATE PLOTTED => 08-MAY-2013 TIME PLOTTED => 06:55

DIST	COUNTY	ROUTE	POST MILES TOTAL PROJECT	SHEET No	TOTAL SHEETS
04	Sol	12,80	2.1/2.8, 12.0/13.1	500	597

Michael Painter 11/9/12
DATE

5-6-13
PLANS APPROVAL DATE

REGISTERED LANDSCAPE ARCHITECT
MICHAEL R. PAINTER
No. 2324
M. Painter
Signature
1/31/13
Renewal Date
11/9/12
Date
STATE OF CALIFORNIA

The State of California or its officers or agents shall not be responsible for the accuracy or completeness of electronic copies of this plan sheet.

SOLANO TRANSPORTATION AUTHORITY
ONE HARBOR CENTER, SUITE 130
SUISUN CITY, CA 94585

MPA DESIGN
1801 OAKLAND BOULEVARD SUITE 315
WALNUT CREEK CA 94596

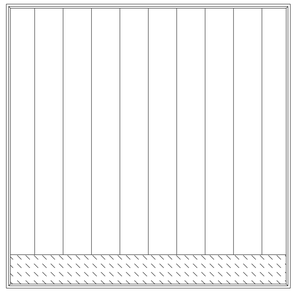
Panel #1 - part of airwave motif

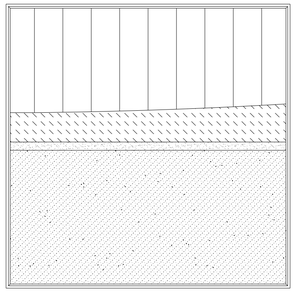
Panel #2 - part of airwave motif

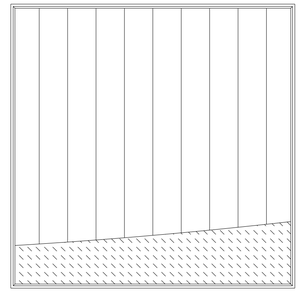
Panel #3 - part of airwave motif

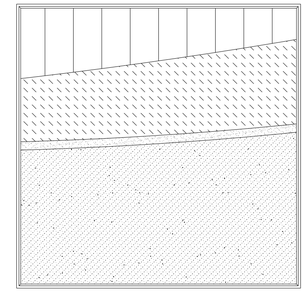
Panel #4 - part of airwave motif

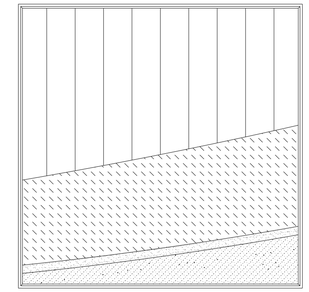
Panel #5 - part of airwave motif

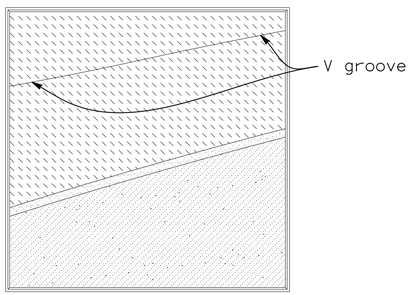

Panel #6 - part of airwave motif

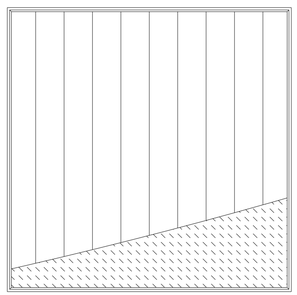
Panel #7 - part of airwave motif

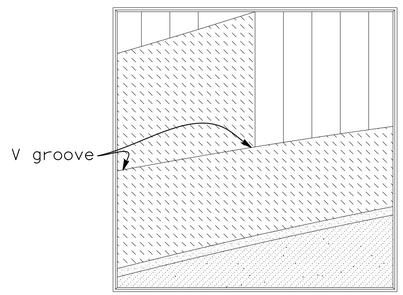

Panel #8 - part of airwave motif

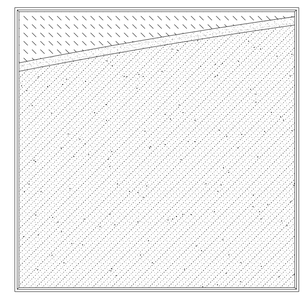
Panel #9 - part of airwave motif

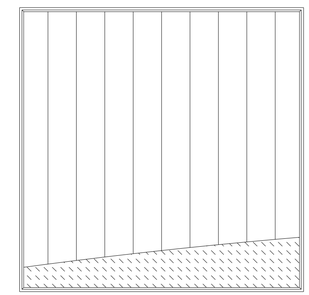
Panel #10 - part of airwave motif

GENERAL NOTE

For surface relief details refer to "Details No. 3" - KEY TO SURFACE RELIEF - MSE PANELS AND CIP WALLS

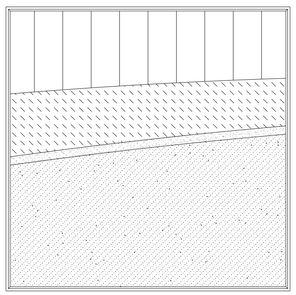
Panel #11 - part of airwave motif

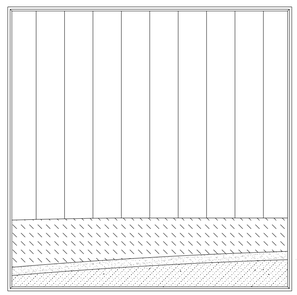
Panel #12 - part of airwave motif

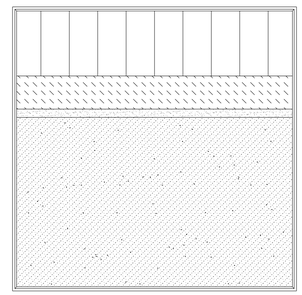
Panel #13 - part of airwave motif

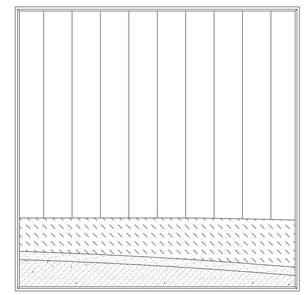
Panel #14 - part of airwave motif

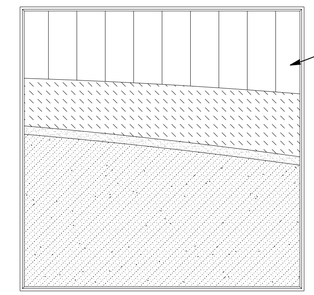

Panel #15 - part of airwave motif

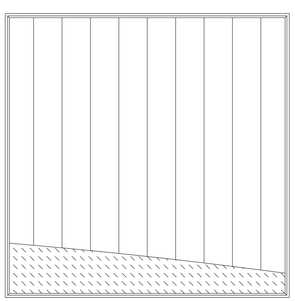
Panel #16 - part of airwave motif

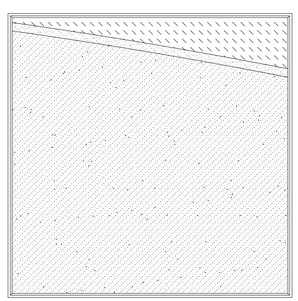
Panel #17 - part of airwave motif

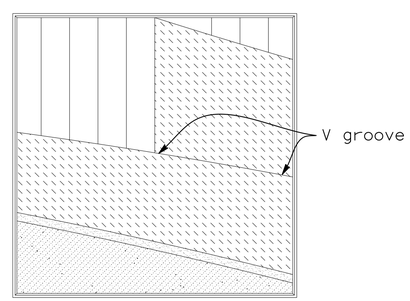

Panel #18 - part of airwave motif

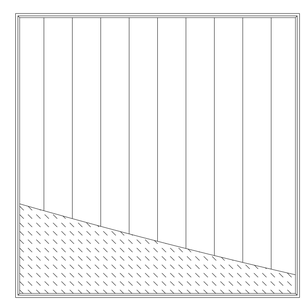
Panel #19 - part of airwave motif

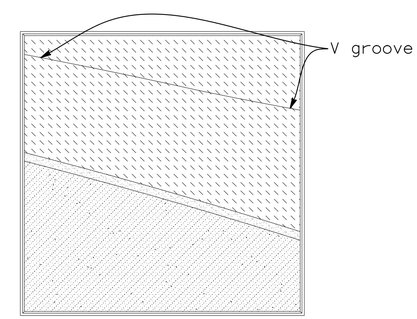

Panel #20 - part of airwave motif

Scale 3/4" = 1'-0"

Tracy L. Bertram
DESIGN OVERSIGHT Tracy L Bertram
1-7-13
SIGN OFF DATE

	BY		CHECKED	
DESIGN	BY	S KENNEY	CHECKED	R ALCINA
DETAILS	BY	S KENNEY	CHECKED	R ALCINA
QUANTITIES	BY	S KENNEY	CHECKED	R ALCINA

PREPARED FOR THE
STATE OF CALIFORNIA
DEPARTMENT OF TRANSPORTATION

MICHAEL PAINTER
PROJECT LANDSCAPE ARCHITECT

BRIDGE NO.
POST MILES

AESTHETIC TREATMENT
DETAILS No. 1

DESIGN GENERAL PLAN SHEET (ENGLISH) (REV. 3-14-12)

ORIGINAL SCALE IN INCHES FOR REDUCED PLANS 0 1 2 3

UNIT: 0741
PROJECT NUMBER & PHASE: 04000211311 CONTRACT NO.: 04-0A5341

DISREGARD PRINTS BEARING EARLIER REVISION DATES

REVISION DATES				SHEET	OF
09/06/12	10/19/12			39	51

FILE => 04-0a5341-rwall-g-atd01.dgn

USERNAME => s124496 DATE PLOTTED => 08-MAY-2013 TIME PLOTTED => 06:55