FOR CONTRACT NO: 04-0A0904
PROJECT ID: 04-00000133

REVISION TO

INFORMATION HANDOUT

STORM WATER INFORMATION PACKAGE

ROUTE: 04-Sol-80-R24.8/R25.2

REVISED PER ADDENDUM NO. 3 DATED MARCH 15, 2013

STORM WATER INFORMATION PACKAGE
CONTRACT NO: 04-0A0904
04-SOL-80- PM 24.8/25.2
WIDEN ROADWAY & STRUCTURE to
LENTHEN ACCELERATION LANES

California Department of Transportation
District 04
Water Quality Program
111 Grand Avenue, Oakland California, 94612

February 2013

Disclaimer

A "Disclaimer" is required specifying that the information provided in the Non Storm Water Information Handout is just a guideline and is to be used for information purposes only and should not be considered a sole source document to adhere to the requirements of the new National Pollutant Discharge Elimination System (NPDES) Construction General Permit (CGP), Number CAS000002, adopted on September 2, 2009. The contractor is required to provide water quality monitoring, sampling and implement best management practices (BMPs) based on standard industry operations, field conditions and conditions encountered based on the contractor's means and methods. The information in this handout is not to be construed in any way as a waiver of the provisions in the CGP. Bidders and contractors are cautioned to make independent investigations and examinations as they deem necessary to satisfy the conditions encountered in performance of work, with respect to the following: sampling and monitoring locations, distribution of watershed areas for sizing of BMPs, and selection of BMPs in order to conform to the requirement of the contract documents and the CGP.

TABLE OF CONTENT

CONTRACT NO: 04-0A0904

STORMWATER INFORMATION

1. PROJECT TITLE SHEET & LOCATION OF CONSTRUCTION
2. RISK ASSESSMENT
3. RAINFALL DATA
4. PROJECT DISCHARGE LOCATION
5. WATER POLLUTION CONTROL PLAN

NON-STORMWATER INFORMATION

1. PROJECT DESCRIPTION
2. CONSTRUCTION ACTIVITIES REQUIRING DEWATERING
3. BMP FOR TREATMENT OF GROUNDWATER
4. MONITORING DISPOSAL AND REUSE OF TREATED GROUNDWATER

ATTACHMENTS

A ESTIMATED GROUNDWATER SEEPAGE RATE IN PROJECT AREA

B DEWATERING LOCATION PLAN

C LIST OF PUBLICLY OWNED TREATMENT WORKS (POTW) FACILITY

D SOLANO COUNTY POTW SERVICE AREA

E 401 CERTIFICATION ISSUED BY THE CENTRAL VALLEY REGIONAL WATER QUALITY CONTROL BOARD AND IMPACT MAPS

F 401 CERTIFICATION CONDITION 18 - Project-specific Spill Containment, Cleanup Plan to be included as part of Section 500 (500.1.1) in the Storm Water Pollution Prevention Plan (SWPPP)

G 1602 PERMIT

PROJECT TITLE SHEET &
LOCATION OF CONSTRUCTION

Dist	COUNTY	ROUTE	POST MILES TOTAL PROJECT	SHEET No.	TOTAL SHEETS
04	Sol	80	24.8/25.2	1	6

INDEX OF PLANS

SHEET No.	DESCRIPTION
1	TITLE SHEET AND LOCATION MAP
2	LAYOUTS
3	TYPICAL CROSS SECTIONS AND CONSTRUCTION DETAILS
4	CONSTRUCTION AREA SIGNS
5	SUMMARY OF QUANTITIES
6	REVISED STANDARD PLANS

THE STANDARD PLANS LIST APPLICABLE TO THIS CONTRACT IS INCLUDED IN THE NOTICE TO BIDDERS AND SPECIAL PROVISIONS BOOK.

STATE OF CALIFORNIA

DEPARTMENT OF TRANSPORTATION

PROJECT PLANS FOR CONSTRUCTION ON

STATE HIGHWAY

IN SOLANO COUNTY
IN AND NEAR VACAVILLE
FROM 0.5 MILE WEST OF ALAMO CREEK BRIDGE
TO MERCHANT ST

TO BE SUPPLEMENTED BY STANDARD PLANS DATED MAY 2006

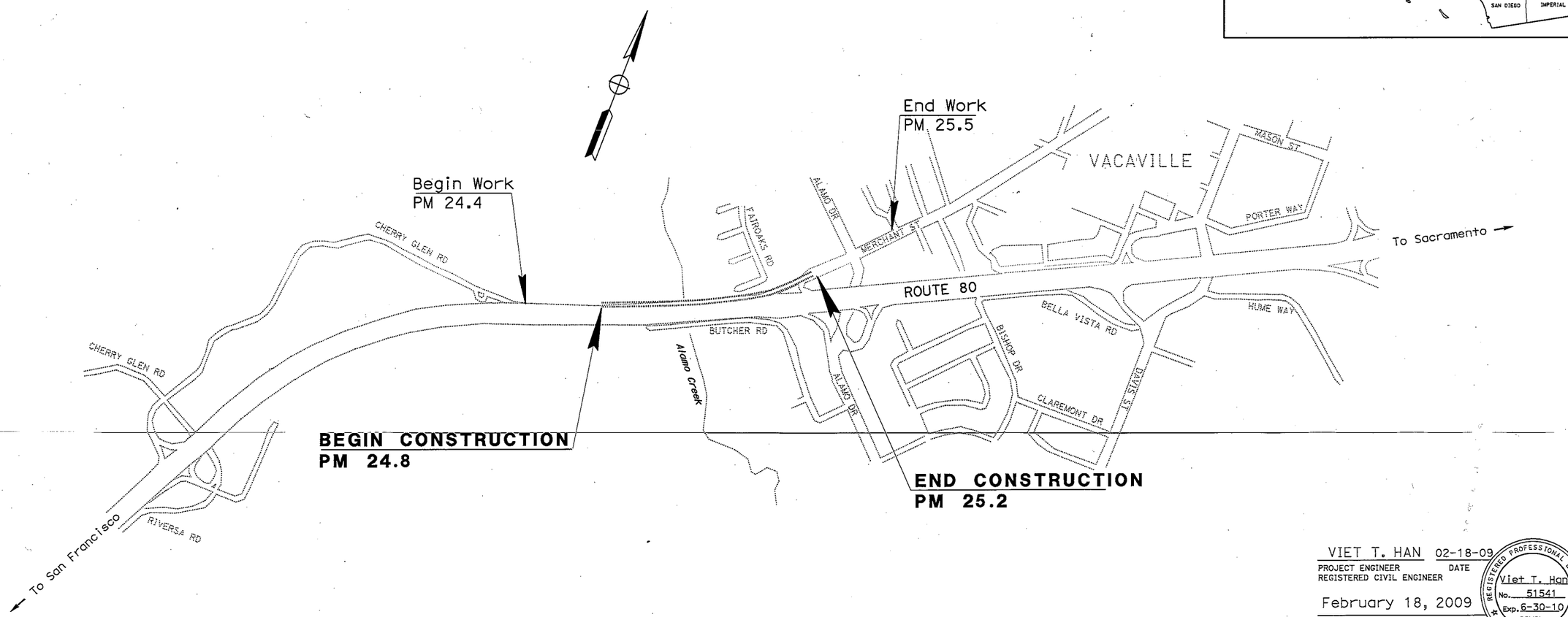

NO SCALE

VIET T. HAN 02-18-09
PROJECT ENGINEER DATE
REGISTERED CIVIL ENGINEER

February 18, 2009
PLANS APPROVAL DATE

REGISTERED PROFESSIONAL ENGINEER
Viet T. Han
No. 51541
Exp. 6-30-10
CIVIL
STATE OF CALIFORNIA

THE STATE OF CALIFORNIA OR ITS OFFICERS OR AGENTS SHALL NOT BE RESPONSIBLE FOR THE ACCURACY OR COMPLETENESS OF SCANNED COPIES OF THIS PLAN SHEET.

THE CONTRACTOR SHALL POSSESS THE CLASS (OR CLASSES) OF LICENSE AS SPECIFIED IN THE "NOTICE TO BIDDERS."

PROJECT MANAGER: SAMEER KHOURI
DESIGN ENGINEER: VIET HAN

LAST REVISION 06-08-10
DATE PLOTTED => 09-MAY-2011
TIME PLOTTED => 10:09

CONTRACT No. **04-0A0901**

Dist	COUNTY	ROUTE	POST MILES TOTAL PROJECT	SHEET No.	TOTAL SHEETS
04	SOL	80	R24.8/ R25.2		

REGISTERED CIVIL ENGINEER DATE

PLANS APPROVAL DATE

REGISTERED PROFESSIONAL ENGINEER VIET T HAN No. 51541 Exp. 6-30-10 CIVIL STATE OF CALIFORNIA

THE STATE OF CALIFORNIA OR ITS OFFICERS OR AGENTS SHALL NOT BE RESPONSIBLE FOR THE ACCURACY OR COMPLETENESS OF ELECTRONIC COPIES OF THIS PLAN SHEET.

LEGEND:

- No. — STRUCTURAL SECTION
- BRIDGE APPROACH SLABS, SEE STRUCTURE PLANS
- BRIDGE WIDENING AREA
- AC PAVEMENT AND RHMA SURFACING

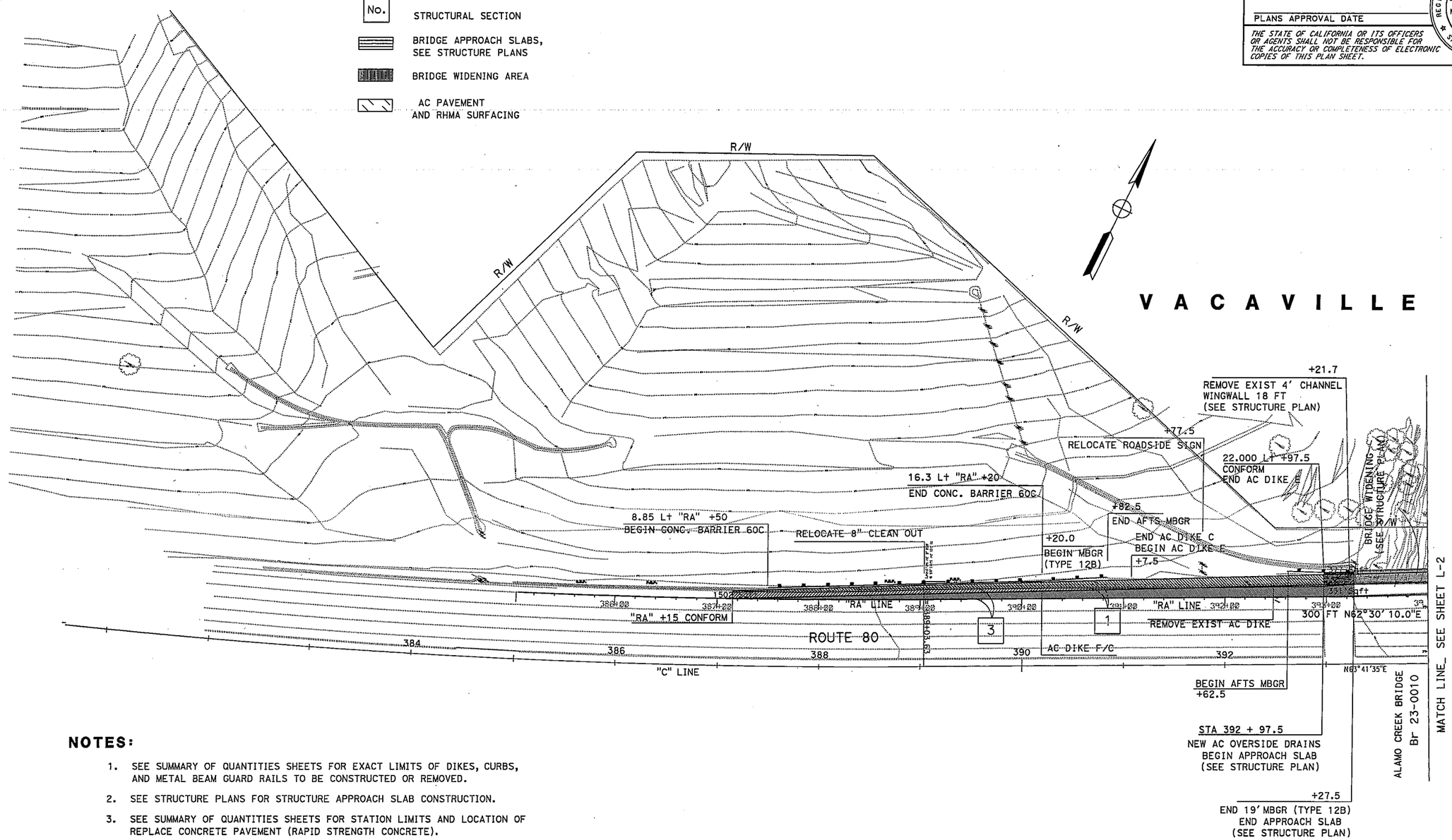

NOTES:

1. SEE SUMMARY OF QUANTITIES SHEETS FOR EXACT LIMITS OF DIKES, CURBS, AND METAL BEAM GUARD RAILS TO BE CONSTRUCTED OR REMOVED.
2. SEE STRUCTURE PLANS FOR STRUCTURE APPROACH SLAB CONSTRUCTION.
3. SEE SUMMARY OF QUANTITIES SHEETS FOR STATION LIMITS AND LOCATION OF REPLACE CONCRETE PAVEMENT (RAPID STRENGTH CONCRETE).
4. SEE CONSTRUCTION DETAILS SHEET C-1 FOR OGFC, RHMA AND HMA PAVEMENT DETAIL.
5. LOCATIONS OF UTILITY FACILITIES SHOWN ON THESE PLANS ARE APPROXIMATE AND SHALL BE VERIFIED BY THE CONTRACTOR PRIOR TO CONSTRUCTION.
6. FOR COMPLETE RIGHT OF WAY AND ACCURATE ACCESS DATA, SEE RIGHT OF WAY RECORD MAPS AT DISTRICT OFFICE.

LAYOUT

SCALE: 1'' = 50'

L-1

REVISED BY	DATE REVISED
HAI NGUYEN	VIET HAN

CALCULATED-DESIGNED BY / CHECKED BY

FUNCTIONAL SUPERVISOR: MANNY CALUYA

STATE OF CALIFORNIA - DEPARTMENT OF TRANSPORTATION

Caltrans DESIGN

LAST REVISION 06-08-10 | DATE PLOTTED => 06-MAY-2011 | TIME PLOTTED => 13:42

Dist	COUNTY	ROUTE	POST MILES TOTAL PROJECT	SHEET No.	TOTAL SHEETS
04	SOL	80	R 24.8/ R 25.2		

REGISTERED CIVIL ENGINEER DATE

PLANS APPROVAL DATE

REGISTERED PROFESSIONAL ENGINEER VIET T HAN No. 51541 Exp. 6-30-10 CIVIL STATE OF CALIFORNIA

THE STATE OF CALIFORNIA OR ITS OFFICERS OR AGENTS SHALL NOT BE RESPONSIBLE FOR THE ACCURACY OR COMPLETENESS OF SCANNED COPIES OF THIS PLAN SHEET.

ABBREVIATION:

MVP MAINTENANCE VEHICLE PULLOUT

(1) CURVE ALIGNMENT DATA

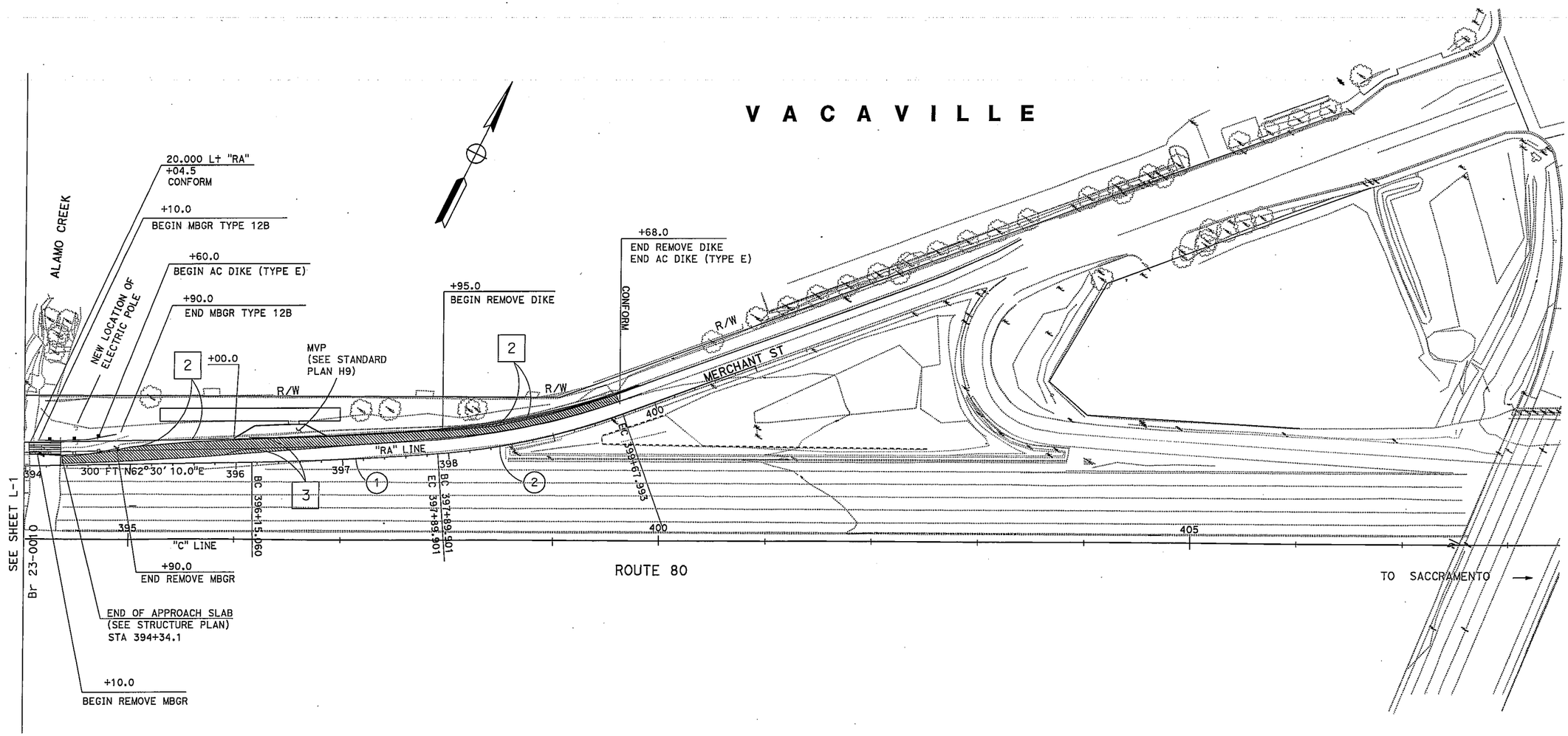

CURVE DATA

ALIGNMENT	No	R	Δ	T	L
RA	1	3000′	-3° 20′ 21.2"	87.445′	174.841′
RA	2	650′	-15° 41′ 54.1"	89.607′	178.092′

LAYOUT

SCALE: 1″ = 50′

L-2

CALCULATED-DESIGNED BY	HAI NGUYEN	REVISED BY
CHECKED BY	HAN VIET	DATE REVISED

FUNCTIONAL SUPERVISOR: MANNY CALUYA

STATE OF CALIFORNIA - DEPARTMENT OF TRANSPORTATION

Caltrans DESIGN

LAST REVISION 06-08-10 DATE PLOTTED => 06-MAY-2011 TIME PLOTTED => 13:43

BORDER LAST REVISED 4/11/2008 | RELATIVE BORDER SCALE IS IN INCHES 0 1 2 3 | USERNAME => s127960 DGN FILE => Layout 02.dgn | CU 04279 | EA 0A0901

RISK ASSESSMENT

	A	B	C
1	**Sediment Risk Factor Worksheet**		**Entry**
2	**A) R Factor**		
3	Analyses of data indicated that when factors other than rainfall are held constant, soil loss is directly proportional to a rainfall factor composed of total storm kinetic energy (E) times the maximum 30-min intensity (I30) (Wischmeier and Smith, 1958). The numerical value of R is the average annual sum of EI30 for storm events during a rainfall record of at least 22 years. "Isoerodent" maps were developed based on R values calculated for more than 1000 locations in the Western U.S. Refer to the link below to determine the R factor for the project site.		
4	http://cfpub.epa.gov/npdes/stormwater/LEW/lewCalculator.cfm		
5	**R Factor Value**		30.6
6	**B) K Factor (weighted average, by area, for all site soils)**		
7	The soil-erodibility factor K represents: (1) susceptibility of soil or surface material to erosion, (2) transportability of the sediment, and (3) the amount and rate of runoff given a particular rainfall input, as measured under a standard condition. Fine-textured soils that are high in clay have low K values (about 0.05 to 0.15) because the particles are resistant to detachment. Coarse-textured soils, such as sandy soils, also have low K values (about 0.05 to 0.2) because of high infiltration resulting in low runoff even though these particles are easily detached. Medium-textured soils, such as a silt loam, have moderate K values (about 0.25 to 0.45) because they are moderately susceptible to particle detachment and they produce runoff at moderate rates. Soils having a high silt content are especially susceptible to erosion and have high K values, which can exceed 0.45 and can be as large as 0.65. Silt-size particles are easily detached and tend to crust, producing high rates and large volumes of runoff. Use Site-specific data must be submitted.		
8	Site-specific K factor guidance		
9	**K Factor Value**		0.31
10	**C) LS Factor (weighted average, by area, for all slopes)**		
11	The effect of topography on erosion is accounted for by the LS factor, which combines the effects of a hillslope-length factor, L, and a hillslope-gradient factor, S. Generally speaking, as hillslope length and/or hillslope gradient increase, soil loss increases. As hillslope length increases, total soil loss and soil loss per unit area increase due to the progressive accumulation of runoff in the downslope direction. As the hillslope gradient increases, the velocity and erosivity of runoff increases. Use the LS table located in separate tab of this spreadsheet to determine LS factors. Estimate the weighted LS for the site prior to construction.		
12	LS Table		
13	**LS Factor Value**		1.42
14			
15	**Watershed Erosion Estimate (=RxKxLS) in tons/acre**	13.47012	
16	**Site Sediment Risk Factor**	**Low**	
17	Low Sediment Risk: < 15 tons/acre		
18	Medium Sediment Risk: >=15 and <75 tons/acre		
19	High Sediment Risk: >= 75 tons/acre		
20			

Receiving Water (RW) Risk Factor Worksheet	Entry	Score
A. Watershed Characteristics	**yes/no**	
A.1. Does the disturbed area discharge (either directly or indirectly) to a **303(d)-listed waterbody impaired by sediment** (For help with impaired waterbodies please check the attached worksheet or visit the link below) or has a **USEPA approved TMDL implementation plan for sediment**?: 2006 Approved Sediment-impared WBs Worksheet http://www.waterboards.ca.gov/water_issues/programs/tmdl/303d_lists2006_epa.shtml	**Yes**	**High**
OR		
A.2. Does the disturbed area discharge to a waterbody with designated beneficial uses of SPAWN & COLD & MIGRATORY? http://www.ice.ucdavis.edu/geowbs/asp/wbquse.asp		

Combined Risk Level Matrix

Receiving Water Risk	Sediment Risk: Low	Sediment Risk: Medium	Sediment Risk: High
Low	Level 1	Level 2	
High	Level 2		Level 3

Project Sediment Risk: **Low**

Project RW Risk: **High**

Project Combined Risk: **Level 2**

RAINFALL DATA

Rainfall Intensity can be obtained by the following link:

http://www.wrcc.dri.edu/pcpnfreq/nca5y24.gif

Refer to chapters 800, Highway Drainage Design of Highway Design Manual for information on runoff coefficient and shed map. The weighted runoff coefficient of 0.55 is recommended for the project area.

PROJECT DISCHARGE LOCATION

Dist	COUNTY	ROUTE	POST MILES TOTAL PROJECT	SHEET No.	TOTAL SHEETS
04	Sol	80	R24.8/R25.2	13	95

REGISTERED CIVIL ENGINEER 6/13/12 DATE

9-24-12
PLANS APPROVAL DATE

REGISTERED PROFESSIONAL ENGINEER Khai Shoon Leong No. 76183 Exp. 6-30-14 CIVIL STATE OF CALIFORNIA

THE STATE OF CALIFORNIA OR ITS OFFICERS OR AGENTS SHALL NOT BE RESPONSIBLE FOR THE ACCURACY OR COMPLETENESS OF SCANNED COPIES OF THIS PLAN SHEET.

NOTES:

1. FOR ACCURATE RIGHT OF WAY DATA, CONTACT RIGHT OF WAY ENGINEERING AT THE DISTRICT OFFICE.
2. LOCATION OF EXISTING DRAINAGE FACILITIES ARE APPROXIMATE. VERIFY LOCATION AND ELEVATION OF EXISTING DRAINAGE FACILITIES PRIOR TO MODIFYING.
3. TOP OF GRATE ELEVATIONS STATION AND OFFSET TIED TO DRAINAGE STRUCTURES ARE MEASURED AS PER DETAIL ON SHEET DD-1.

LEGEND:

- (No.) DRAINAGE SYSTEM NUMBER
- (a) DRAINAGE UNIT
- (D-X) PROJECT DISCHARGE LOCATION

ABBREVIATIONS:

ESA	ENVIRONMENTALLY SENSITIVE AREA
HMAOD	HOT-MIXED ASPHALT OVERSIDE DRAIN
TC	TOP OF COVER
TG	TOP OF GRATE
w/	WITH

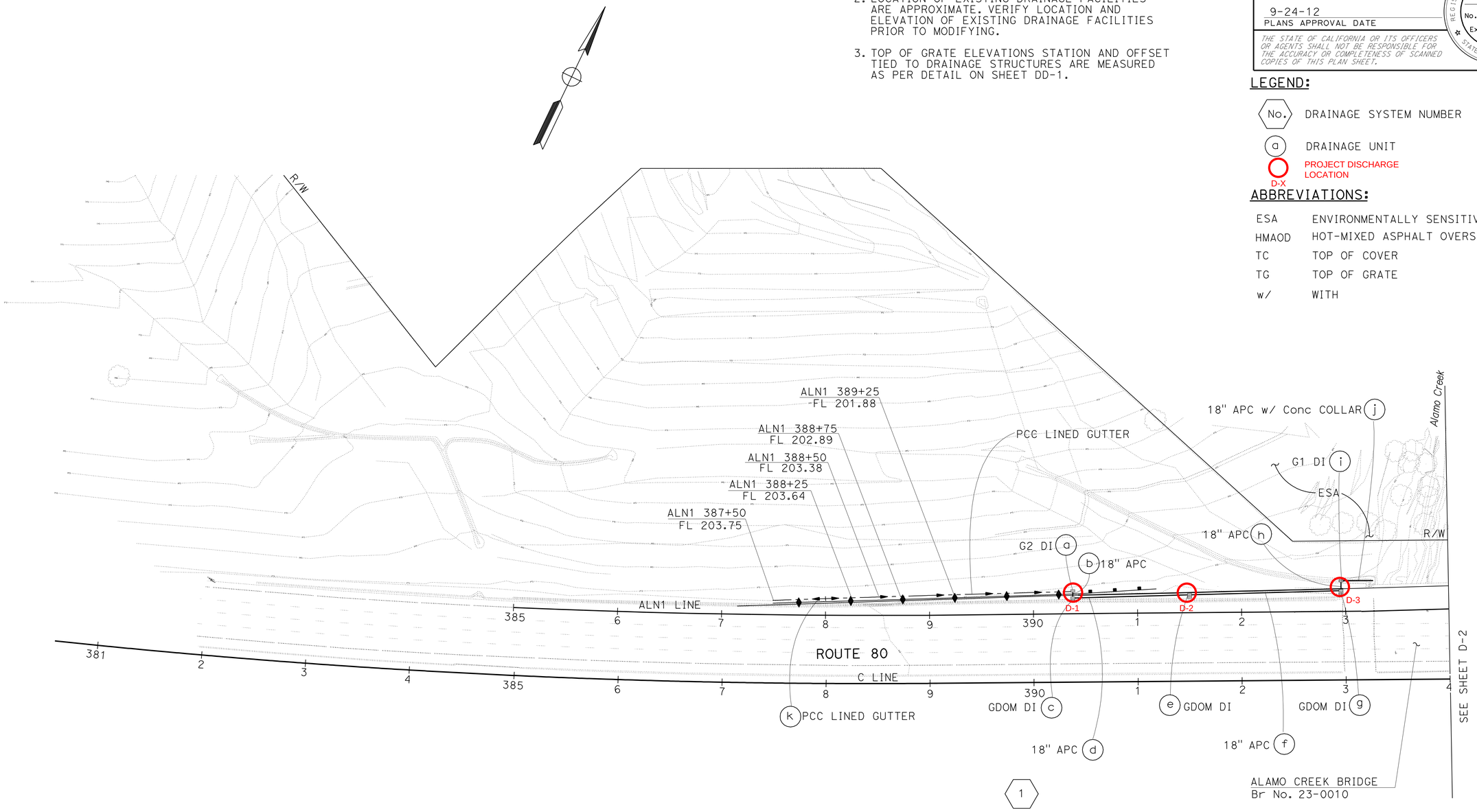

DRAINAGE PLAN

SCALE: 1" = 50'

D-1

APPROVED FOR DRAINAGE WORK ONLY

STATE OF CALIFORNIA - DEPARTMENT OF TRANSPORTATION
Caltrans
HYDRAULICS

FUNCTIONAL SUPERVISOR: KATHLEEN REILLY

CALCULATED-DESIGNED BY: KHAI SHOON LEONG
CHECKED BY: KATHLEEN REILLY

REVISED BY: K L
DATE REVISED: 5/23/12

LAST REVISION 08-21-12
DATE PLOTTED => 04-OCT-2012
TIME PLOTTED => 11:47

Dist	COUNTY	ROUTE	POST MILES TOTAL PROJECT	SHEET No.	TOTAL SHEETS
04	Sol	80	R24.8/R25.2	14	95

REGISTERED CIVIL ENGINEER 6/13/12 DATE

9-24-12
PLANS APPROVAL DATE

REGISTERED PROFESSIONAL ENGINEER
Khai Shoon Leong
No. 76183
Exp. 6-30-14
CIVIL
STATE OF CALIFORNIA

THE STATE OF CALIFORNIA OR ITS OFFICERS OR AGENTS SHALL NOT BE RESPONSIBLE FOR THE ACCURACY OR COMPLETENESS OF SCANNED COPIES OF THIS PLAN SHEET.

NOTE:

FOR ACCURATE RIGHT OF WAY DATA, CONTACT
RIGHT OF WAY ENGINEERING AT THE DISTRICT OFFICE.

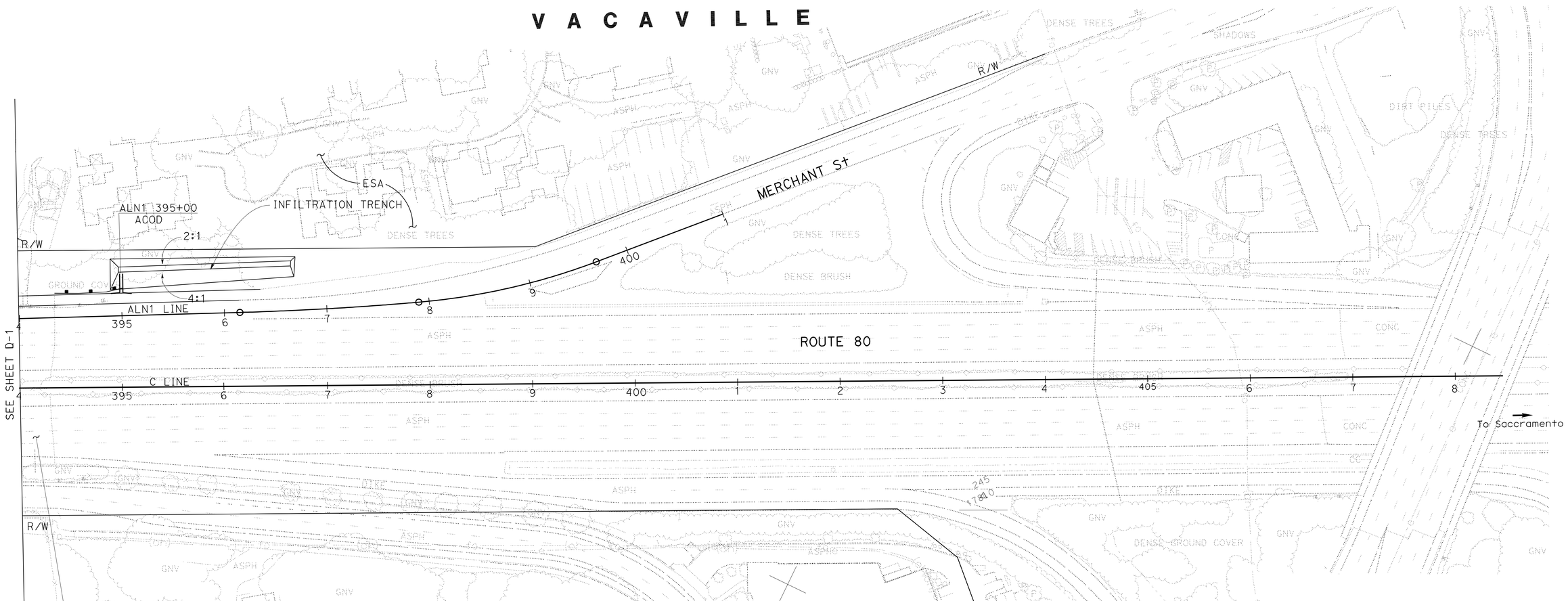

DRAINAGE PLAN

SCALE: 1" = 50'

D-2

FOR NOTES, ABBREVIATIONS AND LEGEND, SEE SHEET D-1

APPROVED FOR DRAINAGE WORK ONLY

STATE OF CALIFORNIA - DEPARTMENT OF TRANSPORTATION
Caltrans
HYDRAULICS

FUNCTIONAL SUPERVISOR: KATHLEEN REILLY

CALCULATED-DESIGNED BY: KHAI SHOON LEONG
CHECKED BY: KATHLEEN REILLY

REVISED BY: K L
DATE REVISED: 5/23/12

LAST REVISION DATE PLOTTED => 04-OCT-2012
TIME PLOTTED => 11:47
08-06-12

1. PROJECT DESCRIPTION

The existing acceleration lane of the on-ramp from Alamo Drive onto Westbound Interstate 80 in the City of Vacaville in Solano County is approximately 400 feet. This project proposes to lengthen this acceleration lane to the standard 1067 feet. The project will involve widening both the roadway and the Alamo Creek Bridge structure. The total estimated cost is $1,465,000, of which $292,000 is for the bridge widening. This project was originally included in the 2006 SHOPP but was later amended in the 2008 SHOPP for FY 2011/2012 under the Operational Improvement Program 201.310.

The total length of the roadway that is being widened is approximately 1700 feet and the widening varies from 0 to 14 feet. The depth of the structural section will be about 2 feet. 300 feet of concrete barrier (type 60C) will also be constructed. The existing Alamo Creek Bridge abutments and piers will be widened by 11 feet. Excavations for the widened abutments will be 10’ wide by 16’ long by 5’ deep. Excavations for the piers will be 5’ wide by 16’ long by 8’ deep.

The existing guardrail at Alamo Creek Bridge will be removed. Guardrail will be installed at the new bridge location and at the retaining wall.

Subsurface soil investigation was done & Groundwater was not-detected for TPHg, TPHd, TPHmo, and VOCs

2. CONSTRUCTION ACTIVITIES REQUIRING DEWATERING

Groundwater will be encountered in the structure excavations for extending two existing piers and abutments. The water table in the project area is estimated about 23 feet below the ground surface at borehole RC-11-004. Excavations for the piers & both sides abutments will require dewatering.

3. BMP FOR TREATMENT OF GROUNDWATER

The treatment system must be capable of removing sediment and turbidity-producing suspended solids. Primary and secondary treatment may be required, or the design of the treatment system may require combined use of the various treatment components in series to achieve effective treatment. The treatment system must have components to:

1. Remove sediment and turbidity-producing suspended solids. Components may include desilting basins, settling tanks, sediment traps, gravity bag filters, sand media filters, pressurized bag filters, cartridge filters, chemical coagulants and in-line flocculants, temporary holding tanks, or any combination necessary to provide primary and secondary treatment.
2. Adjust pH or dissolved oxygen by:
   - 2.1. Addition of sulfuric, phosphoric, or nitric acid under the supplier's specifications for treatment of water with high pH. You may use hydrochloric acid if the water is dechlorinated before discharge.
   - 2.2. Filtration through a limestone bed or addition of sodium hydroxide for treatment of water with a low pH. You may use carbon dioxide diffusion that produces carbonic acid for pH adjustment.

2.3. Aeration for treatment of water with low dissolved oxygen.

Provide pumps and piping to convey the water from the point of dewatering or stormwater capture to the treatment system and to the point of discharge. Pumps and piping must comply with Section 74-2, "Drainage Pump Equipment," of the Standard Specifications.

4. MONITORING DISPOSAL AND REUSE OF TREATED GROUNDWATER

Use a flow meter to measure all discharges from treatment activities.

Provide a method for discharging treated water and include a discharge location. Do not discharge treated water in a way that impacts the natural bedding and aquatic life.

Discharge treated water:

- To control dust in active work areas.
- To land where the grade allows sheet flow and the soil allows infiltration.
- In a way that does not cause erosion and scour. Whenever scour occurs, repair the damage and install a velocity dissipater.

Comply with the manufacturer's instructions for all calibrations of the flow meter. Perform calibrations in the presence of the Engineer.

Water quality must comply with limits for discharge effluents and the receiving waters. Whenever observations and measurements determine the water quality limits are exceeded:

- Stop the discharge immediately
- Notify the Engineer
- Start corrective measures to change, repair, or replace the equipment and procedures used to treat the water

After the Engineer inspects and approves your corrective measures, resume treatment and discharge activities under the startup-phase sampling requirements before resuming regular-phase sampling.

Maintain the ATS to provide proper function and prevent leaks. Whenever a component of the dewatering equipment is not functioning properly, discontinue the treatment activities and repair or replace the component.

Sediments removed from uncontaminated areas during maintenance of the treatment system must be dried, distributed uniformly, and stabilized at a location within the project limits where directed by the Engineer.

Relocate the ATS as needed.

While the ATS is being operated, monitor:

- Influent turbidity
- Effluent turbidity
- Influent pH
- Effluent pH
- Residual chemical
- Effluent flow rate
- Effluent flow volume

Monitoring equipment for the ATS must record data at least once every 15 minutes. Cumulative flow data must be recorded daily. The recording system must have the capacity to record a minimum of 7 days of continuous data.

Monitoring equipment must be interfaced with the control system of the ATS to provide shutoff or recirculation whenever effluent readings exceed limits for turbidity and pH. The control system must default to recirculation or shutoff during a power failure or other catastrophic event.

The control system must control the dose of the coagulant, flocculent, or both to prevent overdosing.

Take water quality measurements to verify limit requirements for receiving waters and discharge effluent for:

1. Discharges of water that exceed 4 hours in duration occurring within a 24-hour period as follows:
   1.1. If the discharge could affect the receiving body of water in a stormwater drainage system, take measurements at the background and receiving water-sampling locations not more than 1 hour before discharging the treated water.
   1.2. Perform start-up phase sampling 10 to 30 minutes after measurable runoff occurs during a storm. Startup-phase sampling includes stormwater runoff, background, and receiving water measurements taken during the first 3 days of discharge. Take samples at regular intervals during the storm. Take at least 4 samples for each discharge lasting 4 hours or more. The time between sampling must not exceed 4 hours.
   1.3. Perform regular-phase sampling at least twice daily. Regular-phase sampling includes effluent, background, and receiving water measurements that occur after the 3rd day of activities. Take samples at regular intervals.
   1.4. Whenever the receiving body of water noticeably changes in color or clarity, take additional effluent, background, and downstream measurements.
   1.5. Whenever an initial measurement shows that the water quality limits are exceeded, take an additional measurement not less than 15 minutes and not more than 1 hour after the initial measurement.
   1.6. Whenever the 2nd test confirms the limits were exceeded, revert to the startup-phase sampling requirements before resuming regular-phase sampling.
   1.7. For cofferdam maintenance dewatering, you may discontinue regular-phase monitoring after 10 days if the effluent and receiving water measurements are consistently below the water quality limits.

2. Discharges of water for 4 hours or less in duration occurring within a 24-hour period as follows:
   2.1. If the discharge could affect the receiving body of water in a stormwater drainage system, take measurements at the background and receiving water-sampling locations no more than 1 hour before discharging the treated water.
   2.2. Take effluent, background, and receiving water measurements from 10 to 30 minutes after initiating the discharge. Continue to take measurements every hour.
   2.3. Whenever an initial measurement shows that the water quality limits are exceeded, take an additional measurement not more than 15 minutes after the initial measurement.
   2.4. Whenever the receiving body of water noticeably changes in color or clarity, take additional effluent, background, and downstream measurements.

3. All other discharges of water as follows:
   3.1. Measure stormwater effluent turbidity and pH at the end of the outfall or in-line sampling port.
   3.2. Measure receiving water turbidity, pH, and dissolved oxygen at a point within the mixing zone.
   3.3. Measure receiving water turbidity, pH, and dissolved oxygen at a point within 15 feet downstream of the discharge point.
   3.4. Measure natural background turbidity, dissolved oxygen, and pH at a location that is from 9 to 15 feet upstream of the discharge point. If another job site activity is being performed, measure at least 150 feet upstream of the discharge point.
   3.5. If the discharge is made into a surface body of water or into a stormwater drainage system that produces an observable effect on a surface body of water, monitor the receiving water.

4. Receiving water and natural background measurements as follows:
   4.1. If the receiving water is deeper than 3 feet, take depth-averaged measurements by taking samples from 3 points within the water column and averaging the following 3 measurements:
      4.1.1. 12 inches below the surface
      4.1.2. Mid-depth
      4.1.3. 12 inches above the bottom.
   4.2. If the receiving water is less than 3 feet in depth, take the measurement 12 inches below the surface.

Comply with the manufacturer's instructions for the use and calibration of meters and devices for taking water quality measurements. Perform calibrations in the presence of the Engineer.

Backfill and repair ground disturbance, including holes and depressions, caused by the installation and removal of the temporary active treatment system. Comply with Section 15-1.02, "Preservation of Property," of the Standard Specifications.

ATTACHMENT A

ESTIMATED GROUNDWATER SEEPAGE RATES IN PROJECT AREA

State of California
DEPARTMENT OF TRANSPORTATION

Business, Transportation and Housing Agency

Memorandum

Flex your power!
Be energy efficient!

To: MR. RONI BOUKHALIL
Branch Chief
Office of Design North Counties

Date: March 19, 2012

Attention: V. Han

File: 04- SOL- 80 PM 24.8/25.2
04 – 0A0901
Alamo Creek Bridge (Widen)

From: RIFAAT NASHED RN
Engineering Geologist
Office of Geotechnical Design – West
Geotechnical Services
Division of Engineering Services

GRANT WILCOX GW
Chief, Branch B
Office of Geotechnical Design – West
Geotechnical Services
Division of Engineering Services

Subject : Seepage Rate (Flow Rate) Estimate at Alamo Creek Bridge Location

This memo is in response to your request to provide the groundwater depth and seepage rate for the construction of Abutment 1, Bent 2, Bent 3and Abutment 4 located in the project site. It is our understanding that this information will be used in estimating dewatering quantities.

It should be noted that in our estimate in all the locations of construction elements, we considered the maximum depth of excavation under the groundwater elevation. Although, the groundwater measured in borehole RC-11-004 is at depth of 23 ft below the ground surface (164 ft elevation), we considered the groundwater elevation to be184.4 ft (the elevation of water surface in the creek).

Abutment 1

For this location, our estimates are limited to the excavation required for two 24 inches piles from the original ground surface to the tip elevations.

Based on the LOTB of boring RC-11-001 drilled in October 2011, the soil layers at and below the groundwater level and extending to the bottom of the excavation are described as: lean clay with sand (CL) and sedimentary rock (mudstone).

By using a Coefficient of Permeability, K, value of 0.027 ft /day for lean clay, and 0.000003 ft /day for mudstone[1], the seepage rate for this location is approximately 0.03 gallon/day/ft^2.

[1] Roy E. Hunt, 2005, Geotechnical Engineering Investigation Handbook, 2nd Edition- Page 167 table 3.12

Pier 2

For this location, our estimates are limited to the excavation required for two 24 inches piles from the original ground surface to the tip elevations and the excavation for infill wall foundation.

Based on the LOTB of the boring RC-11-002 drilled in October 2011, the soil layers at and below the groundwater level and extending to the bottom of the excavation are: sedimentary rocks (sandstone and mudstone), lean clay with sand (CL) and silty sand (SM).

By using a Coefficient of Permeability, K, value of 0.00305 ft/day for sandstone[1], 0.000003 ft /day for mudstone, 0.027 ft /day for lean clay, and 0.27 ft/day for silty sand, the seepage rate for this location is approximately 0.12 gallon/day/ft^2.

Pier 3

For this location, our estimates are limited to the excavation required for two 24 inches piles from the original ground surface to the tip elevations and the excavation for infill wall foundation.

Based on the LOTB of the boring RC-11-003 drilled in October 2011, the soil layers at and below the groundwater level and extending to the bottom of the excavation are: lean clay with sand (CL) and silty sand (SM).

By using a Coefficient of Permeability, K, value of 0.027 ft /day for lean clay, and 0.27 ft/day for silty sand, the seepage rate for this location is approximately 0.4 gallon/day/ft^2.

Abutment 4

For this location, our estimates are limited to the excavation required for two 24 inches piles from the original ground surface to the tip elevations.

Based on the LOTB of borings RC-11-004 drilled in October 2011, the soil layers at and below the groundwater level and extending to the bottom of the excavation are: sandy lean clay (CL), clayey gravel with sand (GC) and clayey sand (SC).

By using a Coefficient of Permeability, K, value of 0.027 ft /day for lean clay, 1.4 ft /day for clayey gravel, and 0.14 ft/day for clayey sand, the seepage rate for this location is approximately 1.0 gallon/day/ft^2.

According to "The Federal Highway Report NO. FHWA-TS-80-224, Page 48-49" the Coefficient of Permeability, K, (ft/day) for all soils encountered in the Alamo Creek Bridge area are as follows:

Unified Soil Classification	Coefficient of Permeability K (ft./day)
Clayey gravel with sand (GC)	2.7×10^{-5} to 2.7×10^{-2}
Silty sand (SM)	2.7×10^{-4} to 1.4
Clayey sand (SC)	2.7×10^{-5} to 0.14
Sandy lean clay(CL)	2.7×10^{-5} to 2.7×10^{-3}

Our estimate of the average seepage rate (flow rate) for the entire project area is approximately 0.4 gallons /day/ $ft^{2.}$ The seepage rate (flow rate) estimates provided in this memo are for cost estimate purposes only. The contractor expected to perform his own calculations to estimate flow rate for his purposes.

If you have any questions or need additional information, please call Rifaat Nashed at (510) 622-1773 or Grant Wilcox at (510) 286-4835.

c: TPokrywka, GWilcox, Route File, Daily File

RNashed/mm

Seepage Rate for Alamo Drive On-ramp/ Merchant Street

Support Location	Soil	No. of Piers	Length (ft)	Total Surface area (A) ft^2	K (ft/day)	H (ft)	H_0 (ft)	dH (ft)	d S (ft)	i	q total (ft3/day)	q total (Gallon/day)	q total (Gallon/day/ft^2)	Average flow rate per sector(Gallon/day/ft2)
Abutment 1														
piles	Lean Clay with sand (CL)	2	6.0	75.36	0.027	184.4	155.20	29.20	110.96	0.26316	0.535453	3.995915161	0.053024352	
	Mudstone	2	22.0	722.6	0.000003	184.4	155.20	29.20	110.96	0.26316	0.00057	0.004257266	5.89159E-06	**0.03**
Bent 2														
piles	Sandstone	2	17.4	218.54	0.00305	184.4	122.00	62.40	237.12	0.26316	0.175407	1.309008248	0.005989788	
	Mudstone	2	22.6	190.14	0.000003	184.4	122.00	62.40	237.12	0.26316	0.00015	0.001120228	5.89159E-06	
in fill wall	Lean clay with sand (CL)		7.0	137.2	0.027	184.4	162.00	22.40	85.12	0.26316	0.974842	7.274941084	0.053024352	
	Silty sand (SM)		0.8	15.68	0.27	184.4	162.00	22.40	85.12	0.26316	1.114105	8.314218382	0.530243519	
	Mudstone		2.2	54.17	0.000003	184.4	162.00	22.40	85.12	0.26316	4.28E-05	0.000319148	5.89159E-06	**0.12**
Bent 3														
piles	Lean Clay with sand (CL)	2	1.0	12.56	0.027	184.4	127.00	57.40	218.12	0.26316	0.089242	0.66598586	0.053024352	
	Silty sand (SM)	2	34.0	433.32	0.27	184.4	127.00	57.40	218.12	0.26316	30.78853	229.7651218	0.530243519	
in fill wall	Silty sand (SM)		8.0	167.85	0.27	184.4	162.00	22.40	85.12	0.26316	11.92618	89.00137471	0.530243519	**0.4**
Abutment 4														
piles	Sandy lean clay (CL)	2	11.1	139.42	0.027	184.4	160.70	23.70	90.06	0.26316	0.990616	7.392655145	0.053024352	
	Clayey gravel w/sand (GC)	2	5.0	62.8	1.4	184.4	160.70	23.70	90.06	0.26316	23.13684	172.6630008	2.749410841	
	Clayey sand (SC)	2	5.0	69.08	0.14	184.4	160.70	23.70	90.06	0.26316	2.545053	18.99293009	0.274941084	**1.0**
												General Average		**0.4**

q = KiA

Note

A = Surface area
k = Soil permeability (from Hwy Subdrainage Design Report No. FHWA - TS-80-224- Page 48-49) and
Roy E. Hunt, Geotechnical Engineering Investigation Handbook, 2nd Edition - Page 167 table 3.12
H = ground water elevation
H0 = elevation the bottomof excavation
dH = water head
ds = gradient distance Li = 3.8x(H - H0).....Ref. FHWA-Ts-80-224 Page 66
"i" = dH/ds
q total = (gallon/day/ft2) = q total (gallon/day)/ total surface area

ATTACHMENT B

DEWATERING LOCATION PLAN

Dist	COUNTY	ROUTE	POST MILES TOTAL PROJECT	SHEET No.	TOTAL SHEETS
04	Sol	80	24.8/25.2	1	6

INDEX OF PLANS

SHEET No.	DESCRIPTION
1	TITLE SHEET AND LOCATION MAP
2	LAYOUTS
3	TYPICAL CROSS SECTIONS AND CONSTRUCTION DETAILS
4	CONSTRUCTION AREA SIGNS
5	SUMMARY OF QUANTITIES
6	REVISED STANDARD PLANS

THE STANDARD PLANS LIST APPLICABLE TO THIS CONTRACT IS INCLUDED IN THE NOTICE TO BIDDERS AND SPECIAL PROVISIONS BOOK.

STATE OF CALIFORNIA

DEPARTMENT OF TRANSPORTATION

PROJECT PLANS FOR CONSTRUCTION ON

STATE HIGHWAY

IN SOLANO COUNTY
IN AND NEAR VACAVILLE
FROM 0.5 MILE WEST OF ALAMO CREEK BRIDGE
TO MERCHANT ST

TO BE SUPPLEMENTED BY STANDARD PLANS DATED MAY 2006

LOCATION MAP

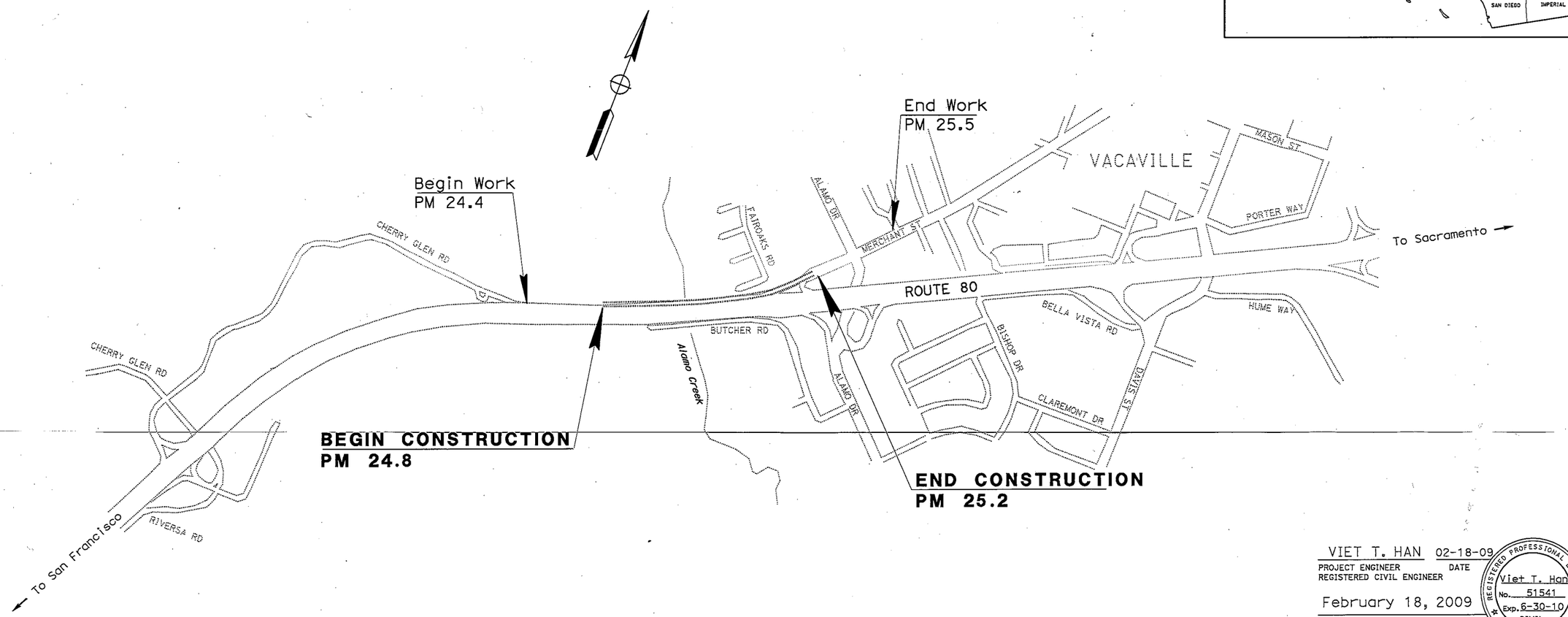

NO SCALE

VIET T. HAN 02-18-09
PROJECT ENGINEER DATE
REGISTERED CIVIL ENGINEER

February 18, 2009
PLANS APPROVAL DATE

REGISTERED PROFESSIONAL ENGINEER
Viet T. Han
No. 51541
Exp. 6-30-10
CIVIL
STATE OF CALIFORNIA

THE STATE OF CALIFORNIA OR ITS OFFICERS OR AGENTS SHALL NOT BE RESPONSIBLE FOR THE ACCURACY OR COMPLETENESS OF SCANNED COPIES OF THIS PLAN SHEET.

THE CONTRACTOR SHALL POSSESS THE CLASS (OR CLASSES) OF LICENSE AS SPECIFIED IN THE "NOTICE TO BIDDERS."

PROJECT MANAGER: SAMEER KHOURI
DESIGN ENGINEER: VIET HAN

LAST REVISION 06-08-10
DATE PLOTTED => 09-MAY-2011
TIME PLOTTED => 10:09

CONTRACT No. **04-0A0901**

DIST	COUNTY	ROUTE	POST MILES TOTAL PROJECT	SHEET No.	TOTAL SHEETS
04	SOL	80	R24.8/ R25.2		

REGISTERED CIVIL ENGINEER DATE

PLANS APPROVAL DATE

REGISTERED PROFESSIONAL ENGINEER VIET T HAN No. 51541 Exp. 6-30-10 CIVIL STATE OF CALIFORNIA

THE STATE OF CALIFORNIA OR ITS OFFICERS OR AGENTS SHALL NOT BE RESPONSIBLE FOR THE ACCURACY OR COMPLETENESS OF ELECTRONIC COPIES OF THIS PLAN SHEET.

LEGEND:

- No. — STRUCTURAL SECTION
- BRIDGE APPROACH SLABS, SEE STRUCTURE PLANS
- BRIDGE WIDENING AREA
- AC PAVEMENT AND RHMA SURFACING

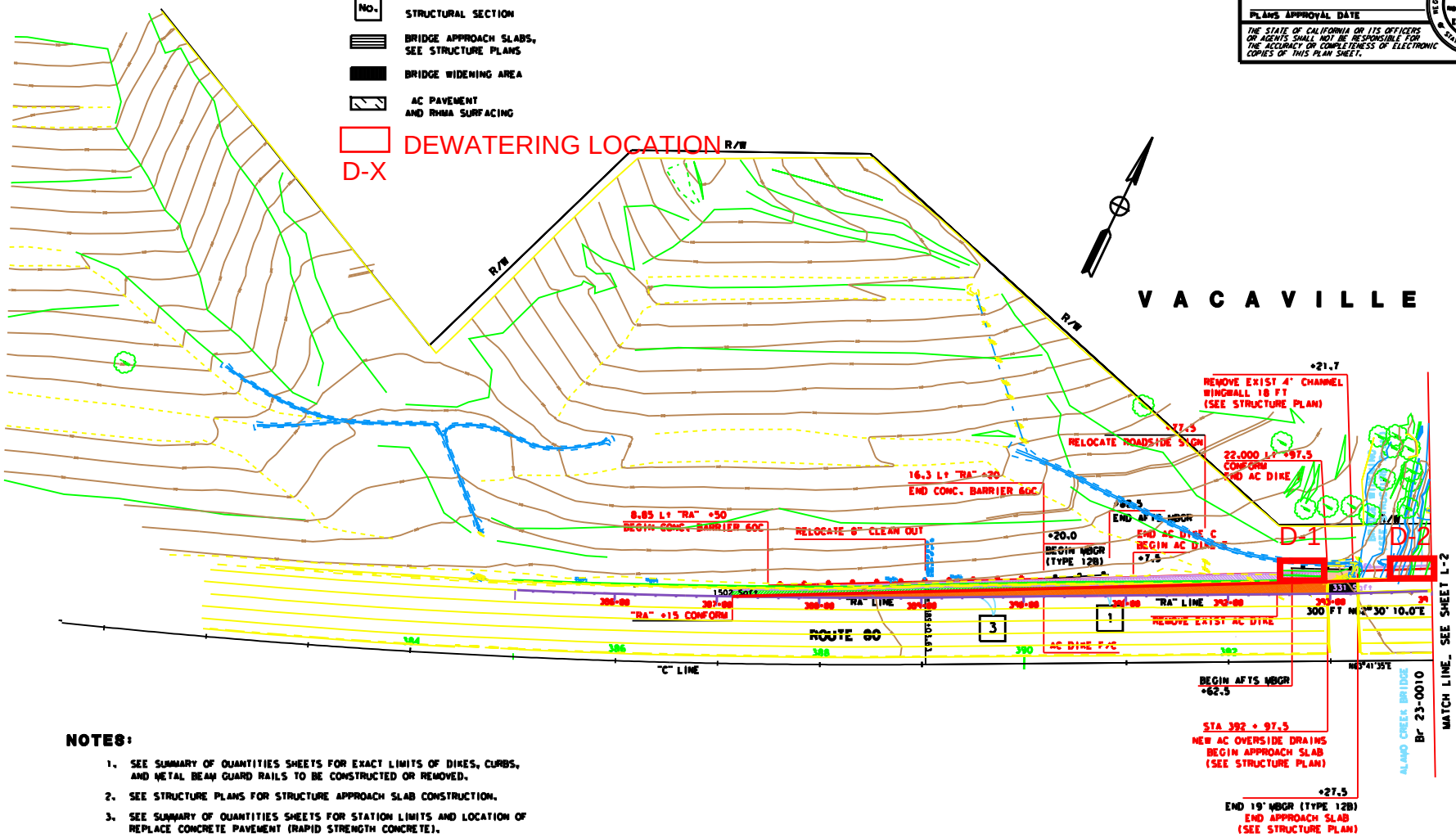

NOTES:

1. SEE SUMMARY OF QUANTITIES SHEETS FOR EXACT LIMITS OF DIKES, CURBS, AND METAL BEAM GUARD RAILS TO BE CONSTRUCTED OR REMOVED.
2. SEE STRUCTURE PLANS FOR STRUCTURE APPROACH SLAB CONSTRUCTION.
3. SEE SUMMARY OF QUANTITIES SHEETS FOR STATION LIMITS AND LOCATION OF REPLACE CONCRETE PAVEMENT (RAPID STRENGTH CONCRETE).
4. SEE CONSTRUCTION DETAILS SHEET C-1 FOR OGFC, RHMA AND HMA PAVEMENT DETAIL.
5. LOCATIONS OF UTILITY FACILITIES SHOWN ON THESE PLANS ARE APPROXIMATE AND SHALL BE VERIFIED BY THE CONTRACTOR PRIOR TO CONSTRUCTION.
6. FOR COMPLETE RIGHT OF WAY AND ACCURATE ACCESS DATA, SEE RIGHT OF WAY RECORD MAPS AT DISTRICT OFFICE.

LAYOUT

SCALE: 1" = 50'

L-1

STATE OF CALIFORNIA - DEPARTMENT OF TRANSPORTATION

DESIGN

FUNCTIONAL SUPERVISOR: MANNY CALUYA

CALCULATED-DESIGNED BY: MAI NGUYEN

CHECKED BY: VIET HAN

REVISED BY

DATE REVISED

LAST REVISION 06-08-10 | DATE PLOTTED => &DATE | TIME PLOTTED => &TIME

BORDER LAST REVISED 3/1/2007

RELATIVE BORDER SCALE IS IN INCHES 0 1 2 3

USERNAME => &USER | DGN FILE => &REQUEST

CU 04279

EA 0A0901

Dist	County	Route	Post Miles Total Project	Sheet No.	Total Sheets
04	SOL	80	R 24.8/ R 25.2		

REGISTERED CIVIL ENGINEER DATE

PLANS APPROVAL DATE

THE STATE OF CALIFORNIA OR ITS OFFICERS OR AGENTS SHALL NOT BE RESPONSIBLE FOR THE ACCURACY OR COMPLETENESS OF SCANNED COPIES OF THIS PLAN SHEET.

REGISTERED PROFESSIONAL ENGINEER VIET T HAM No. 51541 Exp. 6-30-10 CIVIL STATE OF CALIFORNIA

ABBREVIATION:

MVP MAINTENANCE VEHICLE PULLOUT

(1) CURVE ALIGNMENT DATA

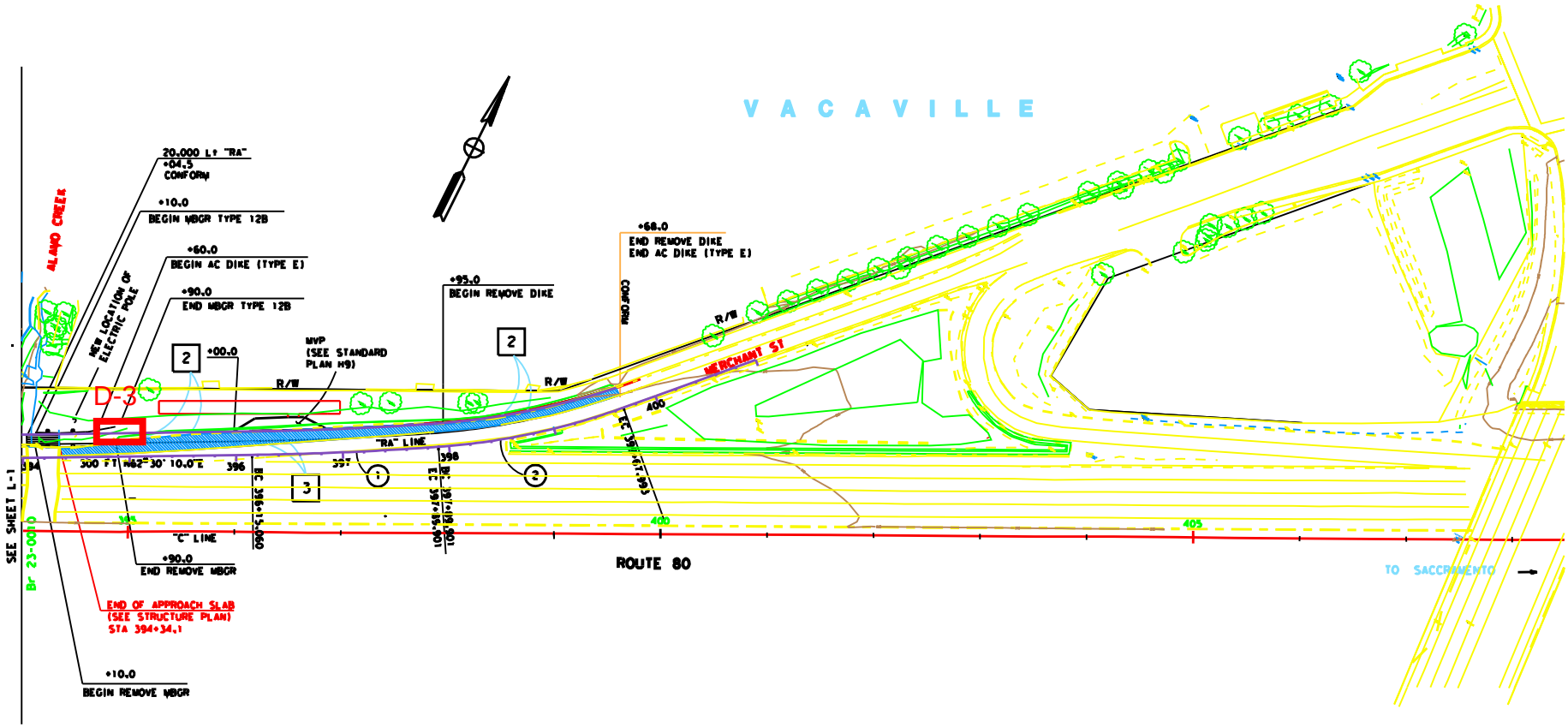

CURVE DATA

ALIGNMENT	No	R	Δ	T	L
RA	1	3000'	-3° 20' 21.2"	87.445'	174.841'
RA	2	650'	-15° 41' 54.1"	89.607'	178.092'

LAYOUT

SCALE: 1" = 50'

L-2

STATE OF CALIFORNIA - DEPARTMENT OF TRANSPORTATION

DESIGN

FUNCTIONAL SUPERVISOR: MANNY CALUYA

CALCULATED-DESIGNED BY: HAI NGUYEN | CHECKED BY: HANH VIET

REVISED BY | DATE REVISED

LAST REVISION 06-08-10 | DATE PLOTTED => $DATE | TIME PLOTTED => $TIME

BORDER LAST REVISED 4/11/2008

RELATIVE BORDER SCALE IS IN INCHES 0 1 2 3

USERNAME => $USER | DGN FILE => $REQUEST

CU 04279 | EA 0A0901

ATTACHMENT C

LIST OF PUBLICLY OWNED TREATMENT WORKS (POTW) FACILITY

	City Discharger	Treatment Plant Name	Permit No.	Current Order No.	WDR Discharger Name	Discharger Contact Name	Contact Phone No.	Contact Email	Mail Address	Satellite / Regional	Ct Contact for Groundwater & De-Watering Discharges	Service Area of the POTW
95	Fairfield-Suisun Sewer District Subregional WWTP	Fairfield-Suisun Sewer District Subregional WWTP	CA0038024	98-077	Fairfield-Suisun Sewer District Subregional WWTP	Larry Bahr	707-429-8930	lbahr@fssd.com		R	Contact either Donna Dessoir or Dennis Ariza @ 707-429-8930. One year permit for $100, and .05 per Gallon fee see 17 page fax of 6/28/04	Per Larry Bahr:"this is the treatment plant (with a few very minor exceptions) for the corporate limits of the cities of Fairfield and Suisun
96					City of Fairfield	James Prichard	707-428-7415	jpritchard@ci.fairfield.ca.us	James pritchard, Sewer Maintenance Manager, City of Fairfield, 420 Gregory St., Fairfield, CA 94533	S	Same as Fairfield-Suisun - see line # A - 95	Sends their WW to Fairfield-Suisun - see Line # A -95
97					City of Suisun City	Gary Cullen	707-421-7340	gcullen@suisun.com	Gary Cullen, City Engineer, City of Suisun City, 701 Civic Center Blvd., Suisun City, CA 94585	S	Same as Fairfield-Suisun - see line # 95	Sends their WW to Fairfield-Suisun - see Line # A -95
98	City of Benicia WWTP	City of Benicia WWTP	CA0038091	01-096	City of Benicia WWTP	John Bailey	707-746-4336	bailey@ci.benicia.ca.us	John Bailey, 614 East 5th Street, Benicia, CA 94510	R	Contact: John Bailey @ 707-746-4294 (or Vicki Shidell (4295) or Peter Fong. Per J.B.: "case-by-case, but DO allow, willing to accommodate. Permit, testing, and sampling are all required	The City of Benicia - "possibly some small unincorporated areas of Solano Co. - but all of our customers have Benicia addressses…"
99	Vallejo Sanitation & Flood Control District	Vallejo Sanitation & Flood Control District	CA0037699	00-026	Vallejo Sanitary & Flood Control District	Daniel Tafolla	707-644-8949 x261	dtafolla@vsfcd.com	Daniel Tafolla, Environmental Services Director, 450 Ryder St., Vallejo, CA 94590	R	Contact Doug Scott @ 707-644-8949 x 260 Has worked with Ct on 37/29 project - "if uncontaminated can go to the storm sewer" Has permit and testing process - every situation is special	City of Vallejo, Mare Island, Hiddenbrooke Golf Course and "a few other small pockets"
100	Mare Island	Mare Island			City of Vallejo	John Cerini; Mark Akaba	707-648-4302	akaba@ci.vallejo.ca.us, jcerini@ci.vallejo.ca.us	Mark Akaba, Utility Director, 555 Santa Clara St., Vallejo, CA 94590		Same as Vallejo Sanitary & Flood Control District - see Line # A - 99	Same as Vallejo Sanitary & Flood Control District - see Line # A - 99
	Vacaville	Easterly WWTP				Jacqueline Mccall	707-469-6416		PO Box 220 Elmira		Jacqueline Mccall	Vacaville

ATTACHMENT D

SOLANO COUNTY-POTW SERVICE AREA

Solano County - POTW Service Areas

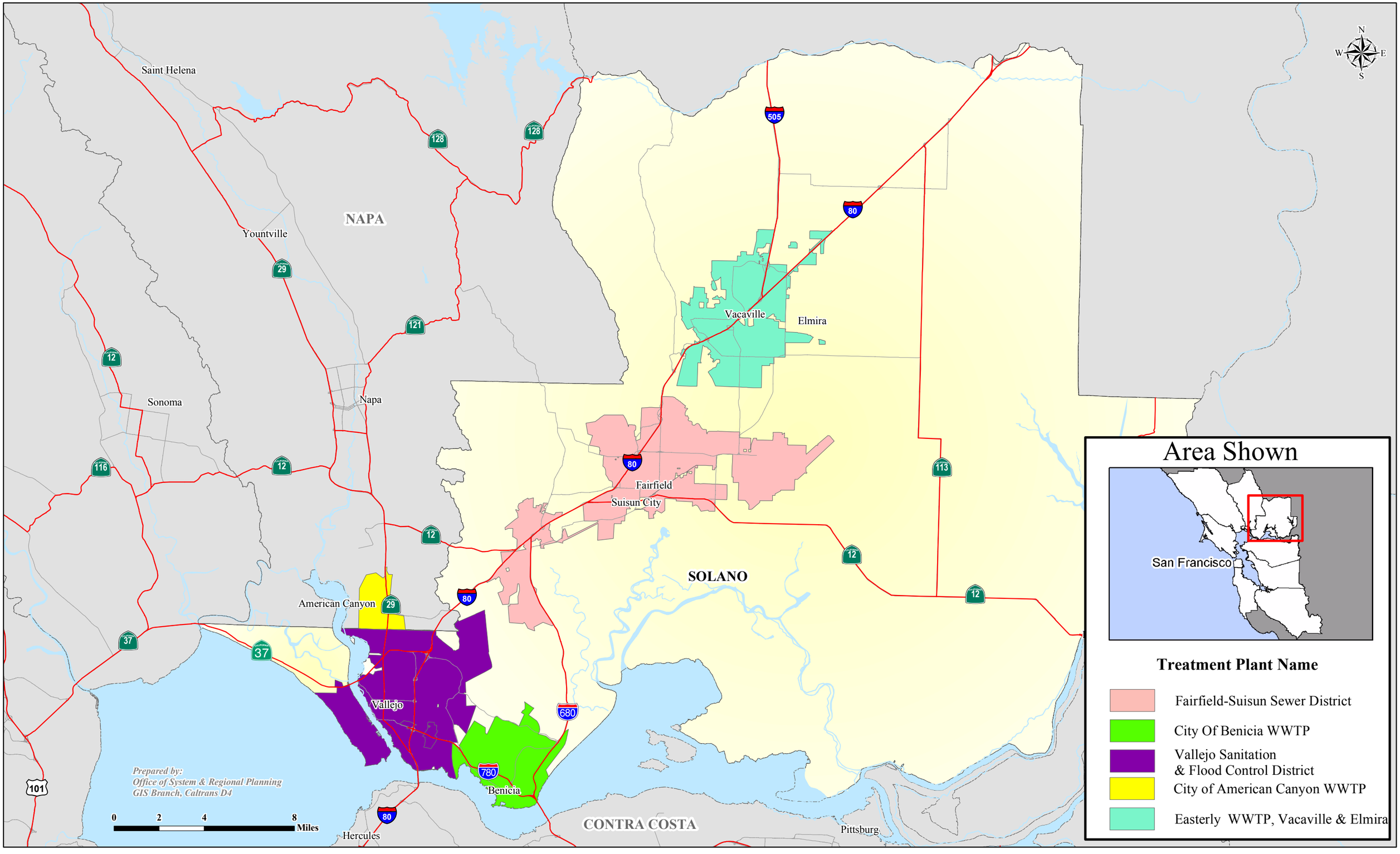

ATTACHMENT E

401 CERTIFICATION FROM CENTRAL VALLEY REGIONAL WATER QUALITY CONTROL BOARD

CALIFORNIA
Water Boards

EDMUND G. BROWN JR.
GOVERNOR

MATTHEW RODRIQUEZ
SECRETARY FOR
ENVIRONMENTAL PROTECTION

Central Valley Regional Water Quality Control Board

11 September 2012

James Hsiao
California Department of Transportation
111 Grand Avenue
Oakland, CA 9461200

CERTIFIED MAIL
7011 2970 0003 8939 2016

CLEAN WATER ACT §401 TECHNICALLY CONDITIONED WATER QUALITY CERTIFICATION; THE CALIFORNIA DEPARTMENT OF TRANSPORTATION, SOL 80 ALAMO CREEK BRIDGE REPLACEMENT PROJECT (WDID#5A48CR00112), SOLANO COUNTY

This Order responds to your 14 June 2012 application submittal for the Water Quality Certification of a roadway expansion project permanently impacting less than 0.01 acre/12 linear feet and temporarily impacting 0.0113 acre of waters of the United States.

This Order serves as certification of the United States Army Corps of Engineers' Nationwide Permit# 14 (SPK# 2012-00543) under § 401 of the Clean Water Act, and a Waste Discharge Requirement under the Porter-Cologne Water Quality Control Act.

WATER QUALITY CERTIFICATION STANDARD CONDITIONS:

1. This Order serves as a Water Quality Certification (Certification) action that is subject to modification or revocation upon administrative or judicial review, including review and amendment pursuant to § 13330 of the California Water Code and § 3867 of the California Code of Regulations.

2. This Certification action is not intended and shall not be construed to apply to any discharge from any activity involving a hydroelectric facility requiring a Federal Energy Regulatory Commission (FERC) license or an amendment to a FERC license unless the pertinent Certification application was filed pursuant to § 3855(b) of the California Code of Regulations, and the application specifically identified that a FERC license or amendment to a FERC license for a hydroelectric facility was being sought.

3. The validity of any non-denial Certification action shall be conditioned upon total payment of the full fee required under § 3833 of the California Code of Regulations, unless otherwise stated in writing by the certifying agency.

4. This Certification is valid for the duration of the described project. This Certification is no longer valid if the project (as currently described) is modified, or coverage under § 404 of the Clean Water Act has expired.

5. All reports, notices, or other documents required by this Certification or requested by the Central Valley Regional Water Quality Control Board (Central Valley Water Board) shall be signed by a person described below or by a duly authorized representative of that person.

   (a) For a corporation: by a responsible corporate officer such as (1) a president, secretary, treasurer, or vice president of the corporation in charge of a principal business function; (2) any other person who performs similar policy or decision-making functions for the corporation; or (3) the manager of one or more manufacturing, production, or operating facilities if authority to sign documents has been assigned or delegated to the manager in accordance with corporate procedures.
   (b) For a partnership or sole proprietorship: by a general partner or the proprietor.
   (c) For a municipality, state, federal, or other public agency: by either a principal executive officer or ranking elected official.

6. Any person signing a document under Standard Condition number 5 shall make the following certification:

   "I certify under penalty of law that this document and all attachments were prepared under my direction or supervision in accordance with a system designed to assure that qualified personnel properly gathered and evaluated the information submitted. Based on my inquiry of the person or persons who manage the system, or those persons directly responsible for gathering the information, the information submitted is, to the best of my knowledge and belief, true, accurate, and complete. I am aware there are significant penalties for submitting false information, including the possibility of fine and imprisonment for knowing violations."

ADDITIONAL TECHNICAL CERTIFICATION CONDITIONS:

In addition to the above standard conditions, The California Department of Transportation shall satisfy the following:

1. The California Department of Transportation shall notify the Central Valley Water Board in writing 7 days in advance of the start of any work within waters of the United States or State. The notification shall include the name of the project and the WDID number, and shall be sent to the Central Valley Water Board Contact indicated in this Certification.

2. Except for activities permitted by the United States Army Corps of Engineers under § 404 of the Clean Water Act, soil, silt, or other organic materials shall not be placed where such materials could pass into surface water or surface water drainage courses.

3. The California Department of Transportation shall maintain a copy of this Certification and supporting documentation (Project Information Sheet) at the Project site during construction for review by site personnel and agencies. All personnel (employees, contractors, and subcontractors) performing work on the proposed project shall be adequately informed and trained regarding the conditions of this Certification.

4. The California Department of Transportation shall perform surface water sampling: 1) when performing any in-water work; 2) in the event that project activities result in any materials reaching surface waters; or 3) when any activities result in the creation of a visible plume in surface waters. The monitoring requirements in Table 1 shall be conducted upstream out of the influence of the project, and 300 feet downstream of the work area. The sampling frequency may be modified for certain projects with written approval from Central Valley Water Board staff.

Table 1:

Parameter	Unit	Type of Sample	Minimum Sampling Frequency	Required Analytical Test Method
Turbidity	NTU	Grab(1)	Every 4 hours during in-water work	(2)
Settleable Material	mL/L	Grab(1)	Every 4 hours during in-water work	(2)
Visible construction related pollutants (3)	Observations	Visual Inspections	Continuous throughout the construction period	—
Temperature(4)	°F (or as °C)	Grab(1)	Every 4 hours during in-water work	(2)
pH(4)	Standard Units	Grab(1)	Every 4 hours during in-water work	(2)
Dissolved Oxygen(4)	mg/L & % saturation	Grab(1)	Every 4 hours during in-water work	(2)

(1) Grab sample shall not be collected at the same time each day to get a complete representation of variations in the receiving water.

(2) Pollutants shall be analyzed using the analytical methods described in 40 Code of Federal Regulations Part 136; where no methods are specified for a given pollutant, method shall be approved by Central Valley Water Board staff.

(3) Visible construction-related pollutants include oil, grease, foam, fuel, petroleum products, and construction-related, excavated, organic or earthen materials.

(4) Temperature, pH, and dissolved oxygen water quality monitoring is required due to the occurrence of state and federally listed species habitat within the project area.

A surface water monitoring report shall be submitted to the Central Valley Water Board Contact indicated in this Certification within two weeks of initiation of sampling and every two weeks thereafter. In reporting the monitoring data, the California Department of Transportation shall arrange the data in tabular form so that the sampling locations, date, constituents, and concentrations are readily discernible. The data shall be summarized in such a manner to illustrate clearly whether the project complies with Certification requirements. The report shall include surface water sampling results and visual observations, laboratory reports, chain of custody records, and identification of the turbidity increase in the receiving water applicable to the natural turbidity conditions specified in the turbidity criteria below.

5. The Central Valley Water Board adopted a *Water Quality Control Plan for the Sacramento River and San Joaquin River Basins*, Fourth Edition, revised October 2011 (Basin Plan) that designates beneficial uses, establishes water quality objectives, and contains implementation programs and policies to achieve those objectives for all waters addressed through the plan. Turbidity, settleable matter, temperature, pH, and dissolved oxygen limits are based on water quality objectives contained in the Basin Plan and are part of this Certification as follows:

   A. Activities shall not cause turbidity increases in surface water to exceed:

      i. where natural turbidity is less than 1 Nephelometric Turbidity Units (NTUs), controllable factors shall not cause downstream turbidity to exceed 2 NTUs;
      ii. where natural turbidity is between 1 and 5 NTUs, increases shall not exceed 1 NTU;
      iii. where natural turbidity is between 5 and 50 NTUs, increases shall not exceed 20 percent;
      iv. where natural turbidity is between 50 and 100 NTUs, increases shall not exceed 10 NTUs; and
      v. where natural turbidty is greater than 100 NTUs, increases shall not exceed 10 percent.

      Except that these limits will be eased during in-water working periods to allow a turbidity increase of 15 NTUs over background turbidity. In determining compliance with the above limits, appropriate averaging periods may be applied provided that beneficial uses will be fully protected. Averaging periods may only be used with prior approval of the Central Valley Water Board staff.

   B. Activities shall not cause settleable matter to exceed 0.1 mL/L in surface waters as measured in surface waters within 300 feet downstream of the project.

   C. Activities shall not cause temperature in surface waters to increase more than 5°F above natural receiving water temperature for waters with designated COLD or WARM beneficial uses.

   D. Activities shall not cause pH to be depressed below 6.5 nor raised above 8.5 in surface water.

E. Activities shall not cause dissolved oxygen to be reduced below 5.0 mg/L for waters designated with the WARM beneficial use, and 7.0 mg/L for waters designated with the COLD or SPWN beneficial uses, in surface water.

6. The California Department of Transportation shall notify the Central Valley Water Board immediately if the above criteria for turbidity, settleable matter, temperature, pH, or dissolved oxygen or other water quality objectives are exceeded.

7. The discharge of petroleum products or other excavated materials to surface water is prohibited. Activities shall not cause visible oil, grease, or foam in the receiving water. The California Department of Transportation shall notify the Central Valley Water Board immediately of any spill of petroleum products or other organic or earthen materials.

8. Activities shall not cause degradation of waters of the State.

9. The California Department of Transportation shall provide a copy of the California Department of Fish and Game Lake or Streambed Alteration Agreement within 14 days of the issuance of this Certification.

10. The California Department of Transportation shall comply with all California Department of Fish and Game requirements and recommendations, including, but not limited to, those requirements and recommendations described in Lake or Streambed Alteration Agreement No. 1600-2012-0148-R3.

11. The use of netting material (e.g., monofilament-based erosion blankets) that could trap aquatic dependent wildlife is prohibited within the project area, as indicated in the attached map (Figure 1).

12. All temporarily affected areas will be restored to pre-construction contours and conditions upon completion of construction activities.

13. All areas disturbed by project activities shall be protected from washout or erosion.

14. In-stream work will occur during periods of low flow and no precipitation.

15. This Certification does not allow permanent water diversion of flow from the receiving water. This Certification is invalid if any water is permanently diverted as a part of the project.

16. Hydroseeding shall be performed with California native seed mix.

17. Refueling of equipment within the floodplain or within 300 feet of the waterway is prohibited. If critical equipment must be refueled within 300 feet of the waterway, strict spill prevention and countermeasures must be implemented to avoid spills. Refueling areas shall be provided with secondary containment including drip pans and/or placement or absorbent material. No hazardous materials, pesticides, fuels, lubricants, oils, hydraulic fluids, or other construction-related potentially hazardous substances should be stored within a floodplain or within 300 feet of a waterway. The California Department of Transportation must perform frequent inspections of construction equipment prior to utilizing it near surface waters to ensure leaks from the equipment are not occurring and are not a threat to water quality.

18. The California Department of Transportation shall develop and maintain onsite a project-specific Spill Prevention, Containment and Cleanup Plan outlining the practices to prevent, minimize, and/or clean up potential spills during construction of the project. The Plan must detail the project elements, construction equipment types and location, access and staging and construction sequence. The Plan must also address the potential of responding to a spill or prevention of spills occurring within the project site.

19. If temporary surface water diversions and/or dewatering are anticipated, the California Department of Transportation shall develop and maintain on-site a Surface Water Diversion and/or Dewatering Plan(s) The Plan(s) shall include the proposed method and duration of diversion activitiesThe Surface Water Diversion and/or Dewatering Plan(s) must be consistent with this Certification.

20. When work in a flowing stream is unavoidable and any dam or other artificial obstruction is being constructed, maintained, or placed in operation, sufficient water shall at all times be allowed to pass downstream, to maintain beneficial uses of waters of the State below the dam. Construction, dewatering, and removal of temporary cofferdams shall not violate Technical Certification Condition 5 of this Certification.

21. Any temporary dam or other artificial obstruction constructed shall only be built from clean materials such as sandbags, gravel bags, water dams, or clean/washed gravel which will cause little or no siltation. Stream flow shall be temporarily diverted using gravity flow through temporary culverts/pipes or pumped around the work site with the use of hoses.

22. Raw cement, concrete (or washing thereof), asphalt, drilling fluids, lubricants, paints, coating material, oil, petroleum products, or any other substances which could be hazardous to fish and wildlife resulting from or disturbed by project-related activities, shall be prevented from contaminating the soil and/or entering waters of the United States or waters of the State.

23. Concrete must completely be cured before coming into contact with waters of the United States and/or waters of the State. Surface water that contacts wet concrete must be pumped out and disposed of at an appropriate off-site commercial facility which is authorized to accept concrete wastes.

24. During replacement of the bridge, a method of containment must be used below the bridge to prevent debris from falling into the water body.

25. During construction, silt fencing, straw wattles, or other effective management practices must be used along the construction zone to minimize soil or sediment along the embankments from migrating into the waters of the United States and/or waters of the State.

26. All materials resulting from the project shall be removed from the site and disposed of properly.

27. If unanticipated discharges to the waters of the State and/or waters of the United States and/or soil occur, the California Department of Transportation shall notify the Central Valley Water Board Contact indicated in this Certification in writing within 5 calendar days of occurrence. Unanticipated discharges may include, but are not limited to, any construction materials, hazardous materials, pesticides, fuels, lubricants, oils, hydraulic fluids, raw cement, concrete, asphalt, paint, coating material, drilling fluids, or other construction-related potentially hazardous substances.

28. The California Department of Transportation shall obtain coverage under the NPDES General Permit for Storm Water Discharges Associated with Construction and Land Disturbance Activities Order No. 2009-0009-DWQ for discharges to surface waters comprised of storm water associated with construction activity, including, but not limited to, demolition, clearing, grading, excavation, and other land disturbance activities of one or more acres, or where projects disturb less than one acre but are part of a larger common plan of development that in total disturbs one or more acres.

29. The Conditions in this Certification are based on the information in the attached "Project Information Sheet." If the actual project, as described in the attached Project Information Sheet, is modified or changed, this Certification is no longer valid until amended by the Central Valley Water Board.

30. In the event of any violation or threatened violation of the conditions of this Certification, the violation or threatened violation shall be subject to any remedies, penalties, process, or sanctions as provided for under state and federal law. The applicability of any state law authorizing remedies, penalties, process, or sanctions for the violation or threatened violation constitutes a limitation necessary to ensure compliance with this Certification.

    (a) If the California Department of Transportation or a duly authorized representative of the project fails or refuses to furnish technical or monitoring reports, as required under this Certification, or falsifies any information provided in the monitoring reports, the applicant is subject to civil liability, for each day of violation, and/or criminal liability.

(b) In response to a suspected violation of any condition of this Certification, the Central Valley Water Board may require the California Department of Transportation to furnish, under penalty of perjury, any technical or monitoring reports the Central Valley Water Board deems appropriate, provided that the burden, including cost of the reports, shall be in reasonable relationship to the need for the reports and the benefits to be obtained from the reports.

(c) The California Department of Transportation shall allow the staff(s) of the Central Valley Water Board, or an authorized representative(s), upon the presentation of credentials and other documents, as may be required by law, to enter the project premises for inspection, including taking photographs and securing copies of project-related records, for the purpose of assuring compliance with this Certification and determining the ecological success of the project.

31. The California Department of Transportation shall provide a Notice of Completion (NOC) no later than 30 days after the project completion. The NOC shall demonstrate that the project has been carried out in accordance with the project's description in the Certification and in any amendments approved. The NOC shall include a map of the project location(s), including final boundaries of any on-site restoration area(s), if appropriate, and representative pre and post construction photographs. Each photograph shall include a descriptive title, date taken, photographic site, and photographic orientation.

CENTRAL VALLEY WATER BOARD CONTACT:

Trevor Cleak, Environmental Scientist
11020 Sun Center Drive #200
Rancho Cordova, CA 95670-8114
tcleak@waterboards.ca.gov
(916) 464-4684

CALIFORNIA ENVIRONMENTAL QUALITY ACT:

The Central Valley Water Board has determined that this project meets the Categorical Exemption, under § 15301 of the California Code of Regulations, which exempts operation, repair, maintenance, permitting, leasing, licensing, or minor alterations of existing public or private structures, facilities, mechanical equipment, or topological features, involving negligible or no expansion of use beyond that existing at the time of the lead agency's determination.

WATER QUALITY CERTIFICATION:

I hereby issue an Order certifying that any discharge from the California Department of Transportation, SOL 80 Alamo Creek Bridge Replacement Project (WDID#*5A48CR00112*) will comply with the applicable provisions of § 301 ("Effluent Limitations"), § 302 ("Water Quality Related Effluent Limitations"), § 303 ("Water Quality Standards and Implementation Plans"), § 306 ("National Standards of Performance"), and § 307 ("Toxic and Pretreatment Effluent Standards") of the Clean Water Act. This discharge is also regulated under State Water Resources Control Board Water Quality Order No. 2003-0017 DWQ "Statewide General Waste Discharge Requirements For Dredged Or Fill Discharges That Have Received State Water Quality Certification (General WDRs)".

Except insofar as may be modified by any preceding conditions, all Certification actions are contingent on (a) the discharge being limited and all proposed mitigation being completed in compliance with the conditions of this Certification, the California Department of Transportation's project description, and the attached Project Information Sheet, and (b) compliance with all applicable requirements of the *Water Quality Control Plan for the Sacramento River and San Joaquin River Basins*, Fourth Edition, revised October 2011.

Frederick I. Moss

for Pamela C. Creedon
Executive Officer

Enclosure: Project Information

Attachment: Figure 1 – Project Location Map

cc: Distribution List, page 13

PROJECT INFORMATION SHEET

Application Date: 14 June 2012

Applicant: James Hsiao
California Department of Transportation
111 Grand Avenue
Oakland, CA 94612

Applicant Representatives: Cyrus Vafai
California Department of Transportation
111 Grand Avenue
Oakland, CA 94612

Project Name: SOL 80 Alamo Creek Bridge Replacement Project

Application Number: WDID#5A48CR00112

Type of Project: Roadway Expansion Project

Timeframe of Project Implementation: January through December

Project Location: Section 29, Township 6 North, Range 1 West, MDB&M.
Latitude: 38°20'41.46"N and Longitude: 122°00'06.38" W

County: Solano County

Receiving Water(s) (hydrologic unit): Alamo Creek, Sacramento Hydrologic Basin, Valley Putah-Cache Hydrologic Unit #511.10, Elmira HA

Water Body Type: Streambed, Riparian

Designated Beneficial Uses: The *Water Quality Control Plan for the Sacramento River and San Joaquin River*, Fourth Edition, revised October 2011 (Basin Plan) has designated beneficial uses for surface and ground waters within the region. Beneficial uses that could be impacted by the project include, but are not limited to: Municipal and Domestic Water Supply (MUN); Agricultural Supply (AGR); Industrial Supply (IND); Hydropower Generation (POW); Groundwater Recharge (GWR); Water Contact Recreation (REC-1); Non-Contact Water Recreation (REC-2); Warm Freshwater Habitat (WARM); Cold Freshwater Habitat (COLD); Preservation of Biological Habitats of Special Significance (BIOL); Rare, Threatened, or Endangered Species (RARE); Migration of Aquatic Organisms (MIGR); Spawning, Reproduction, and/or Early Development (SPWN); and Wildlife Habitat (WILD). A comprehensive and specific list of the Beneficial Uses applicable for the project area can be found at http://www.waterboards.ca.gov/centralvalley/water_issues/basin_plans/index.shtml.

303(d) List of Water Quality Limited Segments: Alamo Creek is the receiving water for the SOL 80 Alamo Creek Bridge Replacement Project. Alamo Creek is listed on the 303(d) list for fecal coliform. This project does not impact an already impaired water body. The most recent list of approved water quality limited segments can be found at: http://www.waterboards.ca.gov/water_issues/programs/tmdl/integrated2010.shtml.

Project Description: The 1.01-acre SOL 80 Alamo Creek Bridge Replacement Project consists of widening the existing 3-span Alamo Creek Bridge, and lengthening the Alamo Drive on-ramp on Interstate 80. The project is located adjacent to Alamo Drive in Vacaville.

The bridge will be widened by 12-feet. The existing abutments and piers will also be widened by 12-feet. Excavations for the abutments will be 10-feet wide by 20-feet long by 5-feet deep and excavations for the piers will be 5-feet wide by 20-feet long by 8-feet deep. A shoring system such as a coffer dam will be used for deep excavation if necessary. A bioswale will be constructed on the east side of the bridge and a 300-feet long concrete barrier will be constructed on the west side of the creek. The concrete for the abutments and piles will be pumped from the top of the bridge embankments. A temporary access road will be constructed to allow equipment to reach the creek. An approximately 12-feet long by 12-feet tall false work will be installed to support the bridge during construction.

The project will increase the length of the existing Alamo Drive on-ramp from approximately 400-feet to 1,067-feet. This section of the project will not impact water quality.

Work in the creek will occur when the creek is dry, but if water does flow during construction cofferdams will be installed.

The project will permanently impact 0.0068 acre/12 linear feet and temporarily impact 0.0113 acre of waters of the United States.

Preliminary Water Quality Concerns: Construction activities may impact surface waters with increased turbidity, settleable matter, temperature, pH and dissolved oxygen.

Proposed Mitigation to Address Concerns: The California Department of Transportation will implement Best Management Practices to control sedimentation and erosion. All temporary affected areas will be restored to pre-construction contours and conditions upon completion of construction activities. The California Department of Transportation will conduct turbidity, settleable matter, temperature, pH and dissolved oxygen testing during in-water work, stopping work if exceedance of Basin Plan criteria are exceeded or are observed.

Excavation/Fill Area: Approximately 10 cubic yards of concrete will be placed into 0.0068 acre/12 linear feet of waters of the United States.

Dredge Volume: Approximately 10 cubic yards of native soil will be dredged from 0.0068 acre/12 linear feet of waters of the United States.

United States Army Corps of Engineers File Number: SPK# 2012-00543

United States Army Corps of Engineers Permit Type: Nationwide Permit# 14

California Department of Fish and Game Lake or Streambed Alteration Agreement: 1600-2012-0148-R3.

Possible Listed Species: Central Valley spring run chinook salmon, Conservancy fairy shrimp, Vernal pool fairy shrimp, Central Valley steelhead, Valley elderberry longhorn beetle, Vernal pool tadpole shrimp, California tiger salamander, California red-legged frog, Sacramento splittail, and California freshwater shrimp.

Status of CEQA Compliance: The Central Valley Water Board has determined that this project meets the Categorical Exemption, under § 15301 of the California Code of Regulations.

The Central Valley Water Board filed a Notice of Exemption with the State Clearinghouse with 5 days of the date of this Certification.

Compensatory Mitigation: The Central Valley Water Board is not requesting compensatory mitigation for the SOL 80 Alamo Creek Bridge Replacement Project.

Application Fee Provided: Total fees of $1,108.00 have been submitted to the Central Valley Water Board as required by § 3833(b)(3)(A) and § 2200(a)(3) of the California Code of Regulations.

DISTRIBUTION LIST

Leah M. Fisher
United States Army Corps of Engineers
Sacramento District Office
Regulatory Division
1325 J Street, Suite 1350
Sacramento, CA 95814-2922

Melissa Escaron
Department of Fish and Game
P.O box 47
Yountville, CA 94599

Bill Jennings
CA Sportfishing Protection Alliance
3536 Rainier Avenue
Stockton, CA 95204

Bill Orme (Electronic copy only)
State Water Resources Control Board
401 Certification and Wetlands Unit Chief

Jason A. Brush (Electronic copy only)
Wetlands Office Supervisor (WTR-8)
United States Environmental Protection Agency

Cyrus Vafai
California Department of Transporation
111 Grand Avenue
Oakland, CA 94612

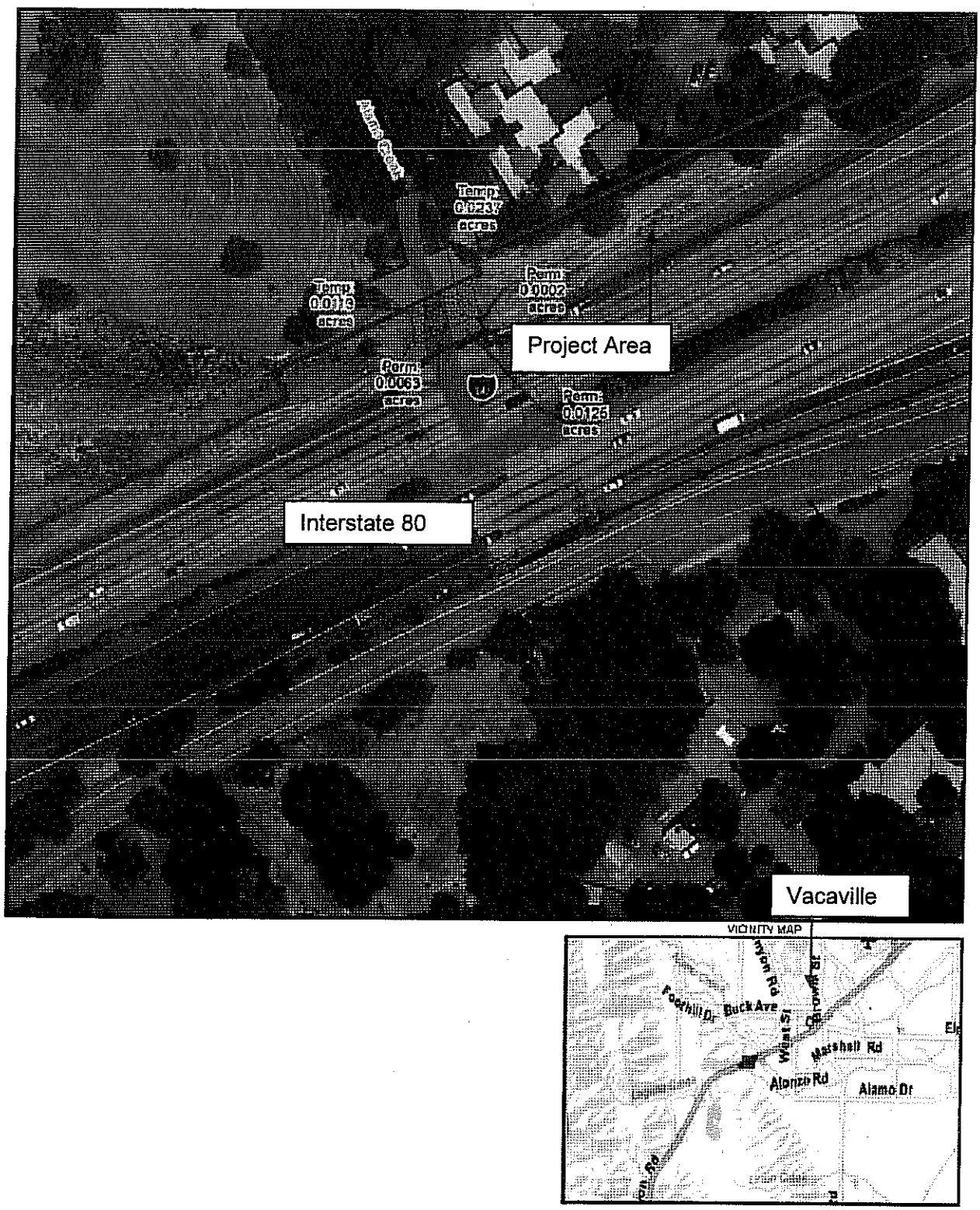

Figure 1 – Project Location Map

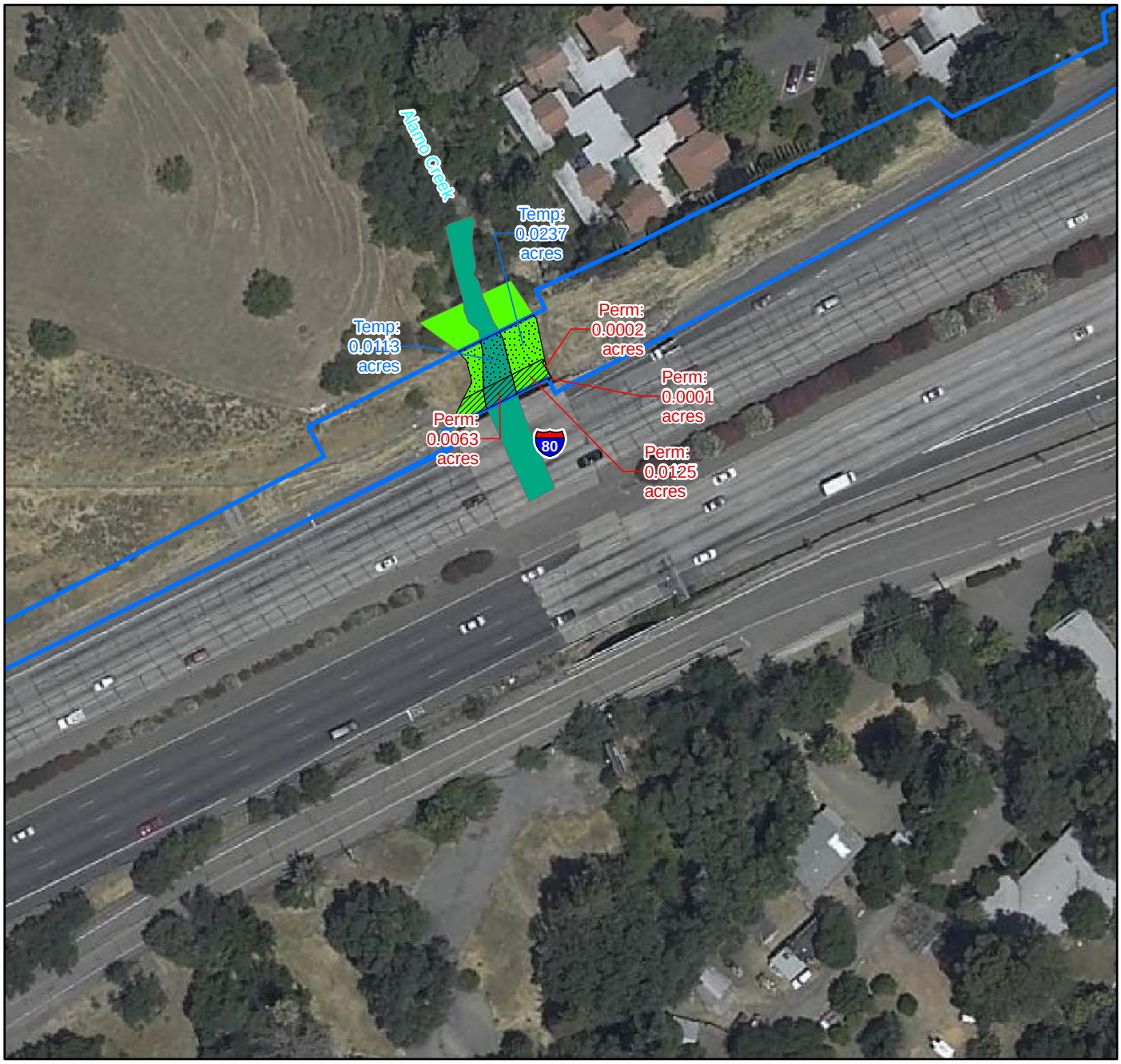

LEGEND

- Action Area
- Riparian Habitat (Central Coast Riparian Forest)
- Aquatic Habitat

Impacts to Aquatic/Riparian Habitat

- Permanent
- Temporary

VICINITY MAP

N

0 50 100 Feet

FIGURE 1-3
Disturbed Aquatic and Riparian Habitat Map
Alamo Road On-Ramp Widening Project
Solano County, CA

DIST	COUNTY	ROUTE	POST MILES TOTAL PROJECT	SHEET No.	TOTAL SHEETS
04	Sol	80			

REGISTERED CIVIL ENGINEER X DATE

PLANS APPROVAL DATE

REGISTERED PROFESSIONAL ENGINEER SAMEH HEGAZI No. C64899 Exp. 06/30/13 CIVIL STATE OF CALIFORNIA

The State of California or its officers or agents shall not be responsible for the accuracy or completeness of electronic copies of this plan sheet.

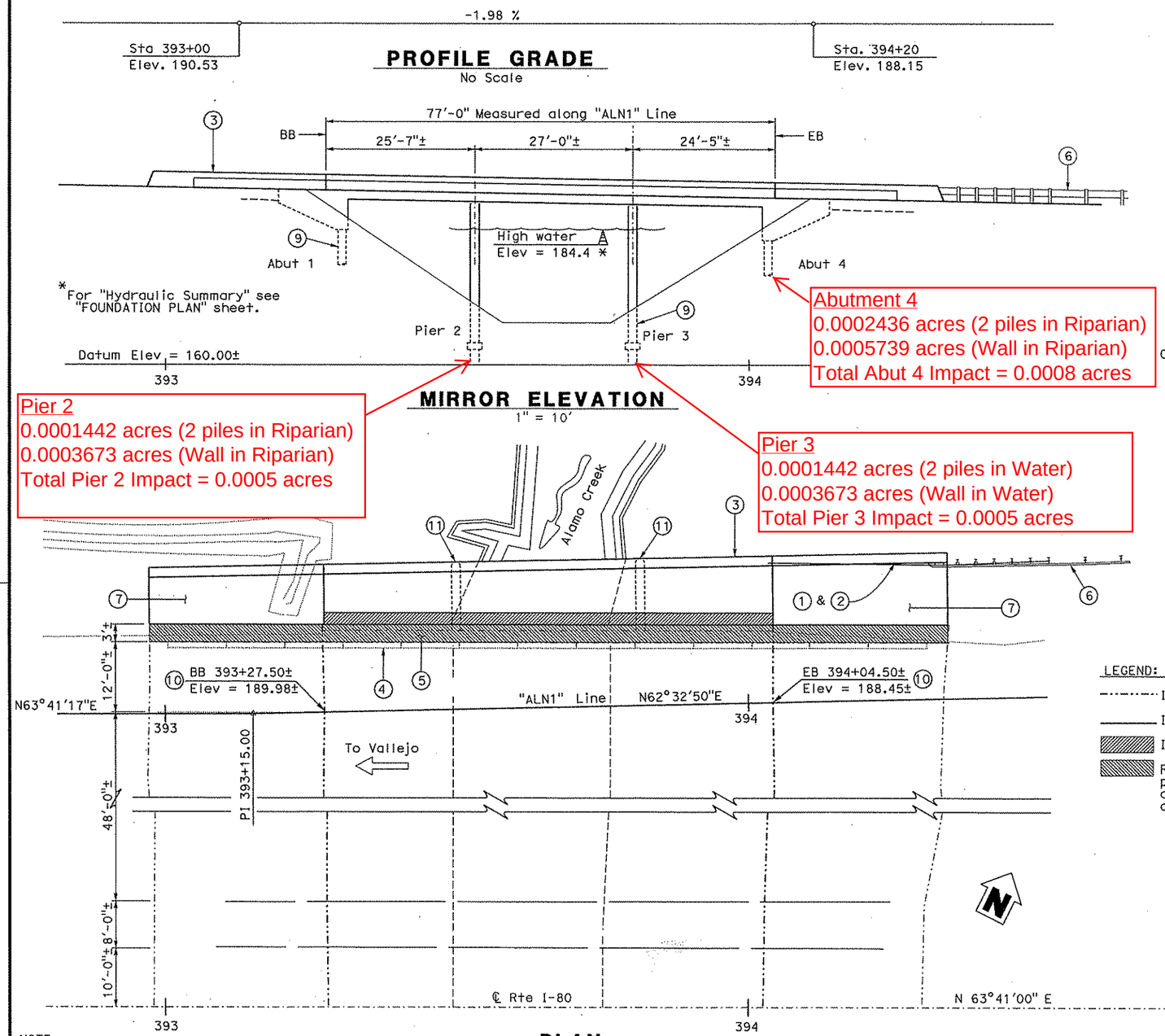

Abutment 4
0.0002436 acres (2 piles in Riparian)
0.0005739 acres (Wall in Riparian)
Total Abut 4 Impact = 0.0008 acres

Pier 2
0.0001442 acres (2 piles in Riparian)
0.0003673 acres (Wall in Riparian)
Total Pier 2 Impact = 0.0005 acres

Pier 3
0.0001442 acres (2 piles in Water)
0.0003673 acres (Wall in Water)
Total Pier 3 Impact = 0.0005 acres

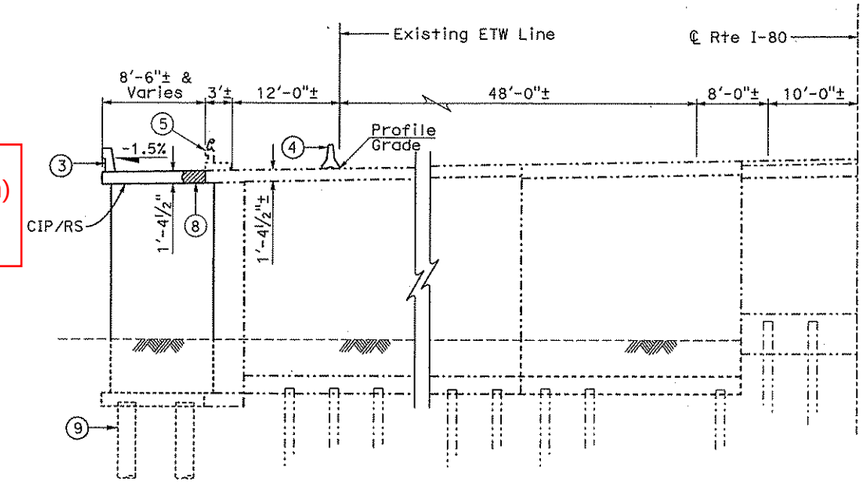

TYPICAL SECTION
⅛" = 1'-0"

NOTE:
CONTRACTOR SHALL VERIFY ALL CONTROLLING FIELD DIMENSIONS BEFORE ORDERING OR FABRICATING ANY MATERIALS.

LEGEND:

- Indicates existing structure
- Indicates new construction
- Indicates limits of Closure Pour
- Remove ¾" concrete deck surface, prepare concrete deck surface and place ¾" polyester concrete overlay.

NOTES:

1. Paint "Alamo Creek Bridge"
2. Paint "Br. No. 23-0010"
3. Concrete Barrier Type 736
4. Temporary Barrier Type K
5. Existing Barrier Type 2 Railing to be removed. Refinish deck surface.
6. Attach MBGR to new barrier type 736.
7. Structure Approach Type N(30D)
8. Closure Pour
9. 24" ø CIDH Piles
10. BB and EB of widening shall match existing bridge.
11. Pier wall locations and directions of widening shall match existing bridge.

X DESIGN ENGINEER	DESIGN	BY Sameh Hegazi	CHECKED Adam Menke	LOAD & RESISTANCE FACTOR DESIGN	LIVE LOADING: HL93 W/"LOW-BOY"; PERMIT DESIGN VEHICLE
	DETAILS	BY JFCasarino	CHECKED S. Hegazi / A. Menke	LAYOUT BY Sameh Hegazi	CHECKED Adam Menke
	QUANTITIES	BY Sameh Hegazi	CHECKED Adam Menke	SPECIFICATIONS BY Dave Klein	PLANS AND SPECS COMPARED Dave Klein

ORIGINAL SCALE IN INCHES FOR REDUCED PLANS 0 1 2 3

STATE OF CALIFORNIA DEPARTMENT OF TRANSPORTATION

DIVISION OF ENGINEERING SERVICES STRUCTURE DESIGN DESIGN BRANCH 8

BRIDGE NO. 23-0010 POST MILE 25.03

ALAMO CREEK BRIDGE (WIDEN)
GENERAL PLAN

UNIT: 3594
PROJECT NUMBER & PHASE: 0400000133 1 CONTRACT NO.: 0A0901

DISREGARD PRINTS BEARING EARLIER REVISION DATES

REVISION DATES 5-16-11 8-8-11 11-17-11

SHEET 1 OF 17

FILE => 23-0010_01gp.dgn

STRUCTURES DESIGN GENERAL PLAN SHEET (ENGLISH) (REV.09-01-10)

USERNAME => S124907 DATE PLOTTED => 01-DEC-2011 TIME PLOTTED => 08:55

DIST	COUNTY	ROUTE	POST MILES TOTAL PROJECT	SHEET No.	TOTAL SHEETS
04	Sol	80			

REGISTERED CIVIL ENGINEER X DATE

PLANS APPROVAL DATE

REGISTERED PROFESSIONAL ENGINEER SAMEH HEGAZI No. C64899 Exp. 06/30/13 CIVIL STATE OF CALIFORNIA

The State of California or its officers or agents shall not be responsible for the accuracy or completeness of electronic copies of this plan sheet.

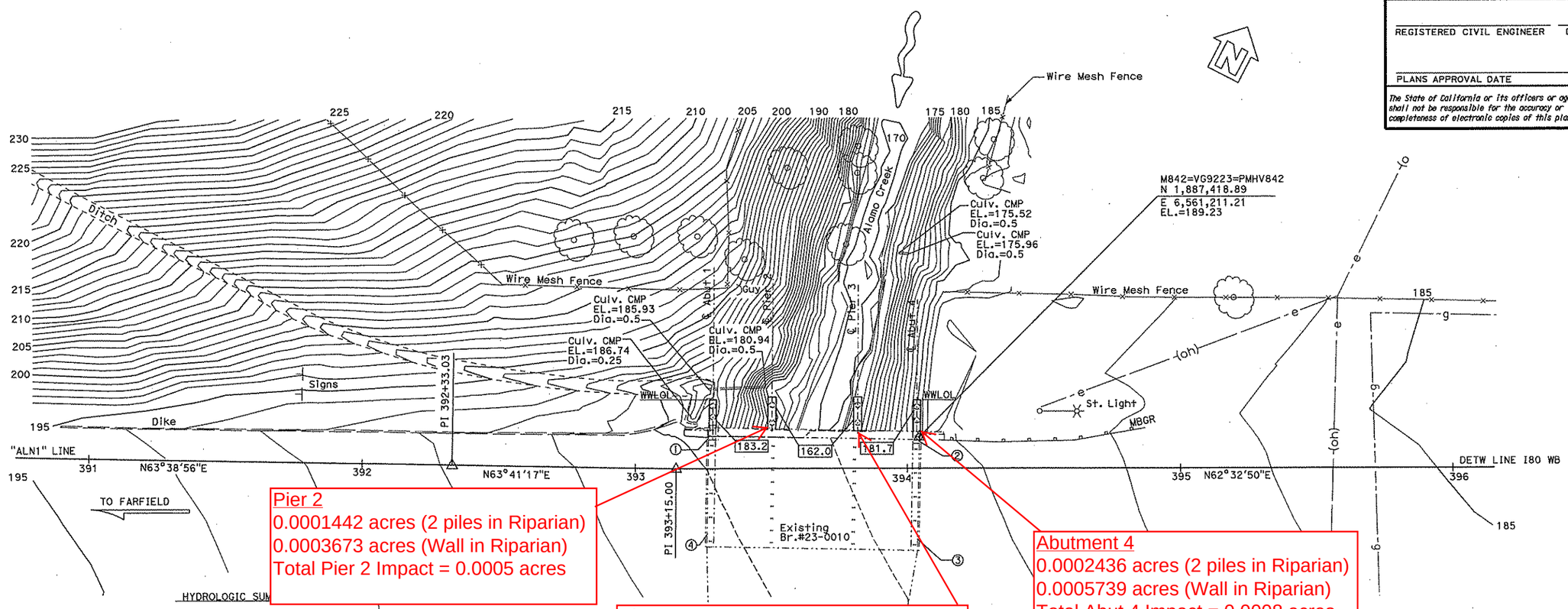

Pier 2
0.0001442 acres (2 piles in Riparian)
0.0003673 acres (Wall in Riparian)
Total Pier 2 Impact = 0.0005 acres

Pier 3
0.0001442 acres (2 piles in Water)
0.0003673 acres (Wall in Water)
Total Pier 3 Impact = 0.0005 acres

Abutment 4
0.0002436 acres (2 piles in Riparian)
0.0005739 acres (Wall in Riparian)
Total Abut 4 Impact = 0.0008 acres

HYDROLOGIC SUM

DRAINAGE AREA = 10.33 MILES^2

	DESIGN FLOOD	BASE FLOOD	OVERTOPPING FLOOD
FREQUENCY (YEARS)	50	100	>> 500
DISCHARGE (FT^3/SEC)	3,200	3,400	---
WATER SURFACE ELEV AT BRIDGE (FT)	184.4	185.3	---

Flood plain data are based upon information available when the plans were prepared and are shown to meet Federal requirements. The accuracy of said information is not warranted by the State and interested or affected parties should make their own investigations.

SURVEY CONTROL

JK140=VG9225=PRHV140 (Not Shown)

Fnd 1" I.P. w/Red Plastic Plug & Tack
14.99 Lt. "ALN1" Line, , DETW Line I80 WB
Sta. 387+16.11
N 1,887,117.54
E 6,560,593.15
EL.=204.68

M842=VG9223=PMHV842

Fnd 3-1/2" USGS Brass Disc
11.46 Lt. "ALN1" Line, , DETW Line I80 WB
Sta. 394+04.37
N 1,887,418.89
E 6,561,211.21
EL.=189.23

NOTES:
1. Elec Line, Gas Line Per Dist. Utility Map.
2. All dia. of tree on level 214 construction class.

Bridge Location #23-0010 (PN Points)
① 11.39 Lt. "ALN1" Line, Sta 393+27.18, EL.=189.87±
② 9.98 Lt. "ALN1" Line, Sta 394+04.69, EL.=188.36±
③ 25.89 Rt. "ALN1" Line, Sta 394+03.60, EL.=188.68±
④ 23.83 Rt. "ALN1" Line, Sta 393+26.58, EL.=190.21±

Indicates 24" CIDH Piles
Indicates bottom of footing elevation

PRELIMINARY INVESTIGATION SECTION

SCALE 1"=20'	VERT.DATUM NAVD 88	PHOTOGRAMMETRY AS OF: X			
	HORZ.DATUM NAD83 (1991.35)	SURVEYED	BY District	CHECKED	BY Don Ivy 07/2011
ALIGNMENT TIES	Dist. Traverse Sheet	DRAFTED	BY Sharon Zheng 07/2011	CHECKED	BY Jim Pallares 07/2011

DESIGN	BY Sameh Hegazi	CHECKED Adam menke
DETAILS	BY JFCasarino	CHECKED S. Hegazi / A. Menke
QUANTITIES	BY Sameh Hegazi	CHECKED Adam Menke

STATE OF CALIFORNIA DEPARTMENT OF TRANSPORTATION

DIVISION OF ENGINEERING SERVICES STRUCTURE DESIGN DESIGN BRANCH 08

BRIDGE NO. 23-0010 POST MILE 24.8-25.2

ALAMO CREEK BRIDGE (WIDEN)
FOUNDATION PLAN

STRUCTURES FOUNDATION PLAN SHEET (ENGLISH) (REV. 09-01-10)

ORIGINAL SCALE IN INCHES FOR REDUCED PLANS 0 1 2 3

UNIT: 3646
PROJECT NUMBER & PHASE: 04 0000 0133-1 CONTRACT NO.: X

DISREGARD PRINTS BEARING EARLIER REVISION DATES

REVISION DATES 1/25/2011 9-7-11

SHEET 4 OF 17

FILE => 23-0010_04fpl1.dgn

DIST	COUNTY	ROUTE	POST MILES TOTAL PROJECT	SHEET No.	TOTAL SHEETS
04	Sol	80			

REGISTERED CIVIL ENGINEER X DATE

PLANS APPROVAL DATE

REGISTERED PROFESSIONAL ENGINEER SAMEH HEGAZI No. C64899 Exp. 06/30/13 CIVIL STATE OF CALIFORNIA

The State of California or its officers or agents shall not be responsible for the accuracy or completeness of electronic copies of this plan sheet.

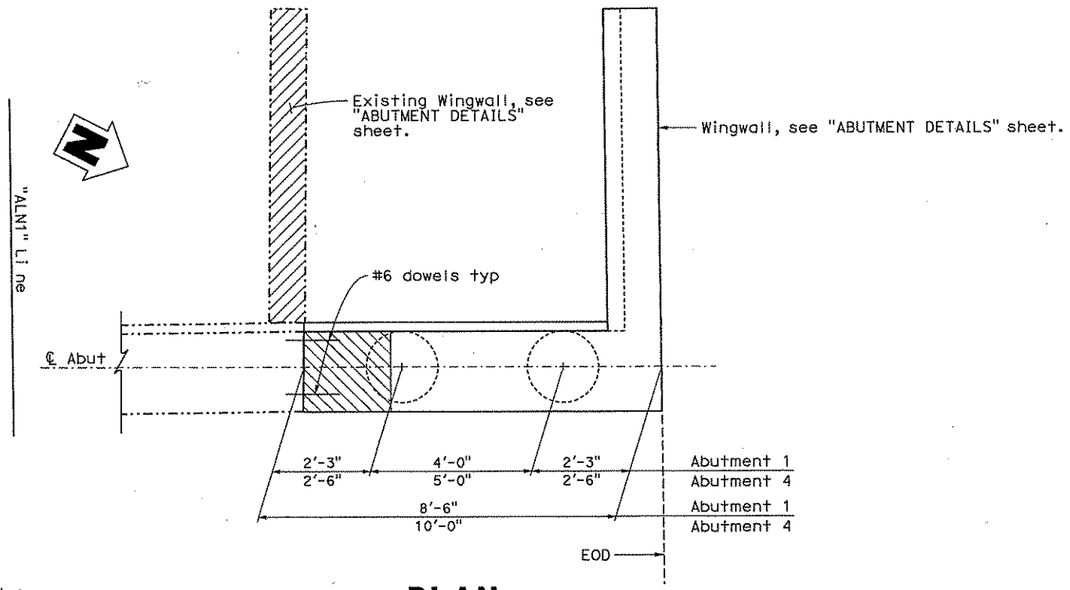

Note:
Abutment 1 shown, Abutment 4 similar.

PLAN
½" = 1'-0"

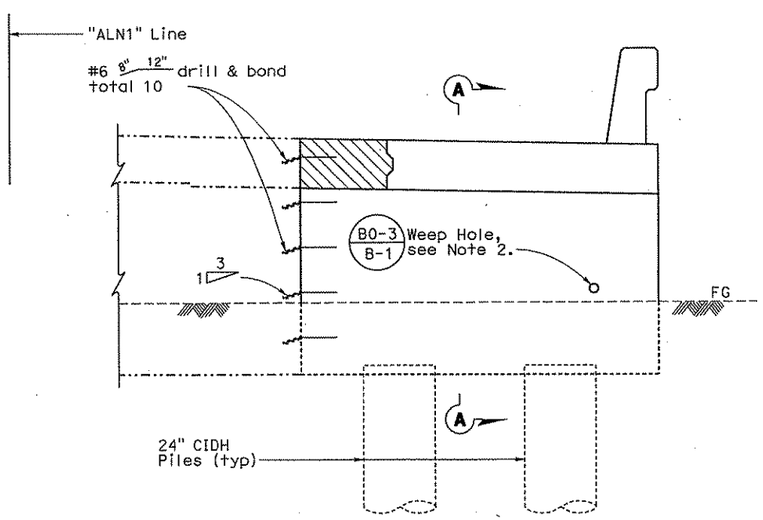

ELEVATION
½" = 1'-0"

LEGEND:

- Indicates existing structure.
- Indicates new construction.
- Limits of Bridge Removal (portion) 3' from top of structure.
- Limits of closure pour.

NOTES:

1. Provide a clean and roughened surface for existing concrete prior to placing new concrete. Roughen to ¼" amplitude.
2. For drainage see "STRUCTURE APPROACH DRAINAGE DETAILS" sheet.

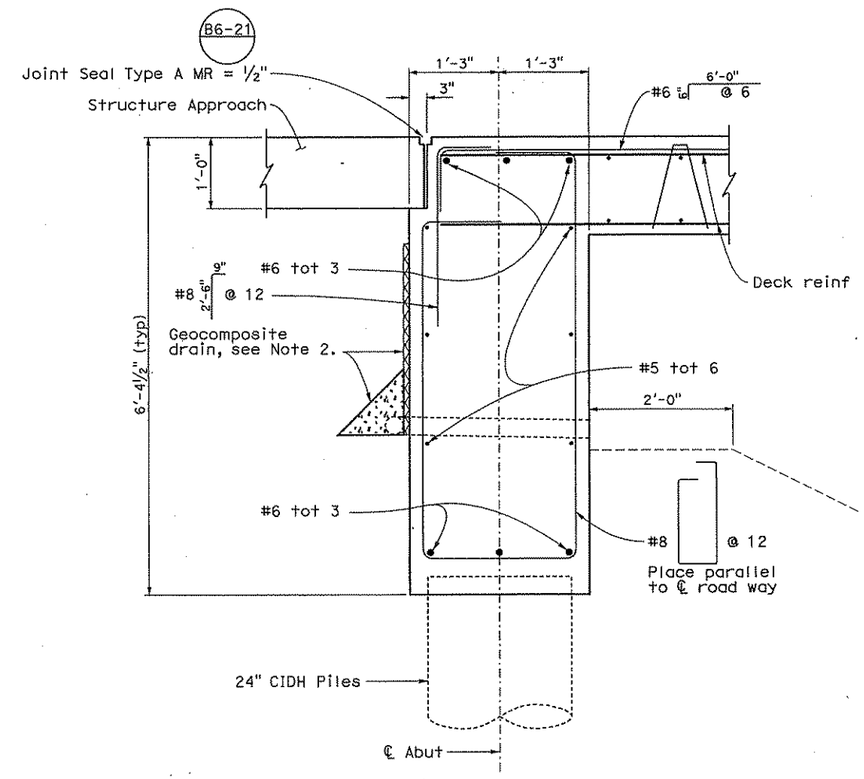

SECTION A-A
1" = 1'-0"

	BY	CHECKED
DESIGN	Sameh Hegazi	Adam Menke
DETAILS	JFCasarino	S. Hegazi / A. Menke
QUANTITIES	Sameh Hegazi	Adam Menke

STATE OF CALIFORNIA
DEPARTMENT OF TRANSPORTATION

DIVISION OF ENGINEERING SERVICES
STRUCTURE DESIGN
DESIGN BRANCH 8

BRIDGE NO. 23-0010
POST MILE 25.03

ALAMO CREEK BRIDGE (WIDEN)
ABUTMENT LAYOUT

STRUCTURES DESIGN DETAIL SHEET (ENGLISH) (REV. 09-01-10)

ORIGINAL SCALE IN INCHES FOR REDUCED PLANS 0 1 2 3

UNIT: X
PROJECT NUMBER & PHASE: 0400000133 1 CONTRACT NO.: 0A0901

DISREGARD PRINTS BEARING EARLIER REVISION DATES

REVISION DATES: ~~1-27-11~~ 9-7-11

SHEET 5 OF 17

FILE => 23-0010_05abtlo.dgn

USERNAME => 612490T DATE PLOTTED => 01-DEC-2011 TIME PLOTTED => 08:56

DIST	COUNTY	ROUTE	POST MILES TOTAL PROJECT	SHEET No.	TOTAL SHEETS
04	Sol	80			

REGISTERED CIVIL ENGINEER X DATE

PLANS APPROVAL DATE

REGISTERED PROFESSIONAL ENGINEER SAMEH HEGAZI No. C64899 Exp. 06/30/13 CIVIL STATE OF CALIFORNIA

The State of California or its officers or agents shall not be responsible for the accuracy or completeness of electronic copies of this plan sheet.

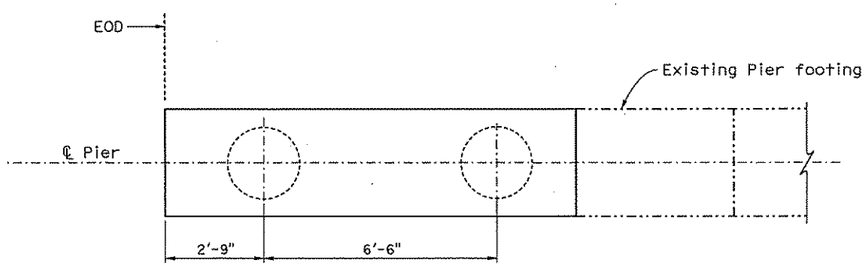

FOOTING PLAN

½" = 1'-0"

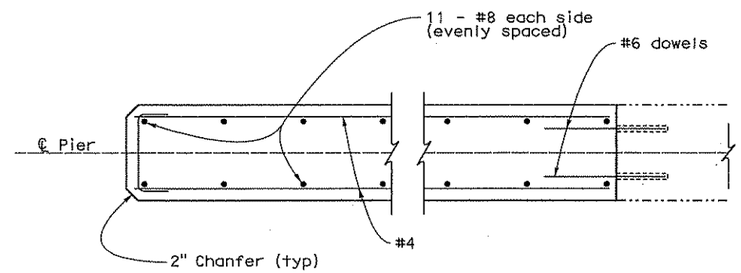

SECTION E-E

1" = 1'-0"

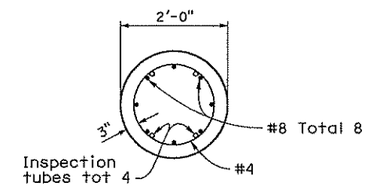

SECTION F-F

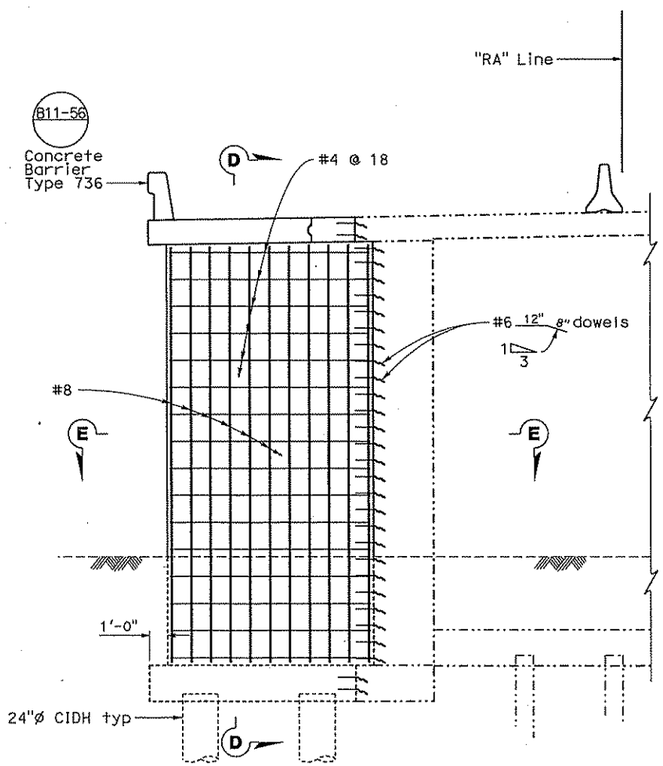

ELEVATION

1/4 " = 1'-0"

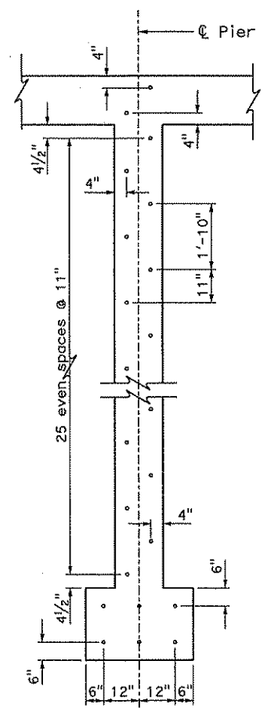

DOWEL LAYOUT

½" = 1'-0"

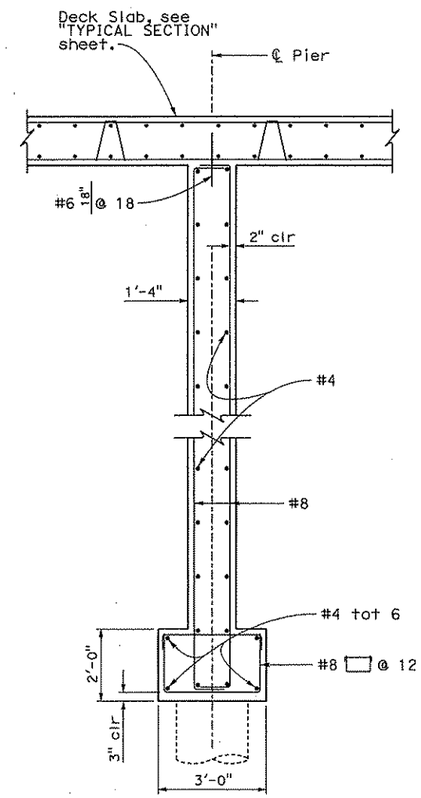

SECTION D-D

½" = 1'-0"

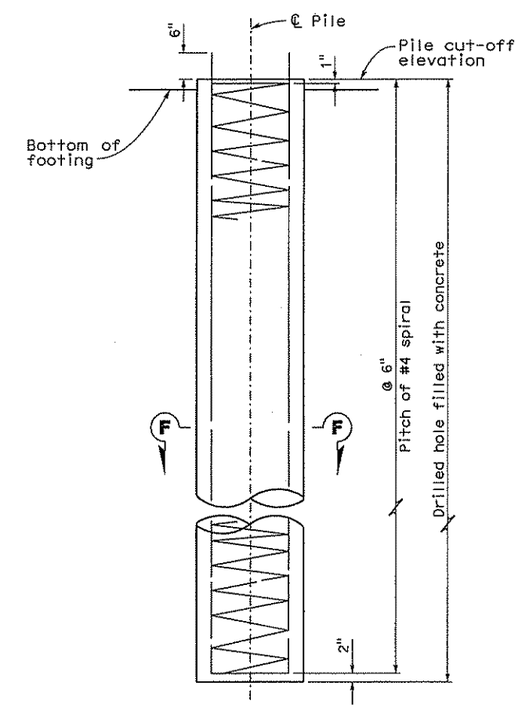

ELEVATION
24" CIDH PILE

¾" = 1'-0"

B2-3

	BY	CHECKED
DESIGN	Sameh Hegazi	Adam Menke
DETAILS	JFCasarino	S. Hegazi / A. Menke
QUANTITIES	Sameh Hegazi	Adam Menke

STATE OF CALIFORNIA DEPARTMENT OF TRANSPORTATION

DIVISION OF ENGINEERING SERVICES STRUCTURE DESIGN DESIGN BRANCH 8

BRIDGE NO. 23-0010 POST MILE 25.03

ALAMO CREEK BRIDGE (WIDEN)
PIER DETAILS

STRUCTURES DESIGN DETAIL SHEET (ENGLISH) (REV. 09-01-10)

ORIGINAL SCALE IN INCHES FOR REDUCED PLANS 0 1 2 3

UNIT: X
PROJECT NUMBER & PHASE: 0400000133 1 CONTRACT NO.: 0A0901

DISREGARD PRINTS BEARING EARLIER REVISION DATES 9-12-11

REVISION DATES | SHEET 7 | OF 17

FILE => 23-0010_07pier.dgn

USERNAME => s124907 DATE PLOTTED => 01-DEC-2011 TIME PLOTTED => 08:56

ATTACHMENT F

401 CERTIFICATION CONDITION 18 - Project-specific Spill Containment, Cleanup Plan to be included as part of Section 500 (500.1.1) in the Storm Water Pollution Prevention Plan (SWPPP)

Compliance with Condition 18 in the 401 Certification:

Project-Specific Spill Containment and Cleanup Plan (SCCP)

To comply with condition 18 in the 401 Certification issued by the Central Valley Regional Water Quality Control Board, a project-specific SCCP should be prepared and included in Section 500 (500.1.1) of the Storm Water Pollution Prevention Plan (SWPPP). Please see Materials Management Plan under Section 500 (500.1.1) of the SWPPP template. This Plan also needs to address Drilling Slurries and Fluids per Standard Specifications section 13-4.03D(5) Liquid Waste.

The SCCP shall describe in detail how the contractor will implement all the requirements of this specification:

1. Spill prevention
2. Materials management
3. Waste management
4. Non Storm Water Management
5. Dewatering

The SCCP is a plan specific to the project which addresses the site conditions during construction and the construction activities needed to complete the project.

All work activities that may produce waste during the construction process, either solid or liquid, must be described in detail in the SCCP with all the associated BMPs implemented to manage the waste. The description shall include

1. Details of materials and equipment used
2. Description of the waste produced
3. Details of BMPs implemented for waste discharge prevention, waste management and disposal, and waste cleanup for accidental discharges
4. Training provided to employees and subcontractors on implementation of these BMPs

The plan shall also include monitoring protocols to:

1. Observe and document waste producing activities
2. Document, manage and report any accidental discharges
3. Clean up and sample affected area
4. Disposal of waste

The SCCP shall be amended whenever new conditions are discovered or arise due to changes in operations, materials, and/or site management practices. The amendment may be proposed by the Contractor or requested by the Engineer.

Every 6 months the Contractor shall submit a SCCP Progress Report that includes the following information for the reporting period:

1. Summary of all discharges
2. Summary of all corrective measures implemented
3. Summary of training in construction site management provided to employees and sub contractors

4. Summary of all environmental sampling conducted to characterize materials,/waste for disposal, to identify any water quality impact, and/or to ascertain effectiveness of the cleanup methods

ATTACHMENT G

1602 PERMIT

State of California – The Natural Resources Agency
DEPARTMENT OF FISH AND GAME
Bay Delta Region
7329 Silverado Trail
Napa, CA 94558
(707) 944-5520
www.dfg.ca.gov

EDMUND G. BROWN JR., Governor
CHARLTON H. BONHAM, Director

SCANNED

August 31, 2012

Jeffrey G. Jensen
California Department of Transportation
111 Grand Avenue
Oakland CA 94623

Subject: Final Lake or Streambed Alteration Agreement
Notification No. 1600-2012-0148-R3
Interstate 80, Alamo Creek Bridge

Dear Mr. Jensen:

Enclosed is the final Streambed Alteration Agreement ("Agreement") for the Alamo Drive On-ramp Widening Project ("Project"). Before the Department may issue an Agreement, it must comply with the California Environmental Quality Act ("CEQA"). In this case, the Department, acting as a lead agency, determined your project is exempt from CEQA and filed a notice of exemption ("NOE") on August 31, 2012.

Under CEQA, filing a NOE starts a 35-day period within which a party may challenge the filing agency's approval of the project. You may begin your project before the 35-day period expires if you have obtained all necessary local, state, and federal permits or other authorizations. However, if you elect to do so, it will be at your own risk.

If you have any questions regarding this matter, please contact Melissa Escaron, Staff Environmental Scientist, at (707) 339-0334 or mescaron@dfg.ca.gov.

Sincerely,

Craig J. Weightman
Acting Environmental Program Manager
Bay Delta Region

cc: Frances Malamud-Roam
Warden Shelton
Melissa Escaron

CALIFORNIA DEPARTMENT OF FISH AND GAME
BAY DELTA REGION
7329 SILVERADO TRAIL
NAPA, CALIFORNIA 94558
(707) 944-5520
WWW.DFG.CA.GOV

STREAMBED ALTERATION AGREEMENT
NOTIFICATION NO. 1600-2012-0148-R3
Alamo Creek

CALIFORNIA DEPARTMENT OF TRANSPORTATION
INTERSTATE 80, ALAMO DRIVE ONRAMP WIDENING PROJECT

This Streambed Alteration Agreement (Agreement) is entered into between the California Department of Fish and Game (DFG) and California Department of Transportation as represented by Mr. Jeffrey Jensen.

RECITALS

WHEREAS, pursuant to Fish and Game Code (FGC) section 1602, Permittee notified DFG on April 6, 2012 that Permittee intends to complete the project described herein.

WHEREAS, pursuant to FGC section 1603, DFG has determined that the project could substantially adversely affect existing fish or wildlife resources and has included measures in the Agreement necessary to protect those resources.

WHEREAS, Permittee has reviewed the Agreement and accepts its terms and conditions, including the measures to protect fish and wildlife resources.

NOW THEREFORE, Permittee agrees to complete the project in accordance with the Agreement

PROJECT LOCATION

The project is located in Alamo Creek at the Interstate 80 bridge crossing, in the County of Solano, State of California.

PROJECT DESCRIPTION

The proposed Project will widen the Alamo Creek Bridge to the north by 10 feet. To accommodate this work the existing Alamo Creek Bridge abutments and piers walls will be widened by 10 ft.

The proposed bridge widening will employ the following construction methods:

- Establishing a temporary access road to allow foot and light vehicle traffic down to the creek area.
- Excavating the abutment areas using small equipment such as a small excavator or backhoe.
- Drilling 24" cast in drilled hole piles at the abutments and pouring concrete from the top of the bridge embankments.
- Installing a diversion dam between pier 2 and pier 3, if the creek has flowing water present.
- If necessary, installing a shoring system for deep excavation below the creek bed.
- Constructing a work platform using 12 x 12 foot mat, or adding rocks on top of filter fabric to support drilling equipment for both piers.
- Drilling piles, removing dirt, lowering steel cage and pouring piles by pumping concrete from above.
- Forming and pouring the pier walls using concrete pumps.
- Installing falsework to support the concrete bridge deck.
- Pouring bridge deck from the top.
- Removing falsework from the creek.
- Restoring temporary impact area to preconstruction contour and condition.

Schedule

Work in the creek is scheduled to occur between June 15 and October 15 and is anticipated to take 100 days.

Equipment

All clearing and grubbing will be completed either by hand using hand tools and/or small power tools, or by using backhoes and excavators. Other equipment to be used may include: a small bulldozer to grade the temporary access road; a backhoe, excavator, and front loader to collect debris and load into dump trucks for offsite disposal; drill augers; cranes; concrete mixer trucks and pump trucks to pump concrete for all cast-in-place structures.

PROJECT IMPACTS

Approximately 10 linear feet (800 square feet) of permanent impacts to the bed and bank of the creek and 30 linear feet (1,300 square feet) of temporary disturbance to the bed and bank of the creek will result from the bent excavation and installation, placement of a construction work platform and the temporary access road down to the creek.

Existing fish or wildlife resources the project could substantially adversely affect include:

- riparian habitat
- historic salmonid habitat
- aquatic invertebrates
- amphibians
- nesting birds
- Western pond turtles

The adverse effects the project could have on the fish or wildlife resources identified above include:

- increased shading
- permanent and temporary loss of natural bed and bank
- loss of habitat
- water quality degradation
- short-term release of contaminants
- tree removal
- disruption to nesting birds and other wildlife

MEASURES TO PROTECT FISH AND WILDLIFE RESOURCES

1. Administrative Measures

Permittee shall meet each administrative requirement described below.

1.1 Documentation at Project Site. Permittee shall make the Agreement, any extensions and amendments to the Agreement, and all related notification materials and California Environmental Quality Act (CEQA) documents, readily available at the project site at all times and shall be presented to DFG personnel, or personnel from another state, federal, or local agency upon request.

1.2 Providing Agreement to Persons at Project Site. Permittee shall provide copies of the Agreement and any extensions and amendments to the Agreement to all biological monitors and all

supervisory personnel who will be working on the project at the project site on behalf of Permittee, including but not limited to contractors, subcontractors, and inspectors.

1.3 Notification of Conflicting Provisions. Permittee shall notify DFG if Permittee determines or learns that a provision in the Agreement might conflict with a provision imposed on the project by another local, state, or federal agency. In that event, DFG shall contact Permittee to resolve any conflict.

1.4 Project Site Entry. Permittee agrees that DFG personnel may enter the project site at any time with notification to the Resident Engineer to verify compliance with the Agreement.

2. Avoidance and Minimization Measures

To avoid or minimize adverse impacts to fish and wildlife resources identified above, Permittee shall implement each measure listed below.

2.1 To minimize adverse impacts to fish and wildlife all work described in the project location and description shall be confined to the period of June 15 to October 15. Revegetation work is not confined to this time period.

2.2 At least 30-days prior to commencing project activities covered by this Agreement, the Permittee shall submit to DFG, for review and approval, the qualifications for a number of biologists (Qualified Biologists) that shall oversee the implementation of the conditions in this Agreement. At a minimum, the Qualified Biologists shall have a combination of academic training and professional experience in biological sciences and related resource management activities. The Qualified Biologists shall communicate to the Resident Engineer when any activity is not in compliance with this Agreement and the Resident Engineer shall immediately stop the activity that is not in compliance with this Agreement.

2.3 Within 48 hours prior to construction, a Qualified Biologist shall conduct a wildlife survey, at the appropriate time of day, focusing on presence of Western pond turtle (*Clemmys marmorata*) and Foothill yellow legged frog (*Rana boylii*). If any Western pond turtles or Foothill yellow legged frogs are found, the Permittee shall coordinate with the DFG to incorporate protection measures into the project.

2.4 Permittee shall conduct work defined in the above project description, and within the project area, during periods of dry weather. The project area is defined as the bed, bank, channel, and associated riparian habitat. The Permittee shall monitor forecasted precipitation. When ¼ inch or more of precipitation is forecasted to occur, the Permittee shall stop work before precipitation commences. No activity of the project may be started if its associated erosion control measures cannot be completed prior to the onset of precipitation. After any storm event, the Permittee shall inspect all sites currently under construction and all sites scheduled to begin construction within the next 72 hours for erosion and sediment problems and take corrective action as needed. Seventy-two hour weather forecasts from National Weather Service shall be consulted and work shall not start back up until runoff ceases and there is less than a 30% forecast for precipitation for the following 24-hour period.

2.5 Permittee shall utilize erosion control measures throughout all phases of operation where sediment runoff from exposed slopes threatens to enter waterways. At no time shall silt laden runoff be allowed to enter the stream or directed to where it may enter the stream. Erosion control installations shall be monitored for effectiveness and shall be repaired or replaced as recommended by the Qualified Biologist.

2.6 Permittee shall revegetate temporarily disturbed areas with native grasses, shrubs, and trees to provide cover and erosion control. Permittee shall submit a detailed Onsite Revegetation Plan to DFG for review and approval prior to start of construction.

2.7 The site shall be dewatered as necessary to provide an adequately dry work area. Any muddy or otherwise contaminated water shall be pumped to a settling tank prior to re-entering the creek. Work site dewatering can be accomplished using pumps and or siphons.

2.8 Disturbance or removal of vegetation shall not exceed the minimum necessary to complete operations.

2.9 The perimeter of the work site shall be adequately fenced using high visibility Environmentally Sensitive Area (ESA) fencing to prevent damage to adjacent riparian habitat. No construction activities, within the riparian zone, will be allowed within the habitat protected by the ESA fencing (this does not preclude activities from occurring on the bridge or deck work above the ESA area).

2.10 To protect nesting birds, no project activities shall occur from February 15 through August 31 unless nesting bird surveys have been completed by a Qualified Biologist. To prevent nest abandonment, a Qualified Biologist shall survey within 500 feet of the proposed Project for

nesting birds. If nests are found within the Project site or 500 feet from the Project then the Qualified Biologist shall establish a 50-foot buffer radius for nests of non-raptor bird species or a 300-foot buffer radius for raptor nests. The Qualified Biologist shall monitor the nesting birds and shall increase the buffer, through the Resident Engineer, if the Qualified Biologist determines the birds are showing signs of unusual or distressed behavior that may be the result of Project activities. To prevent encroachment, the established buffer(s) shall be clearly marked by high visibility material. Surveys shall be conducted during periods of peak activity (early morning, dusk) and shall be of sufficient duration to observe movement patterns. Identified nests shall be reported to DFG. The buffer area shall be fenced off from work activities and avoided until the young have fledged, as determined by a Qualified Biologist. During work, should birds indicate unusual or distressed behavior that could be indicative of future nest abandonment, the Qualified Biologist shall stop work immediately, through the Resident Engineer, and consult DFG on how to proceed.

2.11 If any wildlife is encountered during the course of project activities, said wildlife shall be allowed to leave the area unharmed and on their own volition.

2.12 Permittee shall comply with all applicable state and federal laws, including the California and Federal Endangered Species Act. This Agreement does not authorize the take of any state or federally endangered listed species. Liability for any take or incidental take of such species remains the responsibility of the Permittee for the duration of the project. Any unauthorized take of listed species may result in prosecution and nullification of the Agreement.

2.13 Concrete shall be excluded from surface water for a period of 30-days after it is poured/sprayed. During that time the concrete shall be kept moist and runoff from the concrete shall not be allowed to enter any water body. Commercial sealants may be applied to the concrete surface where difficulty in excluding flow for a long period may occur. If sealant is used, water shall be excluded from the site until the sealant is cured. If groundwater comes into contact with fresh concrete, it shall be prevented from flowing towards surface water.

2.14 Staging and storage areas for equipment, materials, fuels, lubricants and solvents, shall be located outside of the creek channel and banks. Stationary equipment such as motors, pumps, generators, compressors and welders, located within or adjacent to the creek shall be positioned over drip pans. Any equipment or vehicles driven and/or operated within or adjacent to the stream must be checked and

maintained daily, to prevent leaks of materials that if introduced to water could be deleterious to aquatic life.

2.15 Refueling of mobile construction equipment and vehicles shall not occur within 50 feet of any water body, or anywhere that spilled fuel could drain to a water body. Refueling of stationary equipment requiring breakdown and setup to move will remain in place. All equipment shall be refueled with appropriate drip pans, absorbent pads, and water quality Best Management Practices. Equipment and vehicles operating in the project area shall be checked and maintained daily to prevent leaks of fuels, lubricants, or other liquids.

3. Compensatory Measures

To compensate for adverse impacts to fish and wildlife resources identified above that cannot be avoided or minimized, Permittee shall implement each measure listed below.

3.1 At least 30-days prior to construction, Permittee shall submit a plan identifying an offsite mitigation location to DFG for review and approval. The mitigation plan shall mitigate permanent stream impacts at a minimum of a 3:1 ratio and temporary impacts at a 1:1 ratio. The Project will result in approximately 10 linear feet (800 square feet) of permanent impacts to the bed and bank of the creek and 30 linear feet (1,300 square feet) of temporary disturbance. Accordingly, mitigation for permanent impacts will be at least 30 linear feet (2400 square feet) and mitigation for temporary impacts will be 30 linear feet (1,300 square feet).

CONTACT INFORMATION

Any communication that Permittee or DFG submits to the other shall be in writing and any communication or documentation shall be delivered to the address below by U.S. mail, fax, or email, or to such other address as Permittee or DFG specifies by written notice to the other.

To Permittee:

Jeffrey G. Jensen, California Department of Transportation
111 Grand Ave.
Oakland, Ca 94623
Fax: 510.622.8729
Email: jeffrey_jensen@dot.ca.gov

To DFG:

Department of Fish and Game
Bay Delta Region
7329 Silverado Trail
Napa, California 94558
Attn: Lake and Streambed Alteration Program – Melissa Escaron
Notification #1600-2012- 0148-R3
Fax (707) 944-5553
mescaron@dfg.ca.gov

LIABILITY

Permittee shall be solely liable for any violations of the Agreement, whether committed by Permittee or any person acting on behalf of Permittee, including its officers, employees, representatives, agents or contractors and subcontractors, to complete the project or any activity related to it that the Agreement authorizes.

This Agreement does not constitute DFG's endorsement of, or require Permittee to proceed with the project. The decision to proceed with the project is Permittee's alone.

SUSPENSION AND REVOCATION

DFG may suspend or revoke in its entirety the Agreement if it determines that Permittee or any person acting on behalf of Permittee, including its officers, employees, representatives, agents, or contractors and subcontractors, is not in compliance with the Agreement.

Before DFG suspends or revokes the Agreement, it shall provide Permittee written notice by certified or registered mail that it intends to suspend or revoke. The notice shall state the reason(s) for the proposed suspension or revocation, provide Permittee an opportunity to correct any deficiency before DFG suspends or revokes the Agreement, and include instructions to Permittee, if necessary, including but not limited to a directive to immediately cease the specific activity or activities that caused DFG to issue the notice.

ENFORCEMENT

Nothing in the Agreement precludes DFG from pursuing an enforcement action against Permittee instead of, or in addition to, suspending or revoking the Agreement.

Nothing in the Agreement limits or otherwise affects DFG's enforcement authority or that of its enforcement personnel.

OTHER LEGAL OBLIGATIONS

This Agreement does not relieve Permittee or any person acting on behalf of Permittee, including its officers, employees, representatives, agents, or contractors and subcontractors, from obtaining any other permits or authorizations that might be required under other federal, state, or local laws or regulations before beginning the project or an activity related to it.

This Agreement does not relieve Permittee or any person acting on behalf of Permittee, including its officers, employees, representatives, agents, or contractors and subcontractors, from complying with other applicable statutes in the FGC including, but not limited to, FGC sections 2050 et seq. (threatened and endangered species), 3503 (bird nests and eggs), 3503.5 (birds of prey), 5650 (water pollution), 5652 (refuse disposal into water), 5901 (fish passage), 5937 (sufficient water for fish), and 5948 (obstruction of stream).

Nothing in the Agreement authorizes Permittee or any person acting on behalf of Permittee, including its officers, employees, representatives, agents, or contractors and subcontractors, to trespass.

AMENDMENT

DFG may amend the Agreement at any time during its term if DFG determines the amendment is necessary to protect an existing fish or wildlife resource.

Permittee may amend the Agreement at any time during its term, provided the amendment is mutually agreed to in writing by DFG and Permittee. To request an amendment, Permittee shall submit to DFG a completed DFG "Request to Amend Lake or Streambed Alteration" form and include with the completed form payment of the corresponding amendment fee identified in DFG's current fee schedule (see Cal. Code Regs., tit. 14, § 699.5).

TRANSFER AND ASSIGNMENT

This Agreement may not be transferred or assigned to another entity, and any purported transfer or assignment of the Agreement to another entity shall not be valid or effective, unless the transfer or assignment is requested by Permittee in writing, as specified below, and thereafter DFG approves the transfer or assignment in writing.

The transfer or assignment of the Agreement to another entity shall constitute a minor amendment, and therefore to request a transfer or assignment, Permittee shall submit to DFG a completed DFG "Request to Amend Lake or Streambed Alteration" form and include with the completed form payment of the minor amendment fee identified in DFG's current fee schedule (see Cal. Code Regs., tit. 14, § 699.5).

EXTENSIONS

In accordance with FGC section 1605(b), Permittee may request one extension of the Agreement, provided the request is made prior to the expiration of the Agreement's term. To request an extension, Permittee shall submit to DFG a completed DFG "Request to Extend Lake or Streambed Alteration" form and include with the completed form payment of the extension fee identified in DFG's current fee schedule (see Cal. Code Regs., tit. 14, § 699.5). DFG shall process the extension request in accordance with FGC 1605(b) through (e).

If Permittee fails to submit a request to extend the Agreement prior to its expiration, Permittee must submit a new notification and notification fee before beginning or continuing the project the Agreement covers (Fish & G. Code, § 1605, subd. (f)).

EFFECTIVE DATE

The Agreement becomes effective on the date of DFG's signature, which shall be: 1) after Permittee's signature; 2) after DFG complies with all applicable requirements under the California Environmental Quality Act (CEQA); and 3) after payment of the applicable FGC section 711.4 filing fee listed at http://www.dfg.ca.gov/habcon/ceqa/ceqa_changes.html.

TERM

This Agreement shall expire on December 31, 2015, unless it is terminated or extended before then. All provisions in the Agreement shall remain in force throughout its term. Permittee shall remain responsible for implementing any provisions specified herein to protect fish and wildlife resources after the Agreement expires or is terminated, as FGC section 1605(a)(2) requires.

AUTHORITY

If the person signing the Agreement (signatory) is doing so as a representative of Permittee, the signatory hereby acknowledges that he or she is doing so on Permittee's

behalf and represents and warrants that he or she has the authority to legally bind Permittee to the provisions herein.

AUTHORIZATION

This Agreement authorizes only the project described herein. If Permittee begins or completes a project different from the project the Agreement authorizes, Permittee may be subject to civil or criminal prosecution for failing to notify DFG in accordance with FGC section 1602.

CONCURRENCE

The undersigned accepts and agrees to comply with all provisions contained herein.

FOR CALIFORNIA DEPARTMENT OF TRANSPORTATION

Carina S Montano for — 8/10/12

Jeffrey G. Jensen — Date

Office Chief

FOR DEPARTMENT OF FISH AND GAME

Weightman — 8/31/12

Craig J Weightman — Date

Acting Environmental Program Manager

Prepared by: Melissa Escaron
Staff Environmental Scientist

Date Sent: June 26, 2012
Revision Sent: August 10 2012

Pecklt 5/15/12

FOR DEPARTMENT USE ONLY				
Date Received	Amount Received	Amount Due	Date Complete	Notification No.
5/10/12	$ 0	$ 4482.75		1600-2012-0148-3

CK# 082-979329
CA Dept of Transportation

Escaron
Shelton
Mason

STATE OF CALIFORNIA
DEPARTMENT OF FISH AND GAME

NOTIFICATION OF LAKE OR STREAMBED ALTERATION

Complete EACH field, unless otherwise indicated, following the enclosed instructions and submit ALL required enclosures. Attach additional pages, if necessary.

Fish & Game
MAY 10 2012
Yountville

1. APPLICANT PROPOSING PROJECT

Name	Jeffrey G. Jensen		
Business/Agency	Department of Transportation (Caltrans) District 4		
Street Address	111 Grand Avenue, MS 8		
City, State, Zip	Oakland, CA 94612		
Telephone	(510) 622-0114	Fax	(530) 660-9214
Email	jeffrey_jensen@dot.ca.gov		

2. CONTACT PERSON (*Complete only if different from applicant*)

Name	Frances Malamud-Roam		
Street Address	111 Grand Avenue, MS 8		
City, State, Zip	Oakland, CA 94612		
Telephone	(510) 286-5376	Fax	(510) 286-6374
Email	Frances_Malamud-Roam@dot.ca.gov		

3. PROPERTY OWNER (*Complete only if different from applicant*)

Name			
Street Address			
City, State, Zip			
Telephone		Fax	
Email			

4. PROJECT NAME AND AGREEMENT TERM

A. Project Name	Alamo Drive On-Ramp Lengthening Project
B. Agreement Term Requested	☑ Regular (*5 years or less*) ☐ Long-term (*greater than 5 years*)

C. Project Term		D. Seasonal Work Period		E. Number of Work Days
Beginning (*year*)	Ending (*year*)	Start Date (*month/day*)	End Date (*month/day*)	
2013	2014	06/15	10/15	200.00

NOTIFICATION OF LAKE OR STREAMBED ALTERATION

5. AGREEMENT TYPE

Check the applicable box. If box B, C, D, or E is checked, complete the specified attachment.

A.	☑ Standard *(Most construction projects, excluding the categories listed below)*	
B.	☐ Gravel/Sand/Rock Extraction (*Attachment A*)	*Mine I.D. Number:* _____
C.	☐ Timber Harvesting (*Attachment B*)	THP *Number:* _____
D.	☐ Water Diversion/Extraction/Impoundment (*Attachment C*)	*SWRCB Number:* _____
E.	☐ Routine Maintenance (*Attachment D*)	
F.	☐ DFG Fisheries Restoration Grant Program (FRGP)	*FRGP Contract Number:* _____
G.	☐ Master	
H.	☐ Master Timber Harvesting	

6. FEES

Please see the current fee schedule to determine the appropriate notification fee. Itemize each project's estimated cost and corresponding fee. ***Note: The Department may not process this notification until the correct fee has been received.***

	A. Project	B. Project Cost	C. Project Fee
1	Alamo Drive On-ramp Lengthening and Bridge Widening	$2,000,000.00	$4,482.75
2			
3			
4			
5			
		D. Base Fee *(if applicable)*	
		E. TOTAL FEE ENCLOSED	$4,482.75

7. PRIOR NOTIFICATION OR ORDER

A. Has a notification previously been submitted to, or a Lake or Streambed Alteration Agreement previously been issued by, the Department for the project described in this notification?

☐ Yes (*Provide the information below*) ☑ No

Applicant: _____ Notification Number: _____ Date: _____

B. Is this notification being submitted in response to an order, notice, or other directive ("order") by a court or administrative agency (including the Department)?

☑ No ☐ Yes (*Enclose a copy of the order, notice, or other directive. If the directive is not in writing, identify the person who directed the applicant to submit this notification and the agency he or she represents, and describe the circumstances relating to the order.*)

☐ *Continued on additional page(s)*

8. PROJECT LOCATION

A. Address or description of project location.

(Include a map that marks the location of the project with a reference to the nearest city or town, and provide driving directions from a major road or highway)

This proposed project is located in the city of Vacaville in Solano County, at the Alamo Drive on-ramp to westbound I-80 (post mile [PM] 24.8 to 25.2), at latitude 38 20'41.46" N, and longitude 122 00'06.38"W. See attached map and aerial image (Attachment 2).

Driving directions: From Oakland: Merge onto 1-80 E for 44 miles. Take exit 53 for Alamo Drive toward Merchant Street. Keep left at fork and merge onto Alamo Drive. Turn left onto Merchant Street and take the I-80 W on-ramp.
From Sacramento: Merge onto I-80 W for 28 miles. Take Mason Street exit. Turn left onto Mason Street. Turn left onto Merchant Street and take the I-80 W on-ramp.

☐ *Continued on additional page(s)*

B. River, stream, or lake affected by the project.	Alamo Creek
C. What water body is the river, stream, or lake tributary to?	Ulatis Creek
D. Is the river or stream segment affected by the project listed in the state or federal Wild and Scenic Rivers Acts?	☐ Yes ☑ No ☐ Unknown
E. County	Solano

F. USGS 7.5 Minute Quad Map Name	G. Township	H. Range	I. Section	J. ¼ Section
Fairfield North	06N	01W	29	

☐ *Continued on additional page(s)*

K. Meridian (*check one*)	☐ Humboldt ☑ Mt. Diablo ☐ San Bernardino
L. Assessor's Parcel Number(s)	

Caltrans Right of Way

☐ *Continued on additional page(s)*

M. Coordinates (*If available, provide at least latitude/longitude or UTM coordinates and check appropriate boxes)*

Latitude/Longitude	*Latitude:* 38 20'41.46" N	*Longitude:* 122 00'06.38"W	
	☑ Degrees/Minutes/Seconds	☐ Decimal Degrees	☐ Decimal Minutes
UTM	*Easting:* 587241.7	*Northing:* 4244533.3	☑ Zone 10 ☐ Zone 11
Datum used for Latitude/Longitude or UTM	☐ NAD 27	☑ NAD 83 or WGS 84	

9. PROJECT CATEGORY AND WORK TYPE *(Check each box that applies)*

PROJECT CATEGORY	NEW CONSTRUCTION	REPLACE EXISTING STRUCTURE	REPAIR/MAINTAIN EXISTING STRUCTURE
Bank stabilization – bioengineering/recontouring	☐	☐	☐
Bank stabilization – rip-rap/retaining wall/gabion	☐	☐	☐
Boat dock/pier	☐	☐	☐
Boat ramp	☐	☐	☐
Bridge	☑	☐	☐
Channel clearing/vegetation management	☐	☐	☐
Culvert	☐	☐	☐
Debris basin	☐	☐	☐
Dam	☐	☐	☐
Diversion structure – weir or pump intake	☐	☐	☐
Filling of wetland, river, stream, or lake	☐	☐	☐
Geotechnical survey	☐	☐	☐
Habitat enhancement – revegetation/mitigation	☐	☐	☐
Levee	☐	☐	☐
Low water crossing	☐	☐	☐
Road/trail	☐	☐	☐
Sediment removal – pond, stream, or marina	☐	☐	☐
Storm drain outfall structure	☐	☐	☐
Temporary stream crossing	☐	☐	☐
Utility crossing : Horizontal Directional Drilling	☐	☐	☐
Jack/bore	☐	☐	☐
Open trench	☐	☐	☐
Other *(specify)*:	☐	☐	☐

10. PROJECT DESCRIPTION

A. Describe the project in detail. Photographs of the project location and immediate surrounding area should be included.

- Include any structures (e.g., rip-rap, culverts, or channel clearing) that will be placed, built, or completed in or near the stream, river, or lake.
- Specify the type and volume of materials that will be used.
- If water will be diverted or drafted, specify the purpose or use.

Enclose diagrams, drawings, plans, and/or maps that provide all of the following: site specific construction details; the dimensions of each structure and/or extent of each activity in the bed, channel, bank or floodplain; an overview of the entire project area (i.e., "bird's-eye view") showing the location of each structure and/or activity, significant area features, and where the equipment/machinery will enter and exit the project area.

Caltrans proposes to lengthen the westbound on-ramp onto I-80 at Alamo Drive in the City of Vacaville in Solano County. The existing Alamo Creek bridge is a 3-span bridge and will be widened by 10 feet on the north side of the ramp.
Text continues in Attachment 1.

☑ *Continued on additional page(s)*

B. Specify the equipment and machinery that will be used to complete the project.

Small mechanical tools, or backhoes and excavators for clearing; dozer to grade the temporary access road; a backhoe or excavator and a front loader will collect debris and load into dump trucks for offsite disposal; drill augers; cranes; concrete mixer trucks and pump trucks.

☑ *Continued on additional page(s)*

C. Will water be present during the proposed work period (specified in box 4.D) in the stream, river, or lake (specified in box 8.B).	☐ Yes ☑ No (*Skip to box 11*)
D. Will the proposed project require work in the wetted portion of the channel?	☐ Yes (*Enclose a plan to divert water around work site*) ☑ No

11. PROJECT IMPACTS

A. Describe impacts to the bed, channel, and bank of the river, stream, or lake, and the associated riparian habitat. Specify the dimensions of the modifications in length (linear feet) and area (square feet or acres) and the type and volume of material (cubic yards) that will be moved, displaced, or otherwise disturbed, if applicable.

The impacts to aquatic and riparian habitat by the proposed project construction will be limited to 10 linear feet of permanent modification and 30 linear feet of temporary modification.

☑ *Continued on additional page(s)*

B. Will the project affect any vegetation? ☑ Yes (*Complete the tables below*) ☐ No

Vegetation Type	Temporary Impact	Permanent Impact
Non-native grassland	Linear feet: 600 Total area: 5,000 sq ft	Linear feet: 600 Total area: 14,500 sq ft
riparian (grasses, small shrubs, non-native prunus & 1 small oak)	Linear feet: 30 Total area: 1300 sq ft	Linear feet: 10 Total area: 800 sq ft

Tree Species	Number of Trees to be Removed	Trunk Diameter (range)
Prunus dulcis	4	4-6 inch
Quercus lobata	1	6 inch

☑ *Continued on additional page(s)*

C. Are any special status animal or plant species, or habitat that could support such species, known to be present on or near the project site?

☑ Yes *(List each species and/or describe the habitat below)* ☐ No ☐ Unknown

While no listed fish species are present in the creek due to a downstream barrier, the project has been assessed for Essential Fish Habitat for Chinook salmon.

☑ *Continued on additional page(s)*

D. Identify the source(s) of information that supports a "yes" or "no" answer above in Box 11.C.

CA Natural Diversity Database, U.S. Fish and Wildlife species list, NMFS technical assistance, historic observations of Chinook salmon in Ulatis Creek, but unconfirmed in Alamo Creek.

☑ *Continued on additional page(s)*

E. Has a biological study been completed for the project site?

☑ Yes (*Enclose the biological study*) ☐ No

Note: A biological assessment or study may be required to evaluate potential project impacts on biological resources.

F. Has a hydrological study been completed for the project or project site?

☑ Yes (*Enclose the hydrological study*) ☐ No

Note: A hydrological study or other information on site hydraulics (e.g., flows, channel characteristics, and/or flood recurrence intervals) may be required to evaluate potential project impacts on hydrology.

12. MEASURES TO PROTECT FISH, WILDIFE, AND PLANT RESOURCES

A. Describe the techniques that will be used to prevent sediment from entering watercourses during and after construction.

Erosion control measures shall be used to address all disturbed soil areas (including temporary access paths). Measures proposed in the project include compost blanket, and compost incorporated in combination with hydroseeding. Sediment controls, including fiber rolls, will be used to retain sediments and to help control runoff into Alamo Creek.

☑ *Continued on additional page(s)*

B. Describe project avoidance and/or minimization measures to protect fish, wildlife, and plant resources.

Construction in the riparian/stream habitat areas will be limited to the dry season, from June 15 to October 15.

A CDFG-approved biological monitor will be present to conduct preconstruction clearance surveys and to monitor initial ground-disturbing activities. Full discussion of avoidance and minimization measures continues in Attachment 1.

☑ *Continued on additional page(s)*

C. Describe any project mitigation and/or compensation measures to protect fish, wildlife, and plant resources.

Caltrans will plant 5 oaks (Q. agrifolia), tree pot-sized (10 in long), to replace the one oak that is removed. The slope above the bank that will be temporarily disturbed by the project construction will be hydroseeded to stabilize.

☑ *Continued on additional page(s)*

13. PERMITS

List any local, state, and federal permits required for the project and check the corresponding box(es). Enclose a copy of each permit that has been issued.

A.	U.S. Army Corps of Engineers 404 NWP 14 (non-reporting)	☑ Applied	☐ Issued
B.	RWQCB 401 Certification	☑ Applied	☐ Issued
C.	NOAA/NMFS Letter of Concurrence	☐ Applied	☑ Issued

D. Unknown whether ☐ local, ☐ state, or ☐ federal permit is needed for the project. (*Check each box that applies*)

☐ *Continued on additional page(s)*

14. ENVIRONMENTAL REVIEW

A. Has a draft or final document been prepared for the project pursuant to the California Environmental Quality Act (CEQA), National Environmental Protection Act (NEPA), California Endangered Species Act (CESA) and/or federal Endangered Species Act (ESA)?

☑ Yes (*Check the box for each CEQA, NEPA, CESA, and ESA document that has been prepared and enclose a copy of each*)

☐ No (*Check the box for each CEQA, NEPA, CESA, and ESA document listed below that will be or is being prepared*)

☑ Notice of Exemption	☐ Mitigated Negative Declaration	☑ NEPA document (*type*): CE(Attachment 8)
☐ Initial Study	☐ Environmental Impact Report	☑ CESA document (*type*): CE(Attachment 8)
☐ Negative Declaration	☐ Notice of Determination *(Enclose)*	☑ ESA document (*type*): NO EFFECTS
☐ THP/ NTMP	☐ Mitigation, Monitoring, Reporting Plan	

B. State Clearinghouse Number (*If applicable*)			
C. Has a CEQA lead agency been determined?	☑ Yes (*Complete boxes D, E, and F*)	☐ No (*Skip to box 14.G*)	
D. CEQA Lead Agency	California Department of Transportation, District 4		
E. Contact Person	Wahida Rashid	F. Telephone Number	(510) 286-5935

G. If the project described in this notification is part of a larger project or plan, briefly describe that larger project or plan.

Not applicable.

☐ *Continued on additional page(s)*

H. Has an environmental filing fee (Fish and Game Code section 711.4) been paid?

☐ Yes (*Enclose proof of payment*) ☑ No (*Briefly explain below the reason a filing fee has not been paid*)

Not applicable, project is a CE.

Note: If a filing fee is required, the Department may not finalize a Lake or Streambed Alteration Agreement until the filing fee is paid.

15. SITE INSPECTION

Check one box only.

☑ In the event the Department determines that a site inspection is necessary, I hereby authorize a Department representative to enter the property where the project described in this notification will take place at any reasonable time, and hereby certify that I am authorized to grant the Department such entry.

☐ I request the Department to first contact (*insert name*) _____ at (*insert telephone number*) _____ to schedule a date and time to enter the property where the project described in this notification will take place. I understand that this may delay the Department's determination as to whether a Lake or Streambed Alteration Agreement is required and/or the Department's issuance of a draft agreement pursuant to this notification.

16. DIGITAL FORMAT

Is any of the information included as part of the notification available in digital format (i.e., CD, DVD, etc.)?
☑ Yes (Please enclose the information via digital media with the completed notification form) ☐ No

17. SIGNATURE

I hereby certify that to the best of my knowledge the information in this notification is true and correct and that I am authorized to sign this notification as, or on behalf of, the applicant. I understand that if any information in this notification is found to be untrue or incorrect, the Department may suspend processing this notification or suspend or revoke any draft or final Lake or Streambed Alteration Agreement issued pursuant to this notification. I understand also that if any information in this notification is found to be untrue or incorrect and the project described in this notification has already begun, I and/or the applicant may be subject to civil or criminal prosecution. I understand that this notification applies only to the project(s) described herein and that I and/or the applicant may be subject to civil or criminal prosecution for undertaking any project not described herein unless the Department has been separately notified of that project in accordance with Fish and Game Code section 1602 or 1611.

Carrie S. Montow for
Signature of Applicant or Applicant's Authorized Representative

5/9/12
Date

Jeffrey G. Jensen, Office Chief
Print Name

NOTICE OF EXEMPTION

To: Office of Planning and Research Post Office Box 3044 Sacramento, California 95812-3044	**From:** California Department of Fish and Game Bay Delta Region 7329 Silverado Trail Napa, California 94558

Project Title: Alamo Drive On-ramp Widening Project, Interstate 80

Specific Project Location: Interstate 80 at Alamo Creek Bridge

Project Location - City and County: Vacaville, Solano County

Description of Project: The proposed project will widen the Interstate 80 Alamo Creek Bridge by 10 feet to the north. To accommodate this widening, the existing abutments will be extended, new piles will be installed in the creek bed and the three existing pier walls will be extended. A temporary access road will be constructed on the creek bank and a temporary work pad will be built in the creek bed to accommodate the drill rig. If flows are present in the creek, they will be diverted around the work site. Onsite temporary impacts will be address through a regarding, slope stabilization, and revegetation effort, while permanent impacts will be mitigated offsite as approved by the Department of Fish and Game. Issuance of a Streambed Alteration Agreement Number 1600-2012-0148-R3 is pursuant to Fish and Game Code Section 1602.

Name of Lead Agency Approving Project: California Department of Fish and Game

Name of Applicant, Person, or Agency Carrying Out Project: Jeffrey G. Jensen, California Department of Transportation

Applicant Address: 111 Grand Avenue, Oakland, CA 94623

Exempt Status - Class and Guidelines Section: Class 1 – Section 15301 et seq.

Reasons Why Project is Exempt: Existing facilities

Lead Agency Contact Person: Melissa Escaron, Staff Environmental Scientist, (707) 339-0334

Signature: CJWeightman **Date**: August 31, 2012
Name: Craig J. Weightman, Acting Environmental Program Manager

[x] Signed by Lead Agency **Date received for filing at OPR:** _____
[ ] Signed by Applicant