Dist	COUNTY	ROUTE	POST MILES TOTAL PROJECT	SHEET No.	TOTAL SHEETS
04	Sol	80	R24.8/R25.2	21A	95

REGISTERED CIVIL ENGINEER 2/21/13 DATE

9-24-12
PLANS APPROVAL DATE

REGISTERED PROFESSIONAL ENGINEER Ganga D. Tripathi No. 78447 Exp. 9-30-13 CIVIL STATE OF CALIFORNIA

THE STATE OF CALIFORNIA OR ITS OFFICERS OR AGENTS SHALL NOT BE RESPONSIBLE FOR THE ACCURACY OR COMPLETENESS OF SCANNED COPIES OF THIS PLAN SHEET.

2

NOTES:

1. EXACT LOCATION OF UPSTREAM COFFERDAM, DOWNSTREAM COFFERDAM, AND PLASTIC PIPE SIZE TO BE DETERMINED BY CONTRACTOR'S OPERATION.
2. MULTIPLE DEPLOYMENT OF TEMPORARY CREEK DIVERSION SYSTEM MAY BE NECESSARY.

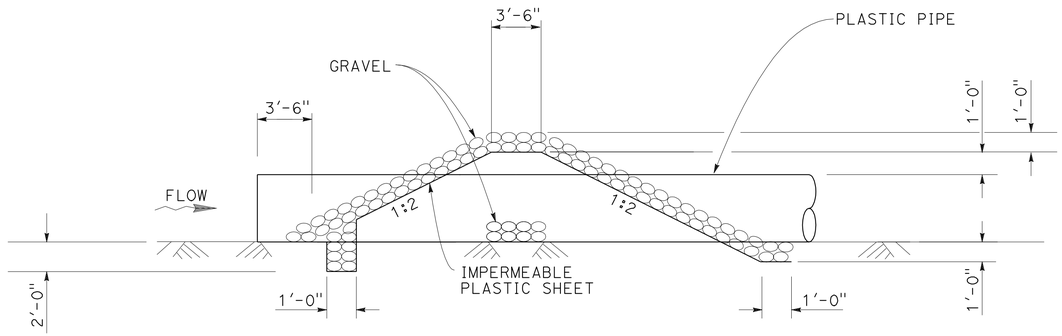

UPSTREAM

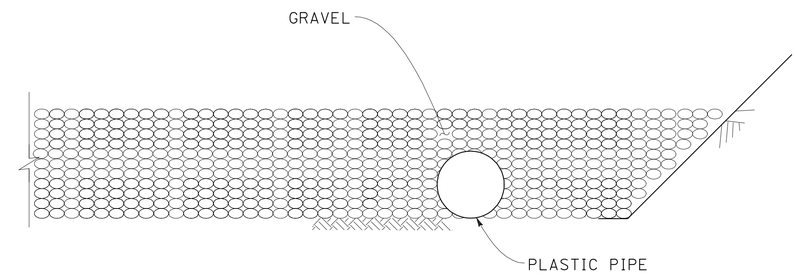

SECTION A-A

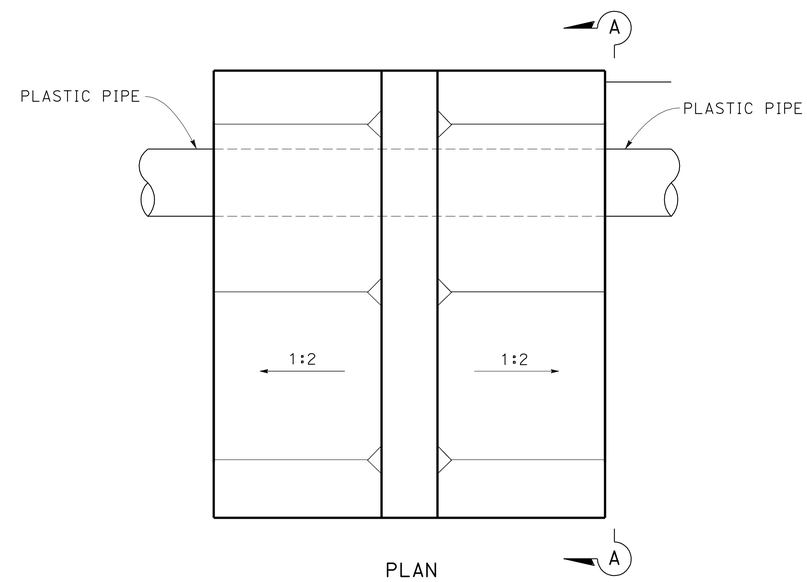

PLAN

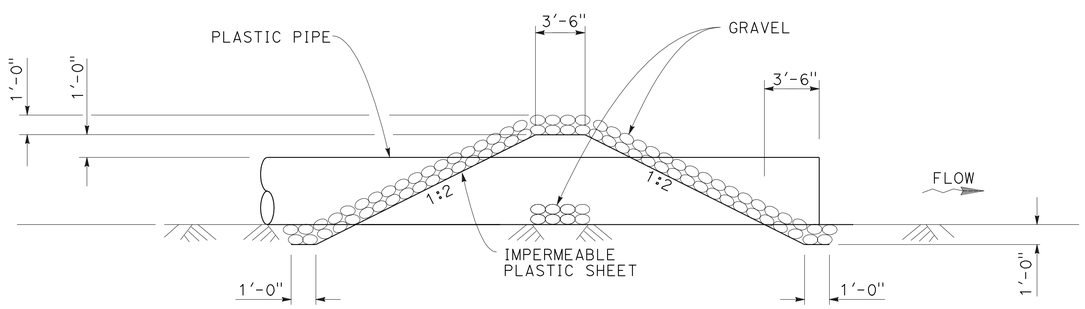

DOWNSTREAM

TEMPORARY CREEK DIVERSION SYSTEM

2 **ADDED PER ADDENDUM No. 2 DATED MARCH 1, 2013**

DRAINAGE DETAILS

NO SCALE

DD-7

STATE OF CALIFORNIA - DEPARTMENT OF TRANSPORTATION
Caltrans
HYDRAULICS

FUNCTIONAL SUPERVISOR: KATHLEEN REILLY

CALCULATED-DESIGNED BY: KHAI SHOON LEONG
CHECKED BY: KATHLEEN REILLY

REVISED BY: K L
DATE REVISED: 2/21/13

LAST REVISION 02-21-13
DATE PLOTTED => 27-FEB-2013
TIME PLOTTED => 12:34

DIST	COUNTY	ROUTE	POST MILES TOTAL PROJECT	SHEET No.	TOTAL SHEETS
04	Sol	80	R24.8/R25.2	85	95

REGISTERED CIVIL ENGINEER 2/1/12 DATE

9-24-12
PLANS APPROVAL DATE

REGISTERED PROFESSIONAL ENGINEER SAMEH HEGAZI No. C64899 Exp. 06/30/13 CIVIL STATE OF CALIFORNIA

The State of California or its officers or agents shall not be responsible for the accuracy or completeness of electronic copies of this plan sheet.

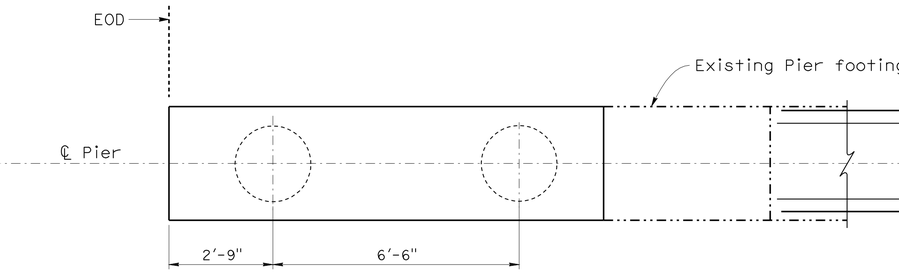

FOOTING PLAN

½" = 1'-0"

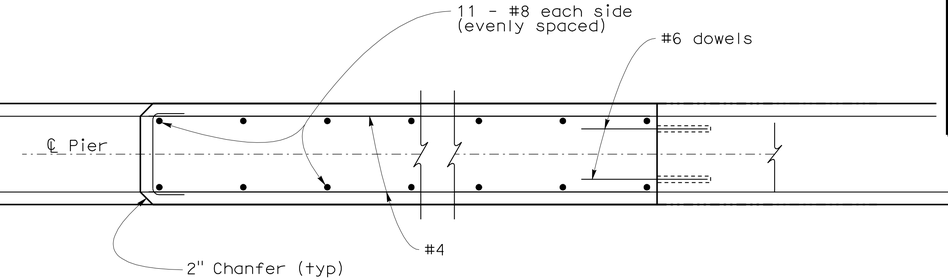

SECTION E-E

1" = 1'-0"

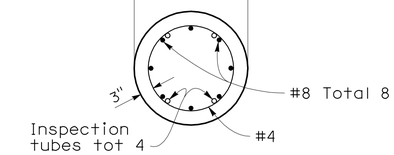

SECTION F-F

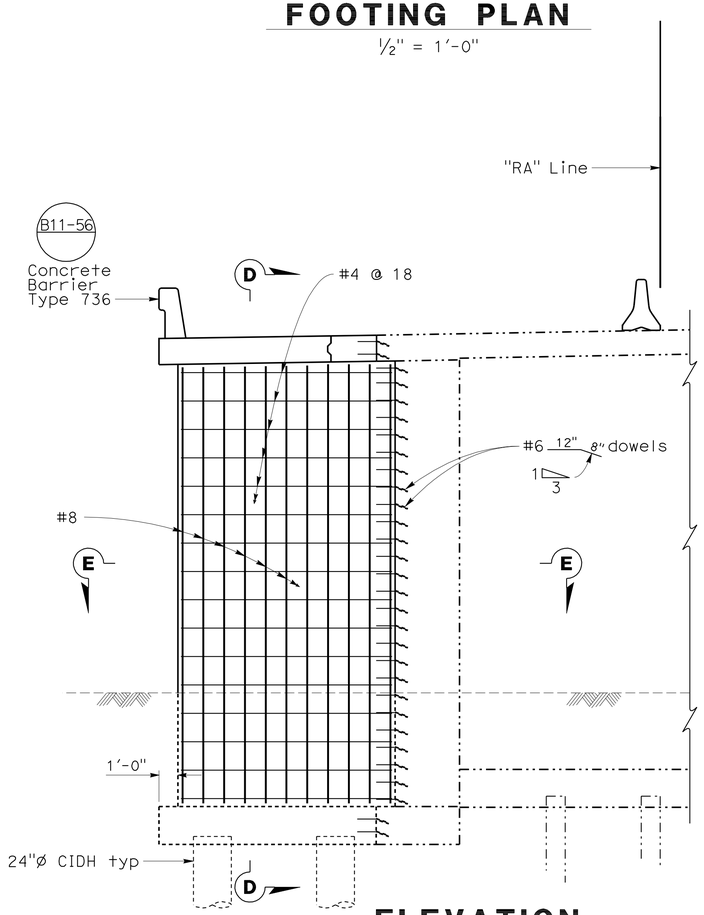

ELEVATION

1/4 " = 1'-0"

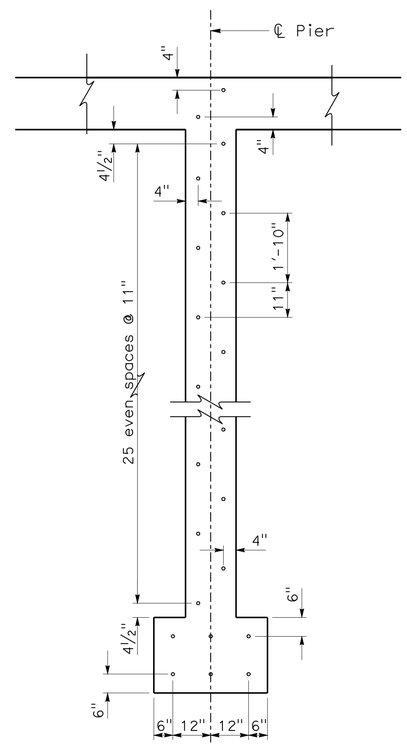

DOWEL LAYOUT

½" = 1'-0"

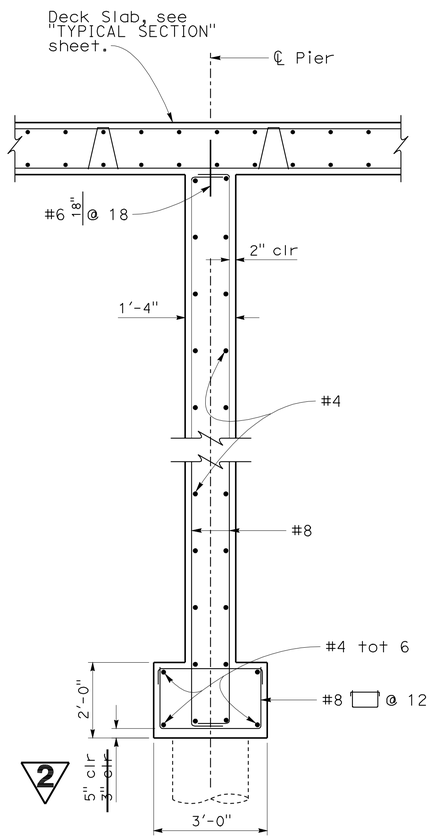

SECTION D-D

½" = 1'-0"

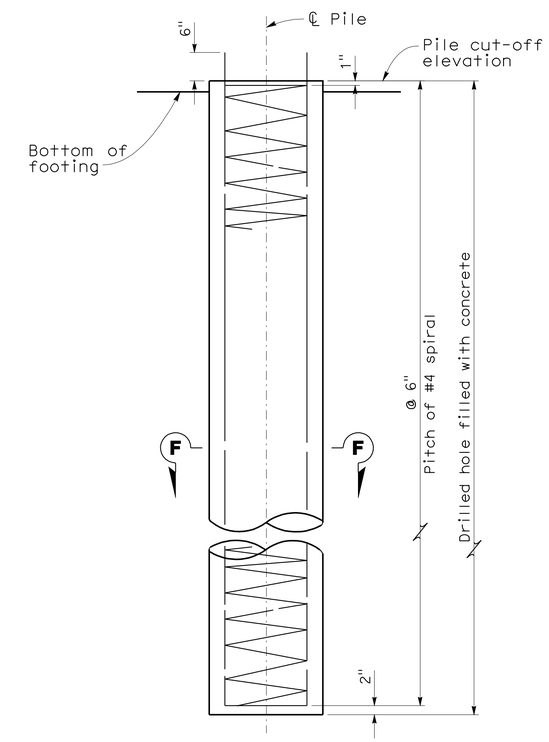

ELEVATION
24" CIDH PILE

¾" = 1'-0"

B2-3

2 REVISED PER ADDENDUM No. 2 DATED MARCH 1, 2013

DESIGN	BY Sameh Hegazi	CHECKED Adam Menke	
DETAILS	BY JFCasarino	CHECKED S. Hegazi / A. Menke	
QUANTITIES	BY Sameh Hegazi	CHECKED Adam Menke	

STATE OF CALIFORNIA
DEPARTMENT OF TRANSPORTATION

DIVISION OF ENGINEERING SERVICES
STRUCTURE DESIGN
DESIGN BRANCH 8

BRIDGE NO. 23-0010
POST MILE R25.03

ALAMO CREEK BRIDGE (WIDEN)
PIER DETAILS

STRUCTURES DESIGN DETAIL SHEET (ENGLISH) (REV. 09-01-10)

ORIGINAL SCALE IN INCHES FOR REDUCED PLANS 0 1 2 3

UNIT: X
PROJECT NUMBER & PHASE: 0400000133 1 CONTRACT NO.: 0A0901

DISREGARD PRINTS BEARING EARLIER REVISION DATES

REVISION DATES 9-12-11

SHEET 7 OF 17

FILE => 23-0010_07pier.dgn

USERNAME => s121614 DATE PLOTTED => 27-FEB-2013 TIME PLOTTED => 12:32