Dist	COUNTY	ROUTE	POST MILES TOTAL PROJECT	SHEET No.	TOTAL SHEETS
04	CC, Sol	80	13.9/14.2, 0.0/0.5	1	42

INDEX OF PLANS

SHEET No.	DESCRIPTION
1	TITLE AND LOCATION MAP
2-3	UTILITY PLANS
4-8	LIGHTING AND DETAILS
9-14	REVISED AND NEW STANDARD PLANS

STRUCTURE PLANS

15-42	CARQUINEZ Br. FENDER REHABILITATION Br. No. 23-0015R

THE STANDARD PLANS LIST APPLICABLE TO THIS CONTRACT IS INCLUDED IN THE NOTICE TO BIDDERS AND SPECIAL PROVISIONS BOOK.

STATE OF CALIFORNIA

DEPARTMENT OF TRANSPORTATION

PROJECT PLANS FOR CONSTRUCTION ON

STATE HIGHWAY

IN CONTRA COSTA AND SOLANO COUNTIES AT THE CARQUINEZ BRIDGES

TO BE SUPPLEMENTED BY STANDARD PLANS DATED MAY 2006

LOCATION MAP

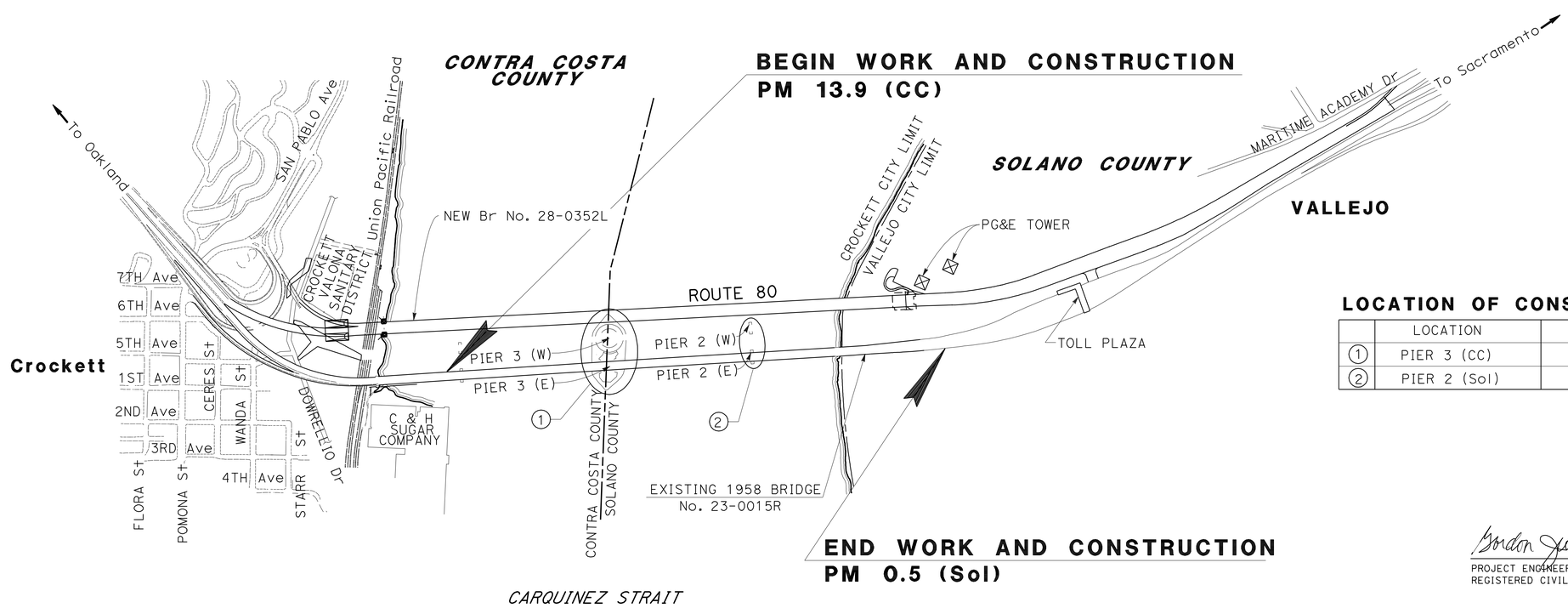

LOCATION OF CONSTRUCTION

	LOCATION	PM
1	PIER 3 (CC)	14.2
2	PIER 2 (Sol)	0.2

PROJECT ENGINEER REGISTERED CIVIL ENGINEER — DATE 2-28-11

June 27, 2011
PLANS APPROVAL DATE

REGISTERED PROFESSIONAL ENGINEER — Gordon W. Jeong — No. 33151 — Exp. 6-30-12 — CIVIL — STATE OF CALIFORNIA

THE STATE OF CALIFORNIA OR ITS OFFICERS OR AGENTS SHALL NOT BE RESPONSIBLE FOR THE ACCURACY OR COMPLETENESS OF SCANNED COPIES OF THIS PLAN SHEET.

THE CONTRACTOR SHALL POSSESS THE CLASS (OR CLASSES) OF LICENSE AS SPECIFIED IN THE "NOTICE TO BIDDERS."

NO SCALE

PROJECT MANAGER: LAWRENCE A. JONES
DESIGN ENGINEER: GORDON W. JEONG

CONTRACT No.	04-049074
PROJECT ID	0400000058

LAST REVISION 02-24-11 — DATE PLOTTED => 30-JUN-2011 — TIME PLOTTED => 15:36

Dist	COUNTY	ROUTE	POST MILES TOTAL PROJECT	SHEET No.	TOTAL SHEETS
04	CC,Sol	80	13.9/14.2, 0.0/0.5	2	42

REGISTERED CIVIL ENGINEER 2-28-11 DATE

6-27-11
PLANS APPROVAL DATE

REGISTERED PROFESSIONAL ENGINEER Gordon W. Jeong No. 33151 Exp. 6-30-12 CIVIL STATE OF CALIFORNIA

THE STATE OF CALIFORNIA OR ITS OFFICERS OR AGENTS SHALL NOT BE RESPONSIBLE FOR THE ACCURACY OR COMPLETENESS OF SCANNED COPIES OF THIS PLAN SHEET.

LEGEND:

UTILITIES	EXISTING UTILITIES	OWNERSHIP
FIBER OPTIC CABLE	—— fo —— —	PAC BELL
COMPRESSED AIR	—— ca ——	CALTRANS
CALTRANS COMMUNICATION	—— ctc ——	CALTRANS
WATER	- —— w —— —	CALTRANS
ELECTRIC	—— -e ——	CALTRANS
GAS	—— -g ——	PG & E

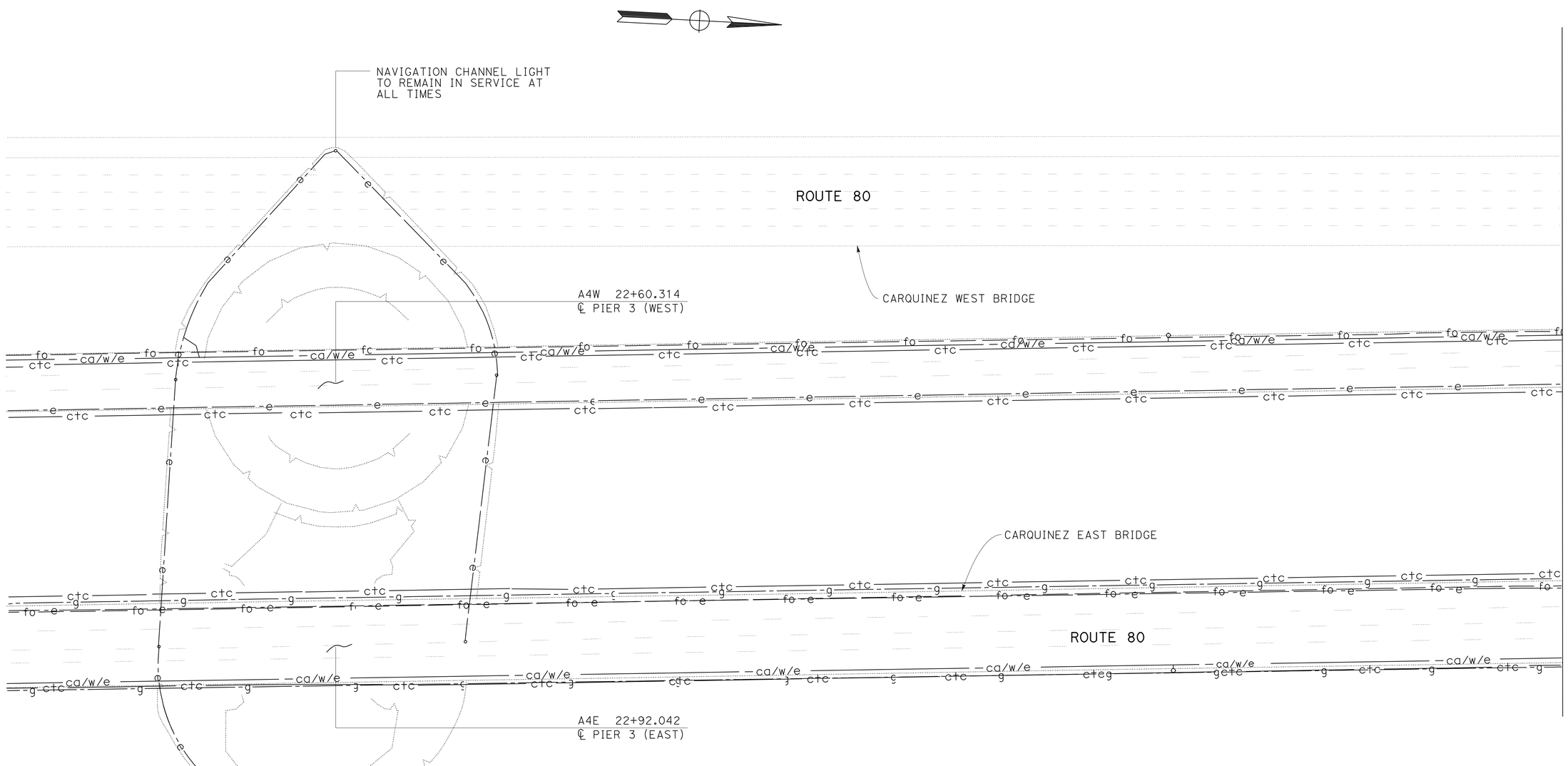

THIS PLAN ACCURATE FOR UTILITY INFORMATION ONLY

UTILITY PLAN

NO SCALE

U-1

STATE OF CALIFORNIA - DEPARTMENT OF TRANSPORTATION
DESIGN
FUNCTIONAL SUPERVISOR: GORDON W. JEONG
CALCULATED-DESIGNED BY: FERNANDO CORDERO
CHECKED BY: SAMATHA SIRIVOL
REVISED BY
DATE REVISED

LAST REVISION 02-24-11
DATE PLOTTED => 30-JUN-2011
TIME PLOTTED => 15:36

Dist	COUNTY	ROUTE	POST MILES TOTAL PROJECT	SHEET No.	TOTAL SHEETS
04	CC,Sol	80	13.9/14.2, 0.0/0.5	3	42

REGISTERED CIVIL ENGINEER DATE 2-28-11

6-27-11
PLANS APPROVAL DATE

REGISTERED PROFESSIONAL ENGINEER Gordon W. Jeong No. 33151 Exp. 6-30-12 CIVIL STATE OF CALIFORNIA

THE STATE OF CALIFORNIA OR ITS OFFICERS OR AGENTS SHALL NOT BE RESPONSIBLE FOR THE ACCURACY OR COMPLETENESS OF SCANNED COPIES OF THIS PLAN SHEET.

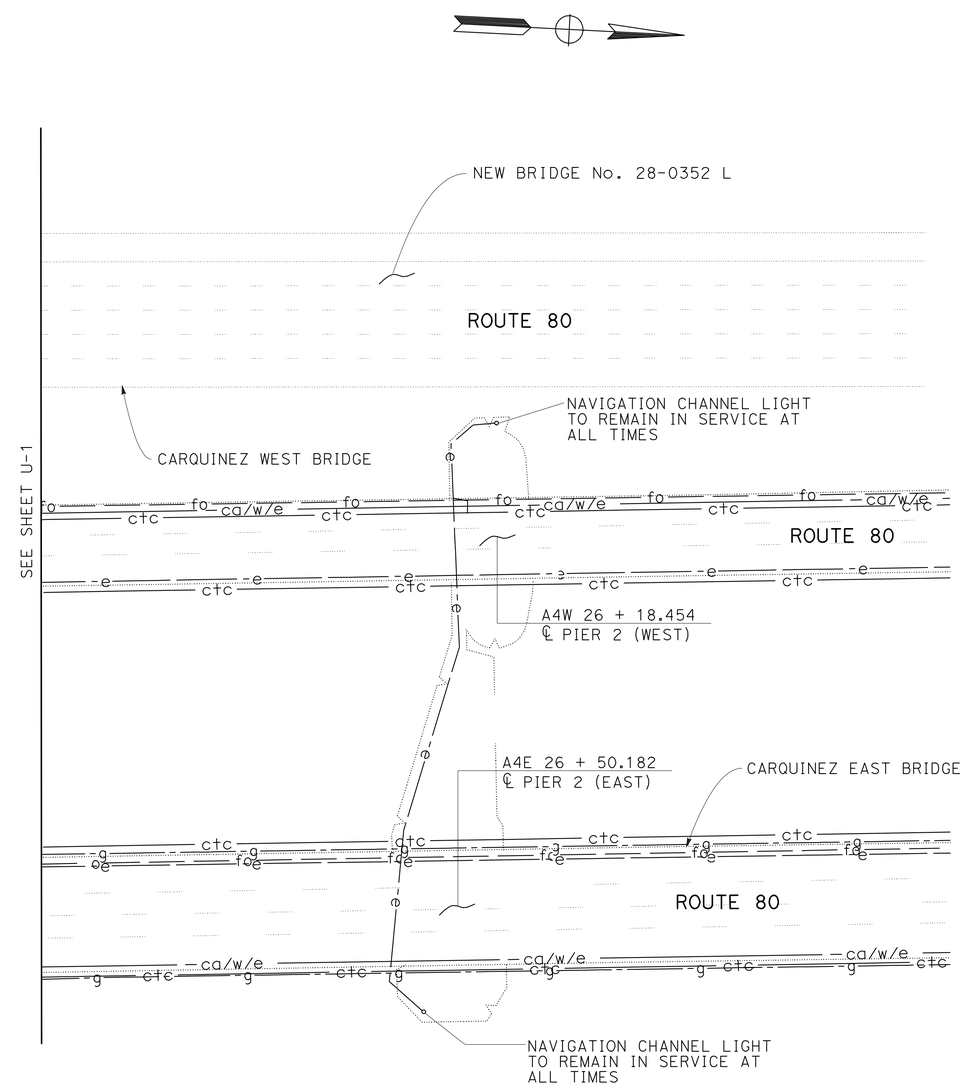

FOR NOTES, ABBREVIATIONS AND LEGEND, SEE SHEET U-1

THIS PLAN ACCURATE FOR UTILITY INFORMATION ONLY

UTILITY PLAN
NO SCALE

U-2

STATE OF CALIFORNIA - DEPARTMENT OF TRANSPORTATION
Caltrans® DESIGN

FUNCTIONAL SUPERVISOR: GORDON W. JEONG
CALCULATED-DESIGNED BY: FERNANDO CORDERO
CHECKED BY: SAMATHA SIRIVOL
REVISED BY
DATE REVISED

LAST REVISION 02-24-11
DATE PLOTTED => 30-JUN-2011
TIME PLOTTED => 15:36

Dist	COUNTY	ROUTE	POST MILES TOTAL PROJECT	SHEET No.	TOTAL SHEETS
04	CC,Sol	80	13.9/14.2, 0.0/0.5	4	42

12-28-10
REGISTERED ELECTRICAL ENGINEER DATE

6-27-11
PLANS APPROVAL DATE

REGISTERED PROFESSIONAL ENGINEER
Robert Hsu
No. 17114
Exp. 9-30-11
ELECTRICAL
STATE OF CALIFORNIA

THE STATE OF CALIFORNIA OR ITS OFFICERS OR AGENTS SHALL NOT BE RESPONSIBLE FOR THE ACCURACY OR COMPLETENESS OF SCANNED COPIES OF THIS PLAN SHEET.

LEGEND:

SYMBOL	DESCRIPTION
	NEW PIER LIGHT
	EXISTING PIER LIGHT
	UTILITY POLE
	JUNCTION BOX
	REMOVE Exist JUNCTION BOX
	CONDUIT, FLEXIBLE
	CONDUIT EXPOSED
	Exist CONDUIT AND CONDUCTORS - REMOVE
	CIRCUIT BREAKER, SINGLE POLE
	CIRCUIT BREAKER, DOUBLE POLE
	FUSE

ABBREVIATIONS:

H	HIGH VOLTAGE
T	TRANSFORMER

GENERAL NOTES:

1. ALL EXISTING ELECTRICAL FACILITIES SHOWN ON PIER 2 AND 3 OF CARQUINEZ BRIDGE ARE INFORMATIVE ONLY. UNLESS INDICATED ON INDIVIDUAL SHEET NOTES, INFORM THE ENGINEER BEFORE ANY ELECTRICAL FACILITY IS REQUIRED TO SHUT DOWN WHEN CONDUCTING WORK.

PIER LIGHTS
ELECTRICAL LEGEND, INDEX AND ABBREVIATIONS
(CARQUINEZ BRIDGE)

THIS PLAN IS ACCURATE FOR ELECTRICAL WORK ONLY.

E-1

STATE OF CALIFORNIA - DEPARTMENT OF TRANSPORTATION
Caltrans
ELECTRICAL

FUNCTIONAL SUPERVISOR: BEHZAD GOLEMOHAMMADI

CALCULATED-DESIGNED BY: ROBERT HSU
CHECKED BY: ROBERT HSU

REVISED BY: RH
DATE REVISED: 12/20/10

LAST REVISION 02-24-11
DATE PLOTTED => 30-JUN-2011
TIME PLOTTED => 15:36

Dist	COUNTY	ROUTE	POST MILES TOTAL PROJECT	SHEET No.	TOTAL SHEETS
04	CC,Sol	80	13.9/14.2, 0.0/0.5	5	42

REGISTERED CIVIL ENGINEER 12-28-10 DATE

6-27-11
PLANS APPROVAL DATE

REGISTERED PROFESSIONAL ENGINEER Robert Hsu No. 17114 Exp. 9-30-11 ELECTRICAL STATE OF CALIFORNIA

THE STATE OF CALIFORNIA OR ITS OFFICERS OR AGENTS SHALL NOT BE RESPONSIBLE FOR THE ACCURACY OR COMPLETENESS OF SCANNED COPIES OF THIS PLAN SHEET.

SHEET NOTES: (APPLICABLE TO THIS SHEET ONLY)

1. TURN OFF THE POWER BEFORE REMOVING PIER LIGHTS. THE MAIN DISCONNECT LOCATED IN AIR COMPRESSOR HOUSE.
2. PROTECT EXISTING CCTV.
3. CONSULT THE ENGINEER FOR THE CCTV REMOVING SCHEDULE. THEN, REMOVE THE CCTV-POLE RR BY THE CONTRACTOR.
4. PROTECT EXISTING EQUIPMENT.

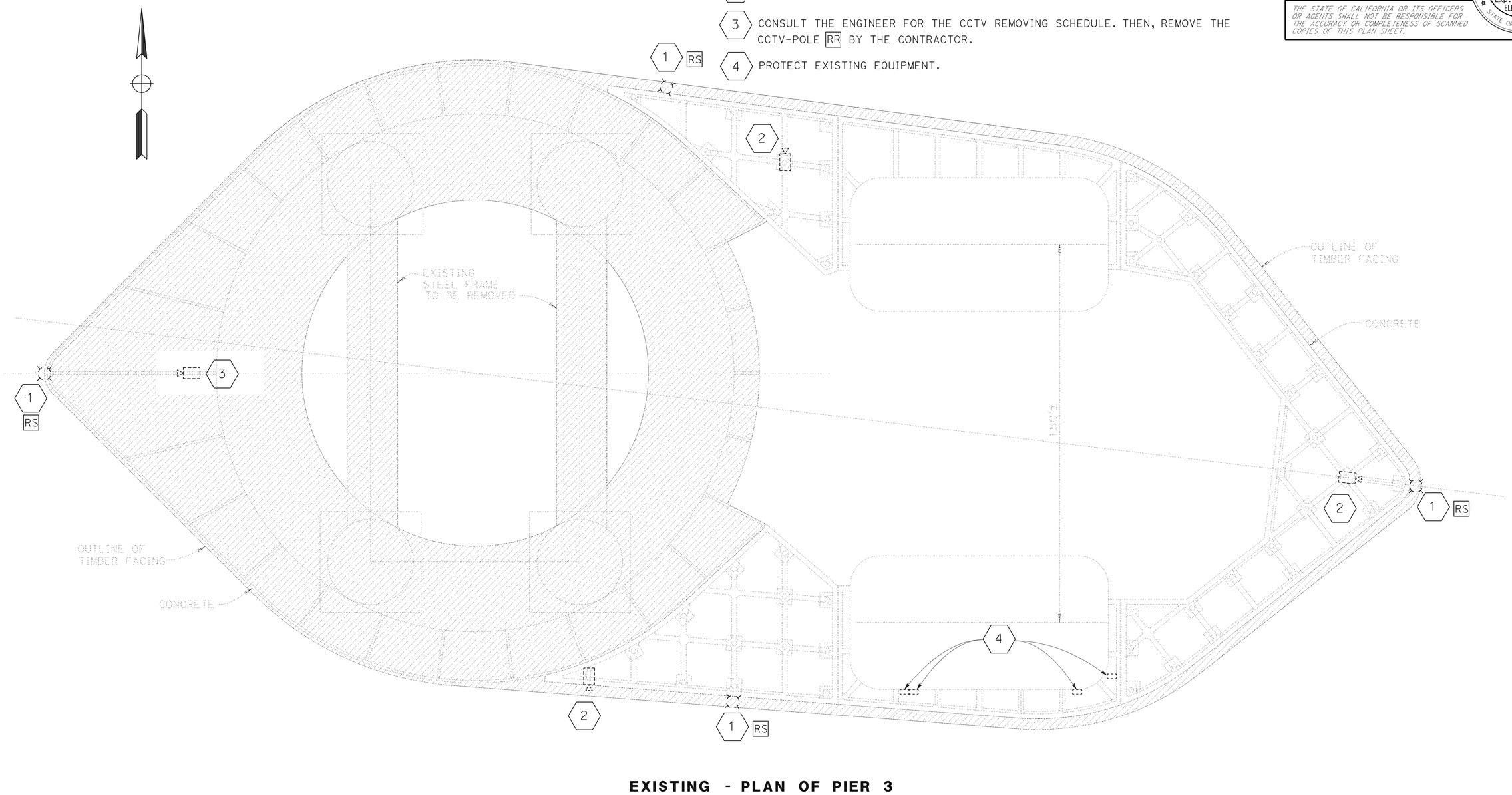

EXISTING - PLAN OF PIER 3

FOR NOTES, ABBREVIATIONS AND LEGEND, SEE SHEET E-1

THIS PLAN IS ACCURATE FOR ELECTRICAL WORK ONLY.

PIER LIGHTS
REMOVING PLAN-PIER 3 (CARQUINEZ BRIDGE)

SCALE: 1" = 20'

E-2

REVISED BY	RH
DATE REVISED	12/20/10
CALCULATED-DESIGNED BY	ROBERT HSU
CHECKED BY	ROBERT HSU
FUNCTIONAL SUPERVISOR	BEHZAD GOLEMOHAMMADI

STATE OF CALIFORNIA - DEPARTMENT OF TRANSPORTATION
Caltrans
ELECTRICAL

LAST REVISION 02-24-11 | DATE PLOTTED => 30-JUN-2011 | TIME PLOTTED => 15:36

Dist	COUNTY	ROUTE	POST MILES TOTAL PROJECT	SHEET No.	TOTAL SHEETS
04	CC,Sol	80	13.9/14.2, 0.0/0.5	6	42

12-28-10
REGISTERED ELECTRICAL ENGINEER DATE

6-27-11
PLANS APPROVAL DATE

REGISTERED PROFESSIONAL ENGINEER
Robert Hsu
No. 17114
Exp. 9-30-11
ELECTRICAL
STATE OF CALIFORNIA

THE STATE OF CALIFORNIA OR ITS OFFICERS OR AGENTS SHALL NOT BE RESPONSIBLE FOR THE ACCURACY OR COMPLETENESS OF SCANNED COPIES OF THIS PLAN SHEET.

SHEET NOTES: (APPLICABLE TO THIS SHEET ONLY)

1. INSTALL PIER LIGHT, SEE PIER LIGHT INSTALLATION DETAIL ON SHEET E-5.
2. INSTALL CCTV POLE. CONSULT WITH THE ENGINEER FOR MOUNTING INSTRUCTION THEN INFORM THE ENGINEER TO HAVE CCTV EQUIPMENTINSTALLED BY OTHERS.
3. INSTALL PIER LIGHT ENCLOSURE. SEE DETAIL 3 ON SHEET E-5.
4. REMOVE EXISTING PIER LIGHT JUNCTION BOX.

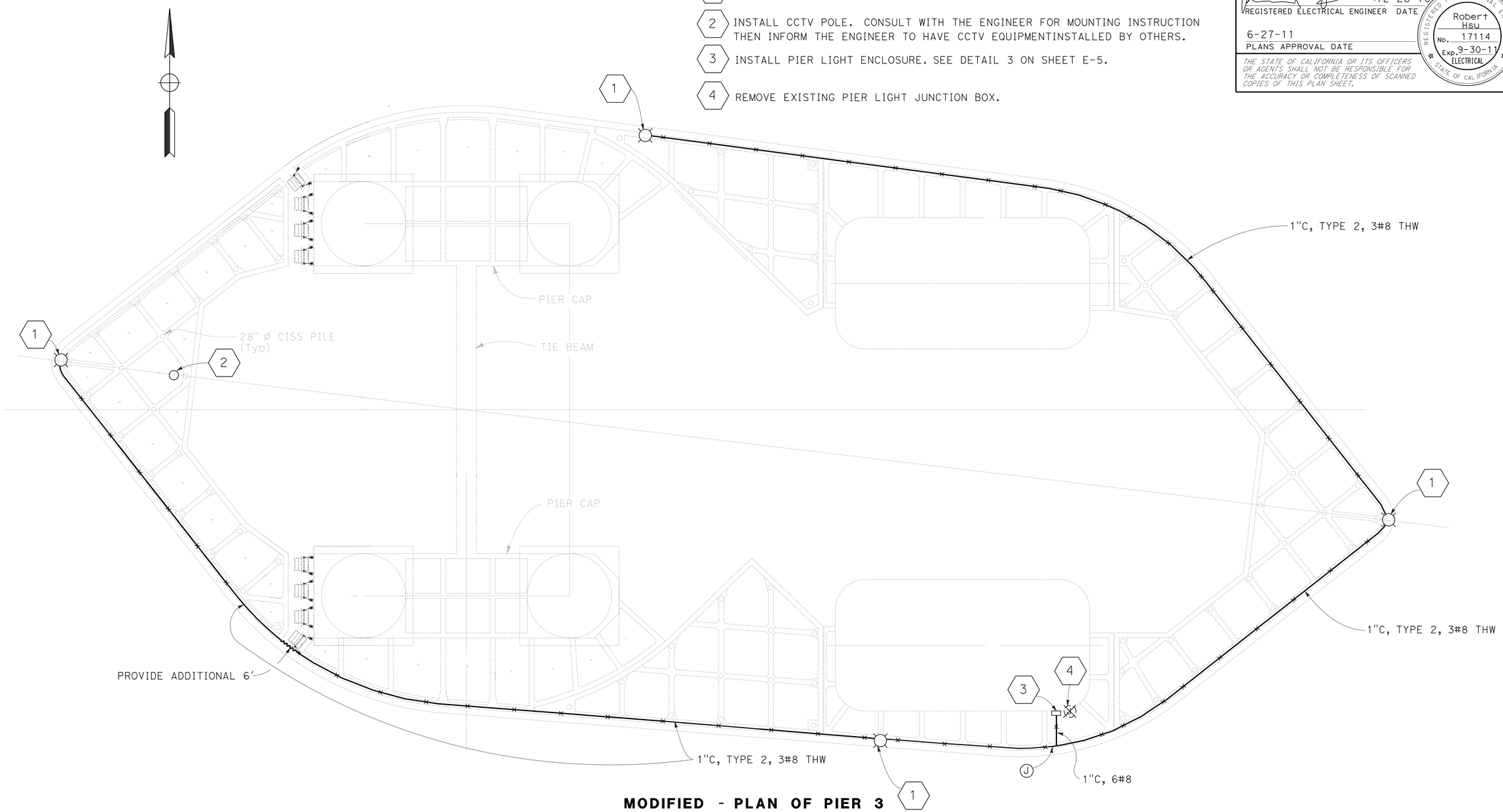

MODIFIED - PLAN OF PIER 3

PIER LIGHTS
INSTALLATION PLAN-P3
(CARQUINEZ BRIDGE)

1'' = 20'

E-3

FOR NOTES, ABBREVIATIONS AND LEGEND, SEE SHEET E-1

THIS PLAN IS ACCURATE FOR ELECTRICAL WORK ONLY.

REVISED BY	RH
DATE REVISED	12/20/10
CALCULATED-DESIGNED BY	ROBERT HSU
CHECKED BY	ROBERT HSU
FUNCTIONAL SUPERVISOR	BEHZAD GOLEMOHAMMADI

STATE OF CALIFORNIA - DEPARTMENT OF TRANSPORTATION
Caltrans
ELECTRICAL

LAST REVISION 02-24-11
DATE PLOTTED => 30-JUN-2011
TIME PLOTTED => 15:36

Dist	COUNTY	ROUTE	POST MILES TOTAL PROJECT	SHEET No.	TOTAL SHEETS
04	CC,Sol	80	13.9/14.2, 0.0/0.5	7	42

12-28-10
REGISTERED ELECTRICAL ENGINEER DATE

6-27-11
PLANS APPROVAL DATE

REGISTERED PROFESSIONAL ENGINEER
Robert Hsu
No. 17114
Exp. 9-30-11
ELECTRICAL
STATE OF CALIFORNIA

THE STATE OF CALIFORNIA OR ITS OFFICERS OR AGENTS SHALL NOT BE RESPONSIBLE FOR THE ACCURACY OR COMPLETENESS OF SCANNED COPIES OF THIS PLAN SHEET.

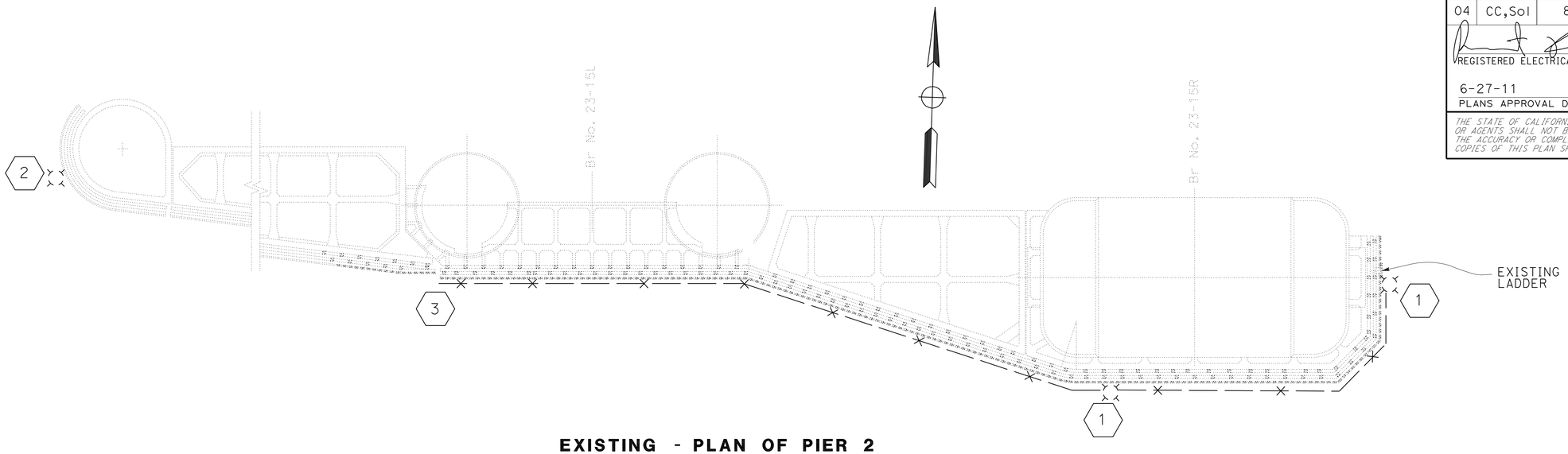

EXISTING - PLAN OF PIER 2

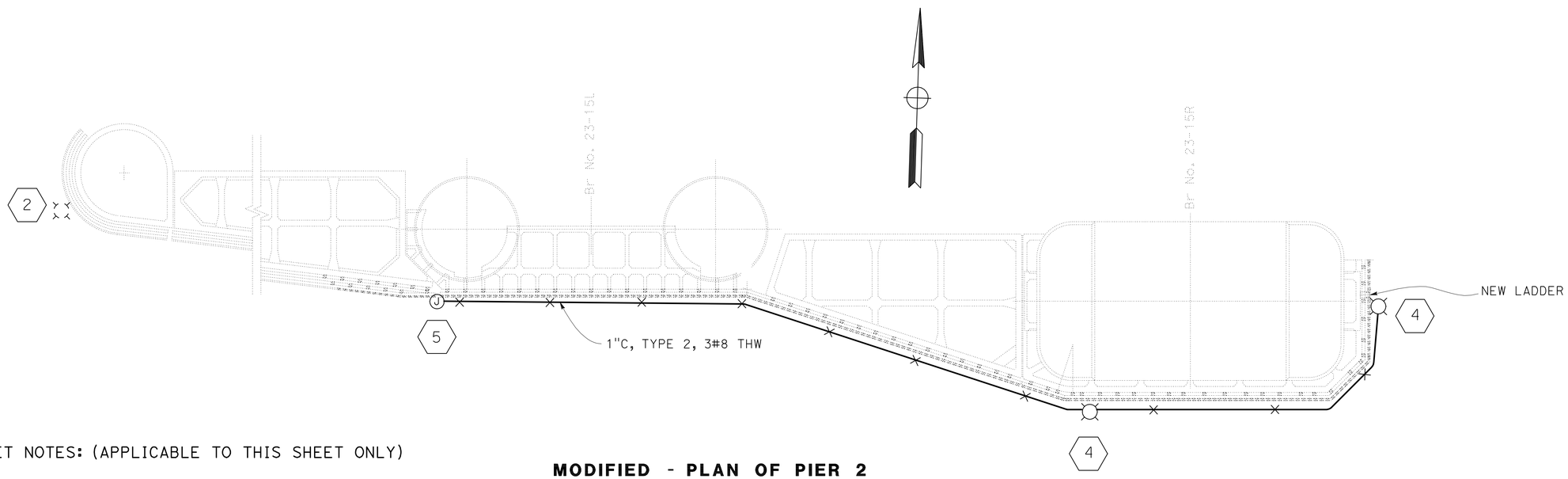

MODIFIED - PLAN OF PIER 2

SHEET NOTES: (APPLICABLE TO THIS SHEET ONLY)

1. TURN OFF THE POWER BEFORE REMOVING PIER LIGHTS,
2. PROTECT IN PLACE.
3. INSTALL 12" x 12" x 6" NEMA TYPE 6P JUNCTION BOX, SEE DETAIL 1 ON SHEET E-5. DISCONNECT POWER BEFORE TERMINATING WIRES TO THE POWER TERMINAL BLOCK.
4. INSTALL PIER LIGHTS, CONDUIT AND CONDUCTORS. SEE PIER LIGHT INSTALLATION DETAIL ON SHEET E-5.
5. INSTALL TYPE 4 CONDUIT TO THE JUNCTION BOX, SEE DETAIL 2 ON SHEET E-5 AND PROVIDE ADDITIONAL 6', TYPE 4 CONDUIT TO THE JUNCTION BOX.

FOR NOTES, ABBREVIATIONS AND LEGEND, SEE SHEET E-1

THIS PLAN IS ACCURATE FOR ELECTRICAL WORK ONLY.

PIER LIGHTS
REMOVING AND INSTALLATION PLAN-P2
(CARQUINEZ BRIDGE)

SCALE: 1" = 20'

E-4

REVISED BY	RH
DATE REVISED	12/20/10
CALCULATED-DESIGNED BY	ROBERT HSU
CHECKED BY	ROBERT HSU
FUNCTIONAL SUPERVISOR	BEHZAD GOLEMOHAMMADI

STATE OF CALIFORNIA - DEPARTMENT OF TRANSPORTATION
Caltrans
ELECTRICAL

LAST REVISION 02-24-11
DATE PLOTTED => 30-JUN-2011
TIME PLOTTED => 15:37

Dist	COUNTY	ROUTE	POST MILES TOTAL PROJECT	SHEET No.	TOTAL SHEETS
04	CC,Sol	80	13.9/14.2, 0.0/0.5	8	42

REGISTERED ELECTRICAL ENGINEER 12-28-10 DATE

6-27-11
PLANS APPROVAL DATE

REGISTERED PROFESSIONAL ENGINEER
Robert Hsu
No. 17114
Exp. 9-30-11
ELECTRICAL
STATE OF CALIFORNIA

THE STATE OF CALIFORNIA OR ITS OFFICERS OR AGENTS SHALL NOT BE RESPONSIBLE FOR THE ACCURACY OR COMPLETENESS OF SCANNED COPIES OF THIS PLAN SHEET.

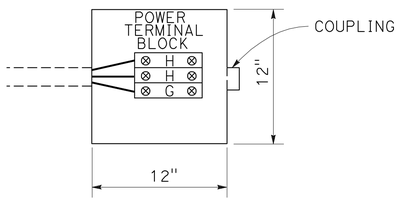

DETAIL 1

INSTALL JUNCTION BOX, POWER TERMINAL BLOCKS, COUPLINGS, CONNECT WIRES TO TERMINAL BLOCKS

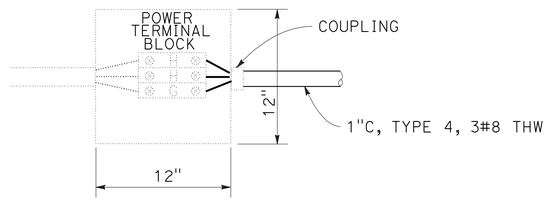

DETAIL 2

DISCONNECT THE POWER BEFORE CONNECT CONDUCTORS TO THE POWER TERMINAL BLOCK

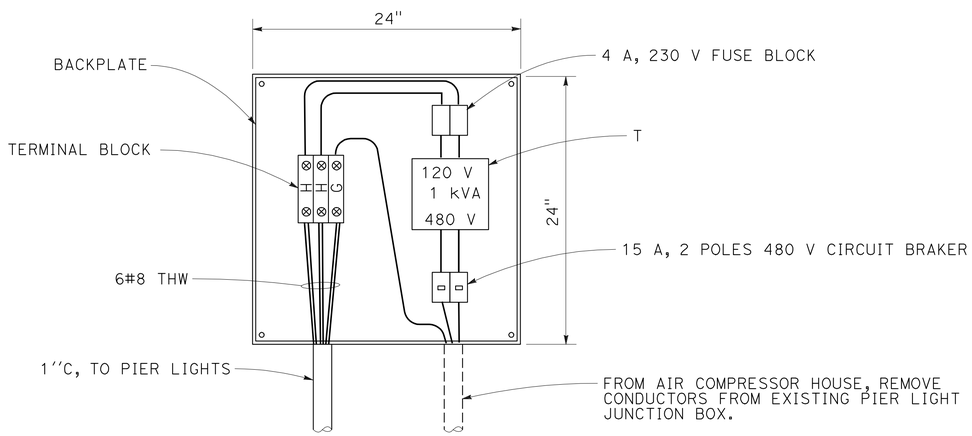

DETAIL 3

INSTALL PIER LIGHT ENCLOSURE, CONDUITS, WIRES, SEE ELECTRICAL WIRE DETAIL

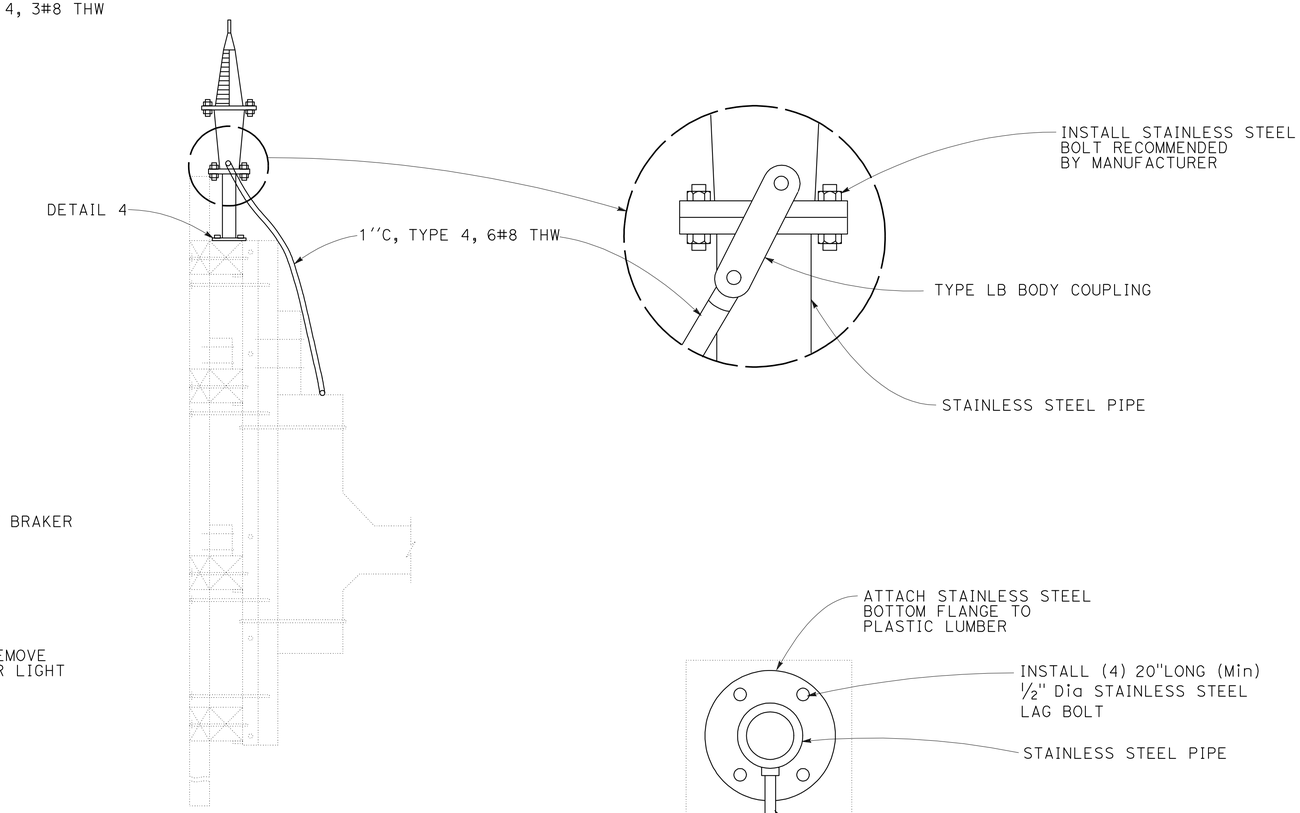

PIER LIGHT INSTALLATION DETAIL
SECTION VIEW OF P2 AND P3
(REFER TO STRUCTURE SHEETS)

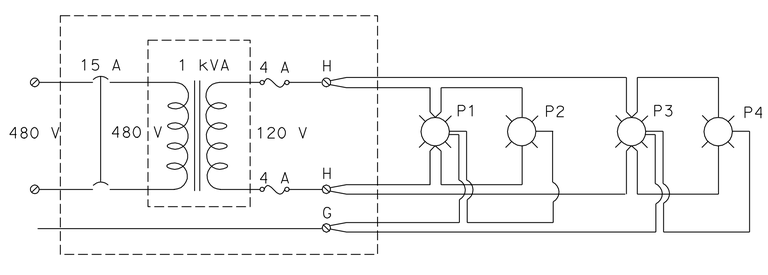

ELECTRICAL WIRE DETAIL

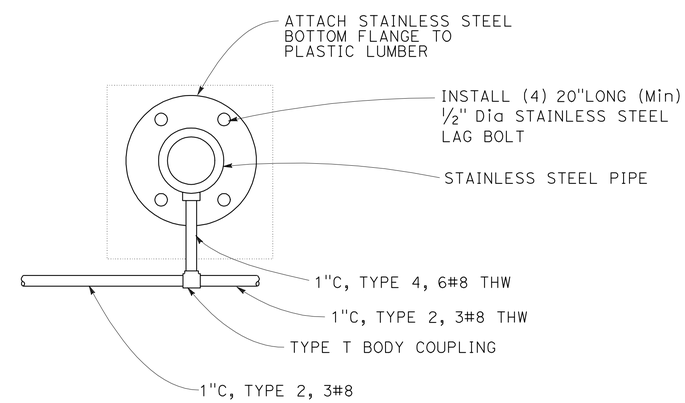

DETAIL 4

FOR NOTES, ABBREVIATIONS AND LEGEND, SEE SHEET E-1

THIS PLAN IS ACCURATE FOR ELECTRICAL WORK ONLY.

PIER LIGHTS
INSTALLATION DETAIL
ELECTRICAL DETAILS
(CARQUINEZ BRIDGE)

NO SCALE

E-5

REVISED BY	DATE REVISED
RH	12/20/10

CALCULATED-DESIGNED BY: ROBERT HSU
CHECKED BY: ROBERT HSU
FUNCTIONAL SUPERVISOR: BEHZAD GOLEMOHAMMADI

STATE OF CALIFORNIA - DEPARTMENT OF TRANSPORTATION
Caltrans®
ELECTRICAL

LAST REVISION 02-24-11
DATE PLOTTED => 30-JUN-2011
TIME PLOTTED => 15:37

DIST	COUNTY	ROUTE	POST MILES TOTAL PROJECT	SHEET NO.	TOTAL SHEETS
04	CC,Sol	80	13.9/14.2, 0.0/0.5	9	42

Randell D. Hiatt
REGISTERED CIVIL ENGINEER

June 6, 2008
PLANS APPROVAL DATE

REGISTERED PROFESSIONAL ENGINEER
Randell D. Hiatt
No. C50200
Exp. 6-30-09
CIVIL
STATE OF CALIFORNIA

The State of California or its officers or agents shall not be responsible for the accuracy or completeness of electronic copies of this plan sheet.

To accompany plans dated 6-27-11

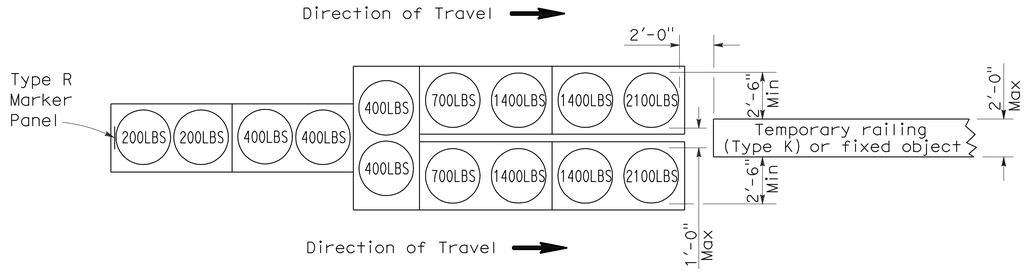

ARRAY 'TU14'

Approach speed 45 mph or more

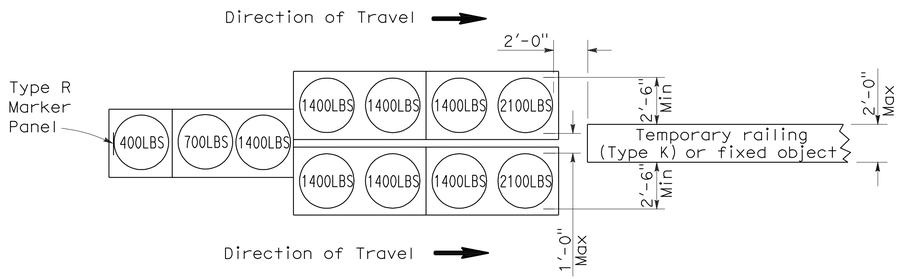

ARRAY 'TU11'

Approach speed less than 45 mph

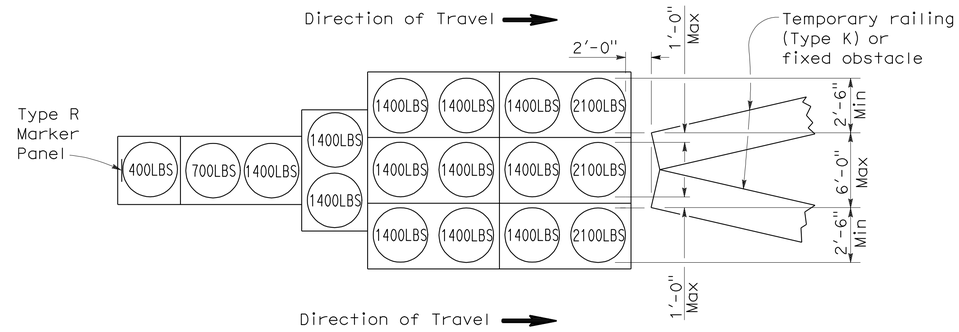

ARRAY 'TU17'

Approach speed less than 45 mph

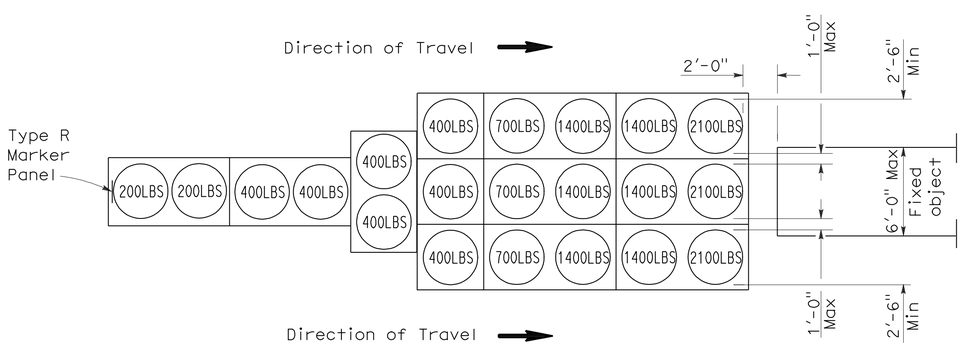

ARRAY 'TU21'

Approach speed 45 mph or more

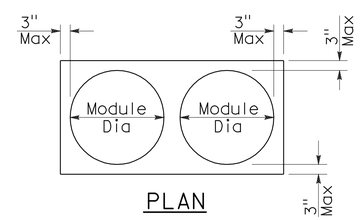

PLAN

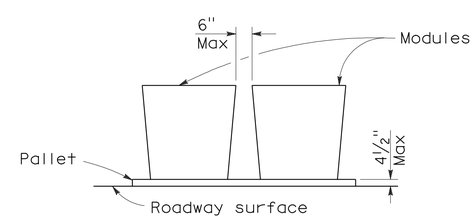

ELEVATION

CRASH CUSHION PALLET DETAIL

See Note 7

NOTES:

1. (XXX) Indicates sand filled module location and weight of sand in pounds for each module. Module spacing is based on the greater diameter of the module.
2. All sand weights are nominal.
3. Temporary crash cushion arrays shall not encroach on the traveled way.
4. Place the top of Type R marker panel 1" below the module lid.
5. Refer to Standard Plan A73B for marker details.
6. Approach speeds indicated conform to NCHRP 350 Report criteria.
7. Use of pallets is optional.

STATE OF CALIFORNIA
DEPARTMENT OF TRANSPORTATION

TEMPORARY CRASH CUSHION, SAND FILLED (UNIDIRECTIONAL)

NO SCALE

RSP T1A DATED JUNE 6, 2008 SUPERSEDES STANDARD PLAN T1A
DATED MAY 1, 2006 - PAGE 211 OF THE STANDARD PLANS BOOK DATED MAY 2006.

REVISED STANDARD PLAN RSP T1A

2006 REVISED STANDARD PLAN RSP T1A

DIST	COUNTY	ROUTE	POST MILES TOTAL PROJECT	SHEET NO.	TOTAL SHEETS
04	CC,Sol	80	13.9/14.2, 0.0/0.5	10	42

Randell D. Hiatt
REGISTERED CIVIL ENGINEER

June 6, 2008
PLANS APPROVAL DATE

REGISTERED PROFESSIONAL ENGINEER
Randell D. Hiatt
No. C50200
Exp. 6-30-09
CIVIL
STATE OF CALIFORNIA

The State of California or its officers or agents shall not be responsible for the accuracy or completeness of electronic copies of this plan sheet.

To accompany plans dated 6-27-11

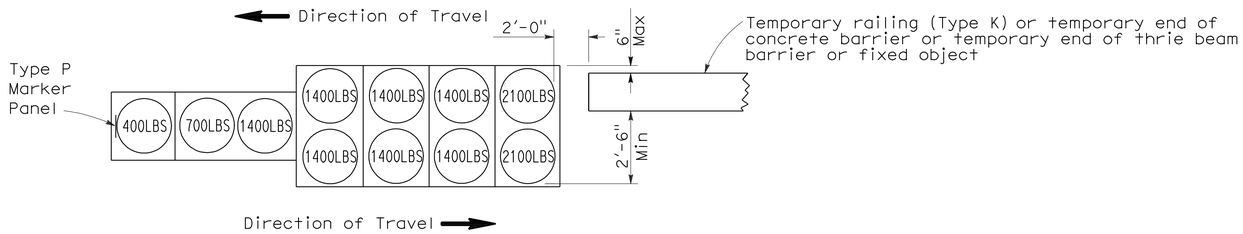

ARRAY 'TB11'

Approach speed less than 45 mph

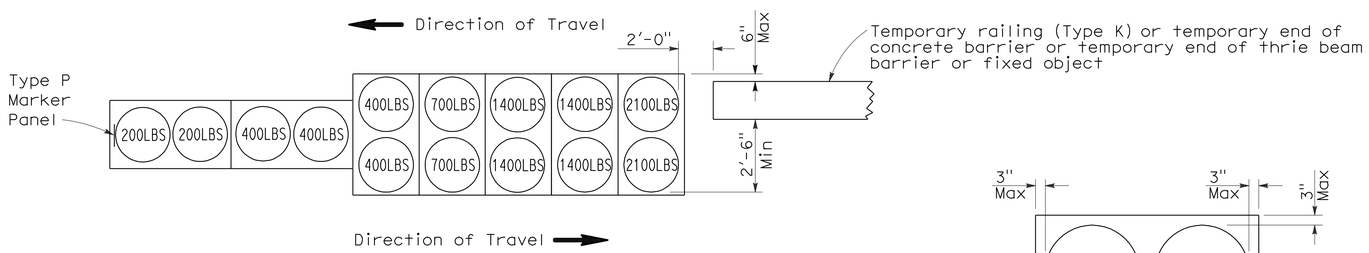

ARRAY 'TB14'

Approach speed 45 mph or more

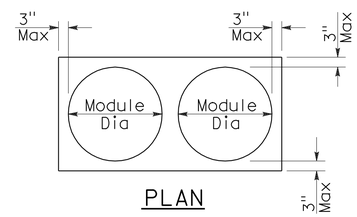

PLAN

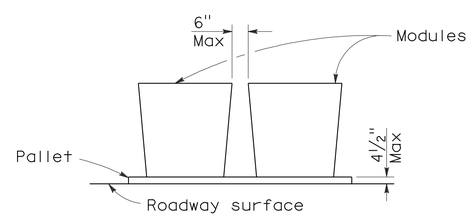

ELEVATION

CRASH CUSHION PALLET DETAIL

See Note 7

NOTES:

1. (XXX) Indicates sand filled module location and weight of sand in pounds for each module. Module spacing is based on the greater diameter of the module.
2. All sand weights are nominal.
3. Temporary crash cushion arrays shall not encroach on the traveled way.
4. Place the Type P marker panel so that the bottom of the panel rests upon the pallet.
5. Refer to Standard Plan A73B for marker details.
6. Approach speeds indicated conform to NCHRP 350 Report criteria.
7. Use of pallets is optional.

STATE OF CALIFORNIA
DEPARTMENT OF TRANSPORTATION

TEMPORARY CRASH CUSHION, SAND FILLED (BIDIRECTIONAL)

NO SCALE

RSP T1B DATED JUNE 6, 2008 SUPERSEDES STANDARD PLAN T1B
DATED MAY 1, 2006 - PAGE 212 OF THE STANDARD PLANS BOOK DATED MAY 2006.

REVISED STANDARD PLAN RSP T1B

2006 REVISED STANDARD PLAN RSP T1B

5-15-08

DIST	COUNTY	ROUTE	POST MILES TOTAL PROJECT	SHEET NO.	TOTAL SHEETS
04	CC,Sol	80	13.9/14.2, 0.0/0.5	11	42

Randell D. Hiatt
REGISTERED CIVIL ENGINEER

June 6, 2008
PLANS APPROVAL DATE

REGISTERED PROFESSIONAL ENGINEER
Randell D. Hiatt
No. C50200
Exp. 6-30-09
CIVIL
STATE OF CALIFORNIA

The State of California or its officers or agents shall not be responsible for the accuracy or completeness of electronic copies of this plan sheet.

To accompany plans dated 6-27-11

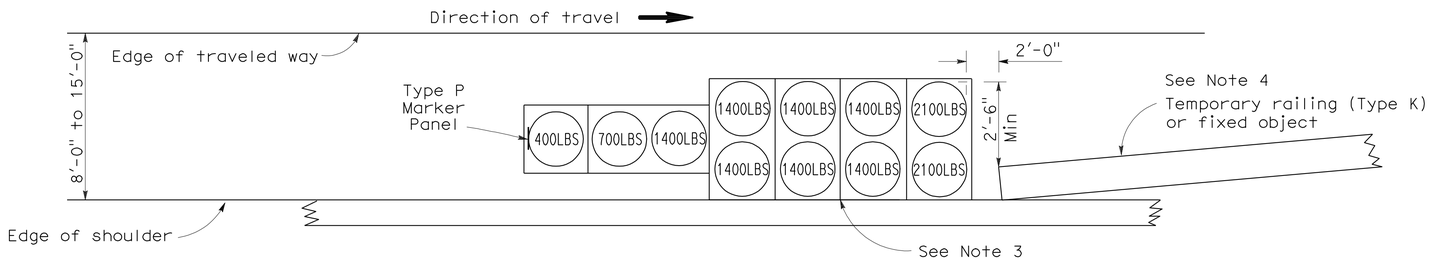

ARRAY 'TS11'

Approach speed less than 45 mph
See Note 9

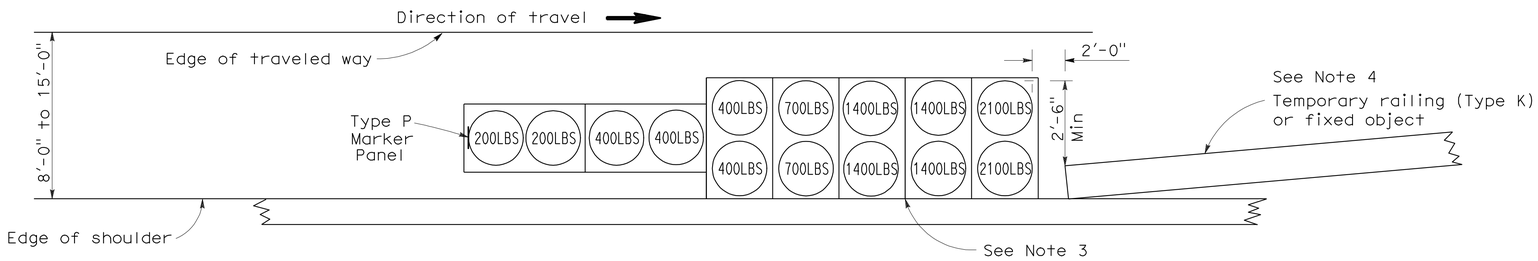

ARRAY 'TS14'

Approach speed 45 mph or more
See Note 9

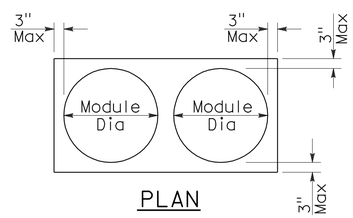

PLAN

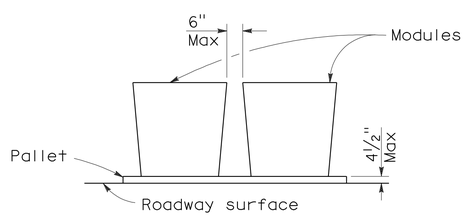

ELEVATION

CRASH CUSHION PALLET DETAIL

See Note 11

NOTES:

1. (XXX) Indicates sand filled module location and weight of sand in pounds for each module. Module spacing is based on the greater diameter of the module.
2. All sand weights are nominal.
3. The temporary crash cushion arrays shown on this plan shall be used only in locations where there will be traffic on one side of the temporary crash cushion array.
4. If the fixed object or approach end of the temporary railing is less than 15'-0" from the edge of traveled way, a temporary crash cushion is required in a construction or work zone.
5. Temporary crash cushion arrays shall not encroach on the traveled way.
6. Arrays for median shoulders shall conform to details shown on this plan for outside shoulders.
7. Place the Type P marker panel so that the bottom of the panel rests upon the pallet and faces traffic.
8. Refer to Standard Plan A73B for marker details.
9. For shoulder widths less than 8'-0", appropriate approved crash cushion protection, other than sand filled modules, shall be provided at fixed objects and at approach ends of temporary railing. The specific type of crash cushion shall be as shown on the project plans or as specified in the Special Provisions, or if not shown on the project plans or specified in the Special Provisions, shall be as approved by the Engineer.
10. Approach speeds indicated conform to NCHRP 350 Report criteria.
11. Use of pallets is optional.

STATE OF CALIFORNIA
DEPARTMENT OF TRANSPORTATION

TEMPORARY CRASH CUSHION, SAND FILLED (SHOULDER INSTALLATIONS)

NO SCALE

RSP T2 DATED JUNE 6, 2008 SUPERSEDES STANDARD PLAN T2
DATED MAY 1, 2006 - PAGE 213 OF THE STANDARD PLANS BOOK DATED MAY 2006.

REVISED STANDARD PLAN RSP T2

2006 REVISED STANDARD PLAN RSP T2

5-15-08

DIST	COUNTY	ROUTE	POST MILES TOTAL PROJECT	SHEET NO.	TOTAL SHEETS
04	CC,Sol	80	13.9/14.2, 0.0/0.5	12	42

REGISTERED ELECTRICAL ENGINEER

October 5, 2007
PLANS APPROVAL DATE

REGISTERED PROFESSIONAL ENGINEER Jeffery G. McRae No. E14512 Exp. 6-30-08 ELECTRICAL STATE OF CALIFORNIA

The State of California or its officers or agents shall not be responsible for the accuracy or completeness of electronic copies of this plan sheet.

To accompany plans dated 6-27-11

ELECTROLIERS

STANDARD TYPES
15, 15D
15 STRUCTURE
21, 21D STRUCTURE
30
31
32
35
36-20A

High mast light pole

Double Arm lighting standard

Existing electrolier

Electrolier foundation (Future installation)

NOTES:

1. Luminaires shall be 310 W HPS when installed on Type 21, 21D, 30, 31, 32, 35 and 36-20A Standards, unless otherwise specified. Luminaires shall be 200 W HPS when installed on other type standards or poles, unless otherwise specified.
2. Luminaires shall be the cutoff type, ANSI Type Ⅲ medium cutoff lighting distribution, unless otherwise specified.
3. Variations noted adjacent to symbol on project plans.

Electrolier (see project notes or project plans)

Luminaire on wood pole

STANDARD NOTES:

- AB — Abandon. If applied to conduit, remove conductors.
- BC — Install pull box in existing conduit run.
- BP — Pedestrian barricade, type as indicated on plan.
- CB — Install conduit into existing pull box.
- CC — Connect new and existing conduit. Remove existing conductors and install conductors as indicated.
- CF — Conduit to remain for future use. Remove conductors. Install pull wire or rope.
- DH — Detector handhole.
- FA — Foundation to be abandoned.
- IS — Install sign on signal mast arm.
- NS — No slip base on standard.
- PEC — Photoelectric control.
- PEU — Photoelectric unit.
- RC — Equipment or material to be removed and become the property of the Contractor.
- RE — Remove electrolier, fuses and ballast. Tape ends of conductors.
- RL — Relocate equipment.
- RR — Remove and reuse equipment.
- RS — Remove and salvage equipment.
- SC — Splice new to existing conductors.
- SD — Service disconnect.
- SF — Standard to remain for future use. Remove luminaire, pole conductors, fuses and ballast.
- TSP — Telephone service point.

ABBREVIATIONS AND EQUIPMENT DESIGNATIONS

PROPOSED	EXISTING	
BBS	bbs	Battery backup system
BC	bc	Bolt circle
C	C	Conduit
CCTV	cctv	Closed circuit television
CKT	ckt	Circuit
CMS	cms	Changeable message sign
DLC	dlc	Loop detector lead-in cable
EMS	ems	Extinguishable message sign
EVC	evc	Emergency vehicle cable
EVD	evd	Emergency vehicle detector
FB	fb	Flashing beacon
FBCA	fbca	Flashing beacon control assembly
FBS	fbs	Flashing beacon with slip base
FO	fo	Fiber optic
G	G	Ground (Equipment Grounding Conductor)
GFCI	GFCI	Ground fault circuit interrupt
HAR	har	Highway advisory radio
HEX	hex	Hexagonal
HPS	hps	High pressure sodium
IISNS	iisns	Internally illuminated street name sign
ISL	isl	Induction sign lighting
LED	led	Light emitting diode
LMA	lma	Luminaire mast arm
LPS	lps	Low pressure sodium
LTG	ltg	Lighting
LUM	lum	Luminaire
MAT	mat	Mast arm mounting vehicle signal faces, top attachment
MAS	mas	Mast arm mounting vehicle signal faces, side attachment
MAS-4A	mas-4A	Mast arm mounting vehicle signal faces, side attachment - 4 signal section
MAS-4B	mas-4B	
MAS-4C	mas-4C	
MAS-5A	mas-5A	Mast arm mounting vehicle signal faces, side attachment - 5 signal section
MAS-5B	mas-5B	
MC	mc	Mercury contactor
M/M	m/m	Multiple to multiple transformer
MT	mt	Conduit with pull wire or rope only
MTG	mtg	Mounting
	mv	Mercury vapor lighting fixture
N	N	Neutral (Grounded Conductor)
NC	NC	Normally closed
NO	NO	Normally open
PB	pb	Pull box
PEC	pec	Photoelectric control (Type Ⅰ, Ⅱ, Ⅲ, Ⅳ or Ⅴ as shown)
PED	ped	Pedestrian
PEU	peu	Photoelectric unit
PPB	ppb	Pedestrian push button
RL		Relocated equipment
RM	rm	Ramp metering
SB	sb	Slip base
SIC	sic	Signal interconnect cable
SIG	sig	Signal
SMA	sma	Signal mast arm
SNS	sns	Street name sign
SP	sp	Service point
TDC	tdc	Telephone demarcation cabinet
TMS	tms	Traffic monitoring station
TOS	tos	Traffic Operations System
VEH	veh	Vehicle
XFMR	xfmr	Transformer
COMM	comm	Communication
RWIS	rwis	Roadway weather information system

SOFFIT AND WALL MOUNTED LUMINAIRES

Pendant, 70 W HPS unless otherwise specified.

Flush, 70 W HPS unless otherwise specified.

Wall surface, 70 W HPS unless otherwise specified.

Existing soffit or wall luminaire to remain unmodified.

Existing soffit or wall luminaire to be modified as specified.

NOTE:

Arrow indicates "street side" of luminaire.

STATE OF CALIFORNIA
DEPARTMENT OF TRANSPORTATION

ELECTRICAL SYSTEMS (SYMBOLS AND ABBREVIATIONS)

NO SCALE

RSP ES-1A DATED OCTOBER 5, 2007 SUPERSEDES STANDARD PLAN ES-1A DATED MAY 1, 2006 - PAGE 400 OF THE STANDARD PLANS BOOK DATED MAY 2006.

REVISED STANDARD PLAN RSP ES-1A

2006 REVISED STANDARD PLAN RSP ES-1A

DIST	COUNTY	ROUTE	POST MILES TOTAL PROJECT	SHEET NO.	TOTAL SHEETS
04	CC,Sol	80	13.9/14.2, 0.0/0.5	13	42

REGISTERED ELECTRICAL ENGINEER

October 5, 2007
PLANS APPROVAL DATE

REGISTERED PROFESSIONAL ENGINEER
Jeffery G. McRae
No. E14512
Exp. 6-30-08
ELECTRICAL
STATE OF CALIFORNIA

The State of California or its officers or agents shall not be responsible for the accuracy or completeness of electronic copies of this plan sheet.

To accompany plans dated 6-27-11

CONDUIT

PROPOSED	EXISTING	
		Lighting Conduit, unless otherwise indicated or noted
		Traffic signal conduit
C	c	Communication conduit
T	t	Telephone conduit
F	f	Fire alarm conduit
FO	fo	Fiber optic conduit
		Conduit termination (RSP ES-9A C)
R	r	Conduit riser in/on structure or service pole

SERVICE EQUIPMENT

PROPOSED	EXISTING	
OH	oh	Overhead lines
U	U	Wood pole "U" indicates utility owned
		Pole guy with anchor
		Utility transformer - ground mounted
III		Service equipment enclosure type
		Service equipment enclosure door indicates front of enclosure
T	t	Telephone demarcation cabinet

POLE-MOUNTED SERVICE DESIGNATION

Type of installation

TYPE H SERVICE - 28'-10" ← Pole height above grade

ILLUMINATED OVERHEAD SIGN

PROPOSED	EXISTING	
		Overhead sign - Single post
		Overhead sign - Two post
		Overhead sign - Mounted on structure
		Overhead sign with electrolier

SIGNAL EQUIPMENT

PROPOSED	EXISTING	
		Pedestrian signal face
		Pedestrian push button post
		Pedestrian barricade
		Vehicle signal face (with backplate, 3-Section: red, yellow and green)
		Vehicle signal face with angle visors
PV	PV	Modifications of basic symbols: "L" indicates all non-arrow sections louvered "LG" indicates louvered green section only "PV" indicates 12" programmed visibility sections "8" indicates all 8" sections (only when specified)
		Type 15TS and Vehicle signal face
		Vehicle signal face with red, yellow and green left arrow sections
		Vehicle signal face with red and yellow sections and up green arrow
		Vehicle signal face (5 Section) with red, yellow and green sections and yellow and green right arrows
		Type 1 Standard and attached vehicle signal faces
		Standard with signal mast arm only and attached vehicle signal faces and internally illuminated street name sign
		Type 33 Standard, Left-turn vehicle signal face and sign
		Standard with luminaire and signal mast arms and attached vehicle signal faces
		Cantilever flashing beacon Type 9 Frame, with a sign unless otherwise specified or indicated
		Type 15-FBS Standard with two vehicle signal face sections with lens, backplate and visor with a sign
R	Y	Flashing beacon. One vehicle signal face section with lens, backplate and visor. "R" indicates red indication, "Y" indicates yellow indication
		Controller assembly. Door indicates front of cabinet

SIGNAL EQUIPMENT Cont

PROPOSED	EXISTING	
		Guard post
		Type 1 Standard with "Meter On" sign
		Emergency Vehicle detector

NOTES:

1. All signal sections shall be 12" unless shown otherwise.
2. Signal heads shall be provided with backplates unless shown otherwise.
3. Signal indication shall be LED.

STATE OF CALIFORNIA
DEPARTMENT OF TRANSPORTATION

ELECTRICAL SYSTEMS (SYMBOLS AND ABBREVIATIONS)

NO SCALE

RSP ES-1B DATED OCTOBER 5, 2007 SUPERCEDES STANDARD PLAN ES-1B DATED MAY 1, 2006 - PAGE 401 OF THE STANDARD PLANS BOOK DATED MAY 2006.

REVISED STANDARD PLAN RSP ES-1B

2006 REVISED STANDARD PLAN RSP ES-1B

DIST	COUNTY	ROUTE	POST MILES TOTAL PROJECT	SHEET NO.	TOTAL SHEETS
04	CC,Sol	80	13.9/14.2, 0.0/0.5	14	42

REGISTERED ELECTRICAL ENGINEER

October 5, 2007
PLANS APPROVAL DATE

REGISTERED PROFESSIONAL ENGINEER Jeffery G. McRae No. E14512 Exp. 6-30-08 ELECTRICAL STATE OF CALIFORNIA

The State of California or its officers or agents shall not be responsible for the accuracy or completeness of electronic copies of this plan sheet.

To accompany plans dated 6-27-11

EQUIPMENT IDENTIFICATION

ILLUMINATED SIGN IDENTIFICATION NUMBER:

Sign No. 12345

10 ISL SCI 1.0

- Sign number - Place on post or structure
- Transformer rating (kVA)
- Lighting control type
- Number and type of fixtures

Do NOT place on standard or structure

ELECTROLIER OR EQUIPMENT IDENTIFICATION NUMBER:

12345 - 15'-0"

- Mast arm length, if shown. Do not place on standard or structure.
- Equipment number - Place on standard or structure. Existing equipment numbers are shown in parenthesis

CONDUIT AND CONDUCTOR IDENTIFICATION:

1½"C, 2#10, 15#14, 2 DLC

- Number and size of conductors and cables
- Size of conduit in inches

Ø1, Ø2, Ø2P, etc.	Traffic phase identification for signal faces, detectors and phase diagrams
1 2 3	Project note numbers
A B C	Equipment description, installation or item numbers
1 2 3	Conduit run numbers

SIGNAL AND LIGHTING STANDARD (TYPICAL DESIGNATION):

19A - 3 - 100

- Wind velocity = 100 mph
- Case 3 arm loading
- Standard type
- Standard Plan sheet number
- Detail number or letter

MISCELLANEOUS EQUIPMENT

PROPOSED	EXISTING	
CMS	cms	Changeable message sign
		Closed circuit television camera
		Highway advisory radio pole and antenna
EMS	ems	Extinguishable message sign
M V	m v	Detection device M = Microwave sensor V = Video image sensor

WIRING DIAGRAM LEGEND

P	Pole
CB	Circuit breaker
A	Ampere
V	Volt
M	Metered
UM	Unmetered
NB	Neutral bus
GB	Ground bus
G	Equipment grounding conductor
N	Grounded conductor (Neutral)

- External conductor
- Conductor or bus
- Tie point
- Contactor coil
- Contactor, Contact NO
- Terminal blocks
- Contactor, Contact NC
- Enclosure bond
- Grounding electrode
- Circuit breaker
- Receptacle

PULL BOXES

PROPOSED EXISTING

Pull box-No. 5 unless otherwise indicated or noted.

3 9A(21)

Pull box-Additional designations or descriptions

3	= No. 3½ pull box
5	= No. 5 pull box
6	= No. 6 pull box
7	= No. 7 (Ceiling pull box)
8	= No. 8 (Pendant soffit pull box)
9	= No. 9 pull box
9A	= No. 9A pull box

(C)	= Communications pull box
(E)	= Pull box with extension
(S)	= Sprinkler control pull box
(21)	= Anchor bolts and conduit for future installation of Type 21 Standard
(T)	= Traffic pull box

VEHICLE DETECTORS

5 J 9 U

- Vehicle detector designation
- U = Upper
  L = Lower
- Slot number in input file
- Input file (I or J)
- Phase

PROPOSED EXISTING

	Type A detector loop. Outline of sawcut shown.
	Type B detector loop. Outline of sawcut shown.
	Type C detector loop. Outline of sawcut shown.
	Type D detector loop. Outline of sawcut shown.
	Type E detector loop. Outline of sawcut shown.
	Type Q detector loop. Outline of sawcut shown.
	Magnetic detector
DH dh	Detector handhole
	Microwave or video detection zone

STATE OF CALIFORNIA
DEPARTMENT OF TRANSPORTATION

ELECTRICAL SYSTEMS (SYMBOLS AND ABBREVIATIONS)

NO SCALE

RSP ES-1C DATED OCTOBER 5, 2007 SUPERCEDES STANDARD PLAN ES-1C DATED MAY 1, 2006 - PAGE 402 OF THE STANDARD PLANS BOOK DATED MAY 2006.

REVISED STANDARD PLAN RSP ES-1C

2006 REVISED STANDARD PLAN RSP ES-1C

DIST	COUNTY	ROUTE	POST MILES TOTAL PROJECT	SHEET No	TOTAL SHEETS
04	CC,Sol	80	13.9/14.2, 0.0/0.5	15	42

REGISTERED CIVIL ENGINEER 12-14-10 DATE

6-27-11
PLANS APPROVAL DATE

REGISTERED PROFESSIONAL ENGINEER Michael Bahrami No. 58795 Exp. 6-30-11 CIVIL STATE OF CALIFORNIA

The State of California or its officers or agents shall not be responsible for the accuracy or completeness of electronic copies of this plan sheet.

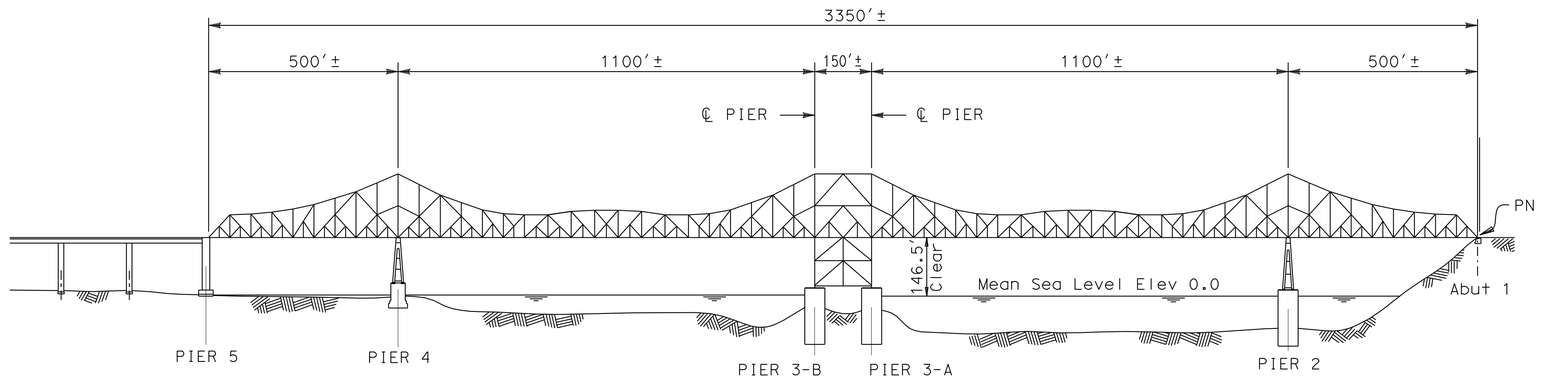

ELEVATION (23-0015R)
1:200'

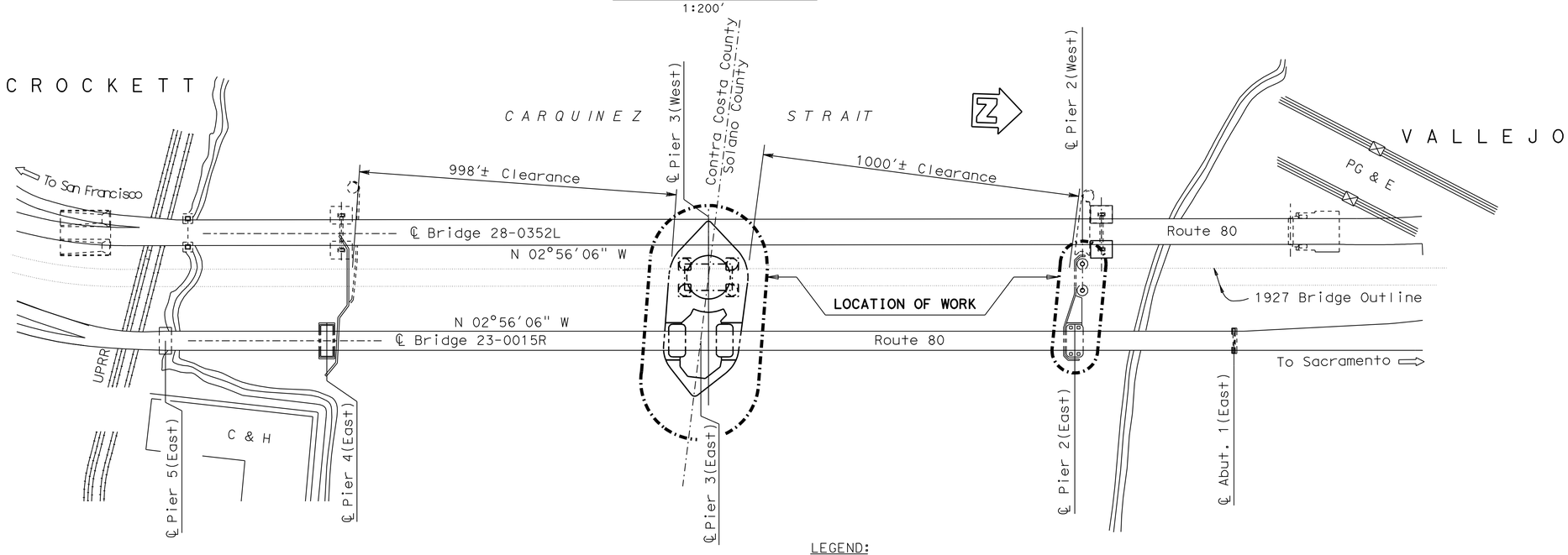

PLAN
1:200'

LEGEND:

C & H C & H Pure Cane Sugar

PG & E Pacific Gas and Electric Company

NOTE:
THE CONTRACTOR SHALL VERIFY ALL CONTROLLING FIELD DIMENSIONS BEFORE ORDERING OR FABRICATING ANY MATERIAL.

DESIGN ENGINEER 12-14-10

DESIGN	BY M. Bahrami	CHECKED A. Kushkaki	LOAD & RESISTANCE FACTOR DESIGN	LIVE LOADING: HL93 W/"LOW-BOY"; PERMIT DESIGN VEHICLE
DETAILS	BY B. Ballesteros	CHECKED M. Bahrami	LAYOUT BY B. Ballesteros	CHECKED
QUANTITIES	BY M. Bahrami	CHECKED A. Kushkaki	SPECIFICATIONS BY E. Franciliso	PLANS AND SPECS COMPARED

STATE OF CALIFORNIA
DEPARTMENT OF TRANSPORTATION

DIVISION OF MAINTENANCE
STRUCTURE MAINTENANCE AND INVESTIGATIONS

BRIDGE NO. 23-0015R
POST MILE 13.9/14.2 0.0/0.5

CARQUINEZ BRIDGE
FENDER REHABILITATION
GENERAL PLAN

STRUCTURES DESIGN GENERAL PLAN SHEET (ENGLISH) (REV. 10/25/05)

ORIGINAL SCALE IN INCHES FOR REDUCED PLANS 0 1 2 3

CU 04609
EA 049071

DISREGARD PRINTS BEARING EARLIER REVISION DATES → 07-24-06 12-06-08 08-31-09

REVISION DATES

SHEET 1 OF 28

FILE => 01_gp.dgn

STRUCTURES DESIGN GENERAL PLAN SHEET (ENGLISH) (REV.07-24-06)

USERNAME => s124496 DATE PLOTTED => 30-JUN-2011 TIME PLOTTED => 15:41

DIST.	COUNTY	ROUTE	POST MILES TOTAL PROJECT	SHEET NO.	TOTAL SHEETS
04	CC,Sol	80	13.9/14.2, 0.0/0.5	16	42

12-14-10
REGISTERED ENGINEER - CIVIL

6-27-11
PLANS APPROVAL DATE

REGISTERED PROFESSIONAL ENGINEER Michael Bahrami No. 58795 Exp. 6-30-11 CIVIL STATE OF CALIFORNIA

The State of California or its officers or agents shall not be responsible for the accuracy or completeness of electronic copies of this plan sheet.

INDEX TO PLANS

Sheet No.	Title
1	GENERAL PLAN
2	INDEX TO PLANS
3	GENERAL DEMOLITION PLAN
4	DEMOLITION DETAIL
5	EXISTING PILE LAYOUT
6	GENERAL LAYOUT PLAN
7	PILE DETAILS
8	NOSE DETAIL 1
9	NOSE DETAIL 2
10	NOSE DETAIL 3
11	PIER CAP SLAB DETAIL
12	TIE BEAM SECTION
13	CANTILEVER SECTION DETAIL - 1
14	CANTILEVER SECTION DETAIL - 2
15	PIER CAP DETAIL
16	MISCELLANEOUS DETAILS
17	NEW SHEATHINGS LAYOUT - PIER 3
18	PIER 2 PLAN
19	REMOVAL EXISTING - DETAIL 1
20	REMOVAL EXISTING - DETAIL 2
21	INSTALLATION DETAIL - 1
22	INSTALLATION DETAIL - 2
23	NOSE SHEATHING DETAILS
24	ACCESS LADDER DETAILS
25	LADDER SECURITY COVER
26	PIER 3 - NEW CABLE RAILING
27	SHEATHING PLAN @ BUMPER GAP
28	LOG OF TEST BORINGS

NOTE:
THE CONTRACTOR SHALL VERIFY ALL CONTROLLING FIELD DIMENSIONS BEFORE ORDERING OR FABRICATING ANY MATERIAL.

GENERAL NOTES

CALTRANS BRIDGE DESIGN SPECIFICATIONS (LFRD)
APRIL 2000. (1996 AASHTO WITH INTERIMS
AND REVISIONS BY CALTRANS)

MATERIALS:

CONCRETE :
f'c = 3500 psi

REINFORCING BAR:
ASTM A615, GRADE 60 OR A706

STRUCTURAL STEEL PLATE, BAR AND SHAPES:
ASTM A709, GRADE 36

HS BOLT:
ASTM 276, TYPE 316
STAINLESS STEEL

STEEL PIPE PILE:
Fy (Minimum yield strength) = 45,000 psi
Fu (Minimum tensile strength) = 66,000 psi

ALL REINFORCING BARS ARE EPOXY COATED
EXCEPT REBARS USED INSIDE CISS PILES

SEISMIC DESIGN: Caltrans Seismic Design Criteria (SDC), Version 1.4 dated June 2006

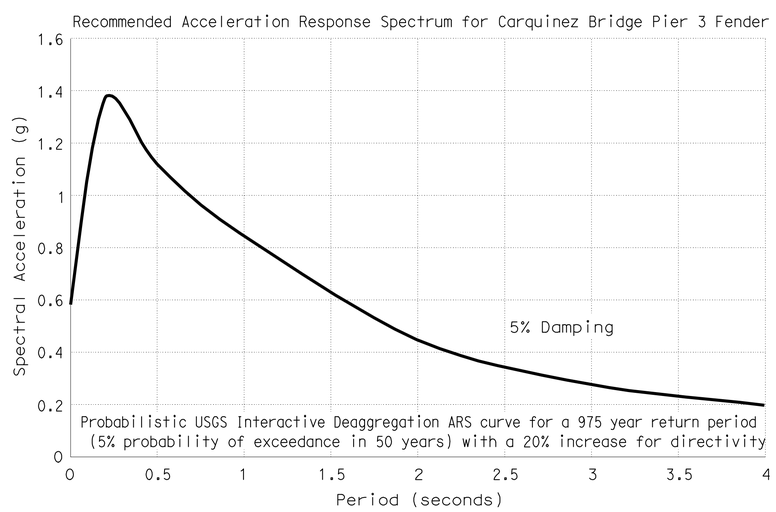

ARS DESIGN CURVE

No Scale

STANDARD PLANS DATED MAY 2006

SHEET No.	TITLE
A10A	ACRONYMS AND ABBREVIATIONS (SHEET 1 OF 2)
A10B	ACRONYMS AND ABBREVIATIONS (SHEET 2 OF 2)

CARQUINEZ BRIDGE — BR NO 23-0015

QUANTITIES

BRIDGE REMOVAL (PORTION)	LUMP	SUM
FURNISH 28" CAST-IN-STEEL SHELL CONCRETE PILING	3,500	LF
DRIVE 28" CAST-IN-STEEL SHELL CONCRETE PILE	25	EA
STRUCTURAL CONCRETE, BRIDGE	3,870	CY
DRILL AND BOND DOWEL	598	LF
RUBBER BUMPER	8	EA
BAR REINFORCING STEEL (BRIDGE)	30,500	LB
BAR REINFORCING STEEL (EPOXY COATED) (BRIDGE)	619,100	LB
PLASTIC LUMBER	341	MFBM
CLEAN AND THERMAL SPRAY COAT STEEL PIPE PILE	LUMP	SUM
MISCELLANEOUS METAL (BRIDGE)	249,600	LB

	BY		CHECKED	
DESIGN	BY	M. Bahrami	CHECKED	A. Kushkaki
DETAILS	BY	B. Ballesteros	CHECKED	M. Bahrami
QUANTITIES	BY	M. Bahrami	CHECKED	A. Kushkaki

STATE OF CALIFORNIA
DEPARTMENT OF TRANSPORTATION

DIVISION OF MAINTENANCE
STRUCTURE MAINTENANCE AND INVESTIGATIONS

BRIDGE NO. 23-0015R
POST MILE 13.9/14.2 0.0/0.5

CARQUINEZ BRIDGE
FENDER REHABILITATION
INDEX TO PLANS

STRUCTURES DESIGN DETAIL SHEET (ENGLISH) (REV. 10/25/05)

ORIGINAL SCALE IN INCHES FOR REDUCED PLANS 0 1 2 3

CU 04609
EA 049071

DISREGARD PRINTS BEARING EARLIER REVISION DATES

REVISION DATES (PRELIMINARY STAGE ONLY) 07-28-08 12-08-08 12-14-10

SHEET 2 OF 28

FILE => 02_quan.dgn

USERNAME => ttmikes1 DATE PLOTTED => 08-AUG-2011 TIME PLOTTED => 12:04

DIST.	COUNTY	ROUTE	POST MILES TOTAL PROJECT	SHEET NO.	TOTAL SHEETS
04	CC,Sol	80	13.9/14.2, 0.0/0.5	17	42

12-14-10
REGISTERED ENGINEER - CIVIL

6-27-11
PLANS APPROVAL DATE

REGISTERED PROFESSIONAL ENGINEER
Michael Bahrami
No. 58795
Exp. 6-30-11
CIVIL
STATE OF CALIFORNIA

The State of California or its officers or agents shall not be responsible for the accuracy or completeness of electronic copies of this plan sheet.

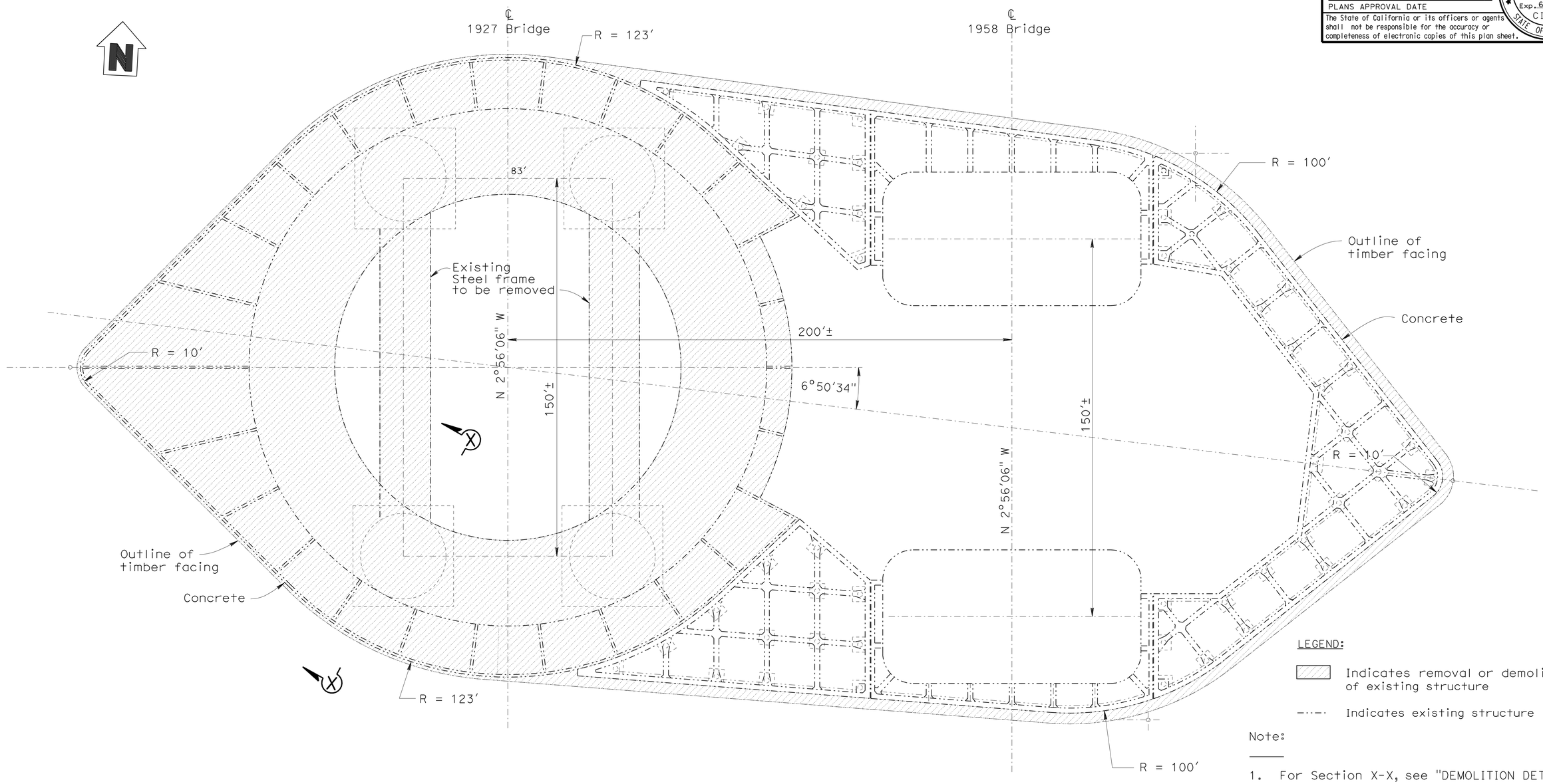

LEGEND:

Indicates removal or demolition of existing structure

Indicates existing structure

Note:

1. For Section X-X, see "DEMOLITION DETAIL" sheet.
2. For sheathing removal on Pier 2, see "PIER 2 PLAN" sheet.

NOTE:
THE CONTRACTOR SHALL VERIFY ALL CONTROLLING FIELD DIMENSIONS BEFORE ORDERING OR FABRICATING ANY MATERIAL.

PIER 3 EXISTING PLAN

Scale: 1" = 20′

	BY		CHECKED	
DESIGN	BY	M. Bahrami	CHECKED	A. Kushkaki
DETAILS	BY	B. Ballesteros	CHECKED	M. Bahrami
QUANTITIES	BY	M. Bahrami	CHECKED	A. Kushkaki

STATE OF CALIFORNIA
DEPARTMENT OF TRANSPORTATION

DIVISION OF MAINTENANCE
STRUCTURE MAINTENANCE AND INVESTIGATIONS

BRIDGE NO. 23-0015R
POST MILE 13.9/14.2 0.0/0.5

CARQUINEZ BRIDGE
FENDER REHABILITATION
GENERAL DEMOLITION PLAN

STRUCTURES DESIGN DETAIL SHEET (ENGLISH) (REV. 10/25/05)

ORIGINAL SCALE IN INCHES FOR REDUCED PLANS 0 1 2 3

CU 04609
EA 049071

DISREGARD PRINTS BEARING EARLIER REVISION DATES

REVISION DATES (PRELIMINARY STAGE ONLY) 08-31-08 12-08-08 09-31-09

SHEET 3 OF 28

FILE => 03_gpdemo.dgn

USERNAME => s124496 DATE PLOTTED => 30-JUN-2011 TIME PLOTTED => 15:43

DIST.	COUNTY	ROUTE	POST MILES TOTAL PROJECT	SHEET NO.	TOTAL SHEETS
04	CC,Sol	80	13.9/14.2, 0.0/0.5	18	42

12-14-10
REGISTERED ENGINEER - CIVIL

6-27-11
PLANS APPROVAL DATE

REGISTERED PROFESSIONAL ENGINEER
Michael Bahrami
No. 58795
Exp. 6-30-11
CIVIL
STATE OF CALIFORNIA

The State of California or its officers or agents shall not be responsible for the accuracy or completeness of electronic copies of this plan sheet.

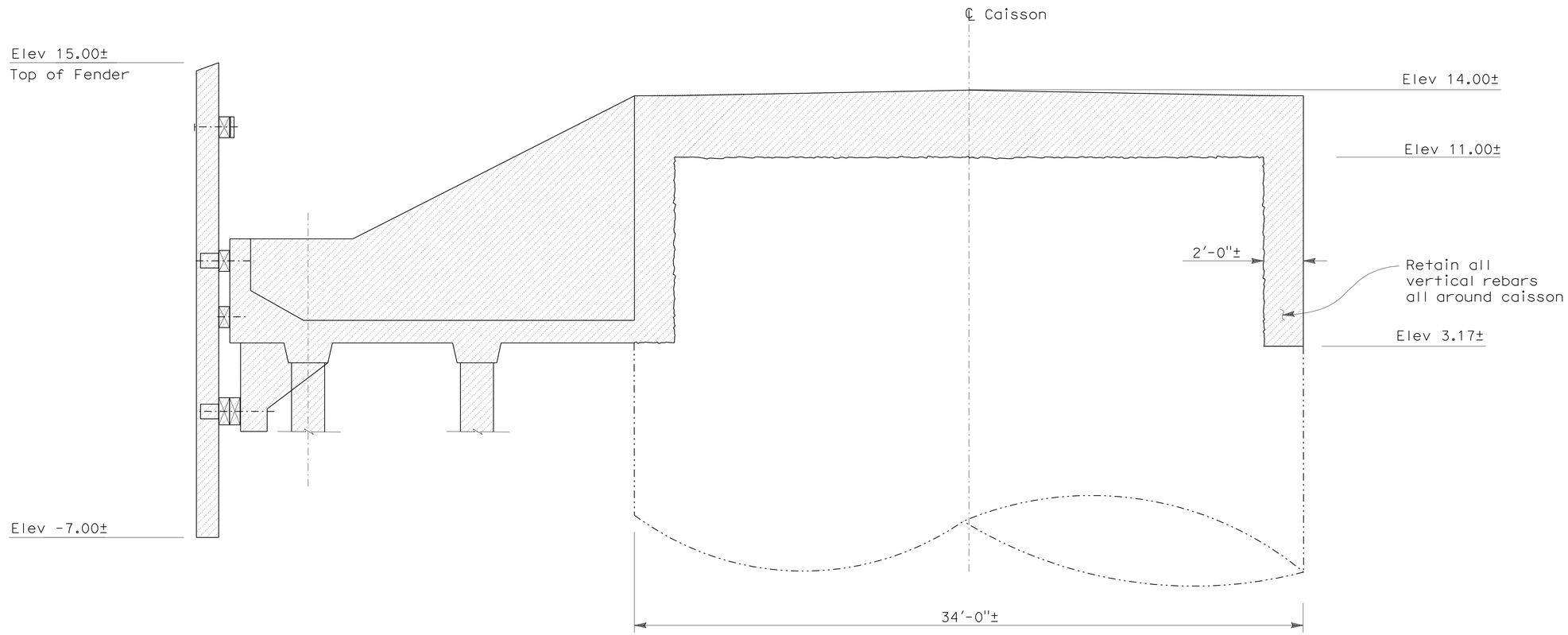

SECTION X-X
Not To Scale

LEGEND:

Indicates removal or demolition of existing structure

NOTE:
THE CONTRACTOR SHALL VERIFY ALL CONTROLLING FIELD DIMENSIONS BEFORE ORDERING OR FABRICATING ANY MATERIAL.

	BY		CHECKED	
DESIGN	BY	M. Bahrami	CHECKED	A. Kushkaki
DETAILS	BY	B. Ballesteros	CHECKED	M. Bahrami
QUANTITIES	BY	M. Bahrami	CHECKED	A. Kushkaki

STATE OF CALIFORNIA
DEPARTMENT OF TRANSPORTATION

DIVISION OF MAINTENANCE
STRUCTURE MAINTENANCE AND INVESTIGATIONS

BRIDGE NO. 23-0015R
POST MILE 13.9/14.2 0.0/0.5

CARQUINEZ BRIDGE
FENDER REHABILITATION
DEMOLITION DETAIL

STRUCTURES MAINTENANCE DETAIL SHEET (ENGLISH) (REV. 1/21/98)

ORIGINAL SCALE IN INCHES FOR REDUCED PLANS 0 1 2 3

CU 04609
EA 049071

DISREGARD PRINTS BEARING EARLIER REVISION DATES

REVISION DATES (PRELIMINARY STAGE ONLY) 08-14-08 10-22-08 09-31-09

SHEET 4 OF 28

FILE => 04_demosect.dgn

USERNAME => s124496 DATE PLOTTED => 30-JUN-2011 TIME PLOTTED => 15:41

DIST	COUNTY	ROUTE	POST MILES TOTAL PROJECT	SHEET No	TOTAL SHEETS
04	CC,Sol	80	13.9/14.2, 0.0/0.5	19	42

REGISTERED CIVIL ENGINEER 13/9/14 2-14-10 DATE

6-27-11
PLANS APPROVAL DATE

REGISTERED PROFESSIONAL ENGINEER
Michael Bahrami
No. 58795
Exp. 6-30-11
CIVIL
STATE OF CALIFORNIA

The State of California or its officers or agents shall not be responsible for the accuracy or completeness of electronic copies of this plan sheet.

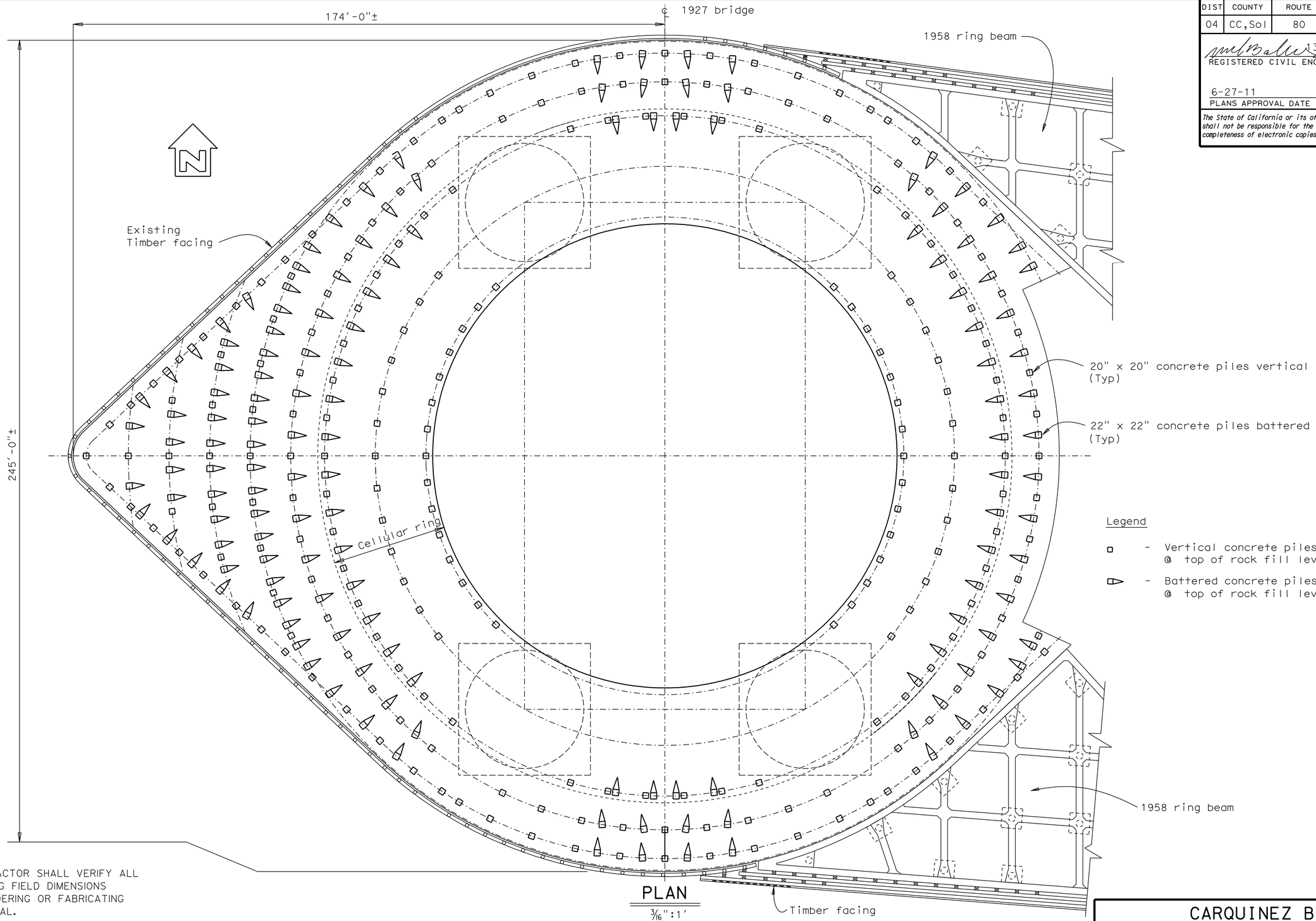

Legend

- Vertical concrete piles to be cut @ top of rock fill level.
- Battered concrete piles to be cut @ top of rock fill level.

NOTE:
THE CONTRACTOR SHALL VERIFY ALL CONTROLLING FIELD DIMENSIONS BEFORE ORDERING OR FABRICATING ANY MATERIAL.

PLAN
3/16":1'

DESIGN	M. Bahrami	CHECKED	A. Kushkaki
DETAILS	BY B. Ballesteros	CHECKED	M. Bahrami
QUANTITIES	BY M. Bahrami	CHECKED	A. Kushkaki

STATE OF CALIFORNIA
DEPARTMENT OF TRANSPORTATION

DIVISION OF MAINTENANCE
STRUCTURE MAINTENANCE AND INVESTIGATIONS

BRIDGE NO. 23-0015
POST MILE 13.9/14.2 0.0/0.5

CARQUINEZ BRIDGE
FENDER REHABILITATION
EXISTING PILE LAYOUT

STRUCTURES DESIGN DETAIL SHEET (ENGLISH) (REV. 10/25/05)

ORIGINAL SCALE IN INCHES FOR REDUCED PLANS 0 1 2 3

CU 04609
EA 049071

DISREGARD PRINTS BEARING EARLIER REVISION DATES → 02-11-09 06-29-09 09-31-09

REVISION DATES

SHEET 5 OF 28

FILE => 05_pileremovl.dgn

USERNAME => s124436 DATE PLOTTED => 30-JUN-2011 TIME PLOTTED => 15:41

DIST.	COUNTY	ROUTE	POST MILES TOTAL PROJECT	SHEET NO.	TOTAL SHEETS
04	CC,Sol	80	13.9/14.2, 0.0/0.5	20	42

12-14-10
REGISTERED ENGINEER - CIVIL

6-27-11
PLANS APPROVAL DATE

REGISTERED PROFESSIONAL ENGINEER Michael Bahrami No. 58795 Exp. 6-30-11 CIVIL STATE OF CALIFORNIA

The State of California or its officers or agents shall not be responsible for the accuracy or completeness of electronic copies of this plan sheet.

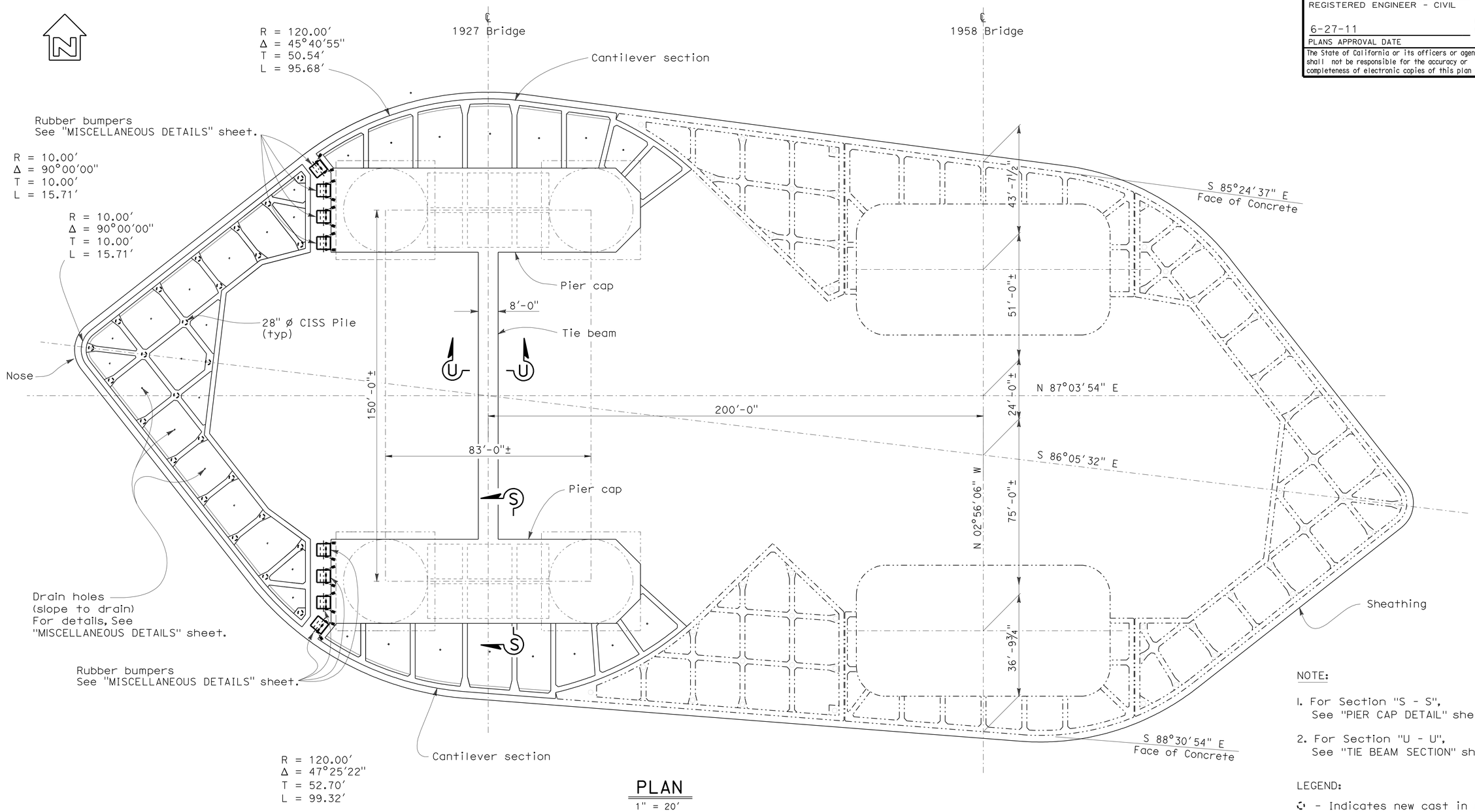

PLAN

1" = 20'

NOTE:

1. For Section "S - S", See "PIER CAP DETAIL" sheet.
2. For Section "U - U", See "TIE BEAM SECTION" sheet.

LEGEND:

- Indicates new cast in steel shell. See "PILE DETAILS" sheet.

NOTE:
THE CONTRACTOR SHALL VERIFY ALL CONTROLLING FIELD DIMENSIONS BEFORE ORDERING OR FABRICATING ANY MATERIAL.

DESIGN	BY M. Bahrami	CHECKED A. Kushkaki	
DETAILS	BY B. Ballesteros	CHECKED M. Bahrami	
QUANTITIES	BY M. Bahrami	CHECKED A. Kushkaki	

STATE OF CALIFORNIA
DEPARTMENT OF TRANSPORTATION

DIVISION OF MAINTENANCE
STRUCTURE MAINTENANCE AND INVESTIGATIONS

BRIDGE NO. 23-0015R
POST MILE 13.9/14.2 0.0/0.5

CARQUINEZ BRIDGE
FENDER REHABILITATION
GENERAL LAYOUT PLAN

STRUCTURES DESIGN DETAIL SHEET (ENGLISH) (REV. 1/21/98)

ORIGINAL SCALE IN INCHES FOR REDUCED PLANS 0 1 2 3

CU 04609
EA 049071

DISREGARD PRINTS BEARING EARLIER REVISION DATES

REVISION DATES (PRELIMINARY STAGE ONLY) 07-28-08 10-23-08 09-31-09 07-15-10

SHEET 6 OF 28

FILE => 06_proplayout.dgn

USERNAME => s124496 DATE PLOTTED => 30-JUN-2011 TIME PLOTTED => 15:41

DIST	COUNTY	ROUTE	POST MILES TOTAL PROJECT	SHEET No	TOTAL SHEETS
04	CC,Sol	80	13.9/14.2, 0.0/0.5	21	42

REGISTERED CIVIL ENGINEER 12-14-10 DATE

6-27-11
PLANS APPROVAL DATE

The State of California or its officers or agents shall not be responsible for the accuracy or completeness of electronic copies of this plan sheet.

REGISTERED PROFESSIONAL ENGINEER
Michael Bahrami
No. 58795
Exp. 6-30-11
CIVIL
STATE OF CALIFORNIA

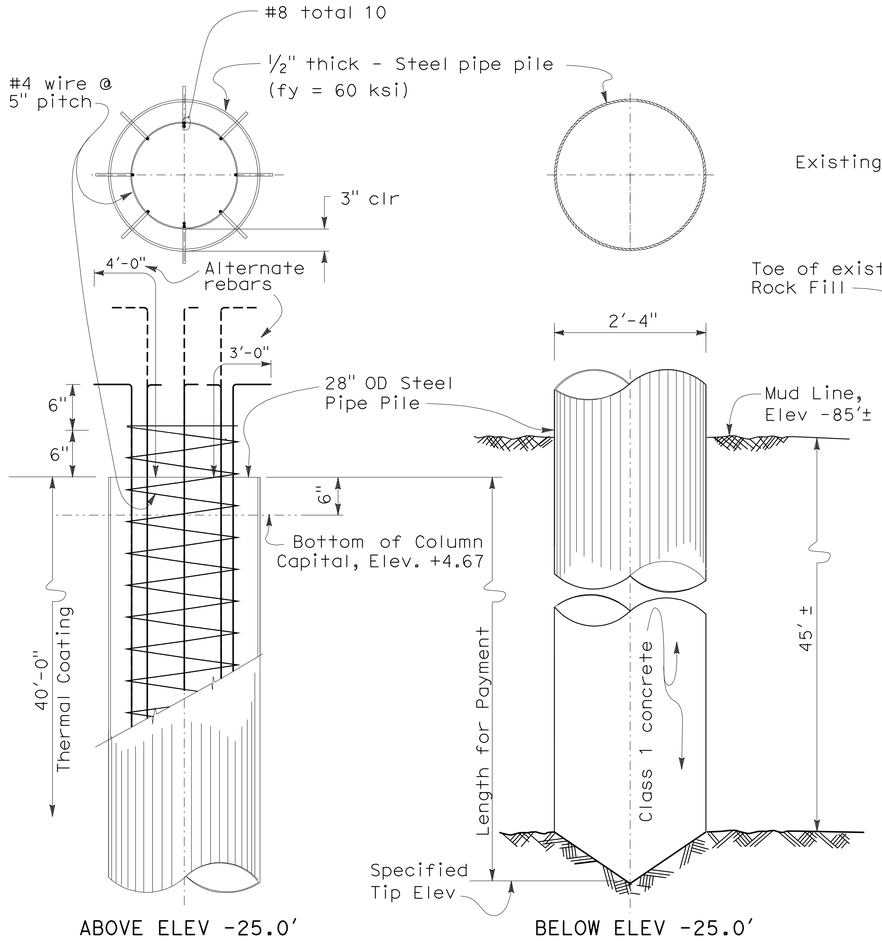

PILE DETAILS

1" = 1'-0"

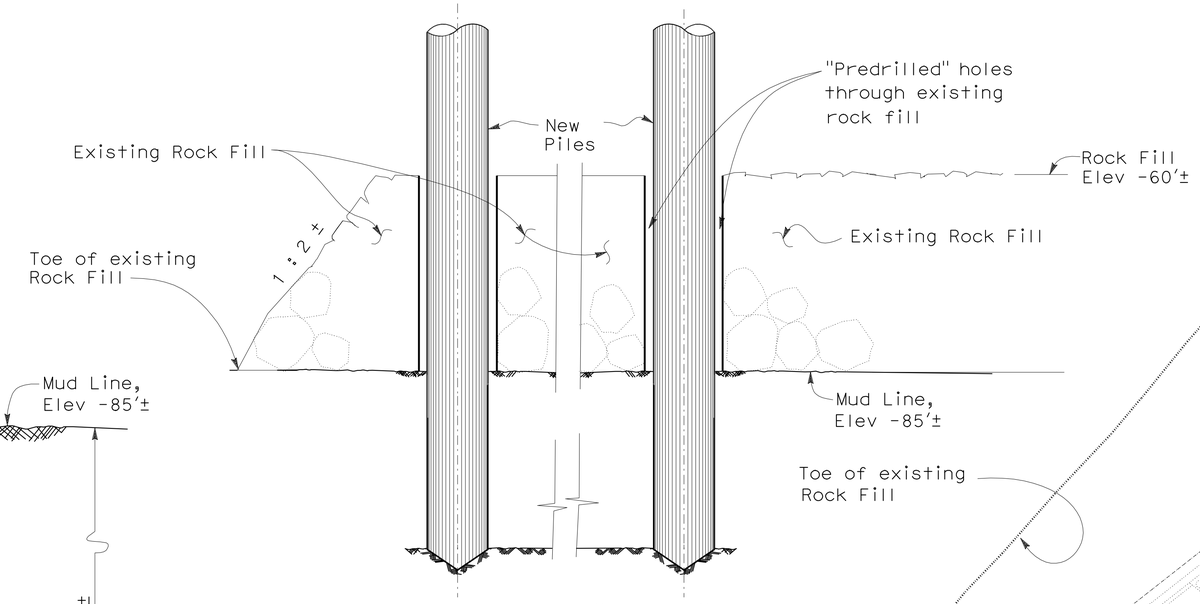

SECTION "R - R"
PILES THROUGH ROCK FILL

NO SCALE

Notes:

1. Sheathings not shown for clarity.
2. Clean and thermal spray coat the top 40' length of steel pipe pile.
3. Lapped splices in spiral pile reinforcement shall be lapped 80 wire diameters minimum. Spiral pile reinforcement at splices and ends shall be terminated by a 135° hook with with 6" tail hooked or round a longitudinal bar or stand.
4. Piles will be driven by vibration method. Predrill through existing rock fill.

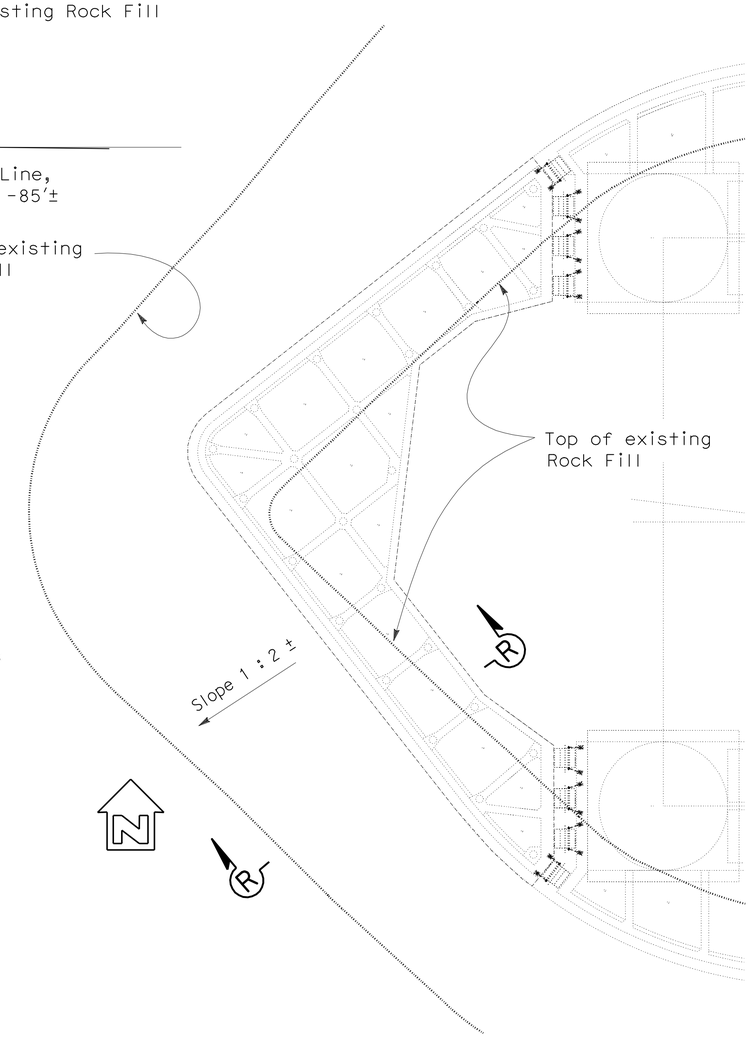

ROCK REMOVAL LIMITS PLAN

NO SCALE

PILE DATA TABLE

Location	Pile Type	Nominal Resistance (kips)		Design Tip Elevations (ft)	Specified Tip Elevations (ft)	Nominal Driving Resistance (kips)
		Compresssion	Tension			
Pier 3	28" CISS	272	N/A	-130 (a) -123 (c)	-130	272

Notes:

1) Calculated based on dense sand layer at Elevation -118 feet, and the surface of shale bedrock at Elevation -128 feet.
2) Design tip elevations are controlled by: (a) Compression (Strength Limit) and (c) Settlement, respectively.
3) The specified tip elevation shall not be raised above the design tip elevation for Settlement.

NOTE:
THE CONTRACTOR SHALL VERIFY ALL CONTROLLING FIELD DIMENSIONS BEFORE ORDERING OR FABRICATING ANY MATERIAL.

DESIGN	BY M. Bahrami	CHECKED A. Kushkaki	
DETAILS	BY B. Ballesteros	CHECKED M. Bahrami	
QUANTITIES	BY M. Bahrami	CHECKED A. Kushkaki	

STATE OF CALIFORNIA
DEPARTMENT OF TRANSPORTATION

DIVISION OF MAINTENANCE
STRUCTURE MAINTENANCE AND INVESTIGATIONS

BRIDGE NO. 23-0015R
POST MILE 13.9/14.2 0.0/0.5

CARQUINEZ BRIDGE
FENDER REHABILITATION
PILE DETAILS

STRUCTURES DESIGN DETAIL SHEET (ENGLISH) (REV. 10/25/05)

ORIGINAL SCALE IN INCHES FOR REDUCED PLANS 0 1 2 3

CU 04609
EA 049071

DISREGARD PRINTS BEARING EARLIER REVISION DATES

REVISION DATES: 09-24-08 10-12-08 06-29-09 09-11-09 05-04-10 11-03-10 12-06-10 12-14-10 12-28-10

SHEET 7 OF 28

FILE => 07_piledet.dgn

USERNAME => s124496 DATE PLOTTED =>

DIST	COUNTY	ROUTE	POST MILES TOTAL PROJECT	SHEET No	TOTAL SHEETS
04	CC,Sol	80	13.9/14.2, 0.0/0.5	22	42

REGISTERED CIVIL ENGINEER 12-14-10 DATE

6-27-11
PLANS APPROVAL DATE

REGISTERED PROFESSIONAL ENGINEER A. KUSHKAKI No. 59045 Exp. 6-30-11 CIVIL STATE OF CALIFORNIA

The State of California or its officers or agents shall not be responsible for the accuracy or completeness of electronic copies of this plan sheet.

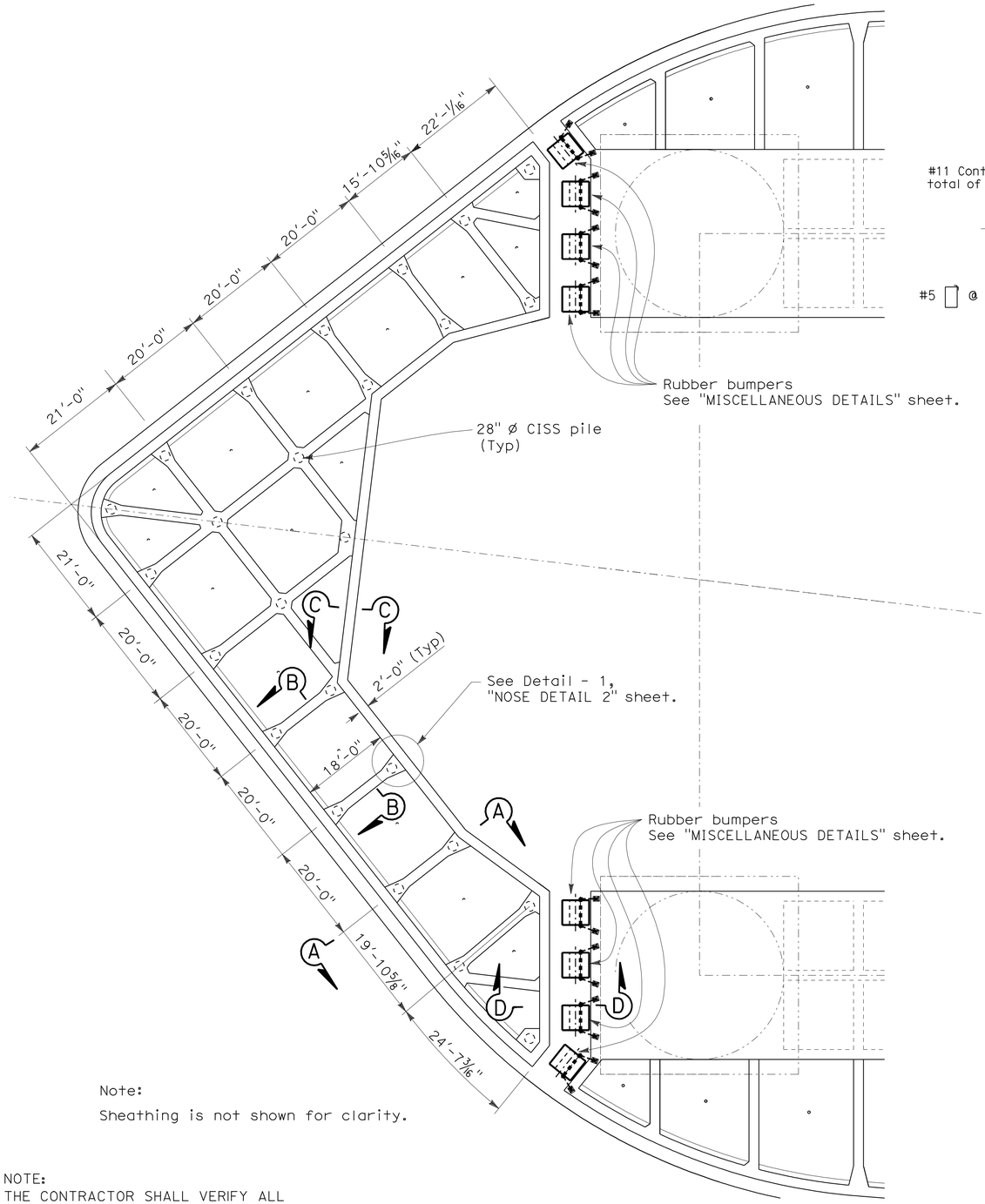

Note:
Sheathing is not shown for clarity.

PART PLAN OF PIER 3, NOSE SECTION

1" = 15'- 0"

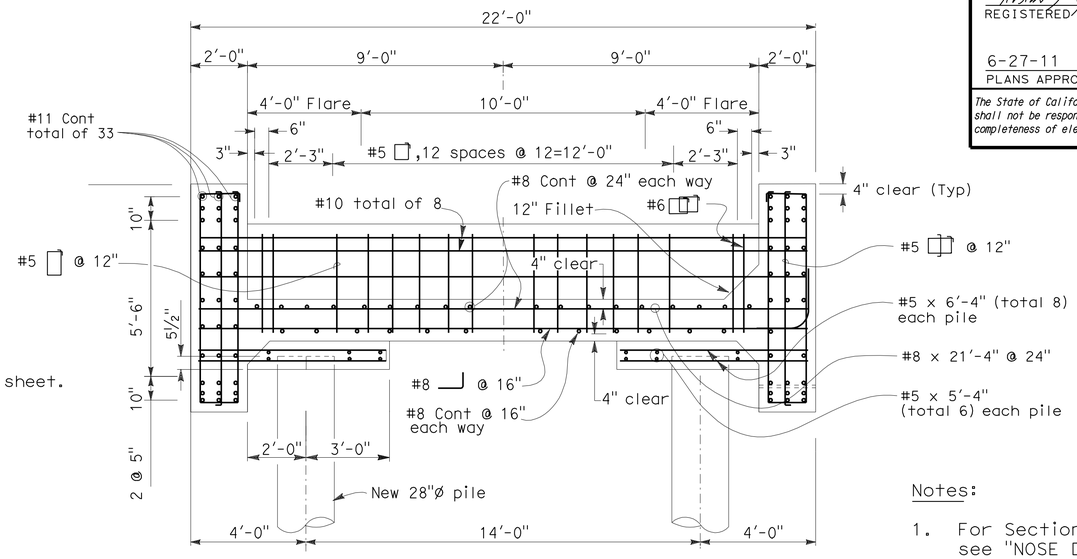

SECTION A - A

3/8" = 1'-0"

Notes:

1. For Section C-C and D-D, see "NOSE DETAIL 2" sheet.
2. Sheathings not shown for clarity.
3. For sheathings anchorage, see "INSTALLATION DETAIL - 2" sheet.

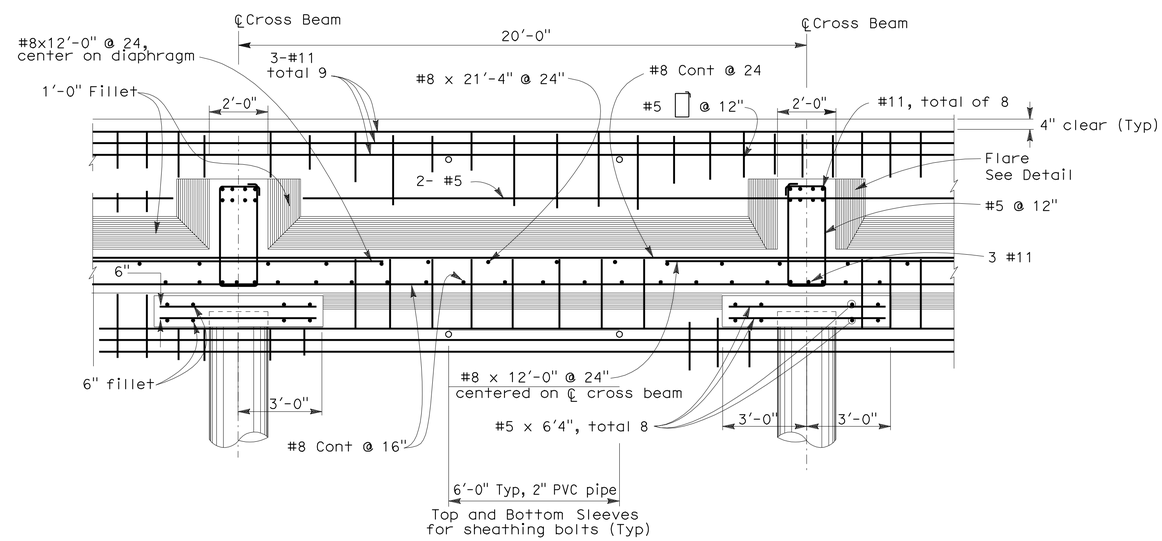

SECTION B - B

3/8" = 1'-0"

NOTE:
THE CONTRACTOR SHALL VERIFY ALL CONTROLLING FIELD DIMENSIONS BEFORE ORDERING OR FABRICATING ANY MATERIAL.

	BY	CHECKED
DESIGN	A. Kushkaki	M. Bahrami
DETAILS	B. Ballesteros	M. Bahrami
QUANTITIES	M. Bahrami	A. Kushkaki

STATE OF CALIFORNIA
DEPARTMENT OF TRANSPORTATION

DIVISION OF MAINTENANCE
STRUCTURE MAINTENANCE AND INVESTIGATIONS

BRIDGE NO. 23-0015R
POST MILE 13.9/14.2 0.0/0.5

CARQUINEZ BRIDGE
FENDER REHABILITATION
NOSE DETAIL 1

STRUCTURES DESIGN DETAIL SHEET (ENGLISH) (REV. 10/25/05)

ORIGINAL SCALE IN INCHES FOR REDUCED PLANS 0 1 2 3

CU 04609
EA 049071

DISREGARD PRINTS BEARING EARLIER REVISION DATES → 06-29-09 09-31-09 11-03-10

REVISION DATES

SHEET 8 OF 28

FILE => 08_pier3nose1.dgn

USERNAME => s124496 DATE PLOTTED => 30-JUN-2011 TIME PLOTTED => 15:41

DIST	COUNTY	ROUTE	POST MILES TOTAL PROJECT	SHEET No	TOTAL SHEETS
04	CC,Sol	80	13.9/14.2, 0.0/0.5	23	42

REGISTERED CIVIL ENGINEER — DATE 12-14-10

6-27-11
PLANS APPROVAL DATE

REGISTERED PROFESSIONAL ENGINEER — A. KUSHKAKI — No. 59045 — Exp. 6-30-11 — CIVIL — STATE OF CALIFORNIA

The State of California or its officers or agents shall not be responsible for the accuracy or completeness of electronic copies of this plan sheet.

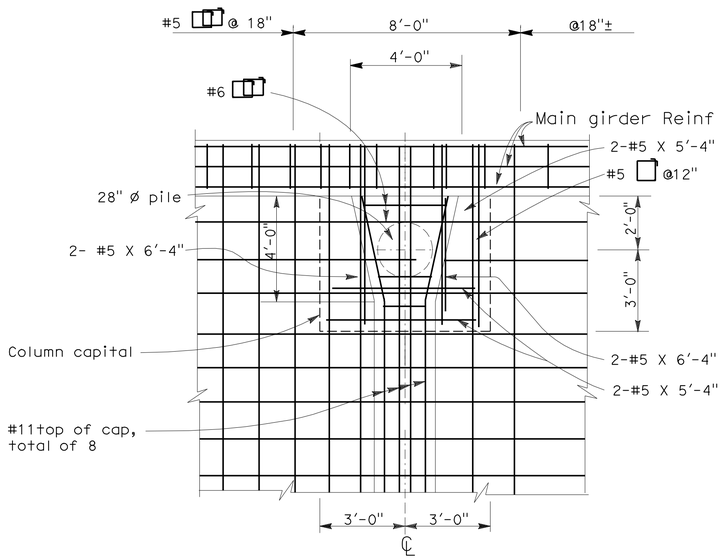

DETAIL - 1

3/8" = 1'-0"

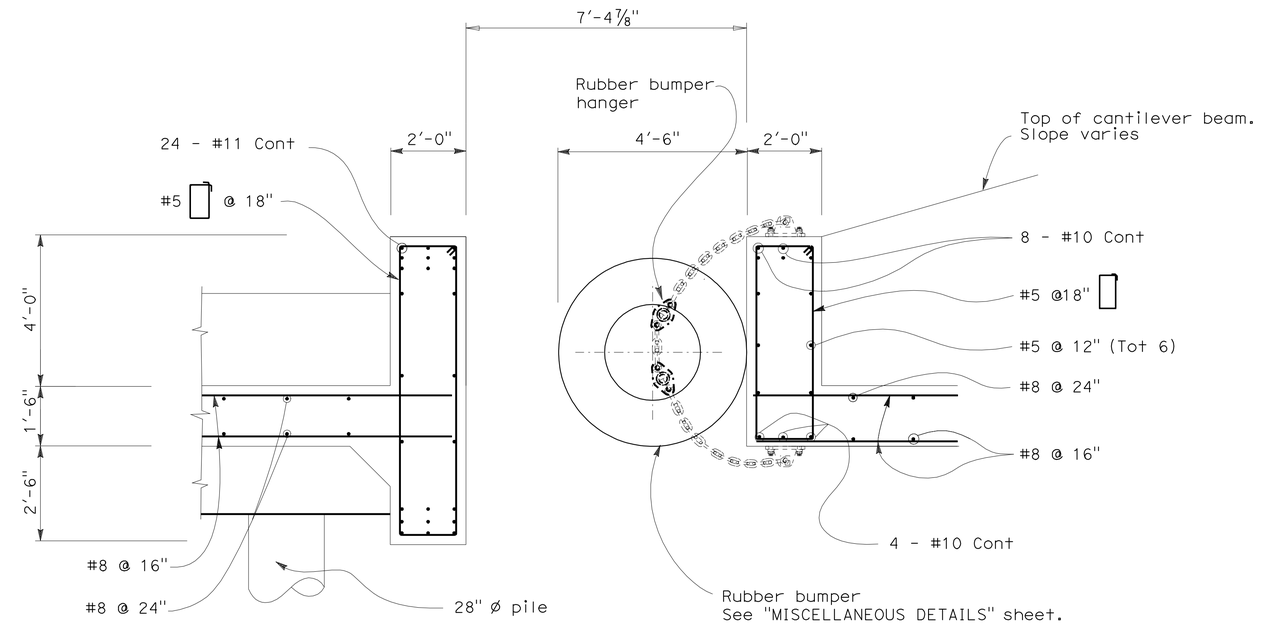

SECTION D - D

JOINT DETAIL

1/2" = 1'-0"

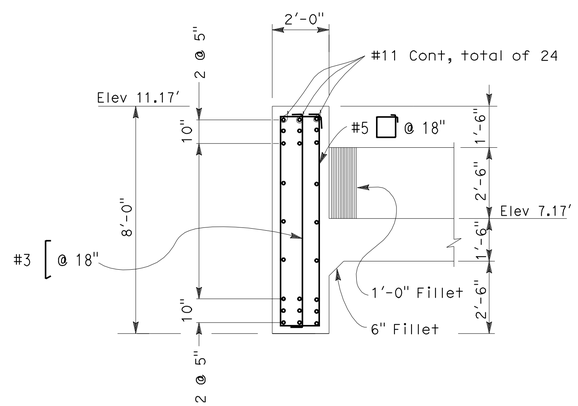

SECTION C - C

3/8" = 1'-0"

Note:

Capital reinforcement not shown for clarity.

NOTE:
THE CONTRACTOR SHALL VERIFY ALL CONTROLLING FIELD DIMENSIONS BEFORE ORDERING OR FABRICATING ANY MATERIAL.

DESIGN	BY A. Kushkaki	CHECKED M. Bahrami	
DETAILS	BY B. Ballesteros	CHECKED M. Bahrami	
QUANTITIES	BY M. Bahrami	CHECKED A. Kushkaki	

STATE OF CALIFORNIA
DEPARTMENT OF TRANSPORTATION

DIVISION OF MAINTENANCE
STRUCTURE MAINTENANCE AND INVESTIGATIONS

BRIDGE NO. 23-0015R
POST MILE 13.9/14.2 0.0/0.5

CARQUINEZ BRIDGE
FENDER REHABILITATION
NOSE DETAIL 2

STRUCTURES DESIGN DETAIL SHEET (ENGLISH) (REV. 10/25/05)

ORIGINAL SCALE IN INCHES FOR REDUCED PLANS 0 1 2 3

CU 04609
EA 049071

DISREGARD PRINTS BEARING EARLIER REVISION DATES

REVISION DATES: 06-28-09 09-31-09 11-02-10

SHEET 9 OF 28

FILE => 09_pier3nose2.dgn

USERNAME => s124196 DATE PLOTTED => 30-JUN-2011 TIME PLOTTED => 15:41

DIST	COUNTY	ROUTE	POST MILES TOTAL PROJECT	SHEET No	TOTAL SHEETS
04	CC,Sol	80	13.9/14.2, 0.0/0.5	24	42

REGISTERED CIVIL ENGINEER 12-14-10 DATE

6-27-11
PLANS APPROVAL DATE

REGISTERED PROFESSIONAL ENGINEER
Michael Bahrami
No. 58795
Exp. 6-30-11
CIVIL
STATE OF CALIFORNIA

The State of California or its officers or agents shall not be responsible for the accuracy or completeness of electronic copies of this plan sheet.

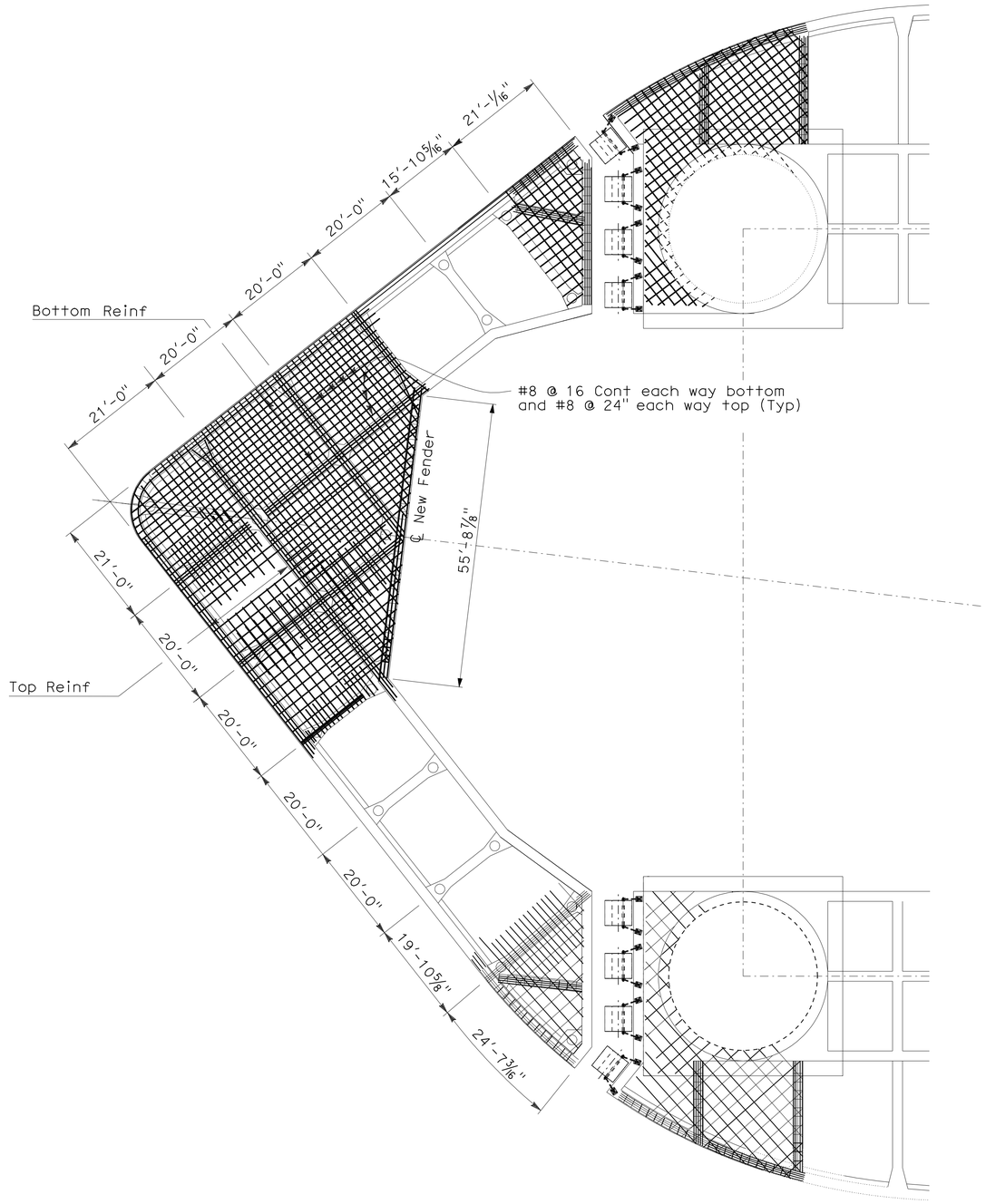

SLAB REINFORCEMENT PLAN

1" = 20'- 0"

NOTE:
THE CONTRACTOR SHALL VERIFY ALL CONTROLLING FIELD DIMENSIONS BEFORE ORDERING OR FABRICATING ANY MATERIAL.

	BY		CHECKED	
DESIGN	M. Bahrami		A. Kushkaki	
DETAILS	B. Ballesteros		M. Bahrami	
QUANTITIES	M. Bahrami		A. Kushkaki	

STATE OF CALIFORNIA
DEPARTMENT OF TRANSPORTATION

DIVISION OF MAINTENANCE
STRUCTURE MAINTENANCE AND INVESTIGATIONS

BRIDGE NO. 23-0015R
POST MILE 13.9/14.2 0.0/0.5

CARQUINEZ BRIDGE
FENDER REHABILITATION
NOSE DETAIL 3

STRUCTURES DESIGN DETAIL SHEET (ENGLISH) (REV. 10/25/05)

ORIGINAL SCALE IN INCHES FOR REDUCED PLANS 0 1 2 3

CU 04609
EA 049071

DISREGARD PRINTS BEARING EARLIER REVISION DATES → 09-24-08 10-12-08 09-31-09 11-02-10

REVISION DATES

SHEET 10 OF 28

FILE => 10_pier3nose3.dgn

USERNAME => s8124196 DATE PLOTTED => 30-JUN-2011 TIME PLOTTED => 15:41

DIST	COUNTY	ROUTE	POST MILES TOTAL PROJECT	SHEET No	TOTAL SHEETS
04	CC,Sol	80	13.9/14.2, 0.0/0.5	25	42

REGISTERED CIVIL ENGINEER 12-14-10 DATE

6-27-11
PLANS APPROVAL DATE

REGISTERED PROFESSIONAL ENGINEER A. KUSHKAKI No. 59045 Exp. 6-30-11 CIVIL STATE OF CALIFORNIA

The State of California or its officers or agents shall not be responsible for the accuracy or completeness of electronic copies of this plan sheet.

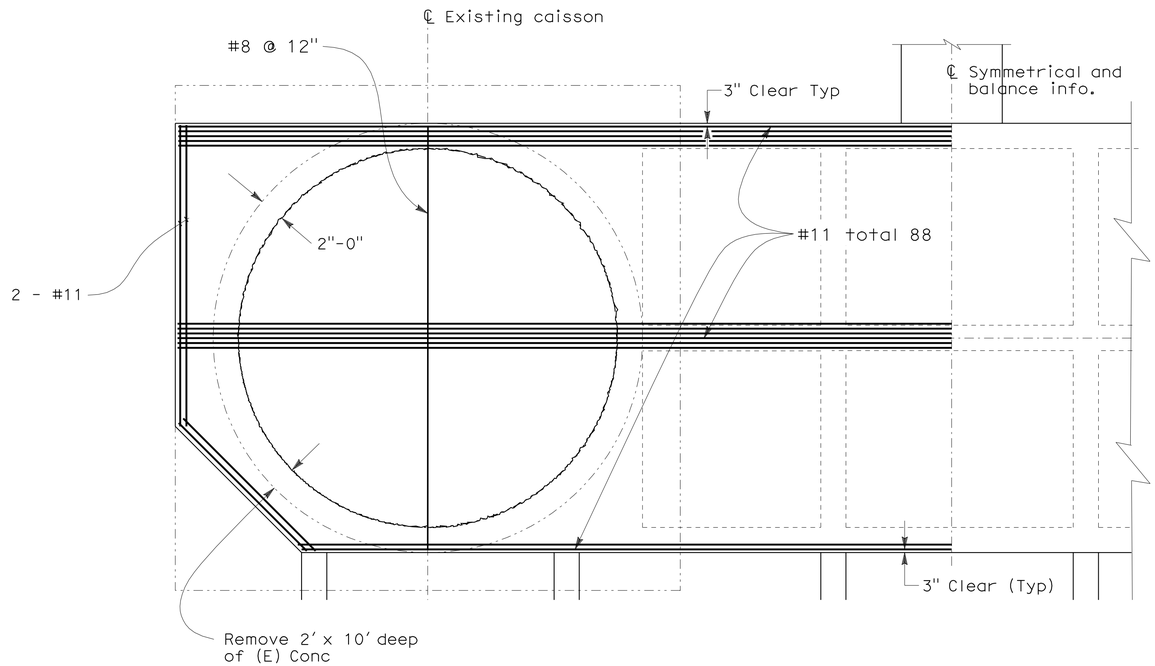

LONGITUDINAL TOP SLAB REINFORCING PLAN

Scale: 1" = 50'

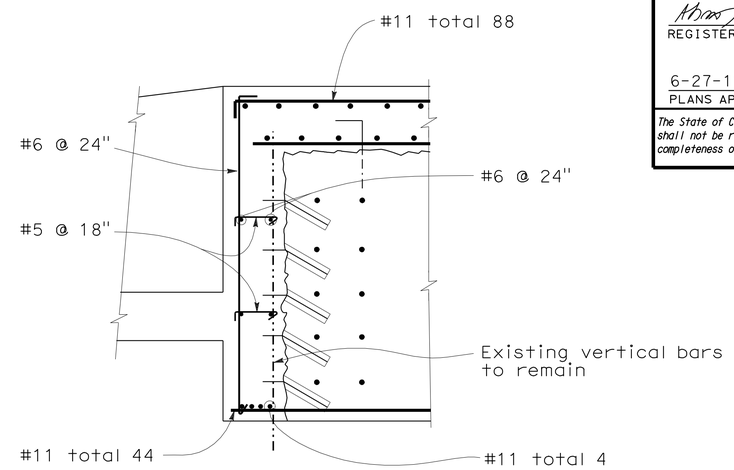

DETAIL - 2

1" = 10'-0"

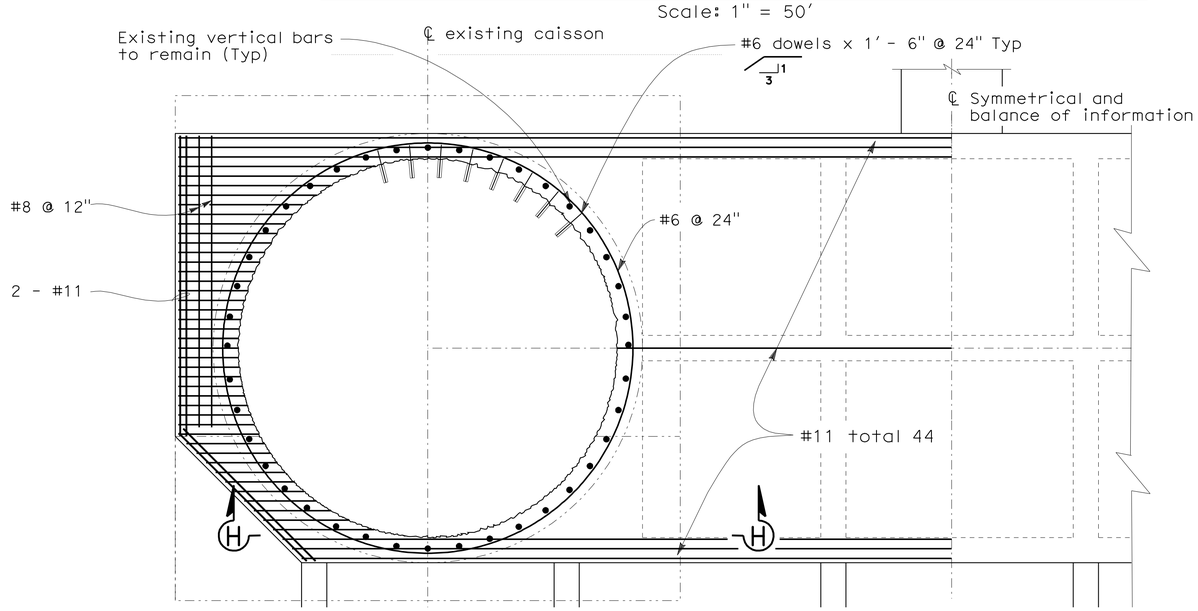

LONGITUDINAL BOTTOM SLAB REINFORCING PLAN

Scale: 1" = 50'

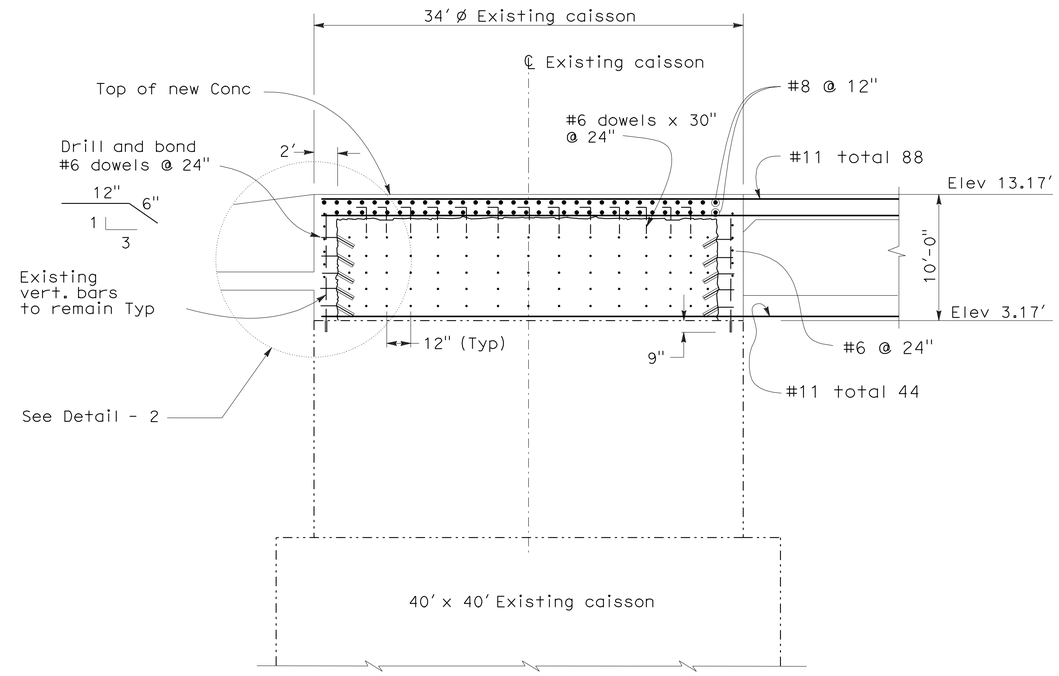

SECTION H - H

Scale: 1" = 50'

NOTE:
THE CONTRACTOR SHALL VERIFY ALL CONTROLLING FIELD DIMENSIONS BEFORE ORDERING OR FABRICATING ANY MATERIAL.

	BY	CHECKED
DESIGN	A. Kushkaki	M. Bahrami
DETAILS	B. Ballesteros	M. Bahrami
QUANTITIES	M. Bahrami	A. Kushkaki

STATE OF CALIFORNIA
DEPARTMENT OF TRANSPORTATION

DIVISION OF MAINTENANCE
STRUCTURE MAINTENANCE AND INVESTIGATIONS

BRIDGE NO. 23-0015R
POST MILE 13.9/14.2 0.0/0.5

CARQUINEZ BRIDGE
FENDER REHABILITATION
PIER CAP SLAB DETAIL

STRUCTURES DESIGN DETAIL SHEET (ENGLISH) (REV. 10/25/05)

ORIGINAL SCALE IN INCHES FOR REDUCED PLANS 0 1 2 3

CU 04609
EA 049071

DISREGARD PRINTS BEARING EARLIER REVISION DATES 01-14-09 09-31-09

REVISION DATES

SHEET 11 OF 28

FILE => 11_bentcap.dgn

USERNAME => trmikest DATE PLOTTED => 03-AUG-2011 TIME PLOTTED => 06:58

DIST	COUNTY	ROUTE	POST MILES TOTAL PROJECT	SHEET No	TOTAL SHEETS
04	CC,Sol	80	13.9/14.2, 0.0/0.5	26	42

REGISTERED CIVIL ENGINEER 12-14-10 DATE

6-27-11
PLANS APPROVAL DATE

REGISTERED PROFESSIONAL ENGINEER A. KUSHKAKI No. 59045 Exp. 6-30-11 CIVIL STATE OF CALIFORNIA

The State of California or its officers or agents shall not be responsible for the accuracy or completeness of electronic copies of this plan sheet.

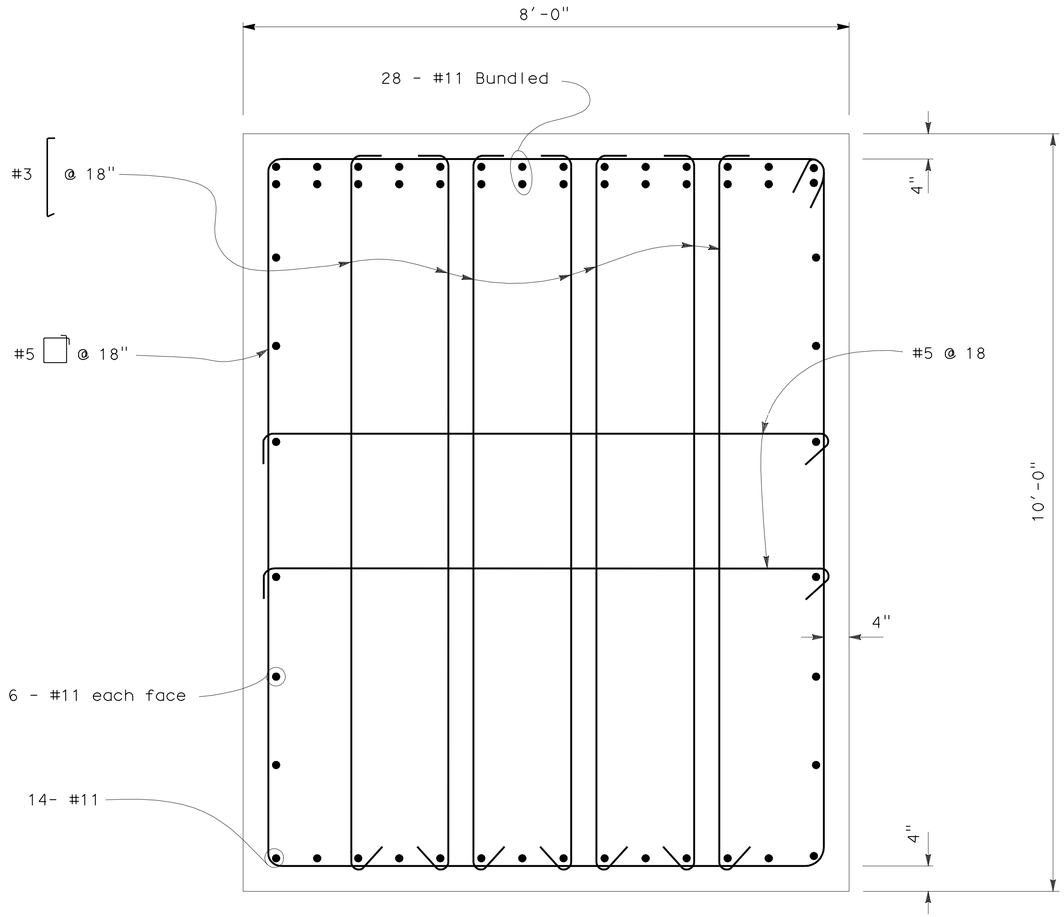

SECTION U - U - 6

1" = 1'-0"

Note:

1. For Section U-U
   See "GENERAL LAYOUT PLAN" sheet.

NOTE:

THE CONTRACTOR SHALL VERIFY ALL CONTROLLING FIELD DIMENSIONS BEFORE ORDERING OR FABRICATING ANY MATERIAL.

	BY		CHECKED	
DESIGN	A. Kushkaki		M. Bahrami	
DETAILS	B. Ballesteros		A. Kushkaki	
QUANTITIES	M. Bahrami		A. Kushkaki	

STATE OF CALIFORNIA
DEPARTMENT OF TRANSPORTATION

DIVISION OF MAINTENANCE
STRUCTURE MAINTENANCE AND INVESTIGATIONS

BRIDGE NO. 23-0015R
POST MILE 13.9/14.2 0.0/0.5

CARQUINEZ BRIDGE
FENDER REHABILITATION
TIE BEAM SECTION

STRUCTURES DESIGN DETAIL SHEET (ENGLISH) (REV. 10/25/05)

ORIGINAL SCALE IN INCHES FOR REDUCED PLANS 0 1 2 3

CU 04609
EA 049071

DISREGARD PRINTS BEARING EARLIER REVISION DATES

REVISION DATES 06-29-09 09-31-09

SHEET 12 OF 28

FILE => 12_connbeam.dgn

USERNAME => s124496 DATE PLOTTED => 30-JUN-2011 TIME PLOTTED => 15:42

DIST	COUNTY	ROUTE	POST MILES TOTAL PROJECT	SHEET No	TOTAL SHEETS
04	CC,Sol	80	13.9/14.2, 0.0/0.5	27	42

REGISTERED CIVIL ENGINEER — DATE 12-14-10

6-27-11
PLANS APPROVAL DATE

REGISTERED PROFESSIONAL ENGINEER — A. KUSHKAKI — No. 59045 — Exp. 6-30-11 — CIVIL — STATE OF CALIFORNIA

The State of California or its officers or agents shall not be responsible for the accuracy or completeness of electronic copies of this plan sheet.

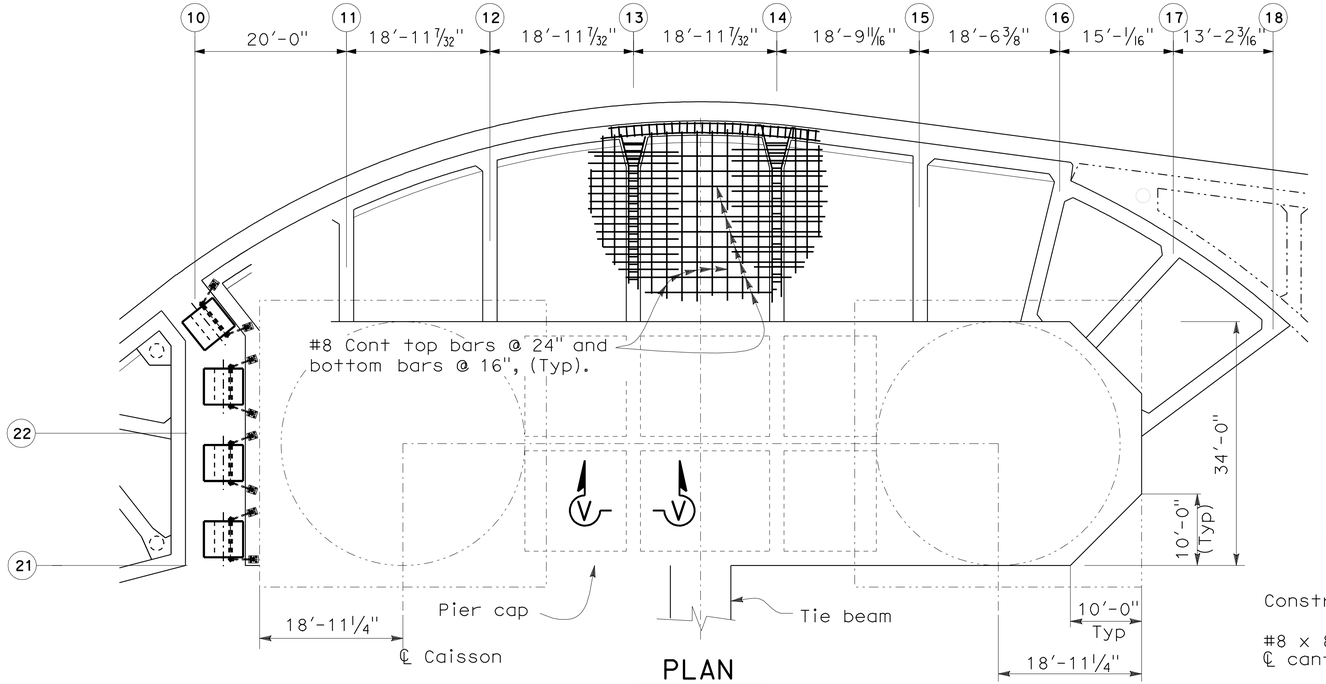

PLAN
1" = 10'-0"

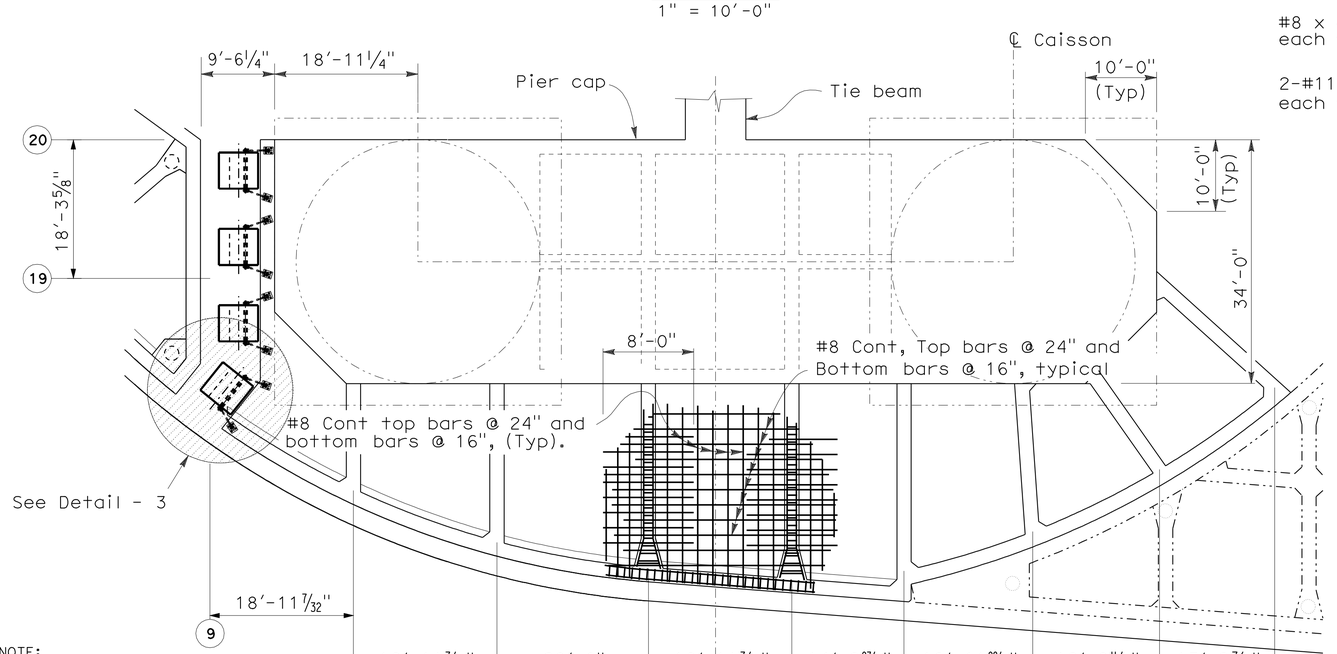

PLAN
1" = 10'-0"

NOTE:
THE CONTRACTOR SHALL VERIFY ALL CONTROLLING FIELD DIMENSIONS BEFORE ORDERING OR FABRICATING ANY MATERIAL.

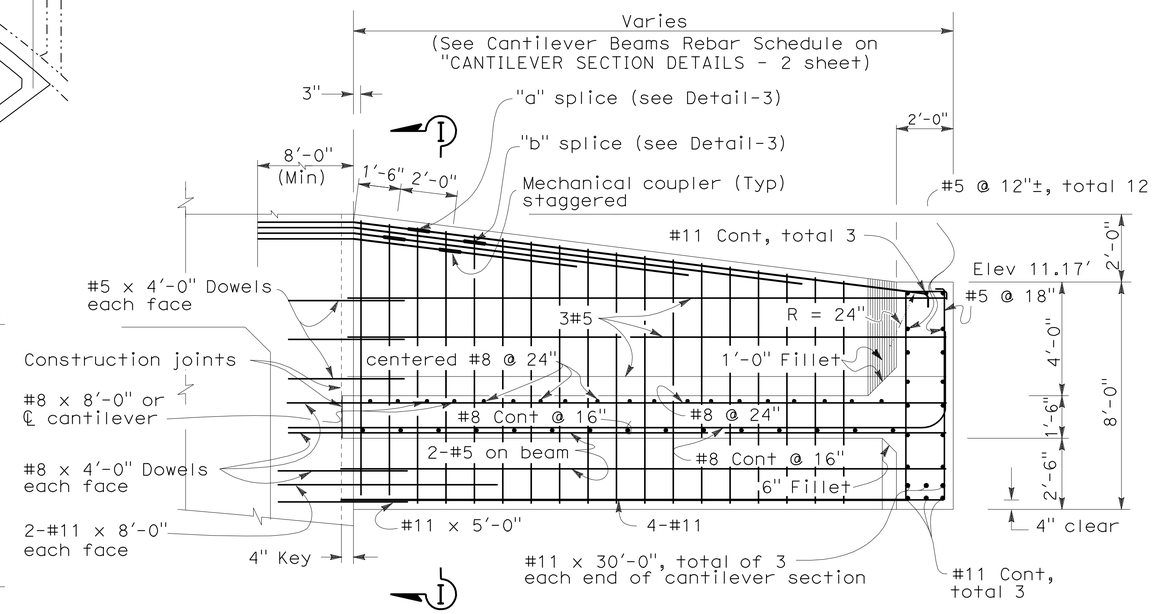

TYPICAL CANTILEVER BEAM
3/8" = 1'-0"

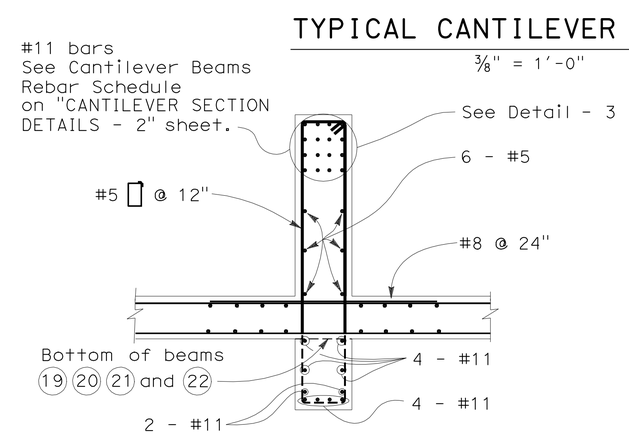

SECTION "I - I"
3/8" = 1'-0"

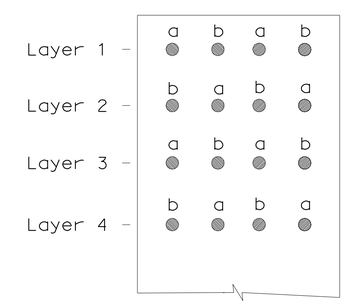

DETAIL - 3

DESIGN	BY A. Kushkaki	CHECKED M. Bahrami	
DETAILS	BY B. Ballesteros	CHECKED M. Bahrami	
QUANTITIES	BY M. Bahrami	CHECKED A. Kushkaki	

STATE OF CALIFORNIA
DEPARTMENT OF TRANSPORTATION

DIVISION OF MAINTENANCE
STRUCTURE MAINTENANCE AND INVESTIGATIONS

BRIDGE NO. 23-0015R
POST MILE 13.9/14.2 0.0/0.5

CARQUINEZ BRIDGE
FENDER REHABILITATION
CANTILEVER SECTION DETAIL - 1

STRUCTURES DESIGN DETAIL SHEET (ENGLISH) (REV. 10/25/05)

ORIGINAL SCALE IN INCHES FOR REDUCED PLANS 0 1 2 3

CU 04609
EA 049071

DISREGARD PRINTS BEARING EARLIER REVISION DATES — REVISION DATES 10-02-08 09-31-09 11-02-10

SHEET 13 OF 28

FILE => 13_cntilvrdet.dgn

USERNAME => s124496 DATE PLOTTED => 30-JUN-2011 TIME PLOTTED => 15:42

DIST	COUNTY	ROUTE	POST MILES TOTAL PROJECT	SHEET No	TOTAL SHEETS
04	CC,Sol	80	13.9/14.2, 0.0/0.5	28	42

REGISTERED CIVIL ENGINEER 12-14-10 DATE

6-27-11
PLANS APPROVAL DATE

REGISTERED PROFESSIONAL ENGINEER Michael Bahrami No. 58795 Exp. 6-30-11 CIVIL STATE OF CALIFORNIA

The State of California or its officers or agents shall not be responsible for the accuracy or completeness of electronic copies of this plan sheet.

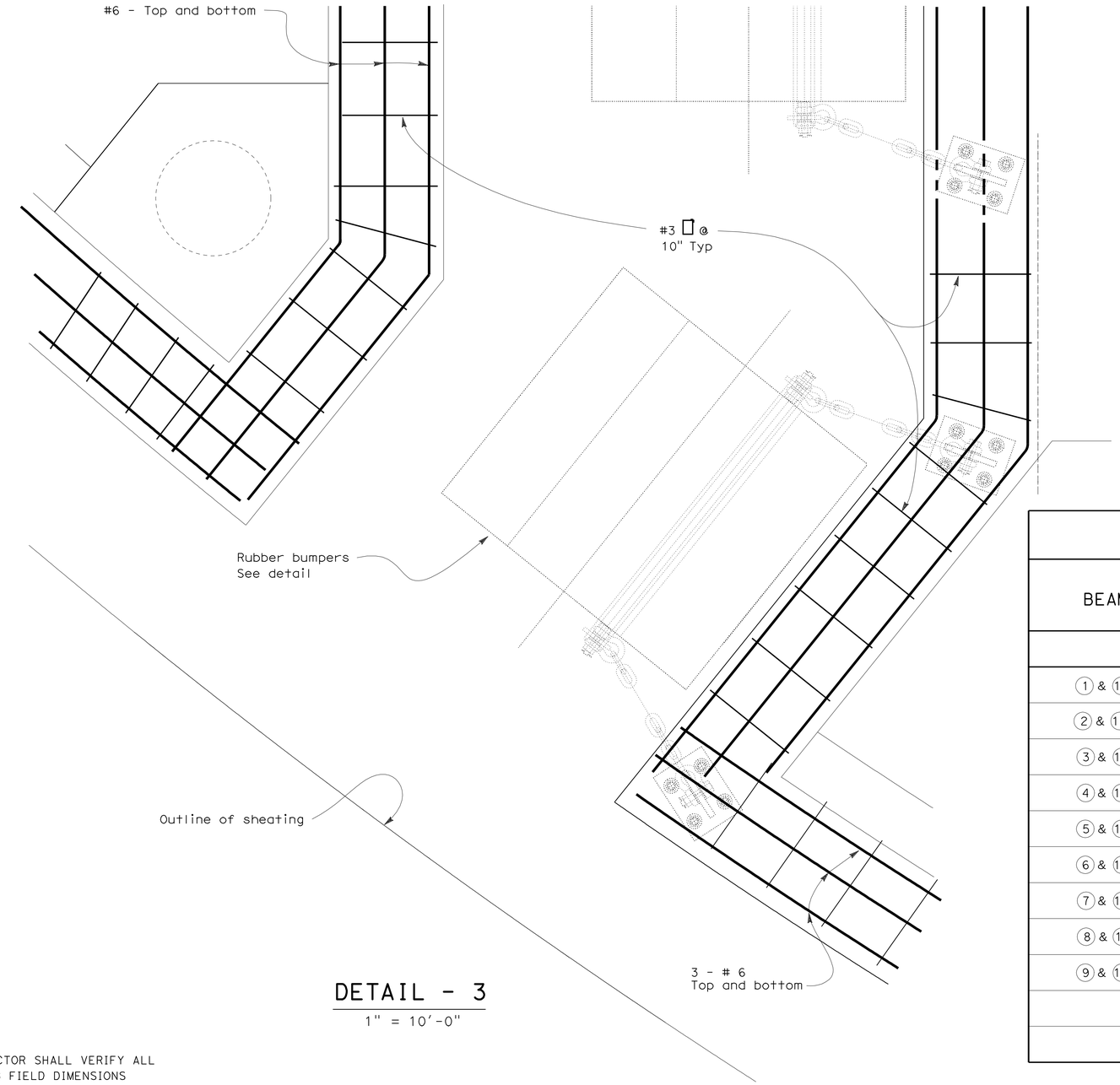

DETAIL - 3
1" = 10'-0"

Note:

1. Length of rebars shown are measured from face of pier cap.
2. For rebar layout See, "CANTILEVER SECTION DETAIL-1" sheet.

CANTILEVER BEAMS REBAR SCHEDULE

BEAM	BEAM LENGTH	Layer 1	Layer 2	Layer 3	Layer 4	STIRRUPS
1 & 18	19'-9"	4 #11	4 #11 x 15'	4 #11 x 10'		#5 □ @ 18"
2 & 17	15'-3"	4 #11	4 #11 x 15'			#5 □ @ 18"
3 & 16	21'-0"	4 #11	4 #11 x 15'	4 #11 x 10'		#5 □ @ 18"
4 & 15	27'-4"	4 #11	4 #11 x 20'	4 #11 x 15'	4 #11 x 10'	#5 □ @ 18"
5 & 14	27'-3"	4 #11	4 #11 x 20'	4 #11 x 15'	4 #11 x 10'	#5 □ @ 18"
6 & 13	25'-9"	4 #11	4 #11 x 20'	4 #11 x 15'	4 #11 x 10'	#5 □ @ 18"
7 & 12	22'-3"	4 #11	4 #11 x 20'	4 #11 x 15'	4 #11 x 10'	#5 □ @ 18"
8 & 11	15'-2"	4 #11	4 #11 x 15'			#5 □ @ 18"
9 & 10	14'-2"	4 #11	4 #11 x 15'			#5 □ @ 18"

NOTE:
THE CONTRACTOR SHALL VERIFY ALL CONTROLLING FIELD DIMENSIONS BEFORE ORDERING OR FABRICATING ANY MATERIAL.

	BY		CHECKED	
DESIGN	BY	M. Bahrami	CHECKED	A. Kushkaki
DETAILS	BY	B. Ballesteros	CHECKED	M. Bahrami
QUANTITIES	BY	M. Bahrami	CHECKED	A. Kushkaki

STATE OF CALIFORNIA
DEPARTMENT OF TRANSPORTATION

DIVISION OF MAINTENANCE
STRUCTURE MAINTENANCE AND INVESTIGATIONS

BRIDGE NO. 23-0015R
POST MILE 13.9/14.2 0.0/0.5

CARQUINEZ BRIDGE
FENDER REHABILITATION
CANTILEVER SECTION DETAIL - 2

STRUCTURES DESIGN DETAIL SHEET (ENGLISH) (REV. 10/25/05)

ORIGINAL SCALE IN INCHES FOR REDUCED PLANS 0 1 2 3

CU 04609
EA 049071

DISREGARD PRINTS BEARING EARLIER REVISION DATES → 01-26-09 09-31-09 11-02-10

REVISION DATES

SHEET 14 OF 28

FILE => 14_cntilvrdet.dgn

USERNAME => s124496 DATE PLOTTED => 30-JUN-2011 TIME PLOTTED => 15:42

DIST	COUNTY	ROUTE	POST MILES TOTAL PROJECT	SHEET No	TOTAL SHEETS
04	CC,Sol	80	13.9/14.2, 0.0/0.5	29	42

REGISTERED CIVIL ENGINEER 12-14-10 DATE

6-27-11
PLANS APPROVAL DATE

REGISTERED PROFESSIONAL ENGINEER A. KUSHKAKI No. 59045 Exp. 6-30-11 CIVIL STATE OF CALIFORNIA

The State of California or its officers or agents shall not be responsible for the accuracy or completeness of electronic copies of this plan sheet.

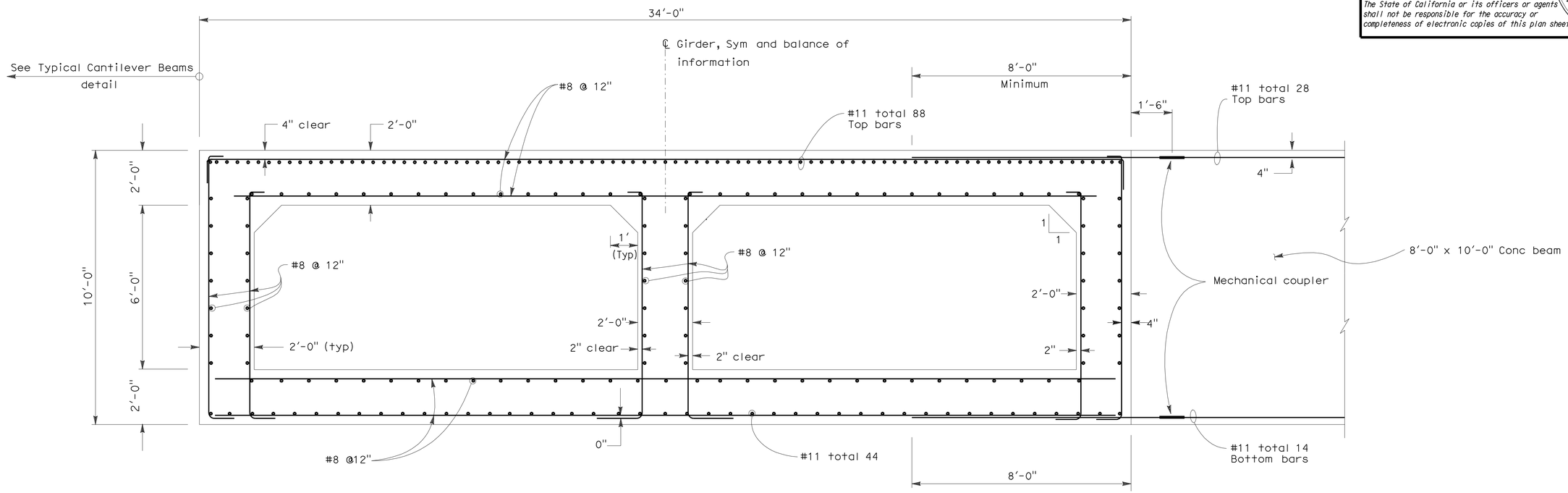

BOX GIRDER SECTION S - S

1/2" = 1'-0"

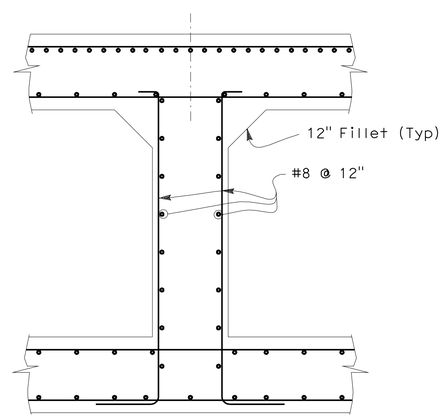

SECTION V - V - 13

1/2" = 1'-0"

Note:

1. For location of Section S-S, see "GENERAL LAYOUT PLAN" sheet.

NOTE:
THE CONTRACTOR SHALL VERIFY ALL CONTROLLING FIELD DIMENSIONS BEFORE ORDERING OR FABRICATING ANY MATERIAL.

DESIGN	BY A. Kushkaki	CHECKED M. Bahrami	
DETAILS	BY B. Ballesteros	CHECKED A. Kushkaki	
QUANTITIES	BY M. Bahrami	CHECKED A. Kushkaki	

STATE OF CALIFORNIA
DEPARTMENT OF TRANSPORTATION

DIVISION OF MAINTENANCE
STRUCTURE MAINTENANCE AND INVESTIGATIONS

CU 04609
EA 049071

BRIDGE NO. 23-0015R
POST MILE 13.9/14.2 0.0/0.5

CARQUINEZ BRIDGE
FENDER REHABILITATION
PIER CAP DETAIL

STRUCTURES DESIGN DETAIL SHEET (ENGLISH) (REV. 10/25/05)

ORIGINAL SCALE IN INCHES FOR REDUCED PLANS 0 1 2 3

DISREGARD PRINTS BEARING EARLIER REVISION DATES

REVISION DATES: ~~07-28-09~~ 09-31-09

SHEET 15 OF 28

FILE => 15_boxgirder.dgn

USERNAME => s124496 DATE PLOTTED => 30-JUN-2011 TIME PLOTTED => 15:42

DIST	COUNTY	ROUTE	POST MILES TOTAL PROJECT	SHEET No	TOTAL SHEETS
04	CC,Sol	80	13.9/14.2, 0.0/0.5	30	42

REGISTERED CIVIL ENGINEER 12-14-10 DATE

6-27-11
PLANS APPROVAL DATE

REGISTERED PROFESSIONAL ENGINEER REYNALDO J. CASTRO No. C36231 Exp. 6-30-12 CIVIL STATE OF CALIFORNIA

The State of California or its officers or agents shall not be responsible for the accuracy or completeness of electronic copies of this plan sheet.

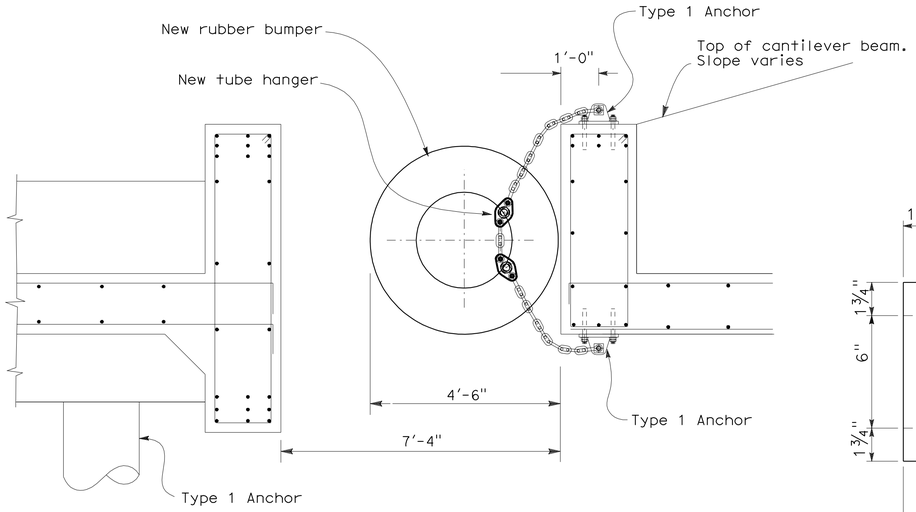

RUBBER BUMPER (TYPICAL)

1/2" = 1'-0"

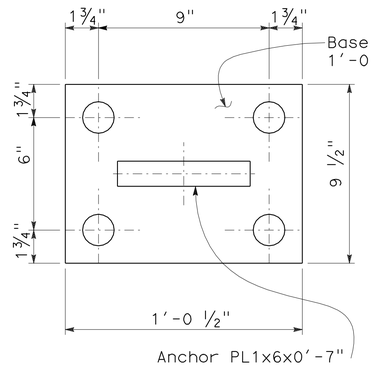

TOP VIEW

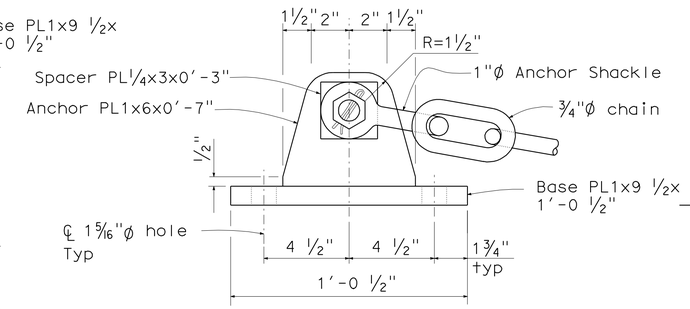

SIDE VIEW

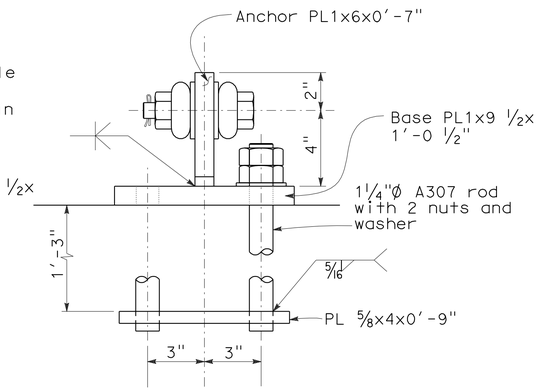

END VIEW

Method A attachment shown

TYPE I ANCHOR

3' = 1'-0"

Type I shown, Type II similar except as noted.

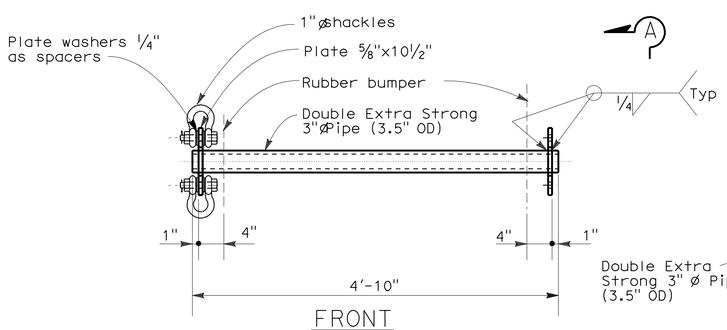

FRONT

TUBE HANGER

1" = 1'-0"

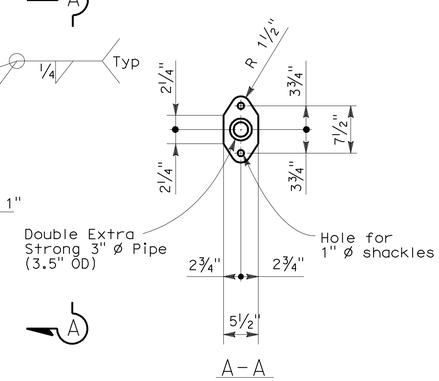

A-A

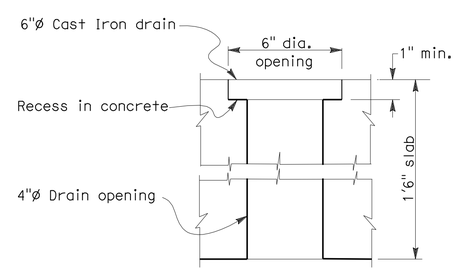

SECTION D - D
DRAIN DETAILS

3" = 1'-0"

NOTE:
THE CONTRACTOR SHALL VERIFY ALL CONTROLLING FIELD DIMENSIONS BEFORE ORDERING OR FABRICATING ANY MATERIAL.

DESIGN	BY R. Castro	CHECKED A. Kushkaki	
DETAILS	BY B. Ballesteros	CHECKED M. Bahrami	
QUANTITIES	BY M. Bahrami	CHECKED M. Bahrami	

STATE OF CALIFORNIA
DEPARTMENT OF TRANSPORTATION

DIVISION OF MAINTENANCE
STRUCTURE MAINTENANCE AND INVESTIGATIONS

BRIDGE NO. 23-0015R
POST MILE 13.9/14.2 0.0/0.5

CARQUINEZ BRIDGE
FENDER REHABILITATION
MISCELLANEOUS DETAILS

STRUCTURES DESIGN DETAIL SHEET (ENGLISH) (REV. 10/25/05)

ORIGINAL SCALE IN INCHES FOR REDUCED PLANS 0 1 2 3

CU 04609
EA 049071

DISREGARD PRINTS BEARING EARLIER REVISION DATES

REVISION DATES: ~~09-24-08~~ ~~10-12-08~~ 06-29-09 07-29-10 11-03-10

SHEET 16 OF 28

FILE => 16_miscdtl.dgn

USERNAME => s124436 DATE PLOTTED => 30-JUN-2011 TIME PLOTTED => 15:42

DIST	COUNTY	ROUTE	POST MILES TOTAL PROJECT	SHEET No	TOTAL SHEETS
04	CC,Sol	80	13.9/14.2, 0.0/0.5	31	42

Reynaldo J. Castro 12-14-10
REGISTERED CIVIL ENGINEER DATE

6-27-11
PLANS APPROVAL DATE

REGISTERED PROFESSIONAL ENGINEER
REYNALDO J. CASTRO
No. C36231
Exp. 6-30-12
CIVIL
STATE OF CALIFORNIA

The State of California or its officers or agents shall not be responsible for the accuracy or completeness of electronic copies of this plan sheet.

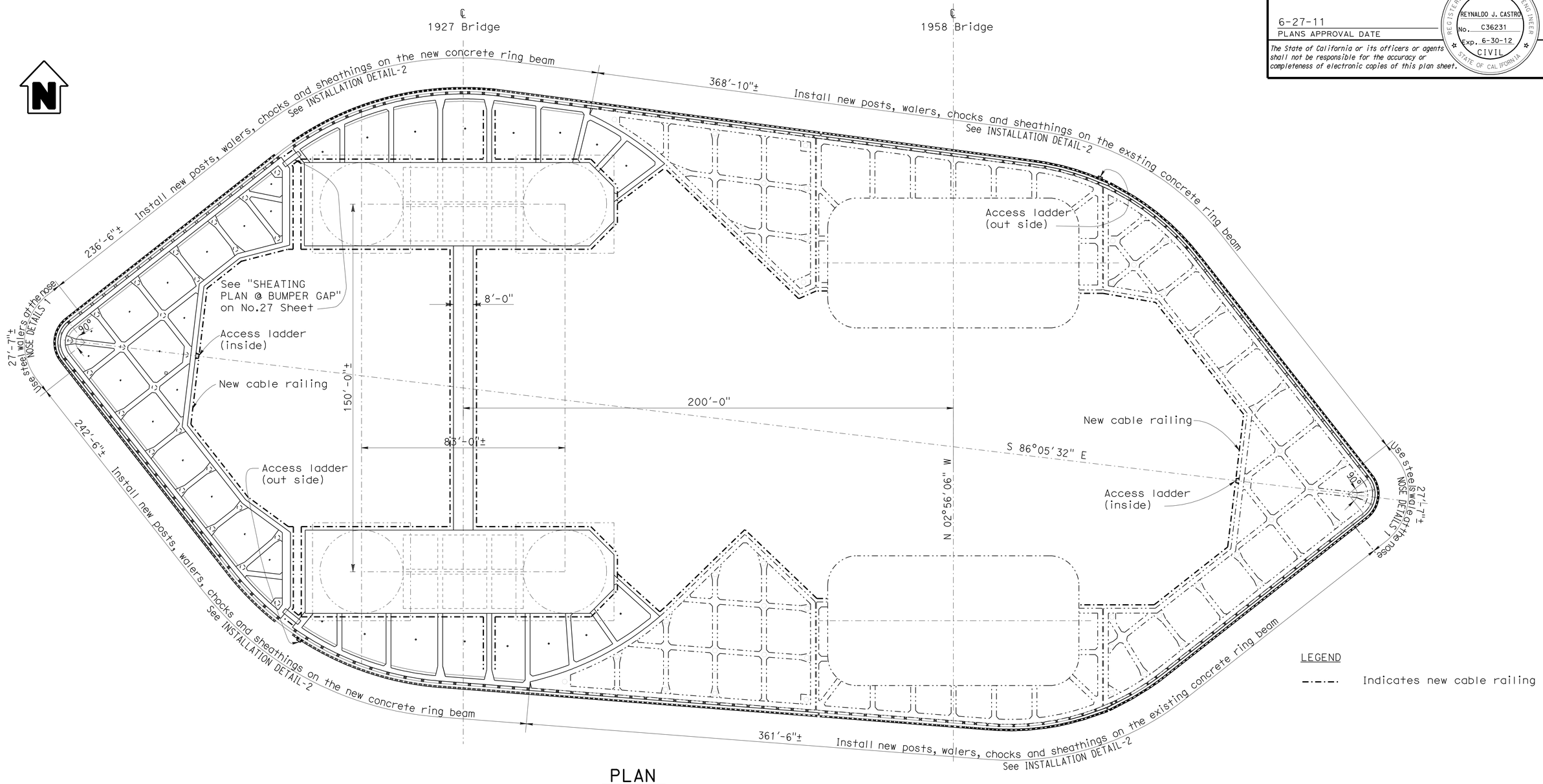

PLAN

1" = 20'

LEGEND

-·-·- Indicates new cable railing

NOTE:
THE CONTRACTOR SHALL VERIFY ALL CONTROLLING FIELD DIMENSIONS BEFORE ORDERING OR FABRICATING ANY MATERIAL.

	BY	CHECKED
DESIGN	R. Castro	M. Bahrami
DETAILS	M. Yu	R. Castro
QUANTITIES	R. Castro	H. Su

STATE OF CALIFORNIA
DEPARTMENT OF TRANSPORTATION

DIVISION OF STRUCTURES
STRUCTURE MAINTENANCE AND INVESTIGATIONS

BRIDGE NO. 23-0015R
POST MILE 13.9/14.2 0.0/0.5

CARQUINEZ BRIDGE
FENDER REHABILITATION
NEW SHEATHINGS LAYOUT - PIER 3

STRUCTURES DESIGN DETAIL SHEET (ENGLISH) (REV. 2-2-05)

ORIGINAL SCALE IN INCHES FOR REDUCED PLANS 0 1 2 3

CU 04609
EA 049071

DISREGARD PRINTS BEARING EARLIER REVISION DATES

REVISION DATES: 1-28-09 3-04-09 8-31-09 1-05-10 5-04-10 08-25-10 11-03-10 03-25-11

SHEET 17 OF 28

FILE => 17-gp-layout.dgn

USERNAME => s124496 DATE PLOTTED => 30-JUN-2011 TIME PLOTTED => 15:42

DIST	COUNTY	ROUTE	POST MILES TOTAL PROJECT	SHEET No	TOTAL SHEETS
04	CC,Sol	80	13.9/14.2, 0.0/0.5	32	42

Reynaldo J. Castro 12-14-10
REGISTERED CIVIL ENGINEER DATE

6-27-11
PLANS APPROVAL DATE

REGISTERED PROFESSIONAL ENGINEER
REYNALDO J. CASTRO
No. C36231
Exp. 6-30-12
CIVIL
STATE OF CALIFORNIA

The State of California or its officers or agents shall not be responsible for the accuracy or completeness of electronic copies of this plan sheet.

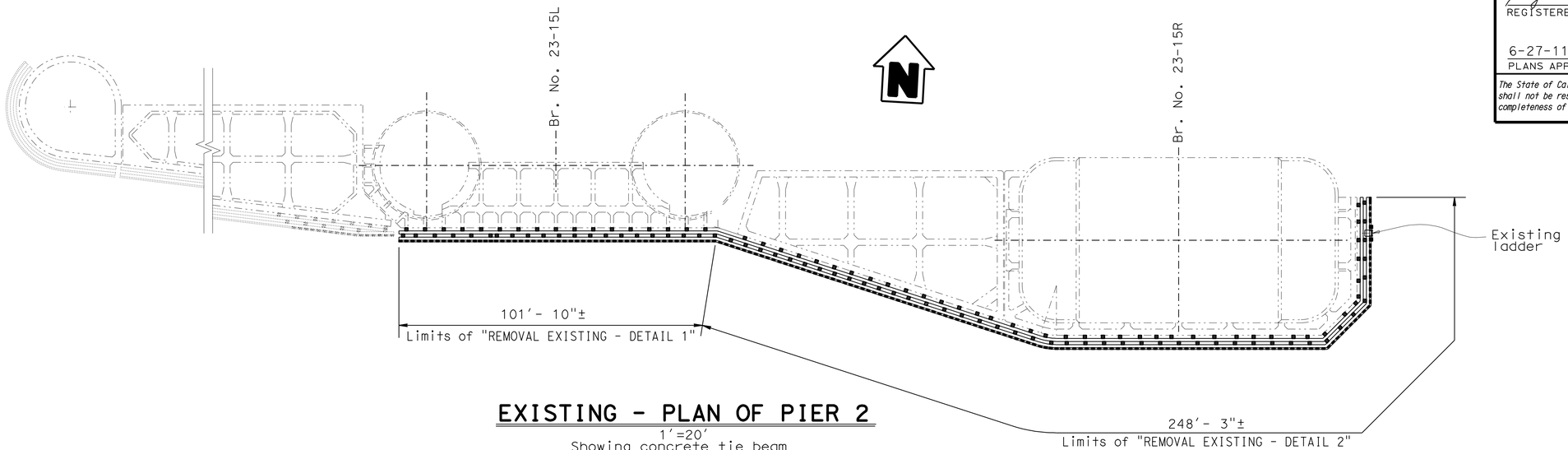

EXISTING - PLAN OF PIER 2

1'=20'
Showing concrete tie beam
and existing timber facing

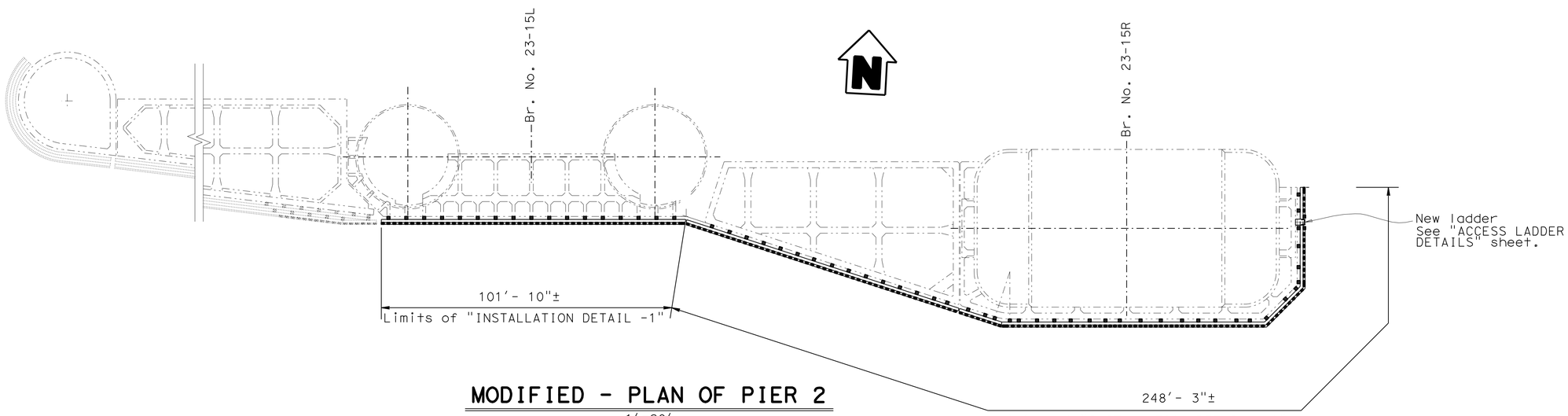

MODIFIED - PLAN OF PIER 2

1'=20'
Showing concrete tie beam
and new plastic timber facing

NOTE:
THE CONTRACTOR SHALL VERIFY ALL CONTROLLING FIELD DIMENSIONS BEFORE ORDERING OR FABRICATING ANY MATERIAL.

	BY	CHECKED
DESIGN	R. Castro	M. Bahrami
DETAILS	M. Yu	R. Castro
QUANTITIES	R. Castro	H. Su

STATE OF CALIFORNIA
DEPARTMENT OF TRANSPORTATION

DIVISION OF STRUCTURES
STRUCTURE MAINTENANCE AND INVESTIGATIONS

BRIDGE NO. 23-0015R
POST MILE 13.9/14.2 0.0/0.5

CARQUINEZ BRIDGE
FENDER REHABILITATION
PIER 2 PLAN

STRUCTURES DESIGN DETAIL SHEET (ENGLISH) (REV. 2-2-05)

ORIGINAL SCALE IN INCHES FOR REDUCED PLANS 0 1 2 3

CU 04609
EA 049071

DISREGARD PRINTS BEARING EARLIER REVISION DATES

REVISION DATES: 1-28-09, 3-09-09, 8-31-09, 1-05-10, 5-04-10, 03-25-11

SHEET 18 OF 28

FILE => 18-pier2gp.dgn

USERNAME => s124496 DATE PLOTTED => 30-JUN-2011 TIME PLOTTED => 15:42

DIST	COUNTY	ROUTE	POST MILES TOTAL PROJECT	SHEET No	TOTAL SHEETS
04	CC,Sol	80	13.9/14.2, 0.0/0.5	33	42

Reynaldo J. Castro 12-14-10
REGISTERED CIVIL ENGINEER DATE

6-27-11
PLANS APPROVAL DATE

REGISTERED PROFESSIONAL ENGINEER REYNALDO J. CASTRO No. C36231 Exp. 6-30-12 CIVIL STATE OF CALIFORNIA

The State of California or its officers or agents shall not be responsible for the accuracy or completeness of electronic copies of this plan sheet.

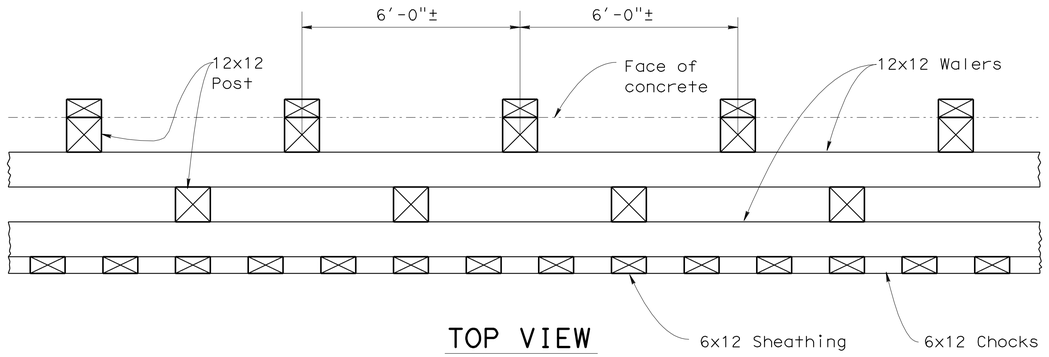

TOP VIEW
½"=1'-0"

Notes:
1. All timber and related hardware to be removed.
2. Dimensions and elevations shown at the existing structure are approximate.
3. All bolts 1" Ø unless otherwise noted.
4. Laminated walers are ½x2x12, not shown, bolted and strapped.

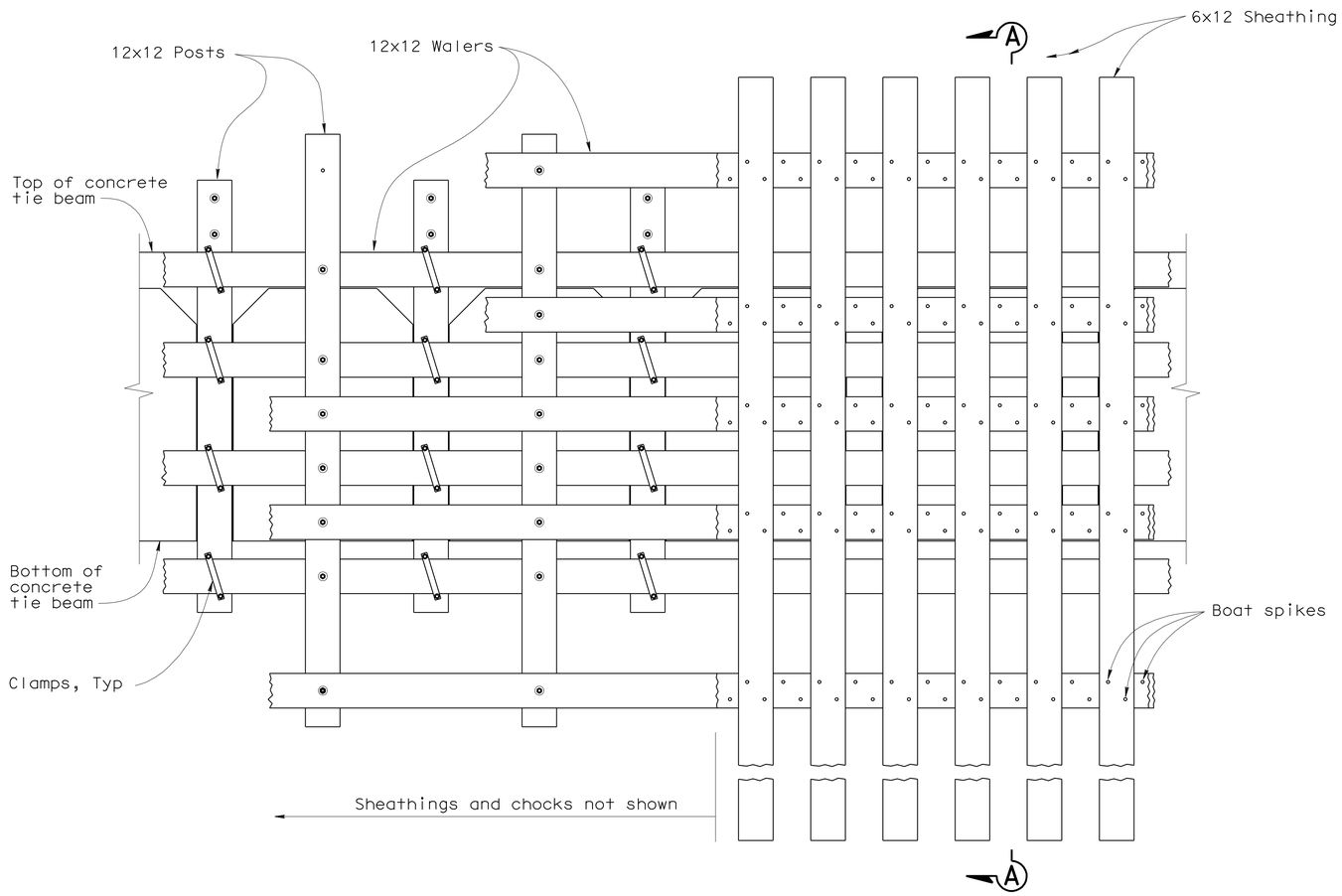

ELEVATION
½"=1'-0"
Showing existing timber posts, walers, sheathing and chocks; and existing concrete fender elements

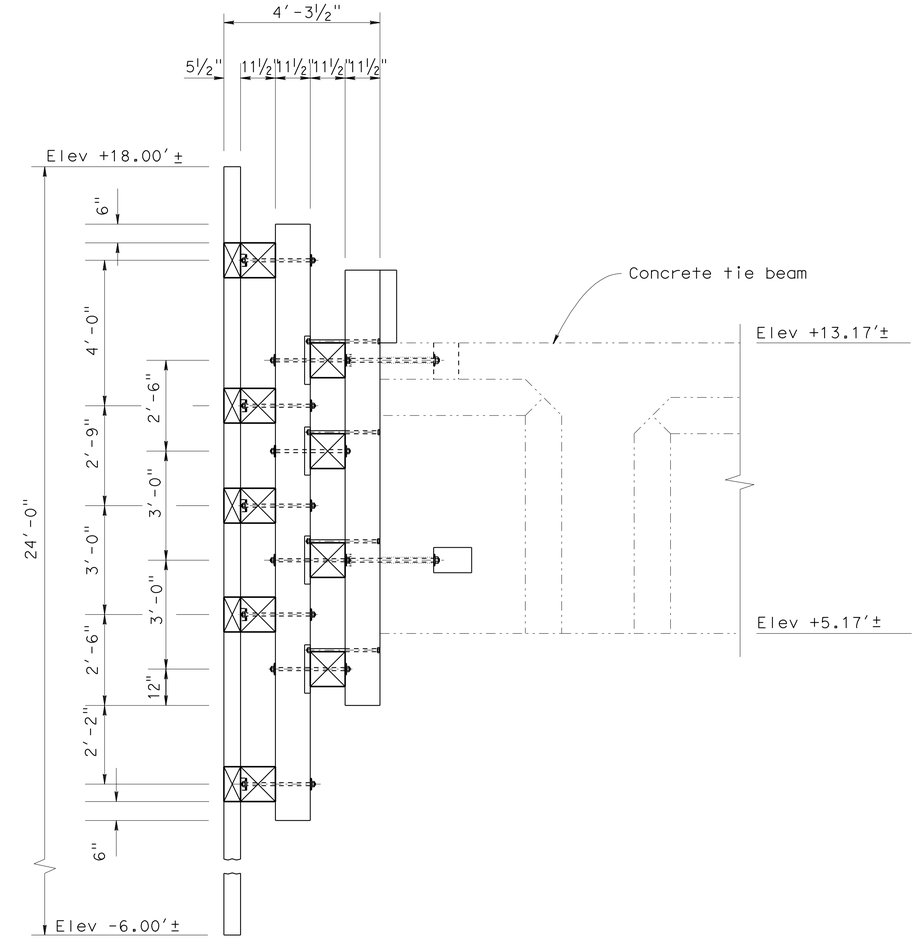

SECTION A-A
½"=1'-0"

NOTE:
THE CONTRACTOR SHALL VERIFY ALL CONTROLLING FIELD DIMENSIONS BEFORE ORDERING OR FABRICATING ANY MATERIAL.

	BY	CHECKED
DESIGN	R. Castro	M. Bahrami
DETAILS	M. Yu	R. Castro
QUANTITIES	R. Castro	H. Su

STATE OF CALIFORNIA
DEPARTMENT OF TRANSPORTATION

DIVISION OF STRUCTURES
STRUCTURE MAINTENANCE AND INVESTIGATIONS

BRIDGE NO. 23-0015R
POST MILE 13.9/14.2 0.0/0.5

CARQUINEZ BRIDGE
FENDER REHABILITATION
REMOVAL EXISTING - DETAIL 1

STRUCTURES DESIGN DETAIL SHEET (ENGLISH) (REV. 2-2-05)

ORIGINAL SCALE IN INCHES FOR REDUCED PLANS 0 1 2 3

CU 04609
EA 049071

DISREGARD PRINTS BEARING EARLIER REVISION DATES

REVISION DATES: 3-08-09 8-31-09 9-14-09 1-05-10 5-04-10 12-30-10 03-25-11

SHEET 19 OF 28

FILE => 19-removel-det.dgn

USERNAME => s124496 DATE PLOTTED => 30-JUN-2011 TIME PLOTTED => 15:42

DIST	COUNTY	ROUTE	POST MILES TOTAL PROJECT	SHEET No	TOTAL SHEETS
04	CC,Sol	80	13.9/14.2, 0.0/0.5	34	42

Reynaldo J. Castro 12-14-10
REGISTERED CIVIL ENGINEER DATE

6-27-11
PLANS APPROVAL DATE

REGISTERED PROFESSIONAL ENGINEER REYNALDO J. CASTRO No. C36231 Exp. 6-30-12 CIVIL STATE OF CALIFORNIA

The State of California or its officers or agents shall not be responsible for the accuracy or completeness of electronic copies of this plan sheet.

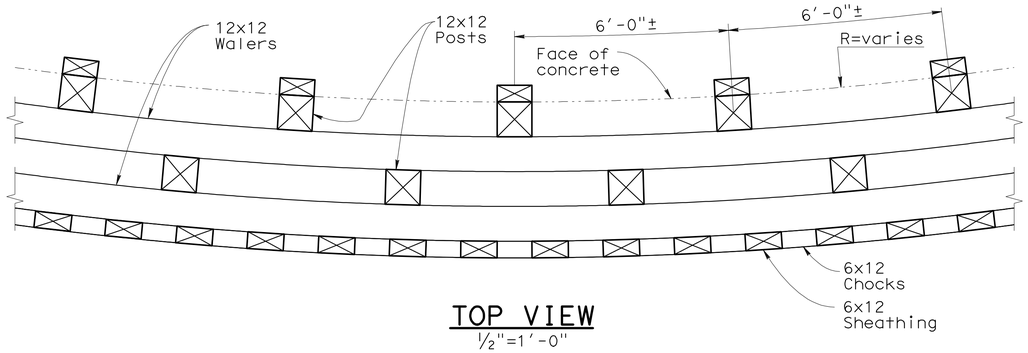

TOP VIEW
½"=1'-0"

Notes:
1. All timber and related hardware to be removed.
2. Dimensions and elevations shown at the existing structure are approximate.
3. All bolts 1" Ø unless otherwise noted.
4. Laminated walers are ½-2x12, bolted and strapped.
5. Curved segment shown; tangent segments similar.

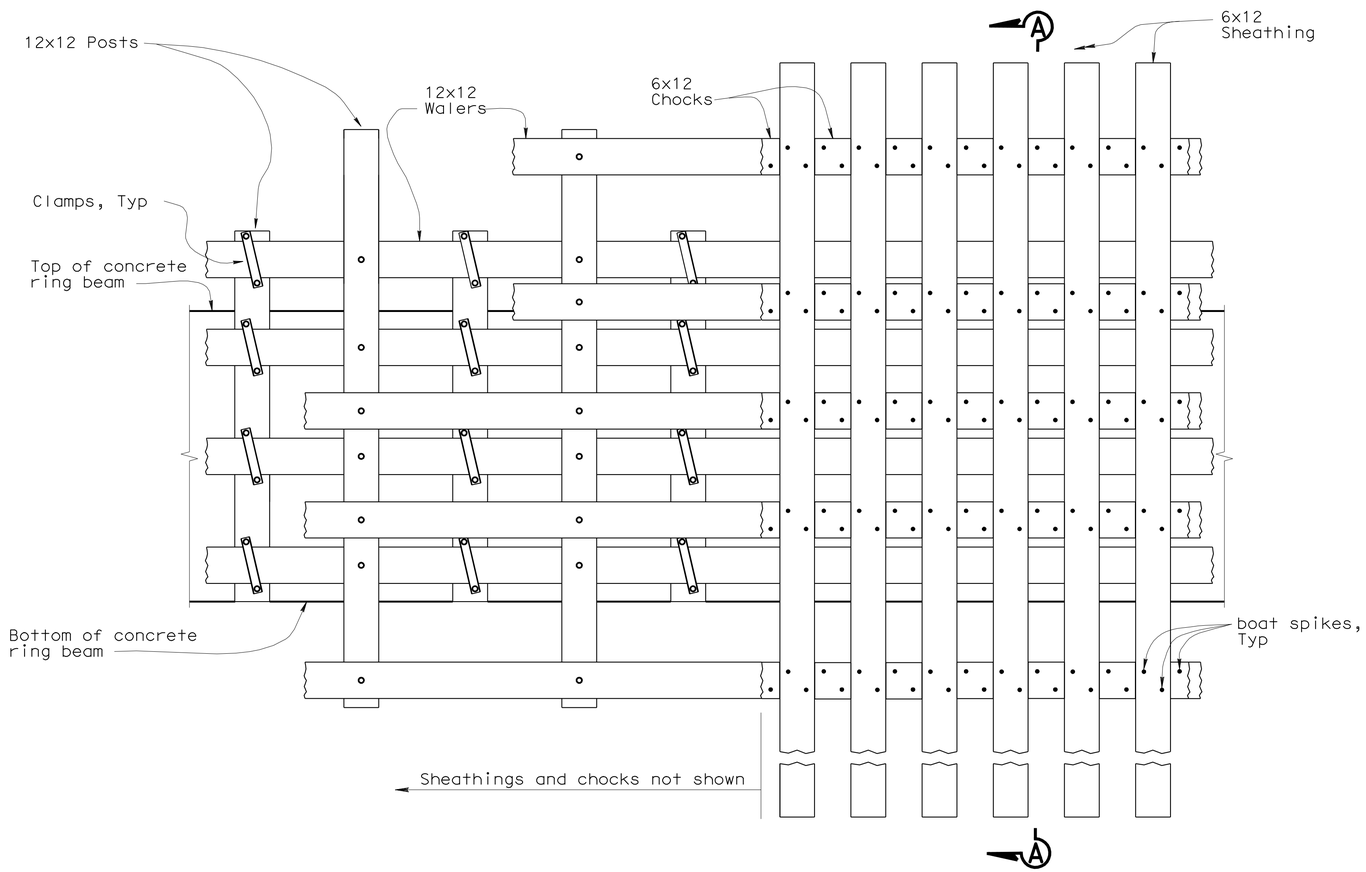

ELEVATION, DEVELOPED
½"=1'-0"
Showing existing timber posts, walers, sheathing and chocks; and existing concrete fender elements

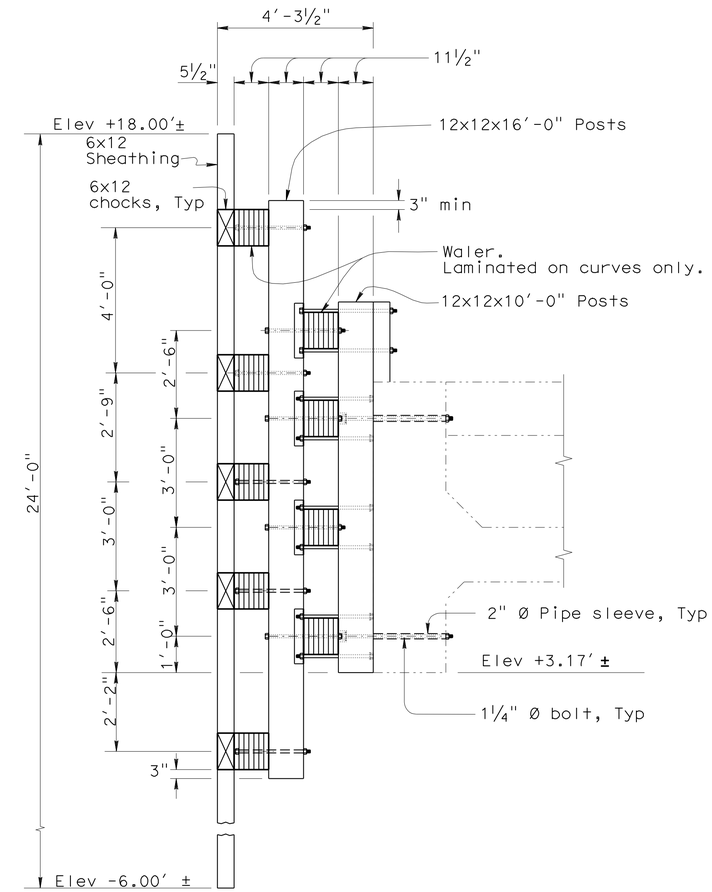

SECTION A-A
½"=1'-0"

NOTE:
THE CONTRACTOR SHALL VERIFY ALL CONTROLLING FIELD DIMENSIONS BEFORE ORDERING OR FABRICATING ANY MATERIAL.

	BY	CHECKED
DESIGN	R. Castro	M. Bahrami
DETAILS	M. Yu	R. Castro
QUANTITIES	R. Castro	H. Su

STATE OF CALIFORNIA
DEPARTMENT OF TRANSPORTATION

DIVISION OF STRUCTURES
STRUCTURE MAINTENANCE AND INVESTIGATIONS

BRIDGE NO. 23-0015R
POST MILE 13.9/14.2 0.0/0.5

CARQUINEZ BRIDGE
FENDER REHABILITATION
REMOVAL EXISTING - DETAIL 2

STRUCTURES DESIGN DETAIL SHEET (ENGLISH) (REV. 2-2-05)

ORIGINAL SCALE IN INCHES FOR REDUCED PLANS 0 1 2 3

CU 04609
EA 049071

DISREGARD PRINTS BEARING EARLIER REVISION DATES

REVISION DATES: 3-08-09, 8-31-09, 9-14-09, 9-16-09, 1-06-10, 5-04-10, 12-10-10, 03-25-11

SHEET 20 OF 28

FILE => 20-removel-det.dgn

USERNAME => s124936 DATE PLOTTED => 30-JUN-2011 TIME PLOTTED => 15:42

DIST	COUNTY	ROUTE	POST MILES TOTAL PROJECT	SHEET No	TOTAL SHEETS
04	CC,Sol	80	13.9/14.2, 0.0/0.5	35	42

Reynaldo J. Castro 12-14-10
REGISTERED CIVIL ENGINEER DATE

6-27-11
PLANS APPROVAL DATE

REGISTERED PROFESSIONAL ENGINEER
REYNALDO J. CASTRO
No. C36231
Exp. 6-30-12
CIVIL
STATE OF CALIFORNIA

The State of California or its officers or agents shall not be responsible for the accuracy or completeness of electronic copies of this plan sheet.

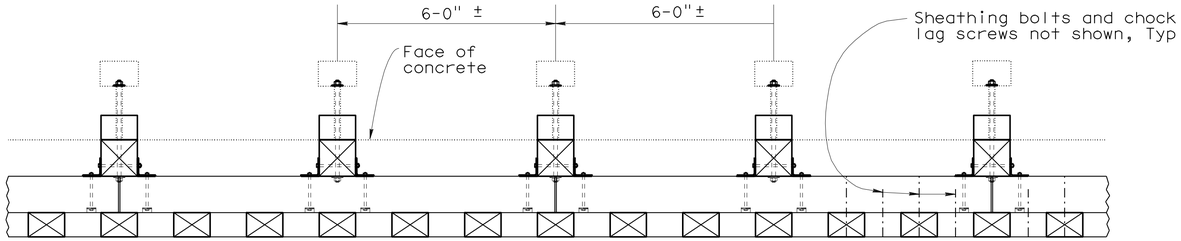

TOP VIEW
½"=1'-0"

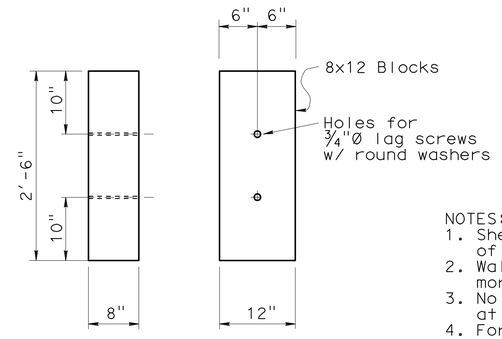

DETAIL 2
1"=1'-0"

NOTES:
1. Sheathing S-1 and S-2 differ in details of attachment to walers and posts.
2. Walers shall be continuous over one or more posts.
3. No more than 3 walers shall be spliced at one post.
4. For DETAIL 1, see "INSTALLATION DETAIL-2" sheet.
5. All sheathing hardware material shall be ASTM 276, Type 316 stainless steel.
6. All structural steel shape, angle and plate shall be hot dip galvanized.

LEGEND:
RR Plastic Lumber: Reinforced Recycled Plastic Lumber

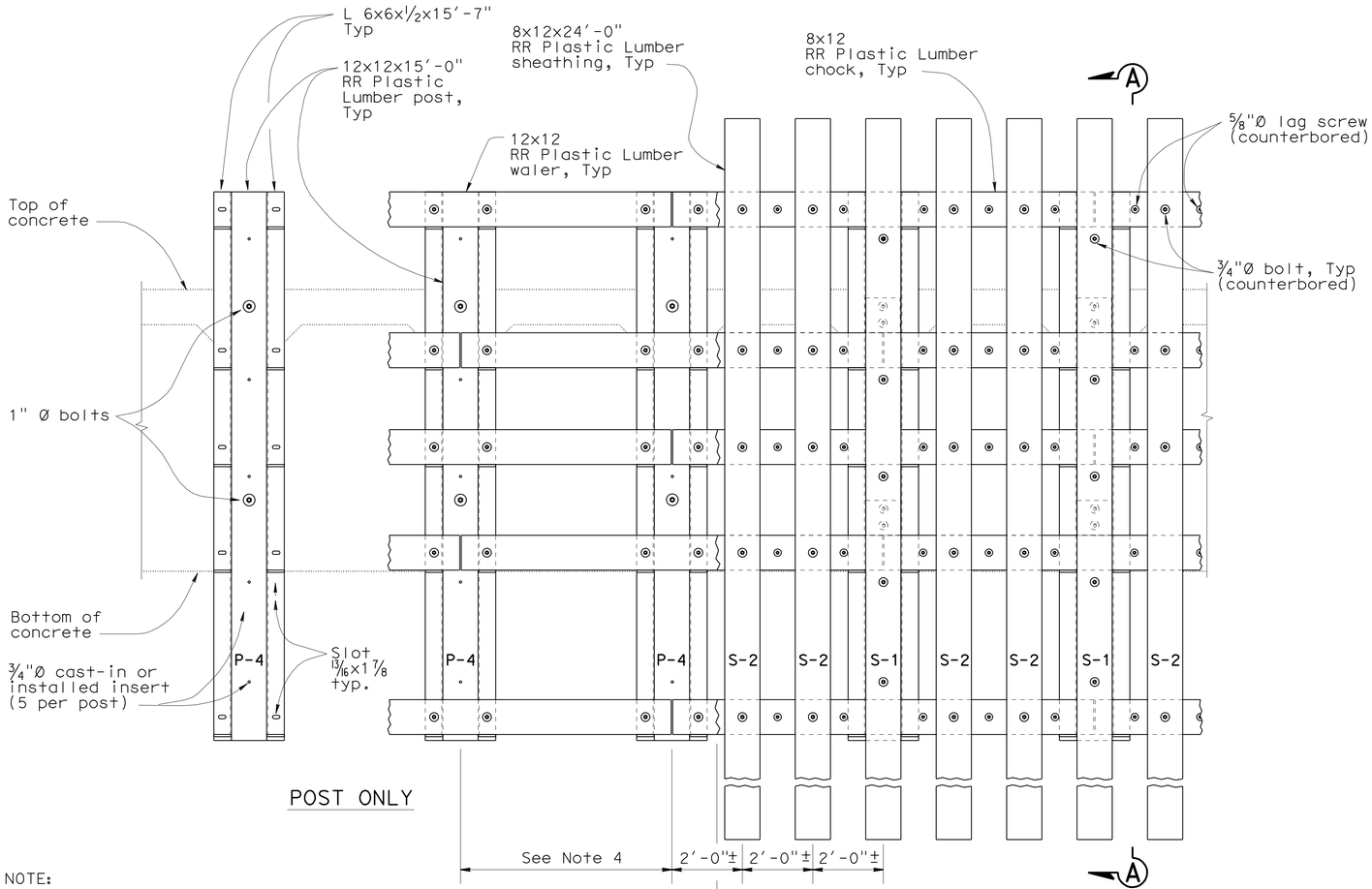

ELEVATION
½"=1'-0"

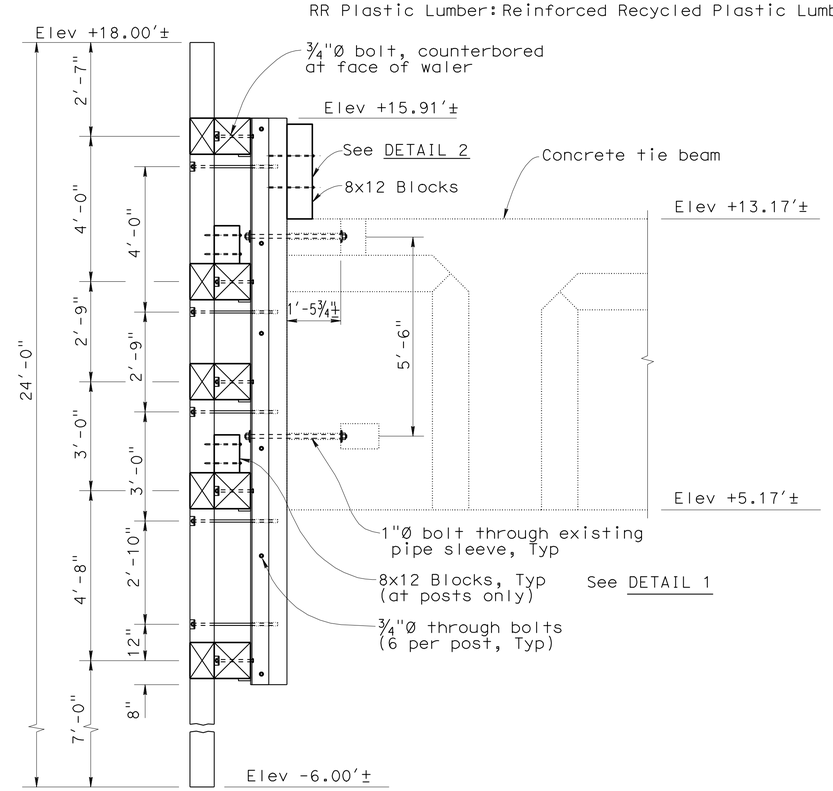

SECTION A-A
½"=1'-0"

NOTE:
THE CONTRACTOR SHALL VERIFY ALL CONTROLLING FIELD DIMENSIONS BEFORE ORDERING OR FABRICATING ANY MATERIAL.

	BY	CHECKED
DESIGN	R. Castro	M. Bahrami
DETAILS	M. Yu	R. Castro
QUANTITIES	R. Castro	H. Su

STATE OF CALIFORNIA
DEPARTMENT OF TRANSPORTATION

DIVISION OF STRUCTURES
STRUCTURE MAINTENANCE AND INVESTIGATIONS

BRIDGE NO. 23-0015R
POST MILE 13.9/14.2 0.0/0.5

CARQUINEZ BRIDGE
FENDER REHABILITATION
INSTALLATION DETAIL - 1

STRUCTURES DESIGN DETAIL SHEET (ENGLISH) (REV. 2-2-05)

ORIGINAL SCALE IN INCHES FOR REDUCED PLANS 0 1 2 3

CU 04609
EA 049071

DISREGARD PRINTS BEARING EARLIER REVISION DATES

REVISION DATES: 1-28-09 3-06-09 8-14-09 9-14-09 9-16-09 1-06-10 5-04-10 12-10-10 3-11-11 03-25-11

SHEET 21 OF 28

FILE => 21-installet-det.dgn

USERNAME => s124496 DATE PLOTTED => 30-JUN-2011 TIME PLOTTED => 15:42

DIST	COUNTY	ROUTE	POST MILES TOTAL PROJECT	SHEET No	TOTAL SHEETS
04	CC,Sol	80	13.9/14.2, 0.0/0.5	36	42

Reynaldo J. Castro 12-14-10
REGISTERED CIVIL ENGINEER DATE

6-27-11
PLANS APPROVAL DATE

REGISTERED PROFESSIONAL ENGINEER REYNALDO J. CASTRO No. C36231 Exp. 6-30-12 CIVIL STATE OF CALIFORNIA

The State of California or its officers or agents shall not be responsible for the accuracy or completeness of electronic copies of this plan sheet.

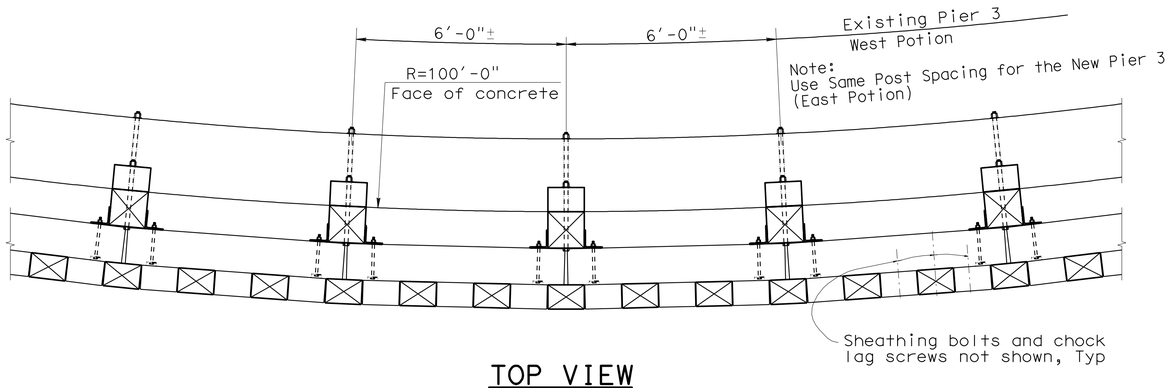

TOP VIEW

See Note 1
½"=1'-0"

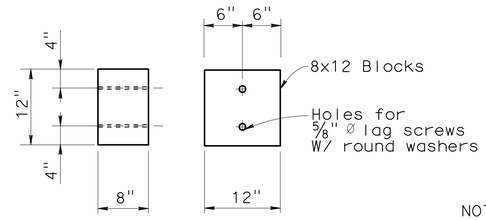

DETAIL 1

1"=1'-0"

NOTES:
1. Curved segment shown; tangent segments similar, except that the walers shall be continuous over one or more posts. Where a waler is continuous over a post, it may be bolted at one side angle only.
2. Walers shall be continuous over one or more posts.
3. No more than 3 walers shall be spliced at one post.
4. All sheathing hardware meterial shall be ASTM 276, Type 316 stainless steel.
5. All structural steel shape, angle and plate shall be hot dip galvanized.

LEGEND:

RR Plastic Lumber: Reinforced Recycled Plastic Lumber

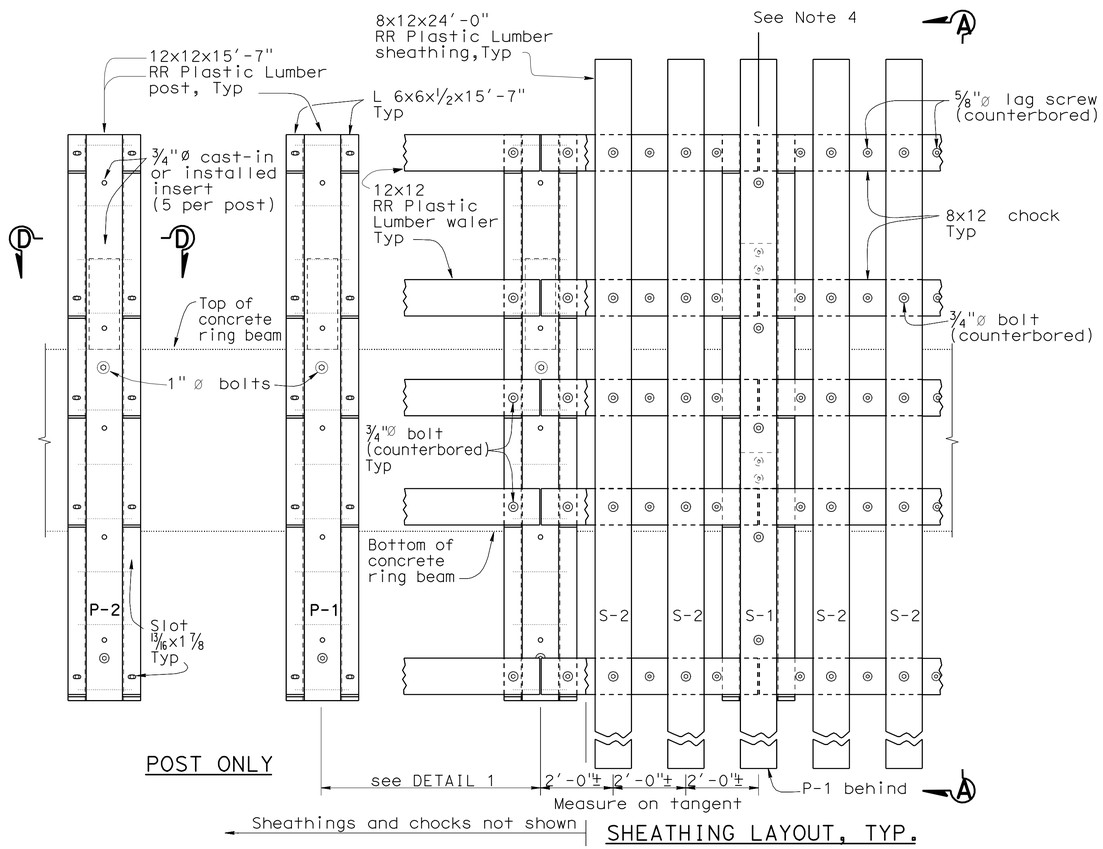

POST ONLY

SHEATHING LAYOUT, TYP.

ELEVATION, DEVELOPED

½"=1'-0"

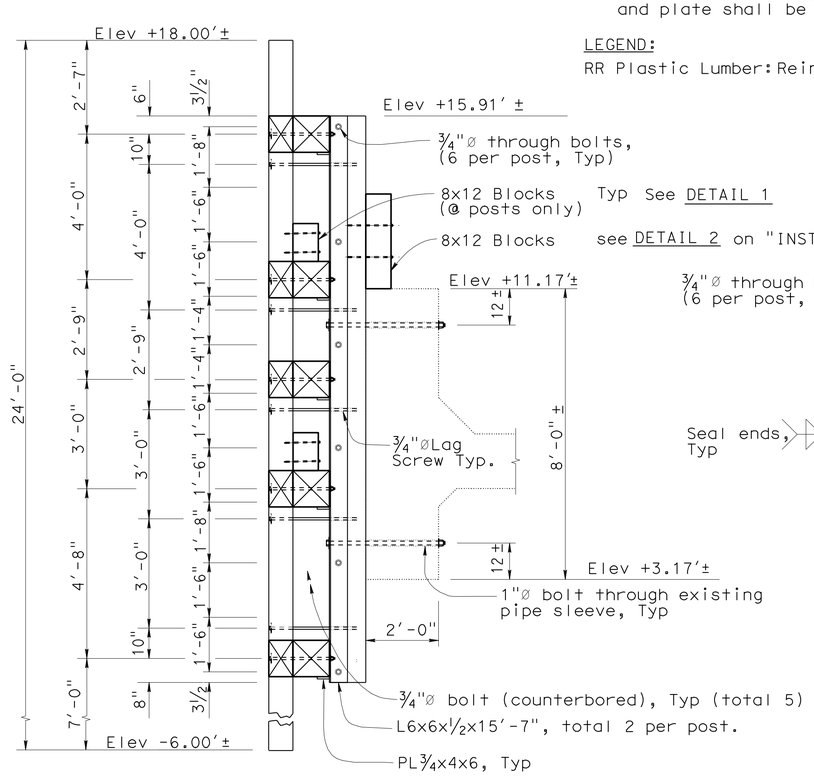

SECTION A-A
PIER 2 (SIMILAR)

½"=1'-0"

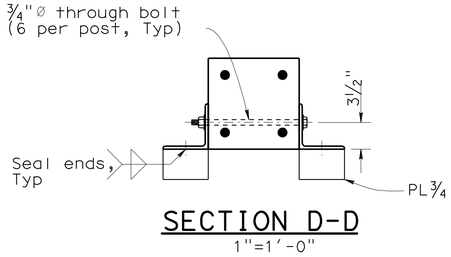

SECTION D-D

1"=1'-0"

NOTE:
THE CONTRACTOR SHALL VERIFY ALL CONTROLLING FIELD DIMENSIONS BEFORE ORDERING OR FABRICATING ANY MATERIAL.

	BY	CHECKED
DESIGN	R. Castro	M. Bahrami
DETAILS	M. Yu	R. Castro
QUANTITIES	R. Castro	H. Su

STATE OF CALIFORNIA
DEPARTMENT OF TRANSPORTATION

DIVISION OF STRUCTURES
STRUCTURE MAINTENANCE AND INVESTIGATIONS

BRIDGE NO. 23-0015R
POST MILE 13.9/14.2 0.0/0.5

CU 04609
EA 049071

CARQUINEZ BRIDGE
FENDER REHABILITATION
INSTALLATION DETAIL - 2

STRUCTURES DESIGN DETAIL SHEET (ENGLISH) (REV. 2-2-05)

ORIGINAL SCALE IN INCHES FOR REDUCED PLANS 0 1 2 3

DISREGARD PRINTS BEARING EARLIER REVISION DATES

REVISION DATES: 1-28-09 3-09-09 8-31-09 9-14-09 9-16-09 1-25-10 5-04-10 12-10-10 3-11-11 03-25-11

SHEET 22 OF 28

FILE => 22-installet-det.dgn

USERNAME => s124436 DATE PLOTTED => 30-JUN-2011 TIME PLOTTED => 15:42

DIST	COUNTY	ROUTE	POST MILES TOTAL PROJECT	SHEET No	TOTAL SHEETS
04	CC,Sol	80	13.9/14.2, 0.0/0.5	37	42

Reynaldo J. Castro 12-14-10
REGISTERED CIVIL ENGINEER DATE

6-27-11
PLANS APPROVAL DATE

REGISTERED PROFESSIONAL ENGINEER REYNALDO J. CASTRO No. C36231 Exp. 6-30-12 CIVIL STATE OF CALIFORNIA

The State of California or its officers or agents shall not be responsible for the accuracy or completeness of electronic copies of this plan sheet.

Notes:
1. All holes and slots in the walers shall be made in the shop, prior to galvanizing.
2. The chocks located at the points of tangency (PT) differ in length from each other.
3. For DETAIL 2, see "INSTALLATION DETAIL - 1" sheet.
4. All sheathing hardware material shall be ASTM 276, Type 316 stainless steel.
5. All structural steel shape, angle and plate shall be hot dip galvanized.

LEGEND:
RR Plastic Lumber: Reinforced Recycled Plastic Lumber
HSS: Hollow Structural Steel

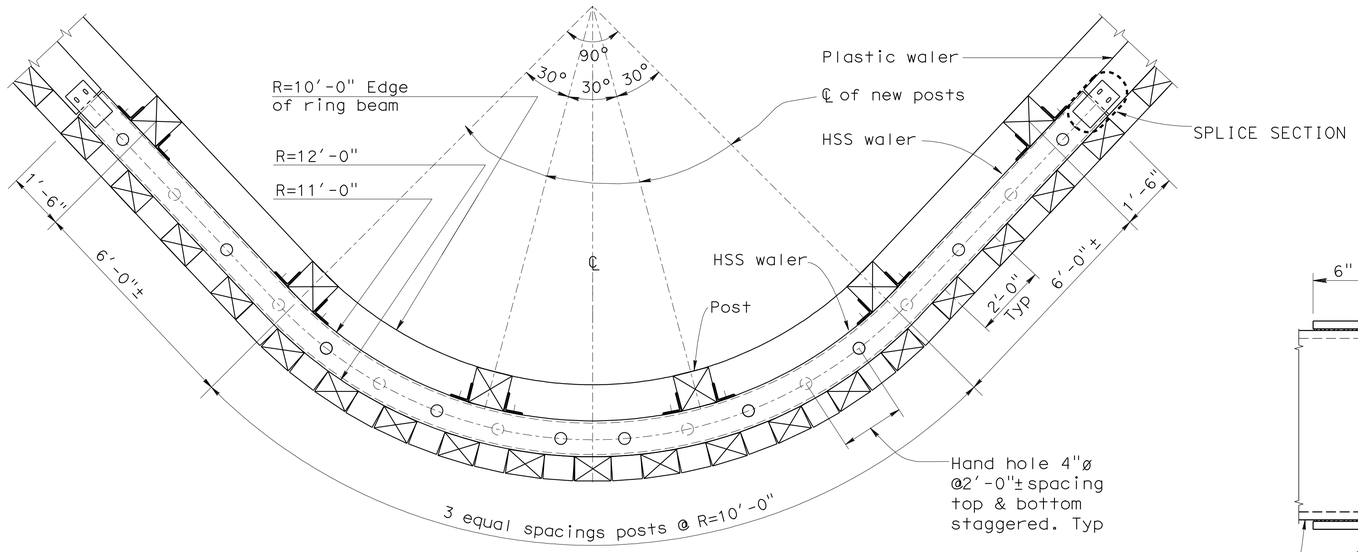

SECTION A-A
at nose
½"=1'-0"

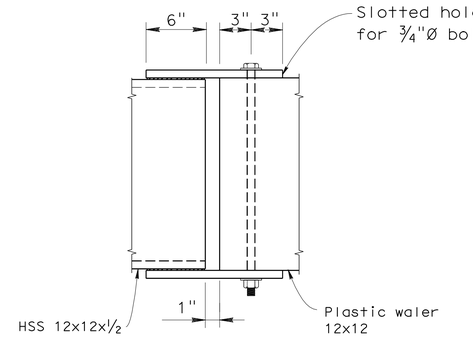

DETAIL 1
1½"=1'-0"

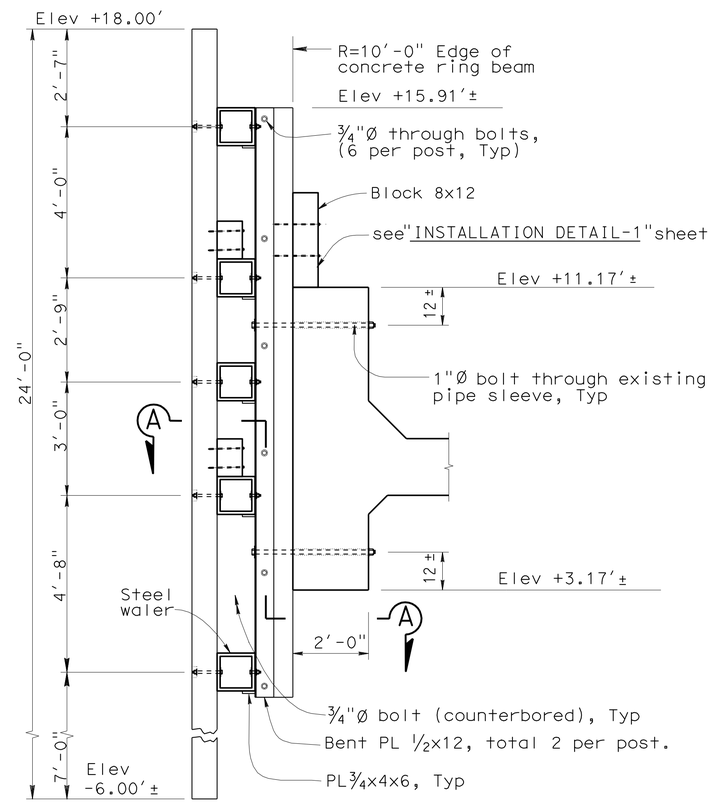

AT NOSE

ELEVATION
½"=1'-0"

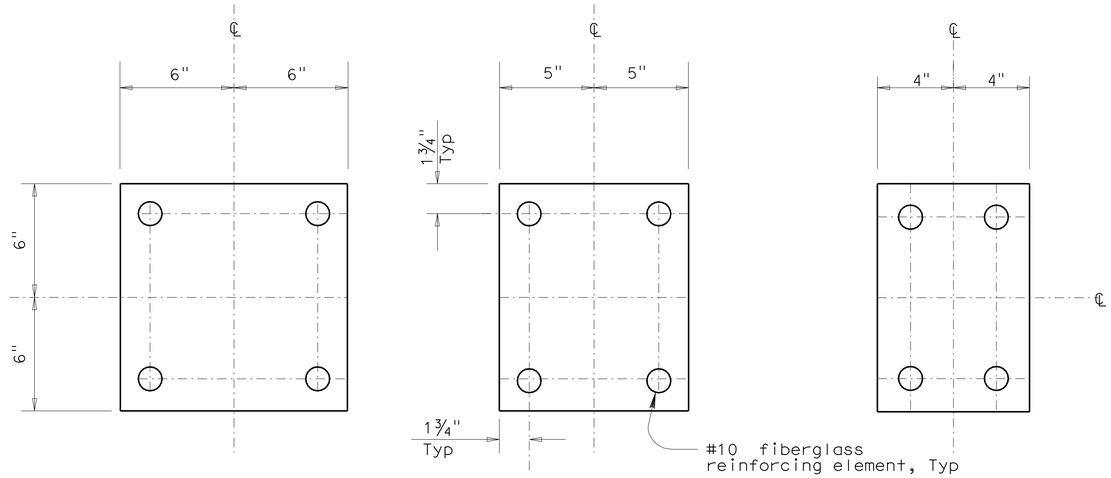

12x12 10x12 8x12

TYPICAL RR PLASTIC LUMBER SECTION
3"=1'-0"

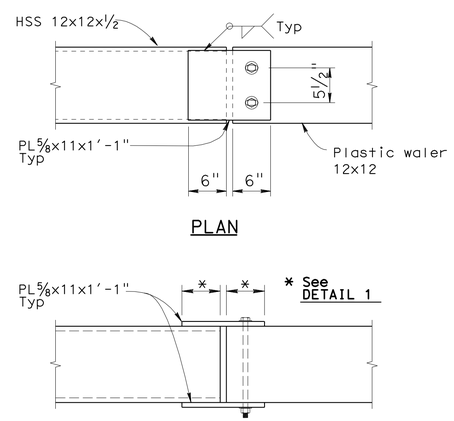

SPLICE SECTION
1"=1'-0"

NOTE:
THE CONTRACTOR SHALL VERIFY ALL CONTROLLING FIELD DIMENSIONS BEFORE ORDERING OR FABRICATING ANY MATERIAL.

	BY	CHECKED
DESIGN	R. Castro	M. Bahrami
DETAILS	M. Yu	R. Castro
QUANTITIES	R. Castro	M. Bahrami

STATE OF CALIFORNIA
DEPARTMENT OF TRANSPORTATION

DIVISION OF STRUCTURES
STRUCTURE MAINTENANCE AND INVESTIGATIONS

BRIDGE NO. 23-0015R
POST MILE 3.9/14.2 0.0/0.5

CARQUINEZ BRIDGE
FENDER REHABILITATION
NOSE SHEATHING DETAILS

STRUCTURES DESIGN DETAIL SHEET (ENGLISH) (REV. 2-2-05)

ORIGINAL SCALE IN INCHES FOR REDUCED PLANS 0 1 2 3

CU 04609
EA 049071

DISREGARD PRINTS BEARING EARLIER REVISION DATES

REVISION DATES: 1-08-09 8-31-09 9-14-09 1-06-10 5-04-10 12-10-10 5-11-11 03-25-11

SHEET 23 OF 28

FILE => 23-nose-det.dgn

USERNAME => s124496 DATE PLOTTED => 30-JUN-2011 TIME PLOTTED => 15:42

DIST	COUNTY	ROUTE	POST MILES TOTAL PROJECT	SHEET No	TOTAL SHEETS
04	CC,Sol	80	13.9/14.2, 0.0/0.5	38	42

Reynaldo J. Castro 12-14-10
REGISTERED CIVIL ENGINEER DATE

6-27-11
PLANS APPROVAL DATE

REGISTERED PROFESSIONAL ENGINEER REYNALDO J. CASTRO No. C36231 Exp. 6-30-12 CIVIL STATE OF CALIFORNIA

The State of California or its officers or agents shall not be responsible for the accuracy or completeness of electronic copies of this plan sheet.

PL 1/4x2'-8"x2'-4" pattern floor plate with bent up sides (4") and bent down front lip (2") & back (2")

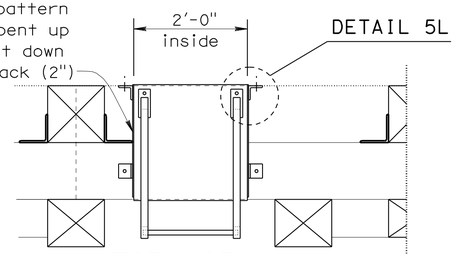

TOP VIEW

NOTES:

1. Access ladder (inside) is similar to access ladder(outside) details except no landing floor plate. Attach ladder directly to concrete ring beam with 5/8"Ø anchor bolts.
2. All sheathing hardware material shall be ASTM 276, Type 316 stainless steel.
3. Access ladder landing floor plate and angle shall be hot dip galvanized after fabrication.

LEGEND:

RR Plastic Lumber: Reinforced Recycled Plastic Lumber
HSS: Hollow Structural Steel

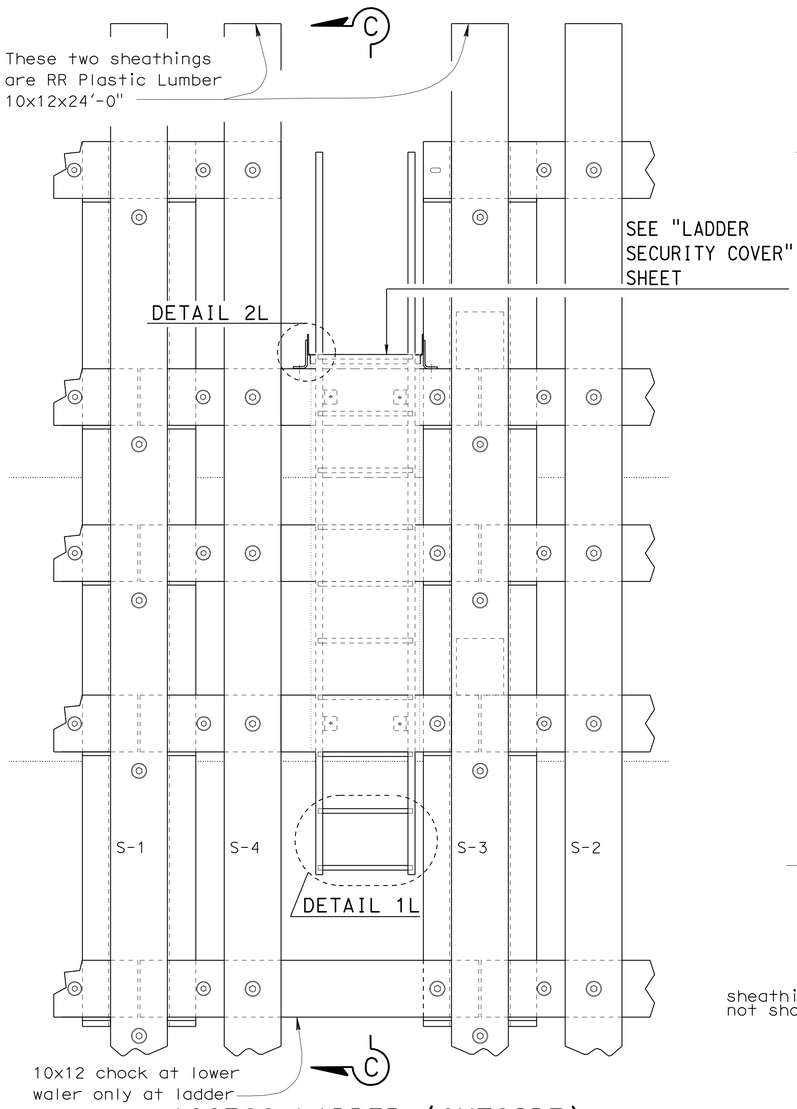

ACCESS LADDER (OUTSIDE)
3/4"=1'-0"

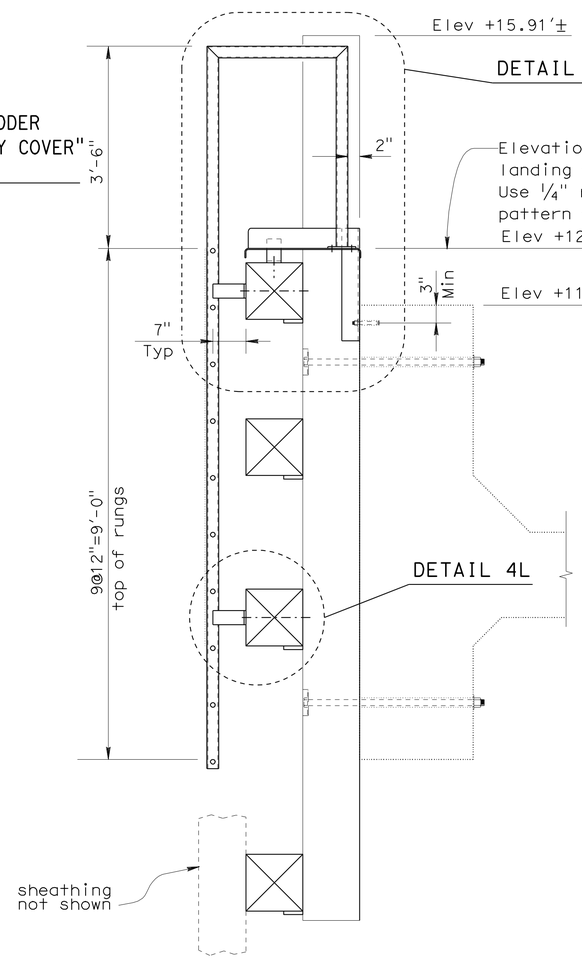

SECTION C-C
3/4"=1'-0"

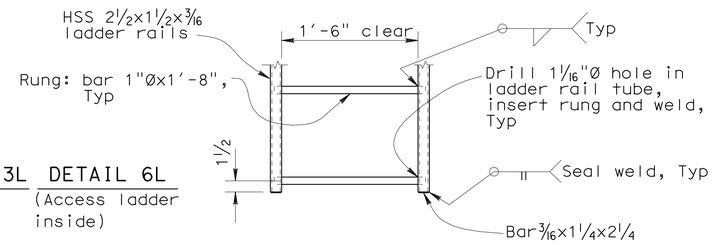

DETAIL 1L
1 1/2"=1'-0"

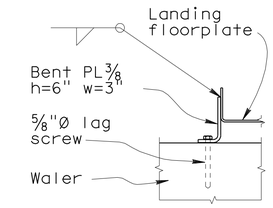

DETAIL 2L
1 1/2"=1'-0"

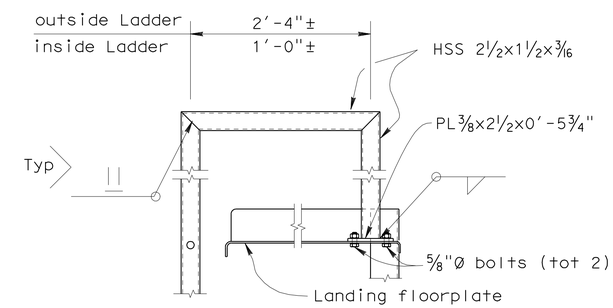

DETAIL 3L
1 1/2"=1'-0"

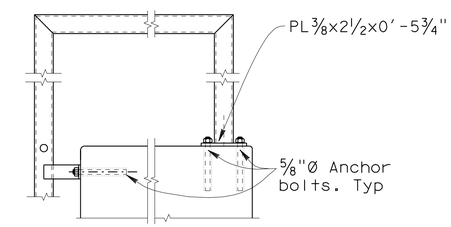

DETAIL 6L
1 1/2"=1'-0"
for ACCESS LADDER (INSIDE)

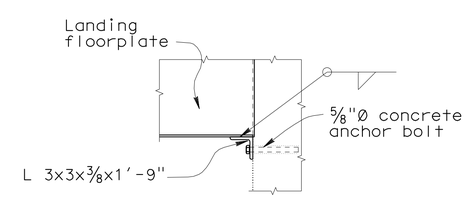

DETAIL 5L
1 1/2"=1'-0"

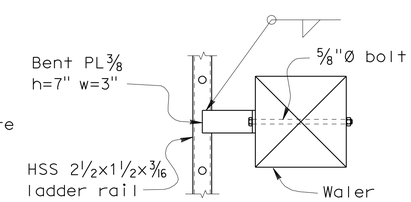

DETAIL 4L
1 1/2"=1'-0"

DESIGN	BY R. Castro	CHECKED M. Bahrami	
DETAILS	BY M. Yu	CHECKED R. Castro	
QUANTITIES	BY R. Castro	CHECKED H. Su	

STATE OF CALIFORNIA
DEPARTMENT OF TRANSPORTATION

DIVISION OF STRUCTURES
STRUCTURE MAINTENANCE AND INVESTIGATIONS

BRIDGE NO. 23-0015R
POST MILE 13.9/14.2 0.0/0.5

CARQUINEZ BRIDGE
FENDER REHABILITATION
ACCESS LADDER DETAILS

STRUCTURES DESIGN DETAIL SHEET (ENGLISH) (REV. 2-2-05)

ORIGINAL SCALE IN INCHES FOR REDUCED PLANS 0 1 2 3

CU 04609
EA 049071

DISREGARD PRINTS BEARING EARLIER REVISION DATES

REVISION DATES: 3-08-09 8-31-09 9-14-09 1-05-10 5-04-10 12-13-10 3-11-11 03-25-11

SHEET 24 OF 28

FILE => 24-nose-det.dgn

USERNAME => s1224496 DATE PLOTTED => 30-JUN-2011 TIME PLOTTED => 15:43

DIST	COUNTY	ROUTE	POST MILES TOTAL PROJECT	SHEET No	TOTAL SHEETS
04	CC,Sol	80	13.9/14.2, 0.0/0.5	39	42

Reynaldo J. Castro 12-14-10
REGISTERED CIVIL ENGINEER DATE

6-27-11
PLANS APPROVAL DATE

REGISTERED PROFESSIONAL ENGINEER
REYNALDO J. CASTRO
No. C36231
Exp. 6-30-12
CIVIL
STATE OF CALIFORNIA

The State of California or its officers or agents shall not be responsible for the accuracy or completeness of electronic copies of this plan sheet.

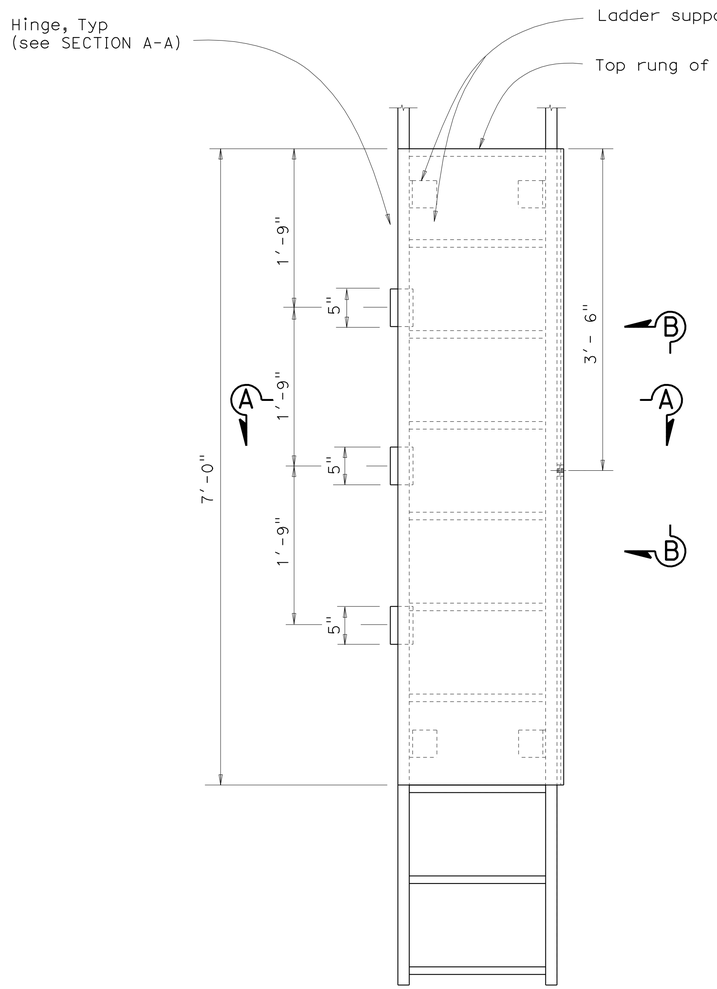

ELEVATION
Scale: 1¼"=1'-0"

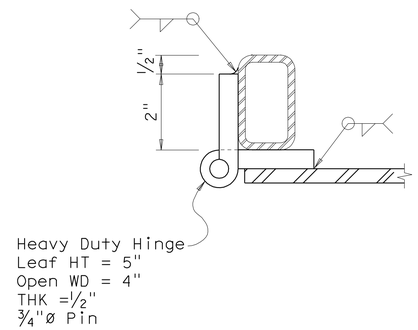

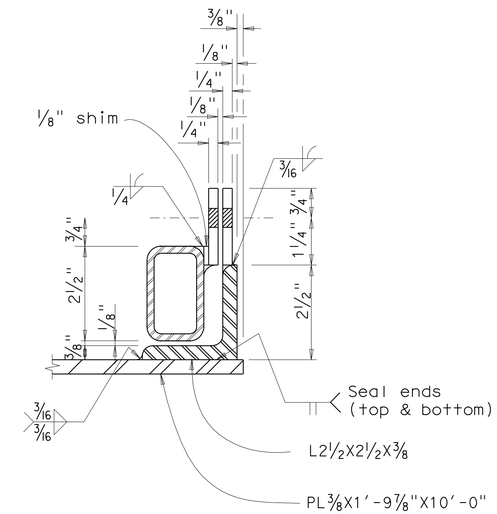

SECTION A-A
Scale: 6"=1'-0"

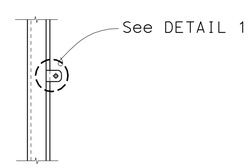

SECTION B-B
Scale: 1¼"=1'-0"

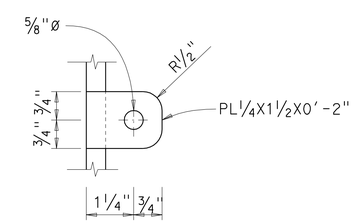

DETAIL 1
Scale: 6"=1'-0"

Note:
1. Ladder security cover shall be galvanized after fabrication.

NOTE:
THE CONTRACTOR SHALL VERIFY ALL CONTROLLING FIELD DIMENSIONS BEFORE ORDERING OR FABRICATING ANY MATERIAL.

	BY	CHECKED
DESIGN	R. Castro	M. Bahrami
DETAILS	M. Yu	R. Castro
QUANTITIES	R. Castro	H. Su

STATE OF CALIFORNIA
DEPARTMENT OF TRANSPORTATION

DIVISION OF STRUCTURES
STRUCTURE MAINTENANCE AND INVESTIGATIONS

BRIDGE NO. 23-0015R
POST MILE 13.9/14.2 0.0/0.5

CU 04609
EA 049071

CARQUINEZ BRIDGE
FENDER REHABILITATION
LADDER SECURITY COVER

STRUCTURES DESIGN DETAIL SHEET (ENGLISH) (REV. 2-2-05)

ORIGINAL SCALE IN INCHES FOR REDUCED PLANS 0 1 2 3

DISREGARD PRINTS BEARING EARLIER REVISION DATES

REVISION DATES: 7-23-09, 8-31-09, 1-06-10, 5-04-10, 12-10-10, 3-11-11, 03-25-11

SHEET 25 OF 28

FILE => 25-ladderdoor.dgn

USERNAME => s124496 DATE PLOTTED => 30-JUN-2011 TIME PLOTTED => 15:43

DIST	COUNTY	ROUTE	POST MILES TOTAL PROJECT	SHEET No	TOTAL SHEETS
04	CC,Sol	80	13.9/14.2, 0.0/0.5	40	42

Reynaldo J. Castro 12-14-10
REGISTERED CIVIL ENGINEER DATE

6-27-11
PLANS APPROVAL DATE

REGISTERED PROFESSIONAL ENGINEER
REYNALDO J. CASTRO
No. C36231
Exp. 6-30-12
CIVIL
STATE OF CALIFORNIA

The State of California or its officers or agents shall not be responsible for the accuracy or completeness of electronic copies of this plan sheet.

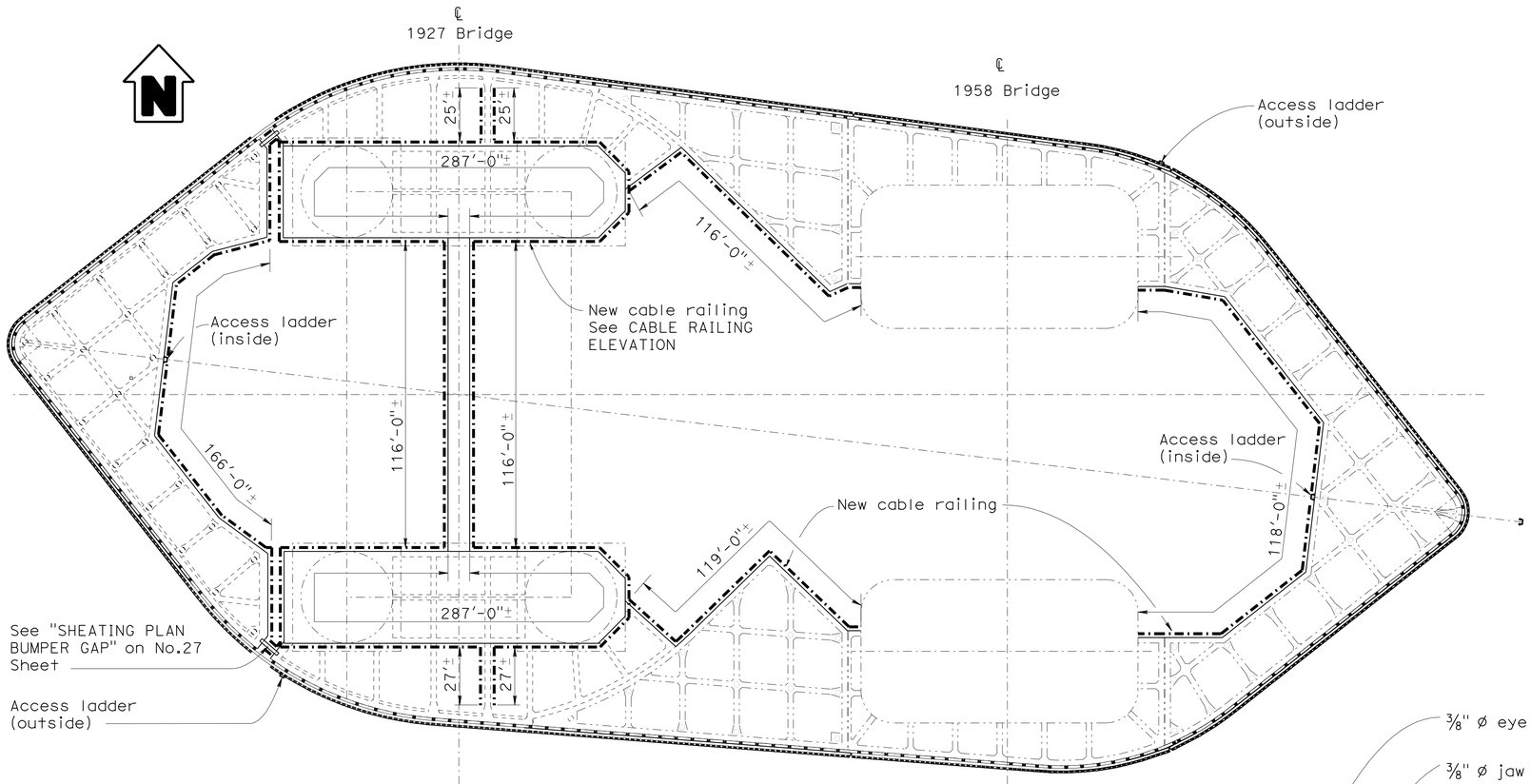

RAILING PLAN

No Scale

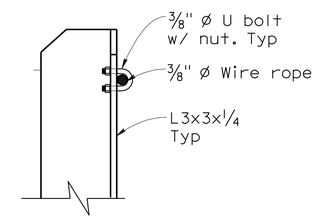

U BOLT DETAIL

Scale: 3"=1'-0"

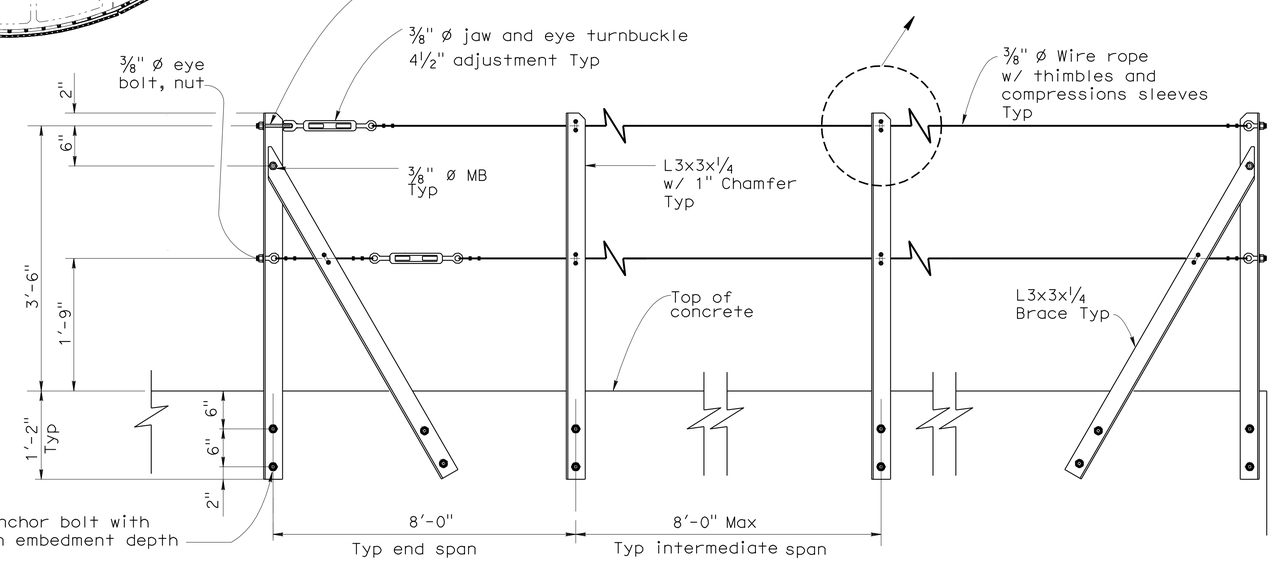

CABLE RAILING ELEVATION

Scale: 1"=1'-0"

Note:
1. All cable railing hardware wire rope, eye bolt, turnbuckle, U-bolt including angle-post and anchor bolt shall be hot dip galvanized.

NOTE:
THE CONTRACTOR SHALL VERIFY ALL CONTROLLING FIELD DIMENSIONS BEFORE ORDERING OR FABRICATING ANY MATERIAL.

	BY	CHECKED
DESIGN	R. Castro	M. Bahrami
DETAILS	M. Yu	R. Castro
QUANTITIES	R. Castro	H. Su

STATE OF CALIFORNIA
DEPARTMENT OF TRANSPORTATION

DIVISION OF STRUCTURES
STRUCTURE MAINTENANCE AND INVESTIGATIONS

BRIDGE NO. 23-0015R
POST MILE 13.9/14.2 0.0/0.5

CARQUINEZ BRIDGE
FENDER REHABILITATION
PIER 3 - NEW CABLE RAILING

STRUCTURES DESIGN DETAIL SHEET (ENGLISH) (REV. 2-2-05)

ORIGINAL SCALE IN INCHES FOR REDUCED PLANS 0 1 2 3

CU 04609
EA 049071

DISREGARD PRINTS BEARING EARLIER REVISION DATES

REVISION DATES: 1-28-09, 3-04-09, 8-31-09, 1-05-10, 5-04-10, 3-11-11, 03-25-11

SHEET 26 OF 28

FILE => 26-railing-layout.dgn

USERNAME => s124496 DATE PLOTTED => 30-JUN-2011 TIME PLOTTED => 15:43

DIST	COUNTY	ROUTE	POST MILES TOTAL PROJECT	SHEET No	TOTAL SHEETS
04	CC,Sol	80	13.9/14.2, 0.0/0.5	41	42

Reynaldo J. Castro 12-14-10
REGISTERED CIVIL ENGINEER DATE

6-27-11
PLANS APPROVAL DATE

REGISTERED PROFESSIONAL ENGINEER REYNALDO J. CASTRO No. C36231 Exp. 6-30-12 CIVIL STATE OF CALIFORNIA

The State of California or its officers or agents shall not be responsible for the accuracy or completeness of electronic copies of this plan sheet.

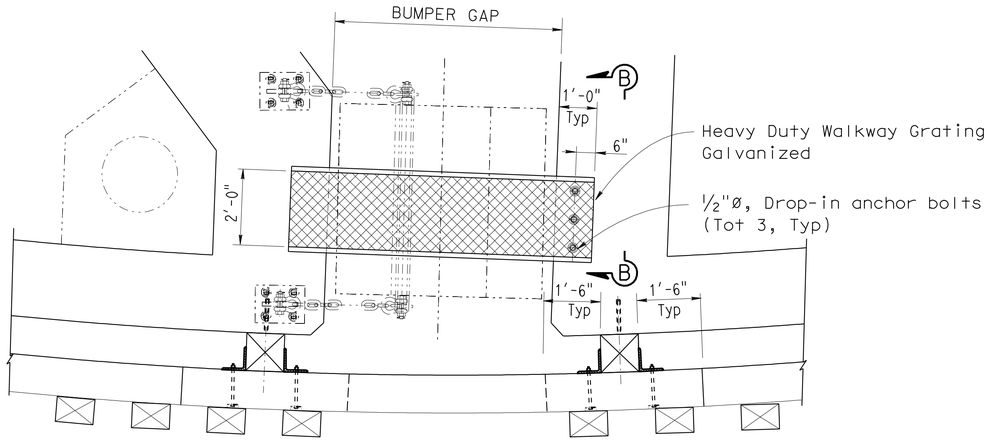

SHEATHING PLAN
1/2 " = 1'-0"

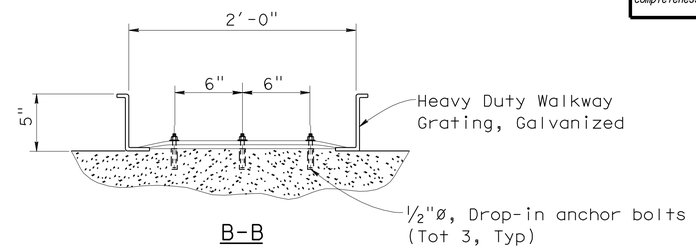

B-B

Note:
For walkway railing, See "PIER 3-NEW CABLE RAILING" on No. 26 Sheet.

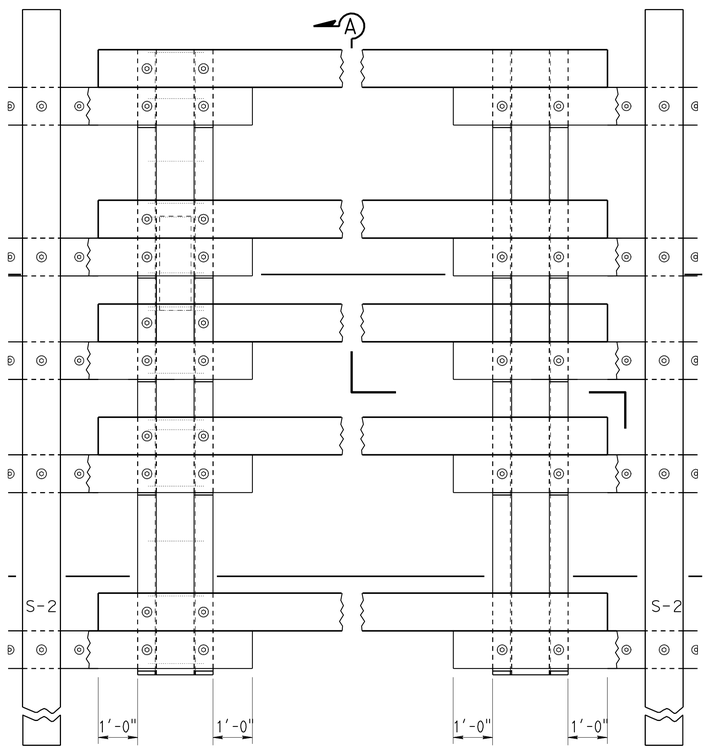

LAYOUT ELEVATION
1/2 " = 1'-0"

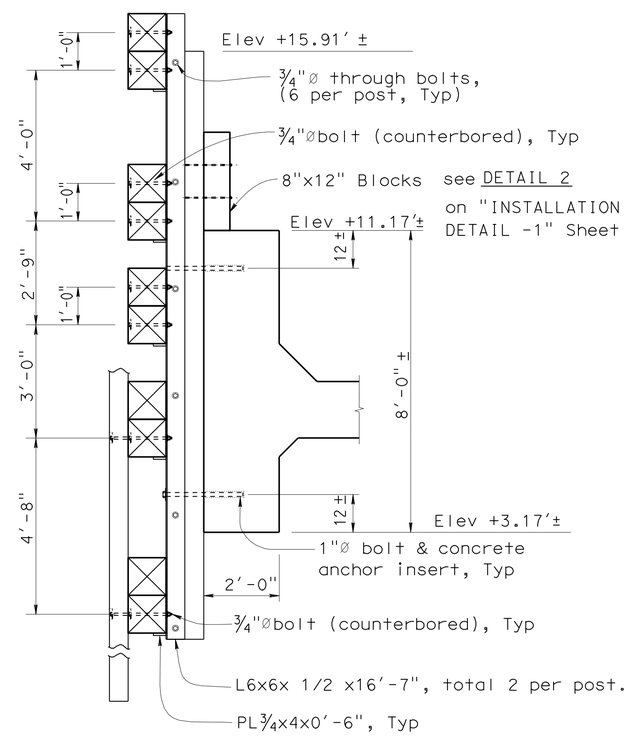

SECTION A-A

NOTE:
THE CONTRACTOR SHALL VERIFY ALL CONTROLLING FIELD DIMENSIONS BEFORE ORDERING OR FABRICATING ANY MATERIAL.

	BY		CHECKED	
DESIGN	R. Castro		M. Bahrami	
DETAILS	M. Yu		R. Castro	
QUANTITIES	R. Castro		H. Su	

STATE OF CALIFORNIA
DEPARTMENT OF TRANSPORTATION

DIVISION OF MAINTENANCE
STRUCTURE MAINTENANCE AND INVESTIGATIONS

BRIDGE NO. 23-0015R
POST MILE 13.9/14.2 0.0/0.5

CARQUINEZ BRIDGE
FENDER REHABILITATION
SHEATHING PLAN @ BUMPER GAP

STRUCTURES DESIGN DETAIL SHEET (ENGLISH) (REV. 10/25/05)

ORIGINAL SCALE IN INCHES FOR REDUCED PLANS 0 1 2 3

CU 04609
EA 049071

DISREGARD PRINTS BEARING EARLIER REVISION DATES 08-26-10 03-25-11

REVISION DATES

SHEET 27 OF 28

FILE => 27-cntilvrdet.dgn

USERNAME => s124496 DATE PLOTTED => 30-JUN-2011 TIME PLOTTED => 15:43

DIST.	COUNTY	ROUTE	POST MILES	SHEET NO.	TOTAL SHEETS
04	CC, Sol	80	A, F	28	30

October 5, 1955

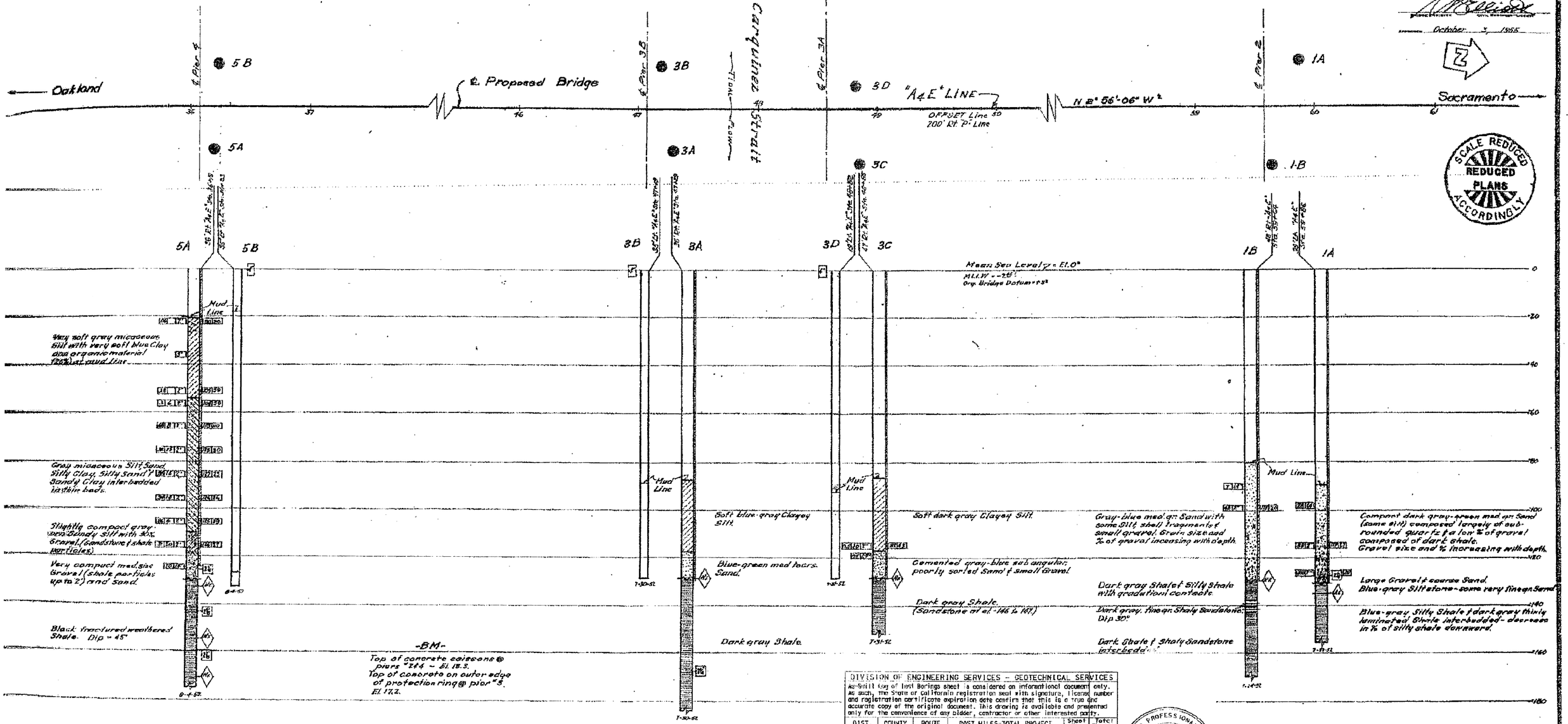

SCALE REDUCED — REDUCED PLANS ACCORDINGLY

UNIFICATION OF MATERIAL BASED ON STANDARD GRADE SIZE LIMITS

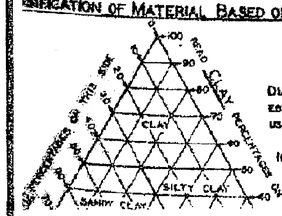

DIAGRAM SHOWING THE BASIS FOR ESTIMATES OF GRADE SIZE DISTRIBUTION USED IN DETERMINATION OF CLASS NAMES

IF GRAVEL IS PRESENT IN APPRECIABLE AMOUNTS THE TERM "GRAVELLY" MAY BE ADDED TO THE CLASS NAME, VIS. "GRAVELLY SAND". THE TERMS "COARSE"

LEGEND OF EARTH MATERIALS

- GRAVEL
- SAND
- SILT
- SILTY CLAY OR CLAYEY SILT
- PEAT AND/OR ORGANIC CLAY
- FILLED MATERIAL

- PLAN OF ANY BORING
- PENETROMETER
- 2¼" CONE PENETROMETER
- SAMPLER BORING (DRY)
- ROTARY BORING (WET)

DIVISION OF ENGINEERING SERVICES - GEOTECHNICAL SERVICES

As-Built log of test Borings sheet is considered an informational document only. As such, the State of California registration seal with signature, license number and registration certificate expiration date confirm that this is a true and accurate copy of the original document. This drawing is available and presented only for the convenience of any bidder, contractor or other interested party.

DIST.	COUNTY	ROUTE	POST MILES-TOTAL PROJECT	Sheet No.	Total Sheets
04	CC, Sol	80	13.9/14.2, 0.0/0.5	42	42

CERTIFIED ENGINEERING GEOLOGIST — DATE 06-21-10

CARQUINEZ BRIDGE FENDER REPLACEMENT

LOG OF TEST BORINGS

NOTE: A COPY OF THIS LOG OF TEST BORINGS IS AVAILABLE AT OFFICE OF STRUCTURE MAINTENANCE AND INVESTIGATIONS, SACRAMENTO, CALIFORNIA

CU: 04 EA: 049071

BRIDGE No. 23-0015

Sheet of

TO ACCOompanying PLANS DATED 6-27-11

REGISTERED PROFESSIONAL ENGINEER — Zhaohui Yang — No. C71801 — Exp. 12-31-11 — CIVIL — STATE OF CALIFORNIA

Top Elev. El. — Blows per foot (Using lb hammer with 12" free fall) — Description of material — Groundwater surface

Top Elev. El. — Casing set — 2" — Description of material

NOTES

THE CONTRACTOR'S ATTENTION IS DIRECTED TO SECTION 2, ARTICLE (c) OF THE STANDARD SPECIFICATIONS AND TO THE SPECIAL PROVISIONS ACCOMPANYING THIS SET OF PLANS. CLASSIFICATION OF EARTH MATERIAL AS SHOWN ON THIS SHEET IS BASED UPON FIELD INSPECTION AND IS NOT TO BE CONSTRUED TO IMPLY MECHANICAL ANALYSIS.

PENETROMETER BORINGS HAVING A RATE OF PENETRATION MEASURED IN SECONDS PER FOOT ARE DRIVEN WITH A Nº 2 McKIERNAN-TERRY AIR HAMMER AT 115 PSI.

STATE OF CALIFORNIA
DEPARTMENT OF PUBLIC WORKS

28_logoftestboring.tif