Dist	COUNTY	ROUTE	POST MILES TOTAL PROJECT	SHEET No.	TOTAL SHEETS
04	SM,Ala	92	R14.4/R18.8, R0.0/R2.6	1	117

STATE OF CALIFORNIA

DEPARTMENT OF TRANSPORTATION

PROJECT PLANS FOR CONSTRUCTION ON STATE HIGHWAY

IN SAN MATEO AND ALAMEDA COUNTIES AT SAN MATEO-HAYWARD BRIDGE

INDEX OF PLANS

SHEET No.	DESCRIPTION
1	TITLE SHEET AND LOCATION MAP
2	CONSTRUCTION DETAILS
3 - 6	CONSTRUCTION AREA SIGNS
7 - 16	MOTORIST INFORMATION PLANS AND QUANTITIES
17 - 18	PAVEMENT DELINEATION PLAN, DETAILS AND QUANTITIES
19 - 86	ELECTRICAL PLANS
87 - 91	REVISED STANDARD PLANS
	STRUCTURE PLANS
92 - 117	SAN MATEO-HAYWARD BRIDGE Br No. 35-0054

THE STANDARD PLANS LIST APPLICABLE TO THIS CONTRACT IS INCLUDED IN THE NOTICE TO BIDDERS AND SPECIAL PROVISIONS BOOK.

TO BE SUPPLEMENTED BY STANDARD PLANS DATED 2010

LOCATION MAP

BEGIN CONSTRUCTION
PM R14.4

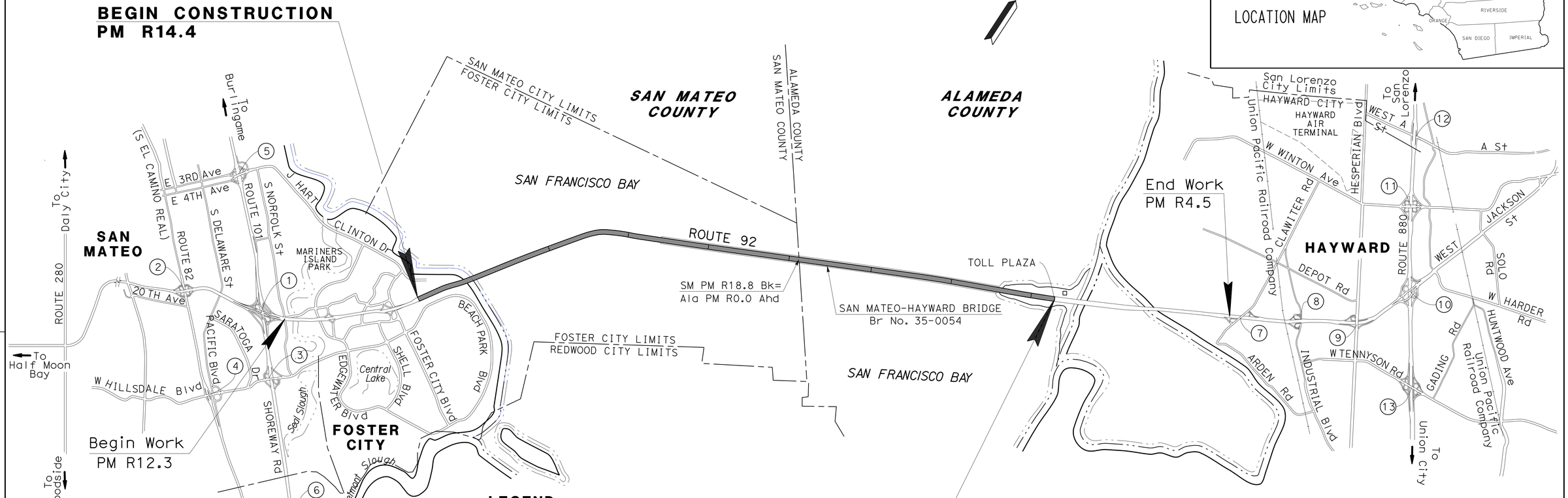

END CONSTRUCTION
PM R2.6

LEGEND:

1. ROUTE 92/101 SEPARATION
2. S EL CAMINO REAL UC
3. E HILLSDALE Blvd OC
4. PACIFIC Blvd OC
5. E 3RD Ave OC
6. RALSTON Ave OC
7. CLAWITER Rd OC
8. INDUSTRIAL Blvd UC
9. HESPERIAN Blvd OC
10. ROUTE 92/880 SEPARATION
11. W WINTON Ave OC
12. W A St UC
13. W TENNYSON Rd OC

NO SCALE

THE CONTRACTOR SHALL POSSESS THE CLASS (OR CLASSES) OF LICENSE AS SPECIFIED IN THE "NOTICE TO BIDDERS."

PROJECT ENGINEER REGISTERED CIVIL ENGINEER — DATE 3/4/14

May 27, 2014
PLANS APPROVAL DATE

REGISTERED PROFESSIONAL ENGINEER — Gordon W. Jeong — No. 33151 — Exp. 6-30-14 — CIVIL — STATE OF CALIFORNIA

THE STATE OF CALIFORNIA OR ITS OFFICERS OR AGENTS SHALL NOT BE RESPONSIBLE FOR THE ACCURACY OR COMPLETENESS OF SCANNED COPIES OF THIS PLAN SHEET.

PROJECT MANAGER: MOHSEN PAZOOKI
DESIGN MANAGER: LAWRENCE A. JONES

CONTRACT No.	04-041004
PROJECT ID	0400000044

LAST REVISION 04-23-14 — DATE PLOTTED => 18-JUN-2014 — TIME PLOTTED => 12:33

Dist	COUNTY	ROUTE	POST MILES TOTAL PROJECT	SHEET No.	TOTAL SHEETS
04	SM,Ala	92	R14.4/R18.8, R0.0/R2.6	2	117

Abdol M. Dehghani 5/12/14
REGISTERED CIVIL ENGINEER DATE

5-27-14
PLANS APPROVAL DATE

REGISTERED PROFESSIONAL ENGINEER Abdol M. Dehghani No. 48216 Exp. 6-30-14 CIVIL STATE OF CALIFORNIA

THE STATE OF CALIFORNIA OR ITS OFFICERS OR AGENTS SHALL NOT BE RESPONSIBLE FOR THE ACCURACY OR COMPLETENESS OF SCANNED COPIES OF THIS PLAN SHEET.

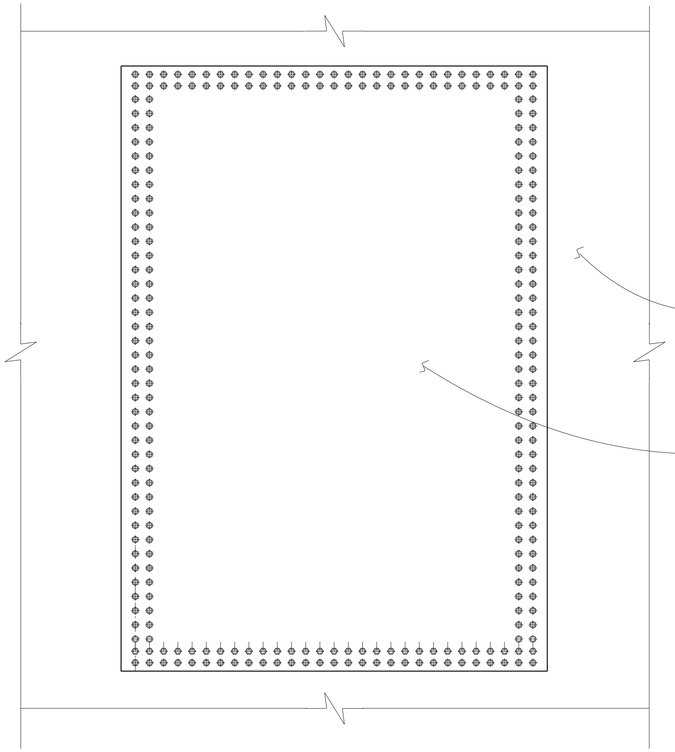

NOTES: (THIS SHEET ONLY)

1. CONTRACTOR SHALL COORDINATE THE REMOVAL OF THE STEEL COVER PLATE WITH THE ENGINEER.

BOLTS	- ASTM A325, TYPE I
NUTS	- ASTM A563 (SNUG TIGHT)
HARDENED WASHERS	- ASTM F436, TYPE I

COVER PLATE ON TOP OF PIER #19 SUBSTATION

SUBSTATION 2
(SAN MATEO-HAYWARD BRIDGE)
CONSTRUCTION DETAILS
NO SCALE

C-1

STATE OF CALIFORNIA - DEPARTMENT OF TRANSPORTATION
Caltrans DESIGN

FUNCTIONAL SUPERVISOR: GORDON W. JEONG
CALCULATED-DESIGNED BY: ABDOL M. DEHGHANI
CHECKED BY: GORDON W. JEONG
REVISED BY: AD
DATE REVISED: 8/23/13

LAST REVISION 05-12-14 | DATE PLOTTED => 18-JUN-2014 | TIME PLOTTED => 12:33

Dist	COUNTY	ROUTE	POST MILES TOTAL PROJECT	SHEET No.	TOTAL SHEETS
04	SM,Ala	92	R14.4/R18.8, R0.0/R2.6	3	117

REGISTERED CIVIL ENGINEER 3/4/14 DATE

5-27-14
PLANS APPROVAL DATE

REGISTERED PROFESSIONAL ENGINEER Jerilyn L. Struven No. 49964 Exp. 12-31-14 CIVIL STATE OF CALIFORNIA

THE STATE OF CALIFORNIA OR ITS OFFICERS OR AGENTS SHALL NOT BE RESPONSIBLE FOR THE ACCURACY OR COMPLETENESS OF SCANNED COPIES OF THIS PLAN SHEET.

LEGEND

CONSTRUCTION AREA SIGN LETTER

NOTE:

1. EXACT LOCATION AND POSITION OF CONSTRUCTION AREA SIGNS TO BE DETERMINED BY THE ENGINEER.

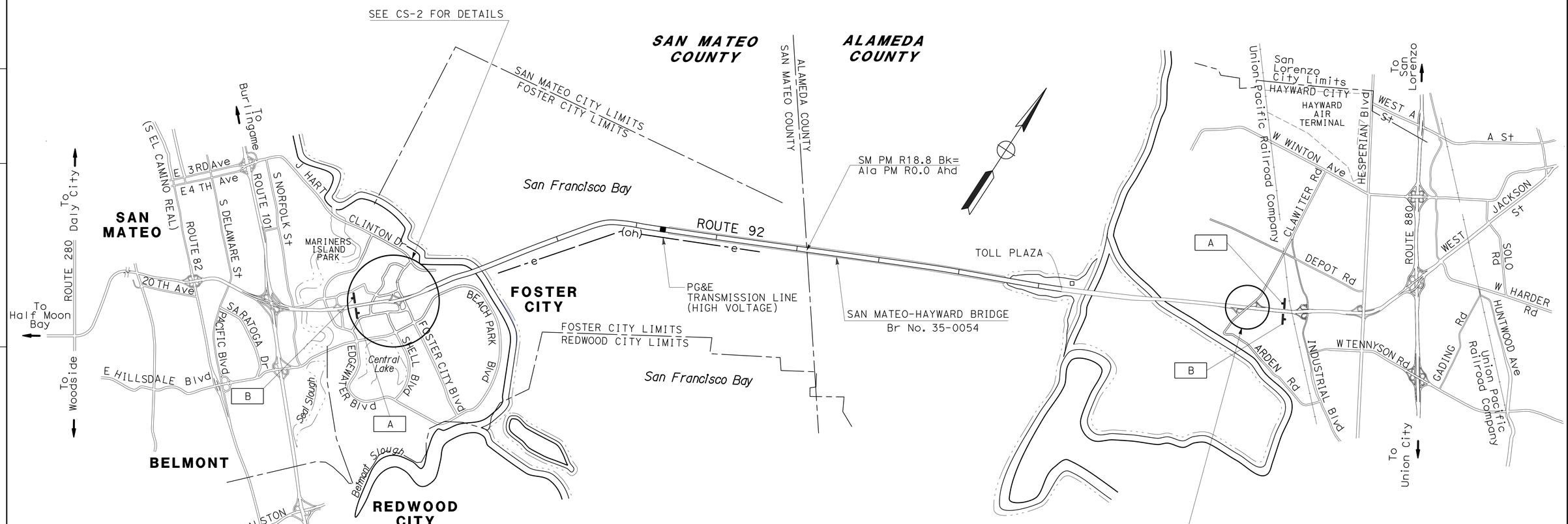

CONSTRUCTION AREA SIGNS

NO SCALE

APPROVED FOR CONSTRUCTION AREA SIGN WORK ONLY

CS-1

REVISED BY	HT	HENRY TAM	
DATE REVISED	11/21/13	JERILYN STRUVEN	
CALCULATED-DESIGNED BY		FUNCTIONAL SUPERVISOR	ROLAND AU-YEUNG
CHECKED BY			

STATE OF CALIFORNIA - DEPARTMENT OF TRANSPORTATION

Caltrans

TRAFFIC

LAST REVISION 04-14-14 | DATE PLOTTED => 18-JUN-2014 | TIME PLOTTED => 12:33

Dist	COUNTY	ROUTE	POST MILES TOTAL PROJECT	SHEET No.	TOTAL SHEETS
04	SM,Ala	92	R14.4/R18.8, R0.0/R2.6	4	117

REGISTERED CIVIL ENGINEER 3/4/14 DATE

5-27-14
PLANS APPROVAL DATE

REGISTERED PROFESSIONAL ENGINEER
Jerilyn L. Struven
No. 49964
Exp. 12-31-14
CIVIL
STATE OF CALIFORNIA

THE STATE OF CALIFORNIA OR ITS OFFICERS OR AGENTS SHALL NOT BE RESPONSIBLE FOR THE ACCURACY OR COMPLETENESS OF SCANNED COPIES OF THIS PLAN SHEET.

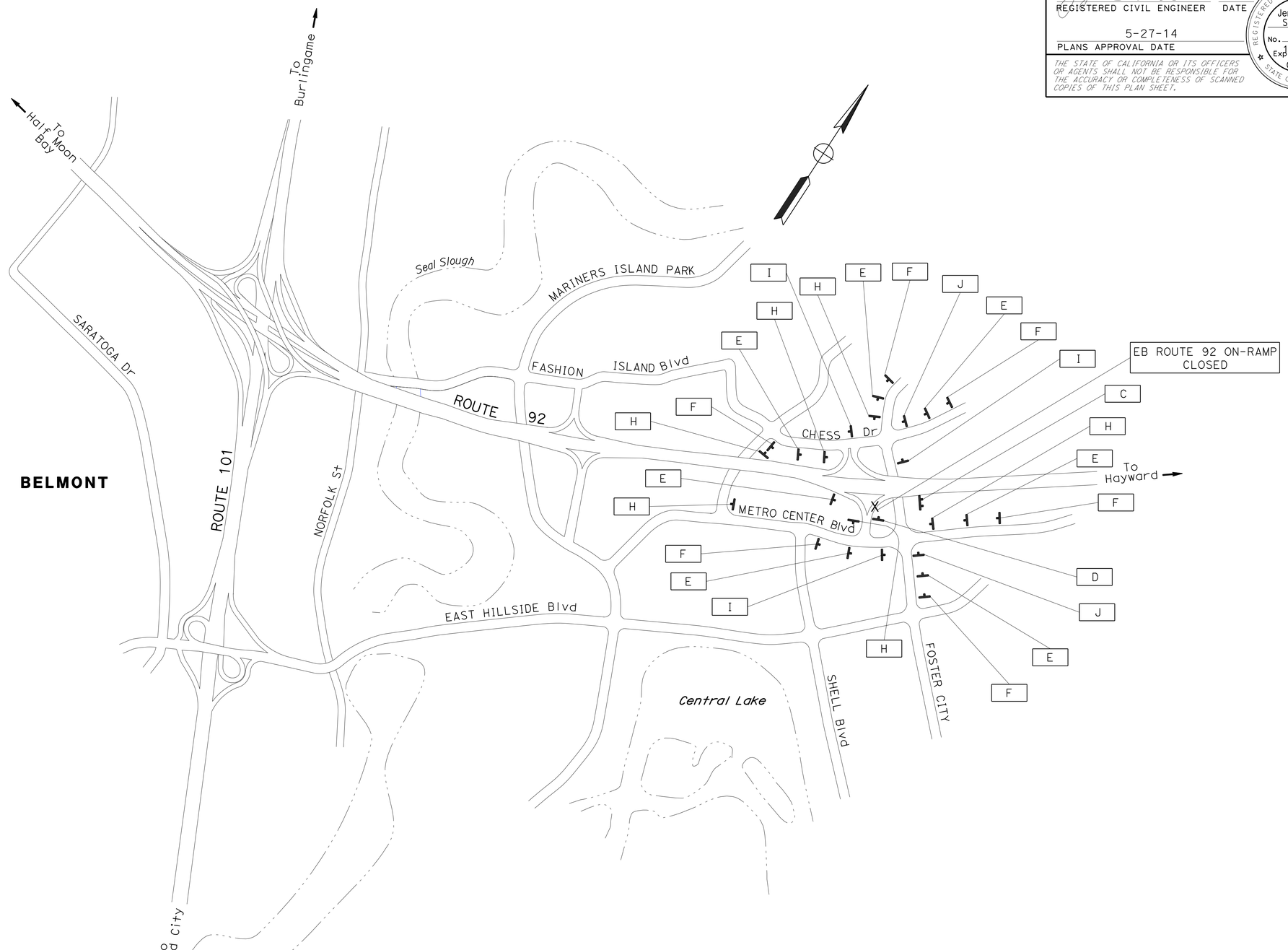

CONSTRUCTION AREA SIGNS

NO SCALE

APPROVED FOR CONSTRUCTION AREA SIGN WORK ONLY

FOR NOTES, ABBREVIATIONS AND LEGEND, SEE SHEET CS-1

CS-2

STATE OF CALIFORNIA - DEPARTMENT OF TRANSPORTATION
Caltrans
TRAFFIC

FUNCTIONAL SUPERVISOR: ROLAND AU-YEUNG
CALCULATED-DESIGNED BY: HENRY TAM
CHECKED BY: JERILYN STRUVEN
REVISED BY: HT
DATE REVISED: 11/21/13

LAST REVISION 04-15-14
DATE PLOTTED => 18-JUN-2014
TIME PLOTTED => 12:33

Dist	COUNTY	ROUTE	POST MILES TOTAL PROJECT	SHEET No.	TOTAL SHEETS
04	SM,Ala	92	R14.4/R18.8, R0.0/R2.6	5	117

REGISTERED CIVIL ENGINEER 3/4/14 DATE

5-27-14
PLANS APPROVAL DATE

REGISTERED PROFESSIONAL ENGINEER
Jerilyn L. Struven
No. 49964
Exp. 12-31-14
CIVIL
STATE OF CALIFORNIA

THE STATE OF CALIFORNIA OR ITS OFFICERS OR AGENTS SHALL NOT BE RESPONSIBLE FOR THE ACCURACY OR COMPLETENESS OF SCANNED COPIES OF THIS PLAN SHEET.

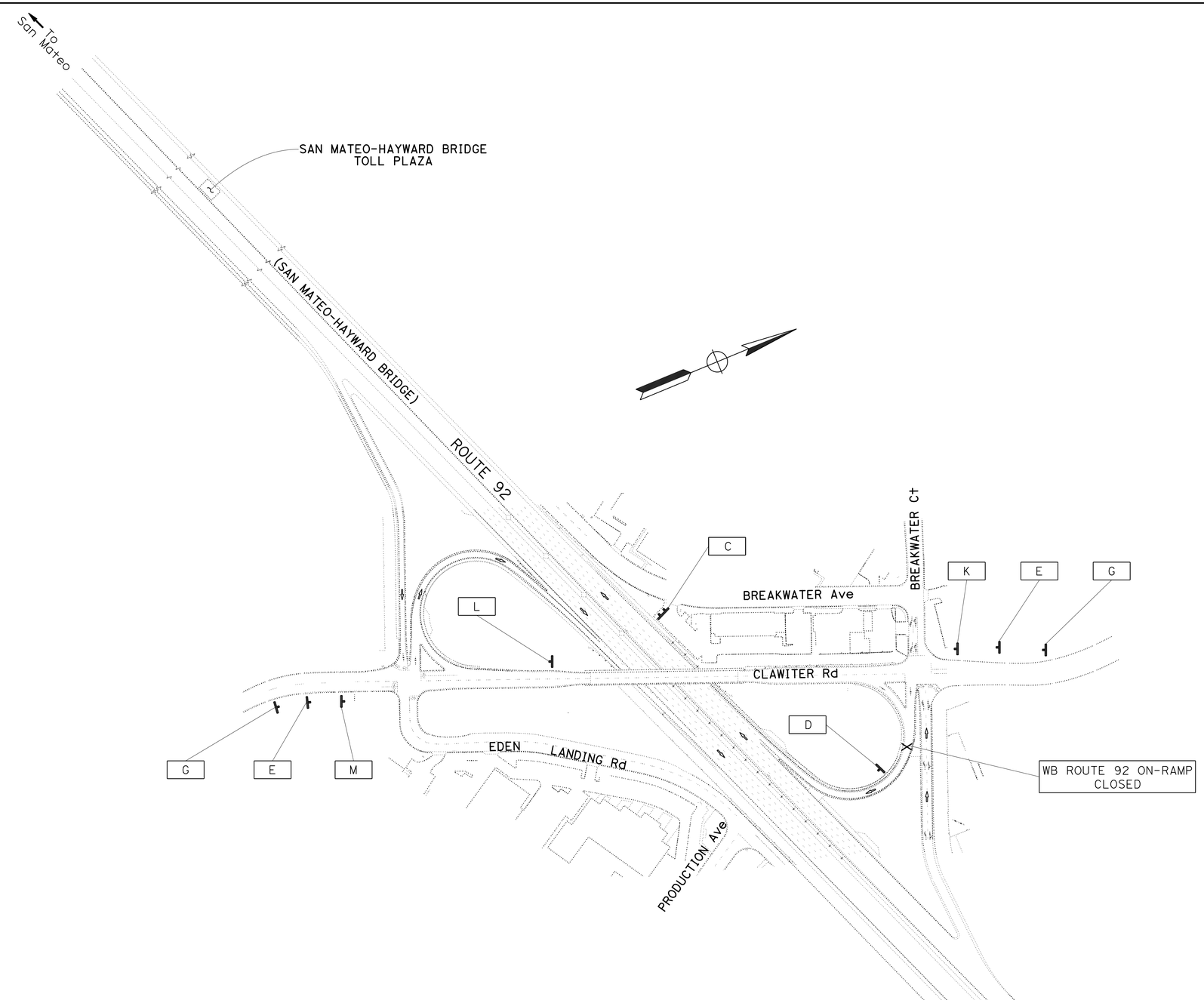

CONSTRUCTION AREA SIGNS

NO SCALE

APPROVED FOR CONSTRUCTION AREA SIGN WORK ONLY

FOR NOTES, ABBREVIATIONS AND LEGEND, SEE SHEET CS-1

CS-3

STATE OF CALIFORNIA - DEPARTMENT OF TRANSPORTATION
Caltrans
TRAFFIC

FUNCTIONAL SUPERVISOR: ROLAND AU-YEUNG
CALCULATED-DESIGNED BY: HENRY TAM
CHECKED BY: JERILYN STRUVEN
REVISED BY: HT
DATE REVISED: 11/21/13

LAST REVISION 03-03-14
DATE PLOTTED => 18-JUN-2014
TIME PLOTTED => 12:33

Dist	COUNTY	ROUTE	POST MILES TOTAL PROJECT	SHEET No.	TOTAL SHEETS
04	SM,Ala	92	R14.4/R18.8, R0.0/R2.6	6	117

REGISTERED CIVIL ENGINEER 3/4/14 DATE

5-27-14
PLANS APPROVAL DATE

REGISTERED PROFESSIONAL ENGINEER Jerilyn L. Struven No. 49964 Exp. 12-31-14 CIVIL STATE OF CALIFORNIA

THE STATE OF CALIFORNIA OR ITS OFFICERS OR AGENTS SHALL NOT BE RESPONSIBLE FOR THE ACCURACY OR COMPLETENESS OF SCANNED COPIES OF THIS PLAN SHEET.

STATIONARY MOUNTED CONSTRUCTION AREA SIGNS

SIGN No.	SIGN CODE	PANEL SIZE	MESSAGE	NUMBER OF POSTS AND SIZE	No. OF SIGNS	REMARKS
A	W20-1	48" x 48"	ROAD WORK AHEAD	1 - 4" x 6"	2	
B	G20-2	36" x 18"	END ROAD WORK	1 - 4" x 6"	2	
C	SPECIAL "A"	120" x 72"	SAN MATEO HAYWARD BRIDGE WILL BE CLOSED (DATE) (TIME)	2 - 6" x 8"	2	SEE SIGN DETAILS
D	SC6-4(CA)	48" x 60"	RAMP CLOSED (DATE) (TIME)	1 - 6" x 6"	2	
E	W20-2	36" x 36"	DETOUR AHEAD	1 - 4" x 6"	9	
F	G28-2(CA)(92)	24" x 25"	ROUTE SHIELD 92	1 - 4" x 6"	6	SEE SIGN DETAILS
	M3-2	24" x 12"	EAST			
	SPECIAL "B"	30" x 24"	CLOSED AHEAD			
G	G28-2(CA)(92)	24" x 25"	ROUTE SHIELD 92	1 - 4" x 6"	2	SEE SIGN DETAILS
	M3-4	24" x 12"	WEST			
	SPECIAL "B"	30" x 24"	CLOSED AHEAD			
H	M4-8	24" x 12"	DETOUR	1 - 4" x 6"	6	
	G28-2(CA)(92)	24" x 25"	ROUTE SHIELD 92			
	M6-1(→)	21" x 15"	RIGHT ARROW			
I	M4-8	24" x 12"	DETOUR	1 - 4" x 6"	3	
	G28-2(CA)(92)	24" x 25"	ROUTE SHIELD 92			
	M6-1(←)	21" x 15"	LEFT ARROW			
J	M4-8	24" x 12"	DETOUR	1 - 4" x 6"	2	
	G28-2(CA)(92)	24" x 25"	ROUTE SHIELD 92			
	M6-3(↑)	21" x 15"	UP ARROW			
K	M4-8	24" x 12"	DETOUR	1 - 4" x 6"	1	
	G27-2(CA)(880)	30" x 25"	ROUTE SHIELD 880			
	M6-3(↑)	21" x 15"	UP ARROW			
L	M4-8	24" x 12"	DETOUR	1 - 4" x 6"	1	
	G27-2(CA)(880)	30" x 25"	ROUTE SHIELD 880			
	M6-1(→)	21" x 15"	RIGHT ARROW			
M	M4-8	24" x 12"	DETOUR	1 - 4" x 6"	1	
	G27-2(CA)(880)	30" x 25"	ROUTE SHIELD 880			
	M6-1(←)	21" x 15"	LEFT ARROW			

8" CAP

SAN MATEO
HAYWARD BRIDGE
WILL BE CLOSED
(DATE)
(TIME)

BLACK/ORANGE 120" x 72"

SPECIAL "A"

5" CAP

CLOSED AHEAD

BLACK/ORANGE 30" x 24"

SPECIAL "B"

SIGN DETAILS

APPROVED FOR CONSTRUCTION AREA SIGN WORK ONLY

FOR NOTES, ABBREVIATIONS AND LEGEND, SEE SHEET CS-1

CONSTRUCTION AREA SIGNS

NO SCALE

CS-4

STATE OF CALIFORNIA - DEPARTMENT OF TRANSPORTATION
Caltrans
TRAFFIC

FUNCTIONAL SUPERVISOR: ROLAND AU-YEUNG
CALCULATED-DESIGNED BY: HENRY TAM
CHECKED BY: JERILYN STRUVEN
REVISED BY: HT
DATE REVISED: 11/21/13

LAST REVISION 04-15-14 | DATE PLOTTED => 18-JUN-2014 | TIME PLOTTED => 12:33

Dist	COUNTY	ROUTE	POST MILES TOTAL PROJECT	SHEET No.	TOTAL SHEETS
04	SM,Ala	92	R14.4/R18.8, R0.0/R2.6	7	117

REGISTERED CIVIL ENGINEER 5/12/14 DATE

5-27-14
PLANS APPROVAL DATE

REGISTERED PROFESSIONAL ENGINEER
Lenka Pleskotova
No. 81728
Exp. 3-31-16
CIVIL
STATE OF CALIFORNIA

THE STATE OF CALIFORNIA OR ITS OFFICERS OR AGENTS SHALL NOT BE RESPONSIBLE FOR THE ACCURACY OR COMPLETENESS OF SCANNED COPIES OF THIS PLAN SHEET.

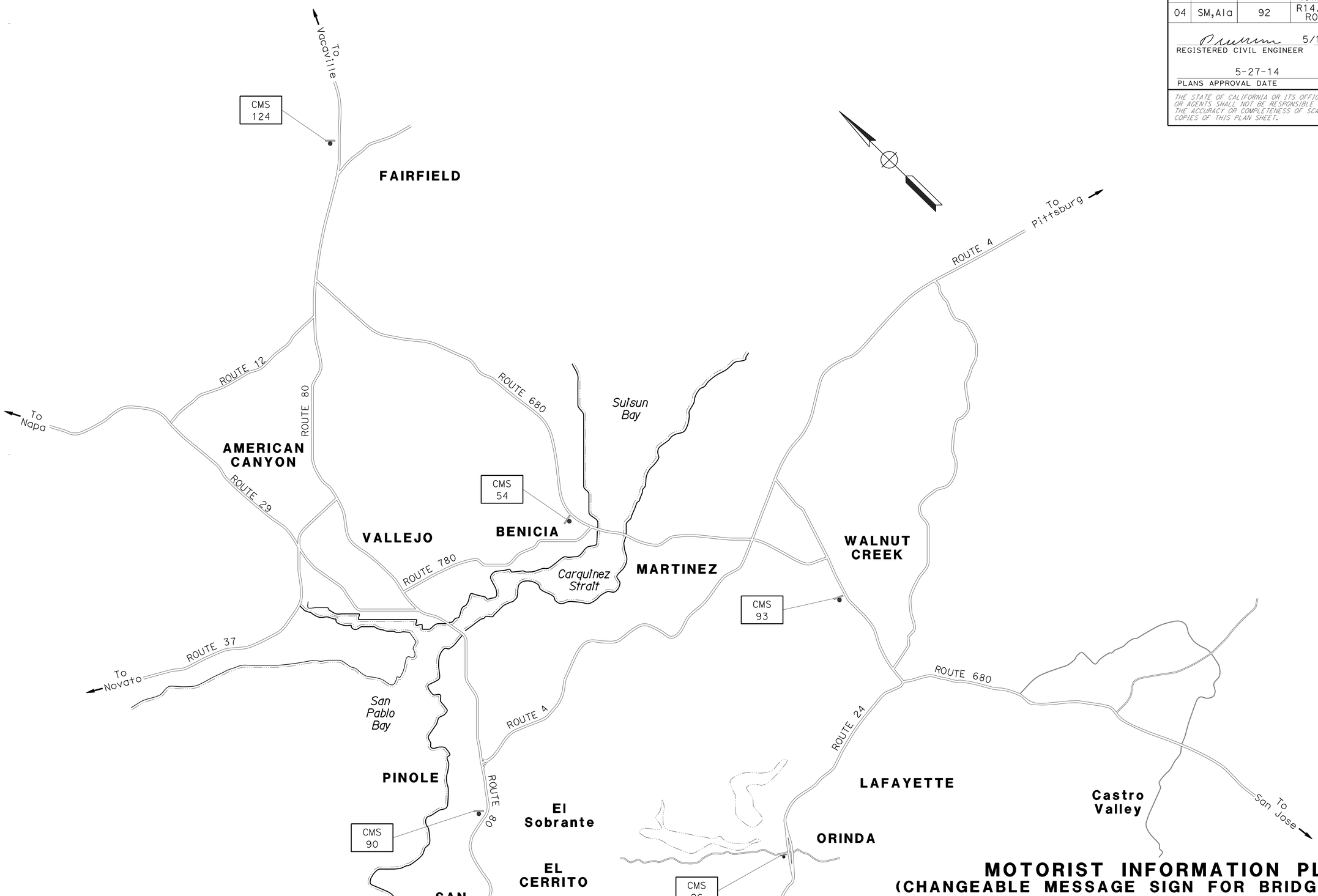

MOTORIST INFORMATION PLAN
(CHANGEABLE MESSAGE SIGN FOR BRIDGE CLOSURE CMS MATRIX MESSAGE SIGN LOCATIONS)
NO SCALE

APPROVED FOR MOTORIST INFORMATION WORK ONLY

MI-1

STATE OF CALIFORNIA - DEPARTMENT OF TRANSPORTATION
Caltrans® TRAFFIC

FUNCTIONAL SUPERVISOR: AUNG MAUNG
CALCULATED-DESIGNED BY: LENKA PLESKOTOVA
CHECKED BY: AUNG MAUNG
REVISED BY: LP
DATE REVISED: 5/10/14

LAST REVISION 05-12-14 | DATE PLOTTED => 18-JUN-2014 | TIME PLOTTED => 12:33

Dist	COUNTY	ROUTE	POST MILES TOTAL PROJECT	SHEET No.	TOTAL SHEETS
04	SM,Ala	92	R14.4/R18.8, R0.0/R2.6	8	117

REGISTERED CIVIL ENGINEER 5/12/14 DATE

5-27-14
PLANS APPROVAL DATE

REGISTERED PROFESSIONAL ENGINEER Lenka Pleskotova No. 81728 Exp. 3-31-16 CIVIL STATE OF CALIFORNIA

THE STATE OF CALIFORNIA OR ITS OFFICERS OR AGENTS SHALL NOT BE RESPONSIBLE FOR THE ACCURACY OR COMPLETENESS OF SCANNED COPIES OF THIS PLAN SHEET.

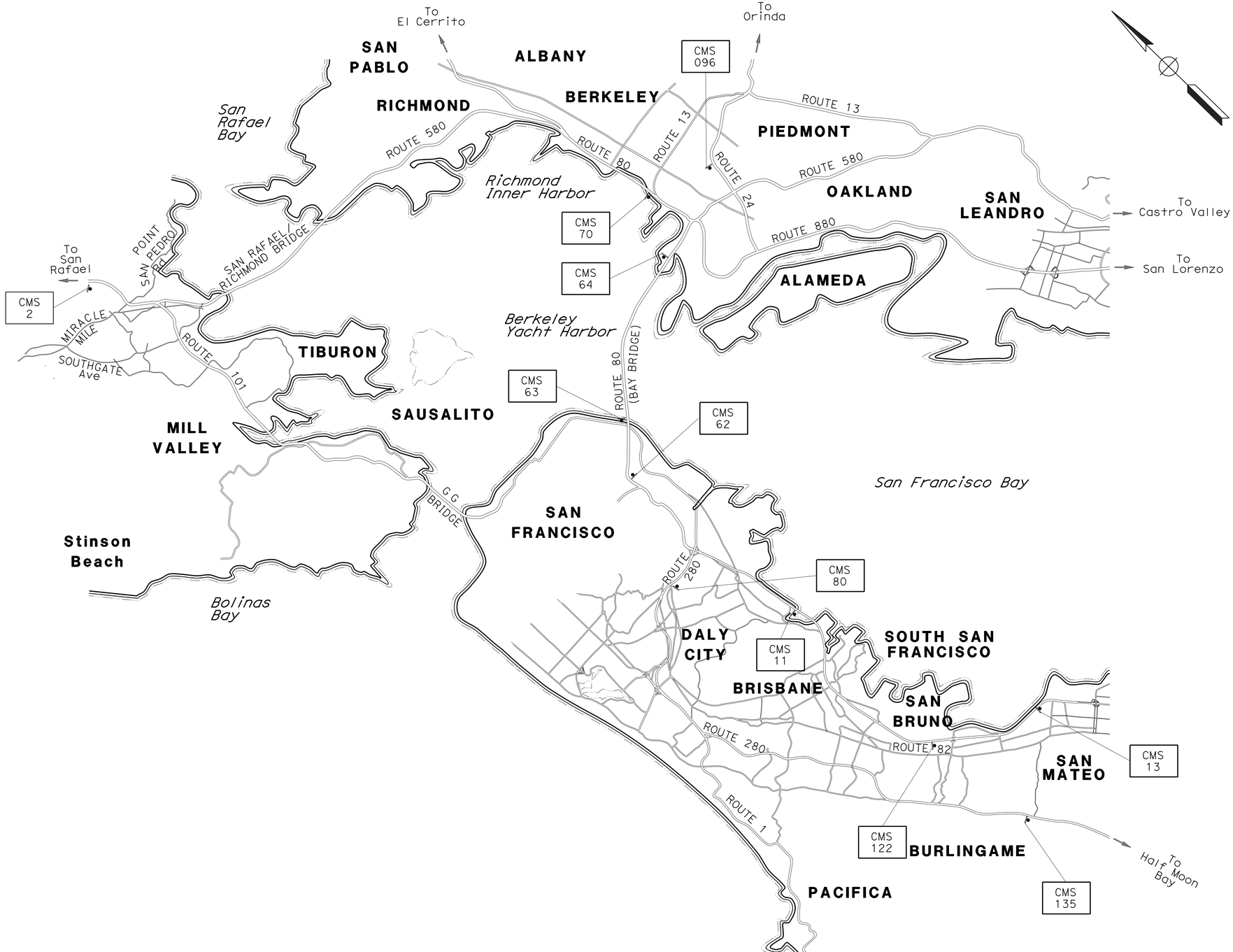

MOTORIST INFORMATION PLAN
(CHANGEABLE MESSAGE SIGN FOR BRIDGE CLOSURE CMS MATRIX MESSAGE SIGN LOCATIONS)
NO SCALE

APPROVED FOR MOTORIST INFORMATION WORK ONLY

MI-2

REVISED BY	DATE REVISED
LP	5/10/14

LENKA PLESKOTOVA — CALCULATED-DESIGNED BY
AUNG MAUNG — CHECKED BY
AUNG MAUNG — FUNCTIONAL SUPERVISOR

STATE OF CALIFORNIA - DEPARTMENT OF TRANSPORTATION
Caltrans®
TRAFFIC

LAST REVISION 05-12-14 | DATE PLOTTED => 18-JUN-2014 | TIME PLOTTED => 12:33

Dist	COUNTY	ROUTE	POST MILES TOTAL PROJECT	SHEET No.	TOTAL SHEETS
04	SM,Ala	92	R14.4/R18.8, R0.0/R2.6	9	117

REGISTERED CIVIL ENGINEER 5/12/14 DATE

5-27-14
PLANS APPROVAL DATE

REGISTERED PROFESSIONAL ENGINEER Lenka Pleskotova No. 81728 Exp. 3-31-16 CIVIL STATE OF CALIFORNIA

THE STATE OF CALIFORNIA OR ITS OFFICERS OR AGENTS SHALL NOT BE RESPONSIBLE FOR THE ACCURACY OR COMPLETENESS OF SCANNED COPIES OF THIS PLAN SHEET.

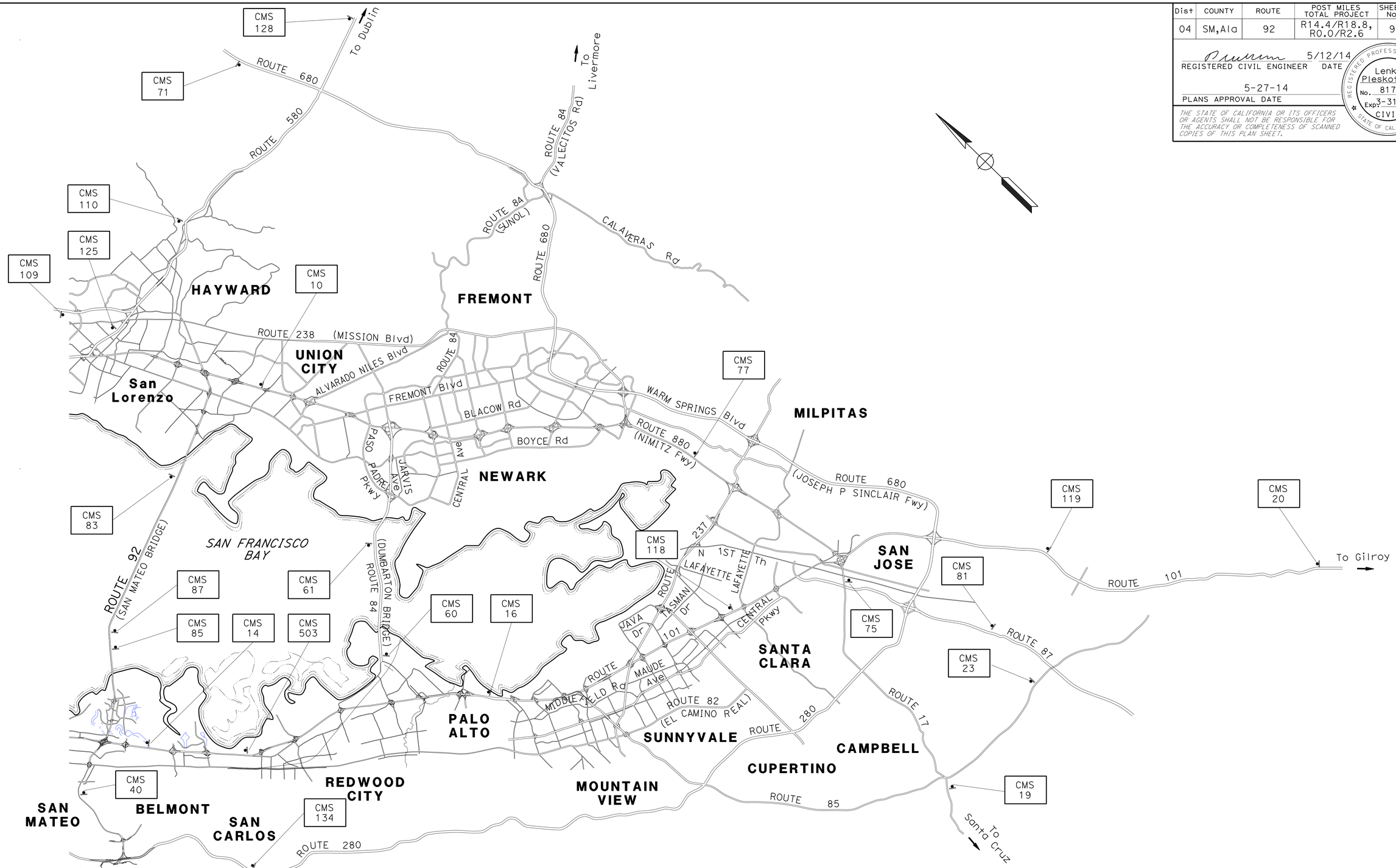

MOTORIST INFORMATION PLAN
(CHANGEABLE MESSAGE SIGN FOR BRIDGE CLOSURE CMS MATRIX MESSAGE SIGN LOCATIONS)
NO SCALE

APPROVED FOR MOTORIST INFORMATION WORK ONLY

MI-3

STATE OF CALIFORNIA - DEPARTMENT OF TRANSPORTATION
Caltrans
TRAFFIC

FUNCTIONAL SUPERVISOR: AUNG MAUNG
CALCULATED-DESIGNED BY: LENKA PLESKOTOVA
CHECKED BY: AUNG MAUNG
REVISED BY: LP
DATE REVISED: 5/10/14

LAST REVISION 05-12-14
DATE PLOTTED => 18-JUN-2014
TIME PLOTTED => 12:33

Dist	COUNTY	ROUTE	POST MILES TOTAL PROJECT	SHEET No.	TOTAL SHEETS
04	SM,Ala	92	R14.4/R18.8, R0.0/R2.6	10	117

REGISTERED CIVIL ENGINEER 5/12/14 DATE

5-27-14
PLANS APPROVAL DATE

REGISTERED PROFESSIONAL ENGINEER Lenka Pleskotova No. 81728 Exp. 3-31-16 CIVIL STATE OF CALIFORNIA

THE STATE OF CALIFORNIA OR ITS OFFICERS OR AGENTS SHALL NOT BE RESPONSIBLE FOR THE ACCURACY OR COMPLETENESS OF SCANNED COPIES OF THIS PLAN SHEET.

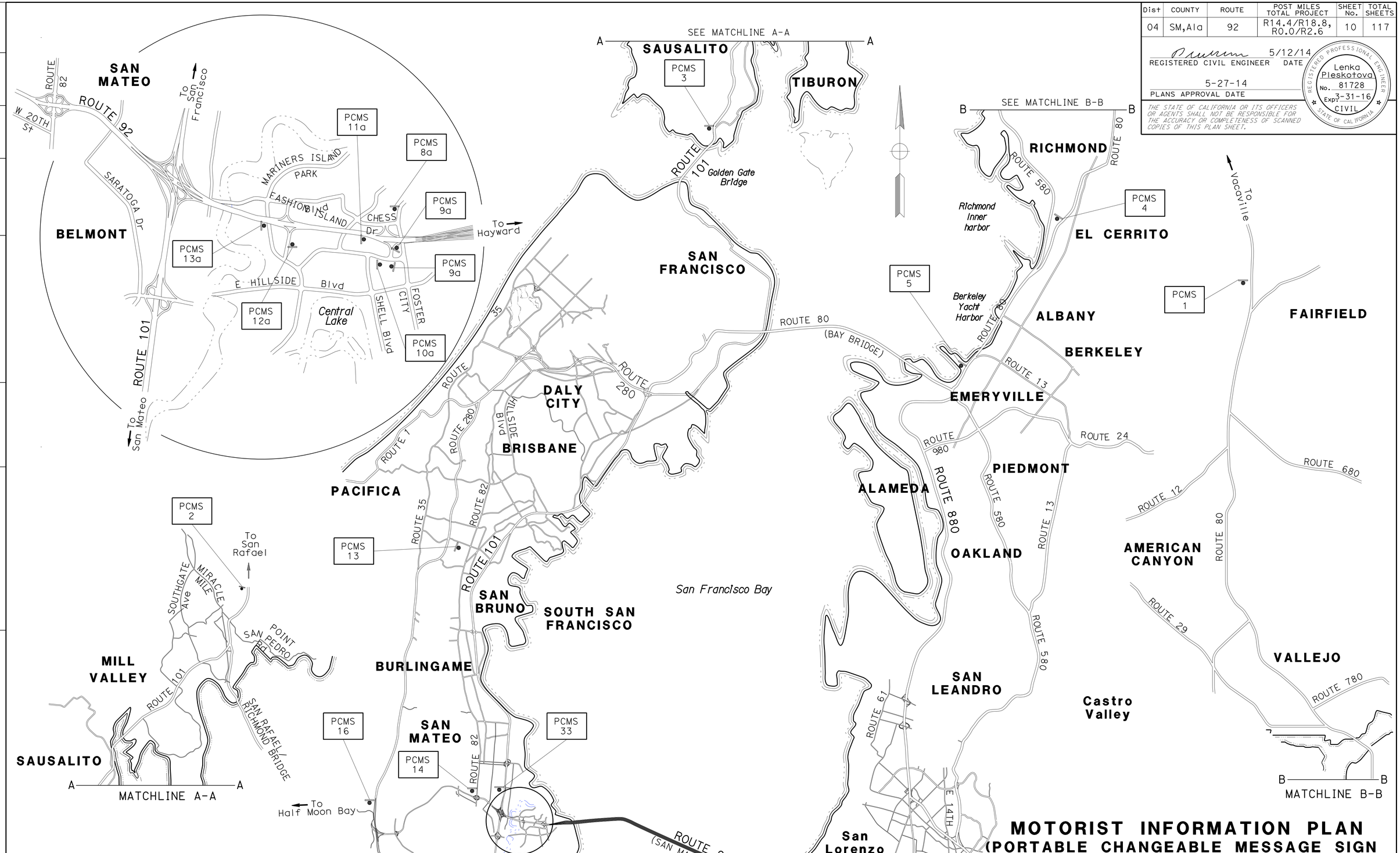

MOTORIST INFORMATION PLAN
(PORTABLE CHANGEABLE MESSAGE SIGN FOR BRIDGE CLOSURE PCMS MESSAGE SIGN LOCATIONS)

NO SCALE

APPROVED FOR MOTORIST INFORMATION WORK ONLY

MI-4

REVISED BY	DATE REVISED
LP	5/10/14

LENKA PLESKOTOVA — CALCULATED-DESIGNED BY
AUNG MAUNG — CHECKED BY
AUNG MAUNG — FUNCTIONAL SUPERVISOR

STATE OF CALIFORNIA - DEPARTMENT OF TRANSPORTATION
TRAFFIC

LAST REVISION 05-12-14 | DATE PLOTTED => 18-JUN-2014 | TIME PLOTTED => 12:33

BORDER LAST REVISED 7/2/2010 | USERNAME => s128787 | DGN FILE => 04000000441b004.dgn | RELATIVE BORDER SCALE IS IN INCHES 0 1 2 3 | UNIT 0700 | PROJECT NUMBER & PHASE 04000000441

Dist	COUNTY	ROUTE	POST MILES TOTAL PROJECT	SHEET No.	TOTAL SHEETS
04	SM,Ala	92	R14.4/R18.8, R0.0/R2.6	11	117

REGISTERED CIVIL ENGINEER 5/12/14 DATE

5-27-14
PLANS APPROVAL DATE

REGISTERED PROFESSIONAL ENGINEER Lenka Pleskotova No. 81728 Exp. 3-31-16 CIVIL STATE OF CALIFORNIA

THE STATE OF CALIFORNIA OR ITS OFFICERS OR AGENTS SHALL NOT BE RESPONSIBLE FOR THE ACCURACY OR COMPLETENESS OF SCANNED COPIES OF THIS PLAN SHEET.

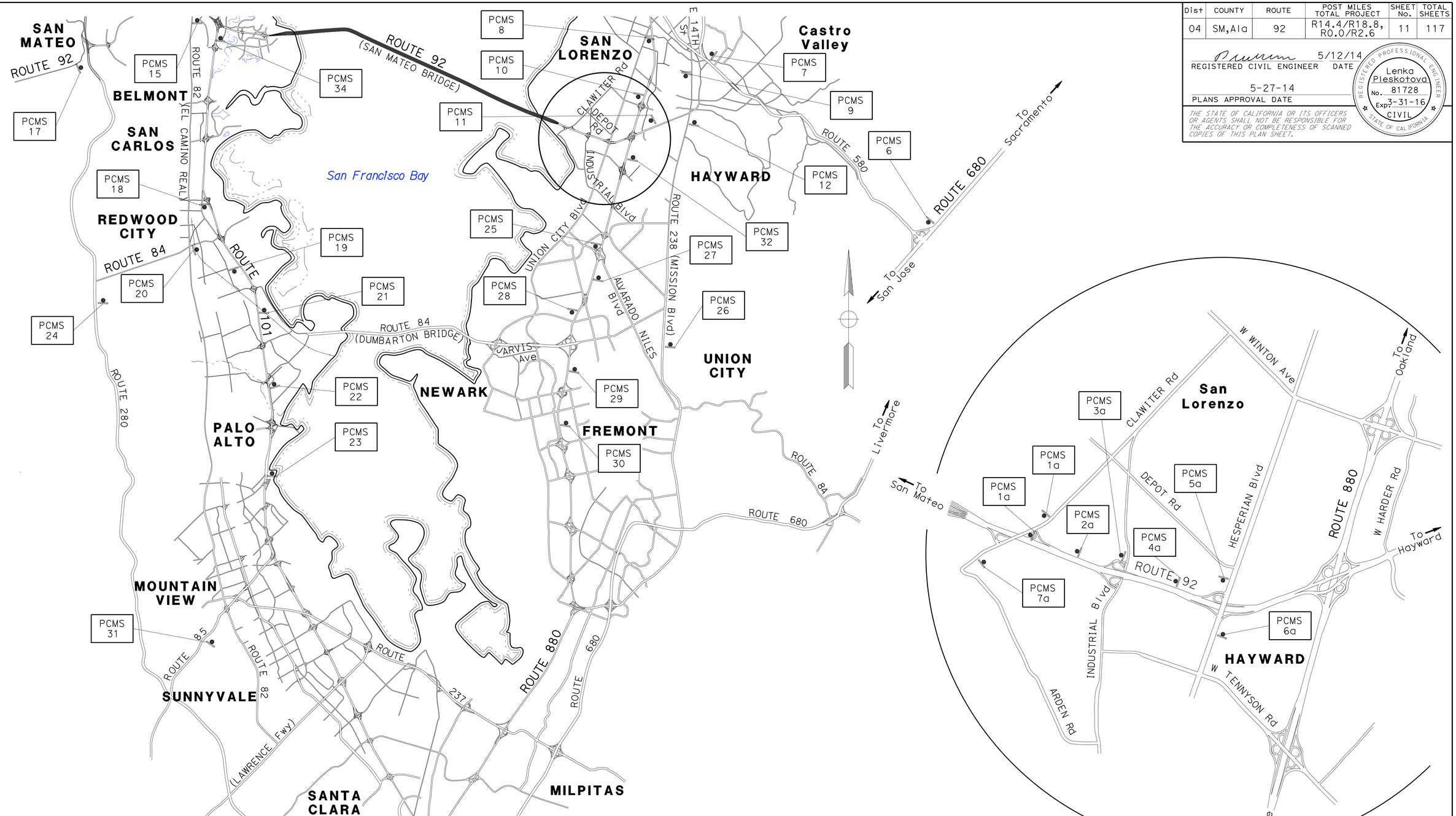

MOTORIST INFORMATION PLAN
(PORTABLE CHANGEABLE MESSAGE SIGN FOR BRIDGE CLOSURE PCMS MESSAGE SIGN LOCATIONS)

NO SCALE

APPROVED FOR MOTORIST INFORMATION WORK ONLY

MI-5

REVISED BY	DATE REVISED
LP	5/10/14

CALCULATED- LENKA PLESKOTOVA
DESIGNED BY AUNG MAUNG
CHECKED BY
FUNCTIONAL SUPERVISOR AUNG MAUNG

STATE OF CALIFORNIA - DEPARTMENT OF TRANSPORTATION
Caltrans
TRAFFIC

LAST REVISION 05-12-14
DATE PLOTTED => 18-JUN-2014
TIME PLOTTED => 12:33

Dist	COUNTY	ROUTE	POST MILES TOTAL PROJECT	SHEET No.	TOTAL SHEETS
04	SM,Ala	92	R14.4/R18.8, R0.0/R2.6	12	117

REGISTERED CIVIL ENGINEER 5/12/14 DATE

5-27-14
PLANS APPROVAL DATE

REGISTERED PROFESSIONAL ENGINEER Lenka Pleskotova No. 81728 Exp. 3-31-16 CIVIL STATE OF CALIFORNIA

THE STATE OF CALIFORNIA OR ITS OFFICERS OR AGENTS SHALL NOT BE RESPONSIBLE FOR THE ACCURACY OR COMPLETENESS OF SCANNED COPIES OF THIS PLAN SHEET.

SAN MATEO BRIDGE FULL WEEKEND CLOSURE CMS MATRIX

CMS No.	COUNTY	ROUTE	DIR	SIGN LOCATION	3 OR 2 WEEKS PRE CLOSURE CMS READING	1 WEEK PRE CLOSURE CMS READING	DURING CLOSURE CMS READING
CM002	Mrn	101	S	S 101 SOUTH OF SAN PEDRO Rd UC	SAN MATEO BR WILL BE CLOSED DATE/TIME	SAN MATEO BR WILL BE CLOSED DAY/TIME	SAN MATEO BR CLSD UNTIL DAY/TIME USE ALT ROUTES
CM010	Ala	880	N	N 880 NORTH OF INDUSTRIAL Pkwy	SAN MATEO BR WILL BE CLOSED DATE/TIME	SAN MATEO BR WILL BE CLOSED DAY/TIME	SAN MATEO BR CLSD UNTIL DAY/TIME USE ALT ROUTES
CM011	SM	101	S	S 101 NORTH OF SIERRA POINT	SAN MATEO BR WILL BE CLOSED DATE/TIME	SAN MATEO BR WILL BE CLOSED DAY/TIME	SAN MATEO BR CLSD UNTIL DAY/TIME USE ALT ROUTES
CM013	SM	101	S	S 101 NORTH OF POPLAR Ave	SAN MATEO BR WILL BE CLOSED DATE/TIME	SAN MATEO BR WILL BE CLOSED DAY/TIME	SAN MATEO BR CLSD UNTIL DAY/TIME USE ALT ROUTES
CM014	SM	101	N	N 101 SOUTH OF HILLSDALE	SAN MATEO BR WILL BE CLOSED DATE/TIME	SAN MATEO BR WILL BE CLOSED DAY/TIME	SAN MATEO BR CLSD UNTIL DAY/TIME USE ALT ROUTES
CM016	SM	101	N	N 101 NORTH OF EMBARCADERO Rd OC	SAN MATEO BR WILL BE CLOSED DATE/TIME	SAN MATEO BR WILL BE CLOSED DAY/TIME	SAN MATEO BR CLSD UNTIL DAY/TIME USE ALT ROUTES
CM019	SCl	17	N	N 17 NORTH OF LOS GATOS Rd	SAN MATEO BR WILL BE CLOSED DATE/TIME	SAN MATEO BR WILL BE CLOSED DAY/TIME	SAN MATEO BR CLSD UNTIL DAY/TIME USE ALT ROUTES
CM020	SCl	101	N	N 101 SOUTH OF E MAIN Ave UC	SAN MATEO BR WILL BE CLOSED DATE/TIME	SAN MATEO BR WILL BE CLOSED DAY/TIME	SAN MATEO BR CLSD UNTIL DAY/TIME USE ALT ROUTES
CM023	SCl	85	N	N 85 NORTH OF ALMADEN Exp	SAN MATEO BR WILL BE CLOSED DATE/TIME	SAN MATEO BR WILL BE CLOSED DAY/TIME	SAN MATEO BR CLSD UNTIL DAY/TIME USE ALT ROUTES
CM026	CC	24	W	W 24 WEST OF CAMINO PABLO Rd	SAN MATEO BR WILL BE CLOSED DATE/TIME	SAN MATEO BR WILL BE CLOSED DAY/TIME	SAN MATEO BR CLSD UNTIL DAY/TIME USE ALT ROUTES
CM040	SM	92	E	E 92 EAST OF W HILLSDALE Blvd	SAN MATEO BR WILL BE CLOSED DATE/TIME	SAN MATEO BR WILL BE CLOSED DAY/TIME	SAN MATEO BR CLSD UNTIL DAY/TIME USE ALT ROUTES
CM054	Sol	680	S	S 680 SOUTH OF BAYSHORE Rd	SAN MATEO BR WILL BE CLOSED DATE/TIME	SAN MATEO BR WILL BE CLOSED DAY/TIME	SAN MATEO BR CLSD UNTIL DAY/TIME USE ALT ROUTES
CM060	SM	84	N	N 84 PG&E SUBSTATION	SAN MATEO BR WILL BE CLOSED DATE/TIME	SAN MATEO BR WILL BE CLOSED DAY/TIME	SAN MATEO BR CLOSED UNTIL DAY/TIME
CM061	Ala	84	S	S 84 AT KGO STATION	SAN MATEO BR WILL BE CLOSED DATE/TIME	SAN MATEO BR WILL BE CLOSED DAY/TIME	SAN MATEO BR CLOSED UNTIL DAY/TIME
CM062	SF	80	E	E 80 NORTH OF 8TH St	SAN MATEO BR WILL BE CLOSED DATE/TIME	SAN MATEO BR WILL BE CLOSED DAY/TIME	SAN MATEO BR CLOSED UNTIL DAY/TIME
CM063	SF	80	W	W 80 AT SFOBB ANCHORAGE	SAN MATEO BR WILL BE CLOSED DATE/TIME	SAN MATEO BR WILL BE CLOSED DAY/TIME	SAN MATEO BR CLOSED UNTIL DAY/TIME
CM064	Ala	80	W	W 80 AT BB CURVE INCLINE	SAN MATEO BR WILL BE CLOSED DATE/TIME	SAN MATEO BR WILL BE CLOSED DAY/TIME	SAN MATEO BR CLOSED UNTIL DAY/TIME
CM070	Ala	80	W	W 80 EAST OF POWELL St	SAN MATEO BR WILL BE CLOSED DATE/TIME	SAN MATEO BR WILL BE CLOSED DAY/TIME	SAN MATEO BR CLSD UNTIL DAY/TIME USE ALT ROUTES
CM071	CC	680	S	S 680 NORTH OF ALCOSTA Blvd OC	SAN MATEO BR WILL BE CLOSED DATE/TIME	SAN MATEO BR WILL BE CLOSED DAY/TIME	SAN MATEO BR CLSD UNTIL DAY/TIME USE ALT ROUTES
CM075	SCl	880	N	N 880 NORTH OF COLEMAN Ave OC	SAN MATEO BR WILL BE CLOSED DATE/TIME	SAN MATEO BR WILL BE CLOSED DAY/TIME	SAN MATEO BR CLSD UNTIL DAY/TIME USE ALT ROUTES

ABBREVIATIONS:

CMS - CHANGEABLE MESSAGE SIGN

DIR - DIRECTION

PCMS - PORTABLE CHANGEABLE MESSAGE SIGN

NOTES:

1. ALL PCMS SIGNS SHALL BE IP-ADDRESSABLE.
2. EVERY SIGN MAY HAVE 3 ALTERNATE MESSAGES PER CLOSURE.
3. EXACT PCMS LOCATION AND MESSAGE DISPLAYED WILL BE DETERMINED BY THE ENGINEER.
4. CMS AND PCMS ADVANCE ADVISORY PERIOD FOR THE FIRST FULL CLOSURE IS THREE WEEKS AND FOR THE FOLLOWING FULL CLOSURES IS TWO WEEKS.
5. CMS SCHEDULE AND LOCATION ARE FOR INFORMATION ONLY.

MOTORIST INFORMATION QUANTITIES
CHANGEABLE MESSAGE SIGN FOR BRIDGE CLOSURE
CMS SCHEDULE AND QUANTITIES

MIQ-1

REVISED BY	DATE REVISED
LP	5/10/14

LENKA PLESKOTOVA — CALCULATED-DESIGNED BY
AUNG MAUNG — CHECKED BY
AUNG MAUNG — FUNCTIONAL SUPERVISOR

STATE OF CALIFORNIA - DEPARTMENT OF TRANSPORTATION
Caltrans® TRAFFIC

LAST REVISION 05-12-14 | DATE PLOTTED => 18-JUN-2014 | TIME PLOTTED => 12:33

Dist	COUNTY	ROUTE	POST MILES TOTAL PROJECT	SHEET No.	TOTAL SHEETS
04	SM,Ala	92	R14.4/R18.8, R0.0/R2.6	13	117

REGISTERED CIVIL ENGINEER 5/12/14 DATE

5-27-14
PLANS APPROVAL DATE

REGISTERED PROFESSIONAL ENGINEER Lenka Pleskotova No. 81728 Exp. 3-31-16 CIVIL STATE OF CALIFORNIA

THE STATE OF CALIFORNIA OR ITS OFFICERS OR AGENTS SHALL NOT BE RESPONSIBLE FOR THE ACCURACY OR COMPLETENESS OF SCANNED COPIES OF THIS PLAN SHEET.

SAN MATEO BRIDGE FULL WEEKEND CLOSURE CMS MATRIX (CONTINUATION)

CMS No.	COUNTY	ROUTE	DIR	SIGN LOCATION	3 OR 2 WEEKS PRE CLOSURE CMS READING	1 WEEK PRE CLOSURE CMS READING	DURING CLOSURE CMS READING
CM077	Ala	880	N	N 880 NORTH OF DIXON LANDING Rd	SAN MATEO BR WILL BE CLOSED DATE/TIME	SAN MATEO BR WILL BE CLOSED DAY/TIME	SAN MATEO BR CLSD UNTIL DAY/TIME USE ALT ROUTES
CM080	SF	280	N	N 280 MISSION St OC	SAN MATEO BR WILL BE CLOSED DATE/TIME	SAN MATEO BR WILL BE CLOSED DAY/TIME	SAN MATEO BR CLSD UNTIL DAY/TIME USE ALT ROUTES
CM081	SCl	87	N	N 87 200F SOUTH OF CAROL Dr	SAN MATEO BR WILL BE CLOSED DATE/TIME	SAN MATEO BR WILL BE CLOSED DAY/TIME	SAN MATEO BR CLSD UNTIL DAY/TIME USE ALT ROUTES
CM083	Ala	92	W	W 92 SAN MATEO Br PLAZA	SAN MATEO BR WILL BE CLOSED DATE/TIME	SAN MATEO BR WILL BE CLOSED DAY/TIME	SAN MATEO BR CLSD UNTIL DAY/TIME USE ALT ROUTES
CM085	SM	92	E	E 92 EAST OF FOSTER CITY Blvd BEFORE BRIDGE INCLINE	SAN MATEO BR WILL BE CLOSED DATE/TIME	SAN MATEO BR WILL BE CLOSED DAY/TIME	SAN MATEO BR CLSD UNTIL DAY/TIME USE ALT ROUTES
CM087	SM	92	E	EB 92 OF HIGH RISE ON SM Br	SAN MATEO BR WILL BE CLOSED DATE/TIME	SAN MATEO BR WILL BE CLOSED DAY/TIME	SAN MATEO BR CLSD UNTIL DAY/TIME USE ALT ROUTES
CM090	CC	80	W	W 80 EAST OF APPIAN Wy	SAN MATEO BR WILL BE CLOSED DATE/TIME	SAN MATEO BR WILL BE CLOSED DAY/TIME	SAN MATEO BR CLSD UNTIL DAY/TIME USE ALT ROUTES
CM093	CC	680	S	S 680 SOUTH OF MONUMENT	SAN MATEO BR WILL BE CLOSED DATE/TIME	SAN MATEO BR WILL BE CLOSED DAY/TIME	SAN MATEO BR CLSD UNTIL DAY/TIME USE ALT ROUTES
CM096	CC	24	W	W 24 AT SHATTUCK Ave/55th St	SAN MATEO BR WILL BE CLOSED DATE/TIME	SAN MATEO BR WILL BE CLOSED DAY/TIME	SAN MATEO BR CLSD UNTIL DAY/TIME USE ALT ROUTES
CM109	Ala	580	E	E 580 EAST OF GRAND Ave	SAN MATEO BR WILL BE CLOSED DATE/TIME	SAN MATEO BR WILL BE CLOSED DAY/TIME	SAN MATEO BR CLSD UNTIL DAY/TIME USE ALT ROUTES
CM110	Ala	580	W	W 580 EAST OF CASTRO VALLEY Blvd OFR	SAN MATEO BR WILL BE CLOSED DATE/TIME	SAN MATEO BR WILL BE CLOSED DAY/TIME	SAN MATEO BR CLSD UNTIL DAY/TIME USE ALT ROUTES
CM118	SCl	101	N	NORTH OF LAFAYETTE St OC	SAN MATEO BR WILL BE CLOSED DATE/TIME	SAN MATEO BR WILL BE CLOSED DAY/TIME	SAN MATEO BR CLSD UNTIL DAY/TIME USE ALT ROUTES
CM119	SCl	101	N	SOUTH OF TULLY Rd OC	SAN MATEO BR WILL BE CLOSED DATE/TIME	SAN MATEO BR WILL BE CLOSED DAY/TIME	SAN MATEO BR CLSD UNTIL DAY/TIME USE ALT ROUTES
CM122	SM	101	S	S 101 SOUTH OF SFO IC	SAN MATEO BR WILL BE CLOSED DATE/TIME	SAN MATEO BR WILL BE CLOSED DAY/TIME	SAN MATEO BR CLSD UNTIL DAY/TIME USE ALT ROUTES
CM124	Sol	80	W	W 80 AT OLIVER Rd	SAN MATEO BR WILL BE CLOSED DATE/TIME	SAN MATEO BR WILL BE CLOSED DAY/TIME	SAN MATEO BR CLSD UNTIL DAY/TIME USE ALT ROUTES
CM125	Ala	238	S	S 238 NORTH OF ASHLAND Ave UC	SAN MATEO BR WILL BE CLOSED DATE/TIME	SAN MATEO BR WILL BE CLOSED DAY/TIME	SAN MATEO BR CLSD UNTIL DAY/TIME USE ALT ROUTES
CM128	Ala	580	W	W 580 JUST WEST OF N LIVERMORE Ave	SAN MATEO BR WILL BE CLOSED DATE/TIME	SAN MATEO BR WILL BE CLOSED DAY/TIME	SAN MATEO BR CLSD UNTIL DAY/TIME USE ALT ROUTES
CM134	SM	280	N	N 280 SOUTH OF CANADA Rd	SAN MATEO BR WILL BE CLOSED DATE/TIME	SAN MATEO BR WILL BE CLOSED DAY/TIME	SAN MATEO BR CLSD UNTIL DAY/TIME USE ALT ROUTES
CM135	SM	280	S	S 280 NORTH OF BLACK MOUNTAIN Rd	SAN MATEO BR WILL BE CLOSED DATE/TIME	SAN MATEO BR WILL BE CLOSED DAY/TIME	SAN MATEO BR CLSD UNTIL DAY/TIME USE ALT ROUTES
CM503	SM	101	N	N 101 SOUTH OF WHIPPLE St	SAN MATEO BR WILL BE CLOSED DATE/TIME	SAN MATEO BR WILL BE CLOSED DAY/TIME	SAN MATEO BR CLSD UNTIL DAY/TIME USE ALT ROUTES

FOR NOTES, ABBREVIATIONS AND LEGEND, SEE SHEET MIQ-1

MOTORIST INFORMATION QUANTITIES
CHANGEABLE MESSAGE SIGN FOR BRIDGE CLOSURE
CMS SCHEDULE AND QUANTITIES

MIQ-2

LAST REVISION 05-12-14 | DATE PLOTTED => 18-JUN-2014 TIME PLOTTED => 12:33

REVISED BY LP | DATE REVISED 5/10/14

LENKA PLESKOTOVA | AUNG MAUNG

CALCULATED-DESIGNED BY | CHECKED BY

FUNCTIONAL SUPERVISOR AUNG MAUNG

STATE OF CALIFORNIA - DEPARTMENT OF TRANSPORTATION

Caltrans TRAFFIC

Dist	COUNTY	ROUTE	POST MILES TOTAL PROJECT	SHEET No.	TOTAL SHEETS
04	SM,Ala	92	R14.4/R18.8, R0.0/R2.6	14	117

REGISTERED CIVIL ENGINEER 5/12/14 DATE

5-27-14
PLANS APPROVAL DATE

REGISTERED PROFESSIONAL ENGINEER Lenka Pleskotova No. 81728 Exp. 3-31-16 CIVIL STATE OF CALIFORNIA

THE STATE OF CALIFORNIA OR ITS OFFICERS OR AGENTS SHALL NOT BE RESPONSIBLE FOR THE ACCURACY OR COMPLETENESS OF SCANNED COPIES OF THIS PLAN SHEET.

SAN MATEO BRIDGE FULL WEEKEND CLOSURE
LOCAL PCMS MATRIX

PCMS No.	COUNTY	ROUTE	DIR	SIGN LOCATION	3 OR 2 WEEKS PRE CLOSURE PCMS READING		1 WEEK PRE CLOSURE PCMS READING		DURING CLOSURE PCMS READING	
					1ST FLASH	2ND FLASH	1ST FLASH	2ND FLASH	1ST FLASH	2ND FLASH
1a	Ala	92	W	AT CLAWITER Rd ON-RAMP	92W ON-RAMP CLOSURE	DATE/TIME	92W ON-RAMP CLOSURE	DAY/TIME		
1a	Ala	CLAWITER	S	AT CLAWITER Rd PRIOR TO IS WITH BREAKWATER Ct					SAN MATEO BR CLOSED	USE ALT ROUTE
2a	Ala	92	W	½ MILE EAST OF CLAWITER Rd	SAN MATEO BR CLOSURE	DATE/TIME	SAN MATEO BR CLOSURE	DAY/TIME	SAN MATEO BR CLOSED	USE ALT ROUTE
3a	Ala	92	W	AT INDUSTRIAL Blvd ON-RAMP	SAN MATEO BR CLOSURE	DATE/TIME	SAN MATEO BR CLOSURE	DAY/TIME	SAN MATEO BR CLOSED	USE ALT ROUTE
4a	Ala	92	W	BETWEEN INDUSTRIAL AND HESPERIAN	SAN MATEO BR CLOSURE	DATE/TIME	SAN MATEO BR CLOSURE	DAY/TIME	SAN MATEO BR CLOSED	USE ALT ROUTE
5a	Ala	HESPERIAN	S	NORTH OF ON-RAMP TO 92 WB	SAN MATEO BR CLOSURE	DATE/TIME	SAN MATEO BR CLOSURE	DAY/TIME	SAN MATEO BR CLOSED	USE ALT ROUTE
6a	Ala	HESPERIAN	N	NORTH OF SLEEPY HOLLOW Ave	SAN MATEO BR CLOSURE	DATE/TIME	SAN MATEO BR CLOSURE	DAY/TIME	SAN MATEO BR CLOSED	USE ALT ROUTE
7a	Ala	CLAWITER	N	AT CLAWITER Rd PRIOR TO IS WITH EDEN LANDING Rd					SAN MATEO BR CLOSED	USE ALT ROUTE
8a	SM	FOSTER CITY Blvd	S	AT FOSTER CITY Blvd PRIOR TO CHESS Dr	SAN MATEO BR CLOSURE	DATE/TIME	SAN MATEO BR CLOSURE	DAY/TIME	SAN MATEO BR CLOSED	USE ALT ROUTE
9a	SM	92	E	AT FOSTER CITY Blvd ON-RAMP	92E ON-RAMP CLOSURE	DATE/TIME	92E ON-RAMP CLOSURE	DAY/TIME		
9a	SM	METRO CENTER Blvd	W	AT METRO CENTER Blvd PRIOR TO FOSTER CITY ON-RAMP					SAN MATEO BR CLOSED	USE ALT ROUTE
10a	SM	METRO CENTER Blvd	E	AT METRO CENTER Blvd PRIOR TO FOSTER CITY ON-RAMP					SAN MATEO BR CLOSED	USE ALT ROUTE
11a	SM	92	E	WEST OF FOSTER CITY OFF-RAMP	SAN MATEO BR CLOSURE	DATE/TIME	SAN MATEO BR CLOSURE	DAY/TIME	SAN MATEO BR CLOSED	USE ALT ROUTE
12a	SM	92	E	AT EDGEWATER Blvd/ MARINERS ISLAND Blvd ON-RAMP	SAN MATEO BR CLOSURE	DATE/TIME	SAN MATEO BR CLOSURE	DAY/TIME	SAN MATEO BR CLOSED	USE ALT ROUTE
13a	SM	92	E	½ MILE EAST OF 101/92 INTERCHANGE	SAN MATEO BR CLOSURE	DATE/TIME	SAN MATEO BR CLOSURE	DAY/TIME	SAN MATEO BR CLOSED	USE ALT ROUTE

MOTORIST INFORMATION QUANTITIES
PORTABLE CHANGEABLE MESSAGE SIGN FOR BRIDGE CLOSURE
PCMS SCHEDULE AND QUANTITIES

FOR NOTES, ABBREVIATIONS AND LEGEND, SEE SHEET MIQ-1

MIQ-3

REVISED BY	DATE REVISED
LP	5/10/14

LENKA PLESKOTOVA — CALCULATED-DESIGNED BY
AUNG MAUNG — CHECKED BY
AUNG MAUNG — FUNCTIONAL SUPERVISOR

STATE OF CALIFORNIA - DEPARTMENT OF TRANSPORTATION
Caltrans®
TRAFFIC

LAST REVISION 05-12-14 | DATE PLOTTED => 18-JUN-2014 | TIME PLOTTED => 12:33

Dist	COUNTY	ROUTE	POST MILES TOTAL PROJECT	SHEET No.	TOTAL SHEETS
04	SM,Ala	92	R14.4/R18.8, R0.0/R2.6	15	117

REGISTERED CIVIL ENGINEER 5/12/14 DATE

5-27-14
PLANS APPROVAL DATE

REGISTERED PROFESSIONAL ENGINEER Lenka Pleskotova No. 81728 Exp. 3-31-16 CIVIL STATE OF CALIFORNIA

THE STATE OF CALIFORNIA OR ITS OFFICERS OR AGENTS SHALL NOT BE RESPONSIBLE FOR THE ACCURACY OR COMPLETENESS OF SCANNED COPIES OF THIS PLAN SHEET.

SAN MATEO BRIDGE WEEKEND CLOSURE REGIONAL PCMS MATRIX

PCMS No.	COUNTY	ROUTE	DIR	SIGN LOCATION	3 OR 2 WEEKS PRE CLOSURE PCMS READING		1 WEEK PRE CLOSURE PCMS READING		DURING CLOSURE PCMS READING	
					1ST FLASH	2ND FLASH	1ST FLASH	2ND FLASH	1ST FLASH	2ND FLASH
1	Sol	80	W	½ MILE EAST OF 37/80 Jct	SAN MATEO BR CLOSURE	DATE/TIME	SAN MATEO BR CLOSURE	DAY/TIME	SAN MATEO BR CLOSED	USE ALT ROUTE
2	Mrn	101	S	½ MILE NORTH OF 101/580 Jct	SAN MATEO BR CLOSURE	DATE/TIME	SAN MATEO BR CLOSURE	DAY/TIME	SAN MATEO BR CLOSED	USE ALT ROUTE
3	Mrn	101	S	NORTH OF GG Br	SAN MATEO BR CLOSURE	DATE/TIME	SAN MATEO BR CLOSURE	DAY/TIME	SAN MATEO BR CLOSED	USE ALT ROUTE
4	Ala	80	W	½ MILE EAST OF CARLSON Blvd	SAN MATEO BR CLOSURE	DATE/TIME	SAN MATEO BR CLOSURE	DAY/TIME	SAN MATEO BR CLOSED	USE ALT ROUTE
5	Ala	80	W	AT POWELL St	SAN MATEO BR CLOSURE	DATE/TIME	SAN MATEO BR CLOSURE	DAY/TIME	SAN MATEO BR CLOSED	USE ALT ROUTE
6	Ala	680	S	NORTH OF AMADOR VALLEY Blvd	SAN MATEO BR CLOSURE	DATE/TIME	SAN MATEO BR CLOSURE	DAY/TIME	SAN MATEO BR CLOSED	USE ALT ROUTE
7	Ala	580	W	½ MILE EAST OF 580/238 I/C	SAN MATEO BR CLOSURE	DATE/TIME	SAN MATEO BR CLOSURE	DAY/TIME	SAN MATEO BR CLOSED	USE ALT ROUTE
8	Ala	880	S	AT HACIENDA Ave	SAN MATEO BR CLOSURE	DATE/TIME	SAN MATEO BR CLOSURE	DAY/TIME	SAN MATEO BR CLOSED	USE 84W DUMBARTN BR
9	Ala	238	S	½ MILES OF 580/238 I/C (FOOTHILL Blvd)	SAN MATEO BR CLOSURE	DATE/TIME	SAN MATEO BR CLOSURE	DAY/TIME	SAN MATEO BR CLOSED	USE 84W DUMBARTN BR
10	Ala	880	S	AT WINTON Ave	SAN MATEO BR CLOSURE	DATE/TIME	SAN MATEO BR CLOSURE	DAY/TIME	SAN MATEO BR CLOSED	USE 84W DUMBARTN BR
11	Ala	92	W	EAST OF SANTA CLARA St	SAN MATEO BR CLOSURE	DATE/TIME	SAN MATEO BR CLOSURE	DAY/TIME	SAN MATEO BR CLOSED	USE 84W DUMBARTN BR
12	Ala	238	N	½ MILE SOUTH OF 238/92 Jct (FOOTHILL Blvd)	SAN MATEO BR CLOSURE	DATE/TIME	SAN MATEO BR CLOSURE	DAY/TIME	SAN MATEO BR CLOSED	USE ALT ROUTE
13	SM	380	E	AT EL CAMINO REAL	SAN MATEO BR CLOSURE	DATE/TIME	SAN MATEO BR CLOSURE	DAY/TIME	SAN MATEO BR CLOSED	USE ALT ROUTE
14	SM	82	S	½ MILE NORTH OF 92/82 Jct	SAN MATEO BR CLOSURE	DATE/TIME	SAN MATEO BR CLOSURE	DAY/TIME	SAN MATEO BR CLOSED	USE 84W DUMBARTN BR
15	SM	82	N	½ MILE SOUTH OF 92/82 Jct	SAN MATEO BR CLOSURE	DATE/TIME	SAN MATEO BR CLOSURE	DAY/TIME	SAN MATEO BR CLOSED	USE ALT ROUTE
16	SM	280	S	½ MILE NORTH OF 280/92 Jct	SAN MATEO BR CLOSURE	DATE/TIME	SAN MATEO BR CLOSURE	DAY/TIME	SAN MATEO BR CLOSED	USE 84W DUMBARTN BR
17	SM	92	E	WEST OF 92/280 Jct	SAN MATEO BR CLOSURE	DATE/TIME	SAN MATEO BR CLOSURE	DAY/TIME	SAN MATEO BR CLOSED	USE ALT ROUTE

MOTORIST INFORMATION QUANTITIES
PORTABLE CHANGEABLE MESSAGE SIGN FOR BRIDGE CLOSURE
PCMS SCHEDULE AND QUANTITIES

FOR NOTES, ABBREVIATIONS AND LEGEND, SEE SHEET MIQ-1

MIQ-4

STATE OF CALIFORNIA - DEPARTMENT OF TRANSPORTATION
Caltrans TRAFFIC

FUNCTIONAL SUPERVISOR: AUNG MAUNG
CALCULATED-DESIGNED BY: LENKA PLESKOTOVA
CHECKED BY: AUNG MAUNG
REVISED BY: LP
DATE REVISED: 5/10/14

LAST REVISION 05-12-14 DATE PLOTTED => 18-JUN-2014 TIME PLOTTED => 12:33

Dist	COUNTY	ROUTE	POST MILES TOTAL PROJECT	SHEET No.	TOTAL SHEETS
04	SM,Ala	92	R14.4/R18.8, R0.0/R2.6	16	117

REGISTERED CIVIL ENGINEER 5/12/14 DATE

5-27-14
PLANS APPROVAL DATE

REGISTERED PROFESSIONAL ENGINEER Lenka Pleskotova No. 81728 Exp. 3-31-16 CIVIL STATE OF CALIFORNIA

THE STATE OF CALIFORNIA OR ITS OFFICERS OR AGENTS SHALL NOT BE RESPONSIBLE FOR THE ACCURACY OR COMPLETENESS OF SCANNED COPIES OF THIS PLAN SHEET.

SAN MATEO BRIDGE WEEKEND CLOSURE REGIONAL PCMS MATRIX

(CONTINUATION)

PCMS No.	COUNTY	ROUTE	DIR	SIGN LOCATION	3 OR 2 WEEKS PRE CLOSURE PCMS READING		1 WEEK PRE CLOSURE PCMS READING		DURING CLOSURE PCMS READING	
					1ST FLASH	2ND FLASH	1ST FLASH	2ND FLASH	1ST FLASH	2ND FLASH
18	SM	101	S	2.5 MILES NORTH OF MARSH Rd	SAN MATEO BR CLOSURE	DATE/TIME	SAN MATEO BR CLOSURE	DAY/TIME	SAN MATEO BR CLOSED	USE 84E DUMBARTN BR
19	SM	101	S	2.5 MILES NORTH OF MARSH Rd	SAN MATEO BR CLOSURE	DATE/TIME	SAN MATEO BR CLOSURE	DAY/TIME	SAN MATEO BR CLOSED	USE 84E DUMBARTN BR
20	SM	84	E	EAST OF EL CAMINO REAL	SAN MATEO BR CLOSURE	DATE/TIME	SAN MATEO BR CLOSURE	DAY/TIME	SAN MATEO BR CLOSED	USE ALT ROUTE
21	SM	101	N	1/2 MILE SOUTH OF MARSH Rd	SAN MATEO BR CLOSURE	DATE/TIME	SAN MATEO BR CLOSURE	DAY/TIME	SAN MATEO BR CLOSED	USE 84E DUMBARTN BR
22	SM	101	N	3.5 MILES SOUTH OF MARSH Rd	SAN MATEO BR CLOSURE	DATE/TIME	SAN MATEO BR CLOSURE	DAY/TIME	SAN MATEO BR CLOSED	USE 84E DUMBARTN BR
23	SCl	101	N	AT SAN ANTONIO Rd	SAN MATEO BR CLOSURE	DATE/TIME	SAN MATEO BR CLOSURE	DAY/TIME	SAN MATEO BR CLOSED	USE 84E DUMBARTN BR
24	SM	280	N	1/2 MILE SOF 84/WOODSIDE Rd IS	SAN MATEO BR CLOSURE	DATE/TIME	SAN MATEO BR CLOSURE	DAY/TIME	SAN MATEO BR CLOSED	USE ALT ROUTE
25	Ala	880	S	2.5 MILES NORTH OF DECOTO Rd	SAN MATEO BR CLOSURE	DATE/TIME	SAN MATEO BR CLOSURE	DAY/TIME	SAN MATEO BR CLOSED	USE 84E DUMBARTN BR
26	Ala	238	N	1/4 MILE SOUTH OF INDUSTRIAL Pkwy EAST MAIN	SAN MATEO BR CLOSURE	DATE/TIME	SAN MATEO BR CLOSURE	DAY/TIME	SAN MATEO BR CLOSED	USE 84E DUMBARTN BR
27	Ala	880	N	NORTH OF FREMONT Blvd	SAN MATEO BR CLOSURE	DATE/TIME	SAN MATEO BR CLOSURE	DAY/TIME	SAN MATEO BR CLOSED	USE ALT ROUTE
28	Ala	880	S	1/2 MILE NORTH OF DECOTO Rd	SAN MATEO BR CLOSURE	DATE/TIME	SAN MATEO BR CLOSURE	DAY/TIME	SAN MATEO BR CLOSED	USE 84E DUMBARTN BR
29	Ala	880	N	1/2 MILE SOUTH OF DECOTO Rd	SAN MATEO BR CLOSURE	DATE/TIME	SAN MATEO BR CLOSURE	DAY/TIME	SAN MATEO BR CLOSED	USE 84E DUMBARTN BR
30	Ala	880	N	1/2 MILE NORTH OF MOWRY Ave	SAN MATEO BR CLOSURE	DATE/TIME	SAN MATEO BR CLOSURE	DAY/TIME	SAN MATEO BR CLOSED	USE 84E DUMBARTN BR
31	SCl	85	N	1/2 MILE SOUTH OF 85/82 Jct	SAN MATEO BR CLOSURE	DATE/TIME	SAN MATEO BR CLOSURE	DAY/TIME	SAN MATEO BR CLOSED	USE ALT ROUTE
32	Ala	880	N	1/2 MILE SOUTH OF 880/92 I/C	SAN MATEO BR CLOSURE	DATE/TIME	SAN MATEO BR CLOSURE	DAY/TIME	SAN MATEO BR CLOSED	USE ALT ROUTE
33	SM	101	S	1/2 MILE NORTH OF 92/101 Jct	SAN MATEO BR CLOSURE	DATE/TIME	SAN MATEO BR CLOSURE	DAY/TIME	SAN MATEO BR CLOSED	USE 84E DUMBARTN BR
34	SM	101	N	1/2 MILE SOUTH OF 92/101 Jct	SAN MATEO BR CLOSURE	DATE/TIME	SAN MATEO BR CLOSURE	DAY/TIME	SAN MATEO BR CLOSED	USE ALT ROUTE

MOTORIST INFORMATION QUANTITIES
PORTABLE CHANGEABLE MESSAGE SIGN FOR BRIDGE CLOSURE
PCMS SCHEDULE AND QUANTITIES

FOR NOTES, ABBREVIATIONS AND LEGEND, SEE SHEET MIQ-1

MIQ-5

STATE OF CALIFORNIA - DEPARTMENT OF TRANSPORTATION
Caltrans TRAFFIC

FUNCTIONAL SUPERVISOR: AUNG MAUNG
CALCULATED-DESIGNED BY: LENKA PLESKOTOVA
CHECKED BY: AUNG MAUNG
REVISED BY: LP
DATE REVISED: 5/10/14

LAST REVISION 05-12-14 | DATE PLOTTED => 18-JUN-2014 | TIME PLOTTED => 12:33

Dist	COUNTY	ROUTE	POST MILES TOTAL PROJECT	SHEET No.	TOTAL SHEETS
04	SM,Ala	92	R14.4/R18.8, R0.0/R2.6	17	117

REGISTERED CIVIL ENGINEER 3/4/14 DATE

5-27-14
PLANS APPROVAL DATE

REGISTERED PROFESSIONAL ENGINEER Gordon W. Jeong No. 33151 Exp. 6-30-14 CIVIL STATE OF CALIFORNIA

THE STATE OF CALIFORNIA OR ITS OFFICERS OR AGENTS SHALL NOT BE RESPONSIBLE FOR THE ACCURACY OR COMPLETENESS OF SCANNED COPIES OF THIS PLAN SHEET.

NOTE:

FOR ACCURATE RIGHT OF WAY DATA, CONTACT RIGHT OF WAY ENGINEERING AT THE DISTRICT OFFICE.

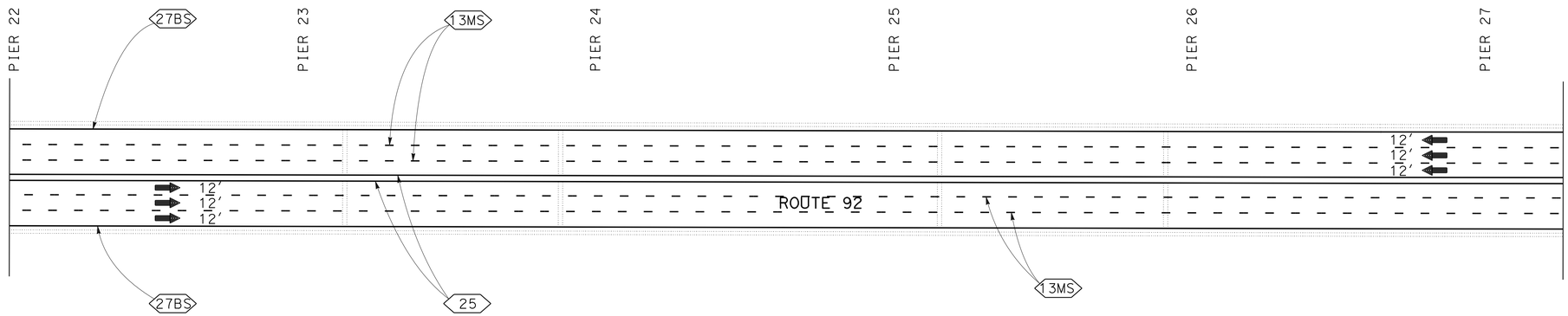

HIGH-RISE SECTION AND APPROACHES

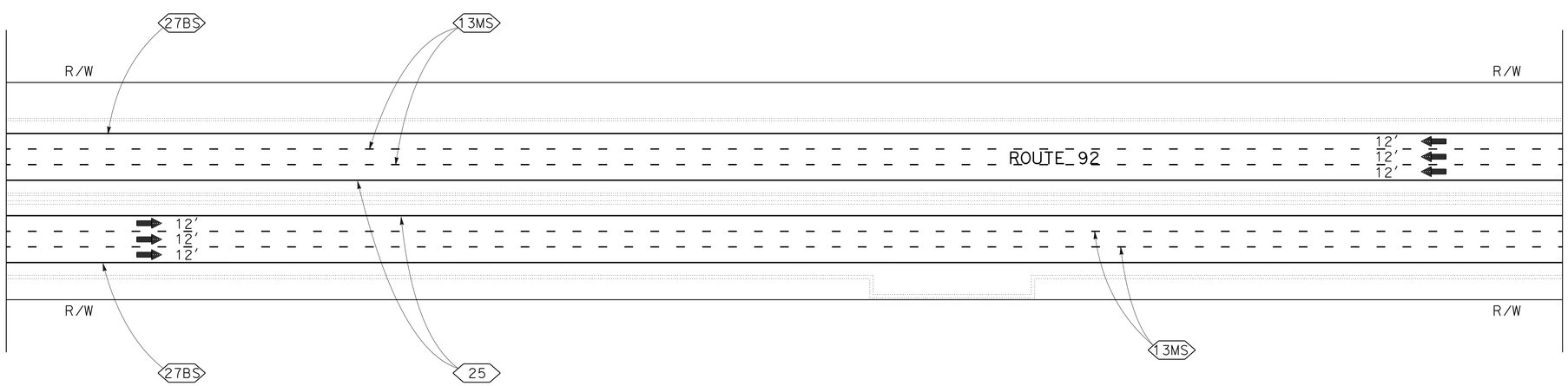

TRESTLE SECTION

PAVEMENT DELINEATION PLAN
(SAN MATEO-HAYWARD BRIDGE)

SCALE: 1" = 50'

PD-1

STATE OF CALIFORNIA - DEPARTMENT OF TRANSPORTATION
Caltrans
DESIGN

FUNCTIONAL SUPERVISOR: LAWRENCE A. JONES
CALCULATED-DESIGNED BY: GORDON W. JEONG
CHECKED BY: FERNANDO CORDERO
REVISED BY: FC
DATE REVISED: 8/23/13

LAST REVISION 03-01-14
DATE PLOTTED => 18-JUN-2014
TIME PLOTTED => 12:33

Dist	COUNTY	ROUTE	POST MILES TOTAL PROJECT	SHEET No.	TOTAL SHEETS
04	SM,Ala	92	R14.4/R18.8, R0.0/R2.6	18	117

REGISTERED CIVIL ENGINEER 3/4/14 DATE

5-27-14
PLANS APPROVAL DATE

REGISTERED PROFESSIONAL ENGINEER Gordon W. Jeong No. 33151 Exp. 6-30-14 CIVIL STATE OF CALIFORNIA

THE STATE OF CALIFORNIA OR ITS OFFICERS OR AGENTS SHALL NOT BE RESPONSIBLE FOR THE ACCURACY OR COMPLETENESS OF SCANNED COPIES OF THIS PLAN SHEET.

NOTES:

1. INSTALL 4" WHITE LINE AFTER INSTALLING PAVEMENT MARKERS.
2. DETAIL 13MS IS PAVEMENT DELINEATION MODIFIED FROM DETAIL 13.
3. FOR DETAILS NOT SHOWN, SEE STANDARD PLAN A20A.

LEGEND:

- ○ TYPE A WHITE NON-REFLECTIVE MARKER
- ◨ TYPE G ONE-WAY CLEAR RETROREFLECTIVE MARKER
- ▭ 4'' WHITE LINE
- ▬ 4'' BLACK PAINT

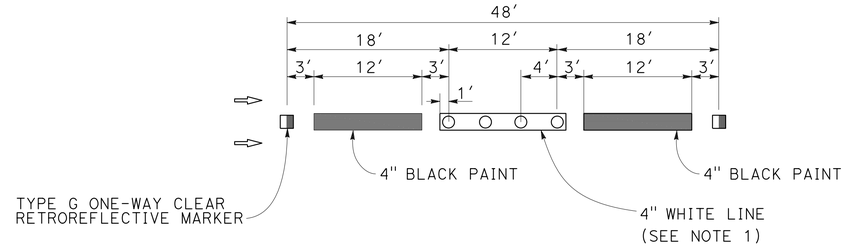

DETAIL 13MS

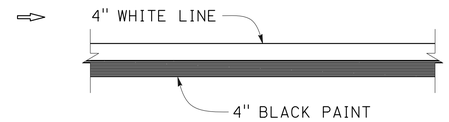

DETAIL 27BS

TRAFFIC STRIPES, PAVEMENT MARKERS

DIRECTION	BRIDGE SECTION	DETAIL No.	PAVEMENT MARKERS: NON-REFLECTIVE TYPE A	PAVEMENT MARKERS: RETROREFLECTIVE TYPE G	PAVEMENT MARKERS: RETROREFLECTIVE TYPE H	REMOVE THERMOPLASTIC TRAFFIC STRIPE: 4" WHITE	REMOVE THERMOPLASTIC TRAFFIC STRIPE: 4" YELLOW	THERMOPLASTIC TRAFFIC STRIPE: 4" WHITE	THERMOPLASTIC TRAFFIC STRIPE: 4" WHITE (BROKEN 34-14)	THERMOPLASTIC TRAFFIC STRIPE: 4" YELLOW	PAINT TRAFFIC STRIPE: 4" BLACK (BROKEN 18-12-6-12)	PAINT TRAFFIC STRIPE: 4" BLACK
			EA			LF						
EASTBOUND (APPLY TO ALL DETAILS)	WEST APPROACH SPANS	25			13		222			222		
		13				444						
		13MS	50	12					444		444	
		27				222						
		27BS						222				222
	HIGH-RISE	25			403		9680			9680		
		13				19360						
		13MS	1614	404					19360		19360	
		27				9680						
		27BS						9680				9680
	TRESTLE	25			1074		25770			25770		
		13				51540						
		13MS	4296	1074					51540		51540	
		27				25770						
		27BS						25770				25770
WESTBOUND (APPLY TO ALL DETAILS)	WEST APPROACH SPANS	25			13		222			222		
		13				444						
		13MS	50	12					444		444	
		27				222						
		27BS						222				222
	HIGH-RISE	25			403		9680			9680		
		13				19360						
		13MS	1614	404					19360		19360	
		27				9680						
		27BS						9680				9680
	TRESTLE	25			1074		25770			25770		
		13				51540						
		13MS	4296	1074					51540		51540	
		27				25770						
		27BS						25770				25770
SUBTOTAL			11920	2980	2980	214032	71344	71344	142688	71344	142688	71344
TOTAL			11920	2980	2980	285376		71344	142688	71344	214032	

PAVEMENT DELINEATION DETAILS

NO SCALE

PDD-1

REVISED BY	DATE REVISED
FC	8/23/13

CALCULATED-DESIGNED BY	CHECKED BY
FERNANDO CORDERO	GORDON W. JEONG

FUNCTIONAL SUPERVISOR: LAWRENCE A. JONES

STATE OF CALIFORNIA - DEPARTMENT OF TRANSPORTATION

Caltrans® DESIGN

LAST REVISION 04-17-14 | DATE PLOTTED => 18-JUN-2014 | TIME PLOTTED => 12:33

Dist	COUNTY	ROUTE	POST MILES TOTAL PROJECT	SHEET No.	TOTAL SHEETS
04	SM,Ala	92	R14.4/R18.8, R0.0/R2.6	19	117

REGISTERED ELECTRICAL ENGINEER 3/4/14 DATE

5-27-14
PLANS APPROVAL DATE

REGISTERED PROFESSIONAL ENGINEER Gizachew Merid No. 18216 Exp. 12-31-15 ELECT STATE OF CALIFORNIA

THE STATE OF CALIFORNIA OR ITS OFFICERS OR AGENTS SHALL NOT BE RESPONSIBLE FOR THE ACCURACY OR COMPLETENESS OF SCANNED COPIES OF THIS PLAN SHEET.

NOTES:

1. VERIFY ALL CONTROLLING FIELD DIMENSIONS AND PARAMETERS BEFORE ORDERING OR FABRICATING ANY MATERIAL.
2. ALL CONNECTIONS OF ARMORED CABLE (AC) TO JUNCTION BOXES OR ANY METALLIC ITEMS SHALL BE DONE USING CAST OR COPPER-FREE ALUMINUM JACKETED INTERLOCKED WATERTIGHT (FOR WET LOCATIONS) COMPOUNDED TYPE ARMORED CABLE CONNECTOR WITH STAINLESS STEEL SCREWS AND LOCKNUTS.
3. ALL ELECTRICAL ITEMS THAT USE ANCHORS TO ATTACH TO THE CONCRETE STRUCTURES SHALL USE STAINLESS STEEL POWER STUD ANCHORS-THREADED VERSION SIZED PER MANUFACTURER RECOMMENDATION AND EPOXY ANCHOR WITH A RATED LIFE OF 25 YEARS OR GREATER.
4. INSTALL PADLOCKS ON ALL JUNCTION BOXES, CABINETS, AND WIRE TROUGHS THAT ARE ACCESSIBLE FROM THE GROUND.
5. BEFORE COMPLETION OF ALL ELECTRICAL WORK, LABEL ALL CONDUCTORS AND CABLES BY TYPE AND CIRCUIT NUMBER, IN EACH PULL BOX, JUNCTION BOX, CABINET, AND WIRE TROUGH.
6. INSTALL FOR EACH TERMINAL BLOCK A PERMANENT LABEL FOR IDENTIFICATIONS. FOR EACH TERMINAL BLOCK, A MEDIUM VOLTAGE BREAKER COMPARTMENTS CABINET, OR JUNCTION BOX, IN WHICH WORK IS PERFORMED.
7. COVER HOLES IN CABINETS, CONDUIT BODIES OR JUNCTION BOXES WITH THE APPROPRIATE TYPE PLUG FOR THE APPLICATION AFTER ANY CONDUIT, CABLE OR DEVICE IS REMOVED
8. THE CONDUITS THAT CONTAIN COMMUNICATION, OR TELEPHONE CABLES OR CONDUCTORS MUST BE TYPE 1 OR TYPE 2 UNLESS OTHERWISE SPECIFIED.
9. IN ADDITION TO THE LATEST EDITION OF NATIONAL ELECTRICAL CODE (NEC), ADHERE TO THE LATEST EDITION OF NATIONAL ELECTRICAL SAFETY CODE (NESC) AND THE UTILITY COMPANIES REQUIREMENTS, AND IF THE CODES AND REQUIREMENTS ARE IN CONFLICT, THEN THE ENGINEER WILL DETERMINE WHICH CODE AND REQUIREMENTS APPLIES AT NO ADDITIONAL COST TO THE DEPARTMENT.
10. ALL CONNECTIONS OF TYPE 1 OR TYPE 2 CONDUITS TO JUNCTION OR PULL BOXES AND ANY METALLIC ITEM (EXCEPT FOR OUTLET BOXES) AND OPEN ENDED TYPE 1 OR TYPE 2 CONDUIT MUST BE DONE OR TERMINATED USING THREADED INSULATED BONDING BUSHING (PRESSURE TYPE LUG) WITH GASKETED SEALING LOCKNUT AND MOISTURE PROOF HUB WITH "O" RING.
11. THE MAXIMUM ARMORED CABLE DISTANCE BETWEEN SUPPORTS SHALL BE 4′ OR LESS.
12. ARMOR CABLE SHALL BE SUPPORTED USING PVC-COATED GRS CHANNEL STRUTS.
13. WIREWAY SHALL BE SUPPORTED USING GRS CHANNEL STRUTS.
14. INSTALL STAINLESS STEEL MESH GRIP FOR 12 kV ARMORED CABLE AT EACH EXPANSION JOINT. INSTALL ARMORED CABLE WITH 10′ SLACK AT EACH EXPANSION JOINT. SEE SHEET E-23 FOR DETAILS.
15. SECURE ARMORED CABLES AND CONDUITS EVERY 5′ USING CHANNEL STRUT OR CONDUIT STRAPS.

LEGEND:

1. INSTALL POWER SUPPLY AND BATTERY CHARGER
2. INSTALL 18" W x 24" L x 8" D STAINLESS STEEL NEMA TYPE 4x JUNCTION BOX (JB)
3. INSTALL 1-#3 1/0 MEDIUM VOLTAGE ARMORED CABLE
4. INSTALL ARMORED CABLE AT THE SOUTHSIDE OF CATWALK
5. INSTALL 48" W x 48" L x 12" D STAINLESS STEEL NEMA TYPE 4X JUNCTION BOX (JB)
6. INSTALL 4"C, 3-1/0 MEDIUM VOLTAGE CABLE
7. SPLICE 3-1/0 MEDIUM VOLTAGE CABLES TO 1-3#1/0 MEDIUM VOLTAGE ARMORED CABLE
8. INSTALL ¾"C, 3#10 CONDUCTOR
9. INSTALL 6" W x 72" L x 6" D NEMA TYPE 3R WIRE TROUGH
10. INSTALL INVERTER
11. INSTALL DC SWITCH
12. INSTALL PENDANT LIGHT FIXTURE AND CONNECT AS SHOWN ON THE PLANS
13. INSTALL ¾"C, 3#12 CONDUCTORS
14. USE CHANNEL STRUT TO ATTACH 1-3#1/0 MEDIUM VOLTAGE ARMORED CABLE ALONGSIDE THE CATWALK (SEE SHEET E-21 FOR DETAIL)
15. INSTALL THE 1-3#1/0 MEDIUM VOLTAGE ARMORED CABLE WITH THE MAXIMUM SLACK POSSIBLE BETWEEN THE SUPPORTS ACROSS THE EXPANSION JOINT. SEE DETAILS ON SHEETS E-17 TO E-25
16. INSTALL 1½"C, 3#6 CONDUCTORS
17. INSTALL ¾"C, 1-1P#16 CONDUCTOR CABLE, RC THE (E) BATTERY CHARGER, CONDUIT CONNECTED TO THE (E) BATTERY CHARGER, (E) OR LIGHTS, (E) DC LIGHT SWITCH AND CONDUITS AND CONDUCTORS CONNECTED TO THE LIGHTS AND SWITCH FOR ALL SUBSTATION EXCEPT FOR SUBSTATION 1 AND 3, AND (E) DC JUNCTION BOX
18. INSTALL ¾"C, TEMPERATURE PROBE CABLE
19. INSTALL EMERGENCY LIGHT SWITCH AND CONNECT AS SHOWN ON THE PLANS
20. INSTALL 15 A POWER OUTLET
21. INSTALL ¾"C, 3#12 CONDUCTORS
22. SEE SHEET E-22 FOR DETAILS OF TYPICAL MULTIPLE HANGER
23. INSTALL 1"C, 3#4 RHW-2 CONDUCTORS FROM DC POWER JUNCTION BOX TO 60 A DC FUSED. DISCONNECT SWITCH AND CONNECT AS SHOWN ON THE PLANS
24. RC THE (E) CONDUIT AND CONDUCTORS USE FOR THE (E) DC PANEL FROM THE (E) DC POWER JUNCTION BOX AND INSTALL (¾"C, 3#10 CONDUCTOR FROM THE NEW DC POWER JUNCTION BOX TO THE (E) DC PANEL
25. INSTALL 1"C, 3#4 RHW-2 CONDUCTORS
26. RC THE (E) CONDUIT CONDUCTORS USE FOR THE AC POWER OF THE BATTERY CHARGER AND INSTALL #10 CONDUCTORS FROM AC PANEL TO DC POWER JUNCTION BOX IN THE (E) CONDUITS
27. RC THE (E) CONDUCTORS AND CONDUITS (E) USE FOR THE DC PANEL FROM THE DC POWER JUNCTION BOX AND INSTALL ¾"C, 3#10 CONDUCTORS FROM THE DC POWER JUNCTION BOX TO NEW POWER SUPPLY AND BATTERY CHARGER
28. RC THE (E) CONDUCTORS USE FOR THE (E) DC PANEL AND INSTALL 4#10 CONDUCTORS FROM THE DC POWER JUNCTION BOX TO THE (E) DC PANEL IN THE (E) CONDUIT
29. INSTALL ¾"C, 3#10 RHW-2 CONDUCTORS FROM THE POWER SUPPLY AND BATTERY CHARGER TO THE DC POWER JUNCTION BOX FOR DC POWER
30. INSTALL ¾"C, 3#10 CONDUCTORS FROM THE POWER SUPPLY AND BATTERY CHARGER TO THE DC POWER JUNCTION BOX FOR THE AC POWER
31. INSTALL 1"C, 3#4 RHW-2 CONDUCTORS FROM THE DISCONNECT SWITCH TO THE BATTERIES IN SERIES AND CONNECT AS SHOWN ON THE PLANS
32. INSTALL ¾"C, 3#12 CONDUCTORS FOR LIGHTING
33. RC THE (E) SUBSTATION TRANSFORMER AND INSTALL 200 kVA SUBSTATION TRANSFORMER
34. RC THE (E) CONDUIT AND CONDUCTORS USE FOR THE SWITCHGEAR AND INSTALL ¾"C, 3#12 CONDUCTOR TO THE SWITCHGEAR
35. RC THE (E) CONDUIT AND CONDUCTORS USE FOR AC POWER BETWEEN THE BATTERY CHARGER AND (E) AC PANEL AND INSTALL ¾"C, 3#10 CONDUCTORS FROM THE POWER SUPPLY AND BATTERY CHARGER TO THE (E) AC PANEL
36. INSTALL 12" W x 12" L x 6" D STAINLESS STEEL NEMA TYPE 4X JUNCTION BOX (JB)
37. RC THE (E) SUBSTATION TRANSFORMER AND INSTALL 500 kVA SUBSTATION TRANSFORMER
38. RC THE (E) LOW VOLTAGE CONTROL CENTER LVCC AND INSTALL NEW LOW VOLTAGE CONTROL CENTER LVCC
39. INSTALL WIREWAY
40. RC THE (E) SUBSTATION TRANSFORMER AND INSTALL 300 kVA SUBSTATION TRANSFORMER
41. SEE DETAILS ON SHEET E-21 AND E-22 FOR INSTALLATION OF ARMORED CABLE
42. INSTALL 10"W x 30"L x 6"D MODIFIED TYPE 9A PULL BOX WITH STEEL DIVIDER BETWEEN COMMUNICATION AND POWER CABLE. THE PULL BOX SHOULD BE RATED NEMA 4X
43. INSTALL 12" W x 72" L x 12" D NEMA TYPE 3R WIRE TROUGH SEE DETAILS OF INSTALLATION ON E-22
44. SPLICE CABLES IN JUNCTION BOX
45. INSTALL ¾"C, 1-2P#16 CONDUCTOR CABLE FOR SCADA
46. RELOCATED METER
47. INSTALL BUILDING TRANSFORMER
48. INSTALL SWITCHBOARD
49. RC EXISTING MV CONDUCTORS

NOTES AND LEGEND

E-1

CALCULATED-DESIGNED BY	
CHECKED BY	
REVISED BY	GM
DATE REVISED	11/21/13
GIZACHEW MERID	
BEHZAD GOLEMOHAMMADI	
FUNCTIONAL SUPERVISOR	BEHZAD GOLEMOHAMMADI

STATE OF CALIFORNIA - DEPARTMENT OF TRANSPORTATION
Caltrans
ELECTRICAL

LAST REVISION 04-22-14 | DATE PLOTTED => 18-JUN-2014 | TIME PLOTTED => 12:33

Dist	COUNTY	ROUTE	POST MILES TOTAL PROJECT	SHEET No.	TOTAL SHEETS
04	SM,Ala	92	R14.4/R18.8, R0.0/R2.6	20	117

REGISTERED ELECTRICAL ENGINEER 3/4/14 DATE

5-27-14
PLANS APPROVAL DATE

REGISTERED PROFESSIONAL ENGINEER Gizachew Merid No. 18216 Exp. 12-31-15 ELECT STATE OF CALIFORNIA

THE STATE OF CALIFORNIA OR ITS OFFICERS OR AGENTS SHALL NOT BE RESPONSIBLE FOR THE ACCURACY OR COMPLETENESS OF SCANNED COPIES OF THIS PLAN SHEET.

LEGEND:

—— L ——	LIGHTING CONDUIT
—— DC ——	DC POWER CONDUIT
—— CP ——	CONTROL POWER CONDUIT
	FEEDER OR CONTROL POWER CIRCUIT BREAKER PER NEC UNLESS OTHERWISE SPECIFIED
OR	FUSE PER NEC UNLESS OTHERWISE SPECIFIED
	PUSH BUTTON NORMALLY OPEN
	PUSH BUTTON NORMALLY CLOSED
(DC)	OUTPUT SPECIFIED ON THE PROTECTIVE RELAY OR BACKUP PROTECTIVE RELAY OPERATING THE MV CIRCUIT BREAKER ON 125 Vdc
—— SC ——	SCADA CONDUIT OR CABLE
—— -e ——	Exist ELECTRICAL CONDUIT
—— —AR——	12 kV ARMORED CABLE

ABBREVIATIONS:

AC	ARMORED CABLE
ACB	AC CIRCUIT BREAKER
AH	AMPERE HOUR
AUX	AUXILIARY
BC	BATTERY CHARGER
BKR	BREAKER
BP	BY-PASS
CCC	COMMUNICATION CONTROL CABINET
CONV	CONVERTER
DC	DIRECT CURRENT
(E)	EXISTING
ELEC	ELECTRICAL
EGC	EQUIPMENT GROUNDING CONDUCTOR
EQ	EQUIPMENT
GRS	GALVANIZED RIGID STEEL
HV	HIGH VOLTAGE
INV	INVERTER
I/O	INPUT/OUTPUT
JB	JUNCTION BOX
kV	KILO VOLT
LV	LOW VOLTAGE
LVCC	LOW VOLTAGE CONTROL CENTER
MV	MEDIUM VOLTAGE
NC	NO CONNECTION OR NORMALLY CLOSED
NEC	NATIONAL ELECTRIC CODE
NEMA	NATIONAL ELECTRIC MANUFACTURERS ASSOCIATION
NESC	NATIONAL ELECTRICAL SAFETY CODE
NiCd	NICKEL CADMIUM
P	PAIR
PAC #	PROGRAMMABLE AUTOMATION CONTROLLER #
PLCS	PROGRAMMABLE LOGIC CONTROLLERS
PS	POWER SUPPLY
R	RESISTOR
RL	RESISTIVE LOAD
RTU	REMOTE TERMINAL UNIT
SCADA	SUPERVISORY CONTROL AND DATA ACQUISITION
STN	STATION
TB	TERMINAL BLOCK
TC	TELEPHONE CABLE
TP	TWISTED PAIR
UPS	UNINTERRUPTIBLE POWER SUPPLY
VAC	VOLTAGE ALTERNATE CURRENT
Vdc	VOLTAGE DIRECT CURRENT
w/	WITH
WH	WATT HOUR

LEGEND AND ABBREVIATIONS

E-2

REVISED BY GM | DATE REVISED 11/21/13

GIZACHEW MERID | BEHZAD GOLEMOHAMMADI

CALCULATED-DESIGNED BY | CHECKED BY

FUNCTIONAL SUPERVISOR BEHZAD GOLEMOHAMMADI

STATE OF CALIFORNIA - DEPARTMENT OF TRANSPORTATION

Caltrans

ELECTRICAL

LAST REVISION 04-28-14 | DATE PLOTTED => 18-JUN-2014 TIME PLOTTED => 12:33

Dist	COUNTY	ROUTE	POST MILES TOTAL PROJECT	SHEET No.	TOTAL SHEETS
04	SM,Ala	92	R14.4/R18.8, R0.0/R2.6	21	117

REGISTERED ELECTRICAL ENGINEER 3/4/14 DATE

PLANS APPROVAL DATE 5-27-14

REGISTERED PROFESSIONAL ENGINEER Gizachew Merid No. 18216 Exp. 12-31-15 ELECT STATE OF CALIFORNIA

THE STATE OF CALIFORNIA OR ITS OFFICERS OR AGENTS SHALL NOT BE RESPONSIBLE FOR THE ACCURACY OR COMPLETENESS OF SCANNED COPIES OF THIS PLAN SHEET.

NOTE:

FOR ACCURATE RIGHT OF WAY DATA, CONTACT RIGHT OF WAY ENGINEERING AT THE DISTRICT OFFICE.

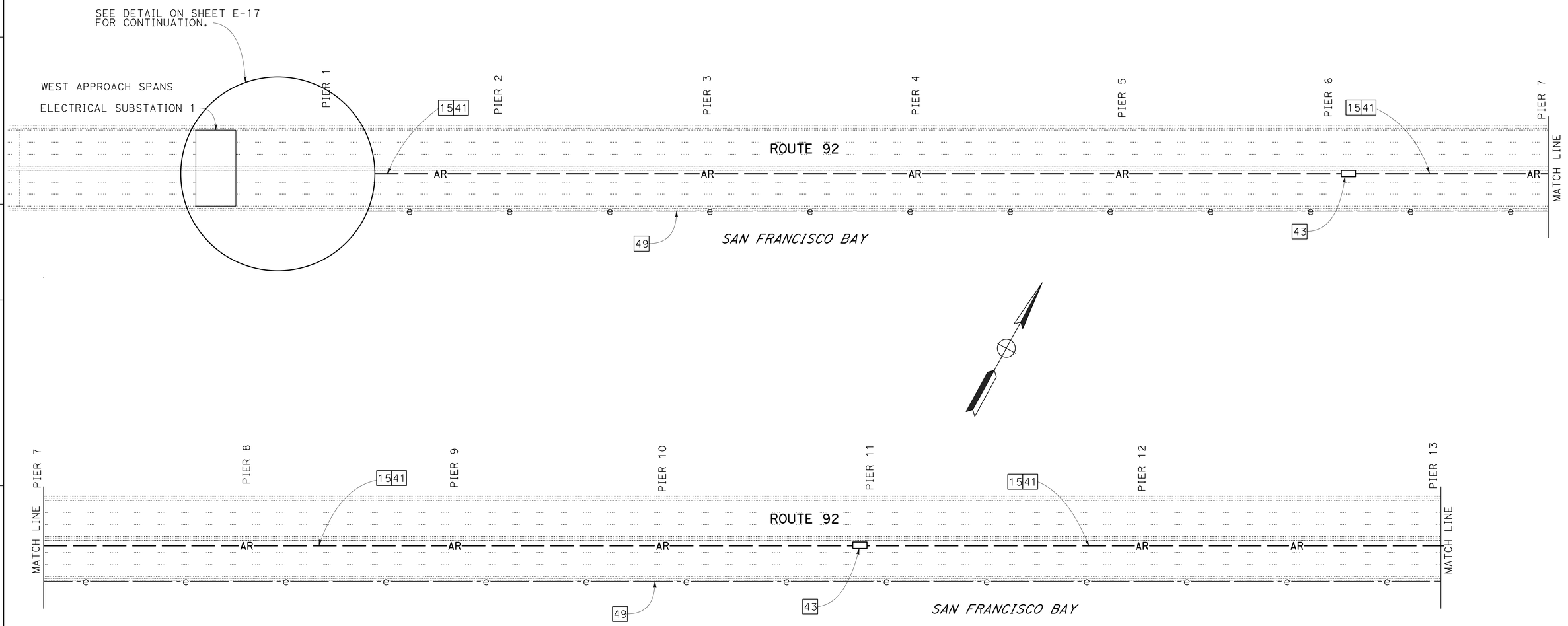

NOTE:

THE CONTRACTOR SHALL VERIFY ALL CONTROLLING FIELD DIMENSIONS BEFORE ORDERING OR FABRICATING ANY MATERIAL.

APPROVED FOR ELECTRICAL WORK ONLY

FOR NOTES, ABBREVIATIONS AND LEGEND, SEE SHEET E-1 AND E-2

12 kV SYSTEM (SAN MATEO-HAYWARD BRIDGE)

SCALE 1" = 50'

E-3

GM	REVISED BY
11/21/13	DATE REVISED
GIZACHEW MERID	CALCULATED-DESIGNED BY
BEHZAD GOLEMOHAMMADI	CHECKED BY
BEHZAD GOLEMOHAMMADI	FUNCTIONAL SUPERVISOR

STATE OF CALIFORNIA - DEPARTMENT OF TRANSPORTATION

Caltrans

ELECTRICAL

LAST REVISION 04-19-14 | DATE PLOTTED => 18-JUN-2014 | TIME PLOTTED => 12:33

Dist	COUNTY	ROUTE	POST MILES TOTAL PROJECT	SHEET No.	TOTAL SHEETS
04	SM,Ala	92	R14.4/R18.8, R0.0/R2.6	22	117

REGISTERED ELECTRICAL ENGINEER 3/4/14 DATE

5-27-14
PLANS APPROVAL DATE

REGISTERED PROFESSIONAL ENGINEER Gizachew Merid No. 18216 Exp. 12-31-15 ELECT STATE OF CALIFORNIA

THE STATE OF CALIFORNIA OR ITS OFFICERS OR AGENTS SHALL NOT BE RESPONSIBLE FOR THE ACCURACY OR COMPLETENESS OF SCANNED COPIES OF THIS PLAN SHEET.

NOTE:

FOR ACCURATE RIGHT OF WAY DATA, CONTACT RIGHT OF WAY ENGINEERING AT THE DISTRICT OFFICE.

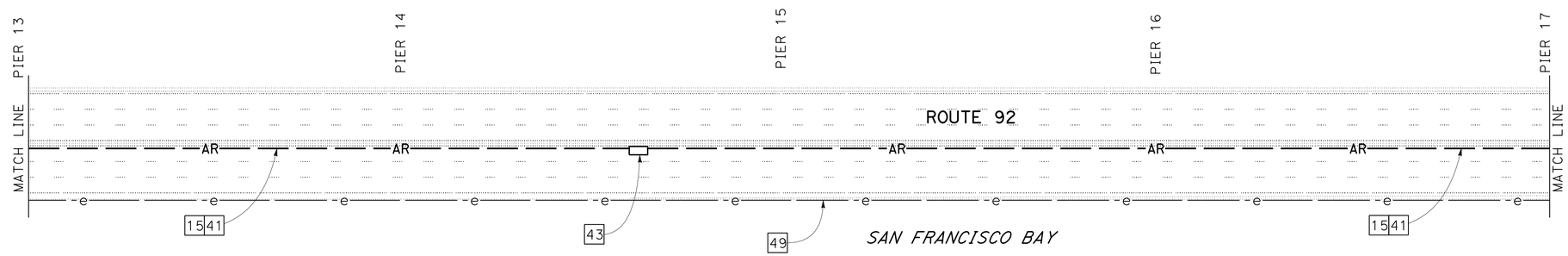

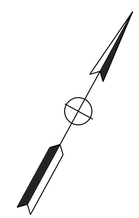

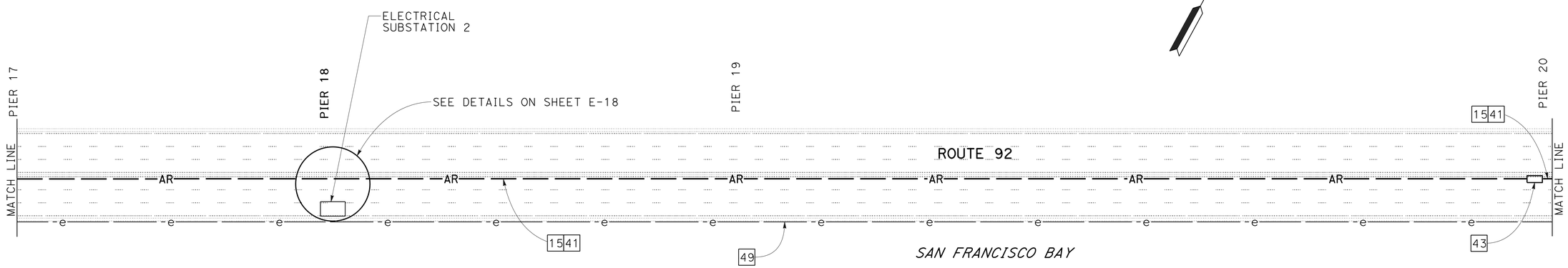

12 kV SYSTEM (SAN MATEO-HAYWARD BRIDGE)

SCALE 1" = 50'

NOTE:

THE CONTRACTOR SHALL VERIFY ALL CONTROLLING FIELD DIMENSIONS BEFORE ORDERING OR FABRICATING ANY MATERIAL.

APPROVED FOR ELECTRICAL WORK ONLY

FOR NOTES, ABBREVIATIONS AND LEGEND, SEE SHEET E-1 AND E-2

E-4

STATE OF CALIFORNIA - DEPARTMENT OF TRANSPORTATION
Caltrans
ELECTRICAL

FUNCTIONAL SUPERVISOR: BEHZAD GOLEMOHAMMADI
CALCULATED-DESIGNED BY: GIZACHEW MERID
CHECKED BY: BEHZAD GOLEMOHAMMADI
REVISED BY: GM
DATE REVISED: 11/21/13

LAST REVISION 04-19-14
DATE PLOTTED => 18-JUN-2014
TIME PLOTTED => 12:33

Dist	COUNTY	ROUTE	POST MILES TOTAL PROJECT	SHEET No.	TOTAL SHEETS
04	SM,Ala	92	R14.4/R18.8, R0.0/R2.6	23	117

REGISTERED ELECTRICAL ENGINEER 3/4/14 DATE

5-27-14
PLANS APPROVAL DATE

REGISTERED PROFESSIONAL ENGINEER Gizachew Merid No. 18216 Exp. 12-31-15 ELECT STATE OF CALIFORNIA

THE STATE OF CALIFORNIA OR ITS OFFICERS OR AGENTS SHALL NOT BE RESPONSIBLE FOR THE ACCURACY OR COMPLETENESS OF SCANNED COPIES OF THIS PLAN SHEET.

NOTE:

FOR ACCURATE RIGHT OF WAY DATA, CONTACT RIGHT OF WAY ENGINEERING AT THE DISTRICT OFFICE.

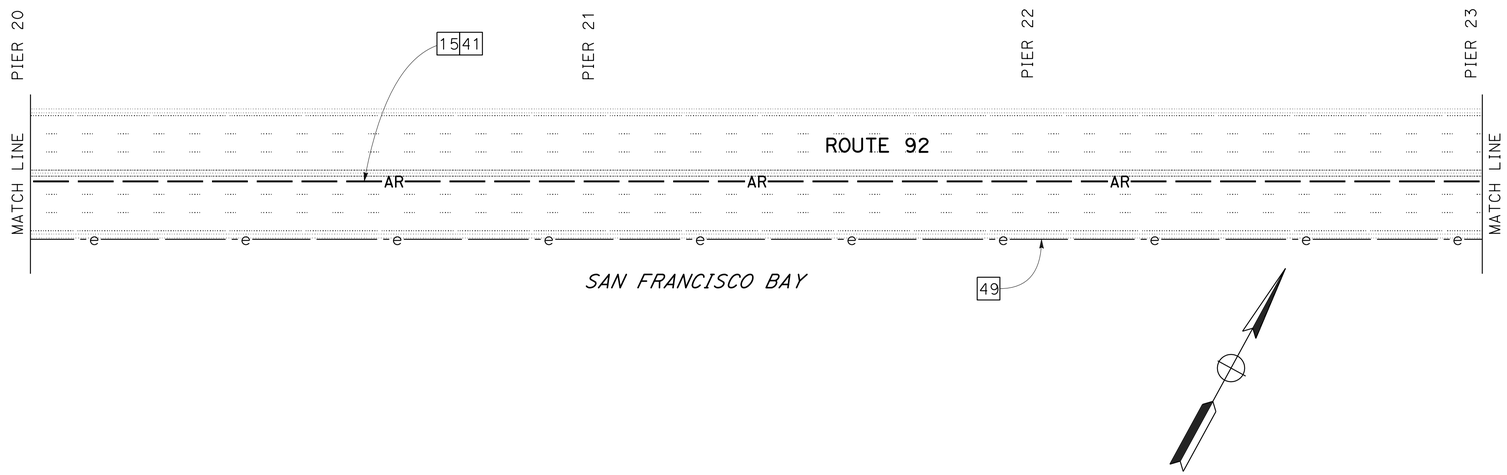

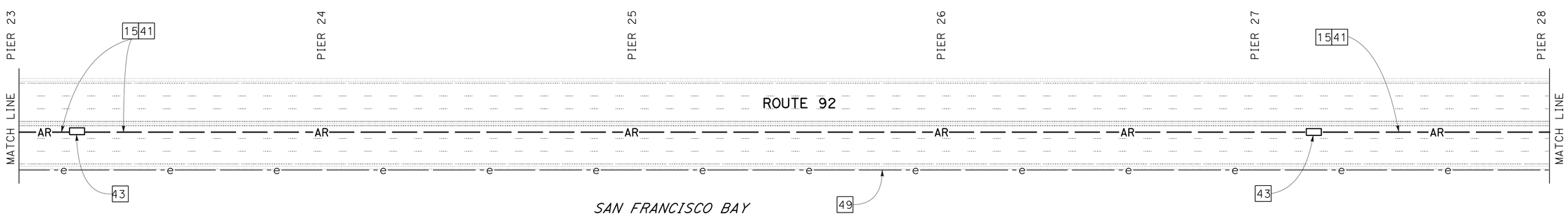

NOTE:

THE CONTRACTOR SHALL VERIFY ALL CONTROLLING FIELD DIMENSIONS BEFORE ORDERING OR FABRICATING ANY MATERIAL.

APPROVED FOR ELECTRICAL WORK ONLY

FOR NOTES, ABBREVIATIONS AND LEGEND, SEE SHEET E-1 AND E-2

12 kV SYSTEM (SAN MATEO-HAYWARD BRIDGE)

SCALE: 1" = 50'

E-5

REVISED BY	DATE REVISED
GM	11/21/13

GIZACHEW MERID — BEHZAD GOLEMOHAMMADI

CALCULATED-DESIGNED BY — CHECKED BY

FUNCTIONAL SUPERVISOR — BEHZAD GOLEMOHAMMADI

STATE OF CALIFORNIA - DEPARTMENT OF TRANSPORTATION — Caltrans — ELECTRICAL

LAST REVISION 04-19-14 | DATE PLOTTED => 18-JUN-2014 | TIME PLOTTED => 12:33

Dist	COUNTY	ROUTE	POST MILES TOTAL PROJECT	SHEET No.	TOTAL SHEETS
04	SM,Ala	92	R14.4/R18.8, R0.0/R2.6	24	117

REGISTERED ELECTRICAL ENGINEER 3/4/14 DATE

5-27-14
PLANS APPROVAL DATE

REGISTERED PROFESSIONAL ENGINEER Gizachew Merid No. 18216 Exp. 12-31-15 ELECT STATE OF CALIFORNIA

THE STATE OF CALIFORNIA OR ITS OFFICERS OR AGENTS SHALL NOT BE RESPONSIBLE FOR THE ACCURACY OR COMPLETENESS OF SCANNED COPIES OF THIS PLAN SHEET.

NOTE:

FOR ACCURATE RIGHT OF WAY DATA, CONTACT RIGHT OF WAY ENGINEERING AT THE DISTRICT OFFICE.

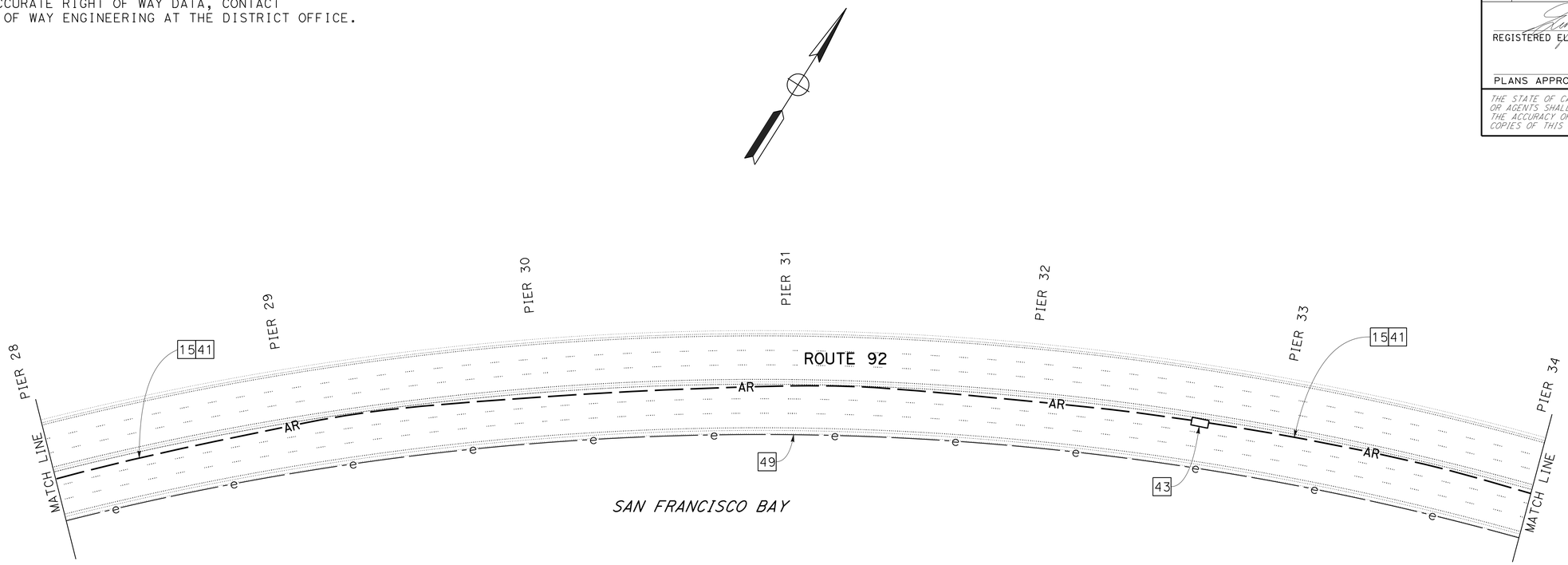

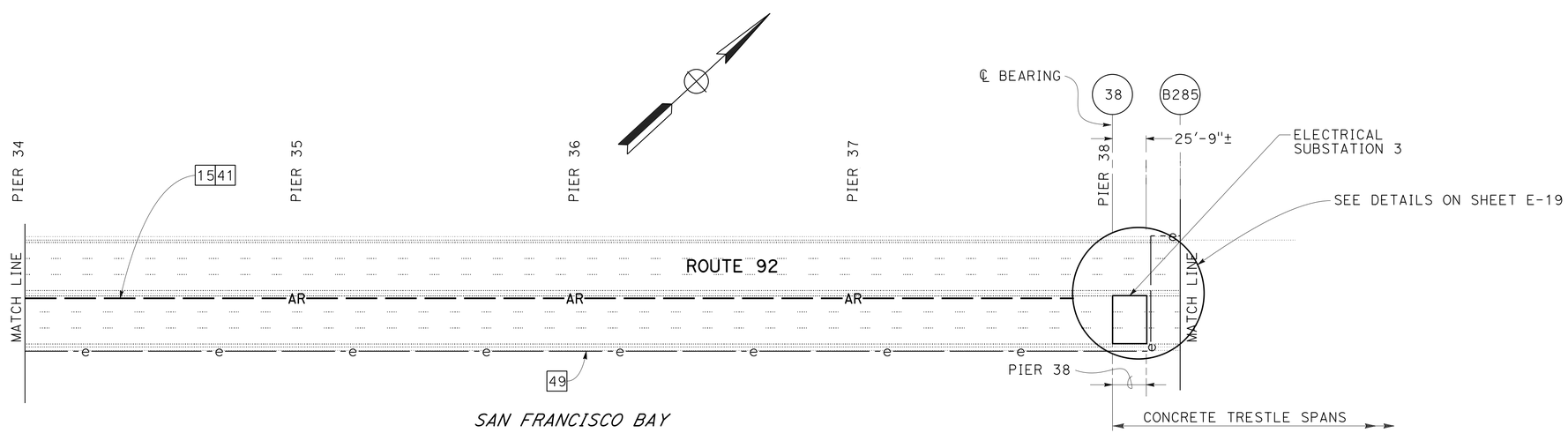

NOTE:

THE CONTRACTOR SHALL VERIFY ALL CONTROLLING FIELD DIMENSIONS BEFORE ORDERING OR FABRICATING ANY MATERIAL.

APPROVED FOR ELECTRICAL WORK ONLY

FOR NOTES, ABBREVIATIONS AND LEGEND, SEE SHEET E-1 AND E-2

12 kV SYSTEM (SAN MATEO-HAYWARD BRIDGE)

SCALE: 1" = 50'

E-6

STATE OF CALIFORNIA - DEPARTMENT OF TRANSPORTATION
Caltrans
ELECTRICAL

FUNCTIONAL SUPERVISOR: BEHZAD GOLEMOHAMMADI

CALCULATED-DESIGNED BY: GIZACHEW MERID
CHECKED BY: BEHZAD GOLEMOHAMMADI

REVISED BY: GM
DATE REVISED: 11/21/13

LAST REVISION 04-19-14
DATE PLOTTED => 18-JUN-2014
TIME PLOTTED => 12:33

Dist	COUNTY	ROUTE	POST MILES TOTAL PROJECT	SHEET No.	TOTAL SHEETS
04	SM,Ala	92	R14.4/R18.8, R0.0/R2.6	25	117

REGISTERED ELECTRICAL ENGINEER 3/4/14 DATE

5-27-14
PLANS APPROVAL DATE

REGISTERED PROFESSIONAL ENGINEER Gizachew Merid No. 18216 Exp. 12-31-15 ELECT STATE OF CALIFORNIA

THE STATE OF CALIFORNIA OR ITS OFFICERS OR AGENTS SHALL NOT BE RESPONSIBLE FOR THE ACCURACY OR COMPLETENESS OF SCANNED COPIES OF THIS PLAN SHEET.

NOTE:

FOR ACCURATE RIGHT OF WAY DATA, CONTACT RIGHT OF WAY ENGINEERING AT THE DISTRICT OFFICE.

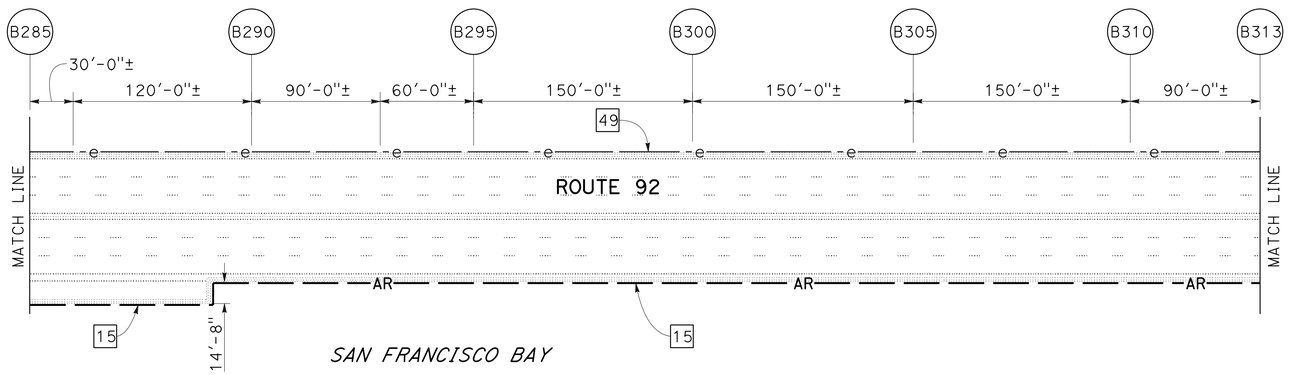

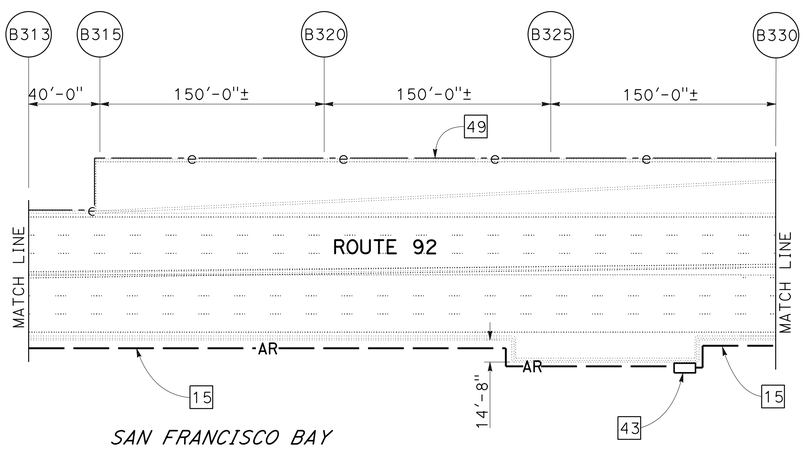

NOTE:

THE CONTRACTOR SHALL VERIFY ALL CONTROLLING FIELD DIMENSIONS BEFORE ORDERING OR FABRICATING ANY MATERIAL.

12 kV SYSTEM (SAN MATEO-HAYWARD BRIDGE)

SCALE: 1" = 50'

E-7

STATE OF CALIFORNIA - DEPARTMENT OF TRANSPORTATION
Caltrans®
ELECTRICAL

FUNCTIONAL SUPERVISOR: BEHZAD GOLEMOHAMMADI

CALCULATED-DESIGNED BY: GIZACHEW MERID
CHECKED BY: BEHZAD GOLEMOHAMMADI

REVISED BY: GM
DATE REVISED: 11/21/13

LAST REVISION 04-19-14
DATE PLOTTED => 18-JUN-2014
TIME PLOTTED => 12:33

Dist	COUNTY	ROUTE	POST MILES TOTAL PROJECT	SHEET No.	TOTAL SHEETS
04	SM,Ala	92	R14.4/R18.8, R0.0/R2.6	26	117

REGISTERED ELECTRICAL ENGINEER DATE 3/4/14

PLANS APPROVAL DATE 5-27-14

REGISTERED PROFESSIONAL ENGINEER Gizachew Merid No. 18216 Exp. 12-31-15 ELECT STATE OF CALIFORNIA

THE STATE OF CALIFORNIA OR ITS OFFICERS OR AGENTS SHALL NOT BE RESPONSIBLE FOR THE ACCURACY OR COMPLETENESS OF SCANNED COPIES OF THIS PLAN SHEET.

NOTE:

FOR ACCURATE RIGHT OF WAY DATA, CONTACT RIGHT OF WAY ENGINEERING AT THE DISTRICT OFFICE.

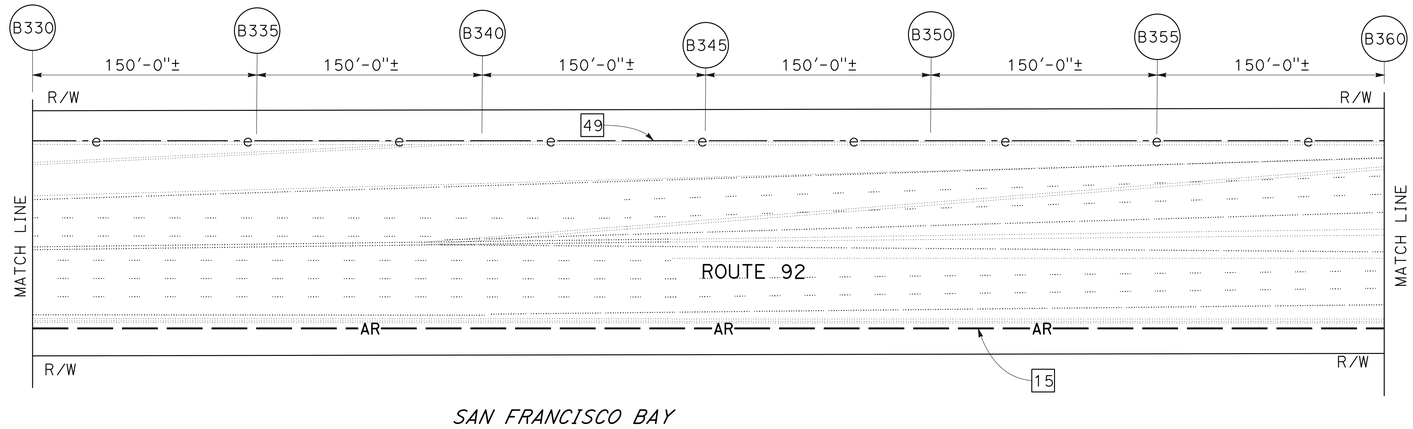

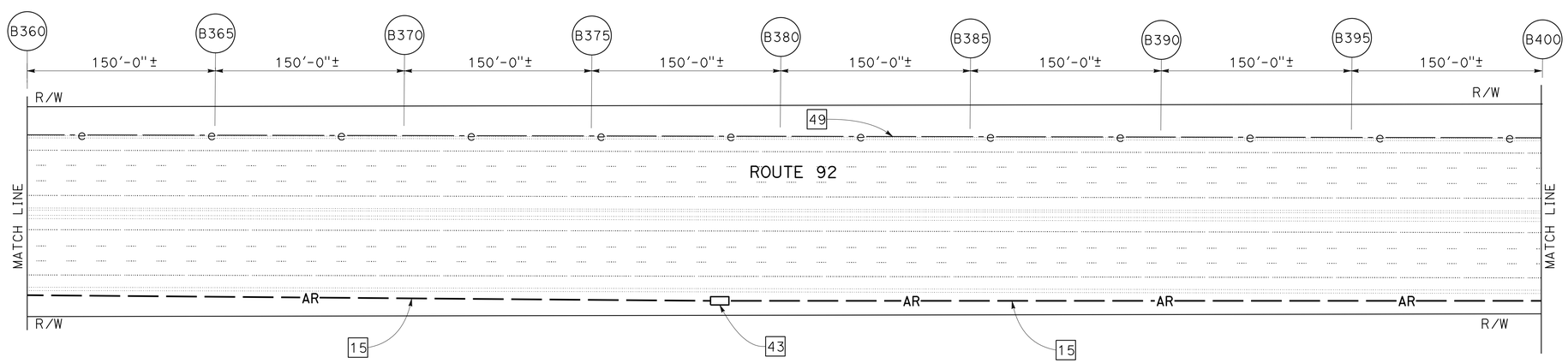

NOTE:

THE CONTRACTOR SHALL VERIFY ALL CONTROLLING FIELD DIMENSIONS BEFORE ORDERING OR FABRICATING ANY MATERIAL.

APPROVED FOR ELECTRICAL WORK ONLY

FOR NOTES, ABBREVIATIONS AND LEGEND, SEE SHEET E-1 AND E-2

12 kV SYSTEM (SAN MATEO-HAYWARD BRIDGE)

SCALE: 1" = 50'

E-8

GM	11/21/13
REVISED BY	DATE REVISED
GIZACHEW MERID	BEHZAD GOLEMOHAMMADI
CALCULATED-DESIGNED BY	CHECKED BY
FUNCTIONAL SUPERVISOR	BEHZAD GOLEMOHAMMADI

STATE OF CALIFORNIA - DEPARTMENT OF TRANSPORTATION

Caltrans

ELECTRICAL

LAST REVISION 04-19-14 | DATE PLOTTED => 18-JUN-2014 | TIME PLOTTED => 12:33

Dist	COUNTY	ROUTE	POST MILES TOTAL PROJECT	SHEET No.	TOTAL SHEETS
04	SM,Ala	92	R14.4/R18.8, R0.0/R2.6	27	117

REGISTERED ELECTRICAL ENGINEER 3/4/14 DATE

5-27-14
PLANS APPROVAL DATE

REGISTERED PROFESSIONAL ENGINEER Gizachew Merid No. 18216 Exp. 12-31-15 ELECT STATE OF CALIFORNIA

THE STATE OF CALIFORNIA OR ITS OFFICERS OR AGENTS SHALL NOT BE RESPONSIBLE FOR THE ACCURACY OR COMPLETENESS OF SCANNED COPIES OF THIS PLAN SHEET.

NOTE:

FOR ACCURATE RIGHT OF WAY DATA, CONTACT RIGHT OF WAY ENGINEERING AT THE DISTRICT OFFICE.

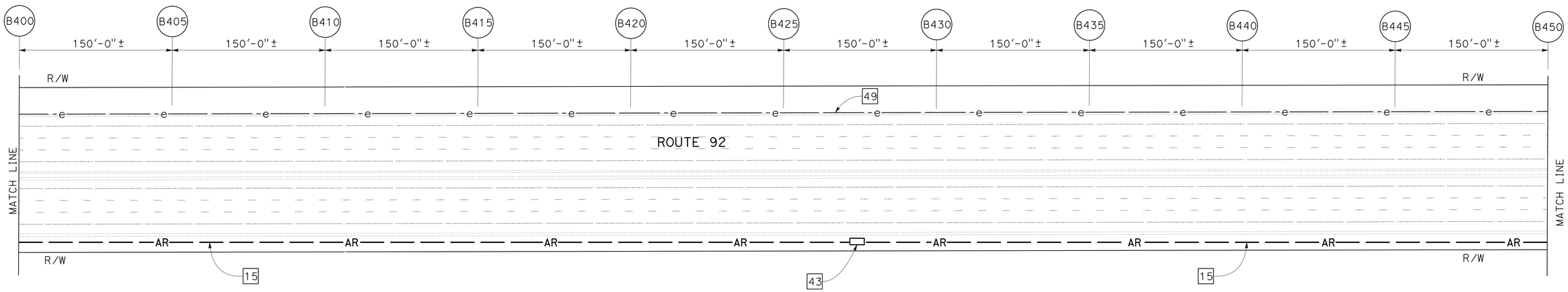

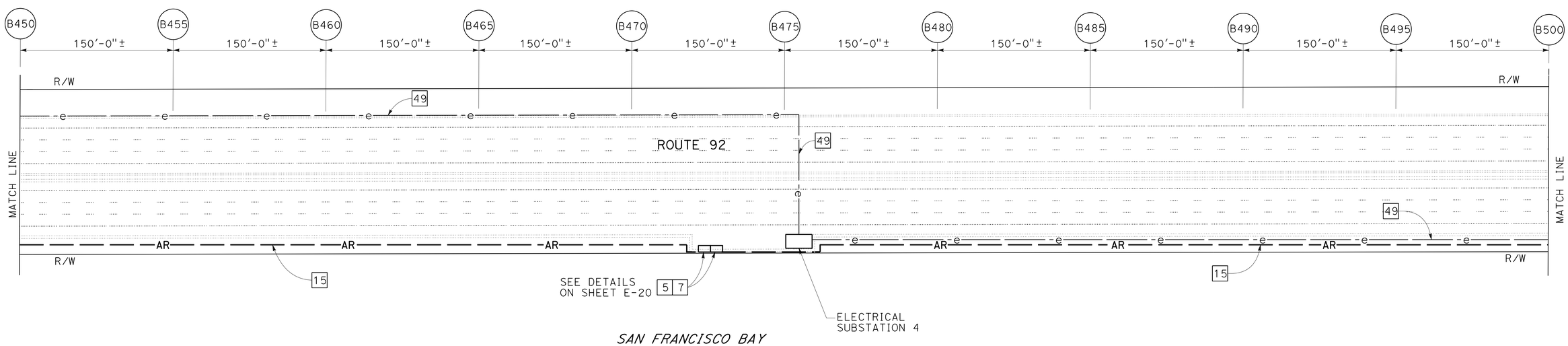

NOTE:

THE CONTRACTOR SHALL VERIFY ALL CONTROLLING FIELD DIMENSIONS BEFORE ORDERING OR FABRICATING ANY MATERIAL.

APPROVED FOR ELECTRICAL WORK ONLY

FOR NOTES, ABBREVIATIONS AND LEGEND, SEE SHEET E-1 AND E-2

12 kV SYSTEM (SAN MATEO-HAYWARD BRIDGE)

SCALE: 1" = 50'

E-9

STATE OF CALIFORNIA - DEPARTMENT OF TRANSPORTATION
Caltrans
ELECTRICAL

FUNCTIONAL SUPERVISOR: BEHZAD GOLEMOHAMMADI
CALCULATED-DESIGNED BY: GIZACHEW MERID
CHECKED BY: BEHZAD GOLEMOHAMMADI
REVISED BY: GM
DATE REVISED: 11/21/13

LAST REVISION 04-19-14
DATE PLOTTED => 18-JUN-2014
TIME PLOTTED => 12:33

Dist	COUNTY	ROUTE	POST MILES TOTAL PROJECT	SHEET No.	TOTAL SHEETS
04	SM,Ala	92	R14.4/R18.8, R0.0/R2.6	28	117

REGISTERED ELECTRICAL ENGINEER 3/4/14 DATE

PLANS APPROVAL DATE 5-27-14

REGISTERED PROFESSIONAL ENGINEER Gizachew Merid No. 18216 Exp. 12-31-15 ELECT STATE OF CALIFORNIA

THE STATE OF CALIFORNIA OR ITS OFFICERS OR AGENTS SHALL NOT BE RESPONSIBLE FOR THE ACCURACY OR COMPLETENESS OF SCANNED COPIES OF THIS PLAN SHEET.

NOTE:

FOR ACCURATE RIGHT OF WAY DATA, CONTACT RIGHT OF WAY ENGINEERING AT THE DISTRICT OFFICE.

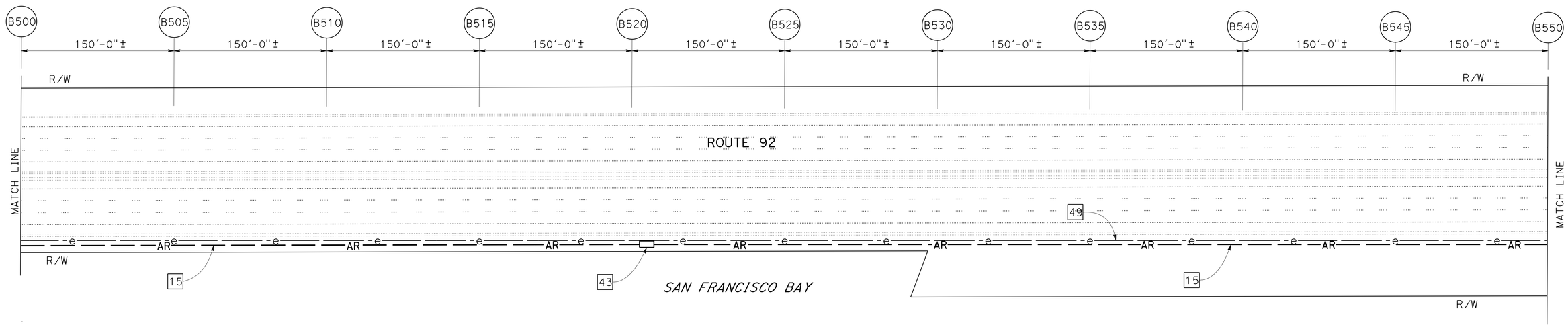

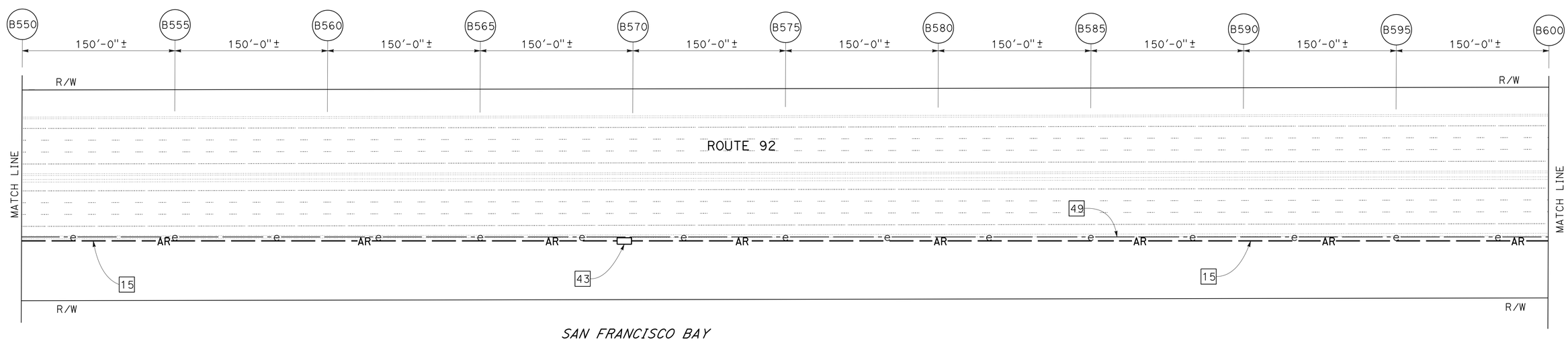

NOTE:

THE CONTRACTOR SHALL VERIFY ALL CONTROLLING FIELD DIMENSIONS BEFORE ORDERING OR FABRICATING ANY MATERIAL.

APPROVED FOR ELECTRICAL WORK ONLY

FOR NOTES, ABBREVIATIONS AND LEGEND, SEE SHEET E-1 AND E-2

12 kV SYSTEM (SAN MATEO-HAYWARD BRIDGE)

SCALE: 1" = 50'

E-10

REVISED BY	DATE REVISED
GM	11/21/13

GIZACHEW MERID — BEHZAD GOLEMOHAMMADI

CALCULATED-DESIGNED BY — CHECKED BY

FUNCTIONAL SUPERVISOR — BEHZAD GOLEMOHAMMADI

STATE OF CALIFORNIA - DEPARTMENT OF TRANSPORTATION — Caltrans — ELECTRICAL

LAST REVISION 04-19-14 — DATE PLOTTED => 18-JUN-2014 — TIME PLOTTED => 12:33

Dist	COUNTY	ROUTE	POST MILES TOTAL PROJECT	SHEET No.	TOTAL SHEETS
04	SM,Ala	92	R14.4/R18.8, R0.0/R2.6	29	117

REGISTERED ELECTRICAL ENGINEER 3/4/14 DATE

5-27-14
PLANS APPROVAL DATE

REGISTERED PROFESSIONAL ENGINEER Gizachew Merid No. 18216 Exp. 12-31-15 ELECT STATE OF CALIFORNIA

THE STATE OF CALIFORNIA OR ITS OFFICERS OR AGENTS SHALL NOT BE RESPONSIBLE FOR THE ACCURACY OR COMPLETENESS OF SCANNED COPIES OF THIS PLAN SHEET.

NOTE:

FOR ACCURATE RIGHT OF WAY DATA, CONTACT RIGHT OF WAY ENGINEERING AT THE DISTRICT OFFICE.

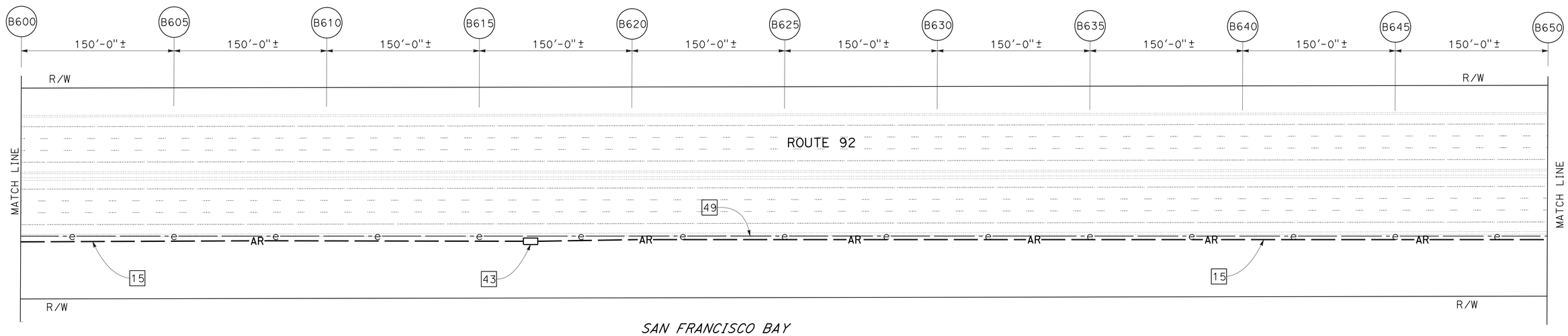

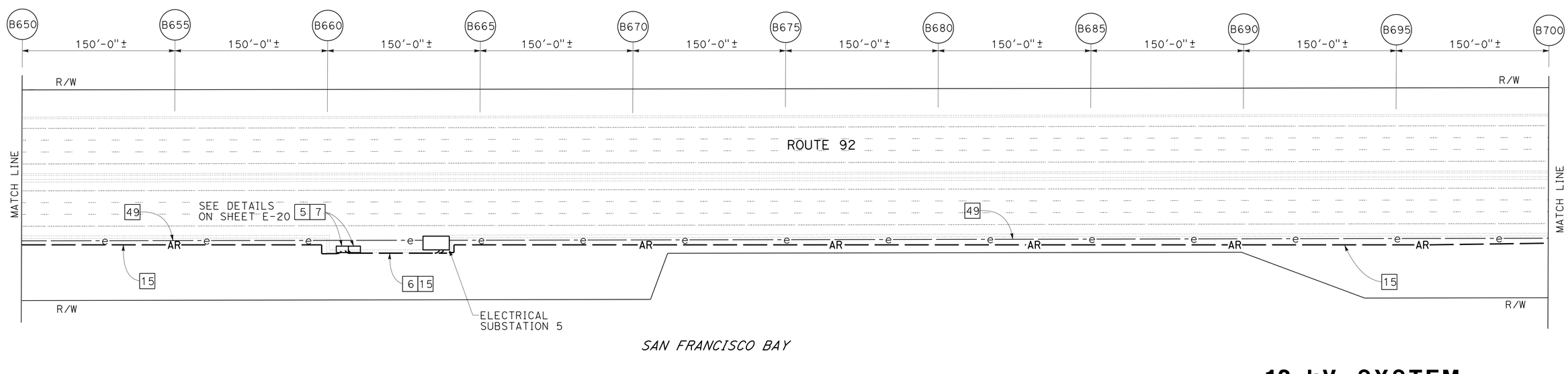

12 kV SYSTEM (SAN MATEO-HAYWARD BRIDGE)

SCALE: 1" = 50'

NOTE:

THE CONTRACTOR SHALL VERIFY ALL CONTROLLING FIELD DIMENSIONS BEFORE ORDERING OR FABRICATING ANY MATERIAL.

APPROVED FOR ELECTRICAL WORK ONLY

FOR NOTES, ABBREVIATIONS AND LEGEND, SEE SHEET E-1 AND E-2

E-11

STATE OF CALIFORNIA - DEPARTMENT OF TRANSPORTATION
Caltrans
ELECTRICAL

FUNCTIONAL SUPERVISOR: BEHZAD GOLEMOHAMMADI

CALCULATED-DESIGNED BY: GIZACHEW MERID
CHECKED BY: BEHZAD GOLEMOHAMMADI

REVISED BY: GM
DATE REVISED: 11/21/13

LAST REVISION 04-19-14
DATE PLOTTED => 18-JUN-2014
TIME PLOTTED => 12:33

Dist	COUNTY	ROUTE	POST MILES TOTAL PROJECT	SHEET No.	TOTAL SHEETS
04	SM,Ala	92	R14.4/R18.8, R0.0/R2.6	30	117

REGISTERED ELECTRICAL ENGINEER 3/4/14 DATE

5-27-14
PLANS APPROVAL DATE

REGISTERED PROFESSIONAL ENGINEER Gizachew Merid No. 18216 Exp. 12-31-15 ELECT STATE OF CALIFORNIA

THE STATE OF CALIFORNIA OR ITS OFFICERS OR AGENTS SHALL NOT BE RESPONSIBLE FOR THE ACCURACY OR COMPLETENESS OF SCANNED COPIES OF THIS PLAN SHEET.

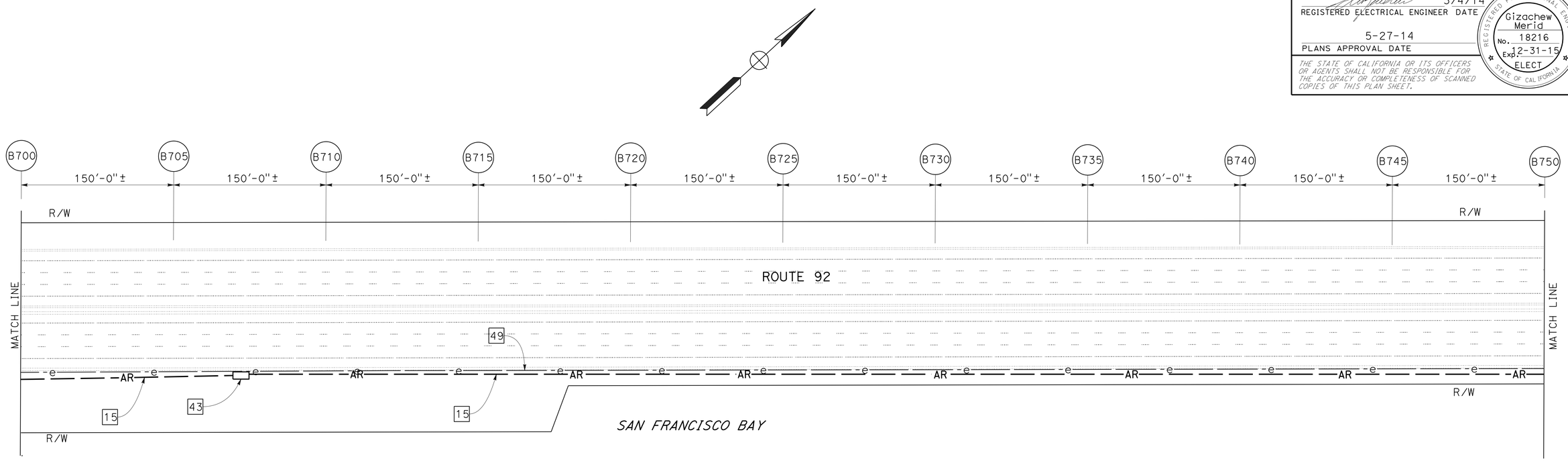

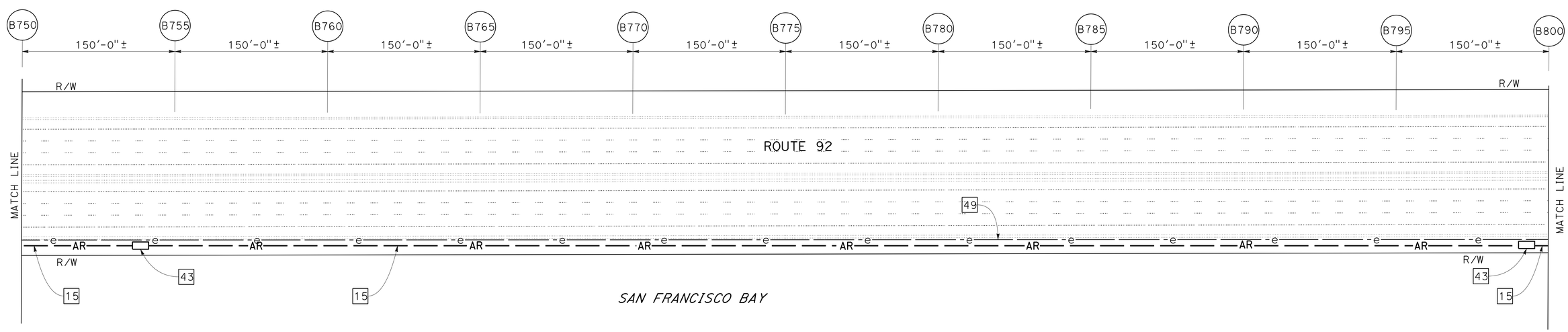

NOTE:

THE CONTRACTOR SHALL VERIFY ALL CONTROLLING FIELD DIMENSIONS BEFORE ORDERING OR FABRICATING ANY MATERIAL.

APPROVED FOR ELECTRICAL WORK ONLY

FOR NOTES, ABBREVIATIONS AND LEGEND, SEE SHEET E-1 AND E-2

12 kV SYSTEM (SAN MATEO-HAYWARD BRIDGE)

SCALE: 1" = 50'

E-12

GM	11/21/13
REVISED BY	DATE REVISED
GIZACHEW MERID	BEHZAD GOLEMOHAMMADI
CALCULATED-DESIGNED BY	CHECKED BY
FUNCTIONAL SUPERVISOR	BEHZAD GOLEMOHAMMADI

STATE OF CALIFORNIA - DEPARTMENT OF TRANSPORTATION **ELECTRICAL** Caltrans

LAST REVISION 04-22-14 DATE PLOTTED => 18-JUN-2014 TIME PLOTTED => 12:33

Dist	COUNTY	ROUTE	POST MILES TOTAL PROJECT	SHEET No.	TOTAL SHEETS
04	SM,Ala	92	R14.4/R18.8, R0.0/R2.6	31	117

REGISTERED ELECTRICAL ENGINEER 3/4/14 DATE

5-27-14
PLANS APPROVAL DATE

REGISTERED PROFESSIONAL ENGINEER Gizachew Merid No. 18216 Exp. 12-31-15 ELECT STATE OF CALIFORNIA

THE STATE OF CALIFORNIA OR ITS OFFICERS OR AGENTS SHALL NOT BE RESPONSIBLE FOR THE ACCURACY OR COMPLETENESS OF SCANNED COPIES OF THIS PLAN SHEET.

NOTE:

FOR ACCURATE RIGHT OF WAY DATA, CONTACT RIGHT OF WAY ENGINEERING AT THE DISTRICT OFFICE.

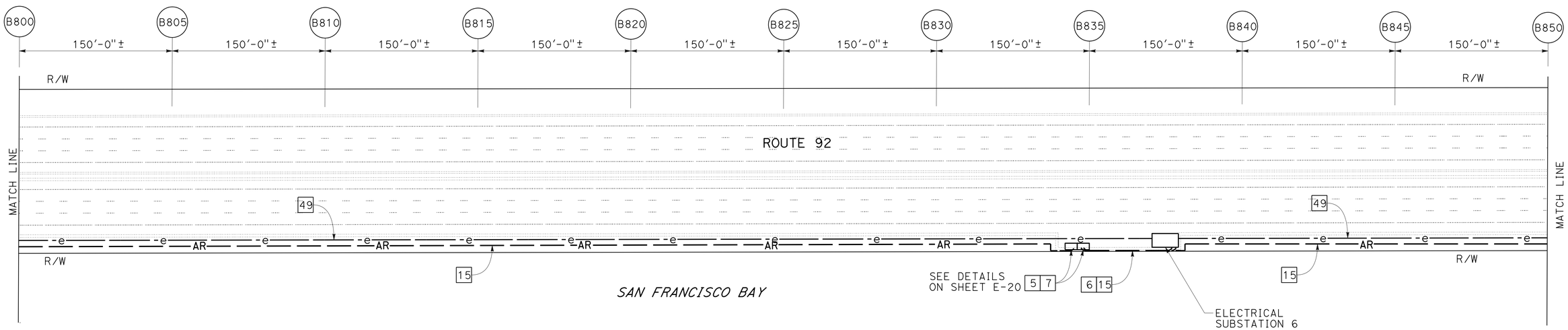

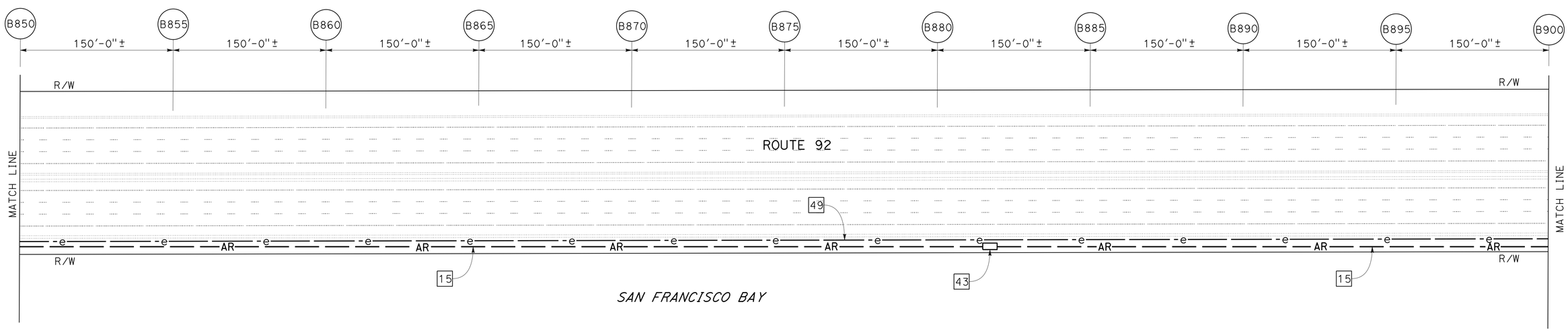

NOTE:

THE CONTRACTOR SHALL VERIFY ALL CONTROLLING FIELD DIMENSIONS BEFORE ORDERING OR FABRICATING ANY MATERIAL.

APPROVED FOR ELECTRICAL WORK ONLY

FOR NOTES, ABBREVIATIONS AND LEGEND, SEE SHEET E-1 AND E-2

12 kV SYSTEM (SAN MATEO-HAYWARD BRIDGE)

SCALE: 1" = 50'

E-13

REVISED BY	DATE REVISED
GM	11/21/13

GIZACHEW MERID — BEHZAD GOLEMOHAMMADI

CALCULATED-DESIGNED BY — CHECKED BY

FUNCTIONAL SUPERVISOR — BEHZAD GOLEMOHAMMADI

STATE OF CALIFORNIA - DEPARTMENT OF TRANSPORTATION — Caltrans — ELECTRICAL

LAST REVISION 04-16-14 — DATE PLOTTED => 18-JUN-2014 — TIME PLOTTED => 12:33

Dist	COUNTY	ROUTE	POST MILES TOTAL PROJECT	SHEET No.	TOTAL SHEETS
04	SM,Ala	92	R14.4/R18.8, R0.0/R2.6	32	117

REGISTERED ELECTRICAL ENGINEER 3/4/14 DATE

PLANS APPROVAL DATE 5-27-14

REGISTERED PROFESSIONAL ENGINEER Gizachew Merid No. 18216 Exp. 12-31-15 ELECT STATE OF CALIFORNIA

THE STATE OF CALIFORNIA OR ITS OFFICERS OR AGENTS SHALL NOT BE RESPONSIBLE FOR THE ACCURACY OR COMPLETENESS OF SCANNED COPIES OF THIS PLAN SHEET.

NOTE:

FOR ACCURATE RIGHT OF WAY DATA, CONTACT RIGHT OF WAY ENGINEERING AT THE DISTRICT OFFICE.

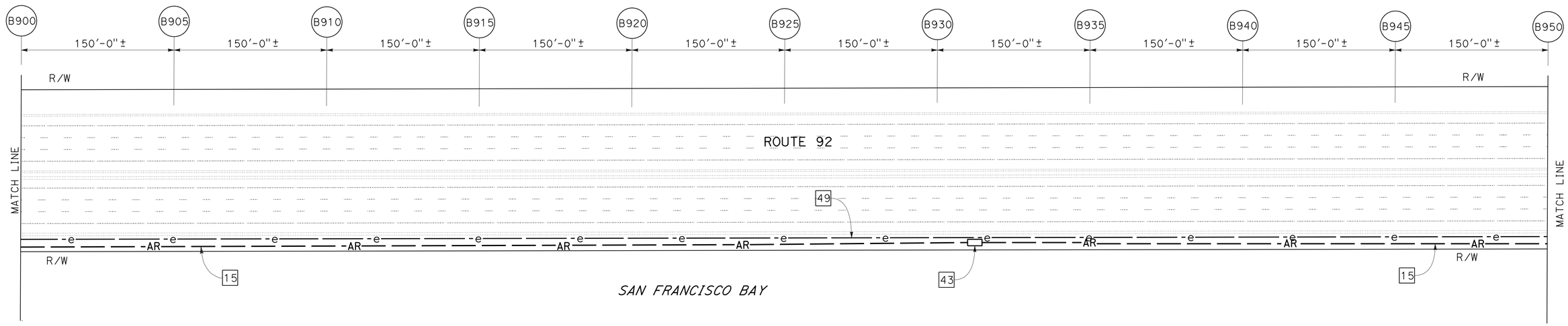

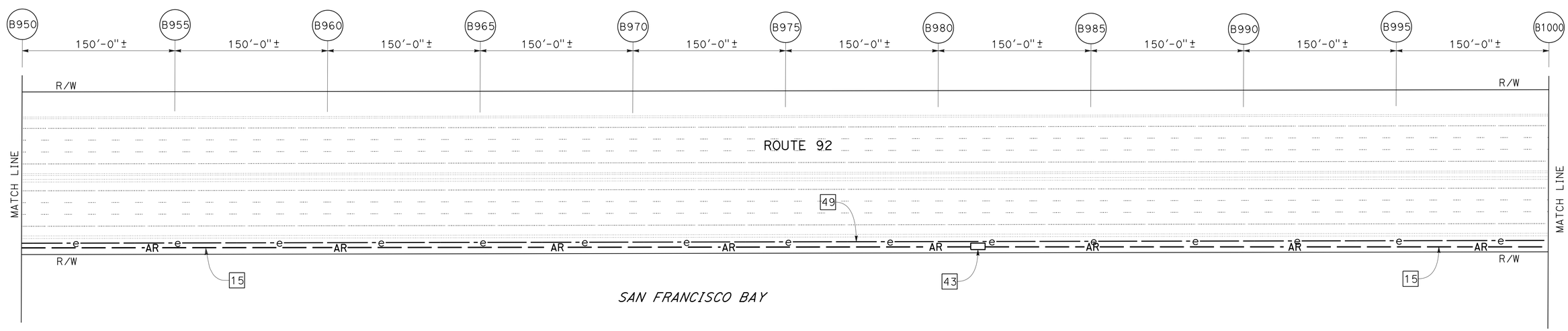

NOTE:

THE CONTRACTOR SHALL VERIFY ALL CONTROLLING FIELD DIMENSIONS BEFORE ORDERING OR FABRICATING ANY MATERIAL.

APPROVED FOR ELECTRICAL WORK ONLY

FOR NOTES, ABBREVIATIONS AND LEGEND, SEE SHEET E-1 AND E-2

12 kV SYSTEM (SAN MATEO-HAYWARD BRIDGE)

SCALE: 1" = 50'

E-14

REVISED BY	DATE REVISED
GM	11/21/13

GIZACHEW MERID — BEHZAD GOLEMOHAMMADI

CALCULATED-DESIGNED BY — CHECKED BY

FUNCTIONAL SUPERVISOR — BEHZAD GOLEMOHAMMADI

STATE OF CALIFORNIA - DEPARTMENT OF TRANSPORTATION — ELECTRICAL

Caltrans

LAST REVISION 04-19-14 — DATE PLOTTED => 18-JUN-2014 — TIME PLOTTED => 12:33

Dist	COUNTY	ROUTE	POST MILES TOTAL PROJECT	SHEET No.	TOTAL SHEETS
04	SM,Ala	92	R14.4/R18.8, R0.0/R2.6	33	117

REGISTERED ELECTRICAL ENGINEER 3/4/14 DATE

PLANS APPROVAL DATE 5-27-14

REGISTERED PROFESSIONAL ENGINEER Gizachew Merid No. 18216 Exp. 12-31-15 ELECT STATE OF CALIFORNIA

THE STATE OF CALIFORNIA OR ITS OFFICERS OR AGENTS SHALL NOT BE RESPONSIBLE FOR THE ACCURACY OR COMPLETENESS OF SCANNED COPIES OF THIS PLAN SHEET.

NOTE:

FOR ACCURATE RIGHT OF WAY DATA, CONTACT RIGHT OF WAY ENGINEERING AT THE DISTRICT OFFICE.

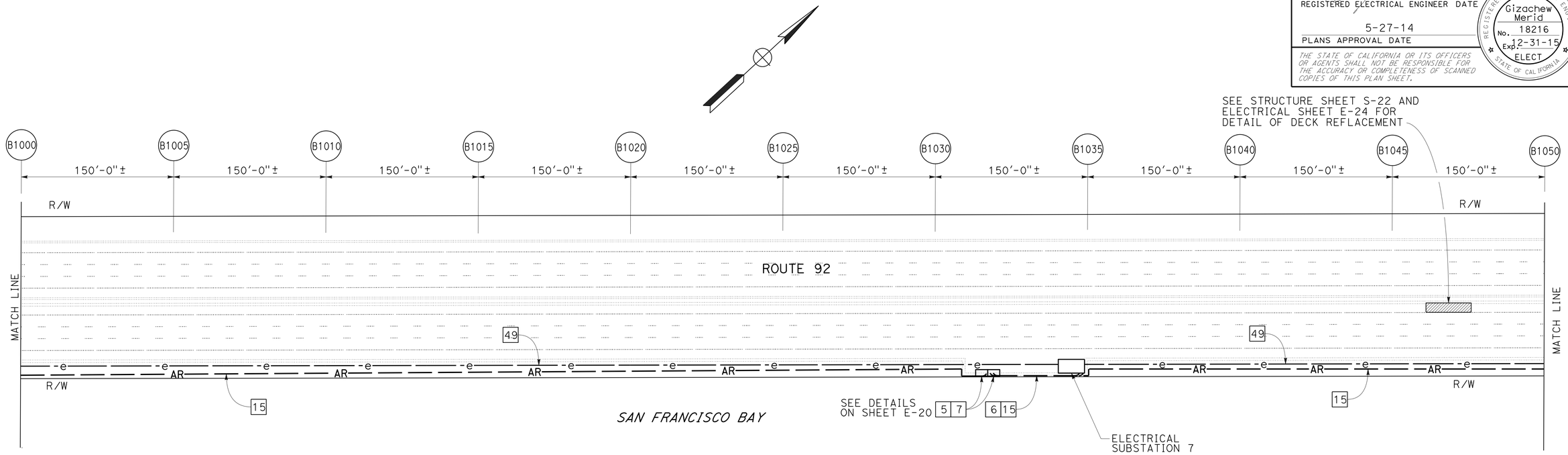

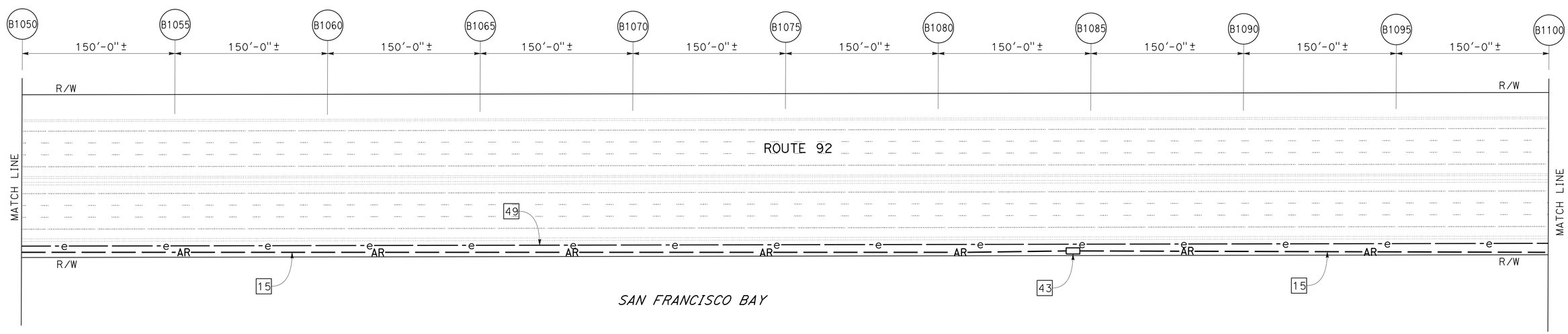

NOTE:

THE CONTRACTOR SHALL VERIFY ALL CONTROLLING FIELD DIMENSIONS BEFORE ORDERING OR FABRICATING ANY MATERIAL.

APPROVED FOR ELECTRICAL WORK ONLY

FOR NOTES, ABBREVIATIONS AND LEGEND, SEE SHEET E-1 AND E-2

12 kV SYSTEM (SAN MATEO-HAYWARD BRIDGE)

SCALE: 1" = 50'

E-15

REVISED BY	DATE REVISED
GM	11/21/13

GIZACHEW MERID — BEHZAD GOLEMOHAMMADI

CALCULATED-DESIGNED BY — CHECKED BY

FUNCTIONAL SUPERVISOR — BEHZAD GOLEMOHAMMADI

STATE OF CALIFORNIA - DEPARTMENT OF TRANSPORTATION

Caltrans

ELECTRICAL

LAST REVISION 04-19-14 — DATE PLOTTED => 18-JUN-2014 — TIME PLOTTED => 12:33

Dist	COUNTY	ROUTE	POST MILES TOTAL PROJECT	SHEET No.	TOTAL SHEETS
04	SM,Ala	92	R14.4/R18.8, R0.0/R2.6	34	117

REGISTERED ELECTRICAL ENGINEER 3/4/14 DATE

5-27-14
PLANS APPROVAL DATE

REGISTERED PROFESSIONAL ENGINEER Gizachew Merid No. 18216 Exp. 12-31-15 ELECT STATE OF CALIFORNIA

THE STATE OF CALIFORNIA OR ITS OFFICERS OR AGENTS SHALL NOT BE RESPONSIBLE FOR THE ACCURACY OR COMPLETENESS OF SCANNED COPIES OF THIS PLAN SHEET.

NOTE:

FOR ACCURATE RIGHT OF WAY DATA, CONTACT RIGHT OF WAY ENGINEERING AT THE DISTRICT OFFICE.

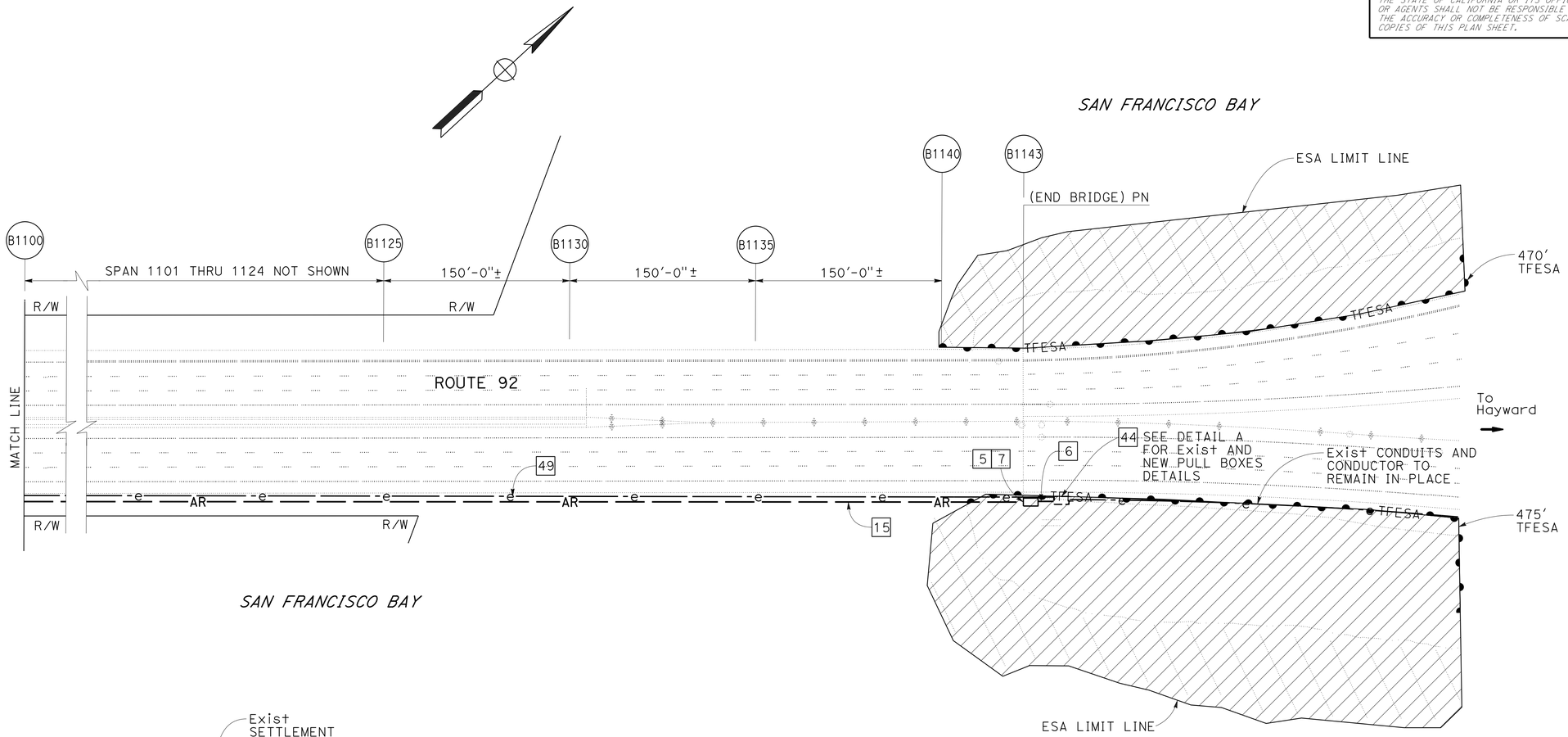

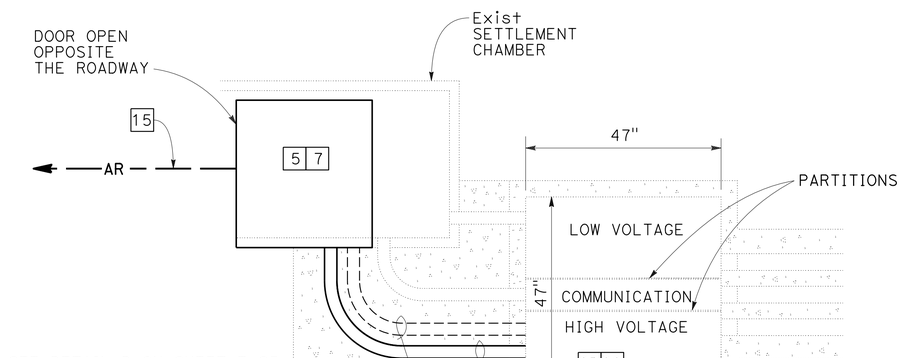

DETAIL A

NO SCALE

NOTE:

THE CONTRACTOR SHALL VERIFY ALL CONTROLLING FIELD DIMENSIONS BEFORE ORDERING OR FABRICATING ANY MATERIAL.

APPROVED FOR ELECTRICAL WORK ONLY

FOR NOTES, ABBREVIATIONS AND LEGEND, SEE SHEET E-1 AND E-2

12 kV SYSTEM (SAN MATEO-HAYWARD BRIDGE)

SCALE: 1" = 50'

E-16

STATE OF CALIFORNIA - DEPARTMENT OF TRANSPORTATION

Caltrans

ELECTRICAL

FUNCTIONAL SUPERVISOR: BEHZAD GOLEMOHAMMADI

CALCULATED-DESIGNED BY: GIZACHEW MERID

CHECKED BY: BEHZAD GOLEMOHAMMADI

REVISED BY: GM

DATE REVISED: 11/21/13

LAST REVISION DATE PLOTTED => 18-JUN-2014
TIME PLOTTED => 12:33

04-23-14

Dist	COUNTY	ROUTE	POST MILES TOTAL PROJECT	SHEET No.	TOTAL SHEETS
04	SM,Ala	92	R14.4/R18.8, R0.0/R2.6	35	117

REGISTERED ELECTRICAL ENGINEER DATE 3/4/14

PLANS APPROVAL DATE 5-27-14

REGISTERED PROFESSIONAL ENGINEER Gizachew Merid No. 18216 Exp. 12-31-15 ELECT STATE OF CALIFORNIA

THE STATE OF CALIFORNIA OR ITS OFFICERS OR AGENTS SHALL NOT BE RESPONSIBLE FOR THE ACCURACY OR COMPLETENESS OF SCANNED COPIES OF THIS PLAN SHEET.

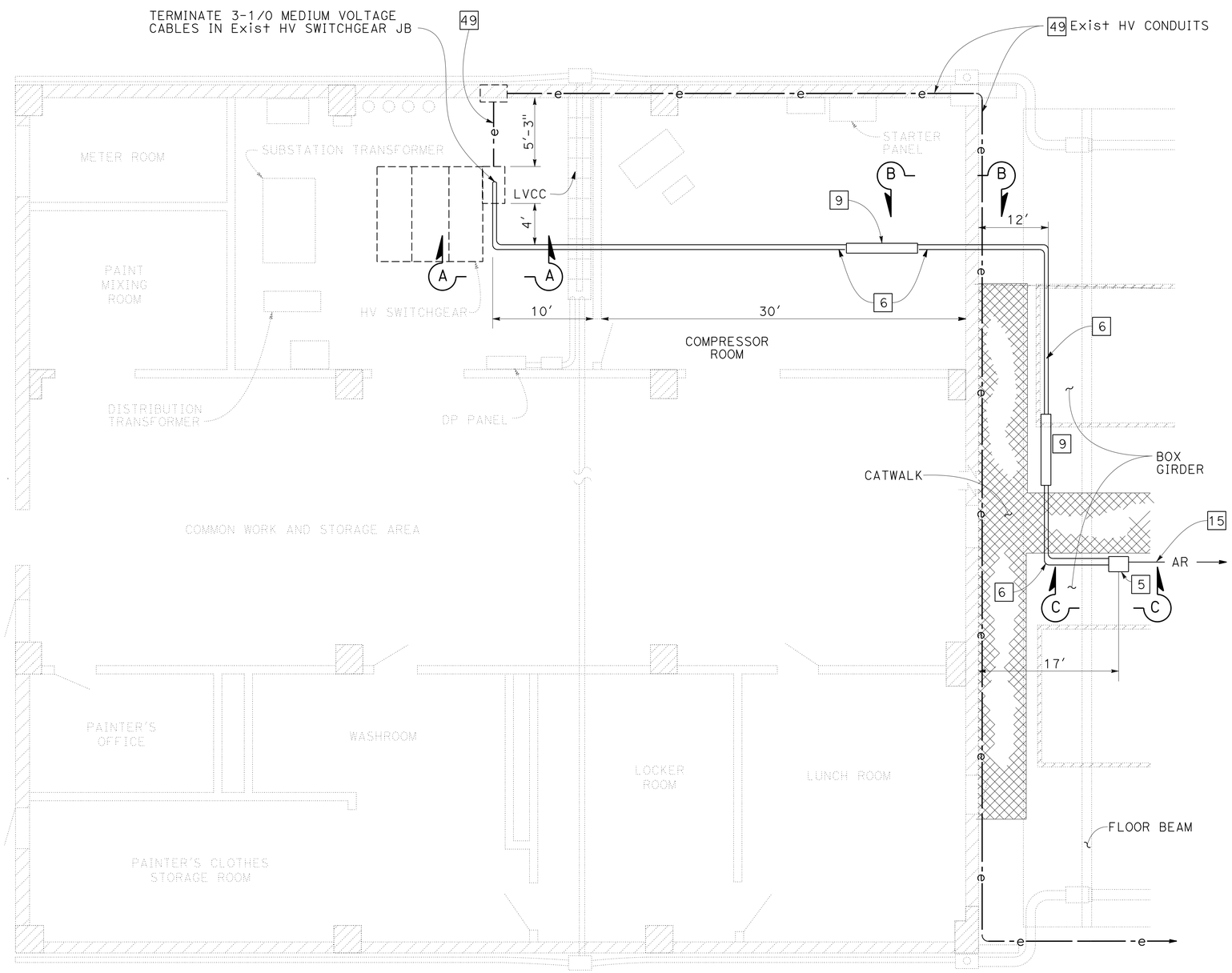

PLAN

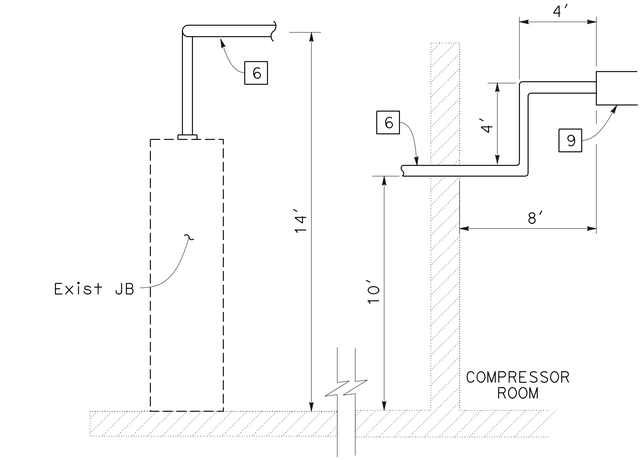

SECTION A-A SECTION B-B

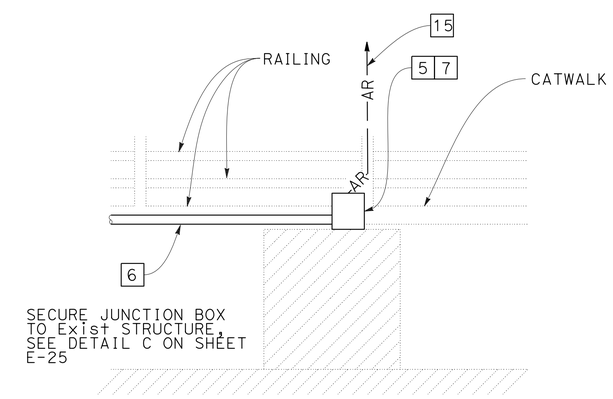

SECTION C-C

PIER 1

EXISTING ELECTRICAL FACILITIES AND PROPOSED MODIFICATIONS, SUBSTATION 1

12 kV SYSTEM (SAN MATEO-HAYWARD BRIDGE)

NO SCALE

APPROVED FOR ELECTRICAL WORK ONLY

E-17

REVISED BY	DATE REVISED
GM	11/21/13

GIZACHEW MERID — CALCULATED-DESIGNED BY
BEHZAD GOLEMOHAMMADI — CHECKED BY
FUNCTIONAL SUPERVISOR: BEHZAD GOLEMOHAMMADI

STATE OF CALIFORNIA - DEPARTMENT OF TRANSPORTATION
Caltrans
ELECTRICAL

LAST REVISION 04-21-14 DATE PLOTTED => 18-JUN-2014 TIME PLOTTED => 12:33

Dist	COUNTY	ROUTE	POST MILES TOTAL PROJECT	SHEET No.	TOTAL SHEETS
04	SM,Ala	92	R14.4/R18.8, R0.0/R2.6	36	117

REGISTERED ELECTRICAL ENGINEER 3/4/14 DATE

5-27-14
PLANS APPROVAL DATE

REGISTERED PROFESSIONAL ENGINEER Gizachew Merid No. 18216 Exp. 12-31-15 ELECT STATE OF CALIFORNIA

THE STATE OF CALIFORNIA OR ITS OFFICERS OR AGENTS SHALL NOT BE RESPONSIBLE FOR THE ACCURACY OR COMPLETENESS OF SCANNED COPIES OF THIS PLAN SHEET.

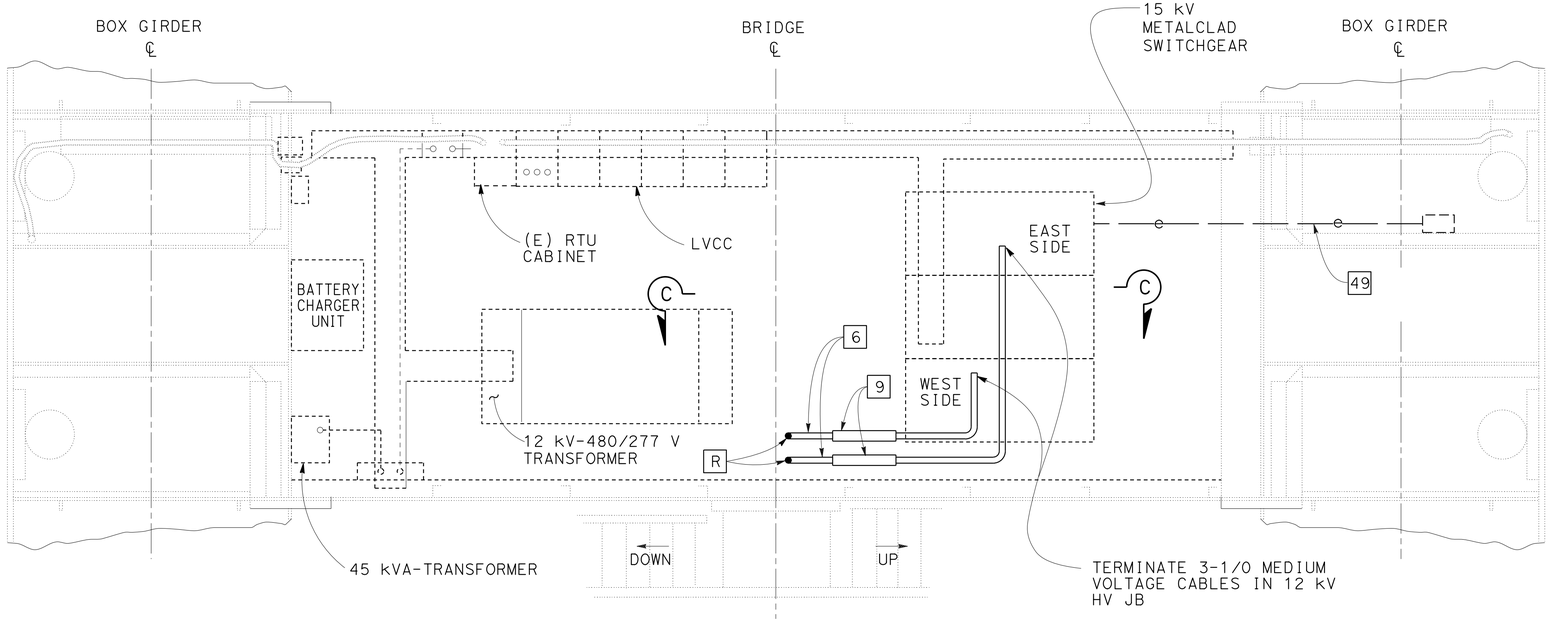

PLAN

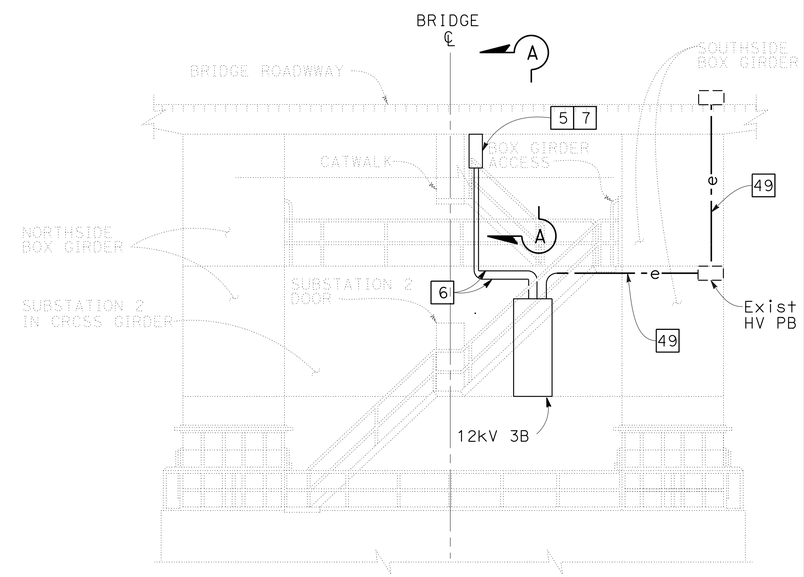

ELEVATION
PIER 19

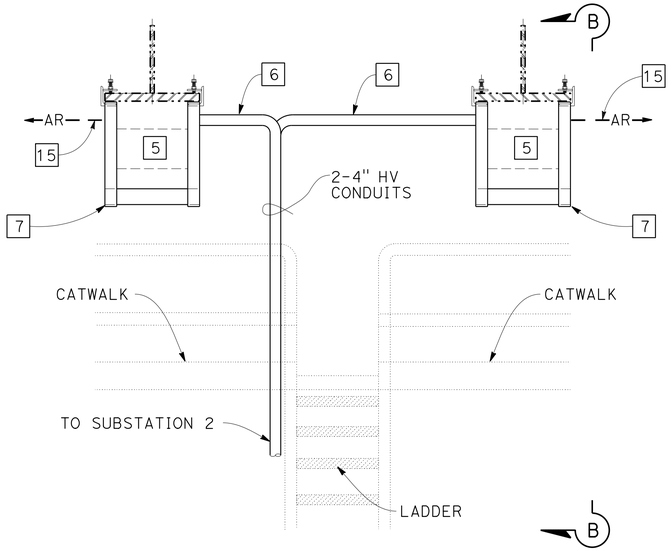

SECTION A-A

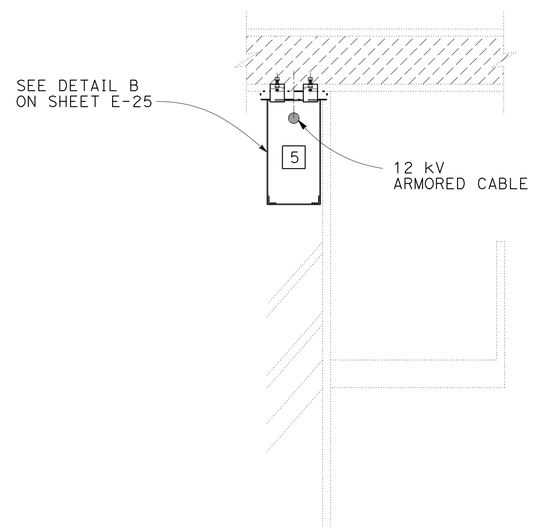

SECTION B-B

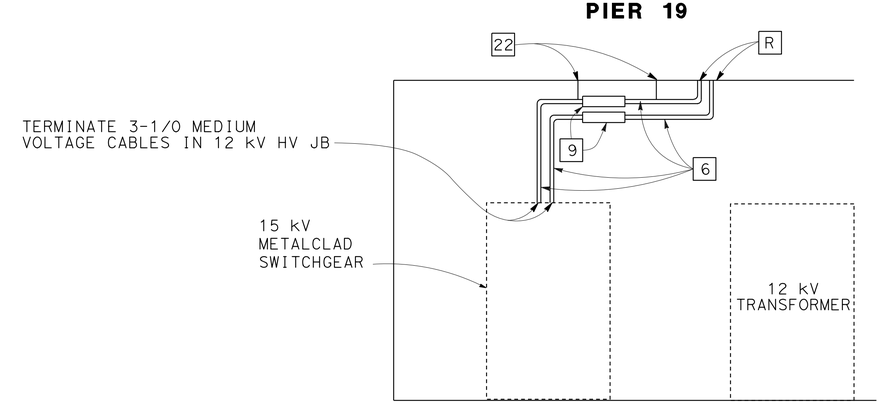

SECTION C-C

EXISTING ELECTRICAL FACILITIES AND PROPOSED MODIFICATIONS, SUBSTATION 2

APPROVED FOR ELECTRICAL WORK ONLY

FOR NOTES, ABBREVIATIONS AND LEGEND, SEE SHEET E-1 AND E-2

12 kV SYSTEM (SAN MATEO-HAYWARD BRIDGE)

NO SCALE

E-18

REVISED BY	DATE REVISED
GM	11/21/13

GIZACHEW MERID — BEHZAD GOLEMOHAMMADI

CALCULATED-DESIGNED BY — CHECKED BY

FUNCTIONAL SUPERVISOR — BEHZAD GOLEMOHAMMADI

STATE OF CALIFORNIA - DEPARTMENT OF TRANSPORTATION

Caltrans

ELECTRICAL

LAST REVISION 04-19-14 | DATE PLOTTED => 18-JUN-2014 | TIME PLOTTED => 12:33

Dist	COUNTY	ROUTE	POST MILES TOTAL PROJECT	SHEET No.	TOTAL SHEETS
04	SM,Ala	92	R14.4/R18.8, R0.0/R2.6	37	117

REGISTERED ELECTRICAL ENGINEER 3/4/14 DATE

5-27-14
PLANS APPROVAL DATE

REGISTERED PROFESSIONAL ENGINEER Gizachew Merid No. 18216 Exp. 12-31-15 ELECT STATE OF CALIFORNIA

THE STATE OF CALIFORNIA OR ITS OFFICERS OR AGENTS SHALL NOT BE RESPONSIBLE FOR THE ACCURACY OR COMPLETENESS OF SCANNED COPIES OF THIS PLAN SHEET.

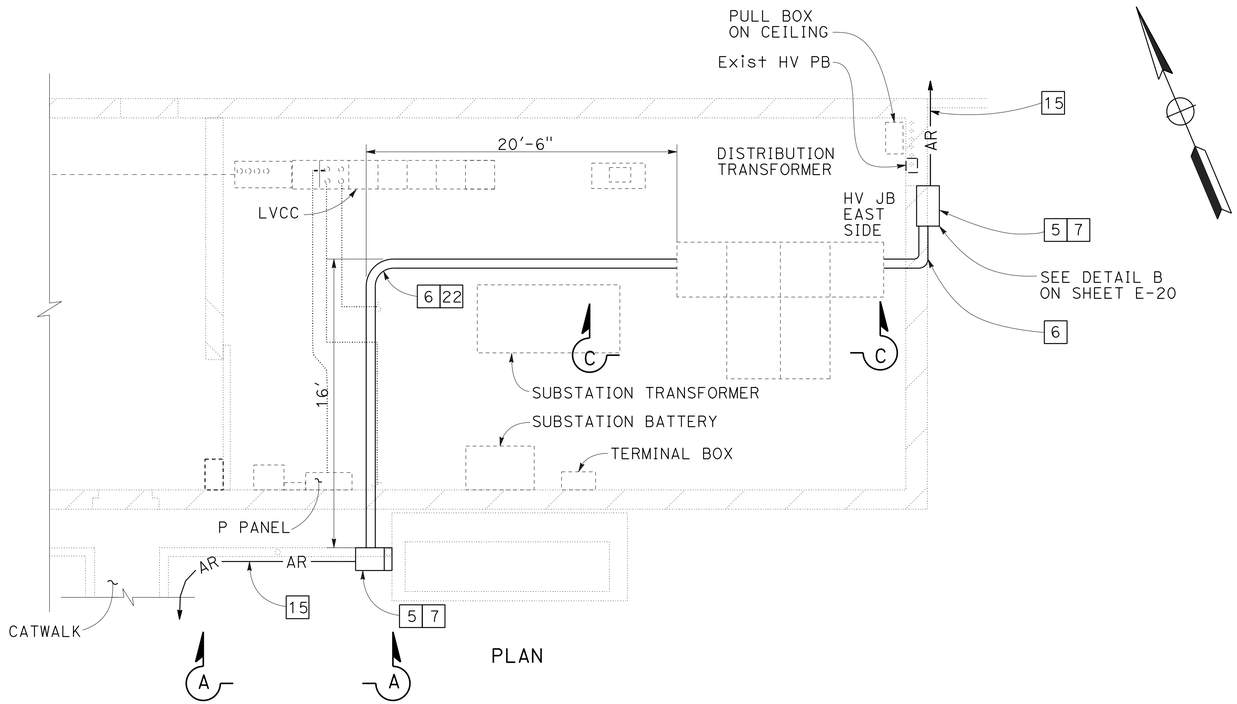

PLAN

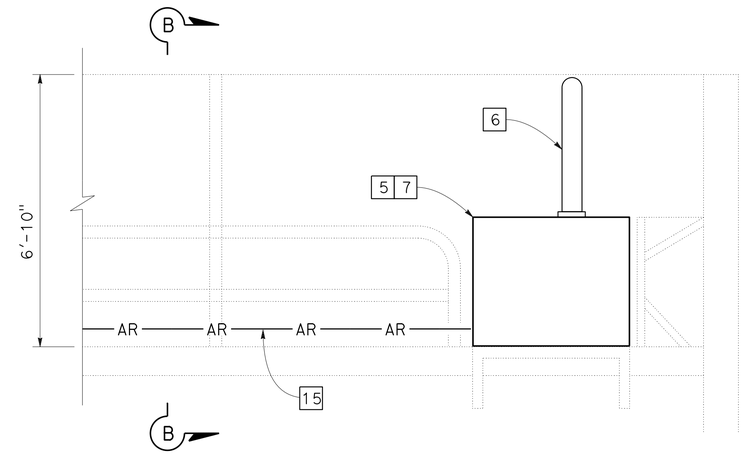

SECTION A-A

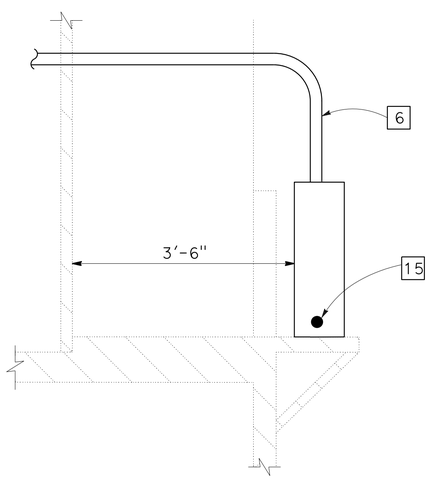

SECTION B-B

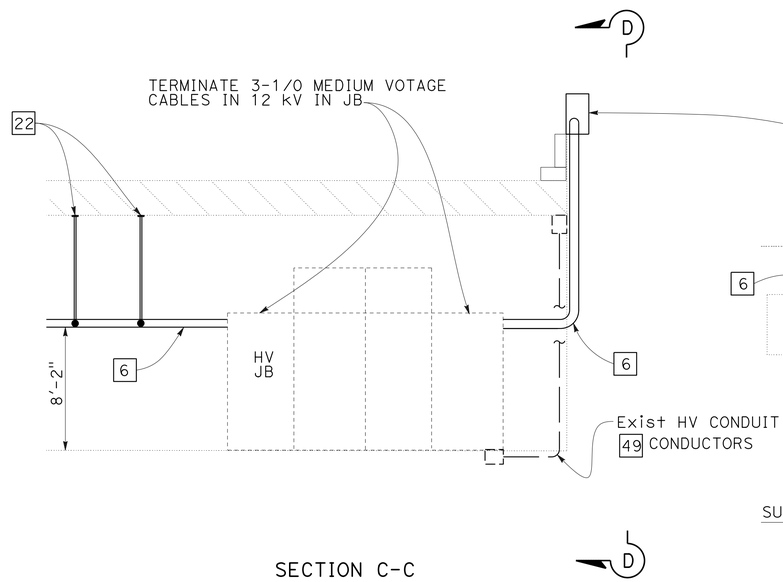

SECTION C-C

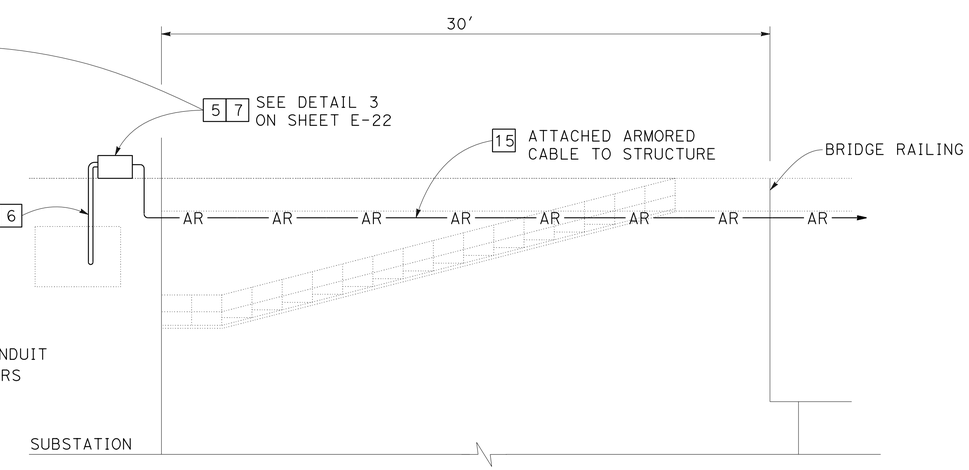

SECTION D-D

EXISTING ELECTRICAL FACILITIES AND PROPOSED MODIFICATIONS, SUBSTATION 3

12 kV SYSTEM (SAN MATEO-HAYWARD BRIDGE)
NO SCALE

APPROVED FOR ELECTRICAL WORK ONLY

E-19

REVISED BY	DATE REVISED
GM	11/21/13

GIZACHEW MERID — CALCULATED-DESIGNED BY
BEHZAD GOLEMOHAMMADI — CHECKED BY
BEHZAD GOLEMOHAMMADI — FUNCTIONAL SUPERVISOR

STATE OF CALIFORNIA - DEPARTMENT OF TRANSPORTATION
Caltrans
ELECTRICAL

LAST REVISION 04-19-14
DATE PLOTTED => 18-JUN-2014
TIME PLOTTED => 12:33

Dist	COUNTY	ROUTE	POST MILES TOTAL PROJECT	SHEET No.	TOTAL SHEETS
04	SM,Ala	92	R14.4/R18.8, R0.0/R2.6	38	117

REGISTERED ELECTRICAL ENGINEER 3/4/14 DATE

5-27-14
PLANS APPROVAL DATE

REGISTERED PROFESSIONAL ENGINEER Gizachew Merid No. 18216 Exp. 12-31-15 ELECT STATE OF CALIFORNIA

THE STATE OF CALIFORNIA OR ITS OFFICERS OR AGENTS SHALL NOT BE RESPONSIBLE FOR THE ACCURACY OR COMPLETENESS OF SCANNED COPIES OF THIS PLAN SHEET.

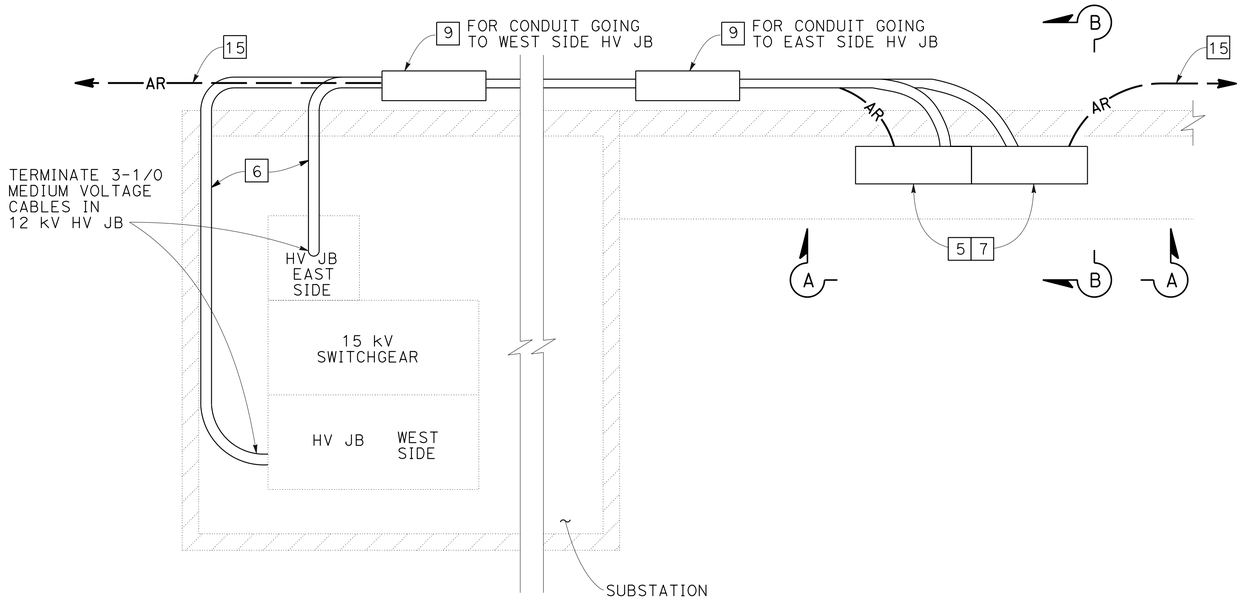

DETAIL B

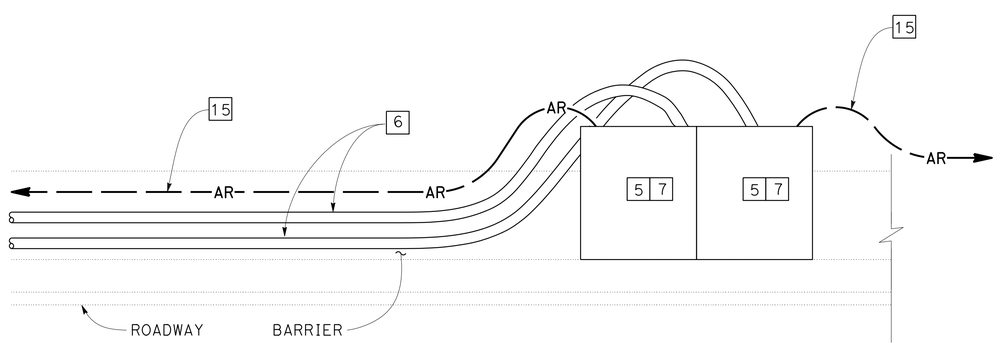

SECTION A-A

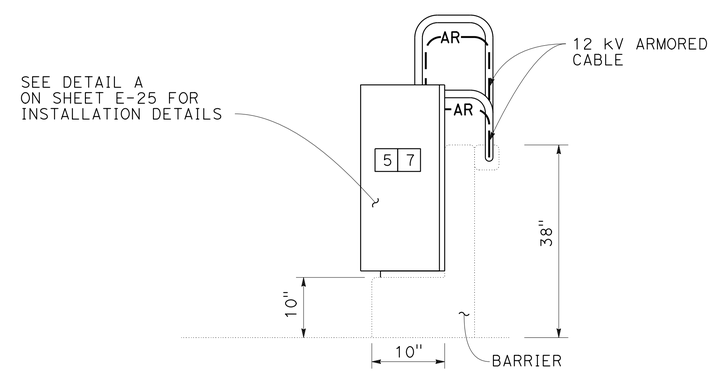

SECTION B-B

EXISTING ELECTRICAL FACILITIES AND PROPOSED MODIFICATIONS, SUBSTATIONS 4,5,6 AND 7

12 kV SYSTEM (SAN MATEO-HAYWARD BRIDGE)

NO SCALE

E-20

STATE OF CALIFORNIA - DEPARTMENT OF TRANSPORTATION
Caltrans
ELECTRICAL

FUNCTIONAL SUPERVISOR: BEHZAD GOLEMOHAMMADI

CALCULATED-DESIGNED BY: GIZACHEW MERID
CHECKED BY: BEHZAD GOLEMOHAMMADI

REVISED BY: GM
DATE REVISED: 11/21/13

LAST REVISION 04-17-14
DATE PLOTTED => 18-JUN-2014
TIME PLOTTED => 12:33

Dist	COUNTY	ROUTE	POST MILES TOTAL PROJECT	SHEET No.	TOTAL SHEETS
04	SM,Ala	92	R14.4/R18.8, R0.0/R2.6	39	117

REGISTERED ELECTRICAL ENGINEER DATE 3/4/14

PLANS APPROVAL DATE 5-27-14

REGISTERED PROFESSIONAL ENGINEER Gizachew Merid No. 18216 Exp. 12-31-15 ELECT STATE OF CALIFORNIA

THE STATE OF CALIFORNIA OR ITS OFFICERS OR AGENTS SHALL NOT BE RESPONSIBLE FOR THE ACCURACY OR COMPLETENESS OF SCANNED COPIES OF THIS PLAN SHEET.

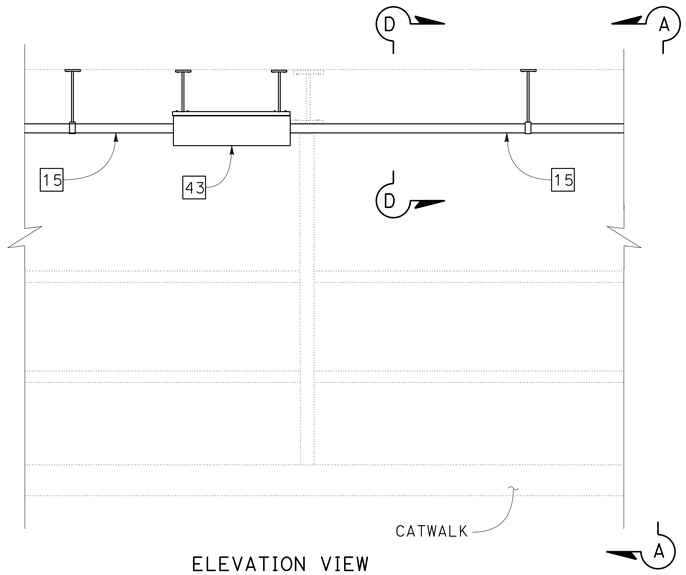

ELEVATION VIEW

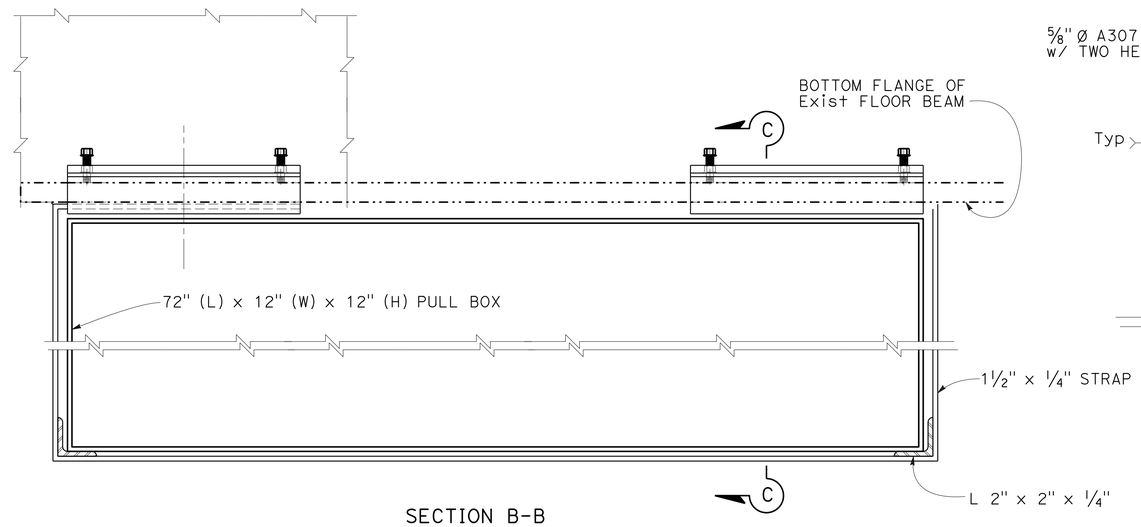

SECTION B-B

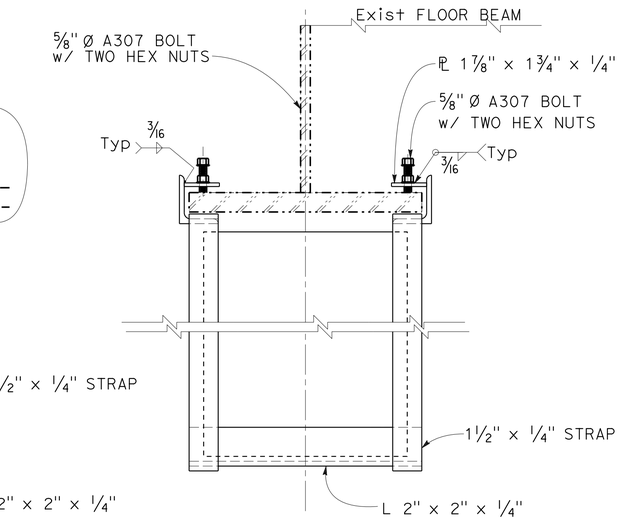

SECTION C-C

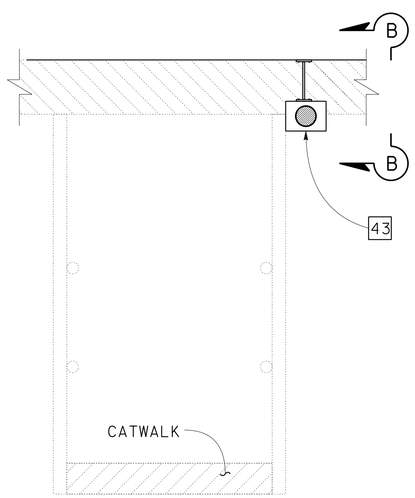

SECTION A-A

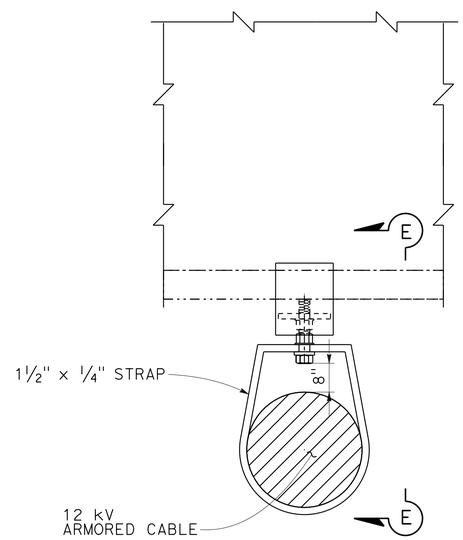

SECTION D-D

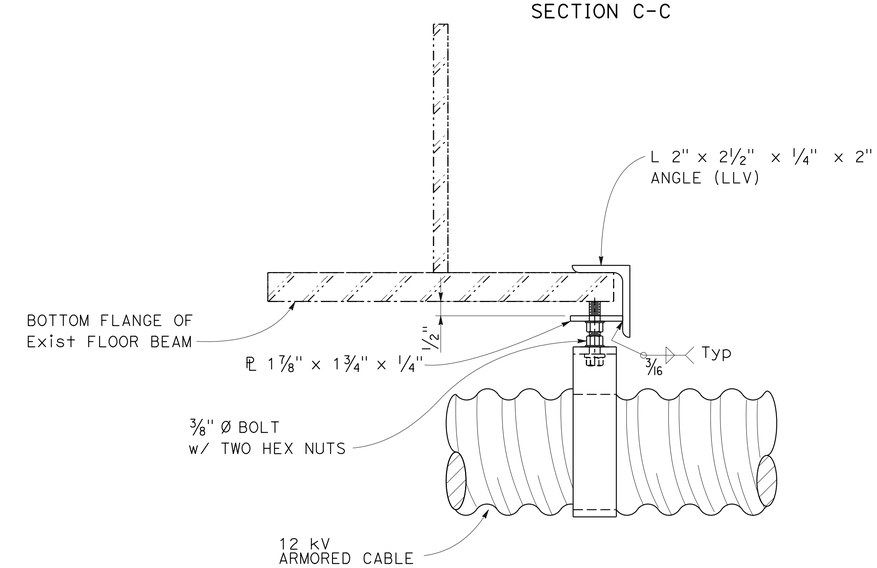

SECTION E-E

ARMORED CABLE AND WIRE TROUGH INSTALLATION AT THE CATWALK

ELECTRICAL DETAILS

12 kV SYSTEM (SAN MATEO-HAYWARD BRIDGE)

NO SCALE

E-21

REVISED BY	DATE REVISED
GM	11/21/13

GIZACHEW MERID — CALCULATED-DESIGNED BY
BEHZAD GOLEMOHAMMADI — CHECKED BY
BEHZAD GOLEMOHAMMADI — FUNCTIONAL SUPERVISOR

STATE OF CALIFORNIA - DEPARTMENT OF TRANSPORTATION
Caltrans
ELECTRICAL

LAST REVISION 04-22-14 | DATE PLOTTED => 18-JUN-2014 | TIME PLOTTED => 12:33

Dist	COUNTY	ROUTE	POST MILES TOTAL PROJECT	SHEET No.	TOTAL SHEETS
04	SM,Ala	92	R14.4/R18.8, R0.0/R2.6	40	117

REGISTERED ELECTRICAL ENGINEER 3/4/14 DATE

5-27-14
PLANS APPROVAL DATE

REGISTERED PROFESSIONAL ENGINEER Gizachew Merid No. 18216 Exp. 12-31-15 ELECT STATE OF CALIFORNIA

THE STATE OF CALIFORNIA OR ITS OFFICERS OR AGENTS SHALL NOT BE RESPONSIBLE FOR THE ACCURACY OR COMPLETENESS OF SCANNED COPIES OF THIS PLAN SHEET.

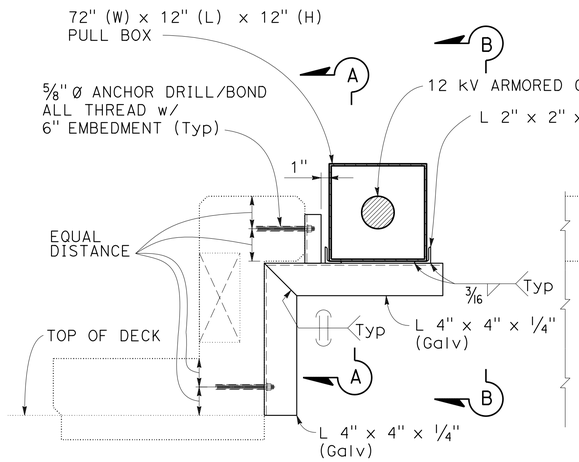

DETAIL 3

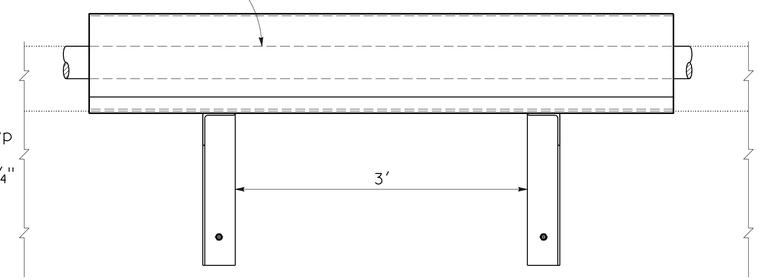

SECTION B-B

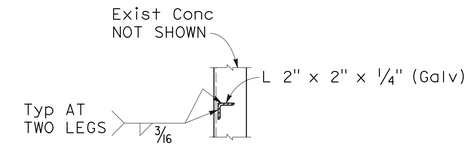

SECTION C-C

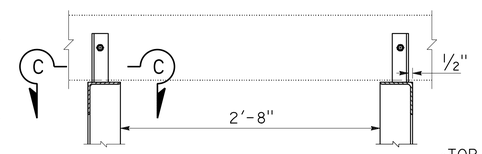

SECTION A-A

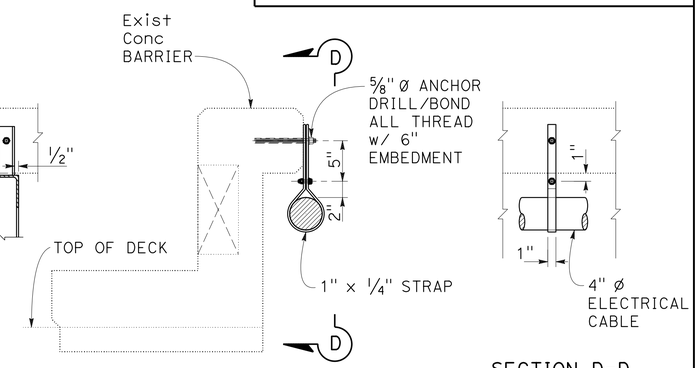

SECTION D-D

DETAIL 4

TYPICAL INSTALLATION DETAIL ON BRIDGE TRESTLE

TYPICAL CONDUIT MOUNTING ON STRUT

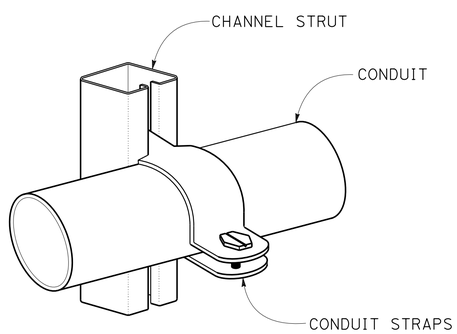

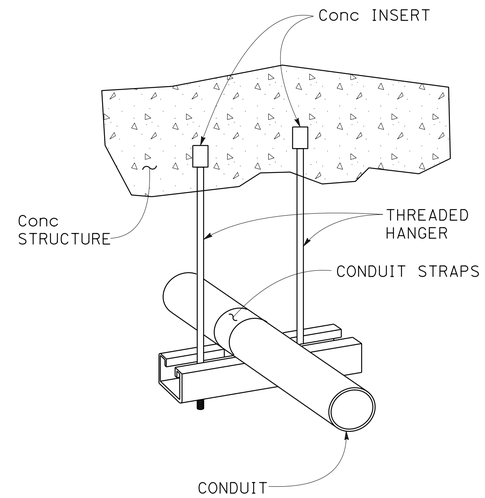

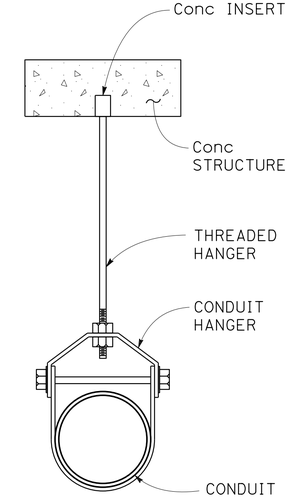

NOTE:

TYPICAL METAL FRAMING AND HANGER SUPPORT EXAMPLES.
OTHER COMBINATIONS SUITABLE FOR THE PURPOSE FROM COMMERCIALLY AVAILABLE METAL FRAMING AND HANGING SYSTEM MANUFACTURERS MAY BE INSTALLED IF APPROVED BY THE ENGINEER.

TYPICAL MULTIPLE HANGER

TYPICAL HANGER ASSEMBLY

ELECTRICAL DETAILS

12 kV SYSTEM (SAN MATEO-HAYWARD BRIDGE)

NO SCALE

E-22

REVISED BY	DATE REVISED
GM	11/21/13

GIZACHEW MERID — BEHZAD GOLEMOHAMMADI
CALCULATED-DESIGNED BY — CHECKED BY
FUNCTIONAL SUPERVISOR — BEHZAD GOLEMOHAMMADI

STATE OF CALIFORNIA - DEPARTMENT OF TRANSPORTATION
Caltrans
ELECTRICAL

LAST REVISION 04-19-14
DATE PLOTTED => 18-JUN-2014
TIME PLOTTED => 12:33

Dist	COUNTY	ROUTE	POST MILES TOTAL PROJECT	SHEET No.	TOTAL SHEETS
04	SM,Ala	92	R14.4/R18.8, R0.0/R2.6	41	117

REGISTERED ELECTRICAL ENGINEER 3/4/14 DATE

PLANS APPROVAL DATE 5-27-14

REGISTERED PROFESSIONAL ENGINEER Gizachew Merid No. 18216 Exp. 12-31-15 ELECT STATE OF CALIFORNIA

THE STATE OF CALIFORNIA OR ITS OFFICERS OR AGENTS SHALL NOT BE RESPONSIBLE FOR THE ACCURACY OR COMPLETENESS OF SCANNED COPIES OF THIS PLAN SHEET.

GENERAL NOTE:

1. INSTALL STAINLESS STEEL MESH GRIP FOR THE ARMORED CABLE AT EACH EXPANSION JOINT.

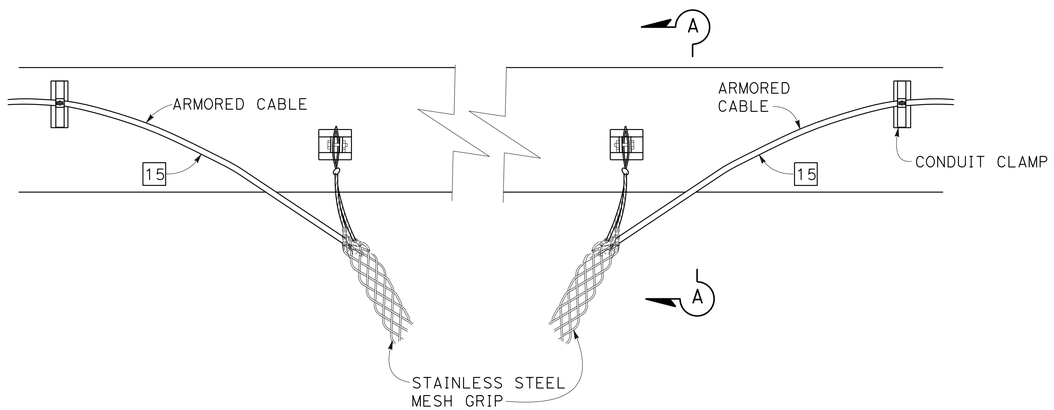

ELEVATION

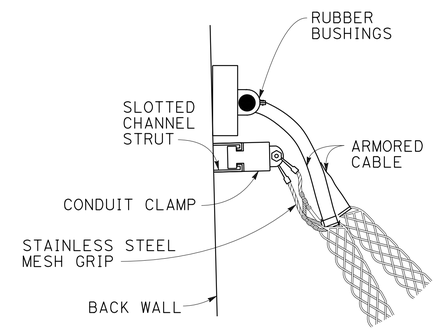

SECTION A-A

ARMORED CABLE DETAIL

APPROVED FOR ELECTRICAL WORK ONLY

FOR NOTES, ABBREVIATIONS AND LEGEND, SEE SHEET E-1 AND E-2

12 kV SYSTEM (SAN MATEO-HAYWARD BRIDGE)

NO SCALE

E-23

GM	11/21/13	GIZACHEW MERID	BEHZAD GOLEMOHAMMADI
REVISED BY	DATE REVISED	CALCULATED-DESIGNED BY	CHECKED BY
FUNCTIONAL SUPERVISOR	BEHZAD GOLEMOHAMMADI		

STATE OF CALIFORNIA - DEPARTMENT OF TRANSPORTATION

Caltrans

ELECTRICAL

LAST REVISION 04-18-14 DATE PLOTTED => 18-JUN-2014 TIME PLOTTED => 12:33

Dist	COUNTY	ROUTE	POST MILES TOTAL PROJECT	SHEET No.	TOTAL SHEETS
04	SM,Ala	92	R14.4/R18.8, R0.0/R2.6	42	117

REGISTERED ELECTRICAL ENGINEER 3/4/14 DATE

PLANS APPROVAL DATE 5-27-14

REGISTERED PROFESSIONAL ENGINEER Gizachew Merid No. 18216 Exp. 12-31-15 ELECT STATE OF CALIFORNIA

THE STATE OF CALIFORNIA OR ITS OFFICERS OR AGENTS SHALL NOT BE RESPONSIBLE FOR THE ACCURACY OR COMPLETENESS OF SCANNED COPIES OF THIS PLAN SHEET.

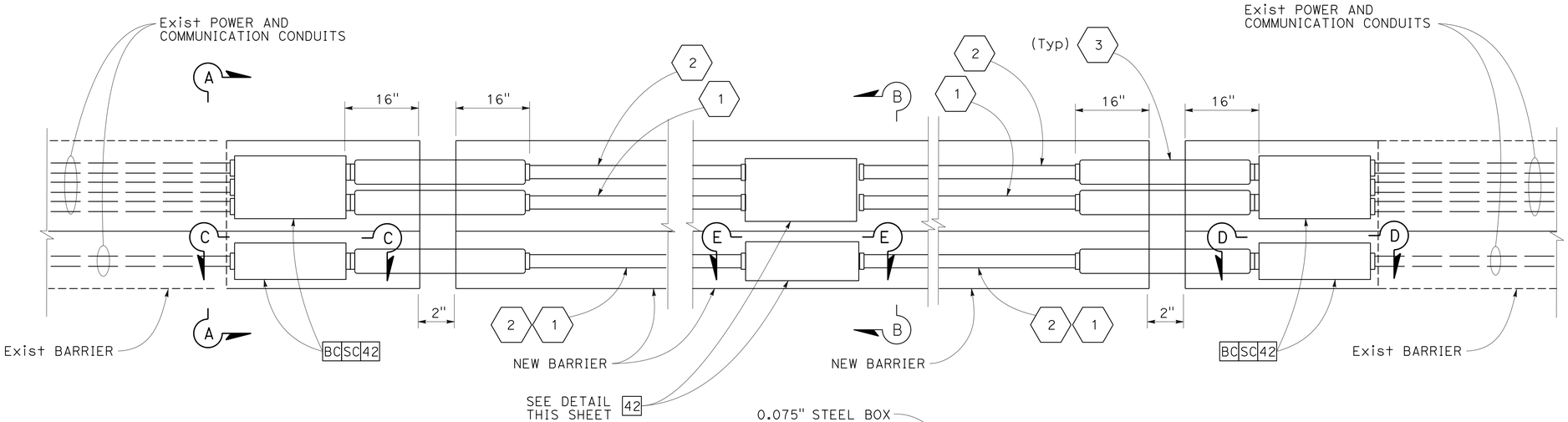

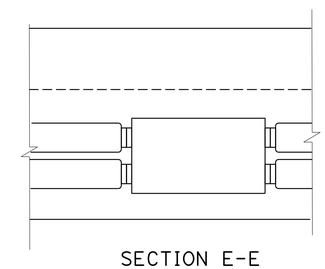

SECTION E-E

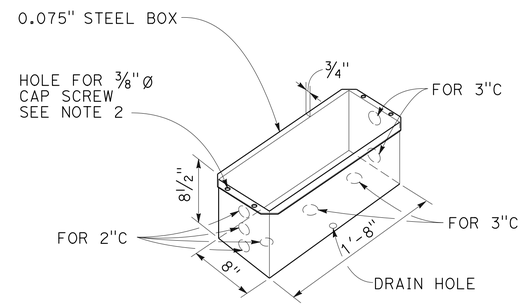

MODIFIED 9A PULL BOX

NOTES:

1. REFER TO THE STRUCTURE PLANS FOR INSTALLATION DETAIL OF THE BOXES.
2. SEE ES-9C FOR 9A PULL BOX DETAILS.
3. SEE ES-9B FOR COMBINATION EXPANSION-DEFLECTION FITTINGS.

GENERAL NOTES: (THIS SHEET ONLY)

1. REPLACE Exist 3"C POWER CONDUCTORS WITH NEW IN THE NEW CONDUITS.
2. REPLACE Exist 3"C COMMUNICATION CABLES WITH NEW IN THE NEW CONDUITS.
3. COMBINATION EXPANSION-DEFLECTION FITTINGS.
4. SPLICE CONDUCTORS IN NEW PULL BOX.

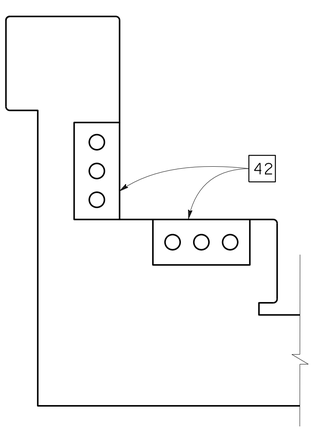

SECTION A-A

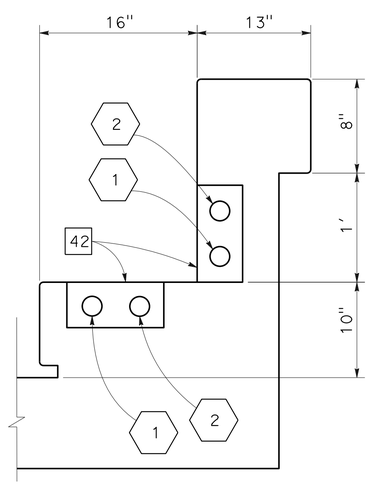

SECTION B-B

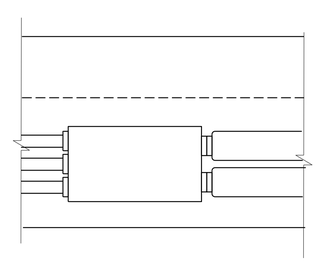

SECTION C-C

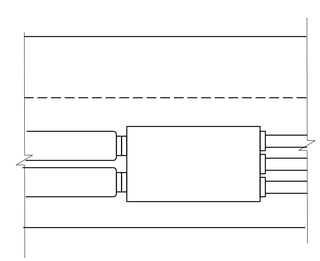

SECTION D-D

ELECTRICAL DETAILS

12 kV SYSTEM (SAN MATEO-HAYWARD BRIDGE)

NO SCALE

E-24

STATE OF CALIFORNIA - DEPARTMENT OF TRANSPORTATION
Caltrans
ELECTRICAL

FUNCTIONAL SUPERVISOR: BEHZAD GOLEMOHAMMADI

CALCULATED-DESIGNED BY: GIZACHEW MERID
CHECKED BY: BEHZAD GOLEMOHAMMADI

REVISED BY: GM
DATE REVISED: 11/21/13

LAST REVISION 04-22-14 | DATE PLOTTED => 18-JUN-2014 | TIME PLOTTED => 12:33

Dist	COUNTY	ROUTE	POST MILES TOTAL PROJECT	SHEET No.	TOTAL SHEETS
04	SM,Ala	92	R14.4/R18.8, R0.0/R2.6	43	117

REGISTERED ELECTRICAL ENGINEER 3/4/14 DATE

5-27-14
PLANS APPROVAL DATE

REGISTERED PROFESSIONAL ENGINEER Gizachew Merid No. 18216 Exp. 12-31-15 ELECT STATE OF CALIFORNIA

THE STATE OF CALIFORNIA OR ITS OFFICERS OR AGENTS SHALL NOT BE RESPONSIBLE FOR THE ACCURACY OR COMPLETENESS OF SCANNED COPIES OF THIS PLAN SHEET.

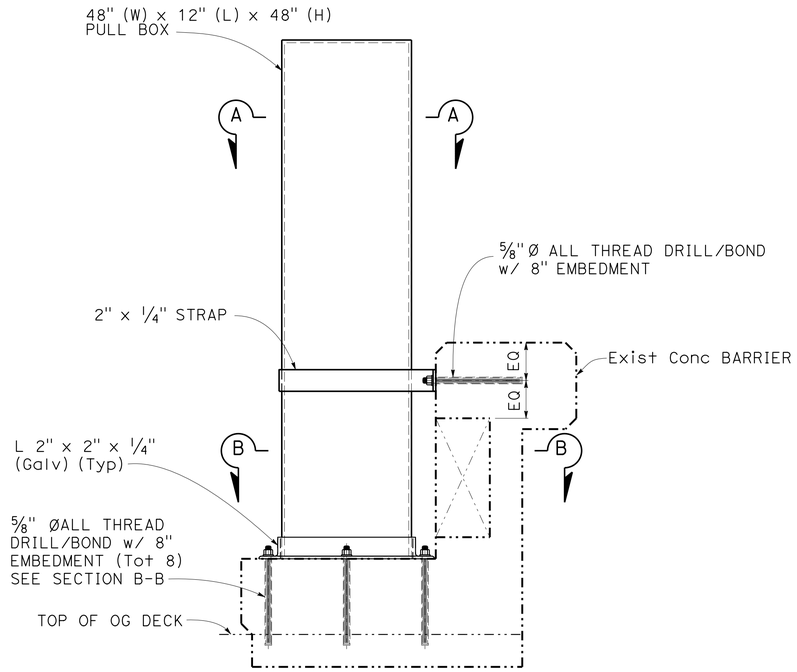

DETAIL A

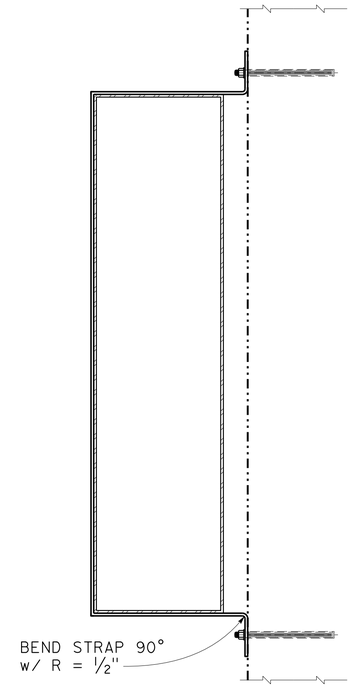

SECTION A-A

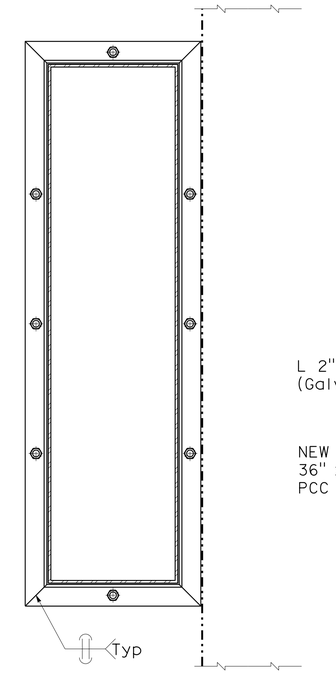

SECTION B-B

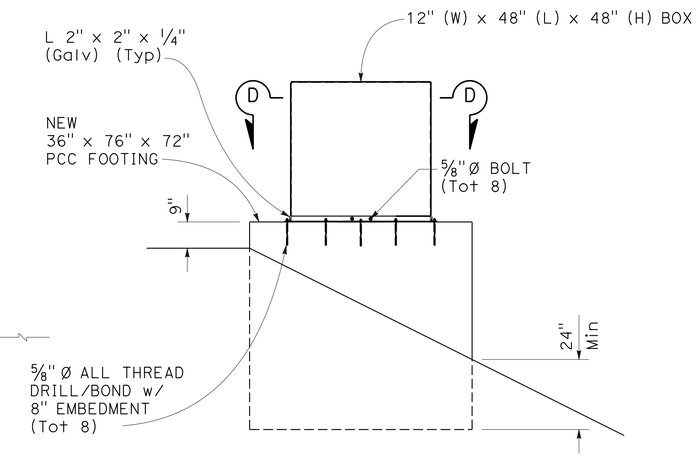

DETAIL D

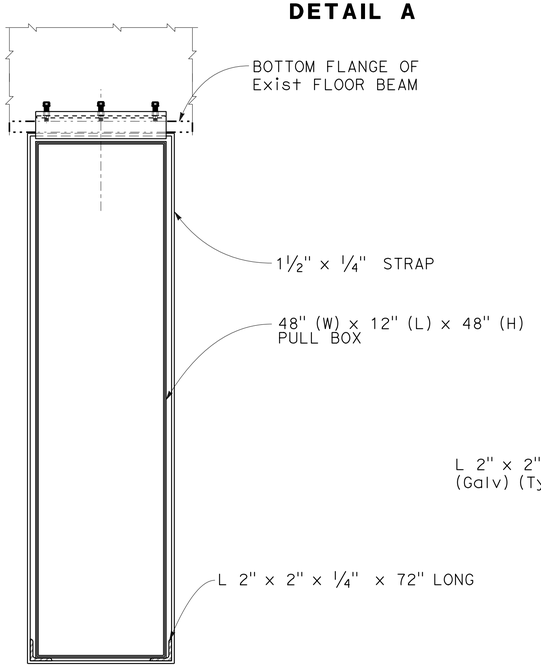

JUNCTION BOX HANGER TO THE
Bot FLANGE OF (E) FLOOR BEAM

DETAIL B

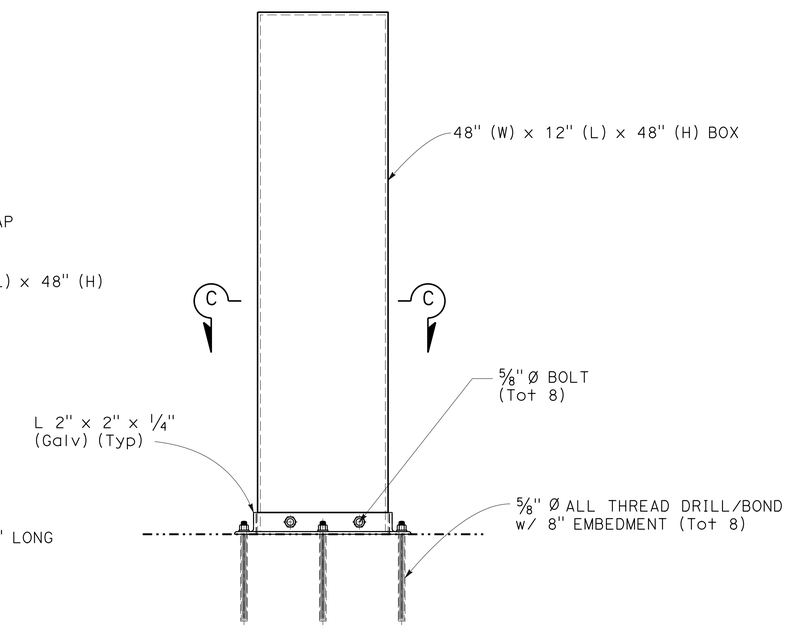

48" x 12" x 48" BOX ON
TOP OF (E) PIER 1

DETAIL C

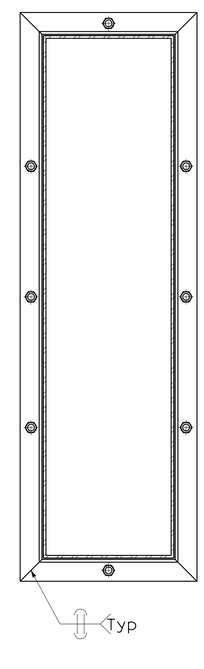

SECTION C-C

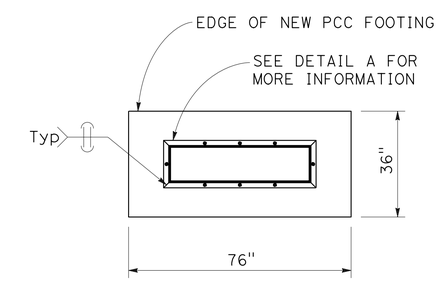

SECTION D-D

MISCELLANEOUS DETAILS

12 kV SYSTEM (SAN MATEO-HAYWARD BRIDGE)

NO SCALE

E-25

STATE OF CALIFORNIA - DEPARTMENT OF TRANSPORTATION
Caltrans
ELECTRICAL

FUNCTIONAL SUPERVISOR: BEHZAD GOLEMOHAMMADI
CALCULATED-DESIGNED BY: GIZACHEW MERID
CHECKED BY: BEHZAD GOLEMOHAMMADI
REVISED BY: GM
DATE REVISED: 11/21/13

LAST REVISION 04-23-14
DATE PLOTTED => 18-JUN-2014
TIME PLOTTED => 12:33

Dist	COUNTY	ROUTE	POST MILES TOTAL PROJECT	SHEET No.	TOTAL SHEETS
04	SM,Ala	92	R14.4/R18.8, R0.0/R2.6	44	117

Lionel J. Sudds 3/3/14
REGISTERED ELECTRICAL ENGINEER DATE

5-27-14
PLANS APPROVAL DATE

REGISTERED PROFESSIONAL ENGINEER Lionel J. Sudds No. 15201 Exp. 6-30-14 ELECT STATE OF CALIFORNIA

THE STATE OF CALIFORNIA OR ITS OFFICERS OR AGENTS SHALL NOT BE RESPONSIBLE FOR THE ACCURACY OR COMPLETENESS OF SCANNED COPIES OF THIS PLAN SHEET.

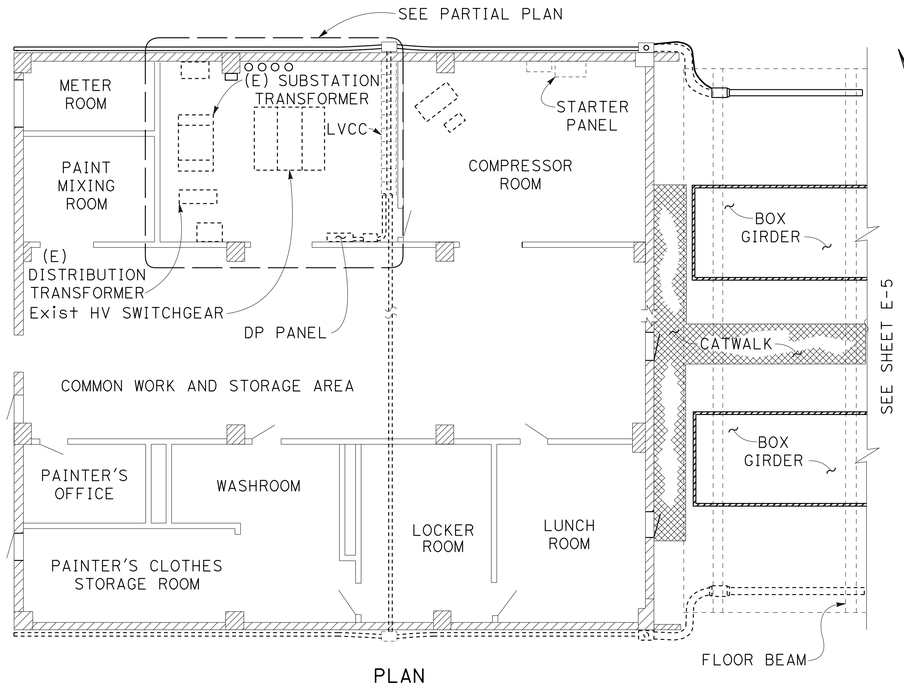

PLAN
SUBSTATION 1

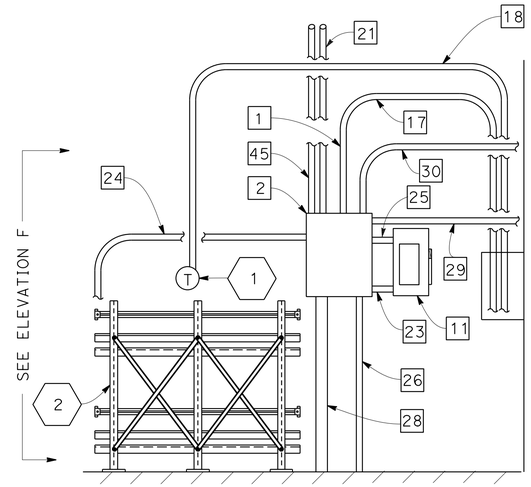

SECTION A-A

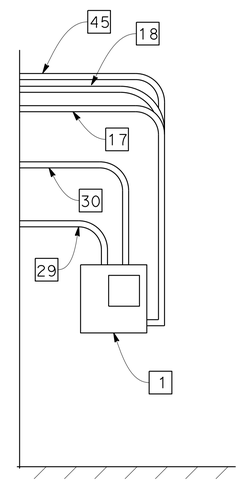

SECTION B-B

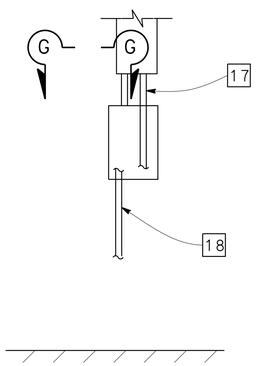

ELEVATION D

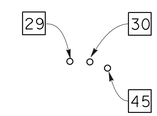

SECTION G-G

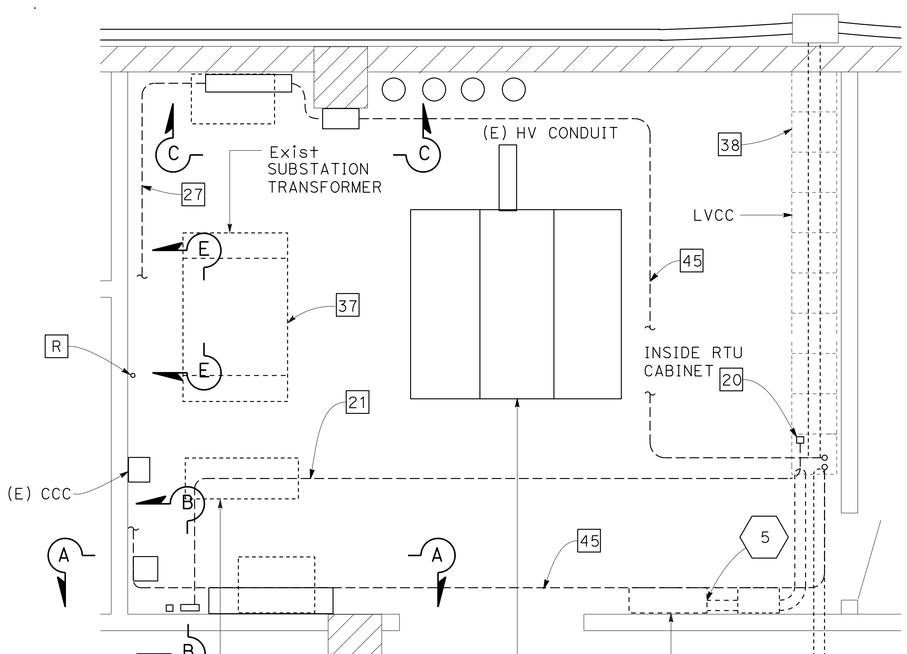

PARTIAL PLAN

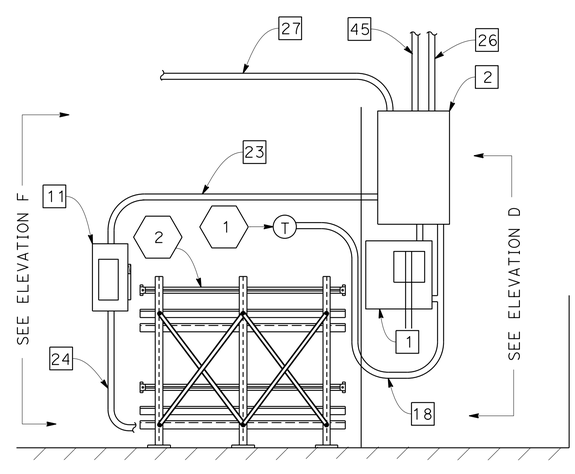

SECTION C-C

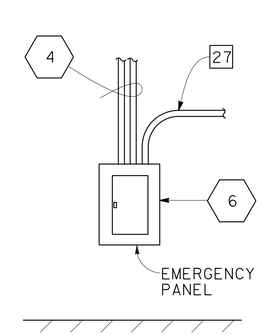

SECTION E-E

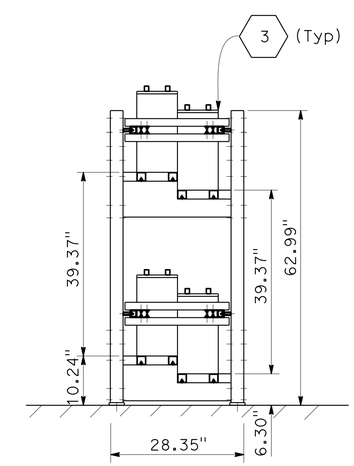

ELEVATION F

LEGEND: (THIS SHEET ONLY)

1. TEMPERATURE SENSOR FROM THE POWER SUPPLY AND BATTERY CHARGER.
2. BATTERY RACK FROM THE POWER SUPPLY AND BATTERY CHARGER.
3. NiCd BATTERY (TOTAL OF 32 BATTERIES) FROM THE POWER SUPPLY AND BATTERY CHARGER.
4. (E) CONDUIT AND (E) CONDUCTORS.
5. DISCONNECT THE (E) CONDUCTORS FROM THE DP PANEL CHARGERS AND CONNECT THE NEW CONDUCTORS AND REPLACE THE (E) CIRCUIT BREAKERS WITH NEW CIRCUIT BREAKER PER THE NEC FOR THE NEW POWER SUPPLY AND BATTERY CHARGERS IN THE DP PANEL.
6. DISCONNECT THE (E) CONDUCTORS FROM THE EMERGENCY PANEL AND REPLACE THE (E) CIRCUIT BREAKER WITH THE NEC CIRCUIT BREAKER PER NEC AND CONNECT THE NEW CONDUCTORS TO THE (E) EMERGENCY PANEL.

SUBSTATION 1
(SAN MATEO-HAYWARD BRIDGE)
ELECTRICAL LAYOUT FOR SUBSTATION 1

NO SCALE

APPROVED FOR ELECTRICAL WORK ONLY

FOR NOTES, ABBREVIATIONS AND LEGEND, SEE SHEETS E-1 AND E-2

E-26

STATE OF CALIFORNIA - DEPARTMENT OF TRANSPORTATION
Caltrans
ELECTRICAL

FUNCTIONAL SUPERVISOR: BEHZAD GOLEMOHAMMADI
CALCULATED-DESIGNED BY: LIONEL J. SUDDS
CHECKED BY: BEHZAD GOLEMOHAMMADI
REVISED BY: LS
DATE REVISED: 3/1/14

LAST REVISION 05-01-14
DATE PLOTTED => 18-JUN-2014
TIME PLOTTED => 12:33

Dist	COUNTY	ROUTE	POST MILES TOTAL PROJECT	SHEET No.	TOTAL SHEETS
04	SM,Ala	92	R14.4/R18.8, R0.0/R2.6	45	117

REGISTERED ELECTRICAL ENGINEER 3/3/14 DATE

5-27-14
PLANS APPROVAL DATE

REGISTERED PROFESSIONAL ENGINEER Lionel J. Sudds No. 15201 Exp. 6-30-14 ELECT STATE OF CALIFORNIA

THE STATE OF CALIFORNIA OR ITS OFFICERS OR AGENTS SHALL NOT BE RESPONSIBLE FOR THE ACCURACY OR COMPLETENESS OF SCANNED COPIES OF THIS PLAN SHEET.

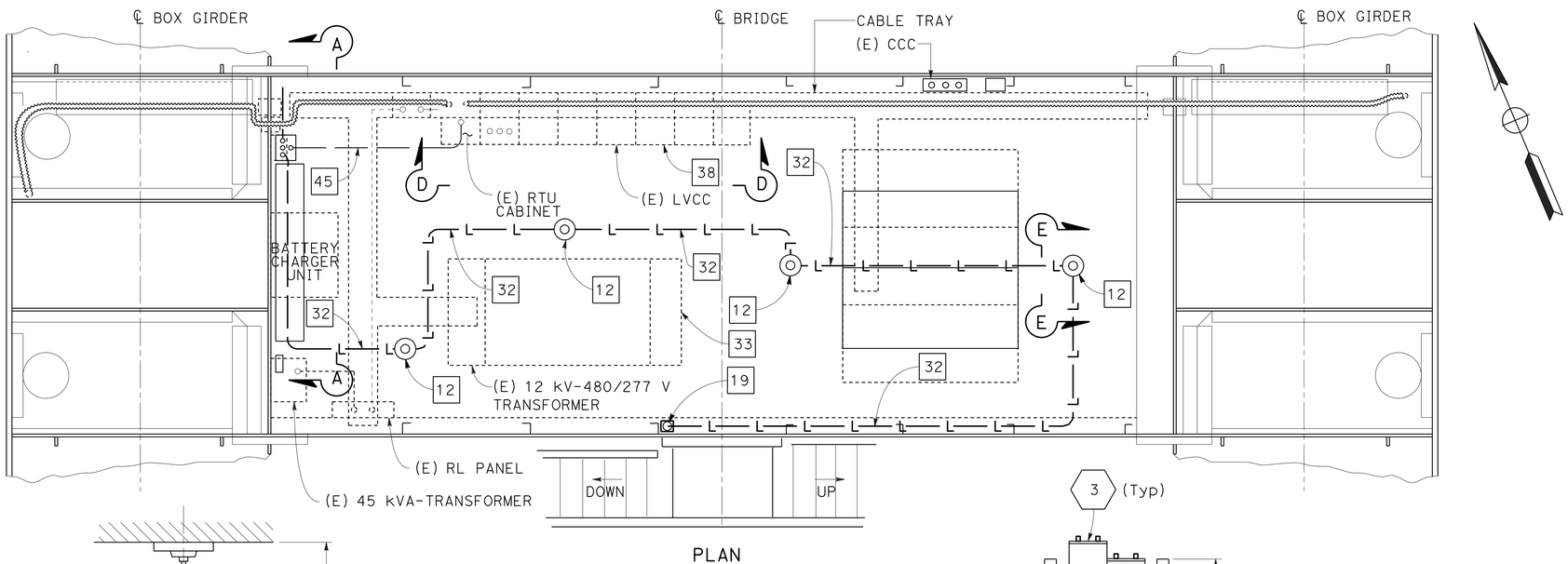

PLAN

SUBSTATION 2

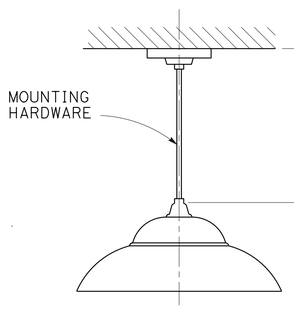

SECTION E-E (Typ)
LIGHT FIXTURE

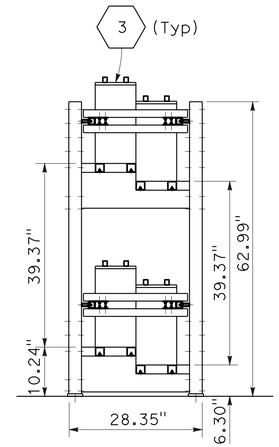

ELEVATION C-C

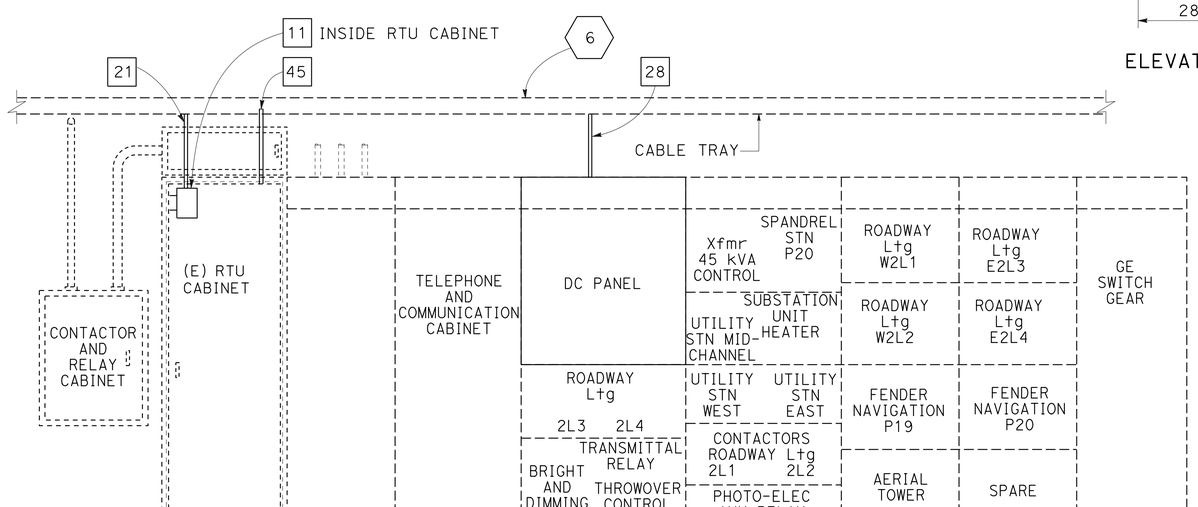

SECTION D-D

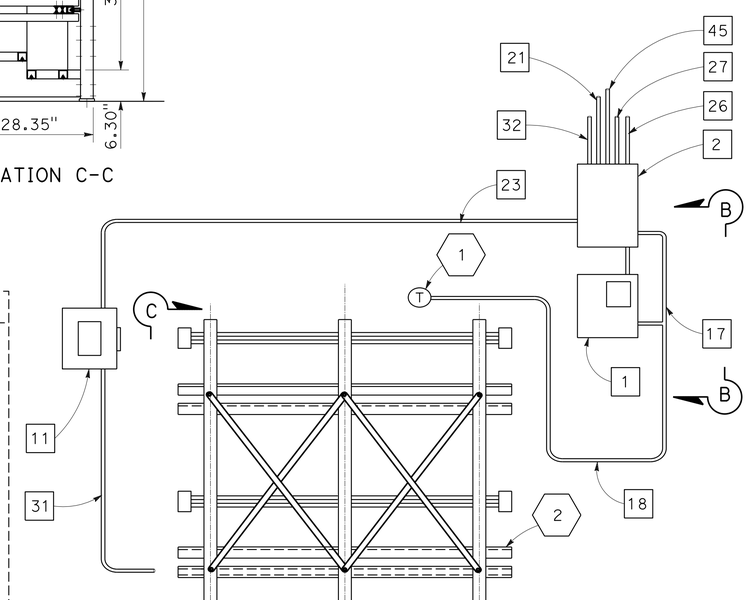

SECTION A-A

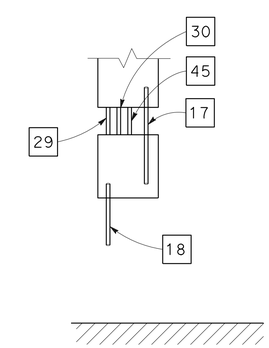

SECTION B-B

LEGEND: (THIS SHEET ONLY)

1. TEMPERATURE SENSOR FROM THE POWER SUPPLY AND BATTERY CHARGER.
2. BATTERY RACK FROM THE POWER SUPPLY AND BATTERY CHARGER.
3. NiCd BATTERY (TOTAL OF 32 BATTERIES) FROM THE POWER SUPPLY AND BATTERY CHARGER.
4. (E) CONDUIT AND (E) CONDUCTORS.
5. INSTALL 3#12 CONDUITS IN WIREWAY USE FOR THE INSTALL OUTLET.
6. RC THE (E) CONDUCTORS USE FOR THE (E) DC PANEL IN WIREWAY AND INSTALL 3#10 CONDUCTORS FOR THE (E) DC PANEL IN WIREWAY.

APPROVED FOR ELECTRICAL WORK ONLY

FOR NOTES, ABBREVIATIONS AND LEGEND, SEE SHEETS E-1 AND E-2

SUBSTATION 2
(SAN MATEO-HAYWARD BRIDGE)
ELECTRICAL LAYOUT FOR SUBSTATION 2
NO SCALE

E-27

LAST REVISION	05-01-14
DATE PLOTTED =>	18-JUN-2014
TIME PLOTTED =>	12:33

STATE OF CALIFORNIA - DEPARTMENT OF TRANSPORTATION
Caltrans
ELECTRICAL

FUNCTIONAL SUPERVISOR: BEHZAD GOLEMOHAMMADI
CALCULATED-DESIGNED BY: LIONEL J. SUDDS
CHECKED BY: BEHZAD GOLEMOHAMMADI
REVISED BY: LS
DATE REVISED: 3/1/14

Dist	COUNTY	ROUTE	POST MILES TOTAL PROJECT	SHEET No.	TOTAL SHEETS
04	SM,Ala	92	R14.4/R18.8, R0.0/R2.6	46	117

REGISTERED ELECTRICAL ENGINEER DATE 3/3/14

PLANS APPROVAL DATE 5-27-14

REGISTERED PROFESSIONAL ENGINEER Lionel J. Sudds No. 15201 Exp. 6-30-14 ELECT STATE OF CALIFORNIA

THE STATE OF CALIFORNIA OR ITS OFFICERS OR AGENTS SHALL NOT BE RESPONSIBLE FOR THE ACCURACY OR COMPLETENESS OF SCANNED COPIES OF THIS PLAN SHEET.

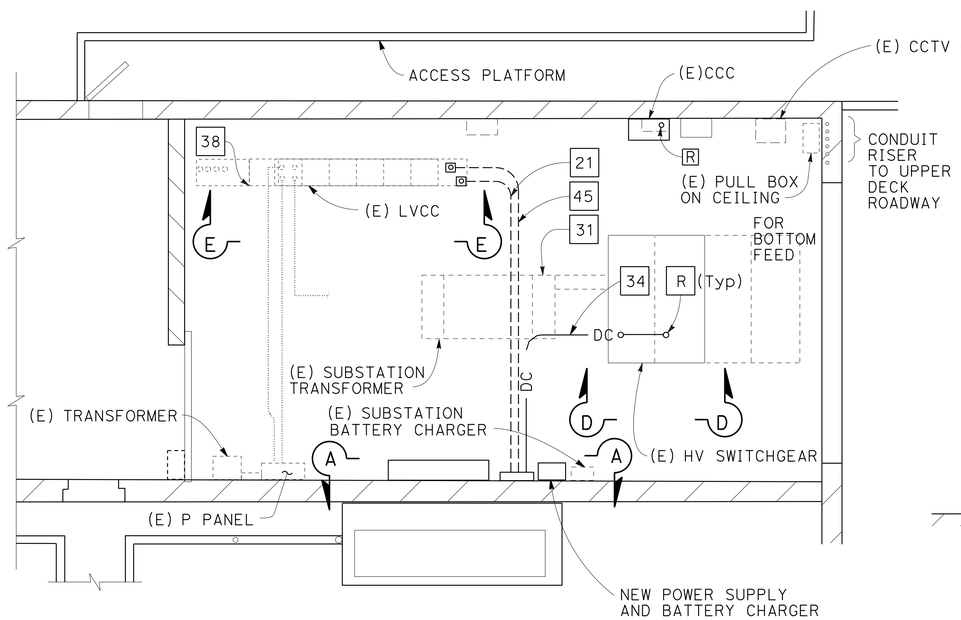

PLAN

SUBSTATION 3

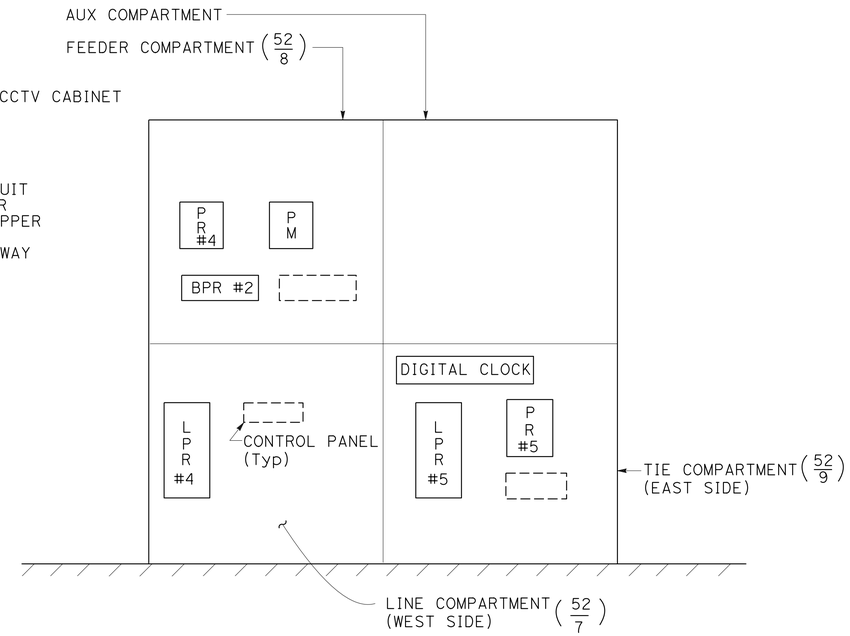

SECTION D-D

NEW PRIMARY EQUIPMENT FRONT PANEL VIEW FOR SUBSTATION 3

LEGEND: (THIS SHEET ONLY)

1. TEMPERATURE SENSOR FROM THE POWER SUPPLY AND BATTERY CHARGER.
2. BATTERY RACK FROM THE POWER SUPPLY AND BATTERY CHARGER.
3. NiCd BATTERY (TOTAL OF 32 BATTERIES) FROM THE POWER SUPPLY AND BATTERY CHARGER.
4. (E) CONDUIT AND (E) CONDUCTORS.

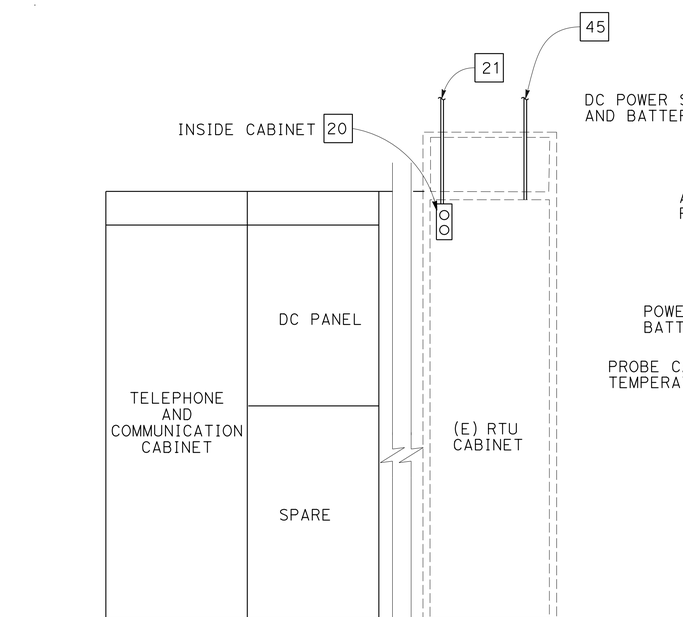

SECTION E-E

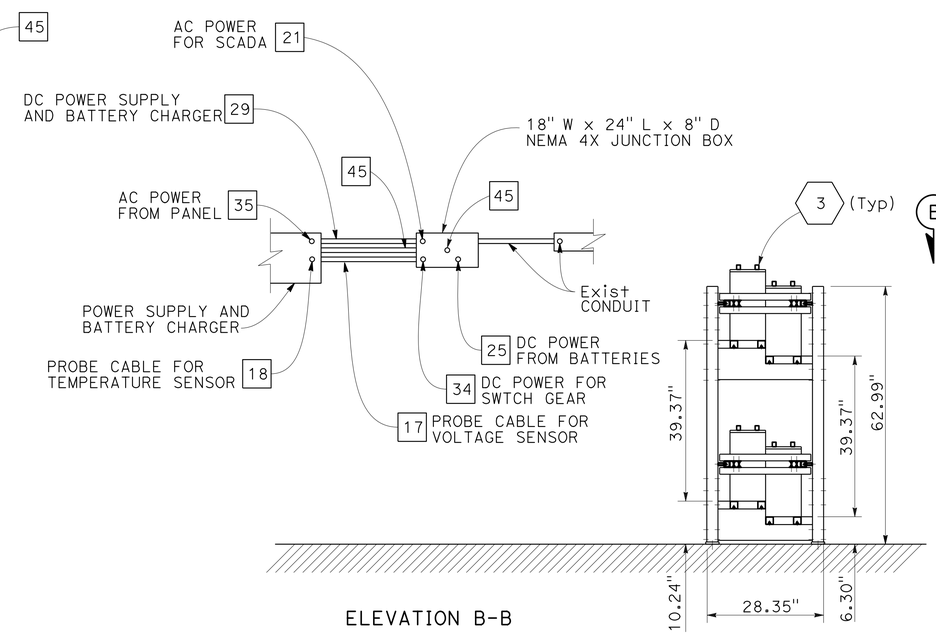

ELEVATION B-B

ELEVATION C-C

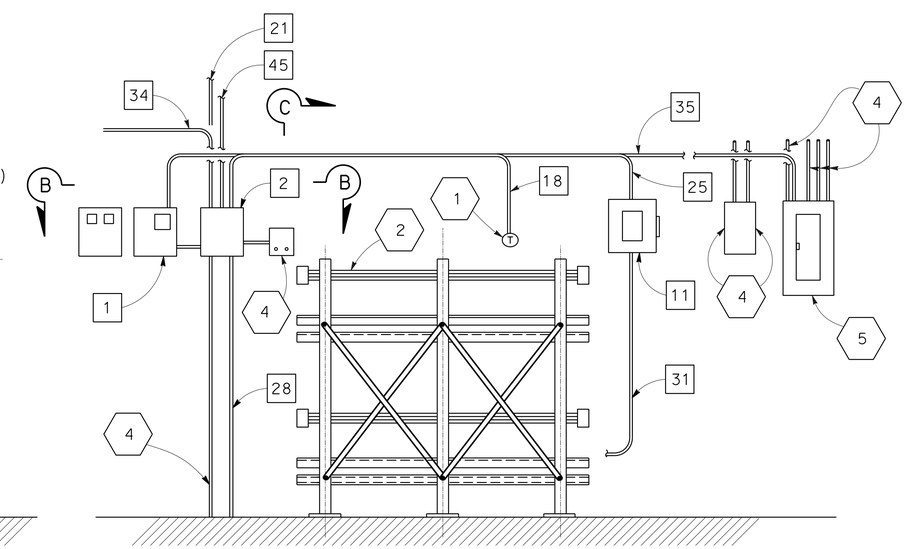

SECTION A-A

SUBSTATION 3
(SAN MATEO-HAYWARD BRIDGE)
ELECTRICAL LAYOUT FOR SUBSTATION 3

NO SCALE

APPROVED FOR ELECTRICAL WORK ONLY

FOR NOTES, ABBREVIATIONS AND LEGEND, SEE SHEETS E-1 AND E-2

E-28

STATE OF CALIFORNIA - DEPARTMENT OF TRANSPORTATION
Caltrans
ELECTRICAL

FUNCTIONAL SUPERVISOR	CALCULATED-DESIGNED BY	CHECKED BY	REVISED BY	DATE REVISED
BEHZAD GOLEMOHAMMADI	LIONEL J. SUDDS	BEHZAD GOLEMOHAMMADI	LS	3/1/14

LAST REVISION 05-01-14 | DATE PLOTTED => 18-JUN-2014 | TIME PLOTTED => 12:34

Dist	COUNTY	ROUTE	POST MILES TOTAL PROJECT	SHEET No.	TOTAL SHEETS
04	SM,Ala	92	R14.4/R18.8, R0.0/R2.6	47	117

Lionel J. Sudds 3/3/14
REGISTERED ELECTRICAL ENGINEER DATE

5-27-14
PLANS APPROVAL DATE

REGISTERED PROFESSIONAL ENGINEER Lionel J. Sudds No. 15201 Exp. 6-30-14 ELECT STATE OF CALIFORNIA

THE STATE OF CALIFORNIA OR ITS OFFICERS OR AGENTS SHALL NOT BE RESPONSIBLE FOR THE ACCURACY OR COMPLETENESS OF SCANNED COPIES OF THIS PLAN SHEET.

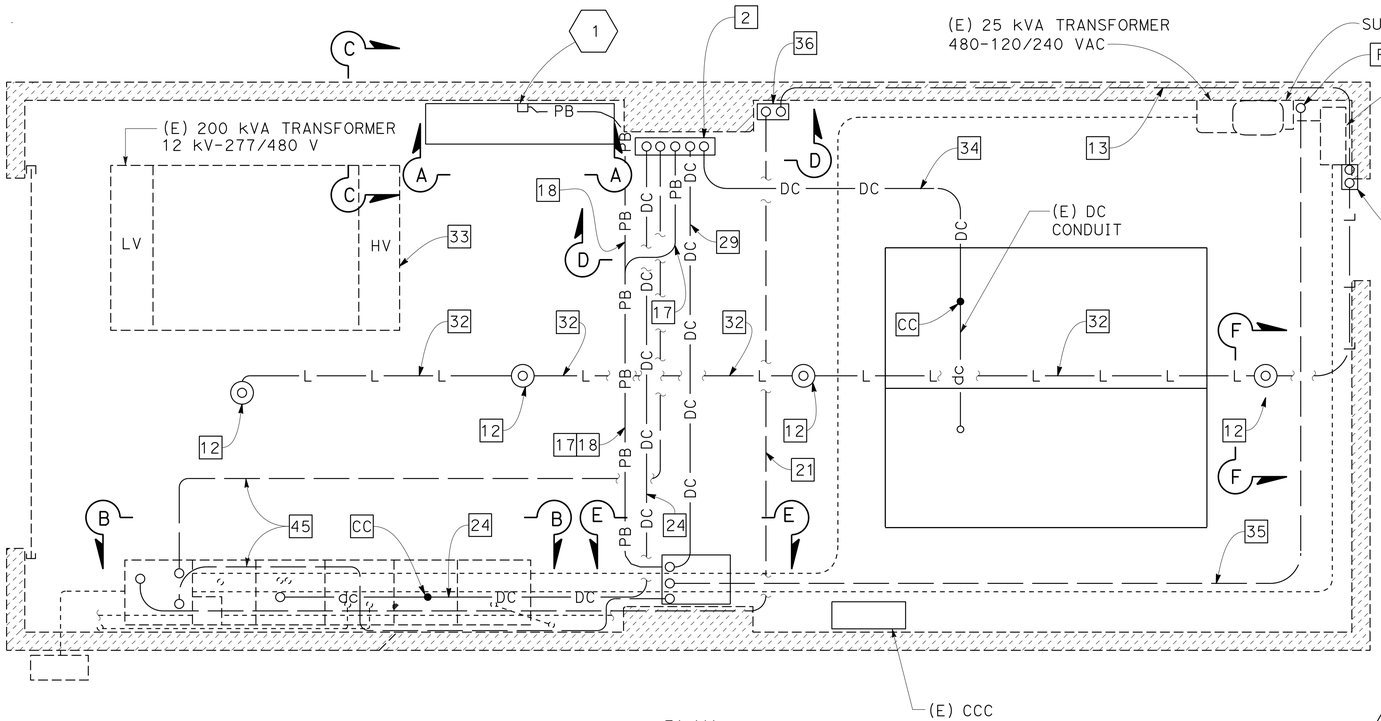

PLAN
SUBSTATION 4

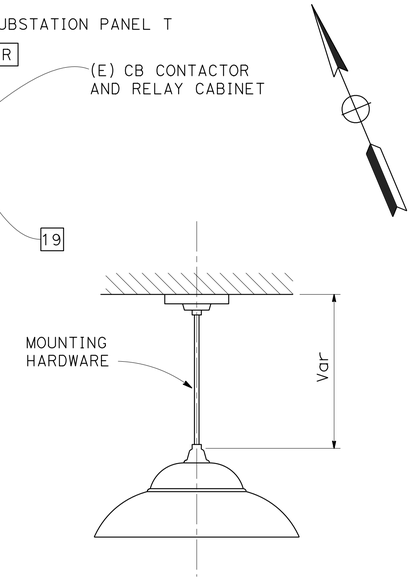

SECTION F-F (Typ)
LIGHT FIXTURE

LEGEND: (THIS SHEET ONLY)

1. TEMPERATURE SENSOR FROM THE POWER SUPPLY AND BATTERY CHARGER.
2. BATTERY RACK FROM THE POWER SUPPLY AND BATTERY CHARGER.
3. NiCd BATTERY (TOTAL OF 32 BATTERIES) FROM THE POWER SUPPLY AND BATTERY CHARGER.
4. (E) CONDUIT AND (E) CONDUCTORS.

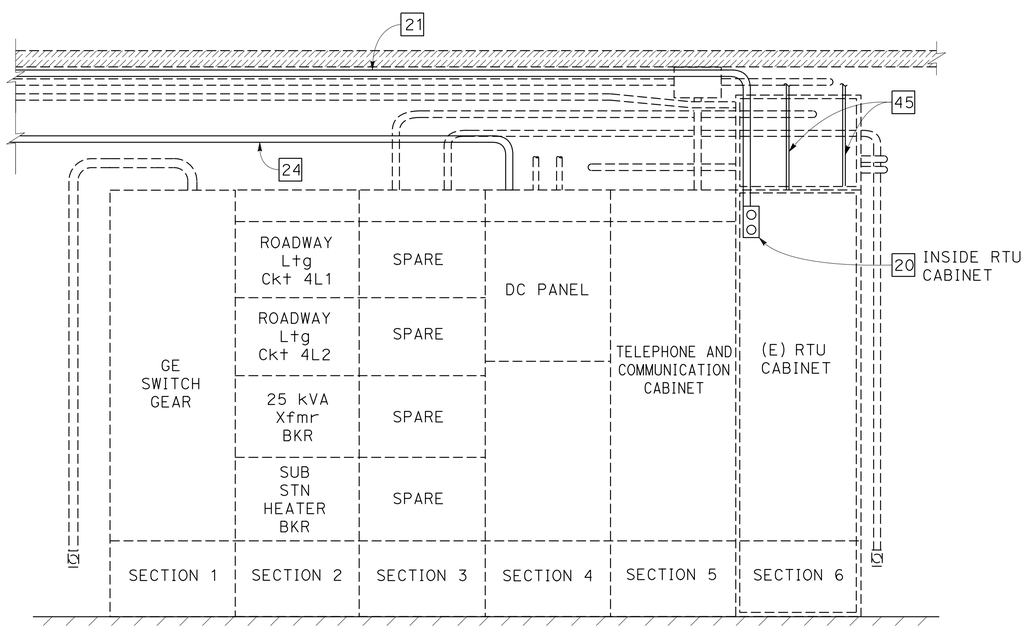

SECTION B-B

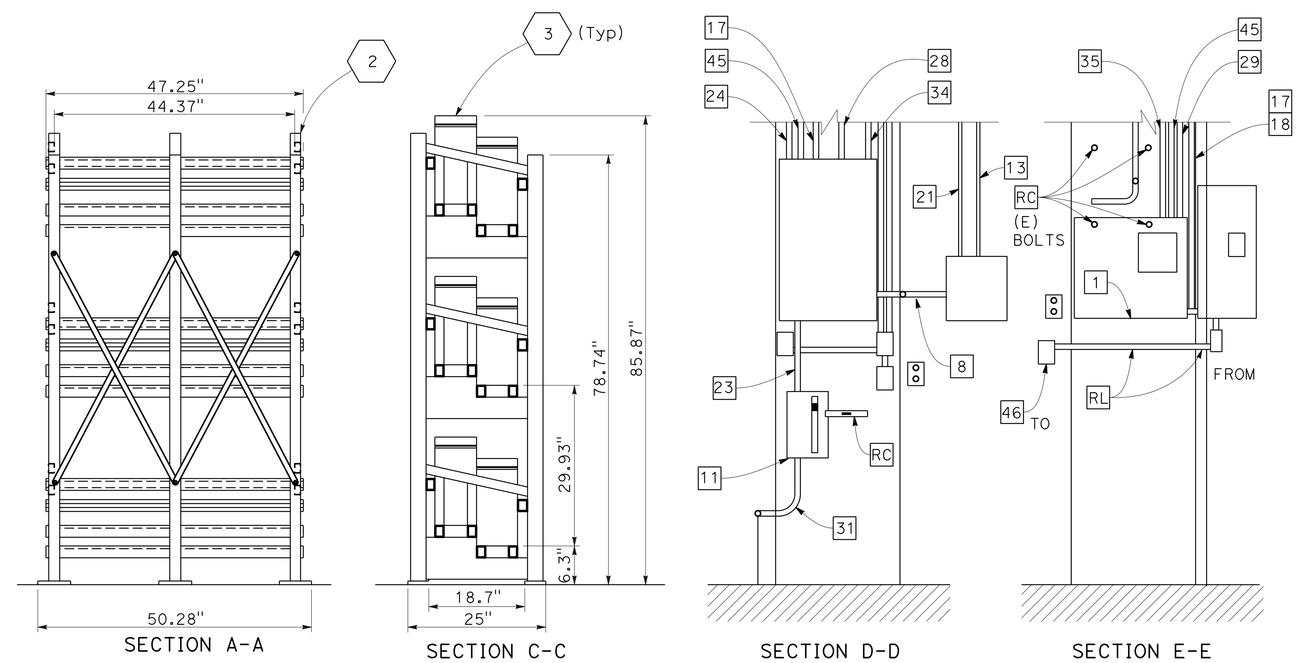

BATTERY RACKS FOR SUBSTATIONS

SUBSTATION 4
(SAN MATEO-HAYWARD BRIDGE)
ELECTRICAL LAYOUT FOR SUBSTATION 4

NO SCALE

APPROVED FOR ELECTRICAL WORK ONLY

FOR NOTES, ABBREVIATIONS AND LEGEND, SEE SHEETS E-1 AND E-2

E-29

LIONEL J. SUDDS	REVISED BY: LS
BEHZAD GOLEMOHAMMADI	DATE REVISED: 3/1/14
CALCULATED-DESIGNED BY	
CHECKED BY	
FUNCTIONAL SUPERVISOR: BEHZAD GOLEMOHAMMADI	

STATE OF CALIFORNIA - DEPARTMENT OF TRANSPORTATION
Caltrans
ELECTRICAL

LAST REVISION 05-01-14
DATE PLOTTED => 18-JUN-2014
TIME PLOTTED => 12:34

Dist	COUNTY	ROUTE	POST MILES TOTAL PROJECT	SHEET No.	TOTAL SHEETS
04	SM,Ala	92	R14.4/R18.8, R0.0/R2.6	48	117

REGISTERED ELECTRICAL ENGINEER DATE 3/3/14

PLANS APPROVAL DATE 5-27-14

Lionel J. Sudds No. 15201 Exp. 6-30-14 ELECT — REGISTERED PROFESSIONAL ENGINEER — STATE OF CALIFORNIA

THE STATE OF CALIFORNIA OR ITS OFFICERS OR AGENTS SHALL NOT BE RESPONSIBLE FOR THE ACCURACY OR COMPLETENESS OF SCANNED COPIES OF THIS PLAN SHEET.

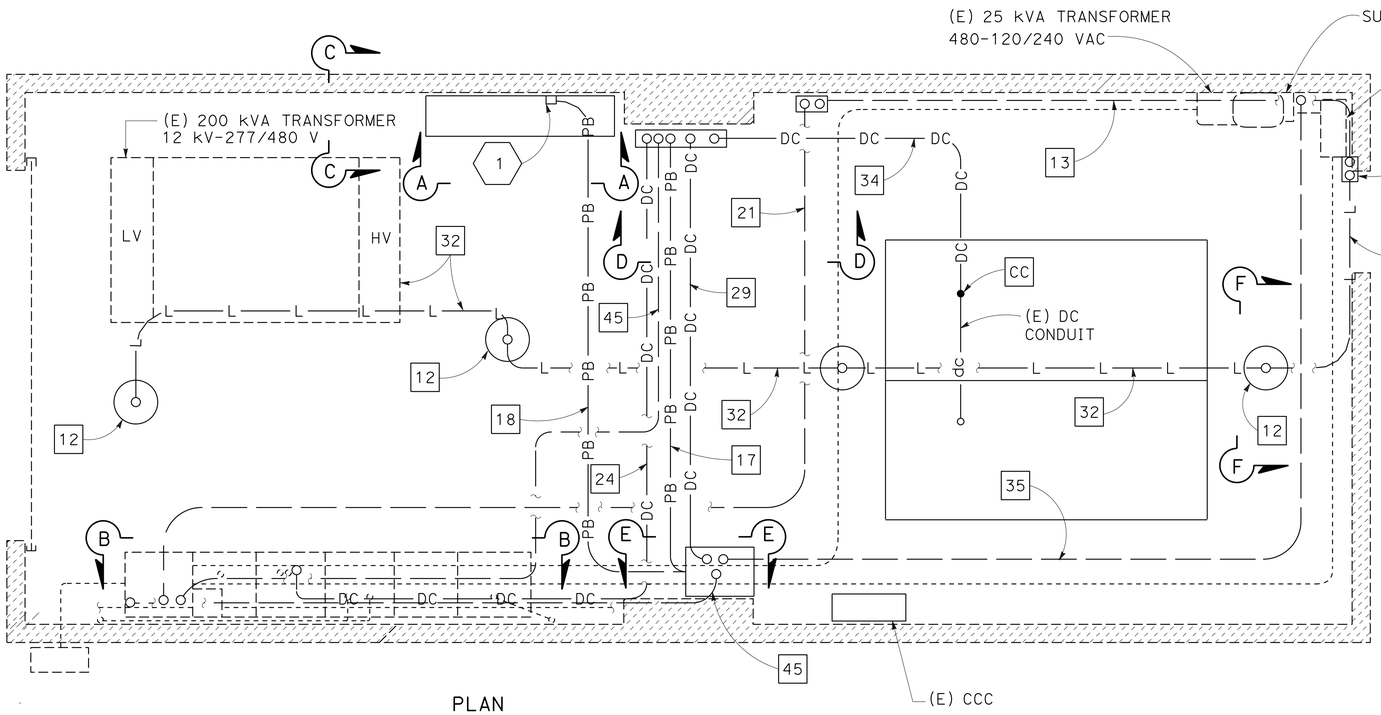

PLAN

SUBSTATION 5

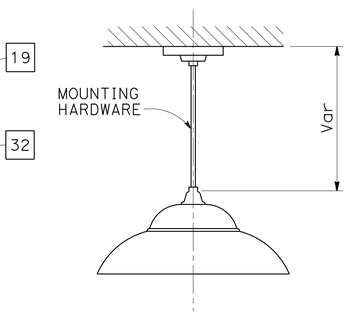

SECTION F-F (Typ)

LIGHT FIXTURE

LEGEND: (THIS SHEET ONLY)

1. TEMPERATURE SENSOR FROM THE POWER SUPPLY AND BATTERY CHARGER.
2. BATTERY RACK FROM THE POWER SUPPLY AND BATTERY CHARGER.
3. NiCd BATTERY (TOTAL OF 32 BATTERIES) FROM THE POWER SUPPLY AND BATTERY CHARGER.
4. (E) CONDUIT AND (E) CONDUCTORS.

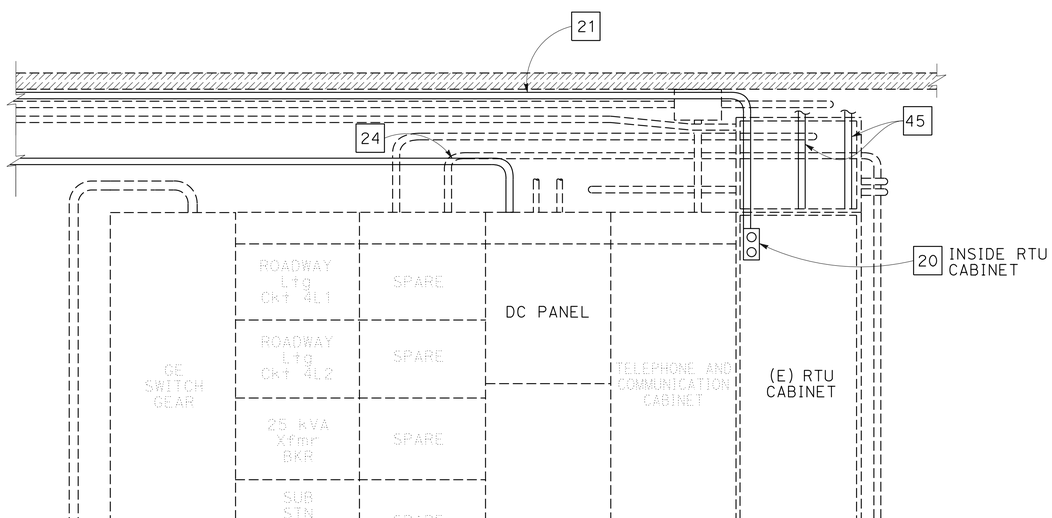

SECTION B-B

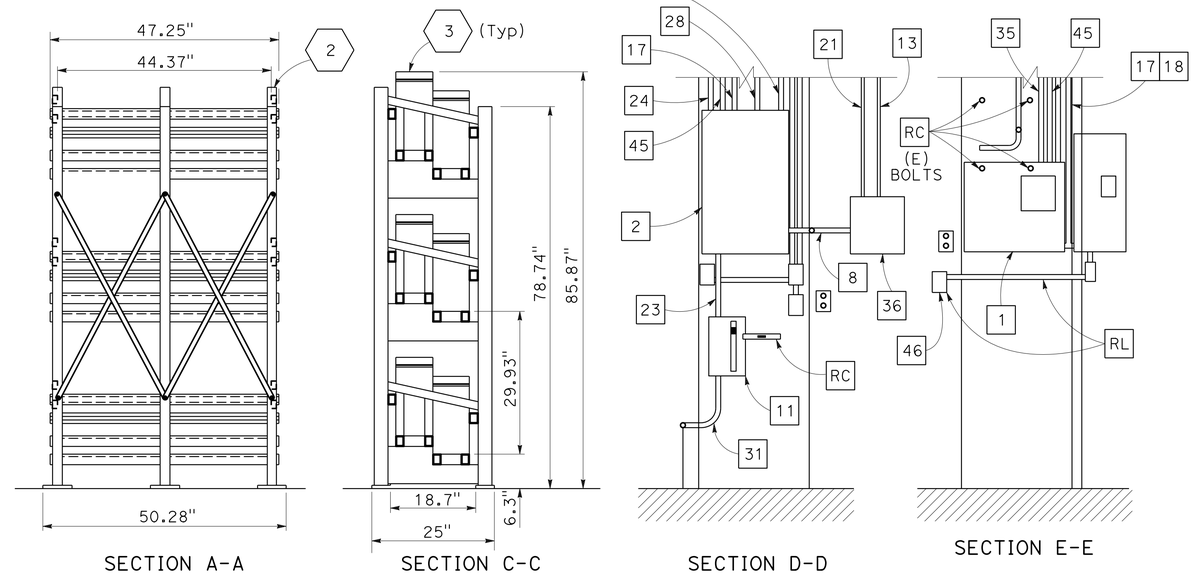

SECTION A-A SECTION C-C SECTION D-D SECTION E-E

BATTERY RACKS FOR SUBSTATIONS

SUBSTATION 5
(SAN MATEO-HAYWARD BRIDGE)
ELECTRICAL LAYOUT FOR SUBSTATION 5

NO SCALE

APPROVED FOR ELECTRICAL WORK ONLY

FOR NOTES, ABBREVIATIONS AND LEGEND, SEE SHEETS E-1 AND E-2

E-30

STATE OF CALIFORNIA - DEPARTMENT OF TRANSPORTATION — Caltrans — ELECTRICAL

FUNCTIONAL SUPERVISOR: BEHZAD GOLEMOHAMMADI

CALCULATED-DESIGNED BY: LIONEL J. SUDDS — CHECKED BY: BEHZAD GOLEMOHAMMADI

REVISED BY: LS — DATE REVISED: 3/1/14

LAST REVISION DATE PLOTTED => 18-JUN-2014 TIME PLOTTED => 12:34 — 05-01-14

BORDER LAST REVISED 7/2/2010 | USERNAME => s128787 | DGN FILE => 0400000044ua030.dgn | RELATIVE BORDER SCALE IS IN INCHES 0 1 2 3 | UNIT 0700 | PROJECT NUMBER & PHASE 04000000441

Dist	COUNTY	ROUTE	POST MILES TOTAL PROJECT	SHEET No.	TOTAL SHEETS
04	SM,Ala	92	R14.4/R18.8, R0.0/R2.6	49	117

REGISTERED ELECTRICAL ENGINEER DATE 3/3/14

5-27-14
PLANS APPROVAL DATE

REGISTERED PROFESSIONAL ENGINEER Lionel J. Sudds No. 15201 Exp. 6-30-14 ELECT STATE OF CALIFORNIA

THE STATE OF CALIFORNIA OR ITS OFFICERS OR AGENTS SHALL NOT BE RESPONSIBLE FOR THE ACCURACY OR COMPLETENESS OF SCANNED COPIES OF THIS PLAN SHEET.

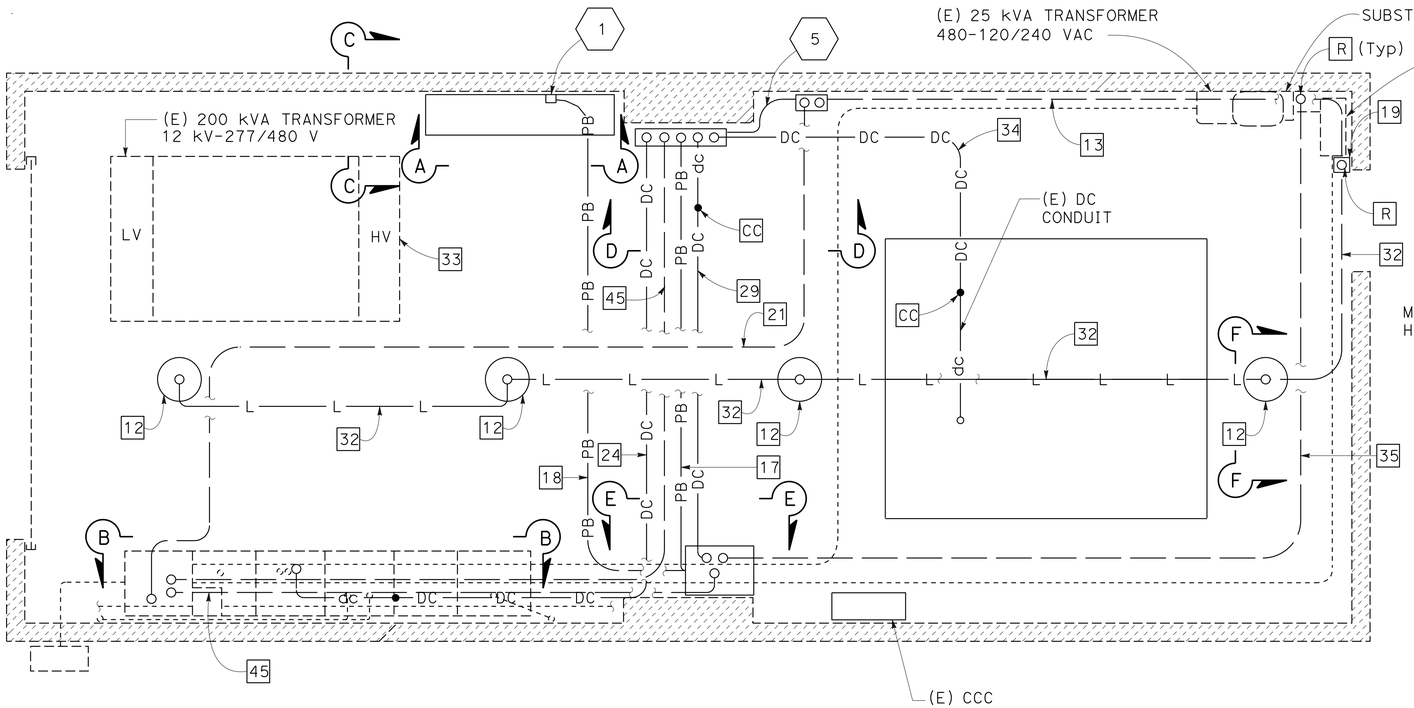

PLAN
SUBSTATION 6

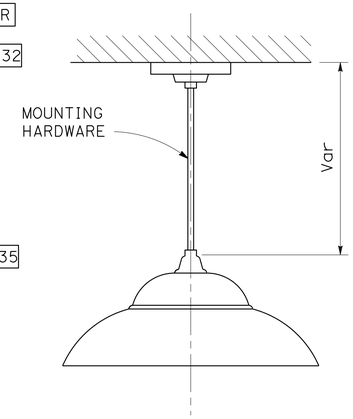

SECTION F-F (Typ)
LIGHT FIXTURE

LEGEND: (THIS SHEET ONLY)

1. TEMPERATURE SENSOR FROM THE POWER SUPPLY AND BATTERY CHARGER.
2. BATTERY RACK FROM THE POWER SUPPLY AND BATTERY CHARGER.
3. NiCd BATTERY (TOTAL OF 32 BATTERIES) FROM THE POWER SUPPLY AND BATTERY CHARGER.
4. (E) CONDUIT AND (E) CONDUCTORS.
5. ¾"C, 3#10 CONDUCTORS.

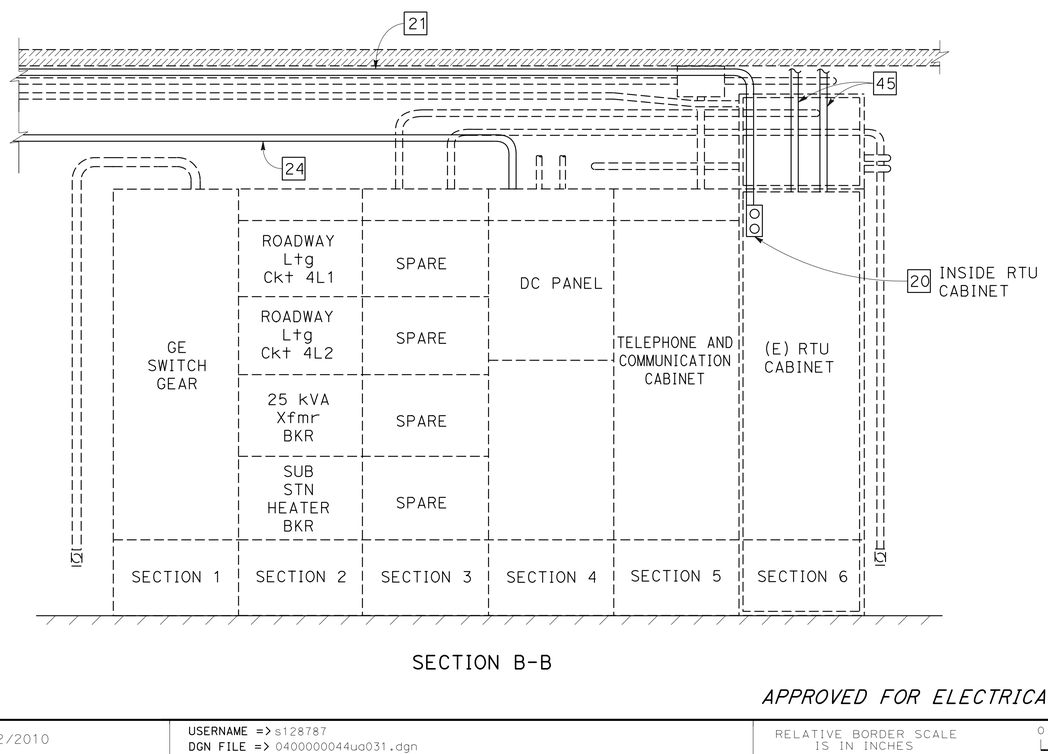

SECTION B-B

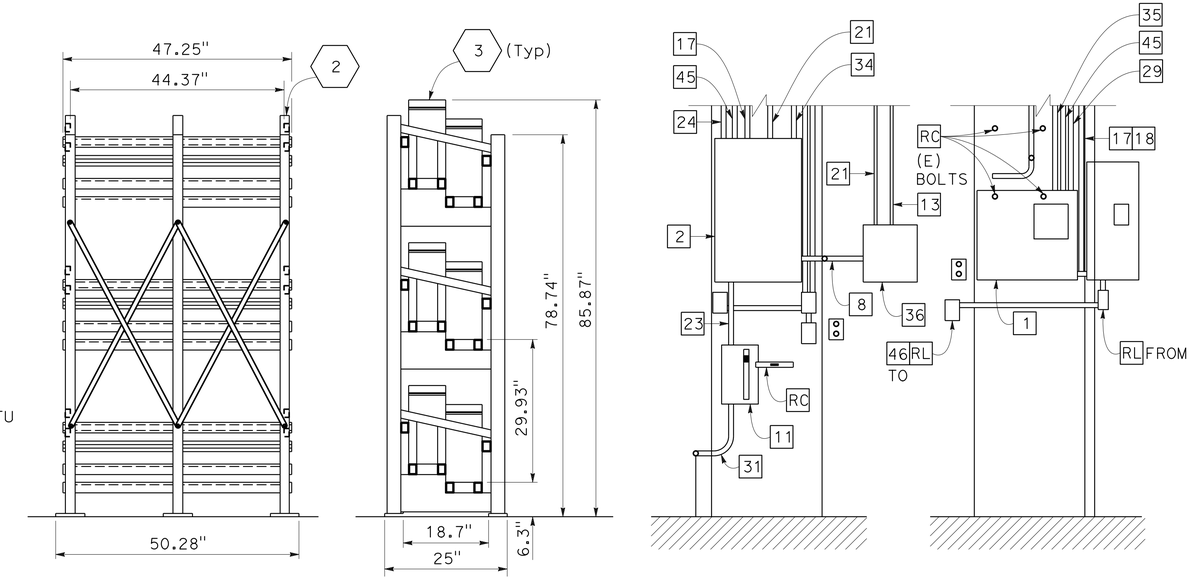

SECTION A-A SECTION C-C SECTION D-D SECTION E-E

BATTERY RACKS FOR SUBSTATIONS

SUBSTATION 6
(SAN MATEO-HAYWARD BRIDGE)
ELECTRICAL LAYOUT FOR SUBSTATION 6

NO SCALE

APPROVED FOR ELECTRICAL WORK ONLY

FOR NOTES, ABBREVIATIONS AND LEGEND, SEE SHEETS E-1 AND E-2

E-31

STATE OF CALIFORNIA - DEPARTMENT OF TRANSPORTATION
Caltrans
ELECTRICAL

FUNCTIONAL SUPERVISOR: BEHZAD GOLEMOHAMMADI
CALCULATED-DESIGNED BY: LIONEL J. SUDDS
CHECKED BY: BEHZAD GOLEMOHAMMADI
REVISED BY: LS
DATE REVISED: 3/1/14

LAST REVISION DATE PLOTTED => 18-JUN-2014
05-01-14 TIME PLOTTED => 12:34

Dist	COUNTY	ROUTE	POST MILES TOTAL PROJECT	SHEET No.	TOTAL SHEETS
04	SM,Ala	92	R14.4/R18.8, R0.0/R2.6	50	117

Lionel J. Sudds 3/3/14
REGISTERED ELECTRICAL ENGINEER DATE

5-27-14
PLANS APPROVAL DATE

REGISTERED PROFESSIONAL ENGINEER Lionel J. Sudds No. 15201 Exp. 6-30-14 ELECT STATE OF CALIFORNIA

THE STATE OF CALIFORNIA OR ITS OFFICERS OR AGENTS SHALL NOT BE RESPONSIBLE FOR THE ACCURACY OR COMPLETENESS OF SCANNED COPIES OF THIS PLAN SHEET.

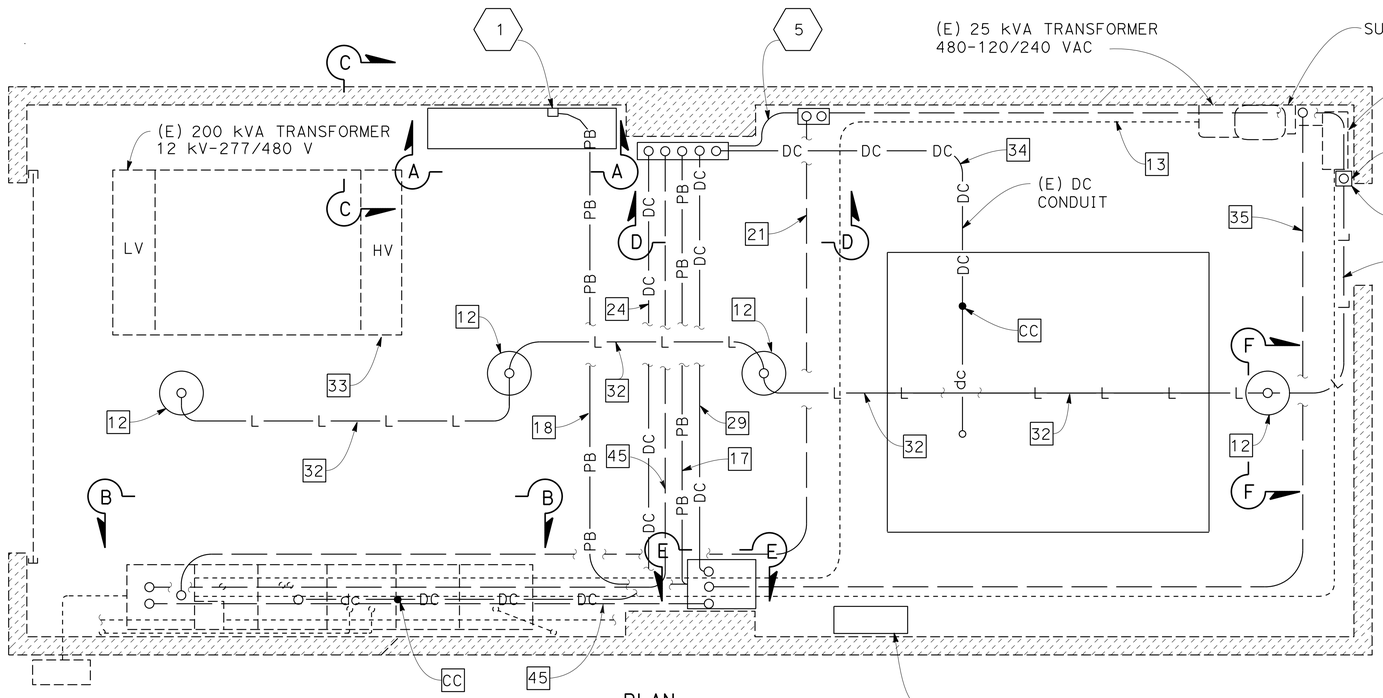

PLAN
SUBSTATION 7

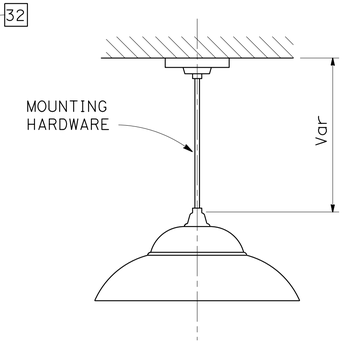

SECTION F-F (Typ)
LIGHT FIXTURE

LEGEND: (THIS SHEET ONLY)

1. TEMPERATURE SENSOR FROM THE POWER SUPPLY AND BATTERY CHARGER.
2. BATTERY RACK FROM THE POWER SUPPLY AND BATTERY CHARGER.
3. NiCd BATTERY (TOTAL OF 32 BATTERIES) FROM THE POWER SUPPLY AND BATTERY CHARGER.
4. (E) CONDUIT AND (E) CONDUCTORS.
5. ¾"C, 3#10 CONDUCTORS.

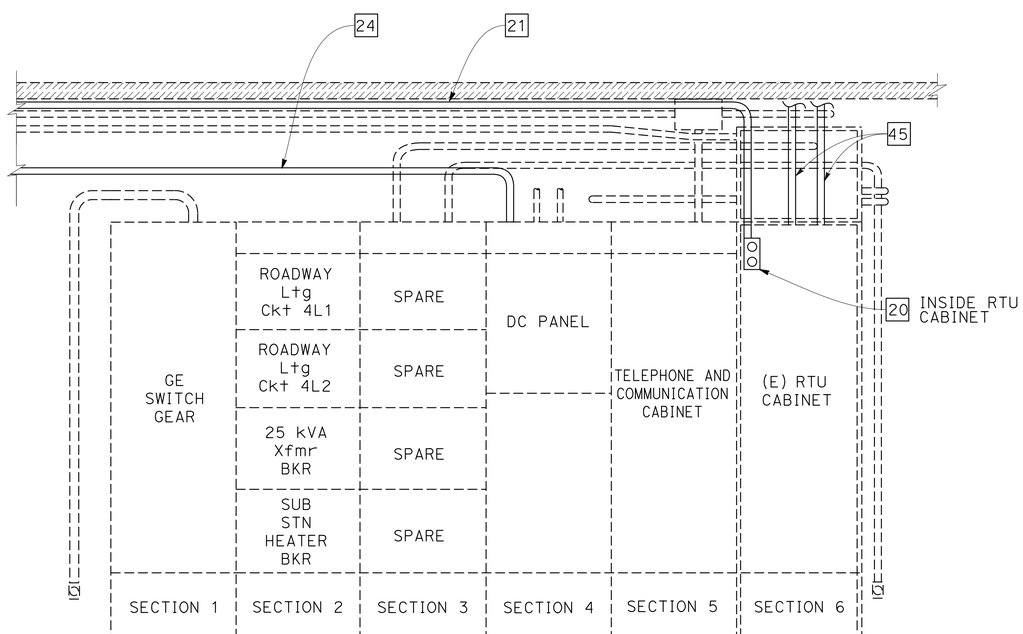

SECTION B-B

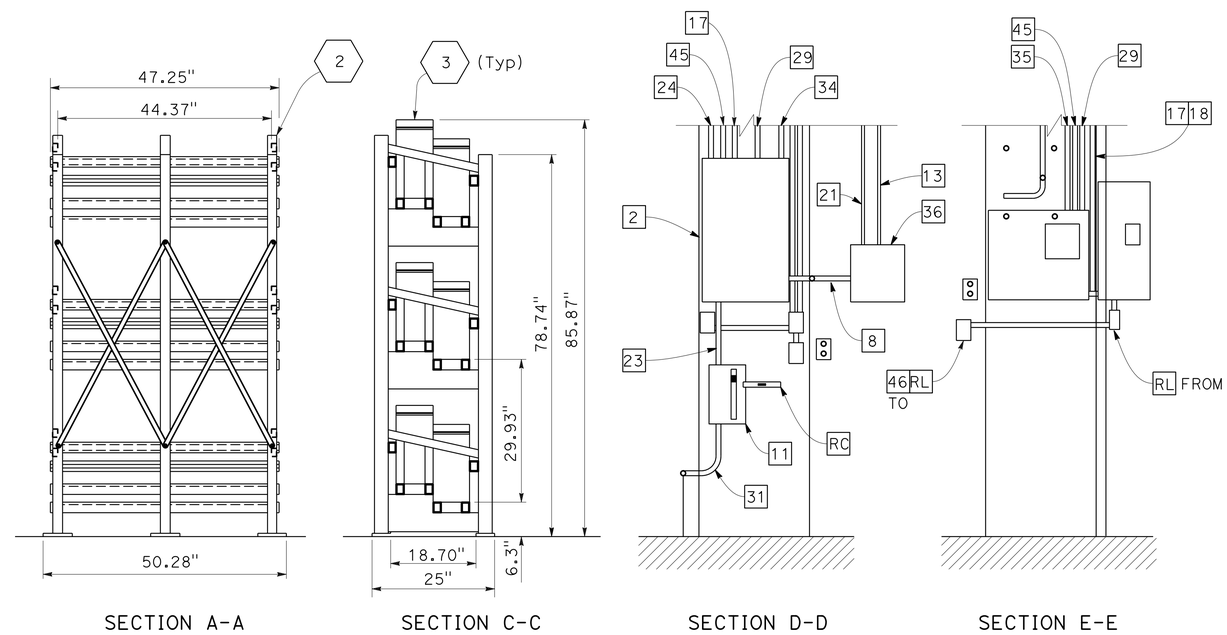

SECTION A-A SECTION C-C SECTION D-D SECTION E-E

BATTERY RACKS FOR SUBSTATIONS

SUBSTATION 7
(SAN MATEO-HAYWARD BRIDGE)
ELECTRICAL LAYOUT FOR SUBSTATION 7
NO SCALE

APPROVED FOR ELECTRICAL WORK ONLY

FOR NOTES, ABBREVIATIONS AND LEGEND, SEE SHEETS E-1 AND E-2

E-32

STATE OF CALIFORNIA - DEPARTMENT OF TRANSPORTATION
Caltrans®
ELECTRICAL

FUNCTIONAL SUPERVISOR: BEHZAD GOLEMOHAMMADI
CALCULATED-DESIGNED BY: LIONEL J. SUDDS
CHECKED BY: BEHZAD GOLEMOHAMMADI
REVISED BY: LS
DATE REVISED: 3/1/14

LAST REVISION 05-01-14
DATE PLOTTED => 18-JUN-2014
TIME PLOTTED => 12:34

Dist	COUNTY	ROUTE	POST MILES TOTAL PROJECT	SHEET No.	TOTAL SHEETS
04	SM,Ala	92	R14.4/R18.8, R0.0/R2.6	51	117

REGISTERED ELECTRICAL ENGINEER 3/3/14 DATE

5-27-14
PLANS APPROVAL DATE

REGISTERED PROFESSIONAL ENGINEER Lionel J. Sudds No. 15201 Exp. 6-30-14 ELECT STATE OF CALIFORNIA

THE STATE OF CALIFORNIA OR ITS OFFICERS OR AGENTS SHALL NOT BE RESPONSIBLE FOR THE ACCURACY OR COMPLETENESS OF SCANNED COPIES OF THIS PLAN SHEET.

LEGEND: (THIS SHEET ONLY)

1. TEMPERATURE SENSOR FROM THE POWER SUPPLY AND BATTERY CHARGER.
2. BATTERY RACK FROM THE POWER SUPPLY AND BATTERY CHARGER.
3. NiCd BATTERY (TOTAL OF 32 BATTERIES) FROM THE POWER SUPPLY AND BATTERY CHARGER.
4. (E) CONDUIT AND (E) CONDUCTORS.

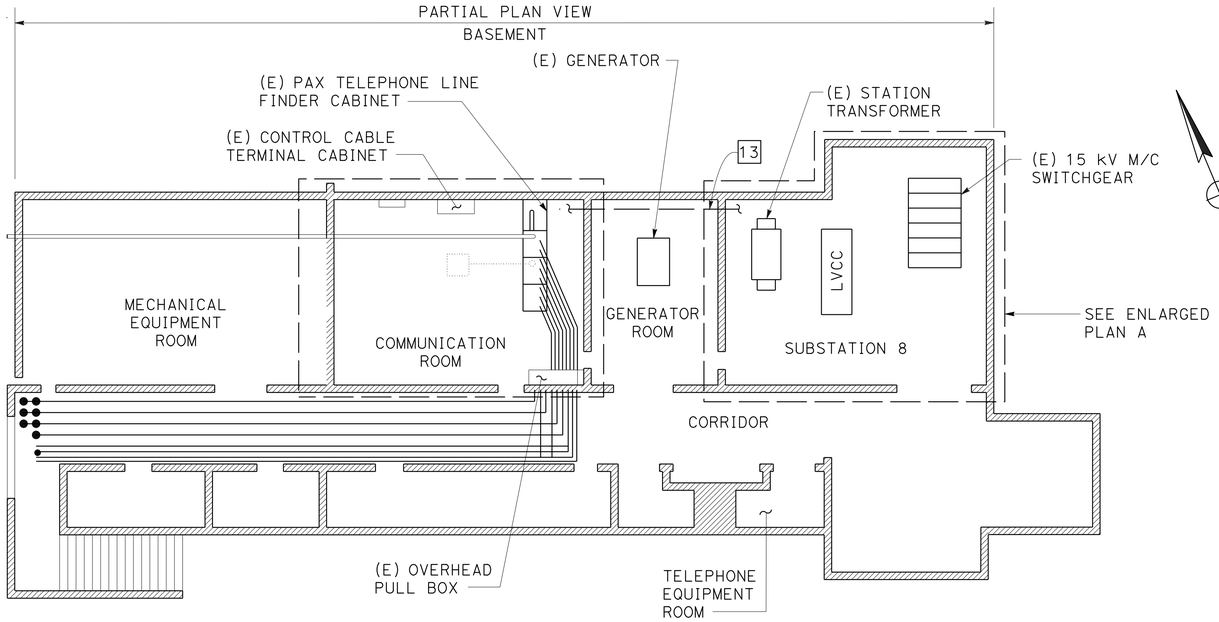

PARTIAL PLAN
ADMINISTRATION BUILDING

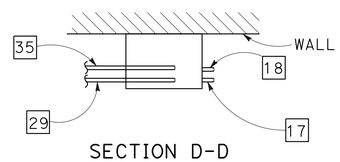

SECTION D-D

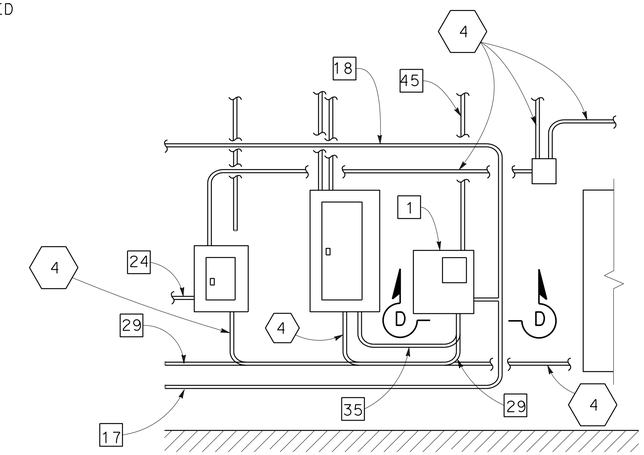

SECTION B-B

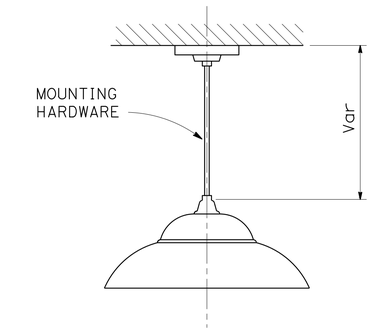

SECTION E-E (Typ)
LIGHT FIXTURE

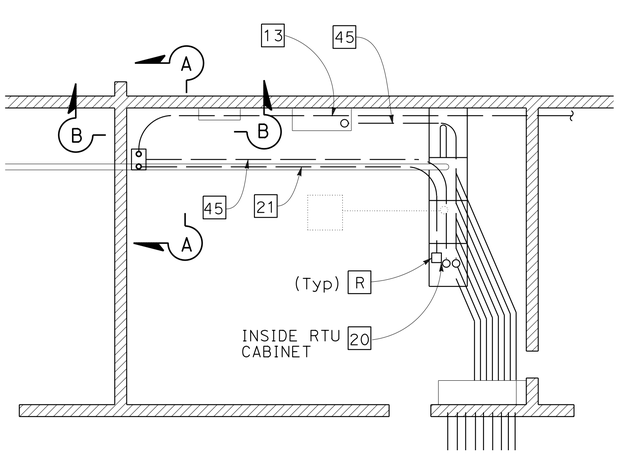

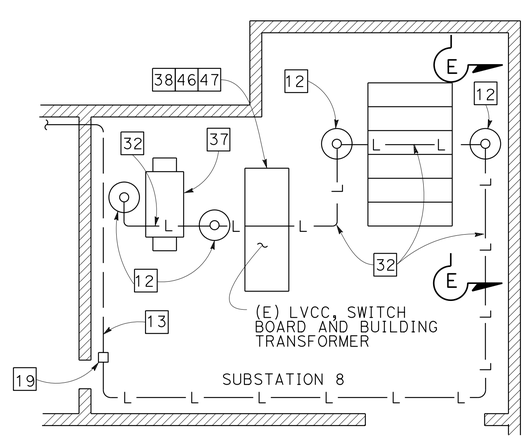

ENLARGED PLAN A
SUBSTATION 8

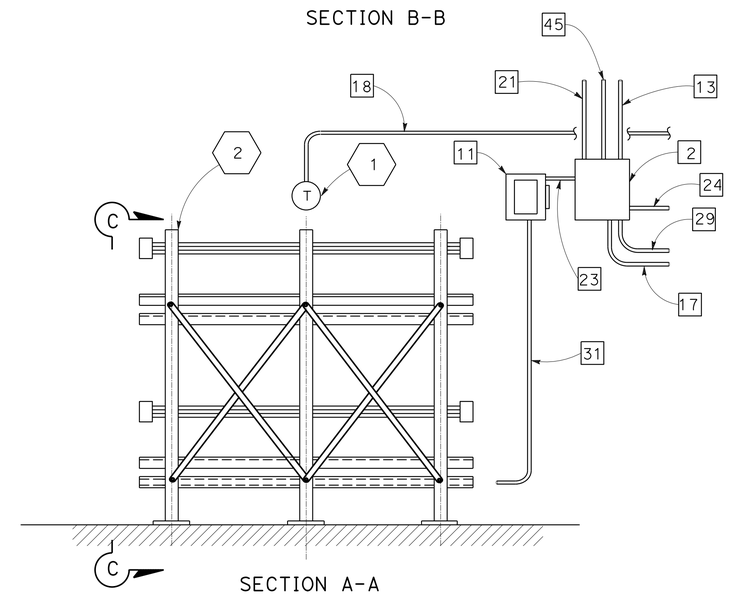

SECTION A-A

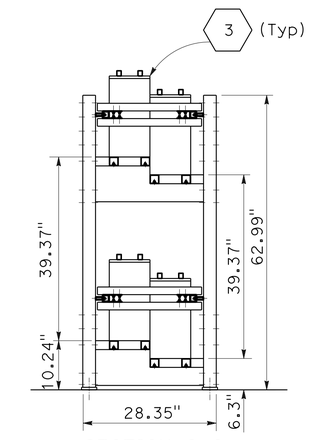

SECTION C-C

SUBSTATION 8
(SAN MATEO-HAYWARD BRIDGE)
ELECTRICAL LAYOUT FOR SUBSTATION 8
NO SCALE

APPROVED FOR ELECTRICAL WORK ONLY

FOR NOTES, ABBREVIATIONS AND LEGEND, SEE SHEETS E-1 AND E-2

E-33

STATE OF CALIFORNIA - DEPARTMENT OF TRANSPORTATION
Caltrans
ELECTRICAL

FUNCTIONAL SUPERVISOR: BEHZAD GOLEMOHAMMADI
CALCULATED-DESIGNED BY: LIONEL J. SUDDS
CHECKED BY: BEHZAD GOLEMOHAMMADI
REVISED BY: LS
DATE REVISED: 3/1/14

LAST REVISION 05-01-14
DATE PLOTTED => 18-JUN-2014
TIME PLOTTED => 12:34

Dist	COUNTY	ROUTE	POST MILES TOTAL PROJECT	SHEET No.	TOTAL SHEETS
04	SM,Ala	92	R14.4/R18.8, R0.0/R2.6	52	117

REGISTERED ELECTRICAL ENGINEER DATE 3/3/14

PLANS APPROVAL DATE 5-27-14

REGISTERED PROFESSIONAL ENGINEER Lionel J. Sudds No. 15201 Exp. 6-30-14 ELECT STATE OF CALIFORNIA

THE STATE OF CALIFORNIA OR ITS OFFICERS OR AGENTS SHALL NOT BE RESPONSIBLE FOR THE ACCURACY OR COMPLETENESS OF SCANNED COPIES OF THIS PLAN SHEET.

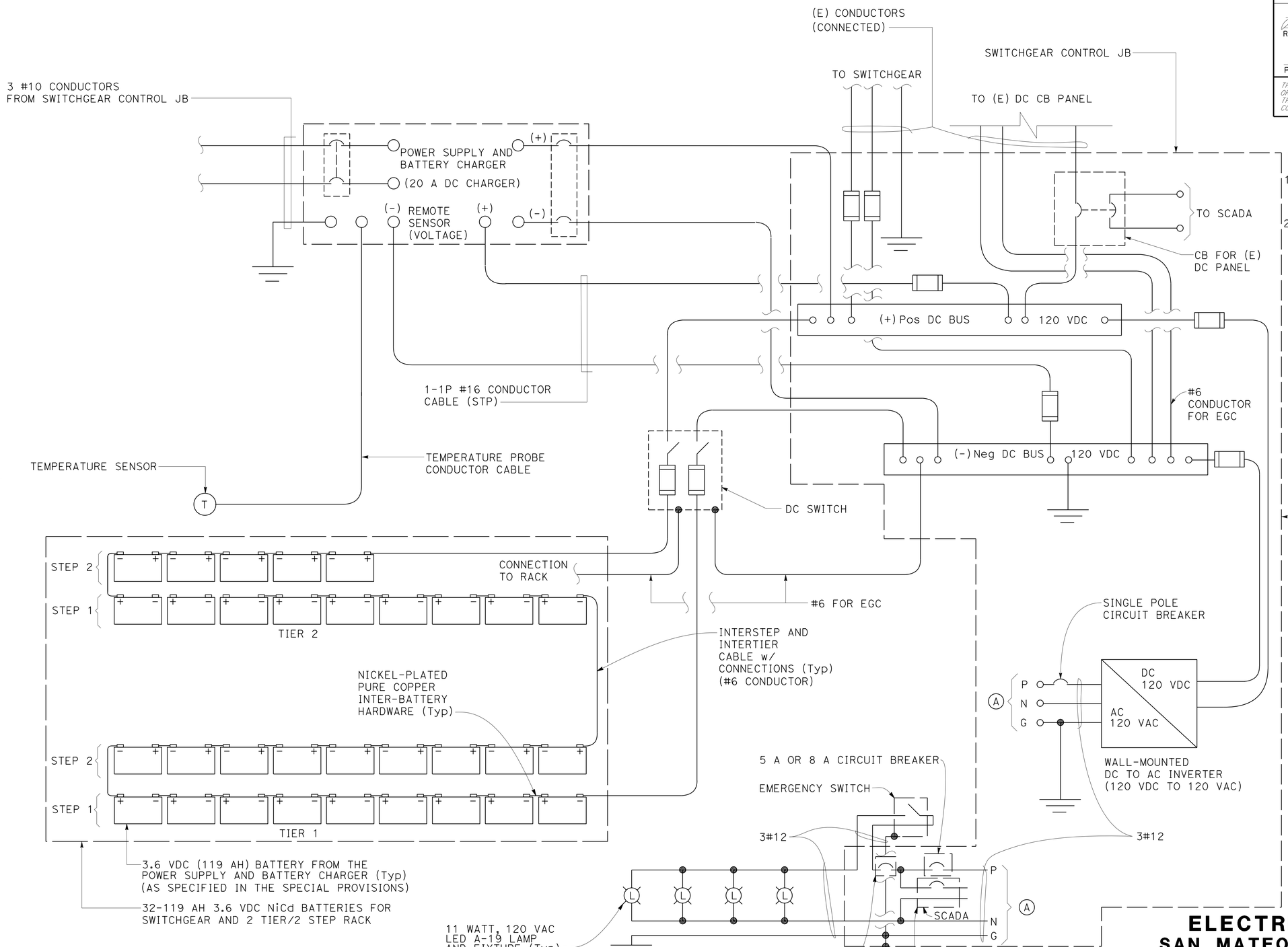

NOTES: (THIS SHEET ONLY)

1. UNLESS OTHERWISE SHOWN ON THIS SHEET, THE CONDUCTORS SHALL BE #6 CONDUCTORS.
2. THE WALL-MOUNTED DC TO AC INVERTER SHALL BE MOUNTED ON THE WALL NEAR THE SWITCHGEAR CONTROL JUNCTION BOX (JB) OR INSIDE THE SWITCHGEAR CONTROL JUNCTION BOX (JB) AS SPECIFIED IN THE SPECIAL PROVISIONS.

EMERGENCY LIGHTING SYSTEM

FOR NOTES, ABBREVIATIONS AND LEGEND, SEE SHEETS E-1 AND E-2

ELECTRICAL DETAILS
SAN MATEO-HAYWARD BRIDGE
(DC POWER SYSTEM FOR SUBSTATION 1, 2, 3 AND 8)

NO SCALE

E-34

LIONEL J. SUDDS	REVISED BY	LS	CALCULATED-DESIGNED BY
BEHZAD GOLEMOHAMMADI	DATE REVISED	3/1/14	CHECKED BY
FUNCTIONAL SUPERVISOR	BEHZAD GOLEMOHAMMADI		

STATE OF CALIFORNIA - DEPARTMENT OF TRANSPORTATION

Caltrans

ELECTRICAL

LAST REVISION 05-01-14 | DATE PLOTTED => 18-JUN-2014 | TIME PLOTTED => 12:34

Dist	COUNTY	ROUTE	POST MILES TOTAL PROJECT	SHEET No.	TOTAL SHEETS
04	SM,Ala	92	R14.4/R18.8, R0.0/R2.6	53	117

REGISTERED ELECTRICAL ENGINEER DATE 3/3/14

PLANS APPROVAL DATE 5-27-14

REGISTERED PROFESSIONAL ENGINEER Lionel J. Sudds No. 15201 Exp. 6-30-14 ELECT STATE OF CALIFORNIA

THE STATE OF CALIFORNIA OR ITS OFFICERS OR AGENTS SHALL NOT BE RESPONSIBLE FOR THE ACCURACY OR COMPLETENESS OF SCANNED COPIES OF THIS PLAN SHEET.

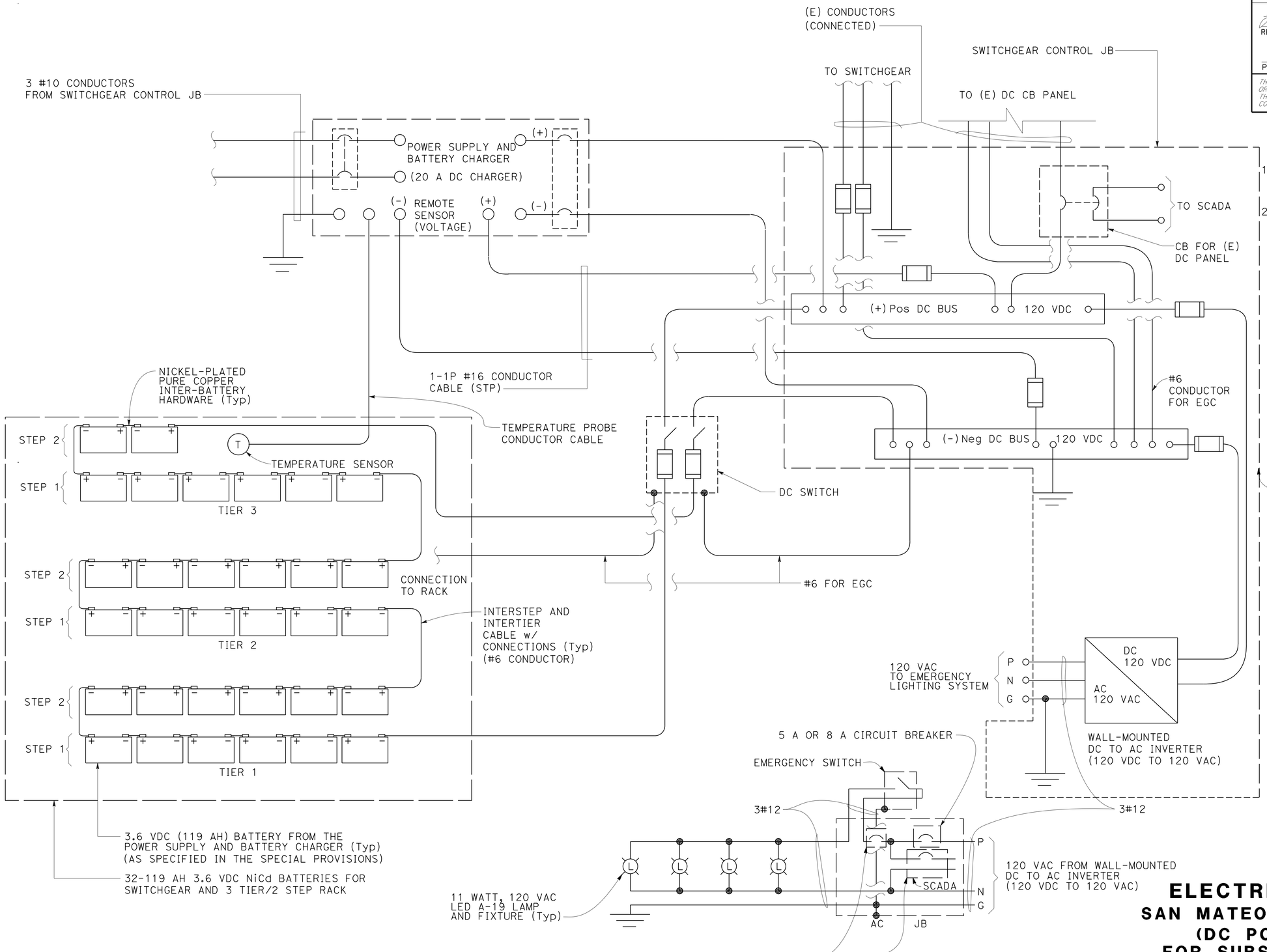

GENERAL NOTES: (THIS SHEET ONLY)

1. UNLESS OTHERWISE SHOWN ON THIS SHEET, THE CONDUCTORS SHALL BE #6 CONDUCTORS.
2. THE WALL-MOUNTED DC TO AC INVERTER SHALL BE MOUNTED ON THE WALL NEAR THE SWITCHGEAR CONTROL JUNCTION BOX (JB) OR INSIDE THE SWITCHGEAR CONTROL JUNCTION BOX (JB) AS SPECIFIED IN THE SPECIAL PROVISIONS.

EMERGENCY LIGHTING SYSTEM

FOR NOTES, ABBREVIATIONS AND LEGEND, SEE SHEETS E-1 AND E-2

ELECTRICAL DETAILS
SAN MATEO-HAYWARD BRIDGE (DC POWER SYSTEM FOR SUBSTATION 4 TO 7)

NO SCALE

E-35

REVISED BY	LS	LIONEL J. SUDDS	CALCULATED-DESIGNED BY
DATE REVISED	3/1/14	BEHZAD GOLEMOHAMMADI	CHECKED BY

FUNCTIONAL SUPERVISOR: BEHZAD GOLEMOHAMMADI

STATE OF CALIFORNIA - DEPARTMENT OF TRANSPORTATION

Caltrans

ELECTRICAL

LAST REVISION 05-01-14 | DATE PLOTTED => 18-JUN-2014 | TIME PLOTTED => 12:34

Dist	COUNTY	ROUTE	POST MILES TOTAL PROJECT	SHEET No.	TOTAL SHEETS
04	SM,Ala	92	R14.4/R18.8, R0.0/R2.6	54	117

REGISTERED ELECTRICAL ENGINEER 3/3/14 DATE

5-27-14
PLANS APPROVAL DATE

REGISTERED PROFESSIONAL ENGINEER Lionel J. Sudds No. 15201 Exp. 6-30-14 ELECT STATE OF CALIFORNIA

THE STATE OF CALIFORNIA OR ITS OFFICERS OR AGENTS SHALL NOT BE RESPONSIBLE FOR THE ACCURACY OR COMPLETENESS OF SCANNED COPIES OF THIS PLAN SHEET.

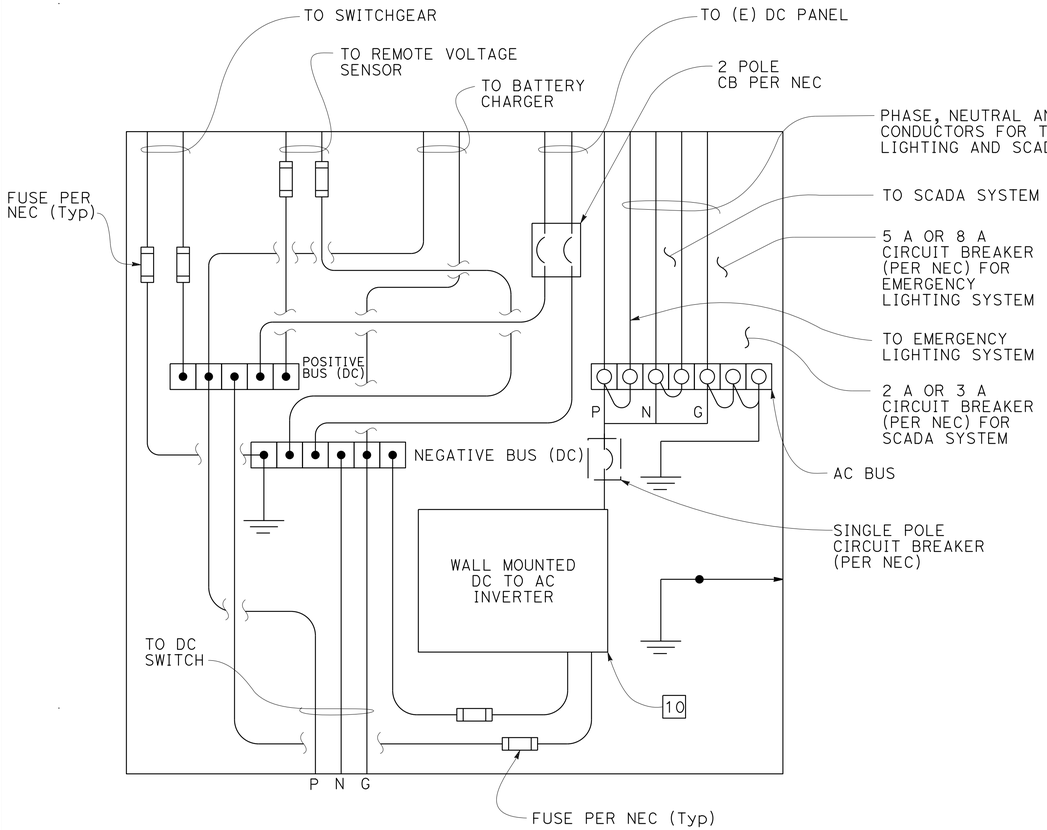

DC POWER JB LAYOUT AND WIRING DIAGRAM (TYPE 1 FOR SUBSTATION 1, 2, 3, AND 8)

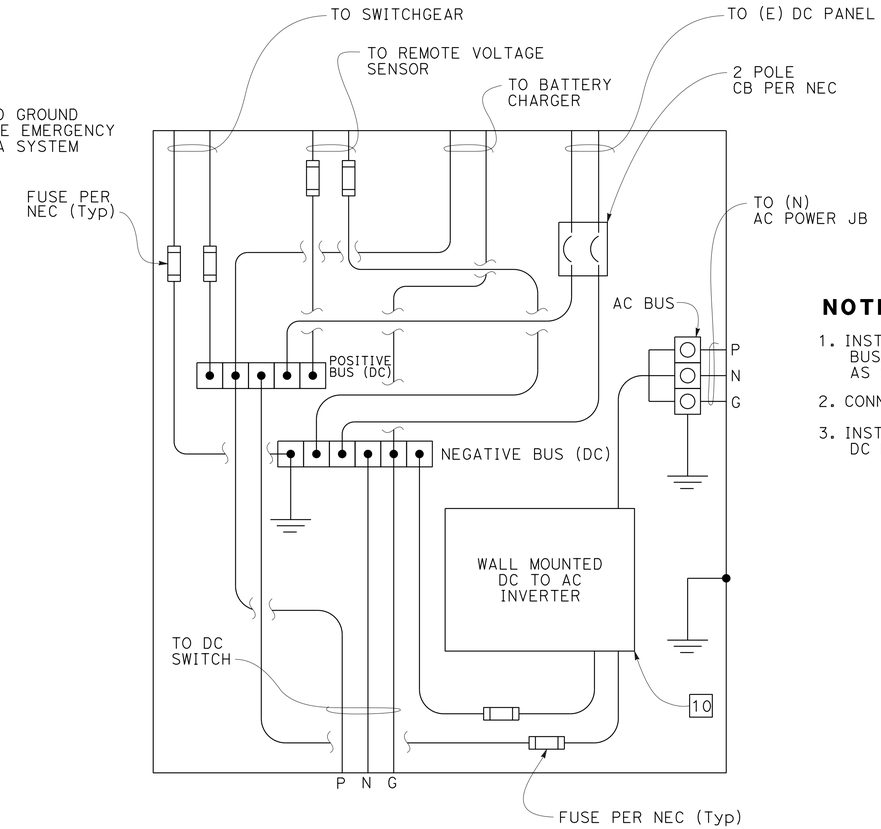

DC POWER JB LAYOUT AND WIRING DIAGRAM (TYPE 2 FOR SUBSTATION 4 TO 7)

NOTES: (THIS SHEET ONLY)

1. INSTALL TERMINAL BLOCKS, CIRCUIT BREAKERS (CB), BUSBARS AND FUSE IN ADDITION TO THE INVERTER AS SHOWN ON THE PLANS.
2. CONNECT AS SHOWN ON THE PLANS.
3. INSTALL EQUIPMENT FOR SUBSTATION 1 TO 8 IN THE DC POWER JB AS SHOWN ON THE PLANS.

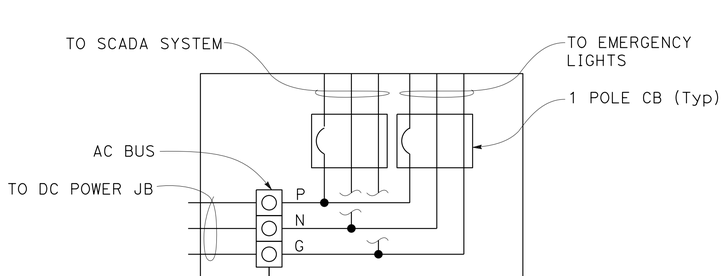

AC POWER JB LAYOUT AND WIRING DIAGRAM

SUBSTATION 1
SAN MATEO-HAYWARD BRIDGE
(BATTERY RACK LAYOUTS AND DETAILS)

NO SCALE

FOR NOTES, ABBREVIATIONS AND LEGEND, SEE SHEETS E-1 AND E-2

E-36

STATE OF CALIFORNIA - DEPARTMENT OF TRANSPORTATION
Caltrans
ELECTRICAL

FUNCTIONAL SUPERVISOR: BEHZAD GOLEMOHAMMADI
CALCULATED-DESIGNED BY: LIONEL J. SUDDS
CHECKED BY: BEHZAD GOLEMOHAMMADI
REVISED BY: LS
DATE REVISED: 3/1/14

LAST REVISION DATE PLOTTED => 18-JUN-2014
05-01-14 TIME PLOTTED => 12:34

Dist	COUNTY	ROUTE	POST MILES TOTAL PROJECT	SHEET No.	TOTAL SHEETS
04	SM,Ala	92	R14.4/R18.8, R0.0/R2.6	55	117

Lionel J. Sudds 3/3/14
REGISTERED ELECTRICAL ENGINEER DATE

5-27-14
PLANS APPROVAL DATE

REGISTERED PROFESSIONAL ENGINEER Lionel J. Sudds No. 15201 Exp. 6-30-14 ELECT STATE OF CALIFORNIA

THE STATE OF CALIFORNIA OR ITS OFFICERS OR AGENTS SHALL NOT BE RESPONSIBLE FOR THE ACCURACY OR COMPLETENESS OF SCANNED COPIES OF THIS PLAN SHEET.

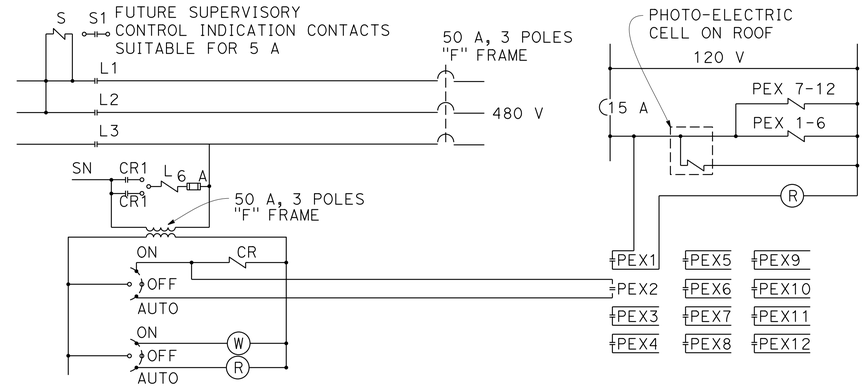

(E) OUTDOOR LIGHTING CONTROL **(E) PHOTO ELECTRIC CONTROL**

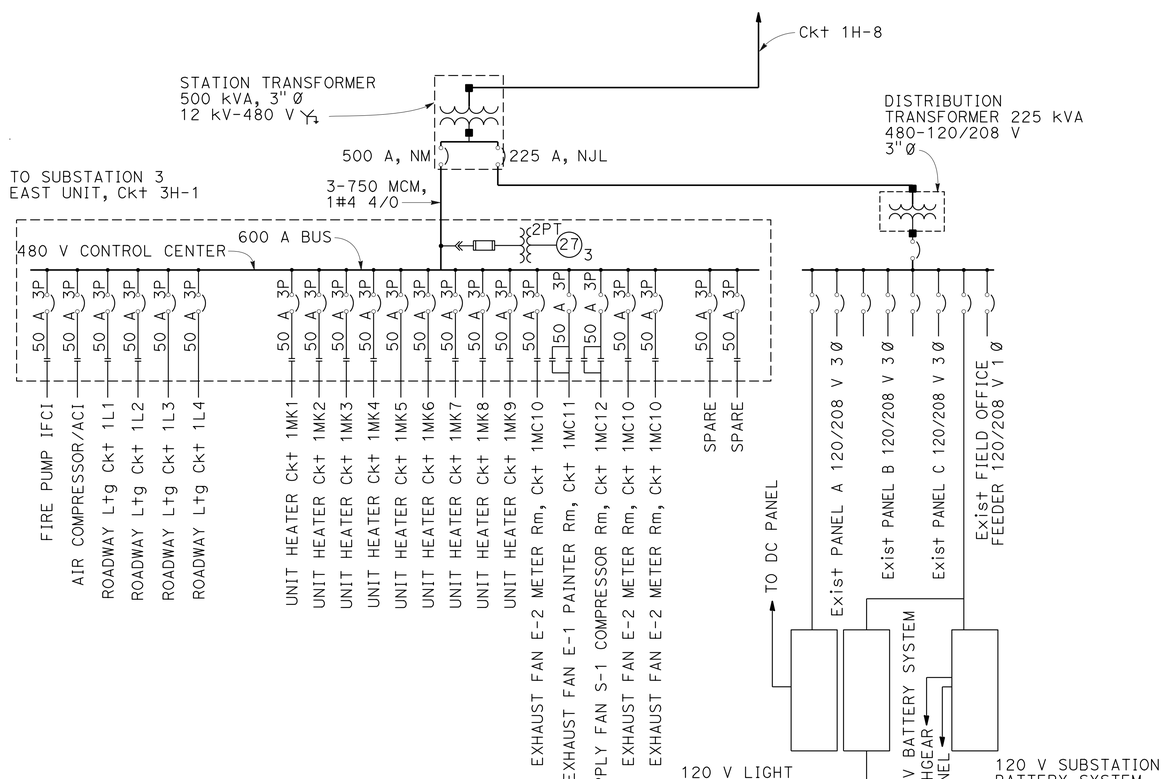

(E) SINGLE LINE DIAGRAM FOR SUBSTATION 1

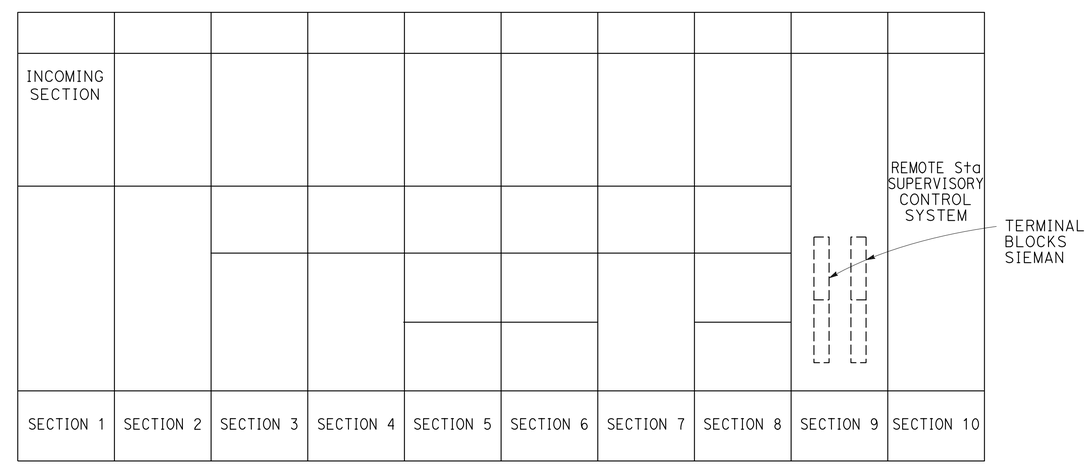

FRONT ELEVATION

LOW VOLTAGE CONTROL CENTER FOR SUBSTATION 1
(SEE SHEET E-43 FOR DETAILS)

ELECTRICAL DETAILS
SAN MATEO-HAYWARD BRIDGE
(E) LOW VOLTAGE CONTROL CENTER (LVCC) AND SUBSTATION TRANSFORMER

NO SCALE

FOR NOTES, ABBREVIATIONS AND LEGEND, SEE SHEETS E-1 AND E-2

E-37

STATE OF CALIFORNIA - DEPARTMENT OF TRANSPORTATION
Caltrans
ELECTRICAL

CALCULATED-DESIGNED BY	LIONEL J. SUDDS	REVISED BY	LS
CHECKED BY	BEHZAD GOLEMOHAMMADI	DATE REVISED	3/1/14
FUNCTIONAL SUPERVISOR	BEHZAD GOLEMOHAMMADI		

LAST REVISION 05-01-14 | DATE PLOTTED => 18-JUN-2014 | TIME PLOTTED => 12:34

Dist	COUNTY	ROUTE	POST MILES TOTAL PROJECT	SHEET No.	TOTAL SHEETS
04	SM,Ala	92	R14.4/R18.8, R0.0/R2.6	56	117

REGISTERED ELECTRICAL ENGINEER DATE 3/3/14

5-27-14
PLANS APPROVAL DATE

REGISTERED PROFESSIONAL ENGINEER Lionel J. Sudds No. 15201 Exp. 6-30-14 ELECT STATE OF CALIFORNIA

THE STATE OF CALIFORNIA OR ITS OFFICERS OR AGENTS SHALL NOT BE RESPONSIBLE FOR THE ACCURACY OR COMPLETENESS OF SCANNED COPIES OF THIS PLAN SHEET.

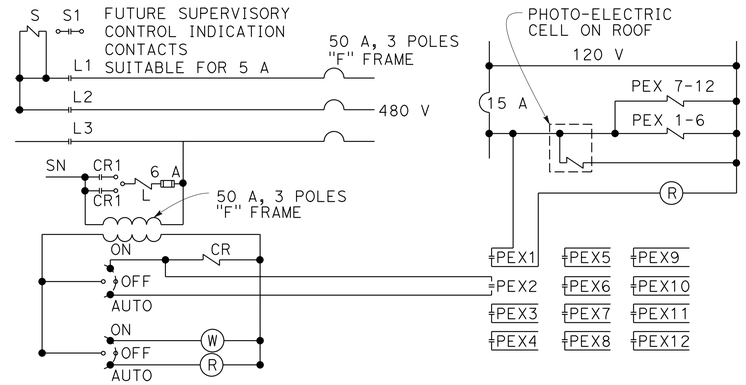

(E) OUTDOOR LIGHTING CONTROL **(E) PHOTO ELECTRIC CONTROL**

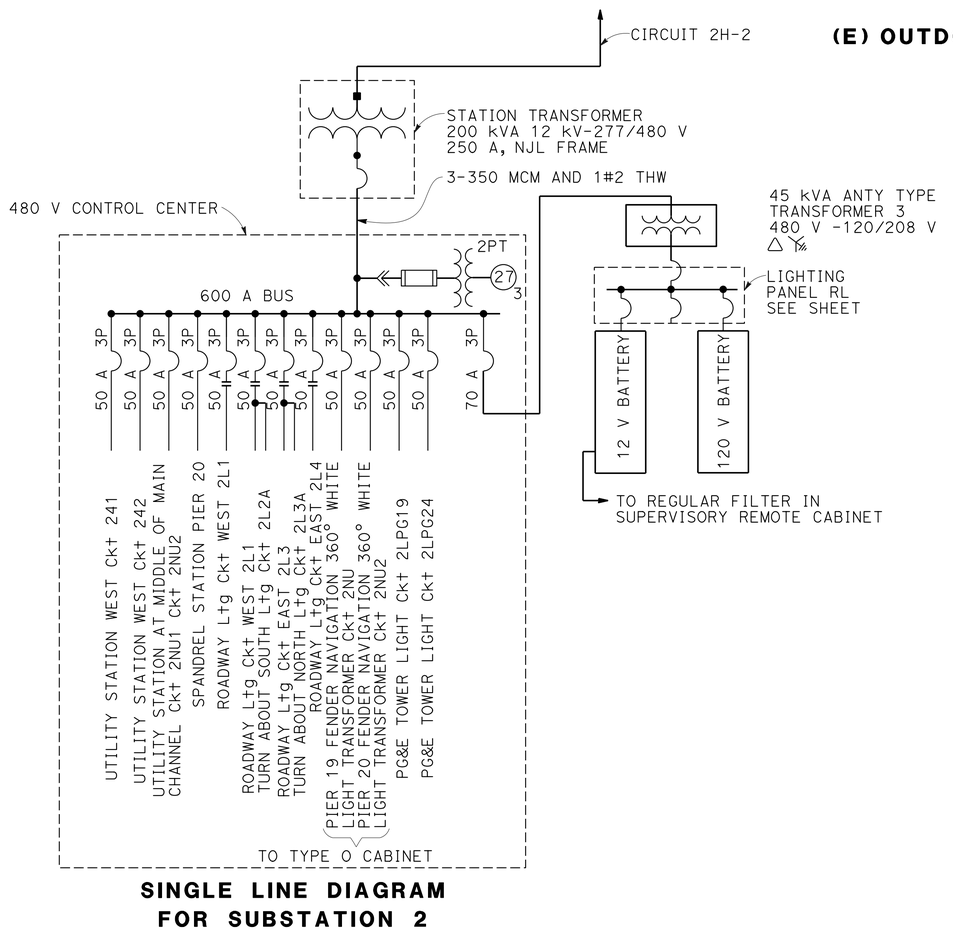

SINGLE LINE DIAGRAM FOR SUBSTATION 2

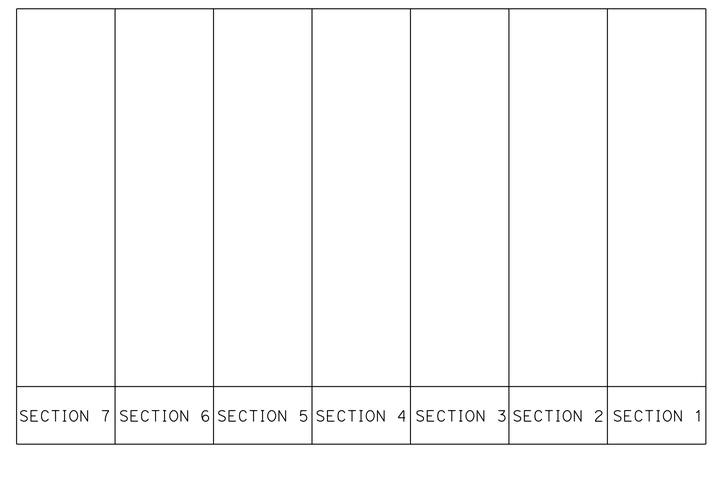

FRONT ELEVATION

(E) LOW VOLTAGE CONTROL CENTER FOR SUBSTATION 2 (SEE SHEET E-46)

ELECTRICAL DETAILS
SAN MATEO-HAYWARD BRIDGE
(E) LOW VOLTAGE CONTROL CENTER (LVCC) AND SUBSTATION TRANSFORMER

NO SCALE

FOR NOTES, ABBREVIATIONS AND LEGEND, SEE SHEETS E-1 AND E-2

E-38

LS	3/1/14	LIONEL J. SUDDS	BEHZAD GOLEMOHAMMADI
REVISED BY	DATE REVISED	CALCULATED-DESIGNED BY	CHECKED BY
FUNCTIONAL SUPERVISOR	BEHZAD GOLEMOHAMMADI		

STATE OF CALIFORNIA - DEPARTMENT OF TRANSPORTATION
Caltrans
ELECTRICAL

LAST REVISION 05-01-14 | DATE PLOTTED => 18-JUN-2014 | TIME PLOTTED => 12:34

Dist	COUNTY	ROUTE	POST MILES TOTAL PROJECT	SHEET No.	TOTAL SHEETS
04	SM,Ala	92	R14.4/R18.8, R0.0/R2.6	57	117

REGISTERED ELECTRICAL ENGINEER 3/3/14 DATE

5-27-14
PLANS APPROVAL DATE

REGISTERED PROFESSIONAL ENGINEER Lionel J. Sudds No. 15201 Exp. 6-30-14 ELECT STATE OF CALIFORNIA

THE STATE OF CALIFORNIA OR ITS OFFICERS OR AGENTS SHALL NOT BE RESPONSIBLE FOR THE ACCURACY OR COMPLETENESS OF SCANNED COPIES OF THIS PLAN SHEET.

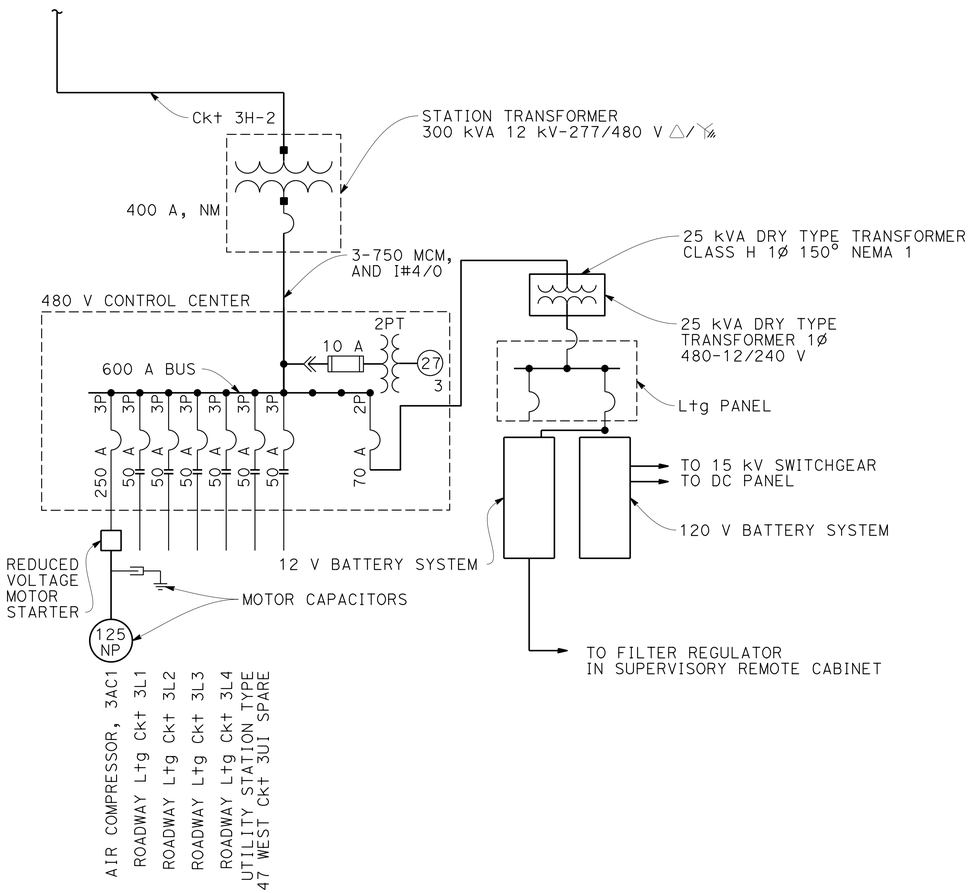

SINGLE LINE DIAGRAM

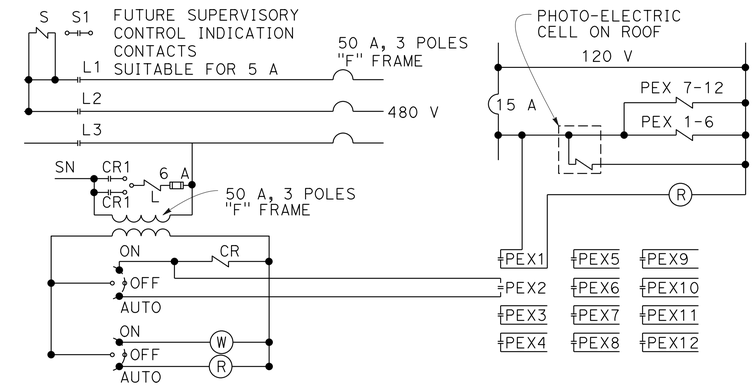

(E) OUTDOOR LIGHTING CONTROL **(E) PHOTO ELECTRIC CONTROL**

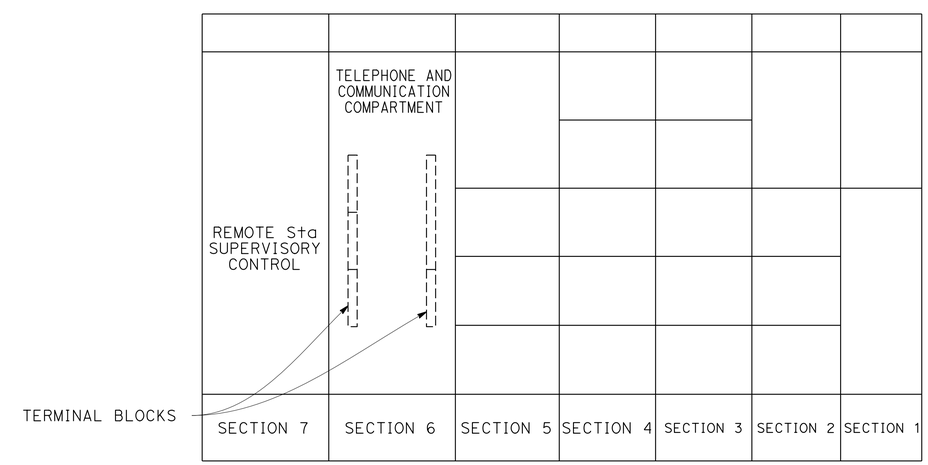

FRONT ELEVATION

(E) LOW VOLTAGE CONTROL CENTER FOR SUBSTATION 3
(SEE SHEET E-44 FOR DETAILS)

ELECTRICAL DETAILS
SAN MATEO-HAYWARD BRIDGE
(E) LOW VOLTAGE CONTROL CENTER (LVCC) AND SUBSTATION TRANSFORMER

NO SCALE

FOR NOTES, ABBREVIATIONS AND LEGEND, SEE SHEETS E-1 AND E-2

E-39

STATE OF CALIFORNIA - DEPARTMENT OF TRANSPORTATION
Caltrans
ELECTRICAL

LIONEL J. SUDDS — REVISED BY — LS
BEHZAD GOLEMOHAMMADI — DATE REVISED — 3/1/14
CALCULATED-DESIGNED BY
CHECKED BY
FUNCTIONAL SUPERVISOR — BEHZAD GOLEMOHAMMADI

LAST REVISION 05-01-14 | DATE PLOTTED => 18-JUN-2014 | TIME PLOTTED => 12:34

Dist	COUNTY	ROUTE	POST MILES TOTAL PROJECT	SHEET No.	TOTAL SHEETS
04	SM,Ala	92	R14.4/R18.8, R0.0/R2.6	58	117

REGISTERED ELECTRICAL ENGINEER DATE 3/3/14

PLANS APPROVAL DATE 5-27-14

REGISTERED PROFESSIONAL ENGINEER Lionel J. Sudds No. 15201 Exp. 6-30-14 ELECT STATE OF CALIFORNIA

THE STATE OF CALIFORNIA OR ITS OFFICERS OR AGENTS SHALL NOT BE RESPONSIBLE FOR THE ACCURACY OR COMPLETENESS OF SCANNED COPIES OF THIS PLAN SHEET.

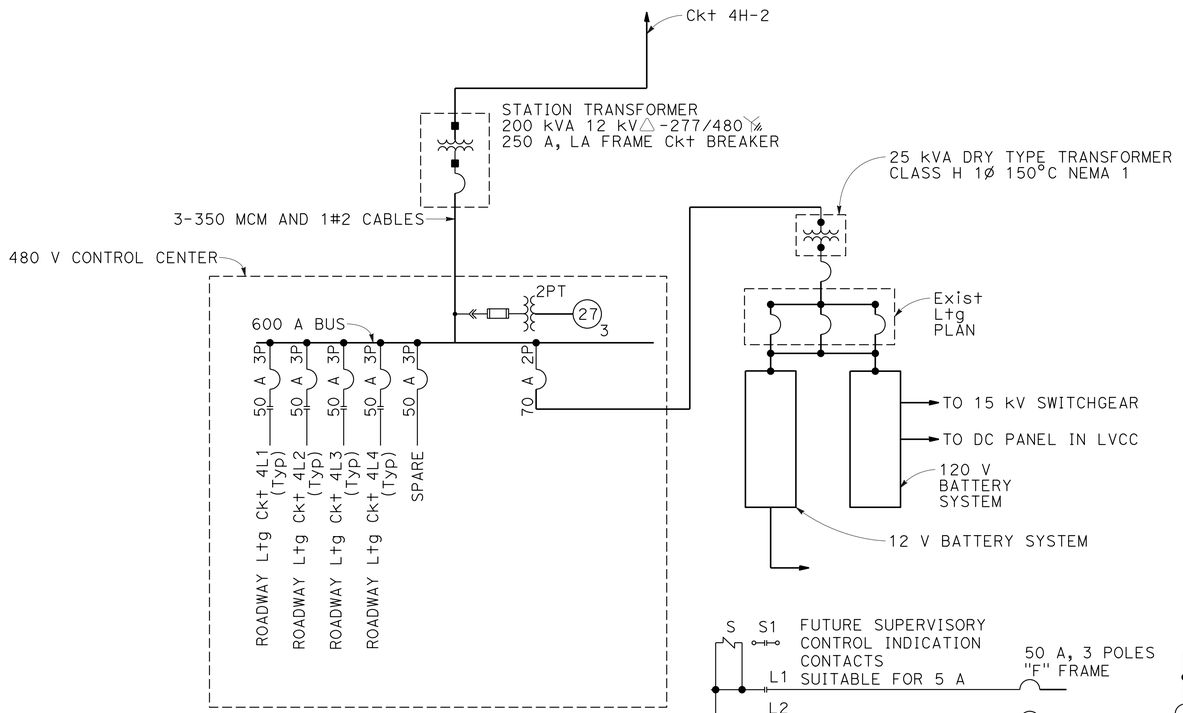

SINGLE LINE DIAGRAM

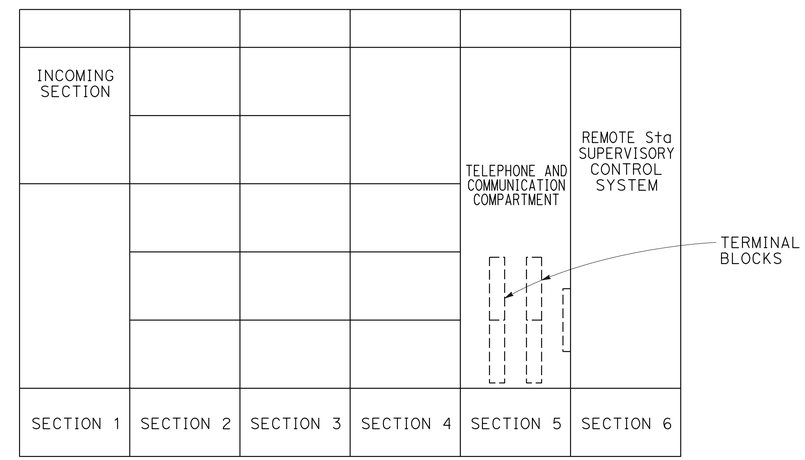

FRONT ELEVATION

(E) LOW VOLTAGE CONTROL CENTER FOR SUBSTATION 4 TO 7

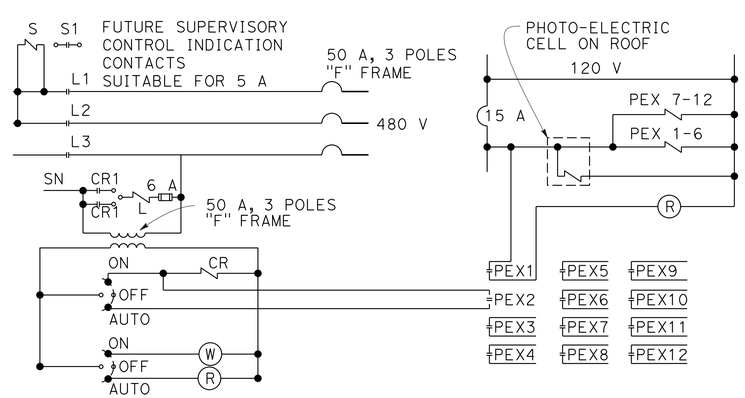

(E) OUTDOOR LIGHTING CONTROL **(E) PHOTO ELECTRIC CONTROL**

ELECTRICAL DETAILS
SAN MATEO-HAYWARD BRIDGE
(E) LOW VOLTAGE CONTROL CENTER (LVCC) AND SUBSTATION TRANSFORMER

NO SCALE

FOR NOTES, ABBREVIATIONS AND LEGEND, SEE SHEETS E-1 AND E-2

E-40

REVISED BY	DATE REVISED
LS	3/1/14

LIONEL J. SUDDS — BEHZAD GOLEMOHAMMADI

CALCULATED-DESIGNED BY — CHECKED BY

FUNCTIONAL SUPERVISOR — BEHZAD GOLEMOHAMMADI

STATE OF CALIFORNIA - DEPARTMENT OF TRANSPORTATION

Caltrans

ELECTRICAL

LAST REVISION 05-01-14 | DATE PLOTTED => 18-JUN-2014 | TIME PLOTTED => 12:34

Dist	COUNTY	ROUTE	POST MILES TOTAL PROJECT	SHEET No.	TOTAL SHEETS
04	SM,Ala	92	R14.4/R18.8, R0.0/R2.6	59	117

REGISTERED ELECTRICAL ENGINEER DATE 3/3/14

5-27-14
PLANS APPROVAL DATE

REGISTERED PROFESSIONAL ENGINEER Lionel J. Sudds No. 15201 Exp. 6-30-14 ELECT STATE OF CALIFORNIA

THE STATE OF CALIFORNIA OR ITS OFFICERS OR AGENTS SHALL NOT BE RESPONSIBLE FOR THE ACCURACY OR COMPLETENESS OF SCANNED COPIES OF THIS PLAN SHEET.

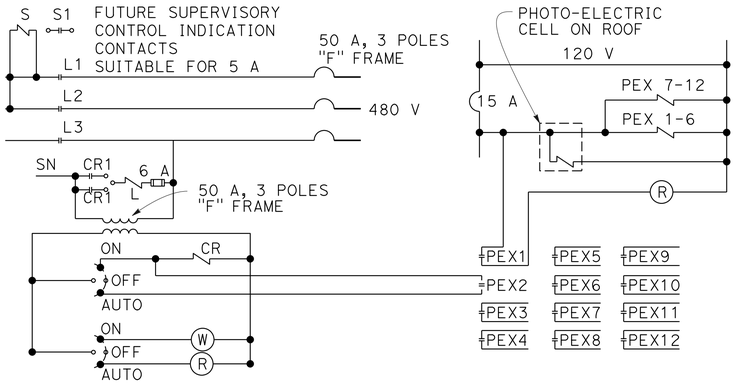

(E) OUTDOOR LIGHTING CONTROL **(E) PHOTO ELECTRIC CONTROL**

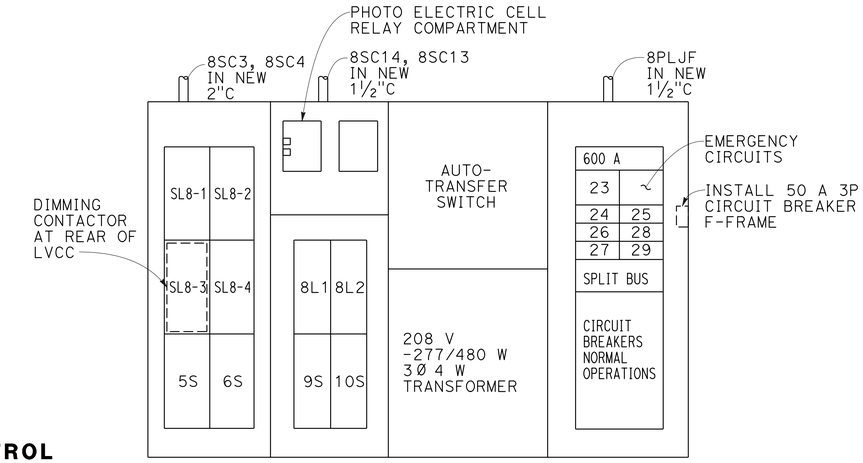

FRONT ELEVATION

EXISTING LOW VOLTAGE CONTROL CENTER, TRANSFORMER AND BUILDING SWITCHBOARD

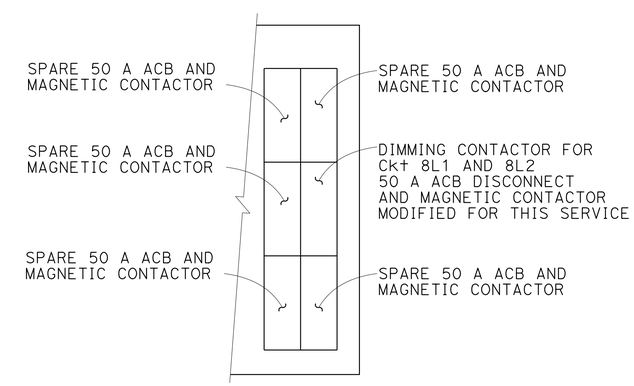

PARTIAL REAR ELEVATION

EXISTING LVCC DIMMING CONTACTOR FOR CIRCUIT 8L1 AND 8L2

ELECTRICAL DETAILS
SAN MATEO-HAYWARD BRIDGE
(E) LOW VOLTAGE CONTROL CENTER (LVCC) AND SUBSTATION TRANSFORMER

NO SCALE

FOR NOTES, ABBREVIATIONS AND LEGEND, SEE SHEETS E-1 AND E-2

E-41

REVISED BY	DATE REVISED
LS	3/1/14

LIONEL J. SUDDS — BEHZAD GOLEMOHAMMADI

CALCULATED-DESIGNED BY — CHECKED BY

FUNCTIONAL SUPERVISOR — BEHZAD GOLEMOHAMMADI

STATE OF CALIFORNIA - DEPARTMENT OF TRANSPORTATION

Caltrans

ELECTRICAL

LAST REVISION 05-01-14 — DATE PLOTTED => 18-JUN-2014 — TIME PLOTTED => 12:34

Dist	COUNTY	ROUTE	POST MILES TOTAL PROJECT	SHEET No.	TOTAL SHEETS
04	SM,Ala	92	R14.4/R18.8, R0.0/R2.6	60	117

REGISTERED ELECTRICAL ENGINEER DATE 3/3/14

5-27-14
PLANS APPROVAL DATE

REGISTERED PROFESSIONAL ENGINEER Lionel J. Sudds No. 15201 Exp. 6-30-14 ELECT STATE OF CALIFORNIA

THE STATE OF CALIFORNIA OR ITS OFFICERS OR AGENTS SHALL NOT BE RESPONSIBLE FOR THE ACCURACY OR COMPLETENESS OF SCANNED COPIES OF THIS PLAN SHEET.

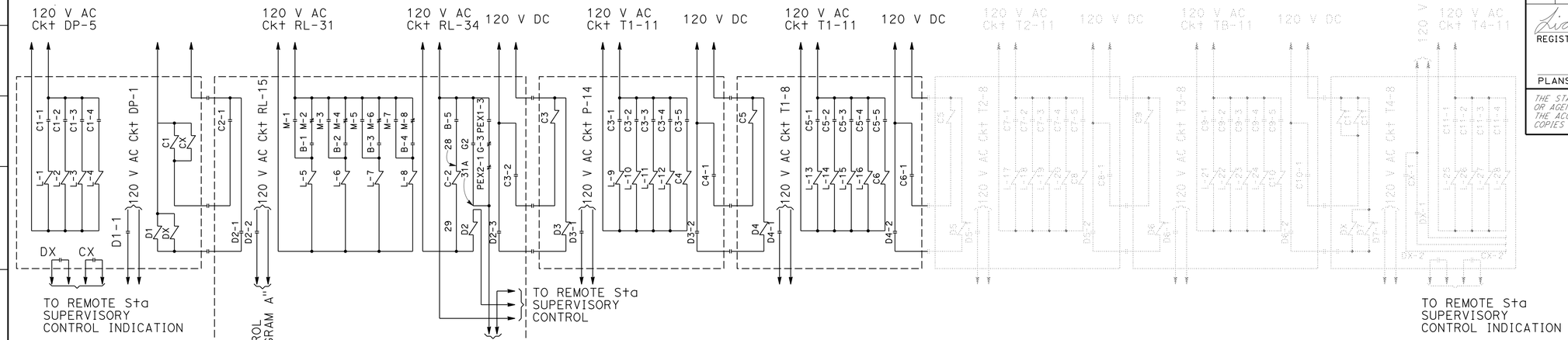

(E) ROADWAY LIGHTING CONTROL TRANSMISSION LINE

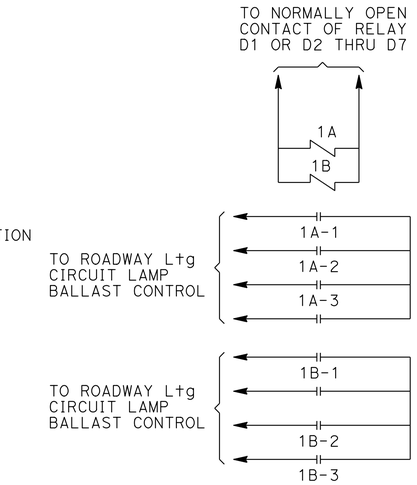

DIAGRAM A

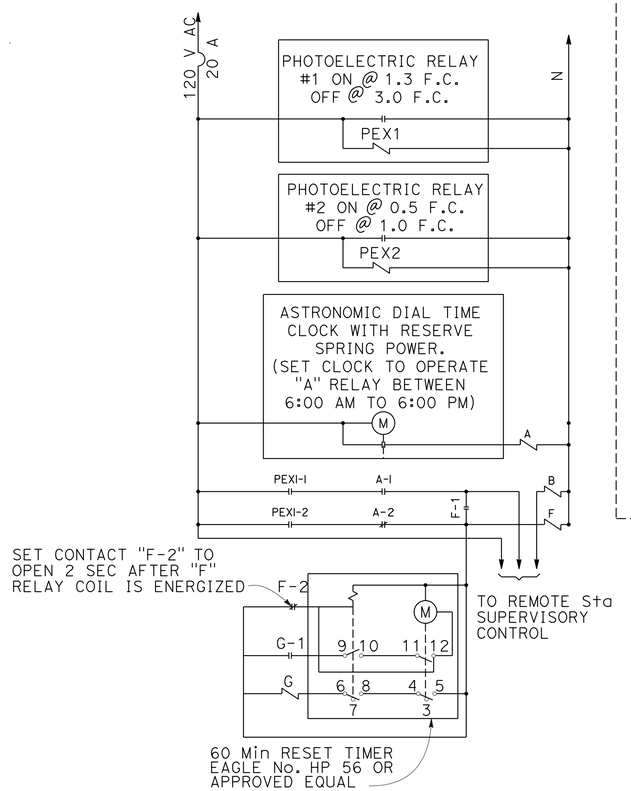

(E) ROADWAY LIGHTING DIMMING

EAGLE TIMER OPERATION

	RESET (POWER OFF)	TIMING	TIMED OUT
CLUTCH METER	OFF OFF	ON ON	ON OFF
9-10	O	X	X
6-8	O	X	X
6-7	X	O	O
4-5	X	X	O
4-3	O	O	X
11-12	X	X	O

X - CLOSED
O - OPEN

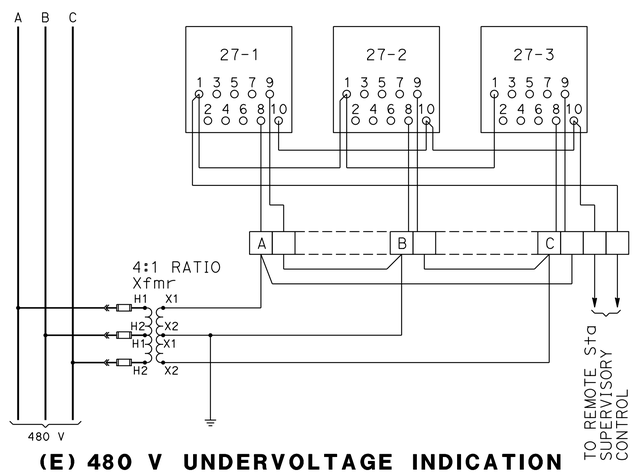

(E) 480 V UNDERVOLTAGE INDICATION

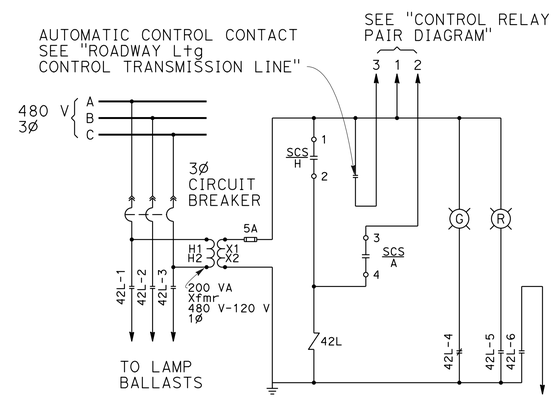

(E) TYPICAL ROADWAY LIGHTING CIRCUIT

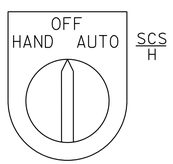

CONTACTS	POSITIONS		
	HAND	OFF	AUTO
	SCS H		SCS A
1 — 2		O	X
3 — 4	X	O	

X - CLOSED
O - OPEN

(E) SELECTOR CONTROL SWITCH

WESTINGHOUSE, TYPE WITH STYLE No. 1530137 (NO SPRING RETURN) OR APPROVED EQUAL

ELECTRICAL DETAILS
SAN MATEO-HAYWARD BRIDGE
(E) LOW VOLTAGE CONTROL CENTER (LVCC) AND SUBSTATION TRANSFORMER

NO SCALE

FOR NOTES, ABBREVIATIONS AND LEGEND, SEE SHEETS E-1 AND E-2

E-42

REVISED BY	DATE REVISED
LS	3/1/14

LIONEL J. SUDDS — BEHZAD GOLEMOHAMMADI
CALCULATED-DESIGNED BY — CHECKED BY
FUNCTIONAL SUPERVISOR — BEHZAD GOLEMOHAMMADI

STATE OF CALIFORNIA - DEPARTMENT OF TRANSPORTATION
Caltrans
ELECTRICAL

LAST REVISION 05-01-14 | DATE PLOTTED => 18-JUN-2014 | TIME PLOTTED => 12:34

Dist	COUNTY	ROUTE	POST MILES TOTAL PROJECT	SHEET No.	TOTAL SHEETS
04	SM,Ala	92	R14.4/R18.8, R0.0/R2.6	61	117

Lionel J. Sudds 3/3/14
REGISTERED ELECTRICAL ENGINEER DATE

5-27-14
PLANS APPROVAL DATE

REGISTERED PROFESSIONAL ENGINEER Lionel J. Sudds No. 15201 Exp. 6-30-14 ELECT STATE OF CALIFORNIA

THE STATE OF CALIFORNIA OR ITS OFFICERS OR AGENTS SHALL NOT BE RESPONSIBLE FOR THE ACCURACY OR COMPLETENESS OF SCANNED COPIES OF THIS PLAN SHEET.

METER	AIR COMPRESSOR	ROADWAY Ltg Ckt#1	ROADWAY Ltg Ckt#3	UNIT HEATER Ckt#1	UNIT HEATER Ckt#6	HOIST CRANE	DC PANEL
	FIRE PUMP	ROADWAY Ltg Ckt#2	ROADWAY Ltg Ckt#4	UNIT HEATER Ckt#2	UNIT HEATER Ckt#7	PUMP MOTOR	
	BOOSTER #1					OUTSIDE BUILDING LIGHTS/ UTILITY STATION UT EAST	
	BOOSTER #2	SUPPLY FAN	EXHAUST FAN	UNIT HEATER Ckt#3	UNIT HEATER Ckt#8		TEST SWITCH
	COOLING RADIATOR					DUCT HEATER Ckt#4	DC CONTROLS
MAIN Ckt BREAKER	EXHAUST FAN E-1	S-1	E-2	UNIT HEATER Ckt#5	UNIT HEATER Ckt#9		ROADWAY Ltg CONTROLS
						SPARE	SPARE

(N) LOW VOLTAGE CONTROL CENTER (LVCC) LAYOUT FOR SUBSTATION 1

	AIR COMPRESSOR (BREAKER ONLY)	ROADWAY Ltg Ckt#1	ROADWAY Ltg Ckt#3	UNIT HEATER Ckt#1	UNIT HEATER Ckt#6	HOIST CRANE	DC PANEL
	FIRE PUMP (BREAKER ONLY)	ROADWAY Ltg Ckt#2	ROADWAY Ltg Ckt#4	UNIT HEATER Ckt#2	UNIT HEATER Ckt#7	PUMP MOTOR	
UV RELAYS	BOOSTER #1 BOOSTER #2 (BREAKER ONLY)	SUPPLY FAN	EXHAUST FAN	UNIT HEATER Ckt#3	UNIT HEATER Ckt#8	OUTSIDE BUILDING LIGHTS/ UTILITY STATION UT EAST	TRANSMITTAL BRIGHT & DIMMING CONTROLS
	EXHAUST FAN E-1	S-1	E-2			DUCT HEATER Ckt#4	
	COOLING RADIATOR (BREAKER ONLY)			UNIT HEATER Ckt#5	UNIT HEATER Ckt#9		

(E) LOW VOLTAGE CONTROL CENTER (LVCC) LAYOUT FOR SUBSTATION 1

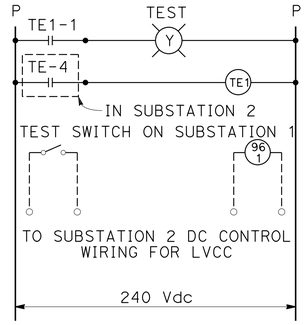

SUBSTATION 1 DC CONTROL WIRING FOR LVCC

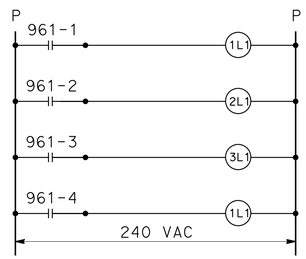

ROADWAY LIGHTING CONTROLS FOR LVCC IN SUBSTATION 1

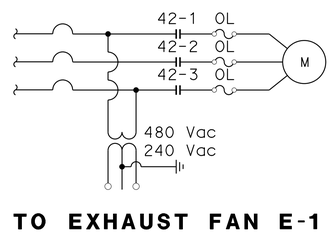

TO EXHAUST FAN E-1 CONTROL DIAGRAM

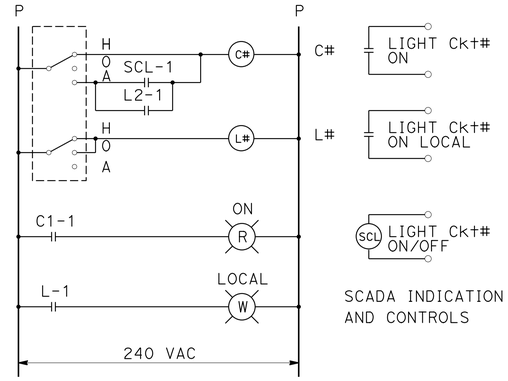

LIGHTING CONTROL CIRCUIT WIRING FOR LVCC (TYPICAL)

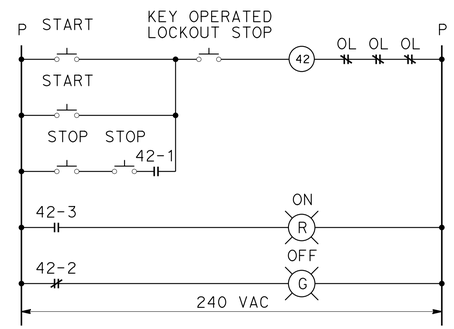

EXHAUST FAN E-1 CONTROL DIAGRAM

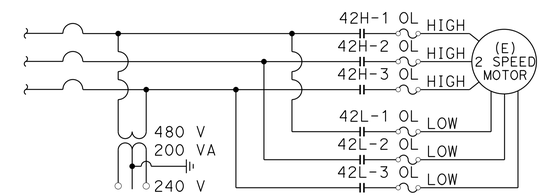

TO EXHAUST FAN E-2 CONTROL DIAGRAM

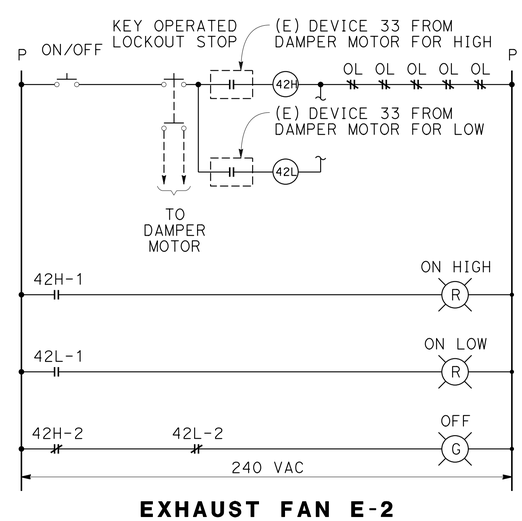

EXHAUST FAN E-2 CONTROL DIAGRAM

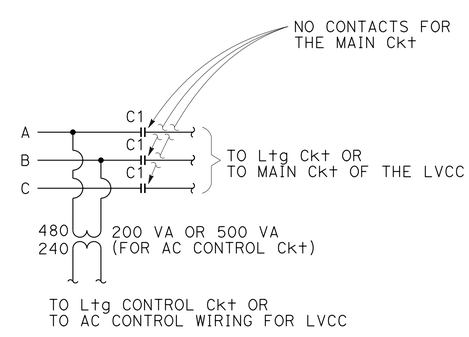

LIGHTING CIRCUIT FOR LVCC

NOTES: (THIS SHEET ONLY)

1. RC THE (E) PARTS OF THE LOW VOLTAGE CONTROL CENTER (LVCC) AS SHOWN ON THIS SHEET AND KEEP THE TELEPHONE AND RTU CABINET IN PLACE. THE TELEPHONE AND RTU CABINET SHALL BE PROVIDED w/ A PLATE TO ENCLOSE THE CABINETS.
2. INSTALL THE NEW LOW VOLTAGE CONTROL CENTER (LVCC) WHERE THE (E) PARTS OF THE LOW VOLTAGE CONTROL CENTER (LVCC) WAS.
3. SEE SHEET E-41 FOR CONNECT TO THE 961 RELAY AND CONNECT CONTACT TE-4 AND THE TEST SWITCH TO THE CCC WITH ¾"C, 1-4p #/6 CONDUCTOR CABLE.

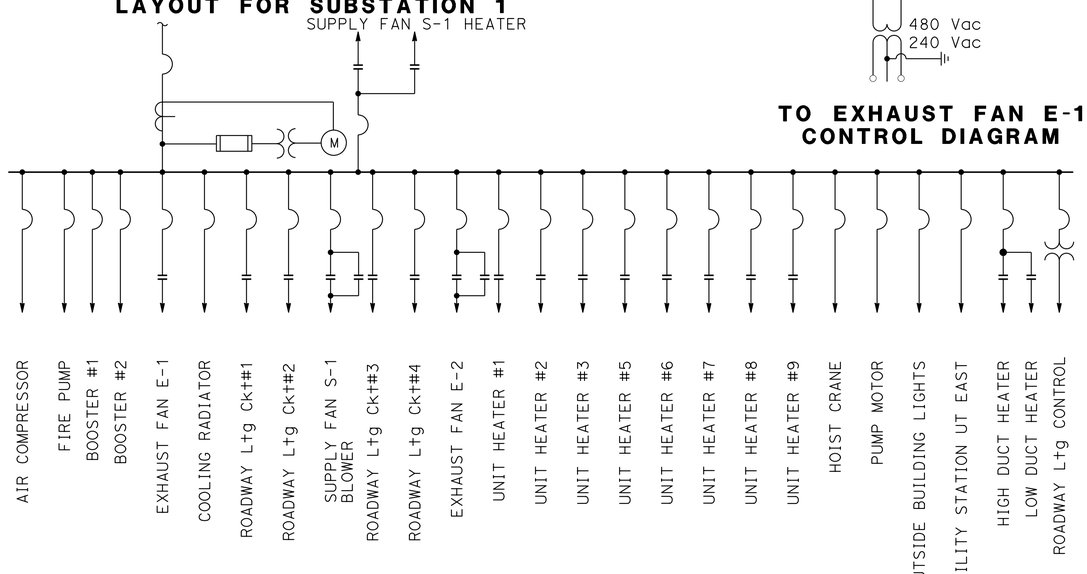

(N) LOW VOLTAGE CONTROL CENTER ONE-LINE DIAGRAM FOR SUBSTATION 1

FOR NOTES, ABBREVIATIONS AND LEGEND, SEE SHEETS E-1 AND E-2

SUBSTATION 1
SAN MATEO-HAYWARD BRIDGE ELECTRICAL FACILITIES
LOW VOLTAGE CONTROL CENTER (LVCC) LAYOUT AND WIRING DIAGRAMS

NO SCALE

E-43

LAST REVISION 05-01-14 | DATE PLOTTED => 18-JUN-2014 | TIME PLOTTED => 12:34

STATE OF CALIFORNIA - DEPARTMENT OF TRANSPORTATION
Caltrans
ELECTRICAL

LIONEL J. SUDDS	LS	REVISED BY	3/1/14 DATE REVISED
BEHZAD GOLEMOHAMMADI			
CALCULATED-DESIGNED BY		CHECKED BY	
FUNCTIONAL SUPERVISOR	BEHZAD GOLEMOHAMMADI		

Dist	COUNTY	ROUTE	POST MILES TOTAL PROJECT	SHEET No.	TOTAL SHEETS
04	SM,Ala	92	R14.4/R18.8, R0.0/R2.6	62	117

REGISTERED ELECTRICAL ENGINEER 3/3/14 DATE

5-27-14
PLANS APPROVAL DATE

REGISTERED PROFESSIONAL ENGINEER Lionel J. Sudds No. 15201 Exp. 6-30-14 ELECT STATE OF CALIFORNIA

THE STATE OF CALIFORNIA OR ITS OFFICERS OR AGENTS SHALL NOT BE RESPONSIBLE FOR THE ACCURACY OR COMPLETENESS OF SCANNED COPIES OF THIS PLAN SHEET.

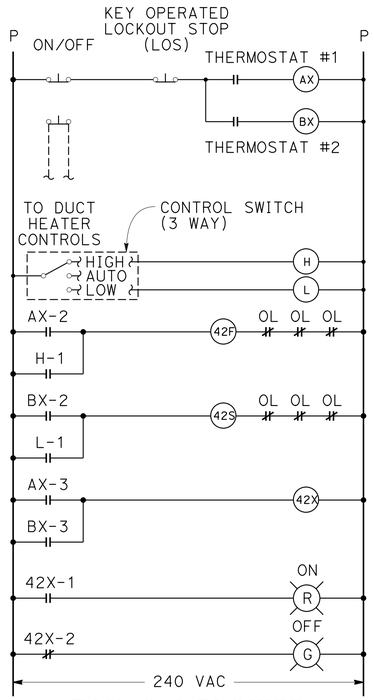

FAN S-1 BLOWER CONTROL WIRING DIAGRAM

TO FAN S-1 BLOWER CONTROL WIRING DIAGRAM

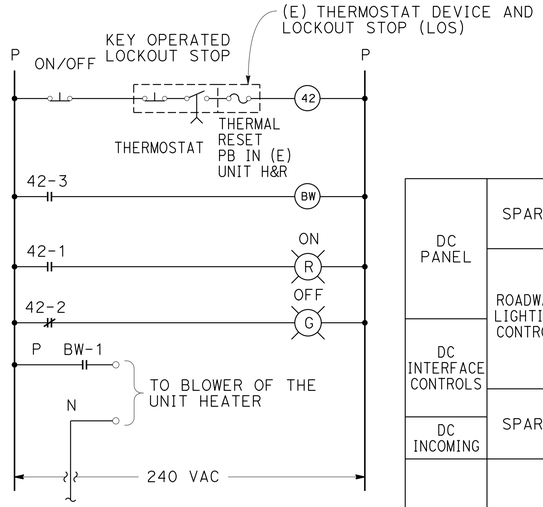

TO UNIT HEATER CONTROL DIAGRAM

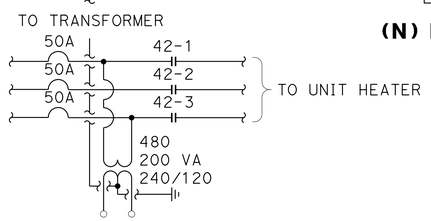

UNIT HEATER CONTROL WIRING DIAGRAM

DC PANEL	SPARE	25kVA TRANSFORMER SUBSTATION HEATER	AIR COMPRESSOR	CIRCULATING PUMP
	ROADWAY LIGHTING CONTROL	UTILITY STATION UT WEST	ROADWAY LIGHTING CKT#3	FAN HEATER EXCHANGE
DC INTERFACE CONTROLS		ROADWAY LIGHTING CKT#1	112.5 TRANSFORMER 200 AMP	METER
DC INCOMING	SPARE	ROADWAY LIGHTING CKT#2	YELLOW HOIST	MAIN CIRCUIT BREAKER
		BLUE HOIST		

(N) LOW VOLTAGE CONTROL CENTER FOR SUBSTATION 3

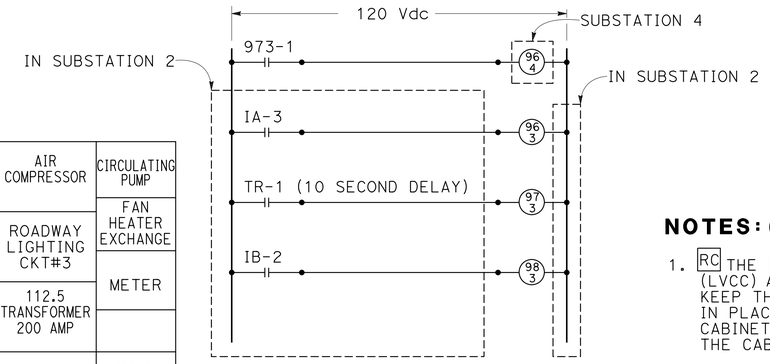

DC INTERFACE CONTROLS FOR SUBSTATION 3

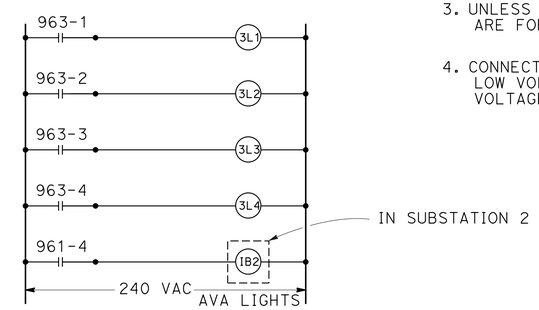

ROADWAY LIGHTING CONTROLS FOR LVCC IN SUBSTATION 3

NOTES: (THIS SHEET ONLY)

1. RC THE (E) PART OF THE LOW VOLTAGE CONTROL CENTER (LVCC) AS SHOWN ON THIS SHEET TO BE REMOVED AND KEEP THE TELEPHONE, MORSE CONTROL AND RTU CABINETS IN PLACE. THE TELEPHONE, MORSE CONTROL AND RTU CABINET SHALL BE PROVIDED w/ A PLATE TO ENCLOSE THE CABINETS.
2. INSTALL THE NEW LOW VOLTAGE CONTROL CENTER (LVCC) WHERE THE PART OF THE LOW VOLTAGE CONTROL CENTER (LVCC) THAT WAS REMOVED.
3. UNLESS OTHERWISE SHOWN ON THIS SHEET, ALL CONTROL ARE FOR SUBSTATION 1.
4. CONNECT (E) EQUIPMENT AND (E) CONTROLS OF THE (E) LOW VOLTAGE CONTROL CENTER (LVCC) TO THE (N) LOW VOLTAGE CENTER (LVCC).

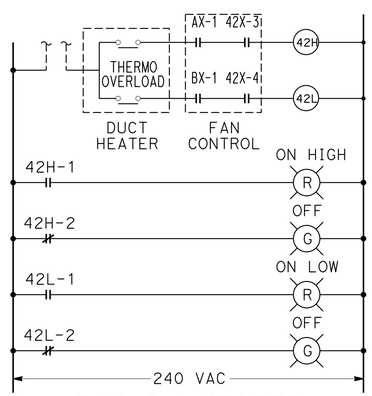

FAN S-1 HEATER CONTROL WIRING DIAGRAM

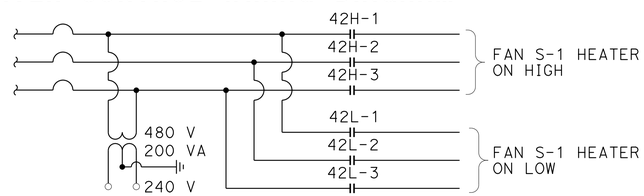

TO FAN S-1 HEATER CONTROL WIRING DIAGRAM

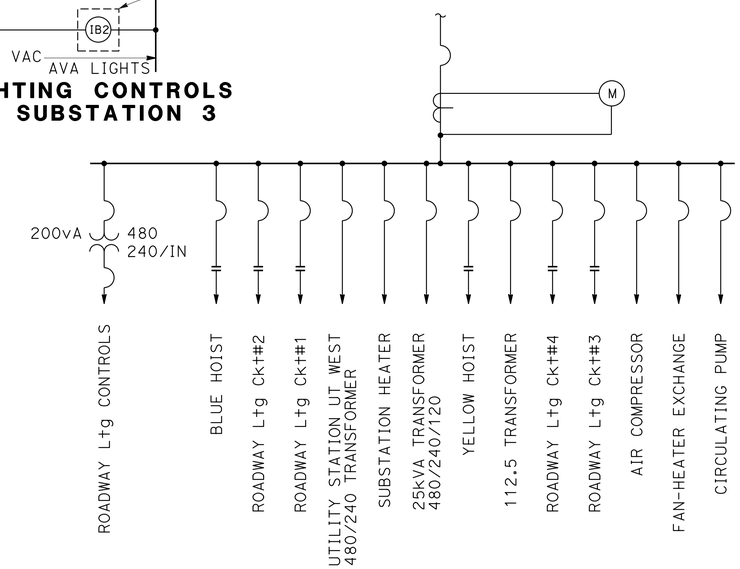

(N) LOW VOLTAGE CONTROL CENTER ONE-LINE DIAGRAM FOR SUBSTATION 3

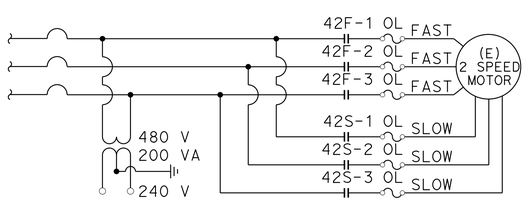

TO FAN S-1 BLOWER CONTROL WIRING DIAGRAM

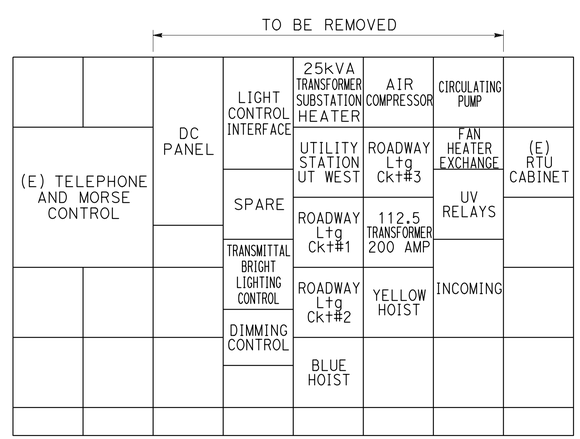

(E) LOW VOLTAGE CONTROL CENTER FOR SUBSTATION 3

FOR NOTES, ABBREVIATIONS AND LEGEND, SEE SHEETS E-1 AND E-2

SUBSTATION 3
SAN MATEO-HAYWARD BRIDGE
ELECTRICAL FACILITIES
LOW VOLTAGE CONTROL CENTER (LVCC) LAYOUT AND WIRING DIAGRAMS

NO SCALE

E-44

REVISED BY	DATE REVISED
LS	3/1/14

LIONEL J. SUDDS — BEHZAD GOLEMOHAMMADI
CALCULATED-DESIGNED BY — CHECKED BY
FUNCTIONAL SUPERVISOR — BEHZAD GOLEMOHAMMADI

STATE OF CALIFORNIA - DEPARTMENT OF TRANSPORTATION
Caltrans
ELECTRICAL

LAST REVISION 05-01-14 — DATE PLOTTED => 18-JUN-2014 — TIME PLOTTED => 12:34

Dist	COUNTY	ROUTE	POST MILES TOTAL PROJECT	SHEET No.	TOTAL SHEETS
04	SM,Ala	92	R14.4/R18.8, R0.0/R2.6	63	117

REGISTERED ELECTRICAL ENGINEER DATE 3/3/14

PLANS APPROVAL DATE 5-27-14

REGISTERED PROFESSIONAL ENGINEER Lionel J. Sudds No. 15201 Exp. 6-30-14 ELECT STATE OF CALIFORNIA

THE STATE OF CALIFORNIA OR ITS OFFICERS OR AGENTS SHALL NOT BE RESPONSIBLE FOR THE ACCURACY OR COMPLETENESS OF SCANNED COPIES OF THIS PLAN SHEET.

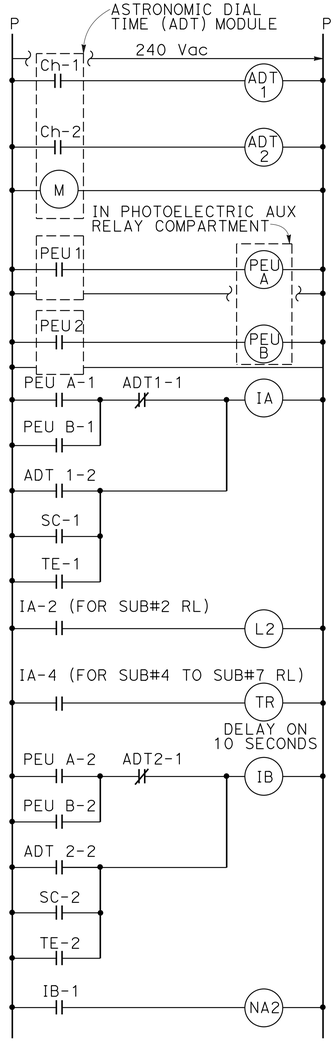

SUBSTATION 2 AC CONTROL WIRING FOR LVCC

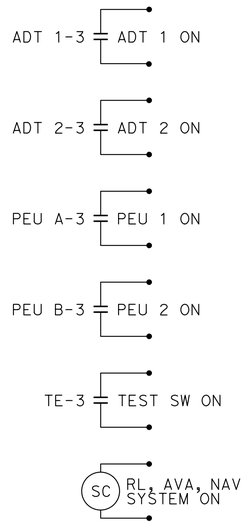

SCADA CONTROL AND INDICATIONS

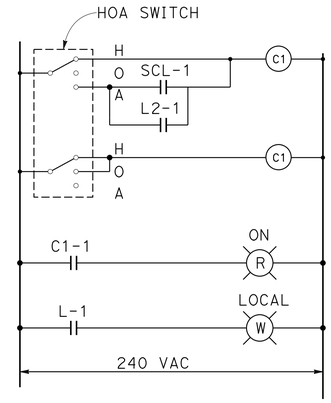

LIGHTING CONTROL CIRCUIT WIRING FOR LVCC (TYPICAL)

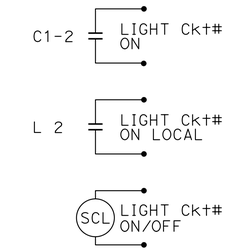

SCADA CONTROL AND INDICATIONS

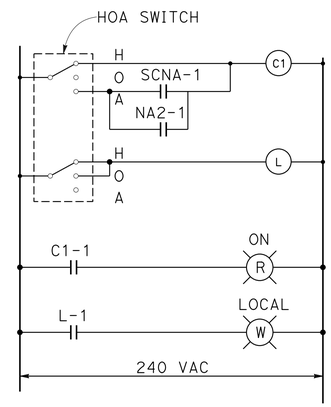

NAVIGATION AND AVIATION CONTROL CIRCUIT WIRING FOR LVCC (TYPICAL)

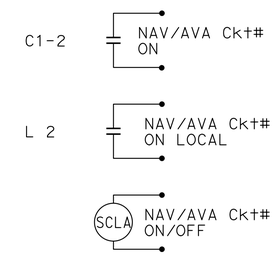

SCADA CONTROL AND INDICATIONS

NOTES: (THIS SHEET ONLY)

1. ALL CONTROL WIRING DIAGRAMS AND CIRCUITS SHOWN ON THIS SHEET ARE FOR SUBSTATION 2.
2. CONNECT THE (E) EQUIPMENT AND (E) CONTROLS OF THE (E) LOW VOLTAGE CONTROL CENTER (LVCC) TO THE (N) LOW VOLTAGE CENTER (LVCC).

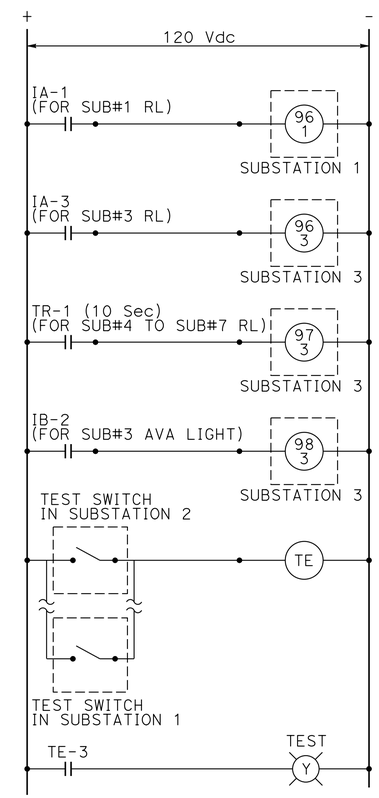

SUBSTATION 2 DC CONTROL WIRING FOR LVCC

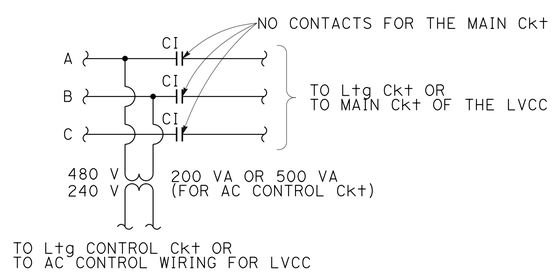

LIGHTING CIRCUIT FOR LVCC

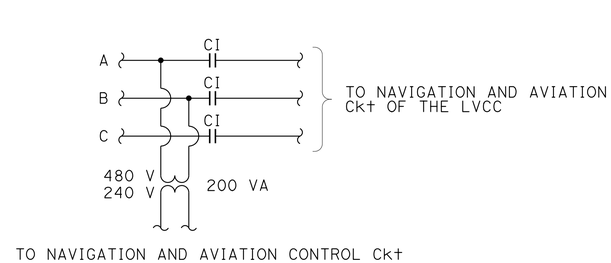

NAVIGATION AND AVIATION CIRCUIT FOR LVCC

ELECTRICAL DETAILS

SAN MATEO-HAYWARD BRIDGE ELECTRICAL FACILITIES SUBSTATION 2 LOW VOLTAGE CONTROL CENTER (LVCC) WIRING DIAGRAMS

NO SCALE

FOR NOTES, ABBREVIATIONS AND LEGEND, SEE SHEETS E-1 AND E-2

E-45

REVISED BY	DATE REVISED
LS	3/1/14

LIONEL J. SUDDS — BEHZAD GOLEMOHAMMADI

CALCULATED-DESIGNED BY — CHECKED BY

FUNCTIONAL SUPERVISOR — BEHZAD GOLEMOHAMMADI

STATE OF CALIFORNIA - DEPARTMENT OF TRANSPORTATION — ELECTRICAL

LAST REVISION 05-08-14 — DATE PLOTTED => 18-JUN-2014 — TIME PLOTTED => 12:34

Dist	COUNTY	ROUTE	POST MILES TOTAL PROJECT	SHEET No.	TOTAL SHEETS
04	SM,Ala	92	R14.4/R18.8, R0.0/R2.6	64	117

REGISTERED ELECTRICAL ENGINEER DATE 3/3/14

PLANS APPROVAL DATE 5-27-14

REGISTERED PROFESSIONAL ENGINEER Lionel J. Sudds No. 15201 Exp. 6-30-14 ELECT STATE OF CALIFORNIA

THE STATE OF CALIFORNIA OR ITS OFFICERS OR AGENTS SHALL NOT BE RESPONSIBLE FOR THE ACCURACY OR COMPLETENESS OF SCANNED COPIES OF THIS PLAN SHEET.

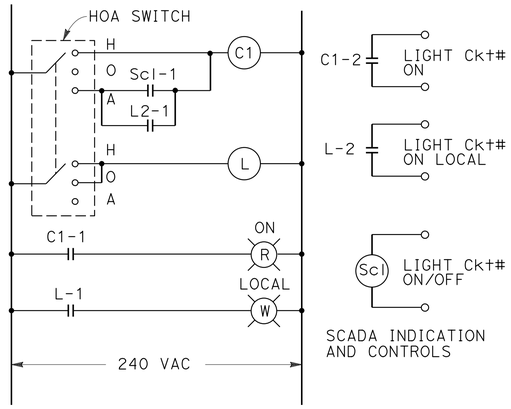

LIGHTING CONTROL CIRCUIT WIRING FOR LVCC

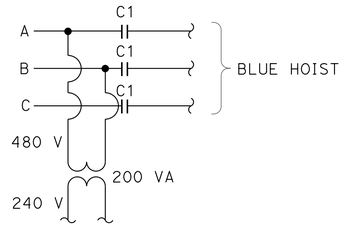

BLUE HOIST CIRCUIT FOR LVCC

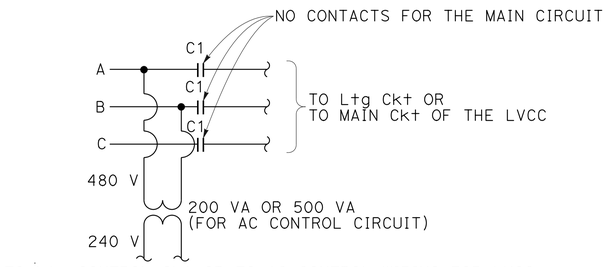

LIGHTING CIRCUIT FOR LVCC

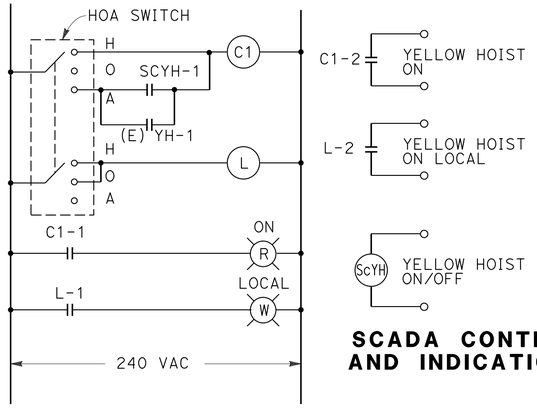

YELLOW HOIST CONTROL WIRING DIAGRAM

SCADA CONTROL AND INDICATIONS

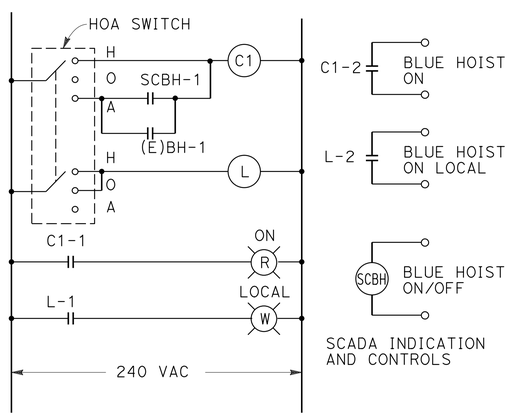

BLUE HOIST CONTROL WIRING DIAGRAM

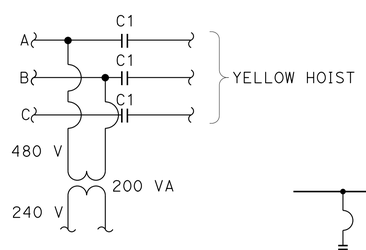

YELLOW HOIST CIRCUIT FOR LVCC

TO BE REMOVED

RTU	MOORE	TELE-PHONE	DC PANEL	45kVA/ SP AND 1 STATION 20	ROADWAY Ltg WEST 2L1	ROADWAY Ltg EAST 2L3	SPARE
				UTILITY STATION MID CHANNEL / SUBSTATION HEATER	ROADWAY Ltg WEST 2L2	ROADWAY Ltg EAST 2L4	
			2L3, 2L4 ØA,ØB,ØC CONTACTOR ROADWAY	2L1, 2L2 ØA,ØB,ØC CONTACTOR ROADWAY	FENDER NAVIGATION LIGHTS PIER 19	FENDER NAVIGATION LIGHTS PIER 20	UV RELAYS
			TRANSMITTAL RELAY TRANSMITTAL DIMMING AND THROW OVER CONTROLS	PHOTO-ELECTRIC AUX RELAYS	AERIAL TOWER 2LPG 24 / AERIAL TOWER 2LPG 19	SPARE	INCOMING

(E) LOW VOLTAGE CONTROL CENTER (LVCC) LAYOUT FOR SUBSTATION 2

DC PANEL	45kVA TRANSPORMER	ROADWAY Ltg WEST 2L1	ROADWAY Ltg EAST 2L3	SPARE
	SP AND 1 STATION 20 / UTILITY STATION MID CHANNEL	ROADWAY Ltg WEST 2L2	ROADWAY Ltg EAST 2L4	
TEST SWITCH	SUBSTATION HEATER	FENDER NAVIGATION LIGHTS PIER 19	FENDER NAVIGATION LIGHTS PIER 20	METER
DC Ltg CONTROL Ckt	ROADWAY Ltg Ckt# 2L1 AND Ckt# 2L2 CONTACTORS	AERIAL TOWER 2LPG 24	AC Ltg CONTROL Ckt	INCOMING
ROADWAY Ltg Ckt# 2L3 AND Ckt# 2L4 CONTACTORS	PHOTO-ELECTRIC AUX RELAYS	AERIAL TOWER 2LPG 19		

(N) LOW VOLTAGE CONTROL CENTER (LVCC) LAYOUT FOR SUBSTATION 2

NOTES: (THIS SHEET ONLY)

1. RC THE (E) PARTS OF THE LOW VOLTAGE CONTROL CENTER (LVCC) AS SHOWN ON THIS SHEET AND KEEP THE (E) RTU, MOORE AND TELEPHONE CABINETS IN PLACE. THE RTU, MOORE AND TELEPHONE CABINETS SHALL BE PROVIDED w/ A PLATE TO ENCLOSE THE CABINETS.
2. INSTALL THE NEW LOW VOLTAGE CONTROL CENTER (LVCC) WHERE THE (E) PARTS OF THE LOW VOLTAGE CONTROL CENTER (LVCC) WAS.
3. ALL CONTROL WIRING DIAGRAM AND CIRCUITS SHOWN ON THIS SHEET IS FOR SUBSTATION 3.
4. CONNECT THE (E) EQUIPMENT AND (E) CONTROLS OF THE (E) LOW VOLTAGE CONTROL CENTER (LVCC) TO THE (N) LOW VOLTAGE CONTROL CENTER (LVCC).

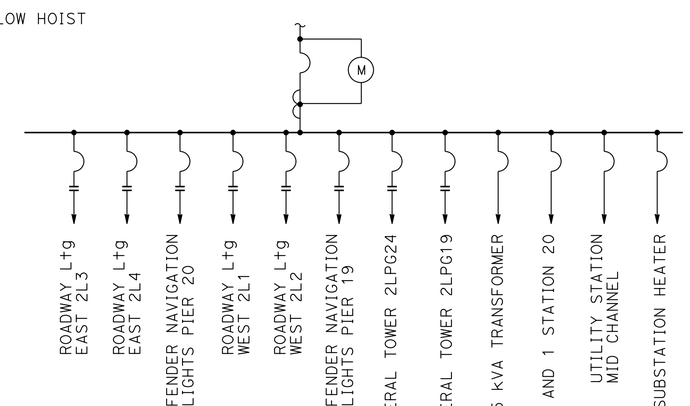

(N) LOW VOLTAGE CONTROL CENTER (LVCC) ONE-LINE DIAGRAM FOR SUBSTATION 2

FOR NOTES, ABBREVIATIONS AND LEGEND, SEE SHEETS E-1 AND E-2

SUBSTATION 2
SAN MATEO-HAYWARD BRIDGE ELECTRICAL FACILITIES
LOW VOLTAGE CONTROL CENTER (LVCC) LAYOUT AND WIRING DIAGRAMS

NO SCALE

E-46

STATE OF CALIFORNIA - DEPARTMENT OF TRANSPORTATION
Caltrans
ELECTRICAL

FUNCTIONAL SUPERVISOR: BEHZAD GOLEMOHAMMADI
CALCULATED-DESIGNED BY: LIONEL J. SUDDS
CHECKED BY: BEHZAD GOLEMOHAMMADI
REVISED BY: LS
DATE REVISED: 3/1/14

LAST REVISION 05-08-14
DATE PLOTTED => 18-JUN-2014
TIME PLOTTED => 12:34

Dist	COUNTY	ROUTE	POST MILES TOTAL PROJECT	SHEET No.	TOTAL SHEETS
04	SM,Ala	92	R14.4/R18.8, R0.0/R2.6	65	117

REGISTERED ELECTRICAL ENGINEER 3/3/14 DATE

5-27-14
PLANS APPROVAL DATE

REGISTERED PROFESSIONAL ENGINEER Lionel J. Sudds No. 15201 Exp. 6-30-14 ELECT STATE OF CALIFORNIA

THE STATE OF CALIFORNIA OR ITS OFFICERS OR AGENTS SHALL NOT BE RESPONSIBLE FOR THE ACCURACY OR COMPLETENESS OF SCANNED COPIES OF THIS PLAN SHEET.

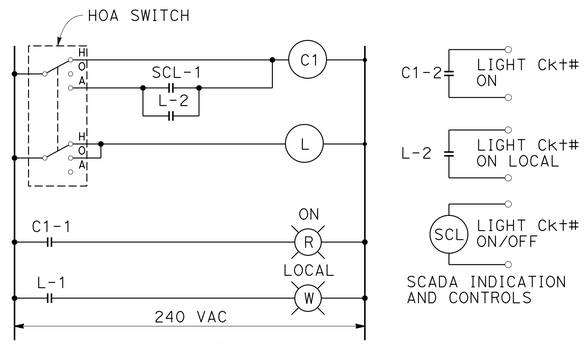

LIGHTING CONTROL CIRCUIT FOR LVCC

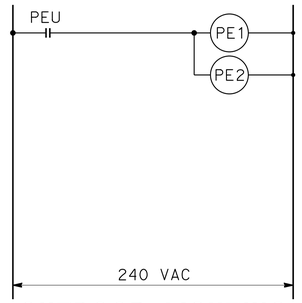

OUTDOOR LIGHTING CONTROLS

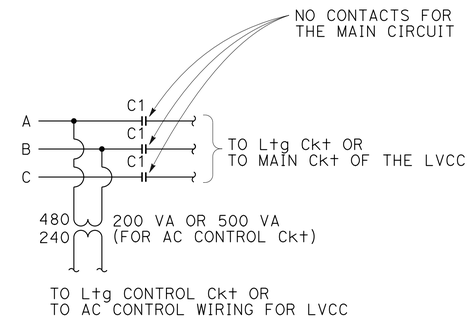

LIGHTING CIRCUIT FOR LVCC

NOTES: (THIS SHEET ONLY)

1. RC THE (E) LOW VOLTAGE CONTROL CENTER (LVCC), (E) TRANSFORMER, (E) TRANSFER SWITCH, AND (E) SWITCHBOARD AS SHOWN ON THIS SHEET AND KEEP THE TRANSFER SWITCH ON SIDE WALL IN PLACE.
2. INSTALL THE NEW LOW VOLTAGE CONTROL CENTER (LVCC), TRANSFORMER AND SWITCHBOARD WHERE THE (E) EQUIPMENT WAS.
3. CONNECT THE (E) EQUIPMENT AND (E) CONTROLS OF THE (E) LOW VOLTAGE CONTROL CENTER (LVCC) TO THE (N) LOW VOLTAGE CONTROL CENTER (LVCC).
4. INSTALL NEW FEEDER BREAKER THAT MATCH THE RATING AND NUMBER OF THE (E) FEEDER BREAKERS OF THE (E) SWITCHBOARD w/ 3 SPARE FEEDER BREAKER INTO THE (N) SWITCHBOARD.

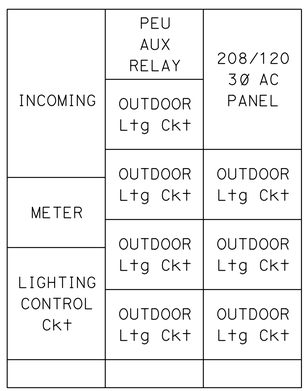

(N) LOW VOLTAGE CONTROL CENTER (LVCC)

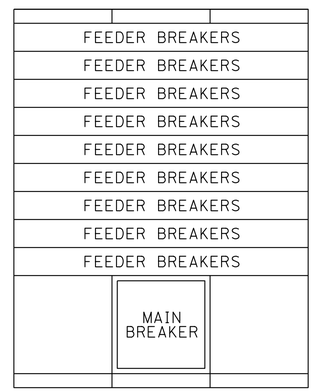

(N) SWITCHBOARD

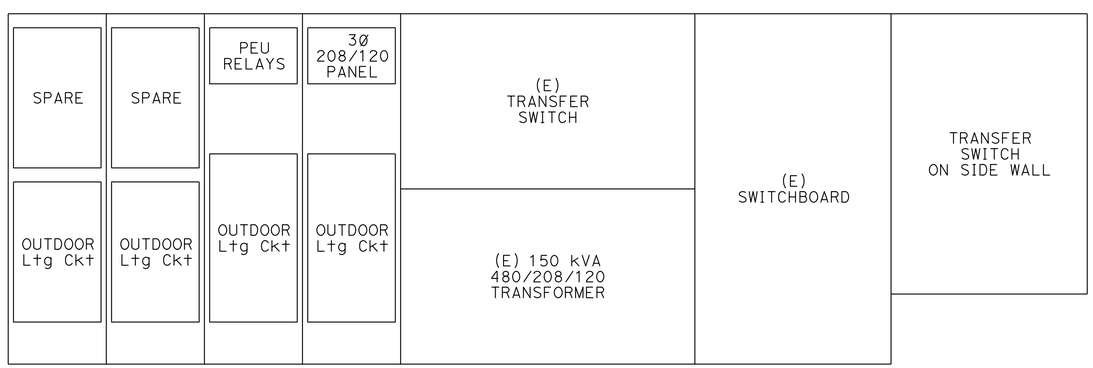

(E) LOW VOLTAGE CONTROL CENTER (LVCC) TRANSFORMER AND SWITCHBOARD

SUBSTATION 8
SAN MATEO-HAYWARD BRIDGE ELECTRICAL FACILITIES
LOW VOLTAGE CONTROL CENTER (LVCC), SWITCHBOARD LAYOUT AND WIRING DIAGRAM

NO SCALE

FOR NOTES, ABBREVIATIONS AND LEGEND, SEE SHEETS E-1 AND E-2

E-47

STATE OF CALIFORNIA - DEPARTMENT OF TRANSPORTATION
Caltrans
ELECTRICAL

LIONEL J. SUDDS — CALCULATED-DESIGNED BY
BEHZAD GOLEMOHAMMADI — CHECKED BY
LS — REVISED BY — 3/1/14 — DATE REVISED
BEHZAD GOLEMOHAMMADI — FUNCTIONAL SUPERVISOR

LAST REVISION 05-01-14
DATE PLOTTED => 18-JUN-2014
TIME PLOTTED => 12:34

Dist	COUNTY	ROUTE	POST MILES TOTAL PROJECT	SHEET No.	TOTAL SHEETS
04	SM,Ala	92	R14.4/R18.8, R0.0/R2.6	66	117

Lionel J. Sudds 3/3/14
REGISTERED ELECTRICAL ENGINEER DATE

5-27-14
PLANS APPROVAL DATE

REGISTERED PROFESSIONAL ENGINEER Lionel J. Sudds No. 15201 Exp. 6-30-14 ELECT STATE OF CALIFORNIA

THE STATE OF CALIFORNIA OR ITS OFFICERS OR AGENTS SHALL NOT BE RESPONSIBLE FOR THE ACCURACY OR COMPLETENESS OF SCANNED COPIES OF THIS PLAN SHEET.

LEGEND: (THIS SHEET ONLY)

FIELD WIREWAY

PAC WIREWAY

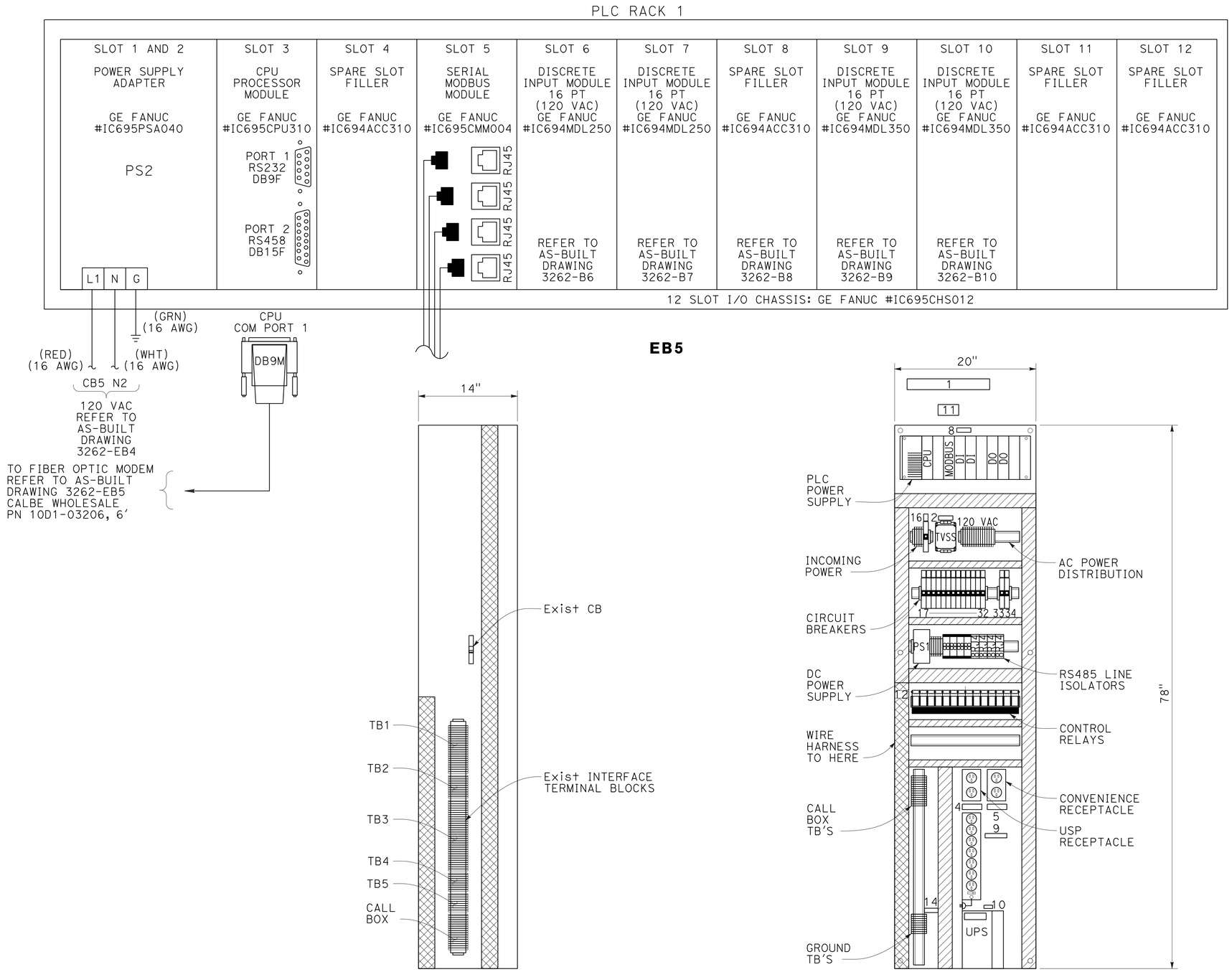

EXISTING LEFT MOUNTING SIDE PAN LAYOUT

NEW MOUNTING PAN LAYOUT

EB1

EXISTING RIGHT MOUNTING SIDE PAN LAYOUT

SUBSTATION 1
SAN MATEO-HAYWARD BRIDGE
PLC-01 PLC RACK LAYOUT
NO SCALE

FOR NOTES, ABBREVIATIONS AND LEGEND, SEE SHEETS E-1 AND E-2

E-48

STATE OF CALIFORNIA - DEPARTMENT OF TRANSPORTATION
Caltrans
ELECTRICAL

FUNCTIONAL SUPERVISOR: BEHZAD GOLEMOHAMMADI

CALCULATED-DESIGNED BY: LIONEL J. SUDDS
CHECKED BY: BEHZAD GOLEMOHAMMADI

REVISED BY: LS
DATE REVISED: 3/1/14

LAST REVISION 05-01-14 | DATE PLOTTED => 18-JUN-2014 | TIME PLOTTED => 12:34

Dist	COUNTY	ROUTE	POST MILES TOTAL PROJECT	SHEET No.	TOTAL SHEETS
04	SM,Ala	92	R14.4/R18.8, R0.0/R2.6	67	117

REGISTERED ELECTRICAL ENGINEER DATE 3/3/14

PLANS APPROVAL DATE 5-27-14

REGISTERED PROFESSIONAL ENGINEER Lionel J. Sudds No. 15201 Exp. 6-30-14 ELECT STATE OF CALIFORNIA

THE STATE OF CALIFORNIA OR ITS OFFICERS OR AGENTS SHALL NOT BE RESPONSIBLE FOR THE ACCURACY OR COMPLETENESS OF SCANNED COPIES OF THIS PLAN SHEET.

LEGEND: (THIS SHEET ONLY)

1 RC THE (E) CONNECTION AND (E) RELAYS.

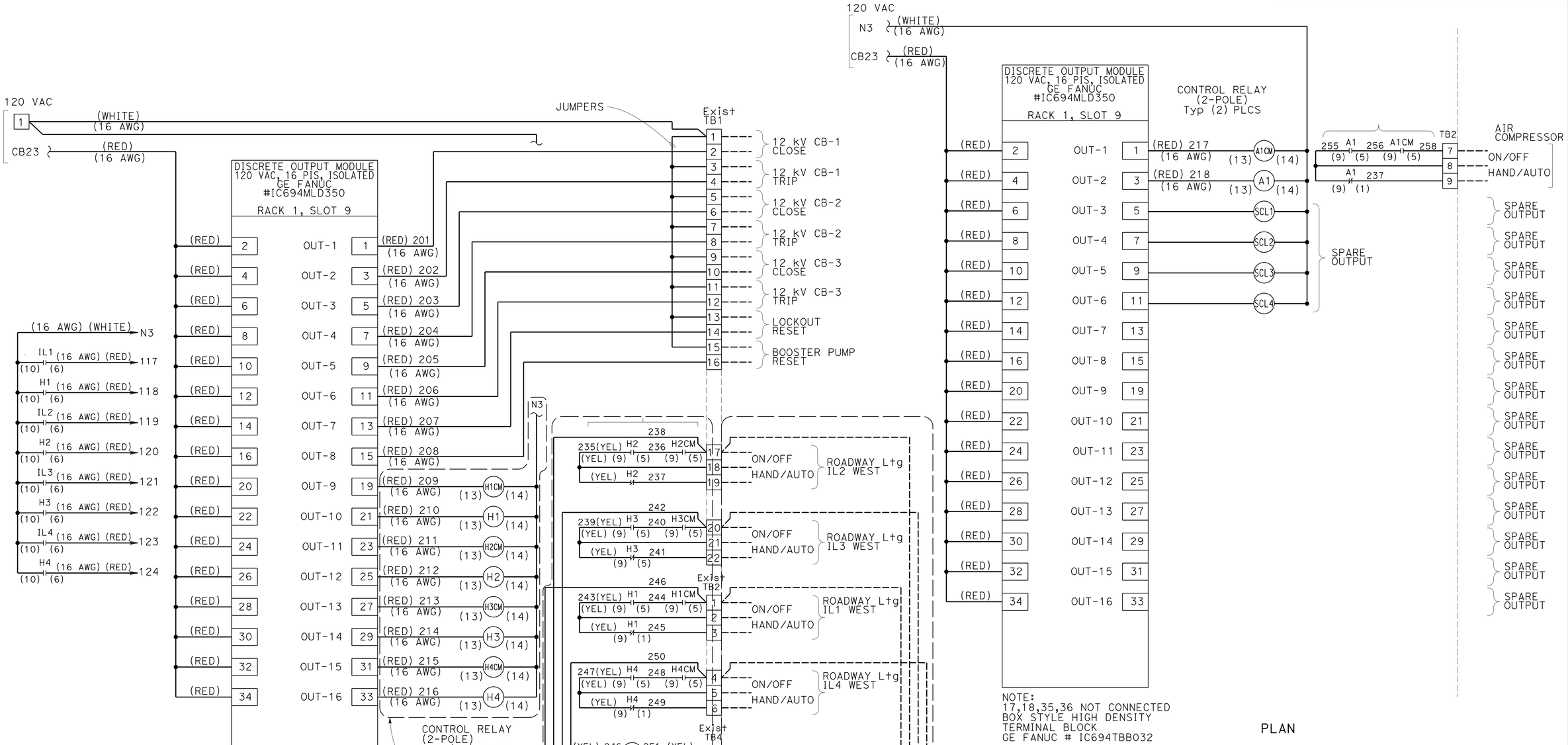

FOR NOTES, ABBREVIATIONS AND LEGEND, SEE SHEETS E-1 AND E-2

SUBSTATION 1
SAN MATEO-HAYWARD BRIDGE
PLC-01 WIRING DIAGRAM
NO SCALE

E-49

REVISED BY	DATE REVISED
LS	3/1/14

LIONEL J. SUDDS — BEHZAD GOLEMOHAMMADI
CALCULATED-DESIGNED BY — CHECKED BY
FUNCTIONAL SUPERVISOR — BEHZAD GOLEMOHAMMADI

STATE OF CALIFORNIA - DEPARTMENT OF TRANSPORTATION
Caltrans
ELECTRICAL

LAST REVISION 05-01-14 | DATE PLOTTED => 18-JUN-2014 | TIME PLOTTED => 12:34

Dist	COUNTY	ROUTE	POST MILES TOTAL PROJECT	SHEET No.	TOTAL SHEETS
04	SM,Ala	92	R14.4/R18.8, R0.0/R2.6	68	117

REGISTERED ELECTRICAL ENGINEER 3/3/14 DATE

5-27-14
PLANS APPROVAL DATE

REGISTERED PROFESSIONAL ENGINEER Lionel J. Sudds No. 15201 Exp. 6-30-14 ELECT STATE OF CALIFORNIA

THE STATE OF CALIFORNIA OR ITS OFFICERS OR AGENTS SHALL NOT BE RESPONSIBLE FOR THE ACCURACY OR COMPLETENESS OF SCANNED COPIES OF THIS PLAN SHEET.

LEGEND: (THIS SHEET ONLY)

(1) RECONNECT NEW CONTACTS FOR ROADWAY LIGHT CIRCUITS ON CONTROL/LOCAL/REMOTE INDICATION TO THE EXISTING CONNECTOR.

(2) CONNECT NEW CONTACTS FOR THE BATTERY CHARGER AND CIRCUIT BREAKER INDICATION.

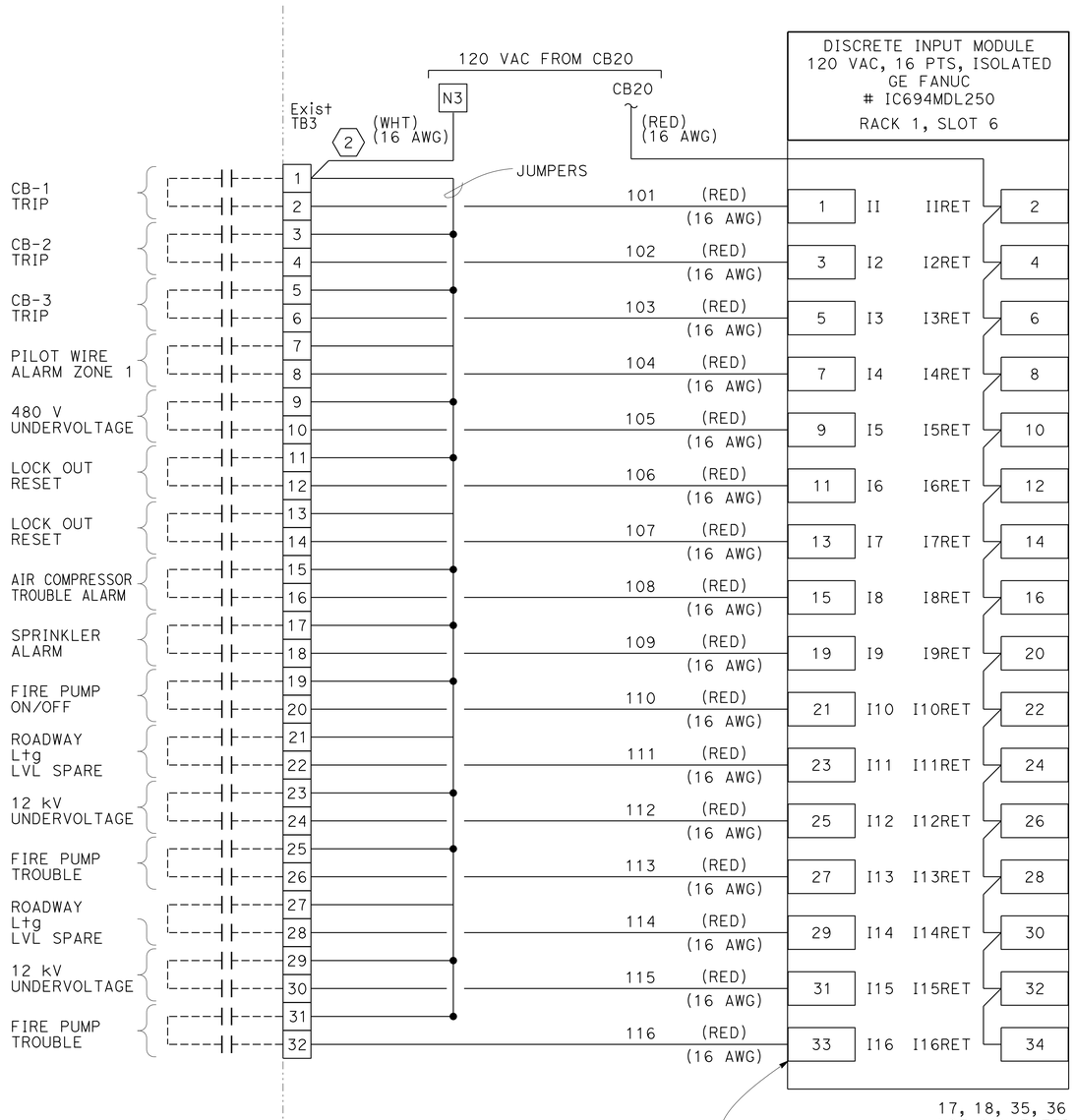

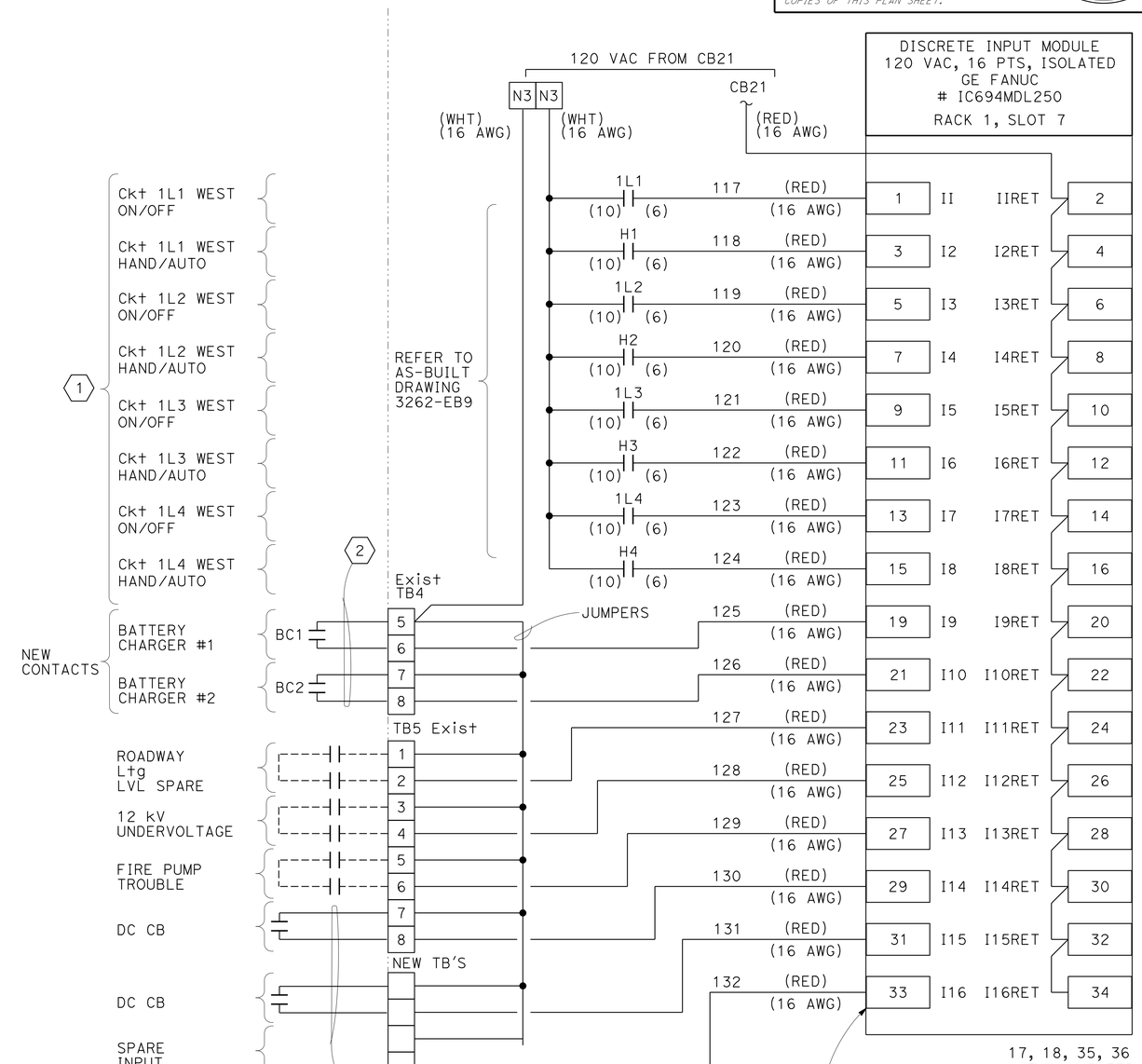

SUBSTATION 1
SAN MATEO-HAYWARD BRIDGE
PLC-01 WIRING DIAGRAM
NO SCALE

FOR NOTES, ABBREVIATIONS AND LEGEND, SEE SHEETS E-1 AND E-2

E-50

STATE OF CALIFORNIA - DEPARTMENT OF TRANSPORTATION
Caltrans
ELECTRICAL

FUNCTIONAL SUPERVISOR: BEHZAD GOLEMOHAMMADI
CALCULATED-DESIGNED BY: LIONEL J. SUDDS
CHECKED BY: BEHZAD GOLEMOHAMMADI
REVISED BY: LS
DATE REVISED: 3/1/14

LAST REVISION: DATE PLOTTED => 18-JUN-2014 TIME PLOTTED => 12:34
05-01-14

Dist	COUNTY	ROUTE	POST MILES TOTAL PROJECT	SHEET No.	TOTAL SHEETS
04	SM,Ala	92	R14.4/R18.8, R0.0/R2.6	69	117

REGISTERED ELECTRICAL ENGINEER DATE 3/3/14

PLANS APPROVAL DATE 5-27-14

REGISTERED PROFESSIONAL ENGINEER Lionel J. Sudds No. 15201 Exp. 6-30-14 ELECT STATE OF CALIFORNIA

THE STATE OF CALIFORNIA OR ITS OFFICERS OR AGENTS SHALL NOT BE RESPONSIBLE FOR THE ACCURACY OR COMPLETENESS OF SCANNED COPIES OF THIS PLAN SHEET.

LEGEND: (FOR THIS SHEET ONLY)

FIELD WIREWAY

PAC WIREWAY

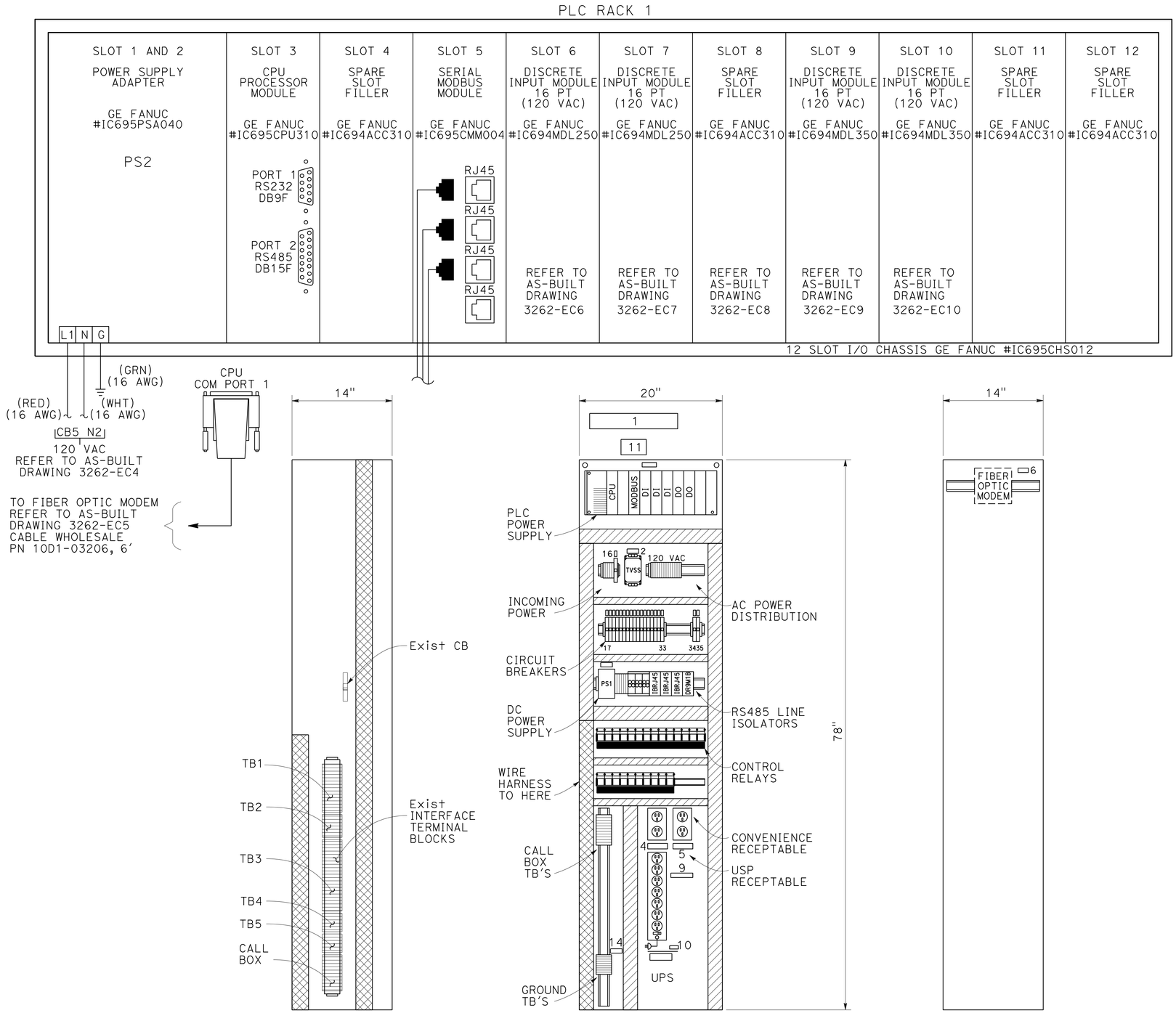

EXISTING LEFT MOUNTING SIDE PAN LAYOUT

NEW MOUNTING PAN LAYOUT

EXISTING RIGHT MOUNTING SIDE PAN LAYOUT

FOR NOTES, ABBREVIATIONS AND LEGEND, SEE SHEETS E-1 AND E-2

SUBSTATION 2
SAN MATEO-HAYWARD BRIDGE
PLC-02 RACK LAYOUT
NO SCALE

E-51

STATE OF CALIFORNIA - DEPARTMENT OF TRANSPORTATION
Caltrans
ELECTRICAL

FUNCTIONAL SUPERVISOR: BEHZAD GOLEMOHAMMADI
CALCULATED-DESIGNED BY
CHECKED BY
REVISED BY: LS
DATE REVISED: 3/1/14
LIONEL J. SUDDS
BEHZAD GOLEMOHAMMADI

LAST REVISION 05-01-14
DATE PLOTTED => 18-JUN-2014
TIME PLOTTED => 12:34

Dist	COUNTY	ROUTE	POST MILES TOTAL PROJECT	SHEET No.	TOTAL SHEETS
04	SM,Ala	92	R14.4/R18.8, R0.0/R2.6	70	117

Lionel J. Sudds 3/3/14
REGISTERED ELECTRICAL ENGINEER DATE

5-27-14
PLANS APPROVAL DATE

REGISTERED PROFESSIONAL ENGINEER Lionel J. Sudds No. 15201 Exp. 6-30-14 ELECT STATE OF CALIFORNIA

THE STATE OF CALIFORNIA OR ITS OFFICERS OR AGENTS SHALL NOT BE RESPONSIBLE FOR THE ACCURACY OR COMPLETENESS OF SCANNED COPIES OF THIS PLAN SHEET.

LEGEND: (THIS SHEET ONLY)

1. RECONNECT NEW CONTACTS FOR THE ROADWAY LIGHT Ckt ON CONTROLS, LOCAL/REMOTE INDICATION TO THE Exist CONNECTOR.
2. CONNECT NEW CONTACTS FOR THE BATTERY CHARGER AND Ckt BREAKER INDICATION.
3. RC THE (E) CONNECTS AND (E) RELAYS.

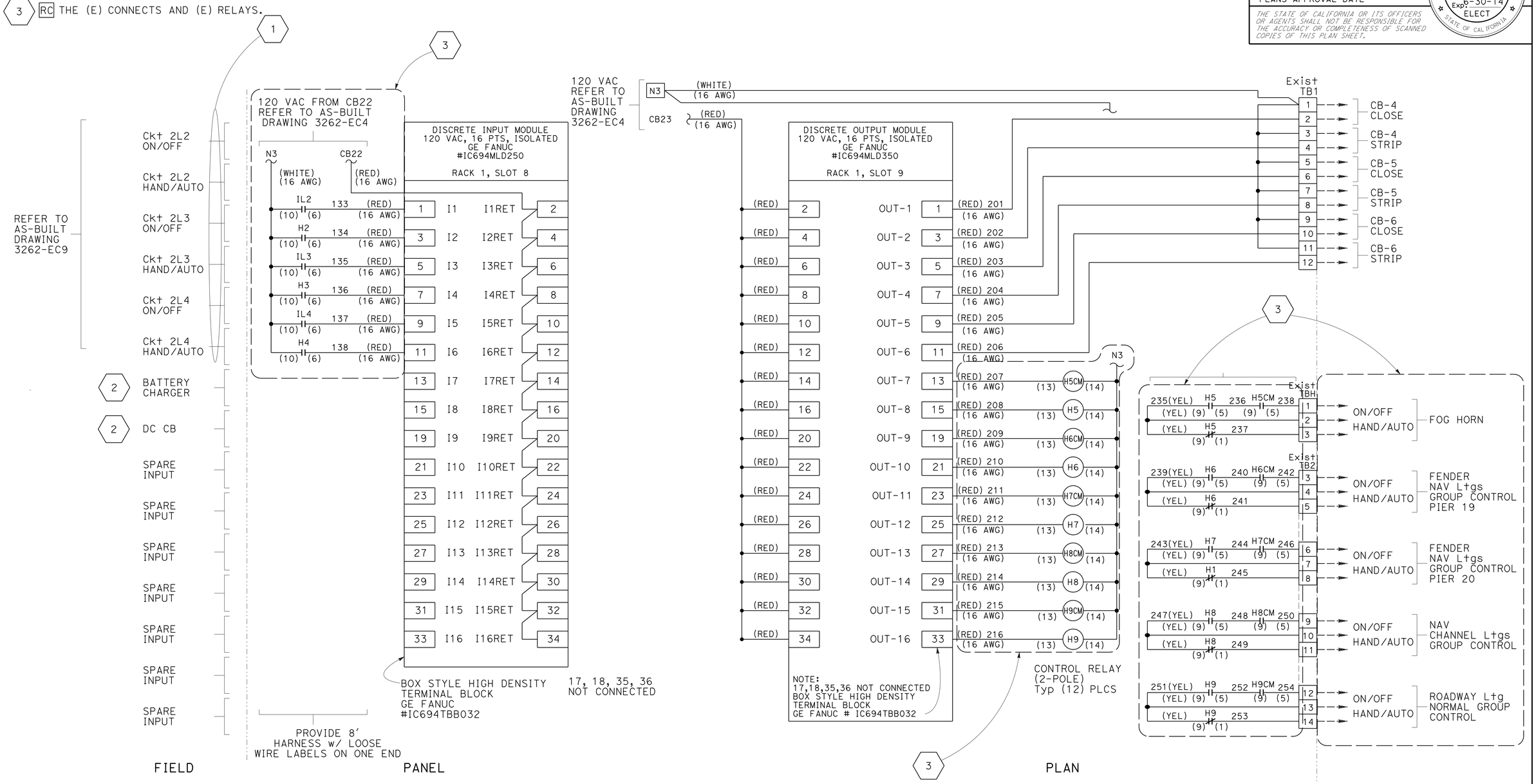

SUBSTATION 2
SAN MATEO-HAYWARD BRIDGE
PLC-02 DISCRETE OUTPUT WIRING DIAGRAM
NO SCALE

FOR NOTES, ABBREVIATIONS AND LEGEND, SEE SHEETS E-1 AND E-2

E-52

LS	3/1/14	REVISED BY	DATE REVISED
LIONEL J. SUDDS	BEHZAD GOLEMOHAMMADI	CALCULATED-DESIGNED BY	CHECKED BY
FUNCTIONAL SUPERVISOR	BEHZAD GOLEMOHAMMADI		

STATE OF CALIFORNIA - DEPARTMENT OF TRANSPORTATION
Caltrans
ELECTRICAL

LAST REVISION 05-01-14 | DATE PLOTTED => 18-JUN-2014 | TIME PLOTTED => 12:34

Dist	COUNTY	ROUTE	POST MILES TOTAL PROJECT	SHEET No.	TOTAL SHEETS
04	SM,Ala	92	R14.4/R18.8, R0.0/R2.6	71	117

REGISTERED ELECTRICAL ENGINEER 3/3/14 DATE

5-27-14
PLANS APPROVAL DATE

REGISTERED PROFESSIONAL ENGINEER Lionel J. Sudds No. 15201 Exp. 6-30-14 ELECT STATE OF CALIFORNIA

THE STATE OF CALIFORNIA OR ITS OFFICERS OR AGENTS SHALL NOT BE RESPONSIBLE FOR THE ACCURACY OR COMPLETENESS OF SCANNED COPIES OF THIS PLAN SHEET.

LEGEND: (THIS SHEET ONLY)

1 RC THE (E) CONNECTS AND (E) RELAYS.

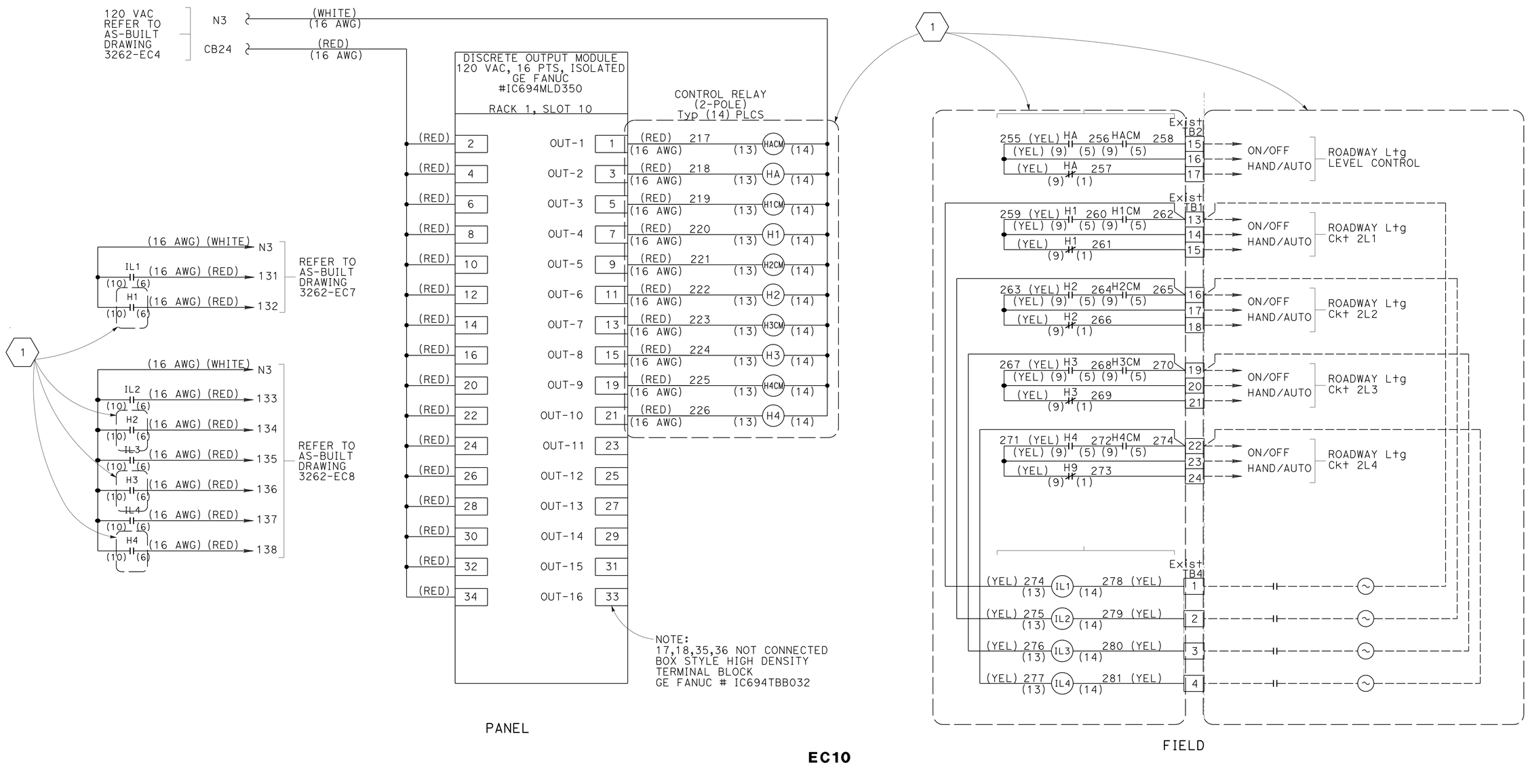

EC10

SUBSTATION 2
SAN MATEO-HAYWARD BRIDGE
PLC-02 DISCRETE OUTPUT WIRING DIAGRAM
NO SCALE

FOR NOTES, ABBREVIATIONS AND LEGEND, SEE SHEETS E-1 AND E-2

E-53

STATE OF CALIFORNIA - DEPARTMENT OF TRANSPORTATION
Caltrans
ELECTRICAL

FUNCTIONAL SUPERVISOR: BEHZAD GOLEMOHAMMADI
CALCULATED-DESIGNED BY: LIONEL J. SUDDS
CHECKED BY: BEHZAD GOLEMOHAMMADI
REVISED BY: LS
DATE REVISED: 3/1/14

LAST REVISION 05-01-14 | DATE PLOTTED => 18-JUN-2014 | TIME PLOTTED => 12:34

Dist	COUNTY	ROUTE	POST MILES TOTAL PROJECT	SHEET No.	TOTAL SHEETS
04	SM,Ala	92	R14.4/R18.8, R0.0/R2.6	72	117

Lionel J. Sudds 3/3/14
REGISTERED ELECTRICAL ENGINEER DATE

5-27-14
PLANS APPROVAL DATE

REGISTERED PROFESSIONAL ENGINEER Lionel J. Sudds No. 15201 Exp. 6-30-14 ELECT STATE OF CALIFORNIA

THE STATE OF CALIFORNIA OR ITS OFFICERS OR AGENTS SHALL NOT BE RESPONSIBLE FOR THE ACCURACY OR COMPLETENESS OF SCANNED COPIES OF THIS PLAN SHEET.

LEGEND: (THIS SHEET ONLY)

FIELD WIREWAY

PAC WIREWAY

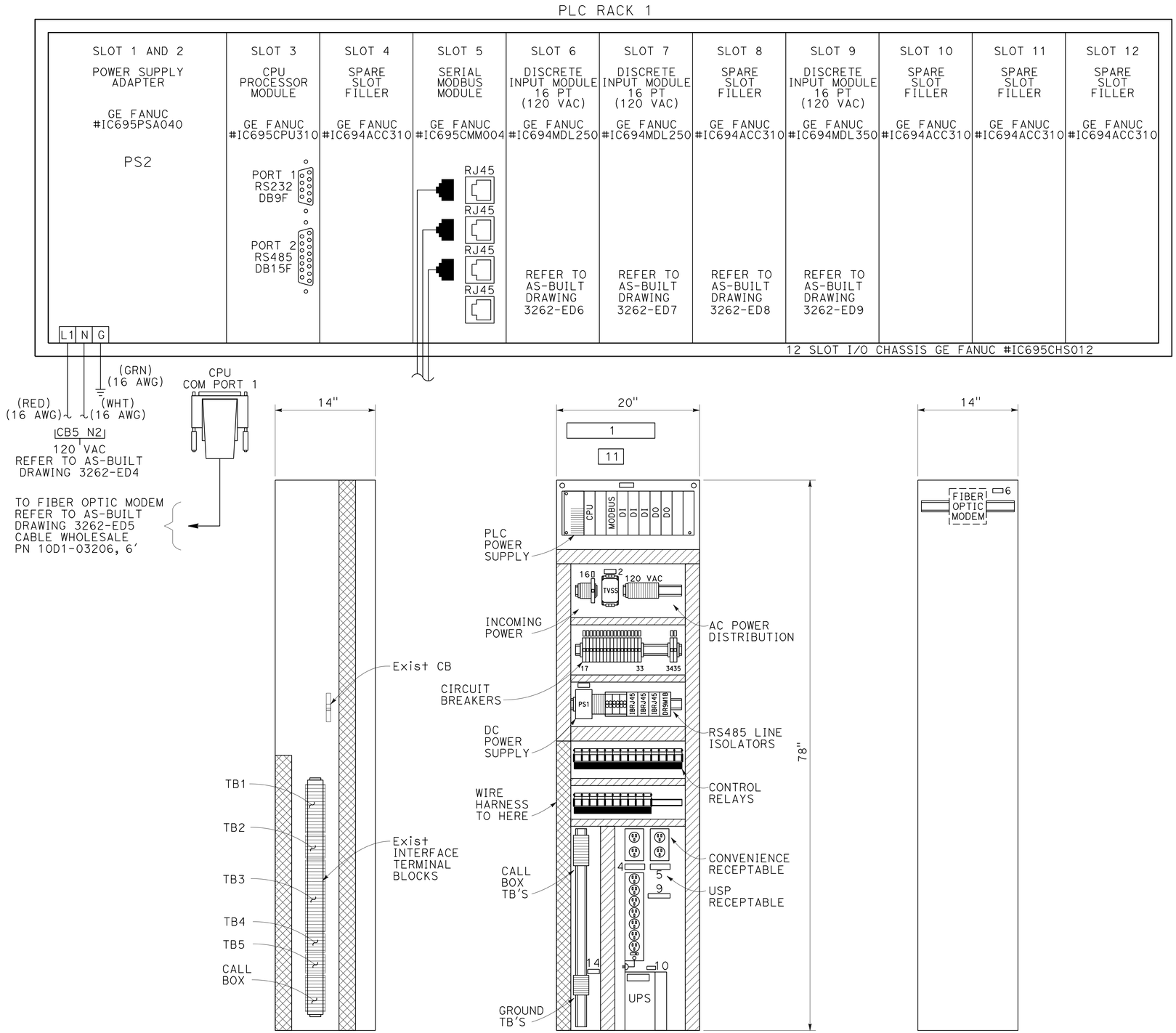

EXISTING LEFT MOUNTING SIDE PAN LAYOUT

NEW MOUNTING PAN LAYOUT

EXISTING RIGHT MOUNTING SIDE PAN LAYOUT

FOR NOTES, ABBREVIATIONS AND LEGEND, SEE SHEETS E-1 AND E-2

SUBSTATION 3
SAN MATEO-HAYWARD BRIDGE
PLC-03 RACK LAYOUT
NO SCALE

E-54

STATE OF CALIFORNIA - DEPARTMENT OF TRANSPORTATION
Caltrans
ELECTRICAL

FUNCTIONAL SUPERVISOR: BEHZAD GOLEMOHAMMADI
CALCULATED-DESIGNED BY: LIONEL J. SUDDS
CHECKED BY: BEHZAD GOLEMOHAMMADI
REVISED BY: LS
DATE REVISED: 3/1/14

LAST REVISION 05-01-14
DATE PLOTTED => 18-JUN-2014
TIME PLOTTED => 12:34

Dist	COUNTY	ROUTE	POST MILES TOTAL PROJECT	SHEET No.	TOTAL SHEETS
04	SM,Ala	92	R14.4/R18.8, R0.0/R2.6	73	117

Lionel J. Sudds 3/3/14
REGISTERED ELECTRICAL ENGINEER DATE

5-27-14
PLANS APPROVAL DATE

REGISTERED PROFESSIONAL ENGINEER Lionel J. Sudds No. 15201 Exp. 6-30-14 ELECT STATE OF CALIFORNIA

THE STATE OF CALIFORNIA OR ITS OFFICERS OR AGENTS SHALL NOT BE RESPONSIBLE FOR THE ACCURACY OR COMPLETENESS OF SCANNED COPIES OF THIS PLAN SHEET.

LEGEND: (THIS SHEET ONLY)

(1) RECONNECT NEW CONTACTS FOR THE ROADWAY LIGHT Ckt ON CONTROLS, LOCAL/REMOTE INDICATION TO THE Exist CONNECTOR.

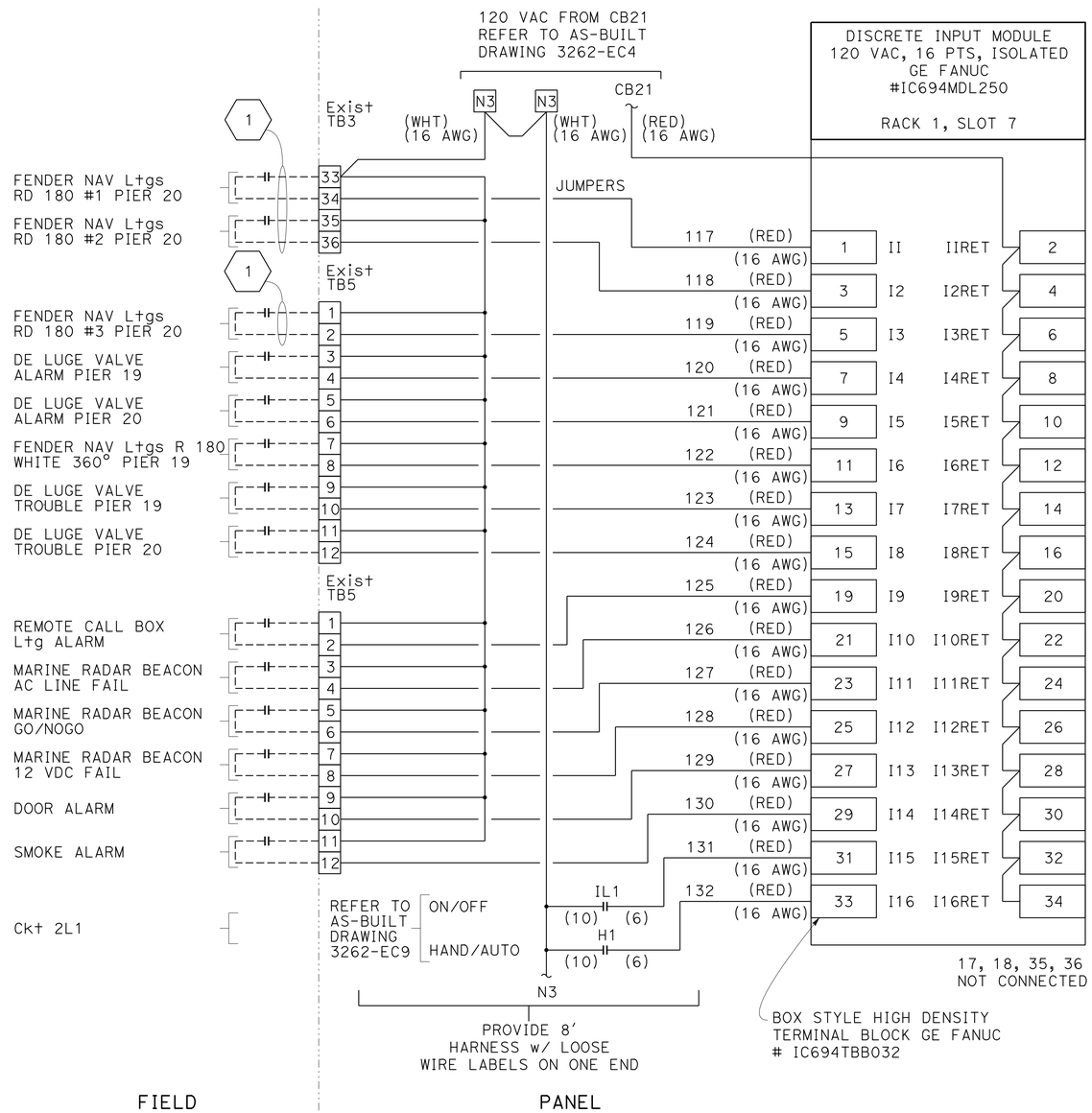

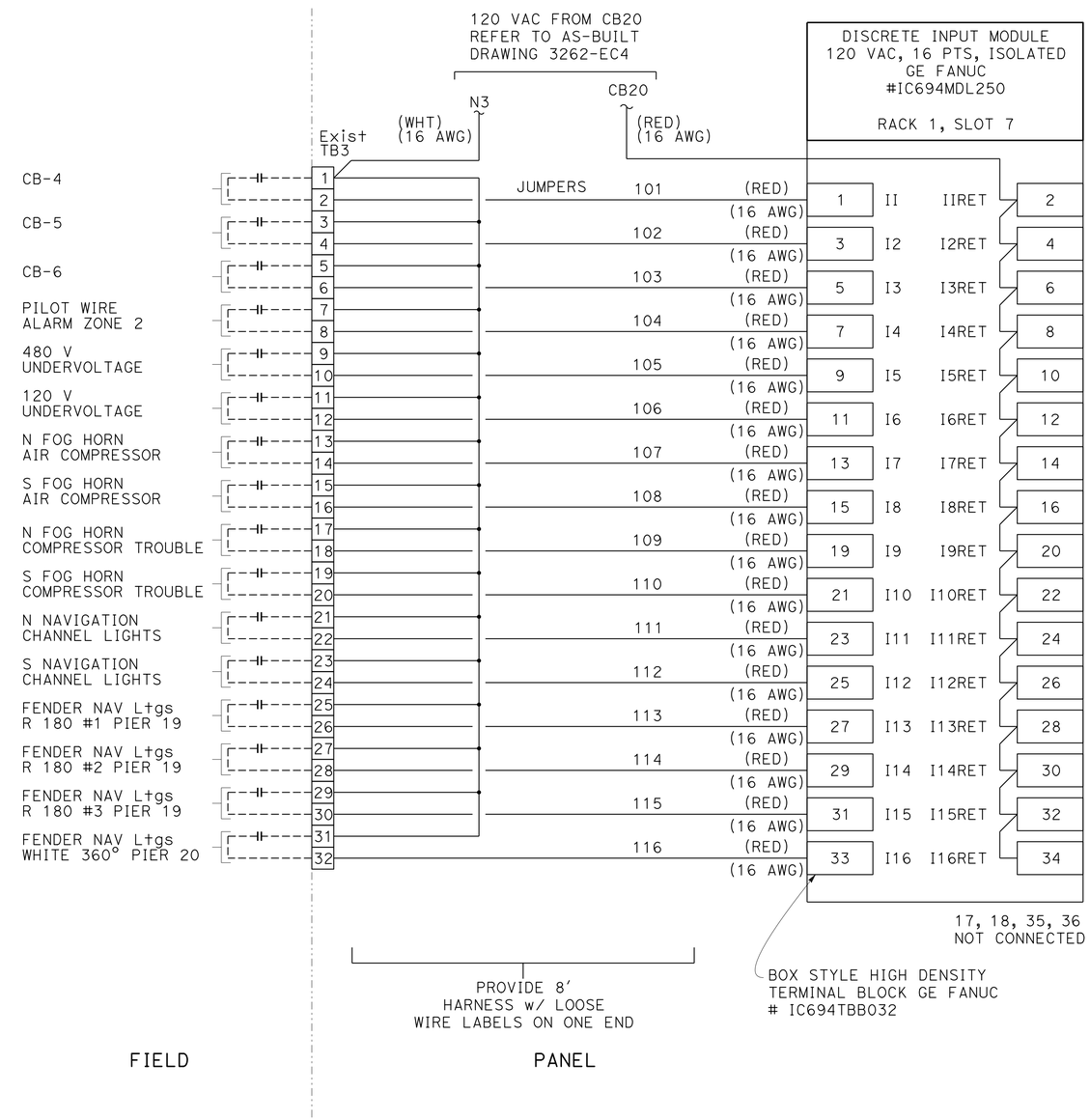

SUBSTATION 3
SAN MATEO-HAYWARD BRIDGE
PAC-03 DISCRETE OUTPUT WIRING DIAGRAM
NO SCALE

E-55

STATE OF CALIFORNIA - DEPARTMENT OF TRANSPORTATION
ELECTRICAL
Caltrans

FUNCTIONAL SUPERVISOR	CALCULATED-DESIGNED BY	REVISED BY	DATE REVISED
BEHZAD GOLEMOHAMMADI	LIONEL J. SUDDS BEHZAD GOLEMOHAMMADI	LS	3/1/14

LAST REVISION 05-01-14 | DATE PLOTTED => 18-JUN-2014 | TIME PLOTTED => 12:34

Dist	COUNTY	ROUTE	POST MILES TOTAL PROJECT	SHEET No.	TOTAL SHEETS
04	SM,Ala	92	R14.4/R18.8, R0.0/R2.6	74	117

Lionel J. Sudds 3/3/14
REGISTERED ELECTRICAL ENGINEER DATE

5-27-14
PLANS APPROVAL DATE

REGISTERED PROFESSIONAL ENGINEER Lionel J. Sudds No. 15201 Exp. 6-30-14 ELECT STATE OF CALIFORNIA

THE STATE OF CALIFORNIA OR ITS OFFICERS OR AGENTS SHALL NOT BE RESPONSIBLE FOR THE ACCURACY OR COMPLETENESS OF SCANNED COPIES OF THIS PLAN SHEET.

LEGEND: (THIS SHEET ONLY)

1. RECONNECT NEW CONTACTS FOR THE ROADWAY LIGHT CIRCUITS ON CONTROLS, LOCAL REMOTE INDICATION TO THE Exist CONNECTOR.
2. RC THE (E) CONNECTS & (E) RELAYS.
3. CONNECT NEW CONTACTS FOR THE BATTERY CHARGER AND CIRCUIT BREAKER INDICATION.

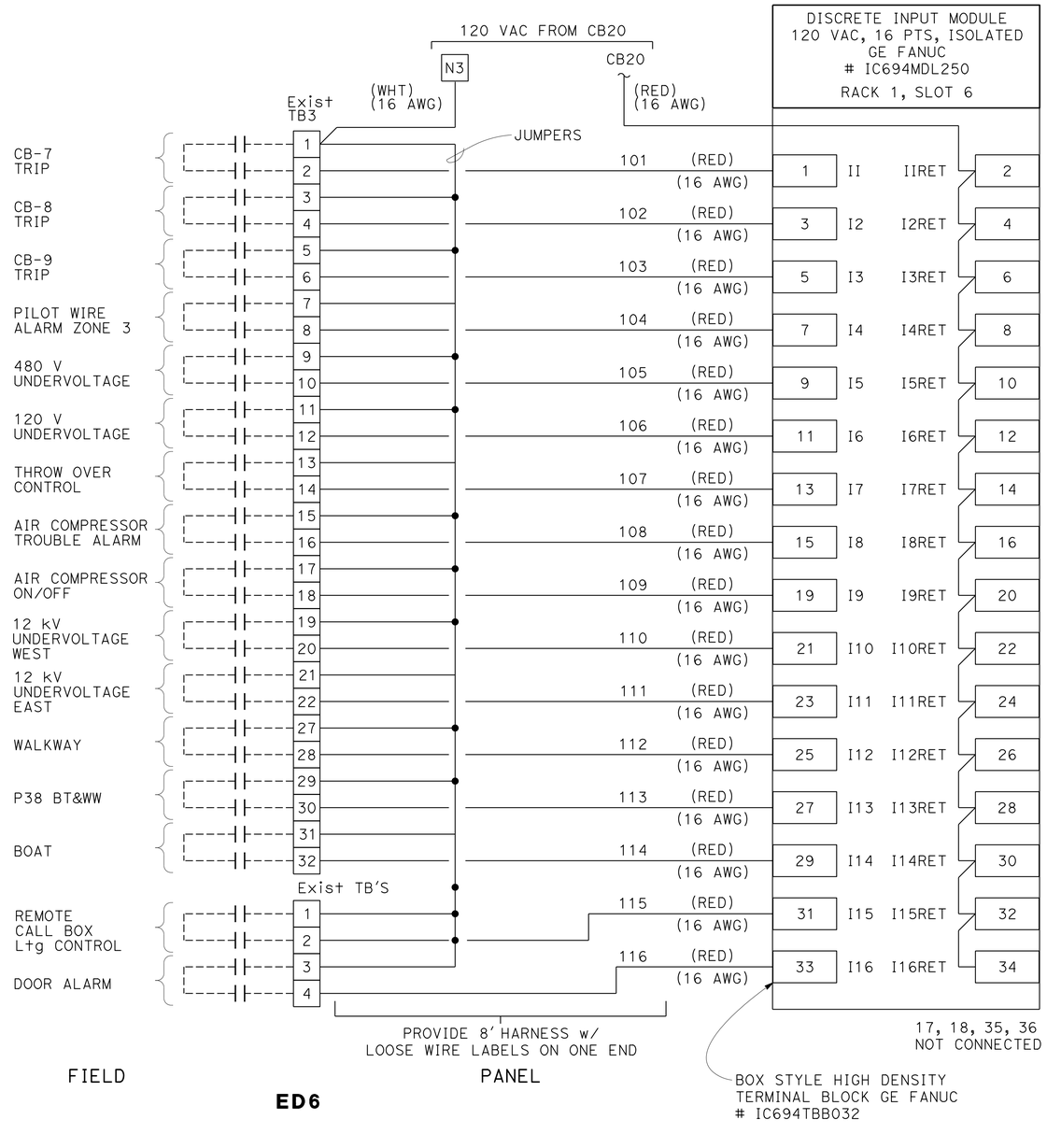

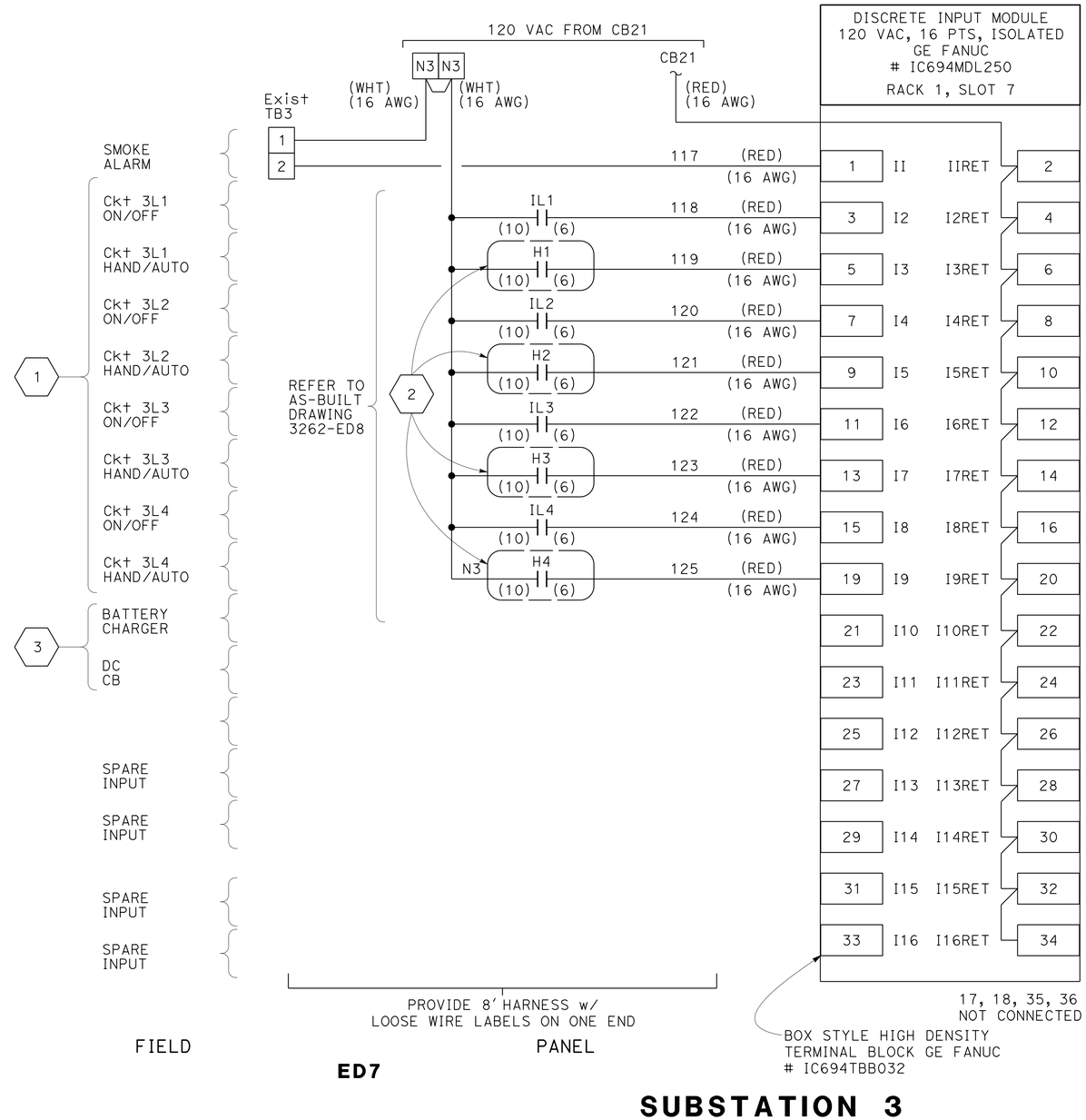

SUBSTATION 3
SAN MATEO-HAYWARD BRIDGE
PLC-03 DISCRETE INPUT WIRING DIAGRAM
NO SCALE

E-56

STATE OF CALIFORNIA - DEPARTMENT OF TRANSPORTATION
ELECTRICAL
FUNCTIONAL SUPERVISOR: BEHZAD GOLEMOHAMMADI
CALCULATED-DESIGNED BY: LIONEL J. SUDDS
CHECKED BY: BEHZAD GOLEMOHAMMADI
REVISED BY: LS
DATE REVISED: 3/1/14

LAST REVISION 05-01-14 | DATE PLOTTED => 18-JUN-2014 | TIME PLOTTED => 12:34

Dist	COUNTY	ROUTE	POST MILES TOTAL PROJECT	SHEET No.	TOTAL SHEETS
04	SM,Ala	92	R14.4/R18.8, R0.0/R2.6	75	117

REGISTERED ELECTRICAL ENGINEER 3/3/14 DATE

5-27-14
PLANS APPROVAL DATE

REGISTERED PROFESSIONAL ENGINEER Lionel J. Sudds No. 15201 Exp. 6-30-14 ELECT STATE OF CALIFORNIA

THE STATE OF CALIFORNIA OR ITS OFFICERS OR AGENTS SHALL NOT BE RESPONSIBLE FOR THE ACCURACY OR COMPLETENESS OF SCANNED COPIES OF THIS PLAN SHEET.

LEGEND: (THIS SHEET ONLY)

(1) RC THE (E) CONNECTS & (E) RELAYS.

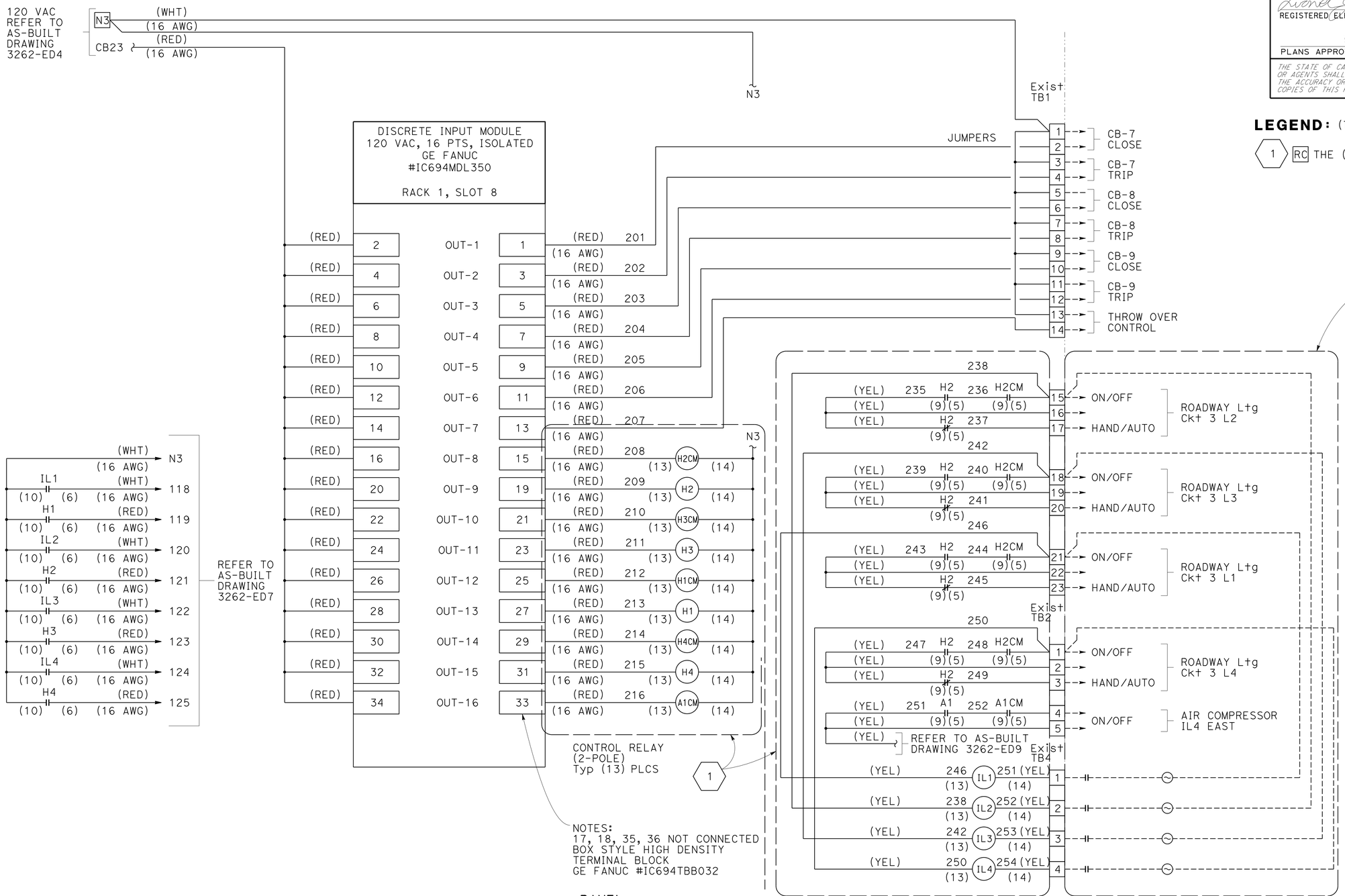

SUBSTATION 3
SAN MATEO-HAYWARD BRIDGE
PAC-03 DISCRETE OUTPUT WIRING DIAGRAM
NO SCALE

E-57

LIONEL J. SUDDS	REVISED BY: LS
BEHZAD GOLEMOHAMMADI	DATE REVISED: 3/1/14
CALCULATED-DESIGNED BY	
CHECKED BY	
FUNCTIONAL SUPERVISOR: BEHZAD GOLEMOHAMMADI	

STATE OF CALIFORNIA - DEPARTMENT OF TRANSPORTATION
Caltrans
ELECTRICAL

LAST REVISION 05-01-14 | DATE PLOTTED => 18-JUN-2014 | TIME PLOTTED => 12:34

Dist	COUNTY	ROUTE	POST MILES TOTAL PROJECT	SHEET No.	TOTAL SHEETS
04	SM,Ala	92	R14.4/R18.8, R0.0/R2.6	76	117

REGISTERED ELECTRICAL ENGINEER 3/3/14 DATE

5-27-14
PLANS APPROVAL DATE

REGISTERED PROFESSIONAL ENGINEER Lionel J. Sudds No. 15201 Exp. 6-30-14 ELECT STATE OF CALIFORNIA

THE STATE OF CALIFORNIA OR ITS OFFICERS OR AGENTS SHALL NOT BE RESPONSIBLE FOR THE ACCURACY OR COMPLETENESS OF SCANNED COPIES OF THIS PLAN SHEET.

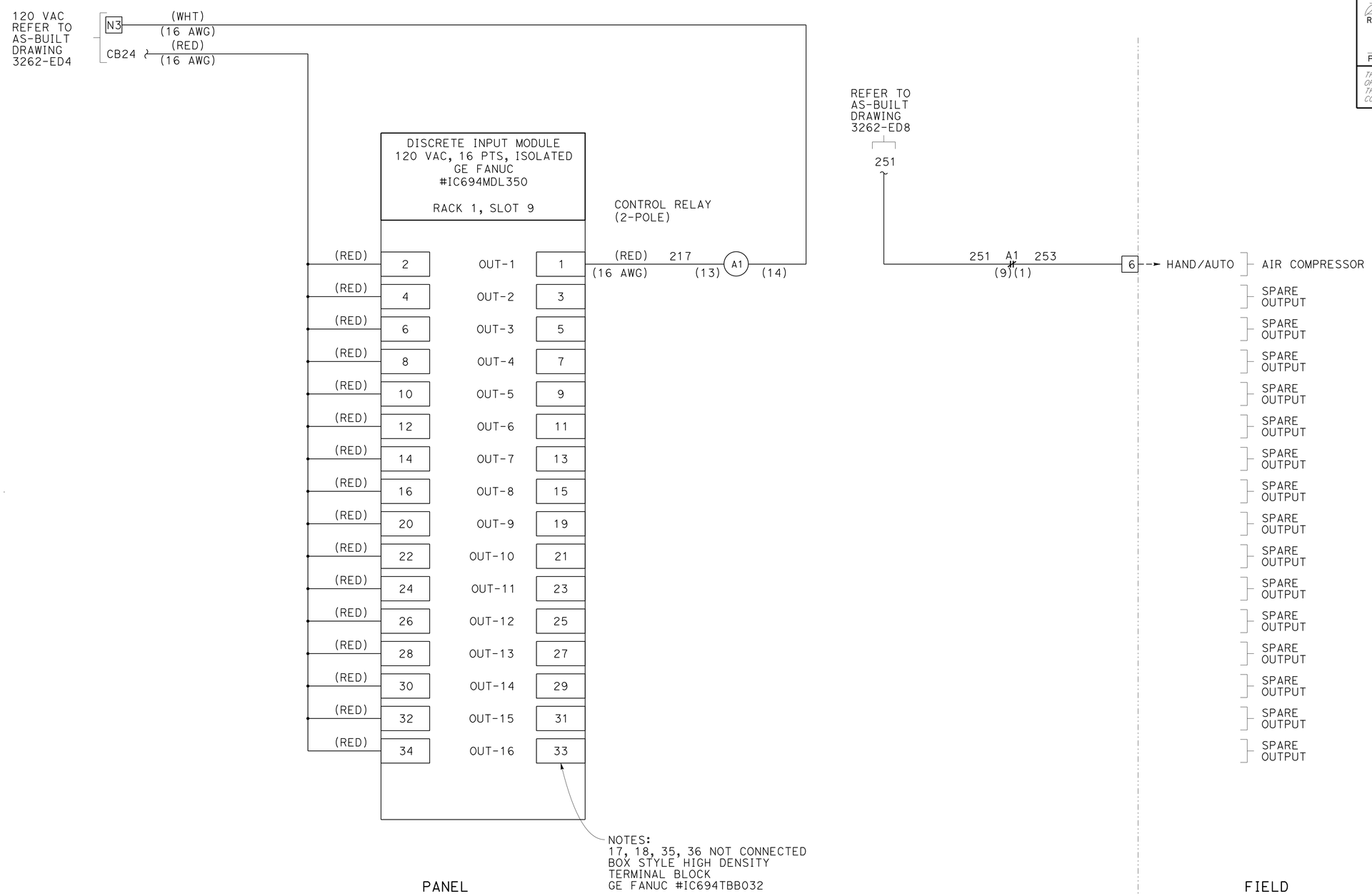

ED9

SUBSTATION 3
SAN MATEO-HAYWARD BRIDGE
PAC-03 DISCRETE OUTPUT WIRING DIAGRAM
NO SCALE

FOR NOTES, ABBREVIATIONS AND LEGEND, SEE SHEETS E-1 AND E-2

E-58

STATE OF CALIFORNIA - DEPARTMENT OF TRANSPORTATION
Caltrans®
ELECTRICAL
FUNCTIONAL SUPERVISOR: BEHZAD GOLEMOHAMMADI
CALCULATED-DESIGNED BY: LIONEL J. SUDDS
CHECKED BY: BEHZAD GOLEMOHAMMADI
REVISED BY: LS
DATE REVISED: 3/1/14

LAST REVISION 05-01-14 | DATE PLOTTED => 18-JUN-2014 | TIME PLOTTED => 12:34

Dist	COUNTY	ROUTE	POST MILES TOTAL PROJECT	SHEET No.	TOTAL SHEETS
04	SM,Ala	92	R14.4/R18.8, R0.0/R2.6	77	117

Lionel J. Sudds 3/3/14
REGISTERED ELECTRICAL ENGINEER DATE

5-27-14
PLANS APPROVAL DATE

REGISTERED PROFESSIONAL ENGINEER Lionel J. Sudds No. 15201 Exp. 6-30-14 ELECT STATE OF CALIFORNIA

THE STATE OF CALIFORNIA OR ITS OFFICERS OR AGENTS SHALL NOT BE RESPONSIBLE FOR THE ACCURACY OR COMPLETENESS OF SCANNED COPIES OF THIS PLAN SHEET.

LEGEND: (THIS SHEET ONLY)

FIELD WIREWAY

PAC WIREWAY

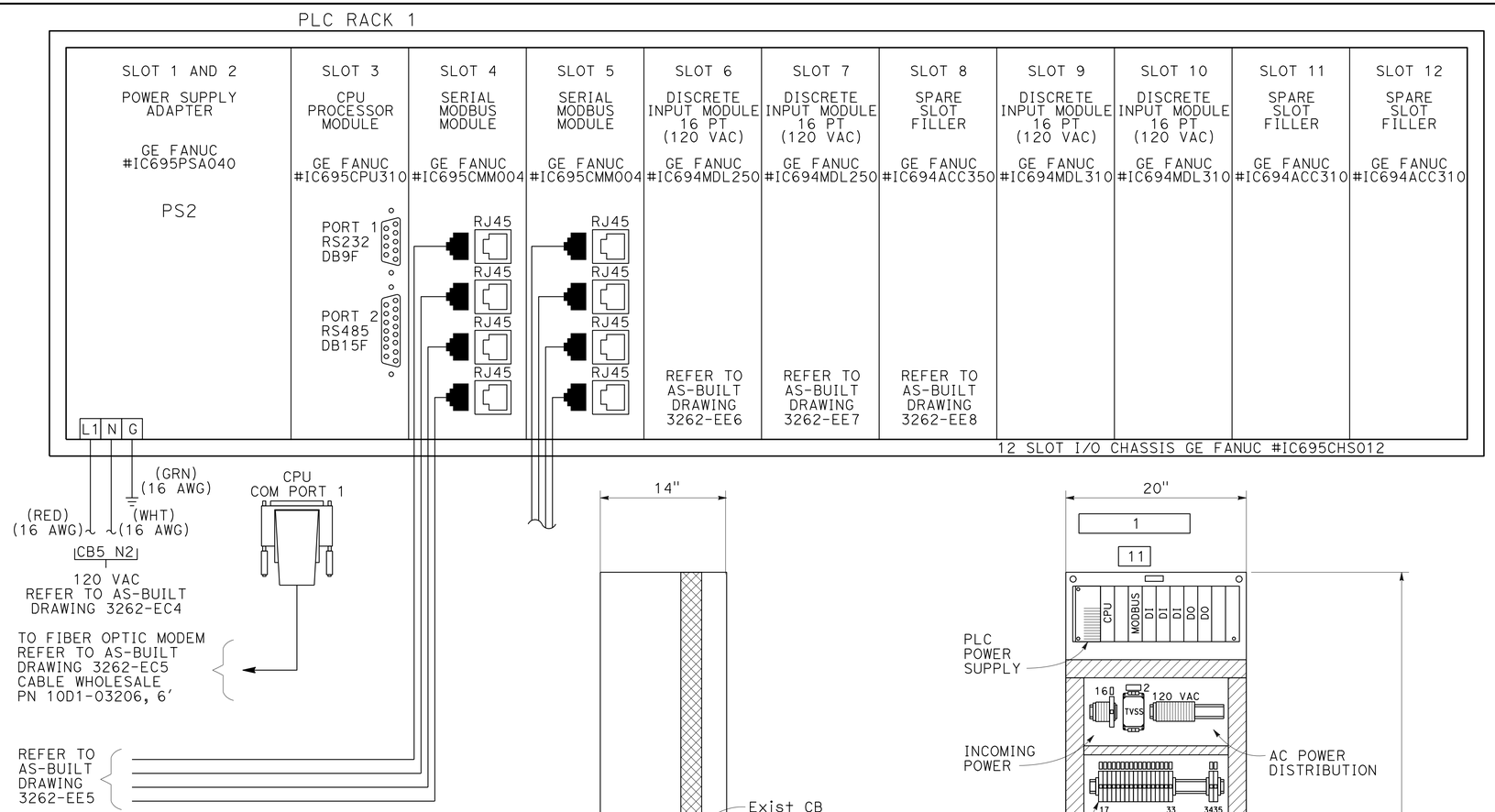

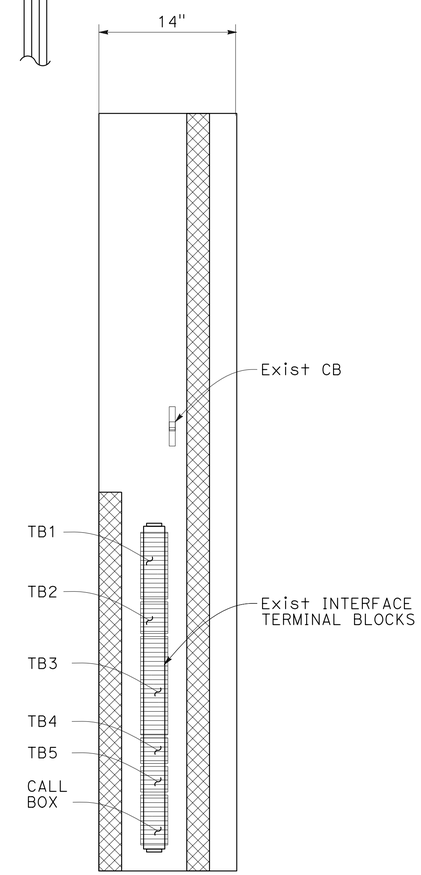

EXISTING LEFT MOUNTING SIDE PAN LAYOUT

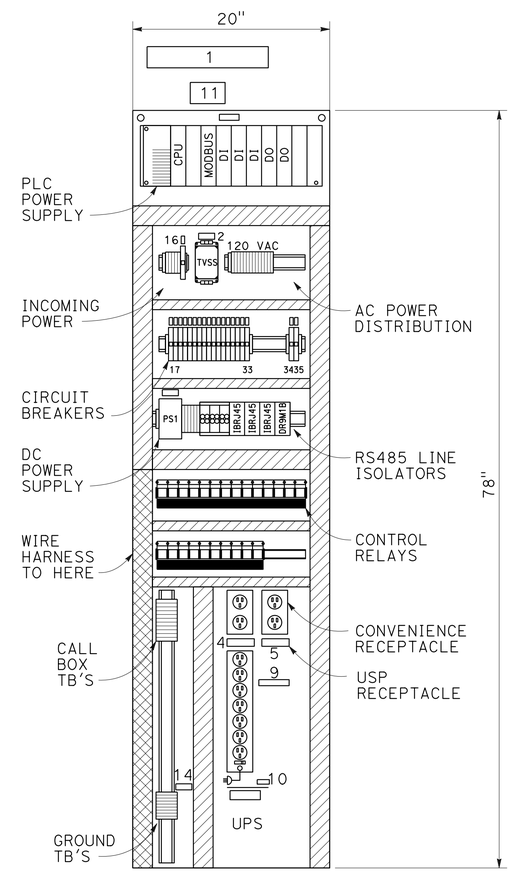

MOUNTING PAN LAYOUT

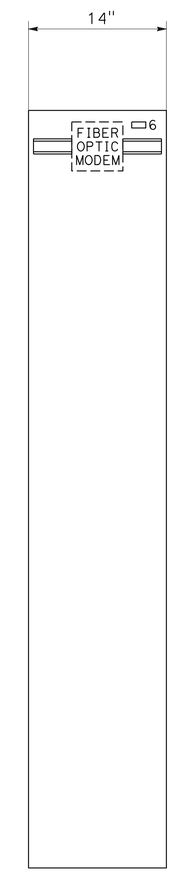

EXISTING RIGHT MOUNTING SIDE PAN LAYOUT

SUBSTATION 4
SAN MATEO-HAYWARD BRIDGE
PLC-04 RACK LAYOUT

NO SCALE

FOR NOTES, ABBREVIATIONS AND LEGEND, SEE SHEETS E-1 AND E-2

E-59

STATE OF CALIFORNIA - DEPARTMENT OF TRANSPORTATION
Caltrans
ELECTRICAL

FUNCTIONAL SUPERVISOR: BEHZAD GOLEMOHAMMADI
CALCULATED-DESIGNED BY: LIONEL J. SUDDS
CHECKED BY: BEHZAD GOLEMOHAMMADI
REVISED BY: LS
DATE REVISED: 3/1/14

LAST REVISION 05-01-14
DATE PLOTTED => 18-JUN-2014
TIME PLOTTED => 12:34

Dist	COUNTY	ROUTE	POST MILES TOTAL PROJECT	SHEET No.	TOTAL SHEETS
04	SM,Ala	92	R14.4/R18.8, R0.0/R2.6	78	117

Lionel J. Sudds 3/3/14
REGISTERED ELECTRICAL ENGINEER DATE

5-27-14
PLANS APPROVAL DATE

REGISTERED PROFESSIONAL ENGINEER Lionel J. Sudds No. 15201 Exp. 6-30-14 ELECT STATE OF CALIFORNIA

THE STATE OF CALIFORNIA OR ITS OFFICERS OR AGENTS SHALL NOT BE RESPONSIBLE FOR THE ACCURACY OR COMPLETENESS OF SCANNED COPIES OF THIS PLAN SHEET.

LEGEND: (THIS SHEET ONLY)

1. CONNECT NEW CONTACTS FOR THE BATTERY CHARGER AND CIRCUIT BREAKER INDICATION.
2. RECONNECT NEW CONTACTS FOR THE ROADWAY LIGHT CIRCUITS ON CONTROLS, LOCAL REMOTE INDICATION TO THE Exist CONNECTOR.

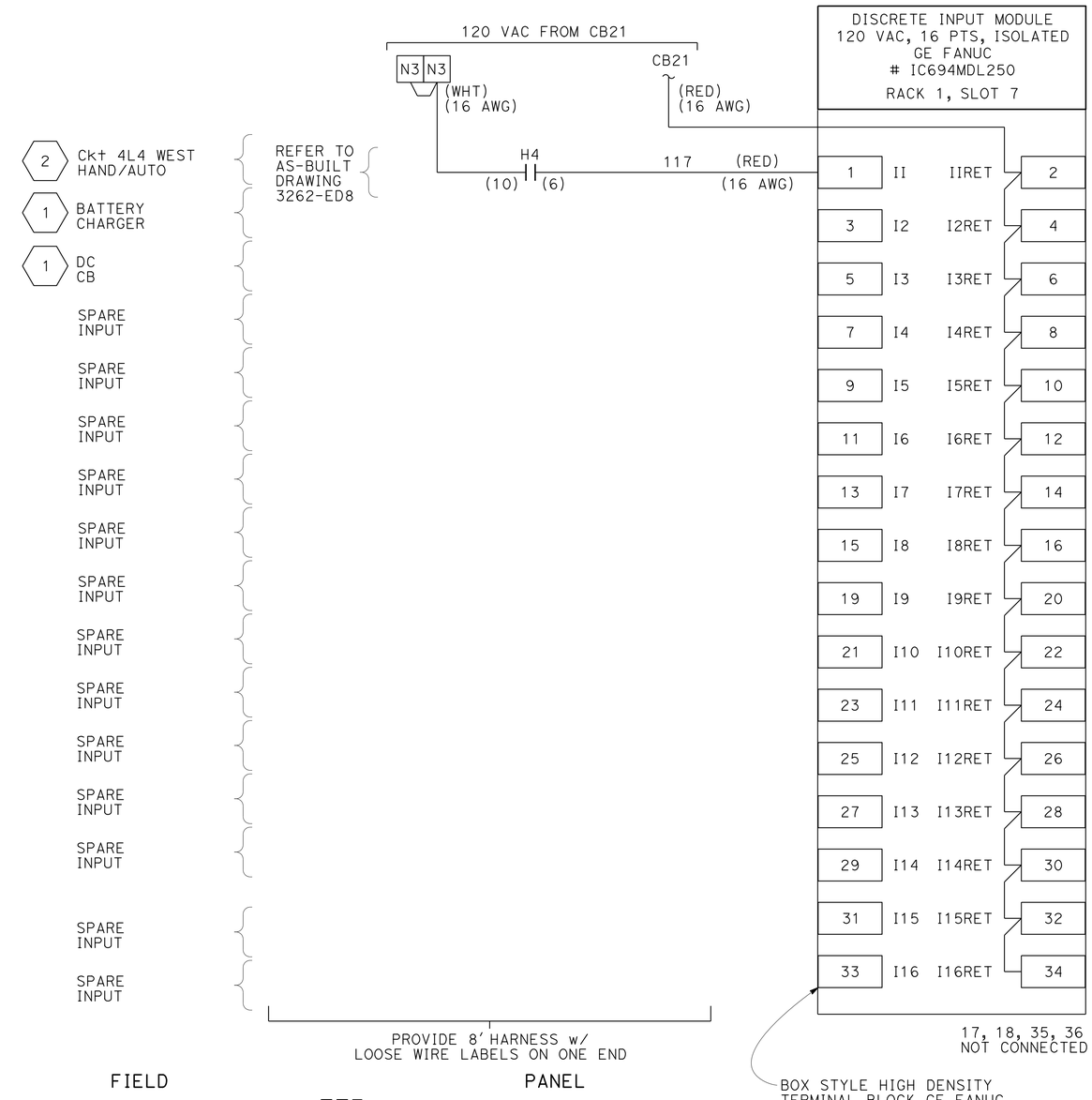

SUBSTATION 4
SAN MATEO-HAYWARD BRIDGE
PLC-04 DISCRETE INPUT WIRING DIAGRAM
NO SCALE

E-60

STATE OF CALIFORNIA - DEPARTMENT OF TRANSPORTATION
Caltrans
ELECTRICAL

FUNCTIONAL SUPERVISOR: BEHZAD GOLEMOHAMMADI
CALCULATED-DESIGNED BY: LIONEL J. SUDDS
CHECKED BY: BEHZAD GOLEMOHAMMADI
REVISED BY: LS
DATE REVISED: 3/1/14

LAST REVISION 05-01-14
DATE PLOTTED => 18-JUN-2014
TIME PLOTTED => 12:34

Dist	COUNTY	ROUTE	POST MILES TOTAL PROJECT	SHEET No.	TOTAL SHEETS
04	SM,Ala	92	R14.4/R18.8, R0.0/R2.6	79	117

Lionel J. Sudds 3/3/14
REGISTERED ELECTRICAL ENGINEER DATE

5-27-14
PLANS APPROVAL DATE

REGISTERED PROFESSIONAL ENGINEER Lionel J. Sudds No. 15201 Exp. 6-30-14 ELECT STATE OF CALIFORNIA

THE STATE OF CALIFORNIA OR ITS OFFICERS OR AGENTS SHALL NOT BE RESPONSIBLE FOR THE ACCURACY OR COMPLETENESS OF SCANNED COPIES OF THIS PLAN SHEET.

LEGEND: (THIS SHEET ONLY)

FIELD WIREWAY

PAC WIREWAY

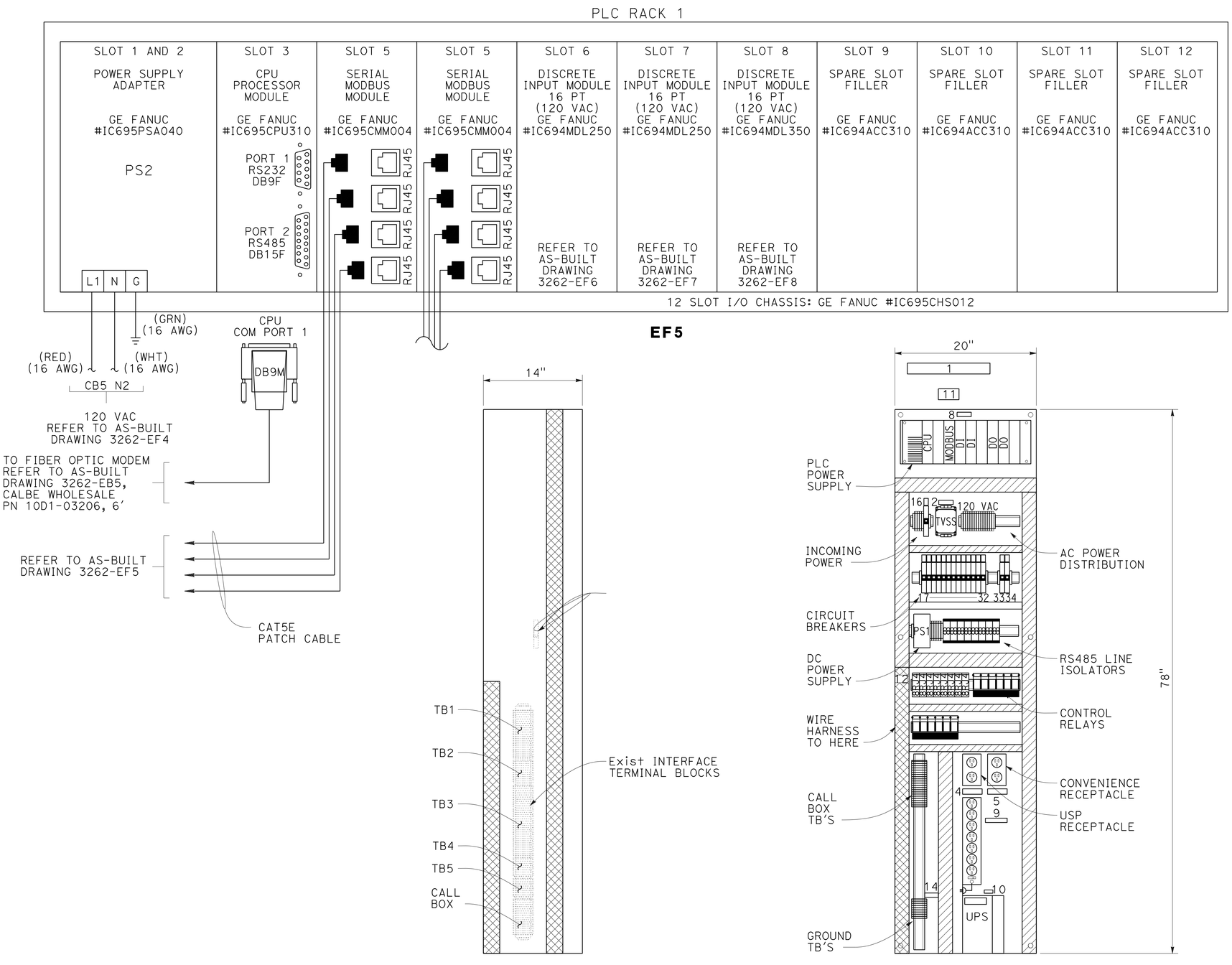

SUBSTATION 5
SAN MATEO-HAYWARD BRIDGE
PLC-05 RACK LAYOUT
NO SCALE

E-61

STATE OF CALIFORNIA - DEPARTMENT OF TRANSPORTATION
Caltrans®
ELECTRICAL

FUNCTIONAL SUPERVISOR: BEHZAD GOLEMOHAMMADI
CALCULATED-DESIGNED BY: LIONEL J. SUDDS
CHECKED BY: BEHZAD GOLEMOHAMMADI
REVISED BY: LS
DATE REVISED: 3/1/14

LAST REVISION 05-01-14
DATE PLOTTED => 18-JUN-2014
TIME PLOTTED => 12:34

Dist	COUNTY	ROUTE	POST MILES TOTAL PROJECT	SHEET No.	TOTAL SHEETS
04	SM,Ala	92	R14.4/R18.8, R0.0/R2.6	80	117

Lionel J. Sudds 3/3/14
REGISTERED ELECTRICAL ENGINEER DATE

5-27-14
PLANS APPROVAL DATE

REGISTERED PROFESSIONAL ENGINEER Lionel J. Sudds No. 15201 Exp. 6-30-14 ELECT STATE OF CALIFORNIA

THE STATE OF CALIFORNIA OR ITS OFFICERS OR AGENTS SHALL NOT BE RESPONSIBLE FOR THE ACCURACY OR COMPLETENESS OF SCANNED COPIES OF THIS PLAN SHEET.

LEGEND: (THIS SHEET ONLY)

FIELD WIREWAY

PAC WIREWAY

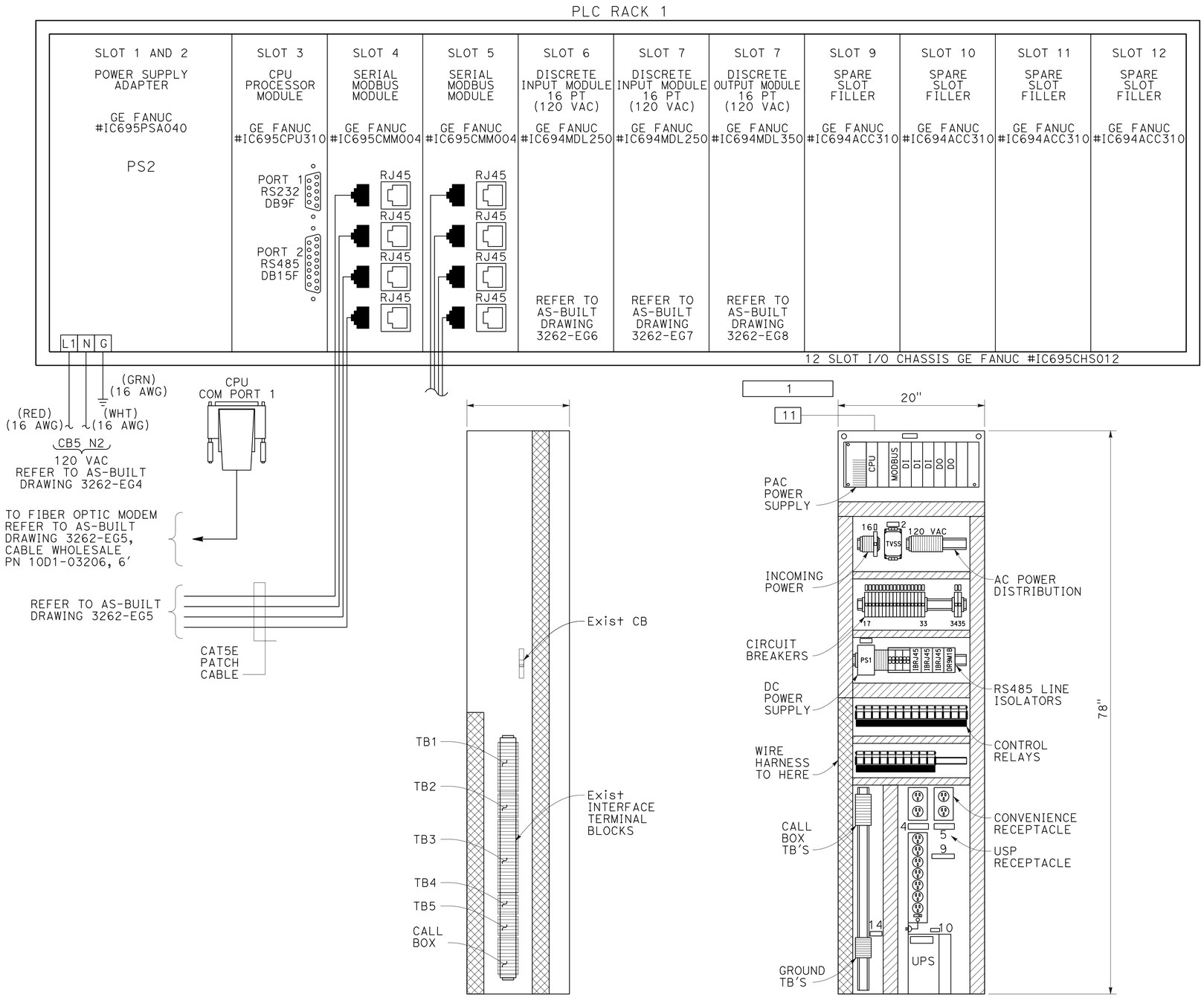

EXISTING LEFT MOUNTING SIDE PAN LAYOUT

NEW MOUNTING PAN LAYOUT

EXISTING RIGHT MOUNTING SIDE PAN LAYOUT

SUBSTATION 6
SAN MATEO-HAYWARD BRIDGE
PLC-06 RACK LAYOUT
NO SCALE

FOR NOTES, ABBREVIATIONS AND LEGEND, SEE SHEETS E-1 AND E-2

E-62

STATE OF CALIFORNIA - DEPARTMENT OF TRANSPORTATION
Caltrans
ELECTRICAL

FUNCTIONAL SUPERVISOR: BEHZAD GOLEMOHAMMADI
CALCULATED-DESIGNED BY: LIONEL J. SUDDS
CHECKED BY: BEHZAD GOLEMOHAMMADI
REVISED BY: LS
DATE REVISED: 3/1/14

LAST REVISION 05-01-14
DATE PLOTTED => 18-JUN-2014
TIME PLOTTED => 12:34

Dist	COUNTY	ROUTE	POST MILES TOTAL PROJECT	SHEET No.	TOTAL SHEETS
04	SM,Ala	92	R14.4/R18.8, R0.0/R2.6	81	117

REGISTERED ELECTRICAL ENGINEER DATE 3/3/14

PLANS APPROVAL DATE 5-27-14

REGISTERED PROFESSIONAL ENGINEER Lionel J. Sudds No. 15201 Exp. 6-30-14 ELECT STATE OF CALIFORNIA

THE STATE OF CALIFORNIA OR ITS OFFICERS OR AGENTS SHALL NOT BE RESPONSIBLE FOR THE ACCURACY OR COMPLETENESS OF SCANNED COPIES OF THIS PLAN SHEET.

LEGEND: (THIS SHEET ONLY)

(1) CONNECT NEW CONTACTS FOR THE BATTERY CHARGER AND CIRCUIT BREAKER INDICATION.

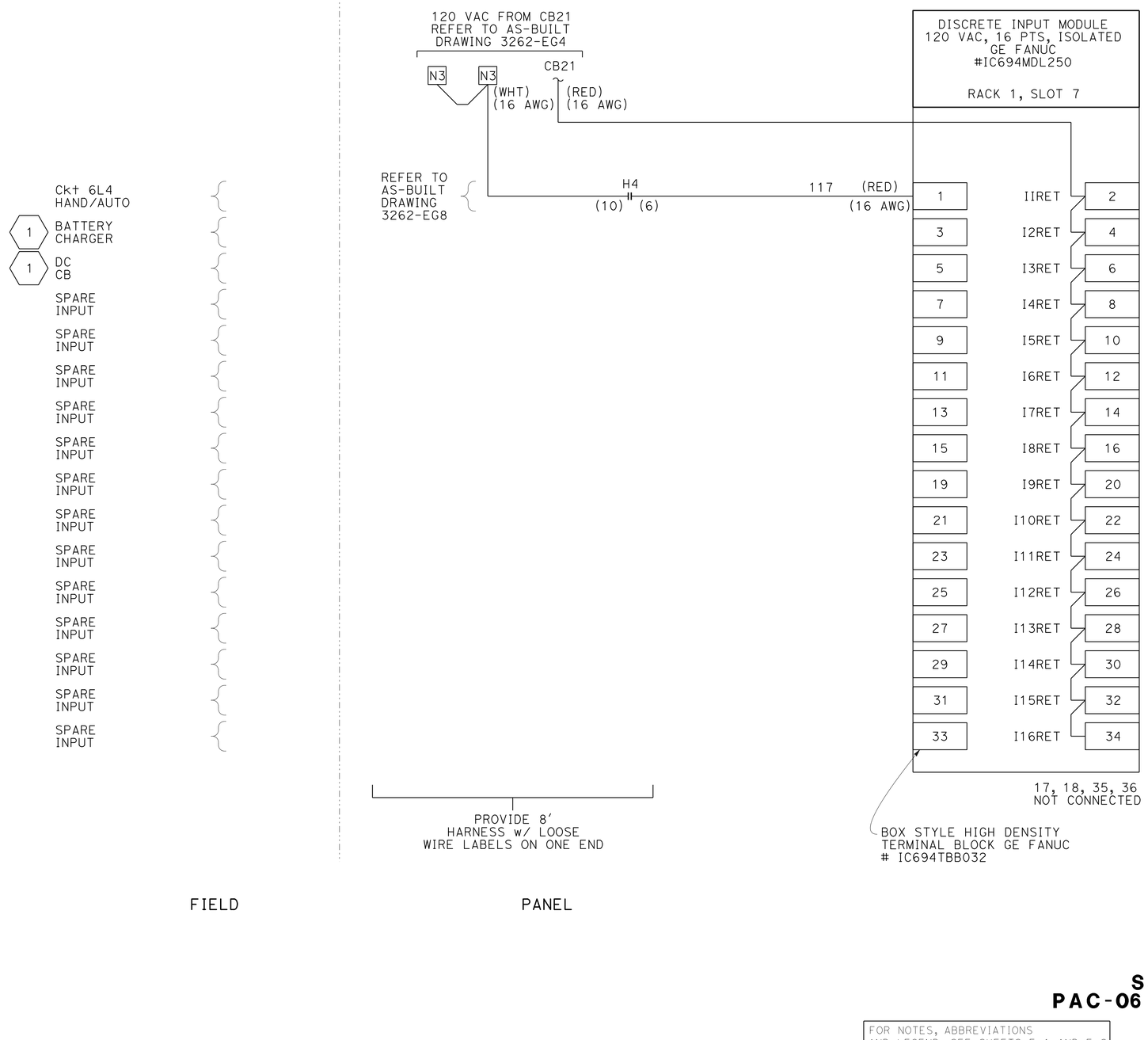

SUBSTATION 6
SAN MATEO-HAYWARD BRIDGE
PAC-06 DISCRETE INPUT WIRING DIAGRAM

NO SCALE

FOR NOTES, ABBREVIATIONS AND LEGEND, SEE SHEETS E-1 AND E-2

E-63

STATE OF CALIFORNIA - DEPARTMENT OF TRANSPORTATION

Caltrans

ELECTRICAL

FUNCTIONAL SUPERVISOR: BEHZAD GOLEMOHAMMADI

CALCULATED-DESIGNED BY: LIONEL J. SUDDS

CHECKED BY: BEHZAD GOLEMOHAMMADI

REVISED BY: LS

DATE REVISED: 3/1/14

LAST REVISION 05-01-14 | DATE PLOTTED => 18-JUN-2014 | TIME PLOTTED => 12:34

Dist	COUNTY	ROUTE	POST MILES TOTAL PROJECT	SHEET No.	TOTAL SHEETS
04	SM,Ala	92	R14.4/R18.8, R0.0/R2.6	82	117

REGISTERED ELECTRICAL ENGINEER DATE 3/3/14

5-27-14
PLANS APPROVAL DATE

REGISTERED PROFESSIONAL ENGINEER Lionel J. Sudds No. 15201 Exp. 6-30-14 ELECT STATE OF CALIFORNIA

THE STATE OF CALIFORNIA OR ITS OFFICERS OR AGENTS SHALL NOT BE RESPONSIBLE FOR THE ACCURACY OR COMPLETENESS OF SCANNED COPIES OF THIS PLAN SHEET.

LEGEND: (THIS SHEET ONLY)

FIELD WIREWAY

PAC WIREWAY

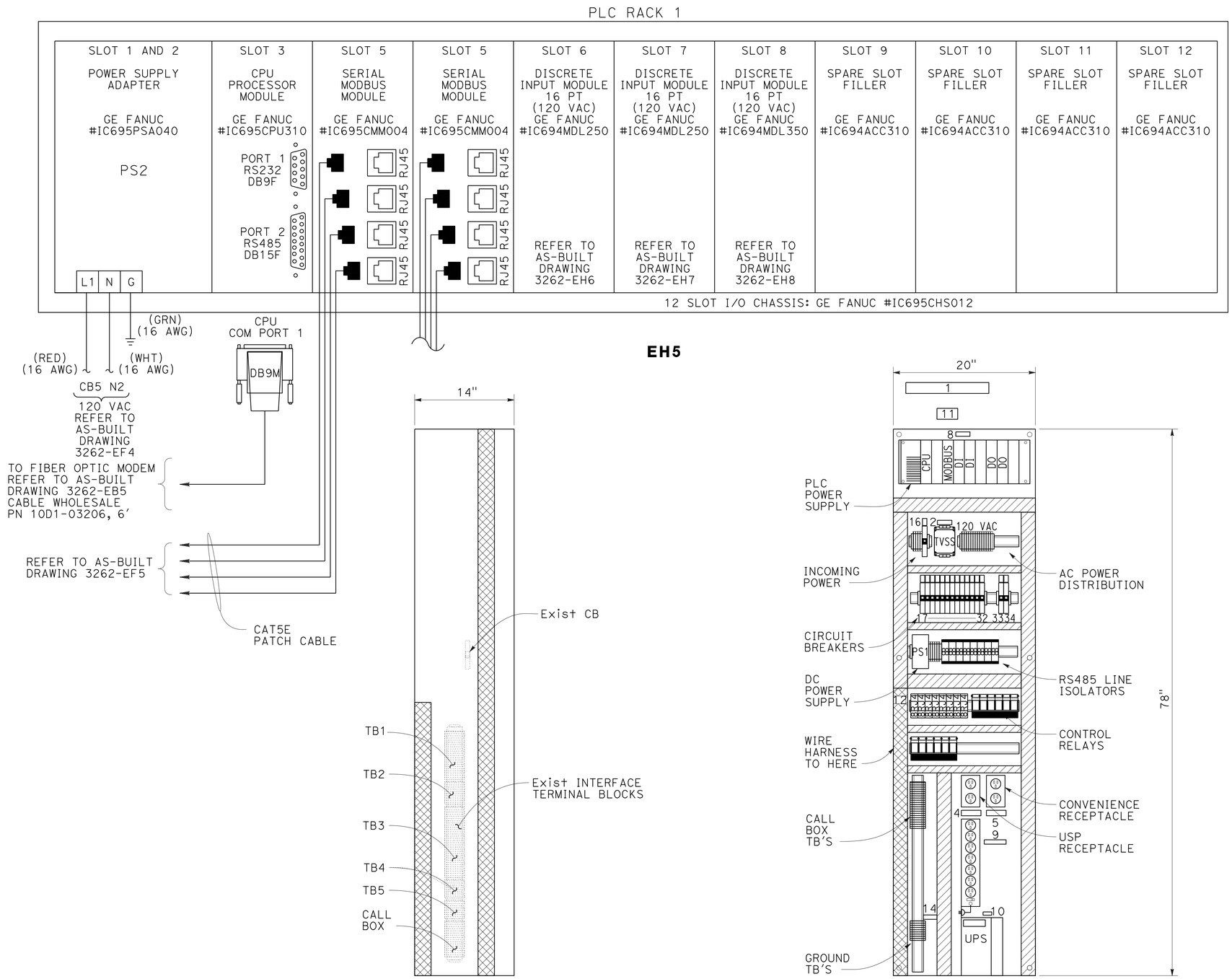

EXISTING LEFT MOUNTING SIDE PAN LAYOUT

NEW MOUNTING PAN LAYOUT

EH1

EXISTING RIGHT MOUNTING SIDE PAN LAYOUT

SUBSTATION 7
SAN MATEO-HAYWARD BRIDGE
PLC-07 RACK LAYOUT
NO SCALE

FOR NOTES, ABBREVIATIONS AND LEGEND, SEE SHEETS E-1 AND E-2

E-64

REVISED BY	DATE REVISED
LS	3/1/14

LIONEL J. SUDDS — BEHZAD GOLEMOHAMMADI
CALCULATED-DESIGNED BY — CHECKED BY
FUNCTIONAL SUPERVISOR — BEHZAD GOLEMOHAMMADI

STATE OF CALIFORNIA - DEPARTMENT OF TRANSPORTATION
Caltrans
ELECTRICAL

LAST REVISION 05-01-14 | DATE PLOTTED => 18-JUN-2014 | TIME PLOTTED => 12:34

Dist	COUNTY	ROUTE	POST MILES TOTAL PROJECT	SHEET No.	TOTAL SHEETS
04	SM,Ala	92	R14.4/R18.8, R0.0/R2.6	83	117

REGISTERED ELECTRICAL ENGINEER DATE 3/3/14

PLANS APPROVAL DATE 5-27-14

REGISTERED PROFESSIONAL ENGINEER Lionel J. Sudds No. 15201 Exp. 6-30-14 ELECT STATE OF CALIFORNIA

THE STATE OF CALIFORNIA OR ITS OFFICERS OR AGENTS SHALL NOT BE RESPONSIBLE FOR THE ACCURACY OR COMPLETENESS OF SCANNED COPIES OF THIS PLAN SHEET.

LEGEND: (THIS SHEET ONLY)

1. CONNECT NEW CONTACTS FOR THE BATTERY CHARGER AND Ck† BREAKER
2. RC THE (E) CONNECTS AND (E) RELAYS

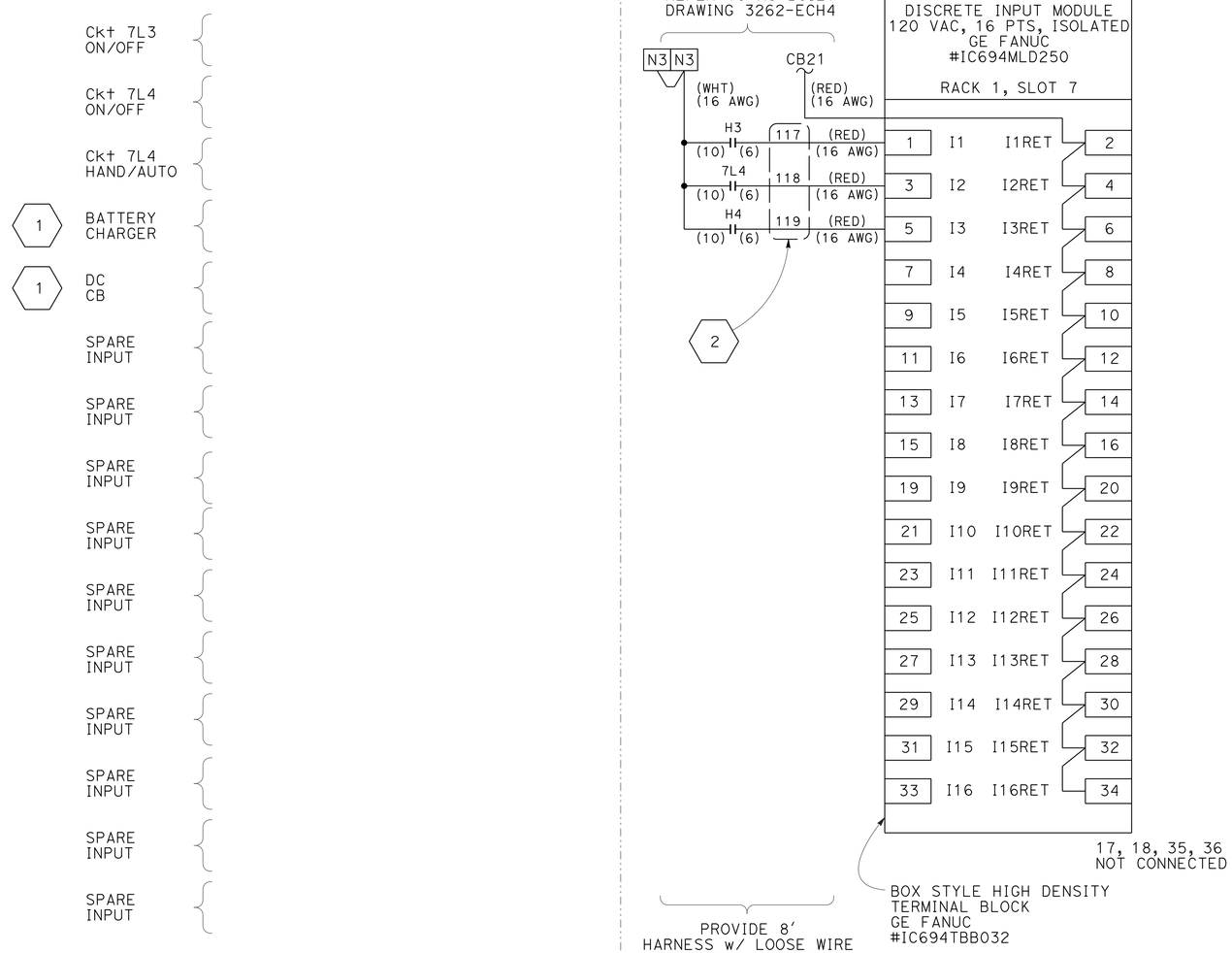

EC8

SUBSTATION 7
SAN MATEO-HAYWARD BRIDGE
PLC-07 DISCRETE INPUT WIRING DIAGRAM

NO SCALE

FOR NOTES, ABBREVIATIONS AND LEGEND, SEE SHEETS E-1 AND E-2

E-65

LIONEL J. SUDDS	REVISED BY LS
BEHZAD GOLEMOHAMMADI	DATE REVISED 3/1/14
CALCULATED-DESIGNED BY	
CHECKED BY	
FUNCTIONAL SUPERVISOR BEHZAD GOLEMOHAMMADI	

STATE OF CALIFORNIA - DEPARTMENT OF TRANSPORTATION

Caltrans

ELECTRICAL

LAST REVISION 05-01-14 | DATE PLOTTED => 18-JUN-2014 | TIME PLOTTED => 12:34

Dist	COUNTY	ROUTE	POST MILES TOTAL PROJECT	SHEET No.	TOTAL SHEETS
04	SM,Ala	92	R14.4/R18.8, R0.0/R2.6	84	117

Lionel J. Sudds 3/3/14
REGISTERED ELECTRICAL ENGINEER DATE

5-27-14
PLANS APPROVAL DATE

REGISTERED PROFESSIONAL ENGINEER Lionel J. Sudds No. 15201 Exp. 6-30-14 ELECT STATE OF CALIFORNIA

THE STATE OF CALIFORNIA OR ITS OFFICERS OR AGENTS SHALL NOT BE RESPONSIBLE FOR THE ACCURACY OR COMPLETENESS OF SCANNED COPIES OF THIS PLAN SHEET.

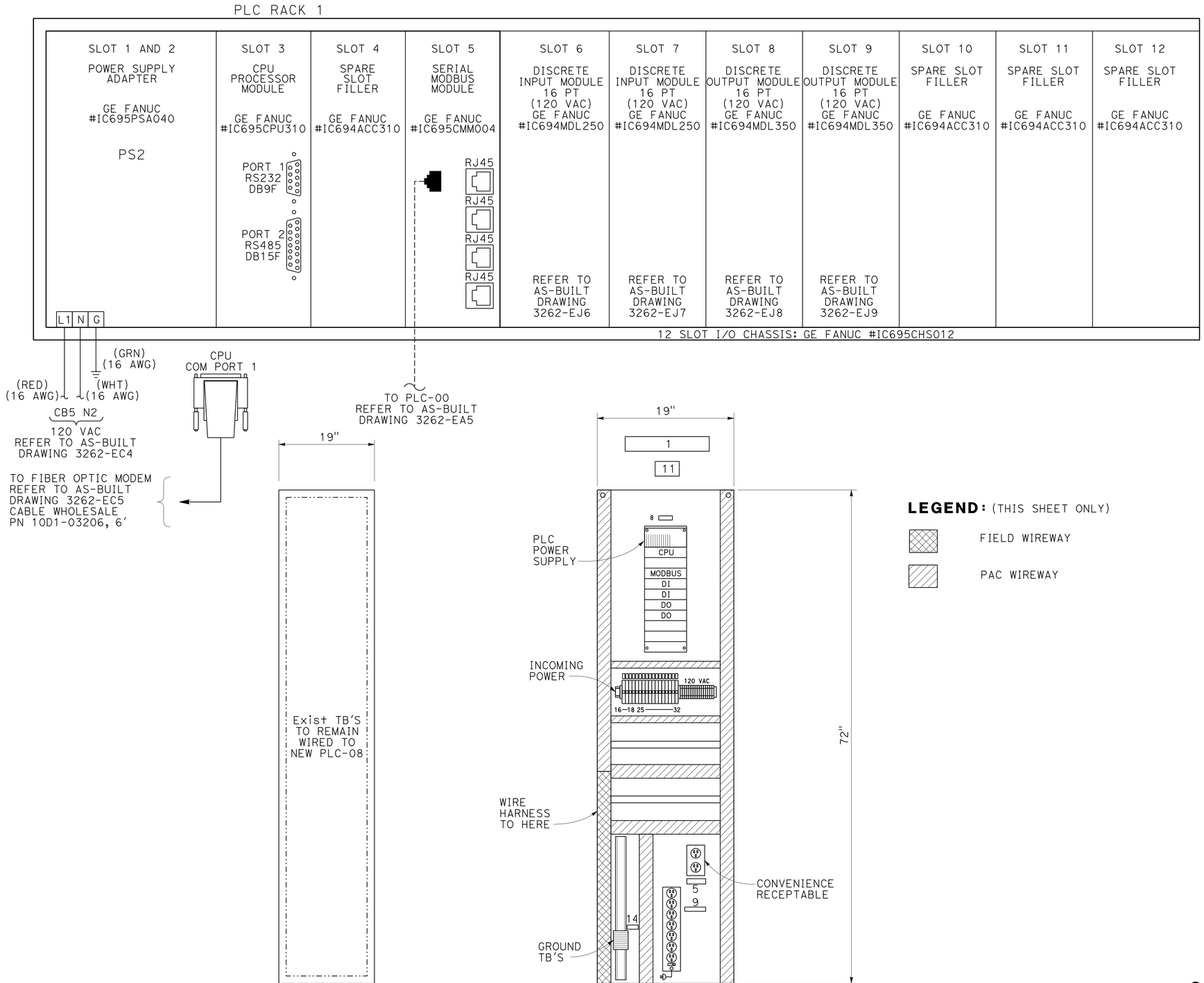

LEGEND: (THIS SHEET ONLY)

FIELD WIREWAY

PAC WIREWAY

EXISTING RTU 10, MOUNTING SPACE

NEW MOUNTING PAN LAYOUT MOUNT IN EXISTING RTU 9 SPACE

FOR NOTES, ABBREVIATIONS AND LEGEND, SEE SHEETS E-1 AND E-2

SUBSTATION 8
SAN MATEO-HAYWARD BRIDGE
PLC-08 RACK LAYOUT
NO SCALE

E-66

LAST REVISION 05-01-14 | DATE PLOTTED => 18-JUN-2014 | TIME PLOTTED => 12:34

STATE OF CALIFORNIA - DEPARTMENT OF TRANSPORTATION
Caltrans
ELECTRICAL

FUNCTIONAL SUPERVISOR: BEHZAD GOLEMOHAMMADI
CALCULATED-DESIGNED BY: LIONEL J. SUDDS
CHECKED BY: BEHZAD GOLEMOHAMMADI
REVISED BY: LS
DATE REVISED: 3/1/14

Dist	COUNTY	ROUTE	POST MILES TOTAL PROJECT	SHEET No.	TOTAL SHEETS
04	SM,Ala	92	R14.4/R18.8, R0.0/R2.6	85	117

REGISTERED ELECTRICAL ENGINEER DATE 3/3/14

5-27-14
PLANS APPROVAL DATE

REGISTERED PROFESSIONAL ENGINEER Lionel J. Sudds No. 15201 Exp. 6-30-14 ELECT STATE OF CALIFORNIA

THE STATE OF CALIFORNIA OR ITS OFFICERS OR AGENTS SHALL NOT BE RESPONSIBLE FOR THE ACCURACY OR COMPLETENESS OF SCANNED COPIES OF THIS PLAN SHEET.

LEGEND: (THIS SHEET ONLY)

(1) RECONNECT NEW CONTACTS FOR THE ROADWAY LIGHT CIRCUITS ON CONTROLS, LOCAL/REMOTE INDICATION TO THE Exist CONNECTOR

(2) CONNECT NEW CONTACTS FOR THE BATTERY CHARGER AND Ckt BREAKER INDICATION

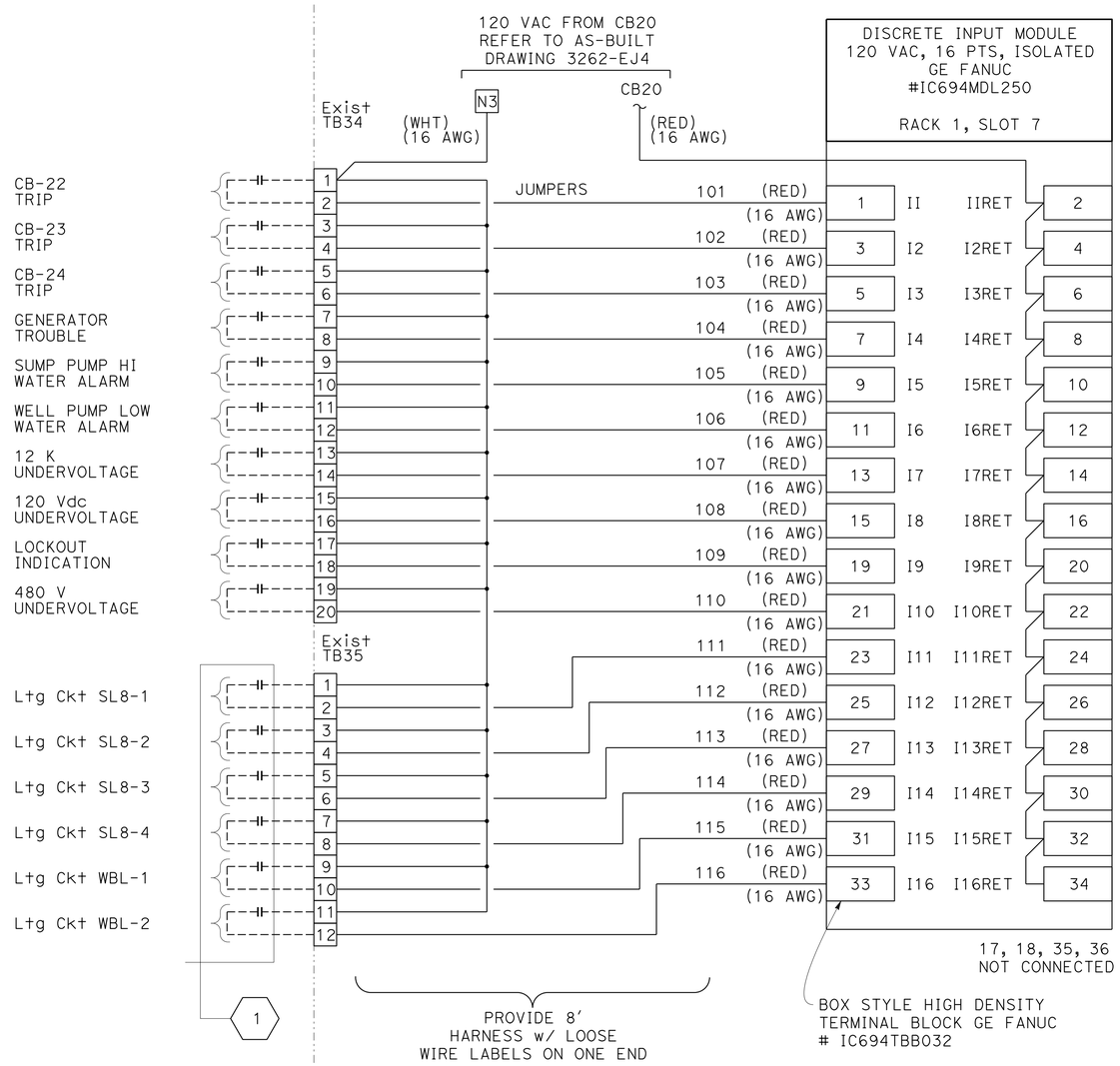

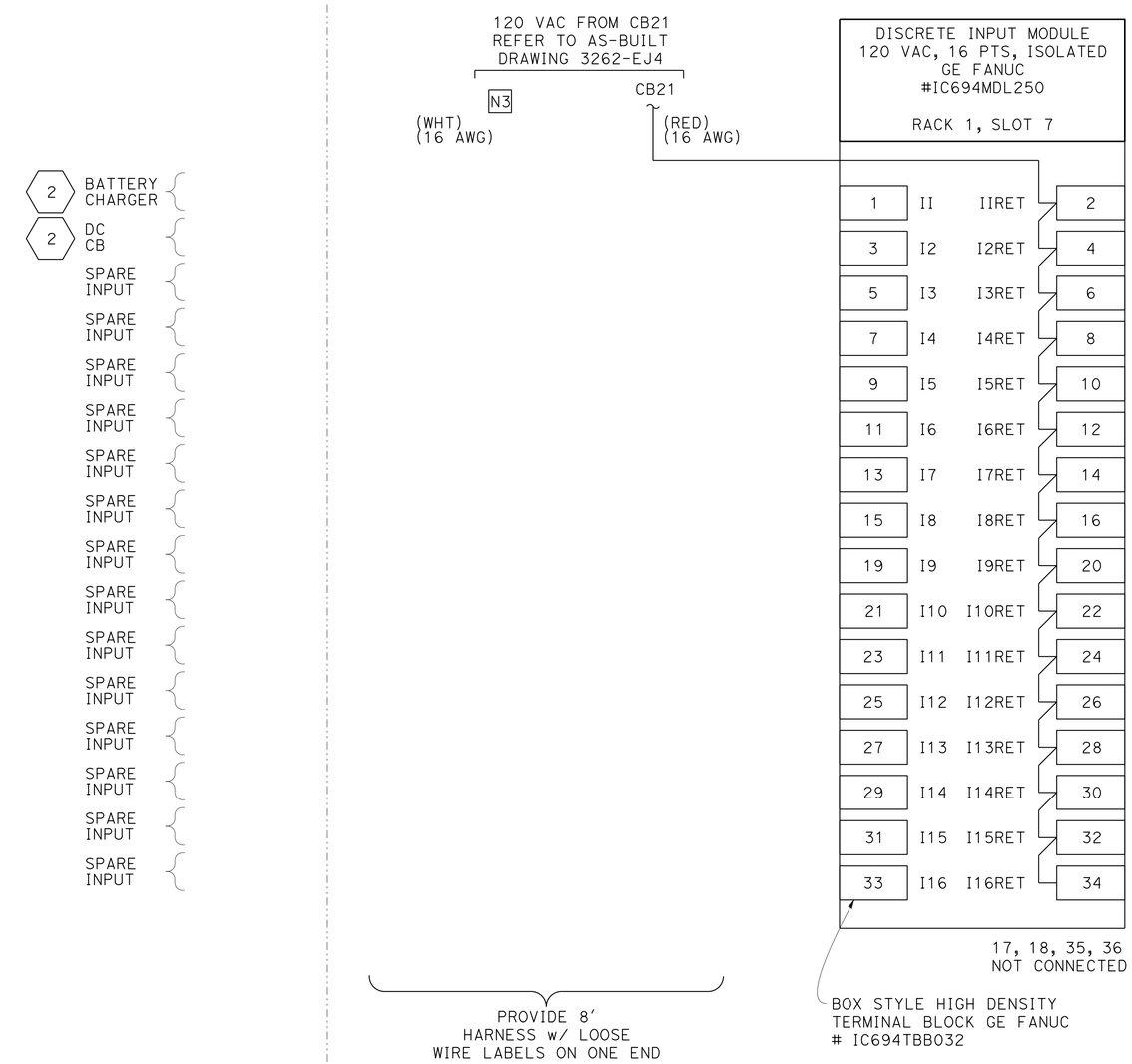

SUBSTATION 8
SAN MATEO-HAYWARD BRIDGE
PLC-08 DISCRETE INPUT WIRING DIAGRAM

NO SCALE

FOR NOTES, ABBREVIATIONS AND LEGEND, SEE SHEETS E-1 AND E-2

E-67

REVISED BY	DATE REVISED
LS	3/1/14

LIONEL J. SUDDS — BEHZAD GOLEMOHAMMADI
CALCULATED-DESIGNED BY — CHECKED BY
FUNCTIONAL SUPERVISOR — BEHZAD GOLEMOHAMMADI

STATE OF CALIFORNIA - DEPARTMENT OF TRANSPORTATION
Caltrans
ELECTRICAL

LAST REVISION 05-01-14 | DATE PLOTTED => 18-JUN-2014 | TIME PLOTTED => 12:34

Dist	COUNTY	ROUTE	POST MILES TOTAL PROJECT	SHEET No.	TOTAL SHEETS
04	SM,Ala	92	R14.4/R18.8, R0.0/R2.6	86	117

REGISTERED ELECTRICAL ENGINEER 3/3/14 DATE

5-27-14
PLANS APPROVAL DATE

REGISTERED PROFESSIONAL ENGINEER Lionel J. Sudds No. 15201 Exp. 6-30-14 ELECT STATE OF CALIFORNIA

THE STATE OF CALIFORNIA OR ITS OFFICERS OR AGENTS SHALL NOT BE RESPONSIBLE FOR THE ACCURACY OR COMPLETENESS OF SCANNED COPIES OF THIS PLAN SHEET.

LEGEND: (THIS SHEET ONLY)

(1) [RC] THE (E) CONNECTS AND (E) RELAYS

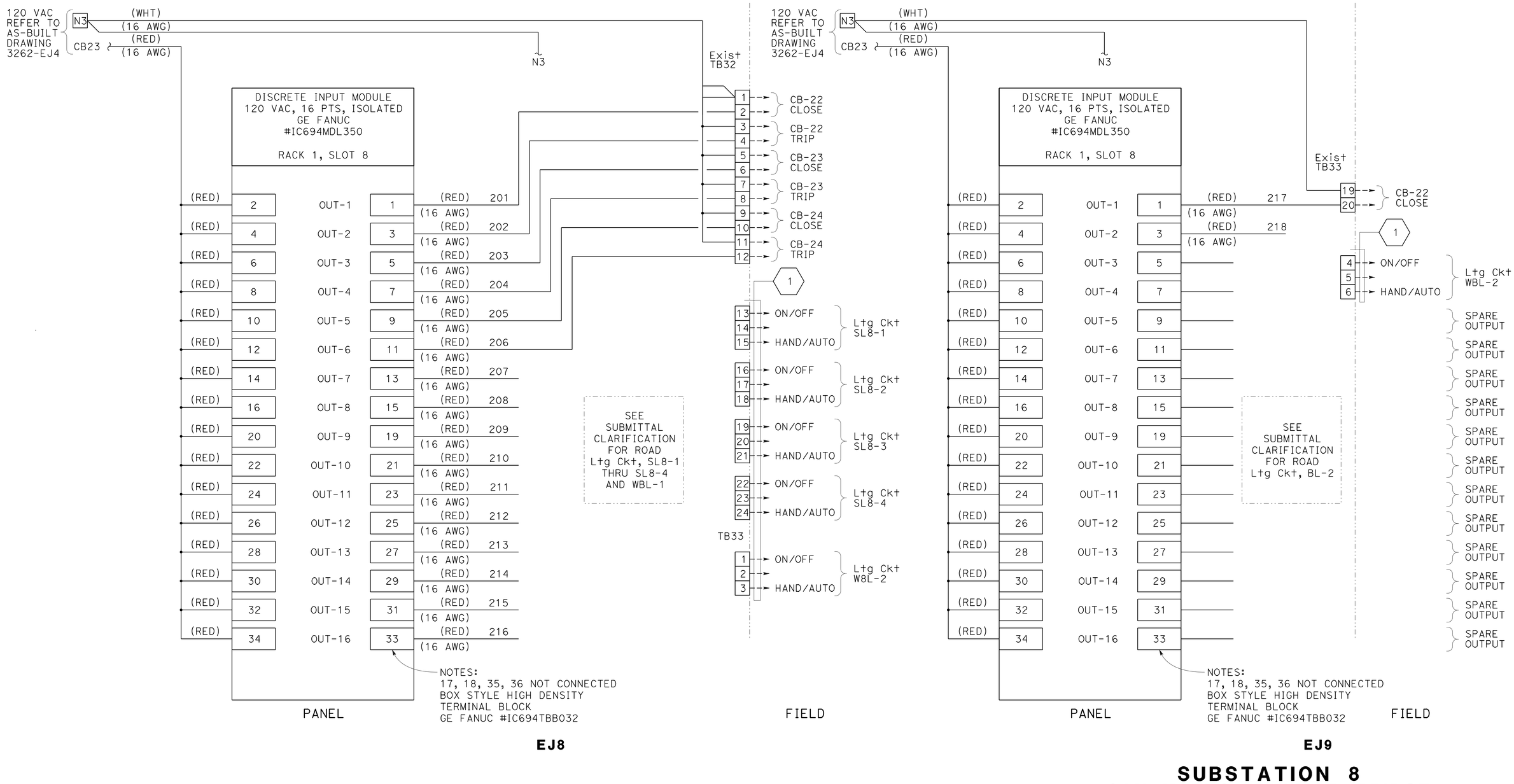

SUBSTATION 8
SAN MATEO-HAYWARD BRIDGE
PLC-08 DISCRETE INPUT WIRING DIAGRAM

NO SCALE

FOR NOTES, ABBREVIATIONS AND LEGEND, SEE SHEETS E-1 AND E-2

E-68

REVISED BY	DATE REVISED
LS	3/1/14

LIONEL J. SUDDS — BEHZAD GOLEMOHAMMADI
CALCULATED-DESIGNED BY — CHECKED BY
FUNCTIONAL SUPERVISOR — BEHZAD GOLEMOHAMMADI

STATE OF CALIFORNIA - DEPARTMENT OF TRANSPORTATION
Caltrans
ELECTRICAL

LAST REVISION 05-01-14 | DATE PLOTTED => 18-JUN-2014 | TIME PLOTTED => 12:35

M

Maint	MAINTENANCE
Max	MAXIMUM
MB	METAL BEAM
MBB	METAL BEAM BARRIER
MBGR	METAL BEAM GUARD RAILING
Med	MEDIAN
MGS	MIDWEST GUARDRAIL SYSTEM
MH	MANHOLE
Min	MINIMUM
Misc	MISCELLANEOUS
Misc I & S	MISCELLANEOUS IRON AND STEEL
Mkr	MARKER
Mod	MODIFIED, MODIFY
Mon	MONUMENT
MP	METAL PLATE
MPGR	METAL PLATE GUARD RAILING
MR	MOVEMENT RATING
MSE	MECHANICALLY STABILIZED EMBANKMENT
Mt	MOUNTAIN, MOUNT
Mtl	MATERIAL
MVP	MAINTENANCE VEHICLE PULLOUT

N

N	NORTH
NB	NORTHBOUND
No.	NUMBER (MUST HAVE PERIOD)
Nos.	NUMBERS (MUST HAVE PERIOD)
NPS	NOMINAL PIPE SIZE
NS	NEAR SIDE
NSP	NEW STANDARD PLAN
NTS	NOT TO SCALE

O

Oblr	OBLITERATE
OC	OVERCROSSING
OD	OUTSIDE DIAMETER
OF	OUTSIDE FACE
OG	ORIGINAL GROUND
OGAC	OPEN GRADED ASPHALT CONCRETE
OGFC	OPEN GRADED FRICTION COURSE
OH	OVERHEAD
OHWM	ORDINARY HIGH WATER MARK
O-O	OUT TO OUT
Opp	OPPOSITE
OSD	OVERSIDE DRAIN

P

p	PAGE
PAP	PERFORATED ALUMINUM PIPE
PB	PULL BOX
PC	POINT OF CURVATURE, PRECAST
PCC	POINT OF COMPOUND CURVE, PORTLAND CEMENT CONCRETE
PCMS	PORTABLE CHANGEABLE MESSAGE SIGN
PCP	PERFORATED CONCRETE PIPE, PRESTRESSED CONCRETE PIPE
PCVC	POINT OF COMPOUND VERTICAL CURVE
PEC	PERMIT TO ENTER AND CONSTRUCT
Ped	PEDESTRIAN
Ped OC	PEDESTRIAN OVERCROSSING
Ped UC	PEDESTRIAN UNDERCROSSING
Perm Mtl	PERMEABLE MATERIAL

P continued

PG	PROFILE GRADE
PI	POINT OF INTERSECTION
PJP	PARTIAL JOINT PENETRATION
Pkwy	PARKWAY
ℙ,PL	PLATE
P/L	PROPERTY LINE
PM	POST MILE, TIME FROM NOON TO MIDNIGHT
PN	PAVING NOTCH
POC	POINT OF HORIZONTAL CURVE
POT	POINT OF TANGENT
POVC	POINT OF VERTICAL CURVE
PP	PIPE PILE, PLASTIC PIPE, POWER POLE
PPL	PREFORMED PERMEABLE LINER
PPP	PERFORATED PLASTIC PIPE
PRC	POINT OF REVERSE CURVE
PRF	PAVEMENT REINFORCING FABRIC
PRVC	POINT OF REVERSE VERTICAL CURVE
PS&E	PLANS, SPECIFICATIONS AND ESTIMATES
PS, P/S	PRESTRESSED
PSP	PERFORATED STEEL PIPE
PT	POINT OF TANGENCY
PVC	POLYVINYL CHLORIDE
Pvmt	PAVEMENT

Q

Qty	QUANTITY

R

R	RADIUS
R & D	REMOVE AND DISPOSE
R & S	REMOVE AND SALVAGE
R/C	RATE OF CHANGE
RCA	REINFORCED CONCRETE ARCH
RCB	REINFORCED CONCRETE BOX
RCP	REINFORCED CONCRETE PIPE
RCPA	REINFORCED CONCRETE PIPE ARCH
Rd	ROAD
Reinf	REINFORCED, REINFORCEMENT, REINFORCING
Rel	RELOCATE
Repl	REPLACEMENT
Ret	RETAINING
Rev	REVISED, REVISION
Rdwy	ROADWAY
RHMA	RUBBERIZED HOT MIX ASPHALT
Riv	RIVER
RM	ROAD-MIXED
RP	RADIUS POINT, REFERENCE POINT
RR	RAILROAD
RSP	ROCK SLOPE PROTECTION, REVISED STANDARD PLAN
Rt	RIGHT
Rte	ROUTE
RW	REDWOOD, RETAINING WALL
R/W	RIGHT OF WAY
Rwy	RAILWAY

S

S	SOUTH, SUPPLEMENT
SAE	STRUCTURE APPROACH EMBANKMENT
Salv	SALVAGE
SAPP	STRUCTURAL ALUMINUM PLATE PIPE
SB	SOUTHBOUND
SC	SAND CUSHION
SCSP	SLOTTED CORRUGATED STEEL PIPE
SD	STORM DRAIN
Sec	SECOND, SECTION
Sep	SEPARATION
SG	SUBGRADE
Shld	SHOULDER
Sht	SHEET
Sim	SIMILAR
℄	STATION LINE
SM	SELECTED MATERIAL
Spec	SPECIAL, SPECIFICATIONS
SPP	SLOTTED PLASTIC PIPE
SS	SLOPE STAKE
SSBM	STRAP AND SADDLE BRACKET METHOD
SSD	STRUCTURAL SECTION DRAIN
SSPA	STRUCTURAL STEEL PLATE ARCH
SSPP	STRUCTURAL STEEL PLATE PIPE
SSPPA	STRUCTURAL STEEL PLATE PIPE ARCH
SSRP	STEEL SPIRAL RIB PIPE
St	STREET
Sta	STATION
STBB	SINGLE THRIE BEAM BARRIER
Std	STANDARD
Str	STRUCTURE
Surf	SURFACING
SW	SIDEWALK, SOUND WALL
Swr	SEWER
Sym	SYMMETRICAL
S4S	SURFACE 4 SIDES

T

T	SEMI-TANGENT
Tan	TANGENT
TBB	THRIE BEAM BARRIER
Tbr	TIMBER
TC	TOP OF CURB
TCB	TRAFFIC CONTROL BOX
TCE	TEMPORARY CONSTRUCTION EASEMENT
Tel	TELEPHONE
Temp	TEMPORARY
TG	TOP OF GRADE
Tot	TOTAL
TP	TELEPHONE POLE
TPB	TREATED PERMEABLE BASE
TPM	TREATED PERMEABLE MATERIAL
Trans	TRANSITION

T continued

TS	TRANSVERSE, TRAFFIC SIGNAL, TUBULAR STEEL
Typ	TYPICAL

U

UC	UNDERCROSSING
UD	UNDERDRAIN
UG	UNDERGROUND
UON	UNLESS OTHERWISE NOTED
UP	UNDERPASS

V

V	VALVE, DESIGN SPEED
Var	VARIABLE, VARIES
VC	VERTICAL CURVE
VCP	VITRIFIED CLAY PIPE
Vert	VERTICAL
Via	VIADUCT
Vol	VOLUME

W

W	WEST, WIDTH
WB	WESTBOUND
WH	WEEP HOLE
WM	WIRE MESH
WS	WATER SURFACE
WSP	WELDED STEEL PIPE
Wt	WEIGHT
WV	WATER VALVE
WW	WINGWALL
WWLOL	WINGWALL LAYOUT LINE

X

X Sec	CROSS SECTION
Xing	CROSSING

Y

Yr	YEAR
Yrs	YEARS

Dist	COUNTY	ROUTE	POST MILES TOTAL PROJECT	SHEET No.	TOTAL SHEETS
04	SM,Ala	92	R14.4/R18.8, R0.0/R2.6	87	117

Grace M. Tsushima
REGISTERED CIVIL ENGINEER

July 19, 2013
PLANS APPROVAL DATE

REGISTERED PROFESSIONAL ENGINEER Grace M. Tsushima No. C49814 Exp. 9-30-14 CIVIL STATE OF CALIFORNIA

THE STATE OF CALIFORNIA OR ITS OFFICERS OR AGENTS SHALL NOT BE RESPONSIBLE FOR THE ACCURACY OR COMPLETENESS OF SCANNED COPIES OF THIS PLAN SHEET.

TO ACCOMPANY PLANS DATED 5-27-14

UNIT OF MEASUREMENT SYMBOLS:

Some of the symbols used in the project plan quantity tables and in the Bid Item List are:

TABLE A

SYMBOL USED	DEFINITIONS
ACRE	ACRE
CF	CUBIC FOOT
CY	CUBIC YARD
EA	EACH
GAL	GALLON
LB	POUND
LF	LINEAR FOOT
SQFT	SQUARE FOOT
SQYD	SQUARE YARD
STA	100 FEET
TAB	TABLET
TON	2,000 POUNDS

Some of the symbols used in the plans other than in the project plan quantity tables are:

TABLE B

SYMBOL USED	DEFINITIONS
ksi	KIPS PER SQUARE INCH
ksf	KIPS PER SQUARE FOOT
psi	POUNDS PER SQUARE INCH
psf	POUNDS PER SQUARE FOOT
lb/ft^3, pcf	POUNDS PER CUBIC FOOT
tsf	TONS PER SQUARE FOOT
mph, MPH *	MILES PER HOUR
ø	NOMINAL DIAMETER
oz	OUNCE
lb	POUND
kip	1,000 POUNDS
cal	CALORIE
ft	FOOT OR FEET
gal	GALLON

* For use on a sign panel only

STATE OF CALIFORNIA
DEPARTMENT OF TRANSPORTATION

ABBREVIATIONS (SHEET 2 OF 2)

NO SCALE

RSP A10B DATED JULY 19, 2013 SUPERSEDES STANDARD PLAN A10B DATED MAY 20, 2011 - PAGE 2 OF THE STANDARD PLANS BOOK DATED 2010.

REVISED STANDARD PLAN RSP A10B

2010 REVISED STANDARD PLAN RSP A10B

6-7-13

TO ACCOMPANY PLANS DATED 5-27-14

Dist	COUNTY	ROUTE	POST MILES TOTAL PROJECT	SHEET No.	TOTAL SHEETS
04	SM,Ala	92	R14.4/R18.8, R0.0/R2.6	88	117

REGISTERED CIVIL ENGINEER

April 19, 2013
PLANS APPROVAL DATE

REGISTERED PROFESSIONAL ENGINEER Gurinderpal Bhullar No. C48815 Exp. 9-30-14 CIVIL STATE OF CALIFORNIA

THE STATE OF CALIFORNIA OR ITS OFFICERS OR AGENTS SHALL NOT BE RESPONSIBLE FOR THE ACCURACY OR COMPLETENESS OF SCANNED COPIES OF THIS PLAN SHEET.

NOTES:

See Revised Standard Plan RSP T9 for tables.

Use cone spacing X for taper segment, Y for tangent segment or Z for conflict situations, as approriate, per Table 1, unless X, Y, or Z cone spacing is shown on this sheet.

Unless otherwise specified in the special provisions, all temporary warning signs shall have black legend on fluorescent orange background.

California codes are designated by (CA). Otherwise, Federal (MUTCD) codes are shown.

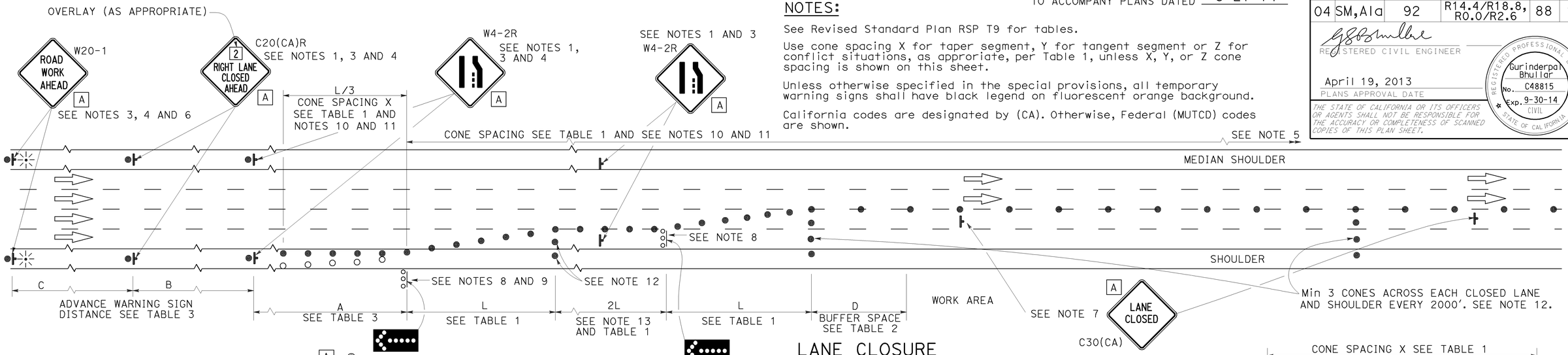

LANE CLOSURE

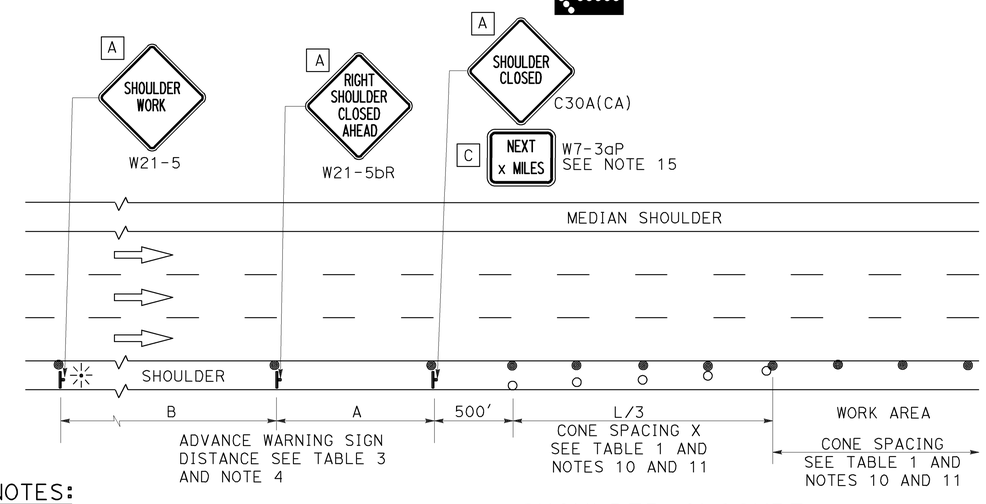

SHOULDER CLOSURE

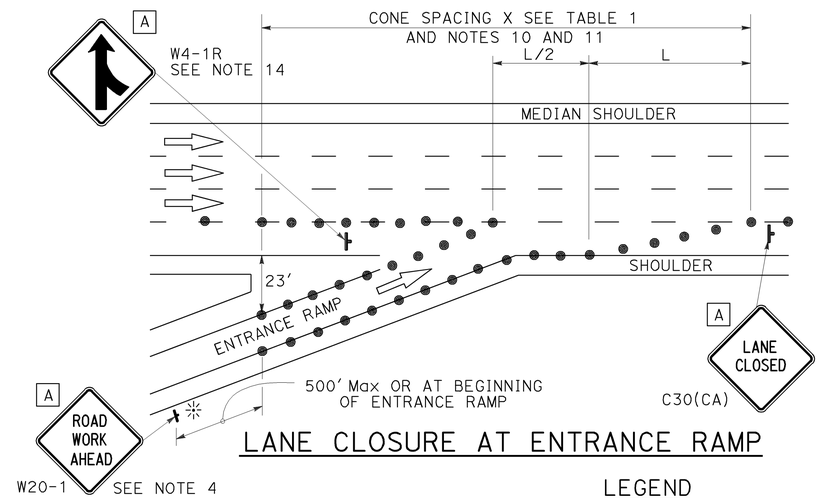

LANE CLOSURE AT ENTRANCE RAMP

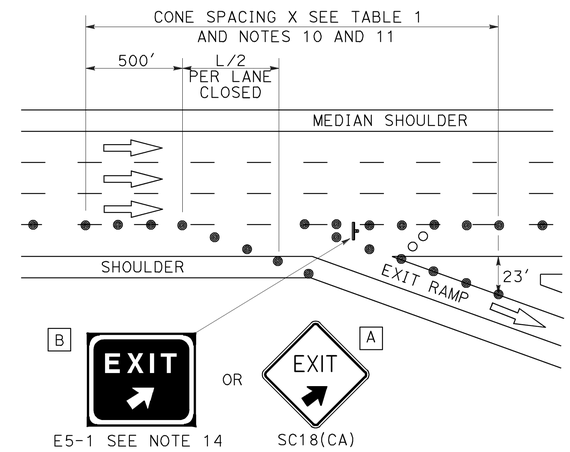

LANE CLOSURE AT EXIT RAMP

NOTES:

1. Median lane closures shall conform to the details as shown except that C20(CA)L and W4-2L signs shall be used.
2. At least one person shall be assigned to provide full time maintenance of traffic control devices for lane closures.
3. Duplicate sign installations are not required:
   a) On opposite shoulder if at least one-half of the available lanes remain open to traffic.
   b) In the median if the width of the median shoulder is less than 8' and the outside lanes are to be closed.
4. Each advance warning sign on each side of the roadway shall be equipped with at least two flags for daytime closure. Each flag shall be at least 16" x 16" in size and shall be orange or fluorescent red-orange in color. Flashing beacons shall be placed at the locations indicated for lane closure during hours of darkness.
5. A G20-2 "END ROAD WORK" sign, with minimum size of 48" x 24" as appropriate, shall be placed at the end of the lane closure unless the end of work area is obvious or ends within a larger project's limits.
6. If the W20-1 sign would follow within 2000' of a stationary W20-1 or G20-1 "ROAD WORK NEXT _____ MILES", use a C20(CA) sign for the first advance warning sign.
7. Place a C30(CA) sign every 2000' throughout length of lane closure.
8. One flashing arrow sign for each lane closed. The flashing arrow signs shall be Type I.
9. A minimum 1500' of sight distance shall be provided where possible for vehicles approaching the first flashing arrow sign. Lane closures shall not begin at top of crest vertical curve or on a horizontal curve.
10. All cones used for lane closures during the hours of darkness shall be fitted with retroreflective bands (or sleeves) as specified in the specifications.
11. Portable delineators, placed at one-half the spacing indicated for traffic cones may be used instead of cones for daytime closures only.
12. Unless otherwise specified in the special provisions, a minimum of 3 cones shall be placed transversely across each closed lane and shoulder at each location where a taper across a traffic lane ends and every 2000' as shown on the "Lane Closure" detail. Two Type II barricades may be used instead of the 3 cones. The transverse alignment of the cones or barricades on the closed shoulder may be shifted from the transverse alignment to provide access to the work.
13. Unless otherwise specified in the special provisions, the 2L tangent shown along lane lines shall be used between the L tapers required for each closed traffic lane.
14. Unless otherwise specified in the special provisions, the E5-1 or SC18(CA) and W4-1 signs shall be used as shown.
15. A W7-3aP "NEXT____ MILES" plaque must be used if theshoulder closure extends beyond the distance that can be perceived by road users.

LEGEND

- TRAFFIC CONE
- TRAFFIC CONE (OPTIONAL TAPER)
- TEMPORARY TRAFFIC CONTROL SIGN
- FLASHING ARROW SIGN (FAS)
- FAS SUPPORT OR TRAILER
- PORTABLE FLASHING BEACON

SIGN PANEL SIZE (Min)

A	48" x 48"
B	72" x 60"
C	36" x 30"

STATE OF CALIFORNIA
DEPARTMENT OF TRANSPORTATION

TRAFFIC CONTROL SYSTEM FOR LANE CLOSURE ON FREEWAYS AND EXPRESSWAYS

NO SCALE

RSP T10 DATED APRIL 19, 2013 SUPERSEDES STANDARD PLAN T10 DATED MAY 20, 2011 - PAGE 237 OF THE STANDARD PLANS BOOK DATED 2010.

REVISED STANDARD PLAN RSP T10

2010 REVISED STANDARD PLAN RSP T10

12-18-12

Dist	COUNTY	ROUTE	POST MILES TOTAL PROJECT	SHEET No.	TOTAL SHEETS
04	SM,Ala	92	R14.4/R18.8, R0.0/R2.6	89	117

Theresa Gabriel
REGISTERED ELECTRICAL ENGINEER

July 19, 2013
PLANS APPROVAL DATE

REGISTERED PROFESSIONAL ENGINEER Theresa Aziz Gabriel No. E15129 Exp. 6-30-14 ELECTRICAL STATE OF CALIFORNIA

THE STATE OF CALIFORNIA OR ITS OFFICERS OR AGENTS SHALL NOT BE RESPONSIBLE FOR THE ACCURACY OR COMPLETENESS OF SCANNED COPIES OF THIS PLAN SHEET.

TO ACCOMPANY PLANS DATED 5-27-14

LEGEND:

AB	ABANDON. IF APPLIED TO CONDUIT, REMOVE CONDUCTORS
BC	INSTALL PULL BOX IN EXISTING CONDUIT RUN
BP	PEDESTRIAN BARRICADE, TYPE AS INDICATED ON PLAN
CB	INSTALL CONDUIT INTO EXISTING PULL BOX
CC	CONNECT NEW AND EXISTING CONDUIT. REMOVE EXISTING CONDUCTORS AND INSTALL CONDUCTORS AS INDICATED
CF	CONDUIT TO REMAIN FOR FUTURE USE. REMOVE CONDUCTORS. INSTALL PULL TAPE
DH	DETECTOR HANDHOLE
FA	FOUNDATION TO BE ABANDONED
IS	INSTALL SIGN ON SIGNAL MAST ARM
NS	NO SLIP BASE ON STANDARD
PEC	PHOTOELECTRIC CONTROL
PEU	PHOTOELECTRIC UNIT
RC	EQUIPMENT OR MATERIAL TO BE REMOVED AND BECOME THE PROPERTY OF THE CONTRACTOR
RE	REMOVE ELECTROLIER, FUSES AND BALLAST. TAPE ENDS OF CONDUCTORS
RL	RELOCATE EQUIPMENT
RR	REMOVE AND REUSE EQUIPMENT
RS	REMOVE AND SALVAGE EQUIPMENT
SC	SPLICE NEW TO EXISTING CONDUCTORS
SD	SERVICE DISCONNECT
TSP	TELEPHONE SERVICE POINT

ABBREVIATIONS

APS	ACCESSIBLE PEDESTRIAN SIGNAL
BBS	BATTERY BACKUP SYSTEM
BC	BOLT CIRCLE
BPB	BICYCLE PUSH BUTTON
C	CONDUIT
CB	CIRCUIT BREAKER
CCTV	CLOSED CIRCUIT TELEVISION
Ckt	CIRCUIT
CMS	CHANGEABLE MESSAGE SIGN
Ctid	CALTRANS IDENTIFICATION
Comm	COMMUNICATION
DLC	LOOP DETECTOR LEAD-IN CABLE
EMS	EXTINGUISHABLE MESSAGE SIGN
EVUC	EMERGENCY VEHICLE UNIT CABLE
EVUD	EMERGENCY VEHICLE UNIT DETECTOR
FB	FLASHING BEACON
FBCA	FLASHING BEACON CONTROL ASSEMBLY
FBS	FLASHING BEACON WITH SLIP BASE
FO	FIBER OPTIC
G	EQUIPMENT GROUNDING CONDUCTOR
GB	GROUND BUS
GFCI	GROUND FAULT CIRCUIT INTERRUPTER
HAR	HIGHWAY ADVISORY RADIO
Hex	HEXAGONAL
HPS	HIGH PRESSURE SODIUM
IISNS	INTERNALLY ILLUMINATED STREET NAME SIGN
ISL	INDUCTION SIGN LIGHTING
LED	LIGHT EMITTING DIODE
LMA	LUMINAIRE MAST ARM
LPS	LOW PRESSURE SODIUM
Ltg	LIGHTING
Lum	LUMINAIRE
M	METERED
MAT	MAST ARM MOUNTING TOP ATTACHMENT
MAS	MAST ARM MOUNTING SIDE ATTACHMENT
M/M	MULTIPLE TO MULTIPLE TRANSFORMER
Mtg	MOUNTING
MV	MERCURY VAPOR LIGHTING FIXTURE
MVDS	MICROWAVE VEHICLE DETECTION SYSTEM
N	NEUTRAL (GROUNDED CONDUCTOR)
NB	NEUTRAL BUS
NC	NORMALLY CLOSE
NO	NORMALLY OPEN
P	CIRCUIT BREAKER'S POLE
PB	PULL BOX
PBA	PUSH BUTTON ASSEMBLY
PEC	PHOTOELECTRIC CONTROL
Ped	PEDESTRIAN
PEU	PHOTOELECTRIC UNIT
PT	CONDUIT WITH PULL TAPE
RE	RELOCATED EQUIPMENT
RM	RAMP METERING
RWIS	ROADSIDE WEATHER INFORMATION SYSTEM
SB	SLIP BASE
SIC	SIGNAL INTERCONNECT CABLE
Sig	SIGNAL
SMA	SIGNAL MAST ARM
SNS	STREET NAME SIGN
SP	SERVICE POINT
TDC	TELEPHONE DEMARCATION CABINET
TMS	TRAFFIC MONITORING STATION
TOS	TRAFFIC OPERATIONS SYSTEM
Veh	VEHICLE
VIVDS	VIDEO IMAGE VEHICLE DETECTION SYSTEM
WIM	WEIGH-IN-MOTION
Xfmr	TRANSFORMER

SOFFIT AND WALL MOUNTED LUMINAIRES

PENDANT, 70 W HPS UNLESS OTHERWISE SPECIFIED

FLUSH, 70 W HPS UNLESS OTHERWISE SPECIFIED

WALL SURFACE, 70 W HPS UNLESS OTHERWISE SPECIFIED

EXISTING SOFFIT OR WALL LUMINAIRE TO REMAIN UNMODIFIED

EXISTING SOFFIT OR WALL LUMINAIRE TO BE MODIFIED AS SPECIFIED

NOTE:

Arrow indicates "street side" of luminaire.

COMMONLY USED SYMBOLS FOR UNITED STATES CUSTOMARY UNITS OF MEASUREMENT:

SYMBOL USED	DEFINITIONS
Ω	OHMS
min	MINUTE
s	SECOND
bps	BITS PER SECOND
Bps	BYTES PER SECOND
A	AMPERE
V	VOLT
V(dc)	VOLT (DIRECT CURRENT)
V(ac)	VOLT (ALTERNATING CURRENT)
FC	FOOT - CANDLE
W	WATTS
VA	VOLT-AMPERE
M	MEGA
k	KILO
m	MILLI
μ	MICRO
P	PICO
Hz	HERTZ

MISCELLANEOUS ELECTROLIERS

NEW	EXISTING	
		LUMINAIRE ON WOOD POLE
		NON-STANDARD ELECTROLIER (SEE PROJECT NOTES OR PROJECT PLANS)
		CITY ELECTROLIER
		ELECTROLIER FOUNDATION (FUTURE INSTALLATION)

NOTES:

1. HPS luminaires shall be 310 W HPS when installed on Type 21, 21D, 30, 31 and 32 Standards, unless otherwise specified. HPS luminaires shall be 200 W when installed on other type standards or poles, unless otherwise specified.
2. LED luminaires shall be 235 W when installed on Type 21, 21D, 30, 31 and 32 Standards, unless otherwise specified. LED luminaires shall be 165 W when installed on other type standards or poles, unless otherwise specified.
3. Luminaires shall be the cutoff type, ANSI Type III medium cutoff lighting distribution, unless otherwise specified.

STANDARD ELECTROLIER

NEW	EXISTING	STANDARD TYPE
		15
		15D
		15 STRUCTURE
		15D STRUCTURE
		21
		21D
		21 STRUCTURE
		21D STRUCTURE
		30
		31
		32

STATE OF CALIFORNIA
DEPARTMENT OF TRANSPORTATION

ELECTRICAL SYSTEMS (LEGEND AND ABBREVIATIONS)

NO SCALE

RSP ES-1A DATED JULY 19, 2013 SUPERSEDES STANDARD PLAN ES-1A DATED MAY 20, 2011 - PAGE 425 OF THE STANDARD PLANS BOOK DATED 2010.

REVISED STANDARD PLAN RSP ES-1A

2010 REVISED STANDARD PLAN RSP ES-1A

7-15-13

Dist	COUNTY	ROUTE	POST MILES TOTAL PROJECT	SHEET No.	TOTAL SHEETS
04	SM,Ala	92	R14.4/R18.8, R0.0/R2.6	90	117

Theresa Gabriel
REGISTERED ELECTRICAL ENGINEER

July 19, 2013
PLANS APPROVAL DATE

REGISTERED PROFESSIONAL ENGINEER Theresa Aziz Gabriel No. E15129 Exp. 6-30-14 ELECTRICAL STATE OF CALIFORNIA

THE STATE OF CALIFORNIA OR ITS OFFICERS OR AGENTS SHALL NOT BE RESPONSIBLE FOR THE ACCURACY OR COMPLETENESS OF SCANNED COPIES OF THIS PLAN SHEET.

TO ACCOMPANY PLANS DATED 5-27-14

CONDUIT

NEW	EXISTING	
		LIGHTING CONDUIT, UNLESS OTHERWISE INDICATED OR NOTED
		TRAFFIC SIGNAL CONDUIT
C	c	COMMUNICATION CONDUIT
T	t	TELEPHONE CONDUIT
F	f	FIRE ALARM CONDUIT
FO	fo	FIBER OPTIC CONDUIT
		CONDUIT TERMINATION
R	r	CONDUIT RISER ATTACHED TO THE STRUCTURE OR SERVICE POLE

SERVICE EQUIPMENT

NEW	EXISTING	
OH	oh	OVERHEAD LINES
U	U	WOOD POLE, "U" INDICATES UTILITY OWNED
		POLE GUY WITH ANCHOR
		UTILITY TRANSFORMER - GROUND MOUNTED
III	III	SERVICE EQUIPMENT ENCLOSURE TYPE. DOOR INDICATES FRONT OF ENCLOSURE
T	t	TELEPHONE DEMARCATION CABINET

POLE-MOUNTED SERVICE DESIGNATION

TYPE H SERVICE, 28'-10" — TYPE OF INSTALLATION AND POLE HEIGHT ABOVE GRADE

FLASHING BEACON

NEW	EXISTING	
R	R	FLASHING BEACON (ONE VEHICLE SIGNAL HEAD WITH BACKPLATE AND VISOR) "R" INDICATES RED INDICATION, "Y" INDICATES YELLOW INDICATION
Y Y	Y Y	FLASHING BEACON WITH TYPE 15-FBS STANDARD AND A SIGN.
R R	R R	FLASHING BEACON WITH TYPES 9, 9A OR 9B SIGN UNLESS OTHERWISE SPECIFIED OR INDICATED

SIGNAL EQUIPMENT

NEW	EXISTING	
C	C	PEDESTRIAN SIGNAL HEAD "C" INDICATES COUNTDOWN PEDESTRIAN HEAD
		PUSH BUTTON ASSEMBLY POST
		PEDESTRIAN BARRICADE
		VEHICLE SIGNAL HEAD (WITH BACKPLATE AND 3-SECTIONS: RED, YELLOW AND GREEN)
		VEHICLE SIGNAL HEAD WITH ANGLE VISOR
PV	PV	MODIFICATIONS OF BASIC SYMBOL: "L" INDICATES ALL NON-ARROW SECTIONS LOUVERED "LG" INDICATES LOUVERED GREEN SECTION ONLY "PV" INDICATES ALL 12" SECTIONS PROGRAMMED VISIBILITY "8" INDICATES ALL 8" SECTIONS (ONLY WHEN SPECIFIED)
		VEHICLE SIGNAL HEAD CONSISTING OF RED, YELLOW AND GREEN LEFT ARROW SECTIONS
		VEHICLE SIGNAL HEAD CONSISTING OF RED AND YELLOW SECTIONS WITH AN UP GREEN ARROW SECTION
		VEHICLE SIGNAL HEAD (5 SECTION) CONSISTING OF RED, YELLOW AND GREEN SECTIONS WITH YELLOW AND GREEN RIGHT ARROW SECTIONS
		TYPE 15TS STANDARD WITH VEHICLE SIGNAL HEAD AND LUMINAIRE
		TYPE 21TS STANDARD WITH VEHICLE SIGNAL HEAD AND LUMINAIRE
		STANDARD WITH LUMINAIRE AND SIGNAL MAST ARMS AND ATTACHED VEHICLE SIGNAL HEADS
		TYPE 1 STANDARD WITH ATTACHED VEHICLE SIGNAL HEADS
		STANDARD WITH A SIGNAL MAST ARM, ATTACHED VEHICLE SIGNAL HEADS AND INTERNALLY ILLUMINATED STREET NAME SIGN
		CONTROLLER ASSEMBLY. DOOR INDICATES FRONT OF CABINET

SIGNAL EQUIPMENT Cont

NEW	EXISTING	
		GUARD POST
		TYPE 1 STANDARD WITH RAMP METERING SIGN
		OPTICAL DETECTOR FOR THE EMERGENCY VEHICLE DETECTION SYSTEM

NOTES:

1. All signal sections shall be 12" unless shown otherwise.
2. Signal heads shall be provided with backplates unless shown otherwise.

ILLUMINATED OVERHEAD SIGN

NEW	EXISTING	
		SINGLE POST, SINGLE ILLUMINATED SIGN, BALANCED BUTTERFLY
		SINGLE POST, DOUBLE ILLUMINATED SIGN, BALANCED BUTTERFLY
		SINGLE POST, SINGLE ILLUMINATED SIGN, FULL CANTILEVER
		DOUBLE POST, SINGLE ILLUMINATED SIGN
		SINGLE ILLUMINATED SIGN MOUNTED ON STRUCTURE
		DOUBLE POST, SINGLE ILLUMINATED SIGN WITH ELECTROLIER

STATE OF CALIFORNIA
DEPARTMENT OF TRANSPORTATION

ELECTRICAL SYSTEMS (LEGEND AND ABBREVIATIONS)

NO SCALE

RSP ES-1B DATED JULY 19, 2013 SUPERSEDES STANDARD PLAN ES-1B DATED MAY 20, 2011 - PAGE 426 OF THE STANDARD PLANS BOOK DATED 2010.

REVISED STANDARD PLAN RSP ES-1B

2010 REVISED STANDARD PLAN RSP ES-1B

7-15-13

Dist	COUNTY	ROUTE	POST MILES TOTAL PROJECT	SHEET No.	TOTAL SHEETS
04	SM,Ala	92	R14.4/R18.8, R0.0/R2.6	91	117

Theresa Gabriel
REGISTERED ELECTRICAL ENGINEER

July 19, 2013
PLANS APPROVAL DATE

REGISTERED PROFESSIONAL ENGINEER Theresa Aziz Gabriel No. E15129 Exp. 6-30-14 ELECTRICAL STATE OF CALIFORNIA

THE STATE OF CALIFORNIA OR ITS OFFICERS OR AGENTS SHALL NOT BE RESPONSIBLE FOR THE ACCURACY OR COMPLETENESS OF SCANNED COPIES OF THIS PLAN SHEET.

TO ACCOMPANY PLANS DATED 5-27-14

EQUIPMENT IDENTIFICATION

ILLUMINATED SIGN IDENTIFICATION NUMBER:

SIGN No. 12345

10 ISL SCI 1.0

- SIGN NUMBER - PLACE ON POST OR STRUCTURE
- TRANSFORMER RATING (kVA)
- LIGHTING CONTROL TYPE
- NUMBER AND TYPE OF FIXTURES

DO NOT PLACE ON STANDARD OR STRUCTURE

ELECTROLIER OR EQUIPMENT IDENTIFICATION NUMBER:

12345 - 15'-0"

- MAST ARM LENGTH, IF SHOWN. DO NOT PLACE ON STANDARD OR STRUCTURE
- EQUIPMENT NUMBER - PLACE ON STANDARD OR STRUCTURE. EXISTING EQUIPMENT NUMBERS ARE SHOWN IN PARENTHESIS

CONDUIT AND CONDUCTOR IDENTIFICATION:

1½"C, 2#10, 15#14, 2 DLC, 12P#18

- PAIR
- NUMBER AND SIZE OF CONDUCTORS AND CABLES
- SIZE OF CONDUIT IN INCHES

ø1, ø2, ø2P, etc.	TRAFFIC PHASE IDENTIFICATION FOR SIGNAL FACES, DETECTORS AND PHASE DIAGRAMS
1 2 3	LEGEND NUMBERS
A B C	EQUIPMENT, SIGNAL POLES, INSTALLATION OR ITEMS
1 2 3	CONDUIT RUN NUMBERS

SIGNAL AND LIGHTING STANDARD (TYPICAL DESIGNATION):

19A - 3 - 100

- WIND VELOCITY = 100 mph
- CASE 3 ARM LOADING
- STANDARD TYPE
- STANDARD PLAN SHEET NUMBER
- DETAIL, NUMBER, SECTION, TYPE OR ELEVATION

MISCELLANEOUS EQUIPMENT

NEW	EXISTING	
CMS	cms	CHANGEABLE MESSAGE SIGN
		CLOSED CIRCUIT TELEVISION CAMERA
		HIGHWAY ADVISORY RADIO POLE AND ANTENNA
EMS	ems	EXTINGUISHABLE MESSAGE SIGN
M V	m v	DETECTION DEVICE M = MICROWAVE SENSOR V = VIDEO IMAGE SENSOR

WIRING DIAGRAM LEGEND

----	EXTERNAL CONDUCTOR
	CONDUCTOR OR BUS
	TIE POINT
	CONTACTOR COIL
	CONTACTOR, NO CONTACT
	TERMINAL BLOCKS
	CONTACTOR, NC CONTACT
	ENCLOSURE BOND
	GROUNDING ELECTRODE
	CIRCUIT BREAKER
	RECEPTACLE

PULL BOXES

NEW	EXISTING	
		PULL BOX, No. 5 UNLESS OTHERWISE INDICATED OR NOTED
3	9A(21)	PULL BOX, ADDITIONAL DESIGNATIONS OR DESCRIPTIONS

3 No. 3½ PULL BOX
5 No. 5 PULL BOX
6 No. 6 PULL BOX
7 No. 7 (CEILING PULL BOX)
8 No. 8 (PENDANT SOFFIT PULL BOX)
9 No. 9 PULL BOX
9A No. 9A PULL BOX

(C) COMMUNICATIONS PULL BOX
(E) PULL BOX WITH EXTENSION
(S) SPRINKLER CONTROL PULL BOX
(21) ANCHOR BOLTS AND CONDUIT FOR FUTURE INSTALLATION OF TYPE 21 STANDARD
(T) TRAFFIC PULL BOX

VEHICLE DETECTORS

5 J 9 U

- VEHICLE DETECTOR DESIGNATION
- U = UPPER
  L = LOWER
- SLOT NUMBER IN INPUT FILE
- INPUT FILE (I OR J)
- PHASE

NEW	EXISTING	
		TYPE A DETECTOR LOOP. OUTLINE OF SAWCUT SHOWN
		TYPE B DETECTOR LOOP. OUTLINE OF SAWCUT SHOWN
		TYPE C DETECTOR LOOP. OUTLINE OF SAWCUT SHOWN
		TYPE D DETECTOR LOOP. OUTLINE OF SAWCUT SHOWN
		TYPE E DETECTOR LOOP. OUTLINE OF SAWCUT SHOWN
		TYPE Q DETECTOR LOOP. OUTLINE OF SAWCUT SHOWN
		MAGNETIC DETECTOR
DH	dh	DETECTOR HANDHOLE
		MICROWAVE OR VIDEO DETECTION ZONE

STATE OF CALIFORNIA
DEPARTMENT OF TRANSPORTATION

ELECTRICAL SYSTEMS (LEGEND AND ABBREVIATIONS)

NO SCALE

RSP ES-1C DATED JULY 19, 2013 SUPERSEDES STANDARD PLAN ES-1C DATED MAY 20, 2011 - PAGE 427 OF THE STANDARD PLANS BOOK DATED 2010.

REVISED STANDARD PLAN RSP ES-1C

2010 REVISED STANDARD PLAN RSP ES-1C

7-11-13

DIST	COUNTY	ROUTE	POST MILES TOTAL PROJECT	SHEET No.	TOTAL SHEETS
04	SM,Ala	92	R14.4/R18.8, R0.0/R2.6	92	117

REGISTERED CIVIL ENGINEER 3-5-14 DATE

5-27-14
PLANS APPROVAL DATE

REGISTERED PROFESSIONAL ENGINEER
CHRISTOPHER T. LEE
No. C38395
Exp. 3-31-15
CIVIL
STATE OF CALIFORNIA

The State of California or its officers or agents shall not be responsible for the accuracy or completeness of electronic copies of this plan sheet.

INDEX TO PLANS

SHEET NO.	TITLE
1	PROJECT PLAN
2	GENERAL PLAN 1
3	GENERAL PLAN 2
4	DECK REHAB DETAILS - 1
5	DECK REHAB DETAILS - 2
6	DECK REHAB DETAILS - 3
7	DECK REHAB DETAILS - 4
8	DECK REHAB DETAILS - 5
9	DECK REHAB DETAILS - 6
10	DECK REHAB DETAILS - 7
11	DECK REHAB DETAILS - 8
12	DECK REHAB DETAILS - 9
13	DECK REHAB DETAILS - 10
14	TYPICAL SECTION - STEEL GIRDER SPANS, LIGHTWEIGHT CONCRETE DECK
15	TYPICAL SECTION - STEEL GIRDER SPANS, ORTHOTROPIC STEEL DECK
16	TYPICAL SECTION - CONCRETE TRESTLE SPAN
17	EXISTING STEEL DECK SPLICE PLATES LOCATION - 1
18	EXISTING STEEL DECK SPLICE PLATES LOCATION - 2
19	EXISTING STEEL DECK SPLICE PLATES LOCATION - 3
20	STEEL DECK OVERLAY CONFORM DETAILS
21	DECK JOINT DETAILS
22	CONCRETE CURB & RAILING REPLACEMENT DETAILS - TRESTLE SPAN
23	METAL RAILING REPLACEMENT DETAILS
24	CONCRETE MEDIAN BARRIER REPLACEMENT DETAILS - STEEL GIRDER SPAN
25	MISCELLANEOUS DETAILS
26	JOINT SEAL AND REPAIR TABLES

STANDARD PLANS 2010

SHEET No.	TITLE
A10A	ABBREVIATIONS (SHEET 1 OF 2)
RSP A10B	ABBREVIATIONS (SHEET 2 OF 2)
B6-21	JOINT SEALS (MAXIMUM MR = 2")

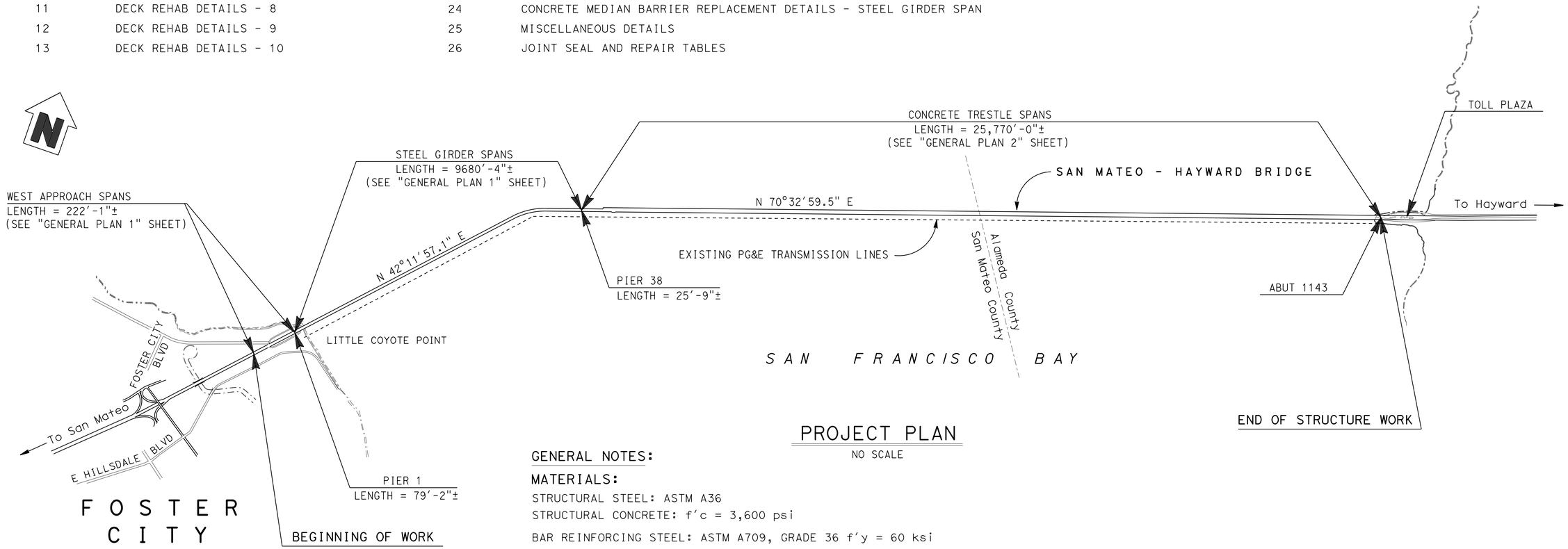

PROJECT PLAN

NO SCALE

NOTE:
THE CONTRACTOR SHALL VERIFY ALL CONTROLLING FIELD DIMENSIONS BEFORE ORDERING OR FABRICATING ANY MATERIAL.

GENERAL NOTES:

MATERIALS:

STRUCTURAL STEEL: ASTM A36
STRUCTURAL CONCRETE: f'c = 3,600 psi
BAR REINFORCING STEEL: ASTM A709, GRADE 36 f'y = 60 ksi
TUBULAR ALUMINUM RAILS AND SLEEVES ASTM B221; 6061-T6 EXTRUDED ALUMINUM & ALLOY TUBING
ALUMINUM SHIM: ASTM B209; 6061-T6 PLATE
FINGER JOINT BOLTS AND NUTS: ASTM A325
METAL RAILING BOLTS & NUTS: ASTM A307
MEDIAN/BARRIER RAIL ANCHOR BOLTS: ASTM A307

SAN MATEO - HAYWARD BRIDGE
DECK REHABILITATION
PROJECT PLAN

DESIGN ENGINEER 03-04-14	DESIGN	BY C. T. Lee	CHECKED H. Su	LOAD FACTOR DESIGN	LIVE LOADING: HS20-44 AND ALTERNATIVE AND PERMIT DESIGN LOAD
	DETAILS	BY B. Ballesteros	CHECKED C. T. Lee	LAYOUT	BY B. Ballesteros / CHECKED H. Su
	QUANTITIES	BY C. T. Lee	CHECKED H. Su	SPECIFICATIONS	BY M. Kopsa / PLANS AND SPECS COMPARED M. Kopsa

STATE OF CALIFORNIA
DEPARTMENT OF TRANSPORTATION

DIVISION OF MAINTENANCE
STRUCTURE MAINTENANCE AND INVESTIGATIONS

BRIDGE NO. 35-0054
POST MILE R14.44

STRUCTURES MAINTENANCE GENERAL PLAN SHEET (ENGLISH) (REV. 09-01-10)

ORIGINAL SCALE IN INCHES FOR REDUCED PLANS 0 1 2 3

UNIT: 3486
PROJECT NUMBER & PHASE: 0400000441
CONTRACT NO.: 04-041004

DISREGARD PRINTS BEARING EARLIER REVISION DATES
REVISION DATES 03-04-14 02-27-13 09-10-13
SHEET 1 OF 26

FILE => 0400000044wa001.dgn

USERNAME => s128787 DATE PLOTTED => 18-JUN-2014 TIME PLOTTED => 12:35

DIST	COUNTY	ROUTE	POST MILES TOTAL PROJECT	SHEET No.	TOTAL SHEETS
04	SM, Ala	92	R14.4/R18.8, R0.0/R2.6	93	117

REGISTERED CIVIL ENGINEER 3-5-14 DATE

5-27-14
PLANS APPROVAL DATE

REGISTERED PROFESSIONAL ENGINEER CHRISTOPHER T. LEE No. C38395 Exp. 3-31-15 CIVIL STATE OF CALIFORNIA

The State of California or its officers or agents shall not be responsible for the accuracy or completeness of electronic copies of this plan sheet.

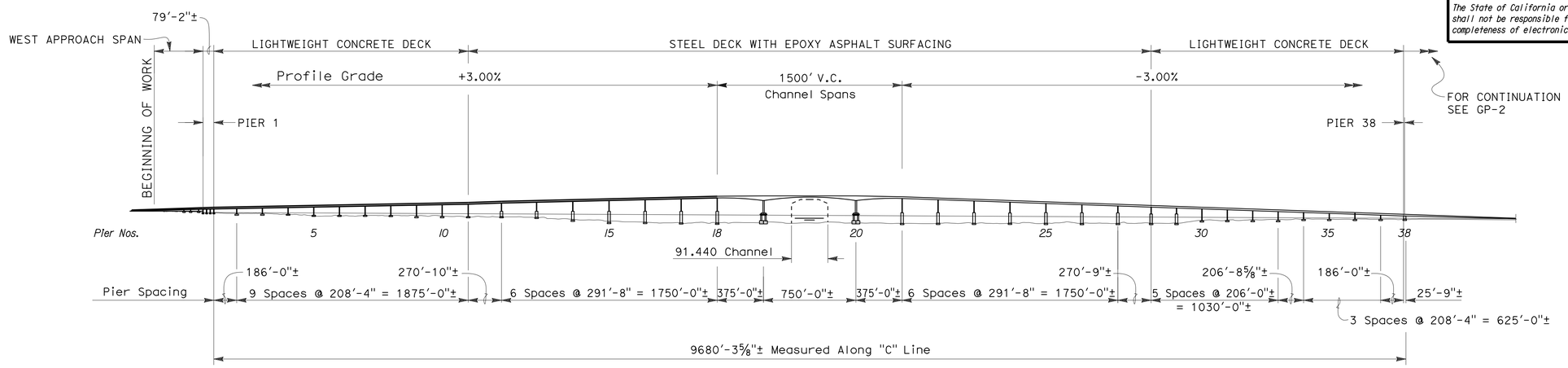

ELEVATION (EXISTING BRIDGE)

NO SCALE

LEGEND:

INDICATES LIMITS OF REMOVING ½" OF EXISTING LIGHTWEIGHT CONCRETE DECK, PREPARE CONCRETE BRIDGE DECK SURFACE, AND PLACE ¾" POLYESTER CONCRETE OVERLAY. EXCEPT FOR EDGE OF DECK SPALLS, BEFORE PLACING DECK OVERLAY, REMOVE UNSOUND CONCRETE AND PATCH DECK WITH RAPID SETTING CONCRETE. FOR EDGE OF DECK SPALLS, USE STRUCTURAL CONCRETE. SEE "DECK REHAB DETAILS - 1, 3 & 4 SHEETS.

INDICATES LIMITS OF REMOVING EXISTING 2"± THICK EPOXY ASPHALT CONCRETE OVERLAY ON ORTHOTROPIC STEEL DECK. PREPARE STEEL DECK SURFACE AND PLACE NEW 2"± THICK POLYESTER CONCRETE OVERLAY. SEE "DECK REHAB DETAILS - 1,2 & 3" SHEETS.

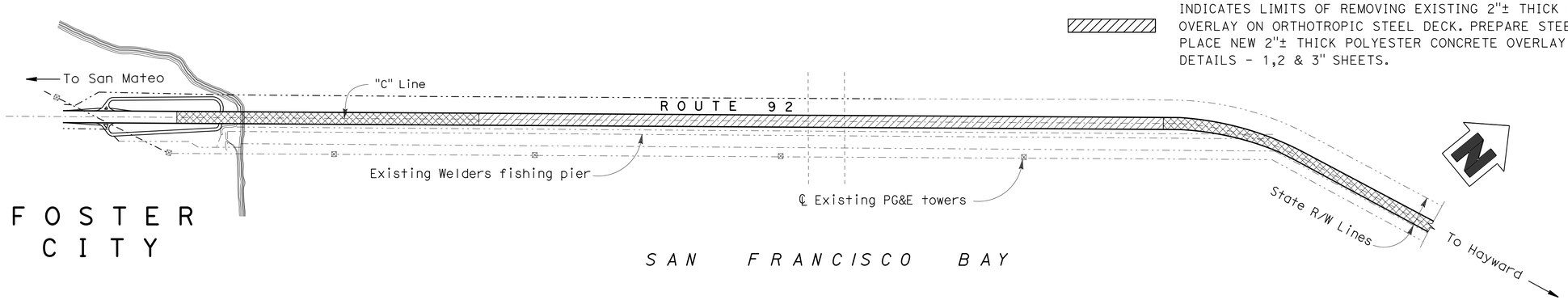

PLAN

NO SCALE

NOTE:

THE CONTRACTOR SHALL VERIFY ALL CONTROLLING FIELD DIMENSIONS BEFORE ORDERING OR FABRICATING ANY MATERIAL.

SAN MATEO - HAYWARD BRIDGE

DECK REHABILITATION

GENERAL PLAN 1

	BY	CHECKED			
DESIGN	C. T. Lee	H. Su	LOAD FACTOR DESIGN	LIVE LOADING: HS20-44 AND ALTERNATIVE AND PERMIT DESIGN LOAD	
DETAILS	B. Ballesteros	C. T. Lee	LAYOUT	B. Ballesteros	H. Su
QUANTITIES	C. T. Lee	H. Su	SPECIFICATIONS	M. Kopsa	PLANS AND SPECS COMPARED M. Kopsa

Hongyuan Su
DESIGN ENGINEER 03-04-14

STATE OF CALIFORNIA
DEPARTMENT OF TRANSPORTATION

DIVISION OF MAINTENANCE
STRUCTURE MAINTENANCE AND INVESTIGATIONS

BRIDGE NO. 35-0054
POST MILE R14.44

STRUCTURES MAINTENANCE GENERAL PLAN SHEET (ENGLISH) (REV. 09-01-10)

ORIGINAL SCALE IN INCHES FOR REDUCED PLANS 0 1 2 3

UNIT: 3486
PROJECT NUMBER & PHASE: 0400000441
CONTRACT NO.: 04-041004

DISREGARD PRINTS BEARING EARLIER REVISION DATES

REVISION DATES 03-21-12 12-26-12 09-10-13

SHEET 2 OF 26

FILE => 0400000044wa002.dgn

USERNAME => s128787 DATE PLOTTED => 18-JUN-2014 TIME PLOTTED => 12:35

DIST	COUNTY	ROUTE	POST MILES TOTAL PROJECT	SHEET No.	TOTAL SHEETS
04	SM,Ala	92	R14.4/R18.8, R0.0/R2.6	94	117

REGISTERED CIVIL ENGINEER 3-5-14 DATE

5-27-14
PLANS APPROVAL DATE

REGISTERED PROFESSIONAL ENGINEER CHRISTOPHER T. LEE No. C38395 Exp. 3-31-15 CIVIL STATE OF CALIFORNIA

The State of California or its officers or agents shall not be responsible for the accuracy or completeness of electronic copies of this plan sheet.

SAN MATEO - HAYWARD BRIDGE BR NO 35-0054

QUANTITIES

WORK AREA MONITORING (BRIDGE)	LUMP	SUM
RAPID SETTING CONCRETE (PATCH)	5,684	CF
REPAIR SPALLED SURFACE AREA	2,971	SQFT
REMOVE EPOXY ASPHALT CONCRETE OVERLAY	418,935	SQFT
REMOVE CONCRETE DECK SURFACE	347,624	SQFT
SALVAGE ALUMINOUS POST	9	EA
RECONSTRUCT ALUMINUM RAILING	96	LF
FURNISH POLYESTER CONCRETE OVERLAY (ZINC)	78,167	CF
PLACE POLYESTER CONCRETE OVERLAY (ZINC)	418,935	SQFT
REMOVE UNSOUND CONCRETE	5,684	CF
PREPARE CONCRETE BRIDGE DECK SURFACE	3,155,223	SQFT
FURNISH POLYESTER CONCRETE OVERLAY	26,072	CF
PLACE POLYESTER CONCRETE OVERLAY	347,624	SQFT
TREAT BRIDGE DECK	2,807,599	SQFT
FURNISH BRIDGE DECK TREATMENT MATERIAL	40,700	GAL
PREPARE STEEL BRIDGE DECK SURFACE	418,935	SQFT
RECONSTRUCT DEBRIS SEAL CATCHMENT	10	LF
BRIDGE REMOVAL (PORTION)	LUMP	SUM
STRUCTURAL CONCRETE, BRIDGE	9	CY

QUANTITIES

CLEAN EXPANSION JOINT	1,600	LF
FURNISH PRECAST CONCRETE MEDIAN BARRIER UNIT (17′)	1	EA
FURNISH PRECAST CONCRETE RAIL AND CURB UNIT (30′)	1	EA
ERECT PRECAST CONCRETE MEDIAN BARRIER UNIT	1	EA
ERECT PRECAST CONCRETE RAIL AND CURB UNIT	1	EA
JOINT SEAL MODIFIED (MR 1/2")	1,600	LF
BAR REINFORCING STEEL (BRIDGE)	80	LB
HEAT STRAIGHTEN STEEL PARAPET	LUMP	SUM
POWER TOOL CLEAN (STEEL SURFACE) AND PAINT ZINC-RICH PRIMER (ORGANIC VEHICLE TYPE)	321	SQFT
POWER TOOL CLEAN (HEAT STRAIGHTEN STEEL PARAPET) AND PAINT UNDERCOATS AND FINISH COATS	339	SQFT
FURNISH METAL PIER AND FLOOR BEAM MARKERS	314	LB
MISCELLANEOUS METAL (BRIDGE)	450	LB

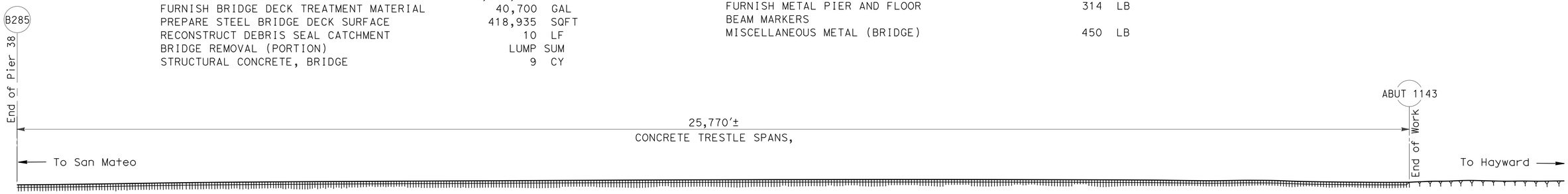

ELEVATION (EXISTING BRIDGE)

NO SCALE

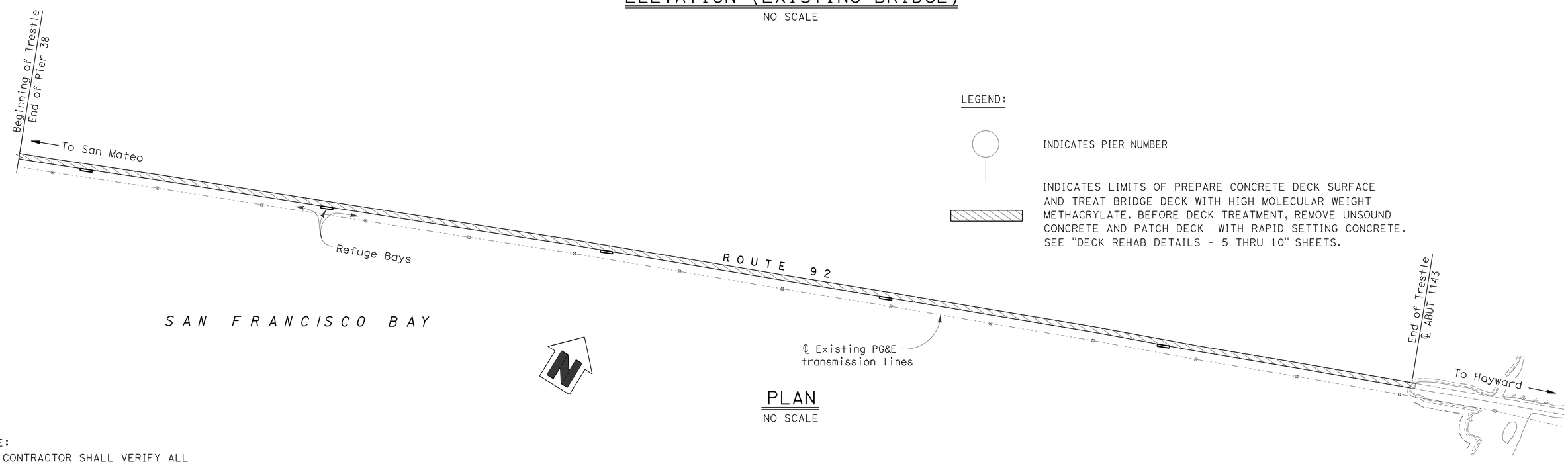

PLAN

NO SCALE

LEGEND:

INDICATES PIER NUMBER

INDICATES LIMITS OF PREPARE CONCRETE DECK SURFACE AND TREAT BRIDGE DECK WITH HIGH MOLECULAR WEIGHT METHACRYLATE. BEFORE DECK TREATMENT, REMOVE UNSOUND CONCRETE AND PATCH DECK WITH RAPID SETTING CONCRETE. SEE "DECK REHAB DETAILS - 5 THRU 10" SHEETS.

NOTE:

THE CONTRACTOR SHALL VERIFY ALL CONTROLLING FIELD DIMENSIONS BEFORE ORDERING OR FABRICATING ANY MATERIAL.

SAN MATEO - HAYWARD BRIDGE

DECK REHABILITATION

GENERAL PLAN 2

	BY	CHECKED			
DESIGN	C. T. Lee	H. Su	LOAD FACTOR DESIGN	LIVE LOADING: HS20-44 AND ALTERNATIVE AND PERMIT DESIGN LOAD	
DETAILS	B. Ballesteros	C. T. Lee	LAYOUT	B. Ballesteros	H. Su
QUANTITIES	C. T. Lee	H. Su	SPECIFICATIONS	M. Kopsa	PLANS AND SPECS COMPARED M. Kopsa

DESIGN ENGINEER 03-04-14

STATE OF CALIFORNIA DEPARTMENT OF TRANSPORTATION

DIVISION OF MAINTENANCE STRUCTURE MAINTENANCE AND INVESTIGATIONS

BRIDGE NO. 35-0054
POST MILE R14.44

STRUCTURES MAINTENANCE GENERAL PLAN SHEET (ENGLISH) (REV. 09-01-10)

ORIGINAL SCALE IN INCHES FOR REDUCED PLANS 0 1 2 3

UNIT: 3486
PROJECT NUMBER & PHASE: 0400000441
CONTRACT NO.: 04-041004

DISREGARD PRINTS BEARING EARLIER REVISION DATES

REVISION DATES 03-03-14 03-04-14 02-26-14

SHEET 3 OF 26

FILE => 0400000044wa003.dgn

USERNAME => s128787 DATE PLOTTED => 18-JUN-2014 TIME PLOTTED => 12:35

DIST	COUNTY	ROUTE	POST MILES TOTAL PROJECT	SHEET No.	TOTAL SHEETS
04	SM, Ala	92	R14.4/R18.8, R0.0/R2.6	95	117

REGISTERED CIVIL ENGINEER 3-5-14 DATE

5-27-14
PLANS APPROVAL DATE

REGISTERED PROFESSIONAL ENGINEER CHRISTOPHER T. LEE No. C38395 Exp. 3-31-15 CIVIL STATE OF CALIFORNIA

The State of California or its officers or agents shall not be responsible for the accuracy or completeness of electronic copies of this plan sheet.

LEGEND (FOR THIS SHEET ONLY):

INDICATES EXISTING STRUCTURE

PIER NUMBER

INDICATES SECTION CUT, SEE "DECK JOINT DETAILS" SHEET

INDICATES LOCATION OF EXISTING FINGER JOINT

INDICATES LOCATION OF EXISTING JOINT SEAL REMOVAL. CLEAN EXPANSION JOINT AND PLACE NEW JOINT SEAL. SEE DETAILS IN "DECK JOINT DETAILS" SHEET.

INDICATES LIMITS OF REMOVE ½" OF EXISTING LIGHTWEIGHT CONCRETE DECK, PREPARE CONCRETE BRIDGE DECK SURFACE, AND PLACE ¾" POLYESTER CONCRETE OVERLAY. EXCEPT FOR EDGE OF DECK SPALLS, BEFORE PLACING DECK OVERLAY, FOR REPAIR TRAFFIC LANES SPALLS REMOVE UNSOUND CONCRETE, AND PATCH DECK WITH RAPID SETTING CONCRETE. FOR EDGE OF DECK SPALLS, REPAIR WITH STRUCTURAL CONCRETE. SEE DETAILS IN "MISCELLANEOUS DETAILS" SHEET.

INDICATES EXISTING METAL BARRIER RAIL. RECONSTRUCT DAMAGED TUBULAR ALUMINUM RAIL WHERE OCCURRED. REPAIR DENTED STEEL PARAPET SURFACE AREA BY POWER TOOL CLEAN AND HEAT STRAIGHTEN STEEL PARAPET, AND PAINT UNDER COATS AND FINISH COATS. SEE DETAILS IN "METAL RAILING REPLACEMENT SHEET".

INDICATES EXISTING CONCRETE MEDIAN BARRIER. REMOVE UNSOUND CONCRETE AND REPAIR SPALLED AREAS OF BARRIER WHERE DAMAGE OCCURRED. SEE DETAILS IN "CONCRETE MEDIAN BARRIER REPLACEMENT DETAILS - STEEL GIRDER SPAN" SHEET

INDICATES LIMITS OF REMOVE EXISTING 2"± THICK EPOXY ASPHALT CONCRETE OVERLAY ON ORTHOTROPIC STEEL DECK. PREPARE STEEL DECK SURFACE AND PLACE NEW 2"± THICK POLYESTER CONCRETE OVERLAY (ZINC). SEE DETAILS IN "STEEL DECK OVERLAY CONFORM DETAIL" SHEET.

ADJUST FINGER JOINT BY TIGHTENING BOLTS AND/OR NUTS TO ELIMINATE RATTLING SOUND. FOR FINGER JOINT DETAILS, SEE "TYPICAL SECTION-STEEL GIRDER SPANS-ORTHOTROPIC STEEL DECK" SHEET.

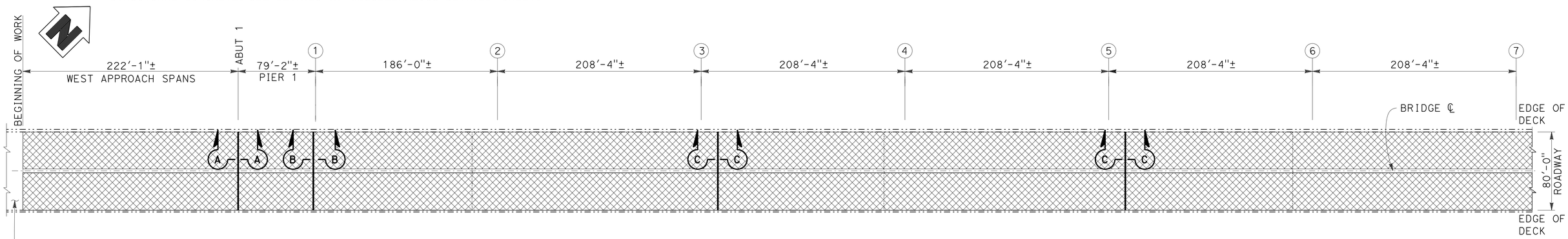

PARTIAL PLAN
SCALE: 1":50'

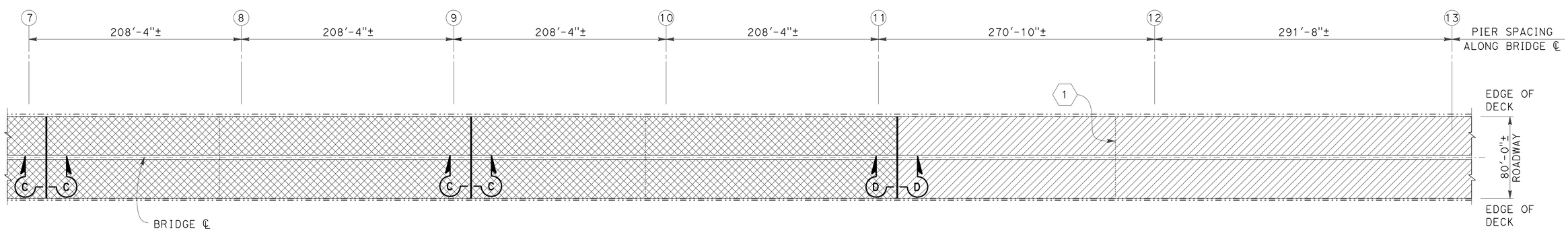

PARTIAL PLAN
SCALE: 1":50'

NOTES:

1. FOR BRIDGE DECK CROSS SECTION, SEE "TYPICAL SECTION-STEEL GIRDER SPANS, LIGHTWEIGHT CONCRETE DECK" SHEETS.
2. FOR STEEL DECK SPLICE PLATES LOCATION, SEE "EXISTING STEEL DECK SPLICE PLATES LOCATION 1 - 3" SHEETS.
3. FOR DECK JOINT AND CONFORM DETAILS SEE "DECK JOINT DETAILS" SHEET AND "STEEL DECK OVERLAY CONFORM DETAILS" SHEETS.

NOTE:

THE CONTRACTOR SHALL VERIFY ALL CONTROLLING FIELD DIMENSIONS BEFORE ORDERING OR FABRICATING ANY MATERIAL.

	BY	CHECKED
DESIGN	C. T. Lee	H. Su
DETAILS	B. Ballesteros	C. T. Lee
QUANTITIES	C. T. Lee	H. Su

STATE OF CALIFORNIA
DEPARTMENT OF TRANSPORTATION

DIVISION OF MAINTENANCE
STRUCTURE MAINTENANCE AND INVESTIGATIONS

BRIDGE NO. 35-0054
POST MILE R14.44

SAN MATEO - HAYWARD BRIDGE
DECK REHABILITATION
DECK REHAB DETAILS - 1

STRUCTURES MAINTENANCE DETAIL SHEET (ENGLISH) (REV. 09-01-10)

ORIGINAL SCALE IN INCHES FOR REDUCED PLANS 0 1 2 3

UNIT: 3486
PROJECT NUMBER & PHASE: 0400000441
CONTRACT NO.: 04-041004

DISREGARD PRINTS BEARING EARLIER REVISION DATES

REVISION DATES 03-04-14 09-10-13 02-17-14

SHEET 4 OF 26

FILE => 0400000044we001.dgn

USERNAME => s128787 DATE PLOTTED => 18-JUN-2014 TIME PLOTTED => 12:35

DIST	COUNTY	ROUTE	POST MILES TOTAL PROJECT	SHEET No.	TOTAL SHEETS
04	SM,Ala	92	R14.4/R18.8, R0.0/R2.6	96	117

REGISTERED CIVIL ENGINEER 4-17-14 DATE

5-27-14
PLANS APPROVAL DATE

REGISTERED PROFESSIONAL ENGINEER CHRISTOPHER T. LEE No. C38395 Exp. 3-31-15 CIVIL STATE OF CALIFORNIA

The State of California or its officers or agents shall not be responsible for the accuracy or completeness of electronic copies of this plan sheet.

LEGEND (FOR THIS SHEET ONLY):

INDICATES EXISTING STRUCTURE

PIER NUMBER

INDICATES SECTION CUT, SEE "DECK JOINT DETAILS" SHEET

INDICATES LOCATION OF EXISTING FINGER JOINT

INDICATES LOCATION OF EXISTING JOINT SEAL REMOVAL. CLEAN EXPANSION JOINT AND PLACEMENT OF NEW JOINT SEAL. SEE DETAILS IN "DECK JOINT DETAILS" SHEET.

INDICATES EXISTING METAL BARRIER RAIL. REPLACE DAMAGED TUBULAR ALUMINUM RAIL WHERE OCCURED. REPAIR DENTED STEEL STEEL BARRIER SURFACE AREA BY POWER TOOL CLEAN AND HEAT STRAIGHTEN STEEL PARAPET, AND PAINT UNDERCOATS AND FINISH COATS. SEE DETAILS IN "METAL RAILING REPLACEMENT SHEET".

INDICATES EXISTING CONCRETE MEDIAN BARRIER. REMOVE UNSOUND CONCRETE AND REPAIR SPALLED SURFACE AREAS OF BARRIER WHERE DAMAGE OCCURRED. PLACE MISSING METAL FLOOR BEAM SIGN ON TOP OF MEDIAN BARRIER. SEE DETAILS IN "CONCRETE MEDIAN BARRIER REPLACEMENT DETAIL - STEEL GIRDER SPAN" SHEET.

INDICATES LIMITS OF REMOVE EXISTING 2"± THICK EPOXY ASPHALT CONCRETE OVERLAY ON ORTHOTROPIC STEEL DECK. PREPARE STEEL DECK SURFACE AND PLACE NEW 2"± THICK POLYESTER CONCRETE OVERLAY (ZINC). SEE DETAILS IN "STEEL DECK OVERLAY CONFORM DETAILS" SHEET.

2 REPLACE A SECTION OF CONCRETE MEDIAN BARRIER RAIL AT SPAN 18. SEE DETAILS IN "CONCRETE MEDIAN BARRIER REPLACEMENT DETAIL-STEEL GIRDER SPAN" SHEET.

3 REPLACE DEBRIS SEAL CATCHMENT UNDER FINGER JOINT. SEE DETAILS IN "TYPICAL SECTION - STEEL GIRDER SPANS - ORTHOTROPIC STEEL DECK"." SHEET.

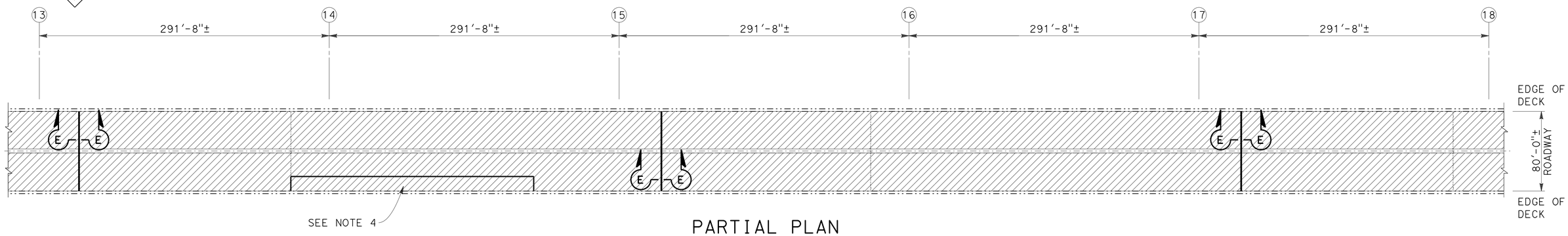

PARTIAL PLAN
SCALE: 1":50'

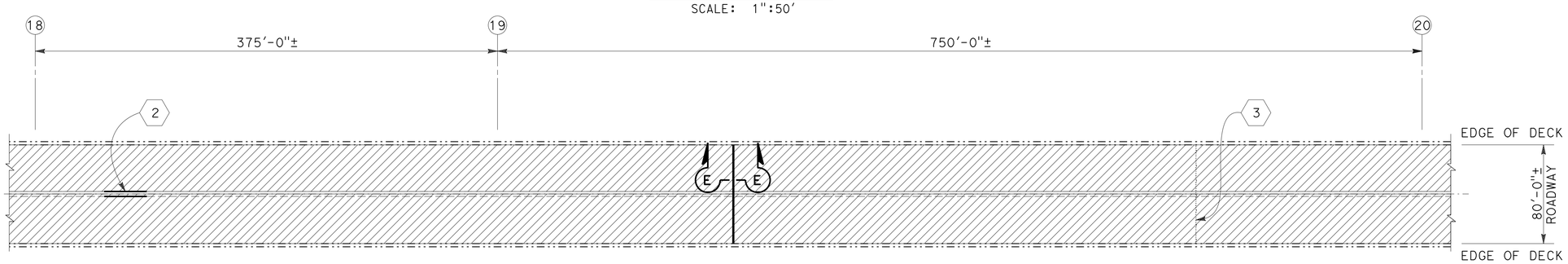

PARTIAL PLAN
SCALE: 1":50'

NOTES:

1. FOR BRIDGE DECK CROSS SECTION, SEE "TYPICAL SECTION-STEEL GIRDER SPANS, ORTHOTROPIC STEEL DECK" SHEETS.
2. FOR STEEL DECK SPLICE PLATES LOCATION, SEE "EXISTING SPLICE PLATES LOCATION" SHEETS.
3. FOR DECK JOINT AND CONFORM DETAILS SEE "DECK JOINT DETAILS" SHEET AND "STEEL DECK OVERLAY CONFORM DETAILS" SHEETS.
4. REMOVE EPOXY ASPHALT CONCRETE OVERLAY. ALSO INCLUDES REMOVING AN APPROXIMATE 10 FOOT WIDE BY 200 FOOT LONG (2" THICK) POLYESTER CONCRETE OVERLAY, IN LANE 3 OF EASTBOUND SPAN 14.

NOTE:

THE CONTRACTOR SHALL VERIFY ALL CONTROLLING FIELD DIMENSIONS BEFORE ORDERING OR FABRICATING ANY MATERIAL.

	BY	CHECKED
DESIGN	C. T. Lee	H. Su
DETAILS	B. Ballesteros	C. T. Lee
QUANTITIES	C. T. Lee	H. Su

STATE OF CALIFORNIA
DEPARTMENT OF TRANSPORTATION

DIVISION OF MAINTENANCE
STRUCTURE MAINTENANCE AND INVESTIGATIONS

BRIDGE NO. 35-0054
POST MILE R14.44

SAN MATEO - HAYWARD BRIDGE
DECK REHABILITATION
DECK REHAB DETAILS - 2

STRUCTURES MAINTENANCE DETAIL SHEET (ENGLISH) (REV. 09-01-10)

ORIGINAL SCALE IN INCHES FOR REDUCED PLANS 0 1 2 3

UNIT: 3486
PROJECT NUMBER & PHASE: 0400000441
CONTRACT NO.: 04-041004

DISREGARD PRINTS BEARING EARLIER REVISION DATES

REVISION DATES 04-12-12 12-26-12 09-10-13 04-17-14

SHEET 5 OF 26

FILE => 0400000044we002.dgn

USERNAME => DATE PLOTTED => 18-JUN-2014 TIME PLOTTED => 12:35

DIST	COUNTY	ROUTE	POST MILES TOTAL PROJECT	SHEET No.	TOTAL SHEETS
04	SM,Ala	92	R14.4/R18.8, R0.0/R2.6	97	117

REGISTERED CIVIL ENGINEER 3-5-14 DATE

5-27-14
PLANS APPROVAL DATE

REGISTERED PROFESSIONAL ENGINEER CHRISTOPHER T. LEE No. C38395 Exp. 3-31-15 CIVIL STATE OF CALIFORNIA

The State of California or its officers or agents shall not be responsible for the accuracy or completeness of electronic copies of this plan sheet.

LEGEND (FOR THIS SHEET ONLY):

INDICATES EXISTING STRUCTURE

PIER NUMBER

INDICATES SECTION CUT, SEE "DECK JOINT DETAILS" SHEET

INDICATES LOCATION OF EXISTING FINGER JOINT

INDICATES LOCATION OF EXISTING JOINT SEAL REMOVAL. CLEAN EXPANSION JOINT AND PLACEMENT OF NEW JOINT SEAL. SEE DETAILS IN "DECK JOINT DETAILS" SHEET.

INDICATES LIMITS OF REMOVE ½" OF EXISTING LIGHTWEIGHT CONCRETE DECK, PREPARE CONCRETE BRIDGE DECK SURFACE, AND PLACE ¾" POLYESTER CONCRETE OVERLAY. EXCEPT FOR EDGE OF DECK SPALLS, BEFORE PLACING DECK OVERLAY, FOR REPAIR TRAFFIC LANES SPALLS REMOVE UNSOUND CONCRETE, AND PATCH DECK WITH RAPID SETTING CONCRETE. FOR EDGE OF DECK SPALLS, REPAIR WITH STRUCTURAL CONCRETE. SEE DETAILS IN "MISCELLANEOUS DETAILS" SHEET.

INDICATES EXISTING METAL BARRIER RAIL. RECONSTRUCT DAMAGED TUBULAR ALUMINUM RAIL WHERE OCCURRED. REPAIR DENTED STEEL PARAPET SURFACE AREA BY POWER TOOL CLEAN AND HEAT STRAIGHTEN STEEL PARAPET, AND PAINT UNDER COATS AND FINISH COATS. SEE DETAILS IN "METAL RAILING REPLACEMENT SHEET".

INDICATES EXISTING CONCRETE MEDIAN BARRIER. REMOVE UNSOUND CONCRETE AND REPAIR SPALLED SURFACE AREAS OF BARRIER WHERE DAMAGE OCCURRED. SEE DETAILS IN "CONCRETE MEDIAN BARRIER REPLACEMENT DETAILS - STEEL GIRDER SPAN" SHEET

INDICATES LIMITS OF REMOVE EXISTING 2"± THICK EPOXY ASPHALT CONCRETE OVERLAY ON ORTHOTROPIC STEEL DECK. PREPARE STEEL DECK SURFACE AND PLACE NEW 2"± THICK POLYESTER CONCRETE OVERLAY (ZINC). SEE DETAILS IN "STEEL DECK OVERLAY CONFORM DETAIL" SHEET.

4 — REPLACE 3 MISSING BOLTS AT FINGER JOINT. SEE DETAILS IN "TYPICAL SECTION-STEEL GIRDER SPANS-ORTHOTROPIC STEEL DECK" SHEET.

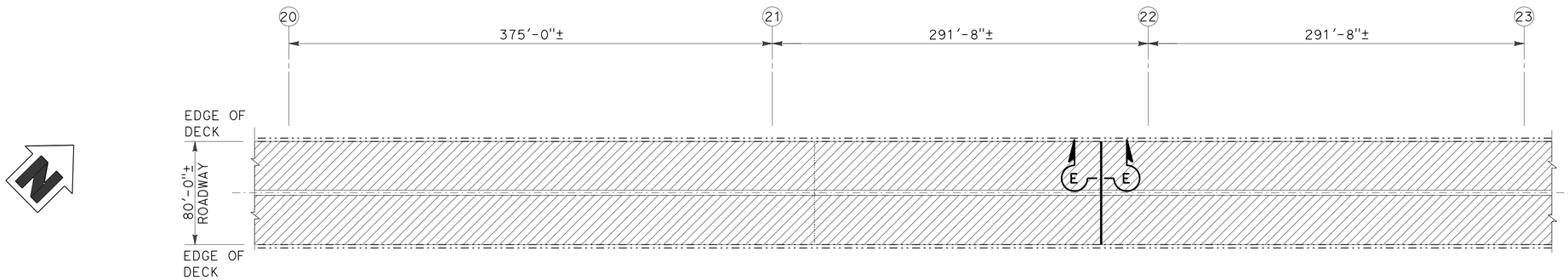

PARTIAL PLAN
SCALE: 1":50'

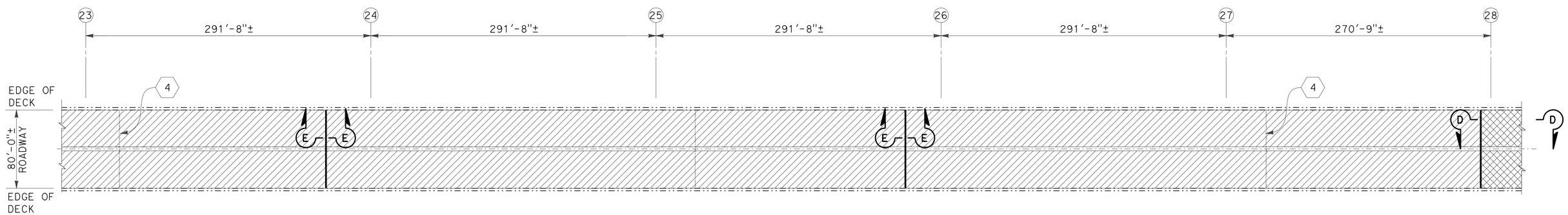

PARTIAL PLAN
SCALE: 1":50'

NOTES:

1. FOR BRIDGE DECK CROSS SECTION, SEE "TYPICAL SECTION-STEEL GIRDER SPANS, ORTHOTROPIC STEEL DECK" SHEETS.
2. FOR STEEL DECK SPLICE PLATES LOCATION, SEE "EXISTING SPLICE PLATES LOCATION" SHEETS.
3. FOR DECK JOINT AND CONFORM DETAILS SEE "DECK JOINT DETAILS" SHEET AND "STEEL DECK OVERLAY CONFORM DETAILS" SHEETS.

NOTE:

THE CONTRACTOR SHALL VERIFY ALL CONTROLLING FIELD DIMENSIONS BEFORE ORDERING OR FABRICATING ANY MATERIAL.

	BY	CHECKED
DESIGN	C. T. Lee	H. Su
DETAILS	B. Ballesteros	C. T. Lee
QUANTITIES	C. T. Lee	H. Su

STATE OF CALIFORNIA
DEPARTMENT OF TRANSPORTATION

DIVISION OF MAINTENANCE
STRUCTURE MAINTENANCE AND INVESTIGATIONS

BRIDGE NO. 35-0054
POST MILE R14.44

SAN MATEO - HAYWARD BRIDGE
DECK REHABILITATION
DECK REHAB DETAILS - 3

STRUCTURES MAINTENANCE DETAIL SHEET (ENGLISH) (REV. 09-01-10)

ORIGINAL SCALE IN INCHES FOR REDUCED PLANS 0 1 2 3

UNIT: 3486
PROJECT NUMBER & PHASE: 0400000441
CONTRACT NO.: 04-041004

DISREGARD PRINTS BEARING EARLIER REVISION DATES
REVISION DATES 03-04-14 09-10-13 02-17-14
SHEET 6 OF 26

FILE => 0400000044we003.dgn

USERNAME => s128787 DATE PLOTTED => 18-JUN-2014 TIME PLOTTED => 12:23:35

DIST	COUNTY	ROUTE	POST MILES TOTAL PROJECT	SHEET No.	TOTAL SHEETS
04	SM,Ala	92	R14.4/R18.8, R0.0/R2.6	98	117

REGISTERED CIVIL ENGINEER 3-5-14 DATE

5-27-14
PLANS APPROVAL DATE

REGISTERED PROFESSIONAL ENGINEER CHRISTOPHER T. LEE No. C38395 Exp. 3-31-15 CIVIL STATE OF CALIFORNIA

The State of California or its officers or agents shall not be responsible for the accuracy or completeness of electronic copies of this plan sheet.

LEGEND (FOR THIS SHEET ONLY):

INDICATES EXISTING STRUCTURE

PIER NUMBER

INDICATES SECTION CUT, SEE "DECK JOINT DETAILS" SHEET

INDICATES LOCATION OF EXISTING FINGER JOINT

INDICATES LOCATION OF EXISTING JOINT SEAL REMOVAL. CLEAN EXPANSION JOINT AND PLACEMENT OF NEW JOINT SEAL. SEE DETAILS IN "DECK JOINT DETAILS" SHEET.

INDICATES LIMITS OF REMOVE ½" OF EXISTING LIGHTWEIGHT CONCRETE DECK, PREPARE CONCRETE BRIDGE DECK SURFACE, AND PLACE ¾" POLYESTER CONCRETE OVERLAY. EXCEPT FOR EDGE OF DECK SPALLS, BEFORE PLACING DECK OVERLAY, FOR REPAIR TRAFFIC LANES SPALLS REMOVE UNSOUND CONCRETE, AND PATCH DECK WITH RAPID SETTING CONCRETE. FOR EDGE OF DECK SPALLS, REPAIR WITH STRUCTURAL CONCRETE. SEE DETAILS IN "MISCELLANEOUS DETAILS" SHEET.

INDICATES EXISTING METAL BARRIER RAIL. RECONSTRUCT DAMAGED TUBULAR ALUMINUM RAIL WHERE OCCURRED. REPAIR DENTED STEEL PARAPET SURFACE AREA BY POWER TOOL CLEAN AND HEAT STRAIGHTEN STEEL PARAPET, AND PAINT UNDER COATS AND FINISH COATS. SEE DETAILS IN "METAL RAILING REPLACEMENT SHEET".

INDICATES EXISTING CONCRETE MEDIAN BARRIER. REMOVE UNSOUND CONCRETE AND REPAIR SPALLED SURFACE AREAS OF BARRIER WHERE DAMAGE OCCURRED. SEE DETAILS IN "CONCRETE MEDIAN BARRIER REPLACEMENT DETAILS - STEEL GIRDER SPAN" SHEET

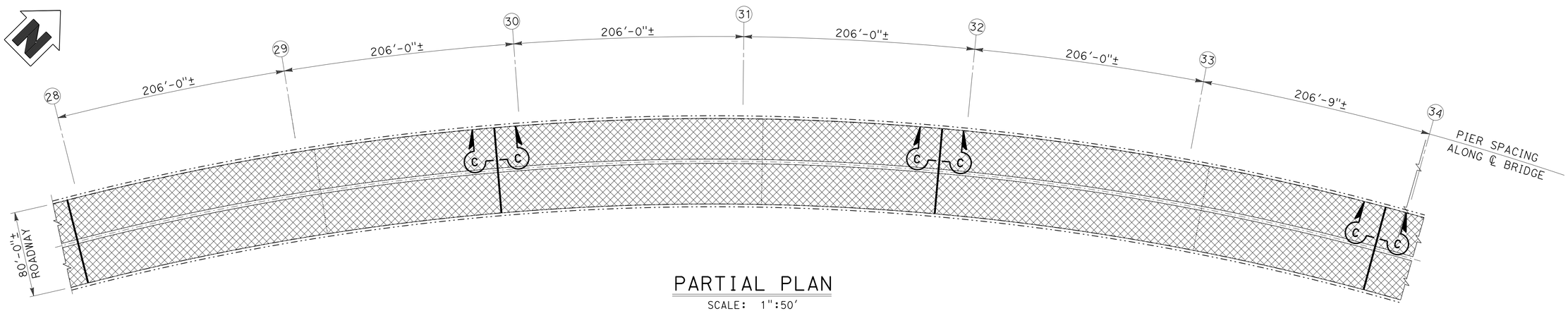

PARTIAL PLAN
SCALE: 1":50'

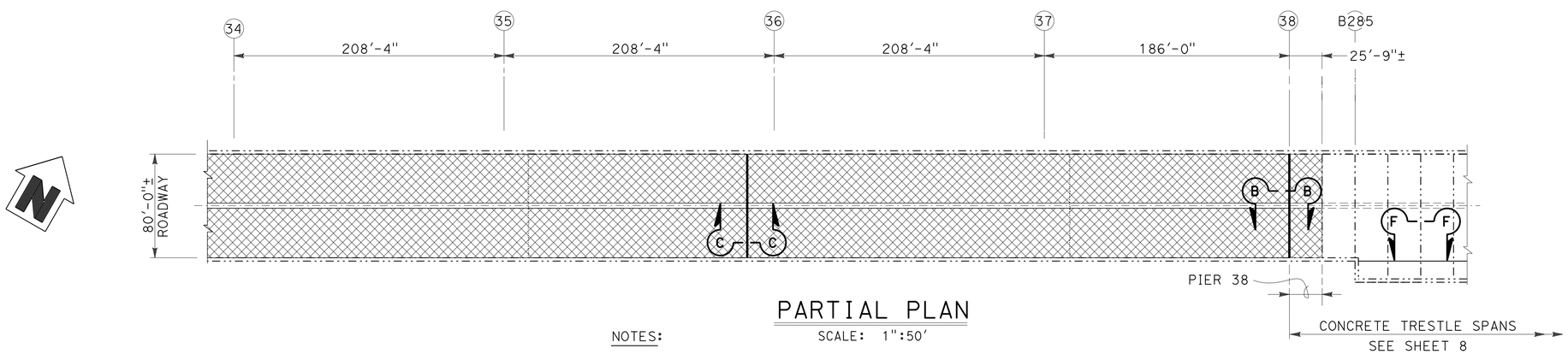

PARTIAL PLAN
SCALE: 1":50'

NOTE:

THE CONTRACTOR SHALL VERIFY ALL CONTROLLING FIELD DIMENSIONS BEFORE ORDERING OR FABRICATING ANY MATERIAL.

NOTES:

1. FOR BRIDGE DECK CROSS SECTION, SEE "TYPICAL SECTION-STEEL GIRDER SPANS, LIGHTWEIGHT CONCRETE DECK" SHEETS.
2. FOR DECK JOINT AND CONFORM DETAILS, SEE "DECK JOINT DETAILS" SHEET.

SAN MATEO - HAYWARD BRIDGE

DECK REHABILITATION

DECK REHAB DETAILS - 4

	BY	CHECKED
DESIGN	C. T. Lee	H. Su
DETAILS	B. Ballesteros	C. T. Lee
QUANTITIES	C. T. Lee	H. Su

STATE OF CALIFORNIA
DEPARTMENT OF TRANSPORTATION

DIVISION OF MAINTENANCE
STRUCTURE MAINTENANCE AND INVESTIGATIONS

BRIDGE NO. 35-0054
POST MILE R14.44

STRUCTURES MAINTENANCE DETAIL SHEET (ENGLISH) (REV. 09-01-10)

ORIGINAL SCALE IN INCHES FOR REDUCED PLANS 0 1 2 3

UNIT: 3486
PROJECT NUMBER & PHASE: 0400000441
CONTRACT NO.: 04-041004

DISREGARD PRINTS BEARING EARLIER REVISION DATES → REVISION DATES 03-04-14 09-10-13 02-17-14

SHEET 7 26

FILE => 0400000044we004.dgn

USERNAME => s128787 DATE PLOTTED => 18-JUN-2014 TIME PLOTTED => 12:35

DIST	COUNTY	ROUTE	POST MILES TOTAL PROJECT	SHEET No.	TOTAL SHEETS
04	SM,Ala	92	R14.4/R18.8, R0.0/R2.6	99	117

REGISTERED CIVIL ENGINEER 3-5-14 DATE

5-27-14
PLANS APPROVAL DATE

REGISTERED PROFESSIONAL ENGINEER CHRISTOPHER T. LEE No. C38395 Exp. 3-31-15 CIVIL STATE OF CALIFORNIA

The State of California or its officers or agents shall not be responsible for the accuracy or completeness of electronic copies of this plan sheet.

LEGEND (FOR THIS SHEET ONLY):

- INDICATES EXISTING STRUCTURE
- INDICATES BENT NUMBER
- INDICATES EXISTING LONGITUDINAL DECK JOINT
- INDICATES LOCATION OF EXISTING OPEN EXPANSION JOINT
- INDICATES EXISTING CONCRETE MEDIAN BARRIER. REPAIR SPALLED SURFACE AREAS OF BARRIER WHERE DAMAGE PRESENT (FROM SPAN 285 THRU SPAN 340). SEE DETAILS IN "MISCELLANEOUS DETAILS" SHEET.
- INDICATES LOCATION OF EXISTING CONCRETE RAIL AND CURB. REPAIR SPALLED SURFACE AREAS ON CONCRETE RAIL WHERE PRESENT. SEE DETAILS IN "MISCELLANEOUS DETAILS" SHEET.
- INDICATES LIMITS OF PREPARE CONCRETE DECK SURFACE AND TREAT BRIDGE DECK WITH HIGH MOLECULAR WEIGHT METHACRYLATE. BEFORE DECK TREATMENT, REMOVE UNSOUND CONCRETE AND PATCH WITH RAPID SETTING CONCRETE. SEE DETAILS IN "MISCELLANEOUS DETAILS" SHEET.
- (5) REPLACE BROKEN OPEN EXPANSION JOINT ARMOR. SEE DETAILS IN "MISCELLANEOUS DETAILS" SHEET.

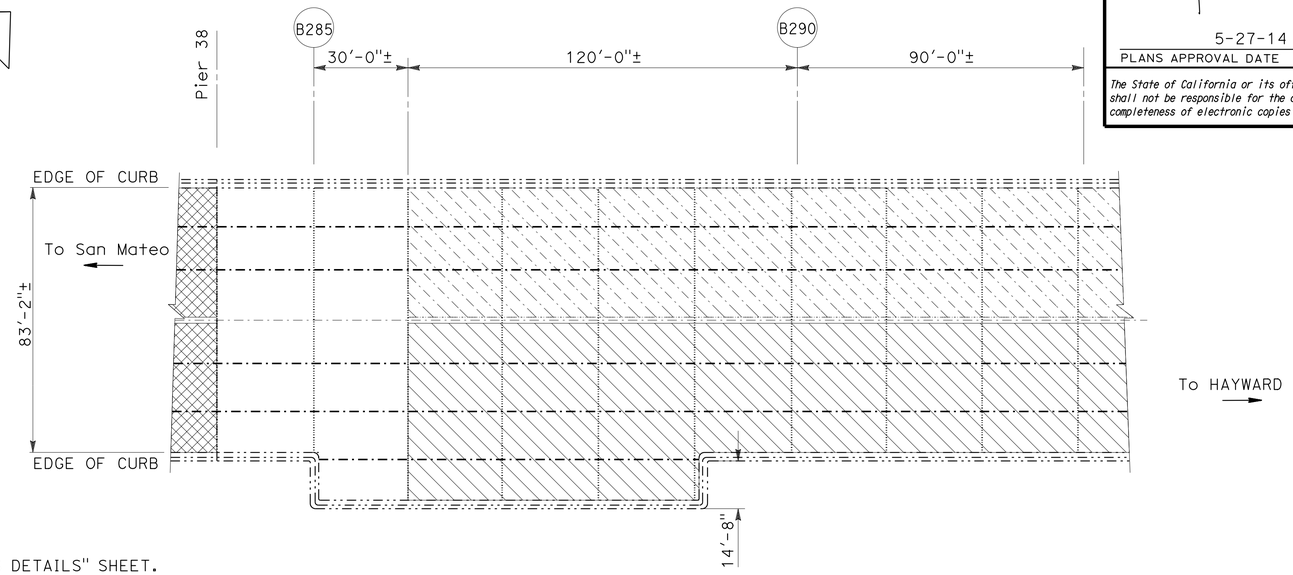

S A N F R A N C I S C O B A Y

PARTIAL PLAN

SCALE: 1":50'

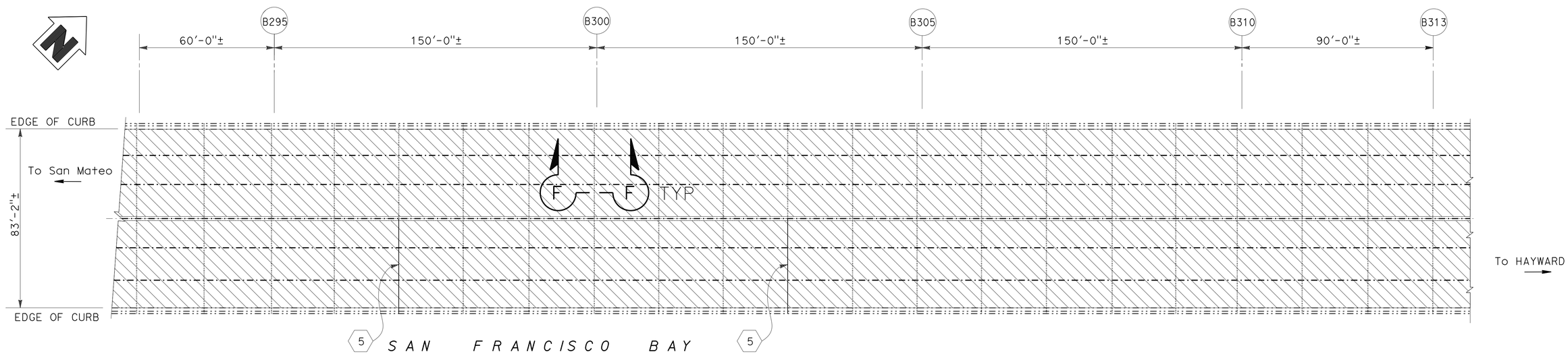

PARTIAL PLAN

SCALE: 1":50'

NOTE:

THE CONTRACTOR SHALL VERIFY ALL CONTROLLING FIELD DIMENSIONS BEFORE ORDERING OR FABRICATING ANY MATERIAL.

NOTE:

1. FOR BRIDGE DECK CROSS SECTION, SEE "TYPICAL SECTION-CONCRETE TRESTLE SPAN" SHEET.

SAN MATEO - HAYWARD BRIDGE

DECK REHABILITATION

DECK REHAB DETAILS - 5

	BY	CHECKED
DESIGN	C. T. Lee	H. Su
DETAILS	B. Ballesteros	C. T. Lee
QUANTITIES	C. T. Lee	H. Su

STATE OF CALIFORNIA
DEPARTMENT OF TRANSPORTATION

DIVISION OF MAINTENANCE
STRUCTURE MAINTENANCE AND INVESTIGATIONS

BRIDGE NO. 35-0054
POST MILE R14.44

STRUCTURES MAINTENANCE DETAIL SHEET (ENGLISH) (REV. 09-01-10)

ORIGINAL SCALE IN INCHES FOR REDUCED PLANS 0 1 2 3

UNIT: 3486
PROJECT NUMBER & PHASE: 0400000441
CONTRACT NO.: 04-041004

DISREGARD PRINTS BEARING EARLIER REVISION DATES

REVISION DATES 04-17-12 12-27-12 09-10-13 02-17-14

SHEET 8 26

FILE => 0400000044we005.dgn

USERNAME => s128787 DATE PLOTTED => 18-JUN-2014 TIME PLOTTED => 12:35

DIST	COUNTY	ROUTE	POST MILES TOTAL PROJECT	SHEET No.	TOTAL SHEETS
04	SM, Ala	92	R14.4/R18.8, R0.0/R2.6	100	117

REGISTERED CIVIL ENGINEER — DATE 3-5-14

5-27-14
PLANS APPROVAL DATE

REGISTERED PROFESSIONAL ENGINEER — CHRISTOPHER T. LEE — No. C38395 — Exp. 3-31-15 — CIVIL — STATE OF CALIFORNIA

The State of California or its officers or agents shall not be responsible for the accuracy or completeness of electronic copies of this plan sheet.

LEGEND:

INDICATES EXISTING STRUCTURE

INDICATES BENT NUMBER

INDICATES EXISTING LONGITUDINAL DECK JOINT

INDICATES LOCATION OF EXISTING CONCRETE RAIL: REPAIR SPALLED SURFACE AREAS ON CONCRETE RAIL WHERE PRESENT. SEE DETAILS IN "MISCELLANEOUS DETAILS" SHEET.

INDICATES LOCATION OF EXISTING OPEN EXPANSION JOINT

INDICATES EXISTING CONCRETE MEDIAN BARRIER. REPAIR SPALLED SURFACE AREAS ON CONCRETE MEDIAN BARRIER WHERE DAMAGE OCCURS (FROM SPAN 285 THRU SPAN 340). SEE DETAILS IN "MISCELLANEOUS DETAILS" SHEET.

INDICATES LOCATION OF EXISTING CONCRETE RAIL AND CURB. REPAIR SPALLED SURFACE AREAS ON CONCRETE RAIL AND CURB WHERE PRESENT. SEE DETAILS IN "MISCELLANEOUS DETAILS" SHEET.

INDICATES LIMITS OF PREPARE CONCRETE DECK SURFACE AND TREAT BRIDGE DECK WITH HIGH MOLECULAR WEIGHT METHACRYLATE. BEFORE DECK TREATMENT, REMOVE UNSOUND CONCRETE, AND PATCH WITH RAPID SETTING CONCRETE. SEE DETAILS IN "MISCELLANEOUS DETAILS" SHEET.

5 — REPLACE BROKEN OPEN EXPANSION JOINT ARMOR. SEE DETAILS IN "MISCELLANEOUS DETAILS" SHEET.

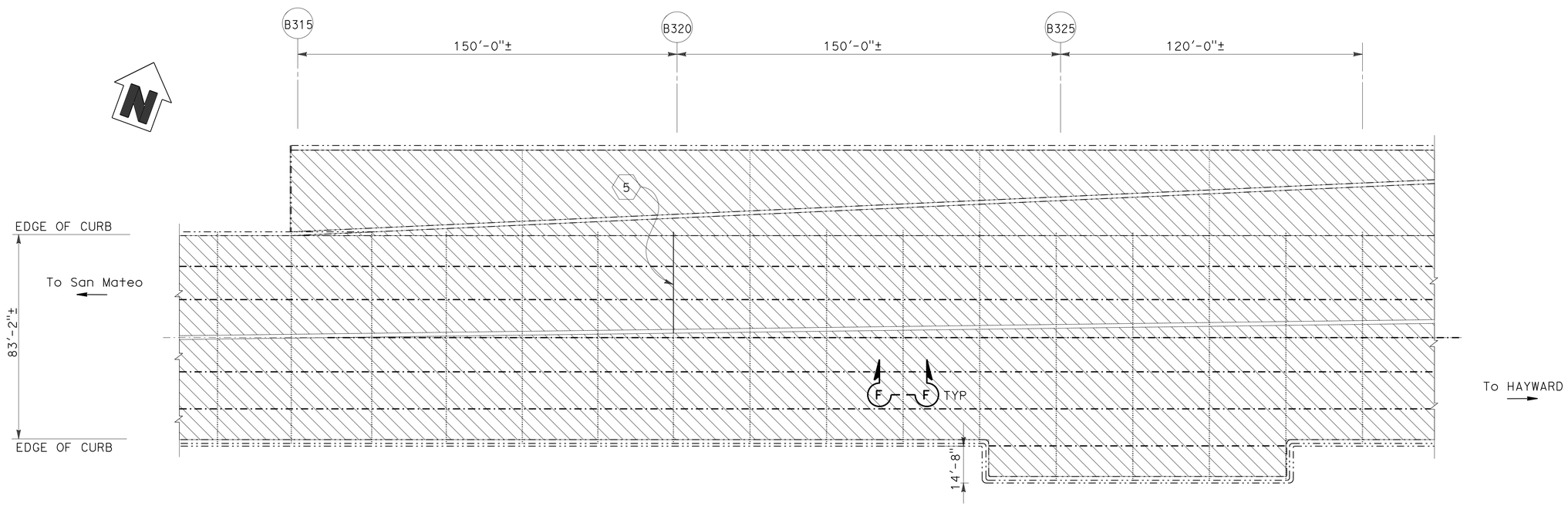

PARTIAL PLAN

SCALE: 1":50'

NOTE:

THE CONTRACTOR SHALL VERIFY ALL CONTROLLING FIELD DIMENSIONS BEFORE ORDERING OR FABRICATING ANY MATERIAL.

NOTE:

1. FOR BRIDGE DECK CROSS SECTION, SEE "TYPICAL SECTION-CONCRETE TRESTLE SPAN" SHEET.

	BY	CHECKED
DESIGN	C. T. Lee	H. Su
DETAILS	B. Ballesteros	C. T. Lee
QUANTITIES	C. T. Lee	H. Su

STATE OF CALIFORNIA
DEPARTMENT OF TRANSPORTATION

DIVISION OF MAINTENANCE
STRUCTURE MAINTENANCE AND INVESTIGATIONS

BRIDGE NO. 35-0054
POST MILE R14.44

SAN MATEO - HAYWARD BRIDGE
DECK REHABILITATION
DECK REHAB DETAILS - 6

STRUCTURES MAINTENANCE DETAIL SHEET (ENGLISH) (REV. 09-01-10)

ORIGINAL SCALE IN INCHES FOR REDUCED PLANS 0 1 2 3

UNIT: 3486
PROJECT NUMBER & PHASE: 0400000441
CONTRACT NO.: 04-041004

DISREGARD PRINTS BEARING EARLIER REVISION DATES → 04-17-12 12-27-12 09-10-13 02-17-14

SHEET 9 OF 26

FILE => 0400000044we006.dgn

USERNAME => s128787 DATE PLOTTED => 18-JUN-2014 TIME PLOTTED => 12:35

DIST	COUNTY	ROUTE	POST MILES TOTAL PROJECT	SHEET No.	TOTAL SHEETS
04	SM, Ala	92	R14.4/R18.8, R0.0/R2.6	101	117

REGISTERED CIVIL ENGINEER 3-5-14 DATE

5-27-14
PLANS APPROVAL DATE

REGISTERED PROFESSIONAL ENGINEER CHRISTOPHER T. LEE No. C38395 Exp. 3-31-15 CIVIL STATE OF CALIFORNIA

The State of California or its officers or agents shall not be responsible for the accuracy or completeness of electronic copies of this plan sheet.

LEGEND:

INDICATES EXISTING STRUCTURE

INDICATES BENT NUMBER

INDICATES EXISTING LONGITUDINAL DECK JOINT

INDICATES LOCATION OF EXISTING CONCRETE RAIL: REPAIR SPALLED SURFACE AREAS ON CONCRETE RAIL WHERE PRESENT. SEE DETAILS IN "MISCELLANEOUS DETAILS" SHEET.

INDICATES LOCATION OF EXISTING OPEN EXPANSION JOINT

INDICATES EXISTING CONCRETE MEDIAN BARRIER. REPAIR SPALLED SURFACE AREAS ON CONCRETE MEDIAN BARRIER WHERE DAMAGE OCCURS (FROM SPAN 285 THRU SPAN 340). SEE DETAILS IN "MISCELLANEOUS DETAILS" SHEET.

INDICATES LOCATION OF EXISTING CONCRETE RAIL AND CURB. REPAIR SPALLED SURFACE AREAS ON CONCRETE RAIL AND CURB WHERE PRESENT. SEE DETAILS IN "MISCELLANEOUS DETAILS" SHEET.

INDICATES LIMITS OF PREPARE CONCRETE DECK SURFACE AND TREAT BRIDGE DECK WITH HIGH MOLECULAR WEIGHT METHACRYLATE. BEFORE DECK TREATMENT, REMOVE UNSOUND CONCRETE, AND PATCH WITH RAPID SETTING CONCRETE. SEE DETAILS IN "MISCELLANEOUS DETAILS" SHEET.

5 REPLACE BROKEN OPEN EXPANSION JOINT ARMOR. SEE DETAILS IN "MISCELLANEOUS DETAILS" SHEET.

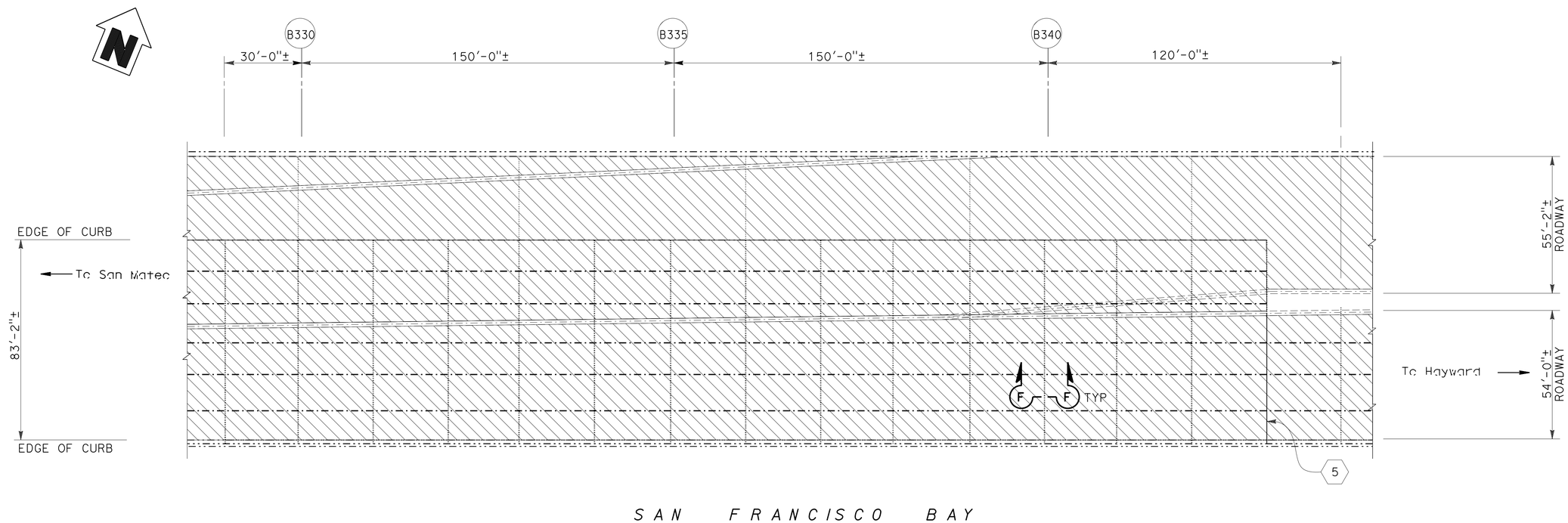

PARTIAL PLAN

SCALE: 1":50'

NOTE:

THE CONTRACTOR SHALL VERIFY ALL CONTROLLING FIELD DIMENSIONS BEFORE ORDERING OR FABRICATING ANY MATERIAL.

NOTE:

1. FOR BRIDGE DECK CROSS SECTION, SEE "TYPICAL SECTION-CONCRETE TRESTLE SPAN" SHEET.

	BY	CHECKED
DESIGN	C. T. Lee	H. Su
DETAILS	B. Ballesteros	C. T. Lee
QUANTITIES	C. T. Lee	H. Su

STATE OF CALIFORNIA DEPARTMENT OF TRANSPORTATION

DIVISION OF MAINTENANCE STRUCTURE MAINTENANCE AND INVESTIGATIONS

BRIDGE NO. 35-0054

POST MILE R14.44

SAN MATEO - HAYWARD BRIDGE

DECK REHABILITATION

DECK REHAB DETAILS - 7

STRUCTURES MAINTENANCE DETAIL SHEET (ENGLISH) (REV. 09-01-10)

ORIGINAL SCALE IN INCHES FOR REDUCED PLANS 0 1 2 3

UNIT: 3486
PROJECT NUMBER & PHASE: 0400000441

CONTRACT NO.: 04-041004

DISREGARD PRINTS BEARING EARLIER REVISION DATES

REVISION DATES 04-17-12 12-27-12 09-10-13 02-17-14

SHEET 10 OF 26

FILE => 0400000044we007.dgn

USERNAME => s128787 DATE PLOTTED => 18-JUN-2014 TIME PLOTTED => 12:35

DIST	COUNTY	ROUTE	POST MILES TOTAL PROJECT	SHEET No.	TOTAL SHEETS
04	SM, Ala	92	R14.4/R18.8, R0.0/R2.6	102	117

REGISTERED CIVIL ENGINEER — DATE 3-5-14

5-27-14
PLANS APPROVAL DATE

REGISTERED PROFESSIONAL ENGINEER — CHRISTOPHER T. LEE — No. C38395 — Exp. 3-31-15 — CIVIL — STATE OF CALIFORNIA

The State of California or its officers or agents shall not be responsible for the accuracy or completeness of electronic copies of this plan sheet.

LEGEND:

INDICATES EXISTING STRUCTURE

INDICATES BENT NUMBER

INDICATES EXISTING LONGITUDINAL DECK JOINT

INDICATES LOCATION OF EXISTING CONCRETE RAIL: REPAIR SPALLED SURFACE AREAS ON CONCRETE RAIL WHERE PRESENT. SEE DETAILS IN "MISCELLANEOUS DETAILS" SHEET.

INDICATES LOCATION OF EXISTING OPEN EXPANSION JOINT

INDICATES EXISTING CONCRETE MEDIAN BARRIER. REPAIR SPALLED SURFACE AREAS ON CONCRETE MEDIAN BARRIER WHERE DAMAGE OCCURS (FROM SPAN 285 THRU SPAN 340). SEE DETAILS IN "MISCELLANEOUS DETAILS" SHEET.

INDICATES LOCATION OF EXISTING CONCRETE RAIL AND CURB. REPAIR SPALLED SURFACE AREAS ON CONCRETE RAIL AND CURB WHERE PRESENT. SEE DETAILS IN "MISCELLANEOUS DETAILS" SHEET.

INDICATES LIMITS OF PREPARE CONCRETE DECK SURFACE AND TREAT BRIDGE DECK WITH HIGH MOLECULAR WEIGHT METHACRYLATE. BEFORE DECK TREATMENT, REMOVE UNSOUND CONCRETE, AND PATCH WITH RAPID SETTING CONCRETE. SEE DETAILS IN "MISCELLANEOUS DETAILS" SHEET.

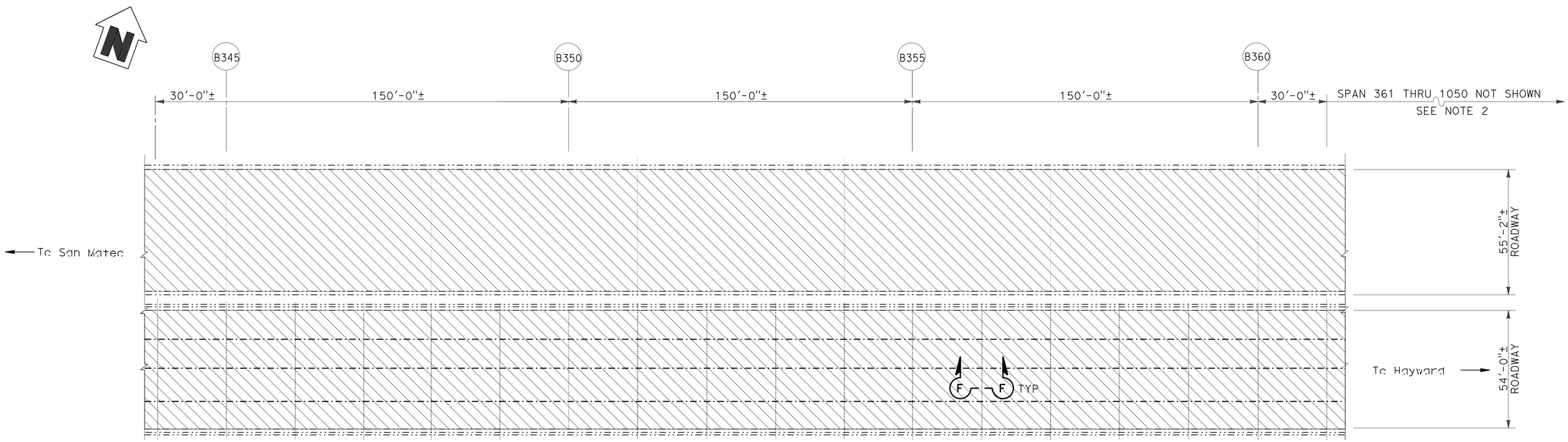

S A N F R A N C I S C O B A Y

NOTES:

1. FOR BRIDGE DECK CROSS SECTION, SEE "TYPICAL SECTION-CONCRETE TRESTLE SPAN" SHEET.
2. DECK SPANS FROM 361 THRU 1050 NOT SHOWN FOR CLARITY. DECK WORK AS SHOWN IN THIS SHEET APPLIES TO THESE SPANS ALSO.

NOTE:

THE CONTRACTOR SHALL VERIFY ALL CONTROLLING FIELD DIMENSIONS BEFORE ORDERING OR FABRICATING ANY MATERIAL.

PARTIAL PLAN

SCALE: 1":50'

SAN MATEO - HAYWARD BRIDGE

DECK REHABILITATION

DECK REHAB DETAILS - 8

	BY	CHECKED
DESIGN	C. T. Lee	H. Su
DETAILS	B. Ballesteros	C. T. Lee
QUANTITIES	C. T. Lee	H. Su

STATE OF CALIFORNIA
DEPARTMENT OF TRANSPORTATION

DIVISION OF MAINTENANCE
STRUCTURE MAINTENANCE AND INVESTIGATIONS

BRIDGE NO. 35-0054
POST MILE R14.44

STRUCTURES MAINTENANCE DETAIL SHEET (ENGLISH) (REV. 09-01-10)

ORIGINAL SCALE IN INCHES FOR REDUCED PLANS 0 1 2 3

UNIT: 3486
PROJECT NUMBER & PHASE: 0400000441
CONTRACT NO.: 04-041004

DISREGARD PRINTS BEARING EARLIER REVISION DATES

REVISION DATES: 04-17-12 12-27-12 09-10-13 02-17-14

SHEET 11 OF 26

FILE => 0400000044we008.dgn

USERNAME => s128787 DATE PLOTTED => 18-JUN-2014 TIME PLOTTED => 12:35

DIST	COUNTY	ROUTE	POST MILES TOTAL PROJECT	SHEET No.	TOTAL SHEETS
04	SM, Ala	92	R14.4/R18.8, R0.0/R2.6	103	117

REGISTERED CIVIL ENGINEER 3-5-14 DATE

5-27-14
PLANS APPROVAL DATE

REGISTERED PROFESSIONAL ENGINEER CHRISTOPHER T. LEE No. C38395 Exp. 3-31-15 CIVIL STATE OF CALIFORNIA

The State of California or its officers or agents shall not be responsible for the accuracy or completeness of electronic copies of this plan sheet.

LEGEND:

INDICATES EXISTING STRUCTURE

INDICATES BENT NUMBER

INDICATES EXISTING LONGITUDINAL DECK JOINT

INDICATES EXISTING CONCRETE RAIL: REPAIR SPALLED SURFACE AREAS OF CONCRETE RAIL WHERE PRESENT. SEE "MISCELLANEOUS DETAILS" SHEET.

INDICATES EXISTING CONCRETE MEDIAN BARRIER. REPAIR SPALLED SURFACE AREAS OF CONCRETE MEDIAN BARRIER WHERE PRESENT. SEE DETAILS IN "MISCELLANEOUS DETAILS" SHEET.

INDICATES LOCATION OF EXISTING OPEN EXPANSION JOINT

INDICATES LOCATION OF EXISTING CONCRETE RAIL AND CURB. REPAIR SPALLED SURFACE AREAS ON CONCRETE RAIL AND CURB WHERE PRESENT. SEE DETAILS IN "MISCELLANEOUS DETAILS" SHEET.

INDICATES LIMITS OF PREPARE CONCRETE DECK SURFACE AND TREAT BRIDGE DECK WITH HIGH MOLECULAR WEIGHT METHACRYLATE. BEFORE DECK TREATMENT, REMOVE UNSOUND CONCRETE, AND PATCH WITH RAPID SETTING CONCRETE. SEE DETAILS IN "MISCELLANEOUS DETAILS" SHEET.

6 REMOVE AND PLACE PC CONCRETE RAIL AND CURB UNIT AT SPAN 1052. SEE DETAILS IN "CONCRETE CURB & RAILING DETAILS" SHEET.

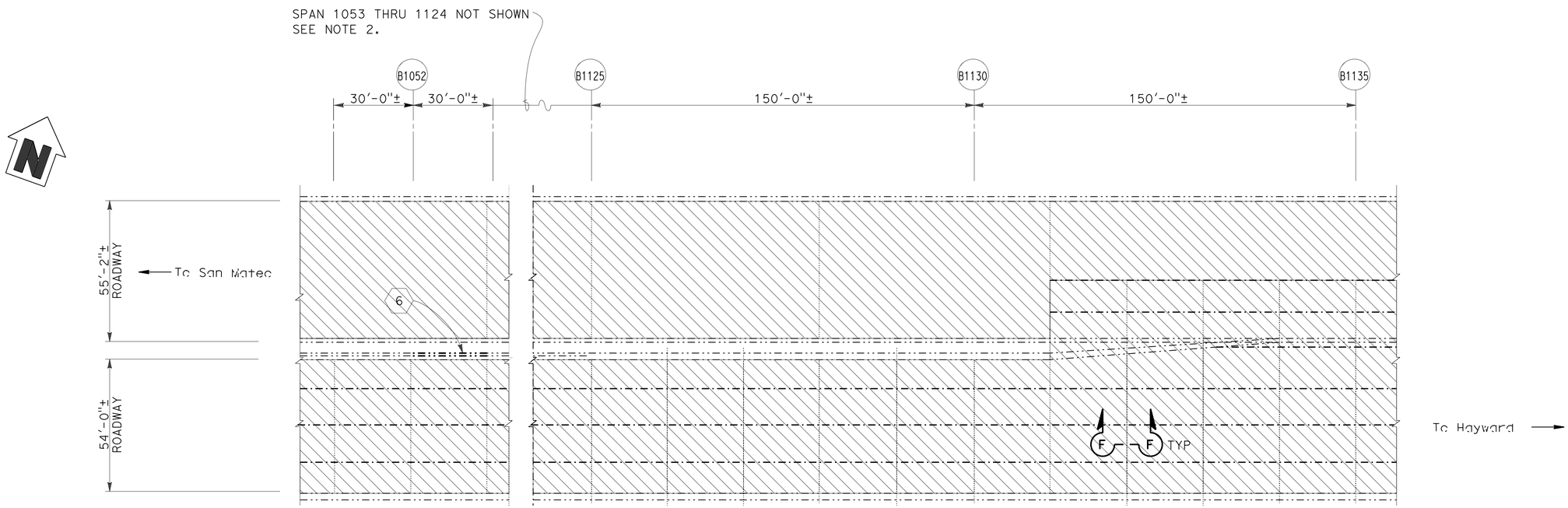

NOTES:

1. FOR BRIDGE DECK CROSS SECTION, SEE "TYPICAL SECTION-CONCRETE TRESTLE SPAN" SHEET.
2. DECK SPANS FROM 1053 THRU 1124 NOT SHOWN FOR CLARITY. DECK WORK AS SHOWN IN THIS SHEET APPLIES TO THESE SPANS ALSO.

NOTE:

THE CONTRACTOR SHALL VERIFY ALL CONTROLLING FIELD DIMENSIONS BEFORE ORDERING OR FABRICATING ANY MATERIAL.

PARTIAL PLAN

SCALE: 1":50'

	BY	CHECKED
DESIGN	C. T. Lee	H. Su
DETAILS	B. Ballesteros	C. T. Lee
QUANTITIES	C. T. Lee	H. Su

STATE OF CALIFORNIA
DEPARTMENT OF TRANSPORTATION

DIVISION OF MAINTENANCE
STRUCTURE MAINTENANCE AND INVESTIGATIONS

BRIDGE NO. 35-0054
POST MILE R14.44

SAN MATEO - HAYWARD BRIDGE

DECK REHABILITATION

DECK REHAB DETAILS - 9

STRUCTURES MAINTENANCE DETAIL SHEET (ENGLISH) (REV. 09-01-10)

ORIGINAL SCALE IN INCHES FOR REDUCED PLANS 0 1 2 3

UNIT: 3486
PROJECT NUMBER & PHASE: 0400000441
CONTRACT NO.: 04-041004

DISREGARD PRINTS BEARING EARLIER REVISION DATES

REVISION DATES 04-17-12 12-27-12 09-10-13

SHEET 12 OF 26

FILE => 0400000044we009.dgn

USERNAME => s128787 DATE PLOTTED => 18-JUN-2014 TIME PLOTTED => 12:35

DIST	COUNTY	ROUTE	POST MILES TOTAL PROJECT	SHEET No.	TOTAL SHEETS
04	SM, Ala	92	R14.4/R18.8, R0.0/R2.6	104	117

REGISTERED CIVIL ENGINEER 3-5-14 DATE

5-27-14
PLANS APPROVAL DATE

REGISTERED PROFESSIONAL ENGINEER CHRISTOPHER T. LEE No. C38395 Exp. 3-31-15 CIVIL STATE OF CALIFORNIA

The State of California or its officers or agents shall not be responsible for the accuracy or completeness of electronic copies of this plan sheet.

LEGEND:

INDICATES EXISTING STRUCTURE

INDICATES BENT NUMBER

INDICATES EXISTING LONGITUDINAL DECK JOINT

INDICATES EXISTING CONCRETE RAIL: REPAIR SPALLED SURFACE AREAS OF CONCRETE RAIL WHERE PRESENT. SEE "MISCELLANEOUS DETAILS" SHEET.

INDICATES EXISTING CONCRETE MEDIAN BARRIER. REPAIR SPALLED SURFACE AREAS OF CONCRETE MEDIAN BARRIER WHERE PRESENT. SEE DETAILS IN "MISCELLANEOUS DETAILS" SHEET.

INDICATES LOCATION OF EXISTING OPEN EXPANSION JOINT

INDICATES LOCATION OF EXISTING CONCRETE RAIL AND CURB. REPAIR SPALLED SURFACE AREAS ON CONCRETE RAIL AND CURB WHERE PRESENT. SEE DETAILS IN "MISCELLANEOUS DETAILS" SHEET.

INDICATES LIMITS OF PREPARE CONCRETE DECK SURFACE AND TREAT BRIDGE DECK WITH HIGH MOLECULAR WEIGHT METHACRYLATE. BEFORE DECK TREATMENT, REMOVE UNSOUND CONCRETE, AND PATCH WITH RAPID SETTING CONCRETE. SEE DETAILS IN "MISCELLANEOUS DETAILS" SHEET.

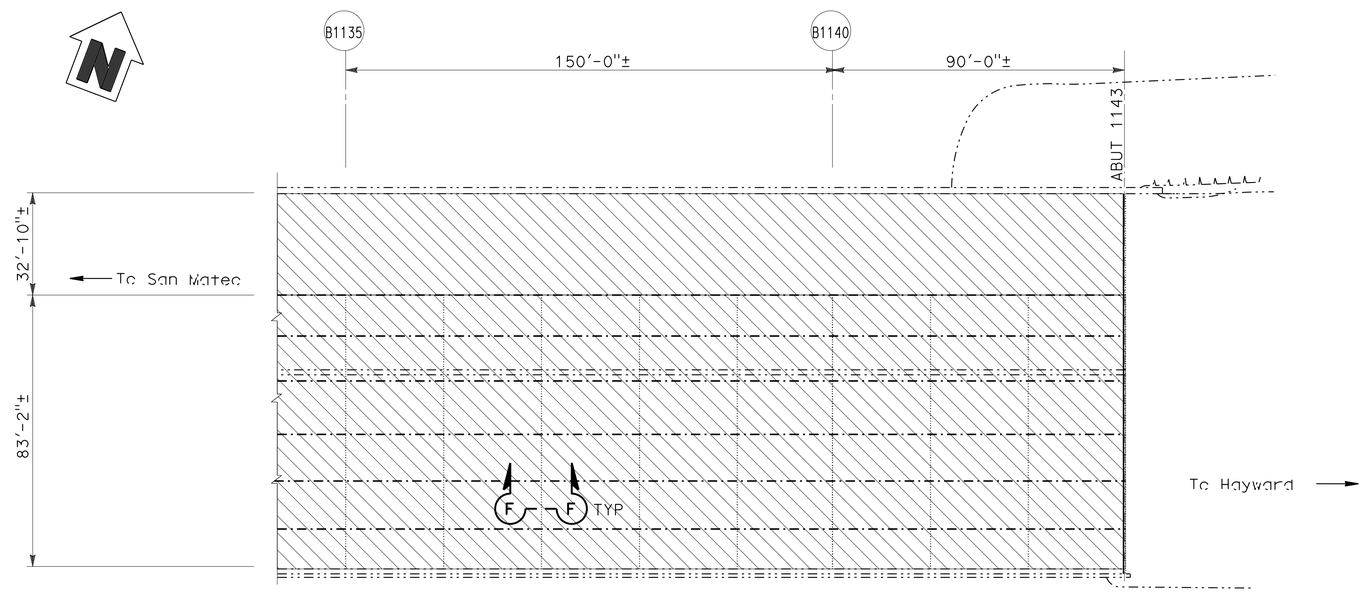

PARTIAL PLAN
SCALE: 1":50'

NOTE:

THE CONTRACTOR SHALL VERIFY ALL CONTROLLING FIELD DIMENSIONS BEFORE ORDERING OR FABRICATING ANY MATERIAL.

NOTES:

1. FOR BRIDGE DECK CROSS SECTION, SEE "TYPICAL SECTION-CONCRETE TRESTLE SPAN" SHEET.

SAN MATEO - HAYWARD BRIDGE

DECK REHABILITATION

DECK REHAB DETAILS - 10

	BY	CHECKED
DESIGN	C. T. Lee	H. Su
DETAILS	B. Ballesteros	C. T. Lee
QUANTITIES	C. T. Lee	H. Su

STATE OF CALIFORNIA
DEPARTMENT OF TRANSPORTATION

DIVISION OF MAINTENANCE
STRUCTURE MAINTENANCE AND INVESTIGATIONS

BRIDGE NO. 35-0054
POST MILE R14.44

STRUCTURES MAINTENANCE DETAIL SHEET (ENGLISH) (REV. 09-01-10)

ORIGINAL SCALE IN INCHES FOR REDUCED PLANS 0 1 2 3

UNIT: 3486
PROJECT NUMBER & PHASE: 0400000441
CONTRACT NO.: 04-041004

DISREGARD PRINTS BEARING EARLIER REVISION DATES → 04-17-12 12-27-12 09-10-13

REVISION DATES

SHEET 13 OF 26

FILE => 0400000044we010.dgn

USERNAME => s128787 DATE PLOTTED => 18-JUN-2014 TIME PLOTTED => 12:35

DIST	COUNTY	ROUTE	POST MILES TOTAL PROJECT	SHEET No.	TOTAL SHEETS
04	SM, Ala	92	R14.4/R18.8, R0.0/R2.6	105	117

REGISTERED CIVIL ENGINEER 3-5-14 DATE

5-27-14
PLANS APPROVAL DATE

REGISTERED PROFESSIONAL ENGINEER CHRISTOPHER T. LEE No. C38395 Exp. 3-31-15 CIVIL STATE OF CALIFORNIA

The State of California or its officers or agents shall not be responsible for the accuracy or completeness of electronic copies of this plan sheet.

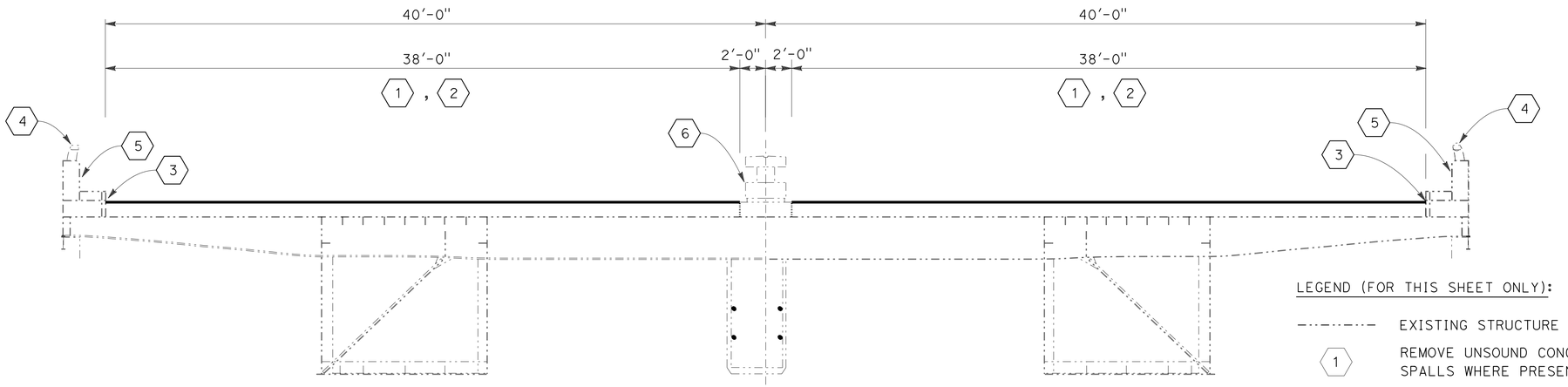

TYPICAL SECTION (PIER 1 - PIER 11.2 & PIER 27.24 - PIER 38)

SCALE: 1":50'

NOTE: CONTRACTOR MUST EXERCISE CARE TO PREVENT DEBRIS AND CONSTRUCTION MATERIAL FROM FALLING THRU THE GAP BETWEEN THE EDGE OF DECK AND RAIL.

LEGEND (FOR THIS SHEET ONLY):

-·-·-·-·- EXISTING STRUCTURE

(1) REMOVE UNSOUND CONCRETE AND PATCH CONCRETE DECK SPALLS WHERE PRESENT. SEE DETAILS IN "MISCELLANEOUS DETAILS" SHEET.

(2) REMOVE ½" LIGHTWEIGHT CONCRETE DECK, PREPARE DECK AND PLACE ¾" POLYESTER CONCRETE OVERLAY.

(3) REMOVE UNSOUND CONCRETE, AND PATCH EDGE OF DECK SPALLS WITH STRUCTURAL CONCRETE WHERE PRESENT. SEE DETAILS IN "MISCELLANEOUS DETAILS" SHEET.

(4) REPLACE DAMAGED TUBULAR ALUMINUM RAIL WHERE PRESENT. SEE DETAILS IN "METAL RAILING REPAIR DETAILS" SHEET.

(5) REPAIR DENTED STEEL PARAPET SURFACE WHERE PRESENT: POWER TOOL CLEAN, HEAT STRAIGHTEN STEEL PARAPET, AND PAINT UNDERCOATS AND FINISH COATS. SEE "METAL RAILING REPLACEMENT DETAILS" SHEET.

(6) REPAIR SPALLED SURFACE AREAS OF MEDIAN BARRIERS WHERE PRESENT. SEE DETAILS IN "MISCELLANEOUS DETAILS" SHEET.

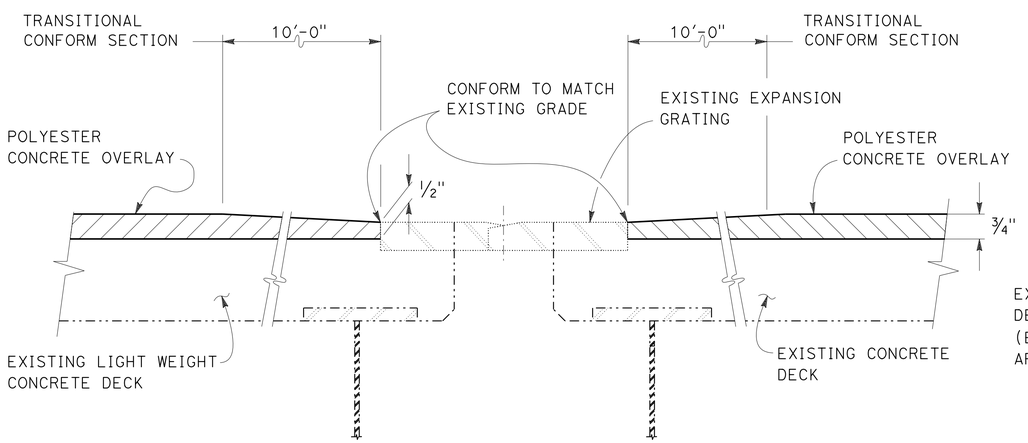

AT FINGER JOINT

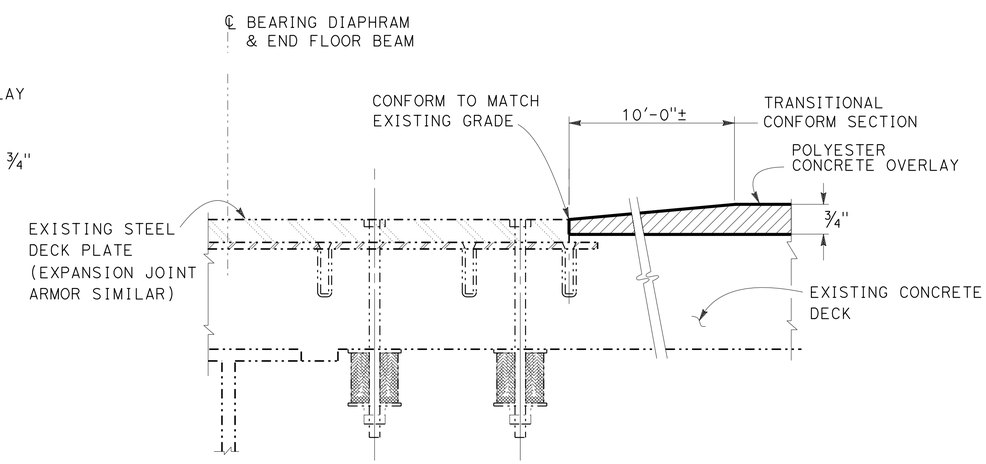

AT DECK PLATE (PIER 1 & PIER 38)

TRANSITIONAL CONFORM DETAIL

NO SCALE

NOTE:

THE CONTRACTOR SHALL VERIFY ALL CONTROLLING FIELD DIMENSIONS BEFORE ORDERING OR FABRICATING ANY MATERIAL.

	BY	CHECKED
DESIGN	C. T. Lee	H. Su
DETAILS	B. Ballesteros	C. T. Lee
QUANTITIES	C. T. Lee	H. Su

STATE OF CALIFORNIA
DEPARTMENT OF TRANSPORTATION

DIVISION OF MAINTENANCE
STRUCTURE MAINTENANCE AND INVESTIGATIONS

BRIDGE NO. 35-0054
POST MILE R14.44

SAN MATEO - HAYWARD BRIDGE

DECK REHABILITATION

TYPICAL SECTION - STEEL GIRDER SPANS, LIGHTWEIGHT CONCRETE DECK

STRUCTURES MAINTENANCE DETAIL SHEET (ENGLISH) (REV. 09-01-10)

ORIGINAL SCALE IN INCHES FOR REDUCED PLANS 0 1 2 3

UNIT: 3486
PROJECT NUMBER & PHASE: 0400000441
CONTRACT NO.: 04-041004

DISREGARD PRINTS BEARING EARLIER REVISION DATES

REVISION DATES 04-17-12 12-27-12 02-17-14

SHEET 14 OF 26

FILE => 0400000044we011.dgn

USERNAME => s128787 DATE PLOTTED => 18-JUN-2014 TIME PLOTTED => 12:35

DIST	COUNTY	ROUTE	POST MILES TOTAL PROJECT	SHEET No.	TOTAL SHEETS
04	SM, Ala	92	R14.4/R18.8, R0.0/R2.6	106	117

REGISTERED CIVIL ENGINEER — DATE 3-5-14

5-27-14
PLANS APPROVAL DATE

REGISTERED PROFESSIONAL ENGINEER — CHRISTOPHER T. LEE — No. C38395 — Exp. 3-31-15 — CIVIL — STATE OF CALIFORNIA

The State of California or its officers or agents shall not be responsible for the accuracy or completeness of electronic copies of this plan sheet.

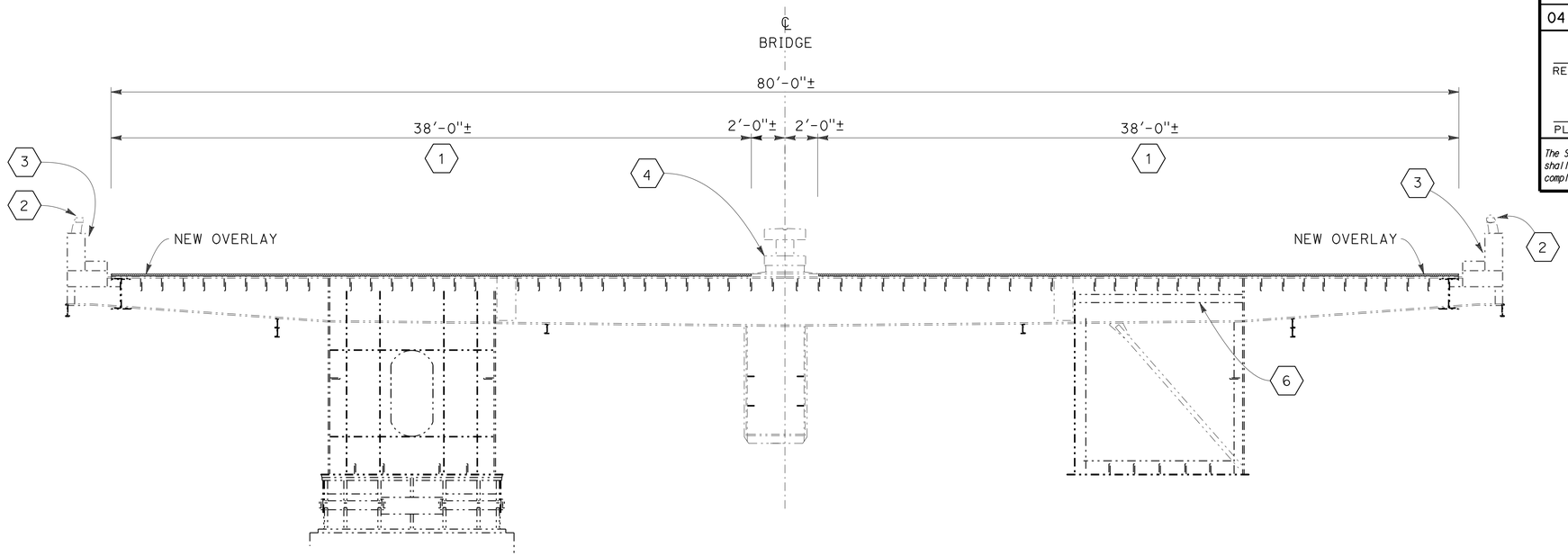

TYPICAL SECTION (PIER 11.2 - PIER 27.24)

NO SCALE

NOTE: 1. CONTRACTOR MUST EXERCISE CARE TO PREVENT DEBRIS AND CONSTRUCTION MATERIAL FROM FALLING THRU THE GAP BETWEEN THE EDGE OF DECK AND RAIL.

2. FOR LOCATIONS OF STEEL DECK SPLICE, SEE "EXISTING STEEL DECK SPLICE PLATES LOCATION" SHEETS.

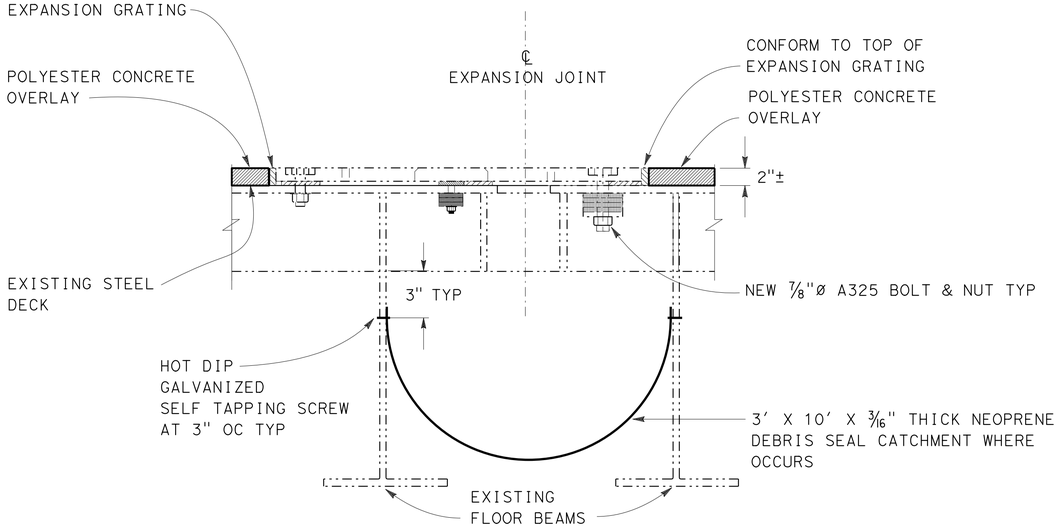

FINGER JOINT DETAIL

NO SCALE

LEGEND (FOR THIS SHEET ONLY):

- EXISTING STRUCTURE
- (1) REMOVE EXISTING EPOXY ASPHALT CONCRETE OVERLAY ON ORTHOTROPIC STEEL DECK. PREPARE STEEL BRIDGE DECK SURFACE, AND PLACE POLYESTER CONCRETE OVERLAY (ZINC).
- (2) RECONSTRUCT DAMAGED TUBULAR ALUMINUM RAIL. SEE DETAILS IN "METAL RAILING REPLACEMENT DETAILS" SHEET.
- (3) REPAIR DENTED STEEL PARAPET SURFACE WHERE PRESENT. POWER TOOL CLEAN, HEAT STRAIGHTEN STEEL PARAPET AND PAINT UNDERCOATS AND FINISH COATS. SEE DETAILS IN "METAL RAILING REPLACEMENT DETAILS" SHEET.
- (4) REPAIR SPALLED SURFACE AREAS OF MEDIAN BARRIER. SEE DETAILS IN "MISCELLANEOUS DETAILS" SHEET.
- (6) RECONSTRUCT DEBRIS SEAL CATCHMENT AT SPAN 19 (10 LF).

NOTE:

THE CONTRACTOR SHALL VERIFY ALL CONTROLLING FIELD DIMENSIONS BEFORE ORDERING OR FABRICATING ANY MATERIAL.

	BY	CHECKED
DESIGN	C. T. Lee	H. Su
DETAILS	B. Ballesteros	C. T. Lee
QUANTITIES	C. T. Lee	H. Su

STATE OF CALIFORNIA
DEPARTMENT OF TRANSPORTATION

DIVISION OF MAINTENANCE
STRUCTURE MAINTENANCE AND INVESTIGATIONS

BRIDGE NO. 35-0054
POST MILE R14.44

SAN MATEO - HAYWARD BRIDGE
DECK REHABILITATION
TYPICAL SECTION - STEEL GIRDER SPANS - ORTHOTROPIC STEEL DECK

STRUCTURES MAINTENANCE DETAIL SHEET (ENGLISH) (REV. 09-01-10)

ORIGINAL SCALE IN INCHES FOR REDUCED PLANS 0 1 2 3

UNIT: 3486
PROJECT NUMBER & PHASE: 0400000441
CONTRACT NO.: 04-041004

DISREGARD PRINTS BEARING EARLIER REVISION DATES → 03-04-14 09-10-13 02-17-14

SHEET 15 OF 26

FILE => 0400000044we012.dgn

USERNAME => s128787 DATE PLOTTED => 18-JUN-2014 TIME PLOTTED => 12:35

DIST	COUNTY	ROUTE	POST MILES TOTAL PROJECT	SHEET No.	TOTAL SHEETS
04	SM, Ala	92	R14.4/R18.8, R0.0/R2.6	107	117

REGISTERED CIVIL ENGINEER 3-5-14 DATE

5-27-14
PLANS APPROVAL DATE

REGISTERED PROFESSIONAL ENGINEER CHRISTOPHER T. LEE No. C38395 Exp. 3-31-15 CIVIL STATE OF CALIFORNIA

The State of California or its officers or agents shall not be responsible for the accuracy or completeness of electronic copies of this plan sheet.

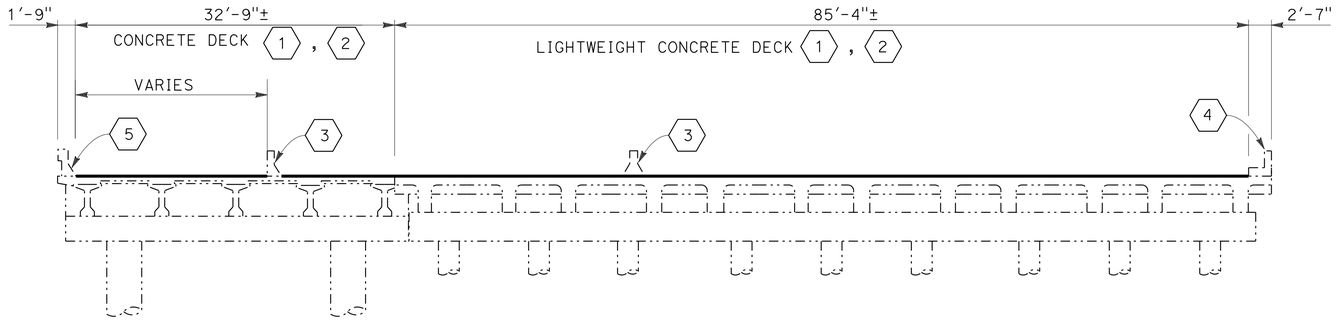

TYPICAL SECTION (B315 TO B343)

NO SCALE

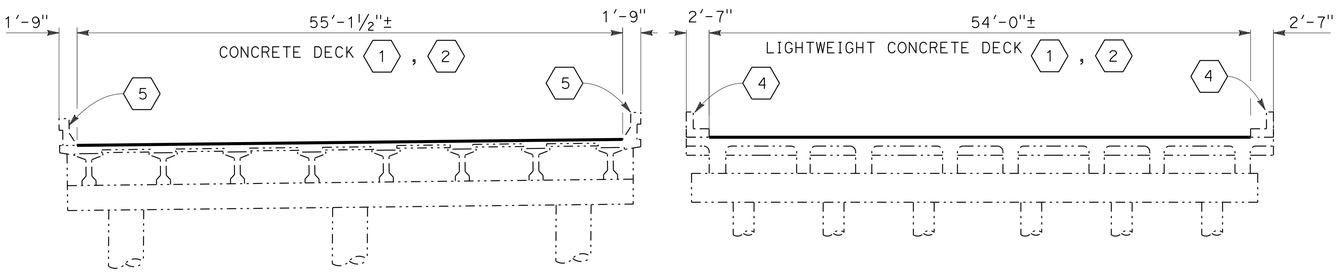

TYPICAL SECTION (B343 TO B1131)

NO SCALE

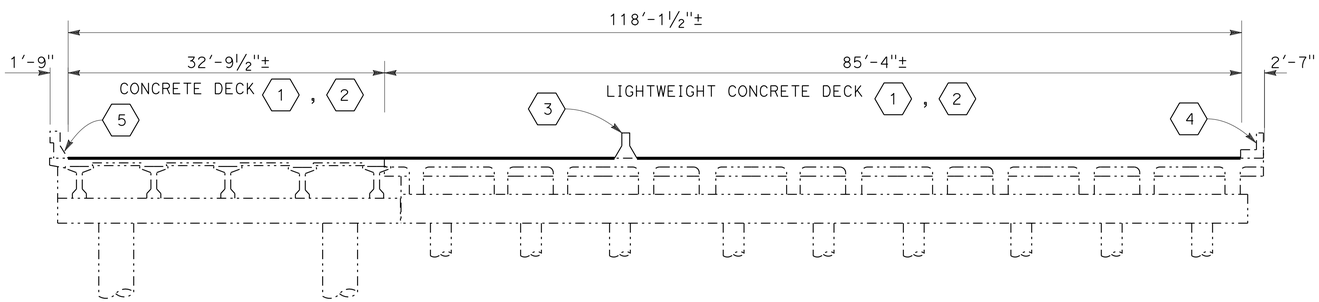

TYPICAL SECTION (B1131 TO B1143)

NO SCALE

LEGEND (FOR THIS SHEET ONLY) :

-·-·-·- EXISTING STRUCTURE

(1) REMOVE UNSOUND CONCRETE AND PATCH WITH RAPID SETTING CONCRETE. SEE DETAILS IN "MISCELLANEOUS DETAILS" SHEET.

(2) PREPARE CONCRETE BRIDGE DECK SURFACE, AND TREAT DECK WITH HIGH MOLECULAR WEIGHT METHACRYLATE.

(3) REPAIR SPALLED SURFACE AREAS OF CONCRETE BARRIER. SEE DETAILS IN "MISCELLANEOUS DETAILS" SHEET.

(4) REPAIR SPALLED SURFACE AREAS OF CONCRETE RAIL AND CURB SPALLS. SEE DETAILS IN "MISCELLANEOUS DETAILS" SHEET.

(5) REPAIR SPALLED SURFACE AREA OF PC CONCRETE RAIL. SEE "CONCRETE CURB & RAILING DETAILS" SHEET.

NOTE:

THE CONTRACTOR SHALL VERIFY ALL CONTROLLING FIELD DIMENSIONS BEFORE ORDERING OR FABRICATING ANY MATERIAL.

NOTE:

CONTRACTOR MUST EXERCISE CARE TO PREVENT DEBRIS AND CONSTRUCTION MATERIAL FROM FALLING THRU THE GAP BETWEEN THE EDGE OF DECK AND RAIL.

SAN MATEO - HAYWARD BRIDGE

DECK REHABILITATION

TYPICAL SECTIONS - CONCRETE TRESTLE SPAN

	BY	CHECKED
DESIGN	C. T. Lee	H. Su
DETAILS	B. Ballesteros	C. T. Lee
QUANTITIES	C. T. Lee	H. Su

STATE OF CALIFORNIA
DEPARTMENT OF TRANSPORTATION

DIVISION OF MAINTENANCE
STRUCTURE MAINTENANCE AND INVESTIGATIONS

BRIDGE NO. 35-0054
POST MILE R14.44

STRUCTURES MAINTENANCE DETAIL SHEET (ENGLISH) (REV. 09-01-10)

ORIGINAL SCALE IN INCHES FOR REDUCED PLANS 0 1 2 3

UNIT: 3486
PROJECT NUMBER & PHASE: 0400000441
CONTRACT NO.: 04-041004

DISREGARD PRINTS BEARING EARLIER REVISION DATES

REVISION DATES 08-30-12 12-27-12 09-10-13 02-26-14

SHEET 16 OF 26

FILE => 0400000044we013.dgn

USERNAME => s128787 DATE PLOTTED => 18-JUN-2014 TIME PLOTTED => 12:35

DIST	COUNTY	ROUTE	POST MILES TOTAL PROJECT	SHEET No.	TOTAL SHEETS
04	SM, Ala	92	R14.4/R18.8, R0.0/R2.6	108	117

REGISTERED CIVIL ENGINEER 3-5-14 DATE

5-27-14
PLANS APPROVAL DATE

REGISTERED PROFESSIONAL ENGINEER CHRISTOPHER T. LEE No. C38395 Exp. 3-31-15 CIVIL STATE OF CALIFORNIA

The State of California or its officers or agents shall not be responsible for the accuracy or completeness of electronic copies of this plan sheet.

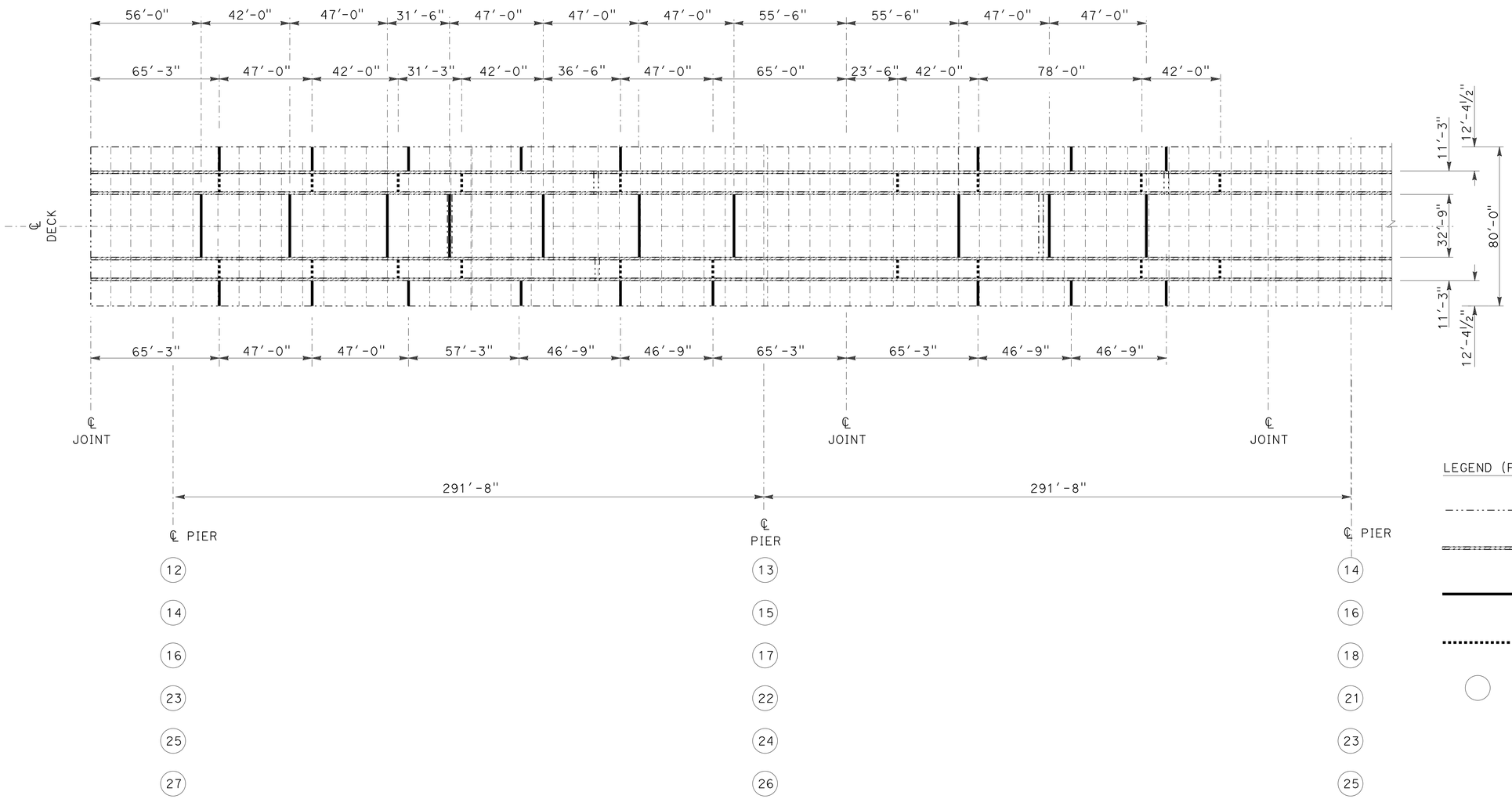

LEGEND (FOR THIS SHEET ONLY):

- INDICATES EXISTING STRUCTURE
- INDICATES EXISTING BOLTED LONGITUDINAL SPLICE PLATE CONNECTIONS
- INDICATES EXISTING BOLTED TRANSVERSE SPLICE PLATE CONNECTIONS
- INDICATES EXISTING FULL PENETRATION BUTT WELDED SPLICE PLATE CONNECTIONS
- PIER NUMBER

EXISTING SPLICE PLATES

NO SCALE

NOTES :

1. APPROXIMATE LOCATION OF SPLICE PLATES SHOWN FOR REFERENCE ONLY.
2. CONTRACTOR MUST EXERCISE CARE DURING EPOXY ASPHALT CONCRETE REMOVAL AND NOT DAMAGE THE DECK SPLICE PLATE CONNECTIONS.
3. FOR EXISTING BOLTED SPLICE PLATE CONNECTION DETAILS. SEE "STEEL DECK OVERLAY CONFORM DETAILS" SHEET.

NOTE:

THE CONTRACTOR SHALL VERIFY ALL CONTROLLING FIELD DIMENSIONS BEFORE ORDERING OR FABRICATING ANY MATERIAL.

SAN MATEO - HAYWARD BRIDGE

DECK REHABILITATION

EXISTING STEEL DECK SPLICE PLATES LOCATION - 1

	BY	CHECKED
DESIGN	C. T. Lee	H. Su
DETAILS	B. Ballesteros	C. T. Lee
QUANTITIES	C. T. Lee	H. Su

STATE OF CALIFORNIA
DEPARTMENT OF TRANSPORTATION

DIVISION OF MAINTENANCE
STRUCTURE MAINTENANCE AND INVESTIGATIONS

BRIDGE NO. 35-0054
POST MILE R14.44

STRUCTURES MAINTENANCE DETAIL SHEET (ENGLISH) (REV. 09-01-10)

ORIGINAL SCALE IN INCHES FOR REDUCED PLANS 0 1 2 3

UNIT: 3486
PROJECT NUMBER & PHASE: 0400000441
CONTRACT NO.: 04-041004

DISREGARD PRINTS BEARING EARLIER REVISION DATES

REVISION DATES 09-20-12 12-27-12 09-10-13

SHEET 17 OF 26

FILE => 0400000044we014.dgn

USERNAME => s128787 DATE PLOTTED => 18-JUN-2014 TIME PLOTTED => 12:35

DIST	COUNTY	ROUTE	POST MILES TOTAL PROJECT	SHEET No.	TOTAL SHEETS
04	SM, Ala	92	R14.4/R18.8, R0.0/R2.6	109	117

REGISTERED CIVIL ENGINEER — DATE 3-5-14

5-27-14
PLANS APPROVAL DATE

REGISTERED PROFESSIONAL ENGINEER — CHRISTOPHER T. LEE — No. C38395 — Exp. 3-31-15 — CIVIL — STATE OF CALIFORNIA

The State of California or its officers or agents shall not be responsible for the accuracy or completeness of electronic copies of this plan sheet.

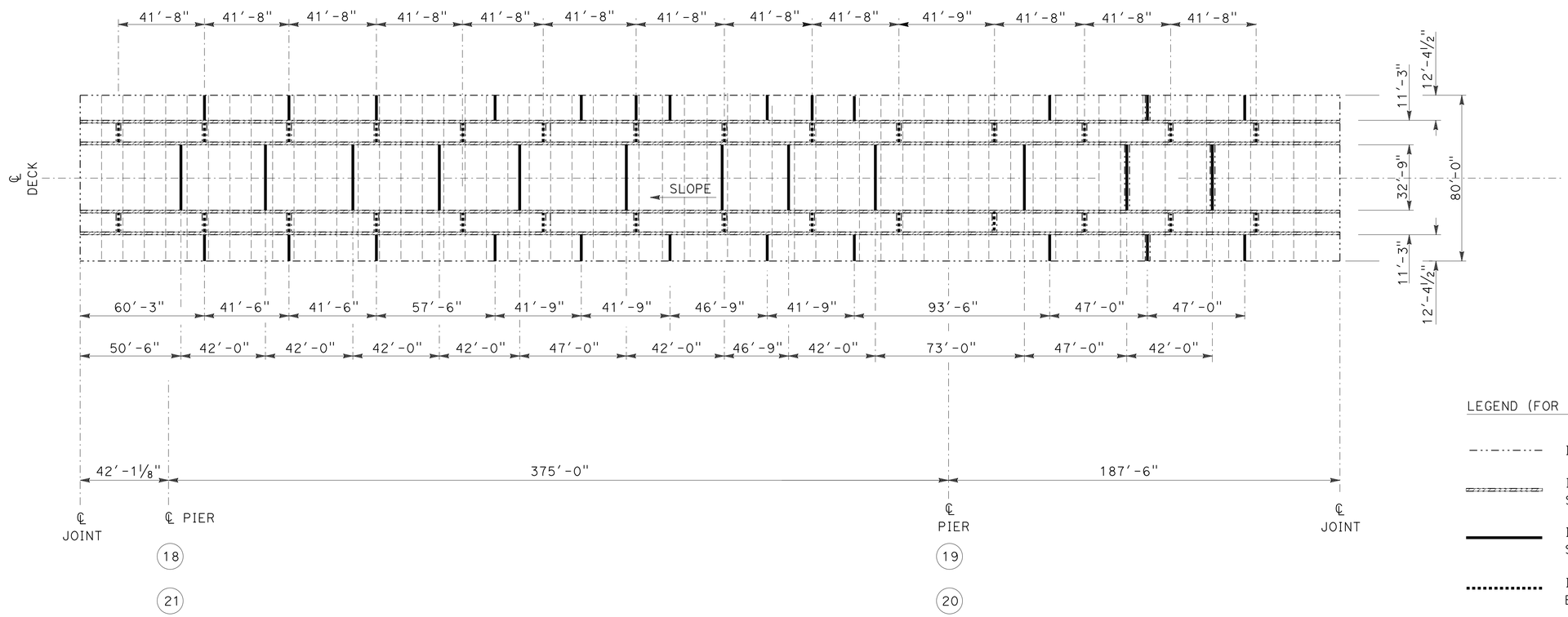

EXISTING SPLICE PLATES

NO SCALE

LEGEND (FOR THIS SHEET ONLY):

- INDICATES EXISTING STRUCTURE
- INDICATES EXISTING LONGITUDINAL SPLICE PLATE CONNECTIONS
- INDICATES EXISTING BOLTED TRANSVERSE SPLICE PLATE CONNECTIONS
- INDICATES EXISTING FULL PENETRATION BUTT SPLICE PLATE CONNECTIONS
- PIER NUMBER

NOTES :

1. APPROXIMATE LOCATION OF SPLICE PLATES SHOWN FOR REFERENCE ONLY.
2. CONTRACTOR MUST EXERCISE CARE DURING EPOXY ASPHALT CONCRETE REMOVAL AND NOT DAMAGE THE DECK SPLICE PLATE CONNECTIONS.
3. FOR EXISTING BOLTED SPLICE PLATE CONNECTION DETAILS. SEE "STEEL DECK OVERLAY CONFORM DETAILS" SHEET.

NOTE:

THE CONTRACTOR SHALL VERIFY ALL CONTROLLING FIELD DIMENSIONS BEFORE ORDERING OR FABRICATING ANY MATERIAL.

SAN MATEO - HAYWARD BRIDGE

DECK REHABILITATION

EXISTING STEEL DECK SPLICE PLATES LOCATION - 2

	BY	CHECKED
DESIGN	C. T. Lee	H. Su
DETAILS	B. Ballesteros	C. T. Lee
QUANTITIES	C. T. Lee	H. Su

STATE OF CALIFORNIA
DEPARTMENT OF TRANSPORTATION

DIVISION OF MAINTENANCE
STRUCTURE MAINTENANCE AND INVESTIGATIONS

BRIDGE NO. 35-0054
POST MILE R14.44

STRUCTURES MAINTENANCE DETAIL SHEET (ENGLISH) (REV. 09-01-10)

ORIGINAL SCALE IN INCHES FOR REDUCED PLANS 0 1 2 3

UNIT: 3486
PROJECT NUMBER & PHASE: 0400000441
CONTRACT NO.: 04-041004

DISREGARD PRINTS BEARING EARLIER REVISION DATES

REVISION DATES: 09-20-12 12-27-12 09-10-13

SHEET 18 OF 26

FILE => 0400000044we015.dgn

USERNAME => s128787 DATE PLOTTED => 18-JUN-2014 TIME PLOTTED => 12:35

DIST	COUNTY	ROUTE	POST MILES TOTAL PROJECT	SHEET No.	TOTAL SHEETS
04	SM, Ala	92	R14.4/R18.8, R0.0/R2.6	110	117

REGISTERED CIVIL ENGINEER 3-5-14 DATE

5-27-14
PLANS APPROVAL DATE

REGISTERED PROFESSIONAL ENGINEER CHRISTOPHER T. LEE No. C38395 Exp. 3-31-15 CIVIL STATE OF CALIFORNIA

The State of California or its officers or agents shall not be responsible for the accuracy or completeness of electronic copies of this plan sheet.

LEGEND (FOR THIS SHEET ONLY):

- INDICATES EXISTING STRUCTURE
- INDICATES EXISTING BOLTED LONGITUDINAL SPLICE PLATE CONNECTIONS
- INDICATES EXISTING BOLTED TRANSVERSE SPLICE PLATE CONNECTIONS
- INDICATES EXISTING FULL PENETRATION WELDED BUTT SPLICE PLATE CONNECTIONS
- PIER NUMBER

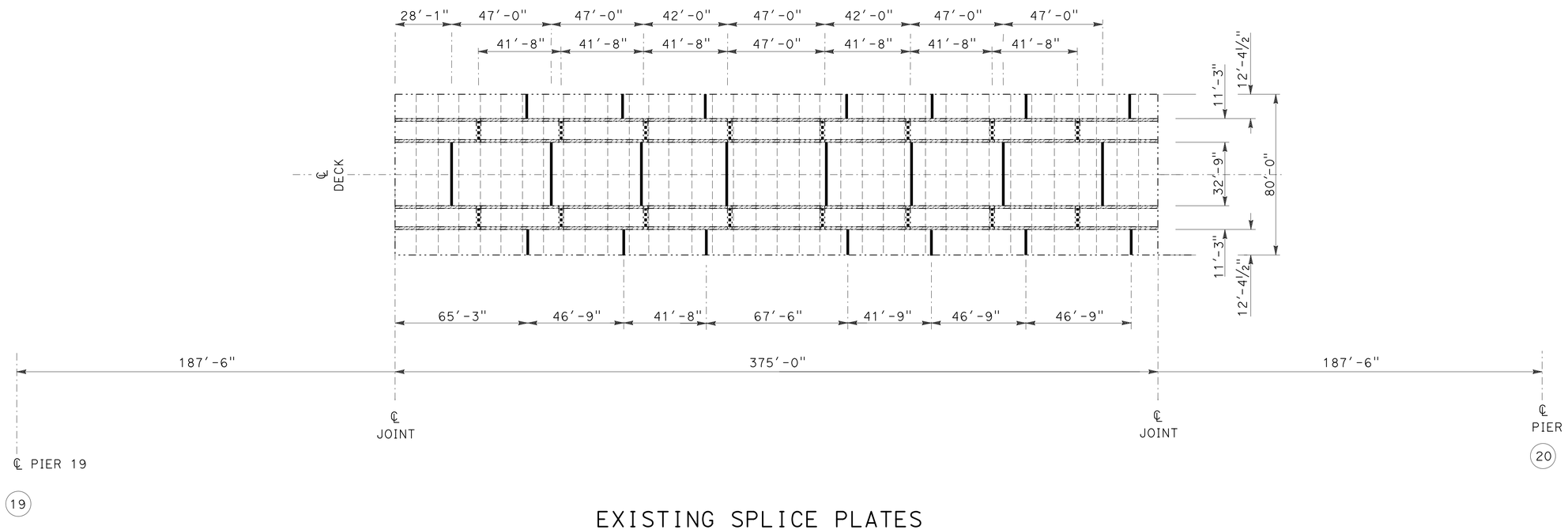

EXISTING SPLICE PLATES

NO SCALE

NOTES :

1. APPROXIMATE LOCATION OF SPLICE PLATES SHOWN FOR REFERENCE ONLY.
2. CONTRACTOR MUST EXERCISE CARE DURING EPOXY ASPHALT CONCRETE REMOVAL AND NOT TO DAMAGE THE DECK SPLICE PLATE CONNECTIONS.
3. FOR EXISTING BOLTED SPLICE PLATE CONNECTION DETAILS. SEE "STEEL DECK OVERLAY CONFORM DETAILS" SHEET.

NOTE:

THE CONTRACTOR SHALL VERIFY ALL CONTROLLING FIELD DIMENSIONS BEFORE ORDERING OR FABRICATING ANY MATERIAL.

	BY	CHECKED
DESIGN	C. T. Lee	H. Su
DETAILS	B. Ballesteros	C. T. Lee
QUANTITIES	C. T. Lee	H. Su

STATE OF CALIFORNIA
DEPARTMENT OF TRANSPORTATION

DIVISION OF MAINTENANCE
STRUCTURE MAINTENANCE AND INVESTIGATIONS

BRIDGE NO. 35-0054
POST MILE R14.44

SAN MATEO - HAYWARD BRIDGE

DECK REHABILITATION

EXISTING STEEL DECK SPLICE PLATES LOCATION - 3

STRUCTURES MAINTENANCE DETAIL SHEET (ENGLISH) (REV. 09-01-10)

ORIGINAL SCALE IN INCHES FOR REDUCED PLANS 0 1 2 3

UNIT: 3486
PROJECT NUMBER & PHASE: 0400000441
CONTRACT NO.: 04-041004

DISREGARD PRINTS BEARING EARLIER REVISION DATES → 09-25-12 12-27-12 09-10-13

SHEET 19 OF 26

FILE => 0400000044we016.dgn

USERNAME => s128787 DATE PLOTTED => 18-JUN-2014 TIME PLOTTED => 12:35

DIST	COUNTY	ROUTE	POST MILES TOTAL PROJECT	SHEET No.	TOTAL SHEETS
04	SM, Ala	92	R14.4/R18.8, R0.0/R2.6	111	117

REGISTERED CIVIL ENGINEER — DATE 4-17-14

5-27-14
PLANS APPROVAL DATE

REGISTERED PROFESSIONAL ENGINEER — CHRISTOPHER T. LEE — No. C38395 — Exp. 3-31-15 — CIVIL — STATE OF CALIFORNIA

The State of California or its officers or agents shall not be responsible for the accuracy or completeness of electronic copies of this plan sheet.

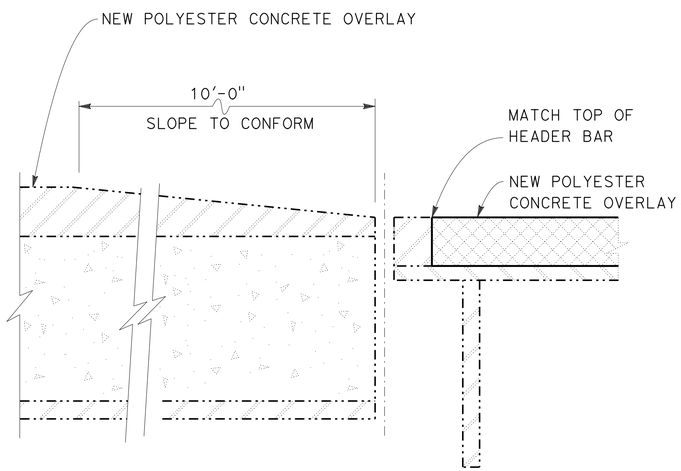

TIED JOINT - CONCRETE TO STEEL

NO SCALE

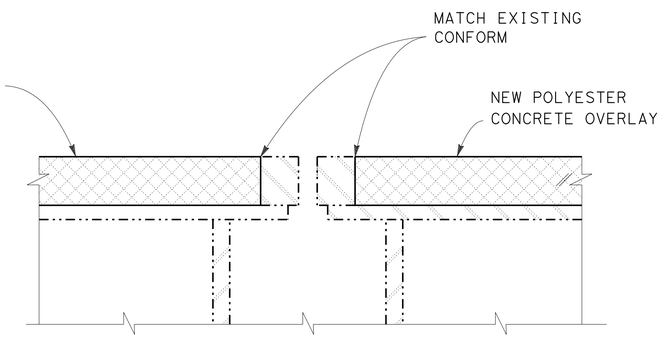

TYPICAL FIXED JOINT

NO SCALE

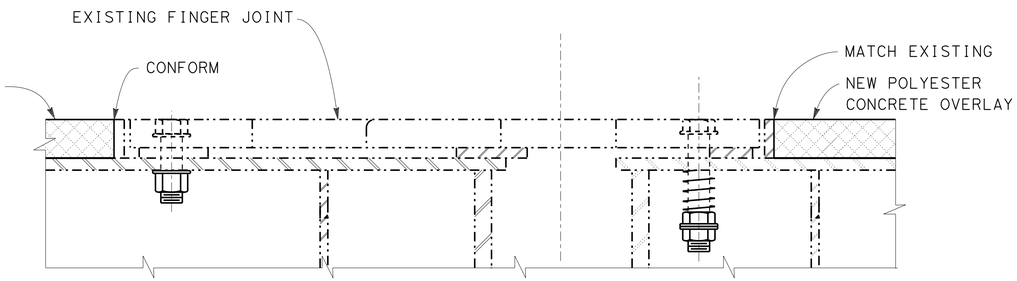

TYPICAL FINGER JOINT

NO SCALE

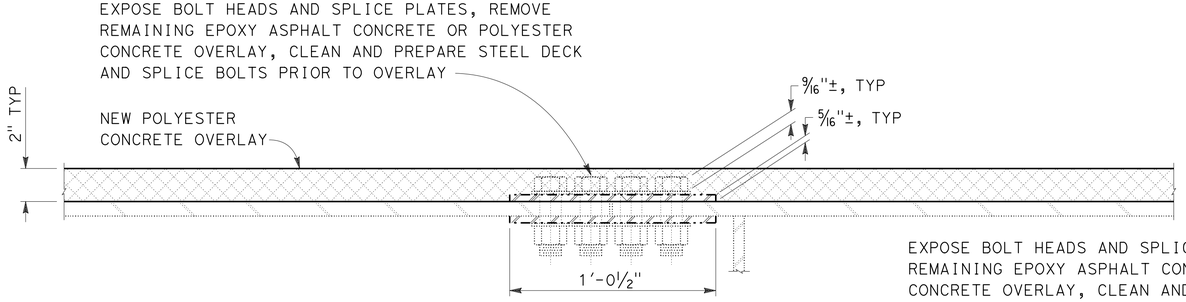

LONGITUDINAL SPLICE

NO SCALE

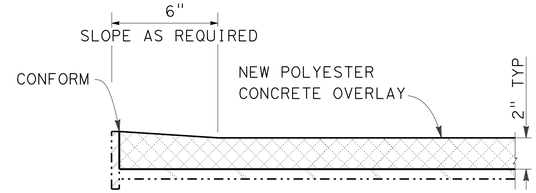

CURB LINE TRANSITION

NO SCALE

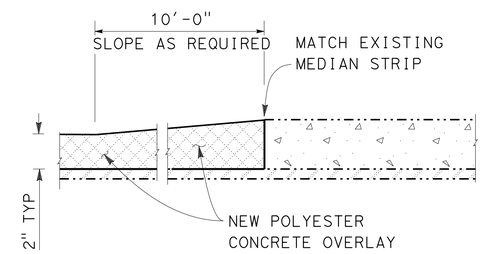

MEDIAN STRIP TRANSITION

NO SCALE

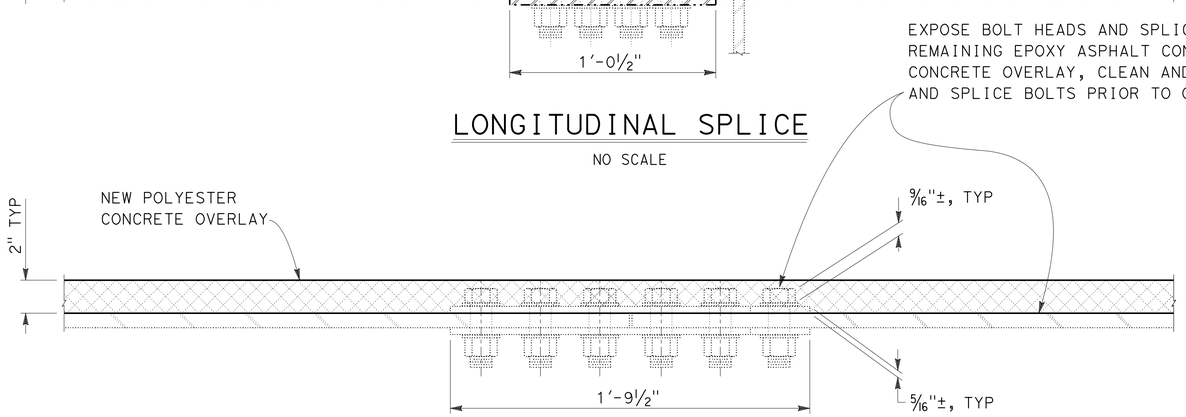

TRANSVERSE SPLICE

NO SCALE

NOTES:

1. FOR LOCATION OF DECK JOINTS, SEE "DECK REHAB DETAILS" SHEETS.
2. FOR LOCATION OF STEEL DECK LONGITUDINAL AND TRANSVERSE SPLICES, SEE "EXISTING STEEL DECK SPLICE PLATE LOCATION 1 - 3" SHEETS.
3. CONTRACTOR MUST EXERCISE CARE DURING EPOXY ASPHALT CONCRETE REMOVAL. DO NOT REMOVE OR DAMAGE BOLTS AND SPLICE PLATE CONNECTIONS. DAMAGED BOLTS SHALL BE REPLACED AT CONTRACTORS EXPENSE.
4. AFTER EXISTING EPOXY ASPHALT CONCRETE OVERLAY REMOVAL, CONTRACTOR HAS TO CLEAN AND PREPARE STEEL DECK, SPLICE PLATES WITH BOLT HEADS PRIOR TO POLYESTER CONCRETE OVERLAY. SEE SPECIFICATION OF DETAILS.
5. LONGITUDINAL CONSTRUCTION JOINT (IF APPLICABLE) MUST BE ON LANE-LINE OR ON MID-LANE OF LANE NO. 2.

NOTE:

THE CONTRACTOR SHALL VERIFY ALL CONTROLLING FIELD DIMENSIONS BEFORE ORDERING OR FABRICATING ANY MATERIAL.

SAN MATEO - HAYWARD BRIDGE

DECK REHABILITATION

STEEL DECK OVERLAY CONFORM DETAILS

	BY	CHECKED
DESIGN	C. T. Lee	H. Su
DETAILS	B. Ballesteros	C. T. Lee
QUANTITIES	C. T. Lee	H. Su

STATE OF CALIFORNIA
DEPARTMENT OF TRANSPORTATION

DIVISION OF MAINTENANCE
STRUCTURE MAINTENANCE AND INVESTIGATIONS

BRIDGE NO. 35-0054
POST MILE R14.44

STRUCTURES MAINTENANCE DETAIL SHEET (ENGLISH) (REV. 09-01-10)

ORIGINAL SCALE IN INCHES FOR REDUCED PLANS 0 1 2 3

UNIT: 3486
PROJECT NUMBER & PHASE: 0400000441
CONTRACT NO.: 04-041004

DISREGARD PRINTS BEARING EARLIER REVISION DATES

REVISION DATES: 07-20-12 12-27-12 09-10-13 04-17-14

SHEET 20 OF 26

FILE => 0400000044we017.dgn

USERNAME => s128787 DATE PLOTTED => 18-JUN-2014 TIME PLOTTED => 12:35

DIST	COUNTY	ROUTE	POST MILES TOTAL PROJECT	SHEET No.	TOTAL SHEETS
04	SM, Ala	92	R14.4/R18.8, R0.0/R2.6	112	117

REGISTERED CIVIL ENGINEER — DATE 3-5-14

5-27-14
PLANS APPROVAL DATE

REGISTERED PROFESSIONAL ENGINEER — CHRISTOPHER T. LEE — No. C38395 — Exp. 3-31-15 — CIVIL — STATE OF CALIFORNIA

The State of California or its officers or agents shall not be responsible for the accuracy or completeness of electronic copies of this plan sheet.

LEGEND (FOR THIS SHEET ONLY):

- EXISTING CONCRETE DECK
- NEW POLYESTER CONCRETE OVERLAY
- EXISTING STEEL HEADER BAR OR ARMOR
- EXISTING STEEL DECK AND/OR BEAM

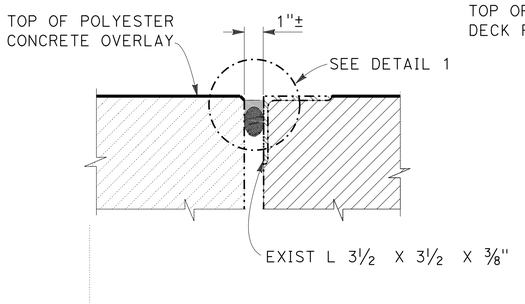

SECTION A - A
NO SCALE

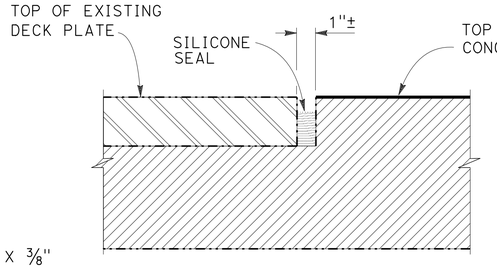

SECTION B - B
NO SCALE

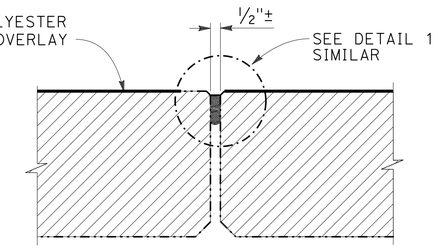

SECTION C - C
NO SCALE

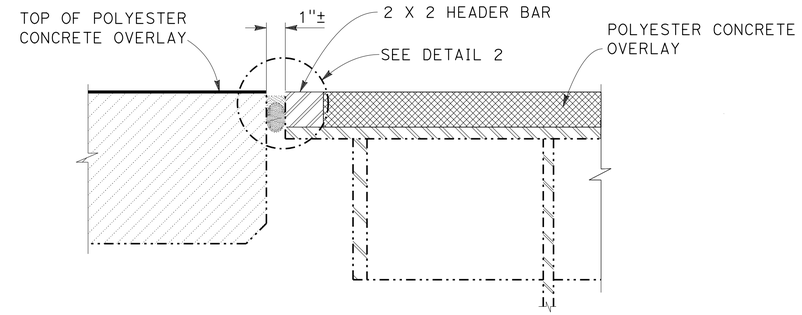

SECTION D - D
NO SCALE

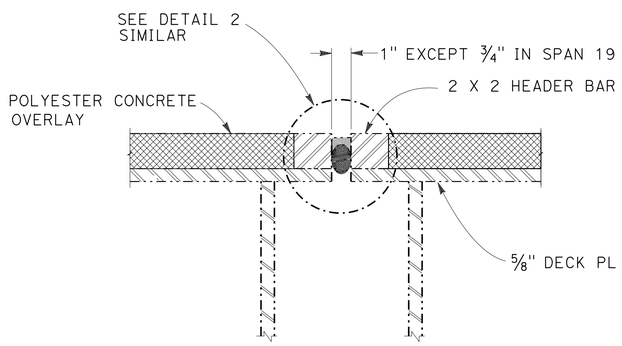

SECTION E - E
NO SCALE

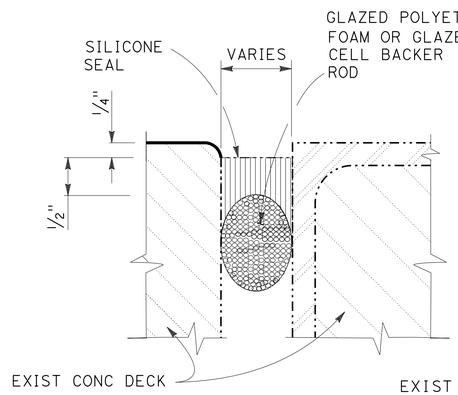

DETAIL 1
NO SCALE

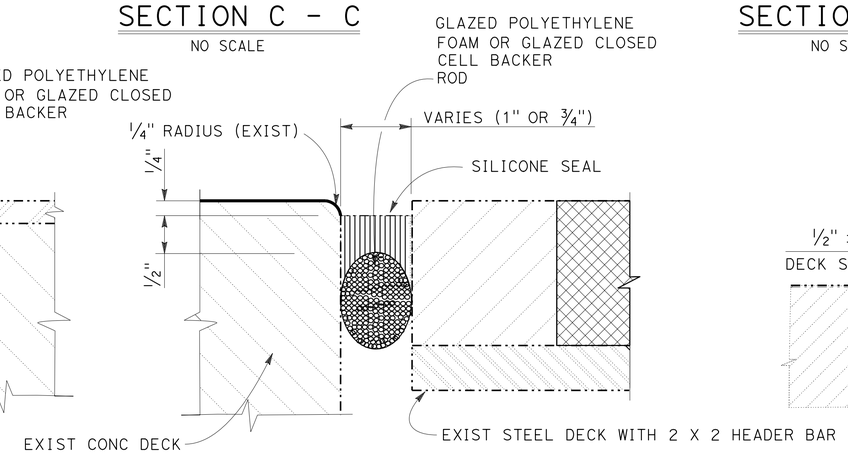

DETAIL 2
NO SCALE

NOTES:

ARMOR ANGLE NOT TO BE COATED WITH DECK SEALANT EXCEPT AS NOTED.

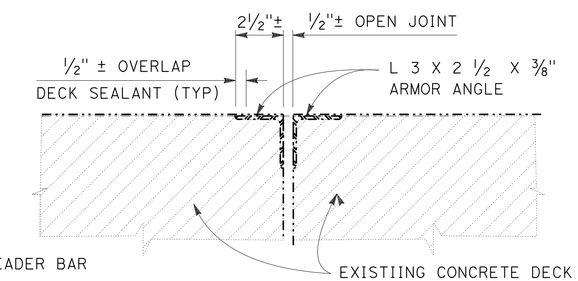

SECTION F - F
(TYPICAL TRESTLE TRANSVERSE JOINT)
NO SCALE

JOINT SEAL TYPE A MODIFIED MR = ½"

NOTES:

1. CLEAN EXPANSION JOINTS AND ABRASIVE BLAST CLEAN JOINT.
2. COMMERCIAL QUALITY GLAZED POLYETHYLENE OR GLAZED CLOSED CELL BACKER ROD.
   UNCOMPRESSED WIDTH DIAMETER TO BE 25% GREATER THAN ACTUAL JOINT GROOVE WIDTH.
3. INSTALL JOINT SEAL.
   END JOINT SEAL AT EDGE OF DECK.

NOTES:

1. FOR LOCATION OF SECTIONS SEE "DECK REHAB DETAILS" SHEETS.
2. MOVEMENT RATING FOR JOINTS SHOWN IN DETAILS 1 OR 2 IS ½".
3. JOINT SEALS ARE TYPE "A" MODIFIED.
4. JOINT GAP DIMENSIONS AS SHOWN ARE FOR REFERENCE ONLY.
5. FOR DECK OVERLAY CONFORM DETAILS. SEE "TYPICAL SECTIONS SHEETS".
6. FOR JOINT LOCATIONS, SEE "DECK REHAB DETAILS" SHEET AND "JOINT SEAL AND REPAIR TABLES" SHEET.

NOTE:

THE CONTRACTOR SHALL VERIFY ALL CONTROLLING FIELD DIMENSIONS BEFORE ORDERING OR FABRICATING ANY MATERIAL.

SAN MATEO - HAYWARD BRIDGE

DECK REHABILITATION

DECK JOINT DETAILS

	BY	CHECKED
DESIGN	C. T. Lee	H. Su
DETAILS	B. Ballesteros	C. T. Lee
QUANTITIES	C. T. Lee	H. Su

STATE OF CALIFORNIA
DEPARTMENT OF TRANSPORTATION

DIVISION OF MAINTENANCE
STRUCTURE MAINTENANCE AND INVESTIGATIONS

BRIDGE NO. 35-0054
POST MILE R14.44

STRUCTURES MAINTENANCE DETAIL SHEET (ENGLISH) (REV. 09-01-10)

ORIGINAL SCALE IN INCHES FOR REDUCED PLANS 0 1 2 3

UNIT: 3486
PROJECT NUMBER & PHASE: 0400000441
CONTRACT NO.: 04-041004

DISREGARD PRINTS BEARING EARLIER REVISION DATES

REVISION DATES: 08-30-12 12-27-12 09-10-13

SHEET 21 OF 26

FILE => 0400000044we018.dgn

USERNAME => s128787 DATE PLOTTED => 18-JUN-2014 TIME PLOTTED => 12:35

DIST	COUNTY	ROUTE	POST MILES TOTAL PROJECT	SHEET No.	TOTAL SHEETS
04	SM,Ala	92	R14.4/R18.8, R0.0/R2.6	113	117

REGISTERED CIVIL ENGINEER — DATE 3-5-14

5-27-14
PLANS APPROVAL DATE

REGISTERED PROFESSIONAL ENGINEER — CHRISTOPHER T. LEE No. C38395 Exp. 3-31-15 CIVIL — STATE OF CALIFORNIA

The State of California or its officers or agents shall not be responsible for the accuracy or completeness of electronic copies of this plan sheet.

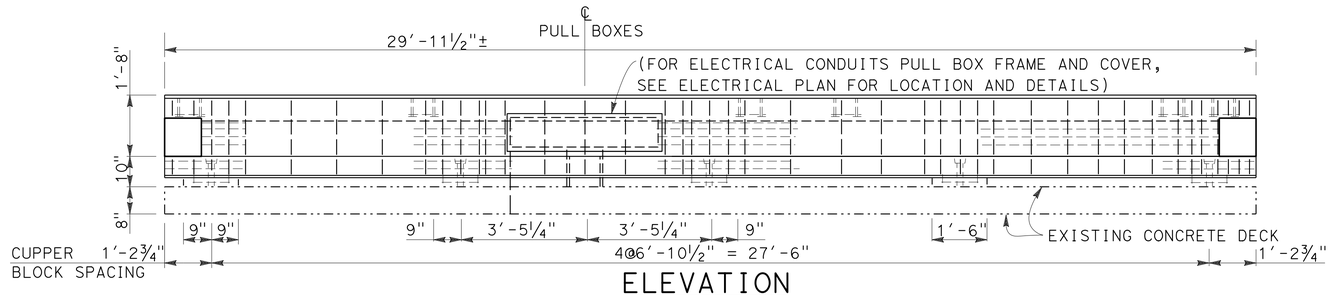

ELEVATION
(LOOKING NORTH)

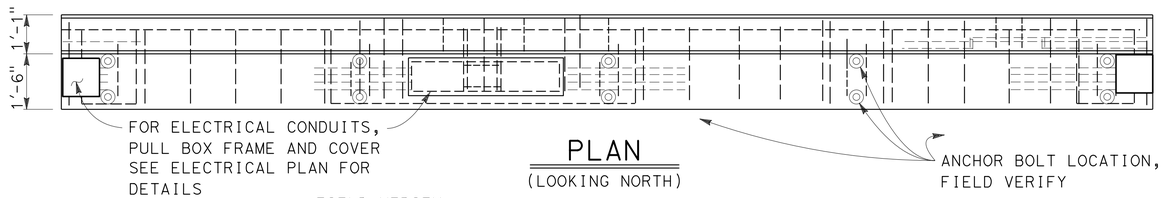

PLAN
(LOOKING NORTH)

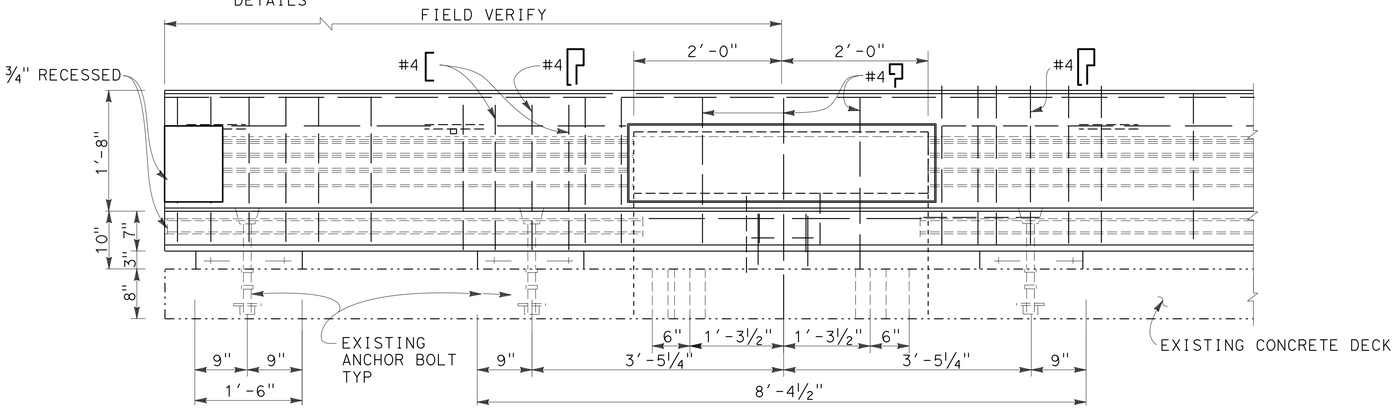

NOTE: EXISTING ANCHOR BOLTS WILL REMAIN AND BE USE TO SECURE THE NEW PC UNIT.

PART ELEVATION

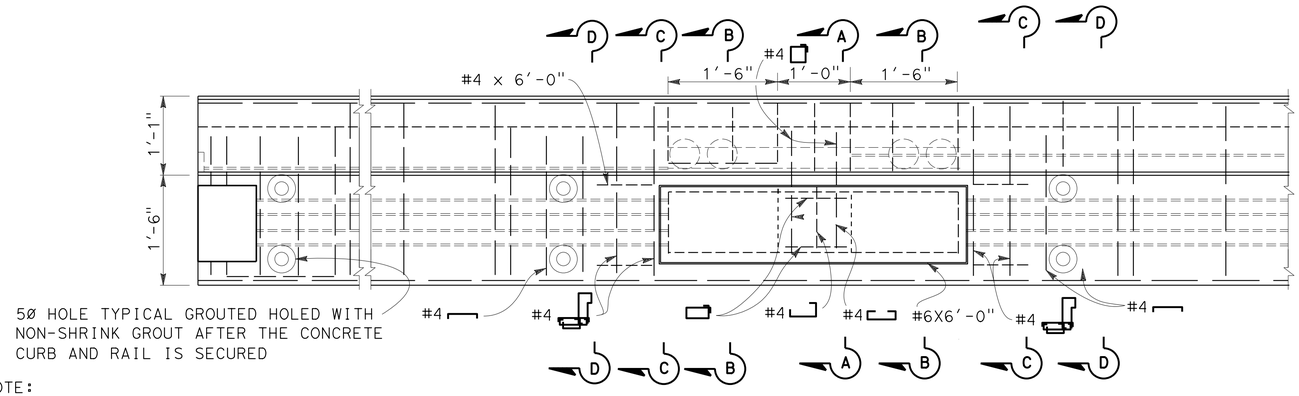

NOTE:
THE CONTRACTOR SHALL VERIFY ALL CONTROLLING FIELD DIMENSIONS BEFORE ORDERING OR FABRICATING ANY MATERIAL.

PART PLAN

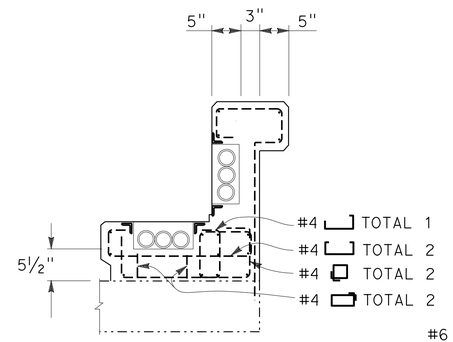

SECTION A - A
NO SCALE

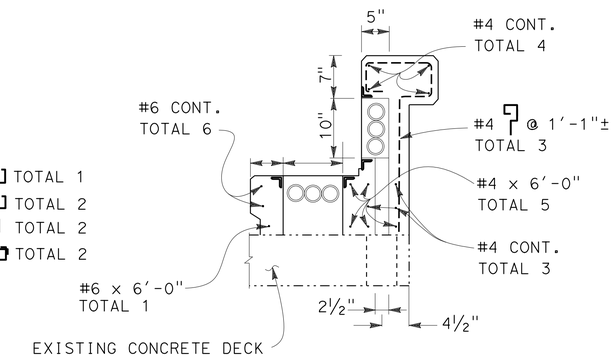

SECTION B - B
NO SCALE

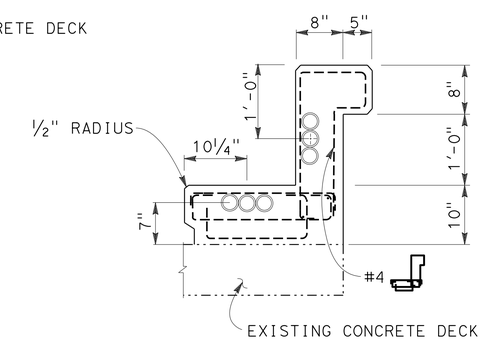

SECTION C - C
NO SCALE

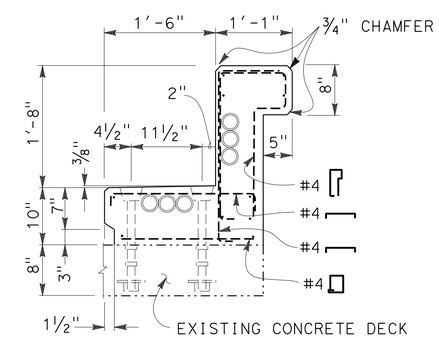

SECTION D - D
NO SCALE

NOTE:
DIMENSIONS AS SHOWN FOR REFERENCE ONLY.

PC CONCRETE RAIL AND CURB UNIT DETAIL
NO SCALE

SAN MATEO - HAYWARD BRIDGE
DECK REHABILITATION
CONCRETE CURB & RAILING DETAILS - TRESTLE SPAN

	BY	CHECKED
DESIGN	C. T. Lee	H. Su
DETAILS	B. Ballesteros	C. T. Lee
QUANTITIES	C. T. Lee	H. Su

STATE OF CALIFORNIA
DEPARTMENT OF TRANSPORTATION

DIVISION OF MAINTENANCE
STRUCTURE MAINTENANCE AND INVESTIGATIONS

BRIDGE NO. 35-0054
POST MILE R14.44

STRUCTURES MAINTENANCE DETAIL SHEET (ENGLISH) (REV. 09-01-10)

ORIGINAL SCALE IN INCHES FOR REDUCED PLANS 0 1 2 3

UNIT: 3486
PROJECT NUMBER & PHASE: 0400000441
CONTRACT NO.: 04-041004

DISREGARD PRINTS BEARING EARLIER REVISION DATES

REVISION DATES 09-26-12 12-27-12 09-10-13 02-24-14

SHEET 22 OF 26

FILE => 0400000044we019.dgn

USERNAME => s128787 DATE PLOTTED => 18-JUN-2014 TIME PLOTTED => 12:35

DIST	COUNTY	ROUTE	POST MILES TOTAL PROJECT	SHEET No.	TOTAL SHEETS
04	SM, Ala	92	R14.4/R18.8, R0.0/R2.6	114	117

REGISTERED CIVIL ENGINEER — DATE 4-17-14

5-27-14
PLANS APPROVAL DATE

REGISTERED PROFESSIONAL ENGINEER — CHRISTOPHER T. LEE — No. C38395 — Exp. 3-31-15 — CIVIL — STATE OF CALIFORNIA

The State of California or its officers or agents shall not be responsible for the accuracy or completeness of electronic copies of this plan sheet.

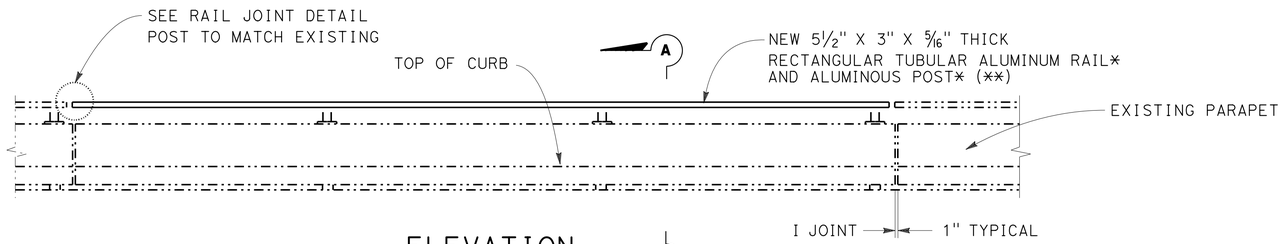

ELEVATION
NO SCALE

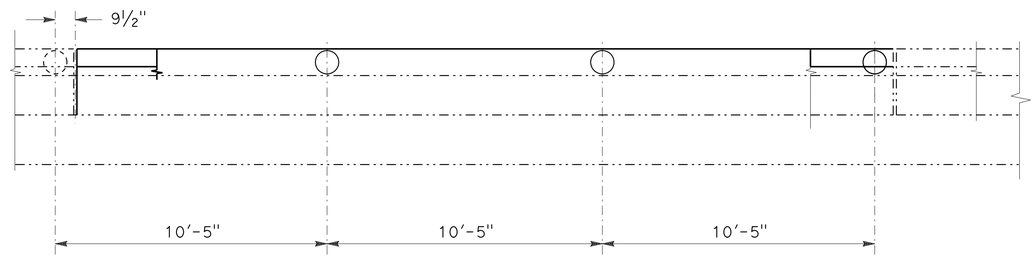

PLAN
NO SCALE

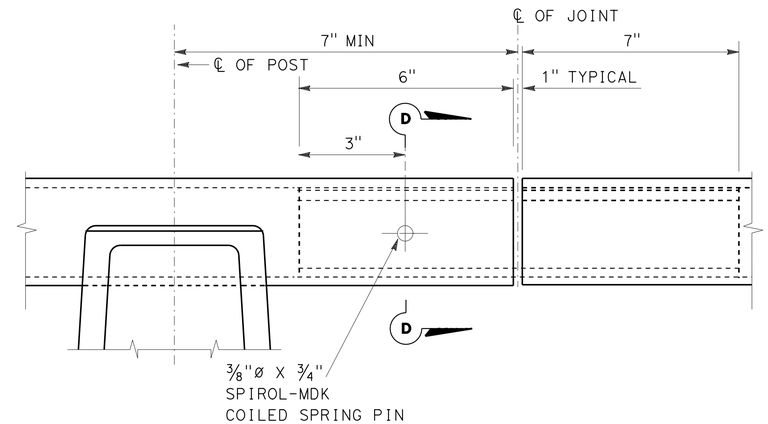

RAIL JOINT DETAIL
NO SCALE

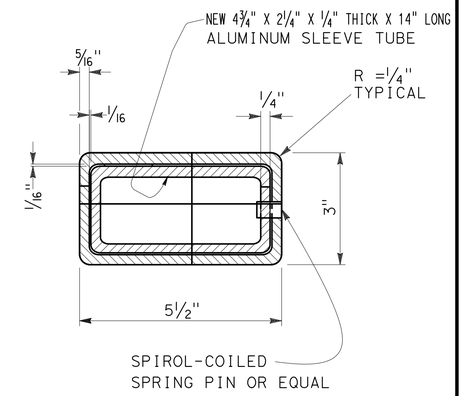

SECTION D-D
NO SCALE

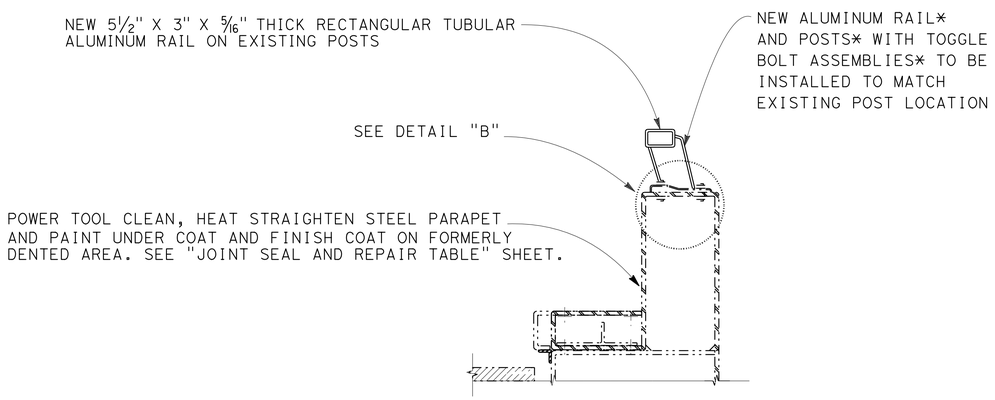

NOTE: EXISTING STEEL PARAPET IS ¼" THICK A36 STEEL PLATE.

SECTION A - A
NO SCALE

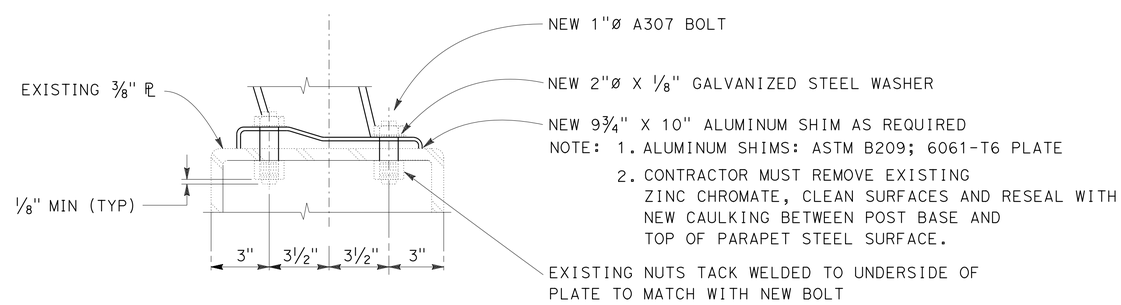

DETAIL B
NO SCALE

* DEPARTMENT - FURNISHED MATERIALS

** REMOVE WELD MATERIAL - GRIND SMOOTH SURFACE, AND SALVAGE ALUMINOUS POSTS

NOTE:

THE CONTRACTOR SHALL VERIFY ALL CONTROLLING FIELD DIMENSIONS BEFORE ORDERING OR FABRICATING ANY MATERIAL.

SAN MATEO - HAYWARD BRIDGE
DECK REHABILITATION
METAL RAILING REPLACEMENT DETAILS

	BY	CHECKED
DESIGN	C. T. Lee	H. Su
DETAILS	B. Ballesteros	C. T. Lee
QUANTITIES	C. T. Lee	H. Su

STATE OF CALIFORNIA
DEPARTMENT OF TRANSPORTATION

DIVISION OF MAINTENANCE
STRUCTURE MAINTENANCE AND INVESTIGATIONS

BRIDGE NO. 35-0054
POST MILE R14.44

STRUCTURES MAINTENANCE DETAIL SHEET (ENGLISH) (REV. 09-01-10)

ORIGINAL SCALE IN INCHES FOR REDUCED PLANS 0 1 2 3

UNIT: 3486
PROJECT NUMBER & PHASE: 0400000441
CONTRACT NO.: 04-041004

DISREGARD PRINTS BEARING EARLIER REVISION DATES → 02-26-14 03-04-14 02-24-14

SHEET 23 OF 26

FILE => 0400000044we020.dgn

USERNAME => s128787 DATE PLOTTED => 18-JUN-2014 TIME PLOTTED => 12:35

DIST	COUNTY	ROUTE	POST MILES TOTAL PROJECT	SHEET No.	TOTAL SHEETS
04	SM, Ala	92	R14.4/R18.8, R0.0/R2.6	115	117

REGISTERED CIVIL ENGINEER 3-5-14 DATE

5-27-14
PLANS APPROVAL DATE

REGISTERED PROFESSIONAL ENGINEER CHRISTOPHER T. LEE No. C38395 Exp. 3-31-15 CIVIL STATE OF CALIFORNIA

The State of California or its officers or agents shall not be responsible for the accuracy or completeness of electronic copies of this plan sheet.

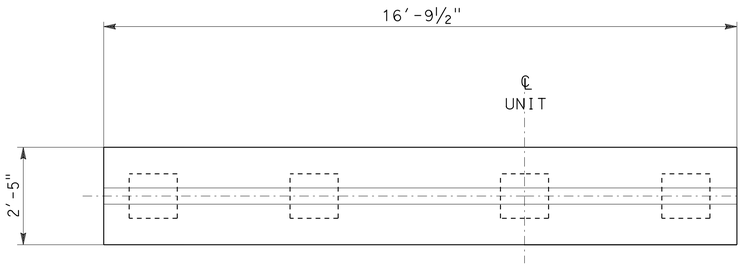

PC CONCRETE MEDIAN BARRIER PLAN (ONE UNIT)

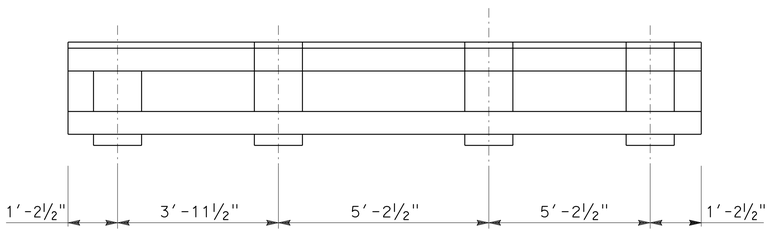

ELEVATION (ONE UNIT)

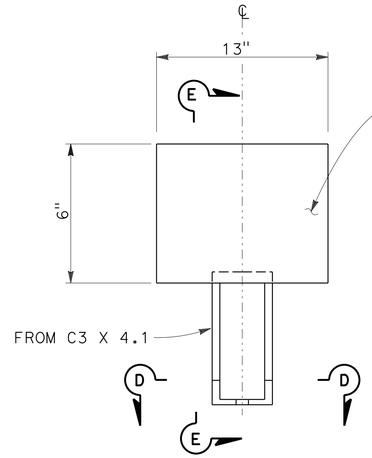

PLAN

NO SCALE

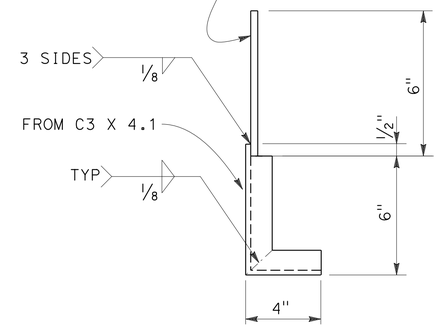

SECTION E - E

NO SCALE

FURNISH METAL PIER AND FLOOR BEAM MARKER QUANTITY
40 EACH-314 LB

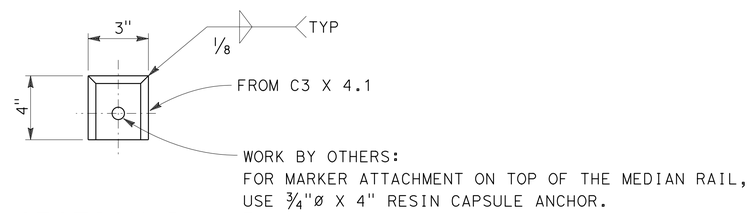

SECTION D - D

NO SCALE

METAL PIER AND FLOOR BEAM MARKER DETAIL

NO SCALE

NOTES: 1. HOT-DIPPED GALVANIZE THE MARKERS AFTER FABRICATION. PAINT AFTER GALVANIZING
2. CONTRACTOR TO FURNISH MARKERS TO THE ENGINEER.

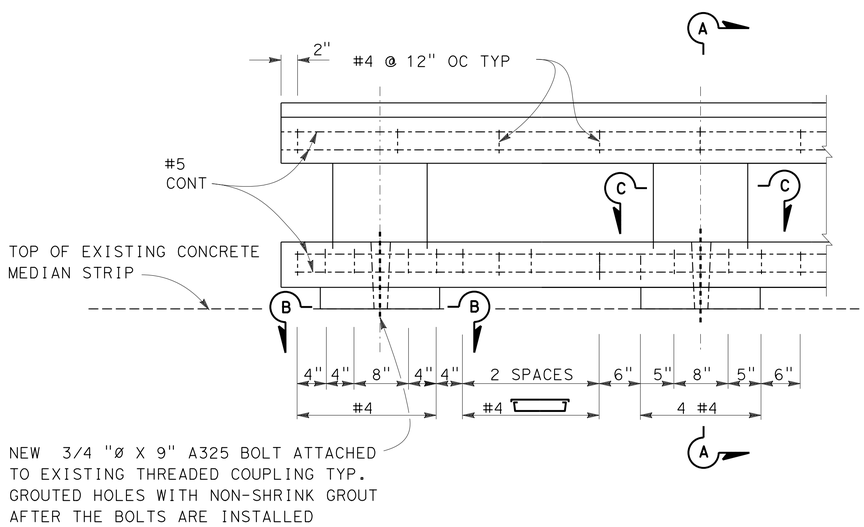

TYPICAL DETAILS

NO SCALE

NOTE:

THE CONTRACTOR SHALL VERIFY ALL CONTROLLING FIELD DIMENSIONS BEFORE ORDERING OR FABRICATING ANY MATERIAL.

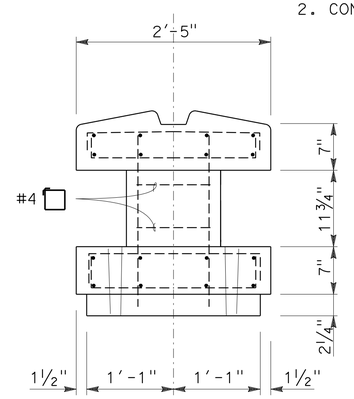

SECTION A - A

NO SCALE

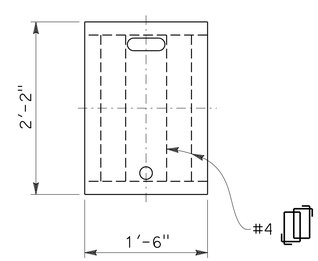

SECTION B - B

NO SCALE

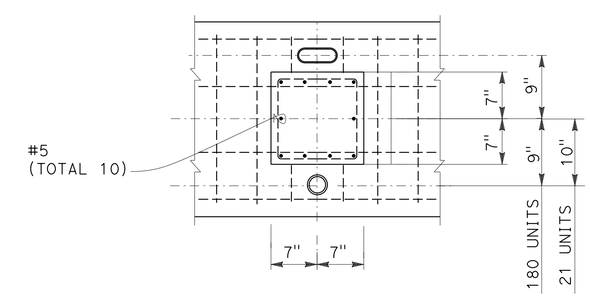

SECTION C - C

NO SCALE

PC CONCRETE MEDIAN BARRIER UNIT DETAIL

NO SCALE

	BY	CHECKED
DESIGN	C. T. Lee	H. Su
DETAILS	B. Ballesteros	C. T. Lee
QUANTITIES	C. T. Lee	H. Su

STATE OF CALIFORNIA
DEPARTMENT OF TRANSPORTATION

DIVISION OF MAINTENANCE
STRUCTURE MAINTENANCE AND INVESTIGATIONS

BRIDGE NO. 35-0054
POST MILE R14.44

SAN MATEO - HAYWARD BRIDGE

DECK REHABILITATION

CONCRETE MEDIAN BARRIER REPLACEMENT DETAIL - STEEL GIRDER SPAN

STRUCTURES MAINTENANCE DETAIL SHEET (ENGLISH) (REV. 09-01-10)

ORIGINAL SCALE IN INCHES FOR REDUCED PLANS 0 1 2 3

UNIT: 3486
PROJECT NUMBER & PHASE: 0400000441
CONTRACT NO.: 04-041004

DISREGARD PRINTS BEARING EARLIER REVISION DATES

REVISION DATES 03-03-14 03-04-14 02-24-15

SHEET 24 OF 26

FILE => 0400000044we021.dgn

USERNAME => s128787 DATE PLOTTED => 18-JUN-2014 TIME PLOTTED => 12:35

DIST	COUNTY	ROUTE	POST MILES TOTAL PROJECT	SHEET No.	TOTAL SHEETS
04	SM, Ala	92	R14.4/R18.8, R0.0/R2.6	116	117

REGISTERED CIVIL ENGINEER 3-5-14 DATE

5-27-14
PLANS APPROVAL DATE

REGISTERED PROFESSIONAL ENGINEER CHRISTOPHER T. LEE No. C38395 Exp. 3-31-15 CIVIL STATE OF CALIFORNIA

The State of California or its officers or agents shall not be responsible for the accuracy or completeness of electronic copies of this plan sheet.

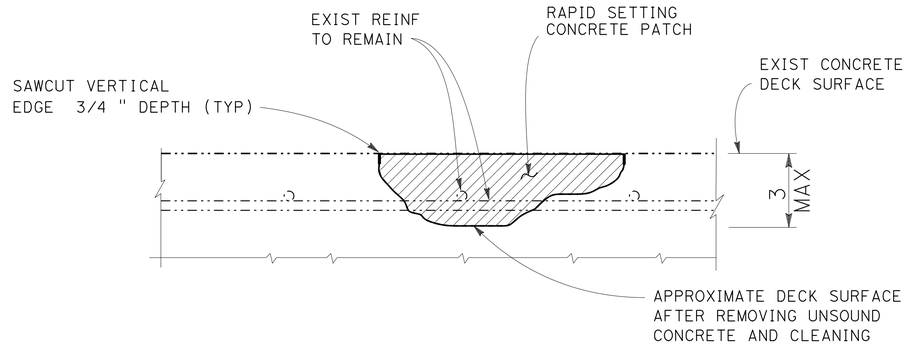

TRESTLE CONCRETE DECK REPAIR DETAIL

DECK JOINT SPALL REPAIR SIMILAR

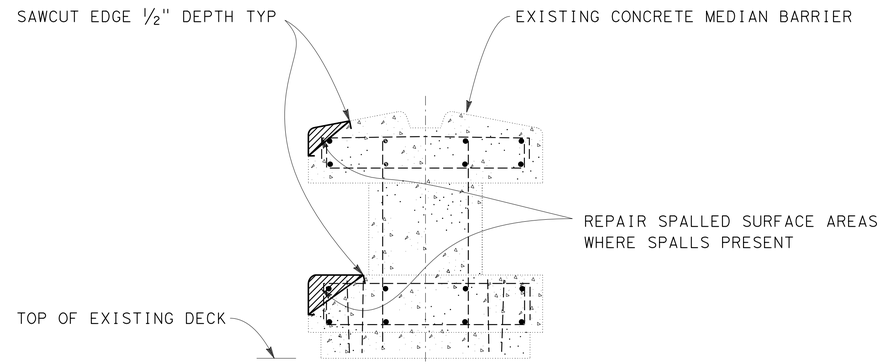

CONCRETE MEDIAN BARRIER REPAIR DETAIL

NO SCALE

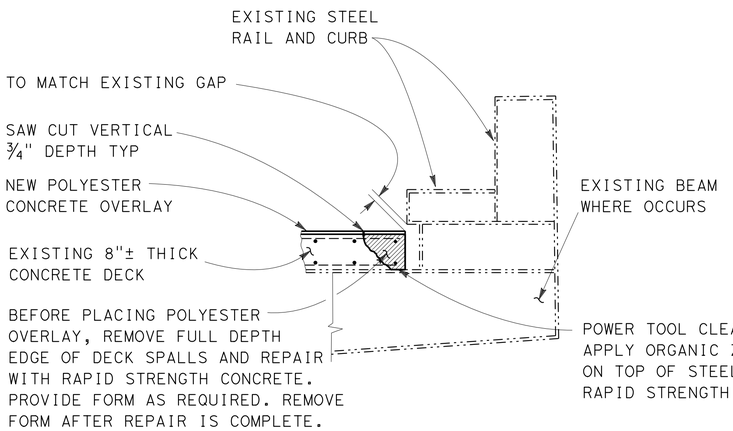

STEEL GIRDER SPAN DECK EDGE OF CONCRETE DECK REPAIR DETAIL

NO SCALE

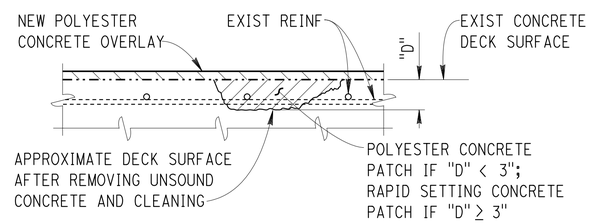

STEEL GIRDER DECK DAMAGE REPAIR DETAIL

NOTE: REINFORCEMENT MAY BE ENCOUNTERED DURING DECK CONCRETE REMOVAL. LOCATION WILL BE DETERMINED BY THE ENGINEER.

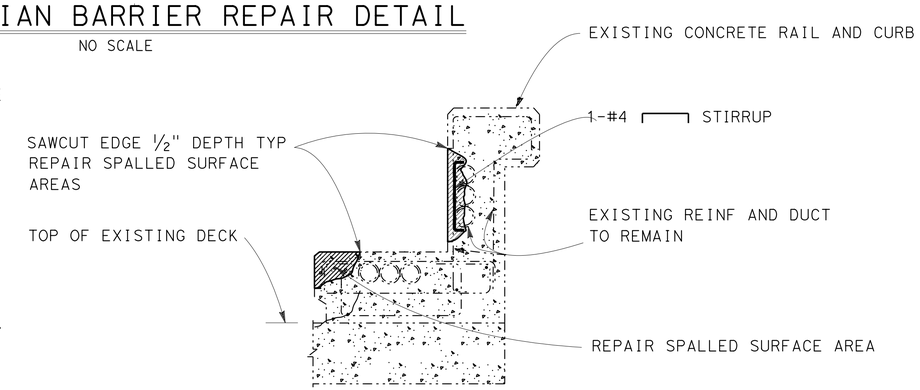

NOTE: PROVIDE 1-#4 STIRRUP TO SECURE CONDUITS WHERE THEY ARE EXPOSED.

CONCRETE RAIL AND CURB REPAIR DETAIL

NO SCALE

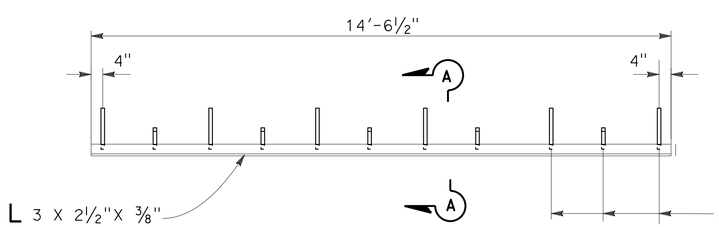

PLAN

NO SCALE

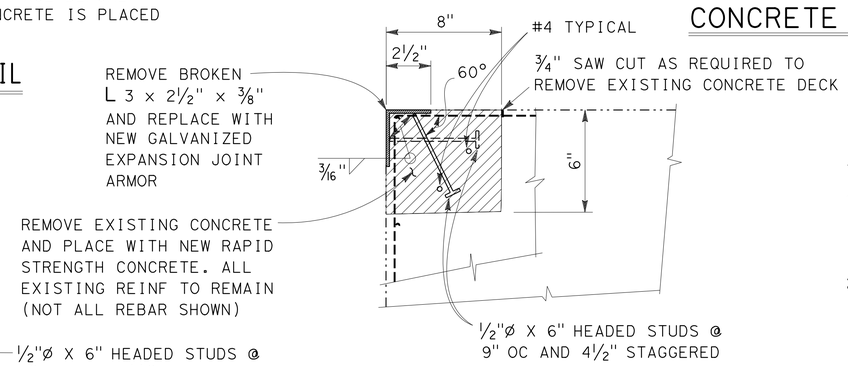

SECTION A - A

NO SCALE

CONCRETE DECK, JOINT, RAIL AND CURB REPAIR NOTES:

1. EXISTING REINFORCEMENT SHALL BE PROTECTED IN PLACE DURING UNSOUND CONCRETE REMOVAL, AND REPAIRING SPALLED SURFACE AREAS.
2. IT IS RESPONSIBILITY OF THE CONTRACTOR TO REPAIR ANY REINFORCEMENT THAT IS ACCIDENTALLY DAMAGED DURING THE SAW CUTTING OPERATION.

NOTE:

THE CONTRACTOR SHALL VERIFY ALL CONTROLLING FIELD DIMENSIONS BEFORE ORDERING OR FABRICATING ANY MATERIAL.

TRESTLE DECK EXPANSION JOINT ARMOR REPLACEMENT DETAIL

NO SCALE

NOTE: HOT GALVANIZE EXPANSION JOINT ARMOR AFTER FABRICATION IS COMPLETED.

SAN MATEO - HAYWARD BRIDGE

DECK REHABILITATION

MISCELLANEOUS DETAILS

	BY	CHECKED
DESIGN	C. T. Lee	H. Su
DETAILS	B. Ballesteros	C. T. Lee
QUANTITIES	C. T. Lee	H. Su

STATE OF CALIFORNIA
DEPARTMENT OF TRANSPORTATION

DIVISION OF MAINTENANCE
STRUCTURE MAINTENANCE AND INVESTIGATIONS

BRIDGE NO. 35-0054
POST MILE R14.44

STRUCTURES MAINTENANCE DETAIL SHEET (ENGLISH) (REV. 09-01-10)

ORIGINAL SCALE IN INCHES FOR REDUCED PLANS 0 1 2 3

UNIT: 3486
PROJECT NUMBER & PHASE: 0400000441
CONTRACT NO.: 04-041004

DISREGARD PRINTS BEARING EARLIER REVISION DATES

REVISION DATES 03-04-14 09-10-13 02-26-14

SHEET 25 OF 26

FILE => 0400000044we022.dgn

USERNAME => s128787 DATE PLOTTED => 18-JUN-2014 TIME PLOTTED => 12:35

DIST	COUNTY	ROUTE	POST MILES TOTAL PROJECT	SHEET No.	TOTAL SHEETS
04	SM, Ala	92	R14.4/R18.8, R0.0/R2.6	117	117

REGISTERED CIVIL ENGINEER 3-5-14 DATE

5-27-14
PLANS APPROVAL DATE

REGISTERED PROFESSIONAL ENGINEER CHRISTOPHER T. LEE No. C38395 Exp. 3-31-15 CIVIL STATE OF CALIFORNIA

The State of California or its officers or agents shall not be responsible for the accuracy or completeness of electronic copies of this plan sheet.

JOINT SEAL TABLE

LOCATION	Min. "MR" (IN)	APPROX. LENGTH (FT)	EXISTING WATERSTOP	APPROX. DEPTH TO CLEAN EXPANSION JOINT (IN)
Abut 1	1/2	80	No	8"
Pier 1 (West)	1/2	80	No	8"
Pier 1 (East)	1/2	80	No	8"
Span 3	1/2	80	No	8"
Span 5	1/2	80	No	8"
Span 7	1/2	80	No	8"
Span 9	1/2	80	No	8"
Span 11	1/2	80	No	3"
Span 13	1/2	80	No	3"
Span 15	1/2	80	No	3"
Span 17	1/2	80	No	3"
Span 19	1/2	80	No	3"
Span 21	1/2	80	No	3"
Span 23	1/2	80	No	3"
Span 25	1/2	80	No	3"
Span 27	1/2	80	No	3"
Span 29	1/2	80	No	8"
Span 31	1/2	80	No	8"
Span 33	1/2	80	No	8"
Span 35	1/2	80	No	8"

1. CLEAN EXPANSION JOINT AND REPLACE JOINT SEAL = 1,600 LF

CONCRETE EDGE OF DECK REPAIR TABLE

LOCATION	APPROX. DEPTH DAMAGED (IN)	APPROX. WIDTH DAMAGED (IN)	APPROX. LENGTH (FT)	VOLUME (CY)
SPAN 1 THRU 11.2 AND 27.24 THRU 37 *	8	12	321	8

* POWER TOOL CLEAN STEEL SURFACE AND PAINT WITH ZINC-RICH PRIMER (ORGANIC VEHICLE TYPE) - 321 SQFT

CONCRETE DECK REPAIR TABLE

LOCATION	DECK AREA (SF)	APPROX. DECK AREA DAMAGED (%)	APPROX. DEPTH DAMAGED (IN) (%)	REMOVE UNSOUND CONCRETE (CF)	RAPID SETTING CONCRETE PATCH (CF)
1. RAPID SETTING CONCRETE PATCH					
West Approach	17,235	1.0	2	29	29
Pier 1	6,146	1.0	2	10	10
Span 1 thru Span 11.2	161,548	1.0	2	268	268
Span 27.24 thru Span 37	160,523	1.0	2	268	268
Pier 38	2,172	1.0	2	4	4
P38 - B285	2,496	2.0	2	8	8
B285 - B343	144,768	2.0	2	483	483
B343 - B1131	1,276,560	2.0	2	4,255	4,255
B1131 - Abut 1143	29,952	2.0	2	100	100
Refuge Bays	10,512	2.0	2	35	35
B315 to B343 (Widen Trestle)	27,510	0.1	2	5	5
B343 to B1131 (Widen Trestle)	1,303,982	0.1	2	217	217
B1131 to Abut 1143 (Widen Trestle)	11,819	0.1	2	2	2
			TOTAL	5,684	5,684

NOTE:

THE CONTRACTOR SHALL VERIFY ALL CONTROLLING FIELD DIMENSIONS BEFORE ORDERING OR FABRICATING ANY MATERIAL.

*CONCRETE RAILING REPAIR TABLE

LOCATION	RAIL LENGTH (LF)	APPROX. LENGTH DAMAGED (%)	PROJECTED SURFACE AREA (SQ FT)	REPAIR SPALLED SURFACE AREA (SQ FT)
1. MEDIAN				
West Approach Span	222	1.0	2.5	6
Pier 1	79	1.0	2.5	2
Span 1 thru Span 37	9,680	1.0	2.5	240
Pier 38	26	1.0	2.5	1
B285 to B343	1,740	1.0	2.5	44
B1131 to Abut 1143	360	1.0	2.5	9
			TOTAL	302
2. TRESTLE - EASTBOUND				
B285 to Abut 1143 (South)	25,944	2.0	2.5	1,297
B343 to B1131 (North)	23,670	2.0	2.5	1,184
			TOTAL	2,481
3. TRESTLE - WESTBOUND				
B343 to B1131 (South)	23,670	0.1	3.8	90
B285 to Abut 1143 (North)	2,570	0.1	3.8	98
			TOTAL	188

*NOTE: SIZE OF SPALL VARIES FROM 1 SQFT TO 2.5 SQFT

MISCELLANEOUS ITEM REPAIR TABLE

ITEM	LOCATION	QUANTITY
1. HEAT STRAIGHTEN STEEL PARAPET *		
AT EASTBOUND GIRDER SPAN	SPAN 14, 30 AND 32	LUMP SUM *
AT EASTBOUND GIRDER SPAN	SPAN 13, 23, 28, 29 AND 37	LUMP SUM *
2. MISCELLANEOUS METAL (BRIDGE) (FOR NEW EXPANSION JOINT ARMOR)		
AT EASTBOUND TRESTLE SPAN	BENT 297, 303, 320 AND 343	450 LB
3. RECONSTRUCT ALUMINUM RAILING		
AT STEEL GIRDER SPAN	SPAN 14 (SOUTH)	32 LF
	SPAN 28 & 37 (NORTH)	64 LF
4. FURNISH PRECAST CONCRETE MEDIAN BARRIER UNIT (17')		
AT STEEL GIRDER SPAN	SPAN 18	1 EA
5. FURNISH PRECAST CONCRETE RAIL AND CURB UNIT (30')		
AT EASTBOUND TRESTLE SPAN	SPAN 1052	1 EA
6. RECONSTRUCT DEBRIS SEAL CATCHMENT		
UNDER FINGER JOINT	SPAN 19	10 LF

* POWER TOOL CLEAN (HEAT STRAIGHTEN STEEL PARAPET), AND PAINT UNDER COATS AND FINISH COATS =339 SQFT.

SAN MATEO - HAYWARD BRIDGE

DECK REHABILITATION

JOINT SEAL AND REPAIR TABLES

	BY	CHECKED
DESIGN	C. T. Lee	H. Su
DETAILS	B. Ballesteros	C. T. Lee
QUANTITIES	C. T. Lee	H. Su

STATE OF CALIFORNIA
DEPARTMENT OF TRANSPORTATION

DIVISION OF MAINTENANCE
STRUCTURE MAINTENANCE AND INVESTIGATIONS

BRIDGE NO. 35-0054
POST MILE R14.44

STRUCTURES MAINTENANCE DETAIL SHEET (ENGLISH) (REV. 09-01-10)

ORIGINAL SCALE IN INCHES FOR REDUCED PLANS 0 1 2 3

UNIT: 3486
PROJECT NUMBER & PHASE: 0400000441
CONTRACT NO.: 04-041004

DISREGARD PRINTS BEARING EARLIER REVISION DATES

REVISION DATES 03-03-14 03-04-14 02-26-14

SHEET 26 OF 26

FILE => 0400000044we023.dgn

USERNAME => s128787 DATE PLOTTED => 18-JUN-2014 TIME PLOTTED => 12:36