Dist	COUNTY	LOCATION CODE	POST MILES TOTAL PROJECT	SHEET No.	TOTAL SHEETS
04	Ala	5785		101	371

LICENSED ARCHITECT — DATE 10-25-13

3-24-14
PLANS APPROVAL DATE

LICENSED ARCHITECT — Lani Rhoades — No. C 26695 — 10-31-15 RENEWAL DATE — STATE OF CALIFORNIA

The State of California or its officers or agents shall not be responsible for the accuracy or completeness of scanned copies of this plan sheet.

ACCESSIBILITY DESIGN APPROVAL DOT / DES / OTA

PROJECT ID **0413000133**

Reviewed by: Y. A. WANG
Date: 02-13-14

CALIFORNIA STATE FIRE MARSHAL APPROVED

Approval of this plan does not authorize or approve any omission or deviation from applicable regulations. Final approval is subject to field inspection. One set of approved plans shall be available on the project site at all times.

Reviewed by: INGRID P. ICASIANO
Approval date: 02-11-14

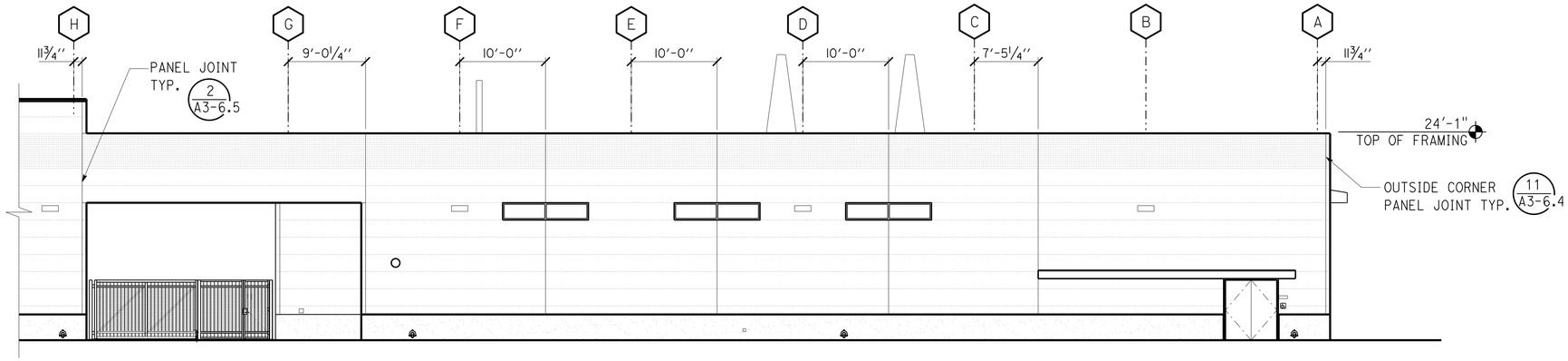

1 NORTH ELEVATION

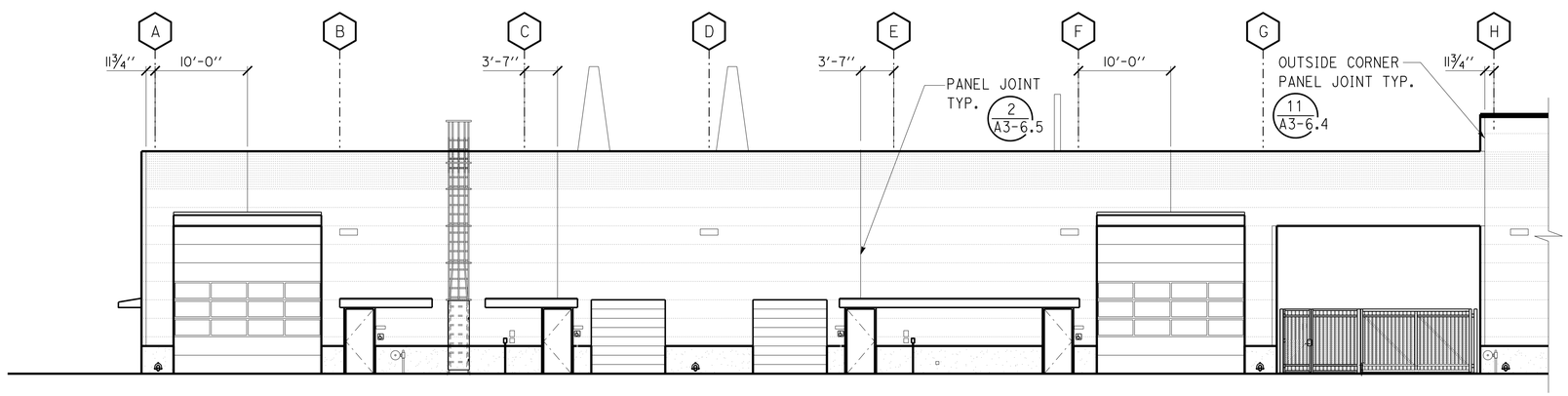

2 SOUTH ELEVATION

VERTICAL PANEL JOINTS

SCALE 1/8" = 1'-0"

	BY	CHECKED
DESIGN	L Rhoades, R Francisco	Q. Wong, F. Thomas
DETAILS	L Rhoades, J. Kwong	Q. Wong, F. Thomas
QUANTITIES		

STATE OF CALIFORNIA DEPARTMENT OF TRANSPORTATION

DIVISION OF ENGINEERING SERVICES ARCHITECTURAL AND STRUCTURAL DESIGN

BRIDGE No. 33M5785
POST MILE

SFOBB WAREHOUSE
BUILDING 1A
VERTICAL PANEL JOINTS

SHEET A1-5.6

TAEMWW Imperial - CCSC Rev. 01/13

ORIGINAL SCALE IN INCHES FOR REDUCED PLANS 0 1 2 3

UNIT: 3598 CONTRACT No.: 014101
PROJECT NUMBER & PHASE: 04130001331

DISREGARD PRINTS BEARING EARLIER REVISION DATES → REVISION DATES (PRELIMINARY STAGE ONLY) - -13 SHEET X OF X

P:\dist_04\0413000133_sfobb_maint_warehouse\arch\CADD\Working Drawings\first expedite\a1_05.6_vrt pnl joints.dgn

30-APR-2014 10:05

Dist	COUNTY	LOCATION CODE	POST MILES TOTAL PROJECT	SHEET No.	TOTAL SHEETS
04	Ala	5785		102	371

LICENSED ARCHITECT — DATE 10-25-13

3-24-14
PLANS APPROVAL DATE

LICENSED ARCHITECT — Lani Rhoades — No. C 26695 — 10-31-15 RENEWAL DATE — STATE OF CALIFORNIA

The State of California or its officers or agents shall not be responsible for the accuracy or completeness of scanned copies of this plan sheet.

ACCESSIBILITY DESIGN APPROVAL DOT / DES / OTA
PROJECT ID **0413000133**
Reviewed by: Y. A. WANG
Date: 02-13-14

CALIFORNIA STATE FIRE MARSHAL APPROVED
Approval of this plan does not authorize or approve any omission or deviation from applicable regulations. Final approval is subject to field inspection. One set of approved plans shall be available on the project site at all times.
Reviewed by: INGRID P. ICASIANO
Approval date: 02-11-14

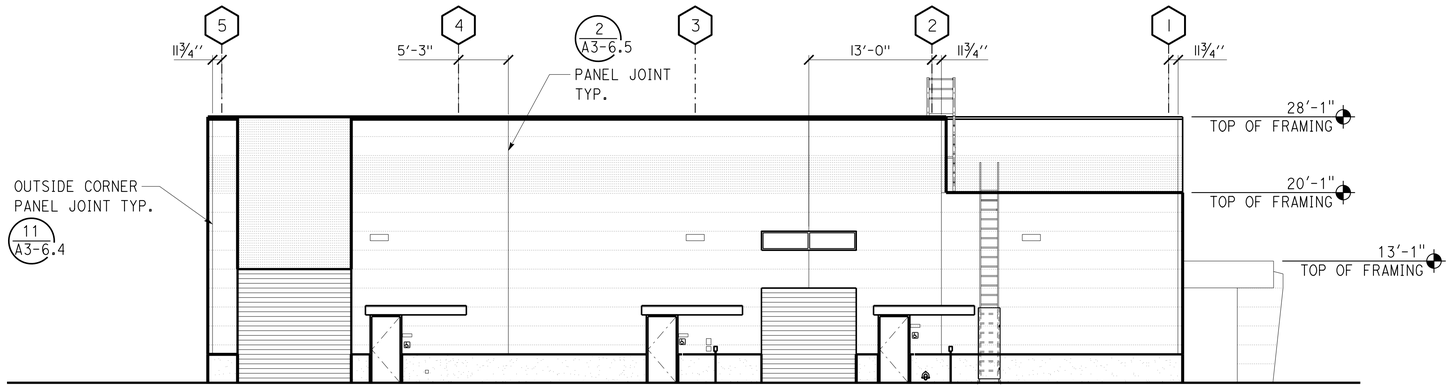

1 EAST ELEVATION

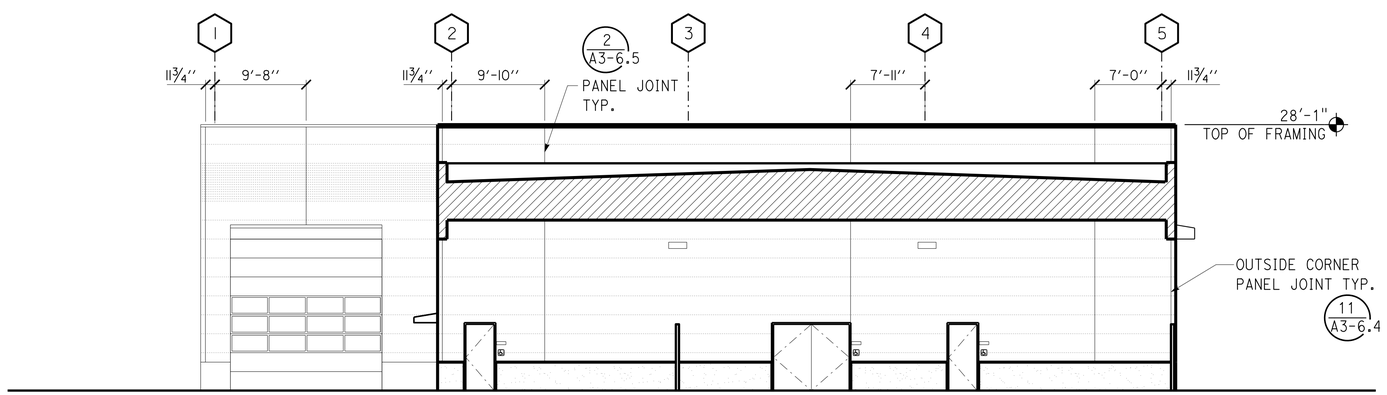

2 WEST ELEVATION

VERTICAL PANEL JOINTS

SCALE 1/8" = 1'-0"

DESIGN	BY L Rhoades, R Francisco	CHECKED Q. Wong, F. Thomas	
DETAILS	BY L Rhoades, J. Kwong	CHECKED Q. Wong, F. Thomas	
QUANTITIES	BY	CHECKED	

STATE OF **CALIFORNIA** DEPARTMENT OF TRANSPORTATION

DIVISION OF ENGINEERING SERVICES
ARCHITECTURAL AND STRUCTURAL DESIGN

BRIDGE No. 33M5785
POST MILE

SFOBB WAREHOUSE
BUILDING 1B
VERTICAL PANEL JOINTS

SHEET **A1-5.7**

TAEMWW Imperial - CCSC Rev. 01/13

ORIGINAL SCALE IN INCHES FOR REDUCED PLANS 0 1 2 3

UNIT: 3598 CONTRACT No.: 014101
PROJECT NUMBER & PHASE: 04130001331

DISREGARD PRINTS BEARING EARLIER REVISION DATES → - -13

REVISION DATES (PRELIMINARY STAGE ONLY) SHEET X OF X

P:\dist_04\0413000133_sfobb_maint_warehouse\arch\CADD\Working Drawings\first expedite\a1_05.7_vrt pnl joints.dgn

30-APR-2014 10:05

Dist	COUNTY	LOCATION CODE	POST MILES TOTAL PROJECT	SHEET No.	TOTAL SHEETS
04	Ala	5785		103	371

LICENSED ARCHITECT — DATE 10-25-13

3-24-14
PLANS APPROVAL DATE

LICENSED ARCHITECT — Lani Rhoades — No. C 26695 — 10-31-15 RENEWAL DATE — STATE OF CALIFORNIA

The State of California or its officers or agents shall not be responsible for the accuracy or completeness of scanned copies of this plan sheet.

ACCESSIBILITY DESIGN APPROVAL DOT / DES / OTA

PROJECT ID **0413000133**

Reviewed by: Y. A. WANG
Date: 02-13-14

CALIFORNIA STATE FIRE MARSHAL APPROVED

Approval of this plan does not authorize or approve any omission or deviation from applicable regulations. Final approval is subject to field inspection. One set of approved plans shall be available on the project site at all times.

Reviewed by: INGRID P. ICASIANO
Approval date: 02-11-14

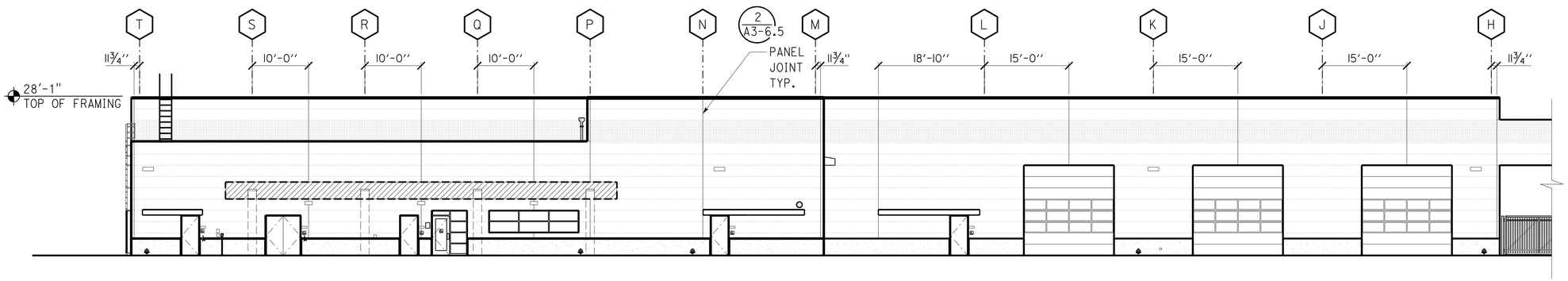

1 NORTH ELEVATION

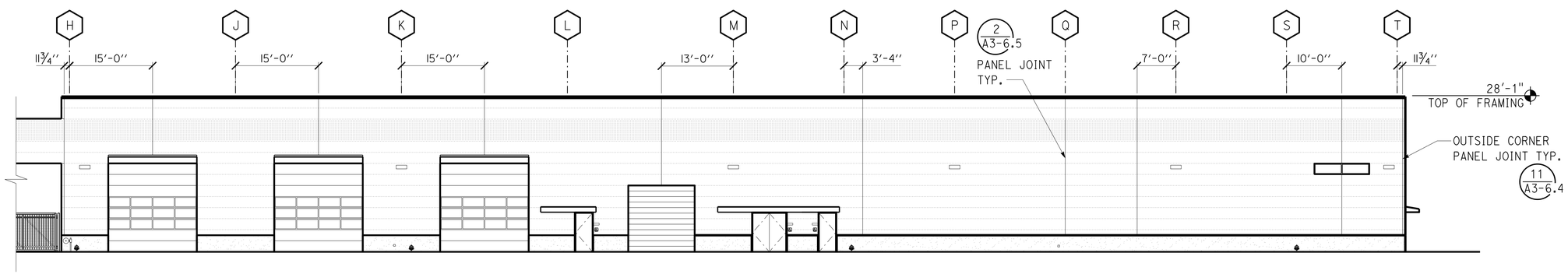

2 SOUTH ELEVATION

VERTICAL PANEL JOINTS

SCALE 3/32 " = 1'-0"

	BY	CHECKED
DESIGN	L Rhoades, R Francisco	Q. Wong, F. Thomas
DETAILS	L Rhoades, J. Kwong	Q. Wong, F. Thomas
QUANTITIES		

STATE OF **CALIFORNIA** DEPARTMENT OF TRANSPORTATION

DIVISION OF ENGINEERING SERVICES
ARCHITECTURAL AND STRUCTURAL DESIGN

BRIDGE No. 33M5785
POST MILE

SFOBB WAREHOUSE
BUILDING 1B
VERTICAL PANEL JOINTS

SHEET **A1-5.8**

TAEMWW Imperial - CCSC Rev. 01/13

ORIGINAL SCALE IN INCHES FOR REDUCED PLANS 0 1 2 3

UNIT: 3598 CONTRACT No.: 014101
PROJECT NUMBER & PHASE: 04130001331

DISREGARD PRINTS BEARING EARLIER REVISION DATES → - -13

REVISION DATES (PRELIMINARY STAGE ONLY) SHEET X OF X

30-APR-2014 10:05

P:\dist_04\0413000133_sfobb_maint_warehouse\arch\CADD\Working Drawings\first expedite\a1_05.8_vrt pnl joints.dgn

Dist	COUNTY	LOCATION CODE	POST MILES TOTAL PROJECT	SHEET No.	TOTAL SHEETS
04	Ala	5785		104	371

LICENSED ARCHITECT — DATE 10-25-13

3-24-14
PLANS APPROVAL DATE

LICENSED ARCHITECT Lani Rhoades No. C 26695 10-31-15 RENEWAL DATE STATE OF CALIFORNIA

The State of California or its officers or agents shall not be responsible for the accuracy or completeness of scanned copies of this plan sheet.

ACCESSIBILITY DESIGN APPROVAL DOT / DES / OTA
PROJECT ID **0413000133**
Reviewed by: Y. A. WANG
Date: 02-13-14

CALIFORNIA STATE FIRE MARSHAL APPROVED
Approval of this plan does not authorize or approve any omission or deviation from applicable regulations. Final approval is subject to field inspection. One set of approved plans shall be available on the project site at all times.
Reviewed by: INGRID P. ICASIANO
Approval date: 02-11-14

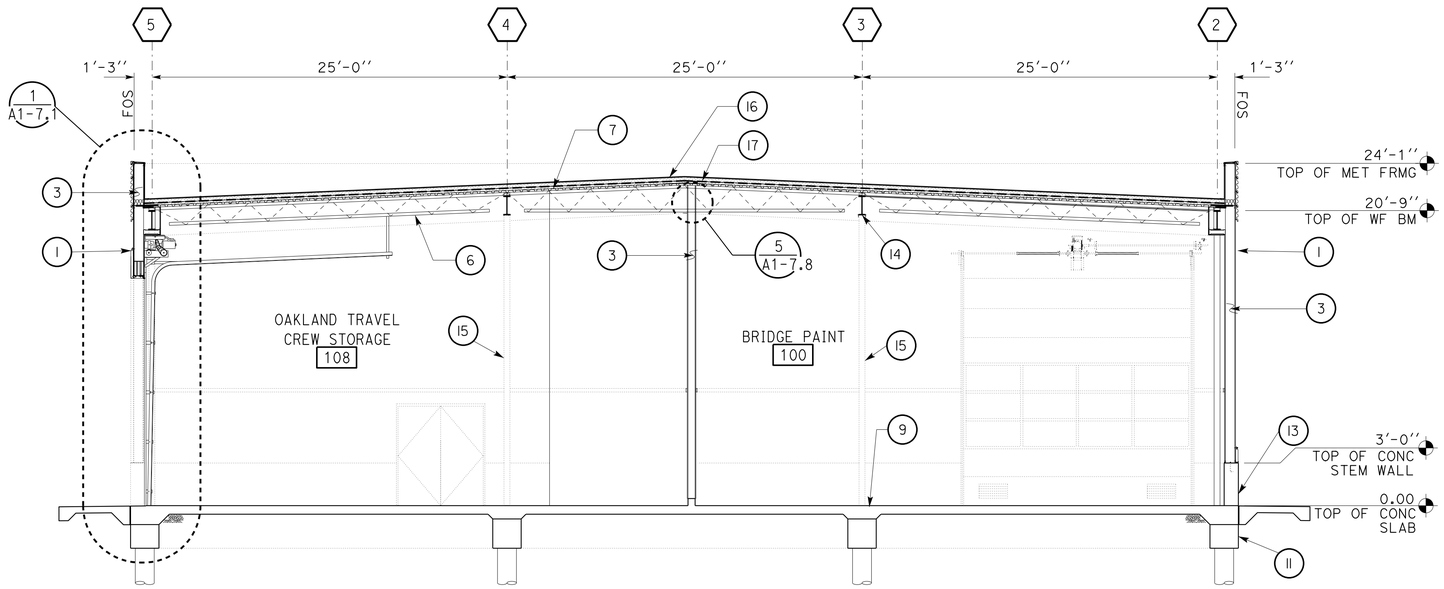

A BUILDING SECTION

SCALE 3/16" = 1'-0"

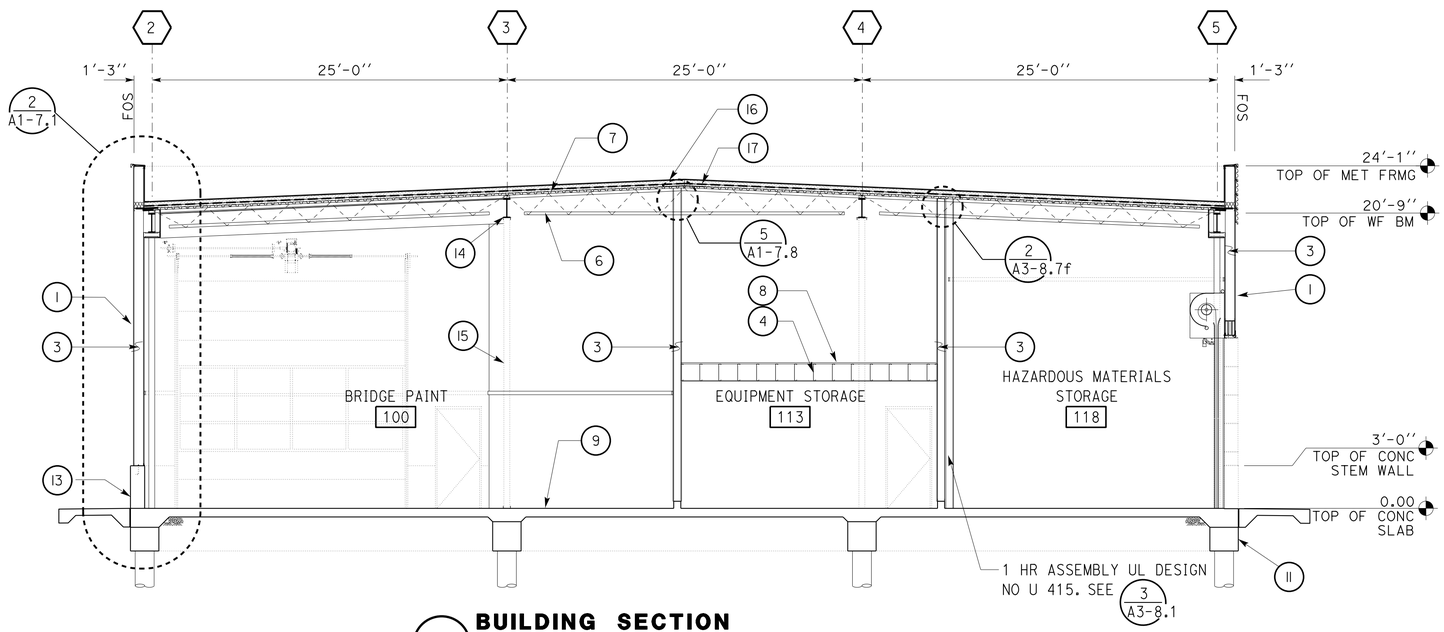

B BUILDING SECTION

SCALE 3/16" = 1'-0"

LEGEND

1. INSULATED METAL WALL PANELS
2. METAL COMPOSITE MATERIAL WALL PANELS
3. COLD FORMED METAL STUD WALL
4. COLD FORMED METAL CEILING JOISTS
5. FORMED METAL PANELS
6. OPEN WEB STEEL JOISTS
7. METAL DECK
8. PLYWOOD DECK
9. CONCRETE SLAB
10. CONCRETE DROP SLAB
11. CONCRETE GRADE BEAM
12. BATT INSULATION
13. CONCRETE STEM WALL
14. STEEL BEAM
15. STEEL COLUMN
16. SINGLE PLY TPO ROOFING OVER ROOF BOARD
17. RIGID INSULATION BOARD OVER METAL DECK
18. STOREFRONT DOOR ASSEMBLY
19. METAL DOOR WITH PRESSED METAL FRAME
20. ALUMINUM WINDOW ASSEMBLY
21. SECURED GATES
22. SECTIONAL OVERHEAD DOOR
23. ALUMINUM STOREFRONT ASSEMBLY
24. METAL AWNING
25. SEE EQUIPMENT INVENTORY LIST

	BY	CHECKED
DESIGN	L Rhoades, R Francisco	Q. Wong, F. Thomas
DETAILS	L Rhoades, J. Kwong	Q. Wong, F. Thomas
QUANTITIES		

STATE OF **CALIFORNIA** DEPARTMENT OF TRANSPORTATION

DIVISION OF ENGINEERING SERVICES
ARCHITECTURAL AND STRUCTURAL DESIGN

BRIDGE No. 33M5785
POST MILE

SFOBB WAREHOUSE
BUILDING 1
BUILDING SECTIONS

SHEET **A1-6.1**

TAEMWW Imperial - CCSC Rev. 01/13

ORIGINAL SCALE IN INCHES FOR REDUCED PLANS 0 1 2 3

UNIT: 3598 CONTRACT No.: 014101
PROJECT NUMBER & PHASE: 04130001331

DISREGARD PRINTS BEARING EARLIER REVISION DATES → 9-27-13

REVISION DATES (PRELIMINARY STAGE ONLY) SHEET X OF X

30-APR-2014 10:05

P:\dist_04\0413000133_sfobb_maint_warehouse\expedite\re-expedited sheets 2-14-14\a1_06.1_bldgsec.dgn

Dist	COUNTY	LOCATION CODE	POST MILES TOTAL PROJECT	SHEET No.	TOTAL SHEETS
04	Ala	5785		105	371

LICENSED ARCHITECT — DATE 10-25-13

3-24-14
PLANS APPROVAL DATE

LICENSED ARCHITECT Lani Rhoades No. C 26695 10-31-15 RENEWAL DATE STATE OF CALIFORNIA

The State of California or its officers or agents shall not be responsible for the accuracy or completeness of scanned copies of this plan sheet.

ACCESSIBILITY DESIGN APPROVAL DOT / DES / OTA
PROJECT ID **0413000133**
Reviewed by: Y. A. WANG
Date: 02-13-14

CALIFORNIA STATE FIRE MARSHAL APPROVED
Approval of this plan does not authorize or approve any omission or deviation from applicable regulations. Final approval is subject to field inspection. One set of approved plans shall be available on the project site at all times.
Reviewed by: INGRID P. ICASIANO
Approval date: 02-11-14

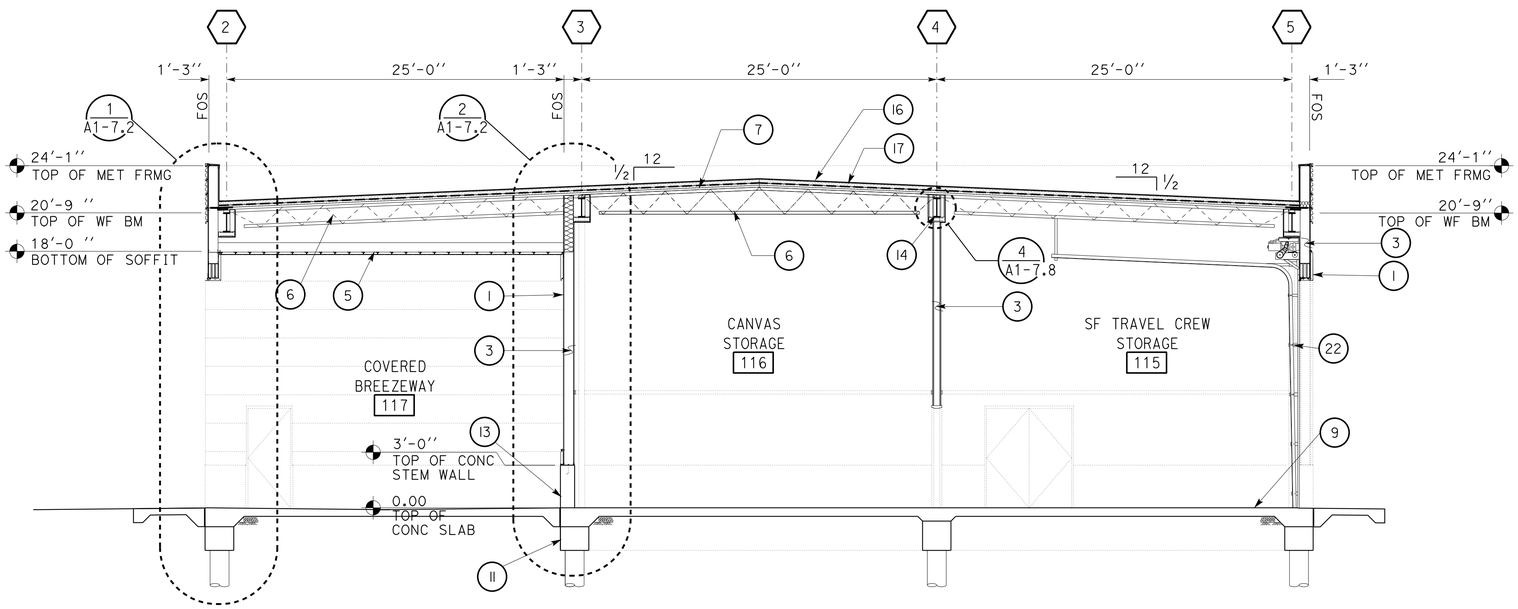

C BUILDING SECTION

SCALE 3/16" = 1'-0"

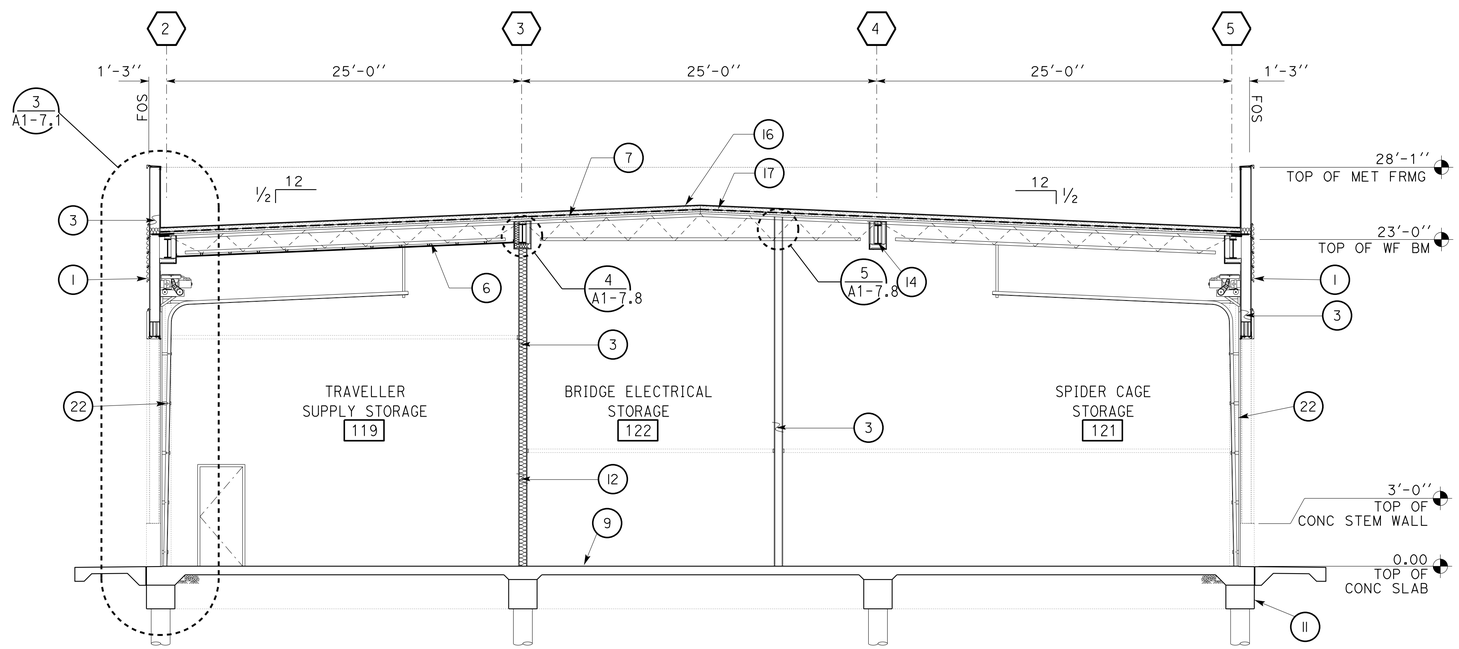

D BUILDING SECTION

SCALE 3/16" = 1'-0"

LEGEND

1. INSULATED METAL WALL PANELS
2. METAL COMPOSITE MATERIAL WALL PANELS
3. COLD FORMED METAL STUD WALL
4. COLD FORMED METAL CEILING JOISTS
5. FORMED METAL PANELS
6. OPEN WEB STEEL JOISTS
7. METAL DECK
8. PLYWOOD DECK
9. CONCRETE SLAB
10. CONCRETE DROP SLAB
11. CONCRETE GRADE BEAM
12. BATT INSULATION
13. CONCRETE STEM WALL
14. STEEL BEAM
15. STEEL COLUMN
16. SINGLE PLY TPO ROOFING OVER ROOF BOARD
17. RIGID INSULATION BOARD OVER METAL DECK
18. STOREFRONT DOOR ASSEMBLY
19. METAL DOOR WITH PRESSED METAL FRAME
20. ALUMINUM WINDOW ASSEMBLY
21. SECURED GATES
22. SECTIONAL OVERHEAD DOOR
23. ALUMINUM STOREFRONT ASSEMBLY
24. METAL AWNING
25. SEE EQUIPMENT INVENTORY LIST

	BY	CHECKED
DESIGN	L Rhoades, R Francisco	Q. Wong, F. Thomas
DETAILS	L Rhoades, J. Kwong	Q. Wong, F. Thomas
QUANTITIES		

STATE OF CALIFORNIA
DEPARTMENT OF TRANSPORTATION

DIVISION OF ENGINEERING SERVICES
ARCHITECTURAL AND STRUCTURAL DESIGN

BRIDGE No. 33M5785
POST MILE

SFOBB WAREHOUSE
BUILDING 1
BUILDING SECTIONS

SHEET **A1-6.2**

TAEMWW Imperial - CCSC Rev. 01/13

ORIGINAL SCALE IN INCHES FOR REDUCED PLANS 0 1 2 3

UNIT: 3598 CONTRACT No.: 014101
PROJECT NUMBER & PHASE: 04130001331

DISREGARD PRINTS BEARING EARLIER REVISION DATES → 9-27-13

REVISION DATES (PRELIMINARY STAGE ONLY) SHEET X OF X

30-APR-2014 10:05

P:\dist_04\0413000133_sfobb_maint_warehouse\arch\CADD\Working Drawings\first expedite\a1_06.2_bldgsec.dgn

Dist	COUNTY	LOCATION CODE	POST MILES TOTAL PROJECT	SHEET No.	TOTAL SHEETS
04	Ala	5785		106	371

LICENSED ARCHITECT — DATE 10-25-13

3-24-14
PLANS APPROVAL DATE

LICENSED ARCHITECT Lani Rhoades No. C 26695 10-31-15 RENEWAL DATE STATE OF CALIFORNIA

The State of California or its officers or agents shall not be responsible for the accuracy or completeness of scanned copies of this plan sheet.

ACCESSIBILITY DESIGN APPROVAL DOT / DES / OTA
PROJECT ID **0413000133**
Reviewed by: Y. A. WANG
Date: 02-13-14

CALIFORNIA STATE FIRE MARSHAL APPROVED
Approval of this plan does not authorize or approve any omission or deviation from applicable regulations. Final approval is subject to field inspection. One set of approved plans shall be available on the project site at all times.
Reviewed by: INGRID P. ICASIANO
Approval date: 02-11-14

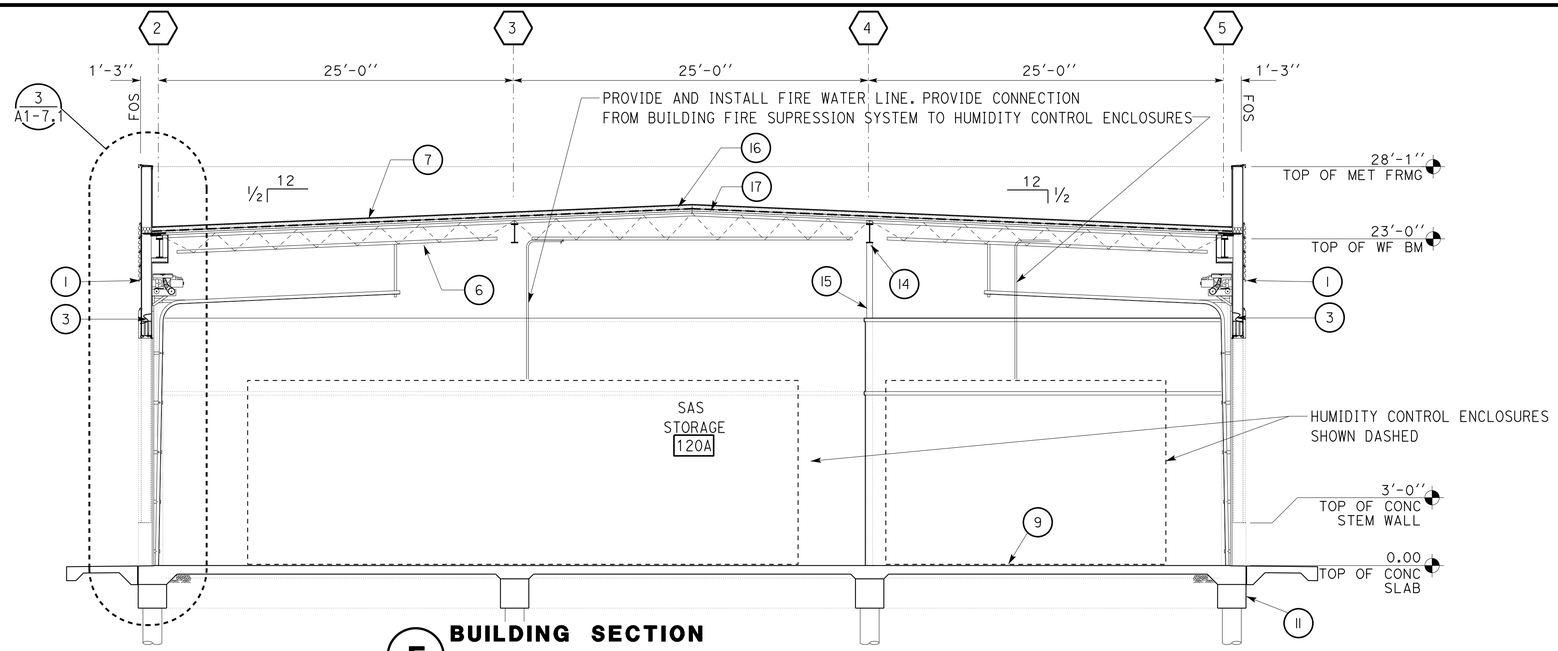

E BUILDING SECTION
SCALE 3/16" = 1'-0"

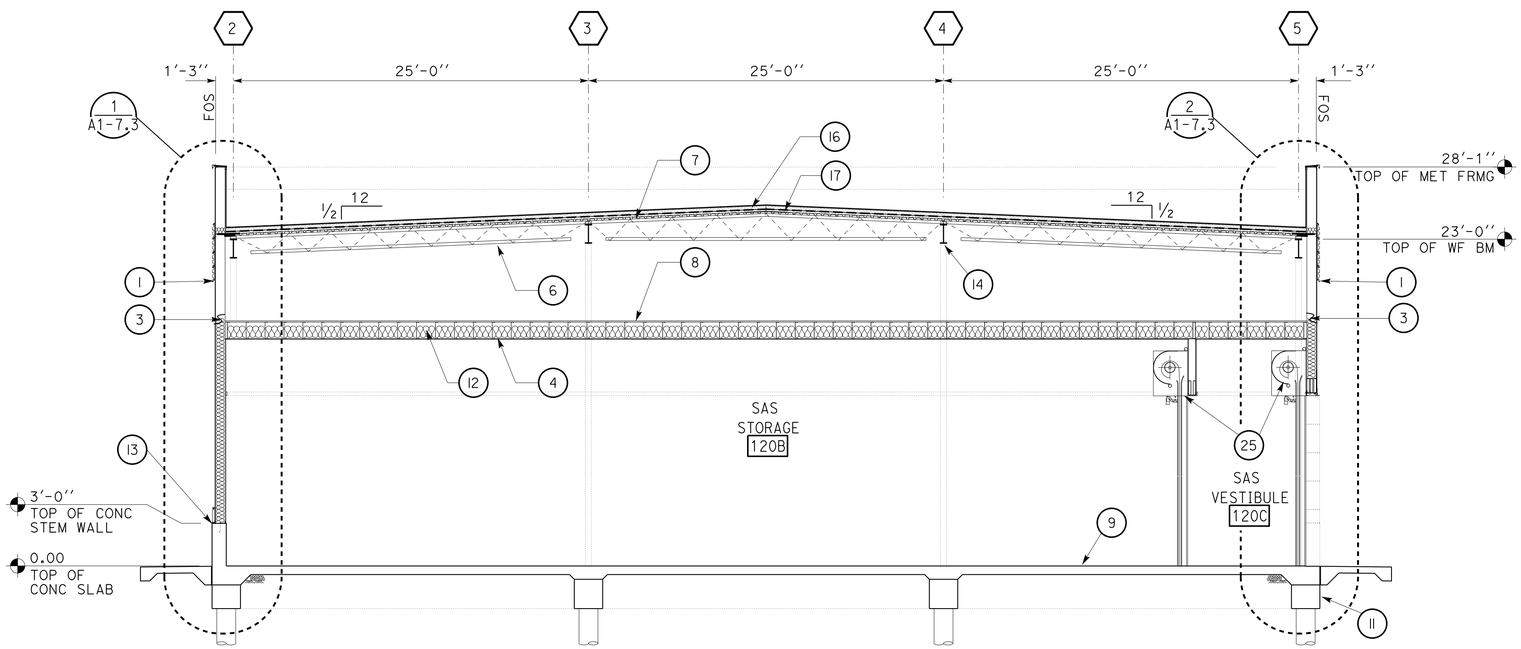

F BUILDING SECTION
SCALE 3/16" = 1'-0"

LEGEND

1. INSULATED METAL WALL PANELS
2. METAL COMPOSITE MATERIAL WALL PANELS
3. COLD FORMED METAL STUD WALL
4. COLD FORMED METAL CEILING JOISTS
5. FORMED METAL PANELS
6. OPEN WEB STEEL JOISTS
7. METAL DECK
8. PLYWOOD DECK
9. CONCRETE SLAB
10. CONCRETE DROP SLAB
11. CONCRETE GRADE BEAM
12. BATT INSULATION
13. CONCRETE STEM WALL
14. STEEL BEAM
15. STEEL COLUMN
16. SINGLE PLY TPO ROOFING OVER ROOF BOARD
17. RIGID INSULATION BOARD OVER METAL DECK
18. STOREFRONT DOOR ASSEMBLY
19. METAL DOOR WITH PRESSED METAL FRAME
20. ALUMINUM WINDOW ASSEMBLY
21. SECURED GATES
22. SECTIONAL OVERHEAD DOOR
23. ALUMINUM STOREFRONT ASSEMBLY
24. METAL AWNING
25. OVERHEAD COILING INSULATED DOOR

	BY	CHECKED
DESIGN	L Rhoades, R Francisco	Q. Wong, F. Thomas
DETAILS	L Rhoades, J. Kwong	Q. Wong, F. Thomas
QUANTITIES		

STATE OF **CALIFORNIA** DEPARTMENT OF TRANSPORTATION

DIVISION OF ENGINEERING SERVICES
ARCHITECTURAL AND STRUCTURAL DESIGN

BRIDGE No. 33M5785
POST MILE

SFOBB WAREHOUSE
BUILDING 1
BUILDING SECTIONS

SHEET **A1-6.3**

TAEMWW Imperial - CCSC Rev. 01/13

ORIGINAL SCALE IN INCHES FOR REDUCED PLANS 0 1 2 3

UNIT: 3598 CONTRACT No.: 014101
PROJECT NUMBER & PHASE: 04130001331

DISREGARD PRINTS BEARING EARLIER REVISION DATES → 9-27-13

REVISION DATES (PRELIMINARY STAGE ONLY) | SHEET X | OF X

30-APR-2014 10:05

P:\dist_04\0413000133_sfobb_maint_warehouse\expedite\re-expedited sheets 2-14-14\a1_06.3_bldgsec.dgn

Dist	COUNTY	LOCATION CODE	POST MILES TOTAL PROJECT	SHEET No.	TOTAL SHEETS
04	Ala	5785		107	371

LICENSED ARCHITECT — DATE 10-25-13

3-24-14
PLANS APPROVAL DATE

LICENSED ARCHITECT Lani Rhoades No. C 26695 10-31-15 RENEWAL DATE STATE OF CALIFORNIA

The State of California or its officers or agents shall not be responsible for the accuracy or completeness of scanned copies of this plan sheet.

ACCESSIBILITY DESIGN APPROVAL DOT / DES / OTA
PROJECT ID **0413000133**
Reviewed by: Y. A. WANG
Date: 02-13-14

CALIFORNIA STATE FIRE MARSHAL APPROVED
Approval of this plan does not authorize or approve any omission or deviation from applicable regulations. Final approval is subject to field inspection. One set of approved plans shall be available on the project site at all times.
Reviewed by: INGRID P. ICASIANO
Approval date: 02-11-14

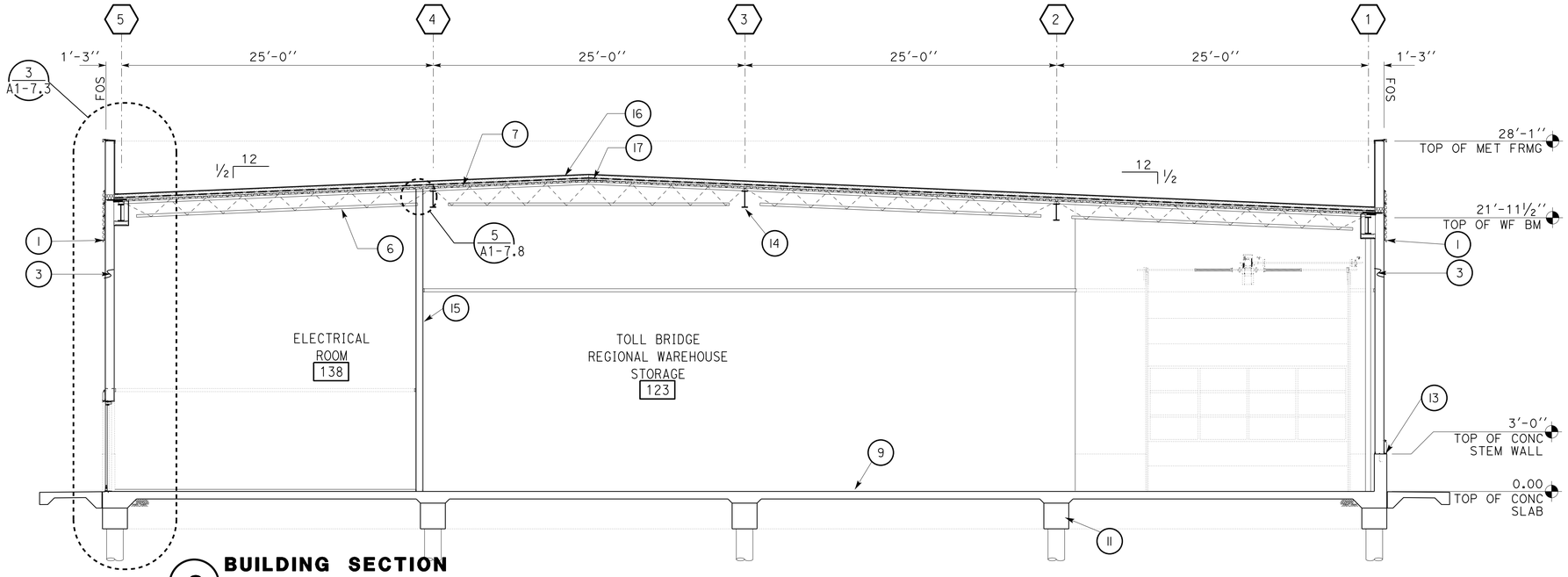

G BUILDING SECTION

SCALE 3/16" = 1'-0"

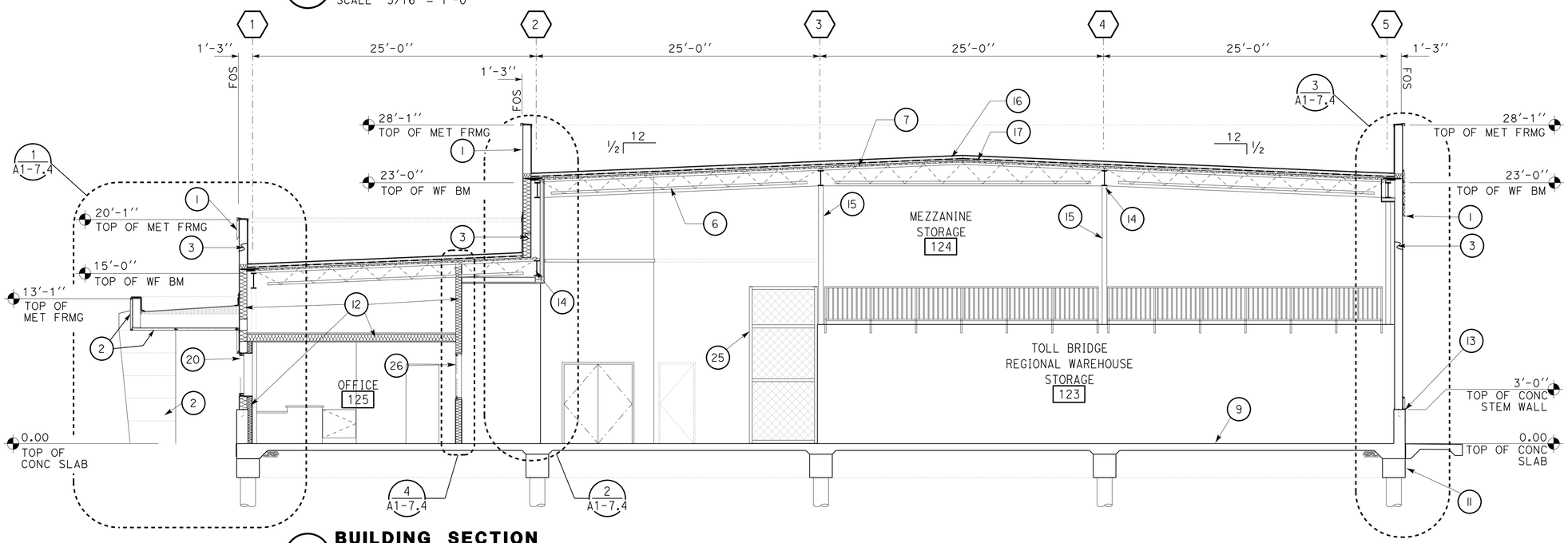

H BUILDING SECTION

SCALE 3/16" = 1'-0"

LEGEND

1. INSULATED METAL WALL PANELS
2. METAL COMPOSITE MATERIAL PANELS
3. COLD FORMED METAL STUD WALL
4. COLD FORMED METAL CEILING JOISTS
5. FORMED METAL PANELS
6. OPEN WEB STEEL JOISTS
7. METAL DECK
8. PLYWOOD DECK
9. CONCRETE SLAB
10. CONCRETE DROP SLAB
11. CONCRETE GRADE BEAM
12. BATT INSULATION
13. CONCRETE STEM WALL
14. STEEL BEAM
15. STEEL COLUMN
16. SINGLE PLY TPO ROOFING OVER ROOF BOARD
17. RIGID INSULATION BOARD OVER METAL DECK
18. STOREFRONT DOOR ASSEMBLY
19. METAL DOOR WITH PRESSED METAL FRAME
20. ALUMINUM WINDOW ASSEMBLY
21. SECURED GATES
22. SECTIONAL OVERHEAD DOOR
23. ALUMINUM STOREFRONT ASSEMBLY
24. METAL AWNING
25. SEE EQUIPMENT INVENTORY LIST
26. PRESSED METAL FRAME WINDOW ASSEMBLY

	BY	CHECKED
DESIGN	L Rhoades, R Francisco	Q. Wong, F. Thomas
DETAILS	L Rhoades, J. Kwong	Q. Wong, F. Thomas
QUANTITIES		

STATE OF CALIFORNIA
DEPARTMENT OF TRANSPORTATION

DIVISION OF ENGINEERING SERVICES
ARCHITECTURAL AND STRUCTURAL DESIGN

BRIDGE No. 33M5785
POST MILE

SFOBB WAREHOUSE
BUILDING 1
BUILDING SECTIONS

SHEET A1-6.4

TAEMWW Imperial - CCSC Rev. 01/13

ORIGINAL SCALE IN INCHES FOR REDUCED PLANS 0 1 2 3

UNIT: 3598 CONTRACT No.: 014101
PROJECT NUMBER & PHASE: 041300001331

DISREGARD PRINTS BEARING EARLIER REVISION DATES → 9-27-13

REVISION DATES (PRELIMINARY STAGE ONLY) SHEET X OF X

30-APR-2014 10:05

D:\temporary\a1_06.4_bldgsec.dgn

Dist	COUNTY	LOCATION CODE	POST MILES TOTAL PROJECT	SHEET No.	TOTAL SHEETS
04	Ala	5785		108	371

LICENSED ARCHITECT — DATE 10-25-13

3-24-14
PLANS APPROVAL DATE

LICENSED ARCHITECT — Lani Rhoades — No. C 26695 — 10-31-15 RENEWAL DATE — STATE OF CALIFORNIA

The State of California or its officers or agents shall not be responsible for the accuracy or completeness of scanned copies of this plan sheet.

ACCESSIBILITY DESIGN APPROVAL DOT / DES / OTA
PROJECT ID **0413000133**
Reviewed by: Y. A. WANG
Date: 02-13-14

CALIFORNIA STATE FIRE MARSHAL APPROVED
Approval of this plan does not authorize or approve any omission or deviation from applicable regulations. Final approval is subject to field inspection. One set of approved plans shall be available on the project site at all times.
Reviewed by: INGRID P. ICASIANO
Approval date: 02-11-14

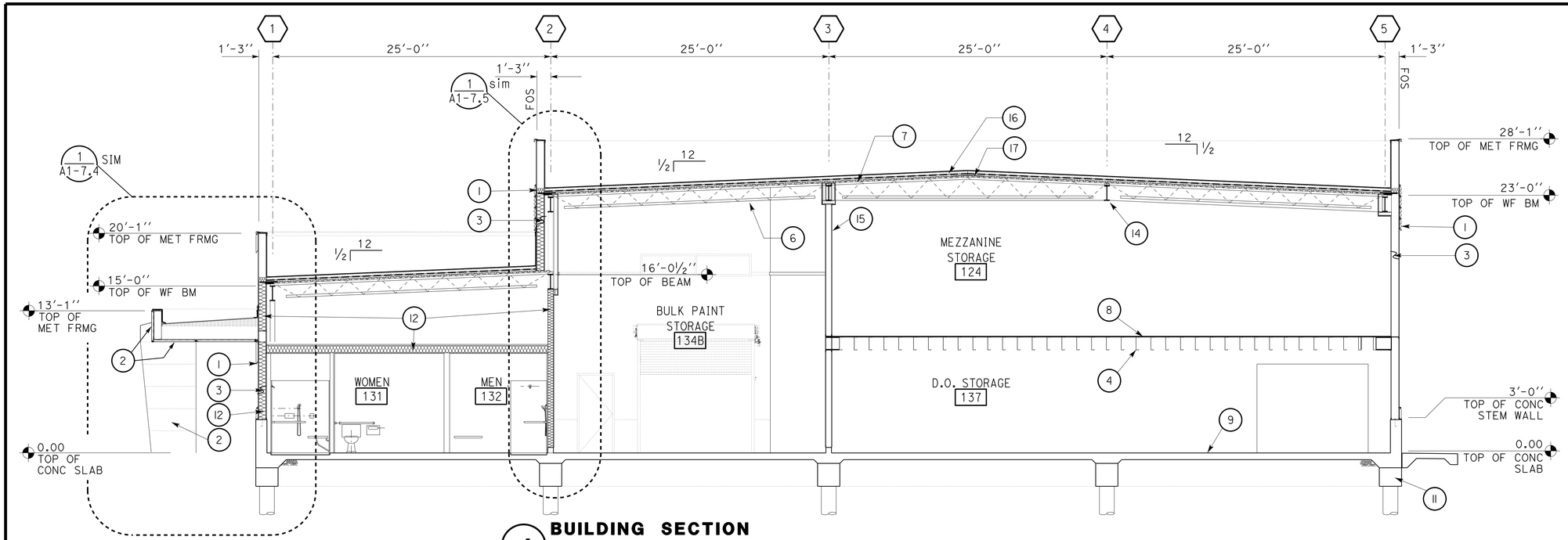

J BUILDING SECTION

SCALE 3/16" = 1'-0"

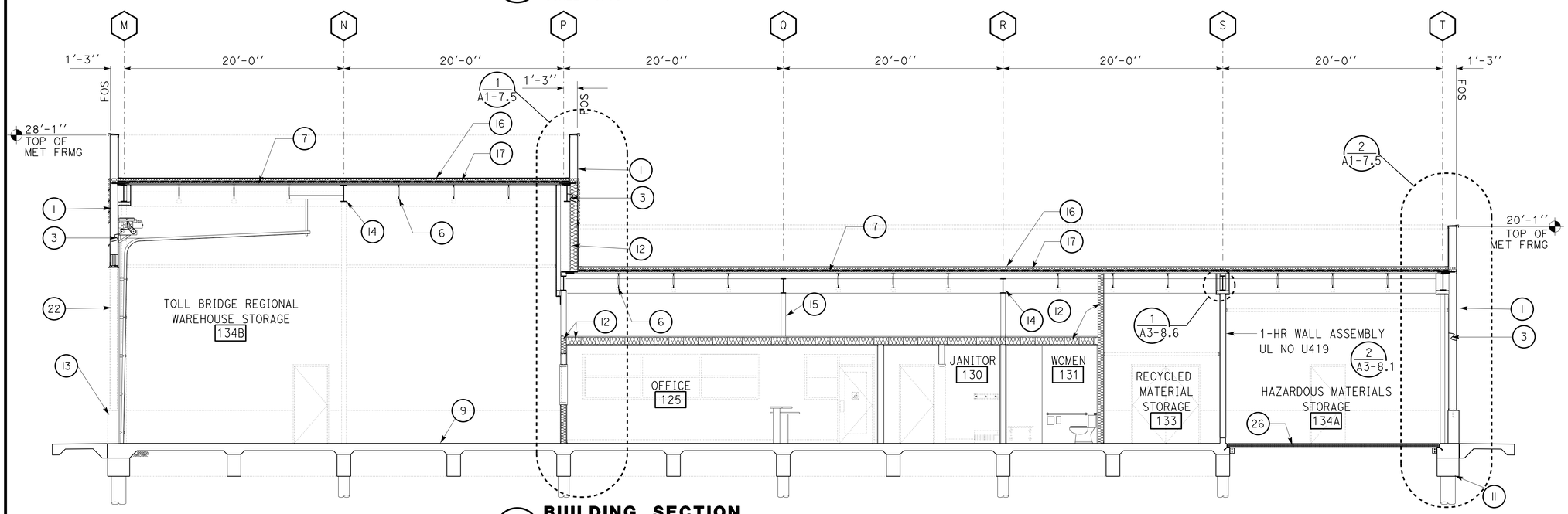

K BUILDING SECTION

SCALE 3/16" = 1'-0"

LEGEND

1. INSULATED METAL WALL PANELS
2. METAL COMPOSITE MATERIAL PANELS
3. COLD FORMED METAL STUD WALL
4. COLD FORMED METAL CEILING JOISTS
5. FORMED METAL PANELS
6. OPEN WEB STEEL JOISTS
7. METAL DECK
8. PLYWOOD DECK
9. CONCRETE SLAB
10. CONCRETE DROP SLAB
11. CONCRETE GRADE BEAM
12. BATT INSULATION
13. CONCRETE STEM WALL
14. STEEL BEAM
15. STEEL COLUMN
16. SINGLE PLY TPO ROOFING OVER ROOF BOARD
17. RIGID INSULATION BOARD OVER METAL DECK
18. STOREFRONT DOOR ASSEMBLY
19. METAL DOOR WITH PRESSED METAL FRAME
20. ALUMINUM WINDOW ASSEMBLY
21. SECURED GATES
22. SECTIONAL OVERHEAD DOOR
23. ALUMINUM STOREFRONT ASSEMBLY
24. METAL AWNING
25. SEE EQUIPMENT INVENTORY LIST
26. METAL GRATE

	BY	CHECKED
DESIGN	L Rhoades, R Francisco	Q. Wong, F. Thomas
DETAILS	L Rhoades, J. Kwong	Q. Wong, F. Thomas
QUANTITIES		

STATE OF CALIFORNIA
DEPARTMENT OF TRANSPORTATION

DIVISION OF ENGINEERING SERVICES
ARCHITECTURAL AND STRUCTURAL DESIGN

BRIDGE No. 33M5785
POST MILE

SFOBB WAREHOUSE
BUILDING 1
BUILDING SECTIONS

SHEET **A1-6.5**

TAEMWW Imperial - CCSC Rev. 01/13

ORIGINAL SCALE IN INCHES FOR REDUCED PLANS 0 1 2 3

UNIT: 3598 CONTRACT No.: 014101
PROJECT NUMBER & PHASE: 04130001331

DISREGARD PRINTS BEARING EARLIER REVISION DATES → 9-27-13

REVISION DATES (PRELIMINARY STAGE ONLY) — SHEET X OF X

30-APR-2014 10:05

D:\temporary\a1_06.5_bldgsec.dgn

Dist	COUNTY	LOCATION CODE	POST MILES TOTAL PROJECT	SHEET No.	TOTAL SHEETS
04	Ala	5785		109	371

LICENSED ARCHITECT — 10-25-13 DATE

3-24-14
PLANS APPROVAL DATE

LICENSED ARCHITECT — Lani Rhoades — No. C 26695 — 10-31-15 RENEWAL DATE — STATE OF CALIFORNIA

The State of California or its officers or agents shall not be responsible for the accuracy or completeness of scanned copies of this plan sheet.

ACCESSIBILITY DESIGN APPROVAL DOT / DES / OTA
PROJECT ID **0413000133**
Reviewed by: Y. A. WANG
Date: 02-13-14

CALIFORNIA STATE FIRE MARSHAL APPROVED
Approval of this plan does not authorize or approve any omission or deviation from applicable regulations. Final approval is subject to field inspection. One set of approved plans shall be available on the project site at all times.
Reviewed by: INGRID P. ICASIANO
Approval date: 02-11-14

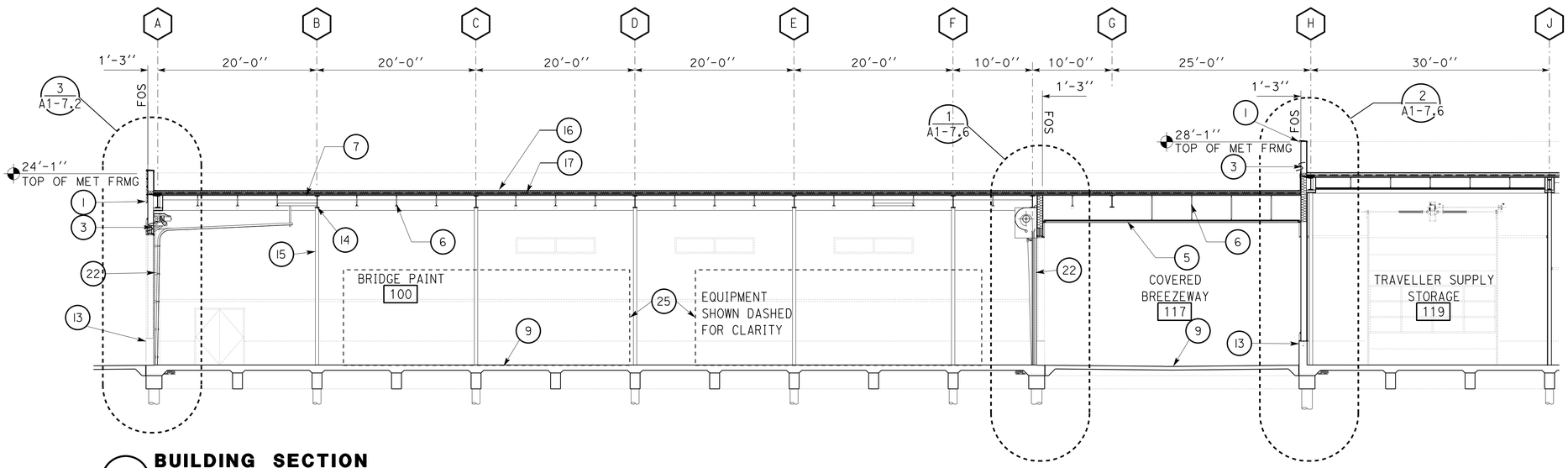

L BUILDING SECTION

SCALE 1/8" = 1'-0"

LEGEND

1. INSULATED METAL WALL PANELS
2. METAL COMPOSITE MATERIAL PANELS
3. COLD FORMED METAL STUD WALL
4. COLD FORMED METAL CEILING JOISTS
5. FORMED METAL PANELS
6. OPEN WEB STEEL JOISTS
7. METAL DECK
8. PLYWOOD DECK
9. CONCRETE SLAB
10. CONCRETE DROP SLAB
11. CONCRETE GRADE BEAM
12. BATT INSULATION
13. CONCRETE STEM WALL
14. STEEL BEAM
15. STEEL COLUMN
16. SINGLE PLY TPO ROOFING OVER ROOF BOARD
17. RIGID INSULATION BOARD OVER METAL DECK
18. STOREFRONT DOOR ASSEMBLY
19. METAL DOOR WITH PRESSED METAL FRAME
20. ALUMINUM WINDOW ASSEMBLY
21. SECURED GATES
22. SECTIONAL OVERHEAD DOOR
23. ALUMINUM STOREFRONT ASSEMBLY
24. METAL AWNING
25. SEE EQUIPMENT INVENTORY LIST

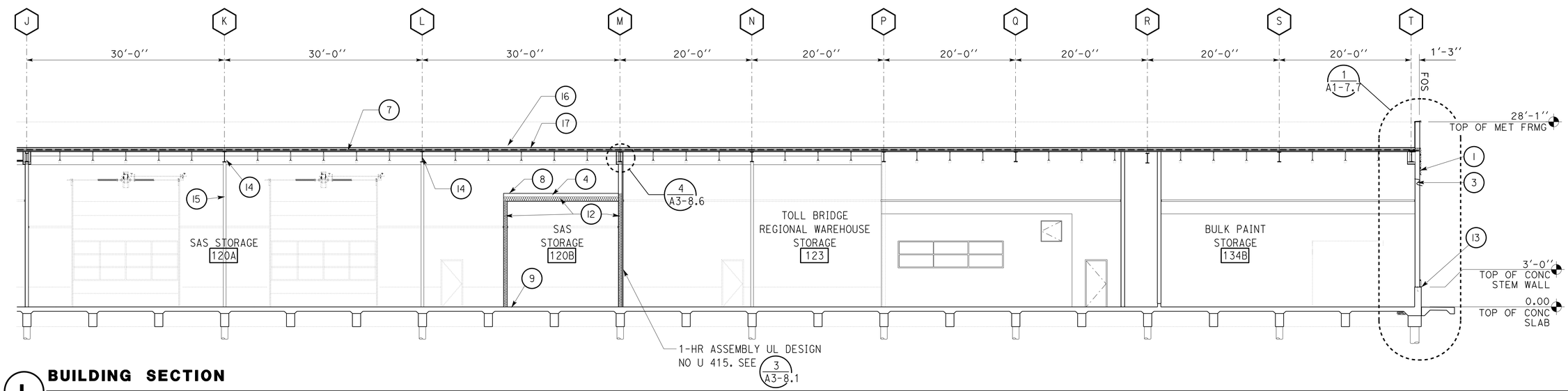

L BUILDING SECTION

SCALE 1/8" = 1'-0"

	BY	CHECKED
DESIGN	L Rhoades, R Francisco	Q. Wong, F. Thomas
DETAILS	L Rhoades, J. Kwong	Q. Wong, F. Thomas
QUANTITIES		

STATE OF CALIFORNIA
DEPARTMENT OF TRANSPORTATION

DIVISION OF ENGINEERING SERVICES
ARCHITECTURAL AND STRUCTURAL DESIGN

BRIDGE No. 33M5785
POST MILE

SFOBB WAREHOUSE
BUILDING 1
BUILDING SECTIONS

SHEET **A1-6.6**

TAEMWW Imperial - CCSC Rev. 01/13

ORIGINAL SCALE IN INCHES FOR REDUCED PLANS 0 1 2 3

UNIT: 3598 CONTRACT No.: 014101
PROJECT NUMBER & PHASE: 04130001331

DISREGARD PRINTS BEARING EARLIER REVISION DATES → 9-27-13

REVISION DATES (PRELIMINARY STAGE ONLY) | SHEET X | OF X

30-APR-2014 10:06

D:\temporary\a1_06.6_bldgsec.dgn

Dist	COUNTY	LOCATION CODE	POST MILES TOTAL PROJECT	SHEET No.	TOTAL SHEETS
04	Ala	5785		110	371

LICENSED ARCHITECT — DATE 10-25-13

3-24-14
PLANS APPROVAL DATE

LICENSED ARCHITECT — Lani Rhoades — No. C 26695 — 10-31-15 RENEWAL DATE — STATE OF CALIFORNIA

The State of California or its officers or agents shall not be responsible for the accuracy or completeness of scanned copies of this plan sheet.

ACCESSIBILITY DESIGN APPROVAL DOT / DES / OTA
PROJECT ID **0413000133**
Reviewed by: Y. A. WANG
Date: 02-13-14

CALIFORNIA STATE FIRE MARSHAL APPROVED
Approval of this plan does not authorize or approve any omission or deviation from applicable regulations. Final approval is subject to field inspection. One set of approved plans shall be available on the project site at all times.
Reviewed by: INGRID P. ICASIANO
Approval date: 02-11-14

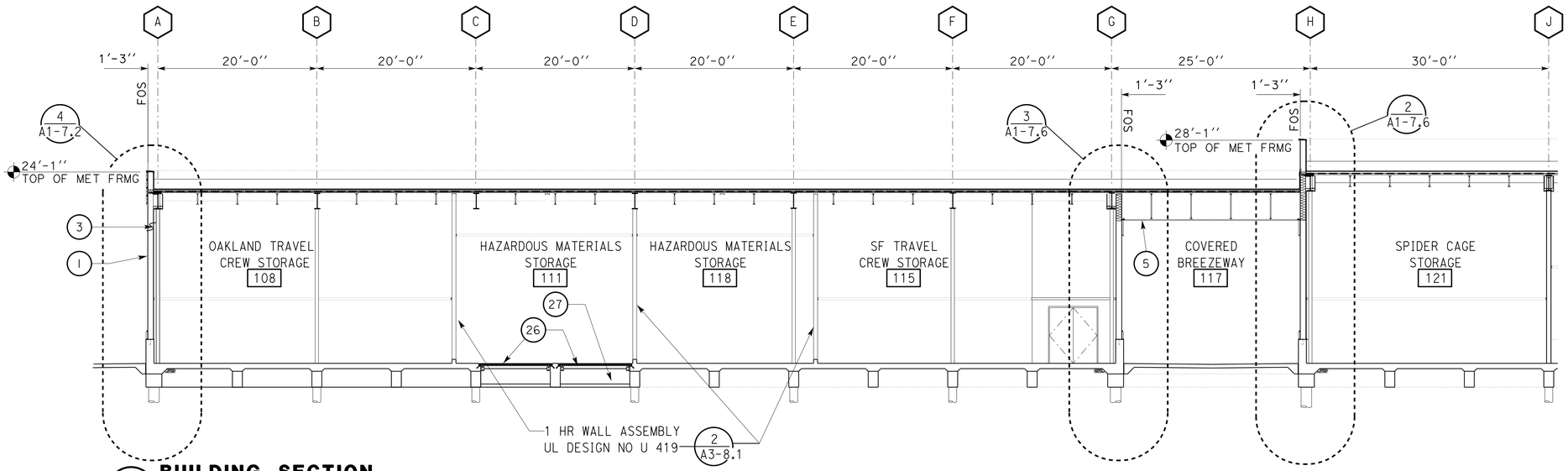

M BUILDING SECTION

SCALE 1/8" = 1'-0"

LEGEND

1. INSULATED METAL WALL PANELS
2. METAL COMPOSITE MATERIAL PANELS
3. COLD FORMED METAL STUD WALL
4. COLD FORMED METAL CEILING JOISTS
5. FORMED METAL PANELS
6. OPEN WEB STEEL JOISTS
7. METAL DECK
8. PLYWOOD DECK
9. CONCRETE SLAB
10. CONCRETE DROP SLAB
11. CONCRETE GRADE BEAM
12. BATT INSULATION
13. CONCRETE STEM WALL
14. STEEL BEAM
15. STEEL COLUMN
16. SINGLE PLY TPO ROOFING OVER ROOF BOARD
17. RIGID INSULATION BOARD OVER METAL DECK
18. STOREFRONT DOOR ASSEMBLY
19. METAL DOOR WITH PRESSED METAL FRAME
20. ALUMINUM WINDOW ASSEMBLY
21. SECURED GATES
22. SECTIONAL OVERHEAD DOOR
23. ALUMINUM STOREFRONT ASSEMBLY
24. METAL AWNING
25. SEE EQUIPMENT INVENTORY LIST
26. METAL GRATE SEE STRUCTURAL
27. DEPRESSED CONCRETE SLAB, SEE STRUCTURAL

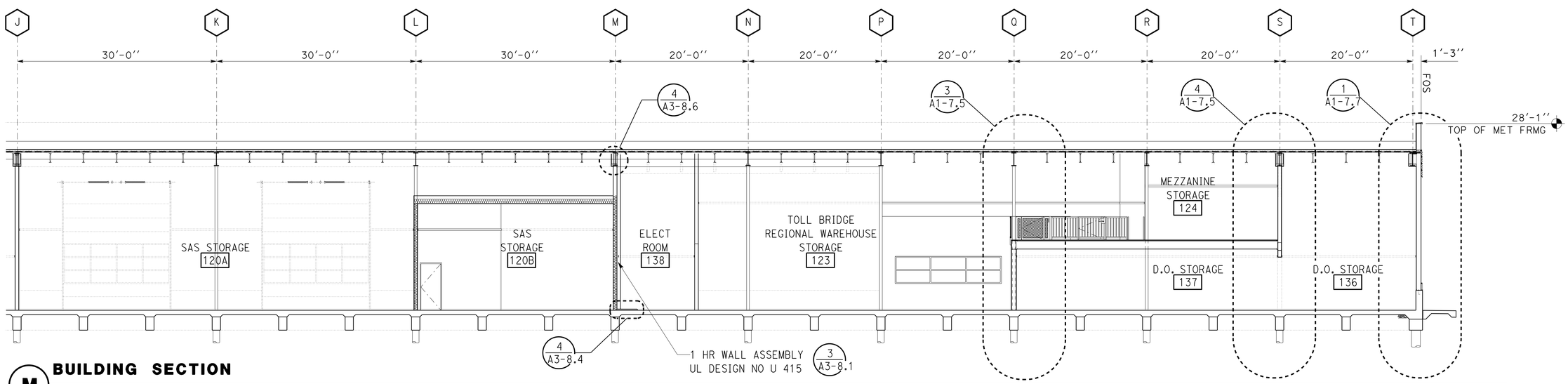

M BUILDING SECTION

SCALE 1/8" = 1'-0"

	BY	CHECKED
DESIGN	L Rhoades, R Francisco	Q. Wong, F. Thomas
DETAILS	L Rhoades, J. Kwong	Q. Wong, F. Thomas
QUANTITIES		

STATE OF CALIFORNIA DEPARTMENT OF TRANSPORTATION

DIVISION OF ENGINEERING SERVICES ARCHITECTURAL AND STRUCTURAL DESIGN

BRIDGE No. 33M5785 — POST MILE

SFOBB WAREHOUSE — BUILDING 1 — BUILDING SECTIONS

SHEET A1-6.7

TAEMWW Imperial - CCSC Rev. 01/13

ORIGINAL SCALE IN INCHES FOR REDUCED PLANS 0 1 2 3

UNIT: 3598 CONTRACT No.: 014101
PROJECT NUMBER & PHASE: 04130001331

DISREGARD PRINTS BEARING EARLIER REVISION DATES → 9-27-13

REVISION DATES (PRELIMINARY STAGE ONLY) — SHEET X OF X

30-APR-2014 10:06

D:\temporary\a1_06.7_bldgsec.dgn

Dist	COUNTY	LOCATION CODE	POST MILES TOTAL PROJECT	SHEET No.	TOTAL SHEETS
04	Ala	5785		111	371

LICENSED ARCHITECT — DATE 10-25-13

3-24-14
PLANS APPROVAL DATE

LICENSED ARCHITECT Lani Rhoades No. C 26695 10-31-15 RENEWAL DATE STATE OF CALIFORNIA

The State of California or its officers or agents shall not be responsible for the accuracy or completeness of scanned copies of this plan sheet.

ACCESSIBILITY DESIGN APPROVAL DOT / DES / OTA
PROJECT ID **0413000133**
Reviewed by: Y. A. WANG
Date: 02-13-14

CALIFORNIA STATE FIRE MARSHAL APPROVED
Approval of this plan does not authorize or approve any omission or deviation from applicable regulations. Final approval is subject to field inspection. One set of approved plans shall be available on the project site at all times.
Reviewed by: INGRID P. ICASIANO
Approval date: 02-11-14

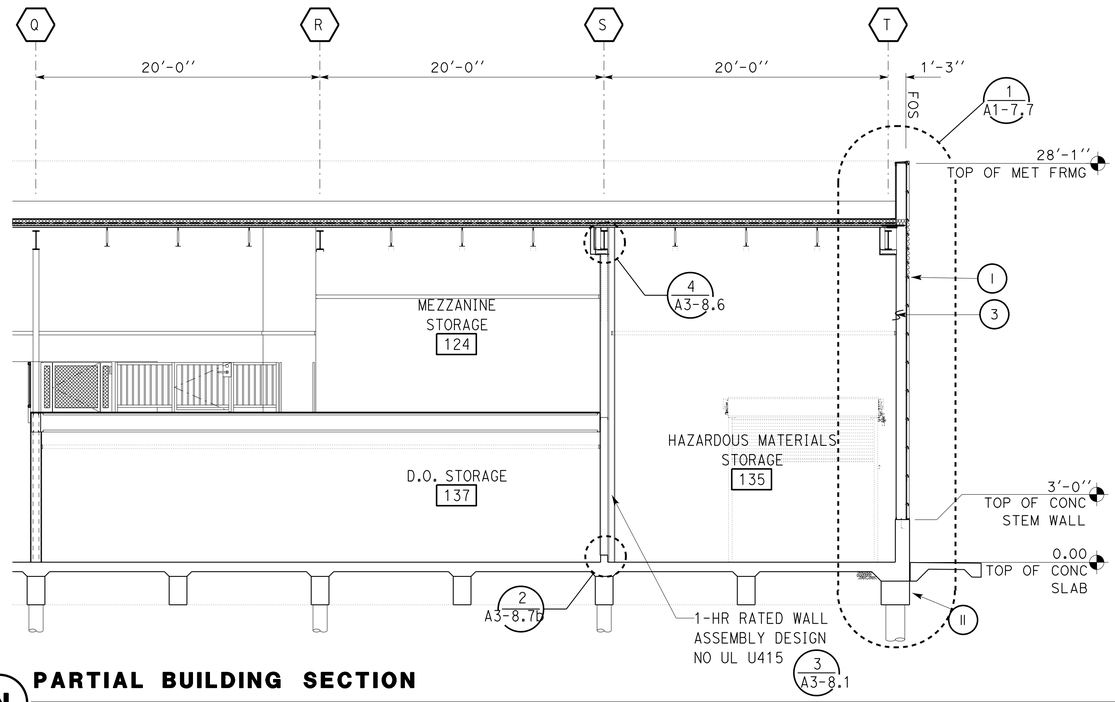

N PARTIAL BUILDING SECTION

SCALE 3/16" = 1'-0"

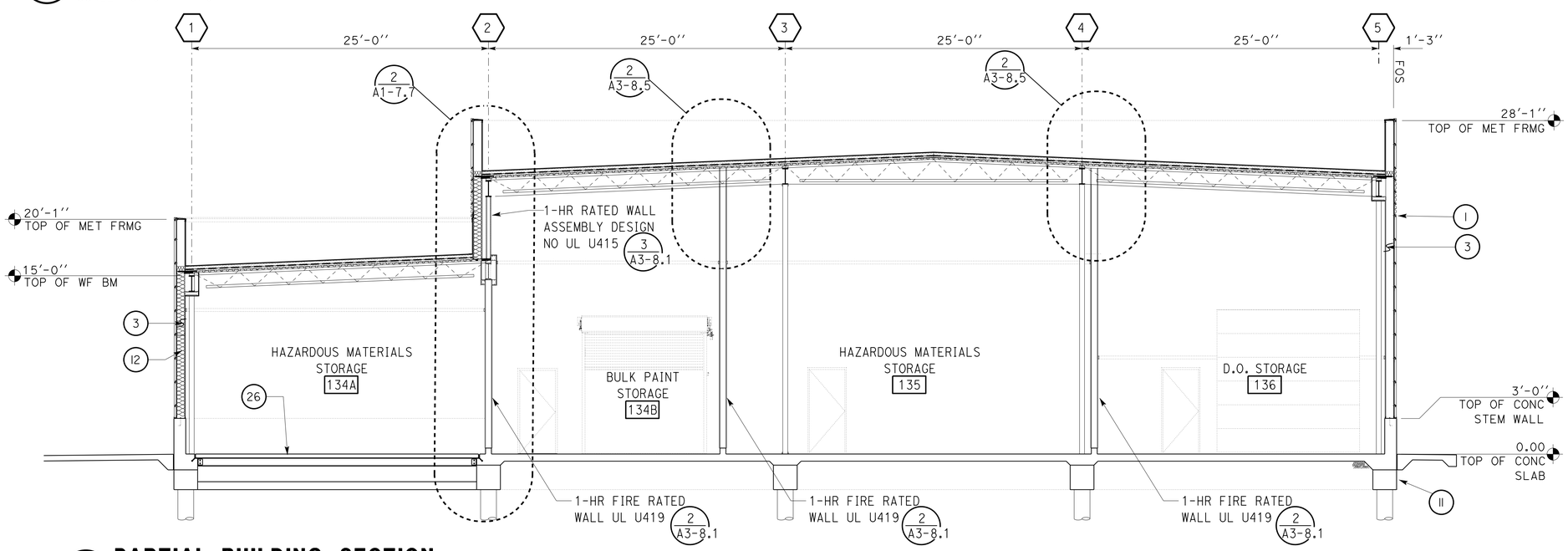

P PARTIAL BUILDING SECTION

SCALE 3/16" = 1'-0"

LEGEND

1. INSULATED METAL WALL PANELS
2. METAL COMPOSITE MATERIAL PANELS
3. COLD FORMED METAL STUD WALL
4. COLD FORMED METAL CEILING JOISTS
5. FORMED METAL PANELS
6. OPEN WEB STEEL JOISTS
7. METAL DECK
8. PLYWOOD DECK
9. CONCRETE SLAB
10. CONCRETE DROP SLAB
11. CONCRETE GRADE BEAM
12. BATT INSULATION
13. CONCRETE STEM WALL
14. STEEL BEAM
15. STEEL COLUMN
16. SINGLE PLY TPO ROOFING OVER ROOF BOARD
17. RIGID INSULATION BOARD OVER METAL DECK
18. STOREFRONT DOOR ASSEMBLY
19. METAL DOOR WITH PRESSED METAL FRAME
20. ALUMINUM WINDOW ASSEMBLY
21. SECURED GATES
22. SECTIONAL OVERHEAD DOOR
23. ALUMINUM STOREFRONT ASSEMBLY
24. METAL AWNING
25. SEE EQUIPMENT INVENTORY LIST
26. METAL GRATE

	BY	CHECKED
DESIGN	L Rhoades, R Francisco	Q. Wong, F. Thomas
DETAILS	L Rhoades, J. Kwong	Q. Wong, F. Thomas
QUANTITIES		

STATE OF CALIFORNIA DEPARTMENT OF TRANSPORTATION

DIVISION OF ENGINEERING SERVICES ARCHITECTURAL AND STRUCTURAL DESIGN

BRIDGE No. 33M5785
POST MILE

SFOBB WAREHOUSE
BUILDING 1
BUILDING SECTIONS

SHEET A1-6.8

TAEMWW Imperial - CCSC Rev. 01/13

ORIGINAL SCALE IN INCHES FOR REDUCED PLANS 0 1 2 3

UNIT: 3598 CONTRACT No.: 014101
PROJECT NUMBER & PHASE: 04130001331

DISREGARD PRINTS BEARING EARLIER REVISION DATES → 9-27-13

REVISION DATES (PRELIMINARY STAGE ONLY) SHEET X OF X

30-APR-2014 10:06

D:\temp3\a1_06.8_bldgsec.dgn

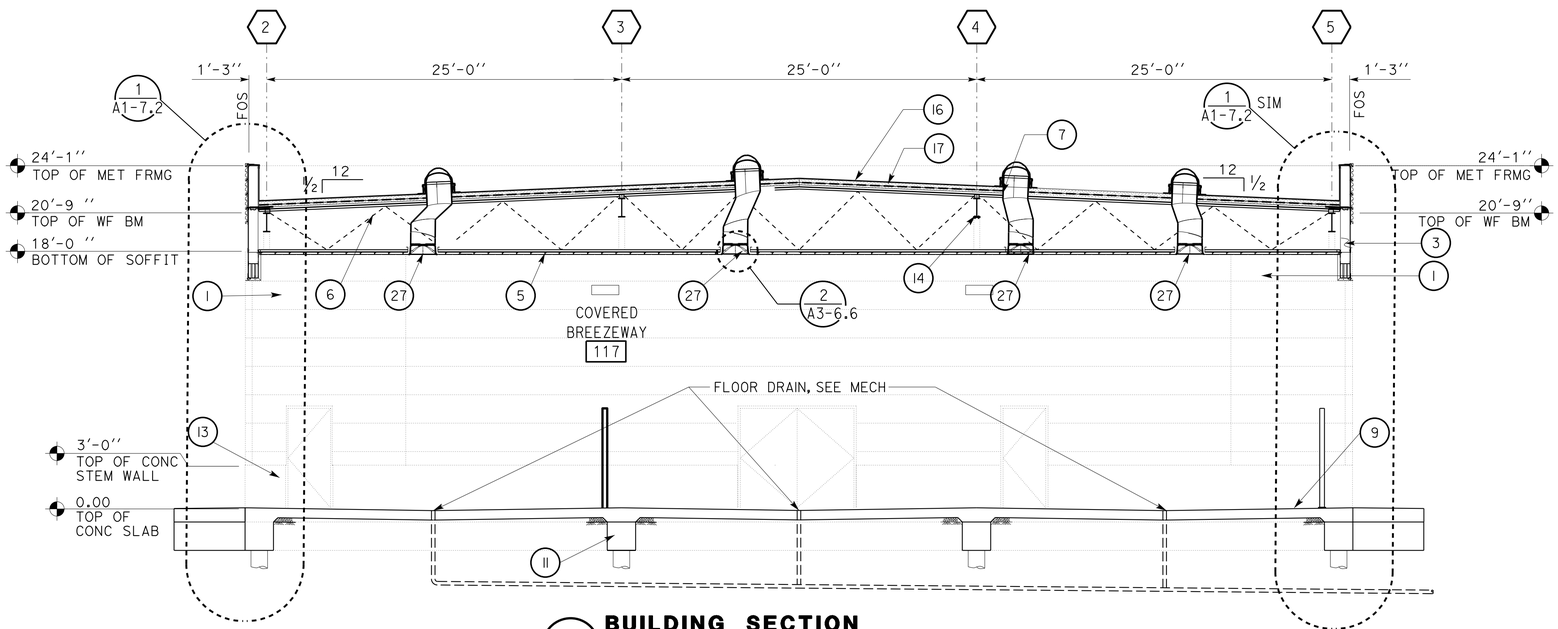

Q BUILDING SECTION

SCALE 3/16" = 1'-0"

Dist	COUNTY	LOCATION CODE	POST MILES TOTAL PROJECT	SHEET No.	TOTAL SHEETS
04	Ala	5785		112	371

LICENSED ARCHITECT — DATE 10-25-13

LICENSED ARCHITECT — Lani Rhoades — No. C 26695 — 10-31-15 RENEWAL DATE — STATE OF CALIFORNIA

3-24-14
PLANS APPROVAL DATE

The State of California or its officers or agents shall not be responsible for the accuracy or completeness of scanned copies of this plan sheet.

ACCESSIBILITY DESIGN APPROVAL DOT / DES / OTA

PROJECT ID **0413000133**

Reviewed by: Y. A. WANG
Date: 02-13-14

CALIFORNIA STATE FIRE MARSHAL APPROVED

Approval of this plan does not authorize or approve any omission or deviation from applicable regulations. Final approval is subject to field inspection. One set of approved plans shall be available on the project site at all times.

Reviewed by: INGRID P. ICASIANO
Approval date: 02-11-14

LEGEND

1. INSULATED METAL WALL PANELS
2. METAL COMPOSITE MATERIAL PANELS
3. COLD FORMED METAL STUD WALL
4. COLD FORMED METAL CEILING JOISTS
5. FORMED METAL PANELS
6. OPEN WEB STEEL JOISTS
7. METAL DECK
8. PLYWOOD DECK
9. CONCRETE SLAB
10. CONCRETE DROP SLAB
11. CONCRETE GRADE BEAM
12. BATT INSULATION
13. CONCRETE STEM WALL
14. STEEL BEAM
15. STEEL COLUMN
16. SINGLE PLY TPO ROOFING OVER ROOF BOARD
17. RIGID INSULATION BOARD OVER METAL DECK
18. STOREFRONT DOOR ASSEMBLY
19. METAL DOOR WITH PRESSED METAL FRAME
20. ALUMINUM WINDOW ASSEMBLY
21. SECURED GATES
22. SECTIONAL OVERHEAD DOOR
23. ALUMINUM STOREFRONT ASSEMBLY
24. METAL AWNING
25. SEE EQUIPMENT INVENTORY LIST
26. METAL GRATE
27. TUBULAR PLASTIC GLAZED UNIT SKYLIGHT

	BY	CHECKED
DESIGN	L Rhoades, R Francisco	Q. Wong, F. Thomas
DETAILS	L Rhoades, J. Kwong	Q. Wong, F. Thomas
QUANTITIES		

STATE OF CALIFORNIA
DEPARTMENT OF TRANSPORTATION

DIVISION OF ENGINEERING SERVICES
ARCHITECTURAL AND STRUCTURAL DESIGN

BRIDGE No. 33M5785
POST MILE

SFOBB WAREHOUSE

BUILDING 1 — BUILDING SECTIONS

SHEET **A1-6.9**

TAEMWW Imperial - CCSC Rev. 01/13

ORIGINAL SCALE IN INCHES FOR REDUCED PLANS 0 1 2 3

UNIT: 3598 CONTRACT No.: 014101
PROJECT NUMBER & PHASE: 04130001331

DISREGARD PRINTS BEARING EARLIER REVISION DATES → 9-27-13

REVISION DATES (PRELIMINARY STAGE ONLY) SHEET X OF X

30-APR-2014 10:06

D:\temporary\a1_06.9_bldgsec.dgn

Dist	COUNTY	LOCATION CODE	POST MILES TOTAL PROJECT	SHEET No.	TOTAL SHEETS
04	Ala	5785		113	371

LICENSED ARCHITECT — DATE 10-25-13

3-24-14
PLANS APPROVAL DATE

LICENSED ARCHITECT — Lani Rhoades — No. C 26695 — 10-31-15 RENEWAL DATE — STATE OF CALIFORNIA

The State of California or its officers or agents shall not be responsible for the accuracy or completeness of scanned copies of this plan sheet.

ACCESSIBILITY DESIGN APPROVAL DOT / DES / OTA
PROJECT ID **0413000133**
Reviewed by: Y. A. WANG
Date: 02-13-14

CALIFORNIA STATE FIRE MARSHAL APPROVED
Approval of this plan does not authorize or approve any omission or deviation from applicable regulations. Final approval is subject to field inspection. One set of approved plans shall be available on the project site at all times.
Reviewed by: INGRID P. ICASIANO
Approval date: 02-11-14

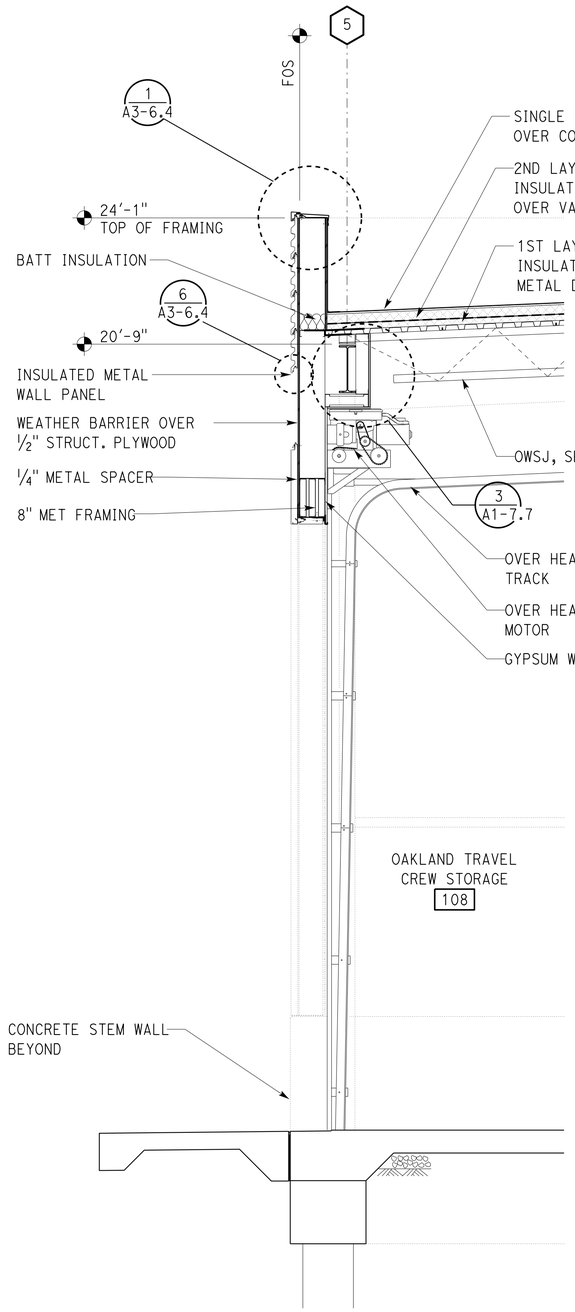

1 WALL SECTION

SCALE 1/2" = 1'-0"

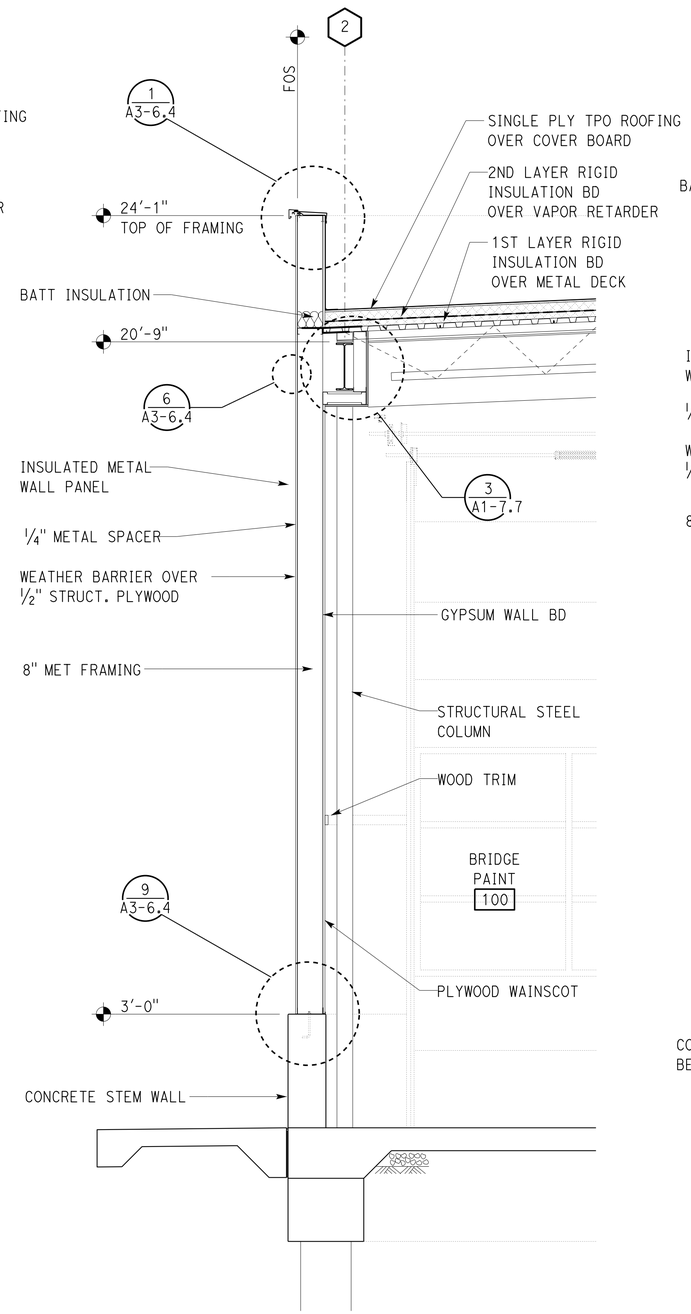

2 WALL SECTION

SCALE 1/2" = 1'-0"

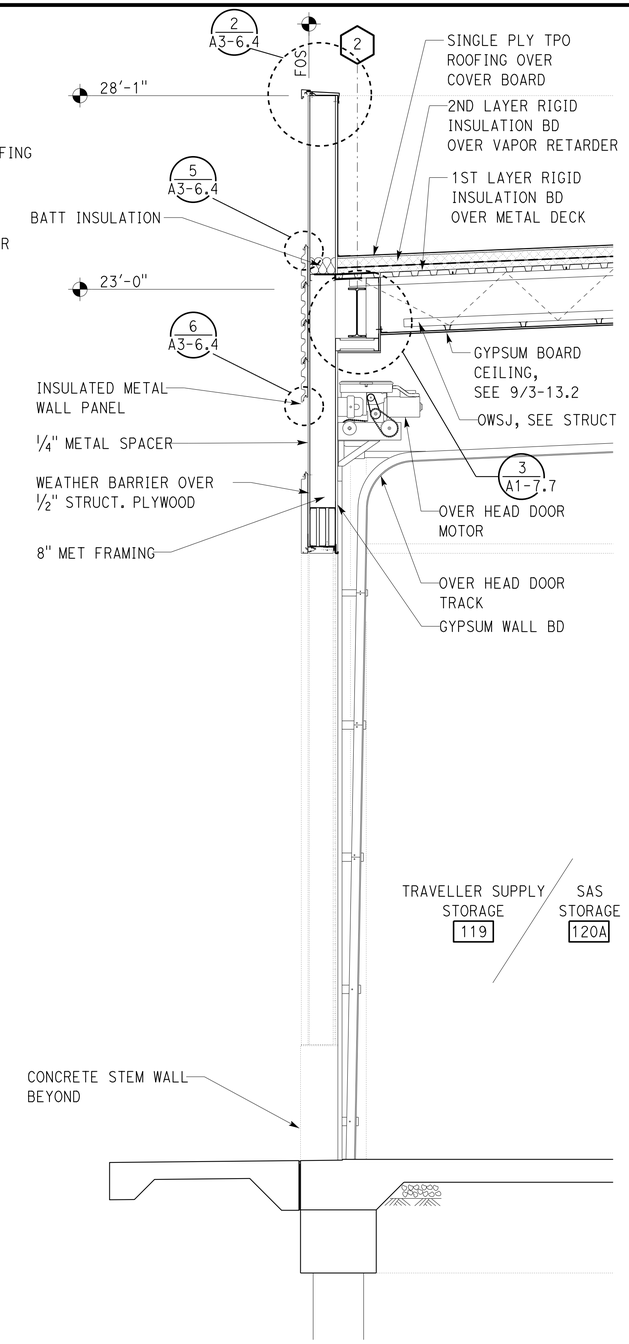

3 WALL SECTION

SCALE 1/2" = 1'-0"

DESIGN	BY L Rhoades, R Francisco	CHECKED Q. Wong, F. Thomas	
DETAILS	BY L Rhoades, J. Kwong	CHECKED Q. Wong, F. Thomas	
QUANTITIES	BY	CHECKED	

STATE OF **CALIFORNIA** DEPARTMENT OF TRANSPORTATION

DIVISION OF ENGINEERING SERVICES
ARCHITECTURAL AND STRUCTURAL DESIGN

BRIDGE No. 33M5785
POST MILE

SFOBB WAREHOUSE
BUILDING 1
WALL SECTIONS

SHEET **A1-7.1**

TAEMWW Imperial - CCSC Rev. 01/13

ORIGINAL SCALE IN INCHES FOR REDUCED PLANS 0 1 2 3

UNIT: 3598 CONTRACT No.: 014101
PROJECT NUMBER & PHASE: 04130001331

DISREGARD PRINTS BEARING EARLIER REVISION DATES →
REVISION DATES (PRELIMINARY STAGE ONLY) SHEET X OF X

30-APR-2014 10:06

P:\dist_04\0413000133_sfobb_maint_warehouse\arch\CADD\Working Drawings\first expedite\a1_07.1_wallsec.dgn

Dist	COUNTY	LOCATION CODE	POST MILES TOTAL PROJECT	SHEET No.	TOTAL SHEETS
04	Ala	5785		114	371

LICENSED ARCHITECT — DATE 10-25-13

3-24-14
PLANS APPROVAL DATE

LICENSED ARCHITECT Lani Rhoades No. C 26695 10-31-15 RENEWAL DATE STATE OF CALIFORNIA

The State of California or its officers or agents shall not be responsible for the accuracy or completeness of scanned copies of this plan sheet.

ACCESSIBILITY DESIGN APPROVAL DOT / DES / OTA
PROJECT ID **0413000133**
Reviewed by: Y. A. WANG
Date: 02-13-14

CALIFORNIA STATE FIRE MARSHAL APPROVED
Approval of this plan does not authorize or approve any omission or deviation from applicable regulations. Final approval is subject to field inspection. One set of approved plans shall be available on the project site at all times.
Reviewed by: INGRID P. ICASIANO
Approval date: 02-11-14

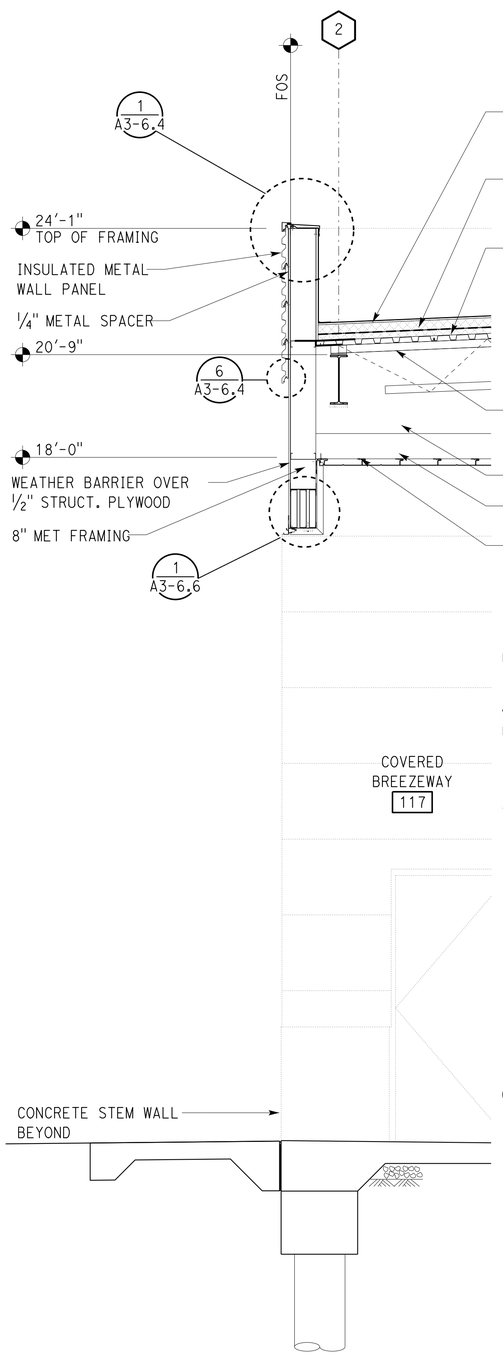

1 WALL SECTION
SCALE 1/2" = 1'-0"

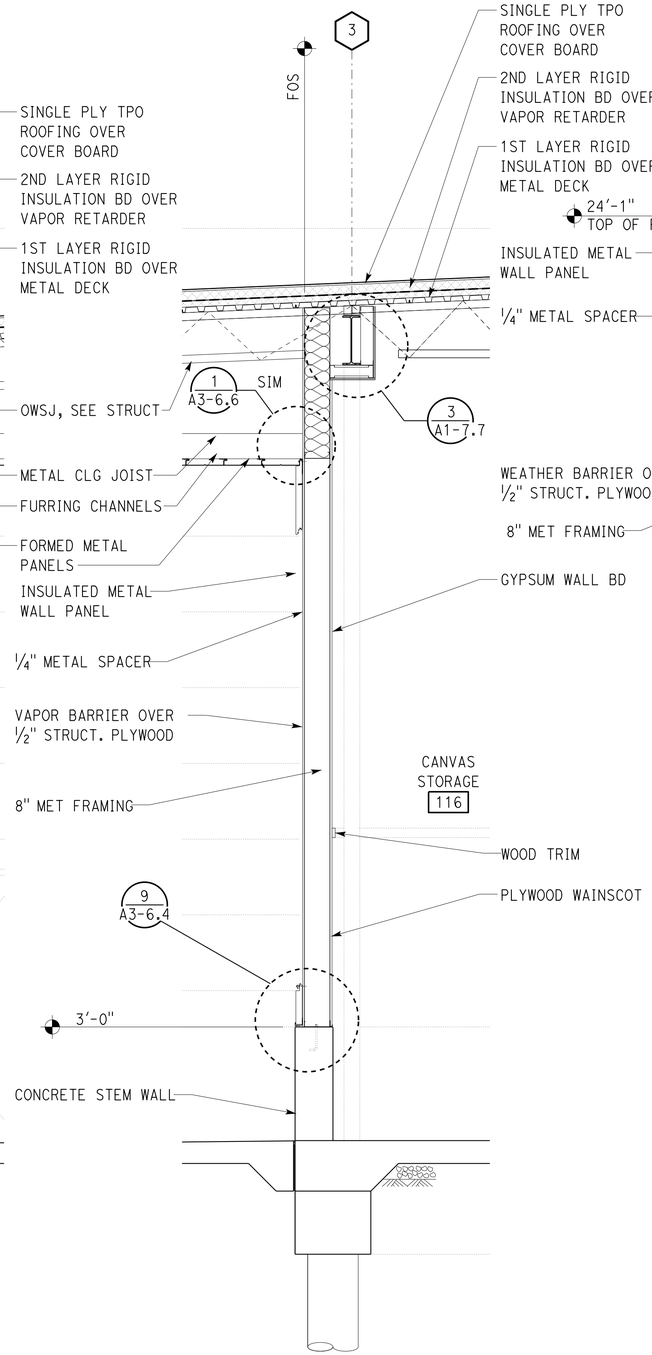

2 WALL SECTION
SCALE 1/2" = 1'-0"

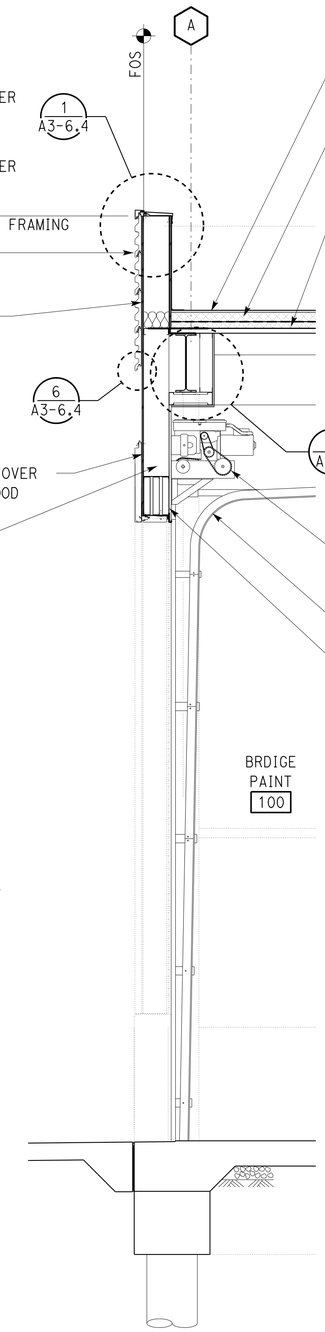

3 WALL SECTION
SCALE 1/2" = 1'-0"

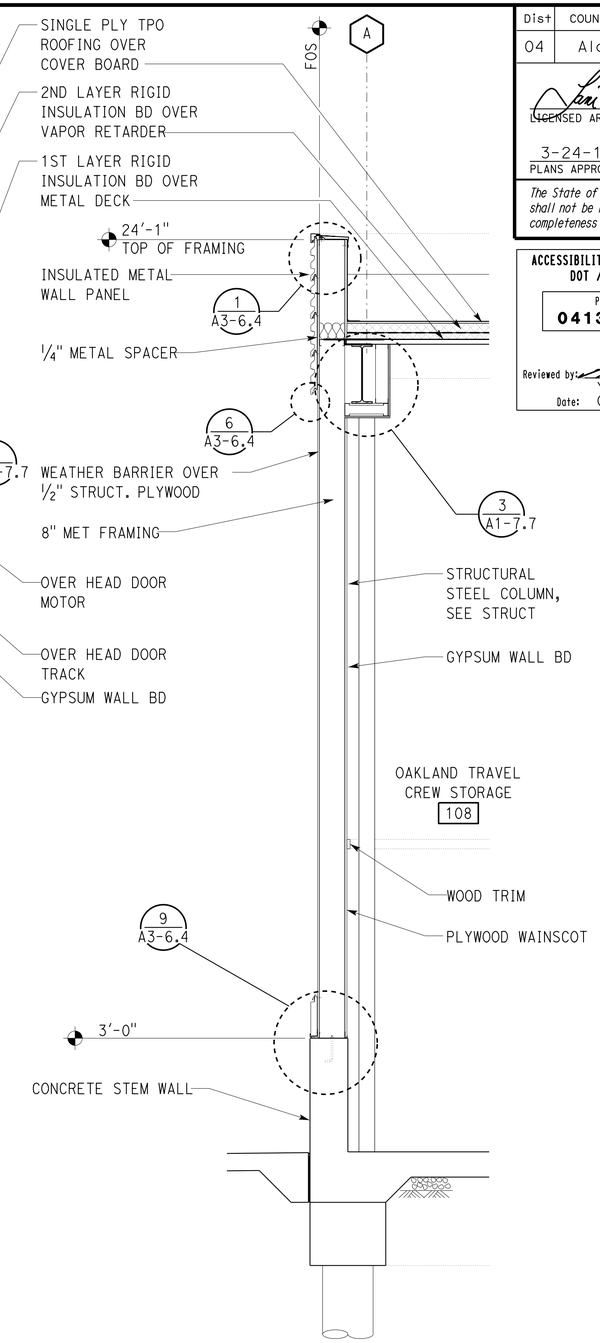

4 WALL SECTION
SCALE 1/2" = 1'-0"

	BY	CHECKED
DESIGN	L Rhoades, R Francisco	Q. Wong, F. Thomas
DETAILS	L Rhoades, J. Kwong	Q. Wong, F. Thomas
QUANTITIES		

STATE OF CALIFORNIA DEPARTMENT OF TRANSPORTATION

DIVISION OF ENGINEERING SERVICES ARCHITECTURAL AND STRUCTURAL DESIGN

BRIDGE No. 33M5785
POST MILE

SFOBB WAREHOUSE
BUILDING 1
WALL SECTIONS

SHEET A1-7.2

TAEMWW Imperial - CCSC Rev. 01/13

ORIGINAL SCALE IN INCHES FOR REDUCED PLANS 0 1 2 3

UNIT: 3598 CONTRACT No.: 014101
PROJECT NUMBER & PHASE: 04130001331

DISREGARD PRINTS BEARING EARLIER REVISION DATES →
REVISION DATES (PRELIMINARY STAGE ONLY) SHEET X OF X

30-APR-2014 10:06

P:\dist_04\0413000133_sfobb_maint_warehouse\arch\CADD\Working Drawings\first expedite\a1_07.2_wallsec.dgn

Dist	COUNTY	LOCATION CODE	POST MILES TOTAL PROJECT	SHEET No.	TOTAL SHEETS
04	Ala	5785		115	371

LICENSED ARCHITECT — DATE 10-25-13

3-24-14
PLANS APPROVAL DATE

LICENSED ARCHITECT — Lani Rhoades — No. C 26695 — 10-31-15 RENEWAL DATE — STATE OF CALIFORNIA

The State of California or its officers or agents shall not be responsible for the accuracy or completeness of scanned copies of this plan sheet.

ACCESSIBILITY DESIGN APPROVAL DOT / DES / OTA
PROJECT ID **0413000133**
Reviewed by: Y. A. WANG
Date: 02-13-14

CALIFORNIA STATE FIRE MARSHAL APPROVED
Approval of this plan does not authorize or approve any omission or deviation from applicable regulations. Final approval is subject to field inspection. One set of approved plans shall be available on the project site at all times.
Reviewed by: INGRID P. ICASIANO
Approval date: 02-11-14

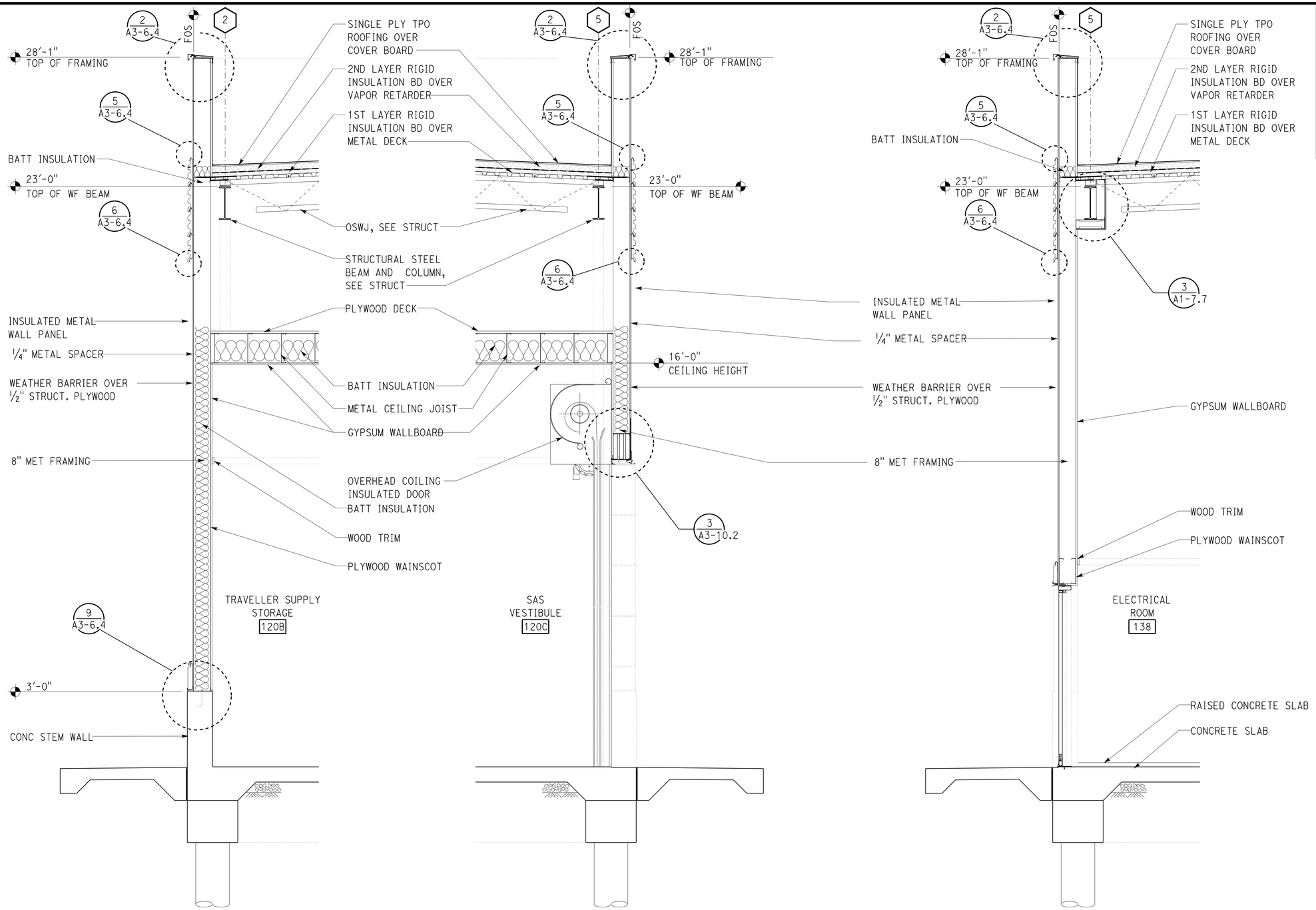

1 WALL SECTION
SCALE 1/2" = 1'-0"

2 WALL SECTION
SCALE 1/2" = 1'-0"

3 WALL SECTION
SCALE 1/2" = 1'-0"

	BY	CHECKED
DESIGN	L Rhoades, R Francisco	Q. Wong, F. Thomas
DETAILS	L Rhoades, J. Kwong	Q. Wong, F. Thomas
QUANTITIES		

STATE OF CALIFORNIA
DEPARTMENT OF TRANSPORTATION

DIVISION OF ENGINEERING SERVICES
ARCHITECTURAL AND STRUCTURAL DESIGN

BRIDGE No. 33M5785
POST MILE

SFOBB WAREHOUSE
BUILDING 1
WALL SECTIONS

SHEET A1-7.3

TAEMWW Imperial - CCSC Rev. 01/13

ORIGINAL SCALE IN INCHES FOR REDUCED PLANS 0 1 2 3

UNIT: 3598 CONTRACT No.: 014101
PROJECT NUMBER & PHASE: 04130001331

DISREGARD PRINTS BEARING EARLIER REVISION DATES →
REVISION DATES (PRELIMINARY STAGE ONLY)
SHEET X OF X

30-APR-2014 10:06

P:\dist_04\0413000133_sfobb_maint_warehouse\arch\CADD\Working Drawings\first expedite\a1_07.3_wallsec.dgn

Dist	COUNTY	LOCATION CODE	POST MILES TOTAL PROJECT	SHEET No.	TOTAL SHEETS
04	Ala	5785		116	371

LICENSED ARCHITECT — DATE 10-25-13

3-24-14
PLANS APPROVAL DATE

LICENSED ARCHITECT Lani Rhoades No. C 26695 10-31-15 RENEWAL DATE STATE OF CALIFORNIA

The State of California or its officers or agents shall not be responsible for the accuracy or completeness of scanned copies of this plan sheet.

ACCESSIBILITY DESIGN APPROVAL DOT / DES / OTA
PROJECT ID **0413000133**
Reviewed by: Y. A. WANG
Date: 02-13-14

CALIFORNIA STATE FIRE MARSHAL APPROVED
Approval of this plan does not authorize or approve any omission or deviation from applicable regulations. Final approval is subject to field inspection. One set of approved plans shall be available on the project site at all times.
Reviewed by: INGRID P. ICASIANO
Approval date: 02-11-14

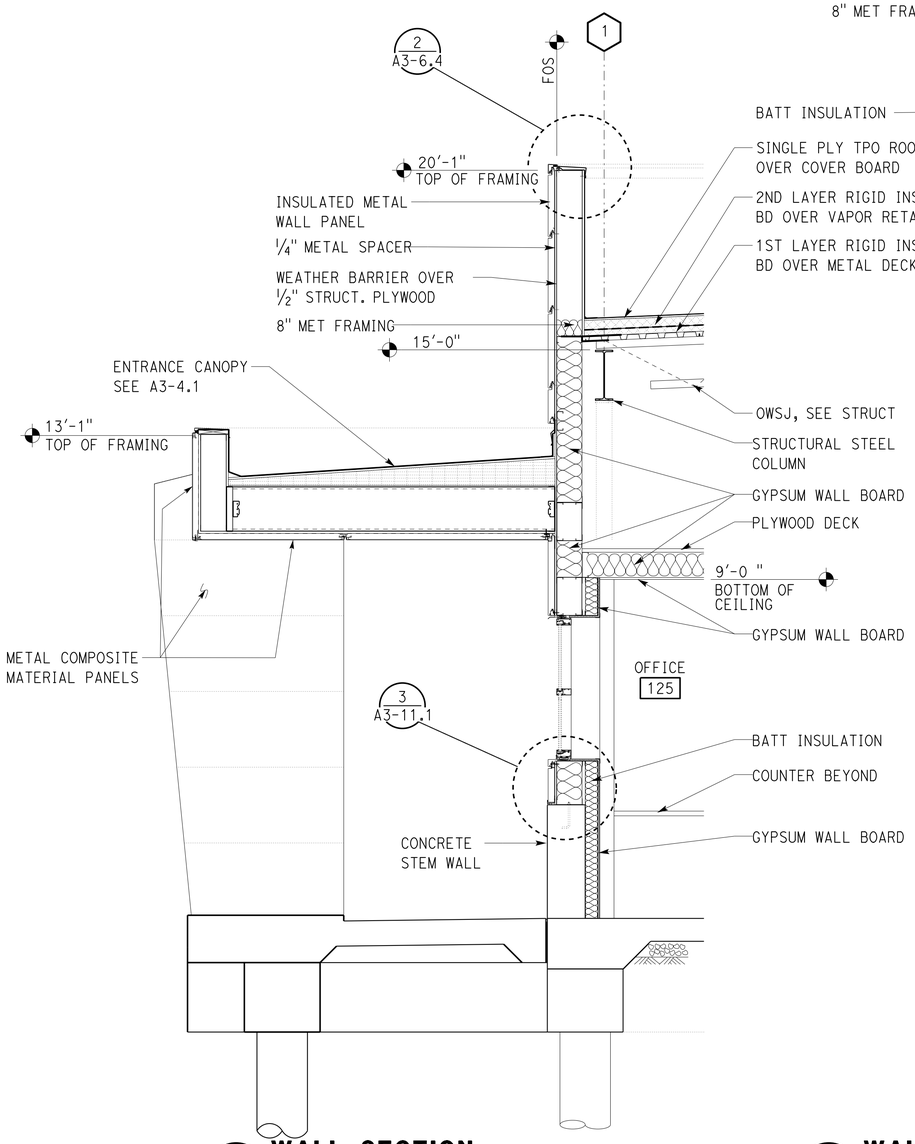

1 WALL SECTION
SCALE 1/2" = 1'-0"

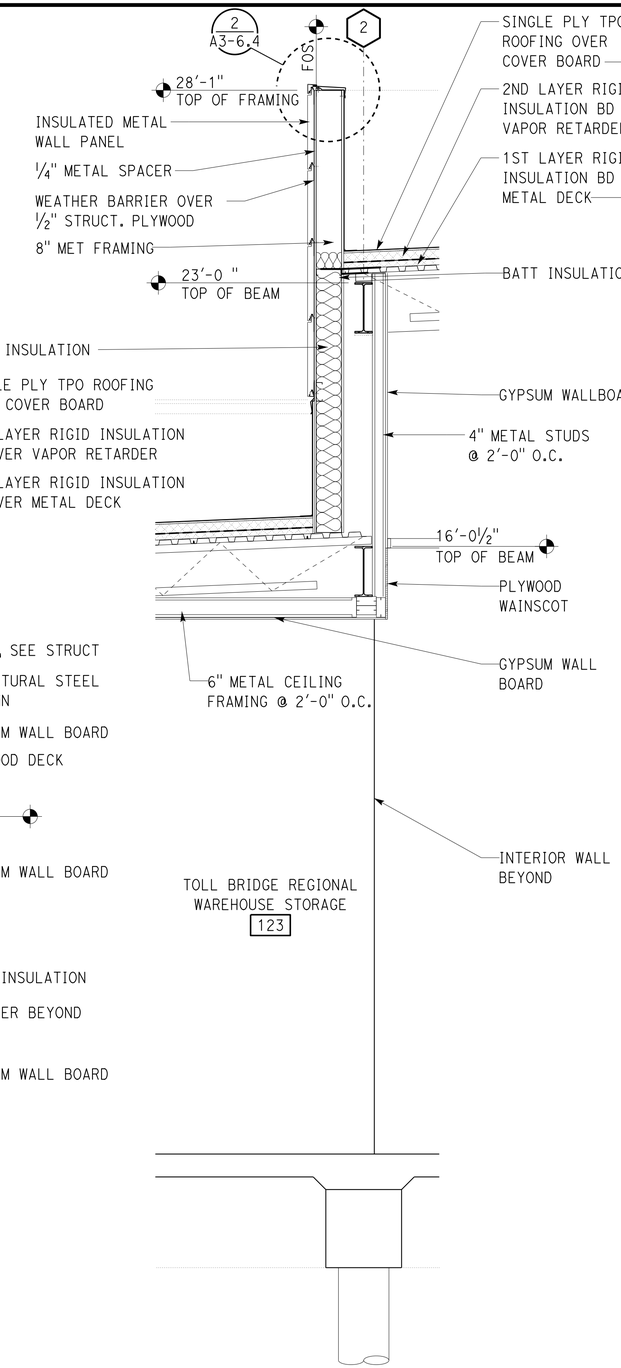

2 WALL SECTION
SCALE 1/2" = 1'-0"

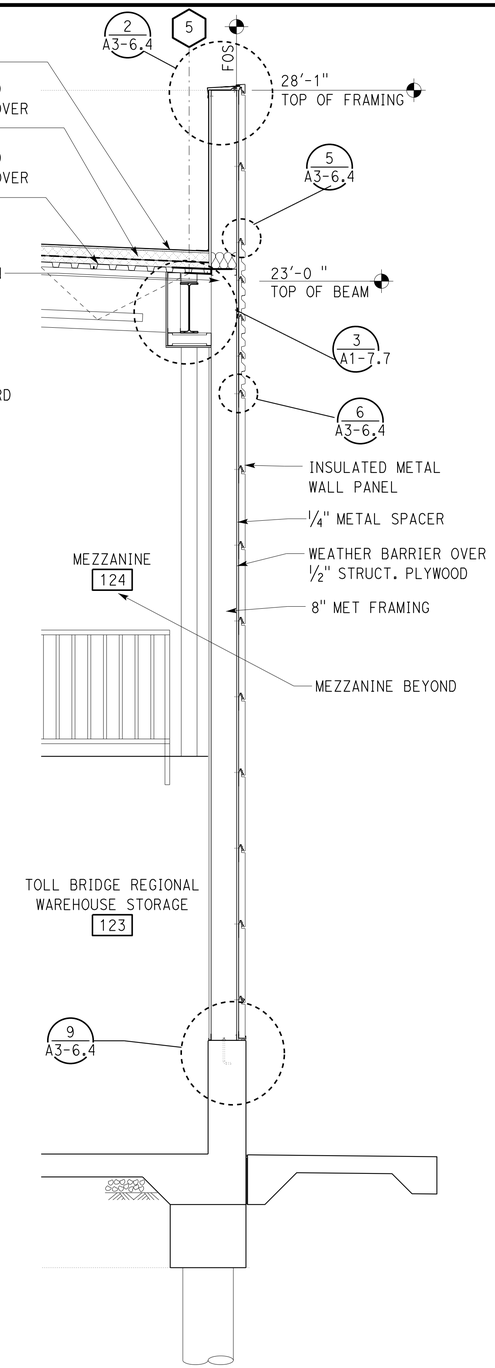

3 WALL SECTION
SCALE 1/2" = 1'-0"

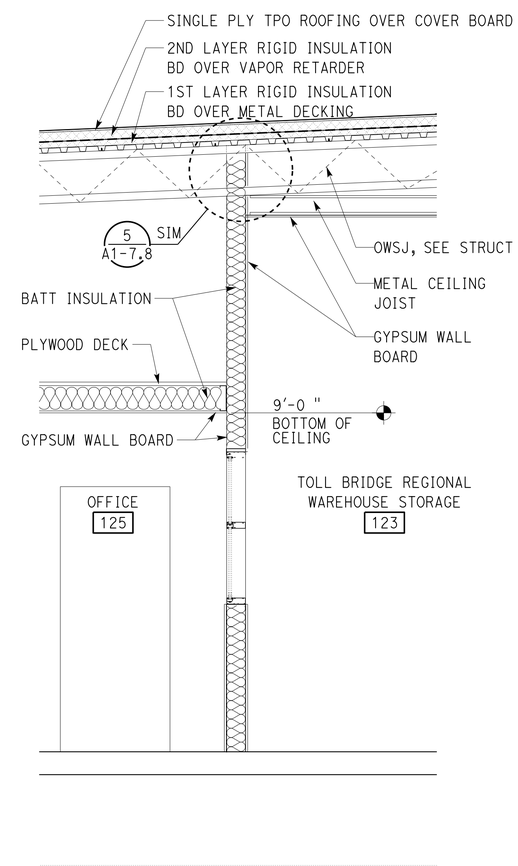

4 WALL SECTION
SCALE 1/2" = 1'-0"

	BY	CHECKED
DESIGN	L Rhoades, R Francisco	Q. Wong, F. Thomas
DETAILS	L Rhoades, J. Kwong	Q. Wong, F. Thomas
QUANTITIES		

STATE OF CALIFORNIA DEPARTMENT OF TRANSPORTATION

DIVISION OF ENGINEERING SERVICES ARCHITECTURAL AND STRUCTURAL DESIGN

BRIDGE No. 33M5785 POST MILE

SFOBB WAREHOUSE — BUILDING 1 — WALL SECTIONS

SHEET A1-7.4

ORIGINAL SCALE IN INCHES FOR REDUCED PLANS 0 1 2 3

UNIT: 3598 CONTRACT No.: 014101
PROJECT NUMBER & PHASE: 04130001331

DISREGARD PRINTS BEARING EARLIER REVISION DATES

REVISION DATES (PRELIMINARY STAGE ONLY) SHEET X OF X

TAEMWW Imperial - CCSC Rev. 01/13

30-APR-2014 10:06

D:\temporary\a1_07.4_wallsec.dgn

Dist	COUNTY	LOCATION CODE	POST MILES TOTAL PROJECT	SHEET No.	TOTAL SHEETS
04	Ala	5785		117	371

LICENSED ARCHITECT — DATE 10-25-13

3-24-14
PLANS APPROVAL DATE

LICENSED ARCHITECT — Lani Rhoades — No. C 26695 — 10-31-15 RENEWAL DATE — STATE OF CALIFORNIA

The State of California or its officers or agents shall not be responsible for the accuracy or completeness of scanned copies of this plan sheet.

ACCESSIBILITY DESIGN APPROVAL DOT / DES / OTA
PROJECT ID **0413000133**
Reviewed by: Y. A. WANG
Date: 02-13-14

CALIFORNIA STATE FIRE MARSHAL APPROVED
Approval of this plan does not authorize or approve any omission or deviation from applicable regulations. Final approval is subject to field inspection. One set of approved plans shall be available on the project site at all times.
Reviewed by: INGRID P. ICASIANO
Approval date: 02-11-14

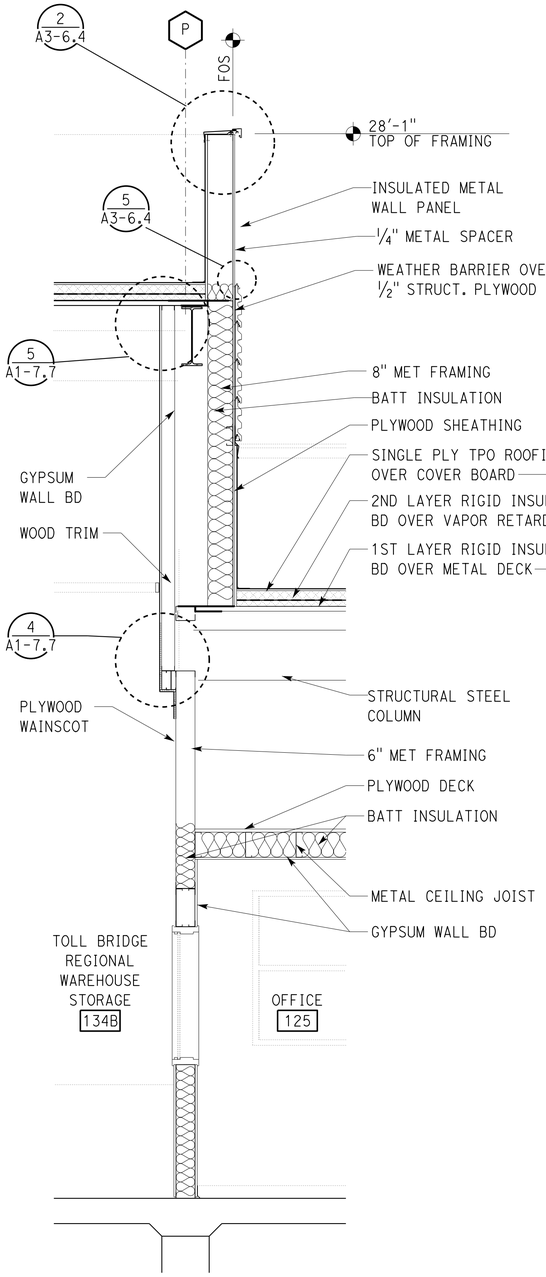

1 WALL SECTION
SCALE 1/2" = 1'-0"

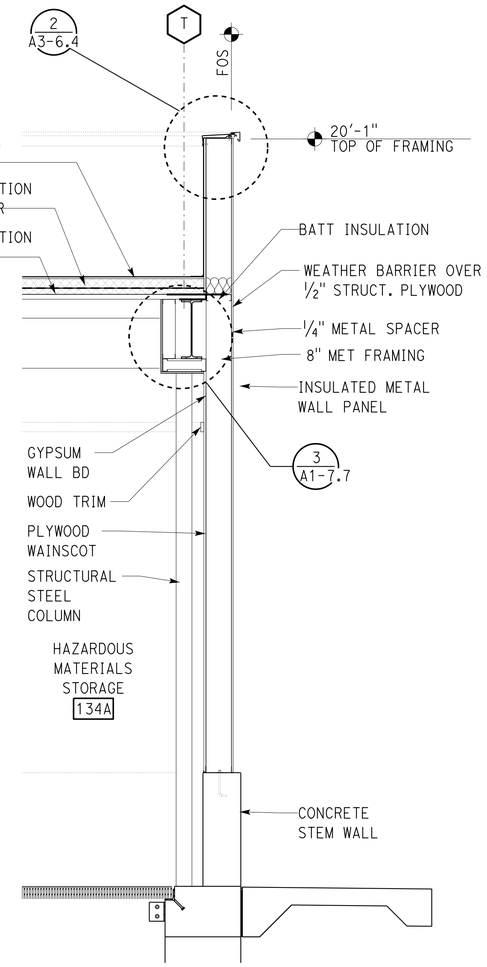

2 WALL SECTION
SCALE 1/2" = 1'-0"

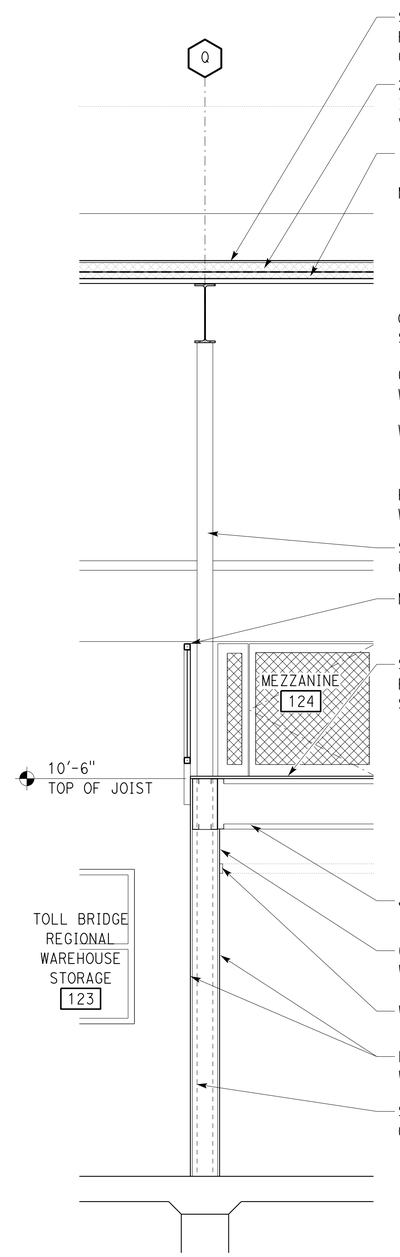

3 WALL SECTION
SCALE 1/2" = 1'-0"

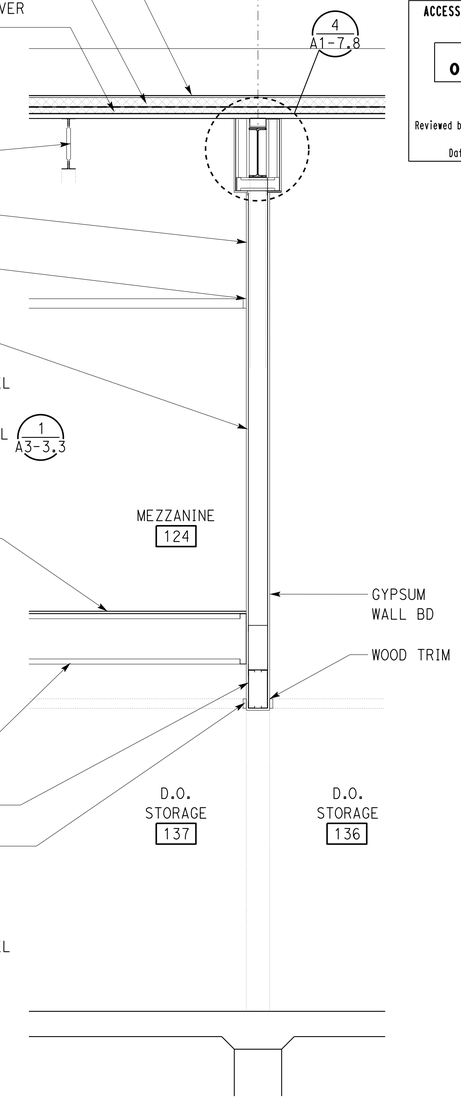

4 WALL SECTION
SCALE 1/2" = 1'-0"

	BY	CHECKED
DESIGN	L Rhoades, R Francisco	Q. Wong, F. Thomas
DETAILS	L Rhoades, J. Kwong	Q. Wong, F. Thomas
QUANTITIES		

STATE OF CALIFORNIA
DEPARTMENT OF TRANSPORTATION

DIVISION OF ENGINEERING SERVICES
ARCHITECTURAL AND STRUCTURAL DESIGN

BRIDGE No. 33M5785
POST MILE

SFOBB WAREHOUSE
BUILDING 1
WALL SECTIONS

SHEET **A1-7.5**

TAEMWW Imperial - CCSC Rev. 01/13

ORIGINAL SCALE IN INCHES FOR REDUCED PLANS 0 1 2 3

UNIT: 3598 CONTRACT No.: 014101
PROJECT NUMBER & PHASE: 04130001331

DISREGARD PRINTS BEARING EARLIER REVISION DATES →
REVISION DATES (PRELIMINARY STAGE ONLY)
SHEET X OF X

30-APR-2014 10:06

P:\dist_04\0413000133_sfobb_maint_warehouse\arch\CADD\Working Drawings\first expedite\a1_07.5_wallsec.dgn

Dist	COUNTY	LOCATION CODE	POST MILES TOTAL PROJECT	SHEET No.	TOTAL SHEETS
04	Ala	5785		118	371

LICENSED ARCHITECT — DATE 10-25-13

3-24-14
PLANS APPROVAL DATE

LICENSED ARCHITECT — Lani Rhoades — No. C 26695 — 10-31-15 RENEWAL DATE — STATE OF CALIFORNIA

The State of California or its officers or agents shall not be responsible for the accuracy or completeness of scanned copies of this plan sheet.

ACCESSIBILITY DESIGN APPROVAL DOT / DES / OTA
PROJECT ID **0413000133**
Reviewed by: Y. A. WANG
Date: 02-13-14

CALIFORNIA STATE FIRE MARSHAL APPROVED
Approval of this plan does not authorize or approve any omission or deviation from applicable regulations. Final approval is subject to field inspection. One set of approved plans shall be available on the project site at all times.
Reviewed by: INGRID P. ICASIANO
Approval date: 02-11-14

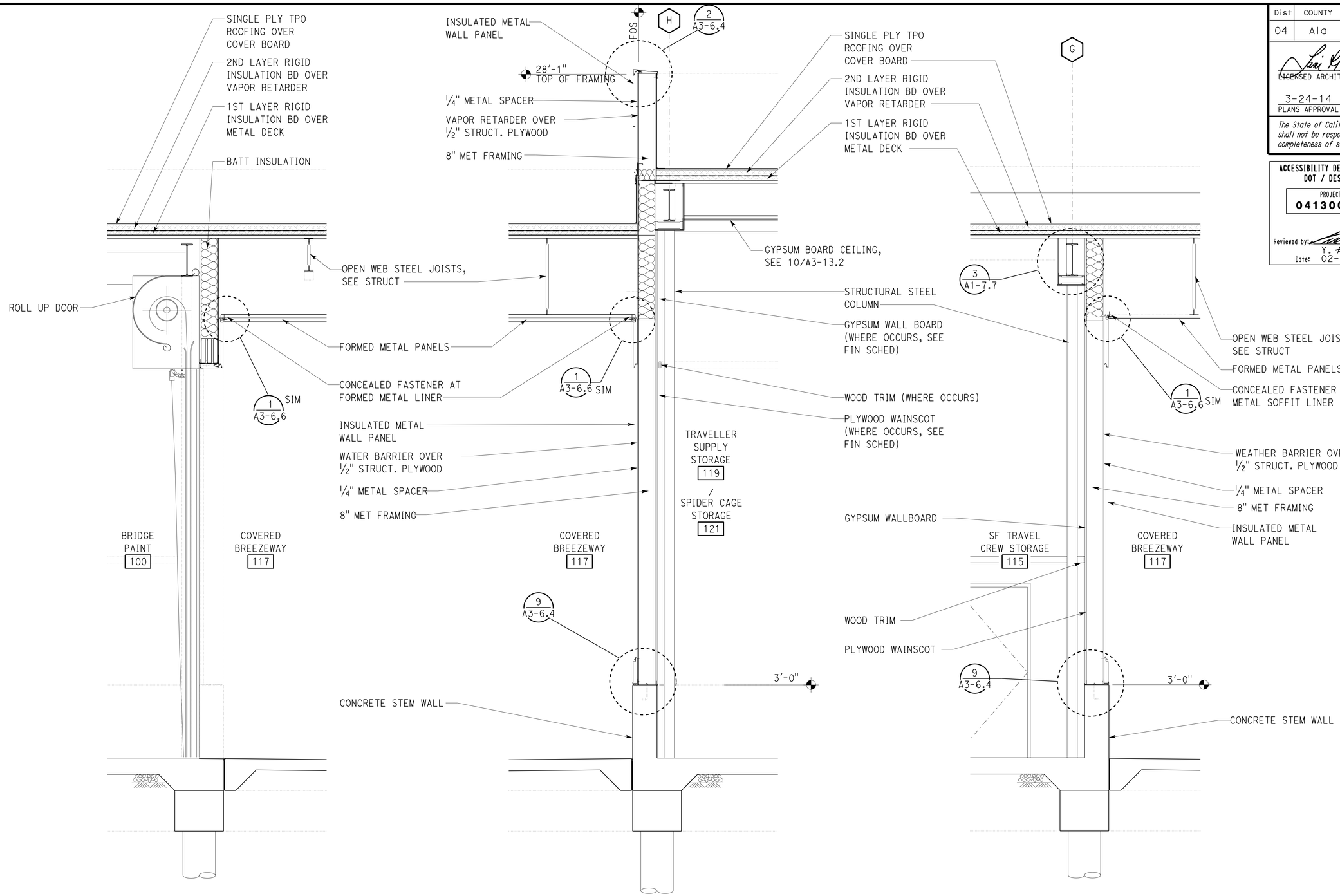

1 WALL SECTION
SCALE 1/2" = 1'-0"

2 WALL SECTION
SCALE 1/2" = 1'-0"

3 WALL SECTION
SCALE 1/2" = 1'-0"

	BY	CHECKED
DESIGN	L Rhoades, R Francisco	Q. Wong, F. Thomas
DETAILS	L Rhoades, J. Kwong	Q. Wong, F. Thomas
QUANTITIES		

STATE OF CALIFORNIA
DEPARTMENT OF TRANSPORTATION

DIVISION OF ENGINEERING SERVICES
ARCHITECTURAL AND STRUCTURAL DESIGN

BRIDGE No. 33M5785
POST MILE

SFOBB WAREHOUSE
BUILDING 1
WALL SECTIONS

SHEET **A1-7.6**

TAEMWW Imperial - CCSC Rev. 01/13

ORIGINAL SCALE IN INCHES FOR REDUCED PLANS 0 1 2 3

UNIT: 3598 CONTRACT No.: 014101
PROJECT NUMBER & PHASE: 04130001331

DISREGARD PRINTS BEARING EARLIER REVISION DATES →
REVISION DATES (PRELIMINARY STAGE ONLY) SHEET X OF X

30-APR-2014 10:06
D:\temporary\a1_07.6_wallsec.dgn

Dist	COUNTY	LOCATION CODE	POST MILES TOTAL PROJECT	SHEET No.	TOTAL SHEETS
04	Ala	5785		119	371

LICENSED ARCHITECT — DATE 10-25-13

3-24-14
PLANS APPROVAL DATE

LICENSED ARCHITECT Lani Rhoades No. C 26695 10-31-15 RENEWAL DATE STATE OF CALIFORNIA

The State of California or its officers or agents shall not be responsible for the accuracy or completeness of scanned copies of this plan sheet.

ACCESSIBILITY DESIGN APPROVAL DOT / DES / OTA
PROJECT ID **0413000133**
Reviewed by: Y. A. WANG
Date: 02-13-14

CALIFORNIA STATE FIRE MARSHAL APPROVED
Approval of this plan does not authorize or approve any omission or deviation from applicable regulations. Final approval is subject to field inspection. One set of approved plans shall be available on the project site at all times.
Reviewed by: INGRID P. ICASIANO
Approval date: 02-11-14

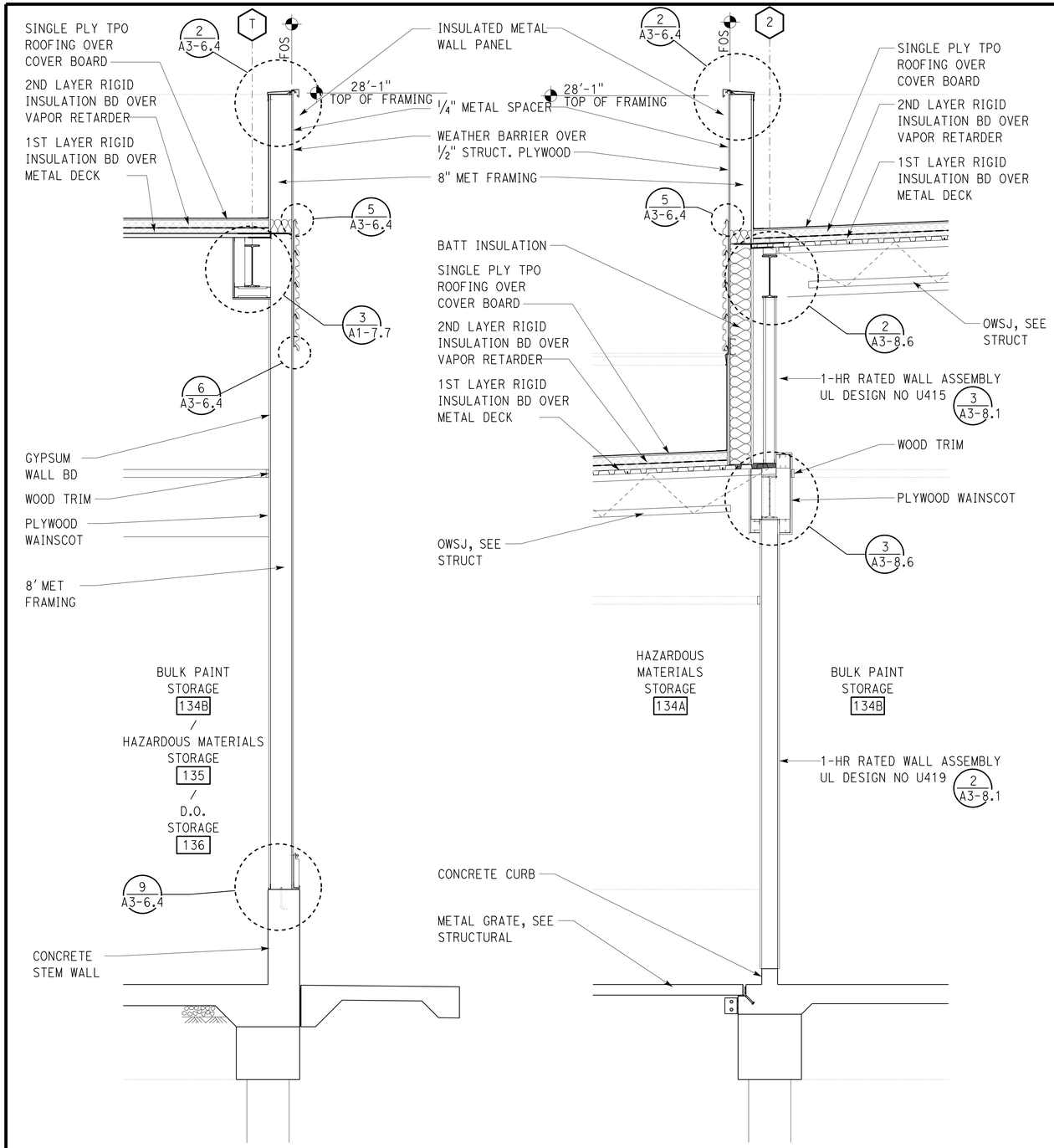

1 WALL SECTION
SCALE 1/2" = 1'-0"

2 WALL SECTION
SCALE 1/2" = 1'-0"

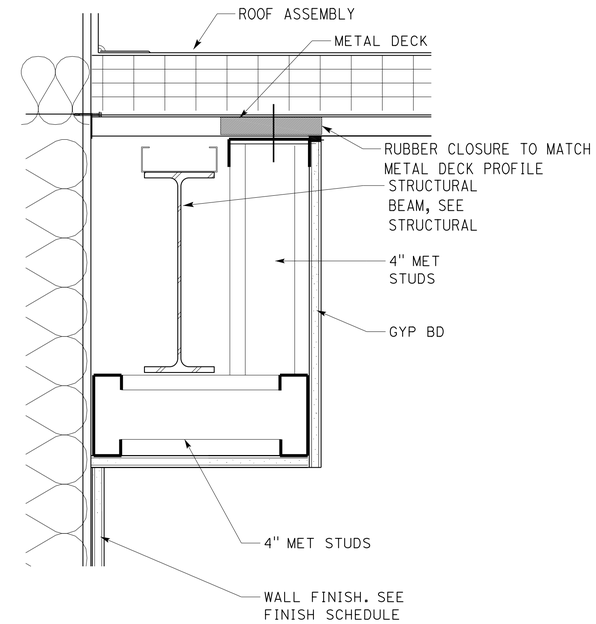

3 WALL DETAIL
SCALE 3" = 1'-0"

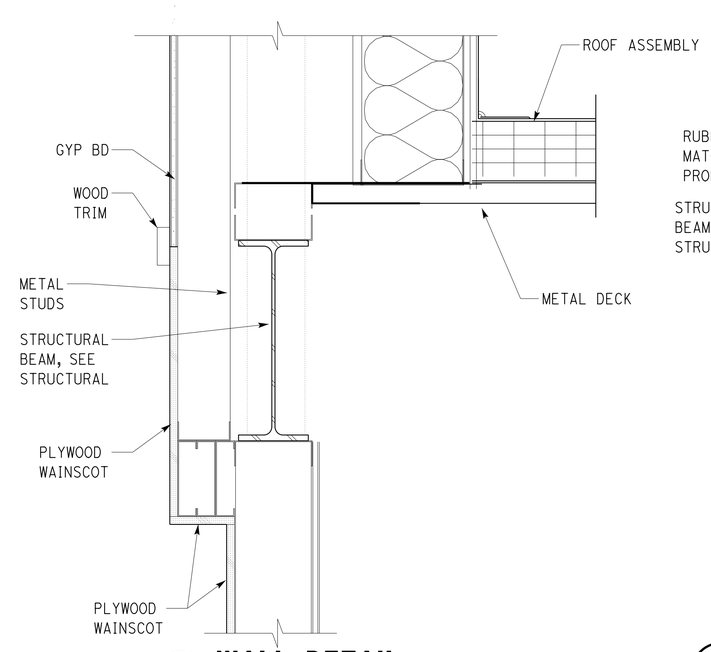

4 WALL DETAIL
SCALE 3" = 1'-0"

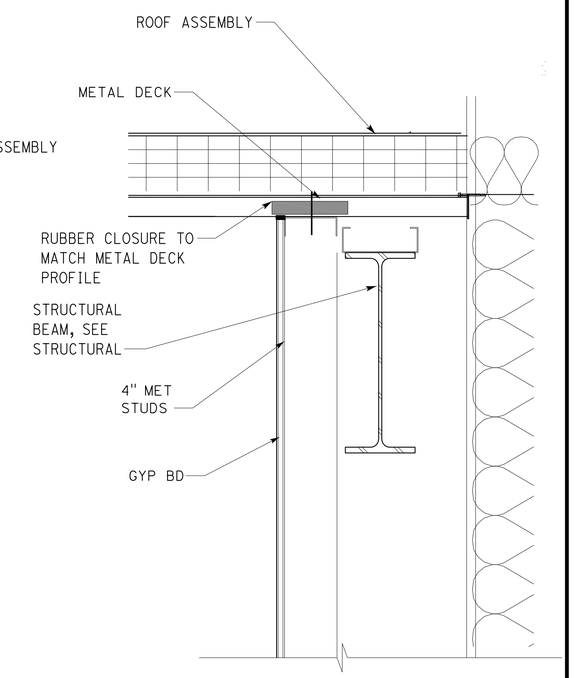

5 WALL DETAIL
SCALE 3" = 1'-0"

	BY	CHECKED
DESIGN	L Rhoades, R Francisco	Q. Wong, F. Thomas
DETAILS	L Rhoades, J. Kwong	Q. Wong, F. Thomas
QUANTITIES		

STATE OF CALIFORNIA DEPARTMENT OF TRANSPORTATION

DIVISION OF ENGINEERING SERVICES ARCHITECTURAL AND STRUCTURAL DESIGN

BRIDGE No. 33M5785 — POST MILE

SFOBB WAREHOUSE — BUILDING 1 — WALL SECTIONS

SHEET A1-7.7

TAEMWW Imperial - CCSC Rev. 01/13

ORIGINAL SCALE IN INCHES FOR REDUCED PLANS 0 1 2 3

UNIT: 3598 CONTRACT No.: 014101
PROJECT NUMBER & PHASE: 04130001331

DISREGARD PRINTS BEARING EARLIER REVISION DATES

REVISION DATES (PRELIMINARY STAGE ONLY) SHEET X OF X

30-APR-2014 10:07

D:\temporary\a1_07.7_wallsec.dgn

Dist	COUNTY	LOCATION CODE	POST MILES TOTAL PROJECT	SHEET No.	TOTAL SHEETS
04	Ala	5785		120	371

LICENSED ARCHITECT — DATE 10-25-13

3-24-14
PLANS APPROVAL DATE

LICENSED ARCHITECT Lani Rhoades No. C 26695 10-31-15 RENEWAL DATE STATE OF CALIFORNIA

The State of California or its officers or agents shall not be responsible for the accuracy or completeness of scanned copies of this plan sheet.

ACCESSIBILITY DESIGN APPROVAL DOT / DES / OTA
PROJECT ID **0413000133**
Reviewed by: Y. A. WANG
Date: 02-13-14

CALIFORNIA STATE FIRE MARSHAL APPROVED
Approval of this plan does not authorize or approve any omission or deviation from applicable regulations. Final approval is subject to field inspection. One set of approved plans shall be available on the project site at all times.
Reviewed by: INGRID P. ICASIANO
Approval date: 02-11-14

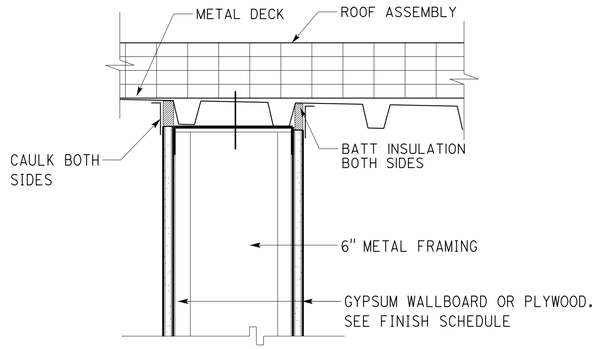

1 INTERIOR WALL PARALLEL WITH DECK

SCALE 3" = 1'-0"

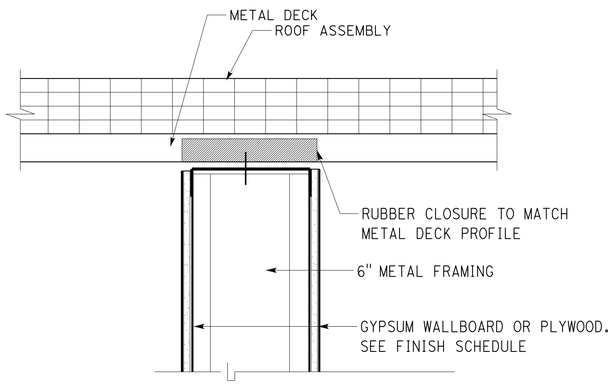

2 INTERIOR WALL PERPENDICULAR WITH DECK

SCALE 3" = 1'-0"

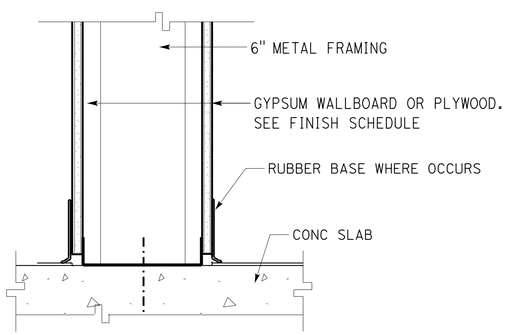

3 INTERIOR WALL

SCALE 3" = 1'-0"

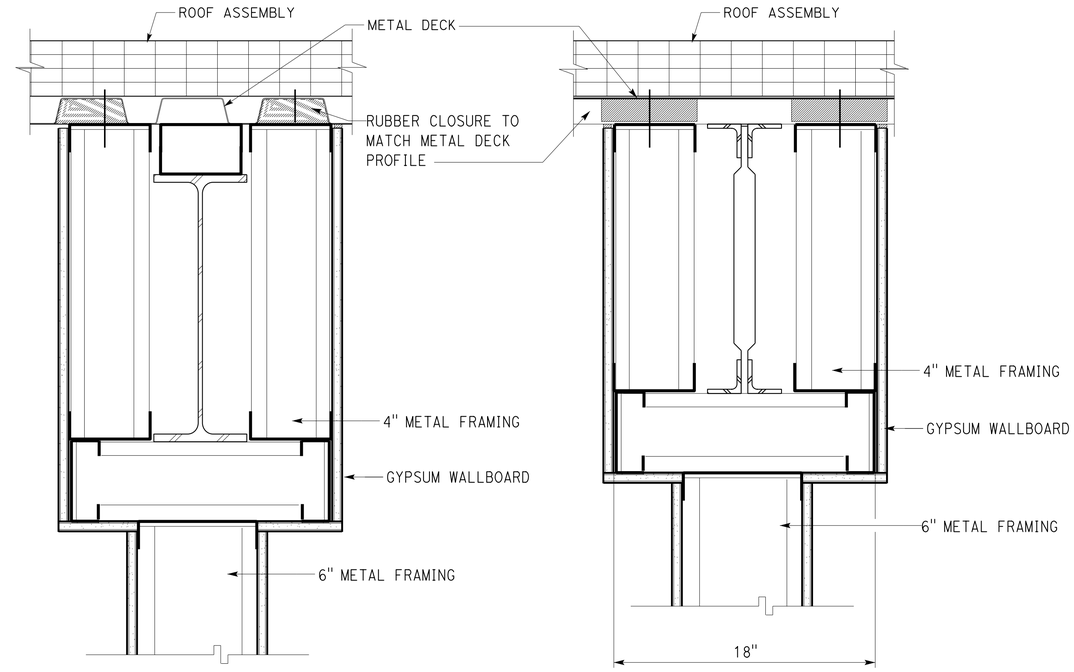

4 INTERIOR WALL PARALLEL TO AND UNDER OWSJ OR BEAM

SCALE 3" = 1'-0"

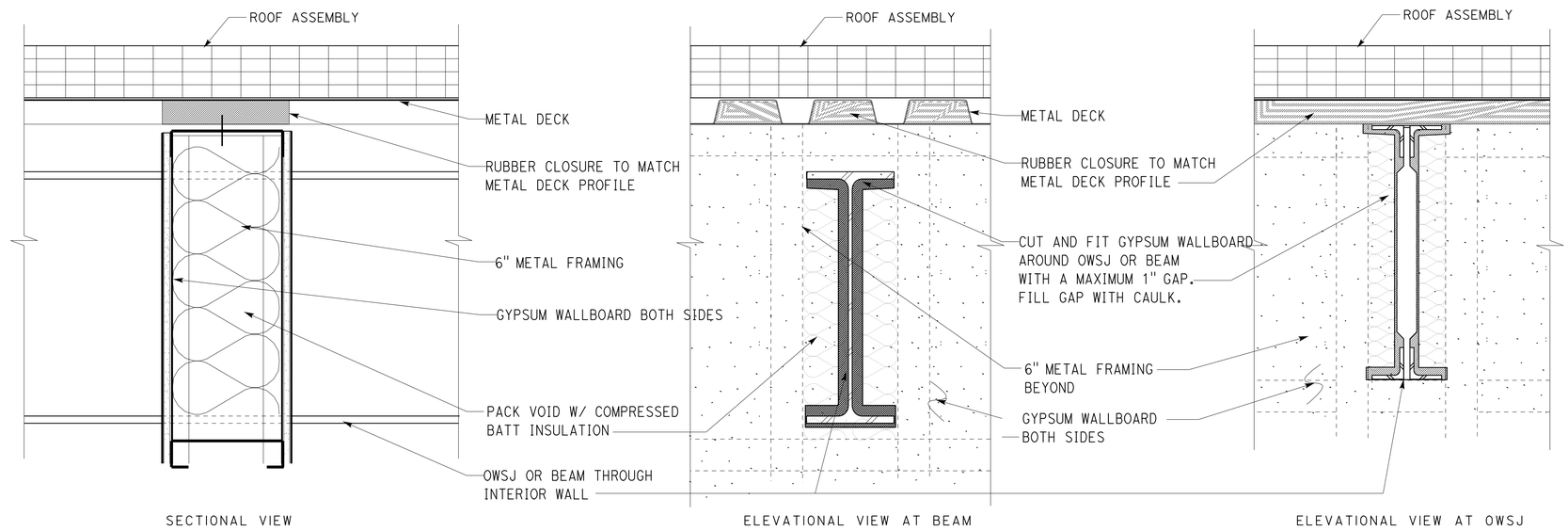

5 INTERIOR WALL PERPENDICULAR TO OWSJ OR BEAM

SCALE 3" = 1'-0"

	BY	CHECKED
DESIGN	L Rhoades, R Francisco	Q. Wong, F. Thomas
DETAILS	L Rhoades, J. Kwong	Q. Wong, F. Thomas
QUANTITIES		

STATE OF CALIFORNIA DEPARTMENT OF TRANSPORTATION

DIVISION OF ENGINEERING SERVICES ARCHITECTURAL AND STRUCTURAL DESIGN

BRIDGE No. 33M5785 POST MILE

SFOBB WAREHOUSE
BUILDING 1
INTERIOR WALL SECTIONS

SHEET A1-7.8

TAEMWW Imperial - CCSC Rev. 01/13

ORIGINAL SCALE IN INCHES FOR REDUCED PLANS 0 1 2 3

UNIT: 3598 CONTRACT No.: 014101
PROJECT NUMBER & PHASE: 04130001331

DISREGARD PRINTS BEARING EARLIER REVISION DATES

REVISION DATES (PRELIMINARY STAGE ONLY) SHEET X OF X

30-APR-2014 10:07

P:\dist_04\0413000133_sfobb_maint_warehouse\arch\CADD\Working Drawings\first expedite\a1_07.8_wallsec.dgn

Dist	COUNTY	LOCATION CODE	POST MILES TOTAL PROJECT	SHEET No.	TOTAL SHEETS
04	Ala	5785		121	371

LICENSED ARCHITECT — DATE 10-25-13

3-24-14
PLANS APPROVAL DATE

LICENSED ARCHITECT — Lani Rhoades — No. C 26695 — 10-31-15 RENEWAL DATE — STATE OF CALIFORNIA

The State of California or its officers or agents shall not be responsible for the accuracy or completeness of scanned copies of this plan sheet.

ACCESSIBILITY DESIGN APPROVAL DOT / DES / OTA
PROJECT ID **0413000133**
Reviewed by: Y. A. WANG
Date: 02-13-14

CALIFORNIA STATE FIRE MARSHAL APPROVED
Approval of this plan does not authorize or approve any omission or deviation from applicable regulations. Final approval is subject to field inspection. One set of approved plans shall be available on the project site at all times.
Reviewed by: INGRID P. ICASIANO
Approval date: 02-11-14

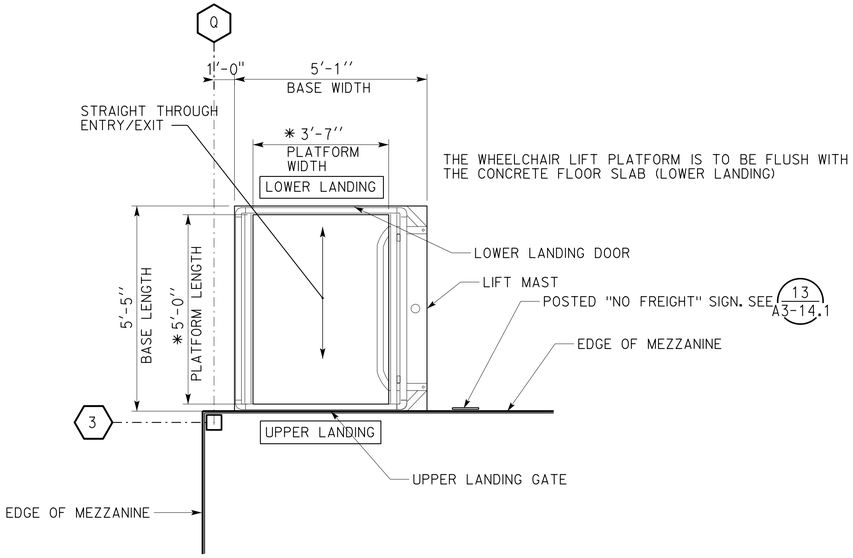

* Note: Size of platform is suitable for a straight-thru enty/exit wheelchair passage

1 VERTICAL WHEELCHAIR LIFT PLAN

SCALE ½" = 1'-0"

PLAN NORTH

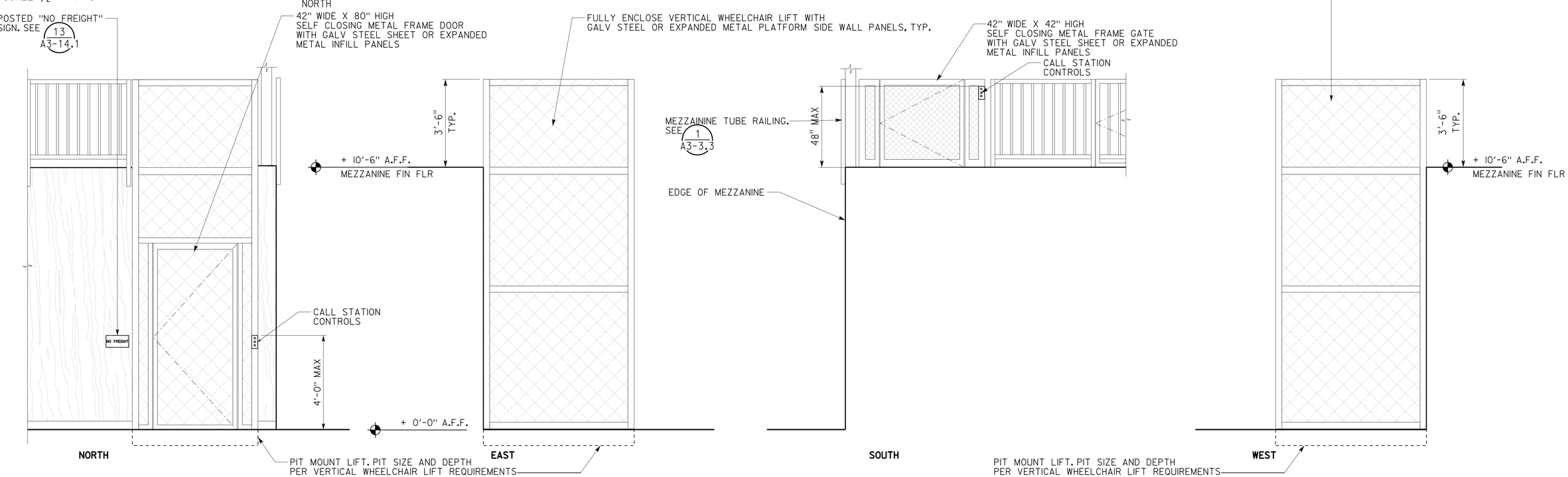

2 VERTICAL WHEELCHAIR LIFT ELEVATIONS

SCALE ½" = 1'-0"

DESIGN SUPERVISOR
DESIGN ARCHITECT
DESIGNER
DRAWN BY
CHECKED BY:
STRUCTURAL REVIEW

SHEET LEGEND
A-1 ARCHITECTURAL ST-1 STRUCTURAL
M-1 MECHANICAL EE-1 ELECTRICAL
MP-1 PLUMBING SS-1 SANITARY

STATE OF CALIFORNIA
DEPARTMENT OF TRANSPORTATION

DIVISION OF ENGINEERING SERVICES
ARCHITECTURAL AND STRUCTURAL DESIGN

BRIDGE No. 33M5785
POST MILE

SFOBB WAREHOUSE
BUILDING 1
VERTICAL WHEELCHAIR LIFT DETAILS

SHEET A1-8.1

TAEMWW Imperial - CCSC Rev. 01/13

ORIGINAL SCALE IN INCHES FOR REDUCED PLANS 0 1 2 3

UNIT: 3598 CONTRACT No.: 014101
PROJECT NUMBER & PHASE: 04130001331

DISREGARD PRINTS BEARING EARLIER REVISION DATES → - -13

REVISION DATES (PRELIMINARY STAGE ONLY) SHEET X OF X

30-APR-2014 10:07

D:\temporary\a1_08.1_mezzanine_lift_details.dgn

Dist	COUNTY	LOCATION CODE	POST MILES TOTAL PROJECT	SHEET No.	TOTAL SHEETS
04	Ala	5785		122	371

LICENSED ARCHITECT — DATE 10-25-13

3-24-14
PLANS APPROVAL DATE

LICENSED ARCHITECT — Lani Rhoades — No. C 26695 — 10-31-15 RENEWAL DATE — STATE OF CALIFORNIA

The State of California or its officers or agents shall not be responsible for the accuracy or completeness of scanned copies of this plan sheet.

ACCESSIBILITY DESIGN APPROVAL DOT / DES / OTA
PROJECT ID **0413000133**
Reviewed by: Y. A. WANG
Date: 02-13-14

CALIFORNIA STATE FIRE MARSHAL APPROVED
Approval of this plan does not authorize or approve any omission or deviation from applicable regulations. Final approval is subject to field inspection. One set of approved plans shall be available on the project site at all times.
Reviewed by: INGRID P. ICASIANO
Approval date: 02-11-14

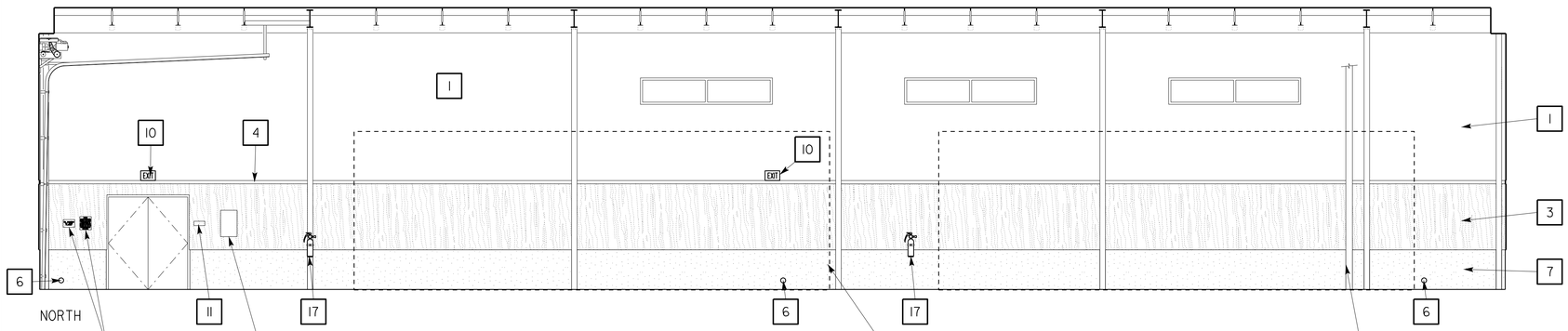

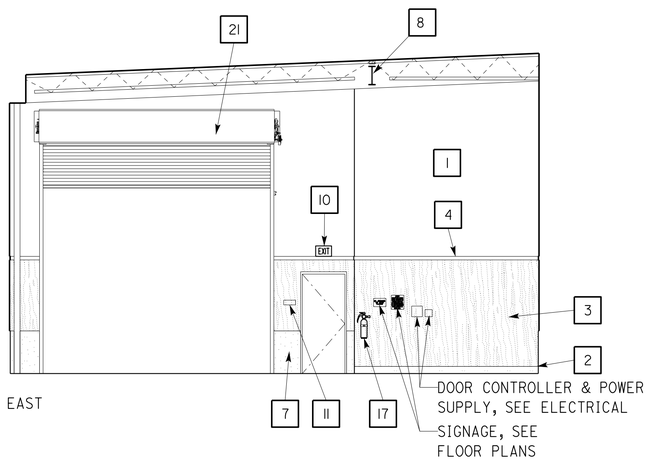

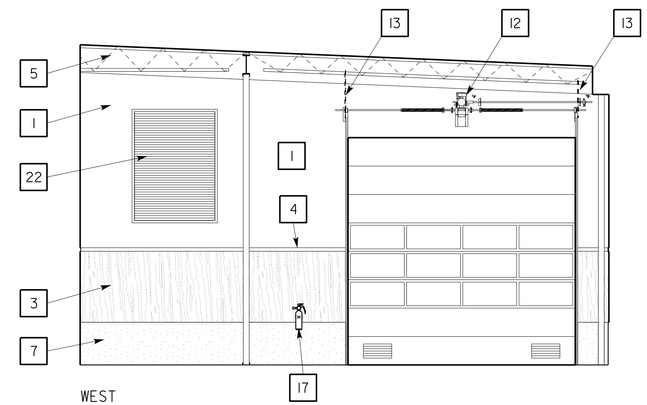

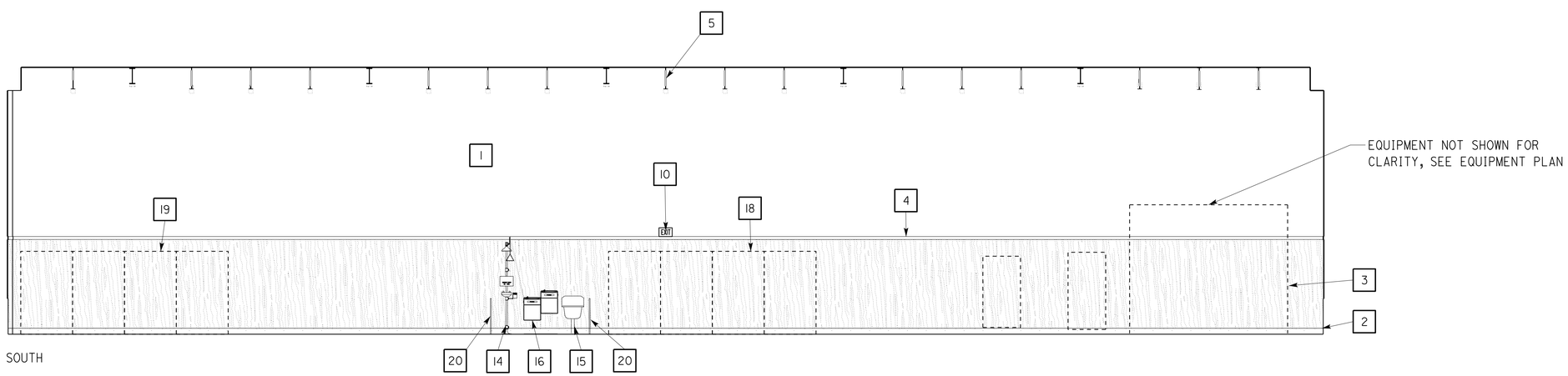

1 BRIDGE PAINT 100
SCALE 3/16" = 1'-0"

KEY NOTES

1. GYPSUM WALL BD, PAINTED
2. 6" CONCRETE CURB
3. PLYWOOD WAINSCOT, PAINTED
4. WOOD TRIM (7 / A3-13.2)
5. OWSJ, SEE STRUCTURAL SHEETS
6. RWL CLEANOUT, SEE MECH
7. CONCRETE STEM WALL
8. STRUCTURAL STEEL COLUMN AND BEAM, PAINTED
9. ROOM IDENTIFICATION SIGN (1 / A0-3.3)
10. SELF LUMINOUS EXIT SIGN (1 / A3-14.1)
11. EXIT SIGN (2 / A0-3.3)
12. OVERHEAD DOOR MOTOR
13. OVERHEAD DOOR TRACK SUPPORT (5 / A3-10.1)
14. EMERGENCY EYEWASH & SHOWER
15. SERVICE SINK
16. ACCESSIBLE ELECTRIC WATER COOLER (7 / A0-3.4)
17. FIRE EXTINGUISHER
18. STEEL PALLET STORAGE RACK W/ SECURITY DOORS & SIDE PANELS, SEE EQUIPMENT PLAN
19. STEEL PALLET STORAGE RACK W/ WIRE GRID DECKS, SEE EQUIPMENT PLAN
20. EMERGENCY EYEWASH GRAB BAR (1 / A3-16.1)
21. OVERHEAD COILING INSULATED DOOR
22. LOUVER, SEE LOUVER TYPE SHEET

	BY	CHECKED
DESIGN	L Rhoades, R Francisco	Q. Wong, F. Thomas
DETAILS	L Rhoades, J. Kwong	Q. Wong, F. Thomas
QUANTITIES		

STATE OF CALIFORNIA
DEPARTMENT OF TRANSPORTATION

DIVISION OF ENGINEERING SERVICES
ARCHITECTURAL AND STRUCTURAL DESIGN

BRIDGE No. 33M5785
POST MILE

SFOBB WAREHOUSE
INTERIOR ELEVATIONS

SHEET **A1-9.1**

TAEMWW Imperial - CCSC Rev. 01/13

ORIGINAL SCALE IN INCHES FOR REDUCED PLANS 0 1 2 3

UNIT: 3598 CONTRACT No.: 014101
PROJECT NUMBER & PHASE: 04130001331

DISREGARD PRINTS BEARING EARLIER REVISION DATES →
REVISION DATES (PRELIMINARY STAGE ONLY) SHEET X OF X

30-APR-2014 10:07
P:\dist_04\0413000133_sfobb_maint_warehouse\arch\CADD\Working Drawings\first expedite\a1_09.1_intelev.dgn

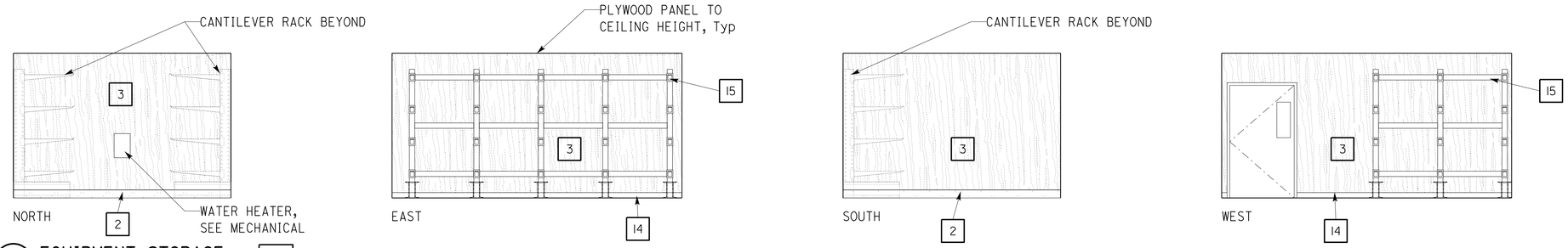

1 EQUIPMENT STORAGE 106

SCALE 1/4" = 1'-0"

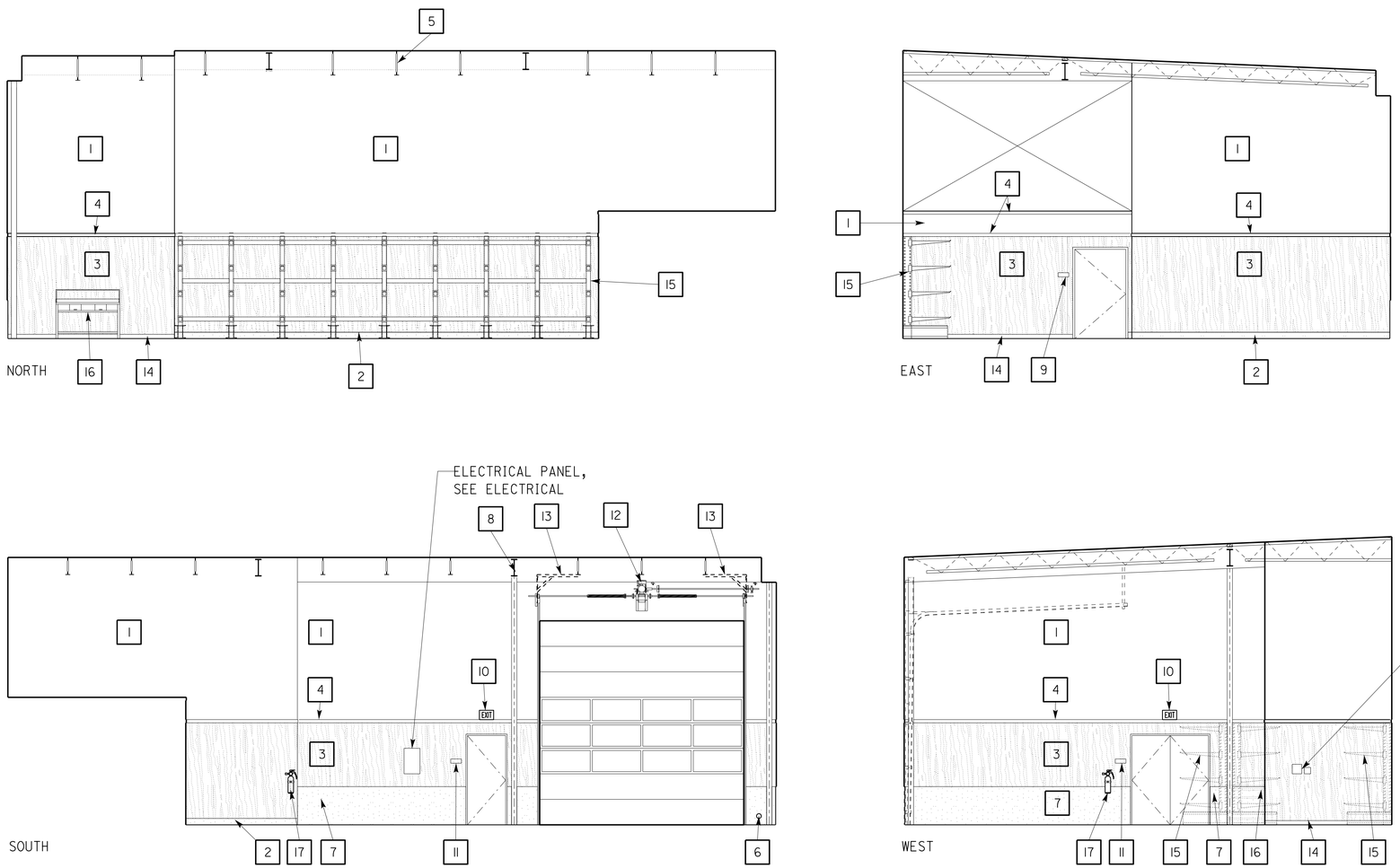

2 OAKLAND TRAVEL CREW STORAGE 108

SCALE 3/16" = 1'-0"

Dist	COUNTY	LOCATION CODE	POST MILES TOTAL PROJECT	SHEET No.	TOTAL SHEETS
04	Ala	5785		123	371

LICENSED ARCHITECT — DATE 10-25-13

3-24-14
PLANS APPROVAL DATE

LICENSED ARCHITECT Lani Rhoades No. C 26695 10-31-15 RENEWAL DATE STATE OF CALIFORNIA

The State of California or its officers or agents shall not be responsible for the accuracy or completeness of scanned copies of this plan sheet.

ACCESSIBILITY DESIGN APPROVAL DOT / DES / OTA

PROJECT ID **0413000133**

Reviewed by: Y. A. WANG
Date: 02-13-14

CALIFORNIA STATE FIRE MARSHAL APPROVED

Approval of this plan does not authorize or approve any omission or deviation from applicable regulations. Final approval is subject to field inspection. One set of approved plans shall be available on the project site at all times.

Reviewed by: INGRID P. ICASIANO
Approval date: 02-11-14

KEY NOTES

1. GYPSUM WALL BD, PAINTED
2. 6" CONCRETE CURB
3. PLYWOOD WAINSCOT, PAINTED
4. WOOD TRIM (7 / A3-13.2)
5. OWSJ, SEE STRUCTURAL SHEETS
6. RWL CLEANOUT, SEE MECH
7. CONCRETE STEM WALL
8. STRUCTURAL STEEL COLUMN AND BEAM, PAINTED
9. ROOM IDENTIFICATION SIGN (1 / A0-3.3)
10. SELF LUMINOUS EXIT SIGN (1 / A3-14.1)
11. EXIT SIGN (2 / A0-3.3)
12. OVERHEAD DOOR MOTOR
13. OVERHEAD DOOR TRACK SUPPORT (5 / A3-10.1)
14. 4" RUBBER BASE
15. CANTILEVER RACK, SEE EQUIPMENT PLAN
16. WORK BENCH, SEE EQUIPMENT PLAN
17. FIRE EXTINGUISHER

	BY	CHECKED
DESIGN	L Rhoades, R Francisco	Q. Wong, F. Thomas
DETAILS	L Rhoades, J. Kwong	Q. Wong, F. Thomas
QUANTITIES		

STATE OF CALIFORNIA DEPARTMENT OF TRANSPORTATION

DIVISION OF ENGINEERING SERVICES ARCHITECTURAL AND STRUCTURAL DESIGN

BRIDGE No. 33M5785 POST MILE

SFOBB WAREHOUSE

INTERIOR ELEVATIONS

SHEET **A1-9.2**

TAEMWW Imperial - CCSC Rev. 01/13

ORIGINAL SCALE IN INCHES FOR REDUCED PLANS 0 1 2 3

UNIT: 3598 CONTRACT No.: 014101
PROJECT NUMBER & PHASE: 04130001331

DISREGARD PRINTS BEARING EARLIER REVISION DATES

REVISION DATES (PRELIMINARY STAGE ONLY) SHEET X OF X

P:\dist_04\0413000133_sfobb_maint_warehouse\arch\CADD\Working Drawings\first expedite\a1_09.2_intelev.dgn

30-APR-2014 10:07

Dist	COUNTY	LOCATION CODE	POST MILES TOTAL PROJECT	SHEET No.	TOTAL SHEETS
04	Ala	5785		124	371

LICENSED ARCHITECT — DATE 10-25-13

3-24-14
PLANS APPROVAL DATE

LICENSED ARCHITECT — Lani Rhoades — No. C 26695 — 10-31-15 RENEWAL DATE — STATE OF CALIFORNIA

The State of California or its officers or agents shall not be responsible for the accuracy or completeness of scanned copies of this plan sheet.

ACCESSIBILITY DESIGN APPROVAL DOT / DES / OTA
PROJECT ID **0413000133**
Reviewed by: Y. A. WANG
Date: 02-13-14

CALIFORNIA STATE FIRE MARSHAL APPROVED
Approval of this plan does not authorize or approve any omission or deviation from applicable regulations. Final approval is subject to field inspection. One set of approved plans shall be available on the project site at all times.
Reviewed by: INGRID P. ICASIANO
Approval date: 02-11-14

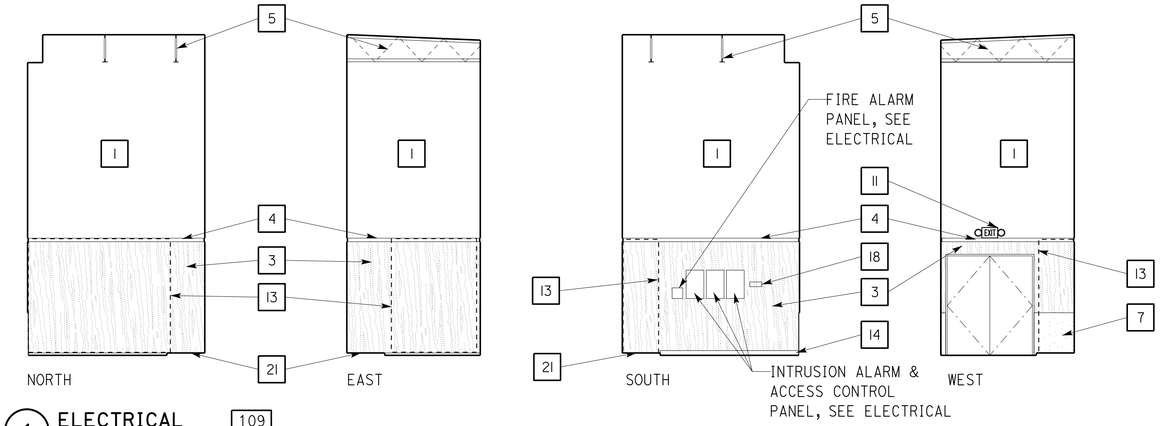

1 ELECTRICAL 109
SCALE 3/16" = 1'-0"

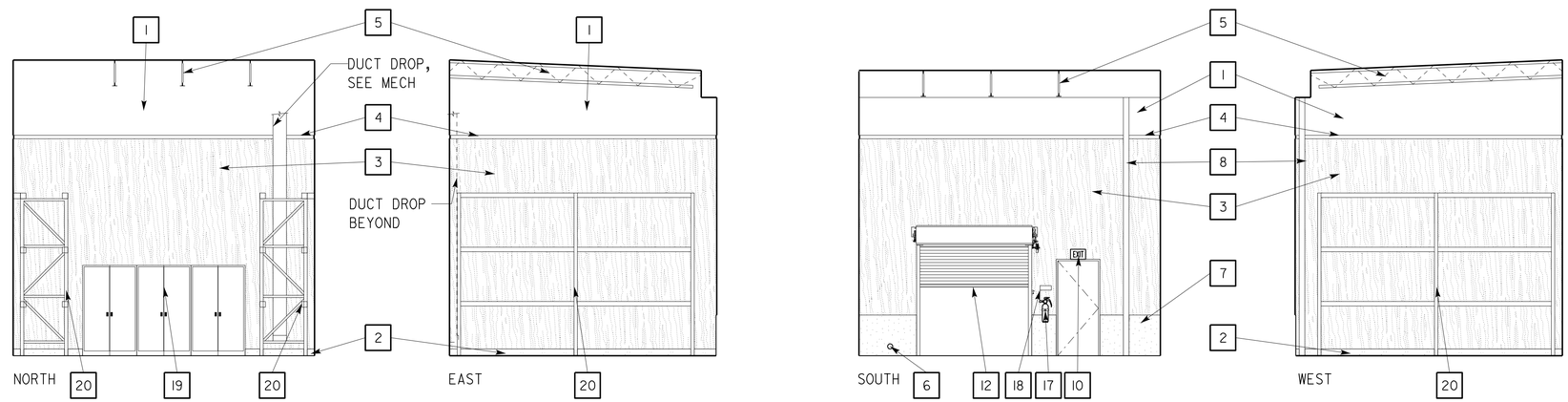

2 HAZARDOUS MATERIALS STORAGE 111
SCALE 3/16" = 1'-0"

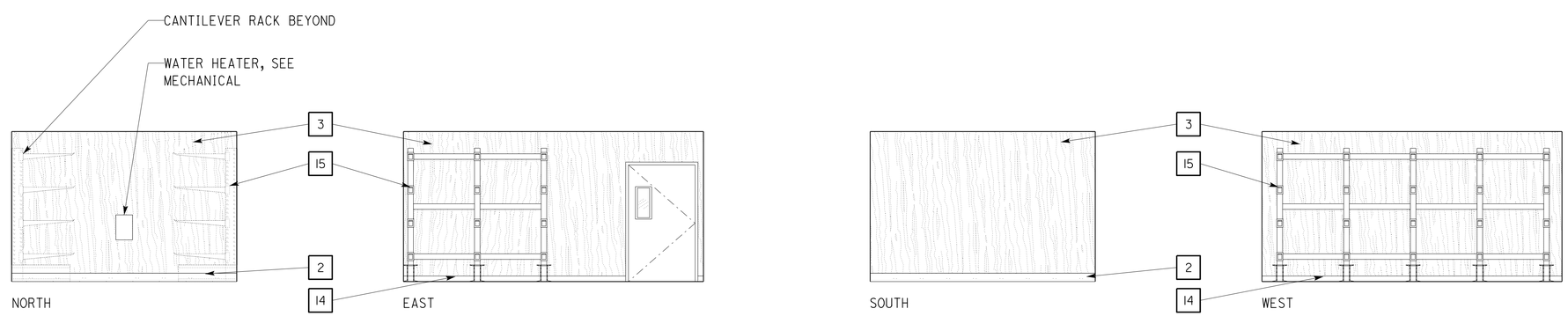

3 EQUIPMENT STORAGE 113
SCALE 1/4" = 1'-0"

KEY NOTES

1. GYPSUM WALL BD, PAINTED
2. 6" CONCRETE CURB
3. PLYWOOD WAINSCOT, PAINTED
4. WOOD TRIM (7 / A3-13.2)
5. OWSJ, SEE STRUCTURAL SHEETS
6. RWL CLEANOUT, SEE MECH
7. CONCRETE STEM WALL
8. STRUCTURAL STEEL COLUMN AND BEAM, PAINTED
9. ROOM IDENTIFICATION SIGN (1 / A0-3.3)
10. SELF LUMINOUS EXIT SIGN (1 / A3-14.1)
11. EXIT SIGN & EMERGENCY LIGHTING COMBO
12. OVERHEAD COILING INSULATED DOOR
13. IFS, SEE ELECTRICAL
14. 4" RUBBER BASE
15. CANTILEVER RACK, SEE EQUIPMENT PLAN
16. WORK BENCH, SEE EQUIPMENT PLAN
17. FIRE EXTINGUISHER
18. EXIT SIGN (2 / A0-3.3)
19. FLAMMABLE STORAGE CABINET, SEE EQUIPMENT PLAN
20. STEEL PALLET STORAGE RACK, SEE EQUIPMENT PLAN
21. RAISED CONCRETE SLAB, SEE FLOOR PLAN & STRUCTURAL

	BY	CHECKED
DESIGN	L Rhoades, R Francisco	Q. Wong, F. Thomas
DETAILS	L Rhoades, J. Kwong	Q. Wong, F. Thomas
QUANTITIES		

STATE OF CALIFORNIA
DEPARTMENT OF TRANSPORTATION

DIVISION OF ENGINEERING SERVICES
ARCHITECTURAL AND STRUCTURAL DESIGN

BRIDGE No. 33M5785
POST MILE

SFOBB WAREHOUSE
INTERIOR ELEVATIONS

SHEET **A1-9.3**

TAEMWW Imperial - CCSC Rev. 01/13

ORIGINAL SCALE IN INCHES FOR REDUCED PLANS 0 1 2 3

UNIT: 3598 CONTRACT No.: 014101
PROJECT NUMBER & PHASE: 04130001331

DISREGARD PRINTS BEARING EARLIER REVISION DATES →
REVISION DATES (PRELIMINARY STAGE ONLY) SHEET X OF X

30-APR-2014 10:07

P:\dist_04\0413000133_sfobb_maint_warehouse\arch\CADD\Working Drawings\first expedite\a1_09.3_intelev.dgn

Dist	COUNTY	LOCATION CODE	POST MILES TOTAL PROJECT	SHEET No.	TOTAL SHEETS
04	Ala	5785		125	371

LICENSED ARCHITECT — DATE 10-25-13

3-24-14
PLANS APPROVAL DATE

LICENSED ARCHITECT — Lani Rhoades — No. C 26695 — 10-31-15 RENEWAL DATE — STATE OF CALIFORNIA

The State of California or its officers or agents shall not be responsible for the accuracy or completeness of scanned copies of this plan sheet.

ACCESSIBILITY DESIGN APPROVAL DOT / DES / OTA
PROJECT ID **0413000133**
Reviewed by: Y. A. WANG
Date: 02-13-14

CALIFORNIA STATE FIRE MARSHAL APPROVED
Approval of this plan does not authorize or approve any omission or deviation from applicable regulations. Final approval is subject to field inspection. One set of approved plans shall be available on the project site at all times.
Reviewed by: INGRID P. ICASIANO
Approval date: 02-11-14

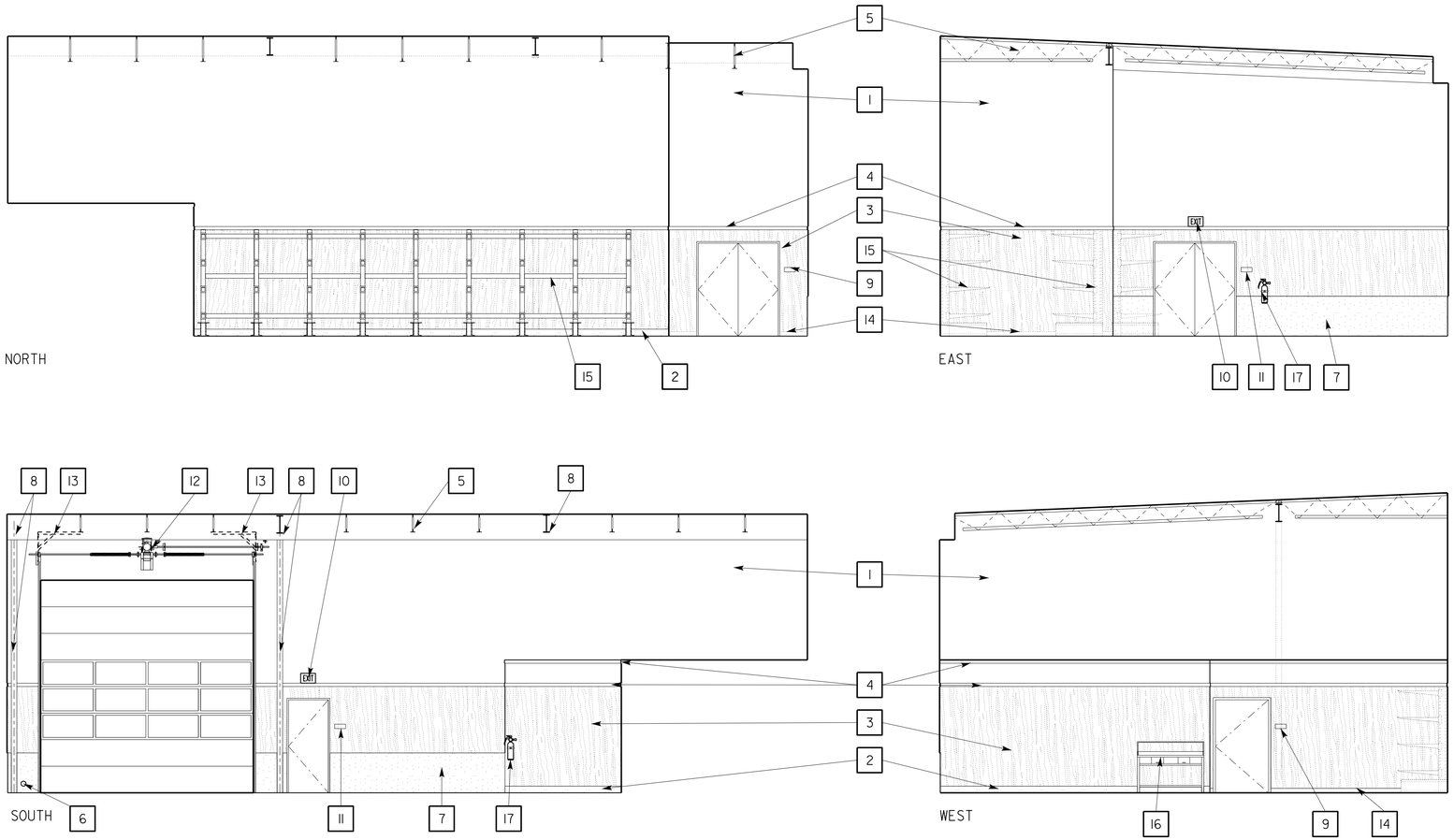

1 SF TRAVEL CREW STORAGE 115
SCALE 3/16" = 1'-0"

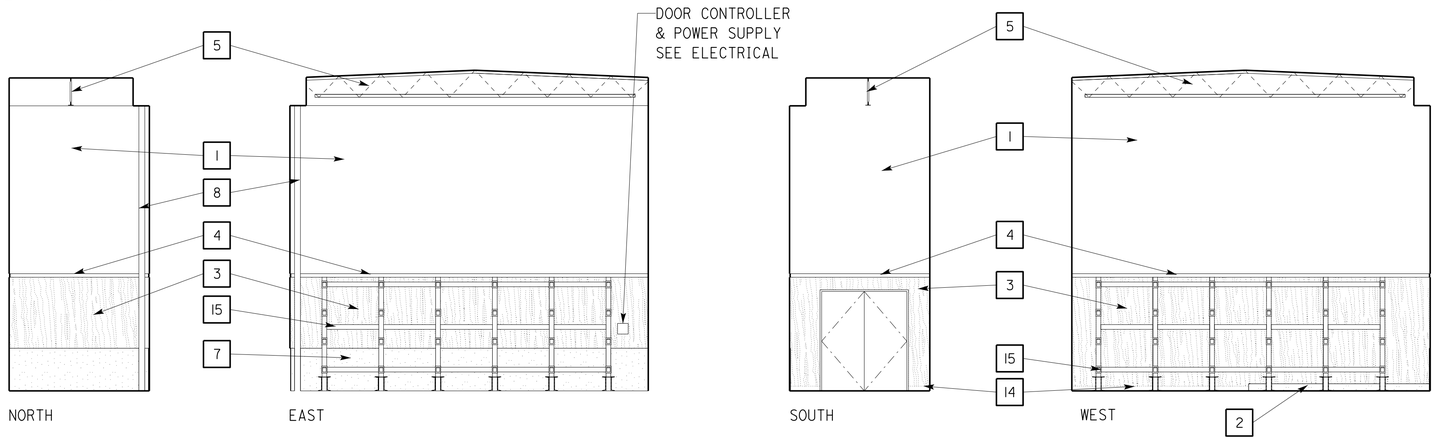

2 CANVAS STORAGE 116
SCALE 3/16" = 1'-0"

KEY NOTES

1. GYPSUM WALL BD, PAINTED
2. 6" CONCRETE CURB
3. PLYWOOD WAINSCOT, PAINTED
4. WOOD TRIM (7 / A3-13.2)
5. OWSJ, SEE STRUCTURAL SHEETS
6. RWL CLEANOUT, SEE MECH
7. CONCRETE STEM WALL
8. STRUCTURAL STEEL COLUMN AND BEAM, PAINTED
9. ROOM IDENTIFICATION SIGN (1 / A0-3.3)
10. SELF LUMINOUS EXIT SIGN (1 / A3-14.1)
11. EXIT SIGN (2 / A0-3.3)
12. OVERHEAD DOOR MOTOR
13. OVERHEAD DOOR TRACK SUPPORT (5 / A3-10.1)
14. 4" RUBBER BASE
15. CANTILEVER RACK, SEE EQUIPMENT PLAN
16. WORK BENCH, SEE EQUIPMENT PLAN
17. FIRE EXTINGUISHER

	BY	CHECKED
DESIGN	L Rhoades, R Francisco	Q. Wong, F. Thomas
DETAILS	L Rhoades, J. Kwong	Q. Wong, F. Thomas
QUANTITIES		

STATE OF CALIFORNIA
DEPARTMENT OF TRANSPORTATION

DIVISION OF ENGINEERING SERVICES
ARCHITECTURAL AND STRUCTURAL DESIGN

BRIDGE No. 33M5785
POST MILE

SFOBB WAREHOUSE
INTERIOR ELEVATIONS

SHEET **A1-9.4**

TAEMWW Imperial - CCSC Rev. 01/13

ORIGINAL SCALE IN INCHES FOR REDUCED PLANS 0 1 2 3

UNIT: 3598 CONTRACT No.: 014101
PROJECT NUMBER & PHASE: 04130001331

DISREGARD PRINTS BEARING EARLIER REVISION DATES →
REVISION DATES (PRELIMINARY STAGE ONLY) SHEET X OF X

P:\dist_04\0413000133_sfobb_maint_warehouse\arch\CADD\Working Drawings\first expedite\a1_09.4_intelev.dgn

30-APR-2014 10:07

Dist	COUNTY	LOCATION CODE	POST MILES TOTAL PROJECT	SHEET No.	TOTAL SHEETS
04	Ala	5785		126	371

LICENSED ARCHITECT — DATE 10-25-13

3-24-14
PLANS APPROVAL DATE

LICENSED ARCHITECT Lani Rhoades No. C 26695 10-31-15 RENEWAL DATE STATE OF CALIFORNIA

The State of California or its officers or agents shall not be responsible for the accuracy or completeness of scanned copies of this plan sheet.

ACCESSIBILITY DESIGN APPROVAL DOT / DES / OTA
PROJECT ID **0413000133**
Reviewed by: Y. A. WANG
Date: 02-13-14

CALIFORNIA STATE FIRE MARSHAL APPROVED
Approval of this plan does not authorize or approve any omission or deviation from applicable regulations. Final approval is subject to field inspection. One set of approved plans shall be available on the project site at all times.
Reviewed by: INGRID P. ICASIANO
Approval date: 02-11-14

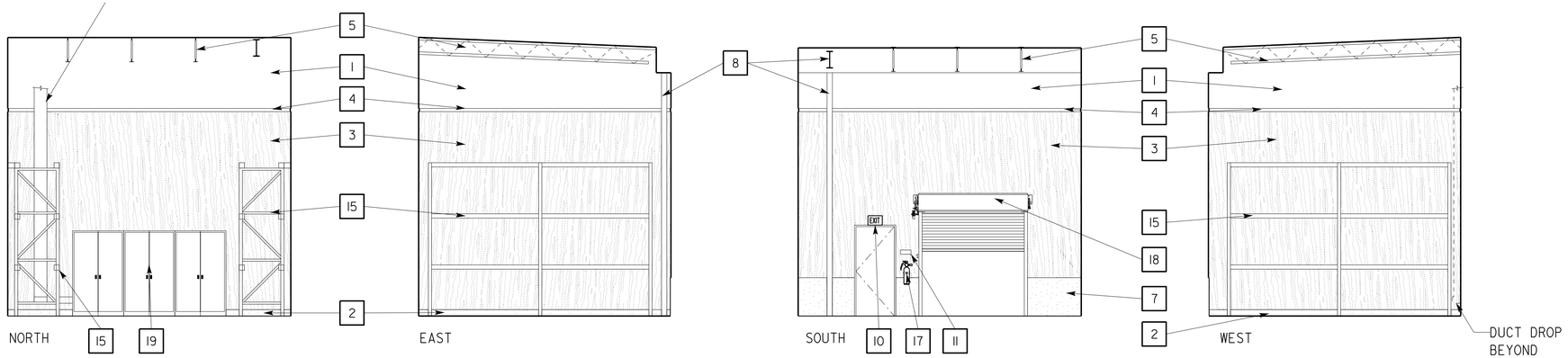

1 HAZARDOUS MATERIALS STORAGE 118
SCALE 3/16" = 1'-0"

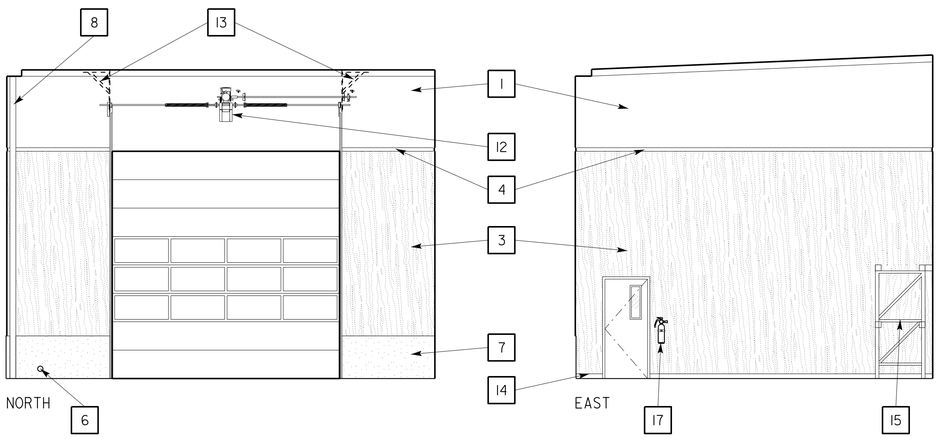

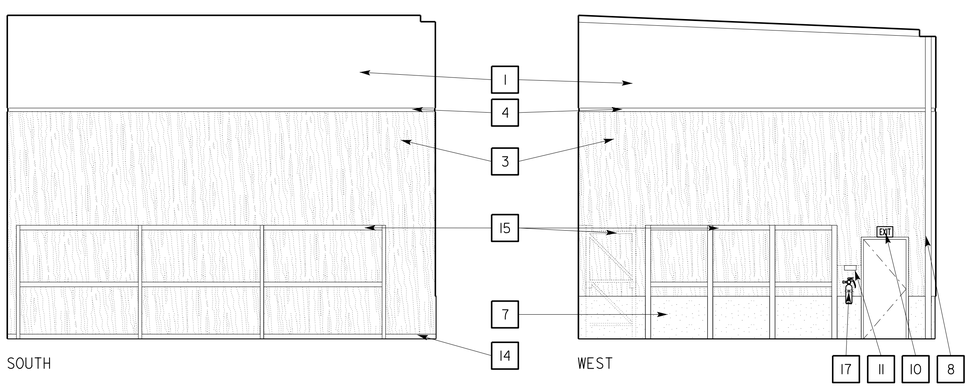

2 TRAVELLER SUPPLY STORAGE 119
SCALE 3/16" = 1'-0"

KEY NOTES

1. GYPSUM WALL BD, PAINTED
2. 6" CONCRETE CURB
3. PLYWOOD WAINSCOT, PAINTED
4. WOOD TRIM (7 / A3-13.2)
5. OWSJ, SEE STRUCTURAL SHEETS
6. RWL CLEANOUT, SEE MECH
7. CONCRETE STEM WALL
8. STRUCTURAL STEEL COLUMN AND BEAM, PAINTED
9. ROOM IDENTIFICATION SIGN (1 / A0-3.3)
10. SELF LUMINOUS EXIT SIGN (1 / A3-14.1)
11. EXIT SIGN (2 / A0-3.3)
12. OVERHEAD DOOR MOTOR
13. OVERHEAD DOOR TRACK SUPPORT (5 / A3-10.1)
14. 4" RUBBER BASE
15. STEEL PALLET STORAGE RACK, SEE EQUIPMENT PLAN
16. WORK BENCH, SEE EQUIPMENT PLAN
17. FIRE EXTINGUISHER
18. OVERHEAD COILING INSULATED DOOR
19. FLAMMABLE STORAGE CABINET, SEE EQUIPMENT PLAN

	BY	CHECKED
DESIGN	L Rhoades, R Francisco	Q. Wong, F. Thomas
DETAILS	L Rhoades, J. Kwong	Q. Wong, F. Thomas
QUANTITIES		

STATE OF CALIFORNIA
DEPARTMENT OF TRANSPORTATION

DIVISION OF ENGINEERING SERVICES
ARCHITECTURAL AND STRUCTURAL DESIGN

BRIDGE No. 33M5785
POST MILE

SFOBB WAREHOUSE
INTERIOR ELEVATIONS

SHEET **A1-9.5**

TAEMWW Imperial - CCSC Rev. 01/13

ORIGINAL SCALE IN INCHES FOR REDUCED PLANS 0 1 2 3

UNIT: 3598 CONTRACT No.: 014101
PROJECT NUMBER & PHASE: 04130001331

DISREGARD PRINTS BEARING EARLIER REVISION DATES →
REVISION DATES (PRELIMINARY STAGE ONLY) SHEET X OF X

30-APR-2014 10:07

P:\dist_04\0413000133_sfobb_maint_warehouse\arch\CADD\Working Drawings\first expedite\a1_09.5_intelev.dgn

Dist	COUNTY	LOCATION CODE	POST MILES TOTAL PROJECT	SHEET No.	TOTAL SHEETS
04	Ala	5785		127	371

LICENSED ARCHITECT — DATE 10-25-13

3-24-14
PLANS APPROVAL DATE

LICENSED ARCHITECT — Lani Rhoades — No. C 26695 — 10-31-15 RENEWAL DATE — STATE OF CALIFORNIA

The State of California or its officers or agents shall not be responsible for the accuracy or completeness of scanned copies of this plan sheet.

ACCESSIBILITY DESIGN APPROVAL DOT / DES / OTA
PROJECT ID **0413000133**
Reviewed by: Y. A. WANG
Date: 02-13-14

CALIFORNIA STATE FIRE MARSHAL APPROVED
Approval of this plan does not authorize or approve any omission or deviation from applicable regulations. Final approval is subject to field inspection. One set of approved plans shall be available on the project site at all times.
Reviewed by: INGRID P. ICASIANO
Approval date: 02-11-14

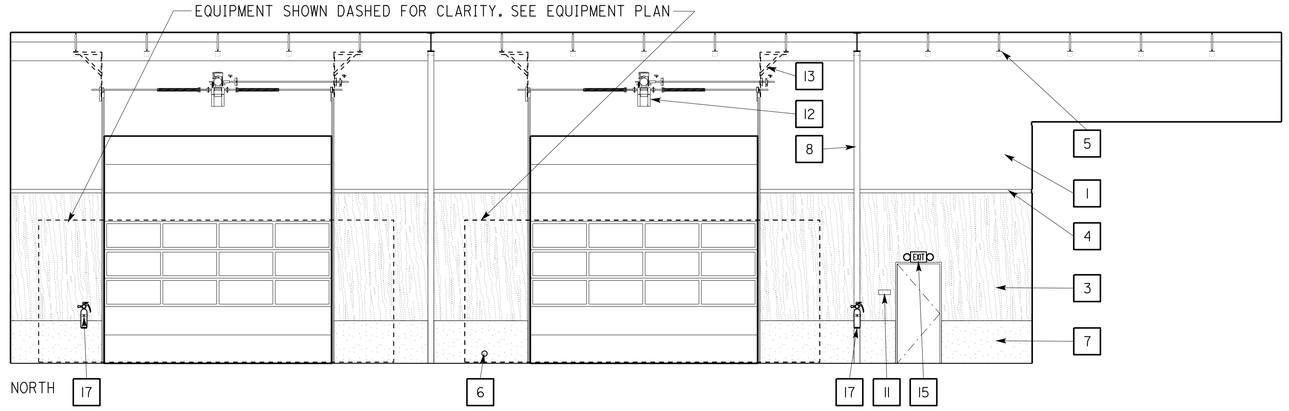

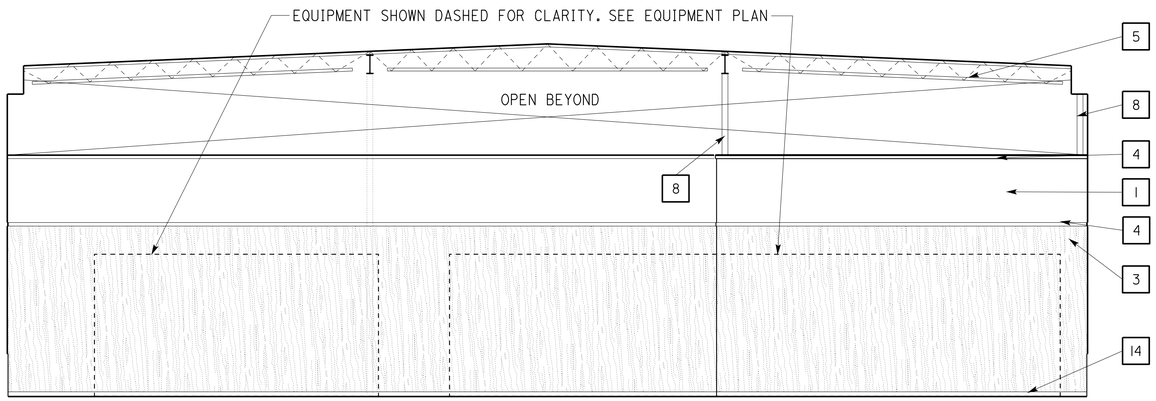

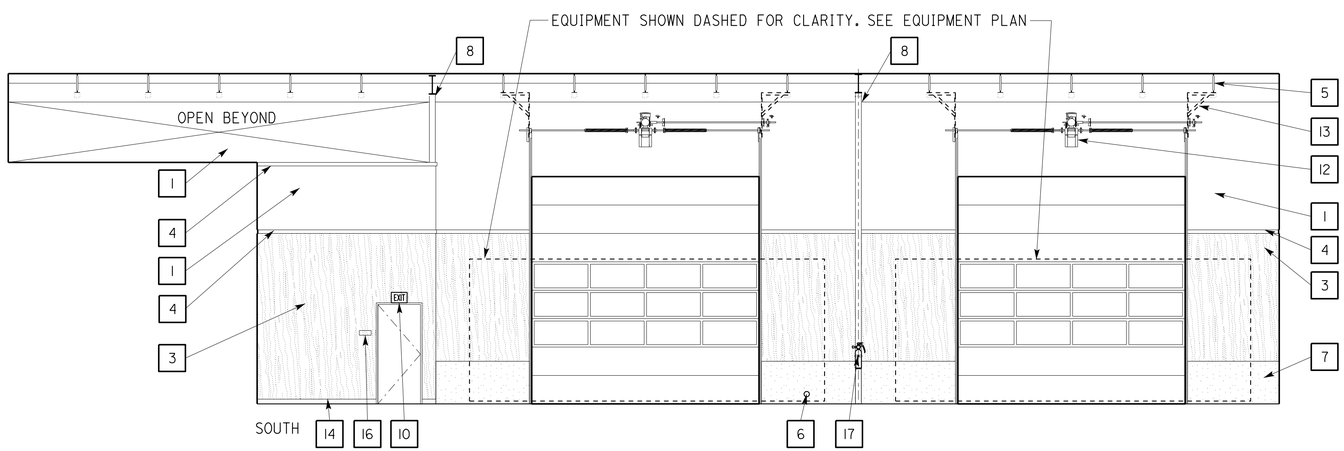

B SAS STORAGE 120A
SCALE 3/16" = 1'-0"

KEY NOTES

1. GYPSUM WALL BD, PAINTED
2. 6" CONCRETE CURB
3. PLYWOOD WAINSCOT, PAINTED
4. WOOD TRIM (7 / A3-13.2)
5. OWSJ, SEE STRUCTURAL SHEETS
6. RWL CLEANOUT, SEE MECHANICAL
7. CONCRETE STEM WALL
8. STRUCTURAL STEEL COLUMN AND BEAM, PAINTED
9. ROOM IDENTIFICATION SIGN (1 / A0-3.3)
10. SELF LUMINOUS EXIT SIGN (1 / A3-14.1)
11. EXIT SIGN (2 / A0-3.3)
12. OVERHEAD DOOR MOTOR
13. OVERHEAD DOOR TRACK SUPPORT (5 / A3-10.1)
14. 4" RUBBER BASE
15. EXIT SIGN & EMERGENCY LIGHTING COMBO
16. EXIT ROUTE SIGN
17. FIRE EXTINGUISHER

	BY	CHECKED
DESIGN	L Rhoades, R Francisco	Q. Wong, F. Thomas
DETAILS	L Rhoades, J. Kwong	Q. Wong, F. Thomas
QUANTITIES		

STATE OF CALIFORNIA
DEPARTMENT OF TRANSPORTATION

DIVISION OF ENGINEERING SERVICES
ARCHITECTURAL AND STRUCTURAL DESIGN

BRIDGE No. 33M5785
POST MILE

SFOBB WAREHOUSE
INTERIOR ELEVATIONS

SHEET A1-9.6

TAEMWW Imperial - CCSC Rev. 01/13

ORIGINAL SCALE IN INCHES FOR REDUCED PLANS 0 1 2 3

UNIT: 3598 CONTRACT No.: 014101
PROJECT NUMBER & PHASE: 04130001331

DISREGARD PRINTS BEARING EARLIER REVISION DATES →
REVISION DATES (PRELIMINARY STAGE ONLY) SHEET X OF X

30-APR-2014 10:07

P:\dist_04\0413000133_sfobb_maint_warehouse\arch\CADD\Working Drawings\first expedite\a1_09.6_intelev.dgn

Dist	COUNTY	LOCATION CODE	POST MILES TOTAL PROJECT	SHEET No.	TOTAL SHEETS
04	Ala	5785		128	371

LICENSED ARCHITECT — DATE 10-25-13

3-24-14
PLANS APPROVAL DATE

LICENSED ARCHITECT Lani Rhoades No. C 26695 10-31-15 RENEWAL DATE STATE OF CALIFORNIA

The State of California or its officers or agents shall not be responsible for the accuracy or completeness of scanned copies of this plan sheet.

ACCESSIBILITY DESIGN APPROVAL DOT / DES / OTA
PROJECT ID **0413000133**
Reviewed by: Y. A. WANG
Date: 02-13-14

CALIFORNIA STATE FIRE MARSHAL APPROVED
Approval of this plan does not authorize or approve any omission or deviation from applicable regulations. Final approval is subject to field inspection. One set of approved plans shall be available on the project site at all times.
Reviewed by: INGRID P. ICASIANO
Approval date: 02-11-14

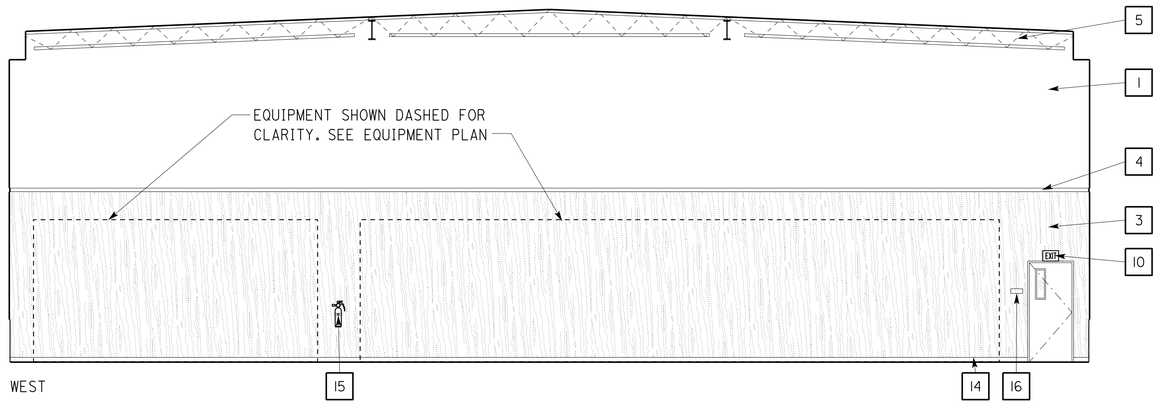

1 SAS STORAGE (CONTINUED) 120A
SCALE 3/16" = 1'-0"

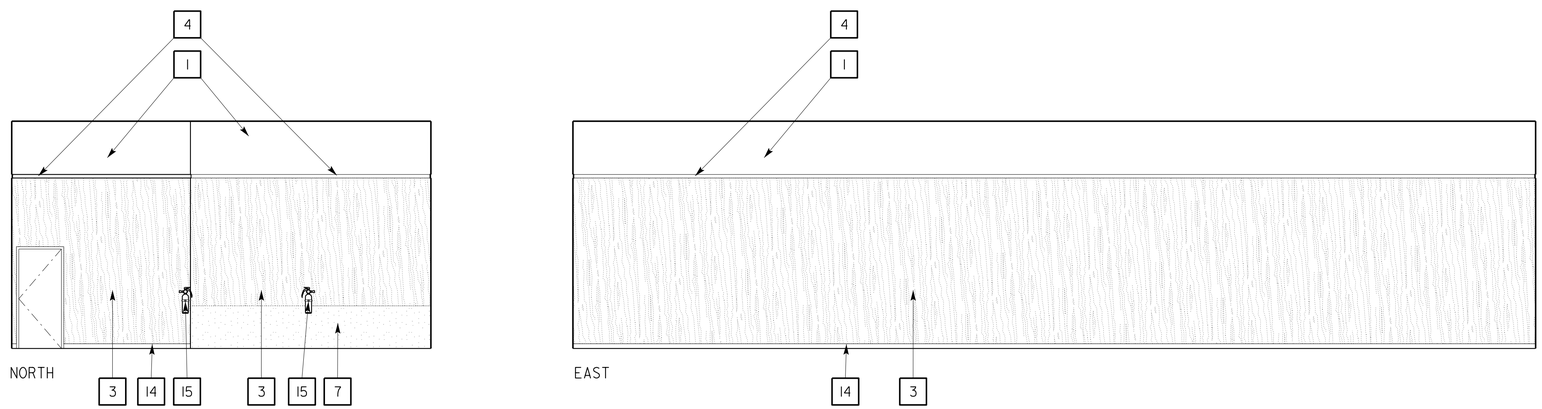

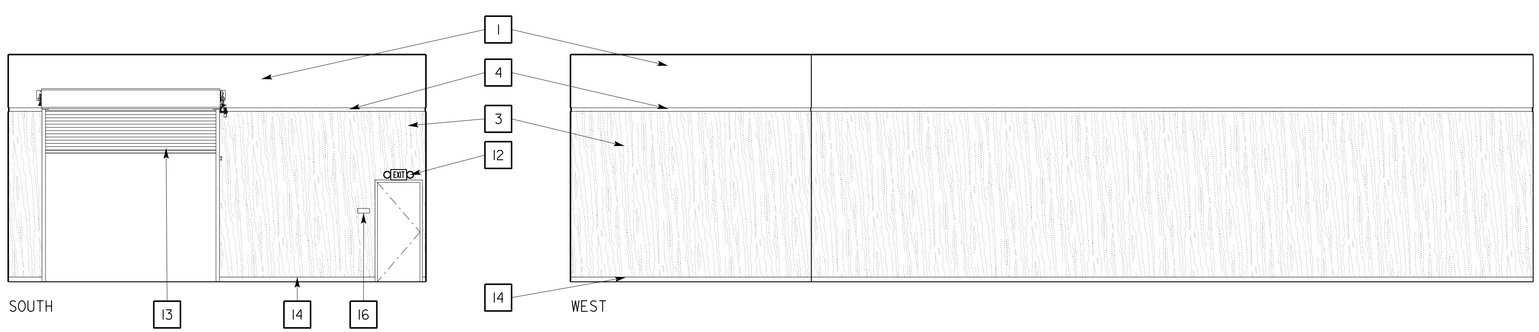

2 SAS STORAGE 120B
SCALE 3/16" = 1'-0"

KEY NOTES

1. GYPSUM WALL BD, PAINTED
2. 6" CONCRETE CURB
3. PLYWOOD WAINSCOT, PAINTED
4. WOOD TRIM (7 / A3-13.2)
5. OWSJ, SEE STRUCTURAL SHEETS
6. RWL CLEANOUT, SEE MECH
7. CONCRETE STEM WALL
8. STRUCTURAL STEEL COLUMN AND BEAM, PAINTED
9. ROOM IDENTIFICATION SIGN (1 / A0-3.3)
10. SELF LUMINOUS EXIT SIGN (1 / A3-14.1)
11. EXIT SIGN (2 / A0-3.3)
12. EXIT SIGN & EMERGENCY LIGHTING COMBO
13. OVERHEAD COILING INSULATED DOOR
14. 4" RUBBER BASE
15. FIRE EXTINGUISHER
16. EXIT ROUTE SIGN

	BY	CHECKED
DESIGN	L Rhoades, R Francisco	Q. Wong, F. Thomas
DETAILS	L Rhoades, J. Kwong	Q. Wong, F. Thomas
QUANTITIES		

STATE OF CALIFORNIA
DEPARTMENT OF TRANSPORTATION

DIVISION OF ENGINEERING SERVICES
ARCHITECTURAL AND STRUCTURAL DESIGN

BRIDGE No. 33M5785
POST MILE

SFOBB WAREHOUSE
INTERIOR ELEVATIONS

SHEET **A1-9.7**

TAEMWW Imperial - CCSC Rev. 01/13

ORIGINAL SCALE IN INCHES FOR REDUCED PLANS 0 1 2 3

UNIT: 3598 CONTRACT No.: 014101
PROJECT NUMBER & PHASE: 04130001331

DISREGARD PRINTS BEARING EARLIER REVISION DATES

REVISION DATES (PRELIMINARY STAGE ONLY) SHEET X OF X

30-APR-2014 10:07

P:\dist_04\0413000133_sfobb_maint_warehouse\arch\CADD\Working Drawings\first expedite\a1_09.7_intelev.dgn

Dist	COUNTY	LOCATION CODE	POST MILES TOTAL PROJECT	SHEET No.	TOTAL SHEETS
04	Ala	5785		129	371

LICENSED ARCHITECT — DATE 10-25-13

3-24-14
PLANS APPROVAL DATE

LICENSED ARCHITECT — Lani Rhoades — No. C 26695 — 10-31-15 RENEWAL DATE — STATE OF CALIFORNIA

The State of California or its officers or agents shall not be responsible for the accuracy or completeness of scanned copies of this plan sheet.

ACCESSIBILITY DESIGN APPROVAL DOT / DES / OTA
PROJECT ID **0413000133**
Reviewed by: Y. A. WANG
Date: 02-13-14

CALIFORNIA STATE FIRE MARSHAL APPROVED
Approval of this plan does not authorize or approve any omission or deviation from applicable regulations. Final approval is subject to field inspection. One set of approved plans shall be available on the project site at all times.
Reviewed by: INGRID P. ICASIANO
Approval date: 02-11-14

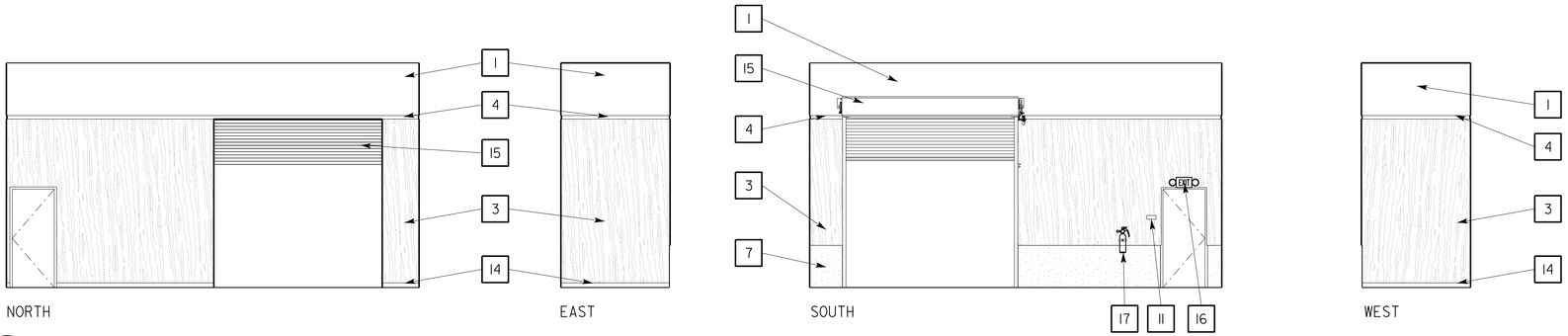

1 SAS VESTIBULE 120C
SCALE 3/16" = 1'-0"

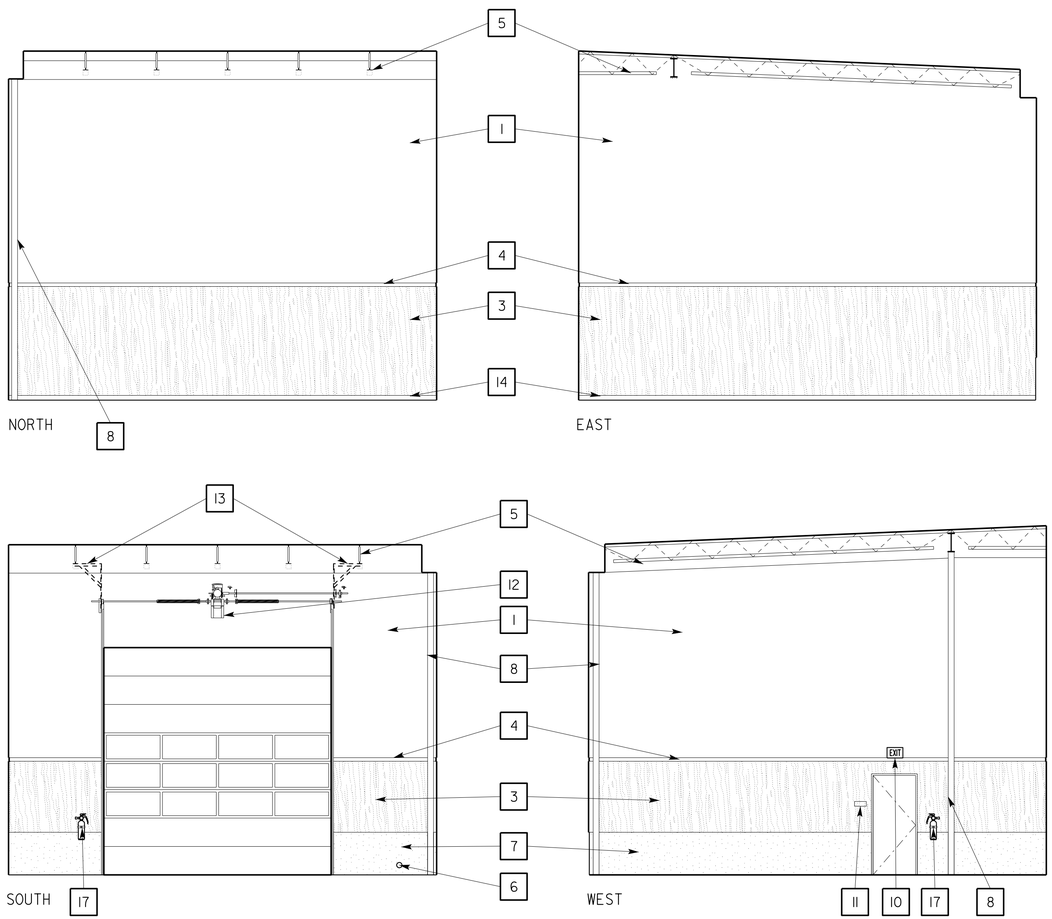

2 SPIDER CAGE STORAGE 121
SCALE 3/16" = 1'-0"

KEY NOTES

1. GYPSUM WALL BD, PAINTED
2. 6" CONCRETE CURB
3. PLYWOOD WAINSCOT, PAINTED
4. WOOD TRIM (7 / A3-13.2)
5. OWSJ, SEE STRUCTURAL SHEETS
6. RWL CLEANOUT, SEE MECH
7. CONCRETE STEM WALL
8. STRUCTURAL STEEL COLUMN AND BEAM, PAINTED
9. ROOM IDENTIFICATION SIGN (1 / A0-3.3)
10. SELF LUMINOUS EXIT SIGN (1 / A3-14.1)
11. EXIT SIGN (2 / A0-3.3)
12. OVERHEAD DOOR MOTOR
13. OVERHEAD DOOR TRACK SUPPORT (5 / A3-10.1)
14. 4" RUBBER BASE
15. OVERHEAD COILING INSULATED DOOR
16. EXIT SIGN & EMERGENCY LIGHTING COMBO
17. FIRE EXTINGUISHER

	BY	CHECKED
DESIGN	L Rhoades, R Francisco	Q. Wong, F. Thomas
DETAILS	L Rhoades, J. Kwong	Q. Wong, F. Thomas
QUANTITIES		

STATE OF CALIFORNIA
DEPARTMENT OF TRANSPORTATION

DIVISION OF ENGINEERING SERVICES
ARCHITECTURAL AND STRUCTURAL DESIGN

BRIDGE No. 33M5785
POST MILE

SFOBB WAREHOUSE
INTERIOR ELEVATIONS

SHEET **A1-9.8**

TAEMWW Imperial - CCSC Rev. 01/13

ORIGINAL SCALE IN INCHES FOR REDUCED PLANS 0 1 2 3

UNIT: 3598 CONTRACT No.: 014101
PROJECT NUMBER & PHASE: 04130001331

DISREGARD PRINTS BEARING EARLIER REVISION DATES →
REVISION DATES (PRELIMINARY STAGE ONLY) SHEET X OF X

P:\dist_04\0413000133_sfobb_maint_warehouse\arch\CADD\Working Drawings\first expedite\a1_09.8_intelev.dgn

30-APR-2014 10:07

Dist	COUNTY	LOCATION CODE	POST MILES TOTAL PROJECT	SHEET No.	TOTAL SHEETS
04	Ala	5785		130	371

LICENSED ARCHITECT — DATE 10-25-13

3-24-14
PLANS APPROVAL DATE

LICENSED ARCHITECT — Lani Rhoades — No. C 26695 — 10-31-15 RENEWAL DATE — STATE OF CALIFORNIA

The State of California or its officers or agents shall not be responsible for the accuracy or completeness of scanned copies of this plan sheet.

ACCESSIBILITY DESIGN APPROVAL DOT / DES / OTA
PROJECT ID **0413000133**
Reviewed by: Y. A. WANG
Date: 02-13-14

CALIFORNIA STATE FIRE MARSHAL APPROVED
Approval of this plan does not authorize or approve any omission or deviation from applicable regulations. Final approval is subject to field inspection. One set of approved plans shall be available on the project site at all times.
Reviewed by: INGRID P. ICASIANO
Approval date: 02-11-14

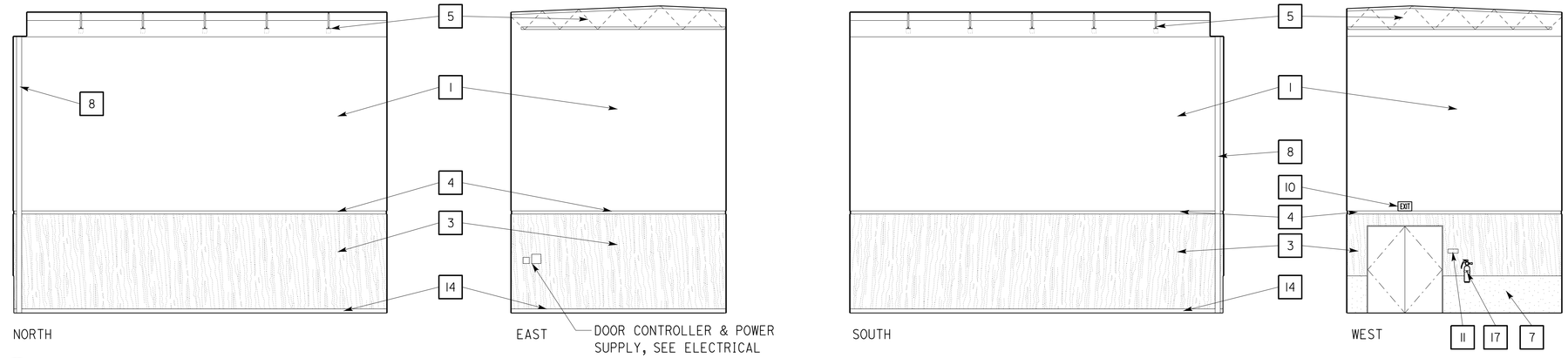

1 BRIDGE ELECTRICAL STORAGE 122
SCALE 3/16" = 1'-0"

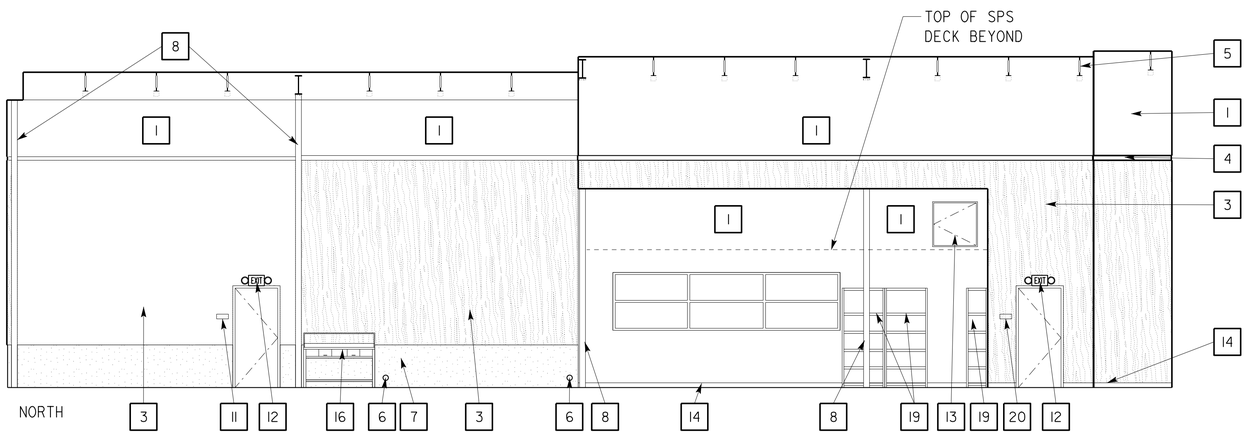

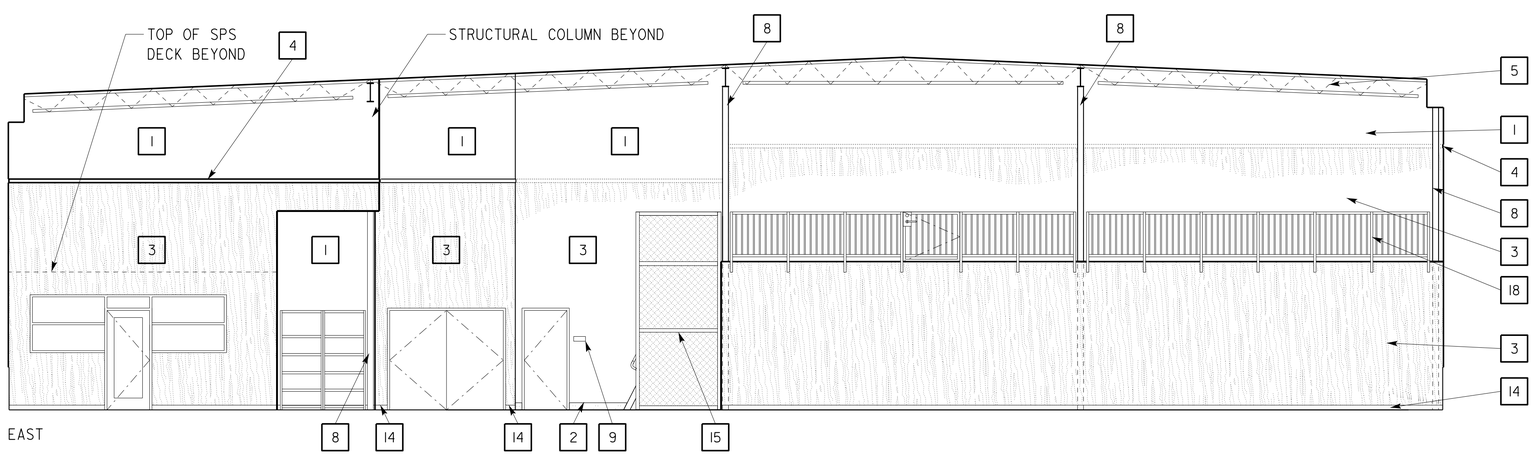

2 TOLL BRIDGE REGIONAL WAREHOUSE 123
SCALE 3/16" = 1'-0"

KEY NOTES

1. GYPSUM WALL BD, PAINTED
2. 6" CONCRETE CURB
3. PLYWOOD WAINSCOT, PAINTED
4. WOOD TRIM (7 / A3-13.2)
5. OWSJ, SEE STRUCTURAL SHEETS
6. RWL CLEANOUT, SEE MECH
7. CONCRETE STEM WALL
8. STRUCTURAL STEEL COLUMN AND BEAM, PAINTED
9. ROOM IDENTIFICATION SIGN (1 / A0-3.3)
10. SELF LUMINOUS EXIT SIGN (1 / A3-14.1)
11. EXIT SIGN (2 / A0-3.3)
12. EXIT SIGN & EMERGENCY LIGHTING COMBO
13. ATTIC ACCESS (KNEEWALL) DOOR
14. 4" RUBBER BASE
15. VERTICAL WHEEL CHAIR LIFT
16. WORK BENCH, SEE EQUIPMENT PLAN
17. FIRE EXTINGUISHER
18. METAL GUARD RAIL
19. METAL SHELVING, SEE EQUIPMENT PLAN
20. EXIT ROUTE SIGN

	BY	CHECKED
DESIGN	L Rhoades, R Francisco	Q. Wong, F. Thomas
DETAILS	L Rhoades, J. Kwong	Q. Wong, F. Thomas
QUANTITIES		

STATE OF CALIFORNIA
DEPARTMENT OF TRANSPORTATION

DIVISION OF ENGINEERING SERVICES
ARCHITECTURAL AND STRUCTURAL DESIGN

BRIDGE No. 33M5785
POST MILE

SFOBB WAREHOUSE
INTERIOR ELEVATIONS

SHEET **A1-9.9**

TAEMWW Imperial - CCSC Rev. 01/13

ORIGINAL SCALE IN INCHES FOR REDUCED PLANS 0 1 2 3

UNIT: 3598 CONTRACT No.: 014101
PROJECT NUMBER & PHASE: 04130001331

DISREGARD PRINTS BEARING EARLIER REVISION DATES →
REVISION DATES (PRELIMINARY STAGE ONLY) SHEET X OF X

30-APR-2014 10:08

P:\dist_04\0413000133_sfobb_maint_warehouse\arch\CADD\Working Drawings\first expedite\a1_09.9_intelev.dgn

Dist	COUNTY	LOCATION CODE	POST MILES TOTAL PROJECT	SHEET No.	TOTAL SHEETS
04	Ala	5785		131	371

LICENSED ARCHITECT — DATE 10-25-13

3-24-14
PLANS APPROVAL DATE

LICENSED ARCHITECT — Lani Rhoades — No. C 26695 — 10-31-15 RENEWAL DATE — STATE OF CALIFORNIA

The State of California or its officers or agents shall not be responsible for the accuracy or completeness of scanned copies of this plan sheet.

ACCESSIBILITY DESIGN APPROVAL DOT / DES / OTA

PROJECT ID **0413000133**

Reviewed by: Y. A. WANG
Date: 02-13-14

CALIFORNIA STATE FIRE MARSHAL APPROVED

Approval of this plan does not authorize or approve any omission or deviation from applicable regulations. Final approval is subject to field inspection. One set of approved plans shall be available on the project site at all times.

Reviewed by: INGRID P. ICASIANO
Approval date: 02-11-14

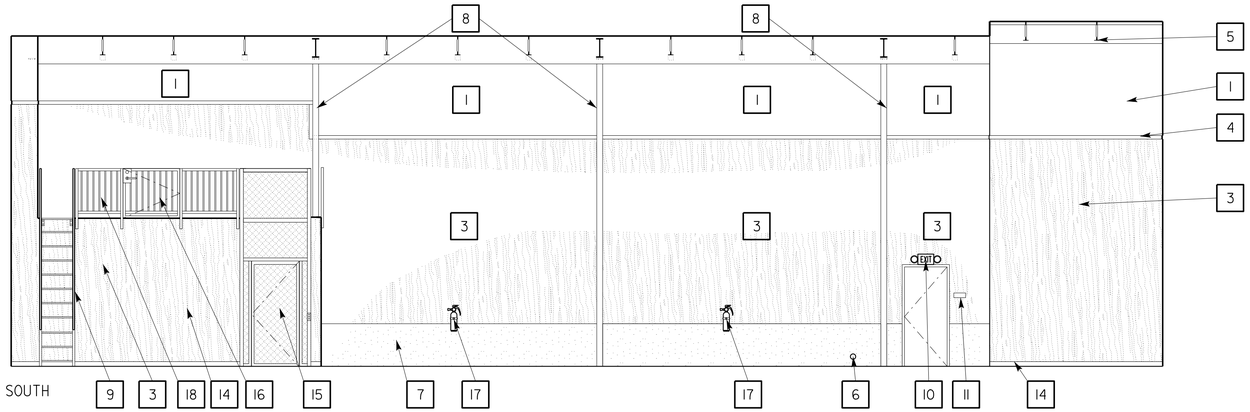

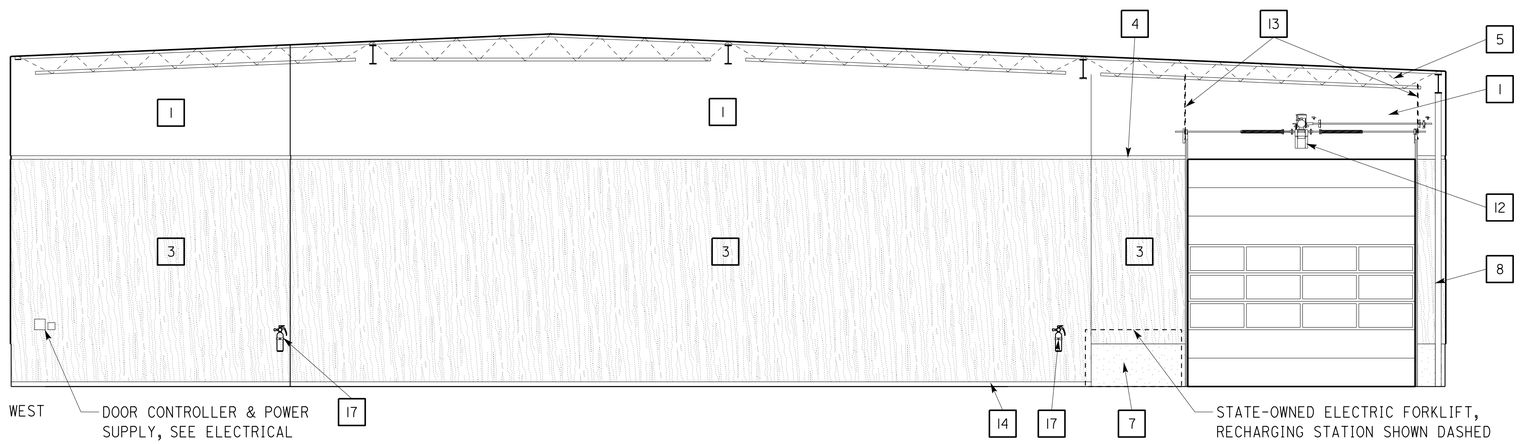

1 TOLL BRIDGE REGIONAL WAREHOUSE (CONTINUED) 123

SCALE 3/16" = 1'-0"

KEY NOTES

1. GYPSUM WALL BD, PAINTED
2. 6" CONCRETE CURB
3. PLYWOOD WAINSCOT, PAINTED
4. WOOD TRIM 7/A3-13.2
5. OWSJ, SEE STRUCTURAL SHEETS
6. RWL CLEANOUT, SEE MECH
7. CONCRETE STEM WALL
8. STRUCTURAL STEEL COLUMN AND BEAM, PAINTED
9. METAL SHIP LADDER
10. EXIT SIGN & EMERGENCY LIGHTING COMBO
11. EXIT SIGN 2/A0-3.3
12. OVERHEAD DOOR MOTOR
13. OVERHEAD DOOR TRACK SUPPORT 5/A3-10.1
14. 4" RUBBER BASE
15. VERTICAL WHEEL CHAIR LIFT
16. GATE
17. FIRE EXTINGUISHER
18. METAL GUARD RAIL

	BY	CHECKED
DESIGN	L Rhoades, R Francisco	Q. Wong, F. Thomas
DETAILS	L Rhoades, J. Kwong	Q. Wong, F. Thomas
QUANTITIES		

STATE OF CALIFORNIA
DEPARTMENT OF TRANSPORTATION

DIVISION OF ENGINEERING SERVICES
ARCHITECTURAL AND STRUCTURAL DESIGN

BRIDGE No. 33M5785
POST MILE

SFOBB WAREHOUSE

INTERIOR ELEVATIONS

SHEET **A1-9.10**

TAEMWW Imperial - CCSC Rev. 01/13

ORIGINAL SCALE IN INCHES FOR REDUCED PLANS 0 1 2 3

UNIT: 3598 CONTRACT No.: 014101
PROJECT NUMBER & PHASE: 04130001331

DISREGARD PRINTS BEARING EARLIER REVISION DATES →

REVISION DATES (PRELIMINARY STAGE ONLY) SHEET X OF X

30-APR-2014 10:08

P:\dist_04\0413000133_sfobb_maint_warehouse\arch\CADD\Working Drawings\first expedite\a1_09.10_intelev.dgn

Dist	COUNTY	LOCATION CODE	POST MILES TOTAL PROJECT	SHEET No.	TOTAL SHEETS
04	Ala	5785		132	371

LICENSED ARCHITECT — DATE 10-25-13

3-24-14
PLANS APPROVAL DATE

LICENSED ARCHITECT — Lani Rhoades — No. C 26695 — 10-31-15 RENEWAL DATE — STATE OF CALIFORNIA

The State of California or its officers or agents shall not be responsible for the accuracy or completeness of scanned copies of this plan sheet.

ACCESSIBILITY DESIGN APPROVAL DOT / DES / OTA

PROJECT ID **0413000133**

Reviewed by: Y. A. WANG
Date: 02-13-14

CALIFORNIA STATE FIRE MARSHAL APPROVED

Approval of this plan does not authorize or approve any omission or deviation from applicable regulations. Final approval is subject to field inspection. One set of approved plans shall be available on the project site at all times.

Reviewed by: INGRID P. ICASIANO
Approval date: 02-11-14

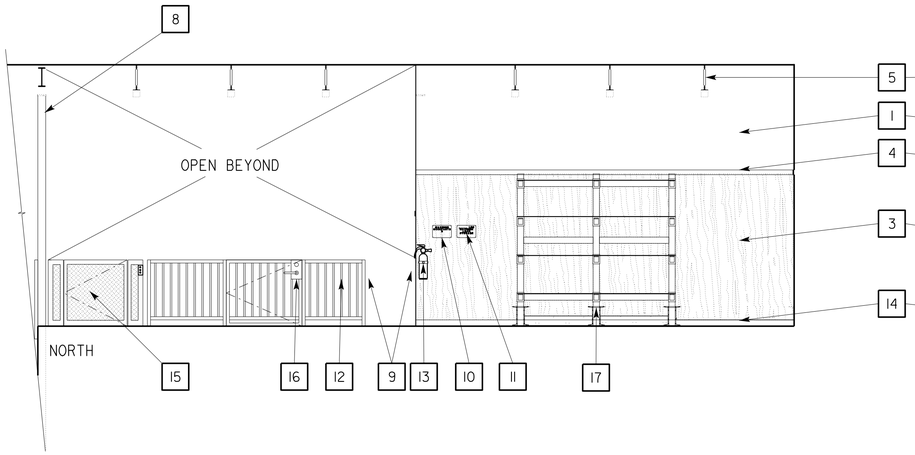

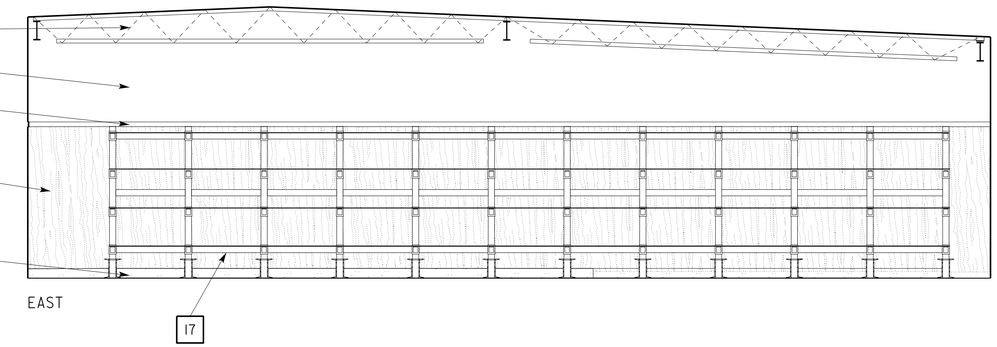

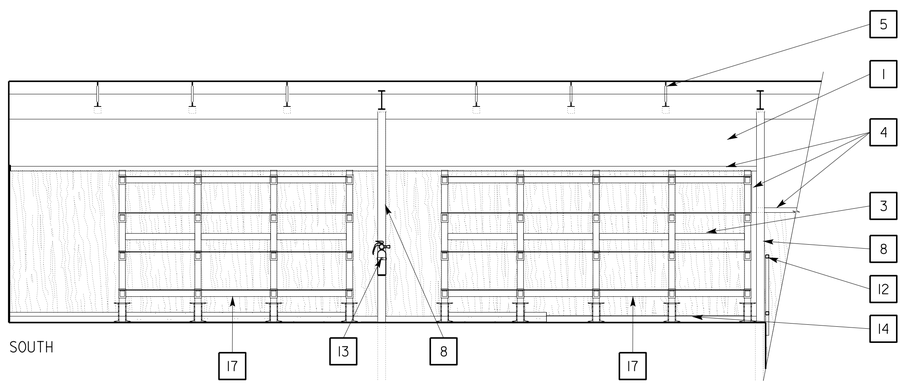

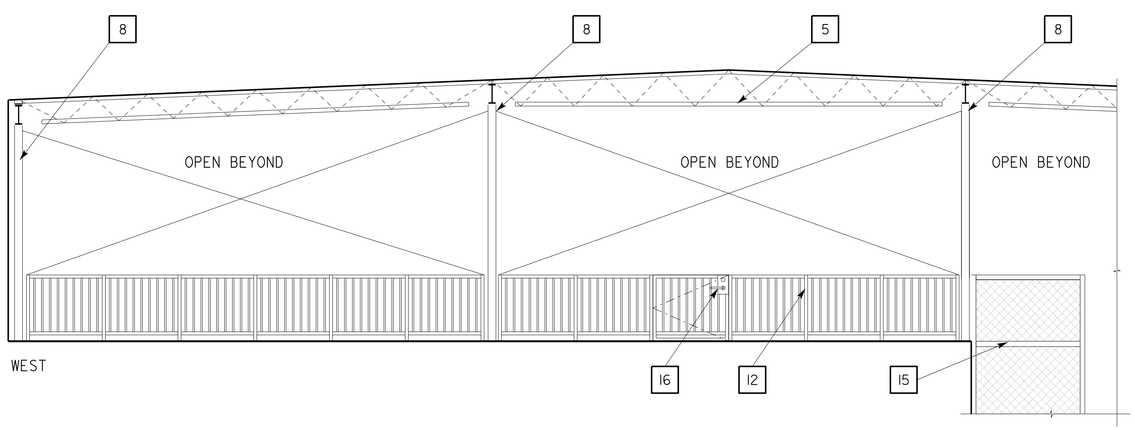

KEY NOTES

1. GYPSUM WALL BD, PAINTED
2. 6" CONCRETE CURB
3. PLYWOOD WAINSCOT, PAINTED
4. WOOD TRIM (7 / A3-13.2)
5. OWSJ, SEE STRUCTURAL SHEETS
6. RWL CLEANOUT, SEE MECH
7. CONCRETE STEM WALL
8. STRUCTURAL STEEL COLUMN AND BEAM, PAINTED
9. METAL SHIP LADDER
10. MAXIMUM OCCUPANTS SIGNAGE (5 / A3-14.1)
11. MAXIMUM LOAD SIGNAGE (11 / A3-14.1)
12. METAL GUARD RAIL
13. FIRE EXTINGUISHER
14. 4" RUBBER BASE
15. VERTICAL WHEEL CHAIR LIFT
16. GATE
17. CANTILEVER RACK, SEE EQUIPMENT PLANS

1 MEZZANINE STORAGE 124

SCALE 1/4" = 1'-0"

	BY	CHECKED
DESIGN	L Rhoades, R Francisco	Q. Wong, F. Thomas
DETAILS	L Rhoades, J. Kwong	Q. Wong, F. Thomas
QUANTITIES		

STATE OF CALIFORNIA
DEPARTMENT OF TRANSPORTATION

DIVISION OF ENGINEERING SERVICES
ARCHITECTURAL AND STRUCTURAL DESIGN

BRIDGE No. 33M5785
POST MILE

SFOBB WAREHOUSE

INTERIOR ELEVATIONS

SHEET **A1-9.11**

TAEMWW Imperial - CCSC Rev. 01/13

ORIGINAL SCALE IN INCHES FOR REDUCED PLANS 0 1 2 3

UNIT: 3598 CONTRACT No.: 014101
PROJECT NUMBER & PHASE: 04130001331

DISREGARD PRINTS BEARING EARLIER REVISION DATES →

REVISION DATES (PRELIMINARY STAGE ONLY) SHEET X OF X

30-APR-2014 10:08

P:\dist_04\0413000133_sfobb_maint_warehouse\arch\CADD\Working Drawings\first expedite\a1_09.11_intelev.dgn

Dist	COUNTY	LOCATION CODE	POST MILES TOTAL PROJECT	SHEET No.	TOTAL SHEETS
04	Ala	5785		133	371

LICENSED ARCHITECT — DATE 10-25-13

3-24-14
PLANS APPROVAL DATE

LICENSED ARCHITECT — Lani Rhoades — No. C 26695 — 10-31-15 RENEWAL DATE — STATE OF CALIFORNIA

The State of California or its officers or agents shall not be responsible for the accuracy or completeness of scanned copies of this plan sheet.

ACCESSIBILITY DESIGN APPROVAL DOT / DES / OTA

PROJECT ID **0413000133**

Reviewed by: Y. A. WANG
Date: 02-13-14

CALIFORNIA STATE FIRE MARSHAL APPROVED

Approval of this plan does not authorize or approve any omission or deviation from applicable regulations. Final approval is subject to field inspection. One set of approved plans shall be available on the project site at all times.

Reviewed by: INGRID P. ICASIANO
Approval date: 02-11-14

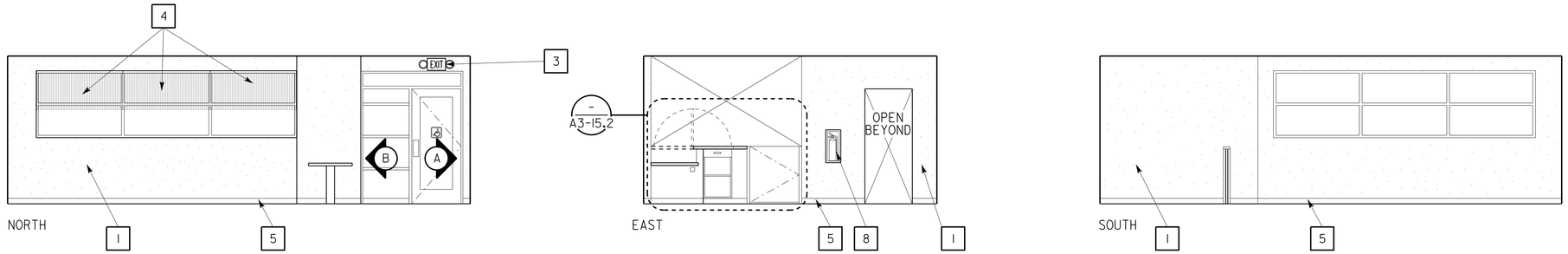

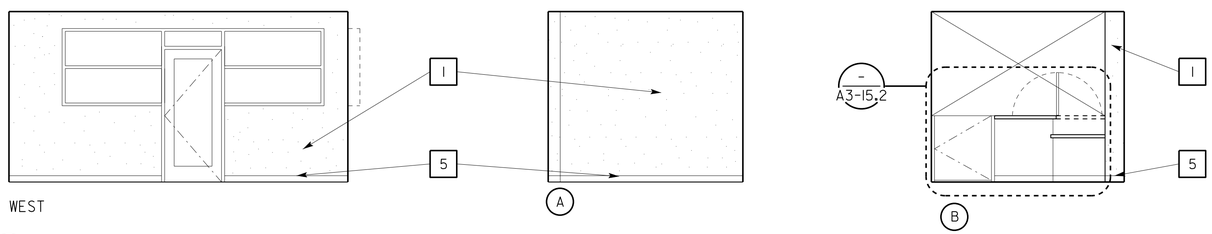

1 OFFICE 125 AND LOBBY 126

SCALE 1/4" = 1'-0"

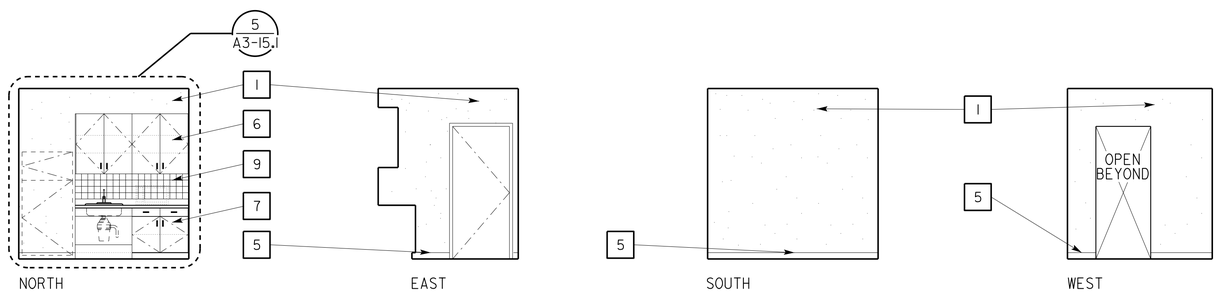

2 KITCHENETTE 127

SCALE 1/4" = 1'-0"

KEY NOTES

1. GYPSUM WALL BD, PAINTED
2. ROOM IDENTIFICATION SIGN (1 / A0-3.3)
3. EXIT SIGN & EMERGENCY LIGHT COMBO
4. HORIZONTAL BLINDS (9 / A3-14.1)
5. 4" RUBBER BASE
6. UPPER CABINET
7. BASE CABINET
8. FIRE EXTINGUISHER W/ CABINET
9. CERAMIC TILE

	BY	CHECKED
DESIGN	L Rhoades, R Francisco	Q. Wong, F. Thomas
DETAILS	L Rhoades, J. Kwong	Q. Wong, F. Thomas
QUANTITIES		

STATE OF CALIFORNIA
DEPARTMENT OF TRANSPORTATION

DIVISION OF ENGINEERING SERVICES
ARCHITECTURAL AND STRUCTURAL DESIGN

BRIDGE No. 33M5785
POST MILE

SFOBB WAREHOUSE

INTERIOR ELEVATIONS

SHEET **A1-9.12**

TAEMWW Imperial - CCSC Rev. 01/13

ORIGINAL SCALE IN INCHES FOR REDUCED PLANS 0 1 2 3

UNIT: 3598 CONTRACT No.: 014101
PROJECT NUMBER & PHASE: 04130001331

DISREGARD PRINTS BEARING EARLIER REVISION DATES →

REVISION DATES (PRELIMINARY STAGE ONLY) SHEET X OF X

30-APR-2014 10:08

D:\temporary\a1_09.12_intelev.dgn

Dist	COUNTY	LOCATION CODE	POST MILES TOTAL PROJECT	SHEET No.	TOTAL SHEETS
04	Ala	5785		134	371

LICENSED ARCHITECT — DATE 10-25-13

3-24-14
PLANS APPROVAL DATE

LICENSED ARCHITECT — Lani Rhoades — No. C 26695 — 10-31-15 RENEWAL DATE — STATE OF CALIFORNIA

The State of California or its officers or agents shall not be responsible for the accuracy or completeness of scanned copies of this plan sheet.

ACCESSIBILITY DESIGN APPROVAL DOT / DES / OTA
PROJECT ID **0413000133**
Reviewed by: Y. A. WANG
Date: 02-13-14

CALIFORNIA STATE FIRE MARSHAL APPROVED
Approval of this plan does not authorize or approve any omission or deviation from applicable regulations. Final approval is subject to field inspection. One set of approved plans shall be available on the project site at all times.
Reviewed by: INGRID P. ICASIANO
Approval date: 02-11-14

KEY NOTES

1. GYPSUM WALL BD, PAINTED
2. CERAMIC TILE (8 / A3-13.1)
3. CERAMIC TILE COVE (2 / A3-13.1)
4. 4" RUBBER BASE
5. WHEELCHAIR ACCESSIBLE SHOWER UNIT
6. GRAB BAR
7. CLOTHES HOOK
8. BENCH
9. WATER CLOSET
10. TOILET SEAT COVER DISPENSER
11. COMBO PAPER TOWEL DISPENSER AND WASTE RECEPTICAL
12. SOAP DISPENSER
13. LAVATORY
14. MIRROR
15. TOILET TISSUE DISPENSER
16. EXIT SIGN & EMERGENCY LIGHT COMBO
17. FIRE EXTINGUISHER WITH CABINET
18. ROOM IDENTIFICATION SIGN (1 / A0-3.3)
19. EXIT SIGN (2 / A0-3.3)
20. MOP RACK
21. MOP SINK
22. ACCEESSIBLE ELECTRIC WATER COOLER (1 / A0-3.5)
23. FRP, SEE FINISH SCHEDULE
24. FOLDING SHOWER SEAT
25. SHOWER CURTAIN ROD

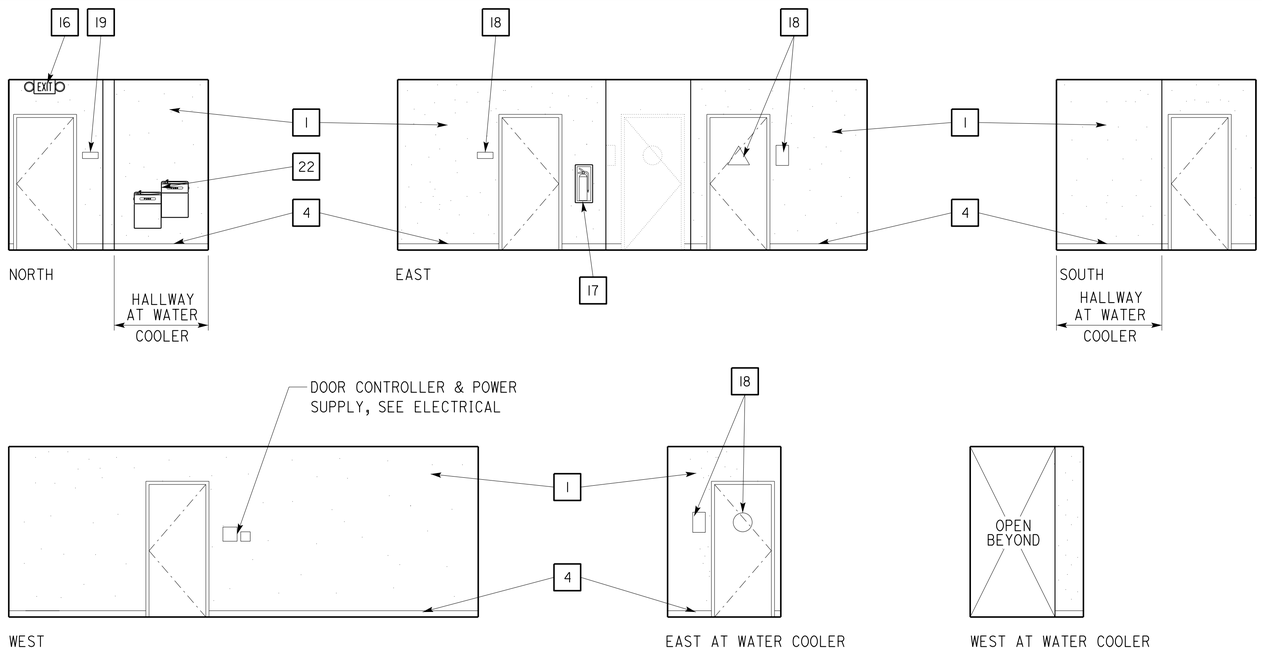

1 HALLWAY 129
SCALE 1/4" = 1'-0"

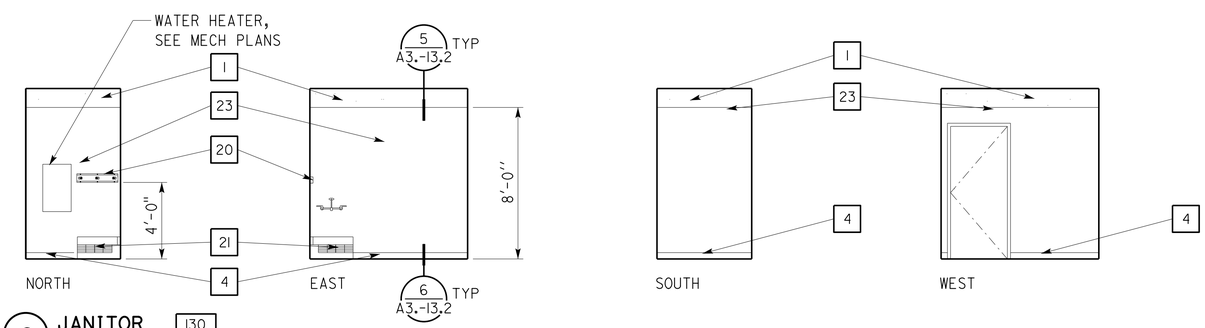

2 JANITOR 130
SCALE 1/4" = 1'-0"

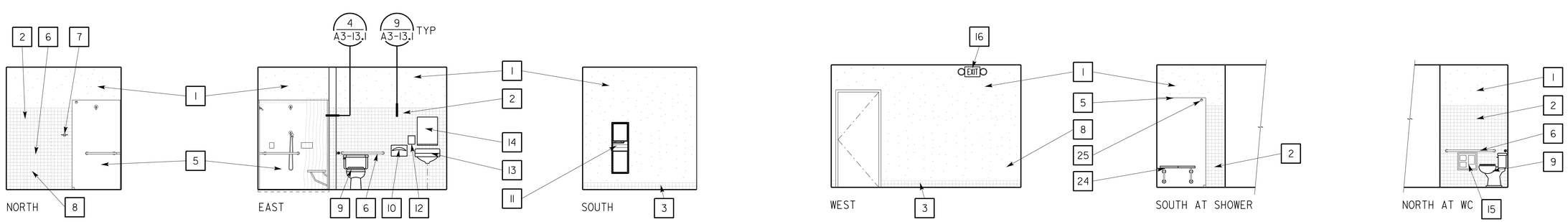

3 WOMEN 131
SCALE 1/4" = 1'-0"

NOTE: FOR MOUNTING HEIGHTS OF TOILET FIXTURES AND ACCESSORIES, SEE ACCESSIBILITY STANDARD DETAILS SHEETS A0-3.4 AND A0-3.5

	BY	CHECKED
DESIGN	L Rhoades, R Francisco	Q. Wong, F. Thomas
DETAILS	L Rhoades, J. Kwong	Q. Wong, F. Thomas
QUANTITIES		

STATE OF CALIFORNIA
DEPARTMENT OF TRANSPORTATION

DIVISION OF ENGINEERING SERVICES
ARCHITECTURAL AND STRUCTURAL DESIGN

BRIDGE No. 33M5785
POST MILE

SFOBB WAREHOUSE

INTERIOR ELEVATIONS

SHEET **A1-9.13**

TAEMWW Imperial - CCSC Rev. 01/13

ORIGINAL SCALE IN INCHES FOR REDUCED PLANS 0 1 2 3

UNIT: 3598 CONTRACT No.: 014101
PROJECT NUMBER & PHASE: 04130001331

DISREGARD PRINTS BEARING EARLIER REVISION DATES

REVISION DATES (PRELIMINARY STAGE ONLY) SHEET X OF X

30-APR-2014 10:08

D:\temporary\a1_09.13_intelev.dgn

Dist	COUNTY	LOCATION CODE	POST MILES TOTAL PROJECT	SHEET No.	TOTAL SHEETS
04	Ala	5785		135	371

LICENSED ARCHITECT — DATE 10-25-13

3-24-14
PLANS APPROVAL DATE

LICENSED ARCHITECT — Lani Rhoades — No. C 26695 — 10-31-15 RENEWAL DATE — STATE OF CALIFORNIA

The State of California or its officers or agents shall not be responsible for the accuracy or completeness of scanned copies of this plan sheet.

ACCESSIBILITY DESIGN APPROVAL DOT / DES / OTA
PROJECT ID **0413000133**
Reviewed by: Y. A. WANG
Date: 02-13-14

CALIFORNIA STATE FIRE MARSHAL APPROVED
Approval of this plan does not authorize or approve any omission or deviation from applicable regulations. Final approval is subject to field inspection. One set of approved plans shall be available on the project site at all times.
Reviewed by: INGRID P. ICASIANO
Approval date: 02-11-14

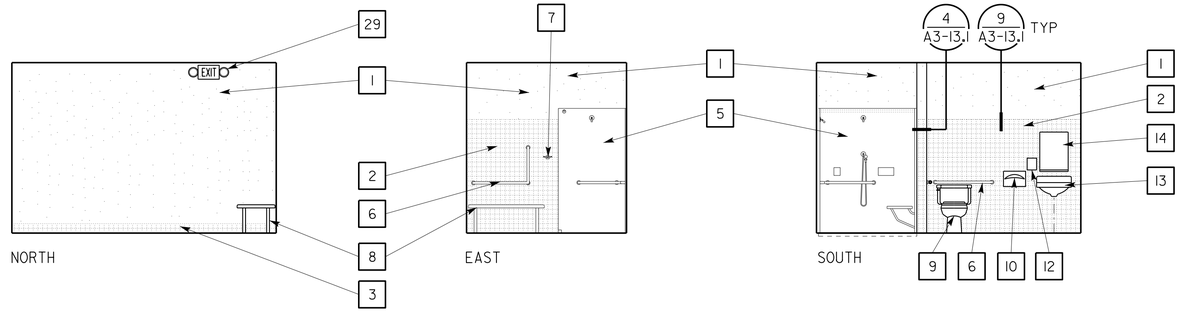

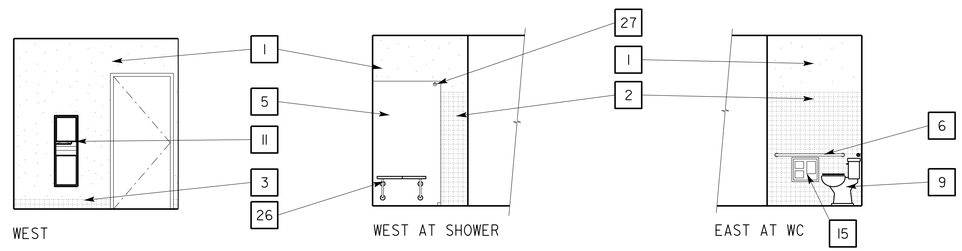

1 MEN 132

SCALE 1/4" = 1'-0" NOTE: FOR MOUNTING HEIGHTS OF TOILET FIXTURES AND ACCESSORIES, SEE ACCESSIBILITY STANDARD DETAILS SHEETS A0-3.4 AND A0-3.5

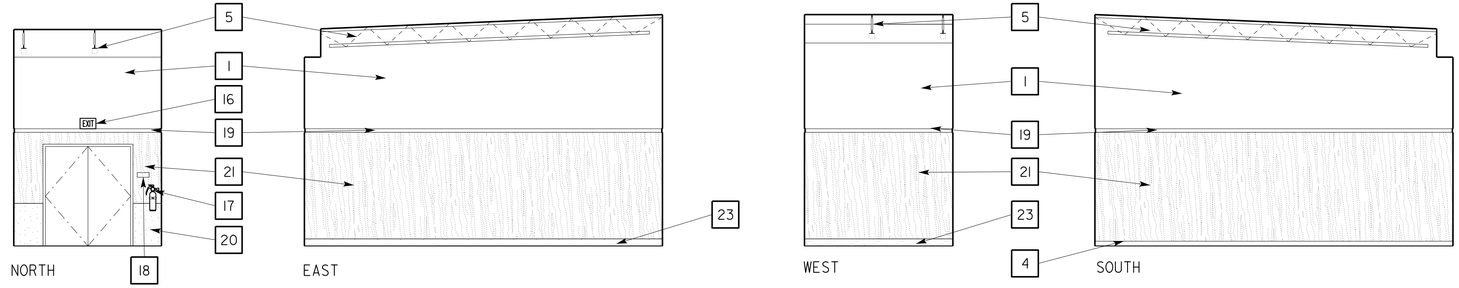

2 RECYCLED MATERIAL STORAGE 133

SCALE 3/16" = 1'-0"

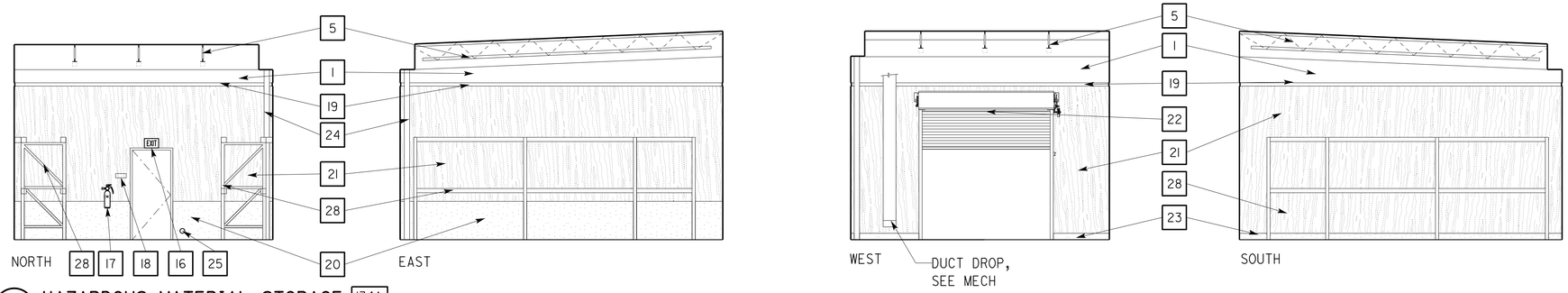

3 HAZARDOUS MATERIAL STORAGE 134A

SCALE 3/16" = 1'-0"

KEY NOTES

1. GYPSUM WALL BD, PAINTED
2. CERAMIC TILE (8 / A3-13.1)
3. CERAMIC TILE COVE (2 / A3-13.1)
4. 4" RUBBER BASE
5. OWSJ
6. GRAB BAR
7. CLOTHES HOOK
8. BENCH
9. WATER CLOSET
10. TOILET SEAT COVER DISPENSER
11. COMBO PAPER TOWEL DISPENSER AND WASTE RECEPTICAL
12. SOAP DISPENSER
13. LAVATORY
14. MIRROR
15. TOILET TISSUE DISPENSER
16. SELF LUMINOUS EXIT SIGN (1 / A3-14.1)
17. FIRE EXTINGUISHER
18. EXIT SIGN (2 / A0-3.3)
19. WOOD TRIM (7 / A3-13.2)
20. CONCRETE STEM WALL
21. PLYWOOD WAINSCOT, PAINTED
22. OVERHEAD COILING FIRE DOOR
23. 6" CONCRETE CURB
24. STRUCTURAL STEEL COLUMN AND BEAM, PAINTED
25. RWL CLEANOUT, SEE MECHANICAL
26. FOLDING SHOWER SEAT
27. SHOWER CURTAIN ROAD
28. PALLET RACK STORAGE UNIT, SEE EQUIPMENT PLAN
29. EXIT SIGN & EMERGENCY LIGHT COMBO

	BY	CHECKED
DESIGN	L Rhoades, R Francisco	Q. Wong, F. Thomas
DETAILS	L Rhoades, J. Kwong	Q. Wong, F. Thomas
QUANTITIES		

STATE OF CALIFORNIA
DEPARTMENT OF TRANSPORTATION

DIVISION OF ENGINEERING SERVICES
ARCHITECTURAL AND STRUCTURAL DESIGN

BRIDGE No. 33M5785
POST MILE

SFOBB WAREHOUSE
INTERIOR ELEVATIONS

SHEET **A1-9.14**

TAEMWW Imperial - CCSC Rev. 01/13

ORIGINAL SCALE IN INCHES FOR REDUCED PLANS 0 1 2 3

UNIT: 3598 CONTRACT No.: 014101
PROJECT NUMBER & PHASE: 04130001331

DISREGARD PRINTS BEARING EARLIER REVISION DATES →
REVISION DATES (PRELIMINARY STAGE ONLY) SHEET X OF X

30-APR-2014 10:08
D:\temporary\a1_09.14_intelev.dgn

Dist	COUNTY	LOCATION CODE	POST MILES TOTAL PROJECT	SHEET No.	TOTAL SHEETS
04	Ala	5785		136	371

LICENSED ARCHITECT — DATE 10-25-13

3-24-14
PLANS APPROVAL DATE

LICENSED ARCHITECT — Lani Rhoades — No. C 26695 — 10-31-15 RENEWAL DATE — STATE OF CALIFORNIA

The State of California or its officers or agents shall not be responsible for the accuracy or completeness of scanned copies of this plan sheet.

ACCESSIBILITY DESIGN APPROVAL DOT / DES / OTA

PROJECT ID **0413000133**

Reviewed by: Y. A. WANG
Date: 02-13-14

CALIFORNIA STATE FIRE MARSHAL APPROVED

Approval of this plan does not authorize or approve any omission or deviation from applicable regulations. Final approval is subject to field inspection. One set of approved plans shall be available on the project site at all times.

Reviewed by: INGRID P. ICASIANO
Approval date: 02-11-14

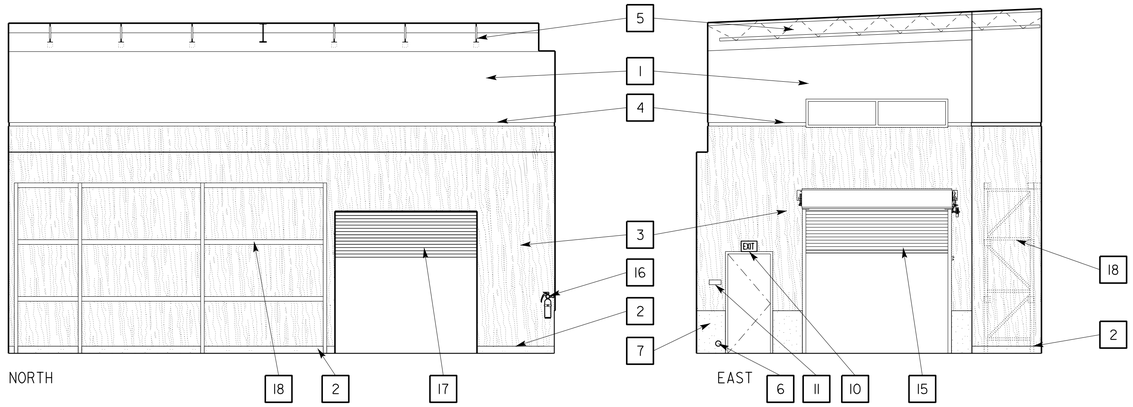

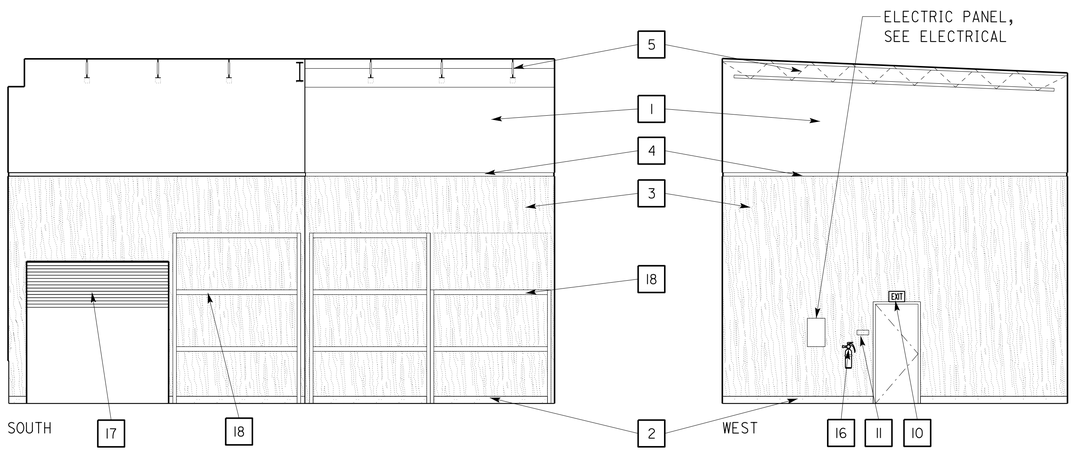

1 BULK PAINT STORAGE 134B
SCALE 3/16" = 1'-0"

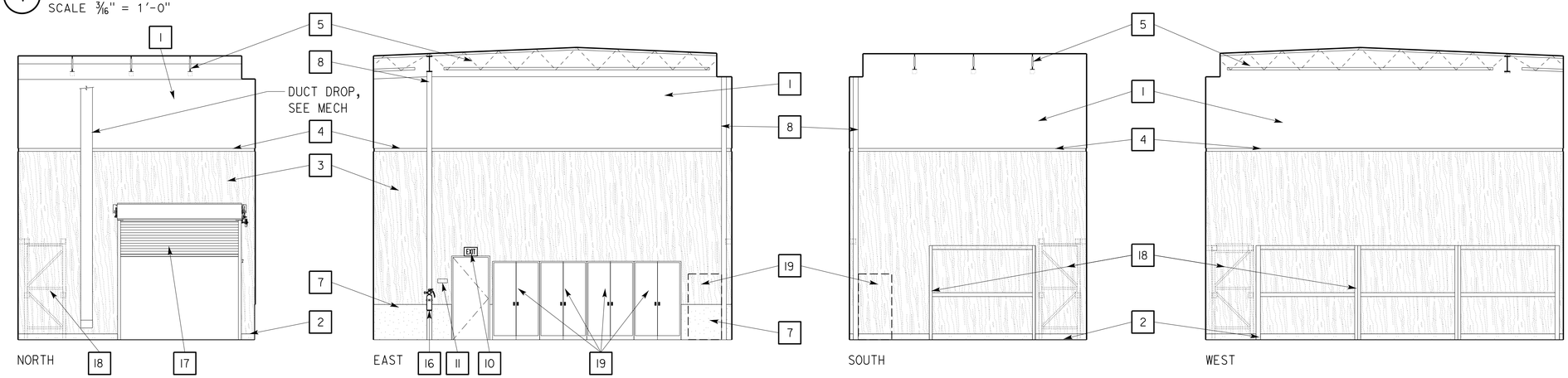

2 HAZARDOUS MATERIAL STORAGE 135
SCALE 3/16" = 1'-0"

KEY NOTES

1. GYPSUM WALL BD, PAINTED
2. 6" CONCRETE CURB
3. PLYWOOD WAINSCOT, PAINTED
4. WOOD TRIM (7 / A3-13.2)
5. OWSJ, SEE STRUCTURAL SHEETS
6. RWL CLEANOUT, SEE MECH
7. CONCRETE STEM WALL
8. STRUCTURAL STEEL COLUMN AND BEAM, PAINTED
9. ROOM IDENTIFICATION SIGN (1 / A0-3.3)
10. SELF LUMINOUS EXIT SIGN (1 / A3-14.1)
11. EXIT SIGN (2 / A0-3.3)
12. OVERHEAD DOOR MOTOR
13. OVERHEAD DOOR TRACK SUPPORT (5 / A3-10.1)
14. 4" RUBBER BASE
15. OVERHEAD COILING INSULATED DOOR
16. FIRE EXTINGUISHER
17. OVERHEAD COILING FIRE DOOR
18. PALLET RACK STORAGE UNIT, SEE EQUIPMENT PLAN
19. FIRE PROTECTION CABINET, SEE EQUIPMENT PLAN

	BY	CHECKED
DESIGN	L Rhoades, R Francisco	Q. Wong, F. Thomas
DETAILS	L Rhoades, J. Kwong	Q. Wong, F. Thomas
QUANTITIES		

STATE OF CALIFORNIA
DEPARTMENT OF TRANSPORTATION

DIVISION OF ENGINEERING SERVICES
ARCHITECTURAL AND STRUCTURAL DESIGN

BRIDGE No. 33M5785
POST MILE

SFOBB WAREHOUSE

INTERIOR ELEVATIONS

SHEET A1-9.15

TAEMWW Imperial - CCSC Rev. 01/13

ORIGINAL SCALE IN INCHES FOR REDUCED PLANS 0 1 2 3

UNIT: 3598 CONTRACT No.: 014101
PROJECT NUMBER & PHASE: 04130001331

DISREGARD PRINTS BEARING EARLIER REVISION DATES →

REVISION DATES (PRELIMINARY STAGE ONLY) SHEET X OF X

30-APR-2014 10:08

D:\temporary\a1_09.15_intelev.dgn

Dist	COUNTY	LOCATION CODE	POST MILES TOTAL PROJECT	SHEET No.	TOTAL SHEETS
04	Ala	5785		137	371

LICENSED ARCHITECT — DATE 10-25-13

3-24-14
PLANS APPROVAL DATE

LICENSED ARCHITECT — Lani Rhoades — No. C 26695 — 10-31-15 RENEWAL DATE — STATE OF CALIFORNIA

The State of California or its officers or agents shall not be responsible for the accuracy or completeness of scanned copies of this plan sheet.

ACCESSIBILITY DESIGN APPROVAL DOT / DES / OTA
PROJECT ID **0413000133**
Reviewed by: Y. A. WANG
Date: 02-13-14

CALIFORNIA STATE FIRE MARSHAL APPROVED
Approval of this plan does not authorize or approve any omission or deviation from applicable regulations. Final approval is subject to field inspection. One set of approved plans shall be available on the project site at all times.
Reviewed by: INGRID P. ICASIANO
Approval date: 02-11-14

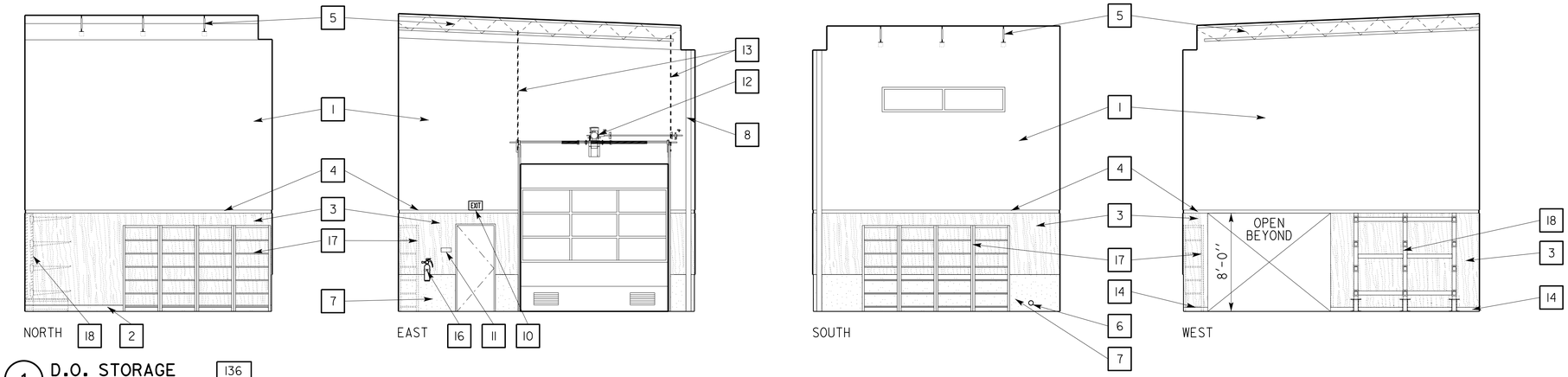

1 D.O. STORAGE 136
SCALE 3/16" = 1'-0"

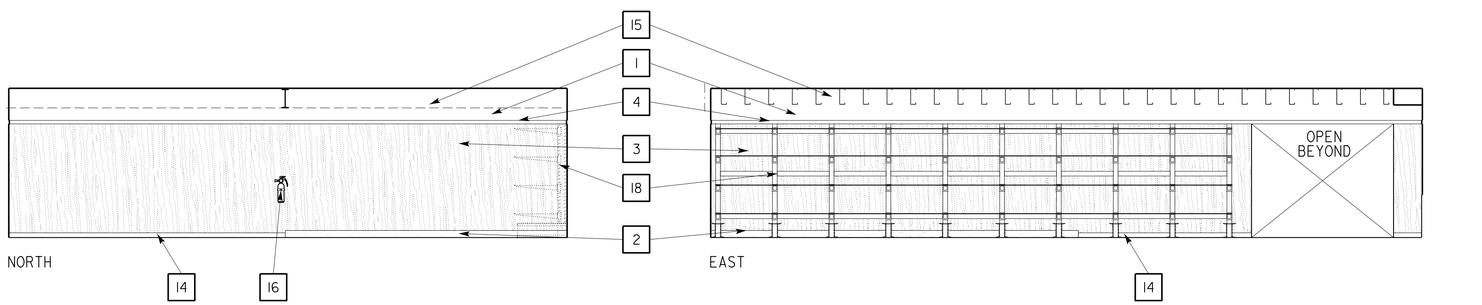

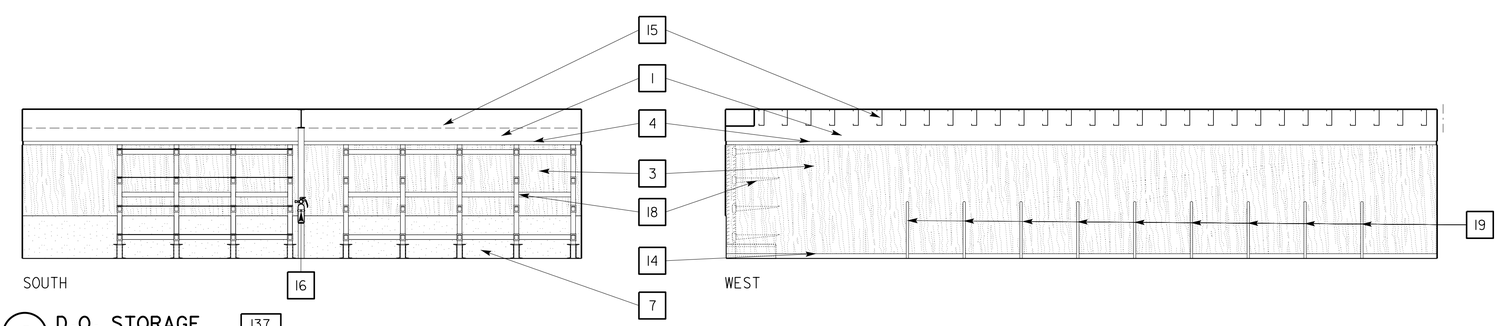

2 D.O. STORAGE 137
SCALE 3/16" = 1'-0"

KEY NOTES

1. GYPSUM WALL BD, PAINTED
2. 6" CONCRETE CURB
3. PLYWOOD WAINSCOT, PAINTED
4. WOOD TRIM (7 / A3-13.2)
5. OWSJ, SEE STRUCTURAL SHEETS
6. RWL CLEANOUT, SEE MECH
7. CONCRETE STEM WALL
8. STRUCTURAL STEEL COLUMN AND BEAM, PAINTED
9. ROOM IDENTIFICATION SIGN (1 / A0-3.3)
10. SELF LUMINOUS EXIT SIGN (1 / A3-14.1)
11. EXIT SIGN (2 / A0-3.3)
12. OVERHEAD DOOR MOTOR
13. OVERHEAD DOOR TRACK SUPPORT (5 / A3-10.1)
14. 4' RUBBER BASE
15. JOIST
16. FIRE EXTINGUISHER
17. STEEL SHELVING, SEE EQUIPMENT PLAN
18. CANITLEVER RACK, SEE EQUIPMENT PLAN
19. STEEL STORAGE DIVIDER, SEE EQUIPMENT PLAN

	BY	CHECKED
DESIGN	L Rhoades, R Francisco	Q. Wong, F. Thomas
DETAILS	L Rhoades, J. Kwong	Q. Wong, F. Thomas
QUANTITIES		

STATE OF CALIFORNIA
DEPARTMENT OF TRANSPORTATION

DIVISION OF ENGINEERING SERVICES
ARCHITECTURAL AND STRUCTURAL DESIGN

BRIDGE No. 33M5785
POST MILE

SFOBB WAREHOUSE
INTERIOR ELEVATIONS

SHEET A1-9.16

TAEMWW Imperial - CCSC Rev. 01/13

ORIGINAL SCALE IN INCHES FOR REDUCED PLANS 0 1 2 3

UNIT: 3598 CONTRACT No.: 014101
PROJECT NUMBER & PHASE: 04130001331

DISREGARD PRINTS BEARING EARLIER REVISION DATES

REVISION DATES (PRELIMINARY STAGE ONLY) SHEET X OF X

30-APR-2014 10:08
D:\temporary\a1_09.16_intelev.dgn

Dist	COUNTY	LOCATION CODE	POST MILES TOTAL PROJECT	SHEET No.	TOTAL SHEETS
04	Ala	5785		138	371

LICENSED ARCHITECT — DATE 10-25-13

3-24-14
PLANS APPROVAL DATE

LICENSED ARCHITECT — Lani Rhoades — No. C 26695 — 10-31-15 RENEWAL DATE — STATE OF CALIFORNIA

The State of California or its officers or agents shall not be responsible for the accuracy or completeness of scanned copies of this plan sheet.

ACCESSIBILITY DESIGN APPROVAL DOT / DES / OTA
PROJECT ID **0413000133**
Reviewed by: Y. A. WANG
Date: 02-13-14

CALIFORNIA STATE FIRE MARSHAL APPROVED
Approval of this plan does not authorize or approve any omission or deviation from applicable regulations. Final approval is subject to field inspection. One set of approved plans shall be available on the project site at all times.
Reviewed by: INGRID P. ICASIANO
Approval date: 02-11-14

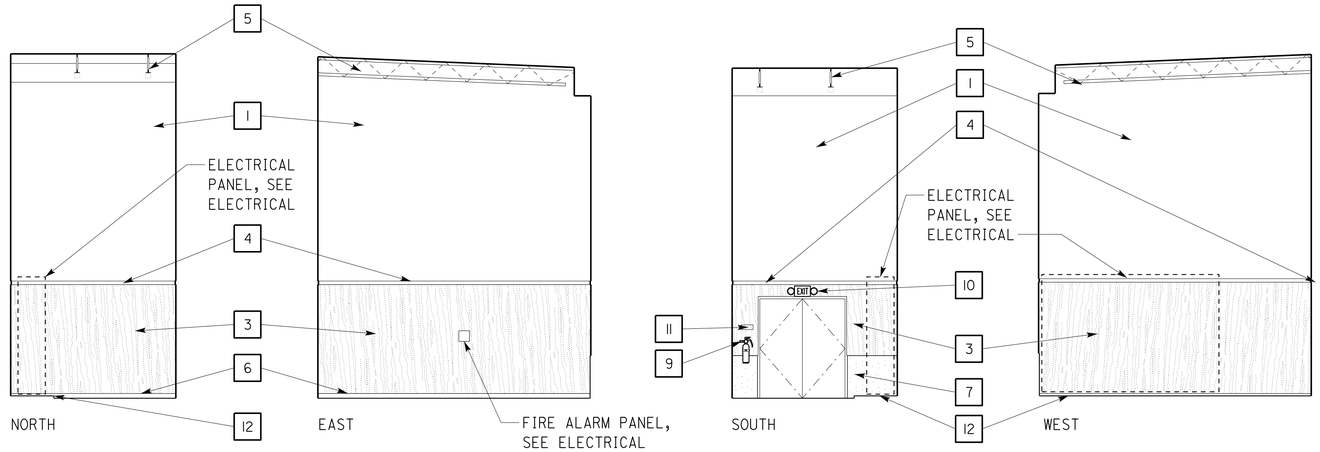

1 ELECTRIC ROOM 138
SCALE 3/16" = 1'-0"

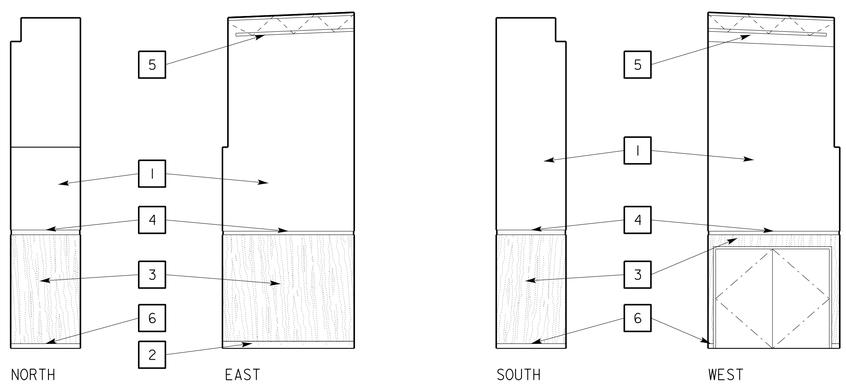

2 IT CLOSET 139
SCALE 3/16" = 1'-0"

KEY NOTES

1. GYPSUM WALL BD, PAINTED
2. 6" CONCRETE CURB
3. PLYWOOD WAINSCOT, PAINTED
4. WOOD TRIM (7 / A3-13.2)
5. OWSJ, SEE STRUCTURAL SHEETS
6. 4" RUBBER BASE
7. CONCRETE STEM WALL
8. STRUCTURAL STEEL COLUMN AND BEAM, PAINTED
9. FIRE EXTINGUISHER
10. EXIT SIGN & EMERGENCY LIGHTING COMBO
11. EXIT SIGN
12. RAISED CONCRETE SLAB, SEE FLOOR PLAN & STRUCTURAL

	BY	CHECKED
DESIGN	L Rhoades, R Francisco	Q. Wong, F. Thomas
DETAILS	L Rhoades, J. Kwong	Q. Wong, F. Thomas
QUANTITIES		

STATE OF CALIFORNIA
DEPARTMENT OF TRANSPORTATION

DIVISION OF ENGINEERING SERVICES
ARCHITECTURAL AND STRUCTURAL DESIGN

BRIDGE No. 33M5785
POST MILE

SFOBB WAREHOUSE

INTERIOR ELEVATIONS

SHEET A1-9.17

TAEMWW Imperial - CCSC Rev. 01/13

ORIGINAL SCALE IN INCHES FOR REDUCED PLANS 0 1 2 3

UNIT: 3598 CONTRACT No.: 014101
PROJECT NUMBER & PHASE: 04130001331

DISREGARD PRINTS BEARING EARLIER REVISION DATES →
REVISION DATES (PRELIMINARY STAGE ONLY) SHEET X OF X

30-APR-2014 10:08

P:\dist_04\0413000133_sfobb_maint_warehouse\arch\CADD\Working Drawings\first expedite\a1_09.17_intelev.dgn

Dist	COUNTY	LOCATION CODE	POST MILES TOTAL PROJECT	SHEET No.	TOTAL SHEETS
04	Ala	5785		139	371

LICENSED ARCHITECT — DATE 10-25-13

3-24-14
PLANS APPROVAL DATE

LICENSED ARCHITECT — Lani Rhoades — No. C 26695 — 10-31-15 RENEWAL DATE — STATE OF CALIFORNIA

The State of California or its officers or agents shall not be responsible for the accuracy or completeness of scanned copies of this plan sheet.

ACCESSIBILITY DESIGN APPROVAL DOT / DES / OTA

PROJECT ID **0413000133**

Reviewed by: Y. A. WANG
Date: 02-13-14

CALIFORNIA STATE FIRE MARSHAL APPROVED

Approval of this plan does not authorize or approve any omission or deviation from applicable regulations. Final approval is subject to field inspection. One set of approved plans shall be available on the project site at all times.

Reviewed by: INGRID P. ICASIANO
Approval date: 02-11-14

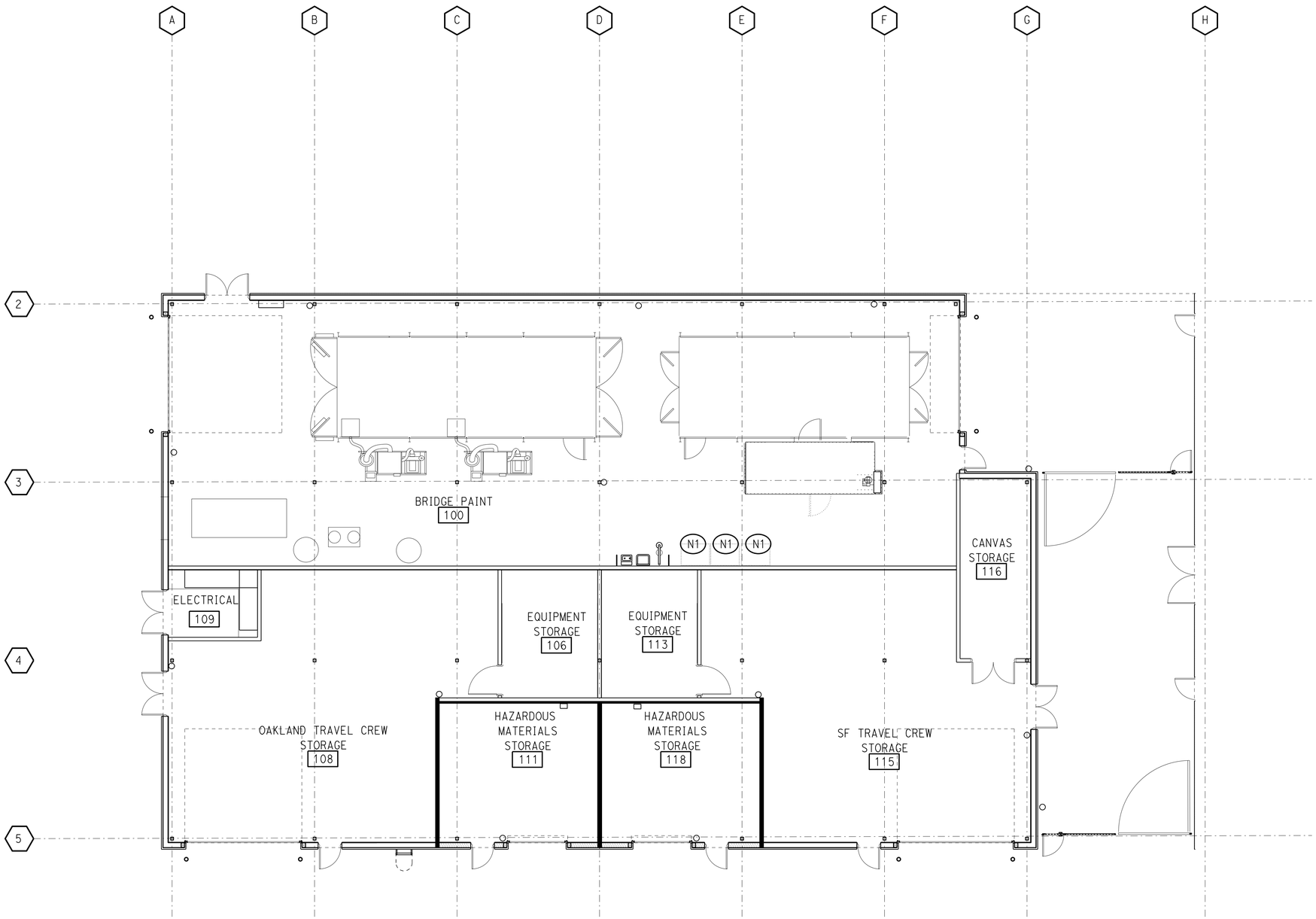

EQUIPMENT PLAN (NIC) FOR REFERENCE ONLY

EQUIPMENT INVENTORY LIST

N1 FLAMMABLE STORAGE CABINETS

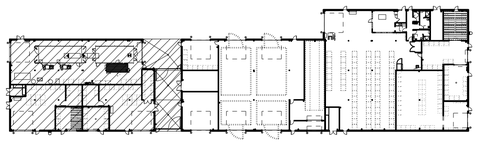

DESIGN	BY L Rhoades, R Francisco	CHECKED Q. Wong, F. Thomas	
DETAILS	BY L Rhoades, J. Kwong	CHECKED Q. Wong, F. Thomas	
QUANTITIES	BY	CHECKED	

STATE OF CALIFORNIA
DEPARTMENT OF TRANSPORTATION

DIVISION OF ENGINEERING SERVICES
ARCHITECTURAL AND STRUCTURAL DESIGN

BRIDGE No. 33M5785
POST MILE

SFOBB WAREHOUSE

BUILDING 1 AREA A

PARTIAL EQUIPMENT PLAN (NIC)- A

SHEET **A1-10.1**

TAEMWW Imperial - CCSC Rev. 01/13

ORIGINAL SCALE IN INCHES FOR REDUCED PLANS 0 1 2 3

UNIT: 3598 CONTRACT No.: 014101
PROJECT NUMBER & PHASE: 04130001331

DISREGARD PRINTS BEARING EARLIER REVISION DATES →

REVISION DATES (PRELIMINARY STAGE ONLY) - -13

SHEET X OF X

30-APR-2014 10:08

D:\temporary\a1_10.1_niceqpln.dgn

Dist	COUNTY	LOCATION CODE	POST MILES TOTAL PROJECT	SHEET No.	TOTAL SHEETS
04	Ala	5785		140	371

LICENSED ARCHITECT — DATE 10-25-13

3-24-14
PLANS APPROVAL DATE

LICENSED ARCHITECT — Lani Rhoades — No. C 26695 — 10-31-15 RENEWAL DATE — STATE OF CALIFORNIA

The State of California or its officers or agents shall not be responsible for the accuracy or completeness of scanned copies of this plan sheet.

ACCESSIBILITY DESIGN APPROVAL DOT / DES / OTA
PROJECT ID **0413000133**
Reviewed by: Y. A. WANG
Date: 02-13-14

CALIFORNIA STATE FIRE MARSHAL APPROVED
Approval of this plan does not authorize or approve any omission or deviation from applicable regulations. Final approval is subject to field inspection. One set of approved plans shall be available on the project site at all times.
Reviewed by: INGRID P. ICASIANO
Approval date: 02-11-14

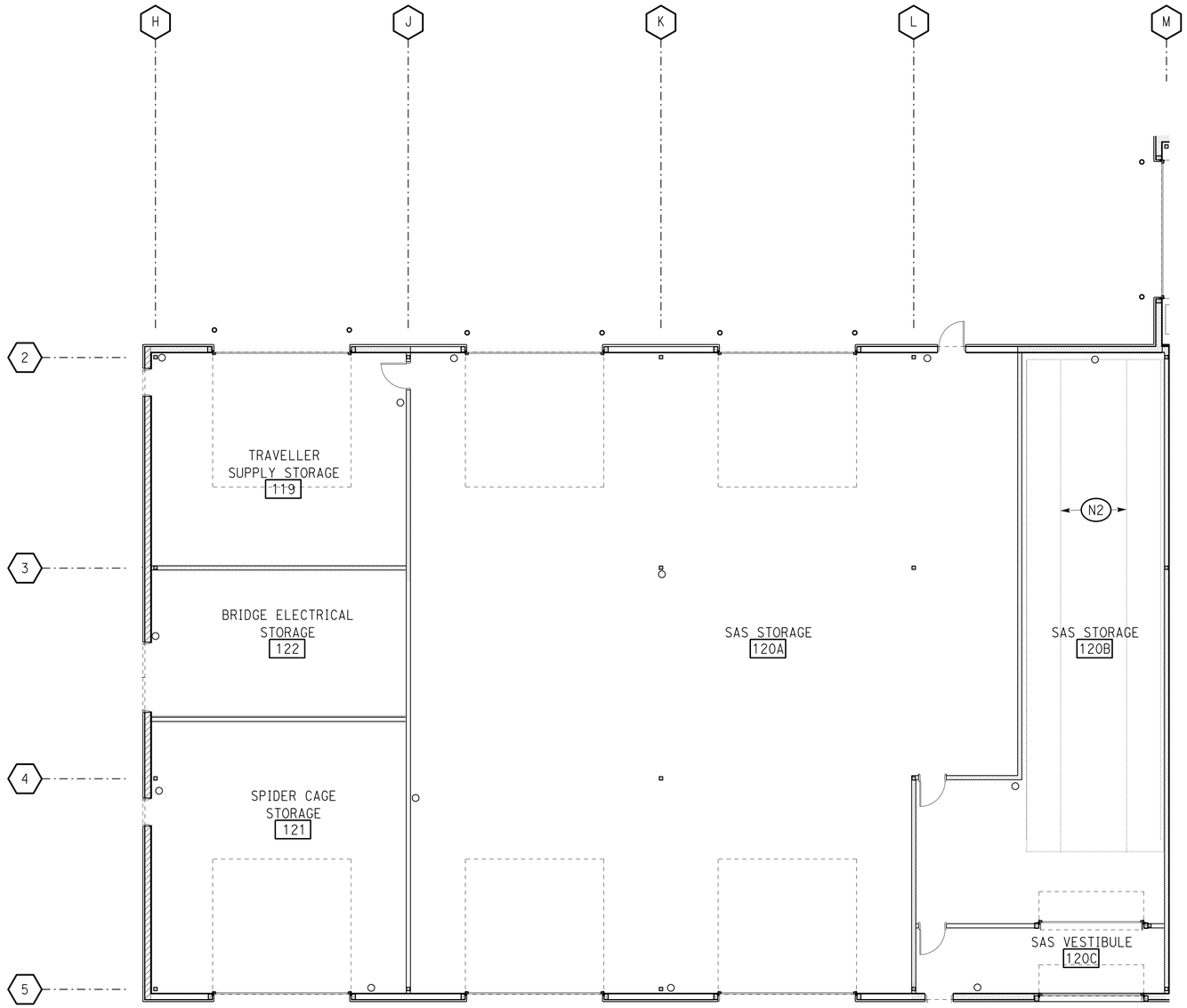

EQUIPMENT PLAN (NIC) FOR REFERENCE ONLY

PLAN NORTH

EQUIPMENT INVENTORY LIST

N2 MOTORIZED STORAGE AND RETRIEVAL PALLET RACK SYSTEM. SEE 1/--

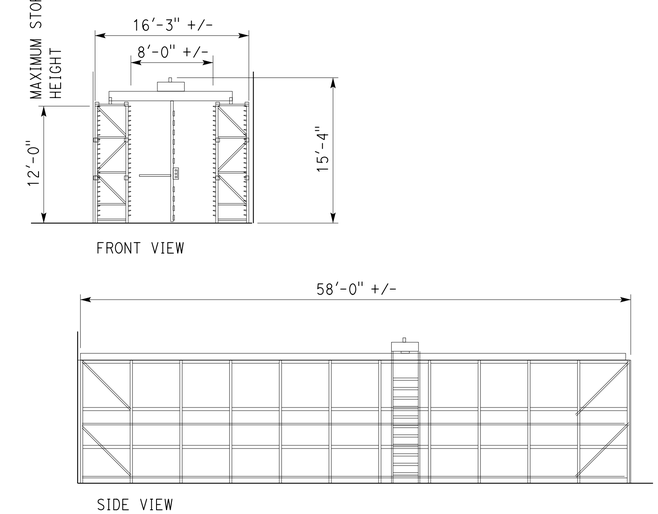

1 MOTORIZED STORAGE AND RETRIEVAL PALLET RACK SYSTEM (NIC)
SCALE 1/4" = 1'-0"

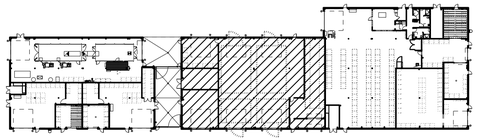

	BY	CHECKED
DESIGN	L Rhoades, R Francisco	Q. Wong, F. Thomas
DETAILS	L Rhoades, J. Kwong	Q. Wong, F. Thomas
QUANTITIES		

STATE OF CALIFORNIA
DEPARTMENT OF TRANSPORTATION

DIVISION OF ENGINEERING SERVICES
ARCHITECTURAL AND STRUCTURAL DESIGN

BRIDGE No. 33M5785
POST MILE

SFOBB WAREHOUSE
BUILDING 1 — PARTIAL EQUIPMENT PLAN (N.I.C)- B

SHEET **A1-10.2**

TAEMWW Imperial - CCSC Rev. 01/13

ORIGINAL SCALE IN INCHES FOR REDUCED PLANS 0 1 2 3

UNIT: 3598 CONTRACT No.: 014101
PROJECT NUMBER & PHASE: 04130001331

DISREGARD PRINTS BEARING EARLIER REVISION DATES → - -13

REVISION DATES (PRELIMINARY STAGE ONLY) — SHEET X — OF X

30-APR-2014 10:08

P:\dist_04\0413000133_sfobb_maint_warehouse\arch\CADD\Working Drawings\first expedite\a1_10.2_niceqpln.dgn

Dist	COUNTY	LOCATION CODE	POST MILES TOTAL PROJECT	SHEET No.	TOTAL SHEETS
04	Ala	5785		141	371

LICENSED ARCHITECT — DATE 10-25-13

3-24-14
PLANS APPROVAL DATE

LICENSED ARCHITECT Lani Rhoades No. C 26695 10-31-15 RENEWAL DATE STATE OF CALIFORNIA

The State of California or its officers or agents shall not be responsible for the accuracy or completeness of scanned copies of this plan sheet.

ACCESSIBILITY DESIGN APPROVAL DOT / DES / OTA
PROJECT ID **0413000133**
Reviewed by: Y. A. WANG
Date: 02-13-14

CALIFORNIA STATE FIRE MARSHAL APPROVED
Approval of this plan does not authorize or approve any omission or deviation from applicable regulations. Final approval is subject to field inspection. One set of approved plans shall be available on the project site at all times.
Reviewed by: INGRID P. ICASIANO
Approval date: 02-11-14

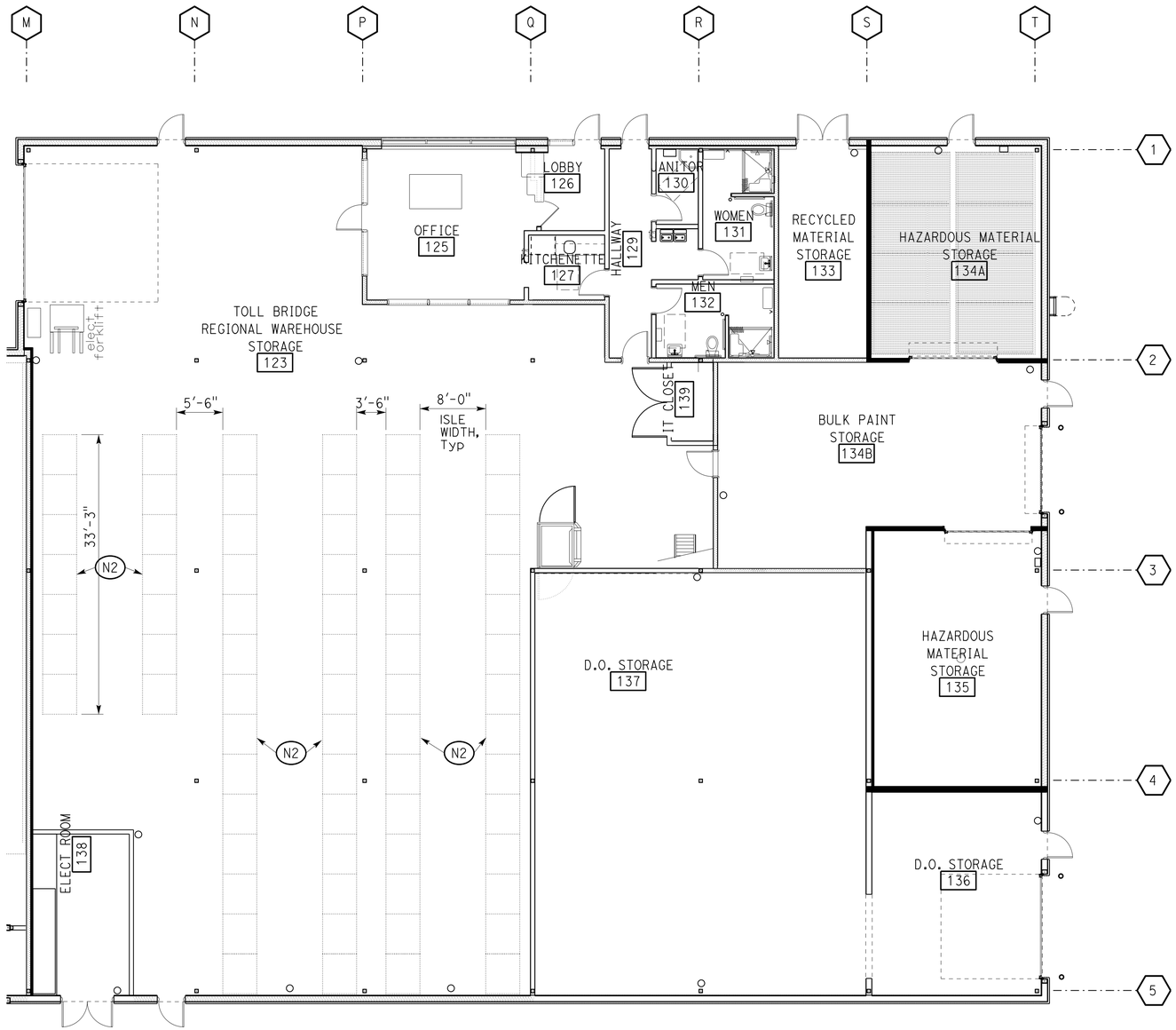

EQUIPMENT INVENTORY LIST

N2 MOTORIZED STORAGE AND RETRIEVAL PALLET RACK SYSTEM. SEE 1/--

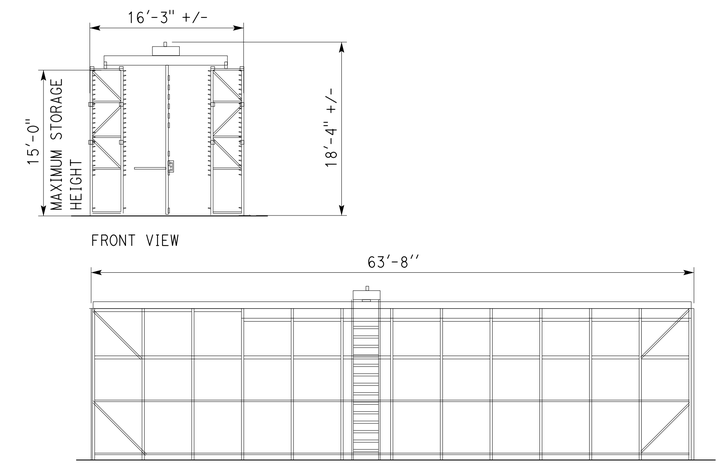

1 MOTORIZED STORAGE AND RETRIEVAL PALLET RACK SYSTEM (NIC)
SCALE 1/4" = 1'-0"

EQUIPMENT PLAN (NIC) FOR REFERENCE ONLY

N PLAN NORTH

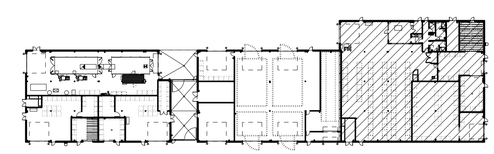

DESIGN	BY L Rhoades, R Francisco	CHECKED Q. Wong, F. Thomas	
DETAILS	BY L Rhoades, J. Kwong	CHECKED Q. Wong, F. Thomas	
QUANTITIES	BY	CHECKED	

ORIGINAL SCALE IN INCHES FOR REDUCED PLANS 0 1 2 3

STATE OF **CALIFORNIA** DEPARTMENT OF TRANSPORTATION

DIVISION OF ENGINEERING SERVICES **ARCHITECTURAL AND STRUCTURAL DESIGN**

UNIT: 3598 CONTRACT No.: 014101
PROJECT NUMBER & PHASE: 04130001331

BRIDGE No. 33M5785
POST MILE

SFOBB WAREHOUSE
BUILDING 1
PARTIAL EQUIPMENT PLAN (N.I.C.) - C

SHEET **A1-10.3**

DISREGARD PRINTS BEARING EARLIER REVISION DATES → - -13
REVISION DATES (PRELIMINARY STAGE ONLY) SHEET X OF X

TAEMWW Imperial - CCSC Rev. 01/13

30-APR-2014 10:09

P:\dist_04\0413000133_sfobb_maint_warehouse\arch\CADD\Working Drawings\first expedite\a1_10.3_niceqpln.dgn

Dist	COUNTY	LOCATION CODE	POST MILES TOTAL PROJECT	SHEET No.	TOTAL SHEETS
04	Ala	5785		142	371

LICENSED ARCHITECT — DATE 10-25-13

3-24-14
PLANS APPROVAL DATE

LICENSED ARCHITECT — Lani Rhoades — No. C 26695 — 10-31-15 RENEWAL DATE — STATE OF CALIFORNIA

The State of California or its officers or agents shall not be responsible for the accuracy or completeness of scanned copies of this plan sheet.

ACCESSIBILITY DESIGN APPROVAL DOT / DES / OTA
PROJECT ID **0413000133**
Reviewed by: Y. A. WANG
Date: 02-13-14

CALIFORNIA STATE FIRE MARSHAL APPROVED
Approval of this plan does not authorize or approve any omission or deviation from applicable regulations. Final approval is subject to field inspection. One set of approved plans shall be available on the project site at all times.
Reviewed by: INGRID P. ICASIANO
Approval date: 02-11-14

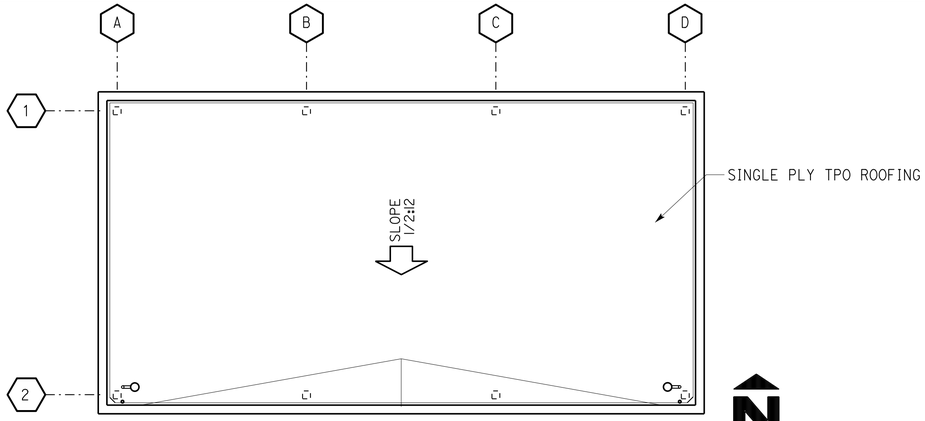

2 ROOF PLAN
SCALE 1/8 " = 1'-0"

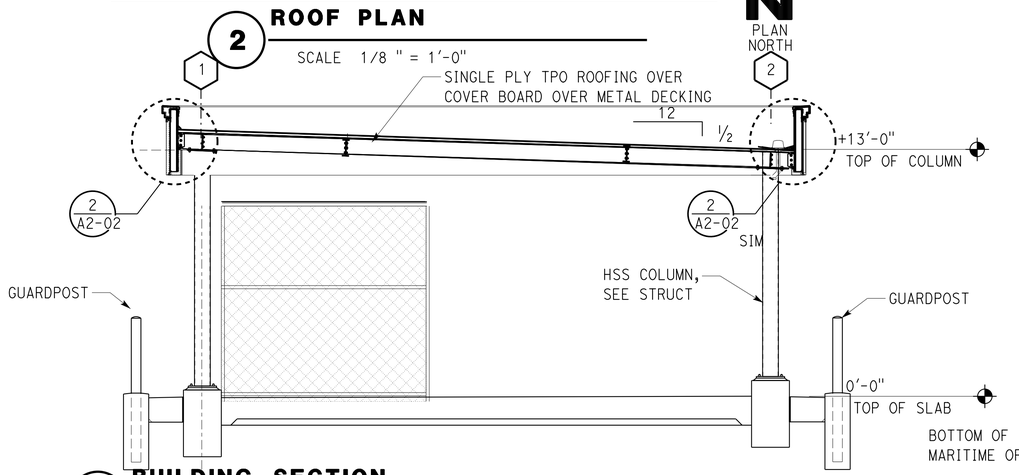

3 BUILDING SECTION
SCALE 1/4" = 1'-0"

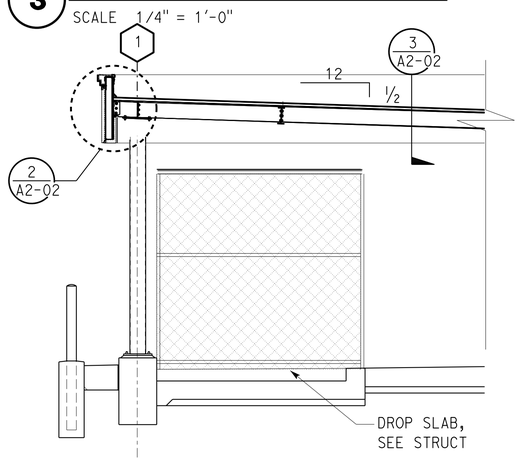

4 BUILDING PARTIAL SECTION
SCALE 1/4" = 1'-0"

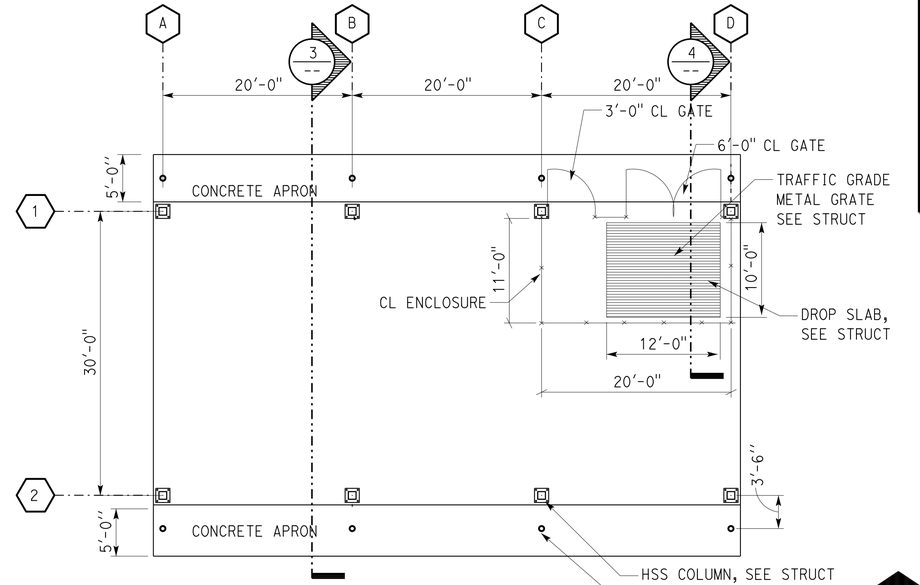

1 FLOOR PLAN
SCALE 1/8" = 1'-0"

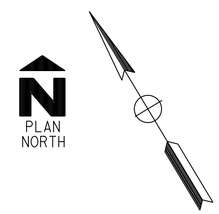

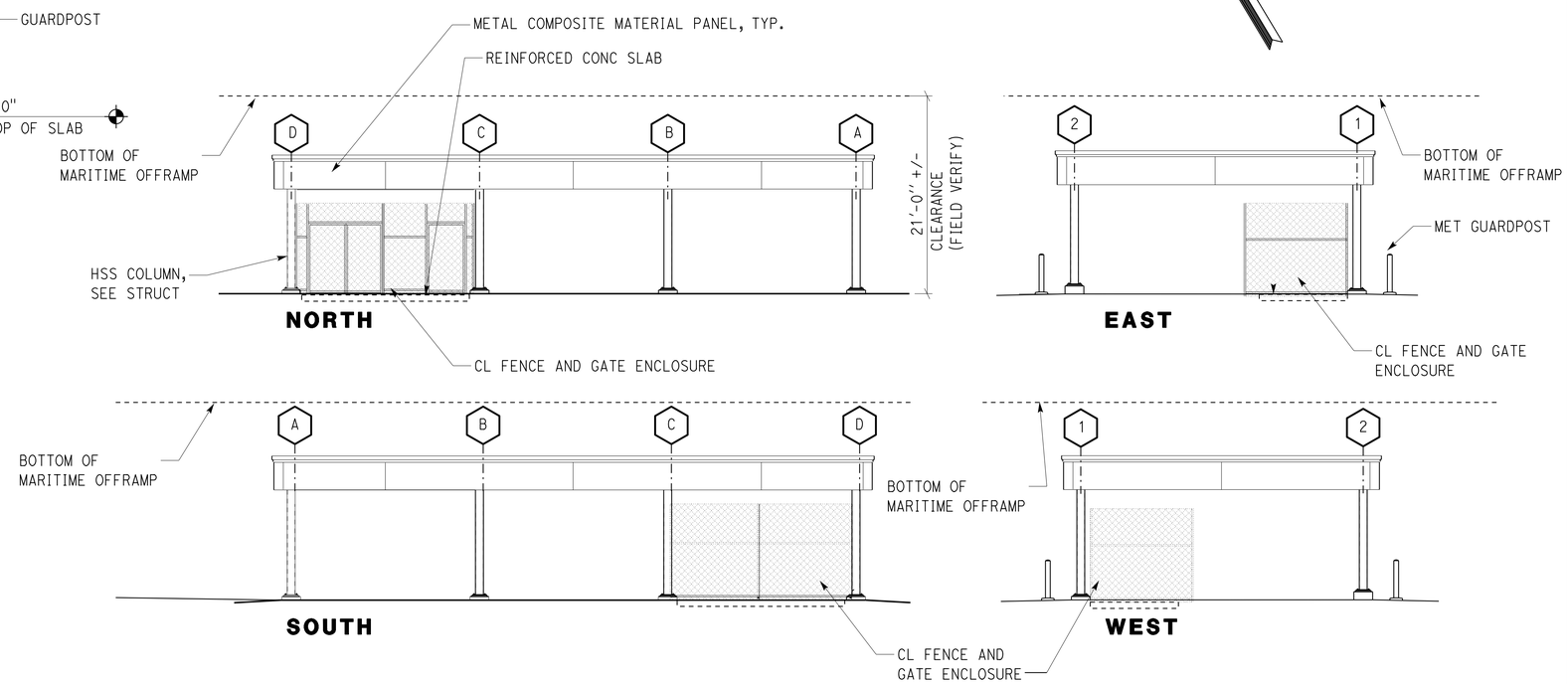

5 BUILDING ELEVATIONS
SCALE 1/8" = 1'-0"

	BY	CHECKED
DESIGN	L Rhoades, R Francisco	Q. Wong, F. Thomas
DETAILS	L Rhoades, J. Kwong	Q. Wong, F. Thomas
QUANTITIES		

STATE OF **CALIFORNIA** DEPARTMENT OF TRANSPORTATION

DIVISION OF ENGINEERING SERVICES
ARCHITECTURAL AND STRUCTURAL DESIGN

BRIDGE No. 33M5785
POST MILE

SFOBB WAREHOUSE
STORAGE CANOPY — FLOOR PLAN

SHEET **A2-01**

TAEMWW Imperial - CCSC Rev. 01/13

ORIGINAL SCALE IN INCHES FOR REDUCED PLANS 0 1 2 3

UNIT: 3598 CONTRACT No.: 014101
PROJECT NUMBER & PHASE: 04130001331

DISREGARD PRINTS BEARING EARLIER REVISION DATES → - -13

REVISION DATES (PRELIMINARY STAGE ONLY) SHEET X OF X

30-APR-2014 10:09

D:\temporary\a2_01.0_flp.dgn

Dist	COUNTY	LOCATION CODE	POST MILES TOTAL PROJECT	SHEET No.	TOTAL SHEETS
04	Ala	5785		143	371

LICENSED ARCHITECT — DATE 10-25-13

3-24-14
PLANS APPROVAL DATE

LICENSED ARCHITECT Lani Rhoades No. C 26695 10-31-15 RENEWAL DATE STATE OF CALIFORNIA

The State of California or its officers or agents shall not be responsible for the accuracy or completeness of scanned copies of this plan sheet.

ACCESSIBILITY DESIGN APPROVAL DOT / DES / OTA
PROJECT ID **0413000133**
Reviewed by: Y. A. WANG
Date: 02-13-14

CALIFORNIA STATE FIRE MARSHAL APPROVED
Approval of this plan does not authorize or approve any omission or deviation from applicable regulations. Final approval is subject to field inspection. One set of approved plans shall be available on the project site at all times.
Reviewed by: INGRID P. ICASIANO
Approval date: 02-11-14

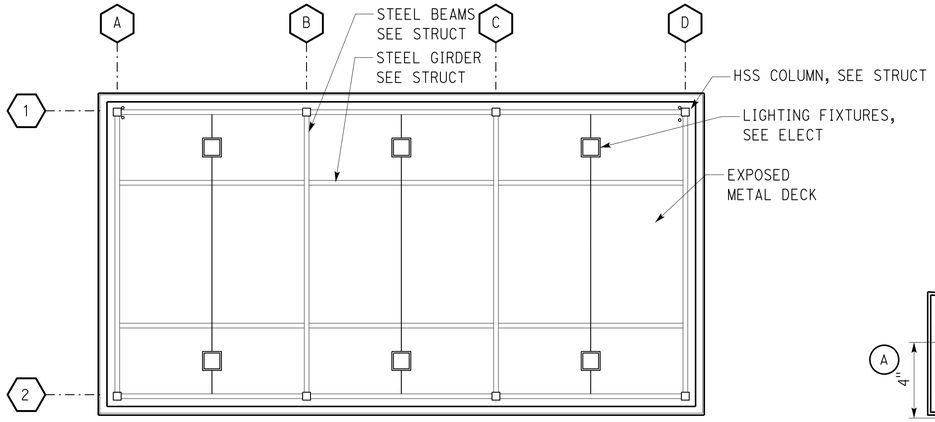

1 REFLECTED CEILING PLAN
SCALE 1/8 " = 1'-0"

PLAN NORTH

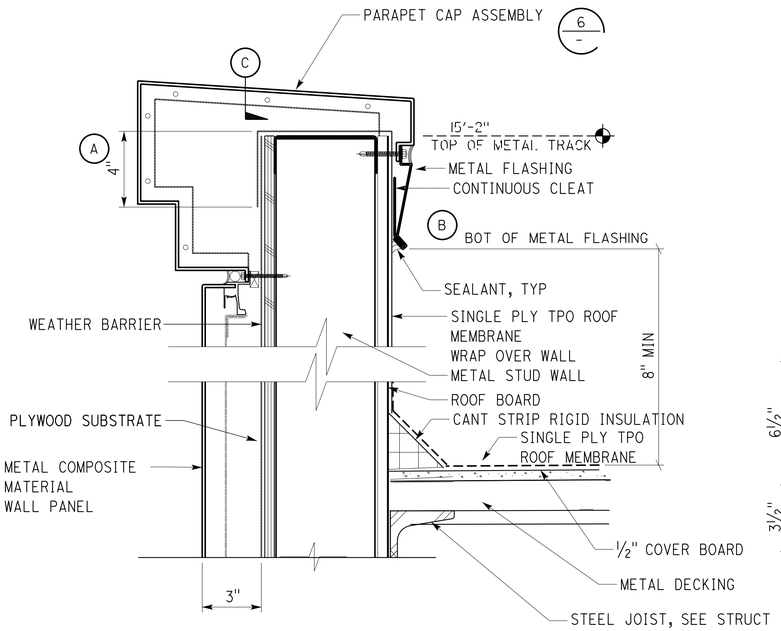

4 PARAPET DETAIL
SCALE 3" = 1'-0"

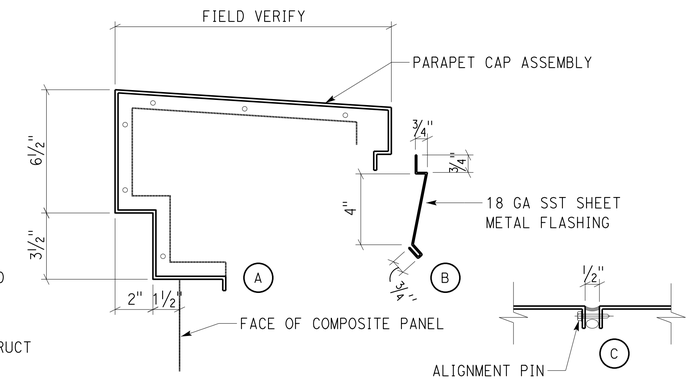

6 PARAPET CAP DETAIL
SCALE 6" = 1'-0"

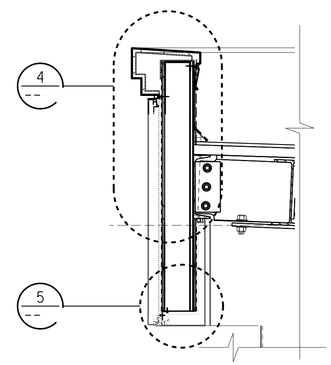

2 PARAPET DETAIL
SCALE 1" = 1'-0"

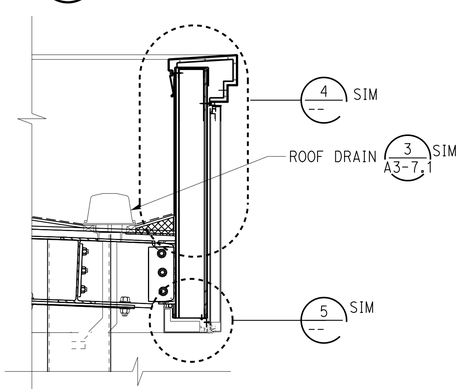

3 PARAPET DETAIL
SCALE 1" = 1'-0"

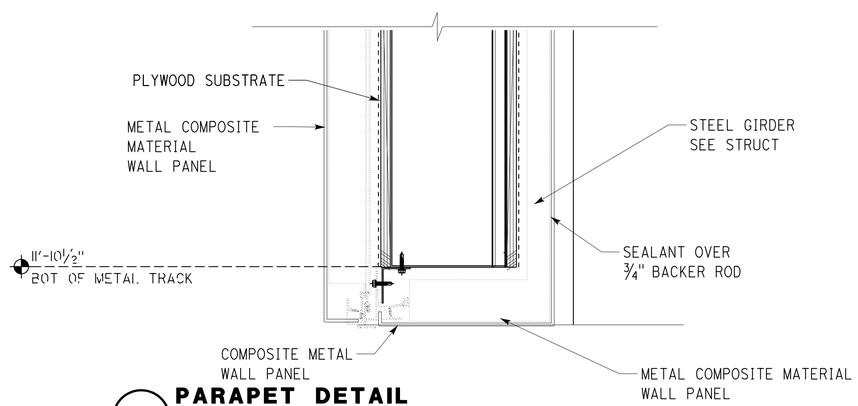

5 PARAPET DETAIL
SCALE 3" = 1'-0"

	BY	CHECKED
DESIGN	L Rhoades, R Francisco	Q. Wong, F. Thomas
DETAILS	L Rhoades, J. Kwong	Q. Wong, F. Thomas
QUANTITIES		

STATE OF CALIFORNIA DEPARTMENT OF TRANSPORTATION

DIVISION OF ENGINEERING SERVICES ARCHITECTURAL AND STRUCTURAL DESIGN

BRIDGE No. 33M5785 POST MILE

SFOBB WAREHOUSE
STORAGE CANOPY
REFLECTED CEILING PLAN AND DETAILS

SHEET **A2-02**

TAEMWW Imperial - CCSC Rev. 01/13

ORIGINAL SCALE IN INCHES FOR REDUCED PLANS 0 1 2 3

UNIT: 3598 CONTRACT No.: 014101
PROJECT NUMBER & PHASE: 04130001331

DISREGARD PRINTS BEARING EARLIER REVISION DATES → - -13

REVISION DATES (PRELIMINARY STAGE ONLY) SHEET X OF X

30-APR-2014 10:09

D:\temporary\a2_02.0_flp.dgn

Dist	COUNTY	LOCATION CODE	POST MILES TOTAL PROJECT	SHEET No.	TOTAL SHEETS
04	Ala	5785		144	371

LICENSED ARCHITECT — DATE 10-25-13

3-24-14
PLANS APPROVAL DATE

LICENSED ARCHITECT — Lani Rhoades No. C 26695 — 10-31-15 RENEWAL DATE — STATE OF CALIFORNIA

The State of California or its officers or agents shall not be responsible for the accuracy or completeness of scanned copies of this plan sheet.

ACCESSIBILITY DESIGN APPROVAL DOT / DES / OTA
PROJECT ID **0413000133**
Reviewed by: Y. A. WANG
Date: 02-13-14

CALIFORNIA STATE FIRE MARSHAL APPROVED
Approval of this plan does not authorize or approve any omission or deviation from applicable regulations. Final approval is subject to field inspection. One set of approved plans shall be available on the project site at all times.
Reviewed by: INGRID P. ICASIANO
Approval date: 02-11-14

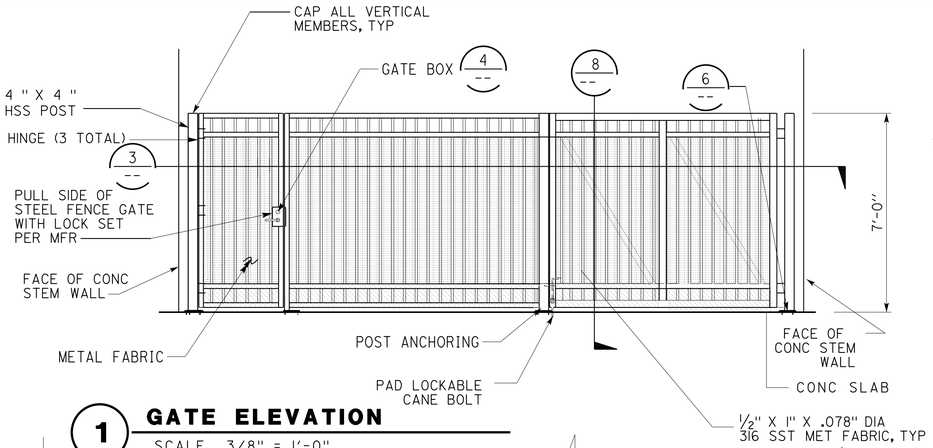

1 GATE ELEVATION
SCALE 3/8" = 1'-0"

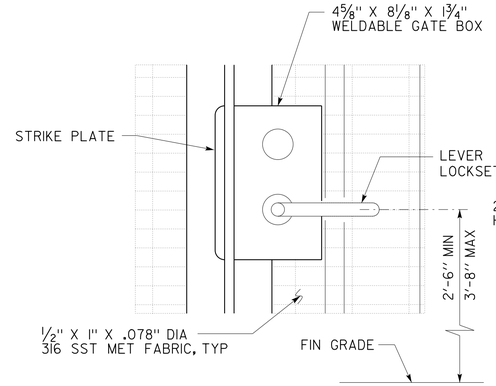

4 GATE BOX (PUSH SIDE)
SCALE 3" = 1'-0"

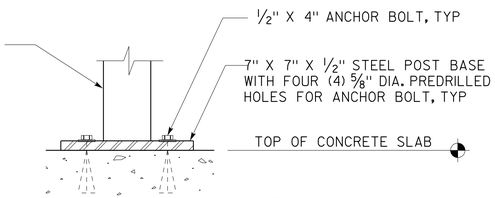

6 ANCHORING DETAIL
SCALE 3" = 1'-0"

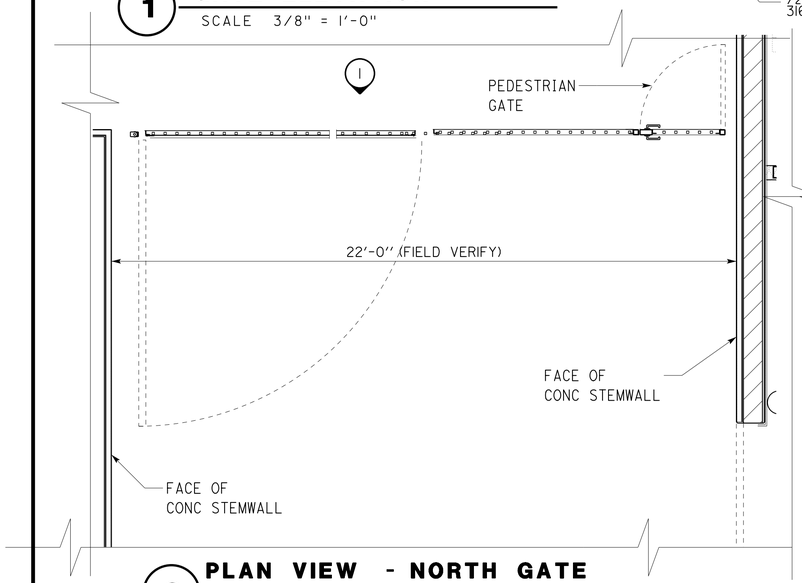

2 PLAN VIEW - NORTH GATE
SCALE 3/8" = 1'-0"

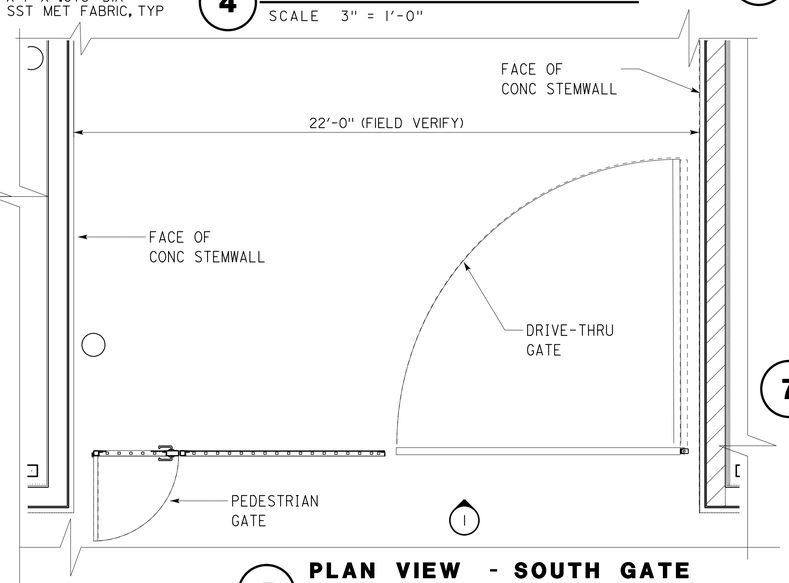

5 PLAN VIEW - SOUTH GATE
SCALE 3/8" = 1'-0"

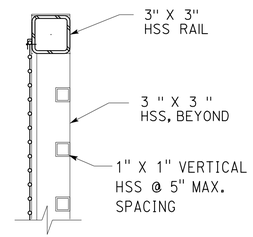

7 VERTICAL RAILS
SCALE 2" = 1'-0"

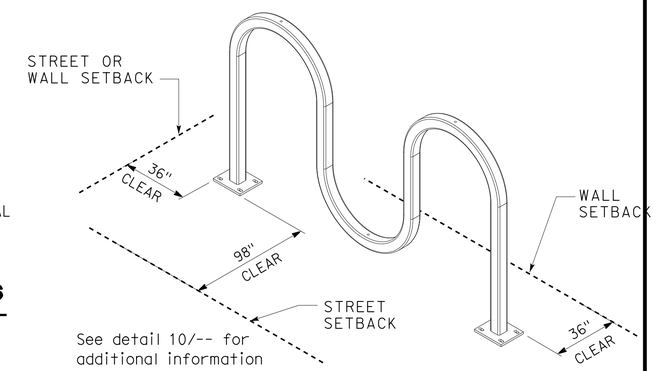

9 BIKE RACKS ISOMETRIC
NOT TO SCALE

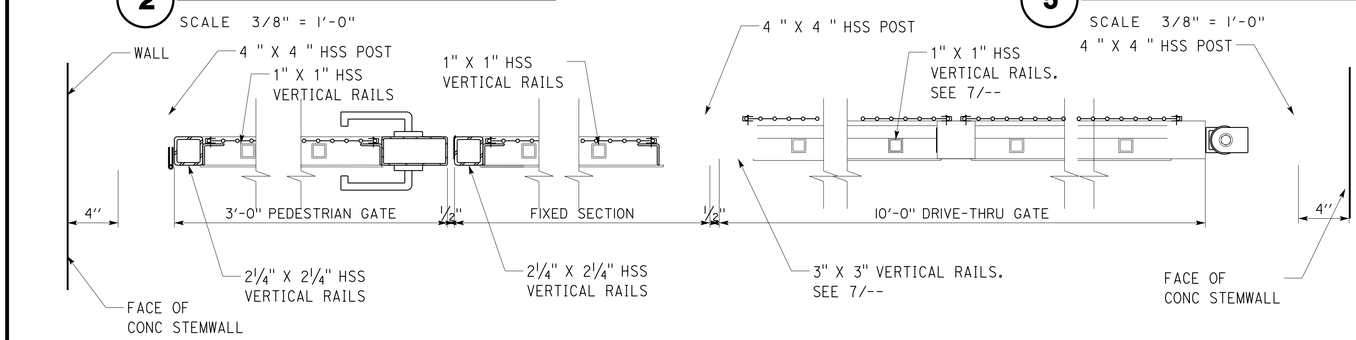

3 DRIVE-THRU GATE & PEDESTRIAN GATE
SCALE 2" = 1'-0"

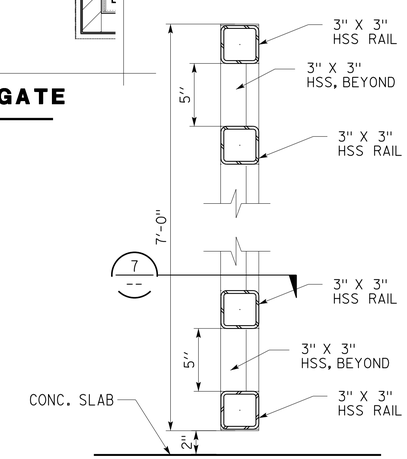

8 HORIZONTAL RAILS
SCALE 2" = 1'-0"

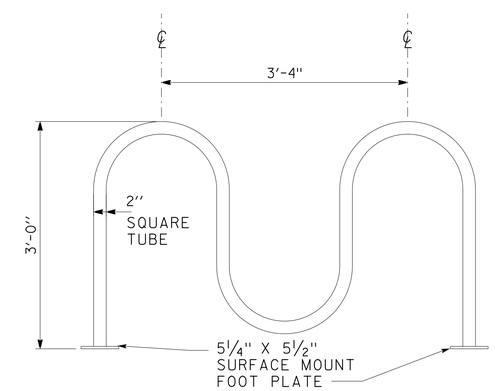

10 BIKE RACKS ELEVATION
SCALE 1" = 1'-0"

DESIGN	BY L Rhoades, R Francisco	CHECKED Q. Wong, F. Thomas
DETAILS	BY L Rhoades, J. Kwong	CHECKED Q. Wong, F. Thomas
QUANTITIES	BY	CHECKED

STATE OF CALIFORNIA
DEPARTMENT OF TRANSPORTATION

DIVISION OF ENGINEERING SERVICES
ARCHITECTURAL AND STRUCTURAL DESIGN

BRIDGE No. 33M5785
POST MILE

SFOBB WAREHOUSE
DETAILS — ORNAMENTAL STEEL FENCES AND GATES

SHEET **A3-1.1**

TAEMWW Imperial - CCSC Rev. 01/13

ORIGINAL SCALE IN INCHES FOR REDUCED PLANS 0 1 2 3

UNIT: 3598 CONTRACT No.: 014101
PROJECT NUMBER & PHASE: 04130001331

DISREGARD PRINTS BEARING EARLIER REVISION DATES → - -13

REVISION DATES (PRELIMINARY STAGE ONLY) — SHEET X OF X

30-APR-2014 10:09

P:\dist_04\0413000133_sfobb_maint_warehouse\arch\CADD\Working Drawings\first expedite\a3_01.1 misc site.dgn

Dist	COUNTY	LOCATION CODE	POST MILES TOTAL PROJECT	SHEET No.	TOTAL SHEETS
04	Ala	5785		145	371

LICENSED ARCHITECT — DATE 10-25-13

3-24-14
PLANS APPROVAL DATE

LICENSED ARCHITECT Lani Rhoades No. C 26695 10-31-15 RENEWAL DATE STATE OF CALIFORNIA

The State of California or its officers or agents shall not be responsible for the accuracy or completeness of scanned copies of this plan sheet.

ACCESSIBILITY DESIGN APPROVAL DOT / DES / OTA
PROJECT ID **0413000133**
Reviewed by: Y. A. WANG
Date: 02-13-14

CALIFORNIA STATE FIRE MARSHAL APPROVED
Approval of this plan does not authorize or approve any omission or deviation from applicable regulations. Final approval is subject to field inspection. One set of approved plans shall be available on the project site at all times.
Reviewed by: INGRID P. ICASIANO
Approval date: 02-11-14

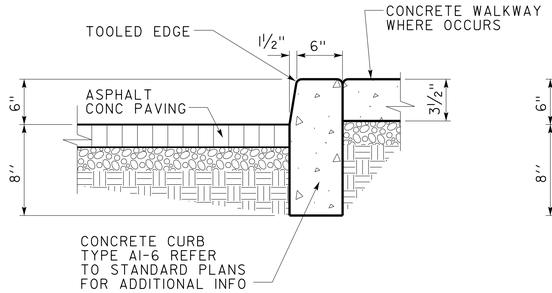

1 CONCRETE CURB AT WALKWAY
NO SCALE

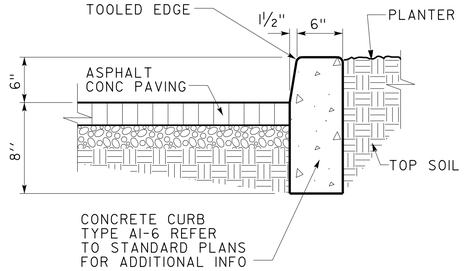

4 CONCRETE CURB AT PLANTER
NO SCALE

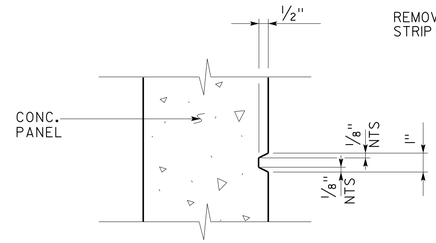

7 VERTICAL RUSTICATION STRIP
SCALE 3" = 1'-0"

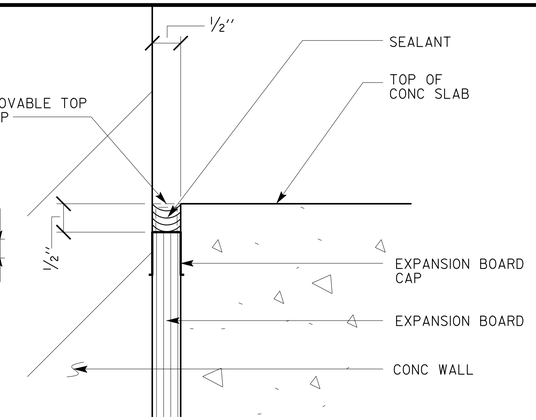

10 EXPANSION JOINT (EXTERIOR)
NO SCALE

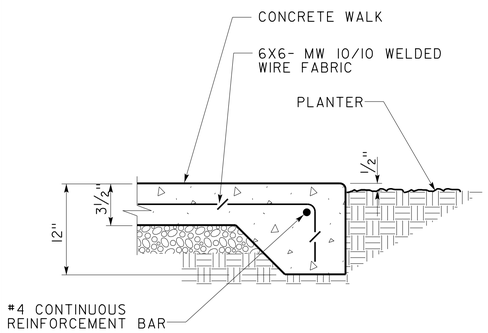

2 CONCRETE WALKWAY
NO SCALE

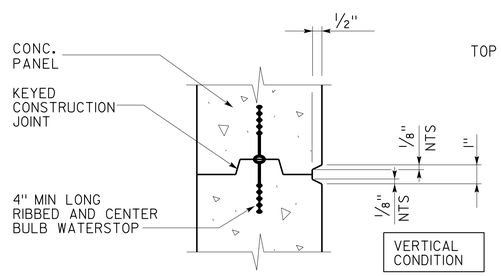

5 CONSTRUCTION JOINT DETAIL
SCALE 3" = 1'-0"

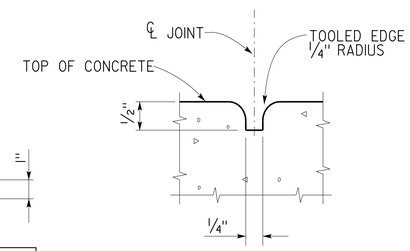

8 TOOLED JOINT
NO SCALE

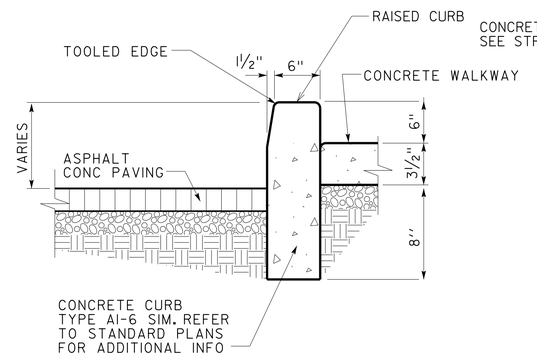

11 RAISED CURB AT WALKWAY
NO SCALE

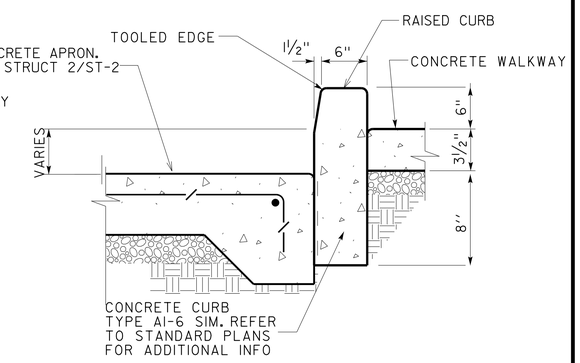

13 RAISED CURB AT WALKWAY
NO SCALE

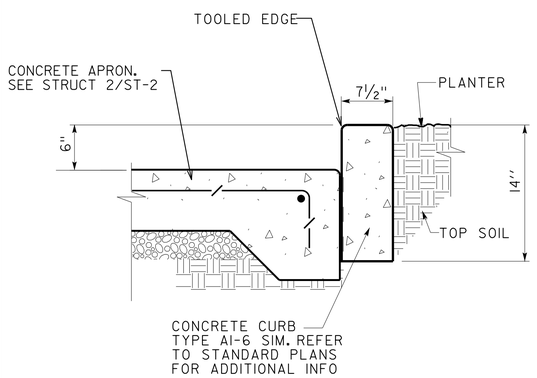

3 CONCRETE CURB AT PLANTER
SCALE 1" = 1'-0"

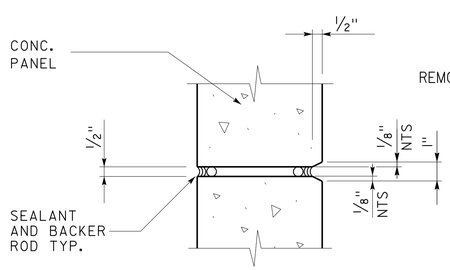

6 PANEL JOINT DETAIL
SCALE 3" = 1'-0"

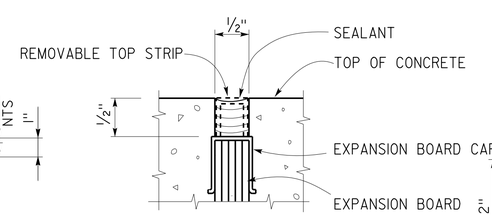

9 EXPANSION JOINT
NO SCALE

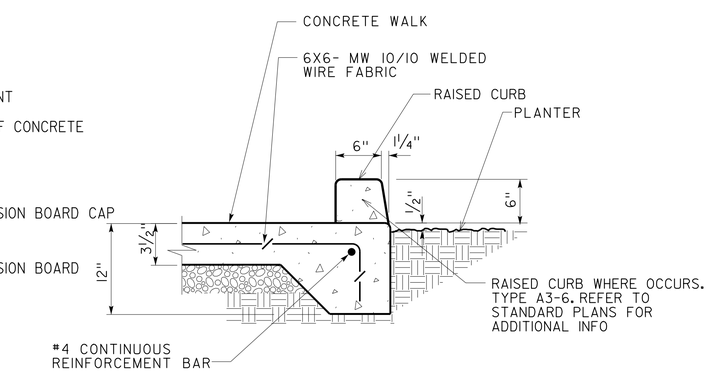

12 RAISED CURB AT WALKWAY
NO SCALE

	BY	CHECKED
DESIGN	L Rhoades, R Francisco	Q. Wong, F. Thomas
DETAILS	L Rhoades, J. Kwong	Q. Wong, F. Thomas
QUANTITIES		

STATE OF CALIFORNIA
DEPARTMENT OF TRANSPORTATION

DIVISION OF ENGINEERING SERVICES
ARCHITECTURAL AND STRUCTURAL DESIGN

BRIDGE No. 33M5785
POST MILE

SFOBB WAREHOUSE
DETAILS — CONCRETE DETAILS

SHEET **A3-2.1**

TAEMWW Imperial - CCSC Rev. 01/13

ORIGINAL SCALE IN INCHES FOR REDUCED PLANS 0 1 2 3

UNIT: 3598 CONTRACT No.: 014101
PROJECT NUMBER & PHASE: 04130001331

DISREGARD PRINTS BEARING EARLIER REVISION DATES → - -13

REVISION DATES (PRELIMINARY STAGE ONLY) — SHEET X OF X

30-APR-2014 10:09

P:\dist_04\0413000133_sfobb_maint_warehouse\arch\CADD\Working Drawings\first expedite\a3_02.1 conc.dgn

Dist	COUNTY	LOCATION CODE	POST MILES TOTAL PROJECT	SHEET No.	TOTAL SHEETS
04	Ala	5785		146	371

LICENSED ARCHITECT — DATE 10-25-13

3-24-14
PLANS APPROVAL DATE

LICENSED ARCHITECT Lani Rhoades No. C 26695 10-31-15 RENEWAL DATE STATE OF CALIFORNIA

The State of California or its officers or agents shall not be responsible for the accuracy or completeness of scanned copies of this plan sheet.

ACCESSIBILITY DESIGN APPROVAL DOT / DES / OTA
PROJECT ID **0413000133**
Reviewed by: Y. A. WANG
Date: 02-13-14

CALIFORNIA STATE FIRE MARSHAL APPROVED
Approval of this plan does not authorize or approve any omission or deviation from applicable regulations. Final approval is subject to field inspection. One set of approved plans shall be available on the project site at all times.
Reviewed by: INGRID P. ICASIANO
Approval date: 02-11-14

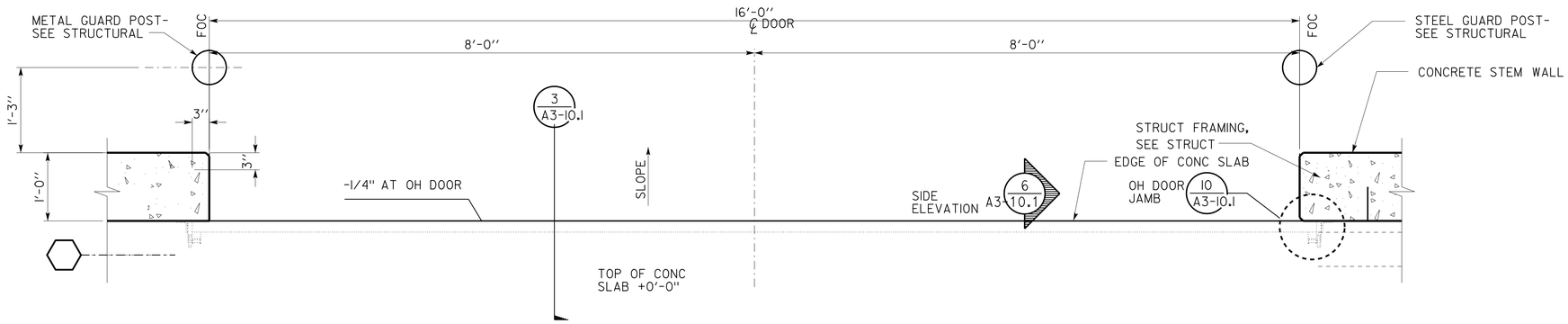

1 CONC WALL OPENING AT OH DOOR

SCALE 1" = 1'-0"

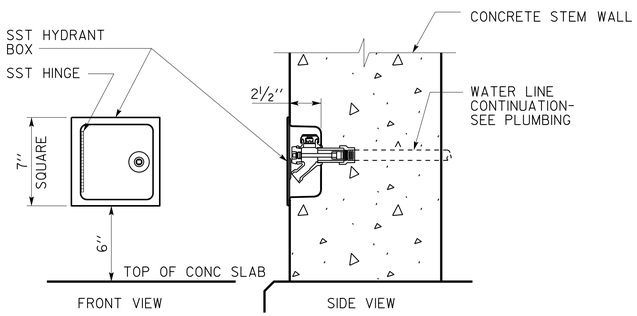

2 HYDRANT BOX

SCALE 2" = 1'-0"

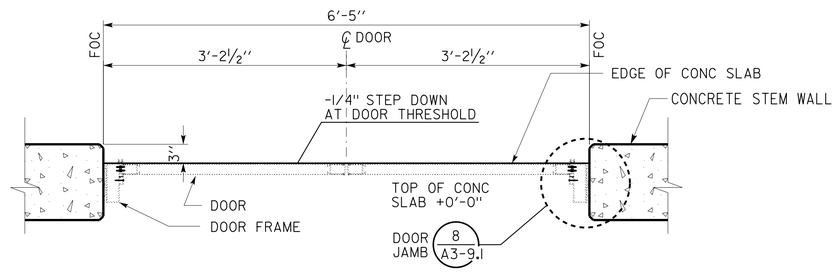

4 CONC WALL OPENING AT DOUBLE DOOR

SCALE 1" = 1'-0"

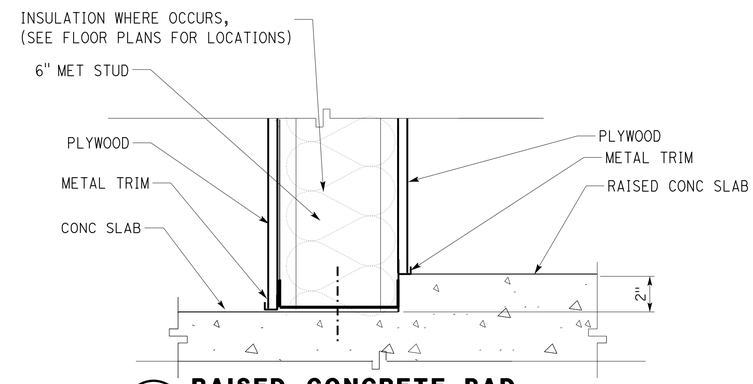

6 RAISED CONCRETE PAD

SCALE 3" = 1'-0"

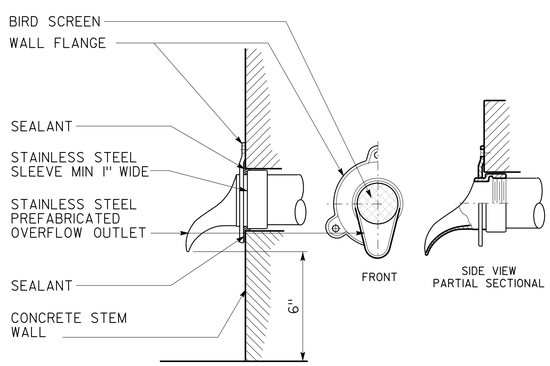

3 PREFAB OVERFLOW OUTLET

NO SCALE

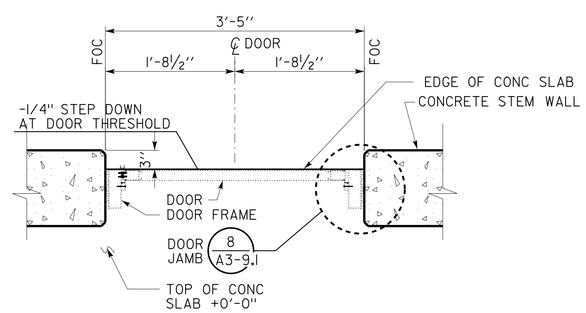

5 CONC WALL OPENING AT SINGLE DOOR

SCALE 1" = 1'-0"

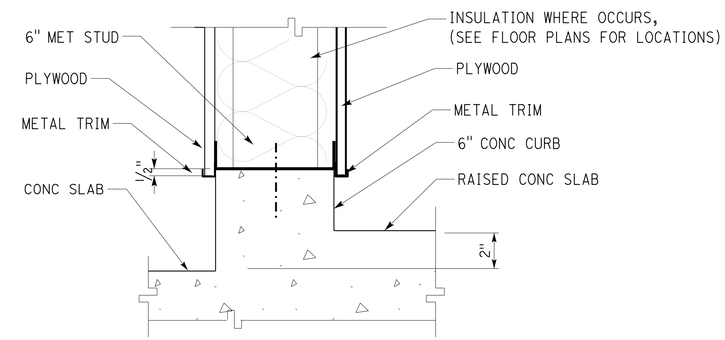

7 RAISED CONCRETE PAD

SCALE 3" = 1'-0"

	BY	CHECKED
DESIGN	L Rhoades, R Francisco	Q. Wong, F. Thomas
DETAILS	L Rhoades, J. Kwong	Q. Wong, F. Thomas
QUANTITIES		

STATE OF **CALIFORNIA** DEPARTMENT OF TRANSPORTATION

DIVISION OF ENGINEERING SERVICES **ARCHITECTURAL AND STRUCTURAL DESIGN**

BRIDGE No. 33M5785 — POST MILE

SFOBB WAREHOUSE — DETAILS — CONCRETE DETAILS

SHEET **A3-2.2**

TAEMWW Imperial - CCSC Rev. 01/13

ORIGINAL SCALE IN INCHES FOR REDUCED PLANS 0 1 2 3

UNIT: 3598 CONTRACT No.: 014101
PROJECT NUMBER & PHASE: 04130001331

DISREGARD PRINTS BEARING EARLIER REVISION DATES → - -13

REVISION DATES (PRELIMINARY STAGE ONLY) SHEET X OF X

30-APR-2014 10:09

D:\temporary\a3_02.2 conc.dgn

Dist	COUNTY	LOCATION CODE	POST MILES TOTAL PROJECT	SHEET No.	TOTAL SHEETS
04	Ala	5785		147	371

LICENSED ARCHITECT — DATE 10-25-13

3-24-14
PLANS APPROVAL DATE

LICENSED ARCHITECT Lani Rhoades No. C 26695 10-31-15 RENEWAL DATE STATE OF CALIFORNIA

The State of California or its officers or agents shall not be responsible for the accuracy or completeness of scanned copies of this plan sheet.

ACCESSIBILITY DESIGN APPROVAL DOT / DES / OTA
PROJECT ID **0413000133**
Reviewed by: Y. A. WANG
Date: 02-13-14

CALIFORNIA STATE FIRE MARSHAL APPROVED
Approval of this plan does not authorize or approve any omission or deviation from applicable regulations. Final approval is subject to field inspection. One set of approved plans shall be available on the project site at all times.
Reviewed by: INGRID P. ICASIANO
Approval date: 02-11-14

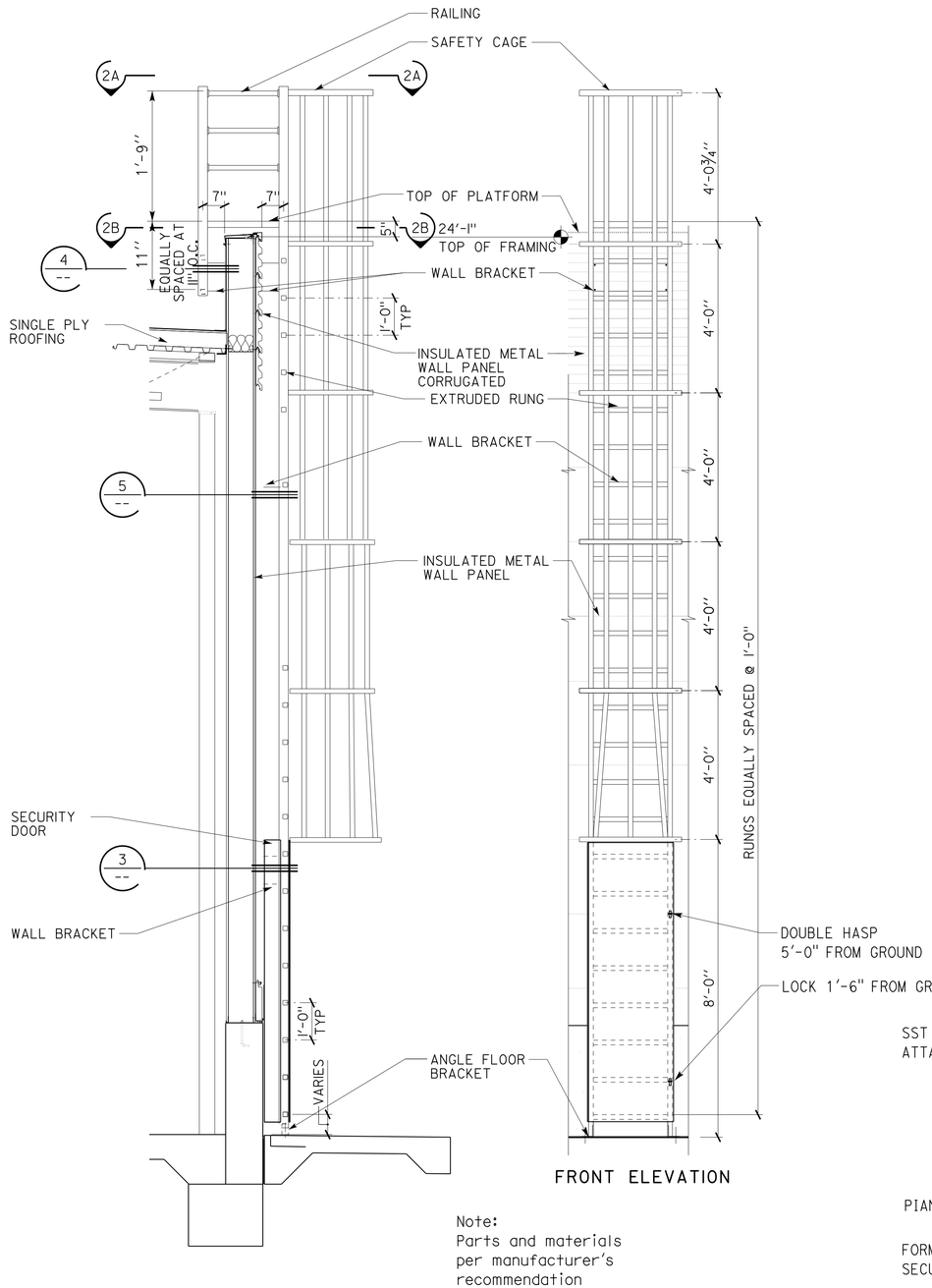

Note:
Parts and materials per manufacturer's recommendation

1 METAL LADDER TO ROOF

SCALE 1/2" = 1'-0"

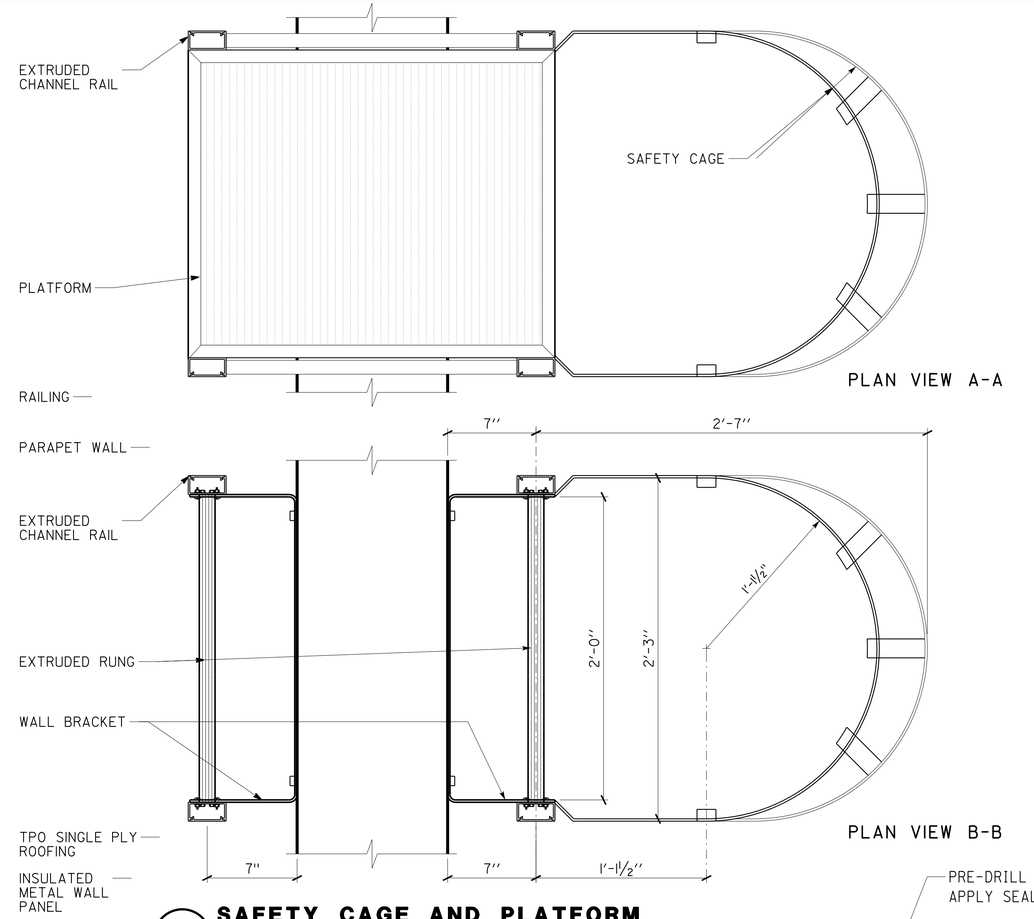

2 SAFETY CAGE AND PLATFORM

SCALE 2" = 1'-0"

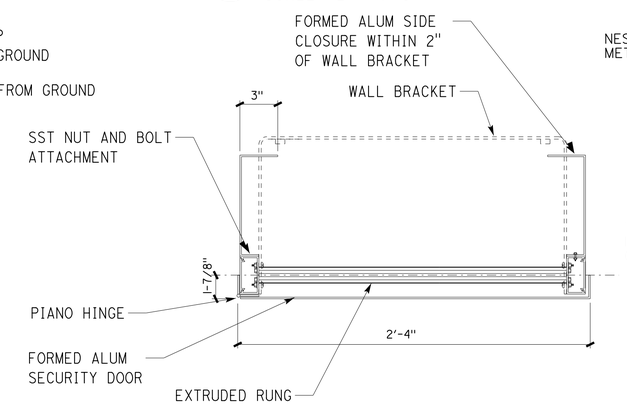

3 SECURITY DOOR

SCALE 2 " = 1'-0"

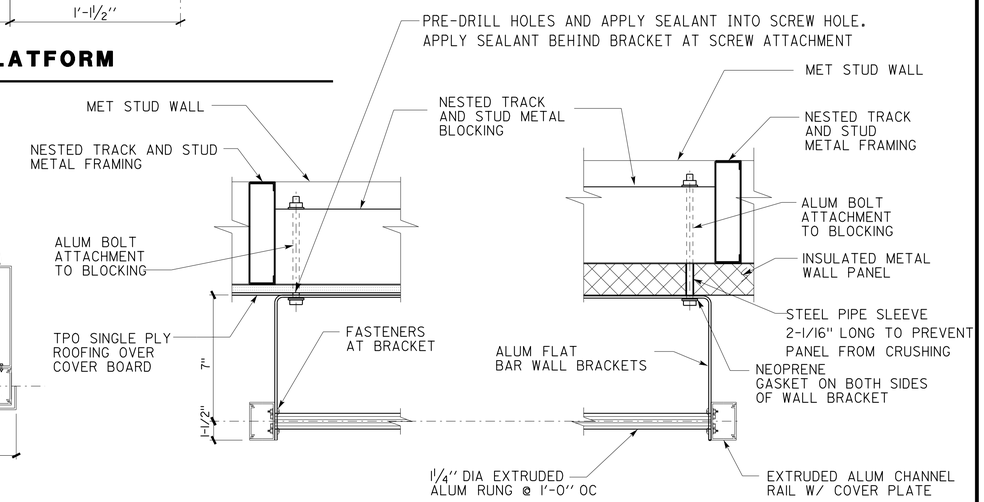

4 RUNG AND WALL BRACKET

SCALE 2" = 1'-0"

5 RUNG AND WALL BRACKET

SCALE 2" = 1'-0"

NOTE:

NEOPRENE TAPE TO BE APPLIED BETWEEN DISSIMLAR MATERIALS

	BY	CHECKED
DESIGN	L Rhoades, R Francisco	Q. Wong, F. Thomas
DETAILS	L Rhoades, J. Kwong	Q. Wong, F. Thomas
QUANTITIES		

STATE OF CALIFORNIA
DEPARTMENT OF TRANSPORTATION

DIVISION OF ENGINEERING SERVICES
ARCHITECTURAL AND STRUCTURAL DESIGN

BRIDGE No. 33M5785
POST MILE

SFOBB WAREHOUSE
DETAILS — METAL LADDER DETAILS

SHEET A3-3.1

UNIT: 3598 CONTRACT No.: 014101
PROJECT NUMBER & PHASE: 04130001331

DISREGARD PRINTS BEARING EARLIER REVISION DATES → - -13

REVISION DATES (PRELIMINARY STAGE ONLY) SHEET X OF X

ORIGINAL SCALE IN INCHES FOR REDUCED PLANS 0 1 2 3

TAEMWW Imperial - CCSC Rev. 01/13

30-APR-2014 10:09

D:\temporary\a3_03.1 ladder.dgn

Dist	COUNTY	LOCATION CODE	POST MILES TOTAL PROJECT	SHEET No.	TOTAL SHEETS
04	Ala	5785		148	371

LICENSED ARCHITECT — DATE 10-25-13

3-24-14
PLANS APPROVAL DATE

LICENSED ARCHITECT Lani Rhoades No. C 26695 10-31-15 RENEWAL DATE STATE OF CALIFORNIA

The State of California or its officers or agents shall not be responsible for the accuracy or completeness of scanned copies of this plan sheet.

ACCESSIBILITY DESIGN APPROVAL DOT / DES / OTA
PROJECT ID **0413000133**
Reviewed by: Y. A. WANG
Date: 02-13-14

CALIFORNIA STATE FIRE MARSHAL APPROVED
Approval of this plan does not authorize or approve any omission or deviation from applicable regulations. Final approval is subject to field inspection. One set of approved plans shall be available on the project site at all times.
Reviewed by: INGRID P. ICASIANO
Approval date: 02-11-14

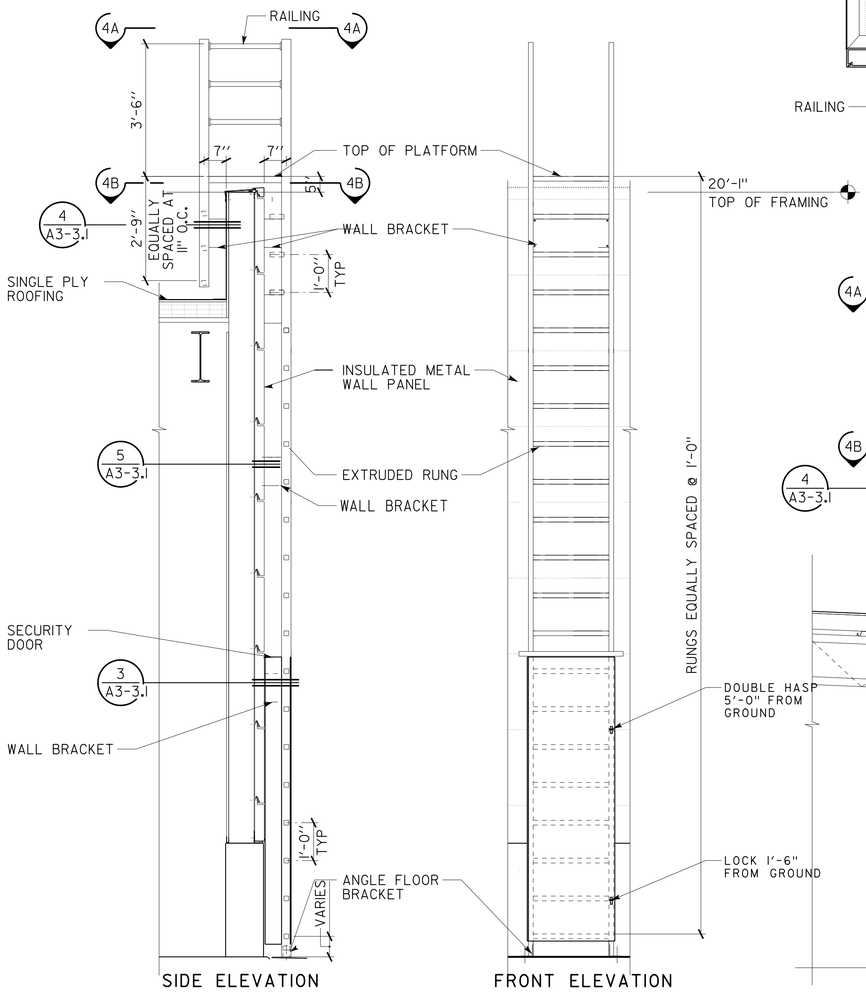

1 METAL LADDER TO ROOF

SCALE 1/2 " = 1'-0"

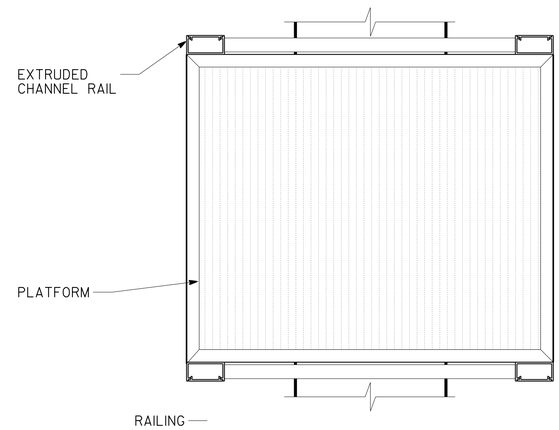

PLAN VIEW A-A

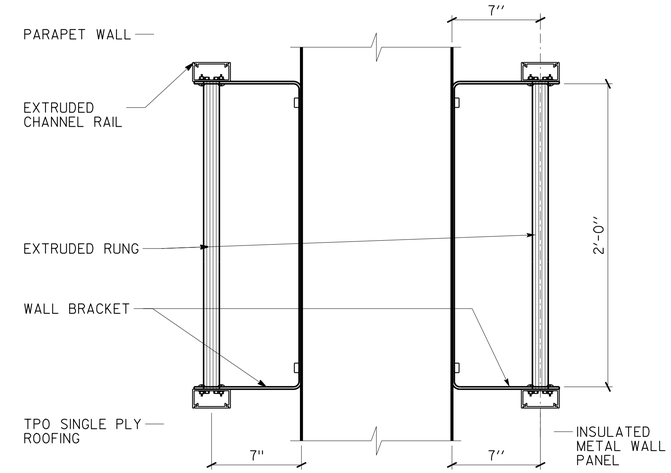

PLAN VIEW B-B

4 PLATFORM

SCALE 2" = 1'-0"

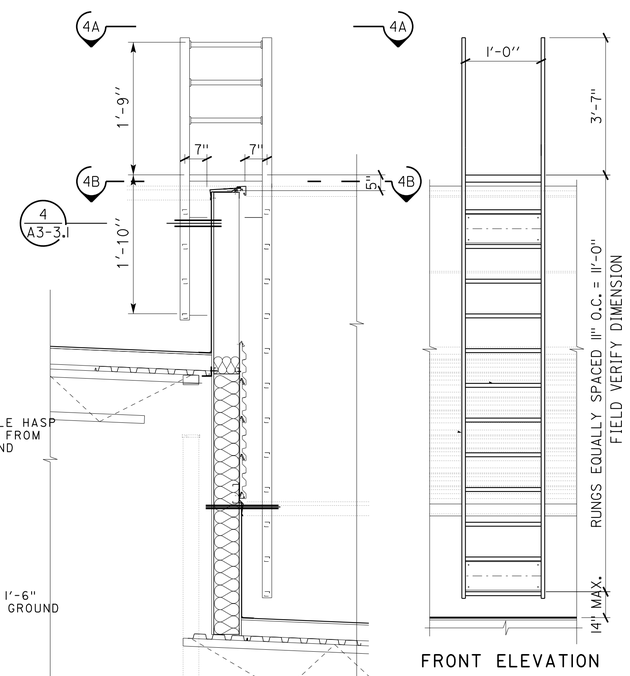

2 METAL LADDER TO ROOF

SCALE 1/2" = 1'-0"

Note:
Parts and materials per manufacture recommendation

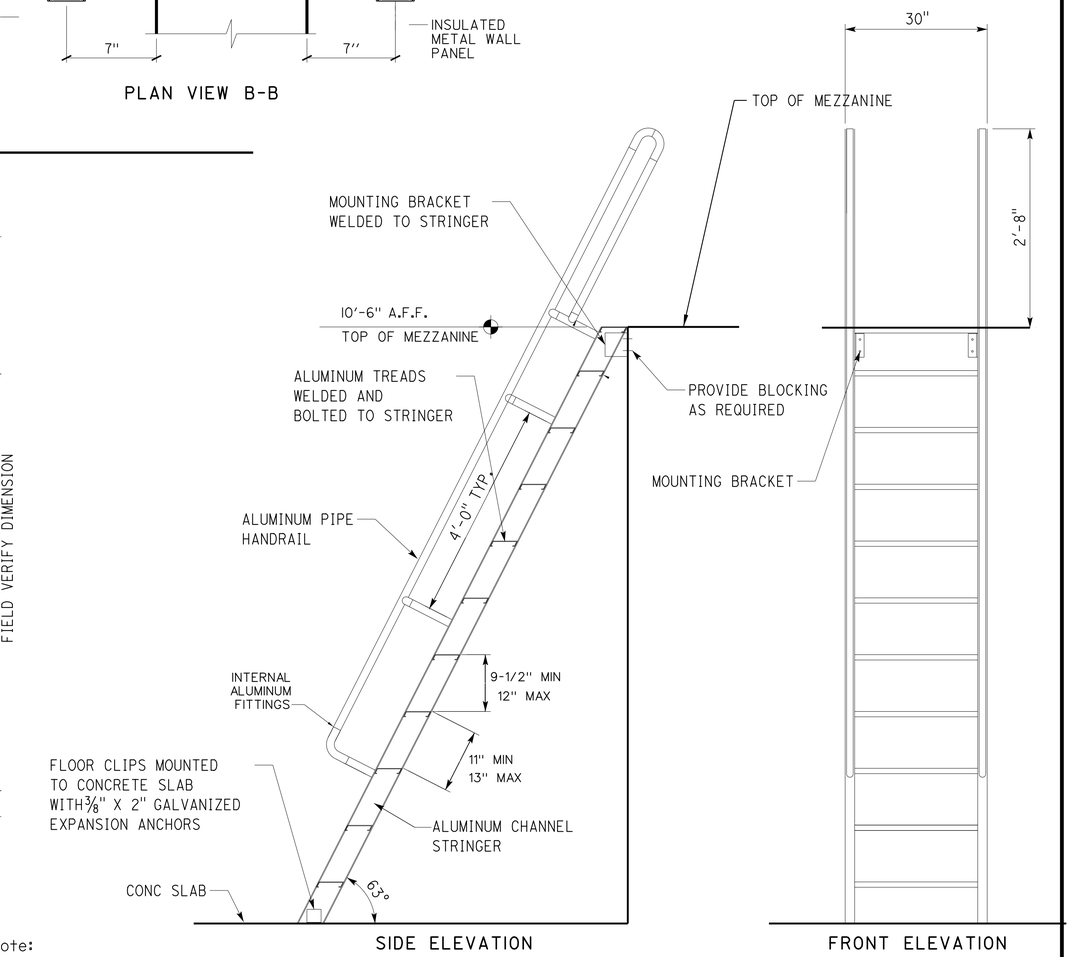

3 SHIPS LADDER TO MEZZANINE

SCALE 3/4" = 1'-0"

	BY	CHECKED
DESIGN	L Rhoades, R Francisco	Q. Wong, F. Thomas
DETAILS	L Rhoades, J. Kwong	Q. Wong, F. Thomas
QUANTITIES		

STATE OF CALIFORNIA DEPARTMENT OF TRANSPORTATION

DIVISION OF ENGINEERING SERVICES ARCHITECTURAL AND STRUCTURAL DESIGN

BRIDGE No. 33M5785
POST MILE

SFOBB WAREHOUSE
DETAILS — METAL LADDER AND SHIPS LADDER DETAILS

SHEET **A3-3.2**

ORIGINAL SCALE IN INCHES FOR REDUCED PLANS 0 1 2 3

UNIT: 3598 CONTRACT No.: 014101
PROJECT NUMBER & PHASE: 04130001331

DISREGARD PRINTS BEARING EARLIER REVISION DATES →
REVISION DATES (PRELIMINARY STAGE ONLY) - -13
SHEET X OF X

TAEMWW Imperial - CCSC Rev. 01/13

30-APR-2014 10:09
D:\temporary\a3_03.2 ladder.dgn

Dist	COUNTY	LOCATION CODE	POST MILES TOTAL PROJECT	SHEET No.	TOTAL SHEETS
04	Ala	5785		149	371

LICENSED ARCHITECT — DATE 10-25-13

3-24-14
PLANS APPROVAL DATE

LICENSED ARCHITECT — Lani Rhoades — No. C 26695 — 10-31-15 RENEWAL DATE — STATE OF CALIFORNIA

The State of California or its officers or agents shall not be responsible for the accuracy or completeness of scanned copies of this plan sheet.

ACCESSIBILITY DESIGN APPROVAL DOT / DES / OTA
PROJECT ID **0413000133**
Reviewed by: Y. A. WANG
Date: 02-13-14

CALIFORNIA STATE FIRE MARSHAL APPROVED
Approval of this plan does not authorize or approve any omission or deviation from applicable regulations. Final approval is subject to field inspection. One set of approved plans shall be available on the project site at all times.
Reviewed by: INGRID P. ICASIANO
Approval date: 02-11-14

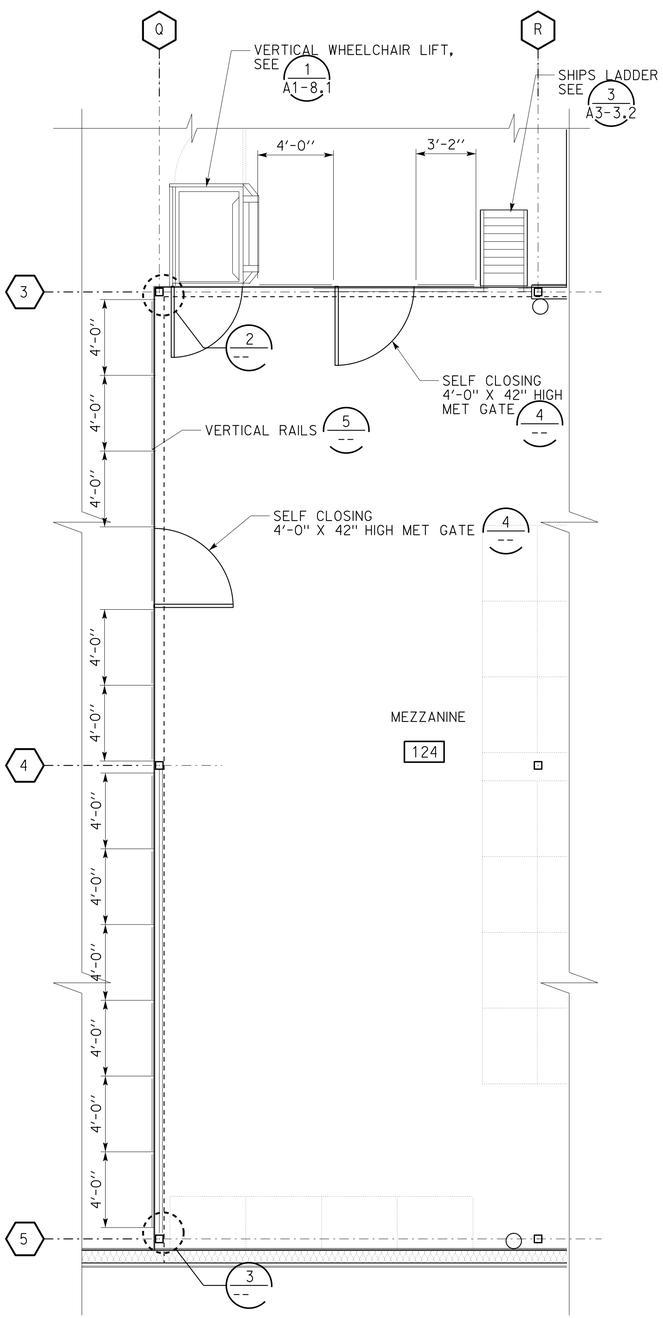

1 MEZZANINE TUBE RAILING (GUARDRAIL) PLANS
SCALE 1/4" = 1'-0"

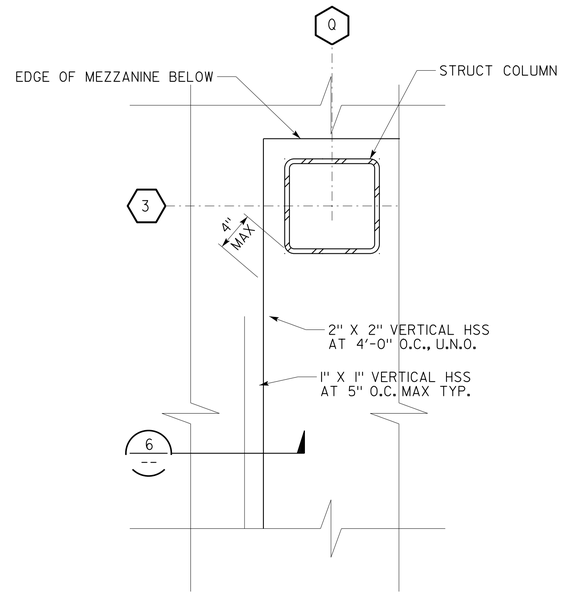

2 GUARDRAIL DETAIL
SCALE 3" = 1'-0"

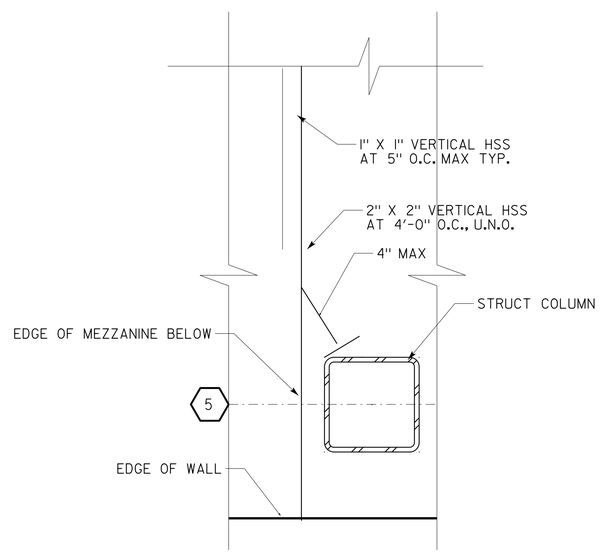

3 GUARDRAIL
SCALE 3" = 1'-0"

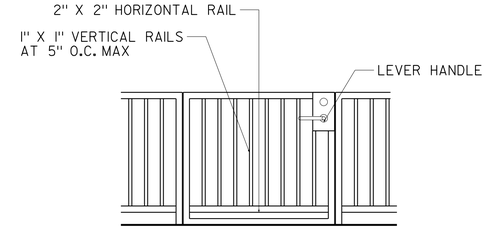

4 METAL GATE
SCALE 1/2" = 1'-0"

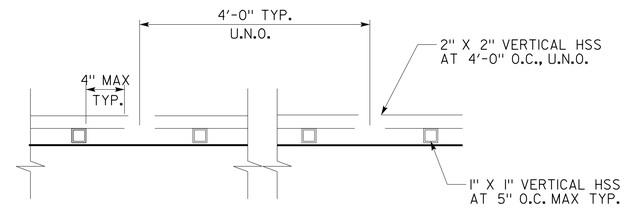

5 VERTICAL RAIL
SCALE 3" = 1'-0"

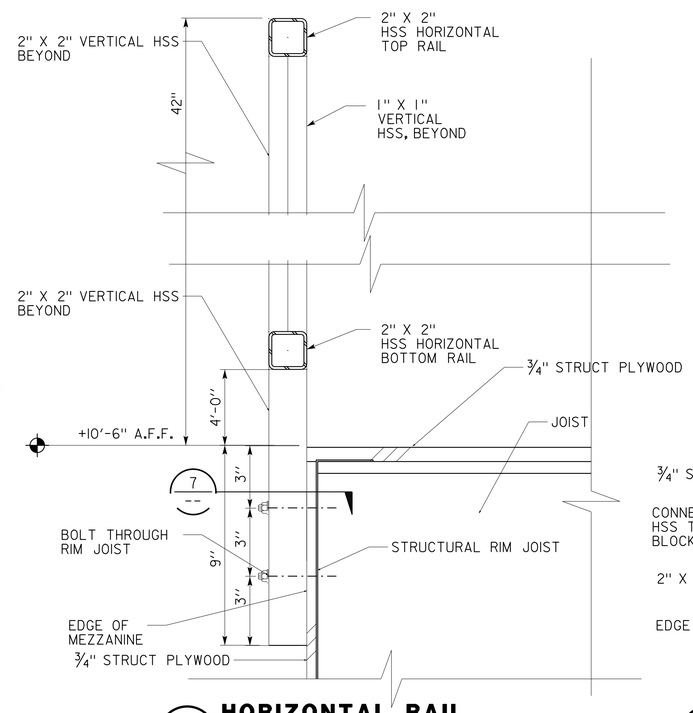

6 HORIZONTAL RAIL
SCALE 3" = 1'-0"

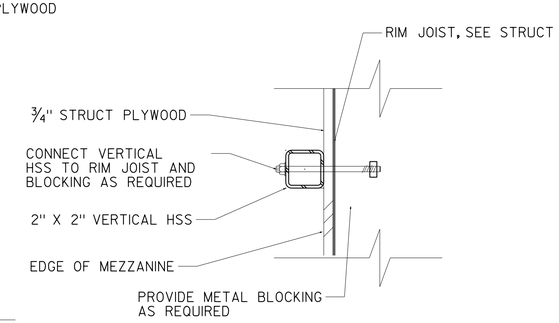

7 VERTICAL RAIL ATTACHMENT
SCALE 3" = 1'-0"

DESIGN SUPERVISOR
DESIGN ARCHITECT
DESIGNER
DRAWN BY
CHECKED BY:
STRUCTURAL REVIEW

SHEET LEGEND
A-1 ARCHITECTURAL ST-1 STRUCTURAL
M-1 MECHANICAL EE-1 ELECTRICAL
MP-1 PLUMBING SS-1 SANITARY

STATE OF CALIFORNIA
DEPARTMENT OF TRANSPORTATION

DIVISION OF ENGINEERING SERVICES
ARCHITECTURAL AND STRUCTURAL DESIGN

BRIDGE No. 33M5785
POST MILE

SFOBB WAREHOUSE
ABBREVIATIONS SYMBOLS
MISCELLANEOUS METAL DETAILS

SHEET A3-3.3

TAEMWW Imperial - CCSC Rev. 01/13

ORIGINAL SCALE IN INCHES FOR REDUCED PLANS 0 1 2 3

UNIT: 3598 CONTRACT No.: 014101
PROJECT NUMBER & PHASE: 04130001331

DISREGARD PRINTS BEARING EARLIER REVISION DATES → - -13

REVISION DATES (PRELIMINARY STAGE ONLY) SHEET X OF X

30-APR-2014 10:09

P:\dist_04\0413000133_sfobb_maint_warehouse\arch\CADD\Working Drawings\first expedite\a3_03.3_misc_metal_details.dgn

Dist	COUNTY	LOCATION CODE	POST MILES TOTAL PROJECT	SHEET No.	TOTAL SHEETS
04	Ala	5785		150	371

LICENSED ARCHITECT — DATE 10-25-13

3-24-14
PLANS APPROVAL DATE

LICENSED ARCHITECT Lani Rhoades No. C 26695 10-31-15 RENEWAL DATE STATE OF CALIFORNIA

The State of California or its officers or agents shall not be responsible for the accuracy or completeness of scanned copies of this plan sheet.

ACCESSIBILITY DESIGN APPROVAL DOT / DES / OTA
PROJECT ID **0413000133**
Reviewed by: Y. A. WANG
Date: 02-13-14

CALIFORNIA STATE FIRE MARSHAL APPROVED
Approval of this plan does not authorize or approve any omission or deviation from applicable regulations. Final approval is subject to field inspection. One set of approved plans shall be available on the project site at all times.
Reviewed by: INGRID P. ICASIANO
Approval date: 02-11-14

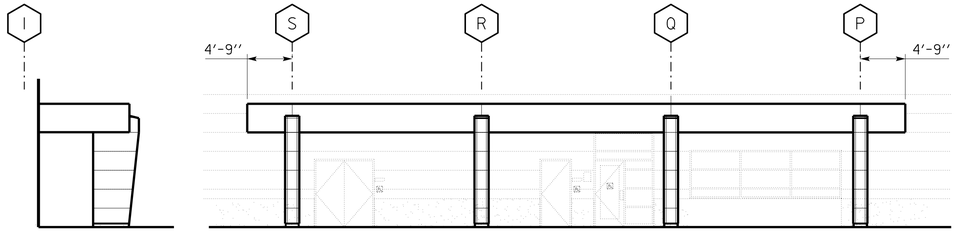

A EAST SIDE VIEW

B FRONT VIEW

1 ELEVATIONS

SCALE 1/8" = 1'-0"

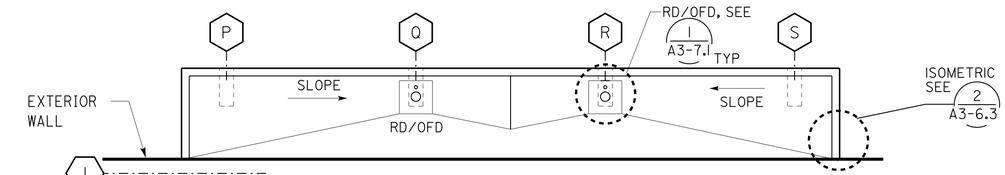

3 ENTRANCE CANOPY ROOF PLAN

SCALE 1/8" = 1'-0"

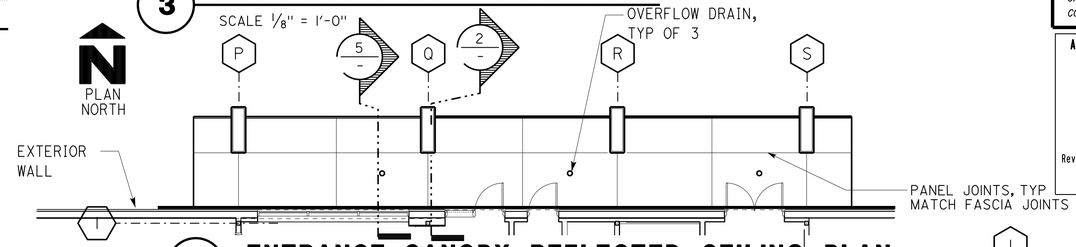

4 ENTRANCE CANOPY REFLECTED CEILING PLAN

SCALE 1/8" = 1'-0"

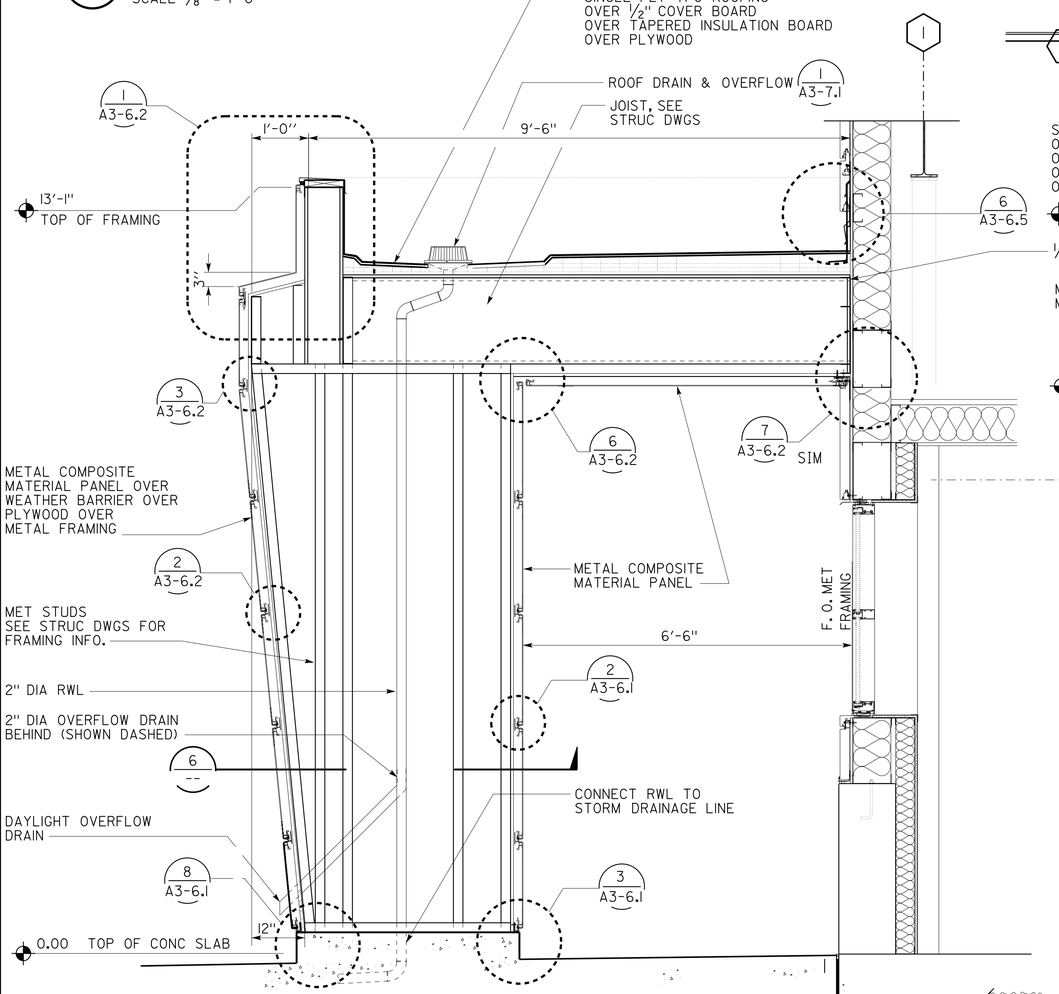

2 CANOPY SECTION

SCALE 3/4 " = 1'-0"

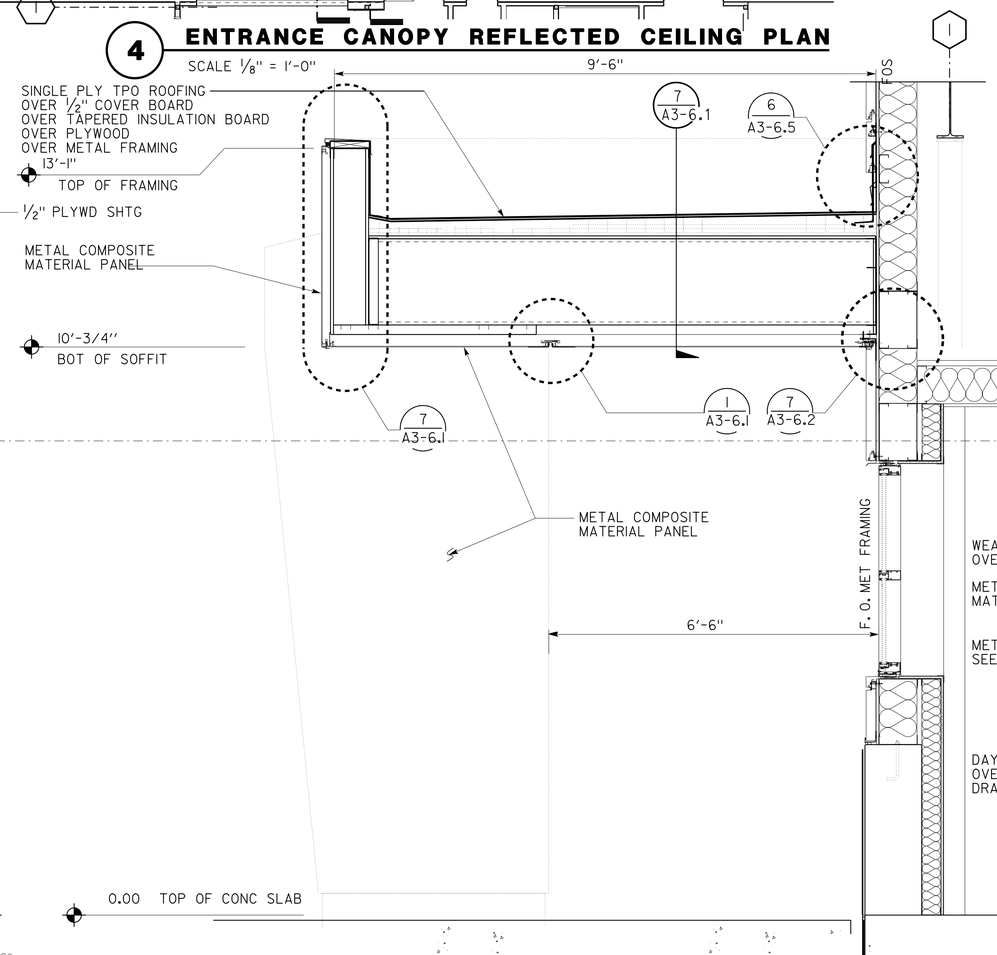

5 CANOPY SECTION

SCALE 3/4 " = 1'-0"

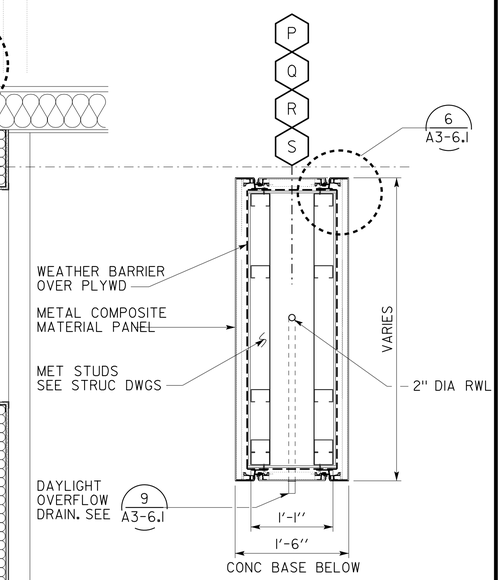

6 COLUMN LAYOUT

SCALE 1" = 1'-0"

	BY	CHECKED
DESIGN	L Rhoades, R Francisco	Q. Wong, F. Thomas
DETAILS	L Rhoades, J. Kwong	Q. Wong, F. Thomas
QUANTITIES		

STATE OF CALIFORNIA DEPARTMENT OF TRANSPORTATION

DIVISION OF ENGINEERING SERVICES ARCHITECTURAL AND STRUCTURAL DESIGN

BRIDGE No. 33M5785 POST MILE

SFOBB WAREHOUSE

DETAILS — ENTRANCE CANOPY

SHEET A3-4.1

TAEMWW Imperial - CCSC Rev. 01/13

ORIGINAL SCALE IN INCHES FOR REDUCED PLANS 0 1 2 3

UNIT: 3598 CONTRACT No.: 014101
PROJECT NUMBER & PHASE: 04130001331

DISREGARD PRINTS BEARING EARLIER REVISION DATES → - -13

REVISION DATES (PRELIMINARY STAGE ONLY) SHEET X OF X

30-APR-2014 10:09

D:\temporary\a3_04.1 entr canopy.dgn

Dist	COUNTY	LOCATION CODE	POST MILES TOTAL PROJECT	SHEET No.	TOTAL SHEETS
04	Ala	5785		151	371

LICENSED ARCHITECT — DATE 10-25-13

3-24-14
PLANS APPROVAL DATE

LICENSED ARCHITECT Lani Rhoades No. C 26695 10-31-15 RENEWAL DATE STATE OF CALIFORNIA

The State of California or its officers or agents shall not be responsible for the accuracy or completeness of scanned copies of this plan sheet.

ACCESSIBILITY DESIGN APPROVAL DOT / DES / OTA
PROJECT ID **0413000133**
Reviewed by: Y. A. WANG
Date: 02-13-14

CALIFORNIA STATE FIRE MARSHAL APPROVED
Approval of this plan does not authorize or approve any omission or deviation from applicable regulations. Final approval is subject to field inspection. One set of approved plans shall be available on the project site at all times.
Reviewed by: INGRID P. ICASIANO
Approval date: 02-11-14

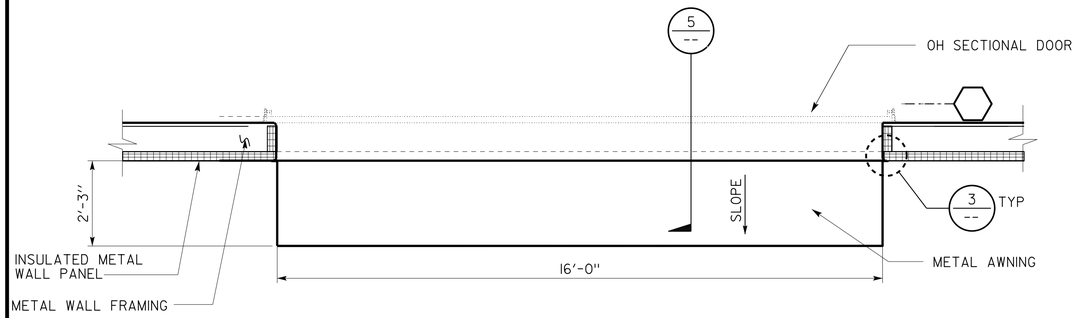

1 METAL AWNING FOR OH DOOR (PLAN)

SCALE 1/2" = 1'-0"

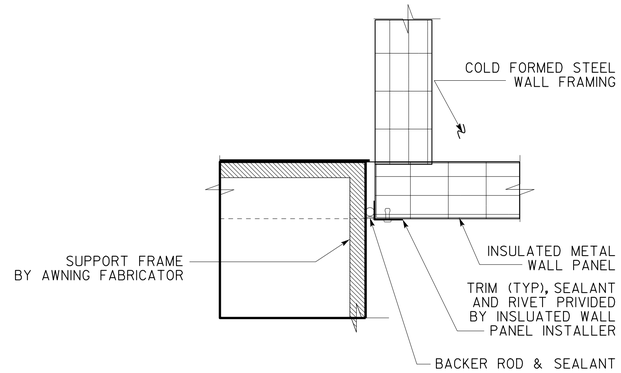

3 AWNING SIDE AT METAL PANEL

SCALE 3" = 1'-0"

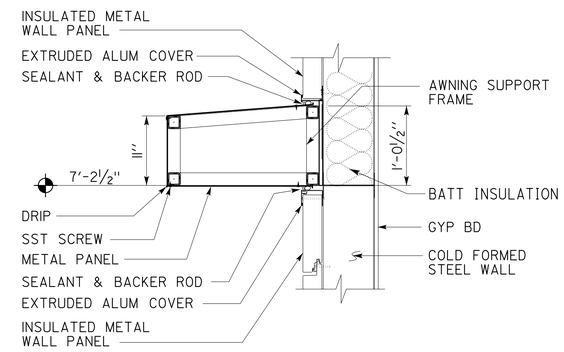

4 AWNING AT WALL

SCALE 1" = 1'-0"

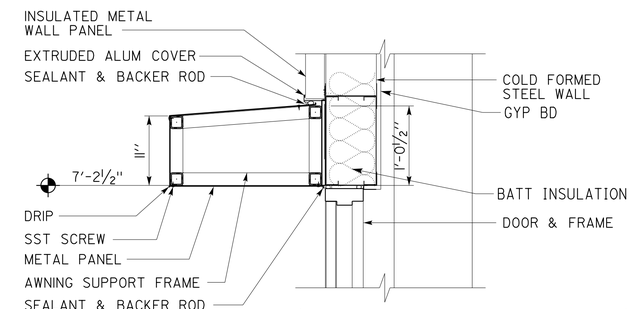

Attachment points for awning frame
A. Double metal studs 16" oc
B. Steel HSS beam (where occurs)

6 AWNING AT DOOR

SCALE 1" = 1'-0"

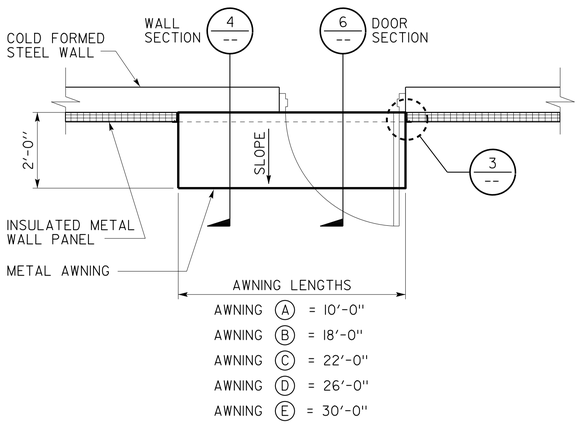

2 METAL AWNING FOR DOOR (PLAN)

SCALE 1/2" = 1'-0"

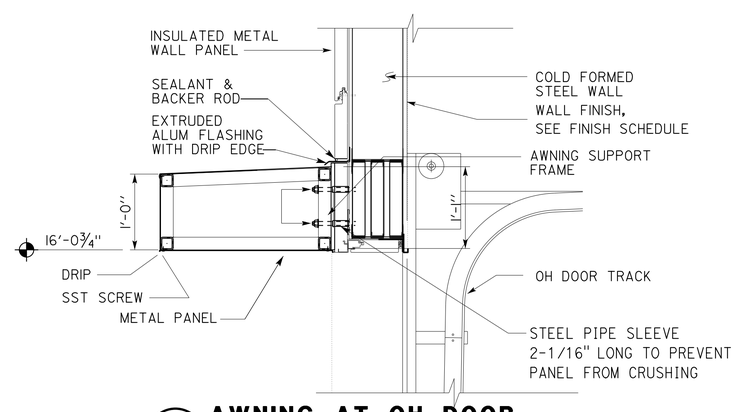

5 AWNING AT OH DOOR

SCALE 1" = 1'-0"

	BY	CHECKED
DESIGN	L Rhoades, R Francisco	Q. Wong, F. Thomas
DETAILS	L Rhoades, J. Kwong	Q. Wong, F. Thomas
QUANTITIES		

STATE OF CALIFORNIA DEPARTMENT OF TRANSPORTATION

DIVISION OF ENGINEERING SERVICES ARCHITECTURAL AND STRUCTURAL DESIGN

BRIDGE No. 33M5785
POST MILE

SFOBB WAREHOUSE
DETAILS — DOOR AWNINGS

SHEET A3-5.1

TAEMWW Imperial - CCSC Rev. 01/13

ORIGINAL SCALE IN INCHES FOR REDUCED PLANS 0 1 2 3

UNIT: 3598 CONTRACT No.: 014101
PROJECT NUMBER & PHASE: 04130001331

DISREGARD PRINTS BEARING EARLIER REVISION DATES → REVISION DATES (PRELIMINARY STAGE ONLY) - -13

SHEET X OF X

30-APR-2014 10:10

D:\temporary\a3_05.1 awning.dgn

Dist	COUNTY	LOCATION CODE	POST MILES TOTAL PROJECT	SHEET No.	TOTAL SHEETS
04	Ala	5785		152	371

LICENSED ARCHITECT — DATE 10-25-13

3-24-14
PLANS APPROVAL DATE

LICENSED ARCHITECT Lani Rhoades No. C 26695 10-31-15 RENEWAL DATE STATE OF CALIFORNIA

The State of California or its officers or agents shall not be responsible for the accuracy or completeness of scanned copies of this plan sheet.

ACCESSIBILITY DESIGN APPROVAL DOT / DES / OTA
PROJECT ID 0413000133
Reviewed by: Y. A. WANG
Date: 02-13-14

CALIFORNIA STATE FIRE MARSHAL APPROVED
Approval of this plan does not authorize or approve any omission or deviation from applicable regulations. Final approval is subject to field inspection. One set of approved plans shall be available on the project site at all times.
Reviewed by: INGRID P. ICASIANO
Approval date: 02-11-14

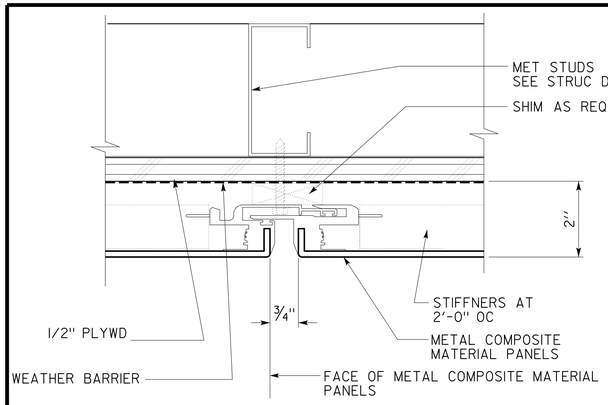

1 VERTICAL PANEL JOINT
SCALE 6" = 1'-0"

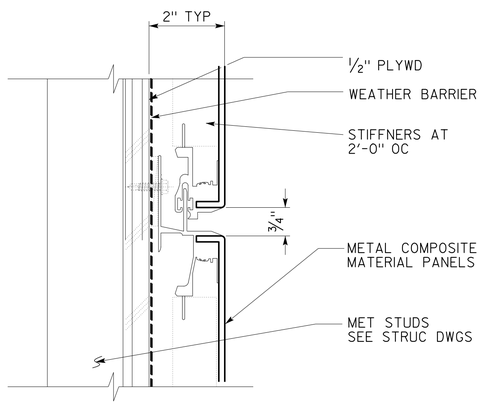

2 HORIZONTAL PANEL JOINT
SCALE 6" = 1'-0"

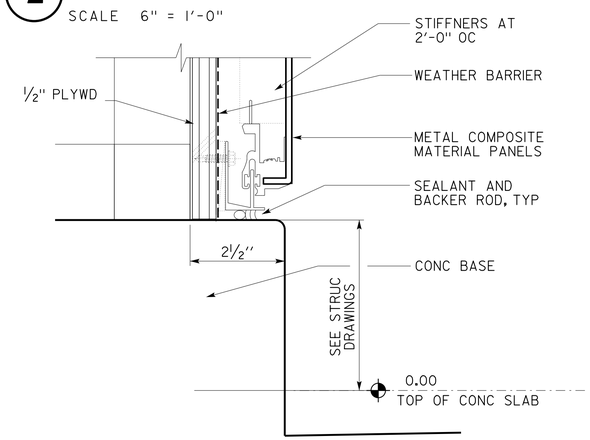

3 PANEL JOINT @ CONC BASE
SCALE 6" = 1'-0"

4 NOT USED
SCALE 6" = 1'-0"

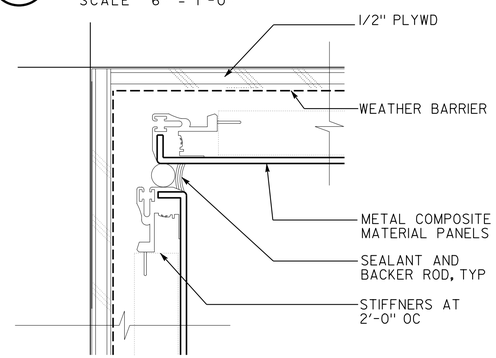

5 INSIDE CORNER
SCALE 6" : 1'-0"

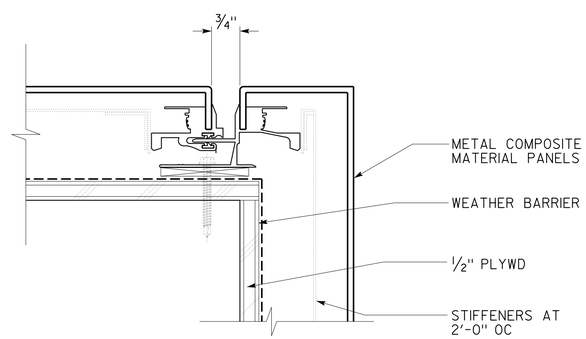

6 PANEL JOINT AT OUTSIDE COLUMN CORNER
SCALE 6" = 1'-0"

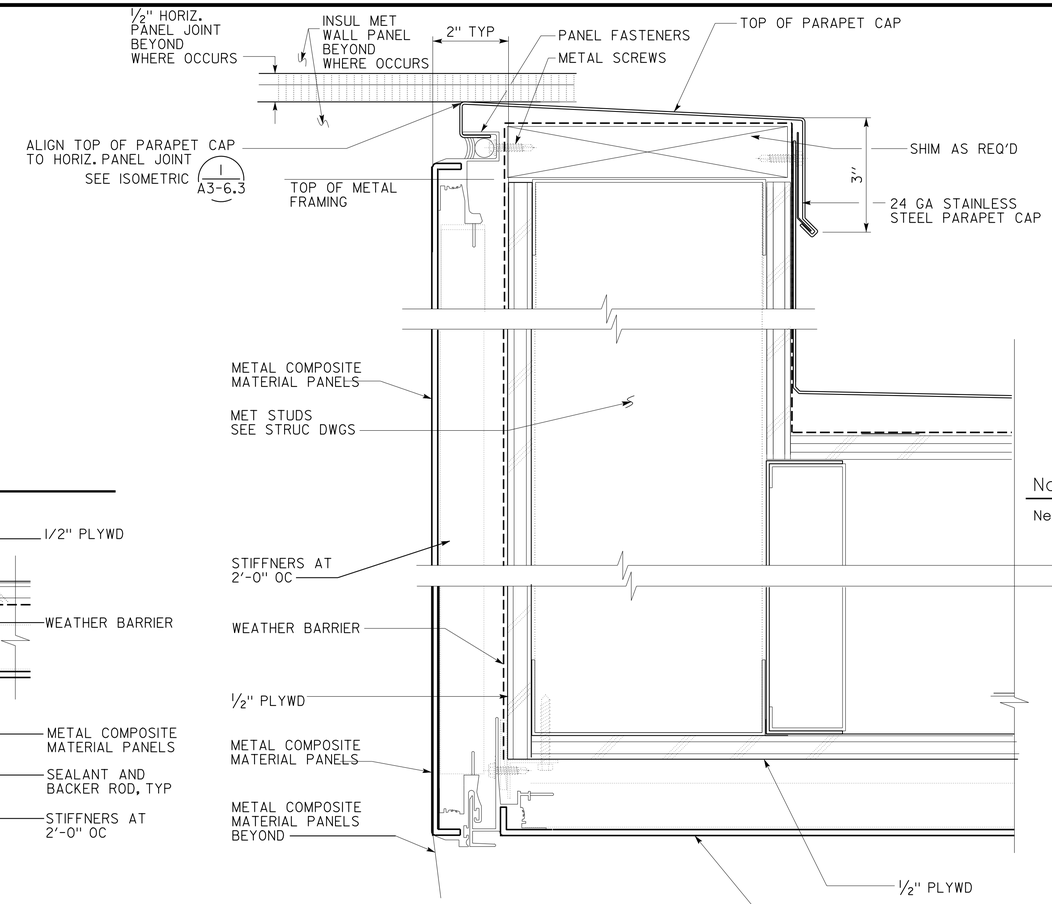

7 PARAPET CAP/SOFFIT EDGE
SCALE 6" : 1'-0"

Note:
Neoprene tape to be applied between disimilar metals.

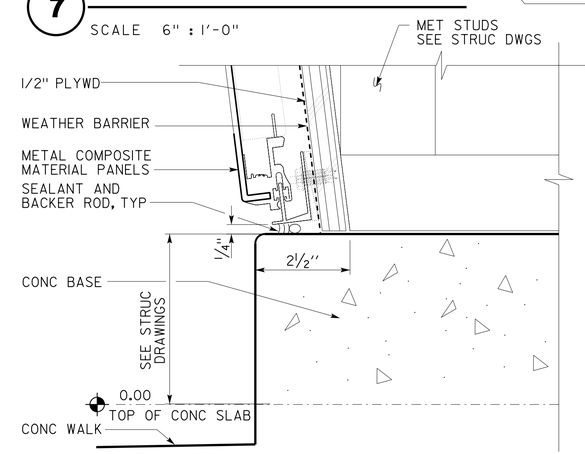

8 SLOPED PANEL JOINT @ BASE
SCALE 6" = 1'-0"

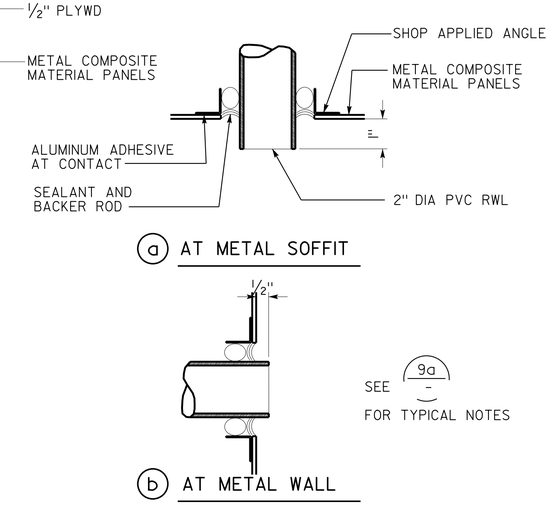

9 OFD DRAIN DETAIL
NO SCALE

DESIGN	BY L Rhoades, R Francisco	CHECKED Q. Wong, F. Thomas	
DETAILS	BY L Rhoades, J. Kwong	CHECKED Q. Wong, F. Thomas	
QUANTITIES	BY	CHECKED	

STATE OF CALIFORNIA
DEPARTMENT OF TRANSPORTATION

DIVISION OF ENGINEERING SERVICES
ARCHITECTURAL AND STRUCTURAL DESIGN

BRIDGE No. 33M5785
POST MILE

SFOBB WAREHOUSE
DETAILS — COMPOSITE PANEL DETAILS

SHEET A3-6.1

TAEMWW Imperial - CCSC Rev. 01/13

ORIGINAL SCALE IN INCHES FOR REDUCED PLANS 0 1 2 3

UNIT: 3598 CONTRACT No.: 014101
PROJECT NUMBER & PHASE: 04130001331

DISREGARD PRINTS BEARING EARLIER REVISION DATES → - -13

REVISION DATES (PRELIMINARY STAGE ONLY) SHEET X OF X

30-APR-2014 10:10

D:\temporary\a3_06.1 det ext comp pnl.dgn

Dist	COUNTY	LOCATION CODE	POST MILES TOTAL PROJECT	SHEET No.	TOTAL SHEETS
04	Ala	5785		153	371

LICENSED ARCHITECT — DATE 10-25-13

3-24-14
PLANS APPROVAL DATE

LICENSED ARCHITECT — Lani Rhoades — No. C 26695 — 10-31-15 RENEWAL DATE — STATE OF CALIFORNIA

The State of California or its officers or agents shall not be responsible for the accuracy or completeness of scanned copies of this plan sheet.

ACCESSIBILITY DESIGN APPROVAL DOT / DES / OTA
PROJECT ID **0413000133**
Reviewed by: Y. A. WANG
Date: 02-13-14

CALIFORNIA STATE FIRE MARSHAL APPROVED
Approval of this plan does not authorize or approve any omission or deviation from applicable regulations. Final approval is subject to field inspection. One set of approved plans shall be available on the project site at all times.
Reviewed by: INGRID P. ICASIANO
Approval date: 02-11-14

NOTE:
NEOPRENE TAPE TO BE APPLIED BETWEEN DISSIMILAR METALS.

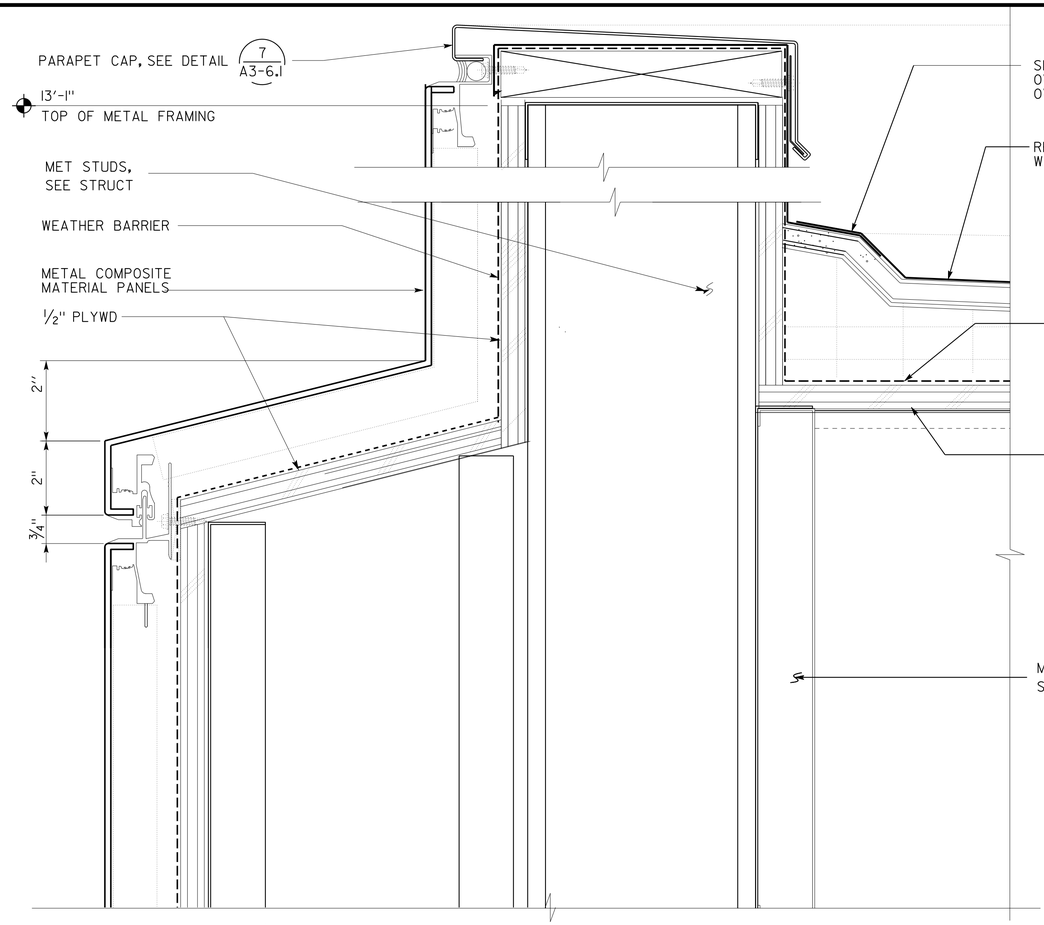

1 PANEL JOINT AT COLUMN TOP
SCALE 6" = 1'-0"

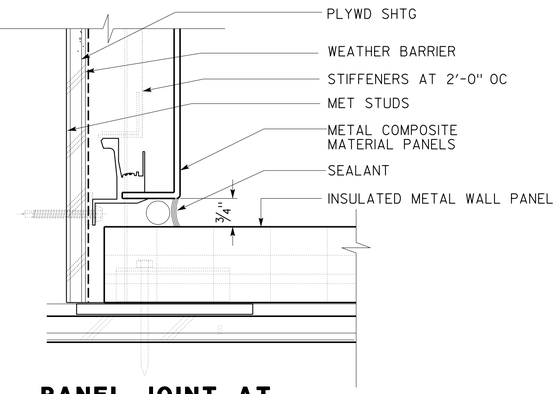

4 PANEL JOINT AT INSULATED PANEL WALL
SCALE 6" = 1'-0"

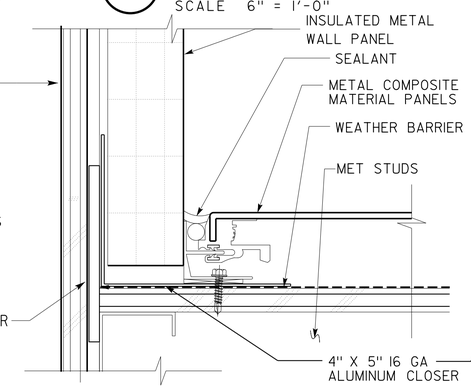

5 PANEL JOINT AT INSULATED PANEL WALL
SCALE 6" = 1'-0"

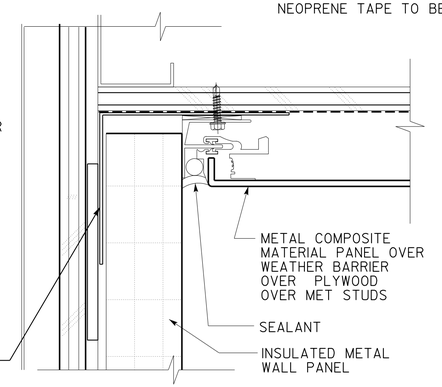

7 PANEL JOINT AT INSULATED PANEL WALL

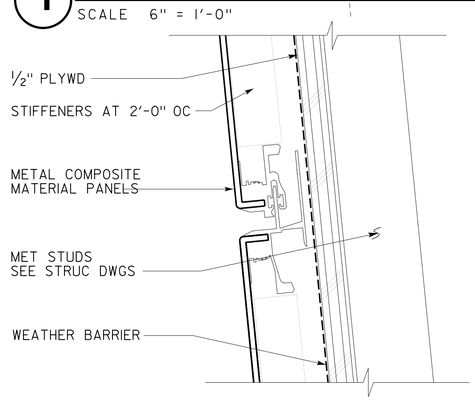

2 SLOPED PANEL JOINT
SCALE 6" = 1'-0"

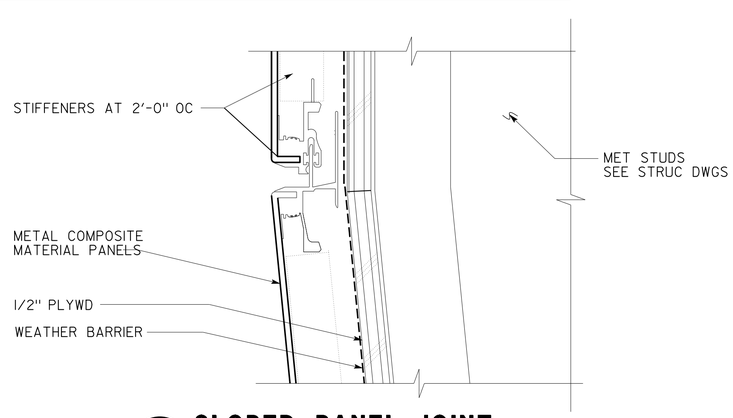

3 SLOPED PANEL JOINT
SCALE 6" = 1'-0"

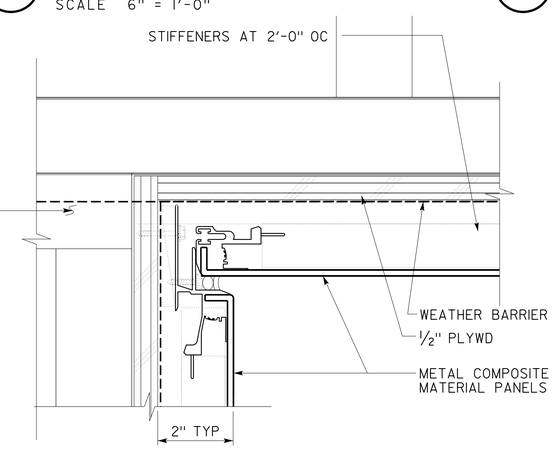

6 INSIDE SOFFIT CORNER
SCALE 6" = 1'-0"

	BY	CHECKED
DESIGN	L Rhoades, R Francisco	Q. Wong, F. Thomas
DETAILS	L Rhoades, J. Kwong	Q. Wong, F. Thomas
QUANTITIES		

STATE OF CALIFORNIA DEPARTMENT OF TRANSPORTATION

DIVISION OF ENGINEERING SERVICES ARCHITECTURAL AND STRUCTURAL DESIGN

BRIDGE No. 33M5785 — POST MILE

SFOBB WAREHOUSE — DETAILS — COMPOSITE PANEL DETAILS

SHEET A3-6.2

TAEMWW Imperial - CCSC Rev. 01/13

ORIGINAL SCALE IN INCHES FOR REDUCED PLANS 0 1 2 3

UNIT: 3598 CONTRACT No.: 014101
PROJECT NUMBER & PHASE: 04130001331

DISREGARD PRINTS BEARING EARLIER REVISION DATES → - -13

REVISION DATES (PRELIMINARY STAGE ONLY) — SHEET X — OF X

30-APR-2014 10:10

D:\temporary\a3_06.2 det ext comp pnl.dgn

Dist	COUNTY	LOCATION CODE	POST MILES TOTAL PROJECT	SHEET No.	TOTAL SHEETS
04	Ala	5785		154	371

LICENSED ARCHITECT — DATE 10-25-13

3-24-14
PLANS APPROVAL DATE

LICENSED ARCHITECT Lani Rhoades No. C 26695 10-31-15 RENEWAL DATE STATE OF CALIFORNIA

The State of California or its officers or agents shall not be responsible for the accuracy or completeness of scanned copies of this plan sheet.

ACCESSIBILITY DESIGN APPROVAL DOT / DES / OTA
PROJECT ID **0413000133**
Reviewed by: Y. A. WANG
Date: 02-13-14

CALIFORNIA STATE FIRE MARSHAL APPROVED
Approval of this plan does not authorize or approve any omission or deviation from applicable regulations. Final approval is subject to field inspection. One set of approved plans shall be available on the project site at all times.
Reviewed by: INGRID P. ICASIANO
Approval date: 02-11-14

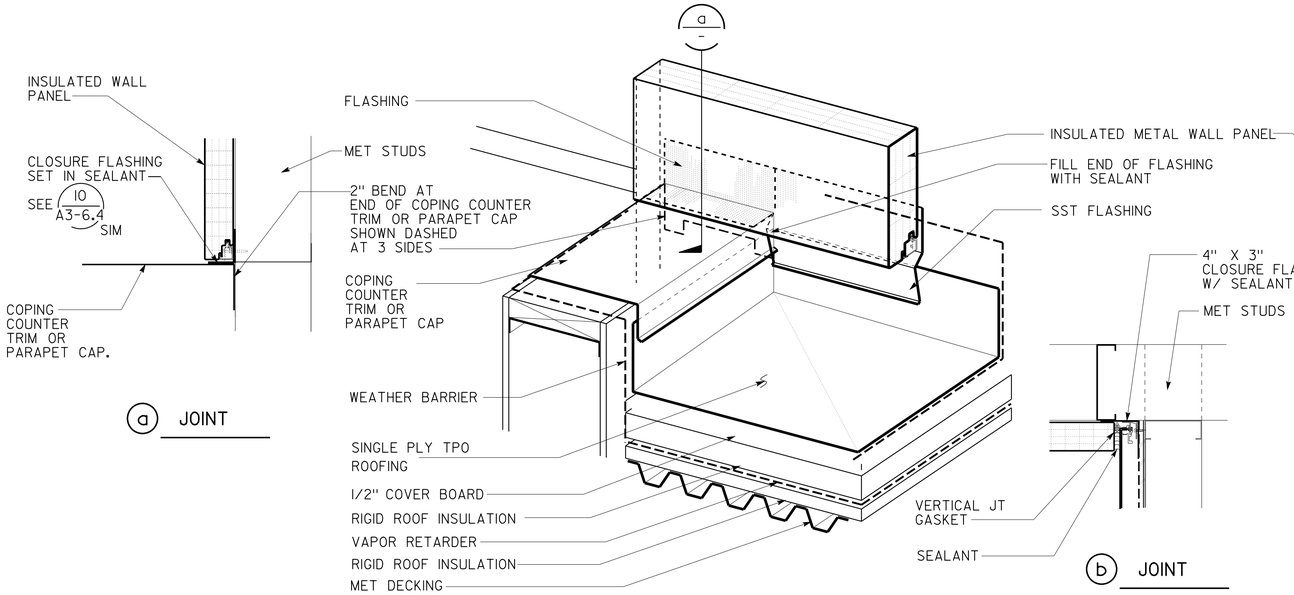

1 ISOMETRIC PARAPET CAP AT WALL PANEL JOINT
NO SCALE

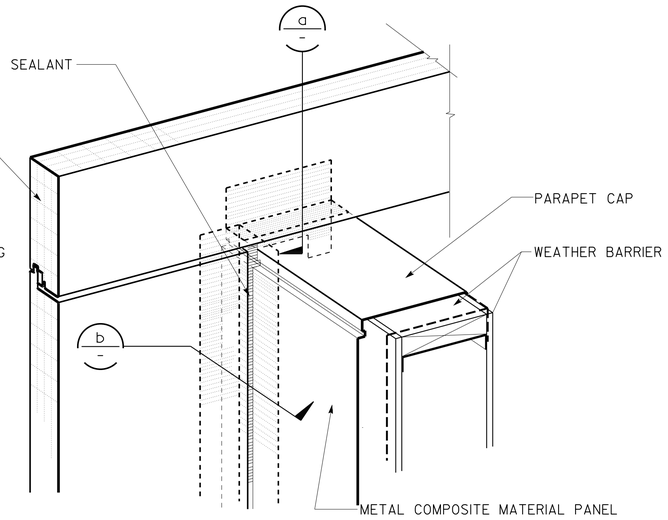

2 ISOMETRIC PARAPET CAP AT NORTH CANOPY
NO SCALE

Note:
Neoprene tape to be applied between dissimilar metals.

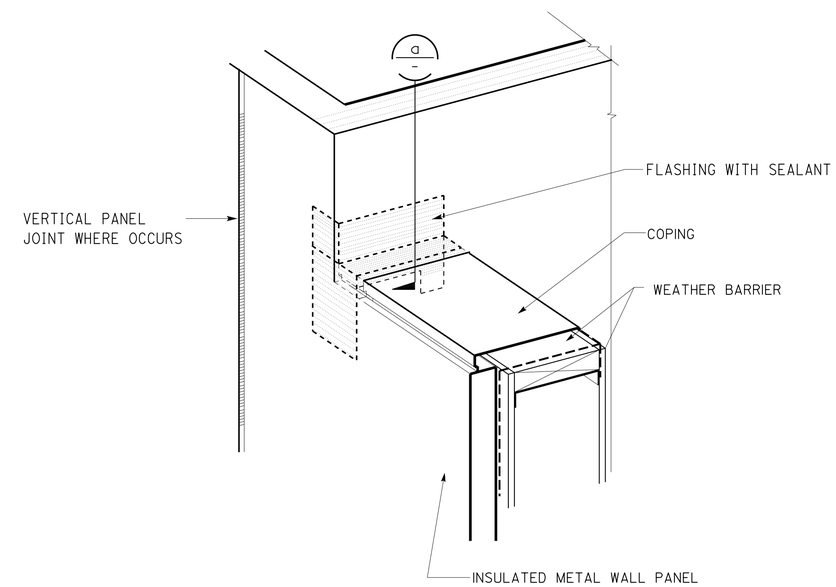

3 ISOMETRIC PARAPET CAP AT COVERED BREEZEWAY
NO SCALE

DESIGN	BY A. CHUNG L Rhoades, R Francisco	CHECKED Q. Wong, F. Thomas
DETAILS	BY A. CHUNG L Rhoades, J. Kwong	CHECKED Q. Wong, F. Thomas
QUANTITIES	BY	CHECKED

STATE OF CALIFORNIA
DEPARTMENT OF TRANSPORTATION

DIVISION OF ENGINEERING SERVICES
ARCHITECTURAL AND STRUCTURAL DESIGN

BRIDGE No. 33M5785
POST MILE

SFOBB WAREHOUSE
DETAILS — COMPOSITE PANEL DETAILS

SHEET A3-6.3

TAEMWW Imperial - CCSC Rev. 01/13

ORIGINAL SCALE IN INCHES FOR REDUCED PLANS 0 1 2 3

UNIT: 3598 CONTRACT No.: 014101
PROJECT NUMBER & PHASE: 04130001331

DISREGARD PRINTS BEARING EARLIER REVISION DATES → - -13

REVISION DATES (PRELIMINARY STAGE ONLY) SHEET X OF X

30-APR-2014 10:10

D:\temporary\a3_06.3 det ext comp pnl.dgn

Dist	COUNTY	LOCATION CODE	POST MILES TOTAL PROJECT	SHEET No.	TOTAL SHEETS
04	Ala	5785		155	371

LICENSED ARCHITECT — DATE 10-25-13

3-24-14
PLANS APPROVAL DATE

LICENSED ARCHITECT — Lani Rhoades — No. C 26695 — 10-31-15 RENEWAL DATE — STATE OF CALIFORNIA

The State of California or its officers or agents shall not be responsible for the accuracy or completeness of scanned copies of this plan sheet.

ACCESSIBILITY DESIGN APPROVAL DOT / DES / OTA
PROJECT ID **0413000133**
Reviewed by: Y. A. WANG
Date: 02-13-14

CALIFORNIA STATE FIRE MARSHAL APPROVED
Approval of this plan does not authorize or approve any omission or deviation from applicable regulations. Final approval is subject to field inspection. One set of approved plans shall be available on the project site at all times.
Reviewed by: INGRID P. ICASIANO
Approval date: 02-11-14

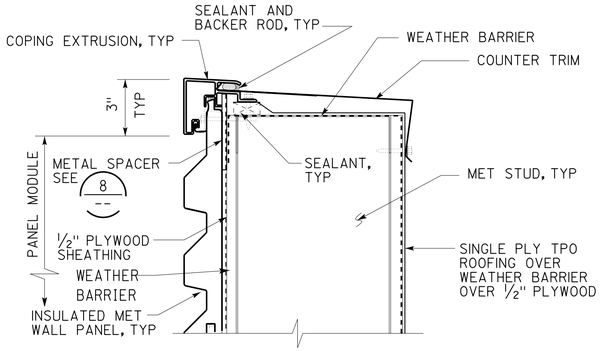

1 COPING DETAIL
SCALE : 3" = 1'-0"

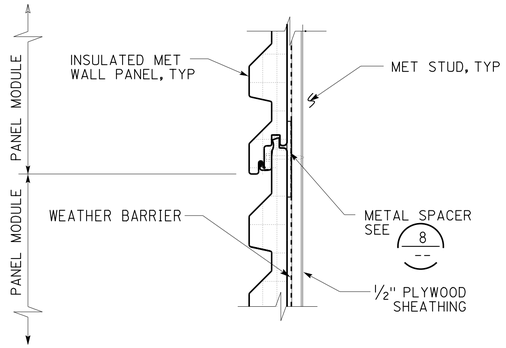

4 HORIZONTAL JOINT
SCALE : 3" = 1'-0"

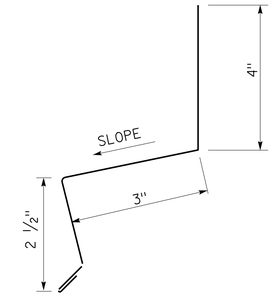

7 METAL BASE FLASHING
NOT TO SCALE

NOTE:

NEOPRENE TAPE TO BE APPLIED BETWEEN DISSIMILAR METALS.

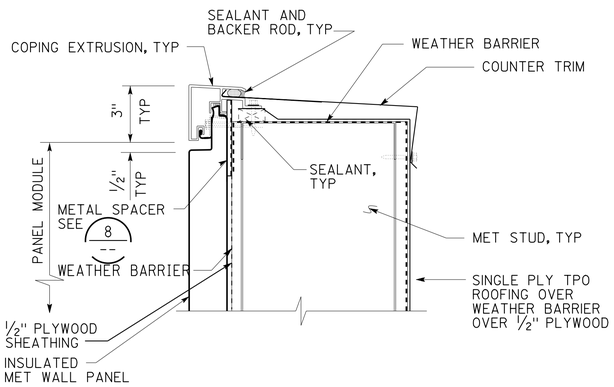

2 COPING DETAIL
SCALE : 3" = 1'-0"

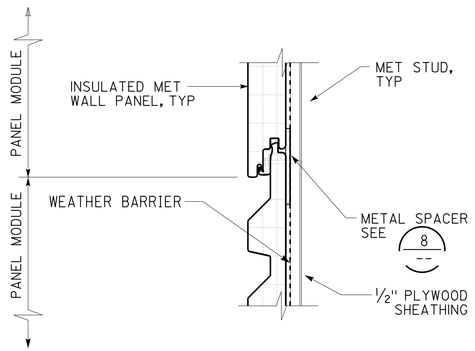

5 HORIZONTAL JOINT
SCALE : 3" = 1'-0"

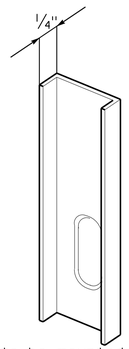

Note: Metal spacer to be mounted vertically the full height of wall where insulated metal wall panels occur. Spacer shall be attached to wall framing per insulated metal wall panel manufacturer's recommendations. Spacing of metal spacer shall be no greater than 8'-0" o.c., and shall be per insulated metal wall panel manufacturer's recommendations.

8 METAL SPACER
NOT TO SCALE

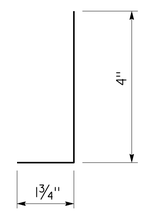

10 CLOSURE FLASHING
NOT TO SCALE

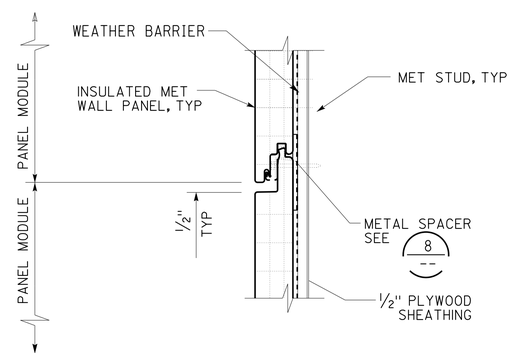

3 HORIZONTAL JOINT
SCALE : 3" = 1'-0"

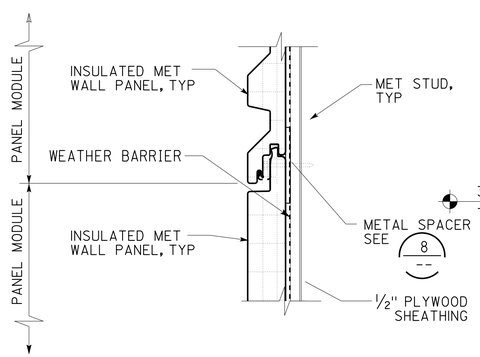

6 HORIZONTAL JOINT
SCALE : 3" = 1'-0"

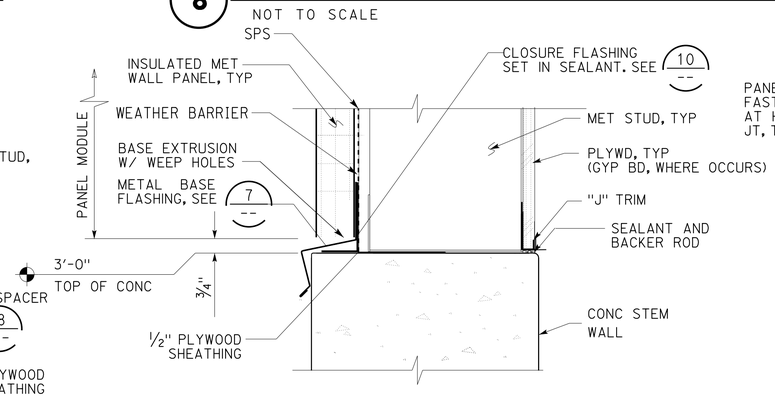

9 BASE DETAIL
SCALE : 3" = 1'-0"

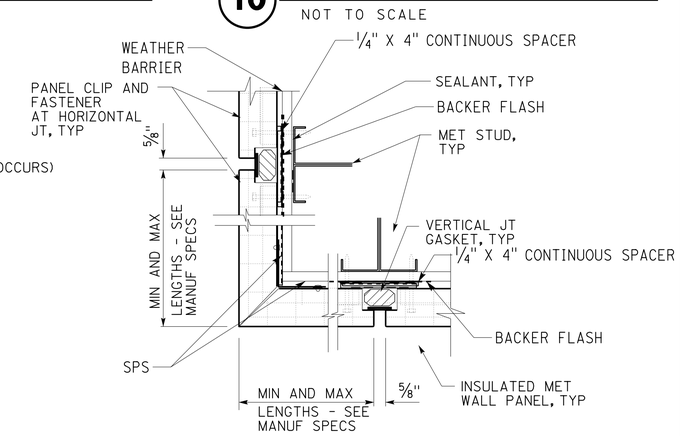

11 OUTSIDE CORNER DETAIL
SCALE : 3" = 1'-0"

	BY	CHECKED
DESIGN	L Rhoades, R Francisco	Q. Wong, F. Thomas
DETAILS	L Rhoades, J. Kwong	Q. Wong, F. Thomas
QUANTITIES		

STATE OF **CALIFORNIA** DEPARTMENT OF TRANSPORTATION

DIVISION OF ENGINEERING SERVICES
ARCHITECTURAL AND STRUCTURAL DESIGN

BRIDGE No. 33M5785
POST MILE

SFOBB WAREHOUSE
DETAILS — INSULATED WALL PANEL DETAILS

SHEET **A3-6.4**

TAEMWW Imperial - CCSC Rev. 01/13

ORIGINAL SCALE IN INCHES FOR REDUCED PLANS 0 1 2 3

UNIT: 3598 CONTRACT No.: 014101
PROJECT NUMBER & PHASE: 04130001331

DISREGARD PRINTS BEARING EARLIER REVISION DATES → REVISION DATES (PRELIMINARY STAGE ONLY) - -13

SHEET X OF X

30-APR-2014 10:10

D:\temporary\a3_06.4 det ins met panel.dgn

Dist	COUNTY	LOCATION CODE	POST MILES TOTAL PROJECT	SHEET No.	TOTAL SHEETS
04	Ala	5785		156	371

LICENSED ARCHITECT — DATE 10-25-13

3-24-14
PLANS APPROVAL DATE

LICENSED ARCHITECT Lani Rhoades No. C 26695 10-31-15 RENEWAL DATE STATE OF CALIFORNIA

The State of California or its officers or agents shall not be responsible for the accuracy or completeness of scanned copies of this plan sheet.

ACCESSIBILITY DESIGN APPROVAL DOT / DES / OTA
PROJECT ID **0413000133**
Reviewed by: Y. A. WANG
Date: 02-13-14

CALIFORNIA STATE FIRE MARSHAL APPROVED
Approval of this plan does not authorize or approve any omission or deviation from applicable regulations. Final approval is subject to field inspection. One set of approved plans shall be available on the project site at all times.
Reviewed by: INGRID P. ICASIANO
Approval date: 02-11-14

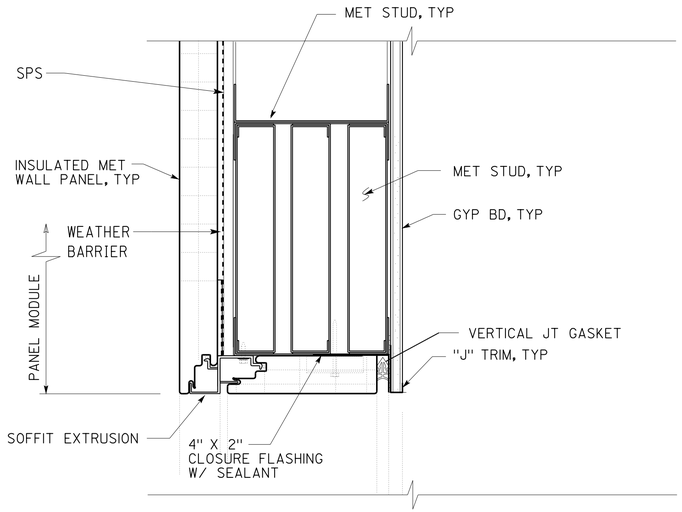

1 SOFFIT AT SECTIONAL OVERHEAD DOOR

SCALE : 3" = 1'-0"

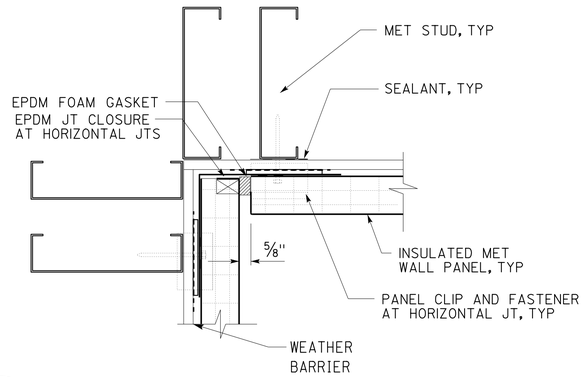

4 INSIDE CORNER DETAIL

SCALE : 6" = 1'-0"

Note:

Neoprene tape to be applied between dissimilar metals.

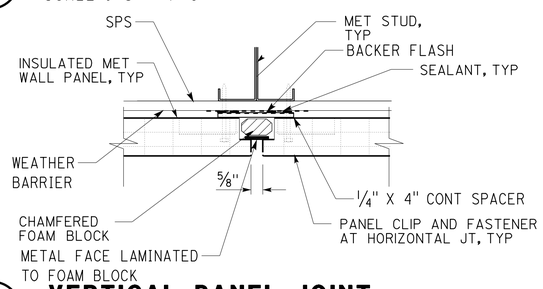

2 VERTICAL PANEL JOINT

SCALE : 3" = 1'-0"

5 NOT USED

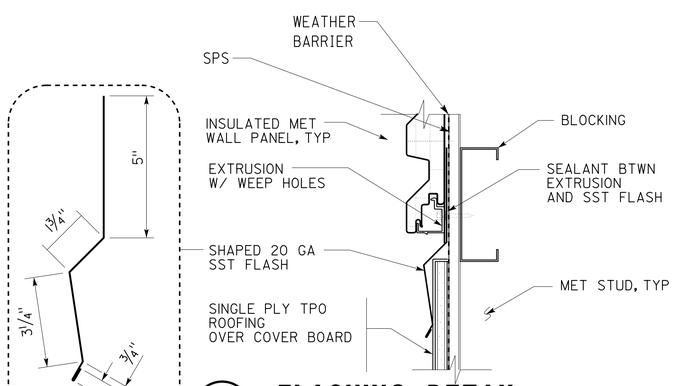

6 FLASHING DETAIL

SCALE : 3" = 1'-0"

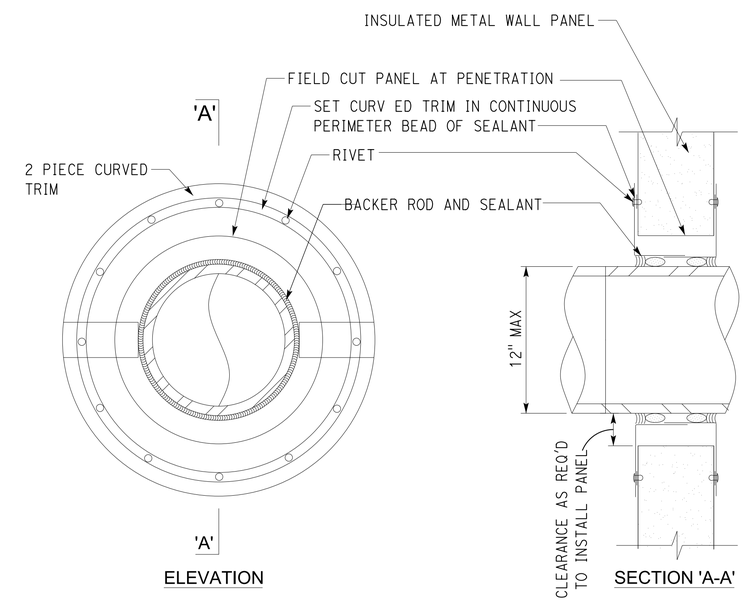

7 PIPE PENETRATION DETAIL

NOT TO SCALE

3 NOT USED

	BY	CHECKED
DESIGN	L Rhoades, R Francisco	Q. Wong, F. Thomas
DETAILS	L Rhoades, J. Kwong	Q. Wong, F. Thomas
QUANTITIES		

STATE OF **CALIFORNIA** DEPARTMENT OF TRANSPORTATION

DIVISION OF ENGINEERING SERVICES
ARCHITECTURAL AND STRUCTURAL DESIGN

BRIDGE No. 33M5785
POST MILE

SFOBB WAREHOUSE
DETAILS — INSULATED WALL PANEL DETAILS

SHEET **A3-6.5**

TAEMWW Imperial - CCSC Rev. 01/13

ORIGINAL SCALE IN INCHES FOR REDUCED PLANS 0 1 2 3

UNIT: 3598 CONTRACT No.: 014101
PROJECT NUMBER & PHASE: 04130001331

DISREGARD PRINTS BEARING EARLIER REVISION DATES → - -13

REVISION DATES (PRELIMINARY STAGE ONLY) — SHEET X OF X

30-APR-2014 10:10

D:\temporary\a3_06.5 det ins met panel.dgn

Dist	COUNTY	LOCATION CODE	POST MILES TOTAL PROJECT	SHEET No.	TOTAL SHEETS
04	Ala	5785		157	371

LICENSED ARCHITECT — DATE 10-25-13

3-24-14
PLANS APPROVAL DATE

LICENSED ARCHITECT — Lani Rhoades — No. C 26695 — 10-31-15 RENEWAL DATE — STATE OF CALIFORNIA

The State of California or its officers or agents shall not be responsible for the accuracy or completeness of scanned copies of this plan sheet.

ACCESSIBILITY DESIGN APPROVAL DOT / DES / OTA
PROJECT ID **0413000133**
Reviewed by: Y. A. WANG
Date: 02-13-14

CALIFORNIA STATE FIRE MARSHAL APPROVED
Approval of this plan does not authorize or approve any omission or deviation from applicable regulations. Final approval is subject to field inspection. One set of approved plans shall be available on the project site at all times.
Reviewed by: INGRID P. ICASIANO
Approval date: 02-11-14

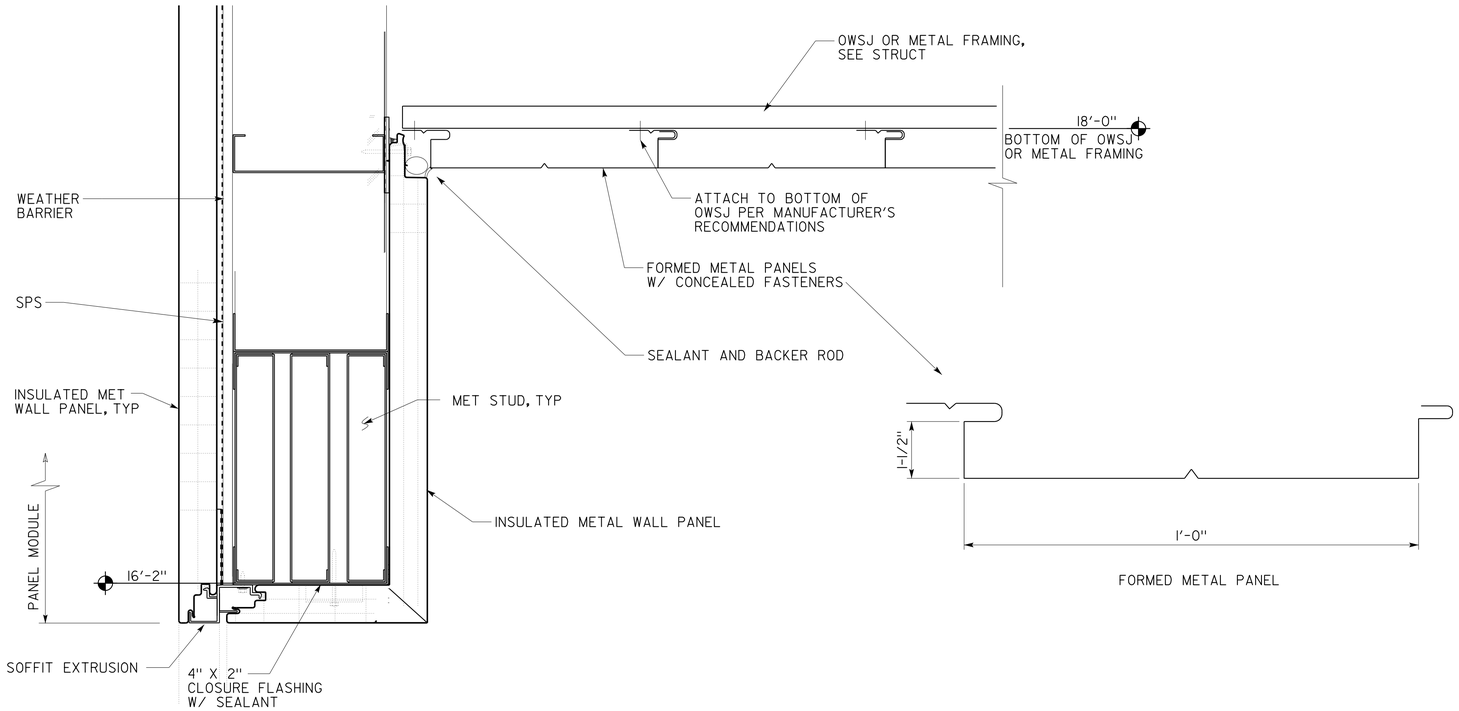

1 METAL SOFFIT AT WALL
SCALE 3" = 1'-0"

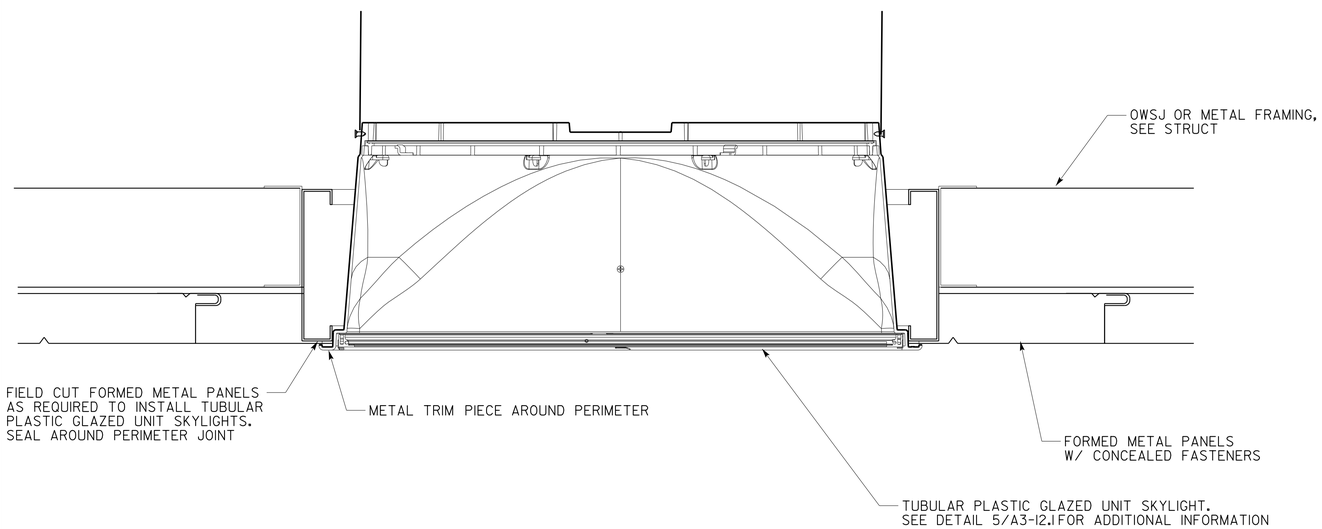

2 METAL SOFFIT AT TUBULAR PLASTIC GLAZED UNIT SKYLIGHT
SCALE 3" = 1'-0"

DESIGN SUPERVISOR
DESIGN ARCHITECT
DESIGNER
DRAWN BY
CHECKED BY:
STRUCTURAL REVIEW

SHEET LEGEND
A-1 ARCHITECTURAL ST-1 STRUCTURAL
M-1 MECHANICAL EE-1 ELECTRICAL
MP-1 PLUMBING SS-1 SANITARY

STATE OF CALIFORNIA
DEPARTMENT OF TRANSPORTATION

DIVISION OF ENGINEERING SERVICES
ARCHITECTURAL AND STRUCTURAL DESIGN

BRIDGE No. 33M5785
POST MILE

SFOBB WAREHOUSE
ABBREVIATIONS SYMBOLS
METAL SOFFIT DETAILS

SHEET A3-6.6

TAEMWW Imperial - CCSC Rev. 01/13

ORIGINAL SCALE IN INCHES FOR REDUCED PLANS 0 1 2 3

UNIT: 3598 CONTRACT No.: 014101
PROJECT NUMBER & PHASE: 04130001331

DISREGARD PRINTS BEARING EARLIER REVISION DATES → - -13

REVISION DATES (PRELIMINARY STAGE ONLY) SHEET X OF X

30-APR-2014 10:10

P:\dist_04\0413000133_sfobb_maint_warehouse\arch\CADD\Working Drawings\first expedite\a3_06.6_metal_soffit_details.dgn

Dist	COUNTY	LOCATION CODE	POST MILES TOTAL PROJECT	SHEET No.	TOTAL SHEETS
04	Ala	5785		158	371

LICENSED ARCHITECT — DATE 10-25-13

3-24-14
PLANS APPROVAL DATE

LICENSED ARCHITECT — Lani Rhoades — No. C 26695 — 10-31-15 RENEWAL DATE — STATE OF CALIFORNIA

The State of California or its officers or agents shall not be responsible for the accuracy or completeness of scanned copies of this plan sheet.

ACCESSIBILITY DESIGN APPROVAL DOT / DES / OTA
PROJECT ID **0413000133**
Reviewed by: Y. A. WANG
Date: 02-13-14

CALIFORNIA STATE FIRE MARSHAL APPROVED
Approval of this plan does not authorize or approve any omission or deviation from applicable regulations. Final approval is subject to field inspection. One set of approved plans shall be available on the project site at all times.
Reviewed by: INGRID P. ICASIANO
Approval date: 02-11-14

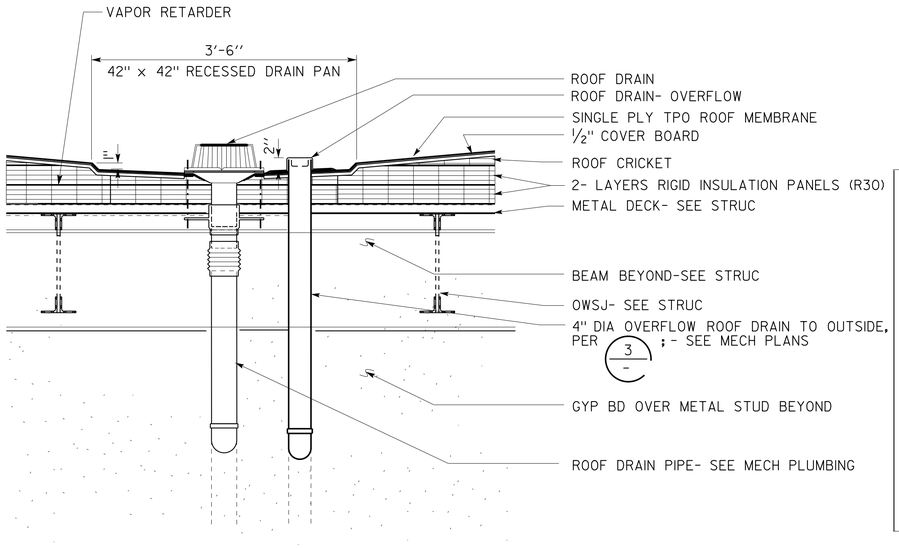

1 ROOF DRAIN AND OVERFLOW (PROFILE)

SCALE 1" = 1'-0"

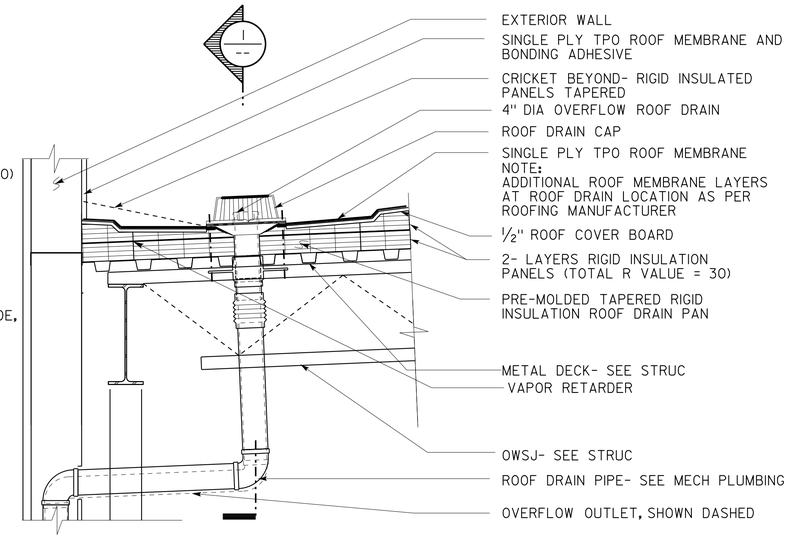

3 ROOF DRAIN

SCALE 1" = 1'-0"

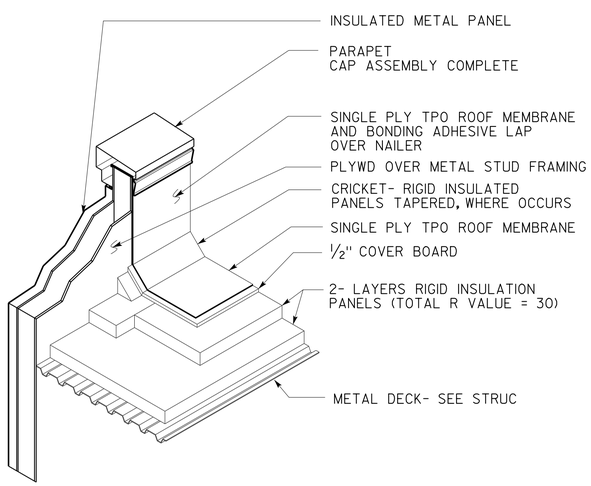

2 ROOFING SYSTEM ISOMETRIC

NO SCALE

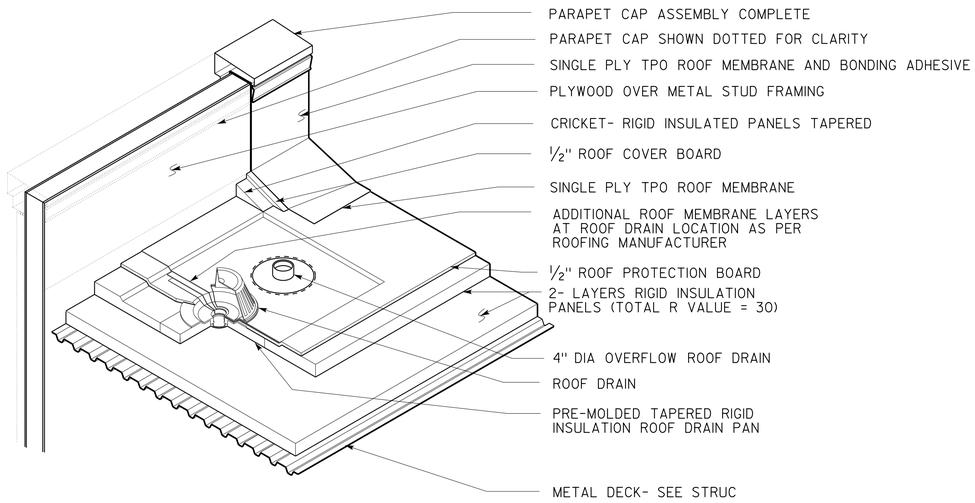

4 ROOF DRAIN ISOMETRIC

NO SCALE

	BY	CHECKED
DESIGN	L Rhoades, R Francisco	Q. Wong, F. Thomas
DETAILS	L Rhoades, J. Kwong	Q. Wong, F. Thomas
QUANTITIES		

STATE OF CALIFORNIA DEPARTMENT OF TRANSPORTATION

DIVISION OF ENGINEERING SERVICES ARCHITECTURAL AND STRUCTURAL DESIGN

BRIDGE No. 33M5785
POST MILE

SFOBB WAREHOUSE
DETAILS — ROOF DRAINS

SHEET A3-7.1

ORIGINAL SCALE IN INCHES FOR REDUCED PLANS 0 1 2 3

UNIT: 3598 CONTRACT No.: 014101
PROJECT NUMBER & PHASE: 04130001331

DISREGARD PRINTS BEARING EARLIER REVISION DATES → REVISION DATES (PRELIMINARY STAGE ONLY) - -13

SHEET X OF X

TAEMWW Imperial - CCSC Rev. 01/13

30-APR-2014 10:10

D:\temporary\a3_07.1 rf drains.dgn

Dist	COUNTY	LOCATION CODE	POST MILES TOTAL PROJECT	SHEET No.	TOTAL SHEETS
04	Ala	5785		159	371

LICENSED ARCHITECT — DATE 10-25-13

3-24-14
PLANS APPROVAL DATE

LICENSED ARCHITECT Lani Rhoades No. C 26695 10-31-15 RENEWAL DATE STATE OF CALIFORNIA

The State of California or its officers or agents shall not be responsible for the accuracy or completeness of scanned copies of this plan sheet.

ACCESSIBILITY DESIGN APPROVAL DOT / DES / OTA
PROJECT ID **0413000133**
Reviewed by: Y. A. WANG
Date: 02-13-14

CALIFORNIA STATE FIRE MARSHAL APPROVED
Approval of this plan does not authorize or approve any omission or deviation from applicable regulations. Final approval is subject to field inspection. One set of approved plans shall be available on the project site at all times.
Reviewed by: INGRID P. ICASIANO
Approval date: 02-11-14

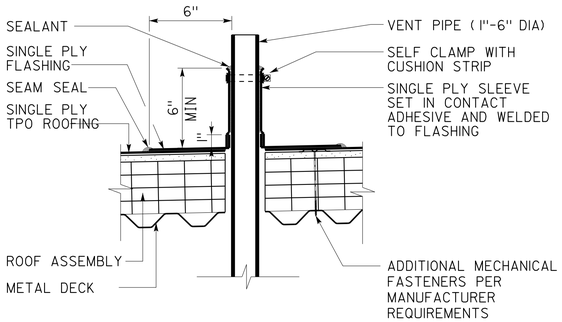

1 PLUMBING VENT THRU ROOF
NO SCALE

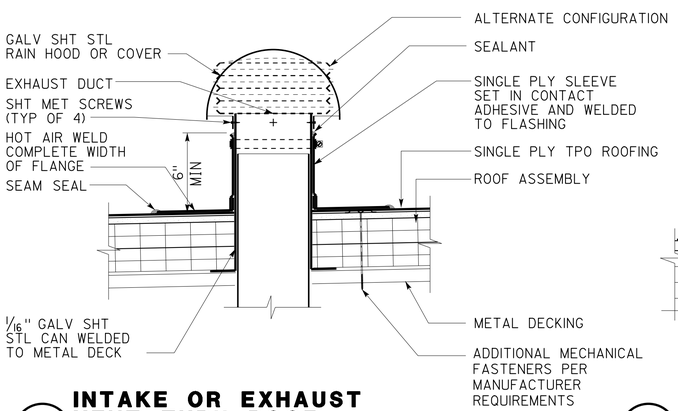

2 INTAKE OR EXHAUST VENT THRU ROOF
NO SCALE

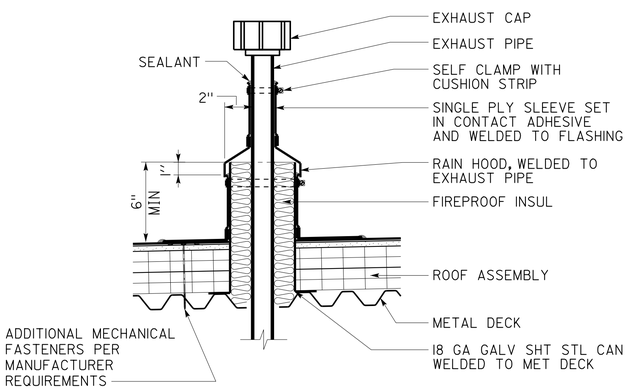

3 FLUE THRU ROOF
NO SCALE

4 NOT USED

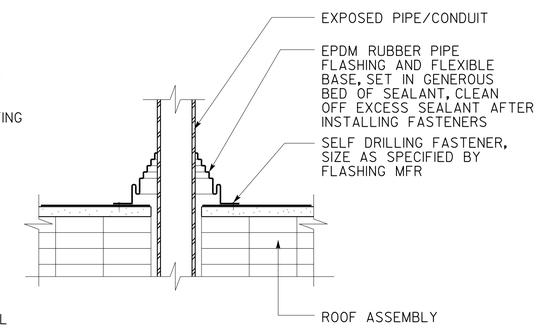

5 PIPE/CONDUIT THRU ROOF
NO SCALE

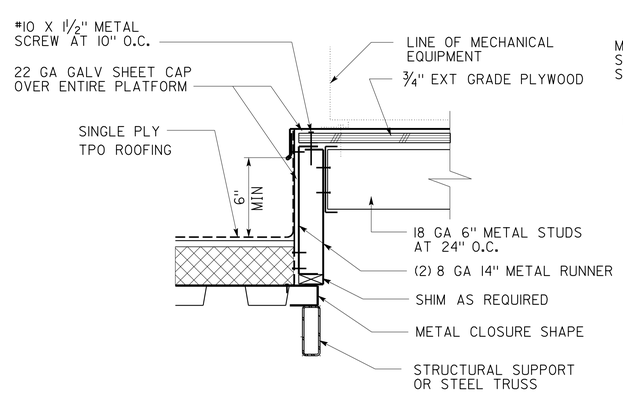

6 MECHANICAL EQUIPMENT PLATFORM
NOT TO SCALE

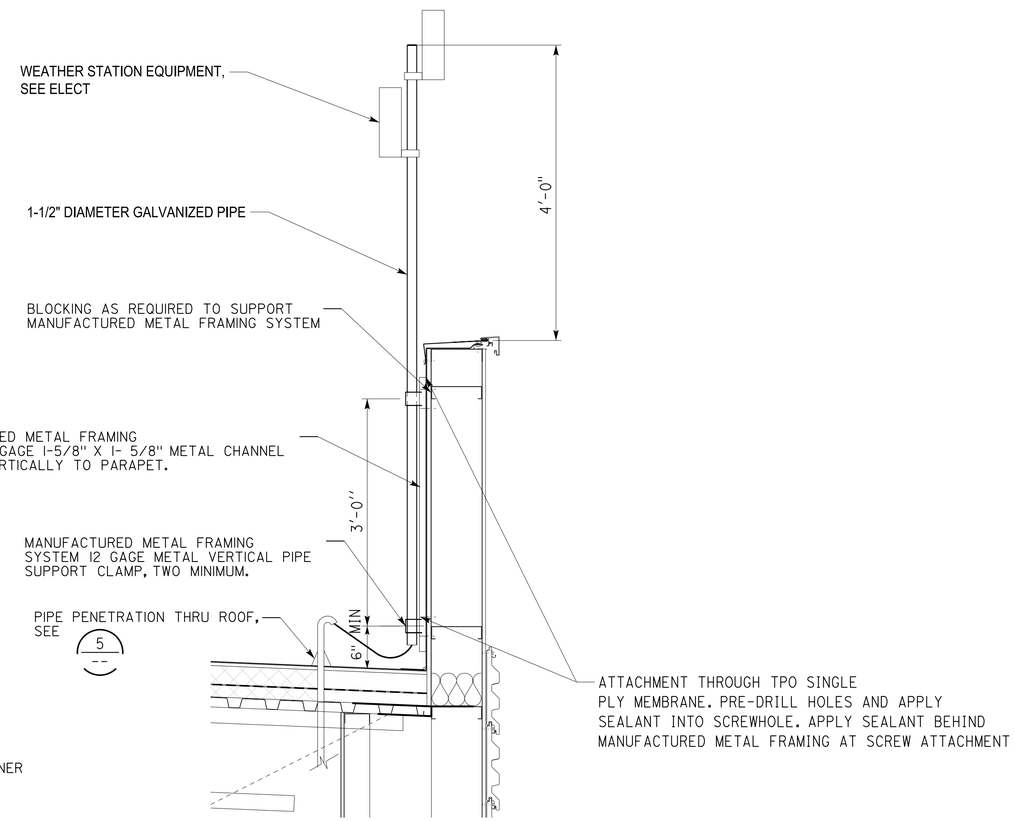

7 WEATHER STATION
NOT TO SCALE

	BY	CHECKED
DESIGN	L Rhoades, R Francisco	Q. Wong, F. Thomas
DETAILS	L Rhoades, J. Kwong	Q. Wong, F. Thomas
QUANTITIES		

STATE OF CALIFORNIA
DEPARTMENT OF TRANSPORTATION

DIVISION OF ENGINEERING SERVICES
ARCHITECTURAL AND STRUCTURAL DESIGN

BRIDGE No. 33M5785
POST MILE

SFOBB WAREHOUSE
DETAILS — MISCELLANEOUS ROOF DETAILS

SHEET A3-7.2

TAEMWW Imperial - CCSC Rev. 01/13

ORIGINAL SCALE IN INCHES FOR REDUCED PLANS 0 1 2 3

UNIT: 3598 CONTRACT No.: 014101
PROJECT NUMBER & PHASE: 04130001331

DISREGARD PRINTS BEARING EARLIER REVISION DATES → REVISION DATES (PRELIMINARY STAGE ONLY) - 13 | SHEET X | OF X

30-APR-2014 10:10

D:\temporary\a3_07.2 misc roof.dgn

Dist	COUNTY	LOCATION CODE	POST MILES TOTAL PROJECT	SHEET No.	TOTAL SHEETS
04	Ala	5785		160	371

LICENSED ARCHITECT — DATE 10-25-13

3-24-14
PLANS APPROVAL DATE

LICENSED ARCHITECT Lani Rhoades No. C 26695 10-31-15 RENEWAL DATE STATE OF CALIFORNIA

The State of California or its officers or agents shall not be responsible for the accuracy or completeness of scanned copies of this plan sheet.

ACCESSIBILITY DESIGN APPROVAL DOT / DES / OTA
PROJECT ID **0413000133**
Reviewed by: Y. A. WANG
Date: 02-13-14

CALIFORNIA STATE FIRE MARSHAL APPROVED
Approval of this plan does not authorize or approve any omission or deviation from applicable regulations. Final approval is subject to field inspection. One set of approved plans shall be available on the project site at all times.
Reviewed by: INGRID P. ICASIANO
Approval date: 02-11-14

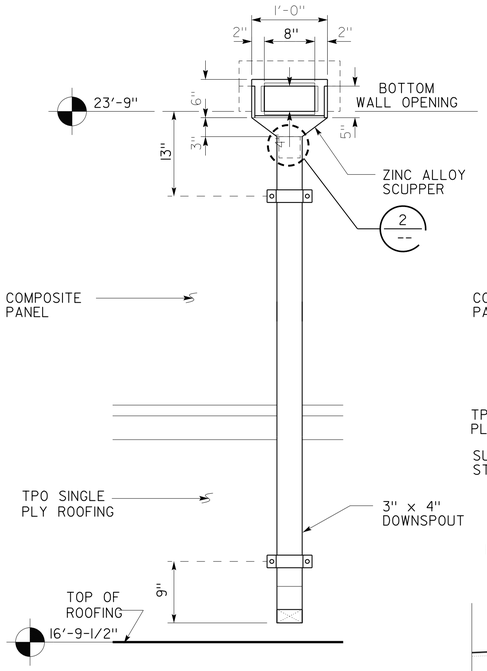

FRONT ELEVATION

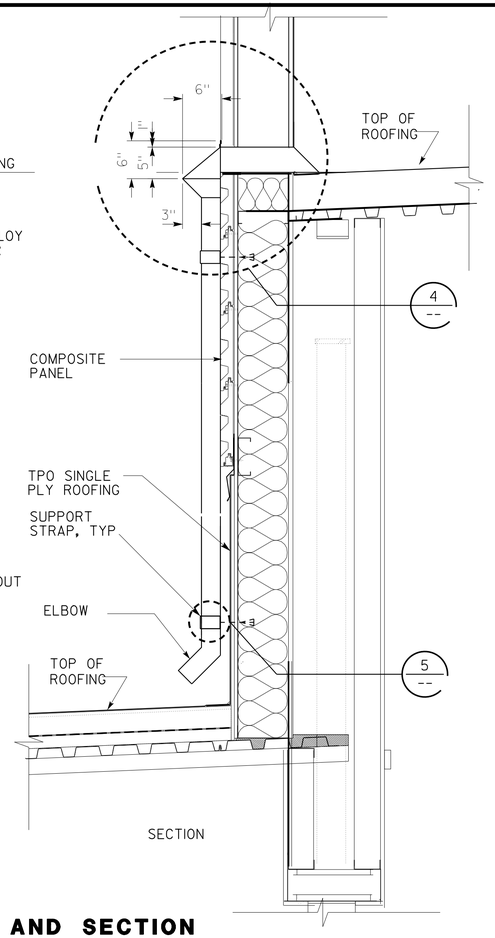

SECTION

1 SCUPPER ELEVATION AND SECTION

SCALE 1" = 1'-0"

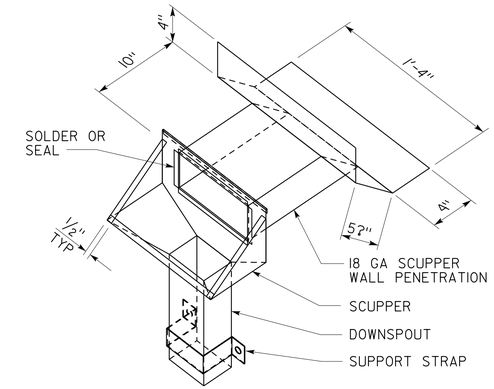

3 SCUPPER ISOMETRIC

NO SCALE

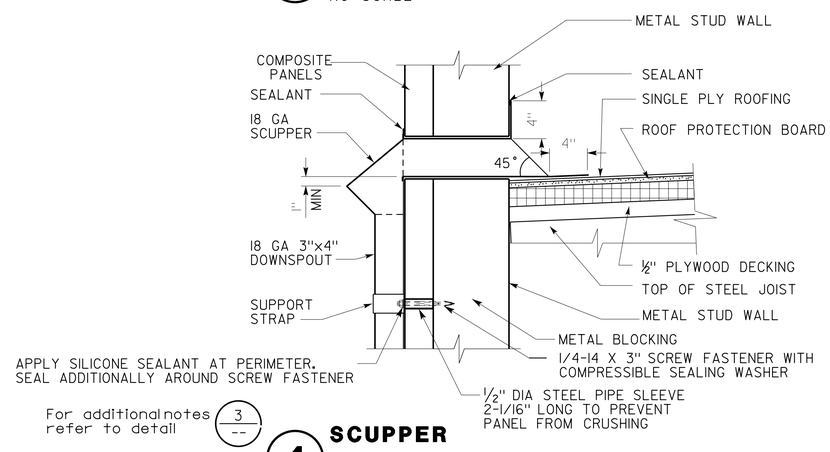

4 SCUPPER

SCALE 1 1/2" = 1'-0"

Note:
All scupper and downspout material (including supports) shall be zinc sheet metal.

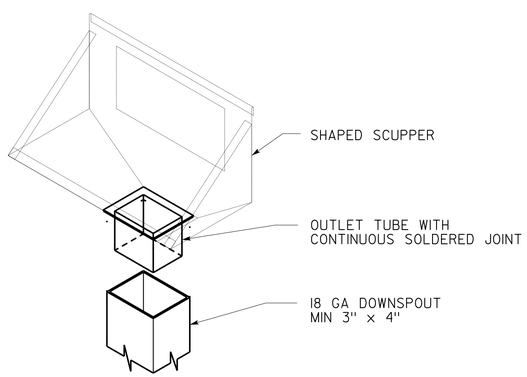

2 DOWNSPOUT CONNECTION

NO SCALE

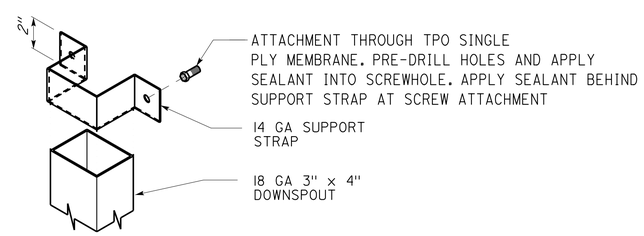

5 DOWNSPOUT SUPPORT

NO SCALE

	BY	CHECKED
DESIGN	L Rhoades, R Francisco	Q. Wong, F. Thomas
DETAILS	L Rhoades, J. Kwong	Q. Wong, F. Thomas
QUANTITIES		

STATE OF CALIFORNIA
DEPARTMENT OF TRANSPORTATION

DIVISION OF ENGINEERING SERVICES
ARCHITECTURAL AND STRUCTURAL DESIGN

BRIDGE No. 33M5785
POST MILE

SFOBB WAREHOUSE
BUILDING 1A AND BUILDING 1B
ROOF DETAILS (DOWNSPOUTS AND SCUPPERS)

SHEET A3-7.3

TAEMWW Imperial - CCSC Rev. 01/13

ORIGINAL SCALE IN INCHES FOR REDUCED PLANS 0 1 2 3

UNIT: 3598 CONTRACT No.: 014101
PROJECT NUMBER & PHASE: 04130001331

DISREGARD PRINTS BEARING EARLIER REVISION DATES → - -13

REVISION DATES (PRELIMINARY STAGE ONLY) SHEET X OF X

30-APR-2014 10:10

D:\temporary\a3_07.3 scupper.dgn

Dist	COUNTY	LOCATION CODE	POST MILES TOTAL PROJECT	SHEET No.	TOTAL SHEETS
04	Ala	5785		161	371

LICENSED ARCHITECT — DATE 10-25-13

3-24-14
PLANS APPROVAL DATE

LICENSED ARCHITECT Lani Rhoades No. C 26695 10-31-15 RENEWAL DATE STATE OF CALIFORNIA

The State of California or its officers or agents shall not be responsible for the accuracy or completeness of scanned copies of this plan sheet.

ACCESSIBILITY DESIGN APPROVAL DOT / DES / OTA
PROJECT ID **0413000133**
Reviewed by: Y. A. WANG
Date: 02-13-14

CALIFORNIA STATE FIRE MARSHAL APPROVED
Approval of this plan does not authorize or approve any omission or deviation from applicable regulations. Final approval is subject to field inspection. One set of approved plans shall be available on the project site at all times.
Reviewed by: INGRID P. ICASIANO
Approval date: 02-11-14

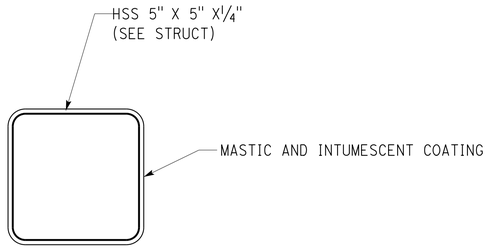

UL DESIGN No. X673

1. Steel Column - Square, rectangular or circular tubular steel columns with the minimum sizes shown in the table below. Steel columns shall be free of dirt, loose scale and oil. Column shall be primed with metal alkyd primer.

2. Mastic and Intumescent Coating* - Coating applied in accordance with manufacturer's instructions to the minimum dry film thickness for size of steel column.

*Bearing the UL Classification Mark

Note: For rated penetrations, see sheets A3-8.8a through A3-8.8d

1 RATED ASSEMBLY- UL DESIGN No. X673
SCALE 3" = 1'-0"

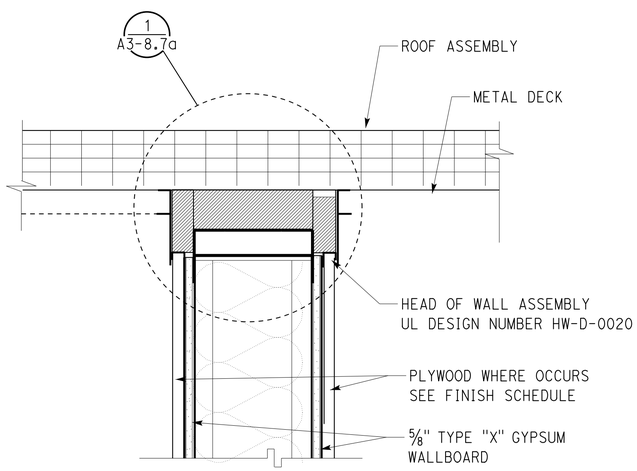

UL DESIGN No. U415

NON-BEARING WALL RATING- 1HOUR

1. Floor, Side and Ceiling Runners - "J" - shaped runner, 6 in. deep , with unequal legs of 1in. and 2 in., fabricated from min 24 MSG galv steel. Runners positioned with short leg toward finished side of wall. Runners attached to structural supports with steel fasteners located not greater than 2 in. from ends and not greater than 24 in. OC.

2. Steel Studs - "C-H" - shaped studs, 6 in. deep, fabricated from min 20 MSG. Cut to lengths 3/8 to 1/2 in. less than floor-to-ceiling height and spaced 24 in. OC.

3. Gypsum Board- * Gypsum liner panels, nom 1in. thick, 24 in. wide. Panels cut 1in. less in length than floor to ceiling height. Vertical edges inserted in "H" portion of "C-H" studs or the gap between the two 3/4 in. legs of the "E" studs. Free edge of end panels attached to long leg of vertical "J" - runners with 1-5/8 in. long Type S steel screws spaced not greater than 12 in. OC. When wall height exceeds liner panel length, liner panel may be butted to extend to the full height of the wall. Horizontal joints need not be backed by steel framing.

4. Gypsum Board- *
System A -- 1Hr - Gypsum panels, with beveled, square or tapered edges, nom 5/8 in. thick, 48 in, applied vertically or horizontally, attached to studs with 1in. long Type S steel screws spaced 12 in. when installed vertically or 8 in OC when installed horizontally. Horizontal joints need not be backed by steel framing.

*Bearing the UL Classification Mark

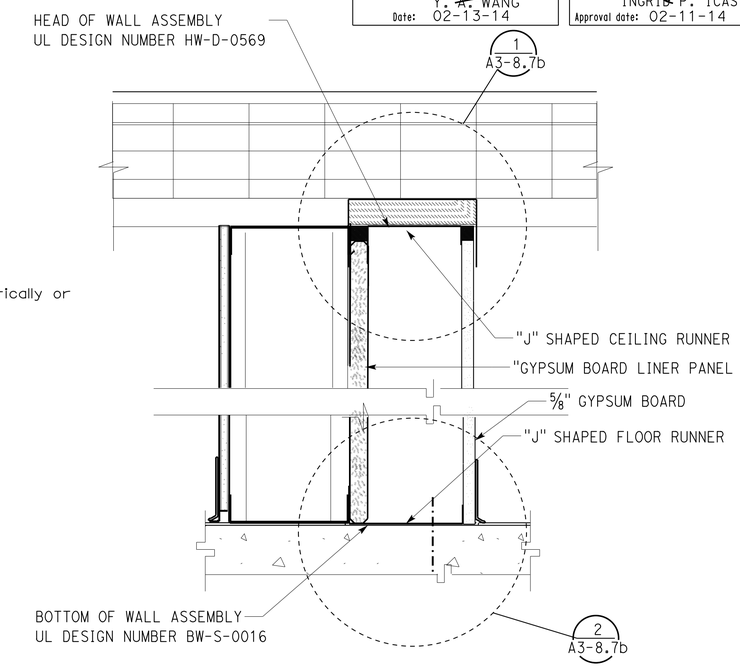

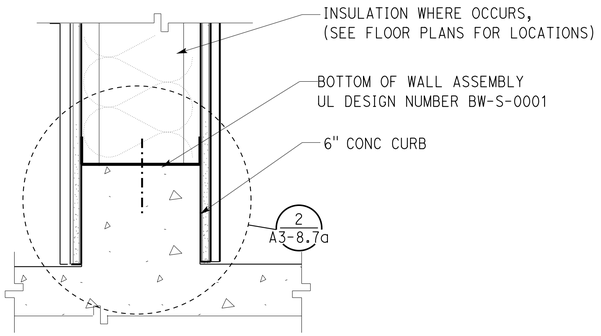

Note: See 1/A3-8.7e for beam and OWSJ penetration

2 RATED WALL ASSEMBLY- UL DESIGN No. U419
SCALE 3" = 1'-0"

UL DESIGN No. U419

NON-BEARING WALL RATING- 1HOUR

1 Floor and ceiling runners- channel shaped, fabricated from min 25 msg corrosion-protected steel, min width to accommodate stud size, with min 1" long legs, attached to floor and ceiling with fasteners 24" Oc max.

2 Steel studs- channel shaped, fabricated from min 25 msg corrosion- protected steel, min width 3-1/2 in. Min width, min 1-1/4" flanges and 1/4" return, spaced a max of 24" oc. Studs to be cut 3/8" to 3/4" less than assembly height.

3 Gypsum wallboard- * Gypsum panels with beveled, square or tapered edges, applied vertically or horizontally. Vertical joints centered over studs and staggered one stud cavity on opposite sides of studs. Vertical joints in adjacent layers (multilayer systems) staggered one stud cavity. Horizontal joints need not be backed by steel framing Horizontal edge joints and horizontal butt joints on opposite sides of studs need not be staggered. Horizontal edge joints and horizontal butt joints in adjacent layers (multilayer systems) staggered a min of 12 in.. The thickness and number of layers for the 1hr rating is as follows:
1Layer, 5/8" thick gypsum panels on each side of wall,

4 Fasteners- type s or s-12 steel screws used to attach panels to studs or furring channels. Single layer systems: 1" long for 5/8 in. thick panels spaced 8 in. oc when panels are applied horizontally, or 8" oc along vertical and bottom edges and 12" oc in the field when panels are applied vertically.

5 Joint tape and compound- vinyl or casein, dry or premixed joint compound applied in two coats to joints and screw heads of outer layers. Paper tape, nominal 2" wide, embedded in the first layer of compound over all joints of outer layer panels. Paper tape and joint compound may be omitted when gypsum panels are supplied with a square edge.

*Bearing the UL Classification Mark

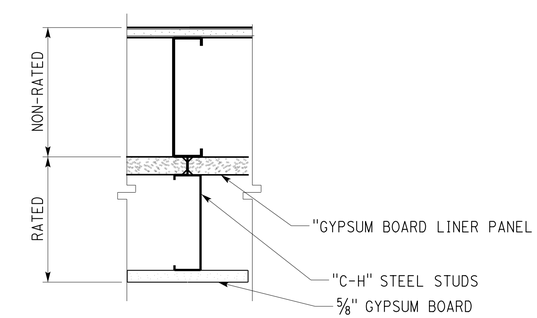

Note: See 1/A3-8.7f for beam and OWSJ penetration

3 RATED WALL ASSEMBLY- UL DESIGN No. U415
SCALE 3" = 1'-0"

	BY	CHECKED
DESIGN	L Rhoades, R Francisco	Q. Wong, F. Thomas
DETAILS	L Rhoades, J. Kwong	Q. Wong, F. Thomas
QUANTITIES		

STATE OF CALIFORNIA DEPARTMENT OF TRANSPORTATION

DIVISION OF ENGINEERING SERVICES ARCHITECTURAL AND STRUCTURAL DESIGN

BRIDGE No. 33M5785 POST MILE

SFOBB WAREHOUSE

DETAILS — FIRE RATED SYSTEMS

SHEET A3-8.1

ORIGINAL SCALE IN INCHES FOR REDUCED PLANS 0 1 2 3

UNIT: 3598 CONTRACT No.: 014101
PROJECT NUMBER & PHASE: 04130001331

DISREGARD PRINTS BEARING EARLIER REVISION DATES — REVISION DATES (PRELIMINARY STAGE ONLY) - -13 — SHEET X OF X

TAEMWW Imperial - CCSC Rev. 01/13

30-APR-2014 10:10

D:\temporary\a3_08.1 fire.dgn

Dist	COUNTY	LOCATION CODE	POST MILES TOTAL PROJECT	SHEET No.	TOTAL SHEETS
04	Ala	5785		162	371

LICENSED ARCHITECT — DATE 10-25-13

3-24-14
PLANS APPROVAL DATE

LICENSED ARCHITECT — Lani Rhoades — No. C 26695 — 10-31-15 RENEWAL DATE — STATE OF CALIFORNIA

The State of California or its officers or agents shall not be responsible for the accuracy or completeness of scanned copies of this plan sheet.

ACCESSIBILITY DESIGN APPROVAL DOT / DES / OTA
PROJECT ID **0413000133**
Reviewed by: Y. A. WANG
Date: 02-13-14

CALIFORNIA STATE FIRE MARSHAL APPROVED
Approval of this plan does not authorize or approve any omission or deviation from applicable regulations. Final approval is subject to field inspection. One set of approved plans shall be available on the project site at all times.
Reviewed by: INGRID P. ICASIANO
Approval date: 02-11-14

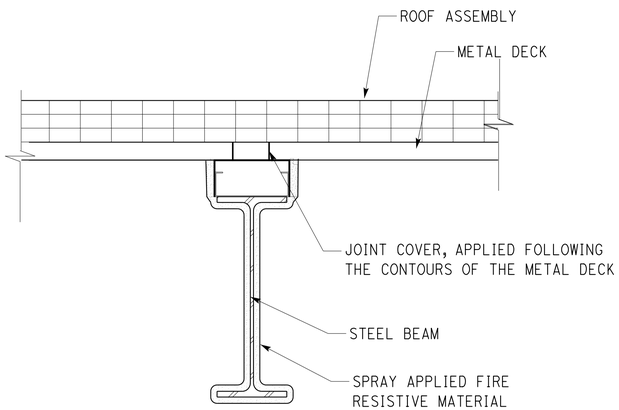

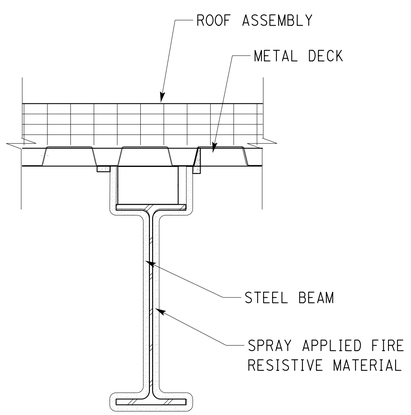

1 **RATED ASSEMBLY- UL DESIGN No. D782**
SCALE 3" = 1'-0"

UL Assembly No. D782
Supports - W8x28 steel beam, min size or steel joists, composite or non-composite, min 10 in. deep, welded or bolted to end supports. May be uncoated or provided with a shop coat of paint. Designed per S.J.I. specifications for a max tensile stress of 30,000 psi. Top chords shall consist of two angles measuring 1-1/4 by 1-1/4 by 0.135 in. thick, min. Bottom chords shall consist of two angles measuring 1 by 1 by 0.115 in. thick, min. The first diagonal web member at each end shall consist of a min 0.595 in. diam round bar. All remaining web members shall consist of 0.5 in. diam round bars, min. Bridging per S.J.I. specifications when non-composite joists are used.

2. Joint Cover - 2 in. wide, pressure-sensitive cloth tape, applied following the contour of floor units.

7. Spray-Applied Fire Resistive Materials* - Applied by mixing with water spraying in one coat to a final thickness as shown above, to steel surfaces which must be clean and free of dirt, loose scale and oil. Min avg and min ind density of 15/14 pcf respectively. For Types MK-6/CBF, MK-6/ED, MK-6/HY, MK-6/HB, MK-6s, MK-10 HB, RG. Min avg and min ind density of 22/19 pcf respectively for Types Z-106 and Z-106/G. For method of density determination see Design Information Section.
7A. Alternate Spray-Applied Fire Resistive Materials* - Applied by mixing with water and spraying in one or more coats to final thicknesses as shown in the table below to steel surfaces which must be clean and free of dirt, loose scale and oil. When steel deck is used the area between the steel deck and the beams top flange or the joist upper angles shall be filled. Min avg and min ind density of 22/19 pcf respectively. For method of density determination, refer to Design Information Section.
7B. Alternate Spray-Applied Fire Resistive Materials* - Applied by mixing with water and spraying in one or more coats to final thicknesses as shown in the table below to steel surfaces which must be clean and free of dirt, loose scale and oil. The area between the steel deck and the beams top flange or the joist upper angle shall be filled. Application of protection material to steel floor units requires the installation of expanded metal lath. See Item 8B . Min avg and min ind density of 40/36 pcf, respectively. Min avg and min ind density of 40/36 pcf respectively for Types Z-146, Z-146PC and Z-146T cementitious mixture. Min avg and min ind density of 50/45 pcf respectively for Types Z-156, Z-156T and Z-156PC. For method of density determination, refer to Design Information Section.

UL Assembly No. D782
(CONTINUED)

8. Metal Lath - (Not Shown) - Metal lath shall be 3/8 in. expanded diamond mesh, weighing 2.5 lb per sq yd. Secured to underside of steel deck with No. 12 by 3/8 in. pan head self-drilling, self-tapping screws and steel washers with an outside diam of 1/2 in. screws spaced 12 in. OC in both directions with lath edges overlapped approx 3 in.
8A. Metal Lath - (Not Shown) - (Required on both sides of joists with Z-146, Z-146T, Z146PC, Z-156, Z-156T and Z-156PC, otherwise optional) - Metal lath may be used to facilitate the spray application of Spray-Applied Fire Resistive Materials on steel bar joist and trusses. The diamond mesh, 3/8 in. expanded steel lath, 1.7 to 3.4 lb per sq yd is secured to one side of each steel joist with No. 18 SWG galv steel wire at joist web and bottom chord members spaced 15 in. OC max. When used, the metal lath is to be fully covered with Spray-Applied Fire Resistive.
8B. Metal Lath - (Not shown) - (Required with Z-146, Sonophone 35, and Monokote Acoustic 35 Item 7B, otherwise optional) - Metal lath shall be 3/8 in. expanded diamond mesh, weighing 2.5 lb per sq yd. Secured to underside of steel deck with No. 12 by 3/8 in. pan head self-drilling, self-tapping screws and steel washers with an outside diam of 1/2 in. screws spaced 12 in. OC in both directions
with lath edges overlapped approx 3 in.
9. Nonmetallic Fabric Mesh - (Optional) - As an alternate to metal lath, Item 8A) glass fiber fabric mesh, weighing approx 2.5 oz per sq yd, polypropylene fabric mesh, weighing approx 1.25 oz per sq yd or equivalent, may be used to facilitate the spray application. The mesh is secured to one side of each joist web member. The method of attaching the mesh must be sufficient to hold the mesh and the spray applied Spray-Applied Fire Resistive Materials in place during application until it has cured.

*Bearing the UL Classification Mark

	BY	CHECKED
DESIGN	L Rhoades, R Francisco	Q. Wong, F. Thomas
DETAILS	L Rhoades, J. Kwong	Q. Wong, F. Thomas
QUANTITIES		

STATE OF CALIFORNIA
DEPARTMENT OF TRANSPORTATION

DIVISION OF ENGINEERING SERVICES
ARCHITECTURAL AND STRUCTURAL DESIGN

BRIDGE No. 33M5785
POST MILE

SFOBB WAREHOUSE
DETAILS — FIRE RATED SYSTEMS

SHEET A3-8.2

TAEMWW Imperial - CCSC Rev. 01/13

ORIGINAL SCALE IN INCHES FOR REDUCED PLANS 0 1 2 3

UNIT: 3598 CONTRACT No.: 014101
PROJECT NUMBER & PHASE: 04130001331

DISREGARD PRINTS BEARING EARLIER REVISION DATES → - -13

REVISION DATES (PRELIMINARY STAGE ONLY) — SHEET X OF X

30-APR-2014 10:10

D:\temporary\a3_08.2 fire.dgn

Dist	COUNTY	LOCATION CODE	POST MILES TOTAL PROJECT	SHEET No.	TOTAL SHEETS
04	Ala	5785		163	371

LICENSED ARCHITECT — DATE 10-25-13

3-24-14
PLANS APPROVAL DATE

LICENSED ARCHITECT Lani Rhoades No. C 26695 10-31-15 RENEWAL DATE STATE OF CALIFORNIA

The State of California or its officers or agents shall not be responsible for the accuracy or completeness of scanned copies of this plan sheet.

ACCESSIBILITY DESIGN APPROVAL DOT / DES / OTA
PROJECT ID **0413000133**
Reviewed by: Y. A. WANG
Date: 02-13-14

CALIFORNIA STATE FIRE MARSHAL APPROVED
Approval of this plan does not authorize or approve any omission or deviation from applicable regulations. Final approval is subject to field inspection. One set of approved plans shall be available on the project site at all times.
Reviewed by: INGRID P. ICASIANO
Approval date: 02-11-14

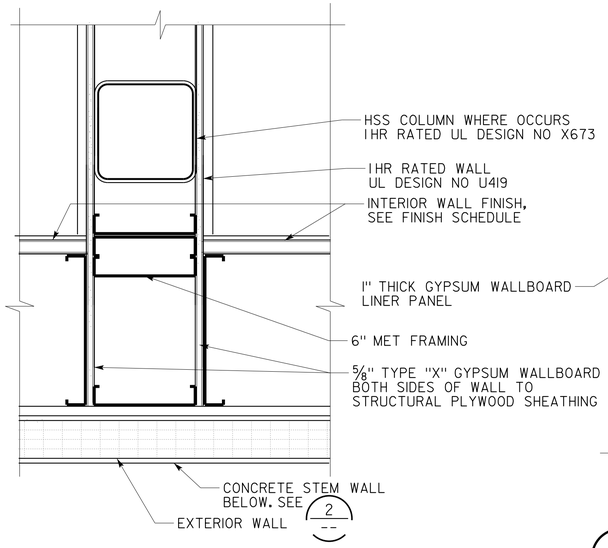

1 **1 HR FIRE BARRIER**
SCALE 3" = 1'-0"

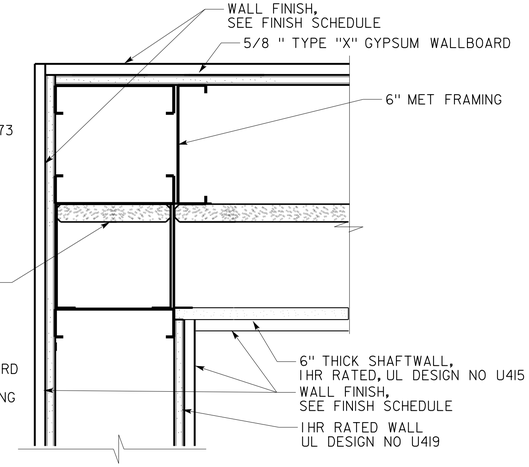

3 **1 HR FIRE BARRIER**
SCALE 3" = 1'-0"

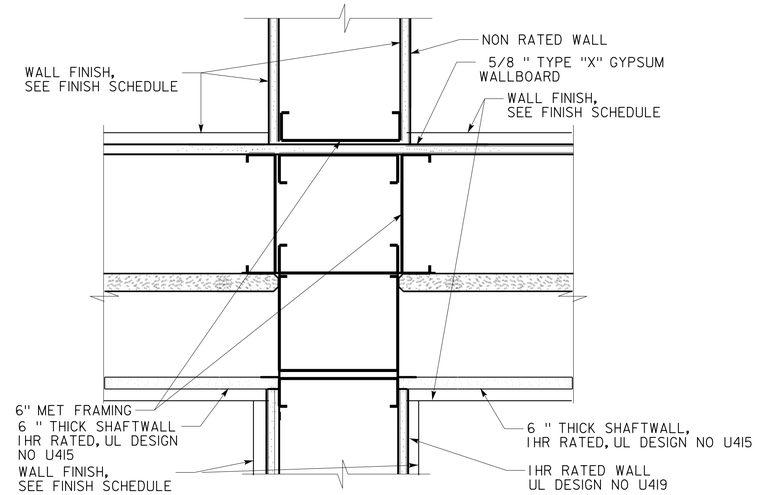

5 **1 HR FIRE BARRIER**
SCALE 3" = 1'-0"

Note: See fire resistance notes on sheet A3-8.1 for additional information on UL design numbers.

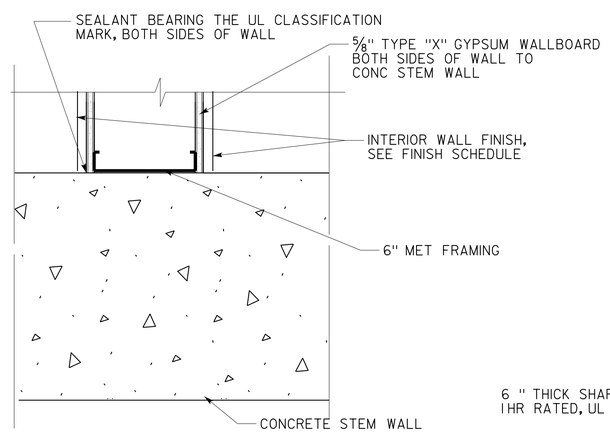

2 **1 HR FIRE BARRIER**
SCALE 3" = 1'-0"

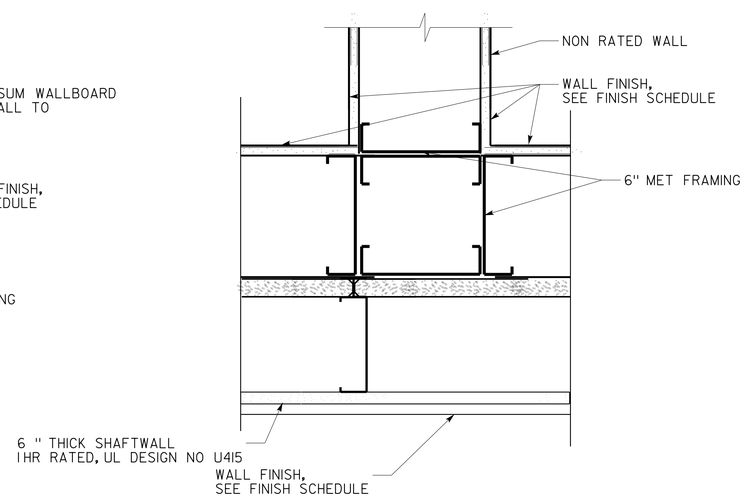

4 **1 HR FIRE BARRIER**
SCALE 3" = 1'-0"

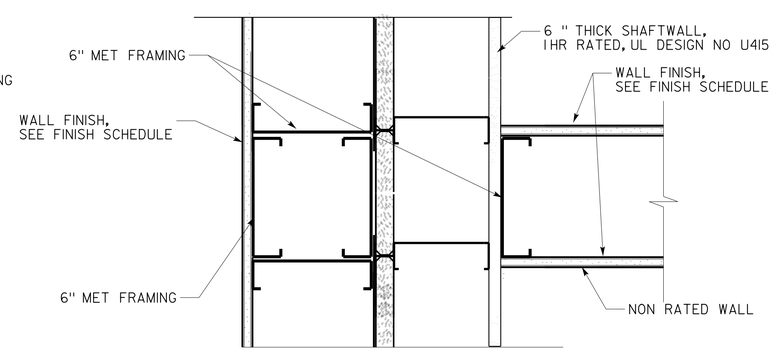

6 **1 HR FIRE BARRIER**
SCALE 3" = 1'-0"

DESIGN SUPERVISOR
DESIGN ARCHITECT
DESIGNER
DRAWN BY
CHECKED BY:
STRUCTURAL REVIEW

SHEET LEGEND
A-1 ARCHITECTURAL ST-1 STRUCTURAL
M-1 MECHANICAL EE-1 ELECTRICAL
MP-1 PLUMBING SS-1 SANITARY

STATE OF CALIFORNIA
DEPARTMENT OF TRANSPORTATION

DIVISION OF ENGINEERING SERVICES
ARCHITECTURAL AND STRUCTURAL DESIGN

BRIDGE No. 33M5785
POST MILE

SFOBB WAREHOUSE
DETAILS — FIRE RATED SYSTEMS

SHEET A3-8.3

TAEMWW Imperial - CCSC Rev. 01/13

ORIGINAL SCALE IN INCHES FOR REDUCED PLANS 0 1 2 3

UNIT: 3598 CONTRACT No.: 014101
PROJECT NUMBER & PHASE: 04130001331

DISREGARD PRINTS BEARING EARLIER REVISION DATES → - -13

REVISION DATES (PRELIMINARY STAGE ONLY) SHEET X OF X

30-APR-2014 10:11

D:\temporary\a3_08.3_misc_fire_rated_details.dgn

Dist	COUNTY	LOCATION CODE	POST MILES TOTAL PROJECT	SHEET No.	TOTAL SHEETS
04	Ala	5785		164	371

LICENSED ARCHITECT — DATE 10-25-13

3-24-14
PLANS APPROVAL DATE

LICENSED ARCHITECT Lani Rhoades No. C 26695 10-31-15 RENEWAL DATE STATE OF CALIFORNIA

The State of California or its officers or agents shall not be responsible for the accuracy or completeness of scanned copies of this plan sheet.

ACCESSIBILITY DESIGN APPROVAL DOT / DES / OTA
PROJECT ID **0413000133**
Reviewed by: Y. A. WANG
Date: 02-13-14

CALIFORNIA STATE FIRE MARSHAL APPROVED
Approval of this plan does not authorize or approve any omission or deviation from applicable regulations. Final approval is subject to field inspection. One set of approved plans shall be available on the project site at all times.
Reviewed by: INGRID P. ICASIANO
Approval date: 02-11-14

Note: See fire resistance notes on sheet A3-8.1 for additional information on UL design numbers.

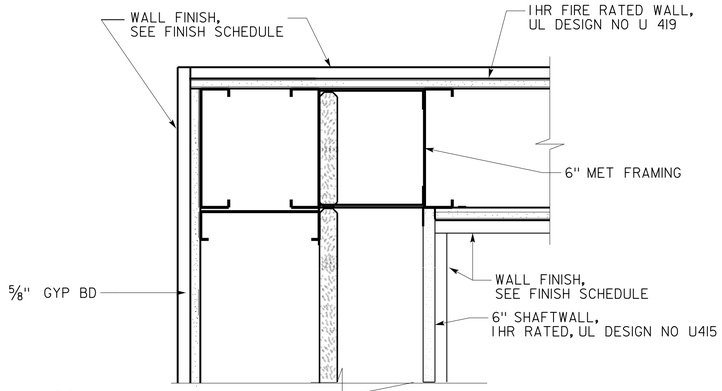

1 HR FIRE BARRIER
SCALE 3" = 1'-0"

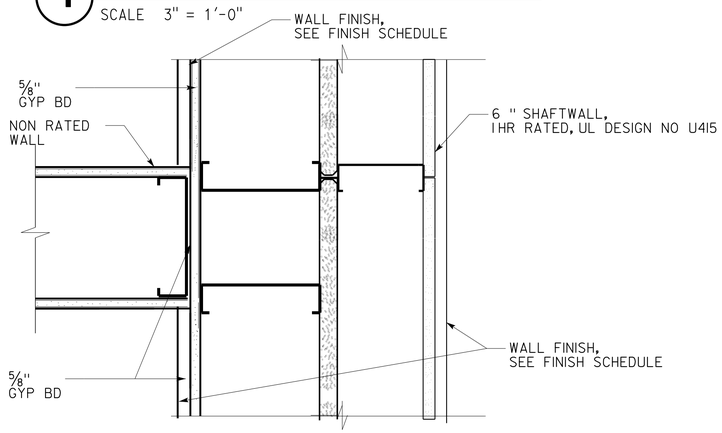

1 HR FIRE BARRIER
SCALE 3" = 1'-0"

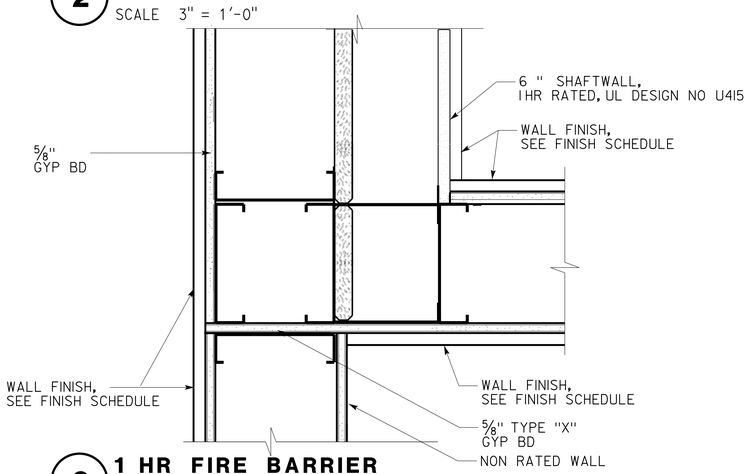

1 HR FIRE BARRIER
SCALE 3" = 1'-0"

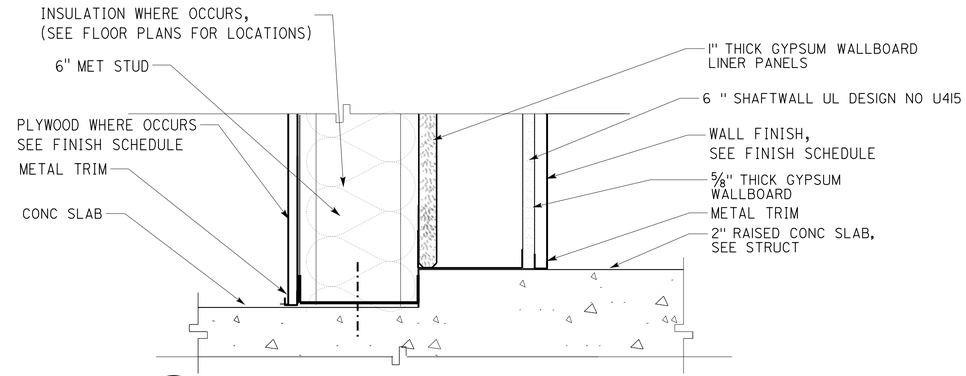

SHAFTWALL AT RAISED CONCRETE PAD
SCALE 3" = 1'-0"

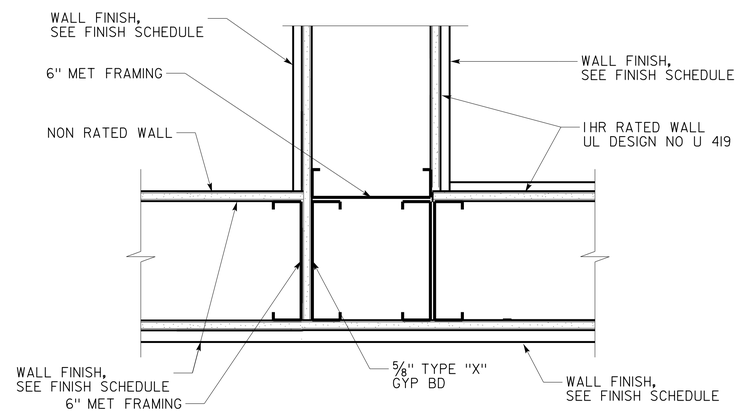

1 HR FIRE BARRIER
SCALE 3" = 1'-0"

DESIGN SUPERVISOR	DESIGNER	CHECKED BY:	SHEET LEGEND A-1 ARCHITECTURAL ST-1 STRUCTURAL M-1 MECHANICAL EE-1 ELECTRICAL MP-1 PLUMBING SS-1 SANITARY	STATE OF CALIFORNIA DEPARTMENT OF TRANSPORTATION	DIVISION OF ENGINEERING SERVICES ARCHITECTURAL AND STRUCTURAL DESIGN	BRIDGE No. 33M5785
DESIGN ARCHITECT	DRAWN BY	STRUCTURAL REVIEW				POST MILE

SFOBB WAREHOUSE — DETAILS — FIRE RATED SYSTEMS — SHEET A3-8.4

TAEMWW Imperial - CCSC Rev. 01/13

ORIGINAL SCALE IN INCHES FOR REDUCED PLANS 0 1 2 3

UNIT: 3598 CONTRACT No.: 014101
PROJECT NUMBER & PHASE: 04130001331

DISREGARD PRINTS BEARING EARLIER REVISION DATES → - -13

REVISION DATES (PRELIMINARY STAGE ONLY) SHEET X OF X

30-APR-2014 10:11

D:\temporary\a3_08.4_misc_fire_rated_details.dgn

Dist	COUNTY	LOCATION CODE	POST MILES TOTAL PROJECT	SHEET No.	TOTAL SHEETS
04	Ala	5785		165	371

Note: See fire resistance notes on sheet A3-8.1 for additional information on UL design numbers.

LICENSED ARCHITECT — DATE 10-25-13

3-24-14
PLANS APPROVAL DATE

LICENSED ARCHITECT Lani Rhoades No. C 26695 10-31-15 RENEWAL DATE STATE OF CALIFORNIA

The State of California or its officers or agents shall not be responsible for the accuracy or completeness of scanned copies of this plan sheet.

ACCESSIBILITY DESIGN APPROVAL DOT / DES / OTA
PROJECT ID **0413000133**
Reviewed by: Y. A. WANG
Date: 02-13-14

CALIFORNIA STATE FIRE MARSHAL APPROVED
Approval of this plan does not authorize or approve any omission or deviation from applicable regulations. Final approval is subject to field inspection. One set of approved plans shall be available on the project site at all times.
Reviewed by: INGRID P. ICASIANO
Approval date: 02-11-14

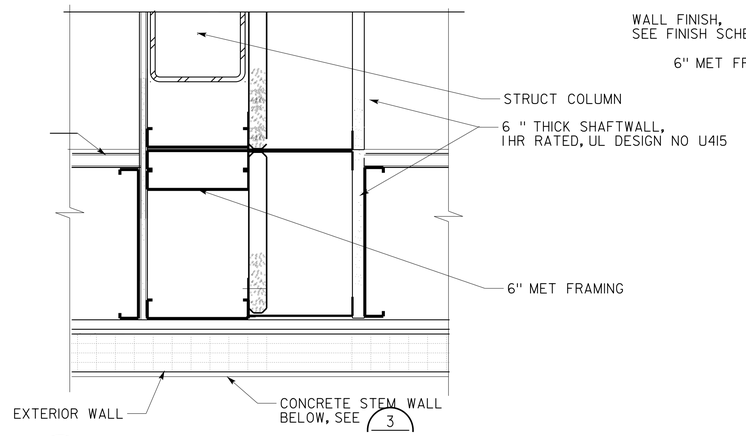

1 HR FIRE BARRIER (1)
SCALE 3" = 1'-0"

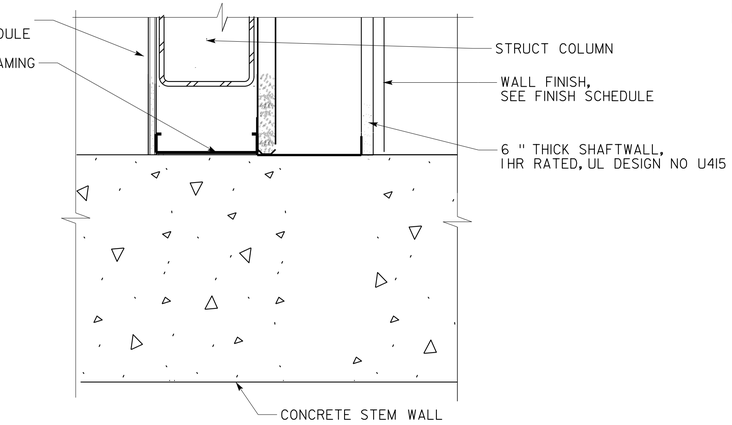

1 HR FIRE BARRIER (3)
SCALE 3" = 1'-0"

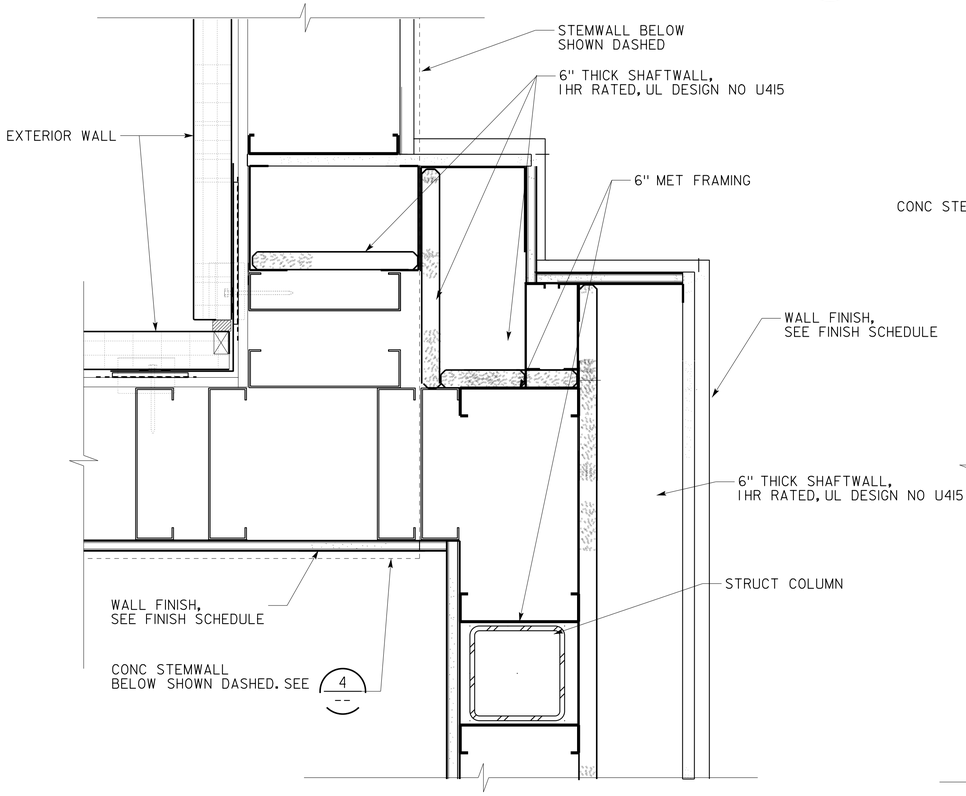

1 HR FIRE BARRIER (2)
SCALE 3" = 1'-0"

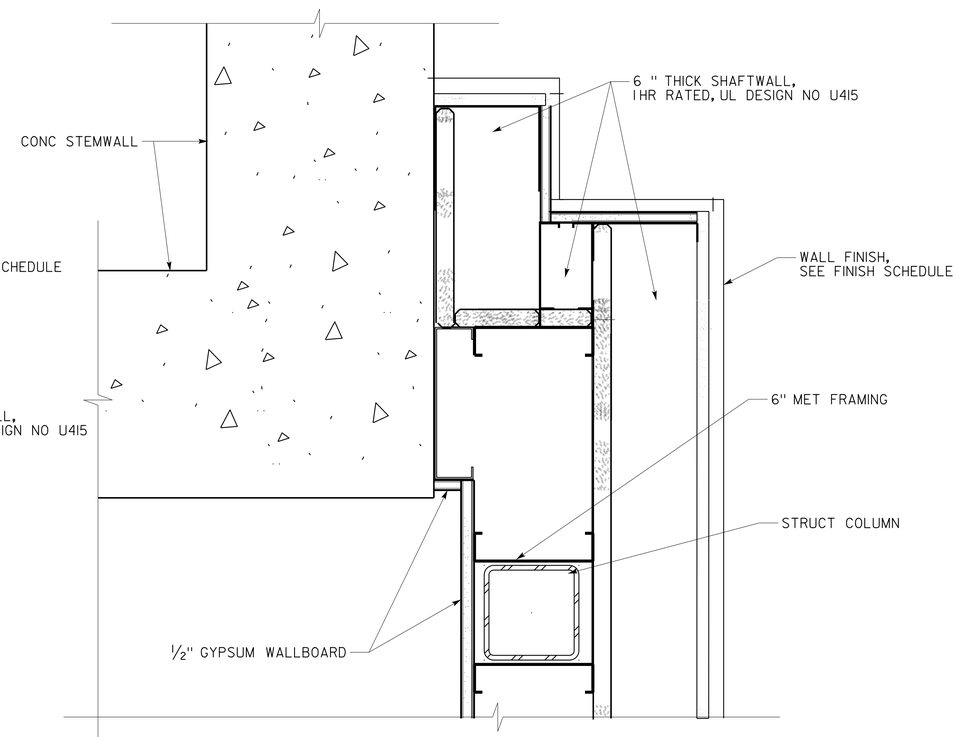

1 HR FIRE BARRIER (4)
SCALE 3" = 1'-0"

DESIGN SUPERVISOR	DESIGNER	CHECKED BY:	SHEET LEGEND A-1 ARCHITECTURAL ST-1 STRUCTURAL M-1 MECHANICAL EE-1 ELECTRICAL MP-1 PLUMBING SS-1 SANITARY	STATE OF CALIFORNIA DEPARTMENT OF TRANSPORTATION	DIVISION OF ENGINEERING SERVICES ARCHITECTURAL AND STRUCTURAL DESIGN	BRIDGE No. 33M5785
DESIGN ARCHITECT	DRAWN BY	STRUCTURAL REVIEW				POST MILE

SFOBB WAREHOUSE
DETAILS — FIRE RATED SYSTEMS
SHEET **A3-8.5**

TAEMWW Imperial - CCSC Rev. 01/13

ORIGINAL SCALE IN INCHES FOR REDUCED PLANS 0 1 2 3

UNIT: 3598 CONTRACT No.: 014101
PROJECT NUMBER & PHASE: 04130001331

DISREGARD PRINTS BEARING EARLIER REVISION DATES → - -13

REVISION DATES (PRELIMINARY STAGE ONLY) SHEET X OF X

30-APR-2014 10:11

D:\temporary\a3_08.5_misc_fire_rated_details.dgn

Dist	COUNTY	LOCATION CODE	POST MILES TOTAL PROJECT	SHEET No.	TOTAL SHEETS
04	Ala	5785		166	371

LICENSED ARCHITECT — DATE 10-25-13

3-24-14
PLANS APPROVAL DATE

LICENSED ARCHITECT — Lani Rhoades — No. C 26695 — 10-31-15 RENEWAL DATE — STATE OF CALIFORNIA

The State of California or its officers or agents shall not be responsible for the accuracy or completeness of scanned copies of this plan sheet.

ACCESSIBILITY DESIGN APPROVAL DOT / DES / OTA
PROJECT ID **0413000133**
Reviewed by: Y. A. WANG
Date: 02-13-14

CALIFORNIA STATE FIRE MARSHAL APPROVED
Approval of this plan does not authorize or approve any omission or deviation from applicable regulations. Final approval is subject to field inspection. One set of approved plans shall be available on the project site at all times.
Reviewed by: INGRID P. ICASIANO
Approval date: 02-11-14

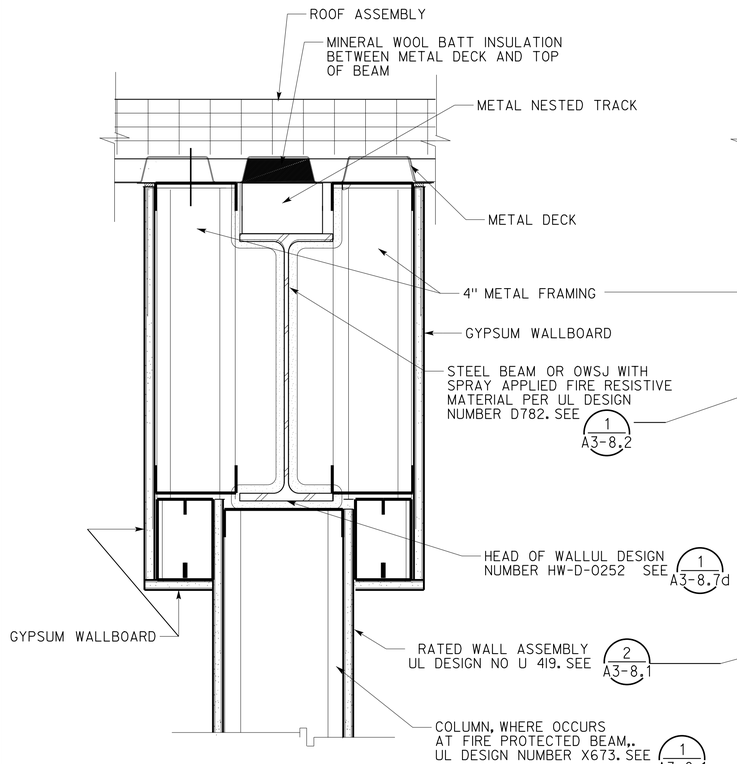

1 INTERIOR WALL PARALLEL TO AND UNDER OWSJ OR BEAM

SCALE 3" = 1'-0"

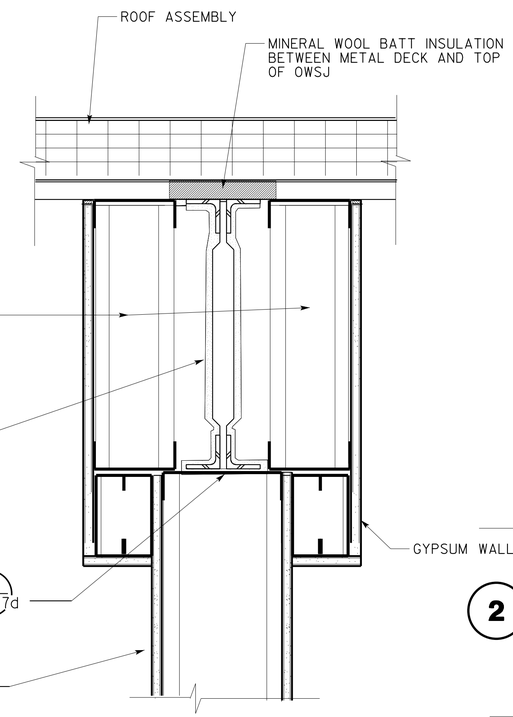

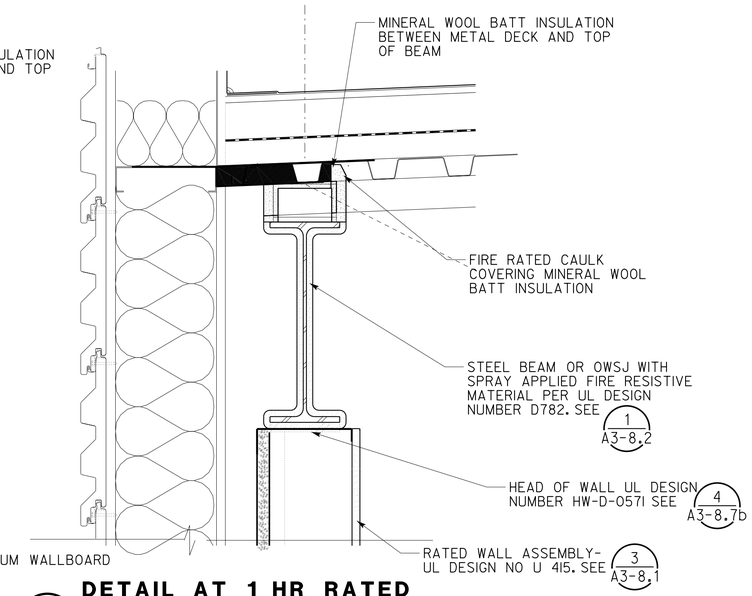

2 DETAIL AT 1 HR RATED WALL ASSEMBLY

SCALE 2" = 1'-0"

Note: See fire resistance notes on sheet A3-8.1 for additional information on UL design numbers.

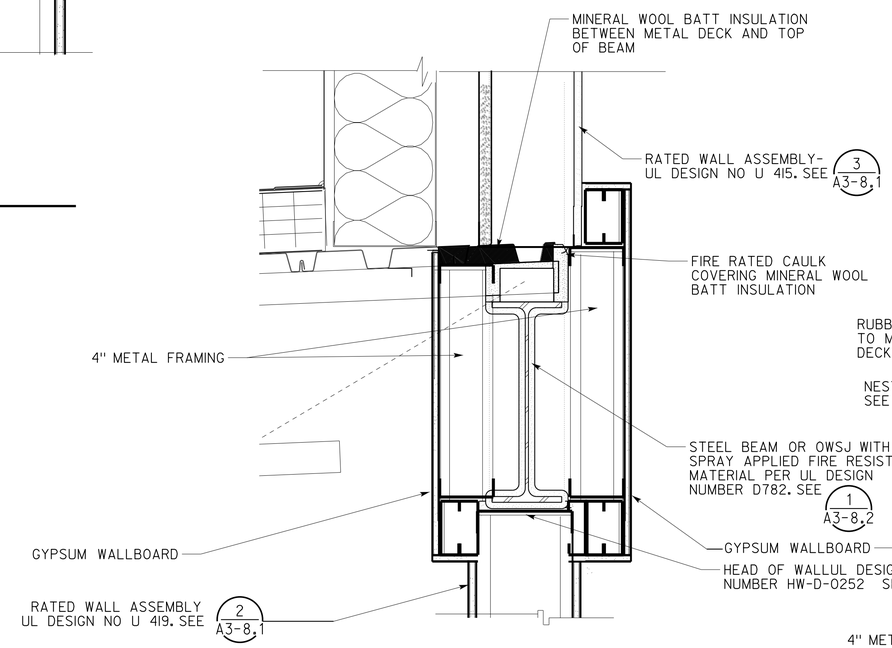

3 DETAIL AT 1 HR RATED WALL ASSEMBLY

SCALE 2" = 1'-0"

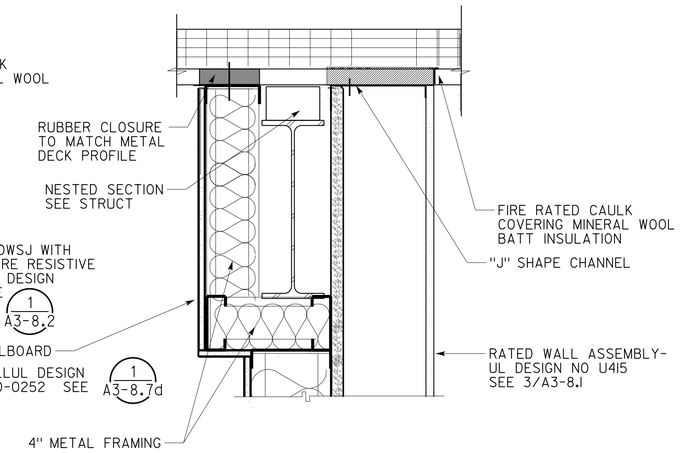

4 SHAFTWALL AT BEAM

SCALE 2" = 1'-0"

DESIGN SUPERVISOR	DRAWN BY	CHECKED BY:	SHEET LEGEND A-1 ARCHITECTURAL ST-1 STRUCTURAL M-1 MECHANICAL EE-1 ELECTRICAL MP-1 PLUMBING SS-1 SANITARY	STATE OF CALIFORNIA DEPARTMENT OF TRANSPORTATION	DIVISION OF ENGINEERING SERVICES ARCHITECTURAL AND STRUCTURAL DESIGN	BRIDGE No. 33M5785 POST MILE
DESIGN ARCHITECT		STRUCTURAL REVIEW				

SFOBB WAREHOUSE
DETAILS — FIRE RATED SYSTEMS
SHEET **A3-8.6**

TAEMWW Imperial - CCSC Rev. 01/13

ORIGINAL SCALE IN INCHES FOR REDUCED PLANS 0 1 2 3

UNIT: 3598 CONTRACT No.: 014101
PROJECT NUMBER & PHASE: 04130001331

DISREGARD PRINTS BEARING EARLIER REVISION DATES → - -13

REVISION DATES (PRELIMINARY STAGE ONLY) — SHEET X OF X

30-APR-2014 10:11

D:\temporary\a3_08.6_misc_fire_rated_details.dgn

Dist	COUNTY	LOCATION CODE	POST MILES TOTAL PROJECT	SHEET No.	TOTAL SHEETS
04	Ala	5785		167	371

LICENSED ARCHITECT — DATE 10-25-13

3-24-14
PLANS APPROVAL DATE

LICENSED ARCHITECT Lani Rhoades No. C 26695 10-31-15 RENEWAL DATE STATE OF CALIFORNIA

The State of California or its officers or agents shall not be responsible for the accuracy or completeness of scanned copies of this plan sheet.

ACCESSIBILITY DESIGN APPROVAL DOT / DES / OTA
PROJECT ID **0413000133**
Reviewed by: Y. A. WANG
Date: 02-13-14

CALIFORNIA STATE FIRE MARSHAL APPROVED
Approval of this plan does not authorize or approve any omission or deviation from applicable regulations. Final approval is subject to field inspection. One set of approved plans shall be available on the project site at all times.
Reviewed by: INGRID P. ICASIANO
Approval date: 02-11-14

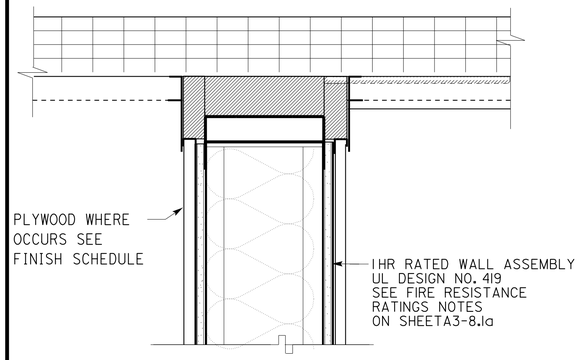

1 HR FIRE BARRIER- UL No. HW-D-0020
1
SCALE 3" = 1'-0"

UL DESIGN NUMBER HW-D-0020

1. Roof Assembly
   A. Steel Roof Deck
   B. Roof Insulation

2. Wall Assembly - The 1 hr fire rated gypsum board/steel stud wall assembly shall be constructed of the materials and in the manner described in the individual U400, V400 or W400 Series Wall and Partition Design in the UL Fire Resistance Directory and shall include the following construction features:

A. Steel Floor And Ceiling Runners - Floor and ceiling runners of wall assembly shall consist of galv steel channels sized to accommodate steel studs (Item 2B). When optional deflection channel (Item 3A) is used, ceiling runner to be provided with 3 in flanges. Ceiling runner installed within the deflection channel with 1 in. gap maintained between the top of ceiling runner and top of deflection channel. When deflection channel is not used, flange height of ceiling runner shall be min ¾ in. greater than nom joint width. Ceiling runner is installed perpendicular to direction of fluted steel deck and secured to valleys with steel masonry anchors or by welds spaced max 24 in. OC. When optional spray-applied fire resistive material is used on the steel deck and when deflection channel is not used, ceiling runner secured through spray-applied material to each valley of steel deck with min 3/16 in. diam steel masonry anchors spaced max 12 in OC.

B. Studs - Steel studs to be min 3-1/2 in. wide. Studs cut ½ to ¾ in. less in length than assembly height with bottom nesting in and resting on floor runner and with top nesting in ceiling runner without attachment. When slotted ceiling runner (Item 2A1) is used, steel studs secured to slotted ceiling runner with No. 8 by ½ in. (13 mm) long wafer head steel screws at midheight of slot on each side of wall. Stud spacing not to exceed 24 in OC.

C. Gypsum Board* - Gypsum board sheets installed to a min total thickness of ⅝ in. and 1-1/4 in. on each side of wall for 1 and 2 hr rated assemblies, respectively. Wall to be constructed as specified in the individual Wall and Partition Design in the UL Fire Resistance Directory, except that a nom 1 in. gap shall be maintained between the top of the gypsum board and the bottom of the steel floor or roof deck and the top row of screws shall be installed into the studs 3-1/2 in. below the lower surface the floor or roof deck. The hourly fire rating of the joint system is equal to the hourly fire rating of the wall.

3. Joint System - Max separation between bottom of floor or roof and top of wall is 1 in.. The joint system is designed to accommodate a max 25 percent compression or extension from its installed width. The joint system consists of an optional deflection channel, forming material and a fill material, as follows:

A. Deflection Channel - (Optional) - A nom 3-5/8 in. wide by 3 in. deep min 24 ga steel U-shaped channel. Deflection channel installed perpendicular to direction of fluted steel deck and secured to valleys with steel masonry anchors or by welds spaced max 24 in. OC. When optional spray-applied fire resistive material is used on the steel deck, deflection channel secured through spray-applied material to each valley of steel deck with min 1-1/2 in. long by min 3/16 in. diam steel masonry anchors spaced max 12 in. OC. The ceiling runner (Item 2A) is installed within the deflection channel to maintain a 1 in. gap between the top of the ceiling runner and the top of the deflection channel. The ceiling runner is not fastened to the deflection channel.

UL DESIGN NUMBER HW-D-0020 (CONTINUED)

B. Forming Material* 15/32 Min 4 in. thickness of min 4 pcf density mineral wool batt insulation cut to the shape of the fluted deck, approx 20 percent larger than the area of the flutes and compressed into flutes of the steel floor or roof deck between the top of the deflection channel or ceiling
runner and the steel deck. Additional pieces of min 4 pcf mineral wool batt insulation are to be cut to the contour of the flutes with an additional 1-3/8 in. high section at the bottom of the shapes to fill the 1 in. gap between the top of the gypsum board and bottom of the steel floor or roof deck. The additional pieces of mineral wool are compressed and firmly packed into the flutes and the gap between the top of the gypsum board and bottom of the steel floor units on both sides of the wall and shall be a min ¾ in. thick for 1 hr Rated Design and a min 1-1/2 in. thick for 2 hr Rated Design.

C. Fill, Void or Cavity Material* - Min 1/16 in. dry (1/8 in. or 3.2 mm wet) thickness of fill material sprayed or brushed on each side of the wall in the flutes of the steel floor or roof deck units and between the top of the gypsum board and the bottom of the steel floor or roof deck units to completely cover mineral wool and overlap a min of ½ in. into gypsum board and steel floor deck on both sides of wall. When the steel floor deck is coated with spray-applied material, the fill material shall overlap min 2 in. onto the spray-applied material.
Fill Material must be exactly as that required for UL Design Number HW-D-0020 compliance.

*Bearing the UL Classification Mark

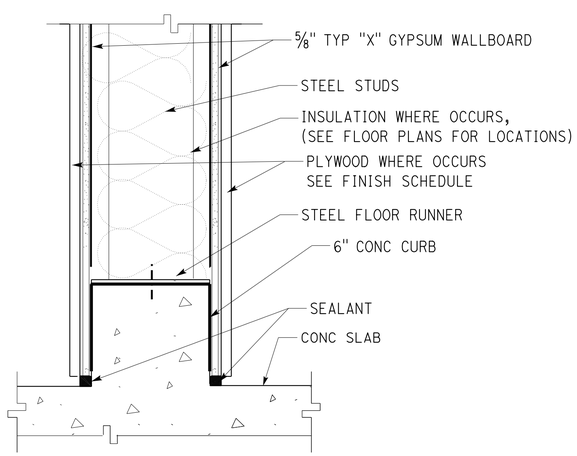

1 HR FIRE BARRIER- UL DESIGN No. BW-S-0001
2
SCALE 3" = 1'-0"

UL DESIGN NUMBER BW-S-0001

1. Floor Assembly - Min 4-1/2 in. thick reinforced lightweight or normal weight (100-150 pcf) structural concrete. Floor may also be constructed of any 6 in. thick UL Classified hollow-core Precast Concrete Units*.
See Precast Concrete Units category in the Fire Resistance Directory for names of manufactures.
2. Wall Assembly - The 1 or 2 h fire-rated gypsum board/steel stud wall assembly shall be constructed of the materials and in the manner specified in the individual U400 or V400 Series Wall or Partition Design in the UL Fire Resistance Directory. In addition, the wall may incorporate a head-of-wall joint system constructed as specified in the HW Series Joint Systems in the UL Fire Resistance Directory. The wall shall include the following construction features:
A. Steel Floor Runner - Floor runners of wall assembly shall consist of min No. 25 gauge galv steel channels sized to accommodate steel studs (Item 2B). Floor runners to be provided with Min 1-1/4 in. flanges. Runners secured with steel fasteners spaced 12 in. OC.
B. Studs - Steel studs to be Min 2-1/2 in. wide. Studs cut ½ to ¾ in. less in length than assembly height with bottom nesting in, resting on and fastened to floor runner with sheet metal screws. Stud spacing not to exceed 24 in. OC.
C. Gypsum Board* - Gypsum board installed to a Min total thickness of ⅝ or 1-1/4 in. on each side of wall for a 1 or 2 hr rated wall, respectively. Wall to be constructed as specified in the individual U400 or V400 Series Design in the UL Fire Resistance Directory, except that a Max ¾ in. gap shall be maintained between the bottom of gypsum board and top of concrete floor. The hourly fire rating of the joint system is equal to the hourly fire rating of the wall.
3. Fill, Void or Cavity Material* -Sealant - Max separation between top of floor and bottom of gypsum board is ¾ in. For 1 and 2 hr rated wall assemblies, Min ⅝ in. or 1-1/4 in. thickness of fill material, respectively, installed on each side of the wall between the bottom of the gypsum board and the top of the concrete floor, flush with each surface of the wall.
Sealant must be exactly as that required for UL Design Number BW-S-001 compliance.

*Bearing the UL Classification Mark

	BY	CHECKED
DESIGN	L Rhoades, R Francisco	Q. Wong, F. Thomas
DETAILS	L Rhoades, J. Kwong	Q. Wong, F. Thomas
QUANTITIES		

STATE OF CALIFORNIA DEPARTMENT OF TRANSPORTATION

DIVISION OF ENGINEERING SERVICES ARCHITECTURAL AND STRUCTURAL DESIGN

BRIDGE No. 33M5785 POST MILE

SFOBB WAREHOUSE
DETAILS — FIRE RATING SYSTEMS

SHEET A3-8.7a

TAEMWW Imperial - CCSC Rev. 01/13

ORIGINAL SCALE IN INCHES FOR REDUCED PLANS 0 1 2 3

UNIT: 3598 CONTRACT No.: 014101
PROJECT NUMBER & PHASE: 04130001331

DISREGARD PRINTS BEARING EARLIER REVISION DATES → - -13

REVISION DATES (PRELIMINARY STAGE ONLY) SHEET X OF X

30-APR-2014 10:11

D:\temporary\a3_08.7a fire.dgn

Dist	COUNTY	LOCATION CODE	POST MILES TOTAL PROJECT	SHEET No.	TOTAL SHEETS
04	Ala	5785		168	371

LICENSED ARCHITECT — DATE 10-25-13

3-24-14
PLANS APPROVAL DATE

LICENSED ARCHITECT Lani Rhoades No. C 26695 10-31-15 RENEWAL DATE STATE OF CALIFORNIA

The State of California or its officers or agents shall not be responsible for the accuracy or completeness of scanned copies of this plan sheet.

ACCESSIBILITY DESIGN APPROVAL DOT / DES / OTA
PROJECT ID **0413000133**
Reviewed by: Y. A. WANG
Date: 02-13-14

CALIFORNIA STATE FIRE MARSHAL APPROVED
Approval of this plan does not authorize or approve any omission or deviation from applicable regulations. Final approval is subject to field inspection. One set of approved plans shall be available on the project site at all times.
Reviewed by: INGRID P. ICASIANO
Approval date: 02-11-14

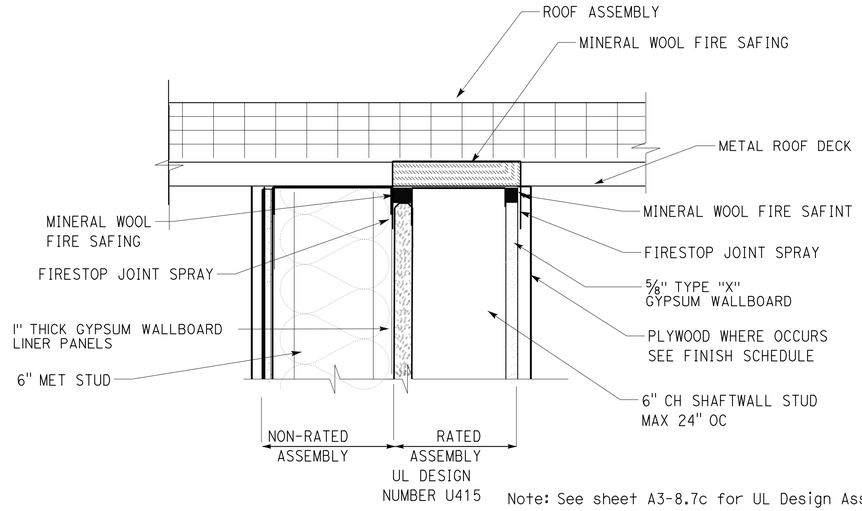

Note: See sheet A3-8.7c for UL Design Assembly description.

1 1-HOUR RATED SHAFTWALL ASSEMBLY UL DESIGN NUMBER HW-D-0569

SCALE 3" = 1'-0"

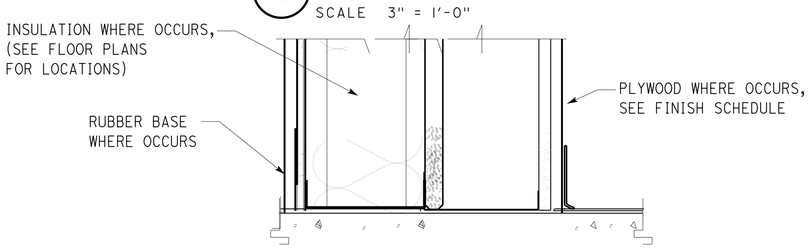

NoteS:
Where raised pad occurs, see detail 4/A3-8.4
Where concrete curb occurs, see detail 3/--

2 1-HOUR RATED SHAFTWALL ASSEMBLY UL DESIGN NUMBER BW-S-0016

SCALE 3" = 1'-0"

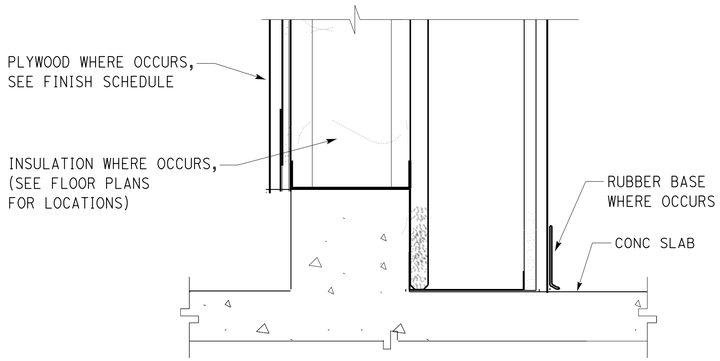

3 1-HOUR RATED SHAFTWALL ASSEMBLY UL DESIGN NUMBER BW-S-0016

SCALE 3" = 1'-0"

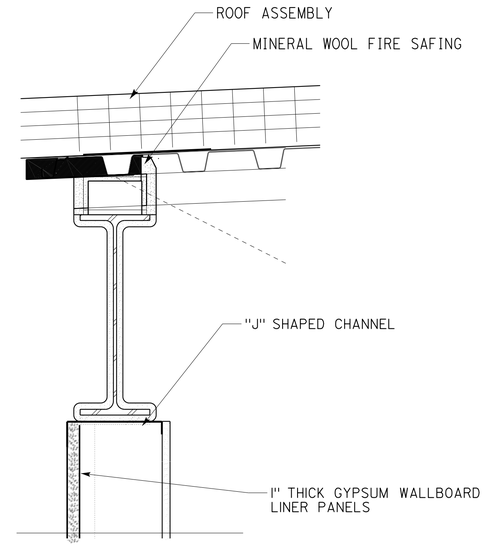

4 1-HOUR RATED SHAFTWALL ASSEMBLY UL DESIGN NUMBER HW-D-0571

SCALE 3" = 1'-0"

UL DESIGN No. BW-S-0016

1. Floor Assembly - Min 4-1/2 in. thick reinforced lightweight or normal weight (100-150 pcf) structural concrete. Floor may also be constructed of any Min 6 in. thick UL Classified hollow-core Precast Concrete Units*.
2. Wall Assembly - The 1 hr fire rated gypsum board/steel stud shaft wall assembly shall be constructed of the materials and in the manner specified in the individual U400, V400 or W400 Series Wall and Partition Design in the UL Fire Resistance Directory. In addition, the wall may incorporate a head-of-wall joint system constructed as specified in the HW Series Joint Systems in the UL Fire Resistance Directory. The wall shall include the following construction features:
A. Steel Floor Runner - "J"-shaped runners, 6 in. deep, with unequal legs of 1 in. and 2 in., fabricated from Min 20 MSG galv steel. Runners positioned with short leg toward finished side of wall. Runners attached to structural supports with steel fasteners located not greater than 2 in. from ends and not greater than 24 in. OC.
B. Studs - "C-H", 6 in. deep, fabricated from Min 20 MSG galv steel. Cut to lengths 3/8 to 1/2 in. less than floor-to-ceiling height and spaced 24 in. OC.
C. Gypsum Board* - 1 in. thick gypsum liner panels and 5/8 in. thick gypsum panels installed as specified in the individual U400, V400 or W400 Series Wall and Partition Design in the UL Fire Resistance Directory.
The hourly ratings of the joint system are equal to the hourly fire rating of the wall.
3. Fill, Void or Cavity Material* - Sealant - Max separation between top of floor and bottom of gypsum board is 1/2 in.. Min 1/2 in. thickness of fill material installed on finish side of the wall between the bottom of the gypsum board and the top of the concrete floor. UNITED STATES GYPSUM CO - Type A or AS

*Bearing the UL Classification Mark

UL Design Number HW-D-0571

1. Shaft Wall Assembly - The 1 hr fire rated gypsum board/steel stud shaft wall assembly shall be constructed of the materials and in the manner described in the individual U400 or V400 Series Wall and Partition Design in the UL Fire Resistance Directory and shall include the following construction features:
A. Floor and Wall Runners - (Not Shown) - J-shaped runner, sized equal in width to steel studs (Item 2C), with unequal legs of 1 in. and 2 in., fabricated from 24 MSG galv steel. Runners positioned with short leg toward finished side of wall. Runners attached to floor with steel fasteners located not greater than 2 in. (51 mm) from ends and not greater than 24 in. OC.
B. Steel Attachment Clips - Z-shaped clips formed from Min 1 in. (25 mm) wide strips of Min 20 ga galv steel. Length of clips should not exceed the width (thickness) of the wall. Clips to be sized to extend through the thickness of the spray-applied fire-resistive material on the bottom flange of the steel beam with 2 in. long upper and lower legs. Height of clips to be equal to the required thickness of spray-applied fireproofing material (Item 1D or 1D1) on the bottom flange of the steel beam. Legs of clips fastened to bottom of beam (prior to application of spray-applied fire-resistive materials) and top of ceiling runner with steel fasteners or welds. Clips spaced Max 24 in. OC.
C. Ceiling Runner - Ceiling runner of wall assembly shall consist of galv steel channel sized to accommodate steel studs (Item 2D). Flange height of ceiling runner shall be Min 1/4 in. (6 mm) greater than max extended joint width. Ceiling runner to be positioned beneath and parallel with bottom flange of steel beam. Ceiling runner secured to steel attachment clips (Item 2B) with steel fasteners or welds spaced Max 24 in. OC.
C1. Light Gauge Framing* - Slotted Ceiling Runner - As an alternate to the ceiling runner in Item 2B, slotted ceiling runner to consist of galv steel channel with slotted flanges sized to accommodate steel studs (Item 2C). Flange height of slotted ceiling runner shall be min 1/4 in. greater than max extended joint width. Slotted ceiling runner to be positioned beneath and parallel with bottom flange of steel beam. Slotted ceiling runner secured to steel attachment clips (Item 2B) with steel fasteners or welds spaced Max 24 in. (610 mm) OC.

C2. Light Gauge Framing* - Slotted Ceiling Runner - As an alternate to the ceiling runner in Item 2C through 2C1, slotted ceiling runner to consist of galv steel channel, sized to accommodate steel studs (Item 2D). Flange height of slotted ceiling runner shall be 3-1/4 in. with 2 in deep slots. Slotted ceiling runner to be positioned beneath and parallel with bottom flange of steel beam. Slotted ceiling runner secured to steel attachment clips (Item 2B) with steel fasteners or welds spaced max 24 in. (610 mm) OC.

D. Steel Studs -2 C-H shaped studs, min 4 in. wide by 1-1/2 in. deep, fabricated from 25 MSG galv steel, cut to lengths 3/4 to 1 in. less than floor to ceiling height beneath coating on steel beam bottom flange and spaced 24 in. OC. When slotted ceiling runner specified in Item 2C2 is used the C-H-shaped studs cut in lengths 3/4 to 1-3/4 in. less than floor to ceiling height beneath coating on steel beam bottom flange and spaced 24 in. OC.

(Continued on Sheet A3-8.7c)

	BY	CHECKED
DESIGN	L Rhoades, R Francisco	Q. Wong, F. Thomas
DETAILS	L Rhoades, J. Kwong	Q. Wong, F. Thomas
QUANTITIES		

STATE OF CALIFORNIA
DEPARTMENT OF TRANSPORTATION

DIVISION OF ENGINEERING SERVICES
ARCHITECTURAL AND STRUCTURAL DESIGN

BRIDGE No. 33M5785
POST MILE

SFOBB WAREHOUSE
DETAILS — FIRE RATING SYSTEMS

SHEET A3-8.7b

TAEMWW Imperial - CCSC Rev. 01/13

ORIGINAL SCALE IN INCHES FOR REDUCED PLANS 0 1 2 3

UNIT: 3598 CONTRACT No.: 014101
PROJECT NUMBER & PHASE: 04130001331

DISREGARD PRINTS BEARING EARLIER REVISION DATES → - -13

REVISION DATES (PRELIMINARY STAGE ONLY) SHEET X OF X

30-APR-2014 10:11

D:\temporary\a3_08.7b fire.dgn

Dist	COUNTY	LOCATION CODE	POST MILES TOTAL PROJECT	SHEET No.	TOTAL SHEETS
04	Ala	5785		169	371

LICENSED ARCHITECT 10-25-13 DATE

3-24-14
PLANS APPROVAL DATE

LICENSED ARCHITECT Lani Rhoades No. C 26695 10-31-15 RENEWAL DATE STATE OF CALIFORNIA

The State of California or its officers or agents shall not be responsible for the accuracy or completeness of scanned copies of this plan sheet.

ACCESSIBILITY DESIGN APPROVAL DOT / DES / OTA
PROJECT ID **0413000133**
Reviewed by: Y. A. WANG
Date: 02-13-14

CALIFORNIA STATE FIRE MARSHAL APPROVED
Approval of this plan does not authorize or approve any omission or deviation from applicable regulations. Final approval is subject to field inspection. One set of approved plans shall be available on the project site at all times.
Reviewed by: INGRID P. ICASIANO
Approval date: 02-11-14

UL DESIGN NUMBER HW-D-0569

1. Roof Assembly
2. Shaft Wall Assembly - The 1 hr or 2 hr fire rated gypsum board/steel stud shaft wall assembly shall be constructed of the materials and in the manner described in the individual U400, V400 or W400 Series Wall and Partition Design in the UL Fire Resistance Directory and shall include the following construction features:

A. Floor and Wall Runners - (Not Shown) - J-shaped runner, equal in width to steel studs (Item 2C), with unequal legs of 1 in. (25 mm) and 2 in. (51 mm), fabricated from 24 MSG galv steel. Runners positioned with short leg toward finished side of wall. Runners attached to floor with steel fasteners located not greater than 2 in. (51 mm) from ends and not greater than 24 in. (610 mm) OC.

B. Ceiling Runner - Ceiling runner of wall assembly shall consist of galv steel channel sized to accommodate steel studs (Item 2C). Flange height of ceiling runner shall be Min 1/4 in. (6 mm) greater than max extended joint width. Ceiling runner installed perpendicular to direction of fluted steel deck and secured to steel deck valleys with steel fasteners or welds spaced Max 24 in. (610 mm) OC or to steel attachment clips (Item 1D) with steel fasteners spaced Max 16 in. (406 mm) OC.

B1. Light Gauge Framing* - Slotted Ceiling Runner - As an alternate to the ceiling runner in Item 2B, slotted ceiling runner to consist of galv steel channel with slotted flanges sized to accommodate steel studs (Item 2C). Flange height of slotted ceiling runner shall be Min 1/4 in. (6 mm) greater than Max extended joint width. Slotted ceiling runner installed perpendicular to direction of fluted steel deck and secured to steel deck valleys before or after optional spray-applied fire resistive material is used with steel masonry anchors spaced Max 24 in. (610 mm) OC. The use of welds to secure the ceiling runner may only be used prior to the installation of the optional spray-applied material.

B2. Light Gauge Framing* - Slotted Ceiling Runner - As an alternate to the ceiling runner in Item 2B, slotted ceiling runner to consist of galv steel channel, sized to accommodate steel studs (Item 2C). Flange height of slotted ceiling runner shall be 3-1/4 in. (83 mm) with 2 in. (51 mm) deep slots. Slotted ceiling runner installed perpendicular to direction of fluted steel deck and secured to steel deck valleys as described in Item B1.

C. Steel Studs - C-H-shaped studs, Min 4 in. (102 mm) wide by 1-1/2 in. (38 mm) deep, fabricated from 25 MSG galv steel, cut to lengths 3/4 to 1 in. (19 to 25 mm) less than floor to ceiling height and spaced 24 in. (610 mm) OC. When slotted ceiling runner specified in Item 2B2 is used the C-H-shaped studs cut in lengths 3/4 to 1-3/4 in. (19 to 44 mm) less than floor to ceiling height.

D. Gypsum Board* - Nom 1 in. (25 mm) thick gypsum board liner panels. Panels cut 1-1/2 in. (38 mm) less in length than floor to ceiling height. Vertical edges inserted in H-shaped section of C-H studs. At the ends of the assembly, the free edge of the end panels are attached to the long leg of vertical J-runners (Item 2A) with 1-5/8 in. (41 mm) long Type S steel screws spaced Max 12 in. (305 mm) OC.

E. Gypsum Board* - Nom 5/8 in. (16 mm) thick gypsum board applied vertically in one or two layers for 1 hr and 2 hr fire rated assemblies, respectively. Panels cut 1-1/2 in. (38 mm) less in length than floor to ceiling height. The screws attaching the gypsum board layers to the C-H studs shall be located 1 to 1-1/2 in. (25 to 38 mm) below the bottom of the ceiling runner or slotted ceiling track. No gypsum board attachment screws are to penetrate the ceiling runner or slotted ceiling track.The hourly ratings of the joint system are equal to the hourly fire rating of the wall.

UL DESIGN NUMBER HW-D-0569
(CONTINUED)

3. Joint System - Max separation between bottom of fluted deck surface and top of gypsum board (at the time of installation of the joint system) is 1 1/2 in. (38 mm). The joint system is designed to accommodate a Max 50 percent compression or extension from its installed width. The joint system consists of the following:

A. Forming Material* - Min 4 pcf (64 kg/m3) density mineral wool batt insulation sized to attain a Min compression rate of 25 percent in the thickness direction and firmly packed to completely fill the flutes of the steel floor units or roof deck above the ceiling runner as a permanent form. The mineral wool batt insulation is to project beyond the ceiling runner to be flush with the finished wall surfaces. Alternately, Nom 4 pcf (64 kg/m3) forming material cut to shape of flute and Nom 1 in. (25 mm) longer than thickness of wall; mineral wool compressed from ends and firmly packed into each flute to attain a Min compression rate of 14.3 percent in the length (wall thickness) direction to be flush with both wall surfaces.

A1. Forming Material* - Plugs - As an alternate to Item 3A, preformed mineral wool plugs, formed to the shape of the fluted floor units or roof deck, friction fit to completely fill the flutes above the ceiling runner. The plugs shall project beyond the finished side of the ceiling runner, flush with wall surface.

B. Forming Material* - Min 4 pcf (64 kg/m3) density mineral wool batt insulation cut to a thickness twice larger than the distance between the top of the gypsum board and the bottom of the steel floor unit or roof deck. Material compressed 50 percent and installed within ceiling runner above top of liner panel flush with the inside surface of the panel. Material compressed and installed on finished side of the wall between the top of the gypsum board and the bottom of the steel floor units or roof deck, flush with the surface of the wall.

B1. Forming Material* - Strips - As an alternate to Item 2B, the strips are stacked to a height twice larger than the distance between the top of the gypsum board and the bottom of the steel floor unit or roof deck. Strips compressed 50 percent and installed within ceiling runner above top of liner panel flush with the inside surface of the panel. Strips compressed and installed on finished side of the wall between the top of the gypsum board and the bottom of the steel floor units or roof deck, flush with the surface of the wall.

C. Fill, Void or Cavity Material* - Min 1/16 in. (1.6 mm) dry thickness (1/8 in. or 3.2 mm wet thickness) of fill material sprayed or troweled within stud cavity and on both sides of the shaft wall to completely cover mineral wool forming material. Fill material to overlap a min of 1/2 in. (13 mm) onto gypsum board and ceiling runner within stud cavity. Fill material to overlap a min of 1/2 in. (13 mm) onto gypsum board and steel deck on finished side of wall. Fill material to overlap a Min of 1/2 in. onto steel deck and ceiling runner on unfinished side of wall with no overlap onto gypsum liner panel. When spray-applied fire resistive material (Item 1C) is applied to the steel deck, the fill material is to overlap the spray-applied fire resistive material a min of 2 in. (51 mm) on both sides of wall.

*Bearing the UL Classification Mark

UL Design Number HW-D-0571
(continued)

E. Gypsum Board* - Nom 1 in. thick gypsum board liner panels. Panels cut 1-1/2 in. less in length than floor to ceiling height beneath coating on steel beam bottom flange. Vertical edges inserted in H-shaped section of C-H studs. At the ends of the assembly, the free edge of the end panels are attached to the long leg of vertical J-runners (Item 2A) with 1-5/8 in. long Type S steel screws spaced max 12 in. OC.

F. Gypsum Board* - Nom 5/8 in. thick gypsum board applied vertically in one or two layers for 1 hr and 2 hr fire rated assemblies, respectively. Panels cut 1-1/2 in. less in length than floor to ceiling height beneath coating on steel beam bottom flange. The screws attaching the gypsum board layers to the C-H studs shall be located 1 to 1-1/2 in. below the bottom of the ceiling runner or slotted ceiling track. No gypsum board attachment screws are to penetrate the ceiling runner or slotted ceiling track. The hourly ratings of the joint system are equal to the hourly fire rating of the wall.

3. Joint System - Max separation between coating on steel beam bottom flange and top of gypsum board (at the time of installation of the joint system) is 1 1/2 in.. The joint system is designed to accommodate a Max 50 percent compression or extension from its installed width. The joint system consists of the following:

A. Forming Material* -2 Min 4 pcf (64 kg/m3) density mineral wool batt insulation cut to a thickness twice larger than the distance between the top of the gypsum board and the bottom of the coating on the steel beam bottom flange. Material compressed 50 percent and installed within ceiling runner above top of liner panel flush with the inside surface of the panel. Material compressed and installed on finished side of the wall between the top of the gypsum board and the bottom of the coating on the steel beam bottom flange, flush with the surface of the wall.

A1. Forming Material* - Strips - As an alternate to Item 2A, the strips are stacked to a height twice larger than the distance between the top of the gypsum board and the bottom of the coating on the steel beam bottom flange. Strips compressed 50 percent and installed within ceiling runner above top of liner panel flush with the inside surface of the panel. Strips compressed and installed on finished side of the wall between the top of the gypsum board and the bottom of the coating on the steel beam bottom flange, flush with the surface of the wall.

B. Fill, Void or Cavity Material* - Min 1/16 in. dry thickness (1/8 in. wet thickness) of fill material sprayed or troweled within stud cavity and on finished side of the shaft wall to completely cover mineral wool forming material. Fill material to overlap a min of 1/2 in. onto gypsum board and ceiling runner within stud cavity. Fill material to overlap a min of 1/2 in. (onto gypsum board and min 2 in. onto spray-applied fire resistive material (Item 1C) on the finished side of the wall.

Bearing the UL: Classification Mark

	BY	CHECKED
DESIGN	L Rhoades, R Francisco	Q. Wong, F. Thomas
DETAILS	L Rhoades, J. Kwong	Q. Wong, F. Thomas
QUANTITIES		

STATE OF CALIFORNIA
DEPARTMENT OF TRANSPORTATION

DIVISION OF ENGINEERING SERVICES
ARCHITECTURAL AND STRUCTURAL DESIGN

BRIDGE No. 33M5785
POST MILE

SFOBB WAREHOUSE
DETAILS
FIRE RATING SYSTEMS

SHEET A3-8.7c

TAEMWW Imperial - CCSC Rev. 01/13

ORIGINAL SCALE IN INCHES FOR REDUCED PLANS 0 1 2 3

UNIT: 3598 CONTRACT No.: 014101
PROJECT NUMBER & PHASE: 04130001331

DISREGARD PRINTS BEARING EARLIER REVISION DATES → - -13

REVISION DATES (PRELIMINARY STAGE ONLY) SHEET X OF X

30-APR-2014 10:11

D:\temporary\a3_08.7c fire.dgn

Dist	COUNTY	LOCATION CODE	POST MILES TOTAL PROJECT	SHEET No.	TOTAL SHEETS
04	Ala	5785		170	371

LICENSED ARCHITECT — DATE 10-25-13

3-24-14
PLANS APPROVAL DATE

LICENSED ARCHITECT Lani Rhoades No. C 26695 10-31-15 RENEWAL DATE STATE OF CALIFORNIA

The State of California or its officers or agents shall not be responsible for the accuracy or completeness of scanned copies of this plan sheet.

ACCESSIBILITY DESIGN APPROVAL DOT / DES / OTA
PROJECT ID **0413000133**
Reviewed by: Y. A. WANG
Date: 02-13-14

CALIFORNIA STATE FIRE MARSHAL APPROVED
Approval of this plan does not authorize or approve any omission or deviation from applicable regulations. Final approval is subject to field inspection. One set of approved plans shall be available on the project site at all times.
Reviewed by: INGRID P. ICASIANO
Approval date: 02-11-14

UL DESIGN NUMBER HW-D-0252

1. Roof Assembly
2. Wall Assembly - The 1 or 2 hr fire-rated gypsum board/stud wall assembly shall be constructed of the materials and in the manner described in the individual U400, V400 or W400 Series Wall and Partition Design in the UL Fire Resistance Directory and shall include the following construction features:

A. Steel Floor and Ceiling Runners Floor and ceiling runners of wall assembly shall consist of galv steel channels sized to accommodate steel studs (Item 2B). Ceiling runner to be provided with min 1-1/4 in. (32 mm) to Max 2 in. (51 mm) flanges. When deflection channel (Item 3A) is used, flange height of ceiling runner is to be equal to or greater than flange height of deflection channel and the ceiling runner is to nest within the deflection channel with a 1/2 in. (13 mm) to 3/4 in. (19 mm) gap maintained between the top of the ceiling runner and the top of the deflection channel. When deflection channel is not used, flange height of ceiling runner shall be Min 1/4 in. (6 mm) greater than max extended joint width and ceiling runner is secured to steel beam (Item 1A) with steel attachment clips (Item 2B) spaced max 24 in. (610 mm) OC. Ceiling runner or deflection channel to be centered beneath and parallel with bottom flange of steel beam. A clearance equal to the required thickness of spray-applied fireproofing material (Item 1D) shall be maintained between the top of the ceiling runner or deflection channel and the bottom flange of the steel beam.

A1. Light Gauge Framing* - Slotted Ceiling Runner Slotted ceiling runner may be used as an alternate to the ceiling runner in Item 2A. Slotted ceiling runner to consist of galv steel channel with slotted flanges sized to accommodate steel studs (Item 2C). Ceiling runner is secured to steel beam (Item 1A) with steel attachment clips (Item 2B) spaced Max 24 in. (610 mm) OC. Slotted ceiling runner to be centered beneath and parallel with bottom flange of steel beam. A clearance equal to the required thickness of spray-applied fireproofing material (Item 1D) shall be maintained between the top of the slotted ceiling runner and the bottom flange of the steel beam. When slotted ceiling runner is used, deflection channel (Item 3A) shall not be used. Light Gauge Framing * must be as that reuqired for UL Design number HW-D-0252 compliance.

B. Steel Attachment Clips - Z-shaped clips formed from 1 in. (25 mm) wide strips of min 20 ga galv steel. Clips to be sized to extend through the thickness of the spray-applied fire-resistive material on the bottom flange of the steel beam with 2 in. (51 mm) long upper and lower legs. Legs of clips fastened to bottom of beam (prior to application of spray-applied fire-resistive materials) and top of ceiling runner (or deflection channel) with steel fasteners or welds. Clips spaced Max 16 in. (406 mm) OC.

C. Studs - Steel studs to be Min 3-1/2 in. (89 mm) wide. Studs cut 1/2 in. (13 mm) to 1-1/4 in. (32 mm) less in length than assembly height with bottom nesting in and secured to floor runner. When deflection channel (Item 3A) is used, steel studs attached to ceiling runner (Item 2A) with sheet metal screws located 1/2 in. (13 mm) below the bottom of the deflection channel. When deflection channel is not used, studs to nest in ceiling runner without attachment.

D. Gypsum Board* - Gypsum board sheets installed to a min total 5/8 in. (16 mm) or 1-1/4 in. (32 mm) thickness on each side of wall for 1 and 2 hr fire rated assemblies, respectively. Wall to be constructed in accordance with the individual U400 or V400 Series Design in the UL Fire Resistance Directory, except that a max 1 in. (25 mm) high gap shall be maintained between the top of the gypsum board and the bottom plane of the spray applied fire resistive material on the structural steel support member. The screws attaching the gypsum board to the studs along the top of the wall shall be located 1 in. (25 mm) below the bottom of the ceiling runner. No gypsum board attachment screws shall be driven into the ceiling runner or into the optional deflection channel. The hourly fire rating of the joint system is equal to the hourly fire rating of the wall.

3. Joint System - Max separation between spray applied fire resistive material on bottom of structural support member and top of gypsum board (at time of installation of joint system) is 3/4 or 1-1/2 in. (19 or 38 mm). The joint system is designed to accommodate a max 50 or 100 percent compression or extension from its installed width as measured between bottom plane of the protective material on the steel beam and the top of the gypsum board. When Item 3B1 is used in lieu of the strips of mineral wool described in Item 3B, the maximum joint width is 3/4 in. (19 mm) and the movement capabilities are 100% compression or extension. The joint system shall consist of forming and fill materials, with or without a deflection channel (Item 3A), as follows:

A. Deflection Channel - (Optional, Not Shown) - Max 2 in. (51 mm) deep Min 24 gauge galv steel channel sized to accommodate ceiling runner (Item 2A). Deflection channel installed parallel with and centered beneath bottom flange of steel beam (Item 1C) and secured to steel beam with steel clips (Item 2B) spaced Max 16 in. (406 mm) OC. The ceiling runner (Item 2A) is installed within the deflection channel to maintain a 1/2 in. (13 mm) to 3/4 in. (19 mm) gap between the top of the ceiling runner and the top of the deflection channel. A clearance equal to the required thickness of spray-applied fireproofing material (Item 1D) shall be maintained between the top of the ceiling runner or deflection channel and the bottom flange of the steel beam. The ceiling runner nests inside the deflection channel without attachment

B. Forming Material* - Sections of Nom 4 pcf (64 kg/m3) mineral wool batt insulation to be compressed 50 percent in thickness and installed cut edge first to completely fill the gap above the top of the gypsum board. The forming material shall be installed flush with both surfaces of wall. Forming Material * must be exactly as that required for UL Design No HW-D-0252 compliance

B1. Forming Material* (Not Shown) - As an option to Item 3B, Nom 3/16 in. (4.8 mm) thick by 4 in. (102 mm) high joint forming material profile installed on both sides of the wall assembly. Profile installed by first marking a line across the top of the wall 3 in. (76 mm) below the bottom plane of the steel floor or roof deck valleys. Joint profile material positioned with its top edge against both the underside of the spray-applied fire-resistive material with its bottom edge on the line scribed on the wall assembly. Bottom of the joint profile attached to gypsum board with Nom 1/2 in. (13 mm) long steel staples spaced not greater than 8 in. (203 mm) OC. Adjoining lengths of profile to overlap approx 3/4 in. (19 mm) at shiplapped ends. Forming Material * must be exactly as that required for UL Design No HW-D-0252 compliance

C. Fill, Void or Cavity Material* - Sealant Min 1/8 in. (3.2 mm) wet thickness or 1/16 in. (1.6 mm) dry thickness of fill material spray applied over the forming material on each side of the wall. Fill material to overlap Min 1/2 in. (13 mm) onto gypsum board and min 2 in. onto the spray applied material (Item 1D) on the steel beam on both sides of wall. Sealant * must be exactly as that required for UL Design No HW-D-0252 compliance. *Bearing the UL Classification Mark

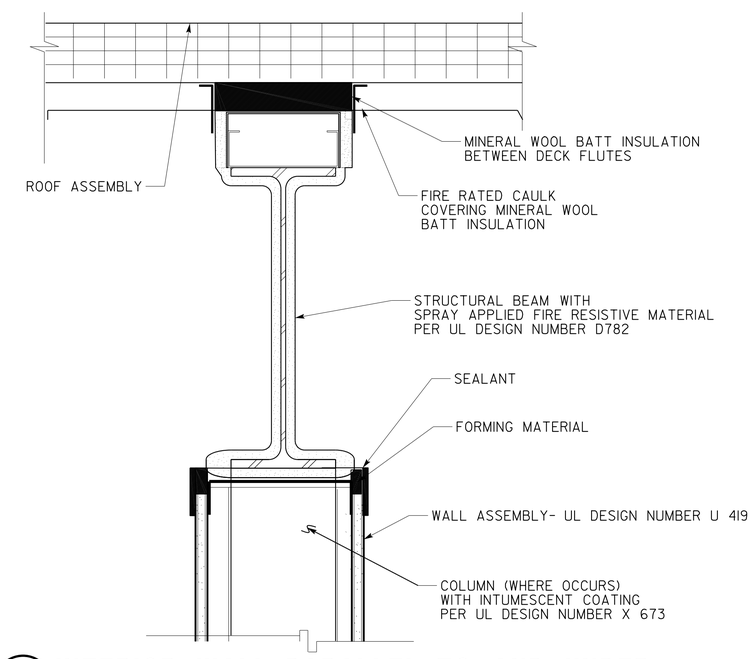

1 INTERIOR WALL PARALLEL TO AND UNDER OWSJ OR BEAM- UL DESIGN NUMBER HW-D-0252

Note: See fire resistance notes on sheet A3-8.1 for additional information on UL design numbers.

DESIGN SUPERVISOR
DESIGN ARCHITECT
DESIGNER
DRAWN BY
CHECKED BY:
STRUCTURAL REVIEW

SHEET LEGEND
A-1 ARCHITECTURAL ST-1 STRUCTURAL
M-1 MECHANICAL EE-1 ELECTRICAL
MP-1 PLUMBING SS-1 SANITARY

STATE OF CALIFORNIA DEPARTMENT OF TRANSPORTATION

DIVISION OF ENGINEERING SERVICES ARCHITECTURAL AND STRUCTURAL DESIGN

BRIDGE No. 33M5785
POST MILE

SFOBB WAREHOUSE
DETAILS — FIRE RATED SYSTEMS

SHEET A3-8.7d

TAEMWW Imperial - CCSC Rev. 01/13

ORIGINAL SCALE IN INCHES FOR REDUCED PLANS 0 1 2 3

UNIT: 3598 CONTRACT No.: 014101
PROJECT NUMBER & PHASE: 04130001331

DISREGARD PRINTS BEARING EARLIER REVISION DATES →
REVISION DATES (PRELIMINARY STAGE ONLY) - -13
SHEET X OF X

30-APR-2014 10:11
D:\temporary\a3_08.7d_misc_fire_rated_details.dgn

UL DESIGN NUMBER HW-D-0495

1. Roof Assembly -

2. Wall Assembly - The 1hr fire rated gypsum board/stud wall assembly shall be constructed of the materials and in the manner described in the individual U400, V400 or W400 Series Wall and Partition Design in the UL Fire Resistance Directory and shall include the following construction features:
A. Steel Floor and Ceiling Runners - Floor runners of wall assembly shall consist of min No. 25 ga galv steel channels sized to accommodate steel studs (Item 2D). Floor runner to be provided with Min 1-1/4 in. legs. The ceiling runners are provided with a fill, void or cavity material and are described in Item 3B.
B. Steel Attachment Clips - Z-shaped or L-shaped clips formed from min 20 ga galv steel. Clips sized to extend from the web of the structural steel support beyond the furthest point of the beam flanges and below the bottom flange a Min 1-1/2 in.. Legs of clips fastened to track frame (Item 2C) or center web and bottom flange of beam (prior to application of spray-applied fire-resistive materials) with steel fasteners or welds. Clips located on both sides of the beam web and below the bottom flange.
C. Steel Track Frame - Length of ceiling track (Item 3B) cut at two points allowing two 90 degree bends creating a one piece U-shaped frame encompassing the structural steel support such that the horizontal section is located Min 1-1/2 in. below the bottom flange of the structural steel support. The vertical sections located a Min 1in. away from the furthest surface of the beam flanges to extend up to the lowest point of the intumescent strip on the ceiling track with the ends of the intumescent strips butted in contact and attached to the ceiling track with typical steel fasteners. The track frame is centered over the Z-clips or L-clips and attached with typical steel fasteners through the frame web.
D. Studs - Steel studs to be Min 3 5/8 in. wide. Studs cut 1/2 to 1-5/8 in. less in length than assembly height with bottom nesting in and secured to floor runner. Studs to nest in ceiling runner without attachment when DL Series (Item 3) is used. When slotted ceiling runner SL (or DSL) Series (Item 3B) is used, steel studs secured to slotted ceiling runner with No. 8 by 1/2 long wafer head steel screws at mid-height of exposed slot on one or both sides of slotted ceiling runner. Studs are not to be attached to the vertical sections of the steel track frame (Item 2C).
E. Gypsum Board* - Gypsum board sheets installed to a Min total 5/8 in. or 1-1/4 in. thickness on each side of wall for 1hr fire rated assemblies, respectively. Wall to be constructed as specified in the individual U400, V400 or W400 Series Design in the UL Fire Resistance Directory except that a Max 3/8 to 1-1/2 in. gap (Item 3) shall be maintained between the top of the gypsum board, the steel floor units and the lowest surface point of the spray applied material on the bottom flange of the steel support. In addition the gypsum board along the vertical edges of the structural steel support to cover the steel track frame (Item 2C). The screws attaching the gypsum board to the studs along the top of the wall shall be located max 2 in. below the bottom of the ceiling runner legs. No gypsum board attachment screws shall be driven into the ceiling runner or the steel track frame (Item 2C).
The hourly fire rating of the joint system is equal to the hourly fire rating of the wall.
3. Joint System - Max separation between steel deck and top of gypsum board (at time of installation) is 3/8 to 1-1/2 in.. The joint system is designed to accommodate a Max 100 percent compression or extension from its installed width.
A. Forming Material - Nom 4 pcf mineral wool batt insulation cut into strips having a thickness of half the wall stacked to maintain a sufficient 50 percent compression between the structural steel support web and the steel track frame (Item 2C), and inserted on both sides of the Steel attachment clips (Item 2B) between the structural steel support and steel track frame. Mineral wool to cover entire area between the structural steel support and the steel track frame.

B. Fill, Void or Cavity Material* - For Nom 3/8 in. joints, a nom 20 ga U-shaped track having solid 2 or slotted 3 in. legs or nom 20 ga J-shaped track having one 2 in. solid leg and one 3 in. slotted leg with a Nom 1in. wide intumescent strip affixed to the top of both legs. Gypsum board to overlap a Min of 5/8 in. over the intumescent strip. Track to be secured to bottom side of floor assembly with steel fasteners spaced a max of 24 in. OC.

B1. Fill, Void or Cavity Material* - For Nom 1/2 in. joints, a nom 20 ga U-shaped track having solid 2 or slotted 3 in. legs or nom 20 ga J-shaped track having one 2 in. solid leg and one 3 in. slotted leg with a Nom 1 1/4 in. wide intumescent strip affixed to the top of both legs. Gypsum board to overlap a Min of 3/4 in. over the intumescent strip. Track to be secured to bottom side of floor assembly with steel fasteners a Max of 24 in. OC.

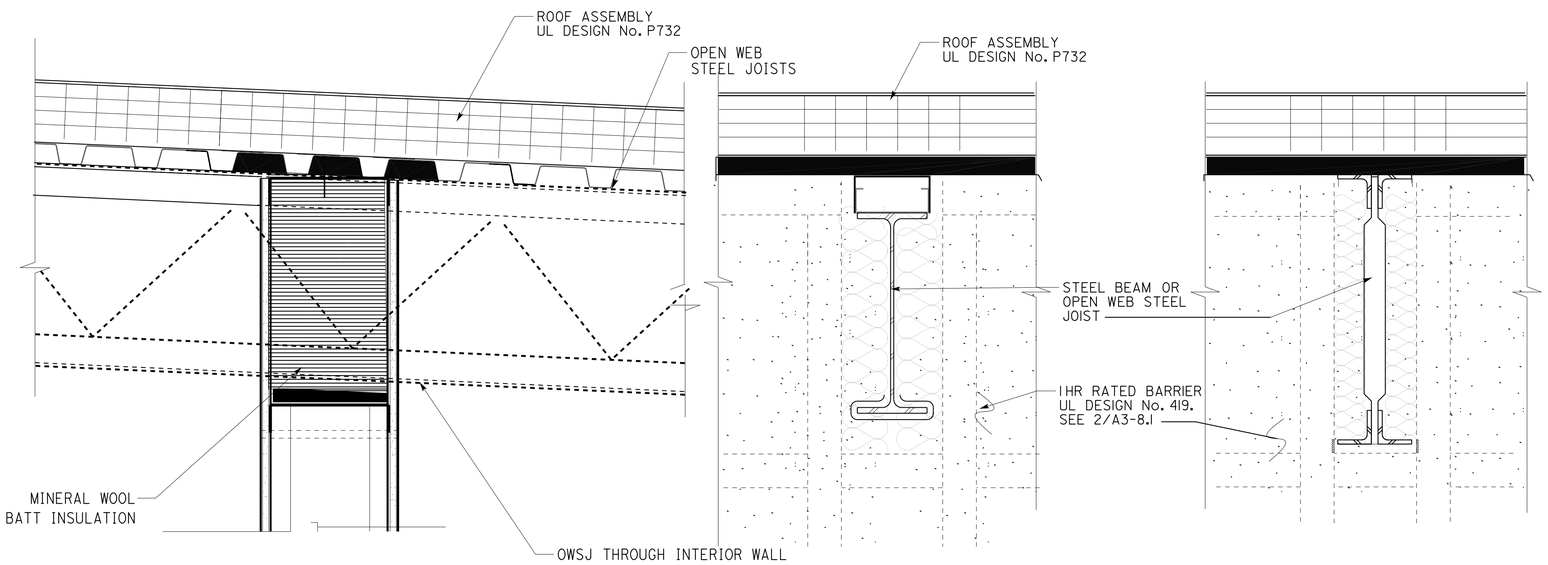

1 HR RATED FIRESTOP AT OWSJ OR BEAM UL DESIGN NUMBER HW-D-0495

1

SCALE 3" = 1'-0"

Note: See fire resistance notes on sheet A3-8.1 for additional information on UL design numbers.

Dist	COUNTY	LOCATION CODE	POST MILES TOTAL PROJECT	SHEET No.	TOTAL SHEETS
04	Ala	5785		171	371

LICENSED ARCHITECT — DATE 10-25-13

3-24-14
PLANS APPROVAL DATE

LICENSED ARCHITECT Lani Rhoades No. C 26695 10-31-15 RENEWAL DATE STATE OF CALIFORNIA

The State of California or its officers or agents shall not be responsible for the accuracy or completeness of scanned copies of this plan sheet.

ACCESSIBILITY DESIGN APPROVAL DOT / DES / OTA
PROJECT ID 0413000133
Reviewed by: Y. A. WANG
Date: 02-13-14

CALIFORNIA STATE FIRE MARSHAL APPROVED
Approval of this plan does not authorize or approve any omission or deviation from applicable regulations. Final approval is subject to field inspection. One set of approved plans shall be available on the project site at all times.
Reviewed by: INGRID P. ICASIANO
Approval date: 02-11-14

DESIGN SUPERVISOR
DESIGN ARCHITECT
DESIGNER
DRAWN BY
CHECKED BY:
STRUCTURAL REVIEW

SHEET LEGEND
A-1 ARCHITECTURAL ST-1 STRUCTURAL
M-1 MECHANICAL EE-1 ELECTRICAL
MP-1 PLUMBING SS-1 SANITARY

STATE OF CALIFORNIA DEPARTMENT OF TRANSPORTATION

DIVISION OF ENGINEERING SERVICES ARCHITECTURAL AND STRUCTURAL DESIGN

BRIDGE No. 33M5785
POST MILE

SFOBB WAREHOUSE
DETAILS — FIRE RATED SYSTEMS

SHEET A3-8.7e

TAEMWW Imperial - CCSC Rev. 01/13

ORIGINAL SCALE IN INCHES FOR REDUCED PLANS 0 1 2 3

UNIT: 3598 CONTRACT No.: 014101
PROJECT NUMBER & PHASE: 04130001331

DISREGARD PRINTS BEARING EARLIER REVISION DATES → REVISION DATES (PRELIMINARY STAGE ONLY) - -13 SHEET X OF X

30-APR-2014 10:11

D:\temporary\a3_08.7e_misc_fire_rated_details.dgn

Dist	COUNTY	LOCATION CODE	POST MILES TOTAL PROJECT	SHEET No.	TOTAL SHEETS
04	Ala	5785		172	371

LICENSED ARCHITECT — DATE 10-25-13

3-24-14
PLANS APPROVAL DATE

LICENSED ARCHITECT — Lani Rhoades — No. C 26695 — 10-31-15 RENEWAL DATE — STATE OF CALIFORNIA

The State of California or its officers or agents shall not be responsible for the accuracy or completeness of scanned copies of this plan sheet.

ACCESSIBILITY DESIGN APPROVAL DOT / DES / OTA

PROJECT ID **0413000133**

Reviewed by: Y. A. WANG
Date: 02-13-14

CALIFORNIA STATE FIRE MARSHAL APPROVED

Approval of this plan does not authorize or approve any omission or deviation from applicable regulations. Final approval is subject to field inspection. One set of approved plans shall be available on the project site at all times.

Reviewed by: INGRID P. ICASIANO
Approval date: 02-11-14

UL System Number HW-D-0623

1. Roof Assembly - Metal Roof Deck Assembly (Non-Fire Rated based on ASTM E2837).
2. Beam - Beam penetration through wall asembly.
3. "J" Runner- J-Runner Profile up to and framed around beam. 20 ga J-shaped track having one 2 in. solid leg and one 3 in. slotted leg with a Nom 1in. wide intumescent strip affixed to the top of both legs. Gypsum board to overlap a Min of 5/8 in. over the intumescent strip. Track to be secured to bottom side of floor assembly with steel fasteners spaced a Max of 24 in. OC.
4. Beam Pocket fill Joint System - Forming Material - Nom 4 pcf mineral wool batt insulation cut to width of wall installed between beam and J-Runner compressed Min 33% filling entire cavity the width of wall.
5. Wall Assembly - The 1hr fire rated Shaft wall assembly shall be constructed of the materials and in the manner described in the individual U400 or V400 Series Wall and Partition Design in the UL Fire Resistance Directory.
6. Angle Clip - Min 20 ga angle attached to "backside edge of vertical J-Runner" extending into beam pocket with a Max 3/4" edge distance between Clip and Beam.

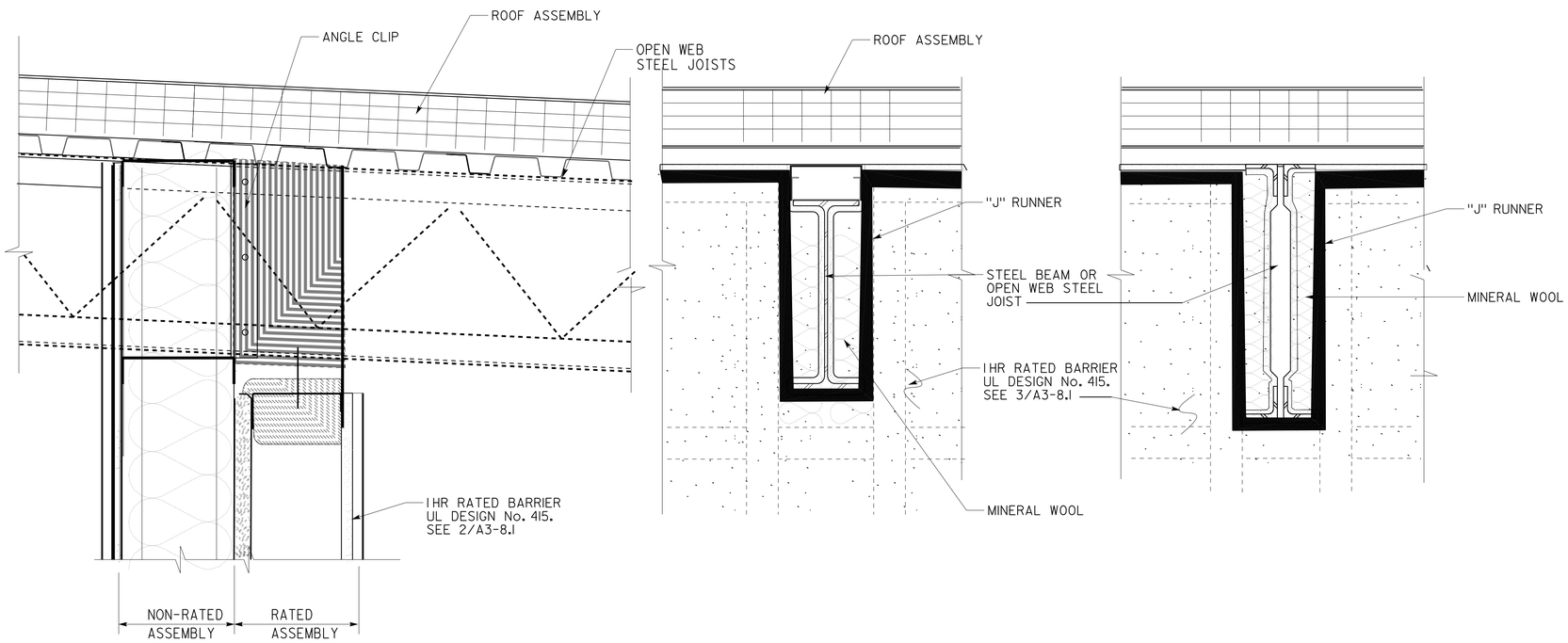

1 1 HR RATED FIRESTOP AT OWSJ OR BEAM UL DESIGN NUMBER HW-D-0623

SCALE 3" = 1'-0"

Note: See fire resistance notes on sheet A3-8.1 for additional information on UL design numbers.

DESIGN SUPERVISOR	DESIGNER	CHECKED BY:	SHEET LEGEND A-1 ARCHITECTURAL ST-1 STRUCTURAL M-1 MECHANICAL EE-1 ELECTRICAL MP-1 PLUMBING SS-1 SANITARY	STATE OF CALIFORNIA DEPARTMENT OF TRANSPORTATION	DIVISION OF ENGINEERING SERVICES ARCHITECTURAL AND STRUCTURAL DESIGN	BRIDGE No. 33M5785
DESIGN ARCHITECT	DRAWN BY	STRUCTURAL REVIEW				POST MILE

SFOBB WAREHOUSE — DETAILS — FIRE RATED SYSTEMS

SHEET A3-8.7f

TAEMWW Imperial - CCSC Rev. 01/13

ORIGINAL SCALE IN INCHES FOR REDUCED PLANS 0 1 2 3

UNIT: 3598 CONTRACT No.: 014101
PROJECT NUMBER & PHASE: 04130001331

DISREGARD PRINTS BEARING EARLIER REVISION DATES → - -13

REVISION DATES (PRELIMINARY STAGE ONLY) — SHEET X OF X

D:\temporary\a3_08.7f_misc_fire_rated_details.dgn

30-APR-2014 10:11

Dist	COUNTY	LOCATION CODE	POST MILES TOTAL PROJECT	SHEET No.	TOTAL SHEETS
04	Ala	5785		173	371

Note: See fire resistance notes on sheet A3-8.1 for additional information on UL design numbers.

LICENSED ARCHITECT — DATE 10-25-13

3-24-14
PLANS APPROVAL DATE

LICENSED ARCHITECT Lani Rhoades No. C 26695 10-31-15 RENEWAL DATE STATE OF CALIFORNIA

The State of California or its officers or agents shall not be responsible for the accuracy or completeness of scanned copies of this plan sheet.

ACCESSIBILITY DESIGN APPROVAL DOT / DES / OTA
PROJECT ID **0413000133**
Reviewed by: Y. A. WANG
Date: 02-13-14

CALIFORNIA STATE FIRE MARSHAL APPROVED
Approval of this plan does not authorize or approve any omission or deviation from applicable regulations. Final approval is subject to field inspection. One set of approved plans shall be available on the project site at all times.
Reviewed by: INGRID P. ICASIANO
Approval date: 02-11-14

UL DESIGN NUMBER W-L-1297

1. Wall Assembly - The 1or 2 hr fire rated gypsum board/stud wall assembly shall be constructed of the materials and in the manner specified in the individual U300, U400 or V400 Series Wall and Partition Designs in the UL Fire Resistance Directory and shall include the following construction features.
A. Studs - Wall framing shall consist of either wood studs or steel channel studs. Wood studs to consist of Nom 2 by 4 in. lumber spaced 16 in. OC. Steel studs to be min 2-1/2 in. (64 mm) wide and spaced Max 24 in. OC.
B. Gypsum Board* - Nom 5/8 in. thick, 4 ft wide with square or tapered edges. The gypsum board type, thickness, number of layers, fastener type and sheet orientation shall be as specified in the individual U300, U400 or V400 Series Design in the Fire Resistance Directory. Max diam of opening is 32 in..
The hourly F Rating of the firestop system is equal to the hourly fire rating of the wall assembly in which it is installed.
2. Through Penetrant - One metallic pipe, conduit or tubing installed concentrically or eccentrically within the firestop system. Pipe, conduit or tubing may be installed at an angle not greater than 45 degrees from perpendicular. Pipe, conduit or tube to be rigidly supported on both sides of wall assembly. The annular space between the pipe, conduit or tube and periphery of the opening shall be Min 0 in (0 mm, point contact) to Max 2 in. in 2 hr fire rated walls and min 0 in (0 mm, point contact) to Max 1in. in 1hr fire rated walls. The following types and sizes of metallic pipes, conduit or tube may be used:
A. Steel Pipe - Nom 30 in. diam (or smaller) Schedule 40 (or heavier) steel pipe.
B. Iron Pipe - Nom 30 in. diam (or smaller) cast or ductile iron pipe.
C. Conduit - Nom 4 in. diam (or smaller) steel electrical metallic tubing (EMT) or 6 in. diam steel conduit.
D. Copper Tube - Nom 6 in. diam (or smaller) Type L (or heavier) copper tube.
E. Copper Pipe - Nom 6 in. diam (or smaller) Regular (or heavier) copper pipe.
3. Fill, Void or Cavity Material*-Sealant - Min 5/8 in. or 1-1/4 in. thickness of fill material applied within the annulus, flush with both surfaces of wall, for 1hr and 2 hr fire rated wall assemblies, respectively. A Min 1/2 in. diam bead of fill material shall be applied at the pipe/wall interface at the point contact location.
HILTI CONSTRUCTION CHEMICALS, DIV OF HILTI INC - CP606 Flexible Firestop Sealant

*Bearing the UL Classification Mark

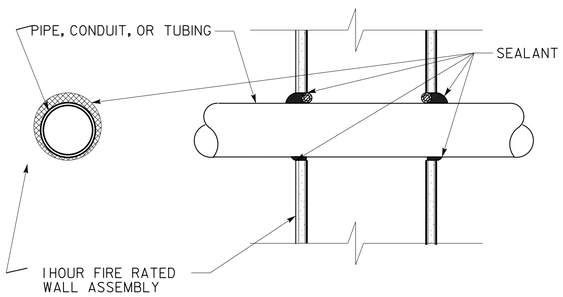

1 HR RATED FIRESTOP FOR METALLIC PIPING THROUGH RATED WALL

1 NOT TO SCALE — UL DESIGN NUMBER W-L-1297

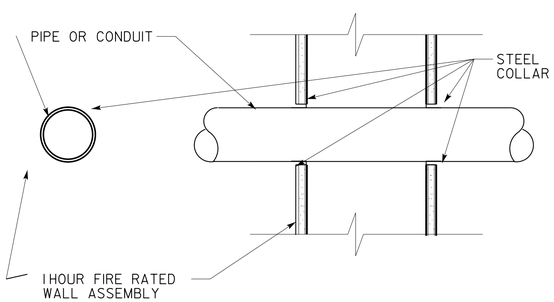

F RATING- 1HR
T RATING- 1HR

1 HR RATED FIRESTOP FOR NON-METALLIC PIPING THROUGH RATED BARRIER

2 NOT TO SCALE — UL DESIGN NUMBER W-L-2018

UL DESIGN NUMBER W-L-2018

System tested with a pressure differential of 50 Pa between the exposed and the unexposed surfaces with the higher pressure on the exposed side.
1. Wall Assembly - 1. Wall Assembly - The 1and 2 hr fire-rated gypsum board/stud wall assembly shall be constructed of the materials and in the manner described in the individual U400 Series Wall or
Partition Design in the UL Fire Resistance Directory and shall include the following construction features:
A. Studs - Wall framing shall consist of steel channel studs. Steel studs to be min 64 mm (2-1/2 in.) wide and spaced max 24 in. OC.
B. Gypsum Board* - The gypsum board type, thickness number of layers, fastener type and sheet orientation shall be specified in the individual U400 Series Design in the UL Fire Resistance Directory.
Max diam of opening is 5 in.. The hourly F and FH Ratings of the firestop system are equal to the hourly fire rating of the wall assembly in which it is installed.
2. Through Penetrants - One nonmetallic pipe to be installed concentrically or eccentrically within the firestop system. Annular space between pipe and periphery of opening to be min 0 in. (point contact) and Max 1/2 in.. Pipe to be rigidly supported on both sides of floor or wall assembly. The following types and sizes of nonmetallic pipes may be used:
A. Acrylonitrile Butadiene Styrene (ABS) - Pipe Nom 4 in. diam (or smaller) Schedule 40 solid or cellular core PVC for use in closed (process or supply) or vented (drain, waste or vent) piping systems.
B. Polyvinyl Chloride (PVC) Pipe - Nom 4 in. diam (or smaller) Schedule 40 cellular core or solid core PVC pipe for use in closed (process or supply) or vented (drain, waste or vent) piping
systems.
C. Chlorinated Polyvinyl Chloride (CPVC) Pipe - Nom 4 in. diam (or smaller) SDR11 or SDR 13.5 CPVC pipe for use in closed (process or supply) piping system.
D. Flame Retardant Polypropylene (FRPP) Pipe - Nom 4 in. diam (or smaller) Schedule 40 FRPP pipe for use in closed (process or supply) or vented (drain, waste or vent) piping system.
E. Chlorinated Polyvinyl Chloride (CPVC) Pipe - Nom 4 in. diam (or smaller) SDR 11 CPVC for use in closed (process or supply) piping systems.
IPEX INC - AquaRise

Nom Diam of Pipe (in.)	F and FH Ratings Hr	FT and FHT Ratings Hr
2	1and 2	3/4
4	1	1
4	2	1-1/2

3. Nonmetallic Pipe Coupling - (Optional) - Pipe coupling to be the same size and type of pipe and installed such that one end of coupling is flush with either side of wall assembly and extending outward. As an alternate, the coupling may be recessed into annular space within the opening and extend a Nom 1/4 in. beyond the steel collar on either side of the wall.
4. Firestop System - The firestop system shall consist of the following:
A. Fill, Void or Cavity Materials* - Sealant - Min 1/4 in. thickness of fill material applied within the annulus, flush with both surfaces of wall.
HILTI CONSTRUCTION CHEMICALS, DIV OF HILTI INC - FS-ONE Sealant
B. Fill, Void or Cavity Material* - Wrap Strip - Layers of intumescent wrap strip are continuously wrapped around the pipe with ends held in place with masking or aluminum tape. Wrap strip butted tightly against both surfaces of wall. Size of wrap strip and number of layers for a given size penetrant are shown in table below.
HILTI CONSTRUCTION CHEMICALS, DIV OF HILTI INC - CP648-E W25/1" or CP648-E W45/1-3/4" Firestop Wrap Strip

Product Designation	Max Pipe Size (in.)	Number of Layers	Nom Wrap Strip Width (in.)
CP648-E W25/1"	3	2	1
CP648-E W45/1-3/4"	3	1	1-3/4
CP648-E W25/1"	4	3	1
CP648-E W45/1-3/4"	4	2	1-3/4

B1. Fill, Void or Cavity Material* - Wrap Strip - (As an alternate to the wrap strip in item 3B on nom 3" and 4" diam pipes only) - One layer of intumescent wrap strip is tightly wrapped around the pipe with ends butted and held in place with integrated tape. Wrap strip butted tightly against both surfaces of wall.
HILTI CONSTRUCTION CHEMICALS, DIV OF HILTI INC - CP648-S-3" US, CP 648-S-4" US
C. Steel Collar - Steel collar fabricated from coils of precut Min 0.016 in. thick (No. 28 gauge) galv steel available from fill material manufacturer. Collar shall be Nom 1in. (for 1in. wide wrap strip) or 1-/3/4 in. (for 1-3/4 in. wide wrap strip) deep with 1in. wide by 2 in. long anchor tabs on 1-3/4 in. centers for securement to both surfaces of wall. The opposite side incorporates retainer tabs, 1/2 in. wide by 3/16 in. long, prebent toward the pipe surface. Collar shall be tightly wrapped over the wrap strip, overlapping min. 1in at seam. A nom 1/2 in. wide stainless steel hose clamp shall be secured to the collar at its mid-height. Collar secured to both surfaces of wall by means of Nom 1-1/4 in. long steel laminating drywall screws in conjunction with 1-1/4 in. diam steel fender washers. Collar fastened to wall at every other tab.

*Bearing the UL Classification Mark

DESIGN SUPERVISOR	DESIGNER	CHECKED BY:	SHEET LEGEND
DESIGN ARCHITECT	DRAWN BY	STRUCTURAL REVIEW	A-1 ARCHITECTURAL ST-1 STRUCTURAL M-1 MECHANICAL EE-1 ELECTRICAL MP-1 PLUMBING SS-1 SANITARY

STATE OF CALIFORNIA DEPARTMENT OF TRANSPORTATION

DIVISION OF ENGINEERING SERVICES ARCHITECTURAL AND STRUCTURAL DESIGN

BRIDGE No. 33M5785 — POST MILE

SFOBB WAREHOUSE — DETAILS — FIRE RATED SYSTEMS

SHEET A3-8.8a

TAEMWW Imperial - CCSC Rev. 01/13

ORIGINAL SCALE IN INCHES FOR REDUCED PLANS 0 1 2 3

UNIT: 3598 CONTRACT No.: 014101
PROJECT NUMBER & PHASE: 04130001331

DISREGARD PRINTS BEARING EARLIER REVISION DATES → - -13

REVISION DATES (PRELIMINARY STAGE ONLY) SHEET X OF X

30-APR-2014 10:11

D:\temporary\a3_08.8a_misc_fire_rated_details.dgn

Dist	COUNTY	LOCATION CODE	POST MILES TOTAL PROJECT	SHEET No.	TOTAL SHEETS
04	Ala	5785		174	371

LICENSED ARCHITECT 10-25-13 DATE

3-24-14
PLANS APPROVAL DATE

LICENSED ARCHITECT Lani Rhoades No. C 26695 10-31-15 RENEWAL DATE STATE OF CALIFORNIA

The State of California or its officers or agents shall not be responsible for the accuracy or completeness of scanned copies of this plan sheet.

ACCESSIBILITY DESIGN APPROVAL DOT / DES / OTA
PROJECT ID **0413000133**
Reviewed by: Y. A. WANG
Date: 02-13-14

CALIFORNIA STATE FIRE MARSHAL APPROVED
Approval of this plan does not authorize or approve any omission or deviation from applicable regulations. Final approval is subject to field inspection. One set of approved plans shall be available on the project site at all times.
Reviewed by: INGRID P. ICASIANO
Approval date: 02-11-14

UL DESIGN NUMBER W-L-3065

1. Wall Assembly - The 1or 2 fire-rated gypsum wallboard/stud wall assembly shall be constructed of the materials and in the manner specified in the individual U300, U400 or V400 Series Wall and Partition Designs in the UL Fire Resistance Directory and shall include the following construction features:
A. Studs - Wall framing may consist of either wood studs or steel channel studs. Wood studs to consist of nom 2 by 4 in. lumber spaced 16 in. OC. Steel studs to be Min 2-1/2 in. (64 mm) wide and spaced max 24 in. (610 mm) OC.
B. Gypsum Board* - Nom 5/8 in. thick gypsum board, with square or tapered edges. The gypsum board type, thickness, number of layers, fastener type and sheet orientation shall be as specified in the individual U300, U400 or V400 Series Design in the UL Fire Resistance Directory. Max diam of opening is 5-1/2 in. (138 mm) when sleeve (Item 2) is employed. Max diam of opening is 4 in. when sleeve (Item 2) is not employed. The F Rating of the firestop system is equal to the fire rating of the wall assembly.
2. Metallic Sleeve - (Optional) - Nom 4 in. diam (or smaller) steel electrical metallic tubing (EMT) or Schedule 5 (or heavier) steel pipe or min 0.016 in. thick No. 28 ga galv steel sleeve installed flush with wall surfaces. The annular space between steel sleeve and periphery of opening shall be min 0 in. (0 mm, point contact) to max 1in.. When Schedule 5 steel pipe or EMT is used, sleeve may extend up to 18 in. beyond the wall surfaces. As an option when Schedule 5 steel pipe or EMT is used, sleeve may extend continuously beyond one wall surfaces. When cable bundle penetrates wall assembly at an angle of 45 degrees, no metallic sleeve is used.
3. Cables - Aggregate cross-sectional area of cable in opening to be max 45 percent of the cross-sectional area of the opening. The annular space between the cable bundle and the periphery of the opening to be min 0 in. (0 mm, point contact) to max 1in. Cables to be rigidly supported on both sides of the wall assembly. Cable bundle, using cables described below, may penetrate the wall at an angle not greater than 45 degrees. Any combination of the following types and sizes of copper conductor cables may be used:
A. Max 7/C No. 12 AWG with polyvinyl chloride (PVC) insulation and jacket.
B. Max 25 pair No. 24 AWG telephone cable with PVC insulation and jacket.
B1. Max 4 pr No. 22 AWG Cat 5 or Cat 6 computer cables.
C. Type RG/U coaxial cable with polyethylene (PE) insulation and PVC jacket having a Max outside diameter of 1/2 in.
C1. Max RG 6/U coaxial cable with fluorinated ethylene insulation and jacketing.
D. Multiple fiber optical communication cable jacketed with PVC and having a Max OD of 5/8 in.
E. Through Penetrating Products* Max three copper conductor No. 8 AWG. Metal-Clad Cable+. AFC CABLE SYSTEMS INC
F. Max 3/C (with ground)(or smaller) No. 8 AWG copper conductor cable with PVC insulation and jacketing.
G. Max 3/4 in. diam copper ground cable with or without a PVC jacket.
H. Fire Resistive Cables* - Max 1-1/4 in. diam single conductor or multi conductor Type MI cable. A min1/8in. (3 mm) separation shall be maintained between MI cables and any other types of cable.
I. Max 4/C with ground 300 kcmil (or smaller) aluminum SER cable with PVC insulation and jacket.
J. Through Penetrating Product* - Any cables, Metal-Clad Cable+ or Armored Cable+ currently Classified under the Through Penetrating Products category.
K. Maximum 3/C No. 8 AWG metal-clad cable.
L. Maximum 5/8 diam fiber-optic cable with PVC jacket. For cable bundle penetrating the wall assembly at an angle of 45 degrees, the T rating is 3/4 hr for a 2 hr wall assembly. See Through Penetrating Product (XHLY) category in the Fire Resistance Directory for names of manufacturers.
4. Fill, Void or Cavity Material* - Sealant or Putty - Fill material applied within the annulus, flush with each end of the steel sleeve or wall surface. Fill material installed symmetrically on both sides of the wall. A Min 5/8 in. thickness of sealant is required for the 1or 2 hr F Rating. An additional 1/2 in. (13 mm) diam bead of fill material shall be applied around the perimeter of sleeve on both sides of the wall when sleeve extends beyond surface of wall.

*Bearing the UL Classification Mark
+Bearing the UL Listing Mark

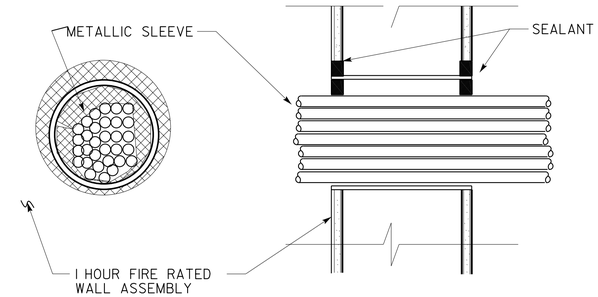

1 HR RATED FIRESTOP FOR CABLES THROUGH RATED BARRIER
1
NOT TO SCALE
UL SYSTEM NO. W-L-3065

UL Design Number w-1-1057

1. Wall Assembly - The fire-rated gypsum wallboard/stud wall assembly shall be constructed of the materials and in the manner specified in the individual U300 or U400 Series Wall and Partition Designs in the UL Fire Resistance Directory and shall include the following construction features:
A. Studs - Wall framing may consist of either wood studs or steel channel studs. Wood studs to consist of nom 2 by 4 in. lumber spaced 16 in. OC. Steel studs to be min 2-1/2 in. wide and spaced max 24 in. OC.
B. Gypsum Board* - Two layers of Nom 5/8in. thick gypsum wallboard, as specified in the individual Wall and Partition Design. Max area of opening is 41.5 sq in. with max dimension of 12.5 in.
2. Steel Pipe - A max of five nom 1in. diam (or smaller) Schedule 40 (or heavier) steel pipes to be installed within the opening. The space between pipes and between pipes and periphery of opening shall be min1/2in. to max 1in. Pipe to be rigidly supported on both sides of wall assembly.
3. Firestop System - The firestop system shall consist of the following:
A. Steel Wire Mesh - No. 8 steel wire mesh having a min 1in. lap along the longitudinal seam. Length of steel wire mesh to be 4 in., centered and formed to fit periphery of through opening.
B. Packing Material - Min 2-1/2 in. thickness of backer rod, foamed plastic backer material or mineral wool batt insulation firmly packed into opening as a permanent form. Packing material to be recessed from both surfaces of wall as required to accommodate the required thickness of fill material.
C. Fill, Void or Cavity Material* - Sealant - Min 1-1/4 in. thickness of tightly packed fill material applied within the annulus, flush with both surfaces of wall.

*Bearing the UL Classification Mark

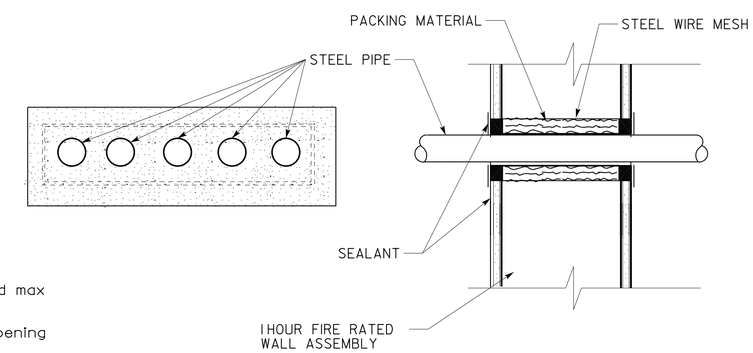

1 HR RATED FIRESTOP FOR NON-METALLIC PIPING THROUGH RATED BARRIER
3
NOT TO SCALE
UL SYSTEM No. W-L-1057

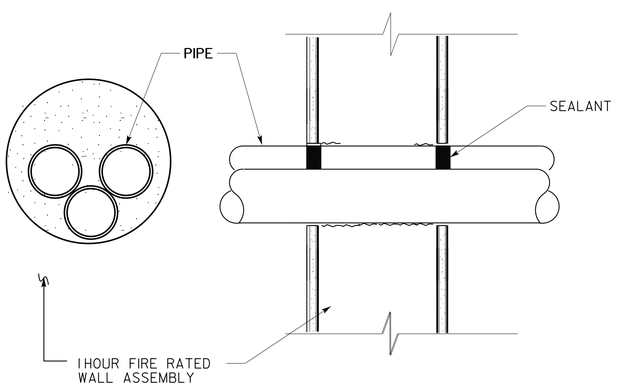

1 HR RATED FIRESTOP FOR NON-METALLIC PIPING THROUGH RATED BARRIER
2
NOT TO SCALE
UL SYSTEM NO. W-L-2242

UL Design Number W-L-2242

1. Wall Assembly - The 1or 2 hr fire-rated gypsum board/stud wall assembly shall be constructed of the materials and in the manner specified in the individual U300 or U400 Series Wall or Partition Design in the UL Fire Resistance Directory and shall include the following construction features:
A. Studs - Wall framing may consist of either wood studs or steel channel studs. Wood studs to consist of Nom 2 by 4 in. (51 by 102 mm) lumber spaced 16 in. (406 mm) OC. Steel studs to be Min 3-5/8 in. (92 mm) wide and spaced Max 24 in. (610 mm) OC.
B. Gypsum Board* - Thickness, type, number of layers and fasteners as specified in the individual Wall and Partition Design. Max diam of opening is 3 in. (76 mm). The hourly F Rating of the firestop system is equal to the hourly fire rating of the wall assembly in which it is installed.
2. Through Penetrant - One or more nonmetallic pipes, conduits or tubes to be bundled together and installed eccentrically or concentrically within the firestop system. Aggregate cross-sectional area of penetrants not to exceed 42 percent of the cross-sectional area of the opening. The annular space between the grounded pipes, conduits or tubes and the periphery of the opening shall be Min 0 in. (point contact) to max 1in. (25 mm). Separation between pipes, conduits or tubes to be Min 0 in. (point contact) to Max 1in. (25 mm). Pipes, conduits or tubes to be rigidly supported on both sides of the wall assembly. The following types and sizes of nonmetallic pipes, conduits and tubes may be used:
A. Polyvinyl Chloride (PVC) Pipe - Nom 1in. (25 mm) diam (or smaller) Schedule 40 solid or cellular core PVC pipe for use in closed (process or supply) piping systems.
B. Chlorinated Polyvinyl Chloride (CPVC) Pipe - Nom 1in. (25 mm) diam (or smaller) SDR17 CPVC pipe for use in closed (process or supply) piping systems.
C. Rigid Nonmetallic Conduit+ - Nom 1in. (25 mm) diam (or smaller) Schedule 40 PVC conduit installed in accordance with the National Electrical Code (NFPA 70).
D. Electrical Nonmetallic Tubing+ - Nom 1in. (25 mm) diam (or smaller) PVC tubing installed in accordance with the National Electrical Code (NFPA 70).
E. Cross Linked Polyethylene (PEX) Tubing - Nom 1in. (25 mm) diam (or smaller) SDR9 PEX tubing for use in closed (process or supply) piping systems.
The T Rating is 1hr and 1-3/4 hr for 1hr and 2 hr fire rated walls, respectively.
3. Fill, Void or Cavity Material* - Sealant - Min 5/8 in. (16 mm) thickness of fill material applied within annulus, flush with both surfaces of wall assembly. Sealant to be forced into interstices between penetrants to max extent possible. At point contact location, Min 1/4 in. (6 mm) diam bead of fill material applied at nonmetallic pipe/gypsum board interface on both surfaces of wall.

*Bearing the UL Classification Mark

DESIGN SUPERVISOR	DESIGNER	CHECKED BY:	SHEET LEGEND A-1 ARCHITECTURAL ST-1 STRUCTURAL M-1 MECHANICAL EE-1 ELECTRICAL MP-1 PLUMBING SS-1 SANITARY	STATE OF CALIFORNIA DEPARTMENT OF TRANSPORTATION	DIVISION OF ENGINEERING SERVICES ARCHITECTURAL AND STRUCTURAL DESIGN	BRIDGE No. 33M5785	SFOBB WAREHOUSE
DESIGN ARCHITECT	DRAWN BY	STRUCTURAL REVIEW				POST MILE	ABBREVIATIONS SYMBOLS — FIRE RATED SYSTEMS
TAEMWW Imperial - CCSC Rev. 01/13			ORIGINAL SCALE IN INCHES FOR REDUCED PLANS 0 1 2 3		UNIT: 3598 CONTRACT No.: 014101 PROJECT NUMBER & PHASE: 04130001331	DISREGARD PRINTS BEARING EARLIER REVISION DATES →	REVISION DATES (PRELIMINARY STAGE ONLY) - -13

SHEET A3-8.8b — SHEET X OF X

30-APR-2014 10:11

D:\temporary\a3_08.8b_misc_fire_rated_details.dgn

Dist	COUNTY	LOCATION CODE	POST MILES TOTAL PROJECT	SHEET No.	TOTAL SHEETS
04	Ala	5785		175	371

Note: See fire resistance notes on sheet A3-8.1 for additional information on UL design numbers.

LICENSED ARCHITECT — DATE 10-25-13

3-24-14
PLANS APPROVAL DATE

LICENSED ARCHITECT Lani Rhoades No. C 26695 10-31-15 RENEWAL DATE STATE OF CALIFORNIA

The State of California or its officers or agents shall not be responsible for the accuracy or completeness of scanned copies of this plan sheet.

ACCESSIBILITY DESIGN APPROVAL DOT / DES / OTA
PROJECT ID **0413000133**
Reviewed by: Y. A. WANG
Date: 02-13-14

CALIFORNIA STATE FIRE MARSHAL APPROVED
Approval of this plan does not authorize or approve any omission or deviation from applicable regulations. Final approval is subject to field inspection. One set of approved plans shall be available on the project site at all times.
Reviewed by: INGRID P. ICASIANO
Approval date: 02-11-14

UL DESIGN NUMBER W-L-2356

1. Wall Assembly - The 2 hr fire-rated shaft wall assembly shall be constructed of the materials and in the manner specified in the individual U400 or V400 Series Wall and Partition Designs in the UL Fire Resistance Directory and shall include the following construction features:
A. Steel Studs - C-H -shaped studs, 2-1/2 in. (64 mm) wide by 1-1/2 in. (38 mm) deep, spaced 24 in. (610 mm) OC.
B. Gypsum Board* - 1 in. (25 mm) thick gypsum board liner panels, supplied in Nom 24 in. (610 mm) widths as specified in the individual Wall and Partition Design. Max diam of opening is 3 in. (76 mm).
C. Gypsum Board* - Two layers of 5/8 in. (16 mm) thick gypsum board as specified in the individual Wall and Partition Design. Max diam of opening is 3 in. (76 mm).
2. Steel Sleeve -Cylindrical sleeve fabricated from Min 0.019 in. (0.49 mm) thick (28 gauge) galv sheet steel and having a Min 2 in. (51 mm) lap along the longitudinal seam. Length of steel sleeve to be equal to thickness of wall or up to 2 in. (51 mm) longer than the thickness of wall such that, when installed, the ends of the sleeve will be flush with wall surface or project up to 1 in. (25 mm) beyond the surface of the wall on each side of the wall assembly. Sleeve installed by coiling the sheet steel to a diam smaller than the Max 3 in. (76 mm) diam through opening, inserting the coil through the opening and releasing the coil to let it uncoil against the circular cutouts in the gypsum board layers.
3. Through Penetrants - One nonmetallic pipe or conduit concentrically or eccentrically within the firestop system. The annular space between penetrant and sleeve shall be Min 1/8 in. (3.2 mm) to Max 1/2 in. (13 mm). Penetrant to be rigidly supported on both sides of wall assembly. The following types and sizes of nonmetallic pipes or conduits:
A. Polyvinyl Chloride (PVC) Pipe - Nom 2 in. (51 mm) diam (or smaller) Schedule 40 solid core or cellular core PVC pipe for use in closed (process or supply) or vented (drain, waste or vent) piping system.
B. Rigid Nonmetallic Conduit++ - Nom 2 in. (51 mm) diam (or smaller) Schedule 40 PVC conduit installed in accordance with the National Electrical Code (NFPA No. 70).
C. Chlorinated Polyvinyl Chloride (CPVC) Pipe - Nom 2 in. (51 mm) diam (or smaller) SDR13.5 CPVC pipe for use in closed (process or supply) piping systems.
D. Acrylonitrile Butadiene Styrene (ABS) Pipe - Nom 2 in. (51 mm) diam (or smaller) Schedule 40 solid core or cellular core ABS pipe for use in closed (process or supply) or vented (drain, waste or vent) piping systems.
4. Firestop System - The firestop system shall consist of the following:
A. Fill, Void or Cavity Materials*-Wrap Strip - Nom 1/8 in. (3.2 mm) thick intumescent material supplied in 2 in. (51 mm) wide strips. Min one layer of wrap strip tightly wrapped around nonmetallic pipe and held in position using foil tape. Wrap strip to be recessed from finished surface of wall (Item 1C) approx 1-3/4 in. (44 mm) such that the leading edge of wrap strip is flush with inner surface of gypsum board liner panel (Item 1B).

B. Packing Material - Min 3 in. (76 mm) thickness of min 4 pcf (64 kg/m3) mineral wool batt insulation firmly packed into opening as a permanent form. Packing material to be recessed from finished surface of wall to accommodate the required thickness of fill material.
C. Fill, Void or Cavity Materials*-Caulk or Sealant - Min 3/4 in. (19 mm) thickness of caulk applied within annulus, flush with finished surface of wall assembly.

*Bearing the UL Classification Mark

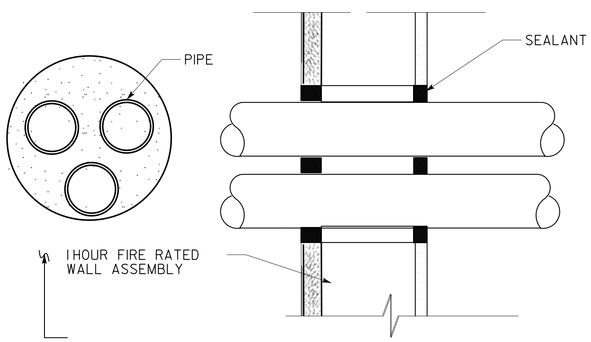

1 HR RATED FIRESTOP FOR METALLIC PIPING THROUGH RATED BARRIER

1

NOT TO SCALE — UL SYSTEM NO. W-L-2483

UL DESIGN NUMBER W-L-2483

1. Wall Assembly - The 1or 2 hr fire-rated gypsum board/stud shaft wall assembly shall be constructed of the materials and in the manner specified in the individual U400 or V400 Series Wall and Partition Designs in the UL Fire Resistance Directory and shall incorporate the following construction features:
A. Steel Studs - "C-H" or "C-T" shaped studs, Min 2-1/2 in. (64 mm) wide by 1-1/2 in. (38 mm) deep, fabricated from Min No. 25 gauge (0.6 mm thick) galv steel, spaced Max 24 in. (610 mm) OC.
B. Gypsum Board* - 1 in. (25 mm) thick, 24 in. (610 mm) wide gypsum liner panels installed vertically. Max diam of circular cutout in gypsum liner panel is 4-1/2 in. (114 mm).
C. Gypsum Board* -1/2 in. or 5/8 in. (13 or 16 mm) thick, 48 in. (1.2 m) wide gypsum boards. The gypsum board type, thickness, number of layers, fastener type and sheet orientation shall be as specified in the individual Wall and Partition Design. Max diam of circular cutout in gypsum board is 4-1/2 in. (114 mm).
The hourly F Rating of the firestop system is equal to the hourly fire rating of the wall assembly in which it is installed.
2. Through-Penetrants - One or more nonmetallic pipes, conduits or tubes installed concentrically or eccentrically within opening. Annular space between penetrants and periphery of opening to be Min 1/4 in. (6 mm) to Max 1 in. (25 mm). Space between penetrants shall be Min 1/4 in. (6 mm) to Max 1 in. (25 mm). Penetrants to be rigidly supported on both sides of wall. The following types and sizes of penetrants may be used:
A. Polyvinyl Chloride (PVC) Pipe - Nom 1 in. (25 mm) diam (or smaller) Schedule 40 solid or cellular core PVC pipe for use in closed (process or supply) or vented (drain, waste or vent) piping systems.
B. Rigid Nonmetallic Conduit++ - Nom 1 in. (25 mm) diam (or smaller) Schedule 40 PVC conduit installed in accordance with the National Electrical Code (NFPA No. 70).
C. Chlorinated Polyvinyl Chloride (CPVC) Pipe - Nom 1 in. (25 mm) diam (or smaller) SDR13.5 CPVC pipe for use in closed (process or supply) piping systems.
D. Crosslinked Polyethylene (PEX) Tubing - Nom 1 in. (25 mm) diam (or smaller) SDR 9 PEX tubing for use in closed (process or supply) piping systems.
3. Fill, Void or Cavity Materials* - Caulk or Sealant - Caulk or sealant applied within annulus at a thickness equal to the total thickness of the gypsum board on both sides of the wall.
3M COMPANY - CP 25WB+ caulk or FB-3000 WT sealant (Note: CP 25WB+ Caulk not suitable for use with CPVC pipes)
*Bearing the UL Classification Mark

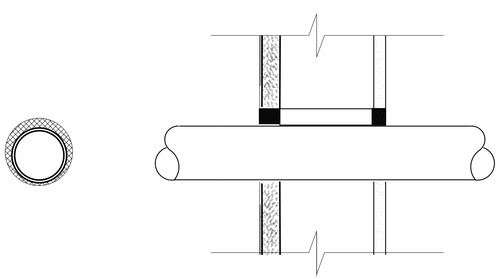

1 HR RATED FIRESTOP FOR NON-METALLIC PIPING THROUGH SHAFTWALL

2

NOT TO SCALE — UL SYSTEM No. W-L-2356

DESIGN SUPERVISOR	DESIGNER	CHECKED BY:	SHEET LEGEND: A-1 ARCHITECTURAL, M-1 MECHANICAL, MP-1 PLUMBING, ST-1 STRUCTURAL, EE-1 ELECTRICAL, SS-1 SANITARY	STATE OF CALIFORNIA DEPARTMENT OF TRANSPORTATION	DIVISION OF ENGINEERING SERVICES ARCHITECTURAL AND STRUCTURAL DESIGN	BRIDGE No. 33M5785 POST MILE	SFOBB WAREHOUSE — DETAILS — FIRE RATED SYSTEMS — SHEET A3-8.8c
DESIGN ARCHITECT	DRAWN BY	STRUCTURAL REVIEW					
TAEMWW Imperial - CCSC Rev. 01/13			ORIGINAL SCALE IN INCHES FOR REDUCED PLANS 0 1 2 3		UNIT: 3598 CONTRACT No.: 014101 PROJECT NUMBER & PHASE: 04130001331	DISREGARD PRINTS BEARING EARLIER REVISION DATES →	REVISION DATES (PRELIMINARY STAGE ONLY) - -13; SHEET X OF X

30-APR-2014 10:12

D:\temporary\a3_08.8c_misc_fire_rated_details.dgn

Dist	COUNTY	LOCATION CODE	POST MILES TOTAL PROJECT	SHEET No.	TOTAL SHEETS
04	Ala	5785		176	371

Note: See fire resistance notes on sheet A3-8.1 for additional information on UL design numbers.

LICENSED ARCHITECT 10-25-13 DATE

3-24-14
PLANS APPROVAL DATE

LICENSED ARCHITECT Lani Rhoades No. C 26695 10-31-15 RENEWAL DATE STATE OF CALIFORNIA

The State of California or its officers or agents shall not be responsible for the accuracy or completeness of scanned copies of this plan sheet.

ACCESSIBILITY DESIGN APPROVAL DOT / DES / OTA
PROJECT ID **0413000133**
Reviewed by: Y. A. WANG
Date: 02-13-14

CALIFORNIA STATE FIRE MARSHAL APPROVED
Approval of this plan does not authorize or approve any omission or deviation from applicable regulations. Final approval is subject to field inspection. One set of approved plans shall be available on the project site at all times.
Reviewed by: INGRID P. ICASIANO
Approval date: 02-11-14

UL System number W-L-1328

1A. Wall Assembly - See Configuration B. The 1or 2 hr fire-rated gypsum board/stud shaft wall assembly shall be constructed of the materials and in the manner specified in the individual U400 and V400 Series Wall and Partition Designs in the UL Fire Resistance Directory and shall incorporate the following construction features:
A. Steel Studs - "C-H" shaped studs, min 2-1/2 in. (64 mm) wide by 1-1/2 in. (38 mm) deep, fabricated from min No. 25 gauge galv steel, spaced Max 24 in. (610 mm) OC.
B. Gypsum Board* - 1in. (25 mm) thick, 24 in. (610 mm) wide gypsum liner panels installed vertically. Max diam of opening is 10 in. (254 mm).
C. Gypsum Board* - One or two layers of nom 1/2 or 5/8 in. (13 or 16 mm) thick gypsum board as specified in the individual Wall and Partition Design. The gypsum board type, thickness, number of layers, fastener type and sheet orientation shall be as specified in the individual U400 Series Design in the UL Fire Resistance Directory. Max diam of opening is 10 in. (254 mm).
The hourly F Rating of the firestop system is equal to the hourly fire rating of the wall assembly in which it is installed.
2. Through Penetrant - One metallic pipe, conduit or tube to be installed either concentrically or eccentrically within the firestop system. Annular space to be Min 0 in. (point contact) to max 2 in.
(51 mm) for Configuration A or Min 1/4 in. (6 mm) to Max 2 in. (51 mm) for Configuration B. Pipe to be located near the center of the stud cavity width and to be rigidly supported on both sides of wall assembly. The following types and sizes of pipe, conduit and tubing may be used:
A. Steel Pipe - Nom 8 in. (203 mm) diam (or smaller) Sch 10 (or heavier) steel pipe.
B. Iron Pipe - Nom 8 in. (203 mm) diam (or smaller) cast or ductile iron pipe.
C. Conduit - Nom 6 in. (152 mm) diam (or smaller) steel conduit or Max 4 in. (102 mm) diam steel electrical metallic tubing.
D. Copper Tube - Nom 4 in. (102 mm) diam (or smaller) Type L (or heavier) copper tubing.
E. Copper Pipe - Nom 4 in. (102 mm) diam (or smaller) Regular (or heavier) copper pipe.
3. Firestop System - The firestop system shall consist of the following:
A. Steel Sleeve - Cylindrical sleeve fabricated from min No. 30 gauge (0.016 in. (0.4 mm)) to Max No. 16 gauge (0.056 in. (1.4 mm)) thick galv steel and having a Min 2 in. (51 mm) lap along the longitudinal seam. Sleeve installed by coiling the sheet steel to a diam smaller than the through openings, inserting the coil through the openings, and releasing the coil to let it uncoil against the
circular cutouts in the gypsum board layers. Ends of sleeve to be flush with or recessed Max 1/8 in. (3 mm) from wall surfaces.
B. Packing Material - Min 4 pcf (64 kg/cu meter) density mineral wool batt insulation firmly-packed into steel sleeve as a permanent form. Packing material to be recessed from one side of wall as required to accommodate the required thickness of fill material. Packing material installed flush with one side of wall (Configuration A) or with the gypsum liner panels (Configuration B) and recessed
5/8 in. (16 mm) from the opposite side of wall to accommodate the required thickness of fill material.
C. Fill, Void or Cavity Material* - Caulk - Min 1in. (25 mm) thickness of fill material applied within the annulus, flush with one surface of wall (Configuration A) or with finished surface of wall
(Configuration B). Min 3/8 in. (10 mm) diam bead of caulk to be applied at point contact location. Edge of steel sleeve to be covered with caulk such that no gap is present between the steel sleeve and the cutout in the gypsum board.

*Bearing the UL Classification Mark

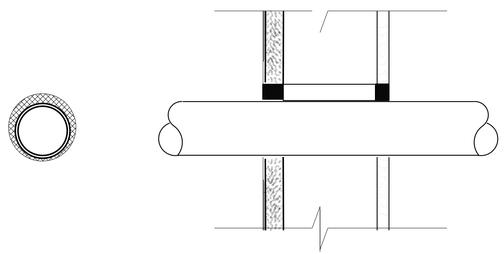

1 HR RATED FIRESTOP FOR METALLIC PIPING THROUGH RATED BARRIER

1

NOT TO SCALE UL SYSTEM No. W-L-1328

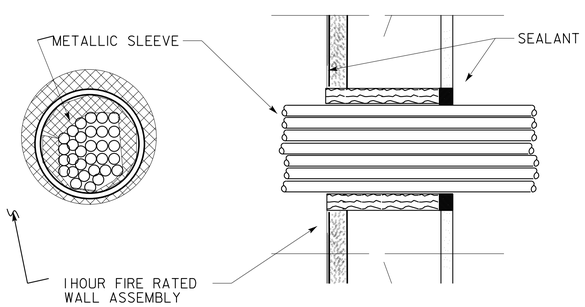

1 HR RATED FIRESTOP FOR NON-METALLIC PIPING THROUGH RATED BARRIER

2

NOT TO SCALE UL SYSTEM NO. W-L-3161

UL System Number W-L-3161

1. Wall Assembly - The 1or 2 Hr fire-rated gypsum board/stud wall assembly shall be constructed of the materials and in the manner described in the individual U400 or V400 Series Wall or Partition Design in the UL Fire Resistance Directory and shall include the following construction features:
A. Studs - "C-T" shaped studs 1-5/8 in. (41 mm) wide by 2-1/2 in. (64 mm) deep, fabricated from 25 MSG galv steel, spaced max 24 in. (610 mm) OC.
B. Gypsum Board* - One layer of nom 1in. (25 mm) thick, 24 in. (610 mm) wide gypsum liner and one or two layers of nom 5/8 in. (16 mm) thick, 4 ft. (1.2 m) wide gypsum board with square or tapered edges. The 5/8 in. (16 mm) thick gypsum board type, number of layers, fastener type and sheet orientation shall be as specified in the individual Wall and Partition Design. Max diam of opening is 4 in. (102 mm)
1A. Wall Assembly - As an alternate to the above wall assembly, the 1or 2 Hr fire rated gypsum board/stud wall assembly shall be constructed of the materials and in the manner specified in the individual U300, U400 or V400 Series Wall and Partition Designs in the UL Fire Resistance Directory and shall include the following construction features:
A. Studs - Wall framing may consist of either wood studs or steel channel studs. Steel studs to be min 2-1/2 in. (64 mm) wide and spaced max 24 in. (610 mm) OC. Wood studs to consist of nom 2 by 4 in. (51 by 102 mm) lumber spaced 16 in. (406 mm) OC.
B. Gypsum Board* - Thickness, type, number of layers and fasteners as required in the individual Wall and Partition Design. Max diam of opening is 4 in. (102 mm).
The hourly F Rating of the firestop system is equal to the hourly fire rating of the wall assembly in which it is installed.
2. Metallic Sleeve - Max 4 in. (102 mm) diam cylindrical sleeve fabricated from Min 0.016 in. (0.41 mm) thick (28 gauge) galv sheet steel and having a Min 1in. (25 mm) lap along the longitudinal seam. Length of steel sleeve to be equal to thickness of wall. Sleeve installed by coiling the sheet steel to a diam smaller than the through opening, inserting the coil through the opening and releasing the coil to let it uncoil against the circular cutouts in the gypsum board layers. Sleeve may also be formed of No. 8 steel wire mesh having a Min 1in. (25 mm) lap along the longitudinal seam.
3. Cables - Aggregate cross-sectional area of cable in opening to be max 33 percent of the cross-sectional area of the opening. The annular space between the cable bundle and the periphery of the opening to be Min 1/4 in. (6.4 mm) to Max 3/4 in. (19 mm). Cables to be rigidly supported on both sides of the wall assembly. Any combination of the following types and sizes of copper conductor cables may be used:
A. Max 7/C No. 12 AWG with polyvinyl chloride (PVC) insulation and jacket.
B. Max 25 pair No. 24 AWG telephone cable with PVC insulation and jacket.
C. Type RG 59/U coaxial cable with polyethylene (PE) insulation and PVC jacket.
D. Multiple fiber optical communication cable jacketed with PVC and having a Max OD of 5/8 in. (16 mm).
E. Max 3/C No. 12 AWG copper conductor steel clad cable.
G. Fire Resistive Cables* - Max 1-1/4 in. (32 mm) diam single conductor or multi conductor Type MI cable. A Min 1/8 in. (3 mm) separation shall be maintained between MI cables and any other types of cable.
4. Firestop System - The firestop system shall consist of the following:
A. Packing Material - Min 2-1/8 in. (54 mm) or 2-3/4 in. (70 mm) thickness of min 4 pcf (64kg/m3) mineral wool batt insulation firmly packed into opening on one side of the wall as permanent form for 1and 2 hr fire rated walls, respectively. Packing material to be recessed from the room side of wall as required to accommodate the required thickness of fill material. In alternate wall assembly, packing material to be flush with either side of the wall and recessed from the other side of the wall to accommodate the required thickness of fill material.
B. Fill, Void or Cavity Material - Sealant* - Min 1in. (25 mm) thickness of fill material applied within sleeve, flush with surface of wall.

*Bearing the UL Classification Mark

DESIGN SUPERVISOR	DESIGNER	CHECKED BY:	SHEET LEGEND A-1 ARCHITECTURAL ST-1 STRUCTURAL M-1 MECHANICAL EE-1 ELECTRICAL MP-1 PLUMBING SS-1 SANITARY	STATE OF CALIFORNIA DEPARTMENT OF TRANSPORTATION	DIVISION OF ENGINEERING SERVICES ARCHITECTURAL AND STRUCTURAL DESIGN	BRIDGE No. 33M5785 POST MILE
DESIGN ARCHITECT	DRAWN BY	STRUCTURAL REVIEW				

SFOBB WAREHOUSE
ABBREVIATIONS SYMBOLS
FIRE RATED SYSTEMS
SHEET A3-8.8d

TAEMWW Imperial - CCSC Rev. 01/13
ORIGINAL SCALE IN INCHES FOR REDUCED PLANS 0 1 2 3
UNIT: 3598 CONTRACT No.: 014101
PROJECT NUMBER & PHASE: 04130001331
DISREGARD PRINTS BEARING EARLIER REVISION DATES →
REVISION DATES (PRELIMINARY STAGE ONLY) - -13
SHEET X OF X

30-APR-2014 10:12
D:\temporary\a3_08.8d_misc_fire_rated_details.dgn

Dist	COUNTY	LOCATION CODE	POST MILES TOTAL PROJECT	SHEET No.	TOTAL SHEETS
04	Ala	5785		177	371

LICENSED ARCHITECT — DATE 10-25-13

3-24-14
PLANS APPROVAL DATE

LICENSED ARCHITECT — Lani Rhoades — No. C 26695 — 10-31-15 RENEWAL DATE — STATE OF CALIFORNIA

The State of California or its officers or agents shall not be responsible for the accuracy or completeness of scanned copies of this plan sheet.

ACCESSIBILITY DESIGN APPROVAL DOT / DES / OTA
PROJECT ID **0413000133**
Reviewed by: Y. A. WANG
Date: 02-13-14

CALIFORNIA STATE FIRE MARSHAL APPROVED
Approval of this plan does not authorize or approve any omission or deviation from applicable regulations. Final approval is subject to field inspection. One set of approved plans shall be available on the project site at all times.
Reviewed by: INGRID P. ICASIANO
Approval date: 02-11-14

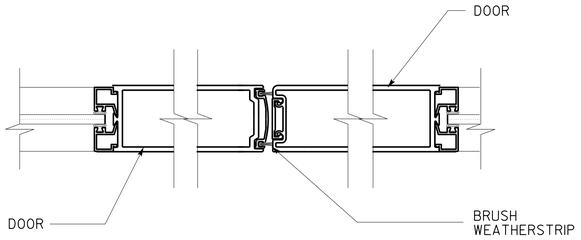

1 DOOR STILE
SCALE 3" = 1'-0"

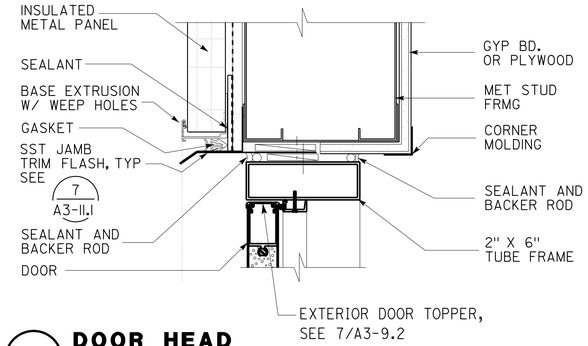

4 DOOR HEAD
SCALE 3" = 1'-0"

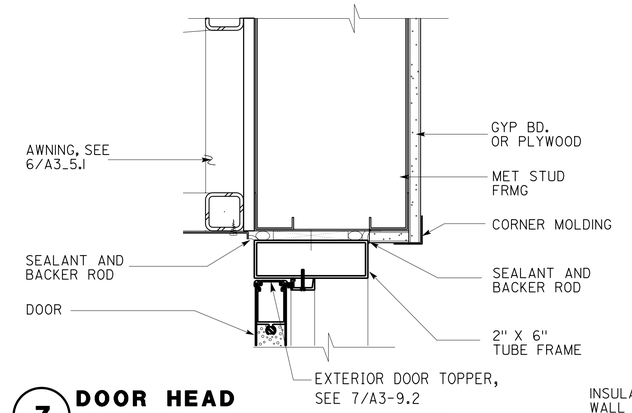

7 DOOR HEAD
SCALE 3" = 1'-0"

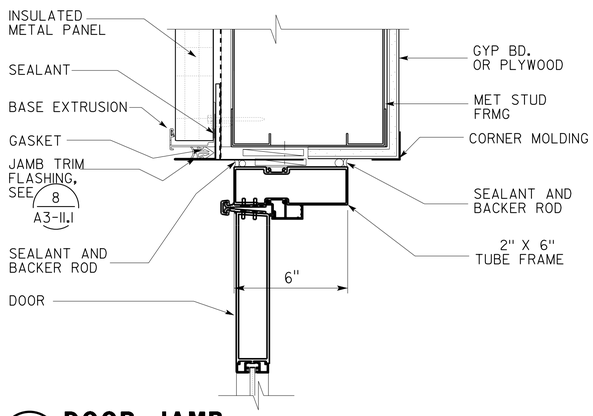

2 DOOR JAMB
SCALE 3" = 1'-0"

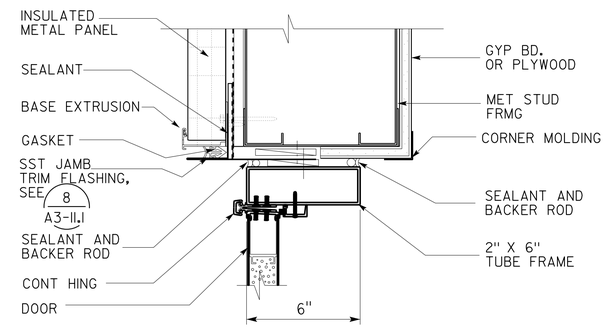

5 DOOR JAMB
SCALE 3" = 1'-0"

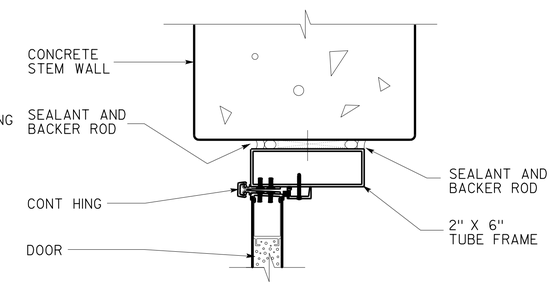

8 DOOR JAMB AT CONCRETE WALL
SCALE 3" = 1'-0"

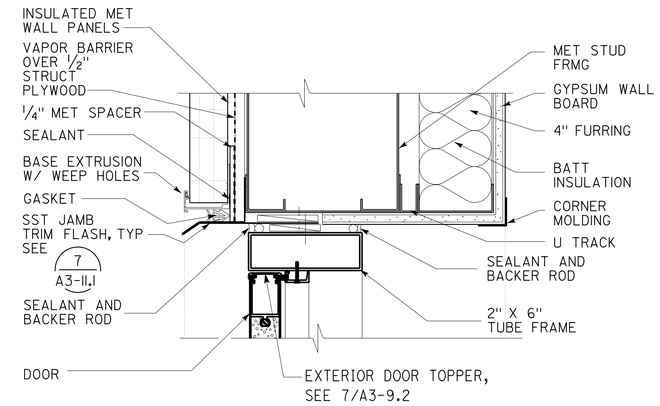

10 DOOR HEAD AT FURRED WALL
SCALE 3" = 1'-0"

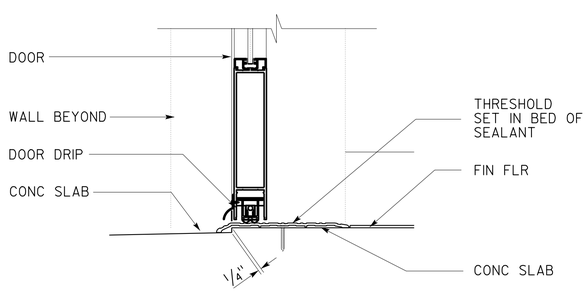

3 DOOR TRESHOLD
SCALE 3" = 1'-0"

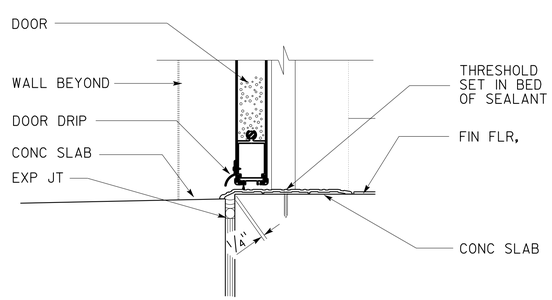

6 DOOR TRESHOLD
SCALE 3" = 1'-0"

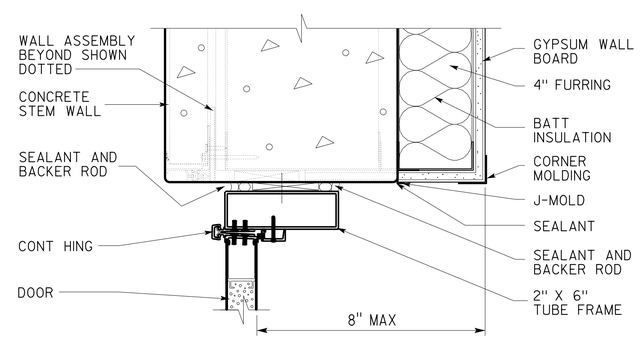

9 DOOR JAMB AT CONCRETE WALL
SCALE 3" = 1'-0"

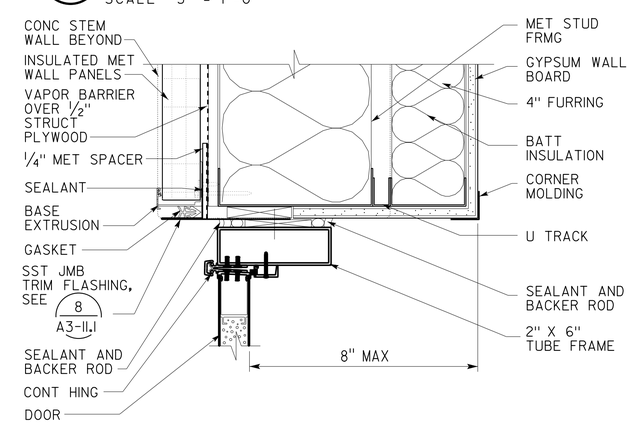

11 DOOR JAMB AT FURRED WALL
SCALE 3" = 1'-0"

	BY	CHECKED
DESIGN	L Rhoades, R Francisco	Q. Wong, F. Thomas
DETAILS	L Rhoades, J. Kwong	Q. Wong, F. Thomas
QUANTITIES		

STATE OF **CALIFORNIA** DEPARTMENT OF TRANSPORTATION

DIVISION OF ENGINEERING SERVICES
ARCHITECTURAL AND STRUCTURAL DESIGN

BRIDGE No. 33M5785
POST MILE

SFOBB WAREHOUSE
DETAILS — DOOR DETAILS

SHEET **A3-9.1**

TAEMWW Imperial - CCSC Rev. 01/13

ORIGINAL SCALE IN INCHES FOR REDUCED PLANS 0 1 2 3

UNIT: 3598 CONTRACT No.: 014101
PROJECT NUMBER & PHASE: 04130001331

DISREGARD PRINTS BEARING EARLIER REVISION DATES → - -13

REVISION DATES (PRELIMINARY STAGE ONLY) — SHEET X OF X

30-APR-2014 10:12

P:\dist_04\0413000133_sfobb_maint_warehouse\arch\CADD\Working Drawings\first expedite\a3_09.1 door det.dgn

Dist	COUNTY	LOCATION CODE	POST MILES TOTAL PROJECT	SHEET No.	TOTAL SHEETS
04	Ala	5785		178	371

LICENSED ARCHITECT — DATE 10-25-13

3-24-14
PLANS APPROVAL DATE

LICENSED ARCHITECT — Lani Rhoades — No. C 26695 — 10-31-15 RENEWAL DATE — STATE OF CALIFORNIA

The State of California or its officers or agents shall not be responsible for the accuracy or completeness of scanned copies of this plan sheet.

ACCESSIBILITY DESIGN APPROVAL DOT / DES / OTA
PROJECT ID **0413000133**
Reviewed by: Y. A. WANG
Date: 02-13-14

CALIFORNIA STATE FIRE MARSHAL APPROVED
Approval of this plan does not authorize or approve any omission or deviation from applicable regulations. Final approval is subject to field inspection. One set of approved plans shall be available on the project site at all times.
Reviewed by: INGRID P. ICASIANO
Approval date: 02-11-14

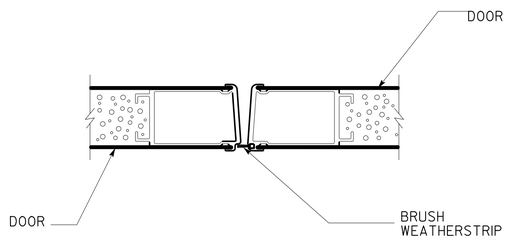

1 DOOR STILE

SCALE 6" = 1'-0"

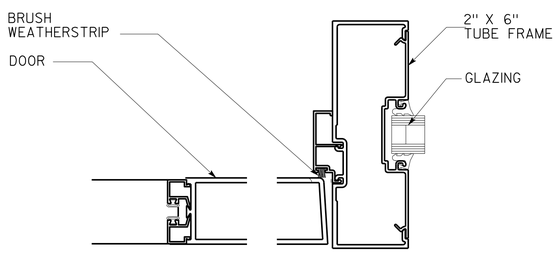

2 DOOR JAMB

SCALE 3" = 1'-0"

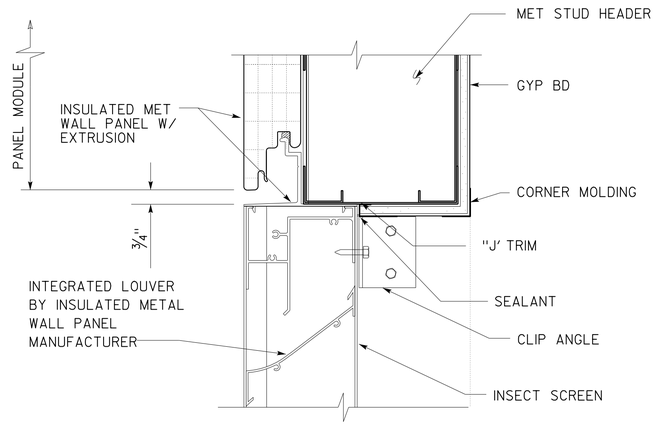

8 LOUVER HEAD

SCALE 3" = 1'-0"

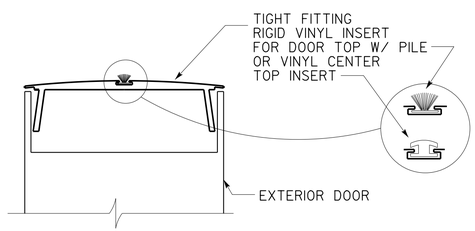

7 EXTERIOR DOOR TOPPER

NO SCALE

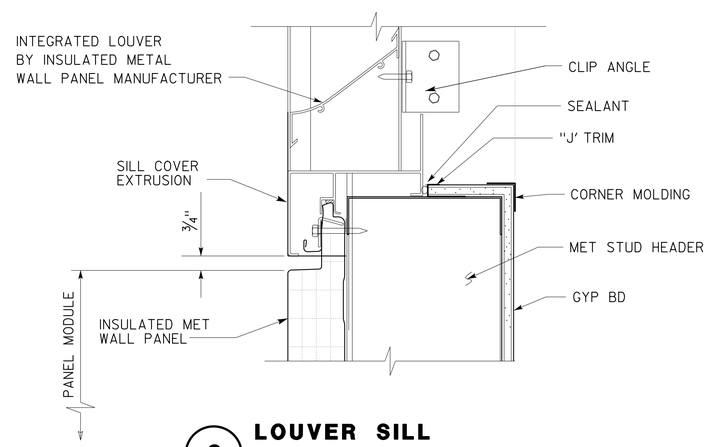

9 LOUVER SILL

SCALE 3" = 1'-0"

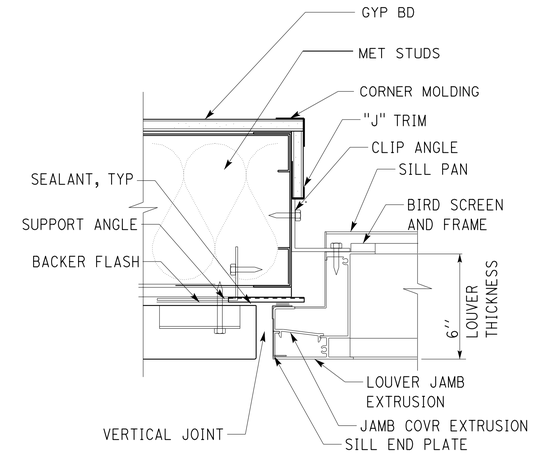

10 LOUVER JAMB

SCALE 3" = 1'-0"

	BY	CHECKED
DESIGN	L Rhoades, R Francisco	Q. Wong, F. Thomas
DETAILS	L Rhoades, J. Kwong	Q. Wong, F. Thomas
QUANTITIES		

STATE OF **CALIFORNIA** DEPARTMENT OF TRANSPORTATION

DIVISION OF ENGINEERING SERVICES
ARCHITECTURAL AND STRUCTURAL DESIGN

BRIDGE No. 33M5785
POST MILE

SFOBB WAREHOUSE
DETAILS — DOOR AND LOUVER DETAILS

SHEET **A3-9.2**

TAEMWW Imperial - CCSC Rev. 01/13

ORIGINAL SCALE IN INCHES FOR REDUCED PLANS 0 1 2 3

UNIT: 3598 CONTRACT No.: 014101
PROJECT NUMBER & PHASE: 04130001331

DISREGARD PRINTS BEARING EARLIER REVISION DATES → - -13

REVISION DATES (PRELIMINARY STAGE ONLY) — SHEET X — OF X

30-APR-2014 10:12

D:\temporary\a3_09.2 door det.dgn

Dist	COUNTY	LOCATION CODE	POST MILES TOTAL PROJECT	SHEET No.	TOTAL SHEETS
04	Ala	5785		179	371

LICENSED ARCHITECT — DATE 10-25-13

3-24-14
PLANS APPROVAL DATE

LICENSED ARCHITECT — Lani Rhoades No. C 26695 — 10-31-15 RENEWAL DATE — STATE OF CALIFORNIA

The State of California or its officers or agents shall not be responsible for the accuracy or completeness of scanned copies of this plan sheet.

ACCESSIBILITY DESIGN APPROVAL DOT / DES / OTA
PROJECT ID **0413000133**
Reviewed by: Y. A. WANG
Date: 02-13-14

CALIFORNIA STATE FIRE MARSHAL APPROVED
Approval of this plan does not authorize or approve any omission or deviation from applicable regulations. Final approval is subject to field inspection. One set of approved plans shall be available on the project site at all times.
Reviewed by: INGRID P. ICASIANO
Approval date: 02-11-14

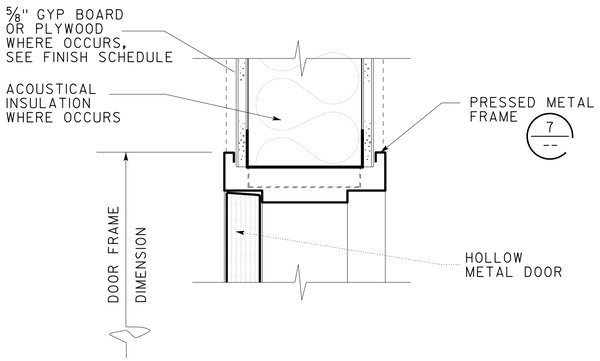

1 INTERIOR DOOR JAMB/HEAD SIM.
SCALE 3" = 1'-0"

4 NOT USED
SCALE 3" = 1'-0"

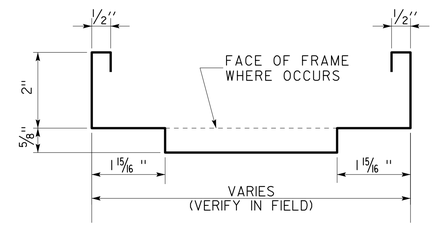

7 PRESSED METAL FRAME
SCALE NONE

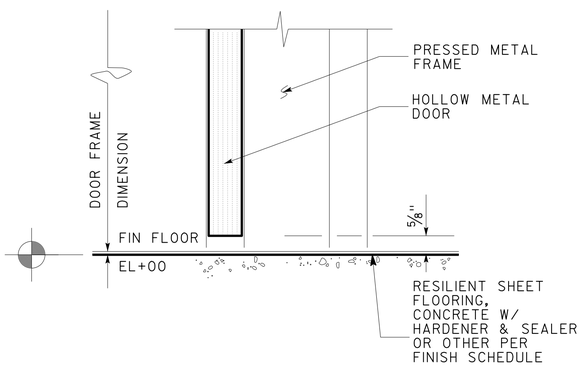

2 INTERIOR DOOR THRESHOLD
SCALE 6" = 1'-0"

5 NOT USED
SCALE 3" = 1'-0"

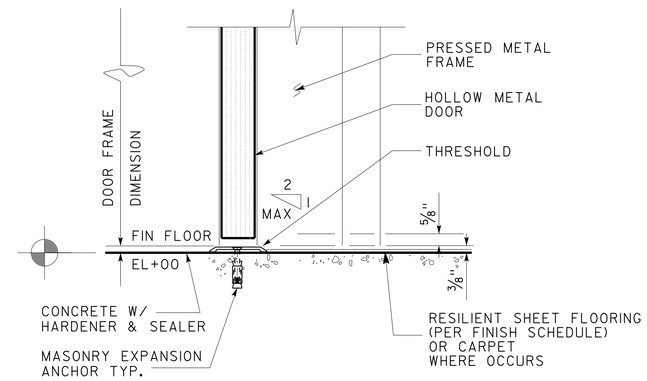

8 INTERIOR DOOR THRESHOLD
SCALE 3" = 1'-0"

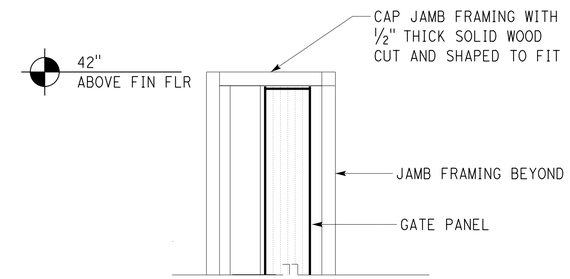

10 TOP OF GATE
SCALE 3" = 1'-0"

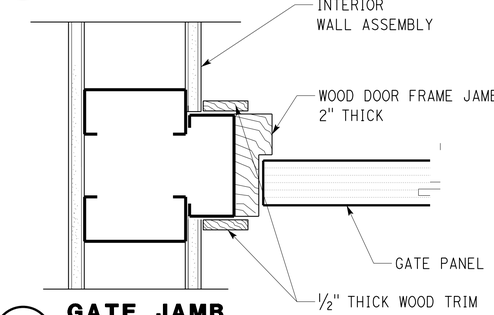

11 GATE JAMB
SCALE 3" = 1'-0"

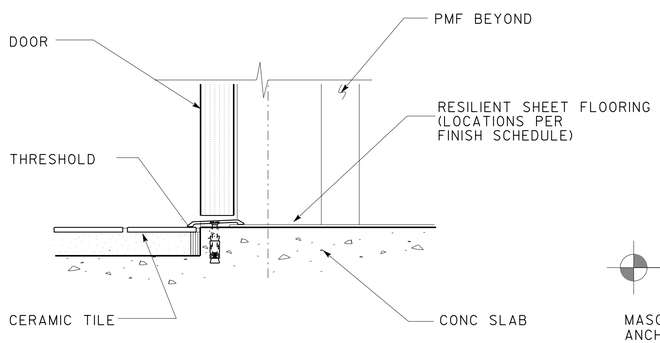

3 NOT USED
SCALE 6" = 1'-0"

6 INTERIOR DOOR THRESHOLD
SCALE 3" = 1'-0"

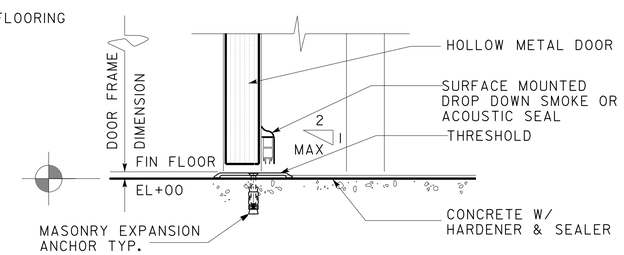

9 DOOR THRESHOLD
SCALE 3" = 1'-0"

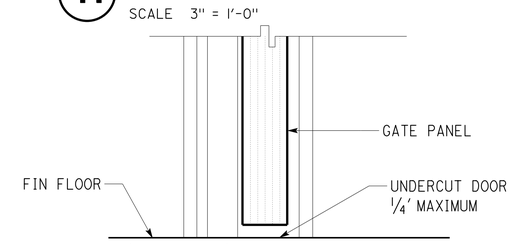

12 GATE THRESHOLD
SCALE 3" = 1'-0"

	BY	CHECKED
DESIGN	L Rhoades, R Francisco	Q. Wong, F. Thomas
DETAILS	L Rhoades, J. Kwong	Q. Wong, F. Thomas
QUANTITIES		

STATE OF **CALIFORNIA** DEPARTMENT OF TRANSPORTATION

DIVISION OF ENGINEERING SERVICES
ARCHITECTURAL AND STRUCTURAL DESIGN

BRIDGE No. 33M5785
POST MILE

SFOBB WAREHOUSE
DETAILS — DOOR DETAILS

SHEET **A3-9.3**

TAEMWW Imperial - CCSC Rev. 01/13

ORIGINAL SCALE IN INCHES FOR REDUCED PLANS 0 1 2 3

UNIT: 3598 CONTRACT No.: 014101
PROJECT NUMBER & PHASE: 04130001331

DISREGARD PRINTS BEARING EARLIER REVISION DATES → - -13

REVISION DATES (PRELIMINARY STAGE ONLY) — SHEET X OF X

30-APR-2014 10:12

P:\dist_04\0413000133_sfobb_maint_warehouse\arch\CADD\Working Drawings\first expedite\a3_09.3 door det.dgn

Dist	COUNTY	LOCATION CODE	POST MILES TOTAL PROJECT	SHEET No.	TOTAL SHEETS
04	Ala	5785		180	371

LICENSED ARCHITECT — DATE 10-25-13

3-24-14
PLANS APPROVAL DATE

LICENSED ARCHITECT — Lani Rhoades — No. C 26695 — 10-31-15 RENEWAL DATE — STATE OF CALIFORNIA

The State of California or its officers or agents shall not be responsible for the accuracy or completeness of scanned copies of this plan sheet.

ACCESSIBILITY DESIGN APPROVAL DOT / DES / OTA
PROJECT ID **0413000133**
Reviewed by: Y. A. WANG
Date: 02-13-14

CALIFORNIA STATE FIRE MARSHAL APPROVED
Approval of this plan does not authorize or approve any omission or deviation from applicable regulations. Final approval is subject to field inspection. One set of approved plans shall be available on the project site at all times.
Reviewed by: INGRID P. ICASIANO
Approval date: 02-11-14

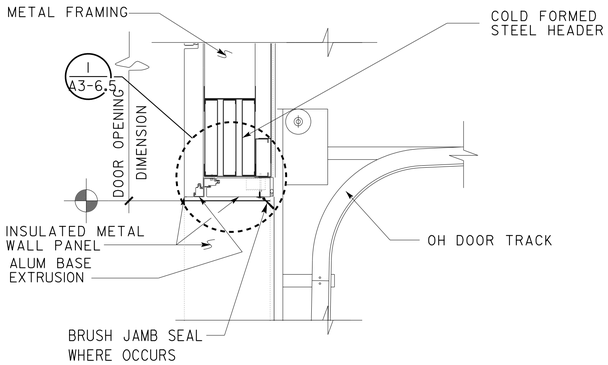

1 SECTIONAL OH DOOR HEAD
SCALE 1" = 1'-0"

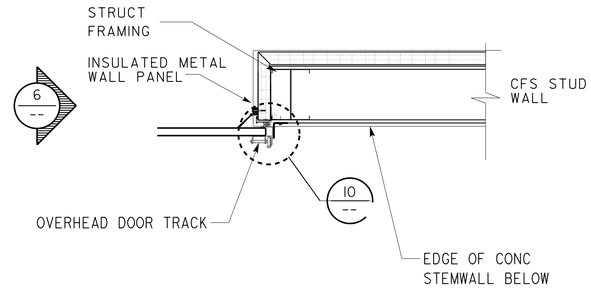

4 SECTIONAL OH JAMB
SCALE 1" = 1'-0"

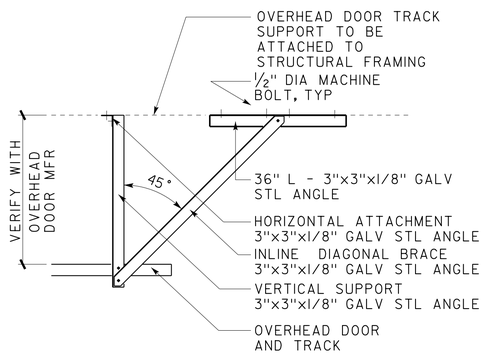

2 OVERHEAD DOOR TRACK AND SUPPORT
SCALE 3/4" = 1'-0"

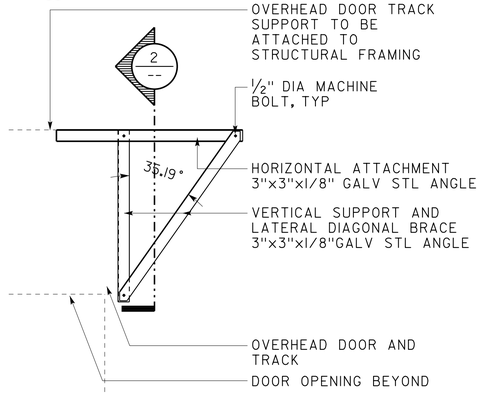

5 OVERHEAD DOOR TRACK SUPPORT
SCALE 3/4" = 1'-0"

7 NOT USED

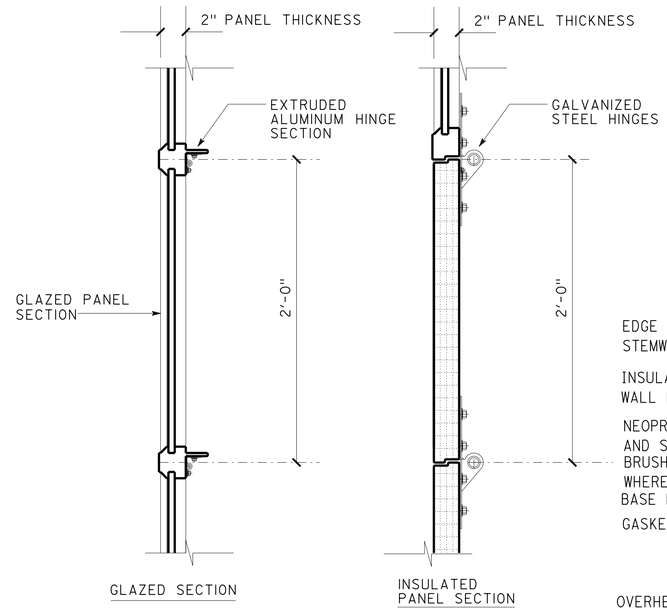

8 SECTIONAL OH DOOR PANELS
SCALE 2" = 1'-0"

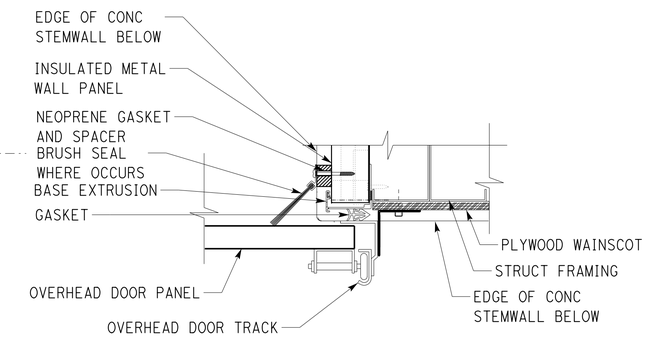

10 JAMB DETAIL
SCALE 3" = 1'-0"

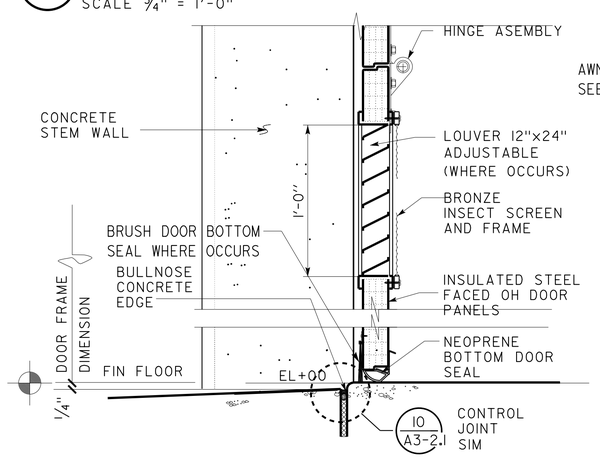

3 SECTIONAL OH THRESHOLD
SCALE 2" = 1'-0"

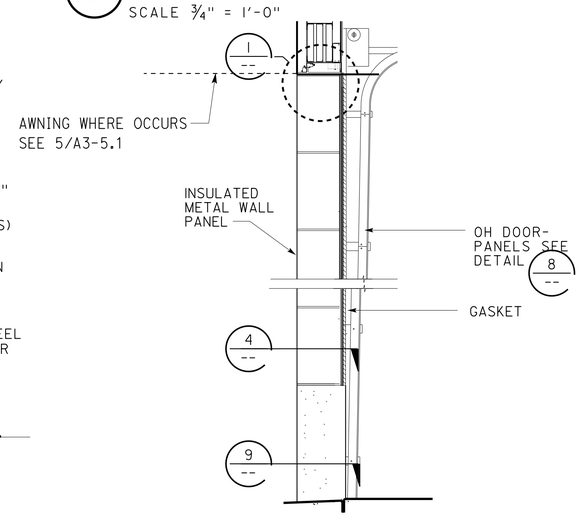

6 SIDE ELEVATION
SCALE 1/2" = 1'-0"

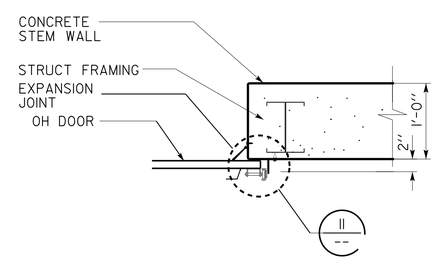

9 SECTIONAL OH JAMB
SCALE 1" = 1'-0"

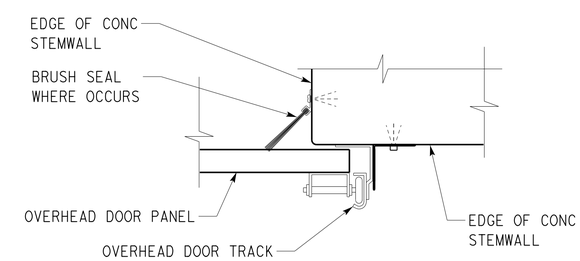

11 JAMB DETAIL
SCALE 3" = 1'-0"

	BY	CHECKED
DESIGN	L Rhoades, R Francisco	Q. Wong, F. Thomas
DETAILS	L Rhoades, J. Kwong	Q. Wong, F. Thomas
QUANTITIES		

STATE OF **CALIFORNIA** DEPARTMENT OF TRANSPORTATION

DIVISION OF ENGINEERING SERVICES ARCHITECTURAL AND STRUCTURAL DESIGN

BRIDGE No. 33M5785
POST MILE

SFOBB WAREHOUSE
DETAILS — OVERHEAD DOOR DETAILS

SHEET **A3-10.1**

TAEMWW Imperial - CCSC Rev. 01/13

ORIGINAL SCALE IN INCHES FOR REDUCED PLANS 0 1 2 3

UNIT: 3598 CONTRACT No.: 014101
PROJECT NUMBER & PHASE: 04130001331

DISREGARD PRINTS BEARING EARLIER REVISION DATES → - -13

REVISION DATES (PRELIMINARY STAGE ONLY) — SHEET X OF X

30-APR-2014 10:12

P:\dist_04\0413000133_sfobb_maint_warehouse\arch\CADD\Working Drawings\first expedite\a3_10.1 oh door.dgn

Dist	COUNTY	LOCATION CODE	POST MILES TOTAL PROJECT	SHEET No.	TOTAL SHEETS
04	Ala	5785		181	371

LICENSED ARCHITECT — DATE 10-25-13

3-24-14
PLANS APPROVAL DATE

LICENSED ARCHITECT — Lani Rhoades — No. C 26695 — 10-31-15 RENEWAL DATE — STATE OF CALIFORNIA

The State of California or its officers or agents shall not be responsible for the accuracy or completeness of scanned copies of this plan sheet.

ACCESSIBILITY DESIGN APPROVAL DOT / DES / OTA
PROJECT ID **0413000133**
Reviewed by: Y. A. WANG
Date: 02-13-14

CALIFORNIA STATE FIRE MARSHAL APPROVED
Approval of this plan does not authorize or approve any omission or deviation from applicable regulations. Final approval is subject to field inspection. One set of approved plans shall be available on the project site at all times.
Reviewed by: INGRID P. ICASIANO
Approval date: 02-11-14

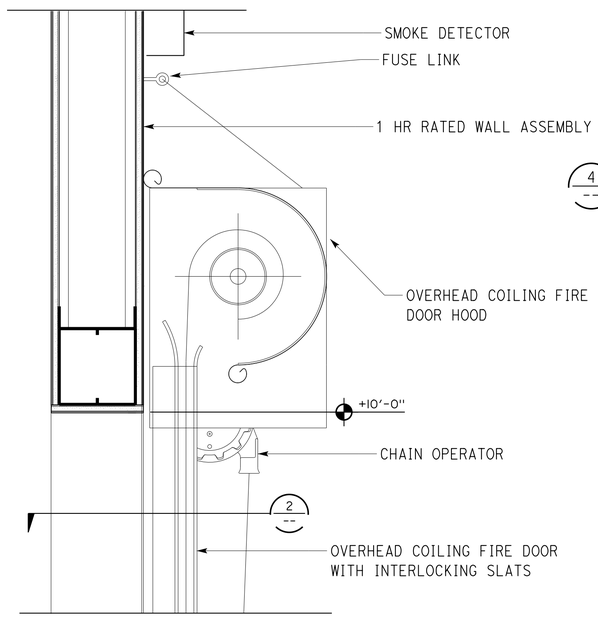

1 OVERHEAD COILING FIRE DOOR AT HEAD
SCALE 2" = 1'-0" UL LABELED 60 MINUTE OVERHEAD COILING FIRE DOOR

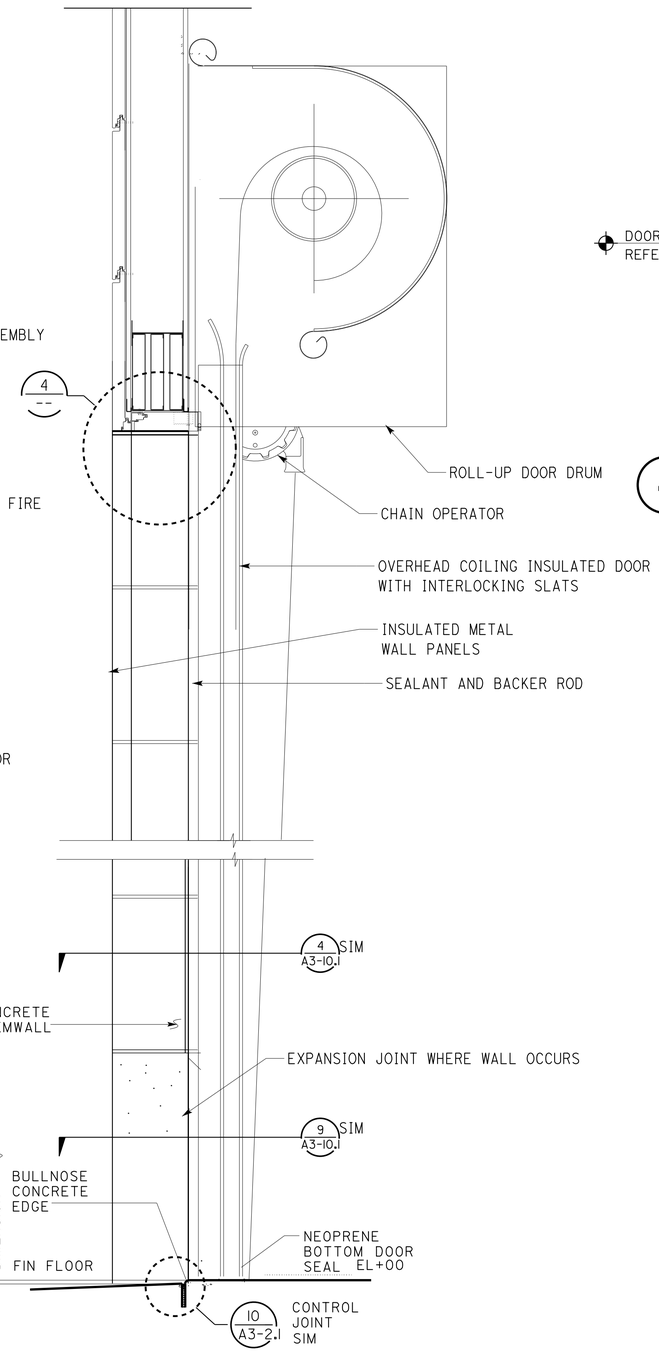

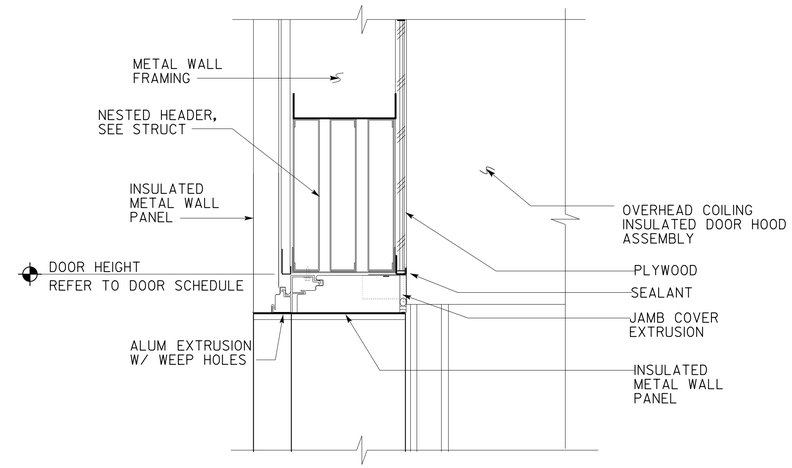

4 OVERHEAD COILING INSULATED DOOR HEAD
SCALE 2" = 1'-0"

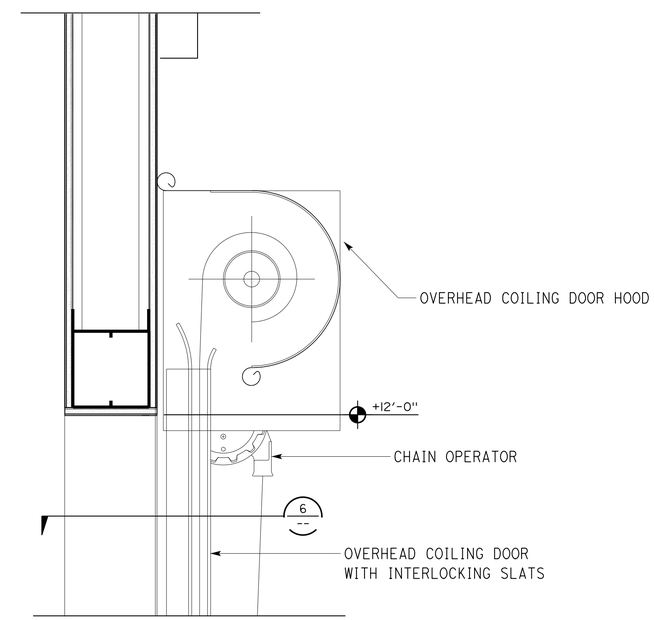

5 OVERHEAD COILING INSULATED DOOR AT HEAD
SCALE 2" = 1'-0"

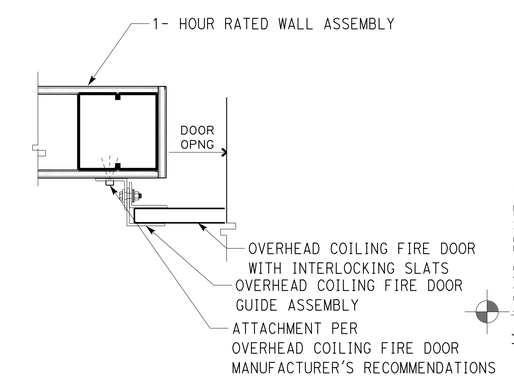

2 OVERHEAD COILING FIRE DOOR AT JAMB
SCALE 2" = 1'-0"

3 OVERHEAD COILING INSULATED DOOR
SCALE 1" = 1'-0"

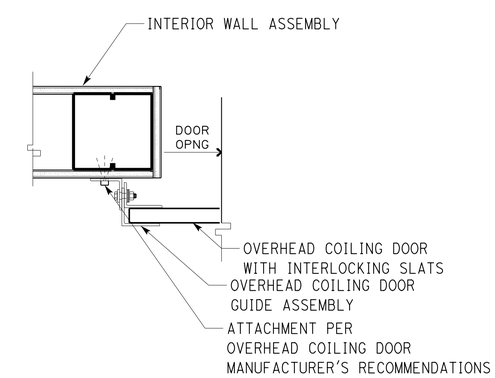

6 OVERHEAD COILING INSULATED DOOR AT JAMB
SCALE 2" = 1'-0"

	BY	CHECKED
DESIGN	L Rhoades, R Francisco	Q. Wong, F. Thomas
DETAILS	L Rhoades, J. Kwong	Q. Wong, F. Thomas
QUANTITIES		

STATE OF **CALIFORNIA** DEPARTMENT OF TRANSPORTATION

DIVISION OF ENGINEERING SERVICES
ARCHITECTURAL AND STRUCTURAL DESIGN

BRIDGE No. 33M5785
POST MILE

SFOBB WAREHOUSE
DETAILS — OVERHEAD COIL DOOR

SHEET **A3-10.2**

TAEMWW Imperial - CCSC Rev. 01/13

ORIGINAL SCALE IN INCHES FOR REDUCED PLANS 0 1 2 3

UNIT: 3598 CONTRACT No.: 014101
PROJECT NUMBER & PHASE: 04130001331

DISREGARD PRINTS BEARING EARLIER REVISION DATES → - -13

REVISION DATES (PRELIMINARY STAGE ONLY) — SHEET X OF X

30-APR-2014 10:12

P:\dist_04\0413000133_sfobb_maint_warehouse\arch\CADD\Working Drawings\first expedite\a3_10.2 coil door.dgn

Dist	COUNTY	LOCATION CODE	POST MILES TOTAL PROJECT	SHEET No.	TOTAL SHEETS
04	Ala	5785		182	371

LICENSED ARCHITECT — DATE 10-25-13

3-24-14
PLANS APPROVAL DATE

LICENSED ARCHITECT Lani Rhoades No. C 26695 10-31-15 RENEWAL DATE STATE OF CALIFORNIA

The State of California or its officers or agents shall not be responsible for the accuracy or completeness of scanned copies of this plan sheet.

ACCESSIBILITY DESIGN APPROVAL DOT / DES / OTA
PROJECT ID **0413000133**
Reviewed by: Y. A. WANG
Date: 02-13-14

CALIFORNIA STATE FIRE MARSHAL APPROVED
Approval of this plan does not authorize or approve any omission or deviation from applicable regulations. Final approval is subject to field inspection. One set of approved plans shall be available on the project site at all times.
Reviewed by: INGRID P. ICASIANO
Approval date: 02-11-14

NOTE:

NEOPRENE TAPE TO BE APPLIED BETWEEN DISSIMILAR METALS.

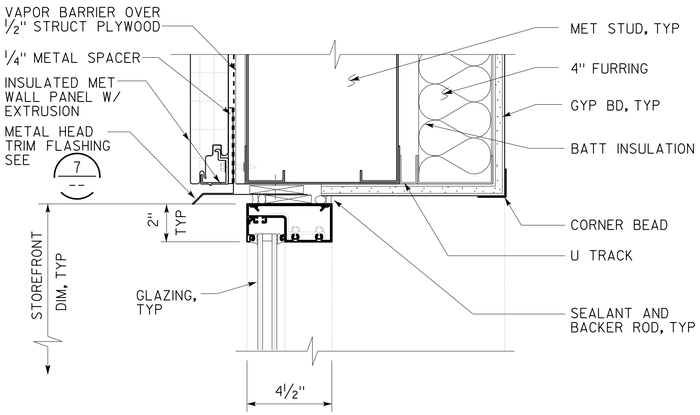

1 HEAD
SCALE : 3" = 1'-0"

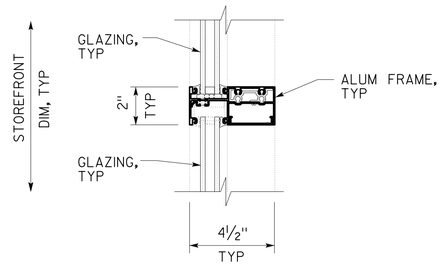

4 MULLION
SCALE : 3" = 1'-0"

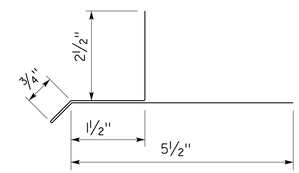

HEAD TRIM FLASHING

7 HEAD TRIM FLASHING
NOT TO SCALE

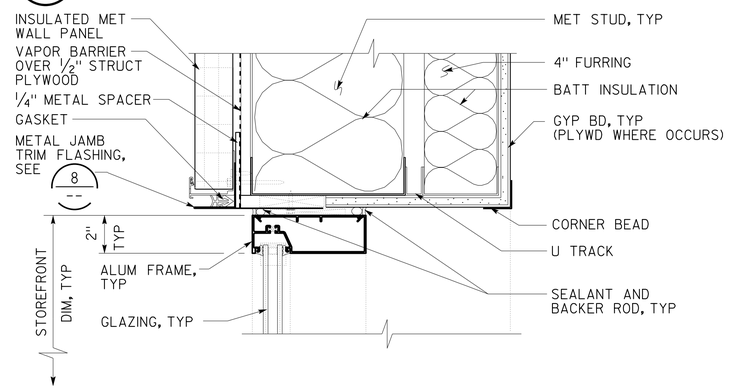

2 JAMB
SCALE : 3" = 1'-0"

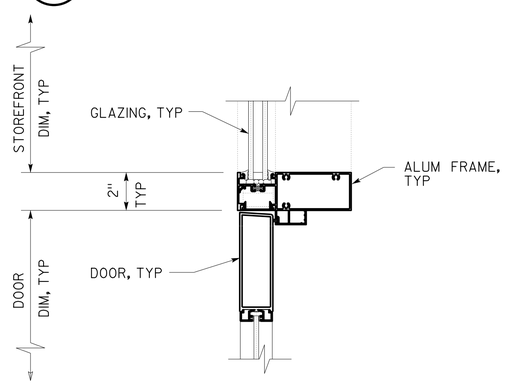

5 JAMB - HEAD SIMILAR
SCALE : 3" = 1'-0"

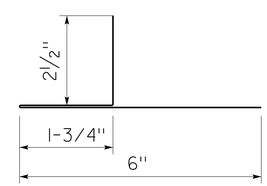

8 JAMB TRIM FLASHING
NOT TO SCALE

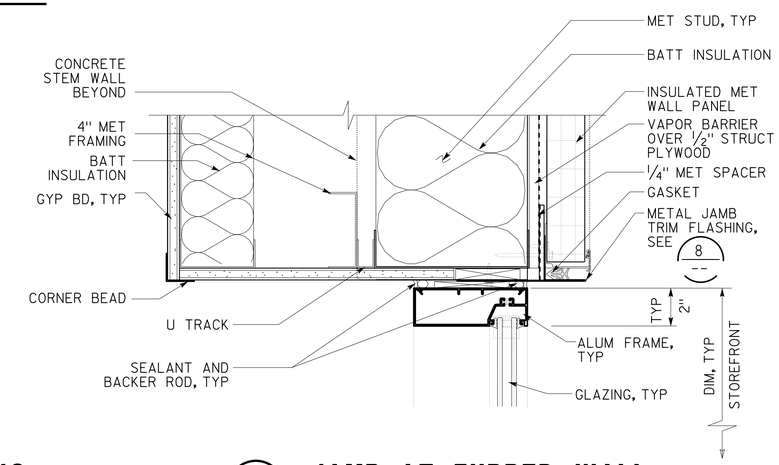

10 JAMB AT FURRED WALL
SCALE : 3" = 1'-0"

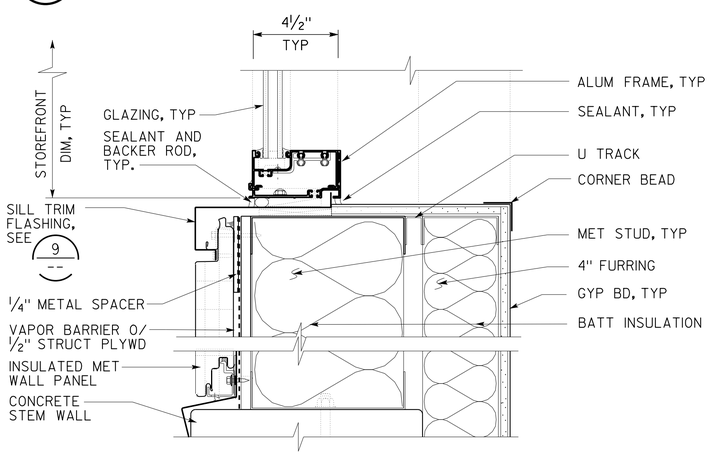

3 SILL
SCALE : 3" = 1'-0"

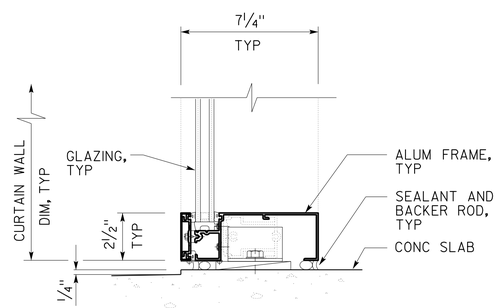

6 SILL
SCALE : 3" = 1'-0"

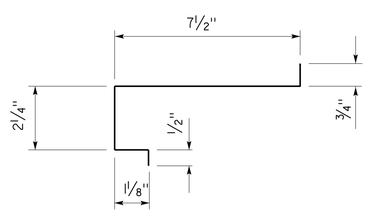

9 SILL TRIM FLASHING
NOT TO SCALE

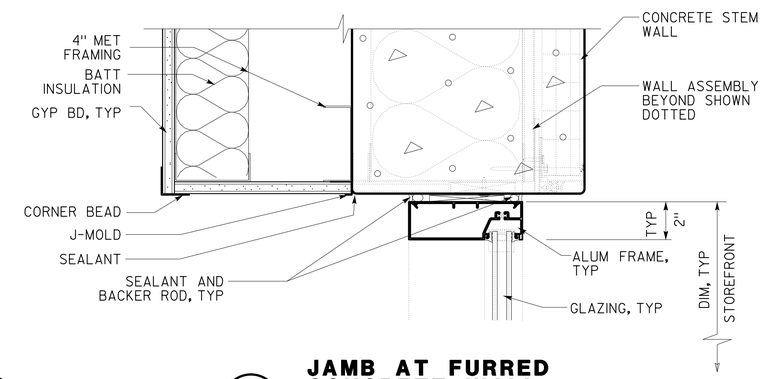

11 JAMB AT FURRED CONCRETE WALL
SCALE : 3" = 1'-0"

DESIGN	BY L Rhoades, R Francisco	CHECKED Q. Wong, F. Thomas	
DETAILS	BY L Rhoades, J. Kwong	CHECKED Q. Wong, F. Thomas	
QUANTITIES	BY	CHECKED	

STATE OF CALIFORNIA DEPARTMENT OF TRANSPORTATION

DIVISION OF ENGINEERING SERVICES ARCHITECTURAL AND STRUCTURAL DESIGN

BRIDGE No. 33M5785
POST MILE

SFOBB WAREHOUSE
DETAIL — STOREFRONT

SHEET A3-11.1

TAEMWW Imperial - CCSC Rev. 01/13

ORIGINAL SCALE IN INCHES FOR REDUCED PLANS 0 1 2 3

UNIT: 3598 CONTRACT No.: 014101
PROJECT NUMBER & PHASE: 04130001331

DISREGARD PRINTS BEARING EARLIER REVISION DATES → - -13

REVISION DATES (PRELIMINARY STAGE ONLY) SHEET X OF X

30-APR-2014 10:12

P:\dist_04\0413000133_sfobb_maint_warehouse\arch\CADD\Working Drawings\first expedite\a3_11.1 sf window.dgn

Dist	COUNTY	LOCATION CODE	POST MILES TOTAL PROJECT	SHEET No.	TOTAL SHEETS
04	Ala	5785		183	371

LICENSED ARCHITECT — DATE 10-25-13

3-24-14
PLANS APPROVAL DATE

LICENSED ARCHITECT — Lani Rhoades — No. C 26695 — 10-31-15 RENEWAL DATE — STATE OF CALIFORNIA

The State of California or its officers or agents shall not be responsible for the accuracy or completeness of scanned copies of this plan sheet.

ACCESSIBILITY DESIGN APPROVAL DOT / DES / OTA
PROJECT ID **0413000133**
Reviewed by: Y. A. WANG
Date: 02-13-14

CALIFORNIA STATE FIRE MARSHAL APPROVED
Approval of this plan does not authorize or approve any omission or deviation from applicable regulations. Final approval is subject to field inspection. One set of approved plans shall be available on the project site at all times.
Reviewed by: INGRID P. ICASIANO
Approval date: 02-11-14

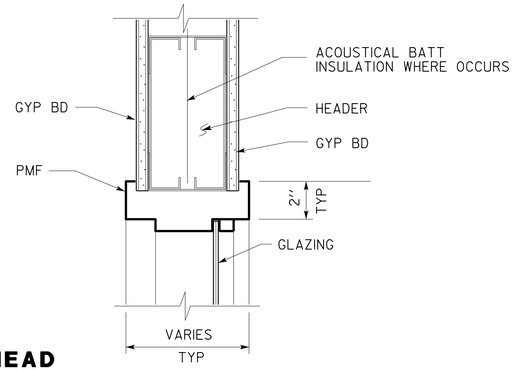

1 HEAD
SCALE 3" = 1'-0"

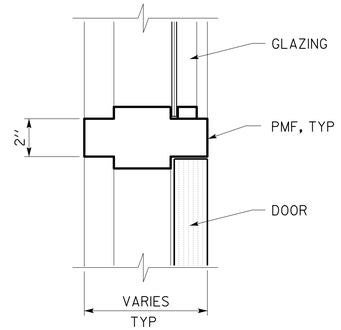

4 MULLION
SCALE 3" = 1'-0"

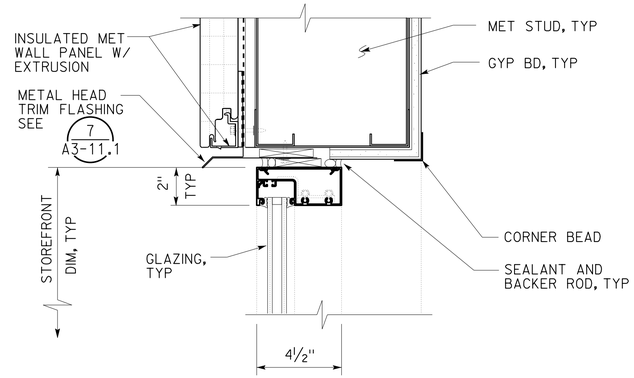

5 HEAD
SCALE : 3" = 1'-0"

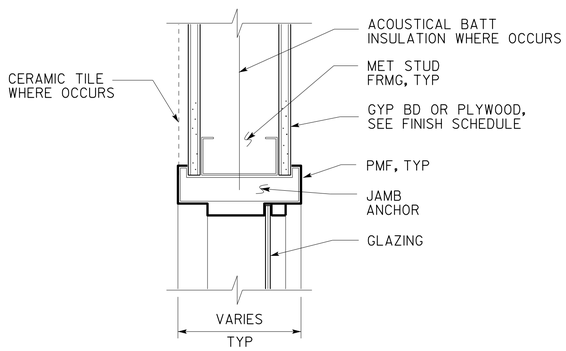

2 JAMB (SILL SIMILAR)
SCALE 3" = 1'-0"

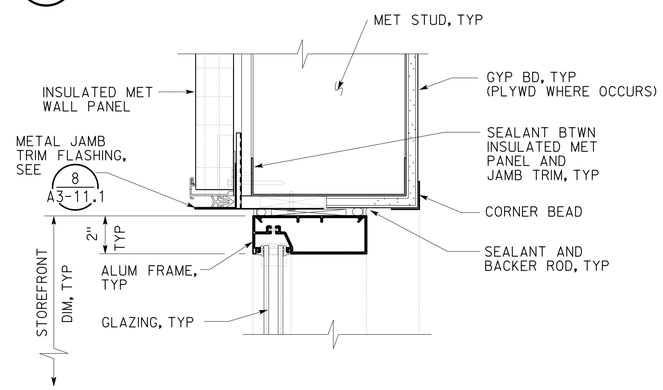

6 JAMB
SCALE : 3" = 1'-0"

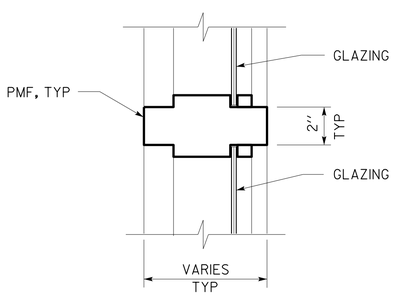

3 MULLION
SCALE 3" = 1'-0"

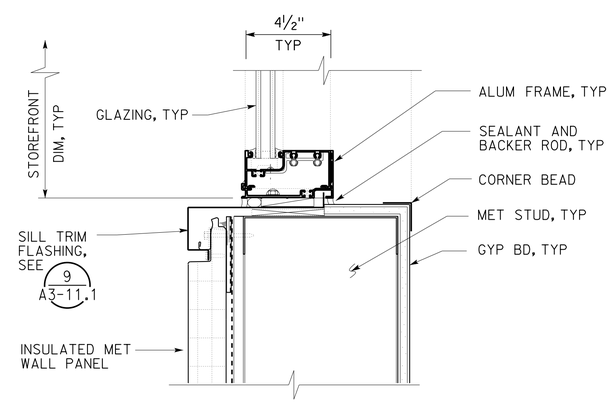

7 SILL
SCALE : 3" = 1'-0"

DESIGN	BY L Rhoades, R Francisco	CHECKED Q. Wong, F. Thomas	
DETAILS	BY L Rhoades, J. Kwong	CHECKED Q. Wong, F. Thomas	
QUANTITIES	BY	CHECKED	

STATE OF CALIFORNIA DEPARTMENT OF TRANSPORTATION

DIVISION OF ENGINEERING SERVICES ARCHITECTURAL AND STRUCTURAL DESIGN

BRIDGE No. 33M5785
POST MILE

SFOBB WAREHOUSE
DETAILS — INTERIOR PMF WINDOWS/DOORS AND STOREFRONT WINDOWS

SHEET **A3-11.2**

TAEMWW Imperial - CCSC Rev. 01/13

ORIGINAL SCALE IN INCHES FOR REDUCED PLANS 0 1 2 3

UNIT: 3598 CONTRACT No.: 014101
PROJECT NUMBER & PHASE: 04130001331

DISREGARD PRINTS BEARING EARLIER REVISION DATES → REVISION DATES (PRELIMINARY STAGE ONLY) - -13 | SHEET X | OF X

30-APR-2014 10:12

P:\dist_04\0413000133_sfobb_maint_warehouse\arch\CADD\Working Drawings\first expedite\a3_11.2 window.dgn

Dist	COUNTY	LOCATION CODE	POST MILES TOTAL PROJECT	SHEET No.	TOTAL SHEETS
04	Ala	5785		184	371

LICENSED ARCHITECT — DATE 10-25-13

3-24-14
PLANS APPROVAL DATE

LICENSED ARCHITECT Lani Rhoades No. C 26695 10-31-15 RENEWAL DATE STATE OF CALIFORNIA

The State of California or its officers or agents shall not be responsible for the accuracy or completeness of scanned copies of this plan sheet.

ACCESSIBILITY DESIGN APPROVAL DOT / DES / OTA
PROJECT ID **0413000133**
Reviewed by: Y. A. WANG
Date: 02-13-14

CALIFORNIA STATE FIRE MARSHAL APPROVED
Approval of this plan does not authorize or approve any omission or deviation from applicable regulations. Final approval is subject to field inspection. One set of approved plans shall be available on the project site at all times.
Reviewed by: INGRID P. ICASIANO
Approval date: 02-11-14

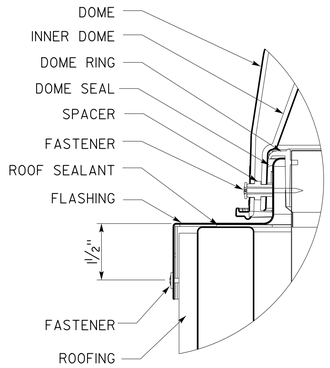

1 DOME EDGE
NO SCALE

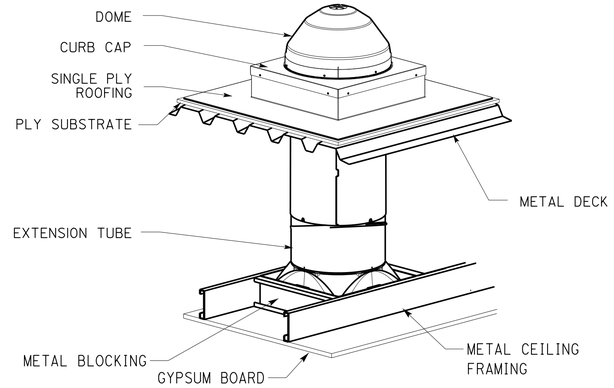

4 TUBULAR PLASTIC GLAZED UNIT SKYLIGHT ISOMETRIC
NO SCALE

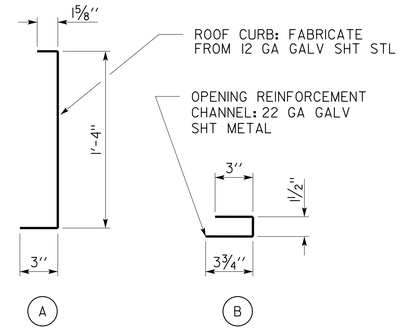

6 CURB AND FLASHING SHAPES
SCALE 2" = 1'-0"

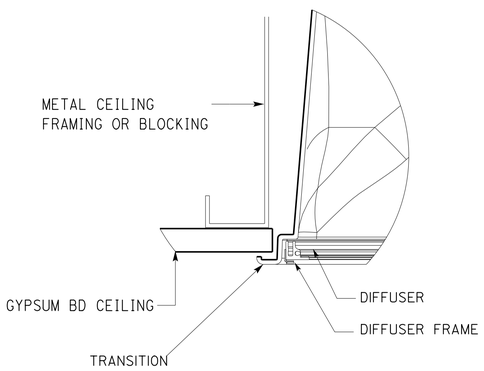

2 CEIILING ATTACHMENT
NO SCALE

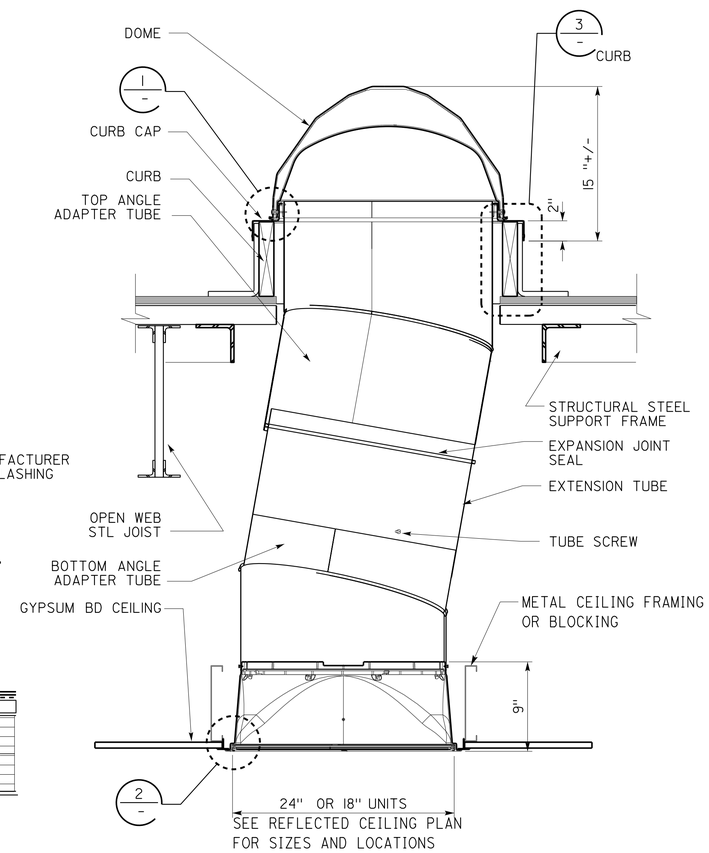

5 TUBULAR PLASTIC GLAZED UNIT SKYLIGHT
NO SCALE

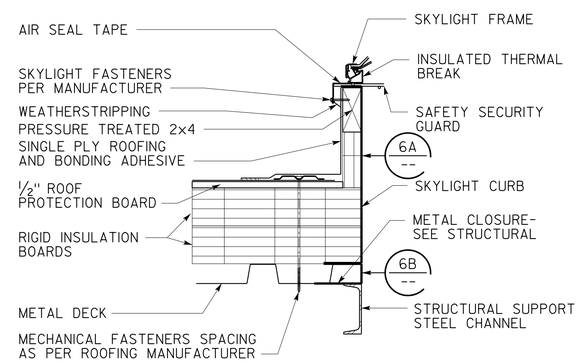

7 SKYLIGHT CURB FLASHING
SCALE 2" = 1'-0"

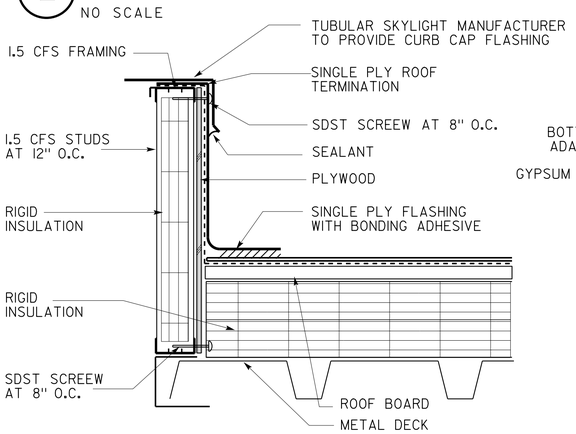

3 CURB CAP FLASHING
SCALE 4" = 1'-0"

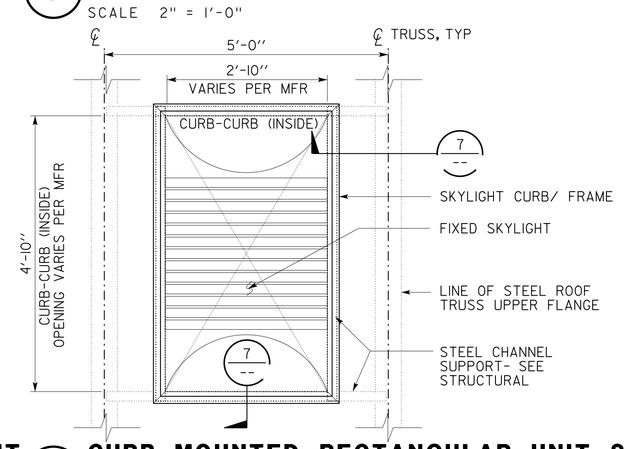

8 CURB MOUNTED RECTANGULAR UNIT SKYLIGHT 5'x3'
SCALE ¾" = 1'-0"

	BY	CHECKED
DESIGN	L Rhoades, R Francisco	Q. Wong, F. Thomas
DETAILS	L Rhoades, J. Kwong	Q. Wong, F. Thomas
QUANTITIES		

STATE OF CALIFORNIA
DEPARTMENT OF TRANSPORTATION

DIVISION OF ENGINEERING SERVICES
ARCHITECTURAL AND STRUCTURAL DESIGN

BRIDGE No. 33M5785
POST MILE

SFOBB WAREHOUSE
DETAILS — SKYLIGHT DETAILS

SHEET A3-12.1

TAEMWW Imperial - CCSC Rev. 01/13

ORIGINAL SCALE IN INCHES FOR REDUCED PLANS 0 1 2 3

UNIT: 3598 CONTRACT No.: 014101
PROJECT NUMBER & PHASE: 04130001331

DISREGARD PRINTS BEARING EARLIER REVISION DATES → - -13

REVISION DATES (PRELIMINARY STAGE ONLY) SHEET X OF X

30-APR-2014 10:12

P:\dist_04\0413000133_sfobb_maint_warehouse\arch\CADD\Working Drawings\first expedite\a3_12.1 skylight.dgn

Dist	COUNTY	LOCATION CODE	POST MILES TOTAL PROJECT	SHEET No.	TOTAL SHEETS
04	Ala	5785		185	371

LICENSED ARCHITECT — DATE 10-25-13

3-24-14
PLANS APPROVAL DATE

LICENSED ARCHITECT Lani Rhoades No. C 26695 10-31-15 RENEWAL DATE STATE OF CALIFORNIA

The State of California or its officers or agents shall not be responsible for the accuracy or completeness of scanned copies of this plan sheet.

ACCESSIBILITY DESIGN APPROVAL DOT / DES / OTA
PROJECT ID **0413000133**
Reviewed by: Y. A. WANG
Date: 02-13-14

CALIFORNIA STATE FIRE MARSHAL APPROVED
Approval of this plan does not authorize or approve any omission or deviation from applicable regulations. Final approval is subject to field inspection. One set of approved plans shall be available on the project site at all times.
Reviewed by: INGRID P. ICASIANO
Approval date: 02-11-14

NOTE: WHERE CERAMIC COVE BASE IS NOT ON A FULL CERAMIC WALL, THE BASE MUST BE 6" HIGH

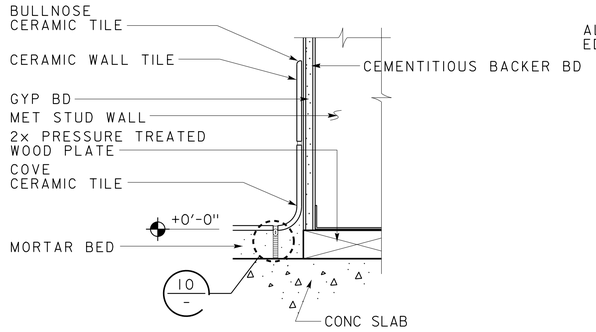

1 TILE BASE AT STUD WALL
SCALE 3" = 1'-0"

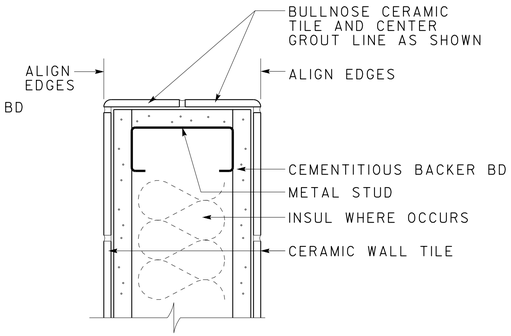

4 TILE AT WING WALL
SCALE 4" = 1'-0"

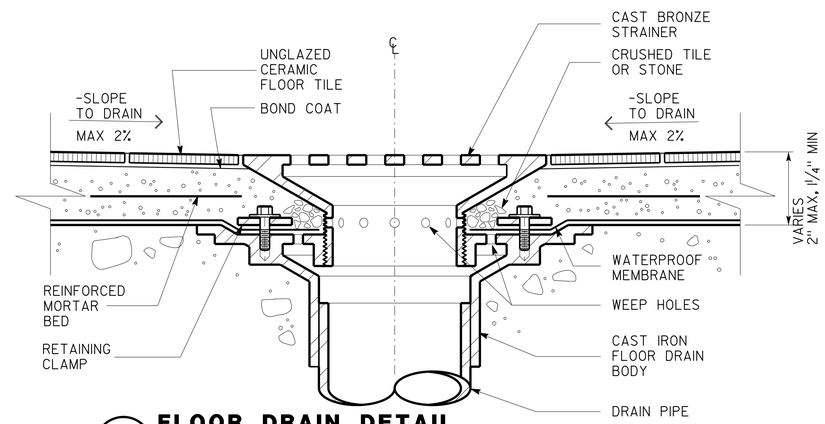

7 FLOOR DRAIN DETAIL
SCALE 6" = 1'-0"

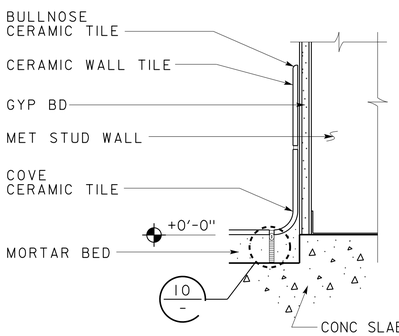

2 TILE BASE AT STUD WALL
SCALE 3" = 1'-0"

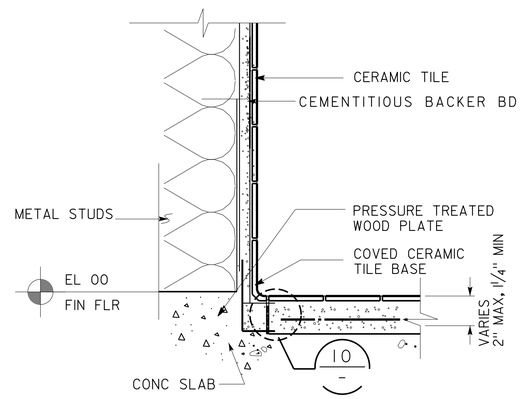

5 FULL MORTAR BED
SCALE 3" = 1'-0"

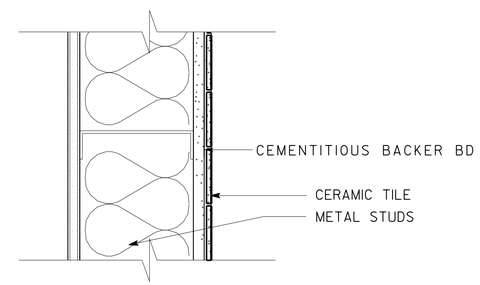

8 WALL TILE INSTALLATION
SCALE 3" = 1'-0"

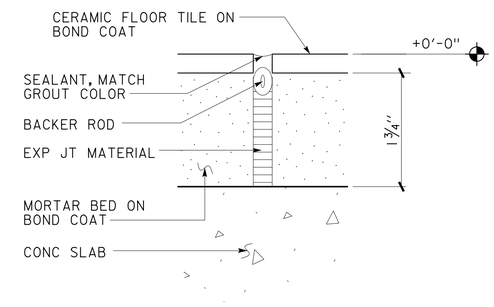

10 CONTROL JOINT
SCALE 1" = 1'-0"

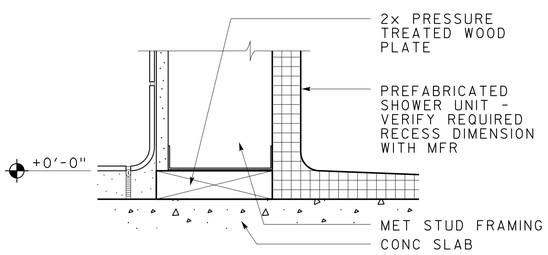

NOTE: SEE 2/A3-13.2 FOR ADD'L INFO AND DIM

3 SHOWER AT WALL
SCALE 3" = 1'-0"

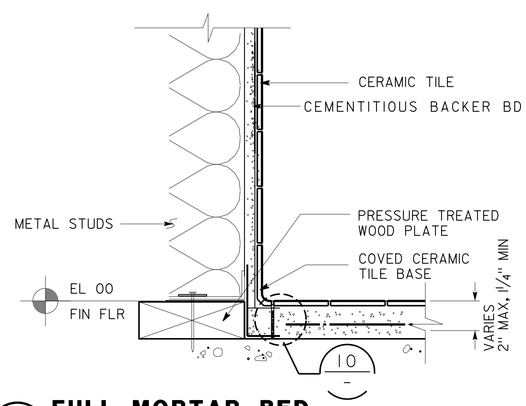

6 FULL MORTAR BED
SCALE 3" = 1'-0"

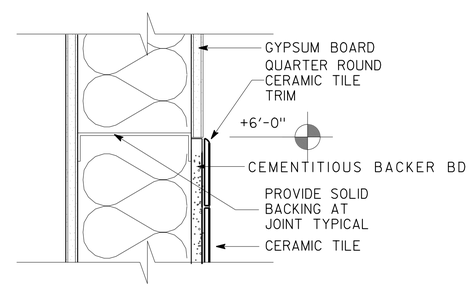

9 WALL TILE
SCALE 3" = 1'-0"

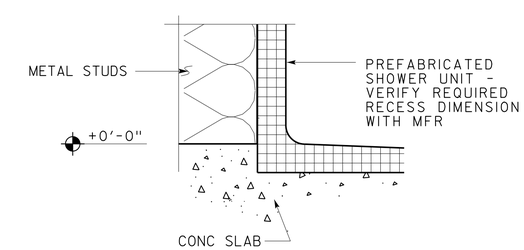

NOTE: SEE 2/A3-13.2 FOR ADD'L INFO AND DIM

11 SHOWER AT WALL
NOT TO SCALE

	BY	CHECKED
DESIGN	L Rhoades, R Francisco	Q. Wong, F. Thomas
DETAILS	L Rhoades, J. Kwong	Q. Wong, F. Thomas
QUANTITIES		

STATE OF CALIFORNIA
DEPARTMENT OF TRANSPORTATION

DIVISION OF ENGINEERING SERVICES
ARCHITECTURAL AND STRUCTURAL DESIGN

BRIDGE No. 33M5785
POST MILE

SFOBB WAREHOUSE
DETAILS — INTERIOR FINISH DETAILS

SHEET A3-13.1

TAEMWW Imperial - CCSC Rev. 01/13

ORIGINAL SCALE IN INCHES FOR REDUCED PLANS 0 1 2 3

UNIT: 3598 CONTRACT No.: 014101
PROJECT NUMBER & PHASE: 04130001331

DISREGARD PRINTS BEARING EARLIER REVISION DATES → - -13

REVISION DATES (PRELIMINARY STAGE ONLY) — SHEET X OF X

30-APR-2014 10:12

P:\dist_04\0413000133_sfobb_maint_warehouse\arch\CADD\Working Drawings\first expedite\a3_13.1 int fin.dgn

Dist	COUNTY	LOCATION CODE	POST MILES TOTAL PROJECT	SHEET No.	TOTAL SHEETS
04	Ala	5785		186	371

LICENSED ARCHITECT — DATE 10-25-13

3-24-14
PLANS APPROVAL DATE

LICENSED ARCHITECT — Lani Rhoades — No. C 26695 — 10-31-15 RENEWAL DATE — STATE OF CALIFORNIA

The State of California or its officers or agents shall not be responsible for the accuracy or completeness of scanned copies of this plan sheet.

ACCESSIBILITY DESIGN APPROVAL DOT / DES / OTA
PROJECT ID **0413000133**
Reviewed by: Y. A. WANG
Date: 02-13-14

CALIFORNIA STATE FIRE MARSHAL APPROVED
Approval of this plan does not authorize or approve any omission or deviation from applicable regulations. Final approval is subject to field inspection. One set of approved plans shall be available on the project site at all times.
Reviewed by: INGRID P. ICASIANO
Approval date: 02-11-14

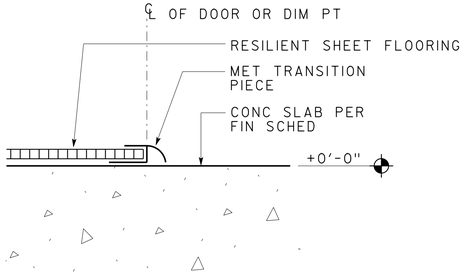

1 FLOOR TRANSITION
NO SCALE

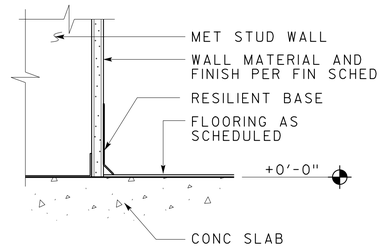

4 RESILIENT BASE
SCALE 3" = 1'-0"

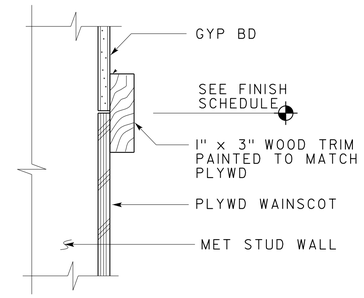

7 WOOD TRIM
SCALE 3" = 1'-0"

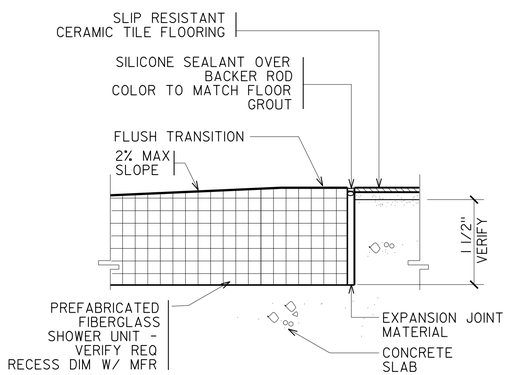

2 FLOOR TRANSITION
NO SCALE

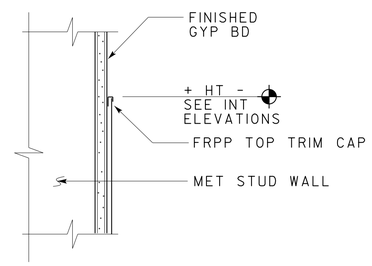

5 FRPP WALL TOP CAP
SCALE 3" = 1'-0"

8 NOT USED

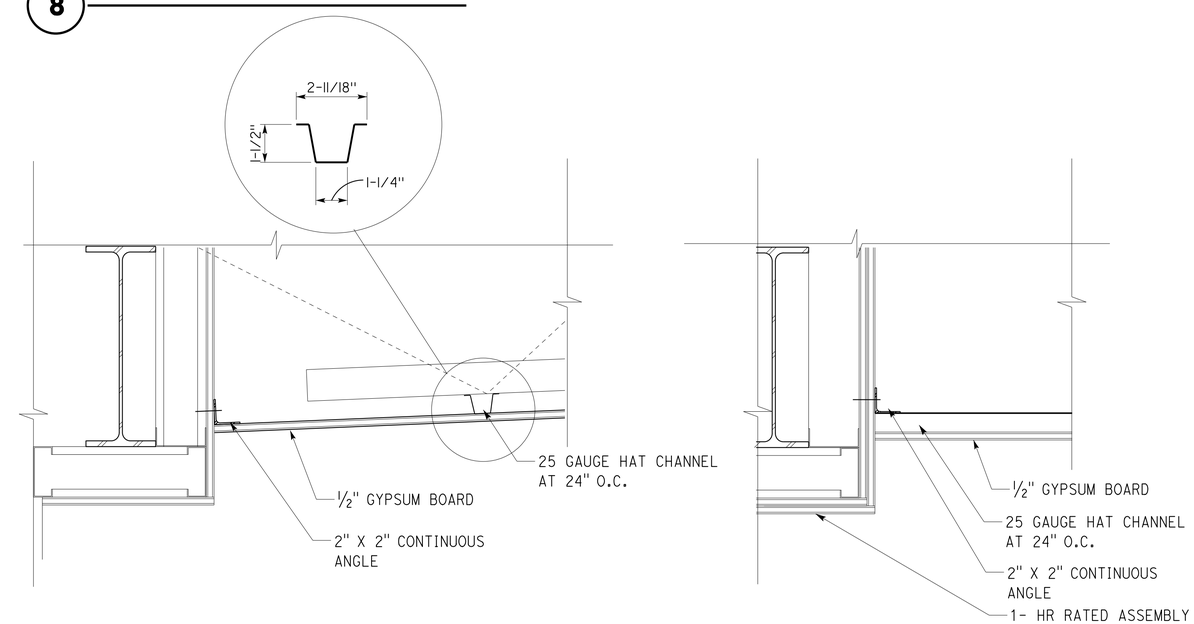

3 NOT USED

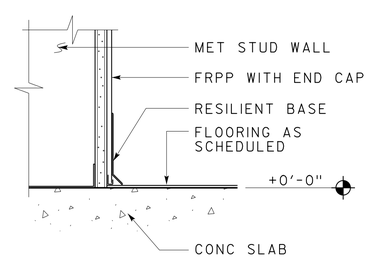

6 BASE AT FRPP/STUD WALL
SCALE 3" = 1'-0"

9 GYPSUM BOARD CEILING
SCALE 1½" = 1'-0"

10 GYPSUM BOARD CEILING
SCALE 1½" = 1'-0"

	BY	CHECKED
DESIGN	L Rhoades, R Francisco	Q. Wong, F. Thomas
DETAILS	L Rhoades, J. Kwong	Q. Wong, F. Thomas
QUANTITIES		

STATE OF CALIFORNIA
DEPARTMENT OF TRANSPORTATION

DIVISION OF ENGINEERING SERVICES
ARCHITECTURAL AND STRUCTURAL DESIGN

BRIDGE No. 33M5785
POST MILE

SFOBB WAREHOUSE
DETAILS — INTERIOR FINISH DETAILS

SHEET A3-13.2

TAEMWW Imperial - CCSC Rev. 01/13

ORIGINAL SCALE IN INCHES FOR REDUCED PLANS 0 1 2 3

UNIT: 3598 CONTRACT No.: 014101
PROJECT NUMBER & PHASE: 04130001331

DISREGARD PRINTS BEARING EARLIER REVISION DATES → - -13

REVISION DATES (PRELIMINARY STAGE ONLY) — SHEET X — OF X

30-APR-2014 10:13

P:\dist_04\0413000133_sfobb_maint_warehouse\arch\CADD\Working Drawings\first expedite\a3_13.2 int fin.dgn

Dist	COUNTY	LOCATION CODE	POST MILES TOTAL PROJECT	SHEET No.	TOTAL SHEETS
04	Ala	5785		187	371

LICENSED ARCHITECT — DATE 10-25-13

3-24-14
PLANS APPROVAL DATE

LICENSED ARCHITECT — Lani Rhoades — No. C 26695 — 10-31-15 RENEWAL DATE — STATE OF CALIFORNIA

The State of California or its officers or agents shall not be responsible for the accuracy or completeness of scanned copies of this plan sheet.

ACCESSIBILITY DESIGN APPROVAL DOT / DES / OTA
PROJECT ID **0413000133**
Reviewed by: Y. A. WANG
Date: 02-13-14

CALIFORNIA STATE FIRE MARSHAL APPROVED
Approval of this plan does not authorize or approve any omission or deviation from applicable regulations. Final approval is subject to field inspection. One set of approved plans shall be available on the project site at all times.
Reviewed by: INGRID P. ICASIANO
Approval date: 02-11-14

SIGN GRAPHICS SHALL CONFORM TO CBC SECTION 1011.5.1

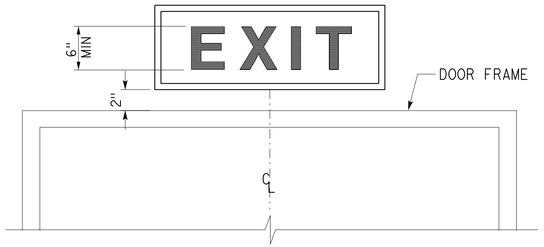

Provide self-luminous exit signs at exit door locations. Exit sign illumination shall conform to CBC Section 1011.4
Mount sign above exit door

1 SELF-LUMINOUS EXIT SIGN
NO SCALE

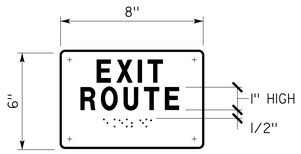

Refer to "Signage notes" for additional information.

4 EXIT SIGN
NO SCALE

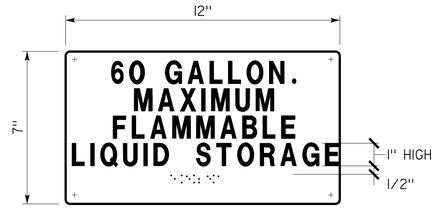

Refer to "Signage notes" for additional information.

7 MAX STORAGE SIGN
NO SCALE

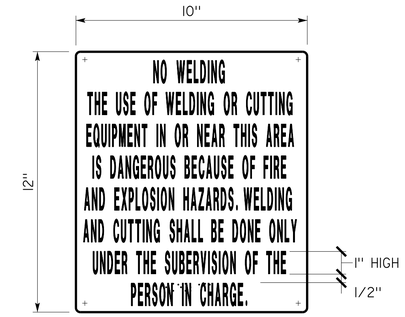

Refer to "Signage notes" for additional information.

10 NO OPEN FLAME SIGN
NO SCALE

SIGNAGE NOTES:

1. See specifications for color contrast requirements.
2. Locate signs on wall adjacent to door on latch side. If wall space is not available on latch side, locate on nearest adjacent wall.
3. Refer to specifications for sign materials and color selection.
4. Contracted- grade 2 braille: dots shall be 1/16" o.c. in each cell with 1/4" space between cells, measured from the second column of dots in the first cell to the first column of dots in the second cell. dots shall be raised a minimum of 1/32" above the background..
5. Tactile characters: Shall be sans serif raised 1/32" with a width to height ration between 3:5 and 1:1 (width 60% to 100% of height) and a stroke width to height ratio of between 1:5 and 1:10 (stroke width 10% to 20% of height).
6. Refer to door schedule on sheets A0-7.1 thru A0-7.3 for doors, signs, and text.
7. Provide 18" X 18" min. clear floor space in front of and centered on signs.
8. Refer to detail 2/A0-3.3 for additional dimensions.
9. Refer to detail 5/A0-3.3 for sign location.
10. Refer to detail 7/A0-3.3 for sign mounting height.

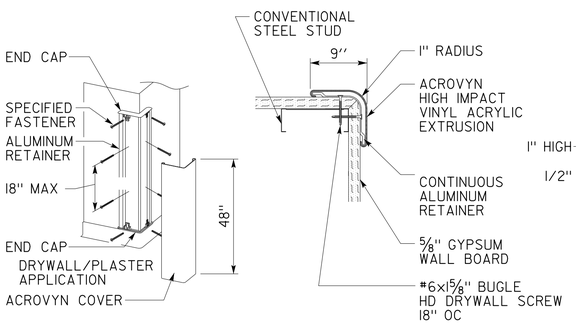

2 CORNER GUARD
NO SCALE

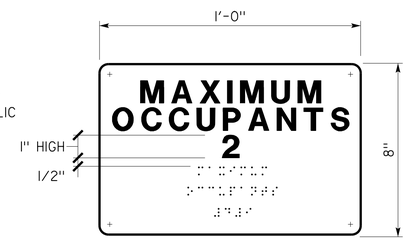

Refer to "Signage notes" for additional information.

5 MAXIMUM OCCUPANTS SIGN
NO SCALE

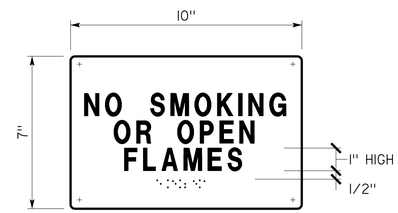

Refer to "Signage notes" for additional information.

8 NO OPEN FLAME SIGN
NO SCALE

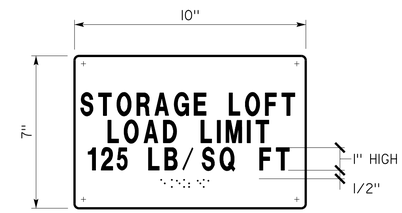

Refer to "Signage notes" for additional information.

11 MAXIMUM STORAGE SIGN
NO SCALE

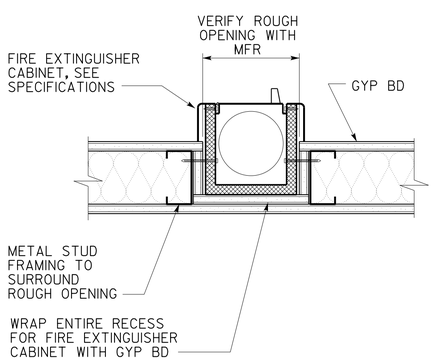

3 FIRE EXTINGUISHER CABINET AT STUD WALL
SCALE 3" = 1'-0"

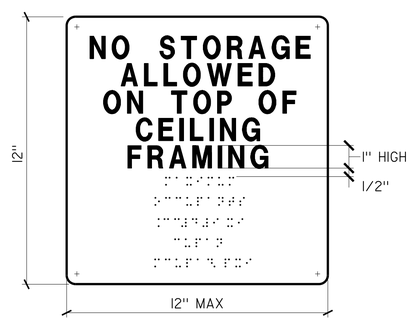

Refer to "Signage notes" for additional information.

6 SIGN
NO SCALE

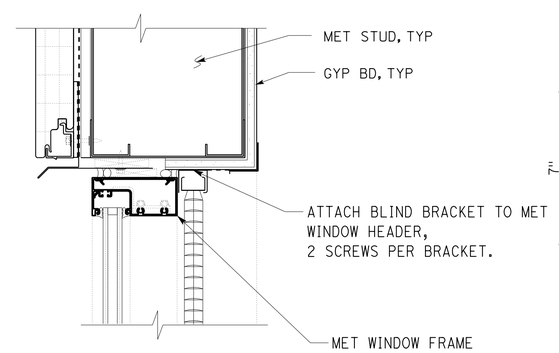

9 INTERIOR WINDOW BLIND
SCALE 3" = 1'-0"

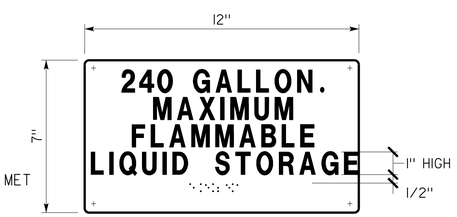

Refer to "Signage notes" for additional information.

12 MAXIMUM STORAGE SIGN
NO SCALE

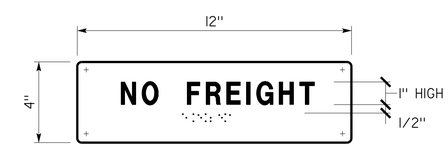

Refer to "Signage notes" for additional information.

13 NO FREIGHT SIGN
NO SCALE

	BY	CHECKED
DESIGN	L Rhoades, R Francisco	Q. Wong, F. Thomas
DETAILS	L Rhoades, J. Kwong	Q. Wong, F. Thomas
QUANTITIES		

STATE OF CALIFORNIA
DEPARTMENT OF TRANSPORTATION

DIVISION OF ENGINEERING SERVICES
ARCHITECTURAL AND STRUCTURAL DESIGN

BRIDGE No. 33M5785
POST MILE

SFOBB WAREHOUSE
DETAILS — MISCELLANEOUS INTERIOR DETAILS

SHEET A3-14.1

UNIT: 3598 CONTRACT No.: 014101
PROJECT NUMBER & PHASE: 04130001331

DISREGARD PRINTS BEARING EARLIER REVISION DATES → - -13

REVISION DATES (PRELIMINARY STAGE ONLY) — SHEET X OF X

ORIGINAL SCALE IN INCHES FOR REDUCED PLANS 0 1 2 3

TAEMWW Imperial - CCSC Rev. 01/13

30-APR-2014 10:13

D:\temporary\a3_14.1 misc int.dgn

Dist	COUNTY	LOCATION CODE	POST MILES TOTAL PROJECT	SHEET No.	TOTAL SHEETS
04	Ala	5785		188	371

LICENSED ARCHITECT — DATE 10-25-13

3-24-14
PLANS APPROVAL DATE

LICENSED ARCHITECT Lani Rhoades No. C 26695 10-31-15 RENEWAL DATE STATE OF CALIFORNIA

The State of California or its officers or agents shall not be responsible for the accuracy or completeness of scanned copies of this plan sheet.

ACCESSIBILITY DESIGN APPROVAL DOT / DES / OTA
PROJECT ID **0413000133**
Reviewed by: Y. A. WANG
Date: 02-13-14

CALIFORNIA STATE FIRE MARSHAL APPROVED
Approval of this plan does not authorize or approve any omission or deviation from applicable regulations. Final approval is subject to field inspection. One set of approved plans shall be available on the project site at all times.
Reviewed by: INGRID P. ICASIANO
Approval date: 02-11-14

NOTE: IN SHOP SUBMITTALS, SHOW PLUMBING SHIELD WITH TRUE SIZE OF GARBAGE DISPOSAL. PLUMBING SHIELD MUST MEET DIMENSIONS SHOWN.

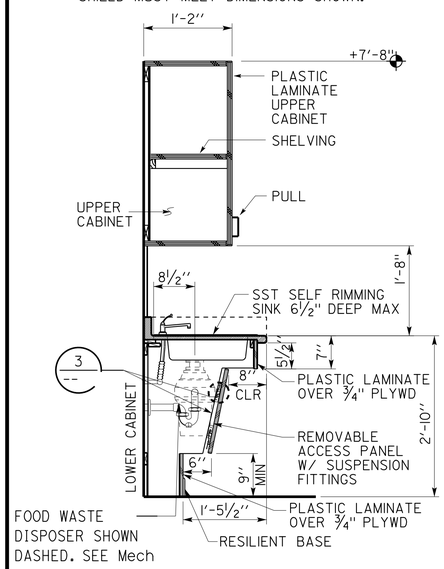

1 ACCESSIBLE COUNTER AT SINK

SCALE ¾" = 1'-0"

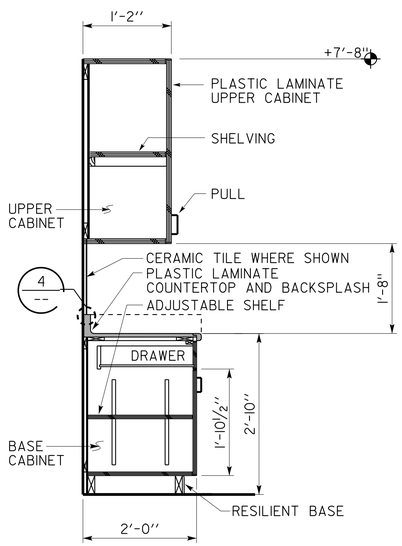

2 CABINET SECTION

SCALE ¾" = 1'-0"

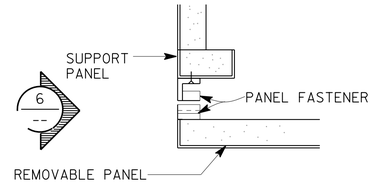

3 CORNER SECTION PANEL UNLATCHED

SCALE 6" = 1'-0"

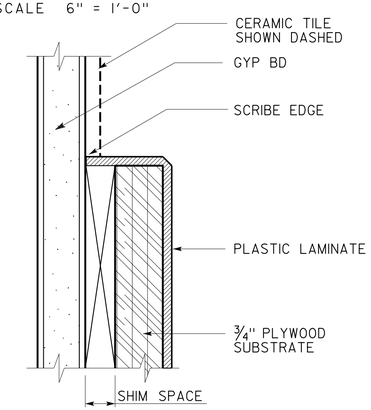

4 BACKSPLASH DETAIL

NO SCALE

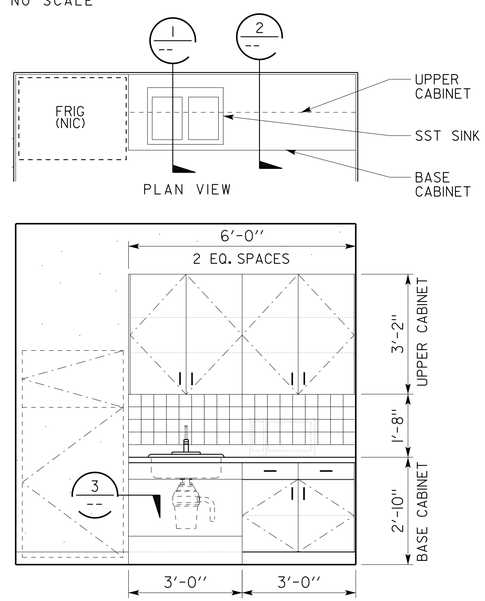

5 KITCHENETTE 127

SCALE 1/4" = 1'-0"

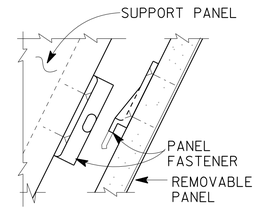

6 PANEL FASTENER

SCALE 6" = 1'-0"

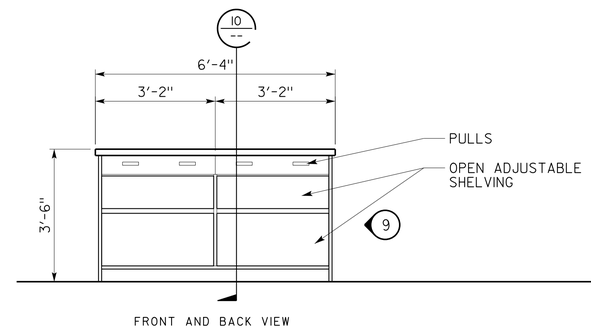

7 WORKTABLE

SCALE ½" = 1'-0"

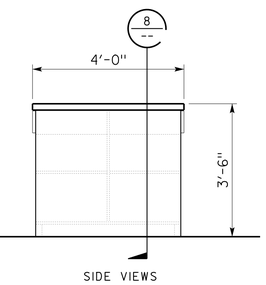

9 WORKTABLE

SCALE ½" = 1'-0"

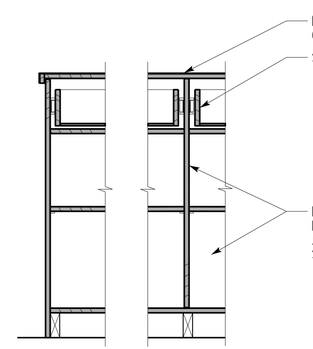

8 WORKTABLE

SCALE 1" = 1'-0"

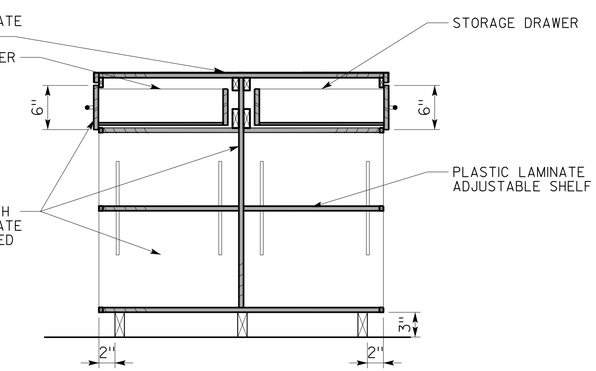

10 WORKTABLE

SCALE 1" = 1'-0"

DESIGN	BY L Rhoades, R Francisco	CHECKED Q. Wong, F. Thomas	
DETAILS	BY L Rhoades, J. Kwong	CHECKED Q. Wong, F. Thomas	
QUANTITIES	BY	CHECKED	

STATE OF CALIFORNIA DEPARTMENT OF TRANSPORTATION

DIVISION OF ENGINEERING SERVICES ARCHITECTURAL AND STRUCTURAL DESIGN

BRIDGE No. 33M5785
POST MILE

SFOBB WAREHOUSE
DETAILS — CABINETRY DETAILS

SHEET A3-15.1

TAEMWW Imperial - CCSC Rev. 01/13

ORIGINAL SCALE IN INCHES FOR REDUCED PLANS 0 1 2 3

UNIT: 3598 CONTRACT No.: 014101
PROJECT NUMBER & PHASE: 04130001331

DISREGARD PRINTS BEARING EARLIER REVISION DATES

REVISION DATES (PRELIMINARY STAGE ONLY) - -13 | SHEET X | OF X

30-APR-2014 10:13

D:\temporary\a3_15.1 cabinetry.dgn

Dist	COUNTY	LOCATION CODE	POST MILES TOTAL PROJECT	SHEET No.	TOTAL SHEETS
04	Ala	5785		189	371

LICENSED ARCHITECT — DATE 10-25-13

3-24-14
PLANS APPROVAL DATE

LICENSED ARCHITECT Lani Rhoades No. C 26695 10-31-15 RENEWAL DATE STATE OF CALIFORNIA

The State of California or its officers or agents shall not be responsible for the accuracy or completeness of scanned copies of this plan sheet.

ACCESSIBILITY DESIGN APPROVAL DOT / DES / OTA
PROJECT ID **0413000133**
Reviewed by: Y. A. WANG
Date: 02-13-14

CALIFORNIA STATE FIRE MARSHAL APPROVED
Approval of this plan does not authorize or approve any omission or deviation from applicable regulations. Final approval is subject to field inspection. One set of approved plans shall be available on the project site at all times.
Reviewed by: INGRID P. ICASIANO
Approval date: 02-11-14

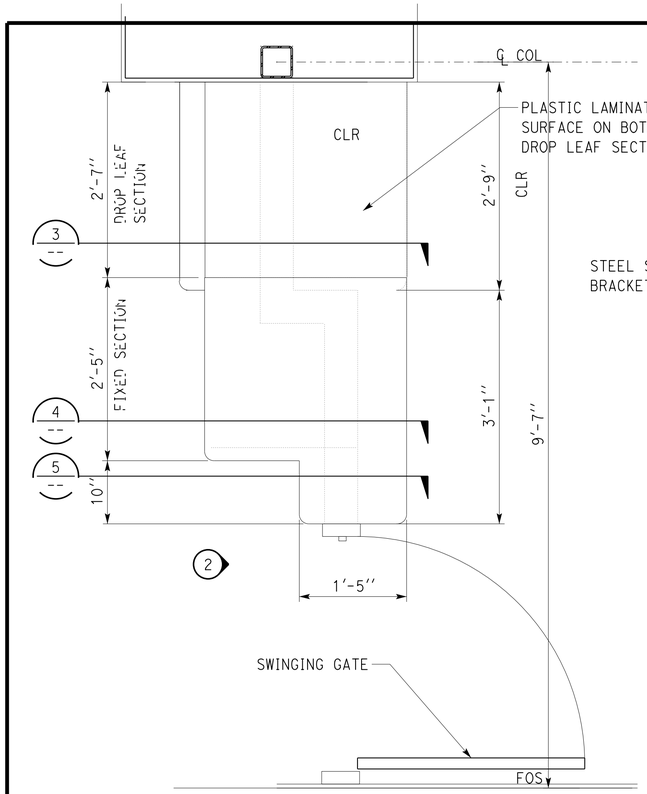

1 BUILT-IN COUNTER PLAN
SCALE 1" = 1'-0"

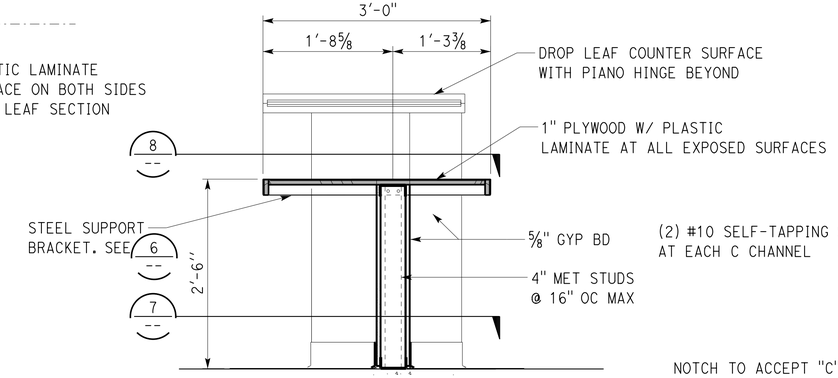

3 BUILT-IN COUNTER SECTION
SCALE 1" = 1'-0"

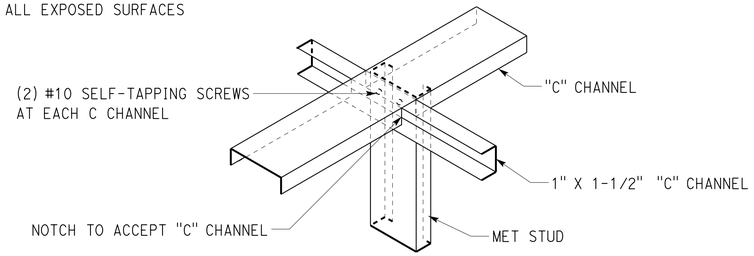

6 SUPPORT BRACKET
NOT TO SCALE

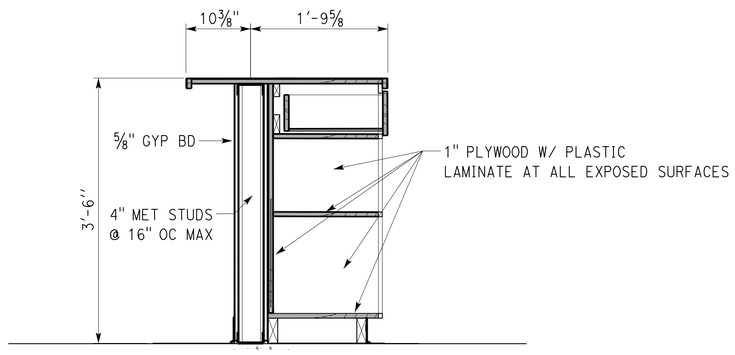

4 BUILT-IN COUNTER SECTION
SCALE 1" = 1'-0"

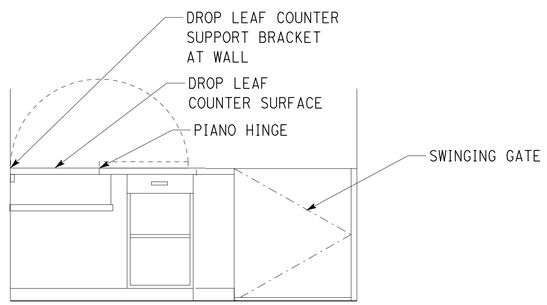

2 BUILT-IN COUNTER ELEVATION
SCALE ½" = 1'-0"

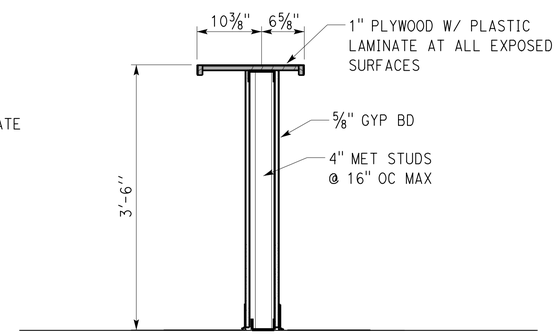

5 BUILT-IN COUNTER SECTION
SCALE 1" = 1'-0"

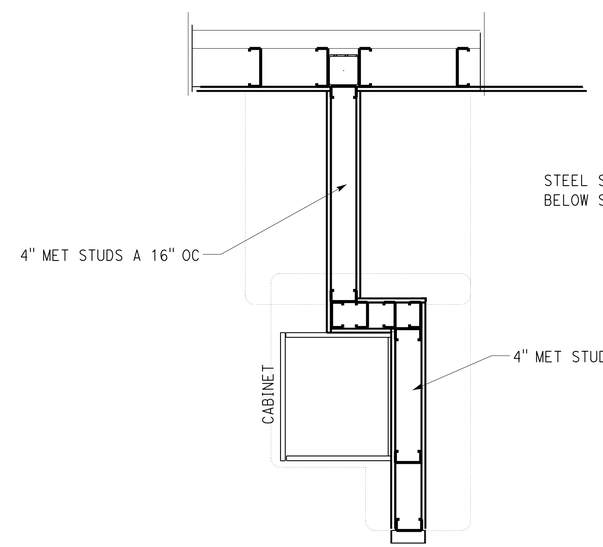

7 FRONT ELEVATION
SCALE 1" = 1'-0"

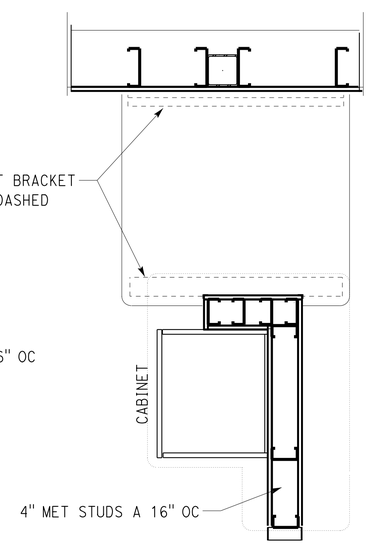

8 FRONT ELEVATION
SCALE 1" = 1'-0"

	BY	CHECKED
DESIGN	L Rhoades, R Francisco	Q. Wong, F. Thomas
DETAILS	L Rhoades, J. Kwong	Q. Wong, F. Thomas
QUANTITIES		

STATE OF CALIFORNIA DEPARTMENT OF TRANSPORTATION

DIVISION OF ENGINEERING SERVICES ARCHITECTURAL AND STRUCTURAL DESIGN

BRIDGE No. 33M5785
POST MILE

SFOBB WAREHOUSE
DETAILS — CASEWORK DETAILS

SHEET **A3-15.2**

TAEMWW Imperial - CCSC Rev. 01/13

ORIGINAL SCALE IN INCHES FOR REDUCED PLANS 0 1 2 3

UNIT: 3598 CONTRACT No.: 014101
PROJECT NUMBER & PHASE: 04130001331

DISREGARD PRINTS BEARING EARLIER REVISION DATES → REVISION DATES (PRELIMINARY STAGE ONLY) - -13 SHEET X OF X

30-APR-2014 10:13

D:\temporary\a3_15.2 casework.dgn

Dist	COUNTY	LOCATION CODE	POST MILES TOTAL PROJECT	SHEET No.	TOTAL SHEETS
04	Ala	5785		190	371

LICENSED ARCHITECT — DATE 10-25-13

3-24-14
PLANS APPROVAL DATE

LICENSED ARCHITECT Lani Rhoades No. C 26695 10-31-15 RENEWAL DATE STATE OF CALIFORNIA

The State of California or its officers or agents shall not be responsible for the accuracy or completeness of scanned copies of this plan sheet.

ACCESSIBILITY DESIGN APPROVAL DOT / DES / OTA
PROJECT ID **0413000133**
Reviewed by: Y. A. WANG
Date: 02-13-14

CALIFORNIA STATE FIRE MARSHAL APPROVED
Approval of this plan does not authorize or approve any omission or deviation from applicable regulations. Final approval is subject to field inspection. One set of approved plans shall be available on the project site at all times.
Reviewed by: INGRID P. ICASIANO
Approval date: 02-11-14

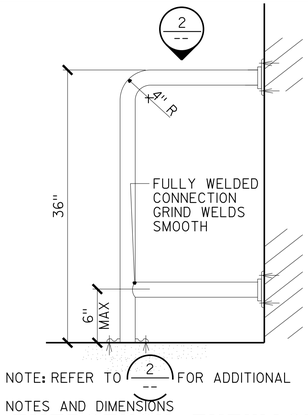

1 EMERGENCY EYEWASH GRAB BAR

NOT TO SCALE

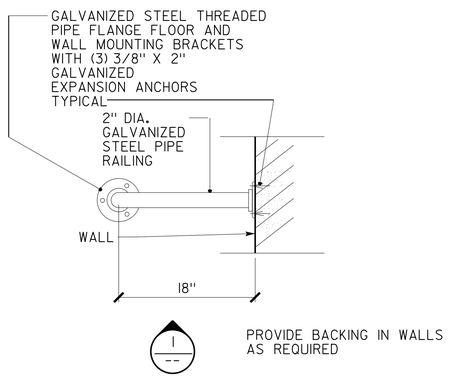

2 EMERGENCY EYEWASH GRAB BAR

NOT TO SCALE

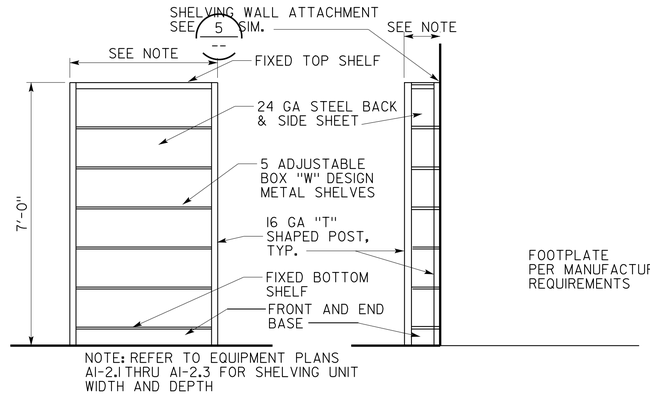

4 STEEL SHELVING

NOT TO SCALE

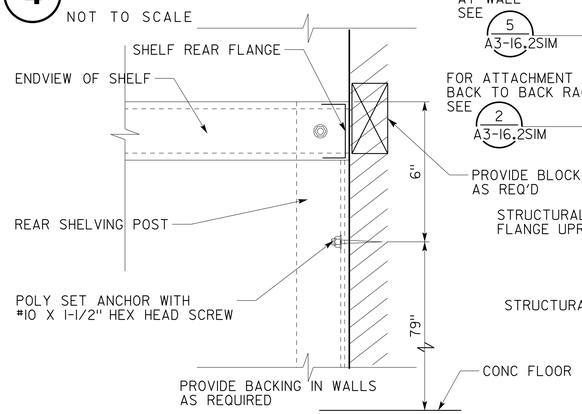

5 SHELVING WALL ATTACHMENT

NOT TO SCALE

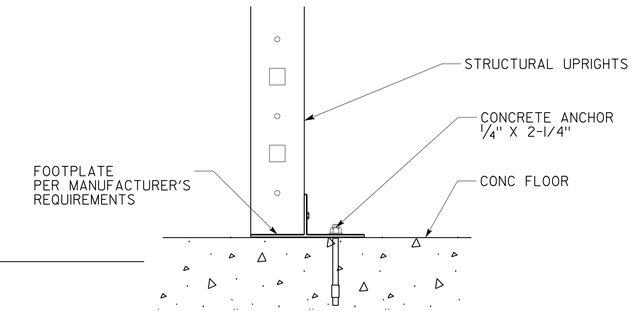

7 FLOOR ATTACHMENT

NOT TO SCALE

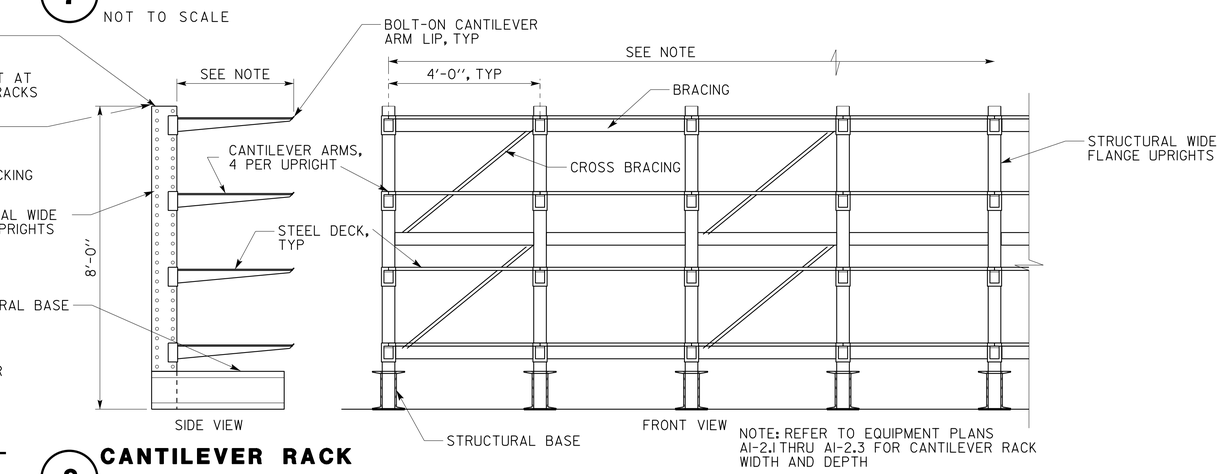

8 CANTILEVER RACK

SCALE 1/2" = 1'-0"

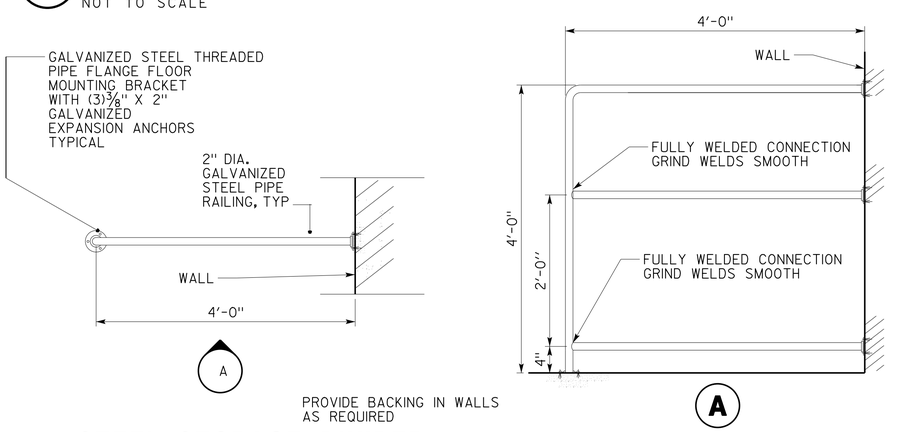

3 STEEL STORAGE DIVIDER

SCALE 1/4" = 1'-0"

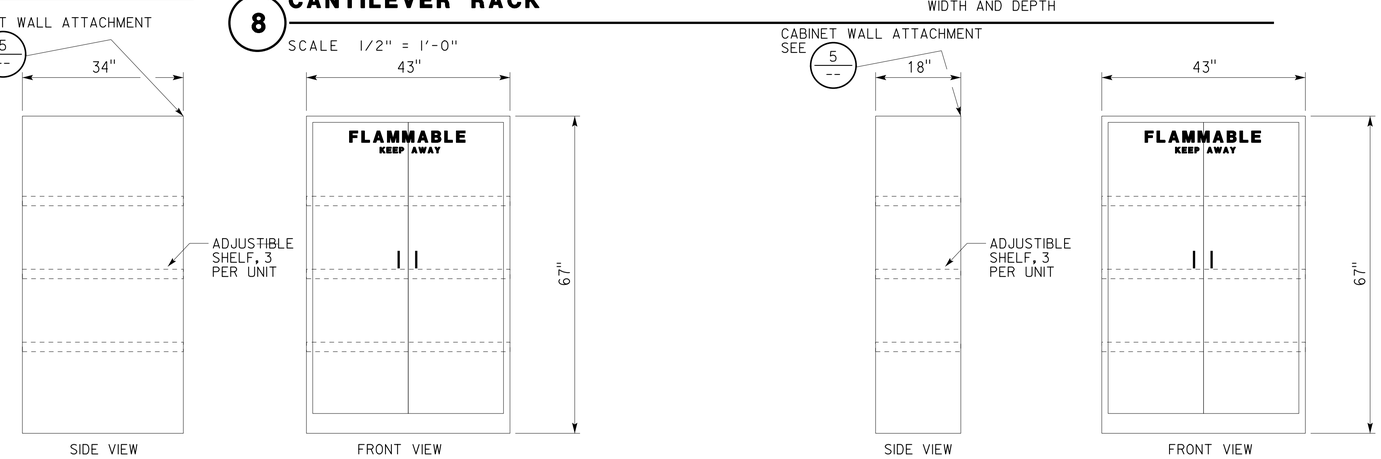

6 FIRE PROTECTION STORAGE CABINET

CABINET SIZES: 67" X 43" X 34" AND 67" X 43" X 18"

SCALE 3/4" = 1'-0"

	BY	CHECKED
DESIGN	L Rhoades, R Francisco	Q. Wong, F. Thomas
DETAILS	L Rhoades, J. Kwong	Q. Wong, F. Thomas
QUANTITIES		

STATE OF CALIFORNIA DEPARTMENT OF TRANSPORTATION

DIVISION OF ENGINEERING SERVICES ARCHITECTURAL AND STRUCTURAL DESIGN

BRIDGE No. 33M5785 — POST MILE

SFOBB WAREHOUSE — DETAILS — FURNISHING DETAILS

SHEET A3-16.1

TAEMWW Imperial - CCSC Rev. 01/13

ORIGINAL SCALE IN INCHES FOR REDUCED PLANS 0 1 2 3

UNIT: 3598 CONTRACT No.: 014101
PROJECT NUMBER & PHASE: 04130001331

DISREGARD PRINTS BEARING EARLIER REVISION DATES → - -13

REVISION DATES (PRELIMINARY STAGE ONLY) — SHEET X OF X

30-APR-2014 10:13

D:\temporary\a3_16.1 furnishing.dgn

Dist	COUNTY	LOCATION CODE	POST MILES TOTAL PROJECT	SHEET No.	TOTAL SHEETS
04	Ala	5785		191	371

LICENSED ARCHITECT — DATE 10-25-13

3-24-14
PLANS APPROVAL DATE

LICENSED ARCHITECT Lani Rhoades No. C 26695 STATE OF CALIFORNIA
10-31-15 RENEWAL DATE

The State of California or its officers or agents shall not be responsible for the accuracy or completeness of scanned copies of this plan sheet.

ACCESSIBILITY DESIGN APPROVAL DOT / DES / OTA
PROJECT ID **0413000133**
Reviewed by: Y. A. WANG
Date: 02-13-14

CALIFORNIA STATE FIRE MARSHAL APPROVED
Approval of this plan does not authorize or approve any omission or deviation from applicable regulations. Final approval is subject to field inspection. One set of approved plans shall be available on the project site at all times.
Reviewed by: INGRID P. ICASIANO
Approval date: 02-11-14

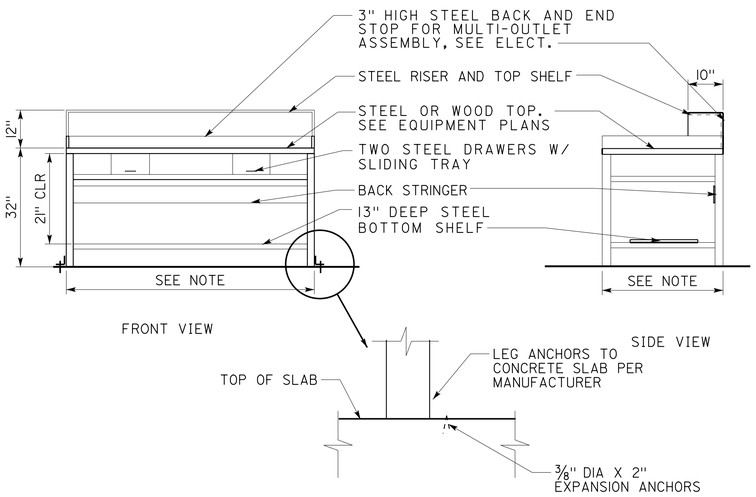

1 WORK BENCH

SCALE 1/2" = 1'-0"

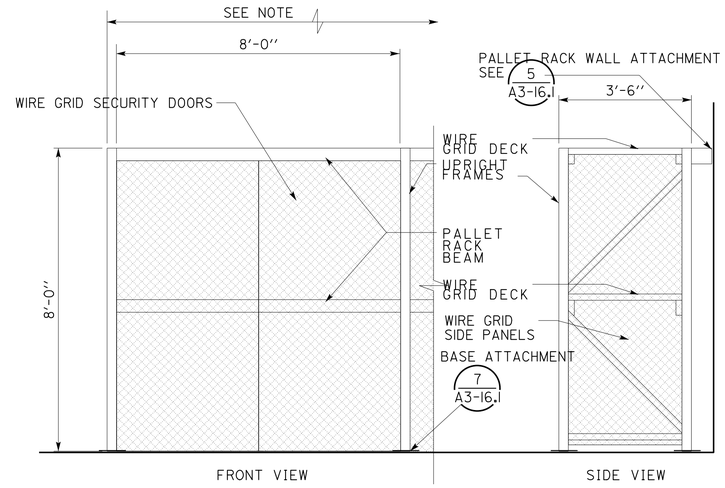

Note Refer to equipment plans AI-2.1 thru AI-2.3 for pallet storage rack width and height.

3 STEEL PALLET STORAGE RACK W/ SECURITY DOORS AND SIDE PANELS

SCALE 1/2" = 1'-0"

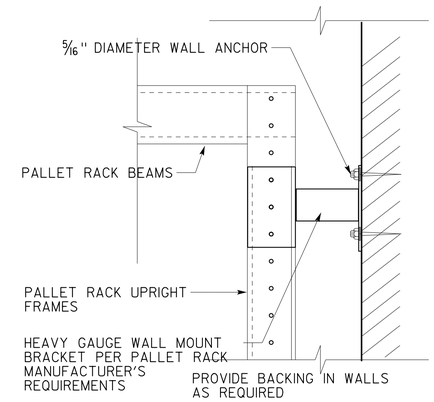

5 STEEL PALLET STORAGE RACK WALL ATTACHMENT

NOT TO SCALE

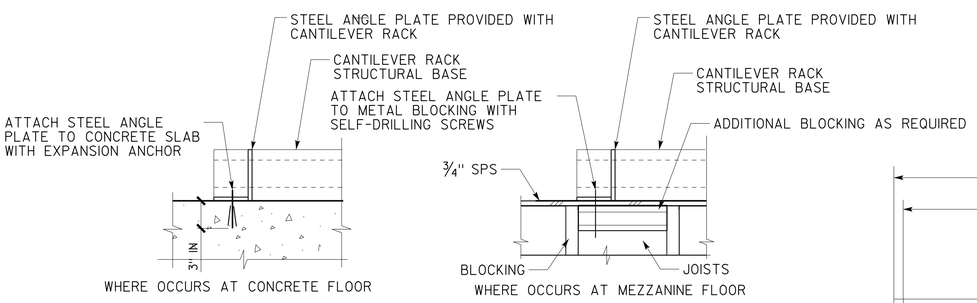

A BRACING AT CANTILEVER RACK STORAGE UNITS

NOT TO SCALE

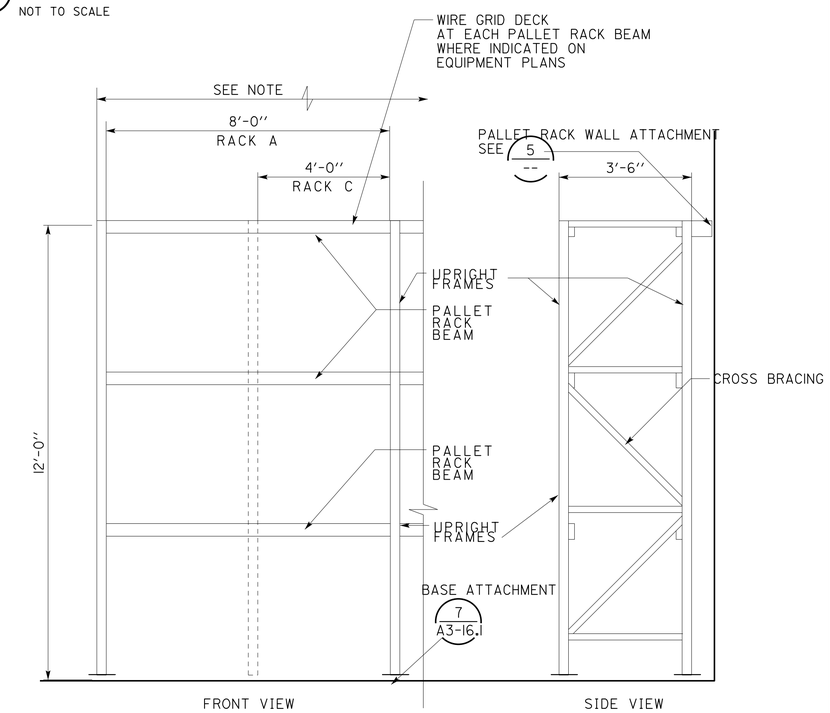

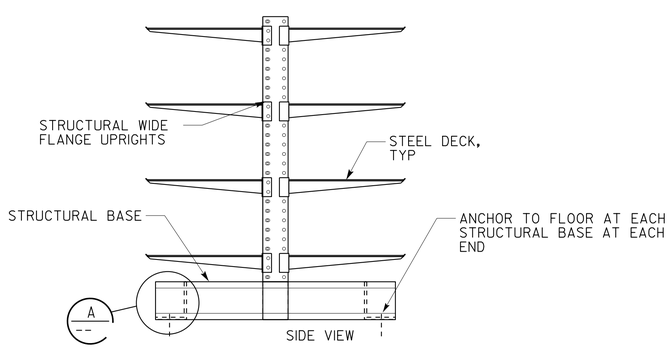

2 CANTILEVER RACK (BACK-TO-BACK)

SCALE 1/2" = 1'-0"

4 STEEL PALLET STORAGE RACKS (W/ WIRE GRID DECKS WHERE INDICATED ON EQUIPMENT PLANS)

SCALE 1/2" = 1'-0"

Note Refer to equipment plans AI-2.1 thru AI-2.3 for pallet storage rack width and height.

DESIGN SUPERVISOR
DESIGN ARCHITECT
DESIGNER
DRAWN BY
CHECKED BY:
STRUCTURAL REVIEW

SHEET LEGEND
A-1 ARCHITECTURAL ST-1 STRUCTURAL
M-1 MECHANICAL EE-1 ELECTRICAL
MP-1 PLUMBING SS-1 SANITARY

STATE OF CALIFORNIA
DEPARTMENT OF TRANSPORTATION

DIVISION OF ENGINEERING SERVICES
ARCHITECTURAL AND STRUCTURAL DESIGN

BRIDGE No. 33M5785
POST MILE

SFOBB WAREHOUSE
DETAILS — MISCELLANEOUS EQUIPMENT AND FURNISHINGS AND DETAILS

SHEET A3-16.2

TAEMWW Imperial - CCSC Rev. 01/13

ORIGINAL SCALE IN INCHES FOR REDUCED PLANS 0 1 2 3

UNIT: 3598 CONTRACT No.: 014101
PROJECT NUMBER & PHASE: 04130001331

DISREGARD PRINTS BEARING EARLIER REVISION DATES → - -13

REVISION DATES (PRELIMINARY STAGE ONLY) SHEET X OF X

30-APR-2014 10:13

D:\temporary\a3_16.2_misc_equipment_and _furnishing.dgn

Dist	COUNTY	LOCATION CODE	POST MILES TOTAL PROJECT	SHEET No.	TOTAL SHEETS
04	Ala	5785		192	371

Lani Rhoades 10-25-13
LICENSED ARCHITECT DATE

3-24-14
PLANS APPROVAL DATE

LICENSED ARCHITECT Lani Rhoades No. C 26695 10-31-15 RENEWAL DATE STATE OF CALIFORNIA

The State of California or its officers or agents shall not be responsible for the accuracy or completeness of scanned copies of this plan sheet.

ACCESSIBILITY DESIGN APPROVAL DOT / DES / OTA
PROJECT ID **0413000133**
Reviewed by: Y. A. WANG
Date: 02-13-14

CALIFORNIA STATE FIRE MARSHAL APPROVED
Approval of this plan does not authorize or approve any omission or deviation from applicable regulations. Final approval is subject to field inspection. One set of approved plans shall be available on the project site at all times.
Reviewed by: INGRID P. ICASIANO
Approval date: 02-11-14

Note:
See Mechanical for additional information.

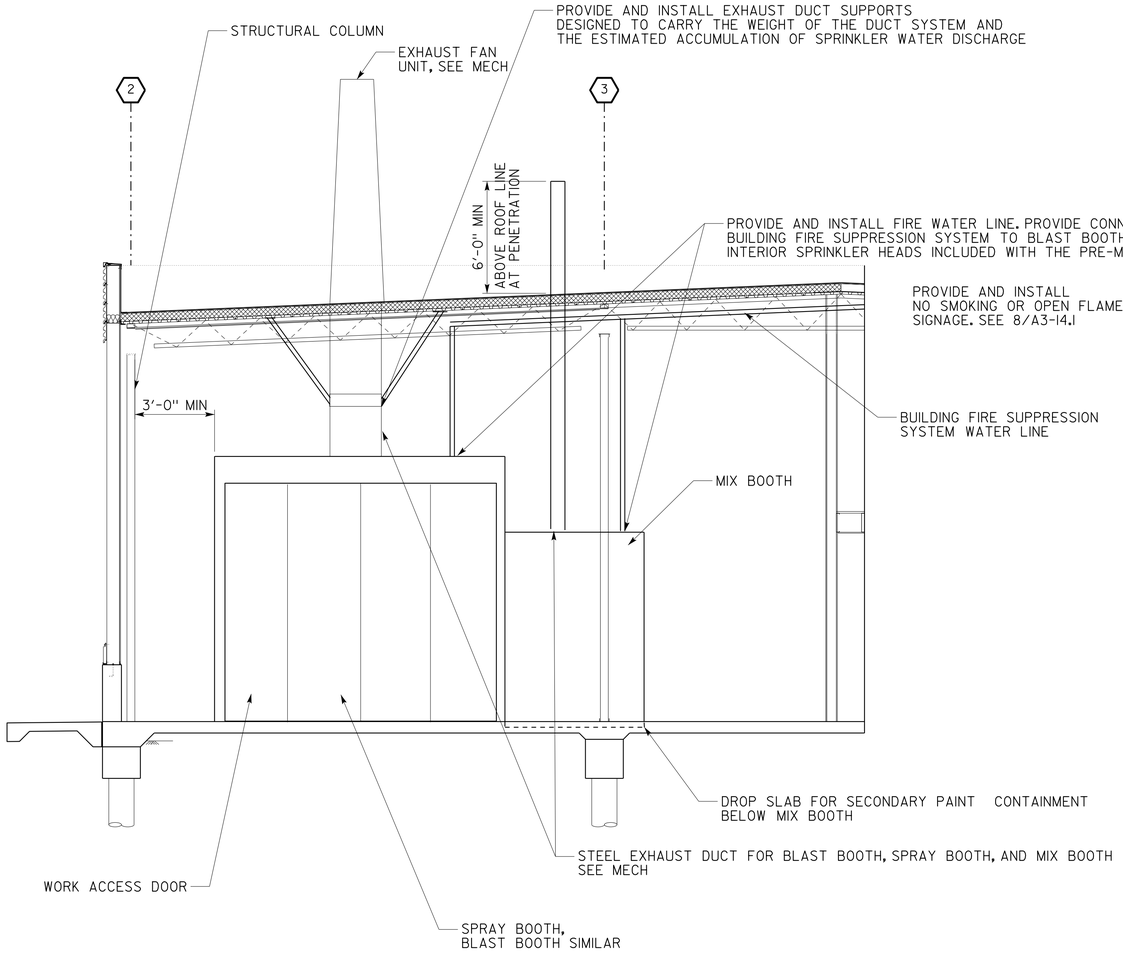

1 PRE-ENGINEERED BLAST BOOTH, SPRAY BOOTH, AND MIX BOOTH
SCALE 1/4" = 1'-0"

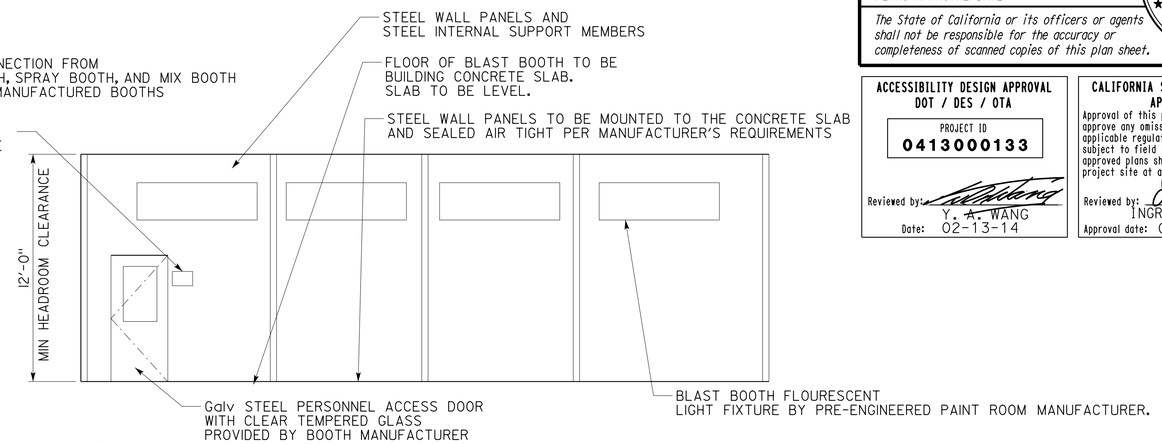

3 TYPICAL INTERIOR VIEW (BLAST BOOTH)
SCALE 1/4" = 1'-0"

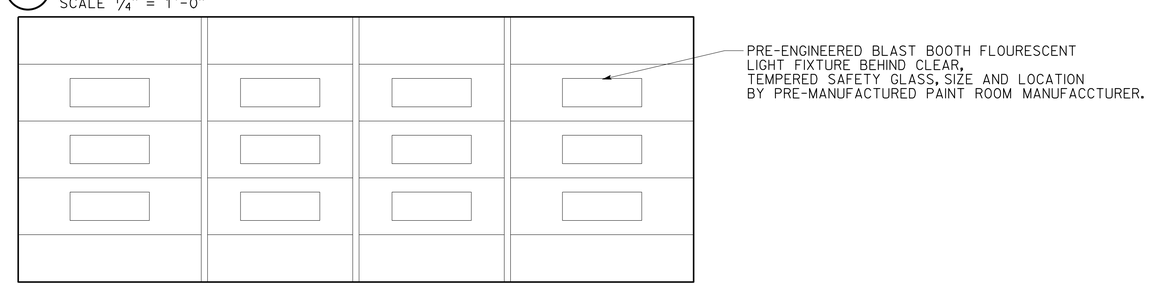

4 TYPICAL REFLECTED CEILING PLAN
SCALE 1/4" = 1'-0"

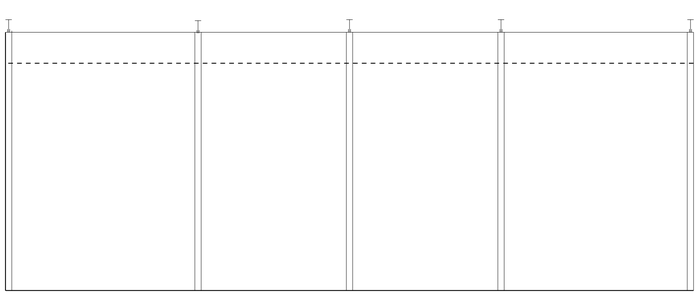

NORTH ELEVATION

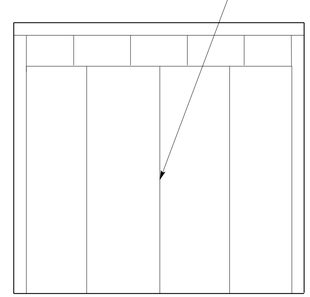

EAST AND WEST ELEVATION

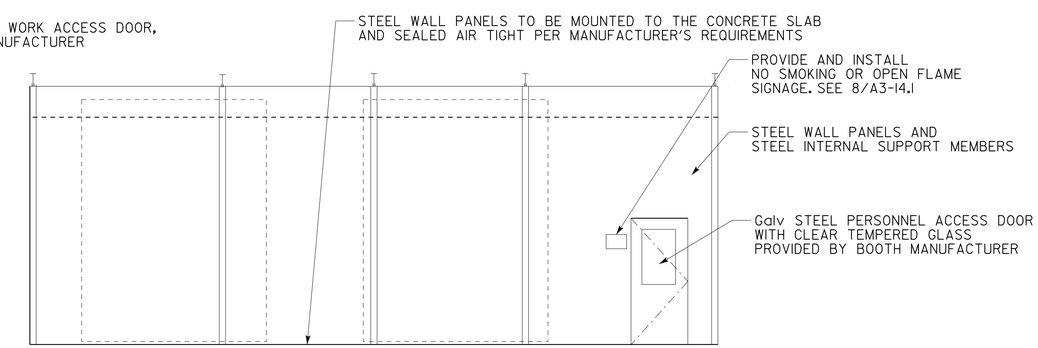

2 BLAST BOOTH EXTERIOR ELEVATIONS
SCALE 1/4" = 1'-0"

DESIGN SUPERVISOR
DESIGN ARCHITECT
DESIGNER
DRAWN BY
CHECKED BY:
STRUCTURAL REVIEW

SHEET LEGEND
A-1 ARCHITECTURAL ST-1 STRUCTURAL
M-1 MECHANICAL EE-1 ELECTRICAL
MP-1 PLUMBING SS-1 SANITARY

STATE OF CALIFORNIA DEPARTMENT OF TRANSPORTATION

DIVISION OF ENGINEERING SERVICES ARCHITECTURAL AND STRUCTURAL DESIGN

BRIDGE No. 33M5785
POST MILE

SFOBB WAREHOUSE
DETAILS
BRIDGE PAINT EQUIPMENT

SHEET A3-16.3

TAEMWW Imperial - CCSC Rev. 01/13

ORIGINAL SCALE IN INCHES FOR REDUCED PLANS 0 1 2 3

UNIT: 3598 CONTRACT No.: 014101
PROJECT NUMBER & PHASE: 04130001331

DISREGARD PRINTS BEARING EARLIER REVISION DATES → - -13

REVISION DATES (PRELIMINARY STAGE ONLY) SHEET X OF X

30-APR-2014 10:13

D:\temporary\a3_16.3_bridge_paint_equipment.dgn

Dist	COUNTY	LOCATION CODE	POST MILES TOTAL PROJECT	SHEET No.	TOTAL SHEETS
04	Ala	5785		193	371

LICENSED ARCHITECT — DATE 10-25-13

3-24-14
PLANS APPROVAL DATE

LICENSED ARCHITECT Lani Rhoades No. C 26695 10-31-15 RENEWAL DATE STATE OF CALIFORNIA

The State of California or its officers or agents shall not be responsible for the accuracy or completeness of scanned copies of this plan sheet.

ACCESSIBILITY DESIGN APPROVAL DOT / DES / OTA
PROJECT ID **0413000133**
Reviewed by: Y. A. WANG
Date: 02-13-14

CALIFORNIA STATE FIRE MARSHAL APPROVED
Approval of this plan does not authorize or approve any omission or deviation from applicable regulations. Final approval is subject to field inspection. One set of approved plans shall be available on the project site at all times.
Reviewed by: INGRID P. ICASIANO
Approval date: 02-11-14

Note:
See Mechanical for additional information.

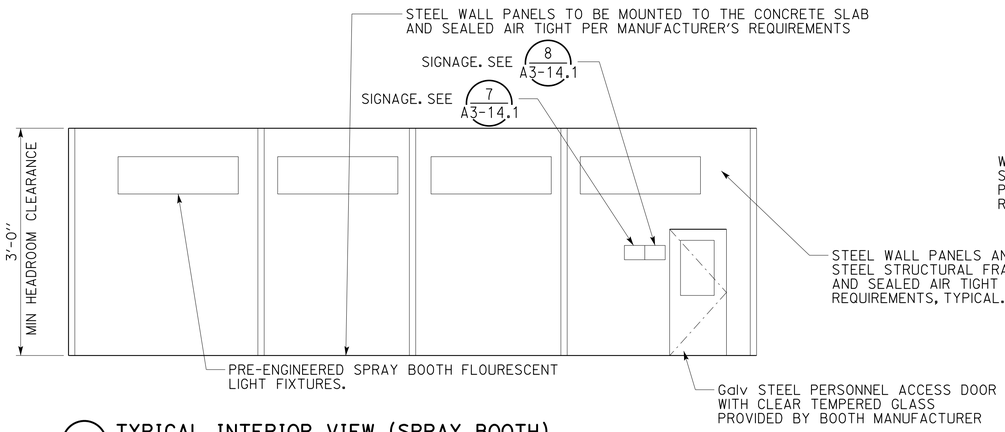

1 TYPICAL INTERIOR VIEW (SPRAY BOOTH)
SCALE 1/4" = 1'-0"

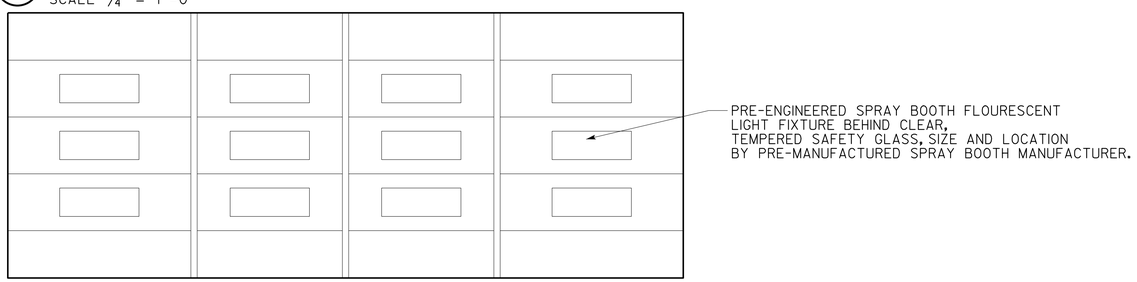

2 TYPICAL REFLECTED CEILING PLAN
SCALE 1/4" = 1'-0"

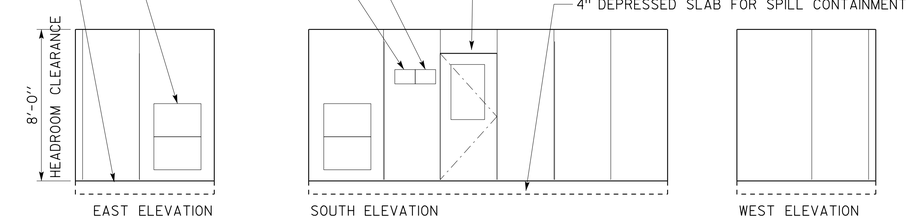

4 PAINT MIX BOOTH INTERIOR VIEW
SCALE 1/4" = 1'-0"

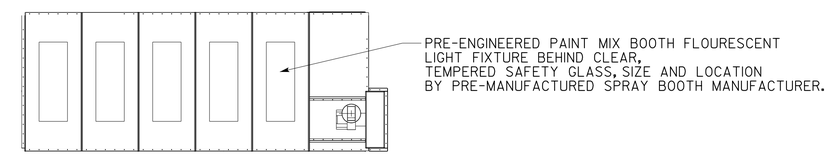

5 PAINT MIX BOOTH REFLECTED CEILING PLAN
SCALE 1/4" = 1'-0"

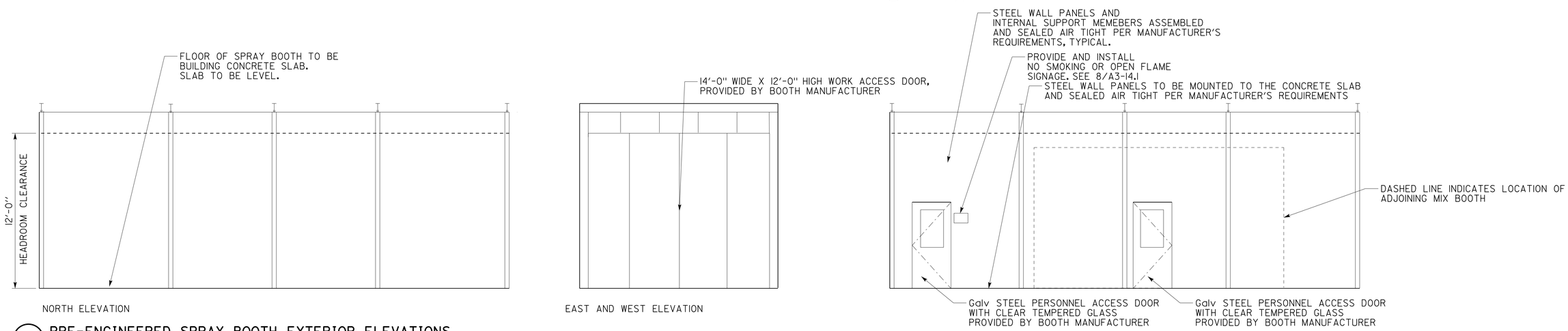

3 PRE-ENGINEERED SPRAY BOOTH EXTERIOR ELEVATIONS
SCALE 1/4" = 1'-0"

DESIGN SUPERVISOR
DESIGN ARCHITECT
DESIGNER
DRAWN BY
CHECKED BY:
STRUCTURAL REVIEW

SHEET LEGEND
A-1 ARCHITECTURAL ST-1 STRUCTURAL
M-1 MECHANICAL EE-1 ELECTRICAL
MP-1 PLUMBING SS-1 SANITARY

STATE OF CALIFORNIA
DEPARTMENT OF TRANSPORTATION

DIVISION OF ENGINEERING SERVICES
ARCHITECTURAL AND STRUCTURAL DESIGN

BRIDGE No. 33M5785
POST MILE

SFOBB WAREHOUSE
DETAILS — BRIDGE PAINT EQUIPMENT

SHEET A3-16.4

TAEMWW Imperial - CCSC Rev. 01/13

ORIGINAL SCALE IN INCHES FOR REDUCED PLANS 0 1 2 3

UNIT: 3598 CONTRACT No.: 014101
PROJECT NUMBER & PHASE: 04130001331

DISREGARD PRINTS BEARING EARLIER REVISION DATES → - -13

REVISION DATES (PRELIMINARY STAGE ONLY) SHEET X OF X

30-APR-2014 10:13

D:\temp3\a3_16.4_bridge_paint_equipment.dgn

DIST.	COUNTY	LOCATION CODE	POST MILES TOTAL PROJECT	SHEET NO.	TOTAL SHEETS
04	Ala	5785		194	371

CALIFORNIA STATE FIRE MARSHAL APPROVED
Approval of this plan does not authorize or approve any omission or deviation from applicable regulations. Final approval is subject to field inspection. One set of approved plans shall be available on the project site at all times.
Reviewed by: INGRID P. ICASIANO
Approval date: 02-11-14

Brian T. Sutliff 2-21-14
REGISTERED CIVIL ENGINEER DATE

REGISTERED PROFESSIONAL ENGINEER Brian T. Sutliff No. 3862 Exp. 3-31-16 STRUCTURAL STATE OF CALIFORNIA

3-24-14
PLANS APPROVAL DATE

The State of California or its officers or agents shall not be responsible for the accuracy or completeness of scanned copies of this plan sheet.

ABBREVIATIONS

AAD	ADHESIVE ANCHORAGE DEVICE
AB	ANCHOR BOLT
AC	ASPHALT CONCRETE
Alt	ALTERNATE
APA	AMERICAN PLYWOOD ASSOCIATION
APC	ALTERNATIVE PIPE CULVERT
Bldg	BUILDING
Blkg	BLOCKING
BN	BOUNDARY NAILING
Btm	BOTTOM
CB	CARRIAGE BOLT
CIDH	CAST IN DRILLED HOLE
CJ	CONTROL JOINT
Clr	CLEAR
CMU	CONCRETE MASONRY UNIT
Conc	CONCRETE
Const	CONSTRUCTION
Cont	CONTINUOUS
CP	COMPLETE PENETRATION WELD
Dbl	DOUBLE
DF	DOUGLAS FIR
Dia	DIAMETER
DIP	DUSTILE IRON PIPE
DN	DIAMETER NOMINAL
do	DITTO
(E)	EXISTING
Ea	EACH
EL	ELEVATION
Elec	ELECTRICAL
Embed	EMBEDMENT
EN	EDGE NAIL
Eq	EQUAL
Exp	EXPANSION
FDGM	FREE DRAINING GRANULAR MATERIAL
FG	FINISH GRADE
FL	FLOW LINE
Flr	FLOOR
FN	FACE (FIELD) NAIL
FOC	FACE OF CONCRETE
FOM	FACE OF MASONRY
FOS	FACE OF STUD
Ftg	FOOTING
Ga	GAGE
Galv	GALVANIZED
GLM	GLUE LAMINATED MEMBER
Gyp Bd	GYPSUM BOARD
HD	HOLDOWN
Hex	HEXAGON
Horiz	HORIZONTAL
HSB	HIGH STRENGTH BOLT
HSS	HOLLOW STRUCTURAL SECTION
Jt	JOINT
LOL	LAYOUT LINE
LVL	LAMINATED VENEER LUMBER
m	METER
Max	MAXIMUM
MEA	MECHANICAL EXPANSION ANCHOR
Mech	MECHANICAL
Mfr	MANUFACTURER
mm	MILLIMETER
Min	MINIMUM
MIW	MALLEABLE IRON WASHER
OC	ON CENTER
OG	ORIGINAL GRADE
OH	OPPOSITE HAND
Opt	OPTIONAL
P	PITCH
PDF	POWER DRIVEN FASTENER
Plwd	PLYWOOD
PT	PRESSURE TREATED
PW	PUDDLE WELD
PWB	PREFABRICATED WOOD I BEAM
RCP	REINFORCED CONCRETE PIPE
Reinf	REINFORCED, REINFORCING
Req'd	REQUIRED
SDSTS	SELF DRILL, SELF TAP SCREW
Sim	SIMILAR
SPS	STRUCTURAL PLYWOOD SHEATHING
Sq	SQUARE
Stagg	STAGGERED
Std	STANDARD
SW	STUD WELD
Sym	SYMMETRICAL
T&G	TONGUE-AND-GROOVE
TN	TOE NAIL
TS	TUBE STEEL
Typ	TYPICAL
UON	UNLESS OTHERWISE NOTED
Vert	VERTICAL

SYMBOLS

BLOCKING IN SECTION OR ELEVATION
CONTINUOUS MEMBER IN SECTION
END OF MEMBER
BEARING WALL
SHEAR WALL
X XXXX — LENGTH; SHEARWALL SCHEDULE SYMBOL; REFERENCE
GLUE LAMINATED MEMBER SECTION
NORTH ARROW
X STX-X — PARTIAL SECTION CUT
X STX-X — FULL SECTION CUT
X — REVISION CALLOUT
A — GRID LINE INDICATOR
℄ — CENTER LINE
$ — STATION LINE
PL — STEEL PLATE
Ø — DIAMETER
□ — SQUARE

CMU WALL ON PLAN VIEWS
DROPPED SLAB ON PLAN VIEWS
REINFORCED CONCRETE
SAND
STRUCTURE BACKFILL
STRUCTURE EXCAVATION
ORIGINAL GROUND
LIMITS OF STRUCTURE BACKFILL (SHOWN ON PLAN VIEWS)
FREE DRAINING GRANULAR MATERIAL
X — BOTTOM OF FOOTING
ELEVATION OR WORKING POINT
EXISTING FEATURES

HOLDOWN, Typ
Simpson / USP / Equal — (MANUFACTURERS ARE THOSE NOTED IN THE ORDER SHOWN)

FRAME CONNECTOR
Simpson / USP / Equal — (MANUFACTURERS ARE THOSE NOTED IN THE ORDER SHOWN)

3 5b ST-1 — DETAIL NUMBER OR NOTE NUMBER; ADDITIONAL REFERENCE (IF REQUIRED); SHEET NUMBER

NOTE: SPECIFIC DETAILS OR NOTES ON OTHER SHEETS SHALL PREVAIL OVER STANDARD DETAILS AND NOTES ON THIS SHEET

STANDARD DRAWING
FILE NO. XS-25-0 | DESIGN BY Sean Samad | CHECKED Joe Capuchino | APPROVED R E Travis
DRAWING DATE 1-04 | DETAILS BY Peter F. von Savoye, II | CHECKED Joe Capuchino | DESIGN SUPERVISOR
SUBMITTED BY Sean Samad, DESIGN ENGINEER

STATE OF CALIFORNIA DEPARTMENT OF TRANSPORTATION
DIVISION OF ENGINEERING SERVICES ARCHITECTURAL AND STRUCTURAL DESIGN
BRIDGE NO. 33M5785 POST MILE
SFOBB WAREHOUSE
LEGEND
SHEET ST-1

TAEMWW Imperial Rev. 7/10
ORIGINAL SCALE IN INCHES FOR REDUCED PLANS 0 1 2 3
UNIT 3599
PROJECT NUMBER & PHASE 04130001331
EA 000000
DISREGARD PRINTS BEARING EARLIER REVISION DATES → REVISION DATES (PRELIMINARY STAGE ONLY) 1-16-04 04-27-12 08-24-12 01-30-13 SHEET OF
st0_01.dgn
30-APR-2014 10:13

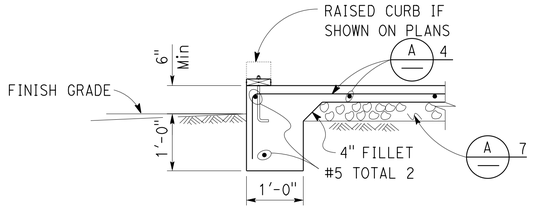

1 EXTERIOR FOOTING
NO SCALE

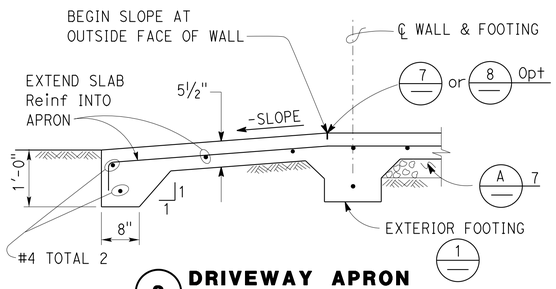

2 DRIVEWAY APRON
NO SCALE

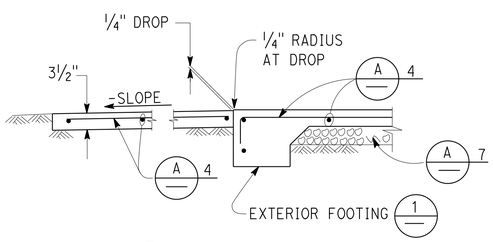

3 WALKWAY APRON
NO SCALE

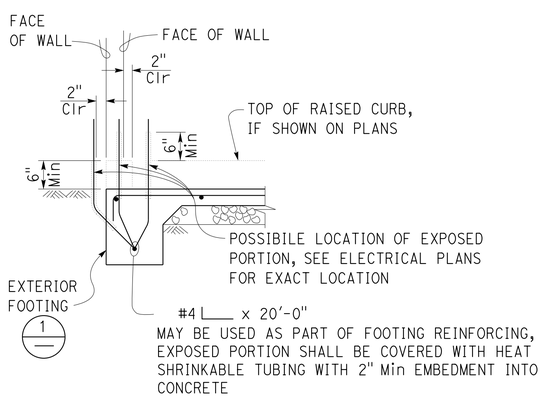

4 GROUND BAR DETAIL
NO SCALE

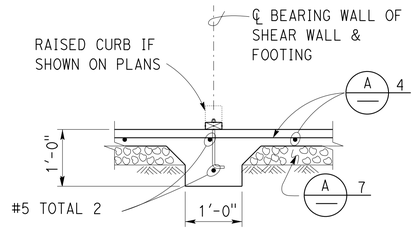

5 INTERIOR FOOTING
NO SCALE

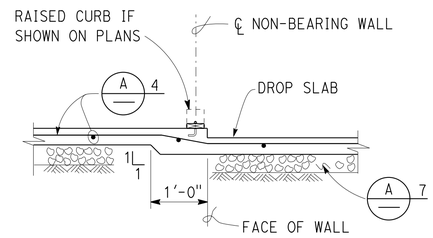

6 DROP SLAB AT NON-BEARING WALL
NO SCALE

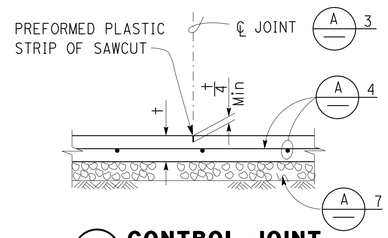

7 CONTROL JOINT
NO SCALE

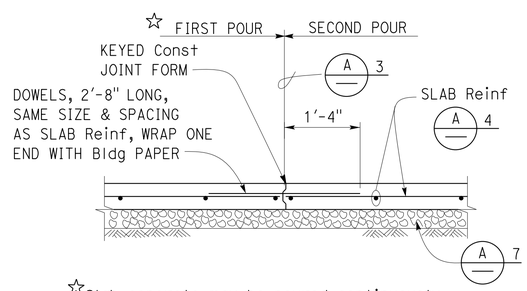

☆Slab concrete may be poured continuously across the Control Joint, to cover as large an area as practical.

8 CONTRACTION JOINT
NO SCALE

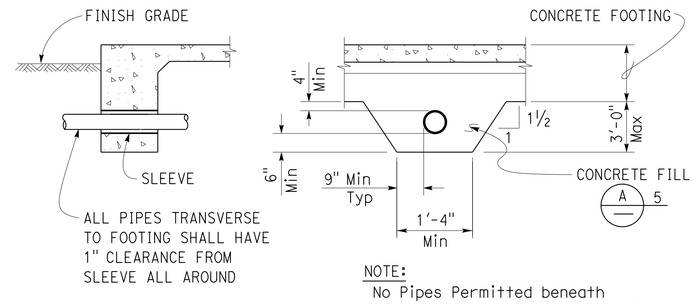

NOTE:
No Pipes Permitted beneath Interior or Exterior Isolated Footing.

9 PIPE DETAILS THROUGH FOOTING
NO SCALE

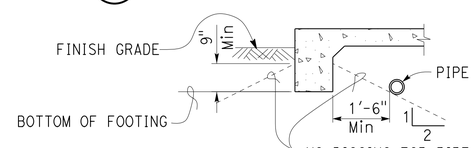

NOTE:
For Pipe Cover, see Specifications: Earthwork for Building Work.

NO DIGGING FOR PIPE TRENCH PARALLEL TO FOOTING BELOW THESE LINES, EXTERIOR FOOTING SHOWN, INTERIOR OR EXTERIOR ISOLATED FOOTINGS ARE SIMILAR

10 PIPE DETAILS PARALLEL TO FOOTING
NO SCALE

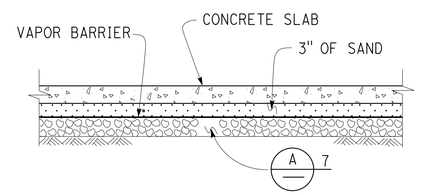

11 MOISTURE BARRIER
NO SCALE

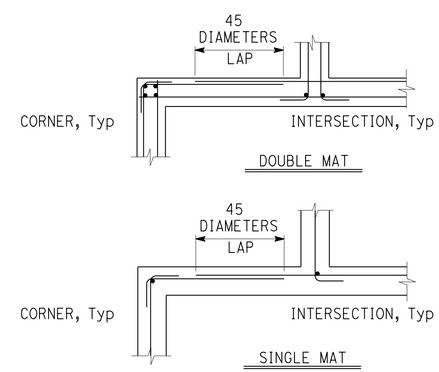

12 CORNER/INTERSECTION REINF SPLICE
NO SCALE

CALIFORNIA STATE FIRE MARSHAL APPROVED
Approval of this plan does not authorize or approve any omission or deviation from applicable regulations. Final approval is subject to field inspection. One set of approved plans shall be available on the project site at all times.
Reviewed by: INGRID P. ICASIANO
Approval date: 02-11-14

DIST.	COUNTY	LOCATION CODE	POST MILES TOTAL PROJECT	SHEET NO.	TOTAL SHEETS
04	Ala	5785		195	371

Brian T. Sutliff 2-21-14
REGISTERED CIVIL ENGINEER DATE

REGISTERED PROFESSIONAL ENGINEER Brian T. Sutliff No. 3862 Exp. 3-31-16 STRUCTURAL STATE OF CALIFORNIA

3-24-14
PLANS APPROVAL DATE

The State of California or its officers or agents shall not be responsible for the accuracy or completeness of scanned copies of this plan sheet.

A CONCRETE NOTES

1. The following minimum concrete cover shall be provided for reinforcement.

	Minimum Cover
a. Concrete cast against and permanently exposed to earth	3"
b. Concrete exposed to earth or weather but cast in forms:	
#6 thru #18 bars	2"
#5 bar and smaller, W31 or D31 Wire, and smaller	1½"
c. Concrete not exposed to weather or in contact with ground: Slabs, Walls and Joists:	
#14 and #18 Bar	1½"
#11 Bar and smaller	¾"
Beams and Columns: Primary Reinforcement, Ties, Stirrups and Spirals	1½"

2. Splices in continuous reinforcement as in Walls, Wall Footings, etc. #8 or smaller shall have a lap of 45 diameters and the splices in adjacent bars shall not be less than 5'-0" apart.

   Continuous Bars in spandrels, Wall Beams, etc. shall lap Top Bars at center of span and Bottom Bars at supports.

3. Contraction Joints and Control Joints shall divide slab into areas not exceeding 25 square yards without reentrant corners and with length to width ratios not exceeding 1.5 to 1. Joint spacing shall not exceed 15'-0".

4.

Slab Thickness (t)	Reinforcement
3½"	#3 @ 18 Each way, place in center of Slab
5½"	#4 @ 18 Each way, place in center of Slab

5. Concrete fill is to be placed before Footing is poured. Make the same width as the Footing and the full width of the Pipe trench. Concrete fill not required for pipes less than 2" diameter for pipes more than 3'-0" below bottom of footing.

6. See Mechanical and Architectural Plans for size and locations of pipe, vents, ducts and other similar openings. See Electrical Plans for conduits and outlet boxes in floors, walls, etc.

7. Place 4" of free draining granular material under slabs.

NOTE: SPECIFIC DETAILS OR NOTES ON OTHER SHEETS SHALL PREVAIL OVER STANDARD DETAILS AND NOTES ON THIS SHEET

STANDARD DRAWING
FILE NO. XS-25-1 | DESIGN BY Sean Sennett | CHECKED Lee Chandler | APPROVED R E Travis
DRAWING DATE 1-04 | DETAILS BY Peter F. von Sauvage, III | CHECKED
SUBMITTED BY Sean Sennett, DESIGN ENGINEER | DESIGN SUPERVISOR

STATE OF CALIFORNIA DEPARTMENT OF TRANSPORTATION

DIVISION OF ENGINEERING SERVICES ARCHITECTURAL AND STRUCTURAL DESIGN

BRIDGE NO. 33M5785 | POST MILE

SFOBB WAREHOUSE
CONCRETE STANDARD

SHEET ST-2

TAEMWW Imperial Rev. 7/10

SCALE: ALL DIMENSIONS ARE IN MILLIMETERS UNLESS OTHERWISE NOTED.

ORIGINAL SCALE IN INCHES FOR REDUCED PLANS 0 1 2 3

UNIT 3599
PROJECT NUMBER & PHASE 04130001331
EA 000000

DISREGARD PRINTS BEARING EARLIER REVISION DATES → 1-16-04 11-14-05 04-27-12 08-24-12 01-30-13

REVISION DATES (PRELIMINARY STAGE ONLY) SHEET OF

st0_02.dgn 30-APR-2014 10:13

Dist	COUNTY	LOCATION CODE	POST MILES TOTAL PROJECT	SHEET No.	TOTAL SHEETS
04	Ala	5785		196	371

CALIFORNIA STATE FIRE MARSHAL APPROVED
Approval of this plan does not authorize or approve any omission or deviation from applicable regulations. Final approval is subject to field inspection. One set of approved plans shall be available on the project site at all times.
Reviewed by: Ingrid P. Icasiano
INGRID P. ICASIANO
Approval date: 02-11-14

Brian T. Sutliff — REGISTERED CIVIL ENGINEER — 2-21-14 DATE

REGISTERED PROFESSIONAL ENGINEER — Brian T. Sutliff — No. 3862 — Exp. 3-31-16 — STRUCTURAL — STATE OF CALIFORNIA

3-24-14
PLANS APPROVAL DATE

The State of California or its officers or agents shall not be responsible for the accuracy or completeness of scanned copies of this plan sheet.

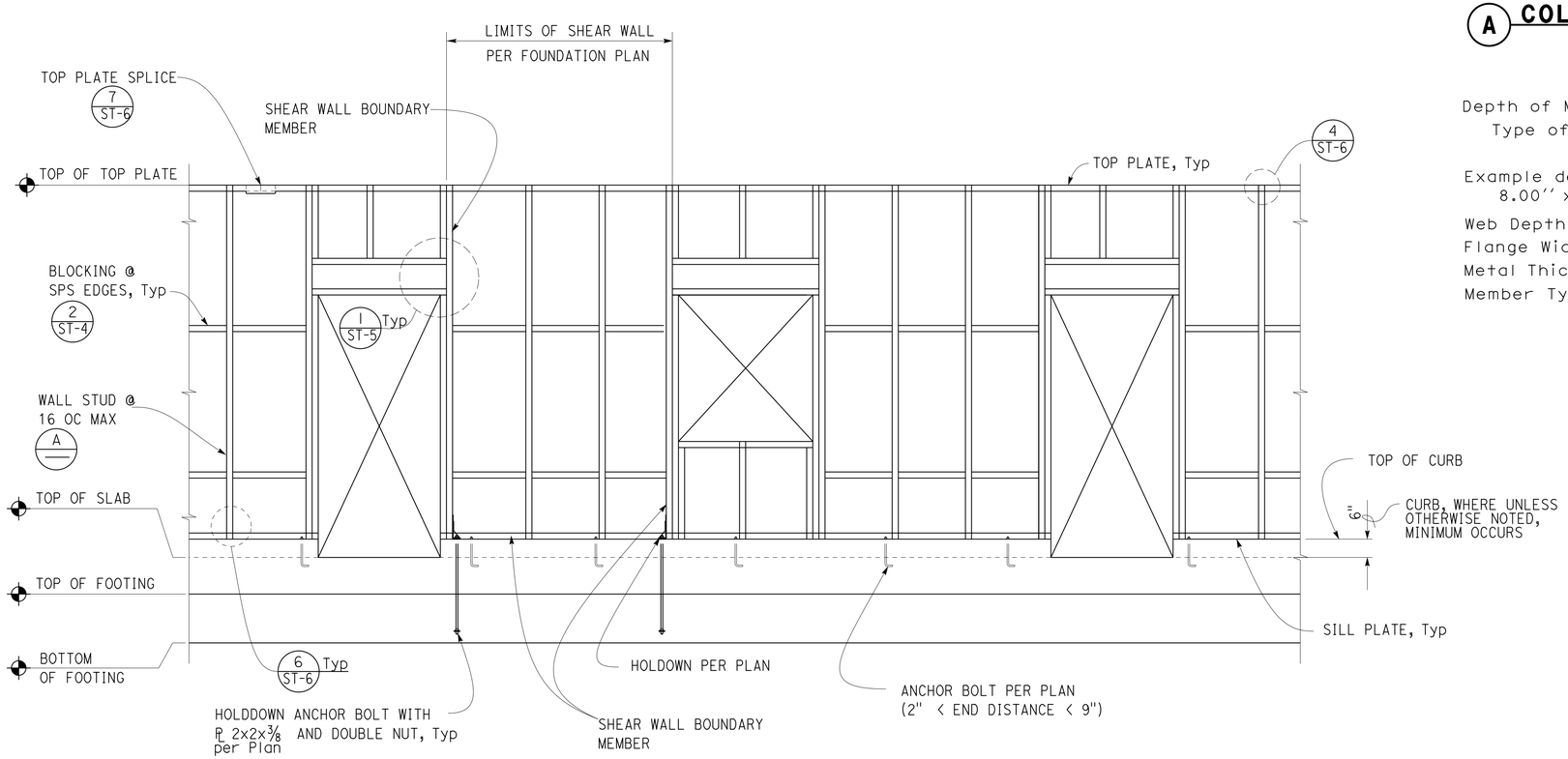

1 TYPICAL BEARING/SHEAR WALL
NO SCALE

A COLD-FORMED STEEL SECTION DESIGNATION

800 S 200 -54

Depth of Member — 800
Type of Member — S
Flange Width — 200
Minimum Metal Thickness (mils) — -54

Example designation is for:
8.00'' x 2.00'' x 54 mils thick Stud member

Web Depth — Depth of member in inches, to two (2) decimal places
Flange Width — Width of member in inches, to two (2) decimal places
Metal Thickness — Minimum uncoated thickness in mils (0.001 in).
Member Types
S = Stud member
T = Track member

Design Thickness

Mils	Gauge
27	22
33	20
43	18
54	16
68	14
97	12

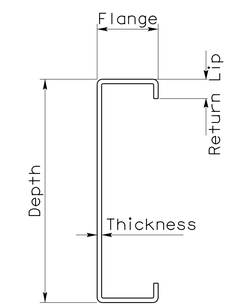

STUD MEMBER
Member Type

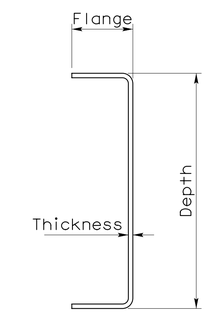

TRACK MEMBER
Member Type

DESIGN	BY JUSTIN UYEHARA	CHECKED BRIAN SUTLIFF	
DETAILS	BY PETE VON SAVOYE	CHECKED BRIAN SUTLIFF	
QUANTITIES	BY	CHECKED	

STATE OF CALIFORNIA
DEPARTMENT OF TRANSPORTATION

DIVISION OF ENGINEERING SERVICES
ARCHITECTURAL AND STRUCTURAL DESIGN

BRIDGE No. 33M5785
POST MILE

SFOBB WAREHOUSE
COLD FORM STEEL DETAILS

SHEET ST-3

TAEMWW Imperial - CCSC Rev. 01/13

ORIGINAL SCALE IN INCHES FOR REDUCED PLANS 0 1 2 3

UNIT: 3599 CONTRACT No.: 000001
PROJECT NUMBER & PHASE: 04130001331

DISREGARD PRINTS BEARING EARLIER REVISION DATES → 05-23-13 07-17-13 07-18-13

REVISION DATES (PRELIMINARY STAGE ONLY) SHEET OF

D:\CADDuser\Projects\Dist_04\SFOBB_maintenance\combined\st\04-18-13\expedite\st0_03.dgn

30-APR-2014 10:13

Dist	COUNTY	LOCATION CODE	POST MILES TOTAL PROJECT	SHEET No.	TOTAL SHEETS
04	Ala	5785		197	371

Brian T. Sutliff 2-21-14
REGISTERED CIVIL ENGINEER DATE

REGISTERED PROFESSIONAL ENGINEER Brian T. Sutliff No. 3862 Exp. 3-31-16 STRUCTURAL STATE OF CALIFORNIA

3-24-14
PLANS APPROVAL DATE

The State of California or its officers or agents shall not be responsible for the accuracy or completeness of scanned copies of this plan sheet.

CALIFORNIA STATE FIRE MARSHAL APPROVED
Approval of this plan does not authorize or approve any omission or deviation from applicable regulations. Final approval is subject to field inspection. One set of approved plans shall be available on the project site at all times.
Reviewed by: INGRID P. ICASIANO
Approval date: 02-11-14

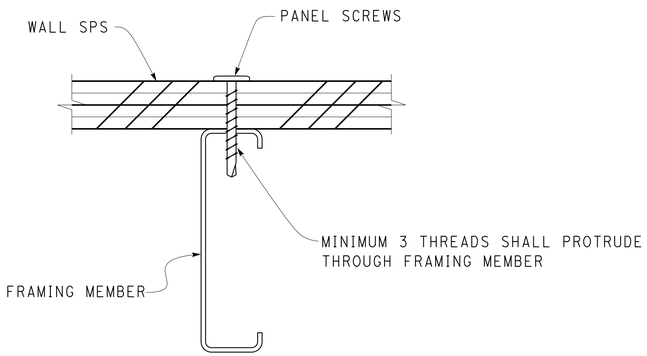

1 SCREW DETAIL
NO SCALE

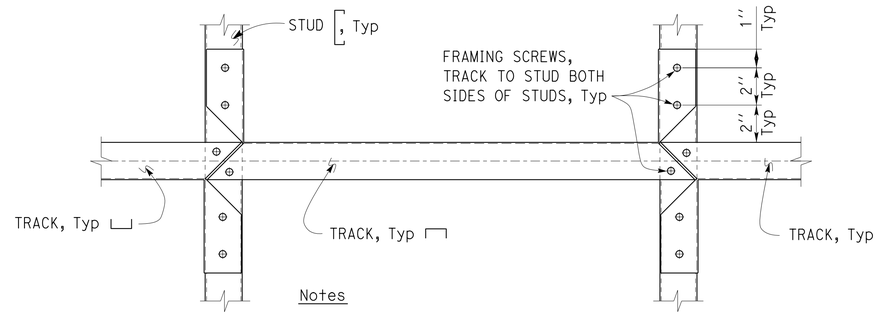

Notes

1. Track used for Blocking shall match Studs, in Width and Gauge thickness.

2 STUD BLOCKING DETAIL
NO SCALE

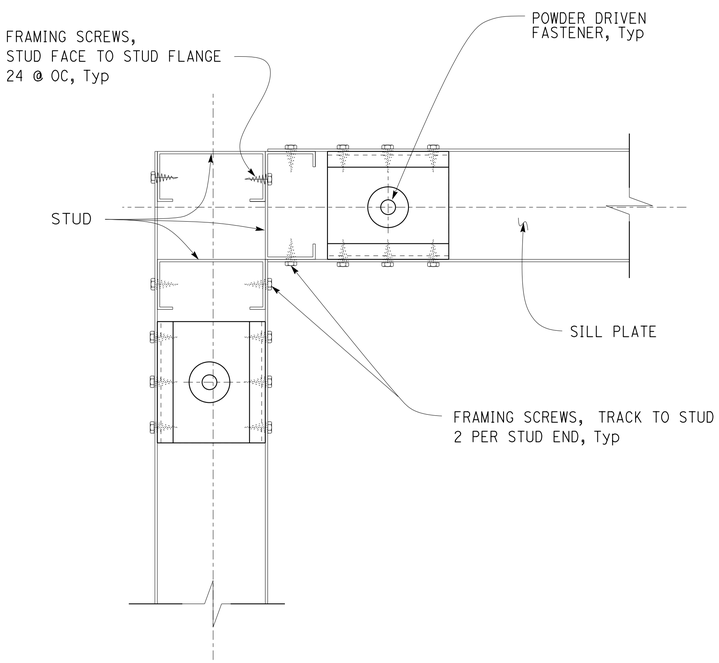

3 PARTITION CORNER CONNECTION
NO SCALE

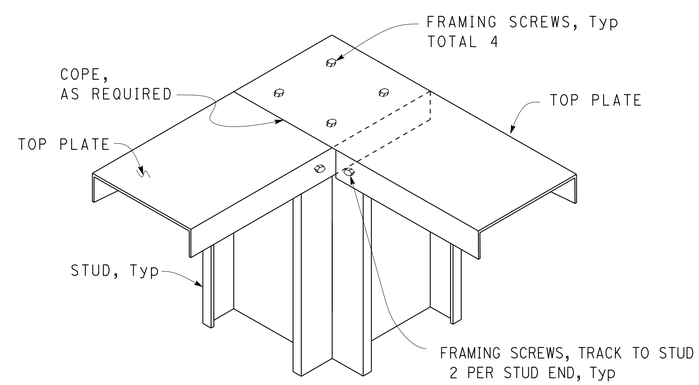

4 TOP PLATE CONNECTION
NO SCALE

DESIGN	BY JUSTIN UYEHARA	CHECKED BRIAN SUTLIFF	
DETAILS	BY PETE VON SAVOYE	CHECKED BRIAN SUTLIFF	
QUANTITIES	BY	CHECKED	

STATE OF CALIFORNIA DEPARTMENT OF TRANSPORTATION

DIVISION OF ENGINEERING SERVICES ARCHITECTURAL AND STRUCTURAL DESIGN

BRIDGE No. 33M5785
POST MILE

SFOBB WAREHOUSE

COLD FORM STEEL DETAILS

SHEET **ST-4**

TAEMWW Imperial - CCSC Rev. 01/13

ORIGINAL SCALE IN INCHES FOR REDUCED PLANS 0 1 2 3

UNIT: 3599 CONTRACT No.: 000001
PROJECT NUMBER & PHASE: 04130001331

DISREGARD PRINTS BEARING EARLIER REVISION DATES → 05-23-13 07-17-13 07-18-13

REVISION DATES (PRELIMINARY STAGE ONLY) SHEET OF

30-APR-2014 10:13

D:\CADDuser\Projects\Dist_04\SFOBB_maintenance\combined\st\04-18-13\expedite\st0_04.dgn

Dist	COUNTY	LOCATION CODE	POST MILES TOTAL PROJECT	SHEET No.	TOTAL SHEETS
04	Ala	5785		198	371

REGISTERED CIVIL ENGINEER — DATE 2-21-14

REGISTERED PROFESSIONAL ENGINEER Brian T. Sutliff No. 3862 Exp. 3-31-16 STRUCTURAL STATE OF CALIFORNIA

PLANS APPROVAL DATE 3-24-14

The State of California or its officers or agents shall not be responsible for the accuracy or completeness of scanned copies of this plan sheet.

CALIFORNIA STATE FIRE MARSHAL APPROVED

Approval of this plan does not authorize or approve any omission or deviation from applicable regulations. Final approval is subject to field inspection. One set of approved plans shall be available on the project site at all times.

Reviewed by: INGRID P. ICASIANO

Approval date: 02-11-14

EXTERIOR STUD WALL HEADER

Opening Span	Joists	Top and Bottom Tracks (Match Stud size)
LESS THAN 5'-0''	800S200-54	800T200-54
5'-0'' to 8'-0''	1000S200-54	
GREATER THAN 16'-0''	1400S200-97	

INTERIOR STUD WALL HEADER

Opening Span	Joists	Top and Bottom Tracks (Match Stud size)
LESS THAN 5'-0''	600S200-54	600T200-54
5'-0'' to 8'-0''	800S200-54	
MEZZANINE HEADER	1400S200-97	

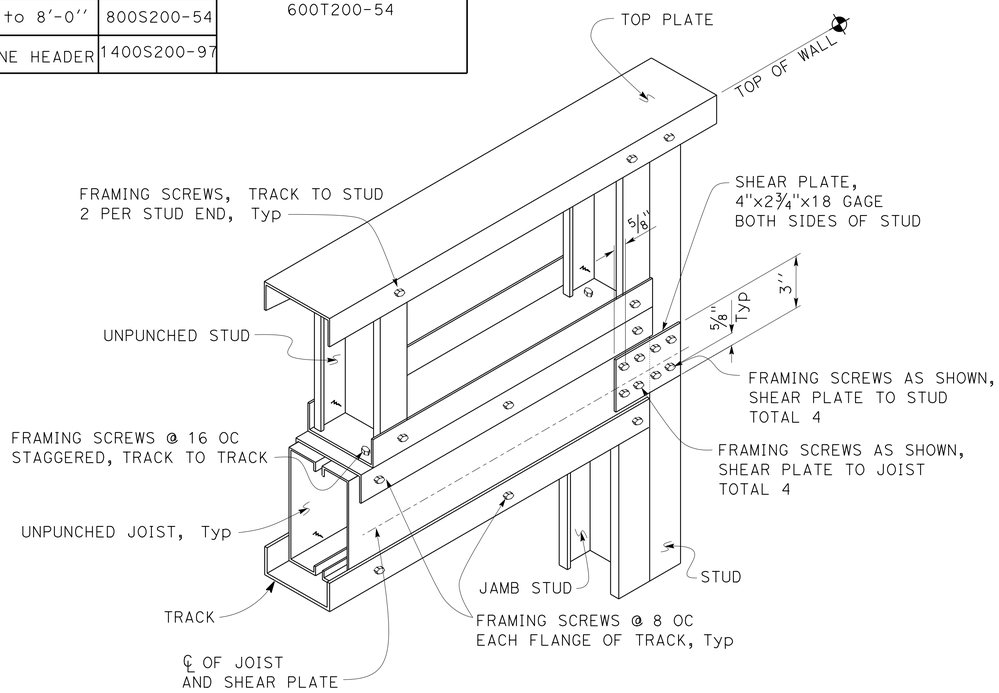

1 EXTERIOR STUD WALL HEADER DETAIL

NO SCALE

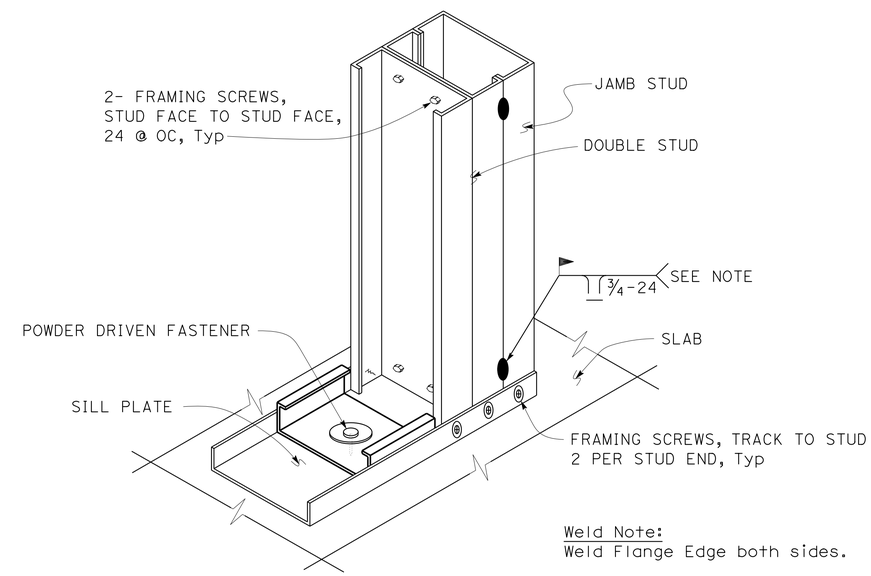

2 DOUBLE STUD WITH JAMB STUD DETAIL

NO SCALE

DESIGN	BY JUSTIN UYEHARA	CHECKED BRIAN SUTLIFF	
DETAILS	BY PETE VON SAVOYE	CHECKED BRIAN SUTLIFF	
QUANTITIES	BY	CHECKED	

STATE OF CALIFORNIA DEPARTMENT OF TRANSPORTATION

DIVISION OF ENGINEERING SERVICES ARCHITECTURAL AND STRUCTURAL DESIGN

BRIDGE No. 33M5785 POST MILE

SFOBB WAREHOUSE

COLD FORM STEEL STUD WALL DETAILS

SHEET **ST-5**

TAEMWW Imperial - CCSC Rev. 01/13

ORIGINAL SCALE IN INCHES FOR REDUCED PLANS 0 1 2 3

UNIT: 3599 CONTRACT No.: 000001
PROJECT NUMBER & PHASE: 041300001331

DISREGARD PRINTS BEARING EARLIER REVISION DATES → 05-23-13 07-18-13

REVISION DATES (PRELIMINARY STAGE ONLY) SHEET OF

D:\CADDuser\Projects\Dist_04\SFOBB_maintenance\combined\st\04-18-13\expedite\st0_05.dgn

30-APR-2014 10:14

Dist	COUNTY	LOCATION CODE	POST MILES TOTAL PROJECT	SHEET No.	TOTAL SHEETS
04	Ala	5785		199	371

Brian T. Sutliff 2-21-14
REGISTERED CIVIL ENGINEER DATE

REGISTERED PROFESSIONAL ENGINEER
Brian T. Sutliff
No. 3862
Exp. 3-31-16
STRUCTURAL
STATE OF CALIFORNIA

3-24-14
PLANS APPROVAL DATE

The State of California or its officers or agents shall not be responsible for the accuracy or completeness of scanned copies of this plan sheet.

CALIFORNIA STATE FIRE MARSHAL APPROVED
Approval of this plan does not authorize or approve any omission or deviation from applicable regulations. Final approval is subject to field inspection. One set of approved plans shall be available on the project site at all times.
Reviewed by: Ingrid P. Casiano
INGRID P. ICASIANO
Approval date: 02-11-14

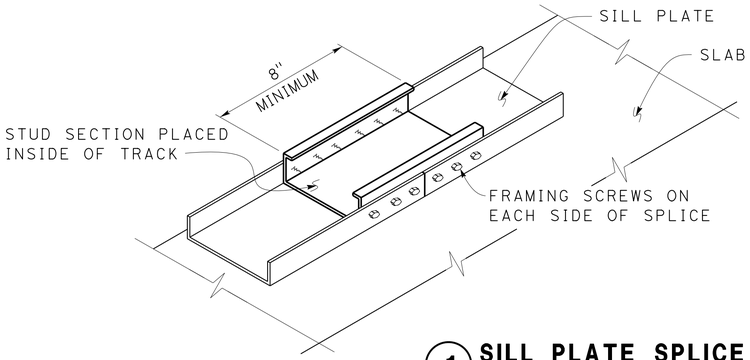

1 SILL PLATE SPLICE
NO SCALE

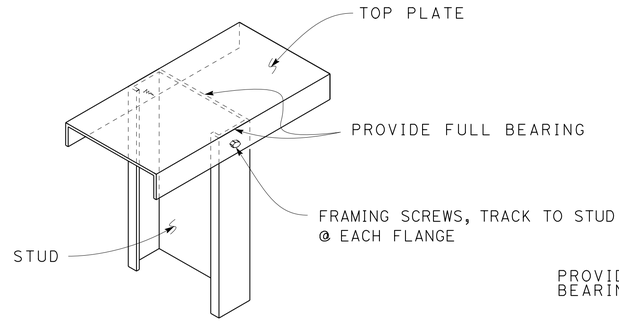

4 STUD TO TOP PLATE
NO SCALE

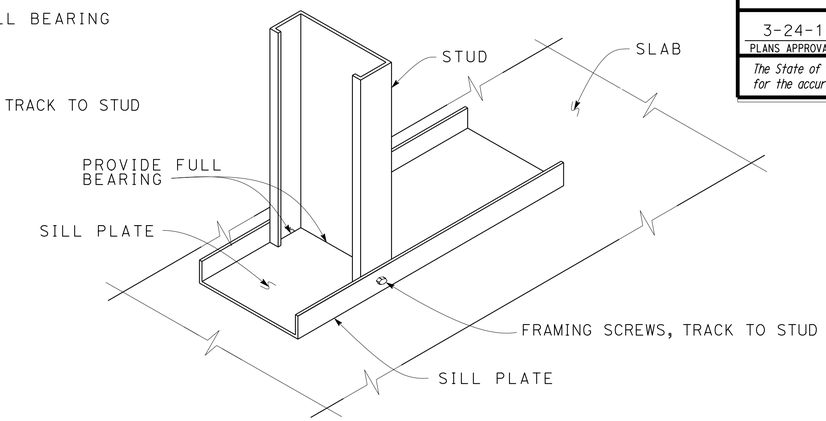

6 STUD TO SILL PLATE
NO SCALE

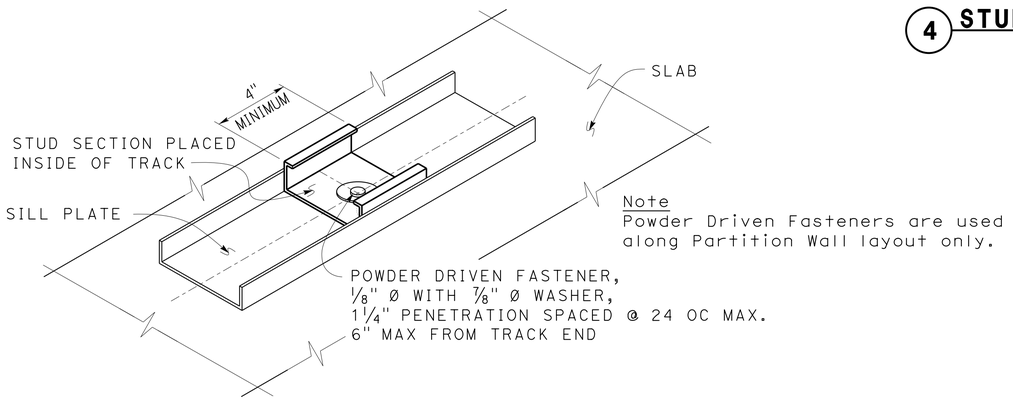

Note
Powder Driven Fasteners are used along Partition Wall layout only.

2 NON BEARING SILL PLATE ANCHORAGE
NO SCALE

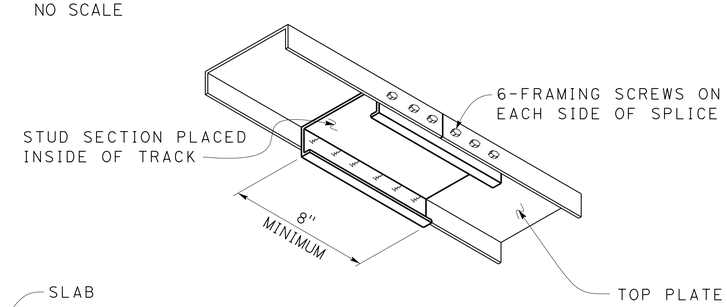

7 TOP PLATE SPLICE
NO SCALE

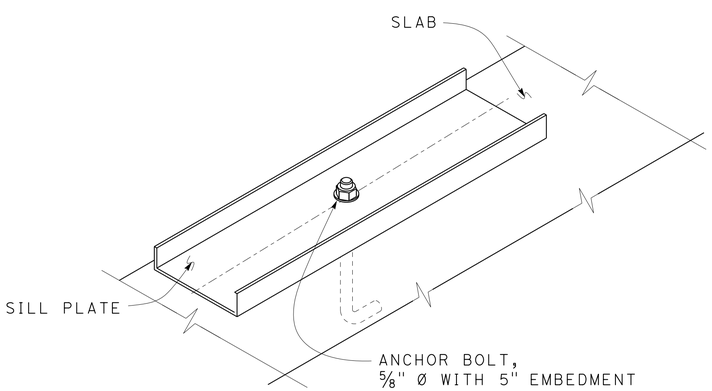

3 SILL PLATE ANCHORAGE
NO SCALE

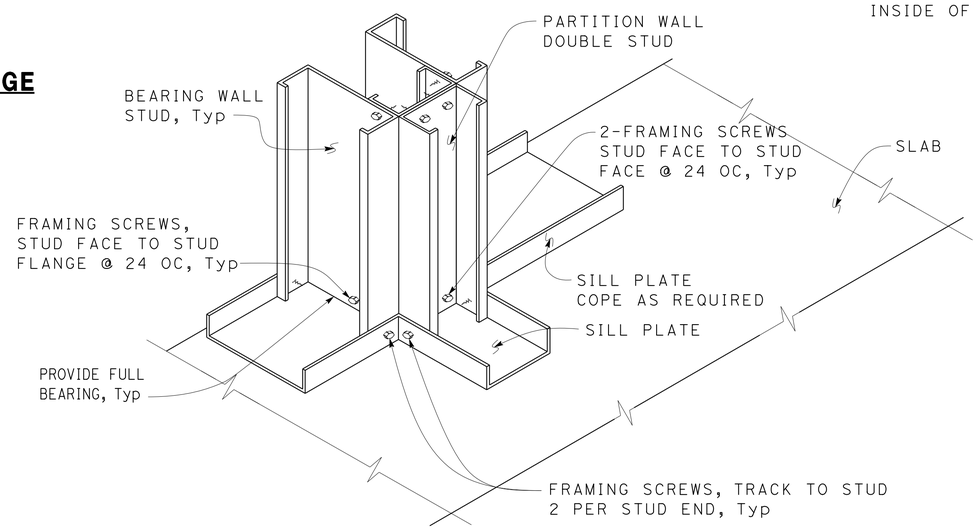

5 WALL INTERSECTION DETAIL
NO SCALE

	BY	CHECKED
DESIGN	JUSTIN UYEHARA	BRIAN SUTLIFF
DETAILS	PETE VON SAVOYE	BRIAN SUTLIFF
QUANTITIES		

STATE OF CALIFORNIA
DEPARTMENT OF TRANSPORTATION

DIVISION OF ENGINEERING SERVICES
ARCHITECTURAL AND STRUCTURAL DESIGN

BRIDGE No. 33M5785
POST MILE

SFOBB WAREHOUSE
COLD FORM STEEL STUD WALL DETAILS

SHEET **ST-6**

TAEMWW Imperial - CCSC Rev. 01/13

ORIGINAL SCALE IN INCHES FOR REDUCED PLANS 0 1 2 3

UNIT: 3599 CONTRACT No.: 000001
PROJECT NUMBER & PHASE: 04130001331

DISREGARD PRINTS BEARING EARLIER REVISION DATES → 05-23-13 07-17-13 07-18-13

REVISION DATES (PRELIMINARY STAGE ONLY) SHEET OF

30-APR-2014 10:14

D:\CADDuser\Projects\Dist_04\SFOBB_maintenance\combined\st\04-18-13\expedite\st0_06.dgn

Dist	COUNTY	LOCATION CODE	POST MILES TOTAL PROJECT	SHEET No.	TOTAL SHEETS
04	Ala	5785		200	371

Brian T. Sutliff 2-21-14
REGISTERED CIVIL ENGINEER DATE

REGISTERED PROFESSIONAL ENGINEER
Brian T. Sutliff
No. 3862
Exp. 3-31-16
STRUCTURAL
STATE OF CALIFORNIA

3-24-14
PLANS APPROVAL DATE

The State of California or its officers or agents shall not be responsible for the accuracy or completeness of scanned copies of this plan sheet.

CALIFORNIA STATE FIRE MARSHAL APPROVED
Approval of this plan does not authorize or approve any omission or deviation from applicable regulations. Final approval is subject to field inspection. One set of approved plans shall be available on the project site at all times.
Reviewed by: INGRID P. ICASIANO
Approval date: 02-11-14

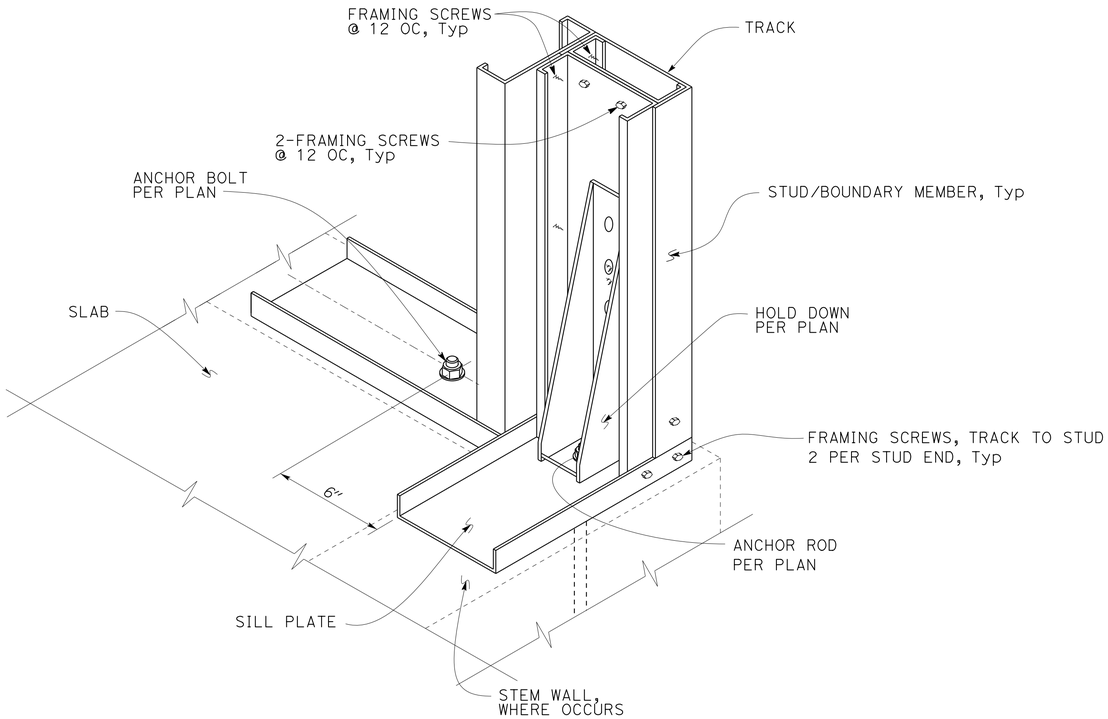

1 WALL ANCHOR AT CORNER
NO SCALE

Note
Wall SPS and Slab Reinforcement not shown for clarity

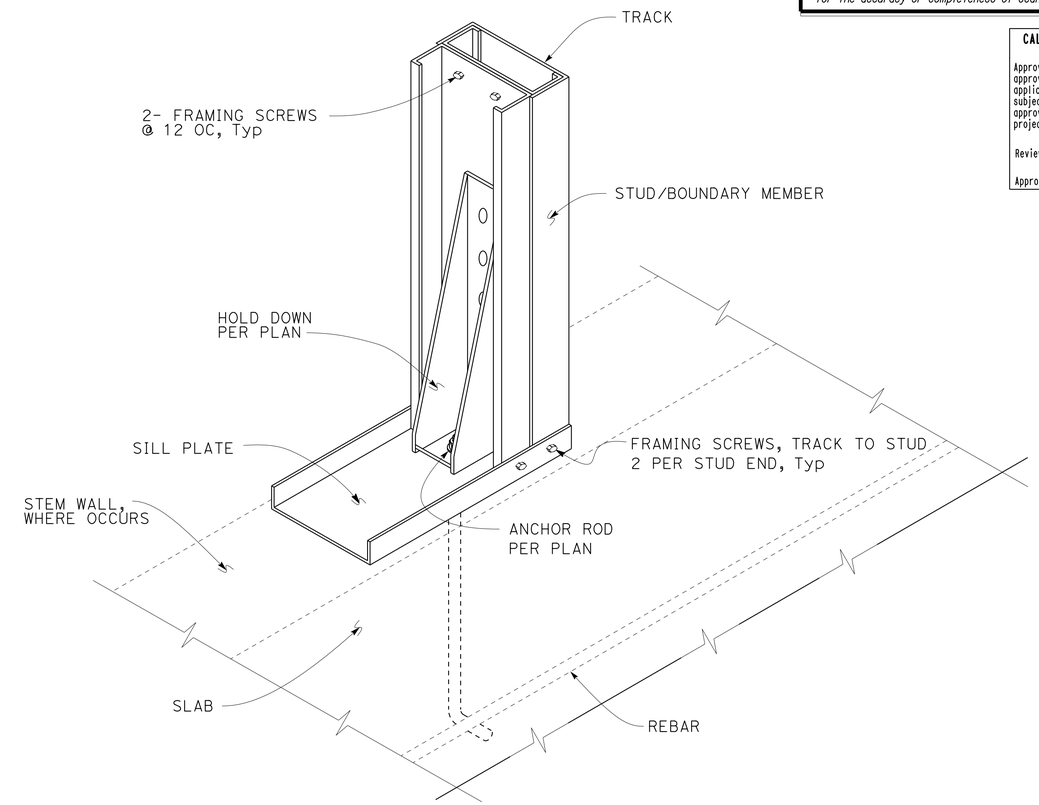

2 WALL ANCHOR DETAIL
NO SCALE

Note
Wall SPS and Slab Reinforcement not shown for clarity

DESIGN	BY JUSTIN UYEHARA	CHECKED BRIAN SUTLIFF	
DETAILS	BY PETE VON SAVOYE	CHECKED BRIAN SUTLIFF	
QUANTITIES	BY	CHECKED	

STATE OF CALIFORNIA
DEPARTMENT OF TRANSPORTATION

DIVISION OF ENGINEERING SERVICES
ARCHITECTURAL AND STRUCTURAL DESIGN

BRIDGE No. 33M5785
POST MILE

SFOBB WAREHOUSE

COLD FORM STEEL HOLDOWN DETAILS

SHEET **ST-7**

TAEMWW Imperial - CCSC Rev. 01/13

ORIGINAL SCALE IN INCHES FOR REDUCED PLANS 0 1 2 3

UNIT: 3599 CONTRACT No.: 000001
PROJECT NUMBER & PHASE: 04130001331

DISREGARD PRINTS BEARING EARLIER REVISION DATES → REVISION DATES (PRELIMINARY STAGE ONLY) 05-23-13 06-21-13 06-21-13 07-18-13 SHEET OF

30-APR-2014 10:14

D:\CADDuser\Projects\Dist_04\SFOBB_maintenance\combined\st\04-18-13\expedite\st0_07.dgn