DIST.	COUNTY	ROUTE	POST MILES TOTAL PROJECT	SHEET NO.	TOTAL SHEETS
04	Ala	80	2.2	301	800

LICENSED ARCHITECT — 5/30/2012 DATE

LICENSED ARCHITECT FRANK THOMAS No. C-31406 Exp. 4-30-13 STATE OF CALIFORNIA

10-22-12
PLANS APPROVAL DATE

The State of California or its officers or agents shall not be responsible for the accuracy or completeness of scanned copies of this plan sheet.

ACCESSIBILITY DESIGN APPROVAL STAMP DOT / DES / OTA
PROJECT ID 0412000666
Reviewed by: Y. A. WANG
Date: 07-24-12

CALIFORNIA STATE FIRE MARSHAL APPROVED
Approval of this plan does not authorize or approve any omission or deviation from applicable regulations. Final approval is subject to field inspection. One set of approved plans shall be available on the project site at all times.
Reviewed by: JOHN E WOODS, SDSFM
Approval date: 8-22-12

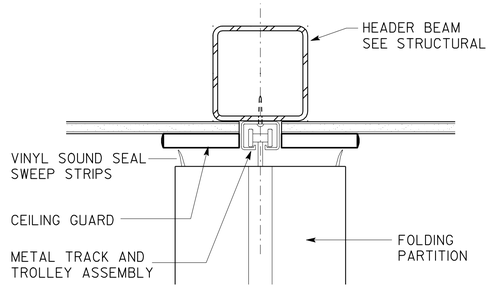

1 ACCORDION PARTITION HEAD

SCALE 3" = 1'-0"

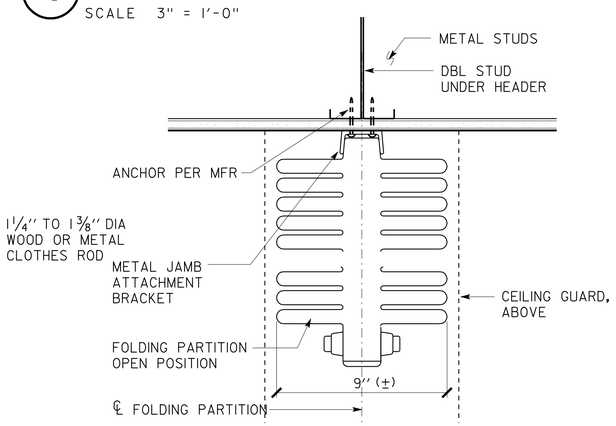

2 ACCORDION PARTITION JAMB

SCALE 3" = 1'-0"

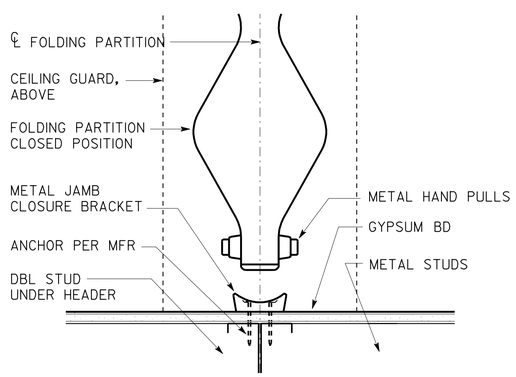

3 ACCORDION PARTITION JAMB

SCALE 3" = 1'-0"

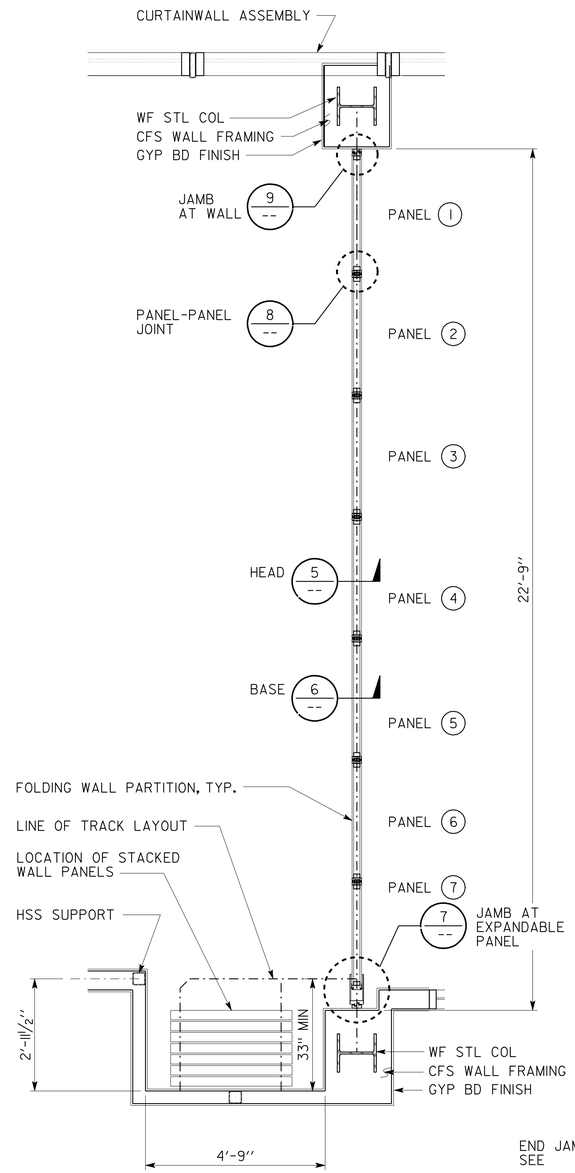

4 FOLDING PARTITION PLAN

SCALE 1/2" = 1'-0"

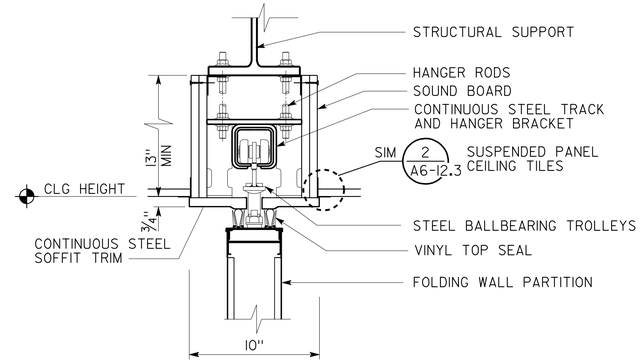

5 FOLDING PARTITION HEAD

SCALE 3" = 1'-0"

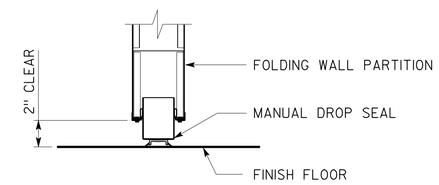

6 FOLDING PARTITION BOTTOM

SCALE 3" = 1'-0"

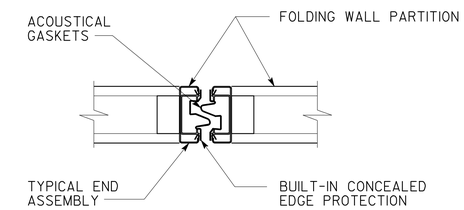

8 PANEL TO PANEL JOINT

SCALE 3" = 1'-0"

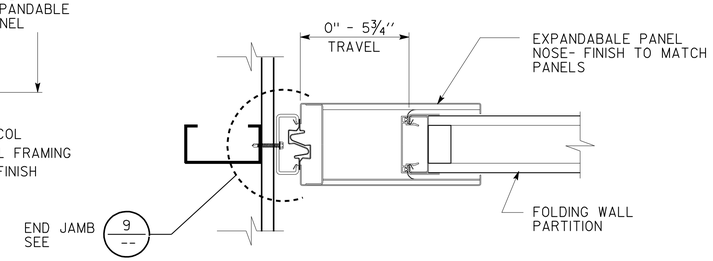

7 EXPANDABLE PANEL W/ JAMB

SCALE 3" = 1'-0"

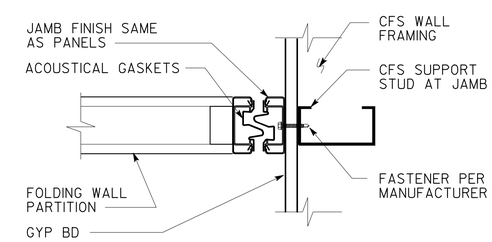

9 PANEL JAMB

SCALE 3" = 1'-0"

DESIGN	BY F. THOMAS, L. RHOADES	CHECKED
DETAILS	BY C. NAKAHARA,	CHECKED
QUANTITIES	BY	CHECKED

STATE OF CALIFORNIA
DEPARTMENT OF TRANSPORTATION

DIVISION OF ENGINEERING SERVICES
ARCHITECTURAL AND STRUCTURAL DESIGN

BRIDGE NO. 33M5785
POST MILE 2.2

SFOBB MAINTENANCE COMPLEX
DETAILS — FOLDING DOOR DETAILS

SHEET A6-8.4

a6_08_04 det fold door.dgn
TAEMWW Imperial Rev. 7/10 25-OCT-2012 14:03

ORIGINAL SCALE IN INCHES FOR REDUCED PLANS 0 1 2 3

UNIT 3598
PROJECT NUMBER & PHASE 04120006661
EA 014081

DISREGARD PRINTS BEARING EARLIER REVISION DATES
REVISION DATES (PRELIMINARY STAGE ONLY): 02-28-12 04-26-12 05-08-12 05-17-12 06-01-12 06-20-12
SHEET X OF X

25-OCT-2012 14:03
a6_08_04 det fold door.dgn

DIST.	COUNTY	ROUTE	POST MILES TOTAL PROJECT	SHEET NO.	TOTAL SHEETS
04	Ala	80	2.2	302	800

LICENSED ARCHITECT — 5/30/2012 DATE

LICENSED ARCHITECT FRANK THOMAS No. C-31406 Exp. 4-30-13 STATE OF CALIFORNIA

10-22-12
PLANS APPROVAL DATE

The State of California or its officers or agents shall not be responsible for the accuracy or completeness of scanned copies of this plan sheet.

ACCESSIBILITY DESIGN APPROVAL STAMP DOT / DES / OTA
PROJECT ID 0412000666
Reviewed by: Y. A. WANG
Date: 07-24-12

CALIFORNIA STATE FIRE MARSHAL APPROVED
Approval of this plan does not authorize or approve any omission or deviation from applicable regulations. Final approval is subject to field inspection. One set of approved plans shall be available on the project site at all times.
Reviewed by: JOHN E WOODS, SDSFM
Approval date: 8-22-12

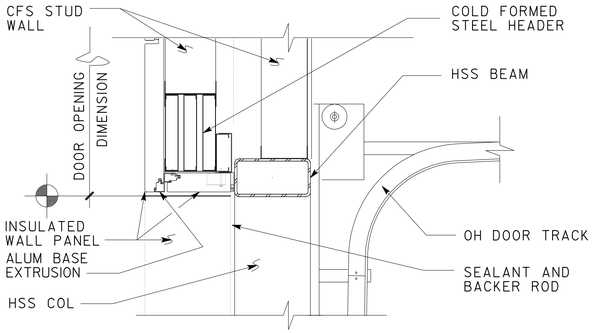

1 SECTIONAL OH DOOR HEAD

SCALE 1" = 1'-0"

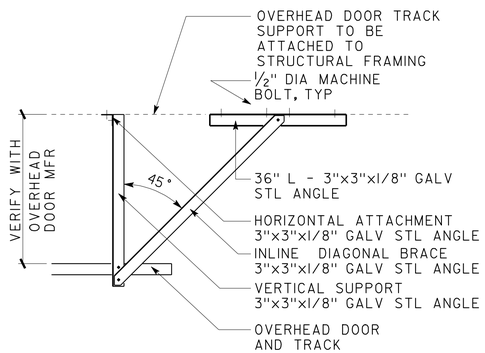

2 OVERHEAD DOOR TRACK AND SUPPORT

SCALE 3/4" = 1'-0"

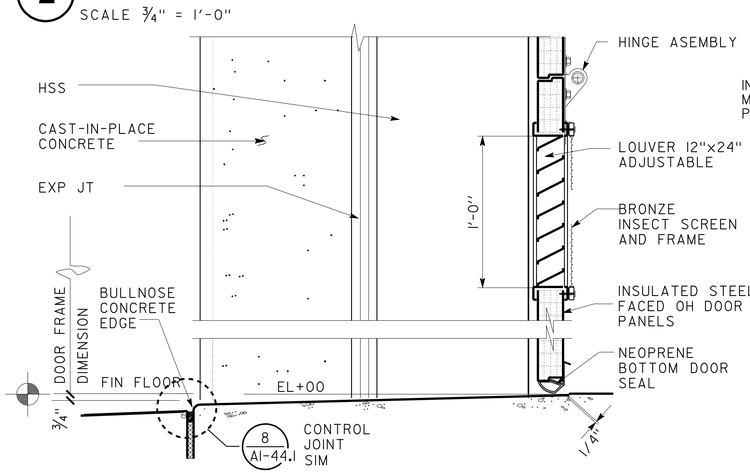

3 SECTIONAL OH THRESHOLD

SCALE 2" = 1'-0"

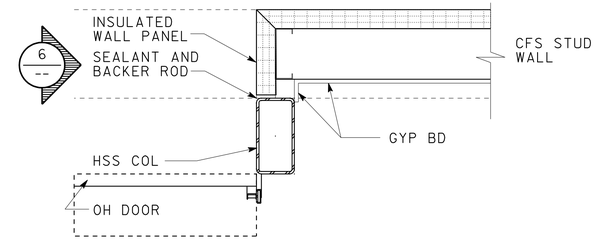

4 SECTIONAL OH JAMB

SCALE 1" = 1'-0"

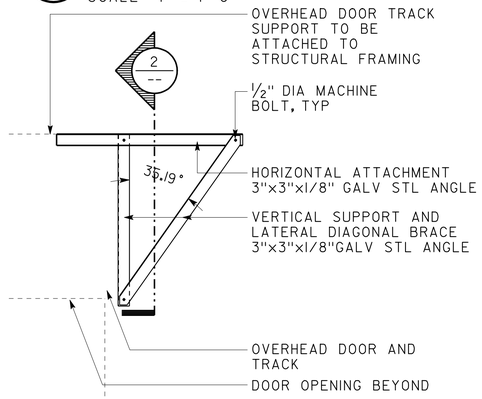

5 OVERHEAD DOOR TRACK SUPPORT

SCALE 3/4" = 1'-0"

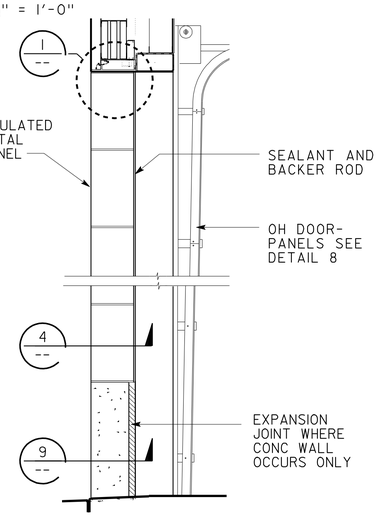

6 SIDE ELEVATION

SCALE 1/2" = 1'-0"

7 NOT USED

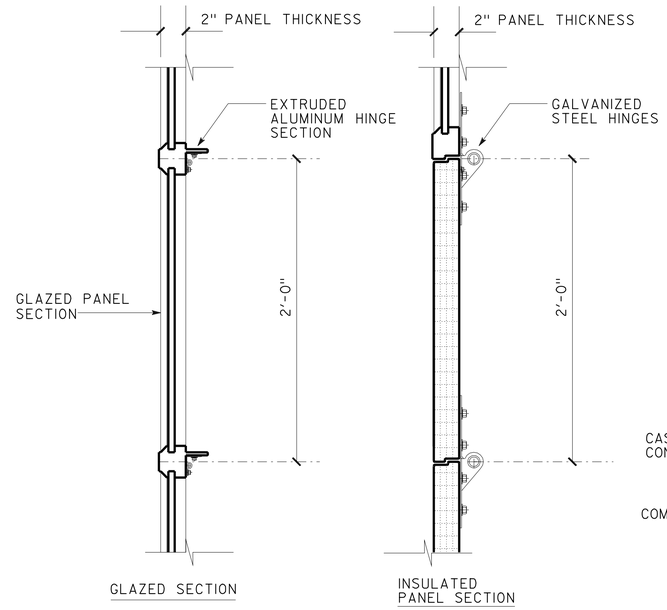

8 SECTIONAL OH DOOR PANELS

SCALE 2" = 1'-0"

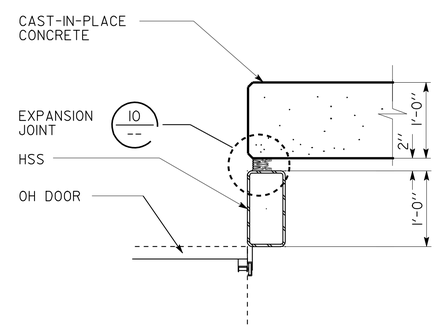

9 SECTIONAL OH JAMB

SCALE 1" = 1'-0"

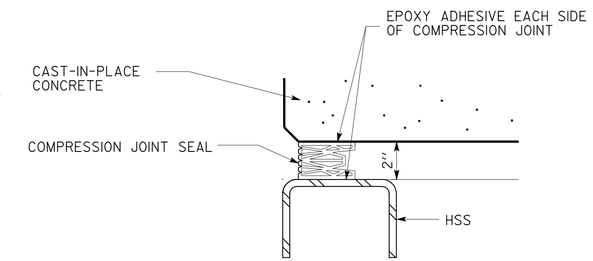

10 EXPANSION JOINT

SCALE 3" = 1'-0"

	BY	CHECKED
DESIGN	F. THOMAS, L. RHOADES	
DETAILS	C. NAKAHARA,	
QUANTITIES		

STATE OF CALIFORNIA
DEPARTMENT OF TRANSPORTATION

DIVISION OF ENGINEERING SERVICES
ARCHITECTURAL AND STRUCTURAL DESIGN

BRIDGE NO. 33M5785
POST MILE 2.2

SFOBB MAINTENANCE COMPLEX

DETAILS — OVERHEAD DOOR DETAILS

SHEET A6-9.1

a6_09_01 det OH doors.dgn
TAEMWW Imperial Rev. 7/10 25-OCT-2012 14:03

ORIGINAL SCALE IN INCHES FOR REDUCED PLANS 0 1 2 3

UNIT 3598
PROJECT NUMBER & PHASE 04120006661
EA 014081

DISREGARD PRINTS BEARING EARLIER REVISION DATES

REVISION DATES (PRELIMINARY STAGE ONLY): 02-28-12 04-26-12 05-08-12 05-17-12 06-01-12 06-20-12

SHEET X OF X

25-OCT-2012 14:03
a6_09_01 det OH doors.dgn

DIST.	COUNTY	ROUTE	POST MILES TOTAL PROJECT	SHEET NO.	TOTAL SHEETS
04	Ala	80	2.2	303	800

LICENSED ARCHITECT — DATE: 5/30/2012

LICENSED ARCHITECT FRANK THOMAS No. C-31406 Exp. 4-30-13 STATE OF CALIFORNIA

10-22-12
PLANS APPROVAL DATE

The State of California or its officers or agents shall not be responsible for the accuracy or completeness of scanned copies of this plan sheet.

ACCESSIBILITY DESIGN APPROVAL STAMP DOT / DES / OTA
PROJECT ID 0412000666
Reviewed by: Y. A. WANG
Date: 07-24-12

CALIFORNIA STATE FIRE MARSHAL APPROVED
Approval of this plan does not authorize or approve any omission or deviation from applicable regulations. Final approval is subject to field inspection. One set of approved plans shall be available on the project site at all times.
Reviewed by: JOHN E WOODS, SDSFM
Approval date: 8-22-12

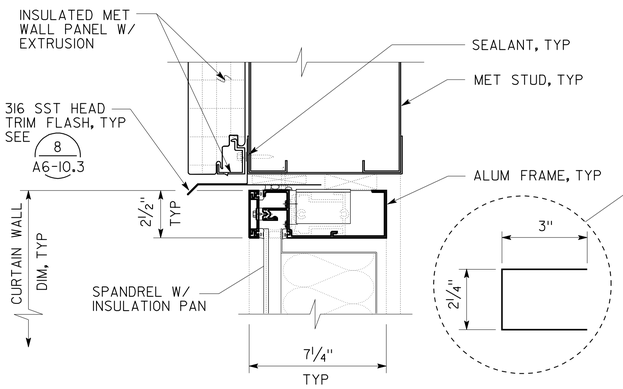

1 HEAD
SCALE : 3" = 1'-0"

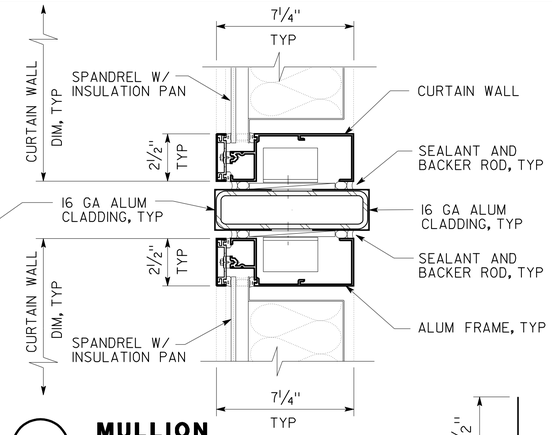

4 MULLION
SCALE : 3" = 1'-0"

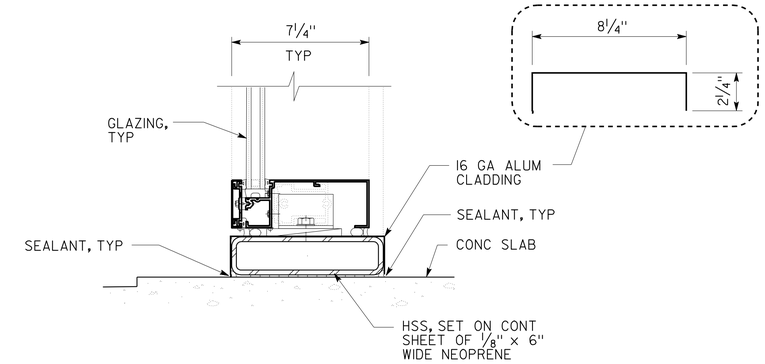

7 SILL
SCALE : 3" = 1'-0"

NOTE:

NEOPRENE TAPE TO BE APPLIED BETWEEN DISSIMILAR METALS.

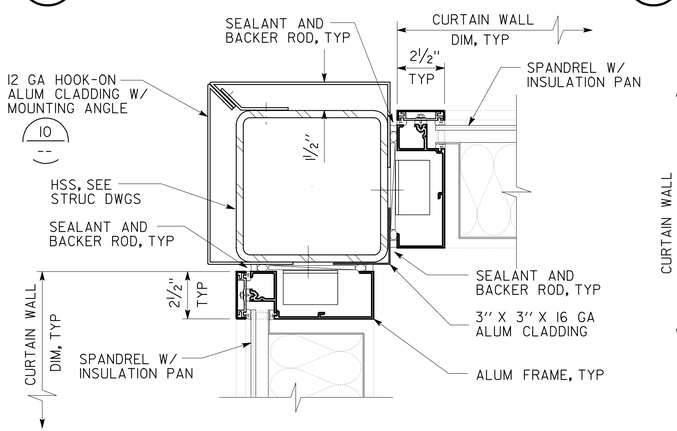

2 JAMB
SCALE : 3" = 1'-0"

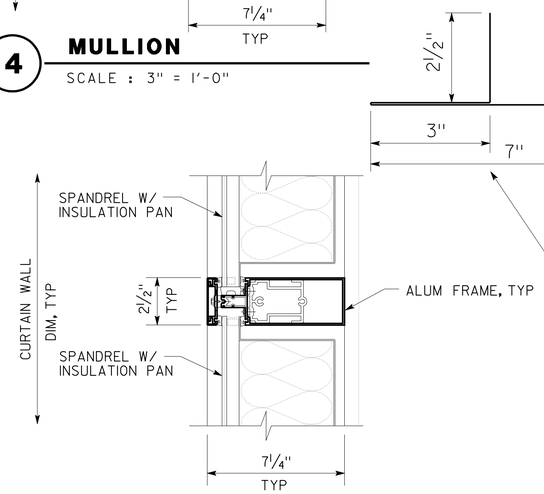

5 MULLION
SCALE : 3" = 1'-0"

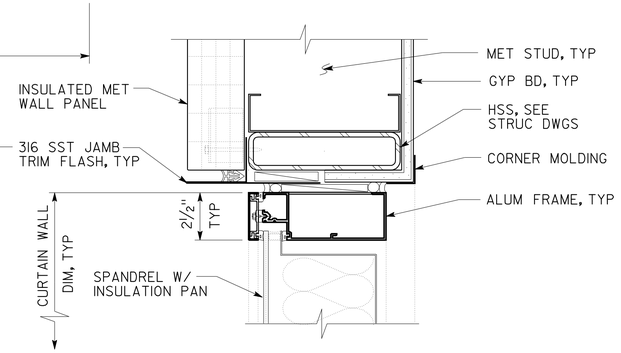

8 JAMB
SCALE : 3" = 1'-0"

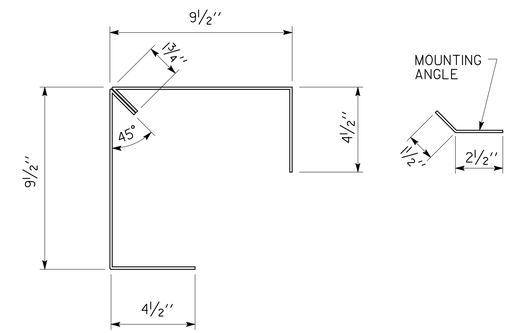

10 ALUMINUM CLADDING
SCALE : 3" = 1'-0"

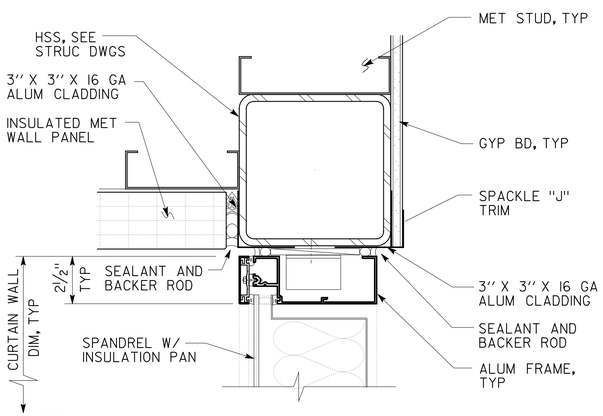

3 JAMB
SCALE : 3" = 1'-0"

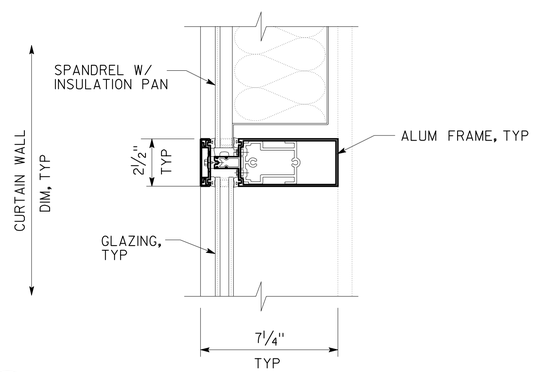

6 MULLION
SCALE : 3" = 1'-0"

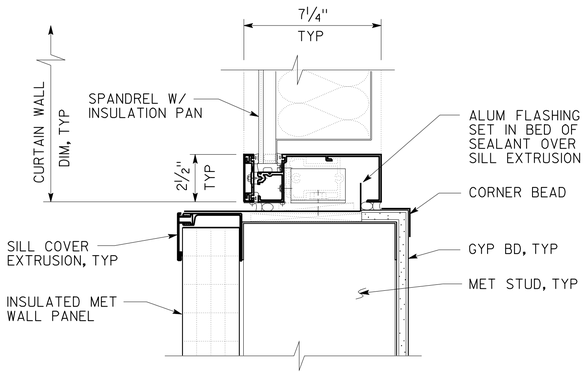

9 SILL
SCALE : 3" = 1'-0"

DESIGN	BY F. THOMAS, L. RHOADES	CHECKED
DETAILS	BY C. NAKAHARA,	CHECKED
QUANTITIES	BY	CHECKED

STATE OF CALIFORNIA
DEPARTMENT OF TRANSPORTATION

DIVISION OF ENGINEERING SERVICES
ARCHITECTURAL AND STRUCTURAL DESIGN

BRIDGE NO. 33M5785
POST MILE 2.2

SFOBB MAINTENANCE COMPLEX
DETAIL — CURTAIN WALL

SHEET **A6-10.1**

a6_10_01 det curtainwall.dgn
TAEMWW Imperial Rev. 7/10 25-OCT-2012 14:04

ORIGINAL SCALE IN INCHES FOR REDUCED PLANS 0 1 2 3

UNIT 3598
PROJECT NUMBER & PHASE 04120006661
EA 014081

DISREGARD PRINTS BEARING EARLIER REVISION DATES
REVISION DATES (PRELIMINARY STAGE ONLY): 02-28-12 04-26-12 05-08-12 05-17-12 06-01-12 06-20-12
SHEET X OF X

25-OCT-2012 14:04
a6_10_01 det curtainwall.dgn

DIST.	COUNTY	ROUTE	POST MILES TOTAL PROJECT	SHEET NO.	TOTAL SHEETS
04	Ala	80	2.2	304	800

LICENSED ARCHITECT — FRANK THOMAS No. C-31406 Exp. 4-30-13 — STATE OF CALIFORNIA

5/30/2012
LICENSED ARCHITECT — DATE

10-22-12
PLANS APPROVAL DATE

The State of California or its officers or agents shall not be responsible for the accuracy or completeness of scanned copies of this plan sheet.

ACCESSIBILITY DESIGN APPROVAL STAMP DOT / DES / OTA
PROJECT ID **0412000666**
Reviewed by: Y. A. WANG
Date: 07-24-12

CALIFORNIA STATE FIRE MARSHAL APPROVED
Approval of this plan does not authorize or approve any omission or deviation from applicable regulations. Final approval is subject to field inspection. One set of approved plans shall be available on the project site at all times.
Reviewed by: JOHN E WOODS, SDSFM
Approval date: 8-22-12

NOTE:

NEOPRENE TAPE TO BE APPLIED BETWEEN DISSIMILAR METALS.

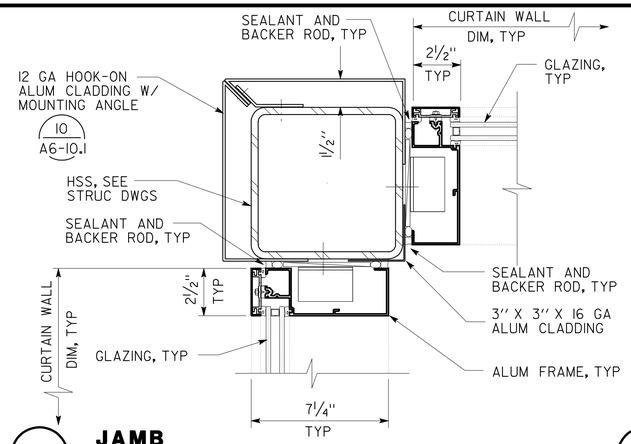

1 JAMB
SCALE : 3" = 1'-0"

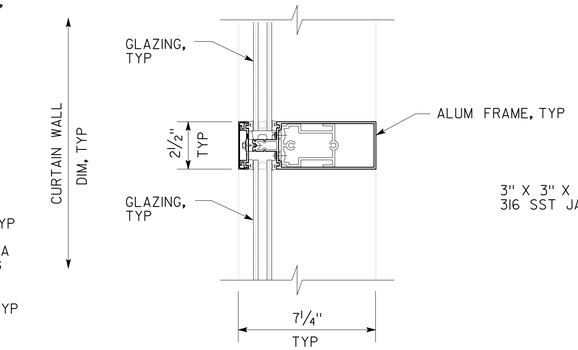

4 MULLION
SCALE : 3" = 1'-0"

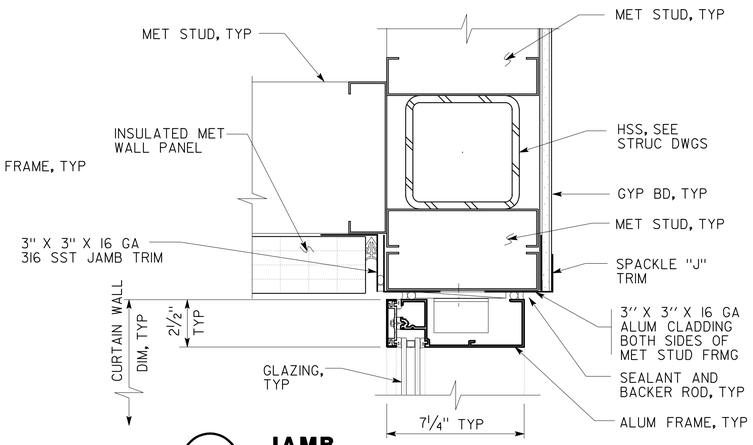

7 JAMB
SCALE : 3" = 1'-0"

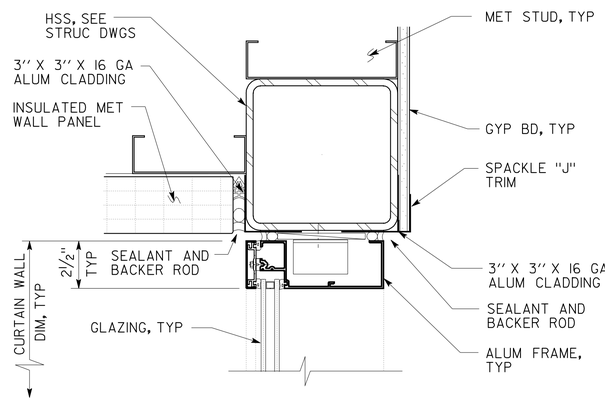

2 JAMB
SCALE : 3" = 1'-0"

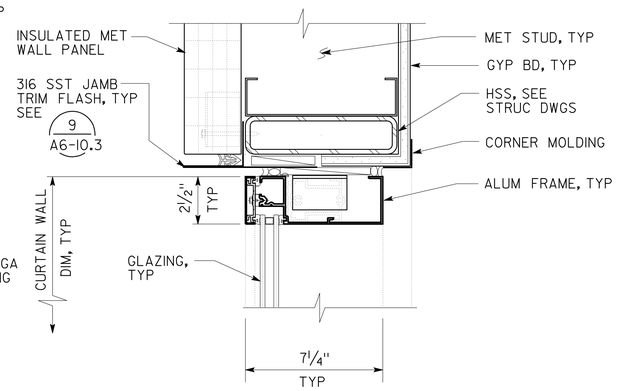

5 JAMB
SCALE : 3" = 1'-0"

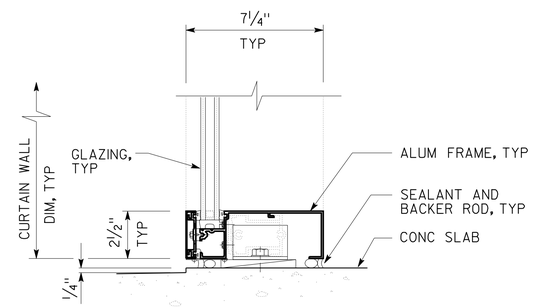

8 SILL
SCALE : 3" = 1'-0"

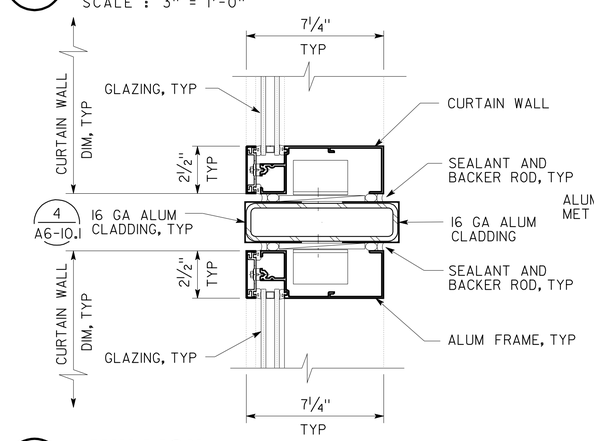

3 MULLION
SCALE : 3" = 1'-0"

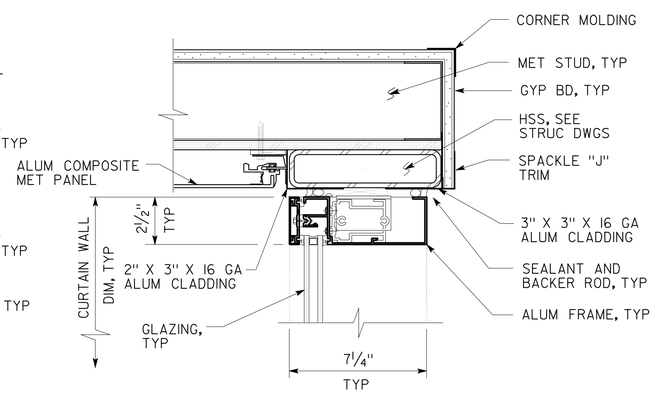

6 HEAD / JAMB SIMILAR
SCALE : 3" = 1'-0"

DESIGN	BY F. THOMAS, L. RHOADES	CHECKED	
DETAILS	BY C. NAKAHARA,	CHECKED	
QUANTITIES	BY	CHECKED	

STATE OF CALIFORNIA
DEPARTMENT OF TRANSPORTATION

DIVISION OF ENGINEERING SERVICES
ARCHITECTURAL AND STRUCTURAL DESIGN

BRIDGE NO. 33M5785
POST MILE 2.2

SFOBB MAINTENANCE COMPLEX
DETAIL — CURTAIN WALL

SHEET **A6-10.2**

a6_10_02 det curtainwall.dgn
TAEMWW Imperial Rev. 7/10 25-OCT-2012 14:04

ORIGINAL SCALE IN INCHES FOR REDUCED PLANS 0 1 2 3

UNIT 3598
PROJECT NUMBER & PHASE 04120006661
EA 014081

DISREGARD PRINTS BEARING EARLIER REVISION DATES
REVISION DATES (PRELIMINARY STAGE ONLY): 02-28-12 04-26-12 05-08-12 05-17-12 06-01-12 06-20-12
SHEET X OF X

25-OCT-2012 14:04
a6_10_02 det curtainwall.dgn

DIST.	COUNTY	ROUTE	POST MILES TOTAL PROJECT	SHEET NO.	TOTAL SHEETS
04	Ala	80	2.2	305	800

LICENSED ARCHITECT — 5/30/2012 DATE

LICENSED ARCHITECT FRANK THOMAS No. C-31406 Exp. 4-30-13 STATE OF CALIFORNIA

10-22-12
PLANS APPROVAL DATE

The State of California or its officers or agents shall not be responsible for the accuracy or completeness of scanned copies of this plan sheet.

ACCESSIBILITY DESIGN APPROVAL STAMP DOT / DES / OTA

PROJECT ID **0412000666**

Reviewed by: Y. A. WANG
Date: 07-24-12

CALIFORNIA STATE FIRE MARSHAL APPROVED

Approval of this plan does not authorize or approve any omission or deviation from applicable regulations. Final approval is subject to field inspection. One set of approved plans shall be available on the project site at all times.

Reviewed by: JOHN E WOODS, SDSFM
Approval date: 8-22-12

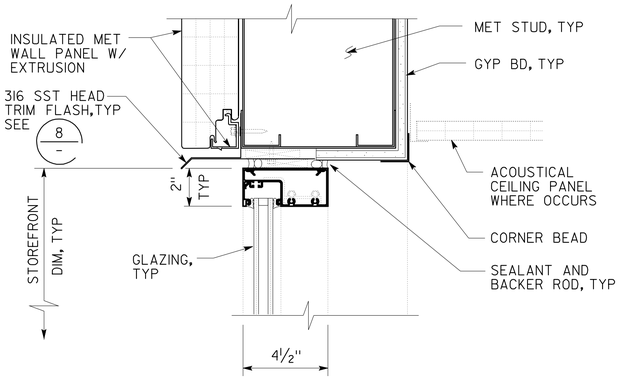

1 HEAD
SCALE : 3" = 1'-0"

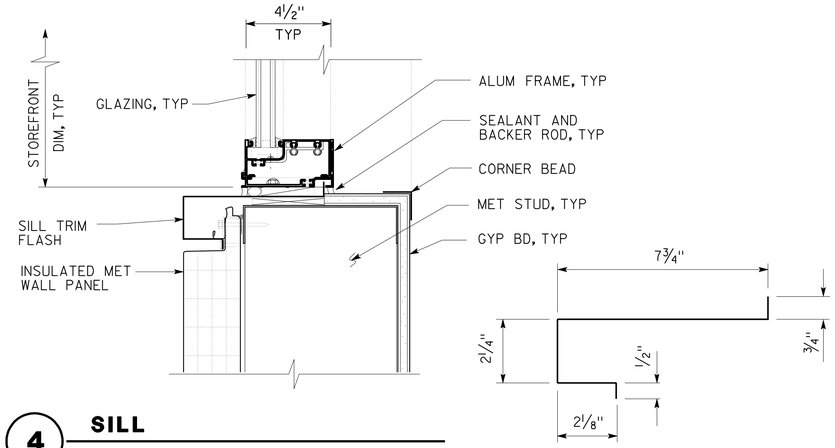

4 SILL
SCALE : 3" = 1'-0"

SILL TRIM FLASHING

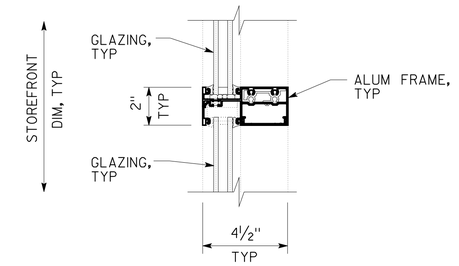

7 MULLION
SCALE : 3" = 1'-0"

NOTE:

NEOPRENE TAPE TO BE APPLIED BETWEEN DISSIMILAR METALS.

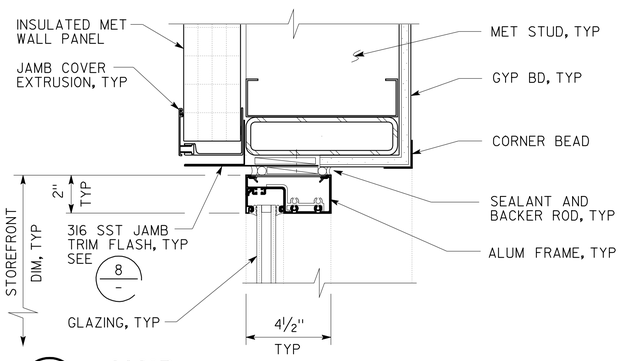

2 JAMB
SCALE : 3" = 1'-0"

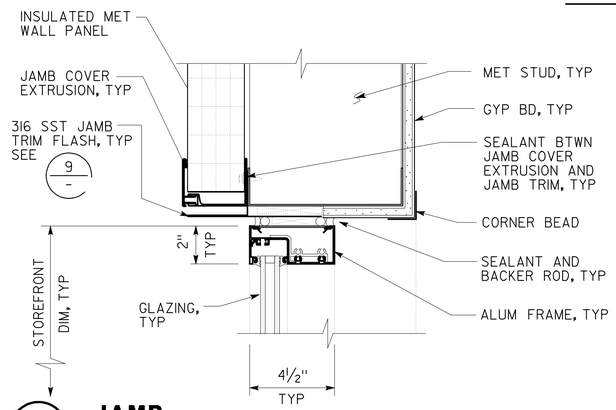

5 JAMB
SCALE : 3" = 1'-0"

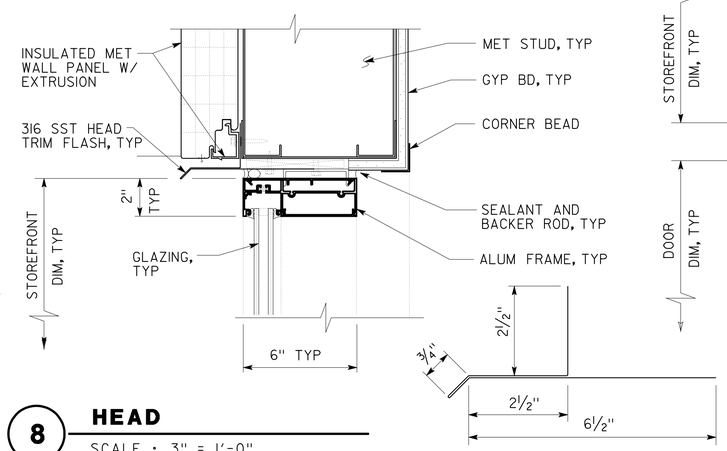

HEAD TRIM FLASHING

8 HEAD
SCALE : 3" = 1'-0"

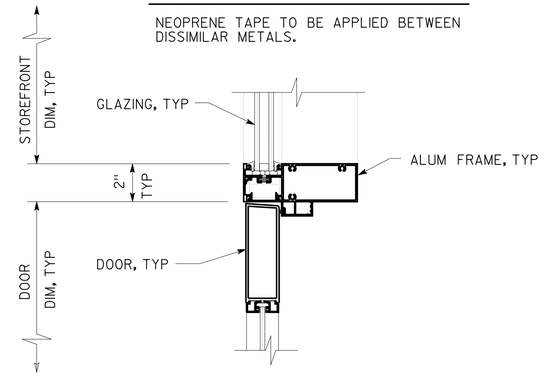

10 JAMB - HEAD SIMILAR
SCALE : 3" = 1'-0"

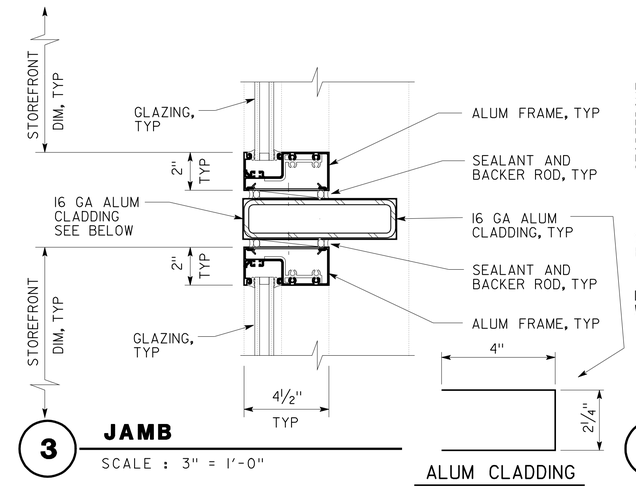

3 JAMB
SCALE : 3" = 1'-0"

ALUM CLADDING

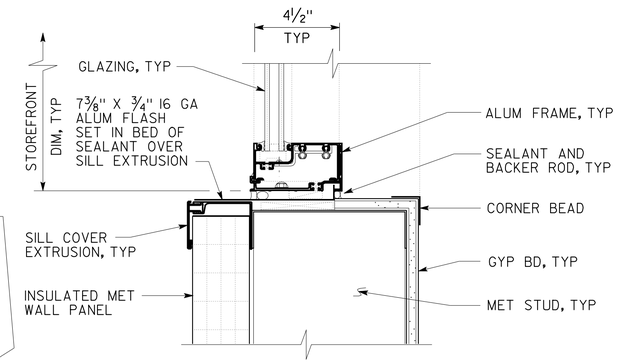

6 SILL
SCALE : 3" = 1'-0"

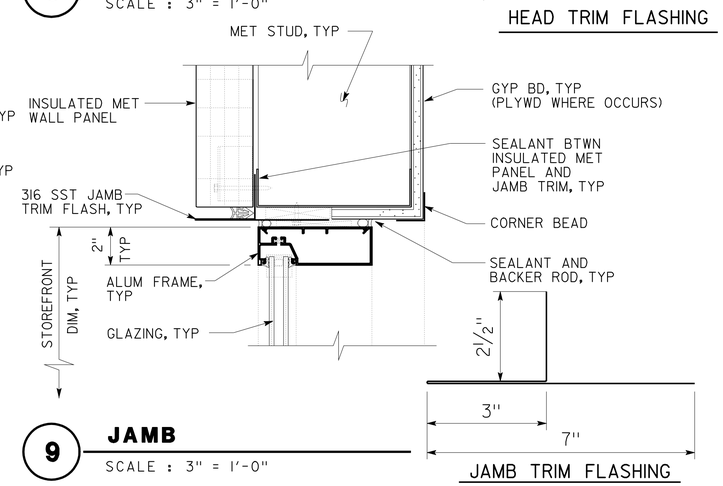

JAMB TRIM FLASHING

9 JAMB
SCALE : 3" = 1'-0"

DESIGN	BY F. THOMAS, L. RHOADES	CHECKED	
DETAILS	BY C. NAKAHARA,	CHECKED	
QUANTITIES	BY	CHECKED	

STATE OF CALIFORNIA
DEPARTMENT OF TRANSPORTATION

DIVISION OF ENGINEERING SERVICES
ARCHITECTURAL AND STRUCTURAL DESIGN

BRIDGE NO. 33M5785
POST MILE 2.2

SFOBB MAINTENANCE COMPLEX

DETAIL — STOREFRONT

SHEET **A6-10.3**

a6_10_03 det storefront.dgn
TAEMWW Imperial Rev. 7/10 25-OCT-2012 14:04

ORIGINAL SCALE IN INCHES FOR REDUCED PLANS 0 1 2 3

UNIT 3598
PROJECT NUMBER & PHASE 04120006661
EA 014081

DISREGARD PRINTS BEARING EARLIER REVISION DATES

REVISION DATES (PRELIMINARY STAGE ONLY): 02-28-12 04-26-12 05-08-12 05-17-12 06-01-12 06-20-12

SHEET X OF X

25-OCT-2012 14:04
a6_10_03 det storefront.dgn

DIST.	COUNTY	ROUTE	POST MILES TOTAL PROJECT	SHEET NO.	TOTAL SHEETS
04	Ala	80	2.2	306	800

LICENSED ARCHITECT — 5/30/2012 DATE

LICENSED ARCHITECT FRANK THOMAS No. C-31406 Exp. 4-30-13 STATE OF CALIFORNIA

10-22-12
PLANS APPROVAL DATE

The State of California or its officers or agents shall not be responsible for the accuracy or completeness of scanned copies of this plan sheet.

ACCESSIBILITY DESIGN APPROVAL STAMP DOT / DES / OTA
PROJECT ID 0412000666
Reviewed by: Y. A. WANG
Date: 07-24-12

CALIFORNIA STATE FIRE MARSHAL APPROVED
Approval of this plan does not authorize or approve any omission or deviation from applicable regulations. Final approval is subject to field inspection. One set of approved plans shall be available on the project site at all times.
Reviewed by: JOHN E WOODS, SDSFM
Approval date: 8-22-12

NOTE:
NEOPRENE TAPE TO BE APPLIED BETWEEN DISSIMILAR METALS.

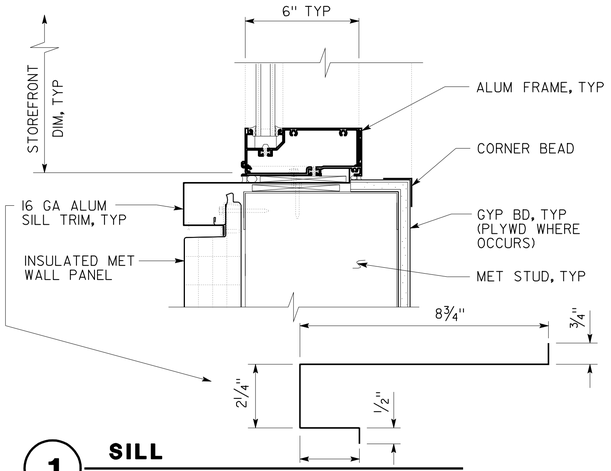

1 SILL
SCALE : 3" = 1'-0"

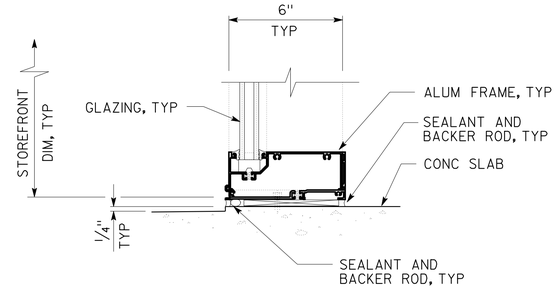

4 SILL
SCALE : 3" = 1'-0"

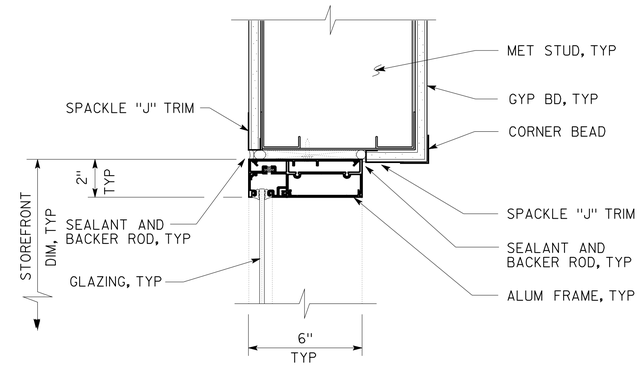

7 JAMB
SCALE : 3" = 1'-0"

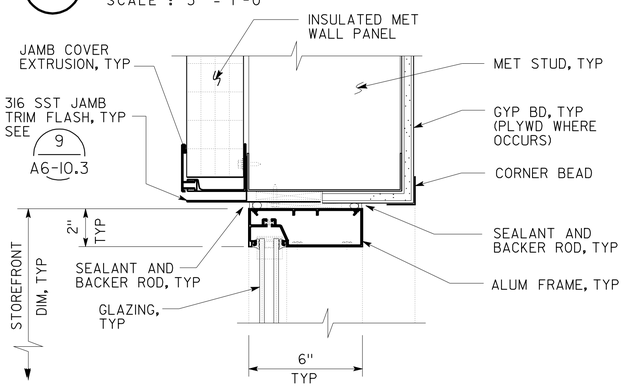

2 JAMB
SCALE : 3" = 1'-0"

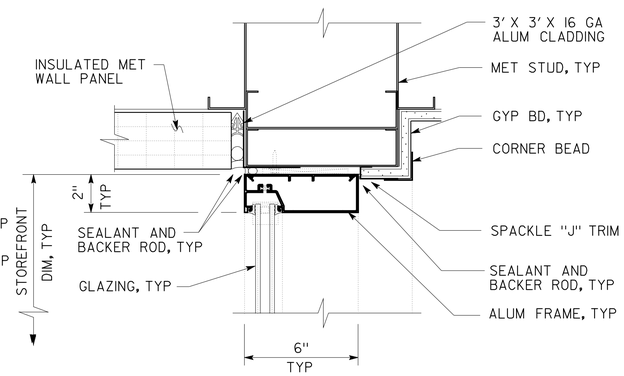

5 JAMB
SCALE : 3" = 1'-0"

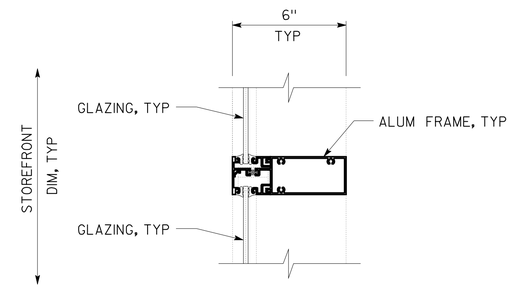

8 MULLION
SCALE : 3" = 1'-0"

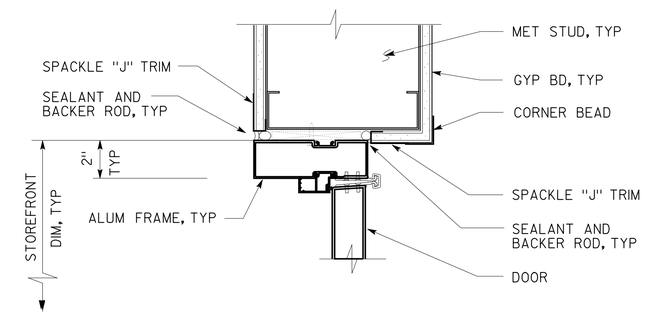

10 JAMB
SCALE : 3" = 1'-0"

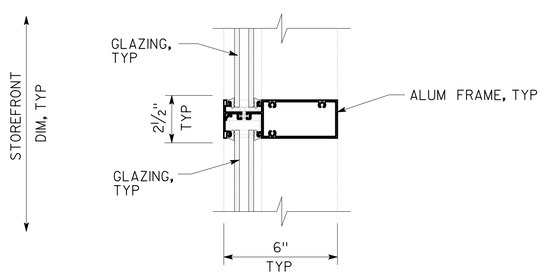

3 MULLION
SCALE : 3" = 1'-0"

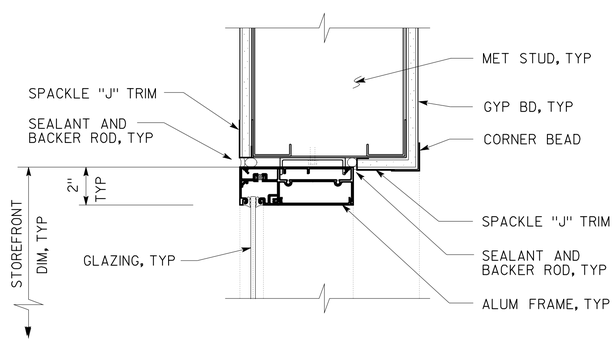

6 HEAD
SCALE : 3" = 1'-0"

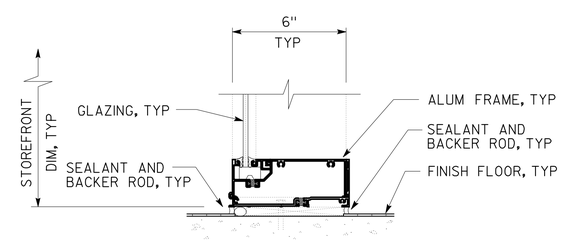

9 SILL
SCALE : 3" = 1'-0"

	BY	CHECKED
DESIGN	F. THOMAS, L. RHOADES	
DETAILS	C. NAKAHARA,	
QUANTITIES		

STATE OF CALIFORNIA
DEPARTMENT OF TRANSPORTATION

DIVISION OF ENGINEERING SERVICES
ARCHITECTURAL AND STRUCTURAL DESIGN

BRIDGE NO. 33M5785
POST MILE 2.2

SFOBB MAINTENANCE COMPLEX
DETAIL — STOREFRONT

SHEET **A6-10.4**

a6_10_04 det storefront.dgn
TAEMWW Imperial Rev. 7/10 25-OCT-2012 14:04

ORIGINAL SCALE IN INCHES FOR REDUCED PLANS 0 1 2 3

UNIT 3598
PROJECT NUMBER & PHASE 04120006661
EA 014081

DISREGARD PRINTS BEARING EARLIER REVISION DATES →
REVISION DATES (PRELIMINARY STAGE ONLY): 02-28-12 04-26-12 05-08-12 05-17-12 06-01-12 06-20-12
SHEET X OF X

25-OCT-2012 14:04
a6_10_04 det storefront.dgn

DIST.	COUNTY	ROUTE	POST MILES TOTAL PROJECT	SHEET NO.	TOTAL SHEETS
04	Ala	80	2.2	307	800

LICENSED ARCHITECT — 5/30/2012 DATE

LICENSED ARCHITECT FRANK THOMAS No. C-31406 Exp. 4-30-13 STATE OF CALIFORNIA

10-22-12
PLANS APPROVAL DATE

The State of California or its officers or agents shall not be responsible for the accuracy or completeness of scanned copies of this plan sheet.

ACCESSIBILITY DESIGN APPROVAL STAMP DOT / DES / OTA
PROJECT ID 0412000666
Reviewed by: Y. A. WANG
Date: 07-24-12

CALIFORNIA STATE FIRE MARSHAL APPROVED
Approval of this plan does not authorize or approve any omission or deviation from applicable regulations. Final approval is subject to field inspection. One set of approved plans shall be available on the project site at all times.
Reviewed by: JOHN E WOODS, SDSFM
Approval date: 8-22-12

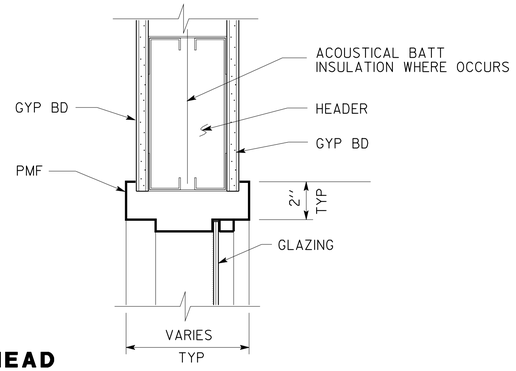

1 HEAD
SCALE 3" = 1'-0"

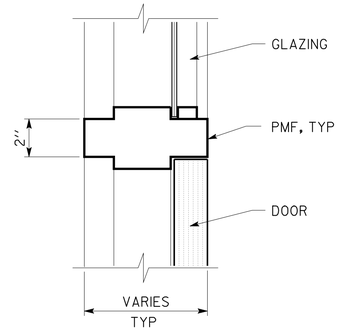

4 MULLION
SCALE 3" = 1'-0"

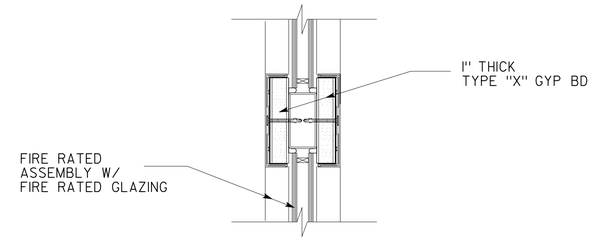

7 MULLION
SCALE 3" = 1'-0"

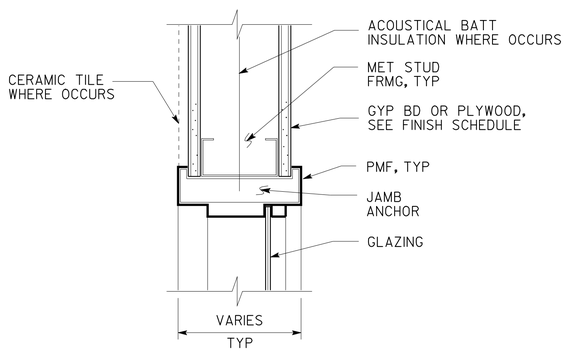

2 JAMB
SCALE 3" = 1'-0"

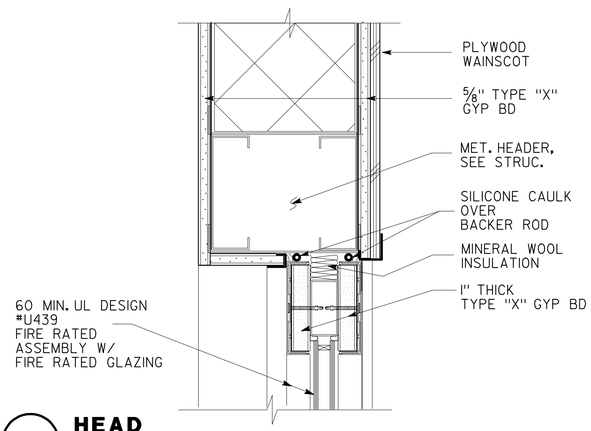

5 HEAD
SCALE 3" = 1'-0"

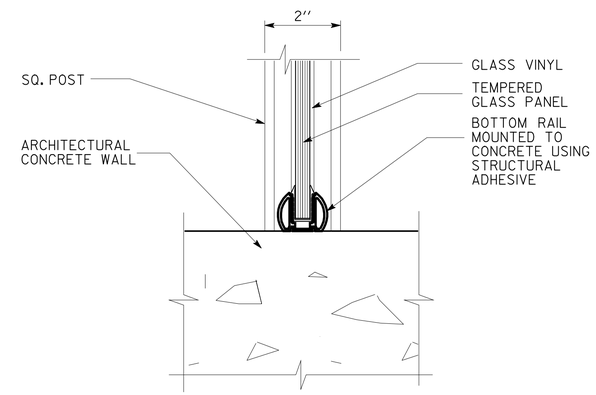

8 SILL
SCALE 6" = 1'-0"

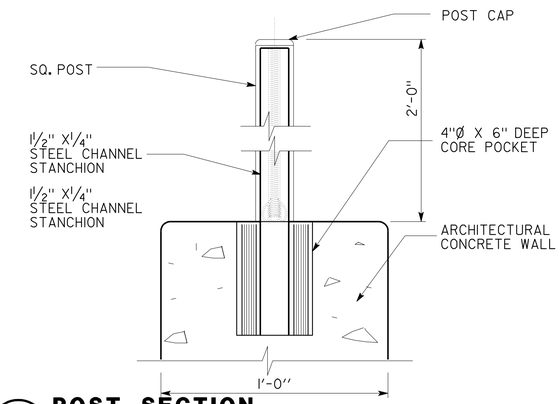

10 POST SECTION
SCALE 3" = 1'-0"

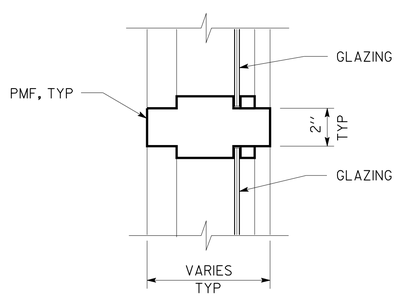

3 MULLION
SCALE 3" = 1'-0"

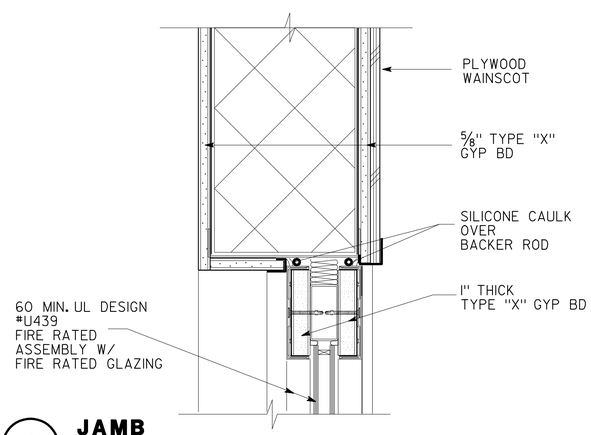

6 JAMB
SCALE x" = 1'-0"

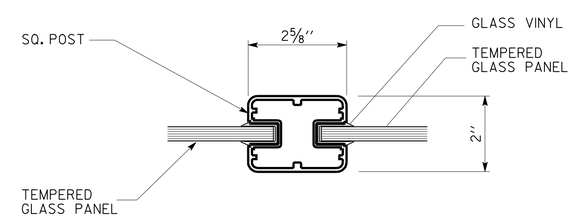

9 MULLION
SCALE 6" = 1'-0"

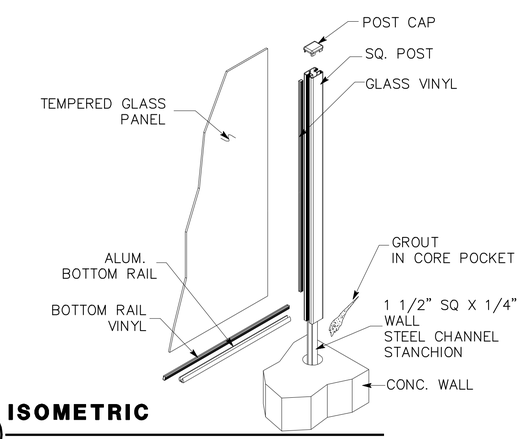

11 ISOMETRIC
SCALE NONE

DESIGN	BY F. THOMAS, L. RHOADES	CHECKED
DETAILS	BY C. NAKAHARA,	CHECKED
QUANTITIES	BY	CHECKED

STATE OF CALIFORNIA
DEPARTMENT OF TRANSPORTATION

DIVISION OF ENGINEERING SERVICES
ARCHITECTURAL AND STRUCTURAL DESIGN

BRIDGE NO. 33M5785
POST MILE 2.2

SFOBB MAINTENANCE COMPLEX
DETAILS — INTERIOR PMF WINDOW & WIND SCREEN SYSTEM DETAILS

SHEET **A6-10.5**

a6_10_05 det pmf win.dgn
TAEMWW Imperial Rev. 7/10 25-OCT-2012 14:04

ORIGINAL SCALE IN INCHES FOR REDUCED PLANS 0 1 2 3

UNIT 3598
PROJECT NUMBER & PHASE 04120006661
EA 014081

DISREGARD PRINTS BEARING EARLIER REVISION DATES → 02-28-12 04-26-12 05-08-12 05-17-12 06-01-12 06-20-12

REVISION DATES (PRELIMINARY STAGE ONLY) SHEET X OF X

25-OCT-2012 14:04
a6_10_05 det pmf win.dgn

DIST.	COUNTY	ROUTE	POST MILES TOTAL PROJECT	SHEET NO.	TOTAL SHEETS
04	Ala	80	2.2	308	800

LICENSED ARCHITECT — DATE 5/30/2012

LICENSED ARCHITECT FRANK THOMAS No. C-31406 Exp. 4-30-13 STATE OF CALIFORNIA

10-22-12
PLANS APPROVAL DATE

The State of California or its officers or agents shall not be responsible for the accuracy or completeness of scanned copies of this plan sheet.

ACCESSIBILITY DESIGN APPROVAL STAMP DOT / DES / OTA
PROJECT ID 0412000666
Reviewed by: Y. A. WANG
Date: 07-24-12

CALIFORNIA STATE FIRE MARSHAL APPROVED
Approval of this plan does not authorize or approve any omission or deviation from applicable regulations. Final approval is subject to field inspection. One set of approved plans shall be available on the project site at all times.
Reviewed by: JOHN E WOODS, SDSFM
Approval date: 8-22-12

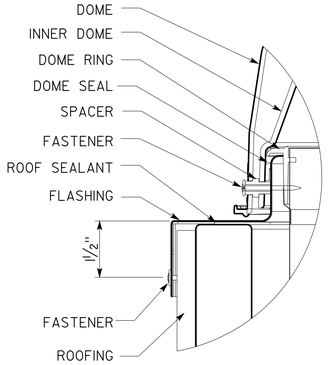

1 DOME EDGE
NO SCALE

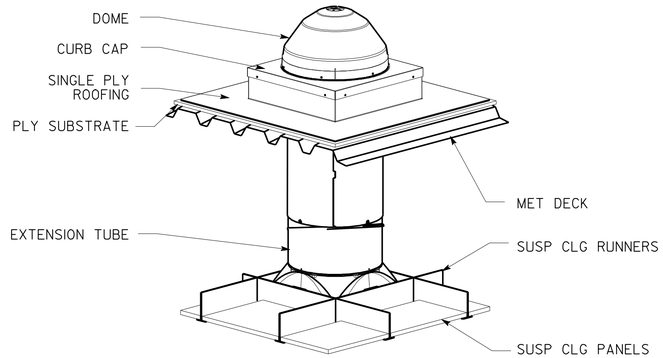

4 TUBULAR DAYLIGHT DEVICE ISOMETRIC
NO SCALE

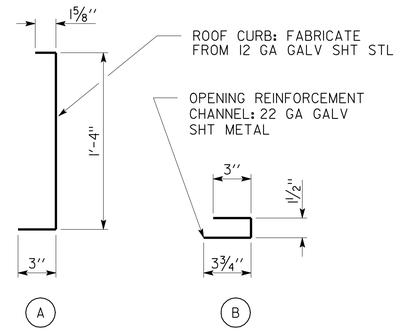

6 CURB AND FLASHING SHAPES
SCALE 2" = 1'-0"

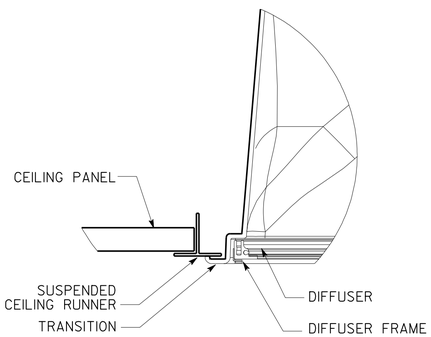

2 CEIILING ATTACHMENT
NO SCALE

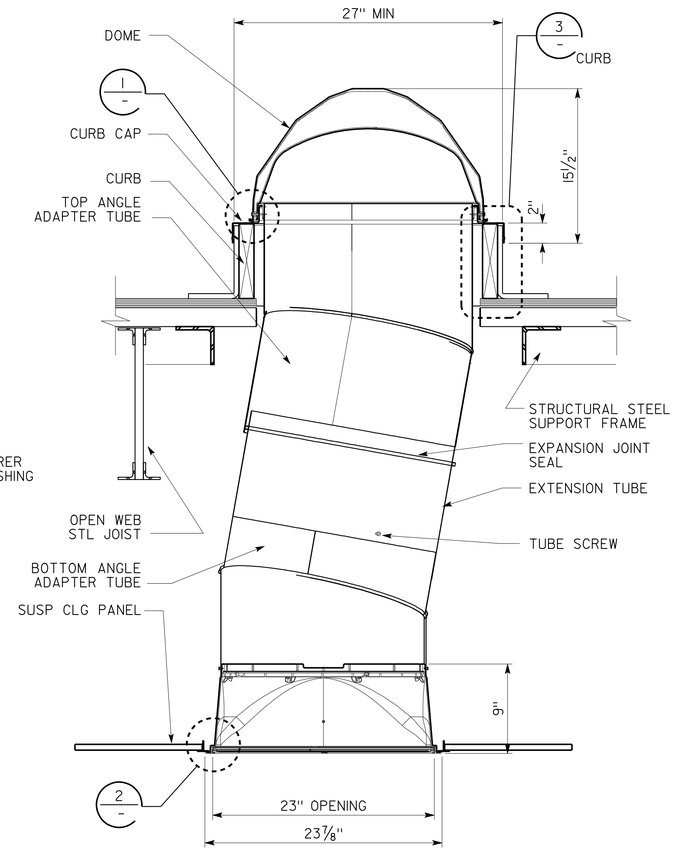

5 TUBULAR DAYLIGHT DEVICE SECTION
NO SCALE

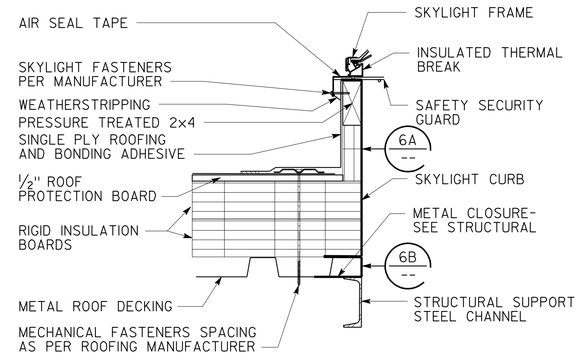

7 SKYLIGHT CURB FLASHING
SCALE 2" = 1'-0"

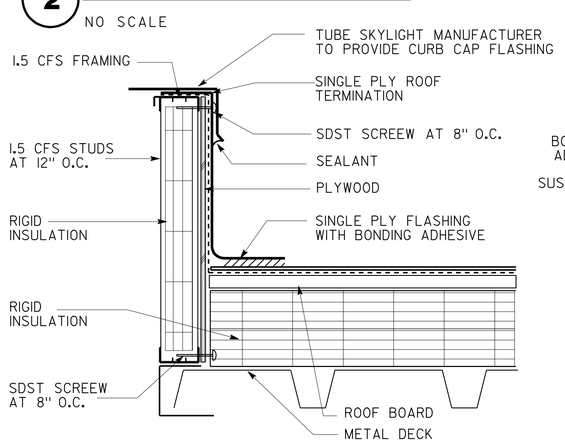

3 CURB CAP FLASHING
SCALE 4" = 1'-0"

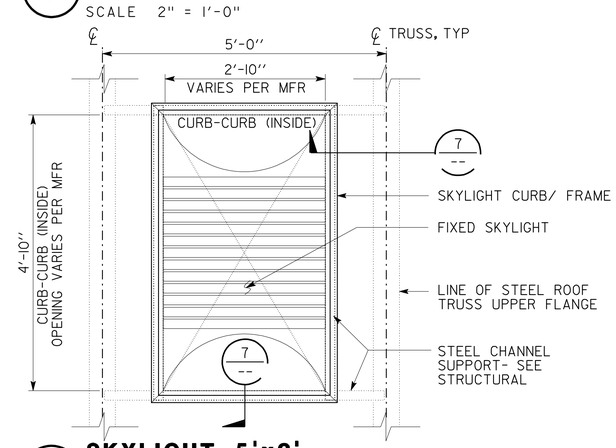

8 SKYLIGHT 5'x3'
SCALE ¾" = 1'-0"

DESIGN	BY F. THOMAS, L. RHOADES	CHECKED
DETAILS	BY C. NAKAHARA,	CHECKED
QUANTITIES	BY	CHECKED

STATE OF CALIFORNIA
DEPARTMENT OF TRANSPORTATION

DIVISION OF ENGINEERING SERVICES
ARCHITECTURAL AND STRUCTURAL DESIGN

BRIDGE NO. 33M5785
POST MILE 2.2

SFOBB MAINTENANCE COMPLEX
DETAILS — SKYLIGHT DETAILS

SHEET A6-11.1

a6_11_00 det skylight.dgn
TAEMWW Imperial Rev. 7/10 25-OCT-2012 14:04

ORIGINAL SCALE IN INCHES FOR REDUCED PLANS 0 1 2 3

UNIT 3598
PROJECT NUMBER & PHASE 04120006661
EA 014081

DISREGARD PRINTS BEARING EARLIER REVISION DATES
REVISION DATES (PRELIMINARY STAGE ONLY) 02-28-12 04-26-12 05-08-12 05-17-12 06-01-12 06-20-12
SHEET X OF X

25-OCT-2012 14:04
a6_11_00 det skylight.dgn

DIST.	COUNTY	ROUTE	POST MILES TOTAL PROJECT	SHEET NO.	TOTAL SHEETS
04	Ala	80	2.2	309	800

LICENSED ARCHITECT — 5/30/2012 DATE

LICENSED ARCHITECT FRANK THOMAS No. C-31406 Exp. 4-30-13 STATE OF CALIFORNIA

10-22-12
PLANS APPROVAL DATE

The State of California or its officers or agents shall not be responsible for the accuracy or completeness of scanned copies of this plan sheet.

ACCESSIBILITY DESIGN APPROVAL STAMP DOT / DES / OTA
PROJECT ID 0412000666
Reviewed by: Y. A. WANG
Date: 07-24-12

CALIFORNIA STATE FIRE MARSHAL APPROVED
Approval of this plan does not authorize or approve any omission or deviation from applicable regulations. Final approval is subject to field inspection. One set of approved plans shall be available on the project site at all times.
Reviewed by: JOHN E WOODS, SDSFM
Approval date: 8-22-12

NOTE: WHERE CERAMIC COVE BASE IS NOT ON A FULL CERAMIC WALL, THE BASE MUST BE 6" HIGH

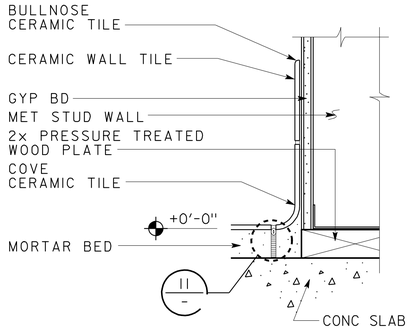

1 TILE BASE AT STUD WALL
SCALE 3" = 1'-0"

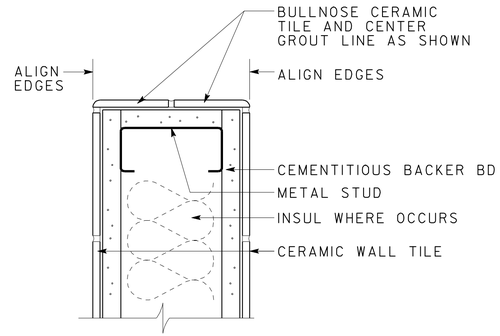

4 TILE AT WING WALL
SCALE 4" = 1'-0"

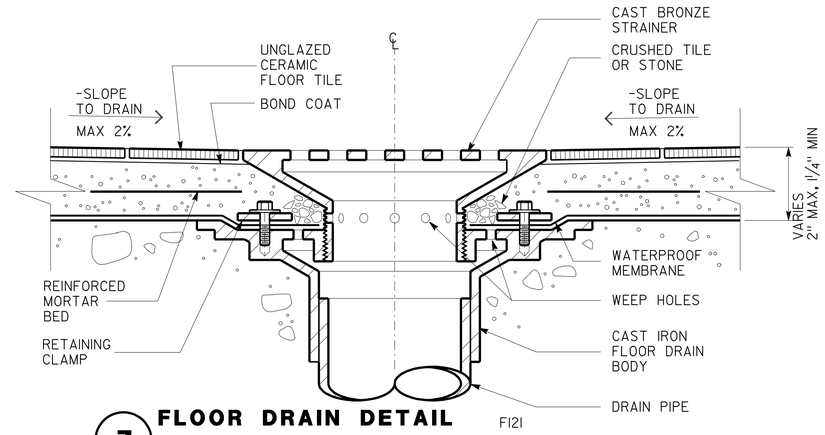

7 FLOOR DRAIN DETAIL
SCALE 6" = 1'-0"

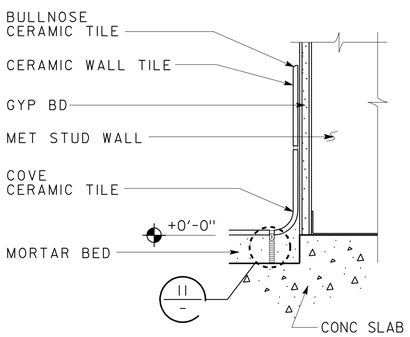

2 TILE BASE AT STUD WALL
SCALE 3" = 1'-0"

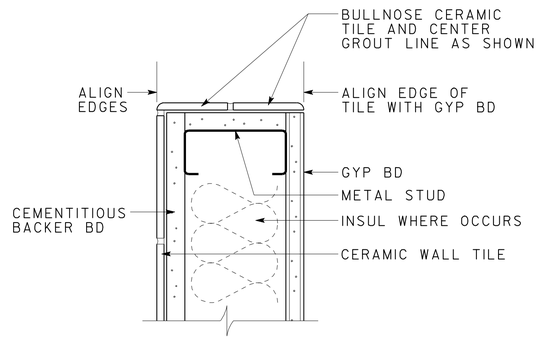

5 TILE/ GYP BD AT WING WALL
SCALE 4" = 1'-0"

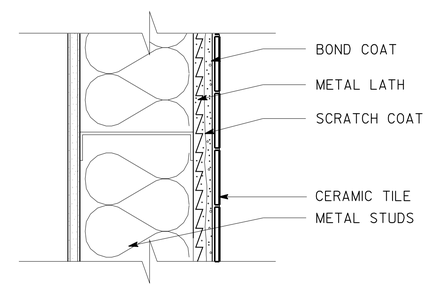

8 WALL TILE INSTALLATION
SCALE 3" = 1'-0"

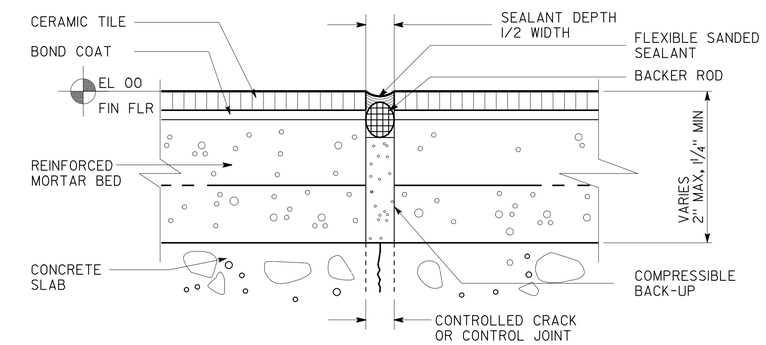

10 CONTROL JOINT
SCALE 1" = 1'-0"

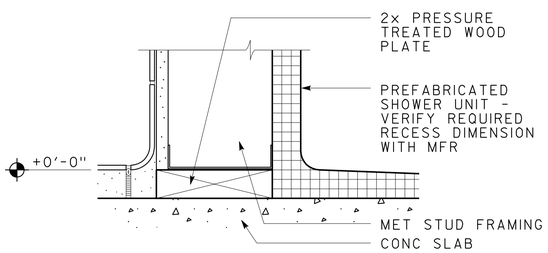

NOTE: SEE DTLS 11/A6-12.1, 4/A6-12.2 FOR ADD'L INFO AND DIM

3 SHOWER AT WALL
SCALE 3" = 1'-0"

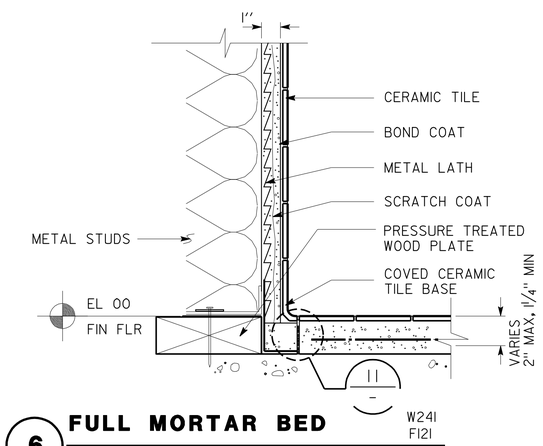

6 FULL MORTAR BED
SCALE 3" = 1'-0"

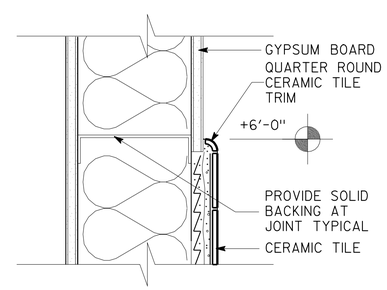

9 WALL TILE
SCALE 3" = 1'-0"

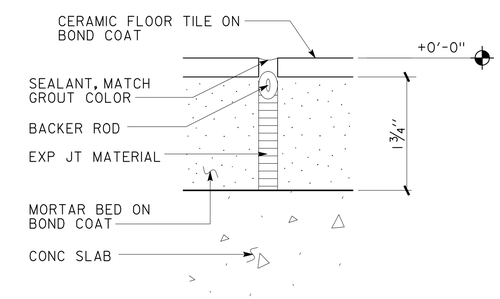

11 CONTROL JOINT
SCALE 1" = 1'-0"

	BY	CHECKED
DESIGN	F. THOMAS, L. RHOADES	
DETAILS	C. NAKAHARA,	
QUANTITIES		

STATE OF CALIFORNIA DEPARTMENT OF TRANSPORTATION

DIVISION OF ENGINEERING SERVICES ARCHITECTURAL AND STRUCTURAL DESIGN

BRIDGE NO. 33M5785
POST MILE 2.2

SFOBB MAINTENANCE COMPLEX
DETAILS — INTERIOR FINISH DETAILS

SHEET A6-12.1

ORIGINAL SCALE IN INCHES FOR REDUCED PLANS 0 1 2 3

UNIT 3598
PROJECT NUMBER & PHASE 04120006661
EA 014081

DISREGARD PRINTS BEARING EARLIER REVISION DATES → 02-28-12 04-26-12 05-08-12 05-11-12 06-01-12 06-20-12

SHEET X OF X

a6_12_01 det finishes.dgn
TAEMWW Imperial Rev. 7/10 25-OCT-2012 14:05

25-OCT-2012 14:05
a6_12_01 det finishes.dgn

DIST.	COUNTY	ROUTE	POST MILES TOTAL PROJECT	SHEET NO.	TOTAL SHEETS
04	Ala	80	2.2	310	800

LICENSED ARCHITECT — 5/30/2012 DATE

LICENSED ARCHITECT FRANK THOMAS No. C-31406 Exp. 4-30-13 STATE OF CALIFORNIA

10-22-12
PLANS APPROVAL DATE

The State of California or its officers or agents shall not be responsible for the accuracy or completeness of scanned copies of this plan sheet.

ACCESSIBILITY DESIGN APPROVAL STAMP DOT / DES / OTA
PROJECT ID **0412000666**
Reviewed by: Y. A. WANG
Date: 07-24-12

CALIFORNIA STATE FIRE MARSHAL APPROVED
Approval of this plan does not authorize or approve any omission or deviation from applicable regulations. Final approval is subject to field inspection. One set of approved plans shall be available on the project site at all times.
Reviewed by: JOHN E WOODS, SDSFM
Approval date: 8-22-12

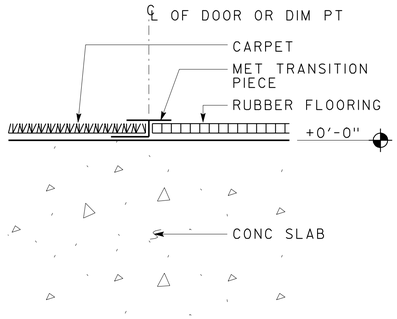

1 FLOOR TRANSITION
NO SCALE

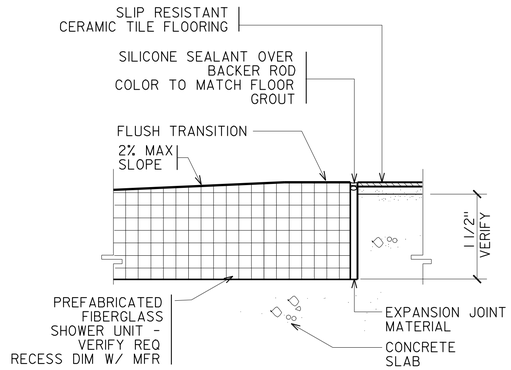

4 FLOOR TRANSITION
SCALE x" = 1'-0"

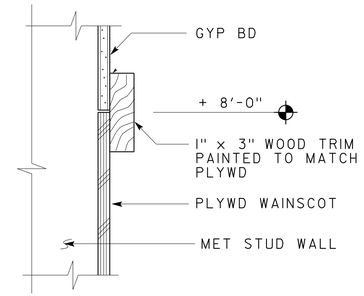

7 WOOD TRIM
SCALE 3" = 1'-0"

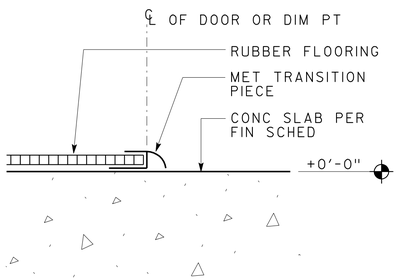

2 FLOOR TRANSITION
NO SCALE

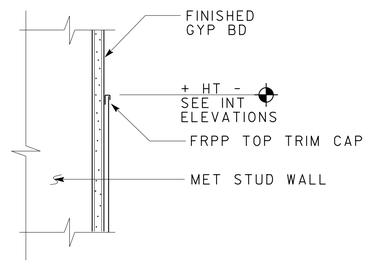

5 FRPP WALL TOP CAP
SCALE 3" = 1'-0"

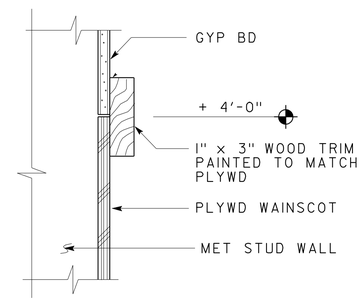

8 WOOD WAINSCOT TRIM
SCALE 3" = 1'-0"

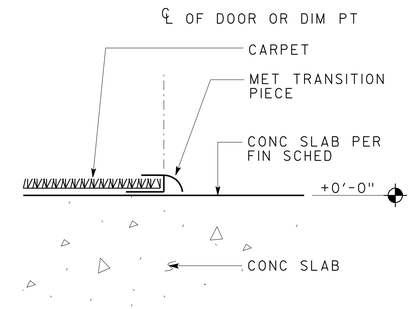

10 FLOOR TRANSITION
NO SCALE

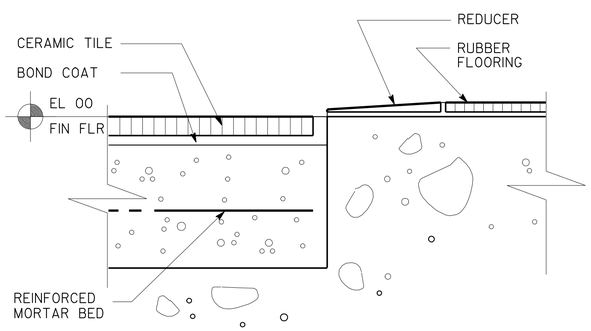

3 FLOOR TRANSITION
SCALE 1" = 1'-0"

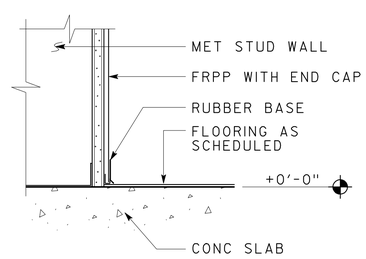

6 BASE AT FRPP/STUD WALL
SCALE 3" = 1'-0"

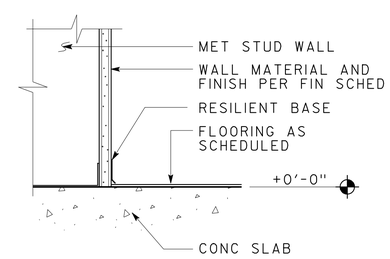

9 RESILIENT BASE
SCALE 3" = 1'-0"

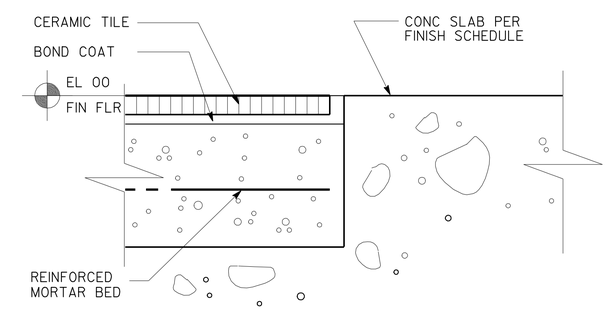

11 FLOOR TRANSITION
NO SCALE

	BY	CHECKED
DESIGN	F. THOMAS, L. RHOADES	
DETAILS	C. NAKAHARA,	
QUANTITIES		

STATE OF CALIFORNIA DEPARTMENT OF TRANSPORTATION

DIVISION OF ENGINEERING SERVICES ARCHITECTURAL AND STRUCTURAL DESIGN

BRIDGE NO. 33M5785
POST MILE 2.2

SFOBB MAINTENANCE COMPLEX
DETAILS — INTERIOR FINISH DETAILS

SHEET **A6-12.2**

ORIGINAL SCALE IN INCHES FOR REDUCED PLANS 0 1 2 3

UNIT 3598
PROJECT NUMBER & PHASE 04120006661
EA 014081

DISREGARD PRINTS BEARING EARLIER REVISION DATES → 02-28-12 04-26-12 05-08-12 05-17-12 06-01-12 06-20-12

REVISION DATES (PRELIMINARY STAGE ONLY) SHEET X OF X

a6_12_02 det finishes2.dgn
TAEMWW Imperial Rev. 7/10 25-OCT-2012 14:05

25-OCT-2012 14:05
a6_12_02 det finishes2.dgn

DIST.	COUNTY	ROUTE	POST MILES TOTAL PROJECT	SHEET NO.	TOTAL SHEETS
04	Ala	80	2.2	311	800

LICENSED ARCHITECT — 5/30/2012 DATE

LICENSED ARCHITECT FRANK THOMAS No. C-31406 Exp. 4-30-13 STATE OF CALIFORNIA

10-22-12
PLANS APPROVAL DATE

The State of California or its officers or agents shall not be responsible for the accuracy or completeness of scanned copies of this plan sheet.

ACCESSIBILITY DESIGN APPROVAL STAMP DOT / DES / OTA
PROJECT ID 0412000666
Reviewed by: Y. A. WANG
Date: 07-24-12

CALIFORNIA STATE FIRE MARSHAL APPROVED
Approval of this plan does not authorize or approve any omission or deviation from applicable regulations. Final approval is subject to field inspection. One set of approved plans shall be available on the project site at all times.
Reviewed by: JOHN E WOODS, SDSFM
Approval date: 8-22-12

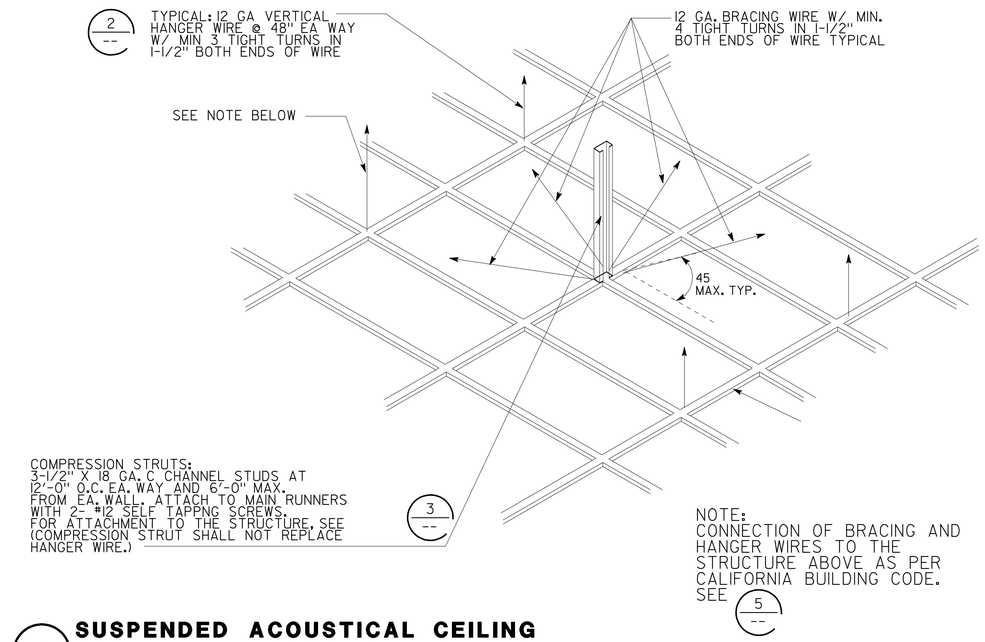

1 SUSPENDED ACOUSTICAL CEILING

NO SCALE

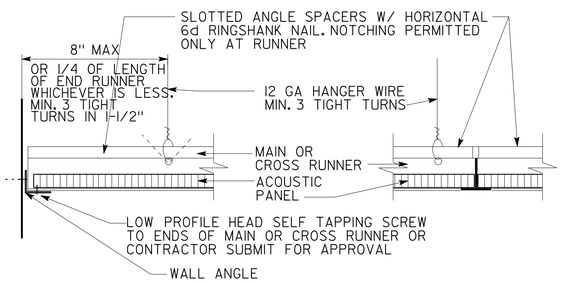

2 SUSPENDED PANEL CEILING

NO SCALE

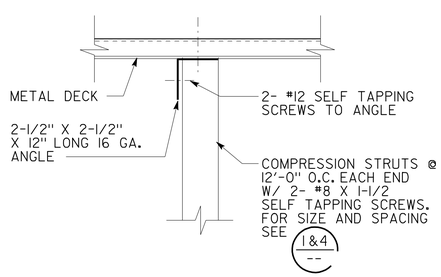

3 COMPRESSION STRUT

NO SCALE

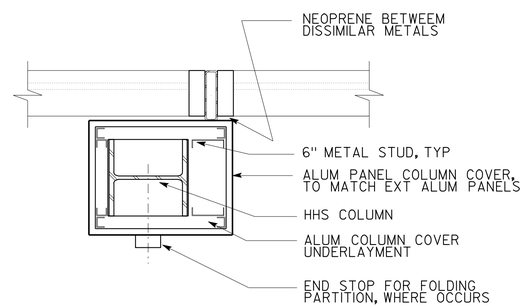

4 FURRED COLUMN NEAR WINDOW (PLAN)

SCALE 3" = 1'-0"

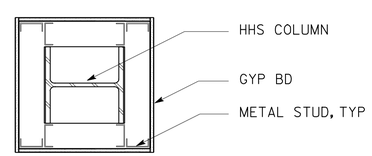

5 FREESTANDING FURRED COLUMN (PLAN)

SCALE 3" = 1'-0"

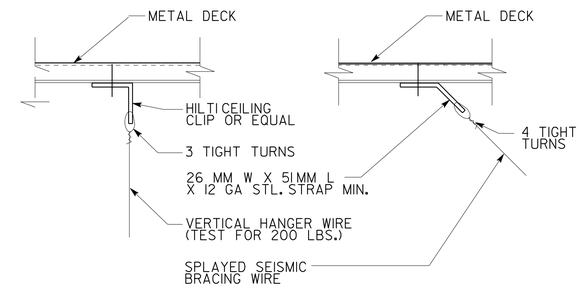

6 HANGER WIRE ANCHORAGE

NO SCALE

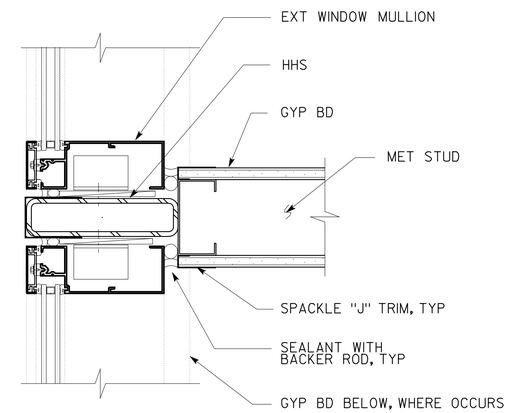

7 WALL TO CURTAIN WALL DETAIL

SCALE 3" = 1'-0"

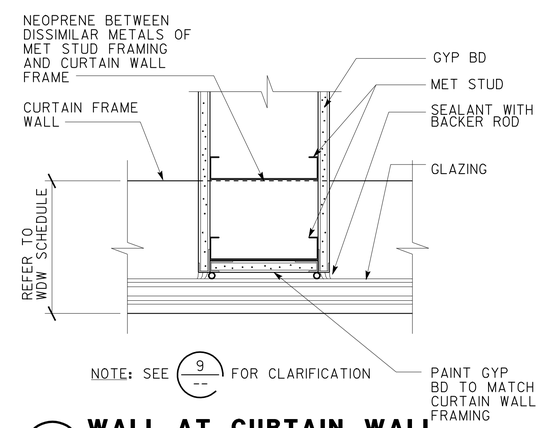

8 WALL AT CURTAIN WALL

SCALE 3" = 1'-0"

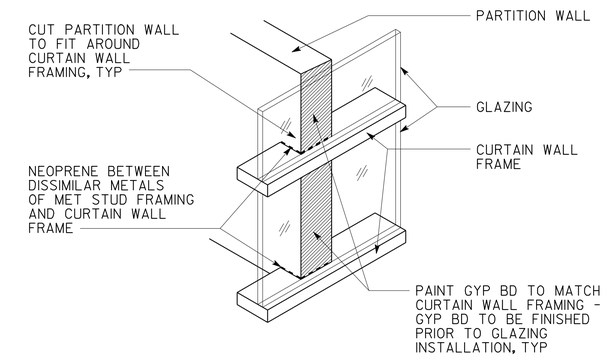

9 ISOMETRIC WALL AT CURTAIN WALL

NO SCALE

	BY	CHECKED
DESIGN	F. THOMAS, L. RHOADES	
DETAILS	C. NAKAHARA,	
QUANTITIES		

STATE OF CALIFORNIA DEPARTMENT OF TRANSPORTATION

DIVISION OF ENGINEERING SERVICES ARCHITECTURAL AND STRUCTURAL DESIGN

UNIT 3598
PROJECT NUMBER & PHASE 04120006661

BRIDGE NO. 33M5785
POST MILE 2.2

SFOBB MAINTENANCE COMPLEX

DETAILS — SUSPENDED CEILING DETAILS

SHEET A6-12.3

ORIGINAL SCALE IN INCHES FOR REDUCED PLANS 0 1 2 3

DISREGARD PRINTS BEARING EARLIER REVISION DATES

REVISION DATES (PRELIMINARY STAGE ONLY) 02-28-12 04-26-12 05-08-12 05-17-12 06-01-12 06-20-12

SHEET X OF X

EA 014081

a6_12_03 det susp clg.dgn
TAEMWW Imperial Rev. 7/10 25-OCT-2012 13:47

25-OCT-2012 13:47
a6_12_03 det susp clg.dgn

DIST.	COUNTY	ROUTE	POST MILES TOTAL PROJECT	SHEET NO.	TOTAL SHEETS
04	Ala	80	2.2	312	800

LICENSED ARCHITECT — 5/30/2012 DATE

LICENSED ARCHITECT FRANK THOMAS No. C-31406 Exp. 4-30-13 STATE OF CALIFORNIA

10-22-12
PLANS APPROVAL DATE

The State of California or its officers or agents shall not be responsible for the accuracy or completeness of scanned copies of this plan sheet.

ACCESSIBILITY DESIGN APPROVAL STAMP DOT / DES / OTA
PROJECT ID 0412000666
Reviewed by: Y. A. WANG
Date: 07-24-12

CALIFORNIA STATE FIRE MARSHAL APPROVED
Approval of this plan does not authorize or approve any omission or deviation from applicable regulations. Final approval is subject to field inspection. One set of approved plans shall be available on the project site at all times.
Reviewed by: JOHN E WOODS, SDSFM
Approval date: 8-22-12

SIGN GRAPHICS SHALL CONFORM TO CBC SECTION 1003.2.8.3

PROVIDE SELF-LUMINOUS EXIT SIGNS AT EXIT DOOR LOCATIONS. EXIT SIGN ILLUMINATION SHALL CONFORM TO CBS SECTION 1003.2.8.4

MOUNT SIGN ABOVE EXIT DOOR

1 SELF-LUMINOUS EXIT SIGN

NO SCALE

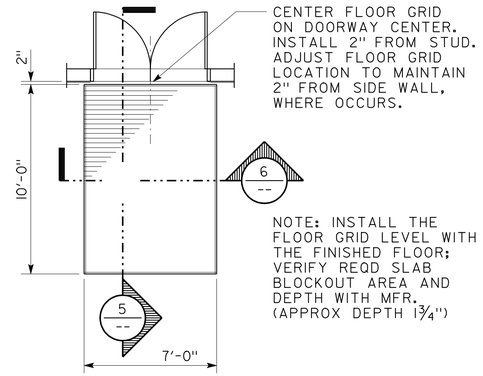

4 ENTRANCE FLOOR GRID PLAN

NO SCALE

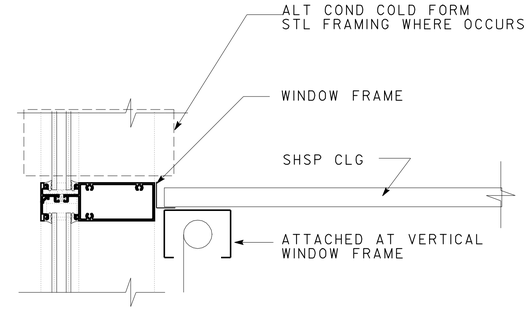

7 INTERIOR WINDOW SHADE

SCALE 3" = 1'-0"

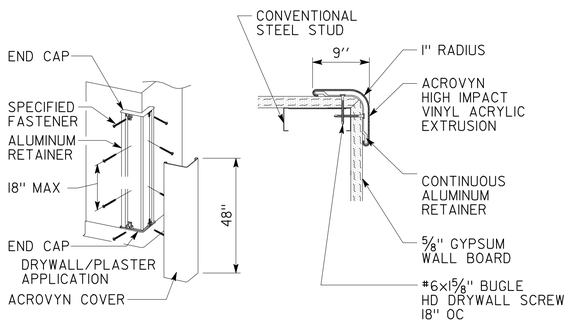

2 WALL GUARD

NO SCALE

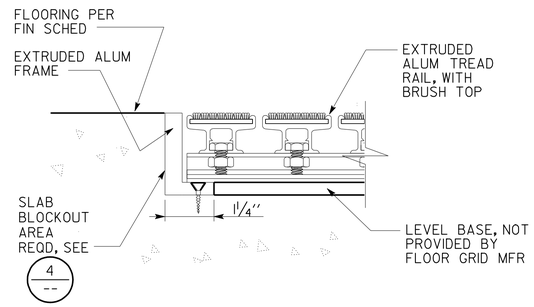

5 FLOOR GRID SECTION

NO SCALE

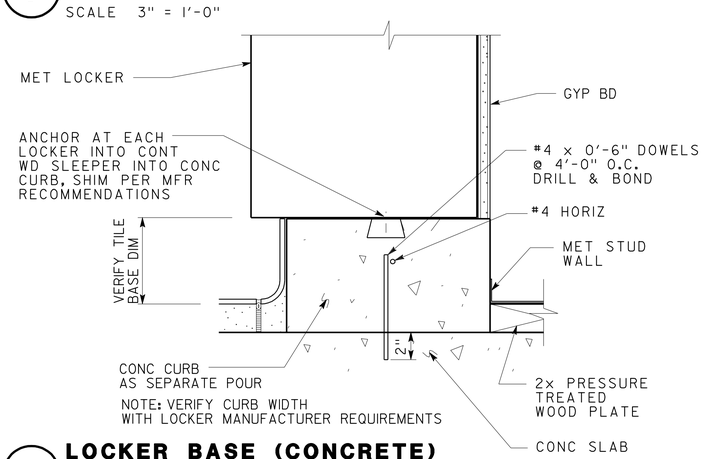

8 LOCKER BASE (CONCRETE)

SCALE 3" = 1'-0"

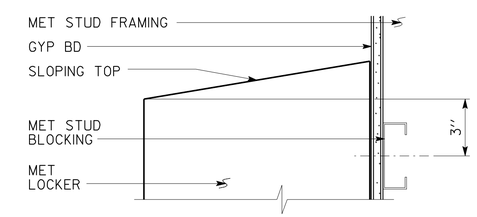

10 LOCKER TOP

SCALE 3" = 1'-0"

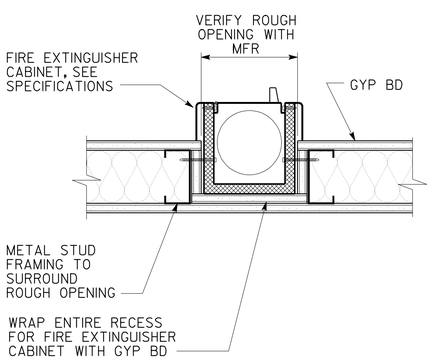

3 FIRE EXTINGUISHER CABINET AT STUD WALL

SCALE 3" = 1'-0"

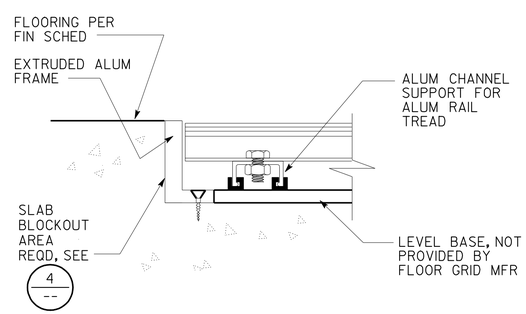

6 FLOOR GRID SECTION

NO SCALE

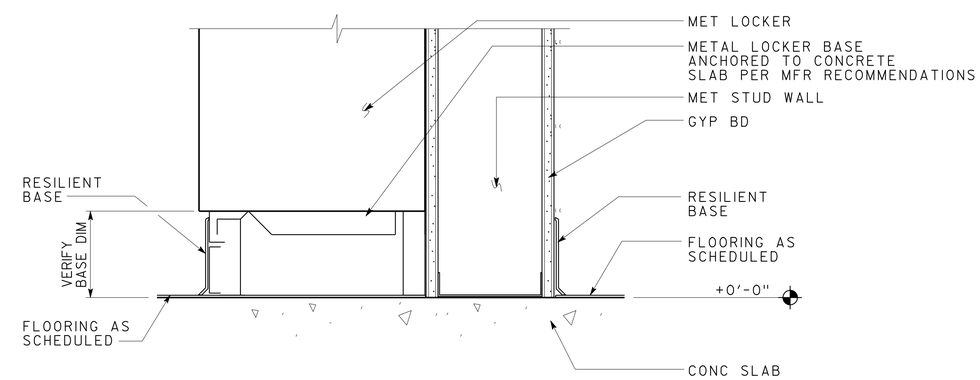

9 LOCKER BASE (METAL)

SCALE 3" = 1'-0"

DESIGN	BY F. THOMAS, L. RHOADES	CHECKED
DETAILS	BY C. NAKAHARA,	CHECKED
QUANTITIES	BY	CHECKED

STATE OF CALIFORNIA DEPARTMENT OF TRANSPORTATION

DIVISION OF ENGINEERING SERVICES ARCHITECTURAL AND STRUCTURAL DESIGN

BRIDGE NO. 33M5785
POST MILE 2.2

SFOBB MAINTENANCE COMPLEX

DETAILS — SPECIALTY DETAILS

SHEET A6-13.1

ORIGINAL SCALE IN INCHES FOR REDUCED PLANS 0 1 2 3

UNIT 3598
PROJECT NUMBER & PHASE 04120006661
EA 014081

DISREGARD PRINTS BEARING EARLIER REVISION DATES

REVISION DATES (PRELIMINARY STAGE ONLY) 02-28-12 04-26-12 05-08-12 05-17-12 06-01-12 06-20-12

SHEET X OF X

a6_13_01 det special.dgn
TAEMWW Imperial Rev. 7/10 25-OCT-2012 13:47

25-OCT-2012 13:47
a6_13_01 det special.dgn

DIST.	COUNTY	ROUTE	POST MILES TOTAL PROJECT	SHEET NO.	TOTAL SHEETS
04	Ala	80	2.2	313	800

LICENSED ARCHITECT — 5/30/2012 DATE

LICENSED ARCHITECT FRANK THOMAS No. C-31406 Exp. 4-30-13 STATE OF CALIFORNIA

10-22-12
PLANS APPROVAL DATE

The State of California or its officers or agents shall not be responsible for the accuracy or completeness of scanned copies of this plan sheet.

ACCESSIBILITY DESIGN APPROVAL STAMP DOT / DES / OTA
PROJECT ID 0412000666
Reviewed by: Y. A. WANG
Date: 07-24-12

CALIFORNIA STATE FIRE MARSHAL APPROVED
Approval of this plan does not authorize or approve any omission or deviation from applicable regulations. Final approval is subject to field inspection. One set of approved plans shall be available on the project site at all times.
Reviewed by: JOHN E WOODS, SDSFM
Approval date: 8-22-12

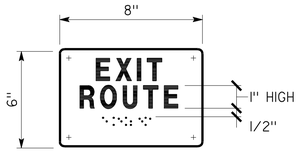

REFER TO DTL 5/ A0-3.3 FOR SIGN LOCATION
REFER TO DTL 7/ A0-3.3 FOR SIGN MOUNTING HEIGHT
REFER TO "SIGNAGE NOTES" FOR ADDITIONAL INFO

1 EXIT SIGN
NO SCALE

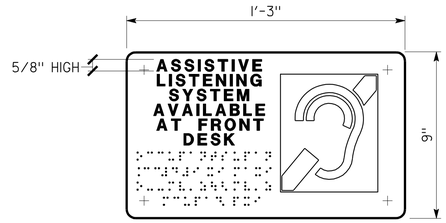

REFER TO DTL 7/ A0-3.3 FOR SIGN MOUNTING HEIGHT

4 ASSISTIVE LISTENING DEVICE SIGN
NO SCALE

REFER TO DTL 5/ A0-3.3 FOR SIGN LOCATION
REFER TO "SIGNAGE NOTES" FOR ADDITIONAL INFO

7 MAX STORAGE SIGN
NO SCALE

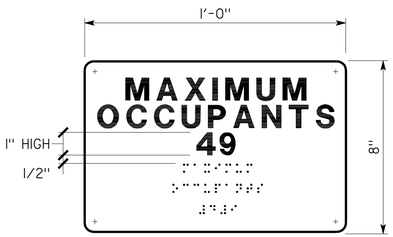

REFER TO DTL 7/ A0-3.3 FOR SIGN MOUNTING HEIGHT
REFER TO "SIGNAGE NOTES" FOR ADDITIONAL INFO

2 MAXIMUM OCCUPANTS SIGN
NO SCALE

REFER TO DTL 7/ A0-3.3 FOR SIGN MOUNTING HEIGHT

5 ELEVATOR SIGNAGE
NO SCALE

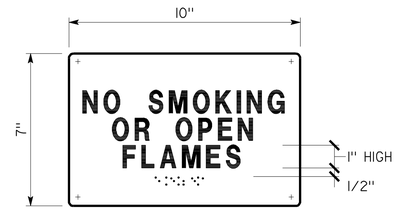

REFER TO DTL 5/ A0-3.3 FOR SIGN LOCATION
REFER TO "SIGNAGE NOTES" FOR ADDITIONAL INFO

8 NO OPEN FLAME SIGN
NO SCALE

REFER TO DTL 7/ A0-3.3 FOR SIGN MOUNTING HEIGHT
REFER TO "SIGNAGE NOTES" FOR ADDITIONAL INFO

3 SIGN
NO SCALE

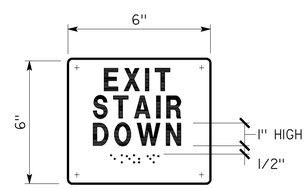

REFER TO DTL 7/ A0-3.3 FOR SIGN MOUNTING HEIGHT
REFER TO DTL 5/ A0-3.3 FOR SIGN LOCATION
REFER TO "SIGNAGE NOTES" FOR ADDITIONAL INFO

6 STAIR EXIT SIGN
NO SCALE

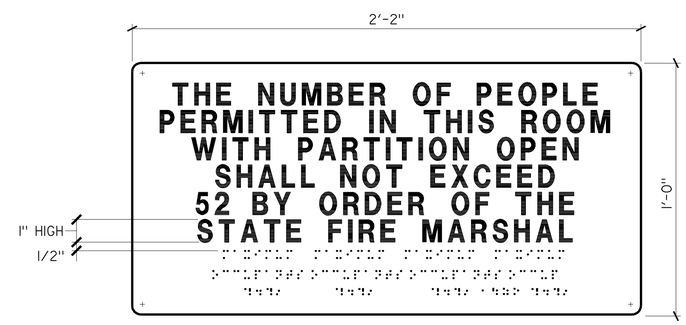

REFER TO DTL 7/ A0-3.3 FOR SIGN MOUNTING HEIGHT
REFER TO "SIGNAGE NOTES" FOR ADDITIONAL INFO

9 MAXIMUM OCCUPANTS SIGN
NO SCALE

SIGNAGE NOTES:

1. SEE SPECIFICATIONS FOR COLOR CONTRAST REQUIREMENTS.
2. LOCATE SIGNS ON WALL ADJACENT TO DOOR ON LATCH SIDE. IF WALL SPACE IS NOT AVAILABLE ON LATCH SIDE, LOCATE ON NEAREST ADJACENT WALL.
3. REFER TO SPECIFICATIONS FOR SIGN MATERIALS AND COLOR SELECTION.
4. CONTRACTED- GRADE 2 BRAILLE: DOTS SHALL BE 1/16" OC IN EACH CELL WITH 1/4" SPACE BETWEEN CELLS, MEASURED FROM THE SECOND COLUMN OF DOTS IN THE FIRST CELL TO THE FIRST COLUMN OF DOTS IN THE SECOND CELL. DOTS SHALL BE RAISED A MINIMUM OF 1/32" ABOVE THE BACKGROUND.
5. TACTILE CHARACTERS: SHALL BE SANS SERIF RAISED 1/32" WITH A WIDTH TO HEIGHT RATIO BETWEEN 3:5 AND 1:1 (WIDTH 60% TO 100% OF HEIGHT) AND A STROKE WIDTH TO HEIGHT RATIO OF BETWEEN 1:5 AND 1:10 (STROKE WIDTH 10% TO 20% OF HEIGHT).
6. REFER TO DOOR SCHEDULE ON SHEETS A0-7.1 THRU A0-7.3 FOR DOORS, SIGNS, AND TEXT.
7. PROVIDE 18" X 18" MIN. CLEAR FLOOR SPACE IN FRONT OF AND CENTERED ON SIGNS.

	BY	CHECKED
DESIGN	F. THOMAS, L. RHOADES	
DETAILS	C. NAKAHARA,	
QUANTITIES		

STATE OF CALIFORNIA
DEPARTMENT OF TRANSPORTATION

DIVISION OF ENGINEERING SERVICES
ARCHITECTURAL AND STRUCTURAL DESIGN

BRIDGE NO. 33M5785
POST MILE 2.2

SFOBB MAINTENANCE COMPLEX
DETAILS — INTERIOR SIGNS

SHEET A6-13.2

a6_13_02 det int signs.dgn
TAEMWW Imperial Rev. 7/10 25-OCT-2012 13:47

ORIGINAL SCALE IN INCHES FOR REDUCED PLANS 0 1 2 3

UNIT 3598
PROJECT NUMBER & PHASE 04120006661
EA 014081

DISREGARD PRINTS BEARING EARLIER REVISION DATES
REVISION DATES (PRELIMINARY STAGE ONLY): 02-28-12 04-26-12 05-08-12 05-17-12 06-01-12 06-20-12 07-23-12
SHEET X OF X

25-OCT-2012 13:47
a6_13_02 det int signs.dgn

DIST.	COUNTY	ROUTE	POST MILES TOTAL PROJECT	SHEET NO.	TOTAL SHEETS
04	Ala	80	2.2	314	800

LICENSED ARCHITECT — DATE: 5/30/2012

LICENSED ARCHITECT FRANK THOMAS No. C-31406 Exp. 4-30-13 STATE OF CALIFORNIA

10-22-12
PLANS APPROVAL DATE

The State of California or its officers or agents shall not be responsible for the accuracy or completeness of scanned copies of this plan sheet.

ACCESSIBILITY DESIGN APPROVAL STAMP DOT / DES / OTA

PROJECT ID **0412000666**

Reviewed by: Y. A. WANG
Date: 07-24-12

CALIFORNIA STATE FIRE MARSHAL APPROVED

Approval of this plan does not authorize or approve any omission or deviation from applicable regulations. Final approval is subject to field inspection. One set of approved plans shall be available on the project site at all times.

Reviewed by: JOHN E WOODS, SDSFM
Approval date: 8-22-12

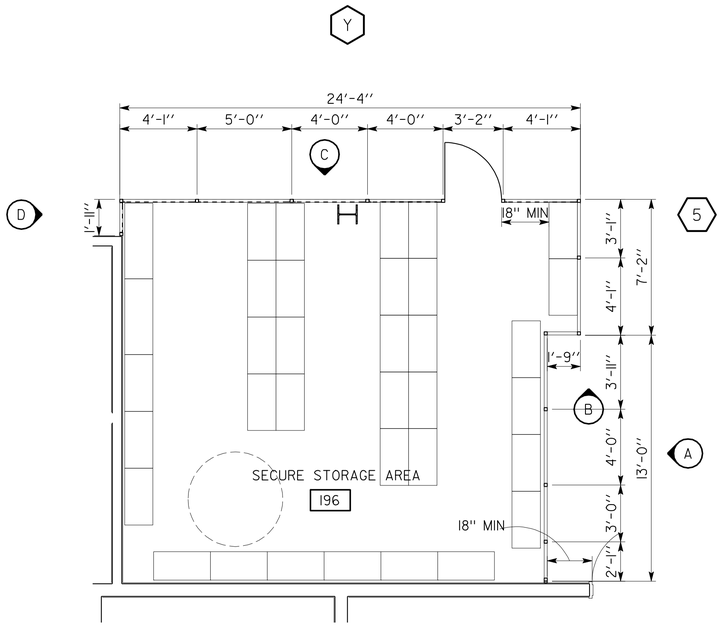

PLAN NORTH

1 PLAN

SCALE 1/4" = 1'-0"

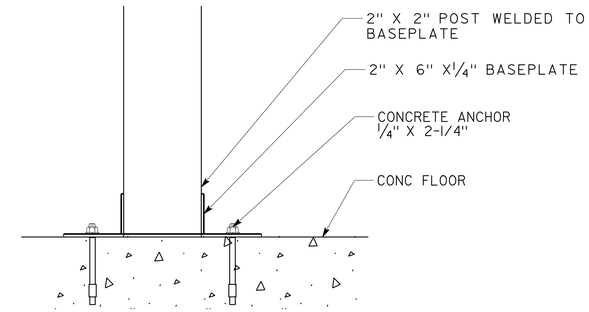

3 BASEPLATE ATTACHMENT

NOT TO SCALE

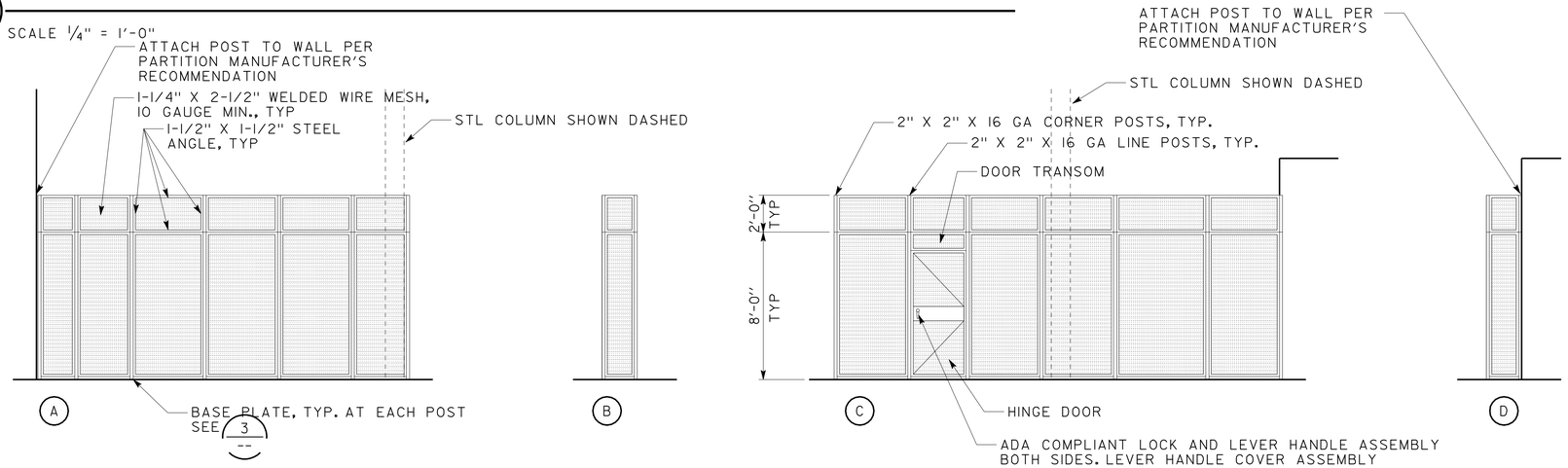

2 ELEVATIONS

SCALE 1/4" = 1'-0"

DESIGN	BY F. THOMAS, L. RHOADES	CHECKED
DETAILS	BY C. NAKAHARA,	CHECKED
QUANTITIES	BY	CHECKED

STATE OF CALIFORNIA
DEPARTMENT OF TRANSPORTATION

DIVISION OF ENGINEERING SERVICES
ARCHITECTURAL AND STRUCTURAL DESIGN

BRIDGE NO. 33M5785
POST MILE 2.2

SFOBB MAINTENANCE COMPLEX

DETAILS — WIRE MESH PARTITION

SHEET **A6-13.3**

a6_13_03 wiremesh part.dgn
TAEMWW Imperial Rev. 7/10 25-OCT-2012 13:47

ORIGINAL SCALE IN INCHES FOR REDUCED PLANS 0 1 2 3

UNIT 3598
PROJECT NUMBER & PHASE 04120006661
EA 014081

DISREGARD PRINTS BEARING EARLIER REVISION DATES →

REVISION DATES (PRELIMINARY STAGE ONLY): 02-28-12 04-26-12 05-08-12 05-17-12 06-01-12 06-20-12

SHEET X OF X

25-OCT-2012 13:47
a6_13_03 wiremesh part.dgn

DIST.	COUNTY	ROUTE	POST MILES TOTAL PROJECT	SHEET NO.	TOTAL SHEETS
04	Ala	80	2.2	315	800

LICENSED ARCHITECT — 5/30/2012 DATE

LICENSED ARCHITECT FRANK THOMAS No. C-31406 Exp. 4-30-13 STATE OF CALIFORNIA

10-22-12
PLANS APPROVAL DATE

The State of California or its officers or agents shall not be responsible for the accuracy or completeness of scanned copies of this plan sheet.

ACCESSIBILITY DESIGN APPROVAL STAMP DOT / DES / OTA

* PROJECT ID **0412000666**

Reviewed by: Y. A. WANG
Date: 07-24-12

CALIFORNIA STATE FIRE MARSHAL APPROVED

Approval of this plan does not authorize or approve any omission or deviation from applicable regulations. Final approval is subject to field inspection. One set of approved plans shall be available on the project site at all times.

Reviewed by: JOHN E WOODS, SDSFM
Approval date: 8-22-12

*APPROVAL DEFERRED TO SUBMITTAL

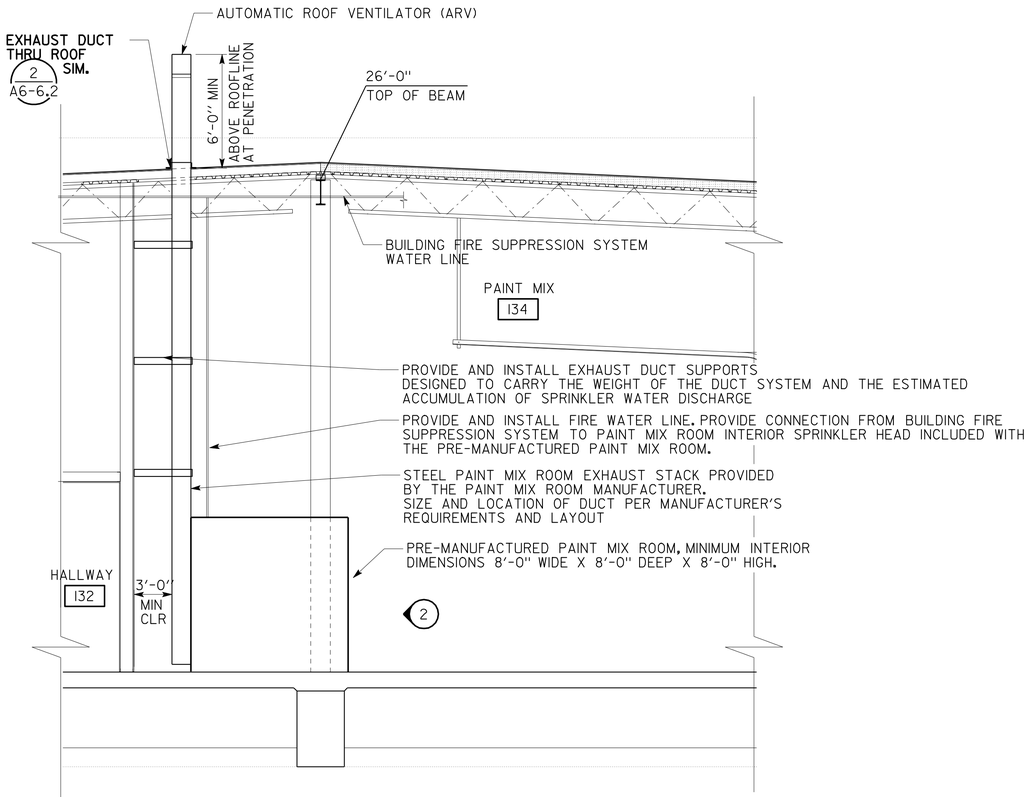

1 PRE-MANUFACTURED PAINT MIX ROOM

SCALE: 1/4" = 1'-0"

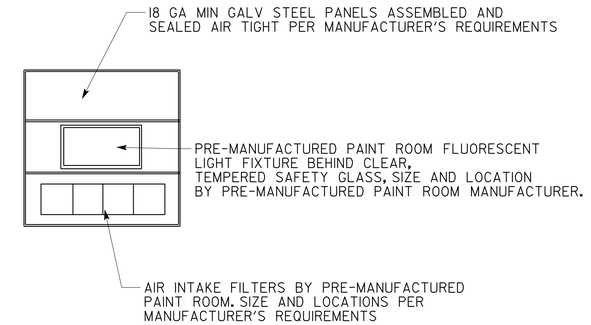

3 REFLECTED CEILING PLAN

SCALE 1/2" = 1'-0"

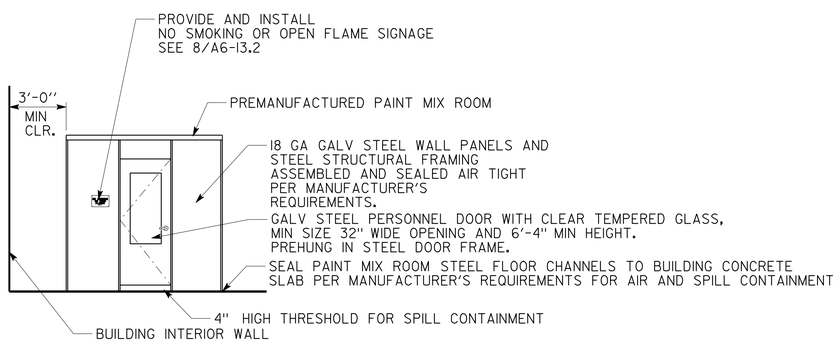

2 FRONT EXTERIOR ELEVATION

SCALE 1/4" = 1'-0"

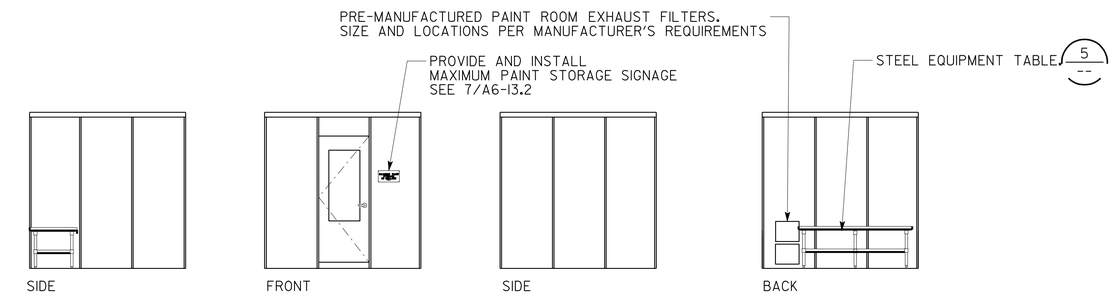

4 INTERIOR ELEVATIONS

SCALE 1/2" = 1'-0"

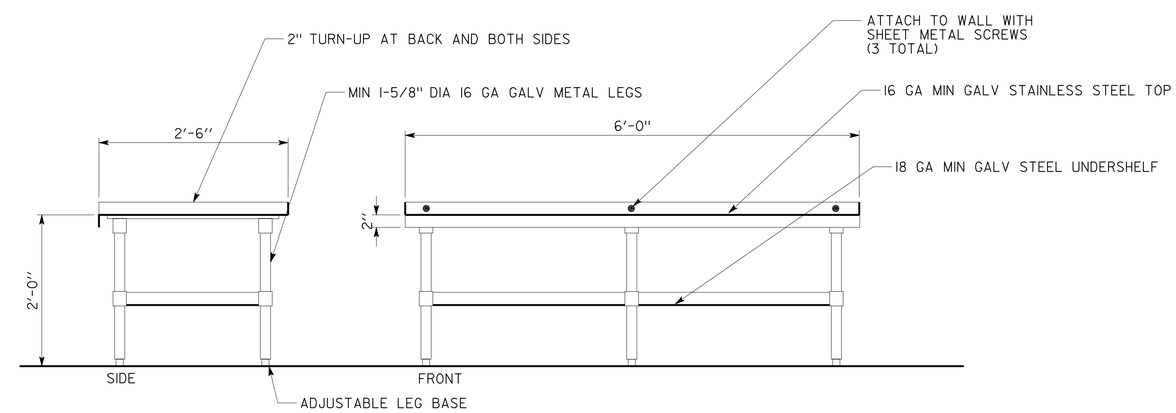

5 EQUIPMENT TABLE

EQUIPMENT TABLE TO HOLD 1000 LBS MIN OF EVENLY DISTRIBUTED WEIGHT

SCALE: 1" = 1'-0"

	BY	CHECKED
DESIGN	F. THOMAS, L. RHOADES	
DETAILS	C. NAKAHARA,	
QUANTITIES		

STATE OF CALIFORNIA DEPARTMENT OF TRANSPORTATION

DIVISION OF ENGINEERING SERVICES ARCHITECTURAL AND STRUCTURAL DESIGN

BRIDGE NO. 33M5785
POST MILE 2.2

SFOBB MAINTENANCE COMPLEX

DETAILS — PAINT MIX ROOM

SHEET A6-14.1

a6_14_01 paint mix.dgn
TAEMWW Imperial Rev. 7/10 25-OCT-2012 13:47

ORIGINAL SCALE IN INCHES FOR REDUCED PLANS 0 1 2 3

UNIT 3598
PROJECT NUMBER & PHASE 04120006661
EA 014081

DISREGARD PRINTS BEARING EARLIER REVISION DATES → 02-28-12 04-26-12 05-08-12 05-17-12 06-01-12 06-20-12 07-23-12

REVISION DATES (PRELIMINARY STAGE ONLY) SHEET X OF X

25-OCT-2012 13:47
a6_14_01 paint mix.dgn

DIST.	COUNTY	ROUTE	POST MILES TOTAL PROJECT	SHEET NO.	TOTAL SHEETS
04	Ala	80	2.2	316	800

LICENSED ARCHITECT — 5/30/2012 DATE

LICENSED ARCHITECT FRANK THOMAS No. C-31406 Exp. 4-30-13 STATE OF CALIFORNIA

10-22-12
PLANS APPROVAL DATE

The State of California or its officers or agents shall not be responsible for the accuracy or completeness of scanned copies of this plan sheet.

ACCESSIBILITY DESIGN APPROVAL STAMP DOT / DES / OTA
PROJECT ID 0412000666
Reviewed by: Y. A. WANG
Date: 07-24-12

CALIFORNIA STATE FIRE MARSHAL APPROVED
Approval of this plan does not authorize or approve any omission or deviation from applicable regulations. Final approval is subject to field inspection. One set of approved plans shall be available on the project site at all times.
Reviewed by: JOHN E WOODS, SDSFM
Approval date: 8-22-12

NOTE: IN SHOP SUBMITTALS, SHOW PLUMBING SHIELD WITH TRUE SIZE OF GARBAGE DISPOSAL. PLUMBING SHIELD MUST MEET DIMENSIONS SHOWN.

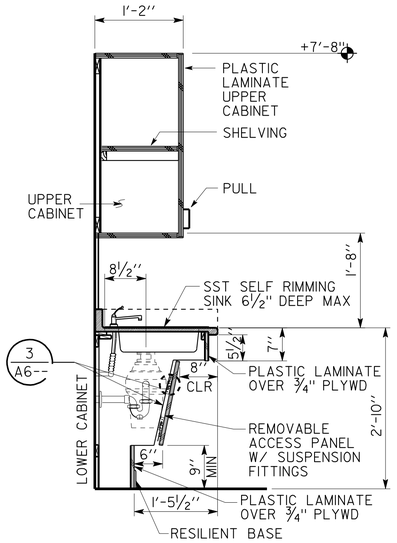

1 ACCESSIBLE COUNTER AT SINK

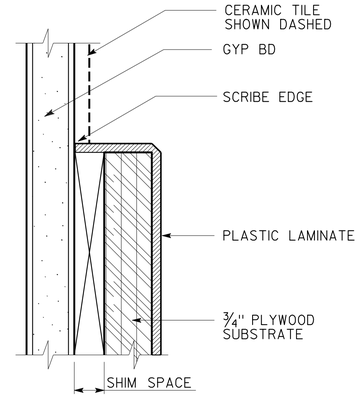

3 BACKSPLASH DETAIL

NO SCALE

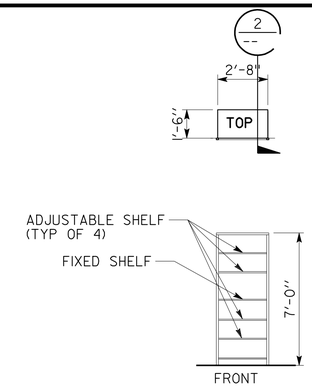

6 MEN'S SHOWER 124

SCALE ¼" = 1'-0"

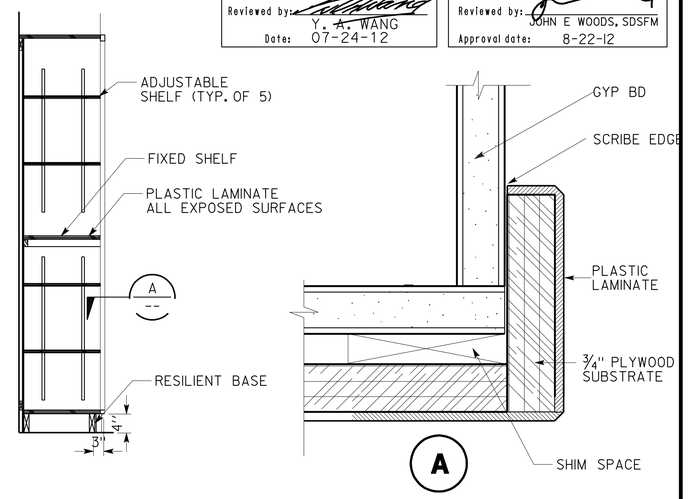

9 OPEN SHELVING UNIT SECTION

SCALE ¾" = 1'-0"

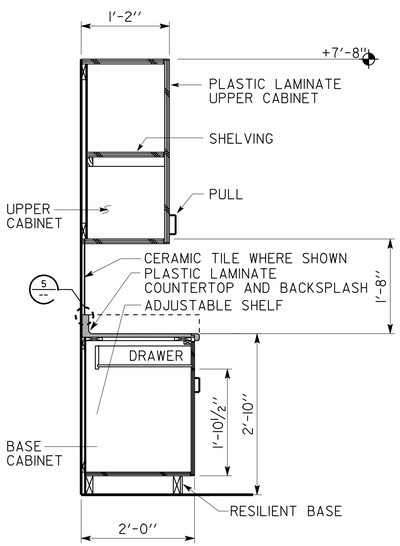

2 CABINET SECTION

SCALE ¾" = 1'-0"

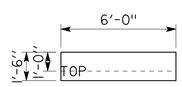

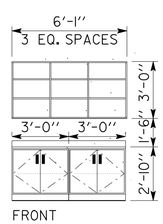

5 HALLWAY 119

SCALE 1/4" = 1'-0"

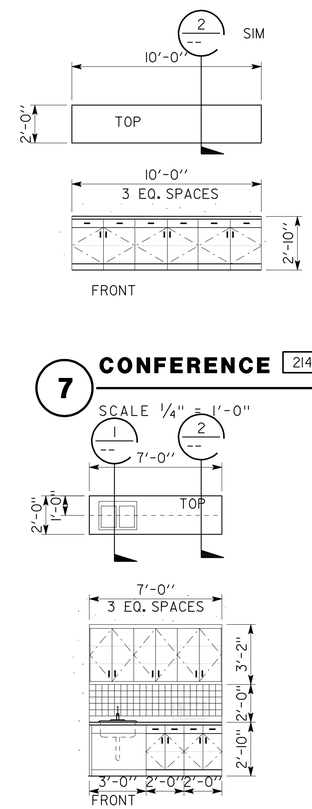

7 CONFERENCE 214

SCALE ¼" = 1'-0"

8 BREAK 218 BREAK 166 CREW ROOM 184 AND KITCHEN 105

SCALE ¼" = 1'-0"

DESIGN	BY F. THOMAS, L. RHOADES	CHECKED
DETAILS	BY C. NAKAHARA,	CHECKED
QUANTITIES	BY	CHECKED

STATE OF CALIFORNIA DEPARTMENT OF TRANSPORTATION

DIVISION OF ENGINEERING SERVICES ARCHITECTURAL AND STRUCTURAL DESIGN

BRIDGE NO. 33M5785
POST MILE 2.2

SFOBB MAINTENANCE COMPLEX

DETAILS — CABINETRY DETAILS

SHEET A6-15.1

ORIGINAL SCALE IN INCHES FOR REDUCED PLANS 0 1 2 3

UNIT 3598
PROJECT NUMBER & PHASE 04120006661
EA 014081

DISREGARD PRINTS BEARING EARLIER REVISION DATES → REVISION DATES (PRELIMINARY STAGE ONLY) 02-28-12 04-26-12 05-08-12 05-17-12 06-01-12 06-20-12

SHEET X OF X

a6_15_01 det cabinetry.dgn
TAEMWW Imperial Rev. 7/10 30-OCT-2012 08:03

30-OCT-2012 08:03
a6_15_01 det cabinetry.dgn

DIST.	COUNTY	ROUTE	POST MILES TOTAL PROJECT	SHEET NO.	TOTAL SHEETS
04	Ala	80	2.2	317	800

LICENSED ARCHITECT — 5/30/2012 DATE

LICENSED ARCHITECT FRANK THOMAS No. C-31406 Exp. 4-30-13 STATE OF CALIFORNIA

10-22-12
PLANS APPROVAL DATE

The State of California or its officers or agents shall not be responsible for the accuracy or completeness of scanned copies of this plan sheet.

ACCESSIBILITY DESIGN APPROVAL STAMP DOT / DES / OTA
PROJECT ID 0412000666
Reviewed by: Y. A. WANG
Date: 07-24-12

CALIFORNIA STATE FIRE MARSHAL APPROVED
Approval of this plan does not authorize or approve any omission or deviation from applicable regulations. Final approval is subject to field inspection. One set of approved plans shall be available on the project site at all times.
Reviewed by: JOHN E WOODS, SDSFM
Approval date: 8-22-12

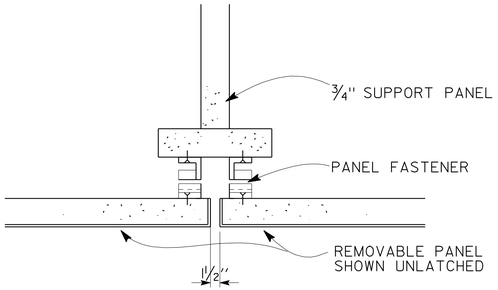

1 PANEL DETAIL
SCALE 1" = 1'-0"

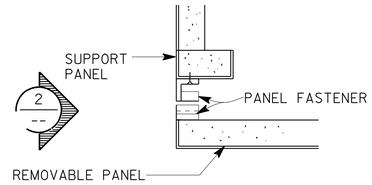

4 CORNER SECTION PANEL UNLATCHED
SCALE 6" = 1'-0"

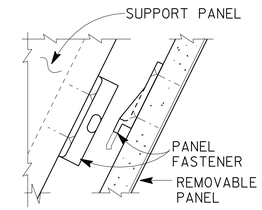

7 PANEL FASTENER
SCALE 6" = 1'-0"

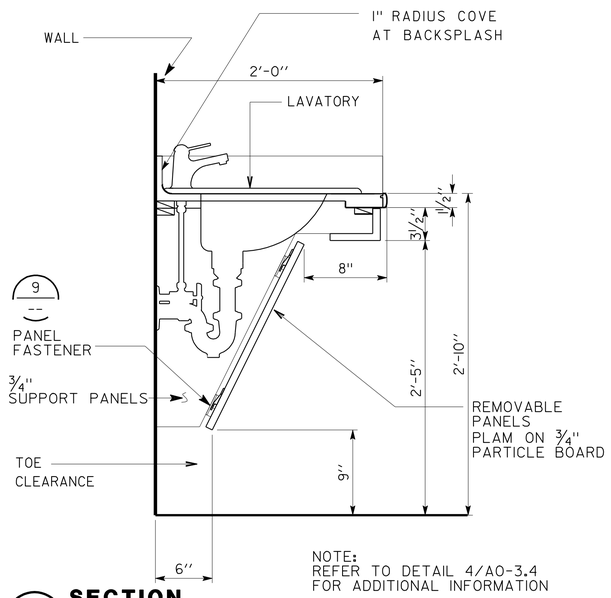

NOTE:
REFER TO DETAIL 4/A0-3.4 FOR ADDITIONAL INFORMATION

2 SECTION
SCALE 1 1/2" = 1'-0"

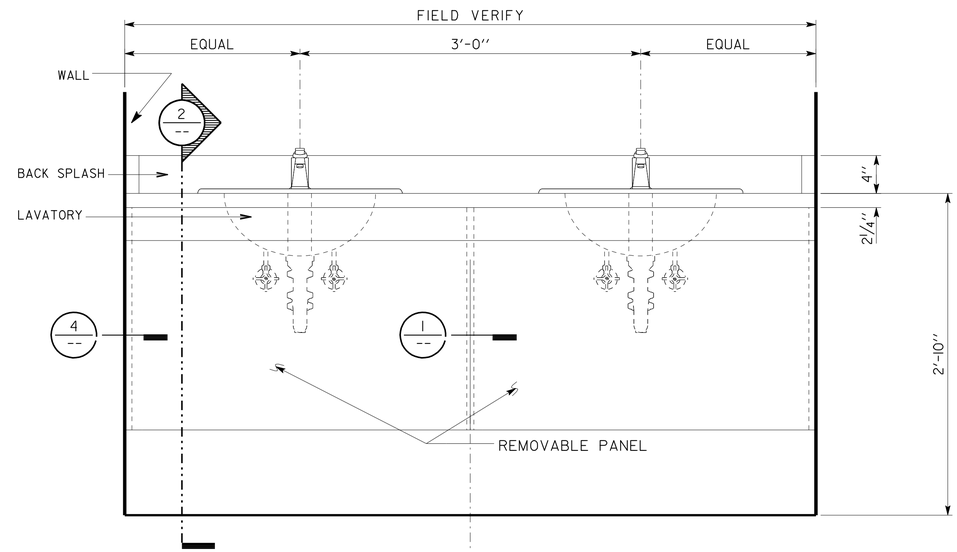

5 ELEVATION
SCALE 1 1/2" = 1'-0"

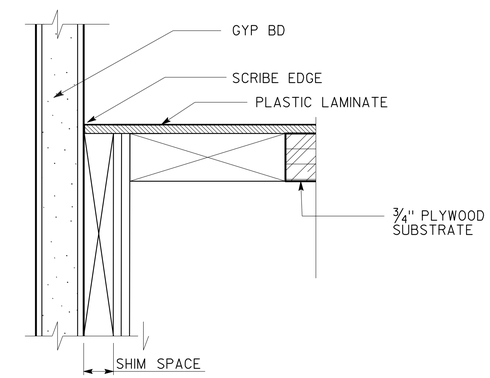

9 CABINET DETAIL
NO SCALE

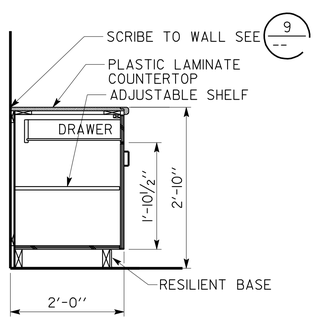

3 CABINET SECTION
SCALE 3/4" = 1'-0"

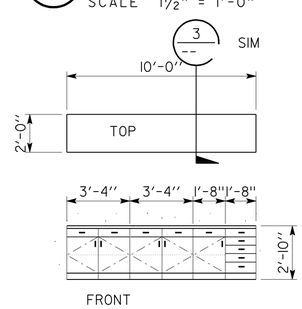

6 SEW ROOM 136
SCALE 1/4" = 1'-0"

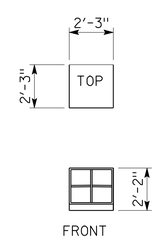

8 SEWING TABLE STORAGE CABINET 136
SCALE 1/4" = 1'-0"

DESIGN	BY F. THOMAS, L. RHOADES	CHECKED
DETAILS	BY C. NAKAHARA,	CHECKED
QUANTITIES	BY	CHECKED

STATE OF CALIFORNIA
DEPARTMENT OF TRANSPORTATION

DIVISION OF ENGINEERING SERVICES
ARCHITECTURAL AND STRUCTURAL DESIGN

BRIDGE NO. 33M5785
POST MILE 2.2

SFOBB MAINTENANCE COMPLEX
DETAILS — CABINETRY DETAILS

SHEET A6-15.2

a6_15_02 det cabinetry2.dgn
TAEMWW Imperial Rev. 7/10 25-OCT-2012 13:47

ORIGINAL SCALE IN INCHES FOR REDUCED PLANS 0 1 2 3

UNIT 3598
PROJECT NUMBER & PHASE 04120006661
EA 014081

DISREGARD PRINTS BEARING EARLIER REVISION DATES
REVISION DATES (PRELIMINARY STAGE ONLY) 02-28-12 04-26-12 05-08-12 05-17-12 06-01-12 06-20-12
SHEET X OF X

25-OCT-2012 13:47
a6_15_02 det cabinetry2.dgn

DIST.	COUNTY	ROUTE	POST MILES TOTAL PROJECT	SHEET NO.	TOTAL SHEETS
04	Ala	80	2.2	318	800

LICENSED ARCHITECT — 5/30/2012 DATE

LICENSED ARCHITECT FRANK THOMAS No. C-31406 Exp. 4-30-13 STATE OF CALIFORNIA

10-22-12
PLANS APPROVAL DATE

The State of California or its officers or agents shall not be responsible for the accuracy or completeness of scanned copies of this plan sheet.

ACCESSIBILITY DESIGN APPROVAL STAMP DOT / DES / OTA

PROJECT ID **0412000666**

Reviewed by: Y. A. WANG
Date: 07-24-12

CALIFORNIA STATE FIRE MARSHAL APPROVED

Approval of this plan does not authorize or approve any omission or deviation from applicable regulations. Final approval is subject to field inspection. One set of approved plans shall be available on the project site at all times.

Reviewed by: JOHN E WOODS, SDSFM
Approval date: 8-22-12

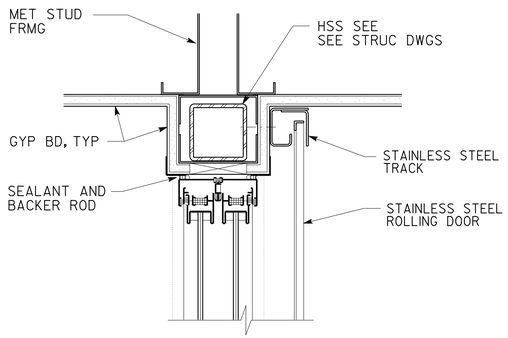

1 JAMB ROLLING DOOR AT COUNTER

SCALE : 3'' = 1'-0''

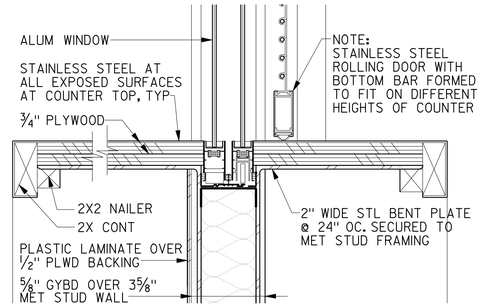

3 SILL ROLLING DOOR AT COUNTER

NO SCALE

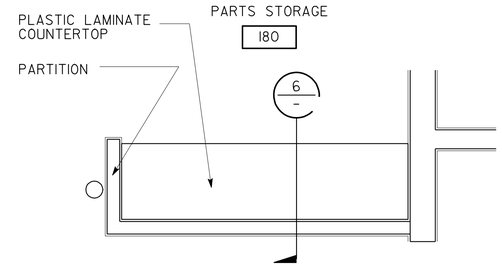

5 DESK (PLAN VIEW)

SCALE 3/4" = 1'-0"

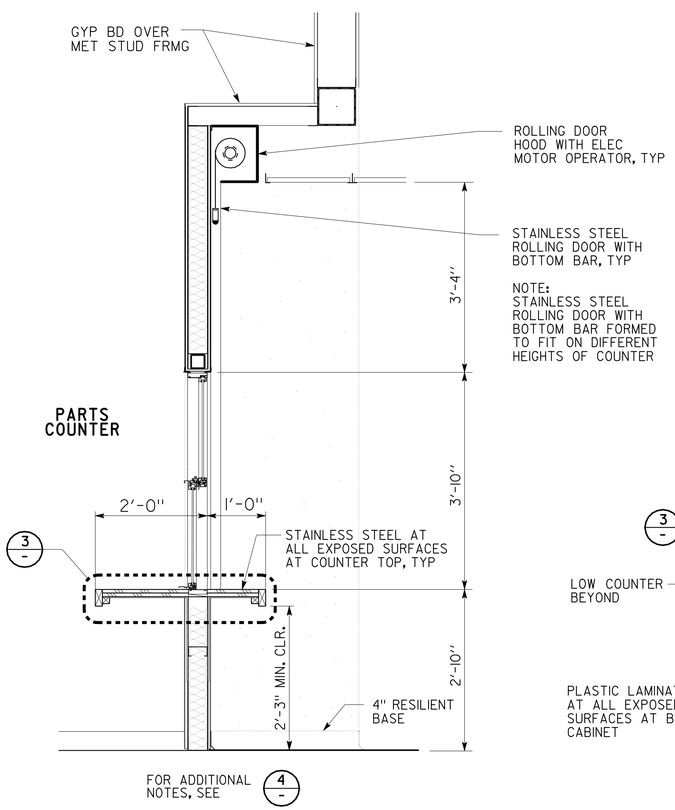

2 ROLLING DOOR/LOW COUNTER

SCALE : 3/4'' = 1'-0''

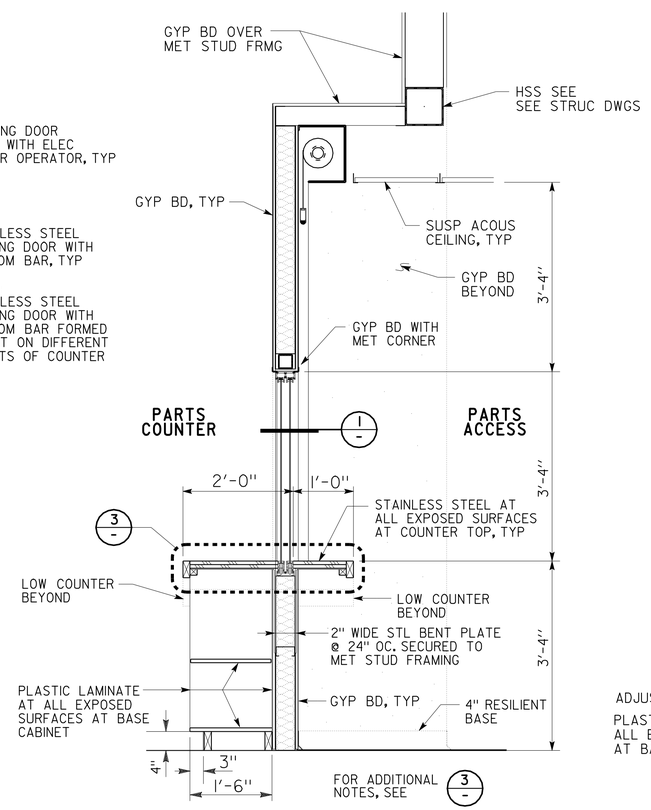

4 ROLLING DOOR/HIGH COUNTER

SCALE : 3/4'' = 1'-0''

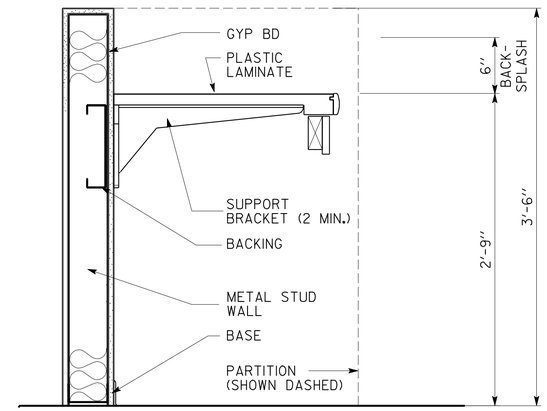

6 DESK SECTION

SCALE 1 1/2" = 1'-0"

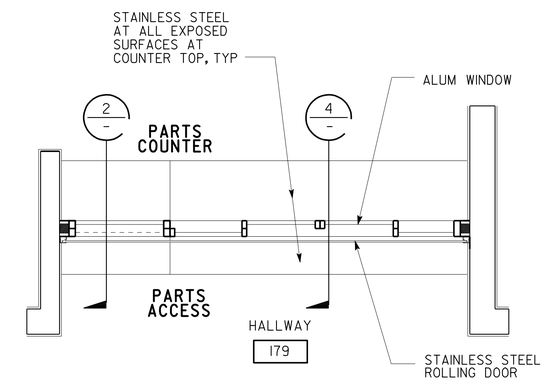

8 PARTS COUNTER (PLAN)

SCALE : 1/2" = 1'-0"

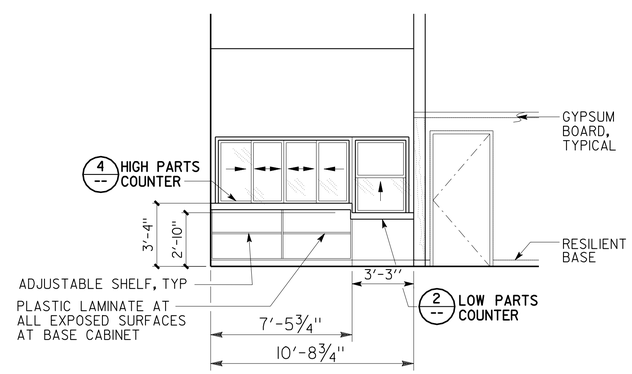

7 PARTS COUNTER

SCALE : 1/4'' = 1'-0''

	BY	CHECKED
DESIGN	F. THOMAS, L. RHOADES	
DETAILS	C. NAKAHARA,	
QUANTITIES		

STATE OF CALIFORNIA DEPARTMENT OF TRANSPORTATION

DIVISION OF ENGINEERING SERVICES ARCHITECTURAL AND STRUCTURAL DESIGN

BRIDGE NO. 33M5785 POST MILE 2.2

SFOBB MAINTENANCE COMPLEX

DETAILS — CASEWORK

SHEET **A6-15.3**

a6_15_03 det parts cntr.dgn
TAEMWW Imperial Rev. 7/10 25-OCT-2012 13:57

ORIGINAL SCALE IN INCHES FOR REDUCED PLANS 0 1 2 3

UNIT 3598
PROJECT NUMBER & PHASE 04120006661
EA 014081

DISREGARD PRINTS BEARING EARLIER REVISION DATES

REVISION DATES (PRELIMINARY STAGE ONLY) 02-28-12 04-26-12 05-08-12 05-17-12 06-01-12 06-20-12 07-23-12 — SHEET X OF X

25-OCT-2012 13:57
a6_15_03 det parts cntr.dgn

DIST.	COUNTY	ROUTE	POST MILES TOTAL PROJECT	SHEET NO.	TOTAL SHEETS
04	Ala	80	2.2	319	800

LICENSED ARCHITECT — 5/30/2012 DATE

LICENSED ARCHITECT FRANK THOMAS No. C-31406 Exp. 4-30-13 STATE OF CALIFORNIA

10-22-12
PLANS APPROVAL DATE

The State of California or its officers or agents shall not be responsible for the accuracy or completeness of scanned copies of this plan sheet.

ACCESSIBILITY DESIGN APPROVAL STAMP DOT / DES / OTA
PROJECT ID 0412000666
Reviewed by: Y. A. WANG
Date: 07-24-12

CALIFORNIA STATE FIRE MARSHAL APPROVED
Approval of this plan does not authorize or approve any omission or deviation from applicable regulations. Final approval is subject to field inspection. One set of approved plans shall be available on the project site at all times.
Reviewed by: JOHN E WOODS, SDSFM
Approval date: 8-22-12

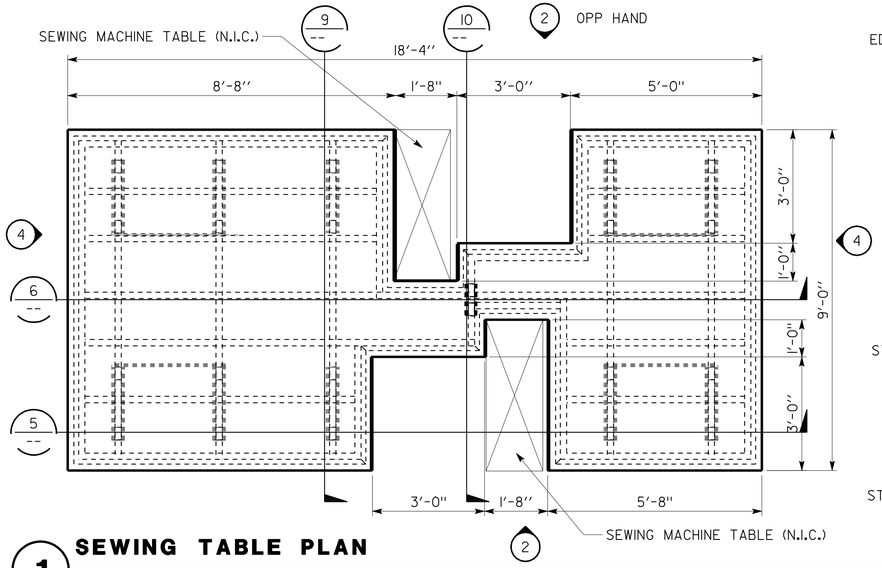

1 SEWING TABLE PLAN
SCALE 1/2" = 1'-0"

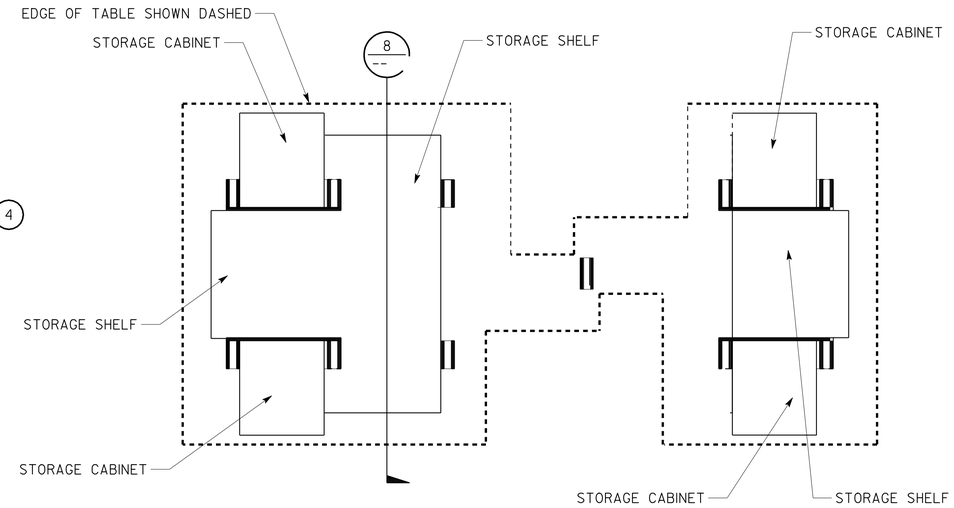

3 SEWING TABLE SECTION
SCALE 1/2" = 1'-0"

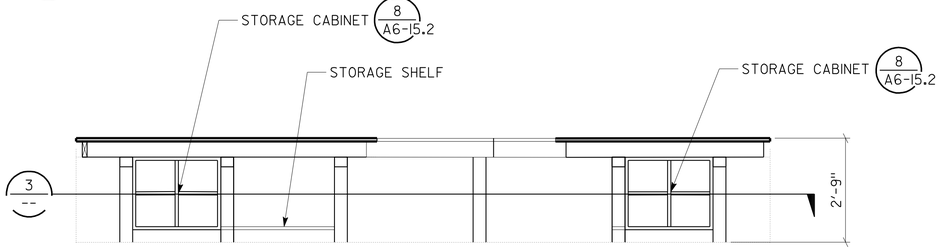

2 SEWING TABLE ELEVATION
SCALE 1/2" = 1'-0"

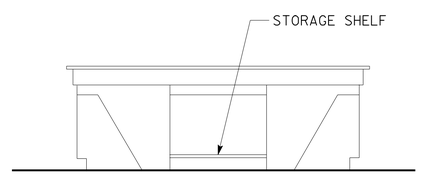

4 SEWING TABLE ELEVATION
SCALE 1/2" = 1'-0"

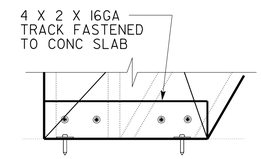

12 DETAIL
SCALE: 3" = 1'-0"

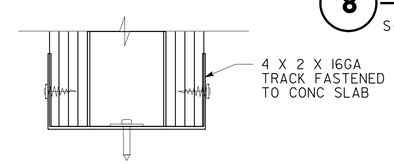

13 SECTION
SCALE: 6" = 1'-0"

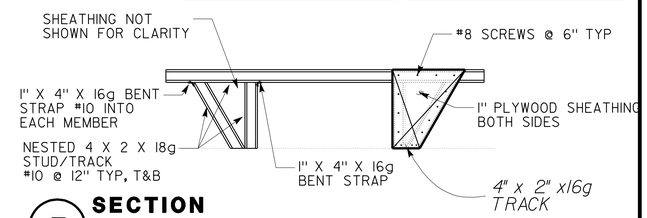

7 SECTION
SCALE 1/2" = 1'-0"

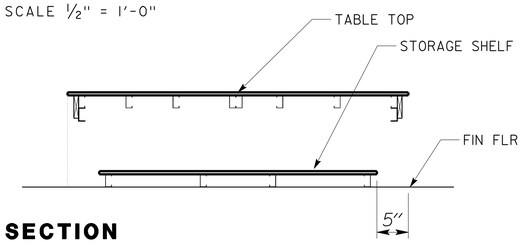

8 SECTION
SCALE 1/2" = 1'-0"

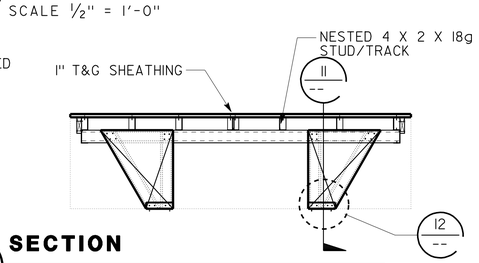

9 SECTION
SCALE 1/2" = 1'-0"

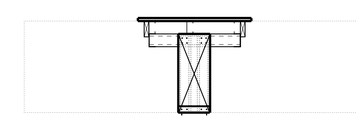

10 SECTION
SCALE 1/2" = 1'-0"

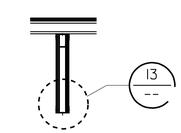

11 SECTION
SCALE 1/2" = 1'-0"

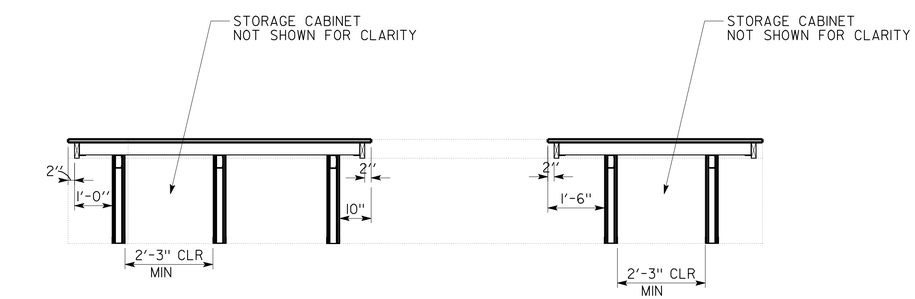

5 SEWING TABLE SECTION
SCALE 1/2" = 1'-0"

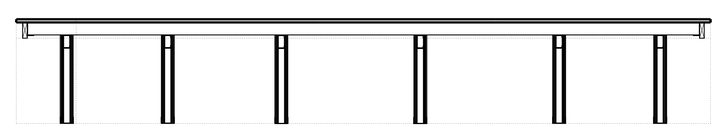

6 SEWING TABLE SECTION
SCALE 1/2" = 1'-0"

DESIGN	BY F. THOMAS, L. RHOADES	CHECKED
DETAILS	BY C. NAKAHARA,	CHECKED
QUANTITIES	BY	CHECKED

STATE OF CALIFORNIA DEPARTMENT OF TRANSPORTATION

DIVISION OF ENGINEERING SERVICES ARCHITECTURAL AND STRUCTURAL DESIGN

BRIDGE NO. 33M5785
POST MILE 2.2

SFOBB MAINTENANCE COMPLEX
DETAILS — SEW ROOM TABLE DETAILS

SHEET A6-15.4

a6_15_04 det sew table.dgn
TAEMWW Imperial Rev.7/10 25-OCT-2012 13:47

ORIGINAL SCALE IN INCHES FOR REDUCED PLANS 0 1 2 3

UNIT 3598
PROJECT NUMBER & PHASE 04120006661
EA 04-014081

DISREGARD PRINTS BEARING EARLIER REVISION DATES
REVISION DATES (PRELIMINARY STAGE ONLY) 02-28-12 04-26-12 05-08-12 05-17-12 06-01-12 06-20-12
SHEET X OF X

25-OCT-2012 13:47
a6_15_04 det sew table.dgn

DIST.	COUNTY	ROUTE	POST MILES TOTAL PROJECT	SHEET NO.	TOTAL SHEETS
04	Ala	80	2.2	320	800

LICENSED ARCHITECT — 5/30/2012 DATE

LICENSED ARCHITECT FRANK THOMAS No. C-31406 Exp. 4-30-13 STATE OF CALIFORNIA

10-22-12
PLANS APPROVAL DATE

The State of California or its officers or agents shall not be responsible for the accuracy or completeness of scanned copies of this plan sheet.

ACCESSIBILITY DESIGN APPROVAL STAMP DOT / DES / OTA

PROJECT ID **0412000666**

Reviewed by: Y. A. WANG
Date: 07-24-12

CALIFORNIA STATE FIRE MARSHAL APPROVED

Approval of this plan does not authorize or approve any omission or deviation from applicable regulations. Final approval is subject to field inspection. One set of approved plans shall be available on the project site at all times.

Reviewed by: JOHN E WOODS, SDSFM
Approval date: 8-22-12

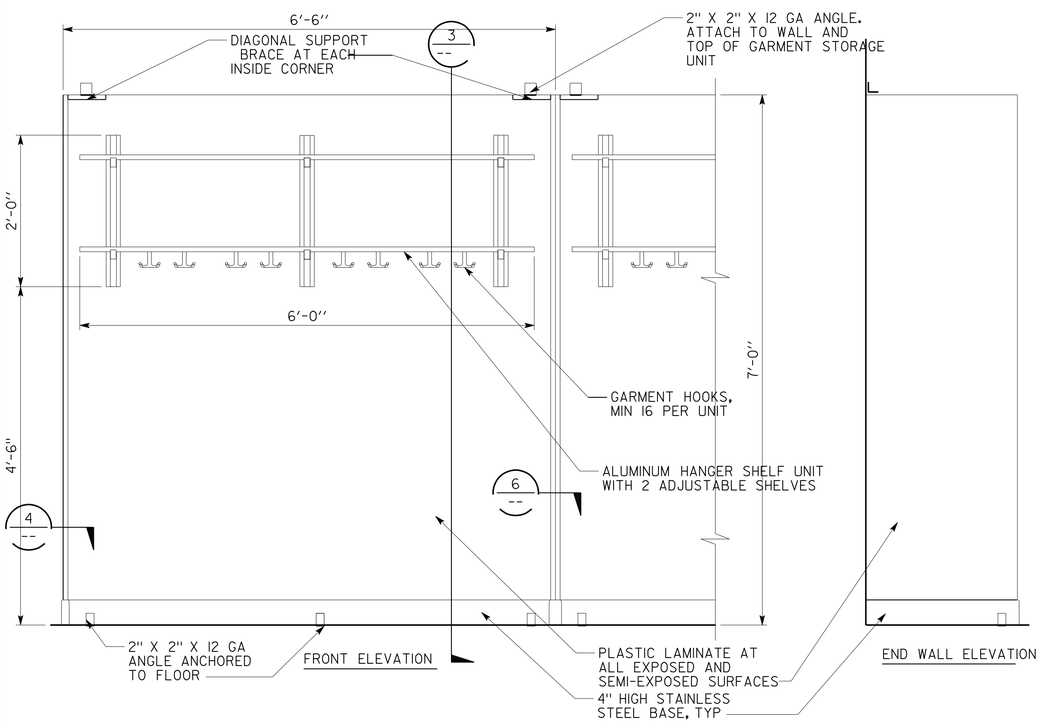

1 GEAR ROOM STORAGE UNIT ELEVATIONS

SCALE 1" = 1'-0"

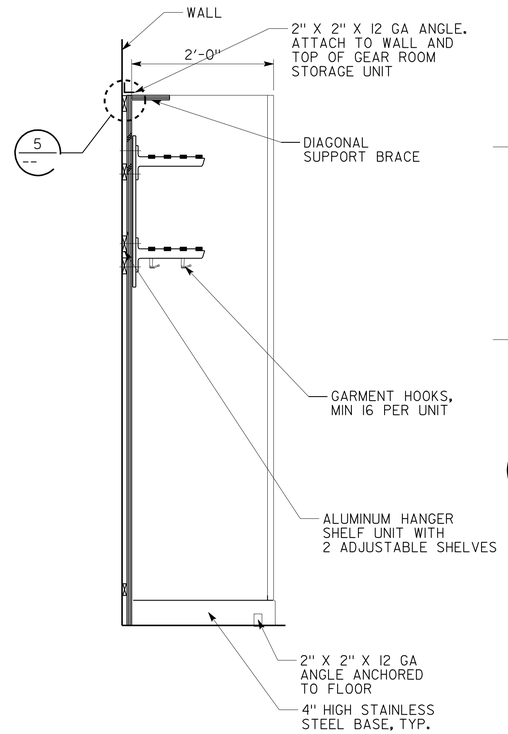

3 SECTION

SCALE 1" = 1'-0"

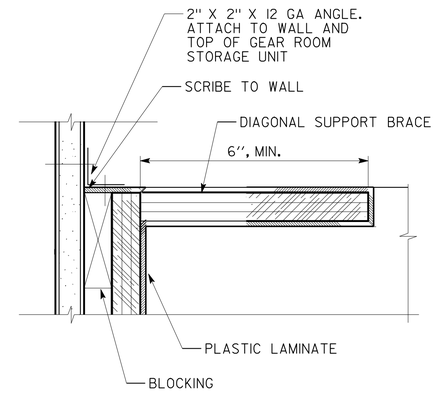

5 DETAIL

SCALE 6" = 1'-0"

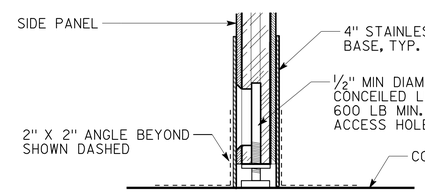

7 DETAIL

SCALE 6" = 1'-0"

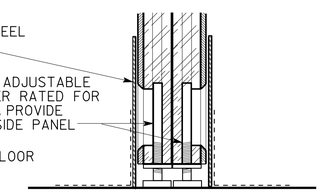

8 DETAIL

SCALE 6" = 1'-0"

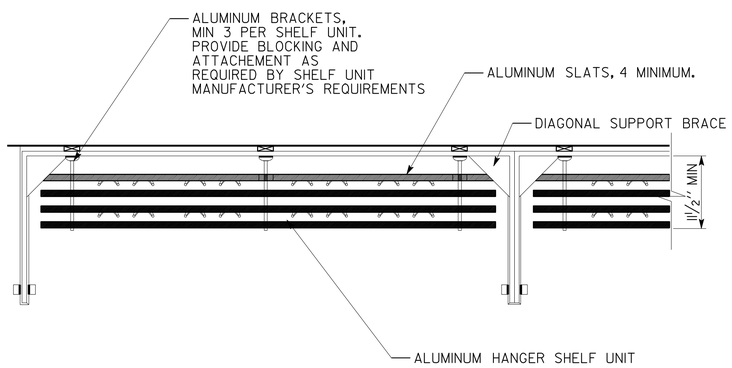

2 PARTIAL PLAN VIEW

SCALE 1 1/2" = 1'-0"

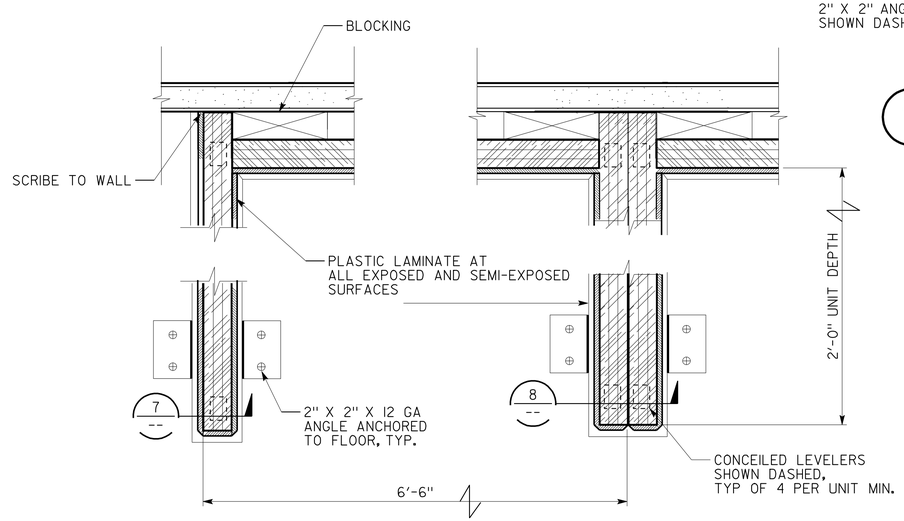

4 DETAIL

SCALE 6" = 1'-0"

6 DETAIL

SCALE 6" = 1'-0"

DESIGN	BY F. THOMAS, L. RHOADES	CHECKED
DETAILS	BY C. NAKAHARA,	CHECKED
QUANTITIES	BY	CHECKED

STATE OF CALIFORNIA
DEPARTMENT OF TRANSPORTATION

DIVISION OF ENGINEERING SERVICES
ARCHITECTURAL AND STRUCTURAL DESIGN

BRIDGE NO. 33M5785
POST MILE 2.2

SFOBB MAINTENANCE COMPLEX

DETAILS — GEAR ROOM CABINETRY DETAILS

SHEET **A6-15.5**

a6_15_05 det gear room cab.dgn
TAEMWW Imperial Rev. 7/10 25-OCT-2012 13:47

ORIGINAL SCALE IN INCHES FOR REDUCED PLANS 0 1 2 3

UNIT 3598
PROJECT NUMBER & PHASE 04120006661
EA 014081

DISREGARD PRINTS BEARING EARLIER REVISION DATES

REVISION DATES (PRELIMINARY STAGE ONLY) 02-28-12 04-26-12 05-08-12 05-17-12 06-01-12 06-20-12

SHEET X OF X

25-OCT-2012 13:47
a6_15_05 det gear room cab.dgn

DIST.	COUNTY	ROUTE	POST MILES TOTAL PROJECT	SHEET NO.	TOTAL SHEETS
04	Ala	80	2.2	321	800

LICENSED ARCHITECT — 5/30/2012 DATE

LICENSED ARCHITECT FRANK THOMAS No. C-31406 Exp. 4-30-13 STATE OF CALIFORNIA

10-22-12
PLANS APPROVAL DATE

The State of California or its officers or agents shall not be responsible for the accuracy or completeness of scanned copies of this plan sheet.

ACCESSIBILITY DESIGN APPROVAL STAMP DOT / DES / OTA

PROJECT ID **0412000666**

Reviewed by: Y. A. WANG
Date: 07-24-12

CALIFORNIA STATE FIRE MARSHAL APPROVED

Approval of this plan does not authorize or approve any omission or deviation from applicable regulations. Final approval is subject to field inspection. One set of approved plans shall be available on the project site at all times.

Reviewed by: JOHN E WOODS, SDSFM
Approval date: 8-22-12

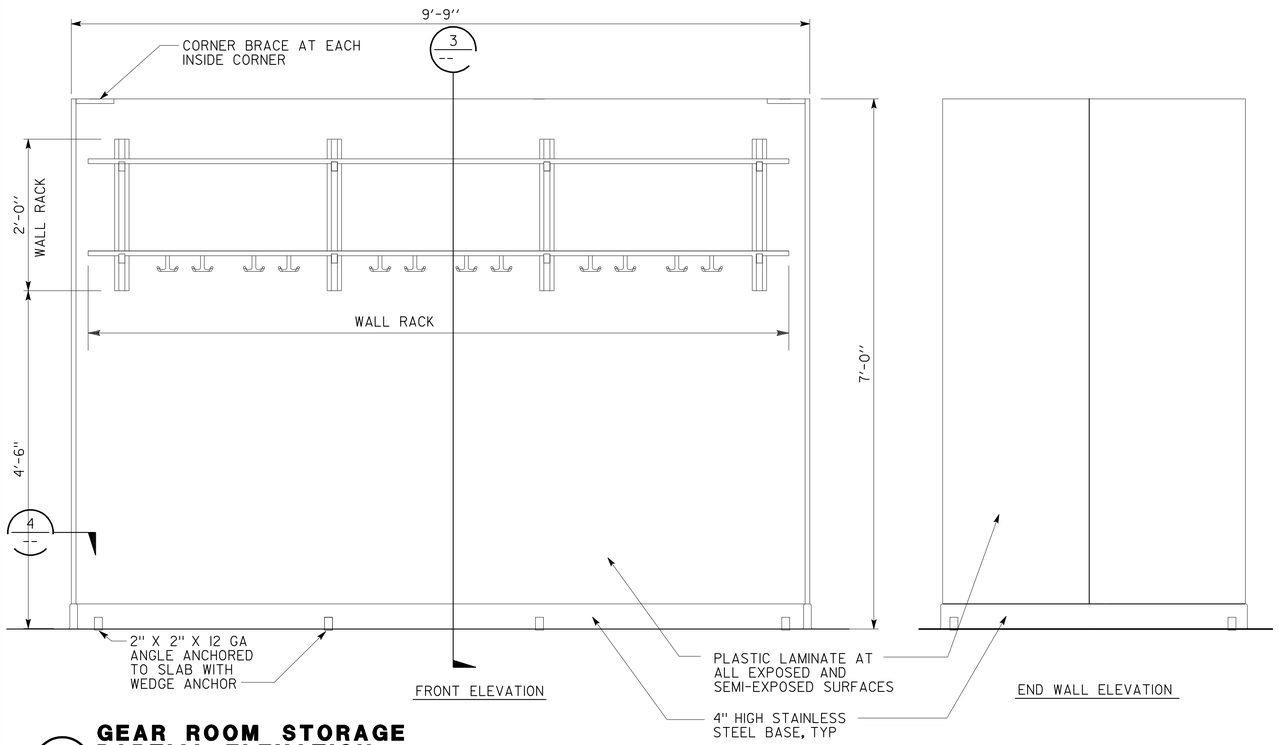

1 GEAR ROOM STORAGE PARTIAL ELEVATION

SCALE 1" = 1'-0"

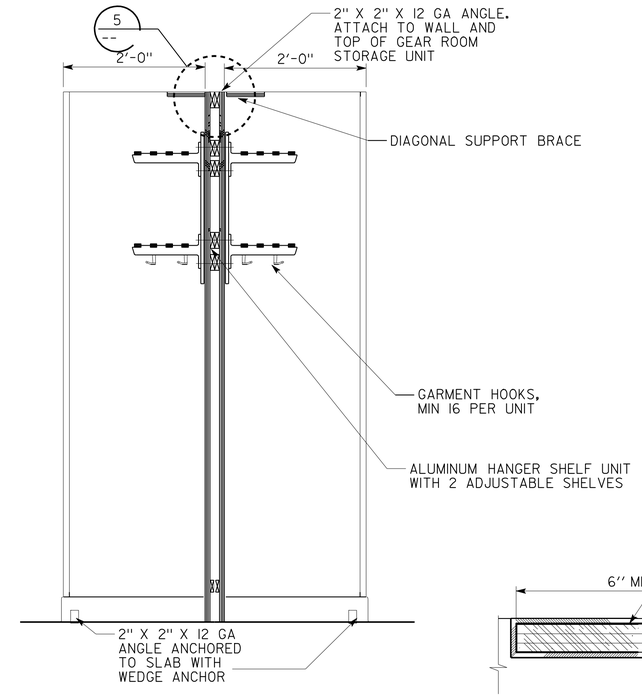

3 SECTION

SCALE 1" = 1'-0"

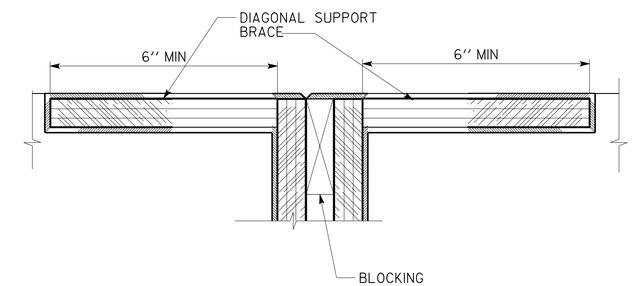

5 DETAIL

SCALE 6" = 1'-0"

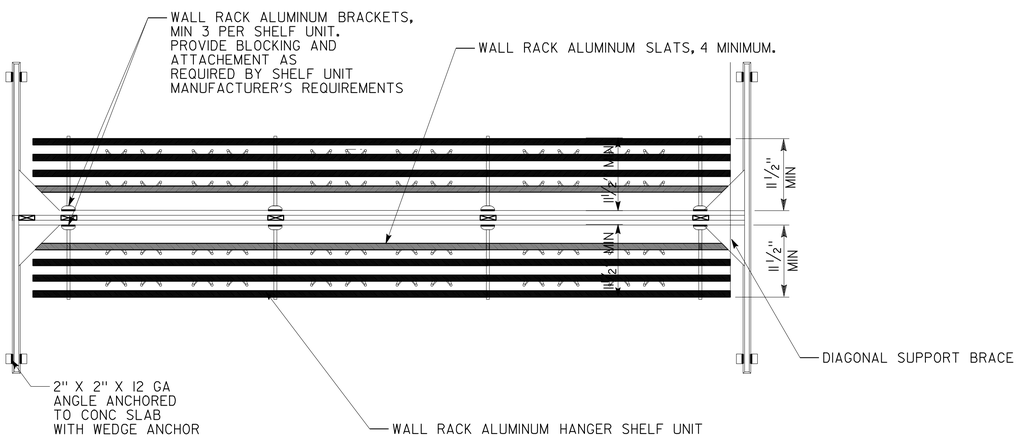

2 PARTIAL PLAN VIEW

SCALE 1½" = 1'-0"

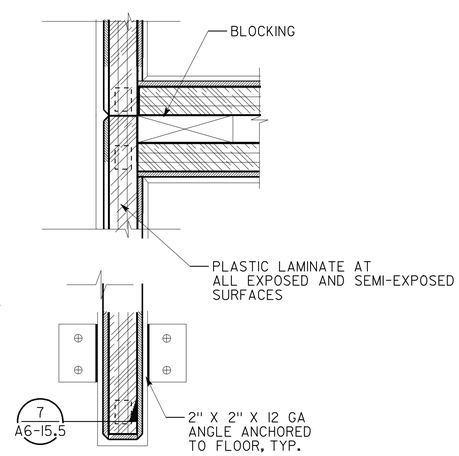

4 DETAIL

SCALE 6" = 1'-0"

DESIGN	BY F. THOMAS, L. RHOADES	CHECKED	
DETAILS	BY C. NAKAHARA,	CHECKED	
QUANTITIES	BY	CHECKED	

STATE OF CALIFORNIA DEPARTMENT OF TRANSPORTATION

DIVISION OF ENGINEERING SERVICES ARCHITECTURAL AND STRUCTURAL DESIGN

BRIDGE NO. 33M5785
POST MILE 2.2

SFOBB MAINTENANCE COMPLEX

DETAILS — GEAR ROOM CABINETRY DETAILS

SHEET **A6-15.6**

a6_15_06 det gear room cab2.dgn
TAEMWW Imperial Rev. 7/10 25-OCT-2012 13:47

ORIGINAL SCALE IN INCHES FOR REDUCED PLANS 0 1 2 3

UNIT 3598
PROJECT NUMBER & PHASE 04120006661
EA 014081

DISREGARD PRINTS BEARING EARLIER REVISION DATES →

REVISION DATES (PRELIMINARY STAGE ONLY): 02-28-12 04-26-12 05-08-12 05-17-12 06-01-12 06-20-12

SHEET X OF X

25-OCT-2012 13:47
a6_15_06 det gear room cab2.dgn

DIST.	COUNTY	ROUTE	POST MILES TOTAL PROJECT	SHEET NO.	TOTAL SHEETS
04	Ala	80	2.2	322	800

LICENSED ARCHITECT — 5/30/2012 DATE

LICENSED ARCHITECT FRANK THOMAS No. C-31406 Exp. 4-30-13 STATE OF CALIFORNIA

10-22-12
PLANS APPROVAL DATE

The State of California or its officers or agents shall not be responsible for the accuracy or completeness of scanned copies of this plan sheet.

ACCESSIBILITY DESIGN APPROVAL STAMP DOT / DES / OTA
PROJECT ID 0412000666
Reviewed by: Y. A. WANG
Date: 07-24-12

CALIFORNIA STATE FIRE MARSHAL APPROVED
Approval of this plan does not authorize or approve any omission or deviation from applicable regulations. Final approval is subject to field inspection. One set of approved plans shall be available on the project site at all times.
Reviewed by: JOHN E WOODS, SDSFM
Approval date: 8-22-12

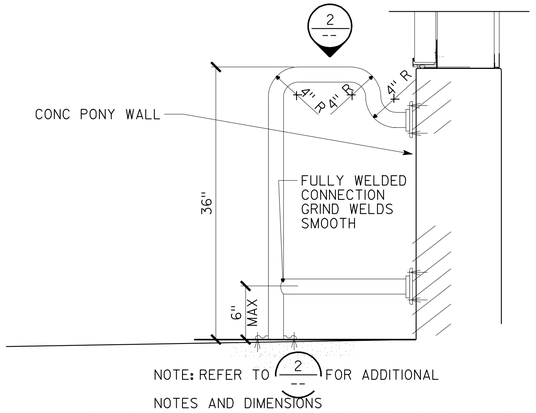

1 EMERGENCY EYEWASH GRAB BAR
NOT TO SCALE

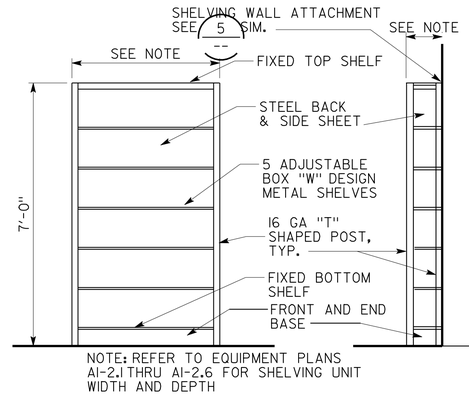

4 METAL SHELVING UNIT
NOT TO SCALE

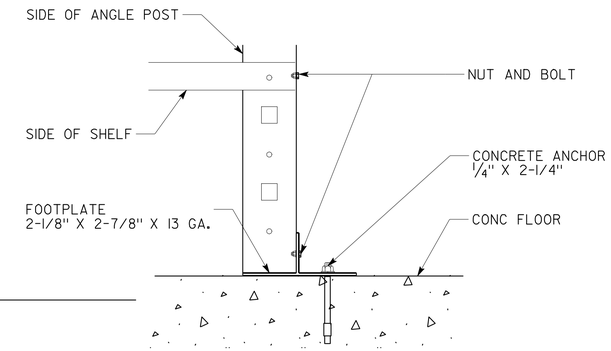

7 FLOOR ATTACHMENT
NOT TO SCALE

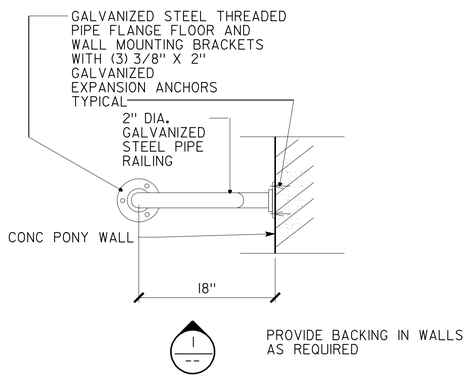

2 EMERGENCY EYEWASH GRAB BAR
NOT TO SCALE

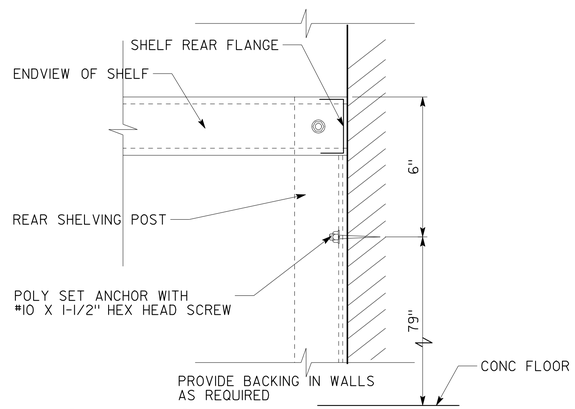

5 SHELVING WALL ATTACHMENT
NOT TO SCALE

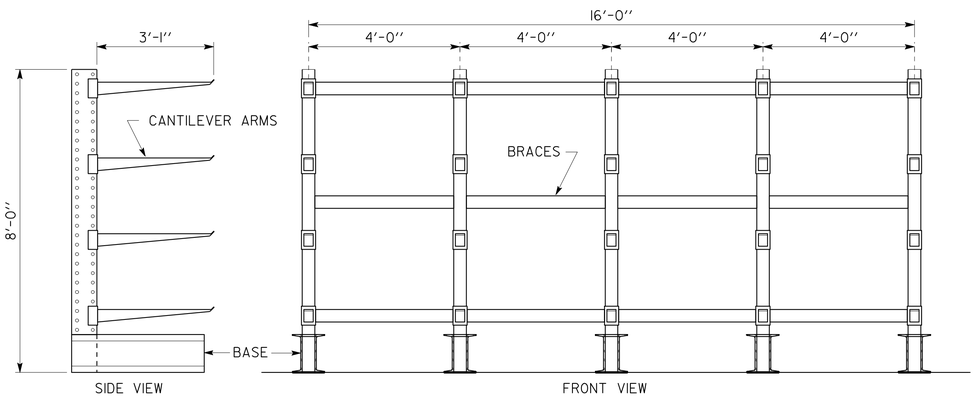

8 CANTELIVER RACK
SCALE 1/2" = 1'-0"

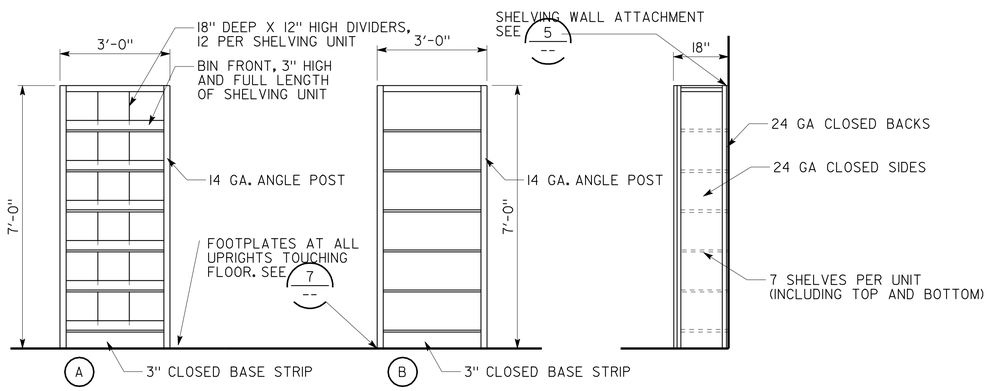

3 PARTS STORAGE METAL SHELVING
SCALE 1/2" = 1'-0"

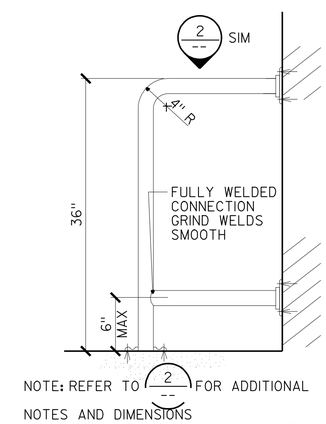

9 EMERGENCY EYEWASH GRAB BAR
NOT TO SCALE

DESIGN	BY F. THOMAS, L. RHOADES	CHECKED
DETAILS	BY C. NAKAHARA,	CHECKED
QUANTITIES	BY	CHECKED

STATE OF CALIFORNIA DEPARTMENT OF TRANSPORTATION

DIVISION OF ENGINEERING SERVICES ARCHITECTURAL AND STRUCTURAL DESIGN

BRIDGE NO. 33M5785
POST MILE 2.2

SFOBB MAINTENANCE COMPLEX
DETAILS — FURNISHING DETAILS

SHEET A6-16.1

a6_16_01 det furnish.dgn
TAEMWW Imperial Rev. 7/10 25-OCT-2012 13:47

ORIGINAL SCALE IN INCHES FOR REDUCED PLANS 0 1 2 3

UNIT 3598
PROJECT NUMBER & PHASE 04120006661
EA 014081

DISREGARD PRINTS BEARING EARLIER REVISION DATES
REVISION DATES (PRELIMINARY STAGE ONLY) 02-28-12 04-26-12 05-08-12 05-17-12 06-01-12 06-20-12
SHEET X OF X

a6_16_01 det furnish.dgn
25-OCT-2012 13:47

DIST.	COUNTY	ROUTE	POST MILES TOTAL PROJECT	SHEET NO.	TOTAL SHEETS
04	Ala	80	2.2	323	800

LICENSED ARCHITECT — 5/30/2012 DATE

LICENSED ARCHITECT FRANK THOMAS No. C-31406 Exp. 4-30-13 STATE OF CALIFORNIA

10-22-12
PLANS APPROVAL DATE

The State of California or its officers or agents shall not be responsible for the accuracy or completeness of scanned copies of this plan sheet.

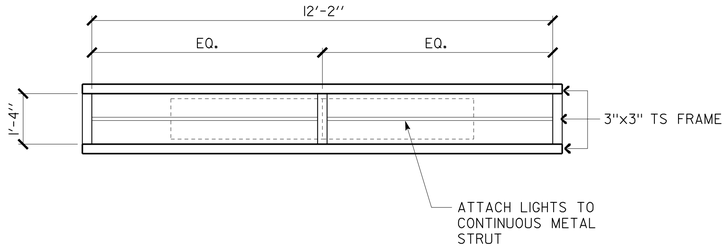

1 WORKBENCH FRAME-TOP VIEW

SCALE 1/2"=1'-0"

FOR ALL ELECTRICAL EQUIPMENT, SEE SHEET EEI-8.10

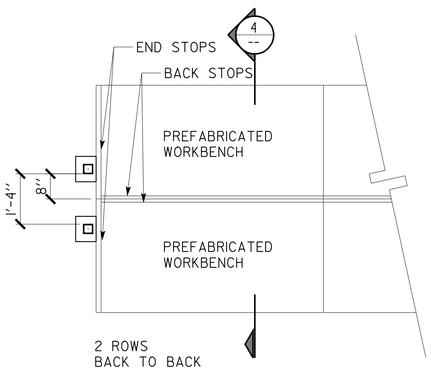

2 WORKBENCH COUNTER-TOP VIEW

SCALE 1/2"=1'-0"

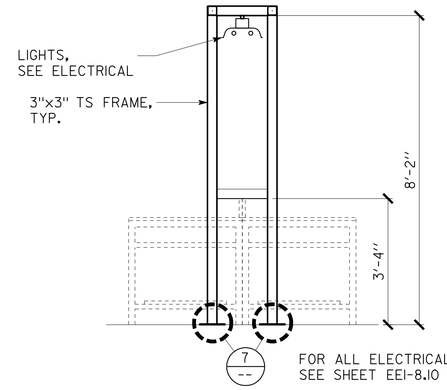

4 WORKBENCH SECTION

SCALE 1/2"=1'-0"

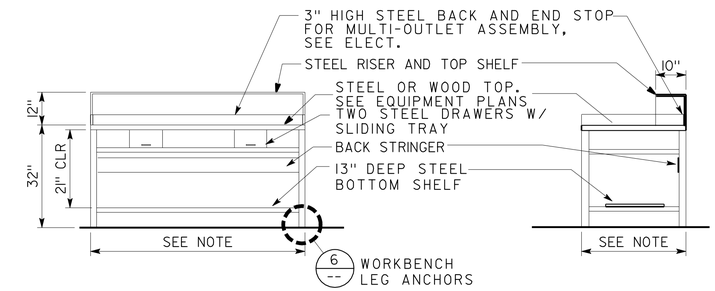

5 PREFABRICATED WORKBENCH

NOT TO SCALE

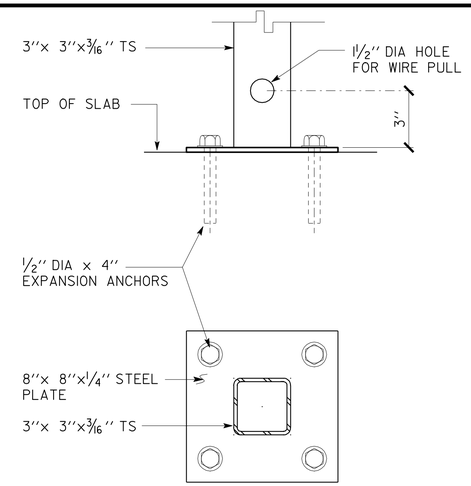

7 COLUMN BASE

SCALE 3"=1'-0"

ACCESSIBILITY DESIGN APPROVAL STAMP DOT / DES / OTA	CALIFORNIA STATE FIRE MARSHAL APPROVED
PROJECT ID 0412000666	Approval of this plan does not authorize or approve any omission or deviation from applicable regulations. Final approval is subject to field inspection. One set of approved plans shall be available on the project site at all times.
Reviewed by: Y. A. WANG	Reviewed by: JOHN E WOODS, SDSFM
Date: 07-24-12	Approval date: 8-22-12

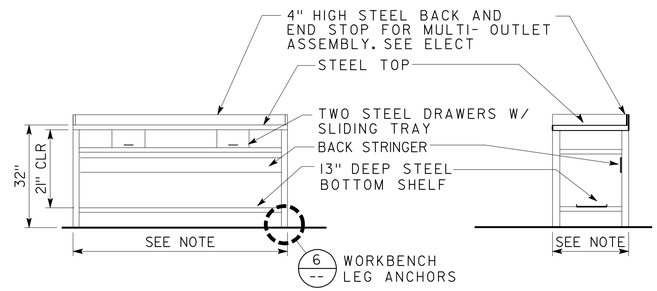

8 PREFABRICATED WORKBENCH

NOT TO SCALE

NOTE: REFER TO EQUIPMENT PLANS A1-2.1 THRU A1-2.6 FOR WORKBENCH WIDTH AND DEPTH

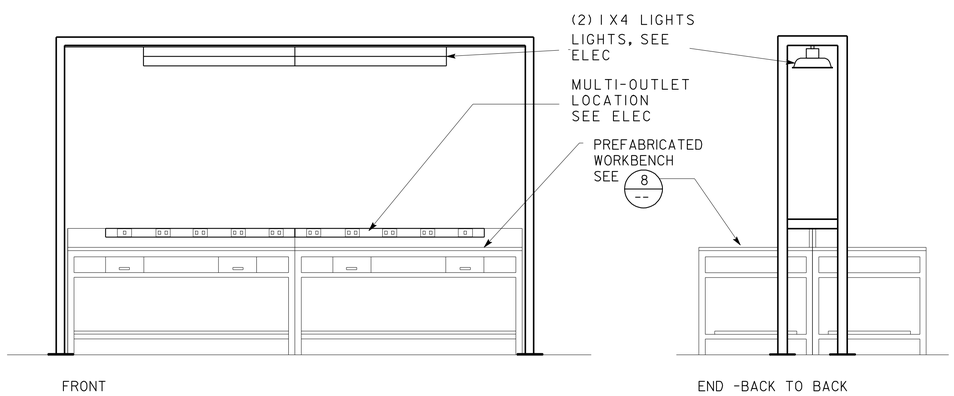

FOR ALL ELECTRICAL EQUIPMENT, SEE SHEET EEI-8.10

3 WORKBENCH ELEVATIONS

SCALE 1/2"=1'-0"

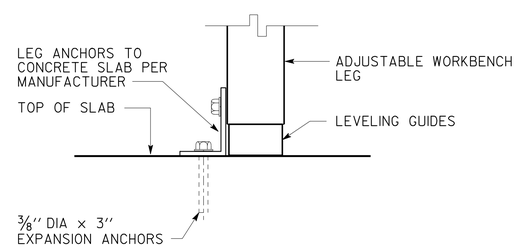

6 WORKBENCH LEG ANCHORS

NOT TO SCALE

	BY	CHECKED
DESIGN	F. THOMAS, L. RHOADES	
DETAILS	C. NAKAHARA,	
QUANTITIES		

STATE OF CALIFORNIA DEPARTMENT OF TRANSPORTATION

DIVISION OF ENGINEERING SERVICES ARCHITECTURAL AND STRUCTURAL DESIGN

BRIDGE NO. 33M5785 — POST MILE 2.2

SFOBB MAINTENANCE COMPLEX — DETAILS — WORK BENCH

SHEET A6-16.2

a6_16_02 workbench.dgn
TAEMWW Imperial Rev. 7/10 25-OCT-2012 14:07

ORIGINAL SCALE IN INCHES FOR REDUCED PLANS 0 1 2 3

UNIT 3598
PROJECT NUMBER & PHASE 04120006661
EA 04-014081

DISREGARD PRINTS BEARING EARLIER REVISION DATES → 02-28-12 03-28-12 05-08-12 05-17-12 06-01-12 06-20-12

REVISION DATES (PRELIMINARY STAGE ONLY) — SHEET X OF X

25-OCT-2012 14:07
a6_16_02 workbench.dgn

DIST.	COUNTY	ROUTE	POST MILES TOTAL PROJECT	SHEET NO.	TOTAL SHEETS
04	Ala	80	2.2	324	800

LICENSED ARCHITECT — 5/30/2012 — DATE

LICENSED ARCHITECT FRANK THOMAS No. C-31406 Exp. 4-30-13 STATE OF CALIFORNIA

10-22-12
PLANS APPROVAL DATE

The State of California or its officers or agents shall not be responsible for the accuracy or completeness of scanned copies of this plan sheet.

ACCESSIBILITY DESIGN APPROVAL STAMP DOT / DES / OTA
PROJECT ID 0412000666
Reviewed by: Y. A. WANG
Date: 07-24-12

CALIFORNIA STATE FIRE MARSHAL APPROVED
Approval of this plan does not authorize or approve any omission or deviation from applicable regulations. Final approval is subject to field inspection. One set of approved plans shall be available on the project site at all times.
Reviewed by: JOHN E WOODS, SDSFM
Approval date: 8-22-12

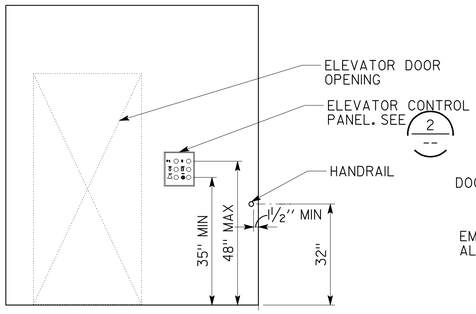

1 ELEVATOR CAB ELEVATION

SCALE ½" = 1'-0"

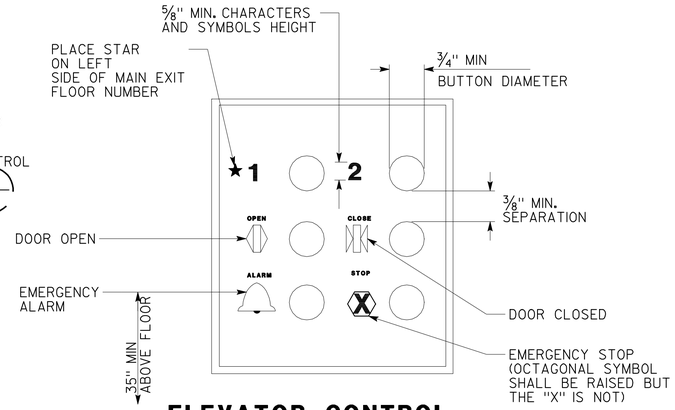

4 ELEVATOR CONTROL PANEL DETAIL

NOT TO SCALE

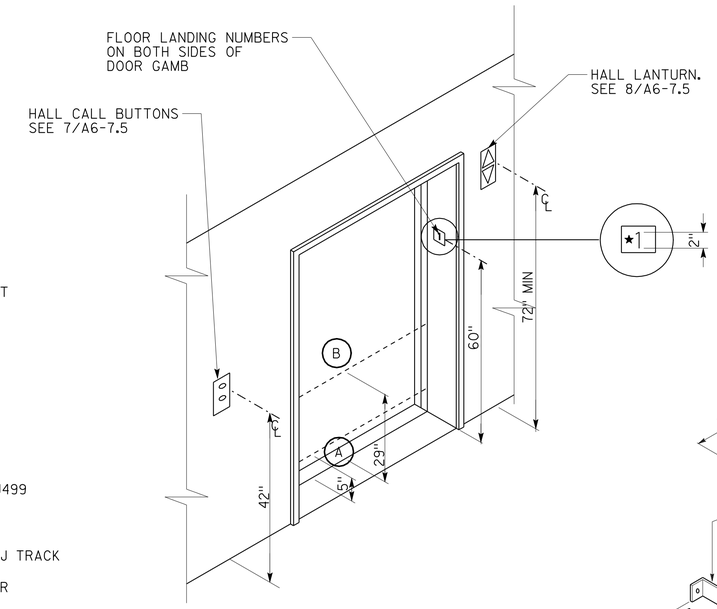

NOTE:
THE AUTOMATIC DOOR REOPENING DEVICE IS ACTIVATED IF AN OBJECT PASSES THROUGH EITHER LINE A OR LINE B LINE A AND LINE B REPRESENT THE VERTICAL LOCATION OF THE DOOR REOPENING DEVICE NOT REQUIRING CONTACT.

7 ELEVATOR ENTRANCE

NOT TO SCALE

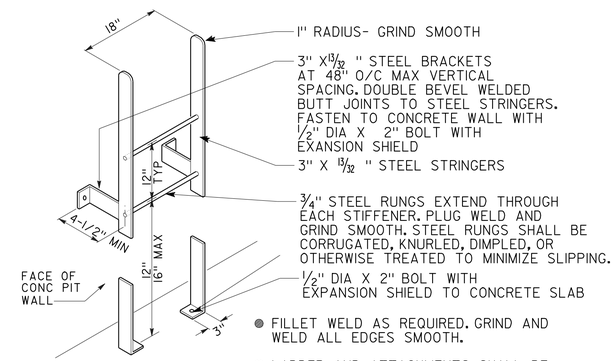

- FILLET WELD AS REQUIRED. GRIND AND WELD ALL EDGES SMOOTH.
- LADDER AND ATTACHMENTS SHALL BE DONE IN ACCORDANCE TO OSHA AND CBC CODES.

9 ELEVATOR PIT LADDER

NOT TO SCALE

NOTE:
SEE SHEET A6-7.4 FOR ADDITIONAL UL DESIGN NOTES

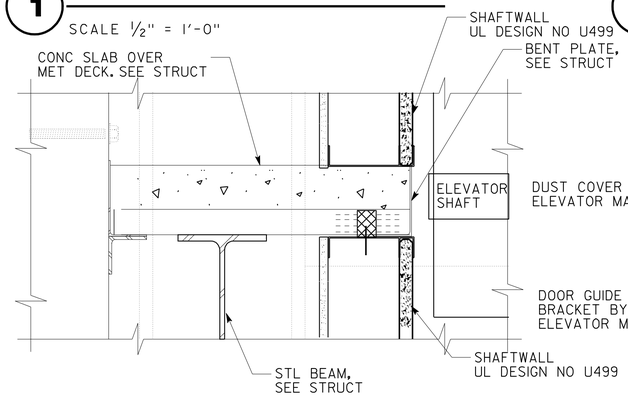

2 SHAFTWALL AT ELEVATOR SHAFT

SCALE 2" = 1'-0"

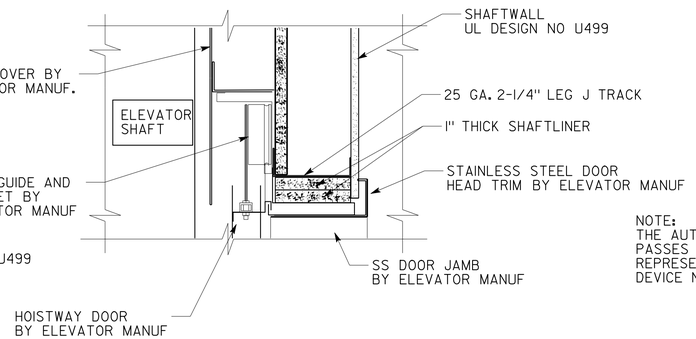

5 ELEVATOR DOOR HEAD DETAIL

SCALE 2" = 1'-0"

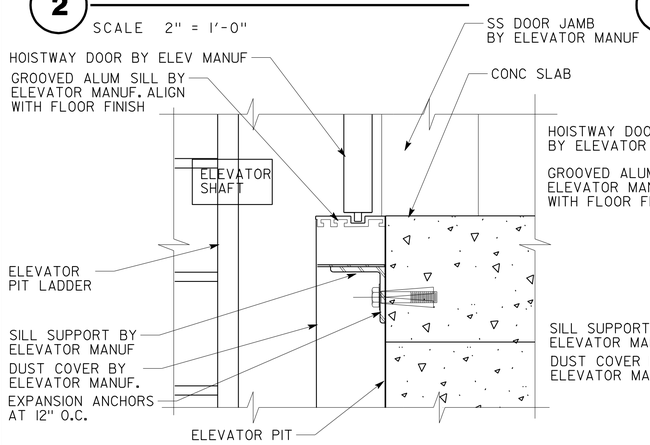

3 SILL DETAIL

SCALE 2" = 1'-0"

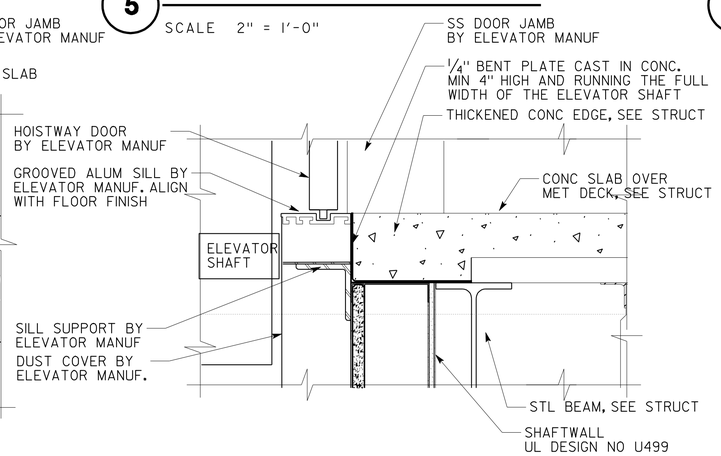

6 SILL DETAIL

SCALE 2" = 1'-0"

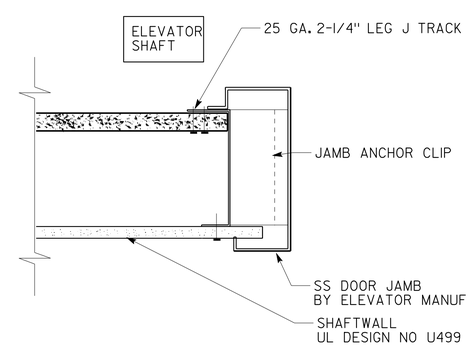

8 ELEVATOR DOOR JAMB DETAIL

SCALE 3" = 1'-0"

	BY	CHECKED
DESIGN	F. THOMAS, L. RHOADES	
DETAILS	C. NAKAHARA,	
QUANTITIES		

STATE OF CALIFORNIA DEPARTMENT OF TRANSPORTATION

DIVISION OF ENGINEERING SERVICES ARCHITECTURAL AND STRUCTURAL DESIGN

BRIDGE NO. 33M5785 — POST MILE 2.2

SFOBB MAINTENANCE COMPLEX
BUILDING IA — ELEVATOR DETAILS

SHEET A6-17.1

a6_17_01 elvtrdet1.dgn
TAEMWW Imperial Rev. 7/10 25-OCT-2012 13:47

ORIGINAL SCALE IN INCHES FOR REDUCED PLANS 0 1 2 3

UNIT 3598
PROJECT NUMBER & PHASE 0412000661
EA 014081

DISREGARD PRINTS BEARING EARLIER REVISION DATES → REVISION DATES (PRELIMINARY STAGE ONLY) 02-28-12 04-26-12 05-08-12 05-17-12 06-01-12 06-20-12 — SHEET X OF X

25-OCT-2012 13:47
a6_17_01 elvtrdet1.dgn

DIST.	COUNTY	ROUTE	POST MILES TOTAL PROJECT	SHEET NO.	TOTAL SHEETS
04	Ala	80	2.2	325	800

REGISTERED CIVIL ENGINEER — DATE 05-31-12

REGISTERED PROFESSIONAL ENGINEER — Sean R. Samuel — No. 54569 — Exp. 12-31-13 — CIVIL — STATE OF CALIFORNIA

10-22-12
PLANS APPROVAL DATE

The State of California or its officers or agents shall not be responsible for the accuracy or completeness of electronic copies of this plan sheet.

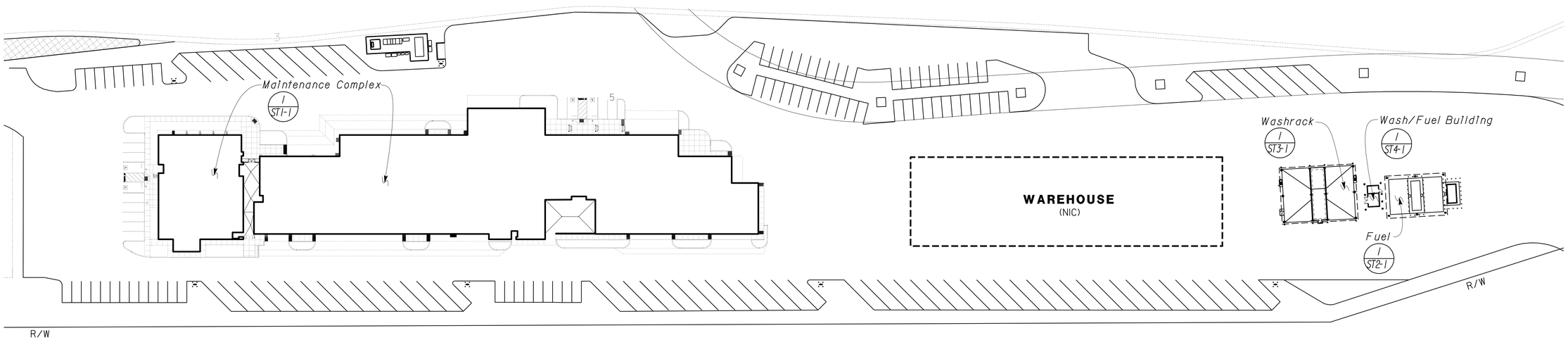

1 BUILDING INDEX SITE PLAN
Scale 1" = 50' - 0"

FOR DETAILS NOT SHOWN SEE ROADWAY PLANS

DESIGN	BY Robert du Plaine	CHECKED Brian Sutliff	
DETAILS	BY David W. Good	CHECKED Robert du Plaine	
QUANTITIES	BY	CHECKED	

STATE OF CALIFORNIA
DEPARTMENT OF TRANSPORTATION

DIVISION OF ENGINEERING SERVICES
ARCHITECTURAL AND STRUCTURAL DESIGN

BRIDGE NO. 33M5785
POST MILE 2.2

SFOBB MAINTENANCE COMPLEX

SITE PLAN

SHEET **ST-0**

TAEMWW Imperial Rev. 7/10

ORIGINAL SCALE IN INCHES FOR REDUCED PLANS 0 1 2 3

UNIT 3599
PROJECT NUMBER & PHASE 04120006661
EA 014081

DISREGARD PRINTS BEARING EARLIER REVISION DATES → 02-28-12 05-31-12 06-18-12

REVISION DATES (PRELIMINARY STAGE ONLY) SHEET OF

N:\dist04\04-014081\st0_00_gp.dgn

29-OCT-2012 16:39

DIST.	COUNTY	ROUTE	POST MILES TOTAL PROJECT	SHEET NO.	TOTAL SHEETS
04	Ala	80	2.2	326	800

REGISTERED CIVIL ENGINEER — DATE 05-31-12

REGISTERED PROFESSIONAL ENGINEER — Sean R. Samuel — No. 54569 — Exp. 12-31-13 — CIVIL — STATE OF CALIFORNIA

10-22-12
PLANS APPROVAL DATE

The State of California or its officers or agents shall not be responsible for the accuracy or completeness of electronic copies of this plan sheet.

ABBREVIATIONS

AAD	Adhesive Anchorage Device
AB	Anchor Bolt
AC	Asphalt Concrete
Alt	Alternate
APA	American Plywood Association
APC	Alternative Pipe Culvert
Bldg	Building
Blkg	Blocking
BN	Boundary Nailing
Btm	Bottom
CB	Carriage Bolt
CFS	Cold-Formed Steel
CIDH	Cast In Drilled Hole
CJ	Control Joint
Clr	Clear
CMU	Concrete Masonry Unit
Conc	Concrete
Const	Construction
Cont	Continuous
CP	Complete Penetration Weld
Dbl	Double
DF	Douglas Fir
Dia	Diameter
DIP	Ductile Iron Pipe
DN	Diameter Nominal
do	Ditto
(E)	Existing
Ea	Each
EL	Elevation
Elec	Electrical
Embed	Embedment
EN	Edge Nail
Eq	Equal
Exp	Expansion
FDGM	Free Draining Granular Material
FG	Finish Grade
FL	Flow Line
Flr	Floor
FN	Face (Field) Nail
FOC	Face of Concrete
FOM	Face of Masonry
FOS	Face of Stud
Ftg	Footing
Ga	Gage
Galv	Galvanized
GLM	Glue Laminated Member
Gyp Bd	Gypsum Board
HD	Holdown
Hex	Hexagon
Horiz	Horizontal
HSB	High Strength Bolt
HSS	Hollow Structural Section
Jt	Joint
LOL	Layout Line
LVL	Laminated Veneer Lumber
m	Meter
Max	Maximum
MEA	Mechanical Expansion Anchor
Mech	Mechanical
Mfr	Manufacturer
mm	Millimeter
Min	Minimum
MIW	Malleable Iron Washer
OC	On Center
OG	Original Grade
OH	Opposite Hand
Opt	Optional
P	Pitch
PDF	Powder Driven Fastener
Plwd	Plywood
PT	Pressure Treated
PW	Puddle Weld
PWB	Prefabricated Wood I Beam
RCP	Reinforced Concrete Pipe
Reinf	Reinforced, Reinforcing
Req'd	Required
SDSTS	Self Drill, Self Tap Screw
Sim	Similar
SPS	Structural Plywood Sheathing
Sq	Square
Stagg	Staggered
Std	Standard
SW	Stud Weld
Sym	Symmetrical
T&G	Tongue-and-Groove
TN	Toe Nail
TS	Tube Steel
Typ	Typical
UON	Unless Otherwise Noted
Vert	Vertical

SYMBOLS

- Blocking In Section or Elevation
- Continuous Member In Section
- End of Member
- Bearing Wall
- Shear Wall
- X XXXX — Length; Shearwall Schedule Symbol; Reference
- Glue Laminated Member Section
- North Arrow
- X STX-X — Partial Section Cut
- X STX-X — Full Section Cut
- X — Revision Callout
- A — Grid Line Indicator
- ℄ — Center Line
- ⊈ — Station Line
- ℙ — Steel Plate
- Ø — Diameter
- ⌑ — Square
- CMU Wall on Plan Views
- Dropped Slab on Plan Views
- Reinforced Concrete
- Sand
- Structural Backfill
- Structural Excavation
- Original Ground
- Limits of Structural Backfill (shown on plan view)
- Free Draining Granular Material
- X — Bottom of Footing
- Elevation or Working Point
- Existing Features
- Holdown, Typ — Simpson / USP / Equal (Manufacturers are those noted in the order shown.)
- Frame Connector — Simpson / USP / Equal (Manufacturers are those noted in the order shown.)
- 3 ST-1 5b — Detail Number or Note Number; Additional Reference (if required); Sheet Number

NOTE: SPECIFIC DETAILS OR NOTES ON OTHER SHEETS SHALL PREVAIL OVER STANDARD DETAILS AND NOTES ON THIS SHEET

FILE NO. XS-25-0	DESIGN BY Sean Samuel	CHECKED	APPROVED R.E. Travis
DRAWING DATE 1-04	DETAILS BY George E. Rove	CHECKED	DESIGN SUPERVISOR
	SUBMITTED BY Sean Samuel, DESIGN ENGINEER		

STANDARD DRAWING

STATE OF CALIFORNIA DEPARTMENT OF TRANSPORTATION

DIVISION OF ENGINEERING SERVICES ARCHITECTURAL AND STRUCTURAL DESIGN

BRIDGE NO. 33M5785 — POST MILE 2.2

SFOBB MAINTENANCE COMPLEX

LEGEND

SHEET ST-1

TAEMWW Imperial Rev. 7/10

ORIGINAL SCALE IN INCHES FOR REDUCED PLANS 0 1 2 3

UNIT 3599
PROJECT NUMBER & PHASE 04120006661
EA 014081

DISREGARD PRINTS BEARING EARLIER REVISION DATES → 1-16-04 12-28-11

REVISION DATES (PRELIMINARY STAGE ONLY) — SHEET — OF

25-OCT-2012 13:47

st0_01.dgn

DIST.	COUNTY	ROUTE	POST MILES TOTAL PROJECT	SHEET NO.	TOTAL SHEETS
04	Ala	80	2.2	327	800

REGISTERED CIVIL ENGINEER — DATE 05-31-12

REGISTERED PROFESSIONAL ENGINEER Sean R. Samuel No. 54569 Exp. 12-31-13 CIVIL STATE OF CALIFORNIA

10-22-12
PLANS APPROVAL DATE

The State of California or its officers or agents shall not be responsible for the accuracy or completeness of electronic copies of this plan sheet.

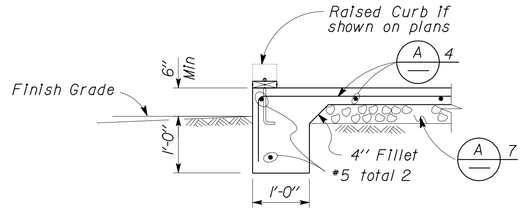

1 EXTERIOR FOOTING
No Scale

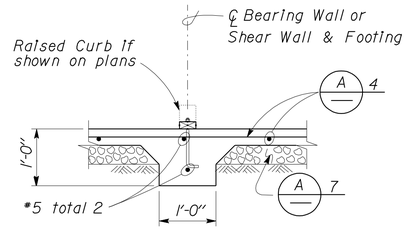

5 INTERIOR FOOTING
No Scale

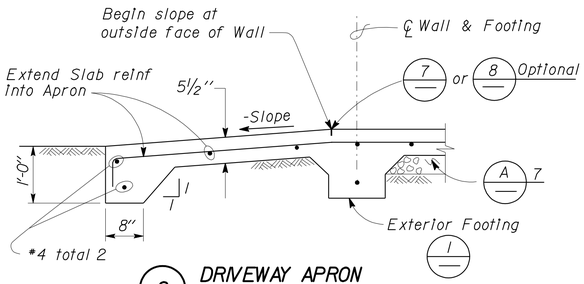

2 DRIVEWAY APRON
No Scale

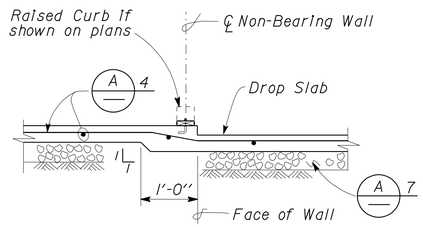

6 DROP SLAB AT NON-BEARING WALL
No Scale

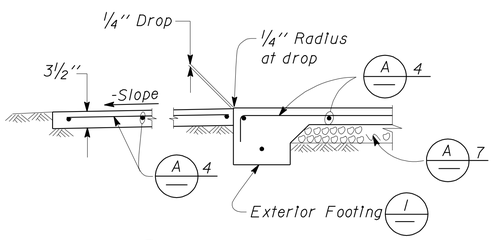

3 WALKWAY APRON
No Scale

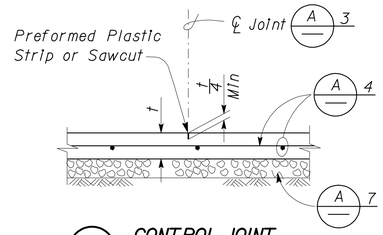

7 CONTROL JOINT
No Scale

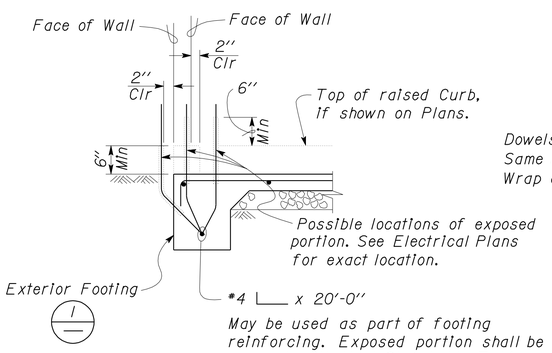

4 GROUND BAR DETAIL
No Scale

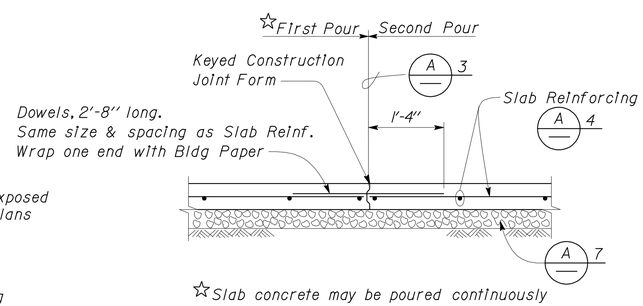

☆Slab concrete may be poured continuously across the Control Joint, to cover as large an area as practical.

8 CONTRACTION JOINT
No Scale

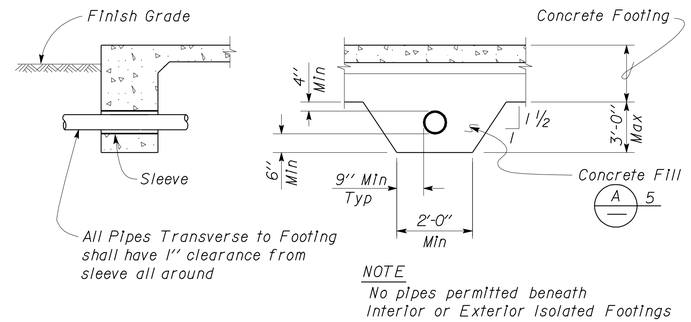

NOTE
No pipes permitted beneath Interior or Exterior Isolated Footings

9 PIPE DETAILS THROUGH FOOTING
No Scale

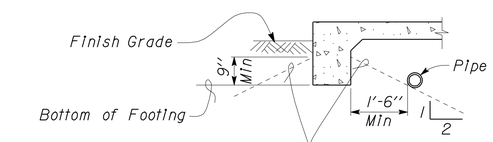

NOTE
For Pipe Cover, see Specifications: Earthwork for Building Work

No digging for Pipe Trench parallel to Footing below these lines.

Exterior Footing shown, Interior or Exterior Isolated Footings are similar.

10 PIPE DETAILS PARALLEL TO FOOTING
No Scale

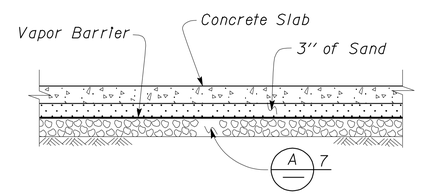

11 MOISTURE BARRIER
No Scale

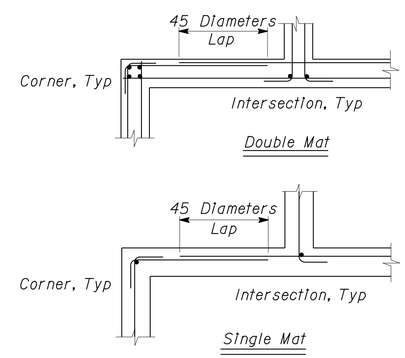

12 CORNER/INTERSECTION REINF SPLICE, TYPICAL
No Scale

A CONCRETE NOTES

1. The following minimum concrete cover shall be provided for reinforcement.

	Minimum Cover
a. Concrete cast against and permanently exposed to earth	3"
b. Concrete exposed to earth or weather but cast in forms :	
#6 thru #18 bars	2"
#5 bar and smaller, W31 or D31 Wire, and smaller	1½"
c. Concrete not exposed to weather or in contact with ground : Slabs, Walls and Joists :	
#14 and #18 Bar	1½"
#11 Bar and smaller	¾"
Beams and Columns : Primary Reinforcement, Ties, Stirrups and Spirals	1½"

2. Splices in continuous reinforcement as in Walls, Wall Footings, etc. #8 or smaller shall have a lap of 45 diameters and the splices in adjacent bars shall not be less than 5'-0" apart.

   Continuous Bars in spandrels, Wall Beams, etc. shall lap Top Bars at center of span and Bottom Bars at supports.

3. Contraction Joints and Control Joints shall divide slab into areas not exceeding 25 square yards without reentrant corners and with length to width ratios not exceeding 1.5 to 1. Joint spacing shall not exceed 15'-0".

4.

Slab Thickness (t)	Reinforcement	
3½"	#3 @ 18	Each way, place in center of Slab
5½"	#4 @ 18	Each way, place in center of Slab

5. Concrete fill is to be placed before Footing is poured. Make the same width as the Footing and the full width of the Pipe trench. Concrete fill not required for pipes less than 2" diameter for pipes more than 3'-0" below bottom of footing.

6. See Mechanical and Architectural Plans for size and locations of pipe, vents, ducts and other similar openings. See Electrical Plans for conduits and outlet boxes in floors, walls, etc.

7. Place 4" of free draining granular material under slabs.

NOTE: SPECIFIC DETAILS OR NOTES ON OTHER SHEETS SHALL PREVAIL OVER STANDARD DETAILS AND NOTES ON THIS SHEET

STANDARD DRAWING

FILE NO. XS-25-1	DESIGN	BY Sean Samuel	CHECKED Lee Saunders	APPROVED R.E. Travis
DRAWING DATE 1-04	DETAILS	BY Peter F. von Sauger, II	CHECKED Lee Saunders	DESIGN SUPERVISOR
	SUBMITTED BY Sean Samuel		, DESIGN ENGINEER	

STATE OF CALIFORNIA DEPARTMENT OF TRANSPORTATION

DIVISION OF ENGINEERING SERVICES ARCHITECTURAL AND STRUCTURAL DESIGN

BRIDGE NO. 33M5785 — POST MILE 2.2

SFOBB MAINTENANCE COMPLEX

CONCRETE STANDARD

SHEET ST-2

TAEMWW Imperial Rev. 7/10

SCALE: ALL DIMENSIONS ARE IN MILLIMETERS UNLESS OTHERWISE NOTED.

ORIGINAL SCALE IN INCHES FOR REDUCED PLANS 0 1 2 3

UNIT 3599
PROJECT NUMBER & PHASE 04120006661
EA 014081

DISREGARD PRINTS BEARING EARLIER REVISION DATES → 1-16-04 11-14-05 12-28-11

REVISION DATES (PRELIMINARY STAGE ONLY) SHEET OF

25-OCT-2012 13:47

st0_02.dgn

DIST.	COUNTY	ROUTE	POST MILES TOTAL PROJECT	SHEET NO.	TOTAL SHEETS
04	Ala	80	2.2	328	800

RdP
REGISTERED CIVIL ENGINEER — DATE 05-31-12

REGISTERED PROFESSIONAL ENGINEER — Robert du Plaine — No. 51447 — Exp. 6-30-14 — CIVIL — STATE OF CALIFORNIA

10-22-12
PLANS APPROVAL DATE

The State of California or its officers or agents shall not be responsible for the accuracy or completeness of scanned copies of this plan sheet.

PROJECT DESIGN CRITERIA

The building work on this project has been designed to conform to the 2007 California Building Code (2006 IBC).

LOADS

SEISMIC: Occupancy Category = II
Importance Factor I = 1.0
Site Soil Class = E
S_S = 1.5 S_{DS} = 0.9
S_1 = 0.6 S_{D1} = 0.96
Seismic Design Category = D
Seismic Force-Resisting System:

North - South

R = 3.25 C_S = 0.28

East - West

R = 3.25 C_S = 0.28

WIND: Importance Factor = 1.0
Basic Wind Speed = 85 mph
Exposure D
Internal Pressure Coefficient GC_{pi} = ± 0.55

LIVE LOAD: Roof = 20 psf
Floor/Loft = 100 psf

MATERIALS

REINFORCED CONCRETE: (Ultimate Strength Design):
f'c = 4,000 psi
f_y = 60,000 psi

STRUCTURAL STEEL: (Allowable Strength Design):

Wide Flange	F_y = 50 ksi
Chevron Brace Gusset Plates (A572)	F_y = 50 ksi
Plates	F_y = 36 ksi
Hollow Structural Section (HSS)	F_y = 46 ksi
Weld Electrode	F_y = 70 ksi

COLD FORMED STEEL: shall be F_y = 33 ksi

FOUNDATION:
Soils report dated : June 8, 2012
For Soil Classification, see Log of Test Boring Sheets.

DETAIL NOTES

1. For Concrete see: "Concrete Standard"
2. All bolts shall be hex head machine bolts, with hex head nuts; unless otherwise noted.
3. All lock washers shall be helical spring lock washers.

STRUCTURAL PLYWOOD SHEATHING

1. Structural Plywood Sheathing shall conform to the Requirements of Voluntary Product Standard PS 1-07 or PS 2-04.

   The Durability Classification shall be Exposure 1.

   Sheathing shall be Class A Fire-Rated Plywood Panels.

(A) METAL DECK NOTES

METAL DECK MINIMUM SECTION PROPERTIES

Deck Type	Depth & Gage	Moment of Inertia	Positive Section Modulus	Negative Section Modulus	Minimum Yield Strength
Metal Decking	1.5" x 20 Ga	0.220 in^4/ft	0.235 in^3/ft	0.246 in^3/ft	38 Ksi

SCREW SCHEDULE and METAL DECK PROFILE

Metal Deck Profile	Self-Drilling Self-Tapping Screws			Minimum Diaphragm Shear Capacity
	Perpendicular Supports and Panel Ends	Parallel Supports	Side Laps	
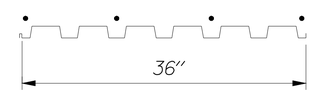	4 - #10 Per Support	#10 @ 12" OC	Button Punch @ 12" OC	350 lb/ft

(B) PILE DATA TABLE

Pile Type	Nominal Resistance		Design Tip Elevation (ft)	Specified Tip Elevation (ft)
	Compression	Tension		
CLASS 90 Alt."X"	160 kips	20 kips	-113 (a) -20 (b)	-113

Pile Tip Elevations controlled by: (a) Compression; (b) Tension.
See CalTrans Standard Plans 2006, B2-5
Cutoff Elevations per Plan

PILE QUANTITIES

FURNISH PILE (CLASS 90) (ALTERNATIVE X)	31,536	LF
DRIVE PILE (CLASS 90) (ALTERNATIVE X)	260	EA
FURNISH INDICATOR PILE (CLASS 90) (ALTERNATIVE X)	650	LF
DRIVE INDICATOR PILE (CLASS 90) (ALTERNATIVE X)	6	EA

	BY	CHECKED
DESIGN	Robert du Plaine	Brian Sutliff
DETAILS	David W. Good	Robert du Plaine
QUANTITIES		

STATE OF CALIFORNIA
DEPARTMENT OF TRANSPORTATION

DIVISION OF ENGINEERING SERVICES
ARCHITECTURAL AND STRUCTURAL DESIGN

BRIDGE NO. 33M5785
POST MILE 2.2

SFOBB MAINTENANCE COMPLEX

DESIGN CRITERIA AND DETAIL NOTES

SHEET **ST1-0**

TAEMWW Imperial Rev. 7/10

ORIGINAL SCALE IN INCHES FOR REDUCED PLANS 0 1 2 3

UNIT 3599
PROJECT NUMBER & PHASE 04120006661
EA 014081

DISREGARD PRINTS BEARING EARLIER REVISION DATES → 05-30-12 06-18-12
REVISION DATES (PRELIMINARY STAGE ONLY) SHEET OF

D:\User\Projects\Dist_04\0400000038_sfobb_ms_complex\Expedite_20120620\Copy of st_01\st1_00.dgn

26-OCT-2012 12:54

DIST.	COUNTY	ROUTE	POST MILES TOTAL PROJECT	SHEET NO.	TOTAL SHEETS
04	Ala	80	2.2	329	800

RdP
REGISTERED CIVIL ENGINEER — DATE 05-31-12

REGISTERED PROFESSIONAL ENGINEER
Robert du Plaine
No. 51447
Exp. 6-30-14
CIVIL
STATE OF CALIFORNIA

10-22-12
PLANS APPROVAL DATE

The State of California or its officers or agents shall not be responsible for the accuracy or completeness of scanned copies of this plan sheet.

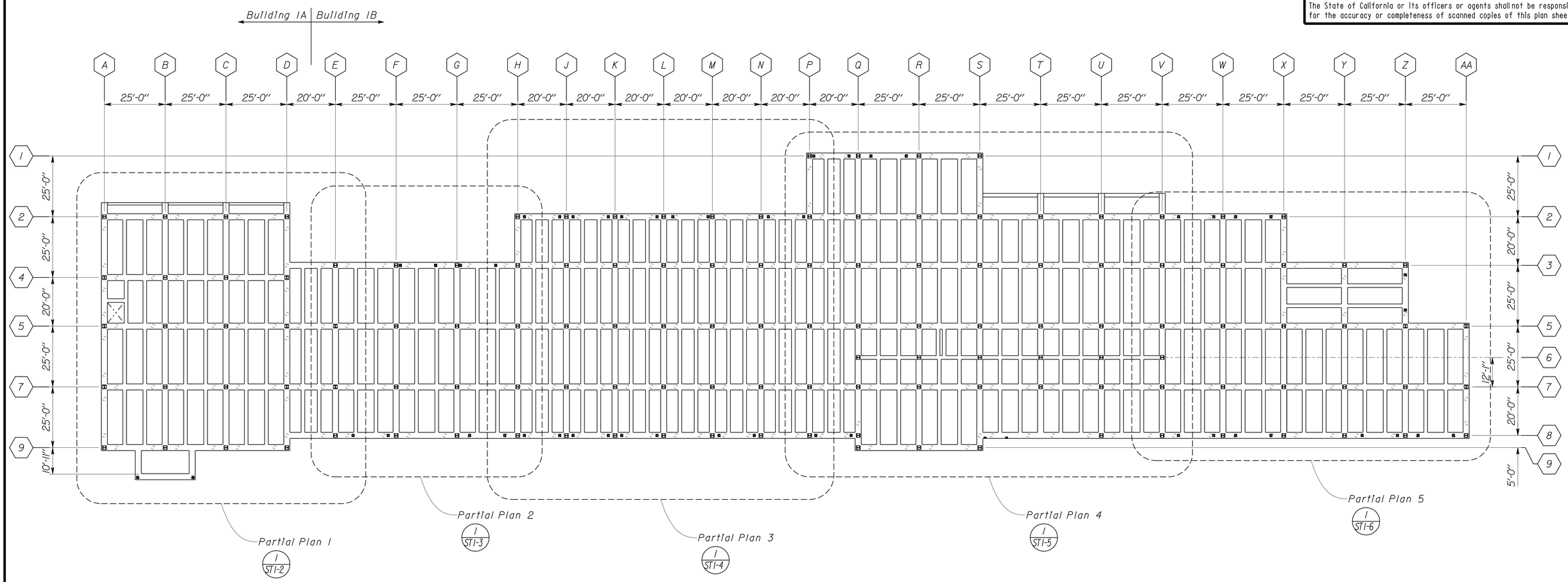

1 GRADE BEAM AND PILE INDEX PLAN

Scale 1" = 20' - 0"

Elevation +11.70 = Datum 0'-0"

DESIGN	BY Robert du Plaine	CHECKED Brian Sutliff	
DETAILS	BY David W. Good	CHECKED Robert du Plaine	
QUANTITIES	BY	CHECKED	

DESIGN ENGINEER

STATE OF CALIFORNIA
DEPARTMENT OF TRANSPORTATION

DIVISION OF ENGINEERING SERVICES
ARCHITECTURAL AND STRUCTURAL DESIGN

BRIDGE NO. 33M5785
POST MILE 2.2

SFOBB MAINTENANCE COMPLEX

GRADE BEAM & PILE INDEX PLAN

SHEET **ST1-1**

TAEMWW Imperial Rev. 7/10

ORIGINAL SCALE IN INCHES FOR REDUCED PLANS 0 1 2 3

UNIT 3599
PROJECT NUMBER & PHASE 04120006661
EA 014081

DISREGARD PRINTS BEARING EARLIER REVISION DATES → 11-16-11 12-28-11 05-08-12 05-30-12

REVISION DATES (PRELIMINARY STAGE ONLY) SHEET OF

D:\User\Projects\Dist_04\0400000038_sfobb_ms_complex\Expedite_20120620\Copy of st_01\st1_001.dgn

25-OCT-2012 13:47

DIST.	COUNTY	ROUTE	POST MILES TOTAL PROJECT	SHEET NO.	TOTAL SHEETS
04	Ala	80	2.2	330	800

RdP
REGISTERED CIVIL ENGINEER — DATE 05-31-12

REGISTERED PROFESSIONAL ENGINEER — Robert du Plaine — No. 51447 — Exp. 6-30-14 — CIVIL — STATE OF CALIFORNIA

10-22-12
PLANS APPROVAL DATE

The State of California or its officers or agents shall not be responsible for the accuracy or completeness of scanned copies of this plan sheet.

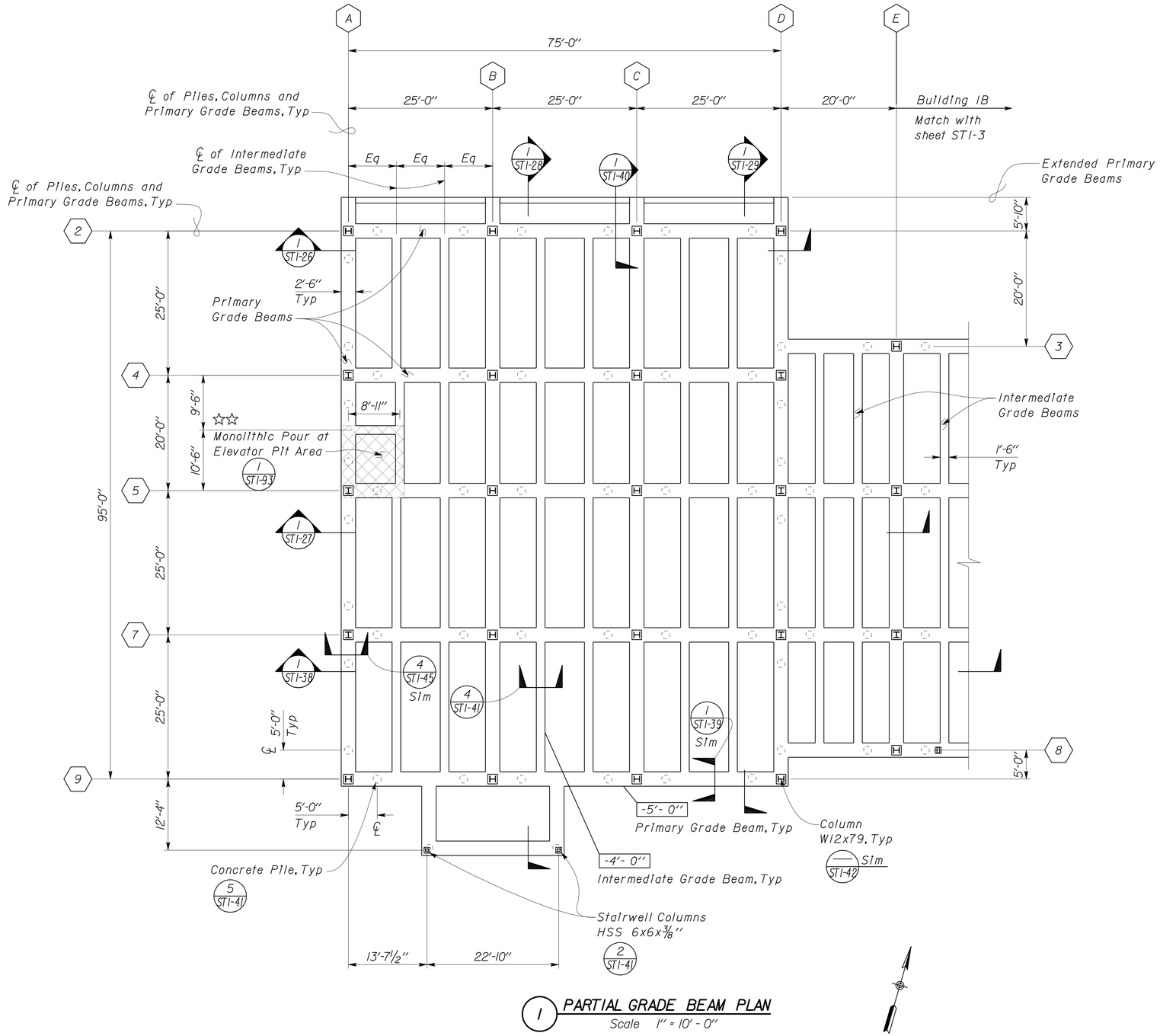

1 PARTIAL GRADE BEAM PLAN
Scale 1" = 10' - 0"

NOTE:
Buildings IA and IB share a common grid system, not all alpha/numeric indicators will show consecutively.

☆☆NOTE:
Dimensions to be determined by the Elevator Manufacturer, prior to commencement of construction of the Elevator Shaft and the Elevator Foundation, subject to Approval by Engineer.

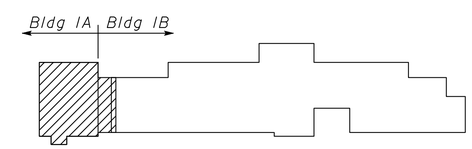

Key Plan

DESIGN	BY Robert du Plaine	CHECKED Brian Sutliff	
DETAILS	BY David W. Good	CHECKED Robert du Plaine	
QUANTITIES	BY	CHECKED	

STATE OF CALIFORNIA
DEPARTMENT OF TRANSPORTATION

DIVISION OF ENGINEERING SERVICES
ARCHITECTURAL AND STRUCTURAL DESIGN

BRIDGE NO. 33M5785
POST MILE 2.2

SFOBB MAINTENANCE COMPLEX
GRADE BEAM PARTIAL PLAN 1 of 5

SHEET ST1-2

TAEMWW Imperial Rev. 7/10

ORIGINAL SCALE IN INCHES FOR REDUCED PLANS 0 1 2 3

UNIT 3599
PROJECT NUMBER & PHASE 04120006661
EA 014081

DISREGARD PRINTS BEARING EARLIER REVISION DATES → REVISION DATES (PRELIMINARY STAGE ONLY) 11-16-11 12-06-11 12-28-11 05-08-12 05-18-12 05-28-12 SHEET OF

D:\User\Projects\Dist_04\0400000038_sfobb_ms_complex\Expedite_20120620\Copy of st_01\st1_002.dgn

25-OCT-2012 12:56

DIST.	COUNTY	ROUTE	POST MILES TOTAL PROJECT	SHEET NO.	TOTAL SHEETS
04	Ala	80	2.2	331	800

RdP
REGISTERED CIVIL ENGINEER — DATE 05-31-12

REGISTERED PROFESSIONAL ENGINEER
Robert du Plaine
No. 51447
Exp. 6-30-14
CIVIL
STATE OF CALIFORNIA

10-22-12
PLANS APPROVAL DATE

The State of California or its officers or agents shall not be responsible for the accuracy or completeness of scanned copies of this plan sheet.

NOTE:
Buildings IA and IB share a common grid system, not all alpha/numeric indicators will show consecutively.

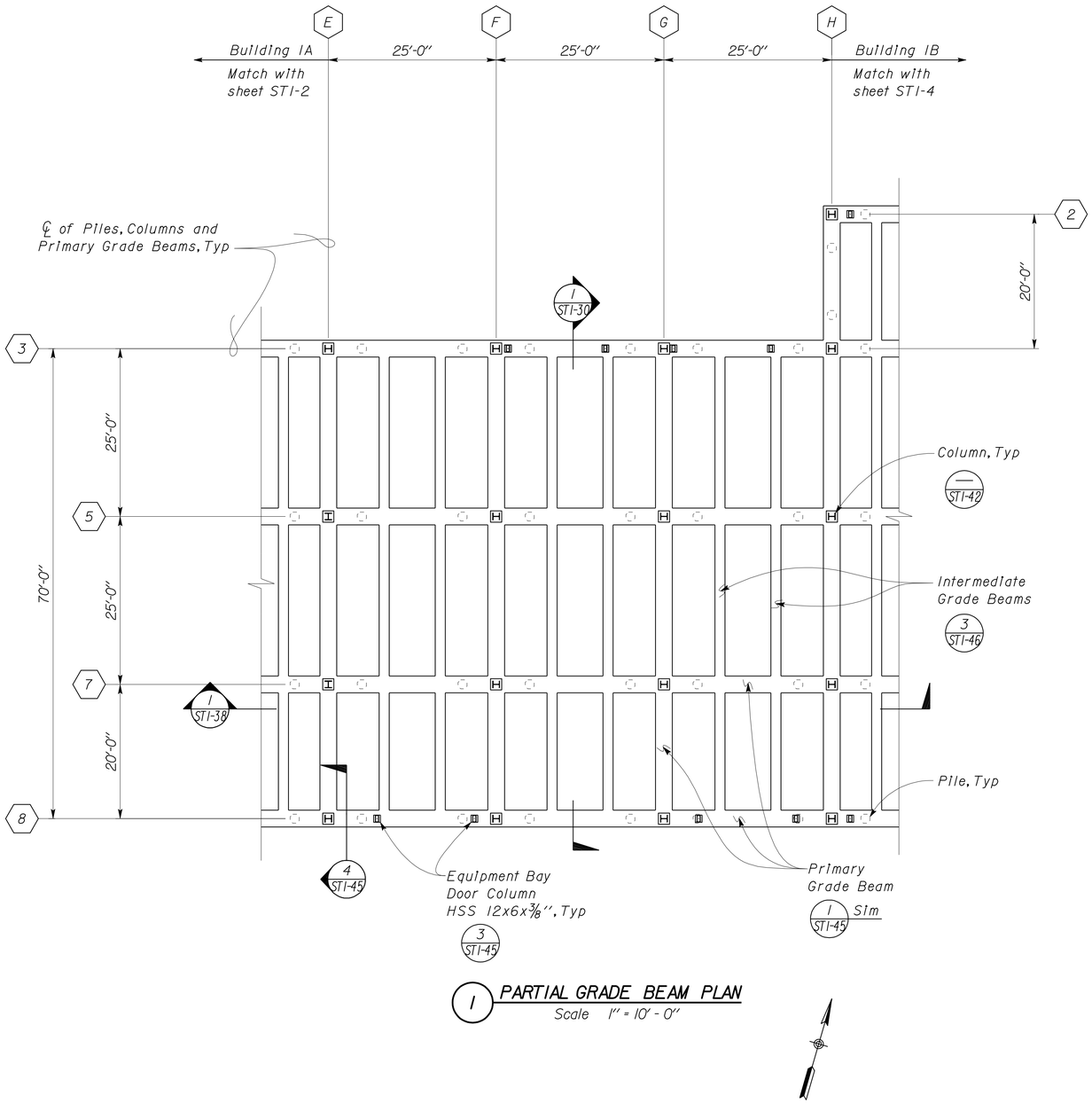

1 PARTIAL GRADE BEAM PLAN
Scale 1" = 10' - 0"

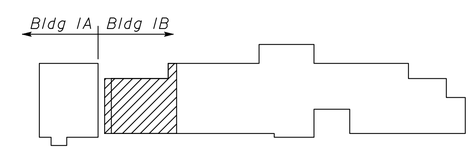

Key Plan

DESIGN	BY Robert du Plaine	CHECKED Brian Sutliff	
DETAILS	BY David W. Good	CHECKED Robert du Plaine	
QUANTITIES	BY	CHECKED	

STATE OF CALIFORNIA
DEPARTMENT OF TRANSPORTATION

DIVISION OF ENGINEERING SERVICES
ARCHITECTURAL AND STRUCTURAL DESIGN

BRIDGE NO. 33M5785
POST MILE 2.2

SFOBB MAINTENANCE COMPLEX
GRADE BEAM PARTIAL PLAN 2 of 5

SHEET **ST1-3**

TAEMWW Imperial Rev. 7/10

ORIGINAL SCALE IN INCHES FOR REDUCED PLANS 0 1 2 3

UNIT 3599
PROJECT NUMBER & PHASE 04120006661
EA 014081

DISREGARD PRINTS BEARING EARLIER REVISION DATES → 11-16-11 12-28-11 05-08-12 05-18-12 05-28-12

REVISION DATES (PRELIMINARY STAGE ONLY) SHEET OF

D:\User\Projects\Dist_04\0400000038_sfobb_ms_complex\Expedite_20120620\Copy of st_01\st1_003.dgn

25-OCT-2012 12:56

DIST.	COUNTY	ROUTE	POST MILES TOTAL PROJECT	SHEET NO.	TOTAL SHEETS
04	Ala	80	2.2	332	800

RdP
REGISTERED CIVIL ENGINEER — DATE 05-31-12

REGISTERED PROFESSIONAL ENGINEER
Robert du Plaine
No. 51447
Exp. 6-30-14
CIVIL
STATE OF CALIFORNIA

10-22-12
PLANS APPROVAL DATE

The State of California or its officers or agents shall not be responsible for the accuracy or completeness of scanned copies of this plan sheet.

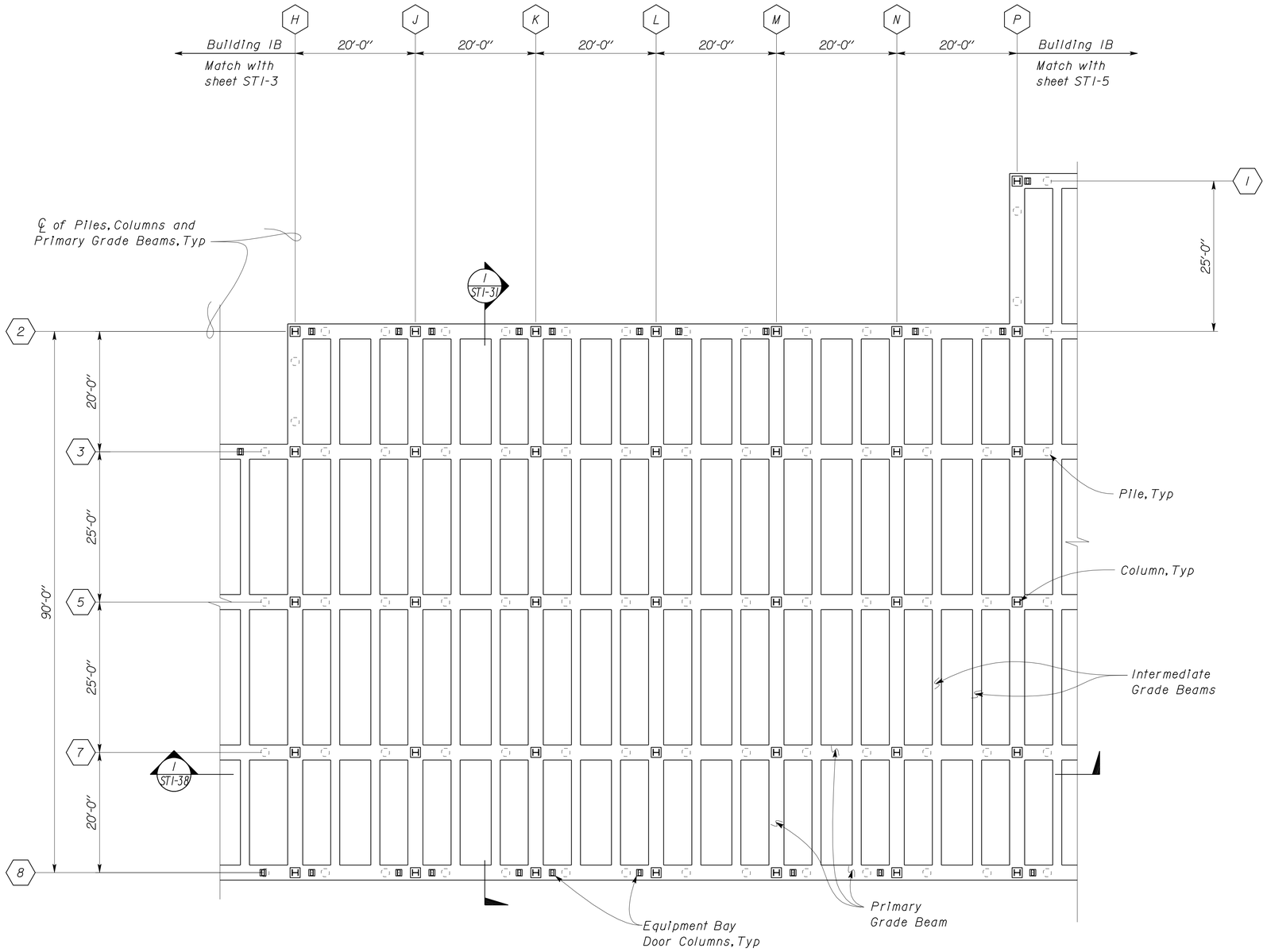

NOTE:
Buildings IA and IB share a common grid system, not all alpha/numeric indicators will show consecutively.

1 PARTIAL GRADE BEAM PLAN
Scale 1" = 10' - 0"

For Typical Information, See 1/ST1-3

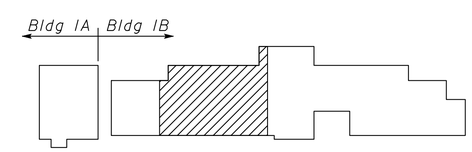

Key Plan

DESIGN	BY Robert du Plaine	CHECKED Brian Sutliff	
DETAILS	BY David W. Good	CHECKED Robert du Plaine	
QUANTITIES	BY	CHECKED	

STATE OF CALIFORNIA
DEPARTMENT OF TRANSPORTATION

DIVISION OF ENGINEERING SERVICES
ARCHITECTURAL AND STRUCTURAL DESIGN

BRIDGE NO. 33M5785
POST MILE 2.2

SFOBB MAINTENANCE COMPLEX

GRADE BEAM PARTIAL PLAN 3 of 5

SHEET ST1-4

TAEMWW Imperial Rev. 7/10

ORIGINAL SCALE IN INCHES FOR REDUCED PLANS 0 1 2 3

UNIT 3599
PROJECT NUMBER & PHASE 04120006661
EA 014081

DISREGARD PRINTS BEARING EARLIER REVISION DATES → REVISION DATES (PRELIMINARY STAGE ONLY) 11-16-11 12-03-11 12-28-11 05-08-12 05-18-12 05-28-12 SHEET OF

D:\User\Projects\Dist_04\0400000038_sfobb_ms_complex\Expedite_20120620\Copy of st_01\st1_004.dgn

25-OCT-2012 12:56

DIST.	COUNTY	ROUTE	POST MILES TOTAL PROJECT	SHEET NO.	TOTAL SHEETS
04	Ala	80	2.2	333	800

RdP
REGISTERED CIVIL ENGINEER — DATE 05-31-12

REGISTERED PROFESSIONAL ENGINEER Robert du Plaine No. 51447 Exp. 6-30-14 CIVIL STATE OF CALIFORNIA

10-22-12
PLANS APPROVAL DATE

The State of California or its officers or agents shall not be responsible for the accuracy or completeness of scanned copies of this plan sheet.

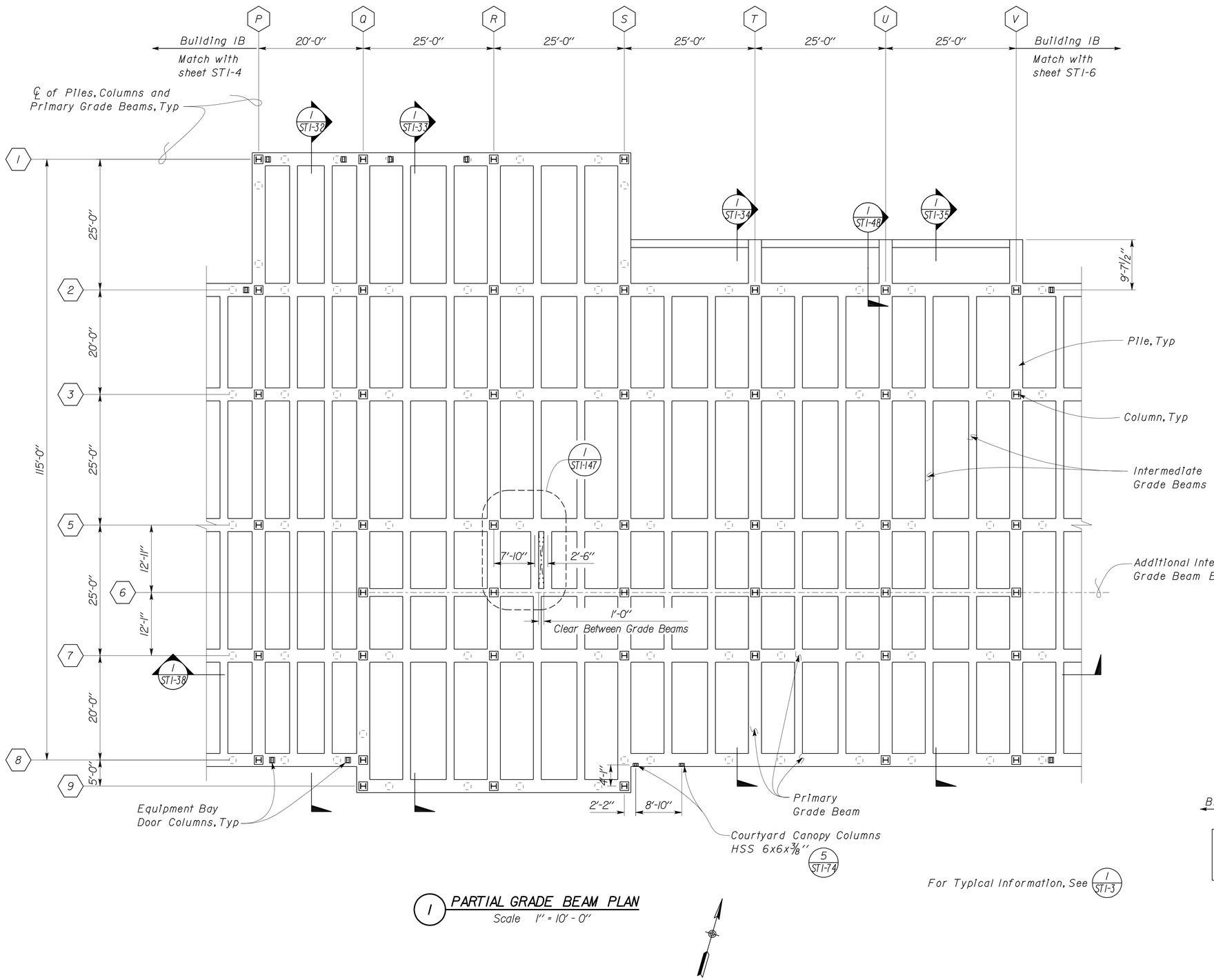

NOTE:
Buildings IA and IB share a common grid system, not all alpha/numeric indicators will show consecutively.

For Typical Information, See 1/ST1-3

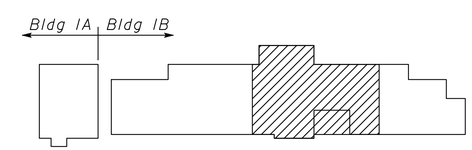

Key Plan

1 PARTIAL GRADE BEAM PLAN
Scale 1" = 10' - 0"

DESIGN	BY Robert du Plaine	CHECKED Brian Sutliff	
DETAILS	BY David W. Good	CHECKED Robert du Plaine	
QUANTITIES	BY	CHECKED	

STATE OF CALIFORNIA
DEPARTMENT OF TRANSPORTATION

DIVISION OF ENGINEERING SERVICES
ARCHITECTURAL AND STRUCTURAL DESIGN

BRIDGE NO. 33M5785
POST MILE 2.2

SFOBB MAINTENANCE COMPLEX
GRADE BEAM PARTIAL PLAN 4 of 5

SHEET **ST1-5**

TAEMWW Imperial Rev. 7/10

ORIGINAL SCALE IN INCHES FOR REDUCED PLANS 0 1 2 3

UNIT 3599
PROJECT NUMBER & PHASE 04120006661
EA 014081

DISREGARD PRINTS BEARING EARLIER REVISION DATES
REVISION DATES (PRELIMINARY STAGE ONLY) 11-16-11 12-03-11 12-28-11 05-08-12 05-18-12 05-28-12
SHEET OF

D:\User\Projects\Dist_04\0400000038_sfobb_ms_complex\Expedite_20120620\Copy of st_01\st1_005.dgn

25-OCT-2012 12:56

DIST.	COUNTY	ROUTE	POST MILES TOTAL PROJECT	SHEET NO.	TOTAL SHEETS
04	Ala	80	2.2	334	800

RdP
REGISTERED CIVIL ENGINEER — DATE 05-31-12

REGISTERED PROFESSIONAL ENGINEER Robert du Plaine No. 51447 Exp. 6-30-14 CIVIL STATE OF CALIFORNIA

10-22-12
PLANS APPROVAL DATE

The State of California or its officers or agents shall not be responsible for the accuracy or completeness of scanned copies of this plan sheet.

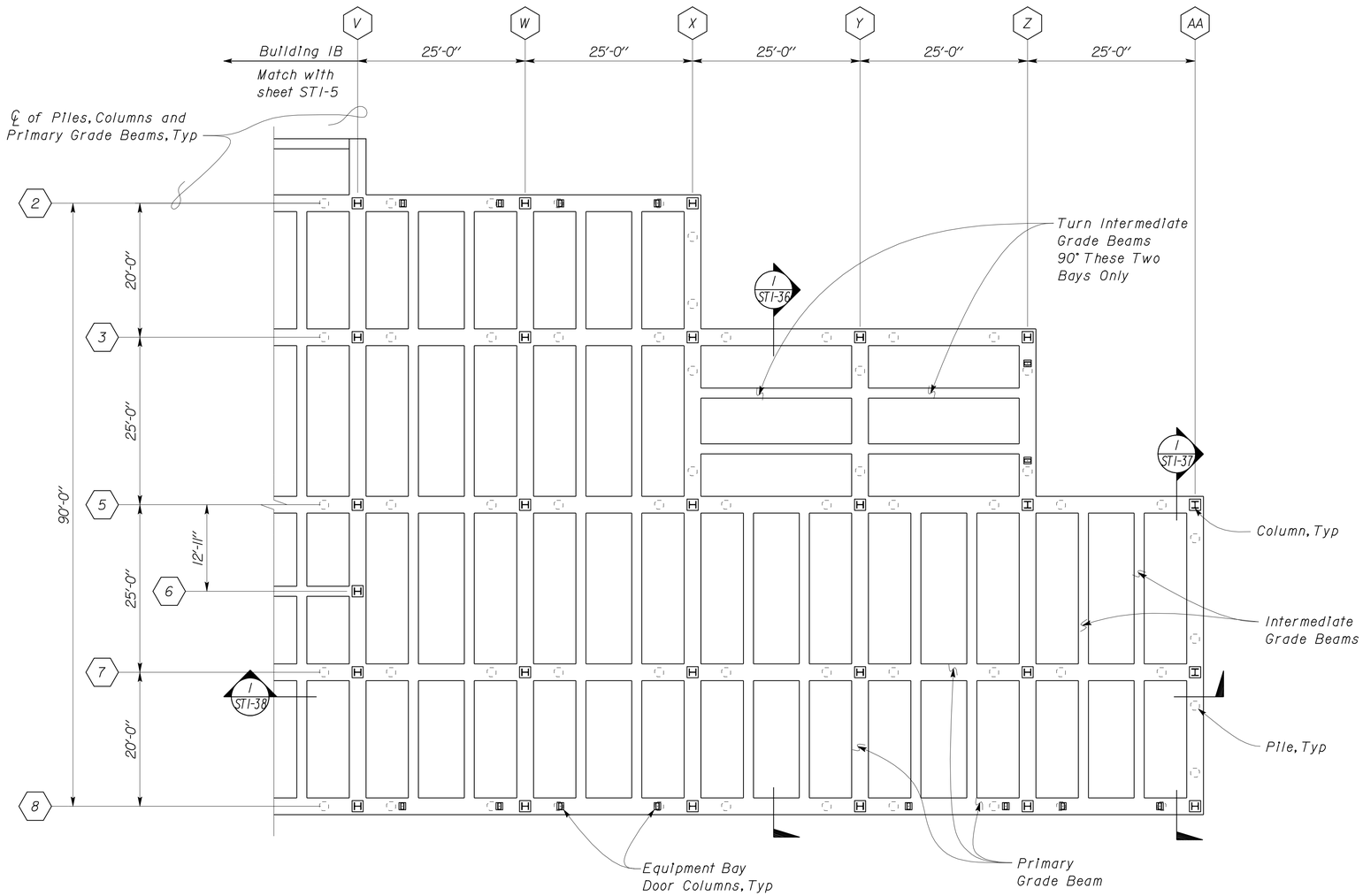

NOTE:
Buildings IA and IB share a common grid system, not all alpha/numeric indicators will show consecutively.

For Typical Information, See 1/ST1-3

1 PARTIAL GRADE BEAM PLAN
Scale 1" = 10' - 0"

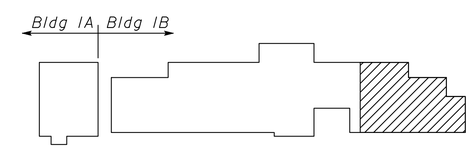

Key Plan

DESIGN	BY Robert du Plaine	CHECKED Brian Sutliff	
DETAILS	BY David W. Good	CHECKED Robert du Plaine	
QUANTITIES	BY	CHECKED	

STATE OF CALIFORNIA
DEPARTMENT OF TRANSPORTATION

DIVISION OF ENGINEERING SERVICES
ARCHITECTURAL AND STRUCTURAL DESIGN

BRIDGE NO. 33M5785
POST MILE 2.2

SFOBB MAINTENANCE COMPLEX

GRADE BEAM PARTIAL PLAN 5 of 5

SHEET **ST1-6**

TAEMWW Imperial Rev. 7/10

ORIGINAL SCALE IN INCHES FOR REDUCED PLANS 0 1 2 3

UNIT 3599
PROJECT NUMBER & PHASE 04120006661
EA 014081

DISREGARD PRINTS BEARING EARLIER REVISION DATES → 11-16-11 12-03-11 12-28-11 05-08-12 05-18-12 05-28-12

REVISION DATES (PRELIMINARY STAGE ONLY) SHEET OF

D:\User\Projects\Dist_04\0400000038_sfobb_ms_complex\Expedite_20120620\Copy of st_01\st1_006.dgn

25-OCT-2012 12:56

DIST.	COUNTY	ROUTE	POST MILES TOTAL PROJECT	SHEET NO.	TOTAL SHEETS
04	Ala	80	2.2	335	800

RdP
REGISTERED CIVIL ENGINEER — DATE 05-31-12

REGISTERED PROFESSIONAL ENGINEER
Robert du Plaine
No. 51447
Exp. 6-30-14
CIVIL
STATE OF CALIFORNIA

10-22-12
PLANS APPROVAL DATE

The State of California or its officers or agents shall not be responsible for the accuracy or completeness of scanned copies of this plan sheet.

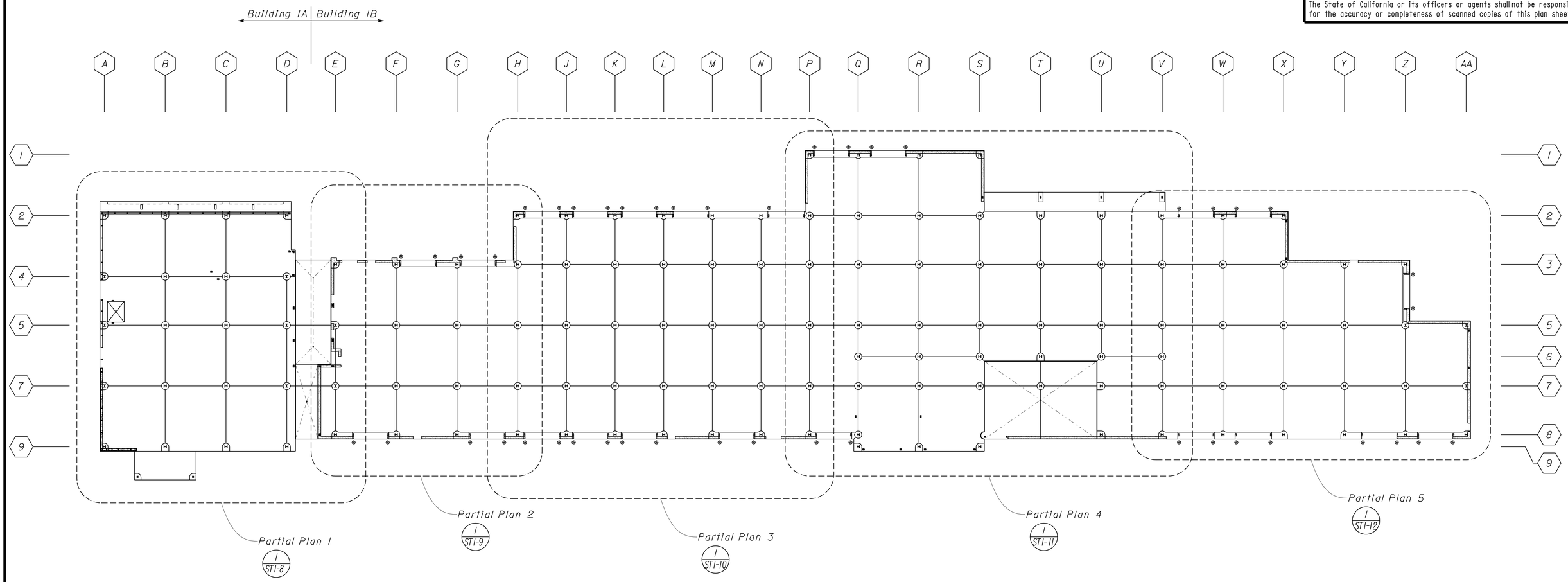

1 SLAB AND CONCRETE WALL INDEX PLAN

Scale 1" = 20' - 0"

DESIGN	BY Robert du Plaine	CHECKED Brian Sutliff	
DETAILS	BY David W. Good	CHECKED Robert du Plaine	
QUANTITIES	BY	CHECKED	

STATE OF CALIFORNIA
DEPARTMENT OF TRANSPORTATION

DIVISION OF ENGINEERING SERVICES
ARCHITECTURAL AND STRUCTURAL DESIGN

BRIDGE NO. 33M5785
POST MILE 2.2

SFOBB MAINTENANCE COMPLEX

SLAB & CONCRETE WALL INDEX PLAN

SHEET **ST1-7**

TAEMWW Imperial Rev. 7/10

ORIGINAL SCALE IN INCHES FOR REDUCED PLANS 0 1 2 3

UNIT 3599
PROJECT NUMBER & PHASE 04120006661
EA 014081

DISREGARD PRINTS BEARING EARLIER REVISION DATES → 11-16-11 12-28-11 05-08-12 06-14-12

REVISION DATES (PRELIMINARY STAGE ONLY) SHEET OF

D:\User\Projects\Dist_04\0400000038_sfobb_ms_complex\Expedite_20120620\Copy of st_01\st1_007.dgn

25-OCT-2012 12:56

DIST.	COUNTY	ROUTE	POST MILES TOTAL PROJECT	SHEET NO.	TOTAL SHEETS
04	Ala	80	2.2	336	800

RdP
REGISTERED CIVIL ENGINEER — DATE 05-31-12

REGISTERED PROFESSIONAL ENGINEER — Robert du Plaine — No. 51447 — Exp. 6-30-14 — CIVIL — STATE OF CALIFORNIA

10-22-12
PLANS APPROVAL DATE

The State of California or its officers or agents shall not be responsible for the accuracy or completeness of scanned copies of this plan sheet.

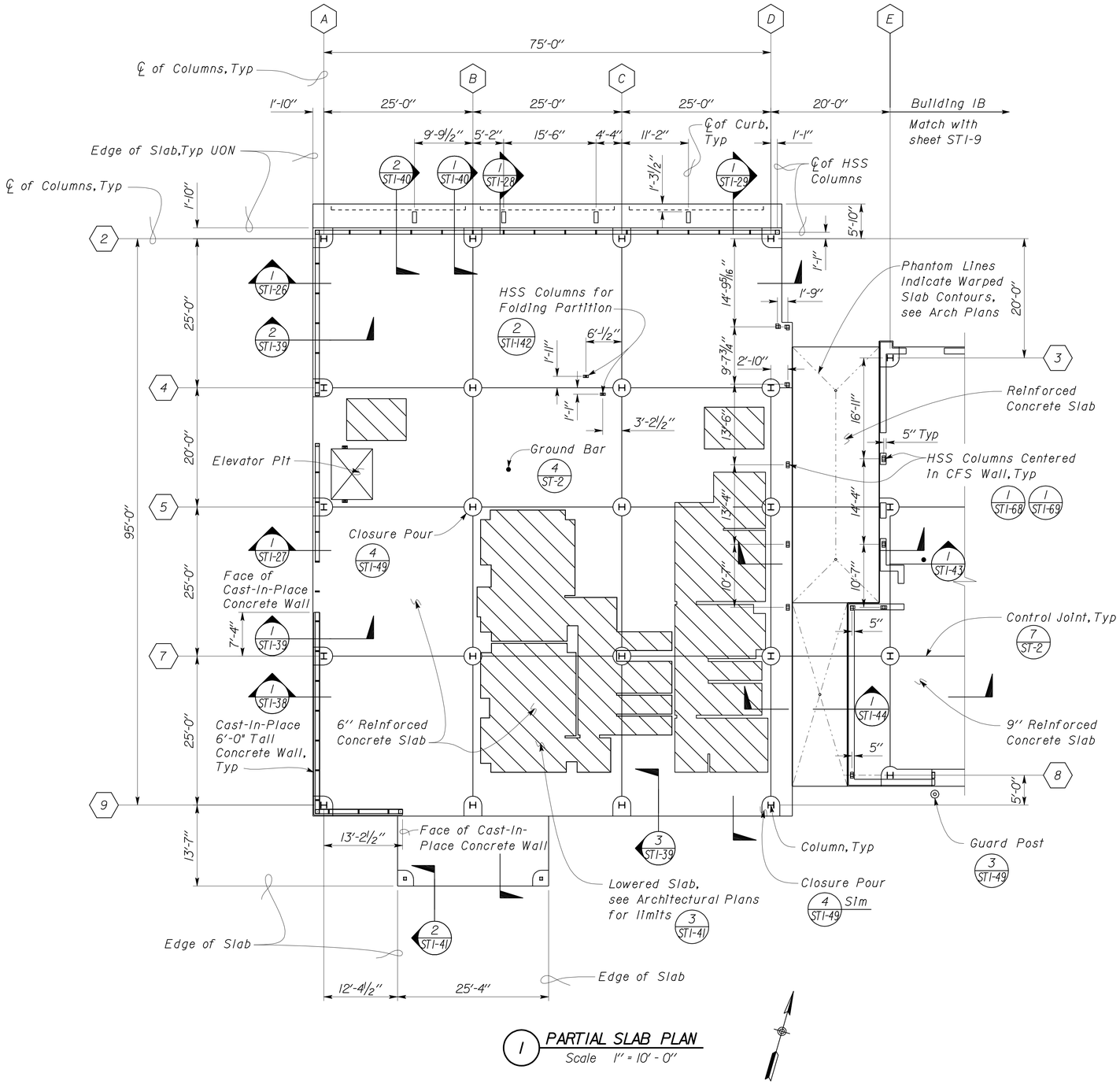

1 PARTIAL SLAB PLAN
Scale 1" = 10' - 0"

NOTES:

Buildings IA and IB share a common grid system, not all alpha/numeric indicators will show consecutively.

For locations of Ground Bars, see Electrical Plans.

For limits of and openings in Cast-In-Place Concrete Walls, see Architectural Plans.

Dimensions to be determined by the Elevator Manufacturer, prior to commencement of construction of the Elevator Shaft and the Elevator Foundation, subject to Approval by Engineer.

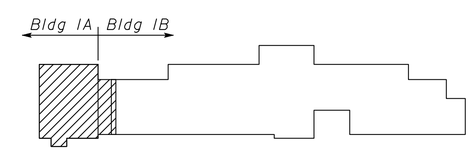

Key Plan

DESIGN	BY Robert du Plaine	CHECKED Brian Sutliff	
DETAILS	BY David W. Good	CHECKED Robert du Plaine	
QUANTITIES	BY	CHECKED	

STATE OF CALIFORNIA
DEPARTMENT OF TRANSPORTATION

DIVISION OF ENGINEERING SERVICES
ARCHITECTURAL AND STRUCTURAL DESIGN

BRIDGE NO. 33M5785
POST MILE 2.2

SFOBB MAINTENANCE COMPLEX
SLAB PARTIAL PLAN 1 of 5

SHEET ST1-8

TAEMWW Imperial Rev. 7/10

ORIGINAL SCALE IN INCHES FOR REDUCED PLANS 0 1 2 3

UNIT 3599
PROJECT NUMBER & PHASE 04120006661
EA 014081

DISREGARD PRINTS BEARING EARLIER REVISION DATES → 11-16-11 12-03-11 12-28-11 05-08-12 05-18-12 05-24-12 05-30-12 06-14-12

REVISION DATES (PRELIMINARY STAGE ONLY) SHEET OF

D:\User\Projects\Dist_04\0400000038_sfobb_ms_complex\Expedite_20120620\Copy of st_01\st1_008.dgn

26-OCT-2012 13:30

DIST.	COUNTY	ROUTE	POST MILES TOTAL PROJECT	SHEET NO.	TOTAL SHEETS
04	Ala	80	2.2	337	800

RdP
REGISTERED CIVIL ENGINEER — DATE 05-31-12

REGISTERED PROFESSIONAL ENGINEER — Robert du Plaine — No. 51447 — Exp. 6-30-14 — CIVIL — STATE OF CALIFORNIA

10-22-12
PLANS APPROVAL DATE

The State of California or its officers or agents shall not be responsible for the accuracy or completeness of scanned copies of this plan sheet.

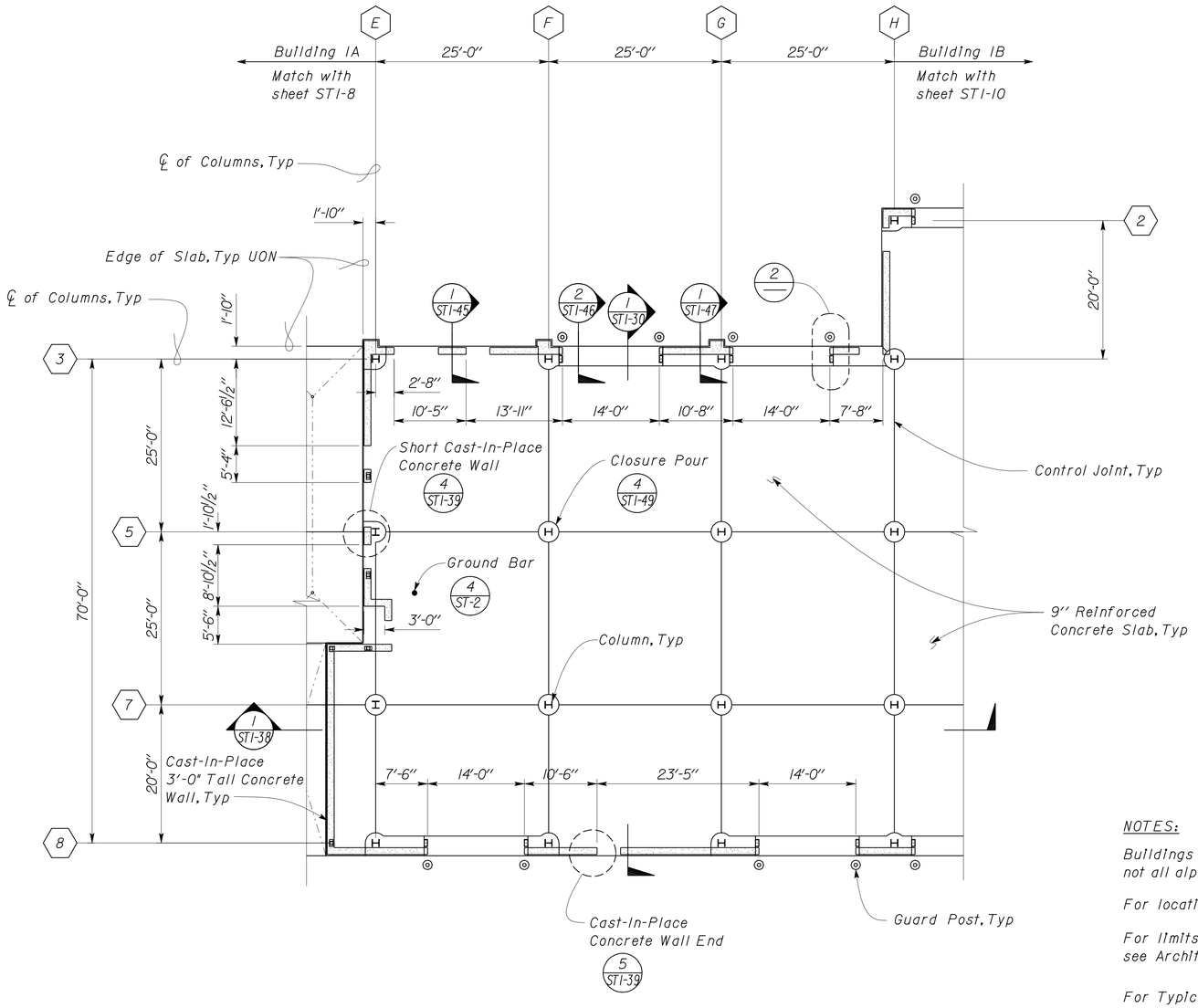

1 PARTIAL SLAB PLAN
Scale 1" = 10' - 0"

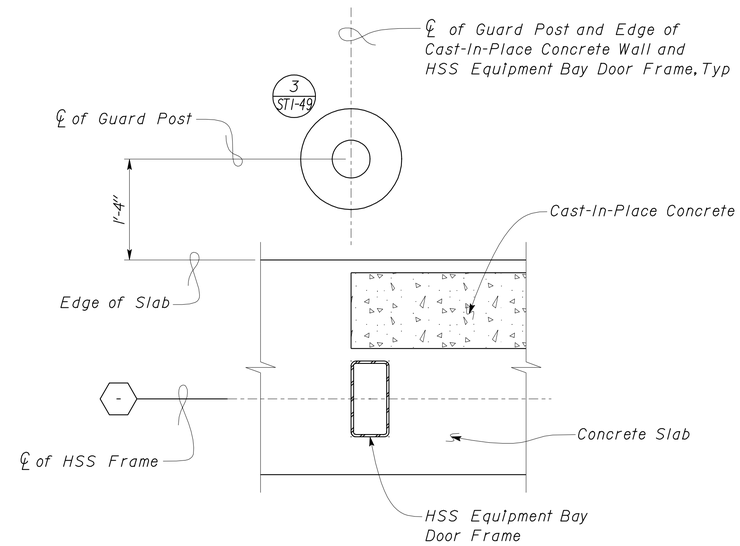

2 GUARD POST PLACEMENT
Scale 1" = 1' - 0"

NOTES:

Buildings IA and IB share a common grid system, not all alpha/numeric indicators will show consecutively.

For locations of Ground Bars, see Electrical Plans.

For limits of and openings in Cast-In-Place Concrete Walls, see Architectural Plans.

For Typical Information, See 1/ST1-8.

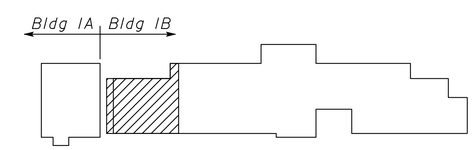

Key Plan

DESIGN	BY Robert du Plaine	CHECKED Brian Sutliff	
DETAILS	BY David W. Good	CHECKED Robert du Plaine	
QUANTITIES	BY	CHECKED	

STATE OF CALIFORNIA
DEPARTMENT OF TRANSPORTATION

DIVISION OF ENGINEERING SERVICES
ARCHITECTURAL AND STRUCTURAL DESIGN

BRIDGE NO. 33M5785
POST MILE 2.2

SFOBB MAINTENANCE COMPLEX

SLAB PARTIAL PLAN 2 of 5

SHEET **ST1-9**

TAEMWW Imperial Rev. 7/10

ORIGINAL SCALE IN INCHES FOR REDUCED PLANS 0 1 2 3

UNIT 3599
PROJECT NUMBER & PHASE 04120006661
EA 014081

DISREGARD PRINTS BEARING EARLIER REVISION DATES
REVISION DATES (PRELIMINARY STAGE ONLY) 11-16-11 12-03-11 12-28-11 05-08-12 05-10-12 05-23-12 05-30-12 06-14-12
SHEET OF

D:\User\Projects\Dist_04\0400000038_sfobb_ms_complex\Expedite_20120620\Copy of st_01\st1_009.dgn

26-OCT-2012 13:30

DIST.	COUNTY	ROUTE	POST MILES TOTAL PROJECT	SHEET NO.	TOTAL SHEETS
04	Ala	80	2.2	338	800

RdP
REGISTERED CIVIL ENGINEER — 05-31-12 DATE

REGISTERED PROFESSIONAL ENGINEER Robert du Plaine No. 51447 Exp. 6-30-14 CIVIL STATE OF CALIFORNIA

10-22-12
PLANS APPROVAL DATE

The State of California or its officers or agents shall not be responsible for the accuracy or completeness of scanned copies of this plan sheet.

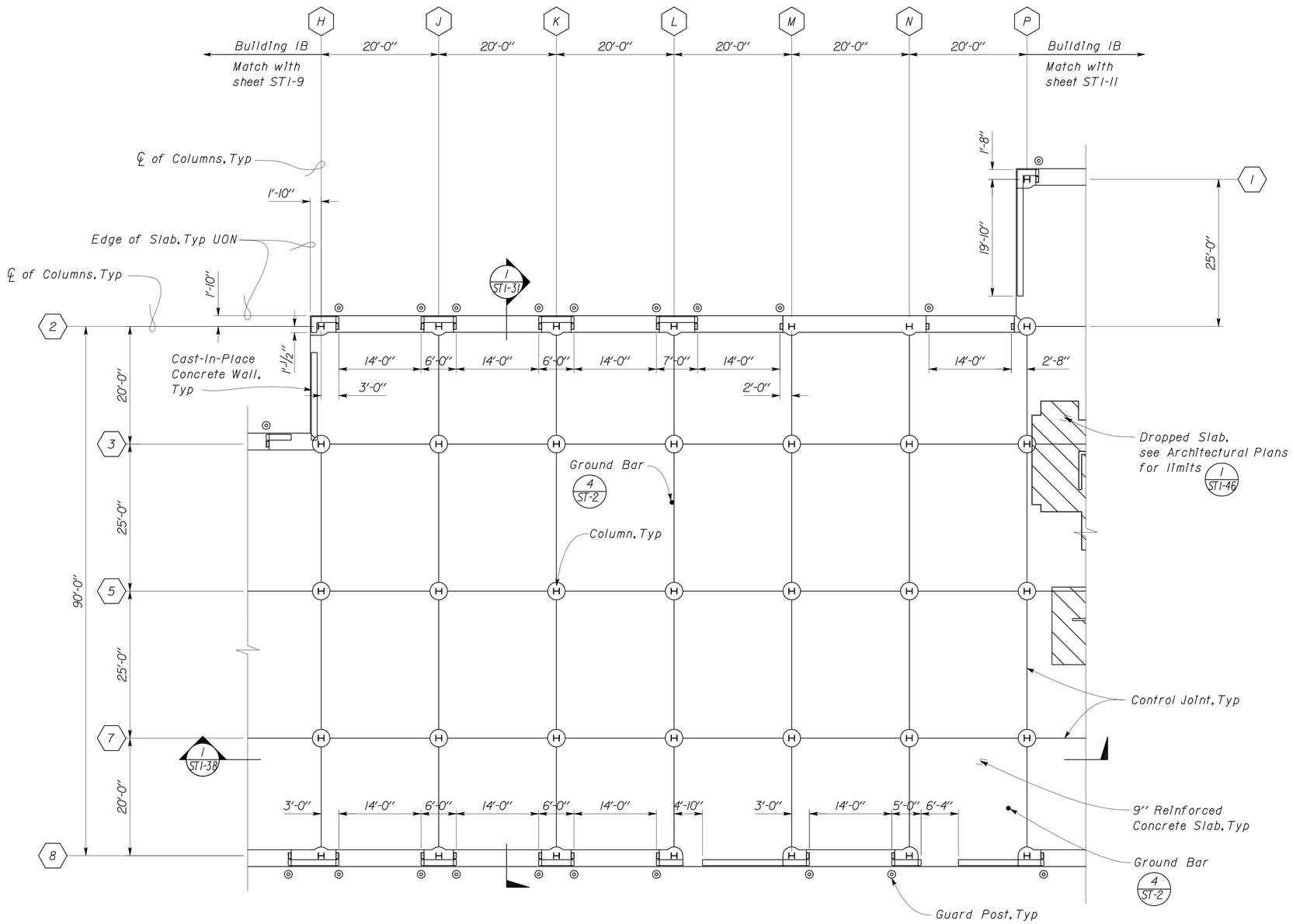

1 PARTIAL SLAB PLAN
Scale 1" = 10' - 0"

NOTES:

Buildings IA and IB share a common grid system, not all alpha/numeric indicators will show consecutively.

For locations of Ground Bars, see Electrical Plans.

For Typical Information, See 1/ST1-9.

For limits of and openings in Cast-in-Place Concrete Walls, see Architectural Plans.

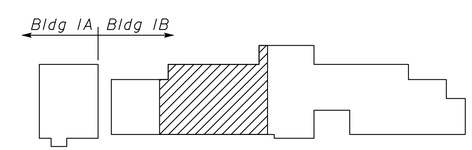

Key Plan

DESIGN	BY Robert du Plaine	CHECKED Brian Sutliff	
DETAILS	BY David W. Good	CHECKED Robert du Plaine	
QUANTITIES	BY	CHECKED	

STATE OF CALIFORNIA
DEPARTMENT OF TRANSPORTATION

DIVISION OF ENGINEERING SERVICES
ARCHITECTURAL AND STRUCTURAL DESIGN

BRIDGE NO. 33M5785
POST MILE 2.2

SFOBB MAINTENANCE COMPLEX

SLAB PARTIAL PLAN 3 of 5

SHEET ST1-10

TAEMWW Imperial Rev. 7/10

ORIGINAL SCALE IN INCHES FOR REDUCED PLANS 0 1 2 3

UNIT 3599
PROJECT NUMBER & PHASE 04120006661
EA 014081

DISREGARD PRINTS BEARING EARLIER REVISION DATES
REVISION DATES (PRELIMINARY STAGE ONLY) 11-16-11 12-03-11 12-28-11 05-08-12 05-10-12 05-23-12 05-28-12 06-14-12
SHEET OF

D:\User\Projects\Dist_04\0400000038_sfobb_ms_complex\Expedite_20120620\Copy of st_01\st1_010.dgn

26-OCT-2012 13:30

DIST.	COUNTY	ROUTE	POST MILES TOTAL PROJECT	SHEET NO.	TOTAL SHEETS
04	Ala	80	2.2	339	800

RdP
REGISTERED CIVIL ENGINEER — DATE 05-31-12

REGISTERED PROFESSIONAL ENGINEER Robert du Plaine No. 51447 Exp. 6-30-14 CIVIL STATE OF CALIFORNIA

10-22-12
PLANS APPROVAL DATE

The State of California or its officers or agents shall not be responsible for the accuracy or completeness of scanned copies of this plan sheet.

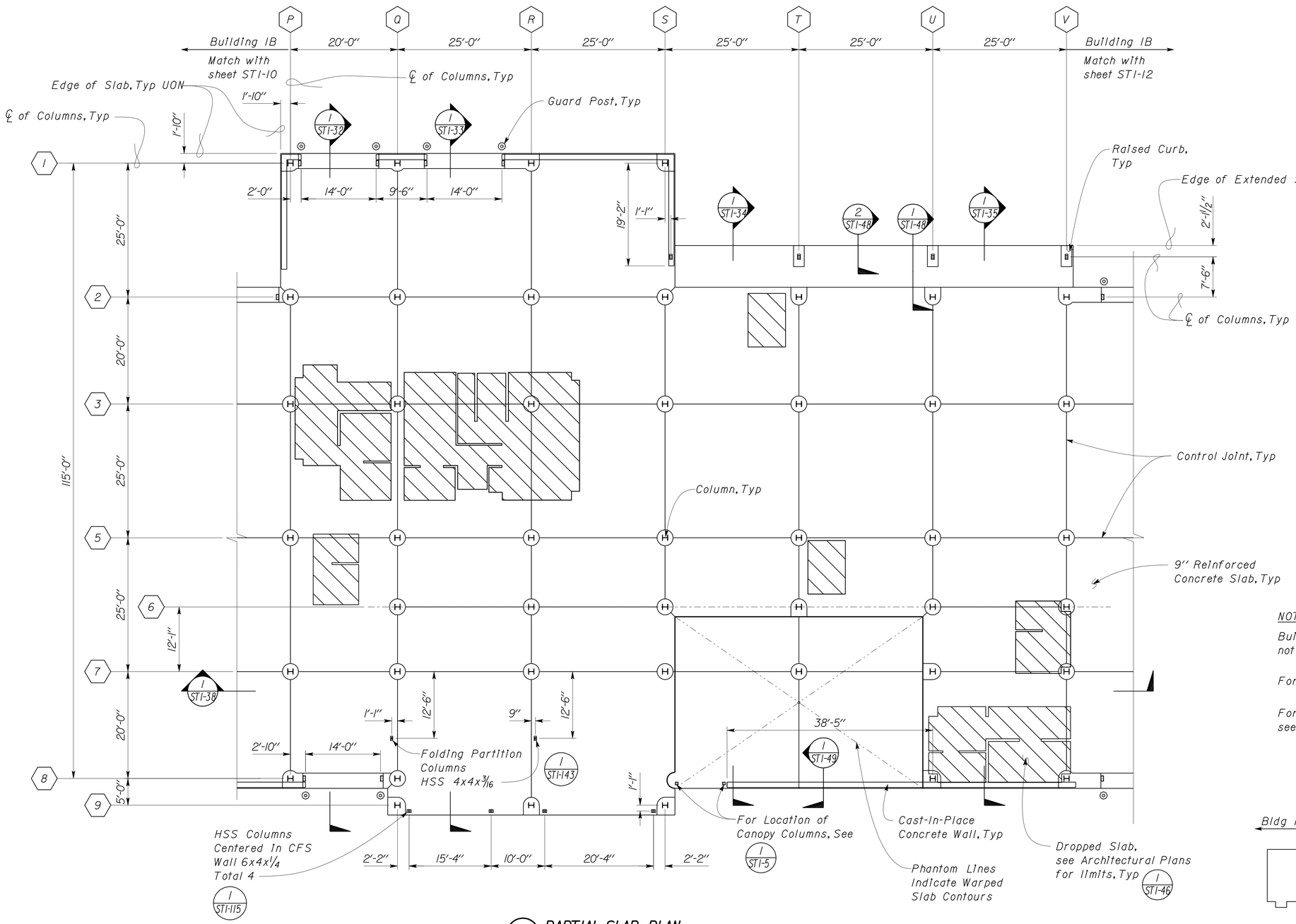

1 PARTIAL SLAB PLAN
Scale 1" = 10' - 0"

NOTES:

Buildings IA and IB share a common grid system, not all alpha/numeric indicators will show consecutively.

For Typical Information, See 1/ST1-9.

For limits of and openings in Cast-In-Place Concrete Walls, see Architectural Plans.

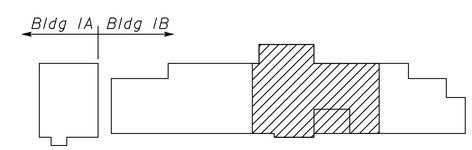

Key Plan

DESIGN	BY Robert du Plaine	CHECKED Brian Sutliff	
DETAILS	BY David W. Good	CHECKED Robert du Plaine	
QUANTITIES	BY	CHECKED	

STATE OF CALIFORNIA
DEPARTMENT OF TRANSPORTATION

DIVISION OF ENGINEERING SERVICES
ARCHITECTURAL AND STRUCTURAL DESIGN

BRIDGE NO. 33M5785
POST MILE 2.2

SFOBB MAINTENANCE COMPLEX

SLAB PARTIAL PLAN 4 of 5

SHEET ST1-11

TAEMWW Imperial Rev. 7/10

ORIGINAL SCALE IN INCHES FOR REDUCED PLANS 0 1 2 3

UNIT 3599
PROJECT NUMBER & PHASE 04120006661
EA 014081

DISREGARD PRINTS BEARING EARLIER REVISION DATES → 11-16-11 12-03-11 12-28-11 05-08-12 05-23-12 05-28-12 06-14-12

REVISION DATES (PRELIMINARY STAGE ONLY) SHEET OF

D:\User\Projects\Dist_04\0400000038_sfobb_ms_complex\Expedite_20120620\Copy of st_01\st1_011.dgn

26-OCT-2012 13:30

DIST.	COUNTY	ROUTE	POST MILES TOTAL PROJECT	SHEET NO.	TOTAL SHEETS
04	Ala	80	2.2	340	800

RdP
REGISTERED CIVIL ENGINEER — 05-31-12 DATE

REGISTERED PROFESSIONAL ENGINEER Robert du Plaine No. 51447 Exp. 6-30-14 CIVIL STATE OF CALIFORNIA

10-22-12
PLANS APPROVAL DATE

The State of California or its officers or agents shall not be responsible for the accuracy or completeness of scanned copies of this plan sheet.

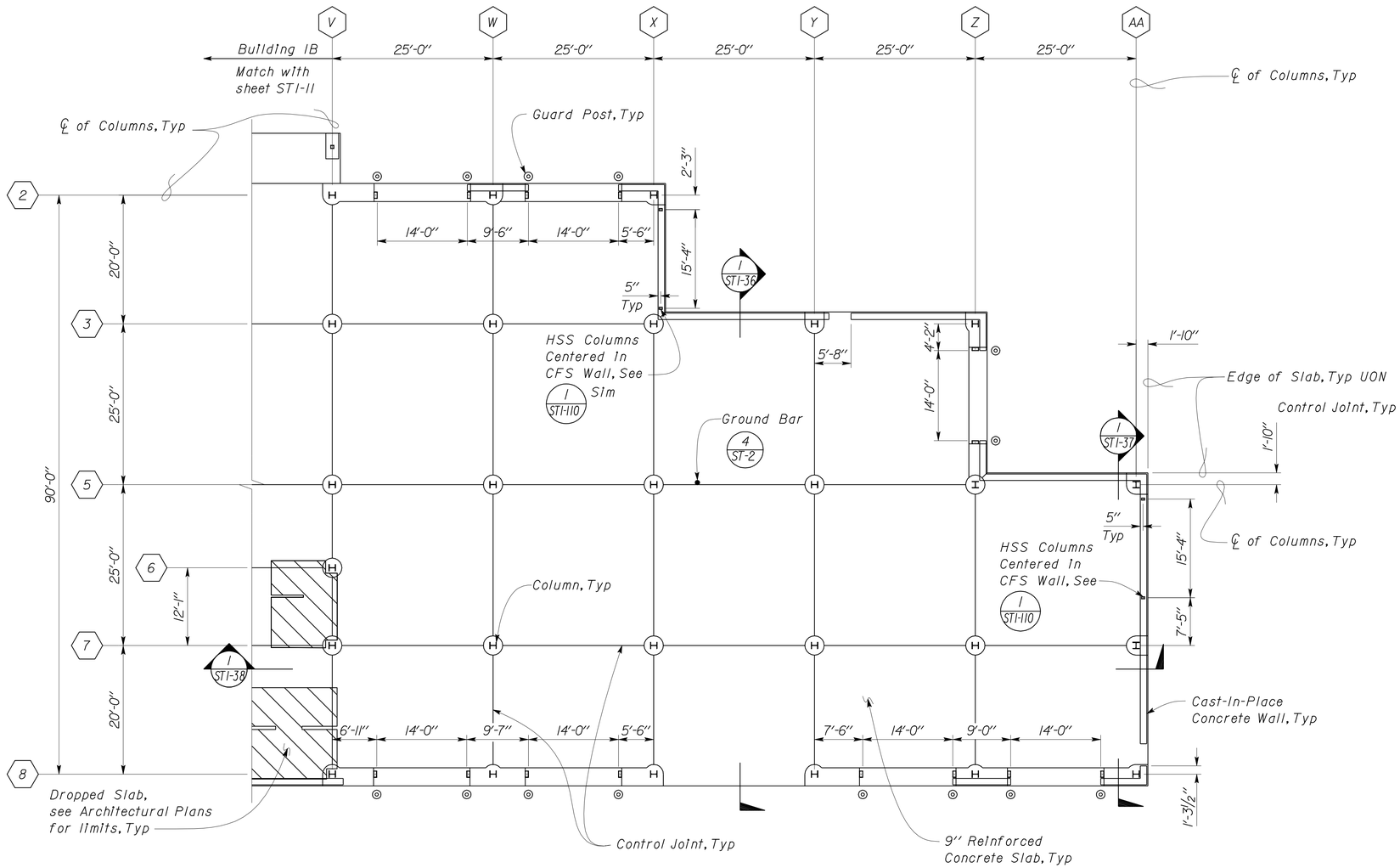

1 PARTIAL SLAB PLAN
Scale 1" = 10' - 0"

NOTES:

Buildings IA and IB share a common grid system, not all alpha/numeric indicators will show consecutively.

For locations of Ground Bars, see Electrical Plans.

For Typical Information, See 1/ST1-9.

For limits of and openings in Cast-In-Place Concrete Walls, see Architectural Plans.

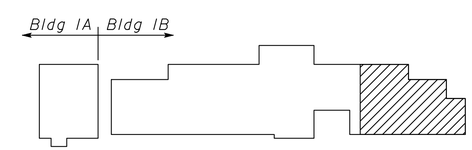

Key Plan

DESIGN	BY Robert du Plaine	CHECKED Brian Sutliff	
DETAILS	BY David W. Good	CHECKED Robert du Plaine	
QUANTITIES	BY	CHECKED	

STATE OF CALIFORNIA
DEPARTMENT OF TRANSPORTATION

DIVISION OF ENGINEERING SERVICES
ARCHITECTURAL AND STRUCTURAL DESIGN

BRIDGE NO. 33M5785
POST MILE 2.2

SFOBB MAINTENANCE COMPLEX

SLAB PARTIAL PLAN 5 of 5

SHEET **ST1-12**

TAEMWW Imperial Rev. 7/10

ORIGINAL SCALE IN INCHES FOR REDUCED PLANS 0 1 2 3

UNIT 3599
PROJECT NUMBER & PHASE 04120006661
EA 014081

DISREGARD PRINTS BEARING EARLIER REVISION DATES → REVISION DATES (PRELIMINARY STAGE ONLY) 11-16-11 12-03-11 12-28-11 05-08-12 05-10-12 05-23-12 05-28-12 06-18-12 SHEET OF

D:\User\Projects\Dist_04\0400000038_sfobb_ms_complex\Expedite_20120620\Copy of st_01\st1_012.dgn

26-OCT-2012 13:30

DIST.	COUNTY	ROUTE	POST MILES TOTAL PROJECT	SHEET NO.	TOTAL SHEETS
04	Ala	80	2.2	341	800

RdP
REGISTERED CIVIL ENGINEER — DATE 05-31-12

REGISTERED PROFESSIONAL ENGINEER
Robert du Plaine
No. 51447
Exp. 6-30-14
CIVIL
STATE OF CALIFORNIA

10-22-12
PLANS APPROVAL DATE

The State of California or its officers or agents shall not be responsible for the accuracy or completeness of scanned copies of this plan sheet.

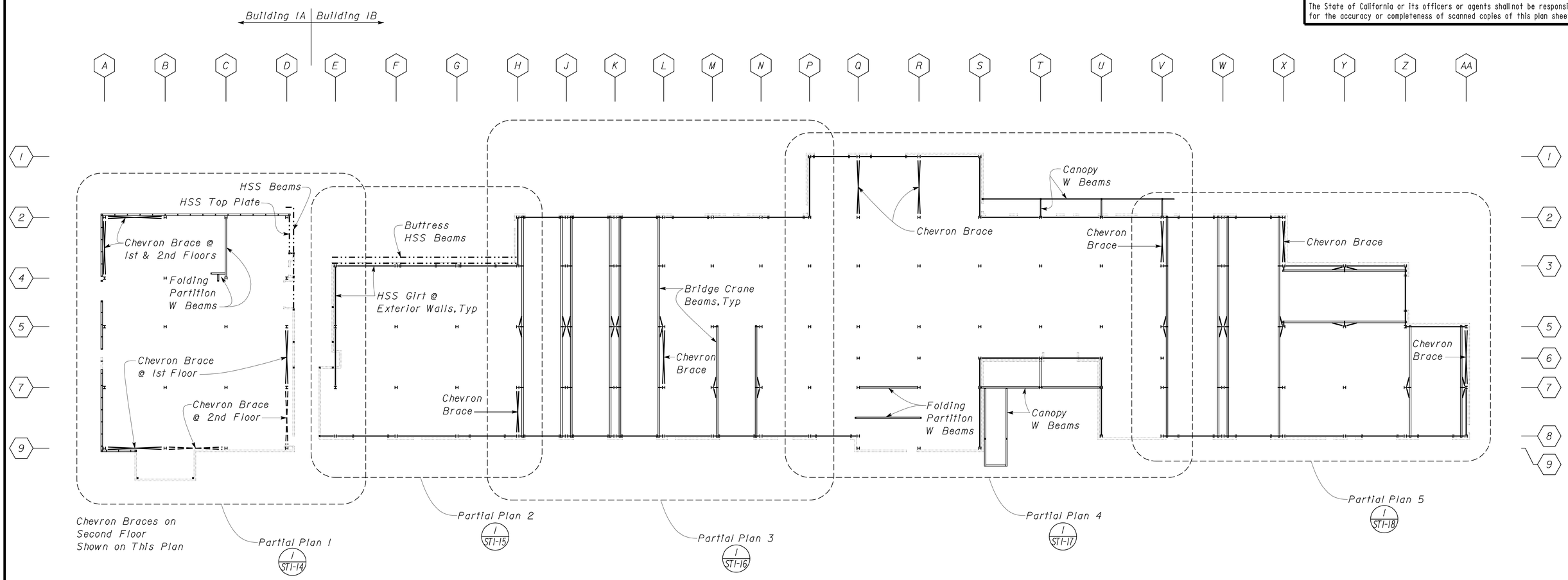

1 INTERMEDIATE BEAM INDEX PLAN
Scale 1" = 20' - 0"

DESIGN	BY Robert du Plaine	CHECKED Brian Sutliff	
DETAILS	BY David W. Good	CHECKED Robert du Plaine	
QUANTITIES	BY	CHECKED	

STATE OF CALIFORNIA
DEPARTMENT OF TRANSPORTATION

DIVISION OF ENGINEERING SERVICES
ARCHITECTURAL AND STRUCTURAL DESIGN

BRIDGE NO. 33M5785
POST MILE 2.2

SFOBB MAINTENANCE COMPLEX

INTERMEDIATE BEAM INDEX PLAN

SHEET **ST1-13**

TAEMWW Imperial Rev. 7/10

ORIGINAL SCALE IN INCHES FOR REDUCED PLANS 0 1 2 3

UNIT 3599
PROJECT NUMBER & PHASE 04120006661
EA 014081

DISREGARD PRINTS BEARING EARLIER REVISION DATES → REVISION DATES (PRELIMINARY STAGE ONLY) 04-30-12 05-02-12 05-08-12 05-24-12 05-28-12 SHEET OF

D:\User\Projects\Dist_04\0400000038_sfobb_ms_complex\Expedite_20120620\Copy of st_01\st1_013.dgn

25-OCT-2012 13:22

DIST.	COUNTY	ROUTE	POST MILES TOTAL PROJECT	SHEET NO.	TOTAL SHEETS
04	Ala	80	2.2	342	800

RdP
REGISTERED CIVIL ENGINEER — 05-31-12 DATE

REGISTERED PROFESSIONAL ENGINEER — Robert du Plaine — No. 51447 — Exp. 6-30-14 — CIVIL — STATE OF CALIFORNIA

10-22-12
PLANS APPROVAL DATE

The State of California or its officers or agents shall not be responsible for the accuracy or completeness of scanned copies of this plan sheet.

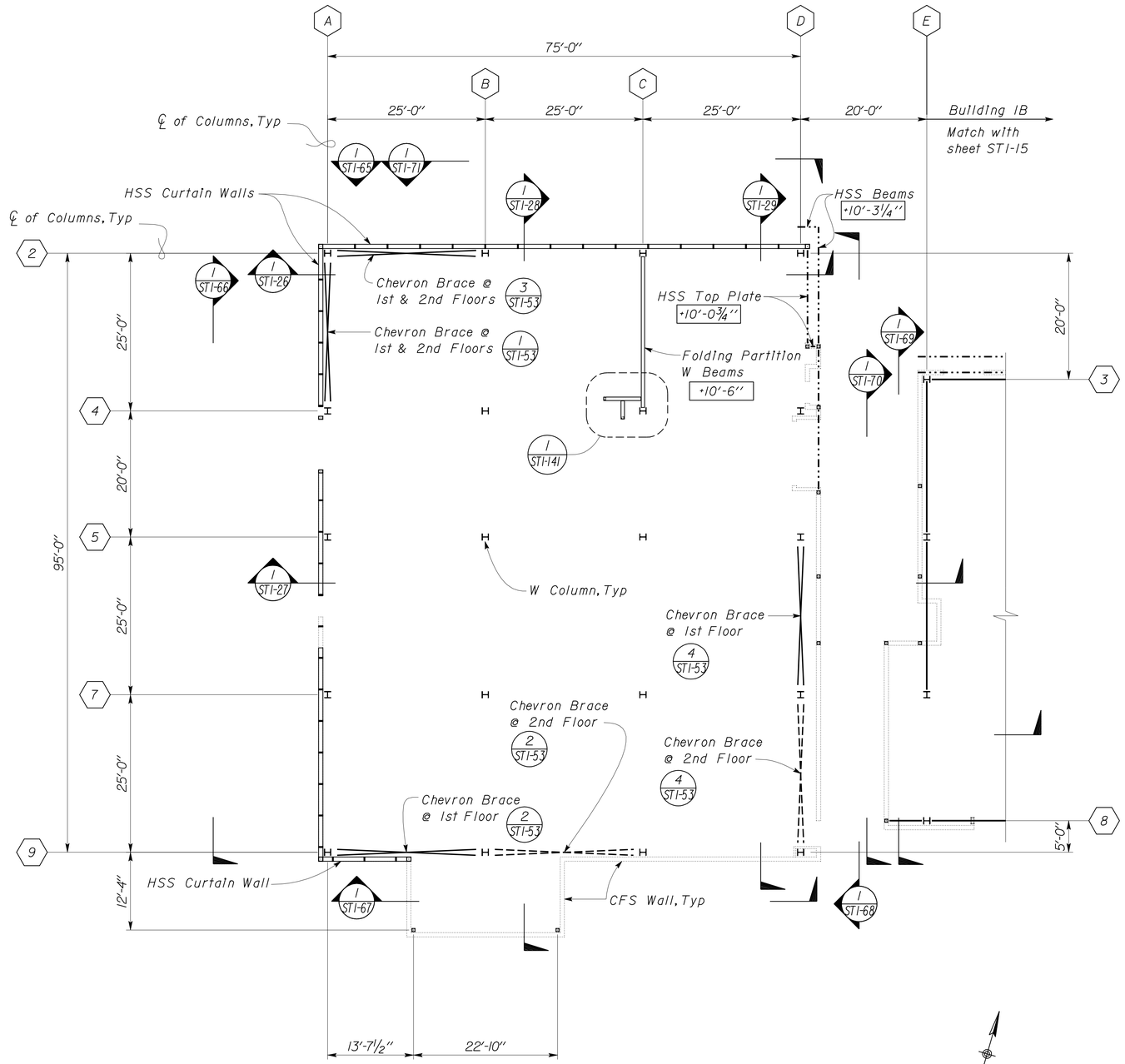

1 PARTIAL INTERMEDIATE BEAM PLAN
Scale 1" = 10' - 0"

NOTE:

Buildings IA and IB share a common grid system, not all alpha/numeric indicators will show consecutively.

LEGEND:

+ '- " - Indicates Height from Top of Concrete Slab to Bottom of Beam

Chevron Details, begin at 1/ST1-51

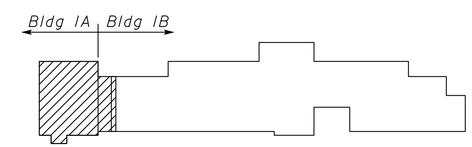

Key Plan

DESIGN	BY Robert du Plaine	CHECKED Brian Sutliff	
DETAILS	BY David W. Good	CHECKED Robert du Plaine	
QUANTITIES	BY	CHECKED	

STATE OF CALIFORNIA
DEPARTMENT OF TRANSPORTATION

DIVISION OF ENGINEERING SERVICES
ARCHITECTURAL AND STRUCTURAL DESIGN

BRIDGE NO. 33M5785
POST MILE 2.2

SFOBB MAINTENANCE COMPLEX

INTERMEDIATE BEAM PARTIAL PLAN 1 of 5

SHEET ST1-14

TAEMWW Imperial Rev. 7/10

ORIGINAL SCALE IN INCHES FOR REDUCED PLANS 0 1 2 3

UNIT 3599
PROJECT NUMBER & PHASE 04120006661
EA 014081

DISREGARD PRINTS BEARING EARLIER REVISION DATES → REVISION DATES (PRELIMINARY STAGE ONLY) 04-30-12 05-02-12 05-08-12 05-18-12 05-28-12 06-14-12 SHEET OF

D:\User\Projects\Dist_04\0400000038_sfobb_ms_complex\Expedite_20120620\Copy of st_01\st1_014.dgn

25-OCT-2012 13:22

DIST.	COUNTY	ROUTE	POST MILES TOTAL PROJECT	SHEET NO.	TOTAL SHEETS
04	Ala	80	2.2	343	800

RdP
REGISTERED CIVIL ENGINEER — DATE 05-31-12

REGISTERED PROFESSIONAL ENGINEER — Robert du Plaine — No. 51447 — Exp. 6-30-14 — CIVIL — STATE OF CALIFORNIA

10-22-12
PLANS APPROVAL DATE

The State of California or its officers or agents shall not be responsible for the accuracy or completeness of scanned copies of this plan sheet.

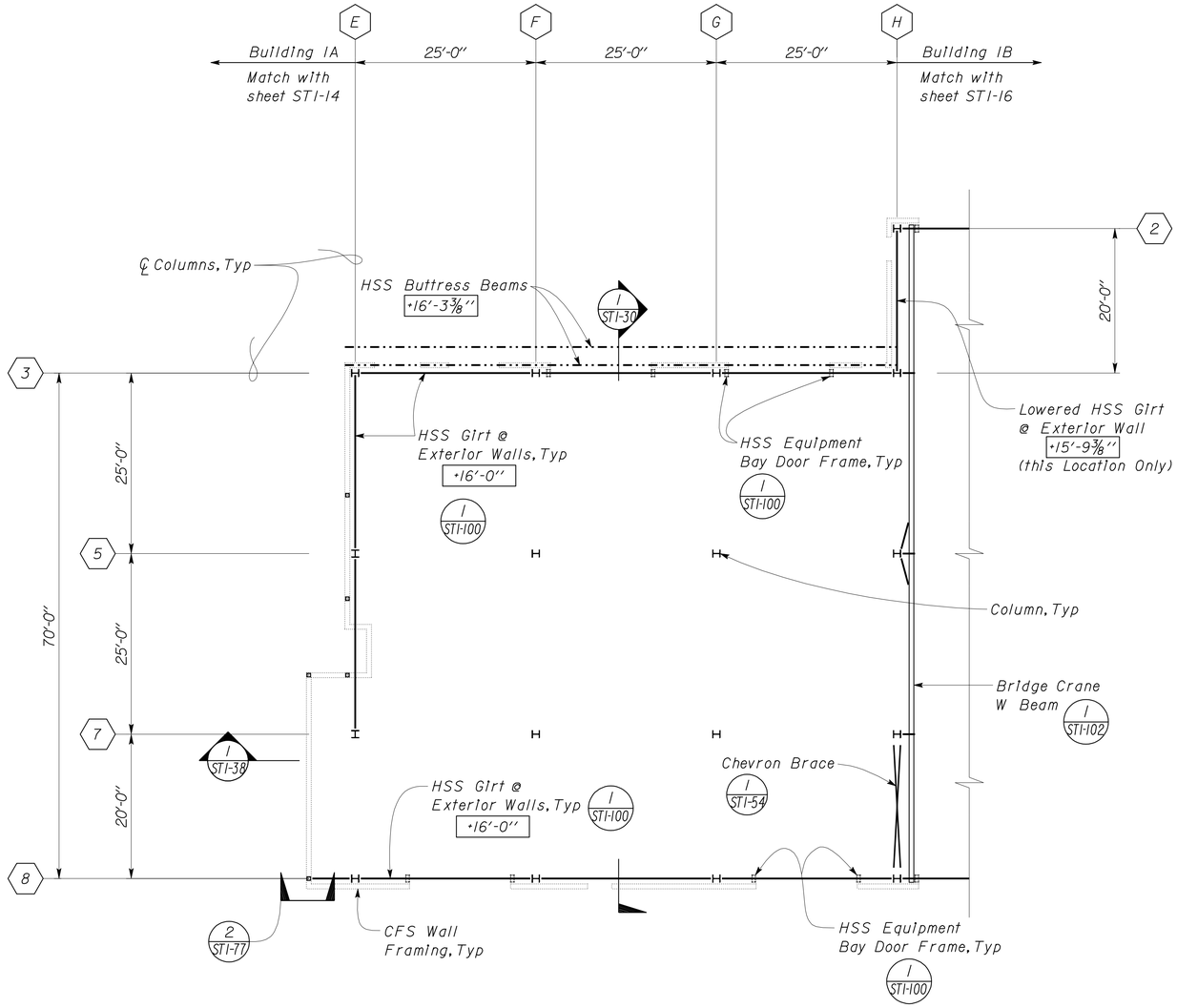

1 PARTIAL INTERMEDIATE BEAM PLAN
Scale 1" = 10' - 0"

NOTE:

Buildings IA and IB share a common grid system, not all alpha/numeric indicators will show consecutively.

LEGEND:

+ '- " - Indicates Height from Top of Concrete Slab to Bottom of Beam

Chevron Details, begin at 1 ST1-51

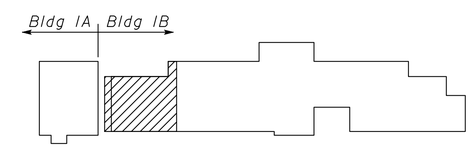

Key Plan

DESIGN	BY Robert du Plaine	CHECKED Brian Sutliff	
DETAILS	BY David W. Good	CHECKED Robert du Plaine	
QUANTITIES	BY	CHECKED	

STATE OF CALIFORNIA
DEPARTMENT OF TRANSPORTATION

DIVISION OF ENGINEERING SERVICES
ARCHITECTURAL AND STRUCTURAL DESIGN

BRIDGE NO. 33M5785
POST MILE 2.2

SFOBB MAINTENANCE COMPLEX

INTERMEDIATE BEAM PARTIAL PLAN 2 of 5

SHEET ST1-15

TAEMWW Imperial Rev. 7/10

ORIGINAL SCALE IN INCHES FOR REDUCED PLANS 0 1 2 3

UNIT 3599
PROJECT NUMBER & PHASE 04120006661
EA 014081

DISREGARD PRINTS BEARING EARLIER REVISION DATES → 04-30-12 05-02-12 05-08-12 05-18-12 05-28-12

REVISION DATES (PRELIMINARY STAGE ONLY) SHEET OF

D:\User\Projects\Dist_04\0400000038_sfobb_ms_complex\Expedite_20120620\Copy of st_01\st1_015.dgn

25-OCT-2012 13:22

DIST.	COUNTY	ROUTE	POST MILES TOTAL PROJECT	SHEET NO.	TOTAL SHEETS
04	Ala	80	2.2	344	800

RdP
REGISTERED CIVIL ENGINEER — DATE 05-31-12

REGISTERED PROFESSIONAL ENGINEER Robert du Plaine No. 51447 Exp. 6-30-14 CIVIL STATE OF CALIFORNIA

10-22-12
PLANS APPROVAL DATE

The State of California or its officers or agents shall not be responsible for the accuracy or completeness of scanned copies of this plan sheet.

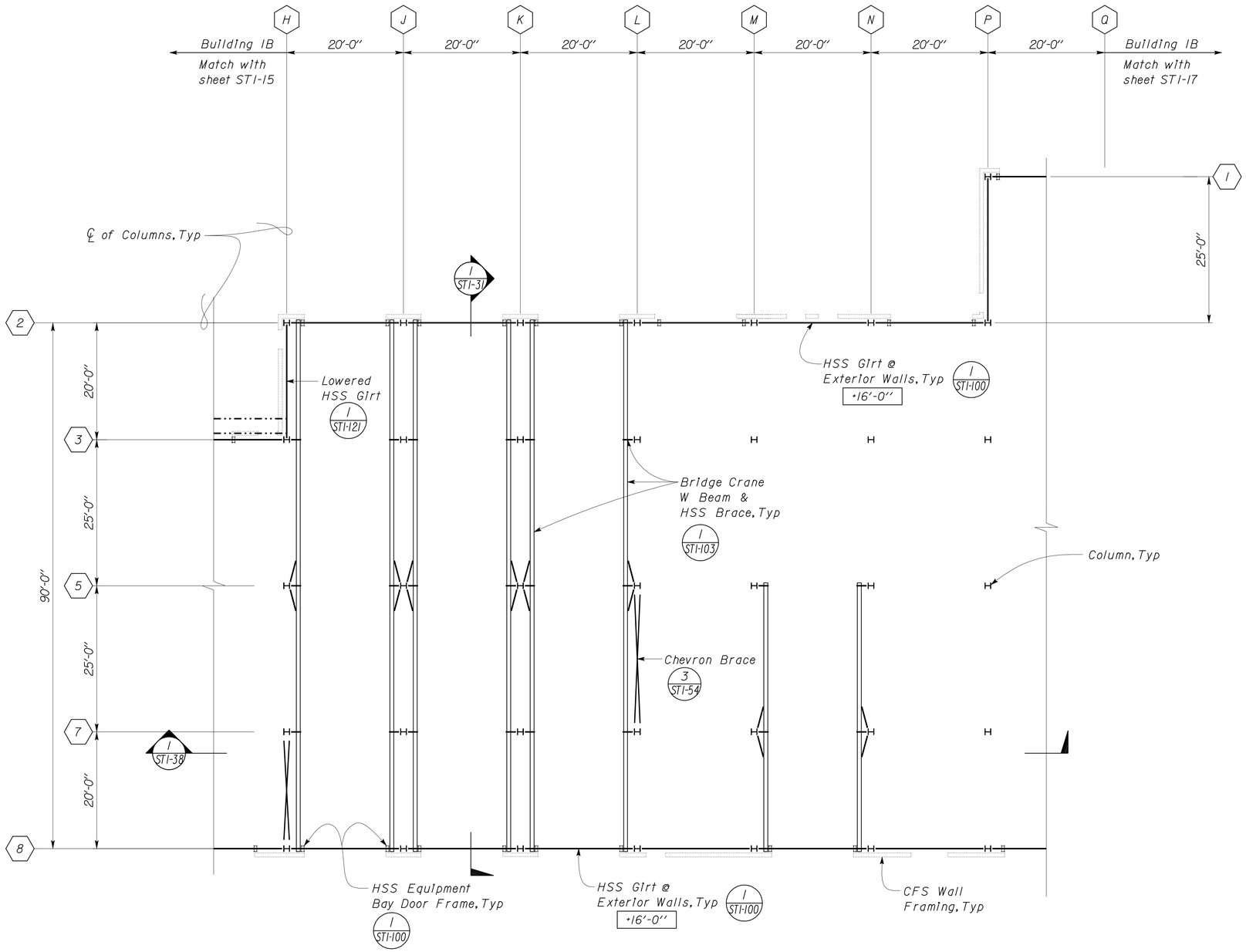

1 PARTIAL INTERMEDIATE BEAM PLAN
Scale 1" = 10' - 0"

NOTE:

Buildings IA and IB share a common grid system, not all alpha/numeric indicators will show consecutively.

LEGEND:

+ '- " - Indicates Height from Top of Concrete Slab to Bottom of Beam

Chevron Details, begin at 1 / ST1-51

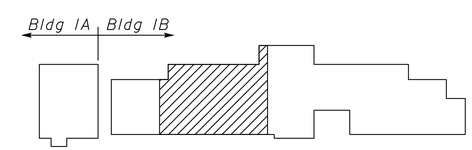

Key Plan

DESIGN	BY Robert du Plaine	CHECKED Brian Sutliff	
DETAILS	BY David W. Good	CHECKED Robert du Plaine	
QUANTITIES	BY	CHECKED	

STATE OF CALIFORNIA
DEPARTMENT OF TRANSPORTATION

DIVISION OF ENGINEERING SERVICES
ARCHITECTURAL AND STRUCTURAL DESIGN

BRIDGE NO. 33M5785
POST MILE 2.2

SFOBB MAINTENANCE COMPLEX
INTERMEDIATE BEAM PARTIAL PLAN 3 of 5

SHEET ST1-16

TAEMWW Imperial Rev. 7/10

ORIGINAL SCALE IN INCHES FOR REDUCED PLANS 0 1 2 3

UNIT 3599
PROJECT NUMBER & PHASE 04120006661
EA 014081

DISREGARD PRINTS BEARING EARLIER REVISION DATES → REVISION DATES (PRELIMINARY STAGE ONLY) 04-30-12 05-02-12 05-08-12 05-18-12 05-28-12

SHEET OF

D:\User\Projects\Dist_04\0400000038_sfobb_ms_complex\Expedite_20120620\Copy of st_01\st1_016.dgn

25-OCT-2012 13:22

DIST.	COUNTY	ROUTE	POST MILES TOTAL PROJECT	SHEET NO.	TOTAL SHEETS
04	Ala	80	2.2	345	800

RdP
REGISTERED CIVIL ENGINEER — 05-31-12 DATE

REGISTERED PROFESSIONAL ENGINEER Robert du Plaine No. 51447 Exp. 6-30-14 CIVIL STATE OF CALIFORNIA

10-22-12
PLANS APPROVAL DATE

The State of California or its officers or agents shall not be responsible for the accuracy or completeness of scanned copies of this plan sheet.

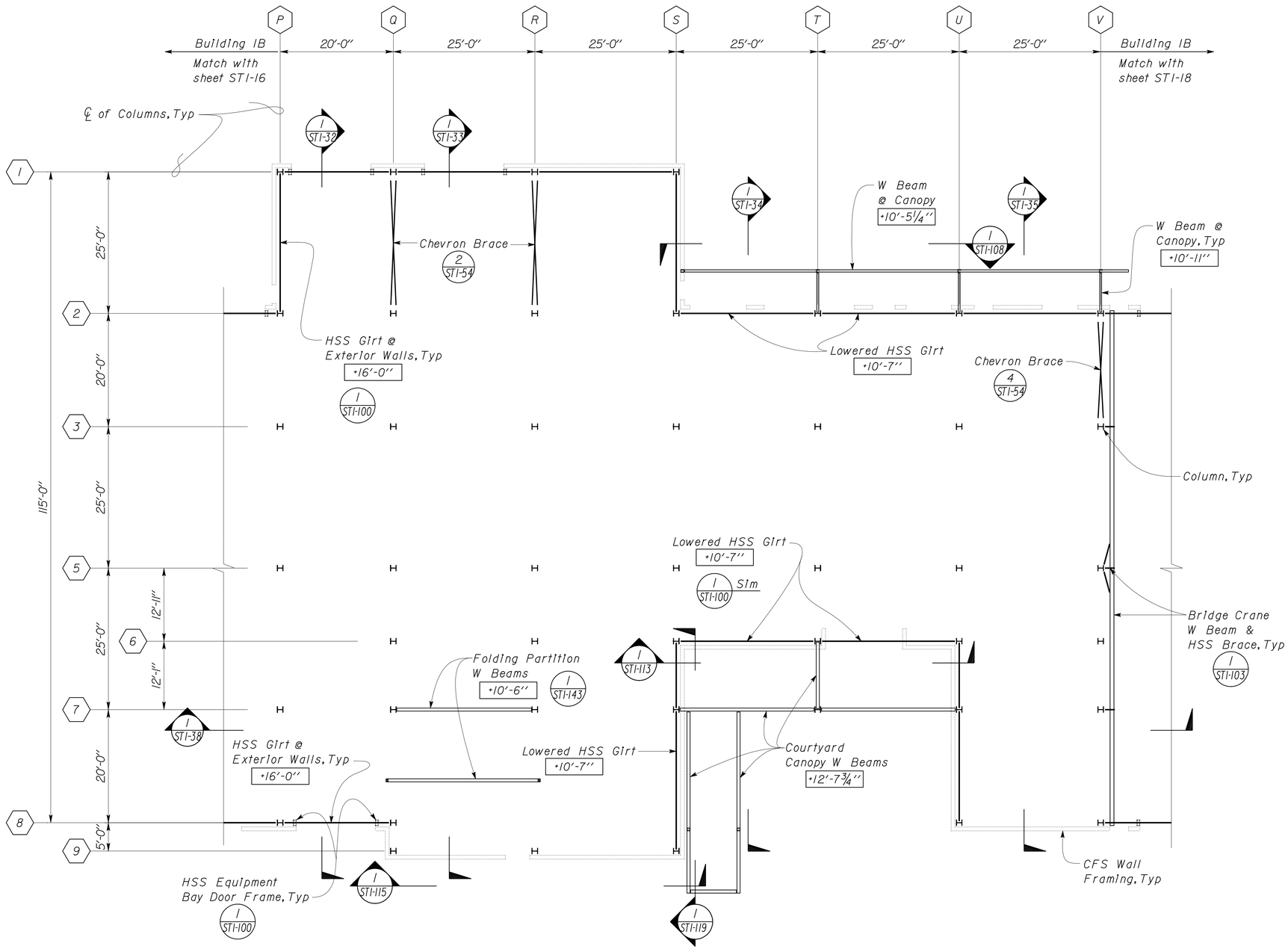

1 PARTIAL INTERMEDIATE BEAM PLAN
Scale 1" = 10' - 0"

NOTE:

Buildings IA and IB share a common grid system, not all alpha/numeric indicators will show consecutively.

LEGEND:

+ '- " - Indicates Height from Top of Concrete Slab to Bottom of Beam

Chevron Details, begin at 1 ST1-51

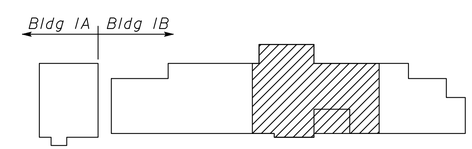

Key Plan

DESIGN	BY Robert du Plaine	CHECKED Brian Sutliff	
DETAILS	BY David W. Good	CHECKED Robert du Plaine	
QUANTITIES	BY	CHECKED	

STATE OF CALIFORNIA DEPARTMENT OF TRANSPORTATION

DIVISION OF ENGINEERING SERVICES ARCHITECTURAL AND STRUCTURAL DESIGN

BRIDGE NO. 33M5785
POST MILE 2.2

SFOBB MAINTENANCE COMPLEX

INTERMEDIATE BEAM PARTIAL PLAN 4 of 5

SHEET ST1-17

TAEMWW Imperial Rev. 7/10

ORIGINAL SCALE IN INCHES FOR REDUCED PLANS 0 1 2 3

UNIT 3599
PROJECT NUMBER & PHASE 04120006661
EA 014081

DISREGARD PRINTS BEARING EARLIER REVISION DATES → 04-30-12 05-02-12 05-08-12 05-18-12 05-28-12

REVISION DATES (PRELIMINARY STAGE ONLY) SHEET OF

D:\User\Projects\Dist_04\0400000038_sfobb_ms_complex\Expedite_20120620\Copy of st_01\st1_017.dgn

25-OCT-2012 13:22

DIST.	COUNTY	ROUTE	POST MILES TOTAL PROJECT	SHEET NO.	TOTAL SHEETS
04	Ala	80	2.2	346	800

RdP
REGISTERED CIVIL ENGINEER — DATE 05-31-12

REGISTERED PROFESSIONAL ENGINEER Robert du Plaine No. 51447 Exp. 6-30-14 CIVIL STATE OF CALIFORNIA

10-22-12
PLANS APPROVAL DATE

The State of California or its officers or agents shall not be responsible for the accuracy or completeness of scanned copies of this plan sheet.

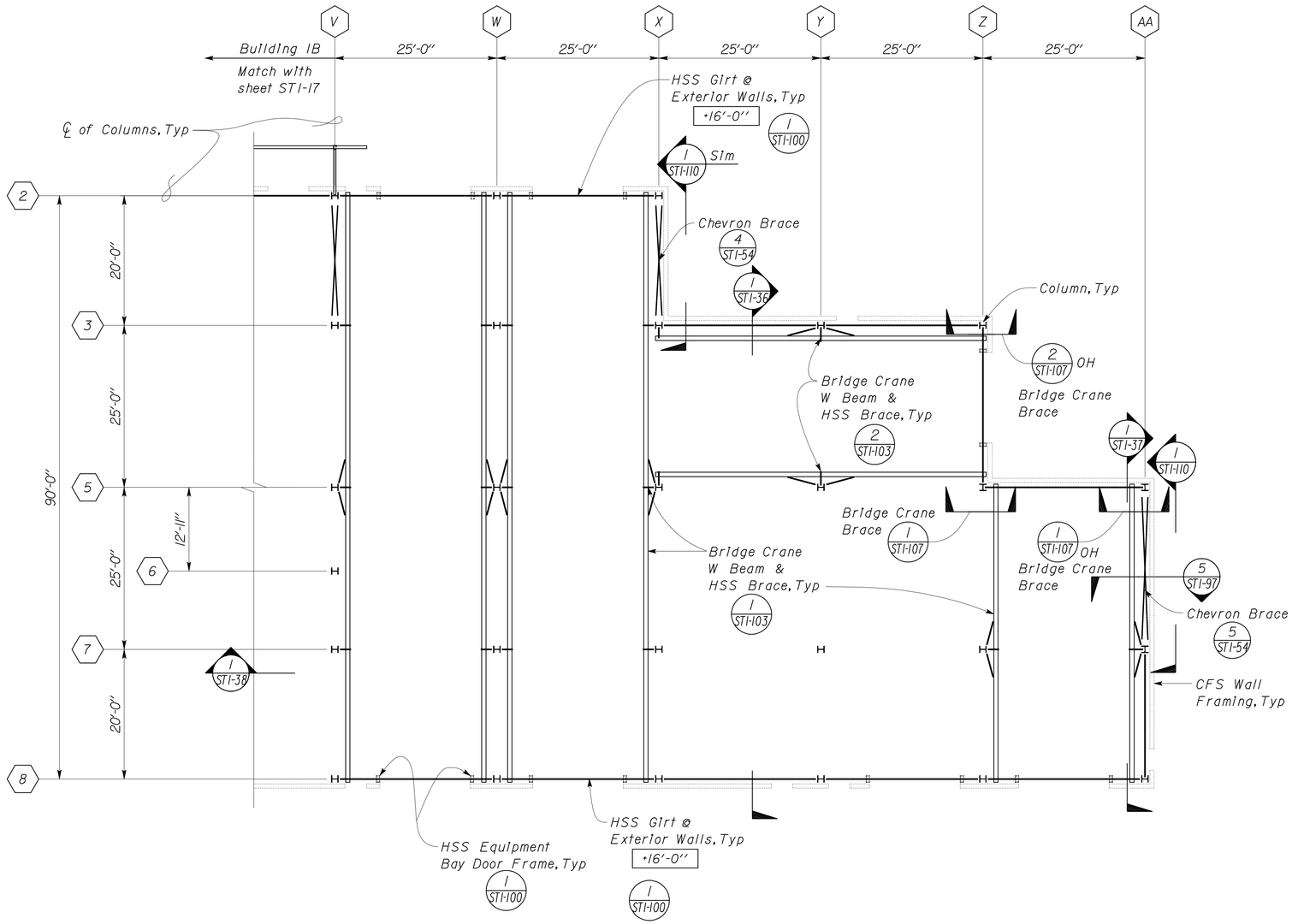

1 PARTIAL INTERMEDIATE BEAM PLAN
Scale 1" = 10' - 0"

NOTE:

Buildings IA and IB share a common grid system, not all alpha/numeric indicators will show consecutively.

LEGEND:

+ '- " - Indicates Height from Top of Concrete Slab to Bottom of Beam

Chevron Details, begin at 1 ST1-51

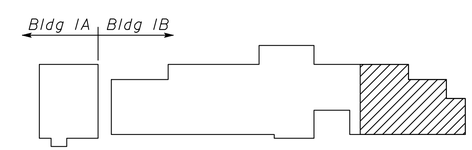

Key Plan

DESIGN	BY Robert du Plaine	CHECKED Brian Sutliff	
DETAILS	BY David W. Good	CHECKED Robert du Plaine	
QUANTITIES	BY	CHECKED	

STATE OF CALIFORNIA
DEPARTMENT OF TRANSPORTATION

DIVISION OF ENGINEERING SERVICES
ARCHITECTURAL AND STRUCTURAL DESIGN

BRIDGE NO. 33M5785
POST MILE 2.2

SFOBB MAINTENANCE COMPLEX
INTERMEDIATE BEAM PARTIAL PLAN 5 of 5

SHEET ST1-18

TAEMWW Imperial Rev. 7/10

ORIGINAL SCALE IN INCHES FOR REDUCED PLANS 0 1 2 3

UNIT 3599
PROJECT NUMBER & PHASE 04120006661
EA 014081

DISREGARD PRINTS BEARING EARLIER REVISION DATES → 04-30-12 05-02-12 05-08-12 05-22-12

REVISION DATES (PRELIMINARY STAGE ONLY) SHEET OF

D:\User\Projects\Dist_04\0400000038_sfobb_ms_complex\Expedite_20120620\Copy of st_01\st1_018.dgn

25-OCT-2012 13:22

DIST.	COUNTY	ROUTE	POST MILES TOTAL PROJECT	SHEET NO.	TOTAL SHEETS
04	Ala	80	2.2	347	800

RdP
REGISTERED CIVIL ENGINEER — DATE 05-31-12

REGISTERED PROFESSIONAL ENGINEER Robert du Plaine No. 51447 Exp. 6-30-14 CIVIL STATE OF CALIFORNIA

10-22-12
PLANS APPROVAL DATE

The State of California or its officers or agents shall not be responsible for the accuracy or completeness of scanned copies of this plan sheet.

Notes:

Buildings 1A and 1B share a common grid system, not all alpha/numeric indicators will show consecutively.

For locations of Ground Bars, see Electrical Plans

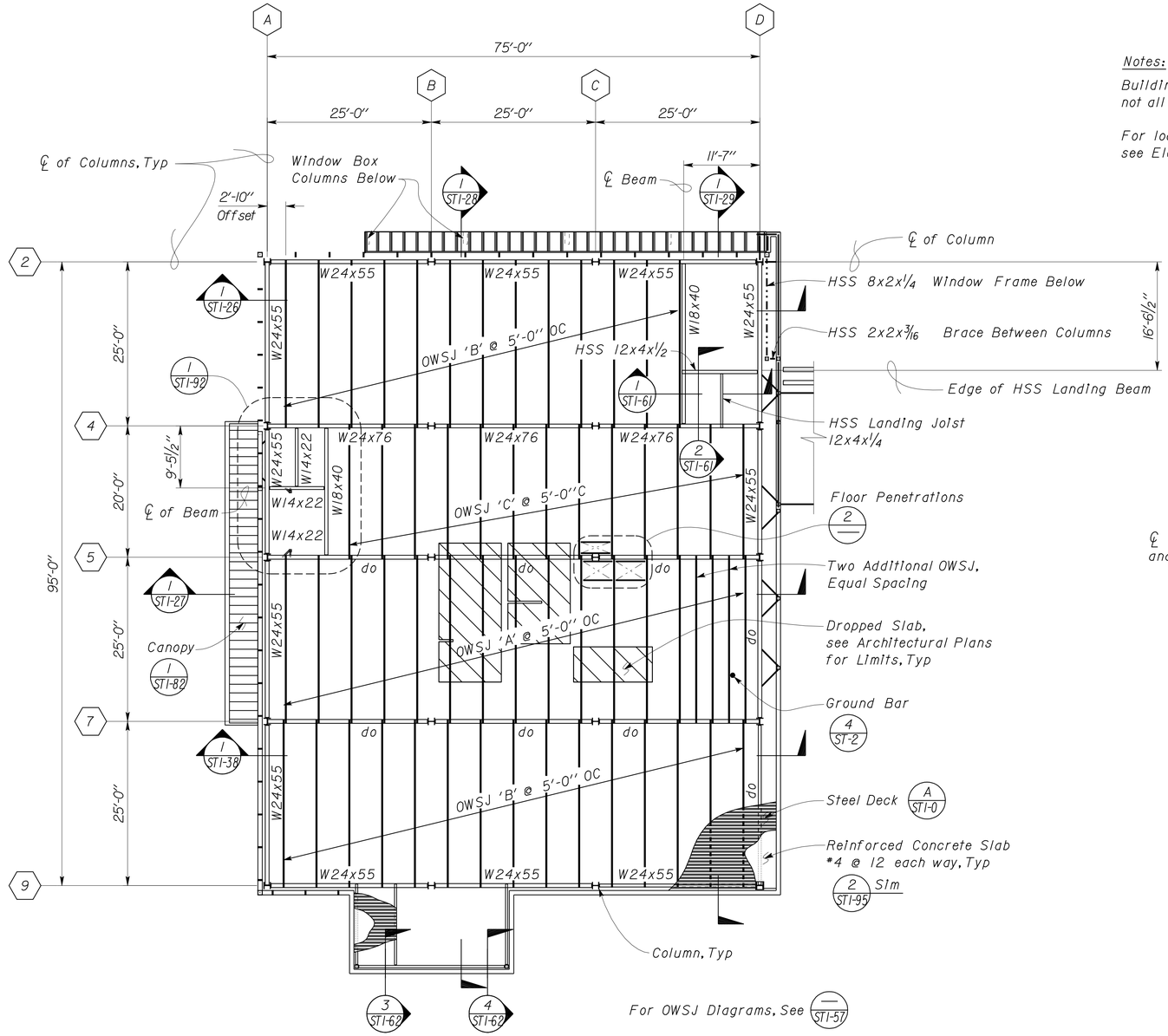

1 SECOND FLOOR FRAMING PLAN
Scale 1" = 10' - 0"

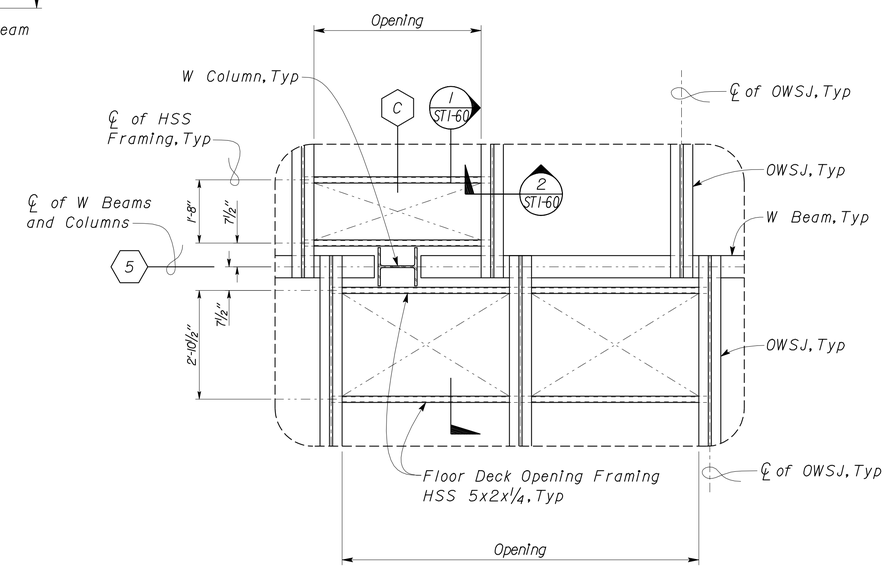

2 FLOOR DECK PENETRATION
Scale 1/2" = 1' - 0"

DESIGN	BY Robert du Plaine	CHECKED Brian Sutliff	
DETAILS	BY David W. Good	CHECKED Robert du Plaine	
QUANTITIES	BY	CHECKED	

STATE OF CALIFORNIA
DEPARTMENT OF TRANSPORTATION

DIVISION OF ENGINEERING SERVICES
ARCHITECTURAL AND STRUCTURAL DESIGN

BRIDGE NO. 33M5785
POST MILE 2.2

SFOBB MAINTENANCE COMPLEX

FLOOR FRAMING PLAN

SHEET ST1-19

TAEMWW Imperial Rev. 7/10

ORIGINAL SCALE IN INCHES FOR REDUCED PLANS 0 1 2 3

UNIT 3599
PROJECT NUMBER & PHASE 04120006661
EA 014081

DISREGARD PRINTS BEARING EARLIER REVISION DATES → REVISION DATES (PRELIMINARY STAGE ONLY) 12-16-11 12-28-11 05-08-12 05-23-12 05-28-12 06-13-12 SHEET OF

D:\User\Projects\Dist_04\0400000038_sfobb_ms_complex\Expedite_20120620\Copy of st_01\st1_019.dgn

25-OCT-2012 13:22

DIST.	COUNTY	ROUTE	POST MILES TOTAL PROJECT	SHEET NO.	TOTAL SHEETS
04	Ala	80	2.2	348	800

RdP
REGISTERED CIVIL ENGINEER — DATE 05-31-12

REGISTERED PROFESSIONAL ENGINEER
Robert du Plaine
No. 51447
Exp. 6-30-14
CIVIL
STATE OF CALIFORNIA

10-22-12
PLANS APPROVAL DATE

The State of California or its officers or agents shall not be responsible for the accuracy or completeness of scanned copies of this plan sheet.

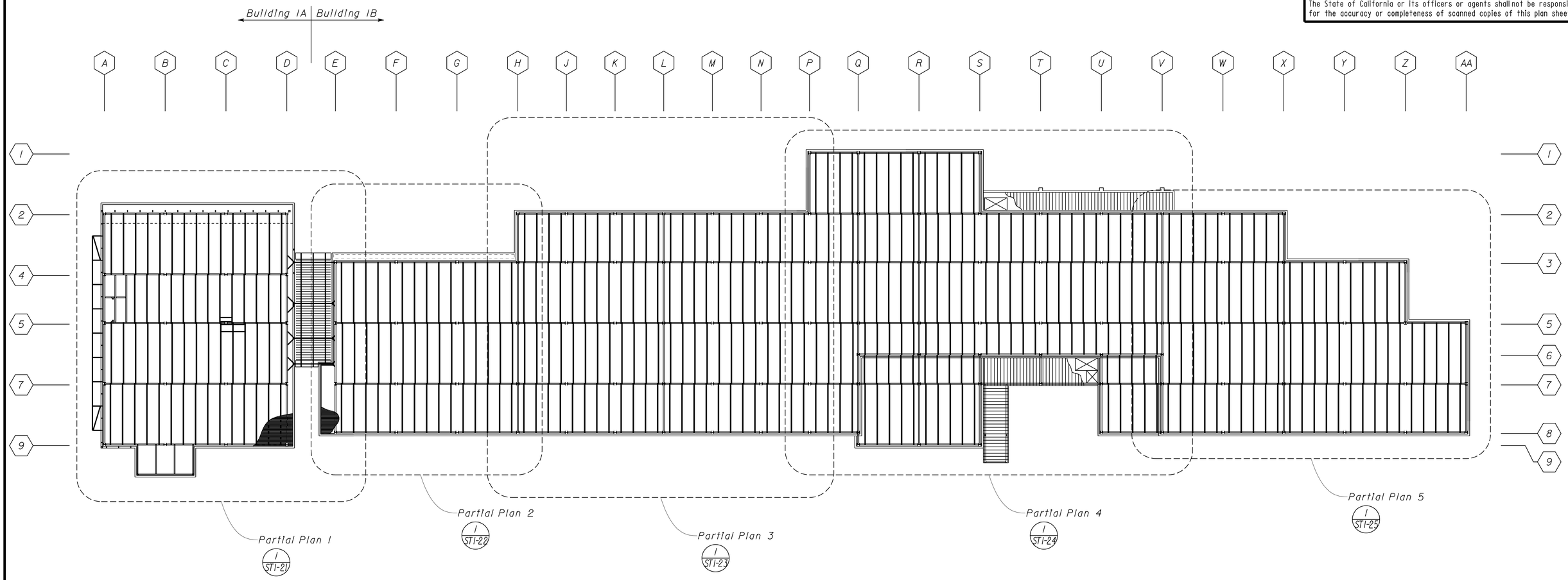

1 ROOF FRAMING INDEX PLAN
Scale 1" = 20' - 0"

DESIGN	BY Robert du Plaine	CHECKED Brian Sutliff	
DETAILS	BY David W. Good	CHECKED Robert du Plaine	
QUANTITIES	BY	CHECKED	

STATE OF CALIFORNIA
DEPARTMENT OF TRANSPORTATION

DIVISION OF ENGINEERING SERVICES
ARCHITECTURAL AND STRUCTURAL DESIGN

BRIDGE NO. 33M5785
POST MILE 2.2

SFOBB MAINTENANCE COMPLEX

ROOF FRAMING INDEX PLAN

SHEET **ST1-20**

TAEMWW Imperial Rev. 7/10

ORIGINAL SCALE IN INCHES FOR REDUCED PLANS 0 1 2 3

UNIT 3599
PROJECT NUMBER & PHASE 04120006661
EA 014081

DISREGARD PRINTS BEARING EARLIER REVISION DATES → 11-29-11 12-28-11 05-08-12 05-18-12

REVISION DATES (PRELIMINARY STAGE ONLY) SHEET OF

D:\User\Projects\Dist_04\0400000038_sfobb_ms_complex\Expedite_20120620\Copy of st_01\st1_020.dgn

26-OCT-2012 13:30

DIST.	COUNTY	ROUTE	POST MILES TOTAL PROJECT	SHEET NO.	TOTAL SHEETS
04	Ala	80	2.2	349	800

RdP
REGISTERED CIVIL ENGINEER — 05-31-12 DATE

REGISTERED PROFESSIONAL ENGINEER Robert du Plaine No. 51447 Exp. 6-30-14 CIVIL STATE OF CALIFORNIA

10-22-12
PLANS APPROVAL DATE

The State of California or its officers or agents shall not be responsible for the accuracy or completeness of scanned copies of this plan sheet.

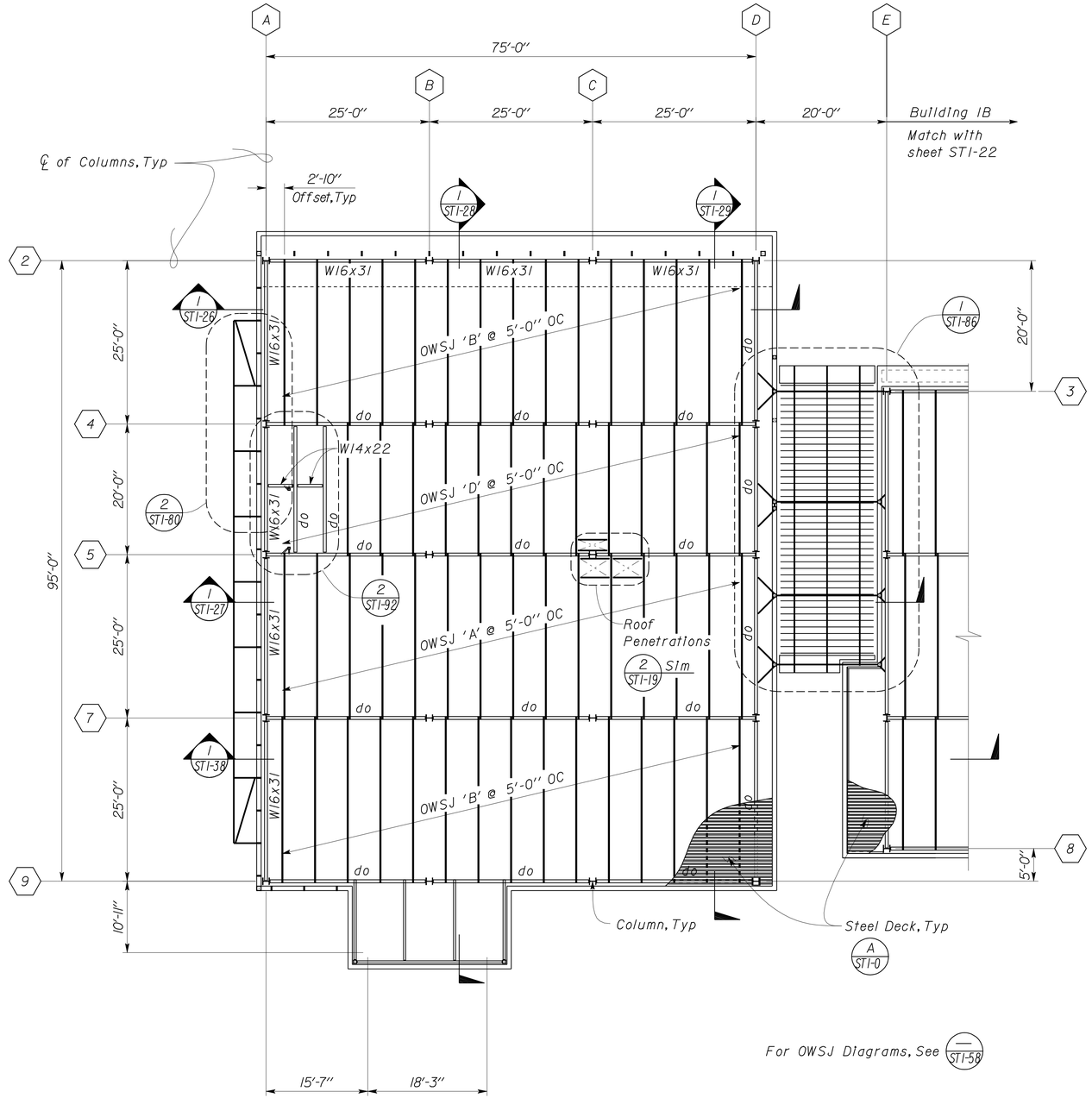

For OWSJ Diagrams, See — ST1-58

1 PARTIAL ROOF FRAMING PLAN
Scale 1" = 10' - 0"

NOTE:

Buildings IA and IB share a common grid system, not all alpha/numeric indicators will show consecutively.

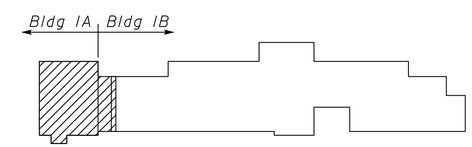

Key Plan

DESIGN	BY Robert du Plaine	CHECKED Brian Sutliff	
DETAILS	BY David W. Good	CHECKED Robert du Plaine	
QUANTITIES	BY	CHECKED	

STATE OF CALIFORNIA
DEPARTMENT OF TRANSPORTATION

DIVISION OF ENGINEERING SERVICES
ARCHITECTURAL AND STRUCTURAL DESIGN

BRIDGE NO. 33M5785
POST MILE 2.2

SFOBB MAINTENANCE COMPLEX
ROOF FRAMING PARTIAL PLAN 1 of 5

SHEET ST1-21

TAEMWW Imperial Rev. 7/10

ORIGINAL SCALE IN INCHES FOR REDUCED PLANS 0 1 2 3

UNIT 3599
PROJECT NUMBER & PHASE 04120006661

DISREGARD PRINTS BEARING EARLIER REVISION DATES → 11-29-11 12-28-11 05-08-12 05-18-12 06-15-12

REVISION DATES (PRELIMINARY STAGE ONLY) SHEET OF

EA 014081

D:\User\Projects\Dist_04\0400000038_sfobb_ms_complex\Expedite_20120620\st_01\st1_021.dgn

25-OCT-2012 13:22

DIST.	COUNTY	ROUTE	POST MILES TOTAL PROJECT	SHEET NO.	TOTAL SHEETS
04	Ala	80	2.2	350	800

RdP
REGISTERED CIVIL ENGINEER — 05-31-12 DATE

REGISTERED PROFESSIONAL ENGINEER Robert du Plaine No. 51447 Exp. 6-30-14 CIVIL STATE OF CALIFORNIA

10-22-12
PLANS APPROVAL DATE

The State of California or its officers or agents shall not be responsible for the accuracy or completeness of scanned copies of this plan sheet.

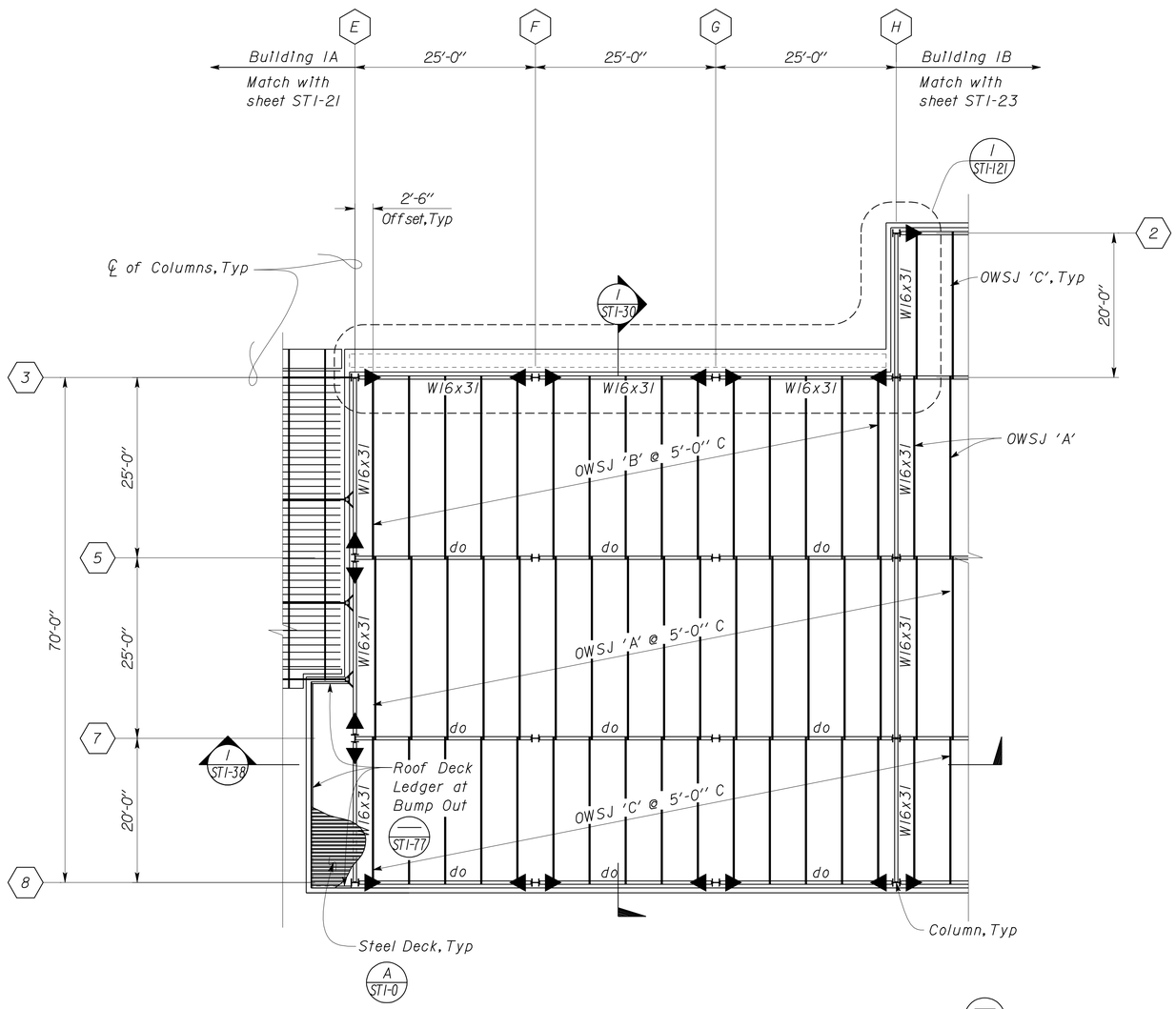

For OWSJ Diagrams, See ST1-58

1 PARTIAL ROOF FRAMING PLAN
Scale 1" = 10' - 0"

NOTE:
Buildings IA and IB share a common grid system, not all alpha/numeric indicators will show consecutively.

SYMBOL KEY:
▶ Indicates Moment Frame Connections, see ST1-132

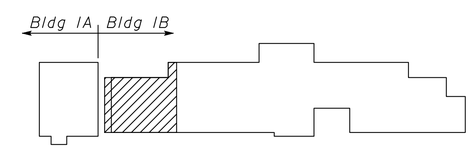

Key Plan

DESIGN	BY Robert du Plaine	CHECKED Brian Sutliff	
DETAILS	BY David W. Good	CHECKED Robert du Plaine	
QUANTITIES	BY	CHECKED	

STATE OF CALIFORNIA
DEPARTMENT OF TRANSPORTATION

DIVISION OF ENGINEERING SERVICES
ARCHITECTURAL AND STRUCTURAL DESIGN

BRIDGE NO. 33M5785
POST MILE 2.2

SFOBB MAINTENANCE COMPLEX
ROOF FRAMING PARTIAL PLAN 2 of 5

SHEET ST1-22

TAEMWW Imperial Rev. 7/10

ORIGINAL SCALE IN INCHES FOR REDUCED PLANS 0 1 2 3

UNIT 3599
PROJECT NUMBER & PHASE 04120006661
EA 014081

DISREGARD PRINTS BEARING EARLIER REVISION DATES → 11-29-11 12-28-11 05-08-12 05-18-12 05-29-12

REVISION DATES (PRELIMINARY STAGE ONLY) SHEET OF

D:\User\Projects\Dist_04\0400000038_sfobb_ms_complex\Expedite_20120620\Copy of st_01\st1_022.dgn

25-OCT-2012 13:22

DIST.	COUNTY	ROUTE	POST MILES TOTAL PROJECT	SHEET NO.	TOTAL SHEETS
04	Ala	80	2.2	351	800

RdP
REGISTERED CIVIL ENGINEER — DATE 05-31-12

REGISTERED PROFESSIONAL ENGINEER Robert du Plaine No. 51447 Exp. 6-30-14 CIVIL STATE OF CALIFORNIA

10-22-12
PLANS APPROVAL DATE

The State of California or its officers or agents shall not be responsible for the accuracy or completeness of scanned copies of this plan sheet.

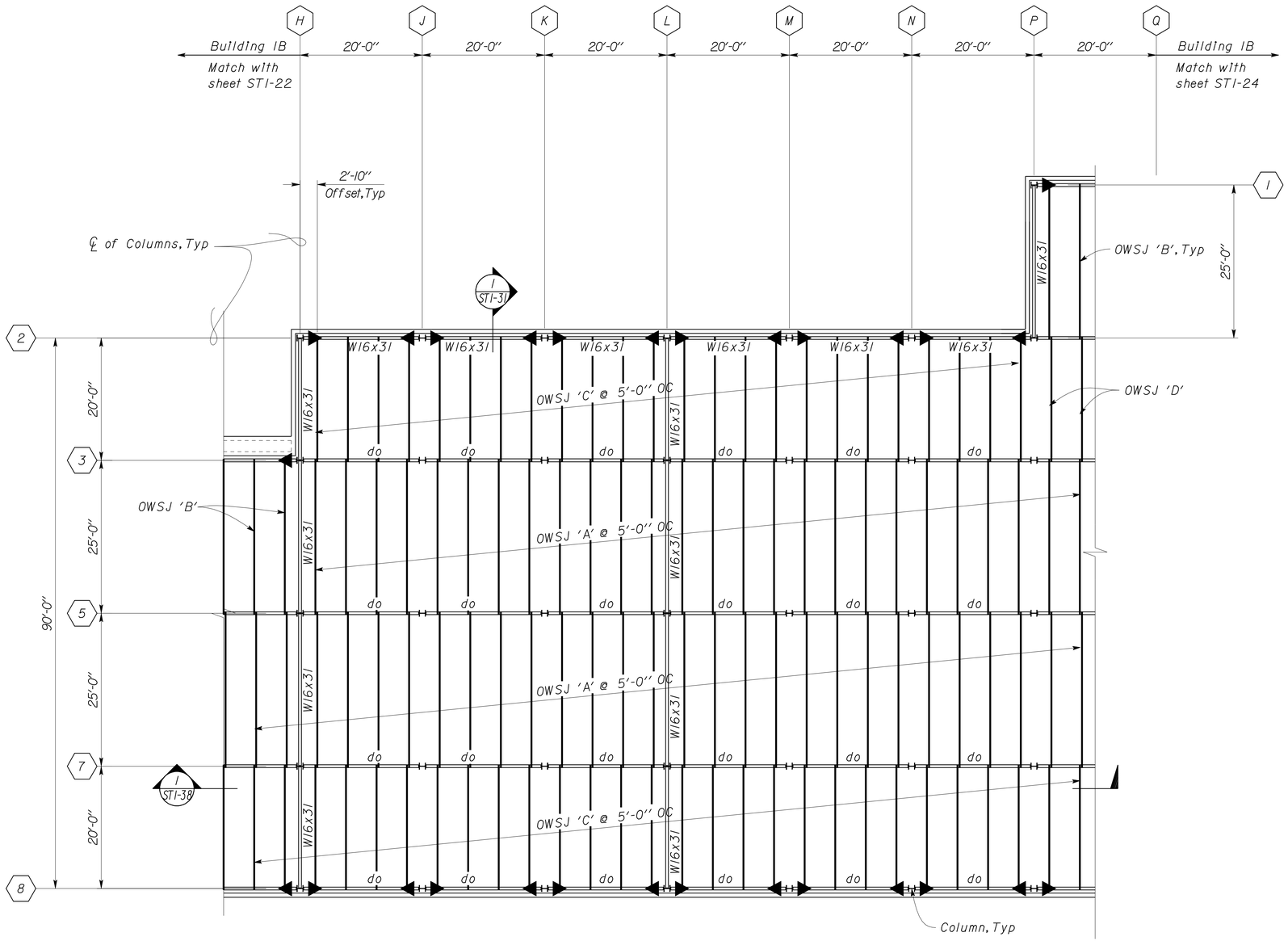

Note
Buildings IA and IB share a common grid system, not all alpha/numeric indicators will show consecutively.

For OWSJ Diagrams, See — ST1-58

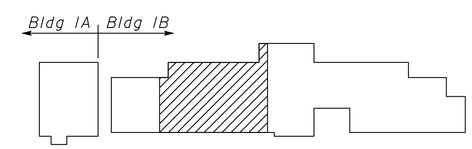

Key Plan

1 PARTIAL ROOF FRAMING PLAN
Scale 1" = 10' - 0"

DESIGN	BY Robert du Plaine	CHECKED Brian Sutliff	
DETAILS	BY David W. Good	CHECKED Robert du Plaine	
QUANTITIES	BY	CHECKED	

STATE OF CALIFORNIA
DEPARTMENT OF TRANSPORTATION

DIVISION OF ENGINEERING SERVICES
ARCHITECTURAL AND STRUCTURAL DESIGN

BRIDGE NO. 33M5785
POST MILE 2.2

SFOBB MAINTENANCE COMPLEX
ROOF FRAMING PARTIAL PLAN 3 of 5

SHEET ST1-23

TAEMWW Imperial Rev. 7/10

ORIGINAL SCALE IN INCHES FOR REDUCED PLANS 0 1 2 3

UNIT 3599
PROJECT NUMBER & PHASE 04120006661
EA 014081

DISREGARD PRINTS BEARING EARLIER REVISION DATES → 11-16-11 12-28-11 05-08-12 05-18-12

REVISION DATES (PRELIMINARY STAGE ONLY) SHEET OF

D:\User\Projects\Dist_04\0400000038_sfobb_ms_complex\Expedite_20120620\Copy of st_01\st1_023.dgn

25-OCT-2012 14:29

DIST.	COUNTY	ROUTE	POST MILES TOTAL PROJECT	SHEET NO.	TOTAL SHEETS
04	Ala	80	2.2	352	800

RdP
REGISTERED CIVIL ENGINEER — DATE 05-31-12

REGISTERED PROFESSIONAL ENGINEER Robert du Plaine No. 51447 Exp. 6-30-14 CIVIL STATE OF CALIFORNIA

10-22-12
PLANS APPROVAL DATE

The State of California or its officers or agents shall not be responsible for the accuracy or completeness of scanned copies of this plan sheet.

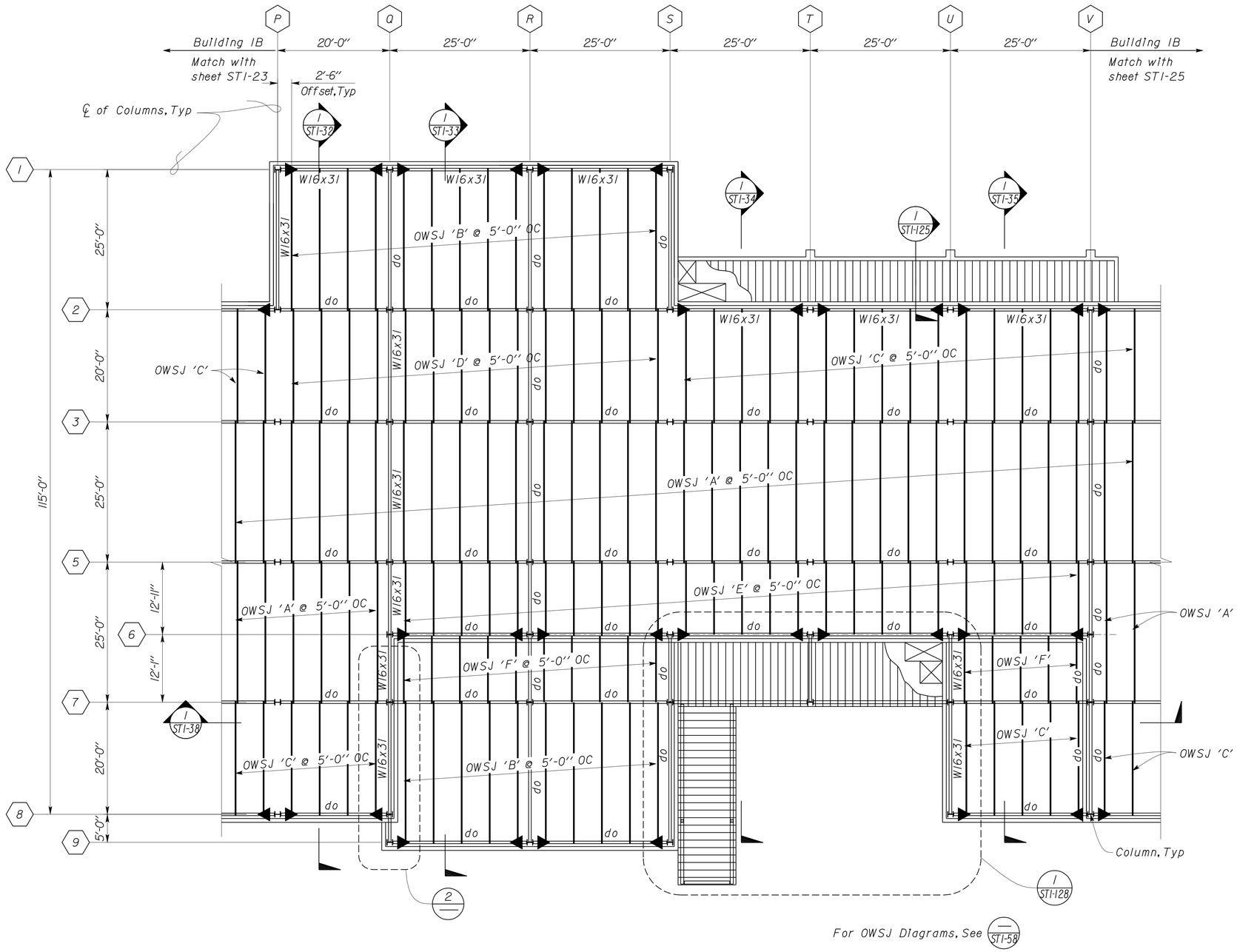

For OWSJ Diagrams, See ST1-58

1 PARTIAL ROOF FRAMING PLAN
Scale 1" = 10' - 0"

Note
Buildings IA and IB share a common grid system, not all alpha/numeric indicators will show consecutively.

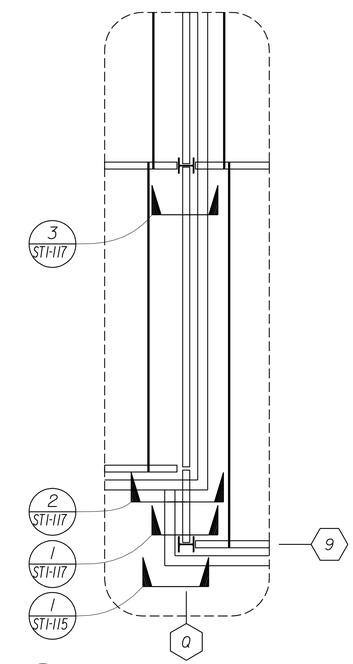

2 WALL SECTION CALLOUTS
No Scale

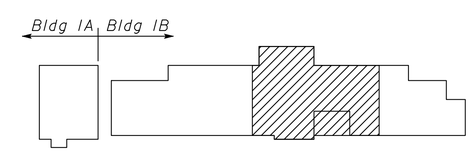

Key Plan

DESIGN	BY Robert du Plaine	CHECKED Brian Sutliff	
DETAILS	BY David W. Good	CHECKED Robert du Plaine	
QUANTITIES	BY	CHECKED	

STATE OF CALIFORNIA
DEPARTMENT OF TRANSPORTATION

DIVISION OF ENGINEERING SERVICES
ARCHITECTURAL AND STRUCTURAL DESIGN

BRIDGE NO. 33M5785
POST MILE 2.2

SFOBB MAINTENANCE COMPLEX

ROOF FRAMING PARTIAL PLAN 4 of 5

SHEET ST1-24

TAEMWW Imperial Rev. 7/10

ORIGINAL SCALE IN INCHES FOR REDUCED PLANS 0 1 2 3

UNIT 3599
PROJECT NUMBER & PHASE 04120006661
EA 014081

DISREGARD PRINTS BEARING EARLIER REVISION DATES → 11-16-11 12-28-11 05-01-12 05-08-12 05-18-12

REVISION DATES (PRELIMINARY STAGE ONLY) SHEET OF

D:\User\Projects\Dist_04\0400000038_sfobb_ms_complex\Expedite_20120620\Copy of st_01\st1_024.dgn

26-OCT-2012 13:30

DIST.	COUNTY	ROUTE	POST MILES TOTAL PROJECT	SHEET NO.	TOTAL SHEETS
04	Ala	80	2.2	353	800

RdP
REGISTERED CIVIL ENGINEER — 05-31-12 DATE

REGISTERED PROFESSIONAL ENGINEER — Robert du Plaine — No. 51447 — Exp. 6-30-14 — CIVIL — STATE OF CALIFORNIA

10-22-12
PLANS APPROVAL DATE

The State of California or its officers or agents shall not be responsible for the accuracy or completeness of scanned copies of this plan sheet.

Note
Buildings IA and IB share a common grid system, not all alpha/numeric indicators will show consecutively.

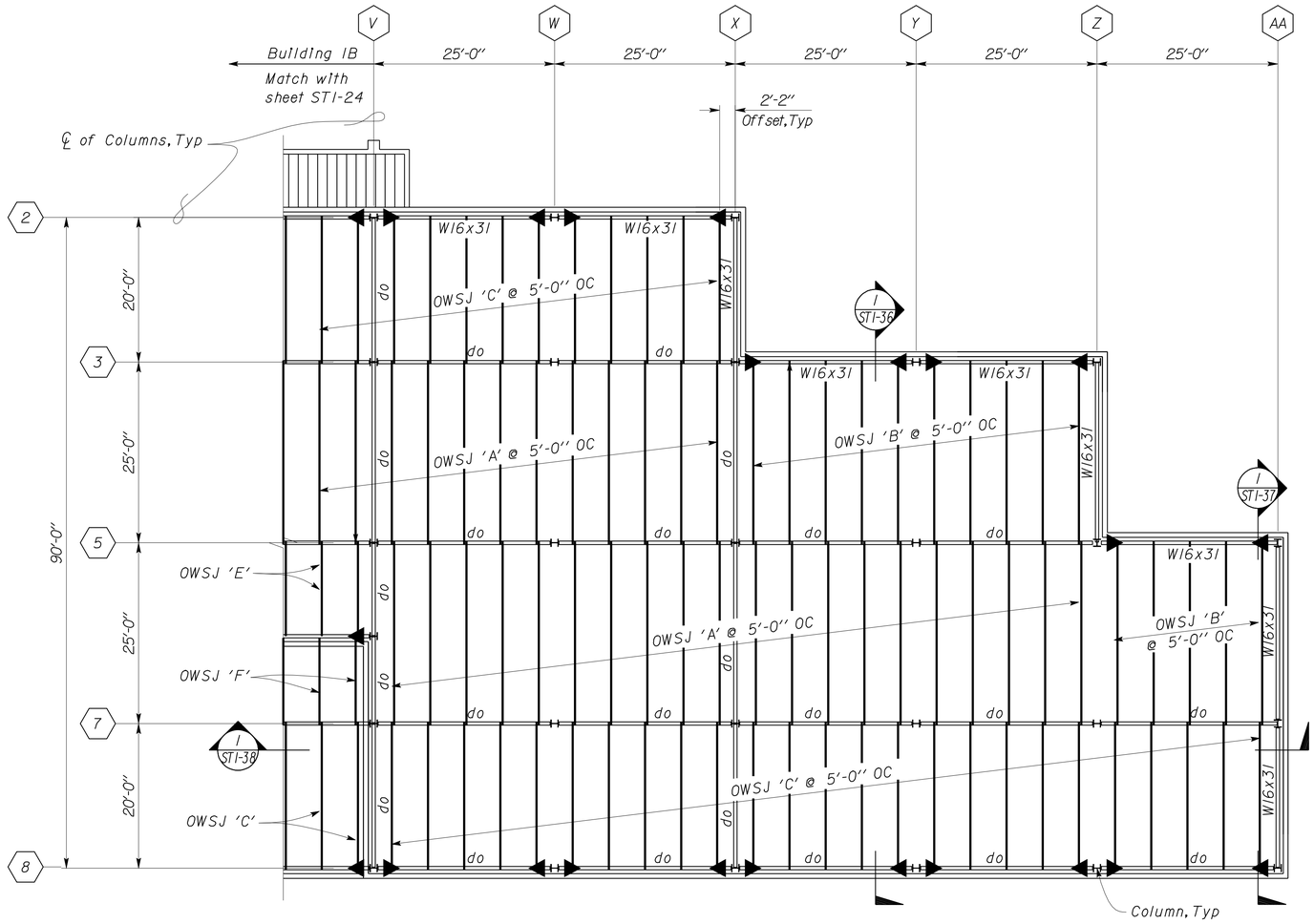

For OWSJ Diagrams, See ST1-58

1 PARTIAL ROOF FRAMING PLAN
Scale 1" = 10' - 0"

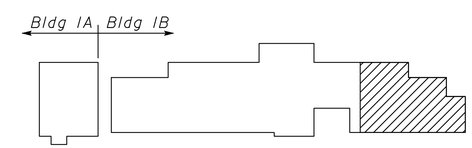

Key Plan

DESIGN	BY Robert du Plaine	CHECKED Brian Sutliff	
DETAILS	BY David W. Good	CHECKED Robert du Plaine	
QUANTITIES	BY	CHECKED	

STATE OF CALIFORNIA
DEPARTMENT OF TRANSPORTATION

DIVISION OF ENGINEERING SERVICES
ARCHITECTURAL AND STRUCTURAL DESIGN

BRIDGE NO. 33M5785
POST MILE 2.2

SFOBB MAINTENANCE COMPLEX

ROOF FRAMING PARTIAL PLAN 5 of 5

SHEET ST1-25

TAEMWW Imperial Rev. 7/10

ORIGINAL SCALE IN INCHES FOR REDUCED PLANS 0 1 2 3

UNIT 3599
PROJECT NUMBER & PHASE 04120006661
EA 014081

DISREGARD PRINTS BEARING EARLIER REVISION DATES → 11-29-11 12-28-11 05-08-12 05-18-12

REVISION DATES (PRELIMINARY STAGE ONLY) SHEET OF

D:\User\Projects\Dist_04\0400000038_sfobb_ms_complex\Expedite_20120620\Copy of st_01\st1_025.dgn

25-OCT-2012 14:30

DIST.	COUNTY	ROUTE	POST MILES TOTAL PROJECT	SHEET NO.	TOTAL SHEETS
04	Ala	80	2.2	354	800

RdP
REGISTERED CIVIL ENGINEER — DATE 05-31-12

REGISTERED PROFESSIONAL ENGINEER
Robert du Plaine
No. 51447
Exp. 6-30-14
CIVIL
STATE OF CALIFORNIA

10-22-12
PLANS APPROVAL DATE

The State of California or its officers or agents shall not be responsible for the accuracy or completeness of scanned copies of this plan sheet.

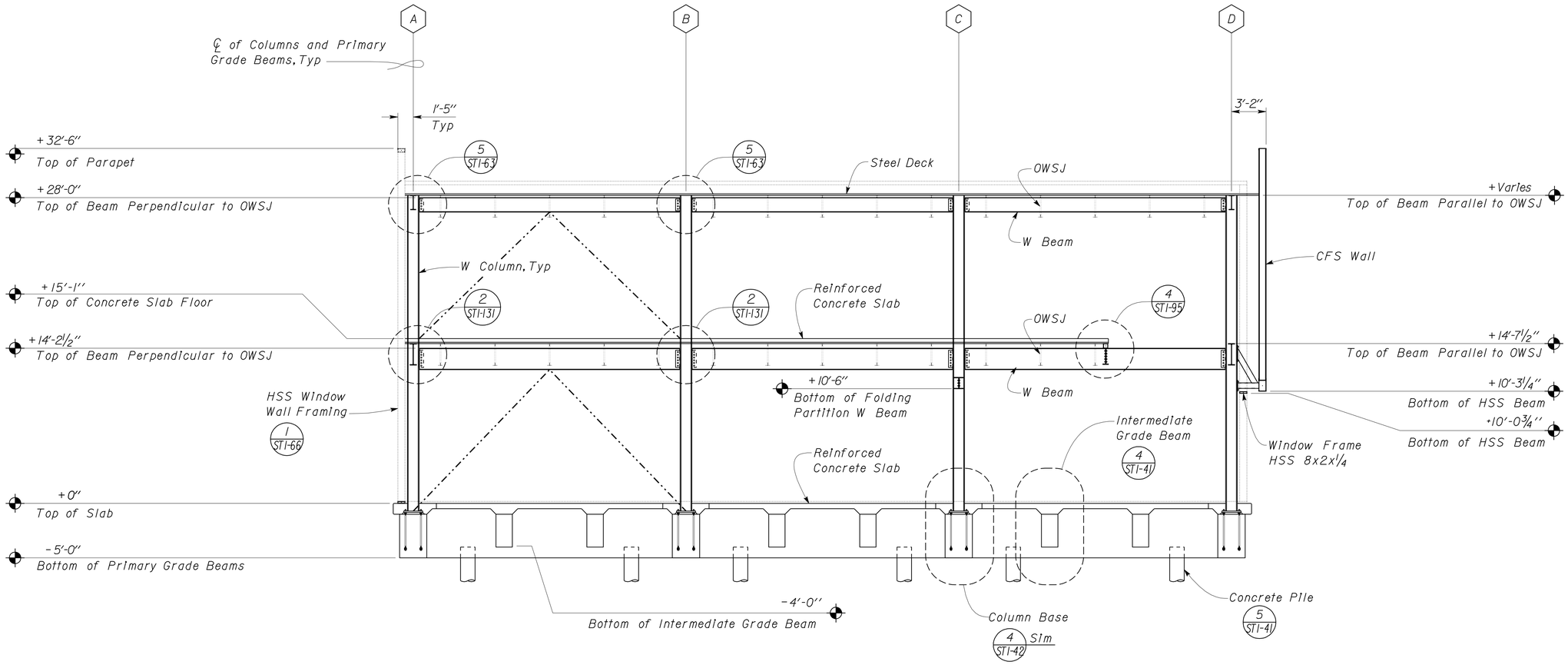

1 BUILDING SECTION
Scale 3/16" = 1'-0"

DESIGN	BY Robert du Plaine	CHECKED Brian Sutliff	
DETAILS	BY David W. Good	CHECKED Robert du Plaine	
QUANTITIES	BY	CHECKED	

STATE OF CALIFORNIA
DEPARTMENT OF TRANSPORTATION

DIVISION OF ENGINEERING SERVICES
ARCHITECTURAL AND STRUCTURAL DESIGN

BRIDGE NO. 33M5785
POST MILE 2.2

SFOBB MAINTENANCE COMPLEX

BUILDING SECTION

SHEET ST1-26

TAEMWW Imperial Rev. 7/10

ORIGINAL SCALE IN INCHES FOR REDUCED PLANS 0 1 2 3

UNIT 3599
PROJECT NUMBER & PHASE 04120006661
EA 014081

DISREGARD PRINTS BEARING EARLIER REVISION DATES →
REVISION DATES (PRELIMINARY STAGE ONLY) 12-28-11 02-07-12 05-08-12 05-18-12 05-30-12 06-14-12
SHEET OF

D:\User\Projects\Dist_04\0400000038_sfobb_ms_complex\Expedite_20120620\Copy of st_01\st1_026.dgn

25-OCT-2012 14:30

DIST.	COUNTY	ROUTE	POST MILES TOTAL PROJECT	SHEET NO.	TOTAL SHEETS
04	Ala	80	2.2	355	800

RdP
REGISTERED CIVIL ENGINEER — DATE 05-31-12

REGISTERED PROFESSIONAL ENGINEER Robert du Plaine No. 51447 Exp. 6-30-14 CIVIL STATE OF CALIFORNIA

10-22-12
PLANS APPROVAL DATE

The State of California or its officers or agents shall not be responsible for the accuracy or completeness of scanned copies of this plan sheet.

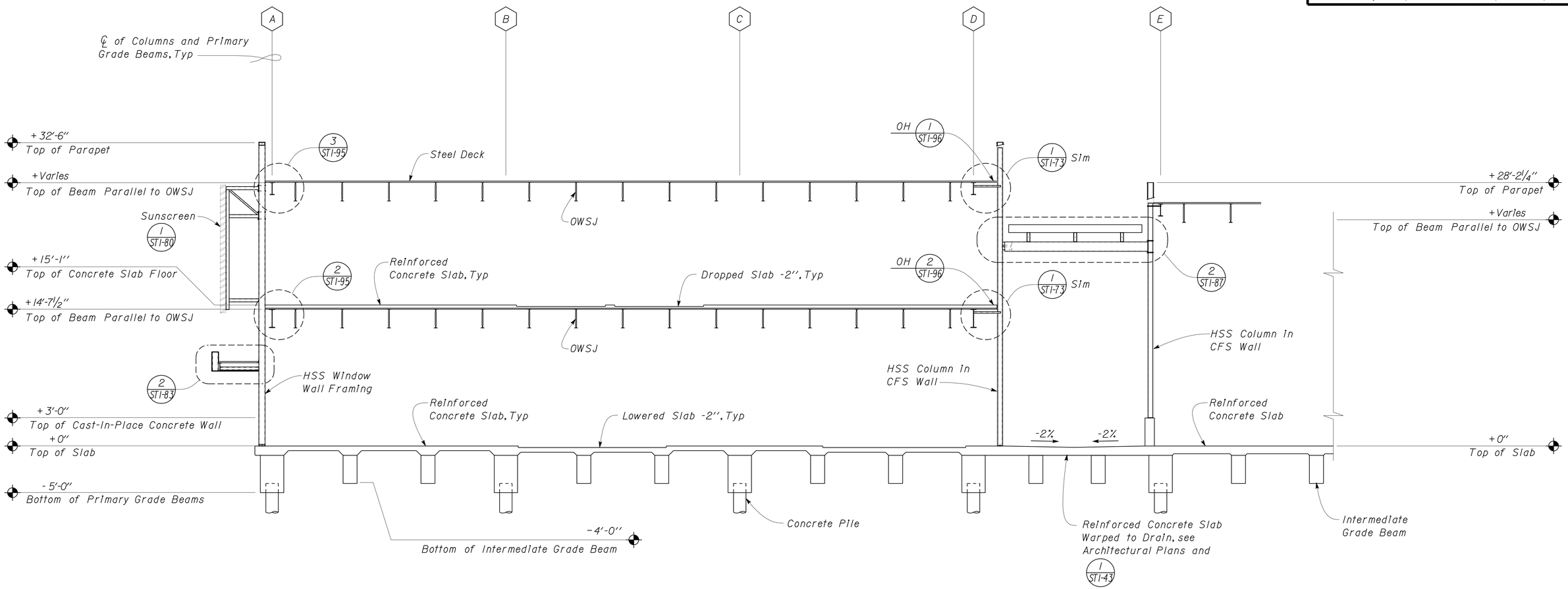

1 BUILDING SECTION
Scale 3/16" = 1'-0"

DESIGN	BY Robert du Plaine	CHECKED Brian Sutliff	
DETAILS	BY David W. Good	CHECKED Robert du Plaine	
QUANTITIES	BY	CHECKED	

STATE OF CALIFORNIA
DEPARTMENT OF TRANSPORTATION

DIVISION OF ENGINEERING SERVICES
ARCHITECTURAL AND STRUCTURAL DESIGN

BRIDGE NO. 33M5785
POST MILE 2.2

SFOBB MAINTENANCE COMPLEX

BUILDING SECTION

SHEET ST1-27

TAEMWW Imperial Rev. 7/10

ORIGINAL SCALE IN INCHES FOR REDUCED PLANS 0 1 2 3

UNIT 3599
PROJECT NUMBER & PHASE 04120006661
EA 014081

DISREGARD PRINTS BEARING EARLIER REVISION DATES → 11-28-11 12-28-11 05-08-12 05-18-12 05-29-12

REVISION DATES (PRELIMINARY STAGE ONLY) SHEET OF

D:\User\Projects\Dist_04\0400000038_sfobb_ms_complex\Expedite_20120620\Copy of st_01\st1_027.dgn

25-OCT-2012 14:30

DIST.	COUNTY	ROUTE	POST MILES TOTAL PROJECT	SHEET NO.	TOTAL SHEETS
04	Ala	80	2.2	356	800

RdP
REGISTERED CIVIL ENGINEER — DATE 05-31-12

REGISTERED PROFESSIONAL ENGINEER — Robert du Plaine — No. 51447 — Exp. 6-30-14 — CIVIL — STATE OF CALIFORNIA

10-22-12
PLANS APPROVAL DATE

The State of California or its officers or agents shall not be responsible for the accuracy or completeness of scanned copies of this plan sheet.

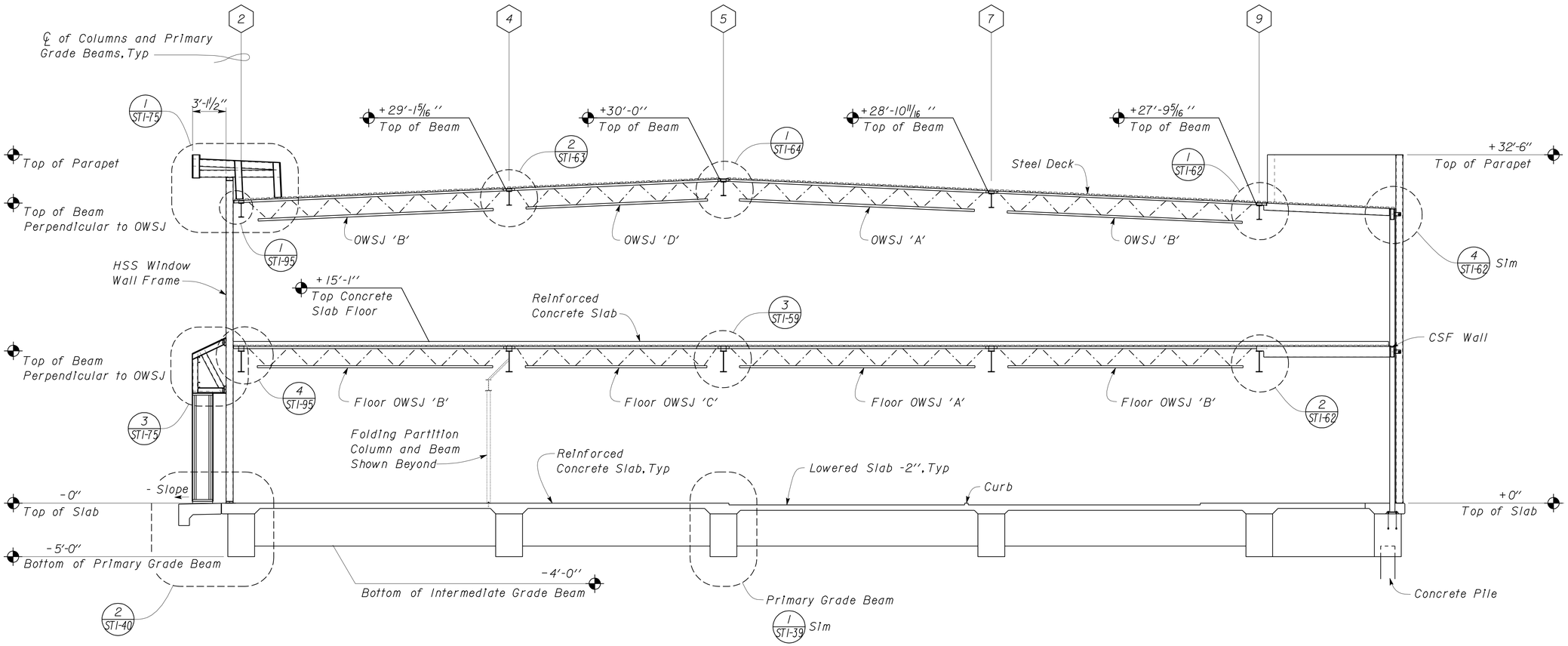

1 BUILDING SECTION
Scale 3/16" = 1'-0"

DESIGN	BY Robert du Plaine	CHECKED Brian Sutliff	
DETAILS	BY David W. Good	CHECKED Robert du Plaine	
QUANTITIES	BY	CHECKED	

STATE OF CALIFORNIA
DEPARTMENT OF TRANSPORTATION

DIVISION OF ENGINEERING SERVICES
ARCHITECTURAL AND STRUCTURAL DESIGN

BRIDGE NO. 33M5785
POST MILE 2.2

SFOBB MAINTENANCE COMPLEX

BUILDING SECTION

SHEET ST1-28

TAEMWW Imperial Rev. 7/10

ORIGINAL SCALE IN INCHES FOR REDUCED PLANS 0 1 2 3

UNIT 3599
PROJECT NUMBER & PHASE 04120006661

DISREGARD PRINTS BEARING EARLIER REVISION DATES → 11-29-11 12-28-11 05-08-12 05-23-12 05-29-12 06-18-12

REVISION DATES (PRELIMINARY STAGE ONLY) SHEET OF

EA 014081

D:\User\Projects\Dist_04\0400000038_sfobb_ms_complex\Expedite_20120620\Copy of st_01\st1_028.dgn

26-OCT-2012 13:30

DIST.	COUNTY	ROUTE	POST MILES TOTAL PROJECT	SHEET NO.	TOTAL SHEETS
04	Ala	80	2.2	357	800

RdP
REGISTERED CIVIL ENGINEER — DATE 05-31-12

REGISTERED PROFESSIONAL ENGINEER Robert du Plaine No. 51447 Exp. 6-30-14 CIVIL STATE OF CALIFORNIA

10-22-12
PLANS APPROVAL DATE

The State of California or its officers or agents shall not be responsible for the accuracy or completeness of scanned copies of this plan sheet.

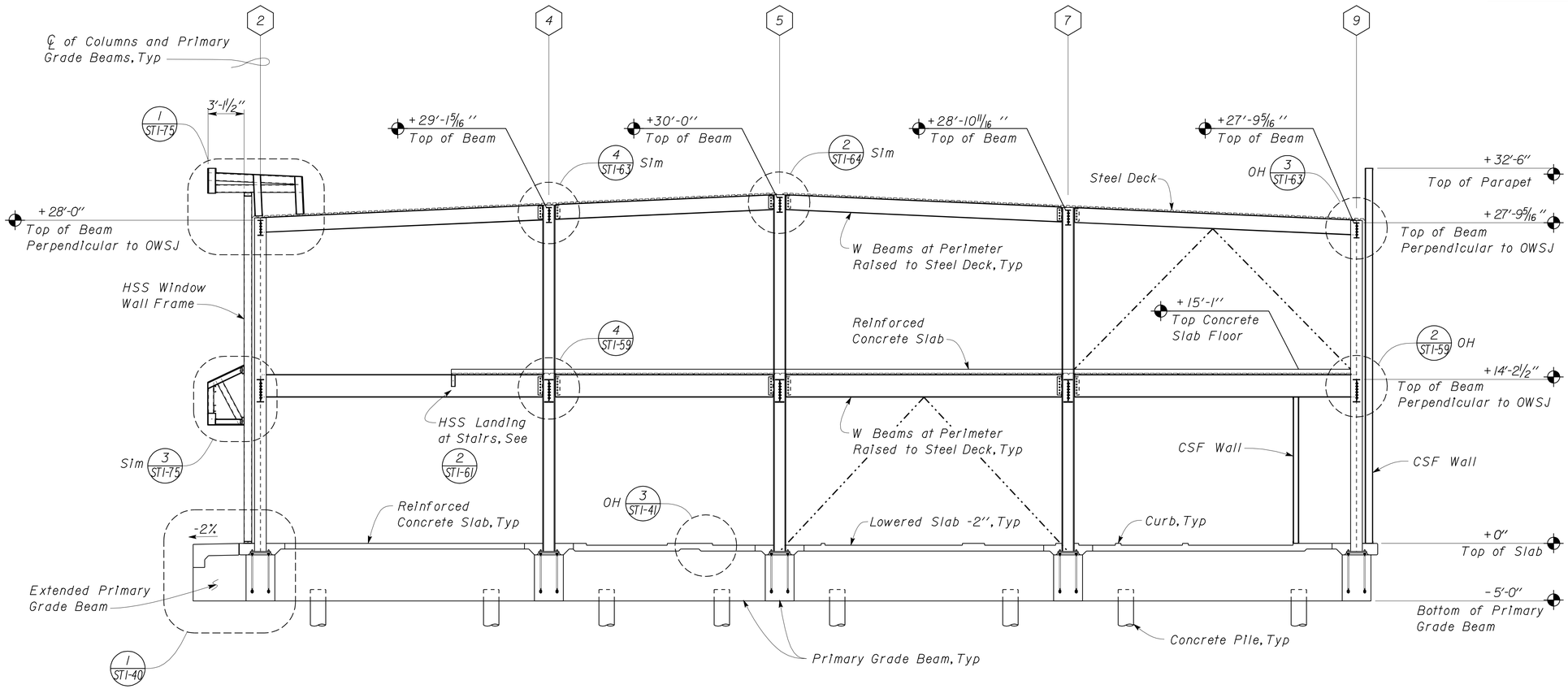

1 BUILDING SECTION
Scale 3/16" = 1'-0"

DESIGN	BY Robert du Plaine	CHECKED Brian Sutliff	
DETAILS	BY David W. Good	CHECKED Robert du Plaine	
QUANTITIES	BY	CHECKED	

STATE OF CALIFORNIA
DEPARTMENT OF TRANSPORTATION

DIVISION OF ENGINEERING SERVICES
ARCHITECTURAL AND STRUCTURAL DESIGN

BRIDGE NO. 33M5785
POST MILE 2.2

SFOBB MAINTENANCE COMPLEX

BUILDING SECTION

SHEET ST1-29

TAEMWW Imperial Rev. 7/10

ORIGINAL SCALE IN INCHES FOR REDUCED PLANS 0 1 2 3

UNIT 3599
PROJECT NUMBER & PHASE 04120006661
EA 014081

DISREGARD PRINTS BEARING EARLIER REVISION DATES → 11-29-11 12-28-11 05-08-12 05-18-12 05-29-12 06-18-12

REVISION DATES (PRELIMINARY STAGE ONLY) SHEET OF

D:\User\Projects\Dist_04\0400000038_sfobb_ms_complex\Expedite_20120620\Copy of st_01\st1_029.dgn

25-OCT-2012 14:30

DIST.	COUNTY	ROUTE	POST MILES TOTAL PROJECT	SHEET NO.	TOTAL SHEETS
04	Ala	80	2.2	358	800

RdP
REGISTERED CIVIL ENGINEER — DATE 05-31-12

REGISTERED PROFESSIONAL ENGINEER — Robert du Plaine — No. 51447 — Exp. 6-30-14 — CIVIL — STATE OF CALIFORNIA

10-22-12
PLANS APPROVAL DATE

The State of California or its officers or agents shall not be responsible for the accuracy or completeness of scanned copies of this plan sheet.

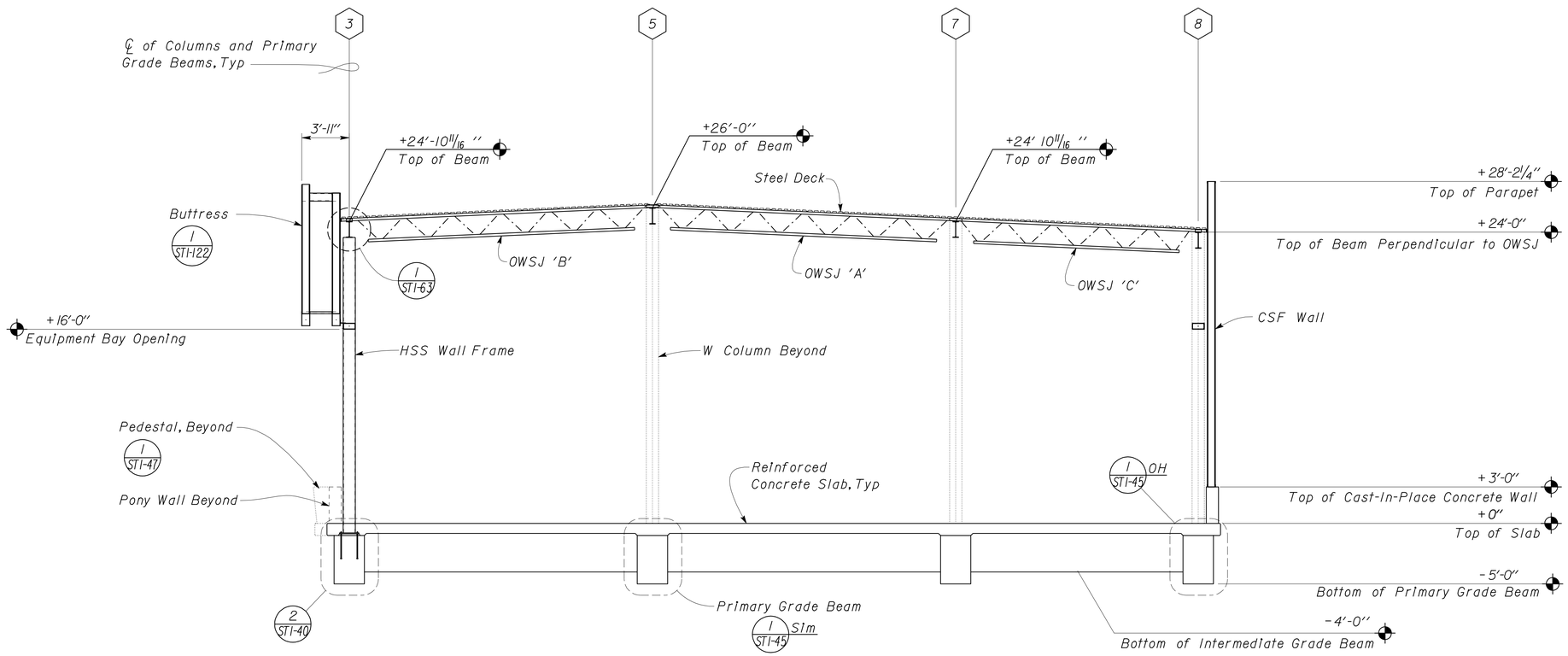

1 BUILDING SECTION
Scale 3/16" = 1'-0"

DESIGN	BY Robert du Plaine	CHECKED Brian Sutliff	
DETAILS	BY David W. Good	CHECKED Robert du Plaine	
QUANTITIES	BY	CHECKED	

STATE OF CALIFORNIA
DEPARTMENT OF TRANSPORTATION

DIVISION OF ENGINEERING SERVICES
ARCHITECTURAL AND STRUCTURAL DESIGN

BRIDGE NO. 33M5785
POST MILE 2.2

SFOBB MAINTENANCE COMPLEX

BUILDING SECTION

SHEET ST1-30

TAEMWW Imperial Rev. 7/10

ORIGINAL SCALE IN INCHES FOR REDUCED PLANS 0 1 2 3

UNIT 3599
PROJECT NUMBER & PHASE 04120006661
EA 014081

DISREGARD PRINTS BEARING EARLIER REVISION DATES → 12-28-11 05-08-12 05-18-12 05-28-12 06-15-12

REVISION DATES (PRELIMINARY STAGE ONLY) SHEET OF

D:\User\Projects\Dist_04\0400000038_sfobb_ms_complex\Expedite_20120620\Copy of st_01\st1_030.dgn

31-OCT-2012 08:34

DIST.	COUNTY	ROUTE	POST MILES TOTAL PROJECT	SHEET NO.	TOTAL SHEETS
04	Ala	80	2.2	359	800

RdP
REGISTERED CIVIL ENGINEER — DATE 05-31-12

REGISTERED PROFESSIONAL ENGINEER
Robert du Plaine
No. 51447
Exp. 6-30-14
CIVIL
STATE OF CALIFORNIA

10-22-12
PLANS APPROVAL DATE

The State of California or its officers or agents shall not be responsible for the accuracy or completeness of scanned copies of this plan sheet.

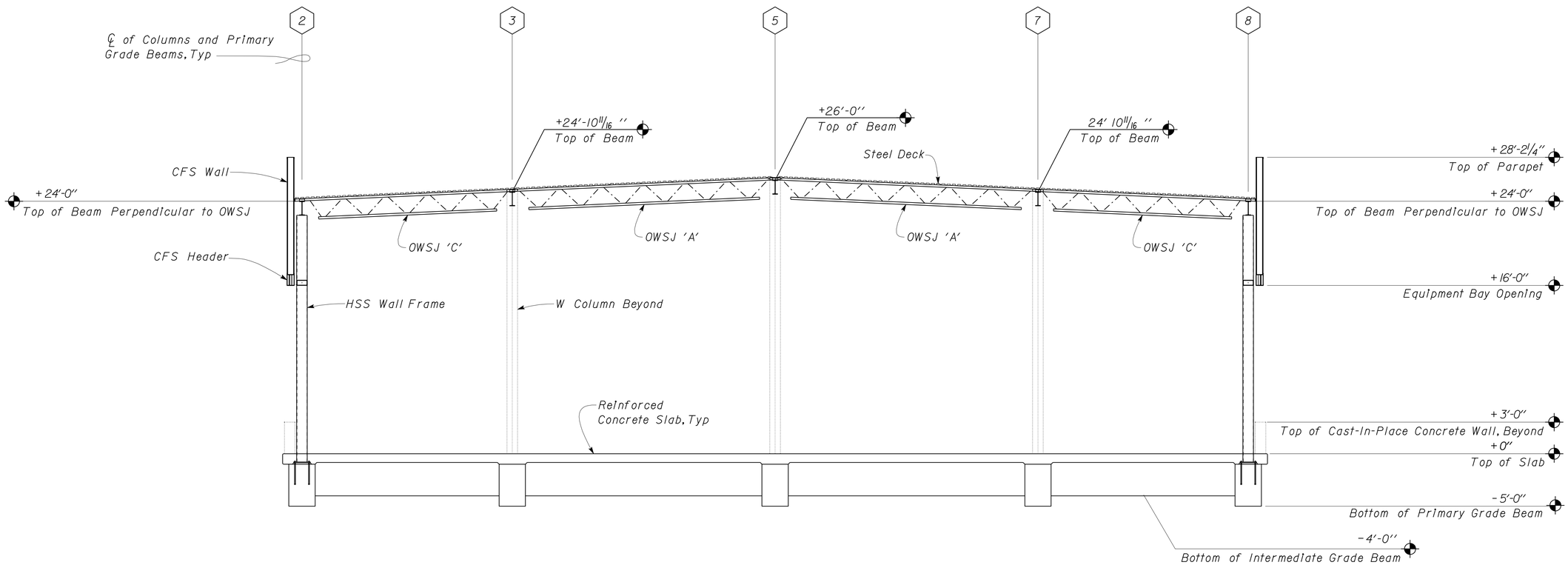

1 BUILDING SECTION
Scale 3/16" = 1'-0"

DESIGN	BY Robert du Plaine	CHECKED Brian Sutliff	
DETAILS	BY David W. Good	CHECKED Robert du Plaine	
QUANTITIES	BY	CHECKED	

STATE OF CALIFORNIA
DEPARTMENT OF TRANSPORTATION

DIVISION OF ENGINEERING SERVICES
ARCHITECTURAL AND STRUCTURAL DESIGN

BRIDGE NO. 33M5785
POST MILE 2.2

SFOBB MAINTENANCE COMPLEX

BUILDING SECTION

SHEET ST1-31

TAEMWW Imperial Rev. 7/10

ORIGINAL SCALE IN INCHES FOR REDUCED PLANS 0 1 2 3

UNIT 3599
PROJECT NUMBER & PHASE 04120006661
EA 014081

DISREGARD PRINTS BEARING EARLIER REVISION DATES → REVISION DATES (PRELIMINARY STAGE ONLY) 11-29-11 12-28-11 05-08-12 05-18-12 05-28-12

SHEET OF

D:\User\Projects\Dist_04\0400000038_sfobb_ms_complex\Expedite_20120620\Copy of st_01\st1_031.dgn

25-OCT-2012 14:30

DIST.	COUNTY	ROUTE	POST MILES TOTAL PROJECT	SHEET NO.	TOTAL SHEETS
04	Ala	80	2.2	360	800

RdP
REGISTERED CIVIL ENGINEER — DATE 05-31-12

REGISTERED PROFESSIONAL ENGINEER
Robert du Plaine
No. 51447
Exp. 6-30-14
CIVIL
STATE OF CALIFORNIA

10-22-12
PLANS APPROVAL DATE

The State of California or its officers or agents shall not be responsible for the accuracy or completeness of scanned copies of this plan sheet.

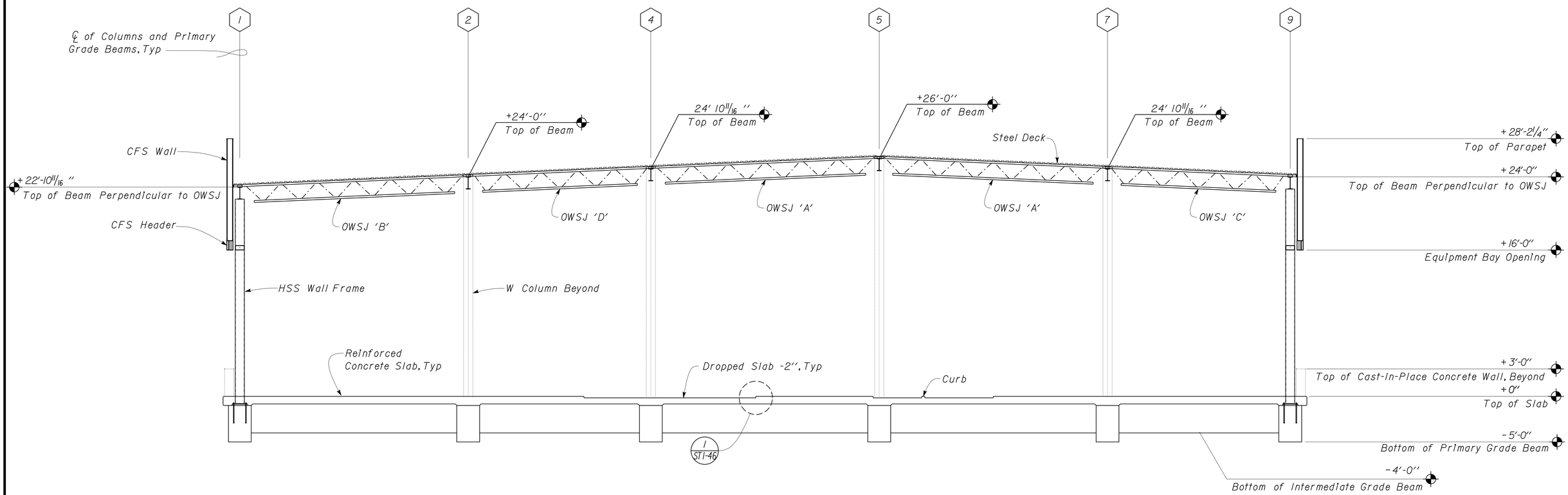

1 BUILDING SECTION
Scale 3/16" = 1'-0"

DESIGN	BY Robert du Plaine	CHECKED Brian Sutliff	
DETAILS	BY David W. Good	CHECKED Robert du Plaine	
QUANTITIES	BY	CHECKED	

STATE OF CALIFORNIA
DEPARTMENT OF TRANSPORTATION

DIVISION OF ENGINEERING SERVICES
ARCHITECTURAL AND STRUCTURAL DESIGN

BRIDGE NO. 33M5785
POST MILE 2.2

SFOBB MAINTENANCE COMPLEX

BUILDING SECTION

SHEET ST1-32

TAEMWW Imperial Rev. 7/10

ORIGINAL SCALE IN INCHES FOR REDUCED PLANS 0 1 2 3

UNIT 3599
PROJECT NUMBER & PHASE 04120006661
EA 014081

DISREGARD PRINTS BEARING EARLIER REVISION DATES → 11-29-11 12-28-11 05-08-12 05-18-12 05-28-12

REVISION DATES (PRELIMINARY STAGE ONLY) SHEET OF

D:\User\Projects\Dist_04\0400000038_sfobb_ms_complex\Expedite_20120620\Copy of st_01\st1_032.dgn

25-OCT-2012 14:30

DIST.	COUNTY	ROUTE	POST MILES TOTAL PROJECT	SHEET NO.	TOTAL SHEETS
04	Ala	80	2.2	361	800

RdP
REGISTERED CIVIL ENGINEER — DATE 05-31-12

REGISTERED PROFESSIONAL ENGINEER
Robert du Plaine
No. 51447
Exp. 6-30-14
CIVIL
STATE OF CALIFORNIA

10-22-12
PLANS APPROVAL DATE

The State of California or its officers or agents shall not be responsible for the accuracy or completeness of scanned copies of this plan sheet.

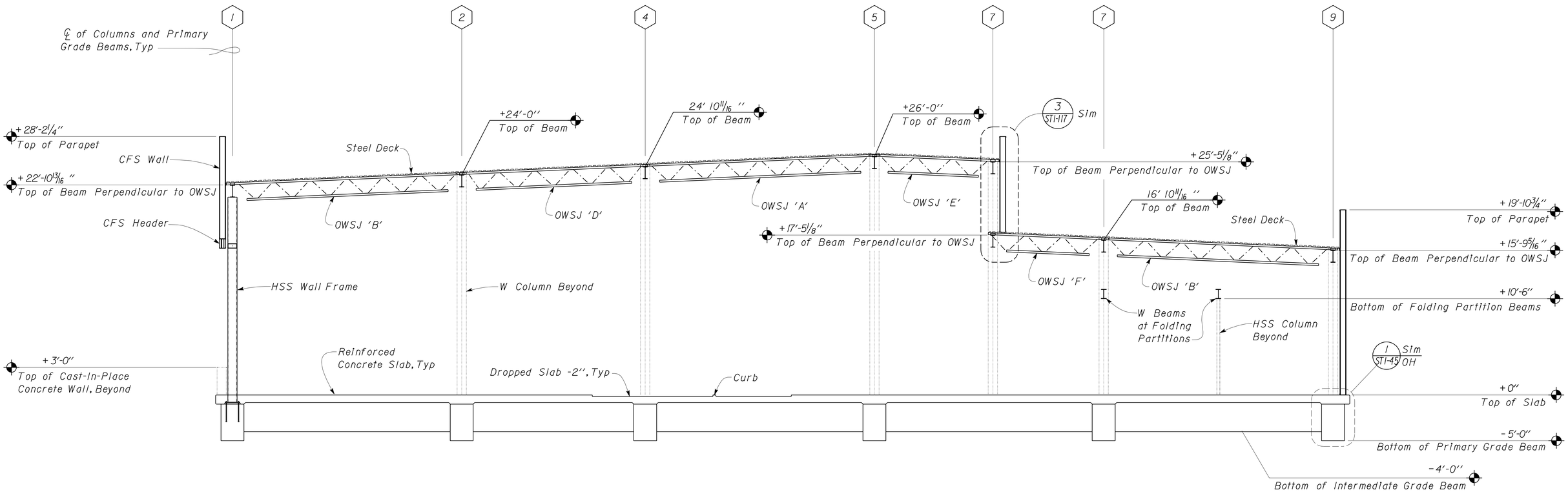

1 BUILDING SECTION
Scale 3/16" = 1'-0"

DESIGN	BY Robert du Plaine	CHECKED Brian Sutliff	
DETAILS	BY David W. Good	CHECKED Robert du Plaine	
QUANTITIES	BY	CHECKED	

STATE OF CALIFORNIA
DEPARTMENT OF TRANSPORTATION

DIVISION OF ENGINEERING SERVICES
ARCHITECTURAL AND STRUCTURAL DESIGN

BRIDGE NO. 33M5785
POST MILE 2.2

SFOBB MAINTENANCE COMPLEX

BUILDING SECTION

SHEET ST1-33

TAEMWW Imperial Rev. 7/10

ORIGINAL SCALE IN INCHES FOR REDUCED PLANS 0 1 2 3

UNIT 3599
PROJECT NUMBER & PHASE 04120006661
EA 014081

DISREGARD PRINTS BEARING EARLIER REVISION DATES → 11-29-11 12-28-11 05-08-12 05-18-12 05-28-12 06-15-12

REVISION DATES (PRELIMINARY STAGE ONLY) SHEET OF

D:\User\Projects\Dist_04\0400000038_sfobb_ms_complex\Expedite_20120620\Copy of st_01\st1_033.dgn

25-OCT-2012 14:30

DIST.	COUNTY	ROUTE	POST MILES TOTAL PROJECT	SHEET NO.	TOTAL SHEETS
04	Ala	80	2.2	362	800

RdP
REGISTERED CIVIL ENGINEER — DATE 05-31-12

REGISTERED PROFESSIONAL ENGINEER
Robert du Plaine
No. 51447
Exp. 6-30-14
CIVIL
STATE OF CALIFORNIA

10-22-12
PLANS APPROVAL DATE

The State of California or its officers or agents shall not be responsible for the accuracy or completeness of scanned copies of this plan sheet.

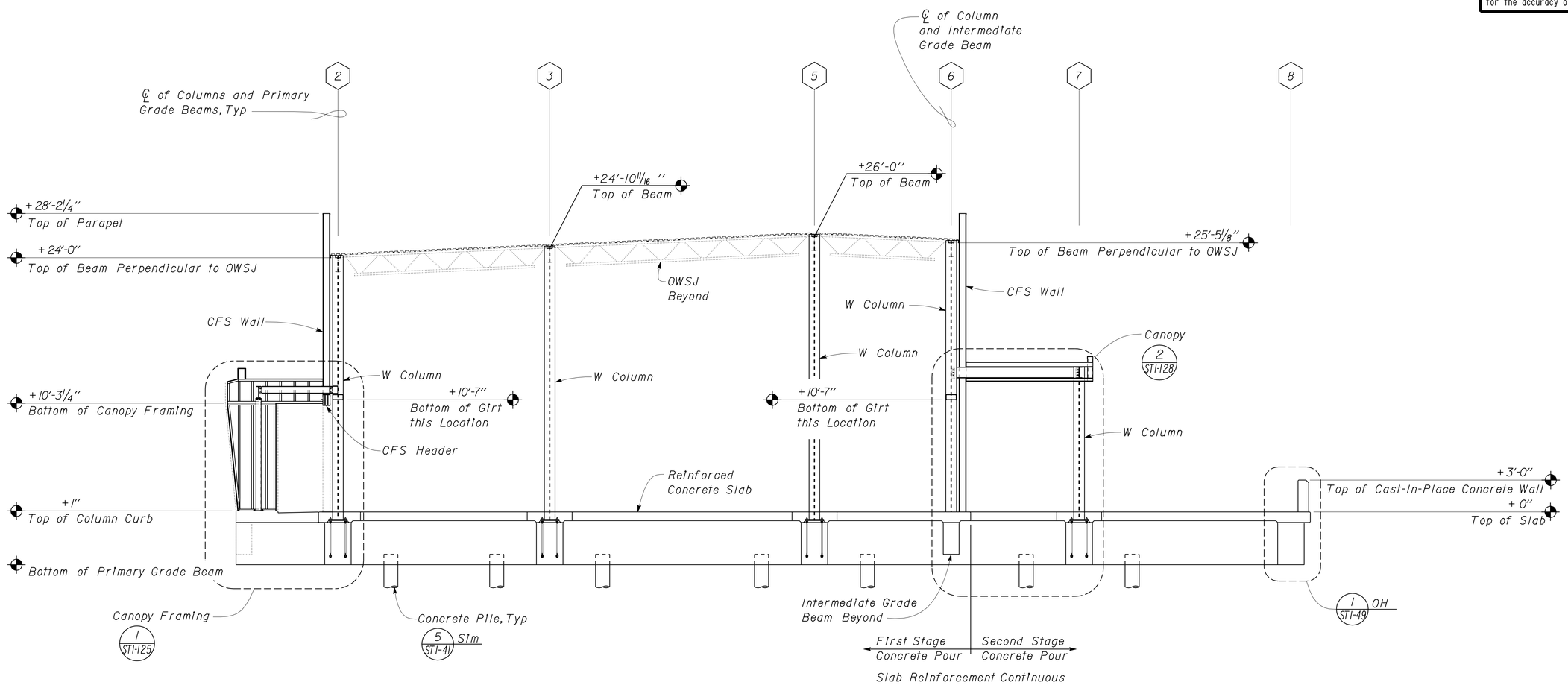

1 BUILDING SECTION
Scale 3/16" = 1'-0"

DESIGN	BY Robert du Plaine	CHECKED Brian Sutliff	
DETAILS	BY David W. Good	CHECKED Robert du Plaine	
QUANTITIES	BY	CHECKED	

STATE OF CALIFORNIA
DEPARTMENT OF TRANSPORTATION

DIVISION OF ENGINEERING SERVICES
ARCHITECTURAL AND STRUCTURAL DESIGN

BRIDGE NO. 33M5785
POST MILE 2.2

SFOBB MAINTENANCE COMPLEX

BUILDING SECTION

SHEET ST1-34

TAEMWW Imperial Rev. 7/10

ORIGINAL SCALE IN INCHES FOR REDUCED PLANS 0 1 2 3

UNIT 3599
PROJECT NUMBER & PHASE 04120006661
EA 014081

DISREGARD PRINTS BEARING EARLIER REVISION DATES →
REVISION DATES (PRELIMINARY STAGE ONLY) 11-29-11 12-28-11 02-13-12 05-08-12 05-10-12 05-18-12 05-28-12 06-15-12
SHEET OF

D:\User\Projects\Dist_04\0400000038_sfobb_ms_complex\Expedite_20120620\Copy of st_01\st1_034.dgn

25-OCT-2012 14:30

DIST.	COUNTY	ROUTE	POST MILES TOTAL PROJECT	SHEET NO.	TOTAL SHEETS
04	Ala	80	2.2	363	800

RdP
REGISTERED CIVIL ENGINEER — DATE 05-31-12

REGISTERED PROFESSIONAL ENGINEER
Robert du Plaine
No. 51447
Exp. 6-30-14
CIVIL
STATE OF CALIFORNIA

10-22-12
PLANS APPROVAL DATE

The State of California or its officers or agents shall not be responsible for the accuracy or completeness of scanned copies of this plan sheet.

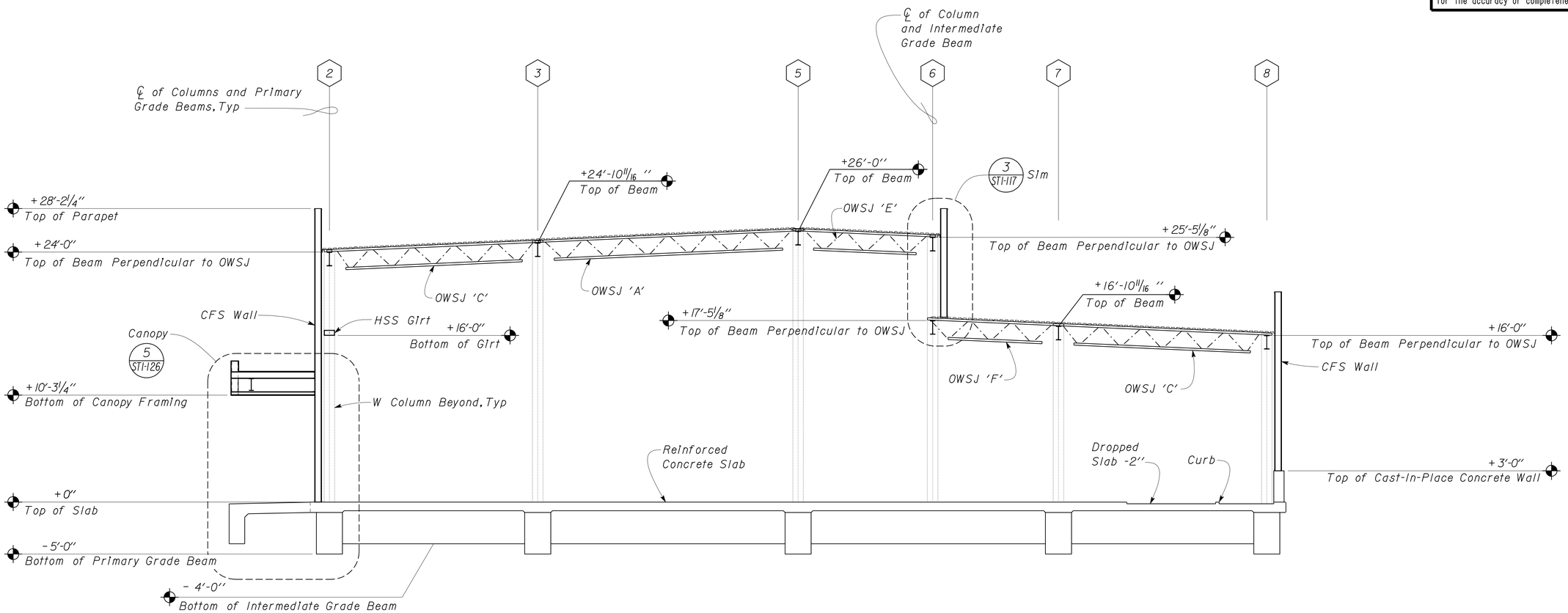

1 BUILDING SECTION
Scale 3/16" = 1'-0"

DESIGN	BY Robert du Plaine	CHECKED Brian Sutliff	
DETAILS	BY David W. Good	CHECKED Robert du Plaine	
QUANTITIES	BY	CHECKED	

STATE OF CALIFORNIA
DEPARTMENT OF TRANSPORTATION

DIVISION OF ENGINEERING SERVICES
ARCHITECTURAL AND STRUCTURAL DESIGN

BRIDGE NO. 33M5785
POST MILE 2.2

SFOBB MAINTENANCE COMPLEX

BUILDING SECTION

SHEET ST1-35

TAEMWW Imperial Rev. 7/10

ORIGINAL SCALE IN INCHES FOR REDUCED PLANS 0 1 2 3

UNIT 3599
PROJECT NUMBER & PHASE 04120006661
EA 014081

DISREGARD PRINTS BEARING EARLIER REVISION DATES → 11-29-11 12-28-11 02-13-12 05-08-12 05-18-12 05-28-12 06-15-12

REVISION DATES (PRELIMINARY STAGE ONLY) SHEET OF

D:\User\Projects\Dist_04\0400000038_sfobb_ms_complex\Expedite_20120620\Copy of st_01\st1_035.dgn

25-OCT-2012 14:30

DIST.	COUNTY	ROUTE	POST MILES TOTAL PROJECT	SHEET NO.	TOTAL SHEETS
04	Ala	80	2.2	364	800

RdP
REGISTERED CIVIL ENGINEER — DATE 05-31-12

REGISTERED PROFESSIONAL ENGINEER
Robert du Plaine
No. 51447
Exp. 6-30-14
CIVIL
STATE OF CALIFORNIA

10-22-12
PLANS APPROVAL DATE

The State of California or its officers or agents shall not be responsible for the accuracy or completeness of scanned copies of this plan sheet.

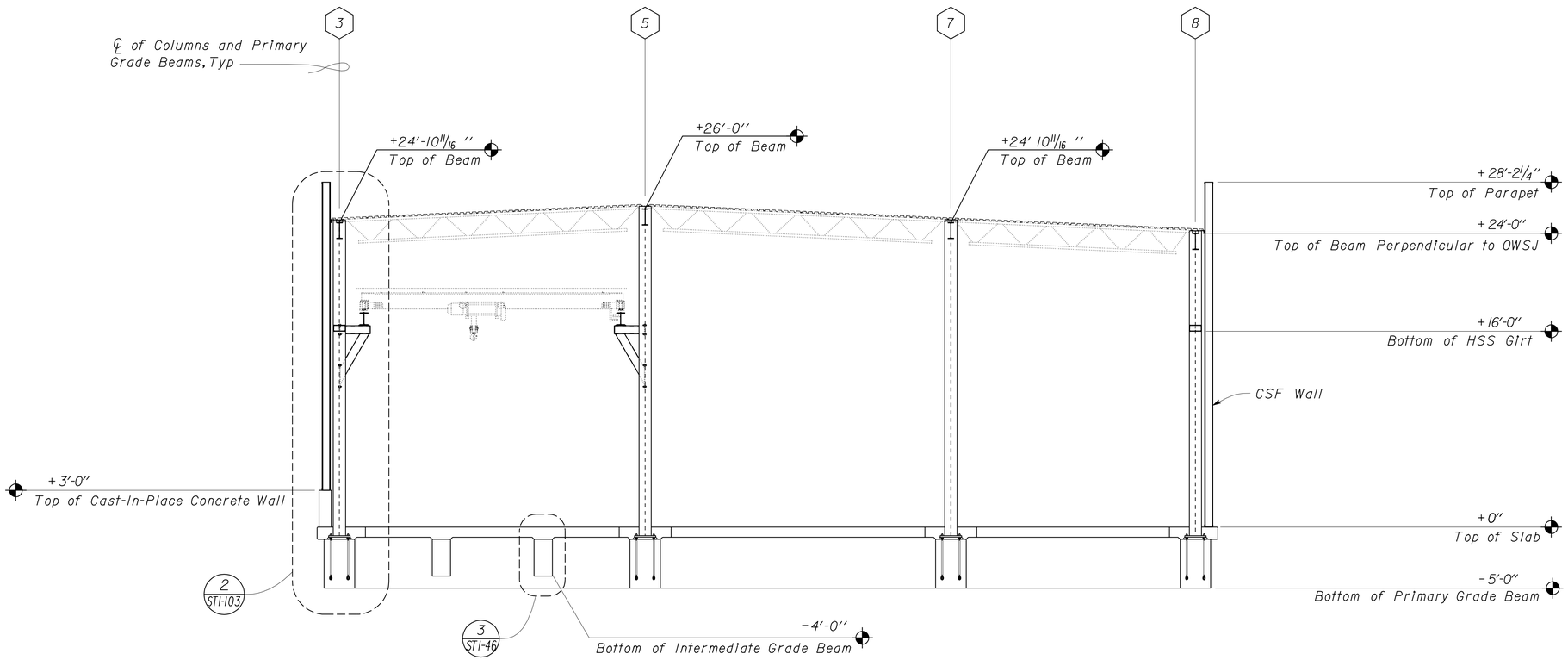

1 BUILDING SECTION
Scale 3/16" = 1'-0"

DESIGN	BY Robert du Plaine	CHECKED Brian Sutliff	
DETAILS	BY David W. Good	CHECKED Robert du Plaine	
QUANTITIES	BY	CHECKED	

STATE OF CALIFORNIA
DEPARTMENT OF TRANSPORTATION

DIVISION OF ENGINEERING SERVICES
ARCHITECTURAL AND STRUCTURAL DESIGN

BRIDGE NO. 33M5785
POST MILE 2.2

SFOBB MAINTENANCE COMPLEX
BUILDING SECTION

SHEET ST1-36

TAEMWW Imperial Rev. 7/10

ORIGINAL SCALE IN INCHES FOR REDUCED PLANS 0 1 2 3

UNIT 3599
PROJECT NUMBER & PHASE 04120006661
EA 014081

DISREGARD PRINTS BEARING EARLIER REVISION DATES → 02-12-12 05-08-12 05-18-12 05-28-12 06-15-12

REVISION DATES (PRELIMINARY STAGE ONLY) SHEET OF

D:\User\Projects\Dist_04\0400000038_sfobb_ms_complex\Expedite_20120620\Copy of st_01\st1_036.dgn

25-OCT-2012 14:30

DIST.	COUNTY	ROUTE	POST MILES TOTAL PROJECT	SHEET NO.	TOTAL SHEETS
04	Ala	80	2.2	365	800

RdP
REGISTERED CIVIL ENGINEER — DATE 05-31-12

REGISTERED PROFESSIONAL ENGINEER
Robert du Plaine
No. 51447
Exp. 6-30-14
CIVIL
STATE OF CALIFORNIA

10-22-12
PLANS APPROVAL DATE

The State of California or its officers or agents shall not be responsible for the accuracy or completeness of scanned copies of this plan sheet.

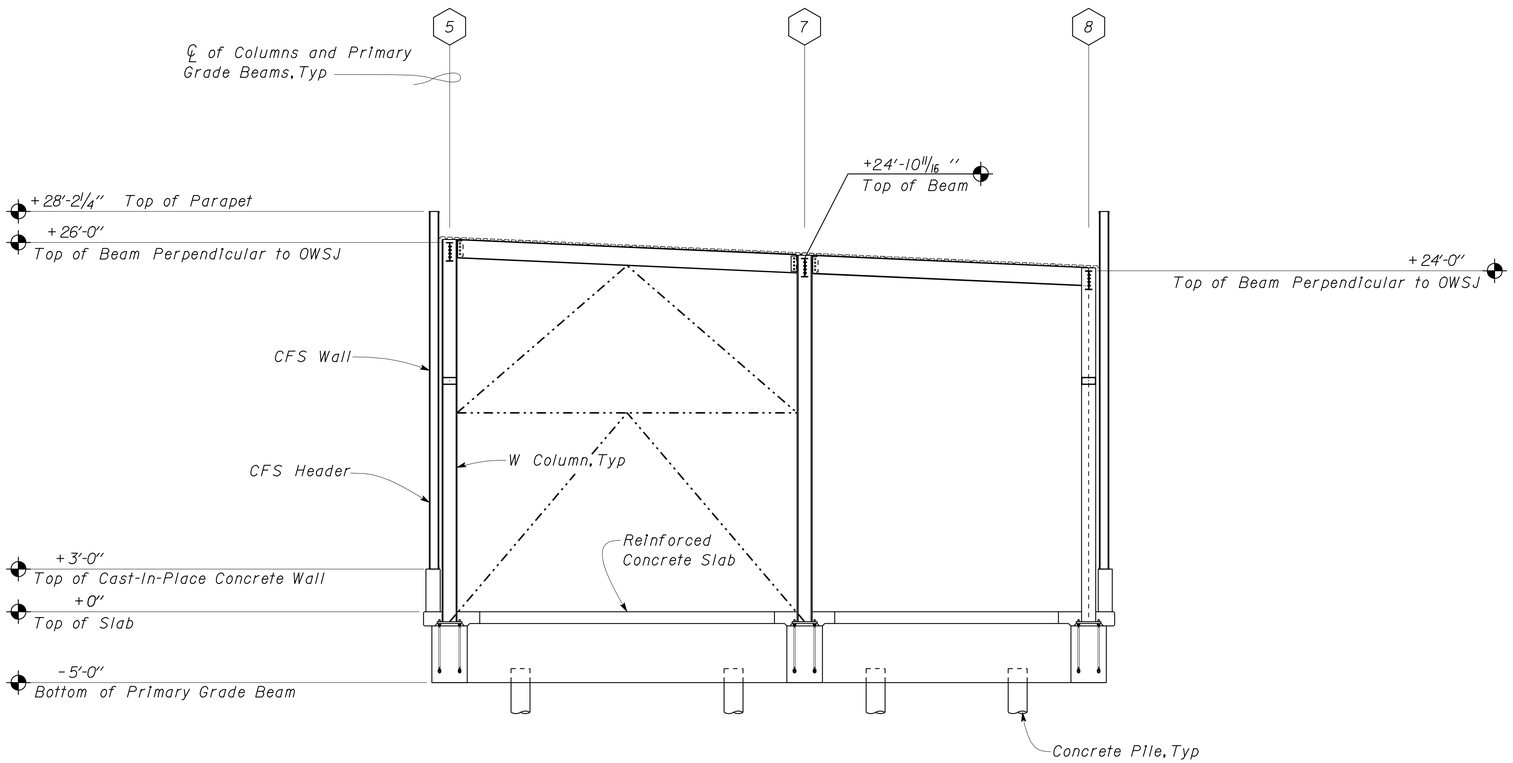

1 BUILDING SECTION
Scale 3/16" = 1'-0"

DESIGN	BY Robert du Plaine	CHECKED Brian Sutliff	
DETAILS	BY David W. Good	CHECKED Robert du Plaine	
QUANTITIES	BY	CHECKED	

STATE OF CALIFORNIA
DEPARTMENT OF TRANSPORTATION

DIVISION OF ENGINEERING SERVICES
ARCHITECTURAL AND STRUCTURAL DESIGN

BRIDGE NO. 33M5785
POST MILE 2.2

SFOBB MAINTENANCE COMPLEX

BUILDING SECTION

SHEET ST1-37

TAEMWW Imperial Rev. 7/10

ORIGINAL SCALE IN INCHES FOR REDUCED PLANS 0 1 2 3

UNIT 3599
PROJECT NUMBER & PHASE 04120006661
EA 014081

DISREGARD PRINTS BEARING EARLIER REVISION DATES → 11-28-11 02-04-12 05-08-12 05-18-12 05-28-12

REVISION DATES (PRELIMINARY STAGE ONLY) SHEET OF

D:\User\Projects\Dist_04\0400000038_sfobb_ms_complex\Expedite_20120620\Copy of st_01\st1_037.dgn

25-OCT-2012 14:31

DIST.	COUNTY	ROUTE	POST MILES TOTAL PROJECT	SHEET NO.	TOTAL SHEETS
04	Ala	80	2.2	366	800

RdP
REGISTERED CIVIL ENGINEER — DATE 05-31-12

REGISTERED PROFESSIONAL ENGINEER
Robert du Plaine
No. 51447
Exp. 6-30-14
CIVIL
STATE OF CALIFORNIA

10-22-12
PLANS APPROVAL DATE

The State of California or its officers or agents shall not be responsible for the accuracy or completeness of scanned copies of this plan sheet.

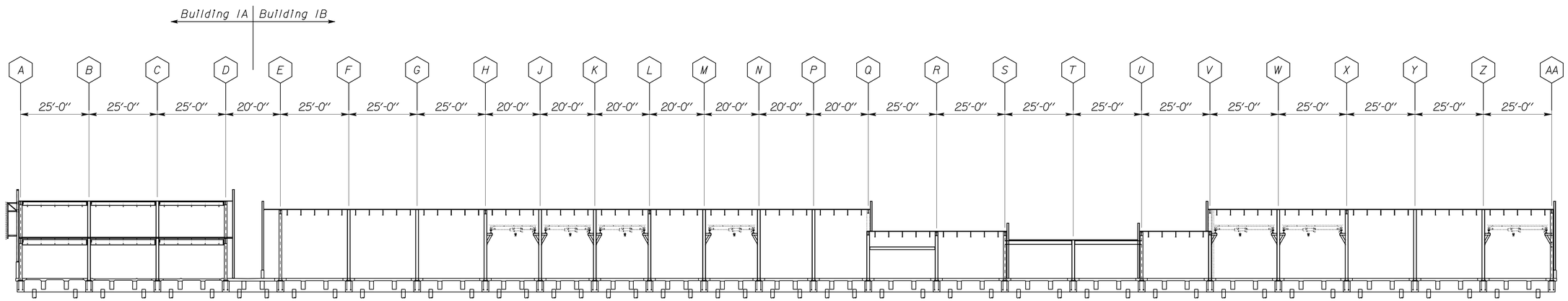

1 LONGITUDINAL SECTION INDEX PLAN
Scale 1" = 20' - 0"

DESIGN	BY Robert du Plaine	CHECKED Brian Sutliff	
DETAILS	BY David W. Good	CHECKED Robert du Plaine	
QUANTITIES	BY	CHECKED	

STATE OF CALIFORNIA
DEPARTMENT OF TRANSPORTATION

DIVISION OF ENGINEERING SERVICES
ARCHITECTURAL AND STRUCTURAL DESIGN

BRIDGE NO. 33M5785
POST MILE 2.2

SFOBB MAINTENANCE COMPLEX

LONGITUDINAL SECTION INDEX PLAN

SHEET ST1-38

TAEMWW Imperial Rev. 7/10

ORIGINAL SCALE IN INCHES FOR REDUCED PLANS 0 1 2 3

UNIT 3599
PROJECT NUMBER & PHASE 04120006661
EA 014081

DISREGARD PRINTS BEARING EARLIER REVISION DATES → 11-29-11 12-28-11 02-04-12 05-08-12 05-18-12

REVISION DATES (PRELIMINARY STAGE ONLY) SHEET OF

D:\User\Projects\Dist_04\0400000038_sfobb_ms_complex\Expedite_20120620\Copy of st_01\st1_038.dgn

25-OCT-2012 14:31

DIST.	COUNTY	ROUTE	POST MILES TOTAL PROJECT	SHEET NO.	TOTAL SHEETS
04	Ala	80	2.2	367	800

RdP
REGISTERED CIVIL ENGINEER — DATE 05-31-12

REGISTERED PROFESSIONAL ENGINEER — Robert du Plaine — No. 51447 — Exp. 6-30-14 — CIVIL — STATE OF CALIFORNIA

10-22-12
PLANS APPROVAL DATE

The State of California or its officers or agents shall not be responsible for the accuracy or completeness of scanned copies of this plan sheet.

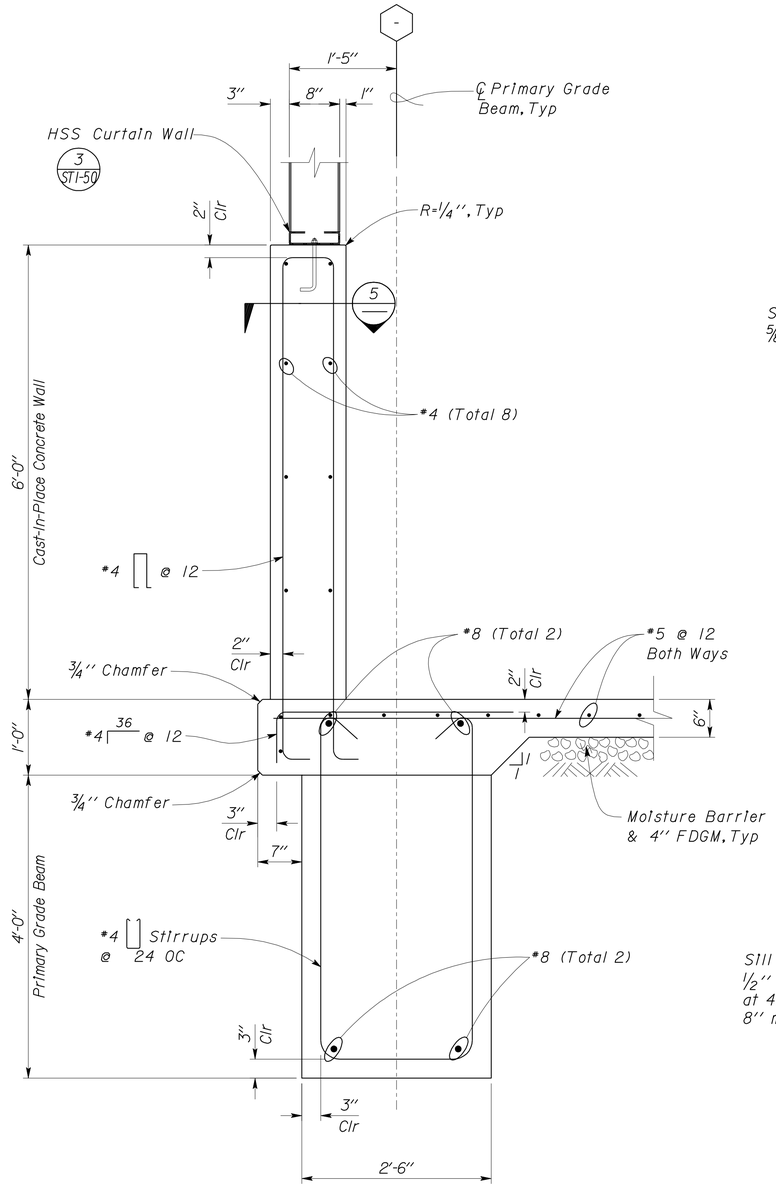

1 FOOTING DETAIL
Scale 1" = 1'-0"

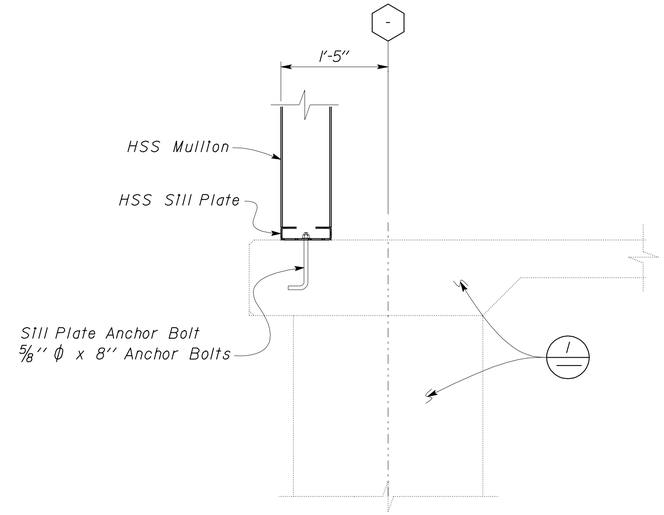

2 HSS SILL PLATE DETAIL
Scale 1" = 1'-0"

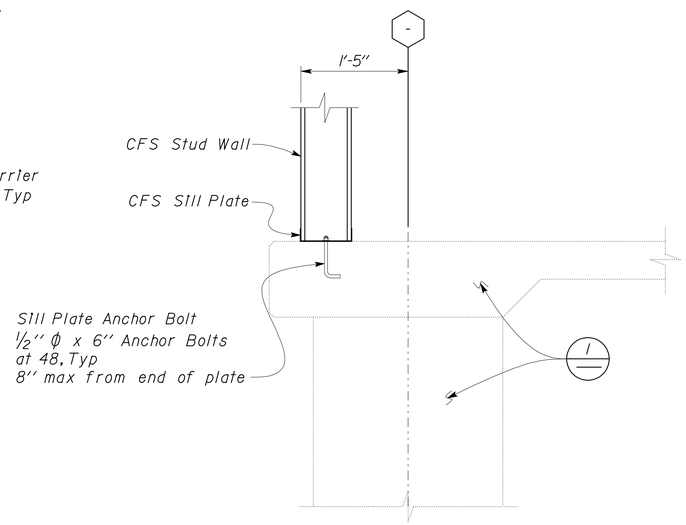

3 CFS SILL PLATE DETAIL
Scale 1" = 1'-0"

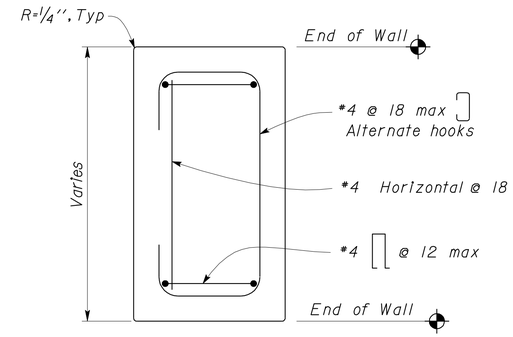

PLAN VIEW

4 SHORT CAST-IN-PLACE CONCRETE WALL REINFORCEMENT
Scale 2" = 1'-0"

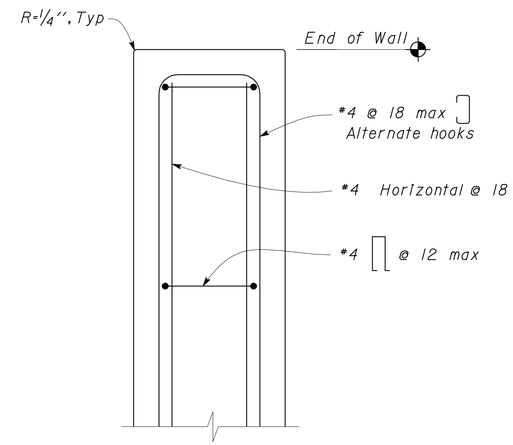

5 CAST-IN-PLACE CONCRETE WALL END REINFORCEMENT
Scale 2" = 1'-0"

	BY	CHECKED
DESIGN	Robert du Plaine	Brian Sutliff
DETAILS	David W. Good	Robert du Plaine
QUANTITIES		

STATE OF CALIFORNIA
DEPARTMENT OF TRANSPORTATION

DIVISION OF ENGINEERING SERVICES
ARCHITECTURAL AND STRUCTURAL DESIGN

BRIDGE NO. 33M5785
POST MILE 2.2

SFOBB MAINTENANCE COMPLEX

FOUNDATION DETAILS

SHEET ST1-39

TAEMWW Imperial Rev. 7/10

ORIGINAL SCALE IN INCHES FOR REDUCED PLANS 0 1 2 3

UNIT 3599
PROJECT NUMBER & PHASE 04120006661
EA 014081

DISREGARD PRINTS BEARING EARLIER REVISION DATES → 04-25-12 05-08-12 05-18-12 05-18-12 05-28-12

REVISION DATES (PRELIMINARY STAGE ONLY) SHEET OF

D:\User\Projects\Dist_04\0400000038_sfobb_ms_complex\Expedite_20120620\Copy of st_01\st1_039.dgn

25-OCT-2012 14:31

DIST.	COUNTY	ROUTE	POST MILES TOTAL PROJECT	SHEET NO.	TOTAL SHEETS
04	Ala	80	2.2	368	800

RdP
REGISTERED CIVIL ENGINEER — DATE 05-31-12

REGISTERED PROFESSIONAL ENGINEER — Robert du Plaine — No. 51447 — Exp. 6-30-14 — CIVIL — STATE OF CALIFORNIA

10-22-12
PLANS APPROVAL DATE

The State of California or its officers or agents shall not be responsible for the accuracy or completeness of scanned copies of this plan sheet.

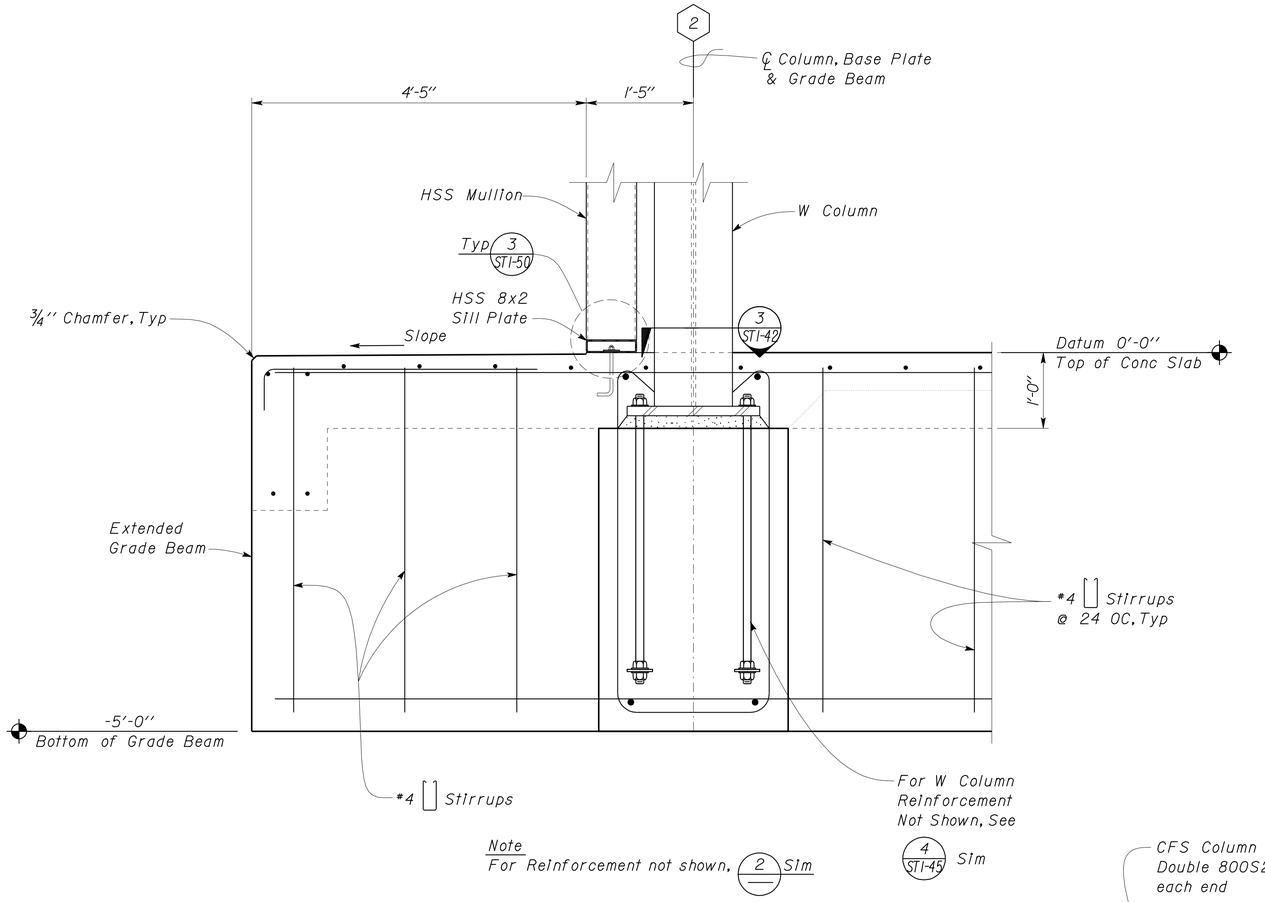

Note
For Reinforcement not shown, 2 Sim

1 BUILDING 'IA' EXTENDED GRADE BEAM
Scale 1" = 1'-0"

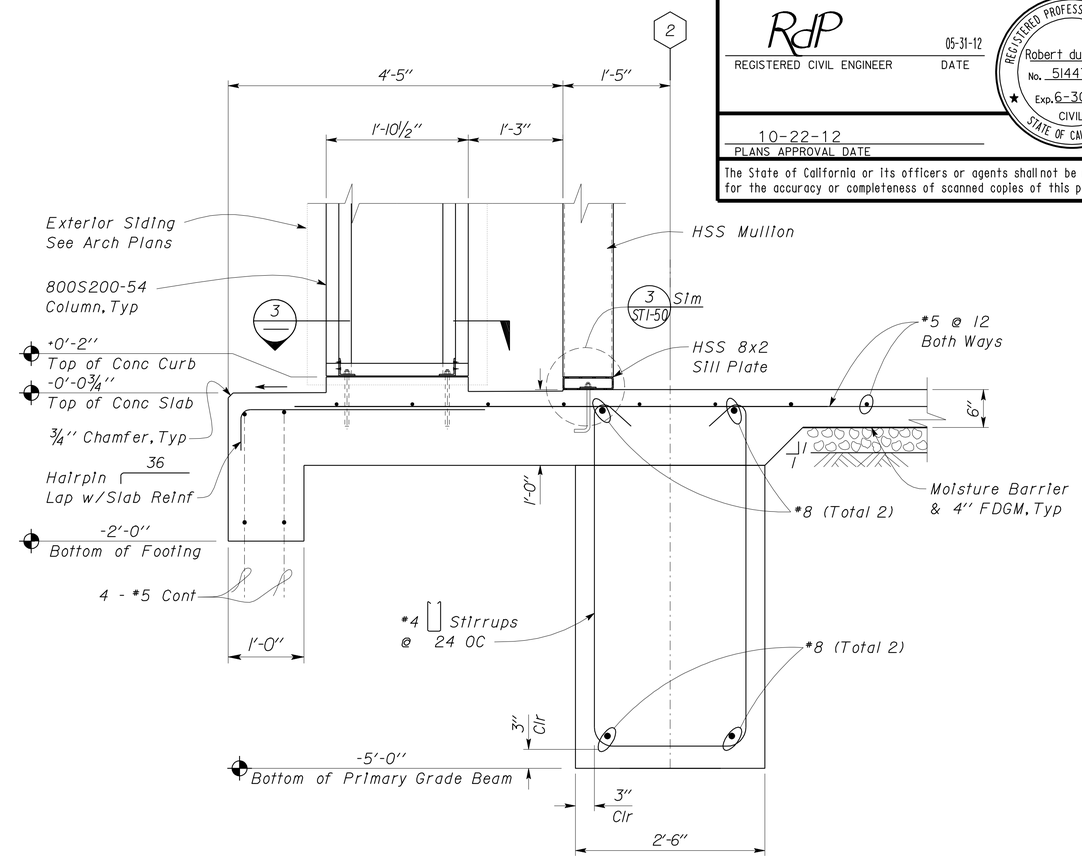

2 BUILDING 'IA' EXTENDED SLAB
Scale 1" = 1'-0"

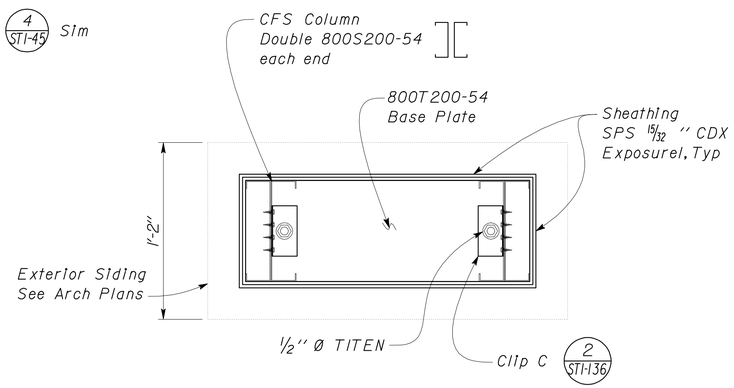

3 COLUMN FRAMING
Scale 2" = 1'-0"

DESIGN	BY Robert du Plaine	CHECKED Brian Sutliff	
DETAILS	BY David W. Good	CHECKED Robert du Plaine	
QUANTITIES	BY	CHECKED	

STATE OF CALIFORNIA
DEPARTMENT OF TRANSPORTATION

DIVISION OF ENGINEERING SERVICES
ARCHITECTURAL AND STRUCTURAL DESIGN

BRIDGE NO. 33M5785
POST MILE 2.2

SFOBB MAINTENANCE COMPLEX

FOUNDATION DETAILS

SHEET ST1-40

TAEMWW Imperial Rev. 7/10

ORIGINAL SCALE IN INCHES FOR REDUCED PLANS 0 1 2 3

UNIT 3599
PROJECT NUMBER & PHASE 04120006661
EA 014081

DISREGARD PRINTS BEARING EARLIER REVISION DATES → 04-26-12 05-08-12 05-10-12 05-23-12 05-28-12
REVISION DATES (PRELIMINARY STAGE ONLY) SHEET OF

D:\User\Projects\Dist_04\0400000038_sfobb_ms_complex\Expedite_20120620\Copy of st_01\st1_040.dgn

25-OCT-2012 14:31

DIST.	COUNTY	ROUTE	POST MILES TOTAL PROJECT	SHEET NO.	TOTAL SHEETS
04	Ala	80	2.2	369	800

RdP
REGISTERED CIVIL ENGINEER — DATE 05-31-12

REGISTERED PROFESSIONAL ENGINEER Robert du Plaine No. 51447 Exp. 6-30-14 CIVIL STATE OF CALIFORNIA

10-22-12
PLANS APPROVAL DATE

The State of California or its officers or agents shall not be responsible for the accuracy or completeness of scanned copies of this plan sheet.

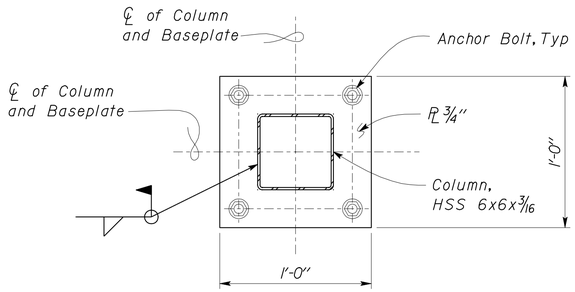

1 HSS COLUMN BASEPLATE
Scale 2" = 1' - 0"

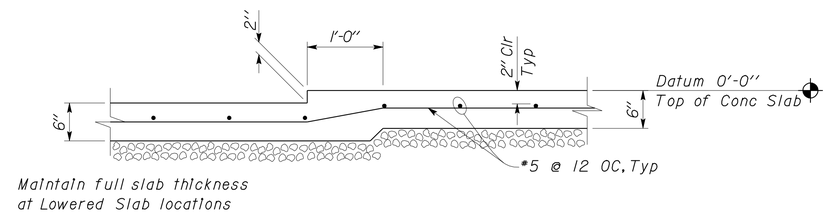

3 LOWERED SLAB DETAIL
Scale 1" = 1' - 0"

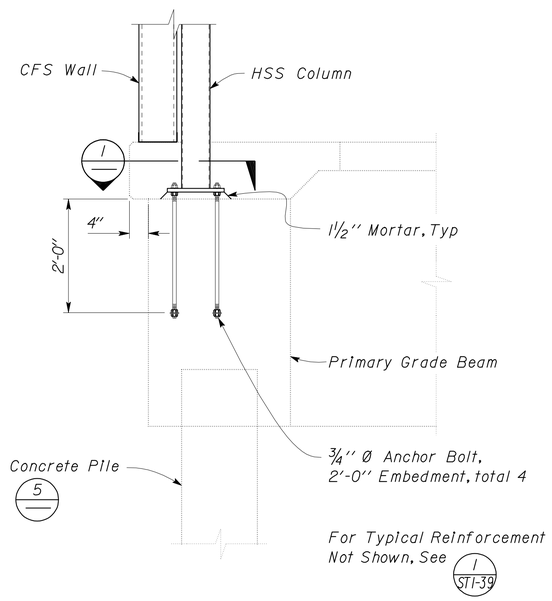

2 HSS COLUMN ANCHORAGE
Scale 3/4" = 1' - 0"

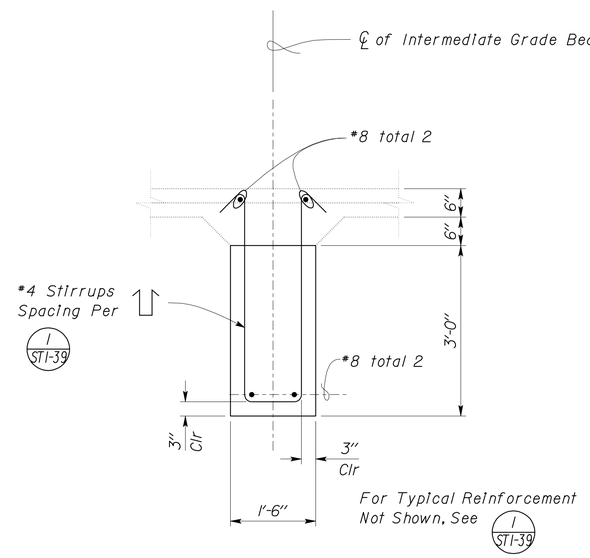

4 INTERMEDIATE GRADE BEAM
Scale 3/4" = 1' - 0"

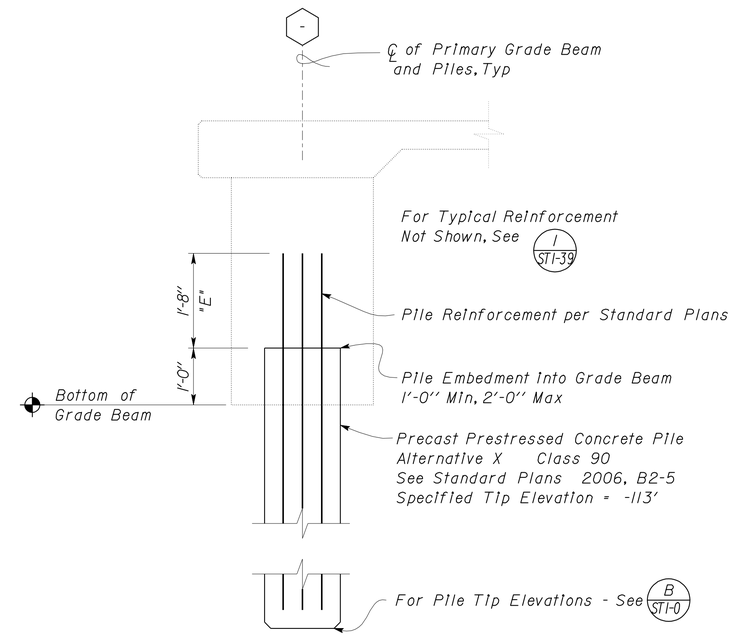

5 PILE TO GRADE BEAM
Scale 3/4" = 1' - 0"

DESIGN	BY Robert du Plaine	CHECKED Brian Sutliff	
DETAILS	BY David W. Good	CHECKED Robert du Plaine	
QUANTITIES	BY	CHECKED	

STATE OF CALIFORNIA
DEPARTMENT OF TRANSPORTATION

DIVISION OF ENGINEERING SERVICES
ARCHITECTURAL AND STRUCTURAL DESIGN

BRIDGE NO. 33M5785
POST MILE 2.2

SFOBB MAINTENANCE COMPLEX

FOUNDATION DETAILS

SHEET ST1-41

TAEMWW Imperial Rev. 7/10

ORIGINAL SCALE IN INCHES FOR REDUCED PLANS 0 1 2 3

UNIT 3599
PROJECT NUMBER & PHASE 04120006661
EA 014081

DISREGARD PRINTS BEARING EARLIER REVISION DATES → 04-26-12 05-08-12 05-10-12 05-18-12 05-28-12 06-14-12

REVISION DATES (PRELIMINARY STAGE ONLY) SHEET OF

D:\User\Projects\Dist_04\0400000038_sfobb_ms_complex\Expedite_20120620\Copy of st_01\st1_041.dgn

25-OCT-2012 14:31

DIST.	COUNTY	ROUTE	POST MILES TOTAL PROJECT	SHEET NO.	TOTAL SHEETS
04	Ala	80	2.2	370	800

RdP
REGISTERED CIVIL ENGINEER — DATE 05-31-12

REGISTERED PROFESSIONAL ENGINEER Robert du Plaine No. 51447 Exp. 6-30-14 CIVIL STATE OF CALIFORNIA

10-22-12
PLANS APPROVAL DATE

The State of California or its officers or agents shall not be responsible for the accuracy or completeness of scanned copies of this plan sheet.

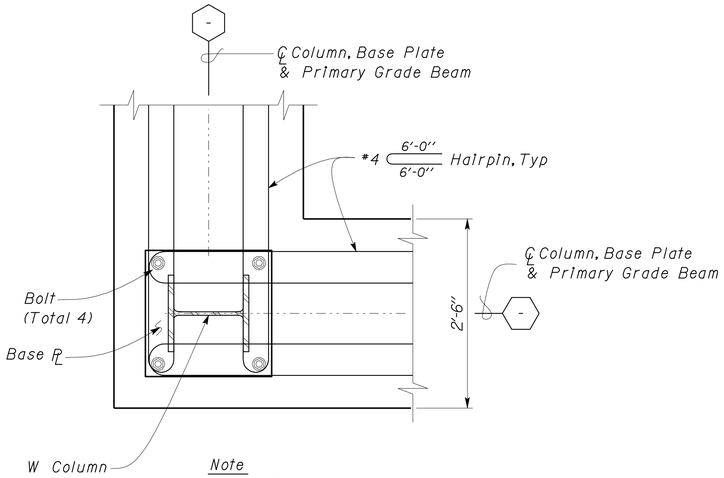

Note
Not all Footing Reinforcement are shown for clarity.

1 ADDITIONAL CORNER REINFORCEMENT DETAIL
Scale 1" = 1' - 0"

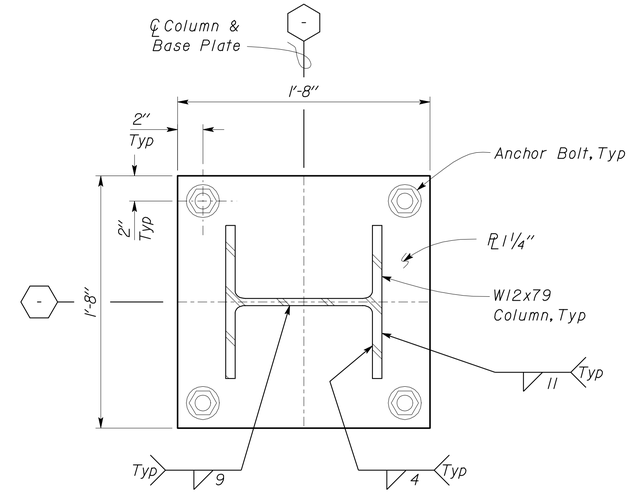

3 COLUMN BASE PLATE DETAIL
Scale 2" = 1' - 0"

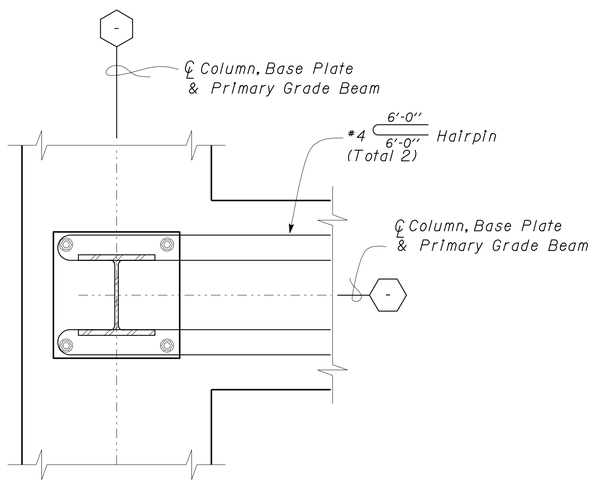

Notes
1. For Details & Dimensions not shown, see 1 / Sim
2. Not all Footing Reinforcement is shown for clarity.

2 ADDITIONAL 'T' INTERSECTION REINFORCEMENT DETAIL
Scale 1" = 1' - 0"

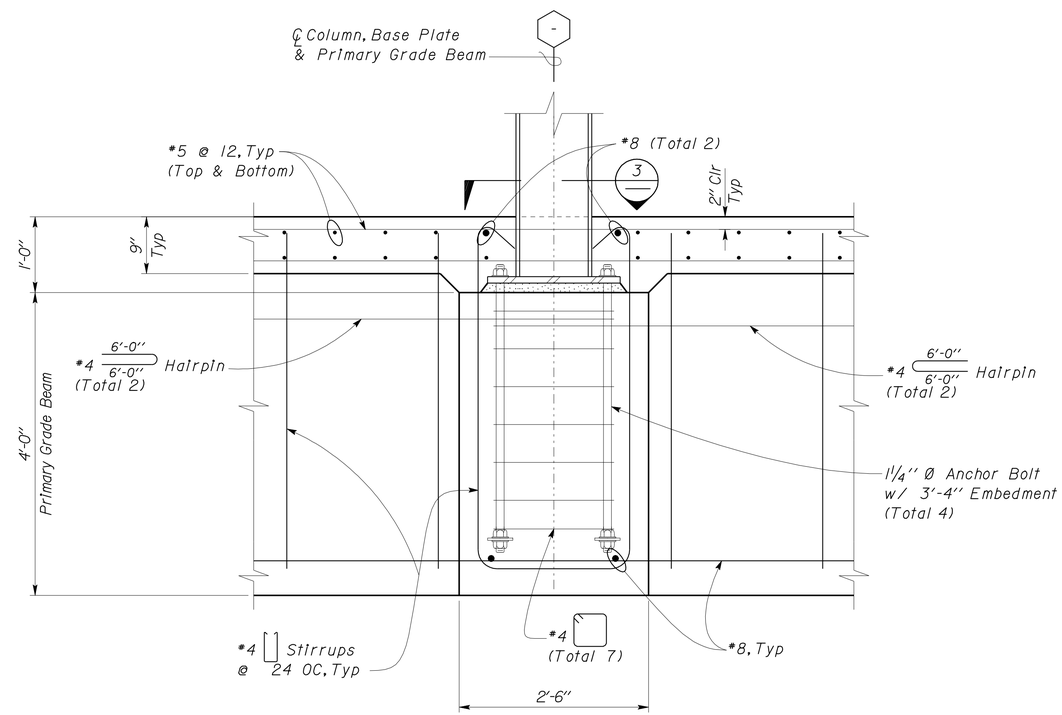

4 ADDITIONAL COLUMN REINFORCEMENT DETAIL
Scale 1" = 1' - 0"

DESIGN	BY Robert du Plaine	CHECKED Brian Sutliff	
DETAILS	BY David W. Good	CHECKED Robert du Plaine	
QUANTITIES	BY	CHECKED	

STATE OF CALIFORNIA
DEPARTMENT OF TRANSPORTATION

DIVISION OF ENGINEERING SERVICES
ARCHITECTURAL AND STRUCTURAL DESIGN

BRIDGE NO. 33M5785
POST MILE 2.2

SFOBB MAINTENANCE COMPLEX
FOUNDATION DETAILS

SHEET ST1-42

TAEMWW Imperial Rev. 7/10

ORIGINAL SCALE IN INCHES FOR REDUCED PLANS 0 1 2 3

UNIT 3599
PROJECT NUMBER & PHASE 04120006661
EA 014081

DISREGARD PRINTS BEARING EARLIER REVISION DATES → 04-26-12 05-08-12 05-18-12 05-28-12

REVISION DATES (PRELIMINARY STAGE ONLY) SHEET OF

D:\User\Projects\Dist_04\0400000038_sfobb_ms_complex\Expedite_20120620\Copy of st_01\st1_042.dgn

25-OCT-2012 14:31

DIST.	COUNTY	ROUTE	POST MILES TOTAL PROJECT	SHEET NO.	TOTAL SHEETS
04	Ala	80	2.2	371	800

RdP
REGISTERED CIVIL ENGINEER — DATE 05-31-12

REGISTERED PROFESSIONAL ENGINEER
Robert du Plaine
No. 51447
Exp. 6-30-14
CIVIL
STATE OF CALIFORNIA

10-22-12
PLANS APPROVAL DATE

The State of California or its officers or agents shall not be responsible for the accuracy or completeness of scanned copies of this plan sheet.

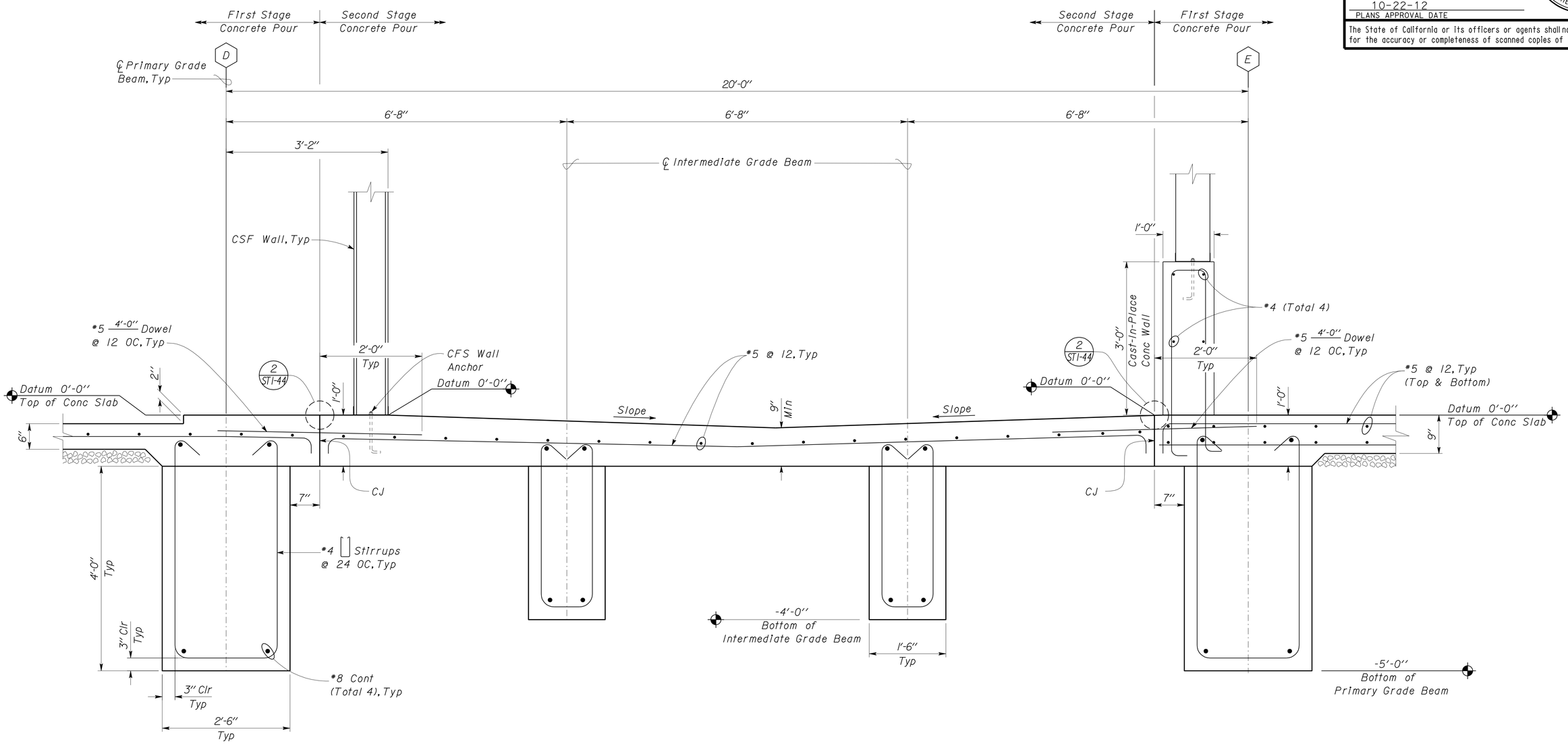

1 BREEZEWAY SLAB SECTION
Scale 1" = 1'-0"

DESIGN	BY Robert du Plaine	CHECKED Brian Sutliff	
DETAILS	BY David W. Good	CHECKED Robert du Plaine	
QUANTITIES	BY	CHECKED	

STATE OF CALIFORNIA
DEPARTMENT OF TRANSPORTATION

DIVISION OF ENGINEERING SERVICES
ARCHITECTURAL AND STRUCTURAL DESIGN

BRIDGE NO. 33M5785
POST MILE 2.2

SFOBB MAINTENANCE COMPLEX

FOUNDATION DETAILS

SHEET **ST1-43**

TAEMWW Imperial Rev. 7/10

ORIGINAL SCALE IN INCHES FOR REDUCED PLANS 0 1 2 3

UNIT 3599
PROJECT NUMBER & PHASE 04120006661
EA 014081

DISREGARD PRINTS BEARING EARLIER REVISION DATES → 01-09-12 01-18-12 03-14-12 05-08-12 05-18-12 05-28-12

REVISION DATES (PRELIMINARY STAGE ONLY) SHEET OF

D:\User\Projects\Dist_04\0400000038_sfobb_ms_complex\Expedite_20120620\Copy of st_01\st1_043.dgn

25-OCT-2012 15:55

DIST.	COUNTY	ROUTE	POST MILES TOTAL PROJECT	SHEET NO.	TOTAL SHEETS
04	Ala	80	2.2	372	800

RdP
REGISTERED CIVIL ENGINEER — DATE 05-31-12

REGISTERED PROFESSIONAL ENGINEER — Robert du Plaine — No. 51447 — Exp. 6-30-14 — CIVIL — STATE OF CALIFORNIA

10-22-12
PLANS APPROVAL DATE

The State of California or its officers or agents shall not be responsible for the accuracy or completeness of scanned copies of this plan sheet.

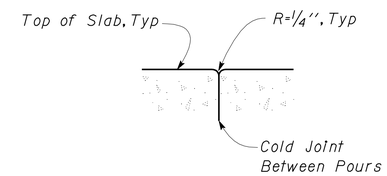

2 COLD JOINT FINISH
No Scale

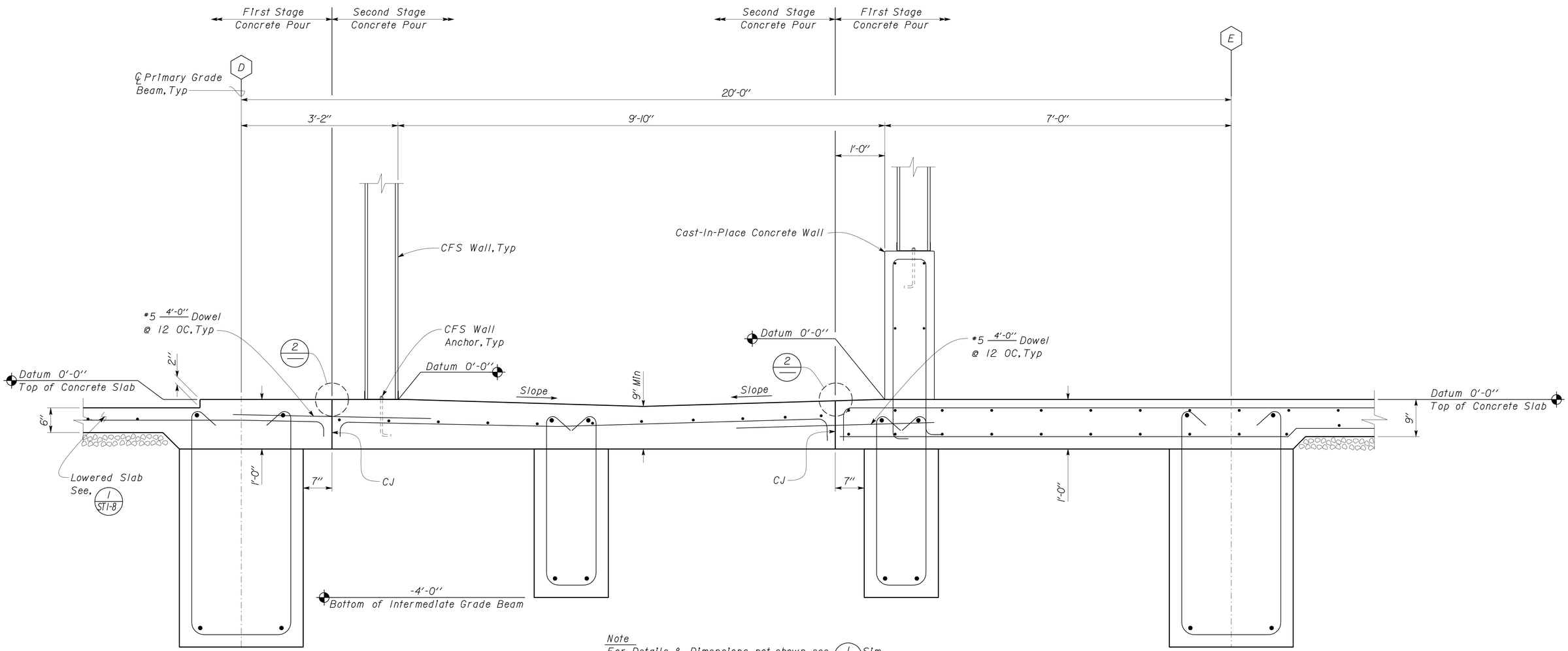

Note
For Details & Dimensions not shown, see 1 ST1-43 Slm

1 BREEZEWAY SLAB SECTION
Scale 1" = 1'-0"

DESIGN	BY Robert du Plaine	CHECKED Brian Sutliff	
DETAILS	BY David W. Good	CHECKED Robert du Plaine	
QUANTITIES	BY	CHECKED	

STATE OF CALIFORNIA
DEPARTMENT OF TRANSPORTATION

DIVISION OF ENGINEERING SERVICES
ARCHITECTURAL AND STRUCTURAL DESIGN

BRIDGE NO. 33M5785
POST MILE 2.2

SFOBB MAINTENANCE COMPLEX
FOUNDATION DETAILS

SHEET ST1-44

TAEMWW Imperial Rev. 7/10

ORIGINAL SCALE IN INCHES FOR REDUCED PLANS 0 1 2 3

UNIT 3599
PROJECT NUMBER & PHASE 04120006661
EA 014081

DISREGARD PRINTS BEARING EARLIER REVISION DATES
REVISION DATES (PRELIMINARY STAGE ONLY) 01-10-12 01-11-12 02-01-12 03-14-12 05-08-12 05-18-12 05-28-12
SHEET OF

D:\User\Projects\Dist_04\0400000038_sfobb_ms_complex\Expedite_20120620\Copy of st_01\st1_044.dgn

25-OCT-2012 15:56

DIST.	COUNTY	ROUTE	POST MILES TOTAL PROJECT	SHEET NO.	TOTAL SHEETS
04	Ala	80	2.2	373	800

RdP
REGISTERED CIVIL ENGINEER — DATE 05-31-12

REGISTERED PROFESSIONAL ENGINEER Robert du Plaine No. 51447 Exp. 6-30-14 CIVIL STATE OF CALIFORNIA

10-22-12
PLANS APPROVAL DATE

The State of California or its officers or agents shall not be responsible for the accuracy or completeness of scanned copies of this plan sheet.

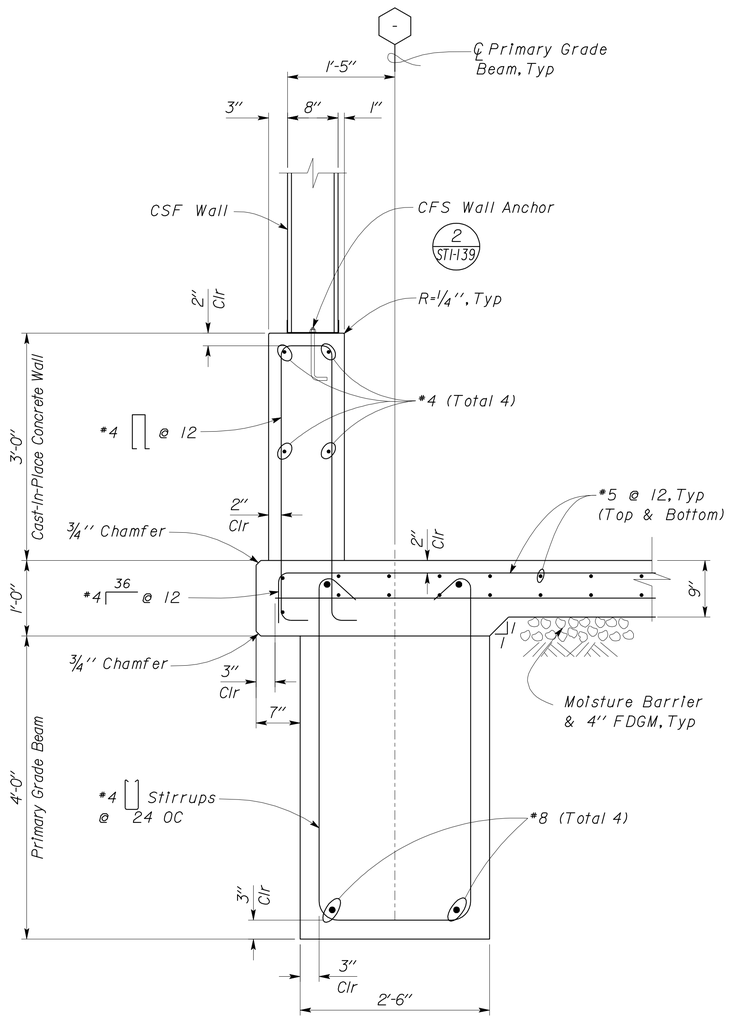

1 FOOTING DETAIL
Scale 1" = 1' - 0"

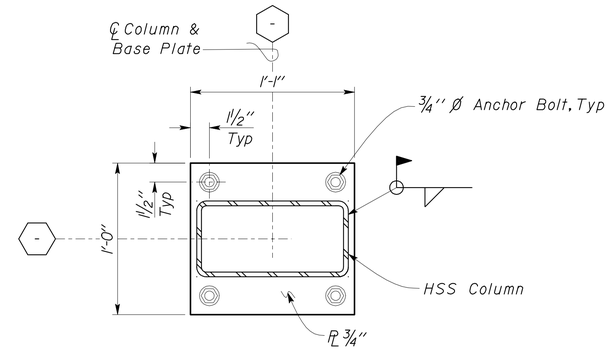

2 HSS COLUMN BASE PLATE DETAIL
Scale 2" = 1' - 0"

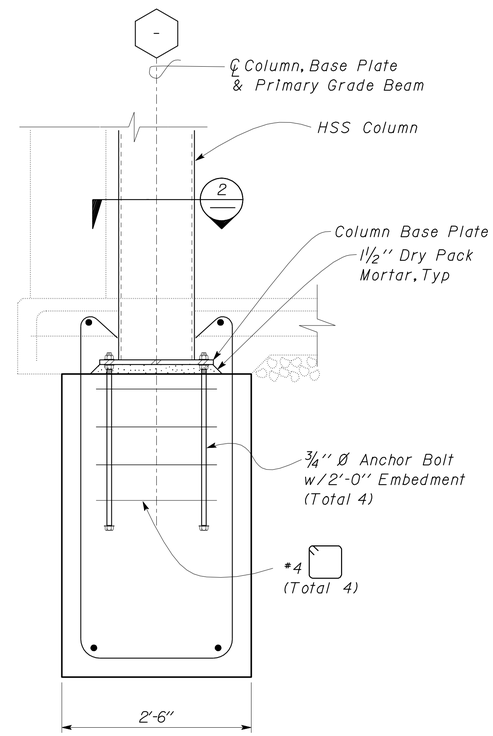

Note
For Details not shown, see 1 S1m

3 FOOTING SECTION @ HSS COLUMN DETAIL
Scale 1" = 1' - 0"

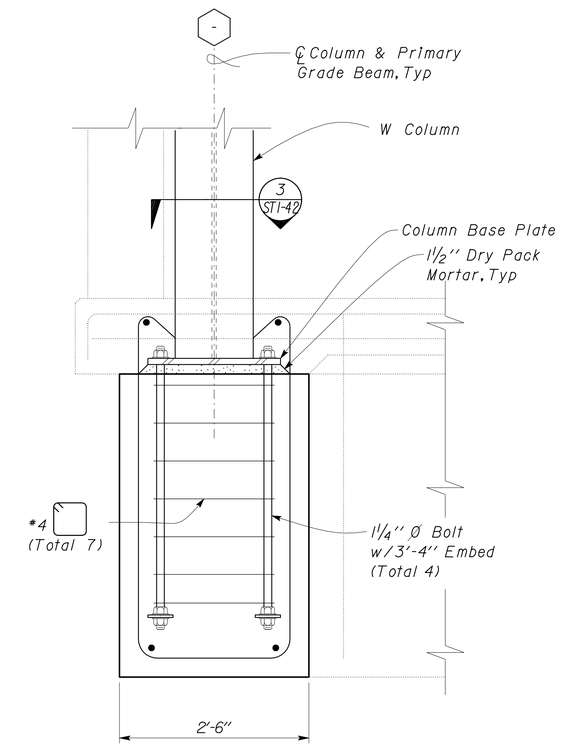

4 FOOTING SECTION @ W COLUMN DETAIL
Scale 1" = 1' - 0"

DESIGN	BY Robert du Plaine	CHECKED Brian Sutliff	
DETAILS	BY David W. Good	CHECKED Robert du Plaine	
QUANTITIES	BY	CHECKED	

STATE OF CALIFORNIA
DEPARTMENT OF TRANSPORTATION

DIVISION OF ENGINEERING SERVICES
ARCHITECTURAL AND STRUCTURAL DESIGN

BRIDGE NO. 33M5785
POST MILE 2.2

SFOBB MAINTENANCE COMPLEX

FOUNDATION DETAILS

SHEET ST1-45

TAEMWW Imperial Rev. 7/10

ORIGINAL SCALE IN INCHES FOR REDUCED PLANS 0 1 2 3

UNIT 3599
PROJECT NUMBER & PHASE 04120006661
EA 014081

DISREGARD PRINTS BEARING EARLIER REVISION DATES → REVISION DATES (PRELIMINARY STAGE ONLY) 04-26-12 05-08-12 05-18-12 05-28-12 SHEET OF

D:\User\Projects\Dist_04\0400000038_sfobb_ms_complex\Expedite_20120620\Copy of st_01\st1_045.dgn

25-OCT-2012 15:56

DIST.	COUNTY	ROUTE	POST MILES TOTAL PROJECT	SHEET NO.	TOTAL SHEETS
04	Ala	80	2.2	374	800

RdP
REGISTERED CIVIL ENGINEER — DATE 05-31-12

REGISTERED PROFESSIONAL ENGINEER — Robert du Plaine — No. 51447 — Exp. 6-30-14 — CIVIL — STATE OF CALIFORNIA

10-22-12
PLANS APPROVAL DATE

The State of California or its officers or agents shall not be responsible for the accuracy or completeness of scanned copies of this plan sheet.

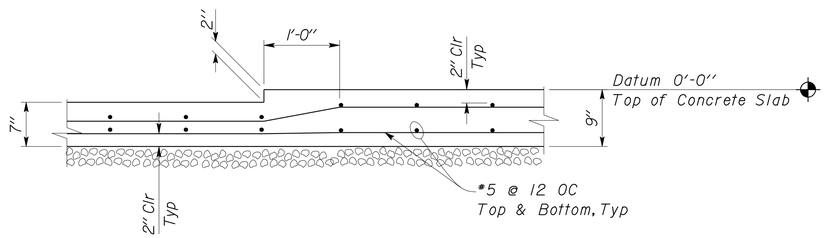

1 DROPPED SLAB DETAIL
Scale 1" = 1' - 0"

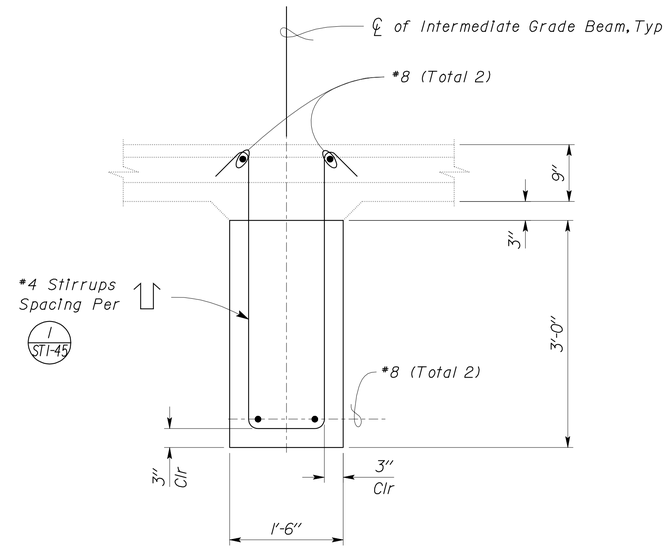

3 INTERMEDIATE GRADE BEAM
Scale 1" = 1' - 0"

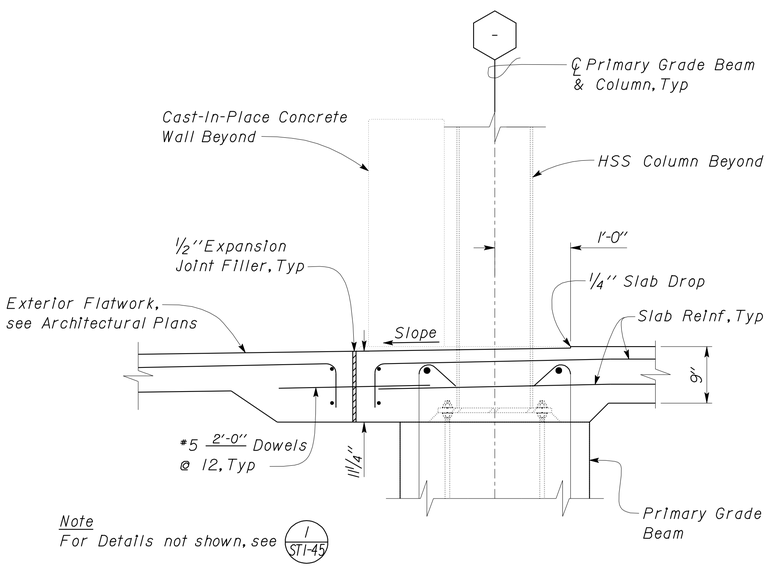

Note
For Details not shown, see 1 / ST1-45

2 SLOPED SLAB AT EQUIPMENT DOORS
Scale 1" = 1' - 0"

DESIGN	BY Robert du Plaine	CHECKED Brian Sutliff	
DETAILS	BY David W. Good	CHECKED Robert du Plaine	
QUANTITIES	BY	CHECKED	

STATE OF CALIFORNIA
DEPARTMENT OF TRANSPORTATION

DIVISION OF ENGINEERING SERVICES
ARCHITECTURAL AND STRUCTURAL DESIGN

BRIDGE NO. 33M5785
POST MILE 2.2

SFOBB MAINTENANCE COMPLEX

FOUNDATION DETAILS

SHEET ST1-46

TAEMWW Imperial Rev. 7/10

ORIGINAL SCALE IN INCHES FOR REDUCED PLANS 0 1 2 3

UNIT 3599
PROJECT NUMBER & PHASE 04120006661
EA 014081

DISREGARD PRINTS BEARING EARLIER REVISION DATES → 01-23-11 01-24-11 05-08-12 05-18-12

REVISION DATES (PRELIMINARY STAGE ONLY) SHEET OF

D:\User\Projects\Dist_04\0400000038_sfobb_ms_complex\Expedite_20120620\Copy of st_01\st1_046.dgn

25-OCT-2012 15:56

DIST.	COUNTY	ROUTE	POST MILES TOTAL PROJECT	SHEET NO.	TOTAL SHEETS
04	Ala	80	2.2	375	800

RdP
REGISTERED CIVIL ENGINEER — DATE 05-31-12

REGISTERED PROFESSIONAL ENGINEER
Robert du Plaine
No. 51447
Exp. 6-30-14
CIVIL
STATE OF CALIFORNIA

10-22-12
PLANS APPROVAL DATE

The State of California or its officers or agents shall not be responsible for the accuracy or completeness of scanned copies of this plan sheet.

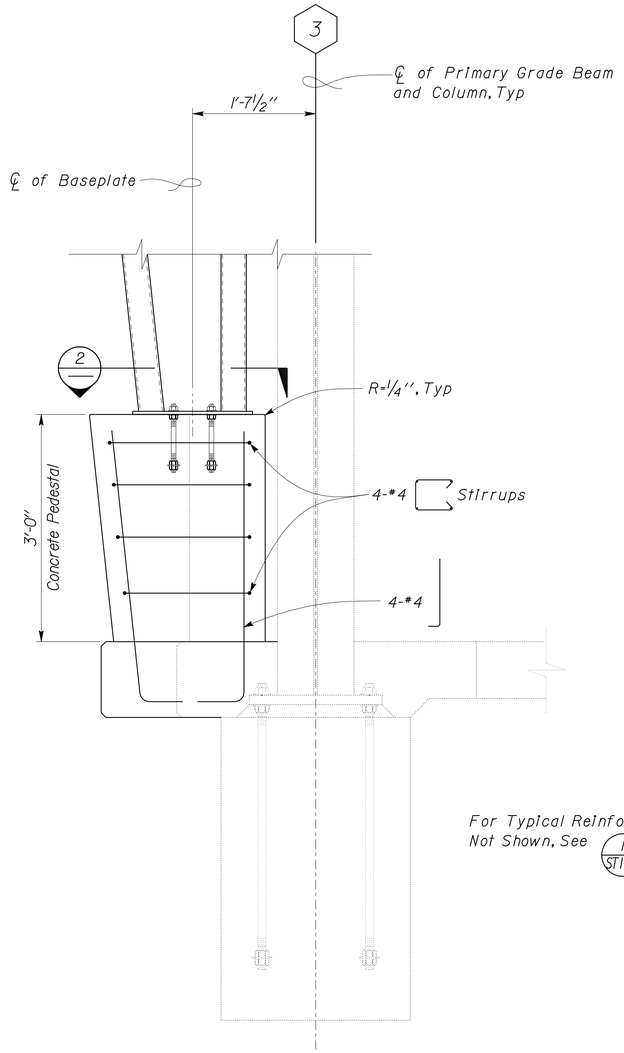

For Typical Reinforcement Not Shown, See 1/ST1-45 & 4/ST1-45

1 COLUMN PEDESTAL
Scale 1" = 1'-0"

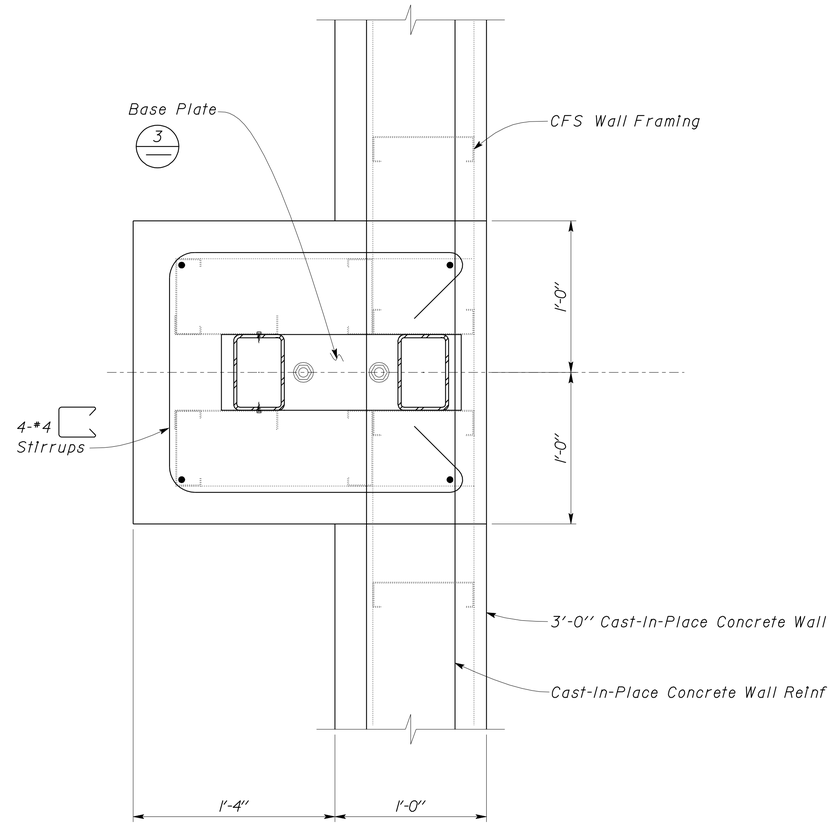

2 COLUMN PEDESTAL
Scale 2" = 1'-0"

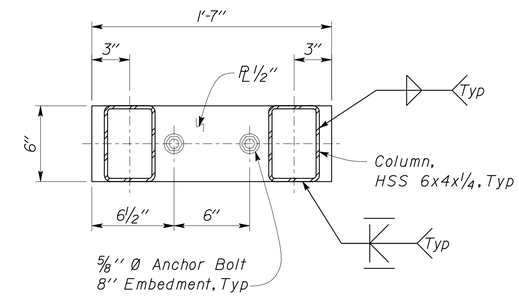

3 HSS COLUMN BASE
Scale 2" = 1'-0"

	BY	CHECKED
DESIGN	Robert du Plaine	Brian Sutliff
DETAILS	David W. Good	Robert du Plaine
QUANTITIES		

STATE OF CALIFORNIA
DEPARTMENT OF TRANSPORTATION

DIVISION OF ENGINEERING SERVICES
ARCHITECTURAL AND STRUCTURAL DESIGN

BRIDGE NO. 33M5785
POST MILE 2.2

SFOBB MAINTENANCE COMPLEX
FOUNDATION DETAILS

SHEET ST1-47

TAEMWW Imperial Rev. 7/10

ORIGINAL SCALE IN INCHES FOR REDUCED PLANS 0 1 2 3

UNIT 3599
PROJECT NUMBER & PHASE 04120006661
EA 014081

DISREGARD PRINTS BEARING EARLIER REVISION DATES → 04-25-12 05-03-12 05-08-12 05-18-12 05-28-12
REVISION DATES (PRELIMINARY STAGE ONLY) SHEET OF

D:\User\Projects\Dist_04\0400000038_sfobb_ms_complex\Expedite_20120620\Copy of st_01\st1_047.dgn

25-OCT-2012 15:56

DIST.	COUNTY	ROUTE	POST MILES TOTAL PROJECT	SHEET NO.	TOTAL SHEETS
04	Ala	80	2.2	376	800

RdP
REGISTERED CIVIL ENGINEER — DATE 05-31-12

REGISTERED PROFESSIONAL ENGINEER Robert du Plaine No. 51447 Exp. 6-30-14 CIVIL STATE OF CALIFORNIA

10-22-12
PLANS APPROVAL DATE

The State of California or its officers or agents shall not be responsible for the accuracy or completeness of scanned copies of this plan sheet.

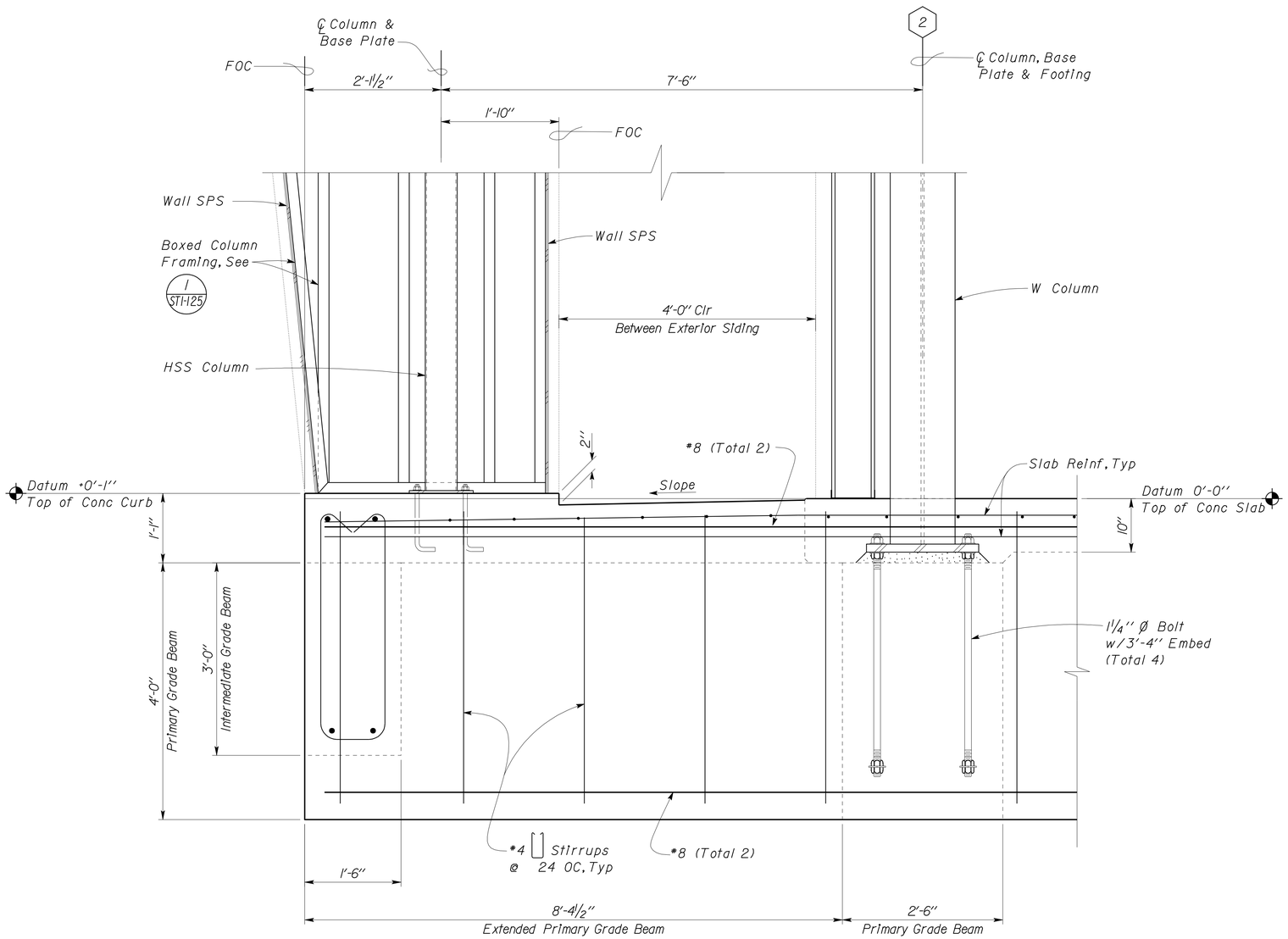

Note
For Details not shown, see 2/— Sim & 1/ST1-45 Sim

1 BUILDING 'IB' EXTENDED SLAB SECTION
Scale 1" = 1' - 0"

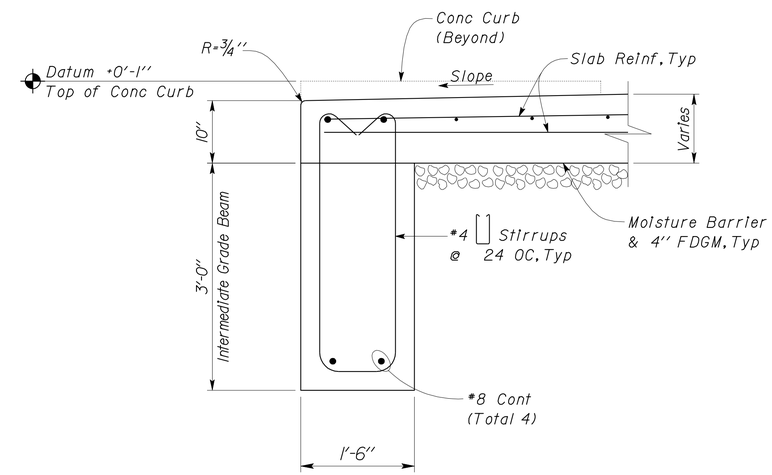

2 INTERMEDIATE GRADE BEAM DETAIL
Scale 1" = 1' - 0"

DESIGN	BY Robert du Plaine	CHECKED Brian Sutliff	
DETAILS	BY David W. Good	CHECKED Robert du Plaine	
QUANTITIES	BY	CHECKED	

STATE OF CALIFORNIA
DEPARTMENT OF TRANSPORTATION

DIVISION OF ENGINEERING SERVICES
ARCHITECTURAL AND STRUCTURAL DESIGN

BRIDGE NO. 33M5785
POST MILE 2.2

SFOBB MAINTENANCE COMPLEX
FOUNDATION DETAILS

SHEET ST1-48

TAEMWW Imperial Rev. 7/10

ORIGINAL SCALE IN INCHES FOR REDUCED PLANS 0 1 2 3

UNIT 3599
PROJECT NUMBER & PHASE 04120006661
EA 014081

DISREGARD PRINTS BEARING EARLIER REVISION DATES → 05-03-12 05-08-12 05-18-12 06-15-12

REVISION DATES (PRELIMINARY STAGE ONLY) SHEET OF

D:\User\Projects\Dist_04\0400000038_sfobb_ms_complex\Expedite_20120620\Copy of st_01\st1_048.dgn

25-OCT-2012 15:56

DIST.	COUNTY	ROUTE	POST MILES TOTAL PROJECT	SHEET NO.	TOTAL SHEETS
04	Ala	80	2.2	377	800

RdP
REGISTERED CIVIL ENGINEER — DATE 05-31-12

REGISTERED PROFESSIONAL ENGINEER — Robert du Plaine — No. 51447 — Exp. 6-30-14 — CIVIL — STATE OF CALIFORNIA

10-22-12
PLANS APPROVAL DATE

The State of California or its officers or agents shall not be responsible for the accuracy or completeness of scanned copies of this plan sheet.

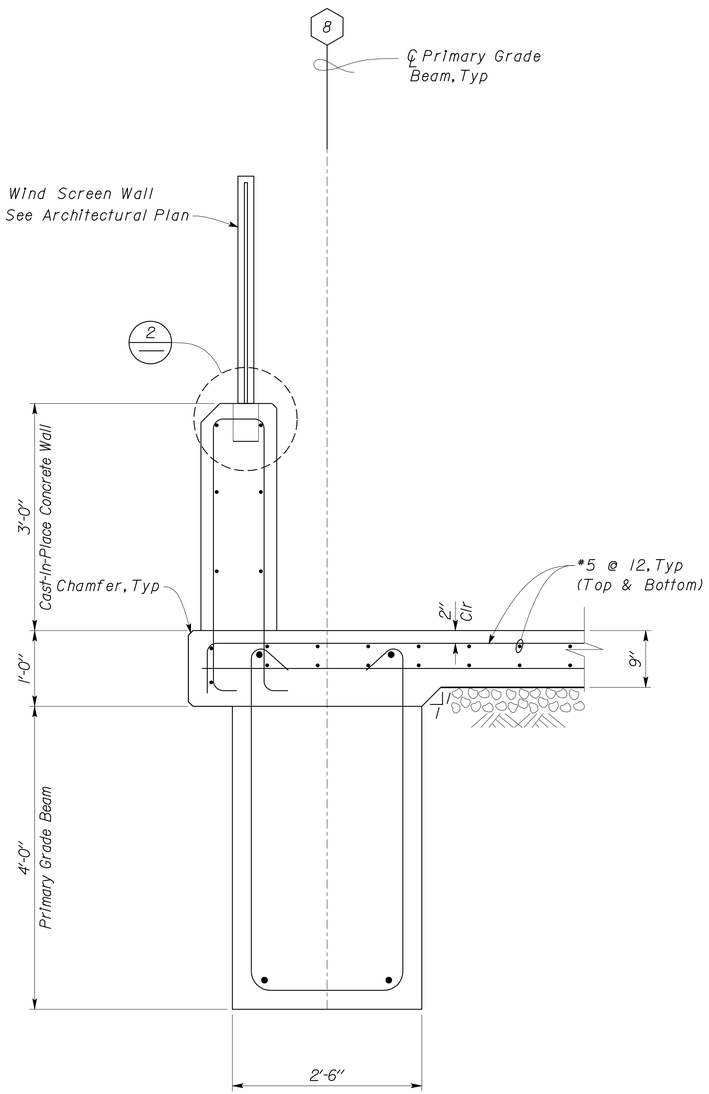

Note
For Details & Dimensions not shown, see 1/ST1-45 Sim

1 WIND SCREEN SYSTEM DETAIL
Scale 1" = 1' - 0"

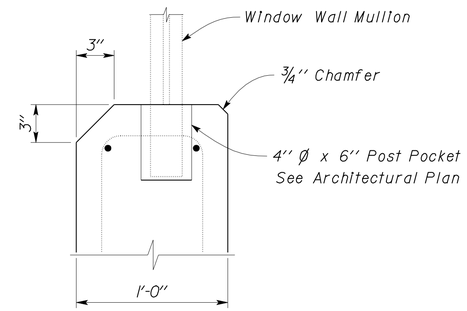

2 POST POCKET DETAIL
Scale 2" = 1' - 0"

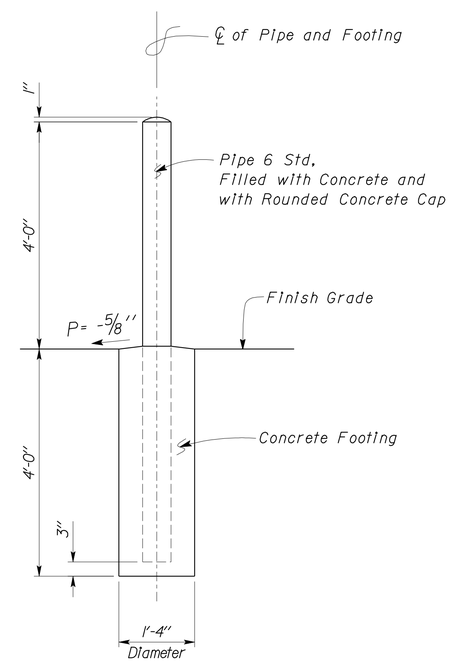

3 PIPE GUARD POST DETAIL
Scale 3/4" = 1' - 0"

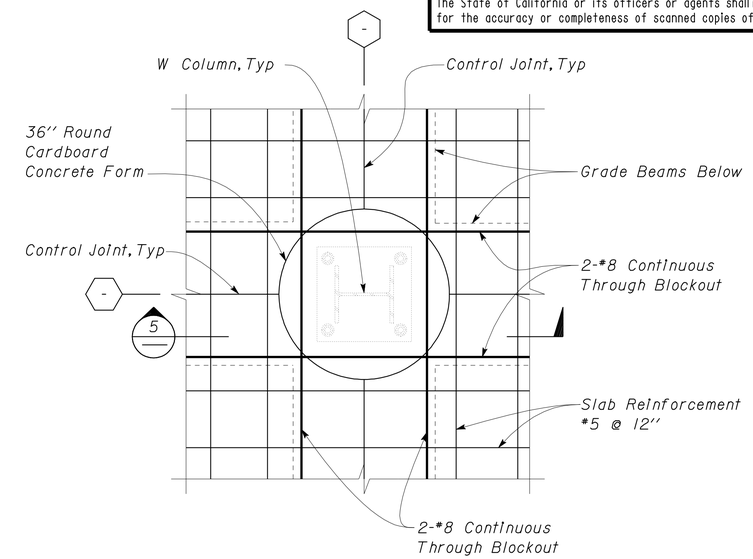

4 CLOSURE POUR PLAN
Scale 3/4" = 1' - 0"

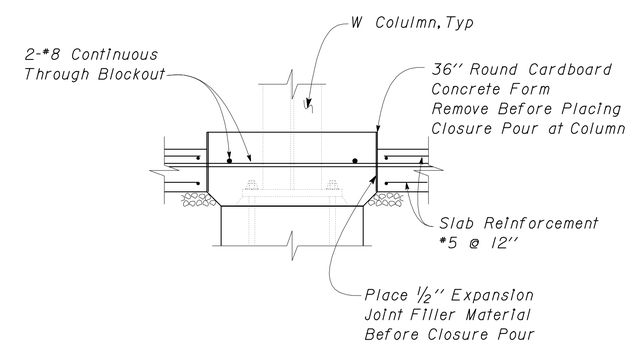

5 CLOSURE POUR SECTION
Scale 3/4" = 1' - 0"

DESIGN	BY Robert du Plaine	CHECKED Brian Sutliff	
DETAILS	BY David W. Good	CHECKED Robert du Plaine	
QUANTITIES	BY	CHECKED	

STATE OF CALIFORNIA
DEPARTMENT OF TRANSPORTATION

DIVISION OF ENGINEERING SERVICES
ARCHITECTURAL AND STRUCTURAL DESIGN

BRIDGE NO. 33M5785
POST MILE 2.2

SFOBB MAINTENANCE COMPLEX
FOUNDATION DETAILS

SHEET ST1-49

TAEMWW Imperial Rev. 7/10

ORIGINAL SCALE IN INCHES FOR REDUCED PLANS 0 1 2 3

UNIT 3599
PROJECT NUMBER & PHASE 04120006661
EA 014081

DISREGARD PRINTS BEARING EARLIER REVISION DATES → 04-28-12 05-08-12 05-11-12 05-18-12 05-30-12 06-15-12

REVISION DATES (PRELIMINARY STAGE ONLY) SHEET OF

D:\User\Projects\Dist_04\0400000038_sfobb_ms_complex\Expedite_20120620\Copy of st_01\st1_049.dgn

25-OCT-2012 15:56

DIST.	COUNTY	ROUTE	POST MILES TOTAL PROJECT	SHEET NO.	TOTAL SHEETS
04	Ala	80	2.2	378	800

RdP
REGISTERED CIVIL ENGINEER — DATE 05-31-12

REGISTERED PROFESSIONAL ENGINEER
Robert du Plaine
No. 51447
Exp. 6-30-14
CIVIL
STATE OF CALIFORNIA

10-22-12
PLANS APPROVAL DATE

The State of California or its officers or agents shall not be responsible for the accuracy or completeness of scanned copies of this plan sheet.

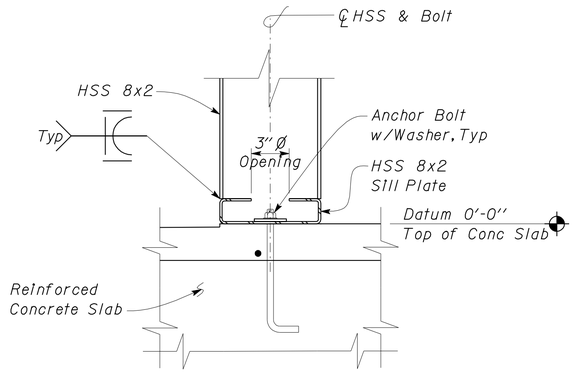

1 HSS SILL PLATE DETAIL
Scale 2" = 1'-0"

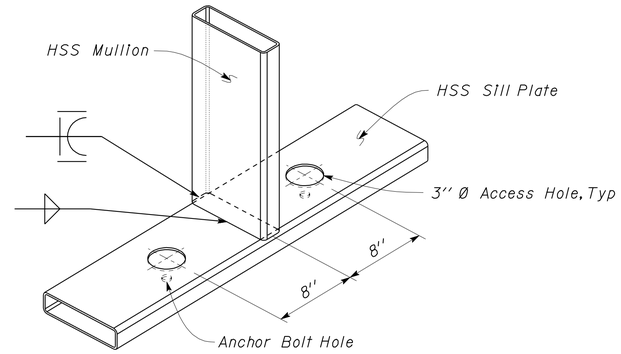

3 HSS SILL PLATE DETAIL
Scale 2" = 1'-0"

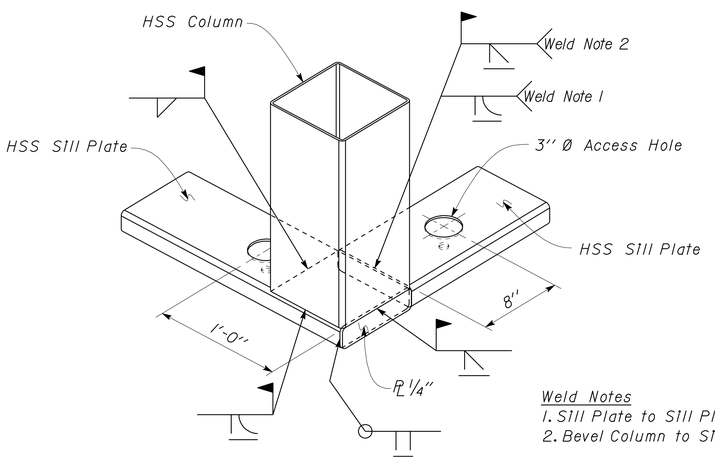

Weld Notes
1. Sill Plate to Sill Plate
2. Bevel Column to Sill Plate

2 HSS SILL PLATE
Scale 2" = 1'-0"

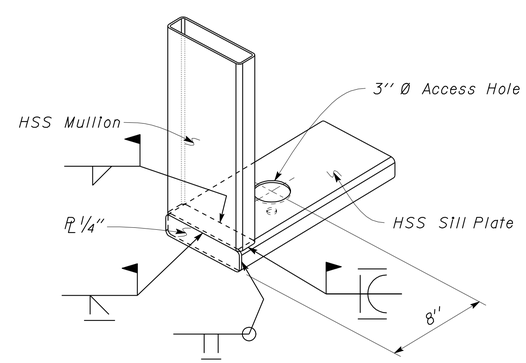

4 HSS SILL PLATE DETAIL
Scale 2" = 1'-0"

DESIGN	BY Robert du Plaine	CHECKED Brian Sutliff	
DETAILS	BY David W. Good	CHECKED Robert du Plaine	
QUANTITIES	BY	CHECKED	

STATE OF CALIFORNIA
DEPARTMENT OF TRANSPORTATION

DIVISION OF ENGINEERING SERVICES
ARCHITECTURAL AND STRUCTURAL DESIGN

BRIDGE NO. 33M5785
POST MILE 2.2

SFOBB MAINTENANCE COMPLEX

FOUNDATION DETAILS

SHEET ST1-50

TAEMWW Imperial Rev. 7/10

ORIGINAL SCALE IN INCHES FOR REDUCED PLANS 0 1 2 3

UNIT 3599
PROJECT NUMBER & PHASE 04120006661
EA 014081

DISREGARD PRINTS BEARING EARLIER REVISION DATES → 04-28-12 05-08-12 05-11-12 05-22-12 05-28-12

REVISION DATES (PRELIMINARY STAGE ONLY) SHEET OF

D:\User\Projects\Dist_04\0400000038_sfobb_ms_complex\Expedite_20120620\Copy of st_01\st1_050.dgn

25-OCT-2012 15:56

DIST.	COUNTY	ROUTE	POST MILES TOTAL PROJECT	SHEET NO.	TOTAL SHEETS
04	Ala	80	2.2	379	800

RdP
REGISTERED CIVIL ENGINEER — DATE 05-31-12

REGISTERED PROFESSIONAL ENGINEER Robert du Plaine No. 51447 Exp. 6-30-14 CIVIL STATE OF CALIFORNIA

10-22-12
PLANS APPROVAL DATE

The State of California or its officers or agents shall not be responsible for the accuracy or completeness of scanned copies of this plan sheet.

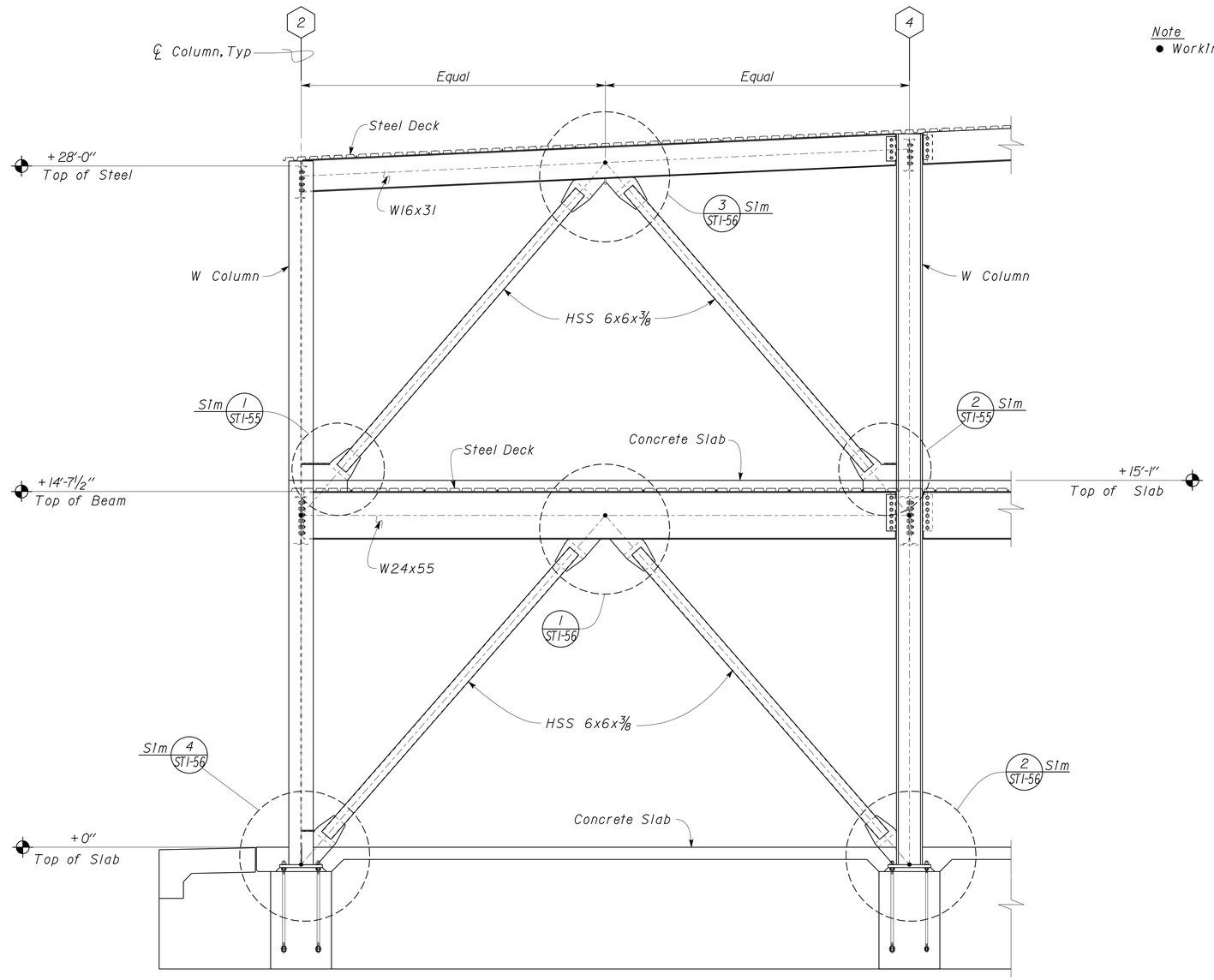

Note
● Working Point

A SPECIAL SEISMIC NOTES

1. Chevron Frames are part of the Seismic Load Resisting System.
2. There are no Demand Critical welds.
3. The Protected Zone consists of all steel within 2'-0" of and including the Gusset Plates.

1 CHEVRON AT GRIDLINE A

Scale 3/8" = 1' - 0"

DESIGN	BY Robert du Plaine	CHECKED Brian Sutliff	
DETAILS	BY David W. Good	CHECKED Robert du Plaine	
QUANTITIES	BY	CHECKED	

STATE OF CALIFORNIA
DEPARTMENT OF TRANSPORTATION

DIVISION OF ENGINEERING SERVICES
ARCHITECTURAL AND STRUCTURAL DESIGN

BRIDGE NO. 33M5785
POST MILE 2.2

SFOBB MAINTENANCE COMPLEX

CHEVRON FRAME ELEVATION

SHEET **ST1-51**

TAEMWW Imperial Rev. 7/10

ORIGINAL SCALE IN INCHES FOR REDUCED PLANS 0 1 2 3

UNIT 3599
PROJECT NUMBER & PHASE 04120006661

DISREGARD PRINTS BEARING EARLIER REVISION DATES → 04-21-12 04-23-12 04-28-12 05-08-12 05-18-12 05-28-12 07-02-12

REVISION DATES (PRELIMINARY STAGE ONLY) SHEET OF

EA 014081

D:\User\Projects\Dist_04\0400000038_sfobb_ms_complex\Expedite_20120620\st_01\REexpedite 20120702\st1_051.dgn

25-OCT-2012 15:56

DIST.	COUNTY	ROUTE	POST MILES TOTAL PROJECT	SHEET NO.	TOTAL SHEETS
04	Ala	80	2.2	380	800

RdP — REGISTERED CIVIL ENGINEER — DATE 05-31-12

REGISTERED PROFESSIONAL ENGINEER Robert du Plaine No. 51447 Exp. 6-30-14 CIVIL STATE OF CALIFORNIA

10-22-12
PLANS APPROVAL DATE

The State of California or its officers or agents shall not be responsible for the accuracy or completeness of scanned copies of this plan sheet.

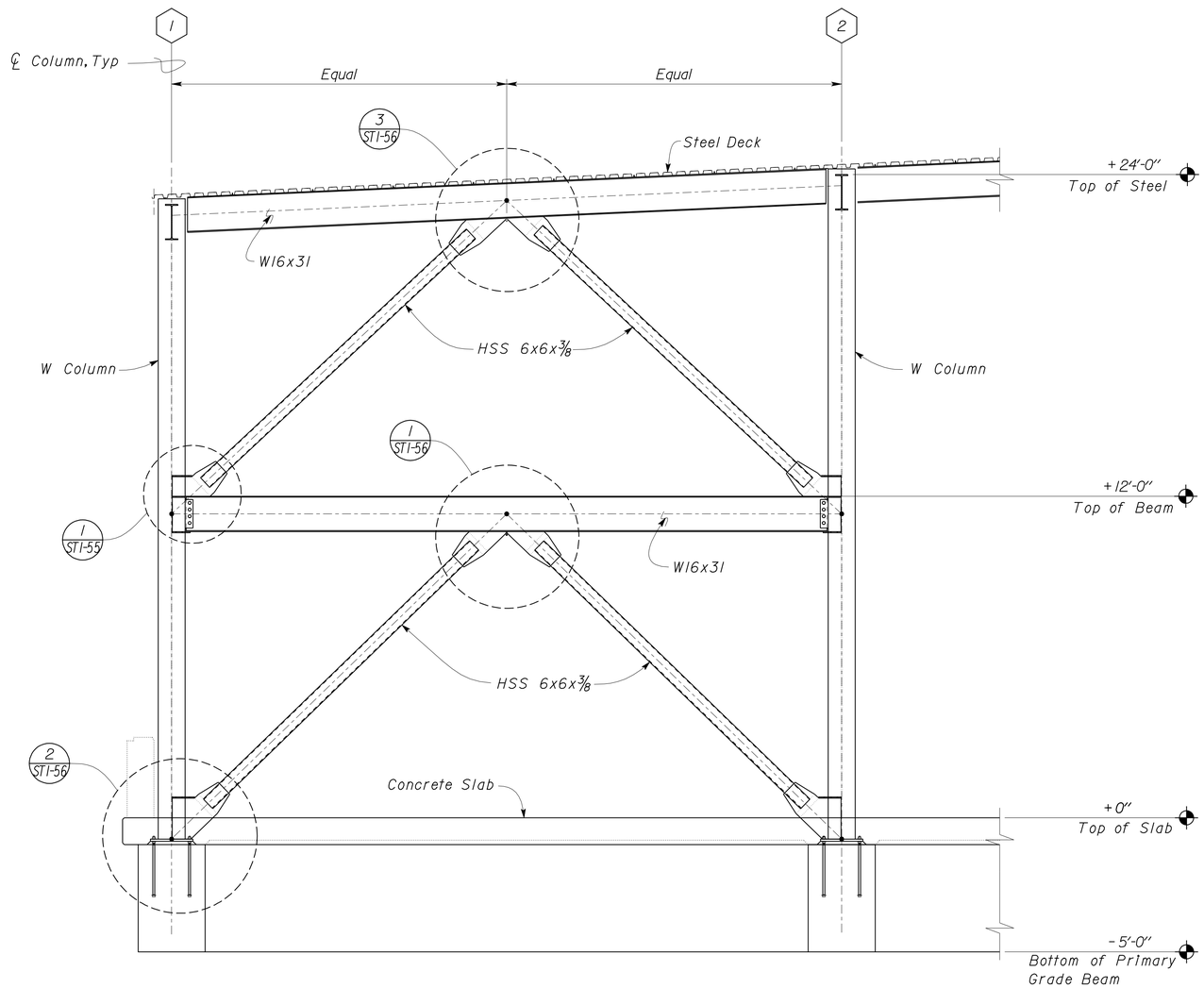

1 CHEVRON AT GRIDLINE Q & R
Scale 3/8" = 1'-0"

Note
- Working Point

A SPECIAL SEISMIC NOTES

1. Chevron Frames are part of the Seismic Load Resisting System.
2. There are no Demand Critical welds.
3. The Protected Zone consists of all steel within 2'-0" of and including the Gusset Plates.

DESIGN	BY Robert du Plaine	CHECKED Brian Sutliff	
DETAILS	BY David W. Good	CHECKED Robert du Plaine	
QUANTITIES	BY	CHECKED	

STATE OF CALIFORNIA
DEPARTMENT OF TRANSPORTATION

DIVISION OF ENGINEERING SERVICES
ARCHITECTURAL AND STRUCTURAL DESIGN

BRIDGE NO. 33M5785
POST MILE 2.2

SFOBB MAINTENANCE COMPLEX

CHEVRON FRAME ELEVATION

SHEET ST1-52

TAEMWW Imperial Rev. 7/10

ORIGINAL SCALE IN INCHES FOR REDUCED PLANS 0 1 2 3

UNIT 3599
PROJECT NUMBER & PHASE 04120006661
EA 014081

DISREGARD PRINTS BEARING EARLIER REVISION DATES → 04-19-12 04-23-12 04-26-12 05-03-12 05-18-12 05-28-12 07-02-12

REVISION DATES (PRELIMINARY STAGE ONLY) SHEET OF

D:\User\Projects\Dist_04\0400000038_sfobb_ms_complex\Expedite_20120620\st_01\REexpedite 20120702\st1_052.dgn

25-OCT-2012 15:56

DIST.	COUNTY	ROUTE	POST MILES TOTAL PROJECT	SHEET NO.	TOTAL SHEETS
04	Ala	80	2.2	381	800

RdP
REGISTERED CIVIL ENGINEER — DATE 05-31-12

REGISTERED PROFESSIONAL ENGINEER Robert du Plaine No. 51447 Exp. 6-30-14 CIVIL STATE OF CALIFORNIA

10-22-12
PLANS APPROVAL DATE

The State of California or its officers or agents shall not be responsible for the accuracy or completeness of scanned copies of this plan sheet.

Note
- Working Point

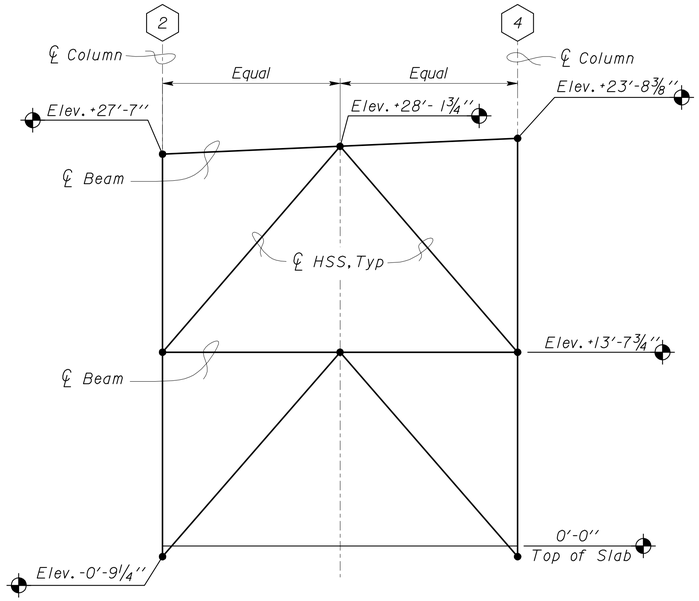

1 GRIDLINE A
No Scale

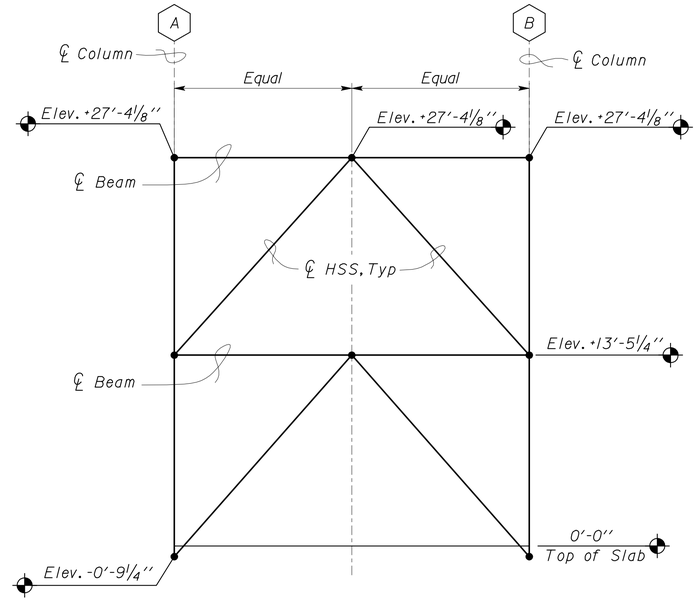

3 GRIDLINE 2
No Scale

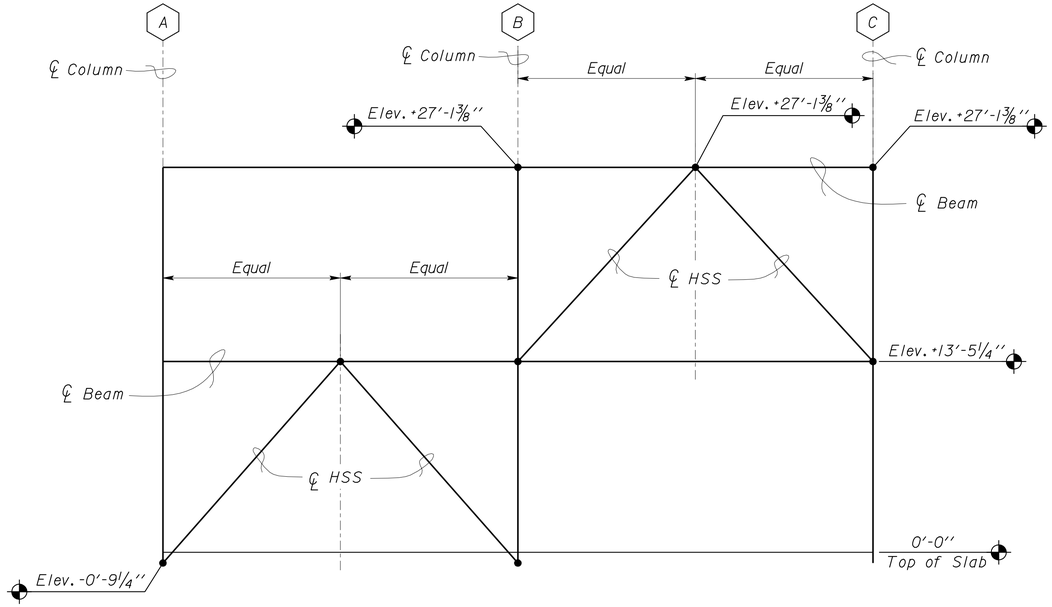

2 GRIDLINE 8
No Scale

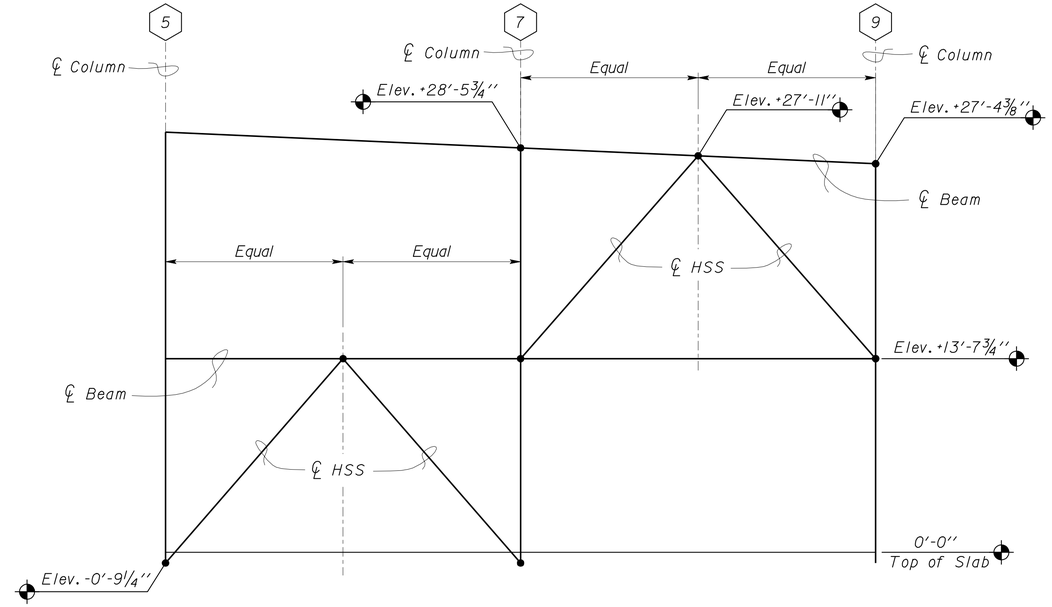

4 GRIDLINE D
No Scale

DESIGN	BY Robert du Plaine	CHECKED Brian Sutliff	
DETAILS	BY David W. Good	CHECKED Robert du Plaine	
QUANTITIES	BY	CHECKED	

STATE OF CALIFORNIA
DEPARTMENT OF TRANSPORTATION

DIVISION OF ENGINEERING SERVICES
ARCHITECTURAL AND STRUCTURAL DESIGN

BRIDGE NO. 33M5785
POST MILE 2.2

SFOBB MAINTENANCE COMPLEX

CHEVRON FRAME DIAGRAMS - BUILDING IA

SHEET **ST1-53**

TAEMWW Imperial Rev. 7/10

ORIGINAL SCALE IN INCHES FOR REDUCED PLANS 0 1 2 3

UNIT 3599
PROJECT NUMBER & PHASE 04120006661
EA 014081

DISREGARD PRINTS BEARING EARLIER REVISION DATES → 04-22-12 04-23-12 05-08-12 05-18-12 05-28-12

REVISION DATES (PRELIMINARY STAGE ONLY) SHEET OF

D:\User\Projects\Dist_04\0400000038_sfobb_ms_complex\Expedite_20120620\Copy of st_01\st1_053.dgn

25-OCT-2012 15:56

DIST.	COUNTY	ROUTE	POST MILES TOTAL PROJECT	SHEET NO.	TOTAL SHEETS
04	Ala	80	2.2	382	800

RdP
REGISTERED CIVIL ENGINEER — DATE 05-31-12

REGISTERED PROFESSIONAL ENGINEER — Robert du Plaine — No. 51447 — Exp. 6-30-14 — CIVIL — STATE OF CALIFORNIA

10-22-12
PLANS APPROVAL DATE

The State of California or its officers or agents shall not be responsible for the accuracy or completeness of scanned copies of this plan sheet.

Note
- Working Point

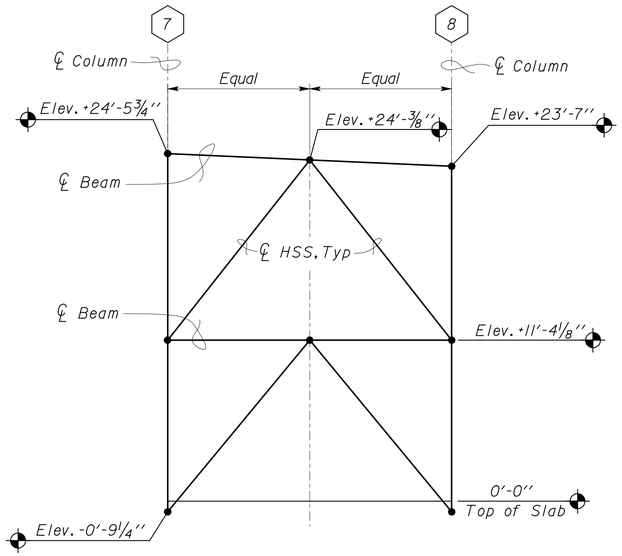

1 GRIDLINE H
No Scale

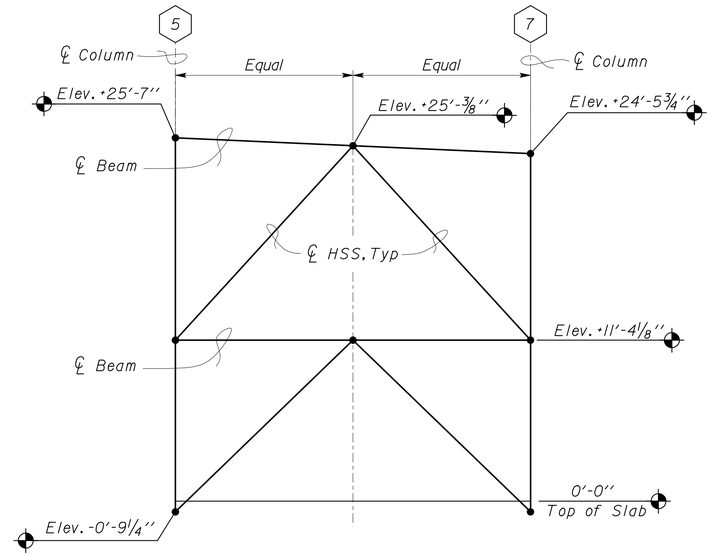

3 GRIDLINE L
No Scale

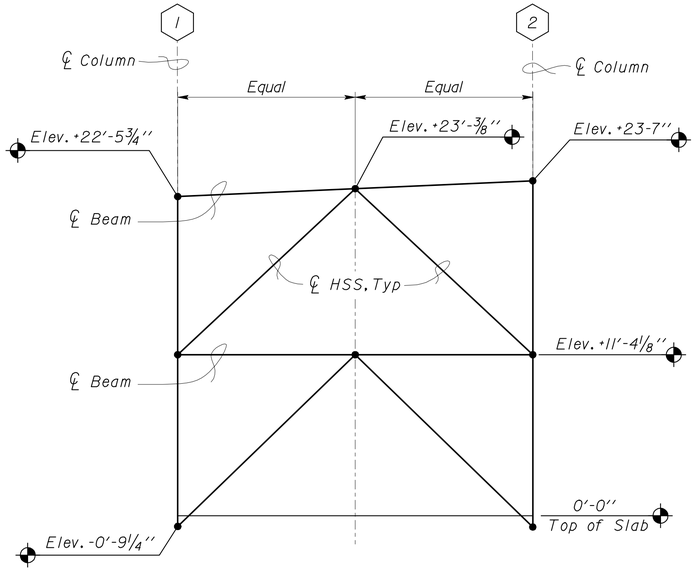

2 GRIDLINE Q & R
No Scale

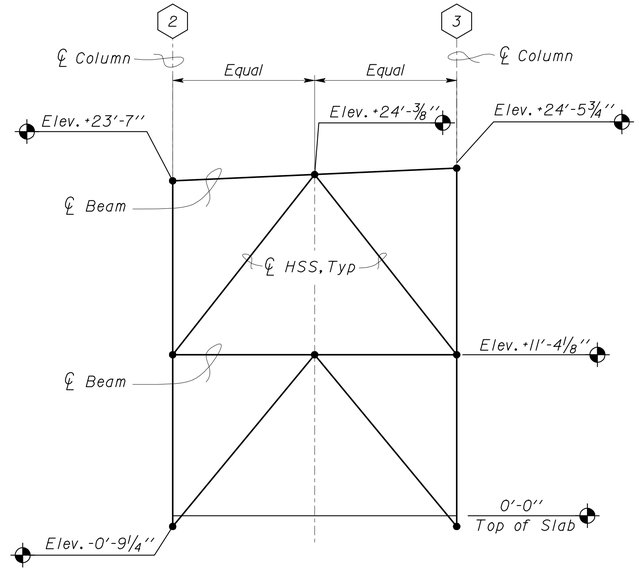

4 GRIDLINE V & X
No Scale

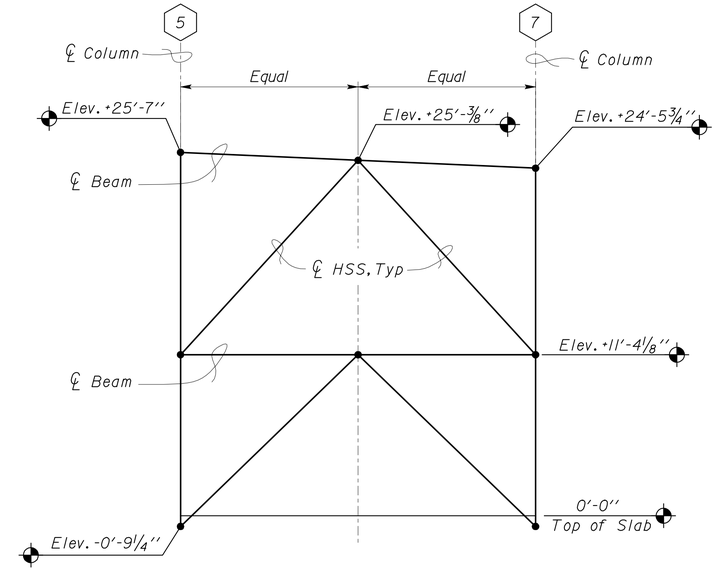

5 GRIDLINE AA
No Scale

DESIGN	BY Robert du Plaine	CHECKED Brian Sutliff	
DETAILS	BY David W. Good	CHECKED Robert du Plaine	
QUANTITIES	BY	CHECKED	

STATE OF CALIFORNIA
DEPARTMENT OF TRANSPORTATION

DIVISION OF ENGINEERING SERVICES
ARCHITECTURAL AND STRUCTURAL DESIGN

BRIDGE NO. 33M5785
POST MILE 2.2

SFOBB MAINTENANCE COMPLEX

CHEVRON FRAME DIAGRAMS - BUILDING IB

SHEET ST1-54

TAEMWW Imperial Rev. 7/10

ORIGINAL SCALE IN INCHES FOR REDUCED PLANS 0 1 2 3

UNIT 3599
PROJECT NUMBER & PHASE 04120006661
EA 014081

DISREGARD PRINTS BEARING EARLIER REVISION DATES → 04-22-12 04-28-12 05-08-12 05-18-12 05-28-12

REVISION DATES (PRELIMINARY STAGE ONLY) SHEET OF

D:\User\Projects\Dist_04\0400000038_sfobb_ms_complex\Expedite_20120620\Copy of st_01\st1_054.dgn

25-OCT-2012 15:56

DIST.	COUNTY	ROUTE	POST MILES TOTAL PROJECT	SHEET NO.	TOTAL SHEETS
04	Ala	80	2.2	383	800

RdP
REGISTERED CIVIL ENGINEER — DATE 05-31-12

REGISTERED PROFESSIONAL ENGINEER
Robert du Plaine
No. 51447
Exp. 6-30-14
CIVIL
STATE OF CALIFORNIA

10-22-12
PLANS APPROVAL DATE

The State of California or its officers or agents shall not be responsible for the accuracy or completeness of scanned copies of this plan sheet.

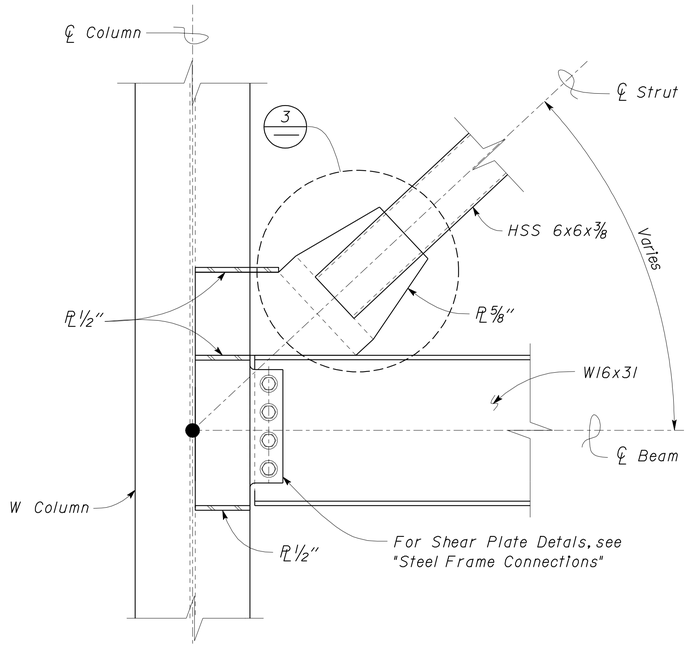

1 WEB TO STRUT
Scale 1 1/2" = 1'-0"

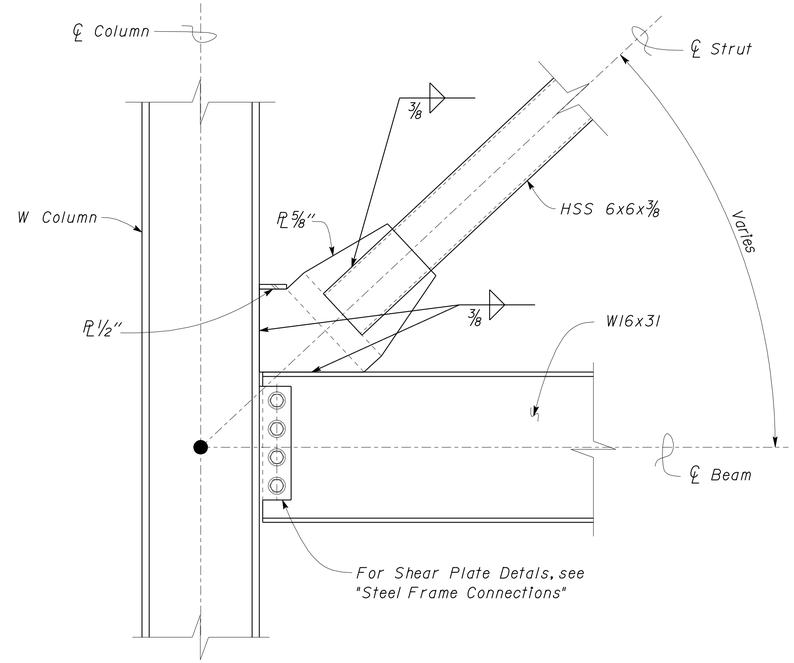

2 FLANGE TO STRUT
Scale 1 1/2" = 1'-0"

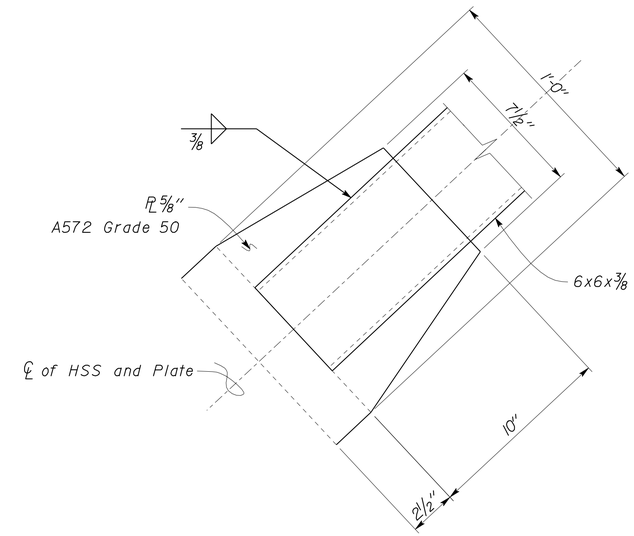

3 PARTIAL GUSSET PLATE
Scale 3" = 1'-0"

Note
● Working Point

DESIGN	BY Robert du Plaine	CHECKED Brian Sutliff	
DETAILS	BY David W. Good	CHECKED Robert du Plaine	
QUANTITIES	BY	CHECKED	

STATE OF CALIFORNIA
DEPARTMENT OF TRANSPORTATION

DIVISION OF ENGINEERING SERVICES
ARCHITECTURAL AND STRUCTURAL DESIGN

BRIDGE NO. 33M5785
POST MILE 2.2

SFOBB MAINTENANCE COMPLEX
CHEVRON FRAME DETAILS

SHEET ST1-55

TAEMWW Imperial Rev. 7/10

ORIGINAL SCALE IN INCHES FOR REDUCED PLANS 0 1 2 3

UNIT 3599
PROJECT NUMBER & PHASE 04120006661
EA 014081

DISREGARD PRINTS BEARING EARLIER REVISION DATES → 04-20-12 04-23-12 04-26-12 05-08-12 05-18-12

REVISION DATES (PRELIMINARY STAGE ONLY) SHEET OF

D:\User\Projects\Dist_04\0400000038_sfobb_ms_complex\Expedite_20120620\Copy of st_01\st1_055.dgn

25-OCT-2012 15:56

DIST.	COUNTY	ROUTE	POST MILES TOTAL PROJECT	SHEET NO.	TOTAL SHEETS
04	Ala	80	2.2	384	800

RdP
REGISTERED CIVIL ENGINEER — DATE 05-31-12

REGISTERED PROFESSIONAL ENGINEER Robert du Plaine No. 51447 Exp. 6-30-14 CIVIL STATE OF CALIFORNIA

10-22-12
PLANS APPROVAL DATE

The State of California or its officers or agents shall not be responsible for the accuracy or completeness of scanned copies of this plan sheet.

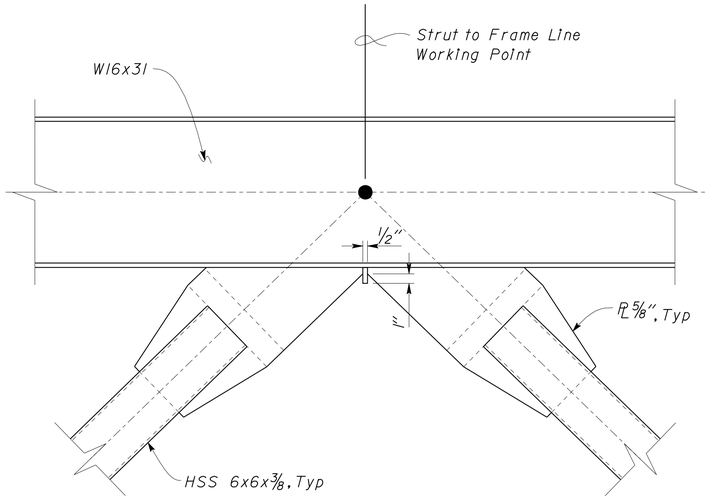

1 STRUT TO FRAME LINK - FLAT
Scale 1 1/2" = 1' - 0"

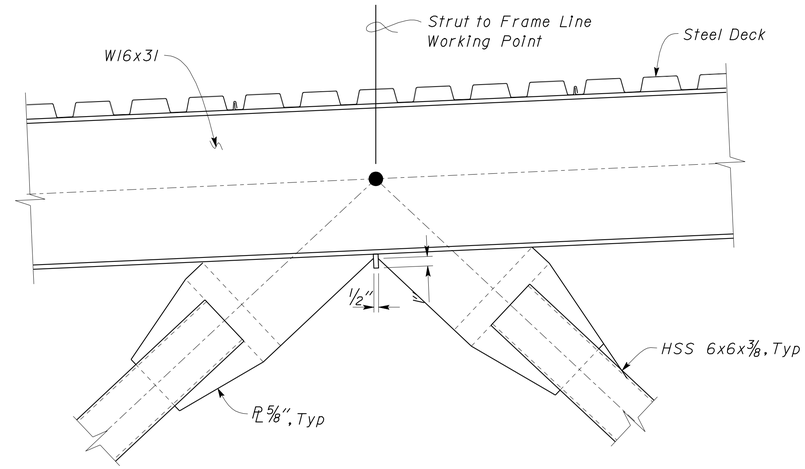

3 STRUT TO FRAME LINK - SLOPED
Scale 1 1/2" = 1' - 0"

Note
- Working Point

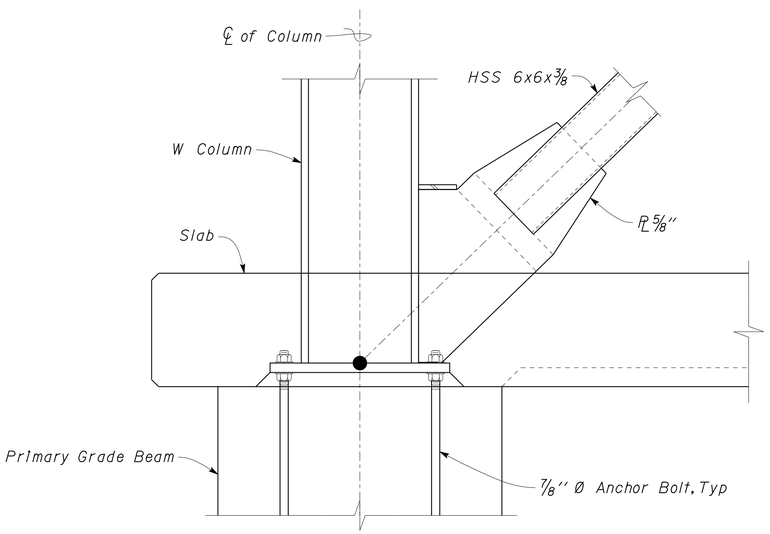

2 STRUT TO FLANGE
Scale 1 1/2" = 1' - 0"

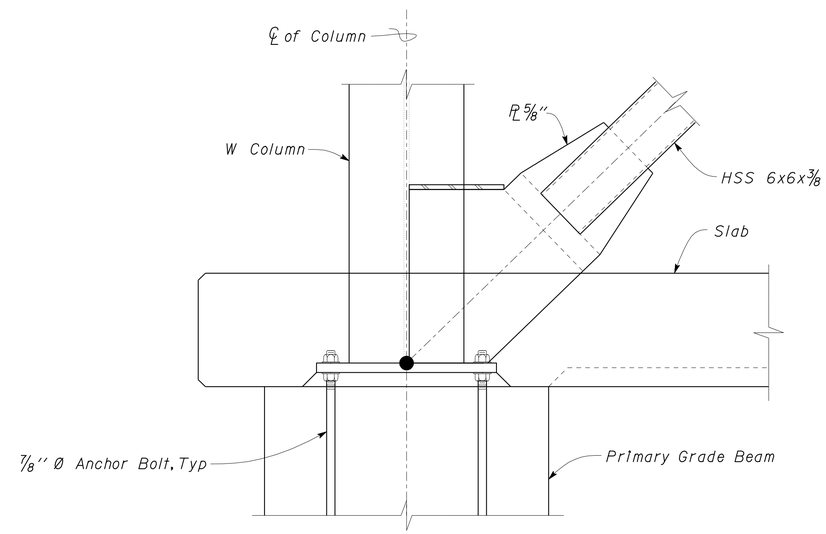

4 STRUT TO WEB
Scale 1 1/2" = 1' - 0"

DESIGN	BY Robert du Plaine	CHECKED Brian Sutliff	
DETAILS	BY David W. Good	CHECKED Robert du Plaine	
QUANTITIES	BY	CHECKED	

STATE OF CALIFORNIA
DEPARTMENT OF TRANSPORTATION

DIVISION OF ENGINEERING SERVICES
ARCHITECTURAL AND STRUCTURAL DESIGN

BRIDGE NO. 33M5785
POST MILE 2.2

SFOBB MAINTENANCE COMPLEX
CHEVRON FRAME DETAILS

SHEET ST1-56

TAEMWW Imperial Rev. 7/10

ORIGINAL SCALE IN INCHES FOR REDUCED PLANS 0 1 2 3

UNIT 3599
PROJECT NUMBER & PHASE 04120006661
EA 014081

DISREGARD PRINTS BEARING EARLIER REVISION DATES → 04-20-12 04-23-12 04-26-12 05-08-12 05-18-12

REVISION DATES (PRELIMINARY STAGE ONLY) SHEET OF

D:\User\Projects\Dist_04\0400000038_sfobb_ms_complex\Expedite_20120620\Copy of st_01\st1_056.dgn

25-OCT-2012 15:56

DIST.	COUNTY	ROUTE	POST MILES TOTAL PROJECT	SHEET NO.	TOTAL SHEETS
04	Ala	80	2.2	385	800

RdP
REGISTERED CIVIL ENGINEER — DATE 05-31-12

REGISTERED PROFESSIONAL ENGINEER
Robert du Plaine
No. 51447
Exp. 6-30-14
CIVIL
STATE OF CALIFORNIA

10-22-12
PLANS APPROVAL DATE

The State of California or its officers or agents shall not be responsible for the accuracy or completeness of scanned copies of this plan sheet.

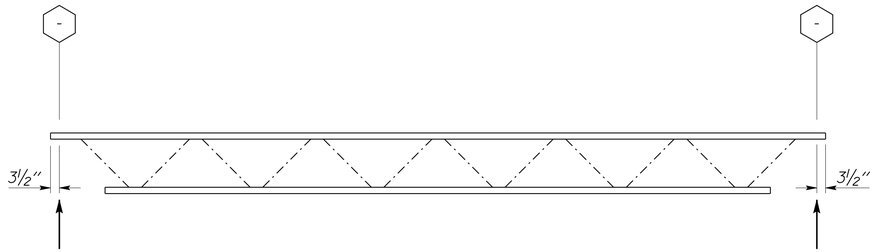

1 OWSJ 'A'
No Scale

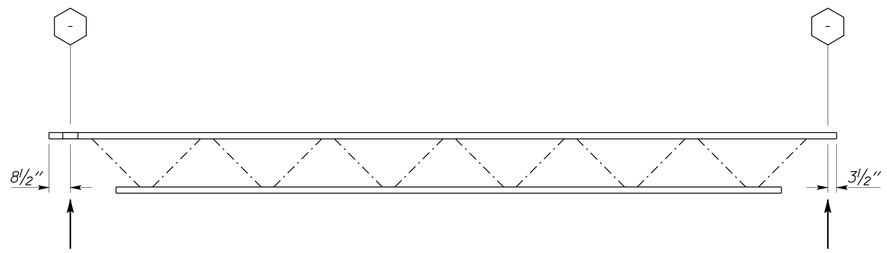

2 OWSJ 'B'
No Scale

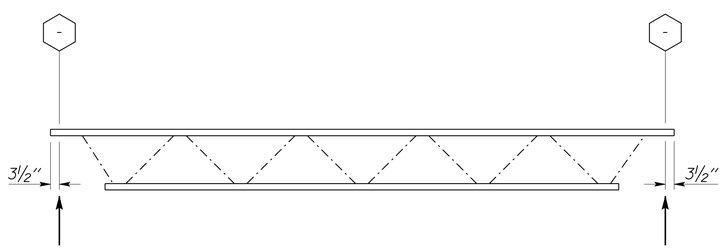

3 OWSJ 'C'
No Scale

A OPEN WEB STEEL JOIST SERIES 24LH08

LOADS:	Dead Load	Live Load
Uniform:	80 psf	100 psf
Concentrated Anywhere:	250 LB	

1. Deflection:
   Live Load ---------- L/360
   Total Load ---------- L/240
2. Camber Shall be 1.5 Times Dead Load Deflection
3. Open Web Steel Joist shall be 2'-0'' in depth.
4. Open Web Steel Joist vender is responsible for design of proper bracing.
5. For Open Web Steel Joist Anchorage see ST1-59

↑ Denotes Point of Support

6. OWSJ Anchorage Seat as per Manufacturer

DESIGN	BY Robert du Plaine	CHECKED Brian Sutliff	
DETAILS	BY David W. Good	CHECKED Robert du Plaine	
QUANTITIES	BY	CHECKED	

STATE OF CALIFORNIA
DEPARTMENT OF TRANSPORTATION

DIVISION OF ENGINEERING SERVICES
ARCHITECTURAL AND STRUCTURAL DESIGN

BRIDGE NO. 33M5785
POST MILE 2.2

SFOBB MAINTENANCE COMPLEX

OPEN WEB STEEL JOISTS - FLOOR

SHEET ST1-57

TAEMWW Imperial Rev. 7/10

ORIGINAL SCALE IN INCHES FOR REDUCED PLANS 0 1 2 3

UNIT 3599
PROJECT NUMBER & PHASE 04120006661
EA 014081

DISREGARD PRINTS BEARING EARLIER REVISION DATES → 01-18-12 05-08-12 05-18-12 05-30-12 06-15-12

REVISION DATES (PRELIMINARY STAGE ONLY) SHEET OF

D:\User\Projects\Dist_04\0400000038_sfobb_ms_complex\Expedite_20120620\Copy of st_01\st1_057.dgn

25-OCT-2012 15:56

DIST.	COUNTY	ROUTE	POST MILES TOTAL PROJECT	SHEET NO.	TOTAL SHEETS
04	Ala	80	2.2	386	800

RdP
REGISTERED CIVIL ENGINEER — DATE 05-31-12

REGISTERED PROFESSIONAL ENGINEER
Robert du Plaine
No. 51447
Exp. 6-30-14
CIVIL
STATE OF CALIFORNIA

10-22-12
PLANS APPROVAL DATE

The State of California or its officers or agents shall not be responsible for the accuracy or completeness of scanned copies of this plan sheet.

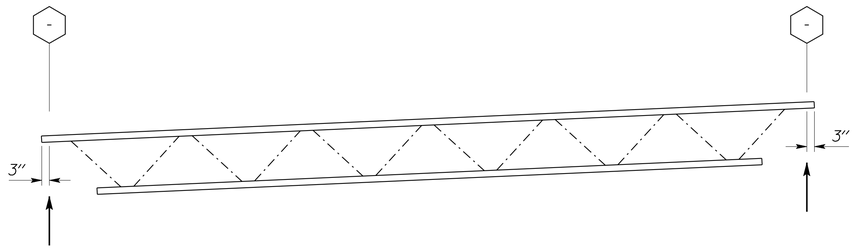

1 OWSJ 'A'
No Scale

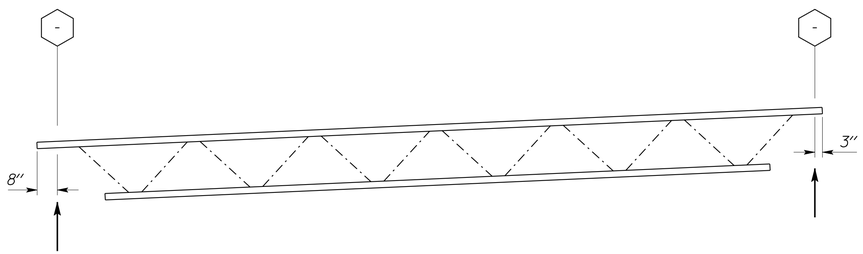

2 OWSJ 'B'
No Scale

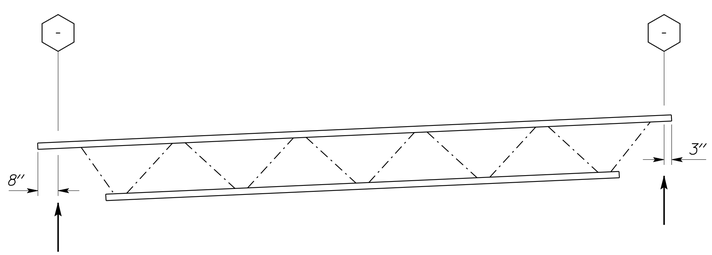

3 OWSJ 'C'
No Scale

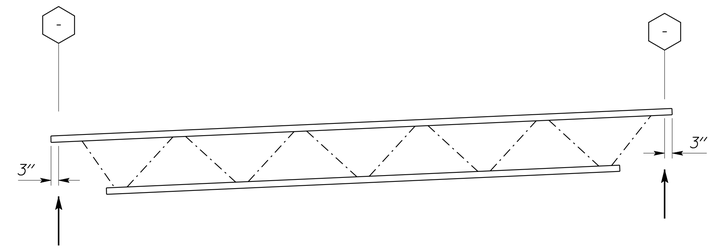

4 OWSJ 'D'
No Scale

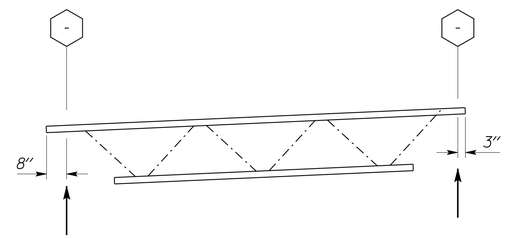

5 OWSJ 'E'
No Scale

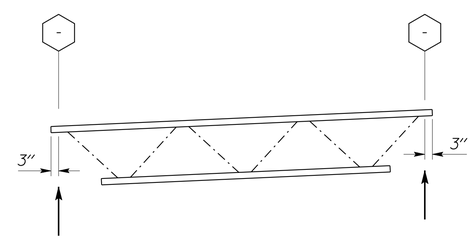

6 OWSJ 'F'
No Scale

A OPEN WEB STEEL JOIST SERIES 18K9

LOADS:	Dead Load	Live Load
Uniform:	40 psf	20 psf
Concentrated Anywhere:	250 LB	

1. Deflection:
   Live Load ---------- L/360
   Total Load ---------- L/240
2. Camber Shall be 1.5 Times Dead Load Deflection
3. Open Web Steel Joist shall be 1'-6" In depth.
4. Open Web Steel Joist vender Is responsible for design of proper bracing.
5. For Open Web Steel Joist Anchorage see ST1-63

↑ Denotes Point of Support

6. OWSJ Anchorage Seat as per Manufacturer

DESIGN	BY Robert du Plaine	CHECKED Brian Sutliff	
DETAILS	BY David W. Good	CHECKED Robert du Plaine	
QUANTITIES	BY	CHECKED	

STATE OF CALIFORNIA
DEPARTMENT OF TRANSPORTATION

DIVISION OF ENGINEERING SERVICES
ARCHITECTURAL AND STRUCTURAL DESIGN

BRIDGE NO. 33M5785
POST MILE 2.2

SFOBB MAINTENANCE COMPLEX

OPEN WEB STEEL JOISTS - ROOF

SHEET ST1-58

TAEMWW Imperial Rev. 7/10

ORIGINAL SCALE IN INCHES FOR REDUCED PLANS 0 1 2 3

UNIT 3599
PROJECT NUMBER & PHASE 04120006661
EA 014081

DISREGARD PRINTS BEARING EARLIER REVISION DATES → 01-18-12 05-08-12 05-18-12 05-30-12

REVISION DATES (PRELIMINARY STAGE ONLY) SHEET OF

D:\User\Projects\Dist_04\0400000038_sfobb_ms_complex\Expedite_20120620\Copy of st_01\st1_058.dgn

25-OCT-2012 15:57

DIST.	COUNTY	ROUTE	POST MILES TOTAL PROJECT	SHEET NO.	TOTAL SHEETS
04	Ala	80	2.2	387	800

RdP
REGISTERED CIVIL ENGINEER — DATE 05-31-12

REGISTERED PROFESSIONAL ENGINEER Robert du Plaine No. 51447 Exp. 6-30-14 CIVIL STATE OF CALIFORNIA

10-22-12
PLANS APPROVAL DATE

The State of California or its officers or agents shall not be responsible for the accuracy or completeness of scanned copies of this plan sheet.

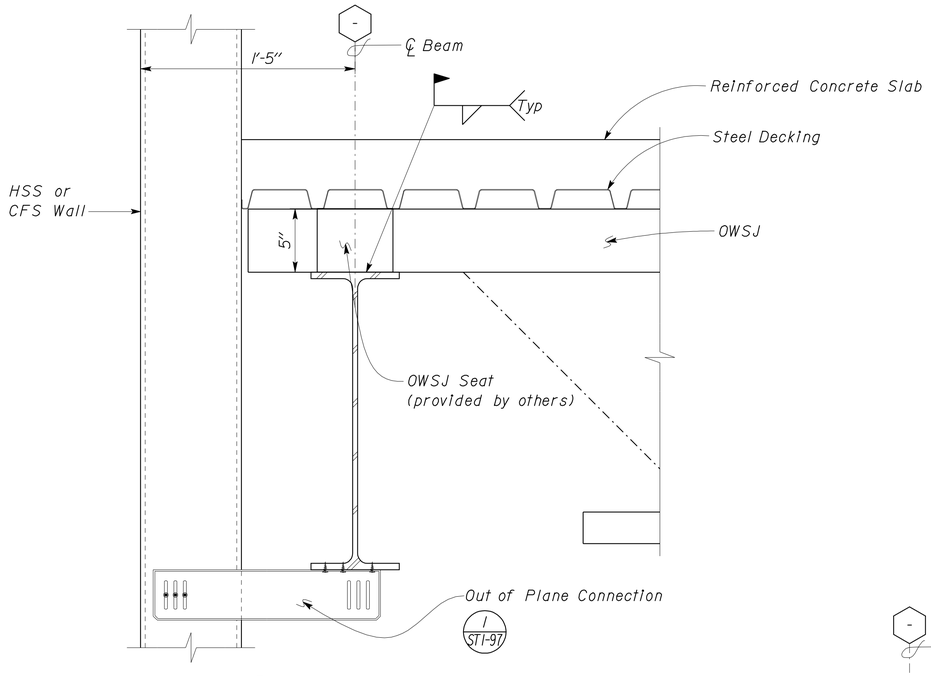

1 TRUSS TO BEAM END CONNECTION
Scale 2" = 1' - 0"

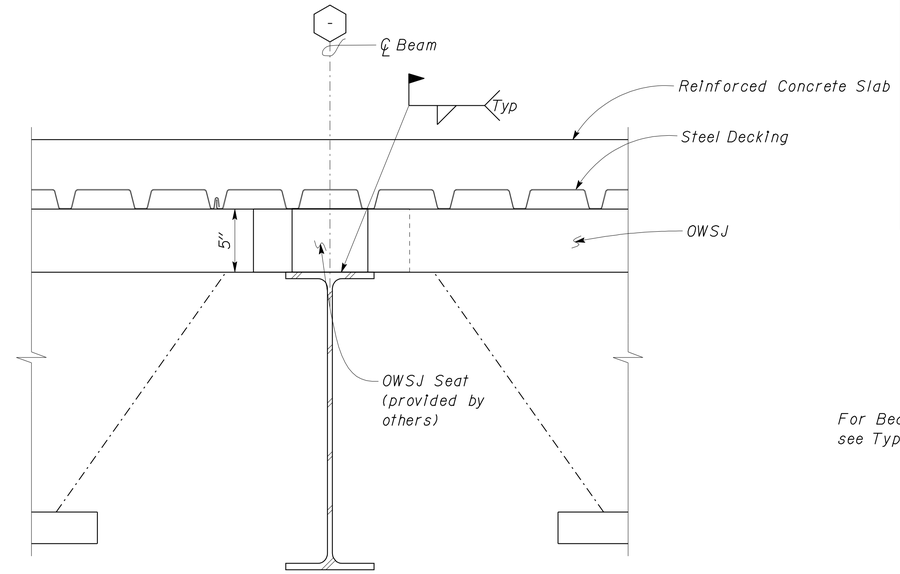

3 TRUSS TO BEAM MID CONNECTION
Scale 2" = 1' - 0"

For Beam to Column connection details, see Typical Steel Framing Details. — ST1-131

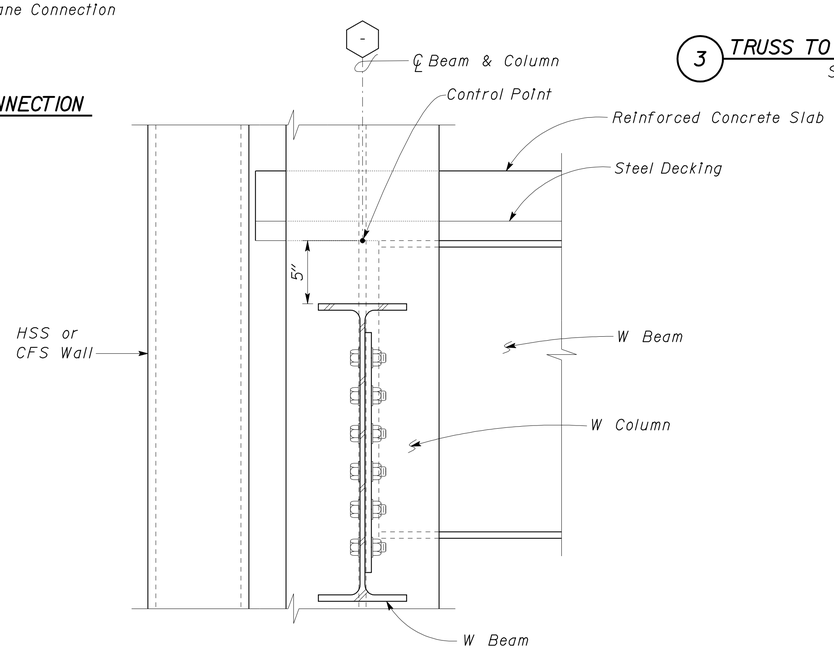

2 END BEAM TO COLUMN
Scale 2" = 1' - 0"

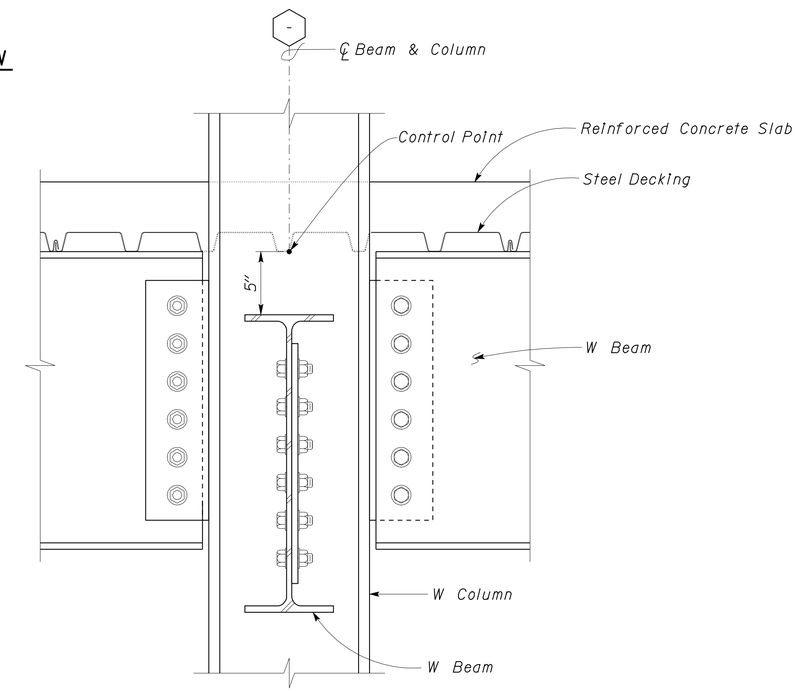

4 END BEAMS TO COLUMN
Scale 2" = 1' - 0"

DESIGN	BY Robert du Plaine	CHECKED Brian Sutliff	
DETAILS	BY David W. Good	CHECKED Robert du Plaine	
QUANTITIES	BY	CHECKED	

STATE OF CALIFORNIA
DEPARTMENT OF TRANSPORTATION

DIVISION OF ENGINEERING SERVICES
ARCHITECTURAL AND STRUCTURAL DESIGN

BRIDGE NO. 33M5785
POST MILE 2.2

SFOBB MAINTENANCE COMPLEX

FLOOR FRAMING DETAILS - STEEL

SHEET ST1-59

TAEMWW Imperial Rev. 7/10

ORIGINAL SCALE IN INCHES FOR REDUCED PLANS 0 1 2 3

UNIT 3599
PROJECT NUMBER & PHASE 04120006661
EA 014081

DISREGARD PRINTS BEARING EARLIER REVISION DATES → 04-10-12 05-11-12 05-18-12 05-28-12

REVISION DATES (PRELIMINARY STAGE ONLY) SHEET OF

D:\User\Projects\Dist_04\0400000038_sfobb_ms_complex\Expedite_20120620\Copy of st_01\st1_059.dgn

25-OCT-2012 15:57

DIST.	COUNTY	ROUTE	POST MILES TOTAL PROJECT	SHEET NO.	TOTAL SHEETS
04	Ala	80	2.2	388	800

RdP
REGISTERED CIVIL ENGINEER — DATE 05-31-12

REGISTERED PROFESSIONAL ENGINEER — Robert du Plaine — No. 51447 — Exp. 6-30-14 — CIVIL — STATE OF CALIFORNIA

10-22-12
PLANS APPROVAL DATE

The State of California or its officers or agents shall not be responsible for the accuracy or completeness of scanned copies of this plan sheet.

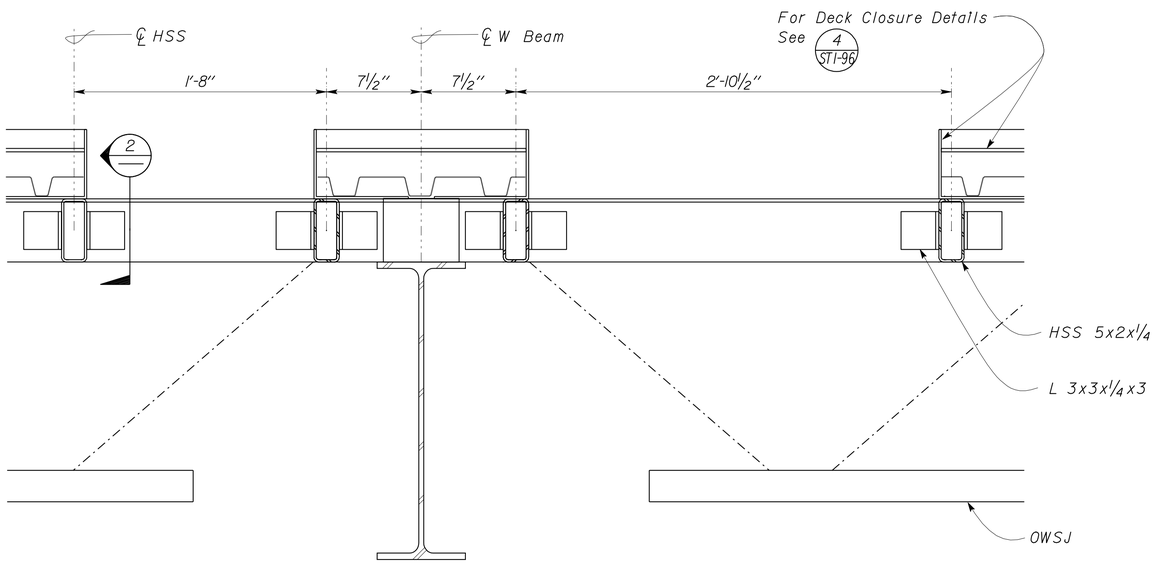

1 FLOOR DECK OPENING
Scale 2" = 1'-0"

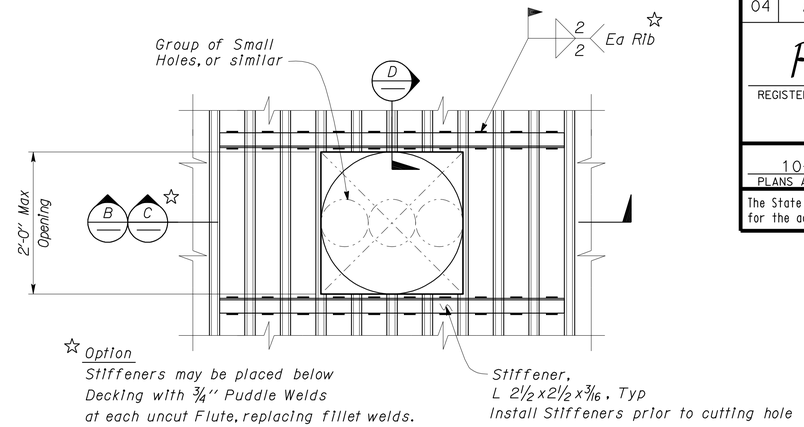

A ROUND OR SQUARE STEEL DECK OPENING PLAN

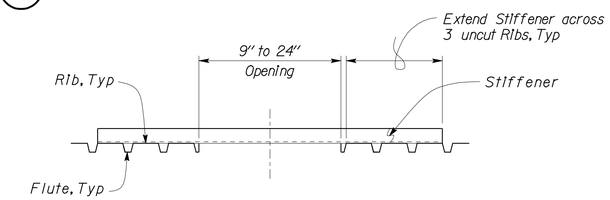

B STEEL DECK OPENING SECTION

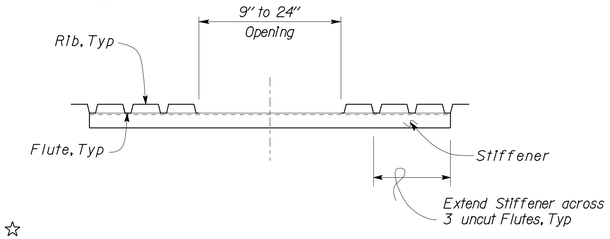

☆ C ALTERNATE STEEL DECK OPENING SECTION

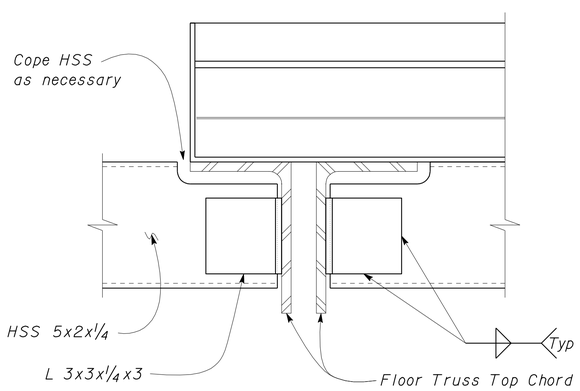

2 HSS COPING DETAIL
Scale 4" = 1'-0"

Note
Rib connection shown, Flute connection similar.

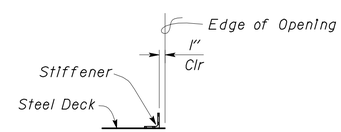

D STEEL DECK OPENING DETAIL

3 STEEL ROOF DECK OPENING DETAIL
No Scale

DESIGN	BY Robert du Plaine	CHECKED Brian Sutliff	
DETAILS	BY David W. Good	CHECKED Robert du Plaine	
QUANTITIES	BY	CHECKED	

STATE OF CALIFORNIA
DEPARTMENT OF TRANSPORTATION

DIVISION OF ENGINEERING SERVICES
ARCHITECTURAL AND STRUCTURAL DESIGN

BRIDGE NO. 33M5785
POST MILE 2.2

SFOBB MAINTENANCE COMPLEX
FLOOR AND ROOF DECK OPENINGS

SHEET ST1-60

TAEMWW Imperial Rev. 7/10

ORIGINAL SCALE IN INCHES FOR REDUCED PLANS 0 1 2 3

UNIT 3599
PROJECT NUMBER & PHASE 04120006661
EA 014081

DISREGARD PRINTS BEARING EARLIER REVISION DATES → REVISION DATES (PRELIMINARY STAGE ONLY) 05-18-12 06-15-12 SHEET OF

D:\User\Projects\Dist_04\0400000038_sfobb_ms_complex\Expedite_20120620\Copy of st_01\st1_060.dgn

25-OCT-2012 15:57

DIST.	COUNTY	ROUTE	POST MILES TOTAL PROJECT	SHEET NO.	TOTAL SHEETS
04	Ala	80	2.2	389	800

RdP
REGISTERED CIVIL ENGINEER — DATE 05-31-12

REGISTERED PROFESSIONAL ENGINEER Robert du Plaine No. 51447 Exp. 6-30-14 CIVIL STATE OF CALIFORNIA

10-22-12
PLANS APPROVAL DATE

The State of California or its officers or agents shall not be responsible for the accuracy or completeness of scanned copies of this plan sheet.

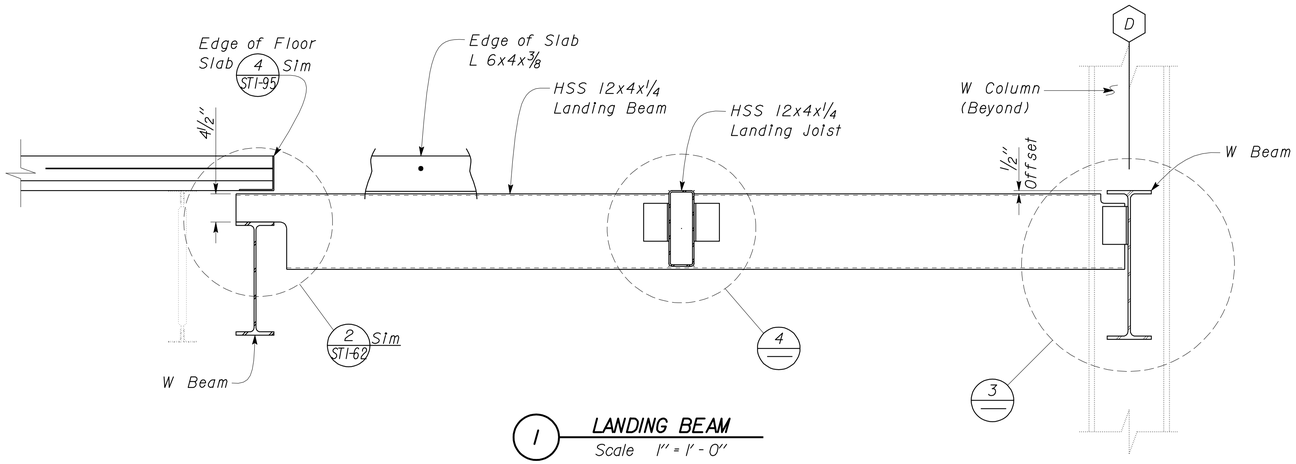

1 LANDING BEAM
Scale 1" = 1' - 0"

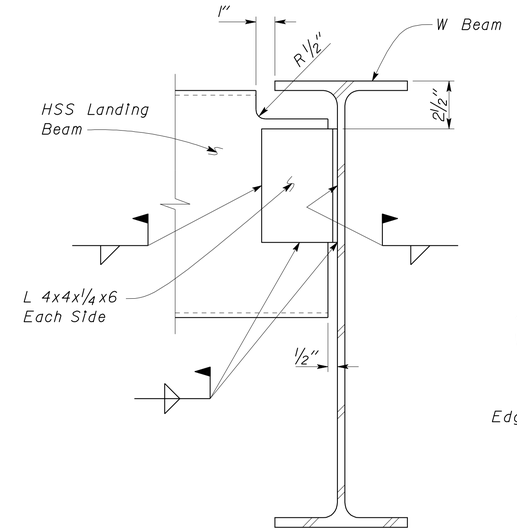

3 HSS TO W BEAM
Scale 3" = 1' - 0"

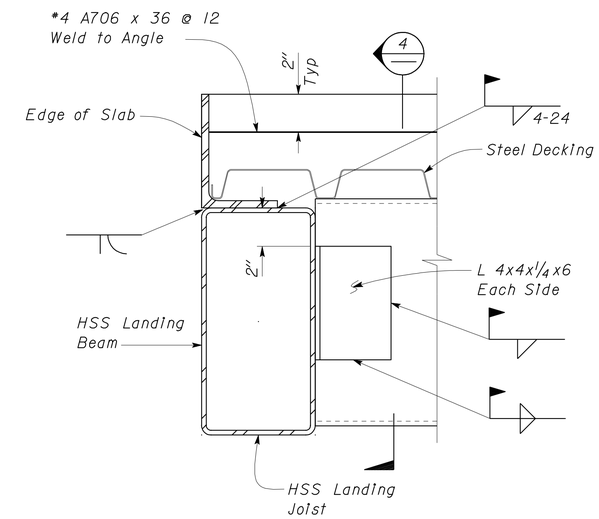

5 LANDING SECTION
Scale 3" = 1' - 0"

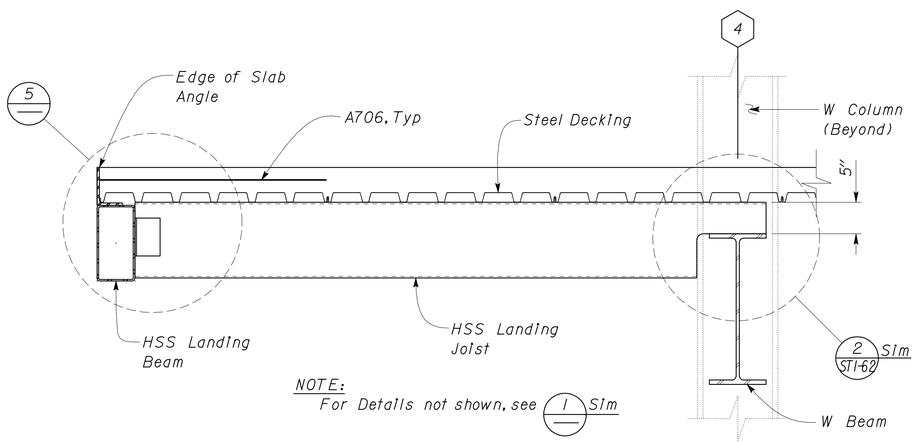

NOTE:
For Details not shown, see 1 Slm

2 LANDNING JOIST
Scale 1" = 1' - 0"

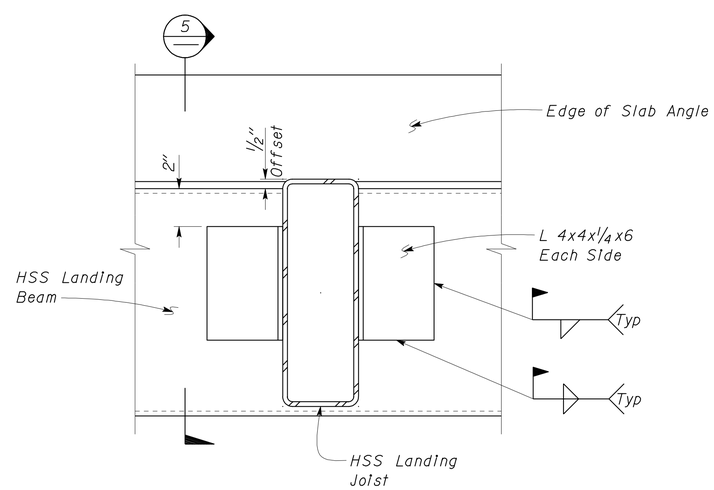

4 JOIST TO BEAM
Scale 3" = 1' - 0"

DESIGN	BY Robert du Plaine	CHECKED Brian Sutliff	
DETAILS	BY David W. Good	CHECKED Robert du Plaine	
QUANTITIES	BY	CHECKED	

STATE OF CALIFORNIA
DEPARTMENT OF TRANSPORTATION

DIVISION OF ENGINEERING SERVICES
ARCHITECTURAL AND STRUCTURAL DESIGN

BRIDGE NO. 33M5785
POST MILE 2.2

SFOBB MAINTENANCE COMPLEX

HSS FRAMING AT STAIRWELL

SHEET **ST1-61**

TAEMWW Imperial Rev. 7/10

ORIGINAL SCALE IN INCHES FOR REDUCED PLANS 0 1 2 3

UNIT 3599
PROJECT NUMBER & PHASE 04120006661
EA 014081

DISREGARD PRINTS BEARING EARLIER REVISION DATES
REVISION DATES (PRELIMINARY STAGE ONLY) 05-03-12 05-08-12 05-18-12 05-28-12
SHEET OF

D:\User\Projects\Dist_04\0400000038_sfobb_ms_complex\Expedite_20120620\Copy of st_01\st1_061.dgn

25-OCT-2012 15:57

DIST.	COUNTY	ROUTE	POST MILES TOTAL PROJECT	SHEET NO.	TOTAL SHEETS
04	Ala	80	2.2	390	800

RdP
REGISTERED CIVIL ENGINEER — DATE 05-31-12

REGISTERED PROFESSIONAL ENGINEER
Robert du Plaine
No. 51447
Exp. 6-30-14
CIVIL
STATE OF CALIFORNIA

10-22-12
PLANS APPROVAL DATE

The State of California or its officers or agents shall not be responsible for the accuracy or completeness of scanned copies of this plan sheet.

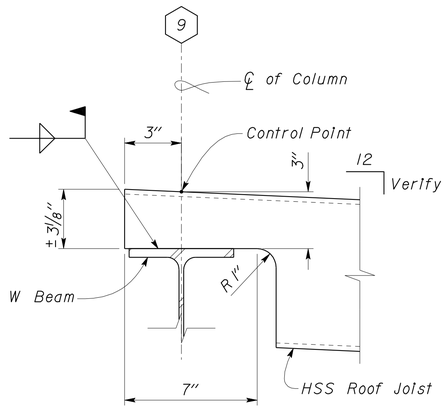

1 HSS ROOF JOIST COPING
Scale 3" = 1' - 0"

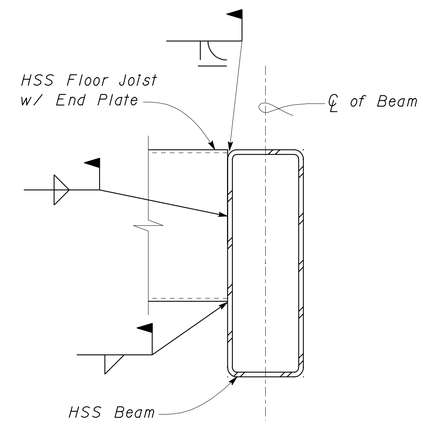

3 HSS JOIST TO BEAM
Scale 3" = 1' - 0"

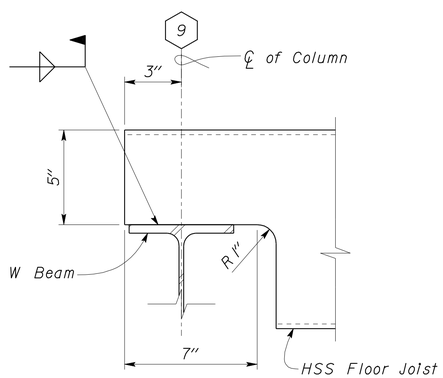

2 HSS FLOOR JOIST COPING
Scale 3" = 1' - 0"

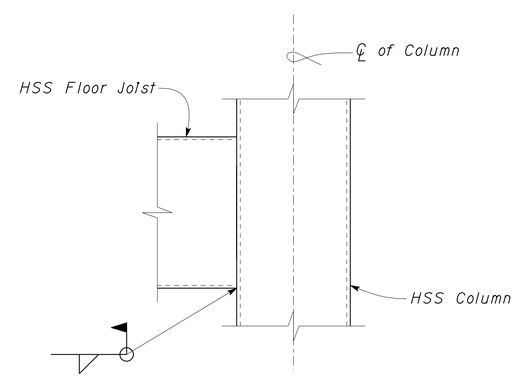

4 HSS JOIST TO COLUMN
Scale 3" = 1' - 0"

DESIGN	BY Robert du Plaine	CHECKED Brian Sutliff	
DETAILS	BY David W. Good	CHECKED Robert du Plaine	
QUANTITIES	BY	CHECKED	

STATE OF CALIFORNIA
DEPARTMENT OF TRANSPORTATION

DIVISION OF ENGINEERING SERVICES
ARCHITECTURAL AND STRUCTURAL DESIGN

BRIDGE NO. 33M5785
POST MILE 2.2

SFOBB MAINTENANCE COMPLEX

HSS FRAMING AT STAIRWELL

SHEET ST1-62

TAEMWW Imperial Rev. 7/10

ORIGINAL SCALE IN INCHES FOR REDUCED PLANS 0 1 2 3

UNIT 3599
PROJECT NUMBER & PHASE 04120006661
EA 014081

DISREGARD PRINTS BEARING EARLIER REVISION DATES → 02-01-12 05-04-12 05-08-12 05-18-12 05-28-12

REVISION DATES (PRELIMINARY STAGE ONLY) SHEET OF

D:\User\Projects\Dist_04\0400000038_sfobb_ms_complex\Expedite_20120620\Copy of st_01\st1_062.dgn

25-OCT-2012 15:57

DIST.	COUNTY	ROUTE	POST MILES TOTAL PROJECT	SHEET NO.	TOTAL SHEETS
04	Ala	80	2.2	391	800

RdP
REGISTERED CIVIL ENGINEER — DATE 05-31-12

REGISTERED PROFESSIONAL ENGINEER Robert du Plaine No. 51447 Exp. 6-30-14 CIVIL STATE OF CALIFORNIA

10-22-12
PLANS APPROVAL DATE

The State of California or its officers or agents shall not be responsible for the accuracy or completeness of scanned copies of this plan sheet.

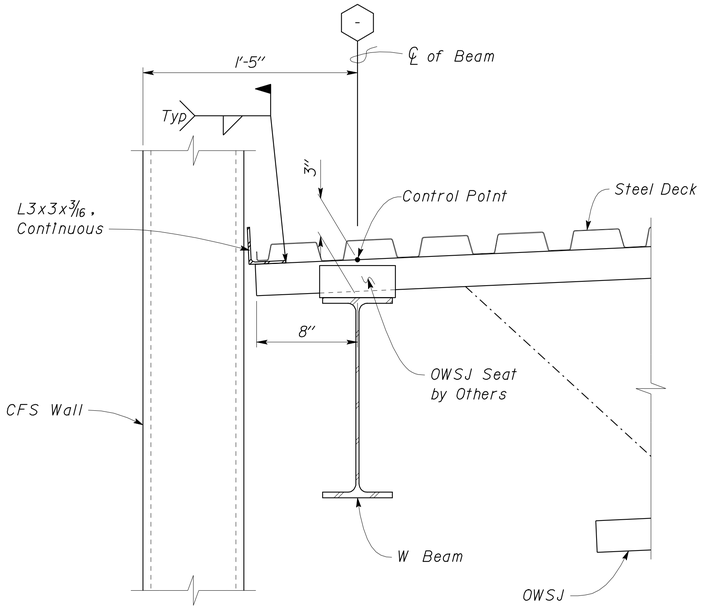

1 TRUSS TO BEAM END CONNECTION
Scale 2" = 1'-0"

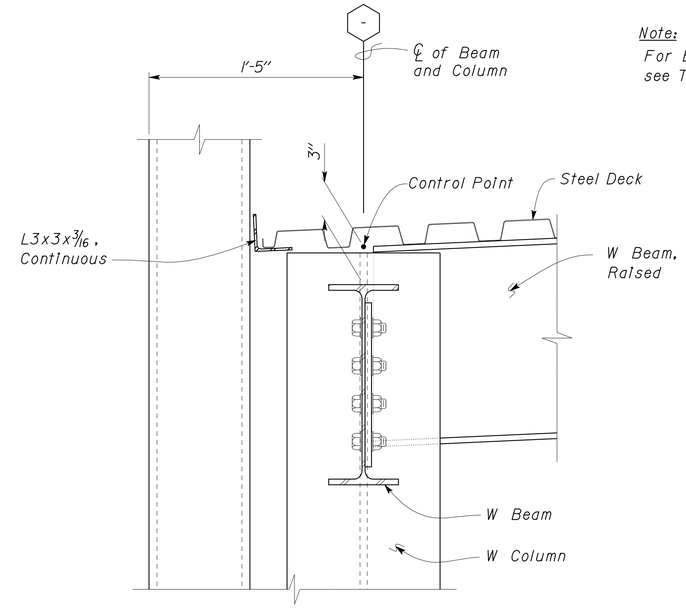

3 END BEAM TO COLUMN
Scale 2" = 1'-0"

Note:
For Beam to Column connection details, see Typical Steel Framing Details. ST1-131

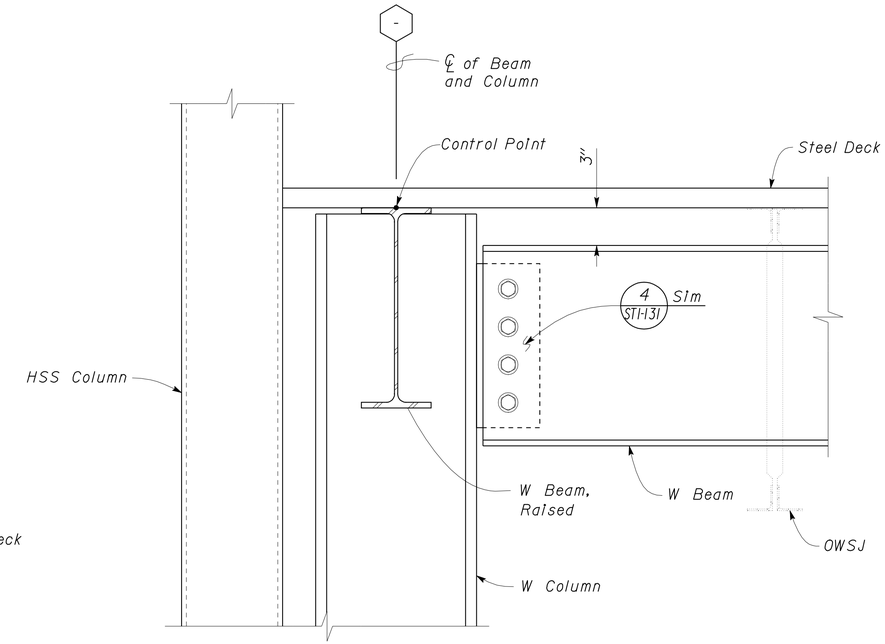

5 RAISED END ROOF BEAM
Scale 2" = 1'-0"

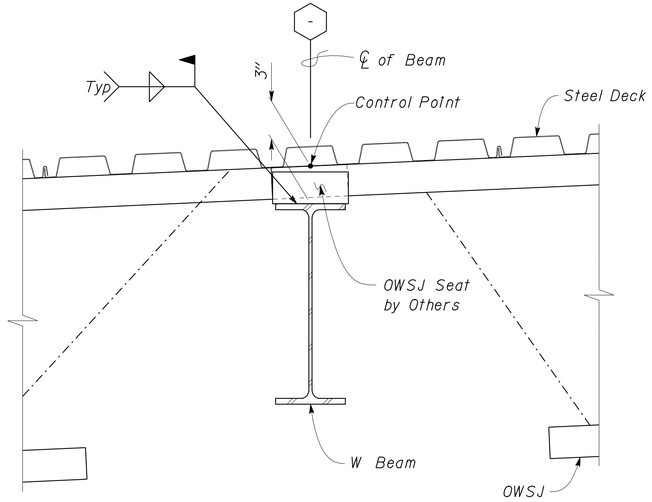

2 TRUSS TO BEAM MID CONNECTION
Scale 2" = 1'-0"

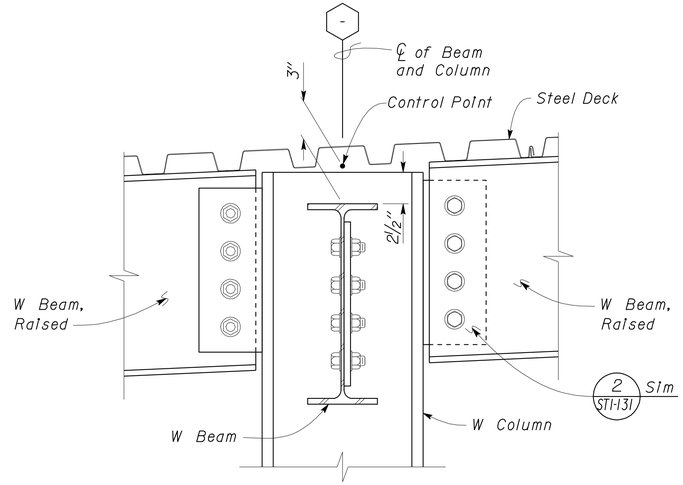

4 END BEAMS TO COLUMN
Scale 2" = 1'-0"

DESIGN	BY Robert du Plaine	CHECKED Brian Sutliff	
DETAILS	BY David W. Good	CHECKED Robert du Plaine	
QUANTITIES	BY	CHECKED	

STATE OF CALIFORNIA
DEPARTMENT OF TRANSPORTATION

DIVISION OF ENGINEERING SERVICES
ARCHITECTURAL AND STRUCTURAL DESIGN

BRIDGE NO. 33M5785
POST MILE 2.2

SFOBB MAINTENANCE COMPLEX

ROOF FRAMING DETAILS - STEEL

SHEET ST1-63

TAEMWW Imperial Rev. 7/10

ORIGINAL SCALE IN INCHES FOR REDUCED PLANS 0 1 2 3

UNIT 3599
PROJECT NUMBER & PHASE 04120006661
EA 014081

DISREGARD PRINTS BEARING EARLIER REVISION DATES → 04-09-12 04-11-12 05-08-12 05-18-12 05-29-12

REVISION DATES (PRELIMINARY STAGE ONLY) SHEET OF

D:\User\Projects\Dist_04\0400000038_sfobb_ms_complex\Expedite_20120620\Copy of st_01\st1_063.dgn

25-OCT-2012 12:59

DIST.	COUNTY	ROUTE	POST MILES TOTAL PROJECT	SHEET NO.	TOTAL SHEETS
04	Ala	80	2.2	392	800

RdP
REGISTERED CIVIL ENGINEER — DATE 05-31-12

REGISTERED PROFESSIONAL ENGINEER
Robert du Plaine
No. 51447
Exp. 6-30-14
CIVIL
STATE OF CALIFORNIA

10-22-12
PLANS APPROVAL DATE

The State of California or its officers or agents shall not be responsible for the accuracy or completeness of scanned copies of this plan sheet.

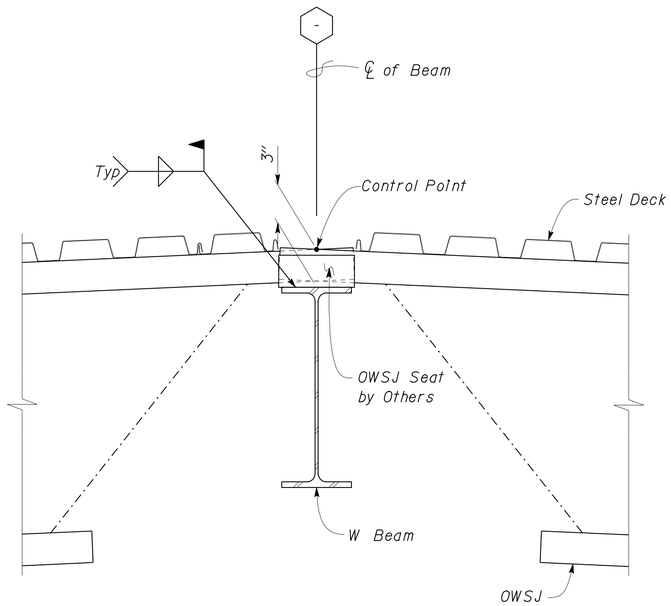

1 TRUSS TO BEAM RIDGE CONNECTION
Scale 2" = 1' - 0"

Note:
For Beam to Column connection details, see Typical Steel Framing Details, (ST1-131)

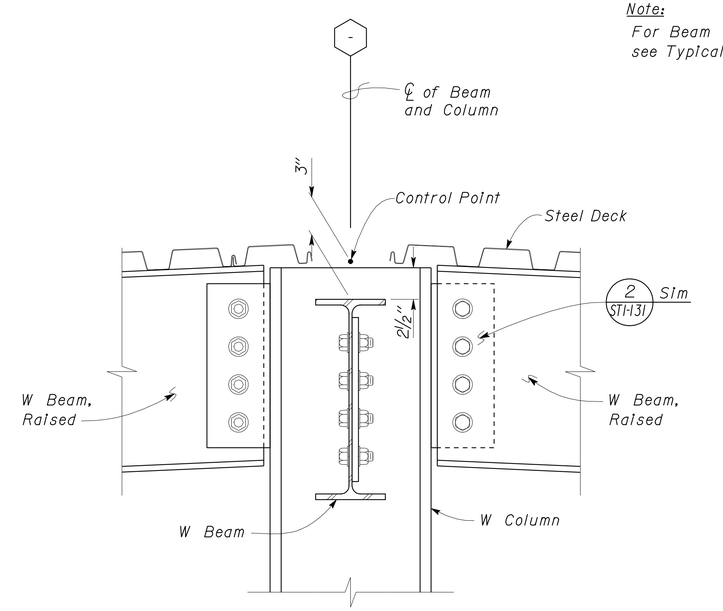

2 RIDGE END BEAMS TO COLUMN
Scale 2" = 1' - 0"

DESIGN	BY Robert du Plaine	CHECKED Brian Sutliff	
DETAILS	BY David W. Good	CHECKED Robert du Plaine	
QUANTITIES	BY	CHECKED	

STATE OF CALIFORNIA
DEPARTMENT OF TRANSPORTATION

DIVISION OF ENGINEERING SERVICES
ARCHITECTURAL AND STRUCTURAL DESIGN

BRIDGE NO. 33M5785
POST MILE 2.2

SFOBB MAINTENANCE COMPLEX
ROOF FRAMING DETAILS - STEEL

SHEET ST1-64

TAEMWW Imperial Rev. 7/10

ORIGINAL SCALE IN INCHES FOR REDUCED PLANS 0 1 2 3

UNIT 3599
PROJECT NUMBER & PHASE 04120006661
EA 014081

DISREGARD PRINTS BEARING EARLIER REVISION DATES → 04-09-12 04-12-12 05-08-12 05-18-12 05-29-12

REVISION DATES (PRELIMINARY STAGE ONLY) SHEET OF

D:\User\Projects\Dist_04\0400000038_sfobb_ms_complex\Expedite_20120620\Copy of st_01\st1_064.dgn

25-OCT-2012 12:59

DIST.	COUNTY	ROUTE	POST MILES TOTAL PROJECT	SHEET NO.	TOTAL SHEETS
04	Ala	80	2.2	393	800

RdP
REGISTERED CIVIL ENGINEER — DATE 05-31-12

REGISTERED PROFESSIONAL ENGINEER
Robert du Plaine
No. 51447
Exp. 6-30-14
CIVIL
STATE OF CALIFORNIA

10-22-12
PLANS APPROVAL DATE

The State of California or its officers or agents shall not be responsible for the accuracy or completeness of scanned copies of this plan sheet.

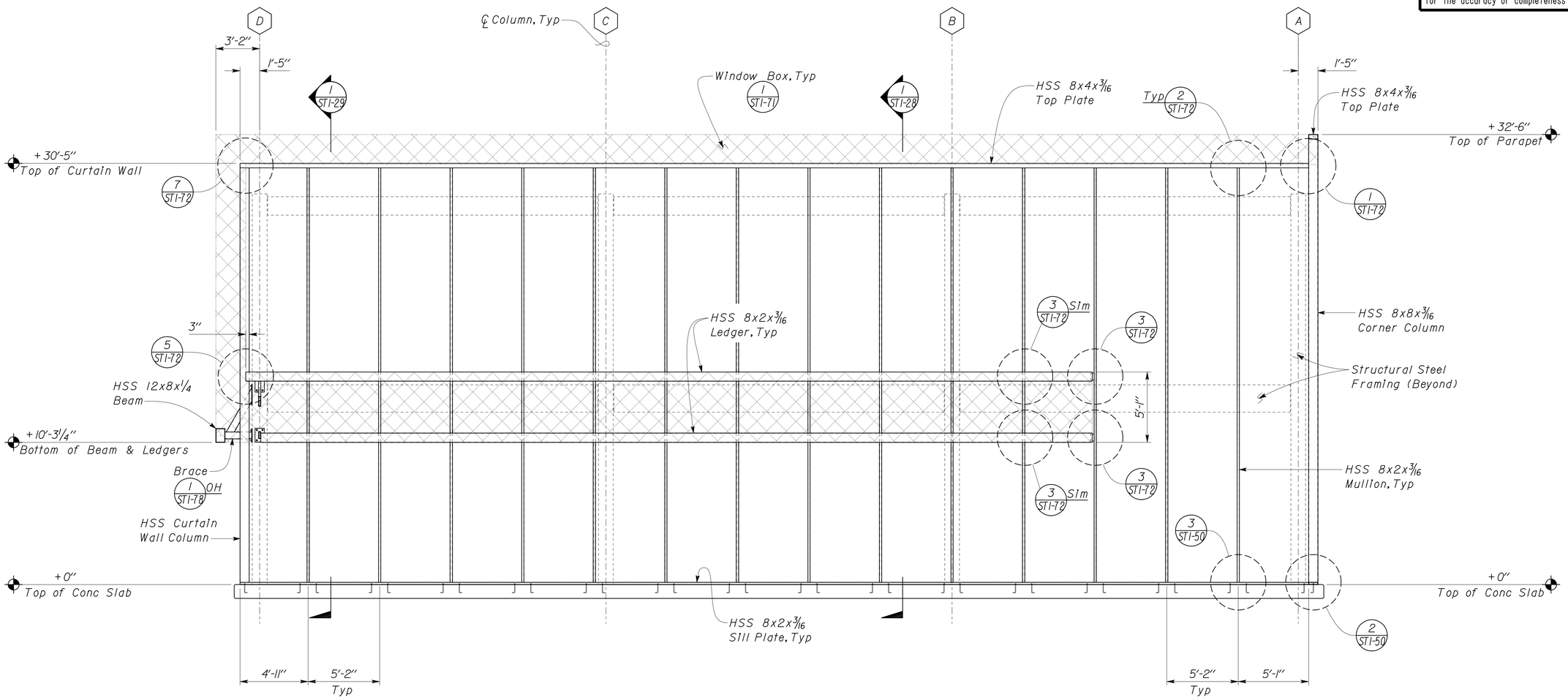

1 HSS CURTAIN WALL FRAMING ALONG GRID 2
Scale 1/4" = 1'-0"

- Indicates Window Box Locations

DESIGN	BY Robert du Plaine	CHECKED Brian Sutliff	
DETAILS	BY David W. Good	CHECKED Robert du Plaine	
QUANTITIES	BY	CHECKED	

STATE OF CALIFORNIA
DEPARTMENT OF TRANSPORTATION

DIVISION OF ENGINEERING SERVICES
ARCHITECTURAL AND STRUCTURAL DESIGN

BRIDGE NO. 33M5785
POST MILE 2.2

SFOBB MAINTENANCE COMPLEX

WALL FRAMING ELEVATION AT GRID 2

SHEET ST1-65

TAEMWW Imperial Rev. 7/10

ORIGINAL SCALE IN INCHES FOR REDUCED PLANS 0 1 2 3

UNIT 3599
PROJECT NUMBER & PHASE 04120006661
EA 014081

DISREGARD PRINTS BEARING EARLIER REVISION DATES → 04-23-12 | 04-30-12 | 05-08-12 | 05-18-12 | 05-28-12 | 06-18-12

REVISION DATES (PRELIMINARY STAGE ONLY) SHEET OF

D:\User\Projects\Dist_04\0400000038_sfobb_ms_complex\Expedite_20120620\Copy of st_01\st1_065.dgn

25-OCT-2012 12:59

DIST.	COUNTY	ROUTE	POST MILES TOTAL PROJECT	SHEET NO.	TOTAL SHEETS
04	Ala	80	2.2	394	800

RdP
REGISTERED CIVIL ENGINEER — DATE 05-31-12

REGISTERED PROFESSIONAL ENGINEER
Robert du Plaine
No. 51447
Exp. 6-30-14
CIVIL
STATE OF CALIFORNIA

10-22-12
PLANS APPROVAL DATE

The State of California or its officers or agents shall not be responsible for the accuracy or completeness of scanned copies of this plan sheet.

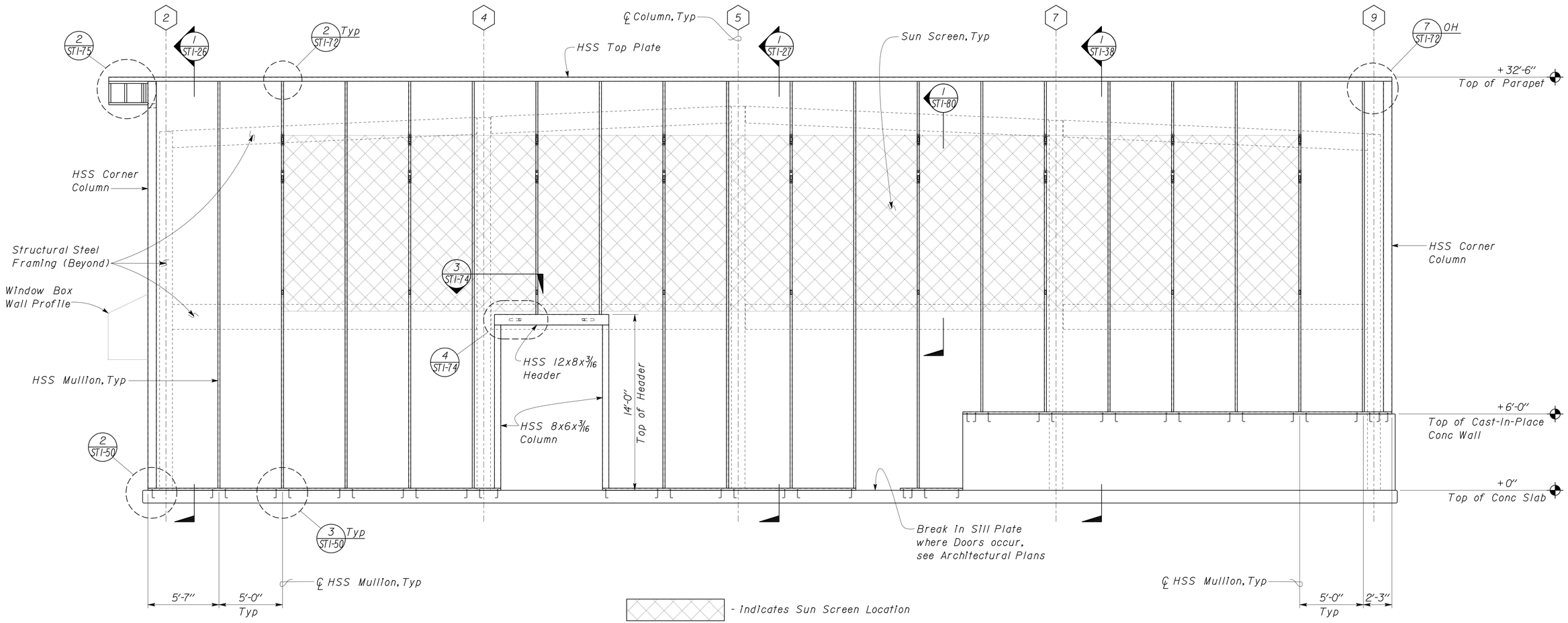

1 HSS CURTAIN WALL FRAMING ALONG GRID A
Scale 1/4" = 1'-0"

DESIGN	BY Robert du Plaine	CHECKED Brian Sutliff	
DETAILS	BY David W. Good	CHECKED Robert du Plaine	
QUANTITIES	BY	CHECKED	

STATE OF CALIFORNIA
DEPARTMENT OF TRANSPORTATION

DIVISION OF ENGINEERING SERVICES
ARCHITECTURAL AND STRUCTURAL DESIGN

BRIDGE NO. 33M5785
POST MILE 2.2

SFOBB MAINTENANCE COMPLEX

WALL FRAMING ELEVATION AT GRID A

SHEET ST1-66

TAEMWW Imperial Rev. 7/10

ORIGINAL SCALE IN INCHES FOR REDUCED PLANS 0 1 2 3

UNIT 3599
PROJECT NUMBER & PHASE 04120006661
EA 014081

DISREGARD PRINTS BEARING EARLIER REVISION DATES → 04-23-12 04-30-12 05-08-12 05-18-12 05-28-12

REVISION DATES (PRELIMINARY STAGE ONLY) SHEET OF

D:\User\Projects\Dist_04\0400000038_sfobb_ms_complex\Expedite_20120620\Copy of st_01\st1_066.dgn

25-OCT-2012 12:59

DIST.	COUNTY	ROUTE	POST MILES TOTAL PROJECT	SHEET NO.	TOTAL SHEETS
04	Ala	80	2.2	395	800

RdP
REGISTERED CIVIL ENGINEER — DATE 05-31-12

REGISTERED PROFESSIONAL ENGINEER
Robert du Plaine
No. 51447
Exp. 6-30-14
CIVIL
STATE OF CALIFORNIA

10-22-12
PLANS APPROVAL DATE

The State of California or its officers or agents shall not be responsible for the accuracy or completeness of scanned copies of this plan sheet.

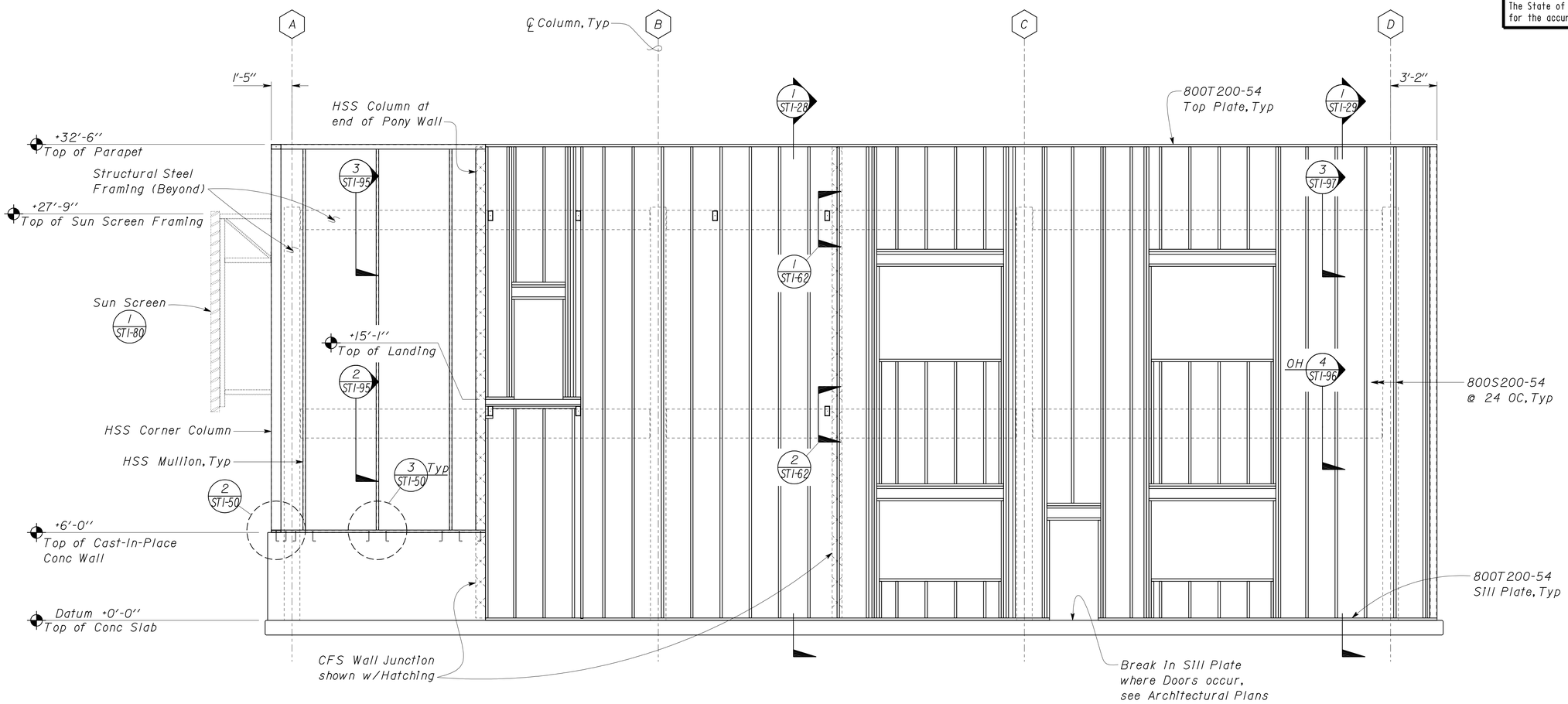

1 HSS CURTAIN WALL FRAMING ALONG GRID 9
Scale 1/4" = 1'-0"

DESIGN	BY Robert du Plaine	CHECKED Brian Sutliff	
DETAILS	BY David W. Good	CHECKED Robert du Plaine	
QUANTITIES	BY	CHECKED	

STATE OF CALIFORNIA
DEPARTMENT OF TRANSPORTATION

DIVISION OF ENGINEERING SERVICES
ARCHITECTURAL AND STRUCTURAL DESIGN

BRIDGE NO. 33M5785
POST MILE 2.2

SFOBB MAINTENANCE COMPLEX

WALL FRAMING ELEVATION AT GRID 9

SHEET ST1-67

TAEMWW Imperial Rev. 7/10

ORIGINAL SCALE IN INCHES FOR REDUCED PLANS 0 1 2 3

UNIT 3599
PROJECT NUMBER & PHASE 04120006661
EA 014081

DISREGARD PRINTS BEARING EARLIER REVISION DATES → 04-23-12 04-30-12 05-08-12 05-18-12 05-29-12 06-15-12

REVISION DATES (PRELIMINARY STAGE ONLY) SHEET OF

D:\User\Projects\Dist_04\0400000038_sfobb_ms_complex\Expedite_20120620\Copy of st_01\st1_067.dgn

25-OCT-2012 12:59

DIST.	COUNTY	ROUTE	POST MILES TOTAL PROJECT	SHEET NO.	TOTAL SHEETS
04	Ala	80	2.2	396	800

RdP
REGISTERED CIVIL ENGINEER — DATE 05-31-12

REGISTERED PROFESSIONAL ENGINEER Robert du Plaine No. 51447 Exp. 6-30-14 CIVIL STATE OF CALIFORNIA

10-22-12
PLANS APPROVAL DATE

The State of California or its officers or agents shall not be responsible for the accuracy or completeness of scanned copies of this plan sheet.

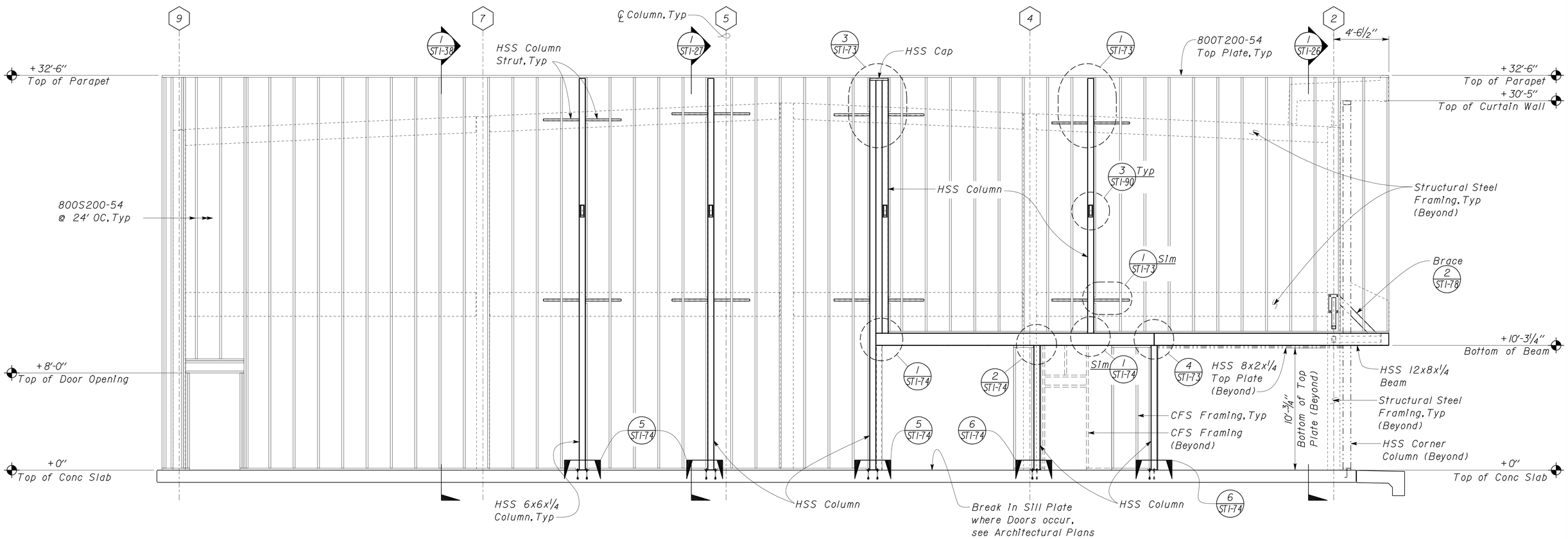

1 WALL FRAMING ALONG GRID D
Scale ¼" = 1'-0"

DESIGN	BY Robert du Plaine	CHECKED Brian Sutliff	
DETAILS	BY David W. Good	CHECKED Robert du Plaine	
QUANTITIES	BY	CHECKED	

STATE OF CALIFORNIA
DEPARTMENT OF TRANSPORTATION

DIVISION OF ENGINEERING SERVICES
ARCHITECTURAL AND STRUCTURAL DESIGN

BRIDGE NO. 33M5785
POST MILE 2.2

SFOBB MAINTENANCE COMPLEX

WALL FRAMING ELEVATION AT GRID D

SHEET ST1-68

TAEMWW Imperial Rev. 7/10

ORIGINAL SCALE IN INCHES FOR REDUCED PLANS 0 1 2 3

UNIT 3599
PROJECT NUMBER & PHASE 04120006661
EA 014081

DISREGARD PRINTS BEARING EARLIER REVISION DATES → 04-23-12 04-30-12 05-08-12 05-18-12 05-28-12 06-18-12

REVISION DATES (PRELIMINARY STAGE ONLY) SHEET OF

D:\User\Projects\Dist_04\0400000038_sfobb_ms_complex\Expedite_20120620\Copy of st_01\st1_068.dgn

25-OCT-2012 12:59

DIST.	COUNTY	ROUTE	POST MILES TOTAL PROJECT	SHEET NO.	TOTAL SHEETS
04	Ala	80	2.2	397	800

RdP
REGISTERED CIVIL ENGINEER — DATE 05-31-12

REGISTERED PROFESSIONAL ENGINEER
Robert du Plaine
No. 51447
Exp. 6-30-14
CIVIL
STATE OF CALIFORNIA

10-22-12
PLANS APPROVAL DATE

The State of California or its officers or agents shall not be responsible for the accuracy or completeness of scanned copies of this plan sheet.

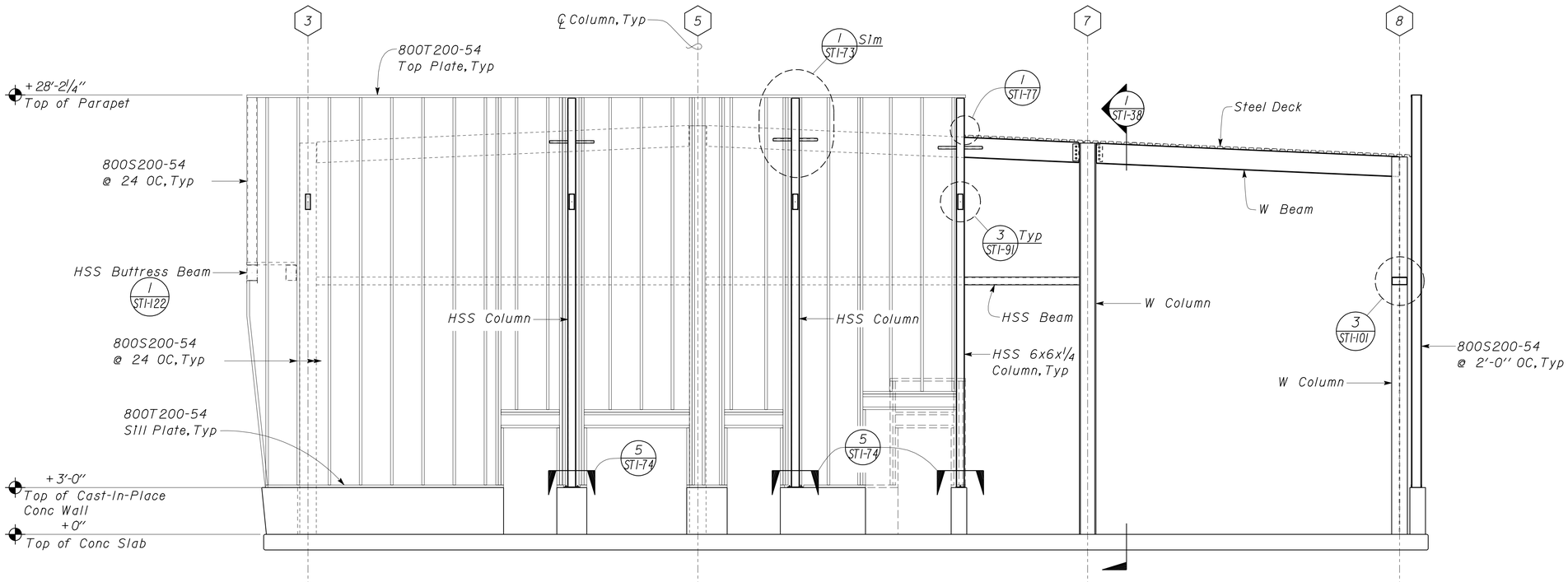

1 WALL FRAMING ALONG GRID E
Scale ¼" = 1'-0"

DESIGN	BY Robert du Plaine	CHECKED Brian Sutliff	
DETAILS	BY David W. Good	CHECKED Robert du Plaine	
QUANTITIES	BY	CHECKED	

STATE OF CALIFORNIA
DEPARTMENT OF TRANSPORTATION

DIVISION OF ENGINEERING SERVICES
ARCHITECTURAL AND STRUCTURAL DESIGN

BRIDGE NO. 33M5785
POST MILE 2.2

SFOBB MAINTENANCE COMPLEX

WALL FRAMING ELEVATION AT GRID E

SHEET **ST1-69**

TAEMWW Imperial Rev. 7/10

ORIGINAL SCALE IN INCHES FOR REDUCED PLANS 0 1 2 3

UNIT 3599
PROJECT NUMBER & PHASE 04120006661
EA 014081

DISREGARD PRINTS BEARING EARLIER REVISION DATES → REVISION DATES (PRELIMINARY STAGE ONLY) 04-25-12 04-30-12 05-08-12 05-18-12 05-29-12 SHEET OF

D:\User\Projects\Dist_04\0400000038_sfobb_ms_complex\Expedite_20120620\Copy of st_01\st1_069.dgn

25-OCT-2012 13:00

DIST.	COUNTY	ROUTE	POST MILES TOTAL PROJECT	SHEET NO.	TOTAL SHEETS
04	Ala	80	2.2	398	800

RdP
REGISTERED CIVIL ENGINEER — DATE 05-31-12

REGISTERED PROFESSIONAL ENGINEER
Robert du Plaine
No. 51447
Exp. 6-30-14
CIVIL
STATE OF CALIFORNIA

10-22-12
PLANS APPROVAL DATE

The State of California or its officers or agents shall not be responsible for the accuracy or completeness of scanned copies of this plan sheet.

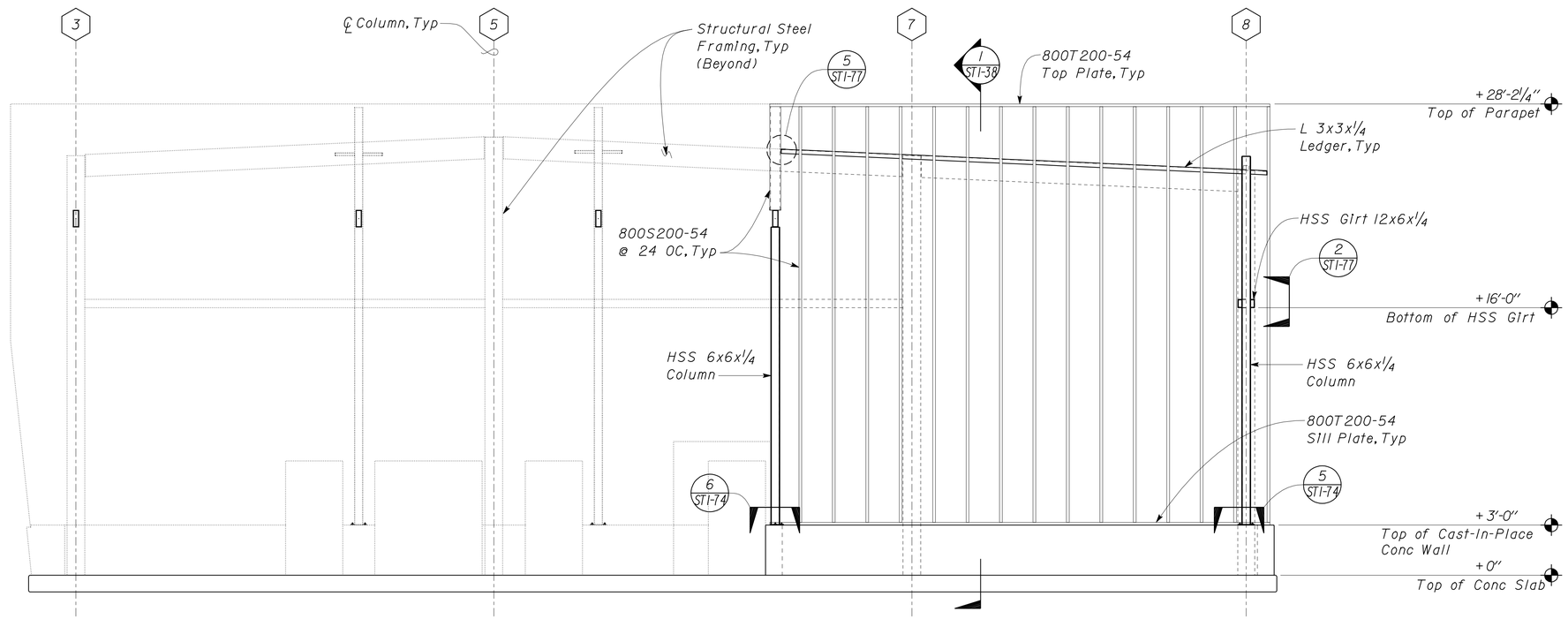

1 WALL FRAMING BUMP OUT ALONG GRID E
Scale ¼" = 1'-0"

DESIGN	BY Robert du Plaine	CHECKED Brian Sutliff	
DETAILS	BY David W. Good	CHECKED Robert du Plaine	
QUANTITIES	BY	CHECKED	

STATE OF CALIFORNIA
DEPARTMENT OF TRANSPORTATION

DIVISION OF ENGINEERING SERVICES
ARCHITECTURAL AND STRUCTURAL DESIGN

BRIDGE NO. 33M5785
POST MILE 2.2

SFOBB MAINTENANCE COMPLEX

WALL FRAMING ELEVATION AT GRID E

SHEET ST1-70

TAEMWW Imperial Rev. 7/10

ORIGINAL SCALE IN INCHES FOR REDUCED PLANS 0 1 2 3

UNIT 3599
PROJECT NUMBER & PHASE 04120006661
EA 014081

DISREGARD PRINTS BEARING EARLIER REVISION DATES → 04-25-12 05-01-12 05-08-12 05-18-12 05-29-12

REVISION DATES (PRELIMINARY STAGE ONLY) SHEET OF

D:\User\Projects\Dist_04\0400000038_sfobb_ms_complex\Expedite_20120620\Copy of st_01\st1_070.dgn

25-OCT-2012 13:00

DIST.	COUNTY	ROUTE	POST MILES TOTAL PROJECT	SHEET NO.	TOTAL SHEETS
04	Ala	80	2.2	399	800

RdP
REGISTERED CIVIL ENGINEER — DATE 05-31-12

REGISTERED PROFESSIONAL ENGINEER — Robert du Plaine — No. 51447 — Exp. 6-30-14 — CIVIL — STATE OF CALIFORNIA

10-22-12
PLANS APPROVAL DATE

The State of California or its officers or agents shall not be responsible for the accuracy or completeness of scanned copies of this plan sheet.

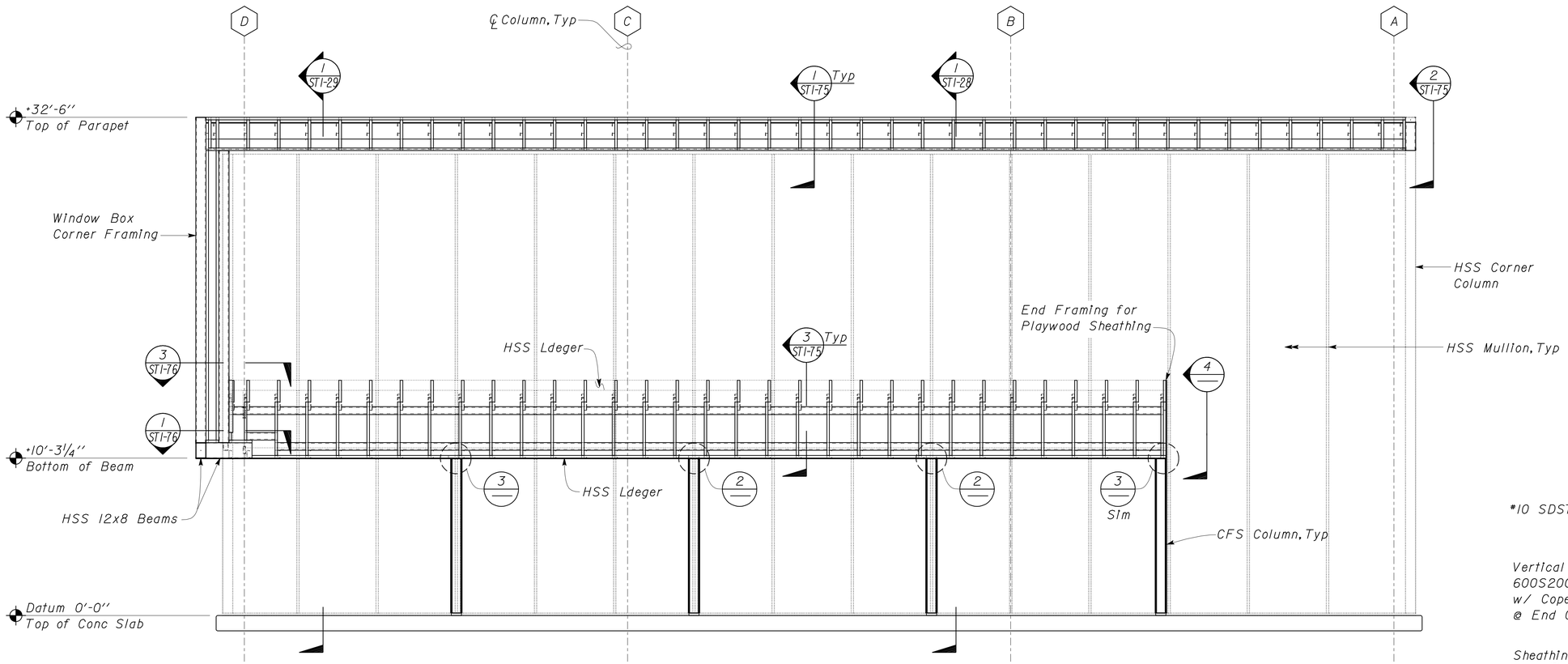

1 WINDOW BOX FRAMING ELEVATION
Scale ¼" = 1'-0"

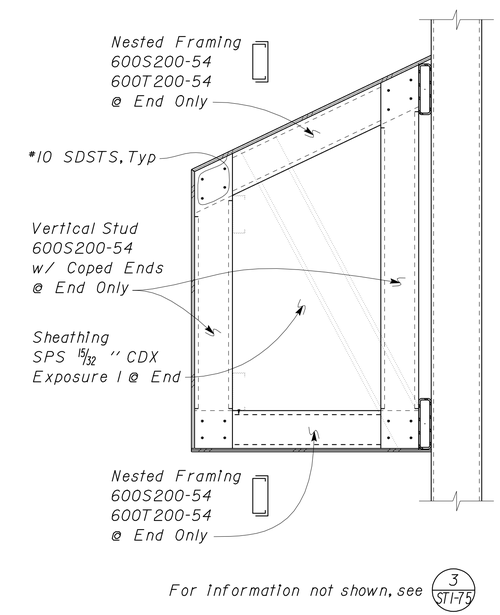

4 END FRAMING
Scale 1" = 1'-0"

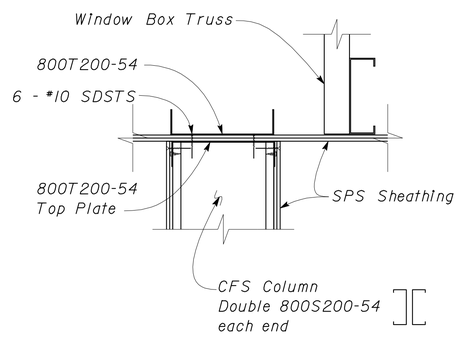

2 COLUMN TO WINDOW BOX
Scale 2" = 1'-0"

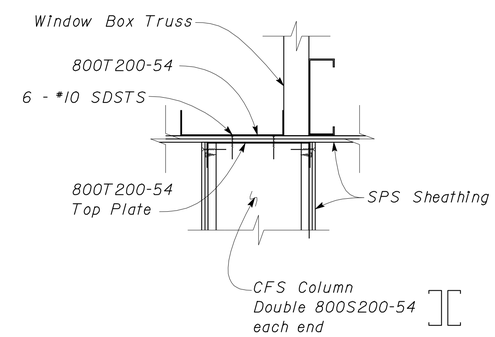

3 ALTERNATIVE ASSEMBLY
Scale 2" = 1'-0"

DESIGN	BY Robert du Plaine	CHECKED Brian Sutliff	
DETAILS	BY David W. Good	CHECKED Robert du Plaine	
QUANTITIES	BY	CHECKED	

STATE OF CALIFORNIA
DEPARTMENT OF TRANSPORTATION

DIVISION OF ENGINEERING SERVICES
ARCHITECTURAL AND STRUCTURAL DESIGN

BRIDGE NO. 33M5785
POST MILE 2.2

SFOBB MAINTENANCE COMPLEX
WINDOW BOX FRAMING ELEVATION

SHEET ST1-71

TAEMWW Imperial Rev. 7/10

ORIGINAL SCALE IN INCHES FOR REDUCED PLANS 0 1 2 3

UNIT 3599
PROJECT NUMBER & PHASE 04120006661
EA 014081

DISREGARD PRINTS BEARING EARLIER REVISION DATES → 04-22-12 05-01-12 05-08-12 05-23-12 06-18-12
REVISION DATES (PRELIMINARY STAGE ONLY) SHEET OF

D:\User\Projects\Dist_04\0400000038_sfobb_ms_complex\Expedite_20120620\Copy of st_01\st1_071.dgn

25-OCT-2012 13:00

DIST.	COUNTY	ROUTE	POST MILES TOTAL PROJECT	SHEET NO.	TOTAL SHEETS
04	Ala	80	2.2	400	800

RdP
REGISTERED CIVIL ENGINEER — DATE 05-31-12

REGISTERED PROFESSIONAL ENGINEER Robert du Plaine No. 51447 Exp. 6-30-14 CIVIL STATE OF CALIFORNIA

10-22-12
PLANS APPROVAL DATE

The State of California or its officers or agents shall not be responsible for the accuracy or completeness of scanned copies of this plan sheet.

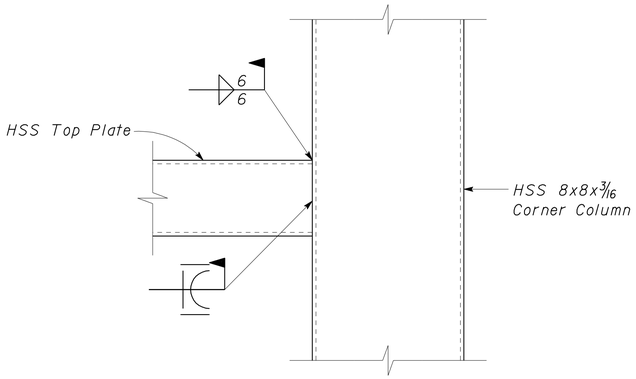

1 TOP PLATE TO COLUMN CONNECTION DETAIL
Scale 3" = 1'-0"

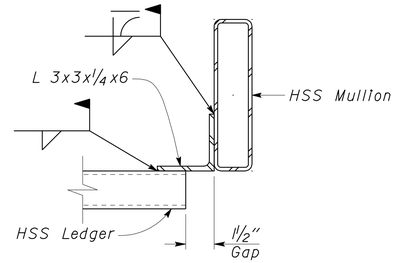

4 LEDGER TO MULLION CONNECTION DETAIL
Scale 3" = 1'-0"

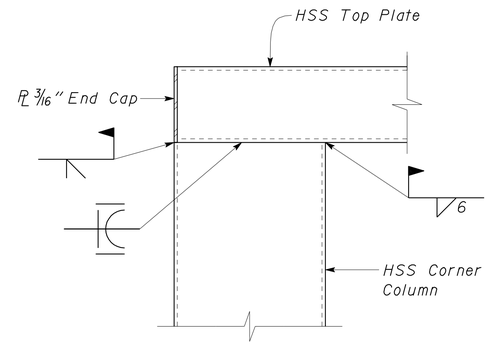

7 COLUMN TO TOP PLATE CONNECTION DETAIL
Scale 3" = 1'-0"

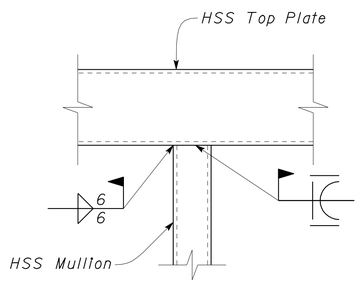

2 MULLION TO TOP PLATE CONNECTION DETAIL
Scale 3" = 1'-0"

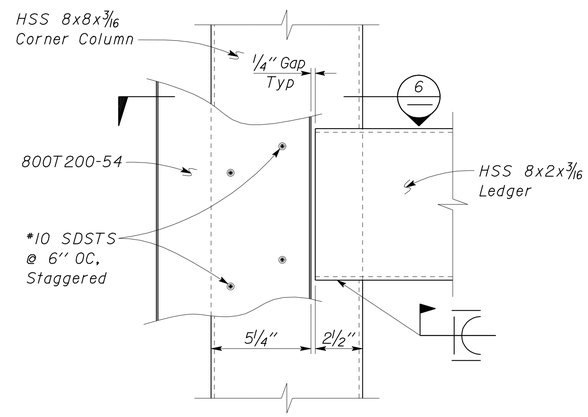

5 LEDGER TO COLUMN CONNECTION DETAIL
Scale 3" = 1'-0"

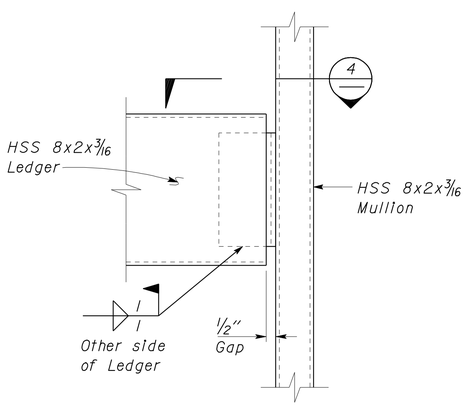

3 LEDGER TO MULLION CONNECTION DETAIL
Scale 3" = 1'-0"

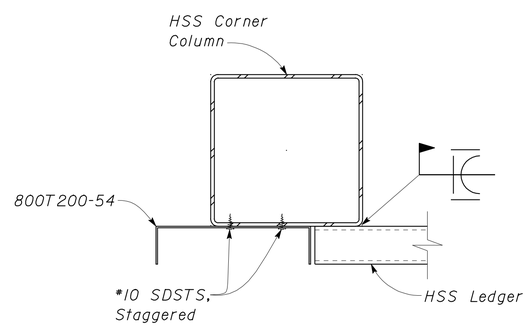

6 LEDGER TO COLUMN CONNECTION DETAIL
Scale 3" = 1'-0"

DESIGN	BY Robert du Plaine	CHECKED Brian Sutliff	
DETAILS	BY David W. Good	CHECKED Robert du Plaine	
QUANTITIES	BY	CHECKED	

STATE OF CALIFORNIA
DEPARTMENT OF TRANSPORTATION

DIVISION OF ENGINEERING SERVICES
ARCHITECTURAL AND STRUCTURAL DESIGN

BRIDGE NO. 33M5785
POST MILE 2.2

SFOBB MAINTENANCE COMPLEX

HSS WALL FRAMING DETAILS

SHEET ST1-72

TAEMWW Imperial Rev. 7/10

ORIGINAL SCALE IN INCHES FOR REDUCED PLANS 0 1 2 3

UNIT 3599
PROJECT NUMBER & PHASE 04120006661
EA 014081

DISREGARD PRINTS BEARING EARLIER REVISION DATES → 04-28-12 05-01-12 05-08-12 05-18-12 06-18-12

REVISION DATES (PRELIMINARY STAGE ONLY) SHEET OF

D:\User\Projects\Dist_04\0400000038_sfobb_ms_complex\Expedite_20120620\Copy of st_01\st1_072.dgn

25-OCT-2012 13:00