Dist	COUNTY	ROUTE	POST MILES TOTAL PROJECT	SHEET No.	TOTAL SHEETS
04	Ala	80	2.2	1	800

STATE OF CALIFORNIA

DEPARTMENT OF TRANSPORTATION

PROJECT PLANS FOR BUILDING CONSTRUCTION ADJACENT TO

STATE HIGHWAY

IN ALAMEDA COUNTY AT THE SAN FRANCISCO-OAKLAND BAY BRIDGE MAINTENANCE YARD

TO BE SUPPLEMENTED BY STANDARD PLANS DATED MAY 2006

INDEX OF PLANS

SHEET No.	DESCRIPTION
1	TITLE AND LOCATION MAP
2-5	TYPICAL CROSS SECTIONS
6-7	LAYOUTS
8-29	CONSTRUCTION DETAILS
30-38	DRAINAGE PLANS, PROFILES, DETAILS AND QUANTITIES
39-41	UTILITY PLANS AND QUANTITIES
42	CONSTRUCTION AREA SIGNS
43-45	STAGE CONSTRUCTION AND TRAFFIC HANDLING PLANS
46-48	~~TRAFFIC HANDLING PLANS AND QUANTITIES~~ PAVEMENT DELINEATION PLANS AND QUANTITIES 3
49-52	SIGN PLANS, DETAILS AND QUANTITIES
53-54	SUMMARY OF QUANTITIES
55-67	HIGHWAY PLANTING
68-72	ELECTRICAL PLANS
73-100	REVISED AND NEW STANDARD PLANS

BUILDING PLANS

101	GENERAL PLAN
102-324	ARCHITECTURAL PLANS
325-522	STRUCTURAL PLANS
523-610	MECHANICAL PLANS
611-792	ELECTRICAL PLANS
793-800	SANITARY PLANS

THE STANDARD PLANS LIST APPLICABLE TO THIS CONTRACT IS INCLUDED IN THE NOTICE TO BIDDERS AND SPECIAL PROVISIONS BOOK.

LOCATION MAP

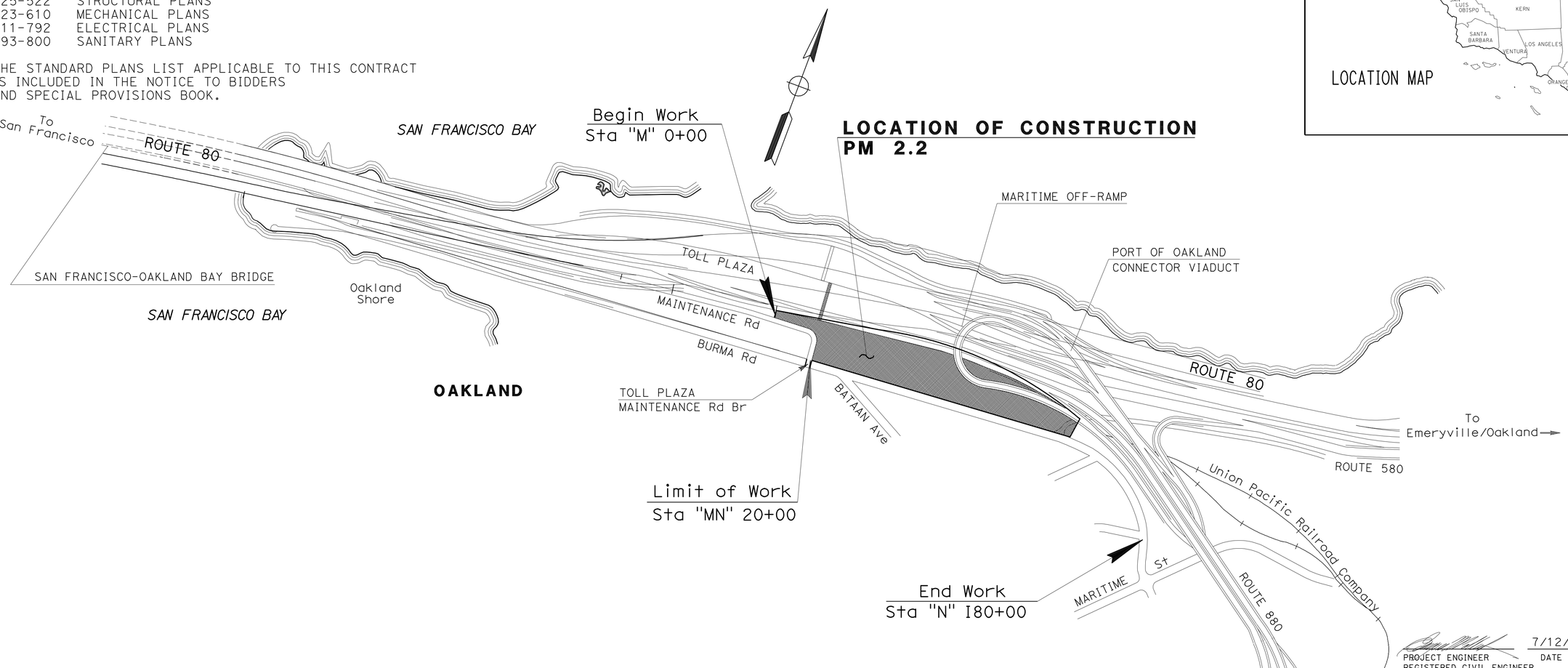

PROJECT ENGINEER
REGISTERED CIVIL ENGINEER

7/12/12
DATE

REGISTERED PROFESSIONAL ENGINEER
Eugene P. Wollak
No. 38955
Exp. 3-31-13
CIVIL
STATE OF CALIFORNIA

October 22, 2012
PLANS APPROVAL DATE

THE STATE OF CALIFORNIA OR ITS OFFICERS OR AGENTS SHALL NOT BE RESPONSIBLE FOR THE ACCURACY OR COMPLETENESS OF SCANNED COPIES OF THIS PLAN SHEET.

3 **REVISED PER ADDENDUM No. 3 DATED JANUARY 4, 2013**

NO SCALE

THE CONTRACTOR SHALL POSSESS THE CLASS (OR CLASSES) OF LICENSE AS SPECIFIED IN THE "NOTICE TO BIDDERS."

PROJECT MANAGER: NIDAL TUQAN

DESIGN ENGINEER: ARLISSA PANG

CONTRACT No.	04-014084
PROJECT ID	0412000666

LAST REVISION 07-12-12

DATE PLOTTED => 03-JAN-2013
TIME PLOTTED => 10:18

Dist	COUNTY	ROUTE	POST MILES TOTAL PROJECT	SHEET No.	TOTAL SHEETS
04	Ala	80	2.2	2	800

REGISTERED CIVIL ENGINEER 7/12/12 DATE

10-22-12
PLANS APPROVAL DATE

REGISTERED PROFESSIONAL ENGINEER Eugene P. Wollak No. 38955 Exp. 3-31-13 CIVIL STATE OF CALIFORNIA

THE STATE OF CALIFORNIA OR ITS OFFICERS OR AGENTS SHALL NOT BE RESPONSIBLE FOR THE ACCURACY OR COMPLETENESS OF SCANNED COPIES OF THIS PLAN SHEET.

NOTES:

1. DIMENSIONS OF THE (PAVEMENT STRUCTURES) STRUCTURAL SECTIONS ARE SUBJECT TO TOLERANCES SPECIFIED IN THE STANDARD SPECIFICATIONS.
2. SEE BUILDING PLANS FOR BUILDING FOUNDATION AND OTHER DETAILS.

ABBREVIATION:

EBMUD	EAST BAY MUNICIPAL UTILITY DISTRICT
GPI (PF)	GEOSYNTHETIC PAVEMENT INTERLAYER (PAVING FABRIC)

TYPICAL PAVEMENT STRUCTURE SECTIONS:

1	0.2′ HMA (TYPE A) GPI (PF) 0.2′ HMA (TYPE A)
2	1.0′ HMA (TYPE A) 0.5′ Cl 3 AB
3	0.5′ MINOR CONCRETE(Misc CONSTRUCTION) 0.65′ Cl 3 AB
5	REMOVE BASE AND SURFACING 3′ IMPORTED TOPSOIL
3 6	0.65′ Cl 3 AB (Min) UNDER BUILDING WALKWAY & APRONS (SEE NOTE 2)

LEGEND:

EXISTING RAILROAD BALLAST

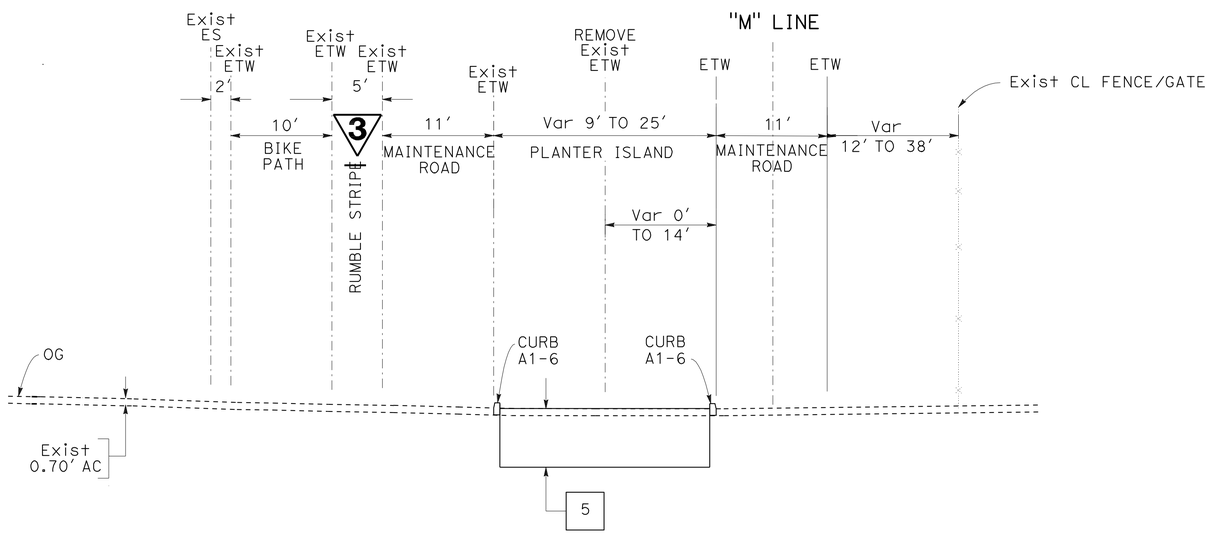

"M" 01+76 TO "M" 03+91

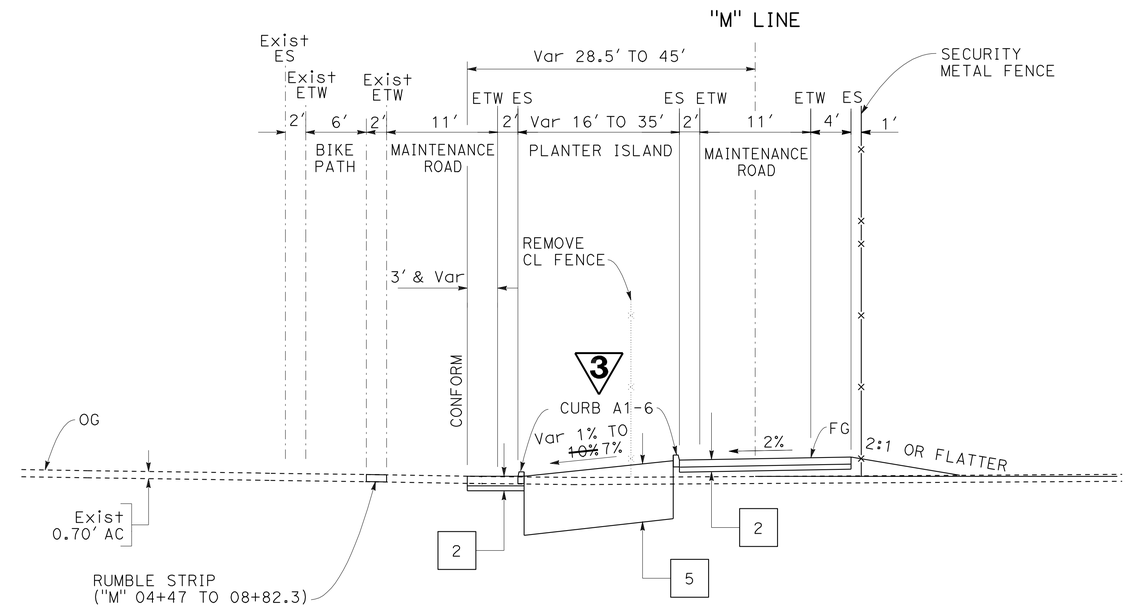

"M" 04+40 TO "M" 08+93

3 REVISED PER ADDENDUM No. 3 DATED JANUARY 4, 2013

TYPICAL CROSS SECTIONS

NO SCALE

X-1

STATE OF CALIFORNIA - DEPARTMENT OF TRANSPORTATION
Caltrans
DESIGN

FUNCTIONAL SUPERVISOR: ARLISSA PANG
CALCULATED-DESIGNED BY: EUGENE P.WOLLAK
CHECKED BY
REVISED BY
DATE REVISED
TRUYEN TRAN

LAST REVISION 07-12-12
DATE PLOTTED => 03-JAN-2013
TIME PLOTTED => 10:18

Dist	COUNTY	ROUTE	POST MILES TOTAL PROJECT	SHEET No.	TOTAL SHEETS
04	Ala	80	2.2	3	800

REGISTERED CIVIL ENGINEER 7/12/12 DATE

10-22-12
PLANS APPROVAL DATE

REGISTERED PROFESSIONAL ENGINEER Eugene P. Wollak No. 38955 Exp. 3-31-13 CIVIL STATE OF CALIFORNIA

THE STATE OF CALIFORNIA OR ITS OFFICERS OR AGENTS SHALL NOT BE RESPONSIBLE FOR THE ACCURACY OR COMPLETENESS OF SCANNED COPIES OF THIS PLAN SHEET.

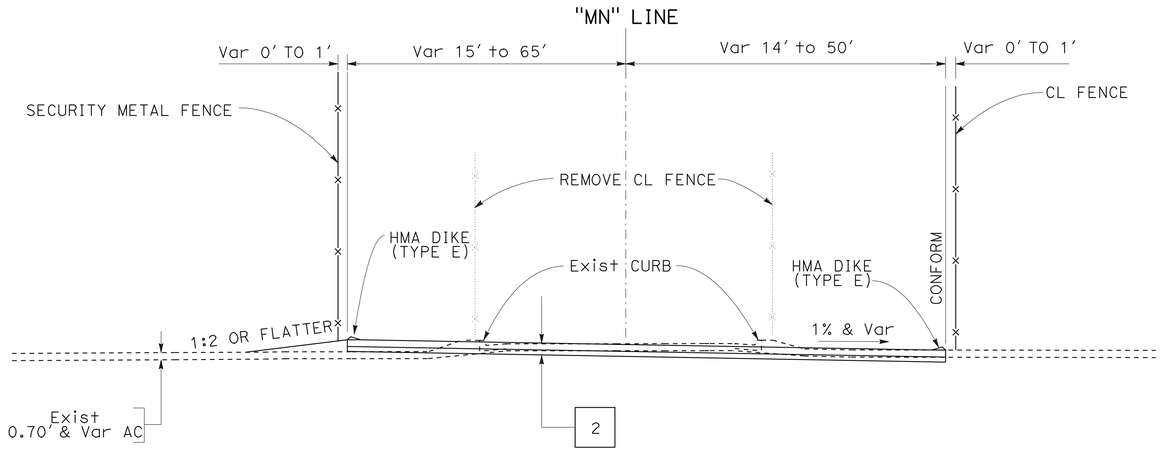

"MN" 00+00 TO "MN" 00+57

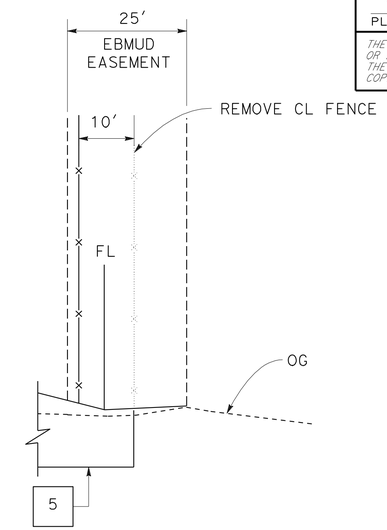

"N" 15+00 TO "N" 15+40

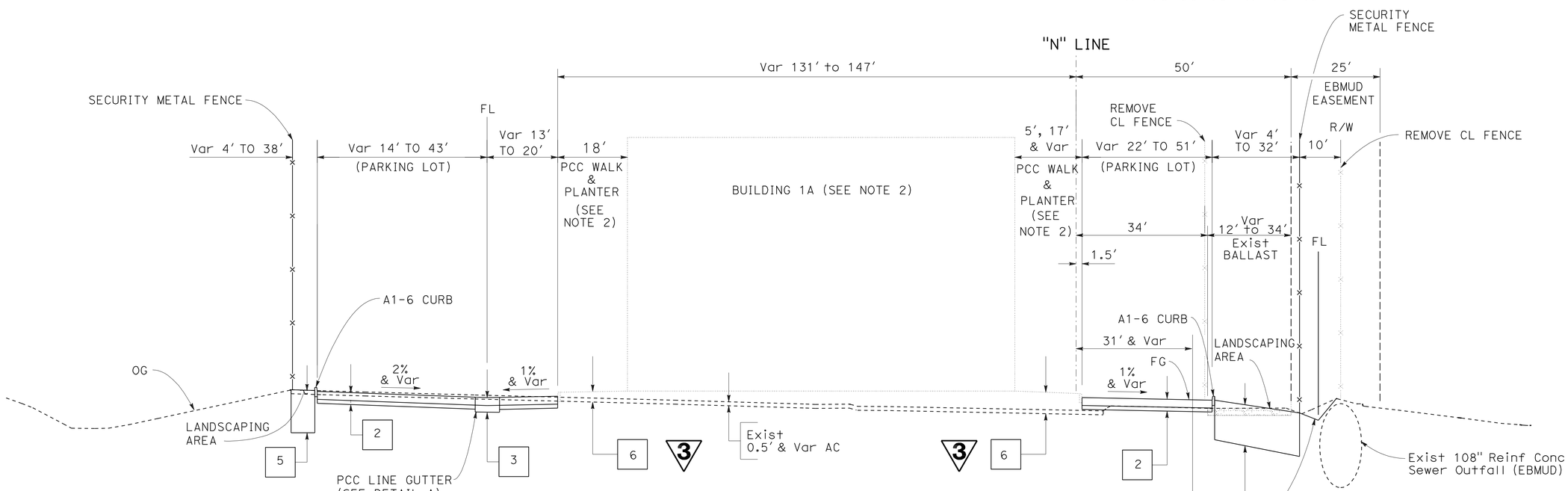

"N" 14+82 TO "N" 15+62

TYPICAL CROSS SECTIONS

NO SCALE

3 **REVISED PER ADDENDUM No. 3 DATED JANUARY 4, 2013**

FOR NOTES, ABBREVIATIONS AND LEGEND, SEE SHEET X-1

X-2

REVISED BY	DATE REVISED
A	A

TRUYEN TRAN — EUGENE P. WOLLAK

CALCULATED-DESIGNED BY — CHECKED BY

FUNCTIONAL SUPERVISOR — ARLISSA PANG

STATE OF CALIFORNIA - DEPARTMENT OF TRANSPORTATION — DESIGN

Caltrans

LAST REVISION 07-12-12 — DATE PLOTTED => 03-JAN-2013 — TIME PLOTTED => 10:18

BORDER LAST REVISED 7/2/2010 — USERNAME => s121614 — DGN FILE => 0400000038ca002.dgn — RELATIVE BORDER SCALE IS IN INCHES 0 1 2 3 — UNIT 0702 — PROJECT NUMBER & PHASE 04120006661

Dist	COUNTY	ROUTE	POST MILES TOTAL PROJECT	SHEET No.	TOTAL SHEETS
04	Ala	80	2.2	4	800

REGISTERED CIVIL ENGINEER 7/12/12 DATE

10-22-12
PLANS APPROVAL DATE

REGISTERED PROFESSIONAL ENGINEER Eugene P. Wollak No. 38955 Exp. 3-31-13 CIVIL STATE OF CALIFORNIA

THE STATE OF CALIFORNIA OR ITS OFFICERS OR AGENTS SHALL NOT BE RESPONSIBLE FOR THE ACCURACY OR COMPLETENESS OF SCANNED COPIES OF THIS PLAN SHEET.

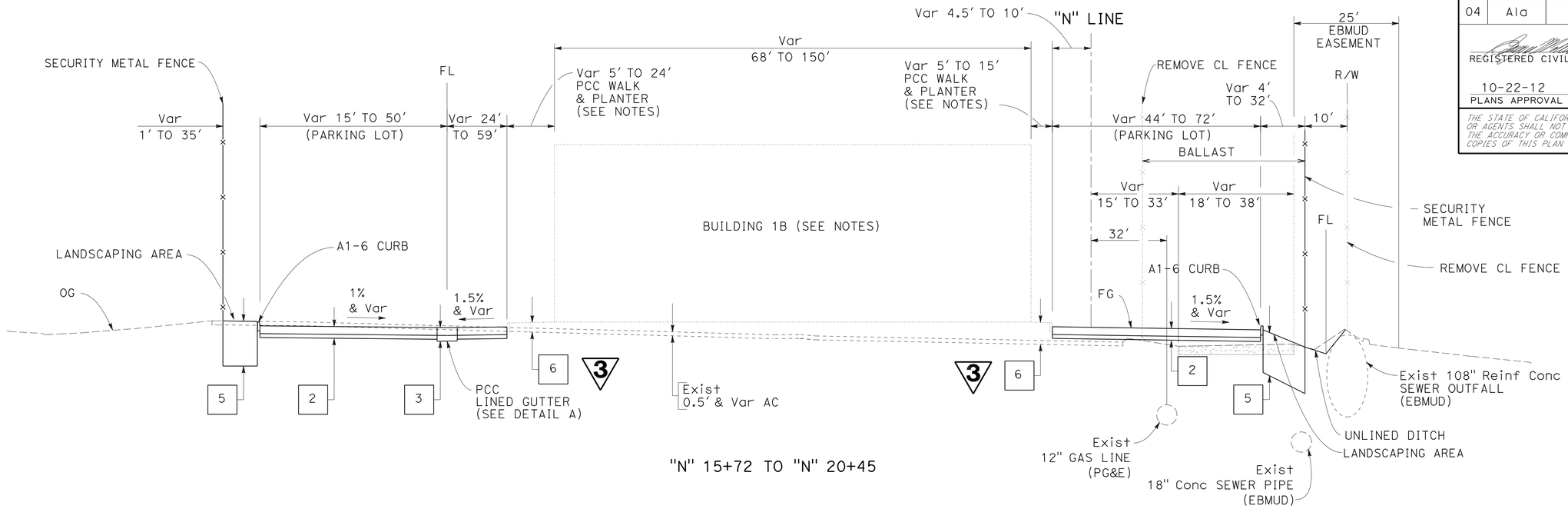

"N" 15+72 TO "N" 20+45

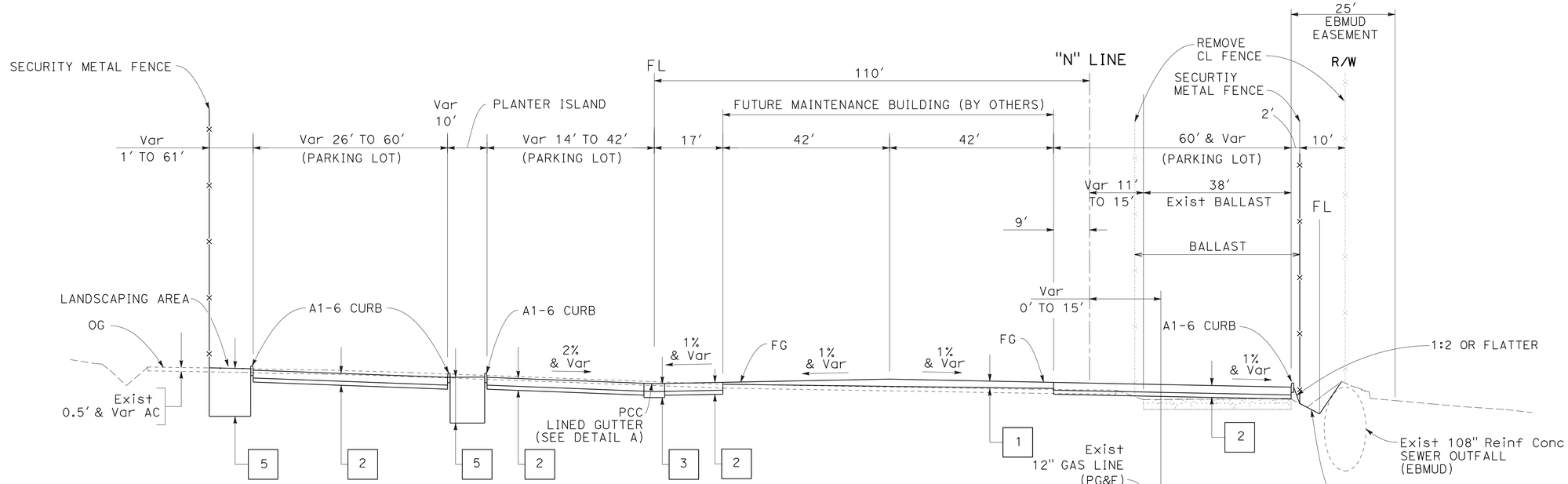

"N" 21+88 TO 24+80

TYPICAL CROSS SECTIONS

NO SCALE

3 **REVISED PER ADDENDUM No. 3 DATED JANUARY 4, 2013**

FOR NOTES, ABBREVIATIONS AND LEGEND, SEE SHEET X-1

X-3

STATE OF CALIFORNIA - DEPARTMENT OF TRANSPORTATION
Caltrans
DESIGN
FUNCTIONAL SUPERVISOR: ARLISSA PANG
CALCULATED-DESIGNED BY: TRUYEN TRAN
CHECKED BY: EUGENE P. WOLLAK
REVISED BY
DATE REVISED

LAST REVISION 07-12-12
DATE PLOTTED => 03-JAN-2013
TIME PLOTTED => 10:18

Dist	COUNTY	ROUTE	POST MILES TOTAL PROJECT	SHEET No.	TOTAL SHEETS
04	Ala	80	2.2	6	800

REGISTERED CIVIL ENGINEER 7/12/12 DATE

10-22-12
PLANS APPROVAL DATE

REGISTERED PROFESSIONAL ENGINEER Eugene P. Wollak No. 38955 Exp. 3-31-13 CIVIL STATE OF CALIFORNIA

THE STATE OF CALIFORNIA OR ITS OFFICERS OR AGENTS SHALL NOT BE RESPONSIBLE FOR THE ACCURACY OR COMPLETENESS OF SCANNED COPIES OF THIS PLAN SHEET.

NOTE:

1. FOR ACCURATE RIGHT OF WAY DATA, CONTACT RIGHT OF WAY ENGINEERING AT THE DISTRICT OFFICE.
2. CURB OPENING AT 6′ CENTER TO CENTER. SEE CONSTRUCTION DETAILS.
3. COORDINATE VALUES SHOWN ARE CCS83 ZONE 3.
4. ELEVATIONS ARE BASED ON NAVD 1988.
5. SEE TYPICAL CROSS SECTION SHEETS FOR PCC LINED GUTTER.

ABBREVIATION

EBMUD EAST BAY MUNICIPAL UTILITY DISTRICT

LEGEND

- No. — STRUCTURAL SECTION
- No. — CURVE NUMBER
- EXISTING WOOD POLES (TO REMAIN IN PLACE)
- EBMUD EASEMENT
- EXISTING RAILRAOD BALLAST

CURVE DATA

No.	R	Δ	T	L	N	E
1	495′	18°34′07″	80.84′	160.26′	2126799.05	6037617.01
2	356′	6°39′07″	20.66′	41.27′	2127639.71	6037744.60
3	495′	12°30′48″	54.22′	108.00′	2127778.54	6037765.42
4	1006′	4°19′22″	37.95′	75.86′	2126361.88	6038314.69

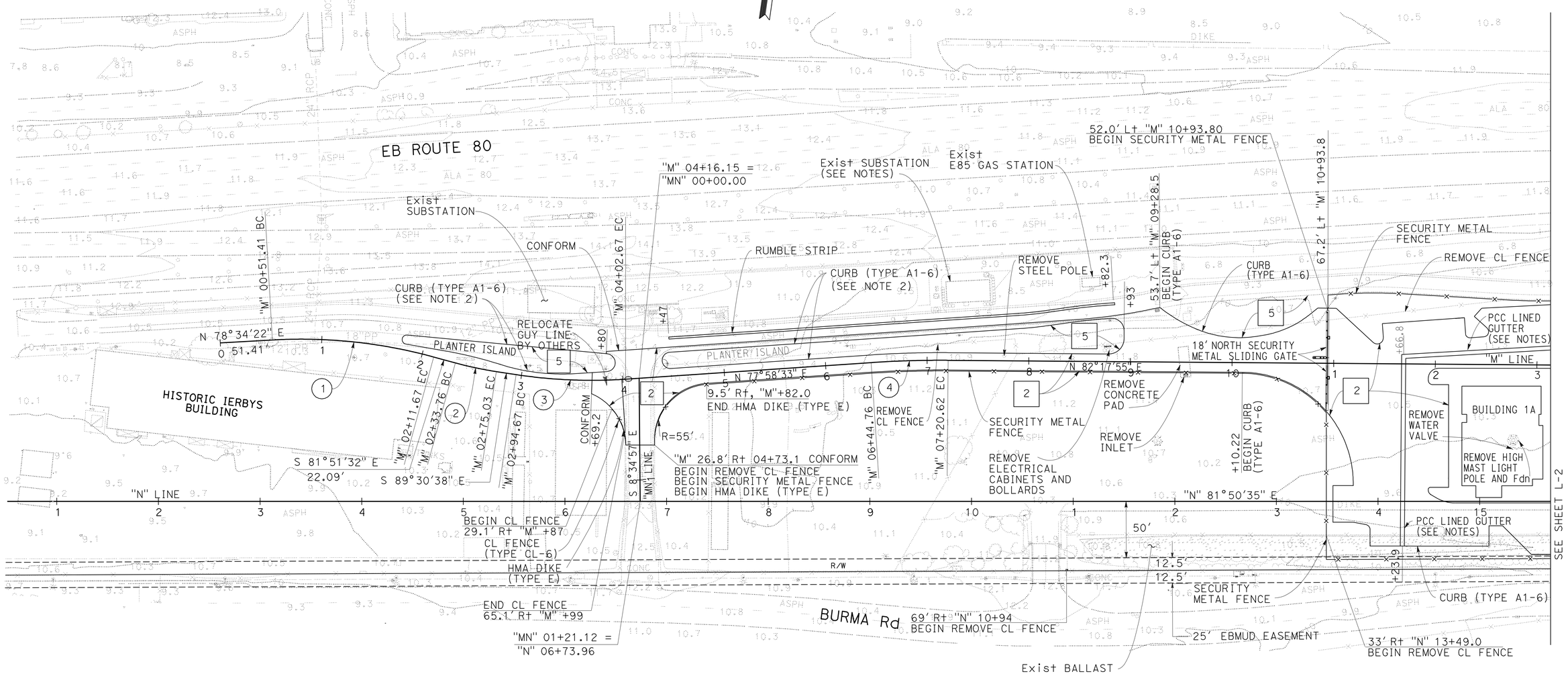

LAYOUT

SCALE: 1" = 50′

3 REVISED PER ADDENDUM No. 3 DATED JANUARY 4, 2013

L-1

STATE OF CALIFORNIA - DEPARTMENT OF TRANSPORTATION
Caltrans DESIGN
FUNCTIONAL SUPERVISOR ARLISSA PANG
CALCULATED-DESIGNED BY TRUYEN TRAN
CHECKED BY EUGENE WOLLAK
REVISED BY
DATE REVISED

LAST REVISION 07-12-12 DATE PLOTTED => 03-JAN-2013 TIME PLOTTED => 10:18

Dist	COUNTY	ROUTE	POST MILES TOTAL PROJECT	SHEET No.	TOTAL SHEETS
04	Ala	80	2.2	7	800

REGISTERED CIVIL ENGINEER 7/12/12 DATE

10-22-12
PLANS APPROVAL DATE

REGISTERED PROFESSIONAL ENGINEER Eugene P. Wollak No. 38955 Exp. 3-31-13 CIVIL STATE OF CALIFORNIA

THE STATE OF CALIFORNIA OR ITS OFFICERS OR AGENTS SHALL NOT BE RESPONSIBLE FOR THE ACCURACY OR COMPLETENESS OF SCANNED COPIES OF THIS PLAN SHEET.

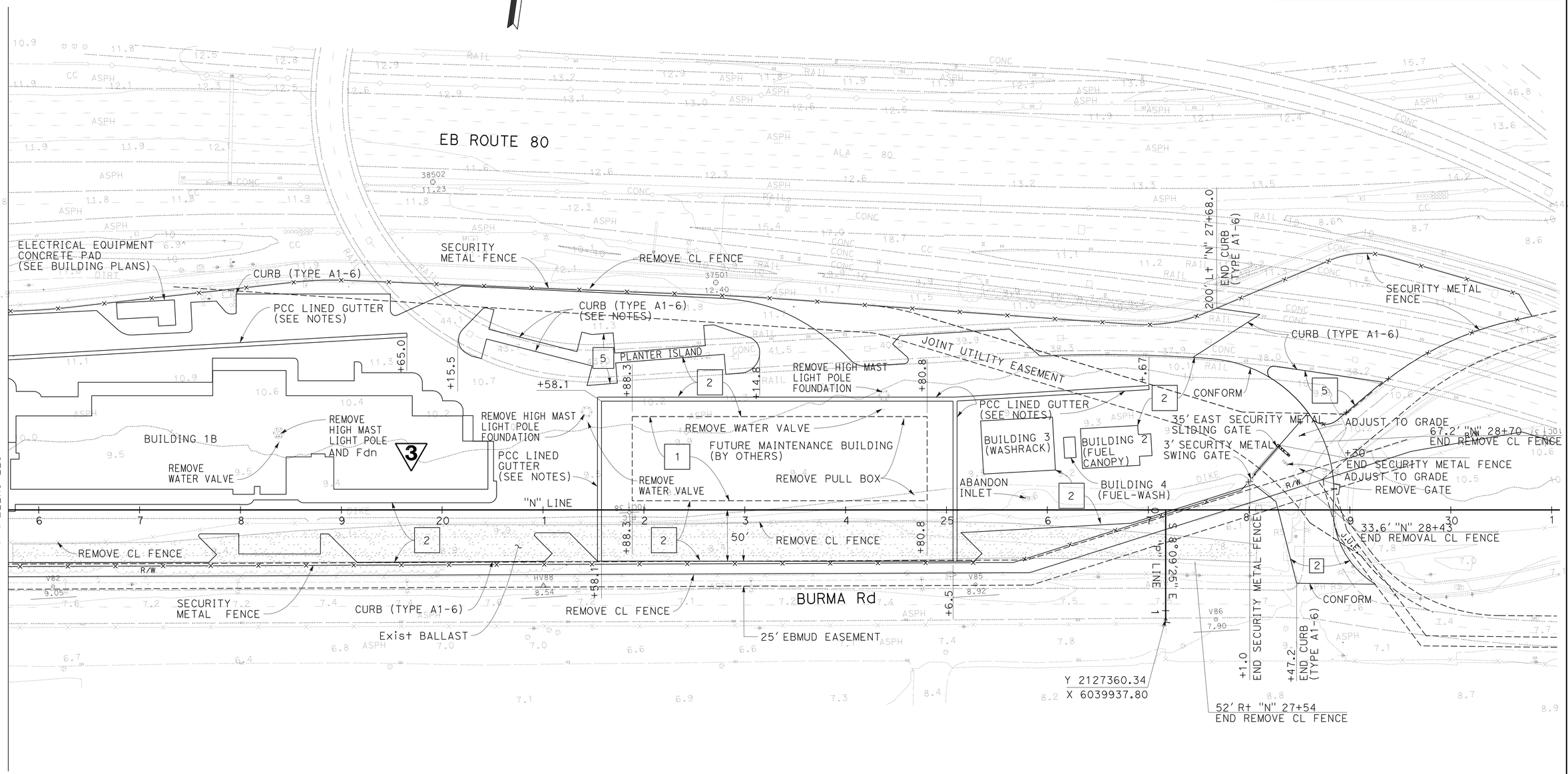

3 **REVISED PER ADDENDUM No. 3 DATED JANUARY 4, 2013**

FOR NOTES, ABBREVIATIONS AND LEGEND, SEE SHEET L-1

LAYOUT
SCALE: 1" = 50'

L-2

STATE OF CALIFORNIA - DEPARTMENT OF TRANSPORTATION
Caltrans
DESIGN
FUNCTIONAL SUPERVISOR: ARLISSA PANG
CALCULATED-DESIGNED BY: EUGENE P. WOLLAK
CHECKED BY: TRUYEN TRAN
REVISED BY
DATE REVISED

LAST REVISION 07-12-12 | DATE PLOTTED => 03-JAN-2013 | TIME PLOTTED => 10:19

Dist	COUNTY	ROUTE	POST MILES TOTAL PROJECT	SHEET No.	TOTAL SHEETS
04	Ala	80	2.2	8	800

REGISTERED CIVIL ENGINEER 7/12/12 DATE

10-22-12
PLANS APPROVAL DATE

REGISTERED PROFESSIONAL ENGINEER Eugene P. Wollak No. 38955 Exp. 3-31-13 CIVIL STATE OF CALIFORNIA

THE STATE OF CALIFORNIA OR ITS OFFICERS OR AGENTS SHALL NOT BE RESPONSIBLE FOR THE ACCURACY OR COMPLETENESS OF SCANNED COPIES OF THIS PLAN SHEET.

NOTES:

1. FOR ACCURATE RIGHT OF WAY DATA, CONTACT RIGHT OF WAY ENGINEERING AT THE DISTRICT OFFICE.
2. ELEVATIONS ARE BASED ON NAVD 1988.
3. SEE BUILDING PLANS FOR SIDEWALK, CURB RAMP, BUILDING APRON. AND PLANTER DETAILS. SEE PLANTING PLANS FOR PLANT DETAILS.
4. EXISTING OVERHEAD STRUCTURES ARE NOT SHOWN FOR CLARITY.

LEGEND:

W — IRRIGATION CROSSOVER

S — IRRIGATION SLEEVE

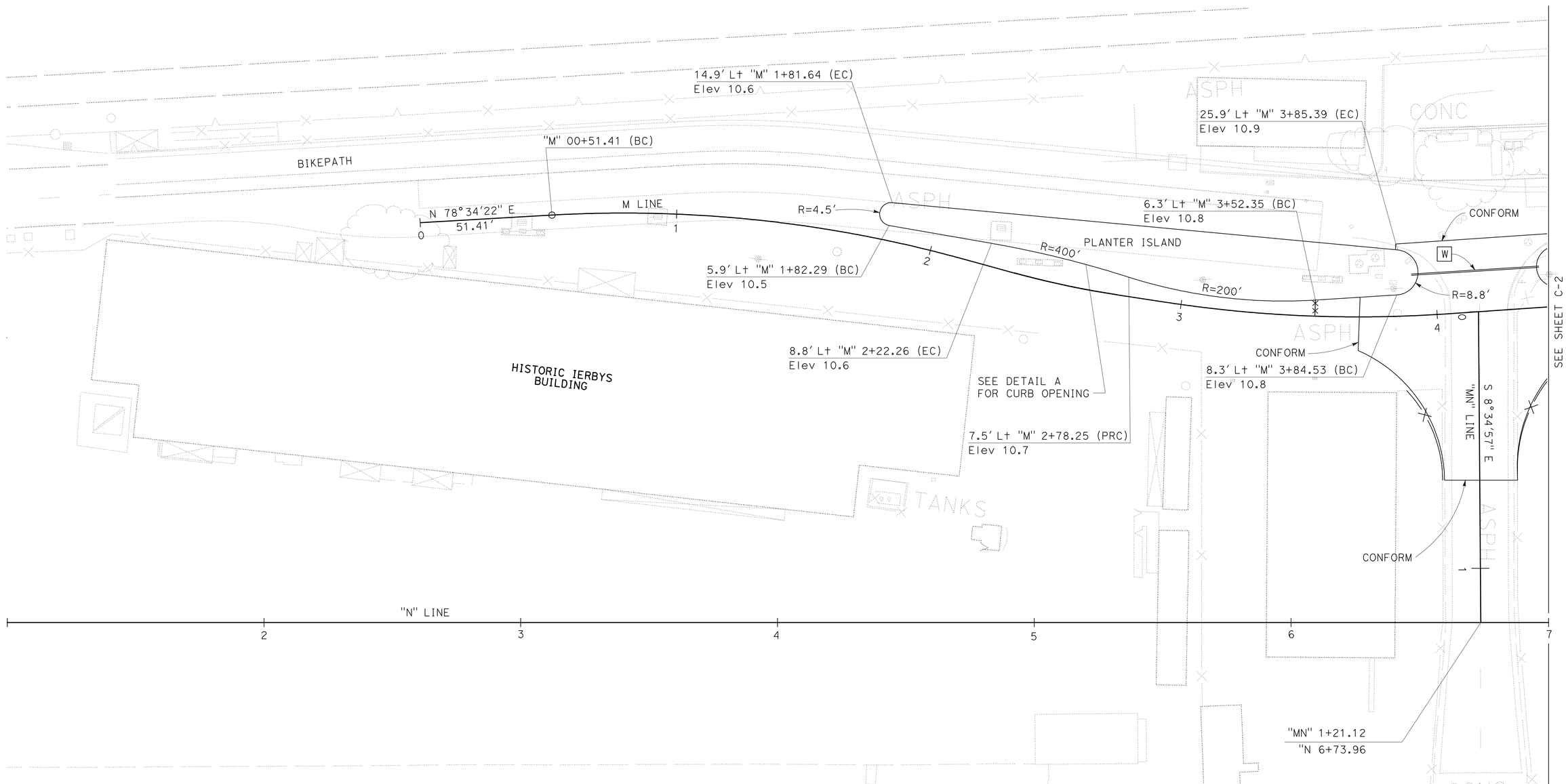

CONSTRUCTION DETAILS
PAVEMENT ELEVATION

SCALE: 1" = 20'

C-1

3 REVISED PER ADDENDUM No. 3 DATED JANUARY 4, 2013

STATE OF CALIFORNIA - DEPARTMENT OF TRANSPORTATION
Caltrans® DESIGN

FUNCTIONAL SUPERVISOR: ARLISSA PANG
CALCULATED-DESIGNED BY: EUGENE P. WOLLAK
CHECKED BY: TRUYEN TRAN
REVISED BY
DATE REVISED

LAST REVISION 07-12-12
DATE PLOTTED => 03-JAN-2013
TIME PLOTTED => 10:19

Dist	COUNTY	ROUTE	POST MILES TOTAL PROJECT	SHEET No.	TOTAL SHEETS
04	Ala	80	2.2	9	800

REGISTERED CIVIL ENGINEER 7/12/12 DATE

10-22-12
PLANS APPROVAL DATE

REGISTERED PROFESSIONAL ENGINEER Eugene P. Wollak No. 38955 Exp. 3-31-13 CIVIL STATE OF CALIFORNIA

THE STATE OF CALIFORNIA OR ITS OFFICERS OR AGENTS SHALL NOT BE RESPONSIBLE FOR THE ACCURACY OR COMPLETENESS OF SCANNED COPIES OF THIS PLAN SHEET.

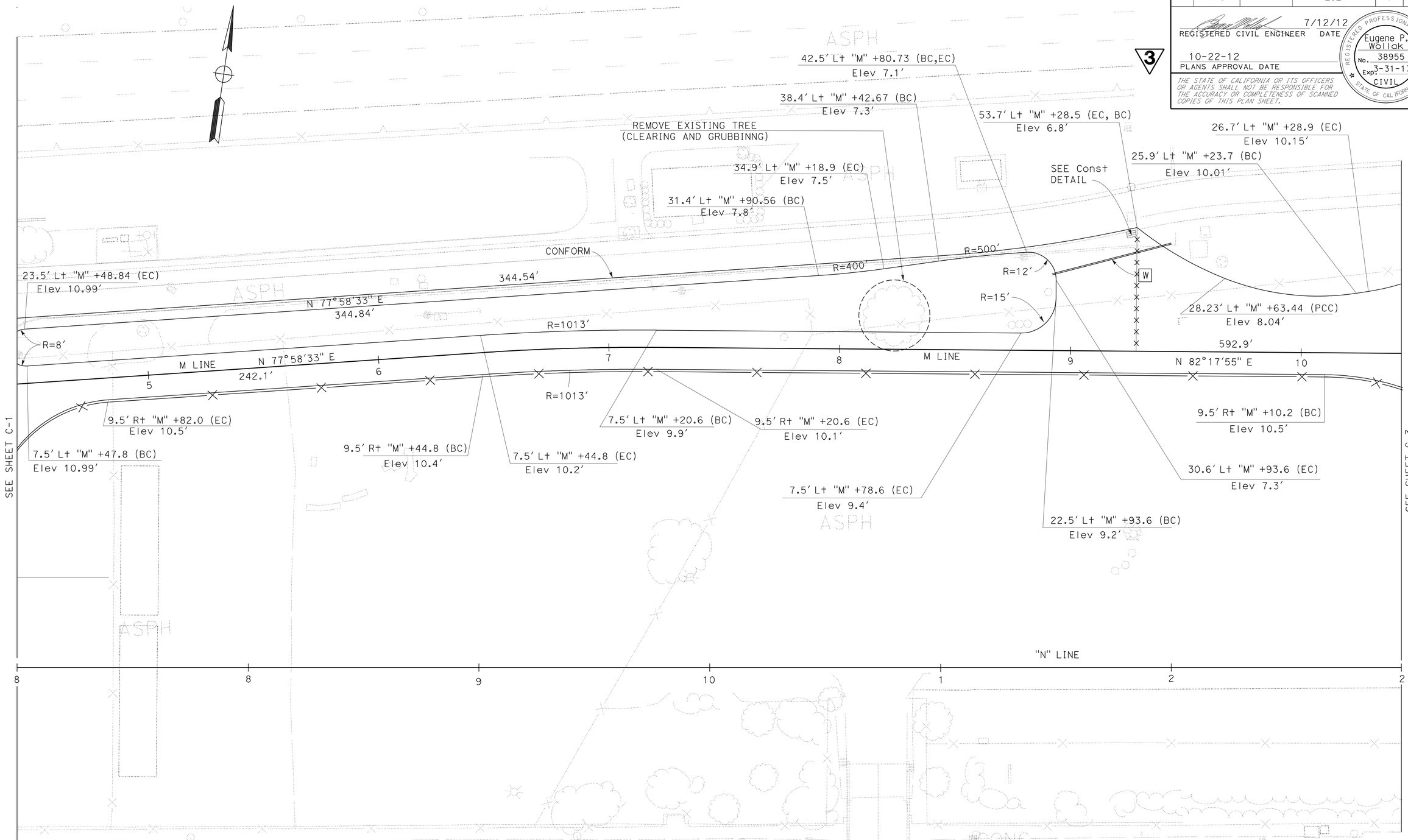

3 REVISED PER ADDENDUM No. 3 DATED JANUARY 4, 2013

FOR NOTES, ABBREVIATIONS AND LEGEND, SEE SHEET C-1

CONSTRUCTION DETAILS
PAVEMENT ELEVATION

SCALE: 1" = 20'

C-2

STATE OF CALIFORNIA - DEPARTMENT OF TRANSPORTATION
DESIGN

FUNCTIONAL SUPERVISOR: ARLISSA PANG
CALCULATED-DESIGNED BY: TRUYEN TRAN
CHECKED BY: EUGENE P. WOLLAK
REVISED BY
DATE REVISED

LAST REVISION 07-12-12
DATE PLOTTED => 03-JAN-2013
TIME PLOTTED => 10:19

Dist	COUNTY	ROUTE	POST MILES TOTAL PROJECT	SHEET No.	TOTAL SHEETS
04	Ala	80	2.2	20	800

REGISTERED CIVIL ENGINEER 7/26/12 DATE

10-22-12
PLANS APPROVAL DATE

REGISTERED PROFESSIONAL ENGINEER Eugene P. Wollak No. 38955 Exp. 3-31-13 CIVIL STATE OF CALIFORNIA

THE STATE OF CALIFORNIA OR ITS OFFICERS OR AGENTS SHALL NOT BE RESPONSIBLE FOR THE ACCURACY OR COMPLETENESS OF SCANNED COPIES OF THIS PLAN SHEET.

3

NOTES:

1. EXCAVATE TO ELEVATIONS SHOWN
2. SEE CROSS SECTIONS FOR OTHER EXCAVATION DEPTHS

LEGEND	CLASSIFICATION
	ROADWAY EXCAVATION (TYPE H)
	ROADWAY EXCAVATION (CLASS 2)

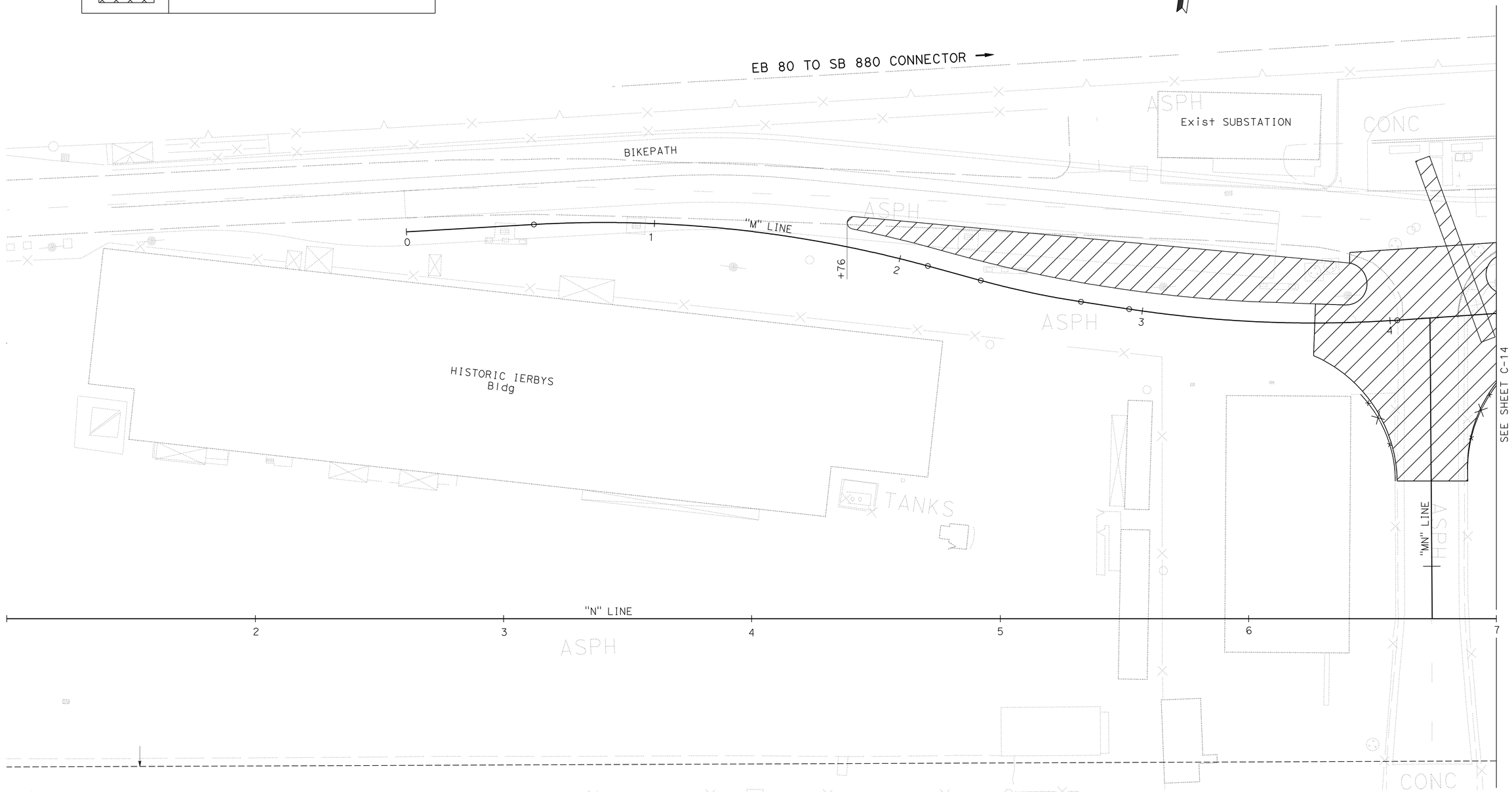

3 **REVISED PER ADDENDUM No. 3 DATED JANUARY 4, 2013**

APPROVED FOR EXCAVATION WORK ONLY

CONSTRUCTION DETAILS
CONTAMINATED MATERIAL ROADWAY EXCAVATION PLAN

SCALE: 1" = 20′

C-13

STATE OF CALIFORNIA - DEPARTMENT OF TRANSPORTATION
Caltrans
DESIGN

FUNCTIONAL SUPERVISOR: ARLISSA PANG
CALCULATED-DESIGNED BY: TRUYEN TRAN
CHECKED BY: EUGENE P. WOLLAK
REVISED BY: TT
DATE REVISED: 08/01/12

LAST REVISION | DATE PLOTTED => 03-JAN-2013
09-28-12 | TIME PLOTTED => 13:27

BORDER LAST REVISED 7/2/2010
USERNAME => s124496
DGN FILE => 0400000038ga013.dgn
RELATIVE BORDER SCALE IS IN INCHES 0 1 2 3
UNIT 0702
PROJECT NUMBER & PHASE 04120006661

Dist	COUNTY	ROUTE	POST MILES TOTAL PROJECT	SHEET No.	TOTAL SHEETS
04	Ala	80	2.2	21	800

REGISTERED CIVIL ENGINEER 7/26/12 DATE

PLANS APPROVAL DATE 10-22-12

REGISTERED PROFESSIONAL ENGINEER Eugene P. Wollak No. 38955 Exp. 3-31-13 CIVIL STATE OF CALIFORNIA

THE STATE OF CALIFORNIA OR ITS OFFICERS OR AGENTS SHALL NOT BE RESPONSIBLE FOR THE ACCURACY OR COMPLETENESS OF SCANNED COPIES OF THIS PLAN SHEET.

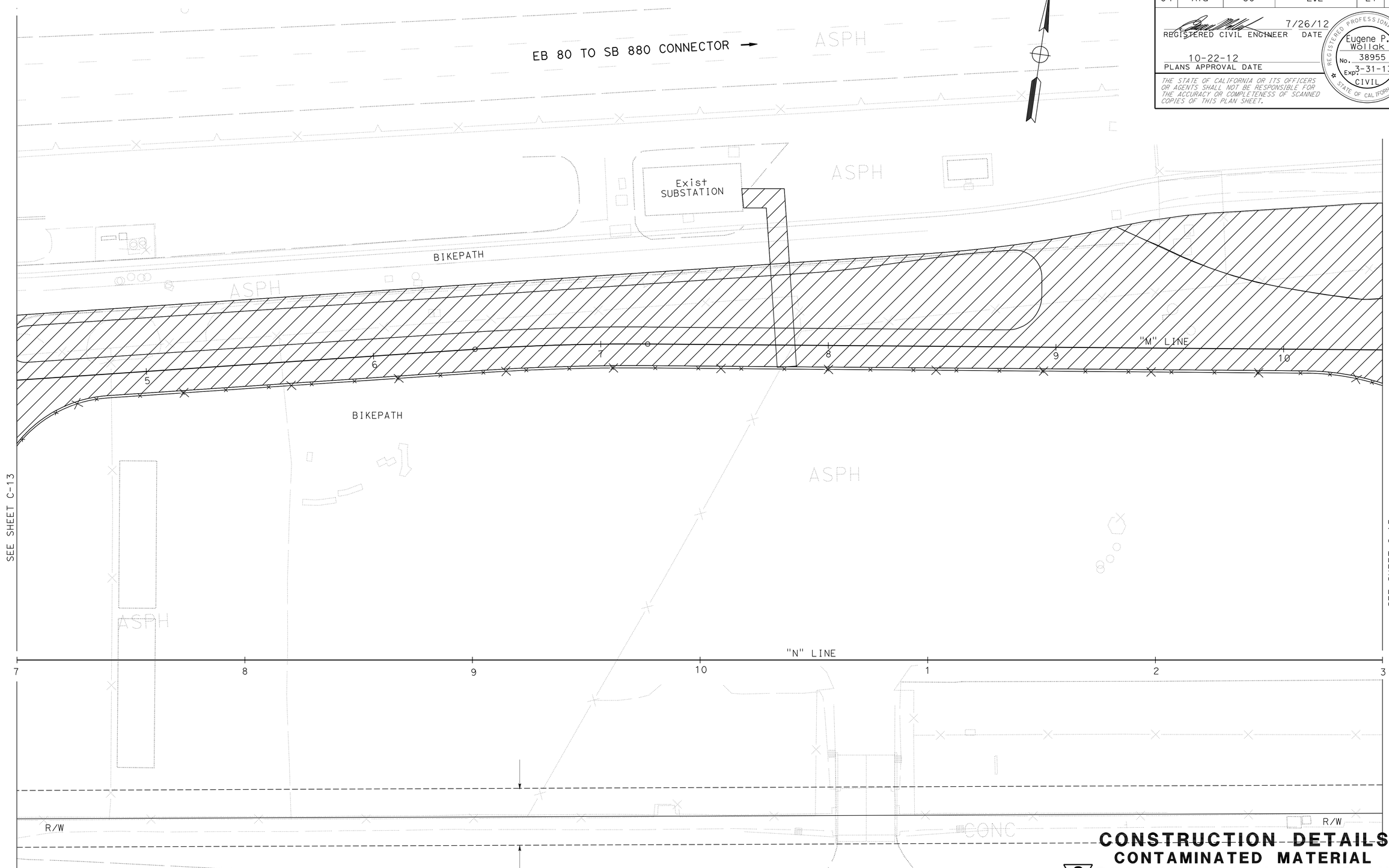

3 REVISED PER ADDENDUM No. 3 DATED JANUARY 4, 2013

APPROVED FOR EXCAVATION WORK ONLY

FOR NOTES AND LEGEND, SEE SHEET C-13

CONSTRUCTION DETAILS
CONTAMINATED MATERIAL
3 ROADWAY EXCAVATION PLAN

SCALE: 1" = 20'

C-14

STATE OF CALIFORNIA - DEPARTMENT OF TRANSPORTATION

Caltrans® DESIGN

FUNCTIONAL SUPERVISOR: ARLISSA PANG

CALCULATED-DESIGNED BY: TRUYEN TRAN

CHECKED BY: EUGENE P. WOLLAK

REVISED BY: TT

DATE REVISED: 08/01/12

LAST REVISION DATE PLOTTED => 03-JAN-2013

TIME PLOTTED => 13:27

09-28-12

BORDER LAST REVISED 7/2/2010

USERNAME => s124496

DGN FILE => 0400000038ga014.dgn

RELATIVE BORDER SCALE IS IN INCHES 0 1 2 3

UNIT 0702

PROJECT NUMBER & PHASE 04120006661

Dist	COUNTY	ROUTE	POST MILES TOTAL PROJECT	SHEET No.	TOTAL SHEETS
04	Ala	80	2.2	22	800

REGISTERED CIVIL ENGINEER 7/26/12 DATE

10-22-12
PLANS APPROVAL DATE

REGISTERED PROFESSIONAL ENGINEER Eugene P. Wollak No. 38955 Exp. 3-31-13 CIVIL STATE OF CALIFORNIA

THE STATE OF CALIFORNIA OR ITS OFFICERS OR AGENTS SHALL NOT BE RESPONSIBLE FOR THE ACCURACY OR COMPLETENESS OF SCANNED COPIES OF THIS PLAN SHEET.

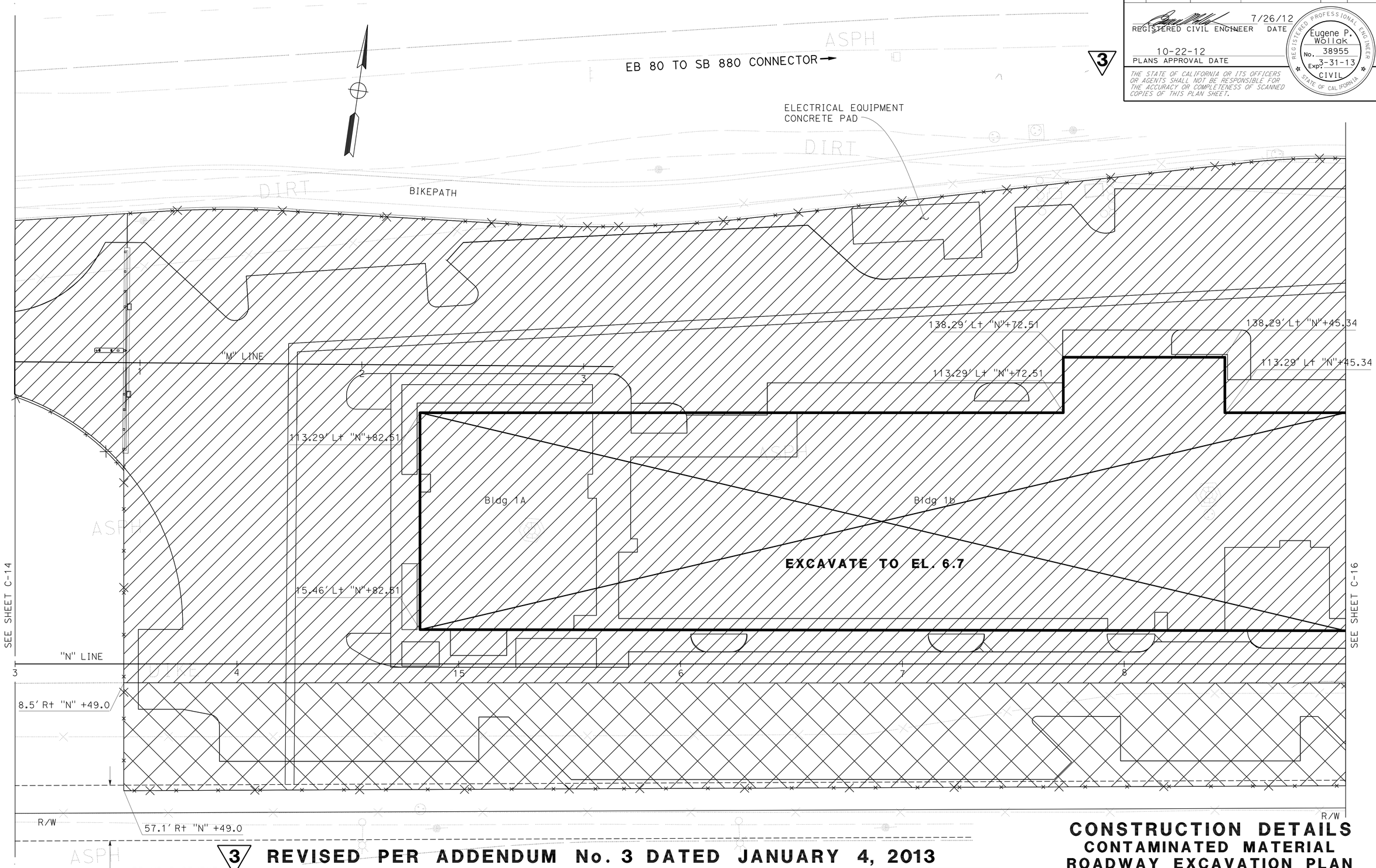

3 REVISED PER ADDENDUM No. 3 DATED JANUARY 4, 2013

APPROVED FOR EXCAVATION WORK ONLY

FOR NOTES AND LEGEND, SEE SHEET C-13

CONSTRUCTION DETAILS
CONTAMINATED MATERIAL ROADWAY EXCAVATION PLAN

SCALE: 1" = 20'

C-15

STATE OF CALIFORNIA - DEPARTMENT OF TRANSPORTATION
Caltrans DESIGN

FUNCTIONAL SUPERVISOR: ARLISSA PANG
CALCULATED-DESIGNED BY: TRUYEN TRAN
CHECKED BY: EUGENE P. WOLLAK
REVISED BY: TT
DATE REVISED: 08/01/12

LAST REVISION 09-24-12
DATE PLOTTED => 03-JAN-2013
TIME PLOTTED => 13:44

Dist	COUNTY	ROUTE	POST MILES TOTAL PROJECT	SHEET No.	TOTAL SHEETS
04	Ala	80	2.2	23	800

REGISTERED CIVIL ENGINEER 7/26/12 DATE

10-22-12
PLANS APPROVAL DATE

REGISTERED PROFESSIONAL ENGINEER Eugene P. Wollak No. 38955 Exp. 3-31-13 CIVIL STATE OF CALIFORNIA

THE STATE OF CALIFORNIA OR ITS OFFICERS OR AGENTS SHALL NOT BE RESPONSIBLE FOR THE ACCURACY OR COMPLETENESS OF SCANNED COPIES OF THIS PLAN SHEET.

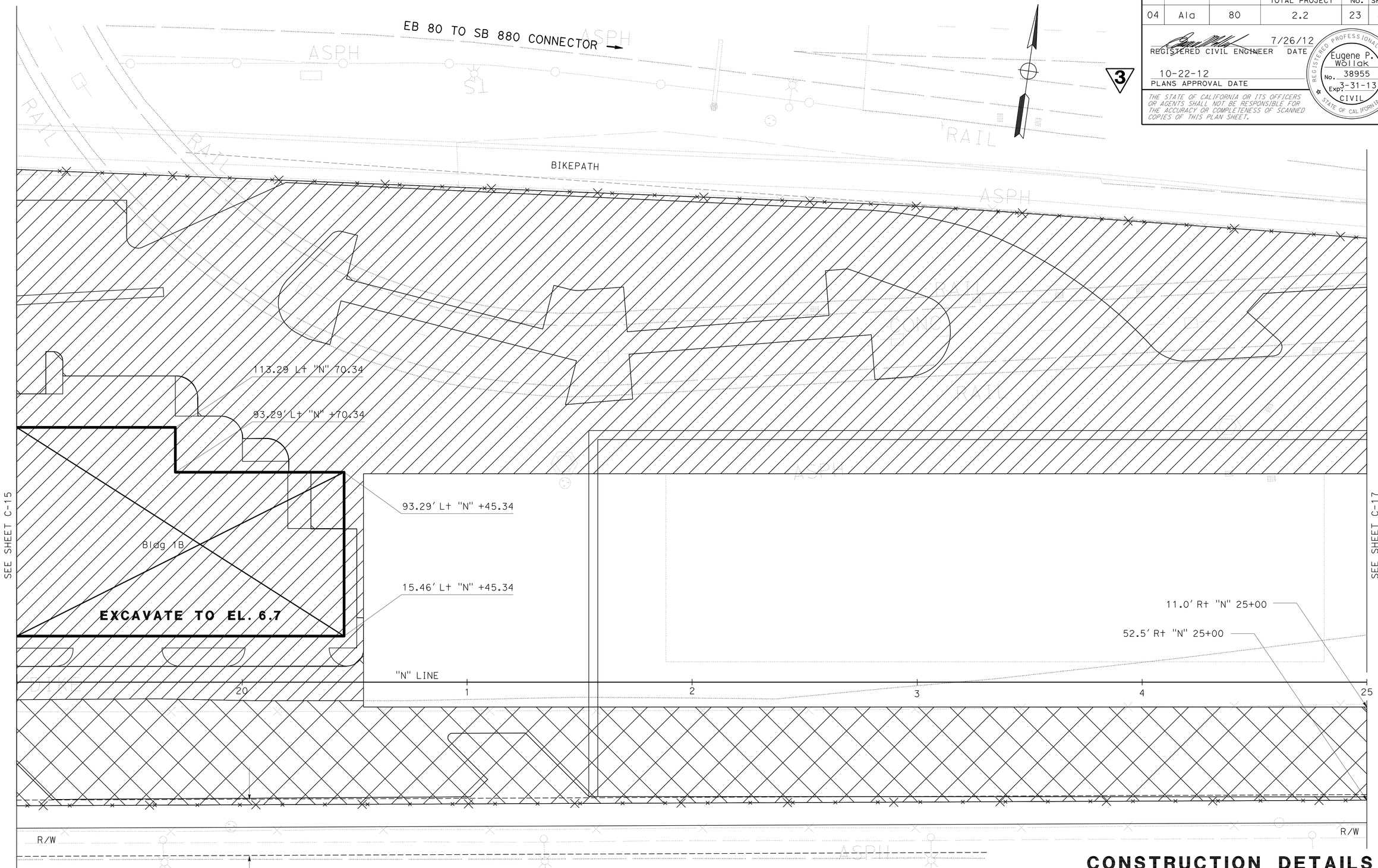

3 **REVISED PER ADDENDUM No. 3 DATED JANUARY 4, 2013**

APPROVED FOR EXCAVATION WORK ONLY

FOR NOTES AND LEGEND, SEE SHEET C-13

CONSTRUCTION DETAILS
CONTAMINATED MATERIAL ROADWAY EXCAVATION PLAN

SCALE: 1" = 20'

C-16

STATE OF CALIFORNIA - DEPARTMENT OF TRANSPORTATION
Caltrans®
DESIGN

FUNCTIONAL SUPERVISOR: ARLISSA PANG

CALCULATED-DESIGNED BY: TRUYEN TRAN
CHECKED BY: EUGENE P. WOLLAK

REVISED BY: TT
DATE REVISED: 08/01/12

LAST REVISION: 09-28-12
DATE PLOTTED => 03-JAN-2013
TIME PLOTTED => 13:44

Dist	COUNTY	ROUTE	POST MILES TOTAL PROJECT	SHEET No.	TOTAL SHEETS
04	Ala	80	2.2	24	800

REGISTERED CIVIL ENGINEER 7/26/12 DATE

10-22-12
PLANS APPROVAL DATE

REGISTERED PROFESSIONAL ENGINEER Eugene P. Wollak No. 38955 Exp. 3-31-13 CIVIL STATE OF CALIFORNIA

THE STATE OF CALIFORNIA OR ITS OFFICERS OR AGENTS SHALL NOT BE RESPONSIBLE FOR THE ACCURACY OR COMPLETENESS OF SCANNED COPIES OF THIS PLAN SHEET.

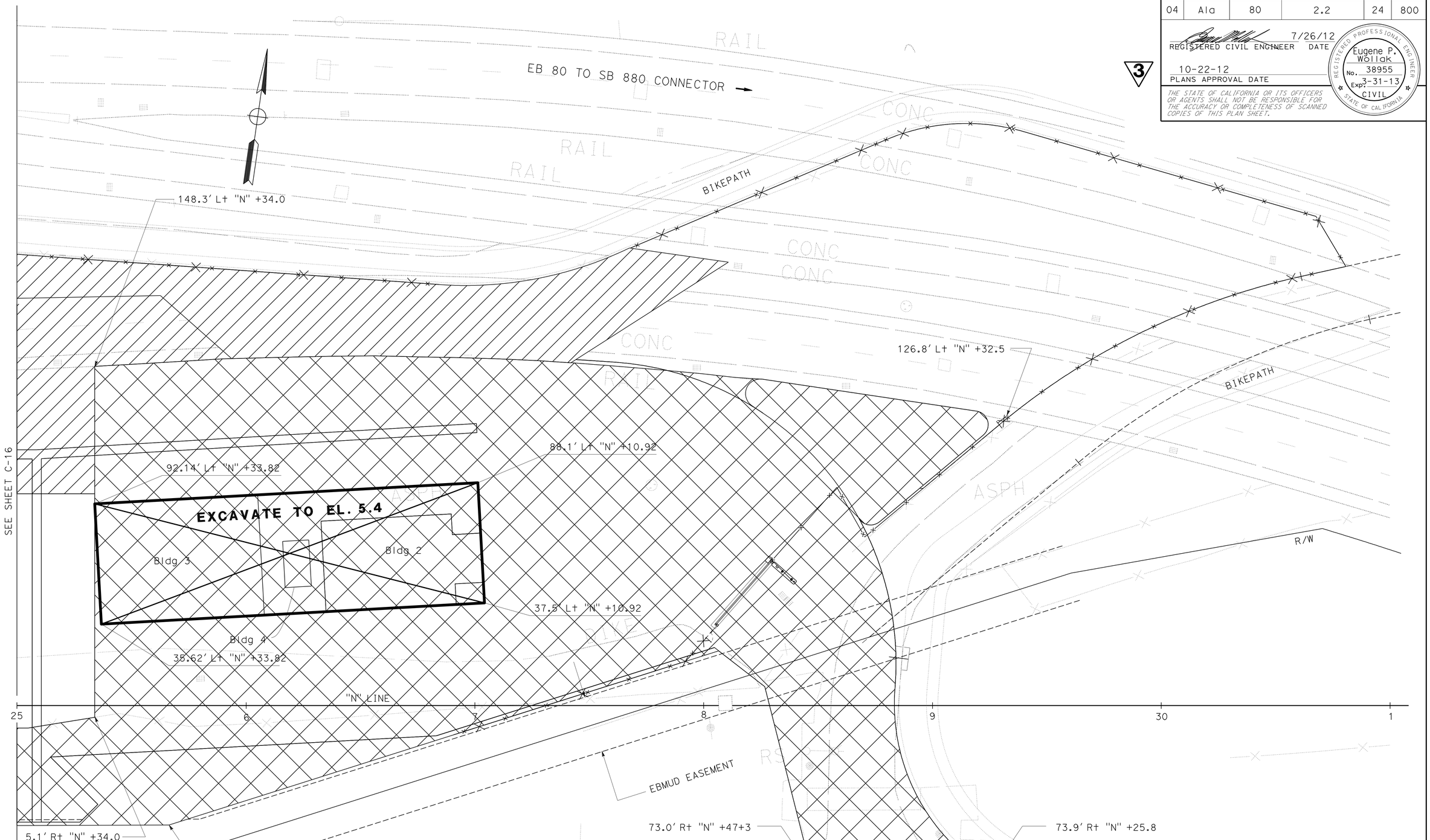

3 **REVISED PER ADDENDUM No. 3 DATED JANUARY 4, 2013**

APPROVED FOR EXCAVATION WORK ONLY

FOR NOTES AND LEGEND, SEE SHEET C-13

CONSTRUCTION DETAILS
CONTAMINATED MATERIAL ROADWAY EXCAVATION PLAN

SCALE: 1" = 20'

C-17

STATE OF CALIFORNIA - DEPARTMENT OF TRANSPORTATION
Caltrans
DESIGN

FUNCTIONAL SUPERVISOR: ARLISSA PANG
CALCULATED-DESIGNED BY: TRUYEN TRAN
CHECKED BY: EUGENE P. WOLLAK
REVISED BY: TT
DATE REVISED: 08/01/12

LAST REVISION: DATE PLOTTED => 03-JAN-2013 TIME PLOTTED => 13:44 09-28-12

BORDER LAST REVISED 7/2/2010
USERNAME => s124496
DGN FILE => 0400000038ga017.dgn
RELATIVE BORDER SCALE IS IN INCHES 0 1 2 3
UNIT 0702
PROJECT NUMBER & PHASE 04120006661

Dist	COUNTY	ROUTE	POST MILES TOTAL PROJECT	SHEET No.	TOTAL SHEETS
04	Ala	80	2.2	27	800

REGISTERED CIVIL ENGINEER 7/12/12 DATE

10-22-12
PLANS APPROVAL DATE

REGISTERED PROFESSIONAL ENGINEER Eugene P. Wollak No. 38955 Exp. 3-31-13 CIVIL STATE OF CALIFORNIA

THE STATE OF CALIFORNIA OR ITS OFFICERS OR AGENTS SHALL NOT BE RESPONSIBLE FOR THE ACCURACY OR COMPLETENESS OF SCANNED COPIES OF THIS PLAN SHEET.

NOTES:

3

DIMENSION "h"

1. IF ~~COVER OVER PIPE~~ IS GREATER THAN 12" THEN NO STEEL REINFORCEMENT IS NEEDED.
2. PIPE SHOULD BE SECURED IF GROUNDWATER IS PRESENT AT TIME OF PIPE PLACEMENT SO IT WILL NOT FLOAT.
3. BACKFILL TRENCH WITH SAND TO 4 INCHES ABOVE THE TOP OF PIPE, OR GROUNDWATER LEVEL, WHICHEVER IS HIGHER. SEE LOG OF TEST BORING FOR GROUND WATER LEVEL.

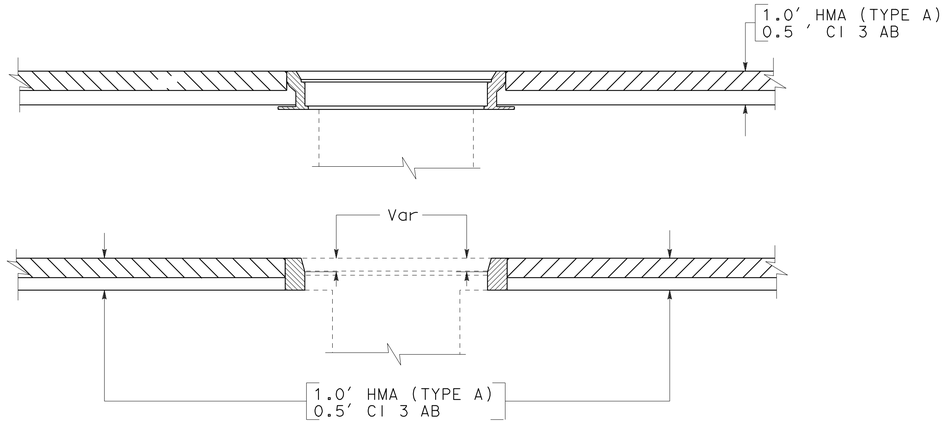

PAVEMENT CONFORM AT UTILITY MANHOLE

NOTE:
HEIGHT OF Exist STEEL COVER TO REMAIN

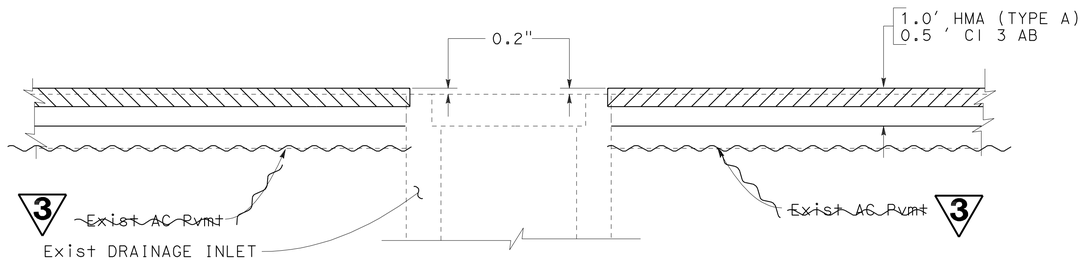

PAVEMENT CONFORM AT INLETS

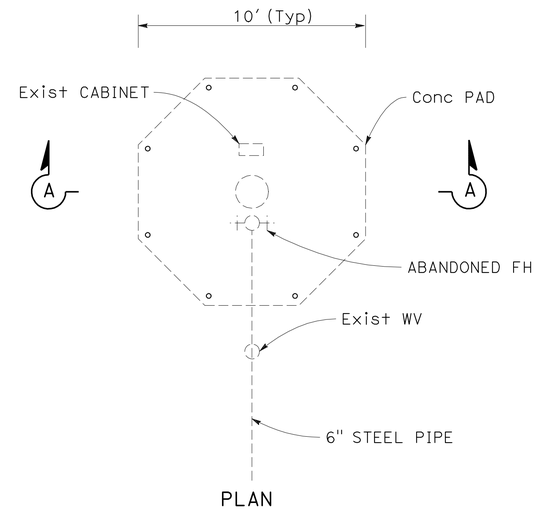

PLAN

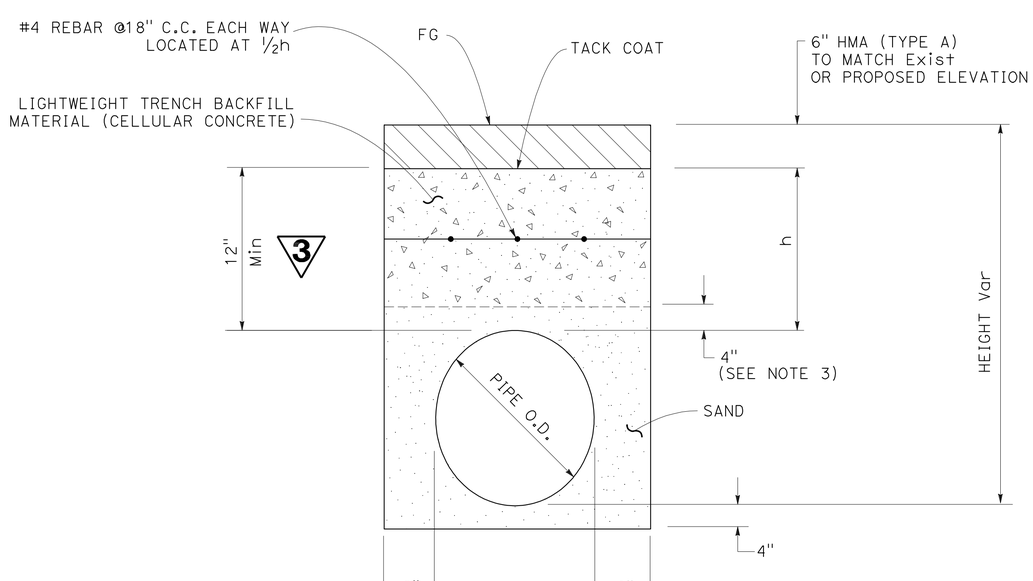

TRENCH BACKFILL DETAIL

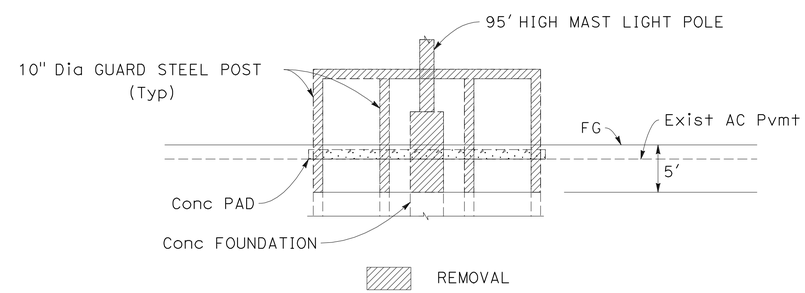

SECTION A-A

REMOVE HIGH MAST LIGHT POLE FOUNDATION

3 **REVISED PER ADDENDUM No. 3 DATED JANUARY 4, 2013**

CONSTRUCTION DETAILS

NO SCALE

C-20

REVISED BY	DATE REVISED
TT	08/01/12

TRUYEN TRAN — EUGENE P. WOLLAK

CALCULATED-DESIGNED BY / CHECKED BY

FUNCTIONAL SUPERVISOR: ARLISSA PANG

STATE OF CALIFORNIA - DEPARTMENT OF TRANSPORTATION — DESIGN — Caltrans

LAST REVISION 09-28-12 | DATE PLOTTED => 03-JAN-2013 | TIME PLOTTED => 10:19

Dist	COUNTY	ROUTE	POST MILES TOTAL PROJECT	SHEET No.	TOTAL SHEETS
04	Ala	80	2.2	28	800

REGISTERED CIVIL ENGINEER 7/26/12 DATE

10-22-12
PLANS APPROVAL DATE

REGISTERED PROFESSIONAL ENGINEER Eugene P. Wollak No. 38955 Exp. 3-31-13 CIVIL STATE OF CALIFORNIA

THE STATE OF CALIFORNIA OR ITS OFFICERS OR AGENTS SHALL NOT BE RESPONSIBLE FOR THE ACCURACY OR COMPLETENESS OF SCANNED COPIES OF THIS PLAN SHEET.

LEGEND:

IMPORTED BORROW AREA = 65,396 SQFT

3

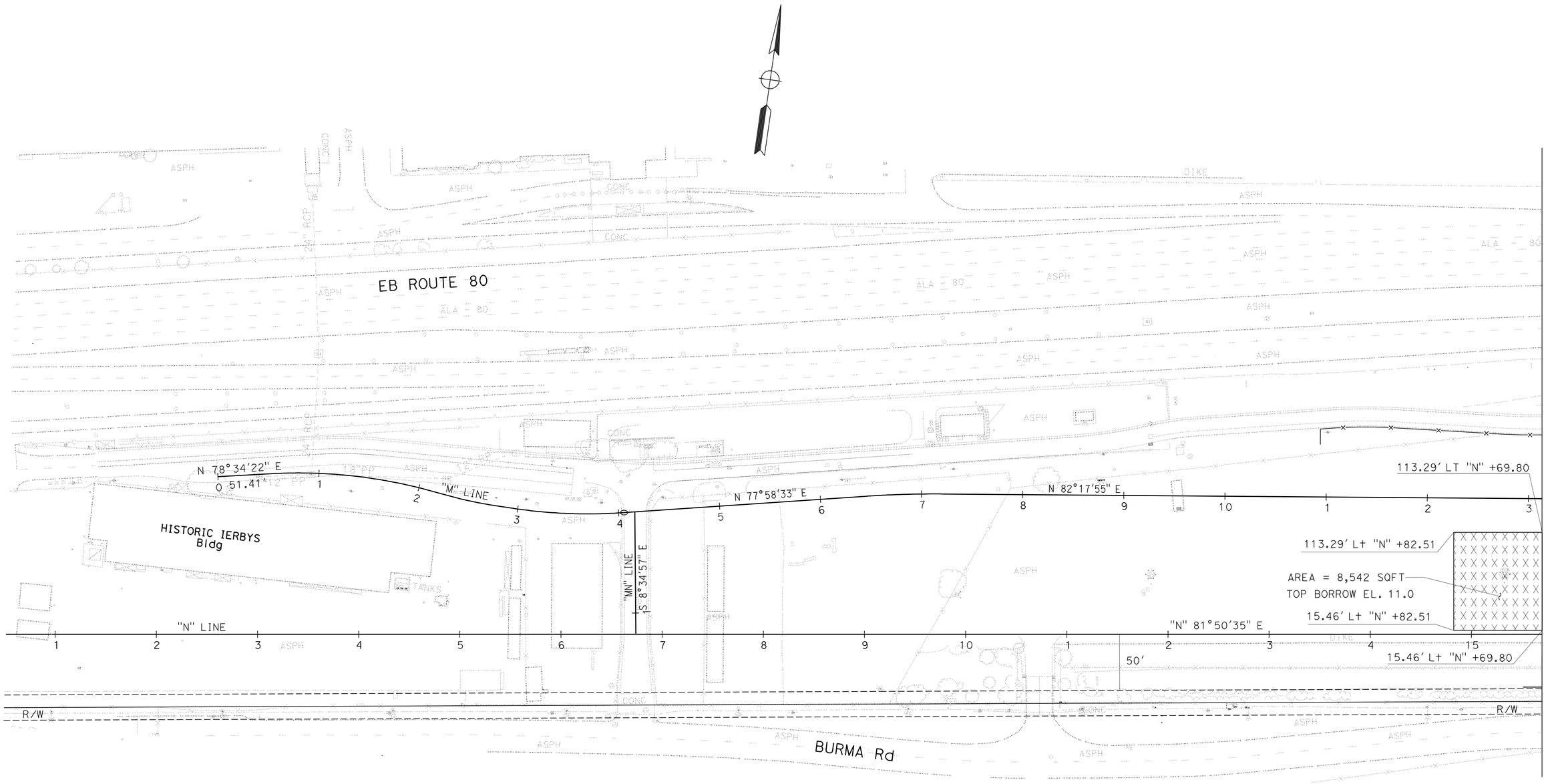

3 **REVISED PER ADDENDUM No. 3 DATED JANUARY 4, 2013**

CONSTRUCTION DETAILS IMPORTED BORROW

SCALE: 1" = 50'

C-21

STATE OF CALIFORNIA - DEPARTMENT OF TRANSPORTATION
Caltrans DESIGN

FUNCTIONAL SUPERVISOR: ARLISSA PANG

CALCULATED-DESIGNED BY: TRUYEN TRAN
CHECKED BY: EUGENE WOLLAK

REVISED BY
DATE REVISED

LAST REVISION 09-28-12
DATE PLOTTED => 03-JAN-2013
TIME PLOTTED => 13:40

Dist	COUNTY	ROUTE	POST MILES TOTAL PROJECT	SHEET No.	TOTAL SHEETS
04	Ala	80	2.2	29	800

REGISTERED CIVIL ENGINEER 7/26/12 DATE

10-22-12
PLANS APPROVAL DATE

REGISTERED PROFESSIONAL ENGINEER Eugene P. Wollak No. 38955 Exp. 3-31-13 CIVIL STATE OF CALIFORNIA

THE STATE OF CALIFORNIA OR ITS OFFICERS OR AGENTS SHALL NOT BE RESPONSIBLE FOR THE ACCURACY OR COMPLETENESS OF SCANNED COPIES OF THIS PLAN SHEET.

3

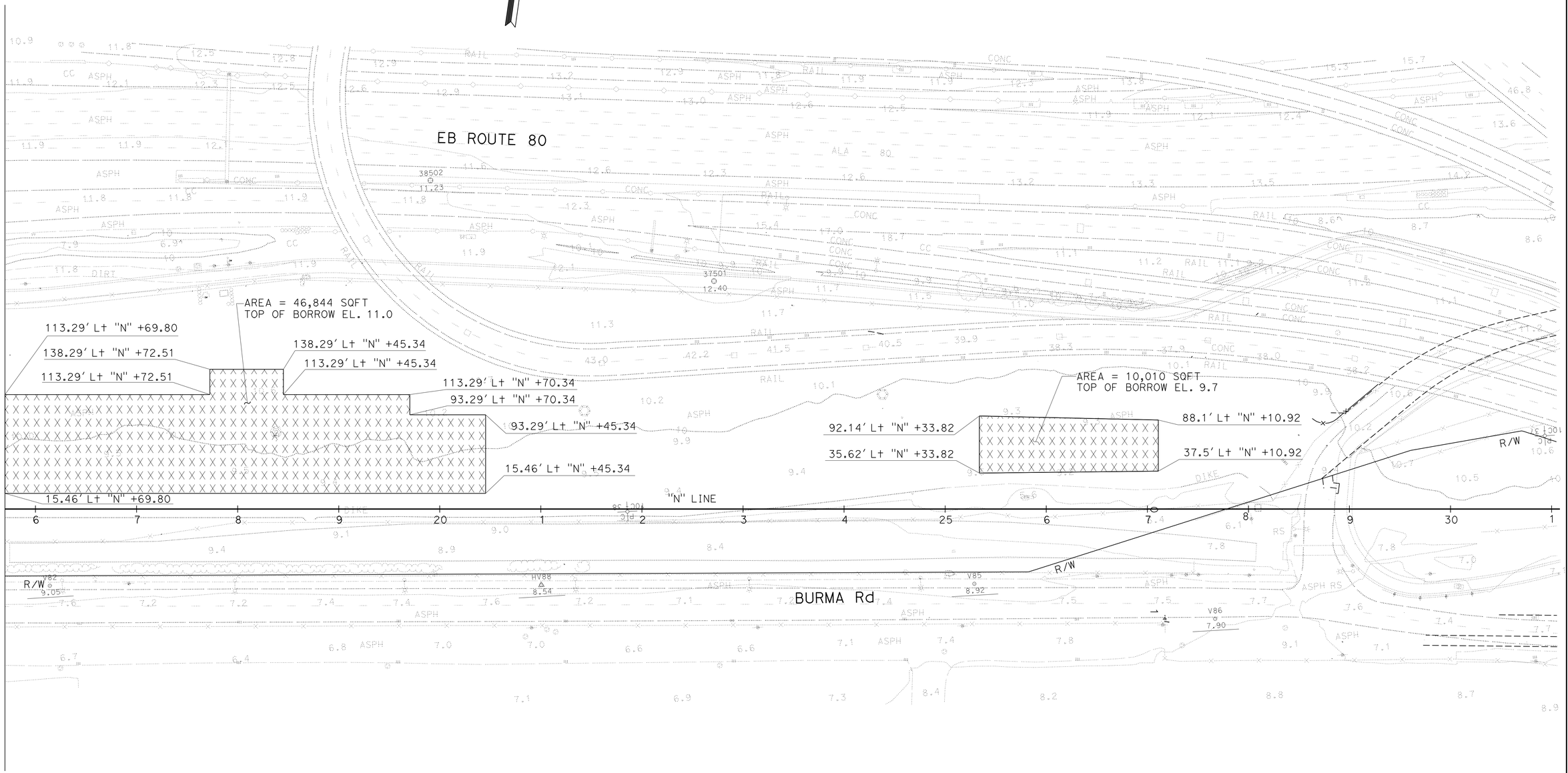

3 REVISED PER ADDENDUM No. 3 DATED JANUARY 4, 2013

FOR LEGEND, SEE SHEET C-21

CONSTRUCTION DETAILS
IMPORTED BORROW

SCALE: 1" = 50'

C-22

STATE OF CALIFORNIA - DEPARTMENT OF TRANSPORTATION
Caltrans
DESIGN

FUNCTIONAL SUPERVISOR: ARLISSA PANG
CALCULATED-DESIGNED BY: TRUYEN TRAN
CHECKED BY: EUGENE P. WOLLAK
REVISED BY
DATE REVISED

LAST REVISION 09-28-12
DATE PLOTTED => 03-JAN-2013
TIME PLOTTED => 13:40

Dist	COUNTY	ROUTE	POST MILES TOTAL PROJECT	SHEET No.	TOTAL SHEETS
04	Ala	80	2.2	37	800

REGISTERED CIVIL ENGINEER 7-12-12 DATE

10-22-12
PLANS APPROVAL DATE

REGISTERED PROFESSIONAL ENGINEER Eugene P. Wollak No. 38955 Exp. 3-31-13 CIVIL STATE OF CALIFORNIA

THE STATE OF CALIFORNIA OR ITS OFFICERS OR AGENTS SHALL NOT BE RESPONSIBLE FOR THE ACCURACY OR COMPLETENESS OF SCANNED COPIES OF THIS PLAN SHEET.

NOTES:

1. ALLOWABLE ALTRENATIVE PIPE MATERIALS ARE RCP AND PLASTIC PIPE (SMOOTH INTERIOR WALL TYPE ONLY).
2. JOINTS FOR ALL PIPES SHALL BE WATERTIGHT TYPE.
3. SEE STANDARD PLANS FOR RCP STRENGTH CLASSIFICATION AND METHOD OF BACKFILL.

APC ALLOWABLE PIPE MATERIAL AND PROTECTION

DESIGNATION	RCP SIZE (IN)	PLASTIC PIPE
12" APC	12"	12"
18" APC	18"	18"
24" APC	24"	24"

ABBREVIATIONS:

w/ WITH

DRAINAGE QUANTITIES

DRAINAGE SHEET No.	DRAINAGE SYSTEM No.	DRAINAGE UNIT	APC 12" (LF)	APC 18" (LF)	APC 24" (LF)	FRAMES, GRATES, AND COVERS (N) 24-12 (EA)	FRAMES, GRATES, AND COVERS (N) 24-12X (EA)	MINOR CONCRETE (MINOR STRUCTURE) (CY)	Misc IRON AND STEEL (LB)	MAXIMUM COVER (N) (LF)	HEIGHT OF INLET (N) (LF)	DITCH EXCAVATION (CY)	MINOR CONCRETE (Misc CONSTRUCTION) (CY)	DESCRIPTION	STATION	DRAINAGE SHEET No.	DRAINAGE SYSTEM No.	DRAINAGE UNIT
D-1	1	a	97							1.7				12" APC		D-1	1	a
		b				1		1.73	326		2.70		0.56	G1 INLET w/ APRON	59.3' Rt "N" 14+24.4			b
		c	48					3 ~~3.56~~		1.88				12" APC				c
		d					1	1.17	239		4.00			G1 INLET	7.9' Rt "N" 14+24.4			d
		e	150					3 ~~11.11~~		3.0				12" APC				e
		f					1	1.11	239		3.73			G1 INLET	142.6' Lt "N" 14+24.4			f
D-1		g	151					3 ~~11.19~~		2.73				12" APC		D-1		g
D-2		h					1	1.01	239		3.25			G1 INLET	160.6' Lt "N" 15+79.7	D-2		h
D-2		i	29							2.25				12" APC		D-2		i
D-2	1	j					1	0.95	239		2.30			G1 INLET		D-2	1	j
D-1	2	a										10.96		UNLINED DITCH	60.0' Rt "N" 13+50 TO 14+24	D-1	2	a
D-1		b										18.67			60.0' Rt "N" 14+24 TO 15+50	D-1		b
D-2		c										32.37			60.0' Rt "N" 15+50 TO 17+68.5	D-2		c
		d										21.85			60.0' Rt "N" 17+68.5 TO 19+16			d
		e										35.87			60.0' Rt "N" 19+16 TO 21+58.1			e
		f										24.73			60.0' Rt "N" 21+58.1 TO 23+25			f
		g										26.89			60.0' Rt "N" 23+25 TO 25+06.5			g
D-2	2	h										25.70		UNLINED DITCH	60.0' Rt "N" 25+06.5 TO 23' Rt "N" 26+80	D-2	2	h
SHEET TOTAL			475			1	4	~~31.83~~ 5.97 3	1282			197.04	0.56					

(N) = NOT A SEPARATE PAY ITEM, FOR INFORMATION ONLY

3 REVISED PER ADDENDUM No. 3 DATED JANUARY 4, 2013

DRAINAGE QUANTITIES
DQ-1

STATE OF CALIFORNIA - DEPARTMENT OF TRANSPORTATION
DESIGN
Caltrans

FUNCTIONAL SUPERVISOR: ARLISSA PANG
CALCULATED-DESIGNED BY: EUGENE P.WOLLAK
CHECKED BY: TRUYEN TRAN
REVISED BY: TT
DATE REVISED: 08/01/12

LAST REVISION 09-28-12
DATE PLOTTED =>
TIME PLOTTED => 10:19

Dist	COUNTY	ROUTE	POST MILES TOTAL PROJECT	SHEET No.	TOTAL SHEETS
04	Ala	80	2.2	38	800

REGISTERED CIVIL ENGINEER 7-12-12 DATE

10-22-12
PLANS APPROVAL DATE

REGISTERED PROFESSIONAL ENGINEER Eugene P. Wollak No. 38955 Exp. 3-31-13 CIVIL STATE OF CALIFORNIA

THE STATE OF CALIFORNIA OR ITS OFFICERS OR AGENTS SHALL NOT BE RESPONSIBLE FOR THE ACCURACY OR COMPLETENESS OF SCANNED COPIES OF THIS PLAN SHEET.

DRAINAGE QUANTITIES

DRAINAGE SHEET No.	DRAINAGE SYSTEM No.	DRAINAGE UNIT	APC 12" (LF)	APC 18" (LF)	APC 24" (LF)	FRAMES, GRATES, AND COVERS (N) 24-12 (EA)	FRAMES, GRATES, AND COVERS (N) 24-12X (EA)	MINOR CONCRETE (MINOR STRUCTURE) (CY)	Misc IRON AND STEEL (LB)	MAXIMUM COVER (N) (LF)	HEIGHT OF INLET (N) (LF)	ABANDON CULVERT	DITCH EXCAVATION (CY)	ABANDON INLET (EA)	MINOR CONCRETE (Misc CONSTRUCTION) (CY)	DESCRIPTION	STATION	DRAINAGE SHEET No.	DRAINAGE SYSTEM No.	DRAINAGE UNIT
D-1	3	a		94						3.63						18" APC		D-1	3	a
D-1		b					1	1.85	239		5.13					G2 INLET	8.9′ R+ "N" 15+21.7	D-1		b
D-1		c		277						4.71						18" APC		D-1		c
D-2		d					1	2.13	239		6.21					G2 INLET	10.1′ R+ "N" 18+05.7	D-2		d
		e	58							3.15						12" APC				e
		f				1		1.73	326		1.70				0.56	G1 INLET w/APRON	60.9′ R+ "N" 17+68.4			f
		g		113						5.11						18" APC				g
		h					1	2.23	239		6.61					G2 INLET	9.4′ R+ "N" 19+19			h
		i		130						5.57						18" APC				i
		j					1	1.31	239		2.30					G2 INLET	9.9′ R+ "N" 20+55.7			j
		k	76							4.13						12" APC				k
		l					1	1.34	239		4.79					G1 INLET	70.1′ L+ "N" 20+55.7			l
		m	85							3.63						12" APC				m
		n					1	1.24	239		4.30					G1 INLET	137.4′ L+ "N" 19+92.4			n
		o	51							3.30						12" APC				o
		p					1	1.08 3	239		3.60					G1 INLET	173.1′ L+ "N" 19+62.4			p
		q	96					~~7.11~~		2.60						12" APC				q
		r					1	0.98	239		3.15					G1 INLET	167.6′ L+ "N" 18+65.2			r
		s	13							2.17						12" APC				s
		t					1	0.99	239		3.17					G1 INLET	151′ L+ "N" 18+65.2			t
		u			98					5.07						24" APC				u
		v					1	2.05	239		5.92					G2 INLET	8.4′ R+ "N" 18+65.2			v
		w	45					~~3.33~~		2.40						12" APC				w
		x				1		0.95	326		1.70				0.56	G1 INLET w/ APRON	58.8′ R+ "N" 18+65.2			x
D-2	3	y			349					4.94						24" APC		D-2	3	y
D-2	4	a				1		1.73	326		1.70				0.56	G1 INLET w/APRON	57.6′ R+ "N" 25+08.5	D-2	4	a
		b	44					~~3.26~~		2.24						12" APC				b
		c					1	2.31	239		6.94					G2 INLET	9.6′ R+ "N" 25+08.5			c
		d	117					~~8.67~~		3.35						12" APC				d
		e					1	1.25	239		4.35					G1 INLET	109.9′ L+ "N" 25+08.5			e
		f	187					~~13.85~~		3.35						12" APC				f
		g					1	0.99	239		3.17					G1 INLET	121.1′ L+ "N" 26+97.8			g
		h			68					5.50						24" APC				h
		i					1	2.51			7.70					G2 INLET	9.6′ R+ "N" 25+80.4			i
		i1												1		ABANDON INLET	11.8′ L+ "N" 25+80.4			i1
		i2										20				ABANDON CULVERT				i2
D-2	4	j		205						2.00						18" APC		D-2	4	j
SHEET TOTAL			772	819	515	3	14	~~62.89~~ 26.67	4085			20		1	1.68					
DQ-1 TOTAL			475			1	4	~~31.83~~ 5.97	1282				197.04		0.56					
GRAND TOTAL			1247	819	515	4	18	~~94.72~~ 32.64	5367			20	197.04	1	2.24					

(N) = NOT A SEPARATE PAY ITEM, FOR INFORMATION ONLY 3

3 REVISED PER ADDENDUM No. 3 DATED JANUARY 4, 2013

DRAINAGE QUANTITIES
DQ-2

STATE OF CALIFORNIA - DEPARTMENT OF TRANSPORTATION
DESIGN
Caltrans

FUNCTIONAL SUPERVISOR: ARLISSA PANG
CALCULATED-DESIGNED BY: EUGENE P.WOLLAK
CHECKED BY: TRUYEN TRAN
REVISED BY: TT
DATE REVISED: 08/01/12

LAST REVISION 09-28-12
DATE PLOTTED => 10:19
TIME PLOTTED =>

Dist	COUNTY	ROUTE	POST MILES TOTAL PROJECT	SHEET No.	TOTAL SHEETS
04	Ala	80	2.2	53	800

REGISTERED CIVIL ENGINEER 10/12/12 DATE

10-22-12
PLANS APPROVAL DATE

REGISTERED PROFESSIONAL ENGINEER Eugene P. Wollak No. 38955 Exp. 3-31-13 CIVIL STATE OF CALIFORNIA

THE STATE OF CALIFORNIA OR ITS OFFICERS OR AGENTS SHALL NOT BE RESPONSIBLE FOR THE ACCURACY OR COMPLETENESS OF SCANNED COPIES OF THIS PLAN SHEET.

MINOR CONCRETE CURB

SHEET No.	STATION	CURB (TYPE A1-6)
		CY
L-1	L+ "M" 01+77 TO 03+91	11
L-1	L+ "M" 04+40 TO 08+94	24
L-1 TO L-2	L+ "N" 11+83 TO 28+11	51
L-2	L+ "N" 20+16 TO 23+15	21
L-2	L+ "N" 12+67 TO R+ 28+47	53
L-2	L+ "N" 28+19 TO 29+33	7
TOTAL		167

ROADWAY QUANTITIES

STATION/LOCATION	CLASS 3 AGGREGATE BASE	HOT MIX ASPHALT (TYPE A)	LIQUID ASPHALT (PRIME COAT)	GEOSYNTHETIC PAVEMENT INTERLAYER (PAVING FABRIC)
	CY	TON	TON	SQYD
"N" 06+27 TO 13+41	448	1269	5	
"N" 13+41 TO 29+26	3726	15091	60	
"N" 21+88 TO 24+81	452	732	2	2714
HMA DIKE		4.0		
TOTAL	4626	17096	67	2714

STAGE CONSTRUCTION AND TRAFFIC HANDLING

SHEET No.	STATION	TEMPORARY FENCE (TYPE CL-6)	CHANNELIZER (SURFACE MOUNTED)
		LF	EA
SC-1	"N" 13+31 TO "N" 21+20	1065	
SC-2	"N" 21+20 TO "N" 28+66	1250	
SC-3	"N" 02+61 TO "N" 13+31		110
TOTAL		2315	110

EARTHWORK EXCAVATION

SHEET No.	STATION	ROADWAY EXCAVATION		REMOVE BASE AND SURFACING	LIGHTWEIGHT CELLULAR CONCRETE	IMPORTED BORROW	TOPSOIL
		TYPE H	CLASS 2				
		CY				TON	CY
C-20, D1, D-2	44' R+ "N" 14+24 TO 23' L+ "N" 27+82	810			1140		
L-1, L-2,	"M" 01+76 TO "M" 08+93	1000					1370
	"N" 11+80 TO "N" 29+26	1370					6340
C-13 TO C-17	"M" 01+76 TO "N" 13+49	2490					
	"N" 13+49 TO "N" 29+26	12740	8080				
C-11, C-12	"M" 01+76 TO "N" 29+26			8596			
C-21, C-22	"N" 14+50 TO "N" 27+05					17349	
E-1, E-2, E-5	"N" 06+73.70 TO "N" 17+80	500				489	
TOTAL		18910	8080	8596	1140	17838	7710

RUMBLE STRIP

SHEET No.	STATION	STA
L-1	38.5' R+ "M" 04+47 TO "58' R+ "M" 08+82.3	4.35
TOTAL		4.35

PLACE HMA DIKE (TYPE E)

SHEET No.	STATION	LENGTH	HMA (TYPE A)
		LF	TON
L-1	"M"03+69.2 TO 03+99	64	1.8
L-1	"M" 04+73.1 TO 04+82.0	84	2.2
TOTAL		148	4.0(*)

(*) QUANTITY INCLUDE IN THE ROADWAY QUANTITIES TABLE.

SECURITY METAL FENCE AND GATES

SHEET No.	STATION	FENCE	SLIDING GATE		SWING GATE
			18'	35'	3'
		LF	EA		
L-1	55' L+ "N" 06+88 TO 87' L+ 13+49	713			
L-1	141' L+ "N" 13+50		2		
L-1	L+, R+ "N" 13+49	177			
L-1, L-2	57' R+ "N" 13+49 TO 29' L+ 28+01	1467			
L-1, L-2	163' L+ "N" 13+49 TO 192' L+ 30+81	1780			
L-2	95' L+ "N" 28+58 TO 192' L+ 30+81	250			
L-2	50' L+ "N" 28+16			1	
L-2	31' L+ "N" 28+02				1
TOTAL		4390	2	1	1

PARKING BUMPER (PRECAST CONCRETE)

STATION	EA
"N" 14+69 TO 25+35	67
TOTAL	67

PCC (GUTTER LINING)

STATION	CY
"N" 13+23.9 TO 27+00.67	120
TOTAL	120

CHAIN LINK FENCE

3

SHEET No.	STATION	(TYPE CL-6) LF
L-1	28.2' R+ "MN" 00+30.5 TO 14.4' R+ 00+65.7	39
TOTAL		39

3 REVISED PER ADDENDUM No. 3 DATED JANUARY 4, 2013

SUMMARY OF QUANTITIES

Q-1

REVISED BY	DATE REVISED
TT	10/11/12

TRUYEN TRAN — EUGENE P. WOLLAK — CALCULATED-DESIGNED BY — CHECKED BY

FUNCTIONAL SUPERVISOR: ARLISSA PANG

STATE OF CALIFORNIA - DEPARTMENT OF TRANSPORTATION — DESIGN — Caltrans

LAST REVISION 10-11-12 — DATE PLOTTED => 03-JAN-2013 — TIME PLOTTED => 13:27

DIST.	COUNTY	ROUTE	POST MILES TOTAL PROJECT	SHEET NO.	TOTAL SHEETS
04	Ala	80	2.2	101	800

ACCESSIBILITY DESIGN APPROVAL STAMP
DOT / DES / OTA
PROJECT ID
0412000666
Reviewed by: Y. A. WANG
Date: 12-06-12

CALIFORNIA STATE FIRE MARSHAL
APPROVED
Approval of this plan does not authorize or approve any omission or deviation from applicable regulations. Final approval is subject to field inspection. One set of approved plans shall be available on the project site at all times.
Reviewed by: SPENCER MEYER
Approval date: 12-13-12
CSFM FILE NO. 01-01-11-0027

3

Frank Thomas 5/30/2012
LICENSED ARCHITECT DATE

LICENSED ARCHITECT
FRANK THOMAS
No. C-31406
Exp. 4-30-13
STATE OF CALIFORNIA

10-22-12
PLANS APPROVAL DATE

The State of California or its officers or agents shall not be responsible for the accuracy or completeness of scanned copies of this plan sheet.

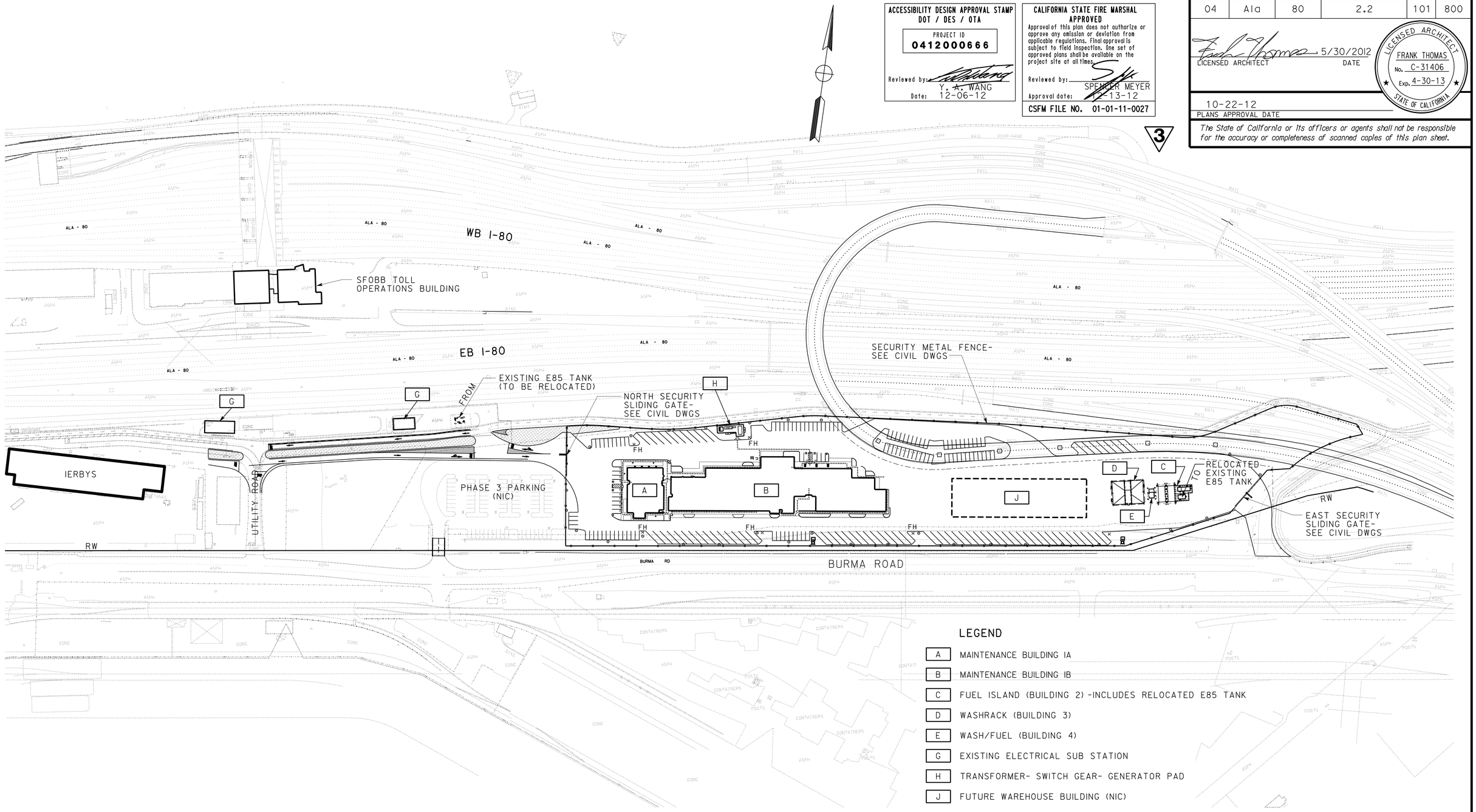

3 **REVISED PER ADDENDUM No. 3 DATED JANUARY 4, 2013**

GENERAL PLAN

SCALE 1" = 100'-0"

R.E. Travis
DESIGN SUPERVISOR
DESIGN ARCHITECT

DESIGNER: F. THOMAS, L. RHOADES
DRAWN BY: C. NAKAHARA, F. THOMAS
CHECKED BY:
STRUCTURAL REVIEW

SHEET LEGEND
A-1 ARCHITECTURAL ST-1 STRUCTURAL
M-1 MECHANICAL EE-1 ELECTRICAL
P-1 PLUMBING SS-1 SANITARY

STATE OF CALIFORNIA
DEPARTMENT OF TRANSPORTATION

DIVISION OF ENGINEERING SERVICES
ARCHITECTURAL AND STRUCTURAL DESIGN

BRIDGE NO. 33M5785
POST MILE 2.2

SFOBB MAINTENANCE COMPLEX
GENERAL PLAN
GENERAL PLAN

SHEET GP

a0_00_gp.add
TAEMWW Imperial Rev. 7/10 28-DEC-2012 07:57

ORIGINAL SCALE IN INCHES FOR REDUCED PLANS 0 1 2 3

UNIT 3598
PROJECT NUMBER & PHASE 04120006661
EA 04-014081

DISREGARD PRINTS BEARING EARLIER REVISION DATES
REVISION DATES (PRELIMINARY STAGE ONLY) 02-28-12 03-26-12 05-08-12 05-17-12 06-01-12 06-20-12
SHEET X OF X

28-DEC-2012 07:57
a0_00_gp.add

INDEX OF DRAWINGS ARCHITECTURAL/STRUCTURAL

DIST.	COUNTY	ROUTE	POST MILES TOTAL PROJECT	SHEET NO.	TOTAL SHEETS
04	Ala	80	2.2	102	800

LICENSED ARCHITECT — DATE 5/30/2012

LICENSED ARCHITECT FRANK THOMAS No. C-31406 Exp. 4-30-13 STATE OF CALIFORNIA

10-22-12
PLANS APPROVAL DATE

The State of California or its officers or agents shall not be responsible for the accuracy or completeness of scanned copies of this plan sheet.

ACCESSIBILITY DESIGN APPROVAL STAMP DOT / DES / OTA
PROJECT ID 0412000666
Reviewed by: Y. A. WANG
Date: 12-06-12

CALIFORNIA STATE FIRE MARSHAL APPROVED
Approval of this plan does not authorize or approve any omission or deviation from applicable regulations. Final approval is subject to field inspection. One set of approved plans shall be available on the project site at all times.
Reviewed by: SPENCER MEYER
Approval date: 12-13-12

3

ARCHITECTURAL

GP	GENERAL PLAN
A0-1.1	INDEX SHEET 1
A0-1.2	INDEX SHEET 2
A0-1.3	ARCHITECTURAL ABBREVIATIONS, SYMBOLS
A0-2.1	SITE PLAN 1
A0-2.2	SITE PLAN 2
A0-2.5	FLATWORK PARTIAL PLAN 1
A0-2.6	FLATWORK PARTIAL PLAN 2
A0-2.7	FLATWORK PARTIAL PLAN 3
A0-2.8	FLATWORK PARTIAL PLAN 4
A0-2.9	FLATWORK PARTIAL PLAN 5
A0-3.1	ACCESSIBILITY STANDARD DETAILS
A0-3.2	ACCESSIBILITY STANDARD DETAILS
A0-3.3	ACCESSIBILITY STANDARD DETAILS
A0-3.4	ACCESSIBILITY STANDARD DETAILS
A0-3.5	ACCESSIBILITY STANDARD DETAILS
A0-4.1	CODE ANALYSIS 1
A0-4.2	CODE ANALYSIS EXITING
A0-4.3	CODE ANALYSIS OCCUPANT LOAD CALCS
A0-4.4	CODE ANALYSIS 2
A0-5.0	EXTERIOR FINISH SCHEDULE
A0-5.1	FINISH SCHEDULE 1
A0-5.2	FINISH SCHEDULE 2
A0-5.3	FINISH SCHEDULE 3
A0-5.4	FINISH SCHEDULE 4
A0-5.5	FINISH SCHEDULE 5
A0-7.1	DOOR SCHEDULE 1
A0-7.2	DOOR SCHEDULE 2
A0-7.3	DOOR SCHEDULE 3
A0-7.4	DOOR,WINDOW, AND LOUVER TYPES
A0-8.1	CURTAIN WALL SYSTEM SCHEDULE-1
A0-8.2	STOREFRONT WINDOW AND DOOR SCHEDULE-1
A0-8.3	STOREFRONT WINDOW SYSTEM SCHEDULE 2
A0-8.4	STOREFRONT WINDOW SYSTEM SCHEDULE-3
A0-8.5	PMF WINDOW AND DOOR SCHEDULE-1
A0-9.1	PERFORMANCE CERT OF COMPLIANCE (1)
A0-9.2	PERFORMANCE CERT OF COMPLIANCE (2)
A0-9.3	PERFORMANCE CERT OF COMPLIANCE (3)
A0-9.4	PERFORMANCE CERT OF COMPLIANCE (4)
A0-9.5	PERFORMANCE CERT OF COMPLIANCE (5)
A0-9.6	PERFORMANCE CERT OF COMPLIANCE (6)

BUILDING IA AND IB

A1-1.0	OVERALL FLOOR PLAN
A1-1.1	1ST FLOOR PLAN
A1-1.2	2ND FLOOR PLAN
A1-1.3	1ST FLOOR PLAN 1
A1-1.4	PARTIAL FLOOR PLAN 2
A1-1.5	PARTIAL FLOOR PLAN 3
A1-1.6	PARTIAL FLOOR PLAN 4
A1-2.1	1ST FLOOR EQUIPMENT PLAN
A1-2.2	2ND FLOOR EQUIPMENT PLAN
A1-2.3	PARTIAL EQUIPMENT PLAN 1
A1-2.4	PARTIAL EQUIPMENT PLAN 2
A1-2.5	PARTIAL EQUIPMENT PLAN 3
A1-2.6	PARTIAL EQUIPMENT PLAN 4
A1-3.1	1ST FLOOR REFLECTED CEILING PLAN
A1-3.2	2ND FLOOR REFLECTED CEILING PLAN
A1-3.3	PARTIAL REFLECTED CEILING PLAN 1
A1-3.4	PARTIAL REFLECTED CEILING PLAN 2
A1-3.5	PARTIAL REFLECTED CEILING PLAN 3
A1-3.6	PARTIAL REFLECTED CEILING PLAN 4
A1-4.0	OVERALL ROOF PLAN
A1-4.1	ROOF PLAN 1
A1-4.2	PARTIAL ROOF PLAN 1
A1-4.3	PARTIAL ROOF PLAN 2
A1-4.4	PARTIAL ROOF PLAN 3
A1-4.5	PARTIAL ROOF PLAN 4
A1-5.1	BUILDING ELEVATIONS 1
A1-5.2	BUILDING ELEVATIONS 2
A1-5.3	BUILDING ELEVATIONS 3
A1-5.4	BUILDING ELEVATIONS 4
A1-5.5	BUILDING ELEVATIONS 5
A1-5.6	BUILDING ELEVATIONS 6

ARCHITECTURAL, continued

A1-6.1	BUILDING SECTIONS 1
A1-6.2	BUILDING SECTIONS 2
A1-6.3	BUILDING SECTIONS 3
A1-6.4	BUILDING SECTIONS 4
A1-6.5	BUILDING SECTIONS 5
A1-6.6	BUILDING SECTIONS 6
A1-6.7	BUILDING SECTIONS 7
A1-6.8	BUILDING SECTIONS 8
A1-6.9	BUILDING SECTIONS 9
A1-6.10	BUILDING SECTIONS 10
A1-6.11	BUILDING SECTIONS 11
A1-6.12	BUILDING SECTIONS 12
A1-7.1	WALL SECTIONS
A1-7.2	WALL SECTIONS
A1-7.3	WALL SECTIONS
A1-7.4	WALL SECTIONS
A1-7.5	WALL SECTIONS
A1-7.6	WALL SECTIONS
A1-7.7	WALL SECTIONS
A1-8.1	ELEVATOR PLANS
A1-8.2	ELEVATOR SECTIONS
A1-9.1	NORTH STAIR PLANS
A1-9.2	SOUTH STAIR PLANS
A1-9.3	NORTH STAIR SECTION
A1-9.4	NORTH STAIR SECTION
A1-9.5	STAIR SECTION
A1-9.6	STAIR DETAILS

BUILDING IA AND IB

A1-10.1	INTERIOR ELEVATIONS
A1-10.2	INTERIOR ELEVATIONS
A1-10.3	ENLARGED PLAN
A1-10.4	INTERIOR ELEVATIONS
A1-10.5	INTERIOR ELEVATIONS
A1-10.6	INTERIOR ELEVATIONS
A1-10.7	INTERIOR ELEVATIONS
A1-10.8	INTERIOR ELEVATIONS
A1-10.9	INTERIOR ELEVATIONS
A1-10.10	INTERIOR ELEVATIONS
A1-10.11	ENLARGED PLAN & INTERIOR ELEVATIONS
A1-10.12	INTERIOR ELEVATIONS
A1-10.13	INTERIOR ELEVATIONS
A1-10.14	INTERIOR ELEVATIONS
A1-10.15	INTERIOR ELEVATIONS
A1-10.16	INTERIOR ELEVATIONS
A1-10.17	INTERIOR ELEVATIONS
A1-10.18	INTERIOR ELEVATIONS
A1-10.19	INTERIOR ELEVATIONS
A1-10.20	INTERIOR ELEVATIONS
A1-10.21	INTERIOR ELEVATIONS
A1-10.22	ENLARGED PLAN & INTERIOR ELEVATIONS
A1-10.23	ENLARGED PLAN & INTERIOR ELEVATIONS
A1-10.24	ENLARGED PLAN & INTERIOR ELEVATIONS
A1-10.25	INTERIOR ELEVATIONS
A1-10.26	INTERIOR ELEVATIONS
A1-10.27	INTERIOR ELEVATIONS
A1-10.28	INTERIOR ELEVATIONS
A1-10.29	INTERIOR ELEVATIONS
A1-10.30	INTERIOR ELEVATIONS
A1-10.31	INTERIOR ELEVATIONS
A1-10.32	INTERIOR ELEVATIONS
A1-10.33	INTERIOR ELEVATIONS
A1-10.34	ENLARGED PLAN & INTERIOR ELEVATIONS
A1-10.35	ENLARGED PLAN & INTERIOR ELEVATIONS
A1-10.36	INTERIOR ELEVATIONS
A1-10.37	INTERIOR ELEVATIONS
A1-10.38	ENLARGED PLAN & INTERIOR ELEVATIONS
A1-10.39	INTERIOR ELEVATIONS
A1-10.40	INTERIOR ELEVATIONS

ARCHITECTURAL, continued

A1-11.1	1ST FLOOR EQUIPMENT (NIC) PLAN (REF ONLY)
A1-11.2	2ND FLOOR EQUIPMENT (NIC) PLAN (REF ONLY)
A1-11.3	PARTIAL EQUIPMENT (NIC) PLAN 1 (REF ONLY)
A1-11.4	PARTIAL EQUIPMENT (NIC) PLAN 2 (REF ONLY)
A1-11.5	PARTIAL EQUIPMENT (NIC) PLAN 3 (REF ONLY)
A1-11.6	PARTIAL EQUIPMENT (NIC) PLAN 4 (REF ONLY)
A1-12.1	WINDOW BOX
A1-13.0	COMPOSITE PANEL COLUMNS
A1-14.1	WEST CANOPY
A1-14.2	WEST CANOPY
A1-14.3	NORTH CANOPY
A1-14.4	SOUTH CANOPY

A2 SERIES - FUEL ISLAND

A2-01	FLOOR PLAN
A2-02	REFLECTED CEILING PLAN
A2-03	ROOF PLAN
A2-04	ELEVATIONS
A2-05	BUILDING SECTIONS
A2-06	BUILDING DETAILS
A2-07	BUILDING DETAILS

A3 SERIES - WASHRACK

A3-01	FLOOR PLAN
A3-02	REFLECTED CEILING PLAN
A3-03	ROOF PLAN
A3-04	ELEVATIONS
A3-05	BUILDING SECTIONS
A3-06	BUILDING DETAILS
A3-07	BUILDING DETAILS

A4 SERIES- WASH/FUEL BUILDING

A4-01	FLOOR PLAN
A4-02	EXTERIOR ELEVATIONS AND BUILDING SECTIONS
A4-03	DOOR SCHEDULE & FINISH SCHEDULE
A4-04	BUILDING DETAILS
A4-05	DOOR DETAILS
A4-06	ROOF DETAILS (DOWNSPOUTS & GUTTERS)

DETAILS

A6-1.1	MISCELLANEOUS SITE DETAILS
A6-1.2	EXTERIOR METAL GATES
A6-1.3	ENTRANCE ISLAND
A6-2.1	CONCRETE DETAILS
A6-2.2	CONCRETE DETAILS
A6-3.1	METAL LADDER DETAILS
A6-3.2	INTERIOR METAL LADDER DETAILS
A6-3.4	SUNSHADE DETAILS 1
A6-3.5	SUNSHADE DETAILS 2
A6-3.6	DOOR AWNINGS
A6-3.7	TRELLIS DETAILS 1
A6-3.8	TRELLIS DETAILS 2
A6-3.9	TRELLIS DETAILS 3
A6-4.1	INSULATED METAL PANEL DETAILS
A6-4.2	INSULATED METAL PANEL DETAILS
A6-5.1	COMPOSITE PANEL DETAILS
A6-5.2	COMPOSITE PANEL DETAILS
A6-5.3	COMPOSITE PANEL DETAILS
A6-5.4	COMPOSITE PANEL DETAILS
A6-6.1	ROOF DRAINS
A6-6.2	ROOF PENETRATIONS
A6-7.1	FIRE RATING DETAILS
A6-7.2	FIRE RATING DETAILS
A6-7.3	FIRE RATING DETAILS
A6-7.4	FIRE RATING DETAILS
A6-7.5	FIRE RATING DETAILS
A6-7.6	FIRE RATING DETAILS
A6-7.7	FIRE RATING DETAILS
A6-7.8	FIRE RATING DETAILS

ARCHITECTURAL, continued

A6-7.9	FIRE RATING DETAILS
A6-8.1	DOOR DETAILS
A6-8.2	DOOR DETAILS 2
A6-8.3	DOOR DETAILS
A6-8.4	FOLDING DOOR DETAILS
A6-9.1	OVERHEAD DOOR DETAILS
A6-10.1	CURTAIN WALL
A6-10.2	CURTAIN WALL
A6-10.3	STOREFRONT
A6-10.4	STOREFRONT
A6-10.5	INTERIOR PMF WINDOW & WIND SCREEN SYSTEM DETAILS
A6-11.1	SKYLIGHT DETAILS
A6-12.1	INTERIOR FINISH DETAILS
A6-12.2	INTERIOR FINISH DETAILS
A6-12.3	SUSPENDED CEILING DETAILS
A6-13.1	SPECIALTY DETAILS
A6-13.2	INTERIOR SIGNS
A6-13.3	WIRE MESH PARTITIONS
A6-14.1	PAINT MIX BOOTH
A6-15.1	CABINETRY DETAILS
A6-15.2	CABINETRY DETAILS
A6-15.3	CASEWORK
A6-15.4	SEW ROOM TABLE DETAILS
A6-15.5	GEAR ROOM CABINETRY DETAILS
A6-15.6	GEAR ROOM CABINETRY DETAILS
A6-16.1	FURNISHING DETAILS
A6-16.2	WORK BENCH
A6-17.1	ELEVATOR DETAILS

STRUCTURAL

ST-00	SITE PLAN
ST-1	LEGEND
ST-2	CONCRETE STANDARD

BUILDING IA AND IB

STI-0	DESIGN CRITERIA AND DETAIL NOTES
STI-1	GRADE BEAM AND PILE INDEX PLAN
STI-2	GRADE BEAM AND PILE PARTIAL PLAN 1 OF 5
STI-3	GRADE BEAM AND PILE PARTIAL PLAN 2 OF 5
STI-4	GRADE BEAM AND PILE PARTIAL PLAN 3 OF 5
STI-5	GRADE BEAM AND PILE PARTIAL PLAN 4 OF 5
STI-6	GRADE BEAM AND PILE PARTIAL PLAN 5 OF 5
STI-7	SLAB AND CONCRETE WALL INDEX PLAN
STI-8	SLAB PARTIAL PLAN 1 OF 5
STI-9	SLAB PARTIAL PLAN 2 OF 5
STI-10	SLAB PARTIAL PLAN 3 OF 5
STI-11	SLAB PARTIAL PLAN 4 OF 5
STI-12	SLAB PARTIAL PLAN 5 OF 5
STI-13	INTERMEDIATE BEAM PARTIAL PLAN
STI-14	INTERMEDIATE BEAM PARTIAL PLAN 1 OF 5
STI-15	INTERMEDIATE BEAM PARTIAL PLAN 2 OF 5
STI-16	INTERMEDIATE BEAM PARTIAL PLAN 3 OF 5
STI-17	INTERMEDIATE BEAM PARTIAL PLAN 4 OF 5
STI-18	INTERMEDIATE BEAM PARTIAL PLAN 5 OF 5
STI-19	FLOOR FRAMING PLAN
STI-20	ROOF FRAMING INDEX PLAN
STI-21	ROOF FRAMING PARTIAL PLAN 1 OF 5
STI-22	ROOF FRAMING PARTIAL PLAN 2 OF 5
STI-23	ROOF FRAMING PARTIAL PLAN 3 OF 5
STI-24	ROOF FRAMING PARTIAL PLAN 4 OF 5
STI-25	ROOF FRAMING PARTIAL PLAN 5 OF 5
STI-26	BUILDING SECTION
STI-27	BUILDING SECTION
STI-28	BUILDING SECTION
STI-29	BUILDING SECTION
STI-30	BUILDING SECTION
STI-31	BUILDING SECTION
STI-32	BUILDING SECTION
STI-33	BUILDING SECTION

STRUCTURAL, continued

STI-34	BUILDING SECTION
STI-35	BUILDING SECTION
STI-36	BUILDING SECTION
STI-37	BUILDING SECTION
STI-38	LONGITUDINAL SECTION INDEX PLAN
STI-39	FOUNDATION DETAILS
STI-40	FOUNDATION DETAILS
STI-41	FOUNDATION DETAILS
STI-42	FOUNDATION DETAILS
STI-43	FOUNDATION DETAILS
STI-44	FOUNDATION DETAILS
STI-45	FOUNDATION DETAILS
STI-46	FOUNDATION DETAILS
STI-47	FOUNDATION DETAILS
STI-48	FOUNDATION DETAILS
STI-49	FOUNDATION DETAILS
STI-50	FOUNDATION DETAILS
STI-51	CHEVRON FRAME ELEVATION
STI-52	CHEVRON FRAME ELEVATION
STI-53	CHEVRON FRAME DIAGRAMS - BUILDING IA
STI-54	CHEVRON FRAME DIAGRAMS - BUILDING IB
STI-55	CHEVRON FRAME DETAILS
STI-56	CHEVRON FRAME DETAILS
STI-57	OPEN WEB STEEL JOISTS - FLOOR
STI-58	OPEN WEB STEEL JOISTS - ROOF
STI-59	FLOOR FRAMING DETAILS - STEEL
STI-60	FLOOR AND ROOF DECK OPENINGS
STI-61	HSS FRAMING AT STAIRWELL
STI-62	HSS FRAMING AT STAIRWELL
STI-63	ROOF FRAMING DETAILS - STEEL
STI-64	ROOF FRAMING DETAILS - STEEL
STI-65	WALL FRAMING ELEVATION AT GRID 2
STI-66	WALL FRAMING ELEVATION AT GRID A
STI-67	WALL FRAMING ELEVATION AT GRID 9
STI-68	WALL FRAMING ELEVATION AT GRID D
STI-69	WALL FRAMING ELEVATION AT GRID E
STI-70	WALL FRAMING ELEVATION AT GRID E
STI-71	WINDOW BOX FRAMING ELEVATION
STI-72	HSS WALL FRAMING DETAILS
STI-73	HSS FRAMING DETAILS
STI-74	HSS FRAMING DETAILS
STI-75	WINDOW BOX FRAMING DETAILS
STI-76	FRAMING DETAILS AT GRIDS 2/D
STI-77	MISCELLANEOUS FRAMING DETAILS
STI-78	HSS BEAM BRACES
STI-79	HSS BEAM BRACE PLATES
STI-80	SUNSCREEN DETAILS
STI-81	WEST SUNSCREEN DETAILS
STI-82	GRIDLINE 'A' CANOPY FRAMING DETAILS
STI-83	GRIDLINE 'A' CANOPY FRAMING DETAILS
STI-84	GRIDLINE 'A' CANOPY FRAMING DETAILS
STI-85	GRIDLINE 'A' CANOPY FRAMING DETAILS
STI-86	LATTICE CANOPY PLAN AT GRIDS D & E
STI-87	LATTICE CANOPY SECTIONS
STI-88	LATTICE CANOPY SECTIONS
STI-89	LATTICE CANOPY SECTIONS
STI-90	LATTICE CANOPY DETAILS
STI-91	LATTICE CANOPY DETAILS
STI-92	ELEVATOR SHAFT FRAMING PLANS
STI-93	ELEVATOR SHAFT SECTION & DETAILS
STI-94	ELEVATOR SHAFT FRAMING DETAILS
STI-95	OUT OF PLANE CONNECTIONS
STI-96	OUT OF PLANE CONNECTIONS
STI-97	OUT OF PLANE CONNECTIONS
STI-98	OUT OF PLANE CONNECTIONS
STI-99	ORDER OF ASSEMBLY DETAILS
STI-100	EQUIPMENT BAY DOOR FRAMING
STI-101	HSS EQUIPMENT BAY DOOR FRAMING DETAILS
STI-102	BRIDGE CRANE HSS FRAMING
STI-103	BRIDGE CRANE FRAMING DETAILS
STI-104	BRIDGE CRANE FRAMING DETAILS
STI-105	BRIDGE CRANE FRAMING DETAILS
STI-106	BRIDGE CRANE FRAMING DETAILS
STI-107	BRIDGE CRANE FRAMING DETAILS
STI-108	WALL FRAMING ELEVATION AT GRID 2
STI-109	WALL FRAMING DETAILS
STI-110	WALL FRAMING ELEVATION AT GRID AA
STI-111	WALL FRAMING SECTION & DETAILS

STRUCTURAL, continued

STI-112	WALL FRAMING DETAILS
STI-113	WALL FRAMING ELEVATION AT GRID 6
STI-114	WALL FRAMING SECTIONS AND DETAILS
STI-115	WINDOW FRAMING ELEVATION AT GRID 9
STI-116	WALL FRAMING SECTIONS
STI-117	WALL FRAMING SECTIONS
STI-118	WALL FRAMING DETAILS
STI-119	WALL FRAMING ELEVATION AT GRID S
STI-120	WALL FRAMING SECTIONS
STI-121	BUTTRESS BEAM PLAN AT GRID 2
STI-122	BUTTRESS FRAMING
STI-123	BUTTRESS FRAMING DETAILS
STI-124	BUTTRESS FRAMING DETAILS
STI-125	CANOPY AT GRID 2
STI-126	CANOPY AT GRID 2 DETAILS
STI-127	CANOPY AT GRID 2 DETAILS
STI-128	COURTYARD CANOPY PLAN
STI-129	COURTYARD CANOPY SECTIONS
STI-130	COURTYARD CANOPY DETAILS
STI-131	STEEL FRAME CONNECTIONS
STI-132	STEEL MOMENT FRAME CONNECTIONS
STI-133	COLD FORM STEEL DETAILS
STI-134	COLD FORM STEEL DETAILS
STI-135	COLD FORM STEEL DETAILS
STI-136	COLD FORM STEEL DETAILS
STI-137	COLD FORM STEEL DETAILS
STI-138	COLD FORM STEEL DETAILS
STI-139	COLD FORM STEEL DETAILS
STI-140	LUBE REEL SUPPORT DETAILS
STI-141	FOLDING PARTITION SUPPORT DETAILS
STI-142	FOLDING PARTITION SUPPORT DETAILS
STI-143	FOLDING PARTITION SUPPORT DETAILS
STI-144	CIDH PILE DETAILS
STI-145	ELECTRICAL EQUIPMENT SLAB
STI-146	ALLOWABLE CONDUIT PLACEMENT
STI-147	ALLOWABLE CONDUIT PLACEMENT
STI-148	ROOF DECK OPENINGS
STI-149	ANTENNA POLE ANCHORAGE

3 **REVISED PER ADDENDUM No. 3 DATED JANUARY 4, 2013**

ARCHITECTURAL/STRUCTURAL cont, SHEET A0-1.2 INDEX 2

	BY	CHECKED
DESIGN	F. THOMAS, L. RHOADES	
DETAILS	C. NAKAHARA,	
QUANTITIES		

STATE OF CALIFORNIA DEPARTMENT OF TRANSPORTATION

DIVISION OF ENGINEERING SERVICES ARCHITECTURAL AND STRUCTURAL DESIGN

BRIDGE NO. 33M5785 — POST MILE 2.2

SFOBB MAINTENANCE COMPLEX

INDEX SHEET 1

SHEET **A0-1.1**

UNIT 3598
PROJECT NUMBER & PHASE 04120006661
EA 014081

ORIGINAL SCALE IN INCHES FOR REDUCED PLANS 0 1 2 3

DISREGARD PRINTS BEARING EARLIER REVISION DATES → REVISION DATES (PRELIMINARY STAGE ONLY) 02-28-12 04-26-12 05-08-12 05-17-12 06-01-12 06-20-12 07-23-12 — SHEET X OF X

a0_01_1_index.add
TAEMWW Imperial Rev. 7/10 27-DEC-2012 11:15

27-DEC-2012 11:15 a0_01_1_index.add

DIST.	COUNTY	ROUTE	POST MILES TOTAL PROJECT	SHEET NO.	TOTAL SHEETS
04	Ala	80	2.2	103	800

LICENSED ARCHITECT — FRANK THOMAS No. C-31406 Exp. 4-30-13 — STATE OF CALIFORNIA

5/30/2012
LICENSED ARCHITECT — DATE

10-22-12
PLANS APPROVAL DATE

The State of California or its officers or agents shall not be responsible for the accuracy or completeness of scanned copies of this plan sheet.

ACCESSIBILITY DESIGN APPROVAL STAMP DOT / DES / OTA
PROJECT ID **0412000666**
Reviewed by: Y. A. WANG
Date: 12-06-12

CALIFORNIA STATE FIRE MARSHAL APPROVED
Approval of this plan does not authorize or approve any omission or deviation from applicable regulations. Final approval is subject to field inspection. One set of approved plans shall be available on the project site at all times.
Reviewed by: SPENCER MEYER
Approval date: 12-13-12

ARCHITECTURAL / STRUCTURAL

STRUCTURAL, continued

A2-SERIES - FUEL ISLAND

ST2-0	DESIGN CRITERIA AND DETAIL NOTES
ST2-1	FOUNDATION PLAN
ST2-2	ROOF FRAMING PLAN
ST2-3	CANOPY SECTION
ST2-4	CANOPY SECTION
ST2-5	PILE AND MISCELLANEOUS DETAILS
ST2-6	CANOPY FRAMING DETAILS
ST2-7	CANOPY FRAMING DETAILS
ST2-8	CANOPY DETAILS

A3-SERIES - WASHRACK

ST3-0	DESIGN CRITERIA AND DETAIL NOTES
ST3-1	FOUNDATION PLAN
ST3-2	WASHPAD/BASIN PLAN
ST3-3	ROOF FRAMING PLAN
ST3-4	SOFFIT FRAMING PLAN
ST3-5	TRANSVERSE CROSS SECTION
ST3-6	TRANSVERSE CROSS SECTION
ST3-7	FOUNDATION DETAILS
ST3-8	PILE AND MISCELLANEOUS DETAILS
ST3-9	ABUTMENT AND BENT DETAILS
ST3-10	BASIN DETAILS
ST3-11	WASHPAD REINFORCEMENT DETAILS
ST3-12	BASIN REINFORCEMENT & RAILING DETAILS
ST3-13	BASIN OUTLET DETAILS
ST3-14	CANOPY FRAMING DETAILS
ST3-15	FASCIA FRAMING DETAILS
ST3-16	CANOPY DETAILS 2

A4-SERIES - FUEL-WASH

ST4-0	DESIGN CRITERIA AND DETAIL NOTES
ST4-1	FOUNDATION PLAN
ST4-2	ROOF FRAMING PLAN
ST4-3	BUILDING SECTIONS
ST4-4	LONGITUDINAL BUILDING SECTION
ST4-5	WALL FRAMING DETAILS
ST4-6	ROOF FRAMING AND HEADER DETAILS
ST4-7	WALL FRAMING DETAILS AND NOTES

LOG OF TEST BORING

LOG OF TEST BORINGS (1 OF 14)
LOG OF TEST BORINGS (2 OF 14)
LOG OF TEST BORINGS (3 OF 14)
LOG OF TEST BORINGS (4 OF 14)
LOG OF TEST BORINGS (5 OF 14)
LOG OF TEST BORINGS (6 OF 14)
LOG OF TEST BORINGS (7 OF 14)
LOG OF TEST BORINGS (8 OF 14)
LOG OF TEST BORINGS (9 OF 14)
LOG OF TEST BORINGS (10 OF 14)
LOG OF TEST BORINGS (11 OF 14)
LOG OF TEST BORINGS (12 OF 14)
LOG OF TEST BORINGS (13 OF 14)
LOG OF TEST BORINGS (14 OF 14)

ARCHITECTURAL / STRUCTURAL cont from SHEET A0-1.1 INDEX 1

MECHANICAL, PLUMBING, ELECTRICAL, WASTEWATER

MECHANICAL - HVAC

M0-0	LEGENDS AND ABBREVIATIONS
M0-1	TITLE 24
M0-2	TITLE 24
M0-3	TITLE 24
M0-4	TITLE 24
M0-5	TITLE 24
M0-6	TITLE 24
M0-7	EQUIPMENT SCHEDULE
M0-8	EQUIPMENT SCHEDULE

HVAC - BUILDING 1A AND 1B

M1-1	HVAC PLAN 1ST FLOOR PLAN
M1-2	HVAC PLAN 2ND FLOOR PLAN
M1-3	HVAC ROOF PLAN
M1-4	HVAC PARTIAL PLAN - 1
M1-5	HVAC PARTIAL PLAN - 2
M1-6	BUILDING SECTION
M1-7	BUILDING SECTION
M1-8	PARTIAL HVAC PLAN
M1-9	PARTIAL MECHANICAL PLAN
M1-10	PARTIAL MECHANICAL PLAN
M1-11	PARTIAL HVAC PLAN
M1-12	PARTIAL MECHANICAL PLAN
M1-13	PARTIAL ROOF PLAN
M1-14	PARTIAL ROOF PLAN
M1-15	PARTIAL ROOF PLAN
M1-16	HVAC PARTIAL PLAN 3
M1-17	HVAC PARTIAL PLAN 4
M1-18	BUILDING SECTION
M1-19	BUILDING SECTION
M1-20	CONTROL DIAGRAM 1
M1-21	CONTROL DIAGRAM 2
M1-22	CONTROL DIAGRAM
M1-23	SEQUENCE OF OPERATION

M4-1	MECHANICAL DETALS 1
M4-2	MECHANICAL DETALS 2
M4-3	MECHANICAL DETALS 3
M4-4	MECHANICAL DETALS 4
M4-5	MECHANICAL DETALS 5
M4-6	MECHANICAL DETALS 6
M4-7	MECHANICAL DETALS 7

MECHANICAL - PLUMBING

MP0-0	LEGEND AND ABBREVIATION
MP0-1	PARTIAL SITE PIPING PLAN NO. 1
MP0-2	PARTIAL SITE PIPING PLAN NO. 2

BUILDING 1A AND 1B

MP1-1	SANITARY SEWER PLAN NO. 1
MP1-2	SANITARY SEWER PLAN NO. 2
MP1-3	SANITARY SEWER PLAN NO. 3
MP1-4	SANITARY SEWER PLAN NO. 4
MP1-5	SANITARY SEWER PLAN NO. 5
MP1-6	SANITARY SEWER PLAN NO. 6
MP1-7	SANITARY SEWER PLAN NO. 7
MP1-8	DOMESTIC WATER PLAN NO. 1
MP1-9	DOMESTIC WATER PLAN NO. 2
MP1-10	DOMESTIC WATER PLAN NO. 3
MP1-11	DOMESTIC WATER PLAN NO. 4
MP1-12	DOMESTIC WATER PLAN NO. 5
MP1-13	DOMESTIC WATER PLAN NO. 6
MP1-14	DOMESTIC WATER PLAN NO. 7
MP1-15	RW PLUMBING PLAN NO. 1
MP1-16	RW PLUMBING PLAN NO. 2
MP1-17	RW PLUMBING PLAN NO. 3
MP1-18	RW PLUMBING PLAN NO. 4
MP1-19	SANITARY SEWER ISOMETRIC NO 1
MP1-20	SANITARY SEWER ISOMETRIC NO 2
MP1-21	DOMESTIC WATER ISOMETRIC NO 1
MP1-22	DOMESTIC WATER ISOMETRIC NO 2
MP1-23	DOMESTIC WATER ISOMETRIC NO 3
MP1-24	DOMESTIC WATER ISOMETRIC NO 4
MP1-25	ROOF PIPING PLAN NO. 1
MP1-26	ROOF PIPING PLAN NO. 2
MP1-27	EQUIPMENT LAYOUT PLAN NO. 1
MP1-28	EQUIPMENT LAYOUT PLAN NO. 2
MP1-29	EQUIPMENT LAYOUT PLAN NO. 3

MECHANICAL PLUMBING, continued

MP1-30	EQUIPMENT LAYOUT PLAN NO. 4
MP1-31	EQUIPMENT LAYOUT PLAN NO. 5

FUEL ISLAND

MP2-1	FUEL ISLAND PLUMBING PLAN
MP2-2	FUEL TANK SECTIONS AND DETAILS
MP2-3	FILL PIPE AND DISPENSER DETAILS
MP2-4	RELOCATED E-85 TANK AND DETAILS
MP2-5	STANDBY GENERATOR REFUELING DETAILS

DETAILS- BUILDING 1A, 1B, AND 2

MP4-1	PLUMBING DETAILS NO. 1
MP4-2	PLUMBING DETAILS NO. 2
MP4-3	PLUMBING DETAILS NO. 3
MP4-4	PLUMBING DETAILS NO. 4
MP4-5	PLUMBING DETAILS NO. 5
MP4-6	PLUMBING DETAILS NO. 6
MP4-7	MECHANICAL ROOM LAYOUT
MP4-8	DOMESTIC HOT WATER SCHEMATIC
MP4-9	COMMUNICATION VAULT DRAINAGE
MP4-10	EQUIPMENT SCHEDULE
MP4-11	SEWAGE LIFT STATION No. 1
MP4-12	MISCELLANEOUS DETAILS

ELECTRICAL

EE0-0.0	LEGEND

SITE

EE0-0.1	POWER SITE PLAN 1
EE0-0.2	POWER SITE PLAN 2
EE0-0.3	AREA LIGHTING SITE PLAN 1
EE0-0.4	AREA LIGHTING SITE PLAN 2
EE0-0.5	COMMUNICATION SITE PLAN 1
EE0-0.6	COMMUNICATION SITE PLAN 2
EE0-0.7	NORTH SECURITY SLIDING AND SWING GATE DETAILS
EE0-0.8	EAST SECURITY SLIDING AND SWING GATE DETAILS
EE0-0.9	MAIN COMMUNICATION VAULT DETAILS
EE0-0.10	AREA LIGHTING STANDARD DETAILS 1
EE0-0.11	AREA LIGHTING STANDARD DETAILS 2
EE0-0.12	OUTDOOR LIGHTING COMPLIANCE FORM 1
EE0-0.13	OUTDOOR LIGHTING COMPLIANCE FORM 2
EE0-0.14	INDOOR LIGHTING COMPLIANCE FORM 1
EE0-0.15	INDOOR LIGHTING COMPLIANCE FORM 2
EE0-0.16	INDOOR LIGHTING COMPLIANCE FORM 3
EE0-1.1	ELECTRICAL SYSTEM SINGLE LINE DIAGRAM
EE0-1.2	IFS-M SINGLE LINE DIAGRAM
EE0-1.3	IFS-1A SINGLE LINE DIAGRAM
EE0-1.4	IFS-2A SINGLE LINE DIAGRAM
EE0-1.5	IFS-P SINGLE LINE DIAGRAM
EE0-1.6	IFS-B SINGLE LINE DIAGRAM
EE0-1.7	IFS-V SINGLE LINE DIAGRAM
EE0-1.8	ELECTRICAL EQUIPMENT CONCRETE PAD DETAILS
EE0-1.9	MAIN SWITCHBOARD DETAILS
EE0-1.10	GROUNDING PLAN
EE0-1.11	CONDUIT AND CONDUCTOR/CABLE SCHEDULE 1
EE0-1.12	CONDUIT AND CONDUCTOR/CABLE SCHEDULE 2
EE0-1.13	PANEL M SCHEDULE

POWER

EE1-1.1	POWER PANEL KEY PLAN
EE1-1.2	FEEDER SCHEDULE 1
EE1-1.3	FEEDER SCHEDULE 2
EE1-1.4	PANELS INDEX
EE1-1.5	PARTIAL POWER PLAN 1
EE1-1.6	PARTIAL POWER PLAN 2
EE1-1.7	PARTIAL POWER PLAN 3
EE1-1.8	PARTIAL POWER PLAN 3 NOTES
EE1-1.9	PARTIAL POWER PLAN 4
EE1-1.10	PARTIAL POWER PLAN 5
EE1-1.11	PARTIAL POWER PLAN 6
EE1-1.12	PARTIAL POWER PLAN 7
EE1-1.13	PARTIAL POWER PLAN 7 NOTES
EE1-1.14	PARTIAL POWER PLAN 8
EE1-1.15	PARTIAL POWER PLAN 8 NOTES

ELECTRICAL, continued

EE1-1.16	PARTIAL POWER PLAN 9
EE1-1.17	PARTIAL POWER PLAN 9 NOTES
EE1-1.18	PARTIAL POWER PLAN 10
EE1-1.19	PARTIAL POWER PLAN 10 NOTES
EE1-1.20	PARTIAL POWER PLAN 11
EE1-1.21	PARTIAL POWER PLAN 11 NOTES
EE1-1.22	PARTIAL POWER PLAN 12
EE1-1.23	PARTIAL POWER PLAN 12 NOTES
EE1-1.24	PARTIAL POWER PLAN 13
EE1-1.25	PARTIAL POWER PLAN 13 NOTES
EE1-1.26	PARTIAL POWER PLAN 14
EE1-1.27	PARTIAL POWER PLAN 14 NOTES

HVAC

EE1-2.1	HVAC POWER PLAN 1
EE1-2.2	HVAC POWER PLAN 2
EE1-2.3	HVAC POWER PLAN 3
EE1-2.4	HVAC POWER PLAN 4
EE1-2.5	HVAC POWER PLAN 5
EE1-2.6	HVAC POWER PLAN 6
EE1-2.7	HVAC POWER PLAN 7
EE1-2.8	HVAC POWER PLAN 8

LIGHTING

EE1-3.00	LIGHTING PLANS GENERAL NOTES
EE1-3.01	LIGHTING NETWORK KEY PLAN
EE1-3.02	LIGHTING NETWORK BLOCK DIAGRAM
EE1-3.1	LIGHTING POWER PLAN 1
EE1-3.2	LIGHTING CONTROL PLAN 1
EE1-3.3	LIGHTING POWER PLAN 2
EE1-3.4	LIGHTING CONTROL PLAN 2
EE1-3.5	LIGHTING POWER PLAN 3
EE1-3.6	LIGHTING CONTROL PLAN 3
EE1-3.7	LIGHTING POWER PLAN 4
EE1-3.8	LIGHTING CONTROL PLAN 4
EE1-3.9	LIGHTING POWER PLAN 5
EE1-3.10	LIGHTING CONTROL PLAN 5
EE1-3.11	LIGHTING POWER PLAN 6
EE1-3.12	LIGHTING CONTROL PLAN 6
EE1-3.13	LIGHTING POWER PLAN 7
EE1-3.14	LIGHTING CONTROL PLAN 7
EE1-3.15	LIGHTING POWER PLAN 8
EE1-3.16	LIGHTING CONTROL PLAN 8
EE1-3.17	LIGHTING POWER PLAN 9
EE1-3.18	LIGHTING CONTROL PLAN 9
EE1-3.19	BUILDING EXTERIOR LIGHTING PLAN 1
EE1-3.20	BUILDING EXTERIOR LIGHTING PLAN 2
EE1-3.21	LIGHTING POWER AND CONTROL SCHEDULE 1
EE1-3.22	LIGHTING POWER AND CONTROL SCHEDULE 2
EE1-3.23	LIGHTING POWER AND CONTROL SCHEDULE 3
EE1-3.24	LIGHTING POWER AND CONTROL SCHEDULE 4
EE1-3.25	LIGHTING CONTROL SCHEMATICS 1
EE1-3.26	LIGHTING CONTROL SCHEMATICS 2
EE1-3.27	LIGHTING CONTROL SCHEMATICS 3
EE1-3.28	INTERIOR LIGHTING FIXTURE SCHEDULE
EE1-3.29	EXTERIOR LIGHTING FIXTURE SCHEDULE
EE1-3.30	LIGHTING DETAILS

COMMUNICATION

EE1-4.1	COMMUNICATION FEEDER PLAN
EE1-4.2	COMMUNICATION PLAN 1
EE1-4.3	COMMUNICATION PLAN 2
EE1-4.4	COMMUNICATION PLAN 3
EE1-4.5	COMMUNICATION PLAN 4
EE1-4.6	COMMUNICATION PLAN 5
EE1-4.7	COMMUNICATION DETAILS 1
EE1-4.8	COMMUNICATION DETAILS 2
EE1-4.9	COMMUNICATION DETAILS 3
EE1-4.10	COMMUNICATION DETAILS 4
EE1-4.11	COMMUNICATION DETAILS 5
EE1-4.12	GROUNDING PLATE DETAILS
EE1-4.13	COMMUNICATION EQUIPMENT SCHEDULE 1
EE1-4.14	COMMUNICATION EQUIPMENT SCHEDULE 2
EE1-4.15	COMMUNICATION EQUIPMENT SCHEDULE 3
EE1-4.16	COMMUNICATION EQUIPMENT SCHEDULE 4

ELECTRICAL, continued

COMMUNICATION

EE1-4.17	VOICE AND DATA CABLE SCHEDULE 1
EE1-4.18	VOICE AND DATA CABLE SCHEDULE 2
EE1-4.19	VOICE AND DATA CABLE SCHEDULE 3
EE1-4.20	VOICE AND DATA CABLE SCHEDULE 4

INTRUSION

EE1-5.1	INTRUSION ALARM AND ACCESS SYSTEM PLAN 1
EE1-5.2	INTRUSION ALARM AND ACCESS SYSTEM PLAN 2
EE1-5.3	INTRUSION ALARM AND ACCESS SYSTEM 3
EE1-5.4	INTRUSION ALARM AND ACCESS SYSTEM 4
EE1-5.5	INTRUSION ALARM AND ACCESS SYSTEM 5
EE1-5.6	INTRUSION ALARM AND ACCESS SYSTEM ZONING SCHEDULE 1
EE1-5.7	INTRUSION ALARM AND ACCESS SYSTEM ZONING SCHEDULE 2
EE1-5.8	INTRUSION ALARM AND ACCESS SYSTEM ZONING SCHEDULE 3

FIRE ALARM

EE1-6.0	FIRE ALARM KEY PLAN
EE1-6.1	FIRE ALARM PLAN 1
EE1-6.2	FIRE ALARM PLAN 2
EE1-6.3	FIRE ALARM PLAN 3
EE1-6.4	FIRE ALARM PLAN 4
EE1-6.5	FIRE ALARM HVAC PLAN 1
EE1-6.6	FIRE ALARM HVAC PLAN 2
EE1-6.7	FIRE ALARM HVAC PLAN 3
EE1-6.8	FIRE ALARM HVAC PLAN 4

CCTV

EE1-7.1	CCTV SYSTEM PLAN
EE1-7.2	CCTV SYSTEM BLOCK DIAGRAM AND RACK DETAILS

RADIO SYSTEM

EE1-8.1	RADIO COMMUNICATION PLAN
EE1-8.2	RADIO COMMUNICATION DETAILS

DETAILS

EE1-9.1	MULTI-OUTLET ASSEMBLY DETAILS
EE1-9.2	SCHEMATIC DIAGRAM
EE1-9.3	ELEVATION AND DETAILS
EE1-9.4	TYPICAL IFS GROUNDING
EE1-9.5	MOTOR TESTING DIAGRAM
EE1-9.6	EXHAUST FAN CONTROL SCHEMATIC
EE1-9.7	IFS-M DETAILS
EE1-9.8	IFS-1A DETAILS
EE1-9.9	IFS-2A DETAILS
EE1-9.10	IFS-P DETAILS
EE1-9.11	IFS-B DETAILS
EE1-9.12	IFS-V DETAILS

ELECTRICAL, continued

PANEL SCHEDULE

EE1-10.1	PANEL SCHEDULES 1
EE1-10.2	PANEL SCHEDULES 2
EE1-10.3	PANEL SCHEDULES 3
EE1-10.4	PANEL SCHEDULES 4
EE1-10.5	PANEL SCHEDULES 5
EE1-10.6	PANEL SCHEDULES 6
EE1-10.7	PANEL SCHEDULES 7
EE1-10.8	PANEL SCHEDULES 8
EE1-10.9	PANEL SCHEDULES 9
EE1-10.10	PANEL SCHEDULES 10
EE1-10.11	PANEL SCHEDULES 11
EE1-10.12	PANEL SCHEDULES 12
EE1-10.13	PANEL SCHEDULES 13
EE1-10.14	PANEL SCHEDULES 14
EE1-10.15	PANEL SCHEDULES 15
EE1-10.16	EQUIPMENT SCHEDULE 1
EE1-10.17	EQUIPMENT SCHEDULE 2

ELECTRICAL, continued

PHOTOVOLTAIC

EE1-11.1	PARTIAL SITE PLAN
EE1-11.2	SINGLE LINE DIAGRAM GRID-TIED PHOTOVOLTAIC SYSTEM
EE1-11.3	ROOF PLAN
EE1-11.4	DETAILS

SEWAGE LIFT STATION

EE1-12.1	SEWAGE LIFT STATION PUMPS CONTROL PANEL
EE1-12.2	SEWAGE LIFT STATION DETAILS
EE1-12.3	SEWAGE LIFT STATION PUMPS SCHEMATIC DIAGRAM

A2-SERIES - FUEL ISLAND

EE2-1	ELECTRICAL PLAN
EE2-2	LIGHTING PLAN
EE2-3	DETAILS 1
EE2-4	DETAILS 2

A3-SERIES - WASH RACK

EE3-1	POWER PLAN
EE3-2	LIGHTING PLAN

A4-SERIES - WASH/FUEL BUILDING

EE4-1	POWER PLAN
EE4-2	LIGHTING PLAN
EE4-3	DETAILS
EE4-4	SINGLE LINE DIAGRAM
EE4-5	PANEL SCHEDULE

WASTEWATER

SS3-0	NOTES, LEGEND, AND ABBREVIATIONS
SS3-1	SITE PLAN
SS3-2	WASH RACK DETAILS
SS3-3	SAND-OIL SEPARATOR & CLARIFIER TANK
SS3-4	DETAILS
SS3-5	SANITARY STATION DETAILS
SS3-6	DETAILS
SS3-7	DETAILS
SS3-8	SEWAGE LIFT STATION No. 2

3 REVISED PER ADDENDUM No. 3 DATED JANUARY 4, 2013

DESIGN	BY F. THOMAS, L. RHOADES	CHECKED
DETAILS	BY C. NAKAHARA,	CHECKED
QUANTITIES	BY	CHECKED

STATE OF CALIFORNIA
DEPARTMENT OF TRANSPORTATION

DIVISION OF ENGINEERING SERVICES
ARCHITECTURAL AND STRUCTURAL DESIGN

BRIDGE NO. 33M5785
POST MILE 2.2

SFOBB MAINTENANCE COMPLEX
INDEX SHEET 2

SHEET **A0-1.2**

ORIGINAL SCALE IN INCHES FOR REDUCED PLANS 0 1 2 3

UNIT 3598
PROJECT NUMBER & PHASE 04120006661
EA 014081

DISREGARD PRINTS BEARING EARLIER REVISION DATES →
REVISION DATES (PRELIMINARY STAGE ONLY) 02-28-12 04-26-12 05-08-12 05-17-12 06-01-12 06-28-12 07-23-12

SHEET	OF
X	X

DIST.	COUNTY	ROUTE	POST MILES TOTAL PROJECT	SHEET NO.	TOTAL SHEETS
04	Ala	80	2.2	105	800

LICENSED ARCHITECT — 5/30/2012 DATE

LICENSED ARCHITECT FRANK THOMAS No. C-31406 Exp. 4-30-13 STATE OF CALIFORNIA

10-22-12
PLANS APPROVAL DATE

The State of California or its officers or agents shall not be responsible for the accuracy or completeness of scanned copies of this plan sheet.

ACCESSIBILITY DESIGN APPROVAL STAMP DOT / DES / OTA

PROJECT ID **0412000666**

Reviewed by: Y. A. WANG
Date: 12-06-12

CALIFORNIA STATE FIRE MARSHAL APPROVED

Approval of this plan does not authorize or approve any omission or deviation from applicable regulations. Final approval is subject to field inspection. One set of approved plans shall be available on the project site at all times.

Reviewed by: SPENCER MEYER
Approval date: 12-13-12

PARKING CALCULATIONS

(1) ACCESSIBLE PARKING	4
(2) VAN ACCESSIBLE	
(2) STANDARD ACCESSIBLE	
(2) CLEAN AIR - CHARGING STATION	2
(3) CARPOOL/VANPOOL PARKING	4
(4) VISITOR PARKING	5
(5) STANDARD EMPLOYEE PARKING	59
74 EMPLOYEE PARKING	
(6) EQUIPMENT PARKING (9'X20')	37
(7) LARGE EQUIPMENT STALLS 11'X30'	72
109 TOTAL EQUIPMENT PARKING	
179 TOTAL SITE PARKING	

LEGEND

(8) ELEC EQUIPMENT - CONC PAD SEE EEO-1.8

⊙ LIGHT STANDARD SEE ELEC DWGS

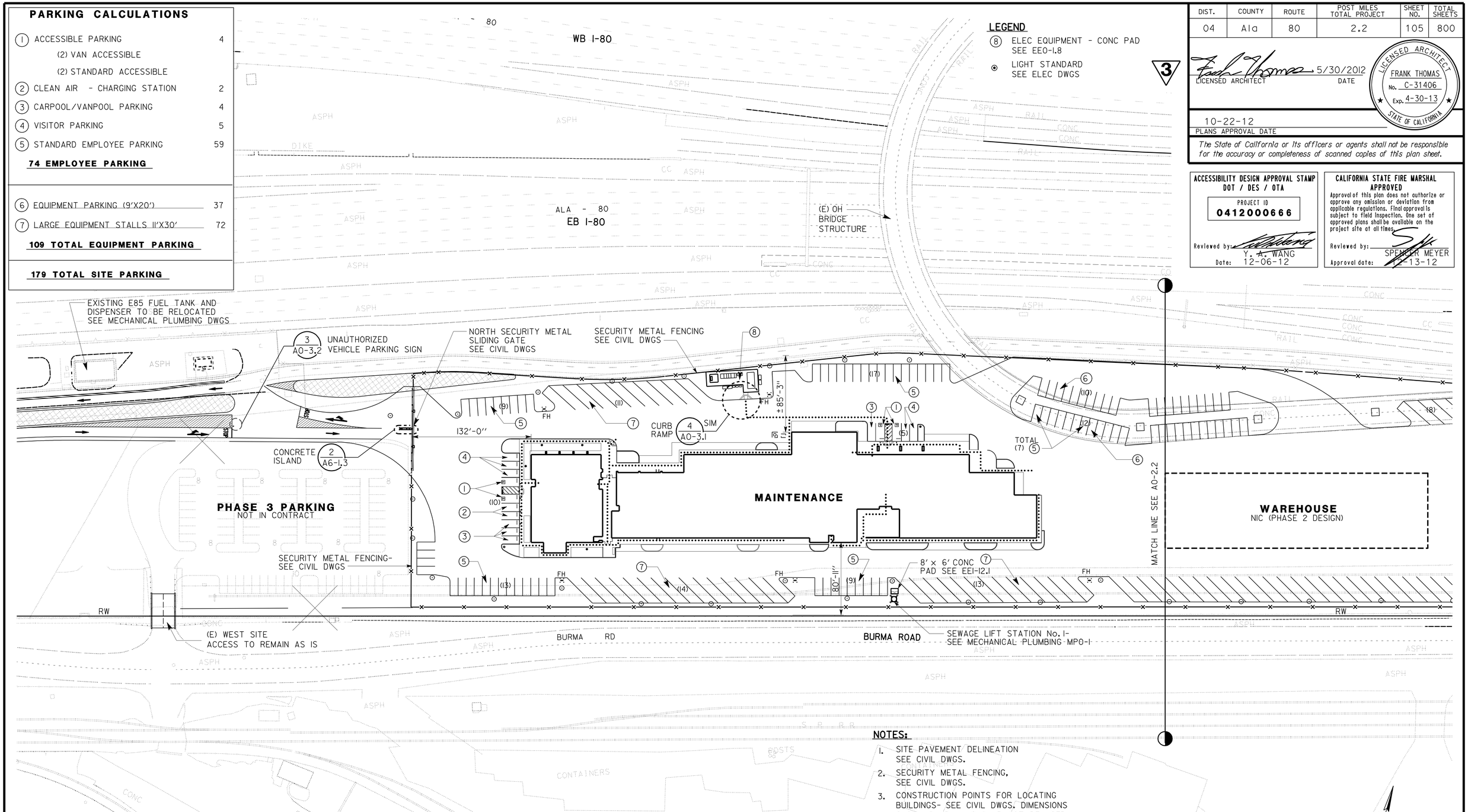

NOTES:

1. SITE PAVEMENT DELINEATION SEE CIVIL DWGS.
2. SECURITY METAL FENCING, SEE CIVIL DWGS.
3. CONSTRUCTION POINTS FOR LOCATING BUILDINGS- SEE CIVIL DWGS. DIMENSIONS SHOWN ON PLAN SHOULD NOT BE USED FOR LAYOUT PURPOSES.
4. PLANTS IN PLANTER LOCATIONS AROUND BUILDING- SEE CIVIL LANDSCAPE DWGS.

SITE PLAN

SCALE 1" = 50'-0"

N

3 REVISED PER ADDENDUM No. 3 DATED JANUARY 4, 2013

	BY	CHECKED
DESIGN	F. THOMAS, L. RHOADES	
DETAILS	C. NAKAHARA,	
QUANTITIES		

STATE OF CALIFORNIA DEPARTMENT OF TRANSPORTATION

DIVISION OF ENGINEERING SERVICES ARCHITECTURAL AND STRUCTURAL DESIGN

BRIDGE NO. 33M5785
POST MILE 2.2

SFOBB MAINTENANCE COMPLEX

SITE DATA — SITE PLAN 1

SHEET **A0-2.1**

a0_02_1_site1.add
TAEMWW Imperial Rev. 7/10 20-DEC-2012 10:26

ORIGINAL SCALE IN INCHES FOR REDUCED PLANS 0 1 2 3

UNIT 3598
PROJECT NUMBER & PHASE

DISREGARD PRINTS BEARING EARLIER REVISION DATES

REVISION DATES (PRELIMINARY STAGE ONLY): 02-28-12 04-26-12 05-08-12 05-11-12 06-01-12 06-28-12 07-23-12

SHEET X OF X

20-DEC-2012 10:26
a0_02_1_site1.add

DIST.	COUNTY	ROUTE	POST MILES TOTAL PROJECT	SHEET NO.	TOTAL SHEETS
04	Ala	80	2.2	106	800

LICENSED ARCHITECT — 5/30/2012 DATE

LICENSED ARCHITECT FRANK THOMAS No. C-31406 Exp. 4-30-13 STATE OF CALIFORNIA

10-22-12
PLANS APPROVAL DATE

The State of California or its officers or agents shall not be responsible for the accuracy or completeness of scanned copies of this plan sheet.

ACCESSIBILITY DESIGN APPROVAL STAMP DOT / DES / OTA

PROJECT ID **0412000666**

Reviewed by: Y. A. WANG
Date: 12-06-12

CALIFORNIA STATE FIRE MARSHAL APPROVED

Approval of this plan does not authorize or approve any omission or deviation from applicable regulations. Final approval is subject to field inspection. One set of approved plans shall be available on the project site at all times.

Reviewed by: SPENCER MEYER
Approval date: 12-13-12

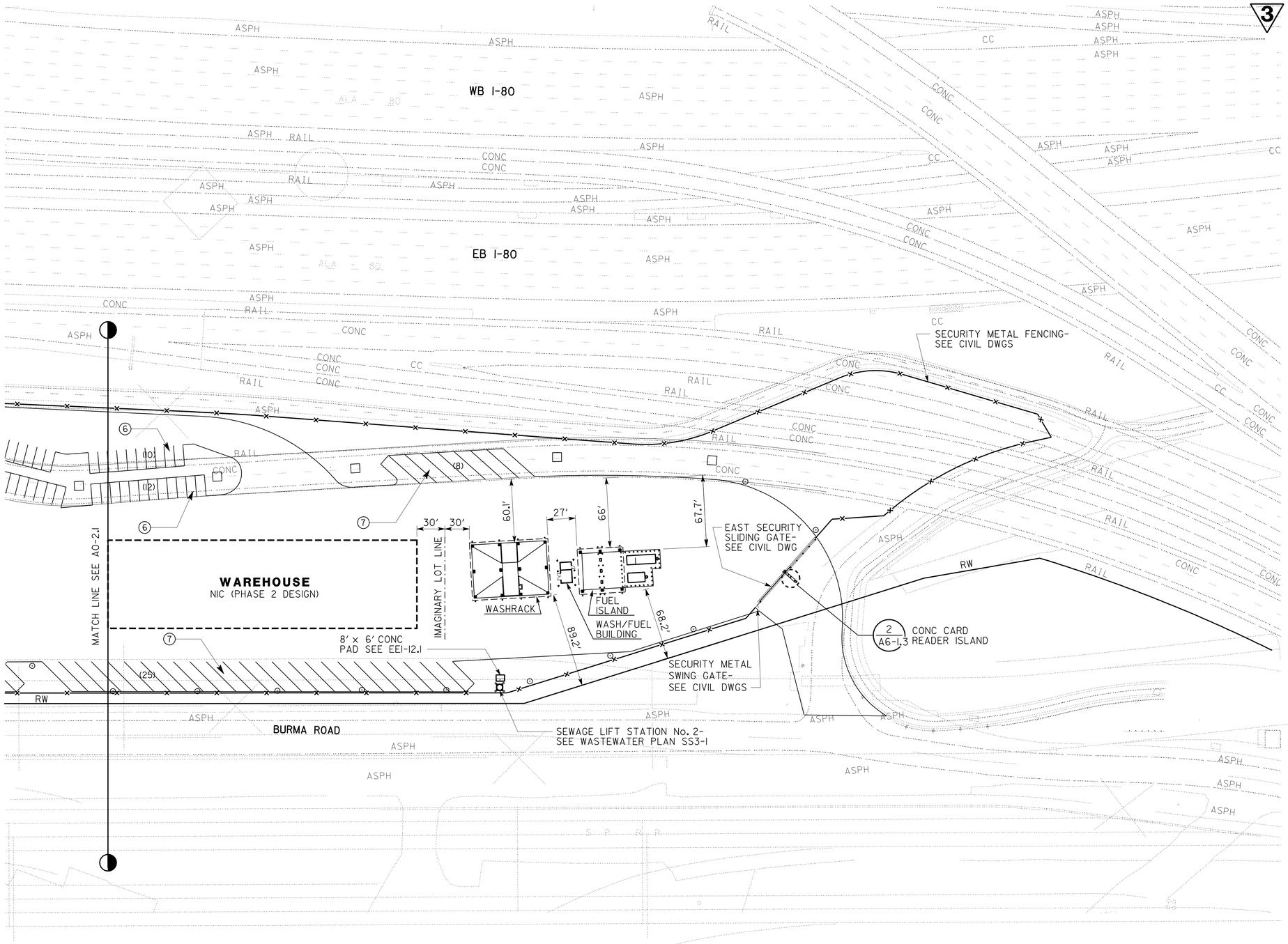

LEGEND

- ⊙ LIGHT STANDARD SEE ELEC DWGS
- (10) PARKING STALL TOTAL

NOTES:

1. SITE PAVEMENT DELINEATION SEE CIVIL DWGS.
2. SECURITY METAL FENCING SEE CIVIL DWGS.
3. CONSTRUCTION POINTS FOR LOCATING BUILDINGS- SEE CIVIL DWGS. DIMENSIONS SHOWN ON PLAN SHOULD NOT BE USED FOR LAYOUT PURPOSES.
4. PLANTS IN PLANTER LOCATIONS AROUND BUILDING- SEE CIVIL LANDSCAPE DWGS.
5. PARKING CALCULATIONS SEE SHT A0-2.1

3 REVISED PER ADDENDUM No. 3 DATED JANUARY 4, 2013

SITE PLAN

SCALE 1" = 50'-0"

N

DESIGN	BY F. THOMAS, L. RHOADES	CHECKED
DETAILS	BY C. NAKAHARA,	CHECKED
QUANTITIES	BY	CHECKED

STATE OF CALIFORNIA DEPARTMENT OF TRANSPORTATION

DIVISION OF ENGINEERING SERVICES ARCHITECTURAL AND STRUCTURAL DESIGN

BRIDGE NO. 33M5785
POST MILE 2.2

SFOBB MAINTENANCE COMPLEX

SITE DATA — SITE PLAN 2

SHEET **A0-2.2**

a0_02_2_site2.add
TAEMWW Imperial Rev. 7/10 20-DEC-2012 10:26

ORIGINAL SCALE IN INCHES FOR REDUCED PLANS 0 1 2 3

UNIT 3598
PROJECT NUMBER & PHASE 04120006661
EA 04-014081

DISREGARD PRINTS BEARING EARLIER REVISION DATES → 02-28-12 04-26-12 05-08-12 05-17-12 06-01-12 06-20-12

REVISION DATES (PRELIMINARY STAGE ONLY) SHEET X OF X

a0_02_2_site2.add 20-DEC-2012 10:26

DIST.	COUNTY	ROUTE	POST MILES TOTAL PROJECT	SHEET NO.	TOTAL SHEETS
04	Ala	80	2.2	112	800

LICENSED ARCHITECT — DATE 10-19-12

LICENSED ARCHITECT Y.A. WANG No. C14891 Exp. 11-30-13 STATE OF CALIFORNIA

10-22-12
PLANS APPROVAL DATE

The State of California or its officers or agents shall not be responsible for the accuracy or completeness of scanned copies of this plan sheet.

ACCESSIBILITY DESIGN APPROVAL STAMP DOT / DES / OTA
PROJECT ID **0412000666**
Reviewed by: Y. A. WANG
Date: 12-06-12

CALIFORNIA STATE FIRE MARSHAL APPROVED
Approval of this plan does not authorize or approve any omission or deviation from applicable regulations. Final approval is subject to field inspection. One set of approved plans shall be available on the project site at all times.
Reviewed by: SPENCER MEYER
Approval date: 12-13-12

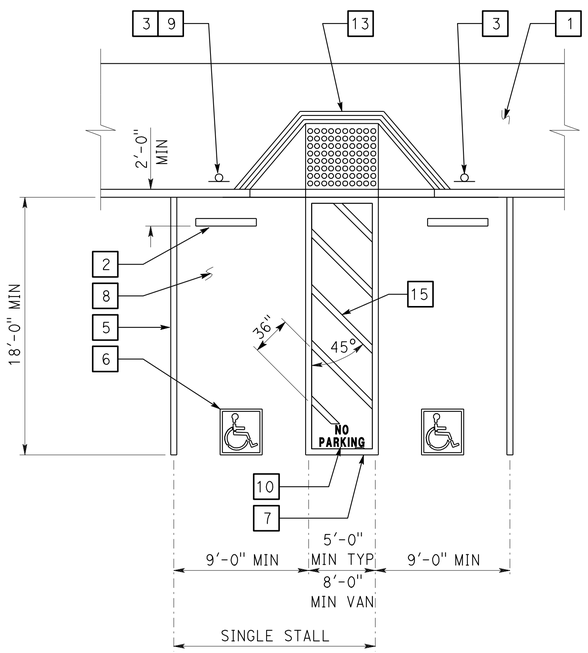

1 ACCESSIBLE PARKING STALL

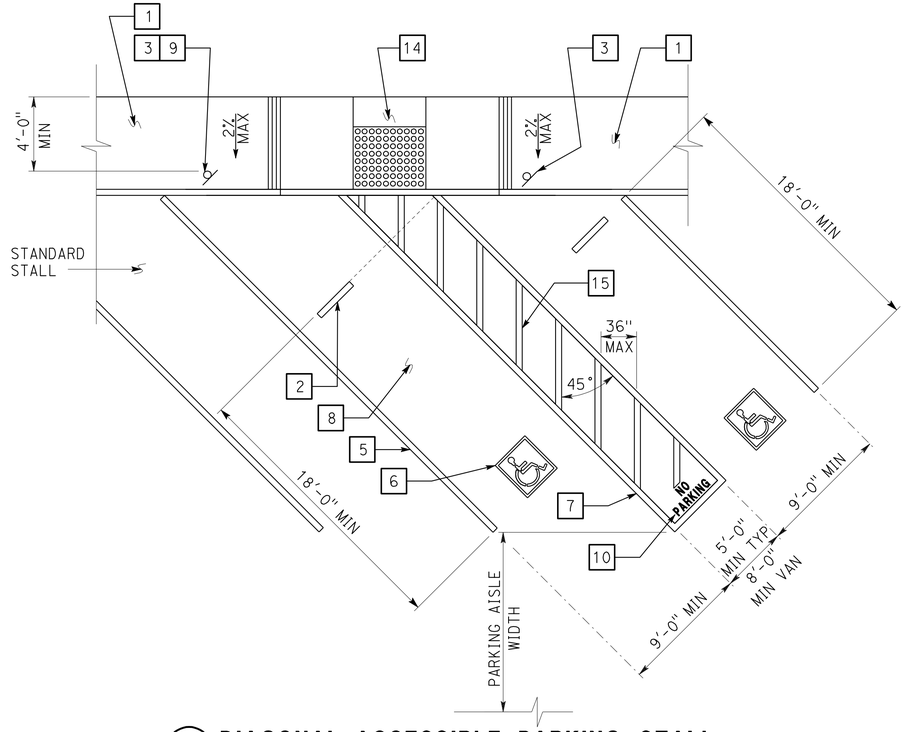

2 DIAGONAL ACCESSIBLE PARKING STALL

See plan for any variation of diagonal parking. Angle of parking stalls shall either match the existing angle or be indicated on plans.

KEYED NOTE LEGEND FOR DETAILS

3

1. Concrete walkway (where occurs). See plans for width, layout (may vary), finish, joints and elevations.
2. Parking bumper (away from access aisle). See Specifications.
3. Accessible parking space signage. See Detail 1 on sheet A0-3.2.
4. 1' wide grooved border on level surface typ at ramp perimeter. See Detail 3 on this sheet.
5. 4" wide white parking stall designation stripe. See site plan(s) for additional stall striping. See specifications for painting.
6. Accessible parking surface identification painted on pavement. See Detail 6 on sheet A0-3.2.
7. 4" wide blue border designating non-parking access aisle to curb ramp.
8. Maximum slope on parking stall and access aisle to be 2%.
9. Van accessible signage. See Detail 2 on sheet A0-3.2. Access aisle shall be on passenger side only.
10. "NO PARKING" in min 12" high white letters to be placed within access aisle to curb ramp. See Detail 7 on sheet A0-3.2.
11. Level landing -2% max slope w/36" deep detectable warning surface adjoining access aisle or vehicular way. See Detail 6 on this sheet.
12. Detectable warning surface to extend full width and min 36" deep from front edge of sidewalk. See Detail 6 on this sheet.
13. Curb ramp. See Detail 4 on this sheet. Also see plans for width and layout (may vary).
14. Curb ramp. See Detail 5 on this sheet. Also see plans for width and layout (may vary).
15. 4" wide white hatched lines to contrast with asphalt surface. Use blue hatched lines for light-color concrete surface.

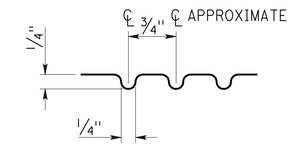

3 GROOVE DETAIL

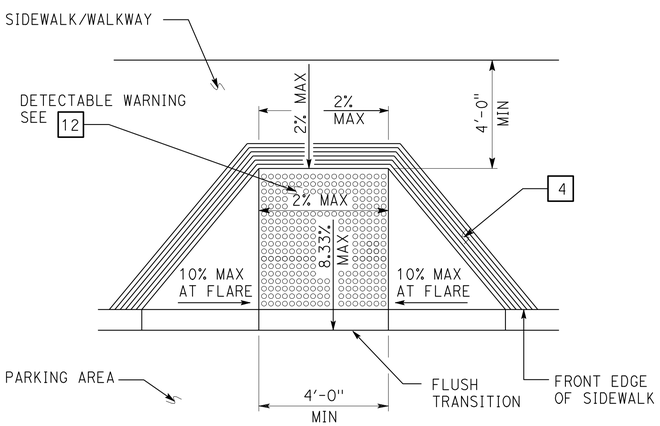

4 PERPENDICULAR CURB RAMP

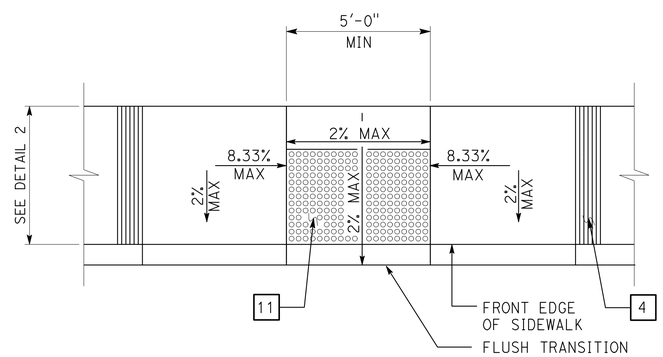

5 PARALLEL CURB RAMP

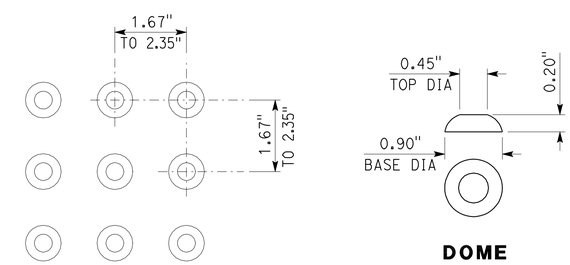

6 DETECTABLE WARNING SURFACE - TRUNCATED DOMES

Dome dimensions are nominal, which may be within ±0.05" for dome spacing, and ±0.02" for dome size.

3 **REVISED PER ADDENDUM No. 3 DATED JANUARY 4, 2013**

DETAILS

No scale unless otherwise noted

NOTE: SPECIFIC DETAILS OR NOTES ON OTHER SHEETS SHALL PREVAIL OVER STANDARD DETAILS AND NOTES ON THIS SHEET

STANDARD DRAWING

FILE NO. __-__-_	DESIGN BY D. Alsey	CHECKED Y. A. Wang	APPROVED R E Travis DESIGN SUPERVISOR
DRAWING DATE 10-12	DETAILS BY D. Good	CHECKED Y. A. Wang	
	SUBMITTED BY Y.A. Wang		

STATE OF CALIFORNIA DEPARTMENT OF TRANSPORTATION

DIVISION OF ENGINEERING SERVICES ARCHITECTURAL AND STRUCTURAL DESIGN

BRIDGE NO. 33M5785 — POST MILE 2.2

SFOBB MAINTENANCE COMPLEX

ACCESSIBILITY — ACCESSIBILITY STANDARD DETAILS

SHEET A0-3.1

a0_03a_i.add
TAEMWW Imperial Rev. 7/10 20-DEC-2012 10:26

ORIGINAL SCALE IN INCHES FOR REDUCED PLANS 0 1 2 3

UNIT 3598
PROJECT NUMBER & PHASE 04120006661
EA 014081

DISREGARD PRINTS BEARING EARLIER REVISION DATES

REVISION DATES (PRELIMINARY STAGE ONLY) 02-28-12 04-26-12 05-08-12 05-17-12 06-01-12 06-20-12 07-23-12 12-5-12 — SHEET — OF

20-DEC-2012 10:26
a0_03a_i.add

DIST.	COUNTY	ROUTE	POST MILES TOTAL PROJECT	SHEET NO.	TOTAL SHEETS
04	Ala	80	2.2	113	800

LICENSED ARCHITECT — DATE 10-19-12

LICENSED ARCHITECT Y.A. WANG No. C14891 Exp. 11-30-13 STATE OF CALIFORNIA

10-22-12
PLANS APPROVAL DATE

The State of California or its officers or agents shall not be responsible for the accuracy or completeness of scanned copies of this plan sheet.

ACCESSIBILITY DESIGN APPROVAL STAMP DOT / DES / OTA
PROJECT ID 0412000666
Reviewed by: Y. A. WANG
Date: 12-06-12

CALIFORNIA STATE FIRE MARSHAL APPROVED
Approval of this plan does not authorize or approve any omission or deviation from applicable regulations. Final approval is subject to field inspection. One set of approved plans shall be available on the project site at all times.
Reviewed by: SPENCER MEYER
Approval date: 12-13-12

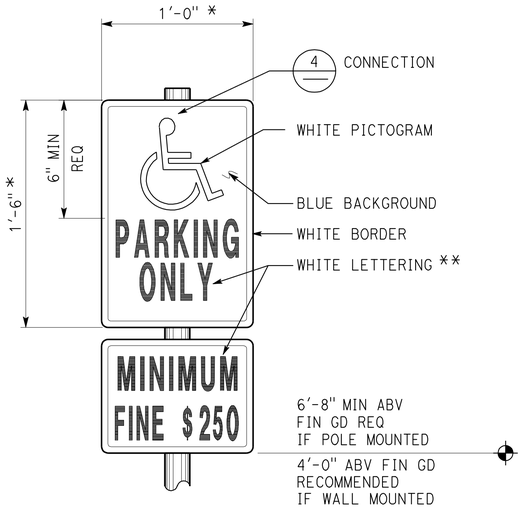

1 ACCESSIBLE PARKING SIGN

Refer to Site Plan for locations.
Combo sign may be used.
* Min area 70 sq in req
** 2" min ht req for up to 10'-0" mounting ht from baseline of highest letter to fin gd.
3" min ht req for mounting ht over 10'-0".

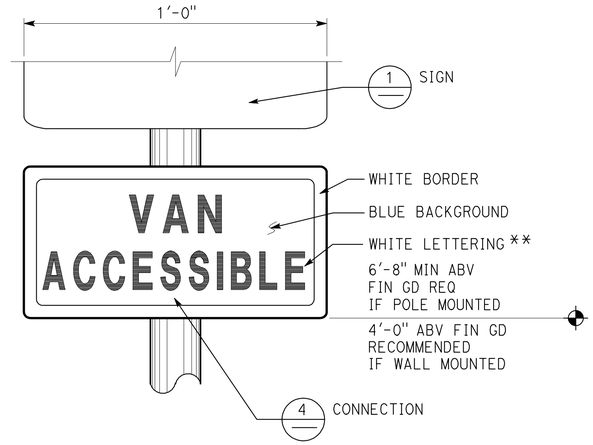

2 ACCESSIBLE VAN PARKING SIGN

Refer to Site Plan for locations.
Combo sign may be used.

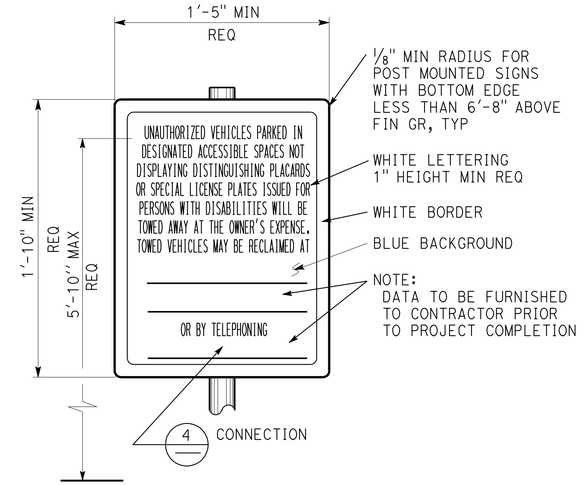

3 UNAUTHORIZED VEHICLES PARKING SIGN

Refer to Site Plan for locations. Colors may vary.
Sign shall not be posted in a path of travel.

Note:
All listed sign sizes are recommended standard sizes, unless otherwise noted as required. All mounting heights are recommended, unless otherwise noted as required.

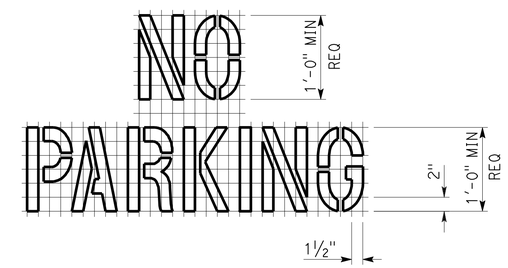

7 ACCESS AISLE PAVEMENT MARKING

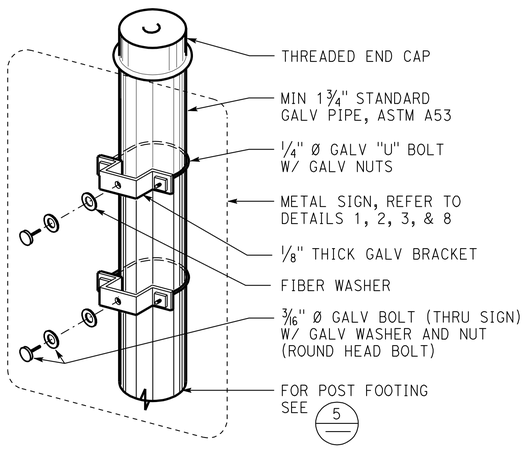

4 SIGN CONNECTION

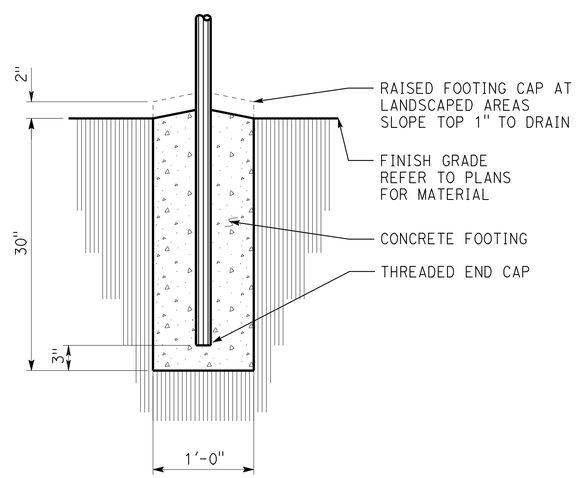

5 SIGN POST FOOTING

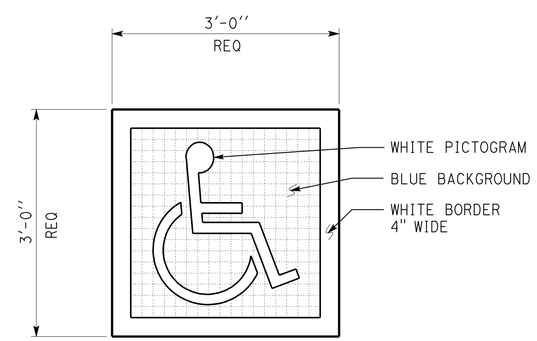

6 ACCESSIBLE PARKING SURFACE IDENTIFICATION

Refer to Details 1 and 2 on sheet A0-3.1 for locations.

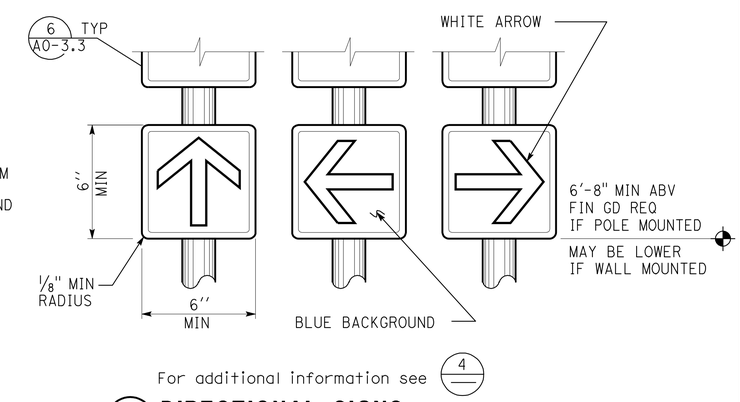

8 DIRECTIONAL SIGNS

Refer to Site Plan or General Plan for locations.
Wall or door mounted signs may be used.
Combo sign may be used.
Colors may vary.

3 REVISED PER ADDENDUM No. 3 DATED JANUARY 4, 2013

DETAILS

No scale unless otherwise noted

NOTE: SPECIFIC DETAILS OR NOTES ON OTHER SHEETS SHALL PREVAIL OVER STANDARD DETAILS AND NOTES ON THIS SHEET

STANDARD DRAWING
FILE NO. __-__-__ | DESIGN BY D. Alsey | CHECKED Y. A. Wang | APPROVED R.E. Travis
DRAWING DATE 10-12 | DETAILS BY D. Good | CHECKED Y. A. Wang | DESIGN SUPERVISOR
SUBMITTED BY Y.A. Wang

STATE OF CALIFORNIA DEPARTMENT OF TRANSPORTATION

DIVISION OF ENGINEERING SERVICES ARCHITECTURAL AND STRUCTURAL DESIGN

BRIDGE NO. 33M5785
POST MILE 2.2

SFOBB MAINTENANCE COMPLEX
ACCESSIBILITY — ACCESSIBILITY STANDARD DETAILS

SHEET A0-3.2

a0_03b_i.add
TAEMWW Imperial Rev. 7/10 20-DEC-2012 10:26

ORIGINAL SCALE IN INCHES FOR REDUCED PLANS 0 1 2 3

UNIT 3598
PROJECT NUMBER & PHASE 04120006661
EA 014081

DISREGARD PRINTS BEARING EARLIER REVISION DATES
REVISION DATES (PRELIMINARY STAGE ONLY) 02-28-12 04-26-12 05-08-12 05-17-12 06-01-12 06-28-12 01-23-12 12-5-12
SHEET OF

20-DEC-2012 10:26
a0_03b_i.add

DIST.	COUNTY	ROUTE	POST MILES TOTAL PROJECT	SHEET NO.	TOTAL SHEETS
04	Ala	80	2.2	114	800

3

LICENSED ARCHITECT — Y.A. WANG — No. C14891 — Exp. 11-30-13 — STATE OF CALIFORNIA

LICENSED ARCHITECT — DATE 10-19-12

10-22-12
PLANS APPROVAL DATE

The State of California or its officers or agents shall not be responsible for the accuracy or completeness of scanned copies of this plan sheet.

ACCESSIBILITY DESIGN APPROVAL STAMP DOT / DES / OTA
PROJECT ID **0412000666**
Reviewed by: Y. A. WANG
Date: 12-06-12

CALIFORNIA STATE FIRE MARSHAL APPROVED
Approval of this plan does not authorize or approve any omission or deviation from applicable regulations. Final approval is subject to field inspection. One set of approved plans shall be available on the project site at all times.
Reviewed by: SPENCER MEYER
Approval date: 12-13-12

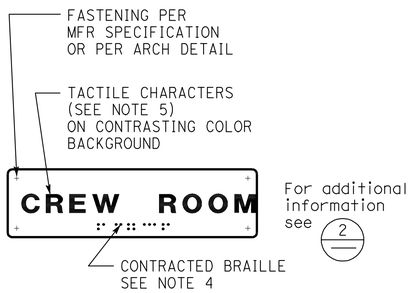

1 ROOM IDENTIFICATION SIGN

Install per Detail 5.
Text varies.
See plans, ext elevations, or door schedule for locations and text.
See Detail 7 for sign mounting heights.

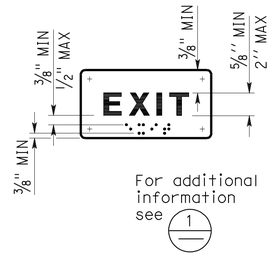

2 INTERIOR EXIT SIGN

Install per Detail 5.
Text may vary.
See plans, or door schedule for locations and text.
See Detail 7 for sign mounting heights.

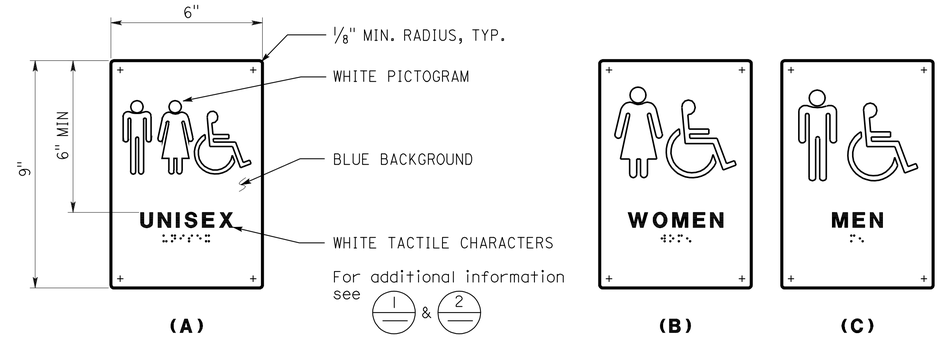

3 RESTROOM/SHOWER ROOM SIGNS

Install per Detail 5.
See Detail 7 for sign mounting height.

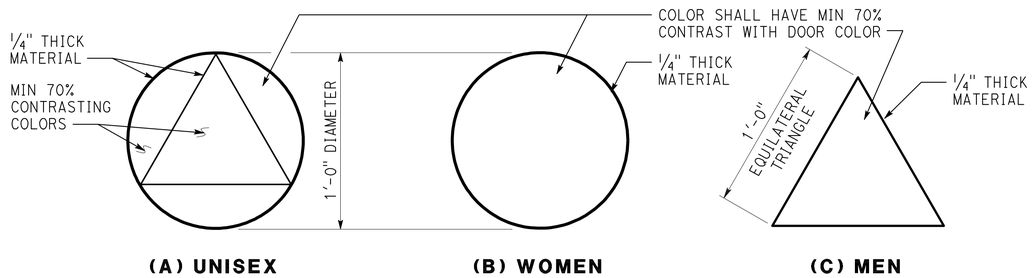

4 RESTROOM/SHOWER ROOM IDENTIFICATION SYMBOLS

Install per Detail 5.
Any pictogram and text are not required.

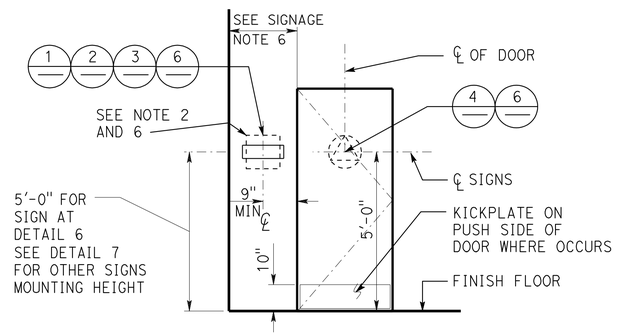

5 SIGN LOCATIONS

Refer to signage notes for additional information.

SIGNAGE NOTES:

1. Locate room identification signs, exit signs, and restroom signs on wall adjacent to door on latch side. If wall space is not available on latch side, locate on nearest adjacent wall. Locate sign on inactive leaf at double doors, or to the right of right hand door at double doors with two active leafs.
2. Refer to specifications for sign material and other color selection. Except Detail 6, sign colors may vary from details.
3. See door schedule for text and sign location, UON.
4. Contracted Braille: dots shall be 1/10" OC in each cell with 2/10" space between cells measured from the second column of dots in the first cell to the first column of dots in the second cell. Dots shall be raised a minimum of 1/40" above the background. Dots shall be domed or rounded.
5. Tactile characters shall be uppercase san serif raised 1/32" min. Fonts shall be selected where width of letter "O" is 60% min and 110% max of height of letter "I". Stroke thickness of letter"I" is 10% min and 20% max of height of the character.
6. Provide 18"x18" min clear floor space in front of and centered on any tactile sign.
7. Sign color shall have a minimum of 70% contrast to door or wall color. Text and pictogram shall have a minimum of 70% contrast to sign color.
8. Tactile character height is measured based on height of uppercase letter "I".

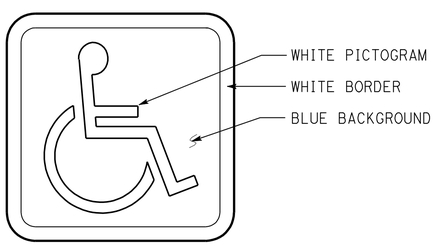

6 INTERNATIONAL SYMBOL OF ACCESSIBILITY SIGN

Install per Detail 5.
See plans, elevations, or schedule for sign locations.
Decal may be used.

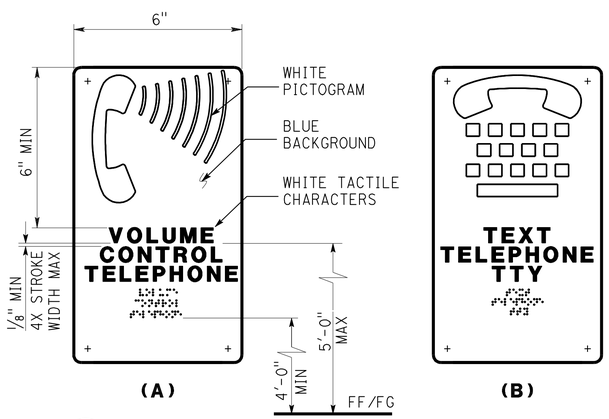

7 TELEPHONE SIGNS

Text may vary.
See plans or exterior elevations for sign locations and mounting heights.

8 RESTROOM ACCOMPANY SIGN

See plans or elevations for locations.
See Detail 7 for sign mounting heights.

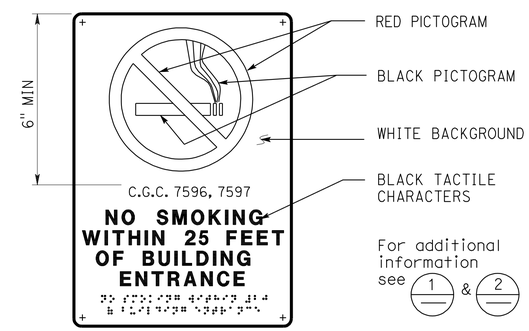

9 NO SMOKING SIGN

See plans or ext elevations for locations.
See Detail 7 for sign mounting heights.

3 **REVISED PER ADDENDUM No. 3 DATED JANUARY 4, 2013**

DETAILS

No scale unless otherwise noted

NOTE: SPECIFIC DETAILS OR NOTES ON OTHER SHEETS SHALL PREVAIL OVER STANDARD DETAILS AND NOTES ON THIS SHEET

STANDARD DRAWING				
FILE NO. __-__-__	DESIGN	BY D. Alsey	CHECKED Y. A. Wang	APPROVED RE Travis DESIGN SUPERVISOR
DRAWING DATE 10-12	DETAILS	BY D. Good	CHECKED Y. A. Wang	
	SUBMITTED BY Y.A. Wang			

STATE OF CALIFORNIA DEPARTMENT OF TRANSPORTATION

DIVISION OF ENGINEERING SERVICES ARCHITECTURAL AND STRUCTURAL DESIGN

BRIDGE NO. 33M5785
POST MILE 2.2

SFOBB MAINTENANCE COMPLEX

ACCESSIBILITY — ACCESSIBILITY STANDARD DETAILS

SHEET **A0-3.3**

a0_03c_i.add
TAEMWW Imperial Rev. 7/10 20-DEC-2012 10:26

ORIGINAL SCALE IN INCHES FOR REDUCED PLANS 0 1 2 3

UNIT 3598
PROJECT NUMBER & PHASE 04120006661
EA 014081

DISREGARD PRINTS BEARING EARLIER REVISION DATES → 02-28-12 04-26-12 05-08-12 05-17-12 06-01-12 06-20-12 07-23-12 12-5-12

REVISION DATES (PRELIMINARY STAGE ONLY) SHEET OF

20-DEC-2012 10:26
a0_03c_i.add

DIST.	COUNTY	ROUTE	POST MILES TOTAL PROJECT	SHEET NO.	TOTAL SHEETS
04	Ala	80	2.2	115	800

LICENSED ARCHITECT — DATE 10-19-12

LICENSED ARCHITECT Y.A. WANG No. C14891 Exp. 11-30-13 STATE OF CALIFORNIA

10-22-12
PLANS APPROVAL DATE

The State of California or its officers or agents shall not be responsible for the accuracy or completeness of scanned copies of this plan sheet.

ACCESSIBILITY DESIGN APPROVAL STAMP DOT / DES / OTA
PROJECT ID **0412000666**
Reviewed by: Y. A. WANG
Date: 12-06-12

CALIFORNIA STATE FIRE MARSHAL APPROVED
Approval of this plan does not authorize or approve any omission or deviation from applicable regulations. Final approval is subject to field inspection. One set of approved plans shall be available on the project site at all times.
Reviewed by: SPENCER MEYER
Approval date: 12-13-12

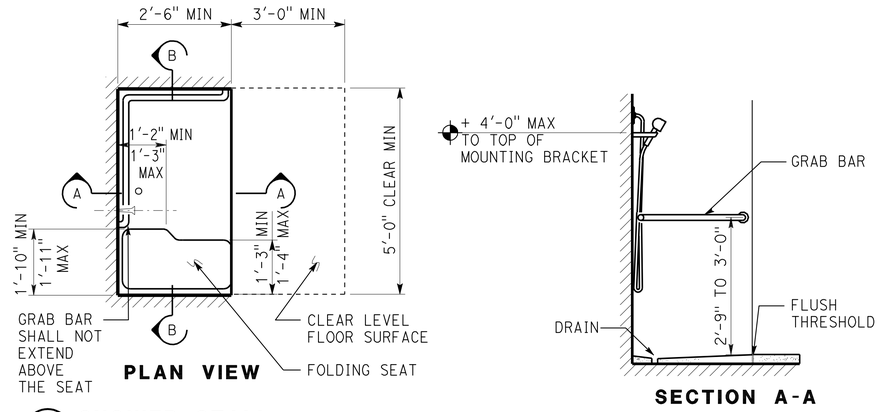

1 SHOWER STALL

Optional standard shower head may be added to wall opposite shower seat. Locate water diverter per water control.

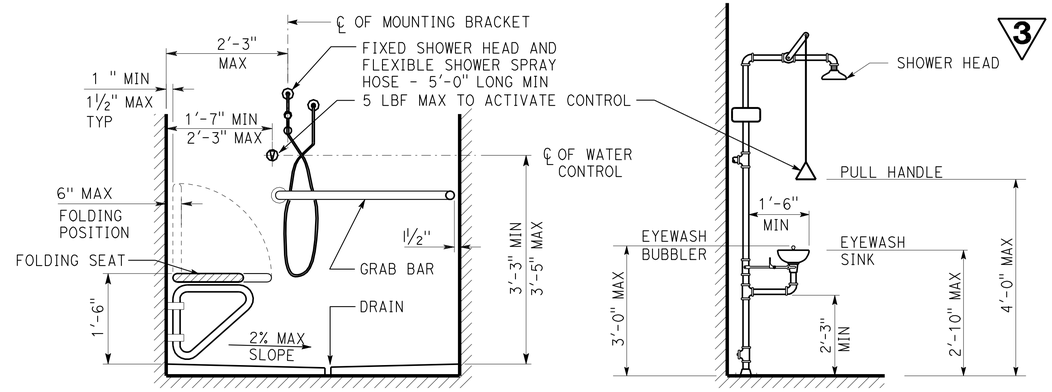

SECTION B-B

2 EMERGENCY EYEWASH/ SHOWER

Foot pedal may be added to operate equipment

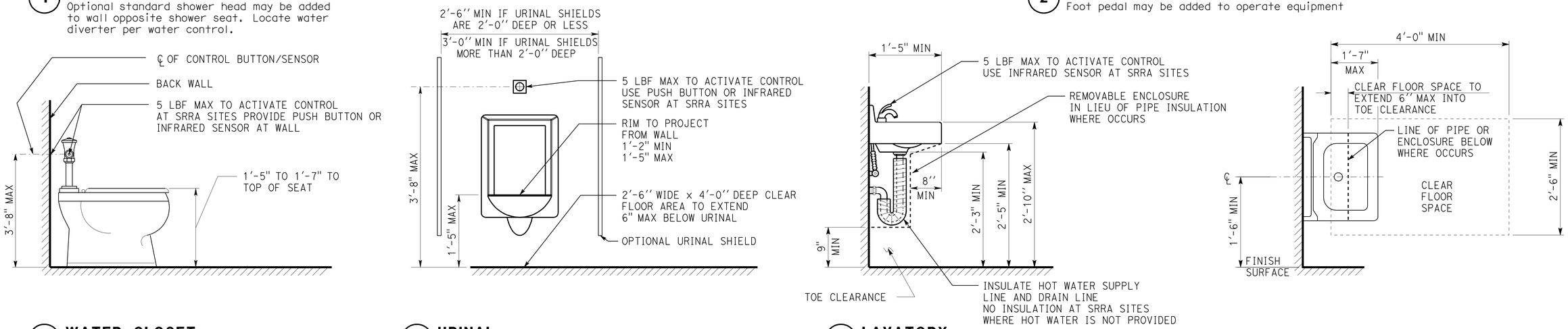

3 WATER CLOSET

See Spec for fixture type

4 URINAL

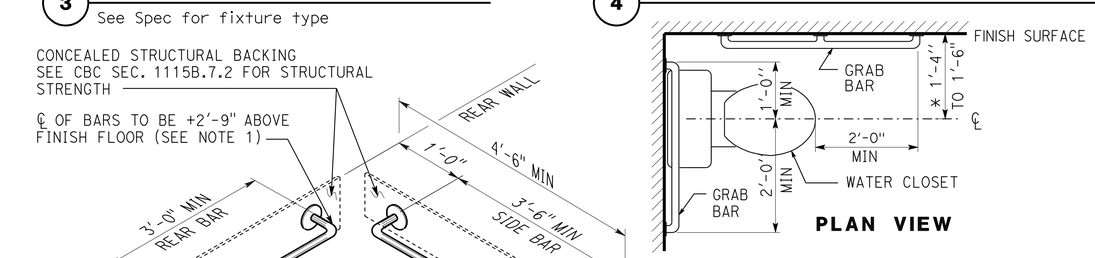

Grab bar note:
1. If tank type toilet is used, centerline of rear bar may be set to 3'-0" max above finish floor. Side bar to remain as shown.
2. Grab bars to be 1 ¼" To 1 ½" diameter with clear space of 1 ½" to smooth wall surface.

* 1'-5" to 1'-7" at ambulatory accessible compartment.

6 GRAB BARS/ WATER CLOSET

5 LAVATORY

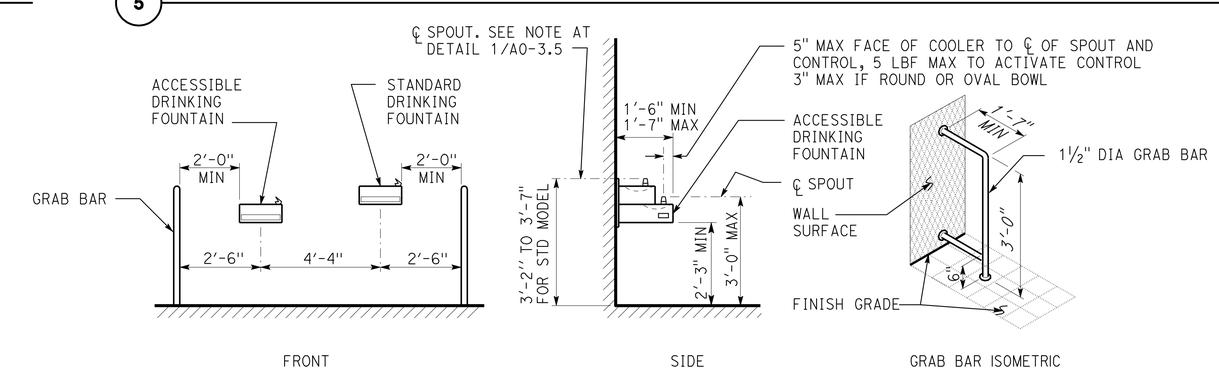

7 ELECTRIC WATER COOLER

In lieu of grab bars, other types of wing walls may be used.
Dimensions at front elevation may vary - see plan.
Provide clear level area w/max 2% slope in all directions at each fixture.
See clear floor space at detail 1/A0-3.5 for size and location.

DETAILS

No scale unless otherwise noted

3 REVISED PER ADDENDUM No. 3 DATED JANUARY 4, 2013

NOTE: SPECIFIC DETAILS OR NOTES ON OTHER SHEETS SHALL PREVAIL OVER STANDARD DETAILS AND NOTES ON THIS SHEET

STANDARD DRAWING				
FILE NO. __-__-_	DESIGN	BY D. Alsey	CHECKED Y. A. Wang	APPROVED R.E. Travis DESIGN SUPERVISOR
DRAWING DATE 10-12	DETAILS	BY D. Good	CHECKED Y. A. Wang	
	SUBMITTED BY Y.A. Wang			

STATE OF CALIFORNIA DEPARTMENT OF TRANSPORTATION

DIVISION OF ENGINEERING SERVICES ARCHITECTURAL AND STRUCTURAL DESIGN

BRIDGE NO. 33M5785 — POST MILE 2.2

SFOBB MAINTENANCE COMPLEX

ACCESSIBILITY — ACCESSIBILITY STANDARD DETAILS

SHEET A0-3.4

a0_03d_i.add
TAEMWW Imperial Rev. 7/10 20-DEC-2012 10:27

ORIGINAL SCALE IN INCHES FOR REDUCED PLANS 0 1 2 3

UNIT 3598
PROJECT NUMBER & PHASE 04120006661
EA 014081

DISREGARD PRINTS BEARING EARLIER REVISION DATES

REVISION DATES (PRELIMINARY STAGE ONLY): 02-28-12 04-26-12 05-08-12 05-17-12 06-01-12 06-28-12 07-23-12 12-5-12

SHEET OF

20-DEC-2012 10:27
a0_03d_i.add

DIST.	COUNTY	ROUTE	POST MILES TOTAL PROJECT	SHEET NO.	TOTAL SHEETS
04	Ala	80	2.2	116	800

LICENSED ARCHITECT — DATE 10-19-12

LICENSED ARCHITECT Y.A. WANG No. C14891 Exp. 11-30-13 STATE OF CALIFORNIA

10-22-12
PLANS APPROVAL DATE

The State of California or its officers or agents shall not be responsible for the accuracy or completeness of scanned copies of this plan sheet.

ACCESSIBILITY DESIGN APPROVAL STAMP DOT / DES / OTA
PROJECT ID 0412000666
Reviewed by: Y. A. WANG
Date: 12-06-12

CALIFORNIA STATE FIRE MARSHAL APPROVED
Approval of this plan does not authorize or approve any omission or deviation from applicable regulations. Final approval is subject to field inspection. One set of approved plans shall be available on the project site at all times.
Reviewed by: SPENCER MEYER
Approval date: 12-13-12

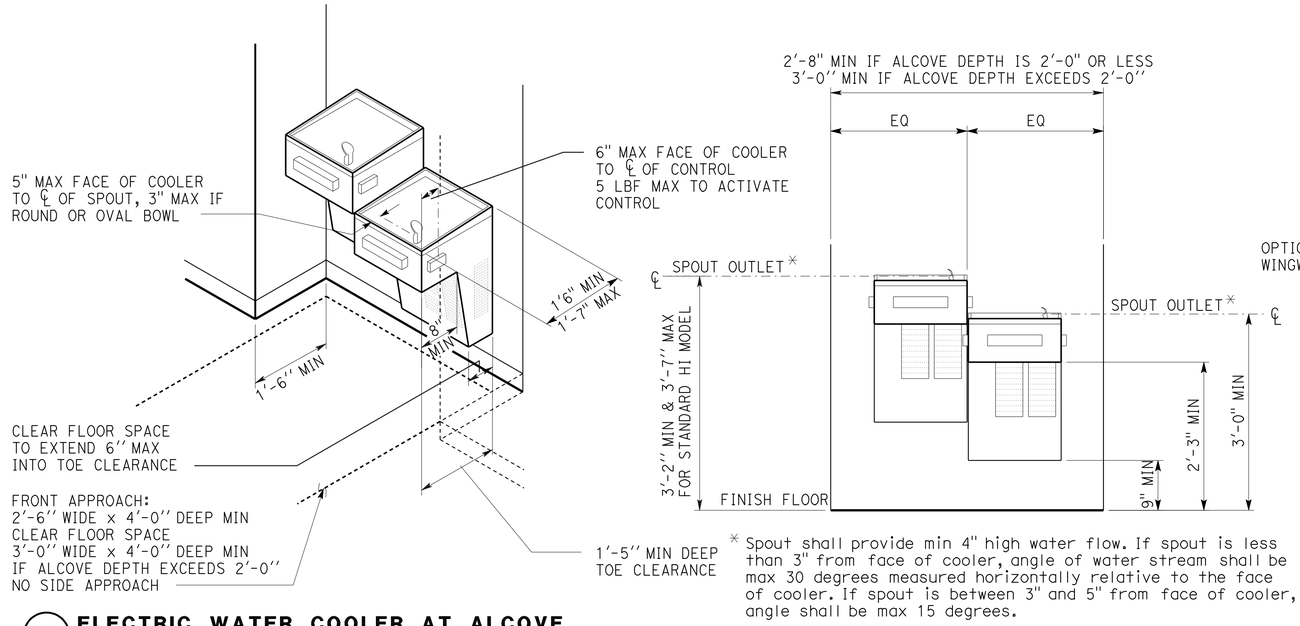

* Spout shall provide min 4" high water flow. If spout is less than 3" from face of cooler, angle of water stream shall be max 30 degrees measured horizontally relative to the face of cooler. If spout is between 3" and 5" from face of cooler, angle shall be max 15 degrees.

1 ELECTRIC WATER COOLER AT ALCOVE

Fixture type may vary.
Width of alcove may vary.
Two fixtures with separate mounting heights may be installed at separate locations.

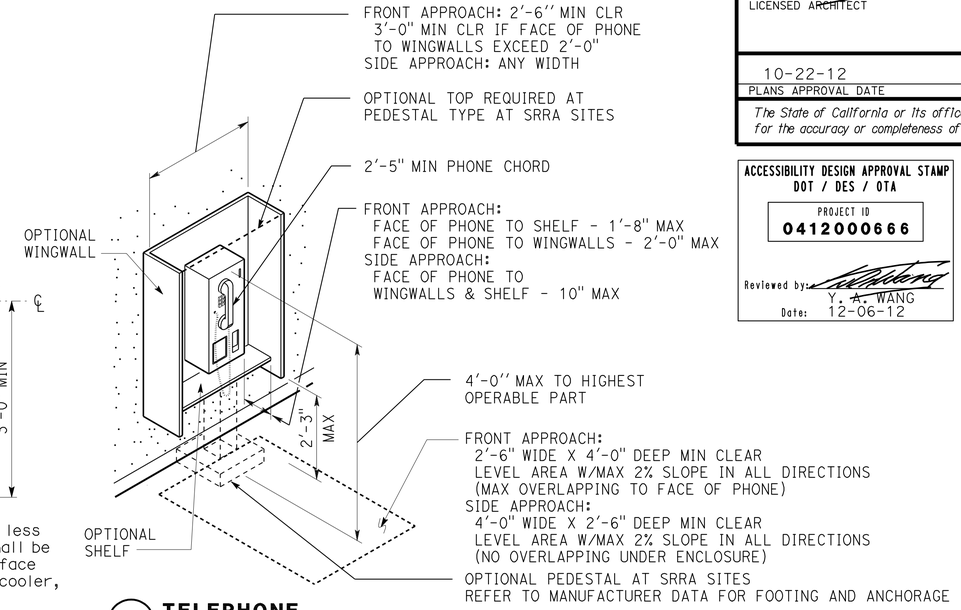

2 TELEPHONE

Note: Seat surface shall be slip resistant and shall not accumulate water (E.G., 2% max slope to drain) when installed in conjuction with wet locations. Structural strength of the bench and attachments shall comply w/CBC Sec. 1115B.7.2

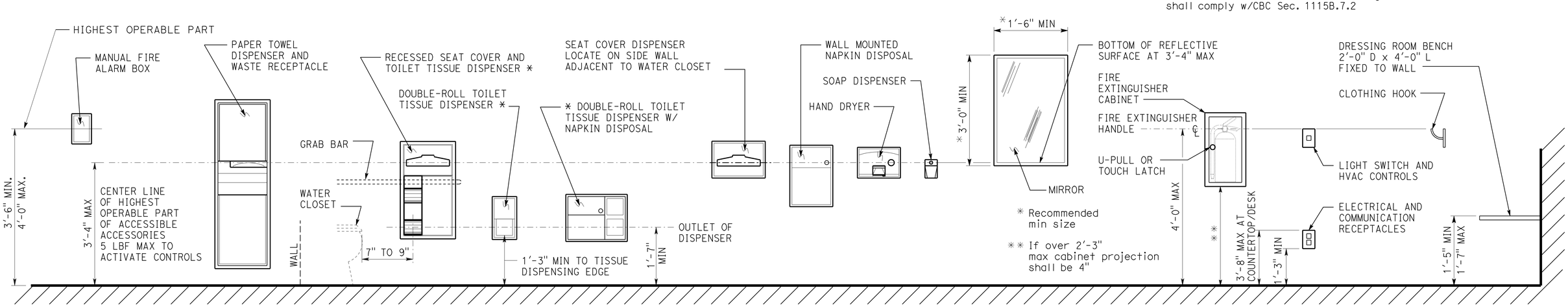

* Recommended min size

** If over 2'-3" max cabinet projection shall be 4"

* Toilet tissue dispenser shall be located on wall or partition closet to water closet

3 ACCESSORIES

3 REVISED PER ADDENDUM No. 3 DATED JANUARY 4, 2013

DETAILS
No scale unless otherwise noted

NOTE: SPECIFIC DETAILS OR NOTES ON OTHER SHEETS SHALL PREVAIL OVER STANDARD DETAILS AND NOTES ON THIS SHEET

STANDARD DRAWING			
FILE NO. __-__-__	DESIGN BY D. Alsey	CHECKED Y. A. Wang	APPROVED R E Travis DESIGN SUPERVISOR
DRAWING DATE 10-12	DETAILS BY D. Good	CHECKED Y. A. Wang	
	SUBMITTED BY Y.A. Wang		

STATE OF CALIFORNIA DEPARTMENT OF TRANSPORTATION

DIVISION OF ENGINEERING SERVICES ARCHITECTURAL AND STRUCTURAL DESIGN

BRIDGE NO. 33M5785
POST MILE 2.2

SFOBB MAINTENANCE COMPLEX
ACCESSIBILITY — ACCESSIBILITY STANDARD DETAILS

SHEET A0-3.5

a0_03e_i.add
TAEMWW Imperial Rev. 7/10 20-DEC-2012 10:27

ORIGINAL SCALE IN INCHES FOR REDUCED PLANS 0 1 2 3

UNIT 3598
PROJECT NUMBER & PHASE 04120006661
EA 014081

DISREGARD PRINTS BEARING EARLIER REVISION DATES
REVISION DATES (PRELIMINARY STAGE ONLY): 02-28-12 04-26-12 05-08-12 05-17-12 06-01-12 06-20-12 07-23-12 12-5-12
SHEET OF

20-DEC-2012 10:27
a0_03e_i.add

DIST.	COUNTY	ROUTE	POST MILES TOTAL PROJECT	SHEET NO.	TOTAL SHEETS
04	Ala	80	2.2	118	800

3

LICENSED ARCHITECT — 5/30/2012
DATE

LICENSED ARCHITECT FRANK THOMAS No. C-31406 Exp. 4-30-13 STATE OF CALIFORNIA

10-22-12
PLANS APPROVAL DATE

The State of California or its officers or agents shall not be responsible for the accuracy or completeness of scanned copies of this plan sheet.

ACCESSIBILITY DESIGN APPROVAL STAMP DOT / DES / OTA

PROJECT ID **0412000666**

Reviewed by: Y. A. WANG
Date: 12-06-12

CALIFORNIA STATE FIRE MARSHAL APPROVED

Approval of this plan does not authorize or approve any omission or deviation from applicable regulations. Final approval is subject to field inspection. One set of approved plans shall be available on the project site at all times.

Reviewed by: SPENCER MEYER
Approval date: 12-13-12

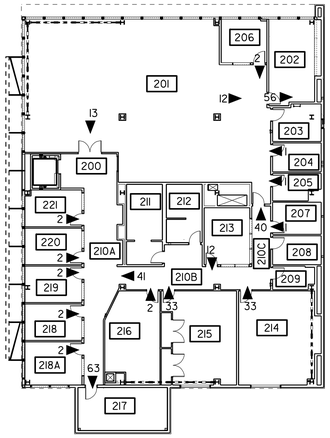

2ND FLOOR

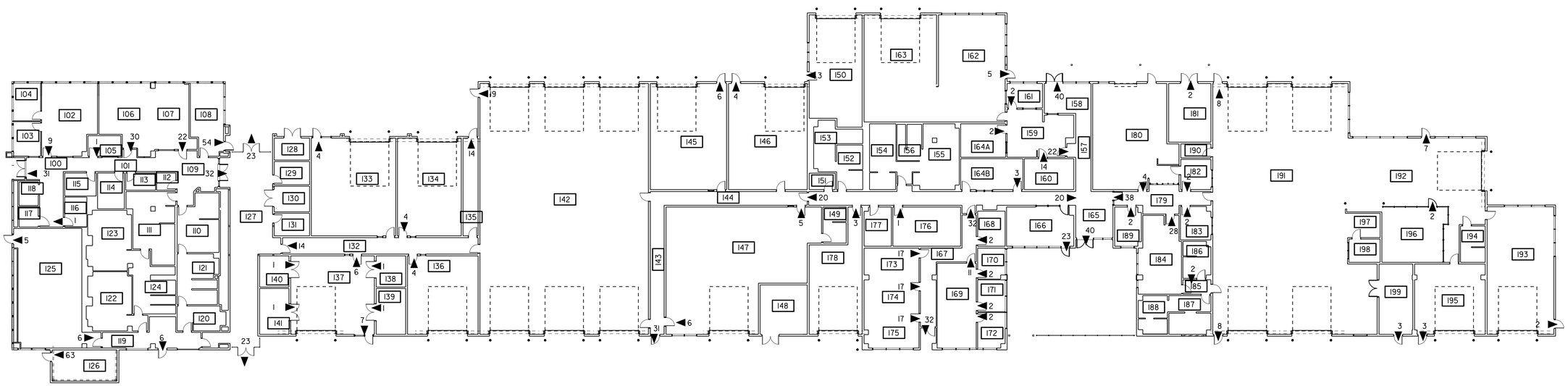

1ST FLOOR

CUMULATIVE EXIT PLAN

3 **REVISED PER ADDENDUM No. 3 DATED JANUARY 4, 2013**

	BY	CHECKED
DESIGN	F. THOMAS, L. RHOADES	
DETAILS	C. NAKAHARA,	
QUANTITIES		

STATE OF CALIFORNIA DEPARTMENT OF TRANSPORTATION

DIVISION OF ENGINEERING SERVICES ARCHITECTURAL AND STRUCTURAL DESIGN

BRIDGE NO. 33M5785
POST MILE 2.2

SFOBB MAINTENANCE COMPLEX

CODE — CODE ANALYSIS- EXITING

SHEET **A0-4.2**

a0_04.2_code2.add
TAEMWW Imperial Rev. 7/10 20-DEC-2012 10:27

ORIGINAL SCALE IN INCHES FOR REDUCED PLANS 0 1 2 3

UNIT 3598
PROJECT NUMBER & PHASE 04120006661
EA 014081

DISREGARD PRINTS BEARING EARLIER REVISION DATES →

REVISION DATES (PRELIMINARY STAGE ONLY): 02-28-12 03-28-12 05-08-12 05-17-12 06-01-12 06-20-12

SHEET X OF X

20-DEC-2012 10:27
a0_04.2_code2.add

1ST FLOOR OCCUPANCY LOAD CALCULATION PER ROOM AREA

	ROOM NUMBER	ROOM NAME	OCCUPANCY GROUPS (SQUARE FEET) B	S-1	F-1	OCCUPANT LOAD FACTOR	NUMBER OF ROOM OCCUPANTS	OCCUPANCY
BUILDING IA	100	LOBBY	254			100	--	
	101	HALLWAY	244			100	--	
	102	LEAD WORKER AREA	504			100	5	
	103	SUPERVISOR OFFICE	120			100	2	
	104	SUPERVISOR OFFICE	128			100	2	
	105	KITCHEN	94			100	1	
	106	CREW ROOM 1	440			15	30	ACCESSORY
	107	CREW ROOM 2	330			15	22	ACCESSORY
	108	NORTH STAIR	301			100	--	
	109	LOBBY	225			100	--	
	110	WOMENS RESTROOM	300			100	--	
	111	MEN'S RESTROOM	393			100	--	
	112	JANITOR	45			100	--	
	113	STORAGE	70			300	--	
	114	ELECTRICAL	128			100	--	
	115	MECHANICAL	98			100	--	
	116	COMMUNICATION	90			100	1	
	117	ELEVATOR EQUIPMENT	50			N/A	--	
	118	NOT USED	--				--	
	119	HALLWAY	257			100	--	
	120	WOMEN DECON	150			100	--	
	121	WOMEN LOCKERS/SHOWERS	262			100	--	
	122	MEN'S DECONTAMINATION	362			100	--	
	123	MEN'S LOCKER	330			100	--	
	124	MEN'S SHOWER	290			100	--	
	125	GEAR ROOM	1055			100	11	
	126	SOUTH STAIR	264			100	--	
BUILDING IB	127	BREEZEWAY			880	100	--	
	128	COMPRESSOR ROOM			102	300	--	
	129	STORAGE			110	300	--	INCIDENTAL
	130	RECYCLE MATERIAL STORAGE			123	300	--	INCIDENTAL
	131	ELECTRICAL			103	300	--	
	132	HALLWAY			430	100	--	
	133	RIGGING SECURE TOOL			1100	300	4	
	134	PAINT MIX			835	200	4	
	135	HALLWAY			195	100	--	
	136	SEW ROOM			745	200	4	
	137	SHOP CREW			875	100	9	
	138	TOOL STORAGE 1			125	300	1	INCIDENTAL
	139	PAINT STORAGE 1			183	300	1	INCIDENTAL
	140	TOOL STORAGE 2			125	300	1	INCIDENTAL
	141	PAINT STORAGE 2			183	300	1	INCIDENTAL
	142	EQUIPMENT STORAGE BAYS		5610		300	19	
	143	HALLWAY	523			100	--	
	144	HALLWAY	500			100	--	
	145	CARPENTER SHOP			1078	200	6	
	146	SECURE STORAGE		1127		300	4	
	147	WELDING SHOP			2120	200	11	
	148	MAIN ELECTRICAL			306	300	--	
	149	TOILET ROOM	110			100	--	
	150	BAIR STORAGE		760		300	3	
	151	JANITOR	47			100	--	
	152	WOMEN'S RESTROOM	154			100	--	
	153	WOMEN'S LOCKER	143			100	--	
	154	MEN'S RESTROOM	230			100	--	
	155	MEN'S LOCKER	398			100	--	
	156	MEN'S SHOWER	116			100	--	
	157	HALLWAY	172			100	--	
	158	LOBBY	190			100	--	
	159	MONITOR SPACE	385			100	4	
	160	CREW ROOM	210			15	14	ACCESSORY
	161	SUPERVISOR	117			100	2	
	162	ELECTRICAL SHOP		950		200	5	
	163	EQUIPMENT STORAGE BAY		1030		300	4	
	164A	BASE		200		100	2	
	164B	ENGINEER MAP ROOM		255		100	3	
	165	LOBBY 4	165			100	--	
	166	BREAK ROOM	346			15	23	ACCESSORY
	167	HALLWAY	295			100	--	
	168	SUPERVISOR	122			100	2	
	169	LEAD WORKER AREA	440			100	5	
	170	SUPERVISOR	120			100	2	
	171	SUPERVISOR	117			100	2	

1ST FLOOR OCCUPANCY LOAD CALCULATION PER ROOM AREA (CONT.)

	ROOM NUMBER	ROOM NAME	OCCUPANCY GROUPS (SQUARE FEET) B	S-1	F-1	OCCUPANT LOAD FACTOR	NUMBER OF ROOM OCCUPANTS	OCCUPANCY
BUILDING IB	172	SUPERVISOR	125			100	2	
	173	CREW ROOM	212			15	14	ACCESSORY
	174	CREW ROOM	246			15	17	ACCESSORY
	175	CREW ROOM	257			15	17	ACCESSORY
	176	MAIN COMMUNICATION	353			300	2	
	177	FIRE/MECHANICAL	128			300	--	INCIDENTAL
	178	ETTIE STORAGE		628		300	3	
	179	HALLWAY	245			100	--	
	180	PARTS STORAGE		1085		300	4	
	181	TIRE STORAGE		318		300	2	
	182	PARTS OFFICE	126			100	2	
	183	SUPERVISOR	130			100	2	
	184	CREW ROOM	415			15	28	ACCESSORY
	185	HALLWAY	53			100	--	
	186	WOMEN'S RESTROOM	115			100	2	
	187	MEN'S RESTROOM	196			100	--	
	188	MEN'S LOCKER	134			100	--	
	189	SUPERVISOR	133			100	2	
	190	JANITOR		53		100	--	
	191	EQUIPMENT REPAIR BAYS		4795		300	16	
	192	EQUIPMENT REPAIR AREA		1445		300	5	
	193	MACHINE SHOP		1124		300	2	
	194	UNISEX TOILET		70		100	--	
	195	ROVER BAY STORAGE		650		300	3	
	196	SECURE STORAGE AREA		455		300	2	
	197	WORKSTATION	115			100	2	
	198	LEED WORKER OFFICE	96			100	1	
	199	UTILITY		315		100	3	
TOTAL AREA BY OCCUPANCY (SF)			**14758**	**20427**	**9718**			
TOTAL OCCUPANTS PER CODE							**341**	

2ND FLOOR OCCUPANCY LOAD CALCULATION PER ROOM AREA

	ROOM NUMBER	ROOM NAME	OCCUPANCY GROUPS (SQUARE FEET) B	S-1	F-1	OCCUPANT LOAD FACTOR	NUMBER OF ROOM OCCUPANTS	OCCUPANCY
BUILDING IA	200	LOBBY	130			100	--	
	201	OPEN OFFICE AREA	2442			100	25	
	202	NORTH STAIR	260			100	--	
	203	MECHANICAL	123			300	--	INCIDENTAL
	204	STORAGE	85			300	1	
	205	COMMUNICATIONS	78			300	1	
	206	OFFICE 6	136			100	2	
	207	RADIO	105			100	1	
	208	ELECTRICAL	96			300	--	
	209	JANITOR	61			300	--	
	210A	HALLWAY	376			100	--	
	210B	HALLWAY	295			100	--	
	210C	HALLWAY	80			100	--	
	211	MENS RESTROOM	200			100	--	
	212	WOMEN'S RESTROOM	145			100	--	
	213	BREAK ROOM	180			15	12	ACCESSORY
	214	CONFERENCE ROOM	493			15	33	ACCESSORY
	215	TRAINING	495			15	33	ACCESSORY
	216	FILE STORAGE	325			300	2	INCIDENTAL
	217	SOUTH STAIRS	265			100	--	
	218	OFFICE 4	144			100	2	
	218A	OFFICE 5	170			100	2	
	219	OFFICE 3	147			100	2	
	220	OFFICE 2	150			100	2	
	221	OFFICE 1	145			100	2	
TOTAL AREA BY OCCUPANCY (SF)			**7126**					
TOTAL OCCUPANTS PER CODE							**120**	

DIST.	COUNTY	ROUTE	POST MILES TOTAL PROJECT	SHEET NO.	TOTAL SHEETS
04	Ala	80	2.2	119	800

LICENSED ARCHITECT — DATE 5/30/2012

LICENSED ARCHITECT FRANK THOMAS No. C-31406 Exp. 4-30-13 STATE OF CALIFORNIA

10-22-12
PLANS APPROVAL DATE

The State of California or its officers or agents shall not be responsible for the accuracy or completeness of scanned copies of this plan sheet.

ACCESSIBILITY DESIGN APPROVAL STAMP DOT / DES / OTA
PROJECT ID **0412000666**
Reviewed by: Y. A. WANG
Date: 12-06-12

CALIFORNIA STATE FIRE MARSHAL APPROVED
Approval of this plan does not authorize or approve any omission or deviation from applicable regulations. Final approval is subject to field inspection. One set of approved plans shall be available on the project site at all times.
Reviewed by: SPENCER MEYER
Approval date: 12-13-12

OCCUPANT LOAD FACTOR BASED ON CBC TABLE 1004.1.1
(MAXIMUM FLOOR AREA ALLOWANCES PER OCCUPANT)

BUILDING IA AND IB OCCUPANCY LOAD CALCULATION TOTALS

OCCUPANCY TYPE	OCCUPANT LOADS 1ST FL	2ND FL	1ST & 2ND
B	219	120	354
FI	47	0	42
SI	75	0	80
	341	120	476

3 REVISED PER ADDENDUM No. 3 DATED JANUARY 4, 2013

DESIGN	BY F. THOMAS, L. RHOADES	CHECKED
DETAILS	BY C. NAKAHARA,	CHECKED
QUANTITIES	BY	CHECKED

STATE OF CALIFORNIA
DEPARTMENT OF TRANSPORTATION

DIVISION OF ENGINEERING SERVICES
ARCHITECTURAL AND STRUCTURAL DESIGN

BRIDGE NO. 33M5785
POST MILE 2.2

SFOBB MAINTENANCE COMPLEX
CODE — CODE ANALYSIS OCCUPANT LOAD CALCS

SHEET **A0-4.3**

a0_04.3_code3.add
TAEMWW Imperial Rev. 7/10 20-DEC-2012 10:27

ORIGINAL SCALE IN INCHES FOR REDUCED PLANS 0 1 2 3

UNIT 3598
PROJECT NUMBER & PHASE 04120006661
EA 014081

DISREGARD PRINTS BEARING EARLIER REVISION DATES
REVISION DATES (PRELIMINARY STAGE ONLY) 02-28-12 04-26-12 05-08-12 05-17-12 06-01-12 06-20-12
SHEET X OF X

20-DEC-2012 10:27
a0_04.3_code3.add

DIST.	COUNTY	ROUTE	POST MILES TOTAL PROJECT	SHEET NO.	TOTAL SHEETS
04	Ala	80	2.2	120	800

3

LICENSED ARCHITECT
FRANK THOMAS
No. C-31406
Exp. 4-30-13
STATE OF CALIFORNIA

LICENSED ARCHITECT — DATE 5/30/2012

10-22-12
PLANS APPROVAL DATE

The State of California or its officers or agents shall not be responsible for the accuracy or completeness of scanned copies of this plan sheet.

ACCESSIBILITY DESIGN APPROVAL STAMP DOT / DES / OTA
PROJECT ID **0412000666**
Reviewed by: Y. A. WANG
Date: 12-06-12

CALIFORNIA STATE FIRE MARSHAL APPROVED
Approval of this plan does not authorize or approve any omission or deviation from applicable regulations. Final approval is subject to field inspection. One set of approved plans shall be available on the project site at all times.
Reviewed by: SPENCER MEYER
Approval date: 12-13-12

AREA TOTALS PER OCCUPANCY TYPE (SQ. FT.)					
		BUILDING 2	BUILDING 3	BUILDING 4	BUILDING 2, 3, AND 4 COMBINED TOTAL
FUNCTION	OCCUPANCY TYPE	SI	SI	SI	
STORAGE		1785	3585	220	5590

PER CBC SECTION 705.3 EXCEPTION,
ALL THREE BUILDINGS ARE CONSIDERED AS PORTIONS OF ONE BUILDING.

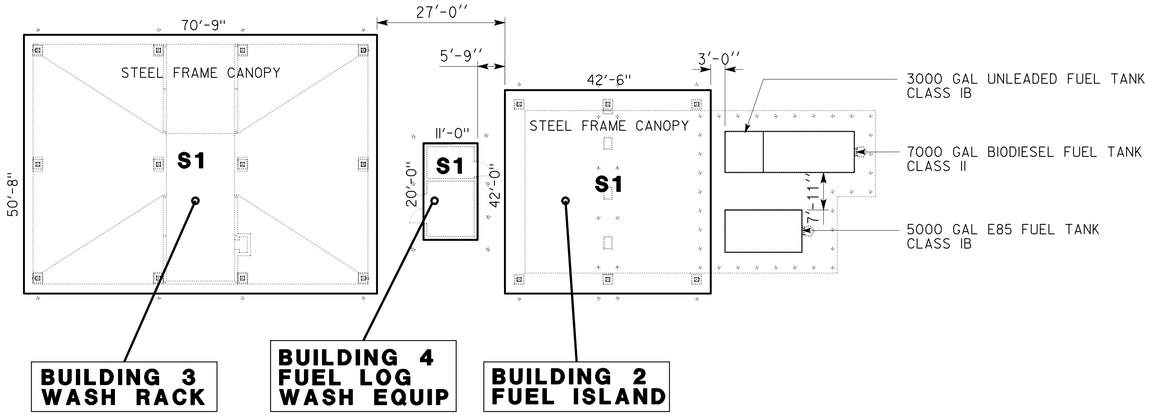

BUILDING OCCUPANCY

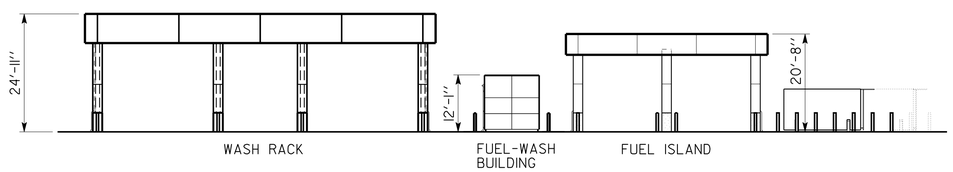

BUILDING HEIGHT

SCALE: 1/16" = 1'-0"

STRUCTURE CODE ANALYSIS

APPLICABLE CODE:

CALIFORNIA BUILDING CODE 2010
CALIFORNIA MECHANICAL CODE 2010
CALIFORNIA PLUMBING CODE 2010
CALIFORNIA ELECTRICAL CODE 2010
CALIFORNIA ENERGY CODE 2010
CALIFORNIA FIRE CODE 2010

NFPA 13 2002 EDITION
NFPA 72 2002 EDITION
2010 EDITION OF ADA STANDARDS

BUILDING CONSTRUCTION TYPE: (CBC SECTION 602) — TYPE V-B (NON RATED STRUCTURE)

FIRE SUPPRESSION SYSTEM: (CBC SECTION 903.3.1.1) — NONE

FIRE ALARM SYSTEM: — NONE

FIRE EXTINGUISHERS: (CFC SECTION 906) — 4A-40B:C

SECURITY ALARM SYSTEM: — NONE PROVIDED

OCCUPANCY TYPES: — S-1 (CBC SECTION 311.2)

OCCUPANCY SEPARATION CBC TABLE 508.4
NO OCCUPANCY SEPARATION

ALLOWABLE BUILDING AREA SF: (CBC TABLE 503) — 9000

TOTAL BUILDING SF: — 5590 (COMBINED AREA)

ALLOWABLE MAXIMUM HEIGHT: 40 FT. (CBC TABLE 503)

ACTUAL BUILDING HEIGHT: 25 FT.

ACTUAL STORIES: 1

HAZARDOUS MATERIALS

MATERIALS STORED WITHIN THE SFOBB MAINTENANCE COMPLEX EXCEEDING THE LIMITS SET FORTH IN CBC TABLE 307.1(1) WILL BE STORED IN THE HAZARDOUS MATERIALS BUILDING

EXIT ACCESS TRAVEL DISTANCE (CBC TABLE 1016.1)

S-1 OCCUPANCY- 200' MAXIMUM (NON-SPRINKLER)

PROVIDED- 47'

MINIMUM NUMBER OF EXITS FOR OCCUPANT LOAD (CBC TABLE 1019.1)

S-1 OCCUPANCIES- 2 MIN REQUIRED
PROVIDED:

ROOF COVERING CBC TABLE 1505.1)

TYPE II-B CONSTRUCTION REQUIRES MIN ROOF COVERING CLASSIFICATION OF CLASS C

3 **REVISED PER ADDENDUM No. 3 DATED JANUARY 4, 2013**

	BY	CHECKED
DESIGN	F. THOMAS, L. RHOADES	
DETAILS	C. NAKAHARA,	
QUANTITIES		

STATE OF CALIFORNIA
DEPARTMENT OF TRANSPORTATION

DIVISION OF ENGINEERING SERVICES
ARCHITECTURAL AND STRUCTURAL DESIGN

BRIDGE NO. 33M5785
POST MILE 2.2

SFOBB MAINTENANCE COMPLEX
CODE — CODE ANALYSIS 2

SHEET **A0-4.4**

a0_04.4_code4.add
TAEMWW Imperial Rev. 7/10 20-DEC-2012 10:27

ORIGINAL SCALE IN INCHES FOR REDUCED PLANS 0 1 2 3

UNIT 3598
PROJECT NUMBER & PHASE 04120006661
EA 014081

DISREGARD PRINTS BEARING EARLIER REVISION DATES → 02-28-12 04-26-12 05-08-12 05-17-12 06-01-12 06-28-12 07-23-12

REVISION DATES (PRELIMINARY STAGE ONLY) SHEET X OF X

20-DEC-2012 10:27
a0_04.4_code4.add

FINISH SCHEDULE

ROOM NUMBER	ROOM NAME	FLOOR: CONCRETE	FLOOR: CERAMIC TILE	FLOOR: RUBBER FLOORING	FLOOR: CARPET	FLOOR:	BASE: RESILIENT BASE	BASE: CERAMIC TILE COVED BASE	BASE: NONE CONDITIONS	BASE:	WALLS NORTH: CERAMIC TILE; WIRE PARTITION	WALLS NORTH: GYPSUM BOARD	WALLS NORTH: PLYWOOD, GYPSUM BD ABOVE	WALLS NORTH: GYPSUM BD WITH FRP	WALLS NORTH: RATED PLYWOOD ON WALL	WALLS EAST: CERAMIC TILE; WIRE PARTITION	WALLS EAST: GYPSUM BOARD	WALLS EAST: PLYWOOD, GYPSUM BD ABOVE	WALLS EAST: GYPSUM BD WITH FRP	WALLS EAST: RATED PLYWOOD ON WALL	WALLS SOUTH: CERAMIC TILE; WIRE PARTITION	WALLS SOUTH: GYPSUM BOARD	WALLS SOUTH: PLYWOOD, GYPSUM BD ABOVE	WALLS SOUTH: GYPSUM BD WITH FRP	WALLS SOUTH: RATED PLYWOOD ON WALL	WALLS WEST: CERAMIC TILE; WIRE PARTITION	WALLS WEST: GYPSUM BOARD	WALLS WEST: PLYWOOD, GYPSUM BD ABOVE	WALLS WEST: GYPSUM BD WITH FRP	WALLS WEST: RATED PLYWOOD ON WALL	CEILING: EXTERIOR SOFFIT PANEL	CEILING: SUSPENDED CEILING	CEILING: GYPSUM BOARD	CEILING: EXPOSED DECKING	CEILING:	MISC: STRUCTURAL BEAMS, RAILS	MISC: EXPOSED UTILITY ITEMS	MISC: PLASTIC LAMINATE (P)	MISC: LIGHTING FIXTURES	MISC: OTHER MISCELLANEOUS	APPROXIMATE CEILING HEIGHT	REMARKS, SPECIAL CONDITIONS	ROOM NUMBER
	BUILDING 1A 2ND FLOOR																																									
202	NORTH STAIRS	F2					BI					W2					W2					W2					W2					C6				MI	M2				VARIES		202
203	MECHANICAL	F2					BI					W2					W2						W3				W2							C4							VARIES		203
204	STORAGE			F4			BI					W2					W2					W2					W2					C2									9'-0"		204
205	COMMUNICATIONS			F4			B6								W7					W7					W7					W7		C2				MI					9'-0"		205
206	OFFICE 6				F6		BI					W2					W2					W2					W2					C2									9'-0"		206
207	RADIO	F7					BI								W7					W7					W7					W7		C2									9'-0"		207
208	ELECTRICAL			F5			BI						W3					W3					W3					W3						C4							9'-0"		208
209	JANITOR			F5			BI					W2		W6			W2		W6			W2					W2						C3								9'-0"		209
210A	HALLWAY			F4			BI					W2					W2					W2					W2					C2									9'-0"		210A
210B	HALLWAY			F4			BI					W2					W2					W2					W2					C2									9'-0"		210B
210C	HALLWAY			F4			BI					W2					W2					W2					W2					C2									9'-0"		210C
211	MENS RESTROOM		F3				BI				W1	W2				W1	W2				W1	W2				W1	W2						C3					P1			9'-0"	2	211
212	WOMENS RESTROOM		F3				BI				W1	W2				W1	W2				W1	W2				W1	W2						C3					P1			9'-0"	2	212
213	BREAKROOM		F4				BI				W9	W2					W2					W2					W2						C3					P2			9'-0"		213
214	CONFERENCE				F6		B4					W2					W2					W2					W2					C2				MI					9'-0"		214
215	TRAINING				F6			B2				W2					W2					W2					W2					C2				MI					9'-0"		215
216	FILE STORAGE			F4				B2				W2					W2					W2					W2						C3			MI					9'-0"		216
217	SOUTH STAIR			F4			BI					W2					W2					W2					W2					C6				MI	M2				VARIES		217
218	OFFICE 4				F6		B4					W2					W2					W2					W2					C2									9'-0"		218
218A	OFFICE 5				F6		B4					W2					W2					W2					W2					C2				MI					9'-0"		218A
219	OFFICE 3				F6		B4					W2					W2					W2					W2					C2				MI					9'-0"		219
220	OFFICE 2				F6		B4					W2					W2					W2					W2					C2									9'-0"		220
221	OFFICE 1				F6		B4					W2					W2					W2					W2					C2									9'-0"		221
	BUILDING 1B																																									
128	COMPRESSOR	F2					BI		B3			W2					W2					W2					W2						C3			MI					10'-0"	2	128
129	STORAGE	F2					BI						W4					W4					W4				W2						C3								10'-0"	2	129
130	RECYCLE MATERIAL STORAGE	F2					BI						W4					W4					W4				W2						C3			MI					10'-0"		130
131	ELECTRICAL	F2					BI		B3				W3					W3				W2					W2							C4		MI					10'-0"	2	131
132	HALLWAY	F2					BI						W5					W5					W5				W2						C3								10'-0"	2	132
133	RIGGING SECURE TOOL	F2					BI		B3				W4					W4					W4						W4					C4		MI	M2				VARIES	2	133
134	PAINT MIX	F2					BI		B3			W2						W4					W4						W4					C4		MI	M2				VARIES	2	134
135	HALLWAY	F2					BI		B3			W2						W5					W5						W5					C3								10'-0"	2	135
136	SEW	F2					BI		B3				W4					W4				W2							W4					C4		MI	M2				VARIES	2	136

3 REVISED PER ADDENDUM No. 3 DATED JANUARY 4, 2013

DIST.	COUNTY	ROUTE	POST MILES TOTAL PROJECT	SHEET NO.	TOTAL SHEETS
04	Ala	80	2.2	123	800

LICENSED ARCHITECT — 5/30/2012 DATE

LICENSED ARCHITECT FRANK THOMAS No. C-31406 Exp. 4-30-13 STATE OF CALIFORNIA

10-22-12
PLANS APPROVAL DATE

The State of California or its officers or agents shall not be responsible for the accuracy or completeness of scanned copies of this plan sheet.

ACCESSIBILITY DESIGN APPROVAL STAMP DOT / DES / OTA
PROJECT ID 0412000666
Reviewed by: Y. A. WANG
Date: 12-06-12

CALIFORNIA STATE FIRE MARSHAL APPROVED
Approval of this plan does not authorize or approve any omission or deviation from applicable regulations. Final approval is subject to field inspection. One set of approved plans shall be available on the project site at all times.
Reviewed by: SPENCER MEYER
Approval date: 12-13-12

NOTES AND REMARKS

1. SEE SHEET A0-5.5 FOR FINISH DESIGNATION.
2. VIEW INTERIOR ELEVATIONS FOR ADDITIONAL ROOM DETAILS NOT SHOWN IN THE FINISH SCHEDULE.

SHEET TITLE
SCALE x" = 1'-0"

DESIGN	BY F. THOMAS, L. RHOADES	CHECKED	
DETAILS	BY C. NAKAHARA,	CHECKED	
QUANTITIES	BY	CHECKED	

STATE OF CALIFORNIA DEPARTMENT OF TRANSPORTATION

DIVISION OF ENGINEERING SERVICES ARCHITECTURAL AND STRUCTURAL DESIGN

BRIDGE NO. 33M5785 | POST MILE 2.2

SFOBB MAINTENANCE COMPLEX
BLDG 1A AND 1B — FINISH SCHEDULE 2

SHEET A0-5.2

a0_05_2 finsch.add
TAEMWW Imperial Rev. 7/10 20-DEC-2012 10:27

ORIGINAL SCALE IN INCHES FOR REDUCED PLANS 0 1 2 3

UNIT 3598
PROJECT NUMBER & PHASE 04120006661
EA 014081

DISREGARD PRINTS BEARING EARLIER REVISION DATES
REVISION DATES (PRELIMINARY STAGE ONLY): 02-28-12 04-26-12 05-08-12 05-17-12 06-01-12 06-28-12 07-23-12
SHEET X OF X

20-DEC-2012 10:27 a0_05_2 finsch.add

DOOR SCHEDULE
BUILDING 1A

NOTES: SEE DETAIL 1/A0-7.4 FOR TYPICAL DOOR FRAME ANCHORAGE
SEE SPECIAL PROVISIONS FOR HARDWARE GROUP SCHEDULE

	DOOR NUMBER	TYPE	WIDTH	HEIGHT	THICK.	MATERIAL	GLASS	LOUVER	FRAME TYPE	FRAME NUMBER	HARDWARE GROUP	ROOM IDENTIFICATION SIGN I-A0-3.3	OTHER SIGNS	DETAILS HEAD	DETAILS JAMB	DETAILS THRESH	FIRE RATING	SIGN TEXT / ADDL MOUNTING INSTRUCTIONS
1st FLOOR	1	D	PR3'-0"	7'-0"	13/4"	ALUM	●		ALUM	W11	1	-	2&6/A0-3.3	1/A6-8.1	2/A6-8.1	3/A6-8.1		EXIT / ON ADJACENT SOUTH WALL
	2	C	3'-0"	7'-0"	13/4"	HM	●		PMF	P11	10	102		1/A6-8.3	1/A6-8.3	2/A6-8.3		
	3	C	3'-0"	7'-0"	13/4"	HM	●		PMF	P11	10	103		1/A6-8.3	1/A6-8.3	2/A6-8.3		
	4	C	3'-0"	7'-0"	13/4"	HM	●		PMF	P11	10	104		1/A6-8.3	1/A6-8.3	2/A6-8.3		
	5	C	3'-0"	7'-0"	13/4"	HM	●		PMF	P11	12	KITCHEN		1/A6-8.3	1/A6-8.3	2/A6-8.3		
	6	C	3'-0"	7'-0"	13/4"	HM	●		PMF	P11	30	106	2/A6-13.2	1/A6-8.3	1/A6-8.3	2/A6-8.3		MAXIMUM OCCUPANTS 30
	7	C	3'-0"	7'-0"	13/4"	HM	●		PMF	P11	30	107	2/A6-13.2	1/A6-8.3	1/A6-8.3	2/A6-8.3		MAXIMUM OCCUPANTS 22
	8	C	3'-0"	7'-0"	13/4"	HM	●		PMF	P11	16	NORTH STAIRS		4/A6-8.3	4/A6-8.3	5/A6-8.3	60-MIN	
	9	A	3'-0"	7'-0"	13/4"	ALUM	-		ALUM	W39	7	-	2/A0-3.3	8/A6-8.1	9/A6-8.1	11/A6-8.1		EXIT
	10	D	PR3'-0'	7'-0"	13/4"	ALUM	●		ALUM	W7	1	-	2&6/A0-3.3	4/A6-8.1	5/A6-8.1	6/A6-8.1		EXIT
	11	B	3'-0"	7'-0"	13/4"	HM	-		PMF	P11	24		3B&4B/A0-3.3	1/A6-8.3	1/A6-8.3	6/A6-8.3		
	12	B	3'-0"	7'-0"	13/4"	HM	-		PMF	P11	24		3C&4C/A0-3.3	1/A6-8.3	1/A6-8.3	6/A6-8.3		
	13	B	3'-0"	7'-0"	13/4"	HM	-		PMF	P11	26	JANITOR		1/A6-8.3	1/A6-8.3	2/A6-8.3		
	14	B	3'-0"	7'-0"	13/4"	HM	-		PMF	P11	17	113		1/A6-8.3	1/A6-8.3	2/A6-8.3		
	15	B	3'-0"	7'-0"	13/4"	HM	-		PMF	P11	17	ELECTRICAL		1/A6-8.3	1/A6-8.3	8/A6-8.3		
	16	B	3'-0"	7'-0"	13/4"	HM	-		PMF	P11	10	115		1/A6-8.3	1/A6-8.3	8/A6-8.3		
	17	B	3'-0"	7'-0"	13/4"	HM	-		PMF	P11	25	COMMUNICATIONS		1/A6-8.3	1/A6-8.3	8/A6-8.3		
	18	B	3'-6"	7'-0"	13/4"	HM	-		PMF	P11	28	ELEVATOR EQUIPMENT		4/A6-8.3	4/A6-8.3	5/A6-8.3	60-MIN	
	19	F	PR3'-0'	7'-0"	--	-	-		-		4	-	2&6/A0-3.3	--	8/A6-1.2 &10/A6-1.2	--		EXIT
	20	F	PR3'-0'	7'-0"	--	-	-		-		4	-	2&6/A0-3.3	--	8/A6-1.2 &10/A6-1.2	--		EXIT
	21	A	3'-0"	7'-0"	13/4"	ALUM	-		ALUM	W39	6	-	2/A0-3.3	8/A6-8.1	9/A6-8.1	11/A6-8.1		EXIT ROUTE / INSIDE RM 119
	22	A	3'-0"	7'-0"	13/4"	ALUM	-		ALUM	W39	7	-	2&6/A0-3.3	8/A6-8.1	9/A6-8.1	11/A6-8.1		EXIT
	23	B	3'-0"	7'-0"	13/4"	HM	-		PMF	P11	24	WOMEN'S LOCKER	3B&4B/A0-3.3	1/A6-8.3	1/A6-8.3	8/A6-8.3		
	24	B	3'-0"	7'-0"	13/4"	HM	-		PMF	P11	13	WOMEN'S SHOWER	3B&4B/A0-3.3	1/A6-8.3	1/A6-8.3	9/A6-8.3		
	25	B	3'-0"	7'-0"	13/4"	HM	-		PMF	P11	13		3B&4B/A0-3.3	1/A6-8.3	1/A6-8.3	10/A6-8.3		
	26	B	3'-0"	7'-0"	13/4"	HM	-		PMF	P11	24	MEN'S LOCKER	3C&4C/A0-3.3	1/A6-8.3	1/A6-8.3	8/A6-8.3		
	27	B	3'-0"	7'-0"	13/4"	HM	-		PMF	P11	13	MEN'S SHOWER	3C&4C/A0-3.3	1/A6-8.3	1/A6-8.3	9/A6-8.3		
	28	B	3'-0"	7'-0"	13/4"	HM	-		PMF	P11	13		3C&4C/A0-3.3	1/A6-8.3	1/A6-8.3	10/A6-8.3		
	29	B	3'-0"	7'-0"	13/4"	HM	-		PMF	P11	12	125		1/A6-8.3	1/A6-8.3	2/A6-8.3		
	30	A	3'-0"	7'-0"	13/4"	ALUM	-		ALUM	W39	7	-	2&6/A0-3.3	8/A6-8.1	9/A6-8.1	11/A6-8.1		EXIT
	31	A	3'-0"	7'-0"	13/4"	ALUM	-		ALUM	W39	8	-	2/A0-3.3	3/A6-8.2	4/A6-8.2	6/A6-8.2	60-MIN	EXIT
2ND FLOOR	32	C	PR3'-0'	7'-0"	13/4"	HM	●		PMF	P13	11	201		1/A6-8.3	1/A6-8.3	7/A6-8.3		
	33	CC	3'-0"	7'-0"	13/4"	HM	●		PMF	P11	15	FLOOR 2 (EXT SIDE)	6/A6-13.2	4/A6-8.3	4/A6-8.3	5/A6-8.3	60-MIN	EXIT STAIR DOWN / OUSTIDE RM 202
	34	B	3'-0"	7'-0"	13/4"	HM	-		PMF	P11	17	MECHANICAL		1/A6-8.3	1/A6-8.3	8/A6-8.3		
	35	B	3'-0"	7'-0"	13/4"	HM	-		PMF	P11	17	204		1/A6-8.3	1/A6-8.3	7/A6-8.3		
	36	B	3'-0"	7'-0"	13/4"	HM	-		PMF	P11	17	COMMUNICATIONS		1/A6-8.3	1/A6-8.3	7/A6-8.3		
	37	C	3'-0"	7'-0"	13/4"	HM	●		PMF	P11	24	-	1/A6-13.2	1/A6-8.3	1/A6-8.3	7/A6-8.3		EXIT ROUTE / INSIDE RM 210C
	38	B	3'-0"	7'-0"	13/4"	HM	-		PMF	P11	17	RADIO		1/A6-8.3	1/A6-8.3	8/A6-8.3		
	39	B	3'-0"	7'-0"	13/4"	HM	-		PMF	P11	26	ELECTRICAL		1/A6-8.3	1/A6-8.3	2/A6-8.3		
	40	B	3'-0"	7'-0"	13/4"	HM	-		PMF	P11	26	JANITOR		1/A6-8.3	1/A6-8.3	2/A6-8.3		
	41	C	3'-0"	7'-0"	13/4"	HM	●		PMF	P11	19	CONFERENCE ROOM	2/A6-13.2 & 4/A6-13.2	1/A6-8.3	1/A6-8.3	7/A6-8.3		MAXIMUM OCCUPANTS 33
	42	B	3'-0"	7'-0"	13/4"	HM	●		PMF	P11	19	206		1/A6-8.3	1/A6-8.3	12/A6-8.3		

NOTE:

1. PRESSED METAL FRAME (PMF) IS EQUIVALENT TO COLD-FORMED STEEL (CFS).
2. ALL RATED DOORS ARE TO BE POSITIVE LATCHING AND SELF-CLOSING (2010 CBC SECTIONS 715.4.8 AND 715.4.8.1).
3. "LABEL" SHALL MEAN "FIRE" ASSEMBLY" AS DEFINED IN 2010 CBC SECTIN 715.4.
4. FIRE DOORS AND FIRE WINDOWS SHALL HAVE AN APPROVED LABEL OR LISTING MARK INDICATING THE FIRE-PROTECTION RATING WHICH IS PERMANENTLY AFFIXED (2010 CBC SECTIONS 715.4.6 AND 715.4.7.3).
5. FIRE-RATED DOORS FRAMES SHALL BE INSTALLED STRICTLY PER MANUFACTURER'S PRINTED INSTUCTIONS. MANUFACTURER'S PRINTED INSTRUCTIONS SHALL BE MADE AVAILABLE TO THE INSPECTING AUTHORITIES (2010 CBC SECTION 715.4 AND NFPA 80).

3

DIST.	COUNTY	ROUTE	POST MILES TOTAL PROJECT	SHEET NO.	TOTAL SHEETS
04	Ala	80	2.2	127	800

LICENSED ARCHITECT — 5/30/2012 DATE

LICENSED ARCHITECT FRANK THOMAS No. C-31406 Exp. 4-30-13 STATE OF CALIFORNIA

10-22-12
PLANS APPROVAL DATE

The State of California or its officers or agents shall not be responsible for the accuracy or completeness of scanned copies of this plan sheet.

ACCESSIBILITY DESIGN APPROVAL STAMP DOT / DES / OTA
PROJECT ID 0412000666
Reviewed by: Y. A. WANG
Date: 12-06-12

CALIFORNIA STATE FIRE MARSHAL APPROVED
Approval of this plan does not authorize or approve any omission or deviation from applicable regulations. Final approval is subject to field inspection. One set of approved plans shall be available on the project site at all times.
Reviewed by: SPENCER MEYER
Approval date: 12-13-12

DOOR SCHEDULE
BUILDING 1A continued

	DOOR NUMBER	TYPE	WIDTH	HEIGHT	THICK.	MATERIAL	GLASS	LOUVER	FRAME TYPE	FRAME NUMBER	HARDWARE GROUP	ROOM IDENTIFICATION SIGN I-A0-3.3	OTHER SIGNS	DETAILS HEAD	DETAILS JAMB	DETAILS THRESH	FIRE RATING	SIGN TEXT / ADDL MOUNTING INSTRUCTIONS
2ND FLOOR (CONT.)	43	C	3'-0"	7'-0"	13/4"	HM	●		PMF	P11	19	TRAINING ROOM	2/A6-13.2	1/A6-8.3	1/A6-8.3	6/A6-8.3		MAXIMUM OCCUPANTS 33
	44	B	PR3'-0"	7'-0"	13/4"	HM	-		PMF	P12	27	-		1/A6-8.3	1/A6-8.3	10/A6-8.3		
	45	B	PR3'-0"	7'-0"	13/4"	HM	-		PMF	P12	27	-		1/A6-8.3	1/A6-8.3	10/A6-8.3		
	46	B	3'-0"	7'-0"	13/4"	HM	-		PMF	P11	12	BREAK ROOM	3A&4A/A0-3.3	1/A6-8.3	1/A6-8.3	8/A6-8.3		
	47	B	3'-0"	7'-0"	13/4"	HM	-		PMF	P11	24		3B&4B/A0-3.3	1/A6-8.3	1/A6-8.3	2/A6-8.3		
	48	B	3'-0"	7'-0"	13/4"	HM	-		PMF	P11	24		3C&4C/A0-3.3	1/A6-8.3	1/A6-8.3	2/A6-8.3		
	49	B	3'-0"	7'-0"	13/4"	HM	-		PMF	P11	18	FILE STORAGE		1/A6-8.3	1/A6-8.3	12/A6-8.3		
	50	C	3'-0"	7'-0"	13/4"	HM	●		PMF	P11	16	FLOOR 2 (EXT SIDE)	6/A6-13.2	4/A6-8.3	4/A6-8.3	5/A6-8.3	60-MIN	EXIT STAIR DOWN / INSIDE RM 210A
	51	B	3'-0"	7'-0"	13/4"	HM	-		PMF	P3	12	218		1/A6-8.3	1/A6-8.3	12/A6-8.3		
	52	B	3'-0"	7'-0"	13/4"	HM	-		PMF	P4	19	219		1/A6-8.3	1/A6-8.3	12/A6-8.3		
	53	B	3'-0"	7'-0"	13/4"	HM	-		PMF	P4	19	220		1/A6-8.3	1/A6-8.3	12/A6-8.3		
	54	B	3'-0"	7'-0"	13/4"	HM	-		PMF	P4	19	221		1/A6-8.3	1/A6-8.3	12/A6-8.3		
	55	B	3'-0"	7'-0"	13/4"	HM	-		PMF	P11	19	218A		1/A6-8.3	1/A6-8.3	12/A6-8.3		

3 **REVISED PER ADDENDUM No. 3 DATED JANUARY 4, 2013**

DESIGN	BY F. THOMAS, L. RHOADES	CHECKED
DETAILS	BY C. NAKAHARA,	CHECKED
QUANTITIES	BY	CHECKED

STATE OF CALIFORNIA
DEPARTMENT OF TRANSPORTATION

DIVISION OF ENGINEERING SERVICES
ARCHITECTURAL AND STRUCTURAL DESIGN

UNIT 3598
PROJECT NUMBER & PHASE 04120006661
EA 014081

BRIDGE NO. 33M5785
POST MILE 2.2

SFOBB MAINTENANCE COMPLEX
BUILDING 1A
DOOR SCHEDULE I

SHEET **A0-7.1**

DISREGARD PRINTS BEARING EARLIER REVISION DATES →
REVISION DATES (PRELIMINARY STAGE ONLY) 02-28-12 04-26-12 05-08-12 05-17-12 06-01-12 06-28-12 07-23-12
SHEET X OF X

ORIGINAL SCALE IN INCHES FOR REDUCED PLANS 0 1 2 3

a0_07_1_doorsched1.add
TAEMWW Imperial Rev. 7/10 03-JAN-2013 10:23

03-JAN-2013 10:23
a0_07_1_doorsched1.add

DIST.	COUNTY	ROUTE	POST MILES TOTAL PROJECT	SHEET NO.	TOTAL SHEETS
04	Ala	80	2.2	134	800

LICENSED ARCHITECT — 5/30/2012 DATE

LICENSED ARCHITECT FRANK THOMAS No. C-31406 Exp. 4-30-13 STATE OF CALIFORNIA

10-22-12
PLANS APPROVAL DATE

The State of California or its officers or agents shall not be responsible for the accuracy or completeness of scanned copies of this plan sheet.

ACCESSIBILITY DESIGN APPROVAL STAMP DOT / DES / OTA

PROJECT ID **0412000666**

Reviewed by: Y. A. WANG
Date: ~~07 24 12~~ 12-06-12

CALIFORNIA STATE FIRE MARSHAL APPROVED

Approval of this plan does not authorize or approve any omission or deviation from applicable regulations. Final approval is subject to field inspection. One set of approved plans shall be available on the project site at all times.

Reviewed by: JOHN E WOODS, SDSFM
Approval date: 8-22-12

3

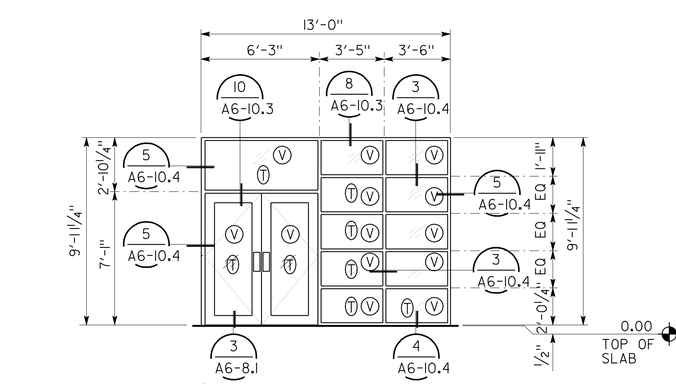

W29 INSULATED GLAZING

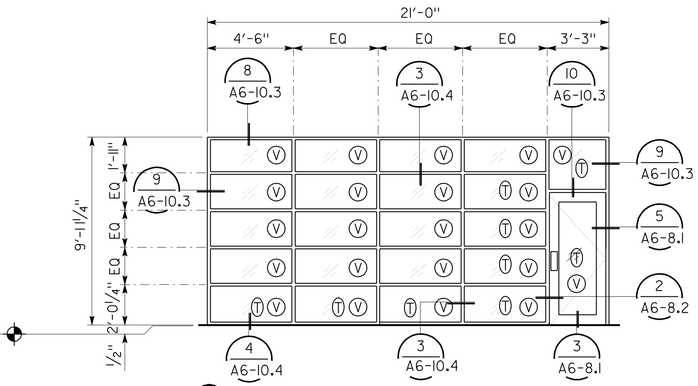

W30 INSULATED GLAZING

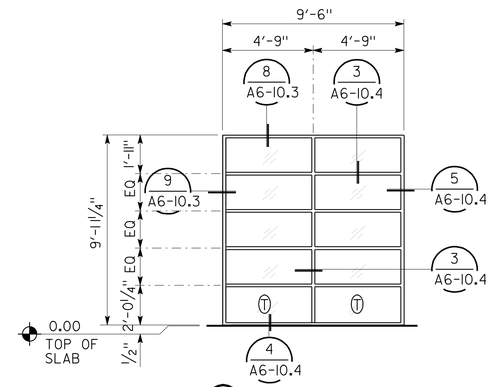

W31 INSULATED GLAZING

3

NOTES:

VERIFY OPENINGS IN FIELD

(T) TEMPERED GLASS D
ALL DIMENSIONS TO BE VERIFIED IN THE FIELD

(V) VISIBLE LIGHT TRANSMITTANCE (VLT) VALUE EQUALS 0.35.

VISIBLE LIGHT TRANSMITTANCE (VLT) VALUE FOR ALL OTHER GLASSES EQUALS 0.7 UON.

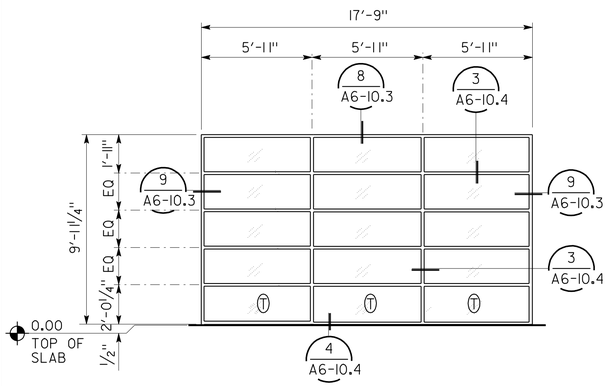

W32 INSULATED GLAZING

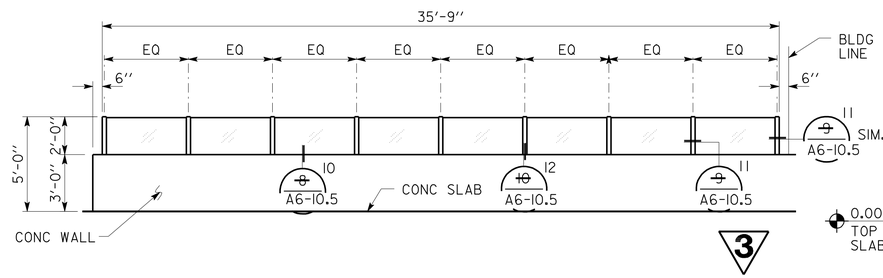

3

W33 WIND SCREEN SYSTEM (SEE EXTERIOR FINISH SCHEDULE ON A0-5.0 FOR MATERIAL)

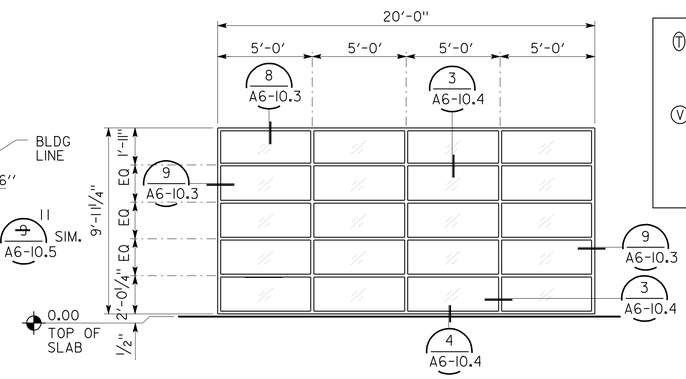

W34 INSULATED GLAZING

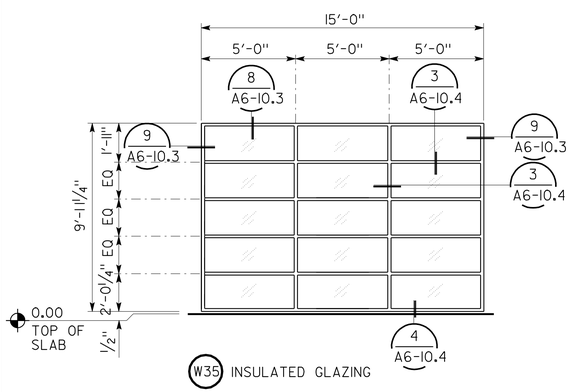

W35 INSULATED GLAZING

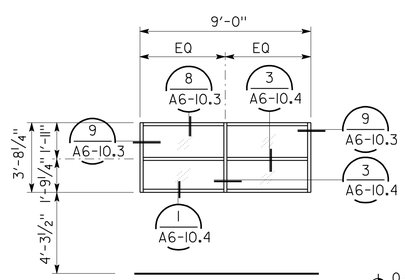

W36 INSULATED GLAZING

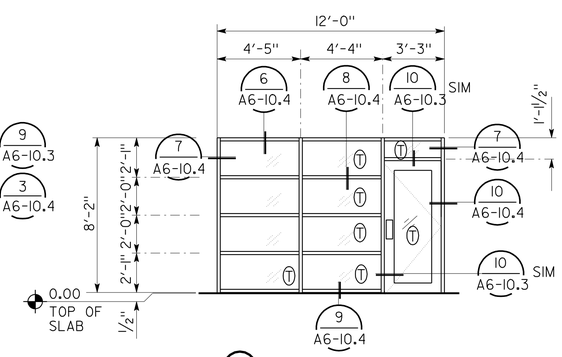

W37 GLAZING

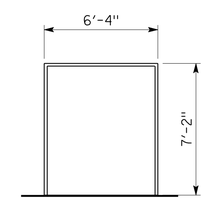

W38 DOOR FRAME

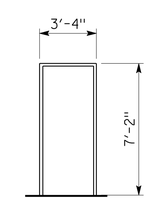

W39 DOOR FRAME

STOREFRONT SYSTEM

SCALE ¼" = 1'-0"

3 **REVISED PER ADDENDUM No. 3 DATED JANUARY 4, 2013**

	BY	CHECKED
DESIGN	F. THOMAS, L. RHOADES	
DETAILS	C. NAKAHARA,	
QUANTITIES		

STATE OF CALIFORNIA DEPARTMENT OF TRANSPORTATION

DIVISION OF ENGINEERING SERVICES ARCHITECTURAL AND STRUCTURAL DESIGN

BRIDGE NO. 33M5785 — POST MILE 2.2

SFOBB MAINTENANCE COMPLEX

BUILDING IB — STOREFRONT WINDOW SYSTEM SCHEDULE-3

SHEET **A0-8.4**

ORIGINAL SCALE IN INCHES FOR REDUCED PLANS 0 1 2 3

UNIT 3598
PROJECT NUMBER & PHASE 04120006661
EA 014081

DISREGARD PRINTS BEARING EARLIER REVISION DATES

REVISION DATES (PRELIMINARY STAGE ONLY): 02-28-12 04-26-12 05-08-12 05-17-12 06-01-12 06-28-12 07-23-12

SHEET X OF X

a0_08_4_winsf3.add
TAEMWW Imperial Rev. 7/10 27-DEC-2012 11:10

27-DEC-2012 11:10
a0_08_4_winsf3.add

DIST.	COUNTY	ROUTE	POST MILES TOTAL PROJECT	SHEET NO.	TOTAL SHEETS
04	Ala	80	2.2	135	800

3

LICENSED ARCHITECT — FRANK THOMAS — No. C-31406 — Exp. 4-30-13 — STATE OF CALIFORNIA

LICENSED ARCHITECT — DATE 5/30/2012

10-22-12
PLANS APPROVAL DATE

The State of California or its officers or agents shall not be responsible for the accuracy or completeness of scanned copies of this plan sheet.

ACCESSIBILITY DESIGN APPROVAL STAMP DOT / DES / OTA
PROJECT ID **0412000666**
Reviewed by: Y. A. WANG
Date: 12-06-12

CALIFORNIA STATE FIRE MARSHAL APPROVED
Approval of this plan does not authorize or approve any omission or deviation from applicable regulations. Final approval is subject to field inspection. One set of approved plans shall be available on the project site at all times.
Reviewed by: SPENCER MEYER
Approval date: 12-13-12

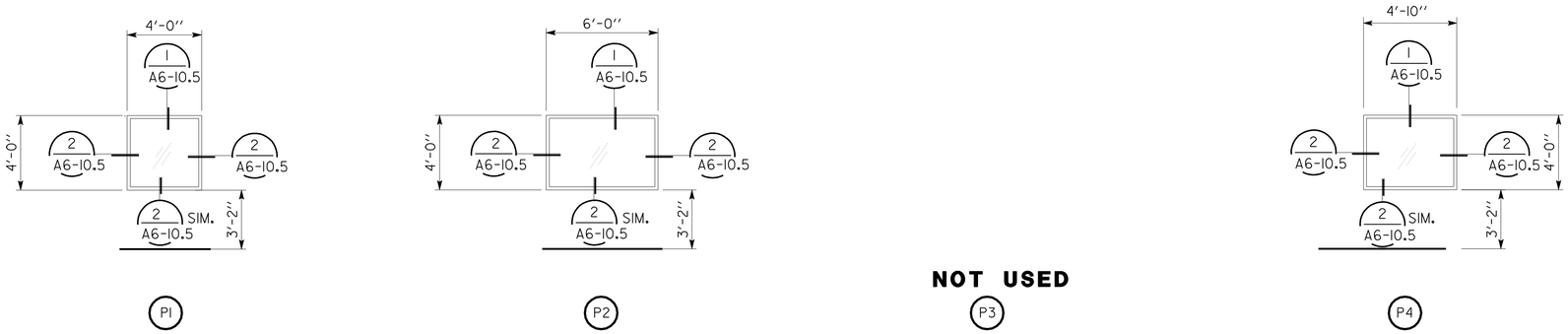

PMF WINDOW & DOOR SYSTEM / BUILDING 1A

SCALE 1/4" = 1'-0"

NOTES:

(FR) 45 MINUTE FIRE RATED GLAZING ASSEMBLY

ALL DIMENSIONS TO BE VERIFIED IN THE FIELD

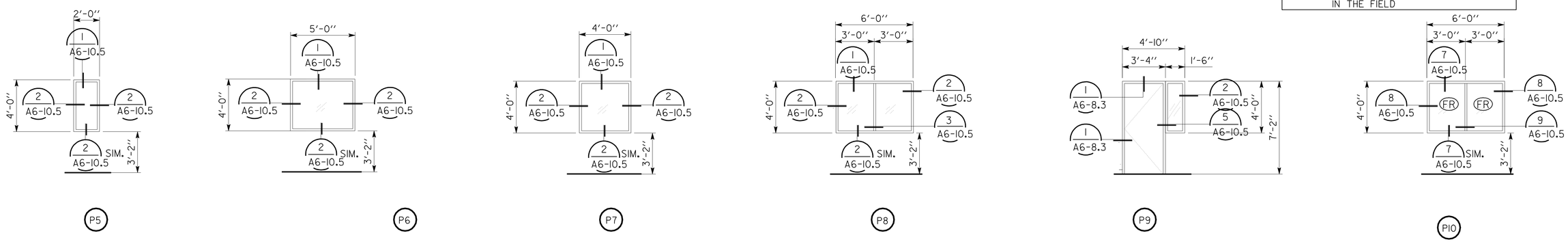

PMF WINDOW & DOOR SYSTEM / BUILDING 1B

SCALE 1/4" = 1'-0"

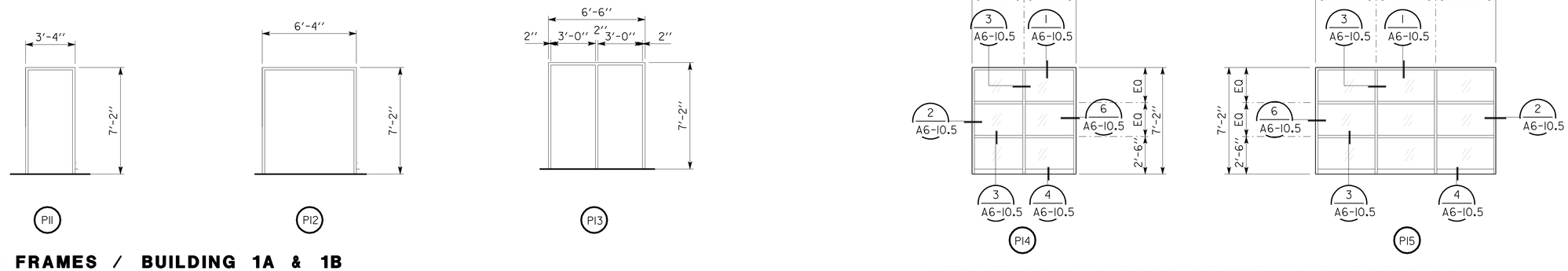

DOOR FRAMES / BUILDING 1A & 1B

SCALE 1/4" = 1'-0"

PMF WINDOW & DOOR SYSTEM / BUILDING 1A

SCALE 1/4" = 1'-0"

3 **REVISED PER ADDENDUM No. 3 DATED JANUARY 4, 2013**

	BY	CHECKED
DESIGN	F. THOMAS, L. RHOADES	
DETAILS	C. NAKAHARA,	
QUANTITIES		

STATE OF CALIFORNIA DEPARTMENT OF TRANSPORTATION

DIVISION OF ENGINEERING SERVICES ARCHITECTURAL AND STRUCTURAL DESIGN

BRIDGE NO. 33M5785
POST MILE 2.2

SFOBB MAINTENANCE COMPLEX
BUILDINGS 1A & 1B — PMF WINDOW & DOOR SCHEDULE I

SHEET **A0-8.5**

a0_08_5 winpmf1.add
TAEMWW Imperial Rev.7/10 28-DEC-2012 10:17

ORIGINAL SCALE IN INCHES FOR REDUCED PLANS 0 1 2 3

UNIT 3598
PROJECT NUMBER & PHASE 04120006661
EA 014081

DISREGARD PRINTS BEARING EARLIER REVISION DATES →
REVISION DATES (PRELIMINARY STAGE ONLY): 02-28-12 04-26-12 05-08-12 05-17-12 06-01-12 06-28-12 07-23-12
SHEET X OF X

28-DEC-2012 10:17
a0_08_5 winpmf1.add

DIST.	COUNTY	ROUTE	POST MILES TOTAL PROJECT	SHEET NO.	TOTAL SHEETS
04	Ala	80	2.2	142	800

3

LICENSED ARCHITECT — 5/30/2012
LICENSED ARCHITECT — DATE

LICENSED ARCHITECT FRANK THOMAS No. C-31406 Exp. 4-30-13 STATE OF CALIFORNIA

10-22-12
PLANS APPROVAL DATE

The State of California or its officers or agents shall not be responsible for the accuracy or completeness of scanned copies of this plan sheet.

ACCESSIBILITY DESIGN APPROVAL STAMP DOT / DES / OTA

PROJECT ID **0412000666**

Reviewed by: Y. A. WANG
Date: 12-06-12

CALIFORNIA STATE FIRE MARSHAL APPROVED

Approval of this plan does not authorize or approve any omission or deviation from applicable regulations. Final approval is subject to field inspection. One set of approved plans shall be available on the project site at all times.

Reviewed by: SPENCER MEYER
Approval date: 12-13-12

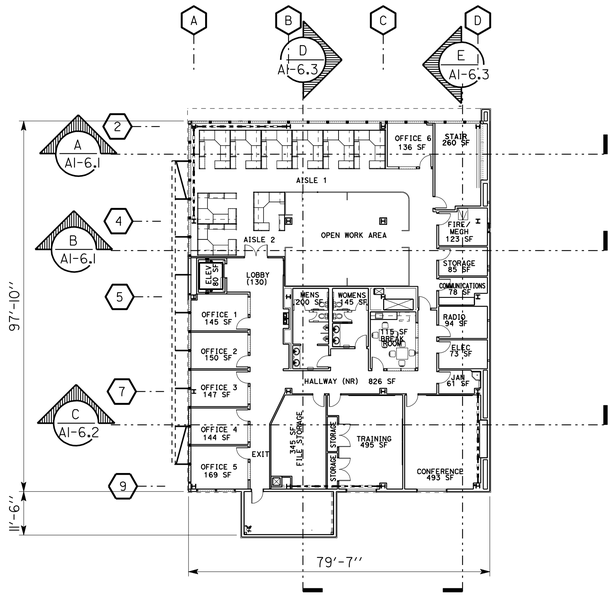

2ND FLOOR BUILDING IA

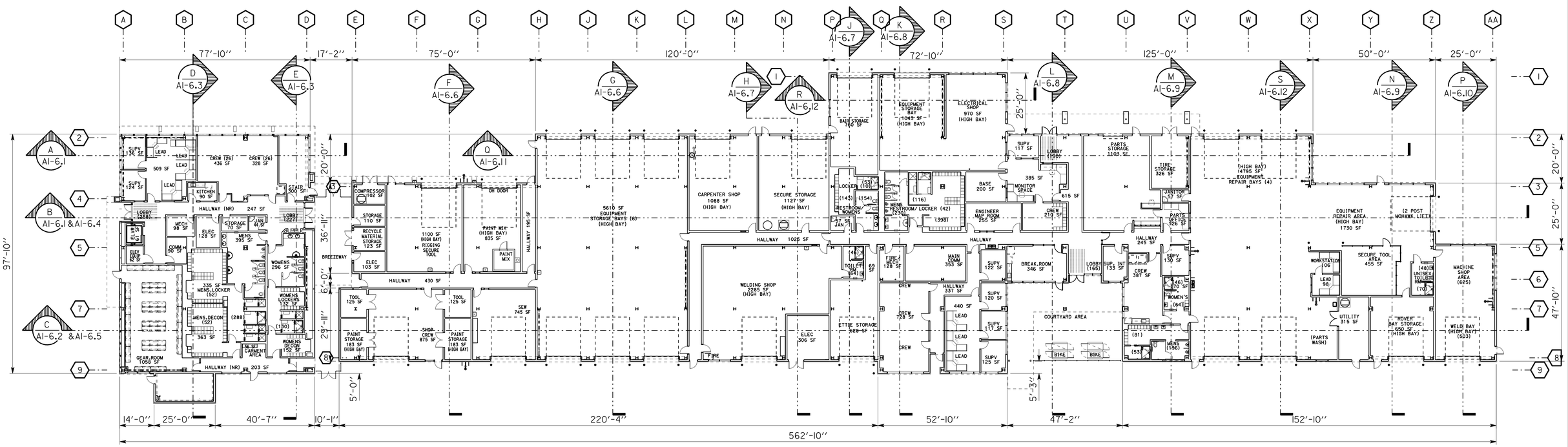

IST FLOOR BUILDING IA

BUILDING IB

3 **REVISED PER ADDENDUM No. 3 DATED JANUARY 4, 2013**

OVERALL FLOOR PLAN

SCALE 1" = 20'-0"

	BY	CHECKED
DESIGN	F. THOMAS, L. RHOADES	
DETAILS	C. NAKAHARA,	
QUANTITIES		

STATE OF CALIFORNIA DEPARTMENT OF TRANSPORTATION

DIVISION OF ENGINEERING SERVICES ARCHITECTURAL AND STRUCTURAL DESIGN

BRIDGE NO. 33M5785
POST MILE 2.2

SFOBB MAINTENANCE COMPLEX

OVERALL — OVERALL FLOOR PLAN

SHEET **A1-1.0**

ORIGINAL SCALE IN INCHES FOR REDUCED PLANS 0 1 2 3

UNIT 3598
PROJECT NUMBER & PHASE 04120006661
EA 014081

DISREGARD PRINTS BEARING EARLIER REVISION DATES → 02-28-12 04-26-12 05-08-12 05-17-12 06-01-12 06-20-12

REVISION DATES (PRELIMINARY STAGE ONLY) SHEET X OF X

a1_01_0 fp.add
TAEMWW Imperial Rev. 7/10 20-DEC-2012 10:28

20-DEC-2012 10:28
a1_01_0 fp.add

DIST.	COUNTY	ROUTE	POST MILES TOTAL PROJECT	SHEET NO.	TOTAL SHEETS
04	Ala	80	2.2	144	800

LICENSED ARCHITECT — DATE 5/30/2012

LICENSED ARCHITECT FRANK THOMAS No. C-31406 Exp. 4-30-13 STATE OF CALIFORNIA

10-22-12
PLANS APPROVAL DATE

The State of California or its officers or agents shall not be responsible for the accuracy or completeness of scanned copies of this plan sheet.

3

ACCESSIBILITY DESIGN APPROVAL STAMP DOT / DES / OTA
PROJECT ID **0412000666**
Reviewed by: Y. A. WANG
Date: 12-06-12

CALIFORNIA STATE FIRE MARSHAL APPROVED
Approval of this plan does not authorize or approve any omission or deviation from applicable regulations. Final approval is subject to field inspection. One set of approved plans shall be available on the project site at all times.
Reviewed by: SPENCER MEYER
Approval date: 12-13-12

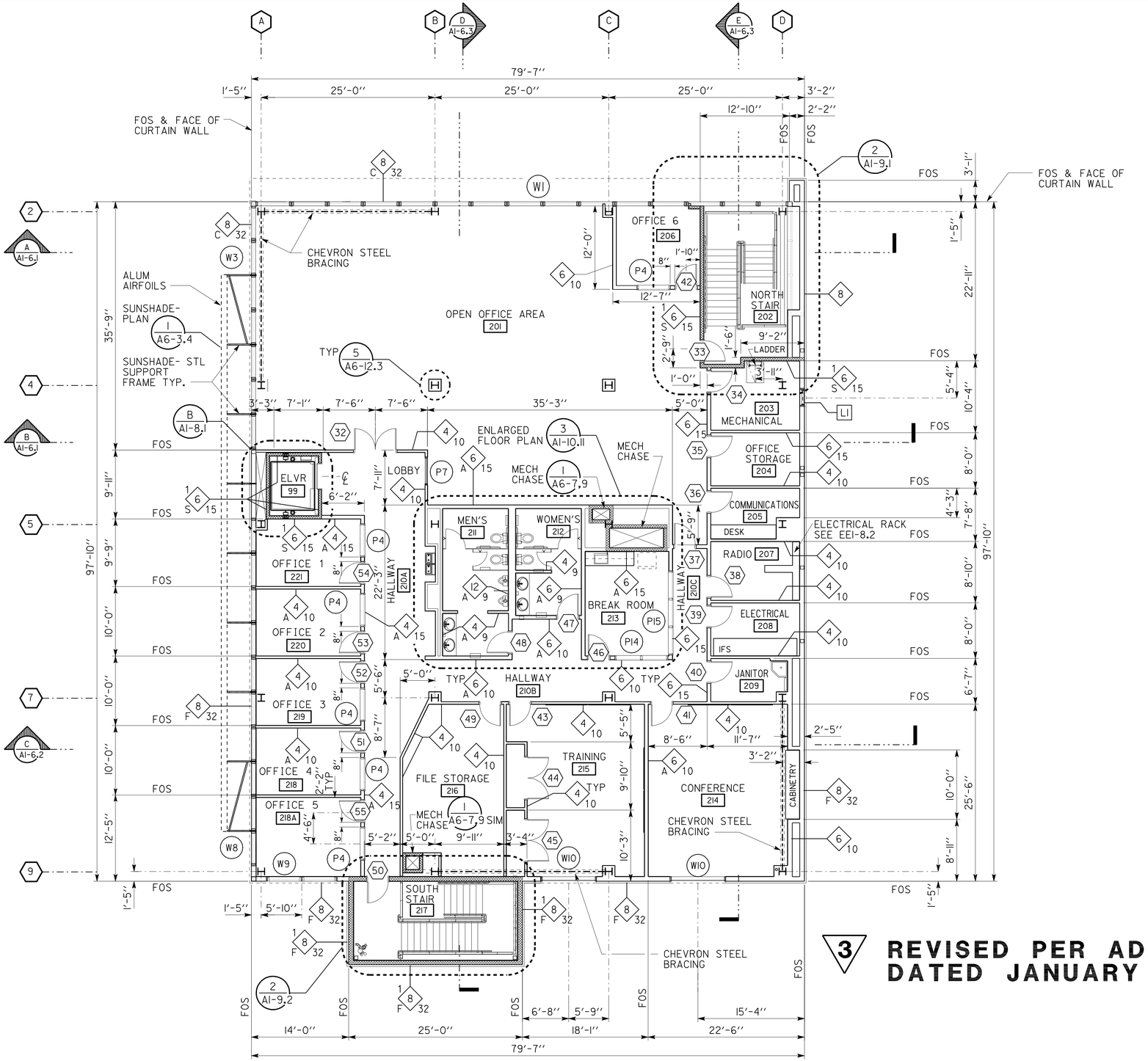

3 **REVISED PER ADDENDUM No. 3 DATED JANUARY 4, 2013**

NOTES:

1. SEE PLAN SHEET A1-2.2 FOR EQUIPMENT AND FURNITURE LOCATIONS
2. SEE PLAN SHEET A1-11.2 FOR FUTURE EQUIPMENT AND FURNITURE NOT IN THIS CONTRACT (NIC)

LEGEND:

WALL TYPE DESIGNATION
- FIRE RATING (IF REQUIRED)
- WALL THICKNESS
  - 4= 4" COLD FORMED METAL STUD WALL
  - 6= 6" COLD FORMED METAL STUD WALL
  - 8= 8" COLD FORMED METAL STUD WALL
  - 12= 12" COLD FORMED METAL STUD WALL
- APPROXIMATE WALL HEIGHT (FT)*
- WALL VARIATION
  - A= ACOUSTICAL BATT INSULATION (4")
  - B= THERMAL BATT INSULATION (R-19)
  - C= CURTAIN WALL FULL HEIGHT
  - F= FULL HEIGHT WALL (EXT ONLY)
  - L= SMOKE RATING (UL LISTED)
  - S= SHAFTWALL (UL LISTED)

ONE HOUR FIRE RATED FIRE BARRIER WALL

* REFER TO BUILDING AND WALL SECTIONS FOR TRUE WALL HEIGHTS

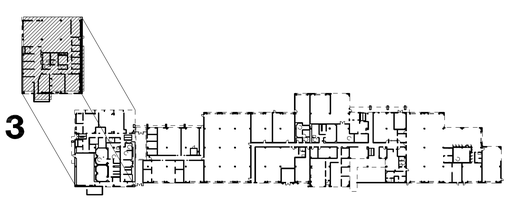

PLAN NORTH

2ND FLOOR PLAN

SCALE 1/8" = 1'-0"

	BY	CHECKED
DESIGN	F. THOMAS, L. RHOADES	
DETAILS	C. NAKAHARA,	
QUANTITIES		

STATE OF CALIFORNIA DEPARTMENT OF TRANSPORTATION

DIVISION OF ENGINEERING SERVICES ARCHITECTURAL AND STRUCTURAL DESIGN

BRIDGE NO. 33M5785 — POST MILE 2.2

SFOBB MAINTENANCE COMPLEX

BUILDING 1A — 2ND FLOOR PLAN

SHEET **A1-1.2**

a1_01_2 fp_2a.add
TAEMWW Imperial Rev. 7/10 28-DEC-2012 07:52

ORIGINAL SCALE IN INCHES FOR REDUCED PLANS 0 1 2 3

UNIT 3598
PROJECT NUMBER & PHASE 04120006661
EA 014081

DISREGARD PRINTS BEARING EARLIER REVISION DATES → 02-28-12 04-26-12 05-08-12 05-17-12 06-01-12 06-20-12

REVISION DATES (PRELIMINARY STAGE ONLY) — SHEET X OF X

28-DEC-2012 07:52
a1_01_2 fp_2a.add

DIST.	COUNTY	ROUTE	POST MILES TOTAL PROJECT	SHEET NO.	TOTAL SHEETS
04	Ala	80	2.2	150	800

LICENSED ARCHITECT — 5/30/2012 DATE

LICENSED ARCHITECT FRANK THOMAS No. C-31406 Exp. 4-30-13 STATE OF CALIFORNIA

10-22-12
PLANS APPROVAL DATE

The State of California or its officers or agents shall not be responsible for the accuracy or completeness of scanned copies of this plan sheet.

ACCESSIBILITY DESIGN APPROVAL STAMP DOT / DES / OTA
PROJECT ID **0412000666**
Reviewed by: Y. A. WANG
Date: 12-06-12

CALIFORNIA STATE FIRE MARSHAL APPROVED
Approval of this plan does not authorize or approve any omission or deviation from applicable regulations. Final approval is subject to field inspection. One set of approved plans shall be available on the project site at all times.
Reviewed by: SPENCER MEYER
Approval date: 12-13-12

3

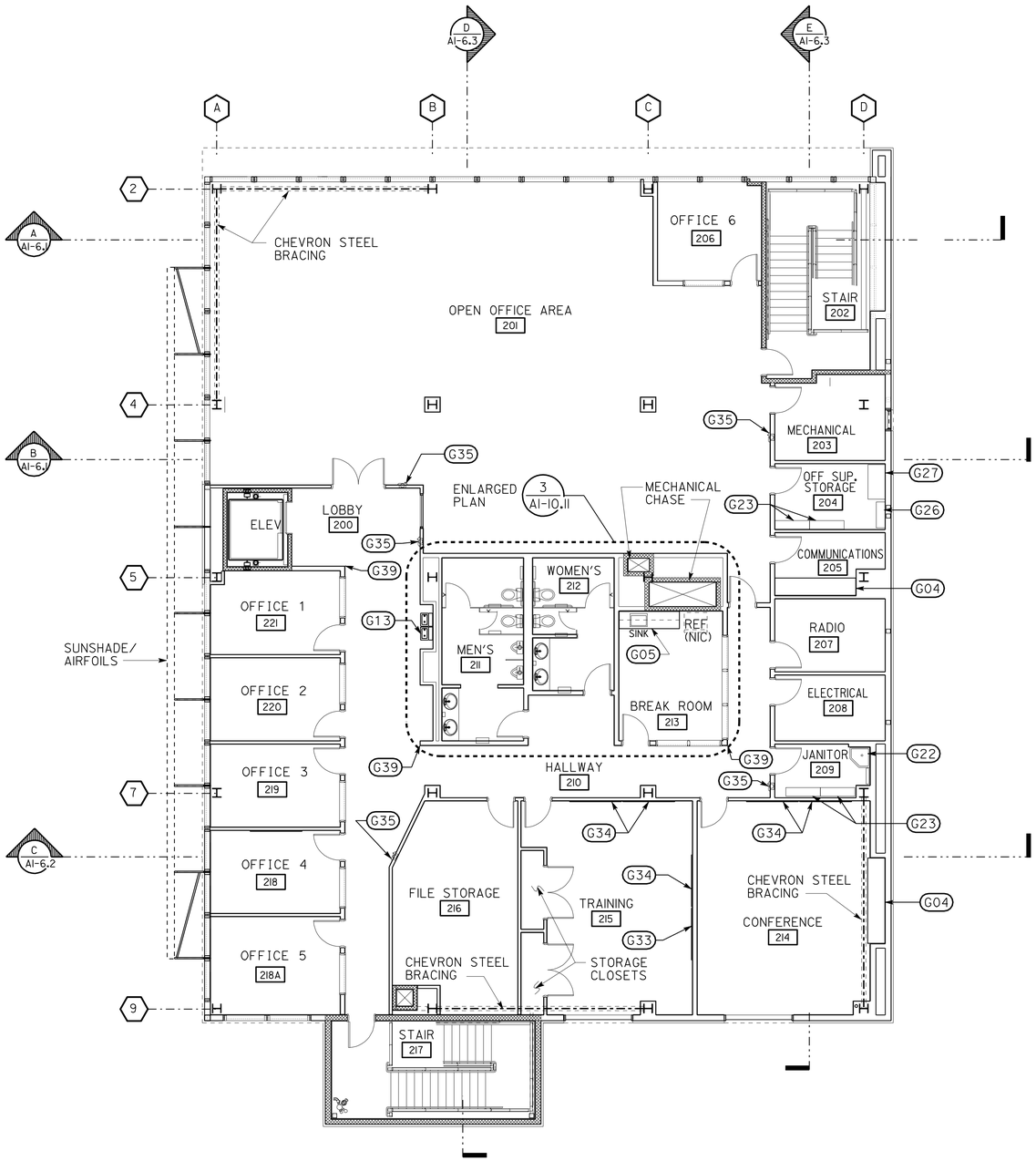

EQUIPMENT LIST

G04	CABINETRY
G05	KITCHEN CABINETRY
G13	ELECTRIC WATER COOLERS
G22	MOP SINK
G23	1' x 4' METAL SHELVING- SEE A6-16.1
G26	1' x 3' METAL SHELVING- SEE A6-16.1
G27	2' x 4' METAL SHELVING- SEE A6-16.1
G33	TACKBOARK (6'x4')
G34	MARKERBOARD (6'x4')
G35	FIRE EXTINGUISHER & CABINET- SEE 3/A6-13.1
G39	WALL GUARD

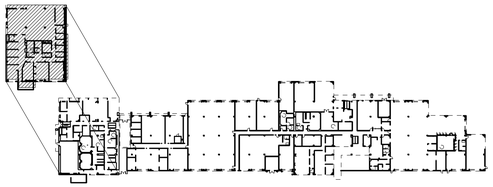

2ND FLOOR AND EQUIPMENT PLAN

SCALE 1/8" = 1'-0"

3 **REVISED PER ADDENDUM No. 3 DATED JANUARY 4, 2013**

	BY	CHECKED
DESIGN	F. THOMAS, L. RHOADES	
DETAILS	C. NAKAHARA,	
QUANTITIES		

STATE OF CALIFORNIA DEPARTMENT OF TRANSPORTATION

DIVISION OF ENGINEERING SERVICES ARCHITECTURAL AND STRUCTURAL DESIGN

BRIDGE NO. 33M5785
POST MILE 2.2

SFOBB MAINTENANCE COMPLEX
BUILDING 1A — 2ND FLOOR EQUIPMENT PLAN

SHEET **A1-2.2**

a1_02_2 eq_fp_2a.add
TAEMWW Imperial Rev. 7/10 28-DEC-2012 07:57

ORIGINAL SCALE IN INCHES FOR REDUCED PLANS 0 1 2 3

UNIT 3598
PROJECT NUMBER & PHASE 04120006661
EA 014081

DISREGARD PRINTS BEARING EARLIER REVISION DATES → 02-28-12 04-26-12 05-08-12 05-17-12 06-01-12 06-20-12

REVISION DATES (PRELIMINARY STAGE ONLY) | SHEET X | OF X

28-DEC-2012 07:57
a1_02_2 eq_fp_2a.add

DIST.	COUNTY	ROUTE	POST MILES TOTAL PROJECT	SHEET NO.	TOTAL SHEETS
04	Ala	80	2.2	156	800

LICENSED ARCHITECT — DATE 5/30/2012

LICENSED ARCHITECT FRANK THOMAS No. C-31406 Exp. 4-30-13 STATE OF CALIFORNIA

10-22-12
PLANS APPROVAL DATE

The State of California or its officers or agents shall not be responsible for the accuracy or completeness of scanned copies of this plan sheet.

ACCESSIBILITY DESIGN APPROVAL STAMP DOT / DES / OTA
PROJECT ID 0412000666
Reviewed by: Y. A. WANG
Date: 12-06-12

CALIFORNIA STATE FIRE MARSHAL APPROVED
Approval of this plan does not authorize or approve any omission or deviation from applicable regulations. Final approval is subject to field inspection. One set of approved plans shall be available on the project site at all times.
Reviewed by: SPENCER MEYER
Approval date: 12-13-12

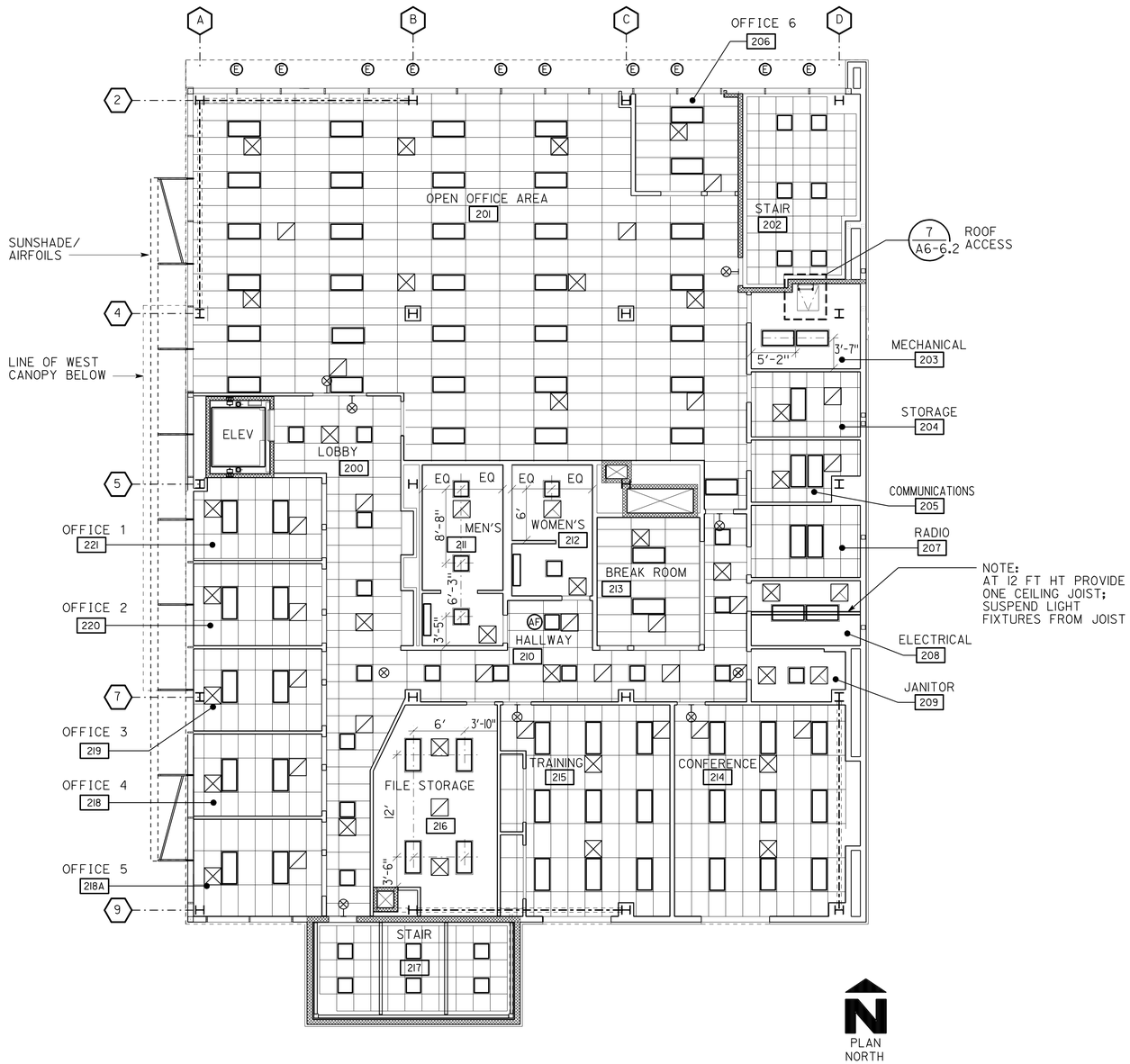

CEILING PLAN LEGEND

- 24" X 48" LAY-IN ACOUSTICAL CEILING PANELS SET IN SUSPENDED METAL T-BAR GRIDS
- 24" X 24" LAY-IN ACOUSTICAL WOOD CEILING PANELS SET IN SUSPENDED METAL T-BAR GRIDS
- NOTE: FOR ROOMS WITH NO CEILING PATTERN SHOWN, SEE FINISH SCHEDULE FOR CEILING TYPE LISTED PER ROOM. FOR GYPSUM BOARD CEILING ATTACHED TO METAL STUDS - SEE STRUC DWG FOR METAL STUD FRAMING LAY-OUT FOR EXPOSED METAL DECKING AND METAL ROOF FRAMING - SEE STRUC DWG FOR FRAMING LAY-OUT
- 24" x 48" RECESSED LED LIGHT FIXTURE - SEE ELEC DWGS FOR ADDL INFO
- 24" x 24" RECESSED LED LIGHT FIXTURE - SEE ELEC DWGS FOR ADDL INFO
- 12" x 48" LED LIGHT FIXTURE SURFACE MOUNTED ON GYP BD CLG OR WALL MOUNTED ON WALLS
- 12" X 48" SUSPENDED LED FIXTURE SUSPENDED FROM STRUCTURE ABOVE
- 24" X 48" SUSPENDED LED FIXTURE SUSPENDED FROM STRUCTURE ABOVE
- RECESSED LED DOWNLIGHT FIXTURE - SEE ELEC DWGS FOR ADDL INFO
- WALL MOUNTED OR CEILING HUNG SELF-LUMINOUS EMER EXIT LIGHT - DARK QUADRANT INDICATES DIRECTIONAL ARROW
- SUPPLY AIR DIFFUSER - SEE MECH DWGS FOR ADDL INFO
- SPECIAL SUPPLY AIR DIFFUSER SET WITH WOOD CLG PANEL - SEE MECH DWGS FOR ADDL INFO
- SPECIAL RETURN AIR REGISTER SET ABOVE WOOD CLG PANEL - SEE MECH DWGS FOR ADDL INFO
- RETURN AIR REGISTER - SEE MECH DWGS FOR ADDL INFO
- EXHAUST AIR GRILL - REFER TO - SEE MECH DWGS FOR ADDL INFO
- EF — EXHAUST FAN - REFER TO MECHANICAL DRAWINGS FOR ADDITIONAL INFORMATION
- DF — DECLASSIFICATION EXHAUST FAN - REFER TO MECH DRAWINGS FOR ADDITIONAL INFORMATION
- S — SMOKE DETECTOR - REFER TO ELEC DWG FOR ADDITIONAL INFORMATION
- H — HEAT DETECTOR - REFER TO ELEC DWG FOR ADDITIONAL INFORMATION
- SKYLIGHT - SEE A1-4 FOR DIMENSIONS AND ADDL INFO
- TUBE SKYLIGHT, SEE A1-4 FOR ADDL INFO
- ROOF HATCH OR CEILING ACCESS PANEL - REFER TO ROOF OR CLG PLANS
- EC — EVAPORATION COOLERS - SEE MECH DWG FOR ADDL INFO
- AF — AUTOMATIC FLUSH JUNCTION BOX ABOVE CLG - SEE ELEC DWGS FOR ADDL INFO
- D — OVERHEAD DOOR OPERATOR - SEE ELEC DWGS FOR ADDL INFO
- WALL OR CEILING MOUNTED LIGHT FIXTURE FIXTURE - SEE ELEC DWGS FOR ADDL INFO
- E — EXTERIOR RECESSED OR SOFFIT-MOUNTED LIGHT - SEE ELEC DWGS FOR ADDL INFO
- LIRH (LOW INFRARED RADIANT HEATER) - SEE MECH & ELEC DWGS FOR ADDL INFO
- × DENOTES THE CENTER OF THE ROOM

3

NOTES:

1. LIGHT FIXTURES AND AIR REGISTERS LOCATED IN ROOMS WITH GYPSOM BOARD OR EXPOSED METAL DECK CEILINGS SHALL:
   A) BE SPACED EQUALLY FROM WALLS LINEARLY ALIGNED WITH EACH OTHER.
   B) BE LOCATED IN THE CENTER OF THE ROOM WHEN ONLY A SINGLE LIGHT FIXTURE OCCURS.
2. EXACT LOCATION OF CEILING LIGHT FIXTURE AND AIR REGISTER SHALL BE DETERMINED BY THE ENGINEER.

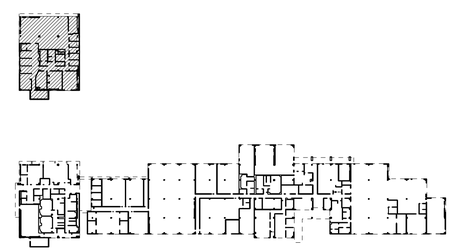

3 **REVISED PER ADDENDUM No. 3 DATED JANUARY 4, 2013**

2ND FLOOR REFELCTED CEILING PLAN

SCALE 1/8" = 1'-0"

	BY	CHECKED
DESIGN	F. THOMAS, L. RHOADES	
DETAILS	C. NAKAHARA,	
QUANTITIES		

STATE OF CALIFORNIA DEPARTMENT OF TRANSPORTATION

DIVISION OF ENGINEERING SERVICES ARCHITECTURAL AND STRUCTURAL DESIGN

BRIDGE NO. 33M5785 — POST MILE 2.2

SFOBB MAINTENANCE COMPLEX

BUILDING IA — 2ND FLOOR REFLECTED CEILING PLAN

SHEET A1-3.2

a1_03_2_rcp_2a.add
TAEMWW Imperial Rev. 7/10 28-DEC-2012 07:57

ORIGINAL SCALE IN INCHES FOR REDUCED PLANS 0 1 2 3

UNIT 3598
PROJECT NUMBER & PHASE 04120006661
EA 014081

DISREGARD PRINTS BEARING EARLIER REVISION DATES → 02-28-12 | 04-26-12 | 05-08-12 | 05-17-12 | 06-01-12 | 06-20-12

REVISION DATES (PRELIMINARY STAGE ONLY) — SHEET X OF X

28-DEC-2012 07:57 a1_03_2_rcp_2a.add

DIST.	COUNTY	ROUTE	POST MILES TOTAL PROJECT	SHEET NO.	TOTAL SHEETS
04	Ala	80	2.2	173	800

LICENSED ARCHITECT — DATE 5/30/2012

LICENSED ARCHITECT FRANK THOMAS No. C-31406 Exp. 4-30-13 STATE OF CALIFORNIA

3

10-22-12
PLANS APPROVAL DATE

The State of California or its officers or agents shall not be responsible for the accuracy or completeness of scanned copies of this plan sheet.

ACCESSIBILITY DESIGN APPROVAL STAMP DOT / DES / OTA

PROJECT ID **0412000666**

Reviewed by: Y. A. WANG
Date: 12-06-12

CALIFORNIA STATE FIRE MARSHAL APPROVED

Approval of this plan does not authorize or approve any omission or deviation from applicable regulations. Final approval is subject to field inspection. One set of approved plans shall be available on the project site at all times.

Reviewed by: JOHN E WOODS, SDSFM
Approval date: 8-22-12

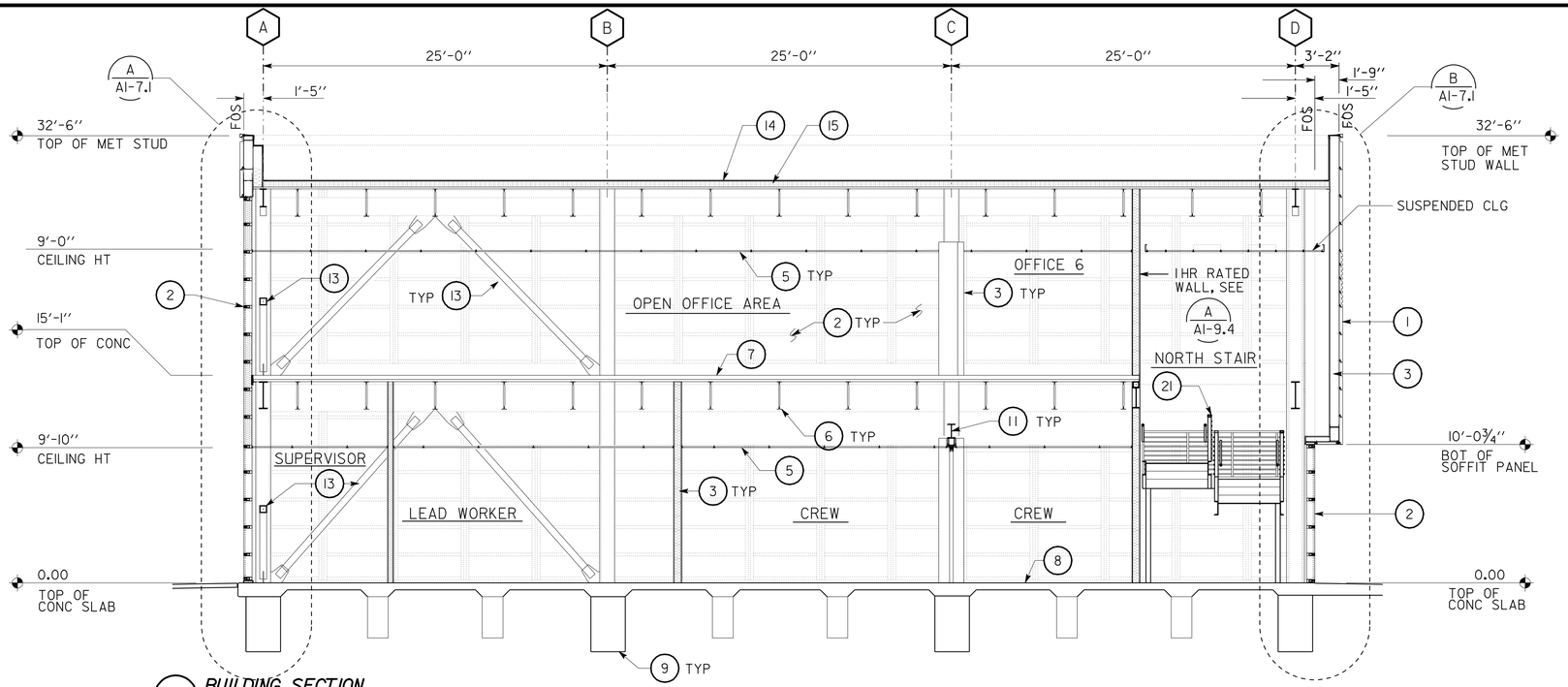

A BUILDING SECTION
SCALE : 3/16 " = 1'-0"

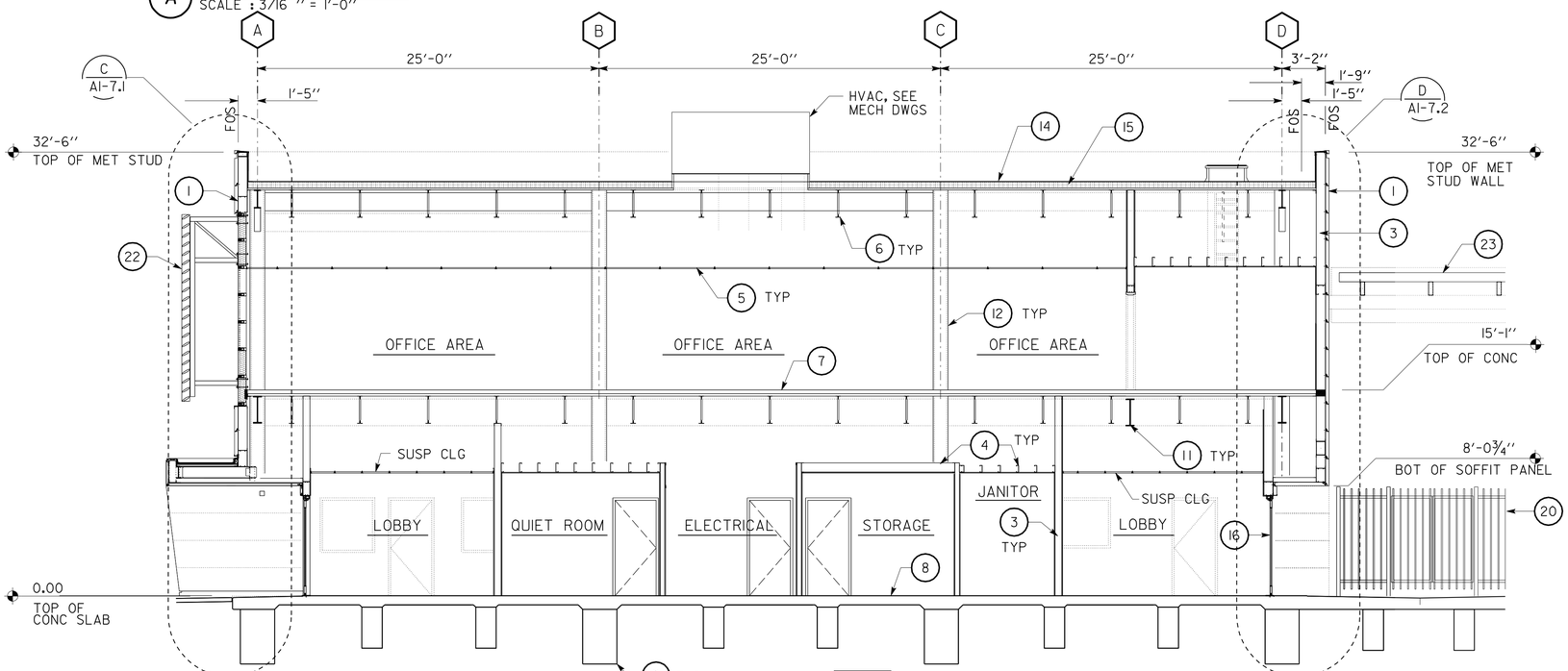

B BUILDING SECTION
SCALE : 3/16 " = 1'-0"

LEGEND

1. INSULATED METAL WALL PANELS
2. ALUMINUM CURTAIN WALL ASSEMBLY
3. COLD FORMED METAL STUD WALL
4. COLD FORMED METAL CEILING JOISTS
5. ACCOUSTIC SUSPENDED CEILING
6. OPEN WEB STEEL JOISTS
7. COMPOSITE METAL DECK
8. CONCRETE SLAB
9. CONCRETE GRADE BEAM
10. CAST-IN-PLACE CONCRETE WALL
11. STEEL BEAM
12. STEEL COLUMN
13. CHEVRON STEEL BRACING
14. SINGLE PLY ROOFING OVER ROOF BOARD
15. RIGID INSULATION BOARD OVER STEEL DECKING
16. STOREFRONT DOOR ASSEMBLY
17. METAL DOOR WITH PRESSED METAL FRAME
18. ALUMINUM WINDOW ASSEMBLY
19. METAL LOCKERS
20. SECURED FENCING AND GATES
21. PREFABRICATED STEEL STAIRS
22. SUNSHADE
23. TRELLIS
24. ALUMINUM COMPOSITE PANELS
25. SECTIONAL OVERHEAD DOOR
26. ALUMINUM STOREFRONT ASSEMBLY
27. BRIDGE CRANE
28. CHAIN LINK SECURITY FENCING
29. SEE EQUIPMENT INVENTORY LIST

3 **REVISED PER ADDENDUM No. 3 DATED JANUARY 4, 2013**

	BY	CHECKED
DESIGN	F. THOMAS, L. RHOADES	
DETAILS	C. NAKAHARA,	
QUANTITIES		

STATE OF CALIFORNIA DEPARTMENT OF TRANSPORTATION

DIVISION OF ENGINEERING SERVICES ARCHITECTURAL AND STRUCTURAL DESIGN

BRIDGE NO. 33M5785
POST MILE 2.2

SFOBB MAINTENANCE COMPLEX

BUILDING IA — BUILDING SECTIONS I

SHEET **A1-6.1**

ORIGINAL SCALE IN INCHES FOR REDUCED PLANS 0 1 2 3

UNIT 3598
PROJECT NUMBER & PHASE 04120006661
EA 014081

DISREGARD PRINTS BEARING EARLIER REVISION DATES → 02-28-12 04-26-12 05-08-12 05-17-12 06-01-12 06-28-12 07-23-12

REVISION DATES (PRELIMINARY STAGE ONLY) SHEET X OF X

a1_06_01_bldgsec_1a.add
TAEMWW Imperial Rev. 7/10 03-JAN-2013 10:23

03-JAN-2013 10:23
a1_06_01_bldgsec_1a.add

DIST.	COUNTY	ROUTE	POST MILES TOTAL PROJECT	SHEET NO.	TOTAL SHEETS
04	Ala	80	2.2	174	800

LICENSED ARCHITECT — DATE 5/30/2012

LICENSED ARCHITECT FRANK THOMAS No. C-31406 Exp. 4-30-13 STATE OF CALIFORNIA

10-22-12
PLANS APPROVAL DATE

The State of California or its officers or agents shall not be responsible for the accuracy or completeness of scanned copies of this plan sheet.

ACCESSIBILITY DESIGN APPROVAL STAMP DOT / DES / OTA

PROJECT ID **0412000666**

Reviewed by: Y. A. WANG
Date: 07-24-12

CALIFORNIA STATE FIRE MARSHAL APPROVED

Approval of this plan does not authorize or approve any omission or deviation from applicable regulations. Final approval is subject to field inspection. One set of approved plans shall be available on the project site at all times.

Reviewed by: JOHN E WOODS, SDSFM
Approval date: 8-22-12

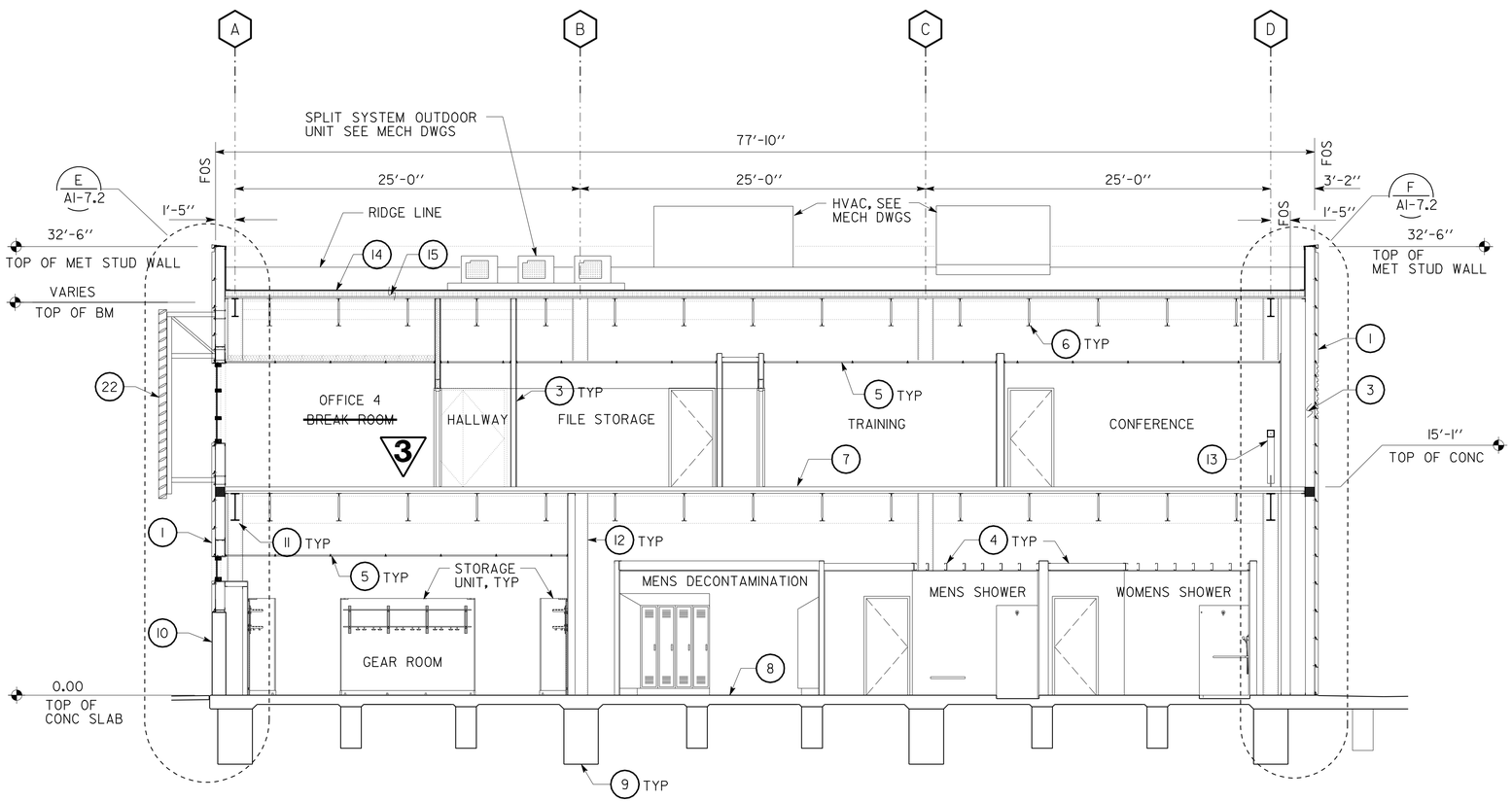

C BUILDING SECTION
SCALE: 3/8" = 1'-0"

LEGEND

1. INSULATED METAL WALL PANELS
2. ALUMINUM CURTAIN WALL ASSEMBLY
3. COLD FORMED METAL STUD WALL
4. COLD FORMED METAL CEILING JOISTS
5. ACCOUSTIC SUSPENDED CEILING
6. OPEN WEB STEEL JOISTS
7. COMPOSITE METAL DECK
8. CONCRETE SLAB
9. CONCRETE GRADE BEAM
10. CAST-IN-PLACE CONCRETE WALL
11. STEEL BEAM
12. STEEL COLUMN
13. CHEVRON STEEL BRACING
14. SINGLE PLY ROOFING OVER ROOF BOARD
15. RIGID INSULATION BOARD OVER STEEL DECKING
16. STOREFRONT DOOR ASSEMBLY
17. METAL DOOR WITH PRESSED METAL FRAME
18. ALUMINUM WINDOW ASSEMBLY
19. METAL LOCKERS
20. SECURED FENCING AND GATES
21. PREFABRICATED STEEL STAIRS
22. SUNSHADE
23. TRELLIS
24. ALUMINUM COMPOSITE PANELS
25. SECTIONAL OVERHEAD DOOR
26. ALUMINUM STOREFRONT ASSEMBLY
27. BRIDGE CRANE
28. CHAIN LINK SECURITY FENCING
29. SEE EQUIPMENT INVENTORY LIST

3 REVISED PER ADDENDUM No. 3 DATED JANUARY 4, 2013

	BY	CHECKED
DESIGN	F. THOMAS, L. RHOADES	
DETAILS	C. NAKAHARA,	
QUANTITIES		

STATE OF CALIFORNIA DEPARTMENT OF TRANSPORTATION

DIVISION OF ENGINEERING SERVICES ARCHITECTURAL AND STRUCTURAL DESIGN

BRIDGE NO. 33M5785
POST MILE 2.2

SFOBB MAINTENANCE COMPLEX

BLDG IA — BUILDING SECTIONS 2

SHEET **A1-6.2**

a1_06_02_bldgsec_2a.add
TAEMWW Imperial Rev. 7/10 27-DEC-2012 12:54

ORIGINAL SCALE IN INCHES FOR REDUCED PLANS 0 1 2 3

UNIT 3598
PROJECT NUMBER & PHASE 04120006661
EA 014081

DISREGARD PRINTS BEARING EARLIER REVISION DATES → 02-28-12 04-26-12 05-08-12 05-11-12 06-01-12 06-28-12 07-23-12

REVISION DATES (PRELIMINARY STAGE ONLY) SHEET X OF X

27-DEC-2012 12:54
a1_06_02_bldgsec_2a.add

DIST.	COUNTY	ROUTE	POST MILES TOTAL PROJECT	SHEET NO.	TOTAL SHEETS
04	Ala	80	2.2	181	800

LICENSED ARCHITECT — 5/30/2012 DATE

LICENSED ARCHITECT FRANK THOMAS No. C-31406 Exp. 4-30-13 STATE OF CALIFORNIA

10-22-12
PLANS APPROVAL DATE

The State of California or its officers or agents shall not be responsible for the accuracy or completeness of scanned copies of this plan sheet.

ACCESSIBILITY DESIGN APPROVAL STAMP DOT / DES / OTA
PROJECT ID 0412000666
Reviewed by: Y. A. WANG
Date: 07-24-12

CALIFORNIA STATE FIRE MARSHAL APPROVED
Approval of this plan does not authorize or approve any omission or deviation from applicable regulations. Final approval is subject to field inspection. One set of approved plans shall be available on the project site at all times.
Reviewed by: SPENCER MEYER
Approval date: 12-13-12

3

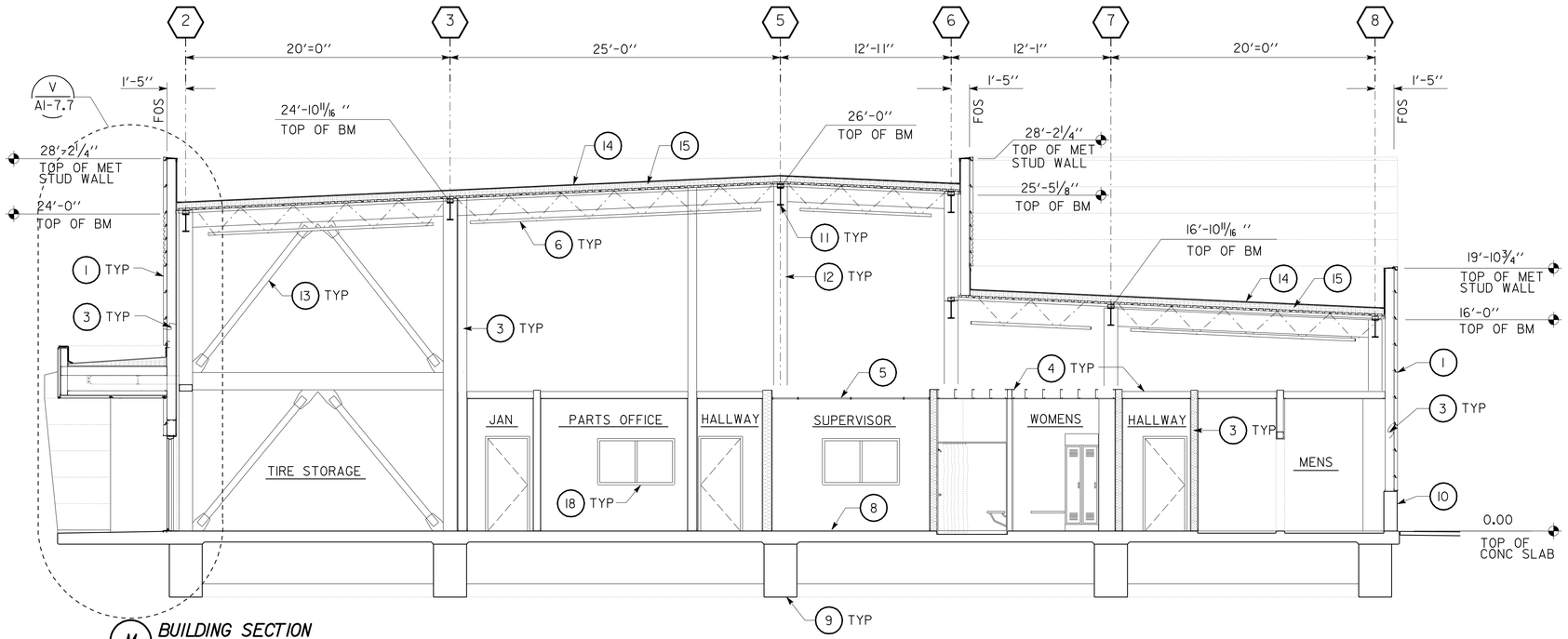

M BUILDING SECTION
SCALE 3/16" = 1'-0"

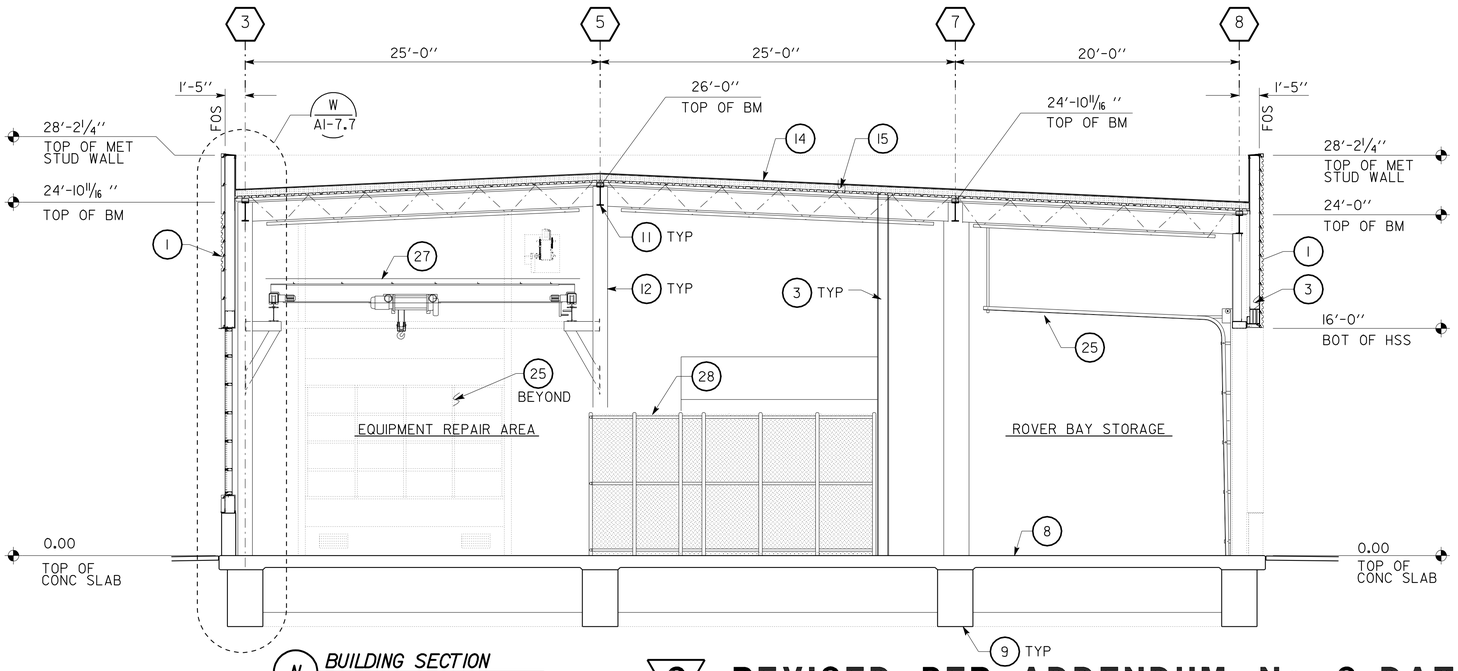

N BUILDING SECTION
SCALE 3/16" = 1'-0"

3 **REVISED PER ADDENDUM No. 3 DATED JANUARY 4, 2013**

LEGEND

1. INSULATED METAL WALL PANELS
2. ALUMINUM CURTAIN WALL ASSEMBLY
3. COLD FORMED METAL STUD WALL
4. COLD FORMED METAL CEILING JOISTS
5. ACCOUSTIC SUSPENDED CEILING
6. OPEN WEB STEEL JOISTS
7. COMPOSITE METAL DECK
8. CONCRETE SLAB
9. CONCRETE GRADE BEAM
10. CAST-IN-PLACE CONCRETE WALL
11. STEEL BEAM
12. STEEL COLUMN
13. CHEVRON STEEL BRACING
14. SINGLE PLY ROOFING OVER ROOF BOARD
15. RIGID INSULATION BOARD OVER STEEL DECKING
16. STOREFRONT DOOR ASSEMBLY
17. METAL DOOR WITH PRESSED METAL FRAME
18. ALUMINUM WINDOW ASSEMBLY
19. METAL LOCKERS
20. SECURED FENCING AND GATES
21. PREFABRICATED STEEL STAIRS
22. SUNSHADE
23. TRELLIS
24. ALUMINUM COMPOSITE PANELS
25. SECTIONAL OVERHEAD DOOR
26. ALUMINUM STOREFRONT ASSEMBLY
27. BRIDGE CRANE
28. WIRE MESH PARTITIONS ~~CHAIN LINK SECURITY FENCING~~ (3)
29. SEE EQUIPMENT INVENTORY LIST

	BY	CHECKED
DESIGN	F. THOMAS, L. RHOADES	
DETAILS	C. NAKAHARA,	
QUANTITIES		

STATE OF CALIFORNIA DEPARTMENT OF TRANSPORTATION

DIVISION OF ENGINEERING SERVICES ARCHITECTURAL AND STRUCTURAL DESIGN

BRIDGE NO. 33M5785
POST MILE 2.2

SFOBB MAINTENANCE COMPLEX
BUILDING IB — BUILDING SECTIONS 9

SHEET **A1-6.9**

a1_06_09_bldgsec_6b.add
TAEMWW Imperial Rev. 7/10 02-JAN-2013 15:05

ORIGINAL SCALE IN INCHES FOR REDUCED PLANS 0 1 2 3

UNIT 3598
PROJECT NUMBER & PHASE 04120006661
EA 014081

DISREGARD PRINTS BEARING EARLIER REVISION DATES → 02-28-12 04-26-12 05-08-12 05-17-12 06-01-12 06-28-12 07-23-12

REVISION DATES (PRELIMINARY STAGE ONLY) SHEET X OF X

02-JAN-2013 15:05
a1_06_09_bldgsec_6b.add

DIST.	COUNTY	ROUTE	POST MILES TOTAL PROJECT	SHEET NO.	TOTAL SHEETS
04	Ala	80	2.2	207	800

LICENSED ARCHITECT — 5/30/2012 DATE

LICENSED ARCHITECT FRANK THOMAS No. C-31406 Exp. 4-30-13 STATE OF CALIFORNIA

10-22-12
PLANS APPROVAL DATE

The State of California or its officers or agents shall not be responsible for the accuracy or completeness of scanned copies of this plan sheet.

ACCESSIBILITY DESIGN APPROVAL STAMP DOT / DES / OTA
PROJECT ID **0412000666**
Reviewed by: Y. A. WANG
Date: 12-06-12

CALIFORNIA STATE FIRE MARSHAL APPROVED
Approval of this plan does not authorize or approve any omission or deviation from applicable regulations. Final approval is subject to field inspection. One set of approved plans shall be available on the project site at all times.
Reviewed by: SPENCER MEYER
Approval date: 12-13-12

KEY NOTES

1. GYP BD, PAINTED
2. 4" RESILIENT BASE (9 / A6-12.2)
3. CHEVRON STEEL BRACING, SEE STRUCT
4. WINDOW WALL SYSTEM
5. ROOM IDENTIFICATION SIGN (1 / A0-3.3)
6. STAIR EXIT SIGN (6 / A6-13.2)
7. SELF-LUMINOUS EXIT SIGN (1 / A6-13.1)

3

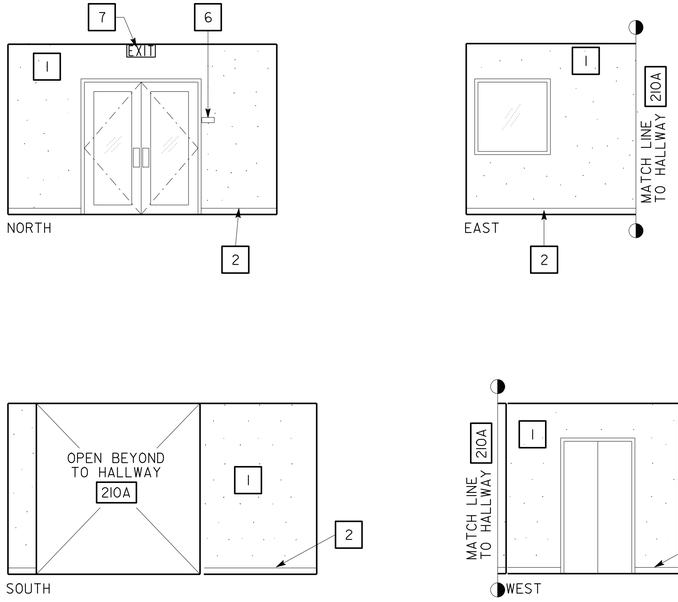

1 LOBBY 200

SCALE 1/4" = 1'-0"

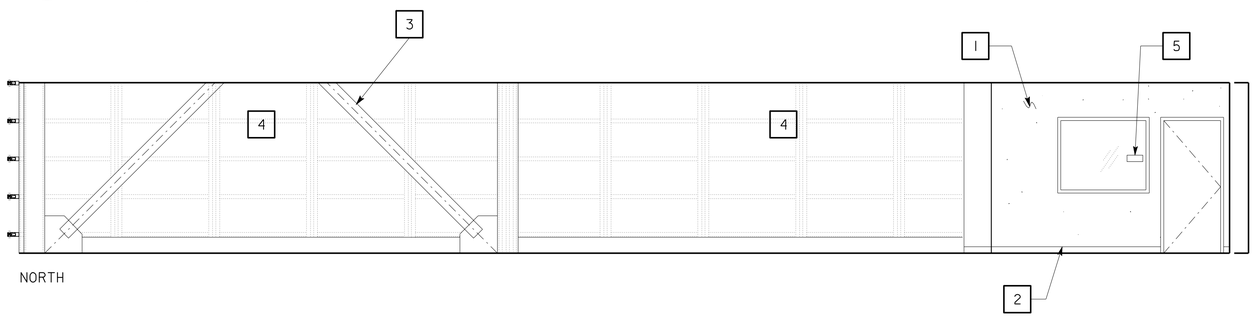

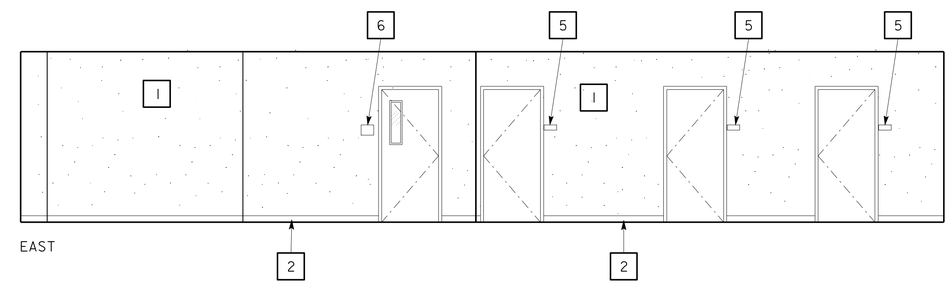

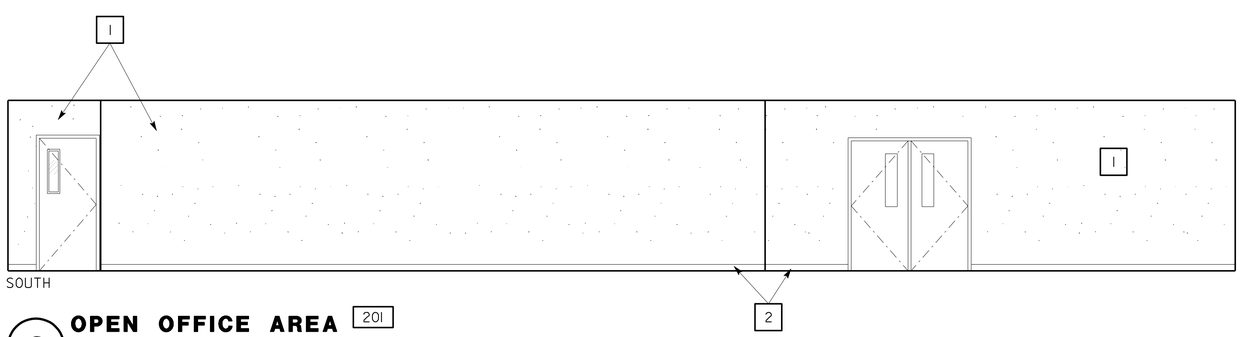

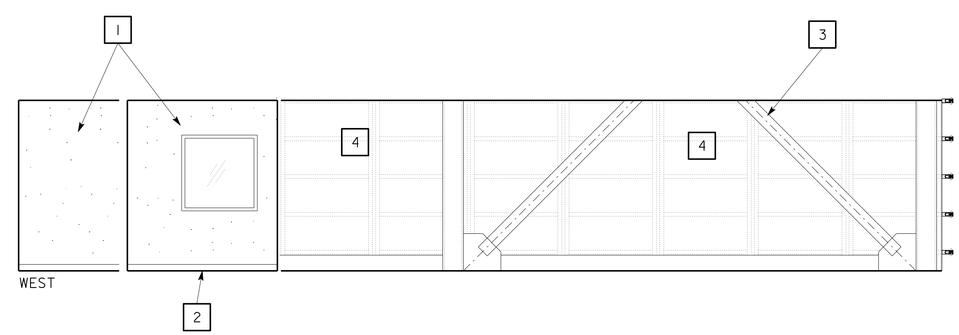

2 OPEN OFFICE AREA 201

SCALE 1/4" = 1'-0"

3 REVISED PER ADDENDUM No. 3 DATED JANUARY 4, 2013

DESIGN	BY F. THOMAS, L. RHOADES	CHECKED
DETAILS	BY C. NAKAHARA,	CHECKED
QUANTITIES	BY	CHECKED

STATE OF CALIFORNIA DEPARTMENT OF TRANSPORTATION

DIVISION OF ENGINEERING SERVICES ARCHITECTURAL AND STRUCTURAL DESIGN

BRIDGE NO. 33M5785
POST MILE 2.2

SFOBB MAINTENANCE COMPLEX
BUILDING IA — INTERIOR ELEVATIONS

SHEET **A1-10.8**

a1_10_08 intel_8a.add
TAEMWW Imperial Rev. 7/10 28-DEC-2012 07:57

ORIGINAL SCALE IN INCHES FOR REDUCED PLANS 0 1 2 3

UNIT 3598
PROJECT NUMBER & PHASE 04120006661
EA 014081

DISREGARD PRINTS BEARING EARLIER REVISION DATES →
REVISION DATES (PRELIMINARY STAGE ONLY): 02-28-12 04-26-12 05-08-12 05-17-12 06-01-12 06-20-12

SHEET X OF X

28-DEC-2012 07:57
a1_10_08 intel_8a.add

DIST.	COUNTY	ROUTE	POST MILES TOTAL PROJECT	SHEET NO.	TOTAL SHEETS
04	Ala	80	2.2	208	800

LICENSED ARCHITECT — 5/30/2012 DATE

LICENSED ARCHITECT FRANK THOMAS No. C-31406 Exp. 4-30-13 STATE OF CALIFORNIA

10-22-12
PLANS APPROVAL DATE

The State of California or its officers or agents shall not be responsible for the accuracy or completeness of scanned copies of this plan sheet.

ACCESSIBILITY DESIGN APPROVAL STAMP DOT / DES / OTA

PROJECT ID **0412000666**

Reviewed by: Y. A. WANG
Date: 12-06-12

CALIFORNIA STATE FIRE MARSHAL APPROVED

Approval of this plan does not authorize or approve any omission or deviation from applicable regulations. Final approval is subject to field inspection. One set of approved plans shall be available on the project site at all times.

Reviewed by: SPENCER MEYER
Approval date: 12-13-12

KEY NOTES

1. GYP BD, PAINTED
2. 4" RESILIENT BASE (9 / A6-12.2)
3. FIRE RATED PLYWOOD
4. DESK (6 / A6-15.3)
5. ACCESS LADDER (1 / A6-3.2)
6. ROOF HATCH (8 / A6-6.2)
7. LOUVER, FIELD VERIFY LOCATION WITH EXTERIOR INSULATED METEL PANEL FOR VERT HT, LOCATE BETWEEN JOINTS OF INSULATED METAL PANEL JOINTS SEE DETAILS (- / A1-1.2) (1 / A6-5.1) (10&11 / A6-8.2)

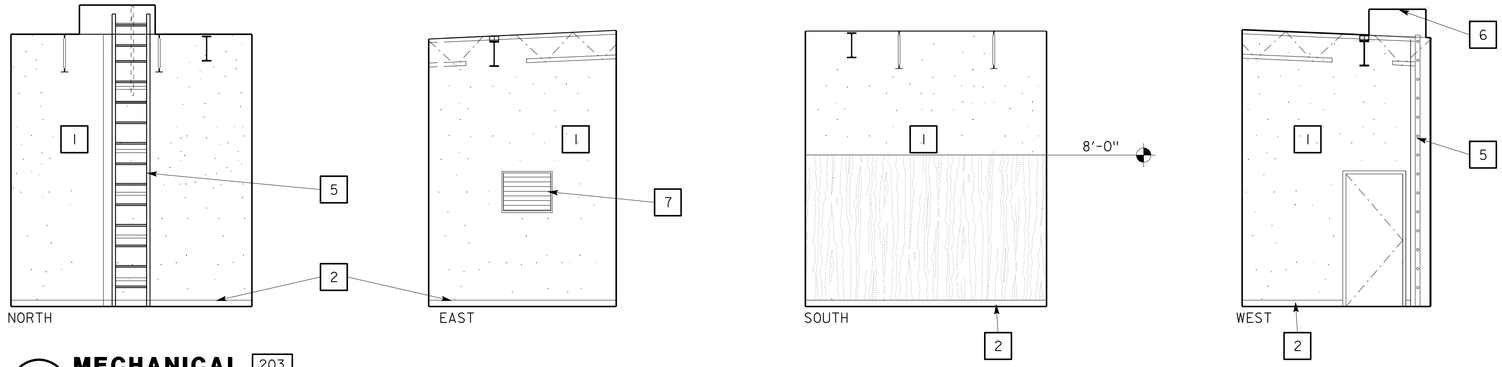

1 MECHANICAL 203

SCALE 1/4" = 1'-0"

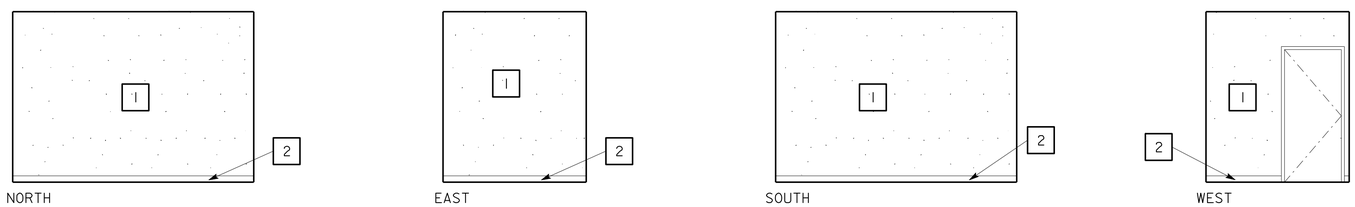

2 OFFICE SUPERVISOR STORAGE 204

SCALE 1/4" = 1'-0"

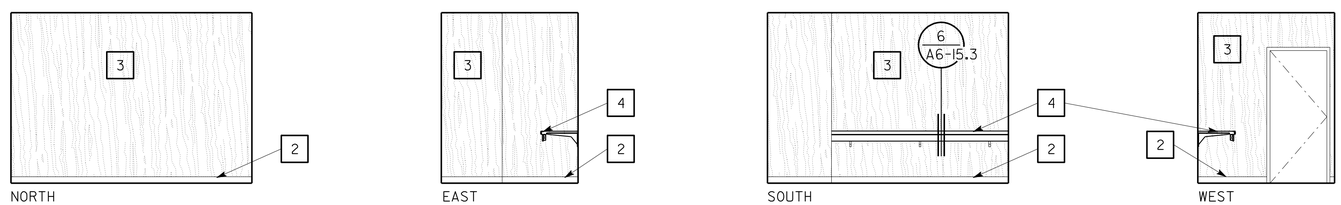

3 COMMUNICATIONS 205

SCALE 1/4" = 1'-0"

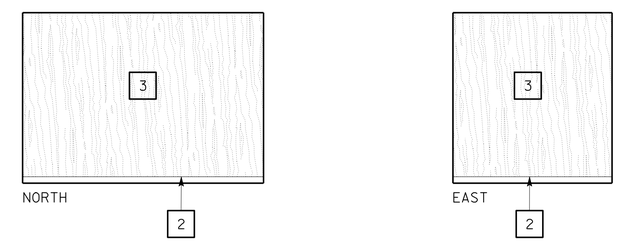

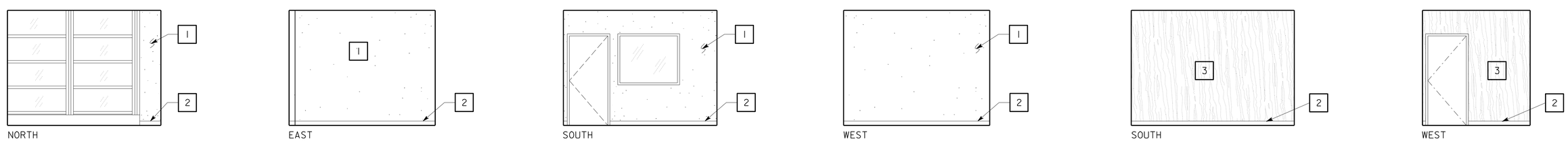

4 OFFICE 6 206

SCALE 1/4" = 1'-0"

5 RADIO 207

SCALE 1/4" = 1'-0"

NOTE: FOR ELEC RACK, SEE ELECT SHEETS.

3 REVISED PER ADDENDUM No. 3 DATED JANUARY 4, 2013

	BY	CHECKED
DESIGN	F. THOMAS, L. RHOADES	
DETAILS	C. NAKAHARA,	
QUANTITIES		

STATE OF CALIFORNIA DEPARTMENT OF TRANSPORTATION

DIVISION OF ENGINEERING SERVICES ARCHITECTURAL AND STRUCTURAL DESIGN

UNIT 3598
PROJECT NUMBER & PHASE 04120006661
EA 014081

BRIDGE NO. 33M5785
POST MILE 2.2

SFOBB MAINTENANCE COMPLEX

BUILDING IA — INTERIOR ELEVATIONS

SHEET **A1-10.9**

ORIGINAL SCALE IN INCHES FOR REDUCED PLANS 0 1 2 3

DISREGARD PRINTS BEARING EARLIER REVISION DATES →

REVISION DATES (PRELIMINARY STAGE ONLY): 02-28-12 04-26-12 05-08-12 05-17-12 06-01-12 06-20-12

SHEET X OF X

a1_10_09 intel_9a.add
TAEMWW Imperial Rev. 7/10 28-DEC-2012 07:57

28-DEC-2012 07:57
a1_10_09 intel_9a.add

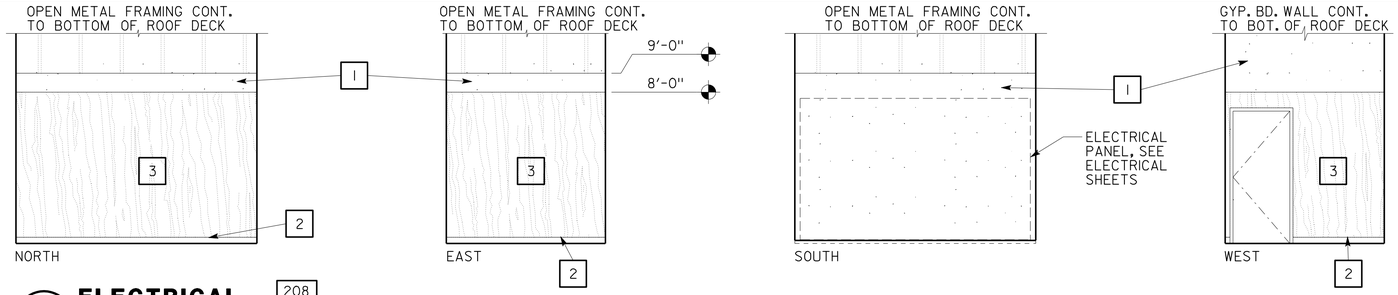

1 ELECTRICAL 208

SCALE 1/4" = 1'-0"

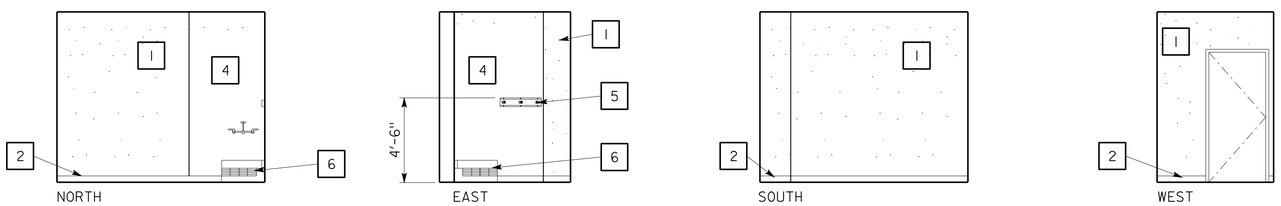

2 JANITOR 209

SCALE 1/4" = 1'-0"

KEY NOTES

3

1. GYP BD, PAINTED
2. 4" RESILIENT BASE (9 / A6-12.2)
3. PLYWOOD WAINSCOT
4. FRPP
5. MOP HOOK
6. MOP SINK
7. RESTROOM/ SHOWER ROOM/ IDENTIFICATION SYMBOLS (4 / A0-3.3)
8. RESTROOM/ SHOWER ROOM ACCESSIBILITY SIGN (3 / A0-3.3)
9. ROOM IDENTIFICATION SIGN (1 / A0-3.3)
10. RECESSED ELEC PANEL
11. ACCESSIBLE EWC (1 / A0-3.5)
12. INTERIOR EXIT SIGN (2 / A0-3.3)
13. STAIR EXIT SIGN (6 / A6-13.2)

DIST.	COUNTY	ROUTE	POST MILES TOTAL PROJECT	SHEET NO.	TOTAL SHEETS
04	Ala	80	2.2	209	800

LICENSED ARCHITECT — 5/30/2012 DATE

LICENSED ARCHITECT FRANK THOMAS No. C-31406 Exp. 4-30-13 STATE OF CALIFORNIA

10-22-12
PLANS APPROVAL DATE

The State of California or its officers or agents shall not be responsible for the accuracy or completeness of scanned copies of this plan sheet.

ACCESSIBILITY DESIGN APPROVAL STAMP DOT / DES / OTA

PROJECT ID 0412000666

Reviewed by: Y. A. WANG
Date: 12-06-12

CALIFORNIA STATE FIRE MARSHAL APPROVED

Approval of this plan does not authorize or approve any omission or deviation from applicable regulations. Final approval is subject to field inspection. One set of approved plans shall be available on the project site at all times.

Reviewed by: SPENCER MEYER
Approval date: 12-13-12

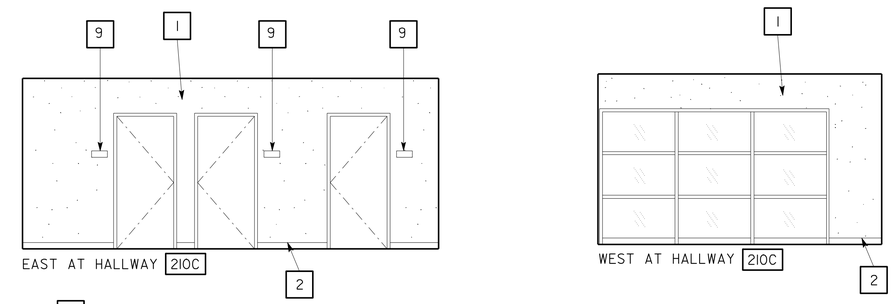

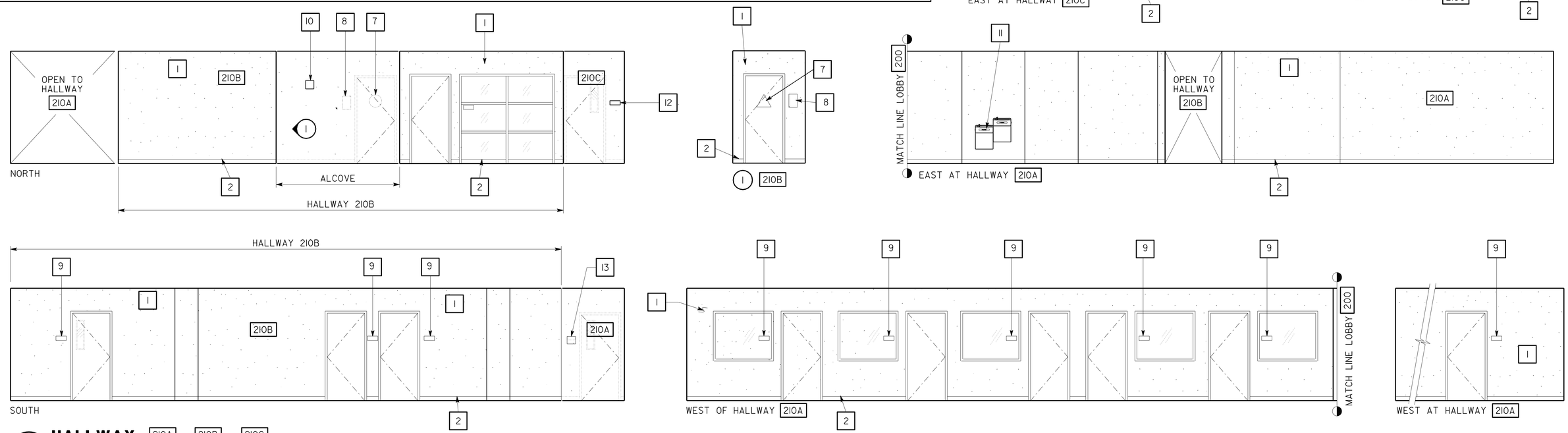

3 HALLWAY 210A 210B 210C

SCALE 1/4" = 1'-0"

3 REVISED PER ADDENDUM No. 3 DATED JANUARY 4, 2013

	BY	CHECKED
DESIGN	F. THOMAS, L. RHOADES	
DETAILS	C. NAKAHARA,	
QUANTITIES		

STATE OF CALIFORNIA DEPARTMENT OF TRANSPORTATION

DIVISION OF ENGINEERING SERVICES ARCHITECTURAL AND STRUCTURAL DESIGN

BRIDGE NO. 33M5785
POST MILE 2.2

SFOBB MAINTENANCE COMPLEX

BUILDING IA — INTERIOR ELEVATIONS

SHEET A1-10.10

a1_10_10 intel_10a.add
TAEMWW Imperial Rev. 7/10 02-JAN-2013 15:05

ORIGINAL SCALE IN INCHES FOR REDUCED PLANS 0 1 2 3

UNIT 3598
PROJECT NUMBER & PHASE 04120006661
EA 014081

DISREGARD PRINTS BEARING EARLIER REVISION DATES → 02-28-12 04-26-12 05-08-12 05-17-12 06-01-12 06-20-12

REVISION DATES (PRELIMINARY STAGE ONLY) SHEET X OF X

02-JAN-2013 15:05
a1_10_10 intel_10a.add

DIST.	COUNTY	ROUTE	POST MILES TOTAL PROJECT	SHEET NO.	TOTAL SHEETS
04	Ala	80	2.2	210	800

LICENSED ARCHITECT — 5/30/2012 DATE

LICENSED ARCHITECT FRANK THOMAS No. C-31406 Exp. 4-30-13 STATE OF CALIFORNIA

10-22-12
PLANS APPROVAL DATE

The State of California or its officers or agents shall not be responsible for the accuracy or completeness of scanned copies of this plan sheet.

ACCESSIBILITY DESIGN APPROVAL STAMP DOT / DES / OTA
PROJECT ID **0412000666**
Reviewed by: Y. A. WANG
Date: 12-06-12

CALIFORNIA STATE FIRE MARSHAL APPROVED
Approval of this plan does not authorize or approve any omission or deviation from applicable regulations. Final approval is subject to field inspection. One set of approved plans shall be available on the project site at all times.
Reviewed by: SPENCER MEYER
Approval date: 12-13-12

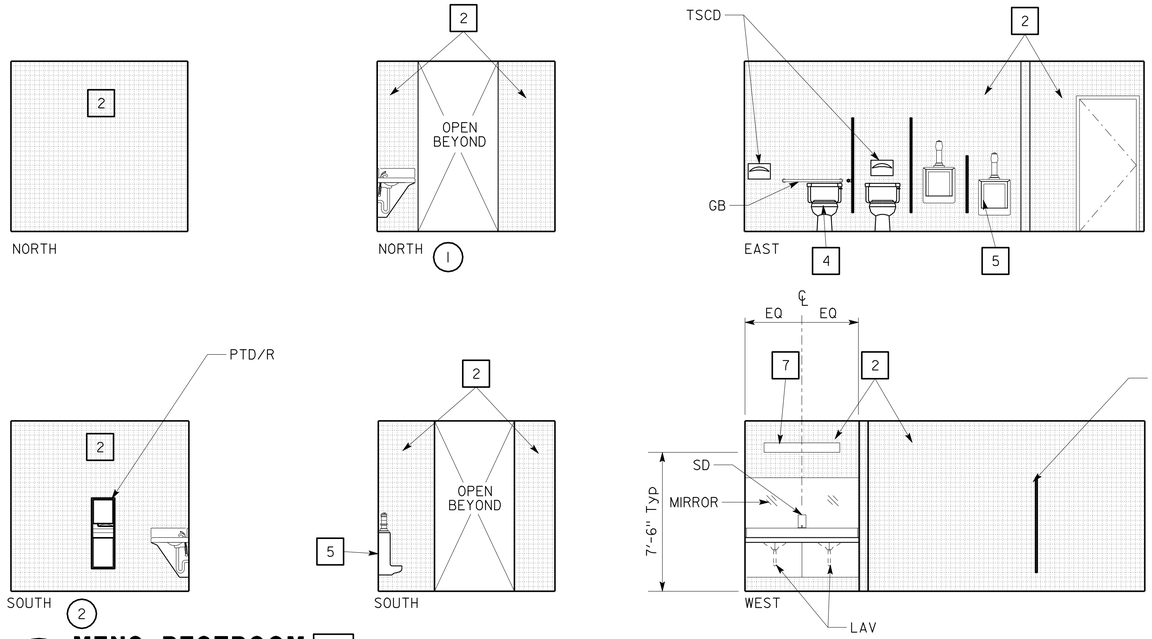

1 MENS RESTROOM 211

SCALE 1/4" = 1'-0"

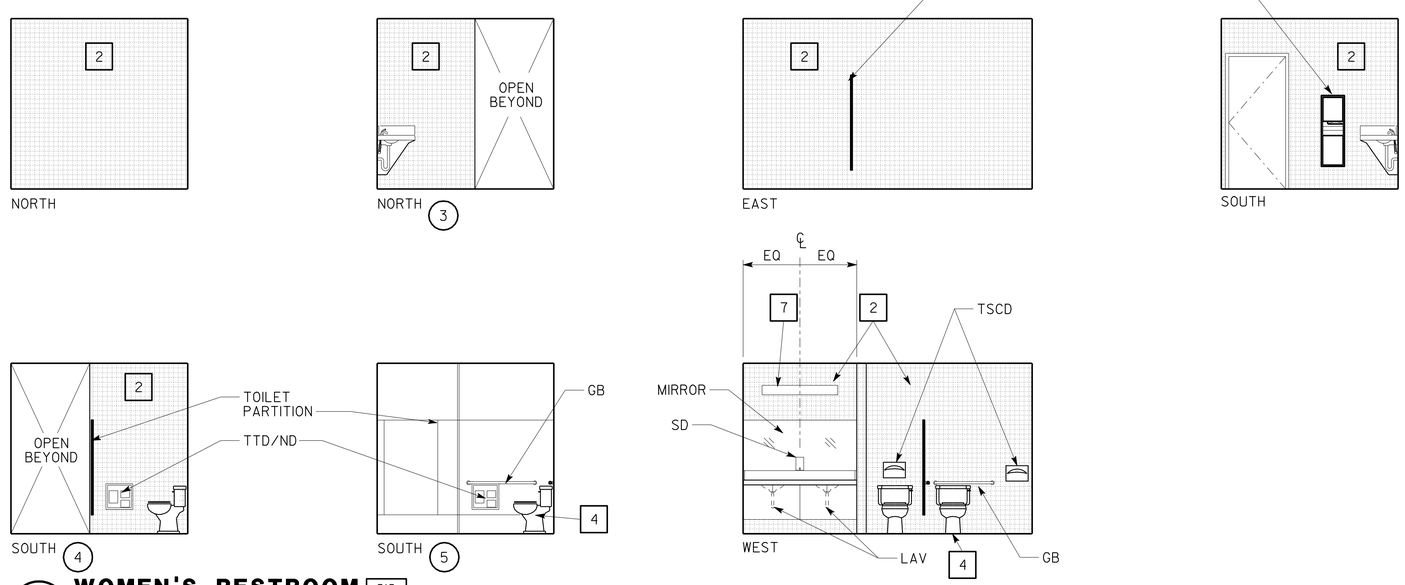

2 WOMEN'S RESTROOM 212

SCALE 1/4" = 1'-0"

3 REVISED PER ADDENDUM No. 3 DATED JANUARY 4, 2013

TOILET ROOM ACCESSORIES

CH = CLOTHES HOOK
MIR = MIRROR
PTD/R = PAPER TOWEL DISPENSER AND RECEPTACLE.
TSCD = TOILET SEAT COVER DISPENSER
TTD = TOILET TISSUE DISPENSER (RECESSED IN WALLS WHERE SHOWN)
TTD/ND = COMBINATION TOILET TISSUE DISPENSER AND SANITARY NAPKIN DISPOSAL (RECESSED IN WALL WHERE SHOWN)
SD = SOAP DISPENSER

SEE 3/A0-3.5 FOR ADDITIONAL INFORMATION REGARDING MOUNTING HEIGHTS
5/A0-3.4 LAV = LAVATORY
3/A0-3.4 WC = WATER CLOSET/ TOILET
6/A0-3.4 GB = GRAB BARS
4/A0-3.4 UR = URINAL
1/A0-3.5 EWC = ELECTRIC WATER COOLER
1/A0-3.4 FTS = FOLDING TRANSFER SEAT
1/A0-3.4 WHEELCHAIR ACCESSIBLE SHOWER UNIT

3

KEY NOTES:

1. GYPSUM BOARD, PAINTED
2. CERAMIC TILE OVER CEMENTITIOUS BACKER BOARD. SEE 4/A6-12.1 SIM
3. CERAMIC TILE COVED BASE 1/A6-12.1 SIM
4. ACCESSIBLE WATER CLOSET
5. ACCESSIBLE URINAL
6. MOP HOOK
7. LIGHT FIXTURES, SEE ELEC

DASHED LINE INDICATES PERIMETER 2: DEPRESSED SLAB

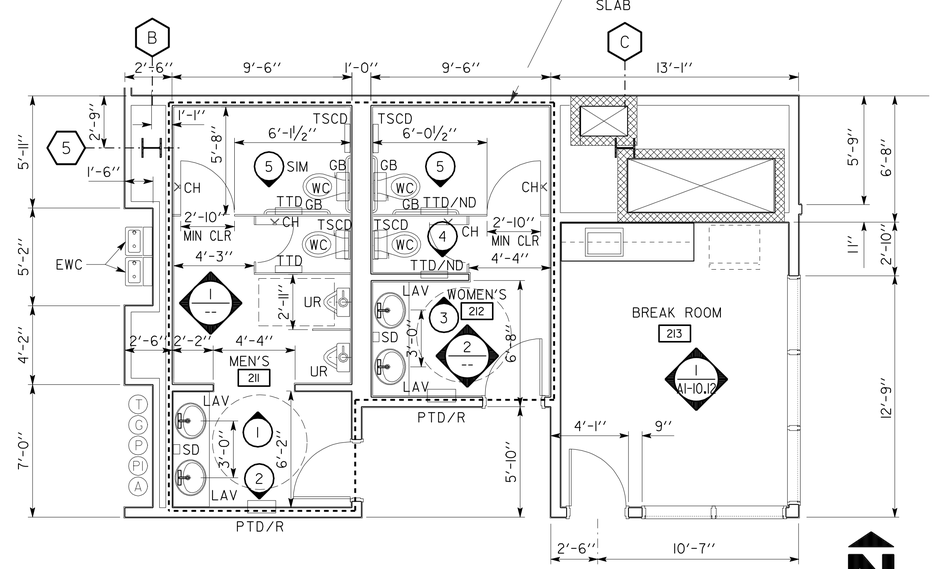

3 ENLARGED PARTIAL FLOOR PLAN

SCALE 1/4" = 1'-0"

	BY	CHECKED
DESIGN	F. THOMAS, L. RHOADES	
DETAILS	C. NAKAHARA,	
QUANTITIES		

STATE OF CALIFORNIA DEPARTMENT OF TRANSPORTATION

DIVISION OF ENGINEERING SERVICES ARCHITECTURAL AND STRUCTURAL DESIGN

BRIDGE NO. 33M5785 | POST MILE 2.2

SFOBB MAINTENANCE COMPLEX
BUILDING IA — ENLARGED PLAN AND INTERIOR ELEVATIONS

SHEET **A1-10.11**

a1_10_11 intel_11a.add
TAEMWW Imperial Rev. 7/10 28-DEC-2012 07:58

ORIGINAL SCALE IN INCHES FOR REDUCED PLANS 0 1 2 3

UNIT 3598
PROJECT NUMBER & PHASE 04120006661
EA 014081

DISREGARD PRINTS BEARING EARLIER REVISION DATES
REVISION DATES (PRELIMINARY STAGE ONLY): 02-28-12 04-26-12 05-08-12 05-17-12 06-01-12 06-20-12 07-23-12
SHEET X OF X

28-DEC-2012 07:58
a1_10_11 intel_11a.add

DIST.	COUNTY	ROUTE	POST MILES TOTAL PROJECT	SHEET NO.	TOTAL SHEETS
04	Ala	80	2.2	211	800

3

LICENSED ARCHITECT — FRANK THOMAS — No. C-31406 — Exp. 4-30-13 — STATE OF CALIFORNIA

5/30/2012
LICENSED ARCHITECT — DATE

10-22-12
PLANS APPROVAL DATE

The State of California or its officers or agents shall not be responsible for the accuracy or completeness of scanned copies of this plan sheet.

ACCESSIBILITY DESIGN APPROVAL STAMP DOT / DES / OTA
PROJECT ID **0412000666**
Reviewed by: Y. A. WANG
Date: 12-06-12

CALIFORNIA STATE FIRE MARSHAL APPROVED
Approval of this plan does not authorize or approve any omission or deviation from applicable regulations. Final approval is subject to field inspection. One set of approved plans shall be available on the project site at all times.
Reviewed by: SPENCER MEYER
Approval date: 12-13-12

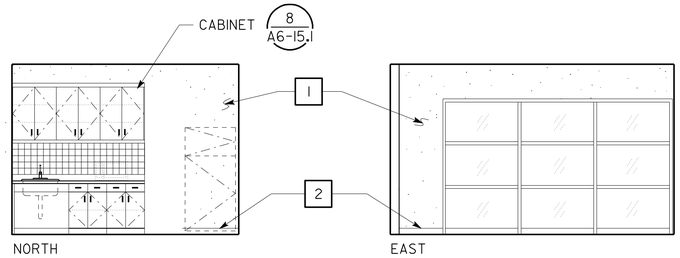

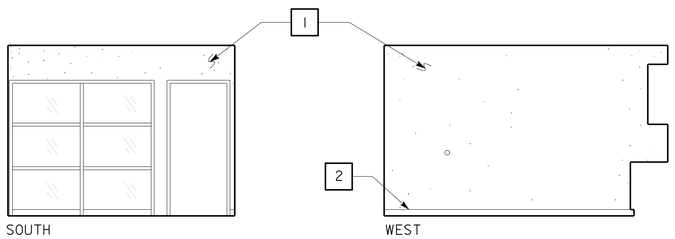

1 BREAKROOM 213

SCALE 1/4" = 1'-0"

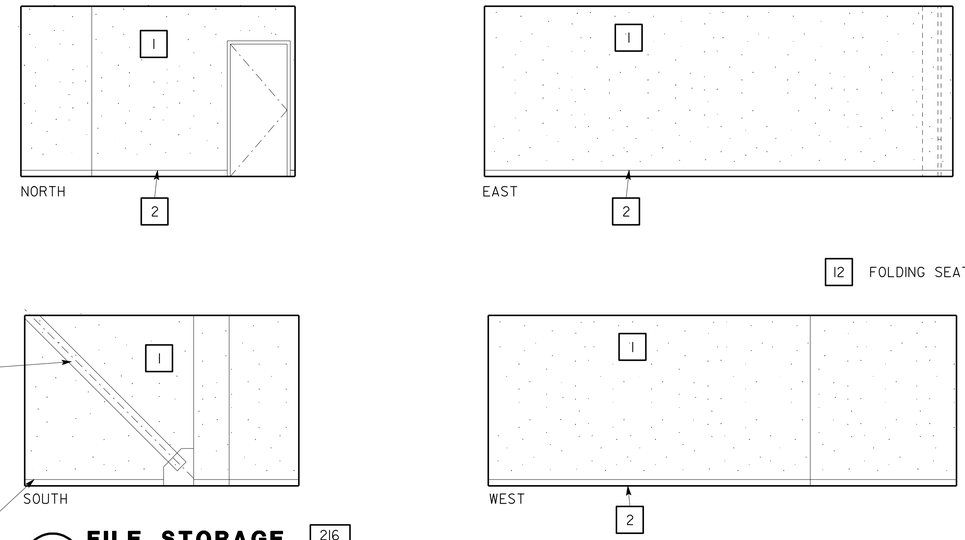

12 FOLDING SEAT

4 FILE STORAGE 216

SCALE 1/4" = 1'-0"

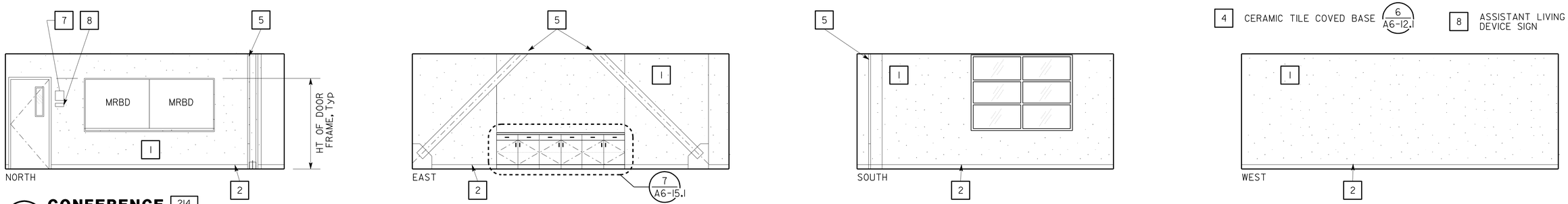

2 CONFERENCE 214

SCALE 1/4" = 1'-0"

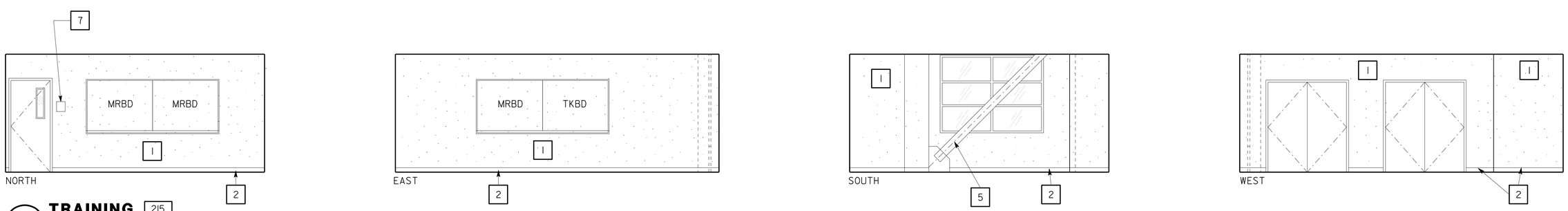

3 TRAINING 215

SCALE 1/4" = 1'-0"

KEY NOTES:

1. GYP BD, PAINTED
2. 4" RESILIENT BASE (9 / A6-12.2)
3. CERAMIC TILE (8 / A6-12.1)
4. CERAMIC TILE COVED BASE (6 / A6-12.1)
5. CHEVRON STEEL BRACING
6. FOLDING SEAT (1 / A0-3.4)
7. MAXIMUM OCCUPANCY SIGN (2 / A6-13.2)
8. ASSISTANT LIVING DEVICE SIGN (4 / A6-13.2)

3 **REVISED PER ADDENDUM No. 3 DATED JANUARY 4, 2013**

DESIGN	F. THOMAS, L. RHOADES	CHECKED
DETAILS	BY C. NAKAHARA,	CHECKED
QUANTITIES	BY	CHECKED

STATE OF CALIFORNIA
DEPARTMENT OF TRANSPORTATION

DIVISION OF ENGINEERING SERVICES
ARCHITECTURAL AND STRUCTURAL DESIGN

BRIDGE NO. 33M5785
POST MILE 2.2

SFOBB MAINTENANCE COMPLEX
BUILDING IA — INTERIOR ELEVATIONS

SHEET **A1-10.12**

a1_10_12 intel_12a.dds
TAEMWW Imperial Rev. 7/10 28-DEC-2012 07:57

ORIGINAL SCALE IN INCHES FOR REDUCED PLANS 0 1 2 3

UNIT 3598
PROJECT NUMBER & PHASE 04120006661
EA 014081

DISREGARD PRINTS BEARING EARLIER REVISION DATES →
REVISION DATES (PRELIMINARY STAGE ONLY): 02-28-12 04-26-12 05-08-12 05-17-12 06-01-12 06-28-12 07-23-12
SHEET X OF X

28-DEC-2012 07:57
a1_10_12 intel_12a.dds

DIST.	COUNTY	ROUTE	POST MILES TOTAL PROJECT	SHEET NO.	TOTAL SHEETS
04	Ala	80	2.2	212	800

LICENSED ARCHITECT — 5/30/2012 DATE

LICENSED ARCHITECT FRANK THOMAS No. C-31406 Exp. 4-30-13 STATE OF CALIFORNIA

10-22-12
PLANS APPROVAL DATE

The State of California or its officers or agents shall not be responsible for the accuracy or completeness of scanned copies of this plan sheet.

KEY NOTES

3

1. GYP BD, PAINTED
2. 4" RESILIENT BASE (9 / A6-12.2)
3. CHEVRON STEEL BRACING, SEE STRUCT
4. WINDOW WALL SYSTEM
5. STRUCTURAL STEEL COLUMN, PAINTED

ACCESSIBILITY DESIGN APPROVAL STAMP DOT / DES / OTA
PROJECT ID 0412000666
Reviewed by: Y. A. WANG
Date: 12-06-12

CALIFORNIA STATE FIRE MARSHAL APPROVED
Approval of this plan does not authorize or approve any omission or deviation from applicable regulations. Final approval is subject to field inspection. One set of approved plans shall be available on the project site at all times.
Reviewed by: SPENCER MEYER
Approval date: 12-13-12

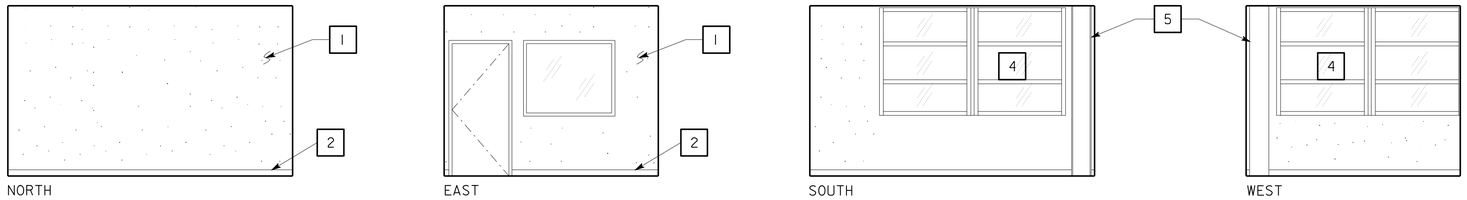

1 OFFICE 5 218A

SCALE 1/4" = 1'-0"

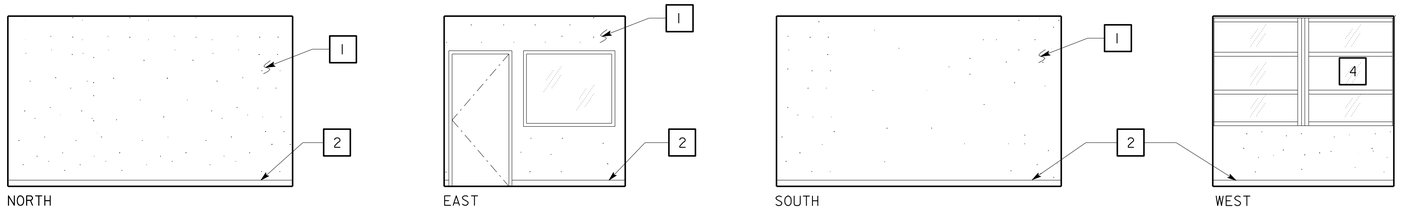

2 OFFICE 4 218

SCALE 1/4" = 1'-0"

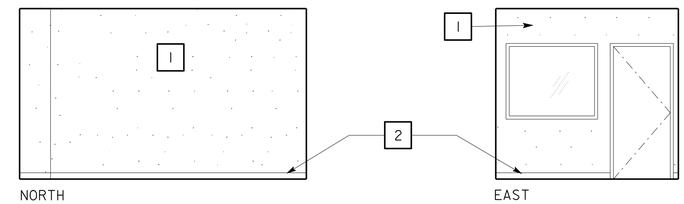

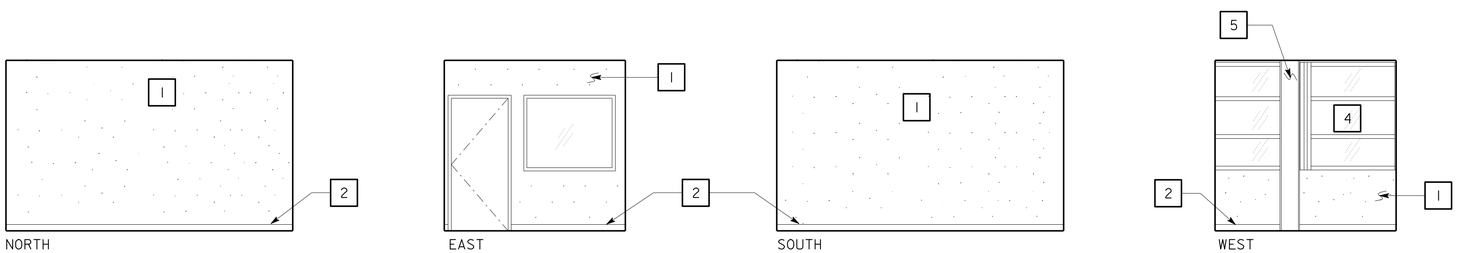

3 OFFICE 3 219

SCALE 1/4" = 1'-0"

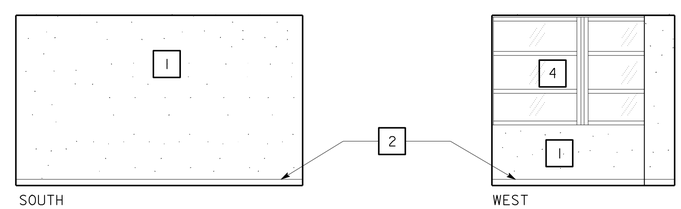

5 OFFICE 1 221

SCALE 1/4" = 1'-0"

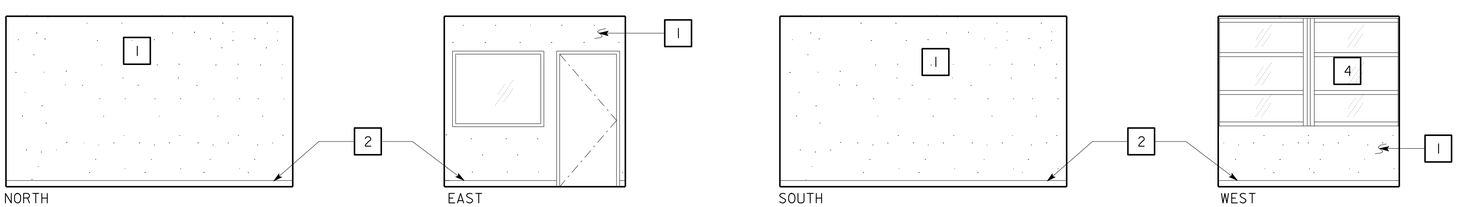

4 OFFICE 2 220

SCALE 1/4" = 1'-0"

3 REVISED PER ADDENDUM No. 3 DATED JANUARY 4, 2013

DESIGN	BY F. THOMAS, L. RHOADES	CHECKED
DETAILS	BY C. NAKAHARA,	CHECKED
QUANTITIES	BY	CHECKED

STATE OF CALIFORNIA
DEPARTMENT OF TRANSPORTATION

DIVISION OF ENGINEERING SERVICES
ARCHITECTURAL AND STRUCTURAL DESIGN

BRIDGE NO. 33M5785
POST MILE 2.2

SFOBB MAINTENANCE COMPLEX
BUILDING IA — INTERIOR ELEVATIONS

SHEET A1-10.13

a1_10_13 intel_13a.add
TAEMWW Imperial Rev. 7/10 28-DEC-2012 07:57

ORIGINAL SCALE IN INCHES FOR REDUCED PLANS 0 1 2 3

UNIT 3598
PROJECT NUMBER & PHASE 04120006661
EA 014081

DISREGARD PRINTS BEARING EARLIER REVISION DATES
REVISION DATES (PRELIMINARY STAGE ONLY): 02-28-12 04-26-12 05-08-12 05-17-12 06-01-12 06-20-12
SHEET X OF X

28-DEC-2012 07:57
a1_10_13 intel_13a.add

DIST.	COUNTY	ROUTE	POST MILES TOTAL PROJECT	SHEET NO.	TOTAL SHEETS
04	Ala	80	2.2	241	800

3

LICENSED ARCHITECT — 5/30/2012 DATE

LICENSED ARCHITECT FRANK THOMAS No. C-31406 Exp. 4-30-13 STATE OF CALIFORNIA

10-22-12
PLANS APPROVAL DATE

The State of California or its officers or agents shall not be responsible for the accuracy or completeness of scanned copies of this plan sheet.

ACCESSIBILITY DESIGN APPROVAL STAMP DOT / DES / OTA
PROJECT ID **0412000666**
Reviewed by: Y. A. WANG
Date: 12-06-12

CALIFORNIA STATE FIRE MARSHAL APPROVED
Approval of this plan does not authorize or approve any omission or deviation from applicable regulations. Final approval is subject to field inspection. One set of approved plans shall be available on the project site at all times.
Reviewed by: SPENCER MEYER
Approval date: 12-13-12

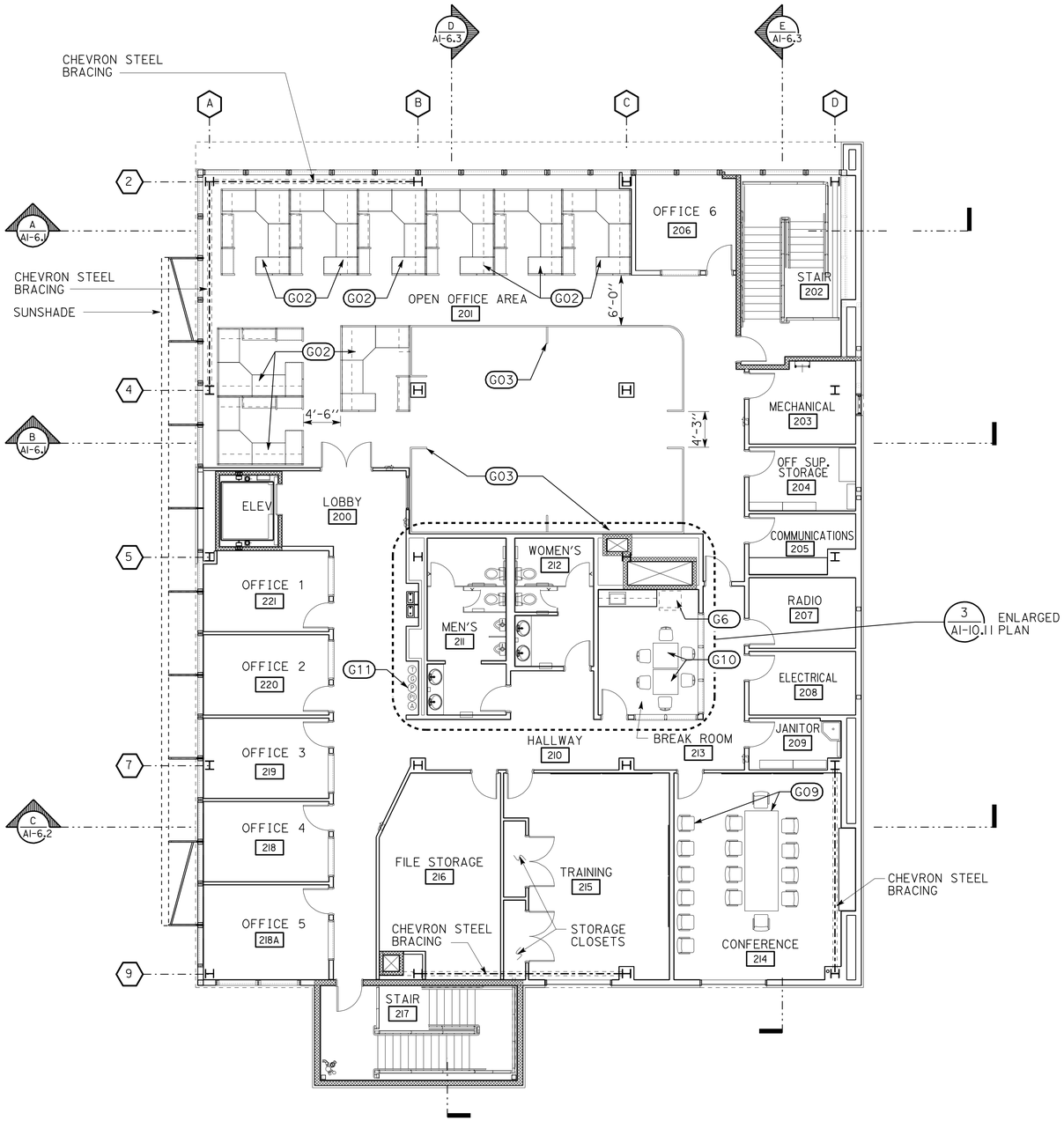

EQUIPMENT NOT IN CONTRACT

G01	MODULAR FURNITURE- SUPERVISOR
G02	MODULAR FURNITURE- EMPLOYEE
G03	MODULAR FURNITURE- GENERAL
G06	REFRIGERATOR
G09	CONFERENCE TABLE AND CHAIRS
G10	TABLES AND CHAIRS
G11	RECYCLE MATERIAL RECEPTACLES

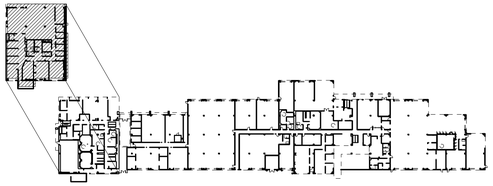

PLAN NORTH

2ND FLOOR EQUIPMENT (NIC) PLAN

SCALE 1/8" = 1'-0"

3 **REVISED PER ADDENDUM No. 3 DATED JANUARY 4, 2013**

	BY	CHECKED
DESIGN	F. THOMAS, L. RHOADES	
DETAILS	C. NAKAHARA,	
QUANTITIES		

STATE OF CALIFORNIA DEPARTMENT OF TRANSPORTATION

DIVISION OF ENGINEERING SERVICES ARCHITECTURAL AND STRUCTURAL DESIGN

BRIDGE NO. 33M5785 | POST MILE 2.2

SFOBB MAINTENANCE COMPLEX
BUILDING 1A — 2ND FLOOR EQUIPMENT (NIC) PLAN (REFERENCE ONLY)

SHEET **A1-11.2**

a1_11_2_nic_eq_fp_2a.add
TAEMWW Imperial Rev. 7/10 28-DEC-2012 07:57

ORIGINAL SCALE IN INCHES FOR REDUCED PLANS 0 1 2 3

UNIT 3598
PROJECT NUMBER & PHASE 04120006661
EA 014081

DISREGARD PRINTS BEARING EARLIER REVISION DATES
REVISION DATES (PRELIMINARY STAGE ONLY) 02-28-12 04-26-12 05-08-12 05-17-12 06-01-12 06-20-12
SHEET X OF X

28-DEC-2012 07:57
a1_11_2_nic_eq_fp_2a.add

DIST.	COUNTY	ROUTE	POST MILES TOTAL PROJECT	SHEET NO.	TOTAL SHEETS
04	Ala	80	2.2	252	800

LICENSED ARCHITECT — DATE: 11-28-12

LICENSED ARCHITECT QUINCY J. WONG No. C-18849 Exp. 5-31-13 STATE OF CALIFORNIA

10-22-12
PLANS APPROVAL DATE

The State of California or its officers or agents shall not be responsible for the accuracy or completeness of scanned copies of this plan sheet.

ACCESSIBILITY DESIGN APPROVAL STAMP DOT / DES / OTA
PROJECT ID 0412000666
Reviewed by: Y. A. WANG
Date: 12-06-12

CALIFORNIA STATE FIRE MARSHAL APPROVED
Approval of this plan does not authorize or approve any omission or deviation from applicable regulations. Final approval is subject to field inspection. One set of approved plans shall be available on the project site at all times.
Reviewed by: SPENCER MEYER
Approval date: 12-13-12

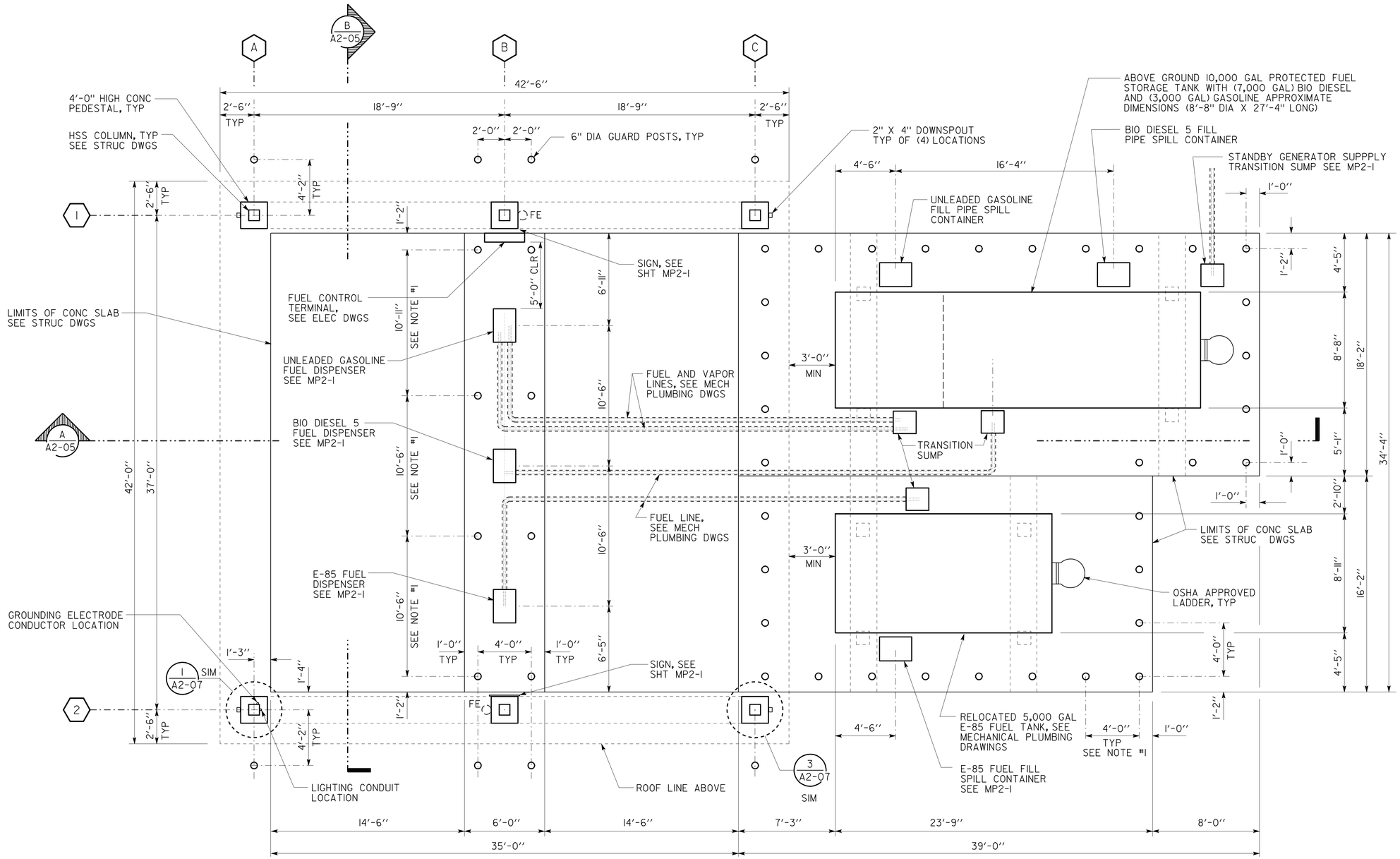

FLOOR PLAN

SCALE 1/4" = 1'-0"

PLAN NORTH

NOTES

1. DIMENSIONS SET FORTH DESIGNATED WITH " NOTE #1" ARE REQUIRED PER 2010 CALIFORNIA CODE SECTION 312 VEHICLE IMPACT PROTECTION.
2. SEE MECHANICAL PLUMBING DRAWINGS, ELECTRICAL DRAWINGS AND STRUCTURAL DRAWINGS FOR ADDITIONAL INFORMATION.
3. TANK DIMENSIONS SHALL BE COORDINATED WITH TANK MANUFACTURER.
4. ACCESSIBLE LEVEL AREA SHALL HAVE MAX. 2% SLOPE IN ANY DIRECTIONS. SUCH AREA SHALL BE MIN. 30 INCHES BY 48" INCHES PROVIDED WITH IN 10 INCHES OF THE FACE OF THE CARD READER AND DISPENSER WITH THE LONG SIDE OF THIS SPACE PARALLEL TO AND CENTERED (PLUS OR MINUS 9 INCHES) WITH THE CARD READER AND DISPENSER.
5. THE HIGHEST OPERABLE PART OF THE CARD READER SHALL BE NO MORE THAN 48 INCHES ABOVE ADJACENT GROUND.

3 **REVISED PER ADDENDUM No. 3 DATED JANUARY 4, 2013**

	BY	CHECKED
DESIGN	R. QUIBIN/ C. NAKAHARA	Q. WONG
DETAILS	R. QUIBIN/ C. NAKAHARA	Q. WONG
QUANTITIES		

STATE OF CALIFORNIA DEPARTMENT OF TRANSPORTATION

DIVISION OF ENGINEERING SERVICES ARCHITECTURAL AND STRUCTURAL DESIGN

BRIDGE NO. 33M5785 — POST MILE 2.2

SFOBB MAINTENANCE COMPLEX

FUEL ISLAND — FLOOR PLAN

SHEET **A2-01**

a2_01_fp_V8.add
TAEMWW Imperial Rev. 7/10 02-JAN-2013 06:55

ORIGINAL SCALE IN INCHES FOR REDUCED PLANS 0 1 2 3

UNIT 3598
PROJECT NUMBER & PHASE 04120006661
EA 014081

DISREGARD PRINTS BEARING EARLIER REVISION DATES →
REVISION DATES (PRELIMINARY STAGE ONLY): 02-28-12 04-26-12 05-08-12 05-17-12 06-28-12 11-2-12
SHEET X OF X

02-JAN-2013 06:55
a2_01_fp_V8.add

DIST.	COUNTY	ROUTE	POST MILES TOTAL PROJECT	SHEET NO.	TOTAL SHEETS
04	Ala	80	2.2	252A	800

LICENSED ARCHITECT — 11-28-12 DATE

LICENSED ARCHITECT QUINCY J. WONG No. C-18849 Exp. 5-31-13 STATE OF CALIFORNIA

10-22-12
PLANS APPROVAL DATE

The State of California or its officers or agents shall not be responsible for the accuracy or completeness of scanned copies of this plan sheet.

ACCESSIBILITY DESIGN APPROVAL STAMP DOT / DES / OTA
PROJECT ID **0412000666**
Reviewed by: Y. A. WANG
Date: 12-06-12

CALIFORNIA STATE FIRE MARSHAL APPROVED
Approval of this plan does not authorize or approve any omission or deviation from applicable regulations. Final approval is subject to field inspection. One set of approved plans shall be available on the project site at all times.
Reviewed by: SPENCER MEYER
Approval date: 12-13-12

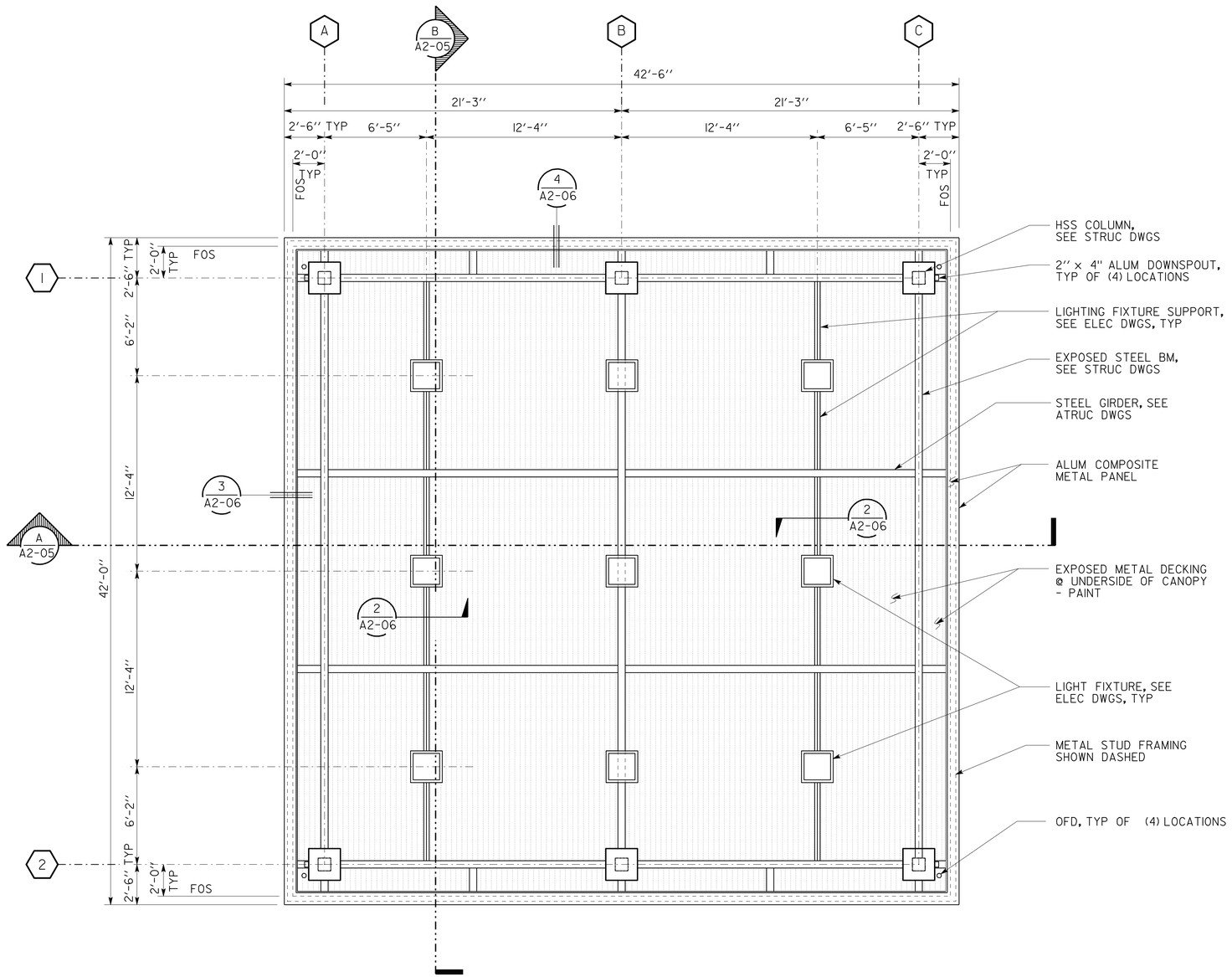

REFLECTED CEILING PLAN

SCALE 1/4" = 1-0"

PLAN NORTH

3 ADDED PER ADDENDUM No. 3 DATED JANUARY 4, 2013

DESIGN	BY R. QUIBIN/ C. NAKAHARA	CHECKED Q. WONG	
DETAILS	BY R. QUIBIN/ C. NAKAHARA	CHECKED Q. WONG	
QUANTITIES	BY	CHECKED	

STATE OF CALIFORNIA DEPARTMENT OF TRANSPORTATION

DIVISION OF ENGINEERING SERVICES ARCHITECTURAL AND STRUCTURAL DESIGN

BRIDGE NO. 33M5785
POST MILE 2.2

SFOBB MAINTENANCE COMPLEX
FUEL ISLAND — REFLECTED CEILING PLAN

SHEET **A2-02**

a2_02_rcp_V8.add
TAEMWW Imperial Rev. 7/10 28-DEC-2012 07:58

ORIGINAL SCALE IN INCHES FOR REDUCED PLANS 0 1 2 3

UNIT 3598
PROJECT NUMBER & PHASE 04120006661
EA 014081

DISREGARD PRINTS BEARING EARLIER REVISION DATES →
REVISION DATES (PRELIMINARY STAGE ONLY): 02-28-12 04-26-12 05-08-12 05-17-12 06-28-12 11-2-12
SHEET X OF X

28-DEC-2012 07:58
a2_02_rcp_V8.add

DIST.	COUNTY	ROUTE	POST MILES TOTAL PROJECT	SHEET NO.	TOTAL SHEETS
04	Ala	80	2.2	252B	800

LICENSED ARCHITECT — 11-28-12 — DATE

LICENSED ARCHITECT QUINCY J. WONG No. C-18849 Exp. 5-31-13 STATE OF CALIFORNIA

10-22-12
PLANS APPROVAL DATE

The State of California or its officers or agents shall not be responsible for the accuracy or completeness of scanned copies of this plan sheet.

ACCESSIBILITY DESIGN APPROVAL STAMP DOT / DES / OTA
PROJECT ID **0412000666**
Reviewed by: Y. A. WANG
Date: 12-06-12

CALIFORNIA STATE FIRE MARSHAL APPROVED
Approval of this plan does not authorize or approve any omission or deviation from applicable regulations. Final approval is subject to field inspection. One set of approved plans shall be available on the project site at all times.
Reviewed by: SPENCER MEYER
Approval date: 12-13-12

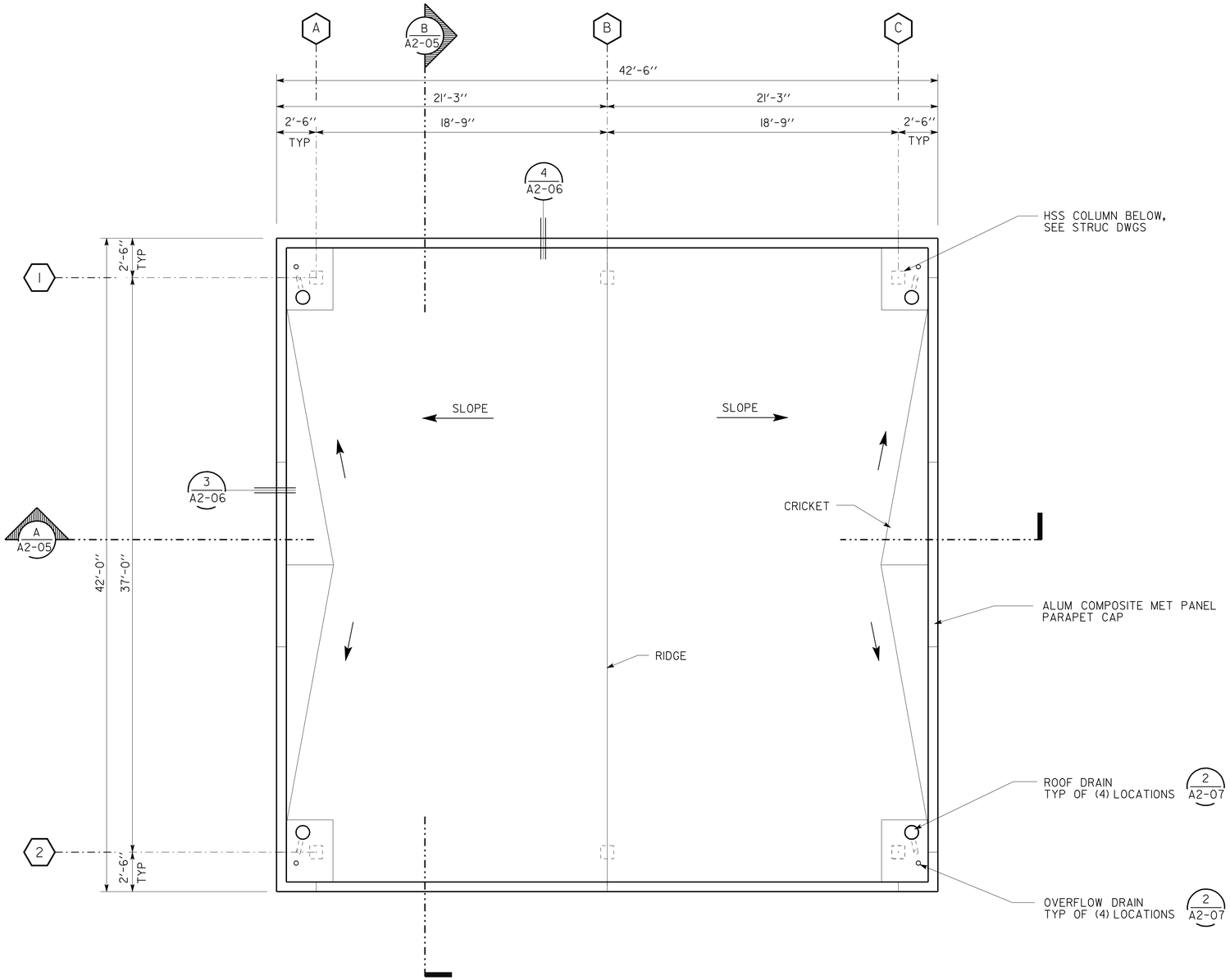

REFLECTED CEILING PLAN

SCALE 1/4" = 1'-0"

PLAN NORTH

3 ADDED PER ADDENDUM No. 3 DATED JANUARY 4, 2013

	BY	CHECKED
DESIGN	R. QUIBIN/ C. NAKAHARA	Q. WONG
DETAILS	R. QUIBIN/ C. NAKAHARA	Q. WONG
QUANTITIES		

STATE OF CALIFORNIA
DEPARTMENT OF TRANSPORTATION

DIVISION OF ENGINEERING SERVICES
ARCHITECTURAL AND STRUCTURAL DESIGN

BRIDGE NO. 33M5785
POST MILE 2.2

SFOBB MAINTENANCE COMPLEX
FUEL ISLAND
ROOF PLAN

SHEET **A2-03**

a2_03_rp_V8.add
TAEMWW Imperial Rev. 7/10 28-DEC-2012 07:58

ORIGINAL SCALE IN INCHES FOR REDUCED PLANS 0 1 2 3

UNIT 3598
PROJECT NUMBER & PHASE 04120006661
EA 014081

DISREGARD PRINTS BEARING EARLIER REVISION DATES
REVISION DATES (PRELIMINARY STAGE ONLY): 02-28-12, 04-26-12, 05-08-12, 05-17-12, 06-28-12, 11-2-12

SHEET X OF X

28-DEC-2012 07:58
a2_03_rp_V8.add

DIST.	COUNTY	ROUTE	POST MILES TOTAL PROJECT	SHEET NO.	TOTAL SHEETS
04	Ala	80	2.2	253	800

LICENSED ARCHITECT — DATE: 11-28-12

LICENSED ARCHITECT QUINCY J. WONG No. C-18849 Exp. 5-31-13 STATE OF CALIFORNIA

10-22-12
PLANS APPROVAL DATE

The State of California or its officers or agents shall not be responsible for the accuracy or completeness of scanned copies of this plan sheet.

ACCESSIBILITY DESIGN APPROVAL STAMP DOT / DES / OTA
PROJECT ID **0412000666**
Reviewed by: Y. A. WANG
Date: 12-06-12

CALIFORNIA STATE FIRE MARSHAL APPROVED
Approval of this plan does not authorize or approve any omission or deviation from applicable regulations. Final approval is subject to field inspection. One set of approved plans shall be available on the project site at all times.
Reviewed by: SPENCER MEYER
Approval date: 12-13-12

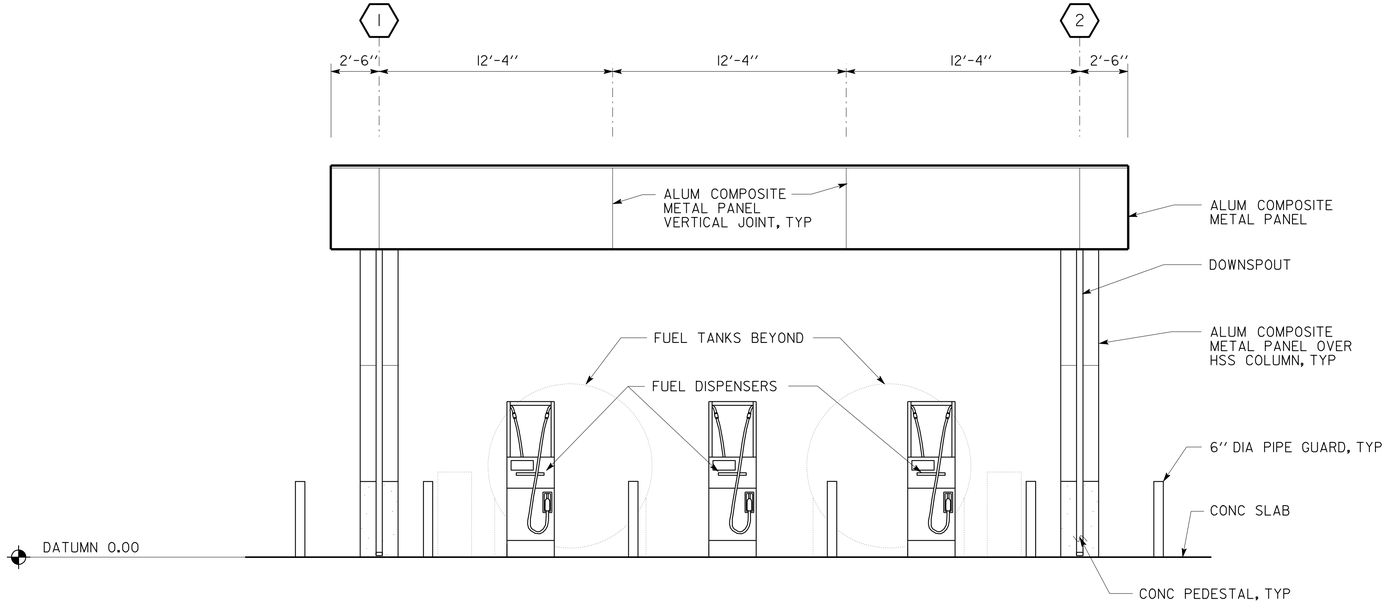

WEST ELEVATION / EAST ELEVATION SIMILAR

SCALE 1/4" = 1-0"

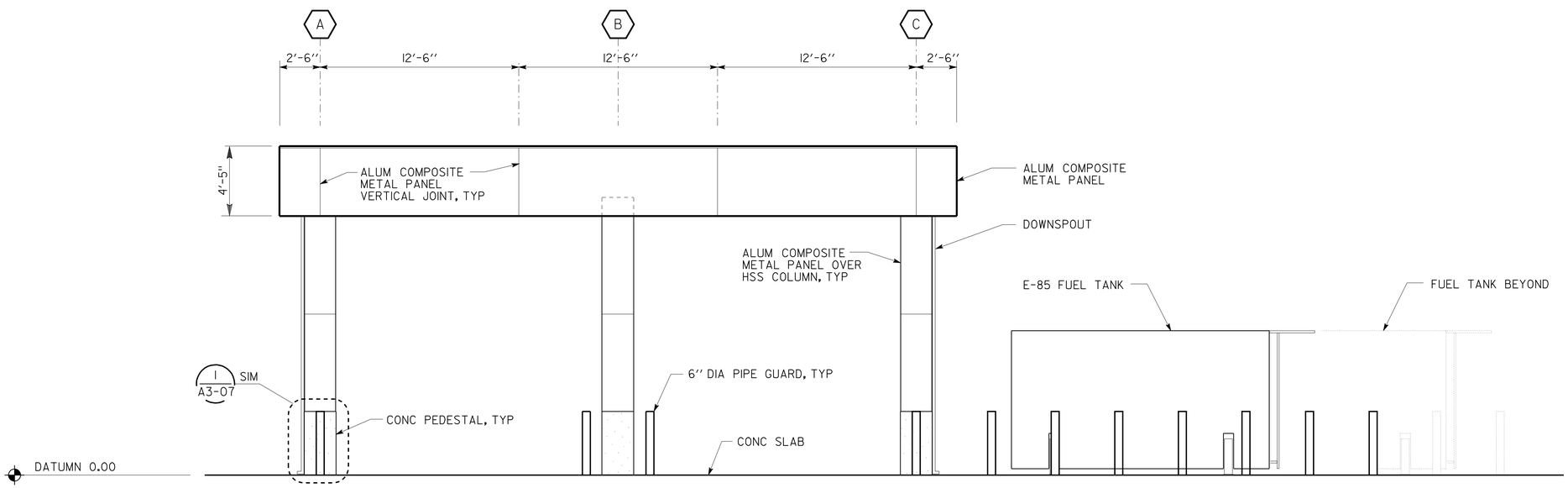

SOUTH ELEVATION / NORTH ELEVATION SIMILAR

SCALE 1/4" = 1-0"

3 REVISED PER ADDENDUM No. 3 DATED JANUARY 4, 2013

	BY	CHECKED
DESIGN	R. QUIBIN/ C. NAKAHARA	Q. WONG
DETAILS	R. QUIBIN/ C. NAKAHARA	Q. WONG
QUANTITIES		

STATE OF CALIFORNIA DEPARTMENT OF TRANSPORTATION

DIVISION OF ENGINEERING SERVICES ARCHITECTURAL AND STRUCTURAL DESIGN

BRIDGE NO. 33M5785
POST MILE 2.2

SFOBB MAINTENANCE COMPLEX
FUEL ISLAND — ELEVATIONS

SHEET **A2-04**

a2_04_extelev_V8.add
TAEMWW Imperial Rev. 7/10 28-DEC-2012 07:58

ORIGINAL SCALE IN INCHES FOR REDUCED PLANS 0 1 2 3

UNIT 3598
PROJECT NUMBER & PHASE 04120006661
EA 014081

DISREGARD PRINTS BEARING EARLIER REVISION DATES →
REVISION DATES (PRELIMINARY STAGE ONLY): 02-28-12, 04-26-12, 05-08-12, 05-17-12, 06-28-12, 11-2-12
SHEET X OF X

28-DEC-2012 07:58
a2_04_extelev_V8.add

DIST.	COUNTY	ROUTE	POST MILES TOTAL PROJECT	SHEET NO.	TOTAL SHEETS
04	Ala	80	2.2	254	800

LICENSED ARCHITECT — 11-28-12 — DATE

LICENSED ARCHITECT QUINCY J. WONG No. C-18849 Exp. 5-31-13 STATE OF CALIFORNIA

10-22-12
PLANS APPROVAL DATE

The State of California or its officers or agents shall not be responsible for the accuracy or completeness of scanned copies of this plan sheet.

ACCESSIBILITY DESIGN APPROVAL STAMP DOT / DES / OTA
PROJECT ID **0412000666**
Reviewed by: Y. A. WANG
Date: 12-06-12

CALIFORNIA STATE FIRE MARSHAL APPROVED
Approval of this plan does not authorize or approve any omission or deviation from applicable regulations. Final approval is subject to field inspection. One set of approved plans shall be available on the project site at all times.
Reviewed by: SPENCER MEYER
Approval date: 12-13-12

3

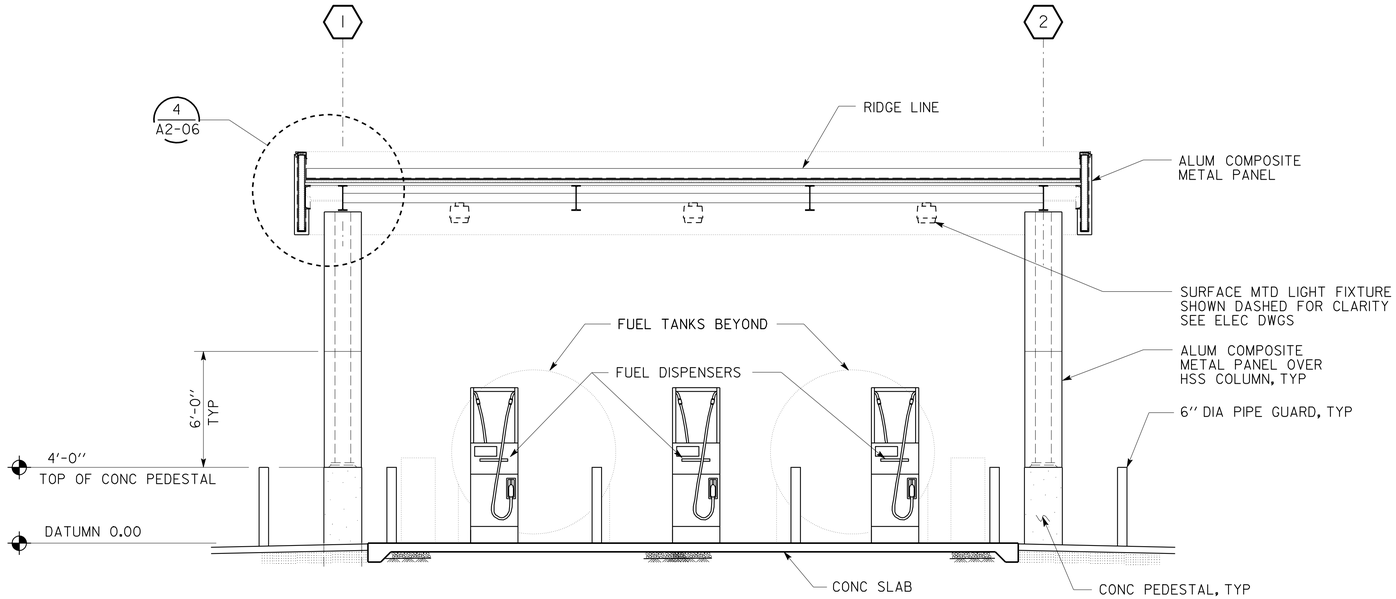

B **BUILDING SECTION**
SCALE 1/4" = 1'-0"

NOTE:
LIGHTING FIXTURE SHALL BE PLUMB

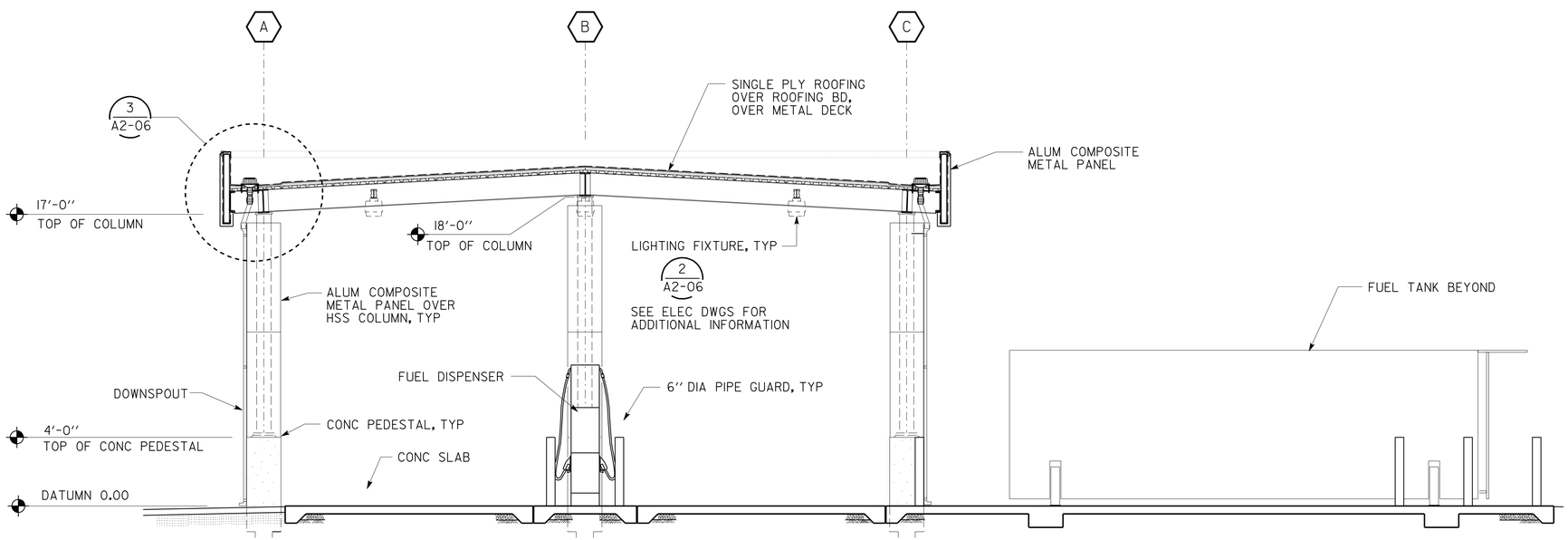

A **BUILDING SECTION**
SCALE 1/4" = 1'-0"

3 **REVISED PER ADDENDUM No. 3 DATED JANUARY 4, 2013**

DESIGN	BY R. QUIBIN/ C. NAKAHARA	CHECKED Q. WONG	
DETAILS	BY R. QUIBIN/ C. NAKAHARA	CHECKED Q. WONG	
QUANTITIES	BY	CHECKED	

STATE OF CALIFORNIA
DEPARTMENT OF TRANSPORTATION

DIVISION OF ENGINEERING SERVICES
ARCHITECTURAL AND STRUCTURAL DESIGN

BRIDGE NO. 33M5785
POST MILE 2.2

SFOBB MAINTENANCE COMPLEX
FUEL ISLAND — BUILDING SECTIONS

SHEET **A2-05**

a2_05_bldgsec_V8.add
TAEMWW Imperial Rev. 7/10 02-JAN-2013 06:58

ORIGINAL SCALE IN INCHES FOR REDUCED PLANS 0 1 2 3

UNIT 3598
PROJECT NUMBER & PHASE 04120006661
EA 014081

DISREGARD PRINTS BEARING EARLIER REVISION DATES
REVISION DATES (PRELIMINARY STAGE ONLY): 02-28-12 04-26-12 05-08-12 05-11-12 06-28-12 11-2-12
SHEET X OF X

02-JAN-2013 06:58
a2_05_bldgsec_V8.add

DIST.	COUNTY	ROUTE	POST MILES TOTAL PROJECT	SHEET NO.	TOTAL SHEETS
04	Ala	80	2.2	254A	800

LICENSED ARCHITECT — DATE 11-28-12

LICENSED ARCHITECT QUINCY J. WONG No. C-18849 Exp. 5-31-13 STATE OF CALIFORNIA

10-22-12
PLANS APPROVAL DATE

The State of California or its officers or agents shall not be responsible for the accuracy or completeness of scanned copies of this plan sheet.

ACCESSIBILITY DESIGN APPROVAL STAMP DOT / DES / OTA
PROJECT ID 0412000666
Reviewed by: Y. A. WANG
Date: 12-06-12

CALIFORNIA STATE FIRE MARSHAL APPROVED
Approval of this plan does not authorize or approve any omission or deviation from applicable regulations. Final approval is subject to field inspection. One set of approved plans shall be available on the project site at all times.
Reviewed by: SPENCER MEYER
Approval date: 12-13-12

3

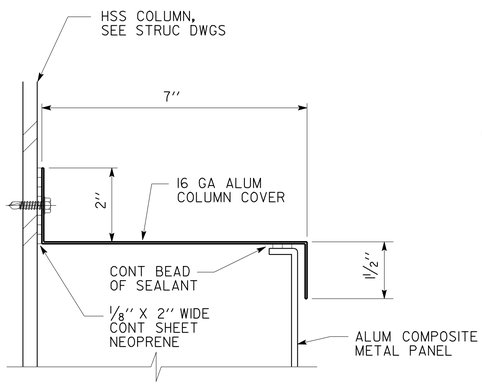

5 COLUMN COVER
SCALE: 6'' = 1'-0''

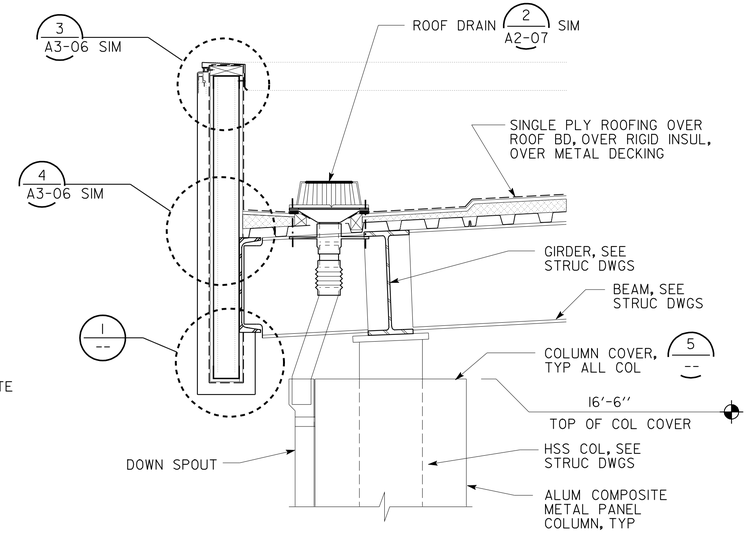

3 ROOF PARAPET DETAIL
SCALE: 1'' = 1'-0''

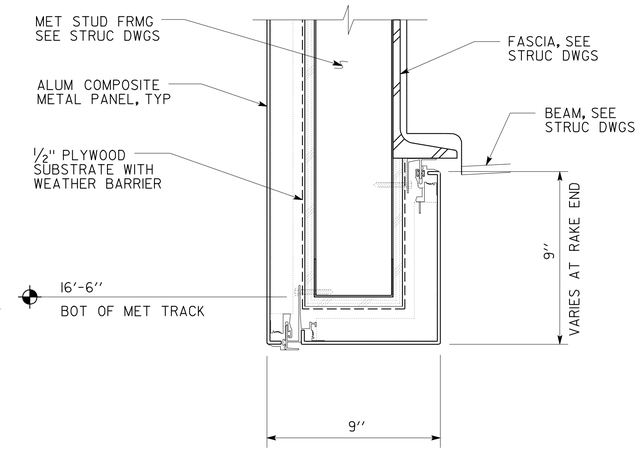

1 COMPOSITE PANEL AT EAVE
SCALE: 3'' = 1'-0''

NOTE:

1. NEOPRENE TAPE TO BE APPLIED BETWEEN DISSIMILAR METALS.

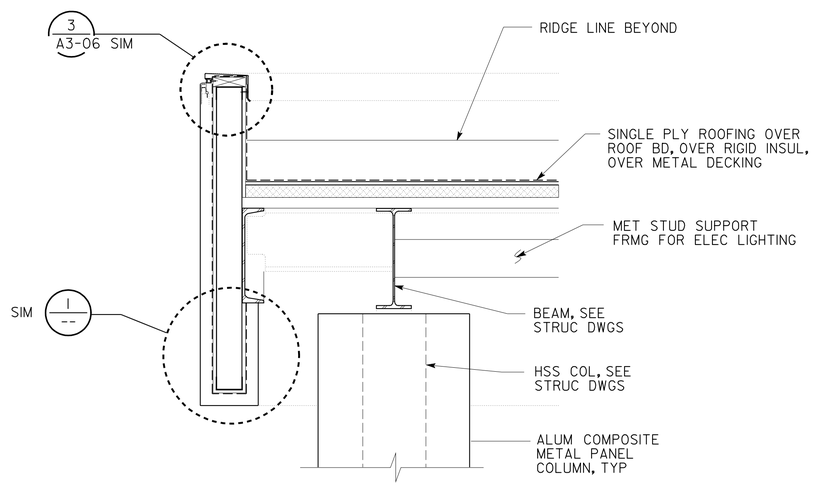

4 ROOF PARAPET DETAIL
SCALE: 1'' = 1'-0''

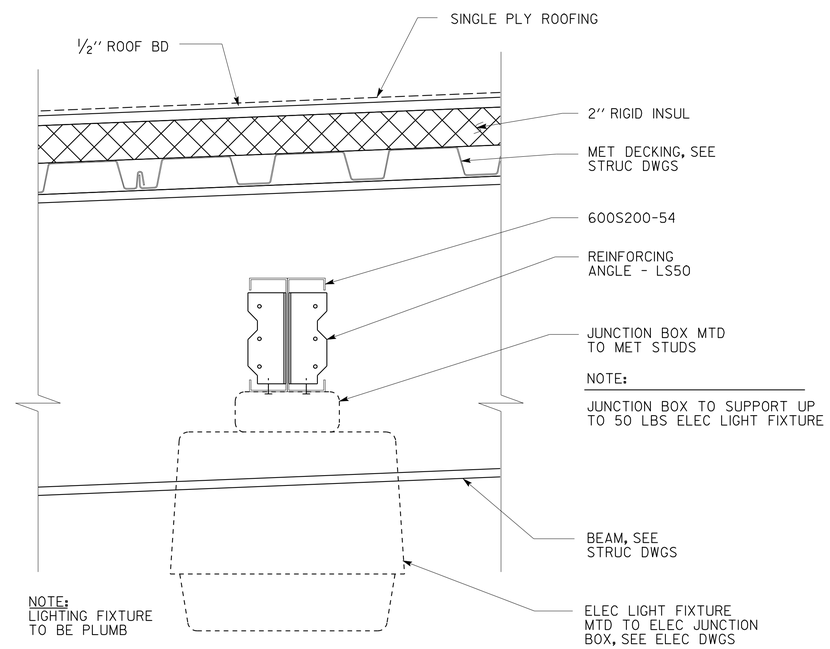

2 LIGHT FIXTURE MOUNTING DETAIL
SCALE: 3'' = 1'-0''

3 **ADDED PER ADDENDUM No. 3 DATED JANUARY 4, 2013**

DESIGN	BY R. QUIBIN/ C. NAKAHARA	CHECKED Q. WONG	
DETAILS	BY R. QUIBIN/ C. NAKAHARA	CHECKED Q. WONG	
QUANTITIES	BY	CHECKED	

STATE OF CALIFORNIA DEPARTMENT OF TRANSPORTATION

DIVISION OF ENGINEERING SERVICES ARCHITECTURAL AND STRUCTURAL DESIGN

BRIDGE NO. 33M5785 — POST MILE 2.2

SFOBB MAINTENANCE COMPLEX
FUEL ISLAND — BUILDING DETAILS

SHEET **A2-06**

a2_06_details_V8.add
TAEMWW Imperial Rev. 7/10 31-DEC-2012 09:05

ORIGINAL SCALE IN INCHES FOR REDUCED PLANS 0 1 2 3

UNIT 3598
PROJECT NUMBER & PHASE 04120006661
EA 014081

DISREGARD PRINTS BEARING EARLIER REVISION DATES → 02-28-12 | 04-26-12 | 05-08-12 | 05-17-12 | 06-28-12 | 11-2-12

REVISION DATES (PRELIMINARY STAGE ONLY) — SHEET X OF X

31-DEC-2012 09:05
a2_06_details_V8.add

DIST.	COUNTY	ROUTE	POST MILES TOTAL PROJECT	SHEET NO.	TOTAL SHEETS
04	Ala	80	2.2	254B	800

LICENSED ARCHITECT — DATE 11-27-12

LICENSED ARCHITECT QUINCY J. WONG No. C-18849 Exp. 5-31-13 STATE OF CALIFORNIA

10-22-12
PLANS APPROVAL DATE

The State of California or its officers or agents shall not be responsible for the accuracy or completeness of scanned copies of this plan sheet.

ACCESSIBILITY DESIGN APPROVAL STAMP DOT / DES / OTA
PROJECT ID 0412000666
Reviewed by: Y. A. WANG
Date: 12-06-12

CALIFORNIA STATE FIRE MARSHAL APPROVED
Approval of this plan does not authorize or approve any omission or deviation from applicable regulations. Final approval is subject to field inspection. One set of approved plans shall be available on the project site at all times.
Reviewed by: SPENCER MEYER
Approval date: 12-13-12

3

NOTE:

1. NEOPRENE TAPE TO BE APPLIED BETWEEN DISSIMILAR METALS.

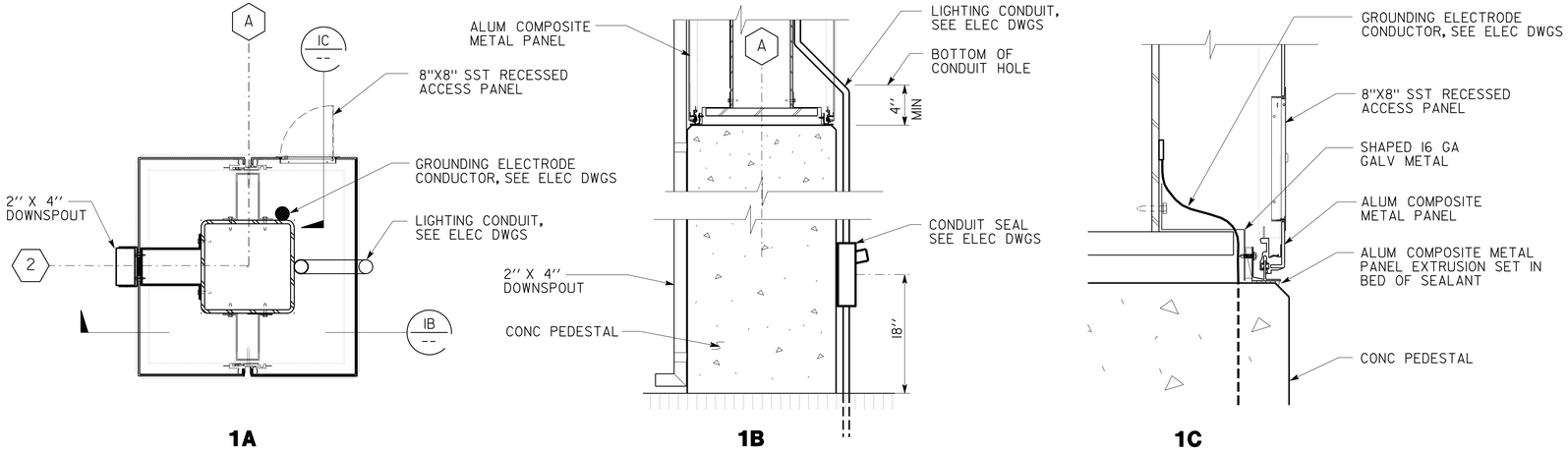

1A SCALE: 1½" = 1'-0"

1B SCALE: 1½" = 1'-0"

1C SCALE: 3" = 1'-0"

1 ELECTRICAL COMPONENTS AT COLUMN

SCALE: AS SHOWN

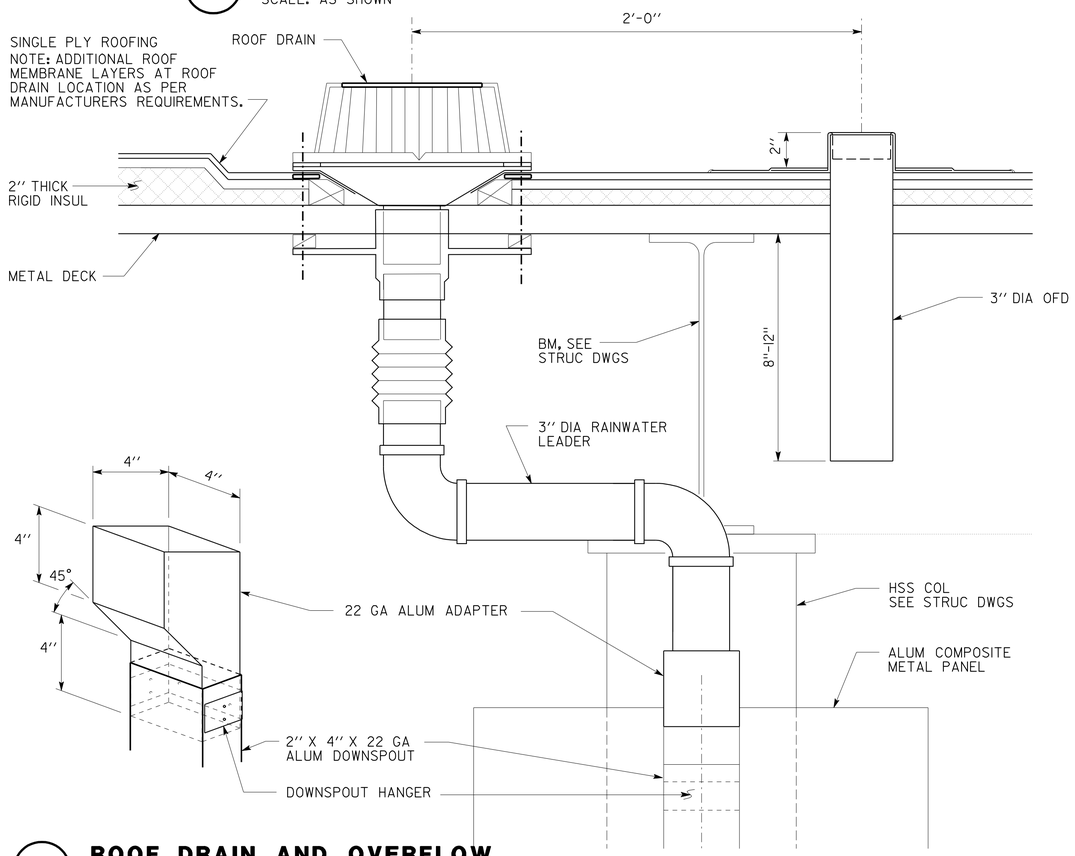

2 ROOF DRAIN AND OVERFLOW

SCALE 3" = 1'-0"

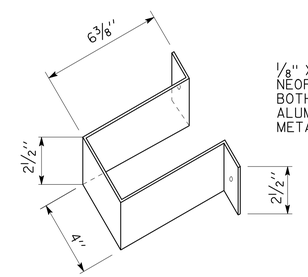

3A SCALE: 3" = 1'-0"

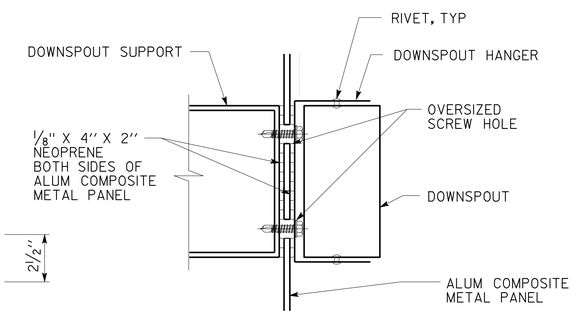

3B SCALE: 6" = 1'-0"

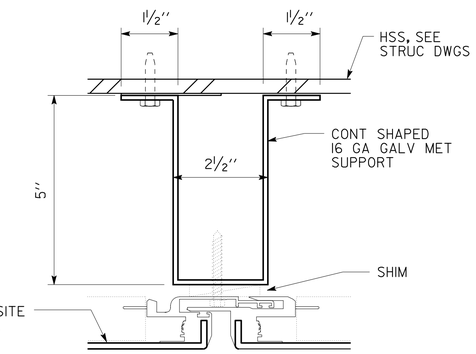

3C SCALE: 6" = 1'-0"

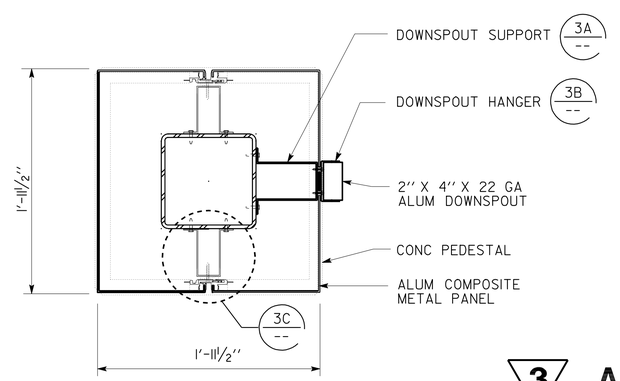

3 TYPICAL COLUMN DETAIL

SCALE 1½" = 1'-0"

3 **ADDED PER ADDENDUM No. 3 DATED JANUARY 4, 2013**

DESIGN	BY R. QUIBIN/ C. NAKAHARA	CHECKED Q. WONG	
DETAILS	BY R. QUIBIN/ C. NAKAHARA	CHECKED Q. WONG	
QUANTITIES	BY	CHECKED	

STATE OF CALIFORNIA DEPARTMENT OF TRANSPORTATION

DIVISION OF ENGINEERING SERVICES ARCHITECTURAL AND STRUCTURAL DESIGN

BRIDGE NO. 33M5785 — POST MILE 2.2

SFOBB MAINTENANCE COMPLEX

FUEL ISLAND — BUILDING DETAILS

SHEET **A2-07**

a2_07_details.add
TAEMWW Imperial Rev. 7/10 31-DEC-2012 09:05

ORIGINAL SCALE IN INCHES FOR REDUCED PLANS 0 1 2 3

UNIT 3598
PROJECT NUMBER & PHASE 04120006661
EA 014081

DISREGARD PRINTS BEARING EARLIER REVISION DATES → 02-28-12 04-26-12 05-08-12 05-17-12 06-28-12 11-2-12

REVISION DATES (PRELIMINARY STAGE ONLY) — SHEET X OF X

31-DEC-2012 09:05
a2_07_details.add

DIST.	COUNTY	ROUTE	POST MILES TOTAL PROJECT	SHEET NO.	TOTAL SHEETS
04	Ala	80	2.2	255	800

LICENSED ARCHITECT — 5-17-12 DATE

LICENSED ARCHITECT QUINCY J. WONG No. C-18849 Exp. 5-31-13 STATE OF CALIFORNIA

10-22-12
PLANS APPROVAL DATE

The State of California or its officers or agents shall not be responsible for the accuracy or completeness of scanned copies of this plan sheet.

ACCESSIBILITY DESIGN APPROVAL STAMP DOT / DES / OTA
PROJECT ID **0412000666**
Reviewed by: Y. A. WANG
Date: 12-06-12

CALIFORNIA STATE FIRE MARSHAL APPROVED
Approval of this plan does not authorize or approve any omission or deviation from applicable regulations. Final approval is subject to field inspection. One set of approved plans shall be available on the project site at all times.
Reviewed by: JOHN E WOODS, SDSFM
Approval date: 8-22-12

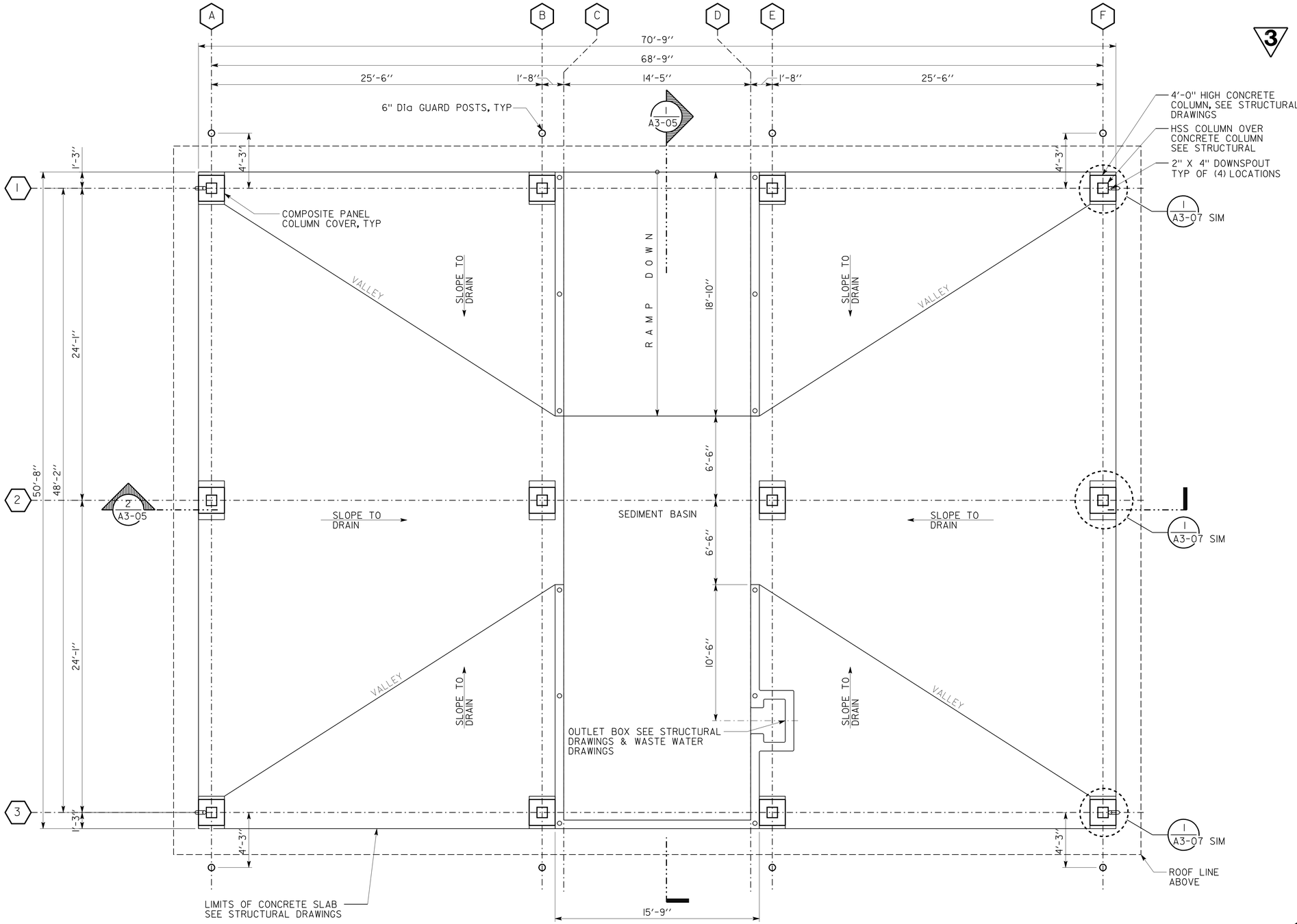

3 **REVISED PER ADDENDUM No. 3 DATED JANUARY 4, 2013**

PLAN NORTH

FLOOR PLAN
SCALE 1/4" = 1'-0"

	BY	CHECKED
DESIGN	R. QUIBIN	Q. WONG
DETAILS	R. QUIBIN	Q. WONG
QUANTITIES		

STATE OF CALIFORNIA DEPARTMENT OF TRANSPORTATION

DIVISION OF ENGINEERING SERVICES ARCHITECTURAL AND STRUCTURAL DESIGN

BRIDGE NO. 33M5785
POST MILE 2.2

SFOBB MAINTENANCE COMPLEX
WASHRACK — FLOOR PLAN

SHEET **A3-01**

a3_01_fp.add
TAEMWW Imperial Rev. 7/10 02-JAN-2013 07:15

ORIGINAL SCALE IN INCHES FOR REDUCED PLANS 0 1 2 3

UNIT 3598
PROJECT NUMBER & PHASE 04120006661
EA 014081

DISREGARD PRINTS BEARING EARLIER REVISION DATES → 02-28-12 04-26-12 05-08-12 05-17-12 06-20-12

REVISION DATES (PRELIMINARY STAGE ONLY) SHEET X OF X

02-JAN-2013 07:15
a3_01_fp.add

DIST.	COUNTY	ROUTE	POST MILES TOTAL PROJECT	SHEET NO.	TOTAL SHEETS
04	Ala	80	2.2	256	800

LICENSED ARCHITECT — 11-27-12 DATE

LICENSED ARCHITECT QUINCY J. WONG No. C-18849 Exp. 5-31-13 STATE OF CALIFORNIA

10-22-12
PLANS APPROVAL DATE

The State of California or its officers or agents shall not be responsible for the accuracy or completeness of scanned copies of this plan sheet.

ACCESSIBILITY DESIGN APPROVAL STAMP DOT / DES / OTA

PROJECT ID **0412000666**

Reviewed by: Y. A. WANG
Date: 12-06-12

CALIFORNIA STATE FIRE MARSHAL APPROVED

Approval of this plan does not authorize or approve any omission or deviation from applicable regulations. Final approval is subject to field inspection. One set of approved plans shall be available on the project site at all times.

Reviewed by: SPENCER MEYER
Approval date: 12-13-12

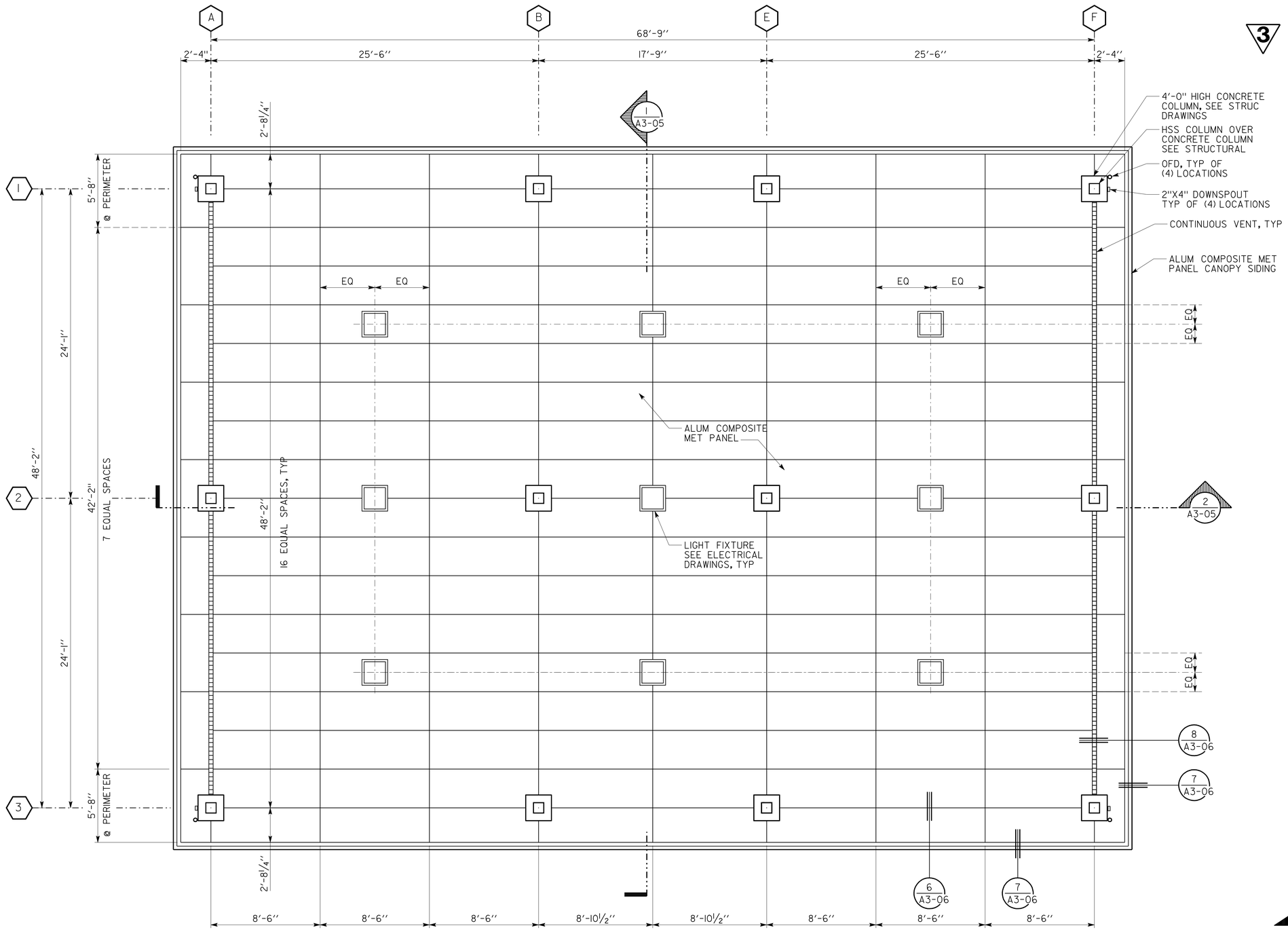

3 REVISED PER ADDENDUM No. 3 DATED JANUARY 4, 2013

PLAN NORTH

REFLECTED CEILING PLAN

SCALE ¼" = 1'-0"

DESIGN	BY R. QUIBIN/ C. NAKAHARA	CHECKED Q. WONG	
DETAILS	BY R. QUIBIN/ C. NAKAHARA	CHECKED Q. WONG	
QUANTITIES	BY	CHECKED	

STATE OF CALIFORNIA
DEPARTMENT OF TRANSPORTATION

DIVISION OF ENGINEERING SERVICES
ARCHITECTURAL AND STRUCTURAL DESIGN

BRIDGE NO. 33M5785
POST MILE 2.2

SFOBB MAINTENANCE COMPLEX

WASHRACK — REFLECTED CEILING PLAN

SHEET **A3-02**

a3_02_rcp.add
TAEMWW Imperial Rev. 7/10 28-DEC-2012 07:53

ORIGINAL SCALE IN INCHES FOR REDUCED PLANS 0 1 2 3

UNIT 3598
PROJECT NUMBER & PHASE 04120006661
EA 014081

DISREGARD PRINTS BEARING EARLIER REVISION DATES

REVISION DATES (PRELIMINARY STAGE ONLY): 02-28-12 04-26-12 05-08-12 05-17-12 11-27-12

SHEET X OF X

28-DEC-2012 07:53
a3_02_rcp.add

DIST.	COUNTY	ROUTE	POST MILES TOTAL PROJECT	SHEET NO.	TOTAL SHEETS
04	Ala	80	2.2	257	800

LICENSED ARCHITECT — 11-27-12 DATE

LICENSED ARCHITECT QUINCY J. WONG No. C-18849 Exp. 5-31-13 STATE OF CALIFORNIA

10-22-12
PLANS APPROVAL DATE

The State of California or its officers or agents shall not be responsible for the accuracy or completeness of scanned copies of this plan sheet.

ACCESSIBILITY DESIGN APPROVAL STAMP DOT / DES / OTA

PROJECT ID **0412000666**

Reviewed by: Y. A. WANG
Date: 12-06-12

CALIFORNIA STATE FIRE MARSHAL APPROVED

Approval of this plan does not authorize or approve any omission or deviation from applicable regulations. Final approval is subject to field inspection. One set of approved plans shall be available on the project site at all times.

Reviewed by: SPENCER MEYER
Approval date: 12-13-12

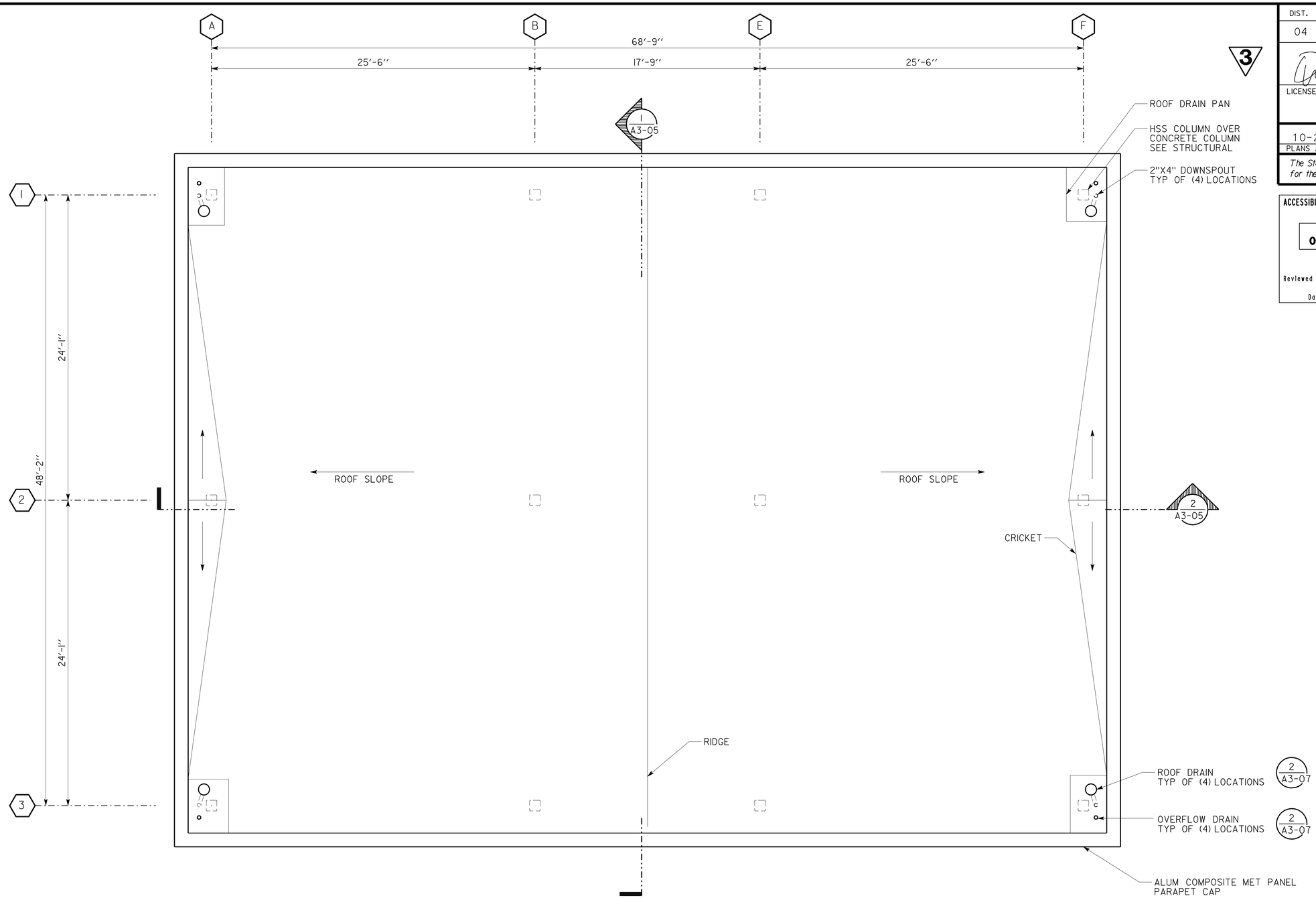

3 **REVISED PER ADDENDUM No. 3 DATED JANUARY 4, 2013**

N PLAN NORTH

ROOF PLAN

SCALE 1/4" = 1'-0"

DESIGN	BY R. QUIBIN/ C. NAKAHARA	CHECKED Q. WONG	
DETAILS	BY R. QUIBIN/ C. NAKAHARA	CHECKED Q. WONG	
QUANTITIES	BY	CHECKED	

STATE OF CALIFORNIA DEPARTMENT OF TRANSPORTATION

DIVISION OF ENGINEERING SERVICES ARCHITECTURAL AND STRUCTURAL DESIGN

BRIDGE NO. 33M5785
POST MILE 2.2

SFOBB MAINTENANCE COMPLEX

WASHRACK — ROOF PLAN

SHEET **A3-03**

a3_03_roof_plan.add
TAEMWW Imperial Rev. 7/10 28-DEC-2012 07:53

ORIGINAL SCALE IN INCHES FOR REDUCED PLANS 0 1 2 3

UNIT 3598
PROJECT NUMBER & PHASE 04120006661
EA 014081

DISREGARD PRINTS BEARING EARLIER REVISION DATES → 02-28-12 04-26-12 05-08-12 05-17-12 11-27-12

REVISION DATES (PRELIMINARY STAGE ONLY) SHEET X OF X

28-DEC-2012 07:53
a3_03_roof_plan.add

DIST.	COUNTY	ROUTE	POST MILES TOTAL PROJECT	SHEET NO.	TOTAL SHEETS
04	Ala	80	2.2	258	800

LICENSED ARCHITECT — 11-27-12 DATE

LICENSED ARCHITECT QUINCY J. WONG No. C-18849 Exp. 5-31-13 STATE OF CALIFORNIA

10-22-12
PLANS APPROVAL DATE

The State of California or its officers or agents shall not be responsible for the accuracy or completeness of scanned copies of this plan sheet.

ACCESSIBILITY DESIGN APPROVAL STAMP DOT / DES / OTA
PROJECT ID **0412000666**
Reviewed by: Y. A. WANG
Date: 12-06-12

CALIFORNIA STATE FIRE MARSHAL APPROVED
Approval of this plan does not authorize or approve any omission or deviation from applicable regulations. Final approval is subject to field inspection. One set of approved plans shall be available on the project site at all times.
Reviewed by: SPENCER MEYER
Approval date: 12-13-12

3

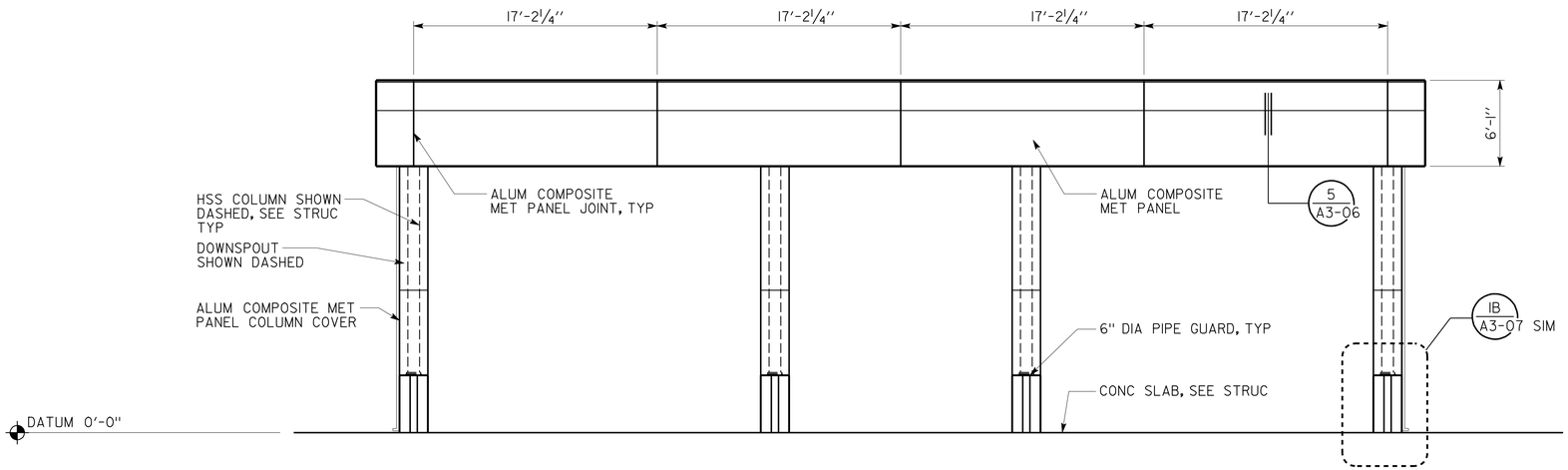

2 NORTH / SOUTH ELEVATION

SCALE 3/16"" = 1'-0"

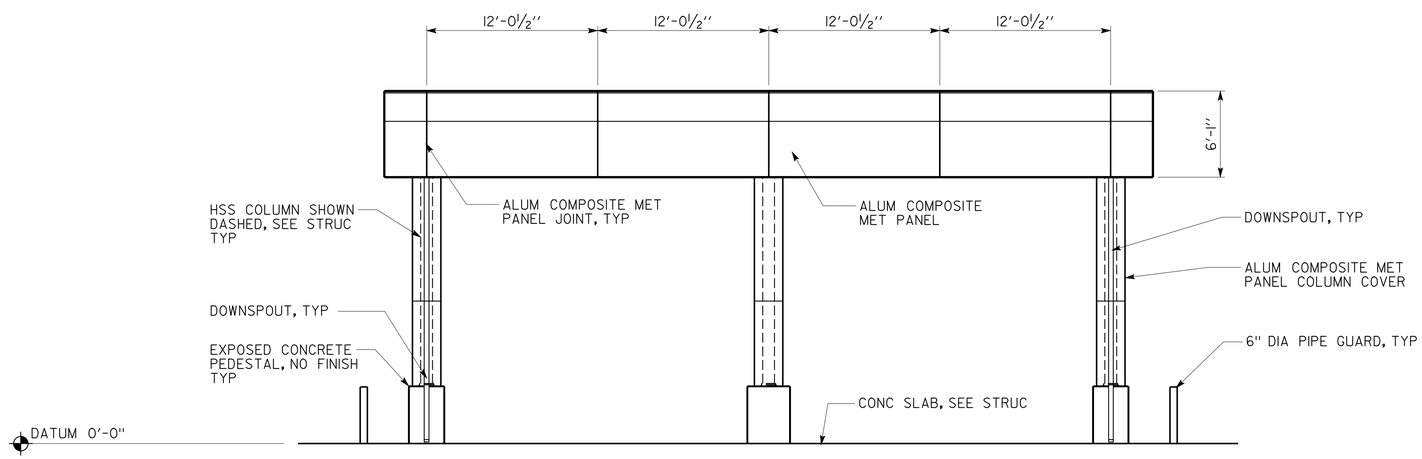

1 WEST / EAST ELEVATION

SCALE 3/16"" = 1'-0"

3 REVISED PER ADDENDUM No. 3 DATED JANUARY 4, 2013

DESIGN	BY R. QUIBIN/ C. NAKAHARA	CHECKED Q. WONG	
DETAILS	BY R. QUIBIN/ C. NAKAHARA	CHECKED Q. WONG	
QUANTITIES	BY	CHECKED	

STATE OF CALIFORNIA DEPARTMENT OF TRANSPORTATION

DIVISION OF ENGINEERING SERVICES ARCHITECTURAL AND STRUCTURAL DESIGN

BRIDGE NO. 33M5785
POST MILE 2.2

SFOBB MAINTENANCE COMPLEX
WASHRACK — ELEVATIONS

SHEET **A3-04**

a3_04_ELEV.add
TAEMWW Imperial Rev. 7/10 28-DEC-2012 08:09

ORIGINAL SCALE IN INCHES FOR REDUCED PLANS 0 1 2 3

UNIT 3598
PROJECT NUMBER & PHASE 04120006661
EA 014081

DISREGARD PRINTS BEARING EARLIER REVISION DATES → REVISION DATES (PRELIMINARY STAGE ONLY) 02-28-12 04-26-12 05-08-12 05-17-12 11-27-12

SHEET X OF X

28-DEC-2012 08:09
a3_04_ELEV.add

DIST.	COUNTY	ROUTE	POST MILES TOTAL PROJECT	SHEET NO.	TOTAL SHEETS
04	Ala	80	2.2	259	800

LICENSED ARCHITECT — 11-27-12 DATE

LICENSED ARCHITECT QUINCY J. WONG No. C-18849 Exp. 5-31-13 STATE OF CALIFORNIA

10-22-12
PLANS APPROVAL DATE

The State of California or its officers or agents shall not be responsible for the accuracy or completeness of scanned copies of this plan sheet.

ACCESSIBILITY DESIGN APPROVAL STAMP DOT / DES / OTA
PROJECT ID **0412000666**
Reviewed by: Y. A. WANG
Date: 12-06-12

CALIFORNIA STATE FIRE MARSHAL APPROVED
Approval of this plan does not authorize or approve any omission or deviation from applicable regulations. Final approval is subject to field inspection. One set of approved plans shall be available on the project site at all times.
Reviewed by: SPENCER MEYER
Approval date: 12-13-12

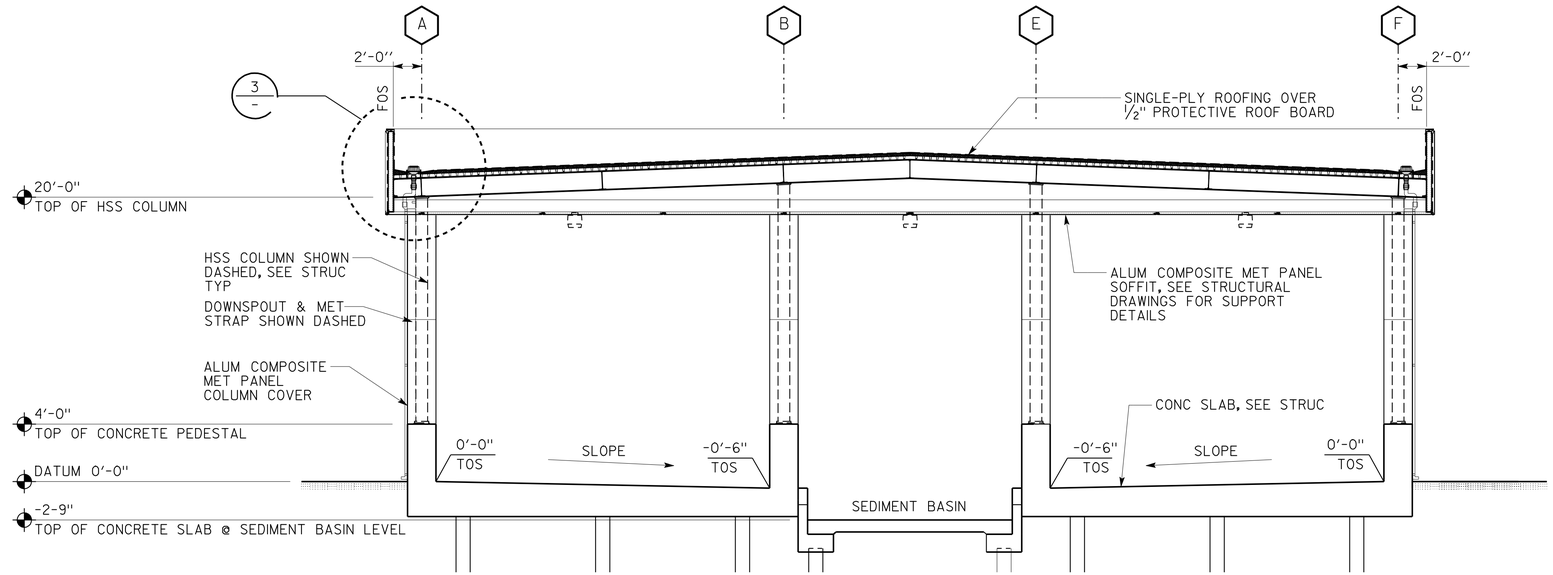

2 BUILDING SECTION

SCALE 3/16 " = 1'-0"

3

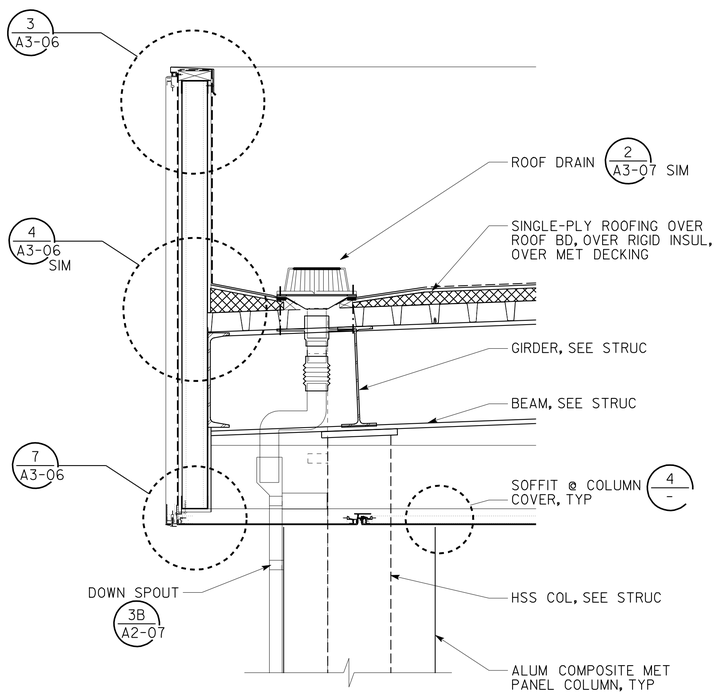

3 ROOF PARAPET DETAIL

SCALE 1" = 1'-0"

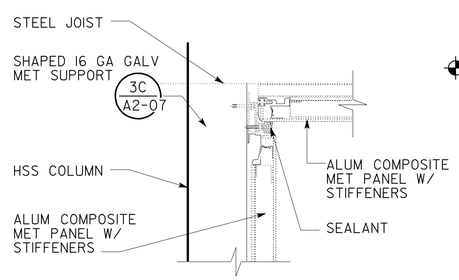

4 SOFFIT @ COLUMN COVER

SCALE 2 " = 1'-0"

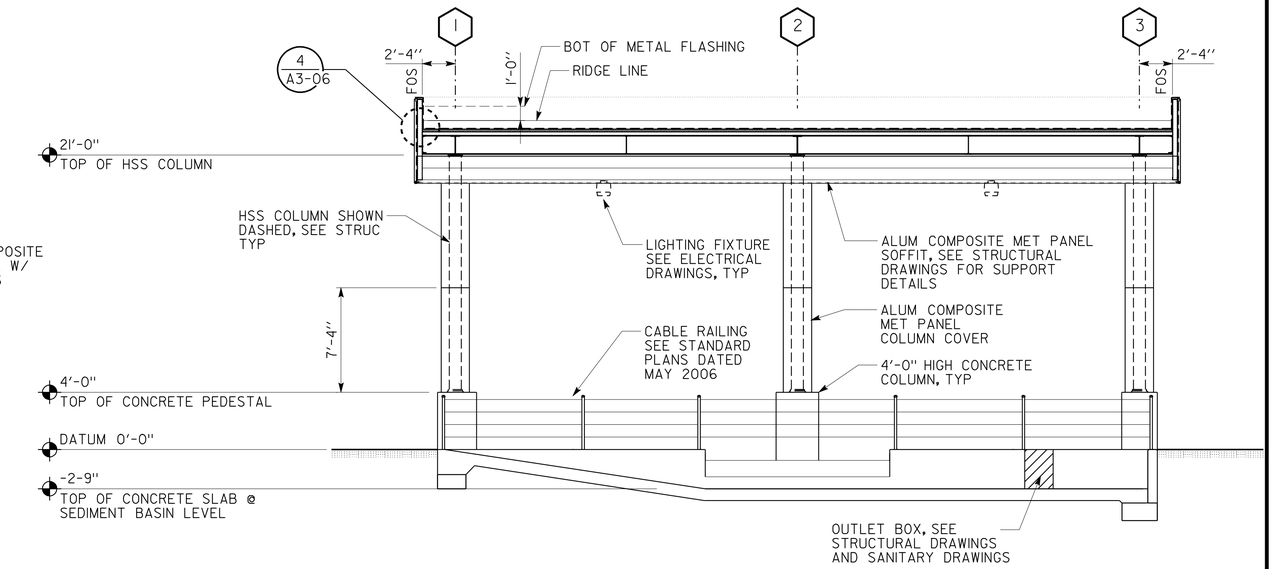

1 BUILDING SECTION

SCALE 3/16" = 1'-0"

3 **REVISED PER ADDENDUM No. 3 DATED JANUARY 4, 2013**

	BY	CHECKED
DESIGN	R. QUIBIN/ C. NAKAHARA	Q. WONG
DETAILS	R. QUIBIN/ C. NAKAHARA	Q. WONG
QUANTITIES		

STATE OF CALIFORNIA DEPARTMENT OF TRANSPORTATION

DIVISION OF ENGINEERING SERVICES ARCHITECTURAL AND STRUCTURAL DESIGN

BRIDGE NO. 33M5785
POST MILE 2.2

SFOBB MAINTENANCE COMPLEX
WASHRACK — BUILDING SECTIONS

SHEET **A3-05**

a3_05_bldg_sections.add
TAEMWW Imperial Rev. 7/10 28-DEC-2012 07:58

ORIGINAL SCALE IN INCHES FOR REDUCED PLANS 0 1 2 3

UNIT 3598
PROJECT NUMBER & PHASE 04120006661
EA 014081

DISREGARD PRINTS BEARING EARLIER REVISION DATES
REVISION DATES (PRELIMINARY STAGE ONLY) 02-28-12 04-26-12 05-08-12 05-17-12 11-27-12
SHEET X OF X

28-DEC-2012 07:58
a3_05_bldg_sections.add

DIST.	COUNTY	ROUTE	POST MILES TOTAL PROJECT	SHEET NO.	TOTAL SHEETS
04	Ala	80	2.2	260	800

LICENSED ARCHITECT — 11-27-12 DATE

LICENSED ARCHITECT QUINCY J. WONG No. C-18849 Exp. 5-31-13 STATE OF CALIFORNIA

10-22-12
PLANS APPROVAL DATE

The State of California or its officers or agents shall not be responsible for the accuracy or completeness of scanned copies of this plan sheet.

ACCESSIBILITY DESIGN APPROVAL STAMP DOT / DES / OTA
PROJECT ID 0412000666
Reviewed by: Y. A. WANG
Date: 12-06-12

CALIFORNIA STATE FIRE MARSHAL APPROVED
Approval of this plan does not authorize or approve any omission or deviation from applicable regulations. Final approval is subject to field inspection. One set of approved plans shall be available on the project site at all times.
Reviewed by: SPENCER MEYER
Approval date: 12-13-12

NOTE

NEOPRENE TAPE TO BE APPLIED BETWEEN DISSIMILAR METALS.

3

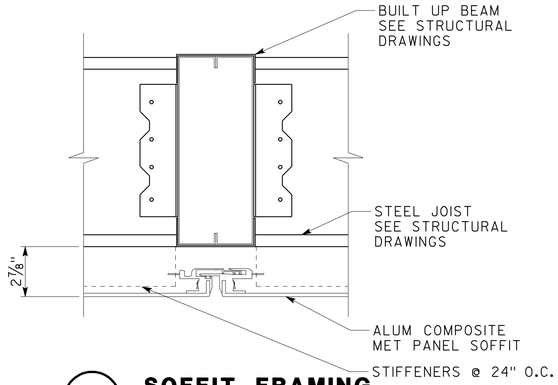

6 SOFFIT FRAMING
SCALE 3" = 1'-0"

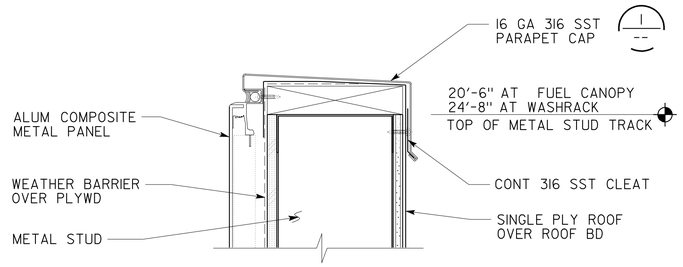

3 PARAPET CAP
NOT TO SCALE

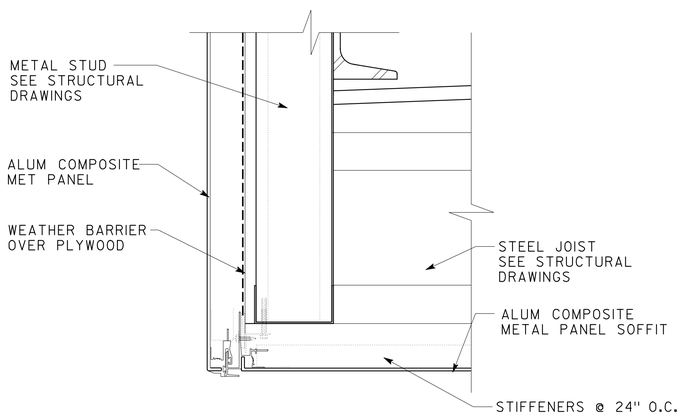

7 SOFFIT FACE
SCALE 3" = 1'-0"

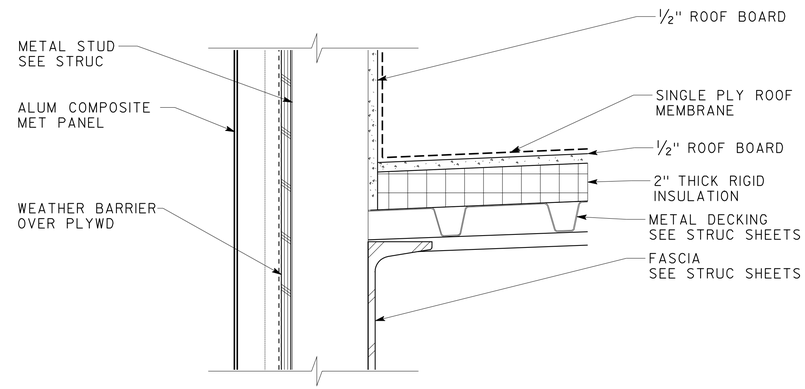

4 SINGLE PLY ROOFING AT PARAPET
SCALE: 3" = 1'-0"

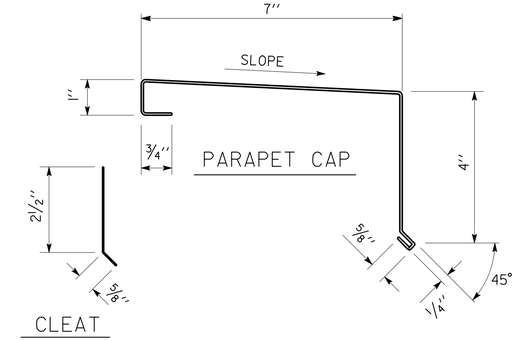

1 PARAPET CAP AND CLEAT
SCALE: 6" = 1'-0"

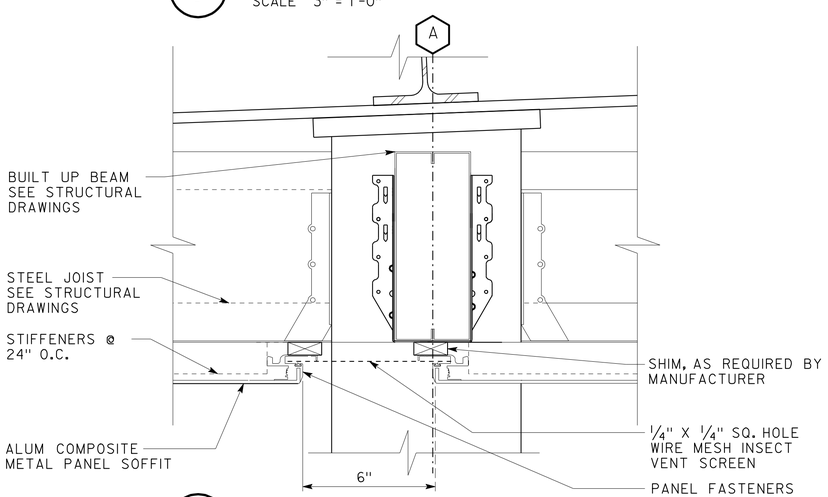

8 SOFFIT VENT
SCALE 3" = 1'-0"

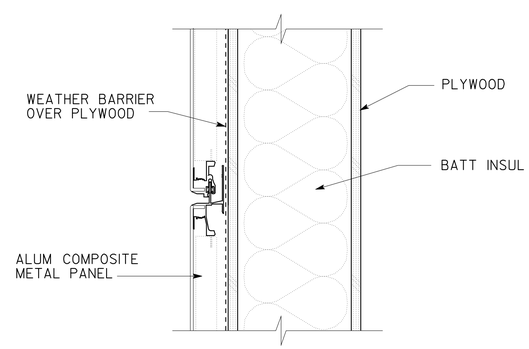

5 ALUMINUM COMPOSITE METAL PANEL HORIZONTAL JOINT
SCALE: 3" = 1'-0"

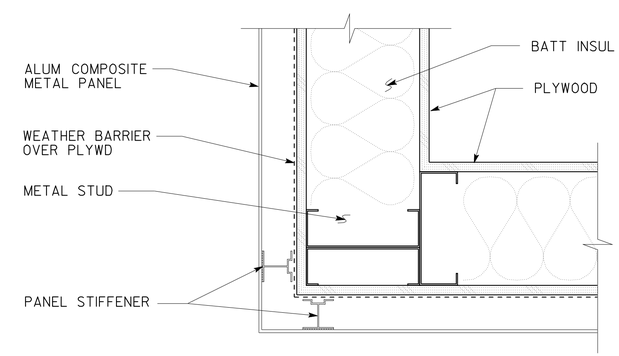

2 ALUMINUM COMPOSITE METAL PANEL OUTSIDE CORNER
SCALE: 3" = 1'-0"

3 REVISED PER ADDENDUM No. 3 DATED JANUARY 4, 2013

	BY	CHECKED
DESIGN	R. QUIBIN/ C. NAKAHARA	Q. WONG
DETAILS	R. QUIBIN/ C. NAKAHARA	Q. WONG
QUANTITIES		

STATE OF CALIFORNIA DEPARTMENT OF TRANSPORTATION

DIVISION OF ENGINEERING SERVICES ARCHITECTURAL AND STRUCTURAL DESIGN

BRIDGE NO. 33M5785
POST MILE 2.2

SFOBB MAINTENANCE COMPLEX
WASHRACK — BUILDING DETAILS

SHEET **A3-06**

a3_06_details.add
TAEMWW Imperial Rev. 7/10 28-DEC-2012 07:58

ORIGINAL SCALE IN INCHES FOR REDUCED PLANS 0 1 2 3

UNIT 3598
PROJECT NUMBER & PHASE 04120006661
EA 014081

DISREGARD PRINTS BEARING EARLIER REVISION DATES → 02-28-12 04-26-12 05-08-12 05-17-12 11-27-12

SHEET X OF X

28-DEC-2012 07:58
a3_06_details.add

DIST.	COUNTY	ROUTE	POST MILES TOTAL PROJECT	SHEET NO.	TOTAL SHEETS
04	Ala	80	2.2	261	800

LICENSED ARCHITECT — 11-27-12 DATE

LICENSED ARCHITECT QUINCY J. WONG No. C-18849 Exp. 5-31-13 STATE OF CALIFORNIA

10-22-12
PLANS APPROVAL DATE

The State of California or its officers or agents shall not be responsible for the accuracy or completeness of scanned copies of this plan sheet.

ACCESSIBILITY DESIGN APPROVAL STAMP DOT / DES / OTA
PROJECT ID 0412000666
Reviewed by: Y. A. WANG
Date: 12-06-12

CALIFORNIA STATE FIRE MARSHAL APPROVED
Approval of this plan does not authorize or approve any omission or deviation from applicable regulations. Final approval is subject to field inspection. One set of approved plans shall be available on the project site at all times.
Reviewed by: SPENCER MEYER
Approval date: 12-13-12

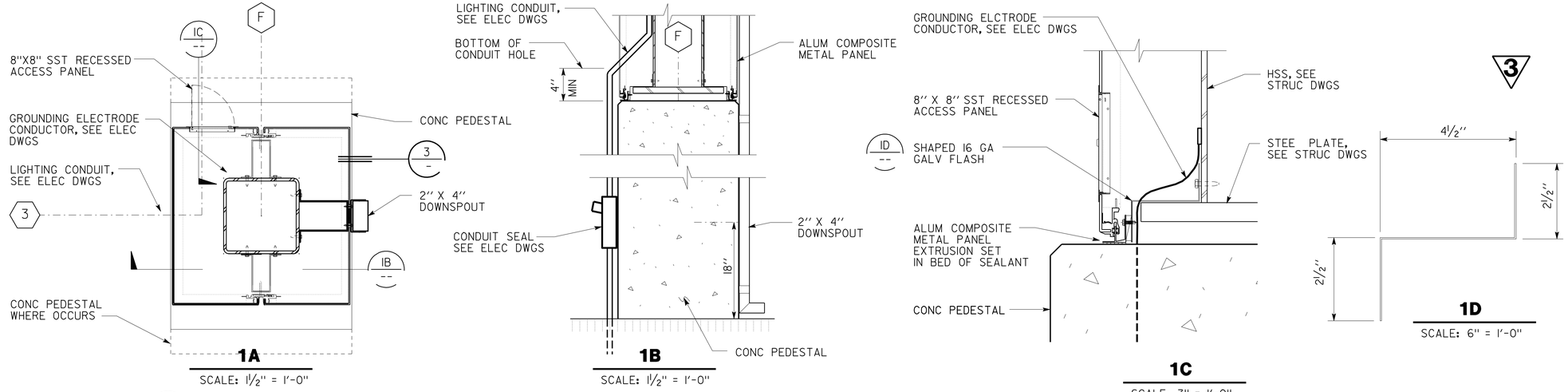

1A SCALE: 1½" = 1'-0"

1B SCALE: 1½" = 1'-0"

1C SCALE: 3" = 1'-0"

1D SCALE: 6" = 1'-0"

1 ELECTRICAL COMPONENTS AT COLUMN

SCALE: AS SHOWN

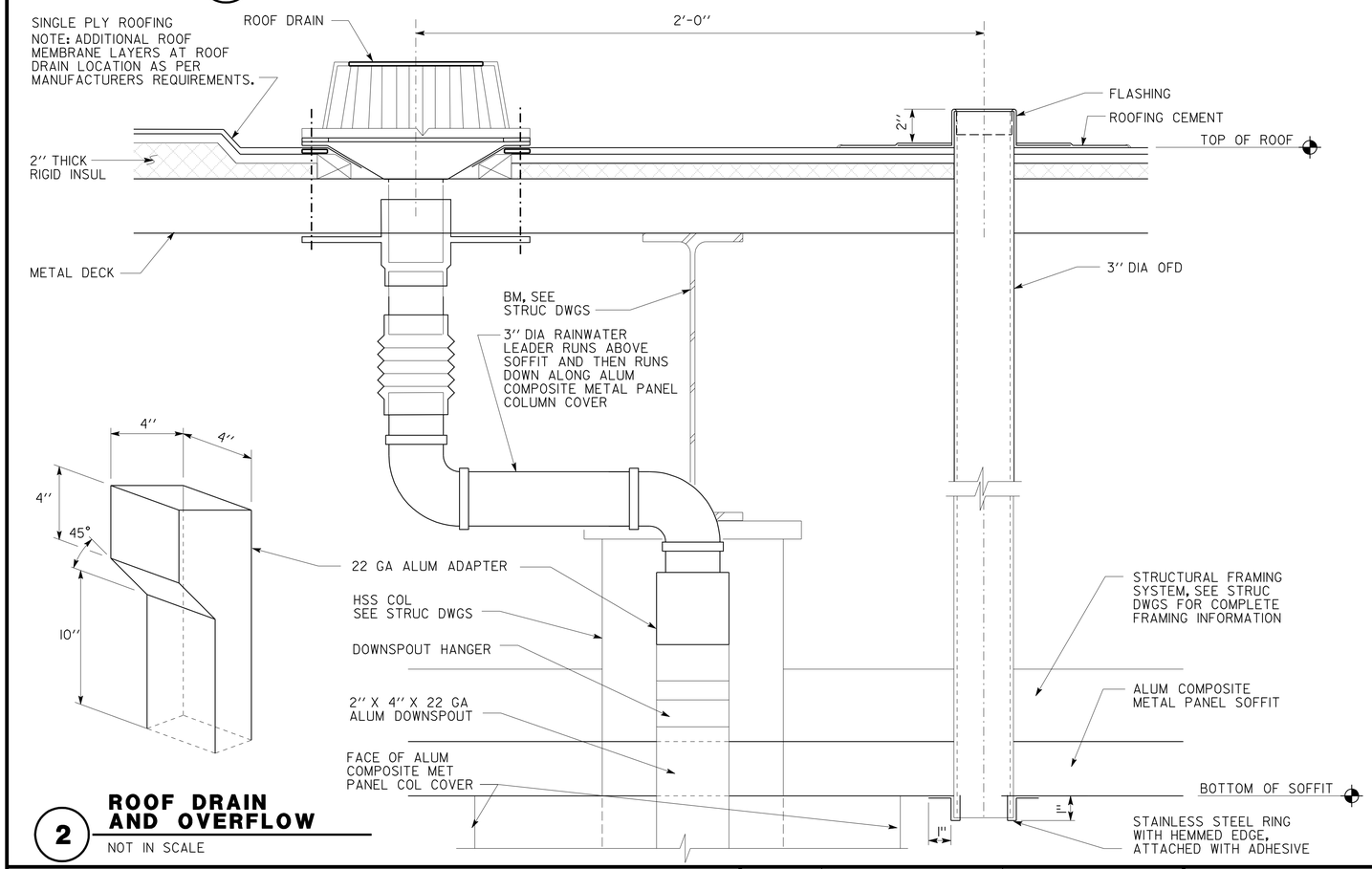

2 ROOF DRAIN AND OVERFLOW

NOT IN SCALE

NOTE

1. NEOPRENE TAPE TO BE APPLIED BETWEEN DISSIMILAR METALS.

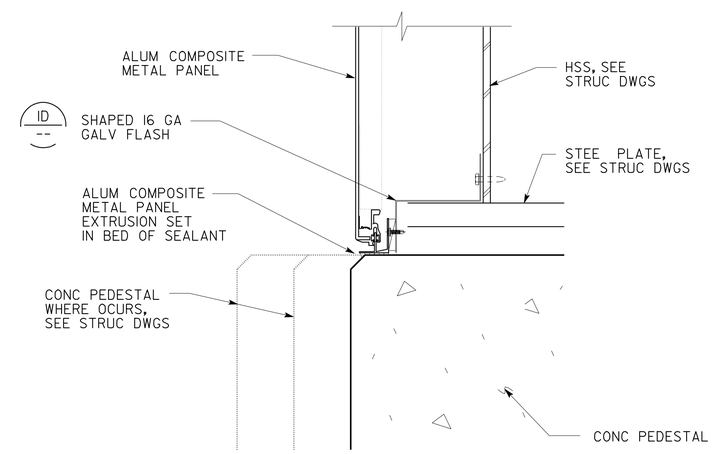

3 ALUM COMPOSITE METAL PANEL AT PEDESTAL

SCALE: AS SHOWN

3 REVISED PER ADDENDUM No. 3 DATED JANUARY 4, 2013

DESIGN	BY R. QUIBIN/ C. NAKAHARA	CHECKED Q. WONG	
DETAILS	BY R. QUIBIN/ C. NAKAHARA	CHECKED Q. WONG	
QUANTITIES	BY	CHECKED	

STATE OF CALIFORNIA DEPARTMENT OF TRANSPORTATION

DIVISION OF ENGINEERING SERVICES ARCHITECTURAL AND STRUCTURAL DESIGN

BRIDGE NO. 33M5785 — POST MILE 2.2

SFOBB MAINTENANCE COMPLEX

WASHRACK — BUILDING DETAILS

SHEET **A3-07**

a3_07_details.dgn
TAEMWW Imperial Rev. 7/10 28-DEC-2012 07:58

ORIGINAL SCALE IN INCHES FOR REDUCED PLANS 0 1 2 3

UNIT 3598
PROJECT NUMBER & PHASE 04120006661
EA 014081

DISREGARD PRINTS BEARING EARLIER REVISION DATES

REVISION DATES (PRELIMINARY STAGE ONLY): 02-28-12 04-26-12 05-08-12 05-17-12 11-27-12

SHEET X OF X

28-DEC-2012 07:58
a3_07_details.dgn

DIST.	COUNTY	ROUTE	POST MILES TOTAL PROJECT	SHEET NO.	TOTAL SHEETS
04	Ala	80	2.2	262	800

LICENSED ARCHITECT — 11-27-12 DATE

LICENSED ARCHITECT QUINCY J. WONG No. C-18849 Exp. 5-31-13 STATE OF CALIFORNIA

10-22-12
PLANS APPROVAL DATE

The State of California or its officers or agents shall not be responsible for the accuracy or completeness of scanned copies of this plan sheet.

ACCESSIBILITY DESIGN APPROVAL STAMP DOT / DES / OTA
PROJECT ID **0412000666**
Reviewed by: Y. A. WANG
Date: 12-06-12

CALIFORNIA STATE FIRE MARSHAL APPROVED
Approval of this plan does not authorize or approve any omission or deviation from applicable regulations. Final approval is subject to field inspection. One set of approved plans shall be available on the project site at all times.
Reviewed by: SPENCER MEYER
Approval date: 12-13-12

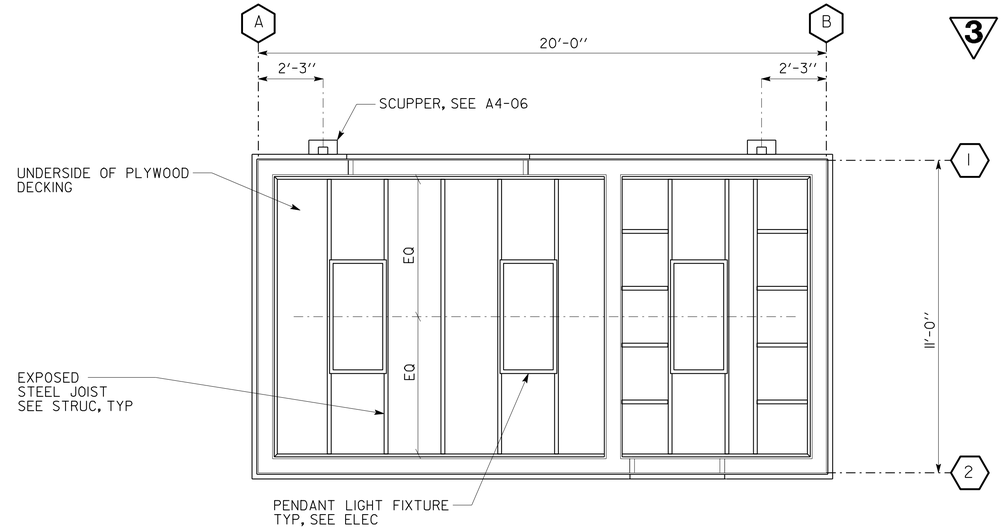

REFLECTED CEILING PLAN

SCALE 1/4" = 1'-0"

PLAN NORTH

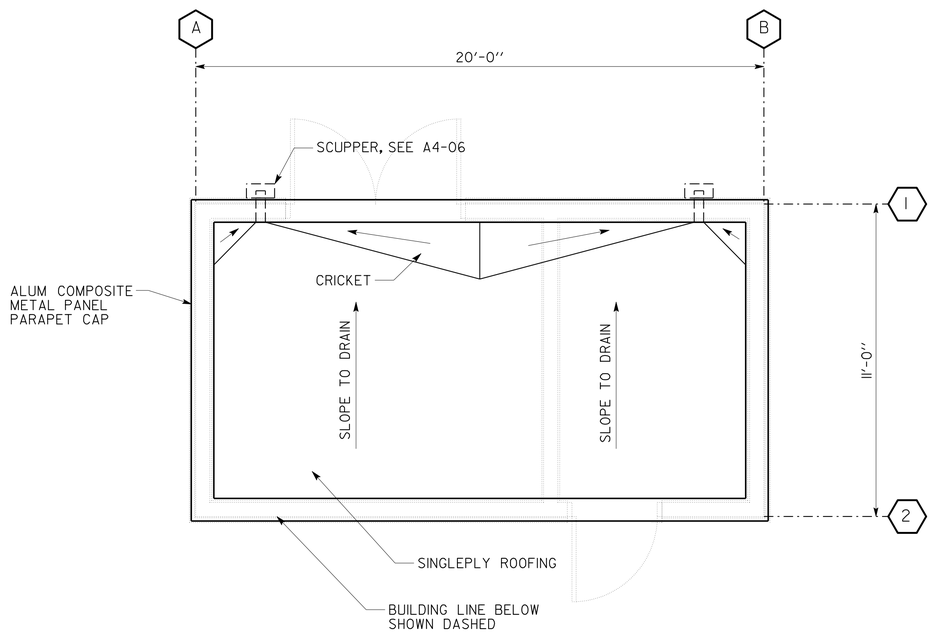

ROOF PLAN

SCALE 1/4" = 1'-0"

PLAN NORTH

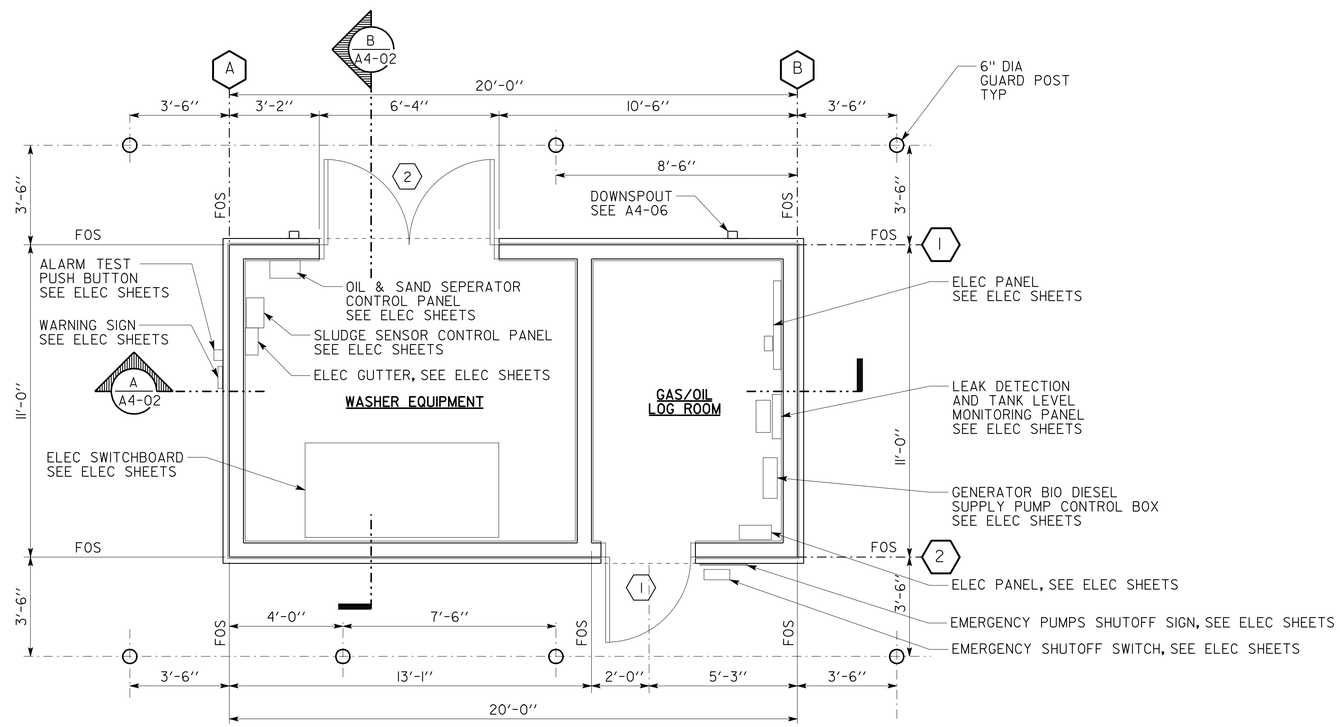

FLOOR PLAN

SCALE 3/8" = 1'-0"

PLAN NORTH

3 REVISED PER ADDENDUM No. 3 DATED JANUARY 4, 2013

	BY	CHECKED
DESIGN	R. QUIBIN/ C. NAKAHARA	Q. WONG
DETAILS	R. QUIBIN/ C. NAKAHARA	Q. WONG
QUANTITIES	BY	CHECKED

STATE OF CALIFORNIA
DEPARTMENT OF TRANSPORTATION

DIVISION OF ENGINEERING SERVICES
ARCHITECTURAL AND STRUCTURAL DESIGN

BRIDGE NO. 33M5785
POST MILE 2.2

SFOBB MAINTENANCE COMPLEX
WASHRACK
FLOOR PLAN

SHEET **A4-01**

a4_01_fp.add
TAEMWW Imperial Rev. 7/10 03-JAN-2013 10:23

ORIGINAL SCALE IN INCHES FOR REDUCED PLANS 0 1 2 3

UNIT 3598
PROJECT NUMBER & PHASE 04120006661
EA 014081

DISREGARD PRINTS BEARING EARLIER REVISION DATES

REVISION DATES (PRELIMINARY STAGE ONLY): 02-28-12 04-26-12 05-08-12 05-17-12 11-27-12

SHEET X OF X

03-JAN-2013 10:23
a4_01_fp.add

DIST.	COUNTY	ROUTE	POST MILES TOTAL PROJECT	SHEET NO.	TOTAL SHEETS
04	Ala	80	2.2	263	800

LICENSED ARCHITECT — 11-27-12 DATE

LICENSED ARCHITECT QUINCY J. WONG No. C-18849 Exp. 5-31-13 STATE OF CALIFORNIA

10-22-12
PLANS APPROVAL DATE

The State of California or its officers or agents shall not be responsible for the accuracy or completeness of scanned copies of this plan sheet.

ACCESSIBILITY DESIGN APPROVAL STAMP DOT / DES / OTA
PROJECT ID **0412000666**
Reviewed by: Y. A. WANG
Date: 12-06-12

CALIFORNIA STATE FIRE MARSHAL APPROVED
Approval of this plan does not authorize or approve any omission or deviation from applicable regulations. Final approval is subject to field inspection. One set of approved plans shall be available on the project site at all times.
Reviewed by: SPENCER MEYER
Approval date: 12-13-12

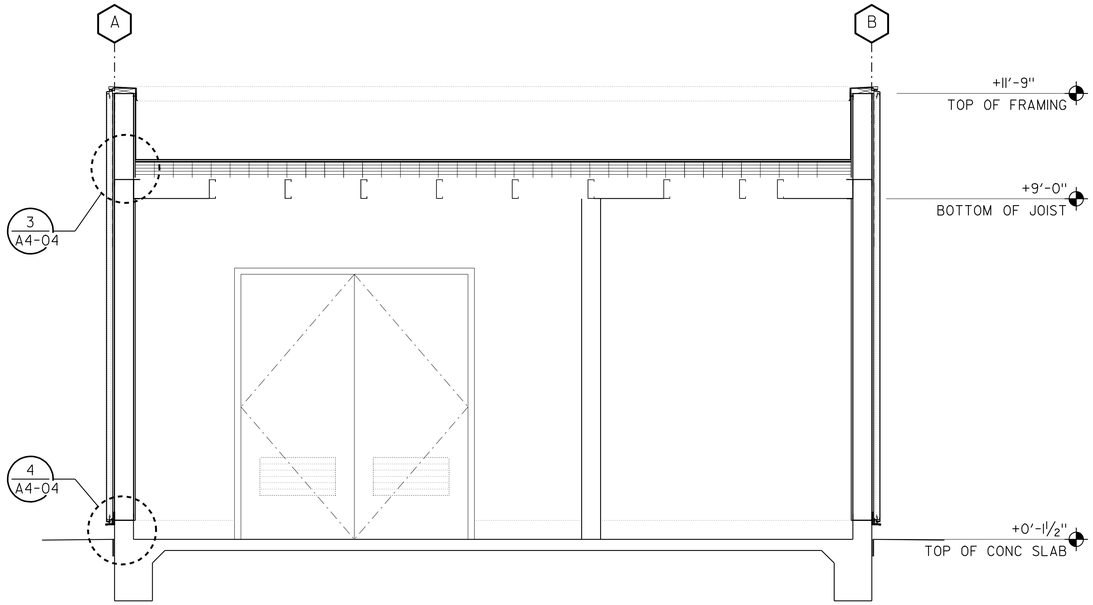

A BUILDING SECTION
SCALE ½" = 1'-0"

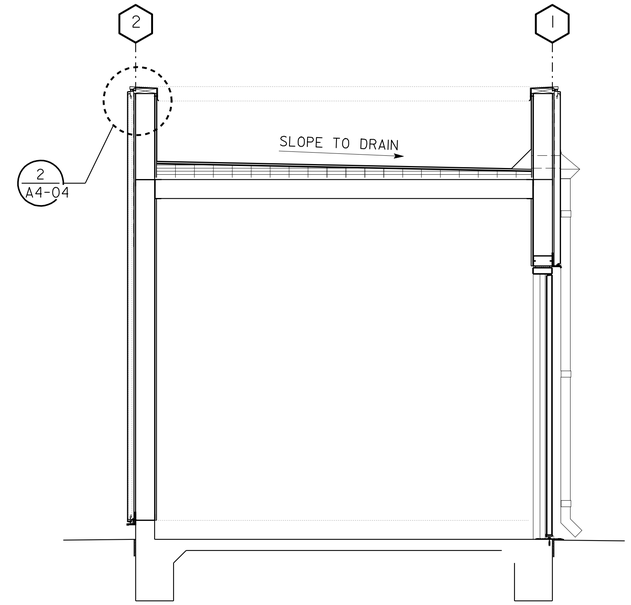

B BUILDING SECTION
SCALE ½" = 1'-0"

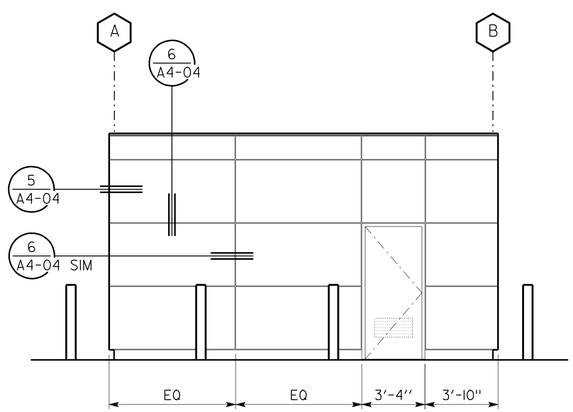

EAST ELEVATION
SCALE ¼" = 1'-0"

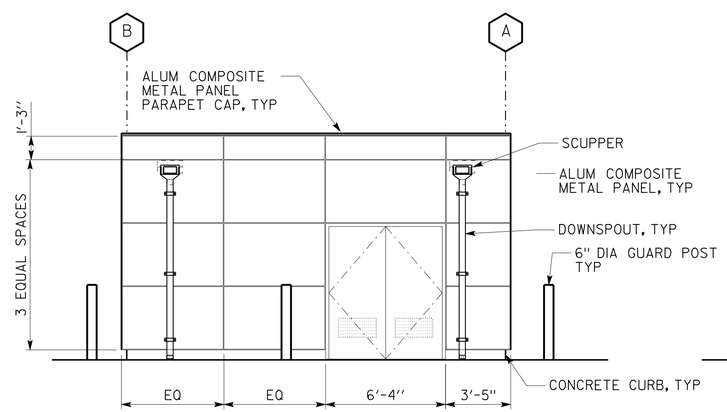

WEST ELEVATION
SCALE ¼" = 1'-0"

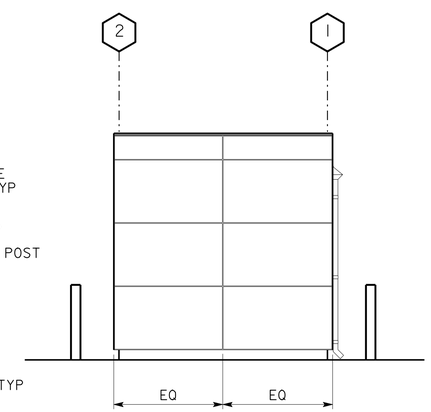

NORTH ELEVATION
SCALE ¼" = 1'-0"

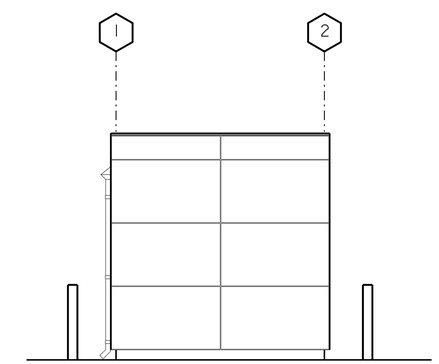

SOUTH ELEVATION
SCALE ¼" = 1'-0"

3 REVISED PER ADDENDUM No. 3 DATED JANUARY 4, 2013

	BY	CHECKED
DESIGN	R. QUIBIN/ C. NAKAHARA	Q. WONG
DETAILS	R. QUIBIN/ C. NAKAHARA	Q. WONG
QUANTITIES		

STATE OF CALIFORNIA DEPARTMENT OF TRANSPORTATION

DIVISION OF ENGINEERING SERVICES ARCHITECTURAL AND STRUCTURAL DESIGN

BRIDGE NO. 33M5785
POST MILE 2.2

SFOBB MAINTENANCE COMPLEX
WASH/FUEL BUILDING
EXTERIOR ELEVATIONS AND BUILDING SECTIONS

SHEET **A4-02**

a4_02_ext_elev.add
TAEMWW Imperial Rev. 7/10 03-JAN-2013 10:23

ORIGINAL SCALE IN INCHES FOR REDUCED PLANS 0 1 2 3

UNIT 3598
PROJECT NUMBER & PHASE 04120006661
EA 014081

DISREGARD PRINTS BEARING EARLIER REVISION DATES → 02-28-12 04-26-12 05-08-12 05-17-12 11-27-12

REVISION DATES (PRELIMINARY STAGE ONLY) SHEET X OF X

03-JAN-2013 10:23
a4_02_ext_elev.add

GAS/OIL LOG ROOM

ROOM FINISH SCHEDULE

No.	ROOM NAME	FLOOR MAT.	FLOOR FIN.	BASE MAT.	BASE FIN.	WALLS NORTH MAT.	WALLS NORTH FIN.	WALLS EAST MAT.	WALLS EAST FIN.	WALLS SOUTH MAT.	WALLS SOUTH FIN.	WALLS WEST MAT.	WALLS WEST FIN.	CEILING MAT.	CEILING FIN.	CEILING HT.	REMARKS
--	GAS/OIL LOG ROOM	F-1	-- --	B-1	-	W-1	-	W-1	-	W-1	-	W-1	-	C-1	-	9'-0"	CLG HEIGHT TO BOTTOM FACE OF EXPOSED JOIST
--	WASHER EQUIPMENT	F-1	-- --	B-1	-	W-1	-	W-1	-	W-1	-	W-1	-	C-1	-	9'-0"	CLG HEIGHT TO BOTTOM FACE OF EXPOSED JOIST

DOOR SCHEDULE

No.	DOOR NO.	DOOR TYPE	NOMINAL DOOR OPENING SIZE WIDTH	HEIGHT	THICK	DOOR MTL	DOOR COLOR	FRAME MTL	FRAME TYPE	SIGNAGE DETAIL	NAME PLATE	HARDWARE GROUP	DETAILS HEAD	JAMB	THRESH	REMARKS
--	1	A	3'-0"	7'-0"	1¾"	ALUM	-	METAL	ALUM	1/A0-3.3 & 6/A0-3.3 & 2/A4-03	GAS/OIL LOG ROOM	7	2/A4-05	3/A4-05	1/A4-05	
	2	B	6'-0"	7'-0"	1¾"	ALUM	-	METAL	ALUM	1/A0-3.3 & 6/A0-3.3 & 2/A4-03	WASHER EQUIPMENT	5	2/A4-05	3/A4-05	1/A4-05	

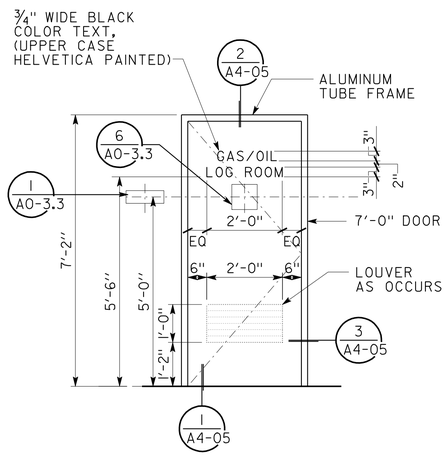

TYPE A
ALUMINUM DOOR

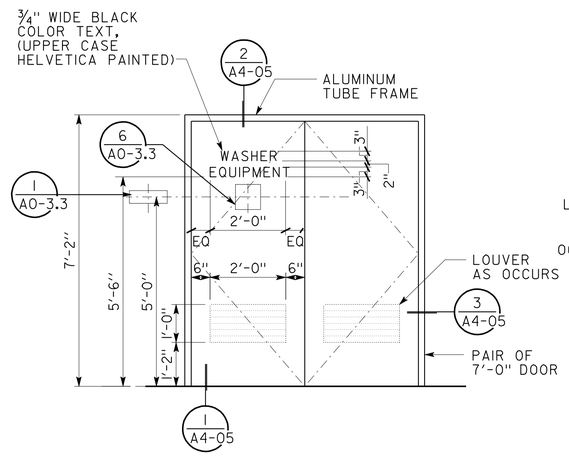

TYPE B
ALUMINUM DOOR (PAIR DOORS)

DOOR TYPES

SCALE ½" = 1'-0"

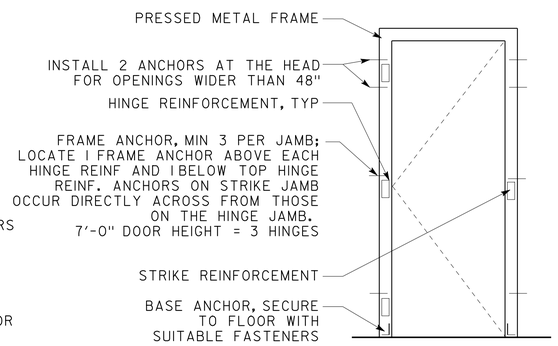

DOOR FRAME ANCHORAGE

NOT TO SCALE

ROOM FINISH TYPES

FLOOR
F-1 CONCRETE W/ HARDENER AND SEALER

BASE
B-1 CONCRETE CURB W/ HARDENER AND SEALER

WALLS (INTERIOR)
W-1 EXPOSED ½" OSB BOARD, PAINTED, COLOR # 36440

CEILING
C-1 EXPOSED PLYWOOD DECK OVER METAL JOISTS, PAINTED, COLOR #36440

NOTES:

1. COLORS NUMBERS LISTED ARE FEDERAL STANDARD COLOR NUMBERS
2. OSB = ORIENTED STRAND BOARD

3 REVISED PER ADDENDUM No. 3 DATED JANUARY 4, 2013

3

DIST.	COUNTY	ROUTE	POST MILES TOTAL PROJECT	SHEET NO.	TOTAL SHEETS
04	Ala	80	2.2	264	800

LICENSED ARCHITECT — DATE 11-27-12

LICENSED ARCHITECT QUINCY J. WONG No. C-18849 Exp. 5-31-13 STATE OF CALIFORNIA

10-22-12
PLANS APPROVAL DATE

The State of California or its officers or agents shall not be responsible for the accuracy or completeness of scanned copies of this plan sheet.

ACCESSIBILITY DESIGN APPROVAL STAMP DOT / DES / OTA
PROJECT ID 0412000666
Reviewed by: Y. A. WANG
Date: 12-06-12

CALIFORNIA STATE FIRE MARSHAL APPROVED
Approval of this plan does not authorize or approve any omission or deviation from applicable regulations. Final approval is subject to field inspection. One set of approved plans shall be available on the project site at all times.
Reviewed by: SPENCER MEYER
Approval date: 12-13-12

DESIGN	BY R. QUIBIN/ C. NAKAHARA	CHECKED Q. WONG	
DETAILS	BY R. QUIBIN/ C. NAKAHARA	CHECKED Q. WONG	
QUANTITIES	BY	CHECKED	

STATE OF CALIFORNIA DEPARTMENT OF TRANSPORTATION

DIVISION OF ENGINEERING SERVICES ARCHITECTURAL AND STRUCTURAL DESIGN

BRIDGE NO. 33M5785
POST MILE 2.2

SFOBB MAINTENANCE COMPLEX
FUEL ISLAND
DOOR SCHEDULE AND FINISH SCHEDULE

SHEET A4-03

a4_03_fin_door_schedules.add
TAEMWW Imperial Rev. 7/10 02-JAN-2013 07:19

ORIGINAL SCALE IN INCHES FOR REDUCED PLANS 0 1 2 3

UNIT 3598
PROJECT NUMBER & PHASE 04120006661
EA 014081

DISREGARD PRINTS BEARING EARLIER REVISION DATES
REVISION DATES (PRELIMINARY STAGE ONLY) 02-28-12 04-26-12 05-08-12 05-17-12 06-28-12 11-2-12
SHEET X OF X

02-JAN-2013 07:19
a4_03_fin_door_schedules.add

DIST.	COUNTY	ROUTE	POST MILES TOTAL PROJECT	SHEET NO.	TOTAL SHEETS
04	Ala	80	2.2	265	800

LICENSED ARCHITECT — 11-27-12 DATE

LICENSED ARCHITECT QUINCY J. WONG No. C-18849 Exp. 5-31-13 STATE OF CALIFORNIA

10-22-12
PLANS APPROVAL DATE

The State of California or its officers or agents shall not be responsible for the accuracy or completeness of scanned copies of this plan sheet.

ACCESSIBILITY DESIGN APPROVAL STAMP DOT / DES / OTA
PROJECT ID **0400000038**
Reviewed by: Y. A. WANG
Date: 12-06-12

CALIFORNIA STATE FIRE MARSHAL APPROVED
Approval of this plan does not authorize or approve any omission or deviation from applicable regulations. Final approval is subject to field inspection. One set of approved plans shall be available on the project site at all times.
Reviewed by: SPENCER MEYER
Approval date: 12-13-12

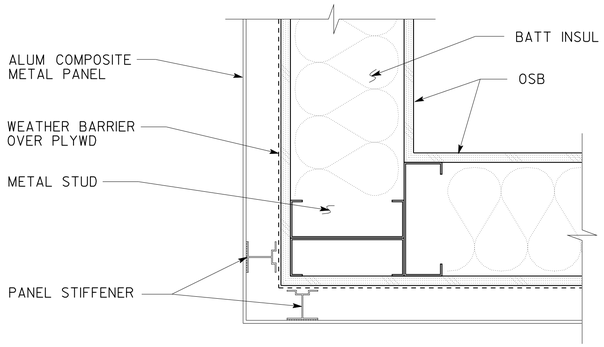

5 ALUM COMPOSITE PANEL OUTSIDE CORNER DETAIL
SCALE: 3" = 1'-0"

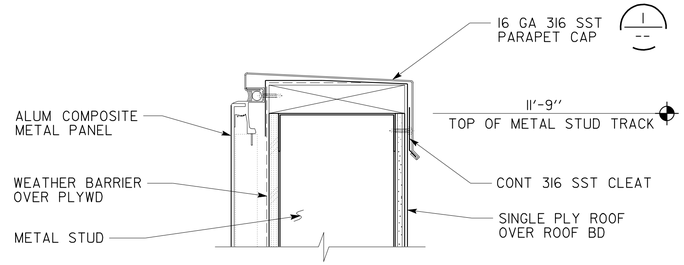

2 PARAPET CAP
SCALE: 3" = 1'-0"

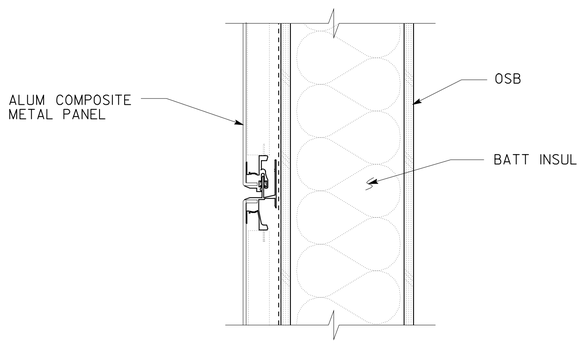

6 ALUM COMPOSITE PANEL HORIZONTAL JOINT DETAIL
SCALE: 3" = 1'-0"

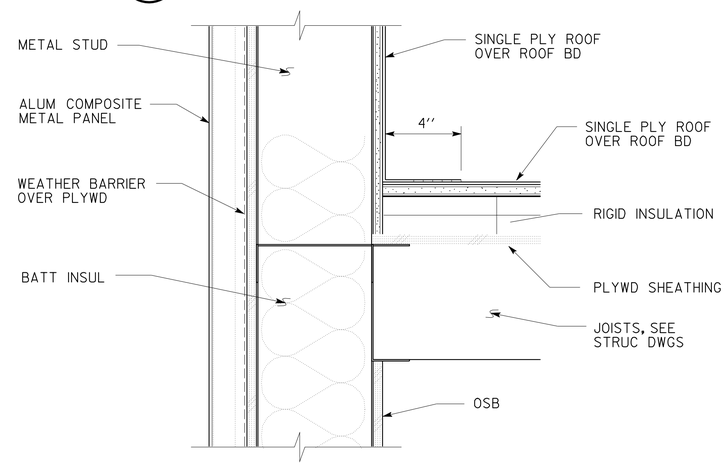

3 SINGLE PLY DETAIL AT PARAPET
SCALE: 3" = 1'-0"

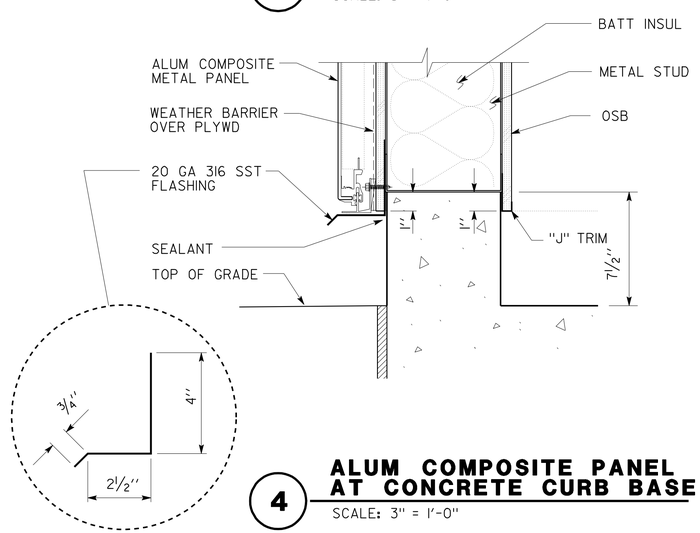

4 ALUM COMPOSITE PANEL AT CONCRETE CURB BASE
SCALE: 3" = 1'-0"

NOTE:

NEOPRENE TAPE TO BE APPLIED BETWEEN DISSIMILIAR METALS.

ABBREVIATION:

OSB = ORIENTED STRAND BOARD

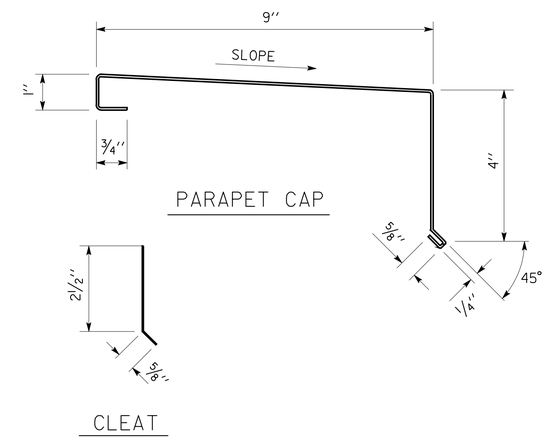

1 PARAPET CAP AND CLEAT
SCALE: 3" = 1'-0"

3 REVISED PER ADDENDUM No. 3 DATED JANUARY 4, 2013

	BY	CHECKED
DESIGN	R. QUIBIN/ C. NAKAHARA	Q. WONG
DETAILS	R. QUIBIN/ C. NAKAHARA	Q. WONG
QUANTITIES		

STATE OF CALIFORNIA DEPARTMENT OF TRANSPORTATION

DIVISION OF ENGINEERING SERVICES ARCHITECTURAL AND STRUCTURAL DESIGN

BRIDGE NO. 33M5785
POST MILE 2.2

SFOBB MAINTENANCE COMPLEX
WASH/FUEL BUILDING
BUILDING DETAILS

SHEET **A4-04**

a4_04_details.add
TAEMWW Imperial Rev. 7/10 03-JAN-2013 10:23

ORIGINAL SCALE IN INCHES FOR REDUCED PLANS 0 1 2 3

UNIT 3598
PROJECT NUMBER & PHASE 04120006661
EA 014081

DISREGARD PRINTS BEARING EARLIER REVISION DATES → 02-28-12 04-26-12 05-08-12 05-17-12 11-27-12

REVISION DATES (PRELIMINARY STAGE ONLY) | SHEET X | OF X

03-JAN-2013 10:23
a4_04_details.add

DIST.	COUNTY	ROUTE	POST MILES TOTAL PROJECT	SHEET NO.	TOTAL SHEETS
04	Ala	80	2.2	266	800

LICENSED ARCHITECT — 11-27-12 DATE

LICENSED ARCHITECT QUINCY J. WONG No. C-18849 Exp. 5-31-13 STATE OF CALIFORNIA

10-22-12
PLANS APPROVAL DATE

The State of California or its officers or agents shall not be responsible for the accuracy or completeness of scanned copies of this plan sheet.

ACCESSIBILITY DESIGN APPROVAL STAMP DOT / DES / OTA
PROJECT ID 0412000666
Reviewed by: Y. A. WANG
Date: 12-06-12

CALIFORNIA STATE FIRE MARSHAL APPROVED
Approval of this plan does not authorize or approve any omission or deviation from applicable regulations. Final approval is subject to field inspection. One set of approved plans shall be available on the project site at all times.
Reviewed by: SPENCER MEYER
Approval date: 12-13-12

3

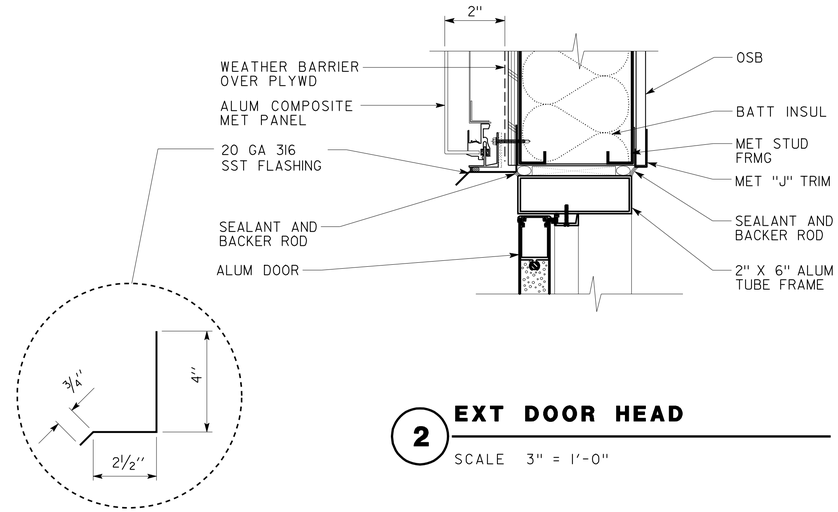

2 EXT DOOR HEAD

SCALE 3" = 1'-0"

NOTES:

1. OSB = ORIENTED STRAND BOARD
2. NEOPRENE TAPE TO BE APPLIED BETWEEN DISSIMILAR METALS.

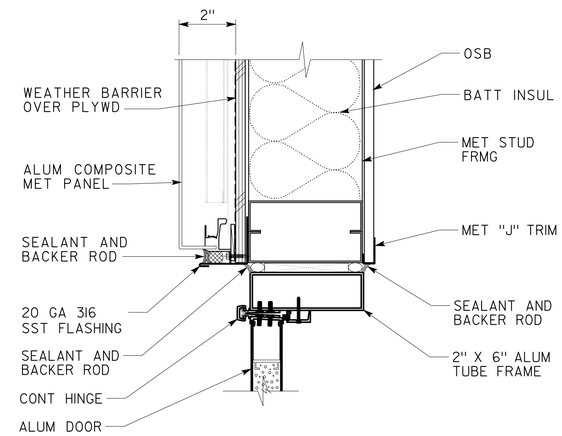

3 EXT DOOR JAMB

SCALE 3" = 1'-0"

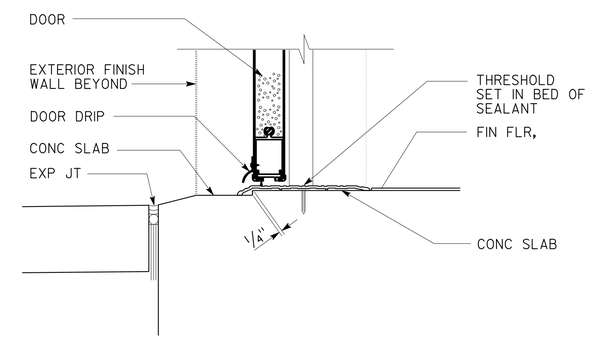

1 EXTERIOR DOOR THRESHOLD

SCALE 3" = 1'-0"

3 **REVISED PER ADDENDUM No. 3 DATED JANUARY 4, 2013**

	BY	CHECKED
DESIGN	R. QUIBIN/ C. NAKAHARA	Q. WONG
DETAILS	R. QUIBIN/ C. NAKAHARA	Q. WONG
QUANTITIES		

STATE OF CALIFORNIA DEPARTMENT OF TRANSPORTATION

DIVISION OF ENGINEERING SERVICES ARCHITECTURAL AND STRUCTURAL DESIGN

BRIDGE NO. 33M5785 POST MILE 2.2

SFOBB MAINTENANCE COMPLEX
WASH/FUEL BUILDING
DOOR DETAILS

SHEET **A4-05**

a4_05_details.add
TAEMWW Imperial Rev. 7/10 02-JAN-2013 07:22

ORIGINAL SCALE IN INCHES FOR REDUCED PLANS 0 1 2 3

UNIT 3598
PROJECT NUMBER & PHASE 04120006661
EA 014081

DISREGARD PRINTS BEARING EARLIER REVISION DATES →
REVISION DATES (PRELIMINARY STAGE ONLY) 02-28-12 04-26-12 05-08-12 05-17-12 11-27-12
SHEET X OF X

02-JAN-2013 07:22
a4_05_details.add

DIST.	COUNTY	ROUTE	POST MILES TOTAL PROJECT	SHEET NO.	TOTAL SHEETS
04	Ala	80	2.2	307	800

3

LICENSED ARCHITECT — 5/30/2012
FRANK THOMAS No. C-31406 Exp. 4-30-13 STATE OF CALIFORNIA

10-22-12
PLANS APPROVAL DATE

The State of California or its officers or agents shall not be responsible for the accuracy or completeness of scanned copies of this plan sheet.

ACCESSIBILITY DESIGN APPROVAL STAMP DOT / DES / OTA
PROJECT ID 0412000666
Reviewed by: Y. A. WANG
Date: 12-06-12

CALIFORNIA STATE FIRE MARSHAL APPROVED
Approval of this plan does not authorize or approve any omission or deviation from applicable regulations. Final approval is subject to field inspection. One set of approved plans shall be available on the project site at all times.
Reviewed by: SPENCER MEYER
Approval date: 12-13-12

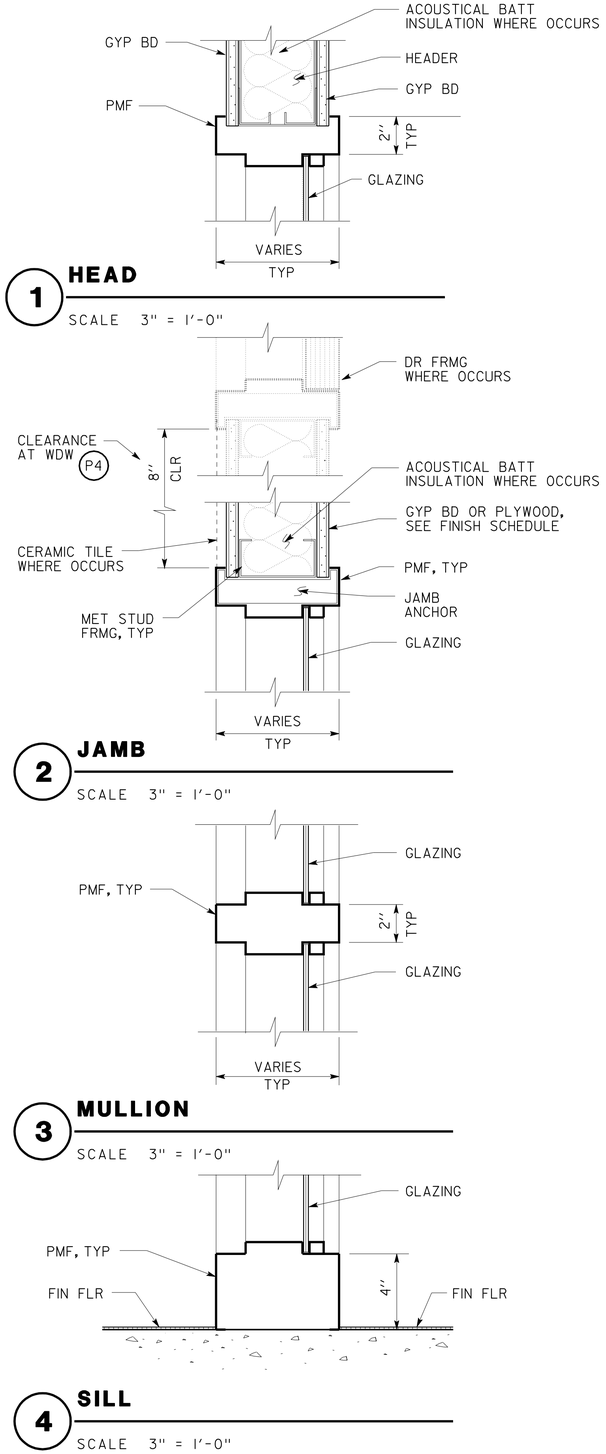

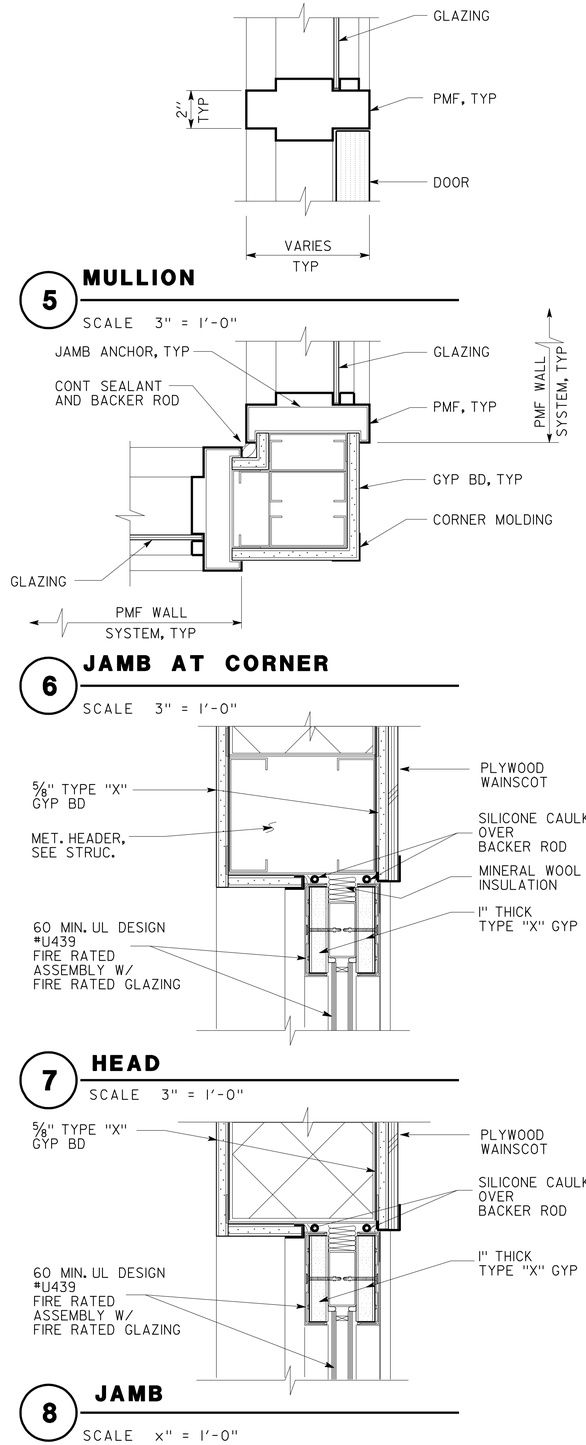

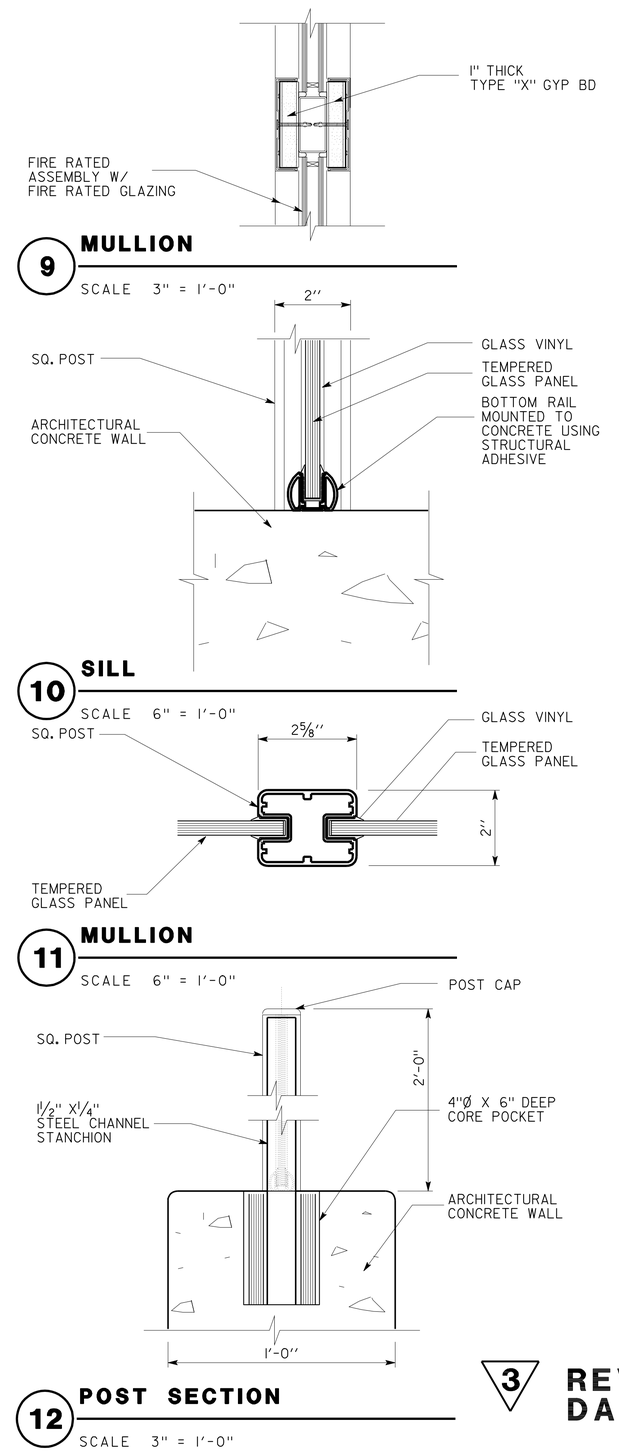

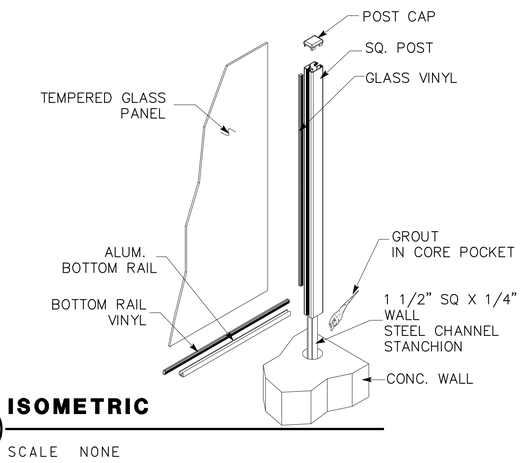

3 **REVISED PER ADDENDUM No. 3 DATED JANUARY 4, 2013**

DESIGN	BY F. THOMAS, L. RHOADES	CHECKED
DETAILS	BY C. NAKAHARA,	CHECKED
QUANTITIES	BY	CHECKED

STATE OF CALIFORNIA DEPARTMENT OF TRANSPORTATION

DIVISION OF ENGINEERING SERVICES ARCHITECTURAL AND STRUCTURAL DESIGN

BRIDGE NO. 33M5785
POST MILE 2.2

SFOBB MAINTENANCE COMPLEX
DETAILS — INTERIOR PMF WINDOW & WIND SCREEN SYSTEM DETAILS

SHEET **A6-10.5**

a6_10_05 det pmf win.add
TAEMWW Imperial Rev. 7/10 28-DEC-2012 10:42

ORIGINAL SCALE IN INCHES FOR REDUCED PLANS 0 1 2 3

UNIT 3598
PROJECT NUMBER & PHASE 04120006661
EA 014081

DISREGARD PRINTS BEARING EARLIER REVISION DATES → 02-28-12 04-26-12 05-08-12 05-17-12 06-01-12 06-20-12

REVISION DATES (PRELIMINARY STAGE ONLY) SHEET X OF X

28-DEC-2012 10:42
a6_10_05 det pmf win.add

DIST.	COUNTY	ROUTE	POST MILES TOTAL PROJECT	SHEET NO.	TOTAL SHEETS
04	Ala	80	2.2	316	800

LICENSED ARCHITECT — 5/30/2012 DATE

LICENSED ARCHITECT FRANK THOMAS No. C-31406 Exp. 4-30-13 STATE OF CALIFORNIA

10-22-12
PLANS APPROVAL DATE

The State of California or its officers or agents shall not be responsible for the accuracy or completeness of scanned copies of this plan sheet.

ACCESSIBILITY DESIGN APPROVAL STAMP DOT / DES / OTA
PROJECT ID 0412000666
Reviewed by: Y. A. WANG
Date: ~~07 24 12~~ 12-06-12

CALIFORNIA STATE FIRE MARSHAL APPROVED
Approval of this plan does not authorize or approve any omission or deviation from applicable regulations. Final approval is subject to field inspection. One set of approved plans shall be available on the project site at all times.
Reviewed by: JOHN E WOODS, SDSFM
Approval date: 8-22-12

NOTE: IN SHOP SUBMITTALS, SHOW PLUMBING SHIELD WITH TRUE SIZE OF GARBAGE DISPOSAL. PLUMBING SHIELD MUST MEET DIMENSIONS SHOWN.

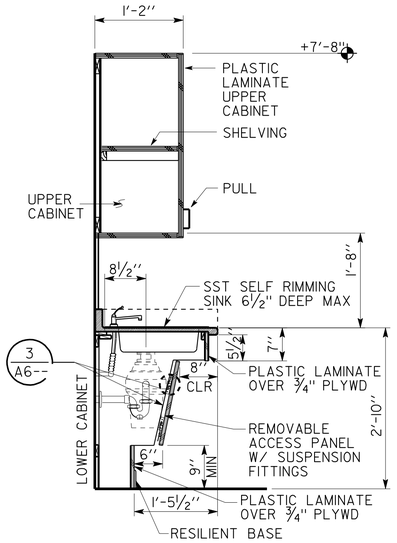

1 ACCESSIBLE COUNTER AT SINK

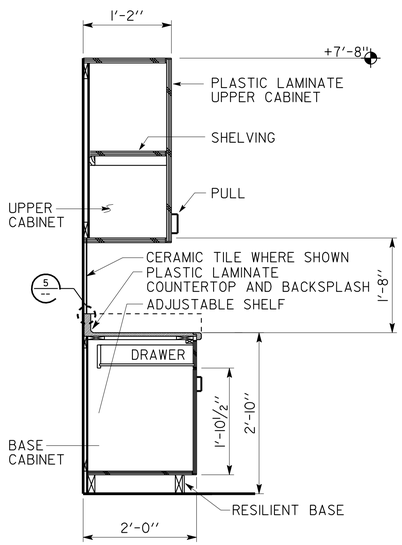

2 CABINET SECTION

SCALE ¾" = 1'-0"

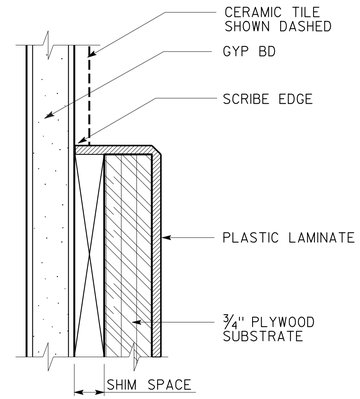

3 BACKSPLASH DETAIL

NO SCALE

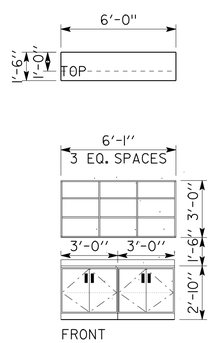

5 HALLWAY 119

SCALE 1/4" = 1'-0"

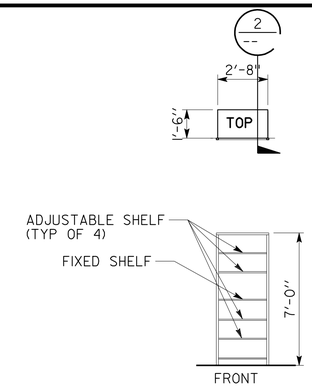

6 MEN'S SHOWER 124

SCALE 1/4" = 1'-0"

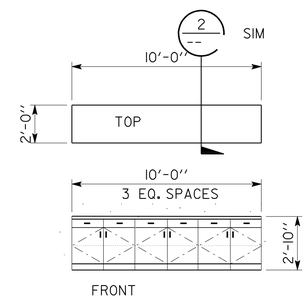

7 CONFERENCE 214

SCALE 1/4" = 1'-0"

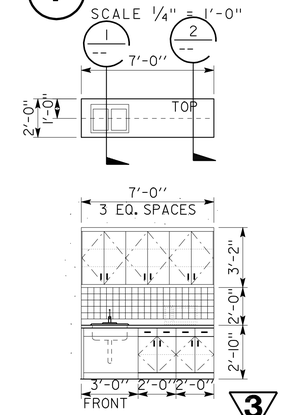

3

8 BREAK ~~210~~ 213 BREAK 166 CREW ROOM 184 AND KITCHEN 105

SCALE 1/4" = 1'-0"

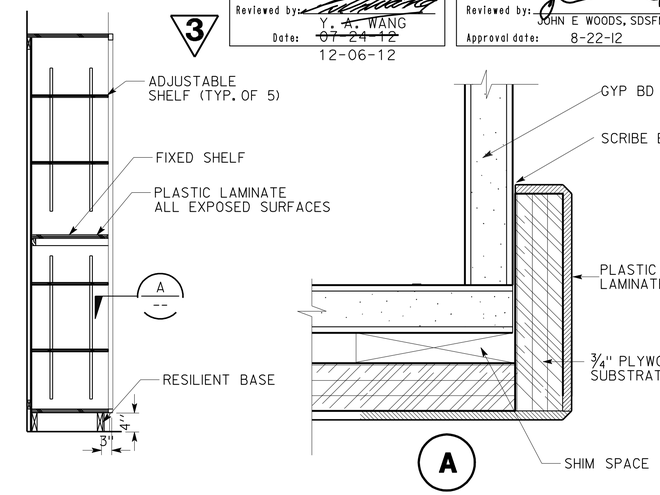

9 OPEN SHELVING UNIT SECTION

SCALE ¾" = 1'-0"

3 **REVISED PER ADDENDUM No. 3 DATED JANUARY 4, 2013**

DESIGN	BY F. THOMAS, L. RHOADES	CHECKED	
DETAILS	BY C. NAKAHARA,	CHECKED	
QUANTITIES	BY	CHECKED	

STATE OF CALIFORNIA DEPARTMENT OF TRANSPORTATION

DIVISION OF ENGINEERING SERVICES ARCHITECTURAL AND STRUCTURAL DESIGN

BRIDGE NO. 33M5785
POST MILE 2.2

SFOBB MAINTENANCE COMPLEX
DETAILS — CABINETRY DETAILS

SHEET A6-15.1

ORIGINAL SCALE IN INCHES FOR REDUCED PLANS 0 1 2 3

UNIT 3598
PROJECT NUMBER & PHASE 04120006661
EA 014081

DISREGARD PRINTS BEARING EARLIER REVISION DATES → REVISION DATES (PRELIMINARY STAGE ONLY) 02-28-12 04-26-12 05-08-12 05-17-12 06-01-12 06-20-12

SHEET X OF X

a6_15_01_det_cabinetry.add
TAEMWW Imperial Rev. 7/10 28-DEC-2012 07:58

28-DEC-2012 07:58 a6_15_01_det_cabinetry.add

DIST.	COUNTY	ROUTE	POST MILES TOTAL PROJECT	SHEET NO.	TOTAL SHEETS
04	Ala	80	2.2	328	800

RdP
REGISTERED CIVIL ENGINEER — DATE 05-31-12

REGISTERED PROFESSIONAL ENGINEER Robert du Plaine No. 51447 Exp. 6-30-14 CIVIL STATE OF CALIFORNIA

10-22-12
PLANS APPROVAL DATE

The State of California or its officers or agents shall not be responsible for the accuracy or completeness of scanned copies of this plan sheet.

3

PROJECT DESIGN CRITERIA

The building work on this project has been designed to conform to the 2007 California Building Code (2006 IBC).

LOADS

SEISMIC: Occupancy Category = II
Importance Factor I = 1.0
Site Soil Class = E
S_S = 1.5 S_{DS} = 0.9
S_1 = 0.6 S_{D1} = 0.96
Seismic Design Category = D
Seismic Force-Resisting System:

North - South

R = 3.25 C_S = 0.28

East - West

R = 3.25 C_S = 0.28

WIND: Importance Factor = 1.0
Basic Wind Speed = 85 mph
Exposure D
Internal Pressure Coefficient GC_{pi} = ± 0.55

LIVE LOAD: Roof = 20 psf
Floor/Loft = 100 psf

MATERIALS

REINFORCED CONCRETE: (Ultimate Strength Design):
f'c = 4,000 psi
f_y = 60,000 psi

STRUCTURAL STEEL: (Allowable Strength Design):

Wide Flange	F_y = 50 ksi
Chevron Brace Gusset Plates (A572)	F_y = 50 ksi
Plates	F_y = 36 ksi
Hollow Structural Section (HSS)	F_y = 46 ksi
Weld Electrode	F_y = 70 ksi

Minimum Fillet Weld = 3/16"

COLD FORMED STEEL: shall be F_y = 33 ksi

FOUNDATION:
Soils report dated : June 8, 2012
For Soil Classification, see Log of Test Boring Sheets.

DETAIL NOTES

1. For Concrete see: "Concrete Standard"
2. All bolts shall be hex head machine bolts, with hex head nuts; unless otherwise noted.
3. All lock washers shall be helical spring lock washers.

STRUCTURAL PLYWOOD SHEATHING

1. Structural Plywood Sheathing shall conform to the Requirements of Voluntary Product Standard PS 1-07 or PS 2-04.

   The Durability Classification shall be Exposure 1.

   Sheathing shall be Class A Fire-Rated Plywood Panels.

2. SPS framing screws shall be #10 Wafer Head, Self-Drilling, Self-Tapping Screws with a Min Head Dia of 5/16". Space at 6" at panel edges, 12" in the field.

SECOND FLOOR DETAILS AND NOTES

1. 5½" Lightweight Concrete
2. #4 @ 12" each way, Lowered at dropped slab.
3. Provide shoring per Deck Manufacturer requirements.

(A) METAL DECK NOTES

METAL DECK MINIMUM SECTION PROPERTIES

Deck Type	Depth & Gage	Moment of Inertia	Positive Section Modulus	Negative Section Modulus	Minimum Yield Strength
Metal Decking Roof	1.5" x 20 Ga	0.220 in^4/ft	0.235 in^3/ft	0.246 in^3/ft	38 Ksi
Metal Decking Floor	1.5" x 18 Ga	0.302 in^4/ft	0.322 in^3/ft	0.335 in^3/ft	38 Ksi

SCREW SCHEDULE and METAL DECK PROFILE

Metal Deck Profile	Self-Drilling Self-Tapping Screws			Minimum Diaphragm Shear Capacity
	Perpendicular Supports and Panel Ends	Parallel Supports	Side Laps	
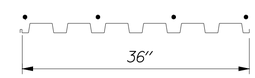	4 - #10 Per Support	#10 @ 12" OC	Button Punch @ 12" OC	350 lb/ft

(B) PILE DATA TABLE

Pile Type	Nominal Resistance		Design Tip Elevation (ft)	Specified Tip Elevation (ft)
	Compression	Tension		
CLASS 90 Alt."X"	160 kips	20 kips	-113 (a) -20 (b)	-113

Pile Tip Elevations controlled by: (a) Compression; (b) Tension.
See CalTrans Standard Plans 2006, B2-5
Cutoff Elevations per Plan

PILE QUANTITIES

FURNISH PILE (CLASS 90) (ALTERNATIVE X)	32,186	LF
DRIVE PILE (CLASS 90) (ALTERNATIVE X)	266	EA
FURNISH INDICATOR PILE (CLASS 90) (ALTERNATIVE X)	484	LF
DRIVE INDICATOR PILE (CLASS 90) (ALTERNATIVE X)	4	EA

3 **REVISED PER ADDENDUM No. 3 DATED JANUARY 4, 2013**

	BY	CHECKED
DESIGN	Robert du Plaine	Brian Sutliff
DETAILS	David W. Good	Robert du Plaine
QUANTITIES		

STATE OF CALIFORNIA
DEPARTMENT OF TRANSPORTATION

DIVISION OF ENGINEERING SERVICES
ARCHITECTURAL AND STRUCTURAL DESIGN

BRIDGE NO. 33M5785
POST MILE 2.2

SFOBB MAINTENANCE COMPLEX

DESIGN CRITERIA AND DETAIL NOTES

SHEET ST1-0

TAEMWW Imperial Rev. 7/10

ORIGINAL SCALE IN INCHES FOR REDUCED PLANS 0 1 2 3

UNIT 3599
PROJECT NUMBER & PHASE 04120006661
EA 014081

DISREGARD PRINTS BEARING EARLIER REVISION DATES → 05-30-12 06-18-12

REVISION DATES (PRELIMINARY STAGE ONLY) SHEET OF

P:\dist_04\0400000038_sfobb_ms_complex\expedite\Addendum Plans\Addendum 2 - 11-28-2012\st1_00.add

02-JAN-2013 15:05

DIST.	COUNTY	ROUTE	POST MILES TOTAL PROJECT	SHEET NO.	TOTAL SHEETS
04	Ala	80	2.2	341	800

RdP
REGISTERED CIVIL ENGINEER — DATE 05-31-12

REGISTERED PROFESSIONAL ENGINEER
Robert du Plaine
No. 51447
Exp. 6-30-14
CIVIL
STATE OF CALIFORNIA

10-22-12
PLANS APPROVAL DATE

The State of California or its officers or agents shall not be responsible for the accuracy or completeness of scanned copies of this plan sheet.

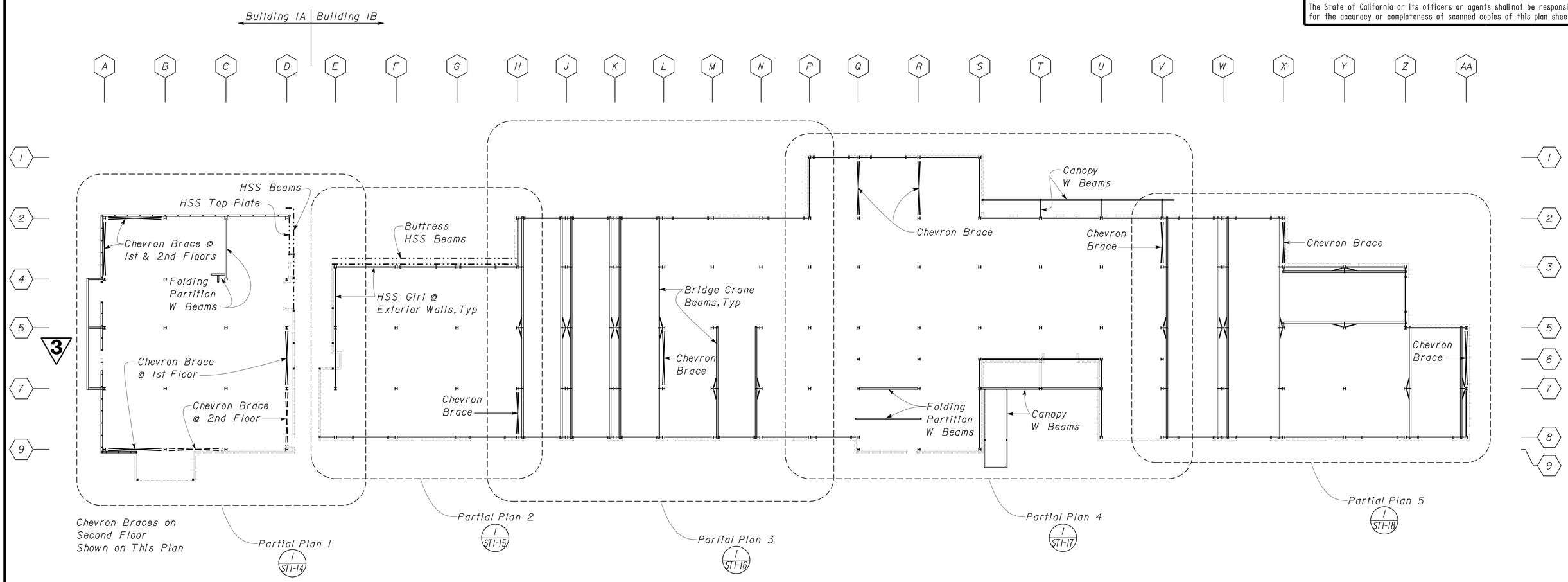

1 INTERMEDIATE BEAM INDEX PLAN
Scale 1" = 20' - 0"

3 REVISED PER ADDENDUM No. 3 DATED JANUARY 4, 2013

DESIGN	BY Robert du Plaine	CHECKED Brian Sutliff	
DETAILS	BY David W. Good	CHECKED Robert du Plaine	
QUANTITIES	BY	CHECKED	

STATE OF CALIFORNIA
DEPARTMENT OF TRANSPORTATION

DIVISION OF ENGINEERING SERVICES
ARCHITECTURAL AND STRUCTURAL DESIGN

BRIDGE NO. 33M5785
POST MILE 2.2

SFOBB MAINTENANCE COMPLEX
INTERMEDIATE BEAM INDEX PLAN

SHEET ST1-13

TAEMWW Imperial Rev. 7/10

ORIGINAL SCALE IN INCHES FOR REDUCED PLANS 0 1 2 3

UNIT 3599
PROJECT NUMBER & PHASE 04120006661
EA 014081

DISREGARD PRINTS BEARING EARLIER REVISION DATES → REVISION DATES (PRELIMINARY STAGE ONLY) 04-30-12 05-02-12 05-08-12 05-24-12 05-28-12

SHEET OF

02-JAN-2013 07:26

st1_013.add

DIST.	COUNTY	ROUTE	POST MILES TOTAL PROJECT	SHEET NO.	TOTAL SHEETS
04	Ala	80	2.2	342	800

RdP
REGISTERED CIVIL ENGINEER — DATE 05-31-12

REGISTERED PROFESSIONAL ENGINEER — Robert du Plaine — No. 51447 — Exp. 6-30-14 — CIVIL — STATE OF CALIFORNIA

10-22-12
PLANS APPROVAL DATE

The State of California or its officers or agents shall not be responsible for the accuracy or completeness of scanned copies of this plan sheet.

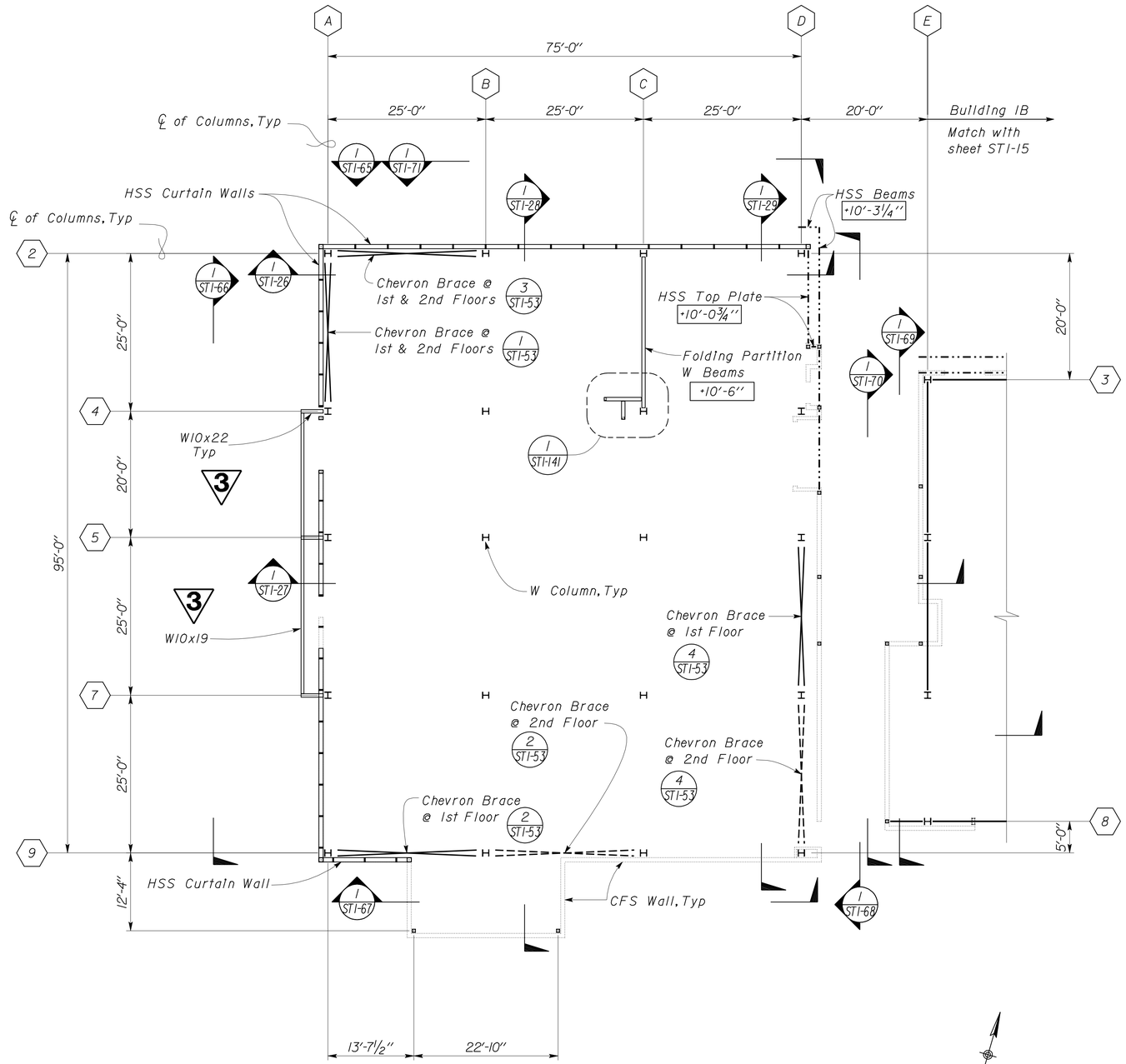

1 PARTIAL INTERMEDIATE BEAM PLAN
Scale 1" = 10' - 0"

NOTE:

Buildings IA and IB share a common grid system, not all alpha/numeric indicators will show consecutively.

LEGEND:

+ '- " - Indicates Height from Top of Concrete Slab to Bottom of Beam

Chevron Details, begin at 1/ST1-51

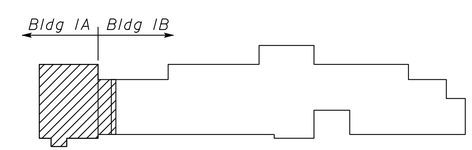

Key Plan

3 REVISED PER ADDENDUM No. 3 DATED JANUARY 4, 2013

DESIGN	BY Robert du Plaine	CHECKED Brian Sutliff	
DETAILS	BY David W. Good	CHECKED Robert du Plaine	
QUANTITIES	BY	CHECKED	

STATE OF CALIFORNIA
DEPARTMENT OF TRANSPORTATION

DIVISION OF ENGINEERING SERVICES
ARCHITECTURAL AND STRUCTURAL DESIGN

BRIDGE NO. 33M5785
POST MILE 2.2

SFOBB MAINTENANCE COMPLEX
INTERMEDIATE BEAM PARTIAL PLAN 1 of 5

SHEET ST1-14

TAEMWW Imperial Rev. 7/10

ORIGINAL SCALE IN INCHES FOR REDUCED PLANS 0 1 2 3

UNIT 3599
PROJECT NUMBER & PHASE 04120006661
EA 014081

DISREGARD PRINTS BEARING EARLIER REVISION DATES → REVISION DATES (PRELIMINARY STAGE ONLY) 04-30-12 05-02-12 05-08-12 05-18-12 05-28-12 06-14-12

SHEET OF

02-JAN-2013 07:29

st1_014.dgn

DIST.	COUNTY	ROUTE	POST MILES TOTAL PROJECT	SHEET NO.	TOTAL SHEETS
04	Ala	80	2.2	347	800

RdP
REGISTERED CIVIL ENGINEER — DATE 05-31-12

REGISTERED PROFESSIONAL ENGINEER Robert du Plaine No. 51447 Exp. 6-30-14 CIVIL STATE OF CALIFORNIA

10-22-12
PLANS APPROVAL DATE

The State of California or its officers or agents shall not be responsible for the accuracy or completeness of scanned copies of this plan sheet.

Notes:

Buildings 1A and 1B share a common grid system, not all alpha/numeric indicators will show consecutively.

For locations of Ground Bars, see Electrical Plans

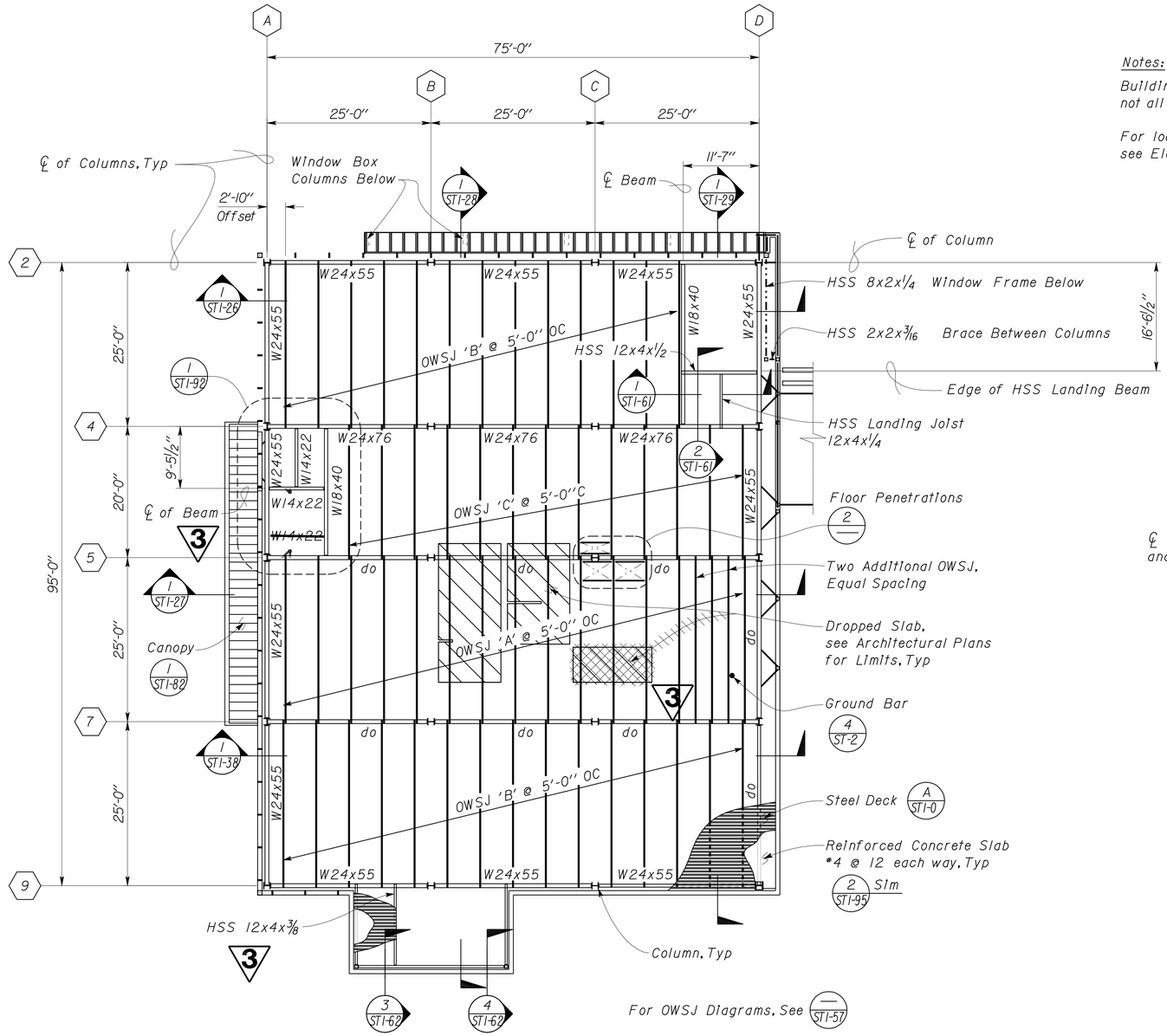

1 SECOND FLOOR FRAMING PLAN
Scale 1" = 10' - 0"

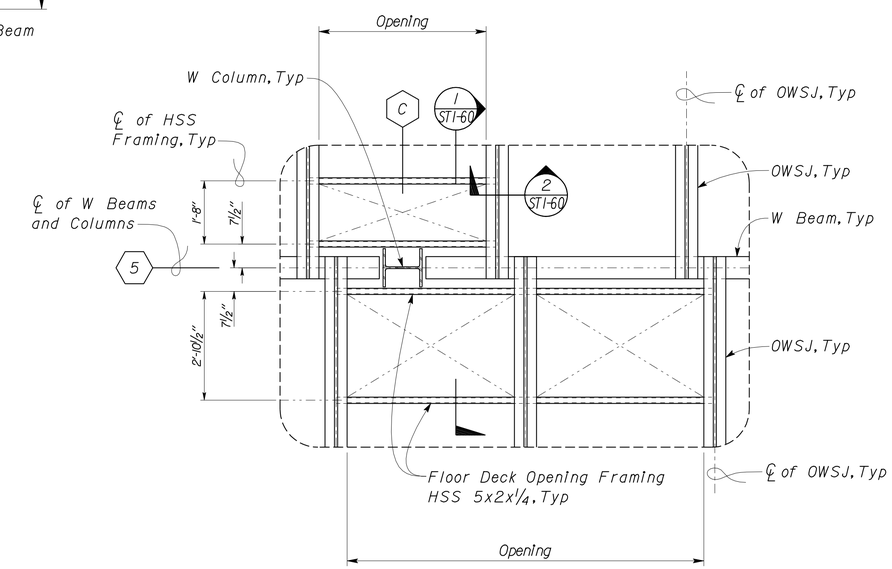

2 FLOOR DECK PENETRATION
Scale 1/2" = 1' - 0"

3 REVISED PER ADDENDUM No. 3 DATED JANUARY 4, 2013

DESIGN	BY Robert du Plaine	CHECKED Brian Sutliff	
DETAILS	BY David W. Good	CHECKED Robert du Plaine	
QUANTITIES	BY	CHECKED	

STATE OF CALIFORNIA DEPARTMENT OF TRANSPORTATION

DIVISION OF ENGINEERING SERVICES ARCHITECTURAL AND STRUCTURAL DESIGN

BRIDGE NO. 33M5785
POST MILE 2.2

SFOBB MAINTENANCE COMPLEX

FLOOR FRAMING PLAN

SHEET ST1-19

TAEMWW Imperial Rev. 7/10

ORIGINAL SCALE IN INCHES FOR REDUCED PLANS 0 1 2 3

UNIT 3599
PROJECT NUMBER & PHASE 04120006661
EA 014081

DISREGARD PRINTS BEARING EARLIER REVISION DATES → REVISION DATES (PRELIMINARY STAGE ONLY) 12-16-11 12-28-11 05-08-12 05-23-12 05-28-12 06-13-12

SHEET OF

03-JAN-2013 13:36

st1_019.dgn

DIST.	COUNTY	ROUTE	POST MILES TOTAL PROJECT	SHEET NO.	TOTAL SHEETS
04	Ala	80	2.2	349	800

RdP
REGISTERED CIVIL ENGINEER — 05-31-12 DATE

REGISTERED PROFESSIONAL ENGINEER
Robert du Plaine
No. 51447
Exp. 6-30-14
CIVIL
STATE OF CALIFORNIA

10-22-12
PLANS APPROVAL DATE

The State of California or its officers or agents shall not be responsible for the accuracy or completeness of scanned copies of this plan sheet.

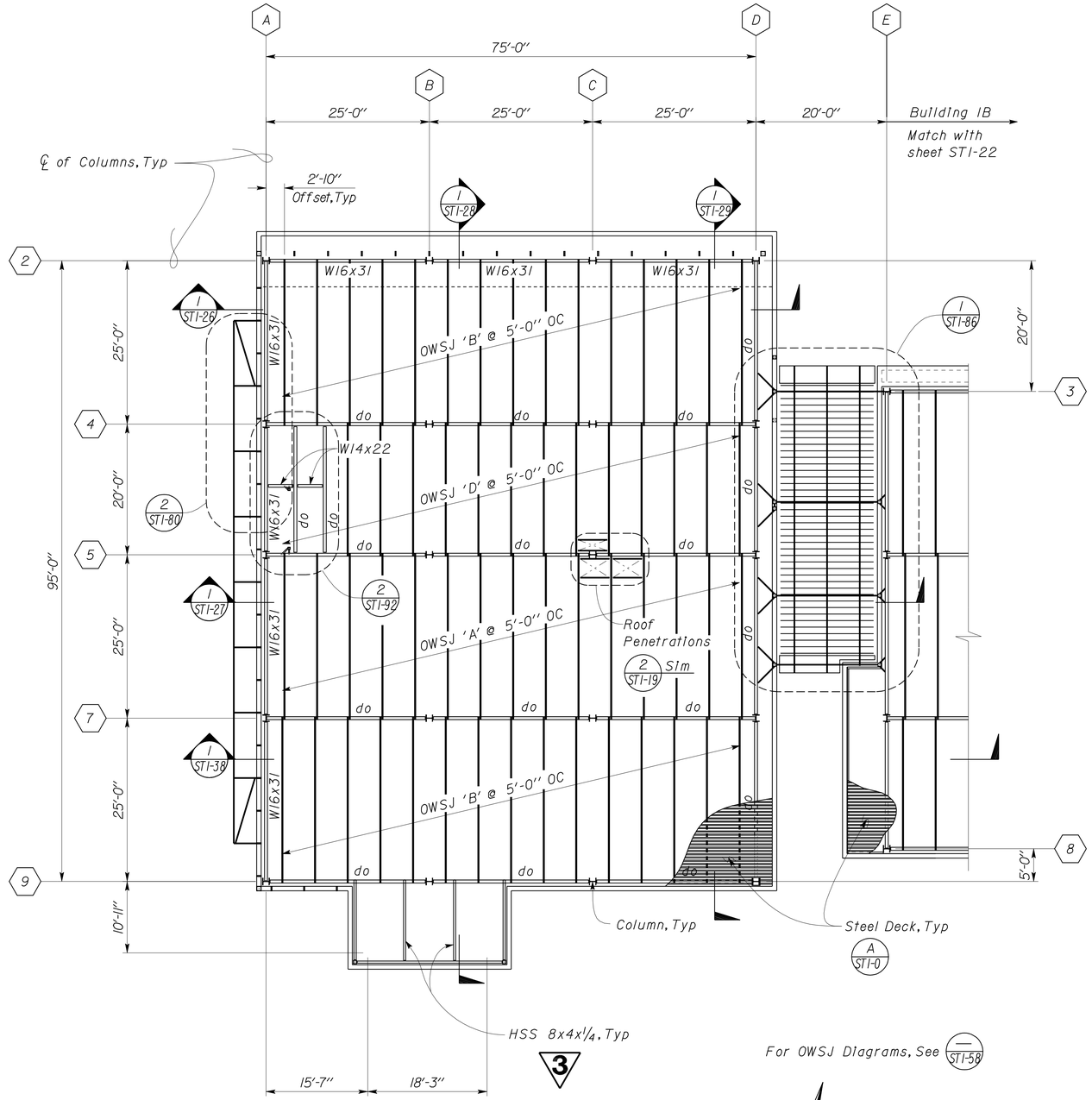

1 PARTIAL ROOF FRAMING PLAN
Scale 1" = 10' - 0"

NOTE:

Buildings IA and IB share a common grid system, not all alpha/numeric indicators will show consecutively.

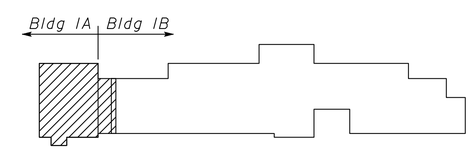

Key Plan

3 REVISED PER ADDENDUM No. 3 DATED JANUARY 4, 2013

DESIGN	BY Robert du Plaine	CHECKED Brian Sutliff	
DETAILS	BY David W. Good	CHECKED Robert du Plaine	
QUANTITIES	BY	CHECKED	

STATE OF CALIFORNIA
DEPARTMENT OF TRANSPORTATION

DIVISION OF ENGINEERING SERVICES
ARCHITECTURAL AND STRUCTURAL DESIGN

BRIDGE NO. 33M5785
POST MILE 2.2

SFOBB MAINTENANCE COMPLEX
ROOF FRAMING PARTIAL PLAN 1 of 5

SHEET ST1-21

TAEMWW Imperial Rev. 7/10

ORIGINAL SCALE IN INCHES FOR REDUCED PLANS 0 1 2 3

UNIT 3599
PROJECT NUMBER & PHASE 04120006661
EA 014081

DISREGARD PRINTS BEARING EARLIER REVISION DATES → 11-29-11 12-28-11 05-08-12 05-18-12 06-15-12

REVISION DATES (PRELIMINARY STAGE ONLY) SHEET OF

28-DEC-2012 11:46
st1_021.add

DIST.	COUNTY	ROUTE	POST MILES TOTAL PROJECT	SHEET NO.	TOTAL SHEETS
04	Ala	80	2.2	355	800

RdP
REGISTERED CIVIL ENGINEER — DATE 05-31-12

REGISTERED PROFESSIONAL ENGINEER Robert du Plaine No. 51447 Exp. 6-30-14 CIVIL STATE OF CALIFORNIA

10-22-12
PLANS APPROVAL DATE

The State of California or its officers or agents shall not be responsible for the accuracy or completeness of scanned copies of this plan sheet.

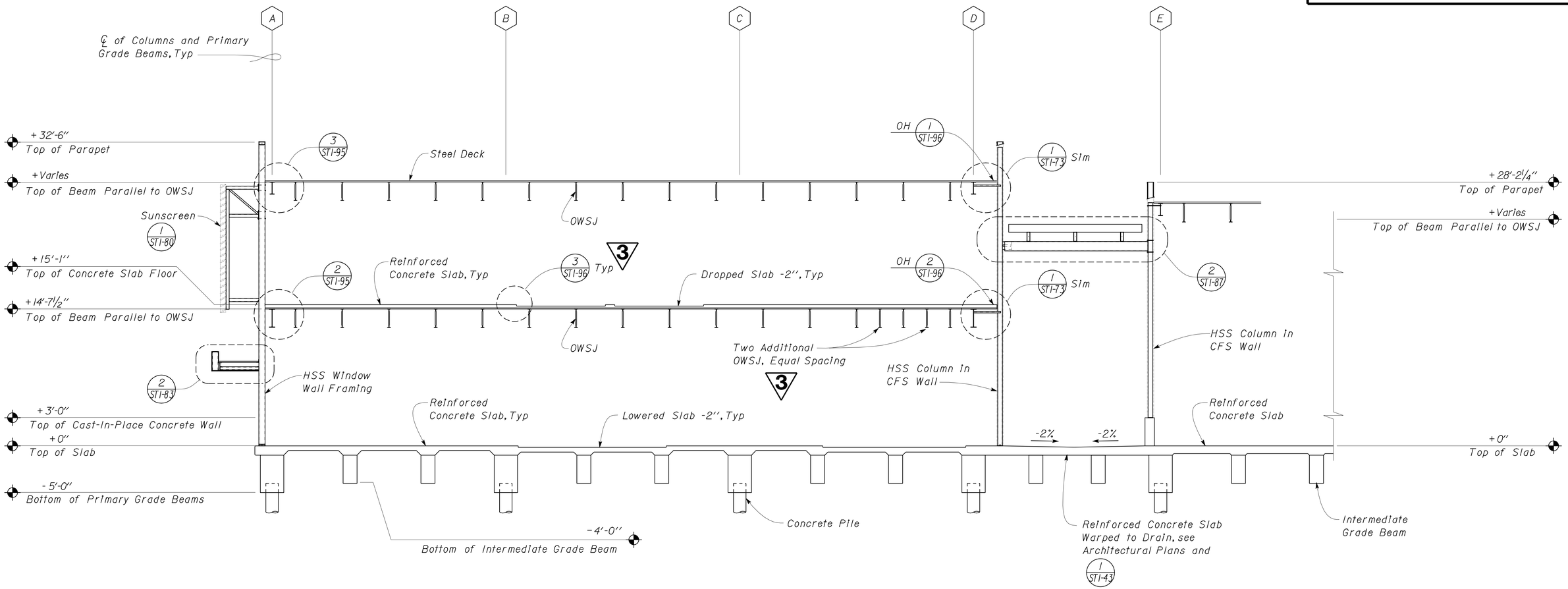

1 BUILDING SECTION
Scale 3/16" = 1'-0"

3 REVISED PER ADDENDUM No. 3 DATED JANUARY 4, 2013

DESIGN	BY Robert du Plaine	CHECKED Brian Sutliff	
DETAILS	BY David W. Good	CHECKED Robert du Plaine	
QUANTITIES	BY	CHECKED	

STATE OF CALIFORNIA DEPARTMENT OF TRANSPORTATION

DIVISION OF ENGINEERING SERVICES
ARCHITECTURAL AND STRUCTURAL DESIGN

BRIDGE NO. 33M5785
POST MILE 2.2

SFOBB MAINTENANCE COMPLEX
BUILDING SECTION

SHEET ST1-27

TAEMWW Imperial Rev. 7/10

ORIGINAL SCALE IN INCHES FOR REDUCED PLANS 0 1 2 3

UNIT 3599
PROJECT NUMBER & PHASE 04120006661
EA 014081

DISREGARD PRINTS BEARING EARLIER REVISION DATES → REVISION DATES (PRELIMINARY STAGE ONLY) 11-29-11 12-28-11 05-08-12 05-18-12 05-29-12 SHEET OF

28-DEC-2012 11:46
st1_027.add

DIST.	COUNTY	ROUTE	POST MILES TOTAL PROJECT	SHEET NO.	TOTAL SHEETS
04	Ala	80	2.2	368	800

RdP
REGISTERED CIVIL ENGINEER — DATE 05-31-12

REGISTERED PROFESSIONAL ENGINEER Robert du Plaine No. 51447 Exp. 6-30-14 CIVIL STATE OF CALIFORNIA

10-22-12
PLANS APPROVAL DATE

The State of California or its officers or agents shall not be responsible for the accuracy or completeness of scanned copies of this plan sheet.

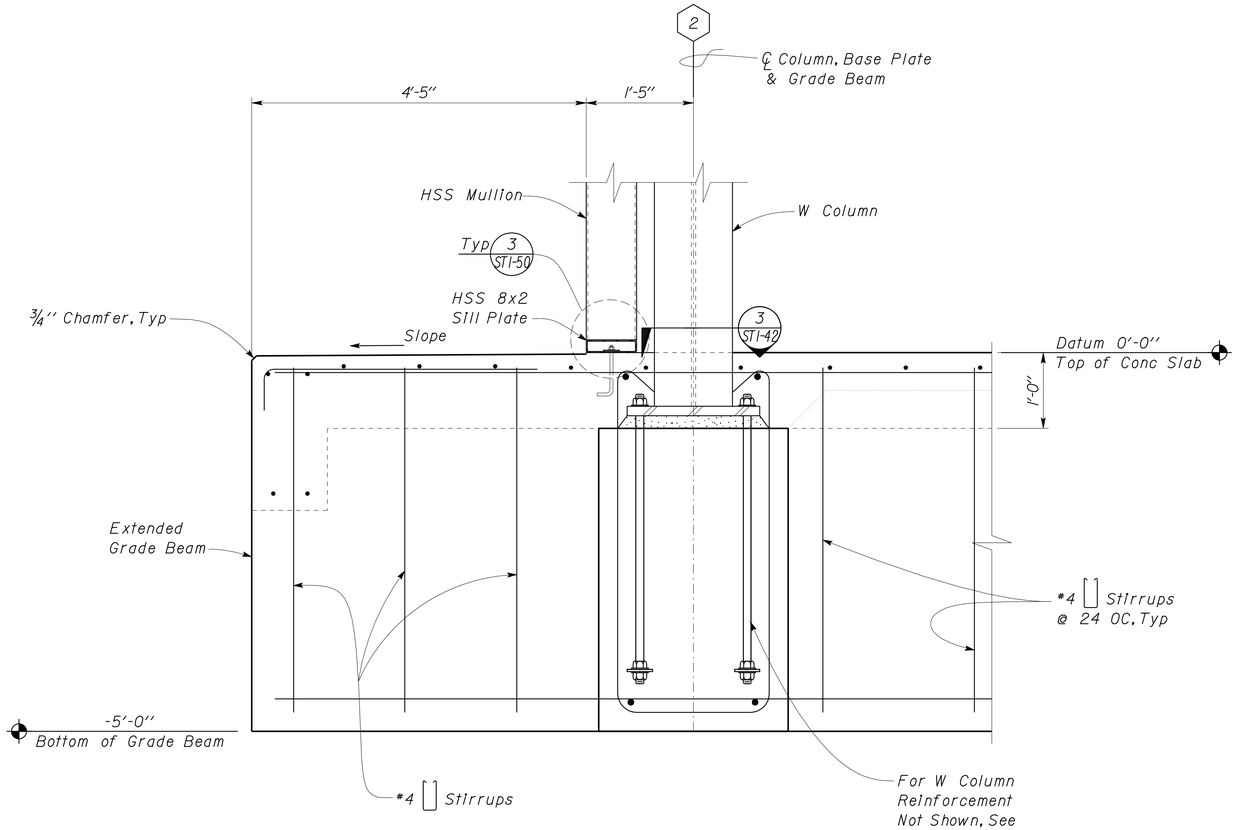

Note
For Reinforcement not shown, 2 Slm

1 BUILDING 'IA' EXTENDED GRADE BEAM
Scale 1" = 1'-0"

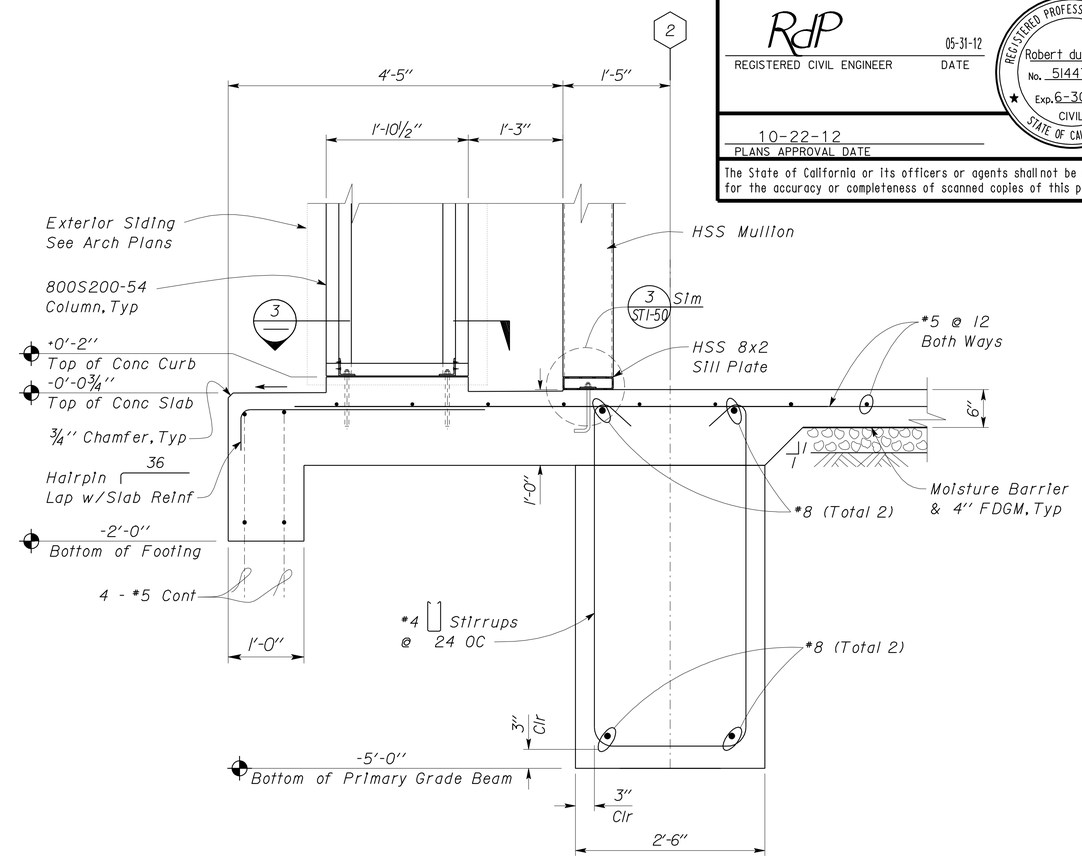

2 BUILDING 'IA' EXTENDED SLAB
Scale 1" = 1'-0"

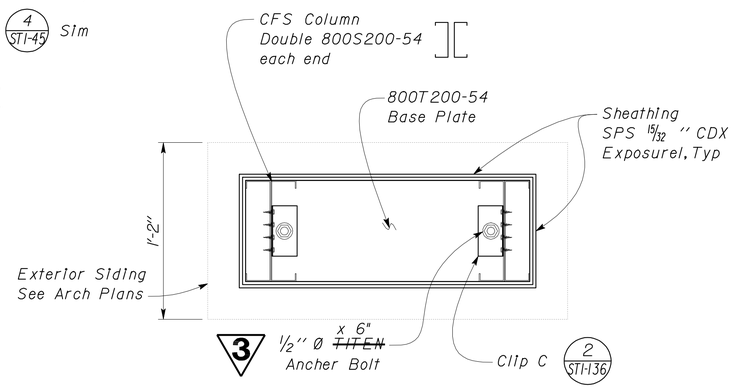

3 COLUMN FRAMING
Scale 2" = 1'-0"

3 **REVISED PER ADDENDUM No. 3 DATED JANUARY 4, 2013**

DESIGN	BY Robert du Plaine	CHECKED Brian Sutliff	
DETAILS	BY David W. Good	CHECKED Robert du Plaine	
QUANTITIES	BY	CHECKED	

STATE OF CALIFORNIA DEPARTMENT OF TRANSPORTATION

DIVISION OF ENGINEERING SERVICES ARCHITECTURAL AND STRUCTURAL DESIGN

BRIDGE NO. 33M5785
POST MILE 2.2

SFOBB MAINTENANCE COMPLEX

FOUNDATION DETAILS

SHEET ST1-40

TAEMWW Imperial Rev. 7/10

ORIGINAL SCALE IN INCHES FOR REDUCED PLANS 0 1 2 3

UNIT 3599
PROJECT NUMBER & PHASE 04120006661
EA 014081

DISREGARD PRINTS BEARING EARLIER REVISION DATES → REVISION DATES (PRELIMINARY STAGE ONLY) 04-25-12 05-08-12 05-10-12 05-23-12 05-28-12 SHEET OF

31-DEC-2012 09:33
st1_040.add

DIST.	COUNTY	ROUTE	POST MILES TOTAL PROJECT	SHEET NO.	TOTAL SHEETS
04	Ala	80	2.2	369	800

RdP
REGISTERED CIVIL ENGINEER — DATE 05-31-12

REGISTERED PROFESSIONAL ENGINEER Robert du Plaine No. 51447 Exp. 6-30-14 CIVIL STATE OF CALIFORNIA

10-22-12
PLANS APPROVAL DATE

The State of California or its officers or agents shall not be responsible for the accuracy or completeness of scanned copies of this plan sheet.

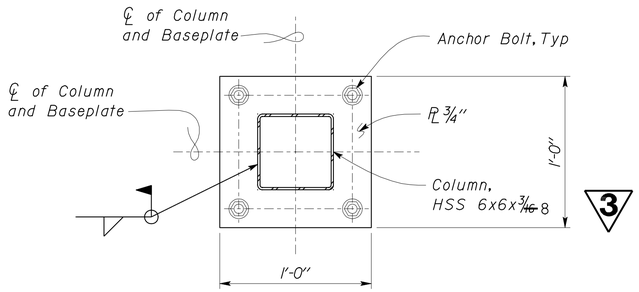

1 HSS COLUMN BASEPLATE
Scale 2" = 1'-0"

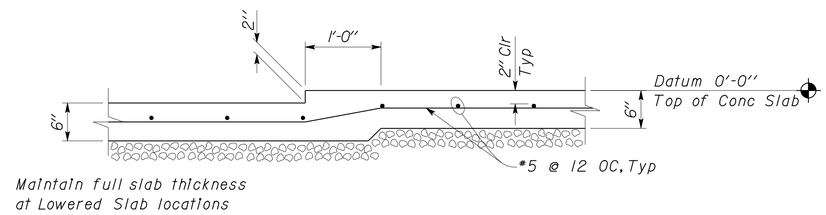

3 LOWERED SLAB DETAIL
Scale 1" = 1'-0"

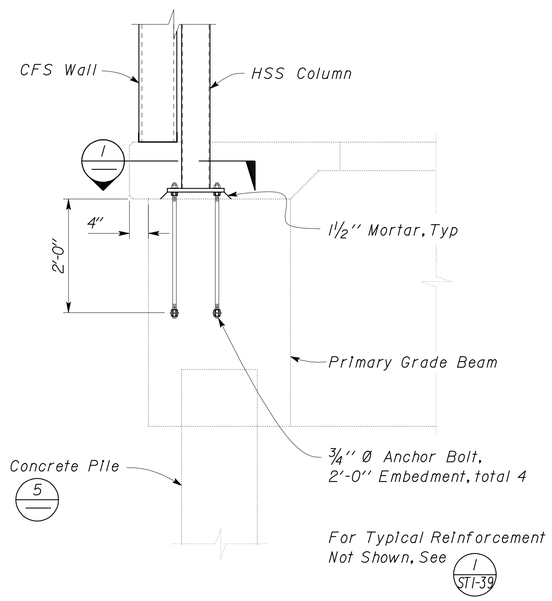

2 HSS COLUMN ANCHORAGE
Scale 3/4" = 1'-0"

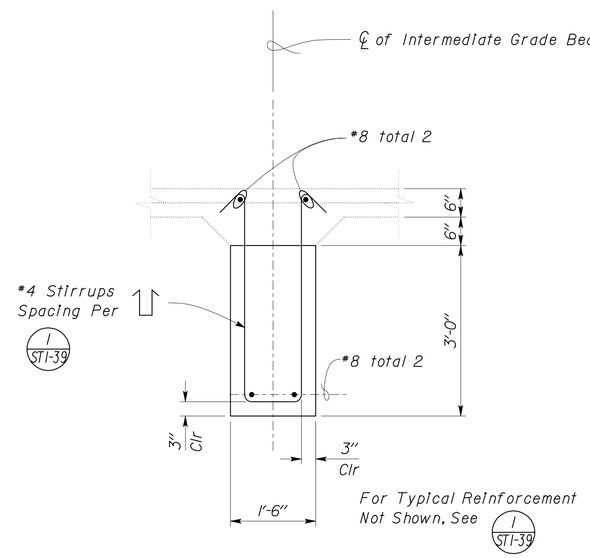

4 INTERMEDIATE GRADE BEAM
Scale 3/4" = 1'-0"

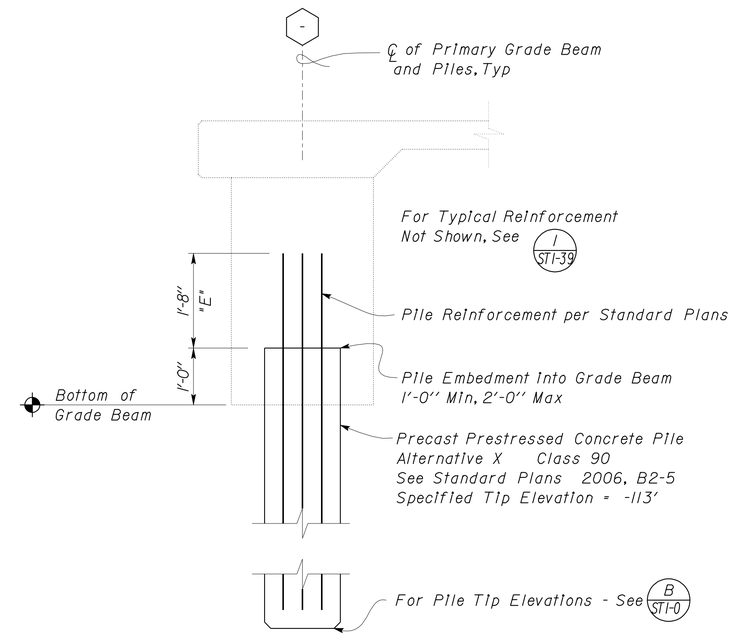

5 PILE TO GRADE BEAM
Scale 3/4" = 1'-0"

3 **REVISED PER ADDENDUM No. 3 DATED JANUARY 4, 2013**

	BY	CHECKED
DESIGN	Robert du Plaine	Brian Sutliff
DETAILS	David W. Good	Robert du Plaine
QUANTITIES		

STATE OF CALIFORNIA
DEPARTMENT OF TRANSPORTATION

DIVISION OF ENGINEERING SERVICES
ARCHITECTURAL AND STRUCTURAL DESIGN

BRIDGE NO. 33M5785
POST MILE 2.2

SFOBB MAINTENANCE COMPLEX
FOUNDATION DETAILS

SHEET **ST1-41**

TAEMWW Imperial Rev. 7/10

ORIGINAL SCALE IN INCHES FOR REDUCED PLANS 0 1 2 3

UNIT 3599
PROJECT NUMBER & PHASE 04120006661
EA 014081

DISREGARD PRINTS BEARING EARLIER REVISION DATES → 04-26-12 05-08-12 05-10-12 05-10-12 05-28-12 06-14-12

REVISION DATES (PRELIMINARY STAGE ONLY) SHEET OF

28-DEC-2012 10:41
st1_041.dgn

DIST.	COUNTY	ROUTE	POST MILES TOTAL PROJECT	SHEET NO.	TOTAL SHEETS
04	Ala	80	2.2	370	800

RdP
REGISTERED CIVIL ENGINEER — DATE 05-31-12

REGISTERED PROFESSIONAL ENGINEER Robert du Plaine No. 51447 Exp. 6-30-14 CIVIL STATE OF CALIFORNIA

10-22-12
PLANS APPROVAL DATE

The State of California or its officers or agents shall not be responsible for the accuracy or completeness of scanned copies of this plan sheet.

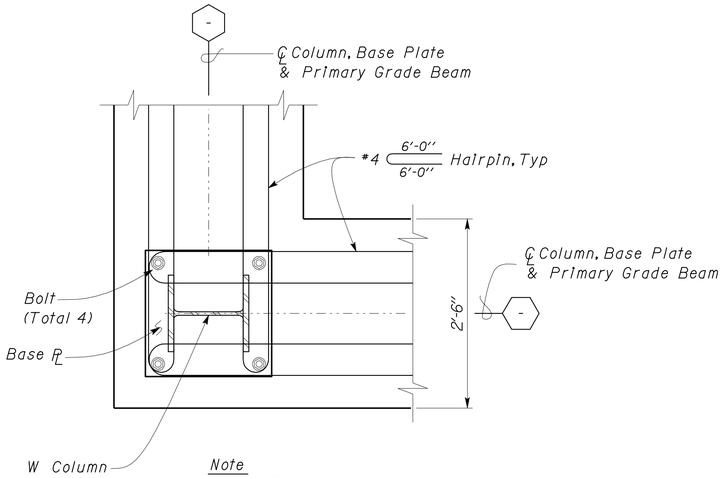

Note
Not all Footing Reinforcement are shown for clarity.

1 ADDITIONAL CORNER REINFORCEMENT DETAIL
Scale 1" = 1' - 0"

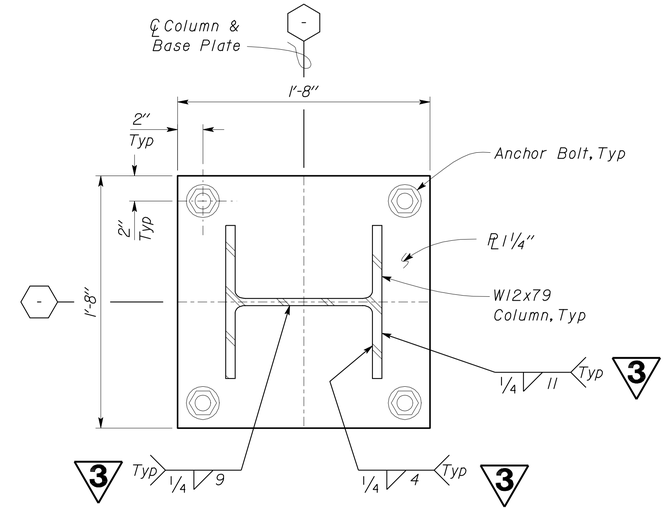

3 COLUMN BASE PLATE DETAIL
Scale 2" = 1' - 0"

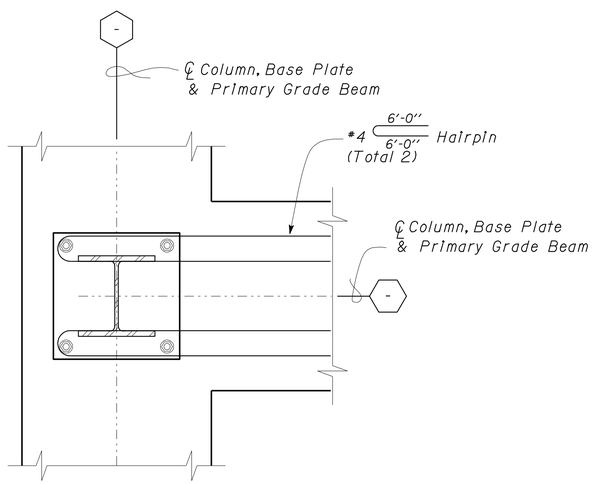

Notes
1. For Details & Dimensions not shown, see 1/S1m
2. Not all Footing Reinforcement is shown for clarity.

2 ADDITIONAL 'T' INTERSECTION REINFORCEMENT DETAIL
Scale 1" = 1' - 0"

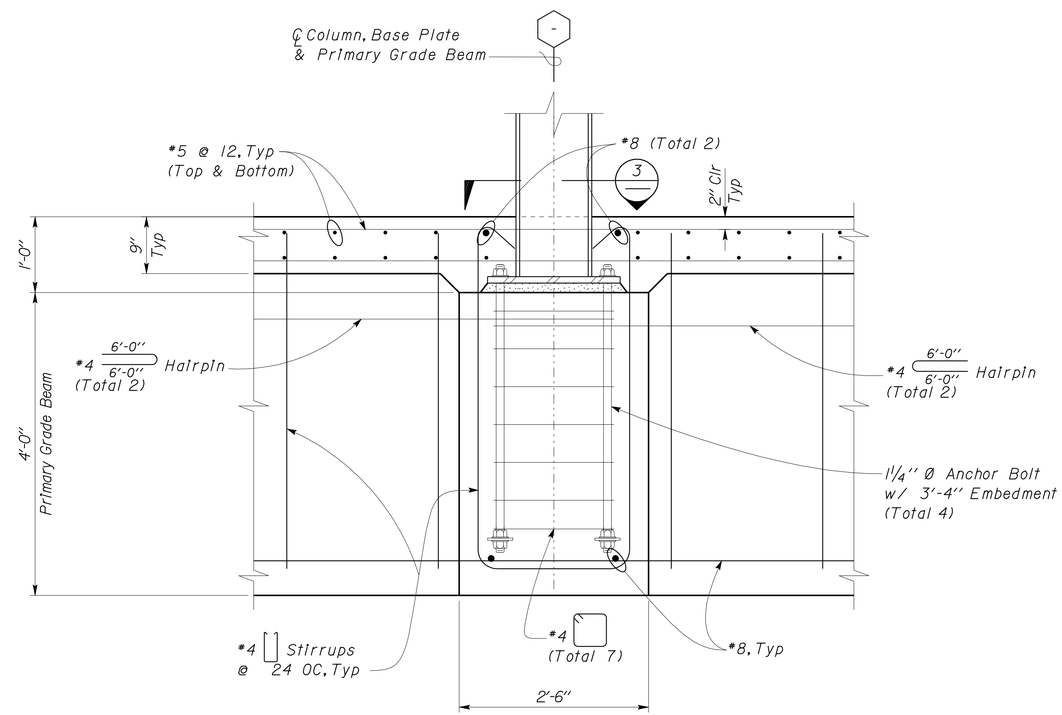

4 ADDITIONAL COLUMN REINFORCEMENT DETAIL
Scale 1" = 1' - 0"

3 REVISED PER ADDENDUM No. 3 DATED JANUARY 4, 2013

DESIGN	BY Robert du Plaine	CHECKED Brian Sutliff	
DETAILS	BY David W. Good	CHECKED Robert du Plaine	
QUANTITIES	BY	CHECKED	

STATE OF CALIFORNIA
DEPARTMENT OF TRANSPORTATION

DIVISION OF ENGINEERING SERVICES
ARCHITECTURAL AND STRUCTURAL DESIGN

BRIDGE NO. 33M5785
POST MILE 2.2

SFOBB MAINTENANCE COMPLEX

FOUNDATION DETAILS

SHEET ST1-42

TAEMWW Imperial Rev. 7/10

ORIGINAL SCALE IN INCHES FOR REDUCED PLANS 0 1 2 3

UNIT 3599
PROJECT NUMBER & PHASE 04120006661
EA 014081

DISREGARD PRINTS BEARING EARLIER REVISION DATES → 04-26-12 05-08-12 05-18-12 05-28-12

REVISION DATES (PRELIMINARY STAGE ONLY) SHEET OF

28-DEC-2012 10:41
st1_042.add

DIST.	COUNTY	ROUTE	POST MILES TOTAL PROJECT	SHEET NO.	TOTAL SHEETS
04	Ala	80	2.2	373	800

RdP
REGISTERED CIVIL ENGINEER — DATE 05-31-12

REGISTERED PROFESSIONAL ENGINEER Robert du Plaine No. 51447 Exp. 6-30-14 CIVIL STATE OF CALIFORNIA

10-22-12
PLANS APPROVAL DATE

The State of California or its officers or agents shall not be responsible for the accuracy or completeness of scanned copies of this plan sheet.

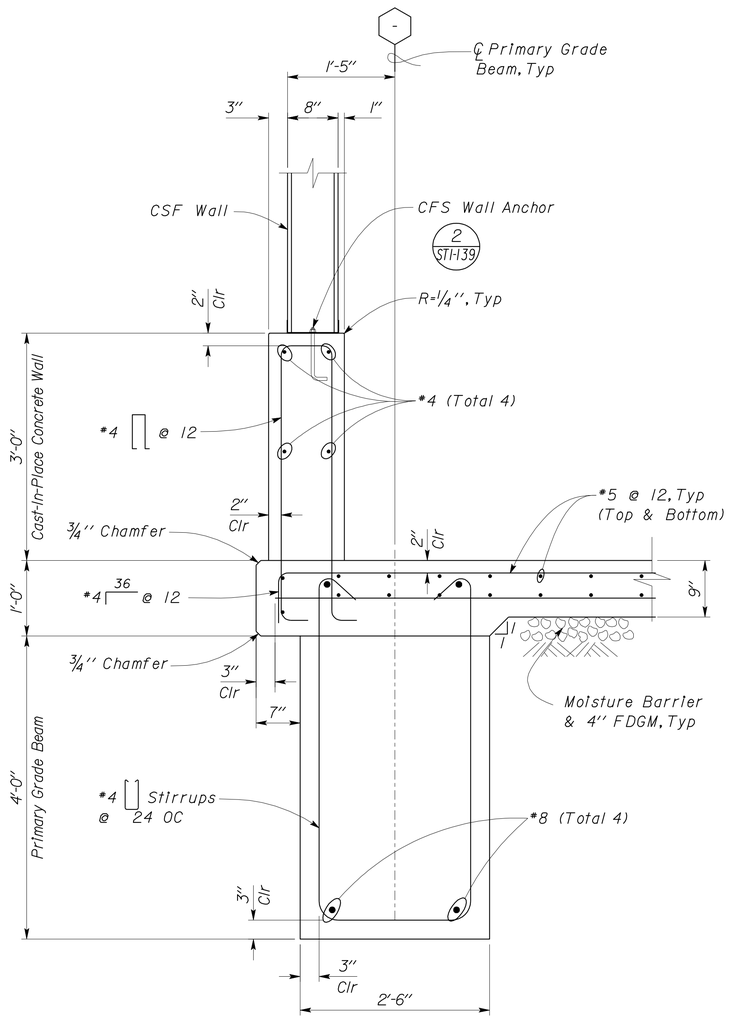

1 FOOTING DETAIL
Scale 1" = 1'-0"

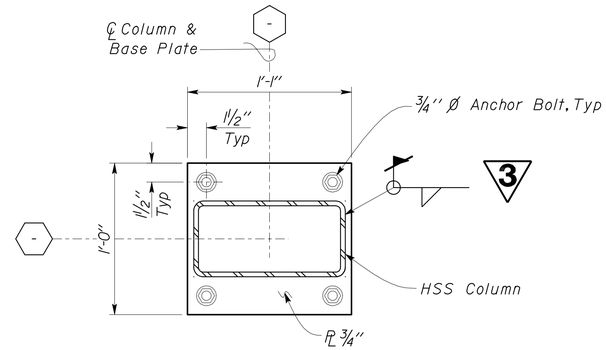

2 HSS COLUMN BASE PLATE DETAIL
Scale 2" = 1'-0"

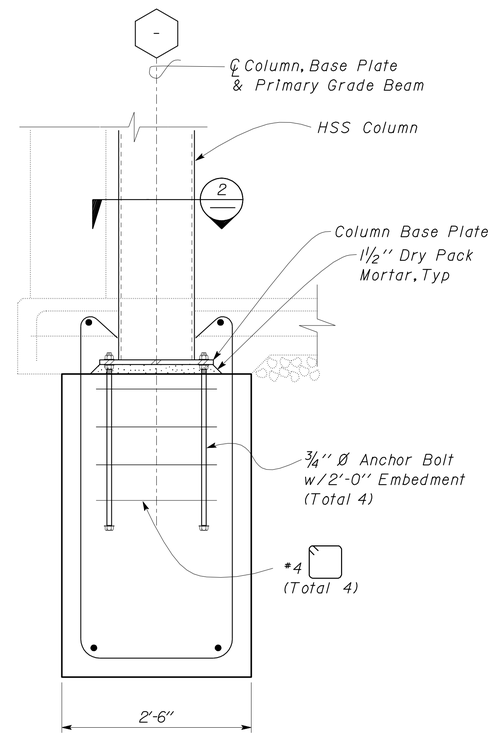

Note
For Details not shown, see 1 S1m

3 FOOTING SECTION @ HSS COLUMN DETAIL
Scale 1" = 1'-0"

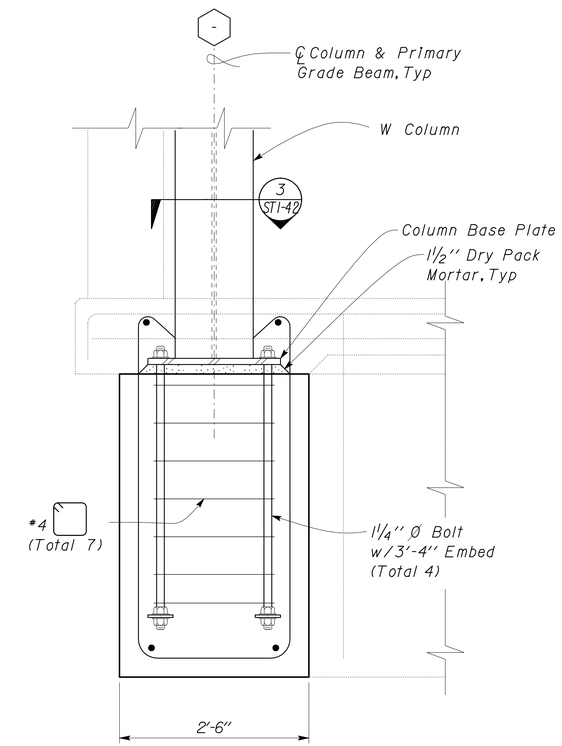

4 FOOTING SECTION @ W COLUMN DETAIL
Scale 1" = 1'-0"

3 **REVISED PER ADDENDUM No. 3 DATED JANUARY 4, 2013**

DESIGN	BY Robert du Plaine	CHECKED Brian Sutliff	
DETAILS	BY David W. Good	CHECKED Robert du Plaine	
QUANTITIES	BY	CHECKED	

STATE OF CALIFORNIA DEPARTMENT OF TRANSPORTATION

DIVISION OF ENGINEERING SERVICES ARCHITECTURAL AND STRUCTURAL DESIGN

BRIDGE NO. 33M5785
POST MILE 2.2

SFOBB MAINTENANCE COMPLEX

FOUNDATION DETAILS

SHEET ST1-45

TAEMWW Imperial Rev. 7/10

ORIGINAL SCALE IN INCHES FOR REDUCED PLANS 0 1 2 3

UNIT 3599
PROJECT NUMBER & PHASE 04120006661
EA 014081

DISREGARD PRINTS BEARING EARLIER REVISION DATES → REVISION DATES (PRELIMINARY STAGE ONLY) 04-25-12 05-08-12 05-18-12 05-28-12

SHEET OF

28-DEC-2012 10:41
st1_045.add

DIST.	COUNTY	ROUTE	POST MILES TOTAL PROJECT	SHEET NO.	TOTAL SHEETS
04	Ala	80	2.2	375	800

RdP
REGISTERED CIVIL ENGINEER — DATE 05-31-12

REGISTERED PROFESSIONAL ENGINEER
Robert du Plaine
No. 51447
Exp. 6-30-14
CIVIL
STATE OF CALIFORNIA

10-22-12
PLANS APPROVAL DATE

The State of California or its officers or agents shall not be responsible for the accuracy or completeness of scanned copies of this plan sheet.

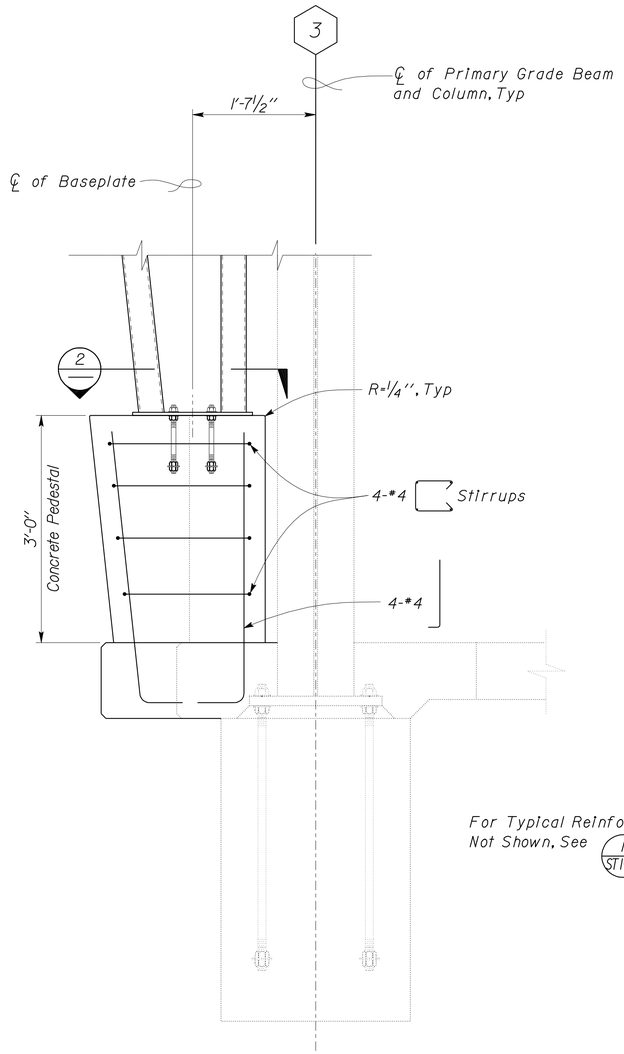

1 COLUMN PEDESTAL
Scale 1" = 1'-0"

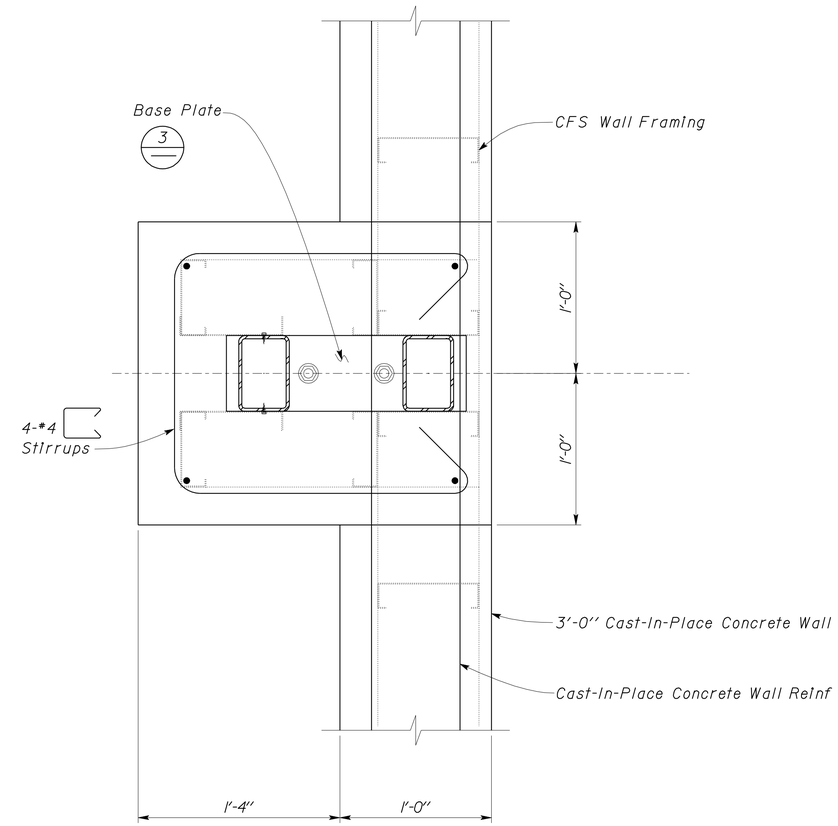

2 COLUMN PEDESTAL
Scale 2" = 1'-0"

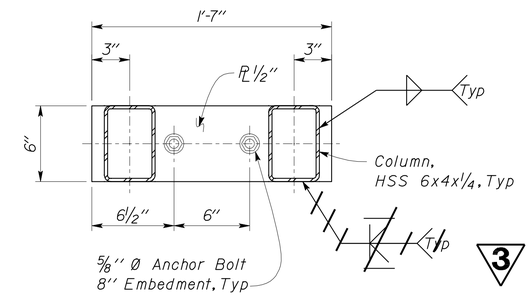

3 HSS COLUMN BASE
Scale 2" = 1'-0"

3 REVISED PER ADDENDUM No. 3 DATED JANUARY 4, 2013

DESIGN	BY Robert du Plaine	CHECKED Brian Sutliff	
DETAILS	BY David W. Good	CHECKED Robert du Plaine	
QUANTITIES	BY	CHECKED	

STATE OF CALIFORNIA
DEPARTMENT OF TRANSPORTATION

DIVISION OF ENGINEERING SERVICES
ARCHITECTURAL AND STRUCTURAL DESIGN

BRIDGE NO. 33M5785
POST MILE 2.2

SFOBB MAINTENANCE COMPLEX
FOUNDATION DETAILS

SHEET ST1-47

TAEMWW Imperial Rev. 7/10

ORIGINAL SCALE IN INCHES FOR REDUCED PLANS 0 1 2 3

UNIT 3599
PROJECT NUMBER & PHASE 04120006661
EA 014081

DISREGARD PRINTS BEARING EARLIER REVISION DATES
REVISION DATES (PRELIMINARY STAGE ONLY) 04-25-12 05-03-12 05-08-12 05-18-12 05-28-12
SHEET OF

28-DEC-2012 10:41
st1_047.dgn

DIST.	COUNTY	ROUTE	POST MILES TOTAL PROJECT	SHEET NO.	TOTAL SHEETS
04	Ala	80	2.2	378	800

RdP
REGISTERED CIVIL ENGINEER — DATE 05-31-12

REGISTERED PROFESSIONAL ENGINEER — Robert du Plaine — No. 51447 — Exp. 6-30-14 — CIVIL — STATE OF CALIFORNIA

10-22-12
PLANS APPROVAL DATE

The State of California or its officers or agents shall not be responsible for the accuracy or completeness of scanned copies of this plan sheet.

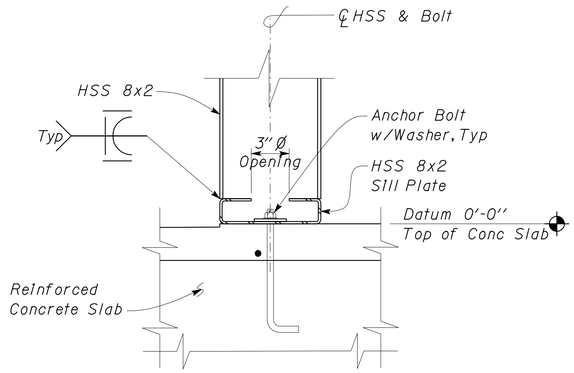

1 HSS SILL PLATE DETAIL
Scale 2" = 1'-0"

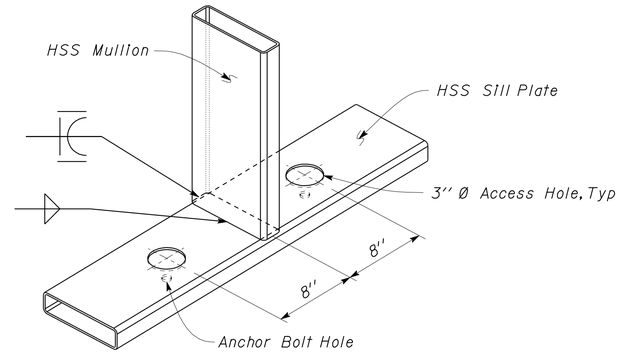

3 HSS SILL PLATE DETAIL
Scale 2" = 1'-0"

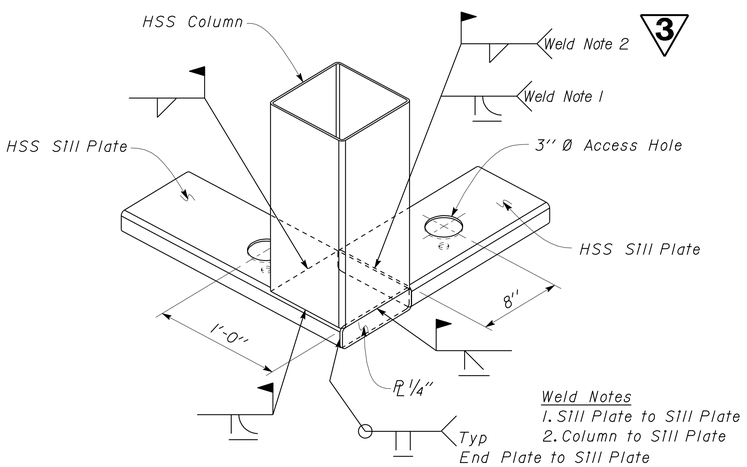

2 HSS SILL PLATE
Scale 2" = 1'-0"

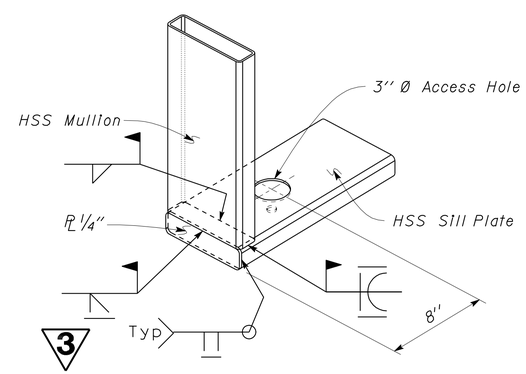

4 HSS SILL PLATE DETAIL
Scale 2" = 1'-0"

3 **REVISED PER ADDENDUM No. 3 DATED JANUARY 4, 2013**

DESIGN	BY Robert du Plaine	CHECKED Brian Sutliff	
DETAILS	BY David W. Good	CHECKED Robert du Plaine	
QUANTITIES	BY	CHECKED	

STATE OF CALIFORNIA
DEPARTMENT OF TRANSPORTATION

DIVISION OF ENGINEERING SERVICES
ARCHITECTURAL AND STRUCTURAL DESIGN

BRIDGE NO. 33M5785
POST MILE 2.2

SFOBB MAINTENANCE COMPLEX

FOUNDATION DETAILS

SHEET **ST1-50**

TAEMWW Imperial Rev. 7/10

ORIGINAL SCALE IN INCHES FOR REDUCED PLANS 0 1 2 3

UNIT 3599
PROJECT NUMBER & PHASE 04120006661
EA 014081

DISREGARD PRINTS BEARING EARLIER REVISION DATES → REVISION DATES (PRELIMINARY STAGE ONLY) 04-25-12 05-08-12 05-11-12 05-22-12 05-28-12

SHEET OF

03-JAN-2013 13:53
st1_050.dgn

DIST.	COUNTY	ROUTE	POST MILES TOTAL PROJECT	SHEET NO.	TOTAL SHEETS
04	Ala	80	2.2	379	800

RdP
REGISTERED CIVIL ENGINEER — DATE 05-31-12

REGISTERED PROFESSIONAL ENGINEER Robert du Plaine No. 51447 Exp. 6-30-14 CIVIL STATE OF CALIFORNIA

10-22-12
PLANS APPROVAL DATE

The State of California or its officers or agents shall not be responsible for the accuracy or completeness of scanned copies of this plan sheet.

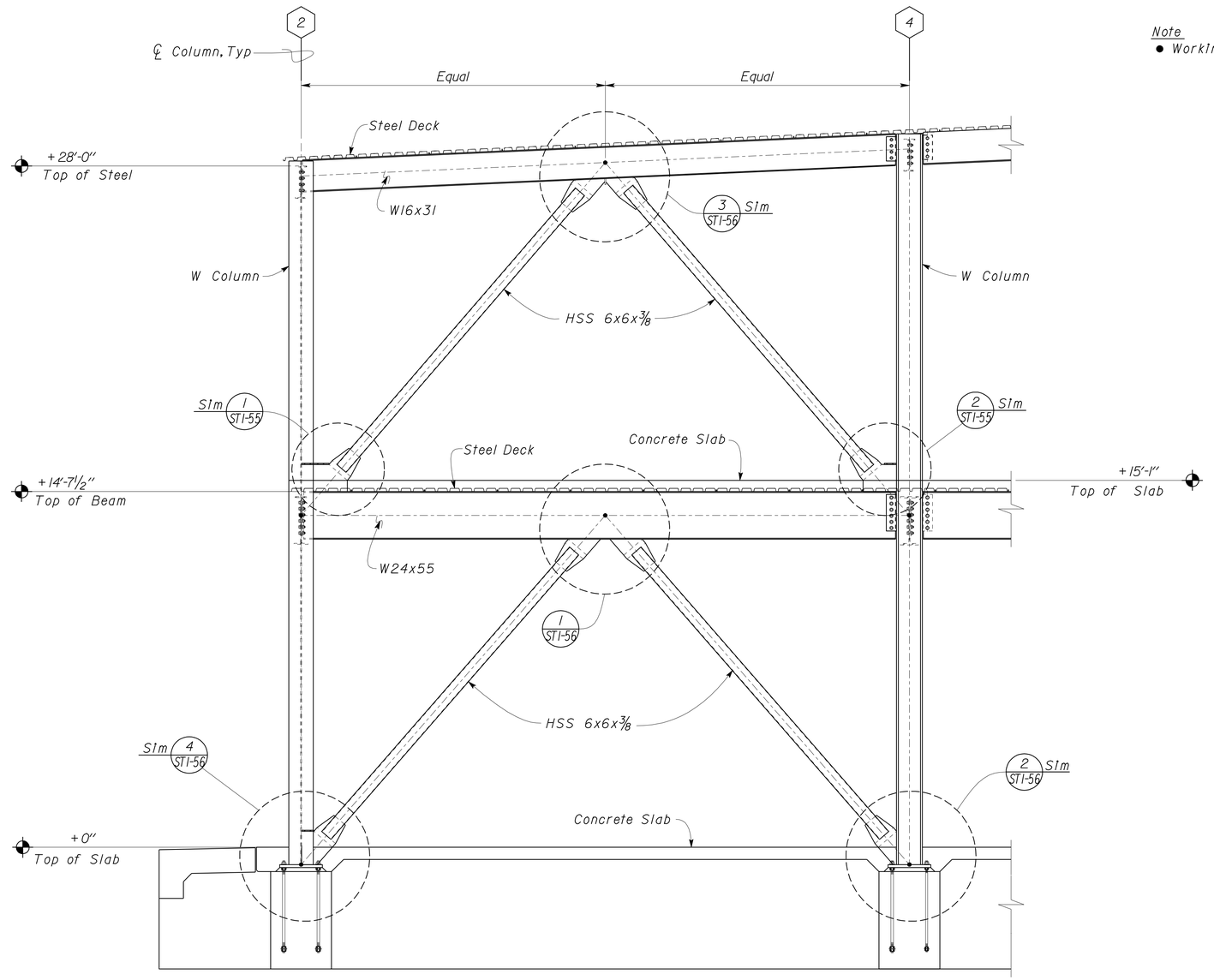

1 CHEVRON AT GRIDLINE A
Scale 3/8" = 1' - 0"

Note
● Working Point

A SPECIAL SEISMIC NOTES

1. Chevron Frames are part of the Seismic Load Resisting System.
2. Gusset Plate welds are Demand Critical welds. (3)
3. The Protected Zone consists of all steel within 2'-0" of and including the Gusset Plates.

3 REVISED PER ADDENDUM No. 3 DATED JANUARY 4, 2013

	BY	CHECKED
DESIGN	Robert du Plaine	Brian Sutliff
DETAILS	David W. Good	Robert du Plaine
QUANTITIES		

STATE OF CALIFORNIA
DEPARTMENT OF TRANSPORTATION

DIVISION OF ENGINEERING SERVICES
ARCHITECTURAL AND STRUCTURAL DESIGN

BRIDGE NO. 33M5785
POST MILE 2.2

SFOBB MAINTENANCE COMPLEX
CHEVRON FRAME ELEVATION

SHEET ST1-51

TAEMWW Imperial Rev. 7/10

ORIGINAL SCALE IN INCHES FOR REDUCED PLANS 0 1 2 3

UNIT 3599
PROJECT NUMBER & PHASE 04120006661
EA 014081

DISREGARD PRINTS BEARING EARLIER REVISION DATES →
REVISION DATES (PRELIMINARY STAGE ONLY) 04-21-12 04-23-12 04-28-12 05-08-12 05-18-12 05-28-12 07-02-12
SHEET OF

28-DEC-2012 10:42
st1_051.dgn

DIST.	COUNTY	ROUTE	POST MILES TOTAL PROJECT	SHEET NO.	TOTAL SHEETS
04	Ala	80	2.2	380	800

RdP
REGISTERED CIVIL ENGINEER — DATE 05-31-12

REGISTERED PROFESSIONAL ENGINEER Robert du Plaine No. 51447 Exp. 6-30-14 CIVIL STATE OF CALIFORNIA

10-22-12
PLANS APPROVAL DATE

The State of California or its officers or agents shall not be responsible for the accuracy or completeness of scanned copies of this plan sheet.

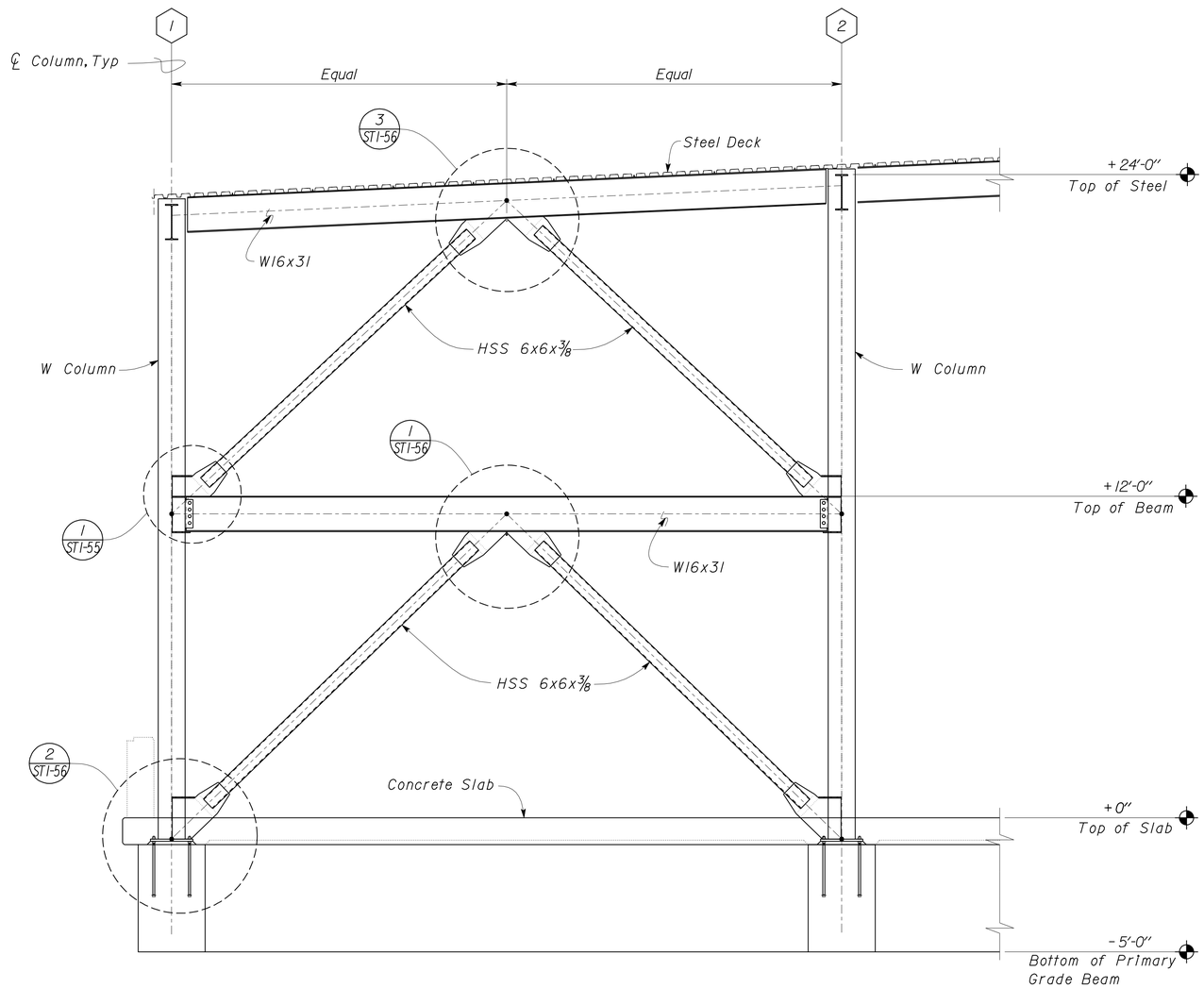

Note
- Working Point

(A) SPECIAL SEISMIC NOTES

1. Chevron Frames are part of the Seismic Load Resisting System.
2. (3) Gusset Plate welds are Demand Critical welds.
3. The Protected Zone consists of all steel within 2'-0" of and including the Gusset Plates.

(1) CHEVRON AT GRIDLINE Q & R

Scale 3/8" = 1'-0"

(3) **REVISED PER ADDENDUM No. 3 DATED JANUARY 4, 2013**

DESIGN	BY Robert du Plaine	CHECKED Brian Sutliff	
DETAILS	BY David W. Good	CHECKED Robert du Plaine	
QUANTITIES	BY	CHECKED	

STATE OF CALIFORNIA
DEPARTMENT OF TRANSPORTATION

DIVISION OF ENGINEERING SERVICES
ARCHITECTURAL AND STRUCTURAL DESIGN

BRIDGE NO. 33M5785
POST MILE 2.2

SFOBB MAINTENANCE COMPLEX

CHEVRON FRAME ELEVATION

SHEET **ST1-52**

TAEMWW Imperial Rev. 7/10

ORIGINAL SCALE IN INCHES FOR REDUCED PLANS 0 1 2 3

UNIT 3599
PROJECT NUMBER & PHASE 04120006661
EA 014081

DISREGARD PRINTS BEARING EARLIER REVISION DATES →
REVISION DATES (PRELIMINARY STAGE ONLY) 04-19-12 04-23-12 04-26-12 05-03-12 05-18-12 05-28-12 07-02-12
SHEET OF

28-DEC-2012 10:42
st1_052.dgn

DIST.	COUNTY	ROUTE	POST MILES TOTAL PROJECT	SHEET NO.	TOTAL SHEETS
04	Ala	80	2.2	383	800

RdP
REGISTERED CIVIL ENGINEER — DATE 05-31-12

REGISTERED PROFESSIONAL ENGINEER Robert du Plaine No. 51447 Exp. 6-30-14 CIVIL STATE OF CALIFORNIA

10-22-12
PLANS APPROVAL DATE

The State of California or its officers or agents shall not be responsible for the accuracy or completeness of scanned copies of this plan sheet.

(A) SPECIAL SEISMIC NOTES

1. Chevron Frames are part of the Seismic Load Resisting System.
2. Gusset Plate welds are Demand Critical welds.
3. The Protected Zone consists of all steel within 2'-0" of and including the Gusset Plates.

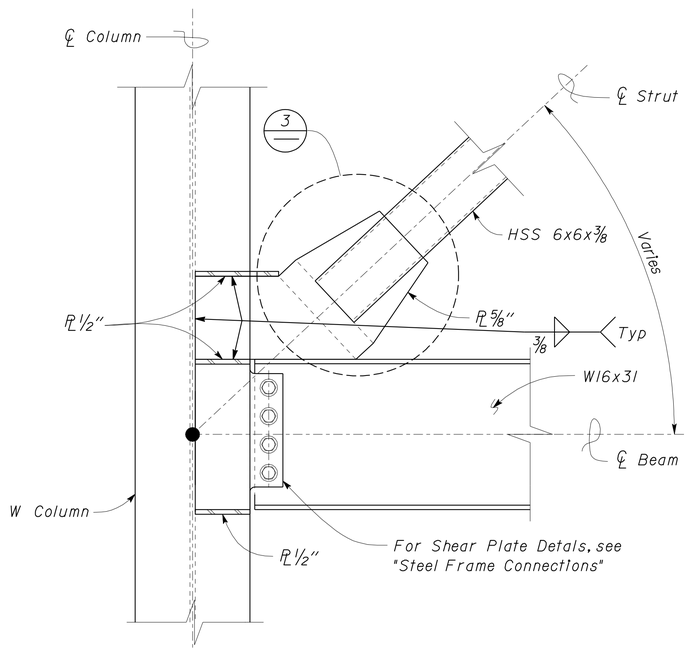

(1) WEB TO STRUT
Scale 1 1/2" = 1'-0"

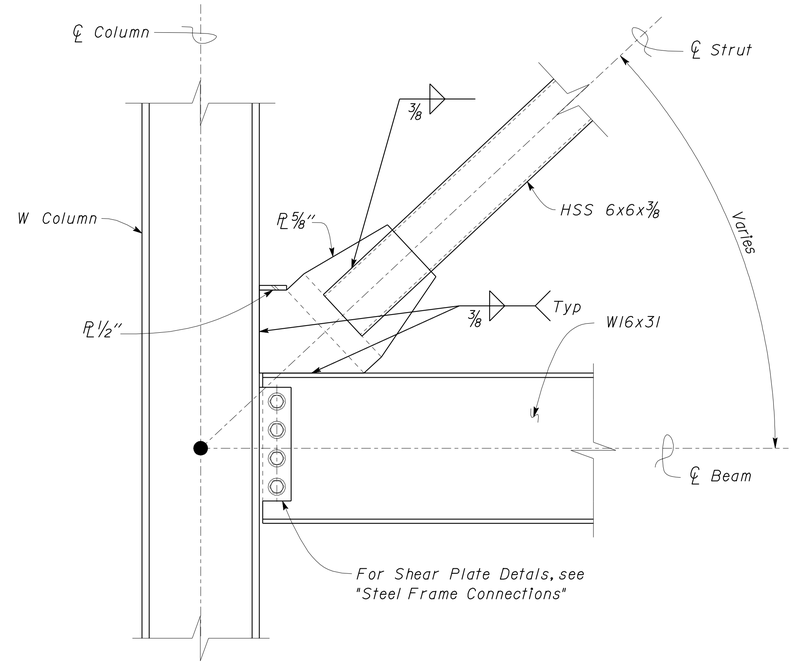

(2) FLANGE TO STRUT
Scale 1 1/2" = 1'-0"

Note
● Working Point

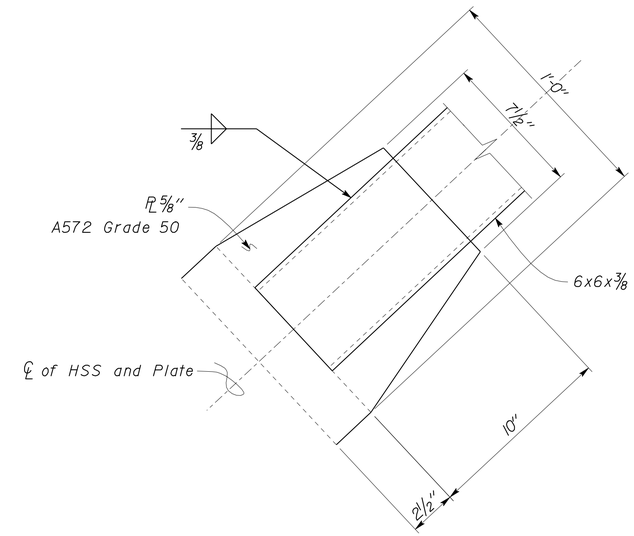

(3) PARTIAL GUSSET PLATE
Scale 3" = 1'-0"

3 REVISED PER ADDENDUM No. 3 DATED JANUARY 4, 2013

DESIGN	BY Robert du Plaine	CHECKED Brian Sutliff	
DETAILS	BY David W. Good	CHECKED Robert du Plaine	
QUANTITIES	BY	CHECKED	

STATE OF CALIFORNIA
DEPARTMENT OF TRANSPORTATION

DIVISION OF ENGINEERING SERVICES
ARCHITECTURAL AND STRUCTURAL DESIGN

BRIDGE NO. 33M5785
POST MILE 2.2

SFOBB MAINTENANCE COMPLEX
CHEVRON FRAME DETAILS

SHEET ST1-55

TAEMWW Imperial Rev. 7/10

ORIGINAL SCALE IN INCHES FOR REDUCED PLANS 0 1 2 3

UNIT 3599
PROJECT NUMBER & PHASE 04120006661
EA 014081

DISREGARD PRINTS BEARING EARLIER REVISION DATES → REVISION DATES (PRELIMINARY STAGE ONLY) 04-20-12 04-23-12 04-26-12 05-08-12 05-18-12 SHEET OF

31-DEC-2012 09:14
st1_055.add

DIST.	COUNTY	ROUTE	POST MILES TOTAL PROJECT	SHEET NO.	TOTAL SHEETS
04	Ala	80	2.2	384	800

REGISTERED CIVIL ENGINEER — DATE 05-31-12

REGISTERED PROFESSIONAL ENGINEER Robert du Plaine No. 51447 Exp. 6-30-14 CIVIL STATE OF CALIFORNIA

10-22-12
PLANS APPROVAL DATE

The State of California or its officers or agents shall not be responsible for the accuracy or completeness of scanned copies of this plan sheet.

3

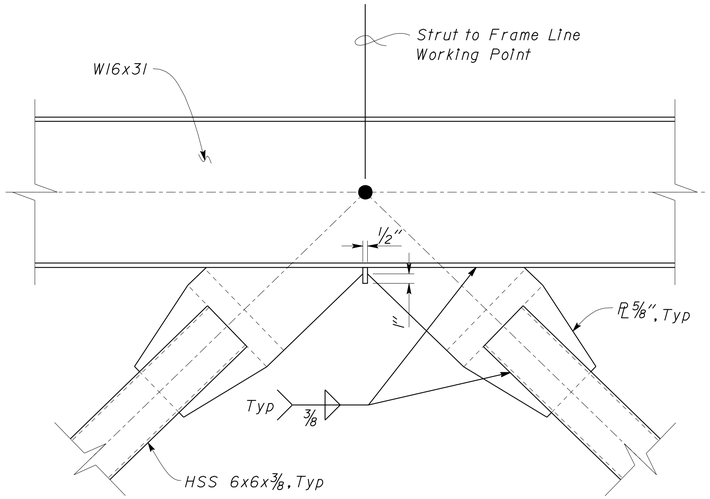

1 STRUT TO FRAME LINK - FLAT
Scale 1 1/2" = 1' - 0"

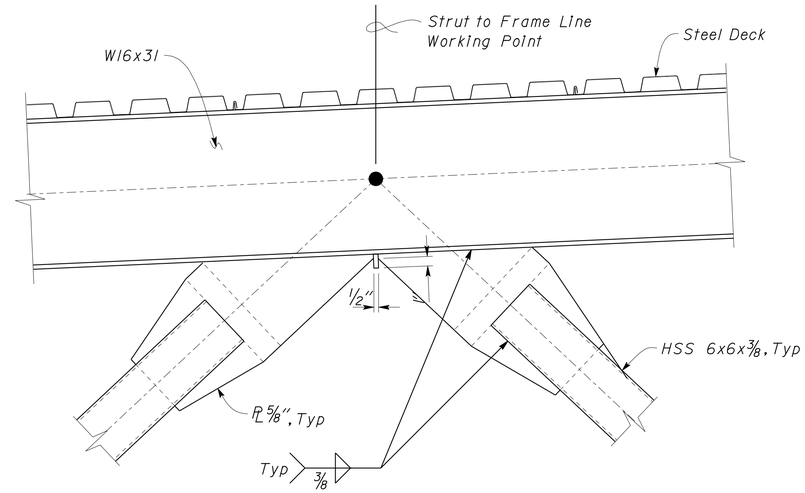

3 STRUT TO FRAME LINK - SLOPED
Scale 1 1/2" = 1' - 0"

Note
- Working Point

A SPECIAL SEISMIC NOTES

1. Chevron Frames are part of the Seismic Load Resisting System.
2. Gusset Plate welds are Demand Critical welds.
3. The Protected Zone consists of all steel within 2'-0" of and including the Gusset Plates.

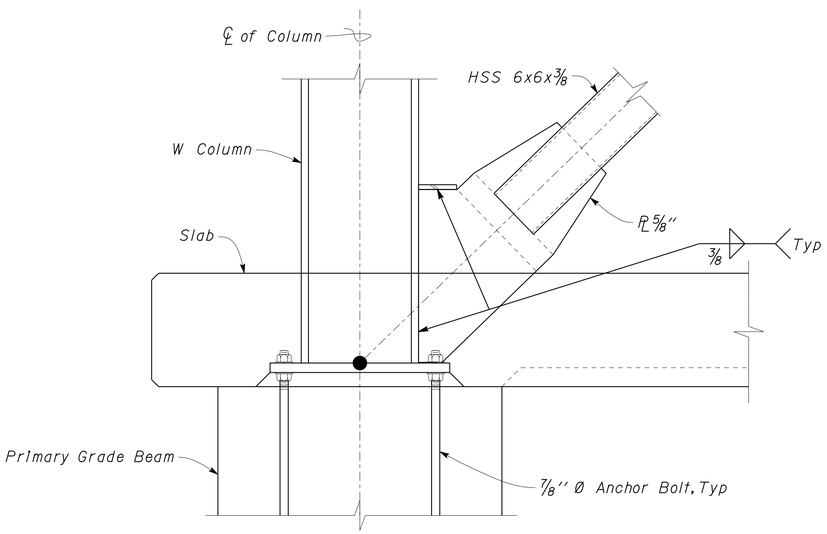

2 STRUT TO FLANGE
Scale 1 1/2" = 1' - 0"

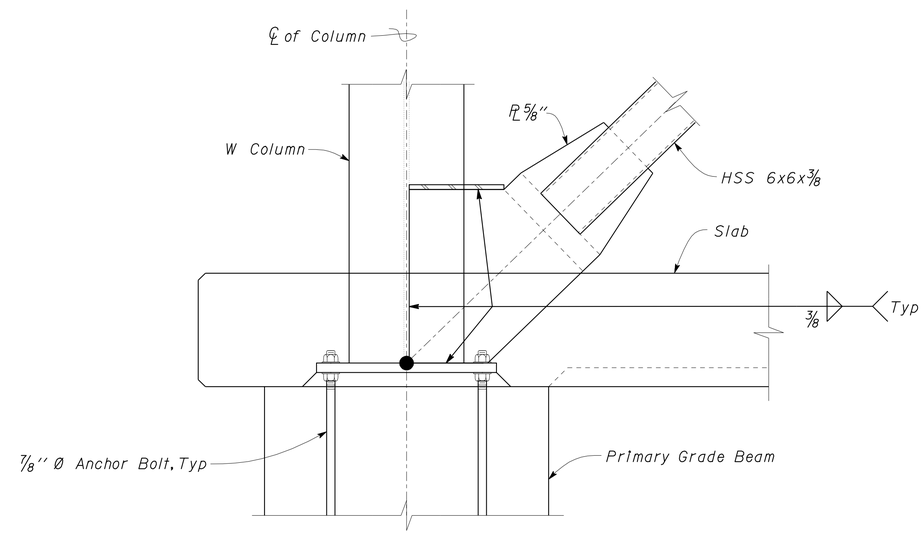

4 STRUT TO WEB
Scale 1 1/2" = 1' - 0"

3 **REVISED PER ADDENDUM No. 3 DATED JANUARY 4, 2013**

	BY	CHECKED
DESIGN	Robert du Plaine	Brian Sutliff
DETAILS	David W. Good	Robert du Plaine
QUANTITIES		

STATE OF CALIFORNIA
DEPARTMENT OF TRANSPORTATION

DIVISION OF ENGINEERING SERVICES
ARCHITECTURAL AND STRUCTURAL DESIGN

BRIDGE NO. 33M5785
POST MILE 2.2

SFOBB MAINTENANCE COMPLEX

CHEVRON FRAME DETAILS

SHEET ST1-56

TAEMWW Imperial Rev. 7/10

ORIGINAL SCALE IN INCHES FOR REDUCED PLANS 0 1 2 3

UNIT 3599
PROJECT NUMBER & PHASE 04120006661
EA 014081

DISREGARD PRINTS BEARING EARLIER REVISION DATES → REVISION DATES (PRELIMINARY STAGE ONLY) 04-20-12 04-23-12 04-26-12 05-08-12 05-18-12 SHEET OF

02-JAN-2013 07:38
st1_056.add

DIST.	COUNTY	ROUTE	POST MILES TOTAL PROJECT	SHEET NO.	TOTAL SHEETS
04	Ala	80	2.2	389	800

RdP
REGISTERED CIVIL ENGINEER — DATE 05-31-12

REGISTERED PROFESSIONAL ENGINEER Robert du Plaine No. 51447 Exp. 6-30-14 CIVIL STATE OF CALIFORNIA

10-22-12
PLANS APPROVAL DATE

The State of California or its officers or agents shall not be responsible for the accuracy or completeness of scanned copies of this plan sheet.

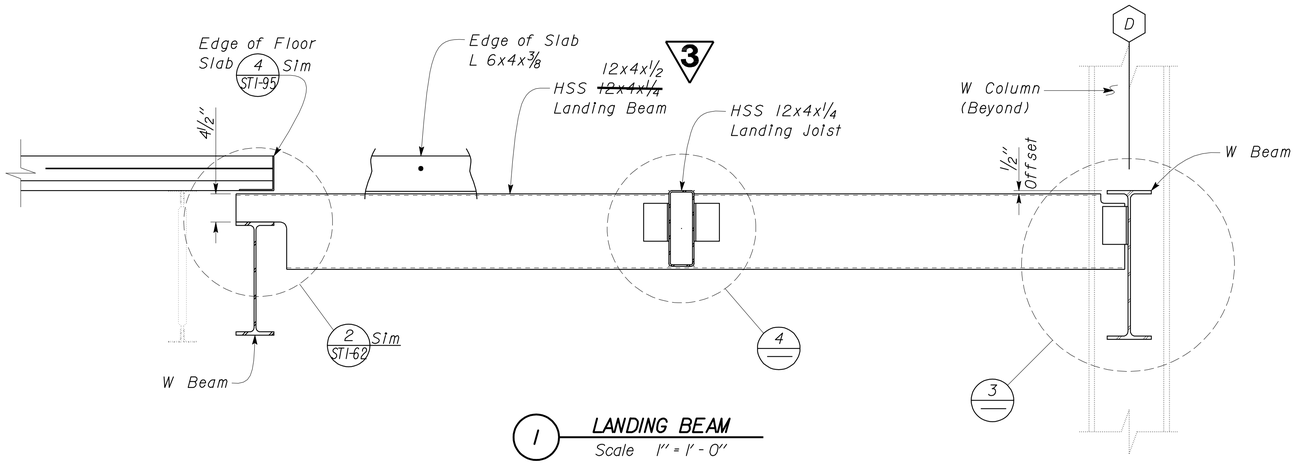

1 LANDING BEAM
Scale 1" = 1' - 0"

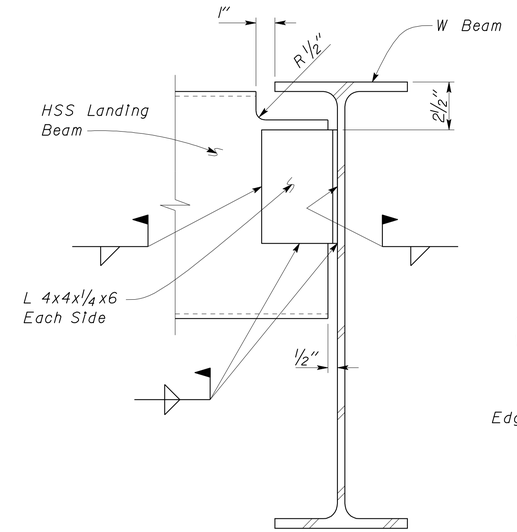

3 HSS TO W BEAM
Scale 3" = 1' - 0"

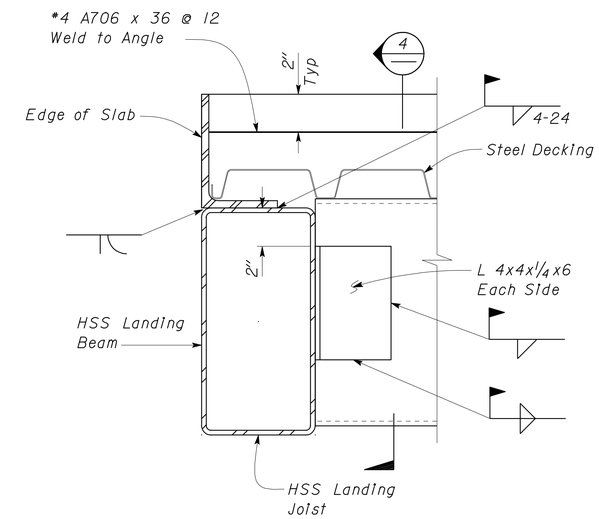

5 LANDING SECTION
Scale 3" = 1' - 0"

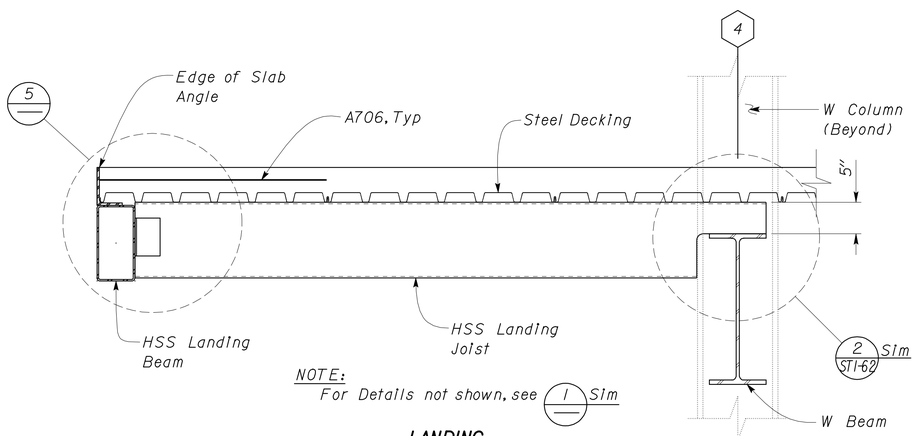

NOTE:
For Details not shown, see 1 Sim

3 2 LANDING ~~LANDNING~~ JOIST
Scale 1" = 1' - 0"

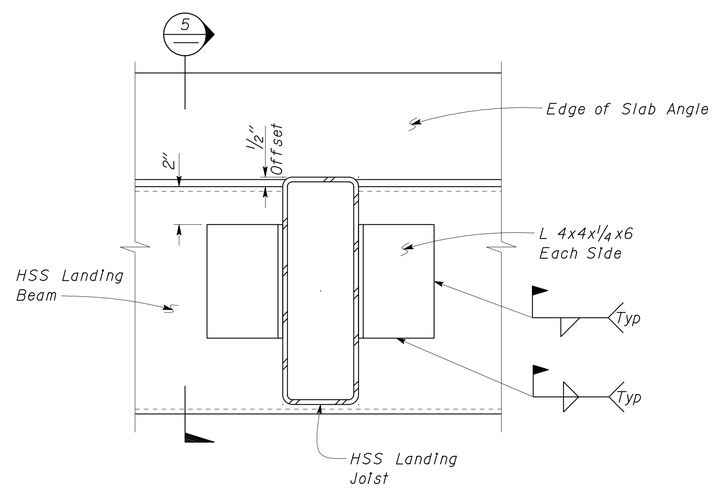

4 JOIST TO BEAM
Scale 3" = 1' - 0"

3 REVISED PER ADDENDUM No. 3 DATED JANUARY 4, 2013

DESIGN	BY Robert du Plaine	CHECKED Brian Sutliff	
DETAILS	BY David W. Good	CHECKED Robert du Plaine	
QUANTITIES	BY	CHECKED	

STATE OF CALIFORNIA DEPARTMENT OF TRANSPORTATION

DIVISION OF ENGINEERING SERVICES
ARCHITECTURAL AND STRUCTURAL DESIGN

BRIDGE NO. 33M5785
POST MILE 2.2

SFOBB MAINTENANCE COMPLEX

HSS FRAMING AT STAIRWELL

SHEET ST1-61

TAEMWW Imperial Rev. 7/10

ORIGINAL SCALE IN INCHES FOR REDUCED PLANS 0 1 2 3

UNIT 3599
PROJECT NUMBER & PHASE 04120006661
EA 014081

DISREGARD PRINTS BEARING EARLIER REVISION DATES → REVISION DATES (PRELIMINARY STAGE ONLY) 05-03-12 05-08-12 05-18-12 05-28-12

SHEET OF

03-JAN-2013 13:56

st1_061.add

DIST.	COUNTY	ROUTE	POST MILES TOTAL PROJECT	SHEET NO.	TOTAL SHEETS
04	Ala	80	2.2	390	800

RdP
REGISTERED CIVIL ENGINEER — DATE 05-31-12

REGISTERED PROFESSIONAL ENGINEER Robert du Plaine No. 51447 Exp. 6-30-14 CIVIL STATE OF CALIFORNIA

10-22-12
PLANS APPROVAL DATE

The State of California or its officers or agents shall not be responsible for the accuracy or completeness of scanned copies of this plan sheet.

3

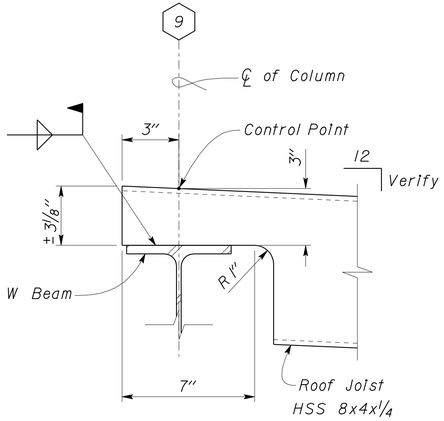

1 HSS ROOF JOIST COPING
Scale 3" = 1' - 0"

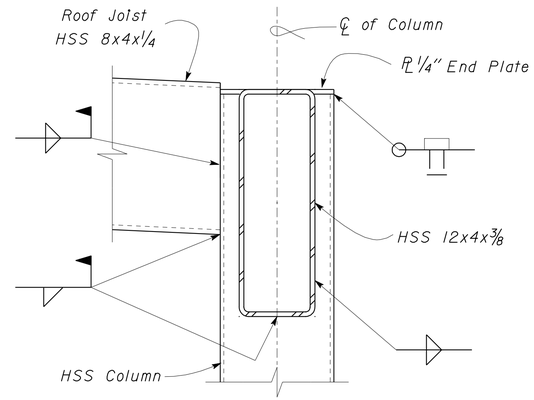

3 HSS JOIST TO COLUMN
Scale 3" = 1' - 0"

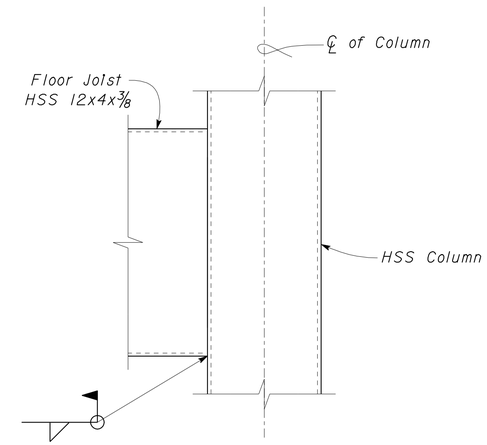

5 HSS JOIST TO COLUMN
Scale 3" = 1' - 0"

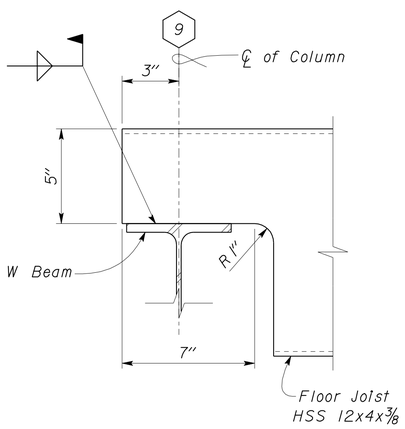

2 HSS FLOOR JOIST COPING
Scale 3" = 1' - 0"

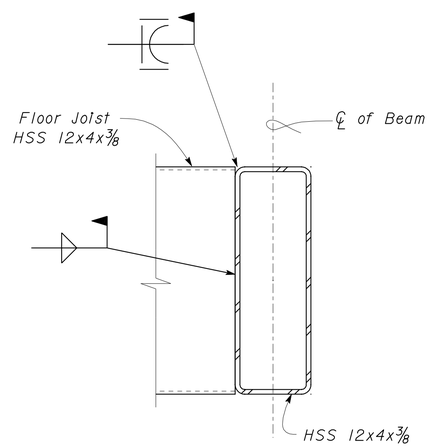

4 HSS JOIST TO BEAM
Scale 3" = 1' - 0"

3 **REVISED PER ADDENDUM No. 3 DATED JANUARY 4, 2013**

	BY	CHECKED
DESIGN	Robert du Plaine	Brian Sutliff
DETAILS	David W. Good	Robert du Plaine
QUANTITIES		

STATE OF CALIFORNIA
DEPARTMENT OF TRANSPORTATION

DIVISION OF ENGINEERING SERVICES
ARCHITECTURAL AND STRUCTURAL DESIGN

BRIDGE NO. 33M5785
POST MILE 2.2

SFOBB MAINTENANCE COMPLEX
HSS FRAMING AT STAIRWELL

SHEET ST1-62

TAEMWW Imperial Rev. 7/10

ORIGINAL SCALE IN INCHES FOR REDUCED PLANS 0 1 2 3

UNIT 3599
PROJECT NUMBER & PHASE 04120006661
EA 014081

DISREGARD PRINTS BEARING EARLIER REVISION DATES → 02-01-12 05-04-12 05-08-12 05-18-12 05-28-12

REVISION DATES (PRELIMINARY STAGE ONLY) SHEET OF

P:\dist_04\0400000038_sfobb_ms_complex\expedite\Addendum Plans\Addendum 2 - 11-28-2012\st1_062.dgn 28-DEC-2012 10:27

DIST.	COUNTY	ROUTE	POST MILES TOTAL PROJECT	SHEET NO.	TOTAL SHEETS
04	Ala	80	2.2	393	800

RdP
REGISTERED CIVIL ENGINEER — DATE 05-31-12

REGISTERED PROFESSIONAL ENGINEER
Robert du Plaine
No. 51447
Exp. 6-30-14
CIVIL
STATE OF CALIFORNIA

10-22-12
PLANS APPROVAL DATE

The State of California or its officers or agents shall not be responsible for the accuracy or completeness of scanned copies of this plan sheet.

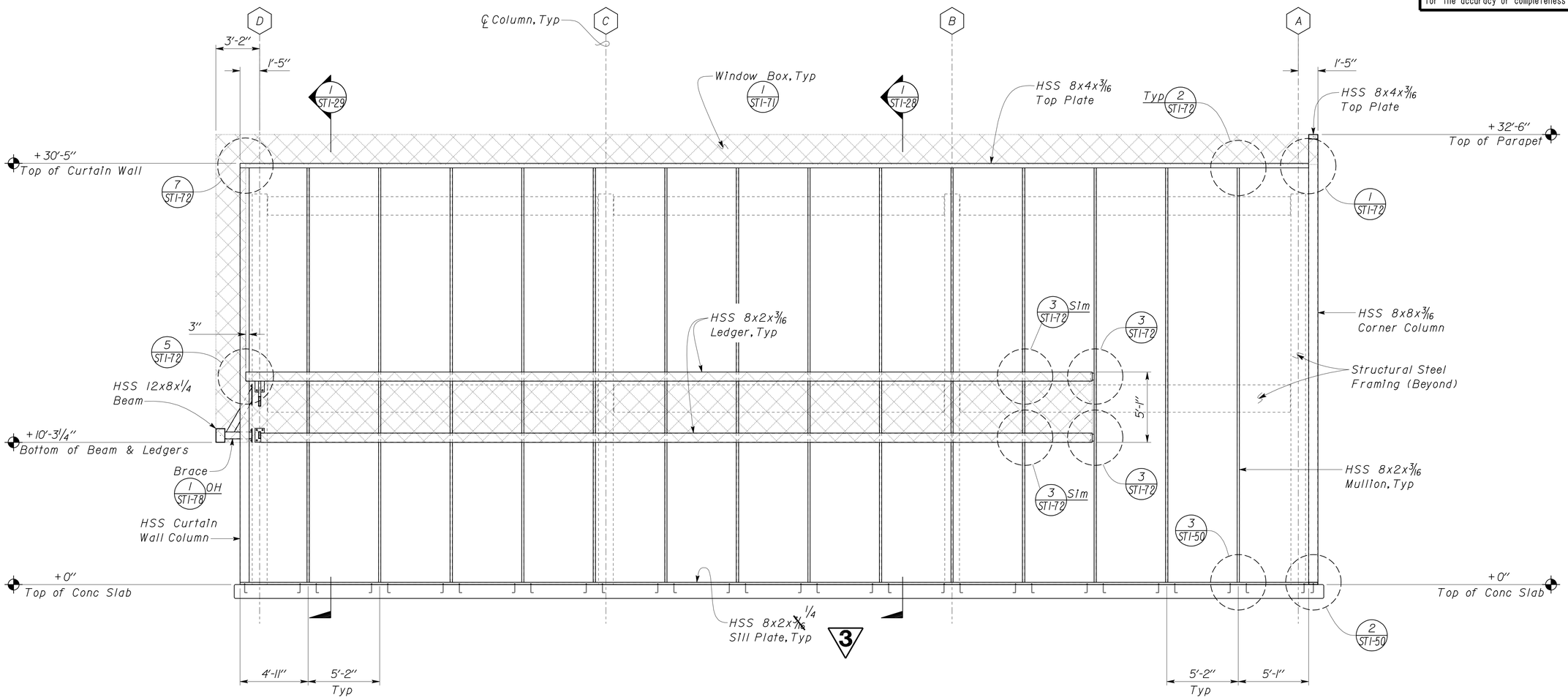

1 HSS CURTAIN WALL FRAMING ALONG GRID 2
Scale 1/4" = 1' - 0"

3 REVISED PER ADDENDUM No. 3 DATED JANUARY 4, 2013

DESIGN	BY Robert du Plaine	CHECKED Brian Sutliff	
DETAILS	BY David W. Good	CHECKED Robert du Plaine	
QUANTITIES	BY	CHECKED	

STATE OF CALIFORNIA
DEPARTMENT OF TRANSPORTATION

DIVISION OF ENGINEERING SERVICES
ARCHITECTURAL AND STRUCTURAL DESIGN

BRIDGE NO. 33M5785
POST MILE 2.2

SFOBB MAINTENANCE COMPLEX
WALL FRAMING ELEVATION AT GRID 2

SHEET ST1-65

TAEMWW Imperial Rev. 7/10

ORIGINAL SCALE IN INCHES FOR REDUCED PLANS 0 1 2 3

UNIT 3599
PROJECT NUMBER & PHASE 04120006661
EA 014081

DISREGARD PRINTS BEARING EARLIER REVISION DATES
REVISION DATES (PRELIMINARY STAGE ONLY): 04-23-12 04-30-12 05-08-12 05-18-12 05-28-12 06-18-12
SHEET OF

28-DEC-2012 15:25
st1_065.dgn

DIST.	COUNTY	ROUTE	POST MILES TOTAL PROJECT	SHEET NO.	TOTAL SHEETS
04	Ala	80	2.2	399	800

RdP
REGISTERED CIVIL ENGINEER — DATE 05-31-12

REGISTERED PROFESSIONAL ENGINEER Robert du Plaine No. 51447 Exp. 6-30-14 CIVIL STATE OF CALIFORNIA

10-22-12
PLANS APPROVAL DATE

The State of California or its officers or agents shall not be responsible for the accuracy or completeness of scanned copies of this plan sheet.

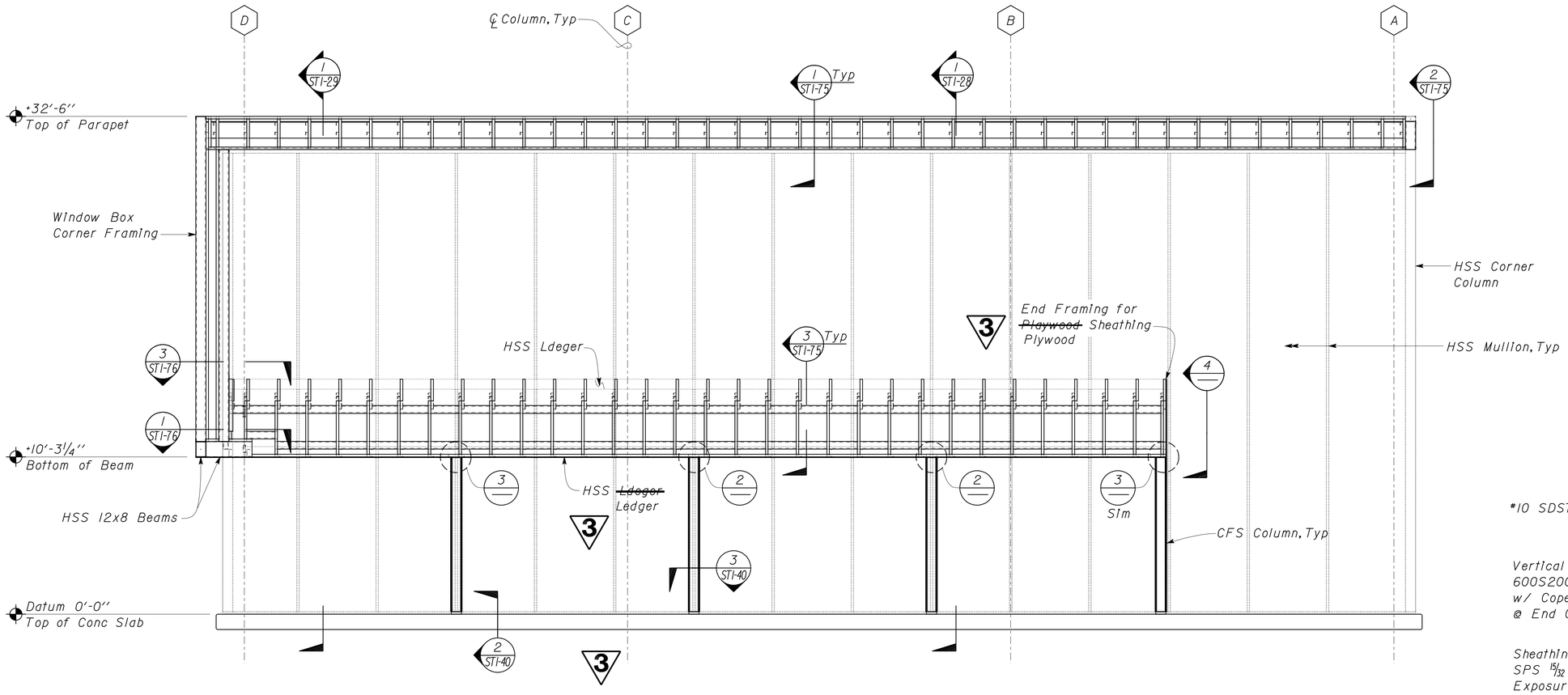

1 WINDOW BOX FRAMING ELEVATION
Scale 1/4" = 1'-0"

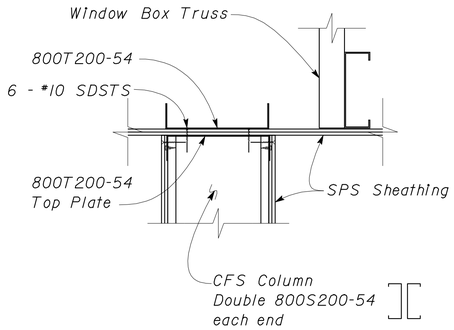

2 COLUMN TO WINDOW BOX
Scale 2" = 1'-0"

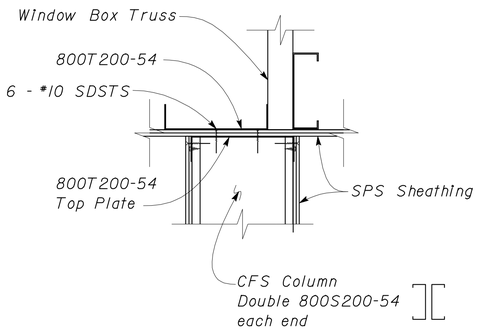

3 ALTERNATIVE ASSEMBLY
Scale 2" = 1'-0"

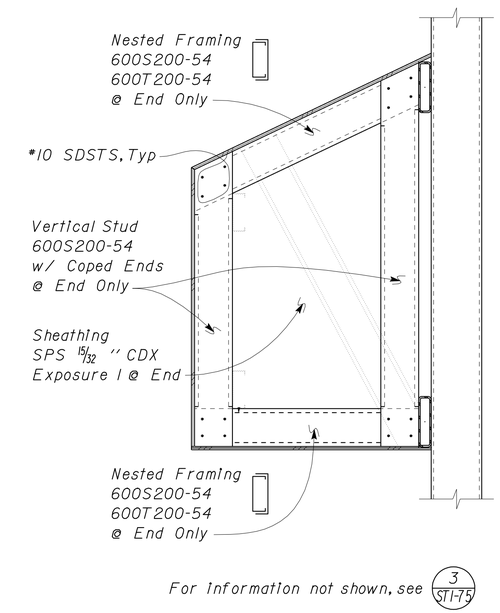

4 END FRAMING
Scale 1" = 1'-0"

3 **REVISED PER ADDENDUM No. 3 DATED JANUARY 4, 2013**

	BY	CHECKED
DESIGN	Robert du Plaine	Brian Sutliff
DETAILS	David W. Good	Robert du Plaine
QUANTITIES		

STATE OF CALIFORNIA
DEPARTMENT OF TRANSPORTATION

DIVISION OF ENGINEERING SERVICES
ARCHITECTURAL AND STRUCTURAL DESIGN

BRIDGE NO. 33M5785
POST MILE 2.2

SFOBB MAINTENANCE COMPLEX

WINDOW BOX FRAMING ELEVATION

SHEET **ST1-71**

TAEMWW Imperial Rev. 7/10

ORIGINAL SCALE IN INCHES FOR REDUCED PLANS 0 1 2 3

UNIT 3599
PROJECT NUMBER & PHASE 04120006661
EA 014081

DISREGARD PRINTS BEARING EARLIER REVISION DATES → 04-22-12 05-01-12 05-08-12 05-23-12 06-18-12

REVISION DATES (PRELIMINARY STAGE ONLY) SHEET OF

st1_071.dgn 03-JAN-2013 13:36

DIST.	COUNTY	ROUTE	POST MILES TOTAL PROJECT	SHEET NO.	TOTAL SHEETS
04	Ala	80	2.2	400	800

3

RdP
REGISTERED CIVIL ENGINEER — 05-31-12 DATE

REGISTERED PROFESSIONAL ENGINEER Robert du Plaine No. 51447 Exp. 6-30-14 CIVIL STATE OF CALIFORNIA

10-22-12
PLANS APPROVAL DATE

The State of California or its officers or agents shall not be responsible for the accuracy or completeness of scanned copies of this plan sheet.

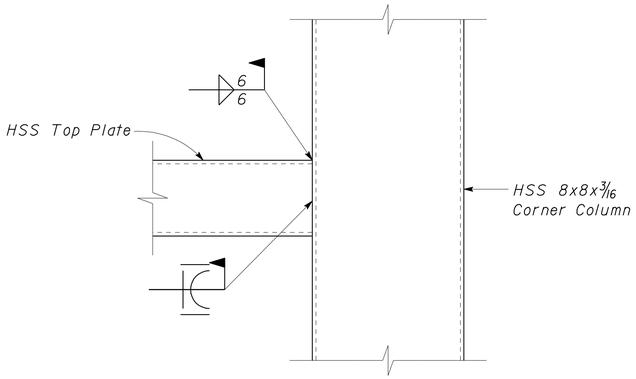

1 TOP PLATE TO COLUMN CONNECTION DETAIL
Scale 3" = 1'-0"

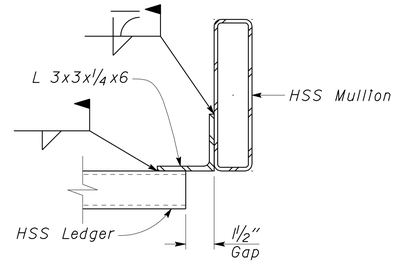

4 LEDGER TO MULLION CONNECTION DETAIL
Scale 3" = 1'-0"

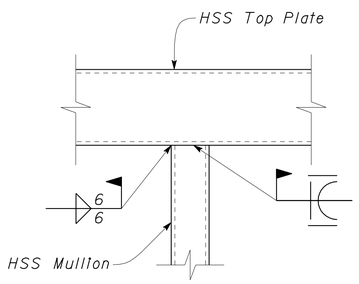

2 MULLION TO TOP PLATE CONNECTION DETAIL
Scale 3" = 1'-0"

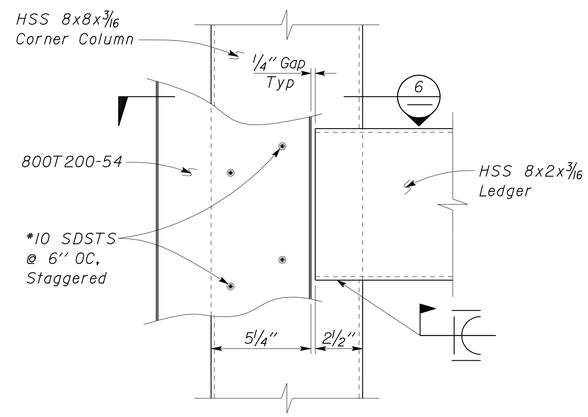

5 LEDGER TO COLUMN CONNECTION DETAIL
Scale 3" = 1'-0"

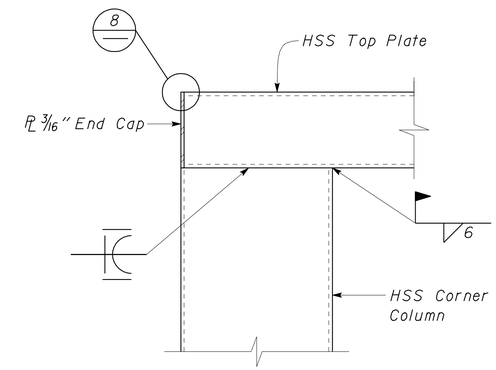

7 COLUMN TO TOP PLATE CONNECTION DETAIL
Scale 3" = 1'-0"

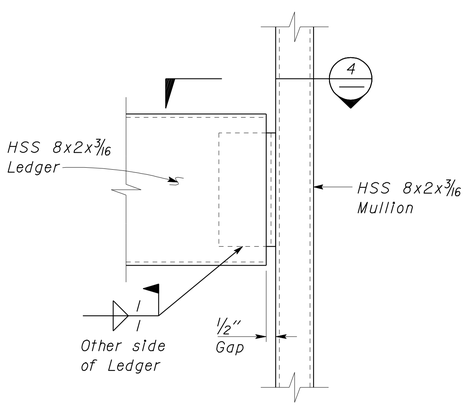

3 LEDGER TO MULLION CONNECTION DETAIL
Scale 3" = 1'-0"

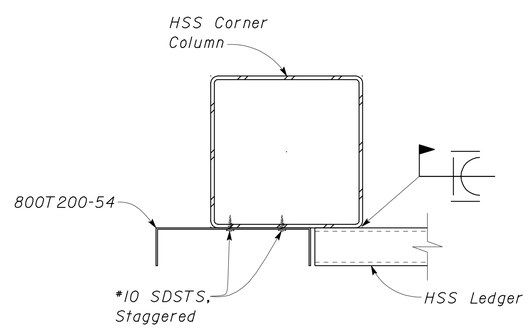

6 LEDGER TO COLUMN CONNECTION DETAIL
Scale 3" = 1'-0"

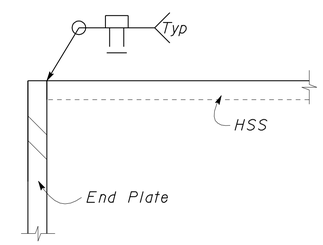

8 HSS END PLATE WELD DETAIL
No Scale

3 **REVISED PER ADDENDUM No. 3 DATED JANUARY 4, 2013**

	BY	CHECKED
DESIGN	Robert du Plaine	Brian Sutliff
DETAILS	David W. Good	Robert du Plaine
QUANTITIES		

STATE OF CALIFORNIA
DEPARTMENT OF TRANSPORTATION

DIVISION OF ENGINEERING SERVICES
ARCHITECTURAL AND STRUCTURAL DESIGN

BRIDGE NO. 33M5785
POST MILE 2.2

SFOBB MAINTENANCE COMPLEX

HSS WALL FRAMING DETAILS

SHEET ST1-72

TAEMWW Imperial Rev. 7/10

ORIGINAL SCALE IN INCHES FOR REDUCED PLANS 0 1 2 3

UNIT 3599
PROJECT NUMBER & PHASE 04120006661
EA 014081

DISREGARD PRINTS BEARING EARLIER REVISION DATES → REVISION DATES (PRELIMINARY STAGE ONLY) 04-28-12 05-01-12 05-08-12 05-18-12 06-18-12 SHEET OF

P:\dist_04\0400000038_sfobb_ms_complex\expedite\Addendum Plans\Addendum 2 - 11-28-2012\st1_072.dgn 28-DEC-2012 14:12

DIST.	COUNTY	ROUTE	POST MILES TOTAL PROJECT	SHEET NO.	TOTAL SHEETS
04	Ala	80	2.2	401	800

RdP
REGISTERED CIVIL ENGINEER — DATE 05-31-12

REGISTERED PROFESSIONAL ENGINEER — Robert du Plaine — No. 51447 — Exp. 6-30-14 — CIVIL — STATE OF CALIFORNIA

10-22-12
PLANS APPROVAL DATE

The State of California or its officers or agents shall not be responsible for the accuracy or completeness of scanned copies of this plan sheet.

3

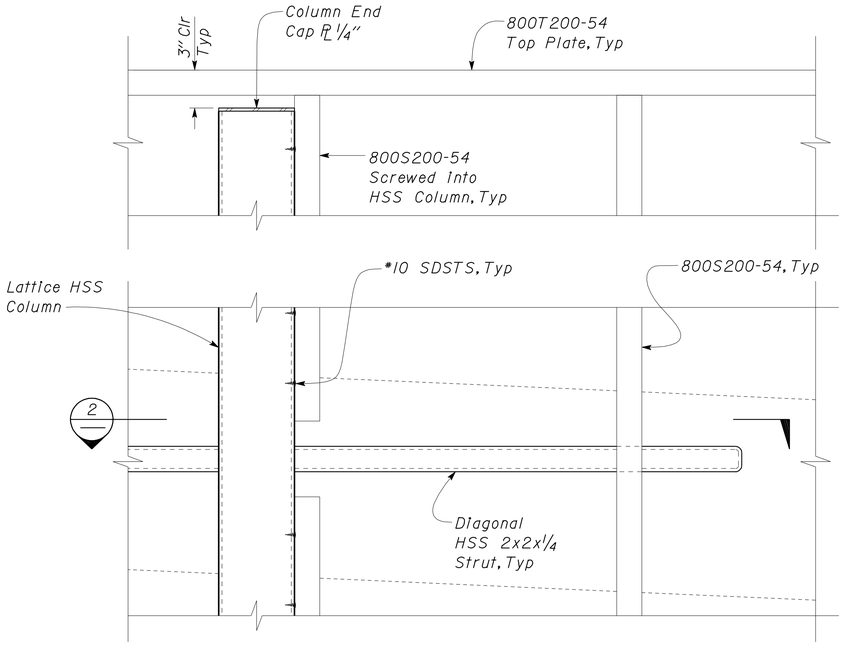

1 HSS LATTICE COLUMN STRUT ELEVATION
Scale 2" = 1' - 0"

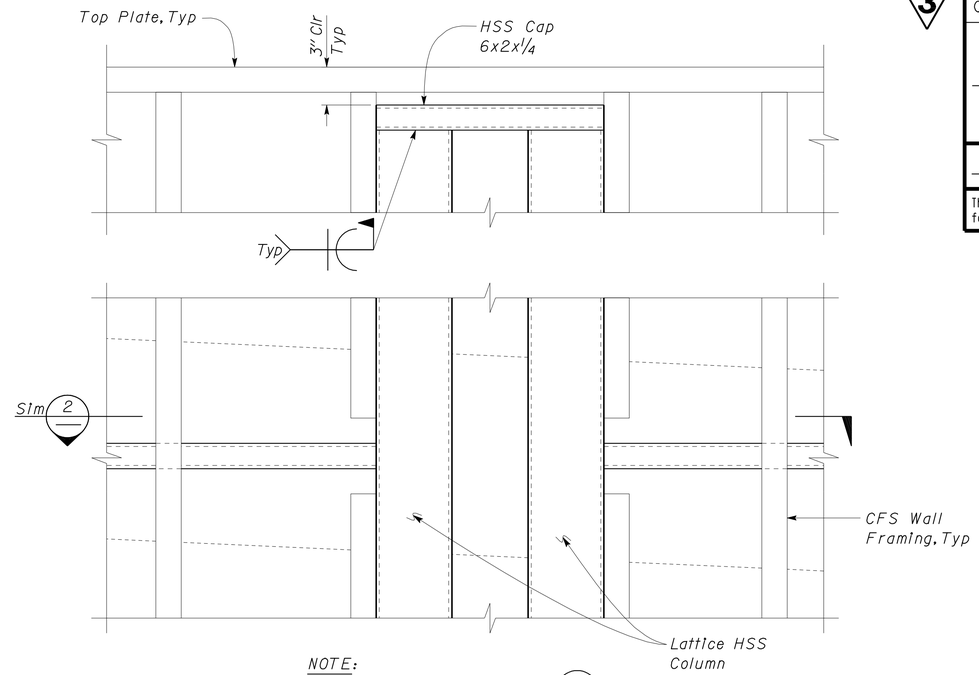

NOTE:
For Details not shown, see 1 Sim

3 DUAL LATTICE COLUMN CAP ELEVATION
Scale 2" = 1' - 0"

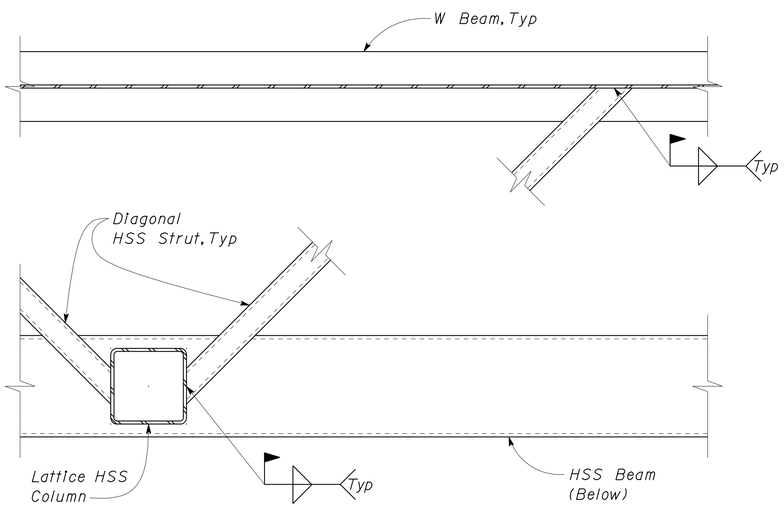

2 HSS LATTICE COLUMN STRUT PLAN
Scale 2" = 1' - 0"

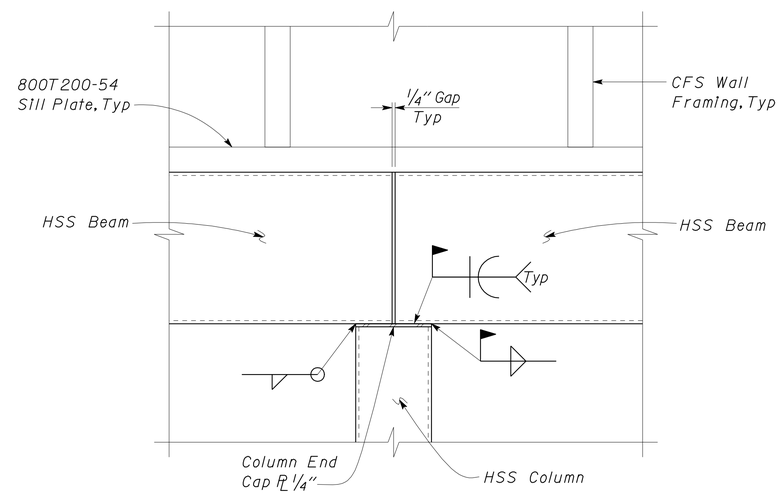

4 HSS BEAM SPLICE AT COLUMN CONNECTION
Scale 2" = 1' - 0"

3 **REVISED PER ADDENDUM No. 3 DATED JANUARY 4, 2013**

	BY	CHECKED
DESIGN	Robert du Plaine	Brian Sutliff
DETAILS	David W. Good	Robert du Plaine
QUANTITIES		

STATE OF CALIFORNIA
DEPARTMENT OF TRANSPORTATION

DIVISION OF ENGINEERING SERVICES
ARCHITECTURAL AND STRUCTURAL DESIGN

BRIDGE NO. 33M5785
POST MILE 2.2

SFOBB MAINTENANCE COMPLEX

HSS FRAMING DETAILS

SHEET ST1-73

TAEMWW Imperial Rev. 7/10

ORIGINAL SCALE IN INCHES FOR REDUCED PLANS 0 1 2 3

UNIT 3599
PROJECT NUMBER & PHASE 04120006661
EA 014081

DISREGARD PRINTS BEARING EARLIER REVISION DATES
REVISION DATES (PRELIMINARY STAGE ONLY) 04-28-12 05-01-12 05-08-12 05-18-12 05-28-12
SHEET OF

03-JAN-2013 13:40
st1_073.add

DIST.	COUNTY	ROUTE	POST MILES TOTAL PROJECT	SHEET NO.	TOTAL SHEETS
04	Ala	80	2.2	402	800

3

RdP
REGISTERED CIVIL ENGINEER — DATE 05-31-12

REGISTERED PROFESSIONAL ENGINEER Robert du Plaine No. 51447 Exp. 6-30-14 CIVIL STATE OF CALIFORNIA

10-22-12
PLANS APPROVAL DATE

The State of California or its officers or agents shall not be responsible for the accuracy or completeness of scanned copies of this plan sheet.

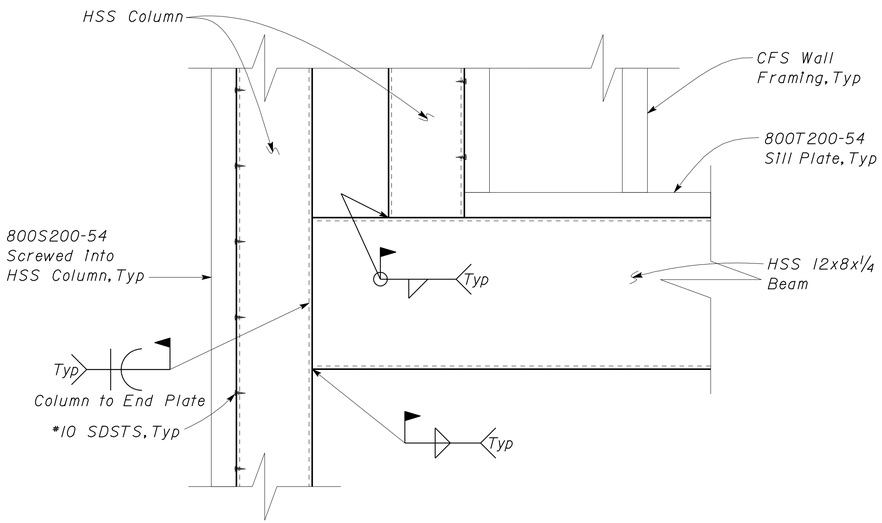

1 HSS BEAM TO COLUMN CONNECTION
Scale 2" = 1' - 0"

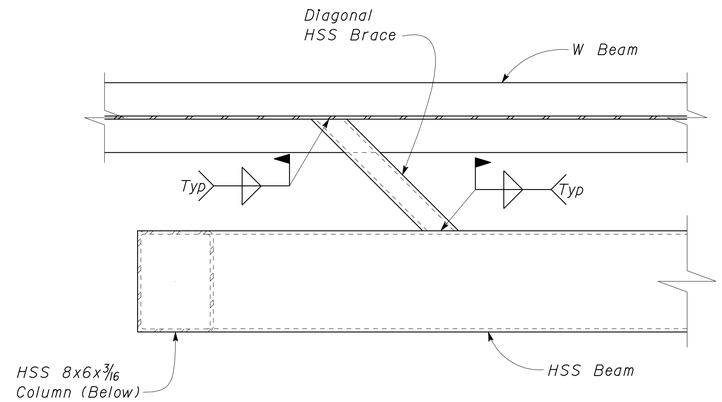

3 HSS BRACE TO BEAM CONNECTION
Scale 2" = 1' - 0"

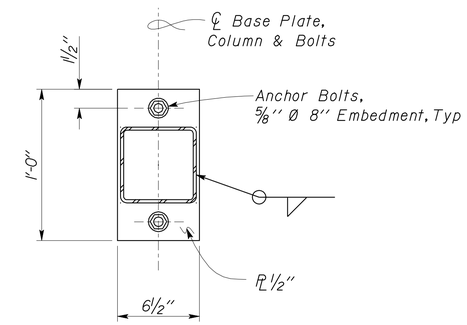

5 HSS COLUMN BASEPLATE
Scale 2" = 1' - 0"

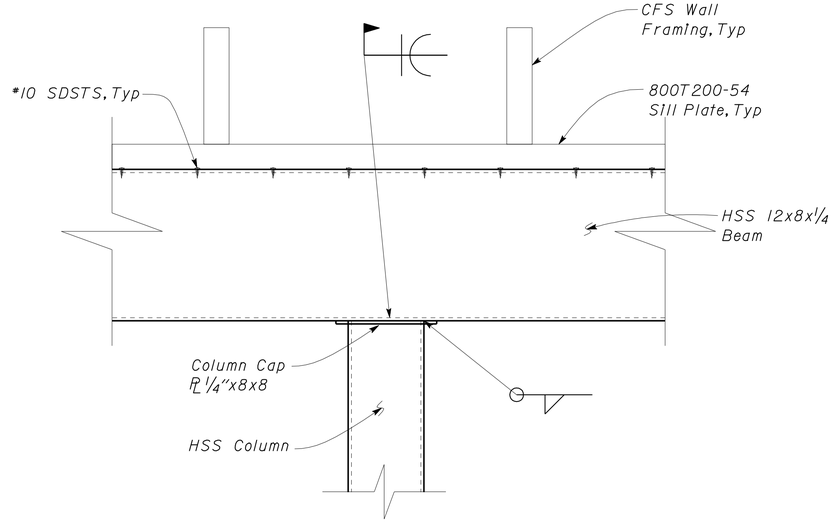

2 HSS BEAM TO COLUMN CONNECTION
Scale 2" = 1' - 0"

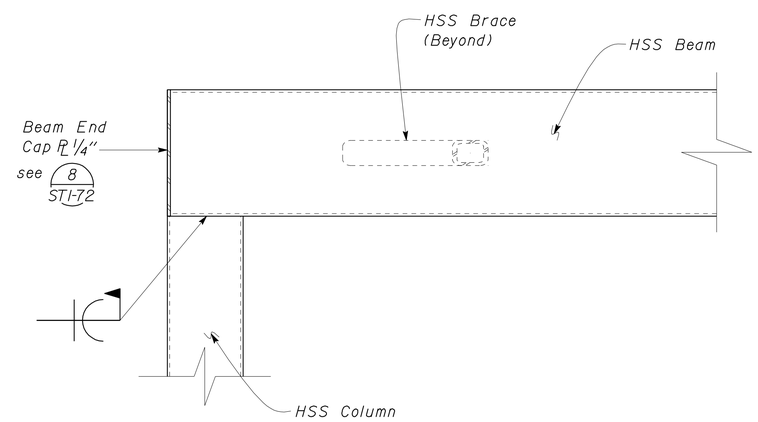

4 HSS BEAM TO COLUMN CONNECTION
Scale 2" = 1' - 0"

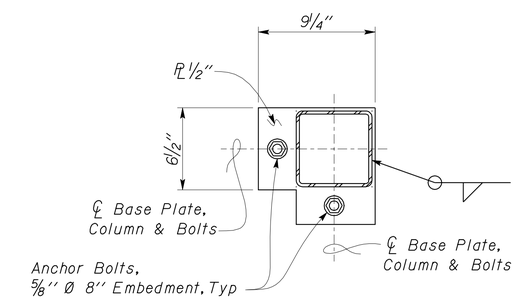

6 HSS COLUMN CORNER BASEPLATE
Scale 2" = 1' - 0"

3 **REVISED PER ADDENDUM No. 3 DATED JANUARY 4, 2013**

DESIGN	BY Robert du Plaine	CHECKED Brian Sutliff	
DETAILS	BY David W. Good	CHECKED Robert du Plaine	
QUANTITIES	BY	CHECKED	

STATE OF CALIFORNIA
DEPARTMENT OF TRANSPORTATION

DIVISION OF ENGINEERING SERVICES
ARCHITECTURAL AND STRUCTURAL DESIGN

BRIDGE NO. 33M5785
POST MILE 2.2

SFOBB MAINTENANCE COMPLEX

HSS FRAMING DETAILS

SHEET ST1-74

TAEMWW Imperial Rev. 7/10

ORIGINAL SCALE IN INCHES FOR REDUCED PLANS 0 1 2 3

UNIT 3599
PROJECT NUMBER & PHASE 04120006661
EA 014081

DISREGARD PRINTS BEARING EARLIER REVISION DATES → REVISION DATES (PRELIMINARY STAGE ONLY) 04-28-12 05-01-12 05-08-12 05-18-12 05-28-12

SHEET OF

03-JAN-2013 13:40
st1_074.dgn

DIST.	COUNTY	ROUTE	POST MILES TOTAL PROJECT	SHEET NO.	TOTAL SHEETS
04	Ala	80	2.2	404	800

RdP
REGISTERED CIVIL ENGINEER — DATE 05-31-12

REGISTERED PROFESSIONAL ENGINEER Robert du Plaine No. 51447 Exp. 6-30-14 CIVIL STATE OF CALIFORNIA

10-22-12
PLANS APPROVAL DATE

The State of California or its officers or agents shall not be responsible for the accuracy or completeness of scanned copies of this plan sheet.

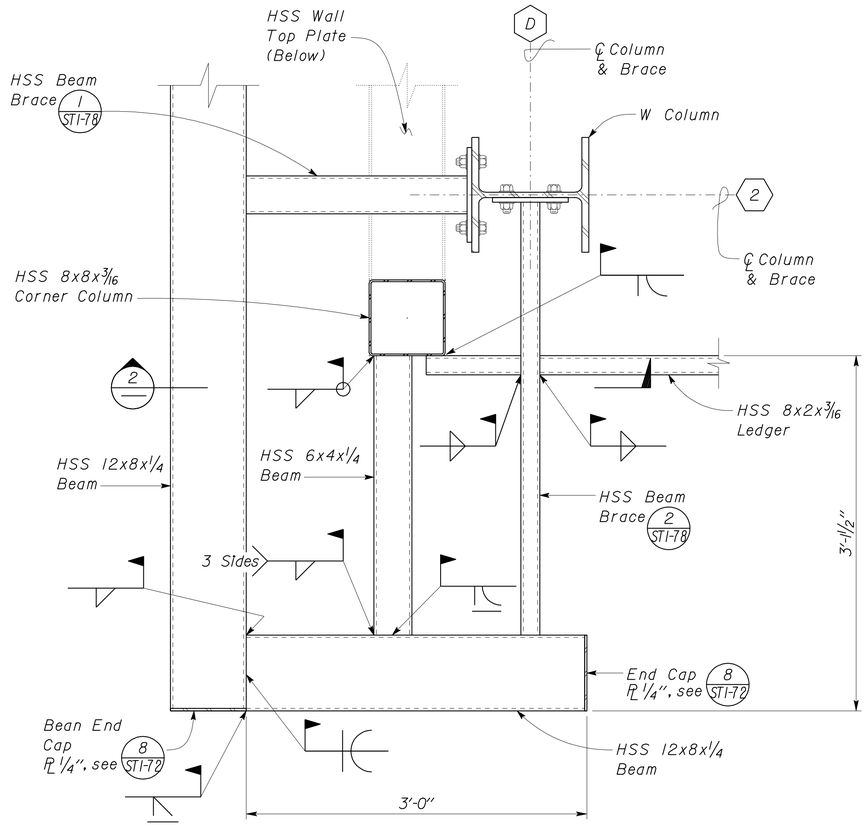

3

1 HSS FRAMING PLAN AT GRIDLINES D & 2
Scale 1 1/2" = 1'-0"

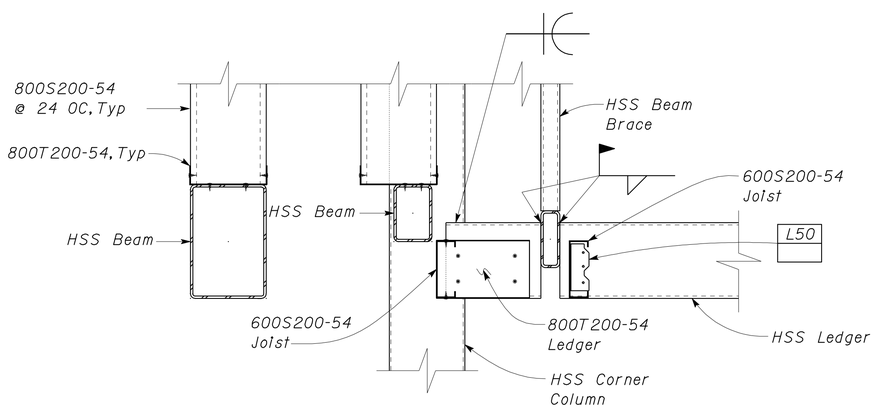

2 HSS FRAMING SECTION AT GRIDLINES D & 2
Scale 1 1/2" = 1'-0"

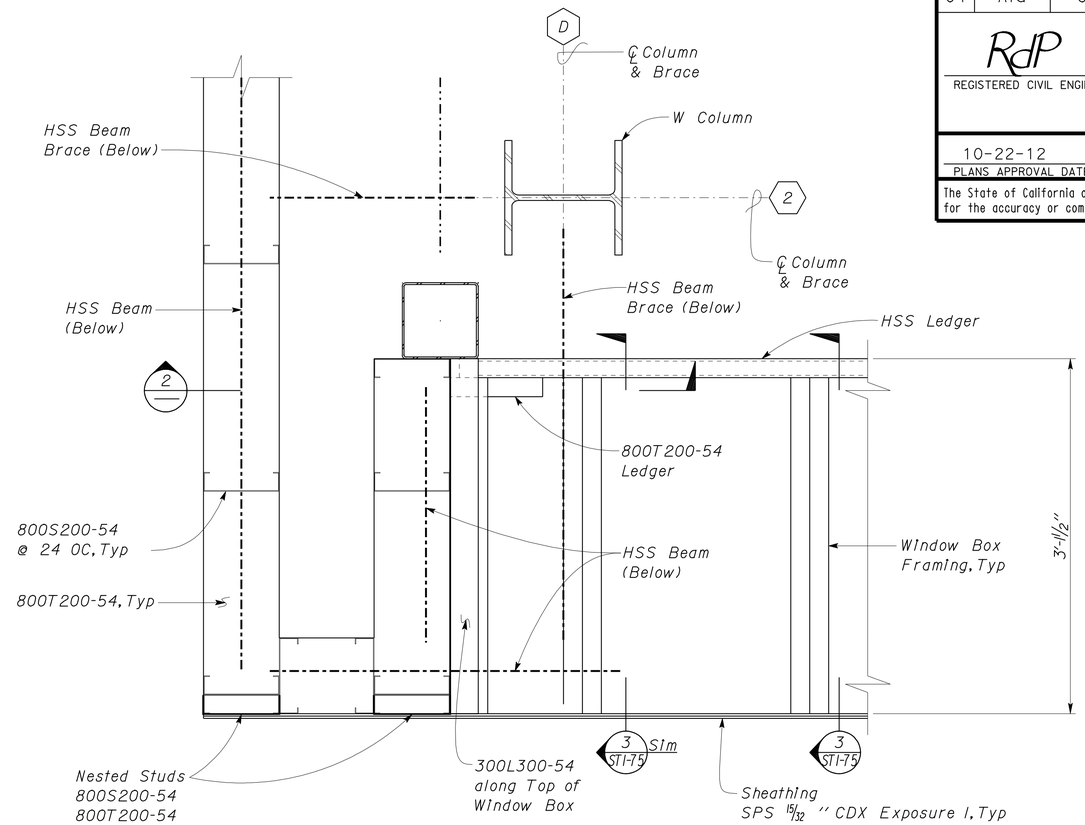

NOTE:
For Details not shown, see 1 Sim

3 CFS FRAMING PLAN AT GRIDLINES D & 2
Scale 1 1/2" = 1'-0"

3 **REVISED PER ADDENDUM No. 3 DATED JANUARY 4, 2013**

DESIGN	BY Robert du Plaine	CHECKED Brian Sutliff	
DETAILS	BY David W. Good	CHECKED Robert du Plaine	
QUANTITIES	BY	CHECKED	

STATE OF CALIFORNIA
DEPARTMENT OF TRANSPORTATION

DIVISION OF ENGINEERING SERVICES
ARCHITECTURAL AND STRUCTURAL DESIGN

BRIDGE NO. 33M5785
POST MILE 2.2

SFOBB MAINTENANCE COMPLEX

FRAMING DETAILS AT GRIDS 2/D

SHEET **ST1-76**

TAEMWW Imperial Rev. 7/10

ORIGINAL SCALE IN INCHES FOR REDUCED PLANS 0 1 2 3

UNIT 3599
PROJECT NUMBER & PHASE 04120006661
EA 014081

DISREGARD PRINTS BEARING EARLIER REVISION DATES → 04-28-12 05-02-12 05-08-12 05-18-12 06-18-12

REVISION DATES (PRELIMINARY STAGE ONLY) SHEET OF

st1_076.add

28-DEC-2012 16:25

DIST.	COUNTY	ROUTE	POST MILES TOTAL PROJECT	SHEET NO.	TOTAL SHEETS
04	Ala	80	2.2	405	800

3

RdP
REGISTERED CIVIL ENGINEER — DATE 05-31-12

REGISTERED PROFESSIONAL ENGINEER Robert du Plaine No. 51447 Exp. 6-30-14 CIVIL STATE OF CALIFORNIA

10-22-12
PLANS APPROVAL DATE

The State of California or its officers or agents shall not be responsible for the accuracy or completeness of scanned copies of this plan sheet.

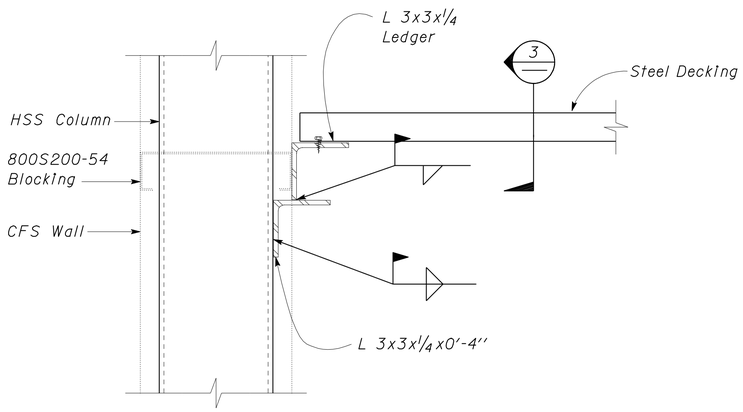

1 ROOF DECK TO HSS CONNECTION
Scale 3'' = 1' - 0''

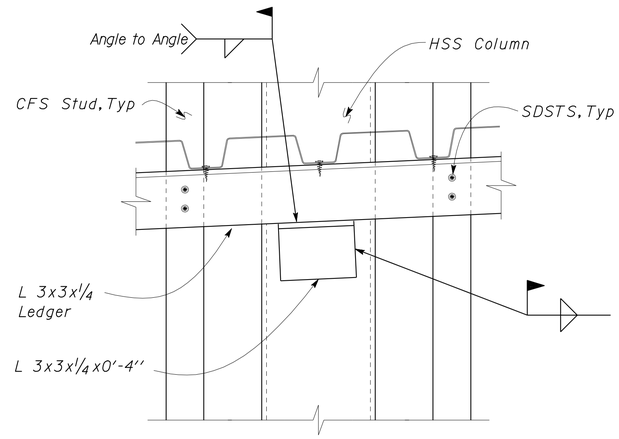

3 TAB TO LEDGER CONNECTION
Scale 3'' = 1' - 0''

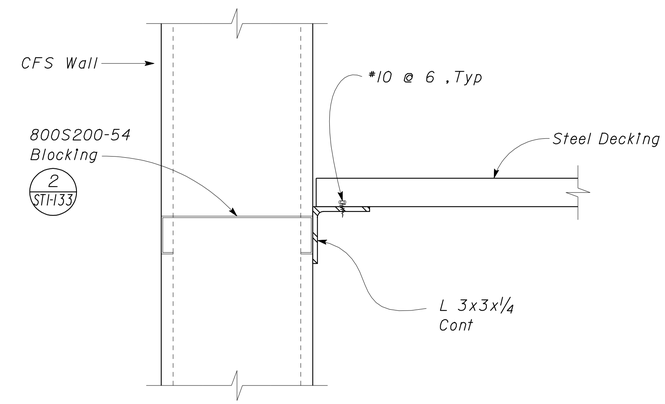

5 BLOCKING AT LEDGER
Scale 3'' = 1' - 0''

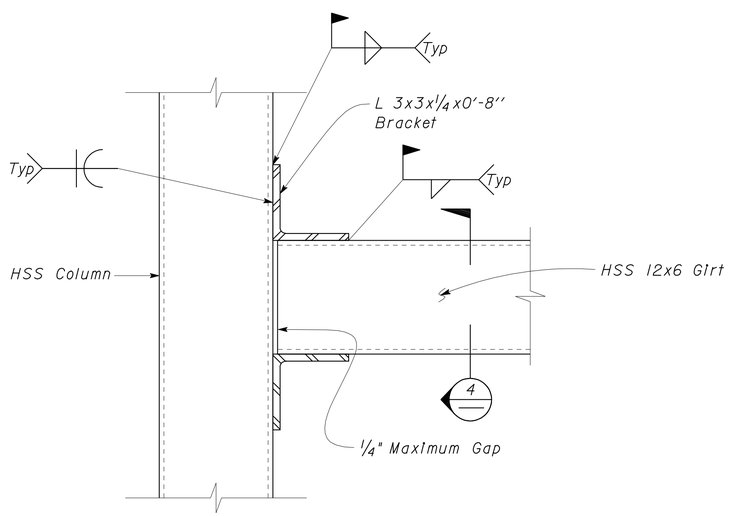

2 GIRT TO COLUMN CONNECTION
Scale 3'' = 1' - 0''

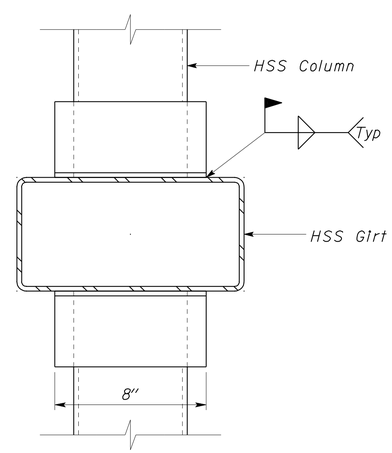

4 GIRT BRACE
Scale 3'' = 1' - 0''

3 **REVISED PER ADDENDUM No. 3 DATED JANUARY 4, 2013**

DESIGN	BY Robert du Plaine	CHECKED Brian Sutliff	
DETAILS	BY David W. Good	CHECKED Robert du Plaine	
QUANTITIES	BY	CHECKED	

STATE OF CALIFORNIA
DEPARTMENT OF TRANSPORTATION

DIVISION OF ENGINEERING SERVICES
ARCHITECTURAL AND STRUCTURAL DESIGN

BRIDGE NO. 33M5785
POST MILE 2.2

SFOBB MAINTENANCE COMPLEX

MISCELLANEOUS FRAMING DETAILS

SHEET **ST1-77**

TAEMWW Imperial Rev. 7/10

ORIGINAL SCALE IN INCHES FOR REDUCED PLANS 0 1 2 3

UNIT 3599
PROJECT NUMBER & PHASE 04120006661
EA 014081

DISREGARD PRINTS BEARING EARLIER REVISION DATES → REVISION DATES (PRELIMINARY STAGE ONLY) 05-04-12 05-11-12 05-18-12 05-29-12 SHEET OF

P:\dist_04\0400000038_sfobb_ms_complex\expedite\Addendum Plans\Addendum 2 - 11-28-2012\st1_077.dgn 28-DEC-2012 16:25

DIST.	COUNTY	ROUTE	POST MILES TOTAL PROJECT	SHEET NO.	TOTAL SHEETS
04	Ala	80	2.2	409	800

RdP
REGISTERED CIVIL ENGINEER — DATE 05-31-12

REGISTERED PROFESSIONAL ENGINEER Robert du Plaine No. 51447 Exp. 6-30-14 CIVIL STATE OF CALIFORNIA

10-22-12
PLANS APPROVAL DATE

The State of California or its officers or agents shall not be responsible for the accuracy or completeness of scanned copies of this plan sheet.

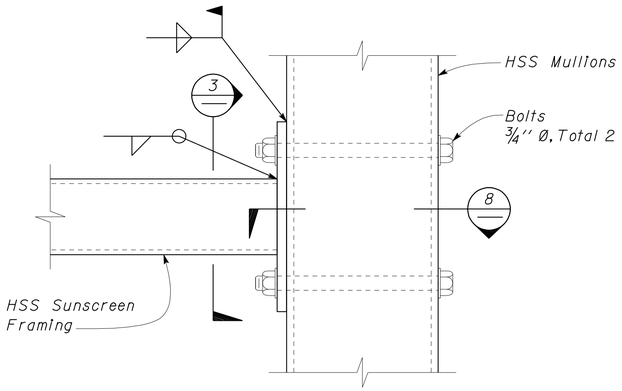

1 UPPER BOLTED CONNECTION
Scale 3" = 1'-0"

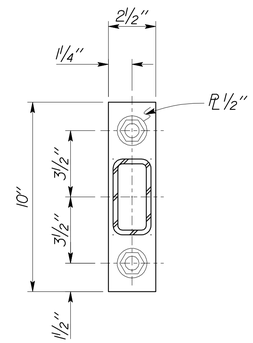

3 UPPER PLATE
Scale 3" = 1'-0"

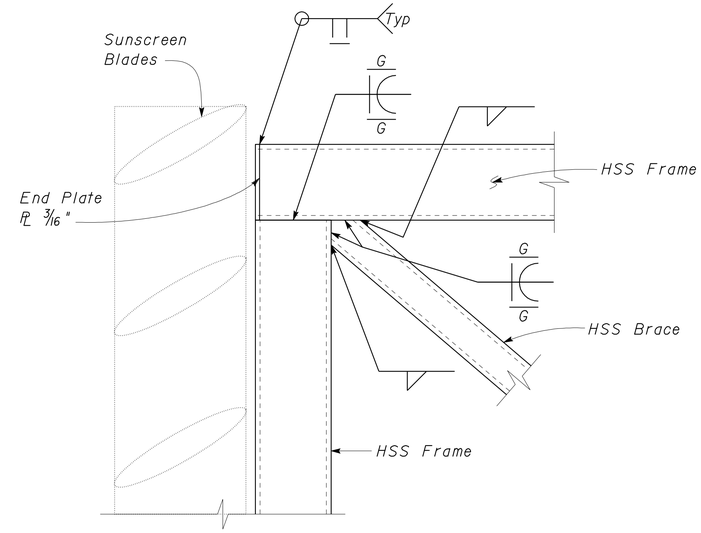

3 5 WELDED FRAME
Scale 3" = 1'-0"

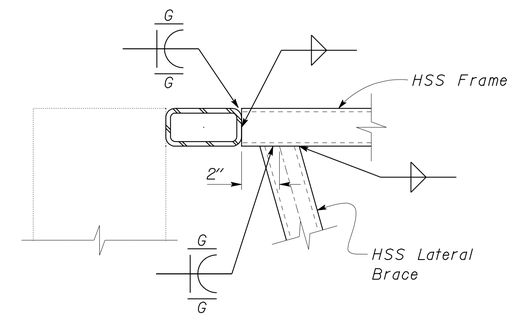

7 WELDED CONNECTIONS
Scale 3" = 1'-0"

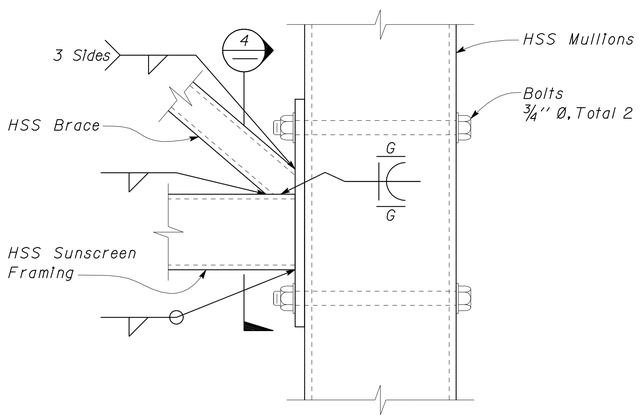

2 MID BOLTED CONNECTION
Scale 3" = 1'-0"

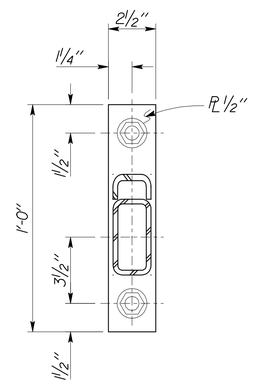

4 MID PLATE
Scale 3" = 1'-0"

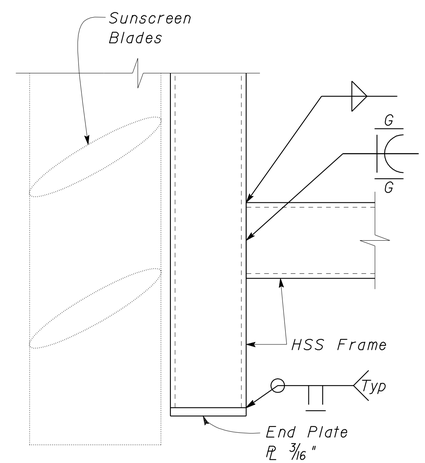

3 6 WELDED CONNECTION
Scale 3" = 1'-0"

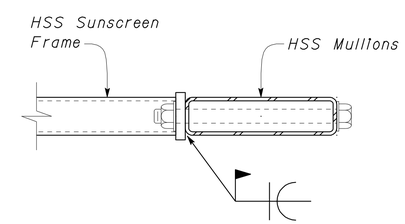

8 BOLTED SECTION
Scale 3" = 1'-0"

3 **REVISED PER ADDENDUM No. 3 DATED JANUARY 4, 2013**

DESIGN	BY Robert du Plaine	CHECKED Brian Sutliff	
DETAILS	BY David W. Good	CHECKED Robert du Plaine	
QUANTITIES	BY	CHECKED	

STATE OF CALIFORNIA
DEPARTMENT OF TRANSPORTATION

DIVISION OF ENGINEERING SERVICES
ARCHITECTURAL AND STRUCTURAL DESIGN

BRIDGE NO. 33M5785
POST MILE 2.2

SFOBB MAINTENANCE COMPLEX

WEST SUNSCREEN DETAILS

SHEET **ST1-81**

TAEMWW Imperial Rev. 7/10

ORIGINAL SCALE IN INCHES FOR REDUCED PLANS 0 1 2 3

UNIT 3599
PROJECT NUMBER & PHASE 04120006661
EA 014081

DISREGARD PRINTS BEARING EARLIER REVISION DATES → 04-18-12 05-11-12 05-18-12

REVISION DATES (PRELIMINARY STAGE ONLY) SHEET OF

02-JAN-2013 07:46

st1_081.add

DIST.	COUNTY	ROUTE	POST MILES TOTAL PROJECT	SHEET NO.	TOTAL SHEETS
04	Ala	80	2.2	411	800

RdP
REGISTERED CIVIL ENGINEER — DATE 05-31-12

REGISTERED PROFESSIONAL ENGINEER Robert du Plaine No. 51447 Exp. 6-30-14 CIVIL STATE OF CALIFORNIA

10-22-12
PLANS APPROVAL DATE

The State of California or its officers or agents shall not be responsible for the accuracy or completeness of scanned copies of this plan sheet.

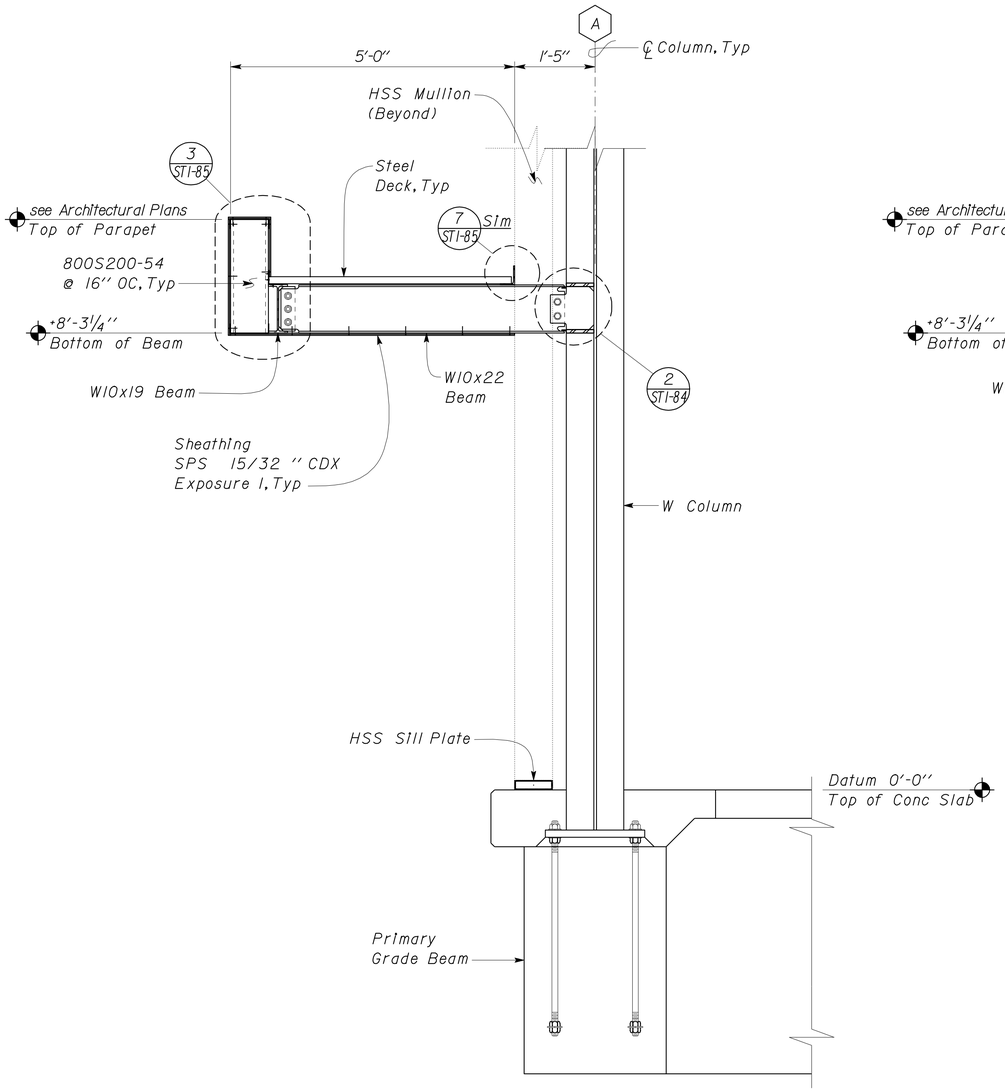

1 GRIDLINE 'A' CANOPY SECTION
Scale 3/4" = 1'-0"

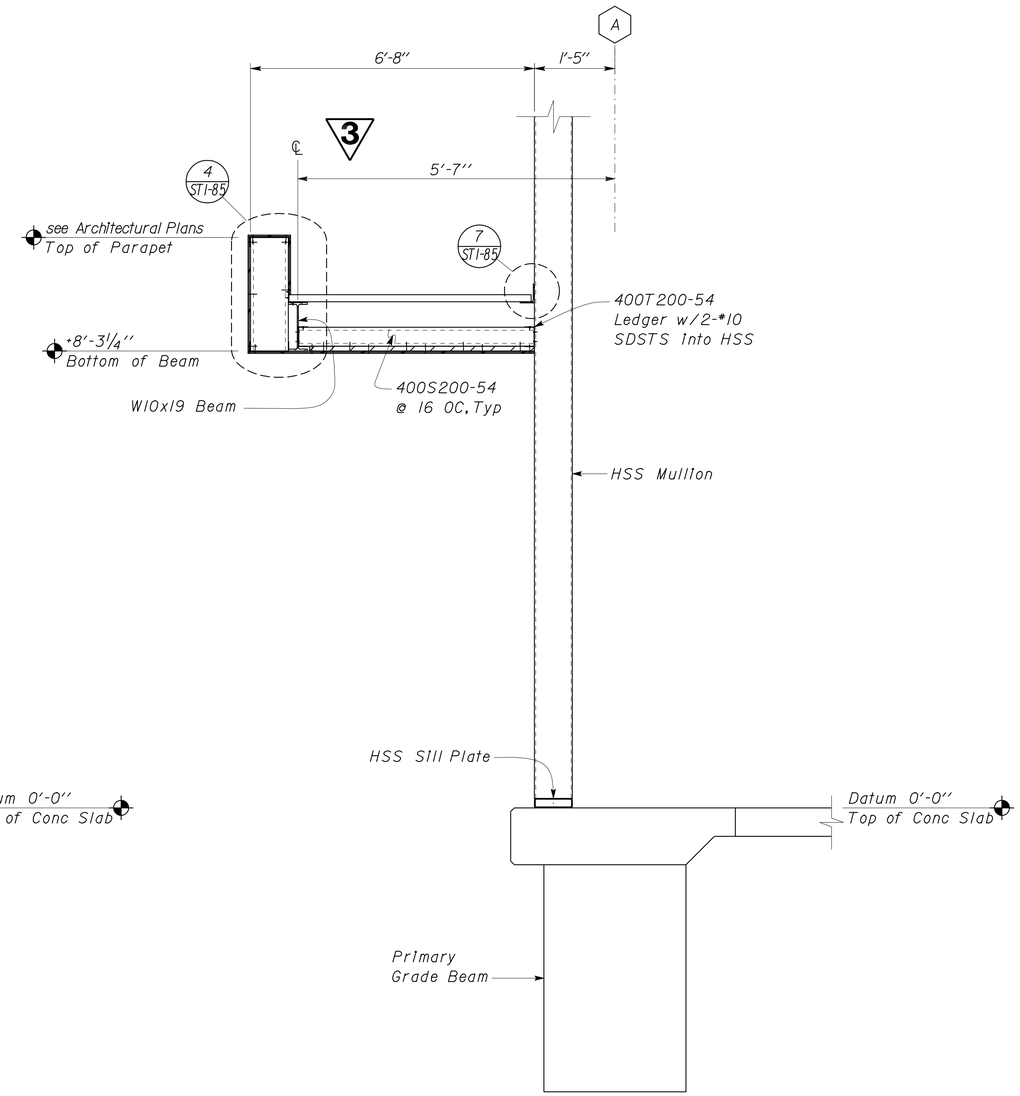

NOTE:
For Details not shown, see 1 Sim

2 GRIDLINE 'A' CANOPY SECTION
Scale 3/4" = 1'-0"

3 **REVISED PER ADDENDUM No. 3 DATED JANUARY 4, 2013**

	BY	CHECKED
DESIGN	Robert du Plaine	Brian Sutliff
DETAILS	David W. Good	Robert du Plaine
QUANTITIES		

STATE OF CALIFORNIA
DEPARTMENT OF TRANSPORTATION

DIVISION OF ENGINEERING SERVICES
ARCHITECTURAL AND STRUCTURAL DESIGN

BRIDGE NO. 33M5785
POST MILE 2.2

SFOBB MAINTENANCE COMPLEX

GRIDLINE 'A' CANOPY FRAMING DETAILS

SHEET **ST1-83**

TAEMWW Imperial Rev. 7/10

ORIGINAL SCALE IN INCHES FOR REDUCED PLANS 0 1 2 3

UNIT 3599
PROJECT NUMBER & PHASE 04120006661
EA 014081

DISREGARD PRINTS BEARING EARLIER REVISION DATES →
REVISION DATES (PRELIMINARY STAGE ONLY) 03-05-12 04-29-12 05-08-12 05-18-12 06-15-12
SHEET OF

03-JAN-2013 13:40
st1_083.add

DIST.	COUNTY	ROUTE	POST MILES TOTAL PROJECT	SHEET NO.	TOTAL SHEETS
04	Ala	80	2.2	412	800

RdP
REGISTERED CIVIL ENGINEER — DATE 05-31-12

REGISTERED PROFESSIONAL ENGINEER Robert du Plaine No. 51447 Exp. 6-30-14 CIVIL STATE OF CALIFORNIA

10-22-12
PLANS APPROVAL DATE

The State of California or its officers or agents shall not be responsible for the accuracy or completeness of scanned copies of this plan sheet.

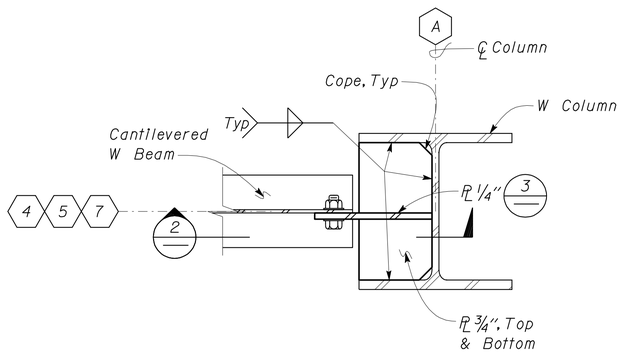

1 MOMENT CONNECTION
Scale 2" = 1' - 0"

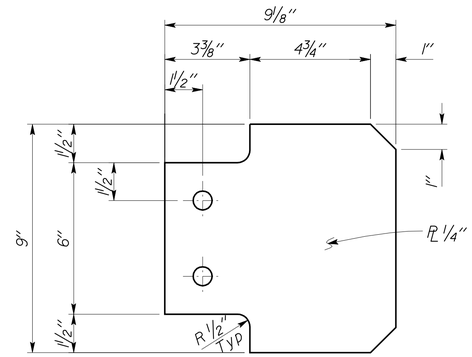

3 SHEAR PLATE
Scale 4" = 1' - 0"

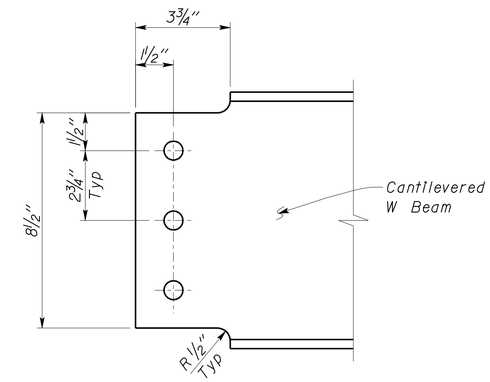

5 CANTILEVERED BEAM
Scale 4" = 1' - 0"

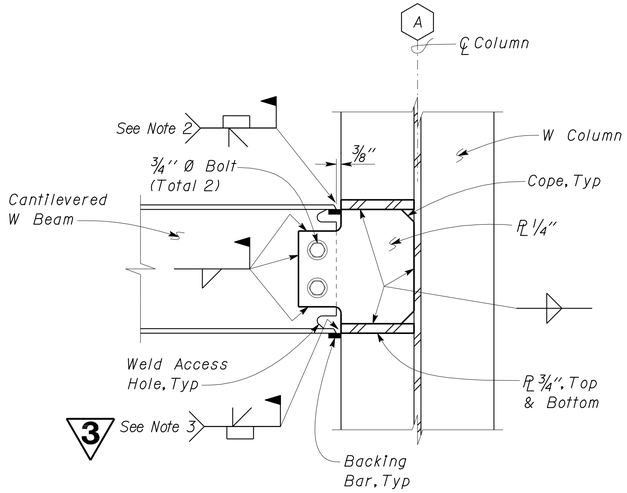

2 MOMENT CONNECTION
Scale 2" = 1' - 0"

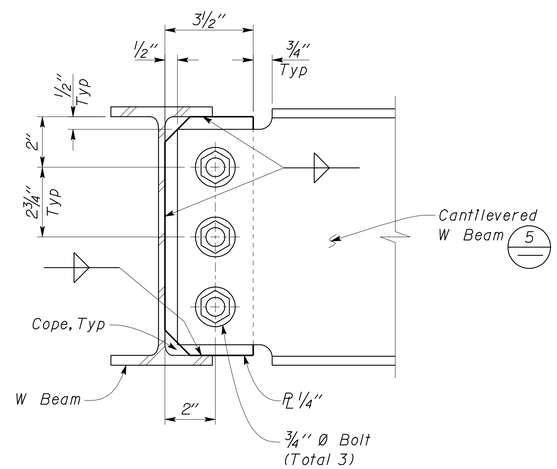

4 BEAM TO BEAM CONNECTION
Scale 4" = 1' - 0"

A SPECIAL SEISMIC NOTES

1. Welding Access holes per AISC 341-05.
2. 3 CJP Demand Critical Weld
   Leave backing bar in place. Add 5/16" fillet weld under backing bar. Typ at top flanges.
3. CJP Demand Critical Weld
   Remove backing bar. Backgouge
   Add 5/16" fillet weld Typ at bottom flanges.

3 REVISED PER ADDENDUM No. 3 DATED JANUARY 4, 2013

	BY	CHECKED
DESIGN	Robert du Plaine	Brian Sutliff
DETAILS	David W. Good	Robert du Plaine
QUANTITIES		

STATE OF CALIFORNIA
DEPARTMENT OF TRANSPORTATION

DIVISION OF ENGINEERING SERVICES
ARCHITECTURAL AND STRUCTURAL DESIGN

BRIDGE NO. 33M5785
POST MILE 2.2

SFOBB MAINTENANCE COMPLEX
GRIDLINE 'A' CANOPY FRAMING DETAILS

SHEET ST1-84

TAEMWW Imperial Rev. 7/10

ORIGINAL SCALE IN INCHES FOR REDUCED PLANS 0 1 2 3

UNIT 3599
PROJECT NUMBER & PHASE 04120006661
EA 014081

DISREGARD PRINTS BEARING EARLIER REVISION DATES → 03-05-12 04-29-12 05-08-12 05-18-12

REVISION DATES (PRELIMINARY STAGE ONLY) SHEET OF

st1_084.dgn 03-JAN-2013 13:45

DIST.	COUNTY	ROUTE	POST MILES TOTAL PROJECT	SHEET NO.	TOTAL SHEETS
04	Ala	80	2.2	417	800

RdP
REGISTERED CIVIL ENGINEER — DATE 05-31-12

REGISTERED PROFESSIONAL ENGINEER Robert du Plaine No. 51447 Exp. 6-30-14 CIVIL STATE OF CALIFORNIA

10-22-12
PLANS APPROVAL DATE

The State of California or its officers or agents shall not be responsible for the accuracy or completeness of scanned copies of this plan sheet.

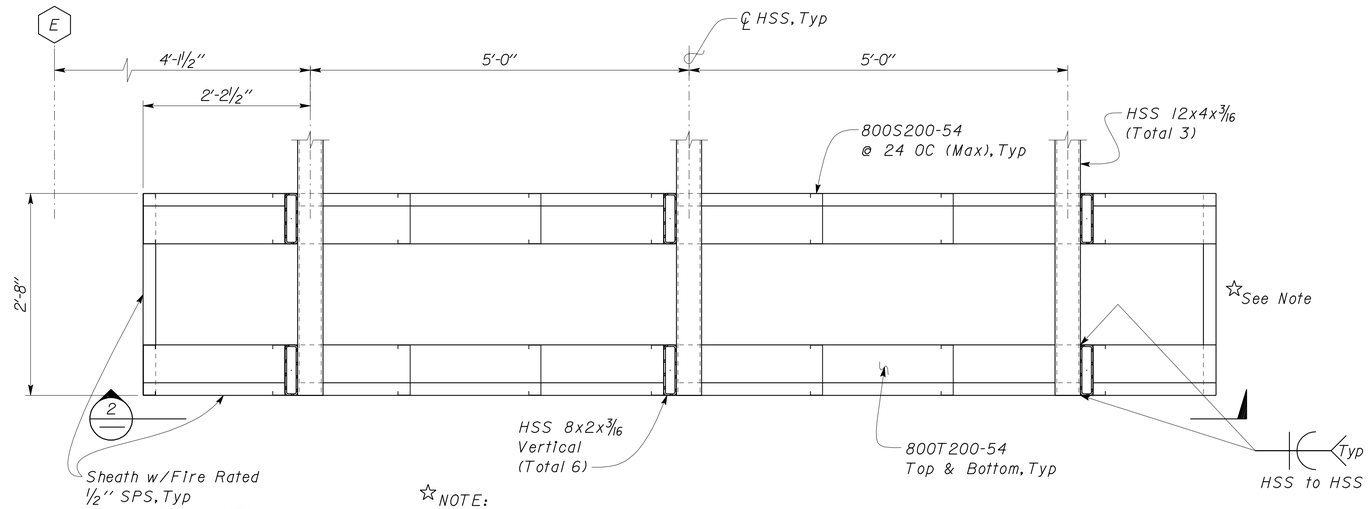

☆NOTE:
Provide 3" Clearance between Soffit Finished Siding and Building Finished Siding for Seismic movement.

1 SOFFIT PLAN
Scale 1" = 1'-0"

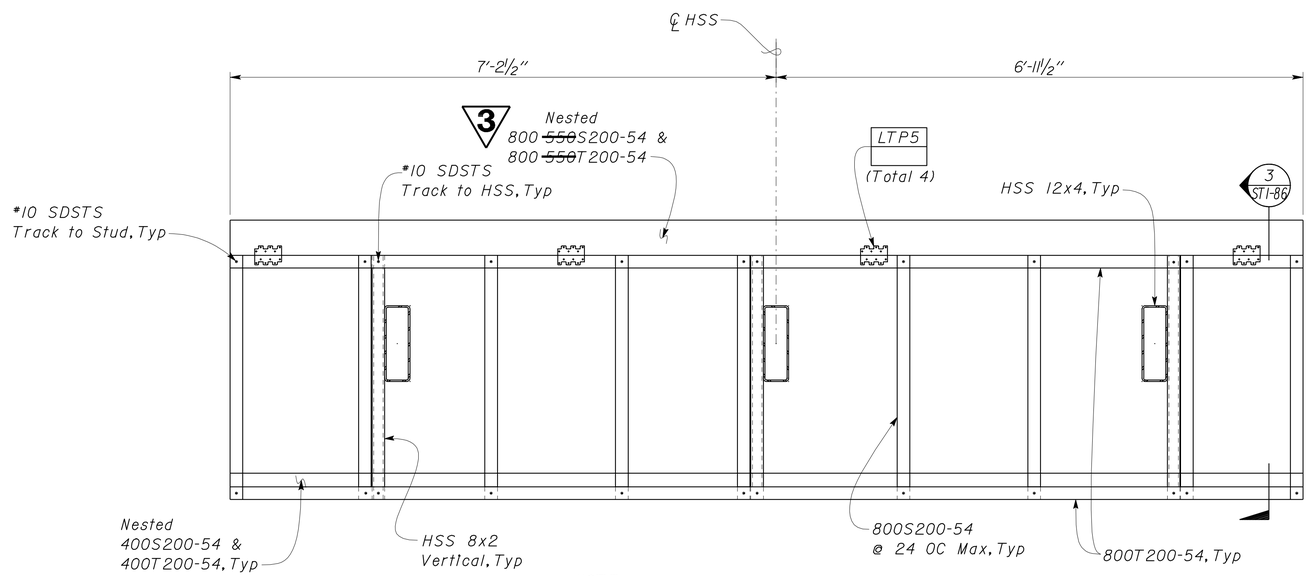

NOTE:
For Details & Dimensions not shown, see 1

2 SOFFIT SECTION
Scale 1" = 1'-0"

3 **REVISED PER ADDENDUM No. 3 DATED JANUARY 4, 2013**

DESIGN	BY Robert du Plaine	CHECKED Brian Sutliff	
DETAILS	BY David W. Good	CHECKED Robert du Plaine	
QUANTITIES	BY	CHECKED	

STATE OF CALIFORNIA
DEPARTMENT OF TRANSPORTATION

DIVISION OF ENGINEERING SERVICES
ARCHITECTURAL AND STRUCTURAL DESIGN

BRIDGE NO. 33M5785
POST MILE 2.2

SFOBB MAINTENANCE COMPLEX

LATTICE CANOPY SECTIONS

SHEET **ST1-89**

TAEMWW Imperial Rev. 7/10

ORIGINAL SCALE IN INCHES FOR REDUCED PLANS 0 1 2 3

UNIT 3599
PROJECT NUMBER & PHASE 04120006661
EA 014081

DISREGARD PRINTS BEARING EARLIER REVISION DATES → 02-21-12 04-26-12 05-08-12 05-18-12

REVISION DATES (PRELIMINARY STAGE ONLY) SHEET OF

st1_089.add

28-DEC-2012 13:53

DIST.	COUNTY	ROUTE	POST MILES TOTAL PROJECT	SHEET NO.	TOTAL SHEETS
04	Ala	80	2.2	421	800

3

RdP
REGISTERED CIVIL ENGINEER — DATE 05-31-12

REGISTERED PROFESSIONAL ENGINEER Robert du Plaine No. 51447 Exp. 6-30-14 CIVIL STATE OF CALIFORNIA

10-22-12
PLANS APPROVAL DATE

The State of California or its officers or agents shall not be responsible for the accuracy or completeness of scanned copies of this plan sheet.

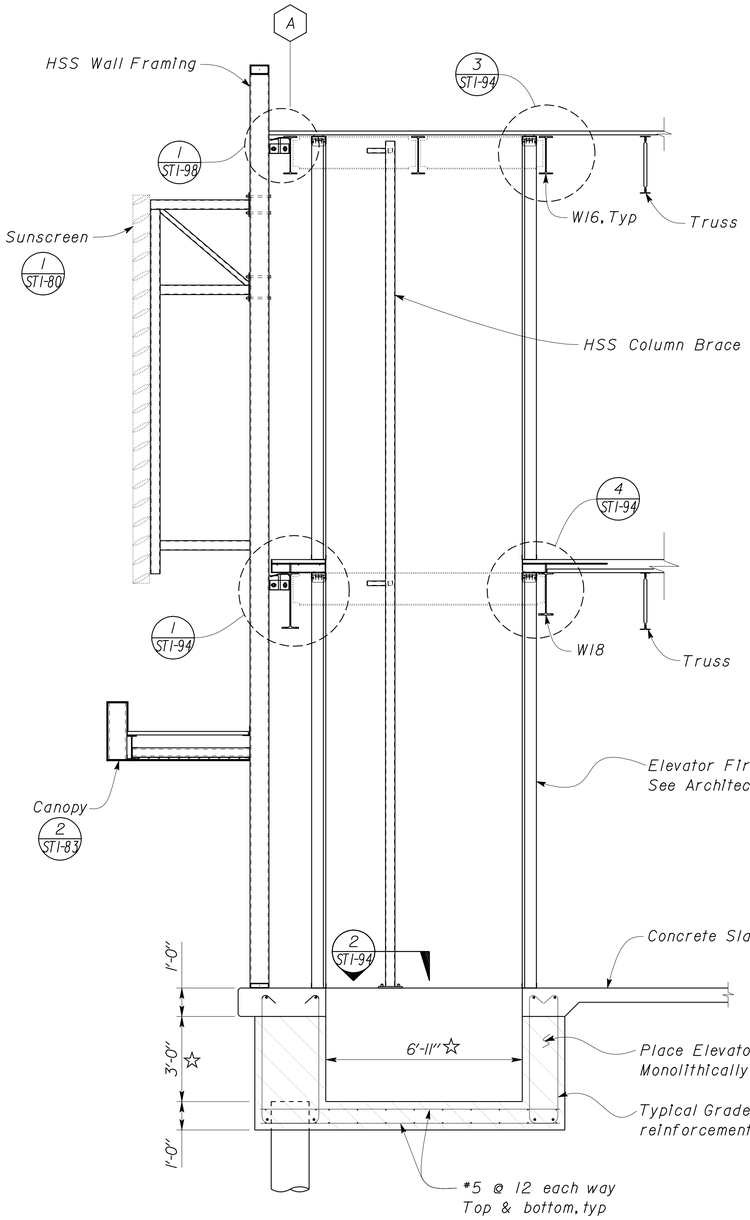

1 ELEVATOR SHAFT SECTION
Scale 3/8" = 1'-0"

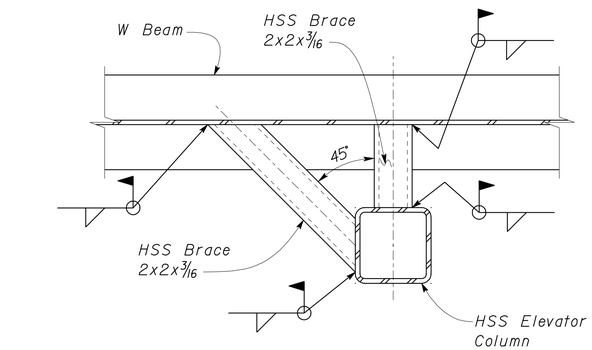

Field Verify Required
Lengths of Braces

2 HSS COLUMN BRACE
Scale 3" = 1'-0"

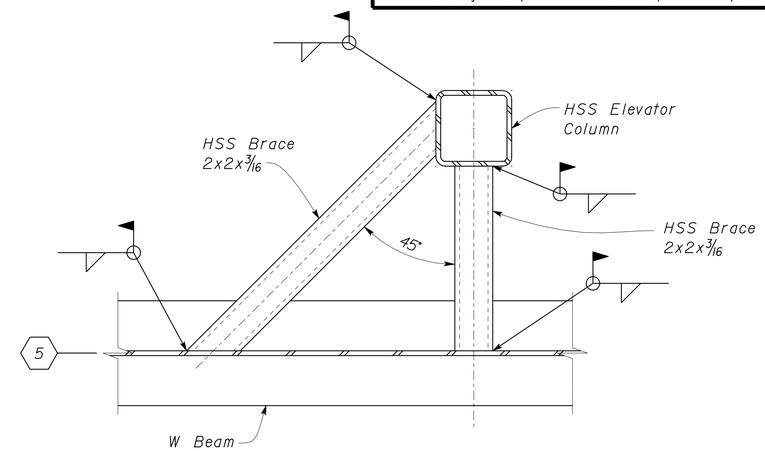

Field Verify Required
Lengths of Braces

3 HSS COLUMN BRACE
Scale 3" = 1'-0"

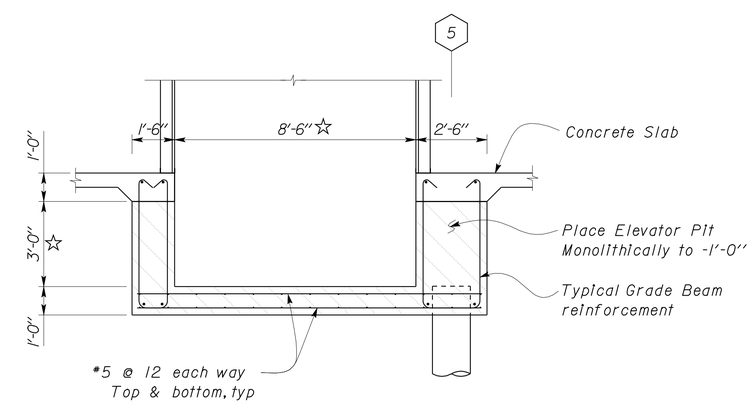

4 ELEVATOR PIT SECTION
Scale 3/8" = 1'-0"

☆ Note
Dimensions to be determined by the Elevator Manufacturer, prior to commencement of construction of the Elevator Shaft and the Elevator Foundation, subject to Approval by Engineer.

3 **REVISED PER ADDENDUM No. 3 DATED JANUARY 4, 2013**

DESIGN	BY Robert du Plaine	CHECKED Brian Sutliff	
DETAILS	BY David W. Good	CHECKED Robert du Plaine	
QUANTITIES	BY	CHECKED	

STATE OF CALIFORNIA
DEPARTMENT OF TRANSPORTATION

DIVISION OF ENGINEERING SERVICES
ARCHITECTURAL AND STRUCTURAL DESIGN

BRIDGE NO. 33M5785
POST MILE 2.2

SFOBB MAINTENANCE COMPLEX

ELEVATOR SHAFT SECTION & DETAILS

SHEET **ST1-93**

TAEMWW Imperial Rev. 7/10

ORIGINAL SCALE IN INCHES FOR REDUCED PLANS 0 1 2 3

UNIT 3599
PROJECT NUMBER & PHASE 04120006661
EA 014081

DISREGARD PRINTS BEARING EARLIER REVISION DATES → 04-20-12 04-24-12 05-08-12 05-18-12 05-28-12

REVISION DATES (PRELIMINARY STAGE ONLY) SHEET OF

P:\dist_04\0400000038_sfobb_ms_complex\expedite\Addendum Plans\Addendum 2 - 11-28-2012\st1_093.dgn

02-JAN-2013 07:52

DIST.	COUNTY	ROUTE	POST MILES TOTAL PROJECT	SHEET NO.	TOTAL SHEETS
04	Ala	80	2.2	424	800

RdP
REGISTERED CIVIL ENGINEER — 05-31-12 DATE

REGISTERED PROFESSIONAL ENGINEER — Robert du Plaine — No. 51447 — Exp. 6-30-14 — CIVIL — STATE OF CALIFORNIA

10-22-12
PLANS APPROVAL DATE

The State of California or its officers or agents shall not be responsible for the accuracy or completeness of scanned copies of this plan sheet.

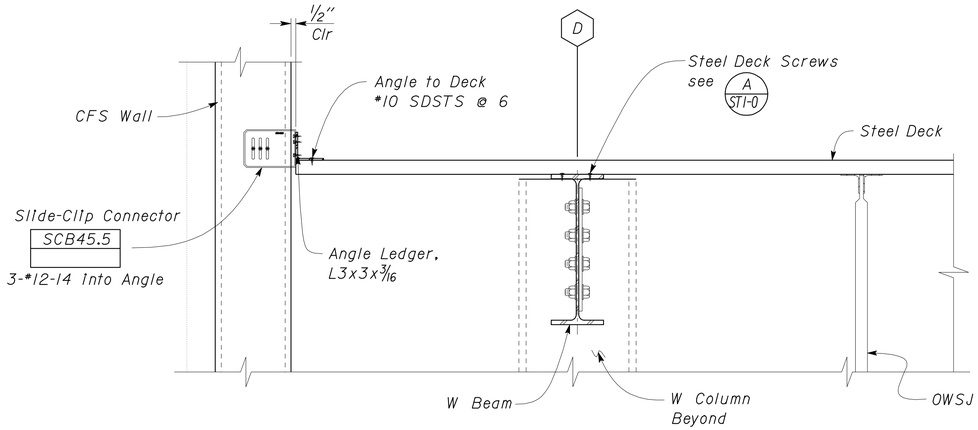

1 OUT OF PLANE ROOF CONNECTION
Scale 1 1/2" = 1'-0"

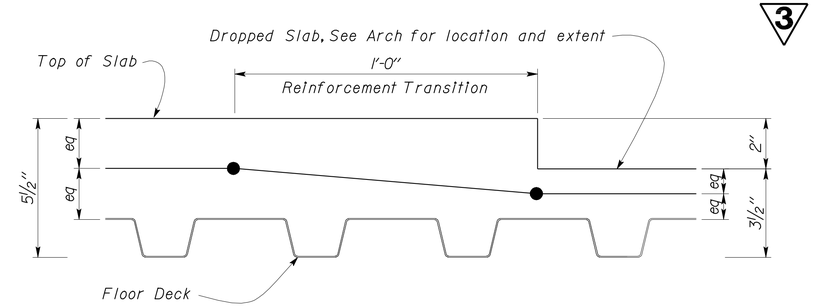

3 DROPPED SLAB TRANSITION DETAIL
Scale 4" = 1'-0"

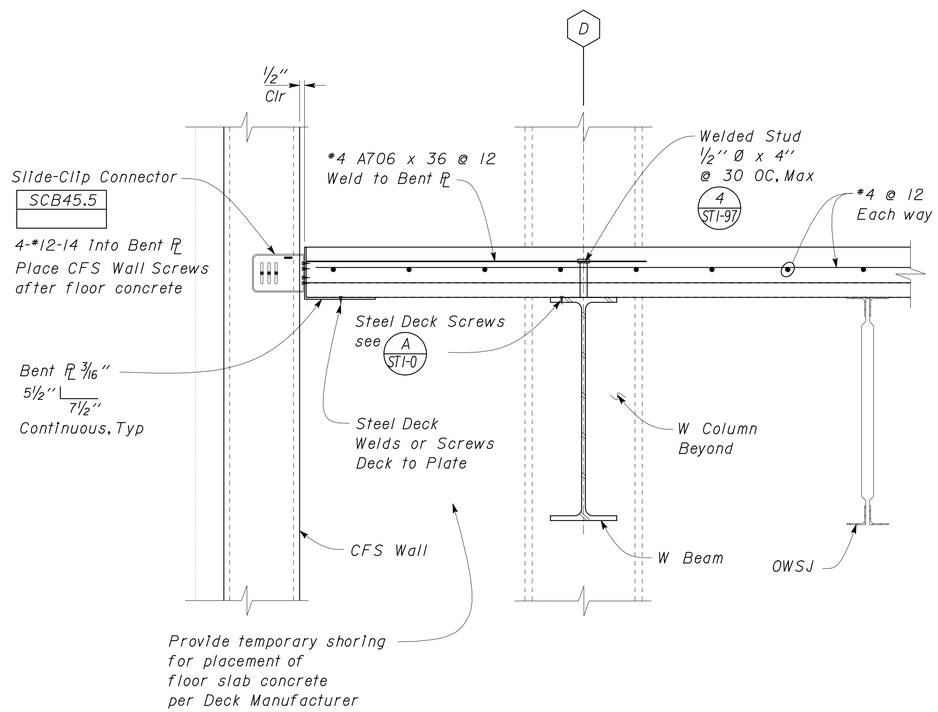

2 OUT OF PLANE FLOOR CONNECTION
Scale 1 1/2" = 1'-0"

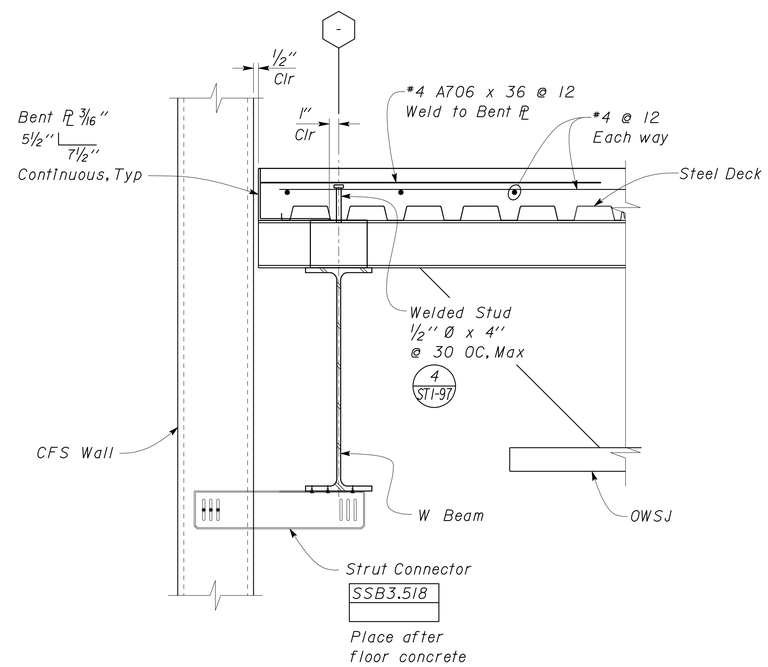

4 OUT OF PLANE FLOOR CONNECTION
Scale 1 1/2" = 1'-0"

3 REVISED PER ADDENDUM No. 3 DATED JANUARY 4, 2013

DESIGN	BY Robert du Plaine	CHECKED Brian Sutliff	
DETAILS	BY David W. Good	CHECKED Robert du Plaine	
QUANTITIES	BY	CHECKED	

STATE OF CALIFORNIA
DEPARTMENT OF TRANSPORTATION

DIVISION OF ENGINEERING SERVICES
ARCHITECTURAL AND STRUCTURAL DESIGN

BRIDGE NO. 33M5785
POST MILE 2.2

SFOBB MAINTENANCE COMPLEX

OUT OF PLANE CONNECTIONS

SHEET **ST1-96**

TAEMWW Imperial Rev. 7/10

ORIGINAL SCALE IN INCHES FOR REDUCED PLANS 0 1 2 3

UNIT 3599
PROJECT NUMBER & PHASE 04120006661
EA 014081

DISREGARD PRINTS BEARING EARLIER REVISION DATES → 04-20-12 04-24-12 04-25-12 04-26-12 04-27-12 05-08-12 05-11-12 05-18-12 05-29-12

SHEET OF

P:\dist_04\0400000038_sfobb_ms_complex\expedite\Addendum Plans\Addendum 2 - 11-28-2012\st1_096.dgn 28-DEC-2012 13:53

DIST.	COUNTY	ROUTE	POST MILES TOTAL PROJECT	SHEET NO.	TOTAL SHEETS
04	Ala	80	2.2	425	800

RdP
REGISTERED CIVIL ENGINEER — DATE 05-31-12

REGISTERED PROFESSIONAL ENGINEER — Robert du Plaine — No. 51447 — Exp. 6-30-14 — CIVIL — STATE OF CALIFORNIA

10-22-12
PLANS APPROVAL DATE

The State of California or its officers or agents shall not be responsible for the accuracy or completeness of scanned copies of this plan sheet.

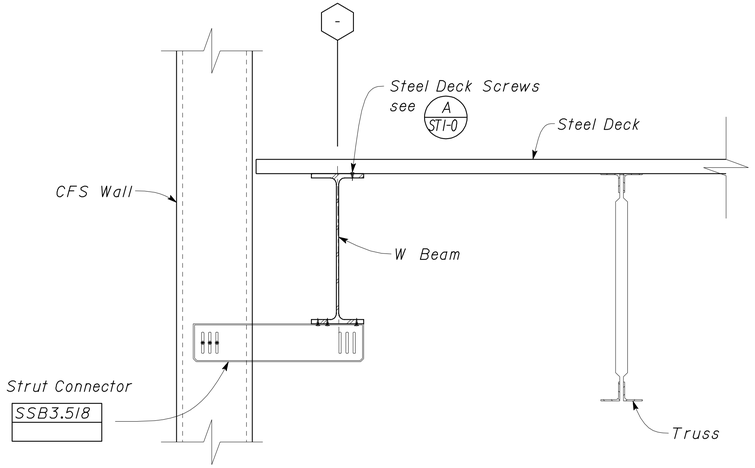

1 CFS TO W BEAM DETAIL
Scale 1 1/2" = 1'-0"

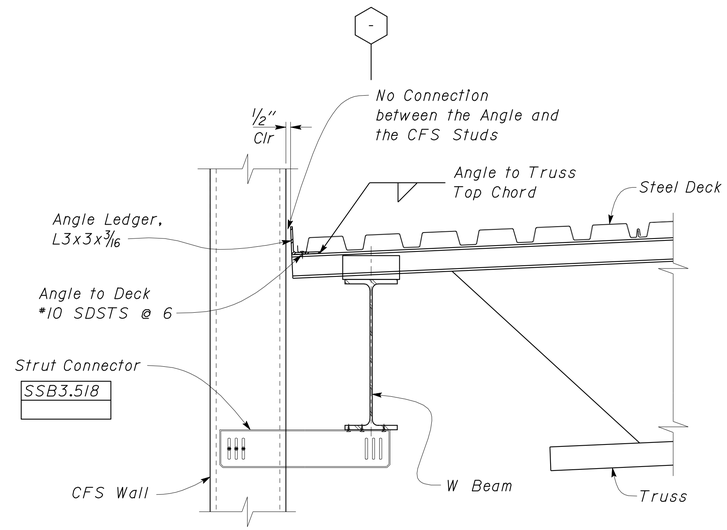

3 OUT OF PLANE ROOF CONNECTION
Scale 1 1/2" = 1'-0"

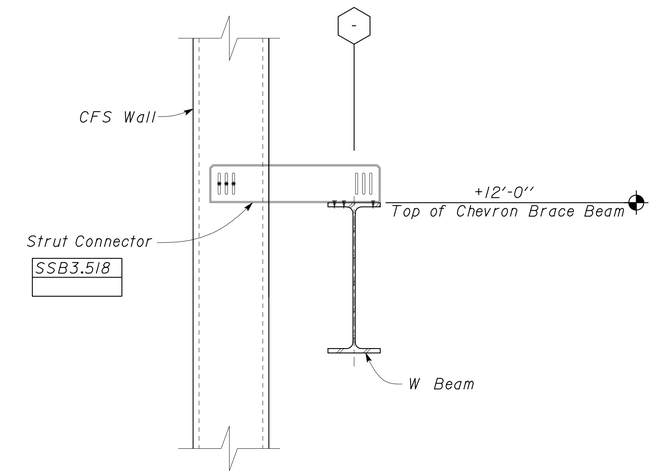

5 CFS TO W BEAM DETAIL
Scale 1 1/2" = 1'-0"

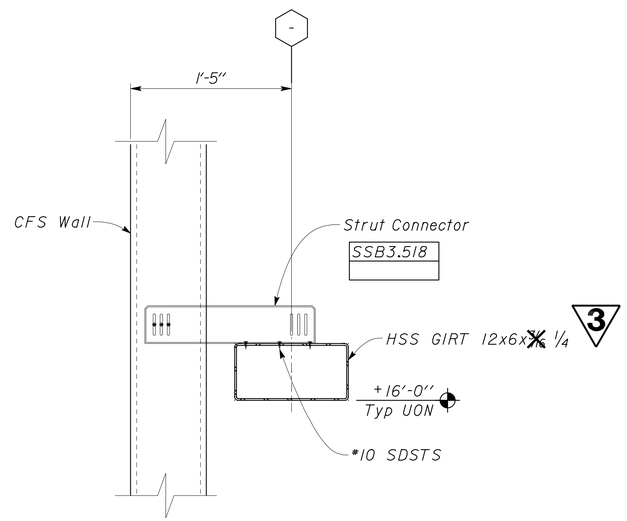

2 CFS TO HSS DETAIL
Scale 1 1/2" = 1'-0"

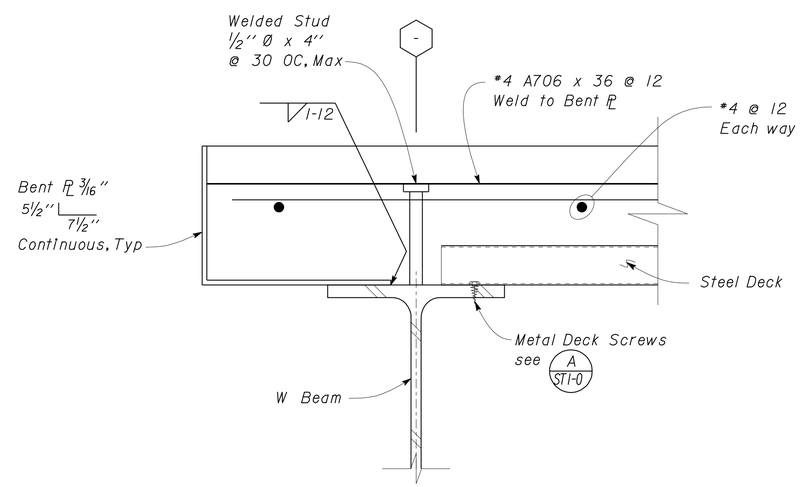

4 PL TO BEAM WELD
Scale 4" = 1'-0"

3 **REVISED PER ADDENDUM No. 3 DATED JANUARY 4, 2013**

DESIGN	BY Robert du Plaine	CHECKED Brian Sutliff	
DETAILS	BY David W. Good	CHECKED Robert du Plaine	
QUANTITIES	BY	CHECKED	

STATE OF CALIFORNIA
DEPARTMENT OF TRANSPORTATION

DIVISION OF ENGINEERING SERVICES
ARCHITECTURAL AND STRUCTURAL DESIGN

BRIDGE NO. 33M5785
POST MILE 2.2

SFOBB MAINTENANCE COMPLEX

OUT OF PLANE CONNECTIONS

SHEET **ST1-97**

TAEMWW Imperial Rev. 7/10

ORIGINAL SCALE IN INCHES FOR REDUCED PLANS 0 1 2 3

UNIT 3599
PROJECT NUMBER & PHASE 04120006661
EA 014081

DISREGARD PRINTS BEARING EARLIER REVISION DATES → 04-20-12 04-24-12 04-25-12 04-27-12 04-28-12 05-08-12 05-18-12

REVISION DATES (PRELIMINARY STAGE ONLY) SHEET OF

28-DEC-2012 13:53
st1_097.add

DIST.	COUNTY	ROUTE	POST MILES TOTAL PROJECT	SHEET NO.	TOTAL SHEETS
04	Ala	80	2.2	428	800

RdP
REGISTERED CIVIL ENGINEER — DATE 05-31-12

REGISTERED PROFESSIONAL ENGINEER Robert du Plaine No. 51447 Exp. 6-30-14 CIVIL STATE OF CALIFORNIA

10-22-12
PLANS APPROVAL DATE

The State of California or its officers or agents shall not be responsible for the accuracy or completeness of scanned copies of this plan sheet.

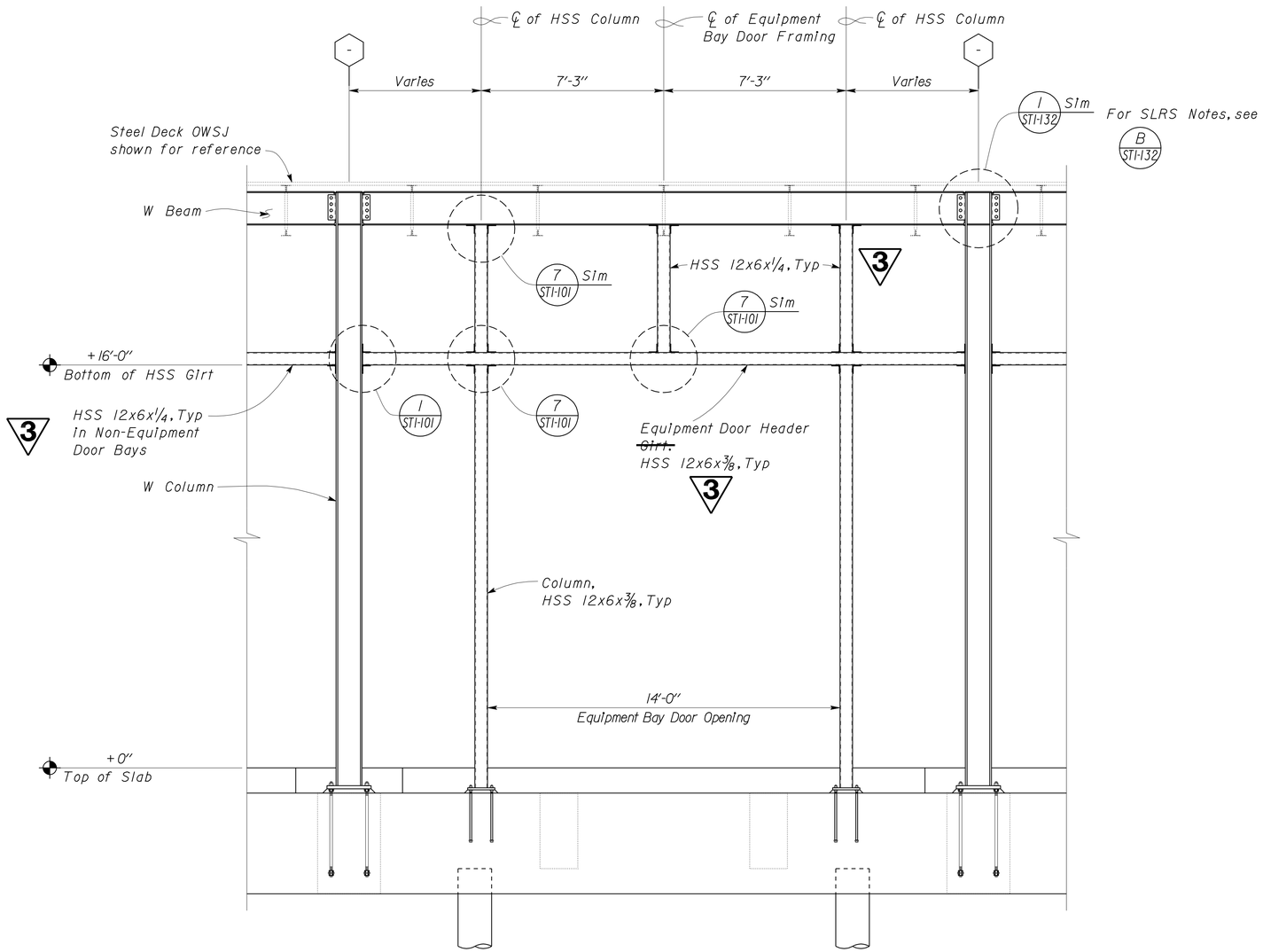

1 HSS EQUIPMENT BAY DOOR FRAMING
Scale 3/8" = 1'-0"

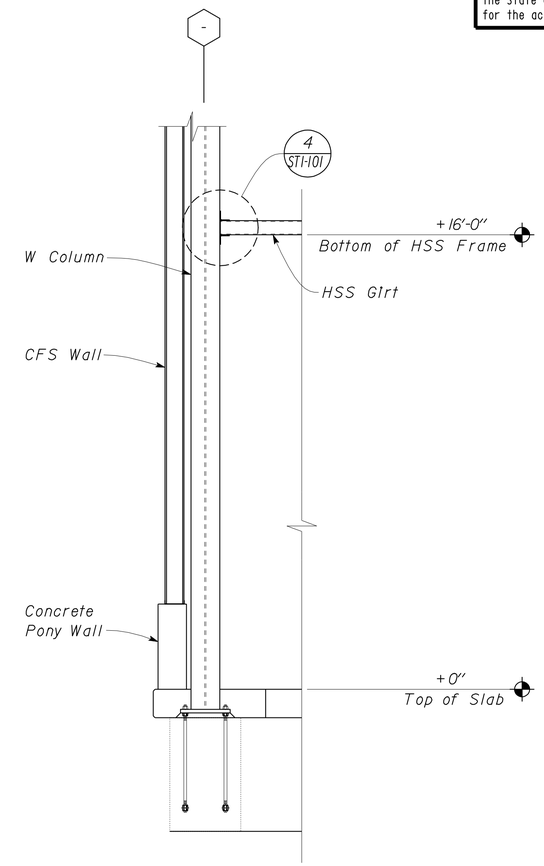

2 HSS GIRT CONNECTION
Scale 3/8" = 1'-0"

3 REVISED PER ADDENDUM No. 3 DATED JANUARY 4, 2013

DESIGN	BY Robert du Plaine	CHECKED Brian Sutliff	
DETAILS	BY David W. Good	CHECKED Robert du Plaine	
QUANTITIES	BY	CHECKED	

STATE OF CALIFORNIA
DEPARTMENT OF TRANSPORTATION

DIVISION OF ENGINEERING SERVICES
ARCHITECTURAL AND STRUCTURAL DESIGN

BRIDGE NO. 33M5785
POST MILE 2.2

SFOBB MAINTENANCE COMPLEX
EQUIPMENT BAY DOOR FRAMING

SHEET ST1-100

TAEMWW Imperial Rev. 7/10

ORIGINAL SCALE IN INCHES FOR REDUCED PLANS 0 1 2 3

UNIT 3599
PROJECT NUMBER & PHASE 04120006661
EA 014081

DISREGARD PRINTS BEARING EARLIER REVISION DATES → 01-27-12 02-06-12 05-08-12 05-18-12 05-28-12 07-02-12

REVISION DATES (PRELIMINARY STAGE ONLY) SHEET OF

03-JAN-2013 13:44
st1_100.add

DIST.	COUNTY	ROUTE	POST MILES TOTAL PROJECT	SHEET NO.	TOTAL SHEETS
04	Ala	80	2.2	434	800

RdP
REGISTERED CIVIL ENGINEER — DATE 05-31-12

REGISTERED PROFESSIONAL ENGINEER — Robert du Plaine — No. 51447 — Exp. 6-30-14 — CIVIL — STATE OF CALIFORNIA

10-22-12
PLANS APPROVAL DATE

The State of California or its officers or agents shall not be responsible for the accuracy or completeness of scanned copies of this plan sheet.

3

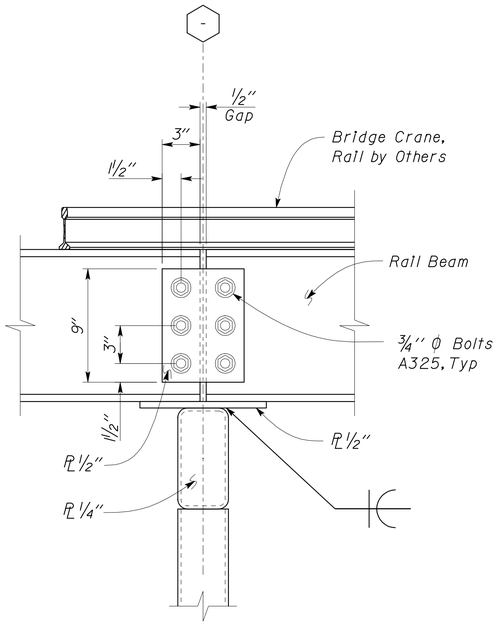

1 BRIDGE CRANE BEAM SPLICE
Scale 2" = 1' - 0"

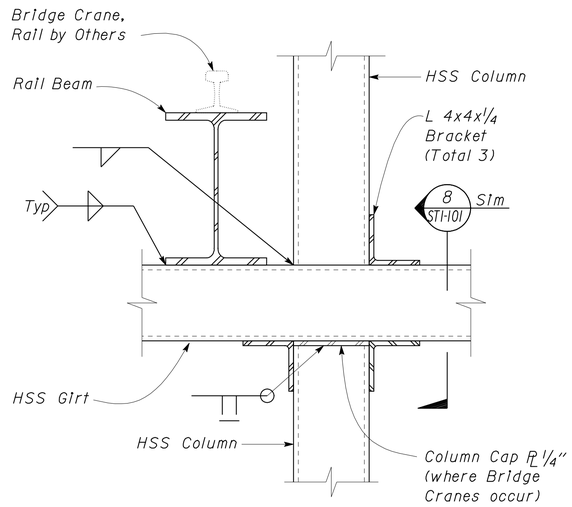

3 BRACKET LAYOUT AT RAIL BEAM
Scale 2" = 1' - 0"

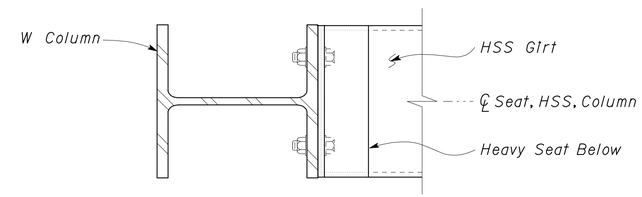

5 HSS TO W CONNECTION
Scale 2" = 1' - 0"

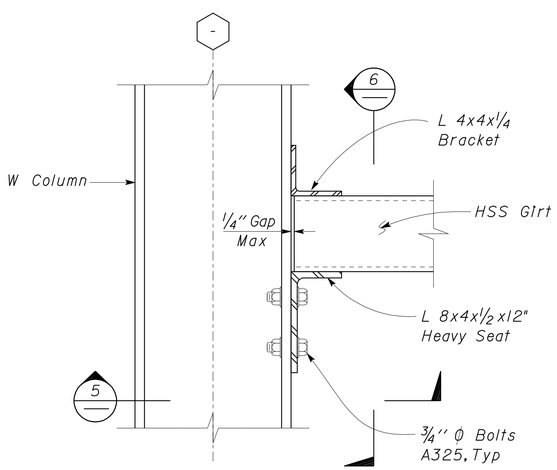

2 GIRT TO W COLUMN HEAVY CONNECTION
Scale 2" = 1' - 0"

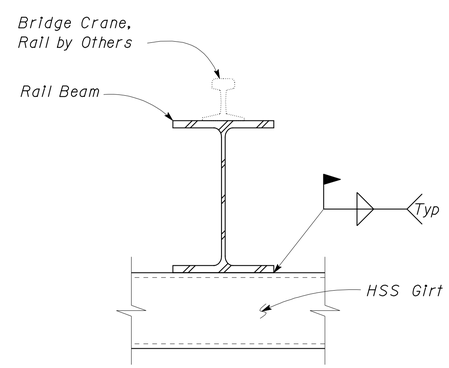

4 RAIL BEAM TO GIRT CONNECTION
Scale 2" = 1' - 0"

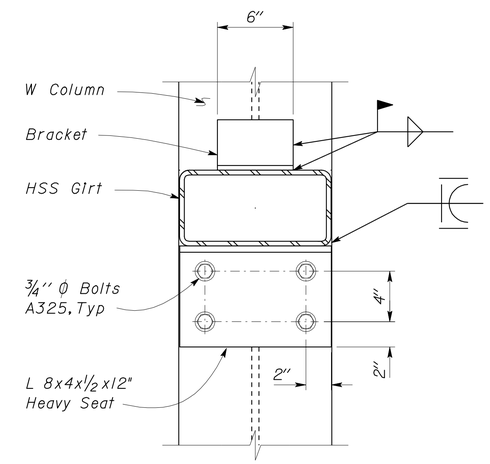

6 HSS TO W HEAVY CONNECTION
Scale 2" = 1' - 0"

3 **REVISED PER ADDENDUM No. 3 DATED JANUARY 4, 2013**

	BY	CHECKED
DESIGN	Robert du Plaine	Brian Sutliff
DETAILS	David W. Good	Robert du Plaine
QUANTITIES		

STATE OF CALIFORNIA
DEPARTMENT OF TRANSPORTATION

DIVISION OF ENGINEERING SERVICES
ARCHITECTURAL AND STRUCTURAL DESIGN

BRIDGE NO. 33M5785
POST MILE 2.2

SFOBB MAINTENANCE COMPLEX

BRIDGE CRANE FRAMING DETAILS

SHEET **ST1-106**

TAEMWW Imperial Rev. 7/10

ORIGINAL SCALE IN INCHES FOR REDUCED PLANS 0 1 2 3

UNIT 3599
PROJECT NUMBER & PHASE 04120006661
EA 014081

DISREGARD PRINTS BEARING EARLIER REVISION DATES → 02-12-12 02-15-12 05-08-12 05-11-12 05-22-12 05-30-12

REVISION DATES (PRELIMINARY STAGE ONLY) SHEET OF

P:\dist_04\0400000038_sfobb_ms_complex\expedite\Addendum Plans\Addendum 2 - 11-28-2012\st1_106.dgn

02-JAN-2013 07:57

DIST.	COUNTY	ROUTE	POST MILES TOTAL PROJECT	SHEET NO.	TOTAL SHEETS
04	Ala	80	2.2	438	800

RdP
REGISTERED CIVIL ENGINEER — DATE 05-31-12

REGISTERED PROFESSIONAL ENGINEER Robert du Plaine No. 51447 Exp. 6-30-14 CIVIL STATE OF CALIFORNIA

10-22-12
PLANS APPROVAL DATE

The State of California or its officers or agents shall not be responsible for the accuracy or completeness of scanned copies of this plan sheet.

3

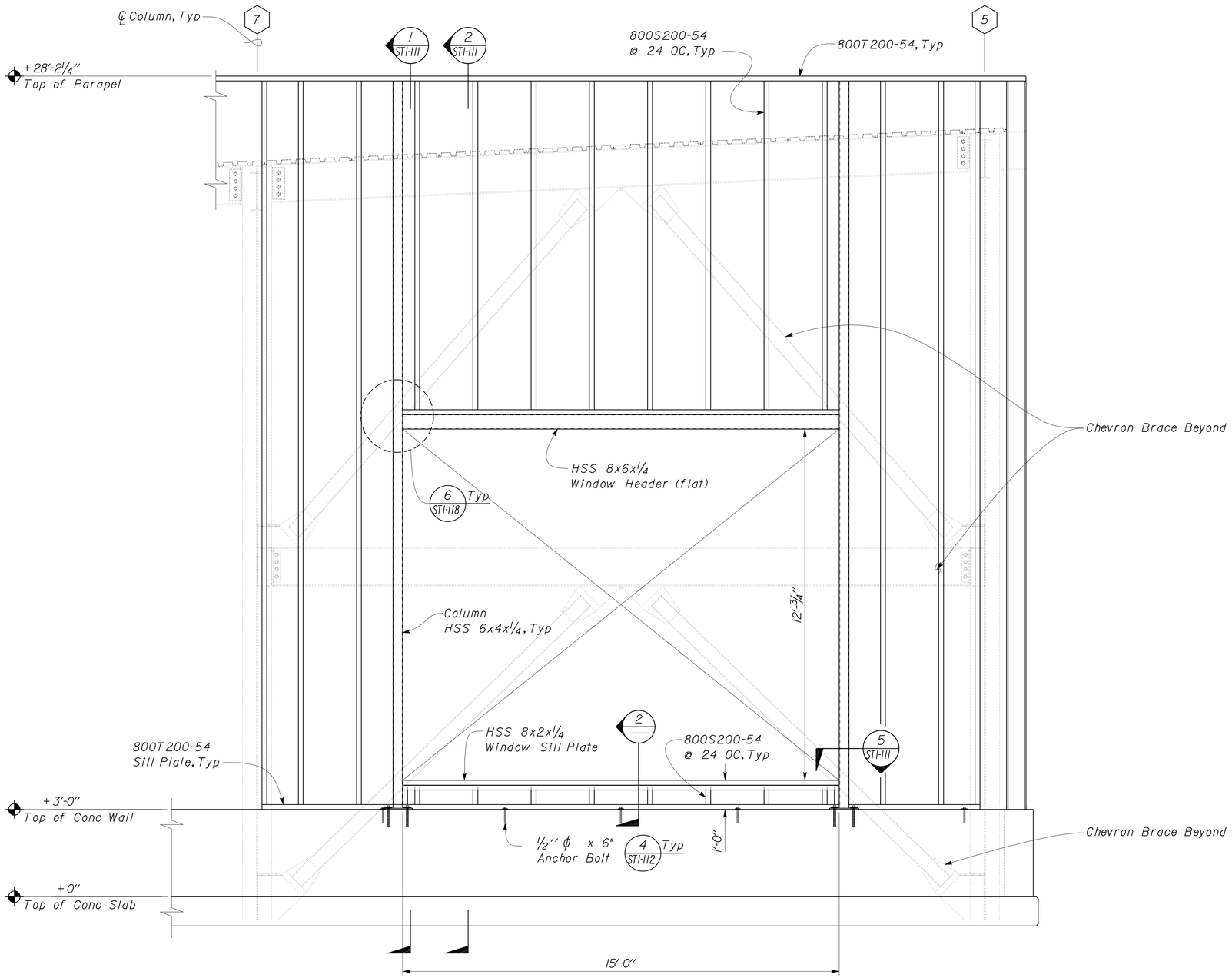

1 GRIDLINE AA WALL ELEVATION
Scale ½" = 1'-0"

Window dimensions and details similar at Grid 'X'.

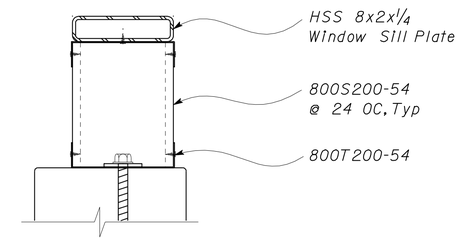

2 SILL SECTION
Scale 2" = 1'-0"

3 **REVISED PER ADDENDUM No. 3 DATED JANUARY 4, 2013**

	BY	CHECKED
DESIGN	Robert du Plaine	Brian Sutliff
DETAILS	David W. Good	Robert du Plaine
QUANTITIES		

STATE OF CALIFORNIA
DEPARTMENT OF TRANSPORTATION

DIVISION OF ENGINEERING SERVICES
ARCHITECTURAL AND STRUCTURAL DESIGN

BRIDGE NO. 33M5785
POST MILE 2.2

SFOBB MAINTENANCE COMPLEX

WALL FRAMING ELEVATION AT GRID AA

SHEET ST1-110

TAEMWW Imperial Rev. 7/10

ORIGINAL SCALE IN INCHES FOR REDUCED PLANS 0 1 2 3

UNIT 3599
PROJECT NUMBER & PHASE 04120006661
EA 014081

DISREGARD PRINTS BEARING EARLIER REVISION DATES → 04-28-12 05-08-12 05-21-12 05-30-12 06-18-12
REVISION DATES (PRELIMINARY STAGE ONLY) SHEET OF

P:\dist_04\0400000038_sfobb_ms_complex\expedite\Addendum Plans\Addendum 2 - 11-28-2012\st1_110.dgn 28-DEC-2012 14:45

DIST.	COUNTY	ROUTE	POST MILES TOTAL PROJECT	SHEET NO.	TOTAL SHEETS
04	Ala	80	2.2	439	800

RdP
REGISTERED CIVIL ENGINEER — DATE 05-31-12

REGISTERED PROFESSIONAL ENGINEER Robert du Plaine No. 51447 Exp. 6-30-14 CIVIL STATE OF CALIFORNIA

10-22-12
PLANS APPROVAL DATE

The State of California or its officers or agents shall not be responsible for the accuracy or completeness of scanned copies of this plan sheet.

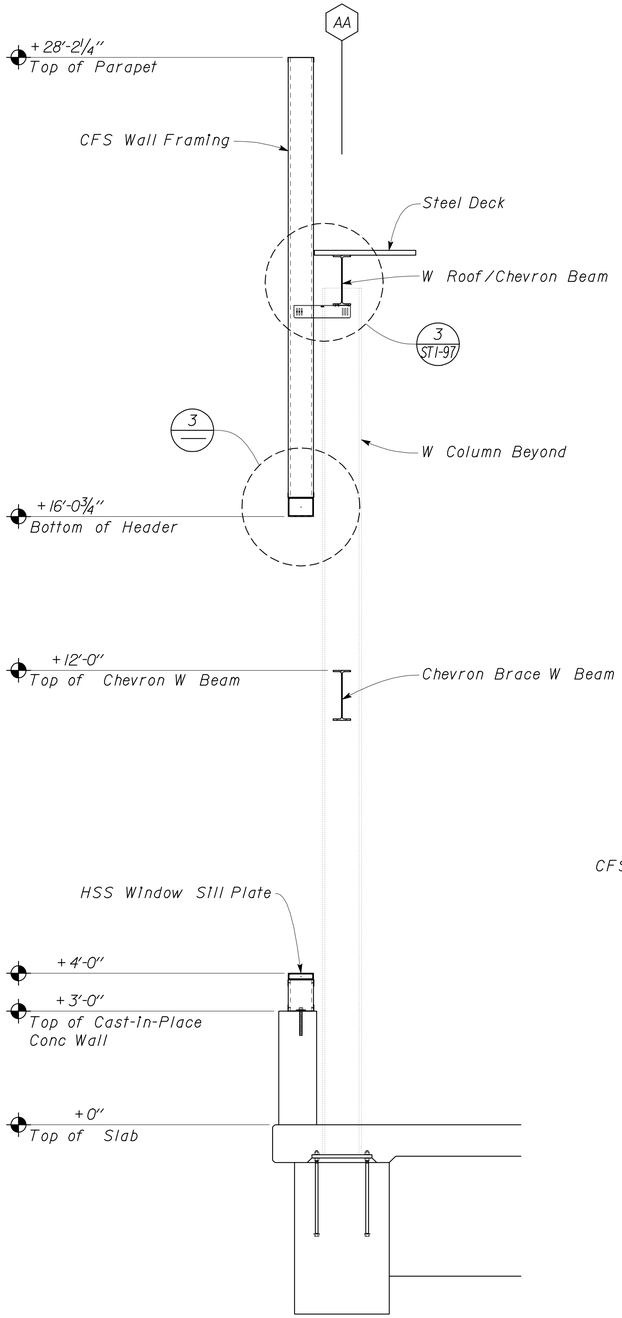

1 WALL SECTION AT WINDOW
Scale ½" = 1'-0"

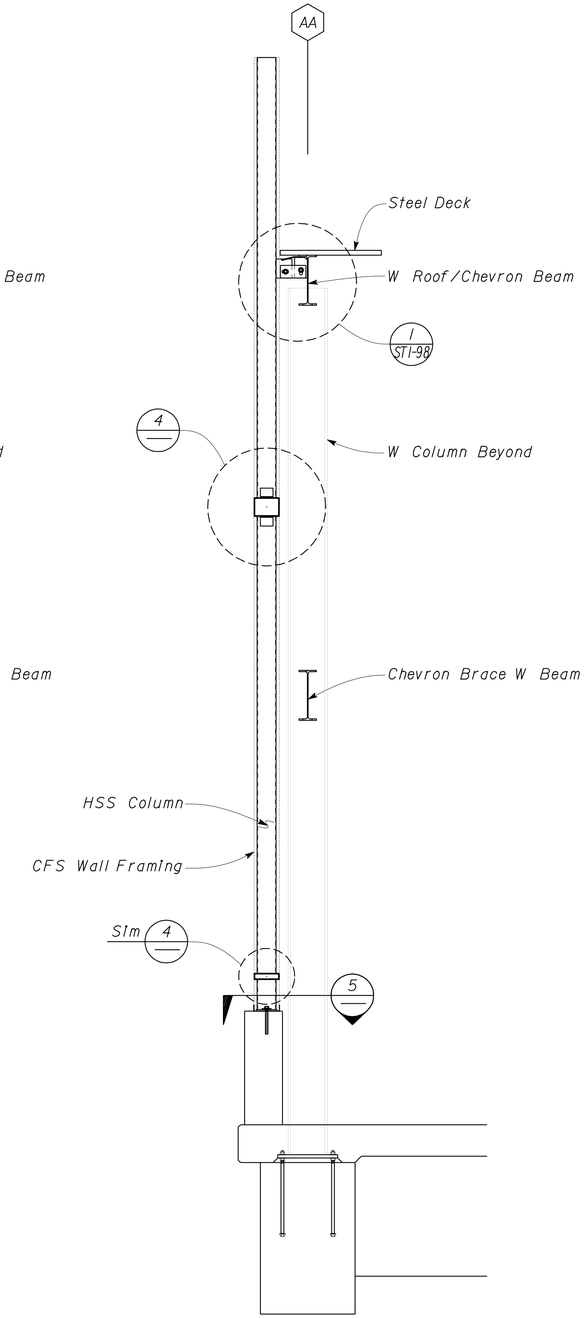

2 WALL SECTION AT COLUMN
Scale ½" = 1'-0"

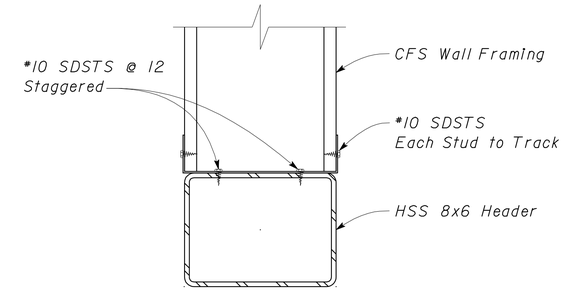

3 HEADER/CFS FRAMING DETAIL
Scale 3" = 1'-0"

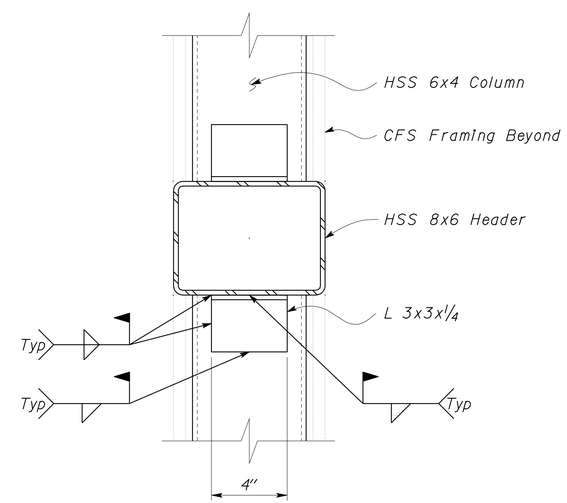

4 HEADER/MULLION DETAIL
Scale 3" = 1'-0"

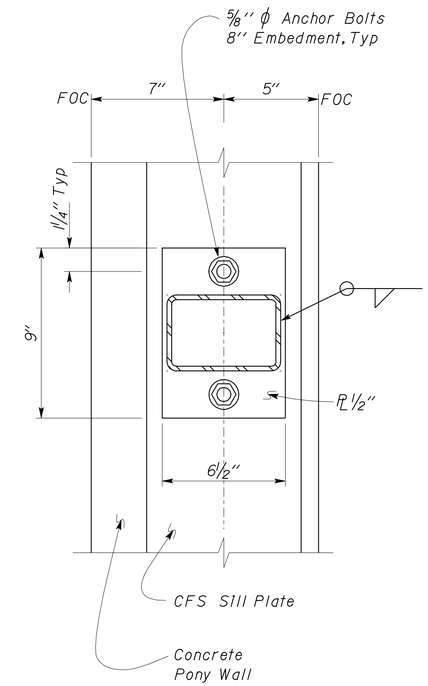

3 5 HSS MULLION BASE PLATE
Scale 3" = 1'-0"

3 REVISED PER ADDENDUM No. 3 DATED JANUARY 4, 2013

DESIGN	BY Robert du Plaine	CHECKED Brian Sutliff	
DETAILS	BY David W. Good	CHECKED Robert du Plaine	
QUANTITIES	BY	CHECKED	

STATE OF CALIFORNIA
DEPARTMENT OF TRANSPORTATION

DIVISION OF ENGINEERING SERVICES
ARCHITECTURAL AND STRUCTURAL DESIGN

BRIDGE NO. 33M5785
POST MILE 2.2

SFOBB MAINTENANCE COMPLEX
WALL FRAMING SECTIONS & DETAILS

SHEET ST1-111

TAEMWW Imperial Rev. 7/10

ORIGINAL SCALE IN INCHES FOR REDUCED PLANS 0 1 2 3

UNIT 3599
PROJECT NUMBER & PHASE 04120006661
EA 014081

DISREGARD PRINTS BEARING EARLIER REVISION DATES → 04-28-12 05-08-12 05-18-12 05-30-12

REVISION DATES (PRELIMINARY STAGE ONLY) SHEET OF

28-DEC-2012 14:45
st1_111.add

DIST.	COUNTY	ROUTE	POST MILES TOTAL PROJECT	SHEET NO.	TOTAL SHEETS
04	Ala	80	2.2	443	800

RdP
REGISTERED CIVIL ENGINEER — DATE 05-31-12

REGISTERED PROFESSIONAL ENGINEER Robert du Plaine No. 51447 Exp. 6-30-14 CIVIL STATE OF CALIFORNIA

10-22-12
PLANS APPROVAL DATE

The State of California or its officers or agents shall not be responsible for the accuracy or completeness of scanned copies of this plan sheet.

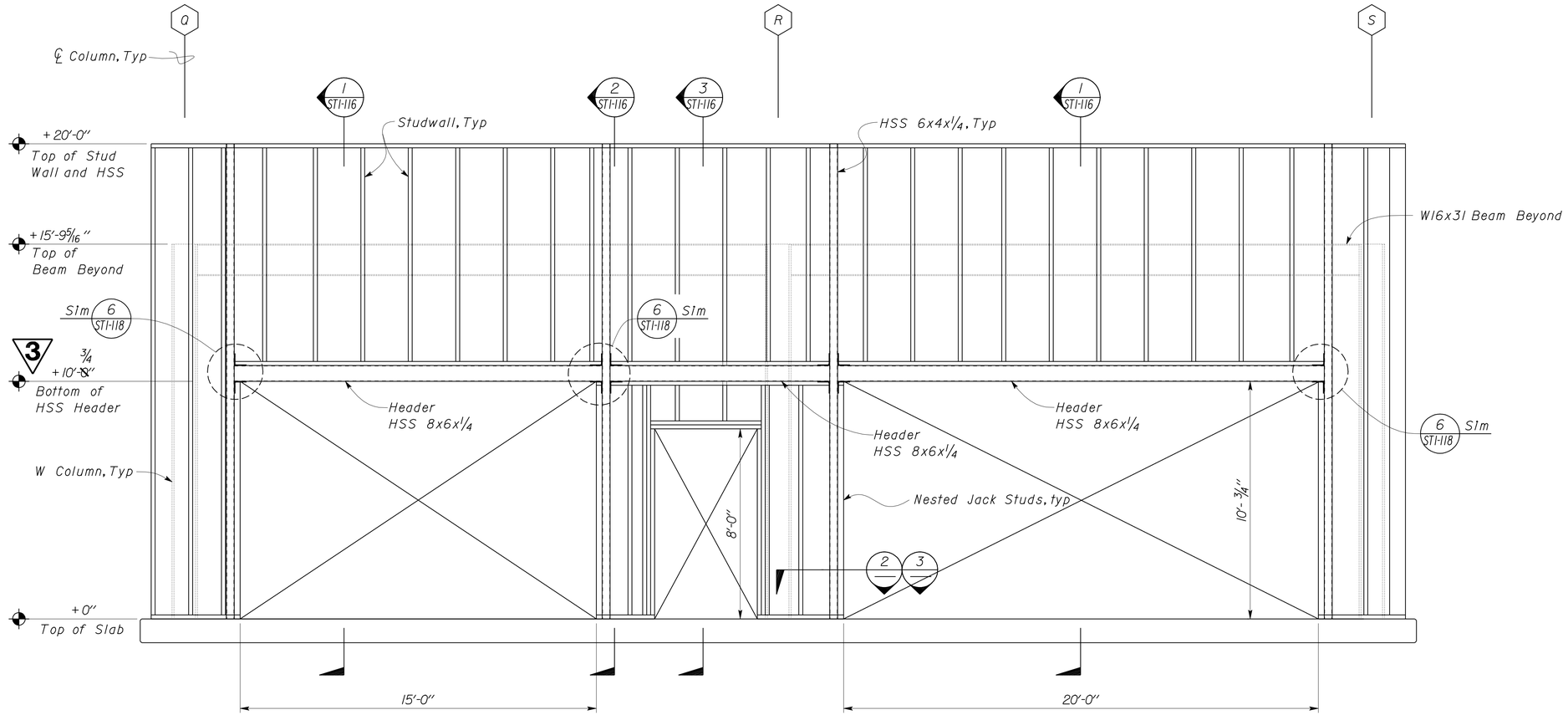

1 WALL ELEVATION AT GRID 9
Scale 3/8" = 1'-0"

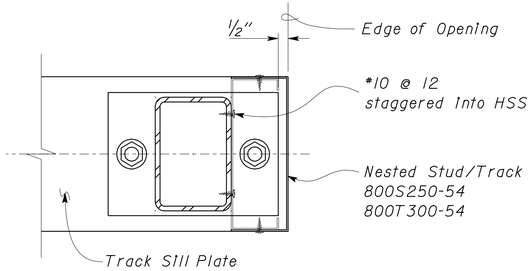

2 HSS MULLION FRAMING
Scale 3" = 1'-0"

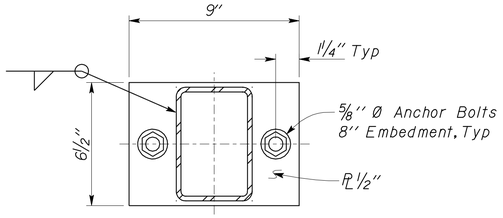

3 HSS MULLION BASE PLATE
Scale 3" = 1'-0"

3 **REVISED PER ADDENDUM No. 3 DATED JANUARY 4, 2013**

DESIGN	BY Robert du Plaine	CHECKED Brian Sutliff	
DETAILS	BY David W. Good	CHECKED Robert du Plaine	
QUANTITIES	BY	CHECKED	

STATE OF CALIFORNIA
DEPARTMENT OF TRANSPORTATION

DIVISION OF ENGINEERING SERVICES
ARCHITECTURAL AND STRUCTURAL DESIGN

BRIDGE NO. 33M5785
POST MILE 2.2

SFOBB MAINTENANCE COMPLEX

WALL FRAMING ELEVATION AT GRID 9

SHEET ST1-115

TAEMWW Imperial Rev. 7/10

ORIGINAL SCALE IN INCHES FOR REDUCED PLANS 0 1 2 3

UNIT 3599
PROJECT NUMBER & PHASE 04120006661
EA 014081

DISREGARD PRINTS BEARING EARLIER REVISION DATES
REVISION DATES (PRELIMINARY STAGE ONLY) 04-29-12 05-01-12 05-08-12 05-18-12 05-22-12 05-30-12 06-15-12
SHEET OF

28-DEC-2012 14:45
st1_115.add

DIST.	COUNTY	ROUTE	POST MILES TOTAL PROJECT	SHEET NO.	TOTAL SHEETS
04	Ala	80	2.2	446	800

RdP
REGISTERED CIVIL ENGINEER — DATE 05-31-12

REGISTERED PROFESSIONAL ENGINEER — Robert du Plaine — No. 51447 — Exp. 6-30-14 — CIVIL — STATE OF CALIFORNIA

10-22-12
PLANS APPROVAL DATE

The State of California or its officers or agents shall not be responsible for the accuracy or completeness of scanned copies of this plan sheet.

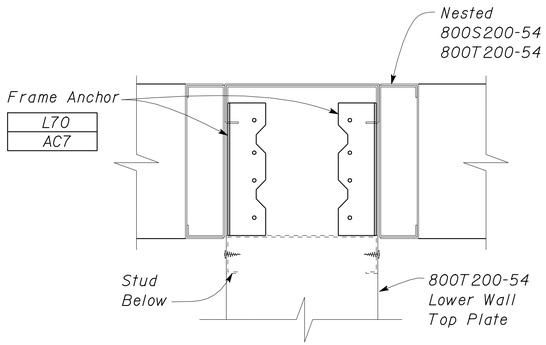

1 WALL INTERSECTION PLAN VIEW
Scale 3" = 1'-0"

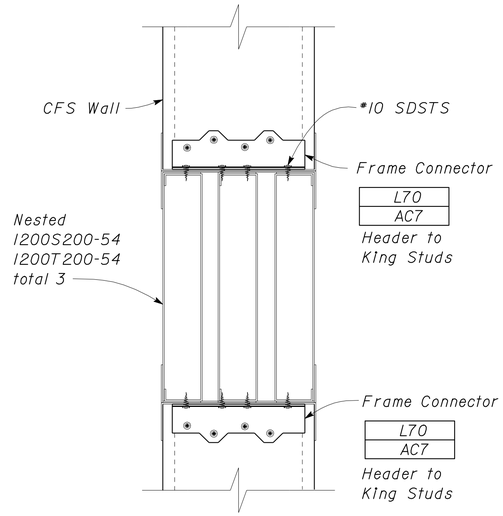

3 TRIPLE NESTED HEADER
Scale 3" = 1'-0"

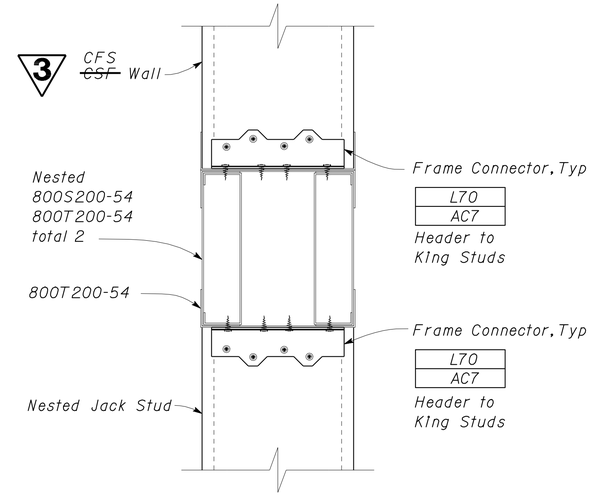

5 DOUBLE NESTED HEADER
Scale 3" = 1'-0"

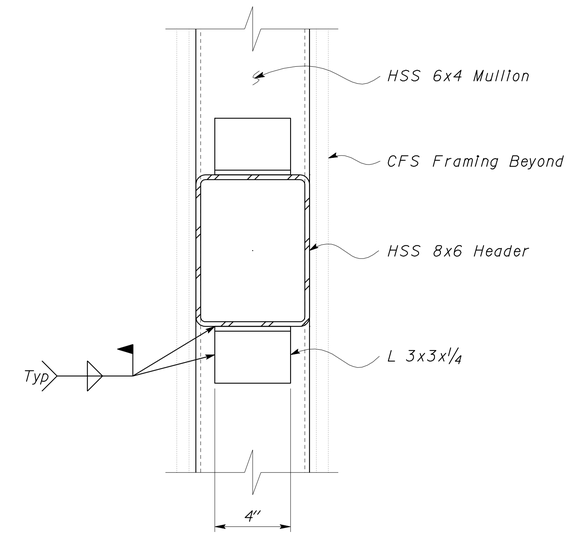

6 HEADER/MULLION DETAIL
Scale 3" = 1'-0"

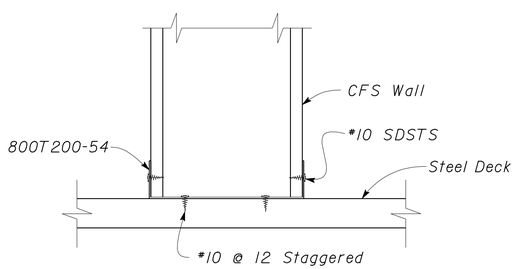

2 TRACK TO DECK CONNECTION
Scale 3" = 1'-0"

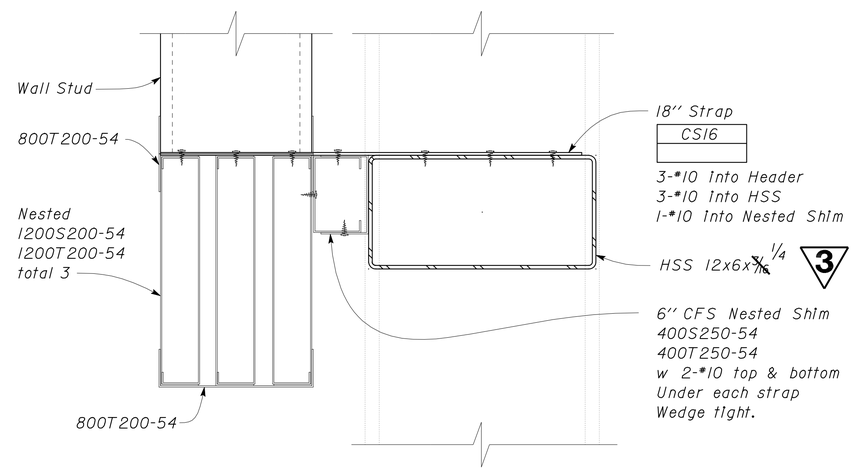

4 HEADER/GIRT DETAIL
Scale 3" = 1'-0"

3 **REVISED PER ADDENDUM No. 3 DATED JANUARY 4, 2013**

DESIGN	BY Robert du Plaine	CHECKED Brian Sutliff	
DETAILS	BY David W. Good	CHECKED Robert du Plaine	
QUANTITIES	BY	CHECKED	

STATE OF CALIFORNIA
DEPARTMENT OF TRANSPORTATION

DIVISION OF ENGINEERING SERVICES
ARCHITECTURAL AND STRUCTURAL DESIGN

BRIDGE NO. 33M5785
POST MILE 2.2

SFOBB MAINTENANCE COMPLEX

WALL FRAMING DETAILS

SHEET ST1-118

TAEMWW Imperial Rev. 7/10

ORIGINAL SCALE IN INCHES FOR REDUCED PLANS 0 1 2 3

UNIT 3599
PROJECT NUMBER & PHASE 04120006661
EA 014081

DISREGARD PRINTS BEARING EARLIER REVISION DATES → REVISION DATES (PRELIMINARY STAGE ONLY) 05-01-12 05-08-12 05-18-12 05-29-12 06-15-12

SHEET OF

st1_118.add

03-JAN-2013 13:44

DIST.	COUNTY	ROUTE	POST MILES TOTAL PROJECT	SHEET NO.	TOTAL SHEETS
04	Ala	80	2.2	453	800

RdP
REGISTERED CIVIL ENGINEER — DATE 05-31-12

REGISTERED PROFESSIONAL ENGINEER Robert du Plaine No. 51447 Exp. 6-30-14 CIVIL STATE OF CALIFORNIA

10-22-12
PLANS APPROVAL DATE

The State of California or its officers or agents shall not be responsible for the accuracy or completeness of scanned copies of this plan sheet.

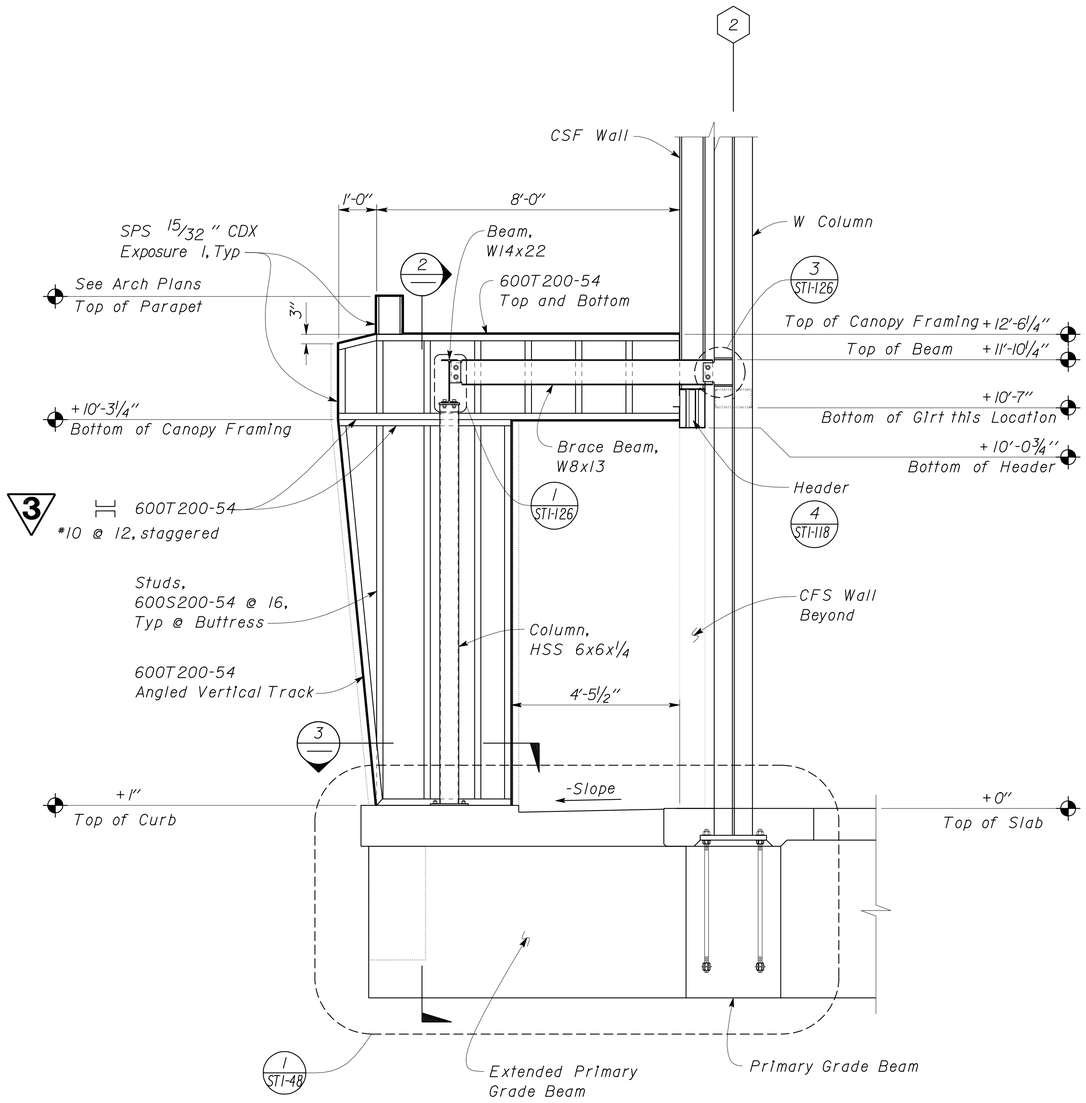

1 BUTTRESS FRAMING
Scale ½" = 1'-0"

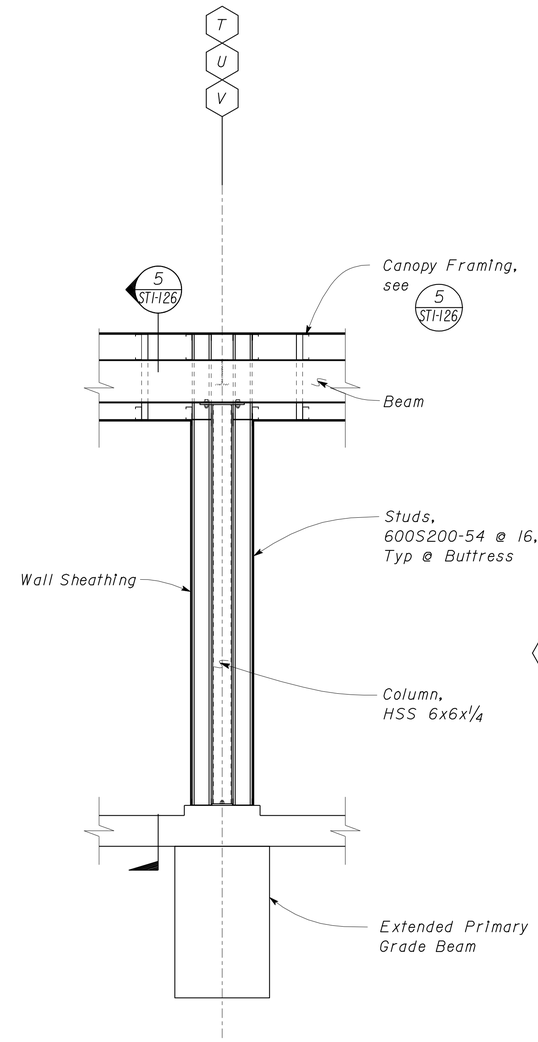

2 COLUMN FRAMING
Scale ½" = 1'-0"

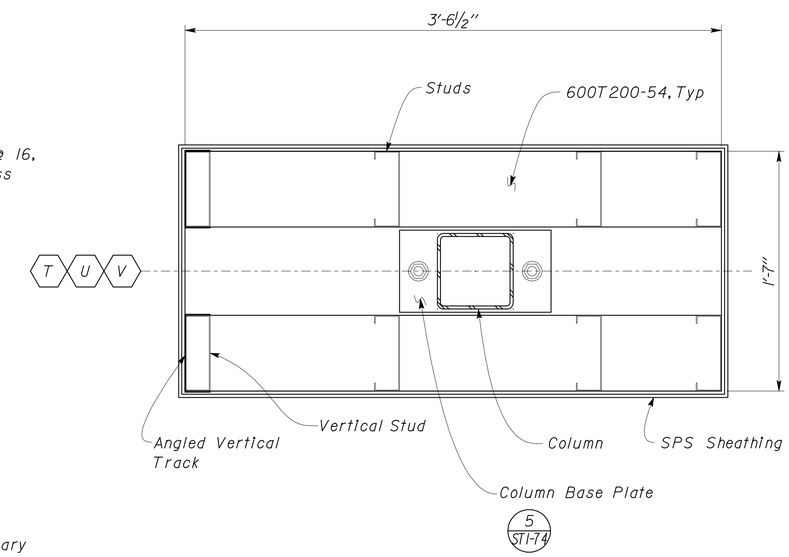

3 COLUMN BASE FRAMING
Scale 2" = 1'-0"

3 REVISED PER ADDENDUM No. 3 DATED JANUARY 4, 2013

DESIGN	BY Robert du Plaine	CHECKED Brian Sutliff	
DETAILS	BY David W. Good	CHECKED Robert du Plaine	
QUANTITIES	BY	CHECKED	

STATE OF CALIFORNIA
DEPARTMENT OF TRANSPORTATION

DIVISION OF ENGINEERING SERVICES
ARCHITECTURAL AND STRUCTURAL DESIGN

BRIDGE NO. 33M5785
POST MILE 2.2

SFOBB MAINTENANCE COMPLEX

CANOPY AT GRID 2

SHEET **ST1-125**

TAEMWW Imperial Rev. 7/10

ORIGINAL SCALE IN INCHES FOR REDUCED PLANS 0 1 2 3

UNIT 3599
PROJECT NUMBER & PHASE 04120006661
EA 014081

DISREGARD PRINTS BEARING EARLIER REVISION DATES → REVISION DATES (PRELIMINARY STAGE ONLY) 01-23-12 01-26-12 02-13-12 05-08-12 05-18-12 05-29-12 06-15-12

SHEET OF

28-DEC-2012 14:45
st1_125.add

DIST.	COUNTY	ROUTE	POST MILES TOTAL PROJECT	SHEET NO.	TOTAL SHEETS
04	Ala	80	2.2	455	800

3

RdP
REGISTERED CIVIL ENGINEER — 05-31-12 DATE

REGISTERED PROFESSIONAL ENGINEER — Robert du Plaine — No. 51447 — Exp. 6-30-14 — CIVIL — STATE OF CALIFORNIA

10-22-12
PLANS APPROVAL DATE

The State of California or its officers or agents shall not be responsible for the accuracy or completeness of scanned copies of this plan sheet.

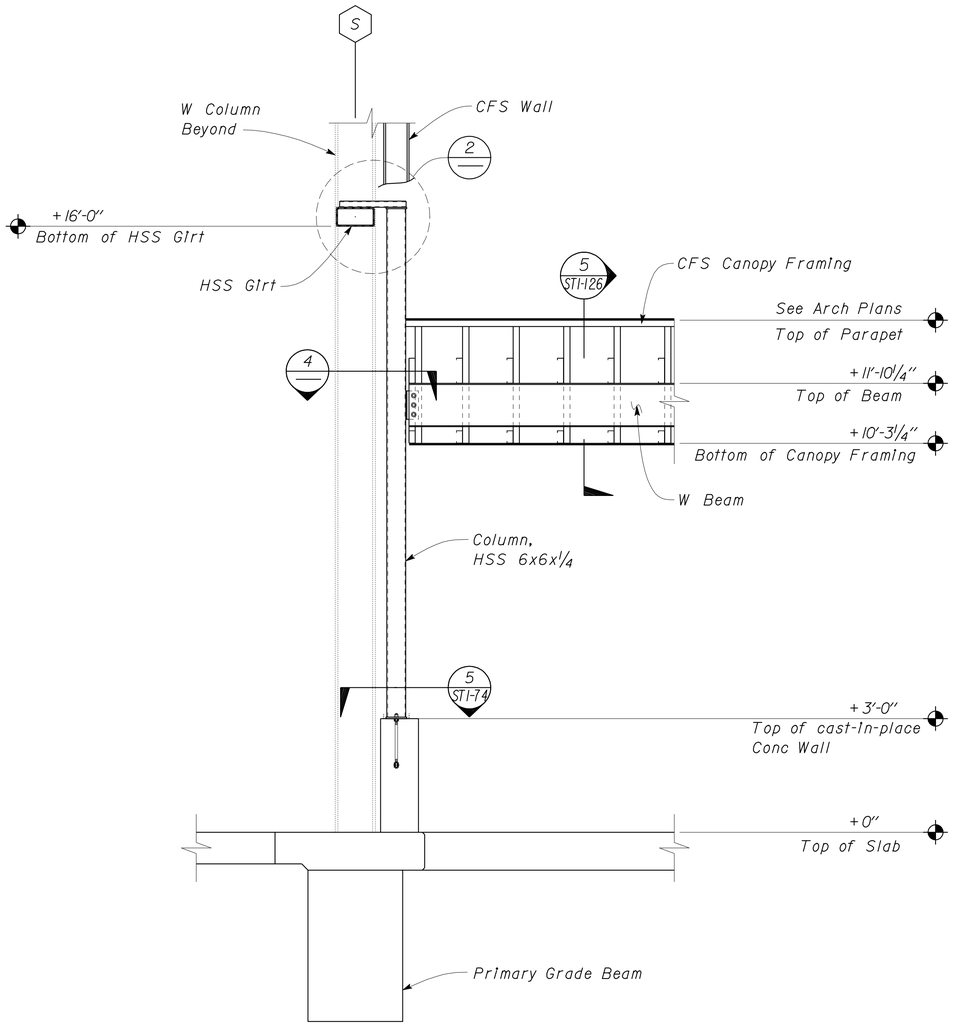

1 CANOPY FRAMING
Scale ½" = 1'-0"

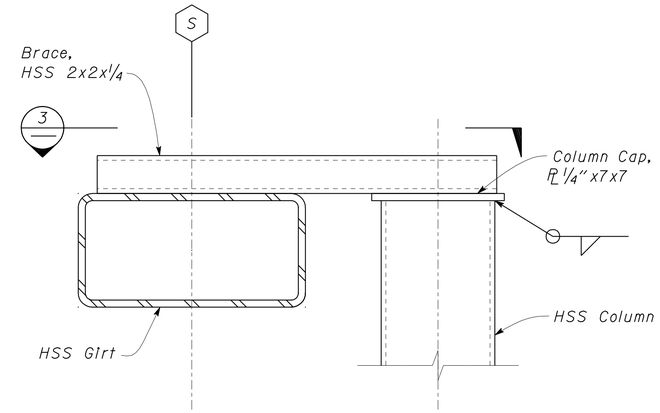

2 HSS COLUMN TO FRAME
Scale 3" = 1'-0"

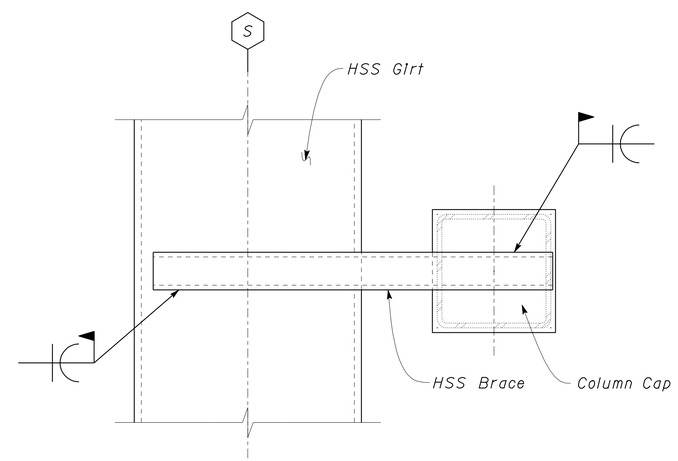

3 HSS BRACE
Scale 3" = 1'-0"

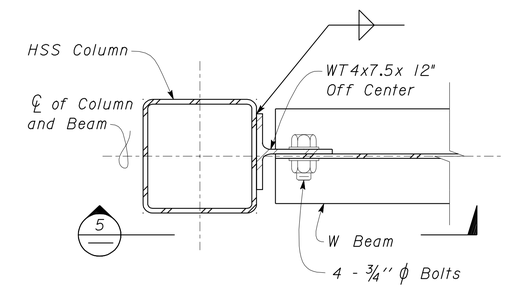

4 BEAM TO HSS COLUMN
Scale 3" = 1'-0"

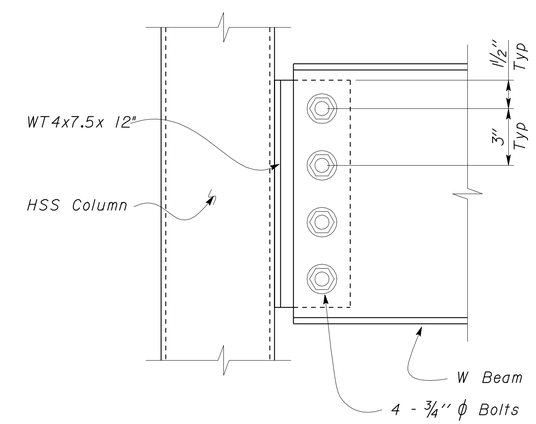

5 BEAM TO HSS COLUMN
Scale 3" = 1'-0"

3 **REVISED PER ADDENDUM No. 3 DATED JANUARY 4, 2013**

	BY	CHECKED
DESIGN	Robert du Plaine	Brian Sutliff
DETAILS	David W. Good	Robert du Plaine
QUANTITIES		

STATE OF CALIFORNIA
DEPARTMENT OF TRANSPORTATION

DIVISION OF ENGINEERING SERVICES
ARCHITECTURAL AND STRUCTURAL DESIGN

BRIDGE NO. 33M5785
POST MILE 2.2

SFOBB MAINTENANCE COMPLEX

CANOPY AT GRID 2 DETAILS

SHEET **ST1-127**

TAEMWW Imperial Rev. 7/10

ORIGINAL SCALE IN INCHES FOR REDUCED PLANS 0 1 2 3

UNIT 3599
PROJECT NUMBER & PHASE 04120006661
EA 014081

DISREGARD PRINTS BEARING EARLIER REVISION DATES → 01-23-12 01-30-12 05-08-12 05-18-12 05-29-12 06-18-12

REVISION DATES (PRELIMINARY STAGE ONLY) SHEET OF

P:\dist_04\0400000038_sfobb_ms_complex\expedite\Addendum Plans\Addendum 2 - 11-28-2012\st1_127.dgn 28-DEC-2012 14:45

DIST.	COUNTY	ROUTE	POST MILES TOTAL PROJECT	SHEET NO.	TOTAL SHEETS
04	Ala	80	2.2	457	800

RdP
REGISTERED CIVIL ENGINEER — DATE 05-31-12

REGISTERED PROFESSIONAL ENGINEER Robert du Plaine No. 51447 Exp. 6-30-14 CIVIL STATE OF CALIFORNIA

10-22-12
PLANS APPROVAL DATE

The State of California or its officers or agents shall not be responsible for the accuracy or completeness of scanned copies of this plan sheet.

3

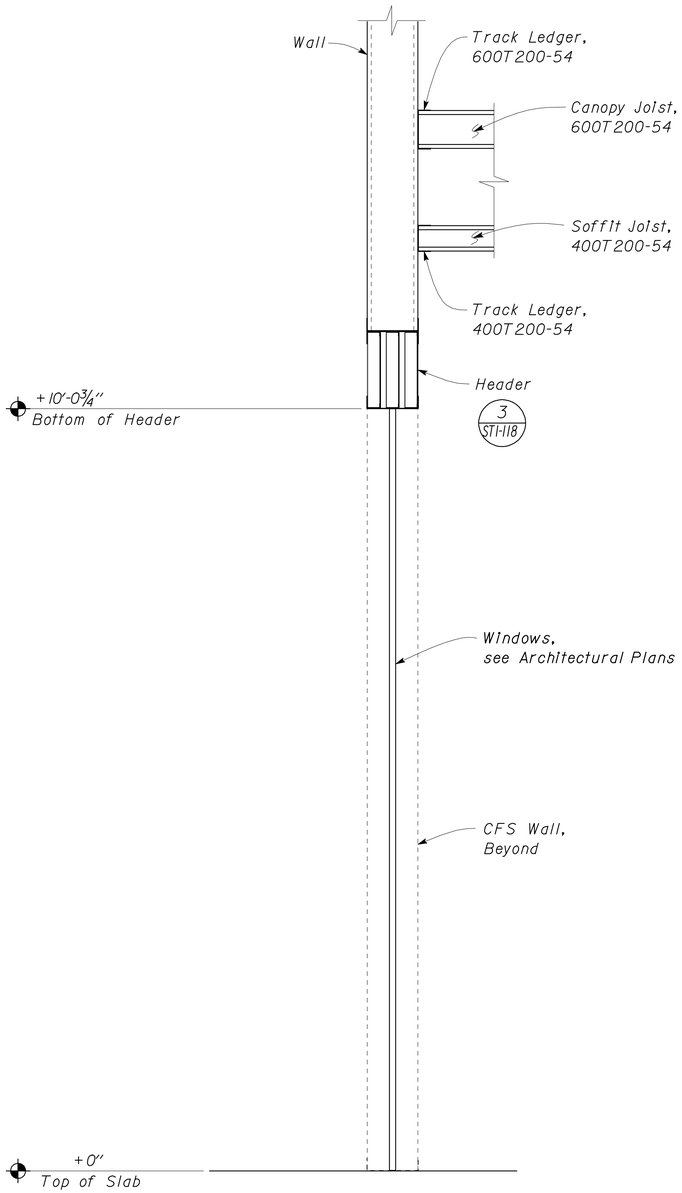

1 CANOPY TO WALL CONNECTION
Scale 1" = 1'-0"

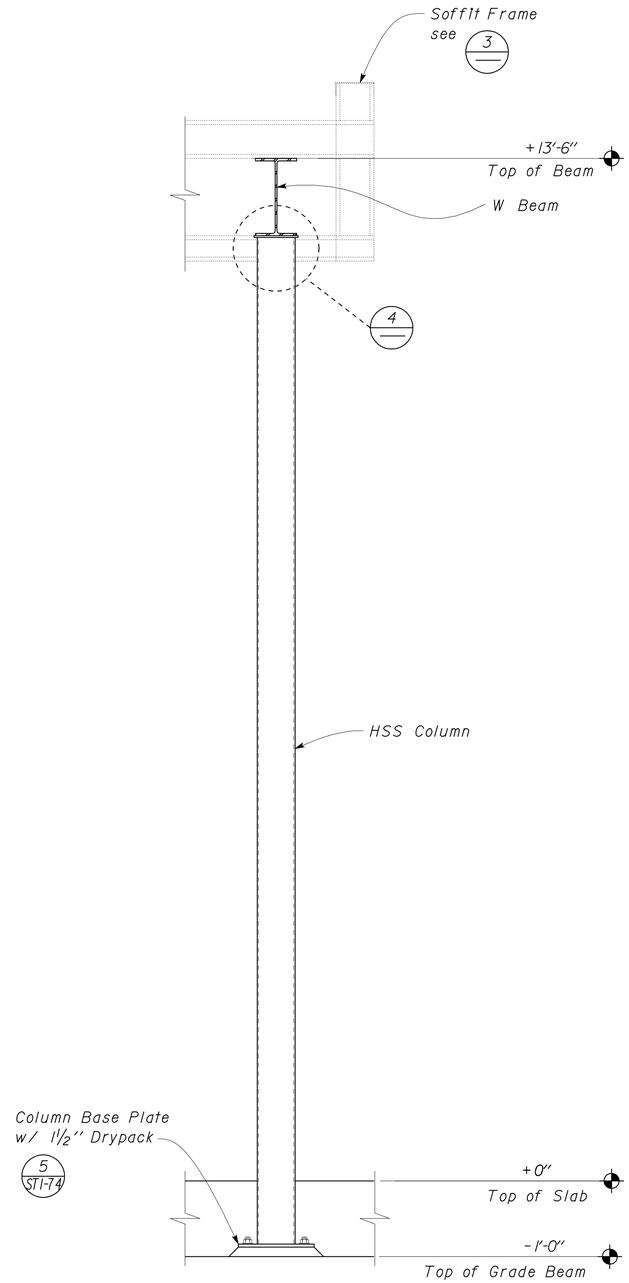

2 COLUMN TO BEAM CONNECTION
Scale 1" = 1'-0"

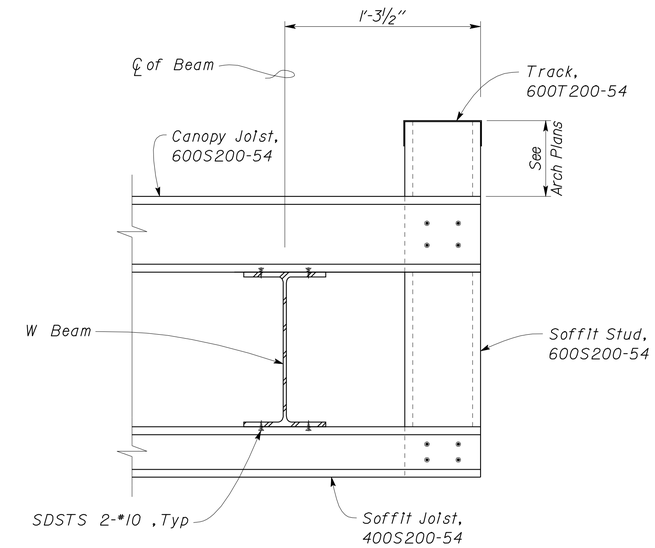

3 SOFFIT FRAMING
Scale 2" = 1'-0"

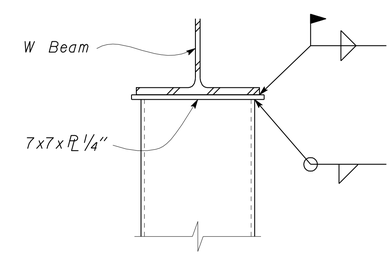

4 SOFFIT FRAMING
Scale 3" = 1'-0"

3 **REVISED PER ADDENDUM No. 3 DATED JANUARY 4, 2013**

DESIGN	BY Robert du Plaine	CHECKED Brian Sutliff	
DETAILS	BY David W. Good	CHECKED Robert du Plaine	
QUANTITIES	BY	CHECKED	

STATE OF CALIFORNIA
DEPARTMENT OF TRANSPORTATION

DIVISION OF ENGINEERING SERVICES
ARCHITECTURAL AND STRUCTURAL DESIGN

BRIDGE NO. 33M5785
POST MILE 2.2

SFOBB MAINTENANCE COMPLEX

COURTYARD CANOPY SECTIONS

SHEET ST1-129

TAEMWW Imperial Rev. 7/10

ORIGINAL SCALE IN INCHES FOR REDUCED PLANS 0 1 2 3

UNIT 3599
PROJECT NUMBER & PHASE 04120006661
EA 014081

DISREGARD PRINTS BEARING EARLIER REVISION DATES → 03-29-12 04-04-12 05-08-12 05-18-12 06-18-12

REVISION DATES (PRELIMINARY STAGE ONLY) SHEET OF

P:\dist_04\0400000038_sfobb_ms_complex\expedite\Addendum Plans\Addendum 2 - 11-28-2012\st1_129.add

28-DEC-2012 14:45

DIST.	COUNTY	ROUTE	POST MILES TOTAL PROJECT	SHEET NO.	TOTAL SHEETS
04	Ala	80	2.2	460	800

RdP
REGISTERED CIVIL ENGINEER — DATE 05-31-12

REGISTERED PROFESSIONAL ENGINEER Robert du Plaine No. 51447 Exp. 6-30-14 CIVIL STATE OF CALIFORNIA

10-22-12
PLANS APPROVAL DATE

The State of California or its officers or agents shall not be responsible for the accuracy or completeness of scanned copies of this plan sheet.

3

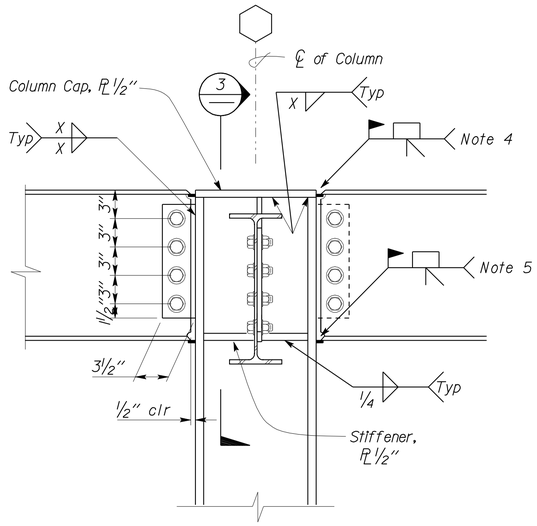

1 BEAM TO COLUMN FLANGE
Scale 1 1/2" = 1' - 0"

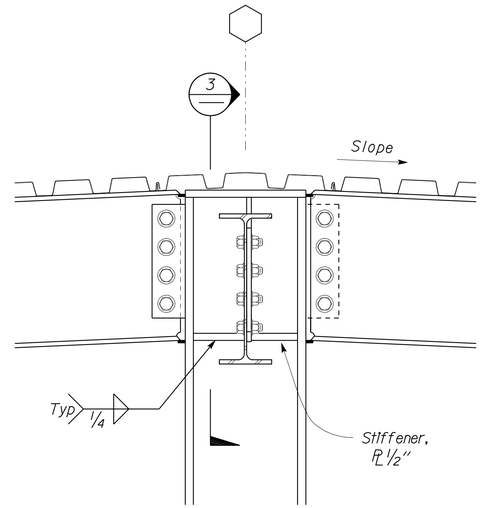

Note: For Details not shown See 1

2 BEAM TO COLUMN FLANGE
Scale 1 1/2" = 1' - 0"

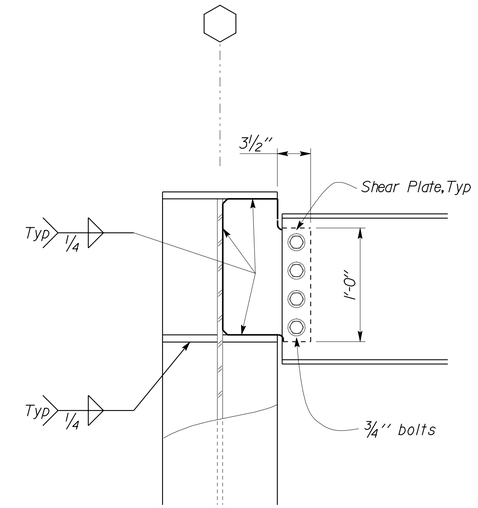

Note: For Details not shown See 1

3 BEAM TO COLUMN WEB
Scale 1 1/2" = 1' - 0"

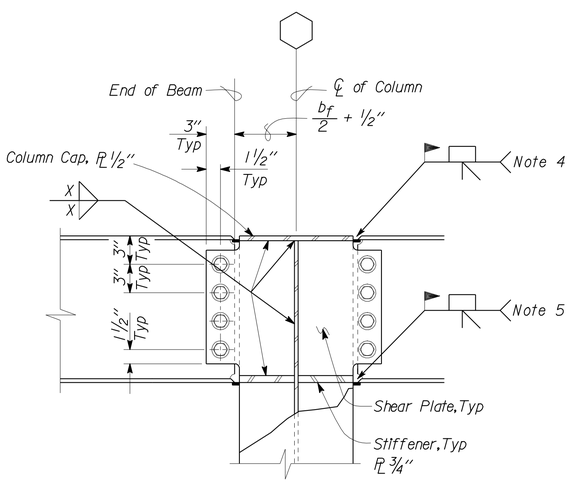

4 BEAM TO COLUMN WEB
Scale 1 1/2" = 1' - 0"

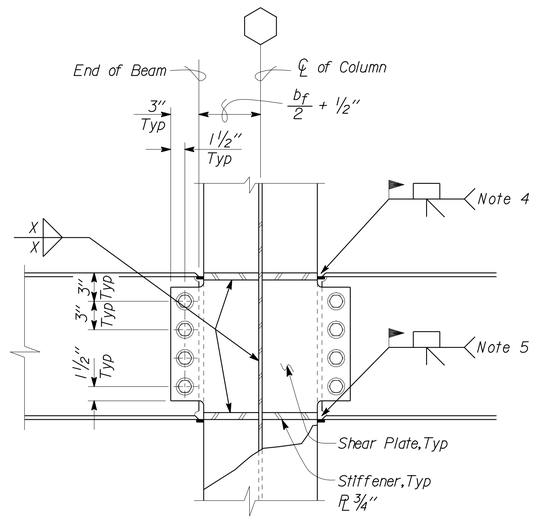

5 BEAM TO COLUMN WEB
Scale 1 1/2" = 1' - 0"

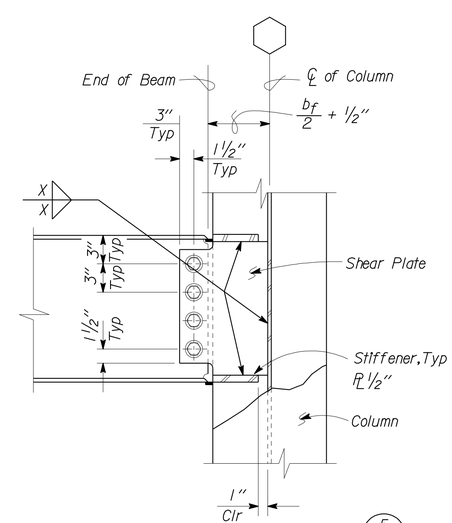

Note: For Details not shown See 5

6 BEAM TO COLUMN WEB
Scale 1 1/2" = 1' - 0"

A MOMENT CONNECTION SCHEDULE

Moment Connections Only

BEAM SIZE	A-325 BOLTS		Shear Plate	X
	Quantity	Diameter		
W16	4	3/4"	1/2"	1/4"
W18	5	3/4"	1/2"	1/4"
W21	5	3/4"	1/2"	5/16"
W24	6	3/4"	1/2"	5/16"

B SPECIAL SEISMIC NOTES

1. All Moment Connections on this sheet are part of the Seismic Load Resisting System.
2. Welding Access holes per AISC 341-05.
3. The Protected Zone consists of all steel within 2'-0" of Moment Connections.
4. CJP Demand Critical Weld
   Leave backing bar in place
   Add 5/16" Fillet weld
   under backing bar.
   Typ at top flanges.
5. CJP Demand Critical Weld
   Remove backing bar,
   Backgouge
   Add 5/16" Fillet weld
   Typ at bottom flanges.

3 **REVISED PER ADDENDUM No. 3 DATED JANUARY 4, 2013**

	BY	CHECKED
DESIGN	Robert du Plaine	Brian Sutliff
DETAILS	David W. Good	Robert du Plaine
QUANTITIES		

STATE OF CALIFORNIA DEPARTMENT OF TRANSPORTATION

DIVISION OF ENGINEERING SERVICES
ARCHITECTURAL AND STRUCTURAL DESIGN

BRIDGE NO. 33M5785
POST MILE 2.2

SFOBB MAINTENANCE COMPLEX

STEEL MOMENT FRAME CONNECTIONS

SHEET ST1-132

TAEMWW Imperial Rev. 7/10

ORIGINAL SCALE IN INCHES FOR REDUCED PLANS 0 1 2 3

UNIT 3599
PROJECT NUMBER & PHASE 04120006661
EA 014081

DISREGARD PRINTS BEARING EARLIER REVISION DATES → 02-06-12 05-04-12 05-08-12 05-18-12 07-02-12

REVISION DATES (PRELIMINARY STAGE ONLY) SHEET OF

P:\dist_04\0400000038_sfobb_ms_complex\expedite\Addendum Plans\Addendum 2 - 11-28-2012\st1_132.add

28-DEC-2012 14:45

DIST.	COUNTY	ROUTE	POST MILES TOTAL PROJECT	SHEET NO.	TOTAL SHEETS
04	Ala	80	2.2	478	800

REGISTERED CIVIL ENGINEER — DATE 05-31-12

REGISTERED PROFESSIONAL ENGINEER Sean R. Samuel No. 54569 Exp. 12-31-13 CIVIL STATE OF CALIFORNIA

10-22-12
PLANS APPROVAL DATE

The State of California or its officers or agents shall not be responsible for the accuracy or completeness of electronic copies of this plan sheet.

3

PROJECT DESIGN CRITERIA

The building work on this project has been designed to conform to the 2007 California Building Code (2006 IBC).

LOADS

SEISMIC: Occupancy Category = II
Importance Factor I = 1.0
Site Soil Class = E
S_S = 1.500 S_{DS} = 0.900
S_1 = 0.600 S_{D1} = 0.960
Seismic Design Category = D
Seismic Force-Resisting System:

North - South

R = 1.25 C_S = 0.7200

East - West

R = 1.25 C_S = 0.7200

WIND: Importance Factor = 1.0
Basic Wind Speed = 85 mph
Exposure D
Internal Pressure Coefficient GC_{pi} = ± 0.00

LIVE LOAD: Roof = 20 psf

MATERIALS

REINFORCED CONCRETE: (Ultimate Strength Design):
f'c = 4,000 psi
f_y = 60,000 psi

STRUCTURAL STEEL: (Allowable Strength Design):

Wide Flange	F_y = 50 ksi
Plates	F_y = 36 ksi
Hollow Structural Section (HSS)	F_y = 46 ksi
Weld Electrode	F_y = 70 ksi

COLD FORMED STEEL: shall be F_y = 33 ksi

FOUNDATION:
Soils report dated : Mar 15, 2011
For Soil Classification, see Log of Test Boring Sheets.

DETAIL NOTES

1. For Concrete see: "Concrete Standard"
2. All bolts shall be hex head machine bolts, with hex head nuts; unless otherwise noted.
3. All lock washers shall be helical spring lock washers.
4. Miscellaneous metal shall be hot drip galvanized.

FRAMING NOTES

1. Cold Formed Steel section designations shall conform to the AISI Standard for Cold-Formed Steel Framing-General Provisions.
2. Framing screws shall be #12 UON Self-Drilling, Self-Tapping Screws.
3. Penetration of Screws through joined Materials shall not be Less than 3 Exposed Threads. Screws shall be Installed and tightened in accordance with Screw Manufacturer's Instructions.
4. All screws to be ICC approved, subject to approval by the Engineer.
5. All Cold Formed Steel sections shall be unpunched.
6. Joists shall be located directly above stud.

WOOD STRUCTURAL PANEL NOTES

1. Wood Structural Panels shall be conform to the Requirements for their Type in Voluntary Product Standard PS 1-07 or PS 2-04. Panels shall be Factory-Marked Indicating Compliance with Grade Requirements. The Durability Classification shall be Exposure 1.
2. Bearing, shear and exterior walls shall be sheathed with 15/32" Oriented Strand Board Panels with 32/16 Span Rating.
3. All Exterior Wall Panels shall be Installed with Strength Axis Placed Horizontally. All Panel Edges shall be Blocked.
4. All roofs shall be sheathed with 19/32" Plywood Panels with 40/20 Span Rating.
5. Plywood for roofs shall be placed face grain perpendicular to supports. Where possible, plywood shall be placed in full sheets and staggered one-half sheet length. Any partial plywood sheet shall not be less than 2'-0" in length or width unless fully blocked.
6. Panel Screws shall be #8 Modified Truss Screw with reamer point and a 5/16" min Head Dia. Maximum Spacing shall be 6" at Panel Edges and 12" at Intermediate Supports. See Shear Wall Schedules for other Spacing Requirements.
7. Prior to Installation, Panels shall be protected from Exposure to Weather and Moisture. Provide Air Circulation around Tarp-Covered Stacks..

STEEL DECK MINIMUM SECTION PROPERTIES

Deck Type	Depth & Gage	Moment of Inertia	Positive Section Modulus	Negative Section Modulus	Minimum Yield Strength
Steel Decking	3" x 20 Ga	0.966 in^4/ft	0.47 in^3/ft	0.522 in^3/ft	38 Ksi

Note
Minimum 2 Span Condition

WELDING SCHEDULE and STEEL DECK PROFILE

Steel Deck Profile	Screw Schedule			Diaphragm Shear Capacity
	Perpendicular Supports and Panel Ends	Parallel Supports	Side Laps	
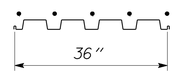	5 - #12	12" OC	12" OC	388 lb/ft

Note
Screws shall be connected using neoprene washers

(A) STEEL DECK NOTES

LOCATION	ITEM	SECTION
Fascia	Stud	400S200-43
	Track	400T200-43

(B) COLD FORMED STEEL SECTIONS

3 **REVISED PER ADDENDUM No. 3 DATED JANUARY 4, 2013**

	BY	CHECKED
DESIGN	Sean Samuel	Brian Sutliff
DETAILS	Sean Samuel	Brian Sutliff
QUANTITIES		

STATE OF CALIFORNIA DEPARTMENT OF TRANSPORTATION

DIVISION OF ENGINEERING SERVICES ARCHITECTURAL AND STRUCTURAL DESIGN

BRIDGE NO. 33M5746
POST MILE 2.2

SFOBB MAINTENANCE COMPLEX
FUEL ISLAND — DESIGN CRITERIA AND DETAIL NOTES

SHEET **ST2-0**

TAEMWW Imperial Rev. 7/10

ORIGINAL SCALE IN INCHES FOR REDUCED PLANS 0 1 2 3

UNIT 3599
PROJECT NUMBER & PHASE 04120006661
EA 014081

DISREGARD PRINTS BEARING EARLIER REVISION DATES → 02-08-11 02-18-11 03-17-11

REVISION DATES (PRELIMINARY STAGE ONLY) SHEET OF

P:\dist_04\0400000038_sfobb_ms_complex\expedite\Addendum Plans\Addendum 2 - 11-28-2012\st2_00.dgn

02-JAN-2013 15:05

DIST.	COUNTY	ROUTE	POST MILES TOTAL PROJECT	SHEET NO.	TOTAL SHEETS
04	Ala	80	2.2	479	800

REGISTERED CIVIL ENGINEER — 05-31-12 DATE

REGISTERED PROFESSIONAL ENGINEER Sean R. Samuel No. 54569 Exp. 12-31-13 CIVIL STATE OF CALIFORNIA

10-22-12
PLANS APPROVAL DATE

The State of California or its officers or agents shall not be responsible for the accuracy or completeness of electronic copies of this plan sheet.

3

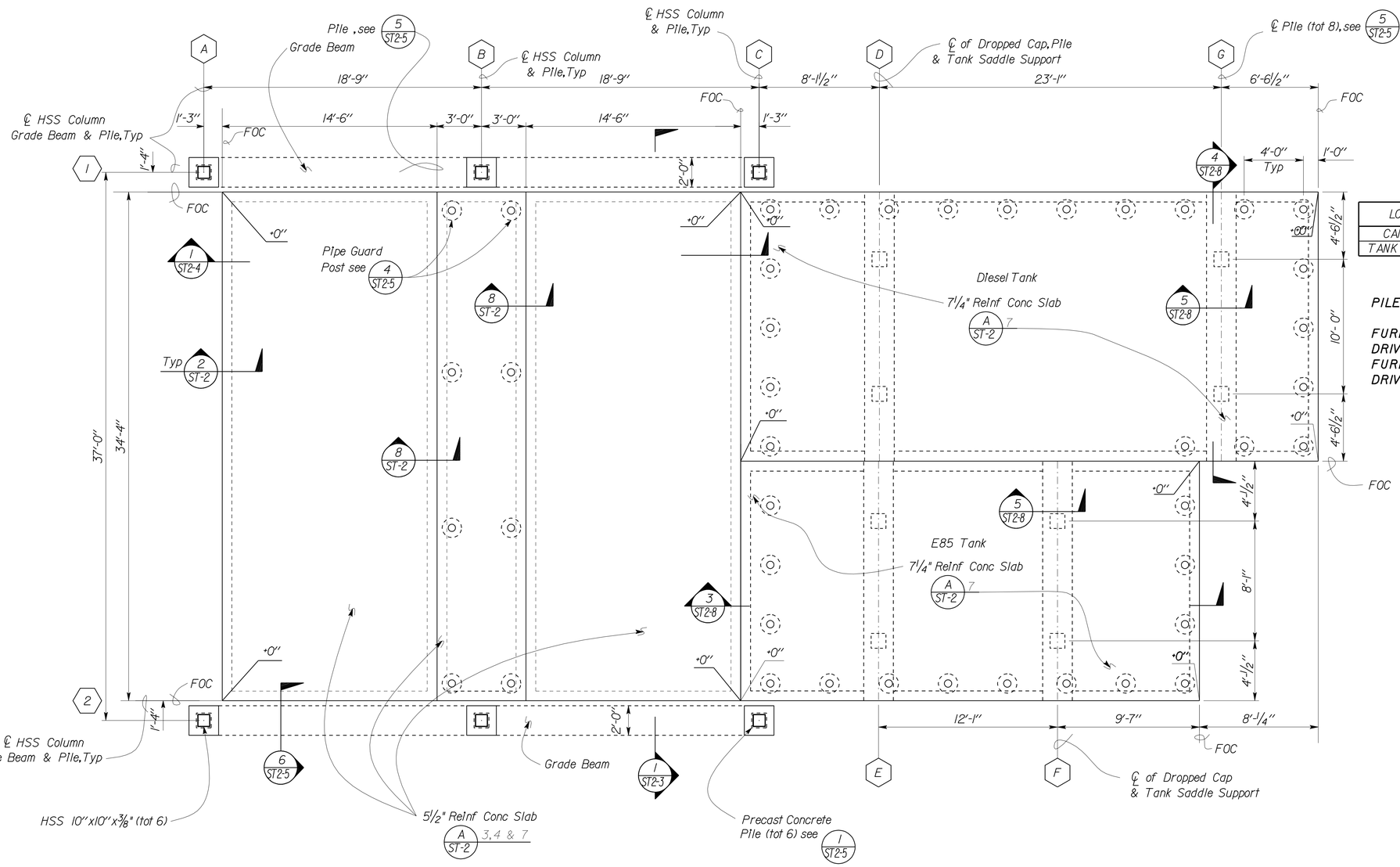

NOTE: For Preast Pile Information see A

Elevation 10.40 = Datum 0'-0"

1 FOUNDATION PLAN
Scale ¼" = 1'-0"

A PILE DATA

PILE DATA - PRECAST PRESTRESSED ALT "X" CONCRETE PILE

LOCATION	DIAMETER	DESIGN LOADING (Service Load)	CUT-OFF ELEVATION	TIP ELEVATION
CANOPY	12"	45 TONS	9.15	-95
TANK SLABS	12"	45 TONS	9.15	-103

PILE QUANTITIES

FURNISH PILE (CLASS 90) (ALTERNATIVE X)	1522 LF
DRIVE PILE (CLASS 90) (ALTERNATIVE X)	14 EA
FURNISH INDICATOR PILE (CLASS 90) (ALTERNATIVE X)	112 LF
DRIVE INDICATOR PILE (CLASS 90) (ALTERNATIVE X)	1 EA

Note
The Contractor shall verify all controlling field dimensions before ordering or fabricating any material.

3 REVISED PER ADDENDUM No. 3 DATED JANUARY 4, 2013

	BY	CHECKED
DESIGN	Sean Samuel	Brian Sutliff
DETAILS	Sean Samuel	Brian Sutliff
QUANTITIES		

STATE OF CALIFORNIA DEPARTMENT OF TRANSPORTATION

DIVISION OF ENGINEERING SERVICES ARCHITECTURAL AND STRUCTURAL DESIGN

BRIDGE NO. 33M5746
POST MILE 2.2

SFOBB MAINTENANCE COMPLEX
FUEL ISLAND — FOUNDATION PLAN

SHEET ST2-1

DOES SD Imperial Rev. 9/02

ORIGINAL SCALE IN INCHES FOR REDUCED PLANS 0 1 2 3

CU 3599
EA 014041

DISREGARD PRINTS BEARING EARLIER REVISION DATES → REVISION DATES (PRELIMINARY STAGE ONLY) 01-21-11 02-02-11 02-04-11 02-10-11 02-16-11 03-21-11 SHEET OF

P:\dist_04\0400000038_sfobb_ms_complex\expedite\Addendum Plans\Addendum 2 - 11-28-2012\st2_01.add

02-JAN-2013 15:05

DIST.	COUNTY	ROUTE	POST MILES TOTAL PROJECT	SHEET NO.	TOTAL SHEETS
04	Ala	80	2.2	480	800

REGISTERED CIVIL ENGINEER — DATE 05-31-12

REGISTERED PROFESSIONAL ENGINEER Sean R. Samuel No. 54569 Exp. 12-31-13 CIVIL STATE OF CALIFORNIA

10-22-12
PLANS APPROVAL DATE

The State of California or its officers or agents shall not be responsible for the accuracy or completeness of electronic copies of this plan sheet.

3

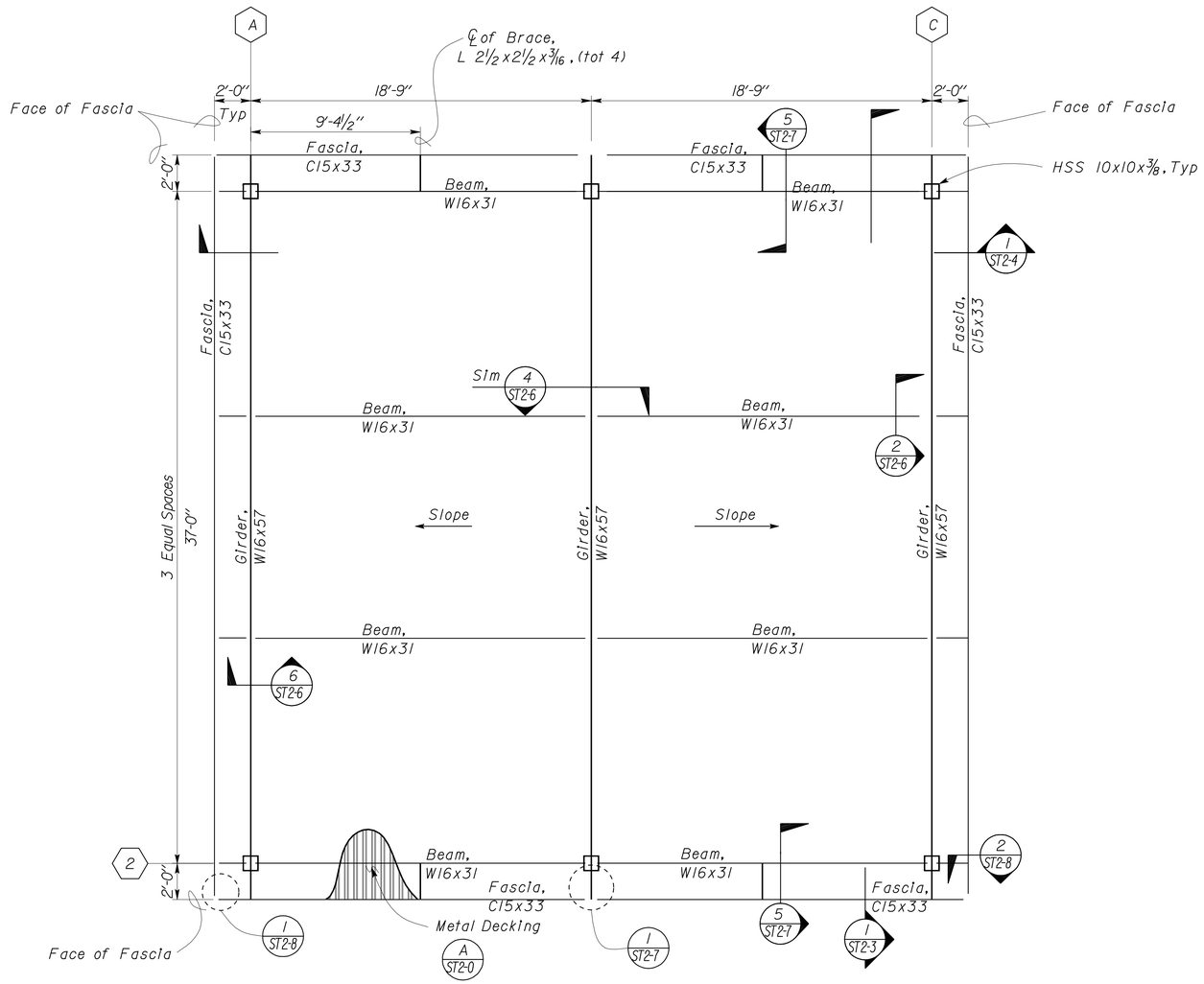

1 ROOF FRAMING PLAN
Scale 3/8" = 1'-0"

3 **REVISED PER ADDENDUM No. 3 DATED JANUARY 4, 2013**

	BY	CHECKED
DESIGN	Sean Samuel	Brian Sutliff
DETAILS	Sean Samuel	Brian Sutliff
QUANTITIES		

STATE OF CALIFORNIA DEPARTMENT OF TRANSPORTATION

DIVISION OF ENGINEERING SERVICES ARCHITECTURAL AND STRUCTURAL DESIGN

BRIDGE NO. 33M5746
POST MILE 2.2

SFOBB MAINTENANCE COMPLEX

FUEL ISLAND — ROOF FRAMING PLAN

SHEET **ST2-2**

DOES SD Imperial Rev. 9/02

ORIGINAL SCALE IN INCHES FOR REDUCED PLANS 0 1 2 3

CU 3599
EA 014041

DISREGARD PRINTS BEARING EARLIER REVISION DATES → REVISION DATES (PRELIMINARY STAGE ONLY) 01-21-11 01-31-11 02-04-11 02-11-11 02-14-11 03-11-11 03-21-11

SHEET OF

02-JAN-2013 15:05

P:\dist_04\0400000038_sfobb_ms_complex\expedite\Addendum Plans\Addendum 2 - 11-28-2012\st2_02.add

DIST.	COUNTY	ROUTE	POST MILES TOTAL PROJECT	SHEET NO.	TOTAL SHEETS
04	Ala	80	2.2	481	800

REGISTERED CIVIL ENGINEER — DATE 05-31-12

REGISTERED PROFESSIONAL ENGINEER Sean R. Samuel No. 54569 Exp. 12-31-13 CIVIL STATE OF CALIFORNIA

10-22-12
PLANS APPROVAL DATE

The State of California or its officers or agents shall not be responsible for the accuracy or completeness of electronic copies of this plan sheet.

3

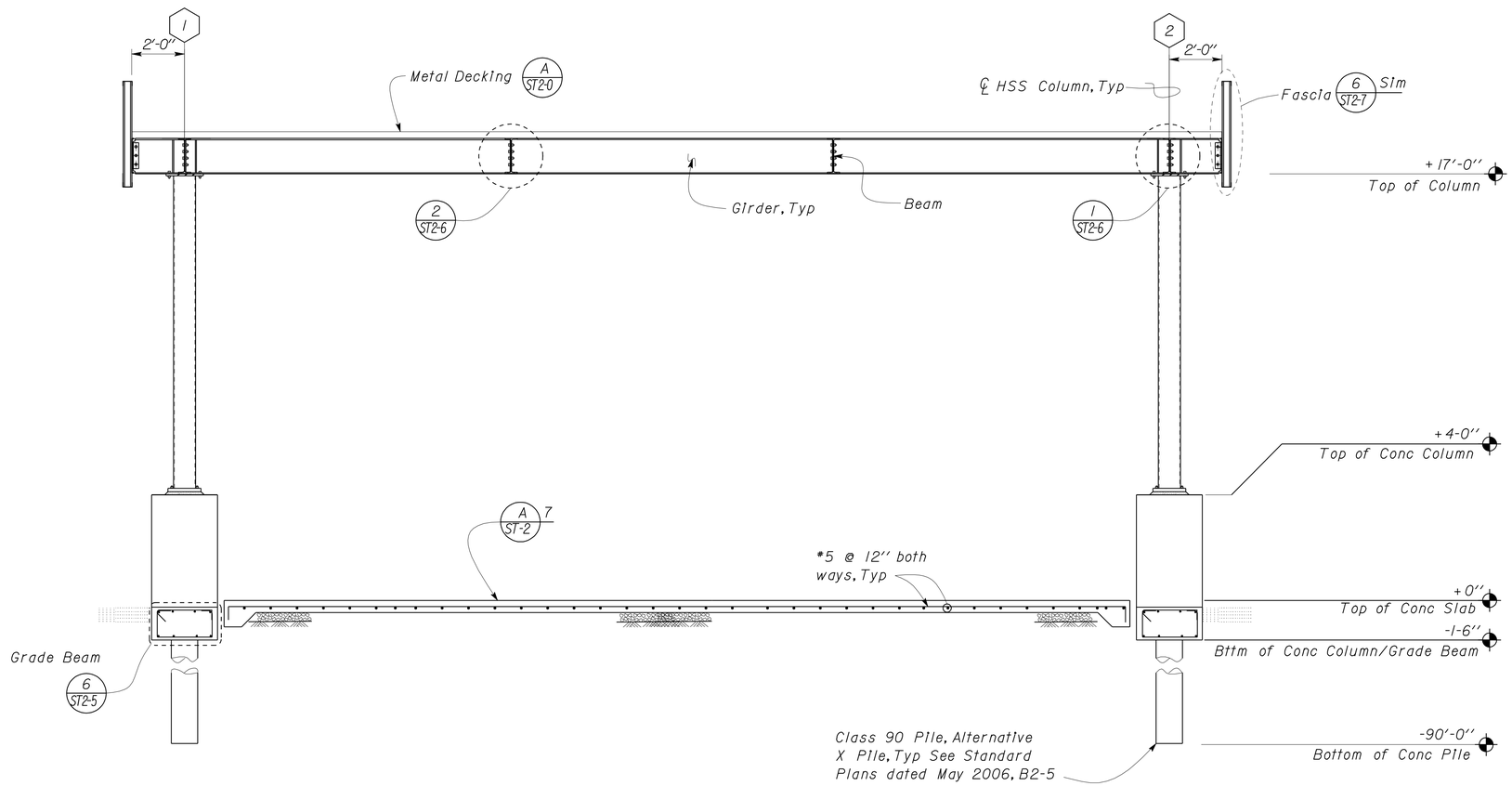

1 CANOPY SECTION
Scale 3/8" = 1' - 0"

Note
The Contractor shall verify all controlling field dimensions before ordering or fabricating any material.

3 **REVISED PER ADDENDUM No. 3 DATED JANUARY 4, 2013**

	BY	CHECKED
DESIGN	Sean Samuel	Brian Sutliff
DETAILS	Sean Samuel	Brian Sutliff
QUANTITIES		

STATE OF CALIFORNIA
DEPARTMENT OF TRANSPORTATION

DIVISION OF ENGINEERING SERVICES
ARCHITECTURAL AND STRUCTURAL DESIGN

BRIDGE NO. 33M5746
POST MILE 2.2

SFOBB MAINTENANCE COMPLEX

FUEL ISLAND — CANOPY SECTION

SHEET **ST2-3**

DOES SD Imperial Rev. 9/02

ORIGINAL SCALE IN INCHES FOR REDUCED PLANS 0 1 2 3

CU 3599
EA 014041

DISREGARD PRINTS BEARING EARLIER REVISION DATES → REVISION DATES (PRELIMINARY STAGE ONLY) 01-21-11 02-04-11 03-17-11 SHEET OF

02-JAN-2013 15:00

P:\dist_04\0400000038_sfobb_ms_complex\expedite\Addendum Plans\Addendum 2 - 11-28-2012\st2_03.add

DIST.	COUNTY	ROUTE	POST MILES TOTAL PROJECT	SHEET NO.	TOTAL SHEETS
04	Ala	80	2.2	482	800

REGISTERED CIVIL ENGINEER — DATE 05-31-12

REGISTERED PROFESSIONAL ENGINEER Sean R. Samuel No. 54569 Exp. 12-31-13 CIVIL STATE OF CALIFORNIA

10-22-12
PLANS APPROVAL DATE

The State of California or its officers or agents shall not be responsible for the accuracy or completeness of electronic copies of this plan sheet.

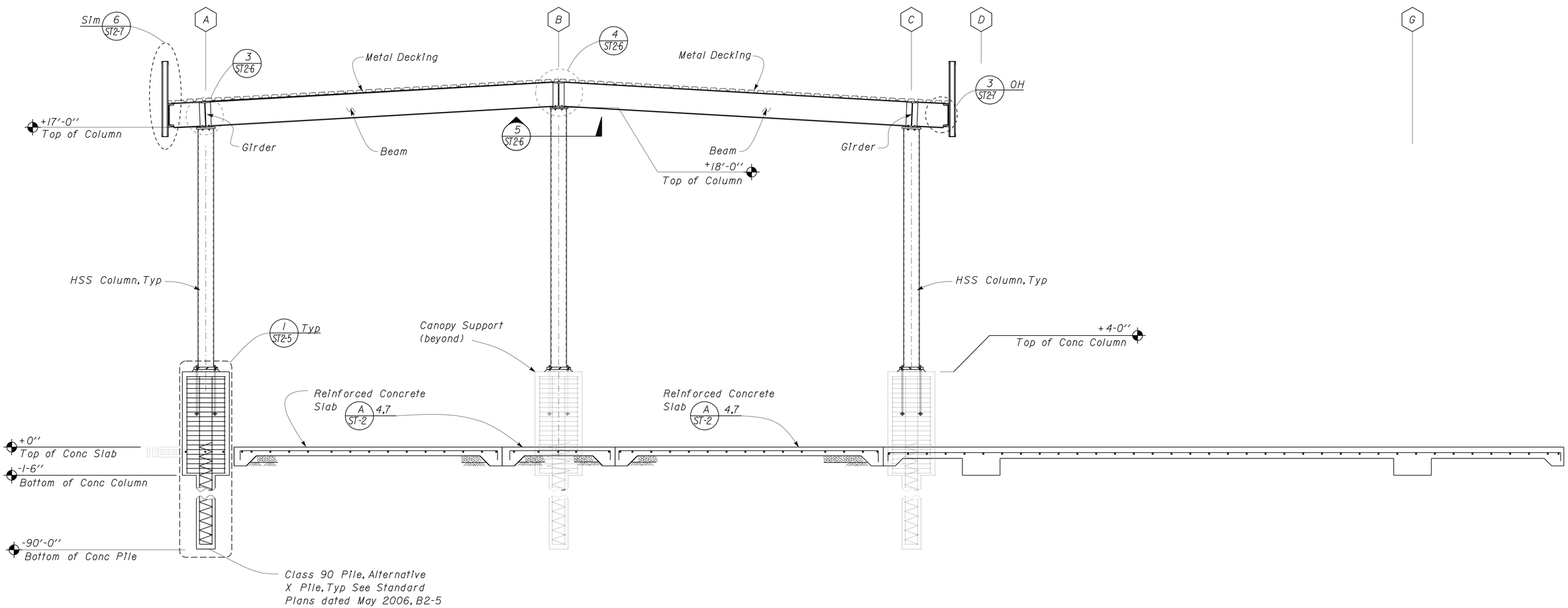

1 CANOPY SECTION
Scale 3/8" = 1'-0"

3 REVISED PER ADDENDUM No. 3 DATED JANUARY 4, 2013

	BY	CHECKED
DESIGN	Sean Samuel	Brian Sutliff
DETAILS	Sean Samuel	Brian Sutliff
QUANTITIES		

STATE OF CALIFORNIA
DEPARTMENT OF TRANSPORTATION

DIVISION OF ENGINEERING SERVICES
ARCHITECTURAL AND STRUCTURAL DESIGN

BRIDGE NO. 33M5746
POST MILE 2.2

SFOBB MAINTENANCE COMPLEX

FUEL ISLAND — CANOPY SECTION

SHEET ST2-4

DOES SD Imperial Rev. 9/02

ORIGINAL SCALE IN INCHES FOR REDUCED PLANS 0 1 2 3

CU 3599
EA 014041

DISREGARD PRINTS BEARING EARLIER REVISION DATES → REVISION DATES (PRELIMINARY STAGE ONLY) 01-24-11 02-01-11 02-08-11 02-11-11 02-16-11 03-17-11 SHEET OF

03-JAN-2013 05:40

P:\dist_04\0400000038_sfobb_ms_complex\expedite\Addendum Plans\Addendum 2 - 11-28-2012\st2_04.add

DIST.	COUNTY	ROUTE	POST MILES TOTAL PROJECT	SHEET NO.	TOTAL SHEETS
04	Ala	80	2.2	483	800

REGISTERED CIVIL ENGINEER — 05-31-12 DATE

REGISTERED PROFESSIONAL ENGINEER Sean R. Samuel No. 54569 Exp. 12-31-13 CIVIL STATE OF CALIFORNIA

10-22-12
PLANS APPROVAL DATE

The State of California or its officers or agents shall not be responsible for the accuracy or completeness of electronic copies of this plan sheet.

3

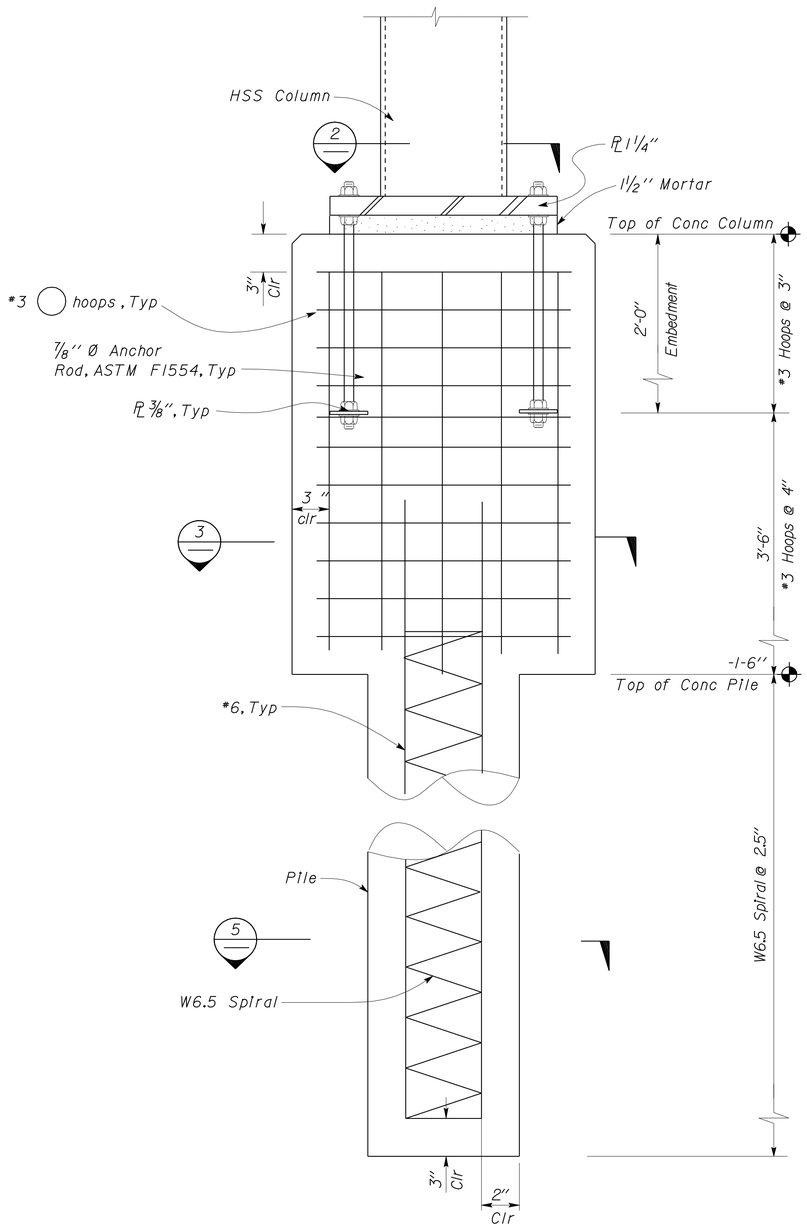

1 PEDESTAL PILE DETAIL
Scale 2" = 1'-0"

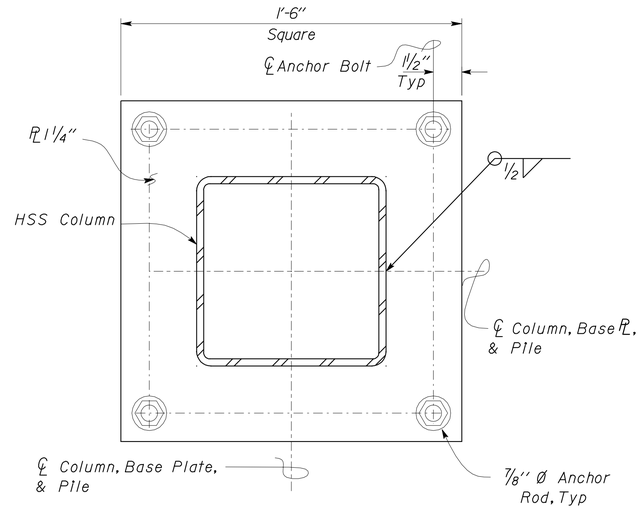

2 W COLUMN BASE PLATE PLAN
Scale 3" = 1'-0"

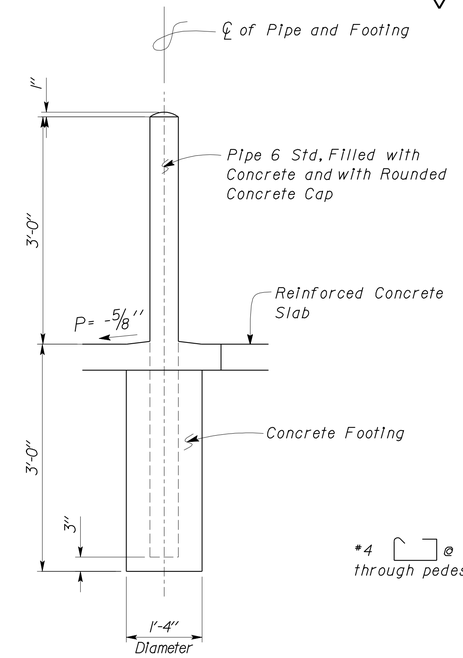

4 PIPE GUARD POST DETAIL
Scale ¾" = 1'-0"

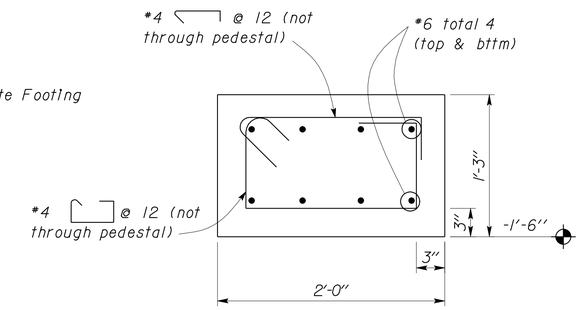

6 GRADE BEAM
Scale 1½" = 1'-0"

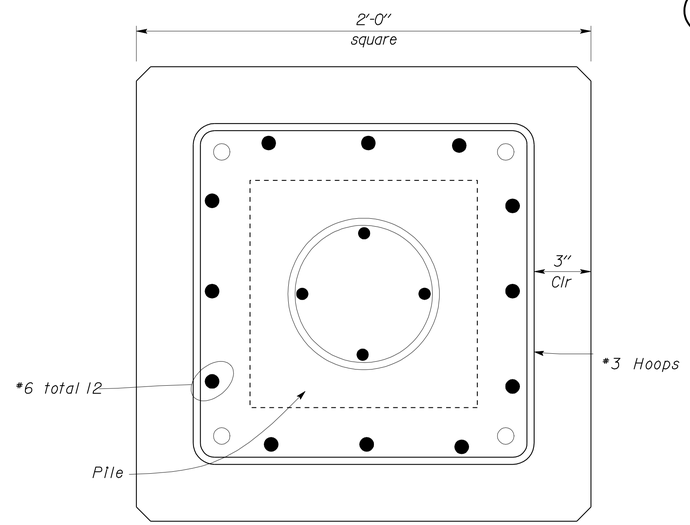

3 COLUMN SECTION
Scale 3" = 1'-0"

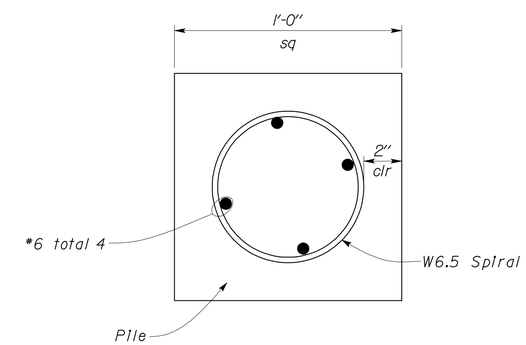

5 PILE SECTION
Scale 3" = 1'-0"

Note
The Contractor shall verify all controlling field dimensions before ordering or fabricating any material.

3 REVISED PER ADDENDUM No. 3 DATED JANUARY 4, 2013

	BY	CHECKED
DESIGN	Sean Samuel	Brian Sutliff
DETAILS	Sean Samuel	Brian Sutliff
QUANTITIES		

STATE OF CALIFORNIA DEPARTMENT OF TRANSPORTATION

DIVISION OF ENGINEERING SERVICES ARCHITECTURAL AND STRUCTURAL DESIGN

BRIDGE NO. 33M5746
POST MILE 2.2

SFOBB MAINTENANCE COMPLEX
FUEL ISLAND — PILE AND MISCELLANEOUS DETAILS

SHEET ST2-5

DOES SD Imperial Rev. 9/02

ORIGINAL SCALE IN INCHES FOR REDUCED PLANS 0 1 2 3

CU 3599
EA 014041

DISREGARD PRINTS BEARING EARLIER REVISION DATES → REVISION DATES (PRELIMINARY STAGE ONLY) 01-26-11 02-01-11 02-08-11 02-11-11 02-16-11 03-17-11 03-21-11

SHEET OF

P:\dist_04\0400000038_sfobb_ms_complex\expedite\Addendum Plans\Addendum 2 - 11-28-2012\st2_05.add

02-JAN-2013 15:00

DIST.	COUNTY	ROUTE	POST MILES TOTAL PROJECT	SHEET NO.	TOTAL SHEETS
04	Ala	80	2.2	483A	800

REGISTERED CIVIL ENGINEER — DATE 05-31-12

REGISTERED PROFESSIONAL ENGINEER Sean R. Samuel No. 54569 Exp. 12-31-13 CIVIL STATE OF CALIFORNIA

10-22-12
PLANS APPROVAL DATE

The State of California or its officers or agents shall not be responsible for the accuracy or completeness of electronic copies of this plan sheet.

3

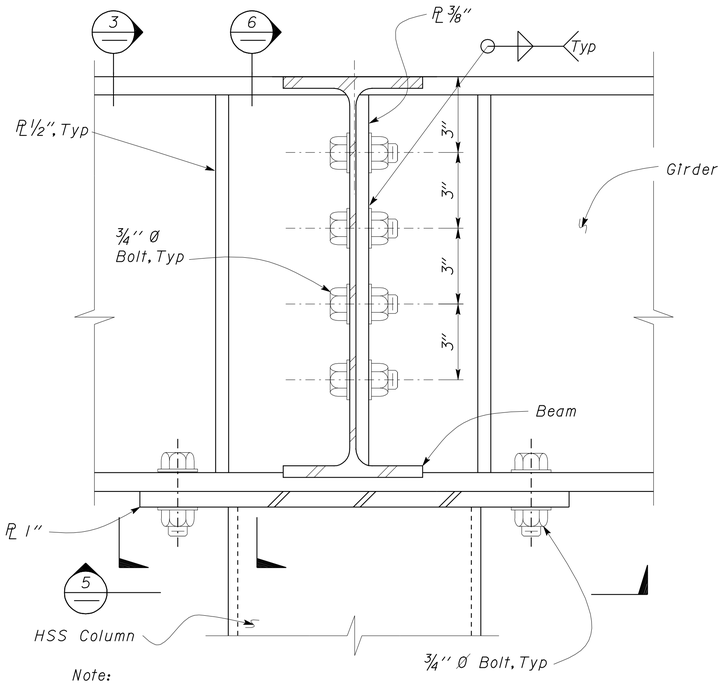

Note:
Metal Decking not shown

1 GIRDER TO BEAM CONNECTION
Scale 4" = 1' - 0"

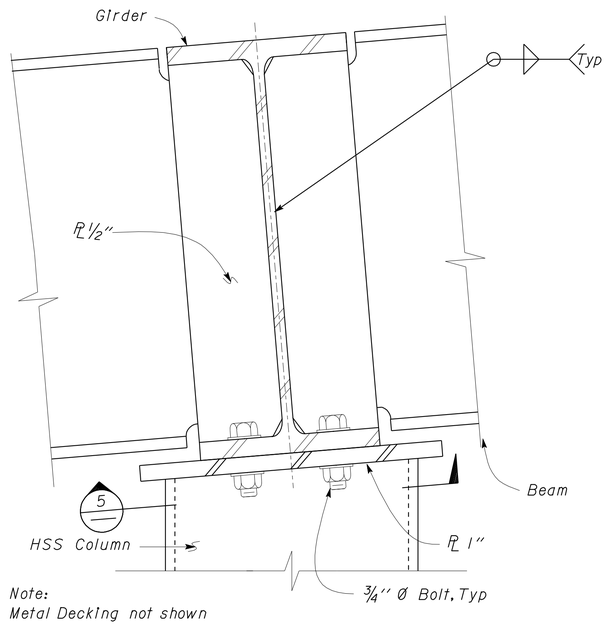

Note:
Metal Decking not shown

3 GIRDER STIFFENER DETAIL
Scale 4" = 1' - 0"

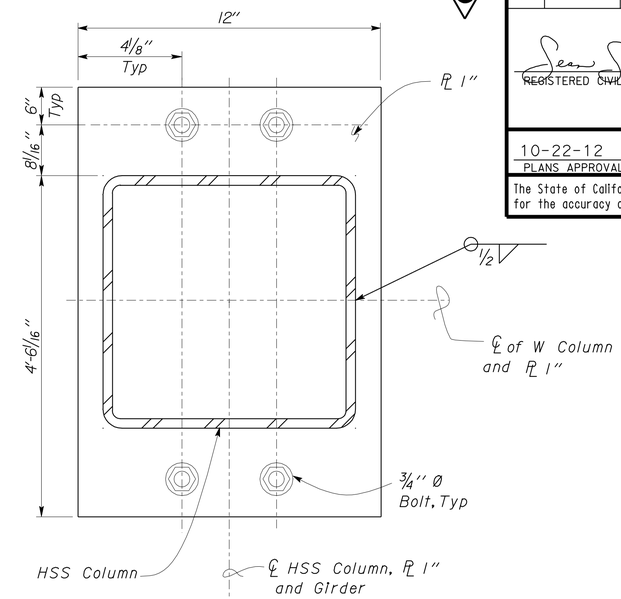

5 COLUMN CAP DETAIL
Scale 4" = 1' - 0"

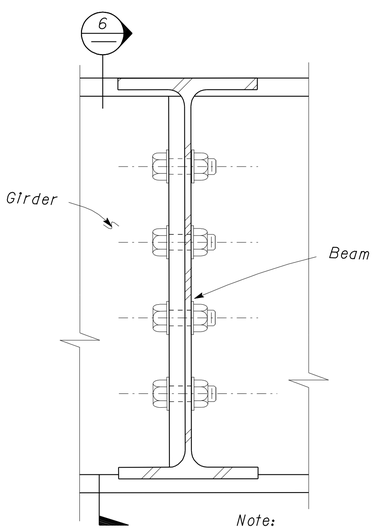

Note:
Metal Decking not shown

2 BEAM TO GIRDER CONNECTION
Scale 4" = 1' - 0"

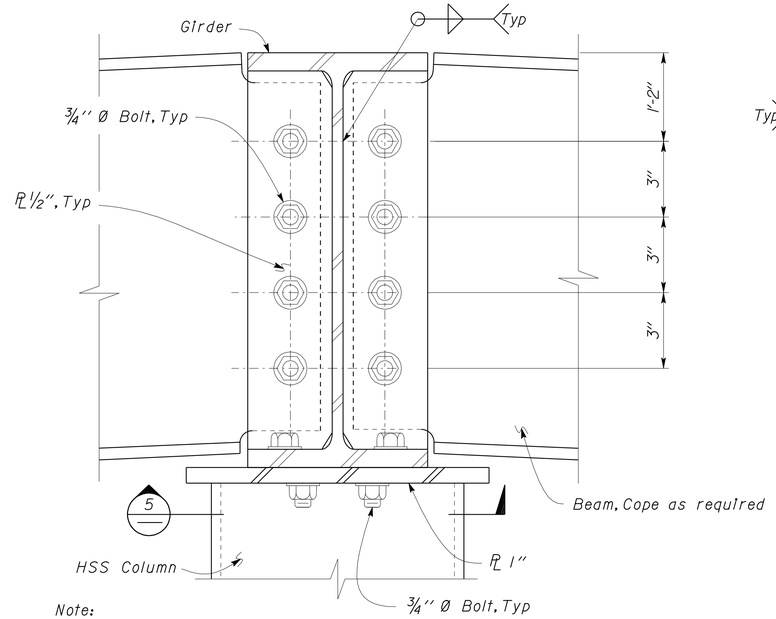

Note:
Metal Decking not shown

4 GIRDER TO BEAM CONNECTION
Scale 4" = 1' - 0"

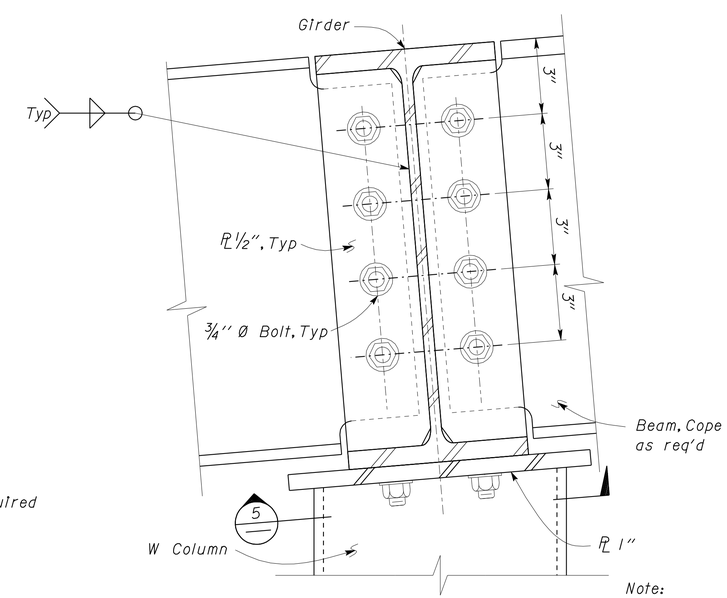

Note:
Metal Decking not shown

6 GIRDER TO BEAM CONNECTION
Scale 4" = 1' - 0"

3 **ADDED PER ADDENDUM No. 3 DATED JANUARY 4, 2013**

	BY	CHECKED
DESIGN	Sean Samuel	Brian Sutliff
DETAILS	Sean Samuel	Brian Sutliff
QUANTITIES		

STATE OF CALIFORNIA
DEPARTMENT OF TRANSPORTATION

DIVISION OF ENGINEERING SERVICES
ARCHITECTURAL AND STRUCTURAL DESIGN

BRIDGE NO. 33M5746
POST MILE 2.2

SFOBB MAINTENANCE COMPLEX
FUEL ISLAND — CANOPY FRAMING DETAILS

SHEET ST2-6

DOES SD Imperial Rev. 9/02

ORIGINAL SCALE IN INCHES FOR REDUCED PLANS 0 1 2 3

CU 3599
EA 014041

DISREGARD PRINTS BEARING EARLIER REVISION DATES → 01-28-11 02-01-11 02-08-11 02-14-11 03-21-11

REVISION DATES (PRELIMINARY STAGE ONLY) SHEET OF

02-JAN-2013 15:45

P:\dist_04\0400000038_sfobb_ms_complex\expedite\Addendum Plans\Addendum 2 - 11-28-2012\st2_06.add

DIST.	COUNTY	ROUTE	POST MILES TOTAL PROJECT	SHEET NO.	TOTAL SHEETS
04	Ala	80	2.2	483B	800

REGISTERED CIVIL ENGINEER — 05-31-12 DATE

REGISTERED PROFESSIONAL ENGINEER — Sean R. Samuel No. 54569 Exp. 12-31-13 CIVIL — STATE OF CALIFORNIA

10-22-12
PLANS APPROVAL DATE

The State of California or its officers or agents shall not be responsible for the accuracy or completeness of electronic copies of this plan sheet.

3

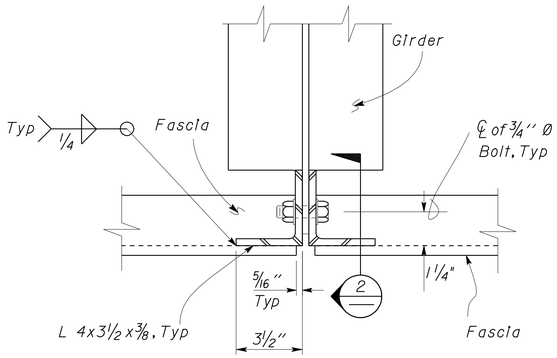

1 GIRDER TO FASCIA CONNECTION
Scale 3" = 1'-0"

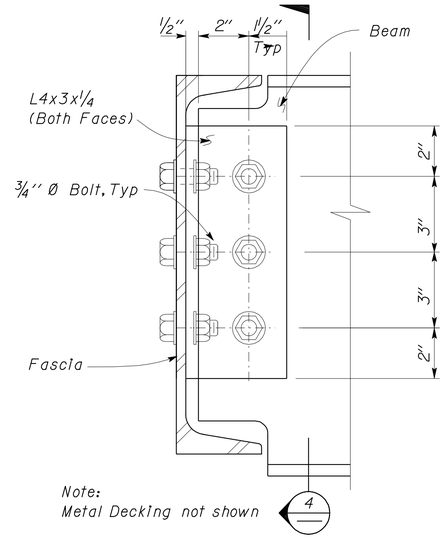

3 FASCIA TO BEAM CONNECTION
Scale 4" = 1'-0"

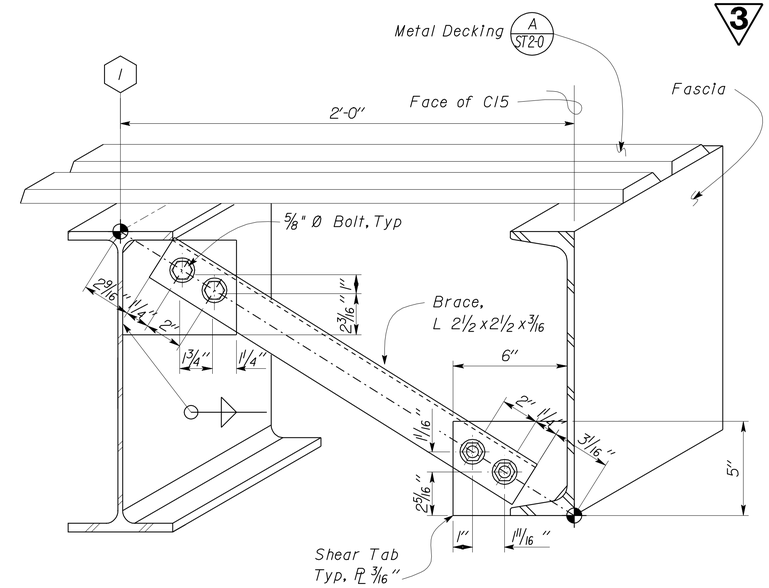

5 CANOPY BRACE CONNECTION DETAIL
Scale 3" = 1'-0"

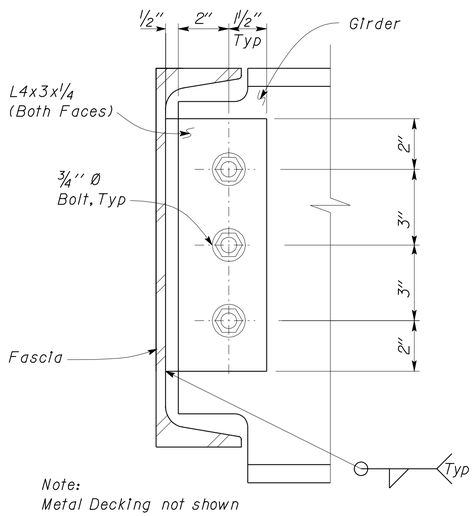

2 FASCIA TO GIRDER CONNECTION
Scale 4" = 1'-0"

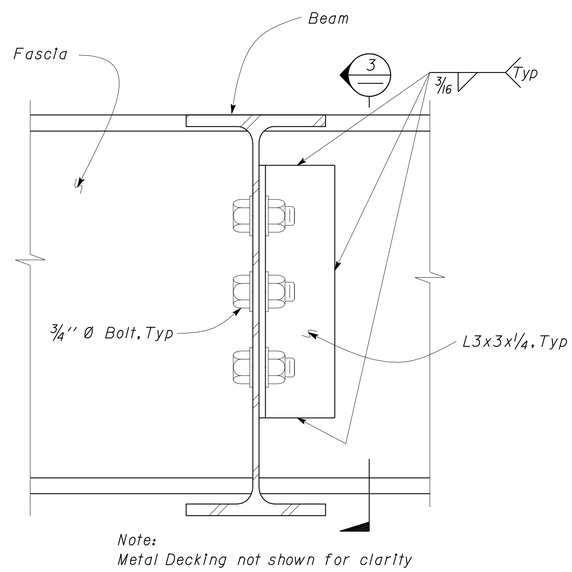

4 FASCIA CONNECTION DETAIL
Scale 4" = 1'-0"

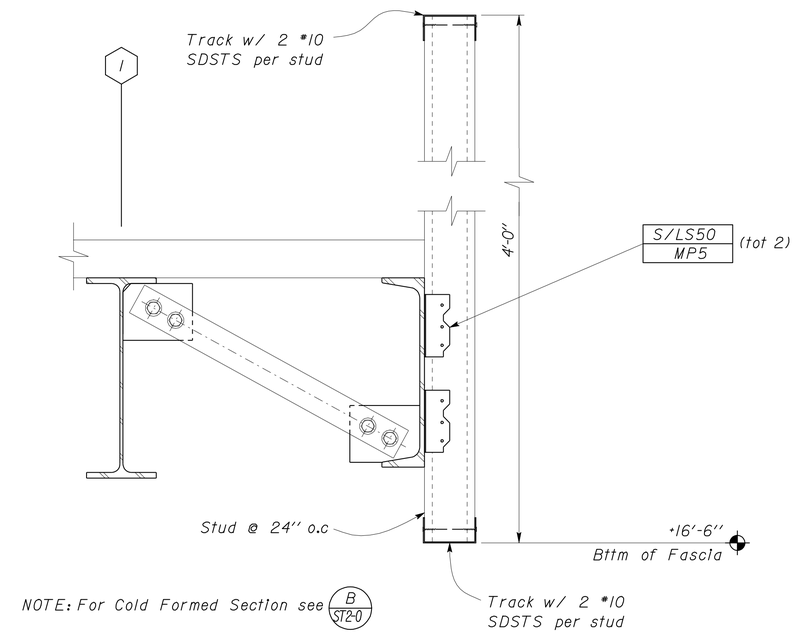

6 CANOPY BRACE CONNECTION DETAIL
Scale 2" = 1'-0"

3 **ADDED PER ADDENDUM No. 3 DATED JANUARY 4, 2013**

	BY	CHECKED
DESIGN	Sean Samuel	Brian Sutliff
DETAILS	Sean Samuel	Brian Sutliff
QUANTITIES		

STATE OF CALIFORNIA DEPARTMENT OF TRANSPORTATION

DIVISION OF ENGINEERING SERVICES ARCHITECTURAL AND STRUCTURAL DESIGN

BRIDGE NO. 33M5746
POST MILE 2.2

SFOBB MAINTENANCE COMPLEX
FUEL ISLAND — CANOPY FRAMING DETAILS

SHEET **ST2-7**

DOES SD Imperial Rev. 9/02

ORIGINAL SCALE IN INCHES FOR REDUCED PLANS 0 1 2 3

CU 3599
EA 014041

DISREGARD PRINTS BEARING EARLIER REVISION DATES → 01-28-11 02-01-11 02-08-11 02-14-11 03-21-11

REVISION DATES (PRELIMINARY STAGE ONLY) SHEET OF

P:\dist_04\0400000038_sfobb_ms_complex\expedite\Addendum Plans\Addendum 2 - 11-28-2012\st2_07.add

02-JAN-2013 15:16

DIST.	COUNTY	ROUTE	POST MILES TOTAL PROJECT	SHEET NO.	TOTAL SHEETS
04	Ala	80	2.2	483C	800

REGISTERED CIVIL ENGINEER — DATE 05-31-12

REGISTERED PROFESSIONAL ENGINEER Sean R. Samuel No. 54569 Exp. 12-31-13 CIVIL STATE OF CALIFORNIA

10-22-12
PLANS APPROVAL DATE

The State of California or its officers or agents shall not be responsible for the accuracy or completeness of electronic copies of this plan sheet.

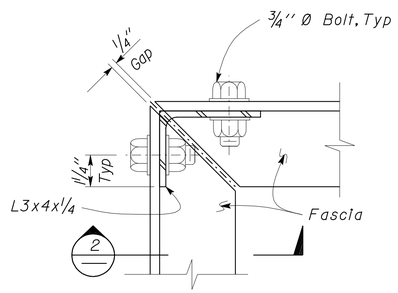

1 FASCIA TO FASCIA CONNECTION PLAN
Scale 4'' = 1' - 0''

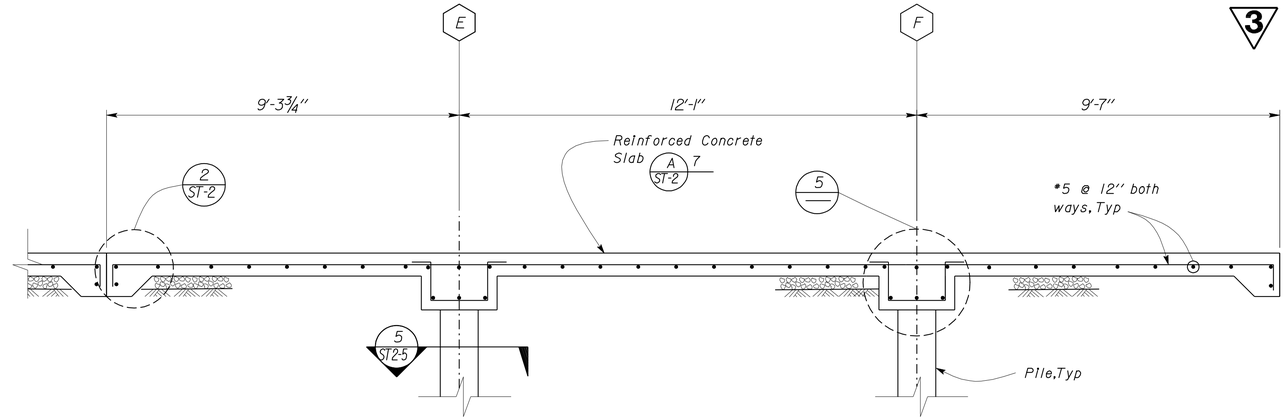

3 E85 TANK SLAB SECTION
Scale 1/2'' = 1' - 0''

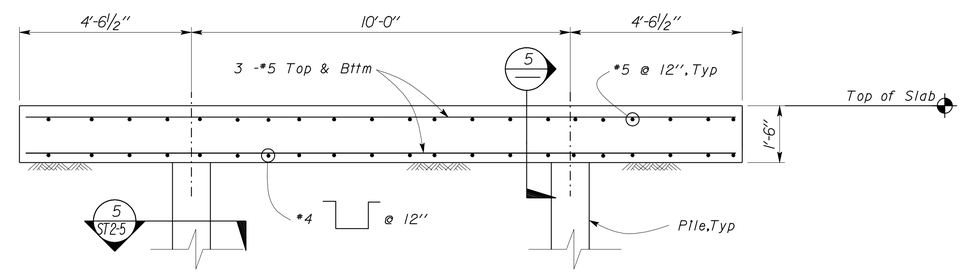

4 DIESEL TANK SLAB CAP SECTION
Scale 1/2'' = 1' - 0''

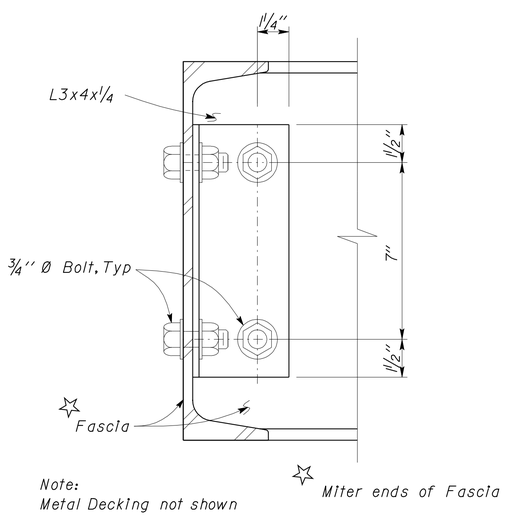

Note:
Metal Decking not shown

2 FASCIA TO FASCIA CONNECTION
Scale 4'' = 1' - 0''

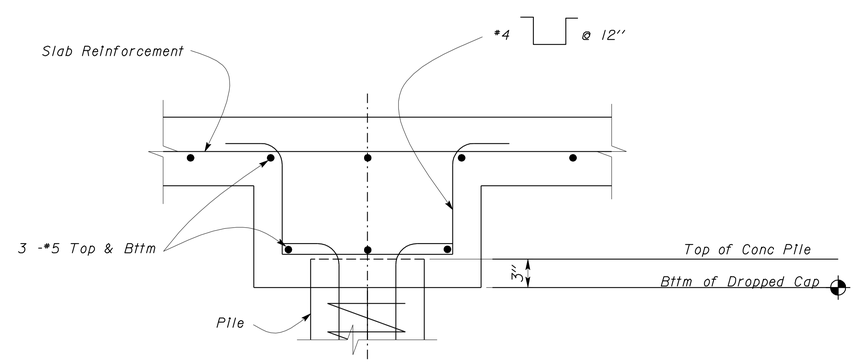

5 DROPPED CAP
Scale 1 1/2'' = 1' - 0''

3 ADDED PER ADDENDUM No. 3 DATED JANUARY 4, 2013

	BY	CHECKED
DESIGN	Sean Samuel	Brian Sutliff
DETAILS	Sean Samuel	Brian Sutliff
QUANTITIES		

STATE OF CALIFORNIA
DEPARTMENT OF TRANSPORTATION

DIVISION OF ENGINEERING SERVICES
ARCHITECTURAL AND STRUCTURAL DESIGN

BRIDGE NO. 33M5746
POST MILE 2.2

SFOBB MAINTENANCE COMPLEX
FUEL ISLAND — CANOPY DETAILS

SHEET ST2-8

DOES SD Imperial Rev. 9/02

ORIGINAL SCALE IN INCHES FOR REDUCED PLANS 0 1 2 3

CU 3599
EA 014041

DISREGARD PRINTS BEARING EARLIER REVISION DATES → 1-5-06
REVISION DATES (PRELIMINARY STAGE ONLY) SHEET OF

02-JAN-2013 15:16

P:\dist_04\0400000038_sfobb_ms_complex\expedite\Addendum Plans\Addendum 2 - 11-28-2012\st2_08.add

DIST.	COUNTY	ROUTE	POST MILES TOTAL PROJECT	SHEET NO.	TOTAL SHEETS
04	Ala	80	2.2	485	800

REGISTERED CIVIL ENGINEER — 05-31-12 DATE

REGISTERED PROFESSIONAL ENGINEER Sean R. Samuel No. 54569 Exp. 12-31-13 CIVIL STATE OF CALIFORNIA

10-22-12
PLANS APPROVAL DATE

The State of California or its officers or agents shall not be responsible for the accuracy or completeness of electronic copies of this plan sheet.

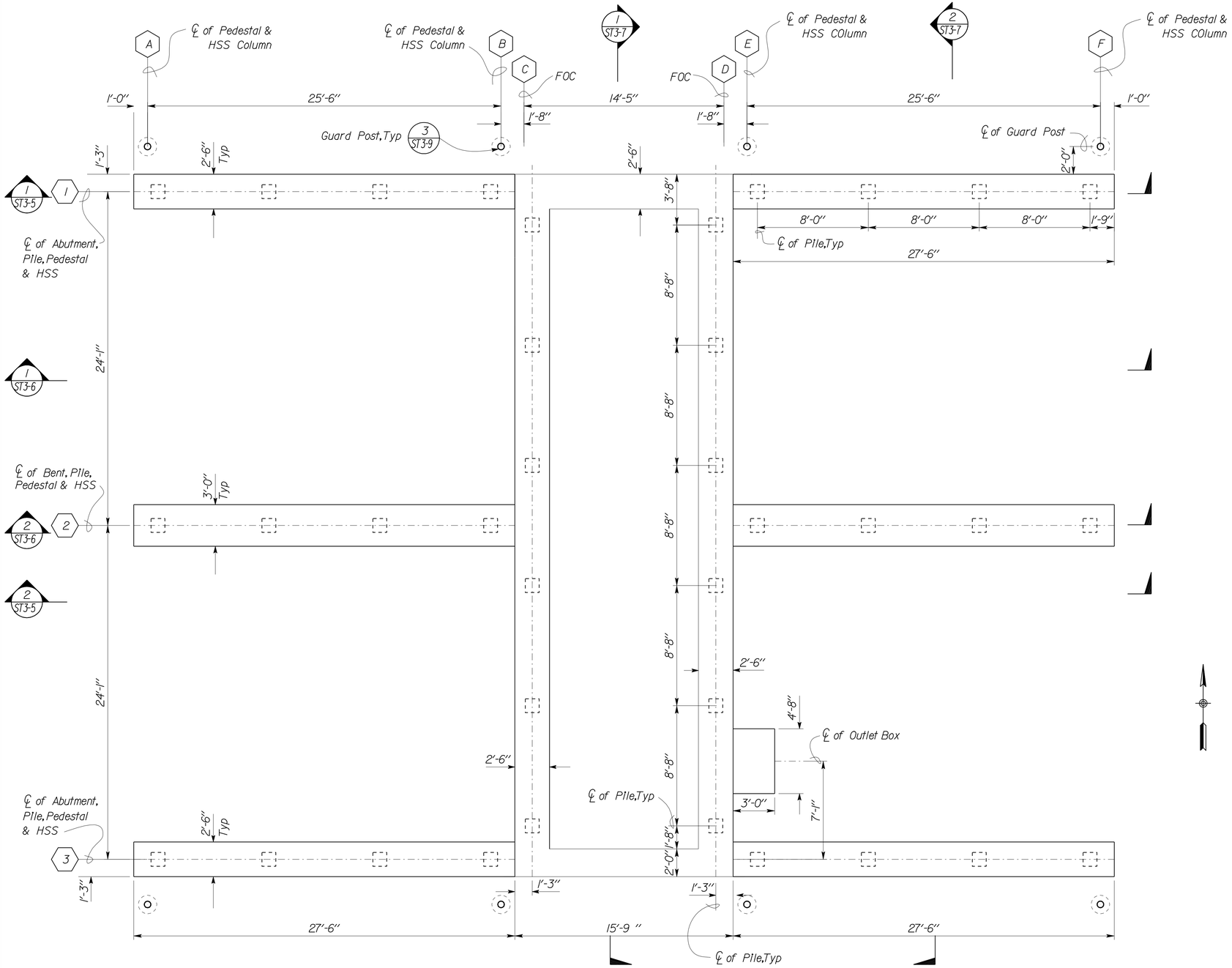

NOTE: For Precast Pile Information see (A)

(1) FOUNDATION PLAN
Scale 1/4" = 1'-0"

Elevation 10.40 = Datum 0'-0"

(3) **REVISED PER ADDENDUM No. 3 DATED JANUARY 4, 2013**

(A) PILE DATA

PILE DATA - PRECAST PRESTRESSED ALT "X" CONCRETE PILE

LOCATION	SIZE	DESIGN LOADING (Service Load)	CUT-OFF ELEVATION	TIP ELEVATION	PILE TYPE
1 3	12"	45 TONS	7.15	-95	CLASS 90 ALTERNATIVE X
2	12"	70 TONS	8.15	-95	CLASS 140 ALTERNATIVE X
Basin Wall near C D	12"	45 TONS	5.65	-95	CLASS 90 ALTERNATIVE X

NOTE:
SEE CALTRANS STANDARD PLAN DATED MAY 2006, B2-5

PILE QUANTITIES:

FURNISH PILE (CLASS 90)
(ALTERNATIVE X) 2843 LF

DRIVE PILE (CLASS 90)
(ALTERNATIVE X) 28 EA

FURNISH PILE (CLASS 140)
(ALTERNATIVE X) 826 LF

DRIVE PILE (CLASS 140)
(ALTERNATIVE X) 8 EA

FURNISH INDICATOR PILE (CLASS 90)
(ALTERNATIVE X) 103 LF

DRIVE INDICATOR PILE (CLASS 90)
(ALTERNATIVE X) 1

(3)

DESIGN	BY Sean Samuel	CHECKED Brian Sutliff	
DETAILS	BY Sean Samuel	CHECKED Brian Sutliff	
QUANTITIES	BY	CHECKED	

STATE OF CALIFORNIA
DEPARTMENT OF TRANSPORTATION

DIVISION OF ENGINEERING SERVICES
ARCHITECTURAL AND STRUCTURAL DESIGN

BRIDGE NO. 33M5746
POST MILE 2.2

SFOBB MAINTENANCE COMPLEX
WASHRACK — FOUNDATION PLAN

SHEET ST3-1

TAEMWW Imperial Rev. 7/10

ORIGINAL SCALE IN INCHES FOR REDUCED PLANS 0 1 2 3

UNIT 3599
PROJECT NUMBER & PHASE 04120006661
EA 014081

DISREGARD PRINTS BEARING EARLIER REVISION DATES →
REVISION DATES (PRELIMINARY STAGE ONLY) SHEET OF

02-JAN-2013 15:16
st3_01.add

DIST.	COUNTY	ROUTE	POST MILES TOTAL PROJECT	SHEET NO.	TOTAL SHEETS
04	Ala	80	2.2	530	800

Christopher M. Faria 05-25-12
REGISTERED MECHANICAL ENGINEER DATE

REGISTERED PROFESSIONAL ENGINEER CHRISTOPHER M. FARIA No. M30419 Exp. 12-31-13 MECH STATE OF CALIFORNIA

10-22-12
PLANS APPROVAL DATE

The State of California or its officers or agents shall not be responsible for the accuracy or completeness of scanned copies of this plan sheet.

PACKAGED UNIT AIR CONDITIONER SCHEDULE

UNIT No.	NOMINAL CFM	ESP Inches	NOMINAL Tons	COOLING OUTPUT		HEATING OUTPUT MBH (HI/Low)	MINIMUM OSA CFM	TOTAL Kw	ELECTRICAL	EER	WEIGHT (lbs)	USE
				TOTAL MBH	SENSIBLE MBH							
A/C-1A	4000	.75	10	120	114	120/84	2350	9.04	460v, 3Φ	13	2000	1st Floor
A/C-2A	5000	1.0	12.5	158	158	122/81	1170	12.33	460v, 3Φ	12	2600	2nd Floor

SPLIT SYSTEM AIR CONDITIONER SCHEDULE

UNIT No.	CFM	NOMINAL COOLING CAPACITY Btu/h	TOTAL WATT	ELECTRICAL	SEER	WEIGHT (lbs)		USE
						INDOOR	OUTDOOR	
A/C-3A	350	12,000	1190	230/240v, 1Φ	15.2	29	82	ELEVATOR EQUIPMENT ROOM (1st FLOOR)
A/C-4A	350	12,000	1190	230/240v, 1Φ	15.2	29	82	COMMUNICATION ROOM (1st FLOOR)
A/C-5A	350	12,000	1190	230/240v, 1Φ	15.2	29	82	RADIO ROOM (2nd FLOOR)

EXHAUST FAN SCHEDULE

UNIT No.	CFM	ESP Inches	HP	ELECTRICAL	WEIGHT (lbs)	USE
EF-1A	2140	0.5	3/4	120V	90	1st FLOOR EXHAUST
EF-2A	530 ~~460~~	0.4	1/4	120v	65	2nd FLOOR EXHAUST

3

3

CALIFORNIA STATE FIRE MARSHAL APPROVED
Approval of this plan does not authorize or approve any omission or deviation from applicable regulations. Final approval is subject to field inspection. One set of approved plans shall be available on the project site at all times.
Reviewed by: SPENCER MEYER
Approval date: 12-13-12

ZONE DAMPER SCHEDULE

UNIT No.	DIAMETER Inches	CFM	
		MINIMUM	MAXIMUM
ZD-1A	14	600	1000
ZD-2A	16	750	1200
ZD-3A	8	250	360
ZD-4A	8	200	320
ZD-5A	14	600	1020
ZD-6A	8	300	420
ZD-7A	8	300	420
ZD-8A	8	160	255

3 **REVISED PER ADDENDUM No. 3 DATED JANUARY 4, 2013**

THIS DRAWING ACCURATE FOR MECHANICAL WORK ONLY

	BY	CHECKED
DESIGN	Chris Faria	Tom Hatam
DETAILS	Angela Chen	Tom Hatam
QUANTITIES	Chris Faria	Tom Hatam

STATE OF CALIFORNIA DEPARTMENT OF TRANSPORTATION

DIVISION OF ENGINEERING SERVICES
ELECTRICAL-MECHANICAL-WATER AND WASTEWATER DESIGN

BRIDGE NO. 33M5785
POST MILE 2.2

SFOBB MAINTENANCE COMPLEX
BUILDING 1A
EQUIPMENT SCHEDULES

SHEET **M0-7**

TAEMWW Imperial Rev. 7/10
FILE => m0_7.dds
DATE PLOTTED => 28-DEC-2012 TIME PLOTTED => 14:39

ORIGINAL SCALE IN INCHES FOR REDUCED PLANS 0 1 2 3

UNIT 3615
PROJECT NUMBER & PHASE 04120006661
EA 014081

DISREGARD PRINTS BEARING EARLIER REVISION DATES → 05-08-12 05-25-12
REVISION DATES (PRELIMINARY STAGE ONLY) SHEET OF

USERNAME => s113946 DATE PLOTTED => 28-DEC-2012 TIME PLOTTED => 14:39

V|=|

DIST.	COUNTY	ROUTE	POST MILES TOTAL PROJECT	SHEET NO.	TOTAL SHEETS
04	Ala	80	2.2	533	800

Christopher M. Faria 05-25-12
REGISTERED MECHANICAL ENGINEER DATE

REGISTERED PROFESSIONAL ENGINEER CHRISTOPHER M. FARIA No. M30419 Exp. 12-31-13 MECH STATE OF CALIFORNIA

10-22-12
PLANS APPROVAL DATE

The State of California or its officers or agents shall not be responsible for the accuracy or completeness of scanned copies of this plan sheet.

CALIFORNIA STATE FIRE MARSHAL APPROVED
Approval of this plan does not authorize or approve any omission or deviation from applicable regulations. Final approval is subject to field inspection. One set of approved plans shall be available on the project site at all times.
Reviewed by: SPENCER MEYER
Approval date: 12-13-12

3

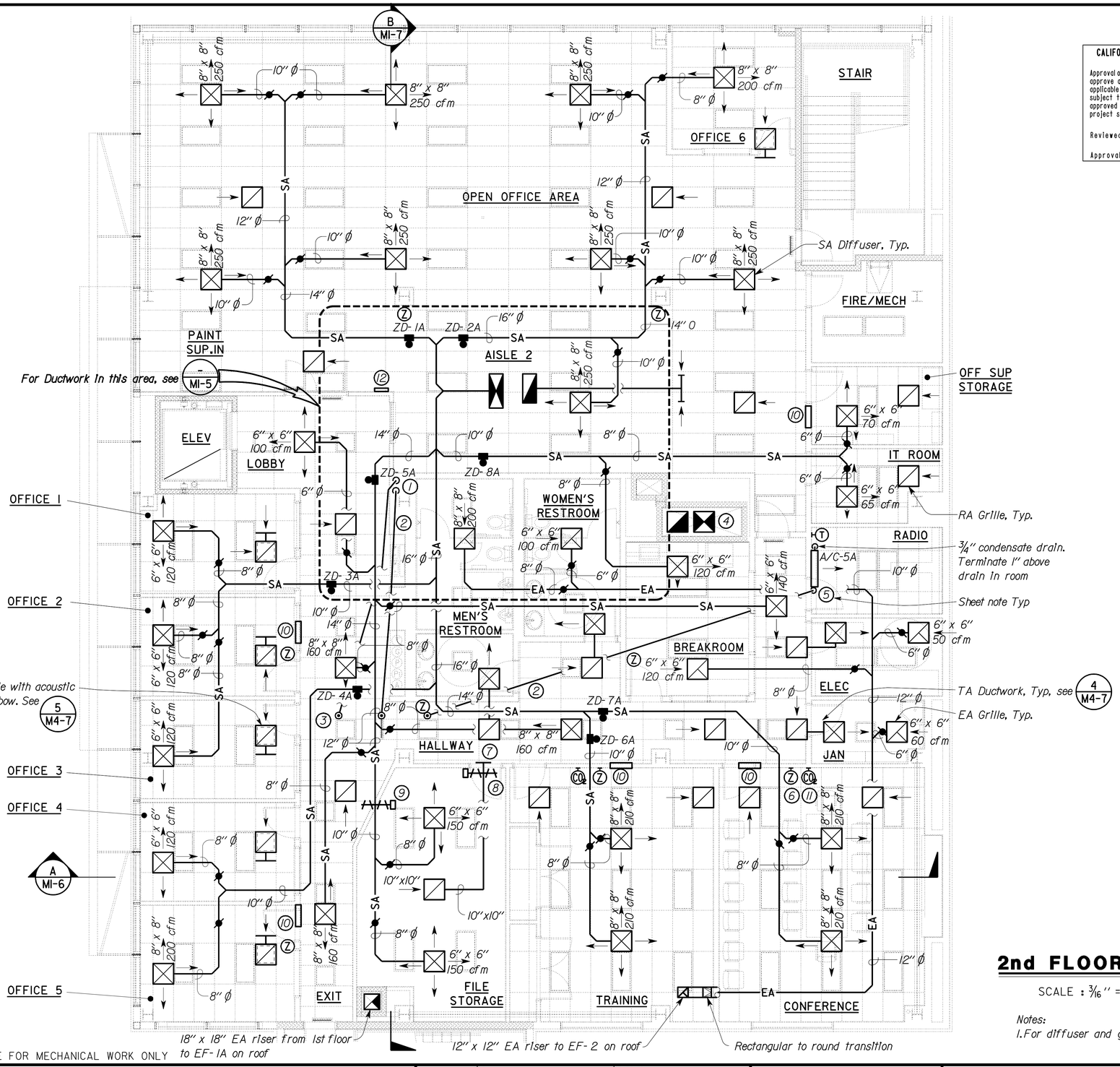

Sheet Notes:

1. *Drop to 1st floor, Typ.*
2. *Split system A/C indoor unit refrigerant lines, control wires, and power wires above ceiling, Typ.*
3. *Rise to split system A/C outdoor unit on roof, Typ.*
4. *18" x 18" RA riser and 22" x 22" SA drop to/from A/C-1A on roof. Provide supports for ductwork in chase.*
5. *Drop thru ceiling and connect to unit.*
6. *Zone Temperature Sensor, Typ.*
7. *Terminate RA duct thru wall above Hallway ceiling. Coordinate with smoke damper.*
8. *10"x10" smoke damper. Fire alarm smoke detector in room must activate damper. Refer to Fire Alarm drawings.*
9. *10"x10" smoke damper with sleeve for round duct connections. Fire alarm smoke detector in room must activate damper. Refer to Fire Alarm drawings.*
10. *12"x12" opening in full height wall above ceiling for RA path.*
11. *Carbon Dioxide Sensor, Typ*
12. *A/C-2A central control panel (CCP)*

2nd FLOOR PLAN

SCALE : 3/16" = 1'-0"

Notes:
1. For diffuser and grille installation see sheet M4-7

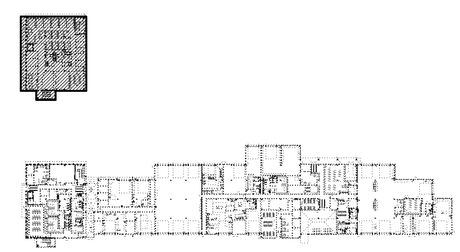

KEY PLAN

THIS DRAWING ACCURATE FOR MECHANICAL WORK ONLY

3 **REVISED PER ADDENDUM No. 3 DATED JANUARY 4, 2013**

DESIGN	BY Chris Faria	CHECKED Tom Hatam	
DETAILS	BY Angela Chen	CHECKED Tom Hatam	
QUANTITIES	BY Chris Faria	CHECKED Tom Hatam	

STATE OF CALIFORNIA DEPARTMENT OF TRANSPORTATION

DIVISION OF ENGINEERING SERVICES
ELECTRICAL-MECHANICAL-WATER AND WASTEWATER DESIGN

BRIDGE NO. 33M5785
POST MILE 2.2

SFOBB MAINTENANCE COMPLEX
BUILDING IA — HVAC 2nd FLOOR PLAN

SHEET **M1-2**

TAEMWW Imperial Rev. 7/10
FILE => m1_2.dds
DATE PLOTTED => 02-JAN-2013 TIME PLOTTED => 15:14
ORIGINAL SCALE IN INCHES FOR REDUCED PLANS 0 1 2 3
UNIT 3615
PROJECT NUMBER & PHASE 04120006661
EA 014081
DISREGARD PRINTS BEARING EARLIER REVISION DATES
REVISION DATES (PRELIMINARY STAGE ONLY) 05-08-12 05-25-12
SHEET OF

USERNAME => s135318 DATE PLOTTED => 02-JAN-2013 TIME PLOTTED => 15:14

DIST.	COUNTY	ROUTE	POST MILES TOTAL PROJECT	SHEET NO.	TOTAL SHEETS
04	Ala	80	2.2	536	800

3

CALIFORNIA STATE FIRE MARSHAL APPROVED
Approval of this plan does not authorize or approve any omission or deviation from applicable regulations. Final approval is subject to field inspection. One set of approved plans shall be available on the project site at all times.
Reviewed by: SPENCER MEYER
Approval date: 12-13-12

Christopher M. Faria 05-25-12
REGISTERED MECHANICAL ENGINEER DATE

REGISTERED PROFESSIONAL ENGINEER CHRISTOPHER M. FARIA No. M30419 Exp. 12-31-13 MECH STATE OF CALIFORNIA

10-22-12
PLANS APPROVAL DATE

The State of California or its officers or agents shall not be responsible for the accuracy or completeness of scanned copies of this plan sheet.

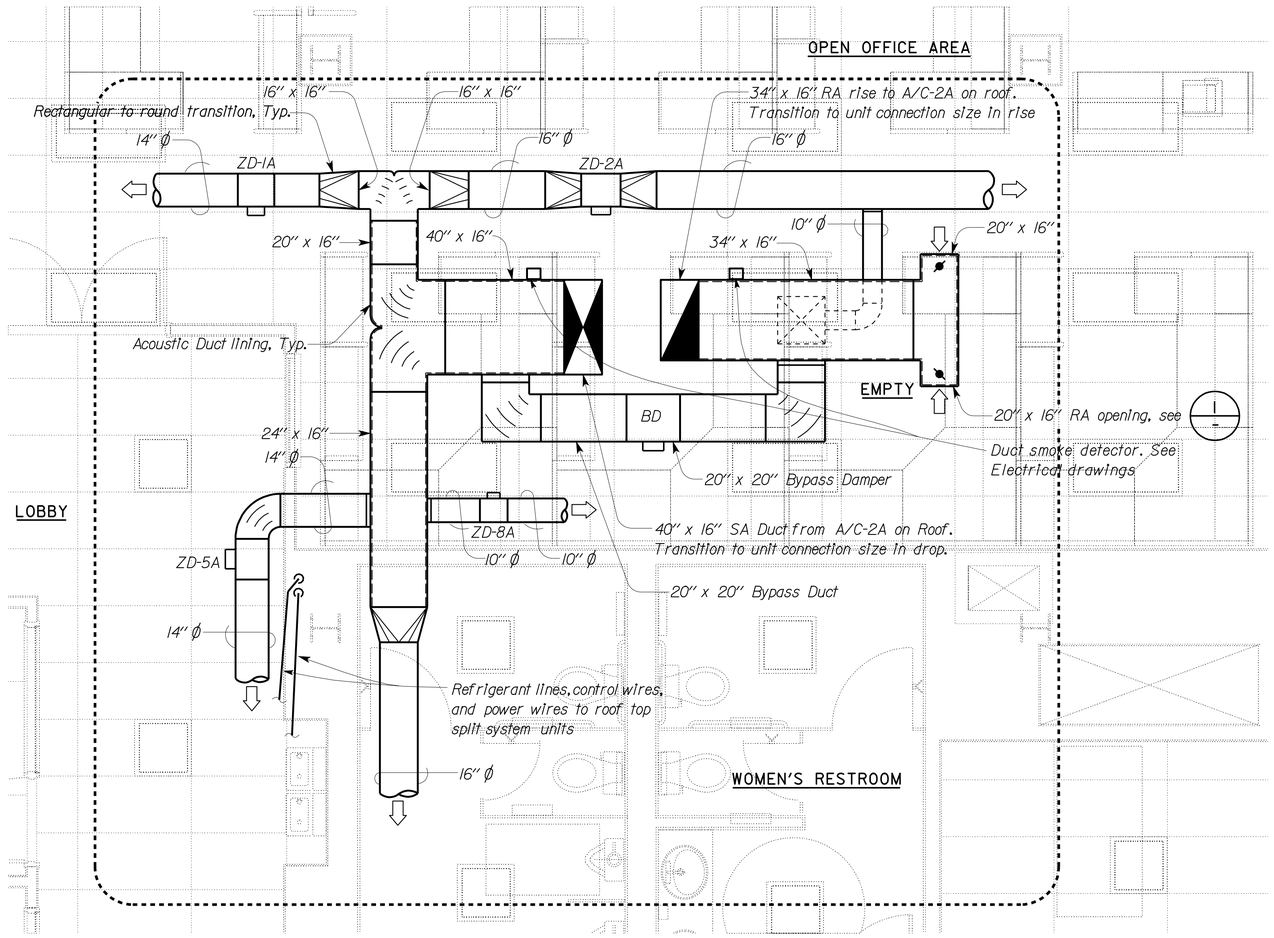

PARTIAL 2nd FLOOR PLAN

SCALE: 3/8" = 1'-0"

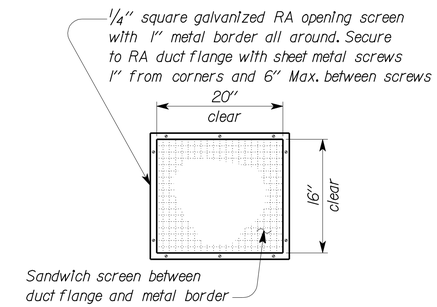

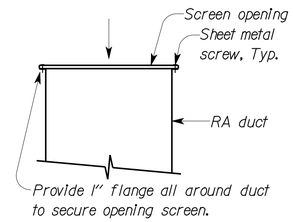

1 RA OPENING DETAIL

NO SCALE

NOTES:

1. Duct sizes are clear inside dimensions. Overall duct size to account for acoustic lining where present.
2. SA and RA duct drop/rise shall have acoustic lining from unit to point indicated.

3 **REVISED PER ADDENDUM No. 3 DATED JANUARY 4, 2013**

THIS DRAWING ACCURATE FOR MECHANICAL WORK ONLY

	BY	CHECKED
DESIGN	Chris Faria	Tom Hatam
DETAILS	Angela Chen	Tom Hatam
QUANTITIES	Chris Faria	Tom Hatam

STATE OF CALIFORNIA DEPARTMENT OF TRANSPORTATION

DIVISION OF ENGINEERING SERVICES
ELECTRICAL-MECHANICAL-WATER AND WASTEWATER DESIGN

BRIDGE NO. 33M5785
POST MILE 2.2

SFOBB MAINTENANCE COMPLEX
BUILDING IA — HVAC PARTIAL PLAN - 2

SHEET M1-5

TAEMWW Imperial Rev. 7/10
FILE => m1_5.dgn
DATE PLOTTED => 02-JAN-2013 TIME PLOTTED => 08:01
ORIGINAL SCALE IN INCHES FOR REDUCED PLANS 0 1 2 3
UNIT 3615
PROJECT NUMBER & PHASE 04120006661
EA 014081
DISREGARD PRINTS BEARING EARLIER REVISION DATES
REVISION DATES (PRELIMINARY STAGE ONLY) 05-08-12 05-25-12
SHEET OF

USERNAME => s121614 DATE PLOTTED => 02-JAN-2013 TIME PLOTTED => 08:01

VI=1

DIST.	COUNTY	ROUTE	POST MILES TOTAL PROJECT	SHEET NO.	TOTAL SHEETS
04	Ala	80	2.2	537	800

CALIFORNIA STATE FIRE MARSHAL APPROVED
Approval of this plan does not authorize or approve any omission or deviation from applicable regulations. Final approval is subject to field inspection. One set of approved plans shall be available on the project site at all times.
Reviewed by: SPENCER MEYER
Approval date: 12-13-12

3

Christopher M. Faria 05-25-12
REGISTERED MECHANICAL ENGINEER DATE

REGISTERED PROFESSIONAL ENGINEER
CHRISTOPHER M. FARIA
No. M30419
Exp. 12-31-13
MECH
STATE OF CALIFORNIA

10-22-12
PLANS APPROVAL DATE

The State of California or its officers or agents shall not be responsible for the accuracy or completeness of scanned copies of this plan sheet.

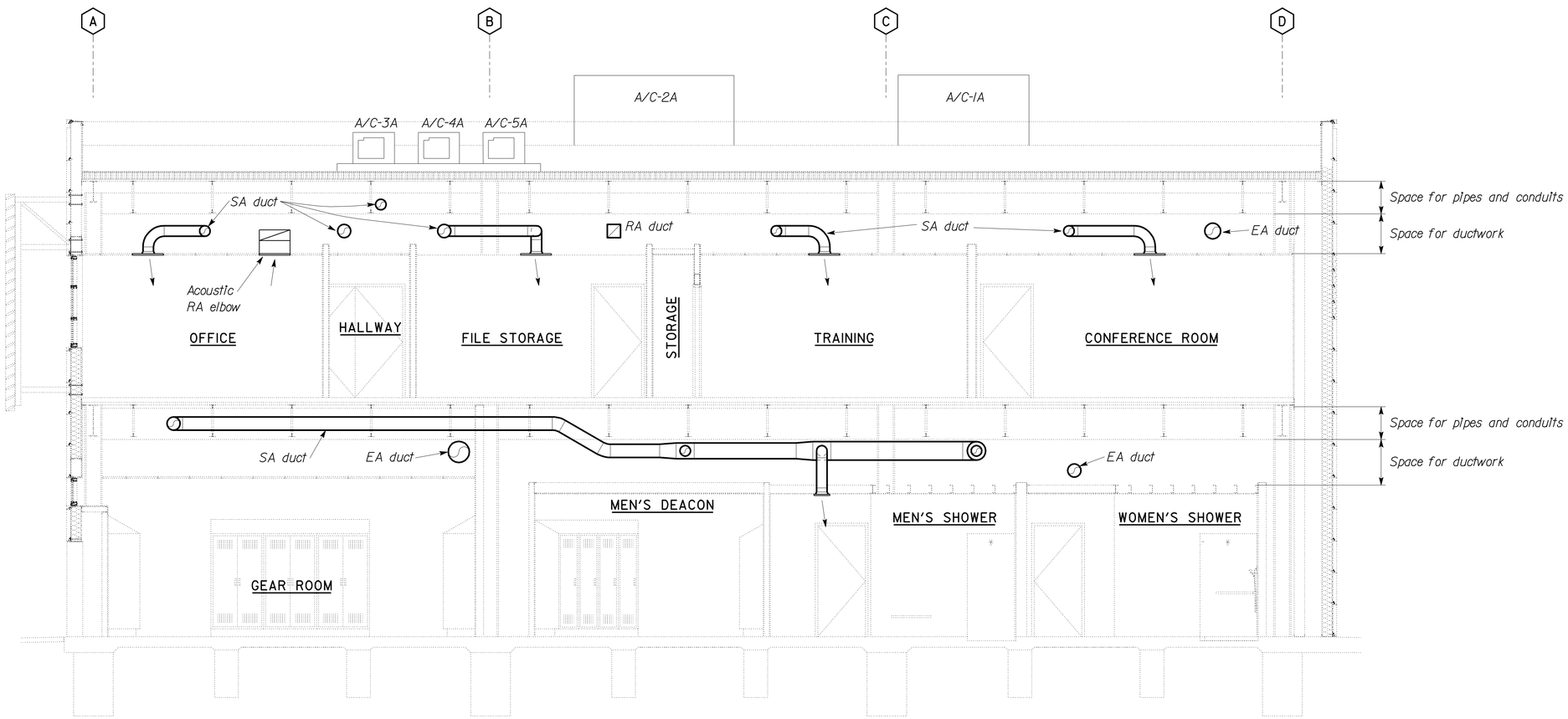

A SECTION

SCALE: 1/4" = 1'-0"

3 **REVISED PER ADDENDUM No. 3 DATED JANUARY 4, 2013**

THIS DRAWING ACCURATE FOR MECHANICAL WORK ONLY

DESIGN	BY Chris Faria	CHECKED Tom Hatam	
DETAILS	BY Angela Chen	CHECKED Tom Hatam	
QUANTITIES	BY Chris Faria	CHECKED Tom Hatam	

STATE OF CALIFORNIA
DEPARTMENT OF TRANSPORTATION

DIVISION OF ENGINEERING SERVICES
ELECTRICAL-MECHANICAL-WATER AND WASTEWATER DESIGN

BRIDGE NO. 33M5785
POST MILE 2.2

SFOBB MAINTENANCE COMPLEX
BUILDING IA
BUILDING SECTION

SHEET **M1-6**

TAEMWW Imperial Rev. 7/10
FILE => m1_6.dds
DATE PLOTTED => 02-JAN-2013 TIME PLOTTED => 15:15
ORIGINAL SCALE IN INCHES FOR REDUCED PLANS 0 1 2 3
UNIT 3615
PROJECT NUMBER & PHASE 04120006661
EA 014081
DISREGARD PRINTS BEARING EARLIER REVISION DATES
REVISION DATES (PRELIMINARY STAGE ONLY) 05-08-12 05-25-12
SHEET OF

USERNAME => s135318 DATE PLOTTED => 02-JAN-2013 TIME PLOTTED => 15:15
V|=|

DIST.	COUNTY	ROUTE	POST MILES TOTAL PROJECT	SHEET NO.	TOTAL SHEETS
04	Ala	80	2.2	551	800

Christopher M. Faria 05-25-12
REGISTERED MECHANICAL ENGINEER DATE

REGISTERED PROFESSIONAL ENGINEER CHRISTOPHER M. FARIA No. M30419 Exp. 12-31-13 MECH STATE OF CALIFORNIA

10-22-12
PLANS APPROVAL DATE

The State of California or its officers or agents shall not be responsible for the accuracy or completeness of scanned copies of this plan sheet.

CALIFORNIA STATE FIRE MARSHAL APPROVED
Approval of this plan does not authorize or approve any omission or deviation from applicable regulations. Final approval is subject to field inspection. One set of approved plans shall be available on the project site at all times.
Reviewed by: SPENCER MEYER
Approval date: 12-13-12

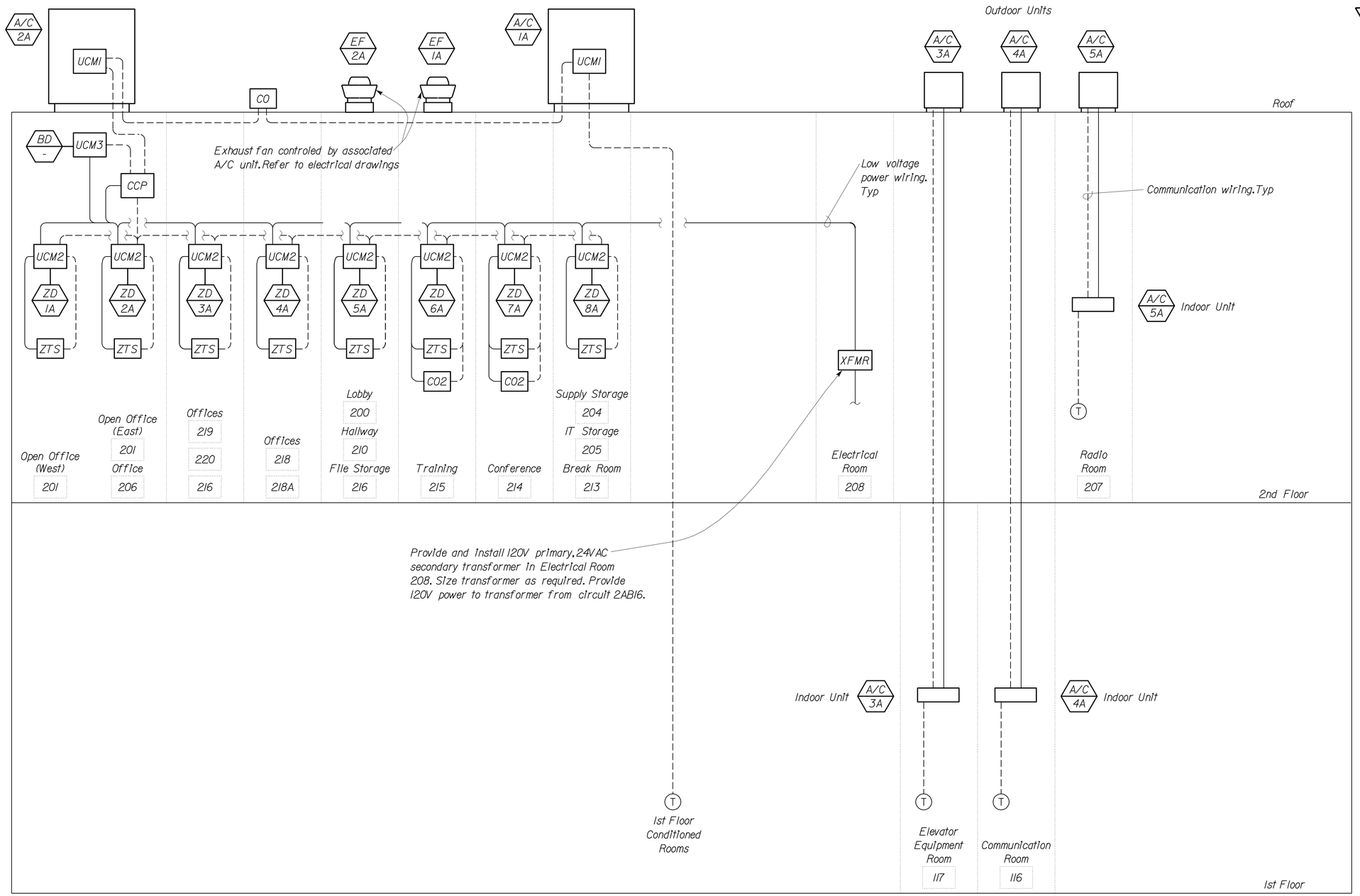

BD -	Bypass Damper
CCP	Central Control Panel
CO2	Carbon Dioxide Sensor
CO	Carbon Monoxide Sensor
OCS	Occupancy Sensor
XFMR	120 V to 24 V Transformer
UCM1	HVAC Unit Control Module
UCM2	Zone Damper Unit Control Module
UCM3	Bypass Damper Unit Control Module
ZD -	Zone Damper
ZTS	Zone Temperature Sensor

3 **REVISED PER ADDENDUM No. 3 DATED JANUARY 4, 2013**

THIS DRAWING ACCURATE FOR MECHANICAL WORK ONLY

	BY	CHECKED
DESIGN	Chris Faria	Tom Hatam
DETAILS	Angela Chen	Tom Hatam
QUANTITIES	Chris Faria	Tom Hatam

STATE OF CALIFORNIA DEPARTMENT OF TRANSPORTATION

DIVISION OF ENGINEERING SERVICES
ELECTRICAL-MECHANICAL-WATER AND WASTEWATER DESIGN

BRIDGE NO. 33M5785
POST MILE 2.2

SFOBB MAINTENANCE COMPLEX
BUILDING IA
CONTROL DIAGRAM - I

SHEET **M1-20**

TAEMWW Imperial Rev. 7/10
FILE => m1_20.add
DATE PLOTTED => 02-JAN-2013 TIME PLOTTED => 15:15
ORIGINAL SCALE IN INCHES FOR REDUCED PLANS 0 1 2 3
UNIT 3615
PROJECT NUMBER & PHASE 04120006661
EA 014081
DISREGARD PRINTS BEARING EARLIER REVISION DATES → 05-08-12 05-25-12
REVISION DATES (PRELIMINARY STAGE ONLY) SHEET OF

USERNAME => s135318 DATE PLOTTED => 02-JAN-2013 TIME PLOTTED => 15:15

V1=1

DIST.	COUNTY	ROUTE	POST MILES TOTAL PROJECT	SHEET NO.	TOTAL SHEETS
04	Ala	80	2.2	563	800

3

Solomon C. Wong — 05-25-12
REGISTERED MECHANICAL ENGINEER — DATE

REGISTERED PROFESSIONAL ENGINEER SOLOMON WONG No. M27626 Exp. 6-30-13 MECH STATE OF CALIFORNIA

10-22-12
PLANS APPROVAL DATE

The State of California or its officers or agents shall not be responsible for the accuracy or completeness of scanned copies of this plan sheet.

CALIFORNIA STATE FIRE MARSHAL APPROVED
Approval of this plan does not authorize or approve any omission or deviation from applicable regulations. Final approval is subject to field inspection. One set of approved plans shall be available on the project site at all times.
Reviewed by: SPENCER MEYER
Approval date: 12-13-12

General Notes:

1. Contractor shall field verify all existing equipment, piping, utility connections and dimensions before ordering and fabricating any materials.
2. The Fire Sprinkler contractor shall hydraulically design a sprinkler system to protect the cross hatched areas of Building 1A and 1B, except otherwise noted. The location and routing of the Firewater main are only suggestive. Actual firewater connections from the utility main shall be obtained from East Bay Municipal Utility District (EBMUD).
3. The contractor shall identify a hydraulically designed sprinkler system with a permanently marked weatherproof metal or rigid plastic sign secured with corrosion-resistance wire, chain, or other approved means. Such shall be placed at the alarm valve, or dry pipe valve supplying the corresponding hydraulically designed area. The Sign shall included the following information:
   (a) Location of design area or areas.
   (b) Discharge densities over the design area or areas.
   (c) Required flow and residual pressure demand of the base of riser.
   (d) Hose stream demand included is addition to the sprinkler demand.
4. Installation of the fire sprinkler system shall not be started until complete plans and specifications (including water supply information and type of existing system, if any) have been approved by the California Fire Marshal.
5. If requested at various stages and upon completion, the system shall be tested in the presence of the California Fire Marshal.
6. The fire service mains and the appurtenances shall conform to the requirements of the 2010 edition of the National Fire Protection Association Standard #24.
7. All post indicator valves shall be pad lockable with tamper proof protection.
8. Flow and pressure characteristics in the existing Water Main are available from East Bay Municipal Utility District (EBMUD). Static pressure 71 psi; Residual pressure 20 psi with 1400 gpm flowing, to be verified by EBMUD.
9. For specific locations of the 3-inch roof drains, total of 23 drains, see (- / A1-4.0)
10. Contractor shall maintain all existing domestic water, irrigation water, firewater, gas supply, and sanitary sewer discharge services during the construction and transition of these services to new building, existing Burma Road building/facilities and the north median buildings/facilities located between the East Bound and West Bound I-80 Freeways.
11. No sprinkler require in Room 99 (Elevator shaft), Building 1A and Room 148 (Main Electrical Room), Building 1B.
12. For Sanitary Sewer piping in Building 1A and 1B, see (- / MPI-1) through (- / MPI-7)
13. For Water and Firewater Supplies to Building 1A and 1B, see (- / MPI-8) through (- / MPI-18)
14. For Gas Supply to Building 1A and 1B, see (- / MPI-8)
15. Building finished floor assumed at +0 ft. See utility grading and profile plans for details.
16. The automatic fire sprinkler shall conform to the requirements of the 2010 edition of the National Fire Protection Association Standard #13.
17. For Guard Post Details, see (3 / M4-2)
18. Per EBMUD's requirements, Contractor to provide and make connection to 2-inch water meter and 3-inch gate valve from the existing 16-inch Recycled Water main located at EBMUD Wastewater Treatment Plant.

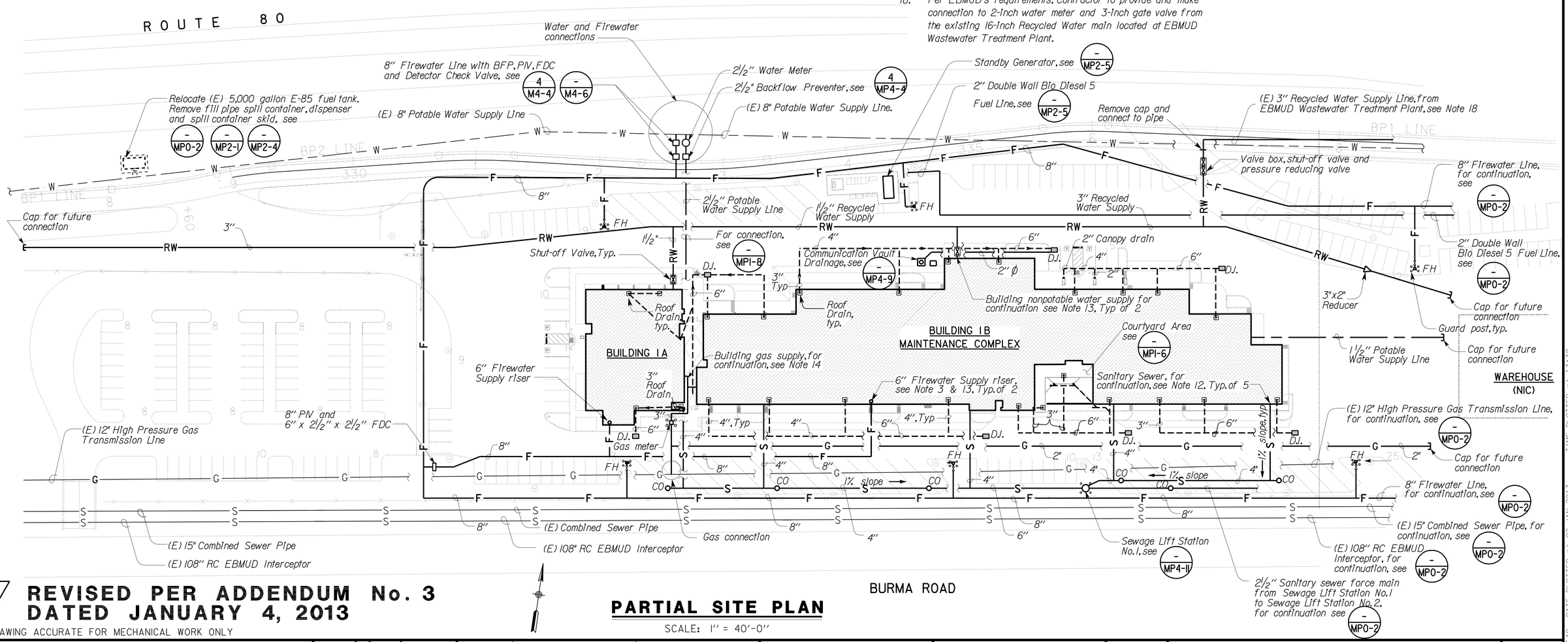

3 **REVISED PER ADDENDUM No. 3 DATED JANUARY 4, 2013**

THIS DRAWING ACCURATE FOR MECHANICAL WORK ONLY

PARTIAL SITE PLAN

SCALE: 1" = 40'-0"

DESIGN SUPERVISOR
DESIGN ENGINEER

	BY	CHECKED
DESIGN	Solomon Wong	Tom Hatam
DETAILS	R. Sarte / A. Chen	Tom Hatam
QUANTITIES	Solomon Wong	Tom Hatam

STATE OF CALIFORNIA DEPARTMENT OF TRANSPORTATION

DIVISION OF ENGINEERING SERVICES
ELECTRICAL-MECHANICAL-WATER AND WASTEWATER DESIGN

BRIDGE NO. 33M5785
POST MILE 2.2

SFOBB MAINTENANCE COMPLEX

PARTIAL SITE PIPING PLAN NO. 1

SHEET **MP0-1**

TAEMWW Imperial Rev. 7/10
FILE => mp0_1.add
DATE PLOTTED => 02-JAN-2013 TIME PLOTTED => 13:38

ORIGINAL SCALE IN INCHES FOR REDUCED PLANS 0 1 2 3

UNIT 3615
PROJECT NUMBER & PHASE 04120006661
EA 014081

DISREGARD PRINTS BEARING EARLIER REVISION DATES
REVISION DATES (PRELIMINARY STAGE ONLY) 05-08-12 05-23-12 12-04-12
SHEET OF

USERNAME => s114640 DATE PLOTTED => 02-JAN-2013 TIME PLOTTED => 13:38

V1=1

DIST.	COUNTY	ROUTE	POST MILES TOTAL PROJECT	SHEET NO.	TOTAL SHEETS
04	Ala	80	2.2	564	800

Solomon C. Wong — 05-25-12
REGISTERED MECHANICAL ENGINEER — DATE

REGISTERED PROFESSIONAL ENGINEER
SOLOMON WONG
No. M27626
Exp. 6-30-13
MECH
STATE OF CALIFORNIA

10-22-12
PLANS APPROVAL DATE

The State of California or its officers or agents shall not be responsible for the accuracy or completeness of scanned copies of this plan sheet.

CALIFORNIA STATE FIRE MARSHAL APPROVED

Approval of this plan does not authorize or approve any omission or deviation from applicable regulations. Final approval is subject to field inspection. One set of approved plans shall be available on the project site at all times.

Reviewed by: SPENCER MEYER

Approval date: 12-13-12

3

Notes:

1. Contractor shall field verify all existing equipment, piping, utility connections and dimensions before ordering and fabricating any materials.
2. For guard post details, see 3 / M4-2

State Fire Marshal Notes:

1. Prior to installation, all plans and specifications shall be approved by the Office of the State Fire Marshal.
2. Inspection are required : 1) prior to pouring thrust blocks, 2) for hydrostatic testing and 3) for flush. Schedule all inspections 48 hours in advance. Inspections cancelled after 1 p.m. on the day before the scheduled date will be subjected to a re-inspection fee. Call local Deputy State Fire Marshal for inspection scheduling.
3. Installation, inspection and testing shall conform to 2010 NFPA 13 and 2010 NFPA 24.
4. Private fire hydrants shall be approved wet barrel style with a minimum of one 2½" and one 4" outlet. The 4" outlet shall face the fire department access road. All outlets shall be provided with National Standard Threads (NST).
5. Fire hydrant supply piping shall be a minimum of six inches in diameter. The lowest operating nut shall be a minimum of 18" above grade and the hydrant flange shall be a minimum of 2" above grade.
6. Fire hydrants shall be a minimum of 40 feet from all structures. A keyed gate valve shall be provided for each hydrant in an accessible location. Valves shall not be located in parking stalls.
7. All pipes shall be approved for use in fire service systems (Class 150 minimum). Class 200 pipe shall be used where the pressure may exceed 150 PSI.
8. All ferrous pipes and fittings shall be protected with a loose 8-mil polyethylene tube. The ends of the tube and any splices mate for "T"s or other piping components shall be sealed with 2" tape, approved for underground use. All bolted joints shall be cleaned and thoroughly coated with asphalt or other corrosion retarding material after assembly and prior to poly-tube installation.
9. A 12" bed of clean fill sand shall be provided below and above the pipe (total 24").
10. All bolts used for underground connections shall be stainless steel.
11. A minimum of 30" of cover, from finish grade to the pipe, shall be provided. When surface loads are expected, a minimum of 36" cover shall be provided.
12. Thrust blocks, or other approved method of thrust restraint, shall be provided wherever pipe changes direction.
13. The trench shall be excavated for thrust blocks and inspected prior to the pour. All corrosion protection shall be in place.
14. A hydrostatic test (200 psi for two hours or 50 psi over maximum static pressure, which ever is greater) shall be witnessed by a Deputy State Fire Marshal. The trench shall be back-filled between the joints to prevent movement of the pipe.
15. The system shall be thoroughly flushed before connection is made to the overhead piping. Flow shall be through a minimum of a 4" hose or pipe unless otherwise approved by the Deputy Fire Marshal. A Deputy Fire Marshal shall witness the flush.
16. Private hydrants, sprinkler control valves, detector check assemblies, post indicating valves and fire department connections shall be painted OSHA red.
17. All control valves shall be locked in the open position. Valves shall be electrically supervised if they serve 100 or more sprinkler heads.

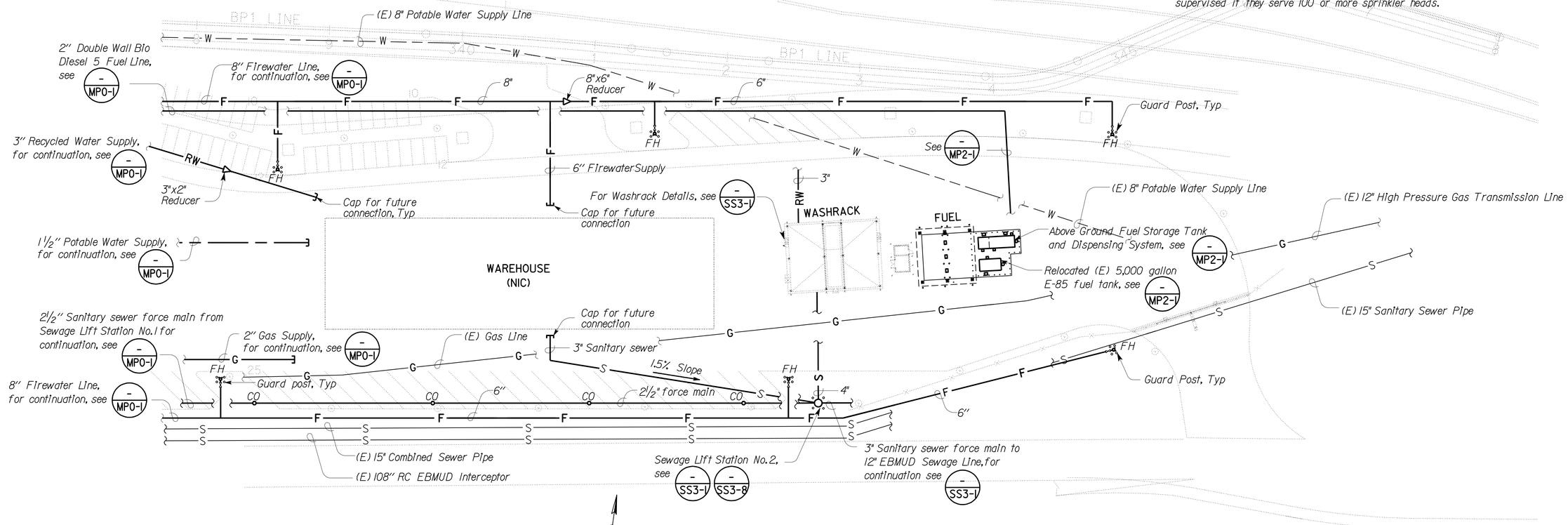

PARTIAL SITE PLAN

SCALE: 1" = 40'-0"

3 **REVISED PER ADDENDUM No. 3 DATED JANUARY 4, 2013**

THIS DRAWING ACCURATE FOR MECHANICAL WORK ONLY

	BY	CHECKED
DESIGN	Solomon Wong	Tom Hatam
DETAILS	Angela Chen	Tom Hatam
QUANTITIES	Solomon Wong	Tom Hatam

STATE OF CALIFORNIA DEPARTMENT OF TRANSPORTATION

DIVISION OF ENGINEERING SERVICES
ELECTRICAL-MECHANICAL-WATER AND WASTEWATER DESIGN

BRIDGE NO. 33M5785
POST MILE 2.2

SFOBB MAINTENANCE COMPLEX

PARTIAL SITE PIPING PLAN NO. 2

SHEET **MP0-2**

TAEMWW Imperial Rev. 7/10

FILE => mp0_2.add
DATE PLOTTED => 02-JAN-2013 TIME PLOTTED => 13:38

ORIGINAL SCALE IN INCHES FOR REDUCED PLANS 0 1 2 3

UNIT 3615
PROJECT NUMBER & PHASE 04120006661
EA 014081

DISREGARD PRINTS BEARING EARLIER REVISION DATES → 05-08-12 05-25-12 12-01-12

REVISION DATES (PRELIMINARY STAGE ONLY) SHEET OF

USERNAME => s114640 DATE PLOTTED => 02-JAN-2013 TIME PLOTTED => 13:38

V=1

DIST.	COUNTY	ROUTE	POST MILES TOTAL PROJECT	SHEET NO.	TOTAL SHEETS
04	Ala	80	2.2	566	800

CALIFORNIA STATE FIRE MARSHAL APPROVED
Approval of this plan does not authorize or approve any omission or deviation from applicable regulations. Final approval is subject to field inspection. One set of approved plans shall be available on the project site at all times.
Reviewed by: SPENCER MEYER
Approval date: 10-13-12

Solomon C. Wong — 05-25-12
REGISTERED MECHANICAL ENGINEER — DATE

REGISTERED PROFESSIONAL ENGINEER
SOLOMON WONG
No. M27626
Exp. 6-30-13
MECH
STATE OF CALIFORNIA

10-22-12
PLANS APPROVAL DATE

The State of California or its officers or agents shall not be responsible for the accuracy or completeness of scanned copies of this plan sheet.

3

2nd FLOOR PLAN

SCALE : 3/16" = 1'-0"

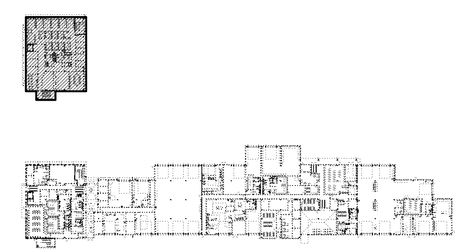

KEY PLAN

THIS DRAWING ACCURATE FOR MECHANICAL WORK ONLY

3 **REVISED PER ADDENDUM No. 3 DATED JANUARY 4, 2013**

	BY	CHECKED
DESIGN	Solomon Wong	Tom Hatam
DETAILS	Angela Chen	Tom Hatam
QUANTITIES	Solomon Wong	Tom Hatam

STATE OF CALIFORNIA
DEPARTMENT OF TRANSPORTATION

DIVISION OF ENGINEERING SERVICES
ELECTRICAL-MECHANICAL-WATER AND WASTEWATER DESIGN

BRIDGE NO. 33M5785
POST MILE 2.2

SFOBB MAINTENANCE COMPLEX
BUILDING 1A — SANITARY SEWER PLAN NO. 2

SHEET **MP1-2**

TAEMWW Imperial Rev. 7/10
FILE => mp1_2.add
DATE PLOTTED => 02-JAN-2013 TIME PLOTTED => 13:38

ORIGINAL SCALE IN INCHES FOR REDUCED PLANS 0 1 2 3

UNIT 3615
PROJECT NUMBER & PHASE 04120006661
EA 014081

DISREGARD PRINTS BEARING EARLIER REVISION DATES → 05-08-12 05-25-12 12-01-12

REVISION DATES (PRELIMINARY STAGE ONLY) SHEET OF

USERNAME => s114640 DATE PLOTTED => 02-JAN-2013 TIME PLOTTED => 13:38

VI=1

DIST.	COUNTY	ROUTE	POST MILES TOTAL PROJECT	SHEET NO.	TOTAL SHEETS
04	Ala	80	2.2	572	800

Solomon C. Wong — 05-25-12
REGISTERED MECHANICAL ENGINEER — DATE

REGISTERED PROFESSIONAL ENGINEER
SOLOMON WONG
No. M27626
Exp. 6-30-13
MECH
STATE OF CALIFORNIA

10-22-12
PLANS APPROVAL DATE

The State of California or its officers or agents shall not be responsible for the accuracy or completeness of scanned copies of this plan sheet.

CALIFORNIA STATE FIRE MARSHAL APPROVED
Approval of this plan does not authorize or approve any omission or deviation from applicable regulations. Final approval is subject to field inspection. One set of approved plans shall be available on the project site at all times.
Reviewed by: SPENCER MEYER
Approval date: 12-13-12

3

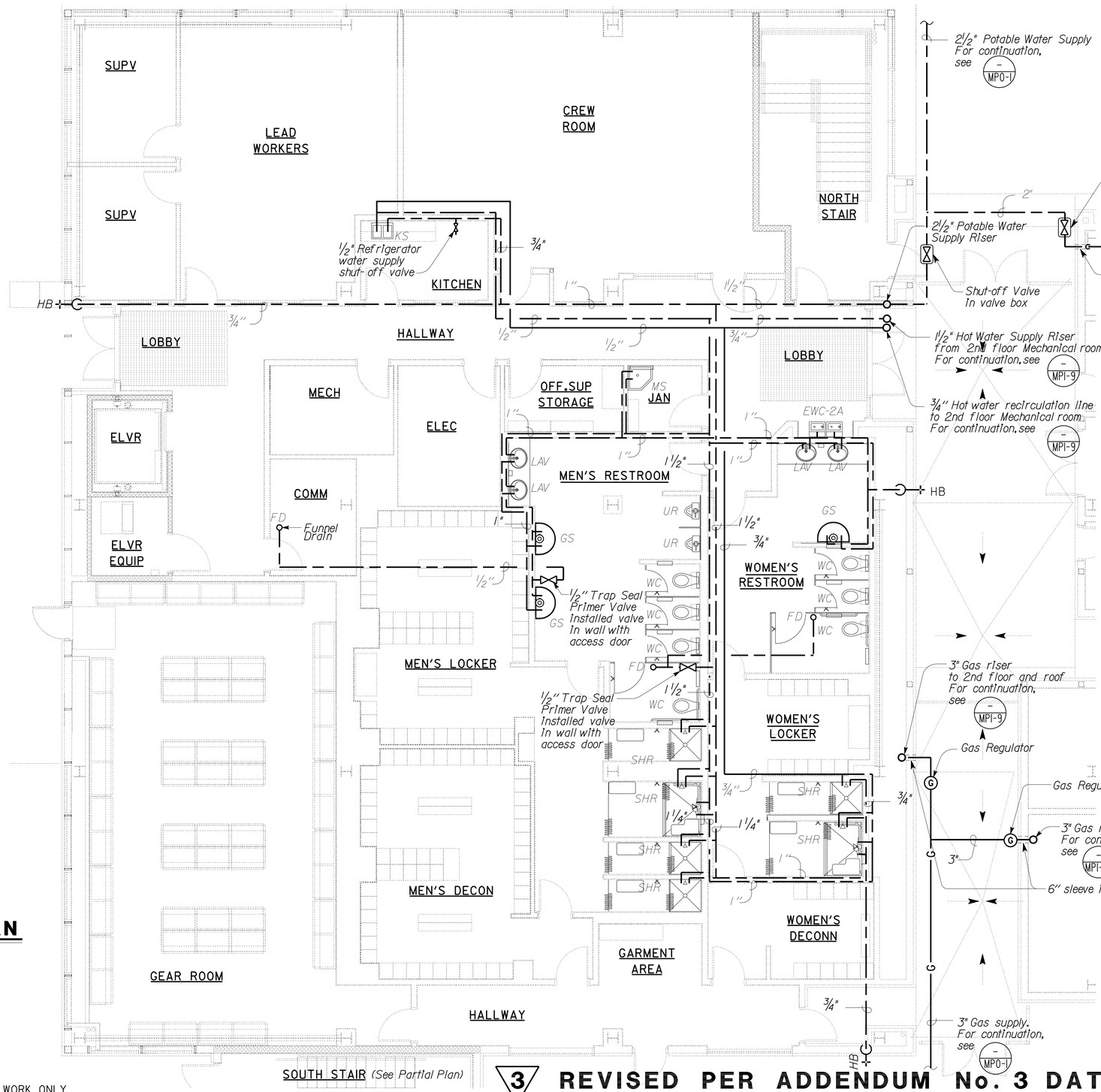

Note:

1. For nonpotable water supply to water closet and urinal, see MPI-15
2. Insulate all hot water supply and recirculation lines.

1st FLOOR PLAN

SCALE : 3/16" = 1'-0"

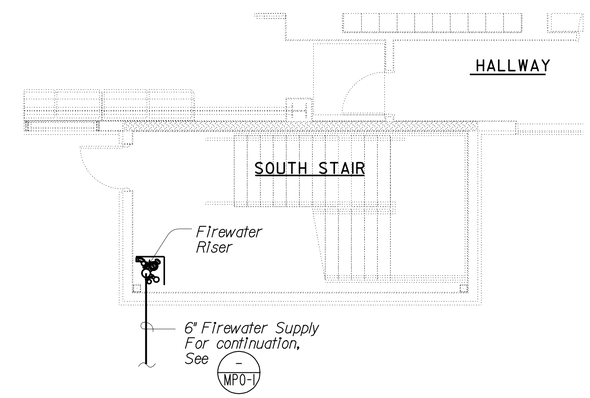

PARTIAL PLAN

SCALE : 3/16" = 1'-0"

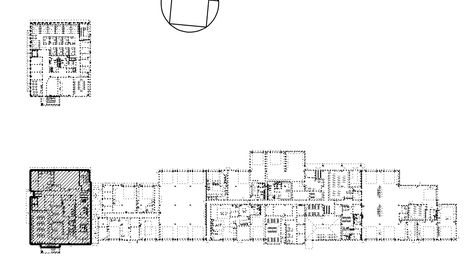

KEY PLAN

THIS DRAWING ACCURATE FOR MECHANICAL WORK ONLY

3 **REVISED PER ADDENDUM No. 3 DATED JANUARY 4, 2013**

DESIGN	BY Solomon Wong	CHECKED Tom Hatam	
DETAILS	BY Angela Chen	CHECKED Tom Hatam	
QUANTITIES	BY Solomon Wong	CHECKED Tom Hatam	

STATE OF CALIFORNIA
DEPARTMENT OF TRANSPORTATION

DIVISION OF ENGINEERING SERVICES
ELECTRICAL-MECHANICAL-WATER AND WASTEWATER DESIGN

BRIDGE NO. 33M5785
POST MILE 2.2

SFOBB MAINTENANCE COMPLEX
BUILDING 1A — DOMESTIC WATER PLAN NO. 1

SHEET **MP1-8**

TAEMWW Imperial Rev. 7/10
FILE => mp1_8.add
DATE PLOTTED => 02-JAN-2013 TIME PLOTTED => 13:38

ORIGINAL SCALE IN INCHES FOR REDUCED PLANS 0 1 2 3

UNIT 3615
PROJECT NUMBER & PHASE 04120006661
EA 014081

DISREGARD PRINTS BEARING EARLIER REVISION DATES
REVISION DATES (PRELIMINARY STAGE ONLY) 05-08-12 05-25-12
SHEET OF

USERNAME => s114640 DATE PLOTTED => 02-JAN-2013 TIME PLOTTED => 13:38

V|=|

DIST.	COUNTY	ROUTE	POST MILES TOTAL PROJECT	SHEET NO.	TOTAL SHEETS
04	Ala	80	2.2	573	800

CALIFORNIA STATE FIRE MARSHAL APPROVED
Approval of this plan does not authorize or approve any omission or deviation from applicable regulations. Final approval is subject to field inspection. One set of approved plans shall be available on the project site at all times.
Reviewed by: SPENCER MEYER
Approval date: 12-13-12

Solomon C. Wong — 05-25-12
REGISTERED MECHANICAL ENGINEER — DATE

REGISTERED PROFESSIONAL ENGINEER — SOLOMON WONG — No. M27626 — Exp. 6-30-13 — MECH — STATE OF CALIFORNIA

10-22-12
PLANS APPROVAL DATE

The State of California or its officers or agents shall not be responsible for the accuracy or completeness of scanned copies of this plan sheet.

3

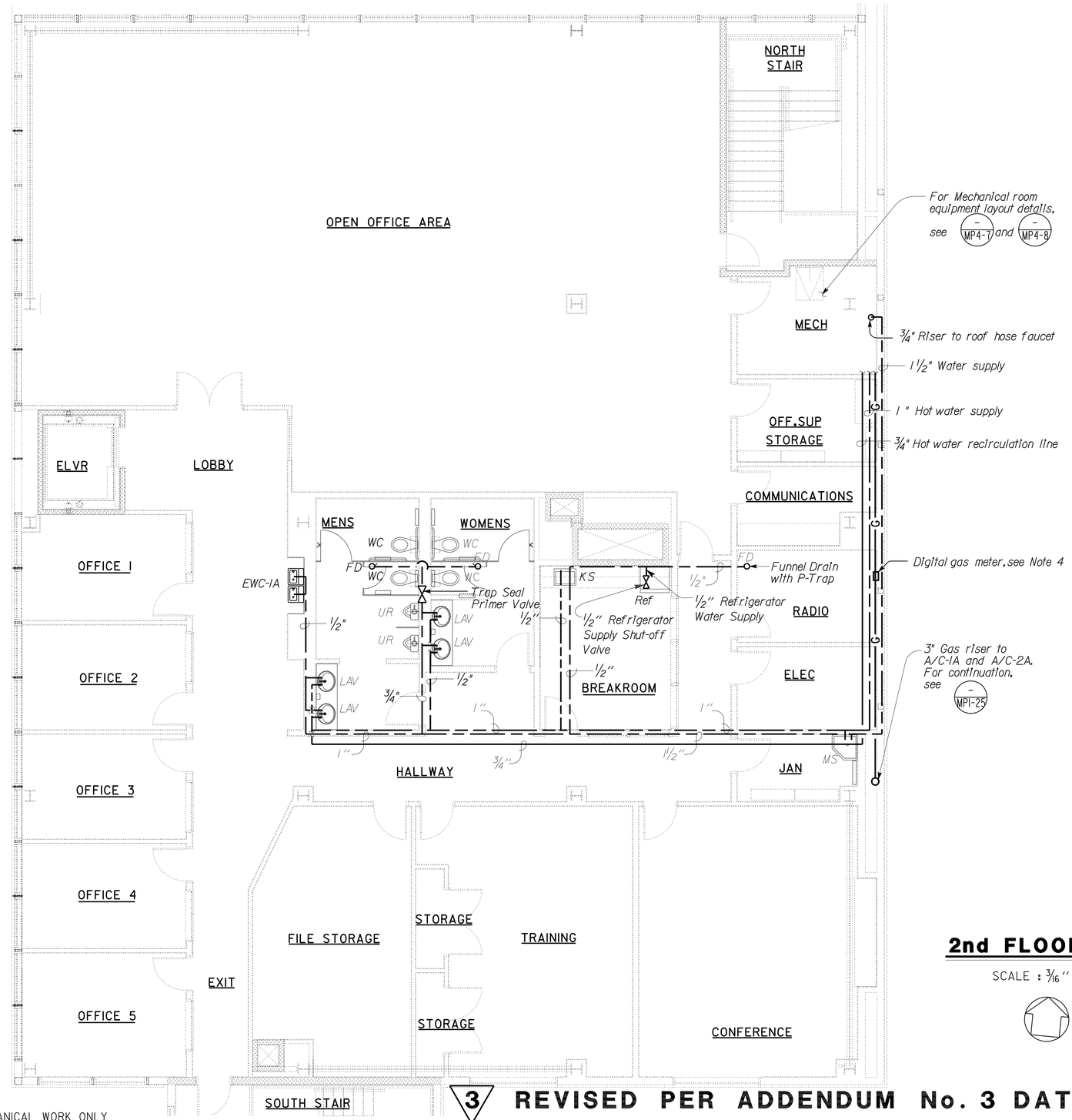

Note:

1. For non potable water supply to water closet and urinal, see MP1-16
2. For hose faucet on roof, see MP1-25
3. Insulate all hot water supply and recirculation lines.
4. Install digital gas meter in an accessible location in accordance with the manufacturer's instructions, see MP4-3
5. Provide access door for Trap Seal Primer Valve.

2nd FLOOR PLAN

SCALE : 3/16" = 1'-0"

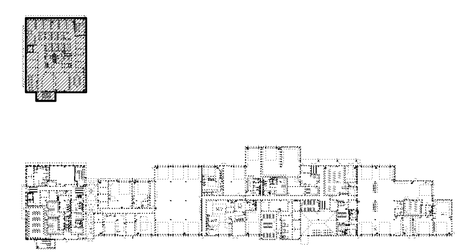

KEY PLAN

THIS DRAWING ACCURATE FOR MECHANICAL WORK ONLY

3 **REVISED PER ADDENDUM No. 3 DATED JANUARY 4, 2013**

	BY		CHECKED
DESIGN	Solomon Wong		Tom Hatam
DETAILS	Angela Chen		Tom Hatam
QUANTITIES	Solomon Wong		Tom Hatam

STATE OF CALIFORNIA
DEPARTMENT OF TRANSPORTATION

DIVISION OF ENGINEERING SERVICES
ELECTRICAL-MECHANICAL-WATER AND WASTEWATER DESIGN

BRIDGE NO. 33M5785
POST MILE 2.2

SFOBB MAINTENANCE COMPLEX
BUILDING 1A — DOMESTIC WATER PLAN NO. 2

SHEET **MP1-9**

TAEMWW Imperial Rev. 7/10
FILE => mp1_9.add
DATE PLOTTED => 02-JAN-2013 TIME PLOTTED => 13:38
ORIGINAL SCALE IN INCHES FOR REDUCED PLANS 0 1 2 3
UNIT 3615
PROJECT NUMBER & PHASE 04120006661
EA 014081
DISREGARD PRINTS BEARING EARLIER REVISION DATES
REVISION DATES (PRELIMINARY STAGE ONLY) 05-08-12 05-25-12 12-04-12
SHEET OF

USERNAME => s114640 DATE PLOTTED => 02-JAN-2013 TIME PLOTTED => 13:38

DIST.	COUNTY	ROUTE	POST MILES TOTAL PROJECT	SHEET NO.	TOTAL SHEETS
04	Ala	80	2.2	574	800

Solomon C. Wong — 05-25-12
REGISTERED MECHANICAL ENGINEER — DATE

REGISTERED PROFESSIONAL ENGINEER
SOLOMON WONG
No. M27626
Exp. 6-30-13
MECH
STATE OF CALIFORNIA

10-22-12
PLANS APPROVAL DATE

The State of California or its officers or agents shall not be responsible for the accuracy or completeness of scanned copies of this plan sheet.

CALIFORNIA STATE FIRE MARSHAL APPROVED
Approval of this plan does not authorize or approve any omission or deviation from applicable regulations. Final approval is subject to field inspection. One set of approved plans shall be available on the project site at all times.
Reviewed by: SPENCER MEYER
Approval date: 12-13-12

3

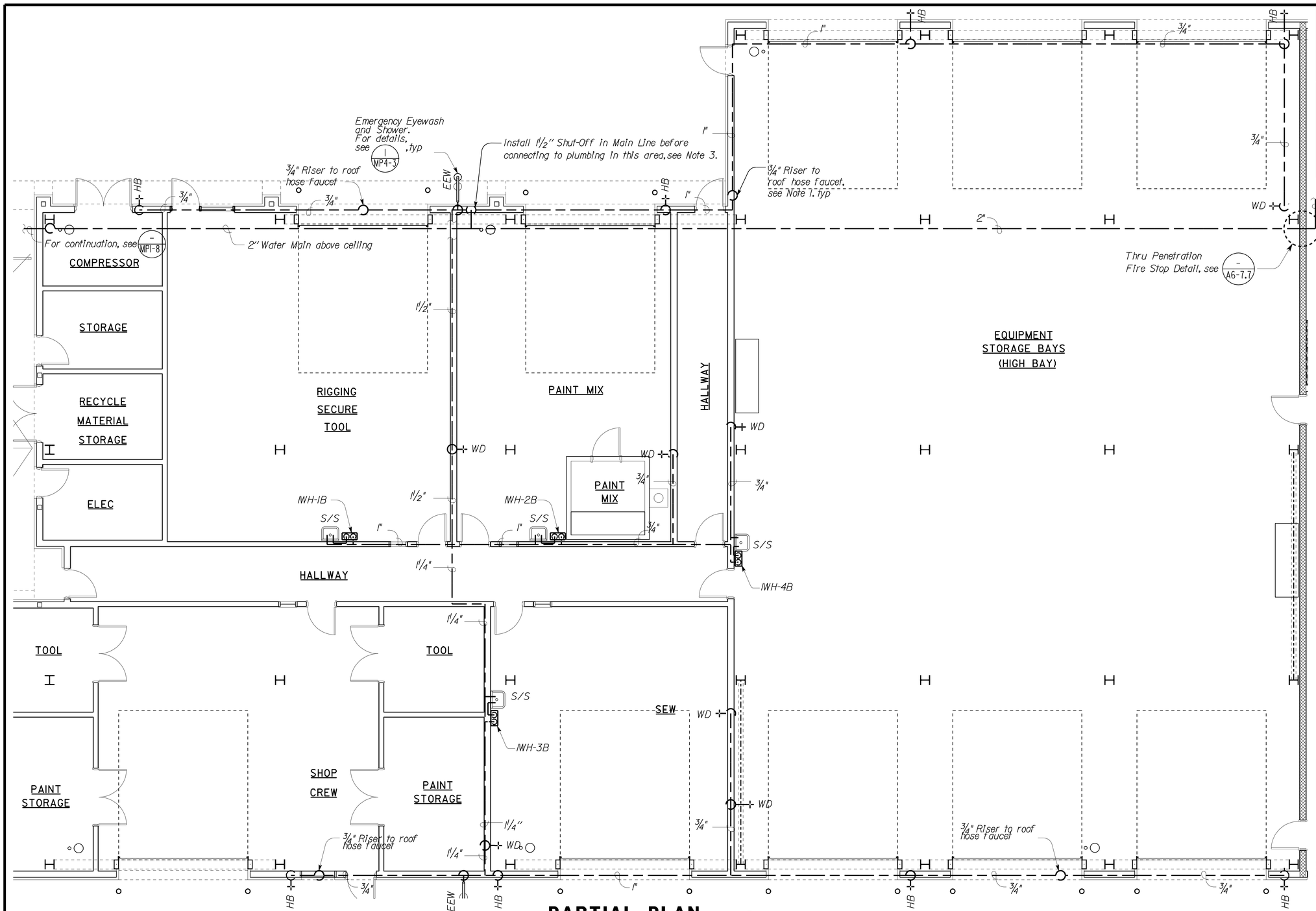

PARTIAL PLAN

SCALE : 3/16" = 1'-0"

Note:

1. For hose faucet on roof see MPI-26
2. Insulate all hot water supply lines.
3. Shut-Off must be Installed In an access box 5' from floor. Mark box "Water Shut-Off Valve".

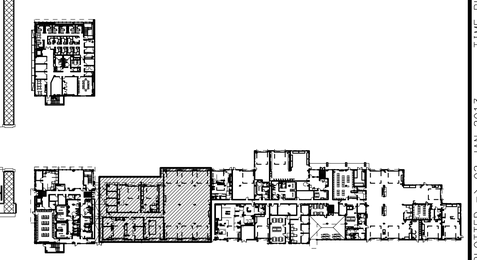

KEY PLAN

THIS DRAWING ACCURATE FOR MECHANICAL WORK ONLY

3 **REVISED PER ADDENDUM No. 3 DATED JANUARY 4, 2013**

	BY		CHECKED
DESIGN	Solomon Wong		Tom Hatam
DETAILS	Angela Chen		Tom Hatam
QUANTITIES	Solomon Wong		Tom Hatam

STATE OF CALIFORNIA DEPARTMENT OF TRANSPORTATION

DIVISION OF ENGINEERING SERVICES
ELECTRICAL-MECHANICAL-WATER AND WASTEWATER DESIGN

BRIDGE NO. 33M5785
POST MILE 2.2

SFOBB MAINTENANCE COMPLEX
BUILDING 1B — DOMESTIC WATER PLAN NO. 3

SHEET **MP1-10**

TAEMWW Imperial Rev. 7/10
FILE => mp1_10.add
DATE PLOTTED => 02-JAN-2013 TIME PLOTTED => 13:38

ORIGINAL SCALE IN INCHES FOR REDUCED PLANS 0 1 2 3

UNIT 3615
PROJECT NUMBER & PHASE 04120006661
EA 014081

DISREGARD PRINTS BEARING EARLIER REVISION DATES → 05-08-12 05-25-12 12-04-12

REVISION DATES (PRELIMINARY STAGE ONLY) SHEET OF

USERNAME => s114640 DATE PLOTTED => 02-JAN-2013 TIME PLOTTED => 13:38

V|=|

DIST.	COUNTY	ROUTE	POST MILES TOTAL PROJECT	SHEET NO.	TOTAL SHEETS
04	Ala	80	2.2	575	800

Solomon C. Wong 05-25-12
REGISTERED MECHANICAL ENGINEER DATE

REGISTERED PROFESSIONAL ENGINEER SOLOMON WONG No. M27626 Exp. 6-30-13 MECH STATE OF CALIFORNIA

10-22-12
PLANS APPROVAL DATE

The State of California or its officers or agents shall not be responsible for the accuracy or completeness of scanned copies of this plan sheet.

CALIFORNIA STATE FIRE MARSHAL
APPROVED
Approval of this plan does not authorize or approve any omission or deviation from applicable regulations. Final approval is subject to field inspection. One set of approved plans shall be available on the project site at all times.
Reviewed by: JOHN E WOODS, SDSFM
Approval date: 8-22-12

3

Notes:

1. For nonpotable water supply to water closet and urinal, see MPI-17
2. For hose faucet on roof, see MPI-26
3. Provide Access Door for Trap Primer Valve.
4. Shut-Off Valve must be installed in an access box 5'± from floor. Mark box "Water Shut-Off Valve".
5. Insulate all hot water supply and recirculation lines.

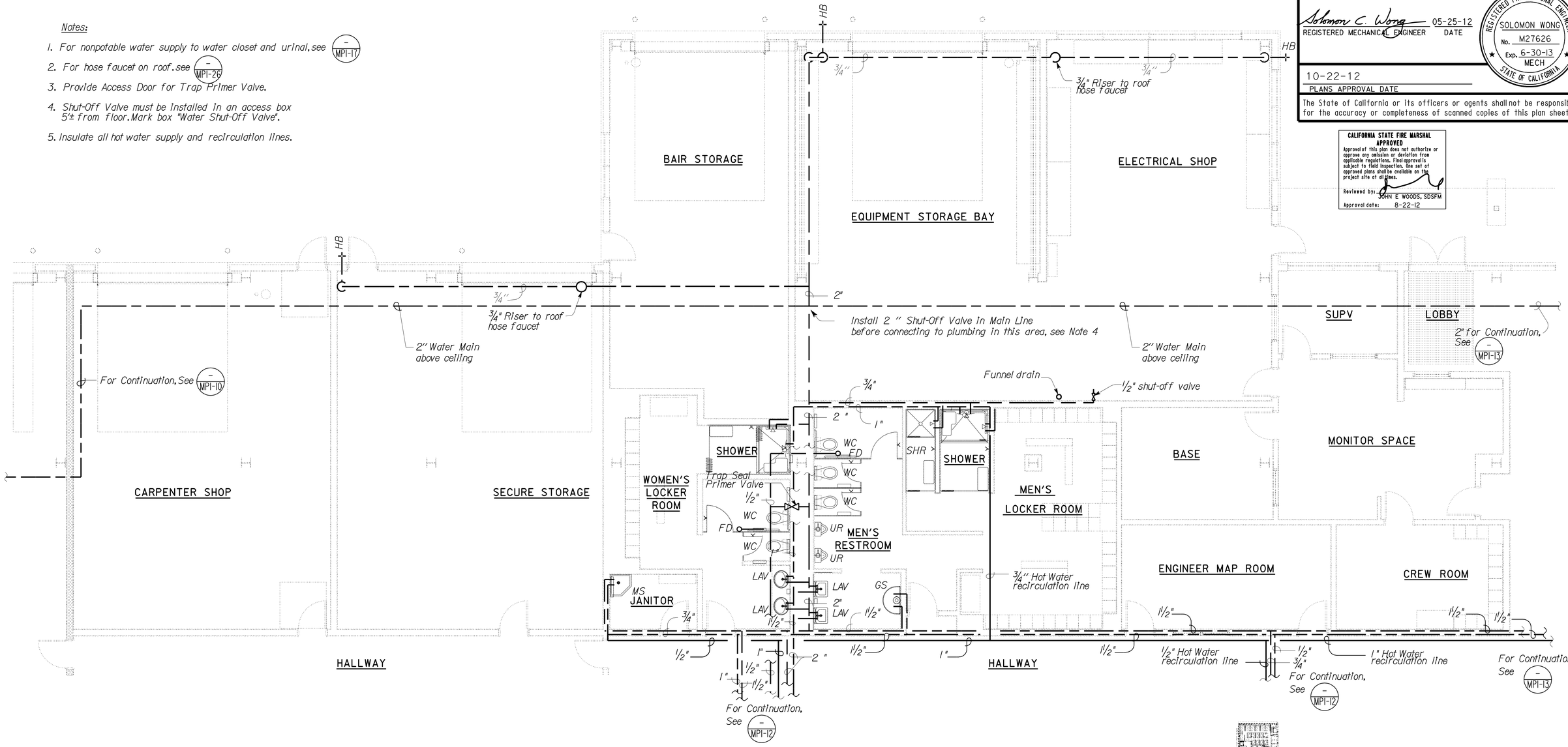

PARTIAL PLAN

SCALE : 3/16" = 1'-0"

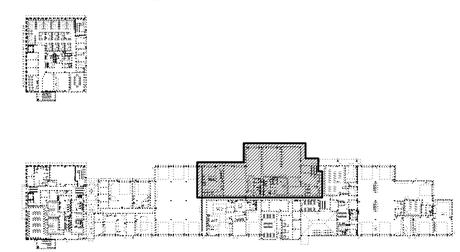

KEY PLAN

3 REVISED PER ADDENDUM No. 3 DATED JANUARY 4, 2013

THIS DRAWING ACCURATE FOR MECHANICAL WORK ONLY

	BY	CHECKED
DESIGN	Solomon Wong	Tom Hatam
DETAILS	Angela Chen	Tom Hatam
QUANTITIES	Solomon Wong	Tom Hatam

STATE OF CALIFORNIA DEPARTMENT OF TRANSPORTATION

DIVISION OF ENGINEERING SERVICES
ELECTRICAL-MECHANICAL-WATER AND WASTEWATER DESIGN

BRIDGE NO. 33M5785
POST MILE 2.2

SFOBB MAINTENANCE COMPLEX
BUILDING 1B
DOMESTIC WATER PLAN NO. 4

SHEET MP1-11

TAEMWW Imperial Rev. 7/10
FILE => mp1_11.dgn
DATE PLOTTED => 03-JAN-2013 TIME PLOTTED => 10:23

ORIGINAL SCALE IN INCHES FOR REDUCED PLANS 0 1 2 3

UNIT 3615
PROJECT NUMBER & PHASE 04120006661
EA 014081

DISREGARD PRINTS BEARING EARLIER REVISION DATES → 05-08-12 05-25-12

REVISION DATES (PRELIMINARY STAGE ONLY) SHEET OF

USERNAME => s121614 DATE PLOTTED => 03-JAN-2013 TIME PLOTTED => 10:23

VI=I

DIST.	COUNTY	ROUTE	POST MILES TOTAL PROJECT	SHEET NO.	TOTAL SHEETS
04	Ala	80	2.2	576	800

CALIFORNIA STATE FIRE MARSHAL APPROVED
Approval of this plan does not authorize or approve any omission or deviation from applicable regulations. Final approval is subject to field inspection. One set of approved plans shall be available on the project site at all times.
Reviewed by: SPENCER MEYER
Approval date: 12-13-12

Solomon C. Wong — 05-25-12
REGISTERED MECHANICAL ENGINEER — DATE

REGISTERED PROFESSIONAL ENGINEER — SOLOMON WONG — No. M27626 — Exp. 6-30-13 — MECH — STATE OF CALIFORNIA

10-22-12
PLANS APPROVAL DATE

The State of California or its officers or agents shall not be responsible for the accuracy or completeness of scanned copies of this plan sheet.

Notes:

1. For nonpotable water supply to water closet, see (– / MPI-17)
2. For hose faucet on roof, see (– / MPI-26)
3. Insulate all hot water supply and recirculation lines.

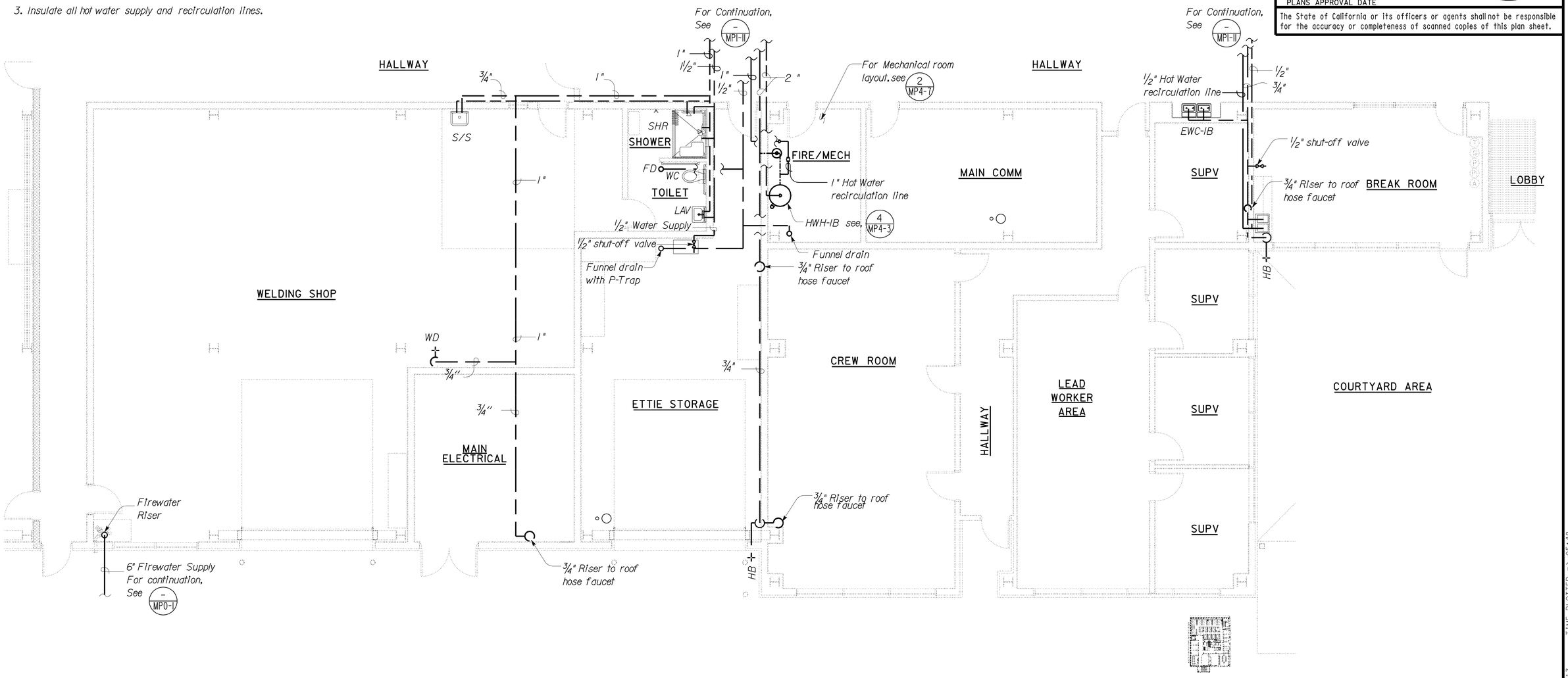

PARTIAL PLAN

SCALE : 3/16" = 1'-0"

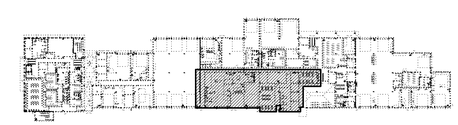

KEY PLAN

3 REVISED PER ADDENDUM No. 3 DATED JANUARY 4, 2013

THIS DRAWING ACCURATE FOR MECHANICAL WORK ONLY

	BY		CHECKED
DESIGN	Solomon Wong		Tom Hatam
DETAILS	Angela Chen		Tom Hatam
QUANTITIES	Solomon Wong		Tom Hatam

STATE OF CALIFORNIA DEPARTMENT OF TRANSPORTATION

DIVISION OF ENGINEERING SERVICES
ELECTRICAL-MECHANICAL-WATER AND WASTEWATER DESIGN

BRIDGE NO. 33M5785
POST MILE 2.2

SFOBB MAINTENANCE COMPLEX
BUILDING 1B — DOMESTIC WATER PLAN NO. 5

SHEET **MP1-12**

TAEMWW Imperial Rev. 7/10
FILE => mp1_12.dds
DATE PLOTTED => 03-JAN-2013 TIME PLOTTED => 05:48

ORIGINAL SCALE IN INCHES FOR REDUCED PLANS 0 1 2 3

UNIT 3615
PROJECT NUMBER & PHASE 04120006661
EA 014081

DISREGARD PRINTS BEARING EARLIER REVISION DATES → 05-08-12 05-25-12

REVISION DATES (PRELIMINARY STAGE ONLY) SHEET OF

USERNAME => s121614 DATE PLOTTED => 03-JAN-2013 TIME PLOTTED => 05:48

V|=|

DIST.	COUNTY	ROUTE	POST MILES TOTAL PROJECT	SHEET NO.	TOTAL SHEETS
04	Ala	80	2.2	577	800

CALIFORNIA STATE FIRE MARSHAL APPROVED
Approval of this plan does not authorize or approve any omission or deviation from applicable regulations. Final approval is subject to field inspection. One set of approved plans shall be available on the project site at all times.
Reviewed by: SPENCER MEYER
Approval date: 10-13-12

Solomon C. Wong 05-25-12
REGISTERED MECHANICAL ENGINEER DATE

REGISTERED PROFESSIONAL ENGINEER SOLOMON WONG No. M27626 Exp. 6-30-13 MECH STATE OF CALIFORNIA

10-22-12
PLANS APPROVAL DATE

The State of California or its officers or agents shall not be responsible for the accuracy or completeness of scanned copies of this plan sheet.

3

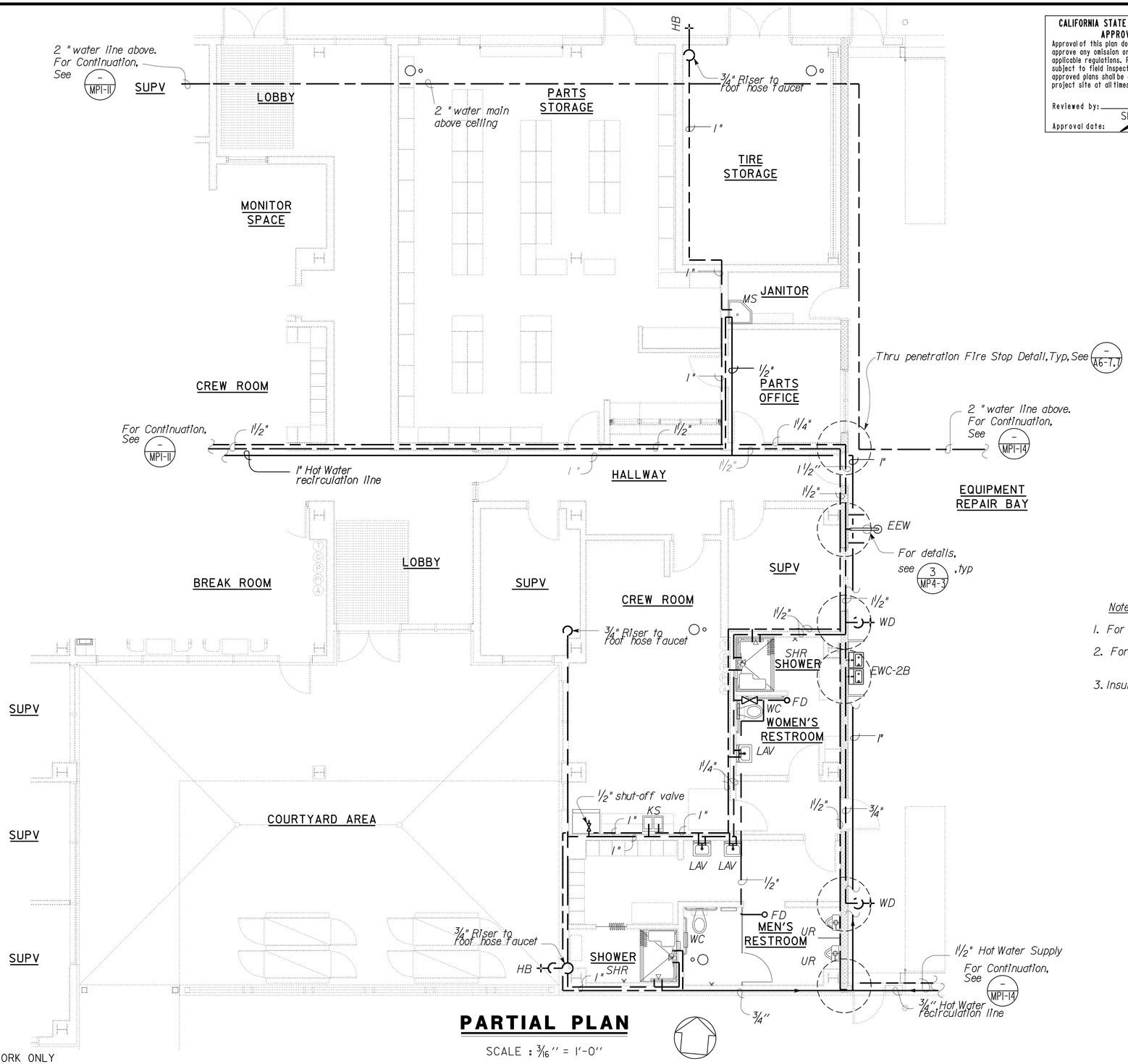

PARTIAL PLAN

SCALE : 3/16" = 1'-0"

Notes:

1. For nonpotable water supply to water closet and urinal, see MPI-17
2. For hose faucet on roof, see MPI-26
3. Insulate all hot water supply and recirculation lines.

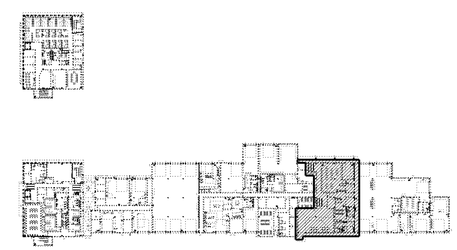

KEY PLAN

THIS DRAWING ACCURATE FOR MECHANICAL WORK ONLY

3 **REVISED PER ADDENDUM No. 3 DATED JANUARY 4, 2013**

	BY		CHECKED	
DESIGN	Solomon Wong		Tom Hatam	
DETAILS	Angela Chen		Tom Hatam	
QUANTITIES	Solomon Wong		Tom Hatam	

STATE OF CALIFORNIA DEPARTMENT OF TRANSPORTATION

DIVISION OF ENGINEERING SERVICES
ELECTRICAL-MECHANICAL-WATER AND WASTEWATER DESIGN

UNIT 3615
PROJECT NUMBER & PHASE 04120006661
EA 014081

BRIDGE NO. 33M5785
POST MILE 2.2

SFOBB MAINTENANCE COMPLEX
BUILDING 1B
DOMESTIC WATER PLAN NO. 6

SHEET **MP1-13**

TAEMWW Imperial Rev. 7/10
FILE => mp1_13.dgn
DATE PLOTTED => 03-JAN-2013 TIME PLOTTED => 05:56
ORIGINAL SCALE IN INCHES FOR REDUCED PLANS 0 1 2 3

DISREGARD PRINTS BEARING EARLIER REVISION DATES → 05-08-12 05-25-12
REVISION DATES (PRELIMINARY STAGE ONLY) SHEET OF

USERNAME => s121614 DATE PLOTTED => 03-JAN-2013 TIME PLOTTED => 05:56

VI=I

DIST.	COUNTY	ROUTE	POST MILES TOTAL PROJECT	SHEET NO.	TOTAL SHEETS
04	Ala	80	2.2	578	800

CALIFORNIA STATE FIRE MARSHAL APPROVED

Approval of this plan does not authorize or approve any omission or deviation from applicable regulations. Final approval is subject to field inspection. One set of approved plans shall be available on the project site at all times.

Reviewed by: SPENCER MEYER

Approval date: 12-13-12

Solomon C. Wong — 05-25-12
REGISTERED MECHANICAL ENGINEER — DATE

REGISTERED PROFESSIONAL ENGINEER — SOLOMON WONG — No. M27626 — Exp. 6-30-13 — MECH — STATE OF CALIFORNIA

10-22-12
PLANS APPROVAL DATE

The State of California or its officers or agents shall not be responsible for the accuracy or completeness of scanned copies of this plan sheet.

3

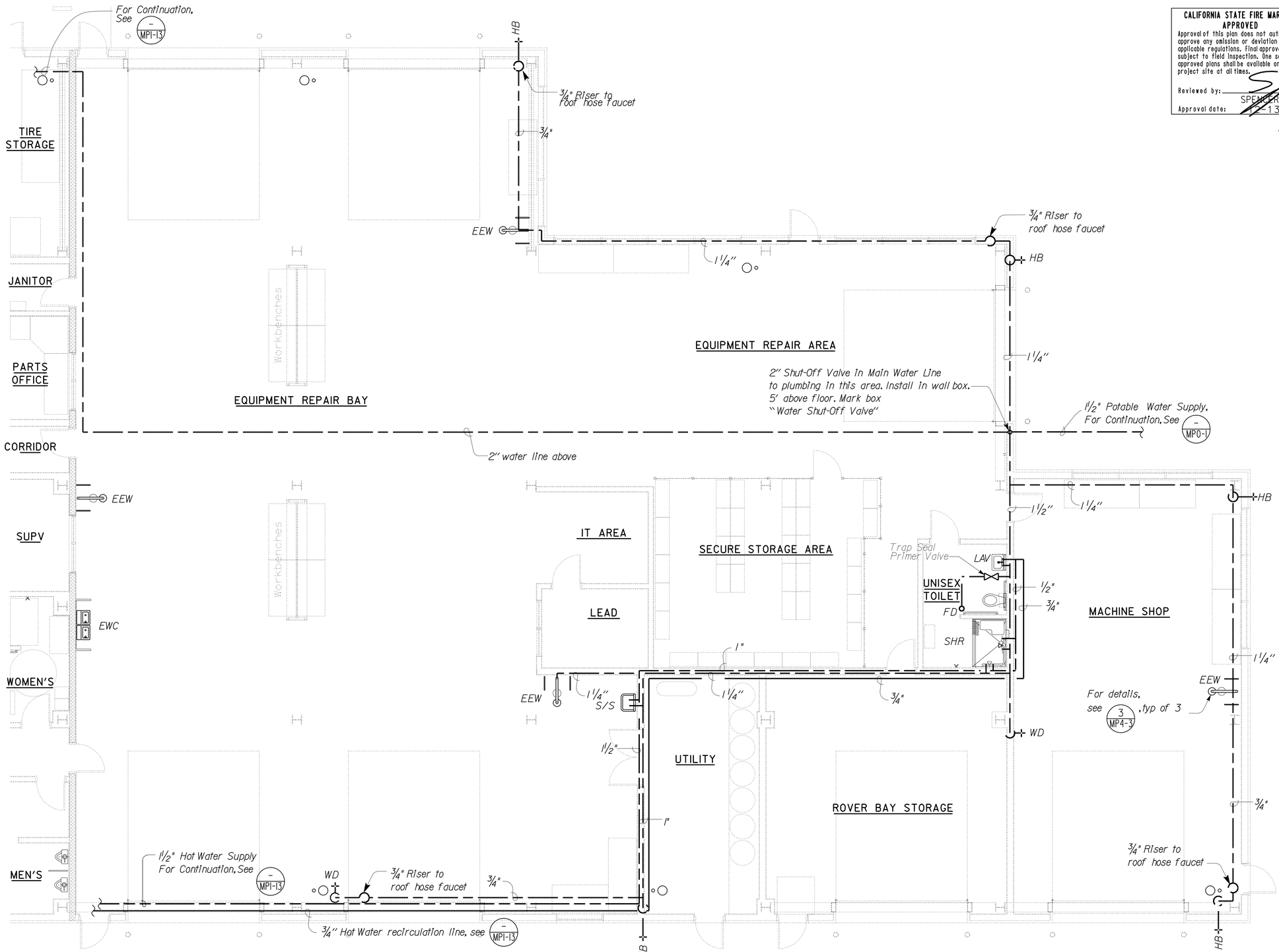

Notes:

1. For nonpotable water supply to water closet, see MP1-18
2. For hose faucet on roof, see MP1-26
3. Insulate all hot water supply and recirculation lines.

PARTIAL PLAN

SCALE : 3/16" = 1'-0"

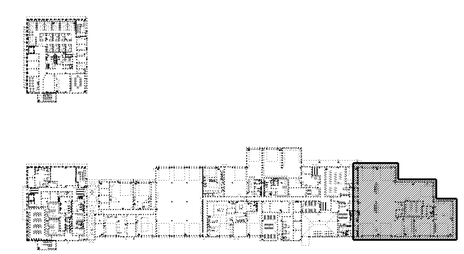

KEY PLAN

THIS DRAWING ACCURATE FOR MECHANICAL WORK ONLY

3 **REVISED PER ADDENDUM No. 3 DATED JANUARY 4, 2013**

DESIGN	BY Solomon Wong	CHECKED Tom Hatam	
DETAILS	BY Angela Chen	CHECKED Tom Hatam	
QUANTITIES	BY Solomon Wong	CHECKED Tom Hatam	

STATE OF CALIFORNIA DEPARTMENT OF TRANSPORTATION

DIVISION OF ENGINEERING SERVICES
ELECTRICAL-MECHANICAL-WATER AND WASTEWATER DESIGN

BRIDGE NO. 33M5785
POST MILE 2.2

SFOBB MAINTENANCE COMPLEX
BUILDING 1B — DOMESTIC WATER PLAN NO. 7

SHEET **MP1-14**

TAEMWW Imperial Rev. 7/10
FILE => mp1_14.dd
DATE PLOTTED => 03-JAN-2013 TIME PLOTTED => 06:02
ORIGINAL SCALE IN INCHES FOR REDUCED PLANS 0 1 2 3
UNIT 3615
PROJECT NUMBER & PHASE 04120006661
EA 014081
DISREGARD PRINTS BEARING EARLIER REVISION DATES
REVISION DATES (PRELIMINARY STAGE ONLY) 05-08-12 05-25-12
SHEET OF

USERNAME => s12614 DATE PLOTTED => 03-JAN-2013 TIME PLOTTED => 06:02

V|=|

DIST.	COUNTY	ROUTE	POST MILES TOTAL PROJECT	SHEET NO.	TOTAL SHEETS
04	Ala	80	2.2	583	800

Solomon C. Wong — 05-25-12
REGISTERED MECHANICAL ENGINEER — DATE

REGISTERED PROFESSIONAL ENGINEER
SOLOMON WONG
No. M27626
Exp. 6-30-13
MECH
STATE OF CALIFORNIA

10-22-12
PLANS APPROVAL DATE

The State of California or its officers or agents shall not be responsible for the accuracy or completeness of scanned copies of this plan sheet.

CALIFORNIA STATE FIRE MARSHAL APPROVED
Approval of this plan does not authorize or approve any omission or deviation from applicable regulations. Final approval is subject to field inspection. One set of approved plans shall be available on the project site at all times.
Reviewed by: SPENCER MEYER
Approval date: 12-13-12

3

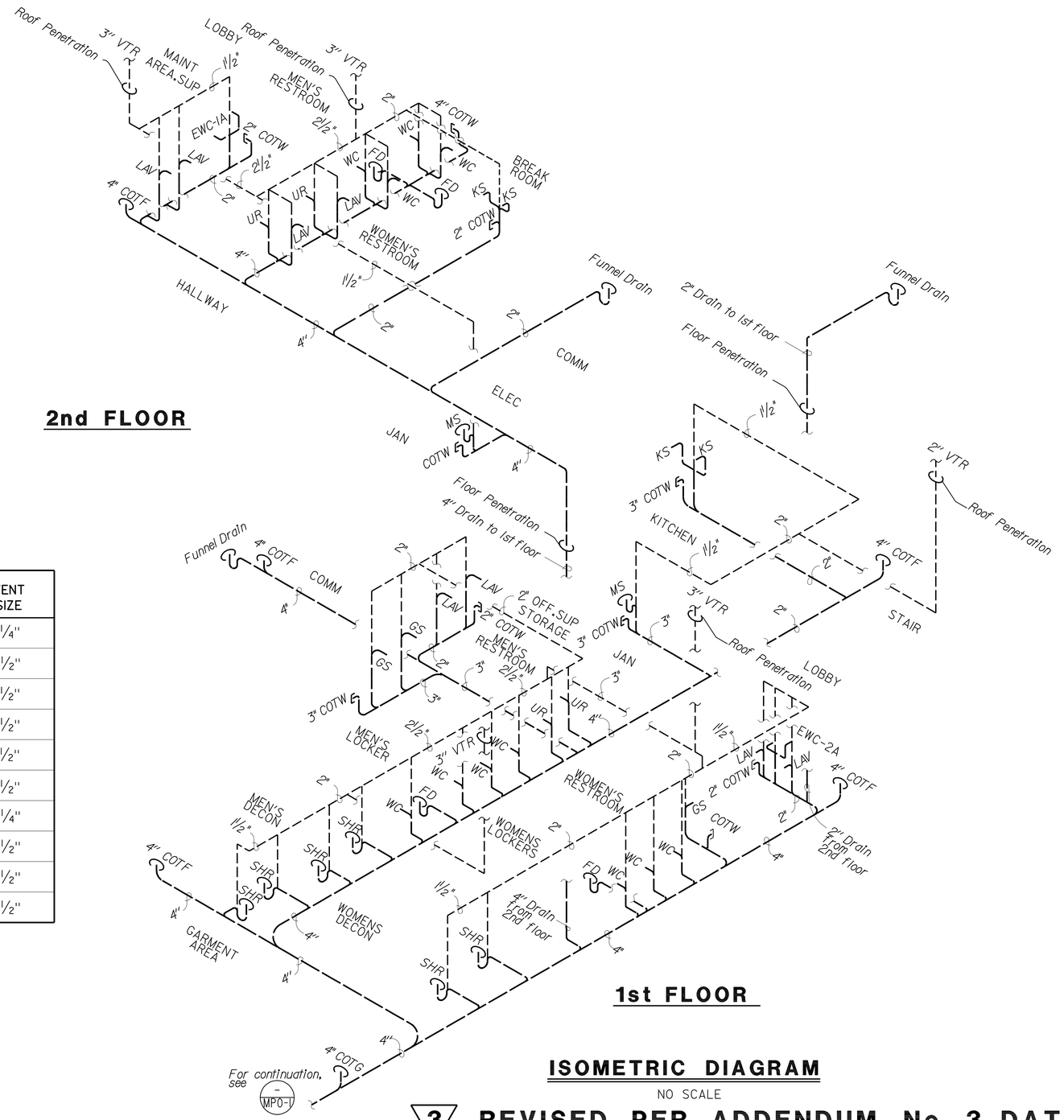

2nd FLOOR

1st FLOOR

ISOMETRIC DIAGRAM

NO SCALE

PLUMBING SCHEDULE

FIXTURE	DRAINAGE ROUGH-IN	TRAP SIZE	VENT SIZE
LAVATORY	2"	1¼"	1¼"
WATER CLOSET	3"	-	1½"
URINAL	2"	-	1½"
SHOWER	2"	2"	1½"
KITCHEN SINK	2"	1½"	1½"
FLOOR DRAIN	2"	2"	1½"
ELECTRIC WATER COOLER	2"	1¼"	1¼"
SERVICE SINK	3"	3"	1½"
MOP SINK	3"	3"	1½"
GANG SINK	2"	1½"	1½"

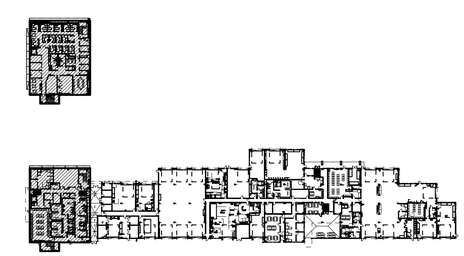

KEY PLAN

3 **REVISED PER ADDENDUM No. 3 DATED JANUARY 4, 2013**

THIS DRAWING ACCURATE FOR MECHANICAL WORK ONLY

	BY		CHECKED
DESIGN	Solomon Wong		Tom Hatam
DETAILS	Angela Chen		Tom Hatam
QUANTITIES	Solomon Wong		Tom Hatam

STATE OF CALIFORNIA
DEPARTMENT OF TRANSPORTATION

DIVISION OF ENGINEERING SERVICES
ELECTRICAL-MECHANICAL-WATER AND WASTEWATER DESIGN

BRIDGE NO. 33M5785
POST MILE 2.2

SFOBB MAINTENANCE COMPLEX
BUILDING 1A — SANITARY SEWER ISOMETRIC NO. 1

SHEET **MP1-19**

TAEMWW Imperial Rev. 7/10
FILE => mp1_19.add
DATE PLOTTED => 02-JAN-2013 TIME PLOTTED => 13:59

ORIGINAL SCALE IN INCHES FOR REDUCED PLANS 0 1 2 3

UNIT 3615
PROJECT NUMBER & PHASE 04120006661
EA 014081

DISREGARD PRINTS BEARING EARLIER REVISION DATES
REVISION DATES (PRELIMINARY STAGE ONLY) 05-08-12 05-25-12 12-01-12
SHEET OF

USERNAME => s135318 DATE PLOTTED => 02-JAN-2013 TIME PLOTTED => 13:59

V|=|

DIST.	COUNTY	ROUTE	POST MILES TOTAL PROJECT	SHEET NO.	TOTAL SHEETS
04	Ala	80	2.2	585	800

Solomon C. Wong — REGISTERED MECHANICAL ENGINEER — 05-25-12 DATE

REGISTERED PROFESSIONAL ENGINEER SOLOMON WONG No. M27626 Exp. 6-30-13 MECH STATE OF CALIFORNIA

10-22-12
PLANS APPROVAL DATE

The State of California or its officers or agents shall not be responsible for the accuracy or completeness of scanned copies of this plan sheet.

3

NOTE:

1. For detail layout of the hot water system in the Fire/Mechanical Room 203, see MP4-7 MP4-8

CALIFORNIA STATE FIRE MARSHAL APPROVED
Approval of this plan does not authorize or approve any omission or deviation from applicable regulations. Final approval is subject to field inspection. One set of approved plans shall be available on the project site at all times.
Reviewed by: SPENCER MEYER
Approval date: 12-13-12

PLUMBING SCHEDULE

FIXTURE	MINIMUM CONNECTIONS	
	COLD WATER	HOT WATER
LAVATORY	1/2"	1/2"
WATER CLOSET	1"	-
URINAL	1"	-
SHOWER	1/2"	1/2"
KITCHEN SINK	1/2"	1/2"
FLOOR DRAIN	1/2"	-
REFRIGERATOR	1/2"	-
ELECTRIC WATER COOLER	1/2"	-
SERVICE SINK	3/4"	3/4"
MOP SINK	3/4"	3/4"
WATER DROP	3/4"	-
HOSE BIBB	3/4"	-
HOT WATER HEATER	1"	1"
GANG SINK	3/4"	3/4"
EMERGENCY EYEWASH & SHOWER	1 1/4"	-

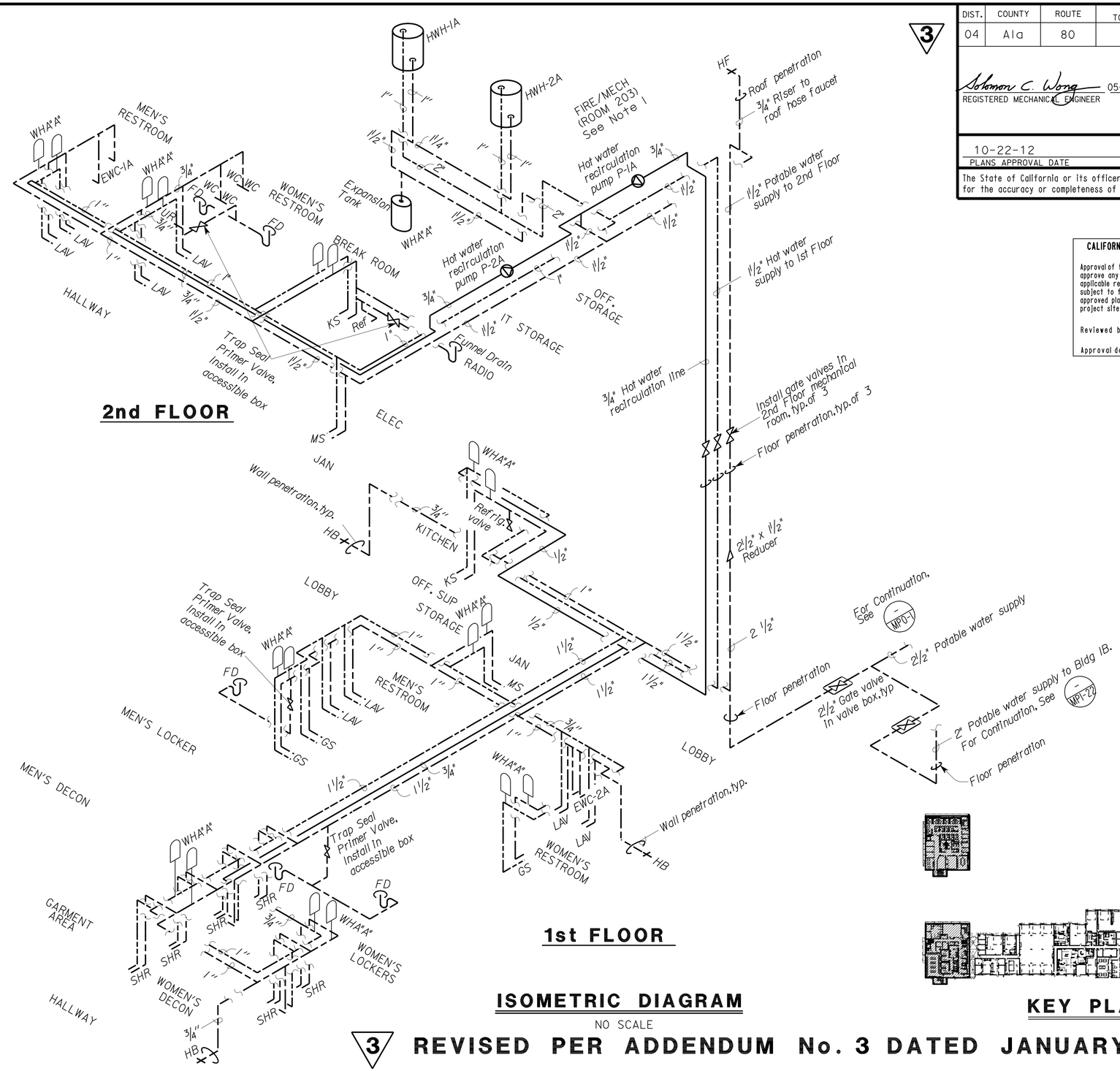

ISOMETRIC DIAGRAM

NO SCALE

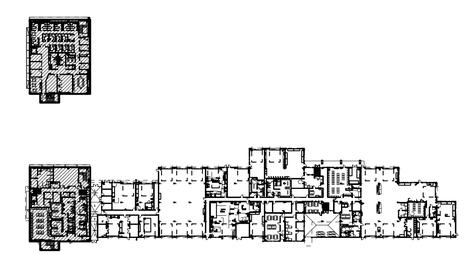

KEY PLAN

3 **REVISED PER ADDENDUM No. 3 DATED JANUARY 4, 2013**

THIS DRAWING ACCURATE FOR MECHANICAL WORK ONLY

	BY		CHECKED
DESIGN	Solomon Wong		Tom Hatam
DETAILS	Angela Chen		Tom Hatam
QUANTITIES	Solomon Wong		Tom Hatam

STATE OF CALIFORNIA DEPARTMENT OF TRANSPORTATION

DIVISION OF ENGINEERING SERVICES
ELECTRICAL-MECHANICAL-WATER AND WASTEWATER DESIGN

BRIDGE NO. 33M5785
POST MILE 2.2

SFOBB MAINTENANCE COMPLEX
BUILDING 1A — DOMESTIC WATER ISOMETRIC NO. 1

SHEET **MP1-21**

TAEMWW Imperial Rev. 7/10
FILE => mp1_21.dds
DATE PLOTTED => 02-JAN-2013 TIME PLOTTED => 13:59

ORIGINAL SCALE IN INCHES FOR REDUCED PLANS 0 1 2 3

UNIT 3615
PROJECT NUMBER & PHASE 04120006661
EA 014081

DISREGARD PRINTS BEARING EARLIER REVISION DATES → 05-08-12 05-25-12 12-01-12

REVISION DATES (PRELIMINARY STAGE ONLY) SHEET OF

USERNAME => s135318 DATE PLOTTED => 02-JAN-2013 TIME PLOTTED => 13:59

V|=|

DIST.	COUNTY	ROUTE	POST MILES TOTAL PROJECT	SHEET NO.	TOTAL SHEETS
04	Ala	80	2.2	586	800

Solomon C. Wong 05-25-12
REGISTERED MECHANICAL ENGINEER DATE

REGISTERED PROFESSIONAL ENGINEER SOLOMON WONG No. M27626 Exp. 6-30-13 MECH STATE OF CALIFORNIA

10-22-12
PLANS APPROVAL DATE

The State of California or its officers or agents shall not be responsible for the accuracy or completeness of scanned copies of this plan sheet.

CALIFORNIA STATE FIRE MARSHAL APPROVED
Approval of this plan does not authorize or approve any omission or deviation from applicable regulations. Final approval is subject to field inspection. One set of approved plans shall be available on the project site at all times.
Reviewed by: SPENCER MEYER
Approval date: 12-13-12

Note:

1. Shut-Off must be installed in an access box 5' from floor. Mark box "Water Shut-Off Valve.

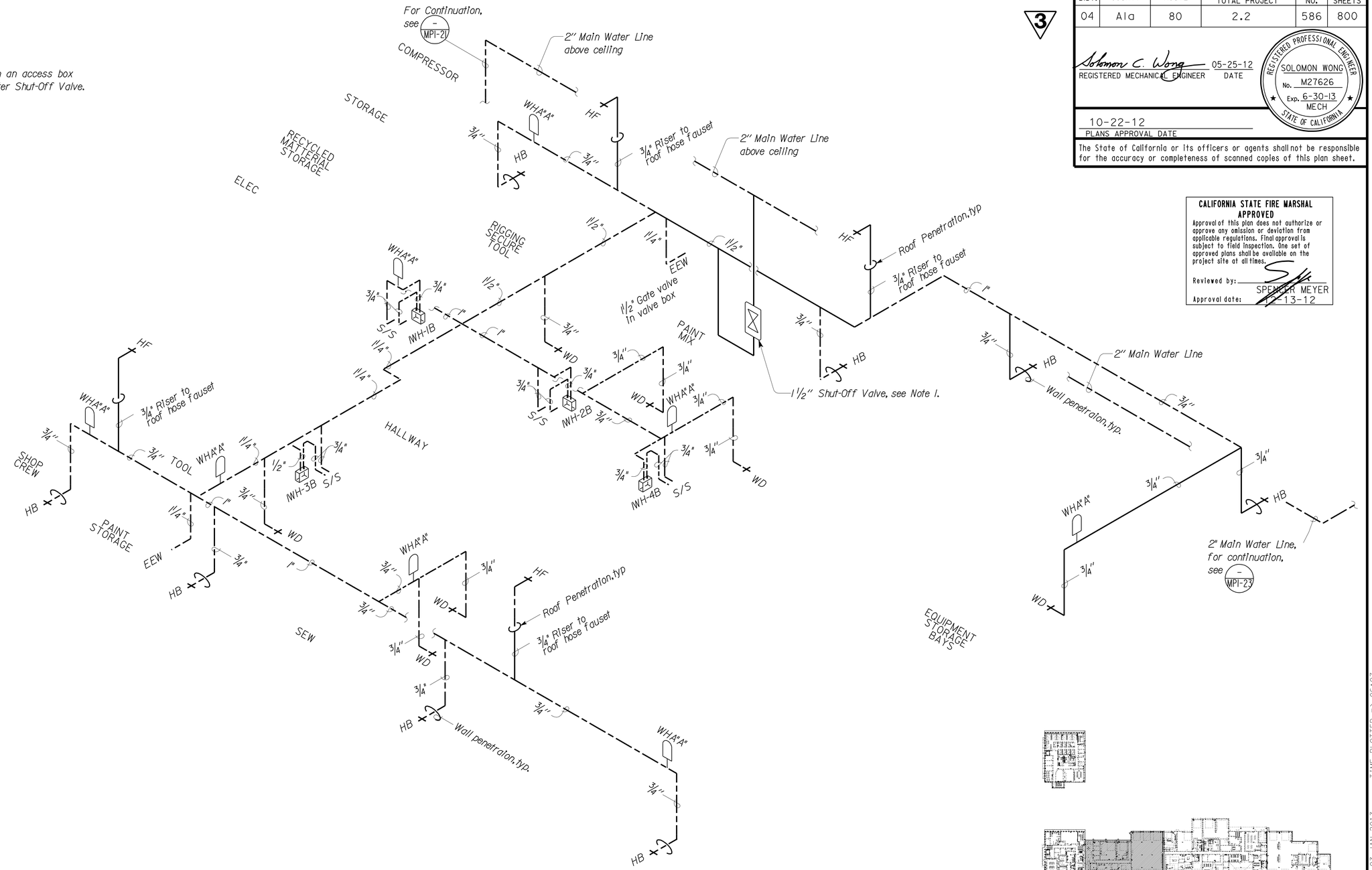

ISOMETRIC DIAGRAM

NO SCALE

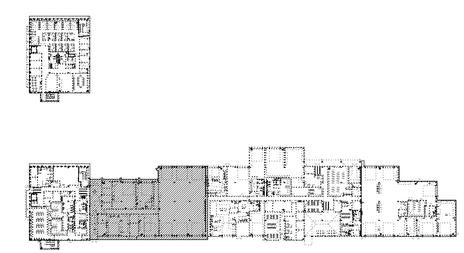

KEY PLAN

3 **REVISED PER ADDENDUM No. 3 DATED JANUARY 4, 2013**

THIS DRAWING ACCURATE FOR MECHANICAL WORK ONLY

	BY		CHECKED
DESIGN	Solomon Wong		Tom Hatam
DETAILS	Angela Chen		Tom Hatam
QUANTITIES	Solomon Wong		Tom Hatam

STATE OF CALIFORNIA DEPARTMENT OF TRANSPORTATION

DIVISION OF ENGINEERING SERVICES
ELECTRICAL-MECHANICAL-WATER AND WASTEWATER DESIGN

BRIDGE NO. 33M5785
POST MILE 2.2

SFOBB MAINTENANCE COMPLEX
BUILDING 1B
DOMESTIC WATER ISOMETRIC NO. 2

SHEET **MP1-22**

TAEMWW Imperial Rev. 7/10
FILE => mp1_22.dgn
DATE PLOTTED => 03-JAN-2013 TIME PLOTTED => 06:07
ORIGINAL SCALE IN INCHES FOR REDUCED PLANS 0 1 2 3
UNIT 3615
PROJECT NUMBER & PHASE 04120006661
EA 014081
DISREGARD PRINTS BEARING EARLIER REVISION DATES → 05-08-12 05-25-12
REVISION DATES (PRELIMINARY STAGE ONLY) SHEET OF

USERNAME => s12614 DATE PLOTTED => 03-JAN-2013 TIME PLOTTED => 06:07

V|=|

DIST.	COUNTY	ROUTE	POST MILES TOTAL PROJECT	SHEET NO.	TOTAL SHEETS
04	Ala	80	2.2	587	800

Solomon C. Wong 05-25-12
REGISTERED MECHANICAL ENGINEER DATE

REGISTERED PROFESSIONAL ENGINEER
SOLOMON WONG
No. M27626
Exp. 6-30-13
MECH
STATE OF CALIFORNIA

10-22-12
PLANS APPROVAL DATE

The State of California or its officers or agents shall not be responsible for the accuracy or completeness of scanned copies of this plan sheet.

CALIFORNIA STATE FIRE MARSHAL
APPROVED
Approval of this plan does not authorize or approve any omission or deviation from applicable regulations. Final approval is subject to field inspection. One set of approved plans shall be available on the project site at all times.
Reviewed by: SPENCER MEYER
Approval date: 12-13-12

3

Notes:

1. *For detail layout of the hot water system in the Fire/Mechanical Room 177, see MP4-7 and MP4-8*
2. *Shut-Off must be installed in an access box 5' from floor. Mark box "Water Shut-Off Valve".*

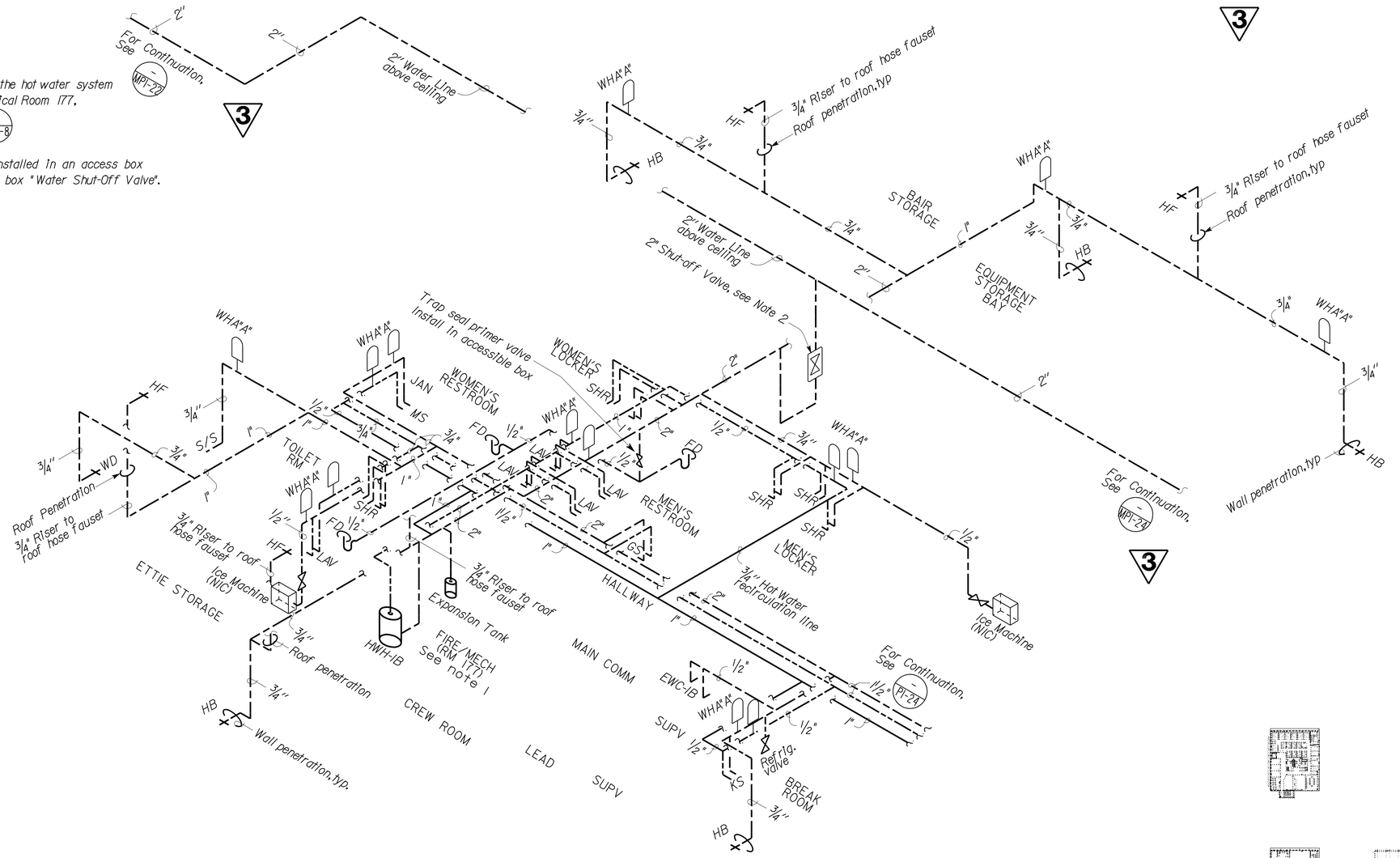

ISOMETRIC DIAGRAM

NO SCALE

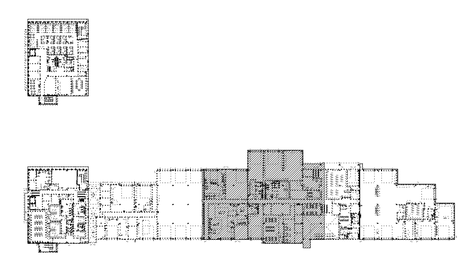

KEY PLAN

3 **REVISED PER ADDENDUM No. 3 DATED JANUARY 4, 2013**

THIS DRAWING ACCURATE FOR MECHANICAL WORK ONLY

DESIGN	BY Solomon Wong	CHECKED Tom Hatam	
DETAILS	BY Angela Chen	CHECKED Tom Hatam	
QUANTITIES	BY Solomon Wong	CHECKED Tom Hatam	

STATE OF CALIFORNIA
DEPARTMENT OF TRANSPORTATION

DIVISION OF ENGINEERING SERVICES
ELECTRICAL-MECHANICAL-WATER AND WASTEWATER DESIGN

BRIDGE NO. 33M5785
POST MILE 2.2

SFOBB MAINTENANCE COMPLEX
BUILDING 1B — DOMESTIC WATER ISOMETRIC NO. 3

SHEET **MP1-23**

TAEMWW Imperial Rev. 7/10
FILE => mp1_23.add
DATE PLOTTED => 03-JAN-2013 TIME PLOTTED => 13:41

ORIGINAL SCALE IN INCHES FOR REDUCED PLANS 0 1 2 3

UNIT 3615
PROJECT NUMBER & PHASE 04120006661
EA 014081

DISREGARD PRINTS BEARING EARLIER REVISION DATES → 05-08-12 05-25-12

REVISION DATES (PRELIMINARY STAGE ONLY) SHEET OF

USERNAME => s123631 DATE PLOTTED => 03-JAN-2013 TIME PLOTTED => 13:41

VI=1

DIST.	COUNTY	ROUTE	POST MILES TOTAL PROJECT	SHEET NO.	TOTAL SHEETS
04	Ala	80	2.2	588	800

CALIFORNIA STATE FIRE MARSHAL APPROVED
Approval of this plan does not authorize or approve any omission or deviation from applicable regulations. Final approval is subject to field inspection. One set of approved plans shall be available on the project site at all times.
Reviewed by: SPENCER MEYER
Approval date: 10-13-12

Solomon C. Wong — 05-25-12
REGISTERED MECHANICAL ENGINEER — DATE

REGISTERED PROFESSIONAL ENGINEER — SOLOMON WONG — No. M27626 — Exp. 6-30-13 — MECH — STATE OF CALIFORNIA

10-22-12
PLANS APPROVAL DATE

The State of California or its officers or agents shall not be responsible for the accuracy or completeness of scanned copies of this plan sheet.

3

Note:

1. Shut-Off must be installed in an access box 5' from floor. Mark box "Water Shut-Off Valve.

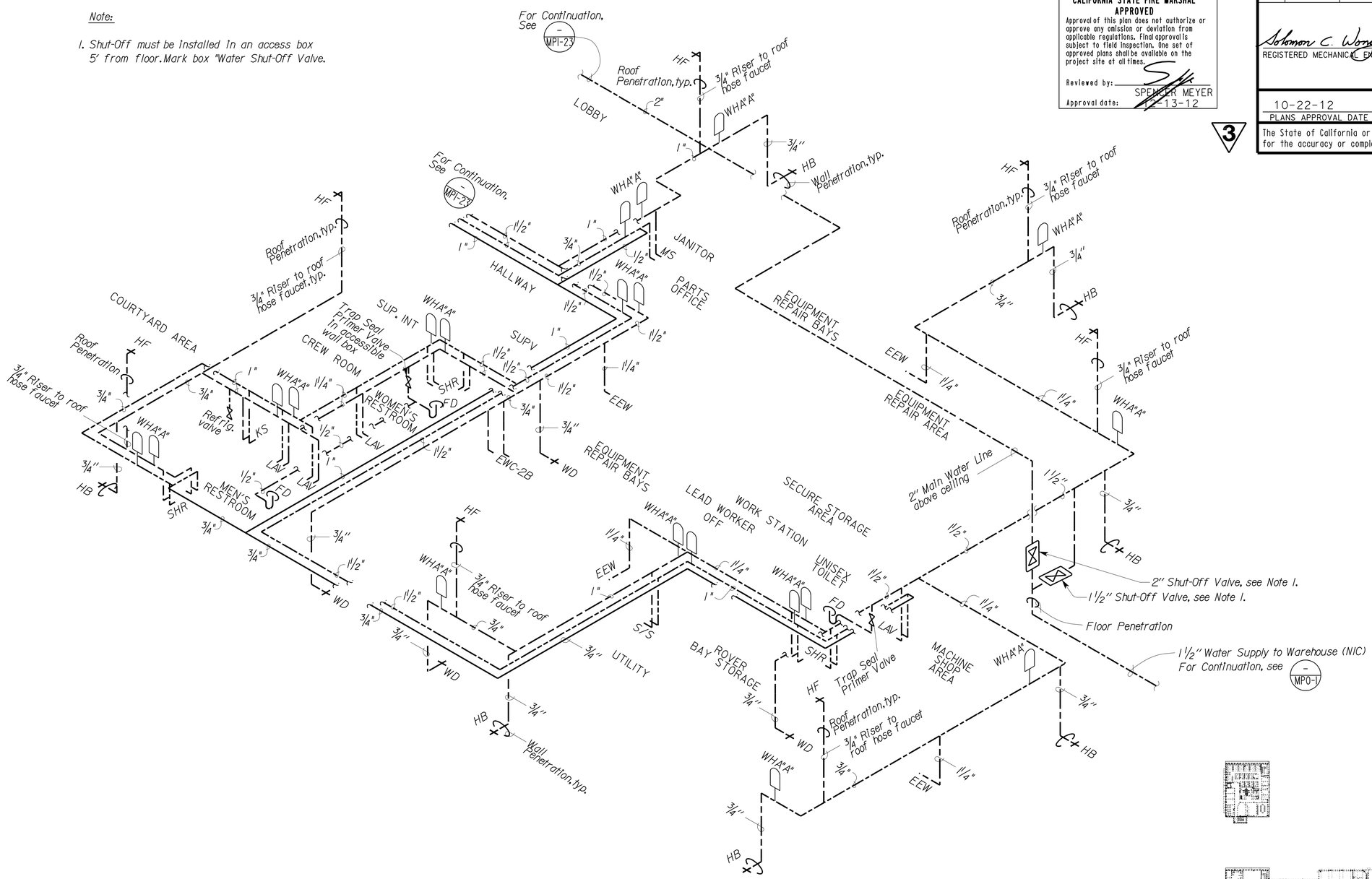

ISOMETRIC DIAGRAM

NO SCALE

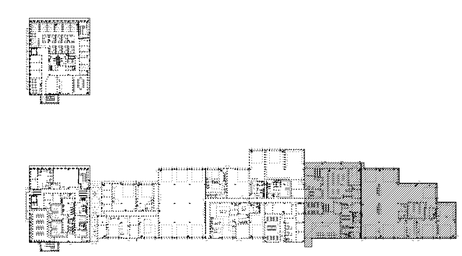

KEY PLAN

3 **REVISED PER ADDENDUM No. 3 DATED JANUARY 4, 2013**

THIS DRAWING ACCURATE FOR MECHANICAL WORK ONLY

	BY		CHECKED	
DESIGN	BY	Solomon Wong	CHECKED	Tom Hatam
DETAILS	BY	Angela Chen	CHECKED	Tom Hatam
QUANTITIES	BY	Solomon Wong	CHECKED	Tom Hatam

STATE OF CALIFORNIA DEPARTMENT OF TRANSPORTATION

DIVISION OF ENGINEERING SERVICES
ELECTRICAL-MECHANICAL-WATER AND WASTEWATER DESIGN

BRIDGE NO. 33M5785
POST MILE 2.2

SFOBB MAINTENANCE COMPLEX
BUILDING 1B — DOMESTIC WATER ISOMETRIC NO. 4

SHEET **MP1-24**

TAEMWW Imperial Rev. 7/10
FILE => mp1_24.add
DATE PLOTTED => 03-JAN-2013 TIME PLOTTED => 13:58
ORIGINAL SCALE IN INCHES FOR REDUCED PLANS 0 1 2 3
UNIT 3615
PROJECT NUMBER & PHASE 04120006661
EA 014081
DISREGARD PRINTS BEARING EARLIER REVISION DATES → 05-08-12 05-25-12
REVISION DATES (PRELIMINARY STAGE ONLY) SHEET OF

USERNAME => s123631 DATE PLOTTED => 03-JAN-2013 TIME PLOTTED => 13:58

V|=|

DIST.	COUNTY	ROUTE	POST MILES TOTAL PROJECT	SHEET NO.	TOTAL SHEETS
04	Ala	80	2.2	596	800

CALIFORNIA STATE FIRE MARSHAL APPROVED
Approval of this plan does not authorize or approve any omission or deviation from applicable regulations. Final approval is subject to field inspection. One set of approved plans shall be available on the project site at all times.
Reviewed by: SPENCER MEYER
Approval date: 12-13-12

REGISTERED MECHANICAL ENGINEER — DATE: 09-06-12
REGISTERED PROFESSIONAL ENGINEER — Jack Wheeler — No. 21648 — Exp. 6-30-13 — MECH — STATE OF CALIFORNIA

10-22-12
PLANS APPROVAL DATE

The State of California or its officers or agents shall not be responsible for the accuracy or completeness of scanned copies of this plan sheet.

3

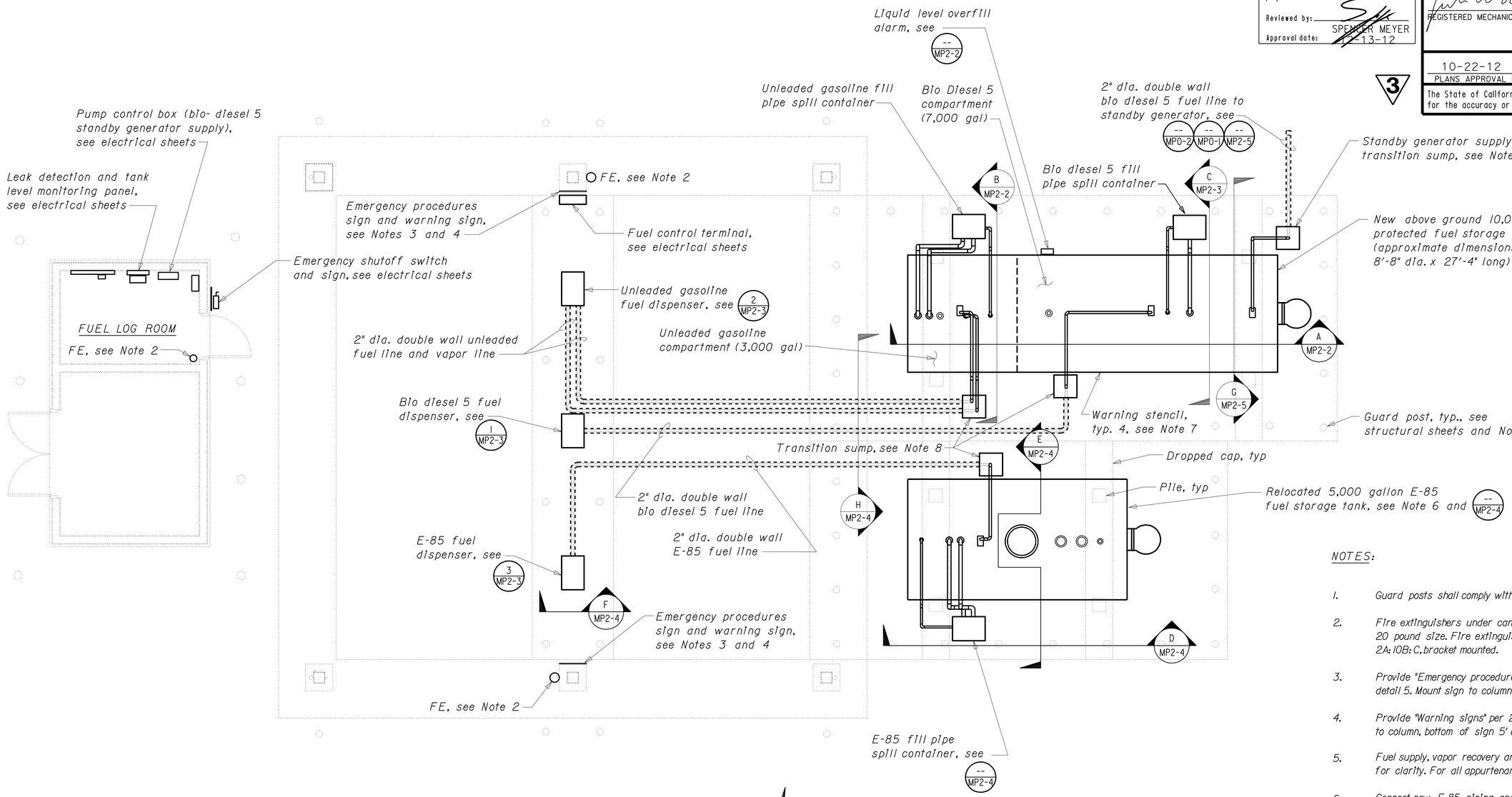

PLAN
1/4"=1'-0"

NOTES:

1. Guard posts shall comply with section 312 of the CFC.
2. Fire extinguishers under canopy shall be 40B:C, bracket mounted, 20 pound size. Fire extinguisher in fuel log building shall be 2A:10B:C, bracket mounted.
3. Provide "Emergency procedures signs" per 2010 CFC, see MP2-5, detail 5. Mount sign to column, bottom of sign 7' above finished slab.
4. Provide "Warning signs" per 2010 CFC, see MP2-5, detail 6. Mount sign to column, bottom of sign 5' above finished slab.
5. Fuel supply, vapor recovery and primary vent lines only shown for clarity. For all appurtenances, see sheets MP2-2 through MP2-5.
6. Connect new E-85 piping and fill pipe spill container to relocated E-85 fuel tank at (E) pipe flanges. Re- configure piping and provide new pipe and fittings as required.
7. On both sides and both ends, the fuel tank shall be stenciled with "NO SMOKING - FLAMMABLE LIQUID" in bold red 6" high letters.
8. A minimum of 1'-0" clearance shall be maintained between transition sumps and underground piping, and piles and dropped caps.

3 **REVISED PER ADDENDUM No. 3 DATED JANUARY 4, 2013**

THIS DRAWING ACCURATE FOR MECHANICAL WORK ONLY

	BY	CHECKED
DESIGN	Thomas Dietsch	Tom H. Hatam
DETAILS	Thomas Dietsch	Tom H. Hatam
QUANTITIES	Thomas Dietsch	Tom H. Hatam

STATE OF CALIFORNIA
DEPARTMENT OF TRANSPORTATION

DIVISION OF ENGINEERING SERVICES
ELECTRICAL-MECHANICAL-WATER AND WASTEWATER DESIGN

BRIDGE NO. 33M5785
POST MILE 2.2

SFOBB MAINTENANCE COMPLEX
FUEL ISLAND — FUEL ISLAND PLUMBING PLAN

SHEET **MP2-1**

TAEMWW Imperial Rev. 7/10
FILE => mp2_1.add
DATE PLOTTED => 02-JAN-2013 TIME PLOTTED => 14:01
ORIGINAL SCALE IN INCHES FOR REDUCED PLANS 0 1 2 3
UNIT 3615
PROJECT NUMBER & PHASE 04120006661
EA 014081
DISREGARD PRINTS BEARING EARLIER REVISION DATES
REVISION DATES (PRELIMINARY STAGE ONLY) 04-26-12 05-08-12 05-31-12
SHEET OF

USERNAME => s114326 DATE PLOTTED => 02-JAN-2013 TIME PLOTTED => 14:01

DIST.	COUNTY	ROUTE	POST MILES TOTAL PROJECT	SHEET NO.	TOTAL SHEETS
04	Ala	80	2.2	597	800

REGISTERED MECHANICAL ENGINEER — DATE 09-06-12

REGISTERED PROFESSIONAL ENGINEER — Jack Wheeler — No. 21648 — Exp. 6-30-13 — MECH — STATE OF CALIFORNIA

10-22-12
PLANS APPROVAL DATE

The State of California or its officers or agents shall not be responsible for the accuracy or completeness of scanned copies of this plan sheet.

CALIFORNIA STATE FIRE MARSHAL APPROVED
Approval of this plan does not authorize or approve any omission or deviation from applicable regulations. Final approval is subject to field inspection. One set of approved plans shall be available on the project site at all times.
Reviewed by: SPENCER MEYER
Approval date: 12-13-12

3

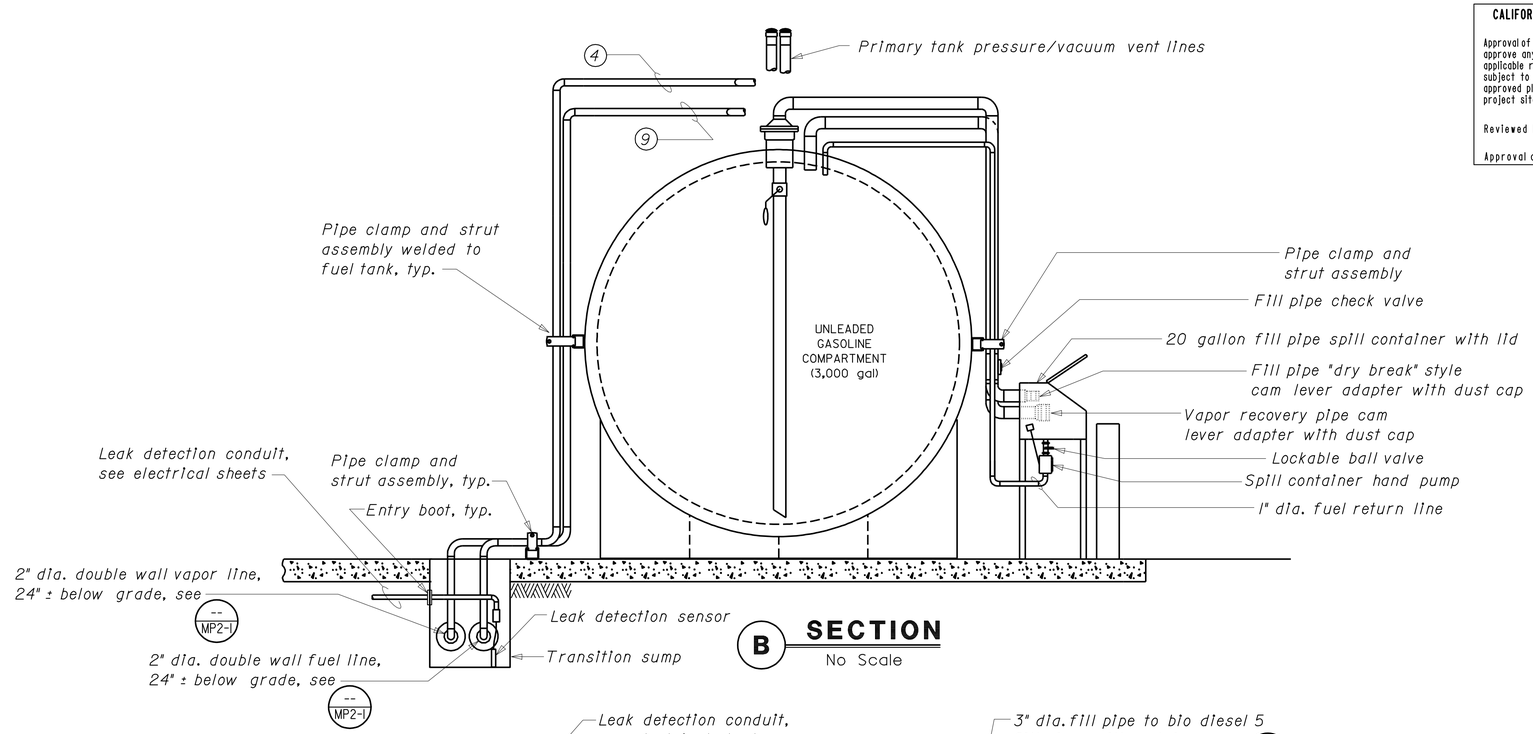

B SECTION
No Scale

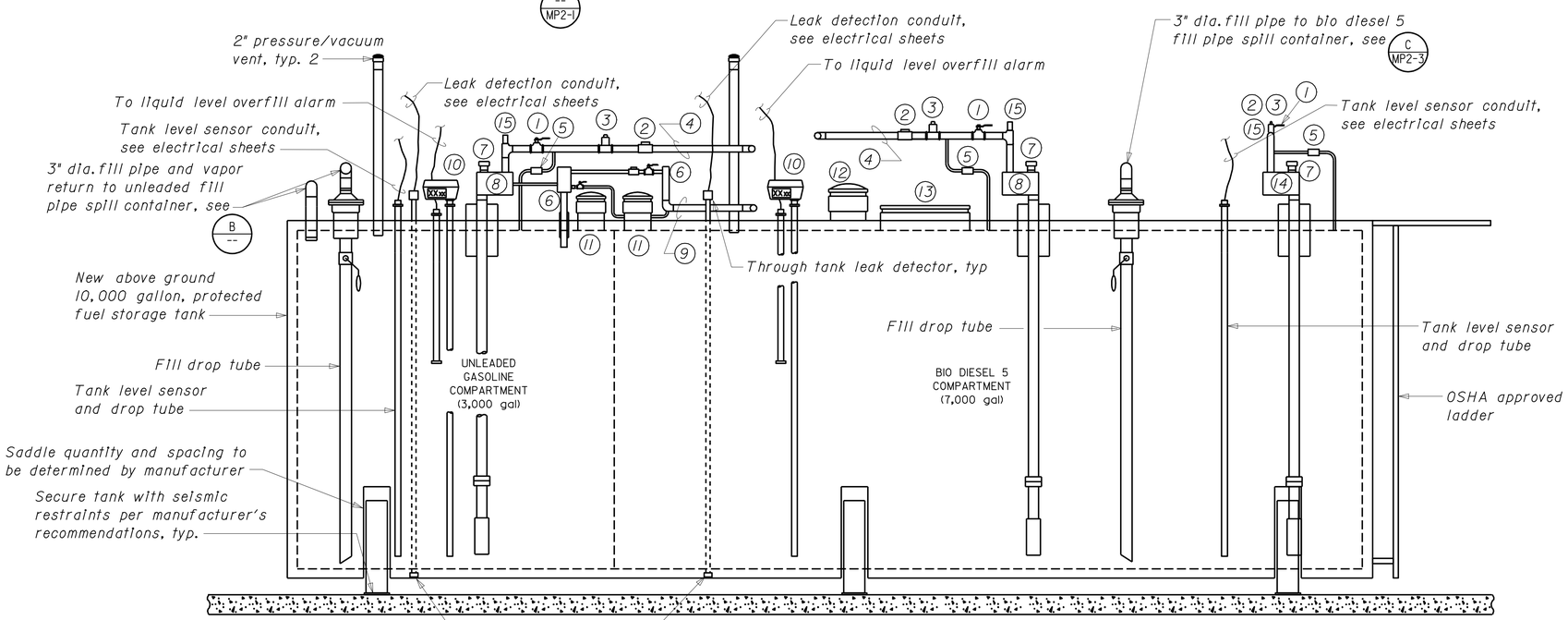

A SECTION
No Scale

NOTE: Transition sumps and fill pipe spill containers not shown for clarity.

EQUIPMENT:

Aboveground storage tank (protected) - 10,000 gallon, dual compartment (unleaded gasoline and bio diesel 5), secondary containment type tank

Unleaded gasoline fuel dispenser, 120 V
Unleaded gasoline fuel pump (submersible) - ¾ hp, 208 V - 1 Phase
Unleaded gasoline fill pipe spill container, 20 gallon

Bio diesel 5 fuel dispenser, 120 V
Bio diesel 5 fuel pump (submersible) - ¾ hp, 208 V - 1 Phase
Bio diesel 5 fill pipe spill container, 20 gallon

Standby generator bio diesel 5 fuel pump (submersible) and control box, ¾ hp, 208 V - 1 Phase

APPURTENANCES:

1. Ball Valve
2. External Emergency Shutoff Valve
3. Solenoid Valve
4. Product Supply Line to Dispenser
5. Expansion Relief Valve
6. Central Vacuum Pump/Vapor Recovery System
7. Mechanical Leak Detector
8. Submersible Pump and Controls
9. Vapor Recovery Line to Dispenser
10. Tank Level Gauge and Drop Tube (display toward spill containers)
11. Primary Tank Emergency Vent
12. Secondary Containment Emergency Vent
13. 24" dia. manway
14. Submersible pump and control box
15. Anti-siphon valve

3 **REVISED PER ADDENDUM No. 3 DATED JANUARY 4, 2013**

THIS DRAWING ACCURATE FOR MECHANICAL WORK ONLY

DESIGN	BY Thomas Dietsch	CHECKED Tom H. Hatam	
DETAILS	BY Thomas Dietsch	CHECKED Tom H. Hatam	
QUANTITIES	BY Thomas Dietsch	CHECKED Tom H. Hatam	

STATE OF CALIFORNIA
DEPARTMENT OF TRANSPORTATION

DIVISION OF ENGINEERING SERVICES
ELECTRICAL-MECHANICAL-WATER AND WASTEWATER DESIGN

BRIDGE NO. 33M5785
POST MILE 2.2

SFOBB MAINTENANCE COMPLEX
FUEL ISLAND — FUEL TANK SECTIONS AND DETAILS

SHEET **MP2-2**

TAEMWW Imperial Rev. 7/10
FILE => mp2_2.add
DATE PLOTTED => 02-JAN-2013 TIME PLOTTED => 14:01
ORIGINAL SCALE IN INCHES FOR REDUCED PLANS 0 1 2 3
UNIT 3615
PROJECT NUMBER & PHASE 04120006661
EA 014081
DISREGARD PRINTS BEARING EARLIER REVISION DATES
REVISION DATES (PRELIMINARY STAGE ONLY) 04-26-12 05-08-12 05-31-12
SHEET OF

USERNAME => s114926 DATE PLOTTED => 02-JAN-2013 TIME PLOTTED => 14:01

DIST.	COUNTY	ROUTE	POST MILES TOTAL PROJECT	SHEET NO.	TOTAL SHEETS
04	Ala	80	2.2	598	800

CALIFORNIA STATE FIRE MARSHAL APPROVED
Approval of this plan does not authorize or approve any omission or deviation from applicable regulations. Final approval is subject to field inspection. One set of approved plans shall be available on the project site at all times.
Reviewed by: SPENCER MEYER
Approval date: 10-13-12

REGISTERED MECHANICAL ENGINEER — 09-06-12 DATE
REGISTERED PROFESSIONAL ENGINEER — Jack Wheeler — No. 21648 — Exp. 6-30-13 — MECH — STATE OF CALIFORNIA

10-22-12
PLANS APPROVAL DATE

The State of California or its officers or agents shall not be responsible for the accuracy or completeness of scanned copies of this plan sheet.

3

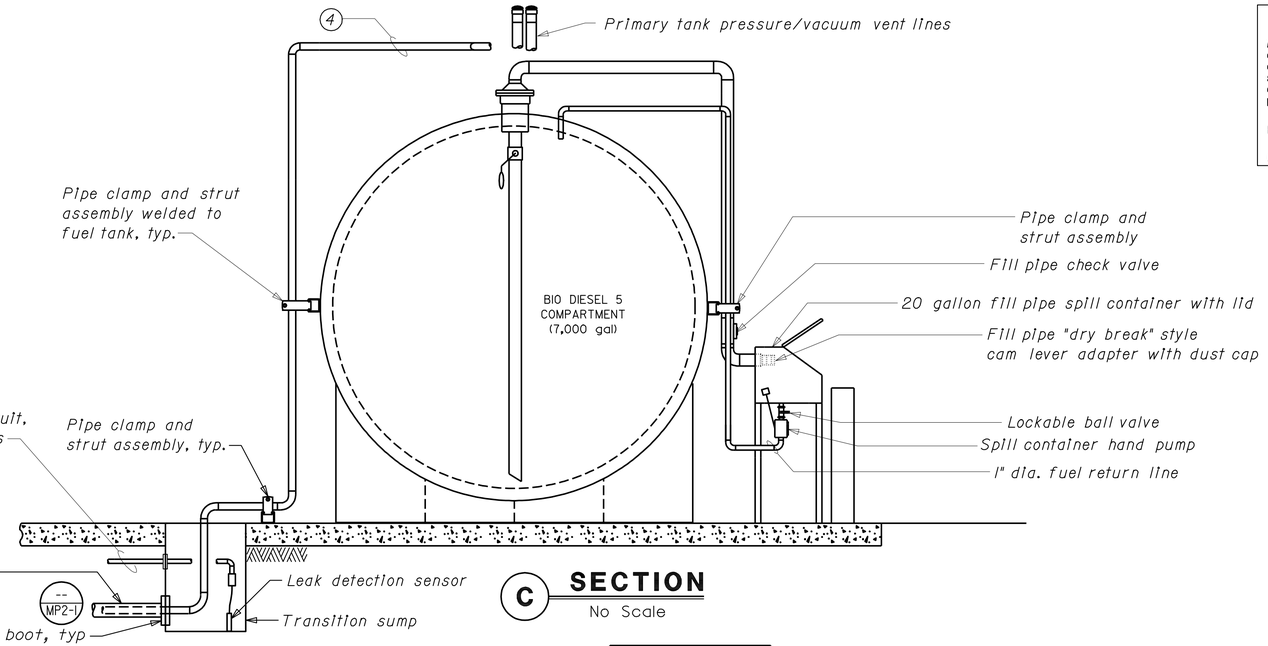

C **SECTION**
No Scale

APPURTENANCES

4 Product Supply Line to Dispenser

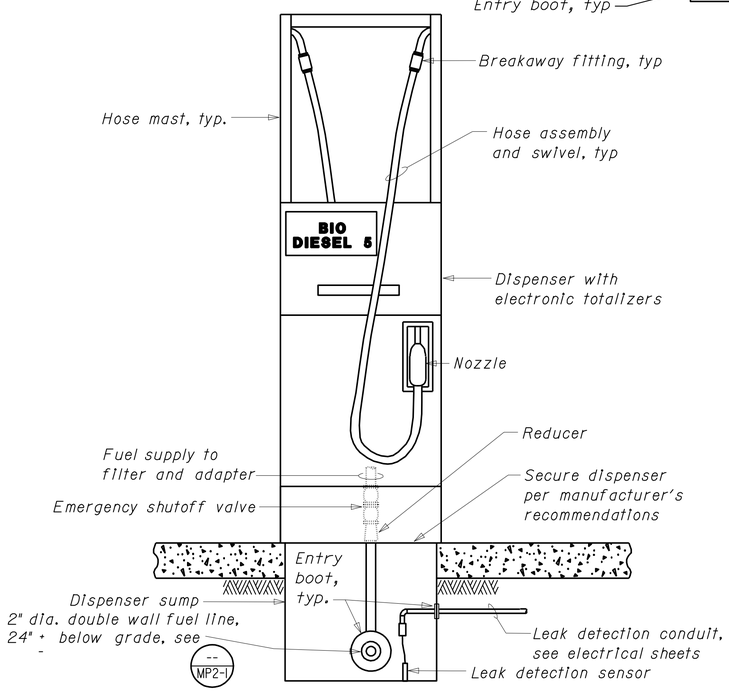

1 **BIO DIESEL 5 FUEL DISPENSER**
No Scale

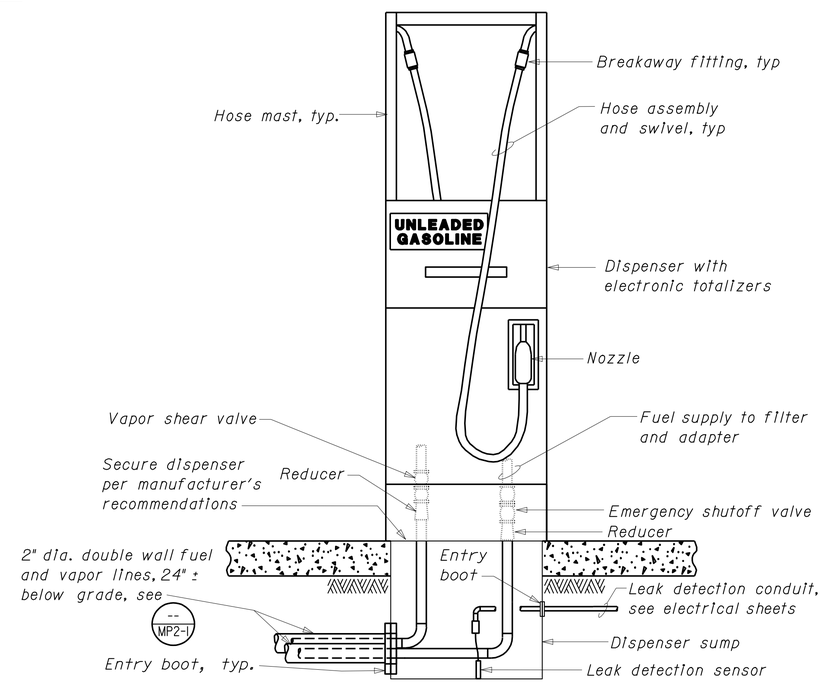

2 **UNLEADED GASOLINE FUEL DISPENSER**
No Scale

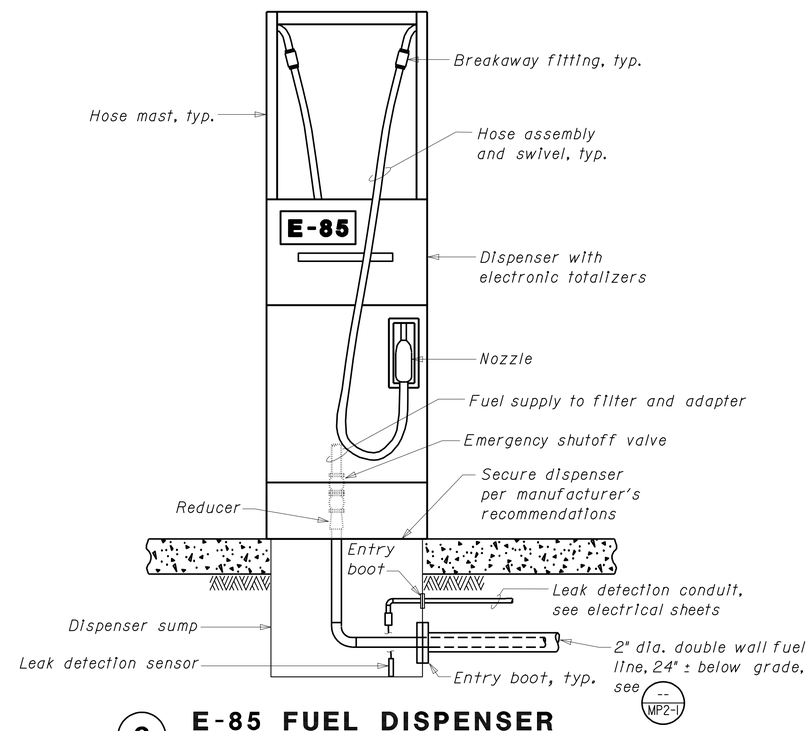

3 **E-85 FUEL DISPENSER**
No Scale

3 REVISED PER ADDENDUM No. 3 DATED JANUARY 4, 2013

THIS DRAWING ACCURATE FOR MECHANICAL WORK ONLY

	BY	CHECKED
DESIGN	Thomas Dietsch	Tom H. Hatam
DETAILS	Thomas Dietsch	Tom H. Hatam
QUANTITIES	Thomas Dietsch	Tom H. Hatam

STATE OF CALIFORNIA
DEPARTMENT OF TRANSPORTATION

DIVISION OF ENGINEERING SERVICES
ELECTRICAL-MECHANICAL-WATER AND WASTEWATER DESIGN

BRIDGE NO. 33M5785
POST MILE 2.2

SFOBB MAINTENANCE COMPLEX
FUEL ISLAND — FILL PIPE AND DISPENSER DETAILS

SHEET **MP2-3**

TAEMWW Imperial Rev. 7/10
FILE => mp2_3.add
DATE PLOTTED => 02-JAN-2013 TIME PLOTTED => 14:01
ORIGINAL SCALE IN INCHES FOR REDUCED PLANS 0 1 2 3
UNIT 3615
PROJECT NUMBER & PHASE 04120006661
EA 014081
DISREGARD PRINTS BEARING EARLIER REVISION DATES → 04-26-12 05-08-12 05-31-12
REVISION DATES (PRELIMINARY STAGE ONLY) SHEET OF

USERNAME => s117606 DATE PLOTTED => 02-JAN-2013 TIME PLOTTED => 14:01
VI=I

DIST.	COUNTY	ROUTE	POST MILES TOTAL PROJECT	SHEET NO.	TOTAL SHEETS
04	Ala	80	2.2	599	800

REGISTERED MECHANICAL ENGINEER 09-06-12 DATE

REGISTERED PROFESSIONAL ENGINEER Jack Wheeler No. 21648 Exp. 6-30-13 MECH STATE OF CALIFORNIA

10-22-12
PLANS APPROVAL DATE

The State of California or its officers or agents shall not be responsible for the accuracy or completeness of scanned copies of this plan sheet.

CALIFORNIA STATE FIRE MARSHAL APPROVED
Approval of this plan does not authorize or approve any omission or deviation from applicable regulations. Final approval is subject to field inspection. One set of approved plans shall be available on the project site at all times.
Reviewed by: SPENCER MEYER
Approval date: 12-13-12

3

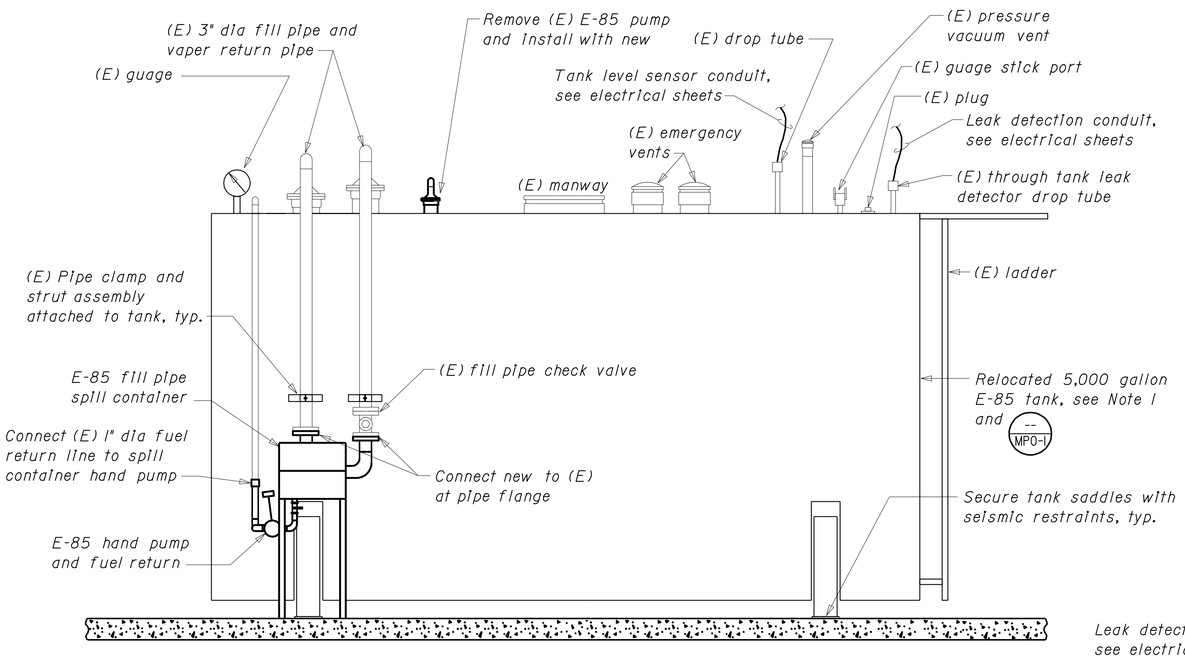

D ELEVATION
No Scale

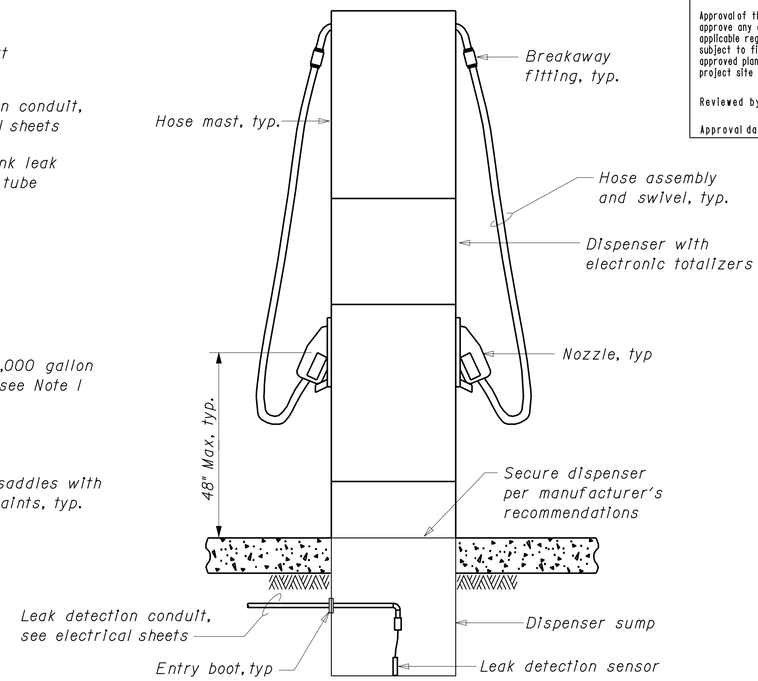

F SECTION
No Scale

Typ. of 3 dispensers, fuel piping not shown

EQUIPMENT

E-85 fuel dispenser, 120 V
E-85 fuel pump (submersible) - ¾ hp, 208 V - 1 Phase
E-85 fill pipe spill container, 20 gallon

NOTES

1. Contractor shall verify all controlling field dimensions before relocating E-85 fuel tank, and before installing new E-85 dispenser, fill pipe spill container, and all other piping and appurtenances.

APPURTENANCES

1. Ball Valve
2. External Emergency Shutoff Valve
3. Solenoid Valve
4. Product Supply Line
5. Expansion Relief Valve
7. Mechanical Leak Detector
14. Submersible Pump and Controls
15. Anti-siphon Valve

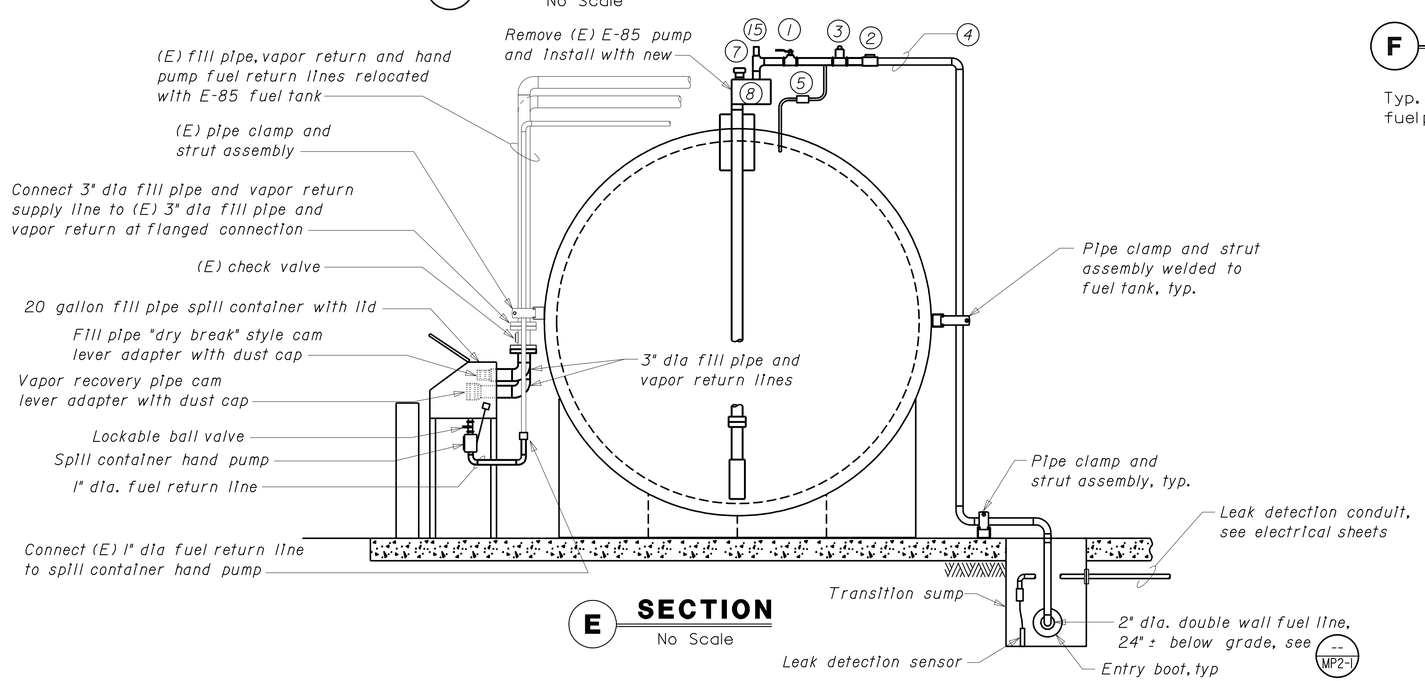

E SECTION
No Scale

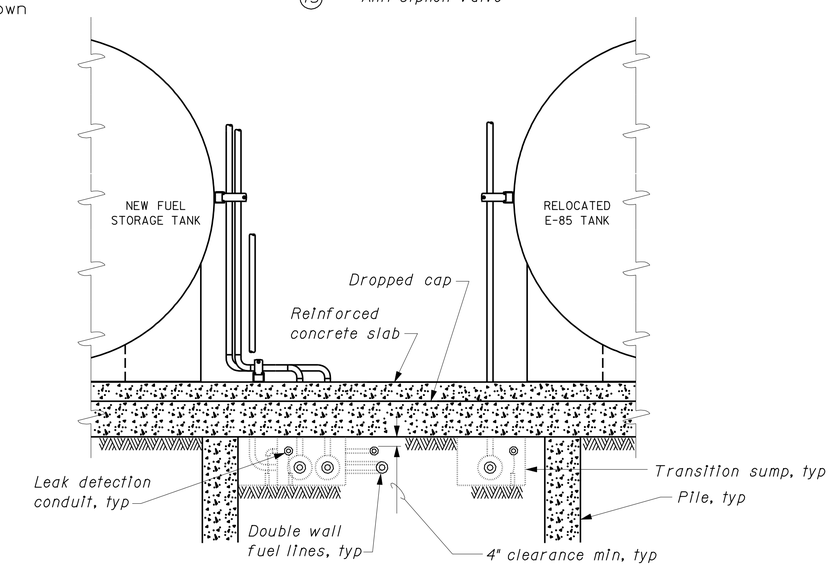

H SECTION
No Scale

3 **REVISED PER ADDENDUM No. 3 DATED JANUARY 4, 2013**

THIS DRAWING ACCURATE FOR MECHANICAL WORK ONLY

	BY	CHECKED
DESIGN	Thomas Dietsch	Tom H. Hatam
DETAILS	Thomas Dietsch	Tom H. Hatam
QUANTITIES	Thomas Dietsch	Tom H. Hatam

STATE OF CALIFORNIA DEPARTMENT OF TRANSPORTATION

DIVISION OF ENGINEERING SERVICES
ELECTRICAL-MECHANICAL-WATER AND WASTEWATER DESIGN

BRIDGE NO. 33M5785
POST MILE 2.2

SFOBB MAINTENANCE COMPLEX
FUEL ISLAND
RELOCATED E-85 TANK AND DETAILS

SHEET **MP2-4**

TAEMWW Imperial Rev. 7/10
FILE => mp2_4.add
DATE PLOTTED => 02-JAN-2013 TIME PLOTTED => 14:01

ORIGINAL SCALE IN INCHES FOR REDUCED PLANS 0 1 2 3

UNIT 3615
PROJECT NUMBER & PHASE 04120006661
EA 014081

DISREGARD PRINTS BEARING EARLIER REVISION DATES → 04-26-12 05-08-12 05-31-12

REVISION DATES (PRELIMINARY STAGE ONLY) SHEET OF

USERNAME => s117606 DATE PLOTTED => 02-JAN-2013 TIME PLOTTED => 14:01

VI=1

DIST.	COUNTY	ROUTE	POST MILES TOTAL PROJECT	SHEET NO.	TOTAL SHEETS
04	Ala	80	2.2	600	800

CALIFORNIA STATE FIRE MARSHAL APPROVED
Approval of this plan does not authorize or approve any omission or deviation from applicable regulations. Final approval is subject to field inspection. One set of approved plans shall be available on the project site at all times.
Reviewed by: SPENCER MEYER
Approval date: 10-13-12

REGISTERED MECHANICAL ENGINEER — DATE: 09-06-12
REGISTERED PROFESSIONAL ENGINEER — Jack Wheeler — No. 21648 — Exp. 6-30-13 — MECH — STATE OF CALIFORNIA

10-22-12
PLANS APPROVAL DATE

The State of California or its officers or agents shall not be responsible for the accuracy or completeness of scanned copies of this plan sheet.

3

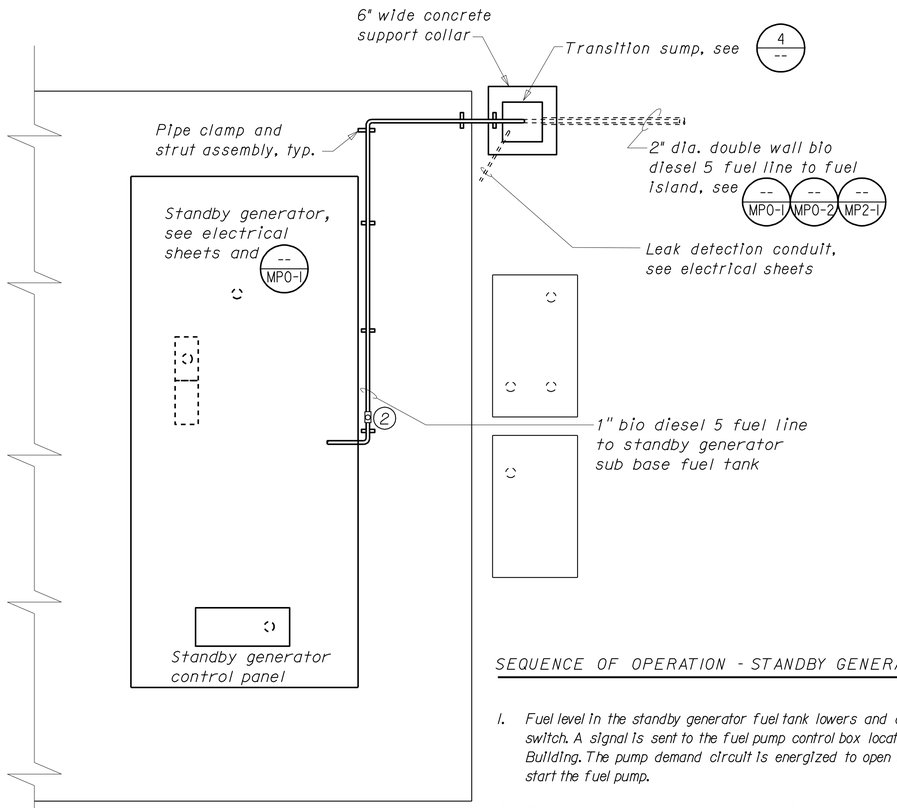

PARTIAL PLAN
3/8"=1'-0"

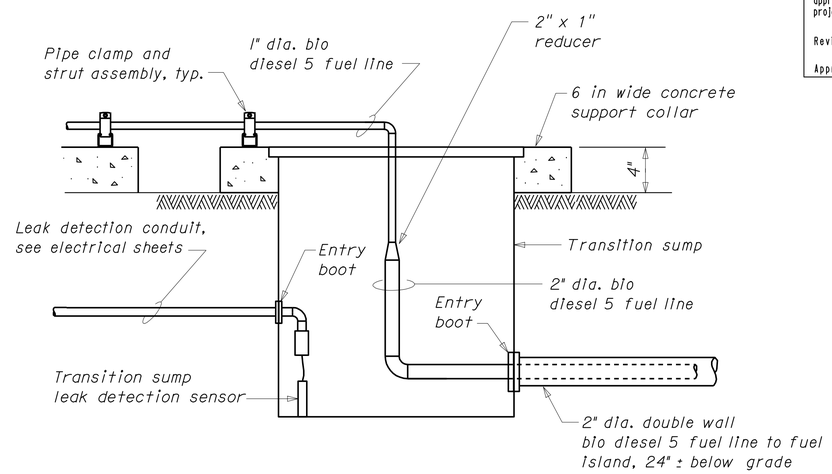

4 TRANSITION SUMP
No Scale

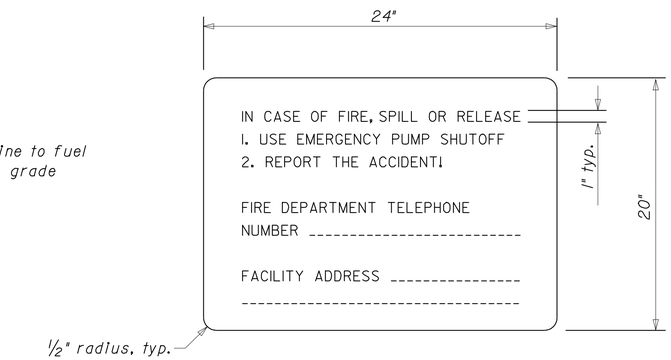

5 EMERGENCY PROCEDURES SIGN
No Scale

SEQUENCE OF OPERATION - STANDBY GENERATOR TANK RE-FUELING

1. Fuel level in the standby generator fuel tank lowers and closes the float switch. A signal is sent to the fuel pump control box located in the Fuel Log Building. The pump demand circuit is energized to open the solenoid valve and start the fuel pump.
2. Once the standby generator fuel tank is full, the float switch opens and de-energizes the control box circuit. The pump demand circuit is de-energized. The fuel pump stops and the solenoid valve is closed.

APPURTENANCES

1. Ball Valve
2. External Emergency Shutoff Valve
3. Solenoid Valve
4. Product Supply Line
5. Expansion Relief Valve
7. Mechanical Leak Detector
14. Submersible Pump with Control Box
15. Anti-siphon Valve

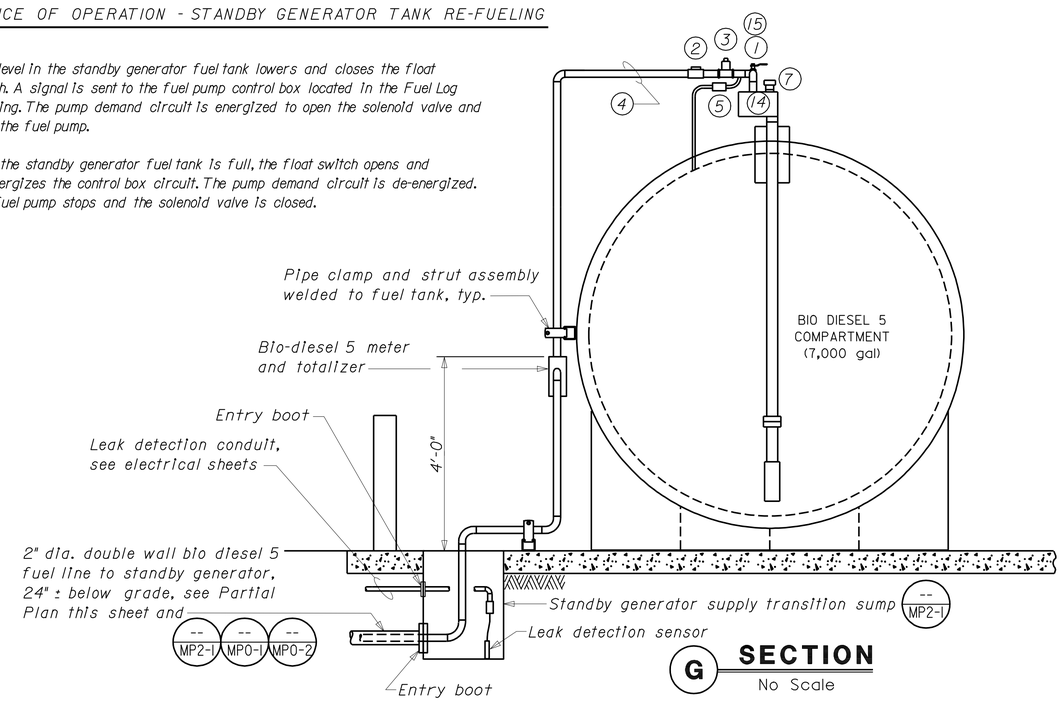

G SECTION
No Scale

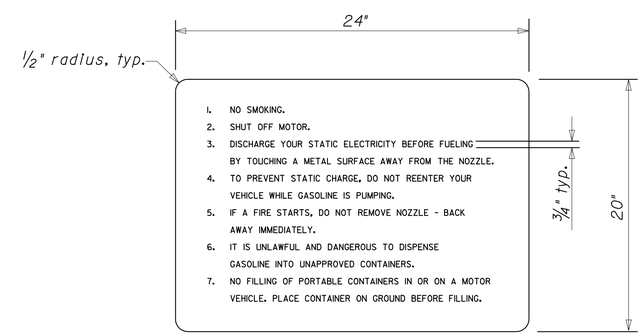

6 WARNING SIGN
No Scale

3 **REVISED PER ADDENDUM No. 3 DATED JANUARY 4, 2013**

THIS DRAWING ACCURATE FOR MECHANICAL WORK ONLY

	BY	CHECKED
DESIGN	Thomas Dietsch	Tom H. Hatam
DETAILS	Thomas Dietsch	Tom H. Hatam
QUANTITIES	Thomas Dietsch	Tom H. Hatam

STATE OF CALIFORNIA
DEPARTMENT OF TRANSPORTATION

DIVISION OF ENGINEERING SERVICES
ELECTRICAL-MECHANICAL-WATER AND WASTEWATER DESIGN

BRIDGE NO. 33M5785
POST MILE 2.2

SFOBB MAINTENANCE COMPLEX
FUEL ISLAND — STANDBY GENERATOR REFUELING DETAILS

SHEET **MP2-5**

TAEMWW Imperial Rev. 7/10
FILE => mp2_5.add
DATE PLOTTED => 02-JAN-2013 TIME PLOTTED => 14:01
ORIGINAL SCALE IN INCHES FOR REDUCED PLANS 0 1 2 3
UNIT 3615
PROJECT NUMBER & PHASE 04120006661
EA 014081
DISREGARD PRINTS BEARING EARLIER REVISION DATES
REVISION DATES (PRELIMINARY STAGE ONLY) 04-26-12 05-08-12 05-31-12
SHEET OF

USERNAME => s117606 DATE PLOTTED => 02-JAN-2013 TIME PLOTTED => 14:01

V1=1

DIST.	COUNTY	ROUTE	POST MILES TOTAL PROJECT	SHEET NO.	TOTAL SHEETS
04	Ala	80	2.2	610A	800

Solomon C. Wong — REGISTERED MECHANICAL ENGINEER — 05-25-12 DATE

REGISTERED PROFESSIONAL ENGINEER — SOLOMON WONG — No. M27626 — Exp. 6-30-13 — MECH — STATE OF CALIFORNIA

10-22-12
PLANS APPROVAL DATE

The State of California or its officers or agents shall not be responsible for the accuracy or completeness of scanned copies of this plan sheet.

CALIFORNIA STATE FIRE MARSHAL APPROVED
Approval of this plan does not authorize or approve any omission or deviation from applicable regulations. Final approval is subject to field inspection. One set of approved plans shall be available on the project site at all times.
Reviewed by: SPENCER MEYER
Approval date: 12-13-12

3

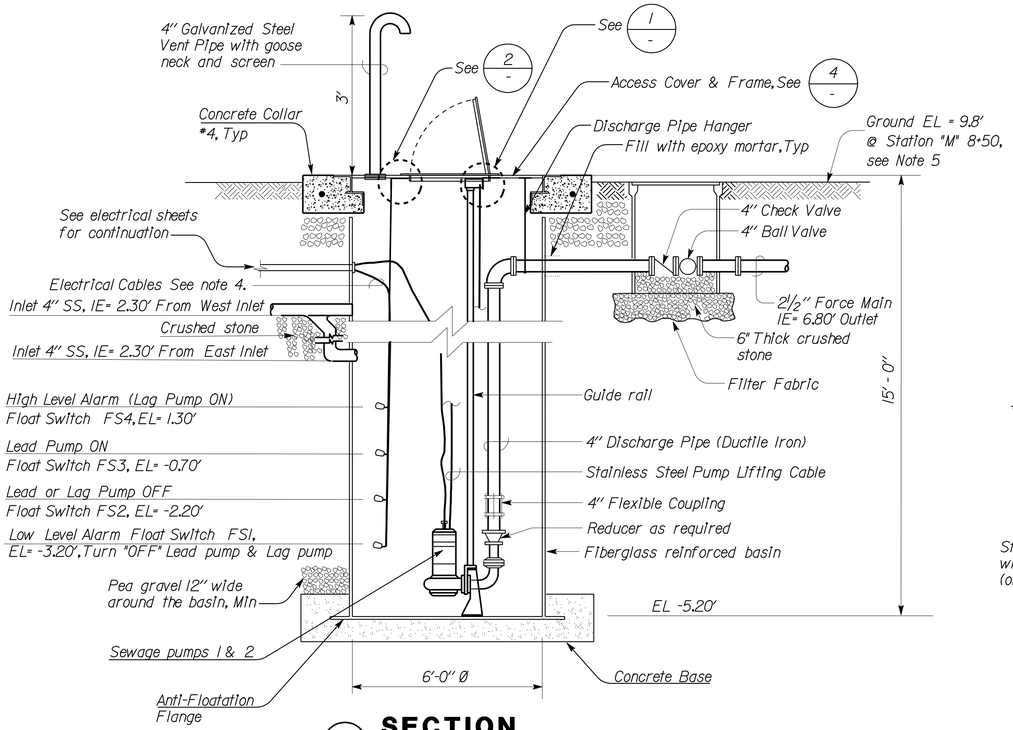

A SECTION
NO SCALE

EQUIPMENT SCHEDULE FOR SEWAGE PUMPS					
EQUIPMENT	PUMPING RATE (GPM)	TOTAL DYNAMIC HEAD (FT)	HP	VOLTS	PHASE
SEWAGE PUMP (NO.1 & 2)	40 50 60	80 60 40	3	208	3

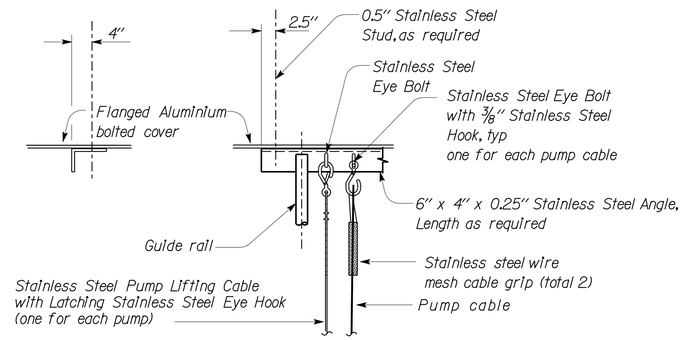

1 SECTION
NO SCALE

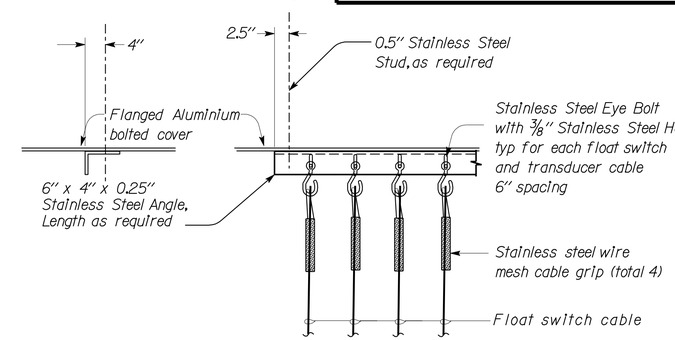

2 SECTION
NO SCALE

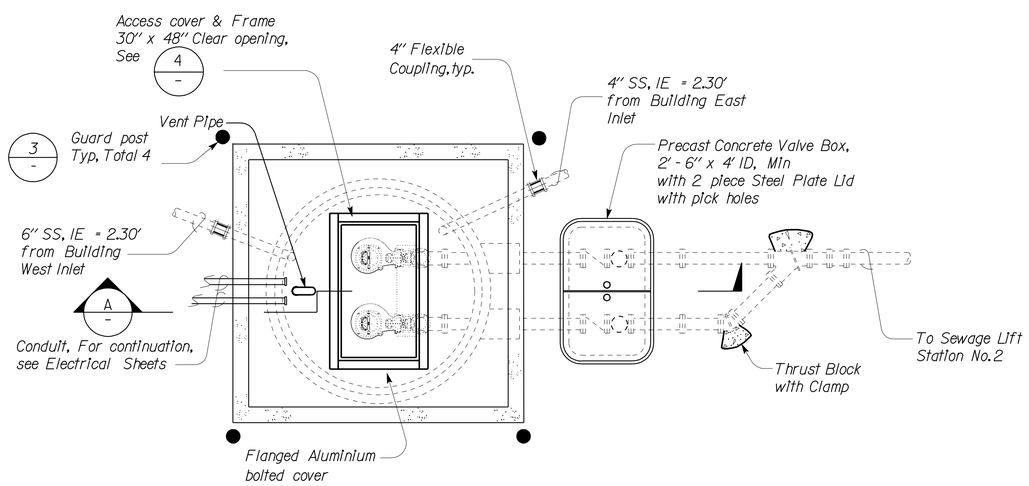

SEWAGE LIFT STATION NO. 1 PLAN
NO SCALE

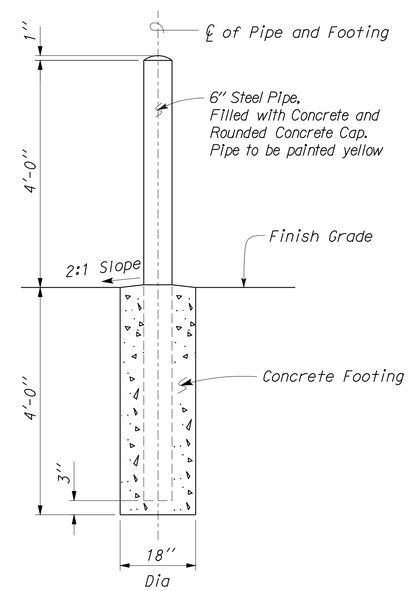

3 GUARD POST DETAIL
NO SCALE

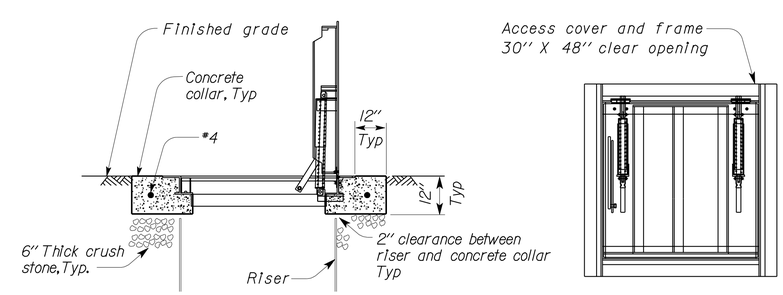

SECTION **PLAN**

4 ACCESS COVER AND FRAME DETAIL
NO SCALE

Notes:

1. For inlet, outlet and installation location, see sheets MP0-1 and MP0-2.
2. Discharge pipe hanger must be stainless steel and attached as per manufacturers recommendation.
3. All fastener to aluminium and fiberglass must be devices with stainless steel threaded stud, hex nut and flat washer. Size as required.
4. Cable length must be continuous from motor, level transducer and floats to controls without splices.
5. Contractor shall field verify all elevations.

3 **ADDED PER ADDENDUM No. 3 DATED JANUARY 4, 2013**

THIS DRAWING ACCURATE FOR MECHANICAL WORK ONLY

	BY		CHECKED	
DESIGN	BY	Solomon Wong	CHECKED	Tom Dietsch
DETAILS	BY	Angela Chen	CHECKED	Tom Dietsch
QUANTITIES	BY	Solomon Wong	CHECKED	Tom Dietsch

STATE OF CALIFORNIA
DEPARTMENT OF TRANSPORTATION

DIVISION OF ENGINEERING SERVICES
ELECTRICAL-MECHANICAL-WATER AND WASTEWATER DESIGN

BRIDGE NO. 33M5785
POST MILE 2.2

SFOBB MAINTENANCE COMPLEX
SEWAGE LIFT STATION No. 1

SHEET **MP4-11**

TAEMWW Imperial Rev. 7/10
FILE => mp4_11.dgn
DATE PLOTTED => 02-JAN-2013 TIME PLOTTED => 15:39
ORIGINAL SCALE IN INCHES FOR REDUCED PLANS 0 1 2 3
UNIT 3615
PROJECT NUMBER & PHASE 04120006661
EA 014081
DISREGARD PRINTS BEARING EARLIER REVISION DATES 12-01-12
REVISION DATES (PRELIMINARY STAGE ONLY) SHEET OF

USERNAME => s117606 DATE PLOTTED => 02-JAN-2013 TIME PLOTTED => 15:39

VI=1

DIST.	COUNTY	ROUTE	POST MILES TOTAL PROJECT	SHEET NO.	TOTAL SHEETS
04	Ala	80	2.2	610B	800

Solomon C. Wong 05-25-12
REGISTERED MECHANICAL ENGINEER DATE

REGISTERED PROFESSIONAL ENGINEER SOLOMON WONG No. M27626 Exp. 6-30-13 MECH STATE OF CALIFORNIA

10-22-12
PLANS APPROVAL DATE

The State of California or its officers or agents shall not be responsible for the accuracy or completeness of scanned copies of this plan sheet.

CALIFORNIA STATE FIRE MARSHAL APPROVED
Approval of this plan does not authorize or approve any omission or deviation from applicable regulations. Final approval is subject to field inspection. One set of approved plans shall be available on the project site at all times.
Reviewed by: SPENCER MEYER
Approval date: 12-13-12

3

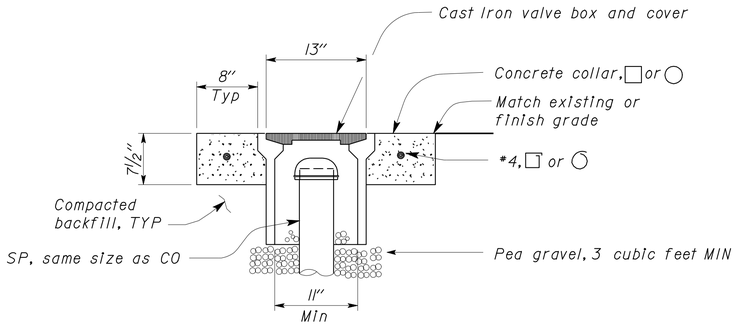

A COTG ACCESS BOX

NO SCALE

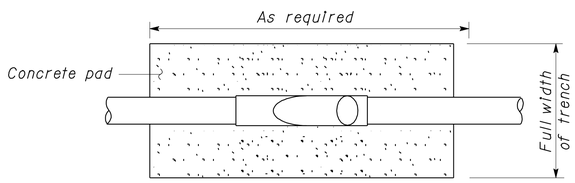

VIEW A-A

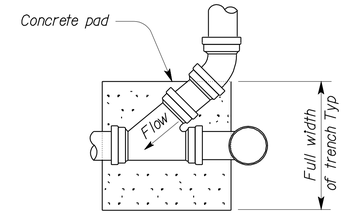

PLAN

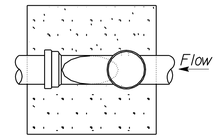

PLAN

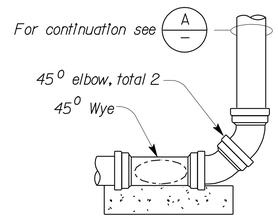

ELEVATION
CLEANOUT (AT BEND)

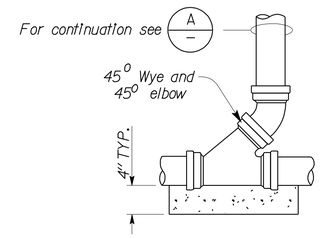

ELEVATION
CLEANOUT (STANDARD)

1 CLEANOUT TO GRADE

NO SCALE

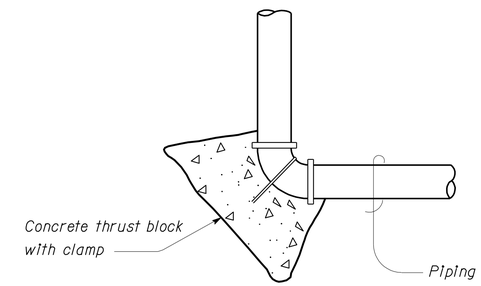

4 THRUST BLOCK DETAIL

NO SCALE

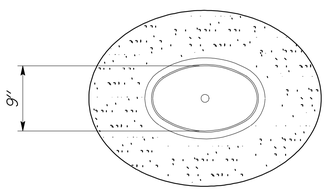

VIEW B-B

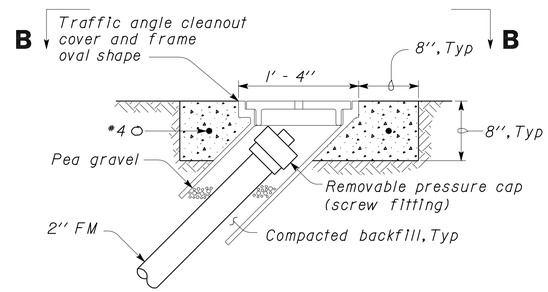

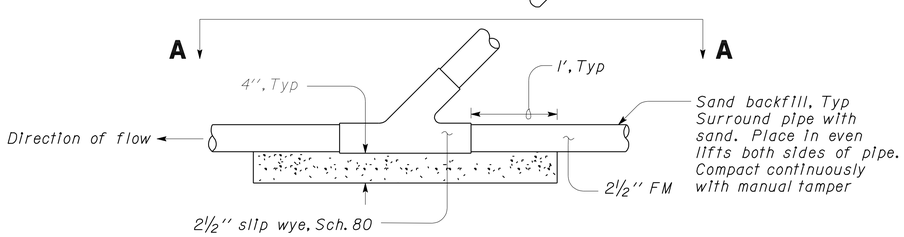

ELEVATION

2 SANITARY SEWER FORCE MAIN CLEANOUT

NO SCALE

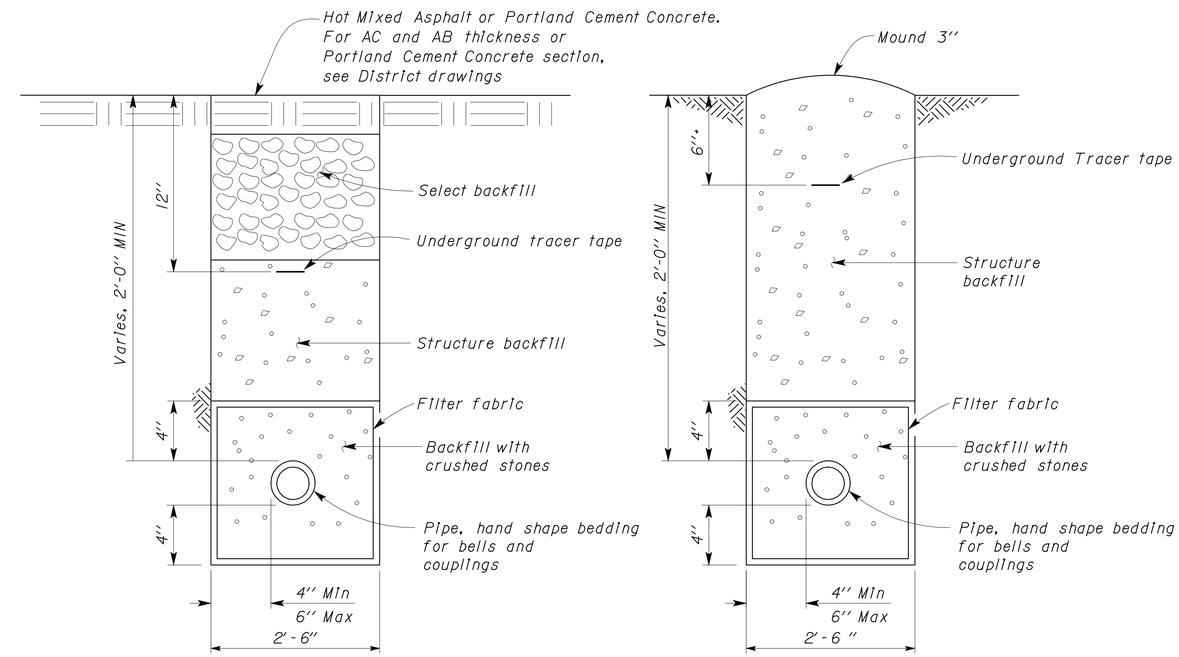

3 SEWER PIPE / FORCE MAIN

NO SCALE

3 ADDED PER ADDENDUM No. 3 DATED JANUARY 4, 2013

THIS DRAWING ACCURATE FOR MECHANICAL WORK ONLY

	BY		CHECKED	
DESIGN	Solomon Wong		Tom Dietsch	
DETAILS	Angela Chen		Tom Dietsch	
QUANTITIES	Solomon Wong		Tom Dietsch	

STATE OF CALIFORNIA
DEPARTMENT OF TRANSPORTATION

DIVISION OF ENGINEERING SERVICES
ELECTRICAL-MECHANICAL-WATER AND WASTEWATER DESIGN

BRIDGE NO. 33M5785
POST MILE 2.2

SFOBB MAINTENANCE COMPLEX

MISCELLANEOUS DETAILS

SHEET **MP4-12**

TAEMWW Imperial Rev. 7/10

FILE => mp4_12.dgn
DATE PLOTTED => 02-JAN-2013 TIME PLOTTED => 15:40

ORIGINAL SCALE IN INCHES FOR REDUCED PLANS 0 1 2 3

UNIT 3615
PROJECT NUMBER & PHASE 04120006661
EA 014081

DISREGARD PRINTS BEARING EARLIER REVISION DATES → 12-01-12

REVISION DATES (PRELIMINARY STAGE ONLY) SHEET OF

USERNAME => s117606 DATE PLOTTED => 02-JAN-2013 TIME PLOTTED => 15:40

VI=1

GRAPHIC SYMBOLS FOR ELECTRICAL WIRING AND LAYOUT DIAGRAMS

SYMBOL	DESCRIPTION
	POLE-TOP ELECTROLIER
	POLE-ARM ELECTROLIER
	POLE-ARM DUAL ELECTROLIER
CEILING / WALL	
S / S	SURFACE LIGHTING FIXTURE
R / R	RECESSED LIGHTING FIXTURE
P	BRIDGE SOFFIT PENDANT INDIVIDUAL LIGHTING FIXTURE
	SURFACE INDIVIDUAL LIGHTING FIXTURE
P	PENDANT INDIVIDUAL LIGHTING FIXTURE
R	RECESSED INDIVIDUAL LIGHTING FIXTURE
	SURFACE OR PENDANT CONTINUOUS ROW LIGHTING FIXTURES
NOTE:	A LOWER CASE LETTER NEAR GRAPHIC LIGHTING FIXTURE SYMBOL DENOTES THAT FIXTURE IS CONTROLLED BY A SIMILARLY MARKED SWITCH, AN ALPHA-NUMERIC SYMBOL NEAR GRAPHIC LIGHTING FIXTURE SYMBOL DENOTES FIXTURE TYPE, (I=INCANDESCENT, F=FLUORESCENT, LED=LIGHT EMITTING DIODE, DESIGN TYPE, NUMBER OF LAMPS AND WATTAGE.
	EXAMPLE : (4) LED 2 - 2 x 32 — 32 WATT LAMPS; 2 LAMPS; DESIGN TYPE; LIGHT; NUMBER OF FIXTURES
OR	RECESSED INDIVIDUAL LIGHTING FIXTURE WITH EMERGENCY LED DRIVER
B / B	BLANK OUTLET
J / J	JUNCTION BOX
	SINGLE RECEPTACLE OUTLET
	DUPLEX RECEPTACLE OUTLET
(GFCI)	DUPLEX RECEPTACLE OUTLET (WITH GFCI)
(GFCI) WP	DUPLEX RECEPTACLE OUTLET, WEATHERPROOF (WITH GFCI)
	SINGLE, SPECIAL PURPOSE RECEPTACLE OUTLET
	FLOOR SINGLE RECEPTACLE OUTLET
	FLOOR DUPLEX RECEPTACLE OUTLET
	FLOOR SPECIAL PURPOSE OUTLET
	FLOOR RADIO OUTLET
	FLOOR TELEPHONE OUTLET
	MULTI-OUTLET ASSEMBLY
SOC1	WALL SWITCH OCCUPANCY SENSOR TYPE1
SOC2	WALL SWITCH OCCUPANCY SENSOR TYPE2
OC1	CEILING OCCUPANCY SENSOR TYPE 1
OC2	CEILING OCCUPANCY SENSOR TYPE 2
OC3	HIGH BAY OCCUPANCY SENSOR TYPE 3
S	SINGLE POLE SWITCH
S_2	DOUBLE POLE SWITCH
S_3	THREE WAY SWITCH
S_{DTS}	DIGITAL TIMER SWITCH
S_{MC}	MOMENTARY CONTACT SWITCH
S_D	DIMMING SWITCH TYPE 1
S_{2D}	DIMMING SWITCH TYPE 2
S_{WP}	WEATHERPROOF SWITCH
S_F	FAN SWITCH
S_L	LIGHT SWITCH
S_{VS}	VARIABLE SPEED MOTOR CONTROL SWITCH
S_M	MOTION SENSOR SWITCH
S_T	MANUAL MOTOR STARTING SWITCH, WITHOUT THERMAL OVERLOAD TYPE
S_{TS}	MECHANICAL SPRING WOUND TIMER SWITCH

SYMBOL	DESCRIPTION
LD#	WALL MOUNTED, EXPOSED, LIGHTING DISCONNECT # : 1-SINGLE POLE, 2-TWO POLE
LD#	WALL OR COLUMN MOUNTED, ABOVE CEILING, LIGHTING DISCONNECT # : 1-SINGLE POLE, 2-TWO POLE
LCP	WALL MOUNTED, EXPOSED, LIGHTING CONTROL PANEL
LCP	WALL OR COLUMN MOUNTED, ABOVE CEILING, LIGHTING CONTROL PANEL
LCPR	LIGHTING CONTROL PANEL RECESSED INSIDE WALL
S	SWITCH AND SINGLE RECEPTACLE
S	SWITCH AND DUPLEX RECEPTACLE
	HAND DRYER NOZZLE
H	HAND DRYER
	RADIO OUTLET
	TELEPHONE OUTLET
	WALL VOICE, DATA OUTLET
	FLOOR VOICE, DATA OUTLET
	SPEAKER OUTLET
	PUSHBUTTON
	PUSHBUTTON STATION MOTOR CONTROL
T	THERMOSTAT
FS	FLOW SWITCH
PES	PHOTOELECTRIC SENSOR
PEU	PHOTOELECTRIC UNIT
	FLUSH-MOUNTED PANELBOARD AND CABINET
	SURFACE-MOUNTED PANELBOARD AND CABINET
	LIGHTING PANEL
	POWER PANEL
	COMBINATION LIGHTING AND POWER
MC	MOTOR CONTROLLER
	NON-FUSIBLE DISCONNECT SWITCH
	FUSIBLE DISCONNECT SWITCH
	CONDUIT CONCEALED IN CEILING OR WALL
	CONDUIT CONCEALED IN FLOOR
	CONDUIT EXPOSED
	CROSS-LINES INDICATE NUMBER OF #12 AWG CONDUCTORS. LONGER CROSS-LINE INDICATES 1#12 AWG (G) FOR EQUIPMENT GROUNDING CONDUCTOR. NO CROSS-LINE INDICATES 2#12 WITH 1#12 (G) UNLESS OTHERWISE NOTED. ALL CONDUIT 1/2" UNLESS OTHERWISE NOTED.
A1, A2	HOMERUN TO PANELBOARD, ARROWS INDICATE NUMBER OF CIRCUITS, LETTER DENOTES PANELBOARD, NUMERAL DENOTES CIRCUIT.
SM	SURFACE METAL RACEWAY
(2) 1/2"C, 2#12	CONDUCTOR INFO (PER CONDUIT); CONDUIT SIZE; NUMBER OF CONDUITS (NO NUMBER INDICATES ONE CONDUIT)
ALC	ARMORED LIGHTING CONTROL CABLE, CONCEALED IN CEILING OR WALL
ALC	EXPOSED ARMORED LIGHTING CONTROL CABLE
LC	LIGHTING CONTROL CABLE, CONCEALED IN CEILING OR WALL
MC	CONDUIT, RIGID STEEL, UNDERGROUND
PVC	CONDUIT, POLYVINYL CHLORIDE, UNDERGROUND
PVC	CONCRETE ENCASED PVC CONDUIT
	CONDUIT, FLEXIBLE
	CONDUIT, TURN UP
	CONDUIT, TURN DOWN
	CONDUIT SEAL, EXPLOSION-PROOF
X	CONDUIT, EXPANSION JOINT
	ADAPTER, ONE TYPE CONDUIT TO ANOTHER

SYMBOL	DESCRIPTION
AV	AUDIO/VISUAL ALARM DEVICE
ARM	ADDRESSABLE RELAY MODULE
C	MAGNETIC CONTACT SWITCH-PEDESTRIAN DOOR
C	MAGNETIC CONTACT SWITCH-VEHICLE DOOR
PD	PANIC DEVICE
CM	COMBINATION MOTION DETECTOR/PASSIVE INFRARED
DS	DUCT MOUNTED SMOKE DETECTOR
EL	ELECTROMECHANICAL LOCK
EH	ELECTRIFIED DOOR HINGE
G	GLASS BREAK DISCRIMINATOR
K	DIGITAL KEYPAD
KBX	KNOX BOX
LB	MAGNETIC DOOR LOCK
LG	LOCK GUARD
H	HEAT DETECTOR
EPT	ELECTRICAL POWER TRANSFER HINGE
EM	ELECTROMAGNETIC LOCK SET
MR	MULTIVOLTAGE RELAY MODULE
P	MANUAL PULL STATION
R	DIGITAL CARD READER
S	SMOKE DETECTOR
DS	DUCT SMOKE DETECTOR
SD	SMOKE DAMPER WITH ACTUATION
TS	REMOTE TEST SWITCH
W	COMBINATION DETECTOR (MICROWAVE/PASSIVE INFRARED)
T	TRANSFORMER
	PULL BOX, SEE NSP ES-8A
(T)	PULL BOX (TRAFFIC RATED), SEE NSP ES-8B
121	CONDUIT OR DOOR NUMBER, SEE PLANS
	FIRE RATED WALL
A	SECTION/ELEVATION LETTER
EE-2	SHEET NUMBER
1	DETAIL NUMBER
EE-2	SHEET NUMBER

GRAPHIC SYMBOLS FOR ELECTRICAL DIAGRAMS

SYMBOL	DESCRIPTION
	CIRCUIT BREAKER, SINGLE POLE
	CIRCUIT BREAKER, DOUBLE POLE
	CIRCUIT BREAKER, THREE POLE
GFCI	CIRCUIT BREAKER, WITH GROUND FAULT CIRCUIT INTERRUPTER
	CONTACT, NORMALLY OPEN
	CONTACT, NORMALLY CLOSED
	CONTACT, SINGLE POLE DOUBLE-THROW
	CONTACT, NORMALLY OPEN TIME DELAY CLOSING ON ENERGIZING
	OPERATING COIL
	PRESSURE ACTUATED SWITCH, NORMALLY CLOSED
	PRESSURE ACTUATED SWITCH, NORMALLY OPEN
	FLOW ACTUATED SWITCH, NORMALLY CLOSED
	FLOW ACTUATED SWITCH, NORMALLY OPEN
	TEMPERATURE ACTUATED SWITCH, NORMALLY CLOSED
	TEMPERATURE ACTUATED SWITCH, NORMALLY OPEN
	LIMIT SWITCH, NORMALLY CLOSED
	LIMIT SWITCH, NORMALLY OPEN
	PUSHBUTTON SWITCH, NORMALLY CLOSED
	PUSHBUTTON SWITCH, NORMALLY OPEN
	SWITCH, SINGLE-POLE
	SWITCH, SINGLE-POLE, DOUBLE-THROW
	SWITCH, DOUBLE-POLE
	SWITCH, DOUBLE-POLE, DOUBLE-THROW
	SWITCH, SINGLE-POLE, 3-POSITION
	THERMAL OVERLOAD
	FUSE
	RESISTOR
	VARIABLE RESISTOR
	TRANSFORMER WINDING
	GROUNDING ELECTRODE
	ENCLOSURE BOND
A	PILOT LIGHT (A=AMBER, G=GREEN, R=RED)
AL	ALARM LIGHT
G	GENERATOR
M	MOTOR
F	FAN MOTOR

PROJECT NOTES

A. SEPARATE GROUNDED (NEUTRAL) CONDUCTOR MUST BE USED FOR EACH 120 and 277-VOLT CIRCUIT.

B. HOMERUNS TO PANELBOARDS SHALL BE INSTALLED AS SHOWN ON THE PLANS. HOMERUNS MUST NOT BE COMBINED.

C. A SINGLE INSULATED EQUIPMENT GROUNDING CONDUCTOR (SIZED AS REQUIRED) MUST BE INSTALLED IN EACH CONDUIT RUN.

D. PENETRATIONS OF WALLS, WALL MEMBRANES AND CEILING SYSTEMS WHICH ARE REQUIRED TO HAVE A FIRE-RESISTANCE RATING MUST BE PROTECTED WITH THROUGH-PENETRATION FIRE STOPS, SUITABLE FOR THE METHOD OF PENETRATION. THROUGH-PENETRATION FIRE STOPS MUST BE TESTED USING ASTM E814, UL 1479 & C.B.C. SECTIONS. FOR FIRE RATING DETAILS, SEE ARCHITECTURAL SHEETS A6-7.1 THROUGH A6-7.9.

E. PENETRATIONS OF FULL HEIGHT INTERIOR WALL PARTITIONS MUST BE SEALED AIR- TIGHT. FOR FULL HEIGHT WALL PARTITIONS, SEE ARCHITECTURAL PLANS.

F. UNDERGROUND CONDUITS ENTERING THE BUILDING FROM OUTSIDE AND WITHIN THE BUILDING MUST BE INSTALLED BELOW THE STRUCTURAL PRIMARY/INTERMEDIATE GRADE BEAMS. FOR LOCATION OF STRUCTURAL PRIMARY/INTERMEDIATE GRADE BEAMS, UNDERGROUND CONDUITS STUB UP, AND PENETRATION DETAILS THROUGH FLOOR/BEAMS, REFER TO STRUCTURAL PLAN SHEETS.

G. OUTLET BOXES ON OPPOSITE SIDES OF FIRE-RESISTIVE WALLS SHALL BE SEPARATED BY A HORIZONTAL DISTANCE OF 24 INCHES (CBC SECTION 709.7).

CALIFORNIA STATE FIRE MARSHAL APPROVED

Approval of this plan does not authorize or approve any omission or deviation from applicable regulations. Final approval is subject to field inspection. One set of approved plans shall be available on the project site at all times.

Reviewed by: SPENCER MEYER

Approval date: 12-13-12

3

DIST.	COUNTY	ROUTE	POST MILES TOTAL PROJECT	SHEET NO.	TOTAL SHEETS
04	Ala	80	2.2	611	800

Catalino A. Enriquez 5-30-12
REGISTERED ELECTRICAL ENGINEER — DATE

REGISTERED PROFESSIONAL ENGINEER C. ENRIQUEZ No. 16944 Exp. 6-30-13 ELEC STATE OF CALIFORNIA

10-22-12
PLANS APPROVAL DATE

The State of California or its officers or agents shall not be responsible for the accuracy or completeness of scanned copies of this plan sheet.

ABBREVIATIONS

A	AMPERES
AC	ALTERNATING CURRENT
A/C	AIR CONDITIONING UNIT
ACS	AIR COMPRESSOR STARTER
AF	AMPERE FRAME
AL	ALARM LIGHT
ALC	ARMORED LIGHTING CONTROL CABLE
ALT	ALTERNATOR
AR	ALARM RESET
AT	ASTRONOMICAL TIMER
AT	AMPERE TRIP
AT	ALARM TEST SWITCH
ATS	AUTOMATIC TRANSFER SWITCH
AUX	AUXILIARY
BD	BUILDING DISCONNECT
BELCP	BUILDING EXTERIOR LIGHTING CONTROL PANEL
BRK	BREAKER
C	CONDUIT
CAT	CATEGORY
CB	CIRCUIT BREAKER
CCTV	CLOSE CIRCUIT TELEVISION
CD	CONTROL DISCONNECT
CKT	CIRCUIT
CFL	COMBINATION FAN LIGHT UNIT
CIDH	CAST-IN-DRILLED HOLE
CLCP	CANOPY LIGHTING CONTROL PANEL
COMM	COMMUNICATION
CR	CONTROL RELAY
CRI	COLOR RENDERING INDEX
CS	CURRENT SWITCH
CT	CURRENT TRANSFORMER
D	DEPTH
DC	DIRECT CURRENT
DMM	DIGITAL MULTI METER
DP	DUPLEX PLUG RECEPTACLE
(E)	EXISTING
ELCP	EXTERIOR LIGHTING CONTROL PANEL
FACP	FIRE ALARM CONTROL PANEL
FO	FIBER OPTIC
FPP	FIBER PATCH PANEL
FR	FAILURE RESET
FS	FLOAT SWITCH
FT	FIBER OPTIC FLOAT TRANSCEIVER
G	GROUND
GB	GROUND BUS
GD	GENERATOR DISCONNECT
GEC	GROUNDING ELECTRODE CONDUCTOR
GFCI	GROUND FAULT CIRCUIT INTERRUPTER
GFP	GROUND FAULT PROTECTION
GND	GROUND
GRS	GALVANIZED RIGID STEEL
GTAW	GAS TUNGSTEN ARC WELDING
HVAC	HEATING, VENTILATING AND AIR CONDITIONING
ID	IDENTIFICATION
IDF	INTERMEDIATE DISTRIBUTION FRAME
I/O	INPUT/OUTPUT
IFS	INTEGRATED FACILITIES SWITCHBOARD
JB	JUNCTION BOX
L	LENGTH
L	LIGHT
LAN	LOCAL AREA NETWORK
LCC	LIGHTING CONTROL CABLE
LC	LIGHTING CONTACTOR
LCD	LIQUID CRYSTAL DISPLAY
LCP	LIGHTING CONTROL PANEL
LCPR	LIGHTING CONTROL PANEL RECESSED
LD	LIGHTING DISCONNECT
LDS	LEAK DETECTION SENSOR
LED	LIGHT EMITTING DIODE
LNP	LIGHTING NETWORK PANEL
LTG	LIGHTING
MAX	MAXIMUM
MB	MAIN BREAKER
MC	METALLIC CONDUIT
MCP	MOTOR CIRCUIT PROTECTOR
MDF	MAIN DISTRIBUTION FRAME
MH	MOUNTING HEIGHT
MIN	MINIMUM

ABBREVIATIONS

MIS	MANAGEMENT INFORMATION SYSTEM
MMFO	MULTIMODE FIBER OPTIC
MPOE	MAIN POINT OF ENTRY
MSB	MAIN SWITCHBOARD
MT	EMPTY CONDUIT
(N)	NEW
NB	NEUTRAL BUS
NC	NORMALLY CLOSED
NIC	NOT IN CONTRACT
NO	NORMALLY OPEN
NO	NUMBER
OL	OVERLOAD
OLTG	OUTSIDE LIGHTING
OS	OCCUPANCY SENSOR
OWSJ	OPEN WEB STEEL JOIST
P	POLE
PAF	POWER ADJUSTMENT FACTOR
PB	PULL BOX
PB	PUSH BUTTON
PCB	PRINTED CIRCUIT BOARD
PD	PUMP DISCONNECT
PDB	POWER DISTRIBUTION BLOCK
PES	PHOTOELECTRIC SENSOR
PG&E	PACIFIC GAS AND ELECTRIC COMPANY
PL	PILOT LIGHT
PP	PATCH PANEL
PS	POWER SUPPLY
PS	PRESSURE SWITCH
PTS	POWER TRANSFER SWITCH
PTZ	PAN TILT AND ZOOM
PV	PHOTOVOLTAIC
PVC	POLYVINYL CHLORIDE
RD	RECEPTACLE DISCONNECT
RES	RESISTOR
RMC	RIGID METAL CONDUIT
RSC	RIGID STEEL CONDUIT
RTB	RADIO TERMINAL BOARD
S	STARTER COIL
SCCR	SHORT CIRCUIT CURRENT RATING
SD	SERVICE DISCONNECT
SF	SQUARE FEET
SFR	SEAL FAILURE RELAY
SL	SUMP LIGHT
SMB	SEWAGE PUMP MAIN BREAKER
SMFO	SINGLE MODE FIBER OPTIC
SPD	SPARE DISCONNECT
SPD	SURGE PROTECTION DEVICE
SPR	STANDBY POWER RECEPTACLE
SS	SELECTOR SWITCH
ST	STARTER
STP	SHIELDED TWISTED PAIR
SV	SOLENOID VALVE
T	TRANSFORMER
TB	TERMINAL BLOCK
TC	TIME CLOCK
TDR	TIME DELAY RELAY
TLS	TANK LEVEL SENSOR
TM	TIME METER
TOT	TOTAL
TS	TIMER SWITCH
TSW	TEST SWITCH
TTB	TELEPHONE TERMINAL BOARD
TYP	TYPICAL
VPP	VOICE PATCH PANEL
UL	UNDERWRITERS LABORATORIES
UTP	UNSHIELDED TWISTED PAIR
UPS	UNINTERRUPTIBLE POWER SUPPLY
W	WIDTH
W	WATTS
WB	WORKBENCH
WLS	WATER LEVEL SWITCH
WP	WEATHERPROOF
Z	ZONE

3 **REVISED PER ADDENDUM No. 3 DATED JANUARY 4, 2013**

	BY	CHECKED
DESIGN	Catalino Enriquez	J.S.S./H.Abdelsayed
DETAILS	Ed D. Tapalla / Dali Zhou	Catalino Enriquez
QUANTITIES	Catalino Enriquez	J.S.S./H.Abdelsayed

STATE OF CALIFORNIA DEPARTMENT OF TRANSPORTATION

DIVISION OF ENGINEERING SERVICES ELECTRICAL-MECHANICAL-WATER AND WASTEWATER DESIGN

BRIDGE NO. 33M5785 POST MILE 2.2

SFOBB MAINTENANCE COMPLEX

LEGEND

SHEET **EE0-0.0**

TAEMWW Imperial Rev. 7/10

ORIGINAL SCALE IN INCHES FOR REDUCED PLANS 0 1 2 3

UNIT 3596
PROJECT NUMBER & PHASE 04120006661
EA 014081

DISREGARD PRINTS BEARING EARLIER REVISION DATES → REVISION DATES (PRELIMINARY STAGE ONLY) 10/5/11 02/22/12 5/25/12 5/30/12 11/29/12 SHEET OF

02-JAN-2013 08:05
ee0_0.00.add

DIST.	COUNTY	ROUTE	POST MILES TOTAL PROJECT	SHEET NO.	TOTAL SHEETS
04	Ala	80	2.2	612	800

3

Jarid Amirazodi 5-30-12
REGISTERED ELECTRICAL ENGINEER DATE

REGISTERED PROFESSIONAL ENGINEER J. AMIRAZODI No. 17509 Exp. 6-30-13 ELEC STATE OF CALIFORNIA

10-22-12
PLANS APPROVAL DATE

The State of California or its officers or agents shall not be responsible for the accuracy or completeness of scanned copies of this plan sheet.

CALIFORNIA STATE FIRE MARSHAL APPROVED
Approval of this plan does not authorize or approve any omission or deviation from applicable regulations. Final approval is subject to field inspection. One set of approved plans shall be available on the project site at all times.
Reviewed by: SPENCER MEYER
Approval date: 12-13-12

General Notes:

A. *Provide and install intermediate electrical pull boxes/vaults between existing PG&E power pole and transformer. Number, size and type as required by PG&E. Submit details to PG&E for approval.*

B. *For Electrical System Single Line Diagram, see EE0-1.1.*

C. *All base elbows and vertical risers through concrete slab shall be PVC coated rigid steel conduit. Wrap joints in contact with soil with two layers of 20 mil thick pipe wrapping tape.*

D. *Unless otherwise noted or required by local utility company, slurry type back filling for underground conduit system shall not be allowed.*

E. *For conduit and conductor/cable schedules, see EE0-1.11 and EE0-1.12.*

F. *For exact location of light pole, see EE0-0.3.*

G. *Underground conduits entering the building from outside and within the building shall be installed below the structural primary/intermediate grade beams. For location of structural primary/intermediate grade beams, underground conduits stub up, and penetration details through floor/beams, refer to Structural Plan sheets.*

H. *For CCTV system block diagram, see EE1-7.2.*

Notes:

1. *Primary power conduit system for PG&E. Submit details to PG&E for approval.*
2. *Electrical Equipment Concrete Pad. For Detail see EE0-1.8.*
3. *This No. 6 communication pull box is the same as shown on EE0-05 and shown for clarity.*
4. *For camera mounting details on light pole, See Detail A on EE0-0.11.*
5. *To junction box. For continuation, see EE1-11.1.*
6. *For continuation, see EE0-0.7.*
7. *Pole mounted, outdoor, PTZ, dome camera.*
8. *Existing E85 fuel tank consists of fuel tank, fuel control terminal and underground and above ground conduit and conductors system. Existing tank and fuel terminal is supplied from existing East Bay substation. For location of East Bay substation, refer to plan sheet E-1. Perform the following:*
   - *Identify circuit supplying the fuel tank system;*
   - *Disconnect conductors and mark the circuit breaker as spare;*
   - *Remove all aboveground and underground conductors;*
   - *Remove all exposed conduits inclusive of all conduits mounted on the tank, and abandon underground conduits;*
   - *Remove fuel control terminal and associated concrete pad. Patch cavity to match surrounding surfaces.*
9. *2"C, 4#6, 1#8G (2ED25-27-29).*
10. *To pull box. For continuation, see EE1-1.1.*
11. *Sewage Lift Station Pumps Control Panel. For details, see EE1-12.1, EE1-12.2 and EE1-12.3. For location of sewage lift station No. 1, see MP0-1.*

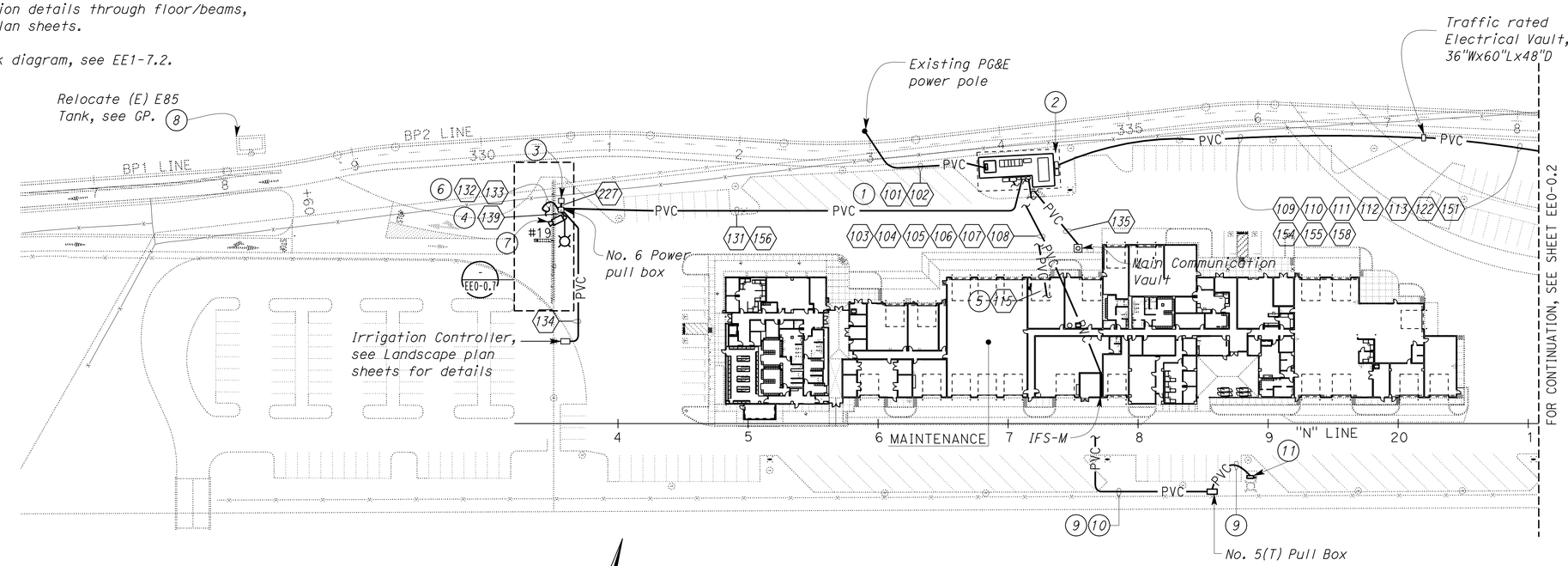

SITE PLAN
SCALE 1" = 50'-0"

3 **REVISED PER ADDENDUM No. 3 DATED JANUARY 4, 2013**

THIS DRAWING ACCURATE FOR ELECTRICAL WORK ONLY

DESIGN SUPERVISOR Jack Schoff	DESIGN	BY Javid Amirazodi	CHECKED J.S. Sandhu/J.R. Lacy	STATE OF CALIFORNIA DEPARTMENT OF TRANSPORTATION
DESIGN ENGINEER Jaswinder S Sandhu	DETAILS	BY Ed D. Tapalla 10/11	CHECKED Javid Amirazodi	
	QUANTITIES	BY Javid Amirazodi	CHECKED J.S. Sandhu/J.R. Lacy	

DIVISION OF ENGINEERING SERVICES
ELECTRICAL-MECHANICAL-WATER AND WASTEWATER DESIGN

BRIDGE NO. 33M5785
POST MILE 2.2

SFOBB MAINTENANCE COMPLEX
POWER SITE PLAN 1

SHEET **EE0-0.1**

TAEMWW Imperial Rev. 7/10

ORIGINAL SCALE IN INCHES FOR REDUCED PLANS 0 1 2 3

UNIT 3596
PROJECT NUMBER & PHASE 04120006661
EA 014081

DISREGARD PRINTS BEARING EARLIER REVISION DATES → 5/30/12 11/29/12 12/12/12

REVISION DATES (PRELIMINARY STAGE ONLY) SHEET OF

31-DEC-2012 07:18
ee0_0.01.dgn

DIST.	COUNTY	ROUTE	POST MILES TOTAL PROJECT	SHEET NO.	TOTAL SHEETS
04	Ala	80	2.2	613	800

Javid Amirazodi 5-30-12
REGISTERED ELECTRICAL ENGINEER DATE

REGISTERED PROFESSIONAL ENGINEER J. AMIRAZODI No. 17509 Exp. 6-30-13 ELEC STATE OF CALIFORNIA

10-22-12
PLANS APPROVAL DATE

The State of California or its officers or agents shall not be responsible for the accuracy or completeness of scanned copies of this plan sheet.

CALIFORNIA STATE FIRE MARSHAL APPROVED
Approval of this plan does not authorize or approve any omission or deviation from applicable regulations. Final approval is subject to field inspection. One set of approved plans shall be available on the project site at all times.
Reviewed by: SPENCER MEYER
Approval date: 12-13-12

3

General Notes:

A. *All base elbows and vertical risers through concrete slab shall be PVC coated rigid steel conduit. Wrap joints in contact with soil with two layers of 20 mil thick pipe wrapping tape.*

B. *All pull boxes on this sheet shall be number 5 traffic rated pull box, unless otherwise noted.*

C. *Unless otherwise noted or required by local Utility Company, slurry type back filling for underground conduit system shall not be allowed.*

D. *For conduit and conductor/cable schedule, see EE0-1.11 and EE0-1.12.*

E. *Panel 2WA is located inside IFS-W, for exact location see EE4-1.*

F. *For exact location of light poles, see EE0-0.4.*

G. *For CCTV system block diagram, see EE1-7.2.*

Notes:

1. *For continuation, see EE0-0.6.*
2. *For camera mounting details on light pole, See Detail A on EE0-0.11.*
3. *To Pump Control Box inside the Fuel Log Room. Change conduit to PVC coated galvanized steel conduit inside the room and install conduit seal. For continuation and exact location of Pump Control Box, see EE2-1.*
4. *For continuation, see EE0-0.8.*
5. *Pole mounted, outdoor, fixed, dome camera.*
6. *Pole mounted, outdoor, PTZ, dome camera.*
7. *2"C, 4#6, 1#8G (2WA37-39-41).*
8. *Sewage Lift Station Pumps Control Panel. For details, see EE1-12.1, EE1-12.2 and EE1-12.3. For location of sewage lift station No. 2, see MP0-2.*

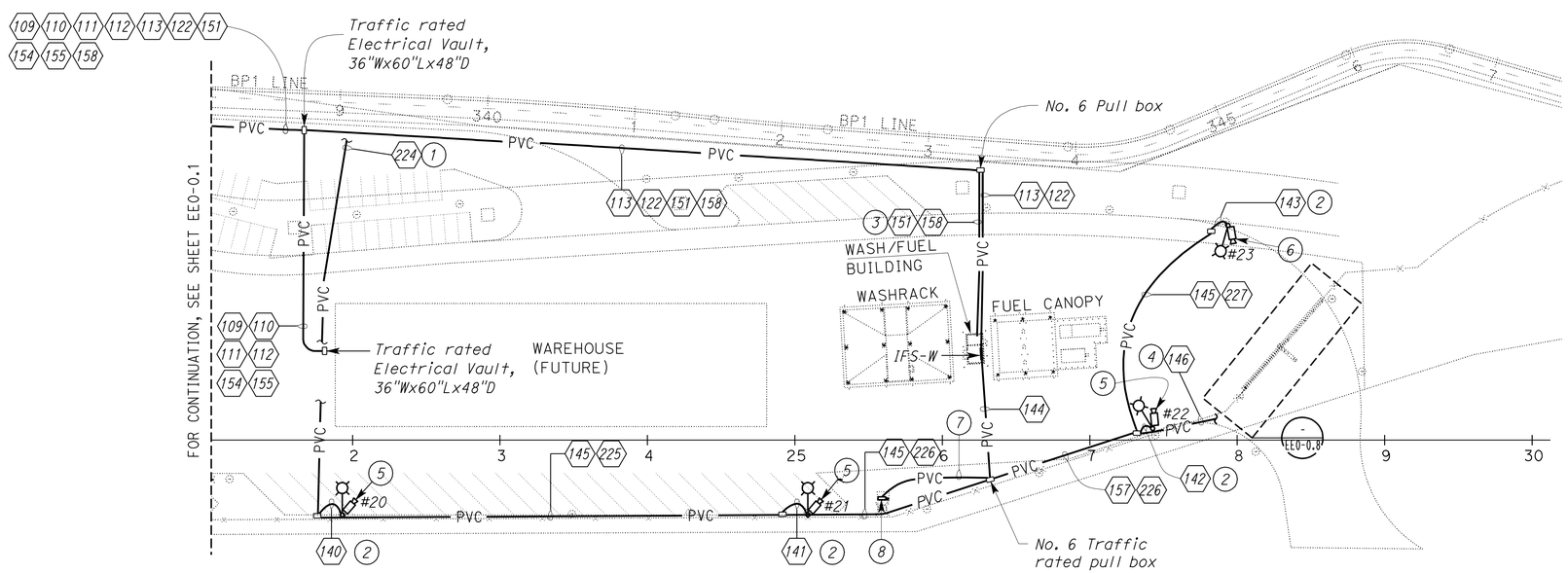

SITE PLAN

SCALE 1" = 50'-0"

3 **REVISED PER ADDENDUM No. 3 DATED JANUARY 4, 2013**

THIS DRAWING ACCURATE FOR ELECTRICAL WORK ONLY

	BY	CHECKED
DESIGN	Javid Amirazodi	J.S. Sandhu/J.R. Lacy
DETAILS	Ed D. Tapalla 10/11	Javid Amirazodi
QUANTITIES	Javid Amirazodi	J.S. Sandhu/J.R. Lacy

STATE OF CALIFORNIA DEPARTMENT OF TRANSPORTATION

DIVISION OF ENGINEERING SERVICES ELECTRICAL-MECHANICAL-WATER AND WASTEWATER DESIGN

BRIDGE NO. 33M5785
POST MILE 2.2

SFOBB MAINTENANCE COMPLEX

POWER SITE PLAN 2

SHEET **EE0-0.2**

TAEMWW Imperial Rev. 7/10

ORIGINAL SCALE IN INCHES FOR REDUCED PLANS 0 1 2 3

UNIT 3596
PROJECT NUMBER & PHASE 04120006661
EA 014081

DISREGARD PRINTS BEARING EARLIER REVISION DATES → 5/30/12 11/29/12 12/12/12

REVISION DATES (PRELIMINARY STAGE ONLY) SHEET OF

31-DEC-2012 07:21

ee0_0.02.add

DIST.	COUNTY	ROUTE	POST MILES TOTAL PROJECT	SHEET NO.	TOTAL SHEETS
04	Ala	80	2.2	614	800

Jaswinder S Gill 5-30-12
REGISTERED ELECTRICAL ENGINEER DATE

REGISTERED PROFESSIONAL ENGINEER J. S. GILL No. 18551 Exp. 12-31-12 ELEC STATE OF CALIFORNIA

10-22-12
PLANS APPROVAL DATE

The State of California or its officers or agents shall not be responsible for the accuracy or completeness of scanned copies of this plan sheet.

CALIFORNIA STATE FIRE MARSHAL APPROVED
Approval of this plan does not authorize or approve any omission or deviation from applicable regulations. Final approval is subject to field inspection. One set of approved plans shall be available on the project site at all times.
Reviewed by: SPENCER MEYER
Approval date: 12-13-12

Notes:

1. Electrical equipment concrete pad. For details, see sheet EE0-1.8.
2. 1"C, 4#6, 1#8G (IFS-MSB Ckt. No. 18). Conductor numbers are 18A, 18B, 18C and 18N.
3. ¾"C, PVC, 2#8, 1#10G to lighting standard.
4. Lighting Standard C. See details on sheet EE0-0.11.
5. 1"C, 3#6, 1#8G. Conductor numbers are 18B, 18C and 18N.
6. Lighting Standard E. See details on sheet EE0-0.10.
7. To pull box near electrical equipment concrete pad. For continuation, see sheet EE0-1.8.
8. 1"C, 4#6, 1#8G (IFS-MSB Ckt. No. 17). Conductor numbers are 17A, 17B, 17C and 17N.
9. * ¾"C, PVC coated RSC, 2#8, 1#10G. Conductor numbers are 17A and 17N.
   * 1"C, PVC coated RSC, 5#12, 5#14, 1#12G. Conductor numbers are 17N, 17S1A, 17S1B, 17S2C, 17S2D, 17D1A, 17D1B, 17D2C, 17D2D & 17DC.
10. Lighting Standard B (Bridge Lights). See Details P on Standard Plans Dated May 2006, ES-9E. Install No. 8 Pull Box for each Lighting Standard.
11. ¾"C, PVC, 2#12, 2#14, 1#12G to the flag pole lights. Conductor number are 114S2D, N8AB11, 114D2D & 114DC. See Architectural plans for flag pole location. Location of the flag pole lights will be determined in the field based on the flag pole manufacturer recommendations.
12. (2) 2"C, MT.
13. ¾"C, 2#12, 2#14, 1#12G. Conductor numbers are 114S2C, N8AB11, 114D2C & 114DC.
14. ¾"C, 3#12, 3#14, 1#12G. Conductor numbers are 114S2C, 114S2D, N8AB11, 114D2C, 114D2D & 114DC.
15. See sheet EE1-3.19 for BELCP114 location & continuation. See sheet EE1-3.27 for BELCP114 schematic.
16. ¾"C, 2#12, 2#14, 1#12G. Conductor numbers are 148S2C, N8MB15, 148D2C & 148DC.
17. See sheet EE1-3.20 for BELCP148 location & continuation. See sheet EE1-3.27 for BELCP148 schematic.
18. (2) LED7E-1x20. In-ground flag pole floodlight. See Detail 3 on sheet EE0-0.10 to install flag pole floodlight at a distance and angle as recommended by the flagpole manufacturer.
19. Exterior Lighting Control Panel. Mount at height of 5'-6". See Detail 5 on sheet EE1-3.30 for mounting. Mount PEC on the panel as shown with a nipple. See sheet EE1-3.27 for the schematic.
20. 1"C, 3#12, 3#14, 1#12G. Conductor numbers are 17N, 17S1A, 17S1B, 17D1A, 17D1B & 17DC to bridge lights.
21. 1"C, 3#6, 1#8G (IFS-MSB Ckt. 17). Conductor numbers are 17B, 17C and 17N.
22. Not used.
23. 1"C, 1 lighting control cable to LNP-V inside IFS-V.
24. See sheet EE1-3.20 for JB location inside Room No. 192. See sheet EE1-3.18 for LNP-V location and schematic.
25. 1"C, 2#6, 1#8G. Conductor numbers are 18B & 18N.
26. Conduit seal at 18" above finished floor. Conduit seal also shown on EE1-3.20
27. 2"C, 4#6, 1#8G (IFS-MSB Ckt. No. 18). Conductor numbers are 18A, 18B, 18C and 18N.
28. 2"C, 4#6, 1#8G (IFS-MSB Ckt. No. 17). Conductor numbers are 17A, 17B, 17C and 17N.

General Notes:

A. Alphanumeric characters 17A, 17B, 17C, 18A, 18B and 18C adjacent to the Lighting Standards, identifies the ungrounded phase conductor to use for wiring the Lighting Standard.

B. Unless otherwise noted, all pull boxes shown on this sheet are No. 5 traffic rated pull boxes.

C. Unless otherwise noted, all the Lighting Standards shown on this sheet are Lighting Standard A. See sheet EE0-0.10 for details.

D. A lower case letter adjacent to the lighting Standard E lighting fixture graphic symbol denotes that fixture is controlled by a similarly marked switching relays located inside the Building Exterior Lighting Control Panel (BELCP). For details, see BELCP schematics.

E. See sheet EE1-3.29 for exterior Lighting Fixture Schedule.

F. See sheet EE1-3.19 & EE1-3.20 for building mounted exterior lights.

G. A lower case letter adjacent to the lighting Standard B lighting fixture graphic symbol denotes that fixture is controlled by a similarly marked switching relays located inside the Exterior Lighting Control Panel (ELCP). For details, see ELCP schematics.

H. Unless otherwise noted or required by local utility company, slurry type backfill for conduit system shall not be allowed.

I. For conduit system to CCTV camera, see sheet EE0-0.1.

J. All conduits mounted exposed on bridge and bridge column shall be rigid steel conduits. Install expansion fittings across bridge joint.

K. All elbows and risers inside the building and outside risers shall be PVC coated galvanized steel conduits. Wrap joints in touch with soil with two layers of pipe wrapping tape.

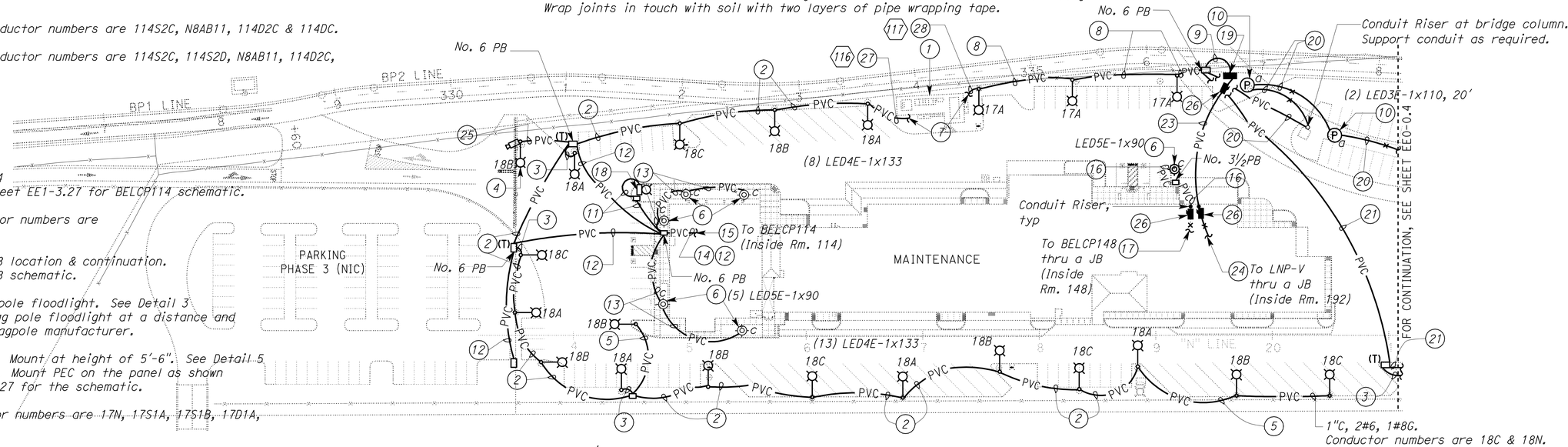

SITE PLAN

SCALE 1" = 50'-0"

L. Unless otherwise noted, all Lighting Standard A & Lighting Standard C lights shown here shall be controlled by fixture integrated motion sensor and photoelectric cell. Lights output shall be dimmed to 50% of maximum output when there is no motion detected.

M. ⬡ Symbol next to a plan note represents a conduit, repeated here for clarity only. For conduit and conductor/cable schedules, see sheets EE0-1.11 and EE0-1.12.

N. Underground conduits entering the building from outside and within the building shall be installed below the structural primary/intermediate grade beams. For location of structural primary/intermediate grade beams, underground conduits stub up, and penetration details through floor/beams, refer to Structural Plan sheets.

3 REVISED PER ADDENDUM No. 3 DATED JANUARY 4, 2013

THIS DRAWING ACCURATE FOR ELECTRICAL WORK ONLY

	BY	CHECKED
DESIGN	Jaswinder Gill	Christine Mamaril
DETAILS	Ed D. Tapalla/Dali Zhou	Jaswinder Gill
QUANTITIES	Jaswinder Gill	Christine Mamaril

STATE OF CALIFORNIA DEPARTMENT OF TRANSPORTATION

DIVISION OF ENGINEERING SERVICES ELECTRICAL-MECHANICAL-WATER AND WASTEWATER DESIGN

BRIDGE NO. 33M5785 POST MILE 2.2

SFOBB MAINTENANCE COMPLEX

AREA LIGHTING SITE PLAN 1

SHEET EE0-0.3

TAEMWW Imperial Rev. 7/10

ORIGINAL SCALE IN INCHES FOR REDUCED PLANS 0 1 2 3

UNIT 3596
PROJECT NUMBER & PHASE 04120006661
EA 014081

DISREGARD PRINTS BEARING EARLIER REVISION DATES → REVISION DATES (PRELIMINARY STAGE ONLY) 10/7/11 3/23/12 5/4/12 5/30/12 11/29/12 SHEET OF

31-DEC-2012 07:27
ee0_0.03.dgn

DIST.	COUNTY	ROUTE	POST MILES TOTAL PROJECT	SHEET NO.	TOTAL SHEETS
04	Ala	80	2.2	615	800

3

Jaswinder S Gill 5-30-12
REGISTERED ELECTRICAL ENGINEER DATE

REGISTERED PROFESSIONAL ENGINEER J. S. GILL No. 18551 Exp. 12-31-12 ELEC STATE OF CALIFORNIA

10-22-12
PLANS APPROVAL DATE

The State of California or its officers or agents shall not be responsible for the accuracy or completeness of scanned copies of this plan sheet.

CALIFORNIA STATE FIRE MARSHAL APPROVED
Approval of this plan does not authorize or approve any omission or deviation from applicable regulations. Final approval is subject to field inspection. One set of approved plans shall be available on the project site at all times.
Reviewed by: SPENCER MEYER
Approval date: 12-13-12

Notes:

1. 1"C, 3#6, 1#8G (IFS-MSB Ckt. No. 17). Conductor numbers are 17B, 17C and 17N.
2. 1"C, 2#6, 1#8G. Conductor numbers are 17B & 17N.
3. ¾"C, PVC, 2#8, 1#10G to Lighting Standard.
4. Lighting Standard B (Bridge Lights). See Detail P on Standard Plans Dated May 2006, ES-9E. Install No. 8 Pull Box for each Lighting Standard.
5. Lighting Standard C. See details on sheet EE0-0.11.
6. 2"C, MT. See sheet EE4-2 for continuation.
7. 1"C, 3#12, 3#14, 1#12G. Conductor numbers are 17N, 17S1A, 17S1B, 17D1A, 17D1B & 17DC.
8. ¾"C, 2#12, 2#14, 1#12G. Conductor numbers are 17N, 17S1A, 17D1A & 17DC.

General Notes:

A. Alphanumeric characters 17B and 17C adjacent to the Lighting Standards, identifies the ungrounded phase conductor to use for wiring the Lighting Standard.

B. Unless otherwise noted, all pull boxes shown on this sheet are No. 5 traffic rated pull boxes.

C. Unless otherwise noted, all the Lighting Standards shown on this sheet are Lighting Standard A. See sheet EE0-0.10 for details.

D. A lower case letter adjacent to the lighting Standard B lighting fixture graphic symbol denotes that fixture is controlled by a similarly marked switching relays located inside the Exterior Lighting Control Panel (ELCP). For details, see ELCP schematics.

E. See sheet EE1-3.29 for exterior Lighting Fixture Schedule.

F. See sheet EE1-3.19 & EE1-3.20 for building mounted exterior lights.

G. Unless otherwise noted or required by local utility company, slurry type backfill for conduit system shall not be allowed.

H. For conduit system to CCTV camera, see sheet EE0-0.2.

I. All conduits mounted exposed on bridge and bridge column shall be rigid steel conduits. Install expansion fittings across any bridge joints.

J. All elbows and risers inside the building shall be PVC coated galvanized steel conduits. Wrap joints in touch with soil with two layers of pipe wrapping tape.

K. Unless otherwise noted, all Lighting Standard A & Lighting Standard C lights shown here shall be controlled by fixture integrated motion sensor and photoelectric cell. Lights output shall be dimmed to 50% of maximum output when there is no motion detected.

L. Underground conduits entering the building from outside and within the building shall be installed below the structural primary/intermediate grade beams. For location of structural primary/intermediate grade beams, underground conduits stub up, and penetration details through floor/beams, refer to Structural Plan sheets.

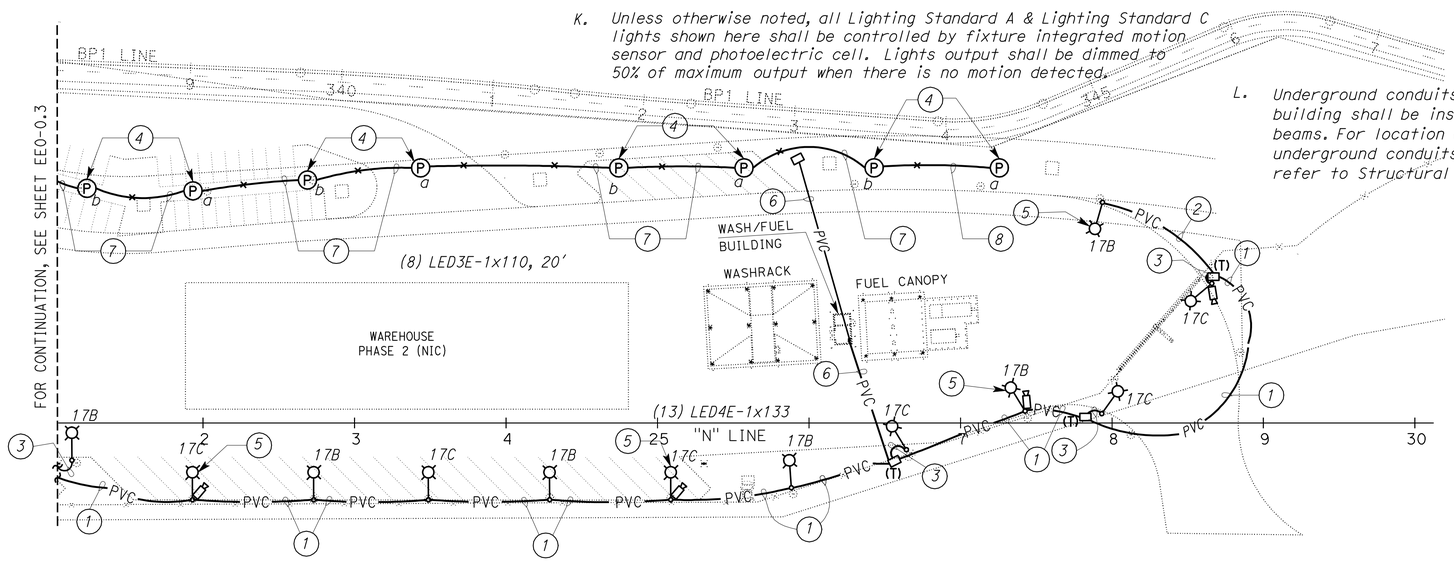

SITE PLAN
SCALE 1" = 50'-0"

3 REVISED PER ADDENDUM No. 3 DATED JANUARY 4, 2013

THIS DRAWING ACCURATE FOR ELECTRICAL WORK ONLY

DESIGN	BY Jaswinder Gill	CHECKED Christine Mamaril	
DETAILS	BY Ed D. Tapalla 10/11	CHECKED Jaswinder Gill	
QUANTITIES	BY Jaswinder Gill	CHECKED Christine Mamaril	

STATE OF CALIFORNIA
DEPARTMENT OF TRANSPORTATION

DIVISION OF ENGINEERING SERVICES
ELECTRICAL-MECHANICAL-WATER AND WASTEWATER DESIGN

BRIDGE NO. 33M5785
POST MILE 2.2

SFOBB MAINTENANCE COMPLEX
AREA LIGHTING SITE PLAN 2

SHEET **EE0-0.4**

TAEMWW Imperial Rev. 7/10

ORIGINAL SCALE IN INCHES FOR REDUCED PLANS 0 1 2 3

UNIT 3596
PROJECT NUMBER & PHASE 04120006661
EA 014081

DISREGARD PRINTS BEARING EARLIER REVISION DATES
REVISION DATES (PRELIMINARY STAGE ONLY) 10/17/11 3/23/12 5/14/12 5/30/12 8/20/12 11/29/12
SHEET OF

31-DEC-2012 07:30
ee0_0.04.dgn

DIST.	COUNTY	ROUTE	POST MILES TOTAL PROJECT	SHEET NO.	TOTAL SHEETS
04	Ala	80	2.2	616	800

REGISTERED ELECTRICAL ENGINEER — DATE 5-30-12

REGISTERED PROFESSIONAL ENGINEER J. AMIRAZODI No. 17509 Exp. 6-30-13 ELEC STATE OF CALIFORNIA

10-22-12
PLANS APPROVAL DATE

The State of California or its officers or agents shall not be responsible for the accuracy or completeness of scanned copies of this plan sheet.

3

CALIFORNIA STATE FIRE MARSHAL APPROVED

Approval of this plan does not authorize or approve any omission or deviation from applicable regulations. Final approval is subject to field inspection. One set of approved plans shall be available on the project site at all times.

Reviewed by: SPENCER MEYER

Approval date: 12-13-12

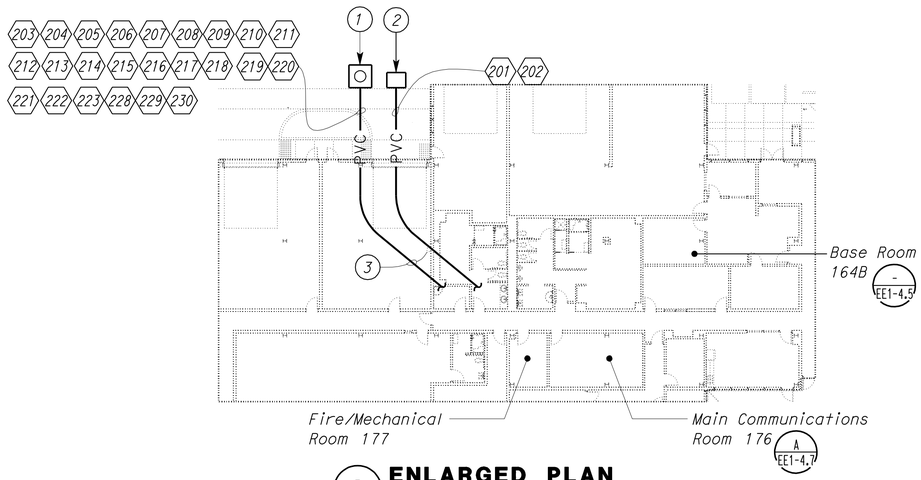

A ENLARGED PLAN

SCALE 1" = 20'-0"

General Notes:

A. All base elbows and vertical risers through concrete slab shall be PVC coated rigid steel conduit. Wrap joints in contact with soil with two layers of 20 mil thick pipe wrapping tape.

B. Unless otherwise noted or required by local Utility Company, slurry type backfilling for underground conduit system shall not be allowed.

C. For conduit and conductor/cable schedule, see EE0-1.11 and EE0-1.12.

D. Underground conduits entering the building from outside and within the building shall be installed below the structural primary/intermediate grade beams. For location of structural primary/intermediate grade beams, underground conduits stub up, and penetration details through floor/beams, refer to Structural Plan sheets.

Notes:

1. 6'Wx6'Lx6'D Main Communication Vault. For Detail, see EE0-0.9.
2. AT&T traffic rated vault. Contractor shall provide and install traffic rated vault; size and type as required by the Telephone Utility Company.
3. To Main Communications Room 176, Fire/Mechanical Room 177 and Base Room 164B. For continuation, See EE1-4.5, EE1-4.7 and EE1-6.0.
4. 2"C, PVC, between AT&T Vault and sump pump area inside the Communication Vault. For Detail, see MP4-9.
5. 8" Firewater line w/backflow preventer, post Indicator Valve, Fire Department Connection and Detector Check Valve. For exact location, see MP0-1.
6. Connect control cables to Fire Department Detector Check Valve tamper switches as required.
7. For continuation, see EE0-0.7.
8. This No. 6 power pull box is the same as shown on EE0-01 and shown for clarity.
9. 1"C, control cables as required. For continuation, see EE1-6.0.

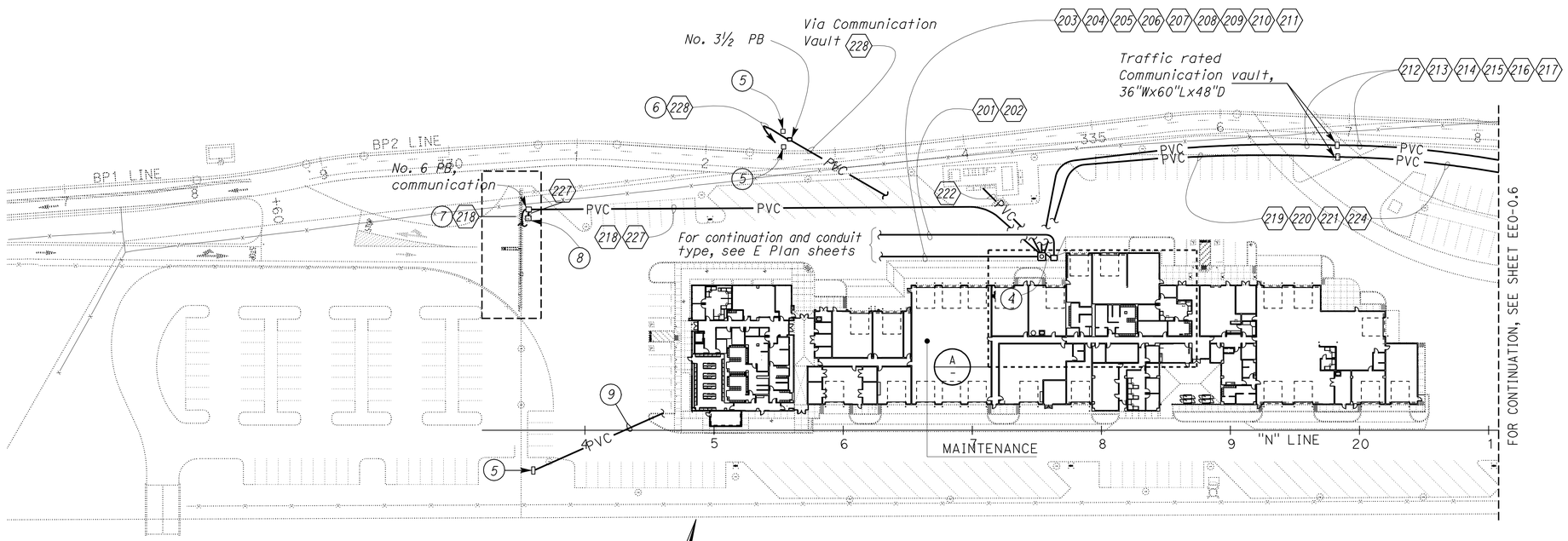

SITE PLAN

SCALE 1" = 50'-0"

3 **REVISED PER ADDENDUM No. 3 DATED JANUARY 4, 2013**

THIS DRAWING ACCURATE FOR ELECTRICAL WORK ONLY

	BY	CHECKED
DESIGN	Javid Amirazodi	J.S. Sandhu/J.R. Lacy
DETAILS	Ed D. Tapalla 10/11	Javid Amirazodi
QUANTITIES	Javid Amirazodi	J.S. Sandhu/J.R. Lacy

STATE OF CALIFORNIA
DEPARTMENT OF TRANSPORTATION

DIVISION OF ENGINEERING SERVICES
ELECTRICAL-MECHANICAL-WATER AND WASTEWATER DESIGN

BRIDGE NO. 33M5785
POST MILE 2.2

SFOBB MAINTENANCE COMPLEX

COMMUNICATION SITE PLAN 1

SHEET **EE0-0.5**

TAEMWW Imperial Rev. 7/10

ORIGINAL SCALE IN INCHES FOR REDUCED PLANS 0 1 2 3

UNIT 3596
PROJECT NUMBER & PHASE 04120006661
EA 014081

DISREGARD PRINTS BEARING EARLIER REVISION DATES → 5/30/12 11/28/12 12/12/12

REVISION DATES (PRELIMINARY STAGE ONLY) SHEET OF

03-JAN-2013 10:26

ee0_0.05.add

DIST.	COUNTY	ROUTE	POST MILES TOTAL PROJECT	SHEET NO.	TOTAL SHEETS
04	Ala	80	2.2	617	800

Javid Amirazodi 5-30-12
REGISTERED ELECTRICAL ENGINEER DATE

REGISTERED PROFESSIONAL ENGINEER J. AMIRAZODI No. 17509 Exp. 6-30-13 ELEC STATE OF CALIFORNIA

10-22-12
PLANS APPROVAL DATE

The State of California or its officers or agents shall not be responsible for the accuracy or completeness of scanned copies of this plan sheet.

3

CALIFORNIA STATE FIRE MARSHAL APPROVED
Approval of this plan does not authorize or approve any omission or deviation from applicable regulations. Final approval is subject to field inspection. One set of approved plans shall be available on the project site at all times.
Reviewed by: SPENCER MEYER
Approval date: 12-13-12

General Notes:

A. *All base elbows and vertical risers through concrete slab shall be PVC coated rigid steel conduit. Wrap joints in contact with soil with two layers of 20 mil thick pipe wrapping tape.*

B. *All pull boxes on this sheet shall be number 5 traffic rated pull box, unless otherwise noted.*

C. *Unless otherwise noted or required by local utility company, slurry type backfilling for underground conduit system shall not be allowed.*

D. *For conduit and conductor/cable schedule, see EE0-1.11 and EE0-1.12.*

Notes:

1. *For continuation, see EE0-0.2.*
2. *To plywood board inside the Fuel Log Room. Terminate voice and data cables on Communication outlet and terminate FO cable on Fule Log Room fiber patch panel, using type SC connectors. For details, see EE2-1.*
3. *For continuation, see EE0-0.8.*

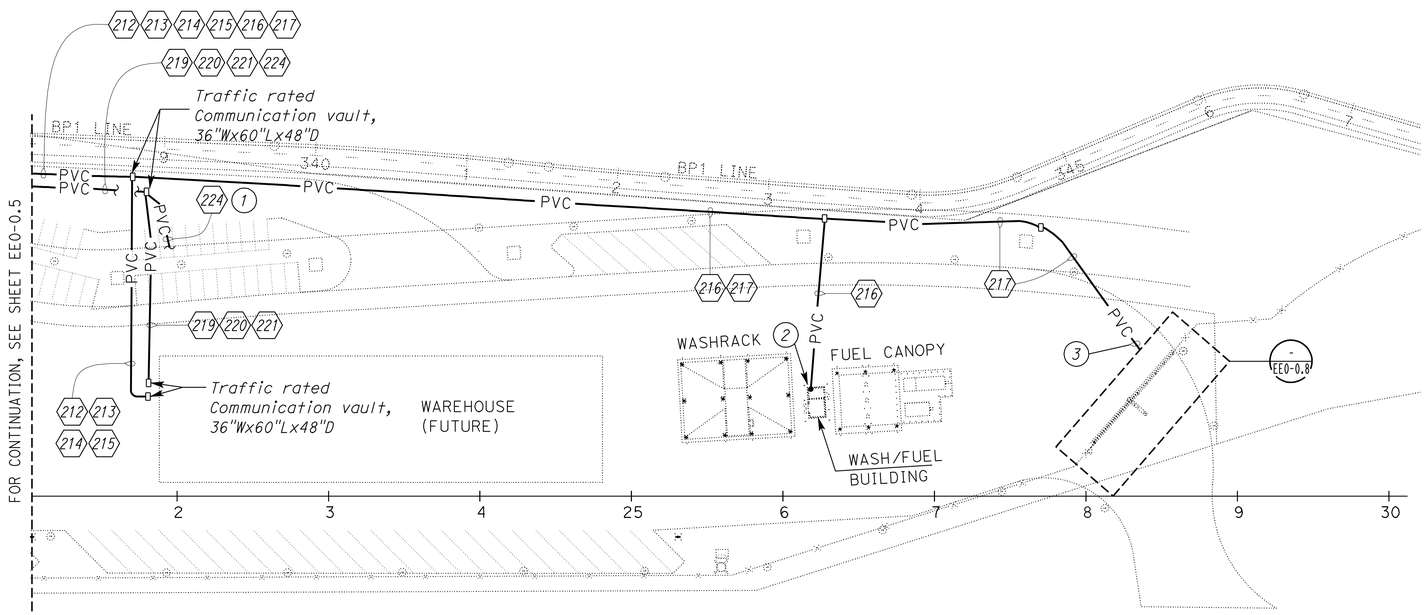

SITE PLAN
SCALE 1" = 50'-0"

3 **REVISED PER ADDENDUM No. 3 DATED JANUARY 4, 2013**

THIS DRAWING ACCURATE FOR ELECTRICAL WORK ONLY

	BY	CHECKED
DESIGN	Javid Amirazodi	J.S. Sandhu/J.R. Lacy
DETAILS	Ed D. Tapalla 10/11	Javid Amirazodi
QUANTITIES	Javid Amirazodi	J.S. Sandhu/J.R. Lacy

STATE OF CALIFORNIA DEPARTMENT OF TRANSPORTATION

DIVISION OF ENGINEERING SERVICES
ELECTRICAL-MECHANICAL-WATER AND WASTEWATER DESIGN

BRIDGE NO. 33M5785
POST MILE 2.2

SFOBB MAINTENANCE COMPLEX
COMMUNICATION SITE PLAN 2

SHEET **EE0-0.6**

TAEMWW Imperial Rev. 7/10

ORIGINAL SCALE IN INCHES FOR REDUCED PLANS 0 1 2 3

UNIT 3596
PROJECT NUMBER & PHASE 04120006661
EA 014081

DISREGARD PRINTS BEARING EARLIER REVISION DATES → 5/30/12 11/29/12
REVISION DATES (PRELIMINARY STAGE ONLY) SHEET OF

31-DEC-2012 07:35
ee0_0.06.dgn

DIST.	COUNTY	ROUTE	POST MILES TOTAL PROJECT	SHEET NO.	TOTAL SHEETS
04	Ala	80	2.2	626	800

Jaswinder S Gill 5-30-12
REGISTERED ELECTRICAL ENGINEER DATE

REGISTERED PROFESSIONAL ENGINEER J. S. GILL No. 18551 Exp. 12-31-12 ELEC STATE OF CALIFORNIA

10-22-12
PLANS APPROVAL DATE

The State of California or its officers or agents shall not be responsible for the accuracy or completeness of scanned copies of this plan sheet.

3

CALIFORNIA STATE FIRE MARSHAL APPROVED
Approval of this plan does not authorize or approve any omission or deviation from applicable regulations. Final approval is subject to field inspection. One set of approved plans shall be available on the project site at all times.
Reviewed by: SPENCER MEYER
Approval date: 12-13-12

CERTIFICATE OF COMPLIANCE (Page 2 of 4) LTG-1C

INDOOR LIGHTING SCHEDULE and FIELD INSPECTION ENERGY CHECKLIST

Project Name: SFOBB MAINTENANCE COMPLEX — Date: 05/25/2012

Installation Certificate, LTG-1-INST (Retain a copy and verify form is compited and signed.) — Field Inspector ☐

Certificate of Acceptance, LTG-2A and LTG-3A (Retain a copy and verify form is completed and signed.) — Field Inspector ☐

A separate Lighting Schedule Must Be Filled Out for Conditioned and Unconditioned Spaces Installed Lighting Power listed on this Lighting Schedule is only for: ☐ CONDITIONED SPACE ☑ UNCONDITIONED SPACE

☑ The actual indoor lighting power listed below includes all installed permanent and portable lighting system in accordance with S 146 (a)

☑ Only for offices: Up to the first 0.2 watts per square foot of portable lighting shall not be rquired to be included in the calculation of actual indoor lighting power density in accordance with Exception to S 146 (a). All portable lighting in excess of 0.2 watts per square foot is totaled below.

	Luminaire Schedule (Type, Lamps, Ballasts)		Installed Watts						
A	B	C	D	E		F	G	H	
				How wattage was determined				Field Inspector 2	
	Complete Luminaire Description (i.e, lamp flourescent troffer, F32T8, one dimmable electronic ballast)		Watts per Luminaire 1	CEC Default from NA8	According to S 130 (d or e)	Number of Luminaires	Installed Watts (D x F)	Pass	Fail
LED1	2X2, LED ENGINE, RECESSED TROFFER		37	☐	☑	32	1184	☐	☐
LED2	2X4, LED ENGINE, RECESSED TROFFER		47	☐	☑	12	564	☐	☐
LED5	LED HIGH BAY, SLIM PROFILE LED ENGINE		116	☐	☑	12	1392	☐	☐
LED6	LED HIGH BAY, SLIM PROFILE LED ENGINE		233	☐	☑	9	2097	☐	☐
LED7	1X4, BI-PIN SOCKET LED LAMP, BRACKET MOUNTED INDUSTRIAL FIXTURE		37	☐	☑	15	555	☐	☐
				☐	☐			☐	☐
				☐	☐			☐	☐
				☐	☐			☐	☐
				☐	☐			☐	☐
				☐	☐			☐	☐
				☐	☐			☐	☐
				☐	☐			☐	☐
				☐	☐			☐	☐
				☐	☐			☐	☐
				☐	☐			☐	☐
				☐	☐			☐	☐
				☐	☐			☐	☐
				☐	☐			☐	☐
			INSTALLED WATTS PAGE TOTAL:				5792		

Building total number of pages: 1 — Installed Watts Building Total (Sum of all pages): 5792

Enter into LTG-1C Page 4 of 4

1. Wattage shall be determined according to Section 130 (d and e). Wattage shall be rating of light fixture, not rating of bulb.
2. If Fail then describe on Page 2 of the Inspection Checklist Form and take appropriate action to correct. Verify building plans if necessary.

2008 Nonresidential Compliance Forms — *July 2010*

CERTIFICATE OF COMPLIANCE (Page 2 of 4) LTG-1C

INDOOR LIGHTING SCHEDULE and FIELD INSPECTION ENERGY CHECKLIST

Project Name: SFOBB MAINTENANCE COMPLEX — Date: 05/25/2012

Installation Certificate, LTG-1-INST (Retain a copy and verify form is compited and signed.) — Field Inspector ☐

Certificate of Acceptance, LTG-2A and LTG-3A (Retain a copy and verify form is completed and signed.) — Field Inspector ☐

A separate Lighting Schedule Must Be Filled Out for Conditioned and Unconditioned Spaces Installed Lighting Power listed on this Lighting Schedule is only for: ☑ CONDITIONED SPACE ☐ UNCONDITIONED SPACE

☑ The actual indoor lighting power listed below includes all installed permanent and portable lighting system in accordance with Section 146 (a)

☑ Only for offices: Up to the first 0.2 watts per square foot of portable lighting shall not be rquired to be included in the calculation of actual indoor lighting power density in accordance with Exception to S 146 (a). All portable lighting in excess of 0.2 watts per square foot is totaled below.

	Luminaire Schedule (Type, Lamps, Ballasts)		Installed Watts						
A	B	C	D	E		F	G	H	
				How wattage was determined				Field Inspector 2	
	Complete Luminaire Description (i.e, lamp flourescent troffer, F32T8, one dimmable electronic ballast)		Watts per Luminaire 1	CEC Default from NA8	According to S 130 (d or e)	Number of Luminaires	Installed Watts (D x F)	Pass	Fail
LED1	2X2, LED ENGINE, RECESSED TROFFER		37	☐	☑	128	4736	☐	☐
LED2	2X4, LED ENGINE, RECESSED TROFFER		47	☐	☑	177	8319	☐	☐
LED3	6" RECESSED LED DOWN LIGHT, WET LOCATION		27	☐	☑	9	243	☐	☐
LED4	1X4, LED ENGINE, WALL MOUNTED, LOW PROFILE WRAP STRIP LIGHT		27	☐	☑	6	162	☐	☐
LED5	LED HIGH BAY, SLIM PROFILE LED ENGINE		116	☐	☑	15	1740	☐	☐
LED6	LED HIGH BAY, SLIM PROFILE LED ENGINE		233	☐	☑	64	14912	☐	☐
LED7	1X4, BI-PIN SOCKET LED LAMP, BRACKET MOUNTED INDUSTRIAL FIXTURE		37	☐	☑	54	1998	☐	☐
LED9	1X4 LED ENGINE, HEAVYDUTY ENCLOSED FIXTURE		40	☐	☑	3	120	☐	☐
				☐	☐			☐	☐
				☐	☐			☐	☐
				☐	☐			☐	☐
				☐	☐			☐	☐
				☐	☐			☐	☐
				☐	☐			☐	☐
				☐	☐			☐	☐
				☐	☐			☐	☐
				☐	☐			☐	☐
				☐	☐			☐	☐
			INSTALLED WATTS PAGE TOTAL:				32230		

Building total number of pages: 1 — Installed Watts Building Total (Sum of all pages): 32230

Enter into LTG-1C Page 4 of 4

1. Wattage shall be determined according to Section 130 (d and e). Wattage shall be rating of light fixture, not rating of bulb.
2. If Fail then describe on Page 2 of the Inspection Checklist Form and take appropriate action to correct. Verify building plans if necessary.

2008 Nonresidential Compliance Forms — *July 2010*

3 **REVISED PER ADDENDUM No. 3 DATED JANUARY 4, 2013**

DESIGN	BY Jaswinder Gill	CHECKED Christine Mamaril	
DETAILS	BY Jaswinder Gill	CHECKED J. S. Sandhu	
QUANTITIES	BY Jaswinder Gill	CHECKED Christine Mamaril	

STATE OF CALIFORNIA DEPARTMENT OF TRANSPORTATION

DIVISION OF ENGINEERING SERVICES
ELECTRICAL-MECHANICAL-WATER AND WASTEWATER DESIGN

BRIDGE NO. 33M5785
POST MILE 2.2

SFOBB MAINTENANCE COMPLEX
INDOOR LIGHTING COMPLIANCE FORM 2

SHEET EE0-0.15

TAEMWW Imperial Rev. 7/10

ORIGINAL SCALE IN INCHES FOR REDUCED PLANS 0 1 2 3

UNIT 3596
PROJECT NUMBER & PHASE 04120006661
EA 014081

DISREGARD PRINTS BEARING EARLIER REVISION DATES
REVISION DATES (PRELIMINARY STAGE ONLY) 11/08/2011 3/23/12 5/14/12 5/30/12 11/29/12
SHEET OF

31-DEC-2012 07:20
ee0_0.15.dgn

DIST.	COUNTY	ROUTE	POST MILES TOTAL PROJECT	SHEET NO.	TOTAL SHEETS
04	Ala	80	2.2	627	800

Jaswinder S Gill 5-30-12
REGISTERED ELECTRICAL ENGINEER DATE

REGISTERED PROFESSIONAL ENGINEER J. S. GILL No. 18551 Exp. 12-31-12 ELEC STATE OF CALIFORNIA

10-22-12
PLANS APPROVAL DATE

The State of California or its officers or agents shall not be responsible for the accuracy or completeness of scanned copies of this plan sheet.

3

CALIFORNIA STATE FIRE MARSHAL APPROVED
Approval of this plan does not authorize or approve any omission or deviation from applicable regulations. Final approval is subject to field inspection. One set of approved plans shall be available on the project site at all times.
Reviewed by: SPENCER MEYER
Approval date: 12-13-12

CERTIFICATE OF COMPLIANCE (Page 3 of 4) LTG-1C

Project Name: SFOBB MAINTENANCE COMPLEX
Date: 05/25/2012

INDOOR LIGHTING SCHEDULE and FIELD ENERGY CHECKLIST

Fill in controls for all spaces: a) area controls, b) multi-level controls, c) manual daylighting controls for daylit areas> 250 sq ft, automatic daylighting controls for daylit areas> 2,500 sq ft, d) shut-off controls, e) display lighting controls, f) tailored lighting controls-general lighting controlled separately from display, ornamental and display case lighting and g) demand responsive automatic controls for retail stores> 50,000 sq ft, in accordance with Section 131.

MANDATORY LIGHTING CONTROLS - FIELD INSPECTION ENERGY CHECKLIST			Field Inspector	
Type/Description	Number of Units	Location in Building	Pass	Fail
LIGHTING CONTROL PANEL (LCP) & LIGHTING CONTROL PANEL RECESSED (LCPR)	35	SEE SHEET EE1-3.01 FOR LOCATIONS	☐	☐
Ceiling Occupancy Sensor, Type1(OC1)	40	OFFICE SPACES WITH CLOSED CEILING SYSTEMS	☐	☐
Ceiling Occupancy Sensor, Type2 (OC2)	34	OFFICE SPACES WITH CLOSED CEILING SYSTEMS	☐	☐
Ceiling Occupancy Sensor, Type3 (OC3)	41	SHOP AREA WITH OPEN DECK CEILINGS	☐	☐
PHOTOELECTRIC CELL UNIT (PEU)	23	AREA WITH SKYLIGHTS & TUBE LIGHTS	☐	☐
WALL SINGLE SWITCH-DIMMER(Sd)	28	SPACES WITH ONE ZONE OF LIGHTING	☐	☐
WALL DOUBLE SWITCH-DIMMER (S2d)	70	SPACES WITH TWO ZONE OF LIGHTING	☐	☐
WALL SINGLE SWITCH OCCUPANCY (SOC1)	21	OFFICES WITH ONE LIGHT	☐	☐
WALL DUAL SWITCH OCCUPANCY (SOC2)	32	SPACES WITH BI-LEVEL SWITCHING	☐	☐
LIGHTING NETWORK PANELS (LNP)-CONTAINS HUBS & MAIN HUBS	6	INSIDE INTEGRATED FACILITIES SWITCHBOARDS	☐	☐
HUBS	20	INSIDE LNP'S	☐	☐
MAIN HUBS	2	INSIDE LNP'S	☐	☐

Field Inspectors's Notes or Descripancies:

2008 Nonresidential Compliance Forms *July 2010*

CERTIFICATE OF COMPLIANCE (Page 4 of 4) LTG-1C

Project Name: SFOBB MAINTENANCE COMPLEX
Date: 05/25/2012

Conditioned and Unconditioned space Lighting must not be combined for compliance

Indoor Lighting Power for Conditioned Spaces		Watts	Indoor Lighting Power for Unconditioned Spaces		Watts
Installed Lighting (from Conditioned LTG-1C Page 2		32,230	Installed Lighting (from Unconditioned LTG-1C Page 2		5,792
Lighting Control Credit Conditioned Spaces (from LTG-2C)	-	3,287	Lighting Control Credit Unconditioned Spaces (from LTG-2C)	-	945
Adjusted Installed Lighting Power	=	28,943	Adjusted Installed Lighting Power	=	4,847
Complies if Installed ≤ Allowed			Complies if Installed ≤ Allowed		
Allowed Lighting Power Conditioned Spaces (from LTG-3C)		38,665	Allowed Lighting Power Unconditioned Spaces (from LTG-3C)		5,099

Required Acceptance Tests

Designer:
This form is to be used by the designer and attached to the plans. Listed below is the acceptance test for the lighting system, LTG-2A and LTG-3A. The designer is required to check the acceptance tests and list all control devices serving the building or space shall be certified as meeting the Acceptance Requirements for Code Compliance. If all the lighting system or control of a certain type requires a test, list the different lighting and the number of systems. The NA7 Section in the Appendix of the Nonresidential Reference Appendices Manual describes the test. Since this form will be part of the plans, completion of this section will allow the responsible party to budget for the scope of work appropriately. Forms can be grouped by type of Luminaire controlled.

Enforcement Agency:
System Acceptance. Before Occupancy Permit is granted for a newly constructed building or space or when ever new lighting system with controls is installed in the building or space shall be certified as meeting the Acceptance Requirements.
The LTG-2A and LTG-3A forms are not considered a complete form and are not to be accepted by the enforcement agency unless the boxes are checked and/or filled and signed. In addition, a Certificate of Acceptance forms shall be submitted to the enforcement agency that certifies plans, specifications, installation certificates, and operating and maintenance information meet the requirements of Section 10-103 (b) of Title 24 Part 6. The field inspector must receive the properly filled out and signed forms before the building can receive final occupancy. A copy of the LTG-2A and LTG-3A for each different lighting luminaire control(s) must be provided to the owner of the building for their records.

Luminaires Controlled				LTG-2A and 3A
Equipment Requiring Testing	Description	Number of like Controls	Location	Controls and Sensors and Automatic Daylighting Controls Acceptance
LCP & LCPR	LCP & LCPR	35		☑
OC1	Ceiling Occupancy Sensor, Type1(OC1)	40		☑
OC2	Ceiling Occupancy Sensor, Type2 (OC2)	34		☑
OC3	Ceiling Occupancy Sensor, Type3 (OC3)	41		☑
PEU	PHOTOELECTRIC CELL UNIT (PEU)	23		☑
Sd	WALL SINGLE SWITCH-DIMMER(Sd)	28		☑
S2d	WALL DOUBLE SWITCH-DIMMER (S2d)	70		☑
SOC1	WALL SINGLE SWITCH OCCUPANCY (SOC1)	21		☑
SOC2	WALL DUAL SWITCH OCCUPANCY (SOC2)	32		☑
LNP	LIGHTING NETWORK PANELS	6		☑
HUBS	HUBS	20		☑
MAIN HUBS	MAIN HUBS	2		☐
				☐
				☐

2008 Nonresidential Compliance Forms *July 2010*

3 **REVISED PER ADDENDUM No. 3 DATED JANUARY 4, 2013**

	BY	CHECKED
DESIGN	Jaswinder Gill	Christine Mamaril
DETAILS	Jaswinder Gill	J. S. Sandhu
QUANTITIES	Jaswinder Gill	Christine Mamaril

STATE OF CALIFORNIA DEPARTMENT OF TRANSPORTATION

DIVISION OF ENGINEERING SERVICES ELECTRICAL-MECHANICAL-WATER AND WASTEWATER DESIGN

BRIDGE NO. 33M5785
POST MILE 2.2

SFOBB MAINTENANCE COMPLEX
INDOOR LIGHTING COMPLIANCE FORM 3

SHEET EE0-0.16

TAEMWW Imperial Rev. 7/10

ORIGINAL SCALE IN INCHES FOR REDUCED PLANS 0 1 2 3

UNIT 3596
PROJECT NUMBER & PHASE 04120006661
EA 014081

DISREGARD PRINTS BEARING EARLIER REVISION DATES → REVISION DATES (PRELIMINARY STAGE ONLY) 11/08/2011 3/23/12 5/4/12 5/30/12 11/29/12 SHEET OF

31-DEC-2012 07:20
ee0_0.16.add

DIST.	COUNTY	ROUTE	POST MILES TOTAL PROJECT	SHEET NO.	TOTAL SHEETS
04	Ala	80	2.2	635	800

REGISTERED ELECTRICAL ENGINEER — 5-30-12 DATE

REGISTERED PROFESSIONAL ENGINEER J. AMIRAZODI No. 17509 Exp. 6-30-13 ELEC STATE OF CALIFORNIA

10-22-12
PLANS APPROVAL DATE

The State of California or its officers or agents shall not be responsible for the accuracy or completeness of scanned copies of this plan sheet.

3

ACCESSIBILITY DESIGN APPROVAL STAMP DOT / DES / OTA
PROJECT ID 0412000666
Reviewed by: Y. A. WANG
Date: 12-06-12

CALIFORNIA STATE FIRE MARSHAL APPROVED
Approval of this plan does not authorize or approve any omission or deviation from applicable regulations. Final approval is subject to field inspection. One set of approved plans shall be available on the project site at all times.
Reviewed by: SPENCER MEYER
Approval date: 12-13-12

General Notes:

A. Provide and install protective bollards around the PG&E transformer, number and type as required by PG&E. Submit details to PG&E for approval prior to installation.

B. Provide and install intermediate electrical pull boxes/vaults between existing PG&E power pole and transformer. Number, size and type as required by PG&E. Submit details to PG&E for approval prior to installation.

C. All base elbows and vertical risers through concrete slab shall be PVC coated rigid steel conduit. Wrap joints in contact with soil with two layers of 20 mil thick pipe wrapping tape.

D. For conduit/conductor continuation, see electrical site plan sheets.

E. For electrical equipment concrete pad foundation details, see Detail 3 on ST1-145.

F. For conduit and conductor/cable schedule, see EE0-1.11 and EE0-1.12.

G. Submit all pertinent details to the Engineer for approval prior to installation. Conduit stub ups may required adjustment.

Notes:

1. Primary power conduit system for PG&E. Submit details to PG&E for approval prior to installation.
2. Provide and install transformer pad, reinforcing bars, slab-box, grounding system and other requirements as required by PG&E for 2000 A, 480/277-Volt, 3-phase, 4-wire service. Submit details to PG&E for approval prior to installation.
3. (8) 5"C with pull rope. Pull rope size/type shall be per PG&E Submit details to PG&E for approval prior to installation.
4. Electrical vault, 36"Wx60"Lx48"D.
5. Number 6 pull box.
6. 1#4/0 bare copper to ground well.
7. 1#4/0 bare copper to building grounding electrode system.
8. 1½" x 1½" construction channels support system for PV Service AC Disconnect Switch, Maintenance Building AC Disconnect Switch and Warehouse Building AC Disconnect Switch. Perform the following:
   - Support construction channels to the concrete with angle bracket, back braces and wedge type expansion anchor as required;
   - Provide cross channels for mounting equipment as required;
   - Construction channels shall be galvanized.
9. Install 12" x 12" (length as required), weatherproof type gutter under the disconnect switches for splicing and routing conduits/conductors to/from disconnect switches, inverters and IFS-MSB. See detail A this sheet for wiring diagram.
10. Warehouse Building AC Disconnect Switch. Disconnect switch shall be 225 AF/150 AT, 3P installed inside a NEMA Type 3R enclosure.
11. Maintenance Building AC Disconnect Switch. Disconnect switch shall be 225 AF/150 AT, 3P installed inside a NEMA Type 3R enclosure.
12. PV Service AC Disconnect Switch. Disconnect switch shall be 400 AF/300 AT, 3P installed inside a NEMA Type 3R enclosure.
13. 1"C, 1 TIA-485 cable. Terminate TIA-485 cable on communication module of the PV inverter as required.
14. 2"C, 3#2/0, 1#2/0G.

3

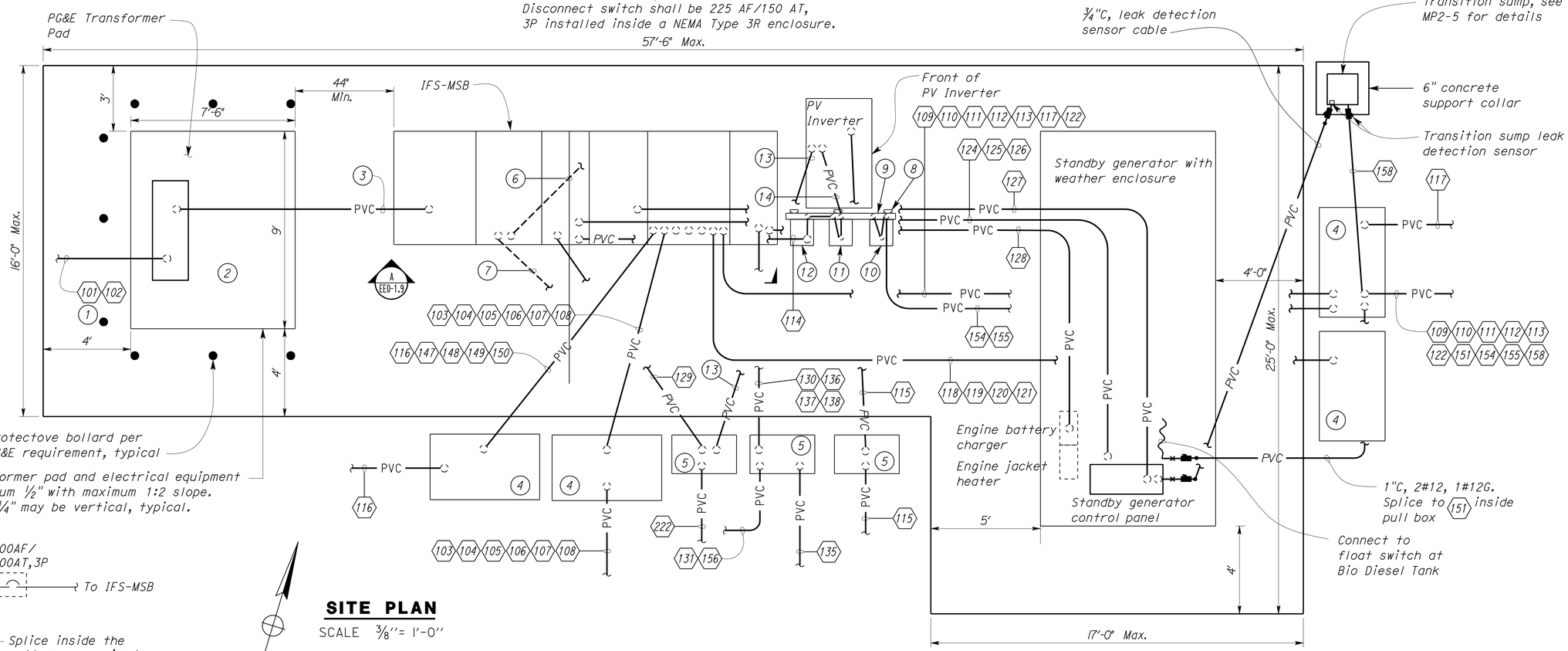

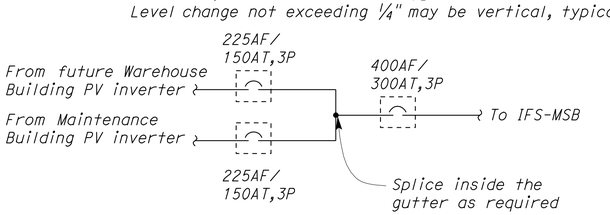

A PV SYSTEM WIRING DIAGRAM

SITE PLAN

SCALE 3/8"= 1'-0"

3 REVISED PER ADDENDUM No. 3 DATED JANUARY 4, 2013

THIS DRAWING ACCURATE FOR ELECTRICAL WORK ONLY

	BY	CHECKED
DESIGN	Javid Amirazodi	J.S. Sandhu/J.R. Lacy
DETAILS	Javid Amirazodi	James R. Lacy
QUANTITIES	Javid Amirazodi	J.S. Sandhu/J.R. Lacy

STATE OF CALIFORNIA DEPARTMENT OF TRANSPORTATION

DIVISION OF ENGINEERING SERVICES
ELECTRICAL-MECHANICAL-WATER AND WASTEWATER DESIGN

BRIDGE NO. 33M5785
POST MILE 2.2

SFOBB MAINTENANCE COMPLEX
ELECTRICAL EQUIPMENT CONCRETE PAD DETAILS

SHEET EE0-1.8

TAEMWW Imperial Rev. 7/10

ORIGINAL SCALE IN INCHES FOR REDUCED PLANS 0 1 2 3

UNIT 3596
PROJECT NUMBER & PHASE 04120006661
EA 014081

DISREGARD PRINTS BEARING EARLIER REVISION DATES
REVISION DATES (PRELIMINARY STAGE ONLY) 5/30/12 7/23/12 12/12/12
SHEET OF

31-DEC-2012 07:20
ee0_1.08.dgn

DIST.	COUNTY	ROUTE	POST MILES TOTAL PROJECT	SHEET NO.	TOTAL SHEETS
04	Ala	80	2.2	638	800

CALIFORNIA STATE FIRE MARSHAL APPROVED
Approval of this plan does not authorize or approve any omission or deviation from applicable regulations. Final approval is subject to field inspection. One set of approved plans shall be available on the project site at all times.
Reviewed by: SPENCER MEYER
Approval date: 12-13-12

Javid Amirazodi 5-30-12
REGISTERED ELECTRICAL ENGINEER DATE

REGISTERED PROFESSIONAL ENGINEER J. AMIRAZODI No. 17509 Exp. 6-30-13 ELEC STATE OF CALIFORNIA

10-22-12
PLANS APPROVAL DATE

The State of California or its officers or agents shall not be responsible for the accuracy or completeness of scanned copies of this plan sheet.

3

CONDUITS AND CONDUCTORS/CABLES SCHEDULE *

CONDUIT NUMBER	REFERENCE SHEET	CONDUIT SIZE/TYPE	FROM	TO	CONDUCTOR/CABLE SIZE
101	EE0-0.1, EE0-1.8	4"C, PVC	PG&E power pole	PG&E transformer	As required by PG&E
102	EE0-0.1, EE0-1.8	4"C, PVC	PG&E power pole	PG&E transformer	As required by PG&E
103	EE0-0.1, EE0-1.1, EE0-1.8	3"C, PVC	IFS-MSB	IFS-M	4#350 kcmil, 1#350 kcmil G
104	EE0-0.1, EE0-1.1, EE0-1.8	3"C, PVC	IFS-MSB	IFS-M	4#350 kcmil, 1#350 kcmil G
105	EE0-0.1, EE0-1.1, EE0-1.8	3"C, PVC	IFS-MSB	IFS-M	4#350 kcmil, 1#350 kcmil G
106	EE0-0.1, EE0-1.1, EE0-1.8	3"C, PVC	IFS-MSB	IFS-M	4#350 kcmil, 1#350 kcmil G
107	EE0-0.1, EE0-1.1, EE0-1.8	4"C, PVC	IFS-MSB	IFS-M	MT, pull rope
108	EE0-0.1, EE0-1.1, EE0-1.8	4"C, PVC	IFS-MSB	IFS-M	MT, pull rope
109	EE0-0.1, EE0-0.2, EE0-1.1, EE0-1.8	4"C, PVC	IFS-MSB	Electrical vault, future warehouse	MT, pull rope
110	EE0-0.1, EE0-0.2, EE0-1.1, EE0-1.8	4"C, PVC	IFS-MSB	Electrical vault, future warehouse	MT, pull rope
111	EE0-0.1, EE0-0.2, EE0-1.1, EE0-1.8	4"C, PVC	IFS-MSB	Electrical vault, future warehouse	MT, pull rope
112	EE0-0.1, EE0-0.2, EE0-1.1, EE0-1.8	4"C, PVC	IFS-MSB	Electrical vault, future warehouse	MT, pull rope
113	EE0-0.1, EE0-0.2, EE0-1.1, EE0-1.8	4"C, PVC	IFS-MSB	IFS-W	4#350 kcmil, 1#350 kcmil G
114	EE0-1.1, EE0-1.8,	3"C, PVC	IFS-MSB	PV service AC disconnect Switch	3#500 kcmil, 1#500 kcmil G
115	EE0-0.1, EE1-11.1	3"C, PVC	PV power DC disconnect switch	PV inverter (DC)	4#4/0, 1#4/0G
116	EE0-1.1, EE0-1.8	2"C, PVC	IFS-MSB	Area light-west	4#6, 1#8 G
117	EE0-1.1, EE0-1.8	2"C, PVC	IFS-MSB	Area light-east	4#6, 1#8 G
118	EE0-1.1, EE0-1.8	4"C, PVC	IFS-MSB	Electrical vault	MT, pull rope
119	EE0-1.1, EE0-1.8	4"C, PVC	IFS-MSB	Electrical vault	MT, pull rope
120	EE0-1.1, EE0-1.8	4"C, PVC	IFS-MSB	Electrical vault	MT, pull rope
121	EE0-1.1, EE0-1.8	4"C, PVC	IFS-MSB	Electrical vault	MT, pull rope
122	EE0-0.1, EE0-0.2, EE0-1.1, EE0-1.8	4"C, PVC	IFS-MSB	IFS-W	MT, pull rope
123	EE0-09, EE0-1.10	-	Building grounding system	Ground plate inside Main communication vault	#4/0 Bare
124	EE0-1.1, EE0-1.8	3"C, PVC	IFS-MSB	Standby generator	4#350 kcmil, 1#350 kcmil G
125	EE0-1.1, EE0-1.8	3"C, PVC	IFS-MSB	Standby generator	4#350 kcmil, 1#350 kcmil G
126	EE0-1.1, EE0-1.8	3"C, PVC	IFS-MSB	Standby generator	4#350 kcmil, 1#350 kcmil G
127	EE0-1.1, EE0-1.8	1"C, PVC	ATS section of IFS-MSB	Standby generator	Control cables as required
128	EE0-1.1, EE0-1.8	1"C, PVC	Panel M inside IFS-MSB	Engine jacket heater (M1-3), engine battery charger (M5)	4#10, 1#10G
129	EE0-1.1, EE0-1.8	1"C, PVC	IFS-MSB	Pull box	Data and control cables as required
130	EE0-1.1, EE0-1.8	3"C, PVC	Panel M inside IFS-MSB	Camera #19 (M7), gate operators-west (M6-8, 10-12), irrigation controller (M2), sump pump receptacle (M4)	4#6(gate operators), 2#10 (sump pump receptacle), 4#8, 1#6G
131	EE0-0.1, EE0-1.8	4"C, PVC	Pull box	Camera #19, gate operators (west), irrigation controller	4#6(gate operators), 4#8, 1#6G
132	EE0-0.1, EE0-0.7	1"C, PVC	Pull box	Gate operator A-west (M6-8)	2#8, 1#8G
133	EE0-0.1, EE0-0.7	1"C, PVC	Pull box	Gate operator B-west (M10-12)	2#8, 1#8G
134	EE0-0.1	4"C, PVC	Pull box	Irrigation controller	2#8, 1#8G
135	EE0-0.1, EE0-0.9 EE0-1.8	1"C, PVC	Panel M inside IFS-MSB	Sump pump receptacle inside Main Communication Vault	2#10, 1#10G
136	EE0-1.1, EE0-1.8	2"C, PVC	IFS-MSB	Pull box	MT, pull rope
137	EE0-1.1, EE0-1.8	2"C, PVC	IFS-MSB	Pull box	MT, pull rope
138	EE0-1.1, EE0-1.8	2"C, PVC	IFS-MSB	Pull box	MT, pull rope
139	EE0-0.1	¾"C, PVC	Pull box	Camera #19 on light pole	One 2 strands, MM, FO cable,2#12,1#12G
140	EE0-0.2	¾"C, PVC	Pull box	Camera #20 on light pole	One 2 strands, MM, FO cable,2#12,1#12G
141	EE0-0.2	¾"C, PVC	Pull box	Camera #21 on light pole	One 2 strands, MM, FO cable,2#12,1#12G
142	EE0-0.2	¾"C, PVC	Pull box	Camera #22 on light pole	One 2 strands, MM, FO cable,2#12,1#12G
143	EE0-0.2	¾"C, PVC	Pull box	Camera #23 on light pole	One 2 strands, MM, FO cable,2#12,1#12G
144	EE0-0.2	3"C, PVC	Panel 2WA	Cameras (2WA8), gate operators-east (2WA16-18, 20-22), Sewage lift pumps (2WA37-39-41)	4#6, 2#8, 4#4, 1#4G
145	EE0-0.2	1"C, PVC	Pull box	Pull box next to cameras #20, 21, 23	2#8, 1#8G
146	EE0-0.2, EE0.08	2"C, PVC	Pull box	Pull box	4#6, 1#6G
147	EE0-1.1, EE0-1.8	4"C, PVC	IFS-MSB	Electrical vault	MT, pull rope
148	EE0-1.1, EE0-1.8	4"C, PVC	IFS-MSB	Electrical vault	MT, pull rope
149	EE0-1.1, EE0-1.8	4"C, PVC	IFS-MSB	Electrical vault	MT, pull rope
150	EE0-1.1, EE0-1.8	4"C, PVC	IFS-MSB	Electrical vault	MT, pull rope
151	EE0-0.1, EE0-0.2, EE0-1.8, EE2-1	1"C, PVC	Float switch inside standby generator bio diesel tank	Pump contol box	2#8, 1#8G
152	EE0-0.1, EE0-0.8	1"C, PVC	Pull box	Gate operator B-east (2WA20-22)	2#8, 1#8G
153	EE0-0.1, EE0-0.8	1"C, PVC	Pull box	Gate operator A-east (2WA16-18)	2#8, 1#8G
154	EE0-0.1, EE0-02 EE0-0.9, EE0-1.1	4"C, PVC	IFS-MSB	Electrical vault, future warehouse pv system	MT, pull rope
155	EE0-0.1, EE0-02 EE0-0.9, EE0-1.1	4"C, PVC	IFS-MSB	Electrical vault, future warehouse pv system	MT, pull rope
156	EE0-0.1, EE0-1.8	4"C, PVC	Pull box	Pull box	MT, pull rope
157	EE0-0.2	3"C, PVC	Panel 2WA	Cameras (2WA8), gate operators-east (2WA16-18,20-22)	4#6, 2#8, 1#6G
158	EE0-0.1, EE0-0.2, EE0-1.8, EE2-1	1"C, PVC	Transition sump	Leak detection panel	1 LDS cable

* For pull box/vault locations/numbers in conduit routes, see site Plan sheets.

THIS DRAWING ACCURATE FOR ELECTRICAL WORK ONLY

3 **REVISED PER ADDENDUM No. 3 DATED JANUARY 4, 2013**

	BY	CHECKED
DESIGN	Javid Amirazodi	J.S. Sandhu/J.R. Lacy
DETAILS	Javid Amirazodi	James R. Lacy
QUANTITIES	Javid Amirazodi	J.S. Sandhu/J.R. Lacy

STATE OF CALIFORNIA DEPARTMENT OF TRANSPORTATION

DIVISION OF ENGINEERING SERVICES ELECTRICAL-MECHANICAL-WATER AND WASTEWATER DESIGN

BRIDGE NO. 33M5785
POST MILE 2.2

SFOBB MAINTENANCE COMPLEX
CONDUIT AND CONDUCTOR/CABLE SCHEDULE I

SHEET **EE0-1.11**

TAEMWW Imperial Rev. 7/10

ORIGINAL SCALE IN INCHES FOR REDUCED PLANS 0 1 2 3

UNIT 3596
PROJECT NUMBER & PHASE 04120006661
EA 014081

DISREGARD PRINTS BEARING EARLIER REVISION DATES → 5/30/12 11/28/12 12/12/12

REVISION DATES (PRELIMINARY STAGE ONLY) SHEET OF

31-DEC-2012 07:20

ee0_1.11.add

DIST.	COUNTY	ROUTE	POST MILES TOTAL PROJECT	SHEET NO.	TOTAL SHEETS
04	Ala	80	2.2	639	800

CALIFORNIA STATE FIRE MARSHAL APPROVED
Approval of this plan does not authorize or approve any omission or deviation from applicable regulations. Final approval is subject to field inspection. One set of approved plans shall be available on the project site at all times.
Reviewed by: SPENCER MEYER
Approval date: 12-13-12

Javid Amirazodi 5-30-12
REGISTERED ELECTRICAL ENGINEER DATE

REGISTERED PROFESSIONAL ENGINEER J. AMIRAZODI No. 17509 Exp. 6-30-13 ELEC STATE OF CALIFORNIA

10-22-12
PLANS APPROVAL DATE

The State of California or its officers or agents shall not be responsible for the accuracy or completeness of scanned copies of this plan sheet.

3

CONDUITS AND CONDUCTORS/CABLES SCHEDULE ✳

CONDUIT NUMBER	REFERENCE SHEET	CONDUIT SIZE/TYPE	FROM	TO	CONDUCTOR/CABLE SIZE AND TERMINATION
201	EE0-0.5, EE1-4.7	4"C, PVC	AT&T vault	AT&T designated space in room 176	Conductors/cables as required by AT&T. Terminate on AT&T equipment in room 176 as required by AT&T
202	EE0-0.5, EE1-4.7	4"C, PVC	AT&T vault	AT&T designated space in room 176	Conductors/cables as required by AT&T. Terminate on AT&T equipment in room 176 as required by AT&T
203	EE0-0.5, EE0-0.9 EE1-4.7	4"C, PVC	IT communication racks designated space in room 176	Toll operation building IT room	One 24 strands, MMFO cable. Terminate on PP 1BR2F1 in room 176, using type SC connectors
204	EE0-0.5, EE0-0.9 EE1-4.7	4"C, PVC	IT communication racks designated space in room 176	Toll operation building IT room	MT, pull rope
205	EE0-0.5, EE0-0.9 EE1-4.7	4"C, PVC	IT communication racks designated space in room 176	Toll Operation Building IT Room	MT, pull rope
206	EE0-0.5, EE0-0.9 EE1-4.7	4"C, PVC	IT communication racks designated space in room 176	East Bay and Oakland substations	Two 12 strands, MMFO cable. Terminate on PP 1BR2F4 in room 176, using type SC connectors
207	EE0-0.5, EE0-0.9 EE1-4.7	4"C, PVC	IT communication racks designated space in room 176	Utility tunnel	MT, pull rope
208	EE0-0.5, EE0-0.9 EE1-4.7	4"C, PVC	IT communication racks designated space in room 176	Utility tunnel	MT, pull rope
209	EE0-0.5, EE0-0.9 EE1-4.7	4"C, PVC	Bridge electrical designated space in room 176	East Bay and Oakland Substations	Two 50 pair, STP cable. Terminate on 66 Blocks 37 and 38 in room 176
210	EE0-0.5, EE0-0.9 EE1-4.7	4"C, PVC	Toll operation building SCADA room	SCADA rack designated space in room 176	✳ ✳
211	EE0-0.5, EE0-0.9 EE1-4.5	4"C, PVC	Toll operation building BASE room	BASE designated space in room 164A	✳ ✳ ✳
212	EE0-0.5,EE0-0.6, EE0-0.9,EE1-4.7	4"C, PVC	IT communication racks designated space in room 176	Pull box for future Warehouse	MT, pull rope
213	EE0-0.5,EE0-0.6, EE0-0.9,EE1-4.7	4"C, PVC	IT communication racks designated space in room 176	Pull box for future Warehouse	MT, pull rope
214	EE0-0.5,EE0-0.6, EE1-4.7	4"C, PVC	IT communication racks designated space in room 176	Pull box for future Warehouse	MT, pull rope
215	EE0-0.5,EE0-0.6, EE0-0.9,EE1-4.7	4"C, PVC	IT communication racks designated space in room 176	Pull box for future Warehouse	MT, pull rope
216	EE0-0.5,EE0-0.6, EE0-0.9,EE1-4.7	4"C, PVC	IT communication racks designated space in room 176	Fuel Log Room	✳ ✳ ✳ ✳
217	EE0-0.5,EE0-0.6, EE0-0.8,EE1-4.7	2"C, PVC	Intrusion alarm designated space in room 176	Knox box and access gate-east	Control cables as required
218	EE0-0.5,EE0-0.6, EE0-0.7,EE1-4.7	2"C, PVC	Intrusion alarm designated space in room 176	Knox box and access gate-west	Control cables as required
219	EE0-0.5,EE0-0.6, EE0-0.9,EE1-4.7	4"C, PVC	Intrusion alarm designated space in room 176	Pull box for future Warehouse	MT, pull rope
220	EE0-0.5, EE0-0.6, EE0-0.9, EE1-4.7	4"C, PVC	CCTV rack designated space in room 176	Pull box for future Warehouse	MT, pull rope
221	EE0-0.5, EE0-0.9, EE5-6.0	4"C, PVC	Fire alarm control panel in room 177	Pull box for future Warehouse	MT, pull rope
222	EE0-0.5, EE0-0.9, EE0-1.8, EE1-1.8, EE1-4.7	3"C, PVC	Power monitoring section of IFS-MSB and PV inverter	Power monitoring system designated space in room 176	Data and control cables for power monitoring system to lighting network workstation via power monitoring gateway and network switch and 1 TIA-485 cable to PV system data acquisition server.Terminate as required.
223	EE0-0.5, EE0-0.9 EE1-4.7	4"C, PVC	CCTV rack designated space in room 176	Main communications vault	Five 2 strands, MMFO cables. Terminate on devices as required
224	EE0-0.5,EE0-0.6, EE0-0.9, EE0-0.2	3"C, PVC	Main communications vault	Pull box	Four 2 strands, MMFO cables
225	EE0-0.2	2"C, PVC	Pull box	Pull box	Three 2 strands, MMFO cables. Terminate on devices as required
226	EE0-0.2	2"C, PVC	Pull box	Pull box	Two 2 strands, MMFO cables. Terminate on devices as required
227	EE0-0.1, EE0-0.2 EE0-0.9, EE0-0.5	2"C, PVC	Main communications vault	Pull box	One 2 strands, MMFO cable
228	EE0-0.2, EE0-0.9, EE5-6.0	1"C, PVC	Fire alarm control panel in room 177	Fire department detector check valve tamper switch	Control cables as required. Terminate on devices as required
229	EE0-0.5, EE0-0.9 EE1-4.7	4"C, PVC	IT Communication racks designated space in room 176	Main Communication Vault	MT, pull rope
230	EE0-0.5, EE0-0.9 EE1-4.7	4"C, PVC	IT Communication racks designated space in room 176	Main Communication Vault	MT, pull rope

✳ For pull box/vault locations/numbers in conduit routes, see site Plan sheets.

✳ ✳ One 12 strands, MMFO cable and one 50 pairs, STP cable. Perform the following:
-Provide and install fiber patch panel in SCADA rack located in room 176. Fiber patch panel shall be Leviton, RDP-175; AFL, LightLink LANSystem 1RU or equal;
-Terminate the 12 multi mode fibers on 12 ST/UPC connectors. 12 connectors shall fit onto two 6 pack module and the modules shall be attached to fiber patch panel;
-Terminate one 50 pairs, STP cable on 66 Block 39 in room 176.
-For SCADA rack and 66 Block location, see EE1-4.5.

✳ ✳ ✳ One 12 strands, SMFO cable. Perform the following:
-Provide and install fiber patch panel in BASE rack located in room 164B. Fiber patch panel shall be Leviton, RDP-175; AFL, LightLink LANSystem 1RU or equal;
-Terminate the 12 single mode fibers on 3 duplex SC/UPC connectors. SMFO cable shall be DryBlock Cable, ofs or FirstLink, Prysmian.The connectors shall be fixed within a 6 pack module and the module shall be attached to fiber patch panel;
-For BASE rack location, see EE1-4.5.

✳ ✳ ✳ ✳ Two data cables, two voice cables.One 4 strands MMFO cable,terminate on 1BR2F3 and Fuel Log Room fiber PP.
Control cables as required for connecting fuel leak detection system to the Intrusion Alarm System for providing central monitoring of the leak detection system as required by California Fire Code 3404.2.8.11 (Zone 80).

3 **REVISED PER ADDENDUM No. 3 DATED JANUARY 4, 2013**

THIS DRAWING ACCURATE FOR ELECTRICAL WORK ONLY

	BY	CHECKED
DESIGN	Javid Amirazodi	J.S. Sandhu/J.R. Lacy
DETAILS	Javid Amirazodi	James R. Lacy
QUANTITIES	Javid Amirazodi	J.S. Sandhu/J.R. Lacy

STATE OF CALIFORNIA
DEPARTMENT OF TRANSPORTATION

DIVISION OF ENGINEERING SERVICES
ELECTRICAL-MECHANICAL-WATER AND WASTEWATER DESIGN

BRIDGE NO. 33M5785
POST MILE 2.2

SFOBB MAINTENANCE COMPLEX
CONDUIT AND CONDUCTOR/CABLE SCHEDULE 2

SHEET **EE0-1.12**

TAEMWW Imperial Rev. 7/10

ORIGINAL SCALE IN INCHES FOR REDUCED PLANS 0 1 2 3

UNIT 3596
PROJECT NUMBER & PHASE 04120006661
EA 014081

DISREGARD PRINTS BEARING EARLIER REVISION DATES → 5/30/12 12/12/12

REVISION DATES (PRELIMINARY STAGE ONLY) SHEET OF

31-DEC-2012 07:21
ee0_1.12.add

DIST.	COUNTY	ROUTE	POST MILES TOTAL PROJECT	SHEET NO.	TOTAL SHEETS
04	Ala	80	2.2	641	800

3

Catalino A. Enriquez 5-30-12
REGISTERED ELECTRICAL ENGINEER DATE

REGISTERED PROFESSIONAL ENGINEER C. ENRIQUEZ No. 16944 Exp. 6-30-13 ELEC STATE OF CALIFORNIA

10-22-12
PLANS APPROVAL DATE

The State of California or its officers or agents shall not be responsible for the accuracy or completeness of scanned copies of this plan sheet.

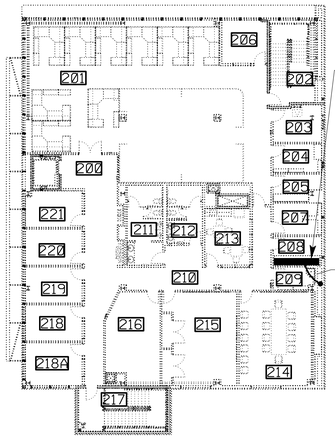

2ND FLOOR

ROOM #	ROOM NAME	ROOM #	ROOM NAME	ROOM #	ROOM NAME	ROOM #	ROOM NAME
100	LOBBY AREA	131	ELECTRICAL	162	ELECTRICAL SHOP	192	EQUIPMENT REPAIR AREA
101	HALLWAY	132	HALLWAY	163	EQUIPMENT STORAGE BAY	193	MACHINE SHOP
102	LEAD WORKER AREA	133	RIGGING SECURE TOOL	164A	BASE ROOM	194	UNISEX TOILET
103	SUPERVISOR OFFICE	134	PAINT MIX	164B	ENGINEER MAP ROOM	195	ROVER BAY STORAGE
104	SUPERVISOR OFFICE	135	HALLWAY	165	LOBBY	196	SECURE STORAGE AREA
105	KITCHEN	136	SEW ROOM	166	BREAK ROOM	197	WORKSTATION
106	CREW ROOM 1	137	SHOP CREW	167	HALLWAY	198	LEAD WORKER OFFICE
107	CREW ROOM 2	138	TOOL STORAGE 1	168	SUPERVISOR	199	UTILITY
108	STAIR 1	139	PAINT STORAGE 1	169	LEAD WORKER AREA		
109	LOBBY 2	140	TOOL STORAGE 2	170	SUPERVISOR	200	LOBBY
110	WOMENS RESTROOM	141	PAINT STORAGE 2	171	SUPERVISOR	201	OPEN OFFICE AREA
111	MEN'S RESTROOM	142	EQUIPMENT STORAGE BAYS	172	SUPERVISOR	202	STAIRS
112	JANITOR	143	HALLWAY	173	CREW ROOM	203	FIRE/MECHANICAL
113	OFF. SUP. STORAGE	144	HALLWAY	174	CREW ROOM	204	OFFICE SUP STORAGE
114	ELECTRICAL	145	CABINET SHOP	175	CREW ROOM	205	COMMUNICATION ROOM
115	MECHANICAL	146	SECURE STORAGE	176	MAIN COMMUNICATION	206	QUIET ROOM
116	COMMUNICATION	147	WELDING SHOP	177	FIRE/MECHANICAL	207	COMMUNICATION
117	ELEVATOR EQUIPMENT	148	MAIN ELECTRICAL	178	ETTIE STORAGE	208	ELECTRICAL
118	ELEVATOR	149	TOILET ROOM	179	HALLWAY	209	JANITOR
119	HALLWAY	150	BAIR STORAGE	180	PARTS STORAGE	210	AISLE
120	WOMEN DECON	151	JANITOR	181	TIRE STORAGE	211	MENS RESTROOM
121	WOMEN LOCKERS/SHOWERS	152	WOMEN'S RESTROOM	182	PARTS OFFICE	212	WOMEN'S RESTROOM
122	MEN'S DECONTAMINATION	153	WOMEN'S LOCKER	183	SUPERVISOR	213	UNISEX SHOWER
123	MEN'S LOCKER	154	MEN'S RESTROOM	184	CREW ROOM	214	CONFERENCE ROOM
124	MEN'S SHOWER	155	MEN'S LOCKER	185	HALLWAY	215	TRAINING
125	GEAR ROOM	156	MEN'S SHOWER	186	WOMEN'S RESTROOM	216	FILE STORAGE
126	STAIRS 2	157	HALLWAY	187	MEN'S RESTROOM	217	STAIRS
127	BREEZEWAY	158	LOBBY	188	MEN'S LOCKER	218	BREAK ROOM
128	COMPRESSOR ROOM	159	MONITOR SPACE	189	SUPERVISOR	219	RIG ENG. SUP
129	STORAGE	160	CREW ROOM	190	JANITOR	220	MAINTENANCE AREA SUP
130	RECYCLE MATERIAL STORAGE	161	SUPERVISOR	191	EQUIPMENT REPAIR BAYS	221	MAINTENANCE AREA SUP

General Notes:

A. For power one line diagrams, see sheets EE0-1.1 through EE0-1.7.

B. For feeder conduit and conductor sizes, see sheets EE1-1.2 and EE1-1.3.

C. For panelboards and switchboards index sheet, see EE1-1.4.

D. For IFS grounding details, see sheet EE1-9.4.

E. All elbows and risers inside the building shall be PVC coated galvanized steel conduit. Wrap joints in touch with soil with two layers of pipe wrapping tape.

F. For Lighting Network Panels (LNP), see lighting plan sheets.

G. Underground conduits entering the building from outside and within the building shall be installed below the structural primary/intermediate grade beams. For location of structural primary/intermediate grade beams, underground conduits stub up, and penetration details through floor/beams, refer to Structural Plan sheets.

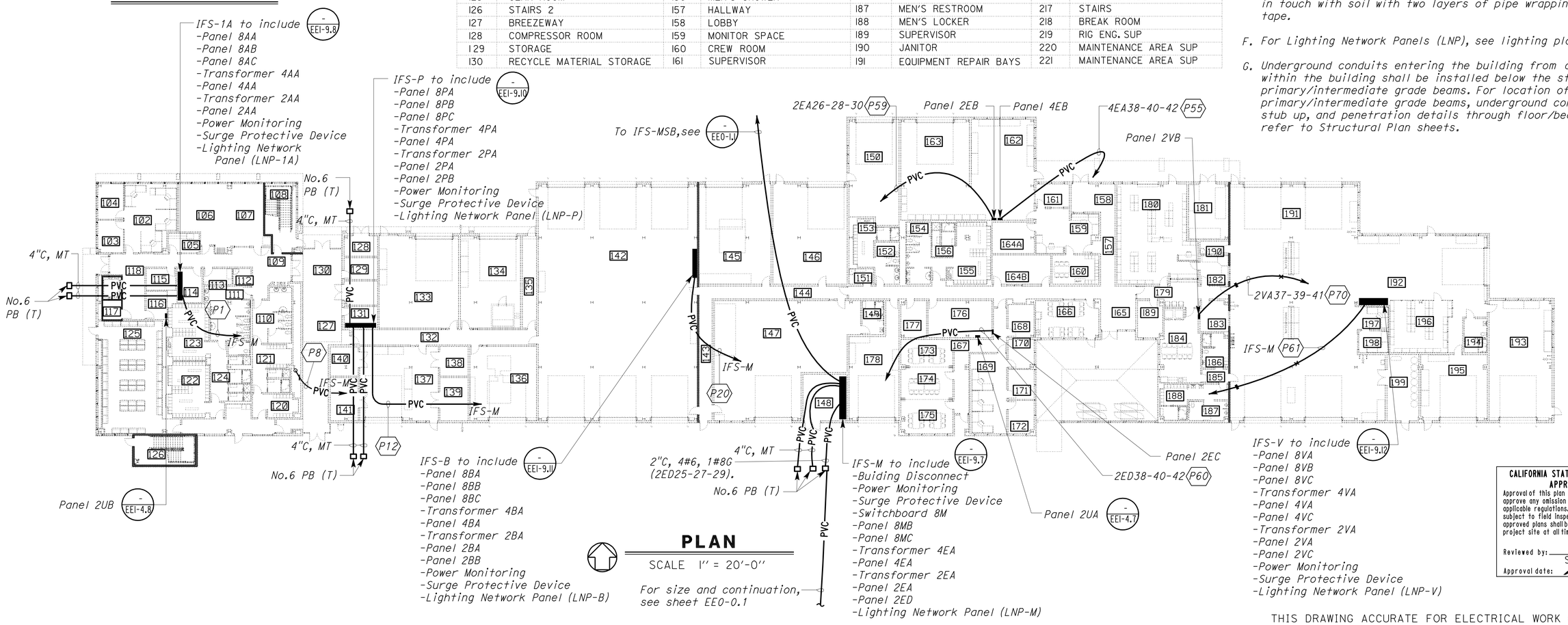

PLAN

SCALE 1" = 20'-0"

For size and continuation, see sheet EE0-0.1

CALIFORNIA STATE FIRE MARSHAL APPROVED

Approval of this plan does not authorize or approve any omission or deviation from applicable regulations. Final approval is subject to field inspection. One set of approved plans shall be available on the project site at all times.

Reviewed by: SPENCER MEYER
Approval date: 5-13-12

THIS DRAWING ACCURATE FOR ELECTRICAL WORK ONLY

3 REVISED PER ADDENDUM No. 3 DATED JANUARY 4, 2013

	BY	CHECKED
DESIGN	Catalino Enriquez	J.S.S./H.Abdelsayed
DETAILS	Dali Zhou	Catalino Enriquez
QUANTITIES	Catalino Enriquez	J.S.S./H.Abdelsayed

STATE OF CALIFORNIA DEPARTMENT OF TRANSPORTATION

DIVISION OF ENGINEERING SERVICES ELECTRICAL-MECHANICAL-WATER AND WASTEWATER DESIGN

BRIDGE NO. 33M5785
POST MILE 2.2

SFOBB MAINTENANCE COMPLEX
POWER PANEL KEY PLAN

SHEET EE1-1.1

TAEMWW Imperial Rev. 7/10

ORIGINAL SCALE IN INCHES FOR REDUCED PLANS 0 1 2 3

UNIT 3596
PROJECT NUMBER & PHASE 04120006661
EA 014081

DISREGARD PRINTS BEARING EARLIER REVISION DATES
REVISION DATES (PRELIMINARY STAGE ONLY) 1/9/12 5/18/12 5/30/12 11/29/12 SHEET OF

31-DEC-2012 08:01
ee1_1.01.dgn

DIST.	COUNTY	ROUTE	POST MILES TOTAL PROJECT	SHEET NO.	TOTAL SHEETS
04	Ala	80	2.2	647	800

CALIFORNIA STATE FIRE MARSHAL APPROVED
Approval of this plan does not authorize or approve any omission or deviation from applicable regulations. Final approval is subject to field inspection. One set of approved plans shall be available on the project site at all times.
Reviewed by: SPENCER MEYER
Approval date: 7-13-12

REGISTERED ELECTRICAL ENGINEER — 5-30-12 DATE
REGISTERED PROFESSIONAL ENGINEER J. ABDELSAYED No. 18915 Exp. 12-31-13 ELEC STATE OF CALIFORNIA

10-22-12
PLANS APPROVAL DATE

The State of California or its officers or agents shall not be responsible for the accuracy or completeness of scanned copies of this plan sheet.

3

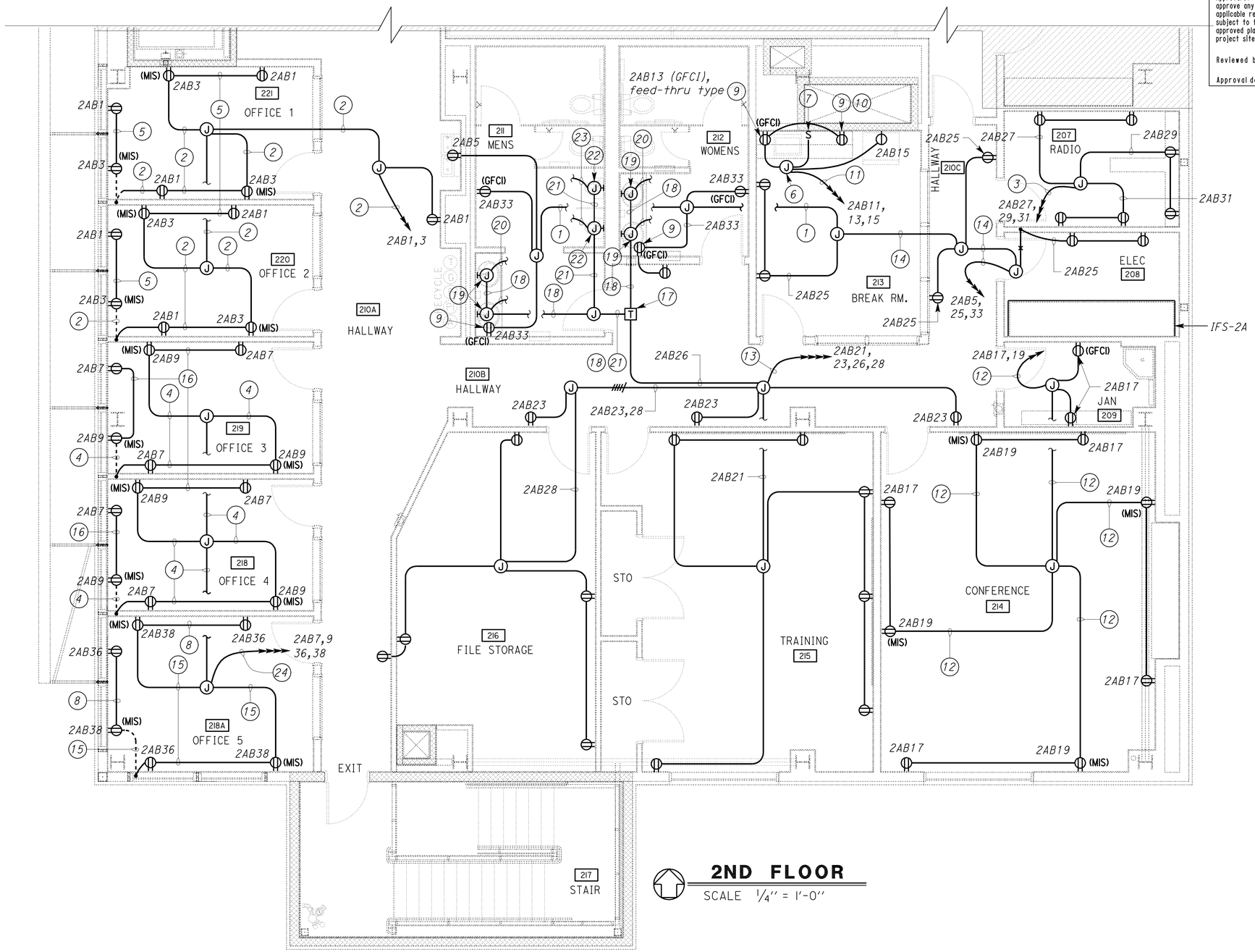

2ND FLOOR
SCALE 1/4" = 1'-0"

General Note:

A. For general and project notes on this sheet, see sheet EE1-1.8.

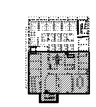

2ND FLOOR

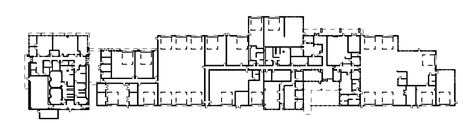

KEY PLAN

THIS DRAWING ACCURATE FOR ELECTRICAL WORK ONLY

3 **REVISED PER ADDENDUM No. 3 DATED JANUARY 4, 2013**

	BY	CHECKED
DESIGN	Joseph Abdelsayed	J. S. Sandhu
DETAILS	Ed Tapalla/Dali Zhou	Joseph Abdelsayed
QUANTITIES	Joseph Abdelsayed	J. S. Sandhu

STATE OF CALIFORNIA
DEPARTMENT OF TRANSPORTATION

DIVISION OF ENGINEERING SERVICES
ELECTRICAL-MECHANICAL-WATER AND WASTEWATER DESIGN

BRIDGE NO. 33M5785
POST MILE 2.2

SFOBB MAINTENANCE COMPLEX
BUILDING 1A
PARTIAL POWER PLAN 3

SHEET **EE1-1.7**

TAEMWW Imperial Rev. 7/10

ORIGINAL SCALE IN INCHES FOR REDUCED PLANS 0 1 2 3

UNIT 3596
PROJECT NUMBER & PHASE 04120006661
EA 014081

DISREGARD PRINTS BEARING EARLIER REVISION DATES → 10/14/11 3/28/12 11/29/12

REVISION DATES (PRELIMINARY STAGE ONLY) SHEET OF

31-DEC-2012 08:01
ee1_1.07.dgn

DIST.	COUNTY	ROUTE	POST MILES TOTAL PROJECT	SHEET NO.	TOTAL SHEETS
04	Ala	80	2.2	648	800

REGISTERED ELECTRICAL ENGINEER — 5-30-12 DATE

REGISTERED PROFESSIONAL ENGINEER J. ABDELSAYED No. 18915 Exp. 12-31-13 ELEC STATE OF CALIFORNIA

10-22-12
PLANS APPROVAL DATE

The State of California or its officers or agents shall not be responsible for the accuracy or completeness of scanned copies of this plan sheet.

CALIFORNIA STATE FIRE MARSHAL APPROVED
Approval of this plan does not authorize or approve any omission or deviation from applicable regulations. Final approval is subject to field inspection. One set of approved plans shall be available on the project site at all times.
Reviewed by: SPENCER MEYER
Approval date: 12-13-12

3

General Notes:

A. *System layout for the automatic flush system as shown is diagrammatic only. The exact layout depends on the system furnished and installed. In addition, provide and install any components that are not shown but are required for the automatic functioning of the automatic flush system. The price for additional components shall be considered part of the lump sum price.*

B. *All device and accessories for automatic flush system are supplied by the water closet, faucet, and urinal manufacturer.*

C. *Provide and install support systems for supporting armored cable as required.*

D. *Transformer supplied by the manufacturer shall be sized adequately to supply all units shown.*

E. *Armored cable to connect various devices shall be of adequate length with approved connectors for terminations at junction boxes and field devices.*

Notes:

1. *¾"C, 4#12 (2AB5,33), 1#12G.*
2. *¾"C, 4#10 (2AB1,3), 1#10 insulated ground, 1#10G.*
3. *¾"C, 6#12 (2AB27,29,31), 1#12G.*
4. *¾"C, 4#10 (2AB7,9), 1#10 insulated ground, 1#10G.*
5. *½"C, 2#10 (2AB1), 1#10G.*
6. *Mount junction box below sink. Connect circuit 2AB11 to undersink garbage disposal. Install weatherproof GFCI receptacle to suit unit furnished.*
7. *Switch for garbage disposal. Mount bottom of switch 6 inches above counter top.*
8. *½"C, 2#10 (2AB36), 1#10G.*
9. *Mount bottom of receptacle 6 inches above counter top.*
10. *Connect this outlet from GFCI feed-through type outlet.*
11. *¾"C, 6#12 (2AB11,13,15), 1#12G.*
12. *¾"C, 4#12 (2AB17,19), 1#12 insulated ground, 1#12G.*
13. *¾"C, 8#12 (2AB21,23,26,28), 1#12G.*
14. *¾"C, 6#12 (2AB5,25,33), 1#12G.*
15. *¾"C, 4#10 (2AB36,38), 1#10 insulated ground, 1#10G.*
16. *½"C, 2#10 (2AB7), 1#10G.*
17. *Install all hardware as required for the installation of the low voltage transformer as recommended by the manufacturer. Mount transformer in a surface mounted junction box in the attic space above the Hallway.*
18. *½"C, conductors as required by electronic faucet manufacturer.*
19. *Recessed junction box. Install junction box as required to suit electronic faucet unit furnished.*
20. *½"C, conductors as required. Terminate conduit and conductors at electronic faucet control module.*
21. *½"C, conductors as required for operation of infrared sensor and solenoid valve.*
22. *Recessed junction box. Install junction box as required to suit urinal infrared sensor and solenoid valve.*
23. *½"C, conductors as required. Terminate conduit and conductors at urinal control module.*
24. *1"C, 8#10 (2AB7,9,36,38), 1#10 insulated ground, 1#10G.*

2ND FLOOR

KEY PLAN

THIS DRAWING ACCURATE FOR ELECTRICAL WORK ONLY

3 **REVISED PER ADDENDUM No. 3 DATED JANUARY 4, 2013**

	BY	CHECKED
DESIGN	Joseph Abdelsayed	J. S. Sandhu
DETAILS	Ed Tapalla/Dali Zhou	Joseph Abdelsayed
QUANTITIES	Joseph Abdelsayed	J. S. Sandhu

STATE OF CALIFORNIA DEPARTMENT OF TRANSPORTATION

DIVISION OF ENGINEERING SERVICES ELECTRICAL-MECHANICAL-WATER AND WASTEWATER DESIGN

BRIDGE NO. 33M5785 POST MILE 2.2

SFOBB MAINTENANCE COMPLEX

BUILDING 1A — PARTIAL POWER PLAN 3 NOTES

SHEET **EE1-1.8**

TAEMWW Imperial Rev. 7/10

ORIGINAL SCALE IN INCHES FOR REDUCED PLANS 0 1 2 3

UNIT 3596
PROJECT NUMBER & PHASE 04120006661
EA 014081

DISREGARD PRINTS BEARING EARLIER REVISION DATES → 10/19/11 3/28/12 11/29/12

REVISION DATES (PRELIMINARY STAGE ONLY) SHEET OF

31-DEC-2012 08:01

ee1_1.08.add

DIST.	COUNTY	ROUTE	POST MILES TOTAL PROJECT	SHEET NO.	TOTAL SHEETS
04	Ala	80	2.2	649	800

CALIFORNIA STATE FIRE MARSHAL APPROVED
Approval of this plan does not authorize or approve any omission or deviation from applicable regulations. Final approval is subject to field inspection. One set of approved plans shall be available on the project site at all times.
Reviewed by: SPENCER MEYER
Approval date: 12-13-12

REGISTERED ELECTRICAL ENGINEER — 5-30-12 DATE
REGISTERED PROFESSIONAL ENGINEER J. ABDELSAYED No. 18915 Exp. 12-31-13 ELEC STATE OF CALIFORNIA

10-22-12
PLANS APPROVAL DATE

The State of California or its officers or agents shall not be responsible for the accuracy or completeness of scanned copies of this plan sheet.

3

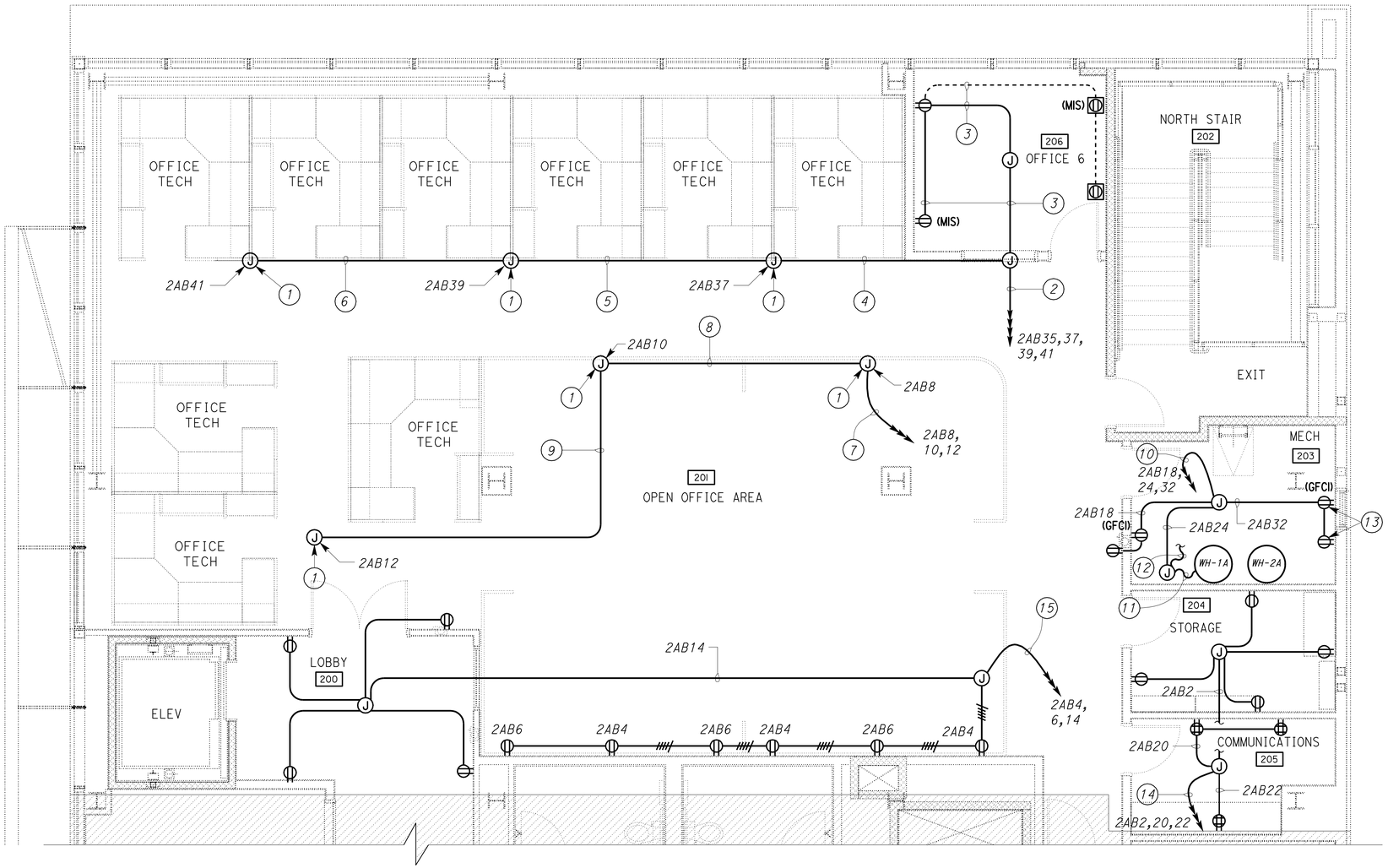

2ND FLOOR

SCALE 1/4" = 1'-0"

Notes:

1. *Install junction box in the attic space for access to future cubicle partitions. Coil one foot of each conductor inside junction box. Label grid ceiling frame adjacent to junction box with corresponding circuit numbers.*
2. *1"C, 4#12 (2AB35,37), 4#10 (2AB39,41), 1#10 insulated ground, 1#10G.*
3. *1/2"C, 2#12 (2AB35), 1#12 insulated ground, 1#12G.*
4. *3/4"C, 2#12 (2AB37), 4#10 (2AB39,41), 1#10 insulated ground, 1#10G.*
5. *3/4"C, 4#10 (2AB39,41), 1#10 insulated ground, 1#10G.*
6. *3/4"C, 2#10 (2AB41), 1#10 insulated ground.*
7. *3/4"C, 4#12 (2AB8,10), 2#10 (2AB12), 1#10 insulated ground, 1#10G.*
8. *3/4"C, 2#12 (2AB10), 2#10 (2AB12), 1#10 insulated ground, 1#10G.*
9. *3/4"C, 2#10 (2AB12), 1#10 insulated ground, 1#10G.*
10. *3/4"C, 6#12 (2AB18,24,32), 1#12G.*
11. *1/2"C, 2#12 (2BA24), 1#12G to Water Heater WH-1A. Terminate conduit and conductors as required to suit unit furnished.*
12. *1/2"C, 2#12 (2BA24), 1#12G to Water Heater WH-2A. Terminate conduit and conductors as required to suit unit furnished.*
13. *Receptacles (2AB32) for Recirculation Pumps P-1A and P-2A. See Mechanical sheets for details.*
14. *3/4"C, 6#12 (2AB2,20,22), 1#12G.*
15. *3/4"C, 6#12 (2AB4,6,14), 1#12G.*

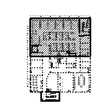

2ND FLOOR

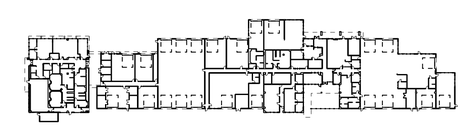

KEY PLAN

THIS DRAWING ACCURATE FOR ELECTRICAL WORK ONLY

3 **REVISED PER ADDENDUM No. 3 DATED JANUARY 4, 2013**

	BY	CHECKED
DESIGN	Joseph Abdelsayed	J. S. Sandhu
DETAILS	Ed Tapalla/Dali Zhou	Joseph Abdelsayed
QUANTITIES	Joseph Abdelsayed	J. S. Sandhu

STATE OF CALIFORNIA DEPARTMENT OF TRANSPORTATION

DIVISION OF ENGINEERING SERVICES ELECTRICAL-MECHANICAL-WATER AND WASTEWATER DESIGN

BRIDGE NO. 33M5785
POST MILE 2.2

SFOBB MAINTENANCE COMPLEX
BUILDING 1A — PARTIAL POWER PLAN 4

SHEET **EE1-1.9**

TAEMWW Imperial Rev. 7/10

ORIGINAL SCALE IN INCHES FOR REDUCED PLANS 0 1 2 3

UNIT 3596
PROJECT NUMBER & PHASE 04120006661
EA 014081

DISREGARD PRINTS BEARING EARLIER REVISION DATES → 10/19/11 5/28/12 11/29/12

REVISION DATES (PRELIMINARY STAGE ONLY) SHEET OF

31-DEC-2012 08:01

ee1_1.09.add

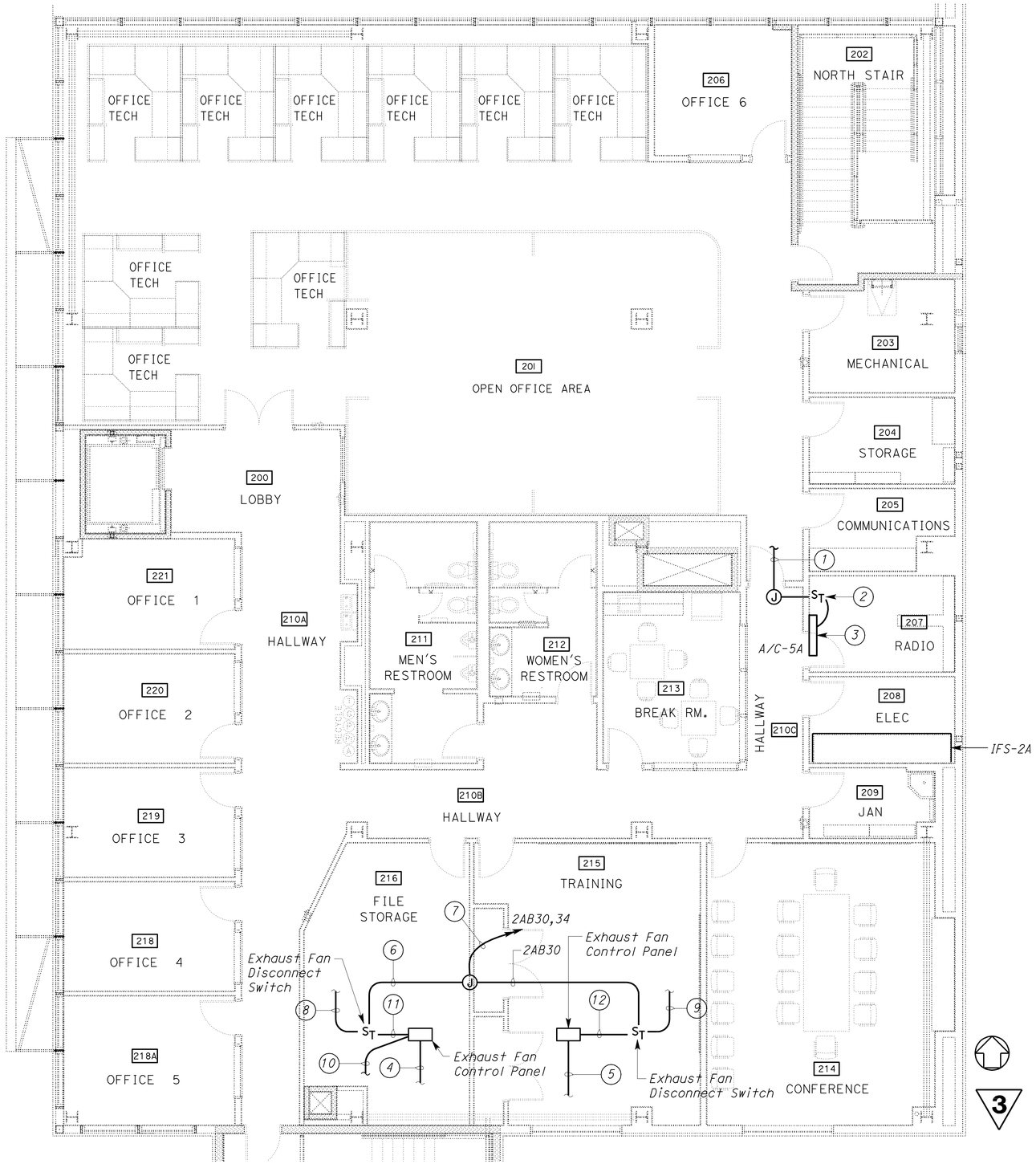

3

CALIFORNIA STATE FIRE MARSHAL APPROVED

Approval of this plan does not authorize or approve any omission or deviation from applicable regulations. Final approval is subject to field inspection. One set of approved plans shall be available on the project site at all times.

Reviewed by: SPENCER MEYER

Approval date: 12-13-12

DIST.	COUNTY	ROUTE	POST MILES TOTAL PROJECT	SHEET NO.	TOTAL SHEETS
04	Ala	80	2.2	669	800

REGISTERED ELECTRICAL ENGINEER — 5-30-12 DATE

REGISTERED PROFESSIONAL ENGINEER J. ABDELSAYED No. 18915 Exp. 12-31-13 ELEC STATE OF CALIFORNIA

10-22-12
PLANS APPROVAL DATE

The State of California or its officers or agents shall not be responsible for the accuracy or completeness of scanned copies of this plan sheet.

General Notes:

A. *Location of all HVAC related equipment is arbitrary only. See Mechanical Plan sheets for exact location of HVAC related equipment.*

B. *HVAC control and communication connections to building control system are not shown. See Mechanical Sheets for details.*

C. *For HVAC equipment schedule, see sheet EE1-10.16.*

D. *For exhaust fan EF-1A and EF-2A wiring diagrams, see* 1 / EEI-9.6

E. *Mount disconnect switches and control panels for EF-1A and EF-2A in attic space.*

Notes:

1. *¾"C, 3#12, 1#12G to Outdoor Condenser Unit A/C-5A on the roof. For continuation, see sheet EE1-2.3.*
2. *Indoor A/C Unit Disconnect Switch. For details, see sheet EE1-10.16.*
3. *A/C Indoor Unit mounted on the wall. For details, see Mechanical sheets.*
4. *½"C, 2#10 (2AB34), 1#10G to Exhaust Fan EF-1A on the roof. For continuation, see sheet EE1-2.3.*
5. *½"C, 2#12 (2AB30), 1#12G to Exhaust Fan EF-2A on the roof. For continuation, see sheet EE1-2.3.*
6. *½"C, 2#10 (2AB34), 1#10G.*
7. *¾"C, 2#12 (2AB30), 2#10 (2AB34), 1#10G.*
8. *½"C, 2#12 low voltage conductors to A/C-1A on the roof. For continuation, see sheet EE1-2.3.*
9. *½"C, 2#12 low voltage conductors to A/C-2A on the roof. For continuation, see sheet EE1-2.3.*
10. *½"C,Control conductors to fire alarm system for emergency shutdown. See Fire Alarm sheets.*
11. *¾"C, 2#12, 2#10, 1#10G.*
12. *¾"C, 4#12, 1#12G.*

2ND FLOOR

2ND FLOOR

SCALE 3/16 '' = 1'-0''

KEY PLAN

3 **REVISED PER ADDENDUM No. 3 DATED JANUARY 4, 2013**

THIS DRAWING ACCURATE FOR ELECTRICAL WORK ONLY

	BY	CHECKED
DESIGN	Joseph Abdelsayed	J. S. Sandhu
DETAILS	Ed Tapalla/Dali Zhou	Joseph Abdelsayed
QUANTITIES	Joseph Abdelsayed	J. S. Sandhu

STATE OF CALIFORNIA DEPARTMENT OF TRANSPORTATION

DIVISION OF ENGINEERING SERVICES ELECTRICAL-MECHANICAL-WATER AND WASTEWATER DESIGN

BRIDGE NO. 33M5785 2.2 X

SFOBB MAINTENANCE COMPLEX — BUILDING 1A — HVAC POWER PLAN 2

SHEET EE1-2.2

TAEMWW Imperial Rev. 7/10

ORIGINAL SCALE IN INCHES FOR REDUCED PLANS 0 1 2 3

UNIT 3596
PROJECT NUMBER & PHASE 04120006661
EA 014081

DISREGARD PRINTS BEARING EARLIER REVISION DATES → 10/19/11 5/28/12 11/29/12

REVISION DATES (PRELIMINARY STAGE ONLY) SHEET OF

31-DEC-2012 08:08

ee1_2.02.dgn

DIST.	COUNTY	ROUTE	POST MILES TOTAL PROJECT	SHEET NO.	TOTAL SHEETS
04	Ala	80	2.2	677	800

Jaswinder S Gill 5-30-12
REGISTERED ELECTRICAL ENGINEER DATE

REGISTERED PROFESSIONAL ENGINEER J. S. GILL No. 18551 Exp. 12-31-12 ELEC STATE OF CALIFORNIA

10-22-12
PLANS APPROVAL DATE

The State of California or its officers or agents shall not be responsible for the accuracy or completeness of scanned copies of this plan sheet.

3

LIGHTING NETWORK DEVICE SCHEDULE

DEVICE ID	DEVICE NAME	ROOM NO.	ROOM NO. CONTROLLED	MOUNTING	PLAN REFERENCE
1	LCPI25	125	125	15	EEI-3.1
2	LCPI26	126	126, 217	15	EEI-3.1
3	LCPRI22	122	119, 122	16	EEI-3.1
4	LCPRI23	123	111, 123, 124	16	EEI-3.1
5	LCPRI21	121	110, 120, 121	16	EEI-3.1
6	LCPI02	102	100, 101, 102, 109	17	EEI-3.3
7	LCPI06	106	106, 107	17	EEI-3.3
8	LCPI08	108	108, 202	17	EEI-3.3
9	LCP2I0	210B	200, 210A, 210B,210C	17	EEI-3.5
10	LCP2I5	215	215	17	EEI-3.5
11	LCP2I4	214	214	17	EEI-3.5
12	LCPR2II	210B	211, 212	16	EEI-3.5
13	LCP20I	201	201	17	EEI-3.7
14	LCPI33	133	132, 133	18	EEI-3.9
15	LCPI34	134	134, 135	18	EEI-3.9
16	LCPI37	137	136, 137	18	EEI-3.9
17	LCPI42	142	142	18	EEI-3.11
18	LCPI43	142	143, 144	18	EEI-3.11
19	LCPI45	145	145, 146	18	EEI-3.11
20	LCPI47	147	147	18	EEI-3.11
21	LCPI78	178	165, 178, 179A	18	EEI-3.13
22	LCPI76	176	176	18	EEI-3.13
23	LCPI75	175	167, 173, 174, 175	15	EEI-3.13
24	LCPI69	169	169	15	EEI-3.13
25	LCPI50	150	150	18	EEI-3.15
26	LCPI62	162	162, 163	18	EEI-3.15
27	LCPI59	159	157, 158, 159	15	EEI-3.15
28	LCPI80	180	180, 181	18	EEI-3.15
29	LCPI9IA	191	179B, 184	18	EEI-3.13
30	LCPI9IB	191	186, 187, 188	18	EEI-3.13
31	LCPI9I	191	191	18	EEI-3.17
32	LCPI92	192	192, 193	18	EEI-3.17
33	LCPI95	195	195, 196	18	EEI-3.17
34	LCPRI53	153	152, 153	16	EEI-3.15
35	LCPRI55	155	154, 155	16	EEI-3.15

Notes:

1. 2"C, PVC, serial control cables from Power Monitoring Type 2 modules, as required.
2. See sheet EE1-3.2 for LNP-1A schematic.
3. See sheet EE1-3.8 for LNP-2A schematic.
4. See sheet EE1-3.10 for LNP-P schematic.
5. See sheet EE1-3.12 for LNP-B schematic.
6. See sheet EE1-3.14 for LNP-M schematic.
7. See sheet EE1-3.18 for LNP-V schematic.
8. See sheet EE1-3.16 for Lighting Network Control schematic.
9. 1"C, serial control cables from Power Monitoring Type 2 modules, as required.
10. Power Monitoring Gateway & Power Monitoring Network Switch.
11. Lighting Network Workstation.
12. Number adjacent to the symbol indicates Device ID. See Lighting Network Device Schedule on this sheet.
13. 1"C, serial control cables to Lighting Network Workstation for Interior Lighting Zone Power Monitoring, as required.
14. Not used.
15. Surface mount on a wall inside attic space above suspended ceiling tiles.
16. Recessed inside a metal stud wall.
17. Surface mount on a structural column inside attic space above ceiling tiles. Use beam clamps to support the panel.
18. Surface mount on a wall above the door.

General Notes:

A. For Lighting Power & Control Schedules, see sheets EE1-3.21 to EE1-3.24.

B. Armored Lighting Control Cables & Lighting Control Cables in between LNP's are also shown on Lighting Control Plans. They are shown here for clarity. See plan sheets for details.

C. Provide and install wall mounting bracket for Power Monitoring Gateway & Power Monitoring Network Switch. Install and secure devices on mounting bracket.

D. Conduit system for Exterior Lighting, PV Inverter & Site Power Monitoring is shown on sheets EE0-0.5 and EE1-4.7.

CALIFORNIA STATE FIRE MARSHAL APPROVED
Approval of this plan does not authorize or approve any omission or deviation from applicable regulations. Final approval is subject to field inspection. One set of approved plans shall be available on the project site at all times.
Reviewed by: SPENCER MEYER
Approval date: 12-13-12

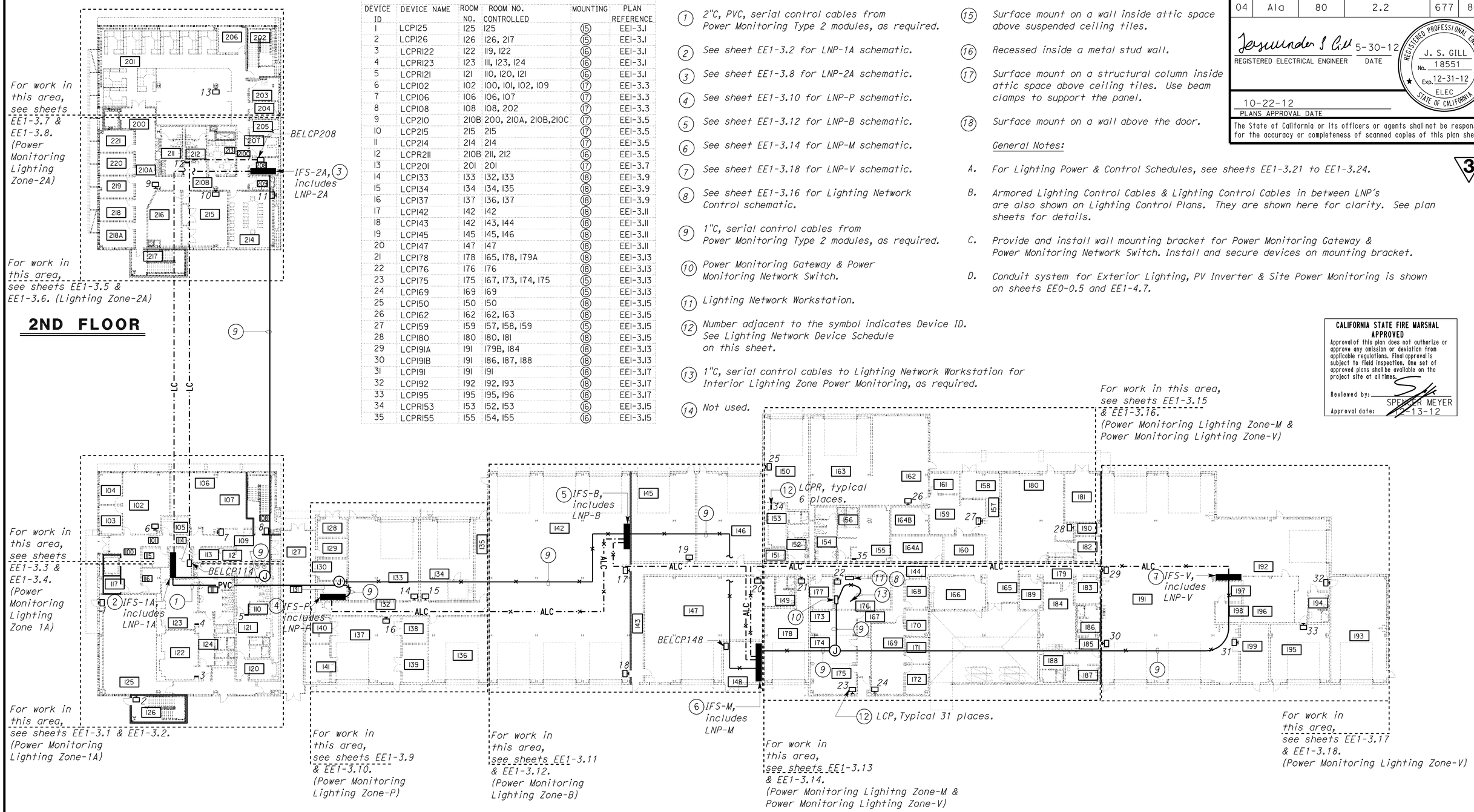

PLAN

SCALE 1" = 20'-0"

3 **REVISED PER ADDENDUM No. 3 DATED JANUARY 4, 2013**

THIS DRAWING ACCURATE FOR ELECTRICAL WORK ONLY

	BY	CHECKED
DESIGN	Jaswinder Gill	Christine Mamaril
DETAILS	Dali Zhou	Jaswinder Gill
QUANTITIES	Jaswinder Gill	Christine Mamaril

STATE OF CALIFORNIA DEPARTMENT OF TRANSPORTATION

DIVISION OF ENGINEERING SERVICES
ELECTRICAL-MECHANICAL-WATER AND WASTEWATER DESIGN

BRIDGE NO. 33M5785
POST MILE 2.2

SFOBB MAINTENANCE COMPLEX

LIGHTING NETWORK KEY PLAN

SHEET **EE1-3.01**

TAEMWW Imperial Rev. 7/10

ORIGINAL SCALE IN INCHES FOR REDUCED PLANS 0 1 2 3

UNIT 3596
PROJECT NUMBER & PHASE 04120006661
EA 014081

DISREGARD PRINTS BEARING EARLIER REVISION DATES → 1/8/12 3/23/12 5/4/12 5/30/12 11/29/12

REVISION DATES (PRELIMINARY STAGE ONLY) SHEET OF

31-DEC-2012 08:08

ee1_3.001.add

DIST.	COUNTY	ROUTE	POST MILES TOTAL PROJECT	SHEET NO.	TOTAL SHEETS
04	Ala	80	2.2	683	800

Jaswinder S Gill 5-30-12
REGISTERED ELECTRICAL ENGINEER DATE

REGISTERED PROFESSIONAL ENGINEER J. S. GILL No. 18551 Exp. 12-31-12 ELEC STATE OF CALIFORNIA

10-22-12
PLANS APPROVAL DATE

The State of California or its officers or agents shall not be responsible for the accuracy or completeness of scanned copies of this plan sheet.

CALIFORNIA STATE FIRE MARSHAL APPROVED
Approval of this plan does not authorize or approve any omission or deviation from applicable regulations. Final approval is subject to field inspection. One set of approved plans shall be available on the project site at all times.
Reviewed by: SPENCER MEYER
Approval date: 1-13-12

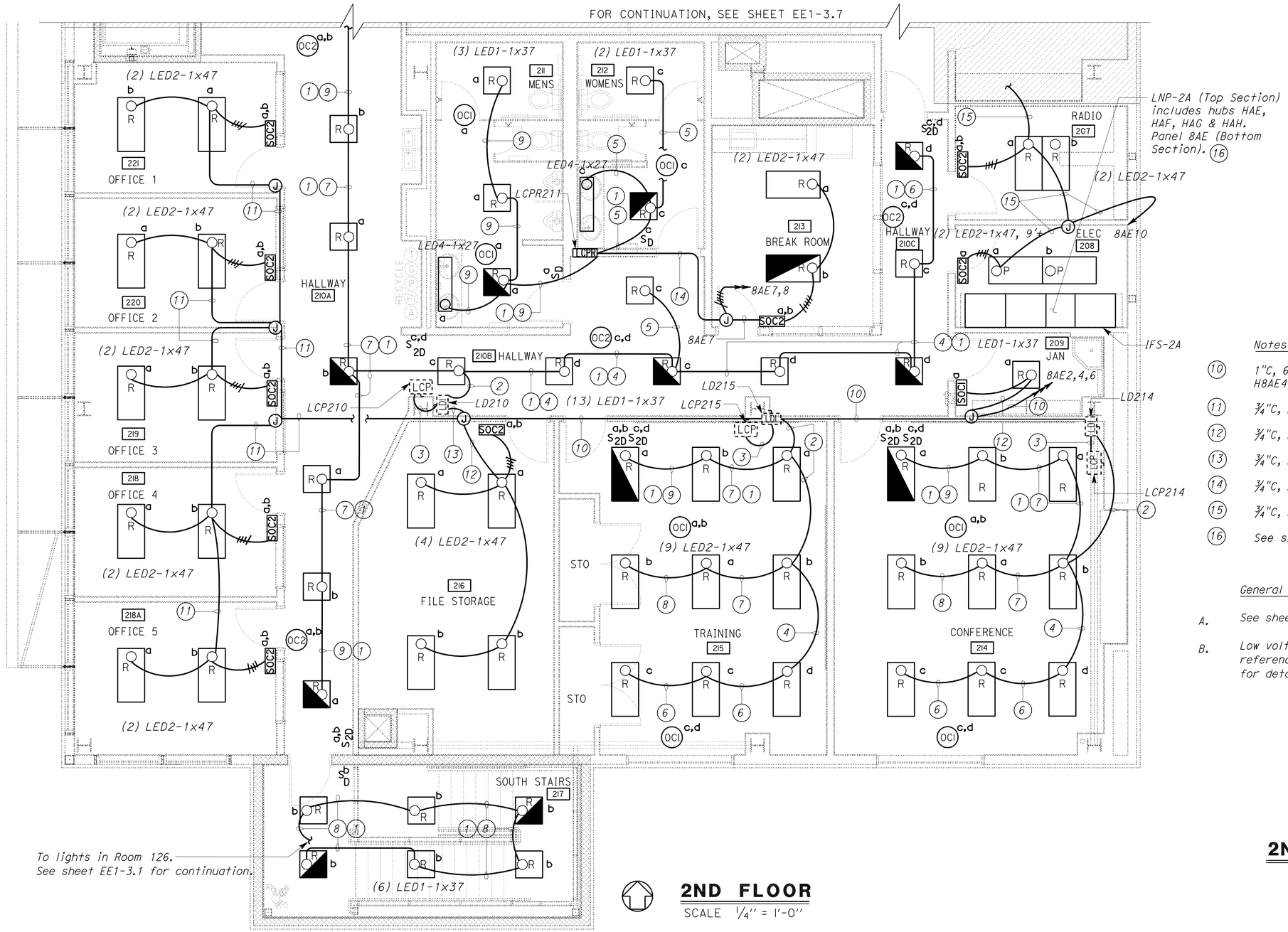

2ND FLOOR
SCALE 1/4" = 1'-0"

Notes:

(10) 1"C, 6#12, 1#12G. Conductor numbers are H8AE2, H8AE4, H8AE6, N8AE2, N8AD4 & N8AE6.

(11) 3/4"C, 2#12, 1#12G. Conductor numbers are H8AE2 & N8AE2.

(12) 3/4"C, 2#12, 1#12G. Conductor numbers are H8AE4 & N8AE4.

(13) 3/4"C, 2#12, 1#12G. Conductor numbers are H8AE6 & N8AE6.

(14) 3/4"C, 2#12, 1#12G. Conductor numbers are H8AE8 & N8AE8.

(15) 3/4"C, 2#12, 1#12G. Conductor numbers are H8AE10 & N8AE10.

(16) See sheet EE1-3.8 for LNP-2A schematic.

General Notes:

A. See sheet EE1-3.00 for plan notes 1 thru 9.

B. Low voltage Lighting Control Devices are shown here for reference only. See Lighting Control Plan 3 on sheet EE1-3.6 for details.

2ND FLOOR

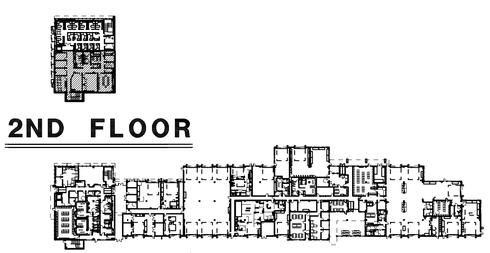

KEY PLAN
THIS DRAWING ACCURATE FOR ELECTRICAL WORK ONLY

3 **REVISED PER ADDENDUM No. 3 DATED JANUARY 4, 2013**

	BY	CHECKED
DESIGN	Jaswinder Gill	Christine Mamaril
DETAILS	Ed D. Tapalla/Dali Zhou	Jaswinder Gill
QUANTITIES	Jaswinder Gill	Christine Mamaril

STATE OF CALIFORNIA
DEPARTMENT OF TRANSPORTATION

DIVISION OF ENGINEERING SERVICES
ELECTRICAL-MECHANICAL-WATER AND WASTEWATER DESIGN

BRIDGE NO. 33M5785
POST MILE 2.2

SFOBB MAINTENANCE COMPLEX
BUILDING 1A
LIGHTING POWER PLAN 3

SHEET EE1-3.5

TAEMWW Imperial Rev. 7/10

ORIGINAL SCALE IN INCHES FOR REDUCED PLANS 0 1 2 3

UNIT 3596
PROJECT NUMBER & PHASE 04120006661
EA 014081

DISREGARD PRINTS BEARING EARLIER REVISION DATES
REVISION DATES (PRELIMINARY STAGE ONLY) 10/14/11 2/24/12 3/23/12 5/4/12 5/30/12 11/29/12
SHEET OF

31-DEC-2012 08:08
ee1_3.05.add

DIST.	COUNTY	ROUTE	POST MILES TOTAL PROJECT	SHEET NO.	TOTAL SHEETS
04	Ala	80	2.2	684	800

CALIFORNIA STATE FIRE MARSHAL APPROVED

Approval of this plan does not authorize or approve any omission or deviation from applicable regulations. Final approval is subject to field inspection. One set of approved plans shall be available on the project site at all times.

Reviewed by: SPENCER MEYER

Approval date: 12-13-12

Jaswinder S Gill 5-30-12

REGISTERED ELECTRICAL ENGINEER — DATE

REGISTERED PROFESSIONAL ENGINEER J. S. GILL No. 18551 Exp. 12-31-12 ELEC STATE OF CALIFORNIA

10-22-12

PLANS APPROVAL DATE

The State of California or its officers or agents shall not be responsible for the accuracy or completeness of scanned copies of this plan sheet.

3

2ND FLOOR

SCALE 1/4" = 1'-0"

DAYLIT ZONE # — Indicates general lighting within a daylit zones as per TITLE 24 SECTION 131 (C) 2B. See Daylit Schedule for details.

DAYLIT SCHEDULE

DAYLIT ZONE	TOTAL DAYLIT SQUARE FEET	AUTOMATIC CONTROLS REQUIRED YES	AUTOMATIC CONTROLS REQUIRED NO	PAF APPLIED YES	PAF APPLIED NO	DAYLIT CONTROL DEVICE
A	80		X		X	
B	80		X		X	
C	80		X		X	
D	70		X		X	
E	107		X		X	
F	100		X		X	
G	140		X		X	

General Notes:

A. Unless otherwise noted, all lighting control cable homeruns shown on this sheet are to Lighting Network Panel, LNP-2A located inside the IFS-2A. Alphanumeric characters adjacent to arrows indicates hub port numbers and number of arrows corresponds to number of lighting control cables.

B. General lighting is shown here for reference only. See sheet EE1-3.5 for details.

Notes:

(10) Lighting Control Cable to hub HAA1 inside LNP-1A in Room 114. See note 11 on sheet EE1-3.4.

(11) See sheet EE1-3.8 for LNP-2A schematic.

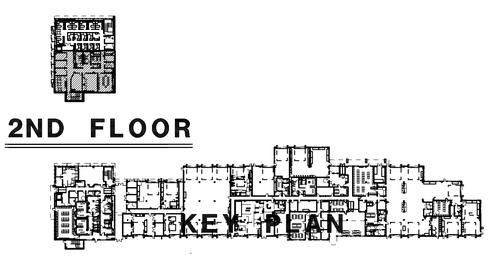

2ND FLOOR

KEY PLAN

THIS DRAWING ACCURATE FOR ELECTRICAL WORK ONLY

3 **REVISED PER ADDENDUM No. 3 DATED JANUARY 4, 2013**

DESIGN	BY Jaswinder Gill	CHECKED Christine Mamaril
DETAILS	BY Ed D. Tapalla/Dali Zhou	CHECKED Jaswinder Gill
QUANTITIES	BY Jaswinder Gill	CHECKED Christine Mamaril

STATE OF CALIFORNIA DEPARTMENT OF TRANSPORTATION

DIVISION OF ENGINEERING SERVICES ELECTRICAL-MECHANICAL-WATER AND WASTEWATER DESIGN

BRIDGE NO. 33M5785 POST MILE 2.2

SFOBB MAINTENANCE COMPLEX — BUILDING 1A — LIGHTING CONTROL PLAN 3

SHEET EE1-3.6

TAEMWW Imperial Rev. 7/10

ORIGINAL SCALE IN INCHES FOR REDUCED PLANS 0 1 2 3

UNIT 3596 PROJECT NUMBER & PHASE 04120006661 EA 014081

DISREGARD PRINTS BEARING EARLIER REVISION DATES — REVISION DATES (PRELIMINARY STAGE ONLY) 10/19/11 2/24/12 3/23/12 5/4/12 5/30/12 11/29/12 SHEET OF

31-DEC-2012 08:08

ee1_3.06.dgn

DIST.	COUNTY	ROUTE	POST MILES TOTAL PROJECT	SHEET NO.	TOTAL SHEETS
04	Ala	80	2.2	685	800

REGISTERED ELECTRICAL ENGINEER — 5-30-12 DATE

REGISTERED PROFESSIONAL ENGINEER J. S. GILL No. 18551 Exp. 12-31-12 ELEC STATE OF CALIFORNIA

10-22-12
PLANS APPROVAL DATE

The State of California or its officers or agents shall not be responsible for the accuracy or completeness of scanned copies of this plan sheet.

CALIFORNIA STATE FIRE MARSHAL APPROVED
Approval of this plan does not authorize or approve any omission or deviation from applicable regulations. Final approval is subject to field inspection. One set of approved plans shall be available on the project site at all times.
Reviewed by: SPENCER MEYER
Approval date: 12-13-12

3

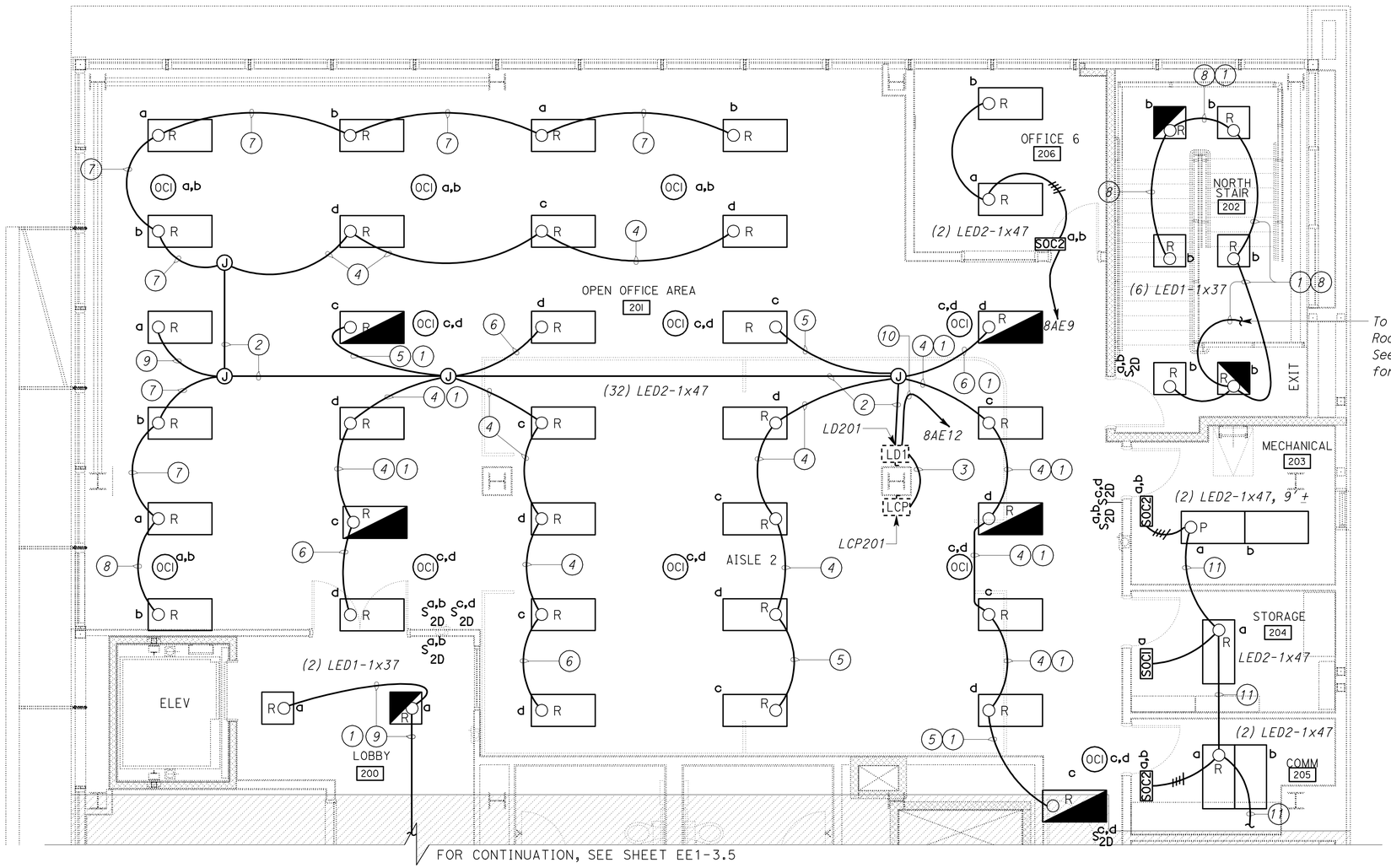

2ND FLOOR

SCALE 1/4" = 1'-0"

General Notes:

A. *Unless otherwise noted, all power homeruns shown on this sheet are to Panelboard 8AE located inside the IFS-2A at Room No. 208. See sheet EE1-3.5 for IFS-2A location.*

B. *See sheet EE1-3.00 for plan Notes 1 thru 9.*

C. *Low Voltage Lighting Control Devices are show here for reference only. See Lighting Control Plan 4 on sheet EE1-3.8 for details.*

Notes:

(10) *¾"C, 2#12, 1#12G. Conductor numbers are H8AE12, & N8AE12.*

(11) *¾"C, 2#12, 1#12G. Conductor numbers are H8AE10 & N8AE10*

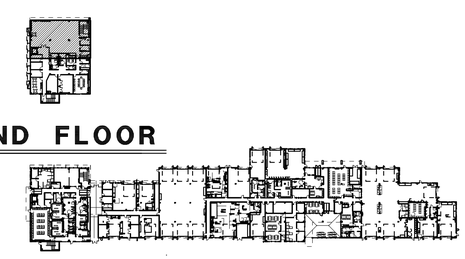

2ND FLOOR

KEY PLAN

3 **REVISED PER ADDENDUM No. 3 DATED JANUARY 4, 2013**

THIS DRAWING ACCURATE FOR ELECTRICAL WORK ONLY

	BY	CHECKED
DESIGN	Jaswinder Gill	Christine Mamaril
DETAILS	Ed D. Tapalla/Dali Zhou	Jaswinder Gill
QUANTITIES	Jaswinder Gill	Christine Mamaril

STATE OF CALIFORNIA DEPARTMENT OF TRANSPORTATION

DIVISION OF ENGINEERING SERVICES ELECTRICAL-MECHANICAL-WATER AND WASTEWATER DESIGN

BRIDGE NO. 33M5785
POST MILE 2.2

SFOBB MAINTENANCE COMPLEX
BUILDING 1A — LIGHTING POWER PLAN 4

SHEET EE1-3.7

TAEMWW Imperial Rev. 7/10

ORIGINAL SCALE IN INCHES FOR REDUCED PLANS 0 1 2 3

UNIT 3596
PROJECT NUMBER & PHASE 04120006661
EA 014081

DISREGARD PRINTS BEARING EARLIER REVISION DATES → REVISION DATES (PRELIMINARY STAGE ONLY) 10/19/11 2/28/12 3/23/12 5/4/12 5/30/12 11/29/12 SHEET OF

31-DEC-2012 08:09
ee1_3.07.add

DIST.	COUNTY	ROUTE	POST MILES TOTAL PROJECT	SHEET NO.	TOTAL SHEETS
04	Ala	80	2.2	686	800

REGISTERED ELECTRICAL ENGINEER — 5-30-12 DATE

REGISTERED PROFESSIONAL ENGINEER J. S. GILL No. 18551 Exp. 12-31-12 ELEC STATE OF CALIFORNIA

10-22-12
PLANS APPROVAL DATE

The State of California or its officers or agents shall not be responsible for the accuracy or completeness of scanned copies of this plan sheet.

CALIFORNIA STATE FIRE MARSHAL APPROVED
Approval of this plan does not authorize or approve any omission or deviation from applicable regulations. Final approval is subject to field inspection. One set of approved plans shall be available on the project site at all times.
Reviewed by: SPENCER MEYER
Approval date: 7-13-12

3

LIGHTING NETWORK PANEL LNP-2A SCHEMATIC (10)

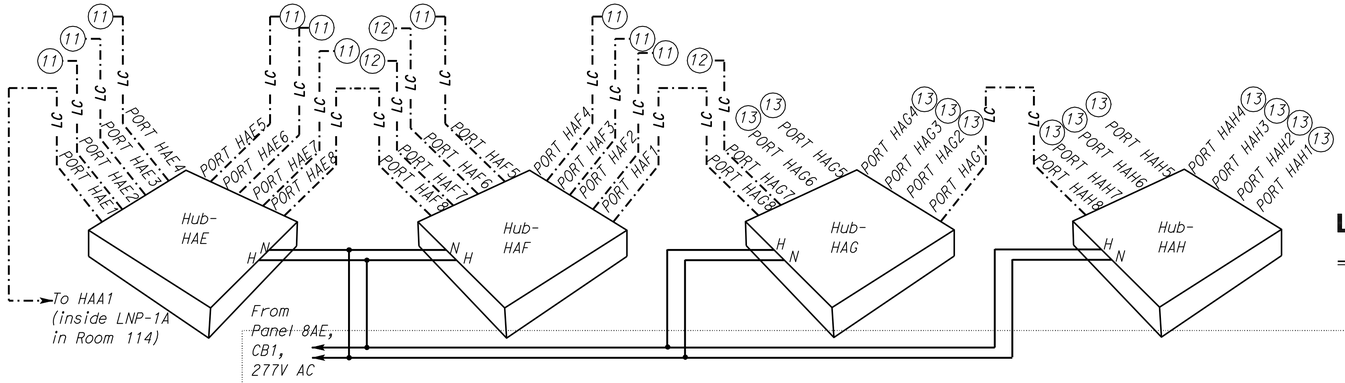

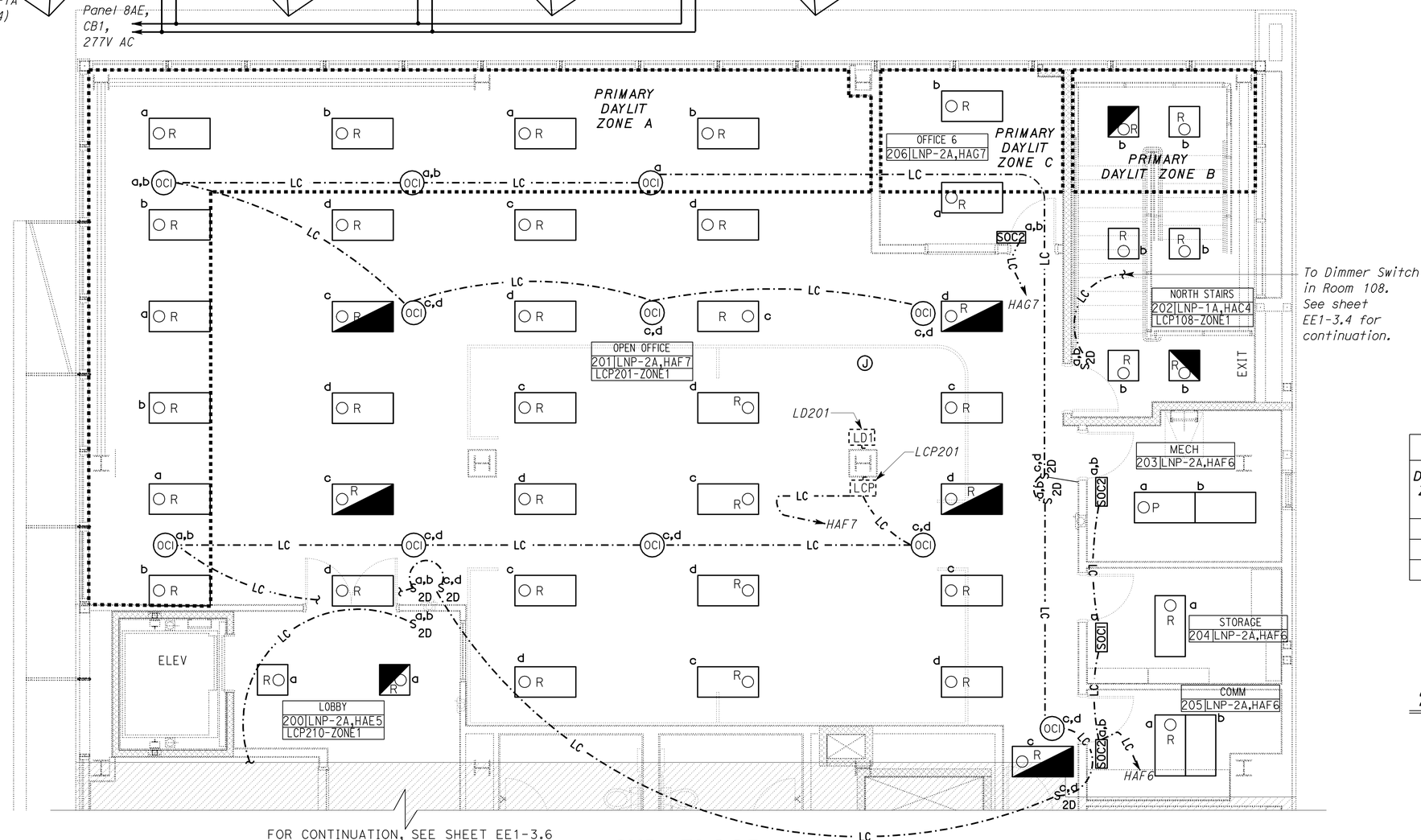

2ND FLOOR

SCALE 1/4" = 1'-0"

General Note:

A. Unless otherwise noted, all lighting control cable homeruns shown on this sheet are to Lighting Control Network Panel, LNP-2A located inside the IFS-2A. Alphanumeric characters adjacent to arrows indicates hub port numbers and number of arrows corresponds to number of lighting control cables.

B. General lighting is shown here for reference only. See sheet EE1-3.7 for details.

Notes:

(10) See sheet EE1-3.5 for LNP-2A location.

(11) For continuation, see sheet EE1-3.6.

(12) For continuation, see plan view.

(13) Spare hub ports for future.

DAYLIT ZONE # — Indicates general lighting within a daylit zones as per TITLE 24 SECTION 131 (C) 2B. See Daylit Schedule for details.

DAYLIT SCHEDULE

DAYLIT ZONE	TOTAL DAYLIT SQUARE FEET	AUTOMATIC CONTROLS REQUIRED		PAF APPLIED		DAYLIT CONTROL DEVICE
		YES	NO	YES	NO	
A	572		X		X	
B	100		X		X	
C	152		X		X	

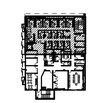

2ND FLOOR

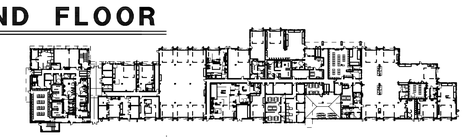

KEY PLAN

3 **REVISED PER ADDENDUM No. 3 DATED JANUARY 4, 2013**

THIS DRAWING ACCURATE FOR ELECTRICAL WORK ONLY

	BY	CHECKED
DESIGN	Jaswinder Gill	Christine Mamaril
DETAILS	Ed D. Tapalla/Dali Zhou	Jaswinder Gill
QUANTITIES	Jaswinder Gill	Christine Mamaril

STATE OF CALIFORNIA DEPARTMENT OF TRANSPORTATION

DIVISION OF ENGINEERING SERVICES
ELECTRICAL-MECHANICAL-WATER AND WASTEWATER DESIGN

BRIDGE NO. 33M5785
POST MILE 2.2

SFOBB MAINTENANCE COMPLEX
BUILDING 1A — LIGHTING CONTROL PLAN 4

SHEET EE1-3.8

TAEMWW Imperial Rev. 7/10

ORIGINAL SCALE IN INCHES FOR REDUCED PLANS 0 1 2 3

UNIT 3596
PROJECT NUMBER & PHASE 04120006661
EA 014081

DISREGARD PRINTS BEARING EARLIER REVISION DATES → 10/14/11 2/28/12 3/23/12 5/4/12 5/30/12 11/29/12

REVISION DATES (PRELIMINARY STAGE ONLY) SHEET OF

31-DEC-2012 08:09
ee1_3.08.add

DIST.	COUNTY	ROUTE	POST MILES TOTAL PROJECT	SHEET NO.	TOTAL SHEETS
04	Ala	80	2.2	697	800

CALIFORNIA STATE FIRE MARSHAL APPROVED
Approval of this plan does not authorize or approve any omission or deviation from applicable regulations. Final approval is subject to field inspection. One set of approved plans shall be available on the project site at all times.
Reviewed by: SPENCER MEYER
Approval date: 10-13-12

Jaswinder S Gill 5-30-12
REGISTERED ELECTRICAL ENGINEER DATE

REGISTERED PROFESSIONAL ENGINEER J. S. GILL No. 18551 Exp. 12-31-12 ELEC STATE OF CALIFORNIA

10-22-12
PLANS APPROVAL DATE

The State of California or its officers or agents shall not be responsible for the accuracy or completeness of scanned copies of this plan sheet.

3

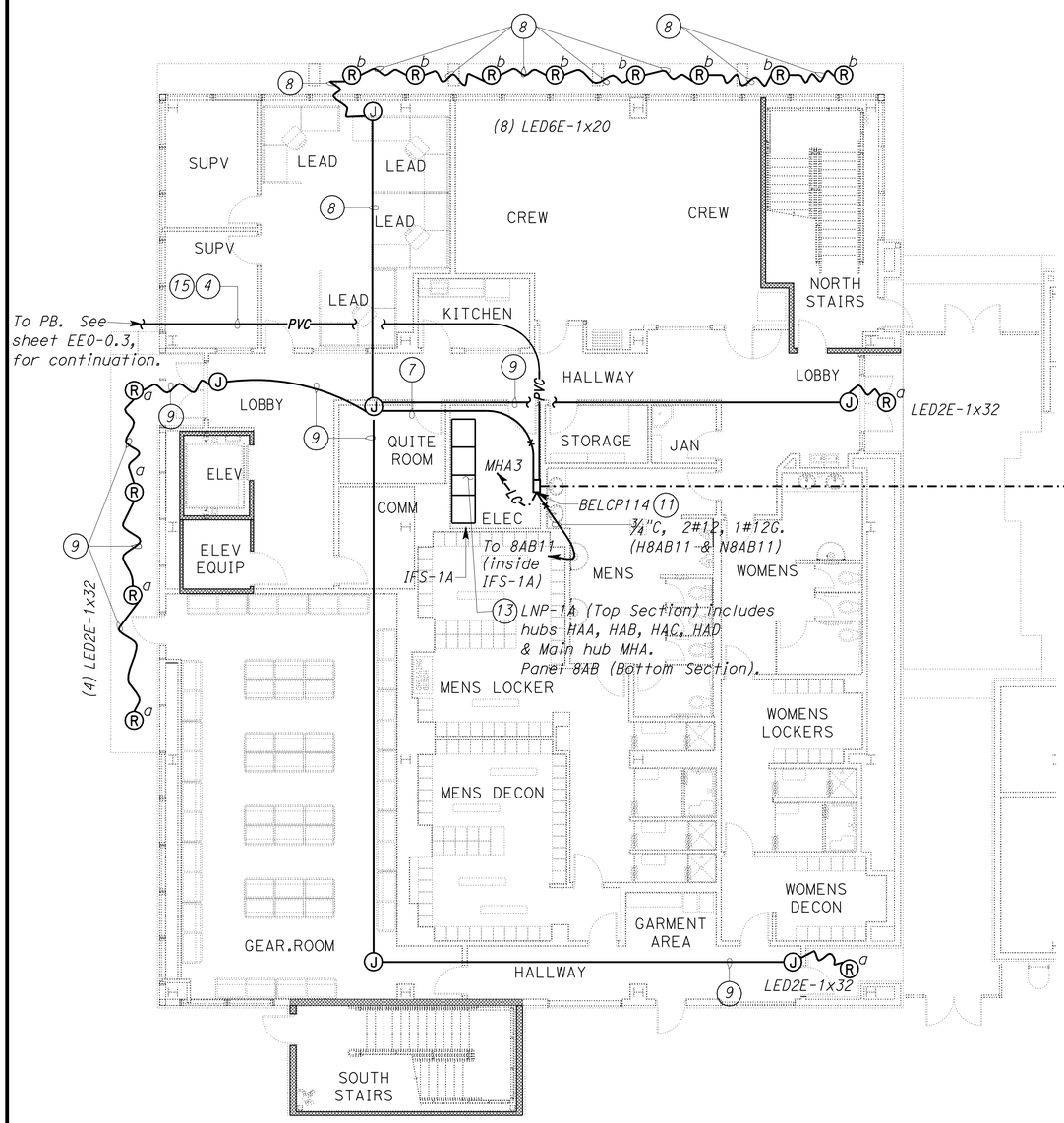

1ST FLOOR

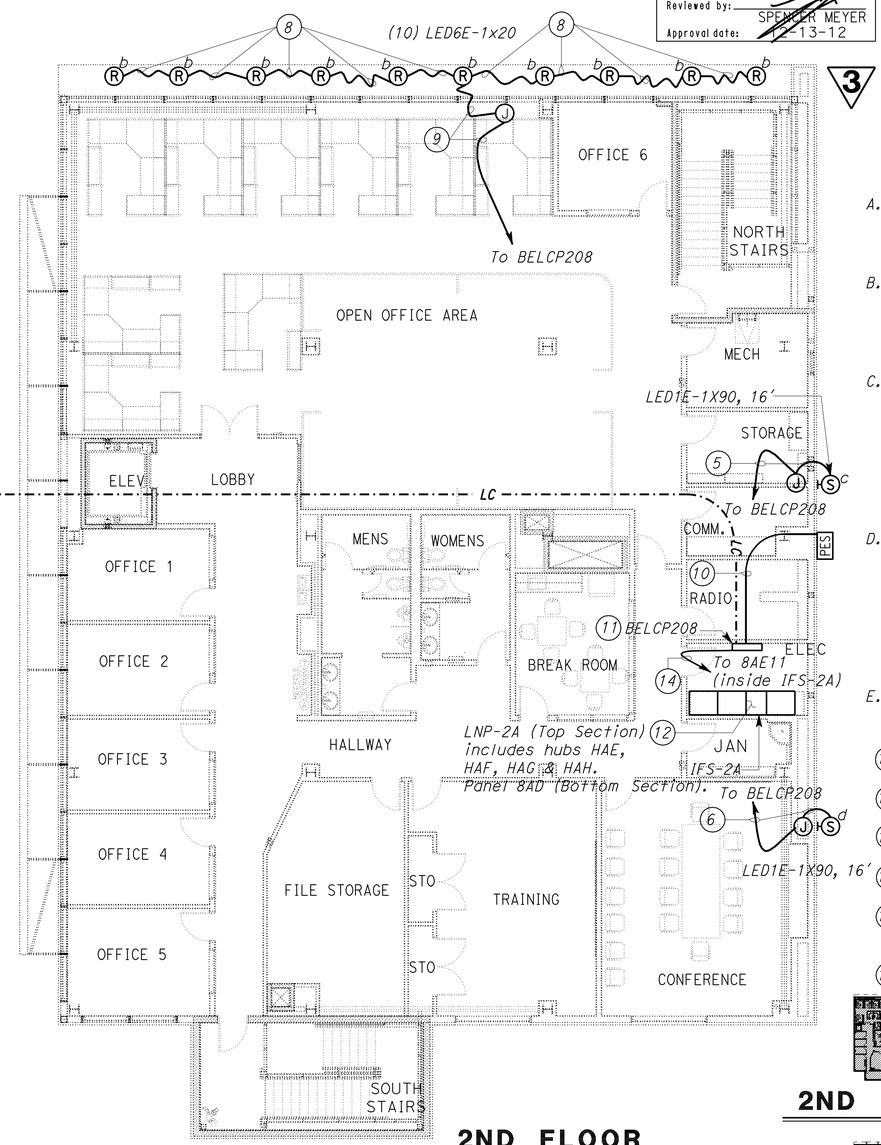

2ND FLOOR

PLAN
SCALE 1/8" = 1'-0"

General Notes:

A. *Install PES at mounting height of 30 feet in a manner, so that the PES window faces North.*

B. *Unless otherwise noted, all homeruns shown on this on this sheet are to BELCP208 inside the Electrical Room No. 208.*

C. *Unless otherwise noted, all lighting control cable homeruns shown on this sheet are to Lighting Network Panel, LNP-1A located inside the IFS-1A. Alphanumeric characters adjacent to arrows indicates hub port numbers and number of arrows corresponds to number of lighting control cables.*

D. *A lower case letter adjacent to the building mounted exterior and recessed soffit lighting fixture graphic symbol denotes that fixture is controlled by a similarly marked switching relays located inside the Building Exterior Lighting Control Panel (BELCP). For details, see BELCP schematics.*

E. *See sheet EE1-3.00 for plan notes 1 thru 9.*

Notes:

(10) *¾"C, 3#12, 1#12G.*

(11) *See sheet EE1-3.27 for BELCP schematic.*

(12) *See sheet EE1-3.8 for LNP-2A schematic.*

(13) *See sheet EE1-3.2 for LNP-1A schematic.*

(14) *¾"C, 2#12, 1#12G. Conductor numbers are H8AE11 & N8AE11.*

(15) *(2) 2"C, MT.*

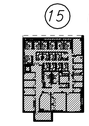

2ND FLOOR

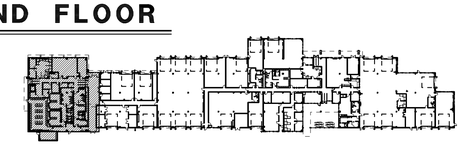

1ST FLOOR KEY PLAN

3 **REVISED PER ADDENDUM No. 3 DATED JANUARY 4, 2013**

THIS DRAWING ACCURATE FOR ELECTRICAL WORK ONLY

	BY	CHECKED
DESIGN	Jaswinder Gill	Christine Mamaril
DETAILS	Ed D. Tapalla 10/11	Jaswinder Gill
QUANTITIES	Jaswinder Gill	Christine Mamaril

STATE OF CALIFORNIA DEPARTMENT OF TRANSPORTATION

DIVISION OF ENGINEERING SERVICES
ELECTRICAL-MECHANICAL-WATER AND WASTEWATER DESIGN

BRIDGE NO. 33M5785
POST MILE 2.2

SFOBB MAINTENANCE COMPLEX
BUILDING 1A — BUILDING EXTERIOR LIGHTING PLAN 1

SHEET **EE1-3.19**

TAEMWW Imperial Rev. 7/10

ORIGINAL SCALE IN INCHES FOR REDUCED PLANS 0 1 2 3

UNIT 3596
PROJECT NUMBER & PHASE 04120006661
EA 014081

DISREGARD PRINTS BEARING EARLIER REVISION DATES →
REVISION DATES (PRELIMINARY STAGE ONLY) 10/25/11 02/28/12 3/29/12 5/30/12 11/29/12 SHEET OF

31-DEC-2012 08:09
ee1_3.19.dgn

DIST.	COUNTY	ROUTE	POST MILES TOTAL PROJECT	SHEET NO.	TOTAL SHEETS
04	Ala	80	2.2	700	800

REGISTERED ELECTRICAL ENGINEER — Jaswinder S Gill — 5-30-12 DATE

REGISTERED PROFESSIONAL ENGINEER — J. S. GILL — No. 18551 — Exp. 12-31-12 — ELEC — STATE OF CALIFORNIA

10-22-12
PLANS APPROVAL DATE

The State of California or its officers or agents shall not be responsible for the accuracy or completeness of scanned copies of this plan sheet.

CALIFORNIA STATE FIRE MARSHAL APPROVED
Approval of this plan does not authorize or approve any omission or deviation from applicable regulations. Final approval is subject to field inspection. One set of approved plans shall be available on the project site at all times.
Reviewed by: SPENCER MEYER
Approval date: 12-13-12

3

LIGHTING CONTROL PANEL SCHEMATIC LEGEND:

① *See schematic details* (1 / EEI-3.25).

② *See schematic details* (1 / EEI-3.26).

③ *See schematic details* (2 / EEI-3.26).

FIXTURE MOUNTING TYPE:

R1 *Recessed on a suspended acoustic ceiling tiles.*

R2 *Recessed on a gypsum board ceiling.*

P *Pendant or Stem mounted, swivel type junction box on an exposed deck ceiling.*

S *Surface mount on gypsum board ceiling.*

W *Wall mounted. See mounting detail* (1 / EEI-3.30).

BUILDING 1A (SECOND FLOOR) LIGHTING POWER & CONTROL SCHEDULE

ROOM NUMBER	ROOM NAME	POWER SCHEDULE: PANELBOARD: PANELBOARD NAME	PANELBOARD: CIRCUIT NO.	PANELBOARD: CIRCUIT BREAKER (AMPERE/PHASE)	PANELBOARD: PANEL LOC. (ROOM NO.)	INTEGRATED FACILITY SWITCHBOARD: IFS NAME	IFS LOC. (ROOM NO.)	CONTROL SCHEDULE: LIGHTING CONTROL DEVICES QUANTITY: SOC1	SOC2	OD1	OC2	OC3	S_D	S_{2D}	PEU	S_{DTS}	LIGHTING CONTROL PANEL (LCP): LCP NUMBER	LCP LOCATION (RM. NO.)	SWITCHING RELAYS	DIMMING RELAYS	CONTROL ZONE NO.	SCHEMATIC REFERENCE	LIGHTING NETWORK PANEL (LNP): LNP NAME	NETWORK HUB NAME	NETWROK HUB PORT NO.	LIGHTING SCHEDULE: LED1 (37 W)	LED2 (47 W)	LED3 (27 W)	LED4 (27 W)	LED5 (116 W)	LED6 (233 W)	LED9 (40 W)	INSTALLED WATTS (W)	MOUNTING	POWER PLAN REFERENCE	CONTROL PLAN REFERENCE	NOTES
200	LOBBY	8AE	6	15/1	208	IFS-2A	208							1			LCP210	210B	SIA	DIA	ZONE1	②	LNP-2A	HAE	5	2							74	RI	EEI-3.7	EEI-3.8	
201	OPEN OFFICE AREA	8AE	12	15/1	208	IFS-2A	208			12				5			LCP201	201	SIA,SIB,S2C,S2D	DIA,DIB,D2C,D2D	ZONE1	②	LNP-2A	HAF	7		34						1598	RI	EEI-3.7	EEI-3.8	
202	NORTH STAIRS	8AB	18	15/1	114	IFS-1A	114							1			LCP108	108	SIB	DIB	ZONE1	②	LNP-1A	HAC	4	6							222	RI	EEI-3.7	EEI-3.8	MODIFY LCP SCHEMATIC TO KEEP S2C & S2D RELAYS AS SPARE
203	MECHANICAL	8AE	10	15/1	208	IFS-2A	208		1														LNP-2A	HAF	6		2						94	P	EEI-3.7	EEI-3.8	
204	STORAGE	8AE	10	15/1	208	IFS-2A	208	1															LNP-2A	HAF	6		1						47	RI	EEI-3.7	EEI-3.8	
205	COMMUNICATION	8AE	10	15/1	208	IFS-2A	208		1														LNP-2A	HAF	6		2						94	RI	EEI-3.7	EEI-3.8	
206	OFFICE 6	8AE	9	15/1	208	IFS-2A	208		1														LNP-2A	HAG	7		2						94	RI	EEI-3.7	EEI-3.8	
207	RADIO	8AE	10	15/1	208	IFS-2A	208		1														LNP-2A	HAE	7		2						94	RI	EEI-3.5	EEI-3.6	
208	ELECTRICAL	8AE	10	15/1	208	IFS-2A	208		1														LNP-2A	HAE	7		2						94	P	EEI-3.5	EEI-3.6	
209	JANITOR	8AE	4	15/1	208	IFS-2A	208	1																		1							37	R2	EEI-3.5		
210A,B,C	HALLWAY	8AE	6	15/1	208	IFS-2A	208				4			3			LCP210	210B	SIA,SIB,S2C,S2D	DIA,DIB,D2C,D2D	ZONE1	②	LNP-2A	HAE	5	13							481	RI	EEI-3.5	EEI-3.6	
211	MENS RESTROOM	8AE	8	15/1	208	IFS-2A	208			2			1				LCPR211	211	SIA	DIA	ZONE1	③	LNP-2A	HAF	2	3			1				138	R2	EEI-3.5	EEI-3.6	LED4 FIXTURES ARE WALL MOUNTED ABOVE MIRROR
212	WOMENS RESTROOM	8AE	8	15/1	208	IFS-2A	208			1			1				LCPR211	211	SIC	DIC	ZONE2	③	LNP-2A	HAF	3	2			1				101	R2	EEI-3.5	EEI-3.6	LED4 FIXTURES ARE WALL MOUNTED ABOVE MIRROR
213	BREAK ROOM	8AE	7	15/1	208	IFS-2A	208		1														LNP-2A	HAE	6		2						94	RI	EEI-3.5	EEI-3.6	
214	CONFERENCE	8AE	4	15/1	208	IFS-2A	208			2				2			LCP214	214	SIA,SIB,S2C,S2D	DIA,DIB,D2C,D2D	ZONE1	②	LNP-2A	HAE	2		9						423	RI	EEI-3.5	EEI-3.6	
215	TRAINING	8AE	4	15/1	208	IFS-2A	208			2				2			LCP215	215	SIA,SIB,S2C,S2D	DIA,DIB,D2C,D2D	ZONE1	②	LNP-2A	HAE	3		9						423	RI	EEI-3.5	EEI-3.6	
216	FILE STORAGE	8AE	4	15/1	208	IFS-2A	208		1														LNP-2A	HAE	4		4						188	R2	EEI-3.5	EEI-3.6	
217	SOUTH STAIRS	8AB	6	15/1	114	IFS-1A	114						1				LCP126	126	SIB	DIB	ZONE1	②	LNP-1A	HAA	3	6							222	RI	EEI-3.5	EEI-3.6	MODIFY LCP SCHEMATIC TO KEEP S2C & S2D RELAYS AS SPARE
218	OFFICE 4	8AE	2	15/1	208	IFS-2A	208		1														LNP-2A	HAF	4		2						94	RI	EEI-3.5	EEI-3.6	
218A	OFFICE 5	8AE	2	15/1	208	IFS-2A	208		1														LNP-2A	HAF	4		2						94	RI	EEI-3.5	EEI-3.6	
219	OFFICE 3	8AE	2	15/1	208	IFS-2A	208		1														LNP-2A	HAF	5		2						94	RI	EEI-3.5	EEI-3.6	
220	OFFICE 2	8AE	2	15/1	208	IFS-2A	208		1														LNP-2A	HAF	5		2						94	RI	EEI-3.5	EEI-3.6	
221	OFFICE 1	8AE	2	15/1	208	IFS-2A	208		1														LNP-2A	HAF	5		2						94	RI	EEI-3.5	EEI-3.6	

3 **REVISED PER ADDENDUM No. 3 DATED JANUARY 4, 2013**

	BY	CHECKED
DESIGN	Jaswinder Gill	Christine Mamaril
DETAILS	Dali Zhou	Jaswinder Gill
QUANTITIES	Jaswinder Gill	Christine Mamaril

STATE OF CALIFORNIA
DEPARTMENT OF TRANSPORTATION

DIVISION OF ENGINEERING SERVICES
ELECTRICAL-MECHANICAL-WATER AND WASTEWATER DESIGN

BRIDGE NO. 33M5785
POST MILE 2.2

SFOBB MAINTENANCE COMPLEX
LIGHTING POWER AND CONTROL SCHEDULE 2

SHEET **EE1-3.22**

TAEMWW Imperial Rev. 7/10

ORIGINAL SCALE IN INCHES FOR REDUCED PLANS 0 1 2 3

UNIT 3596
PROJECT NUMBER & PHASE 04120006661
EA 014081

DISREGARD PRINTS BEARING EARLIER REVISION DATES → REVISION DATES (PRELIMINARY STAGE ONLY) 12/20/11 02/22/12 03/23/12 05/30/12 11/29/12 SHEET OF

31-DEC-2012 08:09
ee1_3.22.dgn

DIST.	COUNTY	ROUTE	POST MILES TOTAL PROJECT	SHEET NO.	TOTAL SHEETS
04	Ala	80	2.2	707	800

Jaswinder S Gill 5-30-12
REGISTERED ELECTRICAL ENGINEER DATE

REGISTERED PROFESSIONAL ENGINEER J. S. GILL No. 18551 Exp. 12-31-12 ELEC STATE OF CALIFORNIA

10-22-12
PLANS APPROVAL DATE

The State of California or its officers or agents shall not be responsible for the accuracy or completeness of scanned copies of this plan sheet.

CALIFORNIA STATE FIRE MARSHAL APPROVED
Approval of this plan does not authorize or approve any omission or deviation from applicable regulations. Final approval is subject to field inspection. One set of approved plans shall be available on the project site at all times.
Reviewed by: SPENCER MEYER
Approval date: 12-13-12

3

LIGHTING FIXTURE SCHEDULE

MANUFACTURER	TYPE	LAMP	MAX. INPUT WATTS	VOLTS	CONTROLS	DESCRIPTION
GARDCO P21 SERIES, BETA LED THE EDGE SERIES, OR EQUAL	LED1E	LED ARRAY	90 W	277 V	INTEGRAL MOTION SENSOR/ /FUSE.SEE NOTE 2. REMOTE PHOTOCELL.	WALL MOUNTED WITH 5" ARM OUTDOOR LED LUMINAIRE, 90 WATT LED ARRAY, TYPE FOUR MEDIUM DISTRIBUTION, FULL CUTOFF LUMINAIRE, 7000 MINIMUM DELIVERED LUMENS AT 5700 DEGREE KELVIN AND WITH CRI OF AT LEAST 70. THE FIXTURE SHALL BE SLIM LOW-PROFILE DESIGN, CONSTRUCTED FROM ONE PIECE DIE-CAST, RUGGED ALUMINUM WITH INTEGRAL, WEATHERTIGHT LED ENGINE DRIVER COMPARTMENTS AND HIGH PERFORMANCE ALUMINUM HEATSINKS. ALL EXPOSED DIE-CAST SURFACE SHALL HAVE A EPOXY PRIMER TO PROVIDE RESISTANCE TO CORROSION AND WHITE POWDER TOPCOAT. LED ENGINE DRIVER SHALL BE UL LISTED, 277V, 50,000 HOUR DESIGN LIFE, 0-10V DIMMING, 0.9 MINIMUM POWER FACTOR, 5-YEAR WARRANTY, COMPLETE WITH INTERNAL THERMAL PROTECTION AND OVERLOAD PROTECTION. FIXTURES SHALL BE UL LISTED FOR WET LOCATION AND IP66 RATED.
LITHONIA DOM6LED, GOTHAM 6" ALED, OR EQUAL	LED2E	LED ARRAY	32 W	277 V	REMOTE PHOTOCELL	6" RECESSED LED DOWN LIGHT, 32 W LED ARRAY, 1000 MINIMUM DELIVERED LUMENS AT 4000 DEGREE KELVIN AND WITH CRI OF AT LEAST 70. THE FIXTURE MOUNTING BARS OR BRACKETS SHALL BE CONSTRUCTED FROM 16-GAUGE GALVANIZED STEEL. THE FIXTURE SHALL HAVE ONE-PIECE DIE-CAST HOUSING WITH WHITE INTERIOR DOME REFLECTOR, GALVANIZED STEEL JUNCTION BOX WITH BOTTOM-HINGED ACCESS COVERS AND SPRING LATCHES COMPLETE WITH A HIGHLY TRANSMISSIVE LENS. LED ENGINE DRIVER SHALL BE UL LISTED WET LOCATION, 277V, 50,000 HOUR DESIGN LIFE, 0-10V DIMMING, 0.9 MINIMUM POWER FACTOR, 5-YEAR WARRANTY, COMPLETE WITH INTERNAL THERMAL PROTECTION AND OVERLOAD PROTECTION. FIXTURE MOUNTING ADAPTERS AND TRIMS SHALL BE SUITABLE FOR RECESSED MOUNTING IN SOFFITS ABOVE EXTERIOR DOORS.
GARDCO EMCO ELG SERIES, BETA LED PKG 304 SERIES, OR EQUAL	LED3E	LED ARRAY	110 W	277 V	INTEGRAL MOTION SENSOR/ /FUSE.SEE NOTE 2. REMOTE PHOTOCELL.	PENDANT/SURFACE MOUNTED OUTDOOR LED LUMINAIRE, 110 WATT LED ARRAY, TYPE FIVE MEDIUM DISTRIBUTION, FULL CUTOFF LUMINAIRE, 7000 MINIMUM DELIVERED LUMENS AT 5700 DEGREE KELVIN AND WITH CRI OF AT LEAST 70. THE FIXTURE SHALL BE CONSTRUCTED FROM ONE PIECE DIE-CAST, RUGGED ALUMINUM WITH INTEGRAL, WEATHERTIGHT LED ENGINE DRIVER COMPARTMENTS AND HIGH PERFORMANCE ALUMINUM HEATSINKS WITH INTEGRATED LENS. ALL EXPOSED DIE-CAST SURFACE SHALL HAVE A EPOXY PRIMER TO PROVIDE RESISTANCE TO CORROSION AND WHITE POWDER TOPCOAT. LED ENGINE DRIVER SHALL BE UL LISTED, 277V, 50,000 HOUR DESIGN LIFE, 0-10V DIMMING, 0.9 MINIMUM POWER FACTOR, 5-YEAR WARRANTY, COMPLETE WITH INTERNAL THERMAL PROTECTION AND OVERLOAD PROTECTION. FIXTURES SHALL BE UL LISTED FOR WET LOCATION AND IP66 RATED. FIXTURES SHALL BE PROVIDED WITH BIRD GUARD OR BIRD SHROUD.
GARDCO P21 SERIES, BETA LED THE EDGE SERIES, OR EQUAL	LED4E	LED ARRAY	133 W	277 V	INTEGRAL MOTION SENSOR/ PHOTOCELL/FUSE. SEE NOTE 1.	SQUARE POLE MOUNTED OUTDOOR LED LUMINAIRE, 133 WATT LED ARRAY, TYPE FOUR MEDIUM FORWARD THROW DISTRIBUTION WITH BACKLIGHT CONTROL, FULL CUTOFF LUMINAIRE, 10,000 MINIMUM DELIVERED LUMENS AT 6000 DEGREE KELVIN AND WITH CRI OF AT LEAST 70. THE FIXTURE SHALL BE SLIM, LOW PROFILE DESIGN, CONSTRUCTED FROM ONE PIECE DIE-CAST, RUGGED ALUMINUM WITH INTEGRAL, WEATHERTIGHT LED ENGINE DRIVER COMPARTMENTS AND HIGH PERFORMANCE ALUMINUM HEATSINKS. ALL EXPOSED DIE-CAST SURFACE SHALL HAVE A EPOXY PRIMER TO PROVIDE RESISTANCE TO CORROSION AND WHITE POWDER TOPCOAT. LED ENGINE DRIVER SHALL BE UL LISTED, 277V, 50,000 HOUR DESIGN LIFE, 0-10V DIMMING, 0.9 MINIMUM POWER FACTOR, 5-YEAR WARRANTY, COMPLETE WITH INTERNAL THERMAL PROTECTION AND OVERLOAD PROTECTION. FIXTURES SHALL BE UL LISTED FOR WET LOCATION AND IP66 RATED.
BETA LED THE EDGE SERIES, OR EQUAL	LED5E	LED ARRAY	90 W	277 V	INTEGRAL MOTION SENSOR/ /FUSE.SEE NOTE 2. REMOTE PHOTOCELL.	POST TOP MOUNTED OUTDOOR LED LUMINAIRE, 90 WATT LED ARRAY, TYPE FIVE MEDIUM SYMMETRICAL SQUARE DISTRIBUTION, FULL CUTOFF LUMINAIRE, 7,000 MINIMUM DELIVERED LUMENS AT 6000 DEGREE KELVIN AND WITH CRI OF AT LEAST 70. THE FIXTURE SHALL BE CONSTRUCTED FROM ONE PIECE DIE-CAST, RUGGED ALUMINUM WITH INTEGRAL, WEATHERTIGHT LED ENGINE DRIVER COMPARTMENTS AND HIGH PERFORMANCE ALUMINUM HEATSINKS. ALL EXPOSED DIE-CAST SURFACE SHALL HAVE A EPOXY PRIMER TO PROVIDE RESISTANCE TO CORROSION AND WHITE POWDER TOPCOAT. LED ENGINE DRIVER SHALL BE UL LISTED, 277V, 50,000 HOUR DESIGN LIFE, 0-10V DIMMING, 0.9 MINIMUM POWER FACTOR, 5-YEAR WARRANTY, COMPLETE WITH INTERNAL THERMAL PROTECTION AND OVERLOAD PROTECTION. FIXTURES SHALL BE UL LISTED FOR WET LOCATION AND IP66 RATED.
PROGRESS LIGHTING PRO-OPTICS, INDY SAW6 SERIES, OR EQUAL	LED6E	LED ARRAY	20 W	277 V	REMOTE PHOTOCELL	6" RECESSED LED WALLWASH, 20 W LED ARRAY, 1000 MINIMUM DELIVERED LUMENS AT 4000 DEGREE KELVIN AND WITH CRI OF AT LEAST 70. THE FIXTURE SHALL BE CONSTRUCTED FROM ONE PIECE DIE-CAST, 22 GAUGE NON-CORRESIVE STEEL AND COMPLETE WITH AN ADJUSTABLE INTEGRATED REFLECTOR TO AIM LIGHT OUTPUT DISTRIBUTION ON THE WALL AT DIFFERENT AIMING ANGLES. LED ENGINE DRIVER SHALL BE UL LISTED, 277V, 50,000 HOUR DESIGN LIFE, 0-10V DIMMING, 0.9 MINIMUM POWER FACTOR, 5-YEAR WARRANTY, COMPLETE WITH INTERNAL THERMAL PROTECTION AND OVERLOAD PROTECTION. FIXTURES SHALL BE UL LISTED FOR WET LOCATION.
EAGLE MOUNTAIN BURIAL SERIES, HOWELL IN-GROUND LED OR EQUAL	LED7E	LED ARRAY	20 W	277 V	REMOTE PHOTOCELL	IN-GROUND LED FLAG POLE LIGHT, 20 W LED ARRAY, 277 V, 3000 DEGREE KELVIN AND WITH CRI OF AT LEAST 70. THE FIXTURE SHALL BE CONSTRUCTED FROM COMPRESSION MOLDED FIBER REINFORCED POLYESTER COMPOSITE. THE LED ARRAY SHALL BE HOUSED WITHIN A ZINC LED BODY WITH HEAT DISSIPATING FINS. FIXTURE SHALL HAVE AN INTERNAL ANTI-SIPHON CHAMBER TO KEEP INTERNAL ELECTRICAL COMPONENTS FROM COMING INTO CONTACT WITH GROUND WATER. THE LIGHT SOURCE IS MOUNTED ON AN ADJUSTABLE YOKE TO ALLOW FOR 360 DEGREE TILT AND SHALL HAVE 15 DEGREE SPOT OPTICAL ASSEMBLY. THE FIXTURE SHALL BE COMPLETE WITH A WALKOVER LENS AND ROCK GUARD. THE LED DRIVER SHALL BE REMOTELY MOUNTED INSIDE THE ELECTRICAL ROOM AND FIXTURE SHALL BE PROVIDED WITH APPROPRIATE LENGTH CORD FROM THE MANUFACTURER.

General Notes:

A. All fixtures shall be warranted for minimum of 5 years.

B. For California Energy Commission Mandatory measures, see sheet EE0-0.14.

C. All fixtures shall be UL listed for wet location.

Notes:

1. Integral motion sensors shall be a factory installed motion sensor on the fixture housing and uses passive infrared technology to detect motions. Motion sensor coverage shall be equal or greater than 2 mounting height diameter coverage with a 360 Degree circular pattern. Fixture shall be complete with an integrated button photocontroller capable of switching lights ON/OFF based on daylighting. Motion sensor shall dim the fixture light output by 50% when there is no motion detected.

2. Integral motion sensors shall be a factory installed motion sensor on the fixture housing and uses passive infrared technology to detect motions. Motion sensor coverage shall be equal or greater than 2 mounting height diameter coverage with a 360 Degree circular pattern. Motion sensor shall dim the fixture light output by 50% when there is no motion detected.

3 **REVISED PER ADDENDUM No. 3 DATED JANUARY 4, 2013**

	BY	CHECKED
DESIGN	Jaswinder Gill	Christine Mamaril
DETAILS	Dhali Zhou	Jaswinder Gill
QUANTITIES	Jaswinder Gill	Christine Mamaril

STATE OF CALIFORNIA DEPARTMENT OF TRANSPORTATION

DIVISION OF ENGINEERING SERVICES
ELECTRICAL-MECHANICAL-WATER AND WASTEWATER DESIGN

BRIDGE NO. 33M5785
POST MILE 2.2

SFOBB MAINTENANCE COMPLEX
EXTERIOR LIGHTING FIXTURE SCHEDULE

SHEET EE1-3.29

TAEMWW Imperial Rev. 7/10

ORIGINAL SCALE IN INCHES FOR REDUCED PLANS 0 1 2 3

UNIT 3596
PROJECT NUMBER & PHASE 04120006661
EA 014081

DISREGARD PRINTS BEARING EARLIER REVISION DATES → REVISION DATES (PRELIMINARY STAGE ONLY) 12/28/11 2/22/12 3/23/12 5/30/12 11/29/12 SHEET OF

31-DEC-2012 08:10
ee1_3.29.add

DIST.	COUNTY	ROUTE	POST MILES TOTAL PROJECT	SHEET NO.	TOTAL SHEETS
04	Ala	80	2.2	709	800

Javid Amirazodi 5-30-12
REGISTERED ELECTRICAL ENGINEER DATE

REGISTERED PROFESSIONAL ENGINEER J. AMIRAZODI No. 17509 Exp. 6-30-13 ELEC STATE OF CALIFORNIA

10-22-12
PLANS APPROVAL DATE

The State of California or its officers or agents shall not be responsible for the accuracy or completeness of scanned copies of this plan sheet.

3

CALIFORNIA STATE FIRE MARSHAL APPROVED
Approval of this plan does not authorize or approve any omission or deviation from applicable regulations. Final approval is subject to field inspection. One set of approved plans shall be available on the project site at all times.
Reviewed by: SPENCER MEYER
Approval date: 12-13-12

General Notes:

A. General Notes shown on this Plan sheet are applicable to all Communication System Plan sheets.

B. Unless otherwise noted or required by the serving Utility Company, all elbows and conduit risers on this sheet shall be PVC coated rigid steel conduit.

C. Communication Outlets shall consist of 2 voice and 2 data jacks. Voice cables shall be terminated on voice jacks of communication outlets using 8P8C connectors and 48 port Voice Patch Panels using 8P8C connectors (1AR1V1, 1AR1V2, 1AR1V3, 1BR1V1, 1BR1V2, 1BR1V3 or 1BR1V4) at nearest communication closet. Data cables shall be terminated on data jacks of communication outlets using 8P8C connectors and on 48 port 8P8C Data Patch Panels using 8P8C connectors (1AR1D1, 1AR1D2, 1AR1D3, 1BR1D1, 1BR1D2, 1BR1D3 or 1BR1D4) at nearest communication closet. All components shall adhere to CAT6 specifications and be terminated in compliance with TIA-568 Standards.

D. All risers for PVC conduits on this sheet shall be PVC coated RSC. Wrap joints in touch with soil with two layers of wrapping tape.

E. Telephone panels are installed only to serve as an intermediate pull point. Cable splicing shall not be accepted.

F. Within office areas and areas with finished ceiling or furred wall, conduits shall be concealed in ceiling or walls.

G. Plan data and voice cable conduit homeruns in a manner so that the total length of each cable from outlet to termination point is less than 300 feet.

H. All conduit stub ups shall be 12" above finished floor or 12" below ceiling. Provide conduit bushings on all conduits.

I. Unless otherwise noted, conduit shown shall be 1"C, with 2 data cables and 2 voice cables.

J. Not all junction boxes shown for clarity. Contractor shall provide and install adequate number of junction boxes as required, without additional cost to the State. Junction boxes shall be sized as required to accommodate number of cables inside.

K. For communication outlet face plate details, see 1/EEI-4.11.

L. All data cables and voice cables shall be identified with label at both ends of the cable with pre-printed, heat shrinkable type marker. Each marker shall be placed at an easily accessible location somewhere between 6-12 inches from each end of the cable. The cable identification marker shall adhere to the following convention:
Data cable (blue cable) 1B-166-1A to indicates Building 1B, Room number 166 and data cable number 1 at outlet A.
Voice cable (white cable) 1B-166-1A to indicates Building 1B, Room number 166 and voice cable number 1 at outlet A.

M. Data cables certified tests utilizing industry standard instruments such as the Fluke DTX Cable Analyzer Series shall be performed and results made available to the Engineer for acceptance and verification purposes. Common tests for datacom cabling including length, wiremap, attenuation, NEXT, DC loop resistance, and return loss shall be performed. All the test data shall be tabulated and provided in printed and electronic file version. Similar industry standard test certification and reporting shall be performed for the fiber optics.

N. For patch panels, communication racks, 66 Blocks, and Communication related equipment, see Communication plan sheets.

O. For Main Communications Room 176 enlarged plan, see Detail A on EE1-4.7. For Communications Room 116 enlarged plan, see Detail A on EE1-4.8.

P. For Communication Equipment Schedule, see EE1-4.13 through EE1-4.16.

Q. For Voice and Data Cable Schedule, see EE1-4.17 through 1-4.20.

R. Submit all pertinent details to the Engineer for approval prior to installation.

S. Provide/install junction boxes as required. Junction boxes shall be sized as required to accommodate number of cables inside.

T. Underground conduits entering the building from outside and within the building shall be installed below the structural primary/intermediate grade beams. For location of structural primary/intermediate grade beams, underground conduits stub up, and penetration details through floor/beams, refer to Structural Plan sheets.

Notes:

1. (3) 3"C, each with 28 data cables and 28 voice cables
2. (2) 2½"C, each with 16 data cables and 16 voice cables.
3. (2) 3"C, each with 31 data cables and 31 voice cables.
4. -4"C, one 24 strands, MMFO cable. Terminate cable on Fiber Patch Panel 1BR2F2 in Main Communications Room 176 and on Fiber Patch Panel 1AR2F1 in Communications Room 116, using type SC connector;
   -4"C, 24 data cables. Terminate cables on UTP Patch Panel 1BR2U1 in Main Communications Room 176 and on UTP Patch Panel 1AR2U1 in Communications Room 116, using 24 port 8P8C Patch Panels, using TIA-568 wiring Standards;
   -4"C, one, 200 pair, UTP phone cable. Terminate cable on 66 Blocks 9 thru 16 in Main Communications Room 176 and on Phone Patch Panels 1AR1P1 and 1AR1P2 using 48 port 8P8C patch panels in Communications Room 116. All components will meet a minimum of CAT3 specifications. The patch panel will be terminated with USOC wiring standards.
   -(2) 4"C, MT. Stub up in Communication Rack designated spaces in Main Communications Room 176 and Communications Room 116.
5. 2"C, 4#4, 1#4G.
6. For feeder to Panel 2UA, see sheet EE1-4.7.

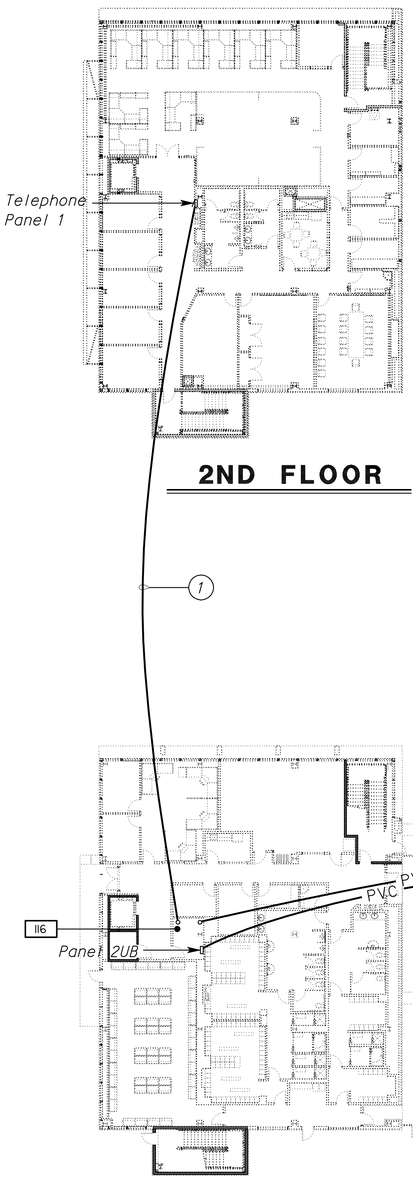

2ND FLOOR

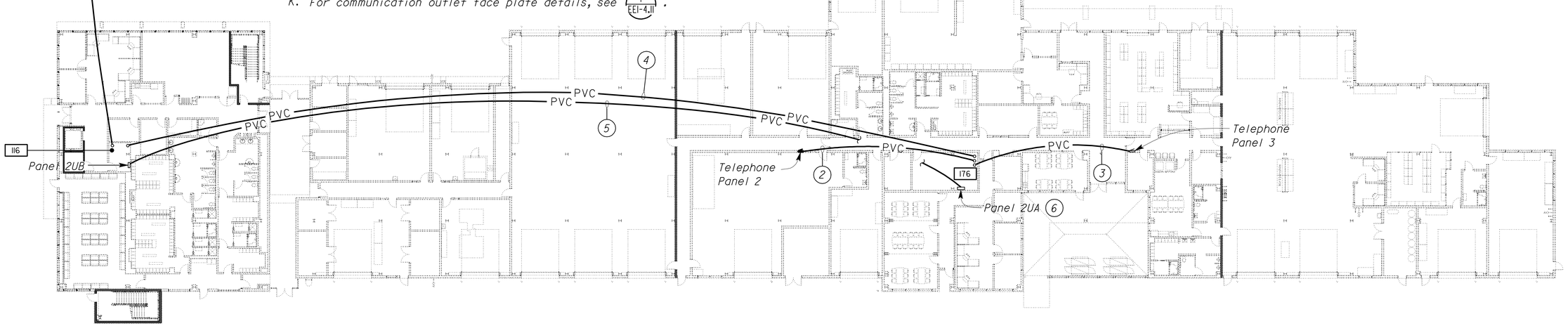

1ST FLOOR

SCALE 1" = 20'-0"

3 **REVISED PER ADDENDUM No. 3 DATED JANUARY 4, 2013**

THIS DRAWING ACCURATE FOR ELECTRICAL WORK ONLY

	BY	CHECKED
DESIGN	Javid Amirazodi	J.S. Sandhu/J.R. Lacy
DETAILS	Ed D. Tapalla 10/11	Javid Amirazodi
QUANTITIES	Javid Amirazodi	J.S. Sandhu/J.R. Lacy

STATE OF CALIFORNIA DEPARTMENT OF TRANSPORTATION

DIVISION OF ENGINEERING SERVICES
ELECTRICAL-MECHANICAL-WATER AND WASTEWATER DESIGN

BRIDGE NO. 33M5785
POST MILE 2.2

SFOBB MAINTENANCE COMPLEX
COMMUNICATION FEEDER PLAN

SHEET EE1-4.1

TAEMWW Imperial Rev. 7/10

ORIGINAL SCALE IN INCHES FOR REDUCED PLANS 0 1 2 3

UNIT 3596
PROJECT NUMBER & PHASE 04120006661
EA 014081

DISREGARD PRINTS BEARING EARLIER REVISION DATES → 5/30/12 11/29/12
REVISION DATES (PRELIMINARY STAGE ONLY) SHEET OF

31-DEC-2012 08:19
ee1_4.01.dgn

DIST.	COUNTY	ROUTE	POST MILES TOTAL PROJECT	SHEET NO.	TOTAL SHEETS
04	Ala	80	2.2	711	800

3

Javid Amirazodi 5-30-12
REGISTERED ELECTRICAL ENGINEER DATE

REGISTERED PROFESSIONAL ENGINEER J. AMIRAZODI No. 17509 Exp. 6-30-13 ELEC STATE OF CALIFORNIA

10-22-12
PLANS APPROVAL DATE

The State of California or its officers or agents shall not be responsible for the accuracy or completeness of scanned copies of this plan sheet.

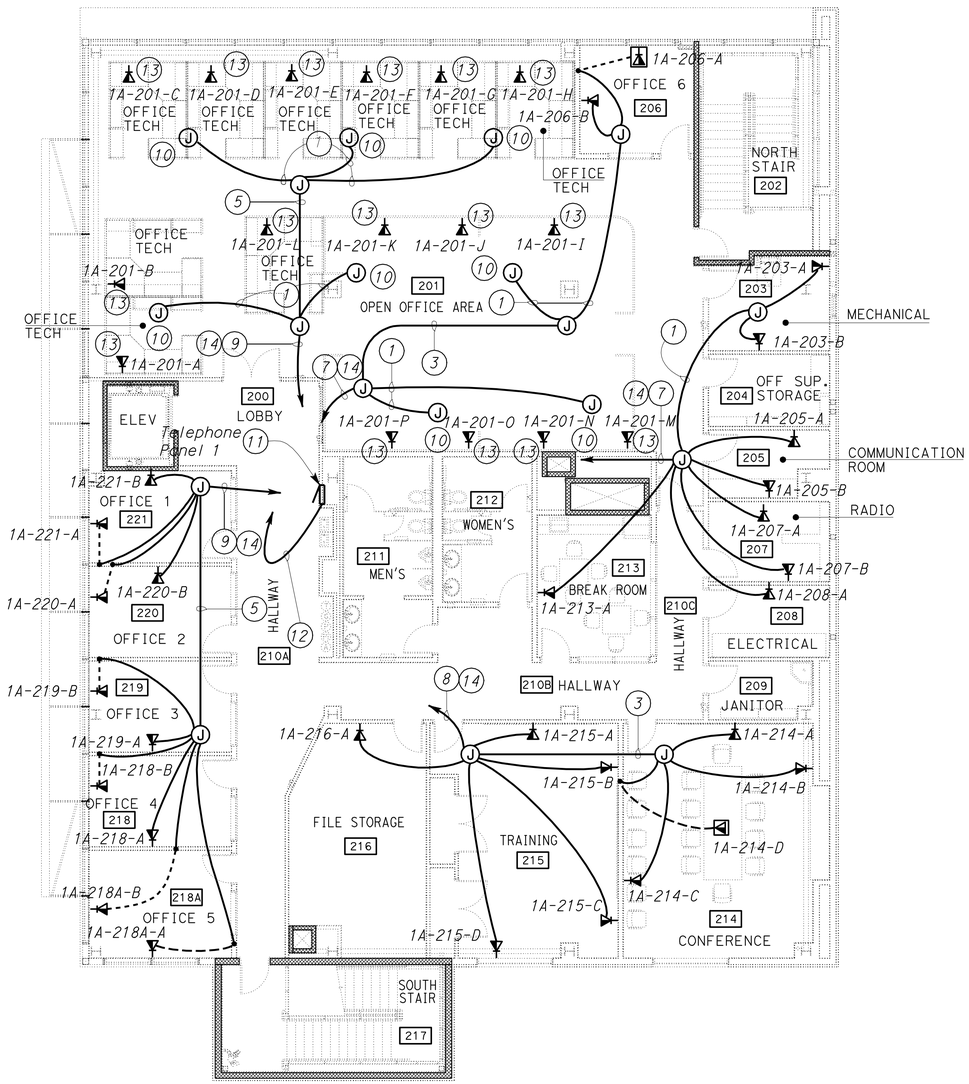

2ND FLOOR

SCALE 1/8" = 1'-0"

Notes

1. *1¼" C, 4 data cables, 4 voice cables.*
2. *1½" C, 6 data cables, 6 voice cables.*
3. *2" C, 8 data cables, 8 voice cables.*
4. *2" C, 10 data cables, 10 voice cables.*
5. *2" C, 12 data cables, 12 voice cables.*
6. *2½" C, 14 data cables, 14 voice cables.*
7. *2½" C, 16 data cables, 16 voice cables.*
8. *2½" C, 18 data cables, 18 voice cables.*
9. *2½" C, 20 data cables, 20 voice cables.*
10. *Ceiling mounted junction box. Terminate 4 data cables and 4 voice cables. Provide 25 feet or more of additional length for each cable coiled inside junction box to ensure sufficient length for installation and termination to designated outlet.*
11. *Telephone Panel 1 shall be flush mounted NEMA Type 1 enclosure with a flush hinged door and shall be 24 inches wide by 24 inches high by 6 inches deep and shall have flush locks on the door trims and with a wooden backboards.*
12. *To voice and data patch panels in Communication Room 116. For size and continuation, see EE1-4.1.*
13. *Not in this contract.*
14. *To voice and data patch panels in Communication Room 116, via Telephone Panel 1.*

CALIFORNIA STATE FIRE MARSHAL APPROVED
Approval of this plan does not authorize or approve any omission or deviation from applicable regulations. Final approval is subject to field inspection. One set of approved plans shall be available on the project site at all times.
Reviewed by: SPENCER MEYER
Approval date: 12-13-12

2ND FLOOR

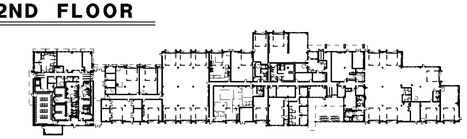

KEY PLAN

THIS DRAWING ACCURATE FOR ELECTRICAL WORK ONLY

3 **REVISED PER ADDENDUM No. 3 DATED JANUARY 4, 2013**

	BY	CHECKED
DESIGN	Javid Amirazodi	J.S. Sandhu/J.R. Lacy
DETAILS	Ed D. Tapalla/Dali Zhou	Javid Amirazodi
QUANTITIES	Javid Amirazodi	J.S. Sandhu/J.R. Lacy

STATE OF CALIFORNIA
DEPARTMENT OF TRANSPORTATION

DIVISION OF ENGINEERING SERVICES
ELECTRICAL-MECHANICAL-WATER AND WASTEWATER DESIGN

BRIDGE NO. 33M5785
POST MILE 2.2

SFOBB MAINTENANCE COMPLEX
BUILDING 1A
COMMUNICATION PLAN 2

SHEET **EE1-4.3**

TAEMWW Imperial Rev. 7/10

ORIGINAL SCALE IN INCHES FOR REDUCED PLANS 0 1 2 3

UNIT 3596
PROJECT NUMBER & PHASE 04120006661
EA 014081

DISREGARD PRINTS BEARING EARLIER REVISION DATES →
REVISION DATES (PRELIMINARY STAGE ONLY) 5/30/12 11/29/12
SHEET OF

31-DEC-2012 08:20
ee1_4.03.dgn

DIST.	COUNTY	ROUTE	POST MILES TOTAL PROJECT	SHEET NO.	TOTAL SHEETS
04	Ala	80	2.2	726	800

3

CALIFORNIA STATE FIRE MARSHAL APPROVED
Approval of this plan does not authorize or approve any omission or deviation from applicable regulations. Final approval is subject to field inspection. One set of approved plans shall be available on the project site at all times.
Reviewed by: SPENCER MEYER
Approval date: 12-13-12

Javid Amirazodi 5-30-12
REGISTERED ELECTRICAL ENGINEER DATE

REGISTERED PROFESSIONAL ENGINEER J. AMIRAZODI No. 17509 Exp. 6-30-13 ELEC STATE OF CALIFORNIA

10-22-12
PLANS APPROVAL DATE

The State of California or its officers or agents shall not be responsible for the accuracy or completeness of scanned copies of this plan sheet.

OUTLET ID	CABLE ID	TERMINATION PORT AT PATCH PANEL	CABLE COLOR
1A-201-O	201-10	1BR1V2-P19	WHITE
	201-20	1BR1V2-P20	
	201-10	1BR1D2-P19	BLUE
	201-20	1BR1D2-P20	
1A-201-P	201-1P	1BR1V2-P21	WHITE
	201-2P	1BR1V2-P22	
	201-1P	1BR1D2-P21	BLUE
	201-2P	1BR1D2-P22	
1A-203-A	203-1A	1BR1V2-P23	WHITE
	203-2A	1BR1V2-P24	
	203-1A	1BR1D2-P23	BLUE
	203-2A	1BR1D2-P24	
1A-203-B	203-1B	1BR1V2-P25	WHITE
	203-2B	1BR1V2-P26	
	203-1B	1BR1D2-P25	BLUE
	203-2B	1BR1D2-P26	
1A-205-A	205-1A	1BR1V2-P27	WHITE
	205-2A	1BR1V2-P28	
	205-1A	1BR1D2-P27	BLUE
	205-2A	1BR1D2-P28	
1A-205-B	205-1B	1BR1V2-P29	WHITE
	205-2B	1BR1V2-P30	
	205-1B	1BR1D2-P29	BLUE
	205-2B	1BR1D2-P30	
1A-206-A	206-1A	1BR1V2-P31	WHITE
	206-2A	1BR1V2-P32	
	206-1A	1BR1D2-P31	BLUE
	206-2A	1BR1D2-P32	
1A-206-B	206-1B	1BR1V2-P33	WHITE
	206-2B	1BR1V2-P34	
	206-1B	1BR1D2-P33	BLUE
	206-2B	1BR1D2-P34	
1A-207-A	207-1A	1BR1V2-P35	WHITE
	207-2A	1BR1V2-P36	
	207-1A	1BR1D2-P35	BLUE
	207-2A	1BR1D2-P36	
1A-207-B	207-1B	1BR1V2-P37	WHITE
	207-2B	1BR1V2-P38	
	207-1B	1BR1D2-P37	BLUE
	207-2B	1BR1D2-P38	
1A-208-A	208-1A	1BR1V2-P39	WHITE
	208-2A	1BR1V2-P40	
	208-1A	1BR1D2-P39	BLUE
	208-2A	1BR1D2-P40	

OUTLET ID	CABLE ID	TERMINATION PORT AT PATCH PANEL	CABLE COLOR
1A-213-A	213-1A	1BR1V2-P41	WHITE
	213-2A	1BR1V2-P42	
	213-1A	1BR1D2-P41	BLUE
	213-2A	1BR1D2-P42	
1A-214-A	214-1A	1BR1V2-P43	WHITE
	214-2A	1BR1V2-P44	
	214-1A	1BR1D2-P43	BLUE
	214-2A	1BR1D2-P44	
1A-214-B	214-1B	1BR1V2-P45	WHITE
	214-2B	1BR1V2-P46	
	214-1B	1BR1D2-P45	BLUE
	214-2B	1BR1D2-P46	
1A-214-C	214-1C	1BR1V2-P47	WHITE
	214-2C	1BR1V2-P48	
	214-1C	1BR1D2-P47	BLUE
	214-2C	1BR1D2-P48	
1A-214-D	214-1D	1BR1V3-P1	WHITE
	214-2D	1BR1V3-P2	
	214-1D	1BR1D3-P1	BLUE
	214-2D	1BR1D3-P2	
1A-215-A	215-1A	1BR1V3-P3	WHITE
	215-2A	1BR1V3-P4	
	215-1A	1BR1D3-P3	BLUE
	215-2A	1BR1D3-P4	
1A-215-B	215-1B	1BR1V3-P5	WHITE
	215-2B	1BR1V3-P6	
	215-1B	1BR1D3-P5	BLUE
	215-2B	1BR1D3-P6	
1A-215-C	215-1C	1BR1V3-P7	WHITE
	215-2C	1BR1V3-P8	
	215-1C	1BR1D3-P7	BLUE
	215-2C	1BR1D3-P8	
1A-215-D	215-1D	1BR1V3-P9	WHITE
	215-2D	1BR1V3-P10	
	215-1D	1BR1D3-P9	BLUE
	215-2D	1BR1D3-P10	
1A-216-A	216-1A	1BR1V3-P11	WHITE
	216-2A	1BR1V3-P12	
	216-1A	1BR1D3-P11	BLUE
	216-2A	1BR1D3-P12	
1A-218A-A	218A-1A	1BR1V3-P13	WHITE
	218A-2A	1BR1V3-P14	
	218A-1A	1BR1D3-P13	BLUE
	218A-2A	1BR1D3-P14	

OUTLET ID	CABLE ID	TERMINATION PORT AT PATCH PANEL	CABLE COLOR
1A-218A-B	218A-1B	1BR1V3-P15	WHITE
	218A-2B	1BR1V3-P16	
	218A-1B	1BR1D3-P15	BLUE
	218A-2B	1BR1D3-P16	
1A-218-A	218-1A	1BR1V3-P17	WHITE
	218-2A	1BR1V3-P18	
	218-1A	1BR1D3-P17	BLUE
	218-2A	1BR1D3-P18	
1A-218-B	218-1B	1BR1V3-P19	WHITE
	218-2B	1BR1V3-P20	
	218-1B	1BR1D3-P19	BLUE
	218-2B	1BR1D3-P20	
1A-219-A	219-1A	1BR1V3-P21	WHITE
	219-2A	1BR1V3-P22	
	219-1A	1BR1D3-P21	BLUE
	219-2A	1BR1D3-P22	
1A-219-B	219-1B	1BR1V3-P23	WHITE
	219-2B	1BR1V3-P24	
	219-1B	1BR1D3-P23	BLUE
	219-2B	1BR1D3-P24	
1A-220-A	220-1A	1BR1V3-P25	WHITE
	220-2A	1BR1V3-P26	
	220-1A	1BR1D3-P25	BLUE
	220-2A	1BR1D3-P26	
1A-220-B	220-1B	1BR1V3-P27	WHITE
	220-2B	1BR1V3-P28	
	220-1B	1BR1D3-P27	BLUE
	220-2B	1BR1D3-P28	
1A-221-A	221-1A	1BR1V3-P29	WHITE
	221-2A	1BR1V3-P30	
	221-1A	1BR1D3-P29	BLUE
	221-2B	1BR1D3-P30	
1A-221-B	221-1B	1BR1V3-P31	WHITE
	221-2B	1BR1V3-P32	
	221-1B	1BR1D3-P31	BLUE
	221-2B	1BR1D3-P32	

3 **REVISED PER ADDENDUM No. 3 DATED JANUARY 4, 2013**

	BY	CHECKED
DESIGN	Javid Amirazodi	J.S. Sandhu/J.R. Lacy
DETAILS	Dali Zhou	J. S. Sandhu
QUANTITIES	Javid Amirazodi	J.S. Sandhu/J.R. Lacy

STATE OF CALIFORNIA DEPARTMENT OF TRANSPORTATION

DIVISION OF ENGINEERING SERVICES
ELECTRICAL-MECHANICAL-WATER AND WASTEWATER DESIGN

BRIDGE NO. 33M5785
POST MILE 2.2

SFOBB MAINTENANCE COMPLEX
VOICE AND DATA CABLE SCHEDULE 2

SHEET **EE1-4.18**

TAEMWW Imperial Rev. 7/10

ORIGINAL SCALE IN INCHES FOR REDUCED PLANS 0 1 2 3

UNIT 3596
PROJECT NUMBER & PHASE 04120006661
EA 014081

DISREGARD PRINTS BEARING EARLIER REVISION DATES → 5/30/12 11/29/12
REVISION DATES (PRELIMINARY STAGE ONLY) SHEET OF

31-DEC-2012 08:20
ee1_4.18.add

DIST.	COUNTY	ROUTE	POST MILES TOTAL PROJECT	SHEET NO.	TOTAL SHEETS
04	Ala	80	2.2	730	800

3

CALIFORNIA STATE FIRE MARSHAL APPROVED

Approval of this plan does not authorize or approve any omission or deviation from applicable regulations. Final approval is subject to field inspection. One set of approved plans shall be available on the project site at all times.

Reviewed by: SPENCER MEYER

Approval date: 12-13-12

Javid Amirazodi 5-30-12

REGISTERED ELECTRICAL ENGINEER — DATE

REGISTERED PROFESSIONAL ENGINEER J. AMIRAZODI No. 17509 Exp. 6-30-13 ELEC STATE OF CALIFORNIA

10-22-12

PLANS APPROVAL DATE

The State of California or its officers or agents shall not be responsible for the accuracy or completeness of scanned copies of this plan sheet.

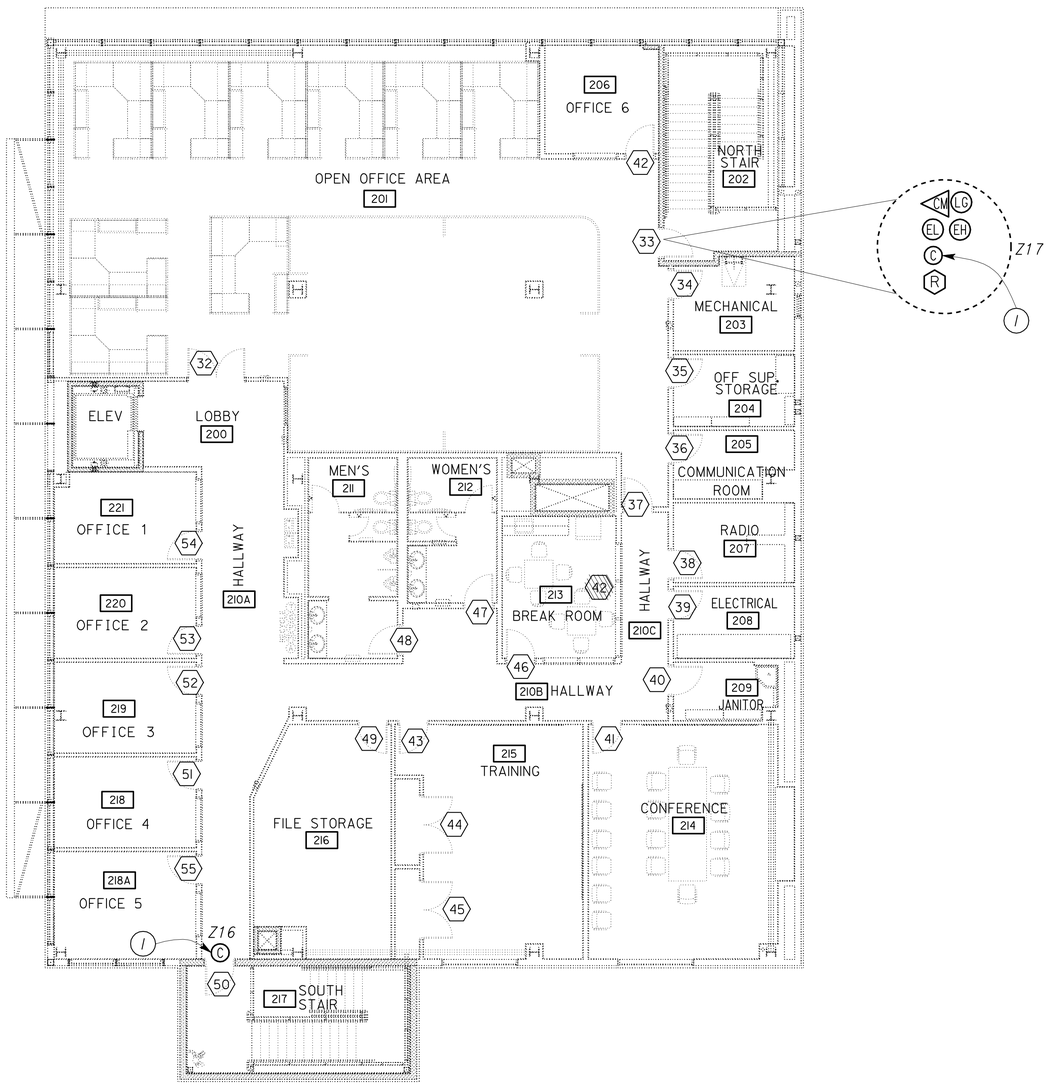

2ND FLOOR

SCALE 1/8" = 1'-0"

Note:

(1) *Surface mounted magnetic contact switch.*

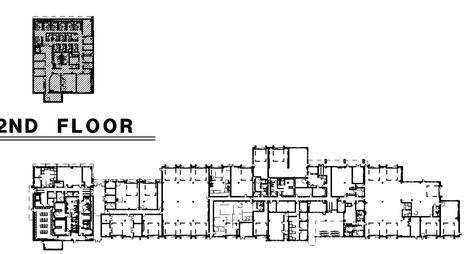

KEY PLAN

THIS DRAWING ACCURATE FOR ELECTRICAL WORK ONLY

3 **REVISED PER ADDENDUM No. 3 DATED JANUARY 4, 2013**

	BY	CHECKED
DESIGN	Javid Amirazodi	J.S. Sandhu/J.R. Lacy
DETAILS	Ed D. Tapalla/Dali Zhou	Javid Amirazodi
QUANTITIES	Javid Amirazodi	J.S. Sandhu/J.R. Lacy

STATE OF CALIFORNIA DEPARTMENT OF TRANSPORTATION

DIVISION OF ENGINEERING SERVICES ELECTRICAL-MECHANICAL-WATER AND WASTEWATER DESIGN

BRIDGE NO. 33M5785 — POST MILE 2.2

SFOBB MAINTENANCE COMPLEX

BUILDING 1A — INTRUSION ALARM AND ACCESS SYSTEM PLAN 2

SHEET **EE1-5.2**

TAEMWW Imperial Rev. 7/10

ORIGINAL SCALE IN INCHES FOR REDUCED PLANS 0 1 2 3

UNIT 3596

PROJECT NUMBER & PHASE 04120006661

EA 014081

DISREGARD PRINTS BEARING EARLIER REVISION DATES → REVISION DATES (PRELIMINARY STAGE ONLY) 5/30/12 11/29/12 — SHEET — OF

02-JAN-2013 08:13

ee1_5.02.dgn

ZONE	LOCATION	QUANTITY	DEVICES DESCRIPTION
57	ELECTRICAL SHOP	3	GLASS BREAK DISCRIMINATOR
58	VEHICLE ACCESS ROLL UP DOOR-DOOR #114	1	MAGNETIC CONTACT SWITCH-VEHICLE
	EQUIPMENT STORAGE BAY	1	GLASS BREAK DISCRIMINATOR
59	VEHICLE ACCESS ROLL-UP DOOR-DOOR #101	1	MAGNETIC CONTACT SWITCH-VEHICLE
	BAIR STORAGE	1	GLASS BREAK DISCRIMINATOR
60	SINGLE PEDESTRIAN DOOR-DOOR #100	1	MAGNETIC CONTACT SWITCH-PEDESTRIAN
		1	LOCK GUARD
61	VEHICLE ACCESS ROLL UP DOOR-DOOR #93	1	MAGNETIC CONTACT SWITCH-VEHICLE
	SECURE STORAGE	1	GLASS BREAK DISCRIMINATOR
62	SINGLE PEDESTRIAN DOOR-DOOR #92	1	MAGNETIC CONTACT SWITCH-PEDESTRIAN
		1	LOCK GUARD
63	SINGLE PEDESTRIAN DOOR-DOOR #91	1	DIGITAL CARD READER
		1	MAGNETIC CONTACT SWITCH-PEDESTRIAN
		1	ELECTRIFIED DOOR HINGE
		1	ELECTROMECHANICAL LOCK
		1	COMBINATION MOTION DETECTOR
		1	LOCK GUARD
64	SINGLE PEDESTRIAN DOOR-DOOR #90	1	MAGNETIC CONTACT SWITCH-PEDESTRIAN
		1	LOCK GUARD
65	VEHICLE ACCESS ROLL UP DOOR-DOOR #89	1	MAGNETIC CONTACT SWITCH-VEHICLE
	CARPENTER SHOP	1	GLASS BREAK DISCRIMINATOR
66	SINGLE PEDESTRIAN DOOR-DOOR #68	1	DIGITAL CARD READER
		1	MAGNETIC CONTACT SWITCH-PEDESTRIAN
		1	ELECTRIFIED DOOR HINGE
		1	ELECTROMECHANICAL LOCK
		1	COMBINATION MOTION DETECTOR
		1	LOCK GUARD
67	EQUIPMENT STORAGE BAYS	3	GLASS BREAK DISCRIMINATOR
	VEHICLE ACCESS ROLL UP DOOR-DOORS #79,80,81	3	MAGNETIC CONTACT SWITCH-VEHICLE
68	SINGLE PEDESTRIAN DOOR-DOOR #78	1	DIGITAL CARD READER
		1	MAGNETIC CONTACT SWITCH-PEDESTRIAN
		1	ELECTRIFIED DOOR HINGE
		1	ELECTROMECHANICAL LOCK
		1	COMBINATION MOTION DETECTOR
		1	LOCK GUARD
		1	DIGITAL KEYPAD DEACTIVATES ZONES:18,19,20,21,22,23,24 ,25,26,27,28,29,30,31,32,33,34,47,48,49,51,52,56 ,59,60,61,62,63,64,65,66,67,68,69,70,71,72,73,74
69	SINGLE PEDESTRIAN DOOR-DOOR #67	1	MAGNETIC CONTACT SWITCH-PEDESTRIAN
		1	LOCK GUARD
70	VEHICLE ACCESS ROLL UP DOOR-DOOR #65	1	MAGNETIC CONTACT SWITCH-VEHICLE
		1	GLASS BREAK DISCRIMINATOR
71	RIGGING SECURE TOOL	1	GLASS BREAK DISCRIMINATOR
	VEHICLE ACCESS ROLL UP-DOOR #63	1	MAGNETIC CONTACT SWITCH-VEHICLE
72	SINGLE PEDESTRIAN DOOR-DOOR #62	1	MAGNETIC CONTACT SWITCH-PEDESTRIAN
		1	LOCK GUARD
73	DOUBLE PEDESTRIAN DOOR-DOOR #56	2	MAGNETIC CONTACT SWITCH-PEDESTRIAN
		1	LOCK GUARD
74	SINGLE PEDESTRIAN DOOR-DOOR #82	1	MAGNETIC CONTACT SWITCH-PEDESTRIAN
75	SINGLE PEDESTRIAN DOOR-DOOR #128	1	DIGITAL CARD READER
		1	MAGNETIC CONTACT SWITCH-PEDESTRIAN
		1	ELECTRIFIED DOOR HINGE
		1	ELECTROMECHANICAL LOCK
		1	COMBINATION MOTION DETECTOR
		1	LOCK GUARD

NAMEPLATE SCHEDULE

ITEM No.	LETTER HEIGHT (inch)	INSCRIPTION
1	1/2	INTRUSION ALARM CONTROL PANEL
2	1/2	ACCESS CONTROL PANEL

3

CALIFORNIA STATE FIRE MARSHAL APPROVED
Approval of this plan does not authorize or approve any omission or deviation from applicable regulations. Final approval is subject to field inspection. One set of approved plans shall be available on the project site at all times.
Reviewed by: SPENCER MEYER
Approval date: 12-13-12

DIST.	COUNTY	ROUTE	POST MILES TOTAL PROJECT	SHEET NO.	TOTAL SHEETS
04	Ala	80	2.2	736	800

Javid Amirazodi 5-30-12
REGISTERED ELECTRICAL ENGINEER DATE

REGISTERED PROFESSIONAL ENGINEER J. AMIRAZODI No. 17509 Exp. 6-30-13 ELEC STATE OF CALIFORNIA

10-22-12
PLANS APPROVAL DATE

The State of California or its officers or agents shall not be responsible for the accuracy or completeness of scanned copies of this plan sheet.

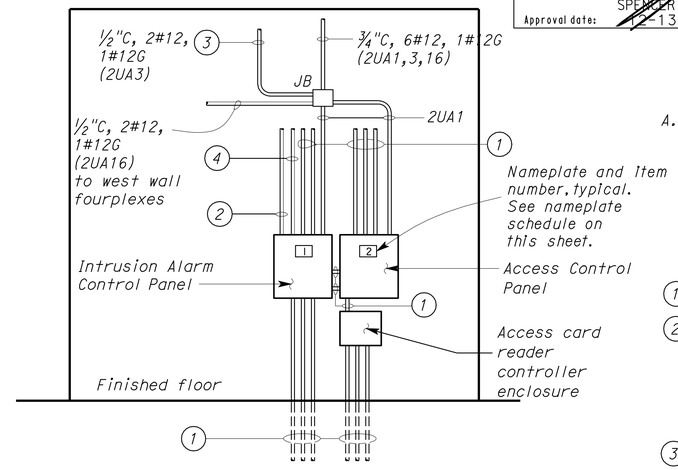

A ELEVATION

General Note:

A. For locations of Panel 2UA, see EE1-4.7.

Notes:

1. Conduit and conductor size as required.
2. 3/4"C, with 2 data cables upto cable ladder. Route one cable to Workstation desk and terminate on access control workstation as required. For location of workstation desk, see EE1-4.7. Route one data cable to communication rack and terminate as required.
3. To Fire Alarm Control Panel in Room 177. For continuation, see EE1-6.3.
4. 2"C, MT to Fire Alarm Control Panel in Room 177. For continuation, see EE1-6.3.

ZONE	LOCATION	QUANTITY	DEVICES DESCRIPTION
76	SINGLE PEDESTRIAN DOOR-DOOR #17	1	DIGITAL CARD READER
		1	MAGNETIC CONTACT SWITCH-PEDESTRIAN
		1	ELECTRIFIED DOOR HINGE
		1	ELECTROMECHANICAL LOCK
		1	COMBINATION MOTION DETECTOR
		1	LOCK GUARD
77	SINGLE PEDESTRIAN DOOR-DOOR #111	1	DIGITAL CARD READER
		1	MAGNETIC CONTACT SWITCH-PEDESTRIAN
		1	ELECTRIFIED DOOR HINGE
		1	ELECTROMECHANICAL LOCK
		1	COMBINATION MOTION DETECTOR
		1	LOCK GUARD
78	VEHICLE ACCESS GATE AND PEDESTRIAN DOOR 200-NORTH	2	GATE DIGITAL CARD READER-SITE ACCESS GATE
		1	DIGITAL CARD READER-PEDESTRIAN GATE
		3	ELECTROMAGNETIC LOCK SET
79	VEHICLE ACCESS GATE AND PEDESTRIAN DOOR 201-EAST	2	GATE DIGITAL CARD READER-SITE ACCESS GATE
		1	DIGITAL CARD READER-PEDESTRIAN GATE
		3	ELECTROMAGNETIC LOCK SET
80	FUEL LOG ROOM AT WASH/FUEL BUILDING	2	DRY CONTACT FROM LEAK DETECTION TANK LEVEL MONITORING PANEL

3 **REVISED PER ADDENDUM No. 3 DATED JANUARY 4, 2013**

	BY	CHECKED
DESIGN	Javid Amirazodi	J.S. Sandhu/J.R. Lacy
DETAILS	Dali Zhou	Javid Amirazodi
QUANTITIES	Javid Amirazodi	J.S. Sandhu/J.R. Lacy

STATE OF CALIFORNIA DEPARTMENT OF TRANSPORTATION

DIVISION OF ENGINEERING SERVICES
ELECTRICAL-MECHANICAL-WATER AND WASTEWATER DESIGN

BRIDGE NO. 33M5785
POST MILE 2.2

SFOBB MAINTENANCE COMPLEX
INTRUSION ALARM AND ACCESS SYSTEM ZONING SCHEDULE 3

SHEET EE1-5.8

TAEMWW Imperial Rev. 7/10

ORIGINAL SCALE IN INCHES FOR REDUCED PLANS 0 1 2 3

UNIT 3596
PROJECT NUMBER & PHASE 04120006661
EA 014081

DISREGARD PRINTS BEARING EARLIER REVISION DATES → 5/30/12 12/12/12

REVISION DATES (PRELIMINARY STAGE ONLY) SHEET OF

31-DEC-2012 08:20
ee1_5.08.dgn

DIST.	COUNTY	ROUTE	POST MILES TOTAL PROJECT	SHEET NO.	TOTAL SHEETS
04	Ala	80	2.2	737	800

3

Jaswinder S Sandhu 5-30-12
REGISTERED ELECTRICAL ENGINEER DATE

REGISTERED PROFESSIONAL ENGINEER J.S. SANDHU No. 11803 Exp. 9-30-12 ELEC STATE OF CALIFORNIA

10-22-12
PLANS APPROVAL DATE

The State of California or its officers or agents shall not be responsible for the accuracy or completeness of scanned copies of this plan sheet.

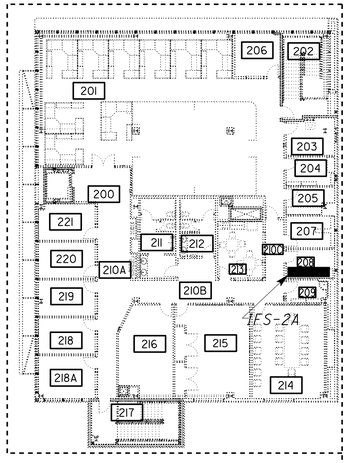

2ND FLOOR

For work in this area, see sheets EE1-6.1 & EE1-6.5

General Notes: (All Fire Alarm Plans)

A. Conduit and conductors system for the Fire Alarm System is not shown. See Special Provisions for requirements.

B. Fire alarm shall comply with NFPA 72-2010 National Fire Alarm Code as amended by CBC, 2004 ADAAG 702, 2010 CBC Sections 907, 2010 CFC Sections 907 and 2010 CEC Article 760.

C. Installation of the Fire Alarm System shall not start up until detailed Plans and Specifications including California Fire Marshall listing numbers of each component of the system have been approved by the California State Fire Marshall.

D. Upon completion of the installation of the Fire Alarm system, a satisfactory test of the entire system shall be made in the presence of the Enforcing Agency.

E. Conduits in and routed thru areas with finished ceilings or furred wall shall be concealed. See the Architectural Finish schedules for the rooms with furred walls and finished ceilings.

F. Fire Alarm System testing shall be reported in the following format to the Engineer.

DEVICE ADDRESS	TYPE CODE LABEL	FLASH SCAN TYPE	CUSTOM LABEL	EXTENDED LABLE	PRE-ALARM SENSITIVITY	FIRE-ALARM SENSITIVITY	COOPERATIVE DETECTOR MODE	ALARM VERIFICATION PARTICIPATION	CONTROL- BY-EVENT

G. ⬡ with number inside represents a given conduit system. For conduit and conductor/cable schedule, see EE0-1.11 and EE0-1.12.

H. Where shown in the plans for fan shutdown, wire addressable relay module in series with the motor controller controls.

I. Underground conduits entering the building from outside and within the building shall be installed below the structural primary/intermediate grade beams. for location of structural primary/intermediate grade beams, underground conduits stub up, and penetration details through floor/beams, refer to structural plan sheets.

J. Detectors shall not be installed until the cleanup of all trades is completed and final as per 2010 NFPA 72 Section 17.7.1.11.

K. Before requesting final approval of the installation, the installing contractor shall furnish a written statement to the State Fire Marshal to the effect that the system has been installed in accordance with approved plans and completely tested in accordance with manufacturer's specifications and appropriate NFPA requirements. (2010 NFPA 72 Section 10.18.1.3)

L. Location of fire alarm devices are shown arbitrary only. Exact location and number of devices shall be deferred for approval by the State Fire Marshall upon submittal of shop drawings.

ACCESSIBILITY DESIGN APPROVAL STAMP DOT / DES / OTA
PROJECT ID 0412000666
Reviewed by: Y. A. WANG
Date: 12-06-12

CALIFORNIA STATE FIRE MARSHAL APPROVED
Approval of this plan does not authorize or approve any omission or deviation from applicable regulations. Final approval is subject to field inspection. One set of approved plans shall be available on the project site at all times.
Reviewed by: SPENCER MEYER
Approval date: 12-13-12

For work in this area, see sheets EE1-6.4 & EE1-6.8.

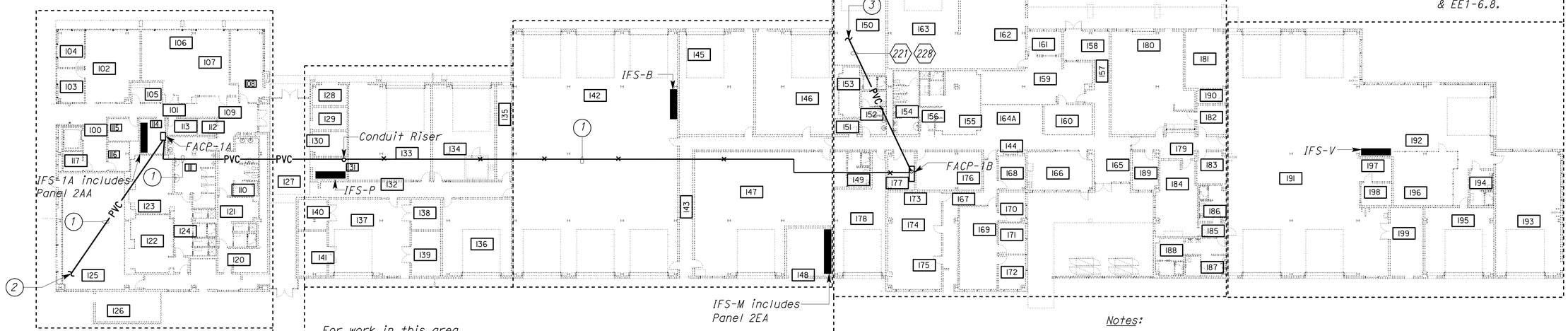

For work in this area, see sheets EE1-6.2 & EE1-6.6

For work in this area, see sheets EE1-6.1 & EE1-6.5

For work in this area, see sheets EE1-6.3 & EE1-6.7.

1ST FLOOR

SCALE 1" = 20'-0"

Notes:

1. 1"C, control conductors as required by the Fire Alarm Control Panel manufacturer.
2. For connection to Fire Department Post Indicator Valve & Detector Check Valve tamper switches, see Communication Site Plan 1 on sheet EE0-0.5.
3. To Communication Vault, see Communication Site Plan 1 on sheet EE0-0.5.

3 **REVISED PER ADDENDUM No. 3 DATED JANUARY 4, 2013**

THIS DRAWING ACCURATE FOR ELECTRICAL WORK ONLY

	BY	CHECKED
DESIGN	J. S. Sandhu	Jaswinder Gill
DETAILS	Dali Zhou	J. S. Sandhu
QUANTITIES	J. S. Sandhu	Jaswinder Gill

STATE OF CALIFORNIA DEPARTMENT OF TRANSPORTATION

DIVISION OF ENGINEERING SERVICES
ELECTRICAL-MECHANICAL-WATER AND WASTEWATER DESIGN

BRIDGE NO. 33M5785
POST MILE 2.2

SFOBB MAINTENANCE COMPLEX

FIRE ALARM KEY PLAN

SHEET EE1-6.0

TAEMWW Imperial Rev. 7/10

ORIGINAL SCALE IN INCHES FOR REDUCED PLANS 0 1 2 3

UNIT 3596
PROJECT NUMBER & PHASE 04120006661
EA 014081

DISREGARD PRINTS BEARING EARLIER REVISION DATES →

REVISION DATES (PRELIMINARY STAGE ONLY) 1/9/12 3/23/12 5/25/12 5/30/12 7/23/12 8/20/12 11/29/12

SHEET OF

31-DEC-2012 08:20

ee1_6.00.add

DIST.	COUNTY	ROUTE	POST MILES TOTAL PROJECT	SHEET NO.	TOTAL SHEETS
04	Ala	80	2.2	738	800

3

Jaswinder S Sandhu 5-30-12
REGISTERED ELECTRICAL ENGINEER DATE

REGISTERED PROFESSIONAL ENGINEER J.S. SANDHU No. 11803 Exp. 9-30-12 ELEC STATE OF CALIFORNIA

10-22-12
PLANS APPROVAL DATE

The State of California or its officers or agents shall not be responsible for the accuracy or completeness of scanned copies of this plan sheet.

ACCESSIBILITY DESIGN APPROVAL STAMP DOT / DES / OTA
PROJECT ID **0412000666**
Reviewed by: Y. A. WANG
Date: 12-06-12

CALIFORNIA STATE FIRE MARSHAL APPROVED
Approval of this plan does not authorize or approve any omission or deviation from applicable regulations. Final approval is subject to field inspection. One set of approved plans shall be available on the project site at all times.
Reviewed by: SPENCER MEYER
Approval date: 12-13-12

General Notes:

A. *Unless otherwise noted, all power homeruns shown on this sheet are to the Panel 2AA inside IFS-1A.*

B. *For conduits to the Post Indicator Valve / Detector Check Valves, see sheet EE1-6.0.*

C. *All the fire alarm conduit system shall be homerun to the Fire Alarm Control Panel FACP-1A inside the Electrical Room No. 114.*

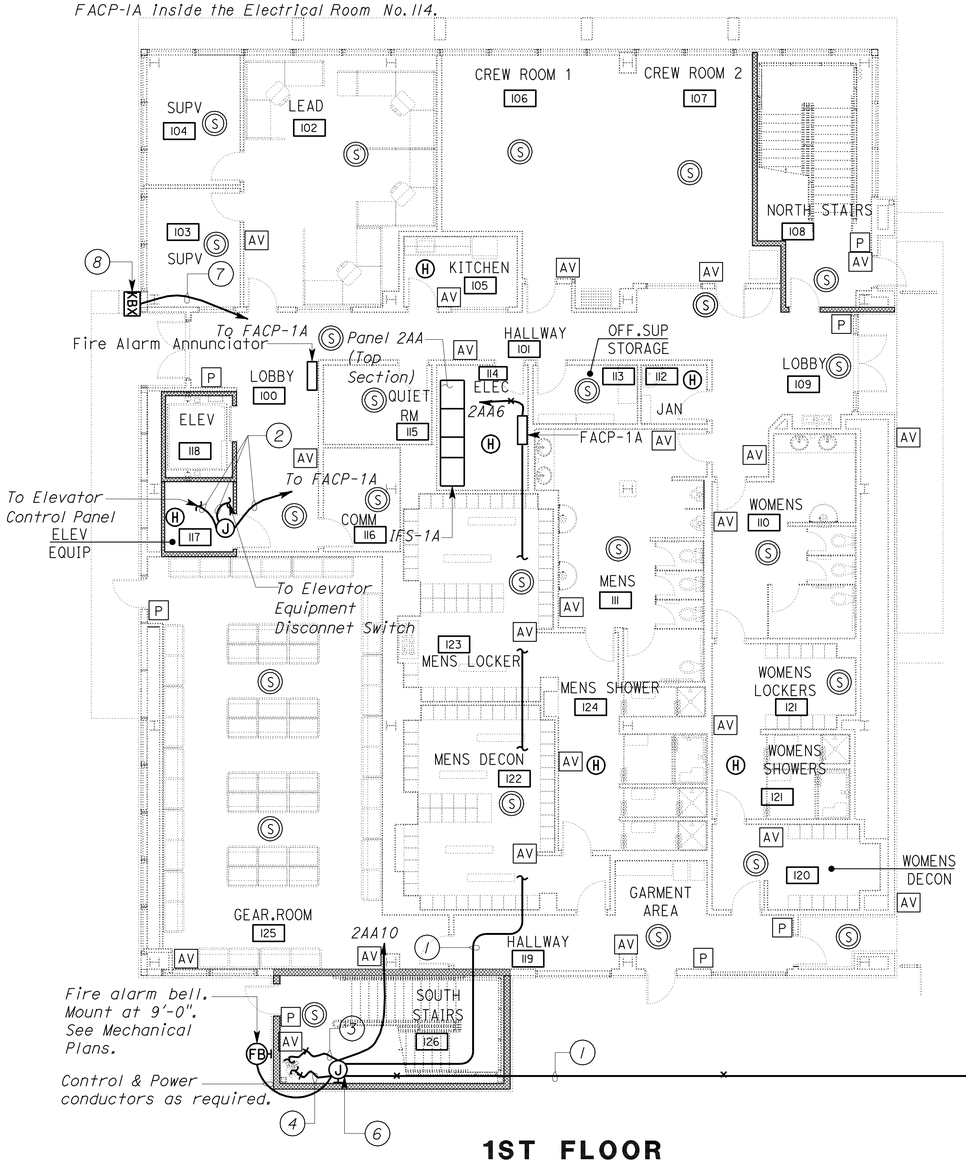

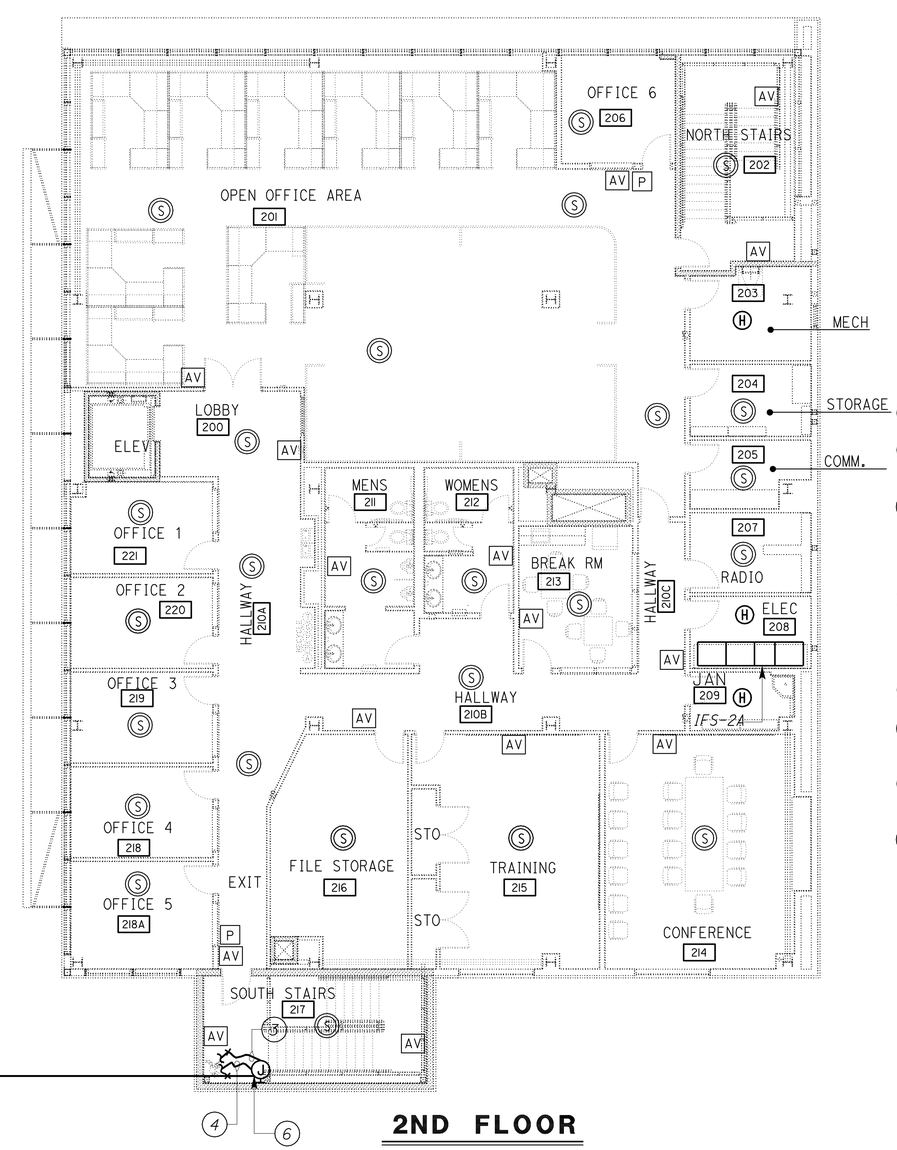

Notes:

1. *¾"C, with control cables as required.*
2. *½"C, Control conductors as required by the Elevator Manufacturer.*
3. *To flow switch on the fire riser. Provide ½"C, flex, with wires and/or cable as recommended by the Fire Alarm Control Panel manufacturer. For Fire Riser details, see Mechanical plans.*
4. *To supervisory switch on the fire riser. Provide ½"C, flex, with wires and/or cable as recommended by the Fire Alarm Control Panel manufacturer. For Fire Riser details, see Mechanical plans.*
5. *Not used.*
6. *Junction box for supervisory switch and flow switch. Mount adjacent to the Fire Riser.*
7. *¾"C, control cables from tamper switch inside Knox box to the Fire Alarm Control Panel-1A.*
8. *Knox box shall be UL listed, ¼" thick stainless steel case, with an exterior hinged door and interior compartment which can holds up to 2 keys and 100% welded with maximum width of 4". Knox box shall be complete with an alarm tamper switch. Mount the knox box recessed into the exterior wall panels at least 6 feet from the finished floor.*

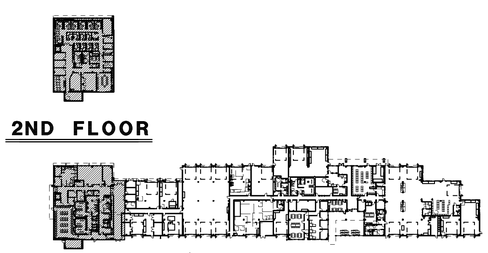

KEY PLAN

PLAN
SCALE 1/8" = 1'-0"

3 **REVISED PER ADDENDUM No. 3 DATED JANUARY 4, 2013**

THIS DRAWING ACCURATE FOR ELECTRICAL WORK ONLY

	BY	CHECKED
DESIGN	J. S. Sandhu	Jaswinder Gill
DETAILS	Ed D. Tapalla 10/11	J. S. Sandhu
QUANTITIES	J. S. Sandhu	Jaswinder Gill

STATE OF CALIFORNIA DEPARTMENT OF TRANSPORTATION

DIVISION OF ENGINEERING SERVICES
ELECTRICAL-MECHANICAL-WATER AND WASTEWATER DESIGN

BRIDGE NO. 33M5785
POST MILE 2.2

SFOBB MAINTENANCE COMPLEX
BUILDING 1A — FIRE ALARM FLOOR PLAN 1

SHEET **EE1-6.1**

ORIGINAL SCALE IN INCHES FOR REDUCED PLANS 0 1 2 3

UNIT 3596
PROJECT NUMBER & PHASE 04120006661
EA 014081

DISREGARD PRINTS BEARING EARLIER REVISION DATES
REVISION DATES (PRELIMINARY STAGE ONLY) 11/28/11 3/23/12 5/25/12 5/30/12 7/23/12 11/29/12
SHEET OF

TAEMWW Imperial Rev. 7/10

31-DEC-2012 08:13
ee1_6.01.dgn

DIST.	COUNTY	ROUTE	POST MILES TOTAL PROJECT	SHEET NO.	TOTAL SHEETS
04	Ala	80	2.2	740	800

ACCESSIBILITY DESIGN APPROVAL STAMP
DOT / DES / OTA
PROJECT ID 0412000666
Reviewed by: Y. A. WANG
Date: 12-06-12

CALIFORNIA STATE FIRE MARSHAL APPROVED
Approval of this plan does not authorize or approve any omission or deviation from applicable regulations. Final approval is subject to field inspection. One set of approved plans shall be available on the project site at all times.
Reviewed by: SPENCER MEYER
Approval date: 12-13-12

Jaswinder S Sandhu 5-30-12
REGISTERED ELECTRICAL ENGINEER DATE

REGISTERED PROFESSIONAL ENGINEER J.S. SANDHU No. 11803 Exp. 9-30-12 ELEC STATE OF CALIFORNIA

10-22-12
PLANS APPROVAL DATE

The State of California or its officers or agents shall not be responsible for the accuracy or completeness of scanned copies of this plan sheet.

3

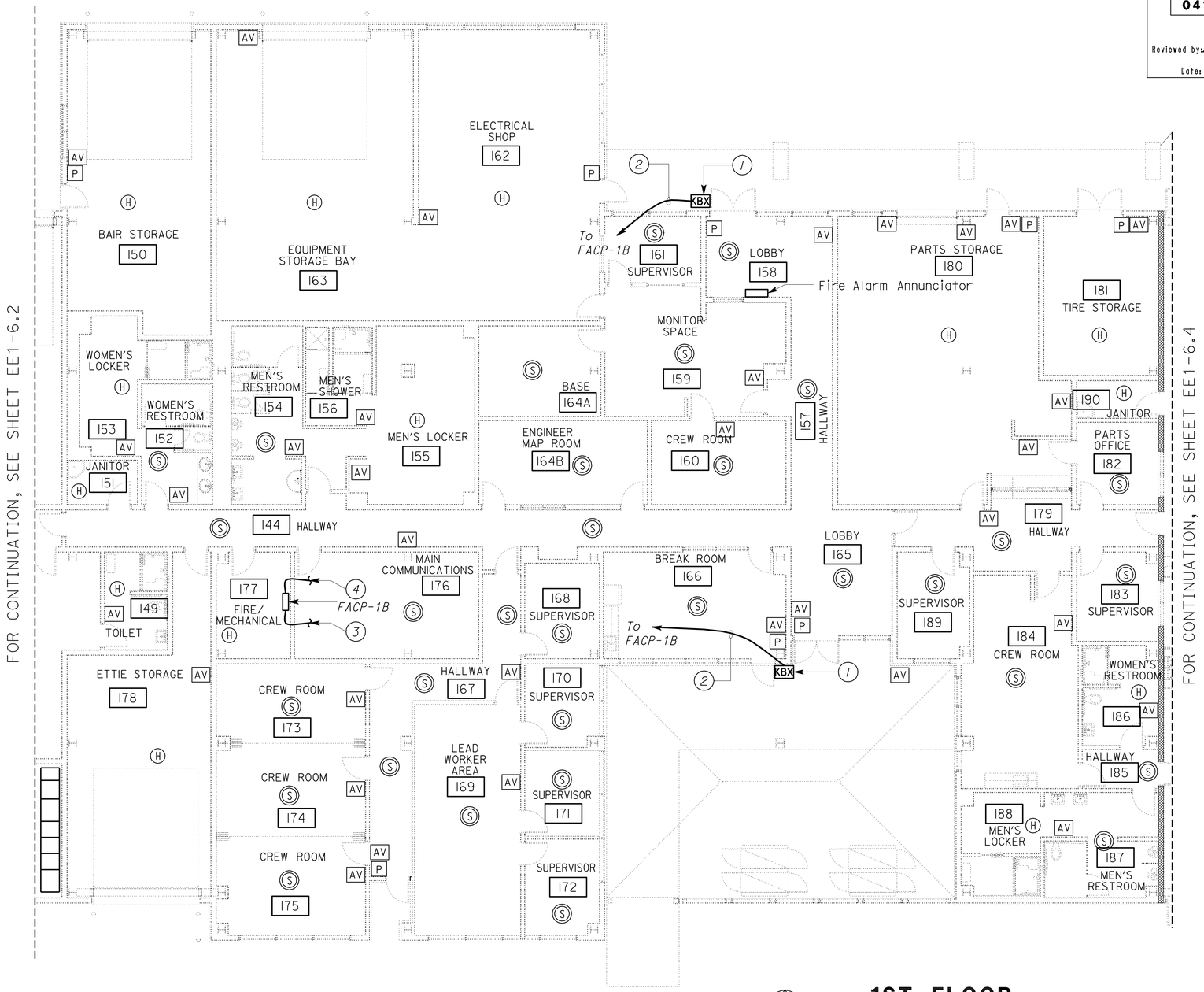

General Notes:

A. All the fire alarm conduit system shall be homerun to the Fire Alarm Control Panel FACP-1B inside the Fire/Mechanical Room No. 177.

B. Install heat detectors at the bottom of the Open Web Steel Joist construction. Typical for all High Bay areas.

C. For conduits to the Post Indicator Valve / Detector Check Valves, see sheet EE1-6.0.

Notes:

(1) Knox box shall be UL listed, 1/4" thick stainless steel case, with an exterior hinged door and interior compartment which can holds up to 2 keys and 100% welded with maximum width of 4". Knox box shall be complete with an alarm tamper switch. Mount the knox box recessed into the exterior wall panels at least 6 feet from the finished floor. Connect tamper switch to Fire Alarm Control Panel-1B.

(2) 3/4"C. control cables from tamper switch inside Knox box to the Fire Alarm Control Panel-1B.

(3) To Panel 2UA thru JB (power to FACP-1B, Ckt. no. 2UA3) inside Main Communication Room. For continuation see sheet EE1-4.7.

(4) 2"C, MT to Intrusion Alarm Control Panel inside Room No. 176. For continuation, see sheet EE1-4.7.

1ST FLOOR

SCALE 1/8" = 1'-0"

3 **REVISED PER ADDENDUM No. 3 DATED JANUARY 4, 2013**

KEY PLAN

THIS DRAWING ACCURATE FOR ELECTRICAL WORK ONLY

	BY	CHECKED
DESIGN	J. S. Sandhu	Jaswinder Gill
DETAILS	Ed D. Tapalla/Dali Zhou	J. S. Sandhu
QUANTITIES	J. S. Sandhu	Jaswinder Gill

STATE OF CALIFORNIA
DEPARTMENT OF TRANSPORTATION

DIVISION OF ENGINEERING SERVICES
ELECTRICAL-MECHANICAL-WATER AND WASTEWATER DESIGN

BRIDGE NO. 33M5785
POST MILE 2.2

SFOBB MAINTENANCE COMPLEX
BUILDING 1B
FIRE ALARM FLOOR PLAN 3

SHEET EE1-6.3

TAEMWW Imperial Rev. 7/10

ORIGINAL SCALE IN INCHES FOR REDUCED PLANS 0 1 2 3

UNIT 3596
PROJECT NUMBER & PHASE 04120006661
EA 014081

DISREGARD PRINTS BEARING EARLIER REVISION DATES
REVISION DATES (PRELIMINARY STAGE ONLY) 10/24/11 3/23/12 5/25/12 5/30/12 7/23/12 11/29/12
SHEET OF

31-DEC-2012 08:13
ee1_6.03.dgn

General Notes:

A. All the homeruns on this sheet are to the Fire Alarm Control Panel FACP-1A Inside the Electrical Room No. 114.

B. A/C's and EF's are mounted on rooftop. See Mechanical plans MI-3 for exact location.

C. All A/C's, EF's and Smoke Dampers shown on this sheet are to be shutdown using Addressable Relay Module mounted adjacent to the A/C's, EF's Control Panel & Smoke Dampers upon detection of fire within the same zone and sends a signal to the FACP-1A.

D. For exact location of the EF's Control Panel, see HVAC Power plan sheets.

CALIFORNIA STATE FIRE MARSHAL APPROVED
Approval of this plan does not authorize or approve any omission or deviation from applicable regulations. Final approval is subject to field inspection. One set of approved plans shall be available on the project site at all times.
Reviewed by: SPENCER MEYER
Approval date: 12-13-12

DIST.	COUNTY	ROUTE	POST MILES TOTAL PROJECT	SHEET NO.	TOTAL SHEETS
04	Ala	80	2.2	742	800

Jaswinder S Sandhu 5-30-12
REGISTERED ELECTRICAL ENGINEER DATE

REGISTERED PROFESSIONAL ENGINEER J.S. SANDHU No. 11803 Exp. 9-30-12 ELEC STATE OF CALIFORNIA

10-22-12
PLANS APPROVAL DATE

The State of California or its officers or agents shall not be responsible for the accuracy or completeness of scanned copies of this plan sheet.

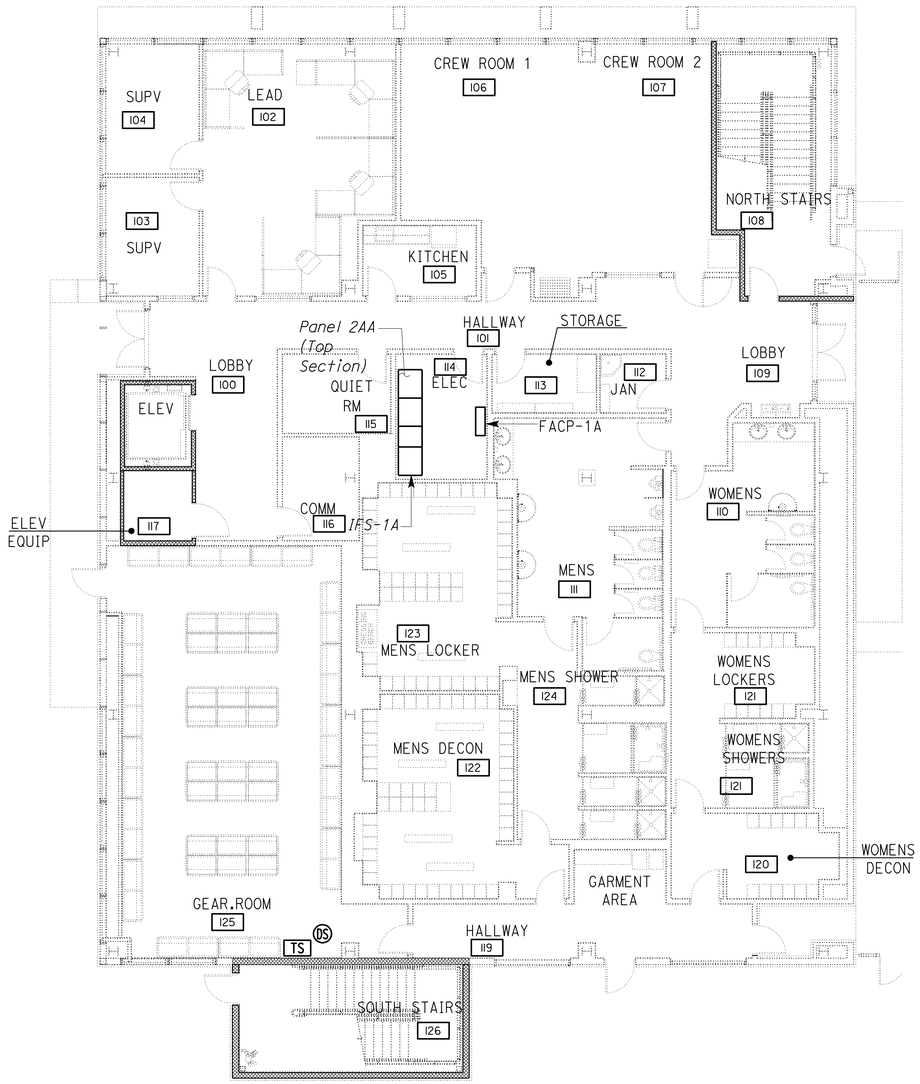

1ST FLOOR

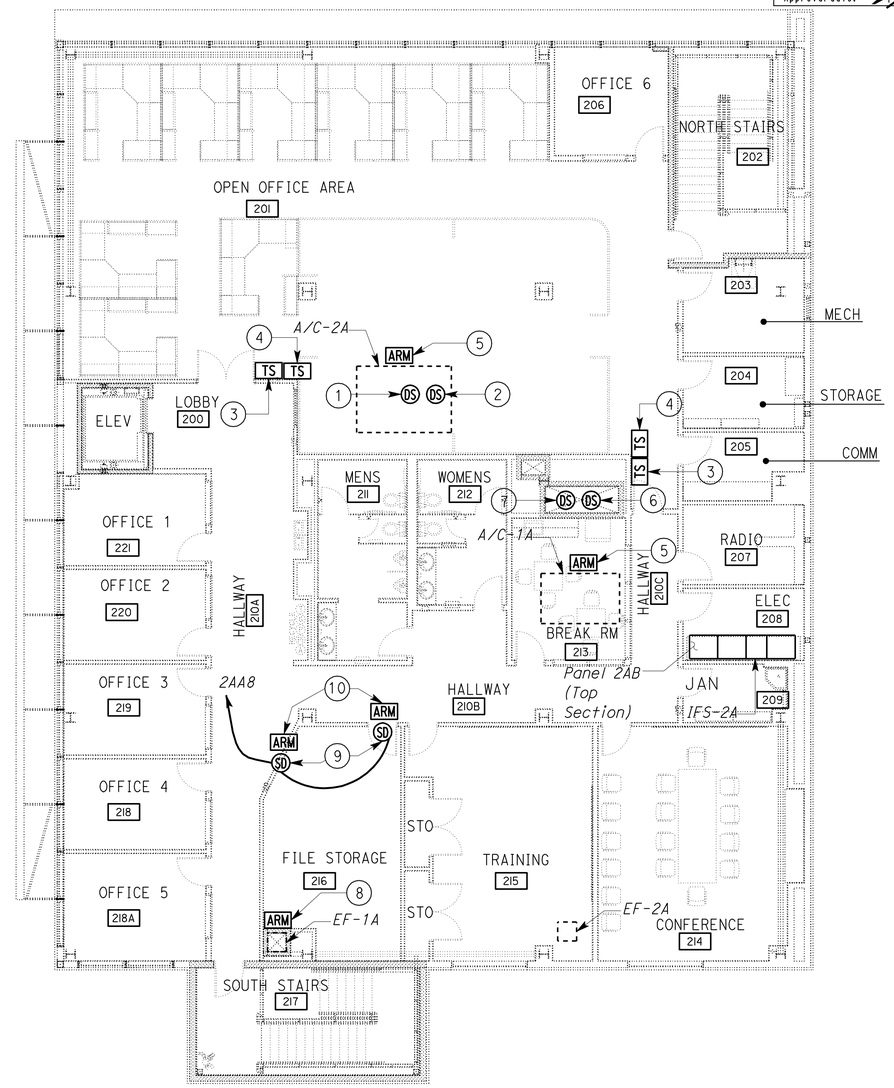

2ND FLOOR

Notes:

1. Supply air duct smoke detector. Install duct smoke detector on the supply duct at an accessible location inside the second floor attic space. See Mechanical enlarged HVAC plan on sheet MI-5 for the exact location.
2. Return air duct smoke detector. Install duct smoke detector on the return duct at an accessible location inside the second floor attic space. See Mechanical enlarged HVAC plan on sheet MI-5 for the exact location.
3. Test switch for supply air duct smoke detector. Provide nameplate on the wall adjacent to the test switch.
4. Test switch for return air duct smoke detector. Provide nameplate on the wall adjacent to the test switch.
5. Install addressable relay module adjacent to the unit supervised. Addressable relay module shall be installed inside a weatherproof enclosure.
6. Supply air duct smoke detector. Install duct smoke detector on the supply duct at an accessible location inside the first floor attic space. See Mechanical enlarged HVAC plan on sheet MI-4 for the exact location.
7. Return air duct smoke detector. Install duct smoke detector on the return duct at an accessible location inside the first floor attic space. See Mechanical enlarged HVAC plan on sheet MI-4 for the exact location.
8. Install addressable relay module adjacent to the EF Control Panel controlling the exhaust fan inside the second floor attic space at an accessible location.
9. Smoke Damper with actuator. See Mechanical HVAC plans on MI-2 for exact location.
10. Install addressable relay module adjacent to the smoke damper inside the second floor attic space at an accessible location. Upon detection of fire, smoke dampers shall close.

3

2ND FLOOR

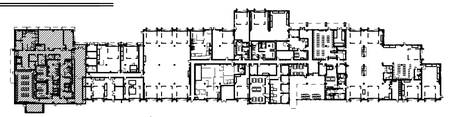

1ST FLOOR

KEY PLAN

PLAN
SCALE 1/8" = 1'-0"

3 REVISED PER ADDENDUM No. 3 DATED JANUARY 4, 2013

THIS DRAWING ACCURATE FOR ELECTRICAL WORK ONLY

	BY	CHECKED
DESIGN	J. S. Sandhu	Jaswinder Gill
DETAILS	Ed D. Tapalla 10/11	J. S. Sandhu
QUANTITIES	J. S. Sandhu	Jaswinder Gill

STATE OF CALIFORNIA
DEPARTMENT OF TRANSPORTATION

DIVISION OF ENGINEERING SERVICES
ELECTRICAL-MECHANICAL-WATER AND WASTEWATER DESIGN

BRIDGE NO. 33M5785
POST MILE 2.2

SFOBB MAINTENANCE COMPLEX
BUILDING 1A
FIRE ALARM HVAC PLAN 1

SHEET EE1-6.5

TAEMWW Imperial Rev. 7/10

ORIGINAL SCALE IN INCHES FOR REDUCED PLANS 0 1 2 3

UNIT 3596
PROJECT NUMBER & PHASE 04120006661
EA 014081

DISREGARD PRINTS BEARING EARLIER REVISION DATES
REVISION DATES (PRELIMINARY STAGE ONLY) 11/28/11 3/23/12 5/25/12 5/30/12 11/29/12
SHEET OF

31-DEC-2012 08:13
ee1_6.05.add

DIST.	COUNTY	ROUTE	POST MILES TOTAL PROJECT	SHEET NO.	TOTAL SHEETS
04	Ala	80	2.2	746	800

3

Javid Amirazodi 5-30-12
REGISTERED ELECTRICAL ENGINEER DATE

REGISTERED PROFESSIONAL ENGINEER J. AMIRAZODI No. 17509 Exp. 6-30-13 ELEC STATE OF CALIFORNIA

10-22-12
PLANS APPROVAL DATE

The State of California or its officers or agents shall not be responsible for the accuracy or completeness of scanned copies of this plan sheet.

CALIFORNIA STATE FIRE MARSHAL APPROVED
Approval of this plan does not authorize or approve any omission or deviation from applicable regulations. Final approval is subject to field inspection. One set of approved plans shall be available on the project site at all times.
Reviewed by: SPENCER MEYER
Approval date: 12-13-12

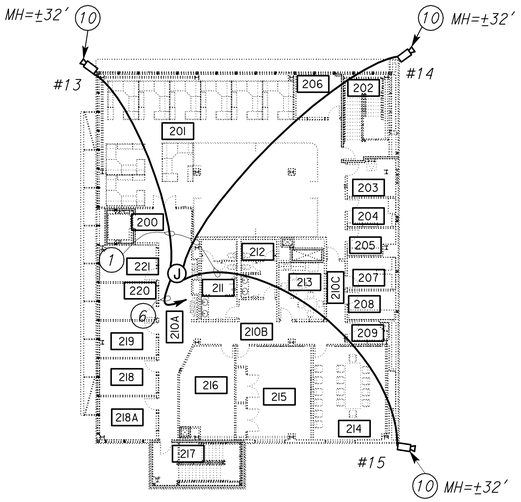

2ND FLOOR

General Notes:

A. *Unless otherwise noted, all conduit homeruns shown on this sheet shall be routed to and stub up in "CCTV designated spaces" either inside Main Communications Room 176 or Communications Room 116.*

B. *Not all junction boxes shown for clarity. Contractor shall provide and install adequate number of junction boxes as required, without additional cost to the State. Junction boxes shall be sized as required to accommodate number of cables inside.*

C. *For CCTV system block diagram, see Detail A on EE1-7.2.*

D. *Within office areas and areas with finished ceiling or furred wall, conduits shall be concealed in ceiling or walls.*

E. *All conduit stub ups shall be 12" above finished floor or 12 below ceiling. Provide conduit bushings on all conduits.*

F. *Submit all pertinent details to the Engineer for approval prior to installation.*

G. *Viewing direction of each camera shall be per Engineer in the field.*

H. *For locations of pole mounted CCTV cameras and details, see EE0-0.1, EE0.0.2, EE0-0.5 and EE0-0.6.*

I. *All base elbows and vertical risers through concrete slab shall be PVC coated rigid steel conduit. Wrap joints in contact with soil with two layers of 20 mil thick pipe wrapping tape.*

J. *All conduits terminated inside outdoor speaker outlets shall be sealed watertight.*

K. *Underground conduits entering the building from outside and within the building shall be installed below the structural primary/intermediate grade beams. For location of structural primary/intermediate grade beams, underground conduits stub up, and penetration details through floor/beams, refer to Structural Plan sheets.*

Notes:

1. *¾"C, 1 video cable.*
2. *¾"C, 1 video cable to CCTV network switch 1.*
3. *¾"C, 2 video cables to CCTV network switch 1.*
4. *1"C, 3 video cables to CCTV network switch 1.*
5. *¾"C, 2 video cables to CCTV network switch 2.*
6. *1"C, 3 video cables to CCTV network switch 2.*
7. *2"C with 1 MMFO cable between CCTV network switch 1 and CCTV network switch 2, terminate as required.*
8. *Ceiling mounted, indoor, fixed, dome camera.*
9. *Wall mounted, indoor, fixed, dome camera.*
10. *Parapet mounted, outdoor, fixed, dome camera.*

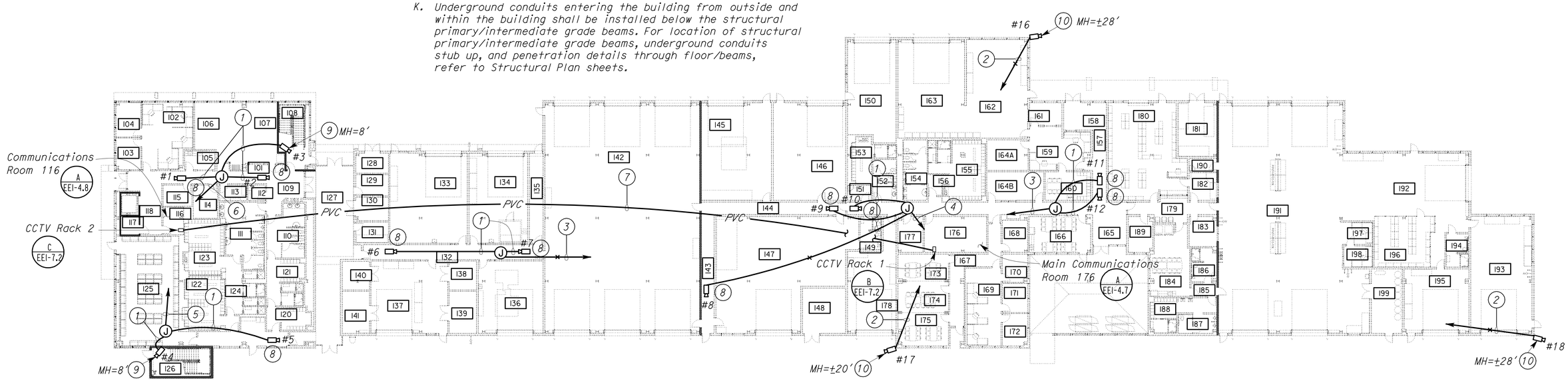

1ST FLOOR

SCALE 1" = 20′-0"

3 **REVISED PER ADDENDUM No. 3 DATED JANUARY 4, 2013**

THIS DRAWING ACCURATE FOR ELECTRICAL WORK ONLY

	BY	CHECKED
DESIGN	Javid Amirazodi	J.S. Sandhu/J.R. Lacy
DETAILS	Ed D. Tapalla 10/11	Javid Amirazodi
QUANTITIES	Javid Amirazodi	J.S. Sandhu/J.R. Lacy

STATE OF CALIFORNIA DEPARTMENT OF TRANSPORTATION

DIVISION OF ENGINEERING SERVICES ELECTRICAL-MECHANICAL-WATER AND WASTEWATER DESIGN

BRIDGE NO. 33M5785
POST MILE 2.2

SFOBB MAINTENANCE COMPLEX

CCTV SYSTEM PLAN

SHEET **EE1-7.1**

TAEMWW Imperial Rev. 7/10

ORIGINAL SCALE IN INCHES FOR REDUCED PLANS 0 1 2 3

UNIT 3596
PROJECT NUMBER & PHASE 04120006661
EA 014081

DISREGARD PRINTS BEARING EARLIER REVISION DATES → 5/30/12 11/29/12

REVISION DATES (PRELIMINARY STAGE ONLY) SHEET OF

31-DEC-2012 08:14
ee1_7.01.add

DIST.	COUNTY	ROUTE	POST MILES TOTAL PROJECT	SHEET NO.	TOTAL SHEETS
04	Ala	80	2.2	748	800

Javid Amirazodi 5-30-12
REGISTERED ELECTRICAL ENGINEER DATE

REGISTERED PROFESSIONAL ENGINEER J. AMIRAZODI No. 17509 Exp. 6-30-13 ELEC STATE OF CALIFORNIA

10-22-12
PLANS APPROVAL DATE

The State of California or its officers or agents shall not be responsible for the accuracy or completeness of scanned copies of this plan sheet.

3

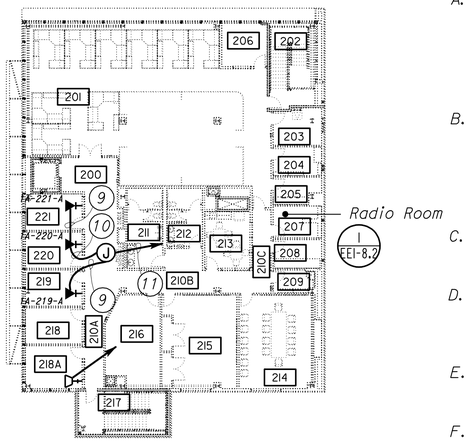

2ND FLOOR

L. All base elbows and vertical risers through concrete slab shall be PVC coated rigid steel conduit. Wrap joints in contact with soil with two layers of 20 mil thick pipe wrapping tape.

M. Unless otherwise noted, all conduit homeruns shown on this sheet shall be routed to and stub up in Radio Room 207, next to radio rack wall. All conduit stub ups shall be 12" above finished floor or 12 below ceiling. Provide conduit bushings on all conduits.

General Notes:

A. All radio cables from radio outlets shown on this plan sheet shall be routed to Radio Rack 1 in Radio Room 207 without splices. Terminate radio cables on radio patch panel and as directed by Caltrans Radio system personnel. Contractor shall provide connectors and additional equipment for proper termination

B. All speaker cables from speaker outlets shown on this plan sheet shall be routed to Radio Rack 1 in Radio Room 207 without splices. Provide 20 feet of additional length for each speaker cable inside Radio Room 207 for future termination.

C. Unless otherwise noted, all conduit shown on this plan sheet shall be ¾"C with one speaker cable.

D. All radio outlets shall be mounted at the same height as communication (telephone) outlets. For radio outlet face plate detail, see Detail 1 this sheet.

E. Outdoor speaker outlet mounting height shall be 10' and indoor speaker outlet mounting height shall be 8' above finished floor.

F. Within office areas and areas with finished ceiling or furred wall, conduits shall be concealed in ceiling or walls.

G. Not all junction boxes shown for clarity. Contractor shall provide and install adequate number of junction boxes as required, without additional cost to the State. Junction boxes shall be sized as required to accommodate number of cables inside.

H. Speaker cables shall be 18 AWG, 2 conductors and tinned copper conductor type cable with PVC insulation and outer jacket.

I. Speaker outlets shall be 18 gauge cold rolled steel and undercoated to prevent resonance.

J. All conduit stub ups shall be 12" above finished floor or 12" below ceiling. Provide conduit bushings on all conduits.

K. Underground conduits entering the building from outside and within the building shall be installed below the structural primary/intermediate grade beams. For location of structural primary/intermediate grade beams, underground conduits stub up, and penetration details through floor/beams, refer to Structural Plan sheets.

Notes:

1. ¾"C, 2 speaker cables.
2. 1"C, 4 speaker cables.
3. 1"C, 5 speaker cables.
4. 1½"C, 7 speaker cables.
5. 1½"C, 11 speaker cables.
6. 2"C, 13 speaker cables.
7. Not used.
8. 2"C, 15 speaker cables.
9. ¾"C, 2 radio cables.
10. 1"C, 4 radio cables.
11. 1"C, 6 radio cables.
12. 1½"C, 8 radio cables.
13. 2"C, 20 radio cables.
14. Route conduit exposed over Room 131 general area and then level with trellis to designated space for conduit transition in Radio Room207. See Detail A on EE1-8.2 for conduit transition designated area. Paint exposed portion of conduit over trellis to match trellis.
15. 3"C, MT, from designated space for communication racks in room 176 to designated space for radio racks in room 207.

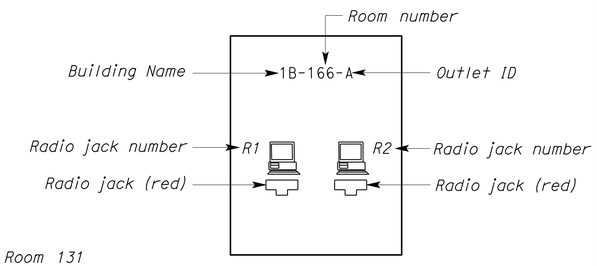

RADIO OUTLET FACE PLATE DETAIL

1

NO SCALE

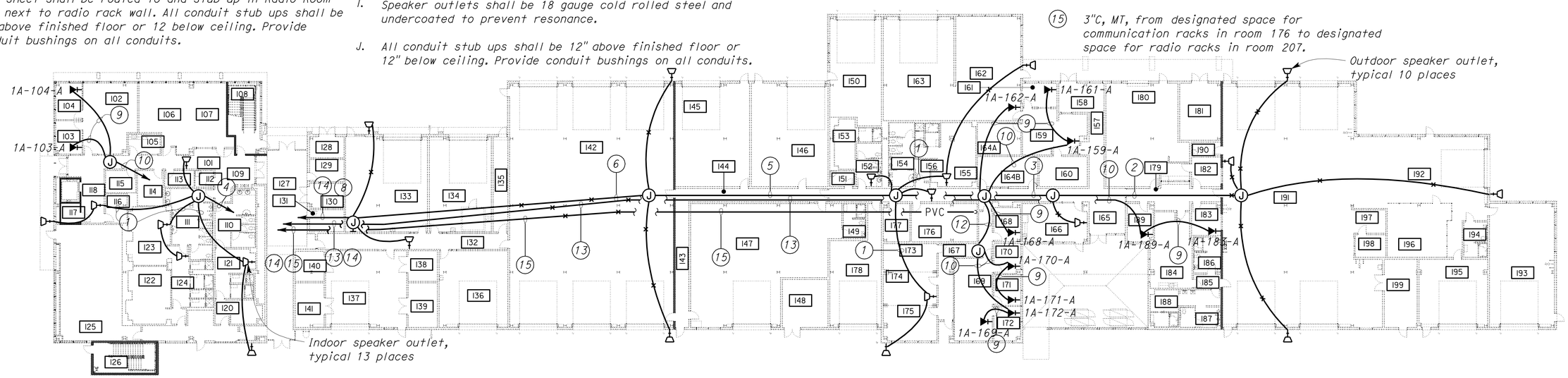

1ST FLOOR

SCALE 1" = 20'-0"

CALIFORNIA STATE FIRE MARSHAL APPROVED
Approval of this plan does not authorize or approve any omission or deviation from applicable regulations. Final approval is subject to field inspection. One set of approved plans shall be available on the project site at all times.
Reviewed by: SPENCER MEYER
Approval date: 12-13-12

3 **REVISED PER ADDENDUM No. 3 DATED JANUARY 4, 2013**

THIS DRAWING ACCURATE FOR ELECTRICAL WORK ONLY

	BY	CHECKED
DESIGN	Javid Amirazodi	J.S. Sandhu/J.R. Lacy
DETAILS	Dali Zhou	Javid Amirazodi
QUANTITIES	Javid Amirazodi	J.S. Sandhu/J.R. Lacy

STATE OF CALIFORNIA DEPARTMENT OF TRANSPORTATION

DIVISION OF ENGINEERING SERVICES
ELECTRICAL-MECHANICAL-WATER AND WASTEWATER DESIGN

BRIDGE NO. 33M5785
POST MILE 2.2

SFOBB MAINTENANCE COMPLEX

RADIO COMMUNICATION PLAN

SHEET EE1-8.1

TAEMWW Imperial Rev. 7/10

ORIGINAL SCALE IN INCHES FOR REDUCED PLANS 0 1 2 3

UNIT 3596
PROJECT NUMBER & PHASE 04120006661
EA 014081

DISREGARD PRINTS BEARING EARLIER REVISION DATES → 5/30/12 11/29/12

REVISION DATES (PRELIMINARY STAGE ONLY) SHEET OF

31-DEC-2012 08:34

ee1_8.01.add

DIST.	COUNTY	ROUTE	POST MILES TOTAL PROJECT	SHEET NO.	TOTAL SHEETS
04	Ala	80	2.2	762	800

CALIFORNIA STATE FIRE MARSHAL APPROVED
Approval of this plan does not authorize or approve any omission or deviation from applicable regulations. Final approval is subject to field inspection. One set of approved plans shall be available on the project site at all times.
Reviewed by: SPENCER MEYER
Approval date: 12-13-12

Catalino A. Enriquez 5-30-12
REGISTERED ELECTRICAL ENGINEER DATE

REGISTERED PROFESSIONAL ENGINEER C. ENRIQUEZ No. 16944 Exp. 6-30-13 ELEC STATE OF CALIFORNIA

10-22-12
PLANS APPROVAL DATE

The State of California or its officers or agents shall not be responsible for the accuracy or completeness of scanned copies of this plan sheet.

3

General Notes:

A. *For one line power diagrams, see sheets EE0-1.1 through EE0-1.7.*

B. *For location of all panelboards and switchboards, see sheet EE1-1.1.*

C. *Provide appropriate lugs for circuit breakers as required to accommodate two set run and/or oversized conductors.*

MAIN: 1,200 AMPERE, 3 POLE CB
VOLTS: 480/277 V, 3 PH, 4W

SWITCHBOARD 8M (BOTTOM FEED)
42 KA SCCR

FEEDER SIZE: 4 SET 3"C, 4#350 KCMIL, 1#350 KCMIL G
LOCATION: IFS-M IN MAIN ELECTRICAL ROOM 148

DESCRIPTION	AMPS A	AMPS B	AMPS C	BRK	CKT	A B C	CKT	BRK	AMPS A	AMPS B	AMPS C	DESCRIPTION
SPARE	-			80/3	1		2	100/3	-			SPARE
		-			3		4			-		
			-		5		6				-	
PANEL 8MB	11			60/3	7		8	60/3	-			SPARE
		15			9		10			-		
			12		11		12				-	
TRANSFORMER 4EA	16			70/3	13		14	70/3	-			SPARE
		18			15		16			-		
			12		17		18				-	
PANEL 8MC	20			100/3	19		20	100/3	-			SPARE
		20			21		22			-		
			20		23		24				-	
TRANSFORMER 2EA	109			175/3	25		26	200/3	41			PANEL 8AD OF IFS-2A
		104			27		28			47		
			106		29		30				48	
PANEL 8AA OF IFS-1A	131			250/3	31		32	250/3	114			PANEL 8PA OF IFS-P
		138			33		34			106		
			123		35		36				103	
PANEL 8BA OF IFS-B	333			500/3	37		38	500/3	252			PANEL 8VA OF IFS-V
		369			39		40			244		
			309		41		42				254	

A	B	C	
1,027	1,061	988	TOTAL CONNECTED LOAD (AMPS PER PHASE)

3 **REVISED PER ADDENDUM No. 3 DATED JANUARY 4, 2013**

	BY	CHECKED
DESIGN	Catalino Enriquez	J.S.S./H.Abdelsayed
DETAILS	Catalino Enriquez	J. S. Sandhu
QUANTITIES	Catalino Enriquez	J.S.S./H.Abdelsayed

STATE OF CALIFORNIA
DEPARTMENT OF TRANSPORTATION

DIVISION OF ENGINEERING SERVICES
ELECTRICAL-MECHANICAL-WATER AND WASTEWATER DESIGN

BRIDGE NO. 33M5785
POST MILE 2.2

SFOBB MAINTENANCE COMPLEX

PANEL SCHEDULES 1

SHEET **EE1-10.1**

TAEMWW Imperial Rev. 7/10

ORIGINAL SCALE IN INCHES FOR REDUCED PLANS 0 1 2 3

UNIT 3596
PROJECT NUMBER & PHASE 04120006661
EA 014081

DISREGARD PRINTS BEARING EARLIER REVISION DATES → 3/28/12 11/29/12

REVISION DATES (PRELIMINARY STAGE ONLY) SHEET OF

31-DEC-2012 08:35

ee1_10.01.add

DIST.	COUNTY	ROUTE	POST MILES TOTAL PROJECT	SHEET NO.	TOTAL SHEETS
04	Ala	80	2.2	765	800

REGISTERED ELECTRICAL ENGINEER — 5-30-12 DATE

REGISTERED PROFESSIONAL ENGINEER J. ABDELSAYED No. 18915 Exp. 12-31-13 ELEC STATE OF CALIFORNIA

10-22-12
PLANS APPROVAL DATE

The State of California or its officers or agents shall not be responsible for the accuracy or completeness of scanned copies of this plan sheet.

CALIFORNIA STATE FIRE MARSHAL APPROVED
Approval of this plan does not authorize or approve any omission or deviation from applicable regulations. Final approval is subject to field inspection. One set of approved plans shall be available on the project site at all times.
Reviewed by: SPENCER MEYER
Approval date: 12-13-12

3

MAIN: 200 AMPERE 3-POLE CB
VOLTS: 480/277 V, 3 PH, 4W

PANEL 8AD
42 kA SCCR

FEEDER SIZE: 2½"C, 4#4/0 AND 1#4/0G
LOCATION: IFS-2A IN ELECTRICAL RM 208

DESCRIPTION	AMPS A	AMPS B	AMPS C	BRK	CKT	A B C	CKT	BRK	AMPS A	AMPS B	AMPS C	DESCRIPTION
TRANSFORMER 2AB	37			125/3	1		2	20/3	-			SPARE
		41			3		4			-		
			39		5		6				-	
SPARE	-			30/3	7		8	50/3	-			SPARE
		-			9		10			-		
			-		11		12				-	
SPACE (FOR POWER MONITORING)	-			-	13		14	60/3	4			PANEL 8AE
		-			15		16			6		
			-		17		18				9	
SPACE	-			-	19		20	-	-			SPACE
		-			21		22			-		
			-		23		24				-	

A	B	C	
41	47	48	TOTAL CONNECTED LOAD (AMPS PER PHASE)

MAIN: 60 AMPERE, MAIN LUGS
VOLTS: 480/277 V, 3 PH, 4W

PANEL 8AE
22 kA SCCR

FEEDER SIZE: 4#4 AND 1#4G
LOCATION: IFS-2A IN ELECTRICAL RM 208

DESCRIPTION	AMPERES A	AMPERES B	AMPERES C	BRK	CKT	A B C	CKT	BRK	AMPERES A	AMPERES B	AMPERES C	DESCRIPTION
LNP-2A	1			15/1	1		2	15/1	1.7			LIGHTS RM NO. 218, 218A, 219, 220 & 221
SPARE		-		15/1	3		4	15/1		3.7		LIGHTS RM NO. 209, 214, 215 & 216
SPARE			-	15/1	5		6	15/1			2	LIGHTS RM NO. 200,210A,210B & 210C
LIGHTS ROOM NO. 213	.3			15/1	7		8	15/1	0.9			LIGHTS RM NO. 211 & 212
LIGHTS ROOM NO. 206		.3		15/1	9		10	15/1		2		LIGHTS RM NO. 203,204,205,206,207 & 208
BELCP208			1	15/1	11		12	15/1			6	LIGHTS RM NO. 201
SPARE	-			15/1	13		14	15/1	-			SPARE
SPARE		-		15/1	15		16	15/1		-		SPARE
SPARE			-	15/1	17		18	15/1			-	SPARE

A	B	C	
4	6	9	TOTAL CONNECTED LOAD (AMPERES PER PHASE)

MAIN: 200 AMPERE 3 POLE CB
VOLTS: 120/208 V, 3 PH, 4W

PANEL 2AB
22 kA SCCR

FEEDER SIZE: 4#4/0 AND 1#4/0G
LOCATION: IFS-2A IN ELECTRICAL RM 208

DESCRIPTION	AMPS A	AMPS B	AMPS C	BRK	CKT	A B C	CKT	BRK	AMPS A	AMPS B	AMPS C	DESCRIPTION
RECEPTACLES: OFFICE 1, OFFICE 2, & HALLWAY	11			20/1	1		2	20/1	6			RECEPTACLES: STORAGE ROOM
MIS RECEPEPTACLES: OFFICE 1 & OFFICE 2		9		20/1	3		4	20/1		5		RECEPTACLES: OPEN OFFICE AREA
WATER CHILLER: HALLWAY			5	20/1	5		6	20/1			5	RECEPTACLES: OPEN OFFICE AREA
RECEPTACLES: OFFICE 3 & OFFICE 4	9			20/1	7		8	20/1	9			OPEN OFFICE AREA 1
MIS RECEPTACLES: OFFICE 3 & OFFICE 4		9		20/1	9		10	20/1		9		OPEN OFFICE AREA 2
UNDERSINK GARBAGE DISPOSAL: BREAK ROOM			5	20/1	11		12	20/1			11	OFFICE TECH CUBICLES 4
REC: BREAK ROOM KITCHEN COUNTERTOP	3			20/1	13		14	20/1	6			RECEPTACLES: LOBBY
REFRIGERATOR: BREAK ROOM		5		20/1	15		16	20/1		2		HVAC SYSTEM TRANSFORMER
REC: CONFERENCE ROOM & JANITOR ROOM			9	20/1	17		18	20/1			5	RECEPTACLES: MECH ROOM & HALLWAY
MIS RECEPTACLES: CONFERENCE ROOM	6			20/1	19		20	20/1	6			REC: COMMUNICATION ROOM NORTH WALL
RECEPTACLES: TRAINING ROOM		9		20/1	21		22	20/1		5		REC: COMMUNICATION ROOM SOUTH WALL
RECEPTACLES: HALLWAY			5	20/1	23		24	20/1			12	WATER HEATERS: MECHANICAL ROOM
REC: ELEC ROOM, HALLWAY, BREAK ROOM	9			20/1	25		26	20/1	2			AUTOMATIC FLUSH
RECEPTACLES: RADIO ROOM NORTH WALL		3		20/1	27		28	20/1		8		RECEPTACLES: FILE STORAGE & HALLWAY
RECEPTACLES: RADIO ROOM EAST WALL			3	20/1	29		30	20/1			6	EXHAUST FAN 2A: ROOF
RECEPTACLES: RADIO ROOM SOUTH WALL	3			20/1	31		32	20/1	1			RECIRCULATION PUMPS: MECHANICAL ROOM
REC: MEN'S AND WOMEN'S RESTROOM		8		20/1	33		34	30/1		14		EXHAUST FAN 1A: ROOF
RECEPTACLES: OFFICE 6			6	20/1	35		36	20/1			5	RECEPTACLES: OFFICE 5
OFFICE TECH CUBICLES 1	9			20/1	37		38	20/1	5			MIS RECEPTACLES: OFFICE 5
OFFICE TECH CUBICLES 2		9		20/1	39		40	-		-		SPACE
OFFICE TECH CUBICLES 3			9	20/1	41		42	-			-	SPACE

A	B	C	
85	95	86	TOTAL CONNECTED LOAD (AMPS PER PHASE)

3 **REVISED PER ADDENDUM No. 3 DATED JANUARY 4, 2013**

DESIGN	BY Joseph Abdelsayed	CHECKED J. S. Sandhu	
DETAILS	BY Ed Tapalla/Dali Zhou	CHECKED Joseph Abdelsayed	
QUANTITIES	BY Joseph Abdelsayed	CHECKED J. S. Sandhu	

STATE OF CALIFORNIA
DEPARTMENT OF TRANSPORTATION

DIVISION OF ENGINEERING SERVICES
ELECTRICAL-MECHANICAL-WATER AND WASTEWATER DESIGN

BRIDGE NO. 33M5785
POST MILE 2.2

SFOBB MAINTENANCE COMPLEX

PANEL SCHEDULES 4

SHEET **EE1-10.4**

TAEMWW Imperial Rev. 7/10

ORIGINAL SCALE IN INCHES FOR REDUCED PLANS 0 1 2 3

UNIT 3596
PROJECT NUMBER & PHASE 04120006661
EA 014081

DISREGARD PRINTS BEARING EARLIER REVISION DATES → 5/20/12 11/29/12

REVISION DATES (PRELIMINARY STAGE ONLY) SHEET OF

31-DEC-2012 08:35

ee1_10.04.add

MAIN: 200 AMPERE 3-POLE CB
VOLTS: 120/208 V, 3 PH, 4W

PANEL 2EA (BOTTOM FEED)
22KA SCCR

FEEDER SIZE: 2 SET 4#3/0 AND 1 SET 1#2/0G
LOCATION: IFS-M IN MAIN ELECTRICAL ROOM 148

DESCRIPTION	AMPS A	AMPS B	AMPS C	BRK	CKT	A B C	CKT	BRK	AMPS A	AMPS B	AMPS C	DESCRIPTION
GRINDER- WELDING SHOP RM 147	13			30/1	1		2	20/1				SPARE
ROOFTOP OUTLETS- BUILDING 1B OFFICE AREA		4.5		20/1	3		4	20/1				SPARE
ROOFTOP OUTLET- A/C 3B OUTDOOR			1.5	20/1	5		6	20/1				SPARE
SPARE	-			20/1	7		8	20/1				SPARE
SPARE		-		20/1	9		10	20/1				SPARE
SPARE			-	20/1	11		12	20/1			-	SPARE
SPARE	-			20/1	13		14	20/1	-			SPARE
SPARE		-		20/1	15		16	20/1		-		SPARE
SPARE			-	20/1	17		18	20/1			-	SPARE
SPARE	-			20/1	19		20	20/1	-			SPARE
SPARE		-		20/1	21		22	20/1		-		SPARE
SPARE			-	20/1	23		24	20/1			-	SPARE
SPARE	-			20/1	25		26		64			
SPARE		-		20/1	27		28	100/3		66		PANEL 2EB IN ELECTRICAL SHOP 162
SPARE			-	20/1	29		30				70	
SPACE	-			-	31		32	-	-			SPACE
SPACE		-		-	33		34	-		-		SPACE
SPACE			-	-	35		36	-			-	SPACE
SPACE	-			-	37		38		70			
SPACE		-		-	39		40	125/3		70		UPS- MAIN COMMUNICATION ROOM 176
SPACE			-	-	41		42				70	

A	B	C	
147	139	143	TOTAL CONNECTED LOAD (AMPS PER PHASE)

MAIN: 200 AMPERE 3-POLE CB
VOLTS: 120/208 V, 3 PH, 4W

PANEL 2ED (BOTTOM FEED)
22KA SCCR

FEEDER SIZE: 2 SET 4#3/0 AND 1 SET 1#2/0G
LOCATION: IFS-M IN MAIN ELECTRICAL ROOM 148

DESCRIPTION	AMPS A	AMPS B	AMPS C	BRK	CKT	A B C	CKT	BRK	AMPS A	AMPS B	AMPS C	DESCRIPTION
MULTIOUTLET- NORTH ETTIE STORAGE 178	7.5			*20/1	1		2	20/1*	8			OUTLET- ELECTRODE OVEN N. WELDING SHOP 147
MULTIOUTLET- EAST ETTIE STORAGE 178		7.5		*20/1	3		4	20/1*		8		OUTLET- ELECTRODE OVEN E. WELDING SHOP 147
MULTIOUTLET- WEST ETTIE STORAGE 178			7.5	*20/1	5		6	20/1*			5	OUTLET- ICE MAKER ETTIE STORAGE 178
SPARE	-			20/1	7		8	20/1	9			OUTLETS- MAIN ELECTRICAL ROOM 148
OUTLETS- ETTIE STORAGE 178		7.5		*20/1	9		10	20/1		-		SPARE
OUTLETS- ETTIE STORAGE 178			7.5	*20/1	11		12	20/1#			1	BELL- FIRE ALARM SYSTEM
SPARE	-			20/1	13		14	20/1	-			SPARE
SPARE		-		20/1	15		16	20/1		-		SPARE
SPARE			-	20/1	17		18	20/1			-	SPARE
SPARE	-			20/1	19		20	20/1	-			SPARE
SPARE		-		20/1	21		22	20/1		-		SPARE
SPARE			-	20/1	23		24	20/1			-	SPARE
SEWAGE LIFT STATION PUMPS CONTROL PANEL	24			40/3	25		26	20/1	-			SPARE
		24			27		28	20/1		-		SPARE
			24		29		30	20/1			-	SPARE
SPACE	-			-	31		32	20/1	-			SPARE
		-			33		34	20/1		-		SPARE
			-		35		36	20/1			-	SPARE
SPACE	-			-	37		38		55			
		-			39		40	100/3		53		PANEL 2EC IN HALLWAY 167
			-		41		42				57	

A	B	C	
104	100	102	TOTAL CONNECTED LOAD (AMPS PER PHASE)

CALIFORNIA STATE FIRE MARSHAL APPROVED
Approval of this plan does not authorize or approve any omission or deviation from applicable regulations. Final approval is subject to field inspection. One set of approved plans shall be available on the project site at all times.
Reviewed by: SPENCER MEYER
Approval date: 12-13-12

DIST.	COUNTY	ROUTE	POST MILES TOTAL PROJECT	SHEET NO.	TOTAL SHEETS
04	Ala	80	2.2	771	800

Catalino A. Enriquez 5-30-12
REGISTERED ELECTRICAL ENGINEER DATE

REGISTERED PROFESSIONAL ENGINEER C. ENRIQUEZ No. 16944 Exp. 6-30-13 ELEC STATE OF CALIFORNIA

10-22-12
PLANS APPROVAL DATE

The State of California or its officers or agents shall not be responsible for the accuracy or completeness of scanned copies of this plan sheet.

3

CIRCUIT BREAKER SHALL LOCKABLE AND WITH RED COLORED HANDLE AND IDENTIFIED AS "FIRE ALARM CIRCUIT".

* INSTALL GFCI TYPE CIRCUIT BREAKER WITH 5 MILLI-AMPERE GROUND FAULT PROTECTION.

MAIN: 125 AMPERE 3 POLE CB
VOLTS: 120/240 V, 3 PH, 4W

PANEL 4EA (BOTTOM FEED)
22 KA SCCR

FEEDER SIZE: 4#1/0, 1#4G
LOCATION: IFS-M IN MAIN ELECTRICAL ROOM 148

DESCRIPTION	AMPS A	AMPS B	AMPS C	BRK	CKT	A B C	CKT	BRK	AMPS A	AMPS B	AMPS C	DESCRIPTION
HVAC AC-3B (SPLIT TYPE)- MAIN COMMUNICATION ROOM ROOF AREA	12			25/2	1		2	15/3	3.2			OVERHEAD DOOR OPERATOR- ETTIE STORAGE ROOM 178
		12			3		4			3.2		
SPARE			-	20/2	5		6				3.2	
	-				7		8	20/3	6			SPECIAL PURPOSE RECEPTACLE- ETTIE STORAGE ROOM 178
SPARE		-		20/2	9		10			6		
			-		11		12				6	
SPARE	-			20/2	13		14	15/3	-			SPARE
		-			15		16			-		
SPARE			-	20/3	17		18				-	
	-				19		20	20/3	-			SPARE
		-			21		22			-		
SPARE			-	20/3	23		24				-	
	-				25		26	20/3	-			SPARE
		-			27		28			-		
SPARE			-	20/2	29		30				-	
	-				31		32	20/3	-			SPARE
SPARE		-		20/2	33		34			-		
			-		35		36				-	
SPARE	-			20/3	37		38	60/3	10			PANEL 4EB IN ELECTRICAL SHOP 162
		-			39		40			13		
			-		41		42				13	

A	B	C	
32	35	23	TOTAL CONNECTED LOAD (AMPS PER PHASE)

General Notes:

A. For one line power diagrams, see sheets EE0-1.1 through EE0-1.7.

B. For location of all panelboards and switchboards, see sheet EE1-1.1.

C. Provide appropriate lugs for circuit breakers as required to accommodate two set run and/or oversized conductors.

3 **REVISED PER ADDENDUM No. 3 DATED JANUARY 4, 2013**

THIS DRAWING ACCURATE FOR ELECTRICAL WORK ONLY

	BY	CHECKED
DESIGN	Catalino Enriquez	J.S.S./H.Abdelsayed
DETAILS	Catalino Enriquez	J.S.S./H.Abdelsayed
QUANTITIES	Catalino Enriquez	J.S.S./H.Abdelsayed

STATE OF CALIFORNIA
DEPARTMENT OF TRANSPORTATION

DIVISION OF ENGINEERING SERVICES
ELECTRICAL-MECHANICAL-WATER AND WASTEWATER DESIGN

BRIDGE NO. 33M5785
POST MILE 2.2

SFOBB MAINTENANCE COMPLEX

PANEL SCHEDULES 10

SHEET **EE1-10.10**

TAEMWW Imperial Rev. 7/10

ORIGINAL SCALE IN INCHES FOR REDUCED PLANS 0 1 2 3

UNIT 3596
PROJECT NUMBER & PHASE 04120006661
EA 014081

DISREGARD PRINTS BEARING EARLIER REVISION DATES → 12/14/12 4/24/12 5/19/12 5/28/12 11/29/12

REVISION DATES (PRELIMINARY STAGE ONLY) SHEET OF

31-DEC-2012 08:35

ee1_10.10.add

DIST.	COUNTY	ROUTE	POST MILES TOTAL PROJECT	SHEET NO.	TOTAL SHEETS
04	Ala	80	2.2	782A	800

Jasvinder S Sandhu 11-29-12
REGISTERED ELECTRICAL ENGINEER DATE

REGISTERED PROFESSIONAL ENGINEER J.S. SANDHU No. 11803 Exp. 9-30-12 ELEC STATE OF CALIFORNIA

10-22-12
PLANS APPROVAL DATE

The State of California or its officers or agents shall not be responsible for the accuracy or completeness of electronic copies of this plan sheet.

CALIFORNIA STATE FIRE MARSHAL APPROVED
Approval of this plan does not authorize or approve any omission or deviation from applicable regulations. Final approval is subject to field inspection. One set of approved plans shall be available on the project site at all times.
Reviewed by: SPENCER MEYER
Approval date: 11-13-12

3

GENERAL NOTE:

A. For Nameplate Schedule, see sheet EE1-12.2.

* Current transformers shall include fuses.

NOTES:

1. 1"C, 4 fiber optic patch cords. Fiber optic patch cord must have the same characteristic as the fiber optic foat switch cable.
2. Splice fiber optic float switch cables to fiber optic patch cords inside juntion box using approved splicing method.
3. Install Arc Flash Hazard Warning Label. See sheet EE1-12.2 for details.
4. Weatherproof NEMA Type 4 junction box with hinged cover. Install terminal blocks for terminating all conductors/cables. Size box as required for installing terminal blocks, conduits and conductors/cables.
5. Provide glued on nameplates for all devices mounted on the back of the hinged interior door. For example, nameplate for item No. 38 on the back of interior door shall read "PL1".
6. To Panel 2WA for sewage pumps no. 3 and no. 4. See sheet EE0-0.2

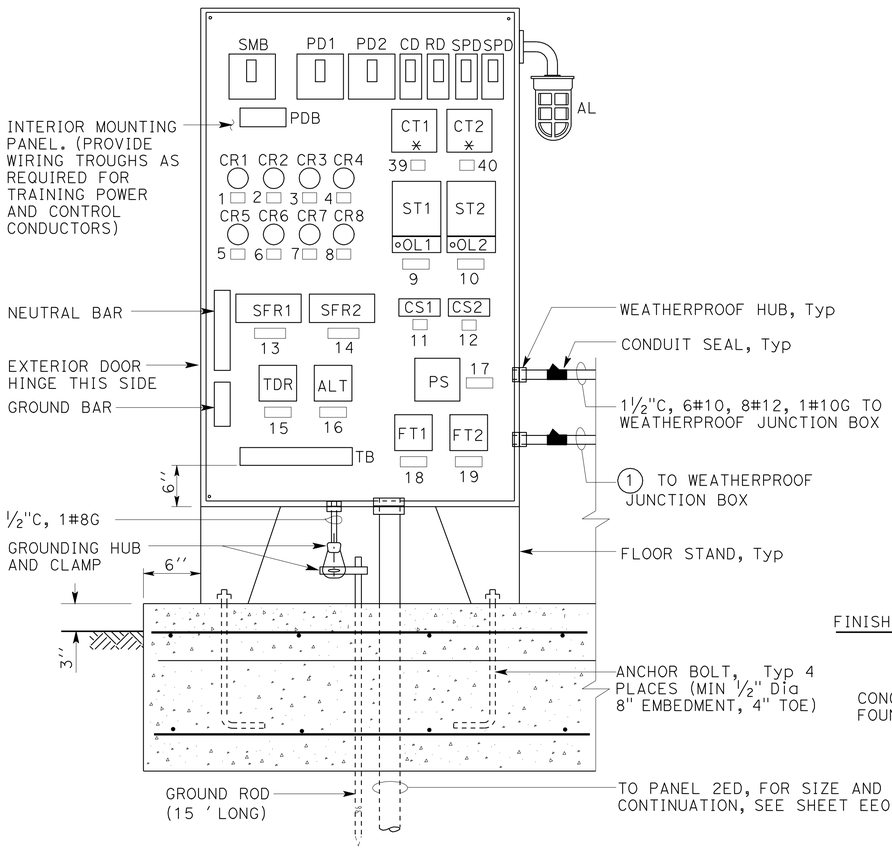

(CONTROL PANEL HINGED EXTERIOR DOOR AND HINGED INTERIOR DOOR NOT SHOWN)

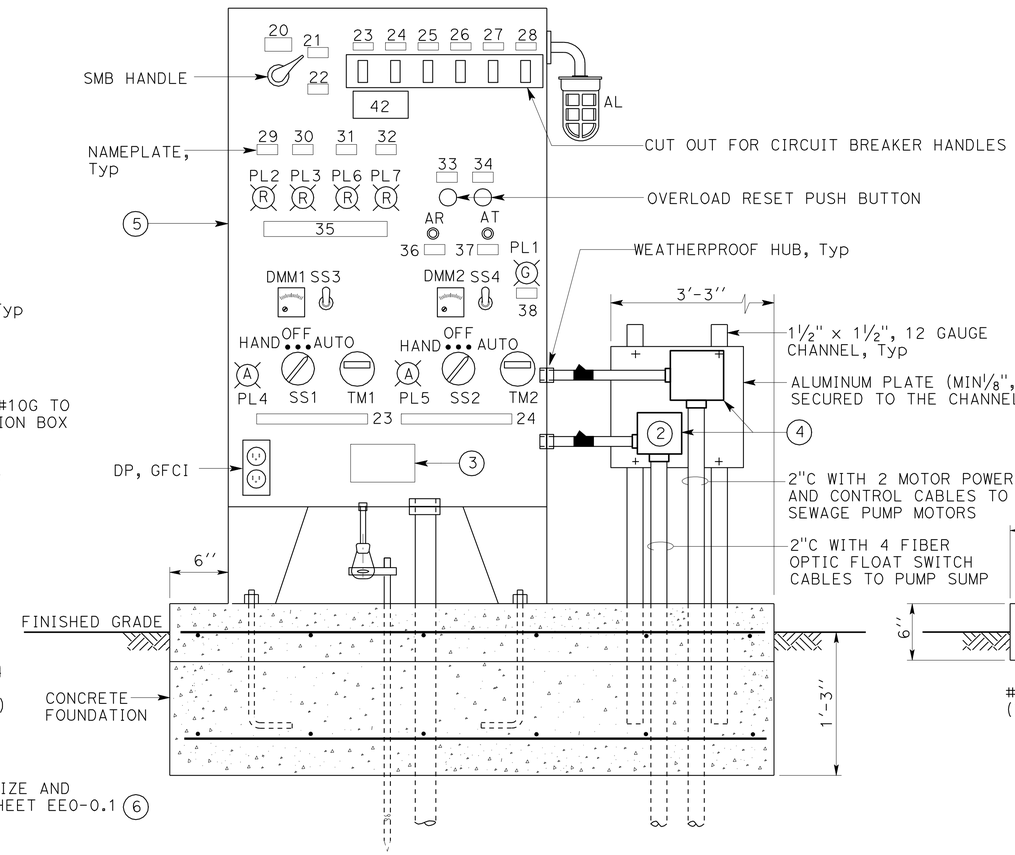

(CONTROL PANEL HINGED EXTERIOR DOOR NOT SHOWN AND HINGED INTERIOR DOOR CLOSED)

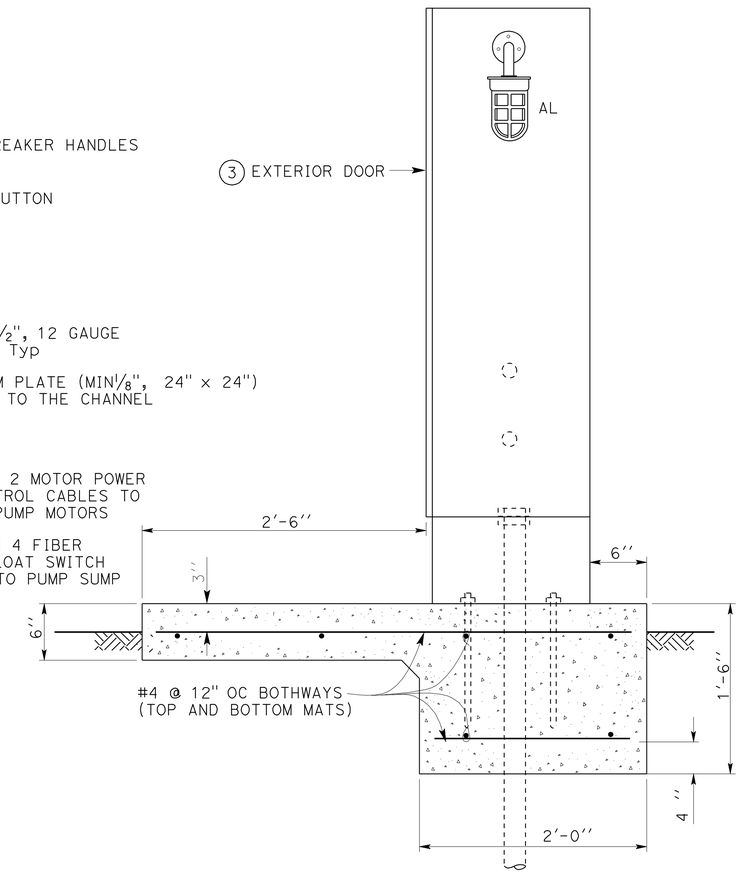

A ELEVATION
NO SCALE

END VIEW
NO SCALE
(WEATHERPROOF JUNCTION BOXES ARE NOT SHOWN FOR CLARITY)

TYPICAL FOR 2 LOCATIONS.
SEWAGE LIFT STATION NO. 1 FOR PUMPS No. 1 AND NO. 2 SHOWN.
SEWAGE LIFT STATION NO. 2 FOR PUMPS No. 3 AND NO. 4 SIMILAR.

3 **ADDED PER ADDENDUM No. 3 DATED JANUARY 4, 2013**

THIS DRAWING ACCURATE FOR ELECTRICAL WORK ONLY

DESIGN	BY Christine H Mamaril	CHECKED Jesse Sandhu	
DETAILS	BY Dali Zhou	CHECKED Christine H Mamaril	
QUANTITIES	BY Christine H Mamaril	CHECKED Jesse Sandhu	

STATE OF CALIFORNIA
DEPARTMENT OF TRANSPORTATION

DIVISION OF ENGINEERING SERVICES
ELECTRICAL-MECHANICAL-WATER AND WASTEWATER DESIGN

BRIDGE NO. 33M5785
POST MILE 2.2

SFOBB MAINTENANCE COMPLEX
SEWAGE LIFT STATION PUMPS CONTROL PANEL

SHEET EE1-12.1

DOES SD Imperial Rev. 9/02

ORIGINAL SCALE IN INCHES FOR REDUCED PLANS 0 1 2 3

CU 3596
EA 04120006661
EA 014081

DISREGARD PRINTS BEARING EARLIER REVISION DATES → 11/29/12

REVISION DATES (PRELIMINARY STAGE ONLY) SHEET OF

02-JAN-2013 15:16
ee1_12_01.add

DIST.	COUNTY	ROUTE	POST MILES TOTAL PROJECT	SHEET NO.	TOTAL SHEETS
04	Ala	80	2.2	782B	800

REGISTERED ELECTRICAL ENGINEER — 11-29-12 DATE

REGISTERED PROFESSIONAL ENGINEER J.S. SANDHU No. 11803 Exp. 9-30-12 ELEC STATE OF CALIFORNIA

10-22-12
PLANS APPROVAL DATE

The State of California or its officers or agents shall not be responsible for the accuracy or completeness of electronic copies of this plan sheet.

CALIFORNIA STATE FIRE MARSHAL APPROVED
Approval of this plan does not authorize or approve any omission or deviation from applicable regulations. Final approval is subject to field inspection. One set of approved plans shall be available on the project site at all times.
Reviewed by: SPENCER MEYER
Approval date: 12-13-12

3

NAMEPLATE SCHEDULE

ITEM No.	INSCRIPTION	LETTER HEIGHT	ITEM No.	INSCRIPTION	LETTER HEIGHT
1	CR1	1/4"	22	OFF	1/4"
2	CR2	1/4"	23	PUMP No. 1	1/4"
3	CR3	1/4"	24	PUMP No. 2	1/4"
4	CR4	1/4"	25	CONTROL	1/4"
5	CR5	1/4"	26	RECEPTACE	1/4"
6	CR6	1/4"	27	SPARE	1/4"
7	CR7	1/4"	28	SPARE	1/4"
8	CR8	1/4"	29	LOW WATER	1/4"
9	ST1	1/4"	30	HIGH WATER	1/4"
10	ST2	1/4"	31	PUMP No. 1 SEAL FAILED	1/4"
11	CS1	1/4"	32	PUMP NO. 2 SEAL FAILED	1/4"
12	CS2	1/4"	33	RESET PUMP No. 1	1/4"
13	SFR1	1/4"	34	RESET PUMP No. 2	1/4"
14	SFR2	1/4"	35	ALARMS	1/4"
15	TDR	1/4"	36	ALARM RESET	1/4"
16	ALTERNATOR	1/4"	37	ALARM TEST	1/4"
17	PS	1/4"	38	POWER ON	1/4"
18	FT1	1/4"	39	CT1	1/4"
19	FT2	1/4"	40	CT2	1/4"
20	MAIN	3/8"	41	SEWAGE LIFT STATION	1/2"
21	ON	1/4"	3	CONTROL CABINET	

WARNING NAMEPLATE

ITEM No.	INSCRIPTION	LETTER HEIGHT
42	WARNING: MOTOR DISCONNECT DOES NOT OPEN CONTROL CIRCUIT	3/8"

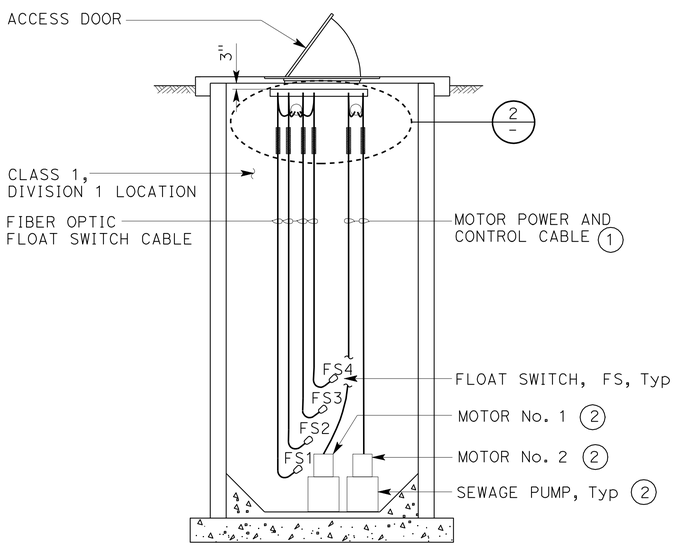

1 SEWAGE LIFT STATION
NO SCALE

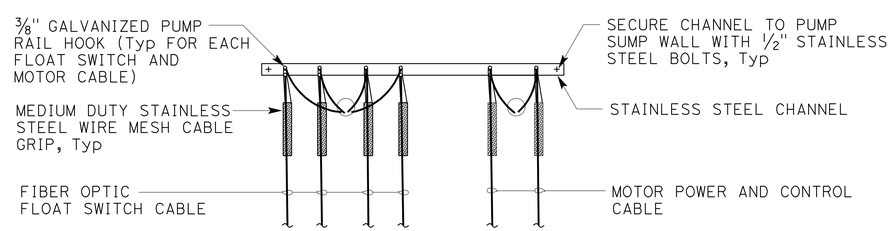

2 CABLE MOUNTING DETAIL
NO SCALE

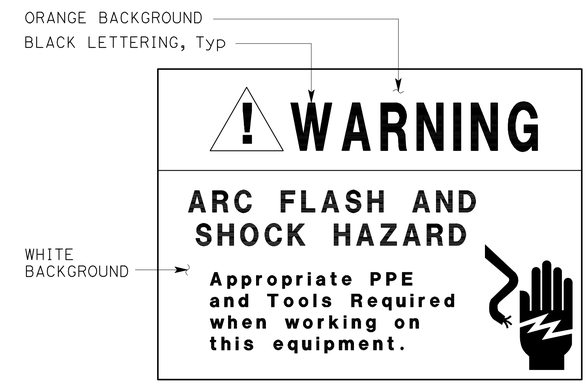

4 ARC FLASH HAZARD WARNING LABEL

GENERAL NOTES:

A. For float switch elevations, see Sewage Lift Station Plans.

B. For orientation of conduits from control panel to pump sump, see Sewage Lift Station Plans.

NOTES:

1. Coil minimum 5 feet of each cable and attach the coiled cables to pump rail hook. Pump rail is not shown for clarity.
2. Sewage pump and motor shown offset for clarity. For exact location, see Sewage Lift Station Plans.
3. Nameplate No. 41 shall be mounted on the exterior door.
4. Warning label shall be constructed with high degree of chemical abrasion, heat resistance and UL recognized material.

TYPICAL FOR 2 LOCATIONS.
SEWAGE LIFT STATION NO. 1 FOR PUMPS No. 1 AND NO. 2 SHOWN.
SEWAGE LIFT STATION NO. 2 FOR PUMPS No. 3 AND NO. 4 SIMILAR.

3 ADDED PER ADDENDUM No. 3 DATED JANUARY 4, 2013

THIS DRAWING ACCURATE FOR ELECTRICAL WORK ONLY

	BY	CHECKED
DESIGN	Christine H Mamaril	Jesse Sandhu
DETAILS	Dali Zhou	Christine H Mamaril
QUANTITIES	Christine H Mamaril	Jesse Sandhu

STATE OF CALIFORNIA DEPARTMENT OF TRANSPORTATION

DIVISION OF ENGINEERING SERVICES
ELECTRICAL-MECHANICAL-WATER AND WASTEWATER DESIGN

BRIDGE NO. 33M5785
POST MILE 2.2

SFOBB MAINTENANCE COMPLEX
SEWAGE LIFT STATION DETAILS

SHEET EE1-12.2

DOES SD Imperial Rev. 9/02

ORIGINAL SCALE IN INCHES FOR REDUCED PLANS 0 1 2 3

CU 3596
EA 04120006661
EA 014061

DISREGARD PRINTS BEARING EARLIER REVISION DATES 11-29-12

REVISION DATES (PRELIMINARY STAGE ONLY) SHEET OF

02-JAN-2013 15:17
ee1_12_02.add

DIST.	COUNTY	ROUTE	POST MILES TOTAL PROJECT	SHEET NO.	TOTAL SHEETS
04	Ala	80	2.2	782C	800

REGISTERED ELECTRICAL ENGINEER — 11-29-12 DATE

REGISTERED PROFESSIONAL ENGINEER J.S. SANDHU No. 11803 Exp. 9-30-12 ELEC STATE OF CALIFORNIA

10-22-12
PLANS APPROVAL DATE

The State of California or its officers or agents shall not be responsible for the accuracy or completeness of electronic copies of this plan sheet.

CALIFORNIA STATE FIRE MARSHAL APPROVED
Approval of this plan does not authorize or approve any omission or deviation from applicable regulations. Final approval is subject to field inspection. One set of approved plans shall be available on the project site at all times.
Reviewed by: SPENCER MEYER
Approval date: 12-13-12

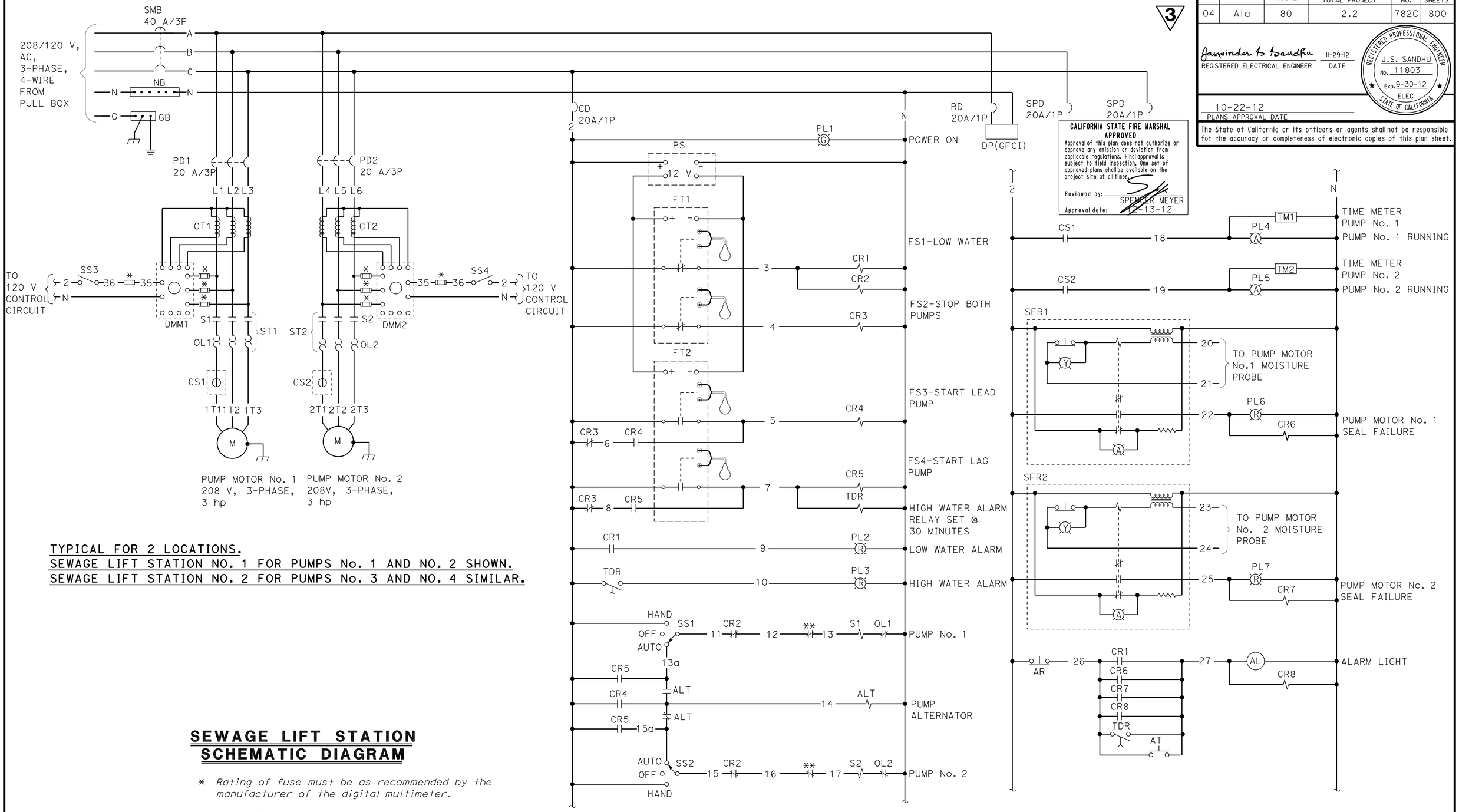

TYPICAL FOR 2 LOCATIONS.
SEWAGE LIFT STATION NO. 1 FOR PUMPS No. 1 AND NO. 2 SHOWN.
SEWAGE LIFT STATION NO. 2 FOR PUMPS No. 3 AND NO. 4 SIMILAR.

SEWAGE LIFT STATION SCHEMATIC DIAGRAM

* *Rating of fuse must be as recommended by the manufacturer of the digital multimeter.*

** *Motor integral thermal protection*

3 **ADDED PER ADDENDUM No. 3 DATED JANUARY 4, 2013**

DESIGN	BY Christine H Mamaril	CHECKED Jesse Sandhu
DETAILS	BY Dali Zhou	CHECKED Christine H Mamaril
QUANTITIES	BY Christine H Mamaril	CHECKED Jesse Sandhu

STATE OF CALIFORNIA DEPARTMENT OF TRANSPORTATION

DIVISION OF ENGINEERING SERVICES ELECTRICAL-MECHANICAL-WATER AND WASTEWATER DESIGN

BRIDGE NO. 33M5785
POST MILE 2.2

SFOBB MAINTENANCE COMPLEX
SEWAGE LIFT STATION PUMPS SCHEMATIC DIAGRAM

SHEET EE1-12.3

DOES SD Imperial Rev. 9/02

ORIGINAL SCALE IN INCHES FOR REDUCED PLANS 0 1 2 3

CU 3596
EA 04120006661
EA 014081

DISREGARD PRINTS BEARING EARLIER REVISION DATES 11-29-12

REVISION DATES (PRELIMINARY STAGE ONLY) SHEET OF

02-JAN-2013 15:17

ee1_12_03.add

DIST.	COUNTY	ROUTE	POST MILES TOTAL PROJECT	SHEET NO.	TOTAL SHEETS
04	Ala	80	2.2	783	800

REGISTERED ELECTRICAL ENGINEER — DATE 5-30-12

REGISTERED PROFESSIONAL ENGINEER J.S. SANDHU No. 11803 Exp. 9-30-12 ELEC STATE OF CALIFORNIA

10-22-12
PLANS APPROVAL DATE

The State of California or its officers or agents shall not be responsible for the accuracy or completeness of scanned copies of this plan sheet.

3

General Notes:

A. All conduits inside Fuel Log room shall be rigid steel conduit.

B. For exact location of Fuel Storage Tanks, Submersible Pumps, Solenoid Valves, Fuel Dispensers, Tank level Sensors, and Leak Detection Sensors, see Mechanical Plans.

C. Location of all conduit system for the fuel system including conduit termination inside the fuel dispenser/transition sumps shown is arbitrary only. Exact location of conduit system depends on equipment installed. Prior to conduit system installation for fuel system, Contractor shall submit the actual conduit system layout to the Engineer for approval.

D. All exposed conduit system inside Fuel Log room shall be installed at least 2 feet above finished floor.

E. Coordinate with Fuel Storage Tanks and Fuel Dispensers manufacturer for location of stub-up conduits.

F. All work at the Fuel Canopy and inside the Fuel Log room shall comply with all the Provisions of NEC Article 514, "Motor Fuel Dispensing and Service Station" conduits.

G. All underground/underslab conduits for the fuel system components shall be PVC coated rigid steel conduit.

H. All above ground conduits for the fuel system components shall be rigid steel conduit.

I. All underground conduits to be ¾ inch minimum.

J. Contractor has the option to install ½ inch minimum for above ground conduits only where applicable.

K. All conduits to be sized as required for the number of conductors/ cables enclosed inside it.

L. Provisions for reduction in conduit fill shall be made by taking into account allowances for conduit seals.

M. All sensor cables and 4-conductors shielded cable to be compatible with equipment it is connected to and as recommended by the manufacturer of the equipment.

N. Unless otherwise noted, all homeruns shown on this sheet are to Panle 2WB. For Panel 2WB Panel Schedule, see sheet EE2-4.

Notes:

(1) ¾"C, 1 LDS cable to gutter below Leak Detection and Tank Level Monitoring panel.

(2) 1"C, 1 TLS, 1 LDS cables to gutter below Leak Detection and Tank Level Monitoring panel.

(3) ¾"C, Submersible Pump and Solenoid Valve conductors as required.

(4) ¾"C, 3#12,1#12G for Fuel Dispensers and Submersible Pump power.

(5) ¾"C, two 4-conductor shielded cables.

(6) ¾"C, 8#12, 1#12G.

(7) ¾"C, 4#12, 1#12G to Generator Bio-Diesel 5 Supply Pump Control Box.

(8) All conduit terminating inside Fuel Dispensers sumps & Transition sumps shall have conduit seals.

(9) All conduits terminating inside Fuel Control Terminal shall have conduit seals.

(10) ¾"C, two 4-conductor shielded cables to the Fuel Control Terminal Junction Box on the 2'x2' plywood board.

(11) For Panel 2WB Panel Schedule, see sheet EE2-4.

(12) ¾"C, 2#12 and 1#12G to panel 2WB circuit 14.

(13) For continuation and termination, see Note 3 on sheet EE0-0.2.

CALIFORNIA STATE FIRE MARSHAL APPROVED

Approval of this plan does not authorize or approve any omission or deviation from applicable regulations. Final approval is subject to field inspection. One set of approved plans shall be available on the project site at all times.

Reviewed by: SPENCER MEYER
Approval date: 12-13-12

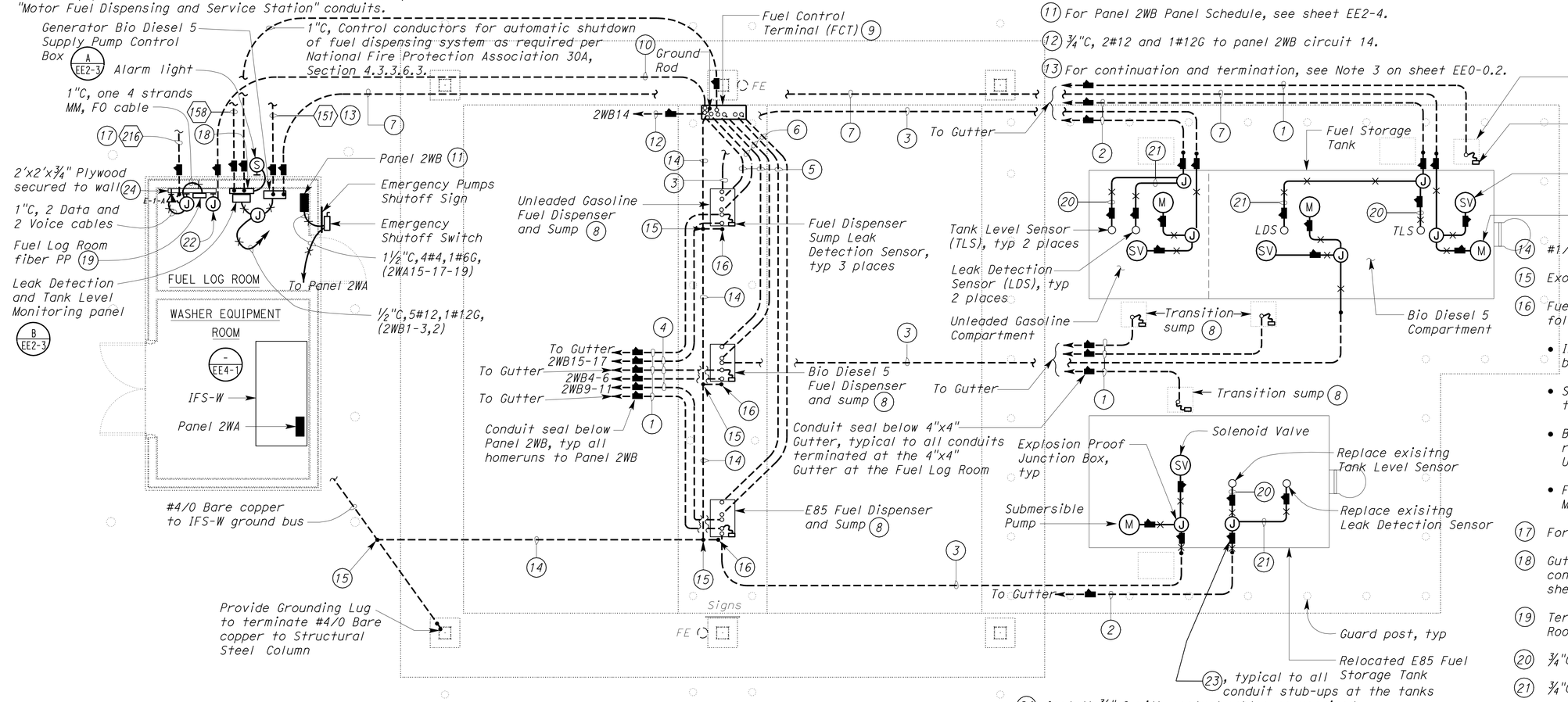

(14) #1/0 Bare copper conductor.

(15) Exothermically weld #1/0.

(16) Fuel Dispensers ground rod. Perform the following at each fuel dispensers:

- Install ground rod at location as directed by the fuel dispenser manufacturer.
- Stub out #1/0 via PVC sleeve and bond to the ground rod.
- Bond all fuel dispensers fuel supply and return lines to the ground rod by utilizing U-bolt type ground clamp.
- For location of fuel pipes, see Mechanical plans.

(17) For continuation, see sheet EE0-0.6.

(18) Gutter (4" x 4"), for terminating underground conduit system, see Elevation "B" on sheet EE2-3.

(19) Terminate 4 strands MM, FO cable on Fuel Log Room Fiber PP, using type SC connectors.

(20) ¾"C, 1 TLS.

(21) ¾"C, 1 LDS.

(22) Fuel control terminal junction box.

(23) Provide conduit seal at 18 inches from ground.

(24) Install ¾" C with control cables as required for connecting fuel leak detection system to the Intrusion Alarm System for providing central monitoring of the leak detection system as required by California Fire Code 3404.2.8.11 (Zone 80).

O. All electrical wiring and equipments at the fuel canopy and fuel storage tanks shall be rated for and installed in accordance with the requirements of California Electrical Code, Article 514, and NFPA 30A.

3 **REVISED PER ADDENDUM No. 3 DATED JANUARY 4, 2013**

PLAN
SCALE ¼" = 1'-0"

THIS DRAWING ACCURATE FOR ELECTRICAL WORK ONLY

	BY	CHECKED
DESIGN	J. S. Sandhu	C. H. Mamaril
DETAILS	Ed D. Tapalla 3/12	J. S. Sandhu
QUANTITIES	J. S. Sandhu	C. H. Mamaril

STATE OF CALIFORNIA
DEPARTMENT OF TRANSPORTATION

DIVISION OF ENGINEERING SERVICES
ELECTRICAL-MECHANICAL-WATER AND WASTEWATER DESIGN

BRIDGE NO. 33M5785
POST MILE 2.2

SFOBB MAINTENANCE COMPLEX
FUEL ISLAND — ELECTRICAL PLAN

SHEET **EE2-1**

ORIGINAL SCALE IN INCHES FOR REDUCED PLANS 0 1 2 3

UNIT 3596
PROJECT NUMBER & PHASE 04120006661
EA 014081

DISREGARD PRINTS BEARING EARLIER REVISION DATES → 3/23/12 5/3/12 5/17/12 5/25/12 5/30/12 8/29/12 11/29/12 12/12/12

REVISION DATES (PRELIMINARY STAGE ONLY) SHEET OF

TAEMWW Imperial Rev. 7/10

31-DEC-2012 08:36

ee2_01.add

DIST.	COUNTY	ROUTE	POST MILES TOTAL PROJECT	SHEET NO.	TOTAL SHEETS
04	Ala	80	2.2	783A	800

3

Jaswinder S Gill 11-29-12
REGISTERED ELECTRICAL ENGINEER DATE

REGISTERED PROFESSIONAL ENGINEER J.S.GILL No. 18551 Exp. 12-31-12 ELEC STATE OF CALIFORNIA

10-22-12
PLANS APPROVAL DATE

The State of California or its officers or agents shall not be responsible for the accuracy or completeness of scanned copies of this plan sheet.

CALIFORNIA STATE FIRE MARSHAL APPROVED
Approval of this plan does not authorize or approve any omission or deviation from applicable regulations. Final approval is subject to field inspection. One set of approved plans shall be available on the project site at all times.
Reviewed by: SPENCER MEYER
Approval date: 12-13-12

General Notes:

A. *A lower case letter adjacent to the lighting fixture graphic symbol denotes that fixture is controlled by a similarly marked switching relays located inside the Canopy Lighting Control Panel (CLCP). For details, see CLCP Schematic on sheet EE4-2.*

B. *All underground/underslab conduit shall be PVC coated rigid steel conduit.*

C. *For Exterior Lighting Fixture Schedule, see sheet EE1-3.29.*

Notes:

1. *1"C, 3#12, 3#14,1#12G. Conductor numbers are N4, 4S2C, 4S2D, 4D2C, 4D2D and DC.*
2. *¾"C, 2#12, 2#14,1#12G. Conductor numbers are N4, 4S2C, 4D2C and DC.*
3. *¾"C, 2#12, 2#14,1#12G. Conductor numbers are N4, 4S2D, 4D2D and DC.*
4. *See Architectural Plans for conduit stub up at the column.*
5. *Install conduit seal at 18" from finished grade.*
6. *1"C, PVC coated RSC, 3#12, 3#14,1#12G. Conductor numbers are N4, 4S2C, 4S2D, 4D2C, 4D2D and DC.*

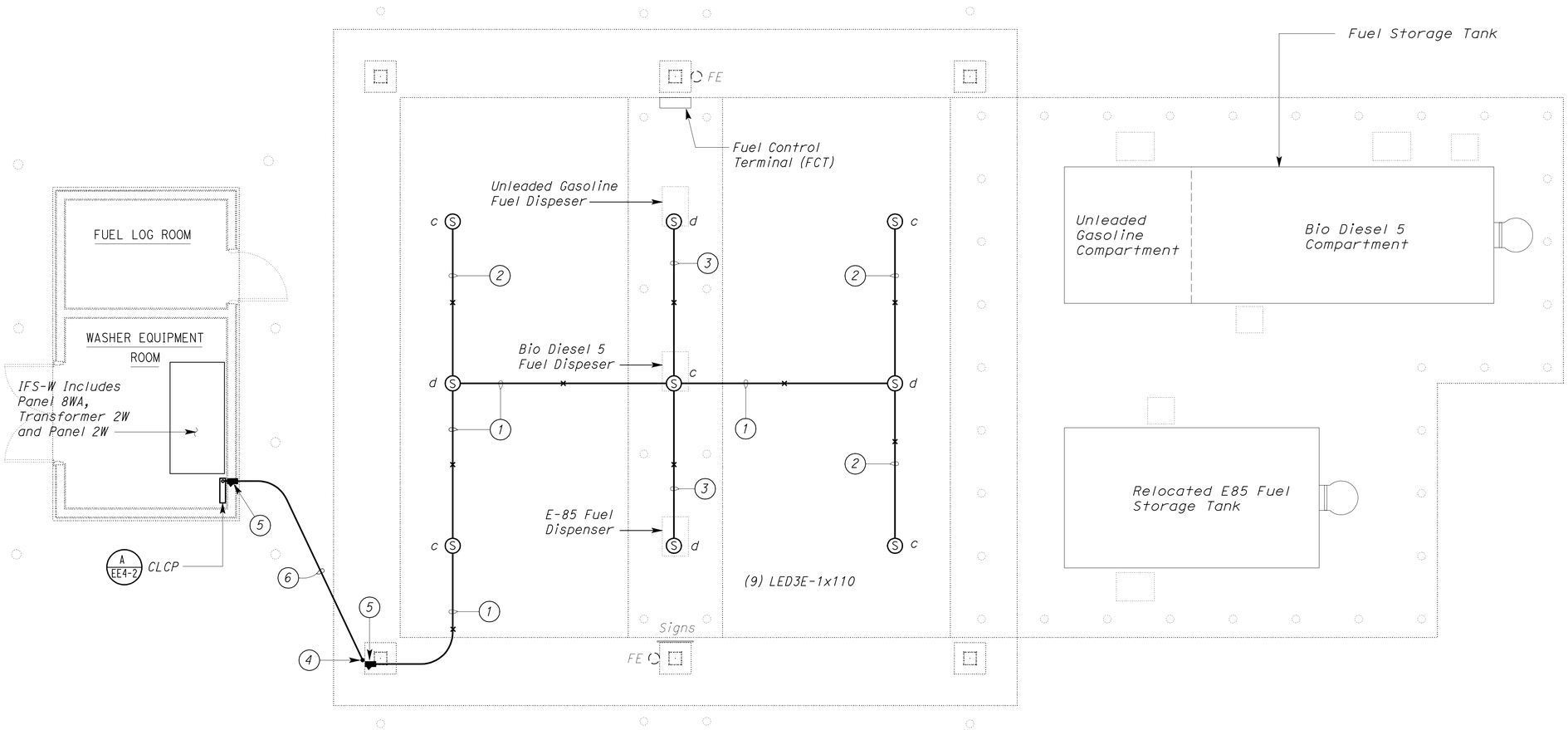

PLAN
SCALE 1/4" = 1'-0"

3 **ADDED PER ADDENDUM No. 3 DATED JANUARY 4, 2013**

THIS DRAWING ACCURATE FOR ELECTRICAL WORK ONLY

	BY	CHECKED
DESIGN	Jaswinder Gill	C. H. Mamaril
DETAILS	Ed D. Tapalla 3/12	Jaswinder Gill
QUANTITIES	Jaswinder Gill	C. H. Mamaril

STATE OF CALIFORNIA DEPARTMENT OF TRANSPORTATION

DIVISION OF ENGINEERING SERVICES ELECTRICAL-MECHANICAL-WATER AND WASTEWATER DESIGN

BRIDGE NO. 33M5785
POST MILE 2.2

SFOBB MAINTENANCE COMPLEX
FUEL ISLAND — LIGHTING PLAN

SHEET **EE2-2**

TAEMWW Imperial Rev. 7/10

ORIGINAL SCALE IN INCHES FOR REDUCED PLANS 0 1 2 3

UNIT 3596
PROJECT NUMBER & PHASE 04120006661
EA 014081

DISREGARD PRINTS BEARING EARLIER REVISION DATES → 11/29/12

REVISION DATES (PRELIMINARY STAGE ONLY) SHEET OF

02-JAN-2013 15:29

ee2_02.add

DIST.	COUNTY	ROUTE	POST MILES TOTAL PROJECT	SHEET NO.	TOTAL SHEETS
04	Ala	80	2.2	784	800

3

REGISTERED ELECTRICAL ENGINEER — 5-30-12 DATE

REGISTERED PROFESSIONAL ENGINEER J.S. SANDHU No. 11803 Exp. 9-30-12 ELEC STATE OF CALIFORNIA

10-22-12
PLANS APPROVAL DATE

The State of California or its officers or agents shall not be responsible for the accuracy or completeness of scanned copies of this plan sheet.

ACCESSIBILITY DESIGN APPROVAL STAMP DOT / DES / OTA
PROJECT ID 0412000666
Reviewed by: Y. A. WANG
Date: 12-06-12 *

CALIFORNIA STATE FIRE MARSHAL APPROVED
Approval of this plan does not authorize or approve any omission or deviation from applicable regulations. Final approval is subject to field inspection. One set of approved plans shall be available on the project site at all times.
Reviewed by: SPENCER MEYER
Approval date: 12-13-12

*APPROVAL DEFERRED TO SUBMITTAL

Notes:

1. For number and size of conduits and conductors to and from Island Conduit Receptacle, see sheet EE2-1.
2. Install conduit seal in conduit run and extend conduit to allow for termination on conduit termination plate at top of the Island Conduit Receptacle.
3. Conduit connections from ground rod to metal piping of Gasoline and Diesel Fuel Dispensers and Panel 2WB are not shown for clarity. See sheet EE2-1 for conduit and conductor sizes.

General Note:

A. Not all electrical components and/or interconnections are shown inside the Fuel Dispensers. Perform all work as required for the complete installation of the Fuel Dispenser system as recommended by the manufacturer.

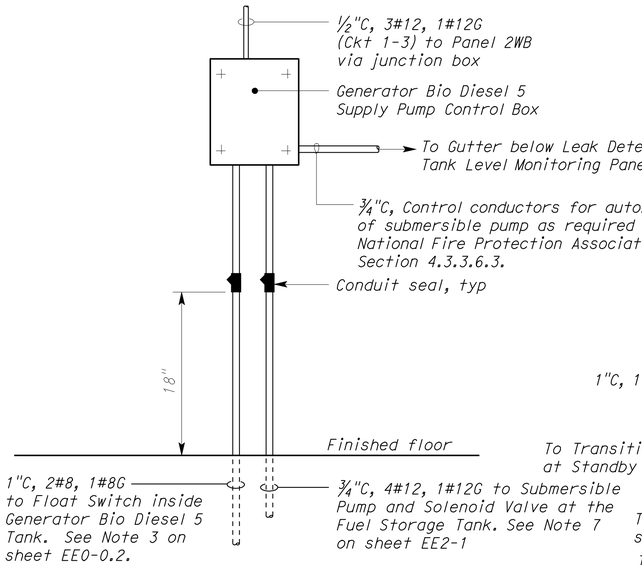

A ELEVATION
NO SCALE

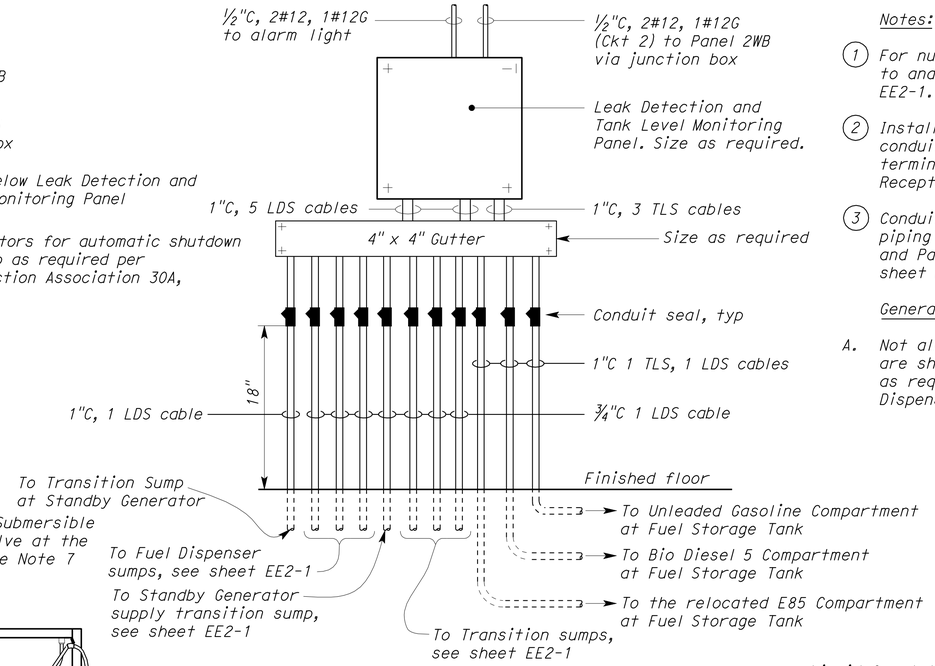

B ELEVATION
NO SCALE

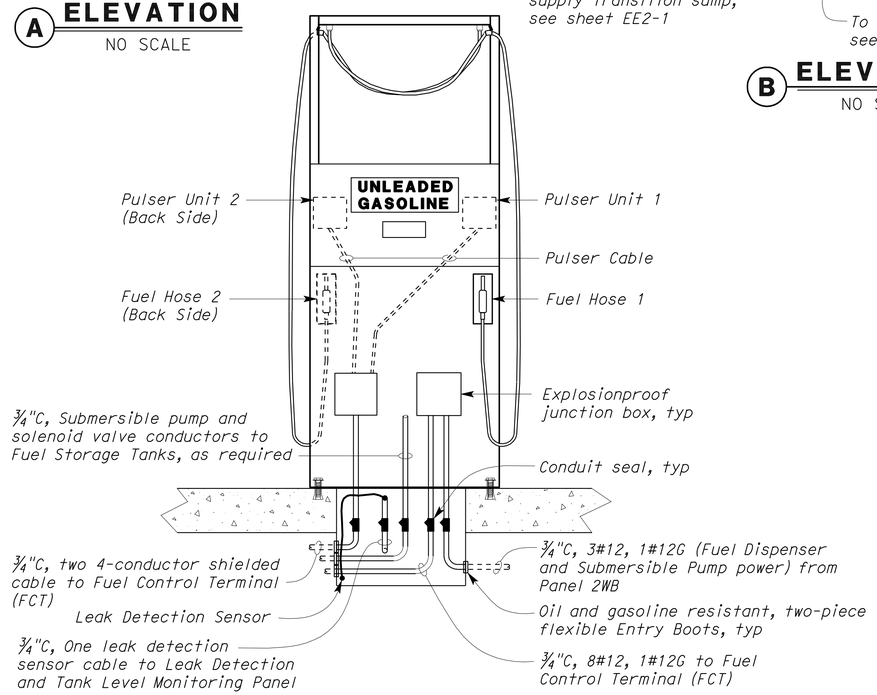

1 TYPICAL FUEL DISPENSER AND SUMP DETAIL
NO SCALE

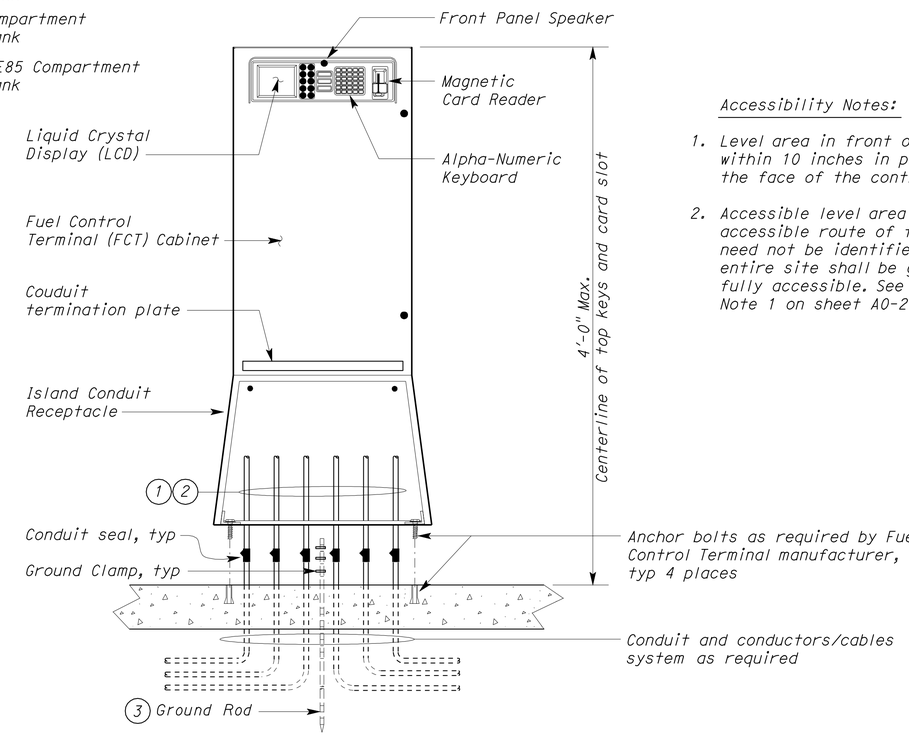

2 FUEL CONTROL TERMINAL DETAIL
NO SCALE

Accessibility Notes:

1. Level area in front of FCT shall be within 10 inches in plan view of the face of the control.
2. Accessible level area and accessible route of travel to FCT need not be identified as the entire site shall be graded to be fully accessible. See Accessiblity Note 1 on sheet A0-2.5.

3 **REVISED PER ADDENDUM No. 3 DATED JANUARY 4, 2013**

THIS DRAWING ACCURATE FOR ELECTRICAL WORK ONLY

	BY	CHECKED
DESIGN	J. S. Sandhu	C.H.Mamaril
DETAILS	Ed D. Tapalla 3/12	J. S. Sandhu
QUANTITIES	J. S. Sandhu	C.H.Mamaril

STATE OF CALIFORNIA DEPARTMENT OF TRANSPORTATION

DIVISION OF ENGINEERING SERVICES ELECTRICAL-MECHANICAL-WATER AND WASTEWATER DESIGN

BRIDGE NO. 33M5785
POST MILE 2.2

SFOBB MAINTENANCE COMPLEX
FUEL ISLAND — DETAILS 1

SHEET EE2-3

TAEMWW Imperial Rev. 7/10

ORIGINAL SCALE IN INCHES FOR REDUCED PLANS 0 1 2 3

UNIT 3596
PROJECT NUMBER & PHASE 04120006661
EA 014081

DISREGARD PRINTS BEARING EARLIER REVISION DATES
REVISION DATES (PRELIMINARY STAGE ONLY) 3/23/12 5/8/12 5/25/12 5/30/12 7/23/12 8/20/12 11/29/12 12/12/12 SHEET OF

31-DEC-2012 08:36
ee2_03.dgn

DIST.	COUNTY	ROUTE	POST MILES TOTAL PROJECT	SHEET NO.	TOTAL SHEETS
04	Ala	80	2.2	785	800

REGISTERED ELECTRICAL ENGINEER 5-30-12 DATE

REGISTERED PROFESSIONAL ENGINEER J.S. SANDHU No. 11803 Exp. 9-30-12 ELEC STATE OF CALIFORNIA

10-22-12
PLANS APPROVAL DATE

The State of California or its officers or agents shall not be responsible for the accuracy or completeness of scanned copies of this plan sheet.

CALIFORNIA STATE FIRE MARSHAL APPROVED
Approval of this plan does not authorize or approve any omission or deviation from applicable regulations. Final approval is subject to field inspection. One set of approved plans shall be available on the project site at all times.
Reviewed by: SPENCER MEYER
Approval date: 7-13-12

3

MAIN: 60 AMPERE 3-POLE CB
VOLTS: 120/208 V, 3 PH, 4W

PANEL 2WB (TOP FEED)
22 KA SCCR

FEEDER SIZE: 1½"C,4#4,1#6G
LOCATION: FUEL LOG ROOM

DESCRIPTION	AMPERES A	AMPERES B	AMPERES C	BRK	CKT	A B C	CKT	BRK	AMPERES A	AMPERES B	AMPERES C	DESCRIPTION
GENERATOR SUPPLY PUMP	7			* 20/2	1		2	20/1	2			TANK LEAK DETECTION PANEL
		7			3		4	* 20/2		7		BIO DIESEL DISPENSER PUMP
			-		5N		6				7	
SPARE	-			20/1	7		8N		-			
E85 FUEL DISPENSER PUMP		7		* 20/2	9		10	20/1		-		SPARE
			7		11		12	↓			-	↓
	-				13N		14	* 20/1	5			FUEL CONTROL TERMINAL
GASOLINE DISPENSER PUMP		7		* 20/2	15		16N			-		
			7		17		18				-	SPACE
	-				19N		20		-			
SPACE		-			21		22			-		
SPACE			-		23		24				-	↓

* INDICATES SWITCH NEUTRAL CIRCUIT BREAKER

14	28	21	TOTAL CONNECTED LOAD (AMPERES PER PHASE)

PANEL SCHEDULE

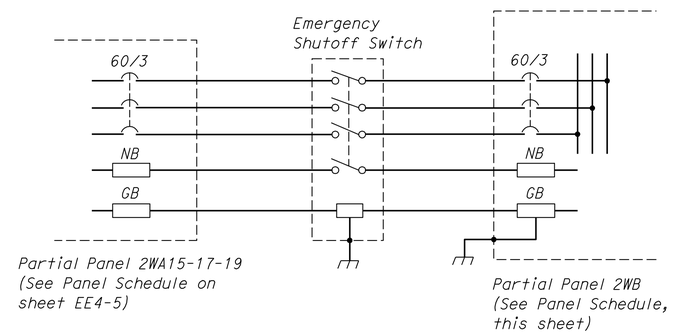

POWER SCHEMATIC
DISPENSER POWER SUPPLY

3 **REVISED PER ADDENDUM No. 3 DATED JANUARY 4, 2013**

	BY	CHECKED
DESIGN	J. S. Sandhu	C.H.Mamaril
DETAILS	Ed D. Tapalla 3/12	J. S. Sandhu
QUANTITIES	J. S. Sandhu	C.H.Mamaril

STATE OF CALIFORNIA
DEPARTMENT OF TRANSPORTATION

DIVISION OF ENGINEERING SERVICES
ELECTRICAL-MECHANICAL-WATER AND WASTEWATER DESIGN

BRIDGE NO. 33M5785
POST MILE 2.2

SFOBB MAINTENANCE COMPLEX
FUEL ISLAND
DETAILS 2

SHEET **EE2-4**

TAEMWW Imperial Rev. 7/10

ORIGINAL SCALE IN INCHES FOR REDUCED PLANS 0 1 2 3

UNIT 3596
PROJECT NUMBER & PHASE 04120006661
EA 014081

DISREGARD PRINTS BEARING EARLIER REVISION DATES →
REVISION DATES (PRELIMINARY STAGE ONLY) 3/23/12 5/8/12 5/22/12 5/25/12 5/30/12 11/29/12
SHEET OF

31-DEC-2012 08:36
ee2_04.add

DIST.	COUNTY	ROUTE	POST MILES TOTAL PROJECT	SHEET NO.	TOTAL SHEETS
04	Ala	80	2.2	789	800

Jaswinder S Gill 5-30-12
REGISTERED ELECTRICAL ENGINEER DATE

REGISTERED PROFESSIONAL ENGINEER J. S. GILL No. 18551 Exp. 12-31-12 ELEC STATE OF CALIFORNIA

10-22-12
PLANS APPROVAL DATE

The State of California or its officers or agents shall not be responsible for the accuracy or completeness of scanned copies of this plan sheet.

3

General Note:

A. For Interior Lighting Fixture Schedule, see sheet EE1-3.28.

Notes:

1. Power conduits are repeated here for clarity only. See sheet EE4-1 for details and continuation.
2. 1"C, 3#12, 3#14,1#12G. Conductor numbers are N2, 2S1A, 2S1B, 2D1A, 2D1B & DC.
3. For continuation, see sheet EE3-1.
4. 1"C, PVC coated RSC, 3#12, 3#14, 1312G. Conductor numbers are N4, 4S2C, 4S2D, 4D2C, 4D2D & DC.
5. For continuation, see sheet EE2-2.
6. Install warning plates on the CLCP with the following inscription:

   To de-energize the CLCP disconnect the circuit breakers numbers 2 and 4 from IFS-W.
7. Install conduit seal at 18" from finished grade under the CLCP.

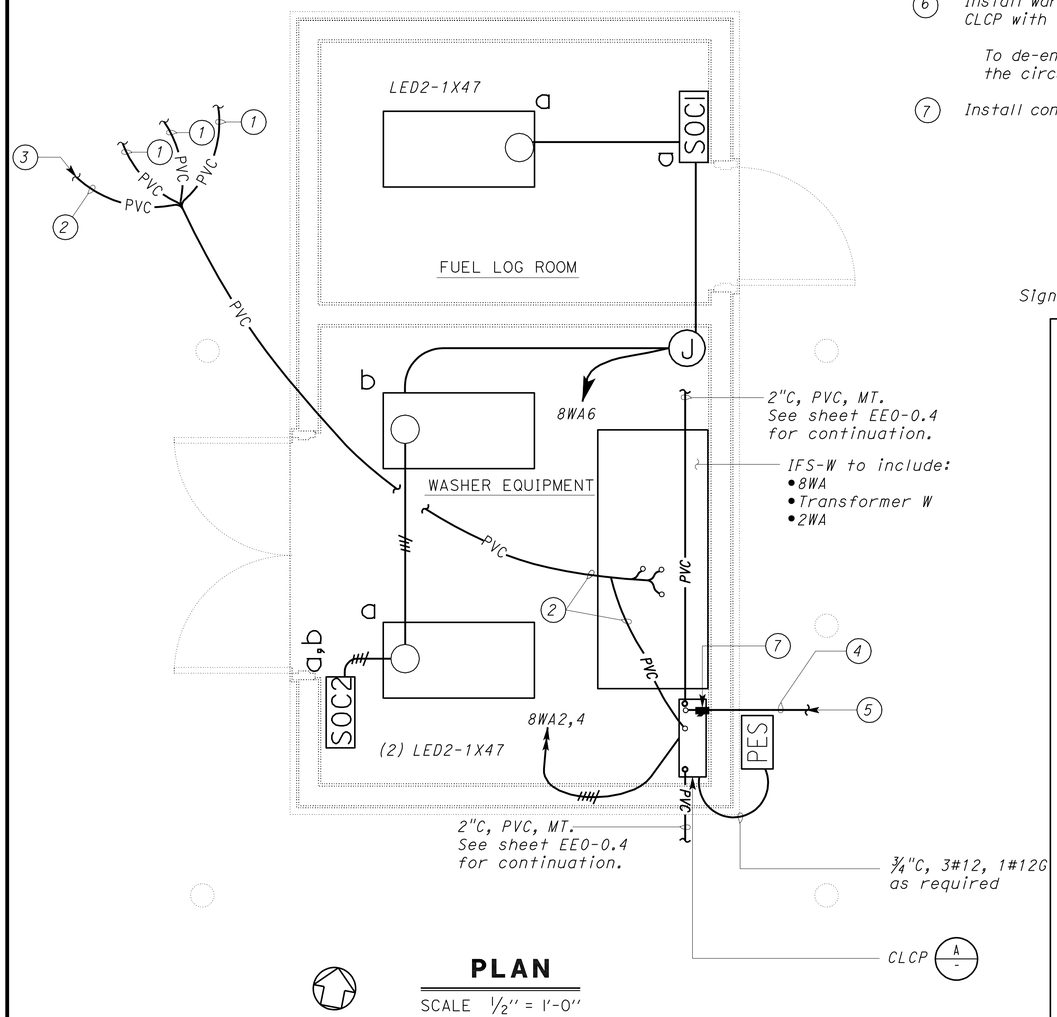

PLAN

SCALE 1/2" = 1'-0"

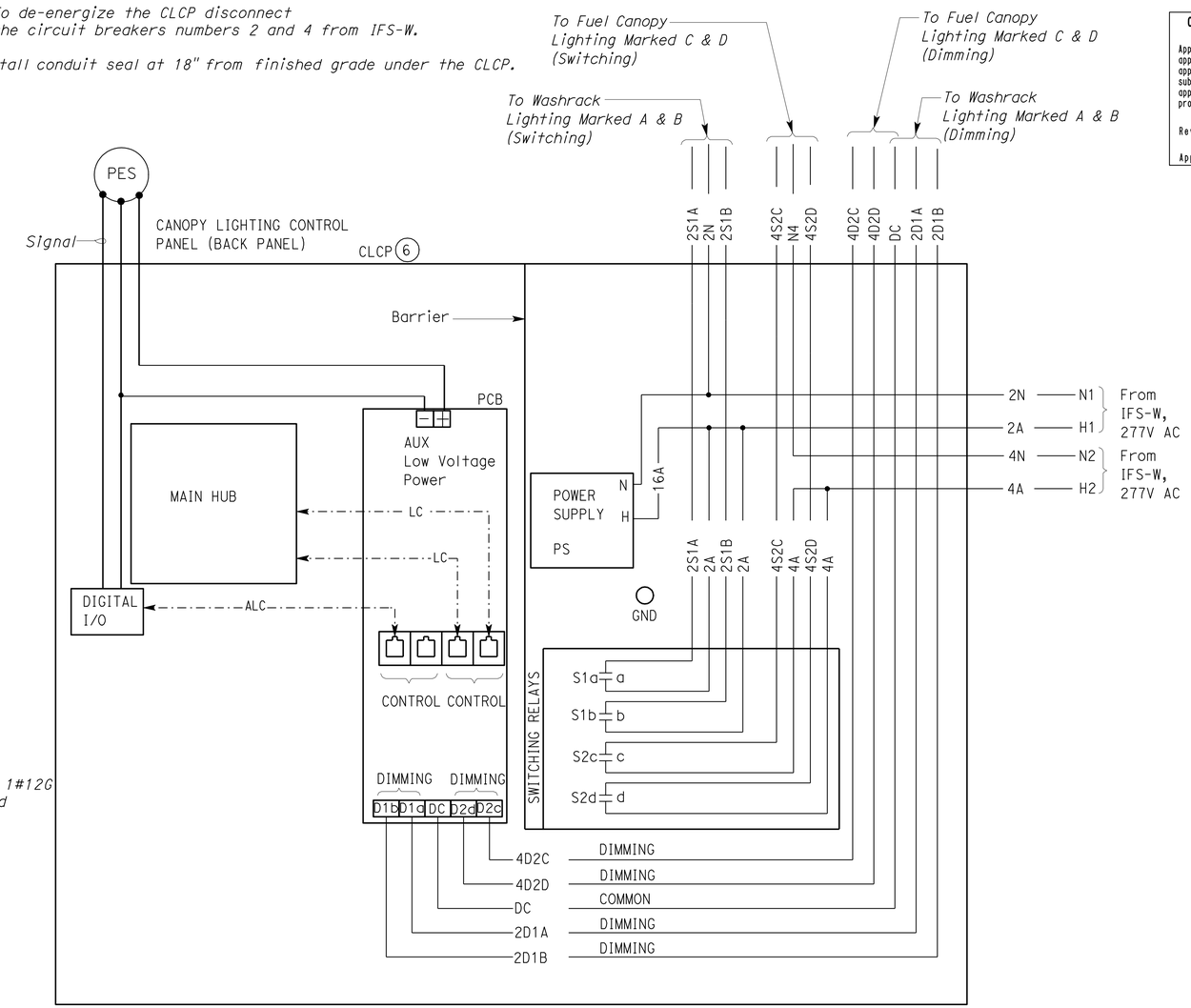

CALIFORNIA STATE FIRE MARSHAL APPROVED

Approval of this plan does not authorize or approve any omission or deviation from applicable regulations. Final approval is subject to field inspection. One set of approved plans shall be available on the project site at all times.

Reviewed by: SPENCER MEYER

Approval date: 12-13-12

A CANOPY LIGHTING CONTROL PANEL WIRING DIAGRAM

(EXTERIOR HINGED PANEL COVER NOT SHOWN FOR CLARITY)

THIS DRAWING ACCURATE FOR ELECTRICAL WORK ONLY

3 **REVISED PER ADDENDUM No. 3 DATED JANUARY 4, 2013**

	BY	CHECKED
DESIGN	Jaswinder Gill	Christine Mamaril
DETAILS	Ed D. Tapalla/Dali Zhou	Jaswinder Gill
QUANTITIES	Jaswinder Gill	Christine Mamaril

STATE OF CALIFORNIA DEPARTMENT OF TRANSPORTATION

DIVISION OF ENGINEERING SERVICES ELECTRICAL-MECHANICAL-WATER AND WASTEWATER DESIGN

BRIDGE NO. 33M5785 POST MILE 2.2

SFOBB MAINTENANCE COMPLEX

WASH/FUEL BUILDING — LIGHTING PLANS

SHEET **EE4-2**

TAEMWW Imperial Rev. 7/10

ORIGINAL SCALE IN INCHES FOR REDUCED PLANS 0 1 2 3

UNIT 3596
PROJECT NUMBER & PHASE 04120006661
EA 014081

DISREGARD PRINTS BEARING EARLIER REVISION DATES → 3/16/12 3/23/12 5/30/12 11/29/12

REVISION DATES (PRELIMINARY STAGE ONLY) SHEET OF

31-DEC-2012 08:36

ee4_02.add

DIST.	COUNTY	ROUTE	POST MILES TOTAL PROJECT	SHEET NO.	TOTAL SHEETS
04	Ala	80	2.2	792	800

Catalino A. Enriquez 5-30-12
REGISTERED ELECTRICAL ENGINEER DATE

REGISTERED PROFESSIONAL ENGINEER C. ENRIQUEZ No. 16944 Exp. 6-30-13 ELEC STATE OF CALIFORNIA

10-22-12
PLANS APPROVAL DATE

The State of California or its officers or agents shall not be responsible for the accuracy or completeness of scanned copies of this plan sheet.

CALIFORNIA STATE FIRE MARSHAL APPROVED
Approval of this plan does not authorize or approve any omission or deviation from applicable regulations. Final approval is subject to field inspection. One set of approved plans shall be available on the project site at all times.
Reviewed by: SPENCER MEYER
Approval date: 12-13-12

3

General Notes:

A. *For one line power diagram, see sheet EE4-4.*

B. *Provide appropriate lugs for circuit breakers as required to accommodate two set run and/or oversized conductors.*

MAIN: 100 AMPERE 3-POLE CB
VOLTS: 277/480 V, 3 PH, 4W

PANEL 8WA** (BOTTOM FEED)
35 KA SCCR

FEEDER SIZE: 4"C, 4#250 KCMIL, 1#250 KCMIL G
LOCATION: IFS-W IN WASH/FUEL BUILDING

DESCRIPTION	AMPS A	AMPS B	AMPS C	BRK	CKT	A B C	CKT	BRK	AMPS A	AMPS B	AMPS C	DESCRIPTION
TRANSFORMER 2WA	48			70/3	1		2	15/2	4			LIGHTING CONTROL PANEL
		50			3		4			4		
			48		5		6	15/1			1	LIGHTING- WASH/FUEL BUILDING
SPARE	-			15/3	7		8	20/1	-			SPARE
		-			9		10	20/1		-		SPARE
			-		11		12	20/1			-	SPARE
SPARE	-			20/3	13		14	40/3	-			SPARE
		-			15		16			-		
			-		17		18				-	
SPACE			-	-	19		20	-			-	SPACE
		-			21		22			-		
	-				23		24		-			

A	B	C	
52	54	49	TOTAL CONNECTED LOAD (AMPS PER PHASE)

MAIN: 150 AMPERE, 3 POLE CB
VOLTS: 120/208 V, 3 PH, 4 WIRE

PANEL 2WA** (BOTTOM FEED)
22 KA SCCR

FEEDER SIZE: 4#3/0 AND 1#1/0G
LOCATION: IFS-W IN WASH/FUEL BUILDING

DESCRIPTION	AMPERES A	AMPERES B	AMPERES C	BRK	CKT	A B C	CKT	BRK	AMPERES A	AMPERES B	AMPERES C	DESCRIPTION
HIGH PRESSURE WASHER OUTLET -WEST WASH RACK	17			30/3	1		2	30/3	17			HIGH PRESSURE WASHER OUTLET -EAST WASH RACK
		17			3		4			17		
			17		5		6				17	
VACUUM CLEANER (120V) AND AIR COMPRESSOR (120V)-WEST WASHRACK	12			20/2	7		8	20/1	4			SECURITY CAMERAS-EAST SITE
		12			9		10	20/1		-		SPARE
OUTLETS-WASHRACK			3	*20/1	11		12	*20/1			7.5	OUTLETS-WASH/FUEL BUILDING
OIL AND SLUDGE CONTROL PANEL	2			15/1	13		14	20/1	-			SPARE
PANEL 2WB (IN FUEL LOG ROOM)		28		60/3	15		16	20/2		8		GATE OPERATOR A-EAST SITE ENTRANCE
			21		17		18				8	
	14				19		20	20/2	8			GATE OPERATOR B-EAST SITE ENTRANCE
SPARE		-		20/1	21		22			8		
SPARE			-	20/1	23		24	20/2			12	VACUUM CLEANER (120V) AND AIR COMPRESSOR (120V)-EAST WASHRACK
SPARE	-			*20/1	25		26		12			
SPARE		-		*20/1	27		28	20/1		-		SPARE
SPARE			-	*20/1	29		30	20/1			-	SPARE
SPARE	-			20/1	31		32	20/1	-			SPARE
SPARE		-		20/1	33		34	20/1		-		SPARE
SPARE			-	20/1	35		36	20/1			-	SPARE
SEWAGE LIFT STATION PUMPS CONTROL PANEL	24			40/3	37		38	20/1	-			SPARE
		24			39		40	20/1		-		SPARE
			24		41		42	20/1			-	SPARE

A	B	C	
110	114	110	TOTAL CONNECTED LOAD (AMPERES PER PHASE)

* INSTALL GFCI TYPE CIRCUIT BREAKER WITH 5 MILLIAMPERE PROTECTION

** INSTALL PROVISIONS FOR PADLOCKING CIRCUIT BREAKERS IN OFF POSITION

3 **REVISED PER ADDENDUM No. 3 DATED JANUARY 4, 2013**

	BY	CHECKED
DESIGN	Catalino Enriquez	J.S.S./H.Abdelsayed
DETAILS	Dali Zhou	Catalino Enriquez
QUANTITIES	Catalino Enriquez	J.S.S./H.Abdelsayed

ORIGINAL SCALE IN INCHES FOR REDUCED PLANS 0 1 2 3

STATE OF CALIFORNIA
DEPARTMENT OF TRANSPORTATION

DIVISION OF ENGINEERING SERVICES
ELECTRICAL-MECHANICAL-WATER AND WASTEWATER DESIGN

UNIT 3596
PROJECT NUMBER & PHASE 04120006661
EA 014081

BRIDGE NO. 33M5785
POST MILE 2.2

SFOBB MAINTENANCE COMPLEX
WASH/FUEL BUILDING
PANEL SCHEDULE

SHEET **EE4-5**

DISREGARD PRINTS BEARING EARLIER REVISION DATES → 3/29/12 5/29/12 11/29/12
REVISION DATES (PRELIMINARY STAGE ONLY) SHEET OF

TAEMWW Imperial Rev. 7/10

31-DEC-2012 08:36
ee4_05.dgn

DIST.	COUNTY	ROUTE	POST MILES TOTAL PROJECT	SHEET NO.	TOTAL SHEETS
04	Ala	80	2.2	794	800

REGISTERED CIVIL ENGINEER — 05/31/2012 DATE

REGISTERED PROFESSIONAL ENGINEER — JEROME R. MARCOTTE — No. C 36844 — Exp. 06/30/12 — CIVIL — STATE OF CALIFORNIA

10-22-12
PLANS APPROVAL DATE

The State of California or its officers or agents shall not be responsible for the accuracy or completeness of scanned copies of this plan sheet.

CALIFORNIA STATE FIRE MARSHAL APPROVED
Approval of this plan does not authorize or approve any omission or deviation from applicable regulations. Final approval is subject to field inspection. One set of approved plans shall be available on the project site at all times.
Reviewed by: SPENCER MEYER
Approval date: 4-13-12

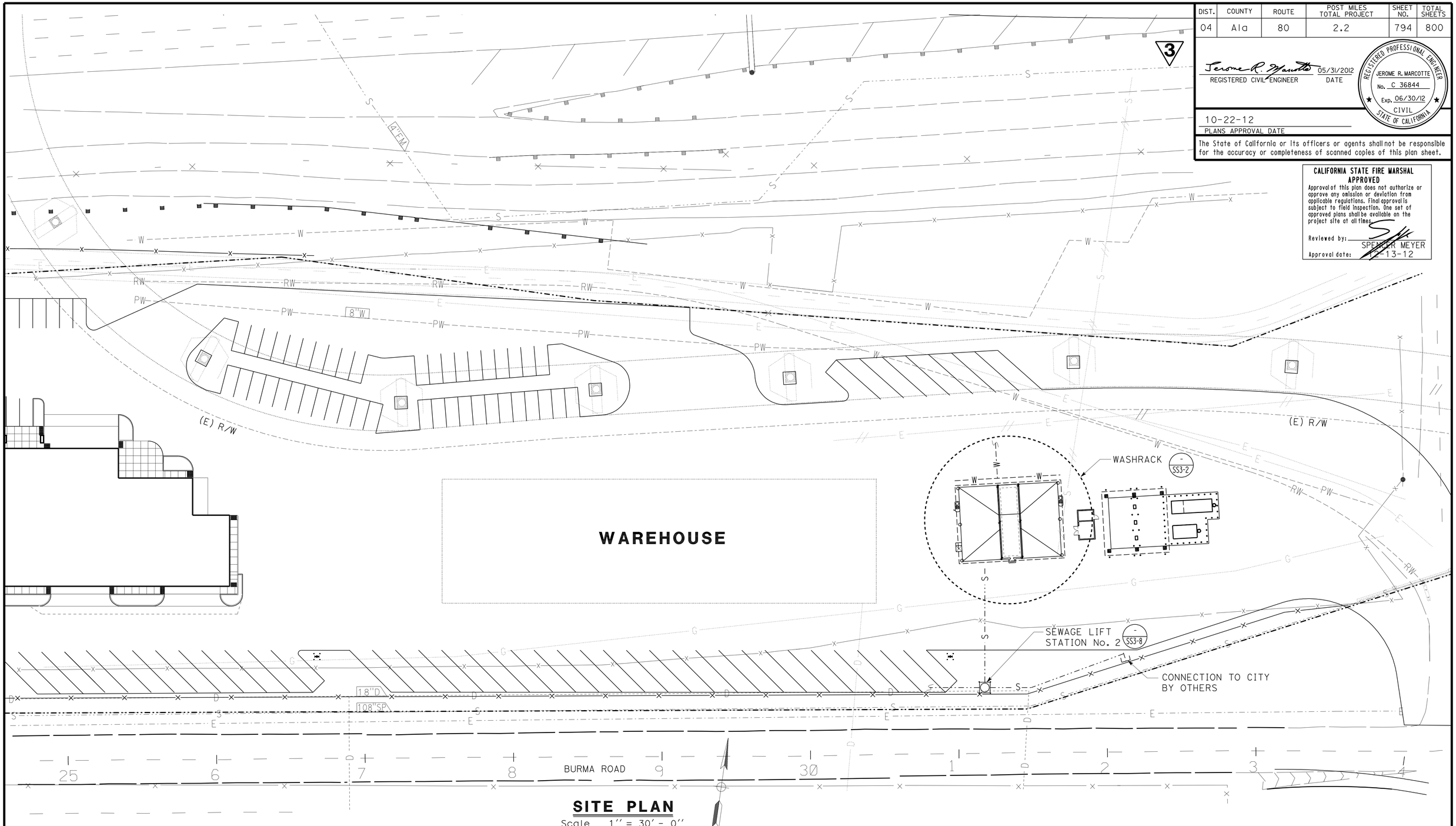

SITE PLAN

Scale 1'' = 30' - 0''

3 REVISED PER ADDENDUM No. 3 DATED JANUARY 4, 2013

DESIGN SUPERVISOR
DESIGN ENGINEER

	BY	CHECKED
DESIGN	Andy Quan	J. Marcotte
DETAILS	Andy Quan	J. Marcotte
QUANTITIES	Andy Quan	J. Marcotte

STATE OF CALIFORNIA
DEPARTMENT OF TRANSPORTATION

DIVISION OF ENGINEERING SERVICES
ELECTRICAL-MECHANICAL-WATER AND WASTEWATER DESIGN

BRIDGE NO. 33M5785
POST MILE 2.2

SFOBB MAINTENANCE COMPLEX
SITE PLAN

SHEET **SS3-1**

TAEMWW Imperial Rev. 7/10

ORIGINAL SCALE IN INCHES FOR REDUCED PLANS 0 1 2 3

UNIT 3616
PROJECT NUMBER & PHASE 04120006661
EA 014081

DISREGARD PRINTS BEARING EARLIER REVISION DATES → 10-17-11 01-23-12 05-31-12

REVISION DATES (PRELIMINARY STAGE ONLY) SHEET OF

02-JAN-2013 15:29

ss3_1.add

DIST.	COUNTY	ROUTE	POST MILES TOTAL PROJECT	SHEET NO.	TOTAL SHEETS
04	Ala	80	2.2	795	800

REGISTERED CIVIL ENGINEER — 05/31/2012 DATE

REGISTERED PROFESSIONAL ENGINEER — JEROME R. MARCOTTE — No. C 36844 — Exp. 06/30/12 — CIVIL — STATE OF CALIFORNIA

10-22-12
PLANS APPROVAL DATE

The State of California or its officers or agents shall not be responsible for the accuracy or completeness of scanned copies of this plan sheet.

CALIFORNIA STATE FIRE MARSHAL APPROVED
Approval of this plan does not authorize or approve any omission or deviation from applicable regulations. Final approval is subject to field inspection. One set of approved plans shall be available on the project site at all times.
Reviewed by: SPENCER MEYER
Approval date: 1-13-12

3

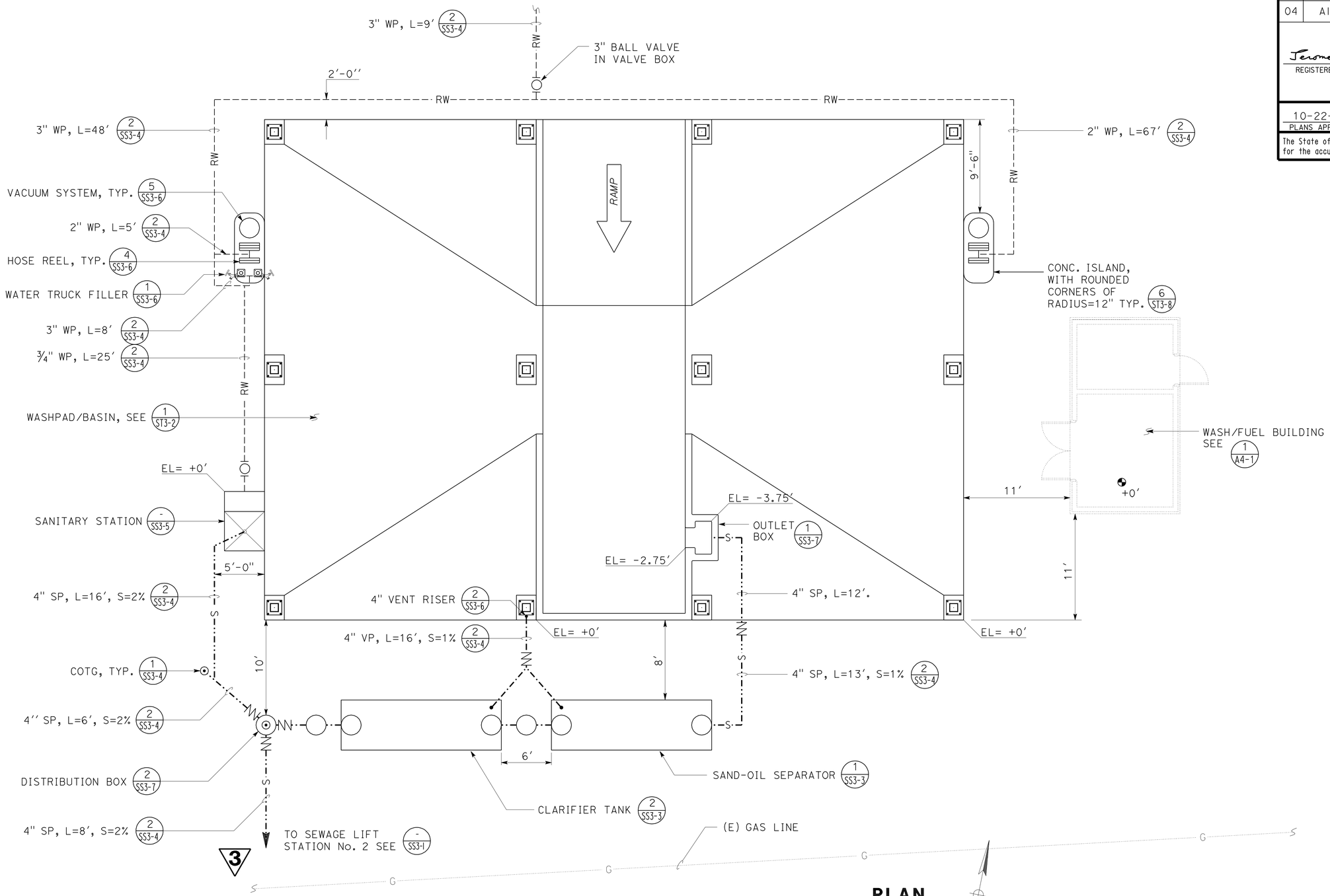

PLAN
Scale 1′′ = 5′ - 0′′

3 **REVISED PER ADDENDUM No. 3 DATED JANUARY 4, 2013**

	BY	CHECKED
DESIGN	Andy Quan	J. Marcotte
DETAILS	Andy Quan	J. Marcotte
QUANTITIES	Andy Quan	J. Marcotte

STATE OF CALIFORNIA DEPARTMENT OF TRANSPORTATION

DIVISION OF ENGINEERING SERVICES
ELECTRICAL-MECHANICAL-WATER AND WASTEWATER DESIGN

BRIDGE NO. 33M5785
POST MILE 2.2

SFOBB MAINTENANCE COMPLEX

WASHRACK DETAILS

SHEET **SS3-2**

TAEMWW Imperial Rev. 7/10

ORIGINAL SCALE IN INCHES FOR REDUCED PLANS 0 1 2 3

UNIT 3616
PROJECT NUMBER & PHASE 04120006661
EA 014081

DISREGARD PRINTS BEARING EARLIER REVISION DATES → REVISION DATES (PRELIMINARY STAGE ONLY) 07-08-11 02-23-12 05-10-12 05-31-12

SHEET OF

02-JAN-2013 15:29
ss3_2.dgn

DIST.	COUNTY	ROUTE	POST MILES TOTAL PROJECT	SHEET NO.	TOTAL SHEETS
04	Ala	80	2.2	800A	800

REGISTERED CIVIL ENGINEER 05/31/2012 DATE

REGISTERED PROFESSIONAL ENGINEER JEROME R. MARCOTTE No. C 36844 Exp. 06/30/12 CIVIL STATE OF CALIFORNIA

10-22-12
PLANS APPROVAL DATE

The State of California or its officers or agents shall not be responsible for the accuracy or completeness of scanned copies of this plan sheet.

CALIFORNIA STATE FIRE MARSHAL APPROVED
Approval of this plan does not authorize or approve any omission or deviation from applicable regulations. Final approval is subject to field inspection. One set of approved plans shall be available on the project site at all times.
Reviewed by: SPENCER MEYER
Approval date: 12-13-12

3

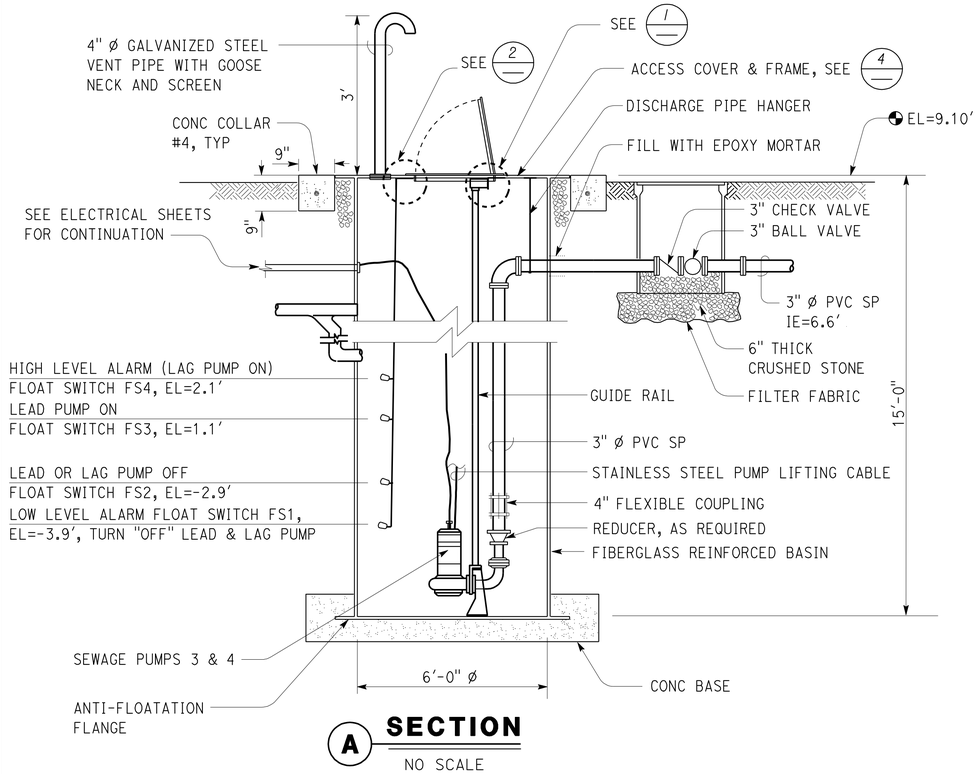

A SECTION
NO SCALE

EQUIPMENT SCHEDULE FOR SEWAGE PUMPS					
EQUIPMENT	PUMPING RATE (GPM)	TOTAL DYNAMIC HEAD (FT)	HP	VOLTS	PHASE
SEWAGE PUMP (NO. 3 & 4)	40	80	3	208	3
	50	60			
	60	40			

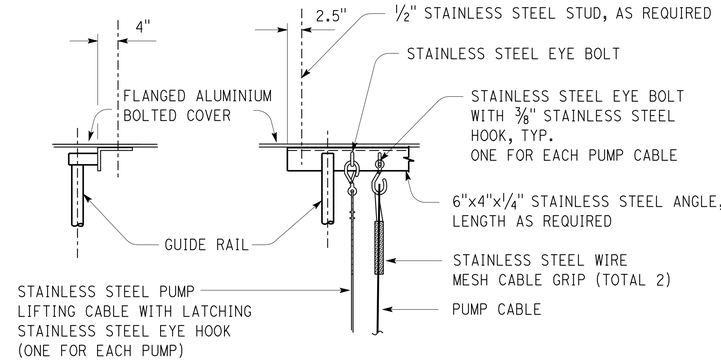

1 SECTION
NO SCALE

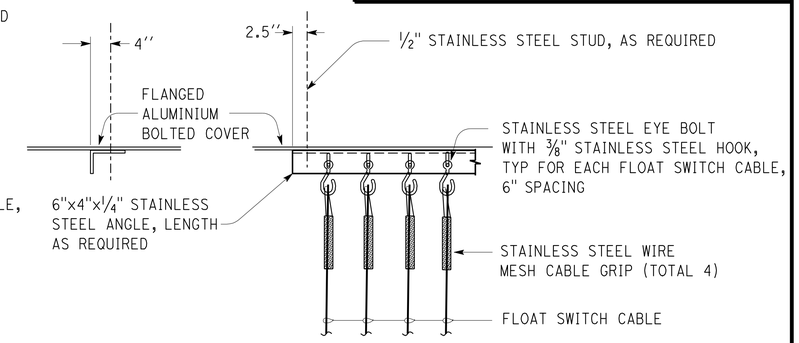

2 SECTION
NO SCALE

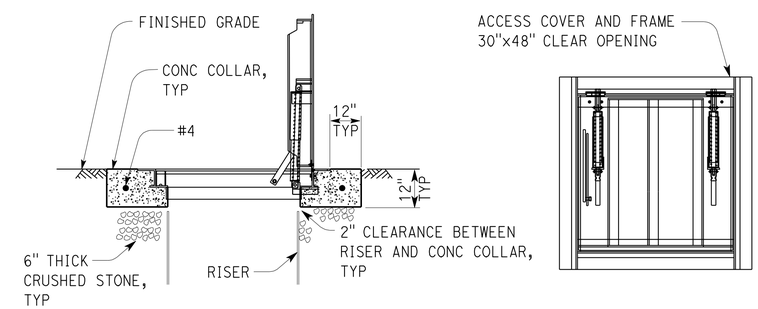

4 ACCESS COVER AND FRAME DETAIL
NO SCALE

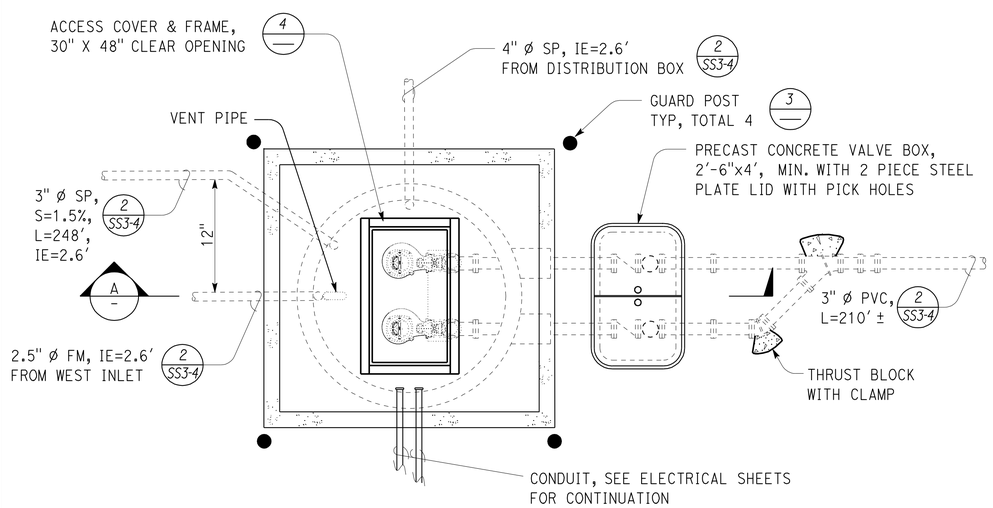

SEWAGE LIFT STATION PLAN
NO SCALE

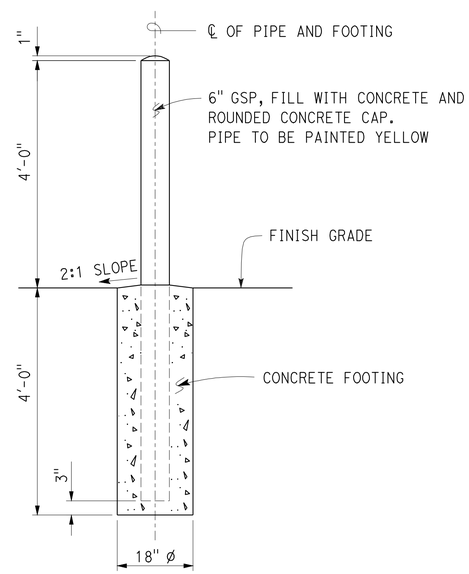

3 GUARD POST DETAIL
NO SCALE

Notes:

1. Discharge pipe hanger must be stainless steel and attached per manufacturer's instruction.
2. All fastener to aluminium and fiberglass must be devices with stainless steel threaded stud, hex nut and flat washer. Size as required.
3. Cable length must be continuous from motor and floats to controls without splices.

3 **ADDED PER ADDENDUM No. 3 DATED JANUARY 4, 2013**

	BY	CHECKED
DESIGN	Andy Quan	J. Marcotte
DETAILS	Andy Quan	J. Marcotte
QUANTITIES	Andy Quan	J. Marcotte

STATE OF CALIFORNIA DEPARTMENT OF TRANSPORTATION

DIVISION OF ENGINEERING SERVICES
ELECTRICAL-MECHANICAL-WATER AND WASTEWATER DESIGN

BRIDGE NO. 33M5785
POST MILE 2.2

SFOBB MAINTENANCE COMPLEX
SEWAGE LIFT STATION No. 2

SHEET SS3-8

TAEMWW Imperial Rev. 7/10

ORIGINAL SCALE IN INCHES FOR REDUCED PLANS 0 1 2 3

UNIT 3616
PROJECT NUMBER & PHASE 04120006661
EA 000000

DISREGARD PRINTS BEARING EARLIER REVISION DATES → 10-18-12 11-14-12

REVISION DATES (PRELIMINARY STAGE ONLY) SHEET OF

02-JAN-2013 15:29

ss3_8.dgn