Dist	COUNTY	ROUTE	KILOMETER POST TOTAL PROJECT	SHEET No.	TOTAL SHEETS
04	SF	80	12.6/13.9	1	821

STATE OF CALIFORNIA

DEPARTMENT OF TRANSPORTATION

PROJECT PLANS FOR CONSTRUCTION ON

STATE HIGHWAY

IN THE CITY AND COUNTY OF SAN FRANCISCO FROM THE YERBA BUENA TUNNEL TO 1.3 KM EAST OF THE YERBA BUENA TUNNEL

TO BE SUPPLEMENTED BY STANDARD PLANS DATED JULY 2004

INDEX OF SHEETS

SHEET No.	DESCRIPTION
1	TITLE AND LOCATION MAP
2-16	TYPICAL CROSS SECTIONS
17	KEY MAP AND LINE INDEX
18-25	LAYOUTS
26-38	PROFILES AND SUPERELEVATION DIAGRAMS
39-90	CONSTRUCTION DETAILS
91-95	TEMPORARY WATER POLLUTION CONTROL PLANS, DETAILS AND QUANTITIES
96-101	EROSION CONTROL PLANS, DETAILS AND QUANTITIES
102-104	CONTOUR GRADING
105-129	DRAINAGE PLANS, PROFILES, DETAILS AND QUANTITIES
130-145	UTILITY PLANS, DETAILS AND QUANTITIES
146-154	CONSTRUCTION AREA SIGNS
155-178	STAGE CONSTRUCTION PLANS, DETAILS AND QUANTITIES
179-191	PAVEMENT DELINEATION PLANS, DETAILS AND QUANTITIES
192-212	SIGN PLANS, DETAILS AND QUANTITIES
213-218	SUMMARY OF QUANTITIES
219-227	RETAINING WALL PLANS
228	HIGHWAY PLANTING PLANS
229-320	ELECTRICAL PLANS
321-372	ELECTRICAL UTILITY RELOCATIONS
373-414	REVISED AND NEW STANDARD PLANS
STRUCTURE PLANS	
415-443	RETAINING WALL No. 51, Br No. 34E0015
444-453	RETAINING WALL No. 52, Br No. RW 52
454-482	YBI EDGE BEAM SUPPORT STRUCTURE (YBIEBSS) Br No. 34-0006
483-487	YBI EDGE BEAM SUPPORT STRUCTURE ARCHITECTURAL EXTENSION Br No. 34-0006
488-491	YBI VIADUCT DECK TREATMENT Br No. 34-0006
492-507	WEST TIE-IN (DEMOLITION) Br No. 34-0006
508-524	SOUTH, SOUTH DETOUR VIADUCT DEMOLITION Br No. 34-0006
525-534	EAST TIE-IN (DEMOLITION) Br No. 34-0006
535-621	EXISTING CANTILEVER TRUSS DEMOLITION Br No. 33-0025
622-645	SELF ANCHORED SUSPENSION BRIDGE (ERECTION OF BIKE PATH AT PIER W2) Br No. 34-0006L/R
646-665	YBI EB TRANSITION STRUCTURE (Mod) Br No. 34-0006R/L
666-726	YBI EB ON-RAMP STRUCTURE (FINAL) Br No. 34-0006S
BUILDING PLANS	
727	GENERAL PLAN
728-769	ARCHITECTURAL PLANS
770-804	STRUCTURAL PLANS
805-809	MECHANICAL PLANS
810-821	ELECTRICAL PLANS

THE STANDARD PLANS LIST APPLICABLE TO THIS CONTRACT IS INCLUDED IN THE NOTICE TO BIDDERS AND SPECIAL PROVISIONS BOOK.

LOCATION MAP

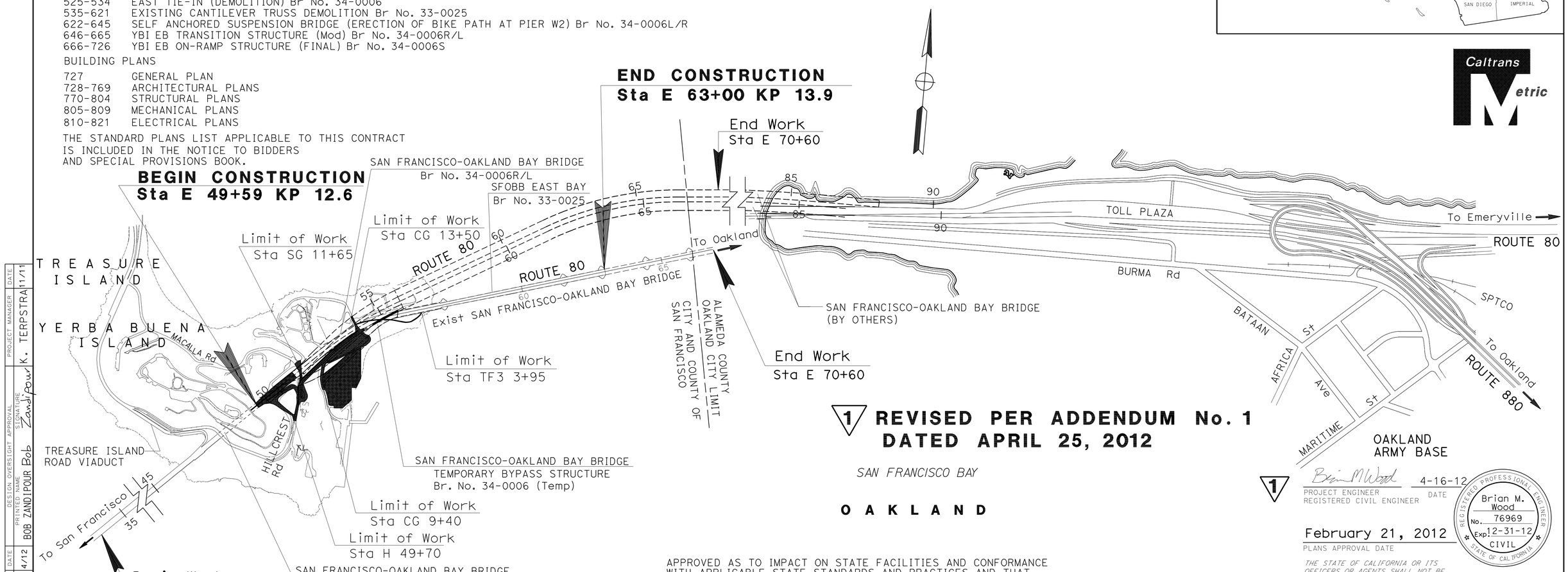

1 REVISED PER ADDENDUM No. 1 DATED APRIL 25, 2012

1 THE CONTRACTOR SHALL POSSESS THE CLASS (OR CLASSES) OF LICENSE AS SPECIFIED IN THE "NOTICE TO BIDDERS."

APPROVED AS TO IMPACT ON STATE FACILITIES AND CONFORMANCE WITH APPLICABLE STATE STANDARDS AND PRACTICES AND THAT TECHNICAL OVERSIGHT WAS PERFORMED AS DESCRIBED IN THE CALIFORNIA DEPARTMENT OF TRANSPORTATION A & E CONSULTANT SERVICE MANUAL.

NO SCALE

Brian M Wood 4-16-12
PROJECT ENGINEER REGISTERED CIVIL ENGINEER — DATE

February 21, 2012
PLANS APPROVAL DATE

REGISTERED PROFESSIONAL ENGINEER Brian M. Wood No. 76969 Exp. 12-31-12 CIVIL STATE OF CALIFORNIA

THE STATE OF CALIFORNIA OR ITS OFFICERS OR AGENTS SHALL NOT BE RESPONSIBLE FOR THE ACCURACY OR COMPLETENESS OF ELECTRONIC COPIES OF THIS PLAN SHEET.

CONTRACT No.	04-0120T4
PROJECT ID	0400000027

PROJECT ENGINEER: BRIAN WOOD — DATE: 4/12
DESIGN OVERSIGHT APPROVAL — PRINTED NAME: BOB ZANDIPOUR — SIGNATURE: Bob Zandipour
PROJECT MANAGER: K. TERPSTRA — DATE: 11/11

LAST REVISION: 04-16-12
DATE PLOTTED => 24-APR-2012
TIME PLOTTED => 16:56

Dist	COUNTY	ROUTE	KILOMETER POST TOTAL PROJECT	SHEET No.	TOTAL SHEETS
04	SF	80	12.6/13.9	83	821

Brian M Wood 04-16-12
REGISTERED CIVIL ENGINEER DATE

2-21-12
PLANS APPROVAL DATE

REGISTERED PROFESSIONAL ENGINEER Brian M. Wood No. 76969 Exp. 12-31-12 CIVIL STATE OF CALIFORNIA

THE STATE OF CALIFORNIA OR ITS OFFICERS OR AGENTS SHALL NOT BE RESPONSIBLE FOR THE ACCURACY OR COMPLETENESS OF ELECTRONIC COPIES OF THIS PLAN SHEET.

Caltrans Metric

FOR COMPLETE RIGHT OF WAY AND ACCURATE ACCESS DATA, SEE RIGHT OF WAY RECORD MAPS AT DISTRICT OFFICE.

LEGEND: (THIS SHEET ONLY)

- CONTRACT No. 04-0120S4
- CONTRACT No. 04-0120F4
- CONTRACT OVERLAP PR
- CONTRACT OVERLAP FP
- CONTRACT OVERLAP FT

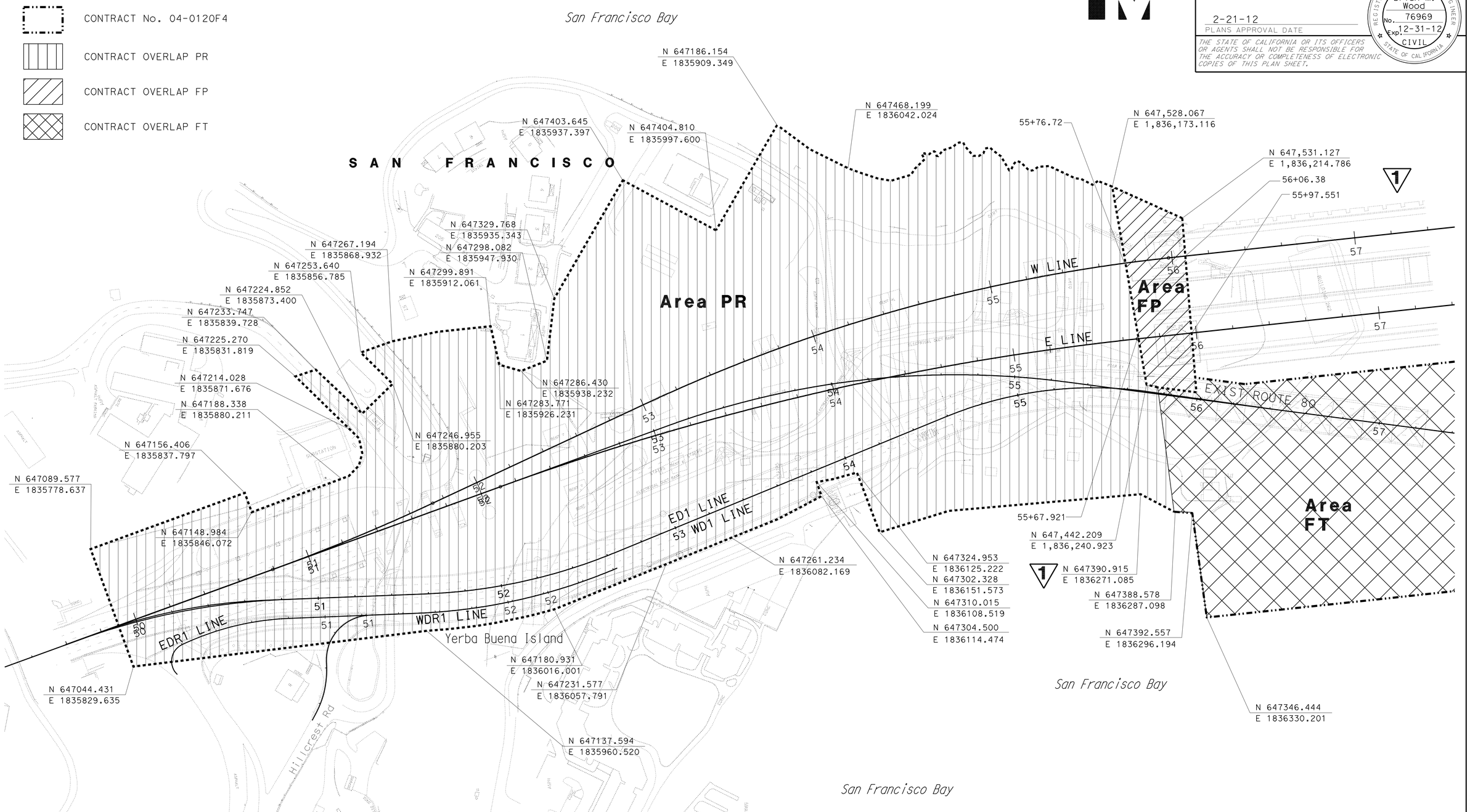

1 REVISED PER ADDENDUM No. 1 DATED APRIL 25, 2012

CONSTRUCTION DETAILS
AREAS FOR CONTRACTOR USE
SCALE 1:1000

C-45

STATE OF CALIFORNIA - DEPARTMENT OF TRANSPORTATION
Caltrans DESIGN

FUNCTIONAL SUPERVISOR BOB ZANDIPOUR
CALCULATED-DESIGNED BY BRIAN WOOD
CHECKED BY AMANDO VITO
REVISED BY BW
DATE REVISED 11-1-11

LAST REVISION 04-16-12
DATE PLOTTED => 24-APR-2012
TIME PLOTTED => 16:57

FOR COMPLETE RIGHT OF WAY AND ACCURATE ACCESS DATA, SEE RIGHT OF WAY RECORD MAPS AT DISTRICT OFFICE.

Dist	COUNTY	ROUTE	KILOMETER POST TOTAL PROJECT	SHEET No.	TOTAL SHEETS
04	SF	80	12.6/13.9	84	821

Caltrans Metric

REGISTERED CIVIL ENGINEER 4-16-12 DATE

2-21-12
PLANS APPROVAL DATE

REGISTERED PROFESSIONAL ENGINEER Brian M. Wood No. 76969 Exp. 12-31-12 CIVIL STATE OF CALIFORNIA

THE STATE OF CALIFORNIA OR ITS OFFICERS OR AGENTS SHALL NOT BE RESPONSIBLE FOR THE ACCURACY OR COMPLETENESS OF ELECTRONIC COPIES OF THIS PLAN SHEET.

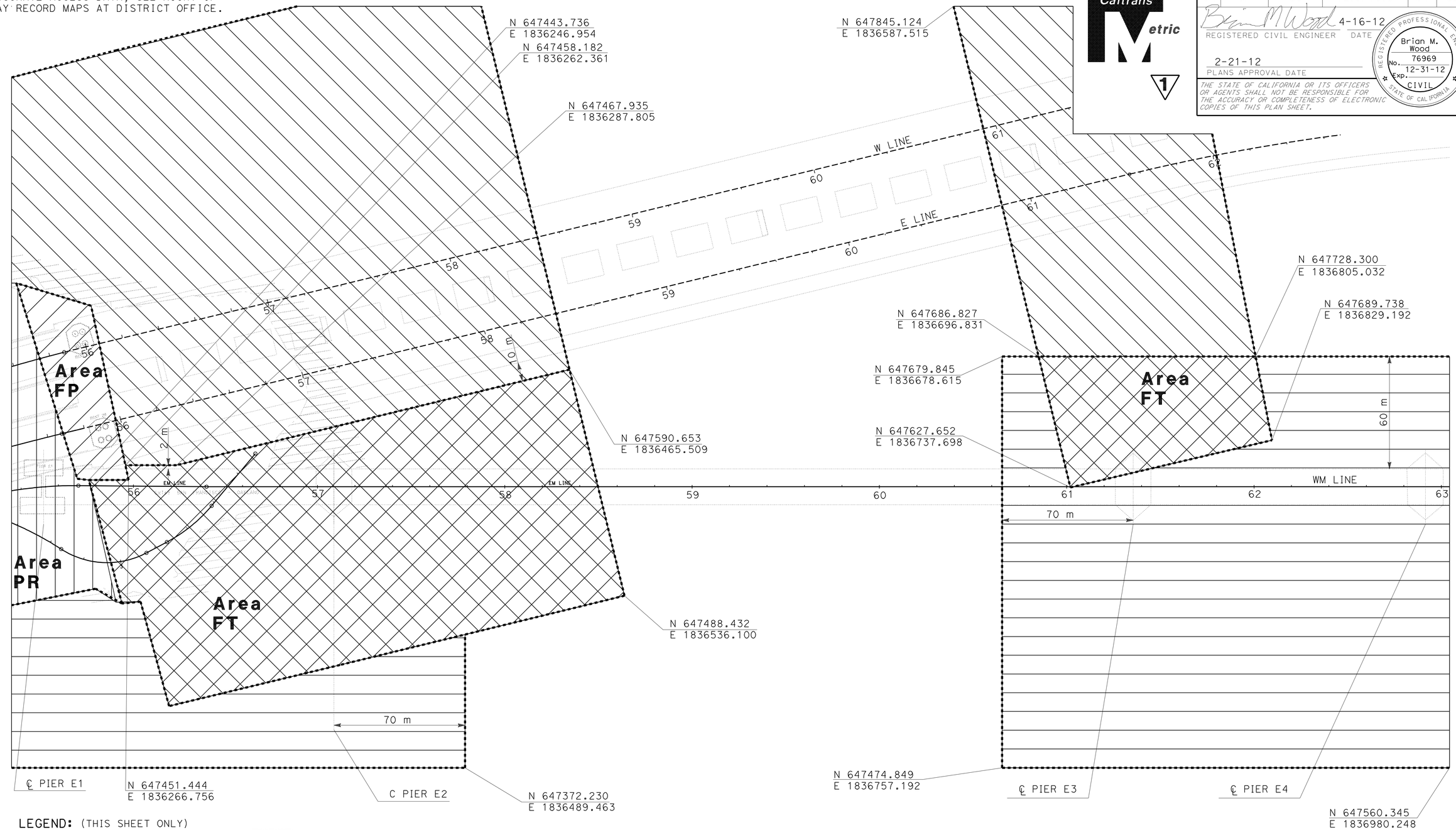

LEGEND: (THIS SHEET ONLY)

- CONTRACT No. 04-0120T4
- CONTRACT No. 04-0120F4
- CONTRACT OVERLAP FT
- CONTRACT OPVERLAP FP
- CONTRACT OVERLAP PR

1 REVISED PER ADDENDUM No. 1 DATED APRIL 25, 2012

NOTES:

1. Provide and maintain a 90 meters wide navigable channel between Piers E2 and E3 during construction.
2. The area within the right of way from 70 meters east of Pier E2 centerline to 70 meters west of Pier E3 centerline is excluded from Area FT. Access by others shall be allowed through this area.

CONSTRUCTION DETAILS AREAS FOR CONTRACTOR USE

SCALE 1:1000

C-46

STATE OF CALIFORNIA - DEPARTMENT OF TRANSPORTATION
Caltrans
DESIGN

FUNCTIONAL SUPERVISOR: BOB ZANDIPOUR
CALCULATED-DESIGNED BY: BRIAN WOOD
CHECKED BY: AMANDO VITO
REVISED BY: BW
DATE REVISED: 11-1-11

LAST REVISION 04-16-12
DATE PLOTTED => 24-APR-2012
TIME PLOTTED => 16:57

Dist	COUNTY	ROUTE	KILOMETER POST TOTAL PROJECT	SHEET No.	TOTAL SHEETS
04	SF	80	12.6/13.9	85	821

Brian M Wood 4-16-12
REGISTERED CIVIL ENGINEER DATE

2-21-12
PLANS APPROVAL DATE

REGISTERED PROFESSIONAL ENGINEER Brian M. Wood No. 76969 Exp. 12-31-12 CIVIL STATE OF CALIFORNIA

THE STATE OF CALIFORNIA OR ITS OFFICERS OR AGENTS SHALL NOT BE RESPONSIBLE FOR THE ACCURACY OR COMPLETENESS OF ELECTRONIC COPIES OF THIS PLAN SHEET.

Caltrans Metric

FOR COMPLETE RIGHT OF WAY AND ACCURATE ACCESS DATA, SEE RIGHT OF WAY RECORD MAPS AT DISTRICT OFFICE.

LEGEND: (THIS SHEET ONLY)

- CONTRACT No. 04-0120T4 (AREA T)
- CONTRACT No. 04-3A6404 (AREA A)
- CONTRACT OVERLAP TA1, TA2, & TA3
- CONTRACT AREA CG

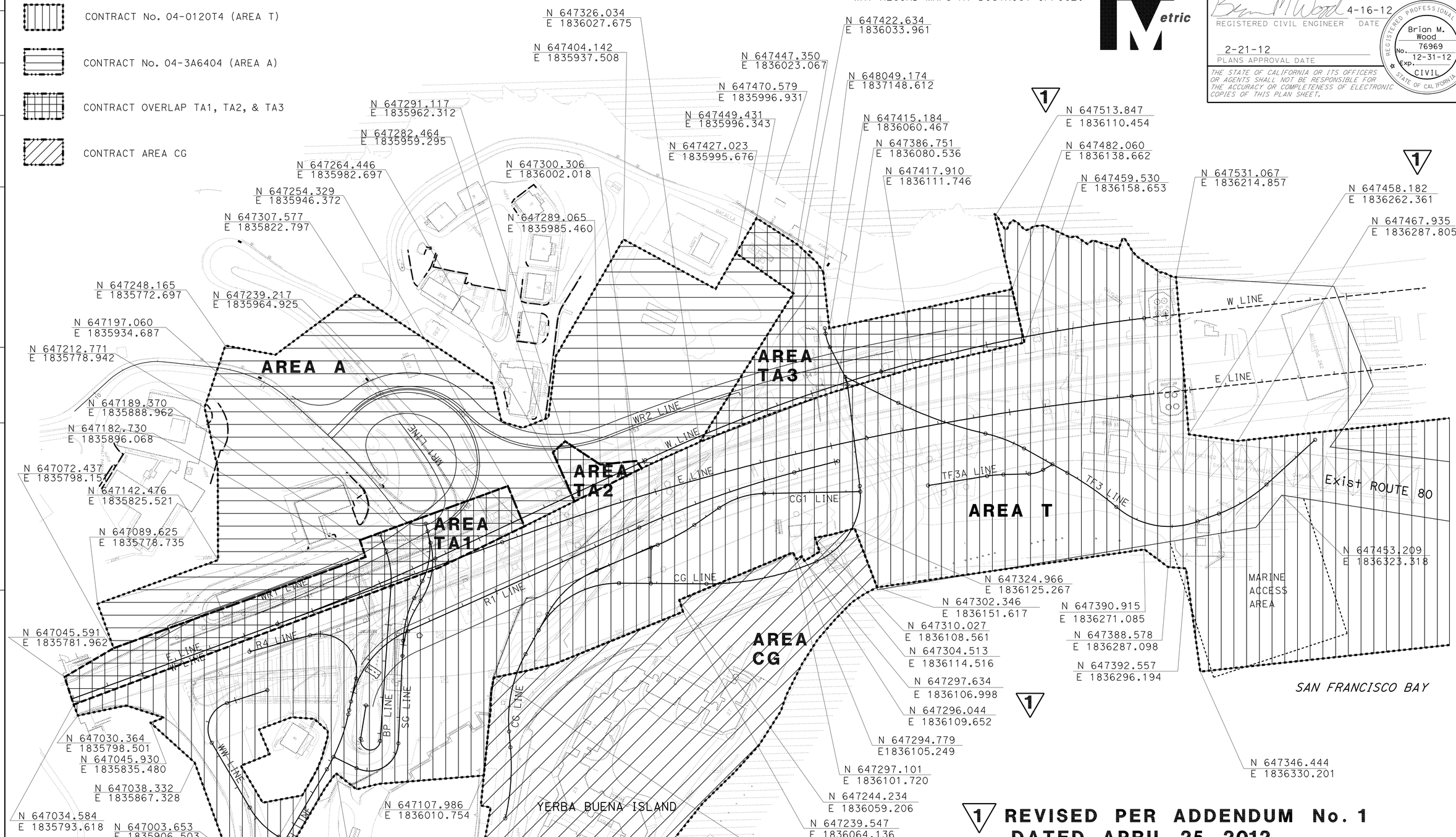

1 REVISED PER ADDENDUM No. 1 DATED APRIL 25, 2012

CONSTRUCTION DETAILS AREAS FOR CONTRACTOR USE

SCALE 1:1000

C-47

REVISED BY	DATE REVISED
BW	11-1-11

BRIAN WOOD
AMANDO VITO
CALCULATED-DESIGNED BY
CHECKED BY
FUNCTIONAL SUPERVISOR
BOB ZANDIPOUR

STATE OF CALIFORNIA - DEPARTMENT OF TRANSPORTATION
Caltrans
DESIGN

LAST REVISION 04-16-12
DATE PLOTTED => 24-APR-2012
TIME PLOTTED => 1657

DIST	COUNTY	ROUTE	KILOMETER POST TOTAL PROJECT	SHEET No	TOTAL SHEETS
04	SF	80	12.6/13.9	456	821

REGISTERED CIVIL ENGINEER 11-09-11 DATE

2-21-12
PLANS APPROVAL DATE

REGISTERED PROFESSIONAL ENGINEER M. J. CULLEN No. C 40620 Exp. 03-31-13 CIVIL STATE OF CALIFORNIA

The State of California or its officers or agents shall not be responsible for the accuracy or completeness of electronic copies of this plan sheet.

1

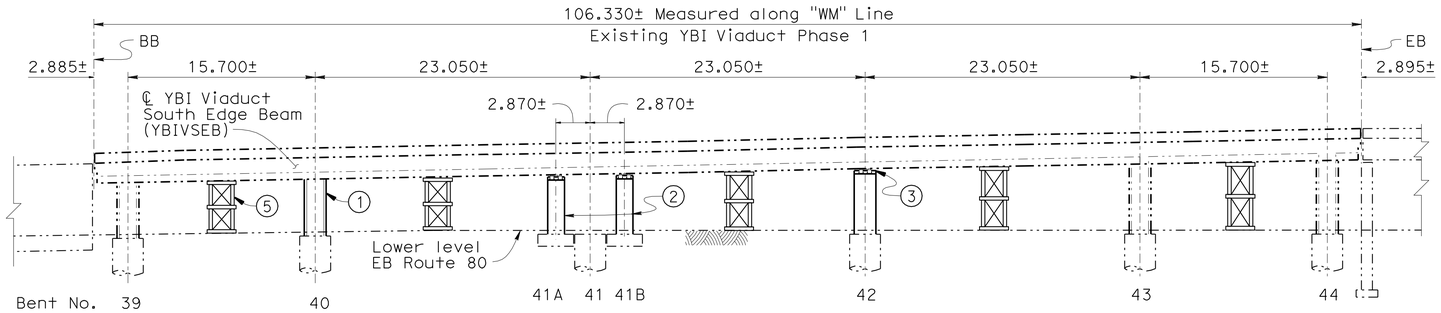

(Existing YBI Viaduct South Edge Beam)

STAGE 2 ELEVATION

1:250

SEQUENCE 1: TRAFFIC SHIFT

(1) Shift Bay Bridge traffic onto the new alignment and off of the South South Detour alignment.

(2) Place Barrier Rail (Type K) on both top and bottom decks on the South Edge of YBI Viaduct. (See "Roadway Plans" for Barrier Rail Layout)

SEQUENCE 2: PLACE SUPPORTS UNDER YBIVSEB

✳ Prior to placing supports, Construction traffic on that portion of the West-Tie-In from Bent 38 to Bent 46 shall be confirmed to one 12 ft lane whose southern boundary is the face of the southern most barrier railing. Once the columns at Bent 40, Bent 41A, Bent 41B and Bent 42 are in place and loads have been jacked on to them, the entire West-Tie-In may be used for Construction traffic.

✳✳ Prior to placing supports under YBI Viaduct South Edge Beam, the vertical profile of the YBIVSEB shall be surveyed and recorded.

(1) Construct permanent column on existing foundation under YBIVSEB at Bent 40 and jack specified load onto column, see "YBI Viaduct Permanent Column 40S Details No.1" and "Details No.2" sheets.

(2) Construct temporary columns on existing spread footings under YBIVSEB at Bent 41A and Bent 41B. Jack specified load onto columns, see "Temporary Column Bent 41S Details" sheet.

(3) Construct temporary column on existing foundation under YBIVSEB at Bent 42 and jack specified load onto column, see "Temporary Column Bent 42S Details" sheet.

(4) After all loads have been jacked onto supports, the YBIVSEB profile shall be monitored daily to assure jacks left in place (Bent 41 and Bent 42) remain rigid and the profile of the YBIVSEB remains consistent.

Adjustment of the jacks may be required to mitigate settlement.

(5) Place Shoring Towers under YBIVSEB at midspan as shown on diagram.

Preload Shoring Towers.

Place Shim Plates between Shoring Towers and YBIVSEB and shim tight. Remove Jacks on Shoring Towers.

Shoring Towers shall be designed to carry 450 kN loading with no more than 3 mm of deflection.

The Shoring Tower load capacity shall be greater than 1320 kN.

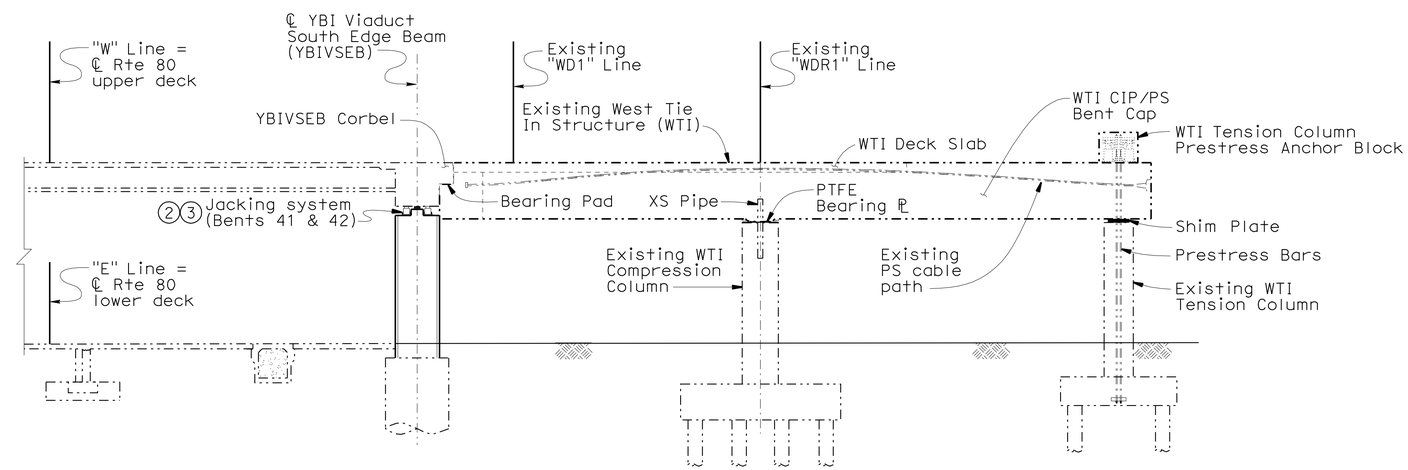

(Section near Bent 42 shown)

STAGE 2 TYPICAL SECTION

no scale

NOTE:
THE CONTRACTOR SHALL VERIFY ALL CONTROLLING FIELD DIMENSIONS BEFORE ORDERING OR FABRICATING ANY MATERIAL.

1 **REVISED PER ADDENDUM No. 1 DATED APRIL 25, 2012**

Caltrans Metric

	BY	CHECKED
DESIGN	M. J. Cullen	G. Schuster
DETAILS	G. Souza/S. Jiang	M. J. Cullen
QUANTITIES	G. Schuster	M. J. Cullen

STATE OF CALIFORNIA DEPARTMENT OF TRANSPORTATION

DIVISION OF ENGINEERING SERVICES STRUCTURE DESIGN
DESIGN BRANCH 5

BRIDGE NO. 34-0006
KILOMETER POST NA

WEST TIE-IN PHASE 3
YBI EDGE BEAM SUPPORT STRUCTURE (YBIEBSS)
CONSTRUCTION SEQUENCE PLAN NO. 1

ALL DIMENSIONS ARE IN MILLIMETERS UNLESS OTHERWISE SHOWN

ORIGINAL SCALE IN MILLIMETERS FOR REDUCED PLANS 0 10 20 30 40 50 60 70 80 90 100

CU 04251
EA 0120T1

DISREGARD PRINTS BEARING EARLIER REVISION DATES

REVISION DATES: 05-26-10 06-02-10 03-02-11 11-08-11

SHEET 3 OF 29

FILE => 34-0006-03-b-ebss const-stage01.add

STRUCTURES DESIGN DETAIL SHEET (METRIC) (REV.03-17-04)

USERNAME => s123631 DATE PLOTTED => 24-APR-2012 TIME PLOTTED => 17:02

DIST	COUNTY	ROUTE	KILOMETER POST TOTAL PROJECT	SHEET No.	TOTAL SHEETS
04	SF	80	12.6/13.9	536	821

Caltrans Metric

REGISTERED CIVIL ENGINEER — DATE 11-07-11

2-21-12
PLANS APPROVAL DATE

REGISTERED PROFESSIONAL ENGINEER — WENYI LONG — No. C57430 — Exp. 12-31-13 — CIVIL — STATE OF CALIFORNIA

The State of California or its officers or agents shall not be responsible for the accuracy or completeness of electronic copies of this plan sheet.

GENERAL DEMOLITION NOTES

1. Design Specifications:

   Caltrans Bridge Design Specifications, 2004;
   AISC Manual of Steel Construction, 1989.

2. Wind Load:

   Windward pressure = 1.86 KN/m^2
   Leeward pressure = 0.93 KN/m^2

3. Existing Structural Steel (MPa):

Steel Type	Nickel	Carbon		Silicon	Heat Treated
		Medium	Mild		
Fy	379	255	207	310	345
$F_{allowable}$	234	152	124	193	234

   Where the material is not otherwise specifically designated on as-built plans, Medium Carbon Steel was used.

4. Existing Rivets (MPa):

   Sizes (Dia): 19 mm, 22 mm, 25 mm, 29 mm, 32 mm, 34 mm
   Shear Connection:
   - Carbon Steel Rivet Allowable = 103
   - Manganese Steel Rivet Allowable = 138

   Bearing Connection:
   - Carbon Steel Rivet Allowable = 207
   - Manganese Steel Rivet Allowable:
     - For Carbon Steel = 207
     - For Silicon Steel = 262
     - For Nickel Steel = 310

5. Datum:

   Elevation based on 1929 NGVD Datum.
   Mean Lower Low Water (MLLW) is at Elevation 0.00.
   All Elevations shown in Meters.

APPROXIMATE TIDAL SUMMARY	
TIDE LEVEL	ELEVATION (m) (NGVD)
Highest Observed Water Level (EHW)	2.61
Mean Higher High Water (MHHW)	1.87
Mean Sea Level (MSL)	0.87
Mean Lower Low Water (MLLW)	0
Lowest Observed Water Level (ELW)	-0.61

   Contractor shall verify tidal elevations prior to beginning work

6. Coordinates, distances, and bearings are based on 1933 as-built plans.

7. Depending on demolition sequence and equipment used, existing structure members and connections may require strengthening and / or supplemental bracing.

STANDARD PLANS DATED JULY 2004

A10A ACRONYMS AND ABBREVIATIONS (A-L)
A10B ACRONYMS AND ABBREVIATIONS (M-Z)

INDEX TO PLANS

SHEET NO.	TITLE
1	GENERAL PLAN
2	INDEX TO PLANS
3	DEMOLITION LIMITS PLAN
4	TRUSS MEMBER MATERIALS
5	FOUNDATION PLAN
6	TYPICAL SECTION
7	PIER E1
8	PIER E2
9	PIER E3
10	LOG OF TEST BORINGS 1
11	LOG OF TEST BORINGS 2
12	LOG OF TEST BORINGS 3
13	LOG OF TEST BORINGS 4
14	LOG OF TEST BORINGS 5
15	LOG OF TEST BORINGS 6
16	LOG OF TEST BORINGS 7
17	LOG OF TEST BORINGS 8
18	LOG OF TEST BORINGS 9
19	LOG OF TEST BORINGS 10
20	LOG OF TEST BORINGS 11
21	LOG OF TEST BORINGS 12
22	LOG OF TEST BORINGS 13
23	LOG OF TEST BORINGS 14
24	LOG OF TEST BORINGS 15
25	LOG OF TEST BORINGS 16
26	LOG OF TEST BORINGS 17
27	LOG OF TEST BORINGS 18
28	LOG OF TEST BORINGS 19
29	LOG OF TEST BORINGS 20
30	LOG OF TEST BORINGS 21
31	LOG OF TEST BORINGS 22
32	LOG OF TEST BORINGS 23
33	LOG OF TEST BORINGS 24
34	LOG OF TEST BORINGS 25
35	LOG OF TEST BORINGS 26
36	LOG OF TEST BORINGS 27
37	LOG OF TEST BORINGS 28
38	LOG OF TEST BORINGS 29
39	LOG OF TEST BORINGS 30
40	LOG OF TEST BORINGS 31
41	LOG OF TEST BORINGS 32
42	LOG OF TEST BORINGS 33
43	LOG OF TEST BORINGS 34
44	LOG OF TEST BORINGS 35
45	LOG OF TEST BORINGS 36
46	LOG OF TEST BORINGS 37
47	LOG OF TEST BORINGS 38
48	LOG OF TEST BORINGS 1 OF 47
49	LOG OF TEST BORINGS 2 OF 47
50	LOG OF TEST BORINGS 3 OF 47
51	LOG OF TEST BORINGS 4 OF 47
52	LOG OF TEST BORINGS 5 OF 47
53	LOG OF TEST BORINGS 6 OF 47
54	LOG OF TEST BORINGS 7 OF 47
55	LOG OF TEST BORINGS 8 OF 47
56	LOG OF TEST BORINGS 9 OF 47
57	LOG OF TEST BORINGS 10 OF 47
58	LOG OF TEST BORINGS 11 OF 47
59	LOG OF TEST BORINGS 12 OF 47
60	LOG OF TEST BORINGS 13 OF 47
61	LOG OF TEST BORINGS 14 OF 47
62	LOG OF TEST BORINGS 15 OF 47
63	LOG OF TEST BORINGS 1 OF 25
64	LOG OF TEST BORINGS 2 OF 25
65	LOG OF TEST BORINGS 3 OF 25
66	LOG OF TEST BORINGS 4 OF 25
67	LOG OF TEST BORINGS 5 OF 25
68	LOG OF TEST BORINGS 6 OF 25
69	LOG OF TEST BORINGS 7 OF 25
70	LOG OF TEST BORINGS 8 OF 25
71	LOG OF TEST BORINGS 9 OF 25
72	LOG OF TEST BORINGS 10 OF 25
73	LOG OF TEST BORINGS 11 OF 25
74	LOG OF TEST BORINGS 12 OF 25
75	LOG OF TEST BORINGS 13 OF 25
76	LOG OF TEST BORINGS 14 OF 25
77	LOG OF TEST BORINGS 15 OF 25
78	LOG OF TEST BORINGS 16 OF 25
79	LOG OF TEST BORINGS 17 OF 25
80	LOG OF TEST BORINGS 18 OF 25
81	LOG OF TEST BORINGS 19 OF 25
82	LOG OF TEST BORINGS 20 OF 25
83	LOG OF TEST BORINGS 21 OF 25
84	LOG OF TEST BORINGS 22 OF 25
85	LOG OF TEST BORINGS 23 OF 25
86	LOG OF TEST BORINGS 24 OF 25
87	LOG OF TEST BORINGS 25 OF 25

CANTILEVER TRUSS REMOVAL SEQUENCE:

1. Connect the top chords between joints US0 and UC7 at four locations, at both ends of the suspended span and at the north and south sides of the span, to exceed the capacity of the adjoining chord members. Install lateral bracing to exceed the capacity of the existing lateral bracing in the adjacent panel.

2. Remove upper deck concrete slab and overlay, deck joists, curbs and barriers. Deck removal shall begin at the center of span E2-E3 and proceed toward Pier E1 and Pier E4.

3. Connect the adjacent steel truss superstructures across Pier 4 to transfer longitudinal and transverse loads. If necessary, strengthen the existing connection of the superstructure to Pier E9 to transfer the longitudinal load.

4. At the Contractor's option, the lower deck concrete slab and overlay, deck joists, curbs and barriers may be a) removed concurrently with the steel truss or b) removed partially or entirely prior to steel truss removal but after upper deck removal has been completed. Deck removal shall begin at the center of span E2-E3 and proceed toward Pier E1 and Pier E4.

5. Remove Steel Truss. Complete steps 1, 2 and 3 prior to beginning steel truss removal.
   a) In span E2-E3, remove lateral bracing at the top and bottom chords only within the panel that is being removed.
   b) Remove suspended span. Remove the steel truss member by member beginning from the center of span E2-E3 and proceed toward Pier E2 and E3.
   c) Install temporary supports under the anchor span prior to beginning steel truss removal in the respective cantilever arm.
   d) Remove cantilever arms. Remove the steel truss member by member beginning from the end of the cantilever arms and proceeding toward Pier E2 and E3.
   e) Remove anchor spans.

   Note: Steps 1, 2 and 3 may be performed concurrently.

1 **REVISED PER ADDENDUM No. 1 DATED APRIL 25, 2012**

NOTE:
THE CONTRACTOR SHALL VERIFY ALL CONTROLLING FIELD DIMENSIONS BEFORE ORDERING OR FABRICATING ANY MATERIAL.

SAN FRANCISCO-OAKLAND BAY BRIDGE
EAST SPAN SEISMIC SAFETY PROJECT

	BY	CHECKED
DESIGN	W. Long	J. Shen
DETAILS	C. Cancino	J. Shen
QUANTITIES	L. Wang	J. Shen

STATE OF CALIFORNIA
DEPARTMENT OF TRANSPORTATION

TOLL BRIDGE DESIGN

BRIDGE NO. 33-0025
KILOMETER POST 13.2/13.9

EXISTING CANTILEVER TRUSS DEMOLITION

INDEX TO PLANS

ALL DIMENSIONS ARE IN METERS UNLESS OTHERWISE SHOWN

ORIGINAL SCALE IN MILLIMETERS FOR REDUCED PLANS 0 10 20 30 40 50 60 70 80 90 100

CU 04
EA 0120T1

DISREGARD PRINTS BEARING EARLIER REVISION DATES

REVISION DATES: ~~10-28-11~~ 02/13/12

SHEET 2 OF 87

STRUCTURES DESIGN DETAIL SHEET (X) (REV. 09-01-10)

FILE => 33-0025-b-Index.dgn

USERNAME => s124496 DATE PLOTTED => 25-APR-2012 TIME PLOTTED => 07:26

DIST	COUNTY	ROUTE	KILOMETER POST TOTAL PROJECT	SHEET No.	TOTAL SHEETS
04	SF	80	12.6/13.9	540	821

Caltrans Metric

Wenyi Long 11-07-11
REGISTERED CIVIL ENGINEER DATE

2-21-12
PLANS APPROVAL DATE

REGISTERED PROFESSIONAL ENGINEER
WENYI LONG
No. C57430
Exp. 12-31-13
CIVIL
STATE OF CALIFORNIA

The State of California or its officers or agents shall not be responsible for the accuracy or completeness of electronic copies of this plan sheet.

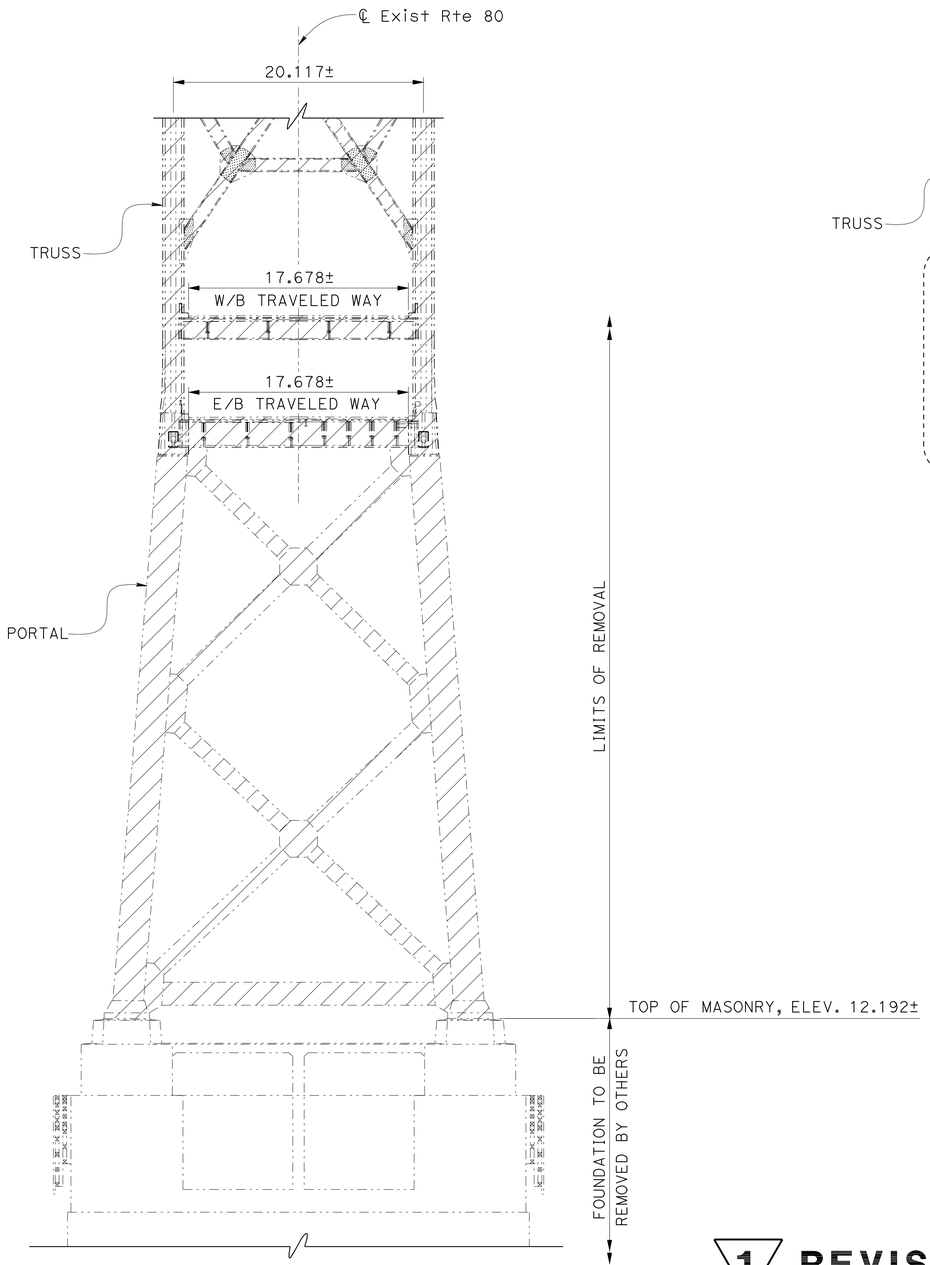

TYPICAL SECTION
PIER E2 AND PIER E3
No Scale

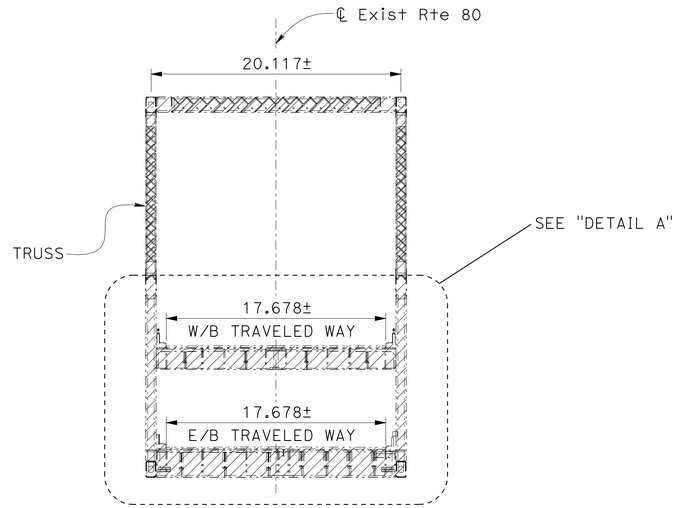

SECTION A-A
No Scale

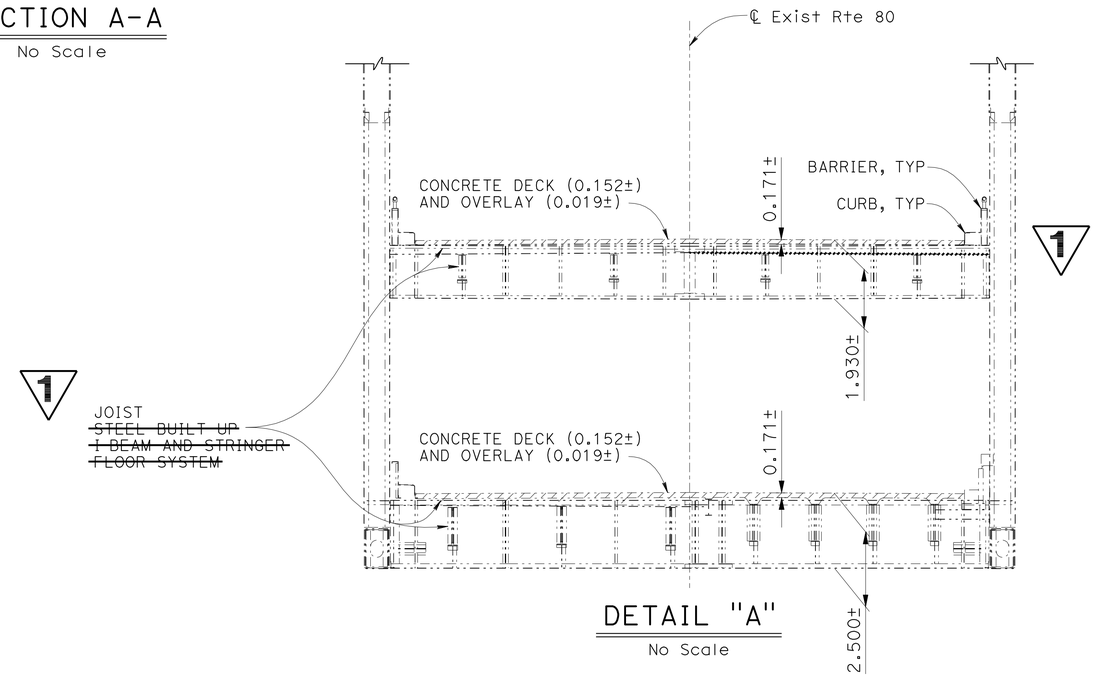

DETAIL "A"
No Scale

1 **REVISED PER ADDENDUM No. 1 DATED APRIL 25, 2012**

LEGEND:
-·-·-·-·- Indicates Existing
Indicates Removal

NOTE:
THE CONTRACTOR SHALL VERIFY ALL CONTROLLING FIELD DIMENSIONS BEFORE ORDERING OR FABRICATING ANY MATERIAL.

SAN FRANCISCO-OAKLAND BAY BRIDGE
EAST SPAN SEISMIC SAFETY PROJECT

	BY	CHECKED
DESIGN	W. Long	J. Shen
DETAILS	C. Cancino	J. Shen
QUANTITIES	L. Wang	J. Shen

STATE OF CALIFORNIA
DEPARTMENT OF TRANSPORTATION

TOLL BRIDGE DESIGN

BRIDGE NO. 33-0025
KILOMETER POST 13.2/13.9

EXISTING CANTILEVER TRUSS DEMOLITION
TYPICAL SECTION

ALL DIMENSIONS ARE IN METERS UNLESS OTHERWISE SHOWN

ORIGINAL SCALE IN MILLIMETERS FOR REDUCED PLANS 0 10 20 30 40 50 60 70 80 90 100

CU 04
EA 0120T1

DISREGARD PRINTS BEARING EARLIER REVISION DATES → REVISION DATES 10-25-11 02/13/12

SHEET 6 OF 87

STRUCTURES DESIGN DETAIL SHEET (X) (REV. 09-01-10)

FILE => 33-0025-e-typsect.ddd

USERNAME => s123631 DATE PLOTTED => 24-APR-2012 TIME PLOTTED => 17:02