DIST.	COUNTY	ROUTE	KILOMETER POST TOTAL PROJECT	SHEET NO.	TOTAL SHEETS
04	Ala	80	1.6/2.7	601	744

Caltrans Metric

REGISTERED ENGINEER - CIVIL

10-3-11

PLANS APPROVAL DATE

REGISTERED PROFESSIONAL ENGINEER A.L. ELY No. 18880 Exp. 6-30-11 CIVIL STATE OF CALIFORNIA

The State of California or its officers or agents shall not be responsible for the accuracy or completeness of electronic copies of this plan sheet.

T.Y. LIN / MOFFATT & NICHOL
TWO HARRISON STREET, SUITE 500
SAN FRANCISCO, CA 94105

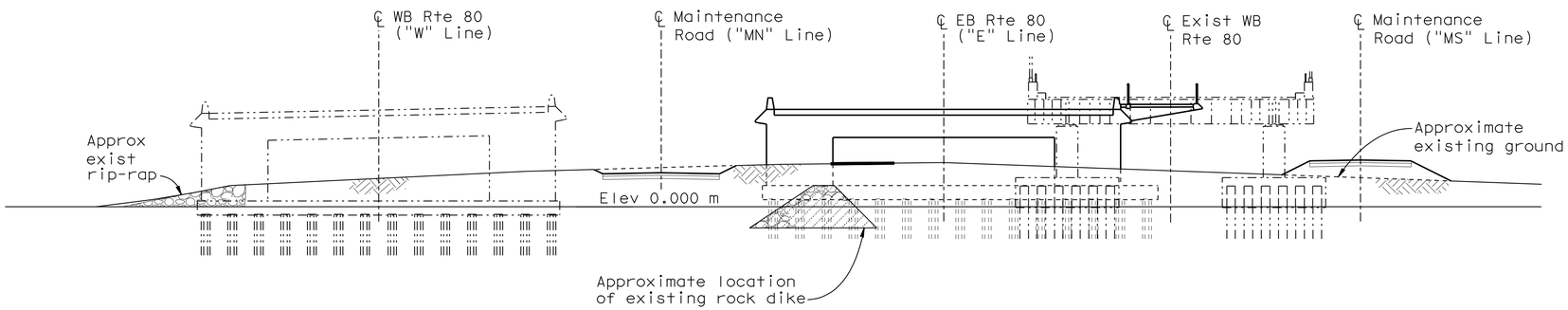

ABUT E23L
1:200

ABUT E23R
1:200

LEGEND

Indicates approximate zone of existing rock dike

Existing structure

New construction

NOTE:
At foundations where existing rock dike is indicated, probe pile locations (prior to pile driving) a minimum of 3 m below bottom of footing to ascertain if rock exists at greater depth than shown here.

ALL DIMENSIONS ARE IN MILLIMETERS UNLESS OTHERWISE SHOWN

SAN FRANCISCO OAKLAND BAY BRIDGE
EAST SPAN SEISMIC SAFETY PROJECT

OAKLAND APPROACH STRUCTURES-PHASE 2

PIER ELEVATIONS NO. 2

BRIDGE NO. 34-0006 L/R

KILOMETER POST

Jal Birdy
PROJECT ENGINEER

DESIGN OVERSIGHT - SAM AKKAD HASAN EL-NATUR

SIGN OFF DATE

	BY	CHECKED
DESIGN	Shangkuan	Birdy
DETAILS	van Ryn/Zucchi/Mai	Birdy
QUANTITIES	Haround/Char	Jaradat/Dudley

PREPARED FOR THE STATE OF CALIFORNIA DEPARTMENT OF TRANSPORTATION

Rev. Date: 5-18-98

ORIGINAL SCALE IN MILLIMETERS FOR REDUCED PLANS 0 10 20 30 40 50 60 70 80 90 100

CU 04
EA 0120M1

DISREGARD PRINTS BEARING EARLIER REVISION DATES

REVISION DATES (PRELIMINARY STAGE ONLY) 1/15/10 4/2/10 5/28/10 9/30/10 3/4/11 3/24/11 4/4/11 6/3/11 3/27/09 10/30/09

SHEET 29 OF 109

SUBMITTAL - 12 June 3, 2011

USERNAME => s121614 DATE PLOTTED => 05-OCT-2011 TIME PLOTTED => 14:01

FILE => 04-0120m1-34-0006r1-i-pdt02.dgn

DIST.	COUNTY	ROUTE	KILOMETER POST TOTAL PROJECT	SHEET NO.	TOTAL SHEETS
04	Ala	80	1.6/2.7	602	744

Caltrans Metric

REGISTERED ENGINEER - CIVIL

10-3-11

PLANS APPROVAL DATE

REGISTERED PROFESSIONAL ENGINEER MOHAN S. CHAR No. 57894 Exp. 6/30/12 CIVIL STATE OF CALIFORNIA

The State of California or its officers or agents shall not be responsible for the accuracy or completeness of electronic copies of this plan sheet.

T.Y. LIN / MOFFATT & NICHOL
TWO HARRISON STREET, SUITE 500
SAN FRANCISCO, CA 94105

AECOM TECHNICAL SERVICES INC.
999 TOWN & COUNTRY ROAD
ORANGE, CA 92868

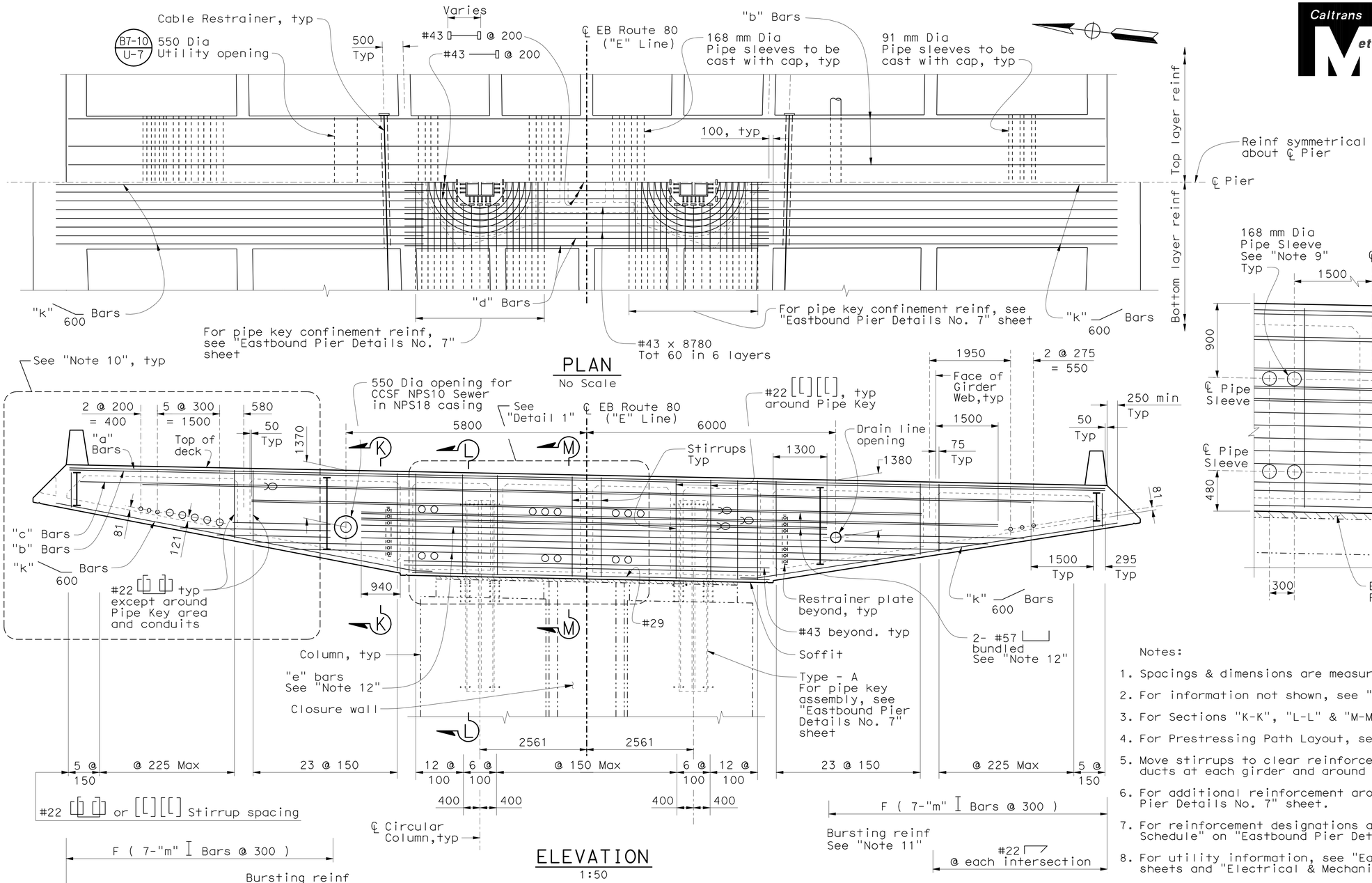

PLAN
No Scale

ELEVATION
1:50

PIER CAP BEAM - PIER E20R

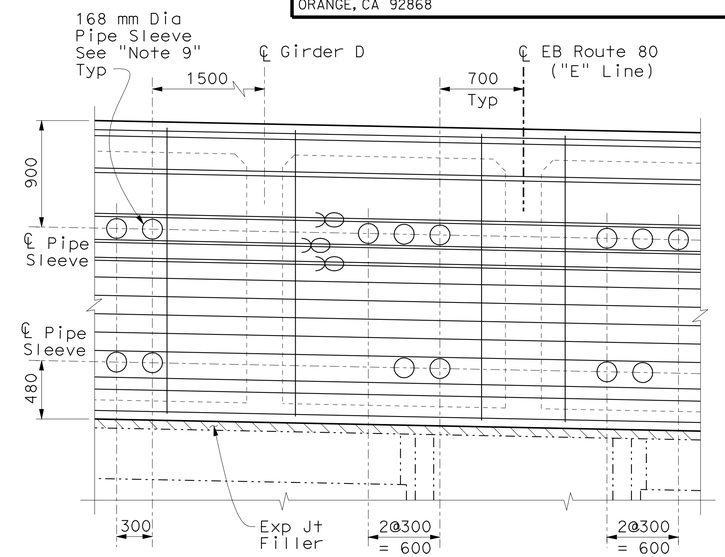

DETAIL 1
1:25

Notes:

1. Spacings & dimensions are measured along ℄ Pier.
2. For information not shown, see "Pier Elevations No. 1 & No. 2" sheets.
3. For Sections "K-K", "L-L" & "M-M" see "Eastbound Pier Details No. 3" sheet.
4. For Prestressing Path Layout, see "Eastbound Pier Details No. 6" sheet.
5. Move stirrups to clear reinforcement, conduit, pipes & prestressing ducts at each girder and around pipe key area.
6. For additional reinforcement around pipe key assembly, see "Eastbound Pier Details No. 7" sheet.
7. For reinforcement designations and dimensions, see "Pier Cap Beam Schedule" on "Eastbound Pier Details No. 3" sheet.
8. For utility information, see "Eastbound Typical Section No. 1 & 2" sheets and "Electrical & Mechanical Plans".
9. Conduit layout shown for Pier E20R is similar to layout at Hinge FE.
10. For "Cap Beam End Details", see "Eastbound Pier Details No. 9" sheet, Typical except Cap Beam Prestressing Ducts.
11. For bursting reinforcement layout, see "Eastbound Pier Details No. 9" sheet.
12. Adjust spacing to avoid Hinge Cable Restrainer Assembly.

LEGEND

- Denotes headed bar (both ends)
- Denotes headed bar
- Denotes bundled bars

Note: The Contractor shall verify all controlling field dimensions before ordering or fabricating any material.

ALL DIMENSIONS ARE IN MILLIMETERS UNLESS OTHERWISE SHOWN

SAN FRANCISCO OAKLAND BAY BRIDGE
EAST SPAN SEISMIC SAFETY PROJECT

OAKLAND APPROACH STRUCTURES - PHASE 2

EASTBOUND PIER DETAILS NO. 1

DESIGN OVERSIGHT					
HASAN EL-NATAR	DESIGN	BY M. CHAR	CHECKED T. DUDLEY	PREPARED FOR THE STATE OF CALIFORNIA DEPARTMENT OF TRANSPORTATION	MOHAN S. CHAR PROJECT ENGINEER
SIGN OFF DATE	DETAILS	BY M. ANDRASEK	CHECKED M. CHAR		
Rev. Date: 5-18-98	QUANTITIES	BY Y. KIM	CHECKED A. SIVATHASAN/T. DUDLEY		

BRIDGE NO. 34-0006R
KILOMETER POST 2.1

CU 04
EA 0120M1

ORIGINAL SCALE IN MILLIMETERS FOR REDUCED PLANS 0 10 20 30 40 50 60 70 80 90 100

DISREGARD PRINTS BEARING EARLIER REVISION DATES

REVISION DATES (PRELIMINARY STAGE ONLY): 10/30/09 1/15/10 4/2/10 5/28/10 9/30/10 12/29/10 3/4/11 3/14/11 4/4/11 6/3/11

SHEET 30 OF 109

FILE => 04-0120m1-34-0006r-i-p01dt01.dgn

SUBMITTAL - 12

USERNAME => s8121614 DATE PLOTTED => 05-OCT-2011 TIME PLOTTED => 14:01

DIST.	COUNTY	ROUTE	KILOMETER POST TOTAL PROJECT	SHEET NO.	TOTAL SHEETS
04	Ala	80	1.6/2.7	603	744

Caltrans Metric

REGISTERED ENGINEER - CIVIL

10-3-11

PLANS APPROVAL DATE

REGISTERED PROFESSIONAL ENGINEER MOHAN S. CHAR No. 57894 Exp. 6/30/12 CIVIL STATE OF CALIFORNIA

The State of California or its officers or agents shall not be responsible for the accuracy or completeness of electronic copies of this plan sheet.

T.Y. LIN / MOFFATT & NICHOL
TWO HARRISON STREET, SUITE 500
SAN FRANCISCO, CA 94105

AECOM TECHNICAL SERVICES INC.
999 TOWN & COUNTRY ROAD
ORANGE, CA 92868

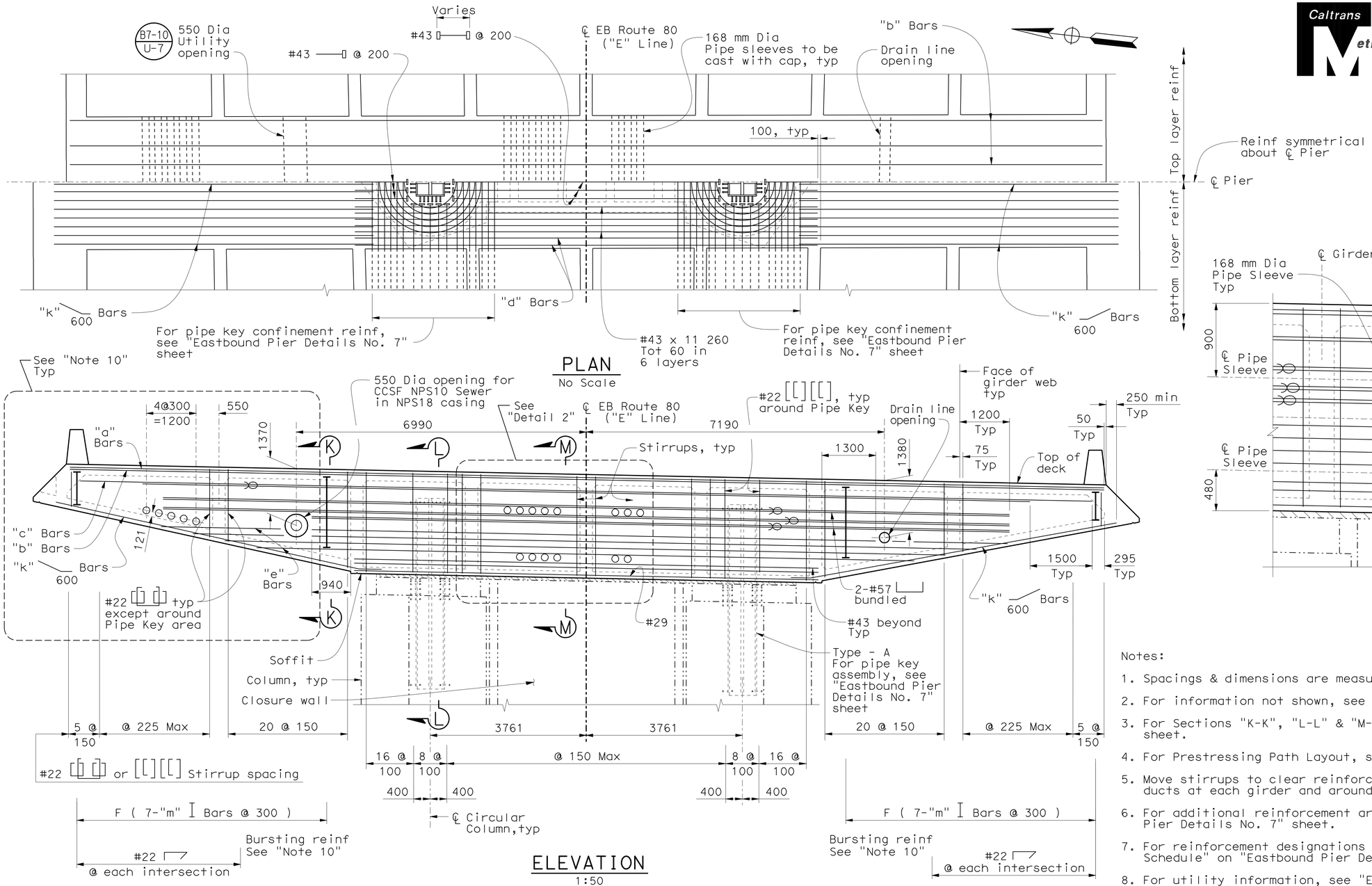

PLAN
No Scale

ELEVATION
1:50

PIER CAP BEAM - PIER E21R

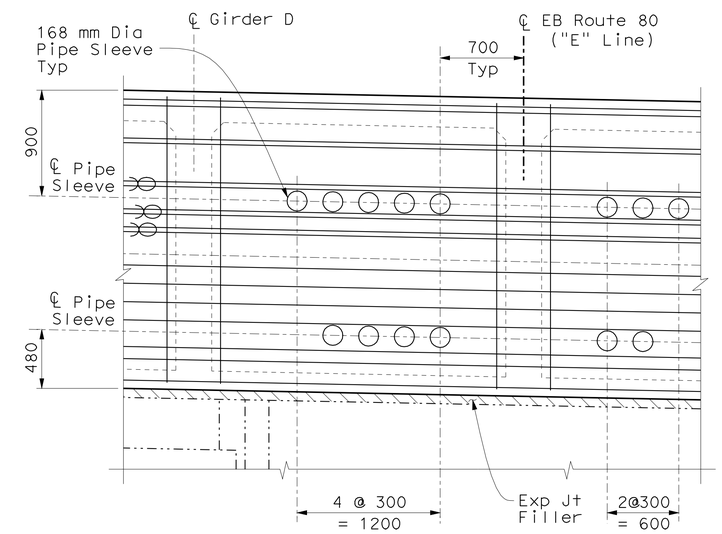

DETAIL 2
1:25

Notes:

1. Spacings & dimensions are measured along ℄ Pier.
2. For information not shown, see "Pier Elevations No. 1 thru 3" sheets.
3. For Sections "K-K", "L-L" & "M-M" see "Eastbound Pier Details No. 3" sheet.
4. For Prestressing Path Layout, see "Eastbound Pier Details No. 6" sheet.
5. Move stirrups to clear reinforcement, conduit, pipes & prestressing ducts at each girder and around pipe key area.
6. For additional reinforcement around pipe key assembly, see "Eastbound Pier Details No. 7" sheet.
7. For reinforcement designations and dimensions, see "Pier Cap Beam Schedule" on "Eastbound Pier Details No. 3" sheet.
8. For utility information, see "Eastbound Typical Section No. 1 & 2" sheets and "Electrical & Mechanical Plans".
9. For "Cap Beam End Details", see "Eastbound Pier Details No. 9" sheet, Typical except Cap Beam Prestressing Ducts.
10. For bursting reinforcement layout, see "Eastbound Pier Details No. 9" sheet.

LEGEND

- Denotes headed bar (both ends)
- Denotes headed bar
- Denotes bundled bars

Note: The Contractor shall verify all controlling field dimensions before ordering or fabricating any material.

ALL DIMENSIONS ARE IN MILLIMETERS UNLESS OTHERWISE SHOWN

SUBMITTAL - 12

DESIGN OVERSIGHT
HASAN EL-NATAR
SIGN OFF DATE

	BY	CHECKED
DESIGN	M. CHAR	T. DUDLEY
DETAILS	M. ANDRASEK	M. CHAR
QUANTITIES	Y. KIM	A. SIVATHASAN/T. DUDLEY

PREPARED FOR THE STATE OF CALIFORNIA DEPARTMENT OF TRANSPORTATION

MOHAN S. CHAR
PROJECT ENGINEER

BRIDGE NO. 34-0006R
KILOMETER POST 2.1

SAN FRANCISCO OAKLAND BAY BRIDGE
EAST SPAN SEISMIC SAFETY PROJECT

OAKLAND APPROACH STRUCTURES - PHASE 2

EASTBOUND PIER DETAILS NO. 2

Rev. Date: 5-18-98

ORIGINAL SCALE IN MILLIMETERS FOR REDUCED PLANS 0 10 20 30 40 50 60 70 80 90 100

CU 04
EA 0120M1

DISREGARD PRINTS BEARING EARLIER REVISION DATES

REVISION DATES (PRELIMINARY STAGE ONLY): 10/30/09 1/15/10 4/22/10 5/28/10 9/30/10 12/29/10 3/14/11 3/14/11 4/14/11 6/3/11

SHEET 31 OF 109

FILE => 04-0120m1-34-0006r-i-p01dt02.dgn

USERNAME => s121614 DATE PLOTTED => 05-OCT-2011 TIME PLOTTED => 14:01

DIST.	COUNTY	ROUTE	KILOMETER POST TOTAL PROJECT	SHEET NO.	TOTAL SHEETS
04	Ala	80	1.6/2.7	604	744

Caltrans Metric

REGISTERED ENGINEER - CIVIL

10-3-11

PLANS APPROVAL DATE

REGISTERED PROFESSIONAL ENGINEER MOHAN S. CHAR No. 57894 Exp. 6/30/12 CIVIL STATE OF CALIFORNIA

The State of California or its officers or agents shall not be responsible for the accuracy or completeness of electronic copies of this plan sheet.

T.Y. LIN / MOFFATT & NICHOL
TWO HARRISON STREET, SUITE 500
SAN FRANCISCO, CA 94105

AECOM TECHNICAL SERVICES INC.
999 TOWN & COUNTRY ROAD
ORANGE, CA 92868

Notes:

1. For top of deck control, see "Eastbound Deck Contours" sheet.
2. For soffit control, see "Eastbound Girder Layout No. 1 & 2" sheets.
3. Reinforcement shall be placed as shown at corners of hooks & intersections. Remaining reinforcement of each Type or group shall be placed equally or evenly within the limit of each group. Move the reinforcement to clear the prestressing ducts as necessary.
4. For additional reinforcement around Pipe Key Assembly, see "Eastbound Pier Details No. 7" sheet.

LEGEND

- Denotes headed bar (both ends)
- Denotes headed bar
- Denotes bundled bars

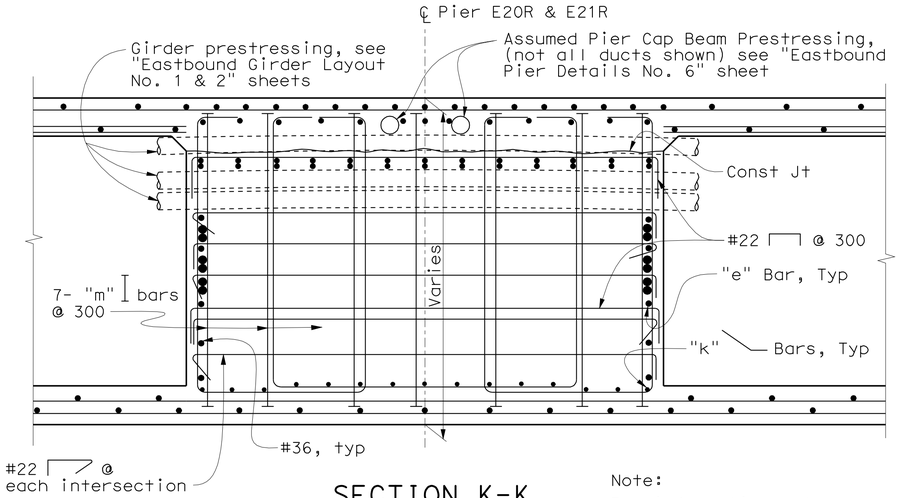

SECTION K-K
1:20

Note:
For information not shown, see "Section M-M".

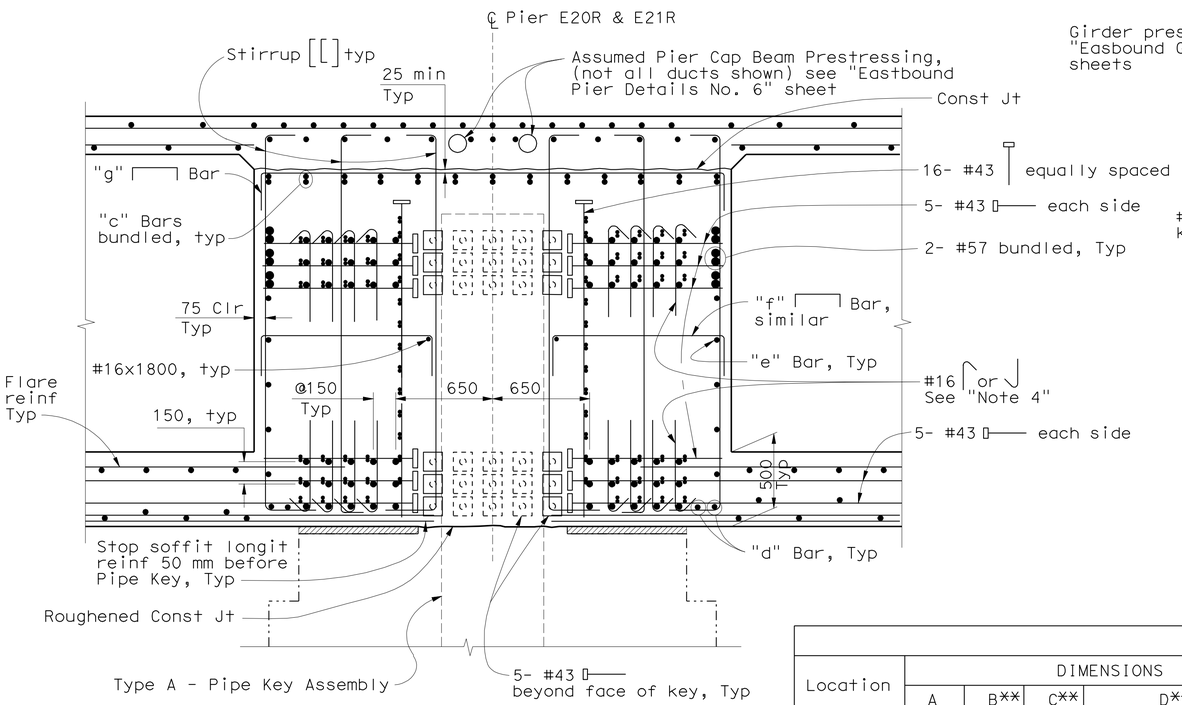

SECTION L-L
1:20

Note:
For information not shown, see "Section M-M".

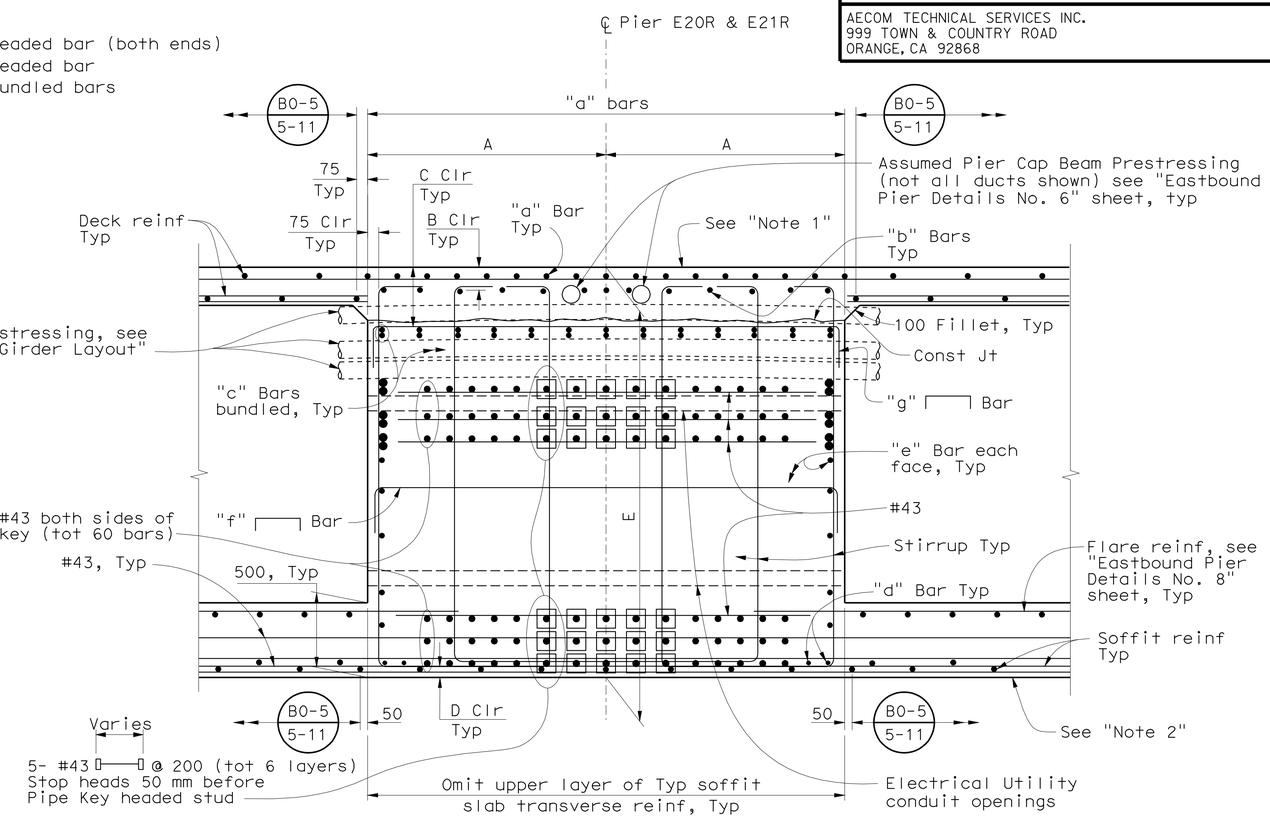

SECTION M-M
1:20

PIER CAP BEAM SCHEDULE

Location	DIMENSIONS						REINFORCEMENT DESIGNATIONS								
	A	B**	C**	D**	E	F	"a" bars	"b" bars	"c" bars	"d" bars	"e" bars*	"f" bars	"g" bars	"k" bars	"m" bars
Pier E20R	1600	130	380	120 min & 210 max clr	2459	6700	17-#19@200	13-#29	2-#32 Bundled (tot 13 bundles)	4-#29	5-#36	#19@300max	#22@300	15-#29	7-#29
Pier E21R	1600	130	380	120 min & 210 max clr	2256	6700	17-#19@200	13-#29	2-#32 Bundled (tot 13 bundles)	4-#29	4-#36	#19@300max	#22@300	15-#29	7-#29

* Cut to clear Prestressing duct where interference occurs
** Clearance to main reinforcing

Note: The Contractor shall verify all controlling field dimensions before ordering or fabricating any material.

ALL DIMENSIONS ARE IN MILLIMETERS UNLESS OTHERWISE SHOWN

SAN FRANCISCO OAKLAND BAY BRIDGE
EAST SPAN SEISMIC SAFETY PROJECT

OAKLAND APPROACH STRUCTURES - PHASE 2

EASTBOUND PIER DETAILS NO. 3

DESIGN OVERSIGHT
HASAN EL-NATAR
SIGN OFF DATE

	BY	CHECKED
DESIGN	M. CHAR	T. DUDLEY
DETAILS	M. ANDRASEK	M. CHAR
QUANTITIES	Y. KIM	A. SIVATHASAN/T. DUDLEY

PREPARED FOR THE STATE OF CALIFORNIA DEPARTMENT OF TRANSPORTATION

MOHAN S. CHAR
PROJECT ENGINEER

BRIDGE NO. 34-0006R
KILOMETER POST 2.1

CU 04
EA 0120M1

DISREGARD PRINTS BEARING EARLIER REVISION DATES

REVISION DATES (PRELIMINARY STAGE ONLY): 1/15/10 4/2/10 5/28/10 9/30/10 12/28/10 3/1/11 3/14/11 4/4/11 6/27/11 7/20/11

SHEET 32 OF 109

Rev. Date: 5-18-98

ORIGINAL SCALE IN MILLIMETERS FOR REDUCED PLANS 0 10 20 30 40 50 60 70 80 90 100

FILE => 04-0120m1-34-0006r-i-p01dt03.dgn

SUBMITTAL - 12

USERNAME => s121614 DATE PLOTTED => 05-OCT-2011 TIME PLOTTED => 14:01

DIST.	COUNTY	ROUTE	KILOMETER POST TOTAL PROJECT	SHEET NO.	TOTAL SHEETS
04	Ala	80	1.6/2.7	605	744

REGISTERED ENGINEER - CIVIL

10-3-11

PLANS APPROVAL DATE

REGISTERED PROFESSIONAL ENGINEER MOHAN S. CHAR No. 57894 Exp. 6/30/12 CIVIL STATE OF CALIFORNIA

The State of California or its officers or agents shall not be responsible for the accuracy or completeness of electronic copies of this plan sheet.

T.Y. LIN / MOFFATT & NICHOL
TWO HARRISON STREET, SUITE 500
SAN FRANCISCO, CA 94105

AECOM TECHNICAL SERVICES INC.
999 TOWN & COUNTRY ROAD
ORANGE, CA 92868

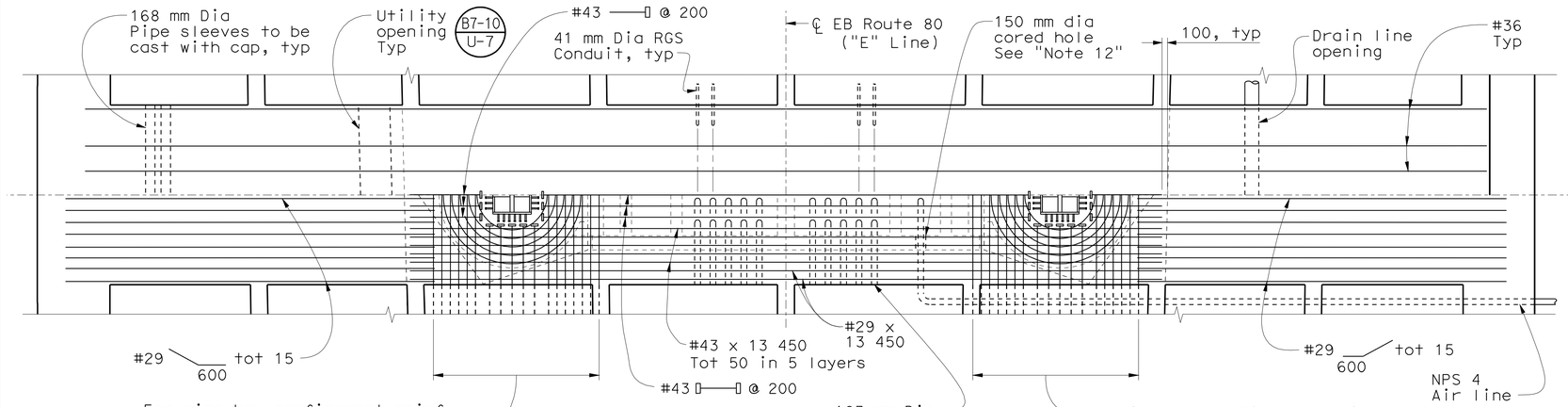

PLAN
1:50

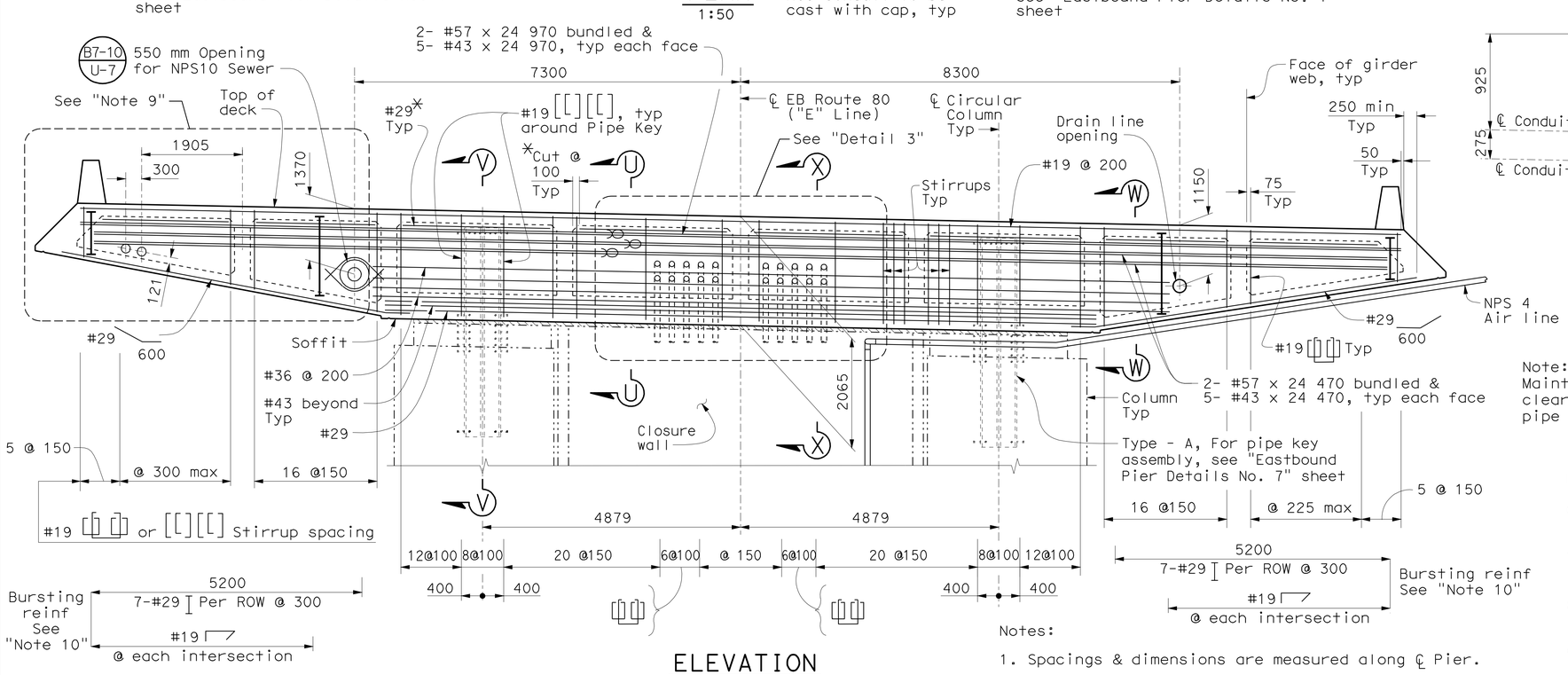

ELEVATION
1:50

PIER CAP BEAM - PIER E22R

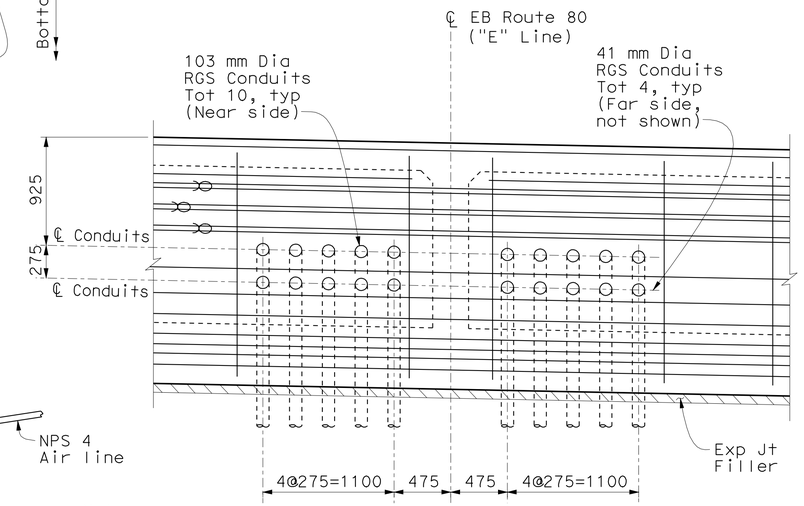

Note:
Maintain 50 mm minimum clearance from embedded pipe sleeves.

DETAIL 3
1:25
(Not all reinf shown)

Bursting reinf See "Note 10"
5200
7-#29 Per ROW @ 300
#19
@ each intersection

LEGEND

- Denotes headed bar (both ends)
- Denotes headed bar
- Denotes bundled bars

Notes:

1. Spacings & dimensions are measured along ℄ Pier.
2. For other information not shown, see "Pier Elevation" sheets.
3. For Sections "U-U", "V-V", "W-W" & "X-X", see "Eastbound Pier Details No. 5" sheet.
4. For Prestressing Path Layout, see "Eastbound Pier Details No. 6" sheet.
5. Move stirrups to clear reinforcement, conduits, pipes and prestressing ducts at each girder and around Pipe Key area.

Notes (cont'd):

6. Other reinforcement around Pipe Key Assembly not shown for clarity, see "Eastbound Pier Details No. 7" sheet.
7. For Pipe key confinement reinforcement and Pipe key assembly, see "Eastbound Pier Details No. 7" sheet.
8. For utility information, see "Eastbound Typical Section No. 1 & 2" sheets and "Electrical and Mechanical Plans".
9. For "Cap Beam End Details", see "Eastbound Pier Details No. 9" sheet, typical except Cap Beam Prestressing Ducts.
10. For bursting reinforcement layout, see "Eastbound Pier Details No. 9" sheet.
11. For Air line details, see "Mechanical Plans".
12. Core 150 mm dia hole through existing closure wall at Pier E22R for NPS 4 Air line.

Note: The Contractor shall verify all controlling field dimensions before ordering or fabricating any material.

ALL DIMENSIONS ARE IN MILLIMETERS UNLESS OTHERWISE SHOWN

SUBMITTAL - 12

DESIGN OVERSIGHT
HASAN EL-NATAR
SIGN OFF DATE

Rev. Date: 5-18-98

	BY	CHECKED
DESIGN	M. CHAR	T. DUDLEY
DETAILS	M. ANDRASEK	M. CHAR
QUANTITIES	Y. KIM	A. SIVATHASAN/T. DUDLEY

PREPARED FOR THE STATE OF CALIFORNIA DEPARTMENT OF TRANSPORTATION

MOHAN S. CHAR
PROJECT ENGINEER

BRIDGE NO. 34-0006R
KILOMETER POST 2.1

SAN FRANCISCO OAKLAND BAY BRIDGE
EAST SPAN SEISMIC SAFETY PROJECT

OAKLAND APPROACH STRUCTURES - PHASE 2

EASTBOUND PIER DETAILS NO. 4

ORIGINAL SCALE IN MILLIMETERS FOR REDUCED PLANS 0 10 20 30 40 50 60 70 80 90 100

CU 04
EA 0120M1

DISREGARD PRINTS BEARING EARLIER REVISION DATES

REVISION DATES (PRELIMINARY STAGE ONLY) 10/30/09 1/15/10 4/2/10 5/28/10 9/30/10 12/29/10 3/4/11 3/14/11 4/4/11 6/3/11

SHEET 33 OF 109

FILE => 04-0120m1-34-0006r-i-p01dt04.dgn

USERNAME => s12614 DATE PLOTTED => 05-OCT-2011 TIME PLOTTED => 14:02

Notes:
1. For top of deck control, see "Eastbound Deck Contours" sheet.
2. For soffit control, see "Eastbound Girder Layout No. 1 & 2" sheets.
3. Move reinforcing to clear the prestressing ducts as necessary.
4. For additional reinforcement around Pipe Key Assembly, see "Eastbound Pier Details No. 7" sheets.

DIST.	COUNTY	ROUTE	KILOMETER POST TOTAL PROJECT	SHEET NO.	TOTAL SHEETS
04	Ala	80	1.6/2.7	606	744

REGISTERED ENGINEER - CIVIL
10-3-11
PLANS APPROVAL DATE
REGISTERED PROFESSIONAL ENGINEER MOHAN S. CHAR No. 57894 Exp. 6/30/12 CIVIL STATE OF CALIFORNIA
The State of California or its officers or agents shall not be responsible for the accuracy or completeness of electronic copies of this plan sheet.

T.Y. LIN / MOFFATT & NICHOL
TWO HARRISON STREET, SUITE 500
SAN FRANCISCO, CA 94105

AECOM TECHNICAL SERVICES INC.
999 TOWN & COUNTRY ROAD
ORANGE, CA 92868

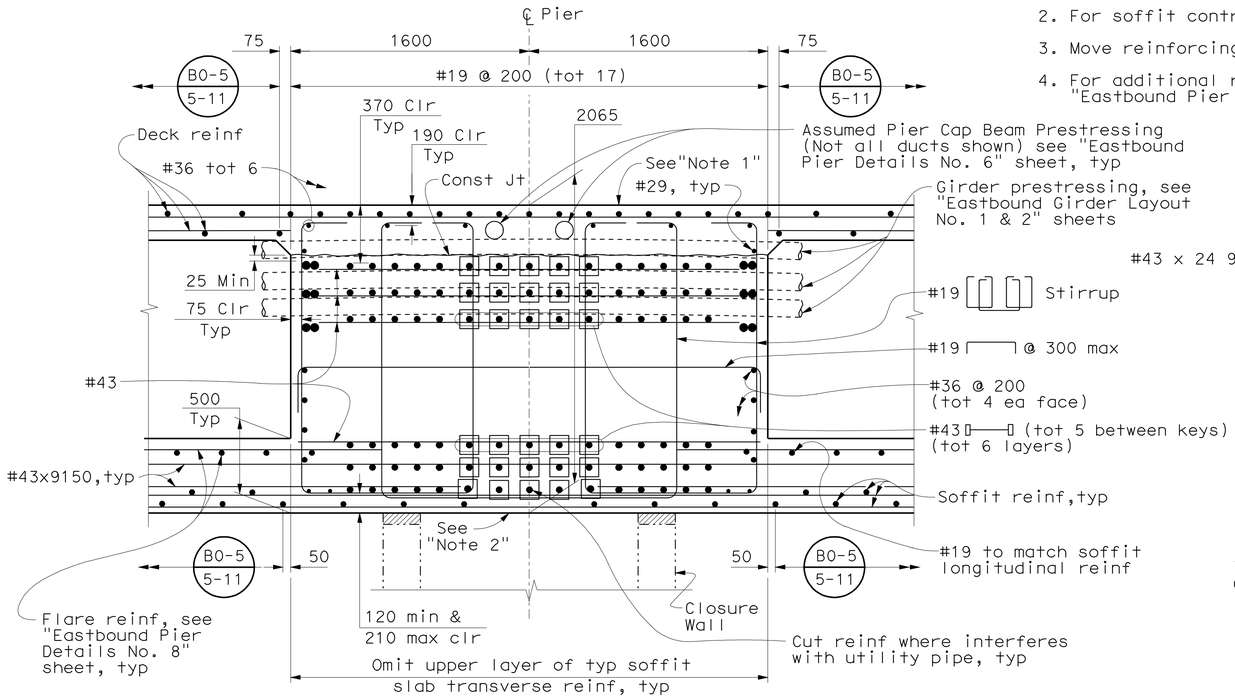

SECTION U-U
1:20

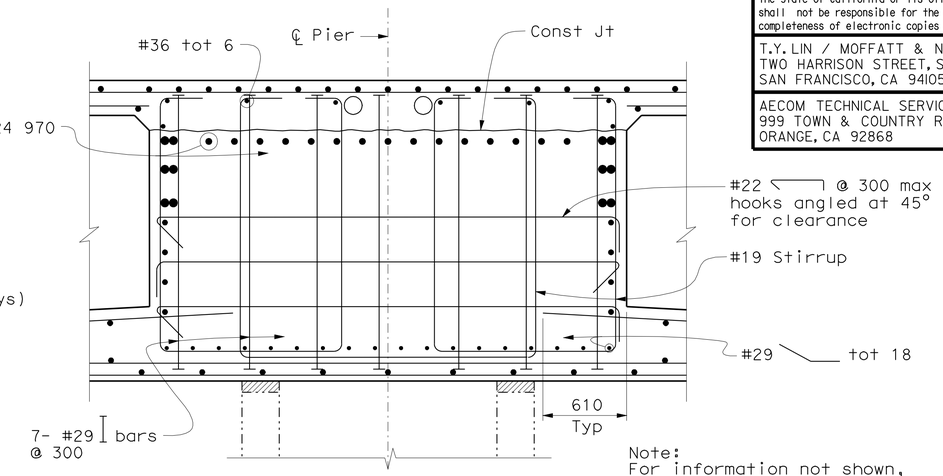

Note:
For information not shown, see "Section U-U".

SECTION W-W
1:20

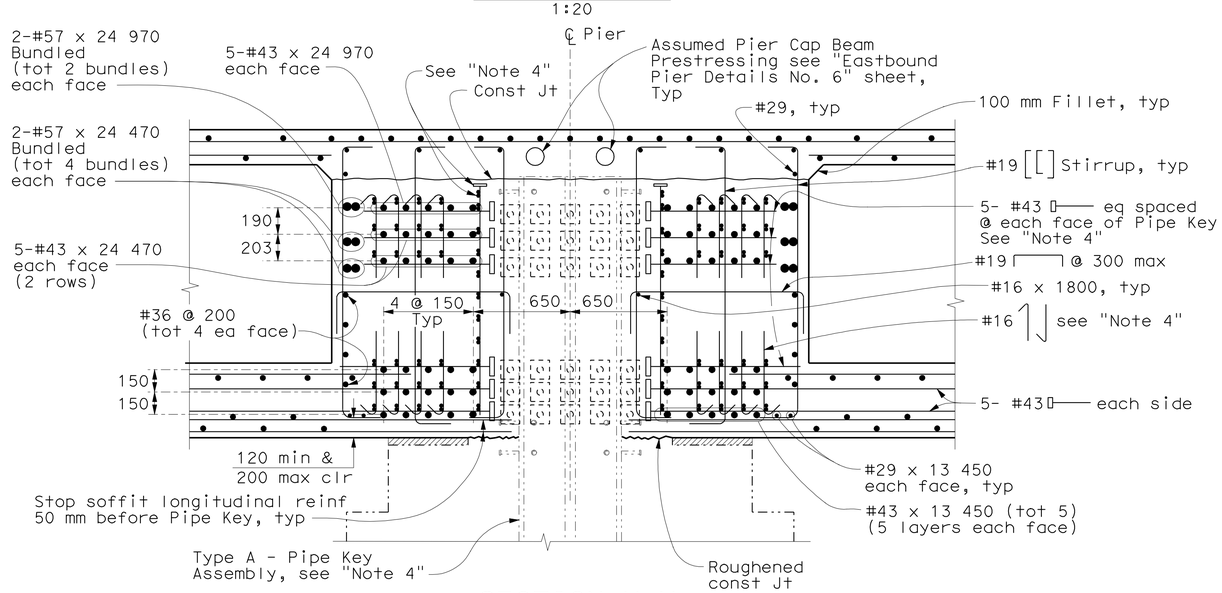

SECTION V-V
1:20

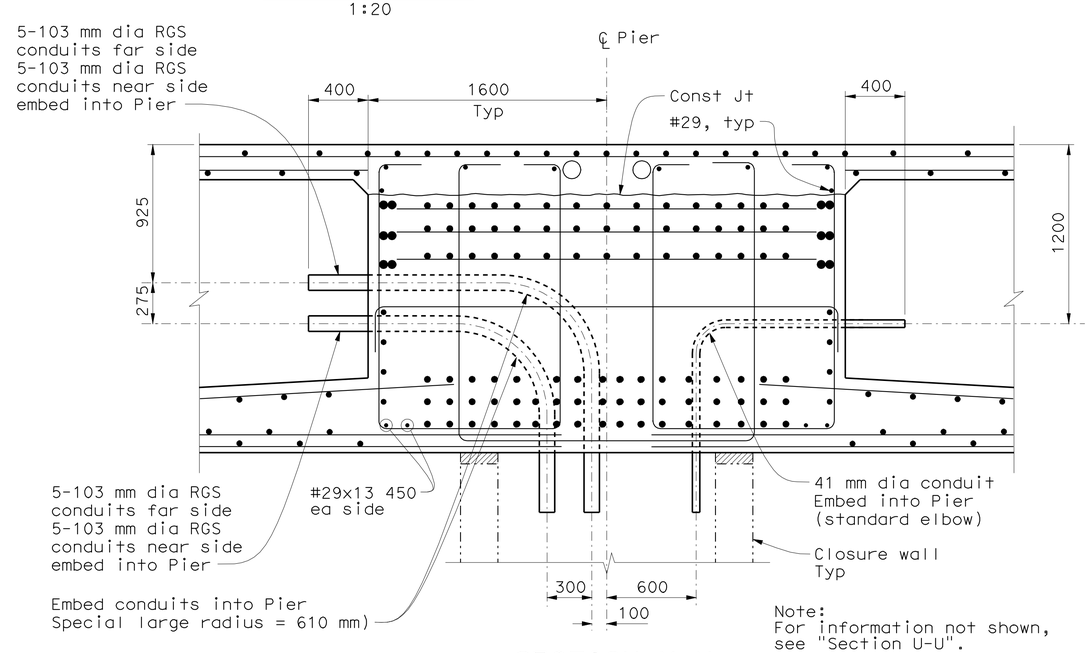

Note:
For information not shown, see "Section U-U".

SECTION X-X
1:20

Note:
The Contractor shall verify all controlling field dimensions before ordering or fabricating any material.

ALL DIMENSIONS ARE IN MILLIMETERS UNLESS OTHERWISE SHOWN

SAN FRANCISCO OAKLAND BAY BRIDGE
EAST SPAN SEISMIC SAFETY PROJECT

OAKLAND APPROACH STRUCTURES - PHASE 2

EASTBOUND PIER DETAILS NO. 5

DESIGN OVERSIGHT
HASAN EL-NATAR
SIGN OFF DATE
Rev. Date: 5-18-98

	BY	CHECKED
DESIGN	M. CHAR	T. DUDLEY
DETAILS	M. ANDRASEK	M. CHAR
QUANTITIES	Y. KIM	A. SIVATHASAN/T. DUDLEY

PREPARED FOR THE STATE OF CALIFORNIA DEPARTMENT OF TRANSPORTATION

MOHAN S. CHAR
PROJECT ENGINEER

BRIDGE NO. 34-0006R
KILOMETER POST 2.1

ORIGINAL SCALE IN MILLIMETERS FOR REDUCED PLANS 0 10 20 30 40 50 60 70 80 90 100

CU 04
EA 0120M1

DISREGARD PRINTS BEARING EARLIER REVISION DATES
REVISION DATES (PRELIMINARY STAGE ONLY) 10/30/09 1/15/10 4/2/10 5/28/10 9/30/10 12/29/10 3/4/11 3/14/11 4/4/11 6/3/11
SHEET 34 OF 109

FILE => 04-0120m1-34-0006r-i-p01dt05.dgn

SUBMITTAL - 12

USERNAME => s121614 DATE PLOTTED => 05-OCT-2011 TIME PLOTTED => 14:02

DIST.	COUNTY	ROUTE	KILOMETER POST TOTAL PROJECT	SHEET NO.	TOTAL SHEETS
04	Ala	80	1.6/2.7	607	744

REGISTERED ENGINEER - CIVIL

10-3-11

PLANS APPROVAL DATE

REGISTERED PROFESSIONAL ENGINEER MOHAN S. CHAR No. 57894 Exp. 6/30/12 CIVIL STATE OF CALIFORNIA

The State of California or its officers or agents shall not be responsible for the accuracy or completeness of electronic copies of this plan sheet.

T.Y. LIN / MOFFATT & NICHOL
TWO HARRISON STREET, SUITE 500
SAN FRANCISCO, CA 94105

AECOM TECHNICAL SERVICES INC.
999 TOWN & COUNTRY ROAD
ORANGE, CA 92868

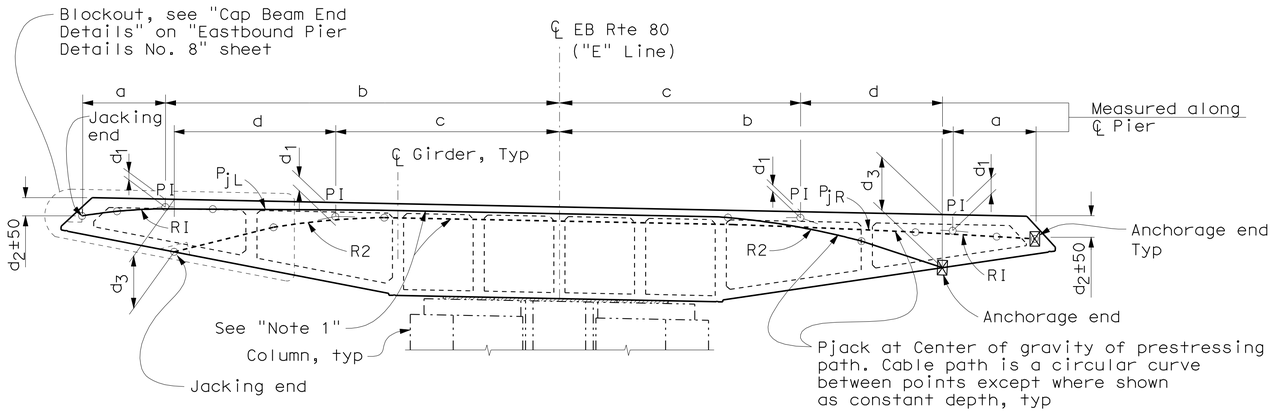

(PIERS E20R THRU E22R)

CAP BEAM PRESTRESSING DUCT LAYOUT

No Scale

Notes:

1. In order to minimize the congestion of jacking end blockouts, the contractor shall divide the Pjack equally & symmetrically and apply it simultaneously at one end of the Cap Beam. The jacking ends shall be alternately located so they do not interfere with each other at the same end. Each duct shall be prestressed from one end only. The distance between the jacking ends (on the same end of the beam) shall be as shown in "Pier Cap Beam Prestressing Table". For center of gravity of prestressing path, see "Cap Beam Prestressing Path Layout".
2. Control dimensions are given horizontally or vertically.
3. For Cap Beam Dimensions, see "Eastbound Typical Section No. 1 & 2" sheets.
4. Pre-installed Strand duct should be used for pier cap prestress, unless jacking blockout from soffit is approved.

LEGEND

⊠ = Denotes theoretical point of no movement for one end stressing

(A) Denotes Girder designation

PRESTRESS NOTES - PIER CAP BEAM

1860 MPa Low Relaxation Strand:
Pjack = See "Pier Cap Beam Prestress Table"
Anchor Set = 10 mm
Friction Curvature Coefficient μ = 0.15
Friction Wobble Coefficient k = 0.0007/m
Concrete: f'_c = 38 MPa @ 28 days (Pier E20R, E21R & E22R)
f'_{ci} = 35* MPa @ time of stressing (Piers E20R, E21R & E22R)
Contractor shall submit elongation calculations based on initial stress at ⊠ = "A" times jacking stress.
One end stressing shall be performed on jacking end from either end.

PIER CAP BEAM PRESTRESS TABLE

Locations	Pjack (kN) LEFT	a	b	c	d	d_1	d_2	d_3	minR_1	minR_2	"A"
Pier E20R	45 400	2640	10 095	8540	3495	180	600	1110	15 800	7600	0.898
Pier E21R	43 900	2380	10 400	9280	2170	180	600	970	11 000	6000	0.888
Pier E22R	37 200	2165	10 620	9280	2170	180	600	1125	8000	6000	0.877

*f'ci can be reduced to 28 MPa (Piers E20R thru E22R), if rebar spiral in local anchor area provided is longer than the min length recommended by manufacturer. Contractor shall submit the calculation to Engineer for approval prior to construction.

SUGGESTED PRESTRESSING SEQUENCE - HINGE FE TO ABUT E23R

Stressing shall not take place until the deck has been placed and has reached specified strength. (100% f'ci)
Pjack should be applied in stages:
(Pjack denotes prestressed jacking forces @ different locations where specified)
Stage 1: Stress all Pier Cap Beams to 25% Pjack.
Stage 2: Stress all Girders (Girders (B) thru (K) only) to 25% Pjack.
Stage 3: Repeat stages 1 & 2 with increasing Pjack by 25% for each process till reaching 75% Pjack.
Stage 4: Stress all Pier Cap Beams to 100% Pjack, grout the prestressing ducts in Pier Cap Beams and patch the blockout with quick-set concrete only.
Stage 5: Stress Girders (A) & (L) to 100% Pjack after the grout/concrete at Pier Cap Beam prestressing ducts and anchorage blockout reaches required strength.
Stage 6: Stress all Girders (Girder (B) thru (K) only) to 100% Pjack.
Stage 7: Grout all ducts at Girders (Girders (A) thru (L)) after all prestressing is completed.
At no time during stressing operations, the eccentric prestress applied about center line of pier shall exceed capacity of one duct.
No removal of falsework is allowed until all stressing and grouting are completed.

For Girder designation, see "Eastbound Girder Layout No. 1 & No. 2" sheets.

Note:
The Contractor shall verify all controlling field dimensions before ordering or fabricating any material.

ALL DIMENSIONS ARE IN MILLIMETERS UNLESS OTHERWISE SHOWN

SAN FRANCISCO OAKLAND BAY BRIDGE
EAST SPAN SEISMIC SAFETY PROJECT

OAKLAND APPROACH STRUCTURES - PHASE 2

EASTBOUND PIER DETAILS NO. 6

DESIGN OVERSIGHT
HASAN EL-NATAR
SIGN OFF DATE

	BY	CHECKED
DESIGN	M. CHAR	T. DUDLEY
DETAILS	M. ANDRASEK	M. CHAR
QUANTITIES	Y. KIM	A. SIVATHASAN/T. DUDLEY

PREPARED FOR THE STATE OF CALIFORNIA DEPARTMENT OF TRANSPORTATION

MOHAN S. CHAR
PROJECT ENGINEER

BRIDGE NO. 34-0006R
KILOMETER POST 2.1

Rev. Date: 5-18-98

ORIGINAL SCALE IN MILLIMETERS FOR REDUCED PLANS 0 10 20 30 40 50 60 70 80 90 100

CU 04
EA 0120M1

DISREGARD PRINTS BEARING EARLIER REVISION DATES

REVISION DATES (PRELIMINARY STAGE ONLY) 10/30/09 1/15/10 4/2/10 5/28/10 9/30/10 12/29/10 3/4/11 3/14/11 4/14/11 6/3/11

SHEET 35 OF 109

FILE => 04-0120m1-34-0006r-i-p01dt06.dgn

SUBMITTAL - 12

USERNAME => s121614 DATE PLOTTED => 05-OCT-2011 TIME PLOTTED => 14:02

DIST.	COUNTY	ROUTE	KILOMETER POST TOTAL PROJECT	SHEET NO.	TOTAL SHEETS
04	Ala	80	1.6/2.7	608	744

Caltrans Metric

REGISTERED ENGINEER - CIVIL

10-3-11

PLANS APPROVAL DATE

REGISTERED PROFESSIONAL ENGINEER MOHAN S. CHAR No. 57894 Exp. 6/30/12 CIVIL STATE OF CALIFORNIA

The State of California or its officers or agents shall not be responsible for the accuracy or completeness of electronic copies of this plan sheet.

T.Y. LIN / MOFFATT & NICHOL
TWO HARRISON STREET, SUITE 500
SAN FRANCISCO, CA 94105

AECOM TECHNICAL SERVICES INC.
999 TOWN & COUNTRY ROAD
ORANGE, CA 92868

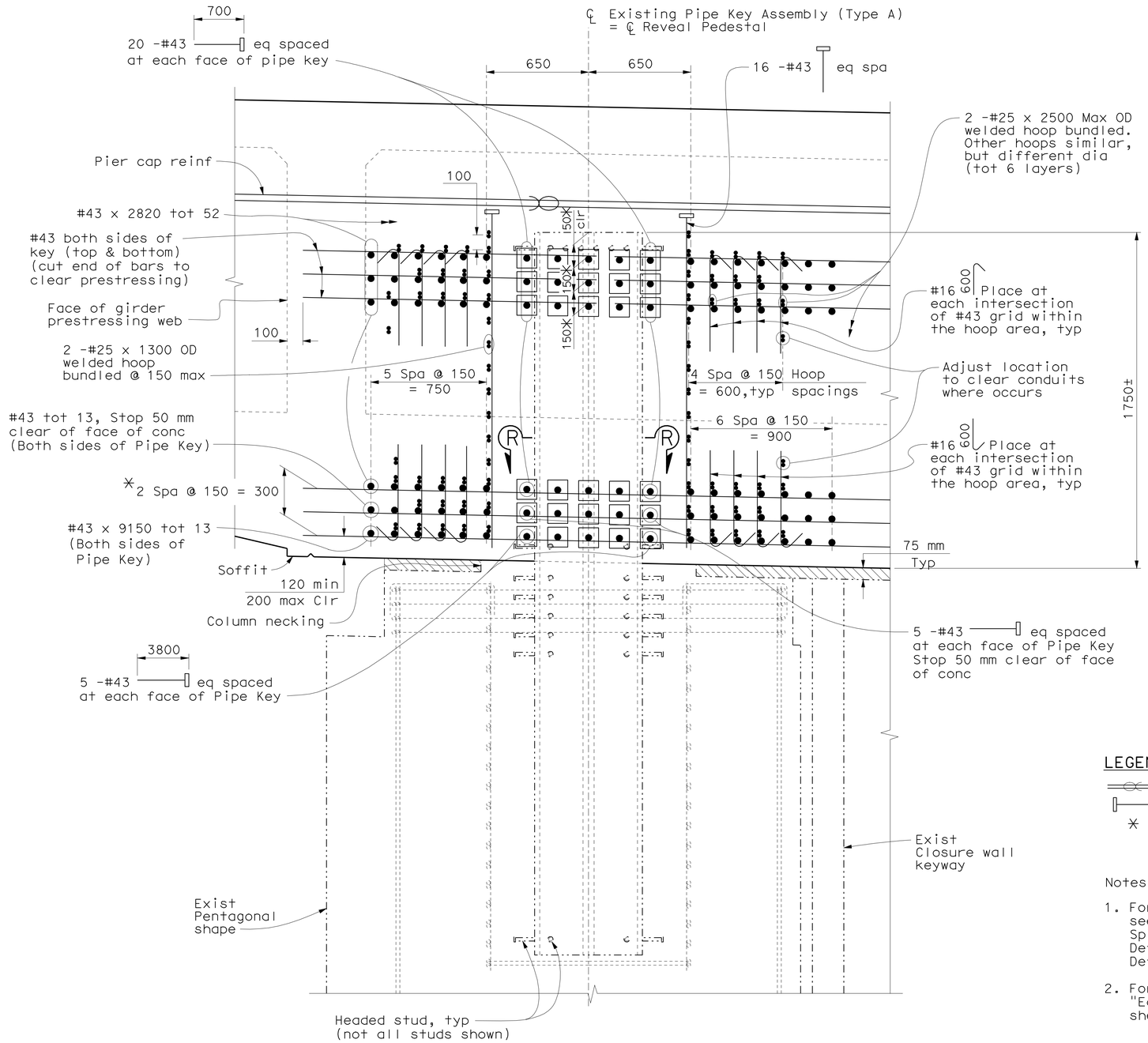

PIERS E20R THRU E22R
PIPE KEY ASSEMBLY DETAILS

1:15

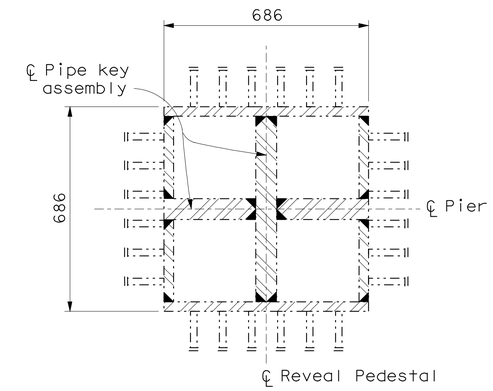

SECTION R-R

1:10

LEGEND

- Denotes bundled bars
- Denotes headed bar
- * Adjust spacing where conflict occurs, see "Note 2"

Notes:

1. For bar spiral & hoop splice, see "Bar Spiral Splice and Spiral Anchor and Welded Hoop Detail" on "Eastbound Pier Details No. 8" sheet.
2. For clearances at Pier E22R, see "Eastbound Pier Details No. 5" sheet.

Note:
The Contractor shall verify all controlling field dimensions before ordering or fabricating any material.

ALL DIMENSIONS ARE IN MILLIMETERS UNLESS OTHERWISE SHOWN

SAN FRANCISCO OAKLAND BAY BRIDGE
EAST SPAN SEISMIC SAFETY PROJECT

OAKLAND APPROACH STRUCTURES - PHASE 2

EASTBOUND PIER DETAILS NO. 7

DESIGN OVERSIGHT
HASAN EL-NATAR
SIGN OFF DATE

	BY	CHECKED
DESIGN	M. CHAR	T. DUDLEY
DETAILS	M. ANDRASEK	M. CHAR
QUANTITIES	Y. KIM	A. SIVATHASAN/T. DUDLEY

PREPARED FOR THE STATE OF CALIFORNIA DEPARTMENT OF TRANSPORTATION

MOHAN S. CHAR
PROJECT ENGINEER

BRIDGE NO. 34-0006R
KILOMETER POST 2.1

CU 04
EA 0120M1

Rev. Date: 5-18-98

ORIGINAL SCALE IN MILLIMETERS FOR REDUCED PLANS 0 10 20 30 40 50 60 70 80 90 100

DISREGARD PRINTS BEARING EARLIER REVISION DATES

REVISION DATES (PRELIMINARY STAGE ONLY): 10/30/09 1/15/10 4/2/10 5/28/10 9/30/10 12/29/10 3/4/11 3/14/11 4/4/11 6/3/11

SHEET 36 OF 109

FILE => 04-0120m1-34-0006r-i-p01dt07.dgn

SUBMITTAL - 12

USERNAME => s8121614 DATE PLOTTED => 06-OCT-2011 TIME PLOTTED => 10:55

DIST.	COUNTY	ROUTE	KILOMETER POST TOTAL PROJECT	SHEET NO.	TOTAL SHEETS
04	Ala	80	1.6/2.7	609	744

Caltrans Metric

REGISTERED ENGINEER - CIVIL

10-3-11

PLANS APPROVAL DATE

REGISTERED PROFESSIONAL ENGINEER MOHAN S. CHAR No. 57894 Exp. 6/30/12 CIVIL STATE OF CALIFORNIA

The State of California or its officers or agents shall not be responsible for the accuracy or completeness of electronic copies of this plan sheet.

T.Y. LIN / MOFFATT & NICHOL
TWO HARRISON STREET, SUITE 500
SAN FRANCISCO, CA 94105

AECOM TECHNICAL SERVICES INC.
999 TOWN & COUNTRY ROAD
ORANGE, CA 92868

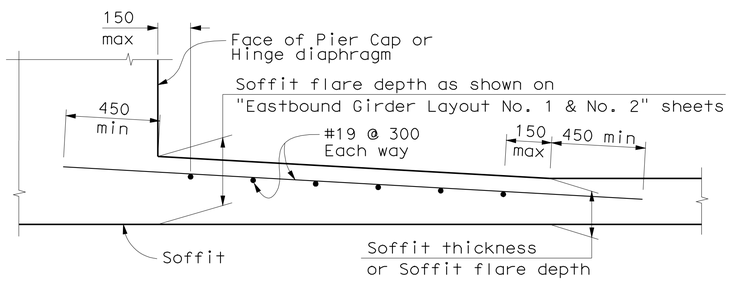

SOFFIT FLARE REINFORCEMENT DETAILS

No Scale

Note:

Other reinforcement not shown for clarity.

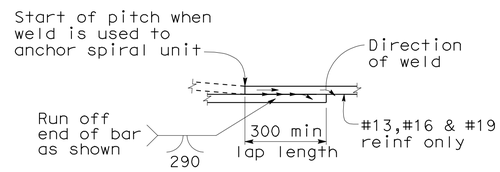

Note: Flare weld to be made in direction shown

WELDED LAP SPLICE AND ANCHOR

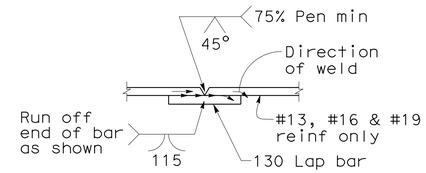

1. Butt weld to be made first
2. Butt weld to be made in flat or horizontal position
3. Lap bar to be centered on splice
4. Flare weld to be made in direction shown
5. Lap bar equal size to spiral bar

VEE GROOVE WELDED SPLICE

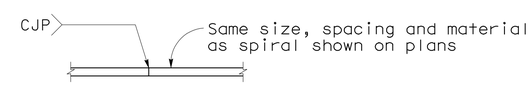

Individual hoops, made continuous with 100% penetration welds, may be substituted for spirals.

BUTT WELDED CONTINUOUS HOOP

BAR SPIRAL SPLICE AND SPIRAL ANCHOR AND HOOP DETAIL

No Scale

SUBMITTAL - 12

ALL DIMENSIONS ARE IN MILLIMETERS UNLESS OTHERWISE SHOWN

DESIGN OVERSIGHT
HASAN EL-NATAR
SIGN OFF DATE

Rev. Date: 5-18-98

	BY	CHECKED
DESIGN	M. CHAR	T. DUDLEY
DETAILS	M. ANDRASEK	M. CHAR
QUANTITIES	Y. KIM	A. SIVATHASAN/T. DUDLEY

PREPARED FOR THE STATE OF CALIFORNIA DEPARTMENT OF TRANSPORTATION

MOHAN S. CHAR
PROJECT ENGINEER

BRIDGE NO. 34-0006R
KILOMETER POST 2.1

SAN FRANCISCO OAKLAND BAY BRIDGE
EAST SPAN SEISMIC SAFETY PROJECT

OAKLAND APPROACH STRUCTURES - PHASE 2

EASTBOUND PIER DETAILS NO. 8

ORIGINAL SCALE IN MILLIMETERS FOR REDUCED PLANS 0 10 20 30 40 50 60 70 80 90 100

CU 04
EA 0120M1

DISREGARD PRINTS BEARING EARLIER REVISION DATES

REVISION DATES (PRELIMINARY STAGE ONLY): 10/30/09 1/15/10 4/22/10 5/28/10 9/30/10 12/29/10 3/4/11 3/14/11 4/4/11 6/3/11

SHEET 37 OF 109

FILE => 04-0120m1-34-0006r-i-p01dt08.dgn

USERNAME => s12614 DATE PLOTTED => 05-OCT-2011 TIME PLOTTED => 14:02

Notes:

1. In order to minimize the congestion of jacking end blockouts, The Contractor shall divide the Pjack equally & symmetrically and apply it simultaneously at both ends of Cap Beam. To reduce the anchorage blockouts @ pier cap end, Contractor should use the pre-installed strand ducts with grout tube at both ends. The jacking end anchorage ends shall be alternately located so they do not interfere with each other at the same end. Each duct shall be prestressed from one end only. The distance between the jacking end and anchorage end shall be as shown on "Eastbound Pier Details No. 6" sheet.
2. Jacking end blockouts @ left end shown. Jacking end blockouts @ right end similar but opposite hand. End view shown for 5 ducts (for total 10 ducts) alternated @ both ends. Contractor shall submit the end blockout details based on the actual numbers of ducts to Engineer for approval.
3. Girder prestressing ducts shall be symmetrically placed. Move to center of girder to clear Pier Cap Beam ducts if two-level blockouts are used.
4. Reinforcement interfering with the prestress jacking process @ prestressing blockouts shall be spliced or coupled after prestress is complete as approved by the Engineer.
5. For Girder designation, see "Eastbound Girder Layout No. 1 & No. 2" sheets.
6. Elevation shown for Pier E20R, other Piers are similar.

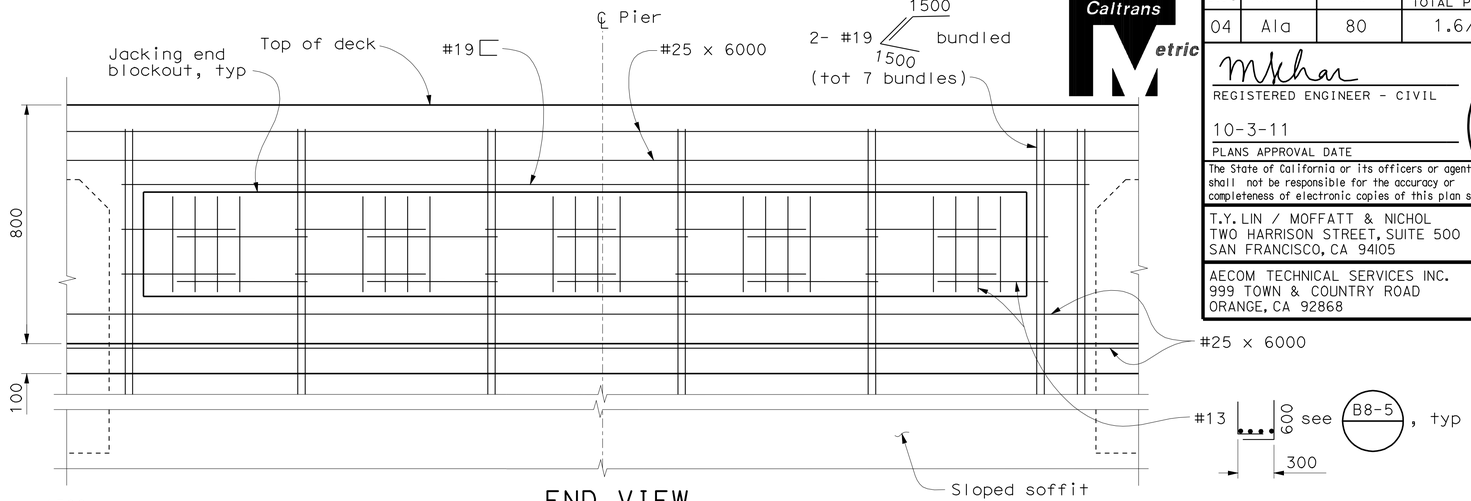

END VIEW

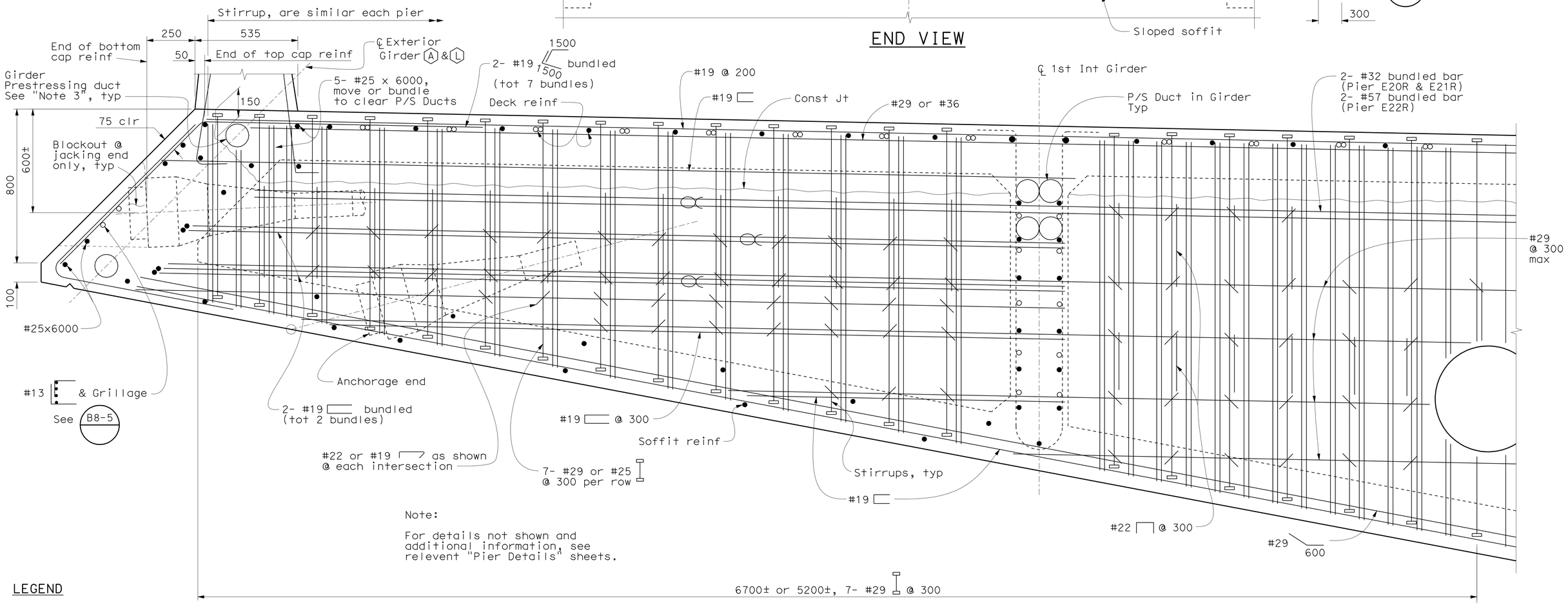

Note:

For details not shown and additional information, see relevent "Pier Details" sheets.

LEGEND

Denotes bundled bars

Denotes headed bar (both ends)

CAP BEAM END DETAILS

1:10

ELEVATION

ALL DIMENSIONS ARE IN MILLIMETERS UNLESS OTHERWISE SHOWN

DIST.	COUNTY	ROUTE	KILOMETER POST TOTAL PROJECT	SHEET NO.	TOTAL SHEETS
04	Ala	80	1.6/2.7	610	744

REGISTERED ENGINEER - CIVIL

10-3-11

PLANS APPROVAL DATE

REGISTERED PROFESSIONAL ENGINEER MOHAN S. CHAR No. 57894 Exp. 6/30/12 CIVIL STATE OF CALIFORNIA

The State of California or its officers or agents shall not be responsible for the accuracy or completeness of electronic copies of this plan sheet.

T.Y. LIN / MOFFATT & NICHOL
TWO HARRISON STREET, SUITE 500
SAN FRANCISCO, CA 94105

AECOM TECHNICAL SERVICES INC.
999 TOWN & COUNTRY ROAD
ORANGE, CA 92868

SUBMITTAL - 12

DESIGN OVERSIGHT

HASAN EL-NATAR

SIGN OFF DATE

Rev. Date: 5-18-98

	BY	CHECKED
DESIGN	M. CHAR	T. DUDLEY
DETAILS	M. ANDRASEK	M. CHAR
QUANTITIES	Y. KIM	A. SIVATHASAN/T. DUDLEY

ORIGINAL SCALE IN MILLIMETERS FOR REDUCED PLANS 0 10 20 30 40 50 60 70 80 90 100

PREPARED FOR THE STATE OF CALIFORNIA DEPARTMENT OF TRANSPORTATION

MOHAN S. CHAR
PROJECT ENGINEER

CU 04
EA 0120M1

BRIDGE NO. 34-0006R
KILOMETER POST 2.1

SAN FRANCISCO OAKLAND BAY BRIDGE
EAST SPAN SEISMIC SAFETY PROJECT

OAKLAND APPROACH STRUCTURES - PHASE 2

EASTBOUND PIER DETAILS NO. 9

DISREGARD PRINTS BEARING EARLIER REVISION DATES

REVISION DATES (PRELIMINARY STAGE ONLY) 1/15/10 4/27/10 5/28/10 9/30/10 12/28/10 3/1/11 3/14/11 4/4/11 6/27/11 7/20/11

SHEET 38 OF 109

FILE => 04-0120m1-34-0006r-i-p01dt09.dgn

USERNAME => s121614 DATE PLOTTED => 05-OCT-2011 TIME PLOTTED => 14:02

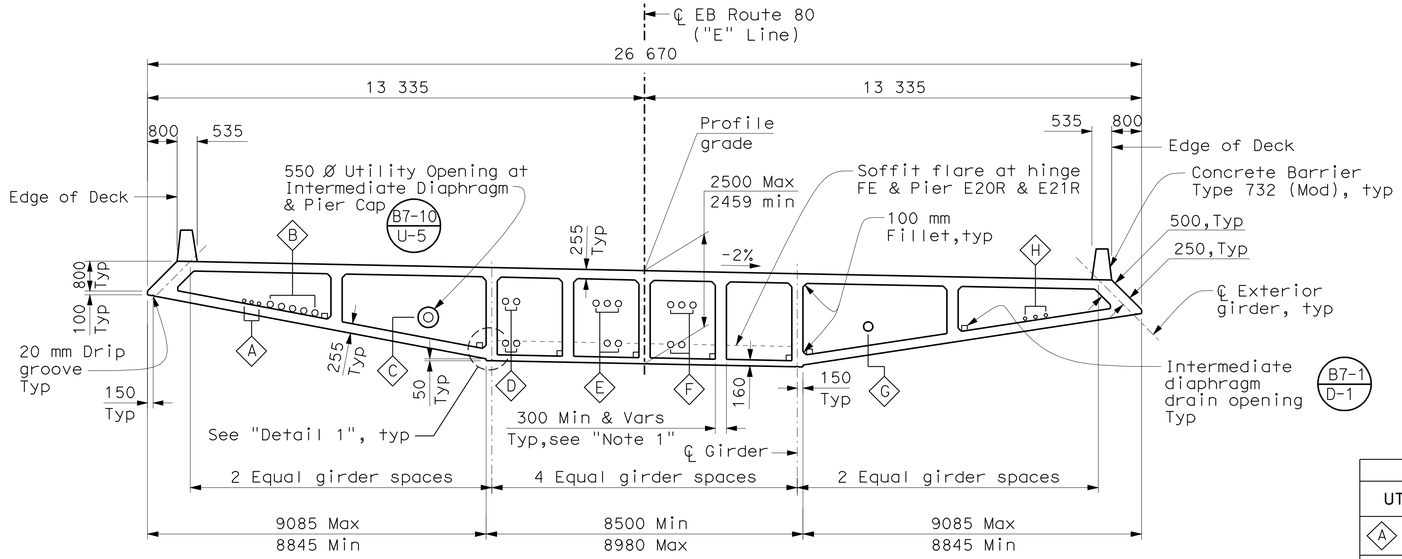

TYPICAL SECTION - HINGE FE TO PIER E20R

1:80

Notes:

1. 380 mm Girder stem width between Hinge FE and Pier E20R. See "Eastbound Girder Layout No. 1" sheet.
2. For reinforcing details, see "Eastbound Typical Section No. 3" sheet.

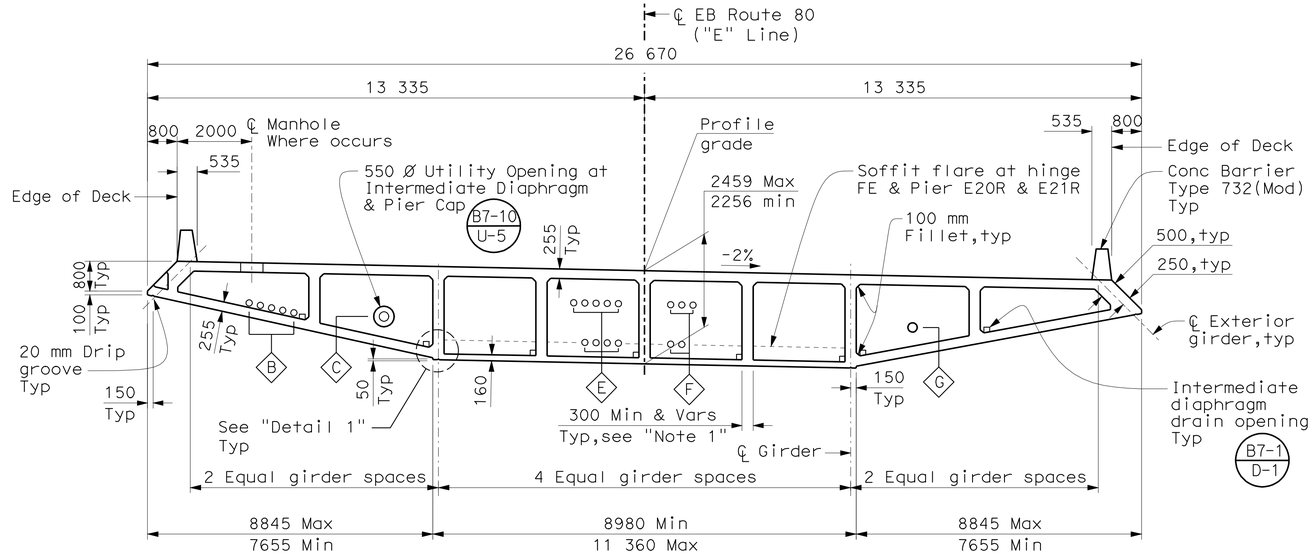

TYPICAL SECTION - PIER E20R TO PIER E21R

1:80

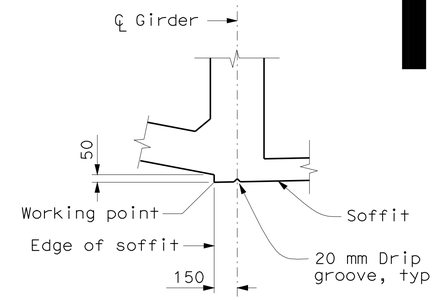

DETAIL 1

No Scale

UTILITY OPENING SCHEDULE				
UTILITY DESCRIPTION	CONDUIT SIZE (mm)	CASING SIZE OD (mm)	PIER / DIAPHRAGM OPENING SIZE (mm)	HINGE OPENING SIZE (mm)
A Pipe sleeves for Electrical conduit	3-41ø (Hinge FE to Pier E20R)	——	Cast-In-Place	Cast-In-Place
B Pipe sleeves for Electrical conduit	5-103ø (Hinge FE to Pier E21R) 2-103ø (at Pier E22R)	——	Cast-In-Place	Cast-In-Place
C Sewer line	NPS 10 (Hinge FE to Pier E22R)	460 ø	550 ø	550 ø
D Pipe sleeves for Electrical conduit	4-103ø (Hinge FE to Pier E20R)	——	Cast-In-Place	Cast-In-Place
E Pipe sleeves for Electrical conduit	5-103ø (Hinge FE to Pier E20R) 9-103ø (Pier E20R to Pier E21R)	——	Cast-In-Place	Cast-In-Place
F Pipe sleeves for Electrical conduit	5-103ø (Hinge FE to Pier E21R)	——	Cast-In-Place	Cast-In-Place
G Drain line	NPS 8 and NPS 10	——	250 ø & 300 ø	None
H Pipe sleeves for Electrical conduit	3-41ø (Hinge FE to Pier E20R)	——	Cast-In-Place	Cast-In-Place
J Cast-in-place embedded conduit	10-103ø (at Pier E22R) 2-41ø (at Pier E22R)	——	Cast-In-Place	Cast-In-Place
K Cast-in-place embedded conduit	10-103ø (at Pier E22R) 2-41ø (at Pier E22R)	——	Cast-In-Place	Cast-In-Place
L Air line See "Note 3"	NPS 4 (at Pier E22R)	——	None	None

Notes:
1. For Utility sizes & locations, see "Eastbound Girder Layout No. 3 & 4" and "Eastbound Pier Details No. 1 thru No. 5" sheets.
2. For conduit layout & details not shown, see "Electrical Plans".
3. For Air line location, see "Pier Details No. 4" sheet.

LEGEND

A Denotes utility designation. For types & opening sizes, see "Utility Opening Schedule" on this sheet.

Note:

Bikepath not shown, see "Eastbound Bikepath Details No. 1 thru 4" sheets".

Caltrans Metric

DIST.	COUNTY	ROUTE	KILOMETER POST TOTAL PROJECT	SHEET NO.	TOTAL SHEETS
04	Ala	80	1.6/2.7	611	744

REGISTERED ENGINEER - CIVIL

10-3-11
PLANS APPROVAL DATE

REGISTERED PROFESSIONAL ENGINEER MOHAN S. CHAR No. 57894 Exp. 6/30/12 CIVIL STATE OF CALIFORNIA

The State of California or its officers or agents shall not be responsible for the accuracy or completeness of electronic copies of this plan sheet.

T.Y. LIN / MOFFATT & NICHOL
TWO HARRISON STREET, SUITE 500
SAN FRANCISCO, CA 94105

AECOM TECHNICAL SERVICES INC.
999 TOWN & COUNTRY ROAD
ORANGE, CA 92868

SUBMITTAL - 12

ALL DIMENSIONS ARE IN MILLIMETERS UNLESS OTHERWISE SHOWN

SAN FRANCISCO OAKLAND BAY BRIDGE
EAST SPAN SEISMIC SAFETY PROJECT

OAKLAND APPROACH STRUCTURES - PHASE 2

EASTBOUND TYPICAL SECTION NO. 1

DESIGN OVERSIGHT
HASAN EL-NATAR
SIGN OFF DATE

Rev. Date: 5-18-98

	BY	CHECKED
DESIGN	M. CHAR	T. DUDLEY
DETAILS	M. ANDRASEK	M. CHAR
QUANTITIES	Y. KIM	A. SIVATHASAN/T. DUDLEY

PREPARED FOR THE STATE OF CALIFORNIA DEPARTMENT OF TRANSPORTATION

MOHAN S. CHAR
PROJECT ENGINEER

BRIDGE NO. 34-0006R
KILOMETER POST 2.1

CU 04
EA 0120M1

ORIGINAL SCALE IN MILLIMETERS FOR REDUCED PLANS 0 10 20 30 40 50 60 70 80 90 100

DISREGARD PRINTS BEARING EARLIER REVISION DATES

REVISION DATES (PRELIMINARY STAGE ONLY): 10/30/09 1/15/10 4/2/10 5/28/10 9/30/10 12/29/10 3/4/11 3/14/11 4/4/11 6/3/11

SHEET 39 OF 109

FILE => 04-0120m1-34-0006r-k-ts01.dgn

USERNAME => s121614 DATE PLOTTED => 05-OCT-2011 TIME PLOTTED => 14:02

DIST.	COUNTY	ROUTE	KILOMETER POST TOTAL PROJECT	SHEET NO.	TOTAL SHEETS
04	Ala	80	1.6/2.7	612	744

Caltrans Metric

REGISTERED ENGINEER - CIVIL

10-3-11

PLANS APPROVAL DATE

REGISTERED PROFESSIONAL ENGINEER MOHAN S. CHAR No. 57894 Exp. 6/30/12 CIVIL STATE OF CALIFORNIA

The State of California or its officers or agents shall not be responsible for the accuracy or completeness of electronic copies of this plan sheet.

T.Y. LIN / MOFFATT & NICHOL
TWO HARRISON STREET, SUITE 500
SAN FRANCISCO, CA 94105

AECOM TECHNICAL SERVICES INC.
999 TOWN & COUNTRY ROAD
ORANGE, CA 92868

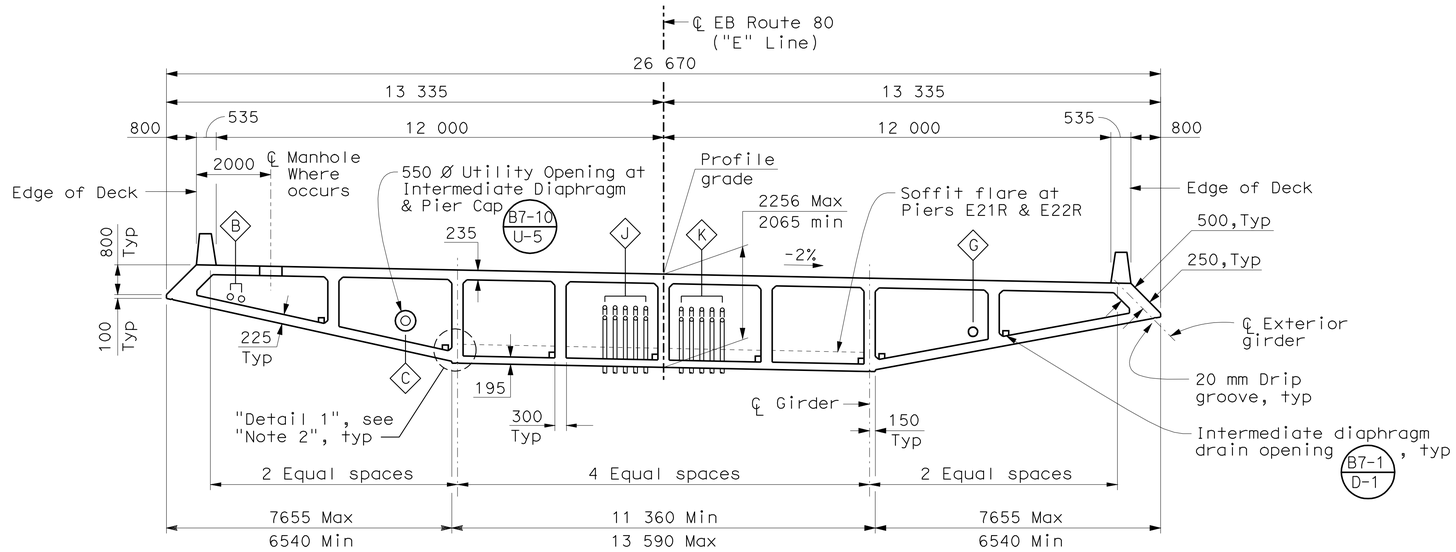

TYPICAL SECTION - PIER E21R TO PIER E22R

1:80

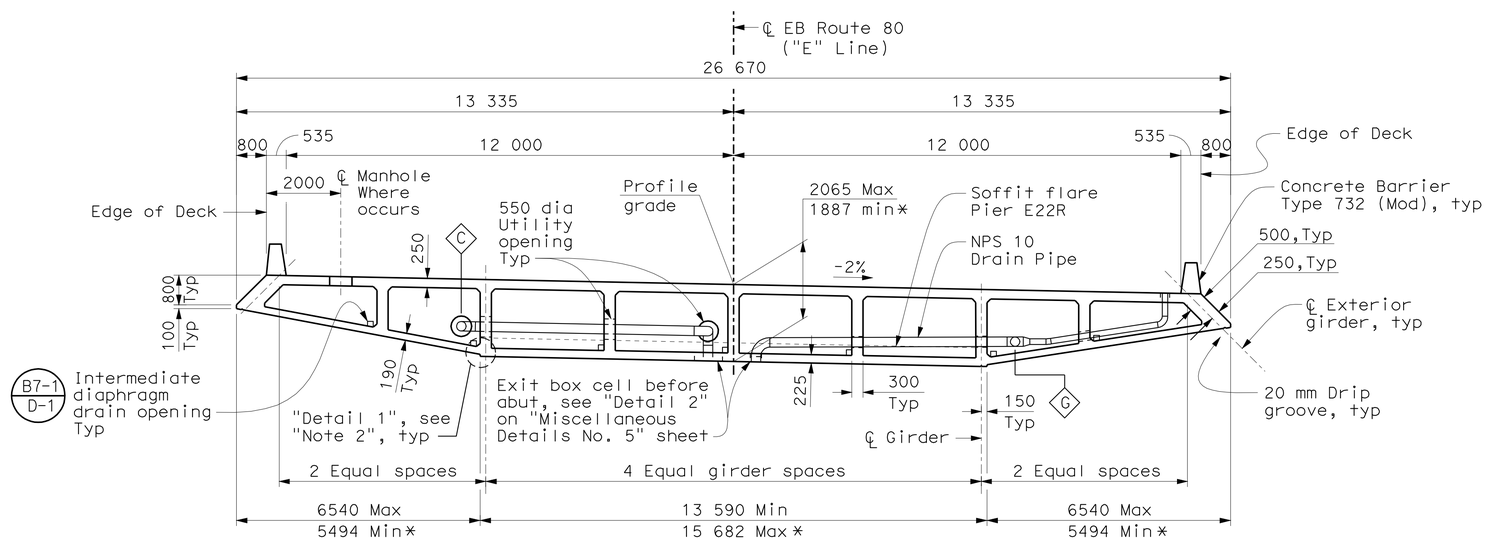

TYPICAL SECTION - PIER E22R TO ABUT E23R

1:80

* Dimensions measured at End of Bridge (Eastbound)

LEGEND

(A) Denotes utility designation. For types & opening sizes, see "Utility Opening Schedule" on "Eastbound Typical Section No. 1" sheet

Notes:

1. Bikepath not shown, see "Eastbound Bikepath Details No. 1 thru 4" sheets".
2. For Detail 1, see "Eastbound Typical Section No. 1" sheet.

SUBMITTAL - 12

ALL DIMENSIONS ARE IN MILLIMETERS UNLESS OTHERWISE SHOWN

DESIGN OVERSIGHT
HASAN EL-NATAR
SIGN OFF DATE

Rev. Date: 5-18-98

	BY	CHECKED
DESIGN	M. CHAR	T. DUDLEY
DETAILS	M. ANDRASEK	M. CHAR
QUANTITIES	Y. KIM	A. SIVATHASAN/T. DUDLEY

ORIGINAL SCALE IN MILLIMETERS FOR REDUCED PLANS 0 10 20 30 40 50 60 70 80 90 100

PREPARED FOR THE STATE OF CALIFORNIA DEPARTMENT OF TRANSPORTATION

MOHAN S. CHAR
PROJECT ENGINEER

CU 04
EA 0120M1

BRIDGE NO. 34-0006R
KILOMETER POST 2.1

SAN FRANCISCO OAKLAND BAY BRIDGE
EAST SPAN SEISMIC SAFETY PROJECT

OAKLAND APPROACH STRUCTURES - PHASE 2

EASTBOUND TYPICAL SECTION NO. 2

DISREGARD PRINTS BEARING EARLIER REVISION DATES

REVISION DATES (PRELIMINARY STAGE ONLY): 10/30/09 1/15/10 4/22/10 5/28/10 9/30/10 12/29/10 3/4/11 3/14/11 4/4/11 6/3/11

SHEET 40 OF 109

FILE => 04-0120m1-34-0006r-k-ts02.dgn

USERNAME => s612614 DATE PLOTTED => 05-OCT-2011 TIME PLOTTED => 14:03

DIST.	COUNTY	ROUTE	KILOMETER POST TOTAL PROJECT	SHEET NO.	TOTAL SHEETS
04	Ala	80	1.6/2.7	613	744

REGISTERED ENGINEER - CIVIL

10-3-11

PLANS APPROVAL DATE

REGISTERED PROFESSIONAL ENGINEER MOHAN S. CHAR No. 57894 Exp. 6/30/12 CIVIL STATE OF CALIFORNIA

The State of California or its officers or agents shall not be responsible for the accuracy or completeness of electronic copies of this plan sheet.

T.Y. LIN / MOFFATT & NICHOL
TWO HARRISON STREET, SUITE 500
SAN FRANCISCO, CA 94105

AECOM TECHNICAL SERVICES INC.
999 TOWN & COUNTRY ROAD
ORANGE, CA 92868

REINFORCEMENT TABLE

Span	Typical Interior Bay					Exterior and 1st Interior bay			
	Deck Slab			Bottom Slab		Deck Slab		Bottom Slab	
	"S_1"	"D"bars	"G"bars	"S_2"	"H"bars	"D"bars	"G"bars	"S_3"	"H"bars
Hinge FE to Pier E21R	250	7	6	400	6	16	7	300	11
Pier E21R to Pier E22R	275	10	6	400	7	13	7	350	9
Pier E22R to Abut E23R	275	13	7	350	9	10	6	400	6

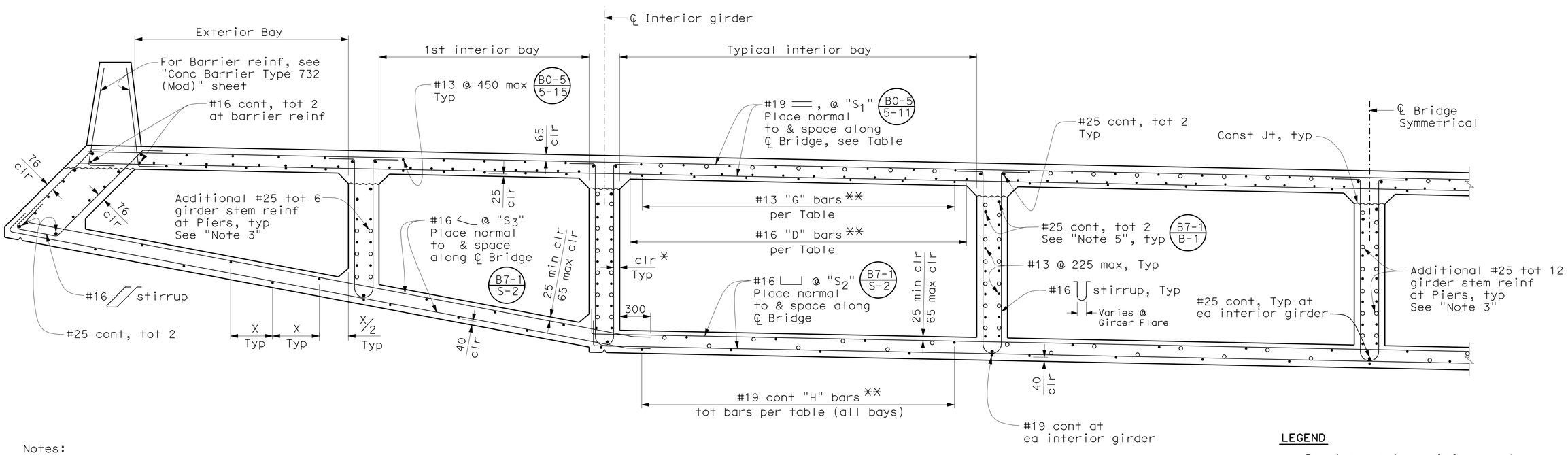

PART TYPICAL SECTION
HINGE FE TO ABUT E23R

1:20

B0-5 B7-1 B8-5

Notes:

1. Lap and mechanical splices are not permitted in deck and soffit slab longitudinal reinforcing within 12 m from ℄ pier.
2. See "Eastbound Girder Layout" sheets for flare of girder webs and soffit slab.
3. For additional girder stem reinforcement, see "Eastbound Girder Details" sheet.
4. Bikepath not shown. See "Eastbound Bikepath Details No. 1 through No. 4" sheets.
5. Where conflict with the Pipe Key occurs, use #25 headed bar and terminate accordingly.

LEGEND

- • Denotes regular reinforcement
- ∘ Denotes additional longitudinal reinforcement, see "Eastbound Deck Details No. 1" sheet. For additional girder stem reinf, see "Eastbound Girder Details" sheet
- * 60 mm Min and 100 mm Max Clr to stirrup (except 25 mm Min clear near anchorage)
- ** Distribution bars
- X Denotes bar spacing

ALL DIMENSIONS ARE IN MILLIMETERS UNLESS OTHERWISE SHOWN

SAN FRANCISCO OAKLAND BAY BRIDGE
EAST SPAN SEISMIC SAFETY PROJECT

OAKLAND APPROACH STRUCTURES - PHASE 2

EASTBOUND PART TYPICAL SECTION

DESIGN OVERSIGHT
HASAN EL-NATAR
SIGN OFF DATE

Rev. Date: 5-18-98

	BY	CHECKED
DESIGN	M. CHAR	T. DUDLEY
DETAILS	M. ANDRASEK	M. CHAR
QUANTITIES	Y. KIM	A. SIVATHASAN/T. DUDLEY

PREPARED FOR THE STATE OF CALIFORNIA DEPARTMENT OF TRANSPORTATION

MOHAN S. CHAR
PROJECT ENGINEER

BRIDGE NO. 34-0006R
KILOMETER POST 2.1

ORIGINAL SCALE IN MILLIMETERS FOR REDUCED PLANS 0 10 20 30 40 50 60 70 80 90 100

CU 04
EA 0120M1

DISREGARD PRINTS BEARING EARLIER REVISION DATES

REVISION DATES (PRELIMINARY STAGE ONLY) 10/30/09 1/15/10 4/2/10 5/28/10 9/30/10 12/29/10 3/4/11 3/14/11 4/14/11 6/3/11

SHEET 41 OF 109

FILE => 04-0120m1-34-0006r-k-tsp01.dgn

SUBMITTAL - 12

USERNAME => s12614 DATE PLOTTED => 05-OCT-2011 TIME PLOTTED => 14:03

DIST.	COUNTY	ROUTE	KILOMETER POST TOTAL PROJECT	SHEET NO.	TOTAL SHEETS
04	Ala	80	1.6/2.7	614	744

Caltrans Metric

REGISTERED ENGINEER - CIVIL

10-3-11

PLANS APPROVAL DATE

REGISTERED PROFESSIONAL ENGINEER MOHAN S. CHAR No. 57894 Exp. 6/30/12 CIVIL STATE OF CALIFORNIA

The State of California or its officers or agents shall not be responsible for the accuracy or completeness of electronic copies of this plan sheet.

T.Y. LIN / MOFFATT & NICHOL
TWO HARRISON STREET, SUITE 500
SAN FRANCISCO, CA 94105

AECOM TECHNICAL SERVICES INC.
999 TOWN & COUNTRY ROAD
ORANGE, CA 92868

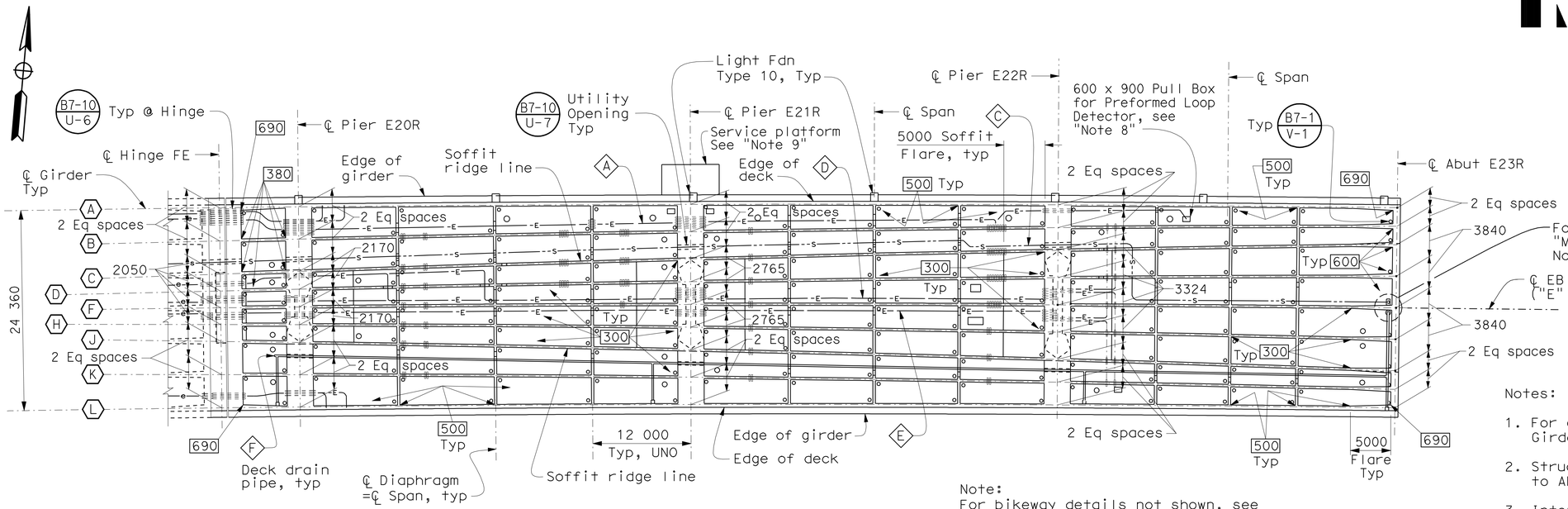

PLAN-FRAME 2

1:300

Note:
For bikeway details not shown, see "Eastbound Bikepath Details No.1 thru No. 4 sheets.

Notes:

1. For girders A, B, K, & L, see "Eastbound Girder Layout No. 2" sheet.
2. Structure depth varies linearly from Hinge FE to Abut E23R.
3. Intermediate diaphragms shall be placed radially. Dimension shown is measured along ℄ EB Route 80.
4. For Access Openings & Electrical Blockouts, see "Eastbound Girder Layout No. 3 & No. 4" sheets.
5. For Utility Information, see "Utility Opening Schedule" on "Eastbound Typical Section No. 1" sheet.
6. For Camber, see "Eastbound Camber Diagrams" sheet.
7. For Prestressing Notes, see "Eastbound Girder Layout No. 2" sheet.
8. For Utility information not shown, see "Notes 1 thru 6" on "Eastbound Girder Layout No. 2" sheet and "Miscellaneous Details No. 7" sheet.
9. For Service platform information, see "Service Platforms" sheets.

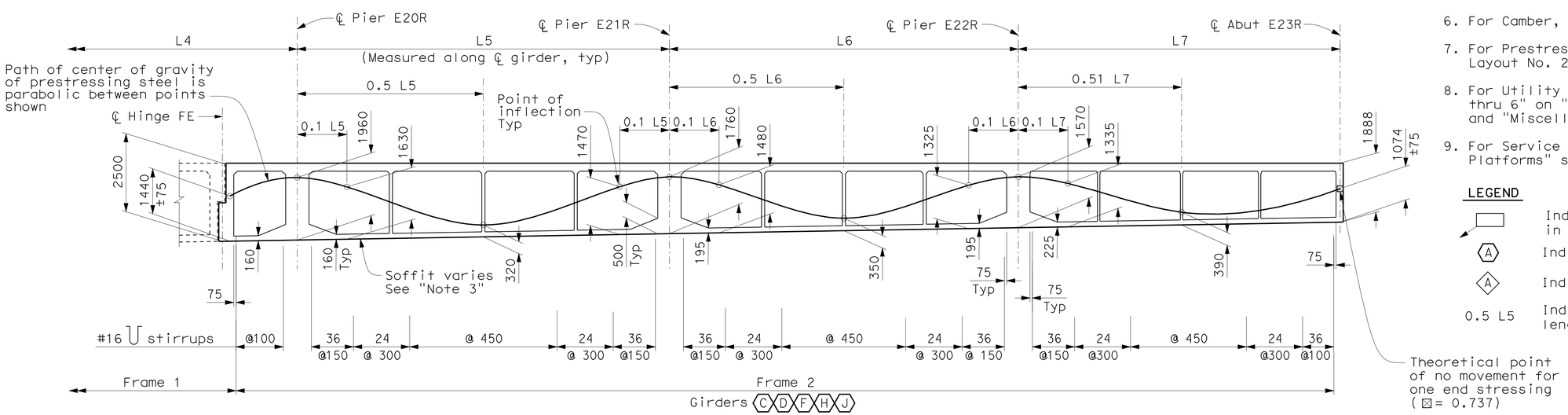

LONGITUDINAL SECTION-FRAME 2

No Scale

Note:
The Contractor shall verify all controlling field dimensions before ordering or fabricating any material.

ALL DIMENSIONS ARE IN MILLIMETERS UNLESS OTHERWISE SHOWN

LEGEND

- Indicates girder stem width in millimeters, see B7-1 / S-3
- A — Indicates girder designation
- A — Indicates Utility designation
- 0.5 L5 — Indicates fraction of each girder length in the span noted

SAN FRANCISCO OAKLAND BAY BRIDGE
EAST SPAN SEISMIC SAFETY PROJECT

OAKLAND APPROACH STRUCTURES - PHASE 2

EASTBOUND GIRDER LAYOUT NO. 1

DESIGN OVERSIGHT HASAN EL-NATAR			
SIGN OFF DATE			
DESIGN	BY M. CHAR	CHECKED T. DUDLEY	
DETAILS	BY M. ANDRASEK	CHECKED M. CHAR	
QUANTITIES	BY Y. KIM	CHECKED A. SIVATHASAN/T. DUDLEY	

PREPARED FOR THE STATE OF CALIFORNIA DEPARTMENT OF TRANSPORTATION

MOHAN S. CHAR
PROJECT ENGINEER

BRIDGE NO. 34-0006R
KILOMETER POST 2.1

Rev. Date: 5-18-98

ORIGINAL SCALE IN MILLIMETERS FOR REDUCED PLANS 0 10 20 30 40 50 60 70 80 90 100

CU 04
EA 0120M1

DISREGARD PRINTS BEARING EARLIER REVISION DATES

REVISION DATES (PRELIMINARY STAGE ONLY) 10/30/09 1/15/10 4/22/10 5/28/10 9/30/10 12/29/10 3/4/11 3/14/11 4/14/11 6/3/11

SHEET 42 OF 109

FILE => 04-0120m1-34-0006r-l-g_lo01.dgn

SUBMITTAL - 12

USERNAME => s121614 DATE PLOTTED => 05-OCT-2011 TIME PLOTTED => 14:03

DIST.	COUNTY	ROUTE	KILOMETER POST TOTAL PROJECT	SHEET NO.	TOTAL SHEETS
04	Ala	80	1.6/2.7	615	744

REGISTERED ENGINEER - CIVIL

10-3-11

PLANS APPROVAL DATE

REGISTERED PROFESSIONAL ENGINEER MOHAN S. CHAR No. 57894 Exp. 6/30/12 CIVIL STATE OF CALIFORNIA

The State of California or its officers or agents shall not be responsible for the accuracy or completeness of electronic copies of this plan sheet.

T.Y. LIN / MOFFATT & NICHOL
TWO HARRISON STREET, SUITE 500
SAN FRANCISCO, CA 94105

AECOM TECHNICAL SERVICES INC.
999 TOWN & COUNTRY ROAD
ORANGE, CA 92868

Pjack TABLE		
Girder Designation	Pjack/ Girder	Initial Force Coefficient @ ⊠
(A) & (L)	4650 kN	0.917
(B) & (K)	19 500 kN	0.805
(C)(D)(F)(H) & (J)	14 200 kN	0.737

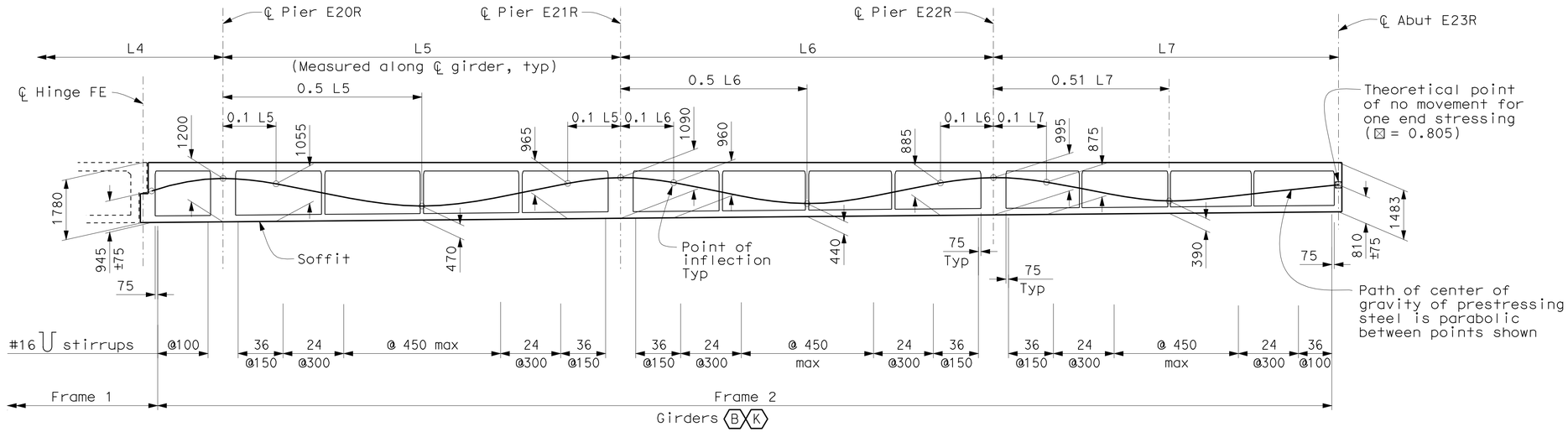

LONGITUDINAL SECTION-FRAME 2

No Scale

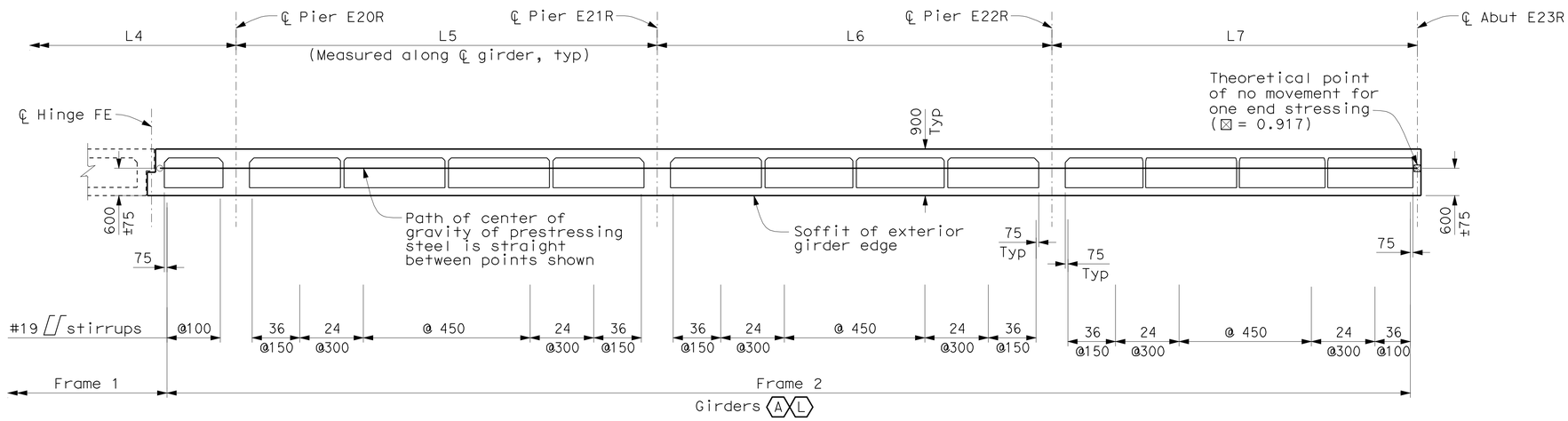

LONGITUDINAL SECTION-FRAME 2

No Scale

PRESTRESSING NOTES

1860 MPa Low Relaxation Strand
Pjack = See "Pjack Table"
K = 0.0007/m, μ = 0.20/rad (Girders)

Anchor Set = 10 mm

Total Number of Girders = 9

Concrete f'c @ 28 days = 38 MPa
Concrete f'ci @ time of stressing = 35 MPa✳

Contractor shall submit elongation calculations based on initial stress at ⊠ = See "Pjack TABLE"

Distribution of final prestress force (Pjack) shall be based on the table shown. Maximum final girder and deck slab force variation from the designated force shall not exceed 3200 kN.

✳ f'ci can be reduced to 28 MPa if rebar spiral in local anchor area provided is longer than the minimum length recommended by the manufacturer. The Contractor shall submit the calculations to the Engineer for approval before construction.

LEGEND

(A) Indicates girder designation

0.5 L5 Indicates fraction of each girder length in the span noted

Note:
The Contractor shall verify all controlling field dimensions before ordering or fabricating any material.

ALL DIMENSIONS ARE IN MILLIMETERS UNLESS OTHERWISE SHOWN

SAN FRANCISCO OAKLAND BAY BRIDGE
EAST SPAN SEISMIC SAFETY PROJECT

OAKLAND APPROACH STRUCTURES - PHASE 2

EASTBOUND GIRDER LAYOUT NO. 2

DESIGN OVERSIGHT
HASAN EL-NATAR
SIGN OFF DATE

	BY	CHECKED
DESIGN	M. CHAR	T. DUDLEY
DETAILS	M. ANDRASEK	M. CHAR
QUANTITIES	Y. KIM	A. SIVATHASAN/T. DUDLEY

PREPARED FOR THE STATE OF CALIFORNIA DEPARTMENT OF TRANSPORTATION

MOHAN S. CHAR
PROJECT ENGINEER

BRIDGE NO. 34-0006R
KILOMETER POST 2.1

CU 04
EA 0120M1

Rev. Date: 5-18-98

ORIGINAL SCALE IN MILLIMETERS FOR REDUCED PLANS 0 10 20 30 40 50 60 70 80 90 100

DISREGARD PRINTS BEARING EARLIER REVISION DATES

REVISION DATES (PRELIMINARY STAGE ONLY): 10/30/09 1/15/10 4/2/10 5/28/10 9/30/10 12/29/10 3/4/11 3/14/11 4/4/11 6/3/11

SHEET 43 OF 109

FILE => 04-0120m1-34-0006r-l-g_lo02.dgn

USERNAME => s121614 DATE PLOTTED => 05-OCT-2011 TIME PLOTTED => 14:03

SUBMITTAL - 12

DIST.	COUNTY	ROUTE	KILOMETER POST TOTAL PROJECT	SHEET NO.	TOTAL SHEETS
04	Ala	80	1.6/2.7	616	744

REGISTERED ENGINEER - CIVIL

10-3-11

PLANS APPROVAL DATE

REGISTERED PROFESSIONAL ENGINEER MOHAN S. CHAR No. 57894 Exp. 6/30/12 CIVIL STATE OF CALIFORNIA

The State of California or its officers or agents shall not be responsible for the accuracy or completeness of electronic copies of this plan sheet.

T.Y. LIN / MOFFATT & NICHOL
TWO HARRISON STREET, SUITE 500
SAN FRANCISCO, CA 94105

AECOM TECHNICAL SERVICES INC.
999 TOWN & COUNTRY ROAD
ORANGE, CA 92868

LEGEND

- (A) Indicates girder designation
- (DI) Indicates 600 mm Ø diaphragm access opening (B7-10 / U-5)
- (G) Indicates 600 mm Ø girder access opening (B7-11 / U-41)
- (S) Indicates 610 mm Ø grated soffit access opening
- (DE) Indicates 600 mm Ø deck access opening See "Note 5" (B7-11 / U-43)

LEGEND (cont'd)

- E-# Indicates Blockout opening type
- #-S # of Pipe sleeves Rigid PVC Sch 80 (Provide elongated slot for adjustment)
- —-E— New Electrical
- —-e— Exist Electrical
- —--S— New NPS 10 CCSF Sewer line
- —--s— Exist NPS 10 CCSF Sewer line
- Indicates smooth trowel finish soffit slab on the inside surface

Notes:

1. For continuation, see "Girder Layout No. 4" sheet.
2. For other details & notes not shown, see "Eastbound Girder Layout No. 1" sheet.
3. For access openings, see "Miscellaneous Details No. 1 through No. 7" & "Eastbound Girder Layout No. 7" sheets.
4. For electrical conduit layout & preformed loop details, see "Electrical Plans".
5. For Ladder details at deck access openings, see "Miscellaneous Details No. 2" sheet.

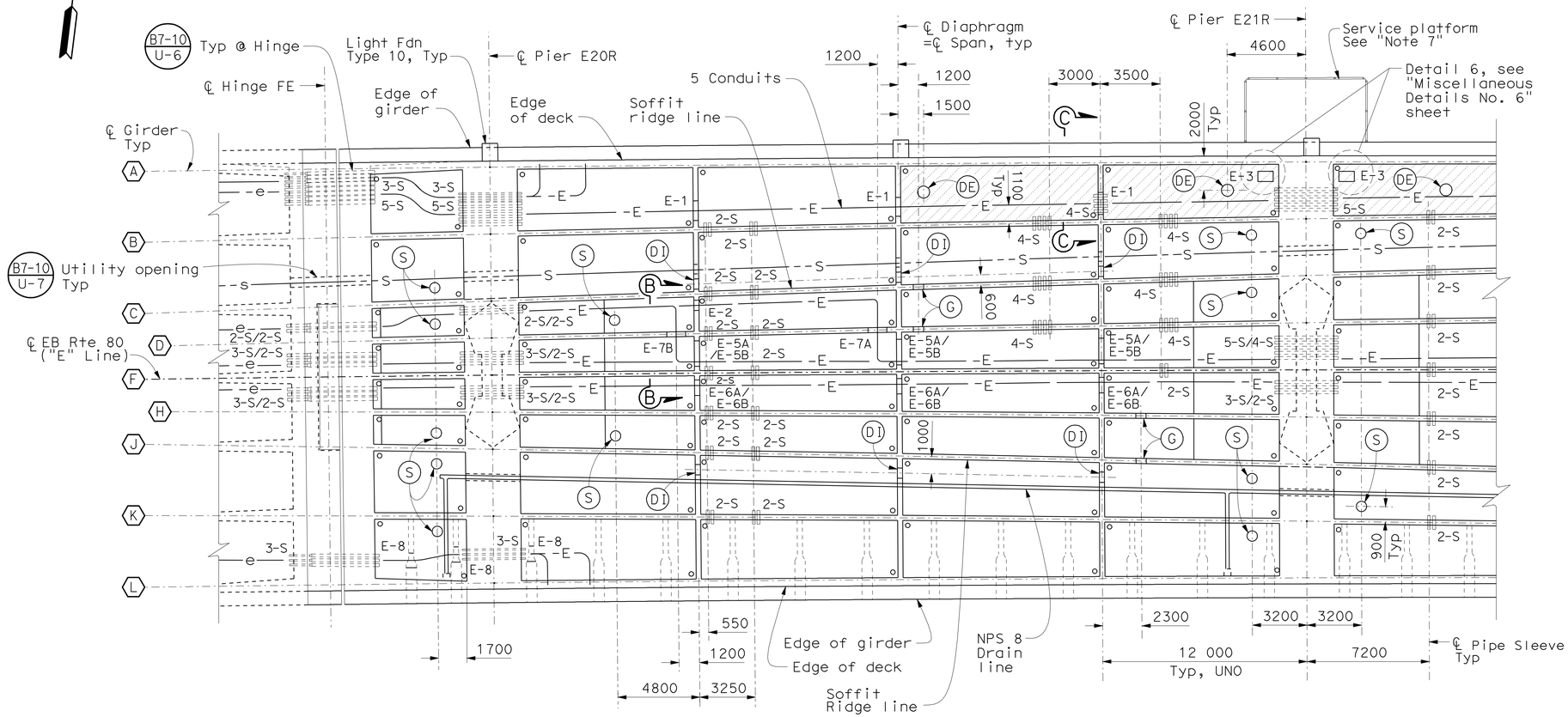

Notes (cont'd):

6. For mechanical layout & pipe support details, see "Mechanical Plans".
7. For Service Platform information, see "Service Platforms" sheets.
8. For Section "B-B" & "C-C", see "Miscellaneous Details No. 6" sheet.

ELECTRICAL BLOCKOUT LEGEND	
BLOCKOUT TYPE	BLOCKOUT SIZE
E-1	1500 × 200
E-2	600 × 200
E-3	900 × 500 Soffit Blockout (To be covered after conduits are installed)
E-4	900 × 200
E-5A	1500 × 200
E-5B	1500 × 200
E-6A	900 × 200
E-6B	900 × 200
E-7A	1100 × 200
E-7B	1100 × 200
E-8 ✳✳	900 × 200
	168 mm OD Rigid PVC Sch 80✳

✳✳ For E-8 blockout detail, see "Eastbound Bikepath Details No. 3" sheet.

Flush to outside face of concrete

✳ Exception: At Hinge FE, 220 mm OD embedded metallic pipe sleeves for 103 mm RGS conduit will be installed and 171 mm OD for 41 mm RGS conduit.

ACCESS OPENINGS & ELECTRICAL BLOCKOUTS
PLAN - FRAME 2
1:150

Note:
The Contractor shall verify all controlling field dimensions before ordering or fabricating any material.

ALL DIMENSIONS ARE IN MILLIMETERS UNLESS OTHERWISE SHOWN

SAN FRANCISCO OAKLAND BAY BRIDGE
EAST SPAN SEISMIC SAFETY PROJECT

OAKLAND APPROACH STRUCTURES - PHASE 2

EASTBOUND GIRDER LAYOUT NO. 3

DESIGN OVERSIGHT
HASAN EL-NATAR
SIGN OFF DATE

Rev. Date: 5-18-98

	BY	CHECKED
DESIGN	M. CHAR	T. DUDLEY
DETAILS	M. ANDRASEK	M. CHAR
QUANTITIES	Y. KIM	A. SIVATHASAN/T. DUDLEY

PREPARED FOR THE STATE OF CALIFORNIA DEPARTMENT OF TRANSPORTATION

MOHAN S. CHAR
PROJECT ENGINEER

BRIDGE NO. 34-0006R
KILOMETER POST 2.1

ORIGINAL SCALE IN MILLIMETERS FOR REDUCED PLANS 0 10 20 30 40 50 60 70 80 90 100

CU 04
EA 0120M1

DISREGARD PRINTS BEARING EARLIER REVISION DATES

REVISION DATES (PRELIMINARY STAGE ONLY): 10/30/09 1/15/10 4/2/10 5/28/10 9/30/10 12/29/10 3/4/11 3/14/11 4/4/11 6/3/11

SHEET 44 OF 109

FILE => 04-0120m1-34-0006r-l-g_lo03.dgn

SUBMITTAL - 12

USERNAME => s121614 DATE PLOTTED => 05-OCT-2011 TIME PLOTTED => 14:03

DIST.	COUNTY	ROUTE	KILOMETER POST TOTAL PROJECT	SHEET NO.	TOTAL SHEETS
04	Ala	80	1.6/2.7	617	744

Caltrans Metric

REGISTERED ENGINEER - CIVIL

10-3-11

PLANS APPROVAL DATE

REGISTERED PROFESSIONAL ENGINEER MOHAN S. CHAR No. 57894 Exp. 6/30/12 CIVIL STATE OF CALIFORNIA

The State of California or its officers or agents shall not be responsible for the accuracy or completeness of electronic copies of this plan sheet.

T.Y. LIN / MOFFATT & NICHOL
TWO HARRISON STREET, SUITE 500
SAN FRANCISCO, CA 94105

AECOM TECHNICAL SERVICES INC.
999 TOWN & COUNTRY ROAD
ORANGE, CA 92868

LEGEND

- (A) Indicates girder designation
- (DI) Indicates 600 mm Ø diaphragm access opening — B7-10 / U-5
- (G) Indicates 600 mm Ø girder access opening — B7-11 / U-41
- (S) Indicates 610 mm Ø grated soffit access opening
- (DE) Indicates 600 mm Ø deck access opening See "Note 5" — B7-11 / U-43

LEGEND (cont'd)

- E-# Indicates Blockout opening type
- #-S # of Pipe sleeves Rigid PVC Sch 80 (Provide elongated slot for adjustment)
- —E— New Electrical
- —S— New NPS 10 CCSF Sewer line
- Indicates smooth trowel finish soffit slab on the inside surface

Notes:

1. For continuation, see "Girder Layout No. 3" sheet.
2. For Electrical Blockout Legend and notes, see "Eastbound Girder Layout No. 3" sheet.
3. For access openings, see "Miscellaneous Details No. 1 through No. 7" & "Eastbound Girder Layout No. 7" sheets.
4. For pullbox opening details, see "Miscellaneous Details No. 7" sheet.
5. For Ladder details at deck access openings, see "Miscellaneous Details No. 2" sheet.

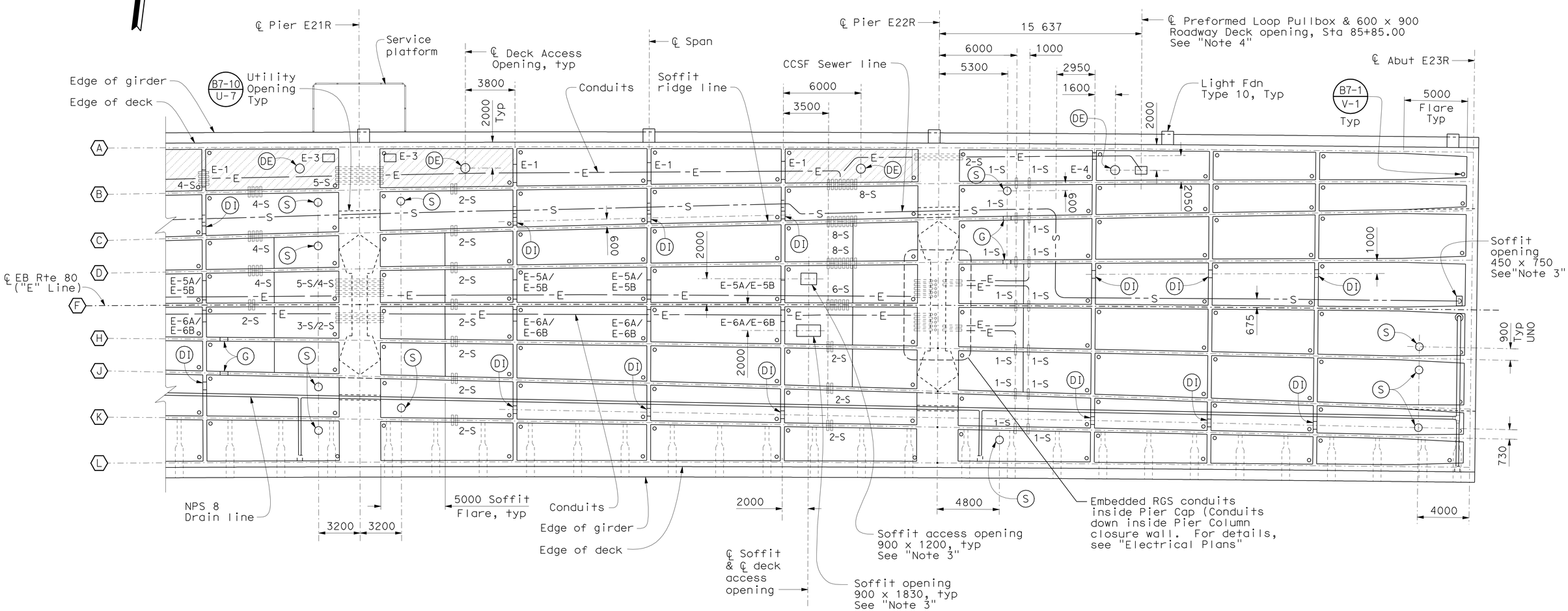

ACCESS OPENINGS & ELECTRICAL BLOCKOUTS
PLAN - FRAME 2
1:150

Note:
The Contractor shall verify all controlling field dimensions before ordering or fabricating any material.

ALL DIMENSIONS ARE IN MILLIMETERS UNLESS OTHERWISE SHOWN

SAN FRANCISCO OAKLAND BAY BRIDGE
EAST SPAN SEISMIC SAFETY PROJECT

OAKLAND APPROACH STRUCTURES - PHASE 2

EASTBOUND GIRDER LAYOUT NO. 4

DESIGN OVERSIGHT
HASAN EL-NATAR
SIGN OFF DATE

Rev. Date: 5-18-98

	BY	CHECKED
DESIGN	M. CHAR	T. DUDLEY
DETAILS	M. ANDRASEK	M. CHAR
QUANTITIES	Y. KIM	A. SIVATHASAN/T. DUDLEY

ORIGINAL SCALE IN MILLIMETERS FOR REDUCED PLANS 0 10 20 30 40 50 60 70 80 90 100

PREPARED FOR THE STATE OF CALIFORNIA DEPARTMENT OF TRANSPORTATION

MOHAN S. CHAR
PROJECT ENGINEER

BRIDGE NO. 34-0006R
KILOMETER POST 2.1

CU 04
EA 0120M1

DISREGARD PRINTS BEARING EARLIER REVISION DATES

REVISION DATES (PRELIMINARY STAGE ONLY) 10/30/09 1/15/10 4/22/10 5/28/10 9/30/10 12/28/10 3/4/11 3/14/11 4/14/11 6/3/11

SHEET 45 OF 109

SUBMITTAL - 12

USERNAME => s121614 DATE PLOTTED => 05-OCT-2011 TIME PLOTTED => 14:03

FILE => 04-0120m1-34-0006r-1-g_lo04.dgn

DIST.	COUNTY	ROUTE	KILOMETER POST TOTAL PROJECT	SHEET NO.	TOTAL SHEETS
04	Ala	80	1.6/2.7	618	744

Caltrans Metric

REGISTERED ENGINEER - CIVIL

10-3-11

PLANS APPROVAL DATE

REGISTERED PROFESSIONAL ENGINEER MOHAN S. CHAR No. 57894 Exp. 6/30/12 CIVIL STATE OF CALIFORNIA

The State of California or its officers or agents shall not be responsible for the accuracy or completeness of electronic copies of this plan sheet.

T.Y. LIN / MOFFATT & NICHOL
TWO HARRISON STREET, SUITE 500
SAN FRANCISCO, CA 94105

AECOM TECHNICAL SERVICES INC.
999 TOWN & COUNTRY ROAD
ORANGE, CA 92868

Notes:

1. Contractor shall maintain a minimum clearance of 150 mm from girder openings and embedded pipe sleeves, from top of highest duct LOL or bottom of lowest duct LOL.
2. Adjust vertical location of the pipe sleeves in the field to avoid conflict with prestressing ducts as approved by the Engineer.
3. For reinforcement around pipe sleeves, blockout and girder access openings, see "Miscellaneous Details No. 6" sheet.
4. For blockouts wider than 1000 mm, see "Eastbound Girder Layout No. 7" sheet.

LEGEND

#-S	Indicates # of Pipe Sleeves or Rigid PVC Sch 80
E-7A/B	Indicates type of Blockout opening
(G)	Indicates 600 mm Ø girder access opening (B7-11 / U-41)

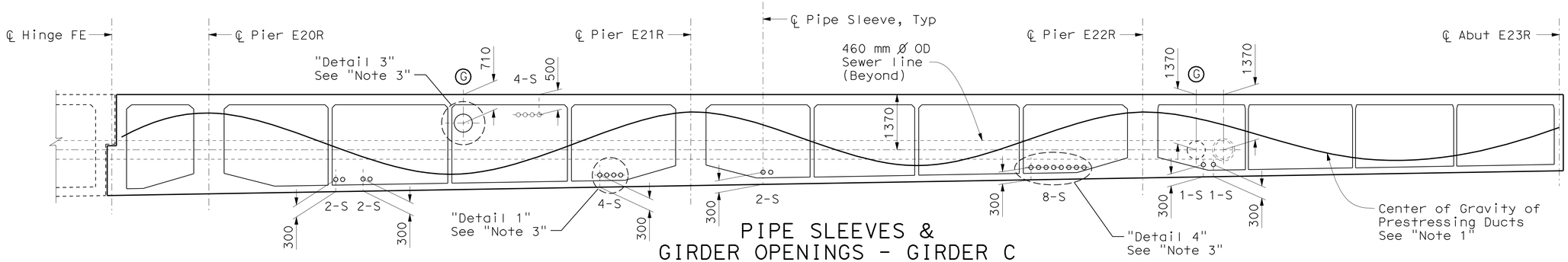

PIPE SLEEVES & GIRDER OPENINGS - GIRDER C

No Scale

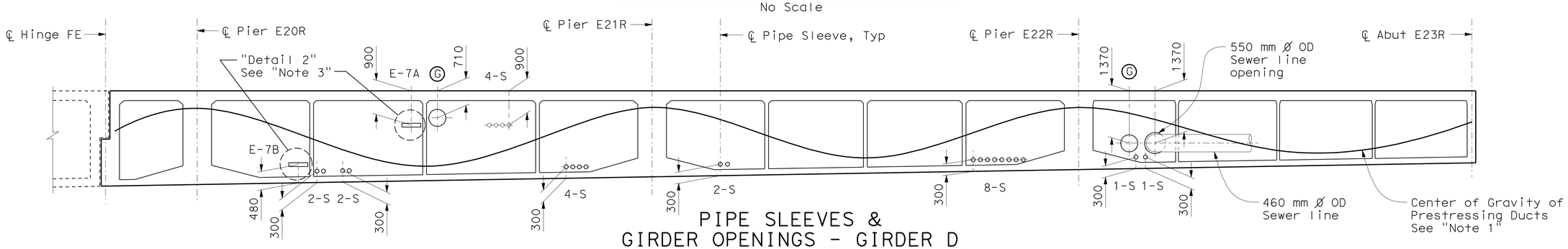

PIPE SLEEVES & GIRDER OPENINGS - GIRDER D

No Scale

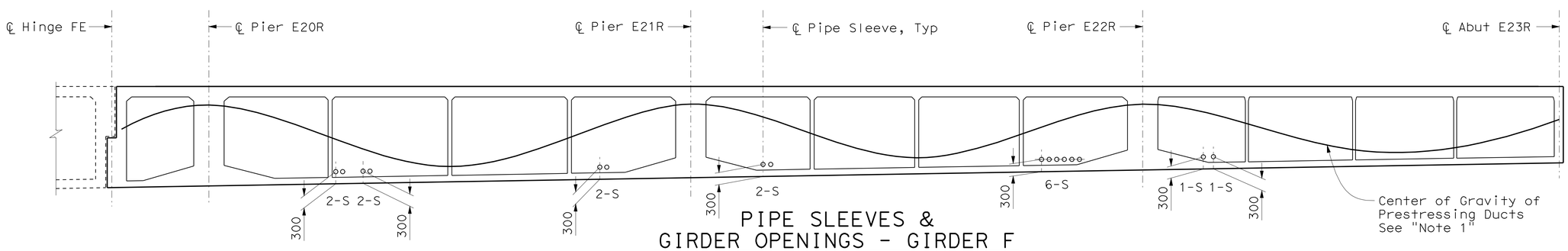

PIPE SLEEVES & GIRDER OPENINGS - GIRDER F

No Scale

Note: The Contractor shall verify all controlling field dimensions before ordering or fabricating any material.

ALL DIMENSIONS ARE IN MILLIMETERS UNLESS OTHERWISE SHOWN

SAN FRANCISCO OAKLAND BAY BRIDGE
EAST SPAN SEISMIC SAFETY PROJECT

OAKLAND APPROACH STRUCTURES - PHASE 2

EASTBOUND GIRDER LAYOUT NO. 5

DESIGN OVERSIGHT
HASAN EL-NATOR
SIGN OFF DATE

	BY	CHECKED
DESIGN	M. CHAR	T. DUDLEY
DETAILS	M. ANDRASEK	M. CHAR
QUANTITIES	Y. KIM	A. SIVATHASAN/T. DUDLEY

PREPARED FOR THE STATE OF CALIFORNIA DEPARTMENT OF TRANSPORTATION

MOHAN S. CHAR
PROJECT ENGINEER

BRIDGE NO. 34-0006R
KILOMETER POST 2.1

Rev. Date: 5-18-98

ORIGINAL SCALE IN MILLIMETERS FOR REDUCED PLANS 0 10 20 30 40 50 60 70 80 90 100

CU 04
EA 0120M1

DISREGARD PRINTS BEARING EARLIER REVISION DATES

REVISION DATES (PRELIMINARY STAGE ONLY): 10/30/09 1/15/10 4/2/10 5/28/10 9/30/10 12/29/10 3/4/11 3/14/11 4/4/11 6/3/11

SHEET 46 OF 109

FILE => 04-0120m1-34-0006r-1-g_1o05.dgn

SUBMITTAL - 12

USERNAME => s121614 DATE PLOTTED => 05-OCT-2011 TIME PLOTTED => 14:03

DIST.	COUNTY	ROUTE	KILOMETER POST TOTAL PROJECT	SHEET NO.	TOTAL SHEETS
04	Ala	80	1.6/2.7	619	744

Caltrans Metric

REGISTERED ENGINEER - CIVIL

10-3-11

PLANS APPROVAL DATE

REGISTERED PROFESSIONAL ENGINEER MOHAN S. CHAR No. 57894 Exp. 6/30/12 CIVIL STATE OF CALIFORNIA

The State of California or its officers or agents shall not be responsible for the accuracy or completeness of electronic copies of this plan sheet.

T.Y. LIN / MOFFATT & NICHOL
TWO HARRISON STREET, SUITE 500
SAN FRANCISCO, CA 94105

AECOM TECHNICAL SERVICES INC.
999 TOWN & COUNTRY ROAD
ORANGE, CA 92868

Notes:

1. Contractor shall maintain a minimum clearance of 150 mm from girder openings and embedded pipe sleeves, from top of highest duct LOL or bottom of lowest duct LOL.
2. Adjust vertical location of the pipe sleeves in the field to avoid conflict with prestressing ducts as approved by the Engineer.
3. For reinforcement around pipe sleeves, blockout and girder access openings, see "Miscellaneous Details No. 6" sheet.
4. For blockouts wider than 1000 mm, see "Eastbound Girder Layout No. 7" sheet.

LEGEND

#-S Indicates # of Pipe Sleeves or Rigid PVC Sch 80

(G) Indicates 600 mm Ø girder access opening (B7-11 / U-41)

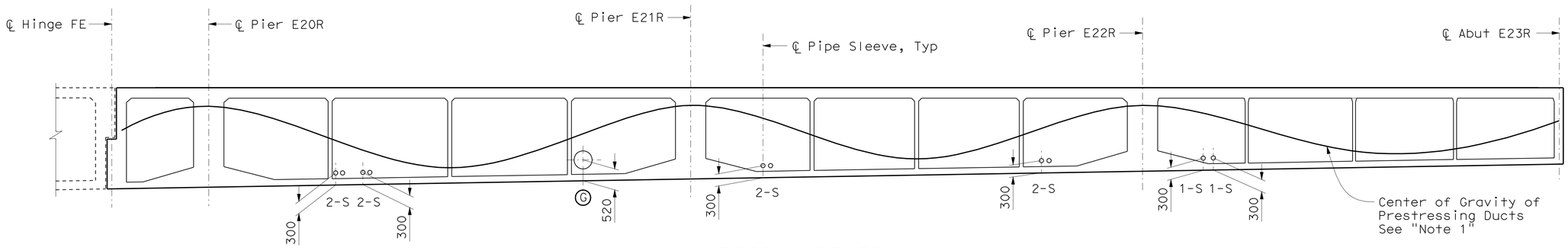

PIPE SLEEVES &
GIRDER OPENINGS - GIRDER H
No Scale

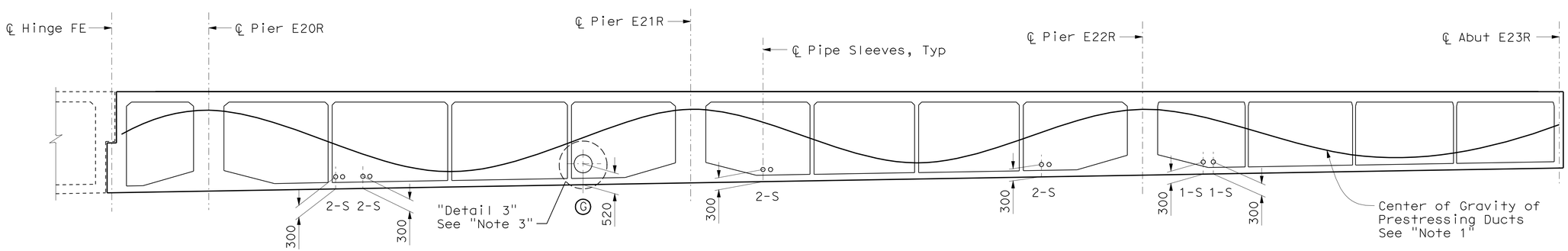

PIPE SLEEVES &
GIRDER OPENINGS - GIRDER J
No Scale

Note: The Contractor shall verify all controlling field dimensions before ordering or fabricating any material.

ALL DIMENSIONS ARE IN MILLIMETERS UNLESS OTHERWISE SHOWN

SAN FRANCISCO OAKLAND BAY BRIDGE
EAST SPAN SEISMIC SAFETY PROJECT

OAKLAND APPROACH STRUCTURES - PHASE 2

EASTBOUND GIRDER LAYOUT NO. 6

DESIGN	BY M. CHAR	CHECKED T. DUDLEY	
DETAILS	BY M. ANDRASEK	CHECKED M. CHAR	
QUANTITIES	BY Y. KIM	CHECKED A. SIVATHASAN/T. DUDLEY	

DESIGN OVERSIGHT
HASAN EL-NATAR
SIGN OFF DATE

PREPARED FOR THE STATE OF CALIFORNIA DEPARTMENT OF TRANSPORTATION

MOHAN S. CHAR
PROJECT ENGINEER

BRIDGE NO. 34-0006R
KILOMETER POST 2.1

Rev. Date: 5-18-98

ORIGINAL SCALE IN MILLIMETERS FOR REDUCED PLANS 0 10 20 30 40 50 60 70 80 90 100

CU 04
EA 0120M1

DISREGARD PRINTS BEARING EARLIER REVISION DATES

REVISION DATES (PRELIMINARY STAGE ONLY) 10/30/09 1/15/10 4/23/10 5/28/10 9/30/10 12/29/10 3/4/11 3/14/11 4/14/11 6/3/11

SHEET 47 OF 109

FILE => 04-0120m1-34-0006r-l-g_lo06.dgn

SUBMITTAL - 12

USERNAME => s121614 DATE PLOTTED => 05-OCT-2011 TIME PLOTTED => 14:03

DIST.	COUNTY	ROUTE	KILOMETER POST TOTAL PROJECT	SHEET NO.	TOTAL SHEETS
04	Ala	80	1.6/2.7	620	744

Caltrans Metric

REGISTERED ENGINEER - CIVIL

10-3-11

PLANS APPROVAL DATE

REGISTERED PROFESSIONAL ENGINEER MOHAN S. CHAR No. 57894 Exp. 6/30/12 CIVIL STATE OF CALIFORNIA

The State of California or its officers or agents shall not be responsible for the accuracy or completeness of electronic copies of this plan sheet.

T.Y. LIN / MOFFATT & NICHOL
TWO HARRISON STREET, SUITE 500
SAN FRANCISCO, CA 94105

AECOM TECHNICAL SERVICES INC.
999 TOWN & COUNTRY ROAD
ORANGE, CA 92868

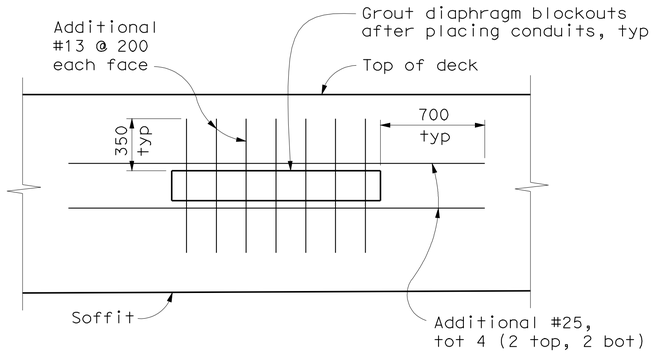

Note: For blockouts wider than 1000 mm only.

DIAPHRAGM ELECTRICAL BLOCKOUT DETAIL

No Scale

Notes:

1. Contractor shall maintain a minimum clearance of 150 mm from girder openings and embedded pipe sleeves, from top of highest duct LOL or bottom of lowest duct LOL.
2. Adjust vertical location of the pipe sleeves in the field to avoid conflict with prestressing ducts as approved by the Engineer.
3. For reinforcement around pipe sleeves, blockout and girder access openings, see "Miscellaneous Details No. 6" sheet.

LEGEND

#-S Indicates # of Pipe Sleeves or Rigid PVC Sch 80

(DR) Indicates 250 mm Ø drain line opening (B7-10 / U-5)

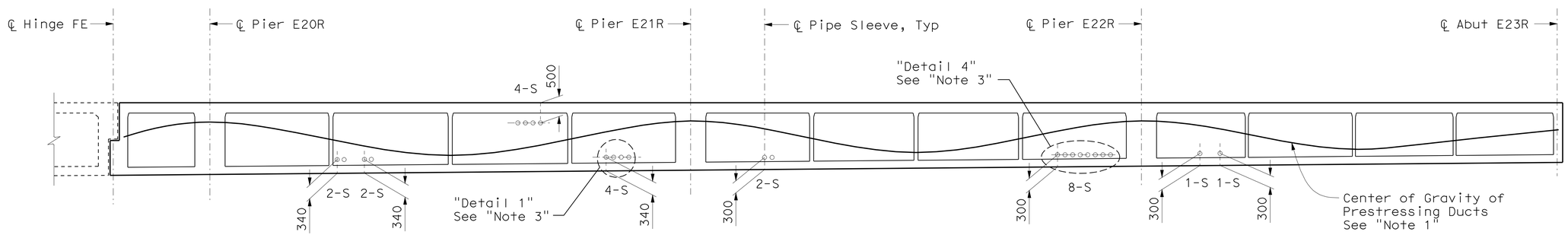

PIPE SLEEVES & GIRDER OPENINGS - GIRDER B

No Scale

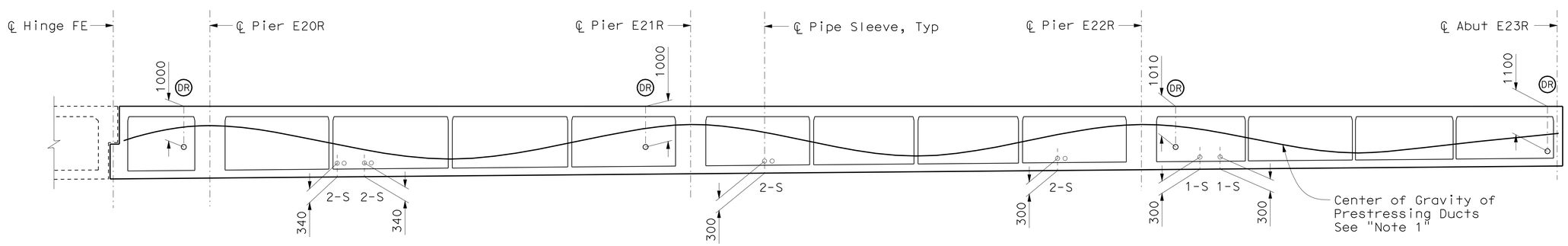

PIPE SLEEVES & GIRDER OPENINGS - GIRDER K

No Scale

Note: The Contractor shall verify all controlling field dimensions before ordering or fabricating any material.

ALL DIMENSIONS ARE IN MILLIMETERS UNLESS OTHERWISE SHOWN

SAN FRANCISCO OAKLAND BAY BRIDGE
EAST SPAN SEISMIC SAFETY PROJECT

OAKLAND APPROACH STRUCTURES - PHASE 2

EASTBOUND GIRDER LAYOUT NO. 7

DESIGN OVERSIGHT			
HASAN EL-NATAR			
SIGN OFF DATE			
DESIGN	BY M. CHAR	CHECKED T. DUDLEY	
DETAILS	BY M. ANDRASEK	CHECKED M. CHAR	
QUANTITIES	BY Y. KIM	CHECKED A. SIVATHASAN/T. DUDLEY	

PREPARED FOR THE STATE OF CALIFORNIA DEPARTMENT OF TRANSPORTATION

MOHAN S. CHAR
PROJECT ENGINEER

BRIDGE NO. 34-0006R
KILOMETER POST 2.1

Rev. Date: 5-18-98

ORIGINAL SCALE IN MILLIMETERS FOR REDUCED PLANS 0 10 20 30 40 50 60 70 80 90 100

CU 04
EA 0120M1

DISREGARD PRINTS BEARING EARLIER REVISION DATES

REVISION DATES (PRELIMINARY STAGE ONLY) 10/30/09 1/15/10 4/21/10 5/28/10 9/30/10 12/29/10 3/4/11 3/14/11 4/4/11 6/3/11

SHEET 48 OF 109

FILE => 04-0120m1-34-0006r-l-g_lo07.dgn

USERNAME => s121614 DATE PLOTTED => 05-OCT-2011 TIME PLOTTED => 14:04

SUBMITTAL - 12

DIST.	COUNTY	ROUTE	KILOMETER POST TOTAL PROJECT	SHEET NO.	TOTAL SHEETS
04	Ala	80	1.6/2.7	621	744

REGISTERED ENGINEER - CIVIL

10-3-11

PLANS APPROVAL DATE

REGISTERED PROFESSIONAL ENGINEER MOHAN S. CHAR No. 57894 Exp. 6/30/12 CIVIL STATE OF CALIFORNIA

The State of California or its officers or agents shall not be responsible for the accuracy or completeness of electronic copies of this plan sheet.

T.Y. LIN / MOFFATT & NICHOL
TWO HARRISON STREET, SUITE 500
SAN FRANCISCO, CA 94105

AECOM TECHNICAL SERVICES INC.
999 TOWN & COUNTRY ROAD
ORANGE, CA 92868

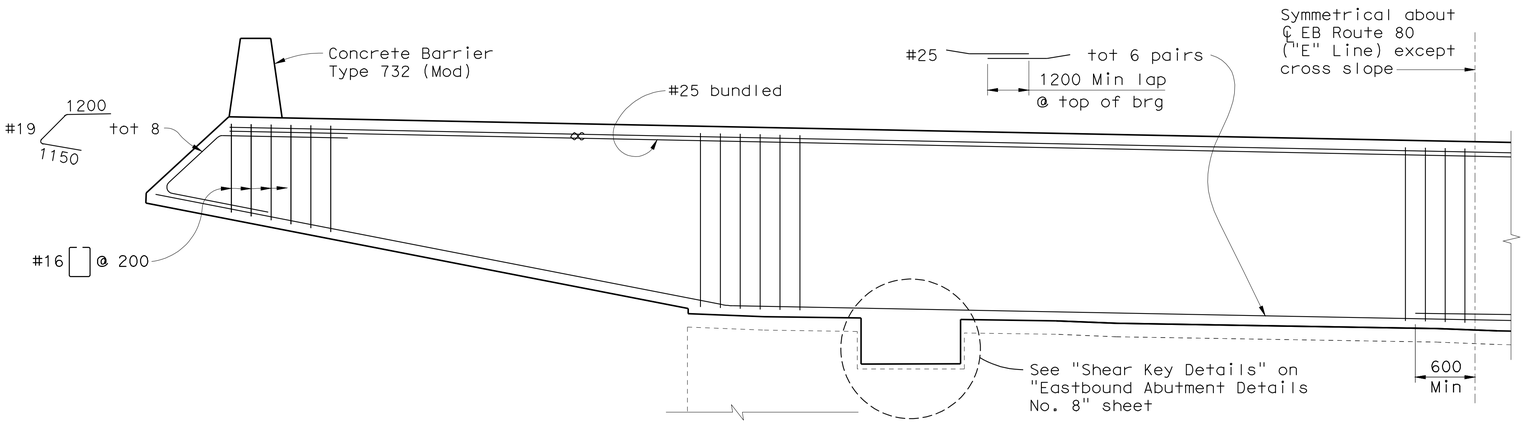

END DIAPHRAGM PART ELEVATION

No Scale

LEGEND

Indicates bundled reinforcing

Notes:

1. For locations and total number of stem reinforcement at each girder, see "Typical Section" sheets.
2. Adjust stem reinforcement to clear P/S ducts.
3. For "a" dimensions & blockout details, see "Deck Joint Details No. 1" sheet.
4. For anchor bolts at deck joint blockouts, see "Seismic Joint" sheets.

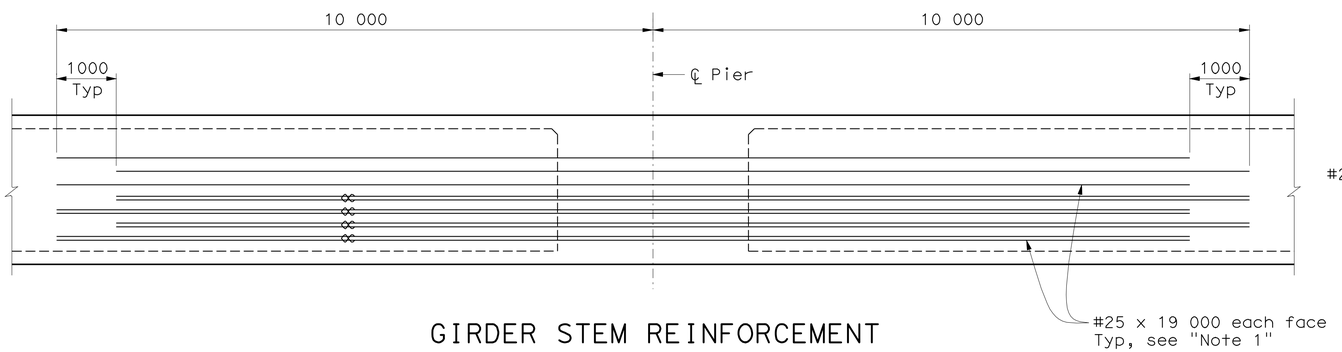

GIRDER STEM REINFORCEMENT
PIERS E20R THRU E22R

No Scale

Note:
Pier E20R Interior girder shown,
other Piers & girders similar.

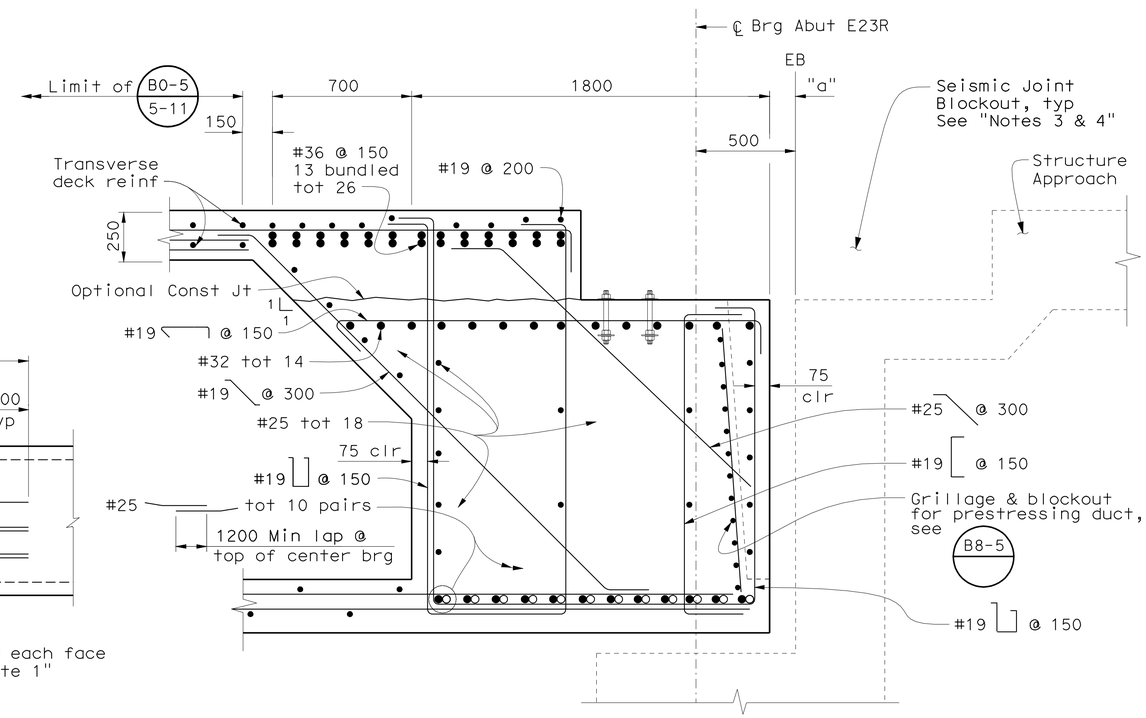

END DIAPHRAGM DETAIL - ABUT E23R

1:15

ALL DIMENSIONS ARE IN MILLIMETERS UNLESS OTHERWISE SHOWN

SAN FRANCISCO OAKLAND BAY BRIDGE
EAST SPAN SEISMIC SAFETY PROJECT

OAKLAND APPROACH STRUCTURES - PHASE 2

EASTBOUND GIRDER DETAILS

DESIGN OVERSIGHT
HASAN EL-NATAR
SIGN OFF DATE

Rev. Date: 5-18-98

	BY	CHECKED
DESIGN	M. CHAR	T. DUDLEY
DETAILS	M. ANDRASEK	M. CHAR
QUANTITIES	Y. KIM	A. SIVATHASAN/T. DUDLEY

PREPARED FOR THE STATE OF CALIFORNIA DEPARTMENT OF TRANSPORTATION

MOHAN S. CHAR
PROJECT ENGINEER

BRIDGE NO. 34-0006R
KILOMETER POST 2.1

CU 04
EA 0120M1

ORIGINAL SCALE IN MILLIMETERS FOR REDUCED PLANS 0 10 20 30 40 50 60 70 80 90 100

DISREGARD PRINTS BEARING EARLIER REVISION DATES

REVISION DATES (PRELIMINARY STAGE ONLY) 10/30/09 1/15/10 4/2/10 5/28/10 9/30/10 12/29/10 3/4/11 3/14/11 4/4/11 6/3/11

SHEET 49 OF 109

SUBMITTAL - 12

FILE => 04-0120m1-34-0006r-l-gdt01.dgn

USERNAME => s12614 DATE PLOTTED => 05-OCT-2011 TIME PLOTTED => 14:04

DIST.	COUNTY	ROUTE	KILOMETER POST TOTAL PROJECT	SHEET NO.	TOTAL SHEETS
04	Ala	80	1.6/2.7	622	744

Caltrans Metric

REGISTERED ENGINEER - CIVIL

10-3-11

PLANS APPROVAL DATE

REGISTERED PROFESSIONAL ENGINEER MOHAN S. CHAR No. 57894 Exp. 6/30/12 CIVIL STATE OF CALIFORNIA

The State of California or its officers or agents shall not be responsible for the accuracy or completeness of electronic copies of this plan sheet.

T.Y. LIN / MOFFATT & NICHOL
TWO HARRISON STREET, SUITE 500
SAN FRANCISCO, CA 94105

AECOM TECHNICAL SERVICES INC.
999 TOWN & COUNTRY ROAD
ORANGE, CA 92868

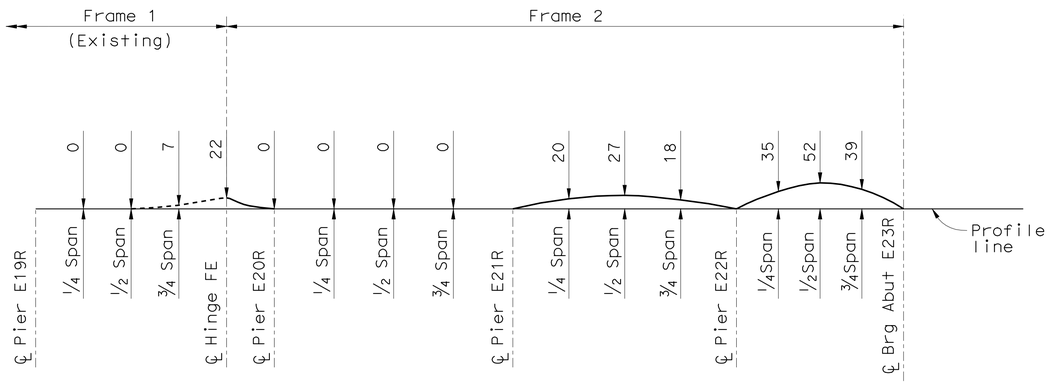

CAMBER DIAGRAM

No Scale

Note:

1. Camber values shown do not include allowance for falsework settlement.

TIME DEPENDENT CAMBER VALUES AT ℄ HINGE FE		
Elapsed time in days measured from prestressing short hinge side until closure and load transfer	Adjustment "A"	Adjustment "B"
30 Days	11	6
60 Days	10	4
90 Days	9	2
120 Days	8	1
180 Days	8	0
240 Days	7	0
360 Days	7	0
720 Days	7	0

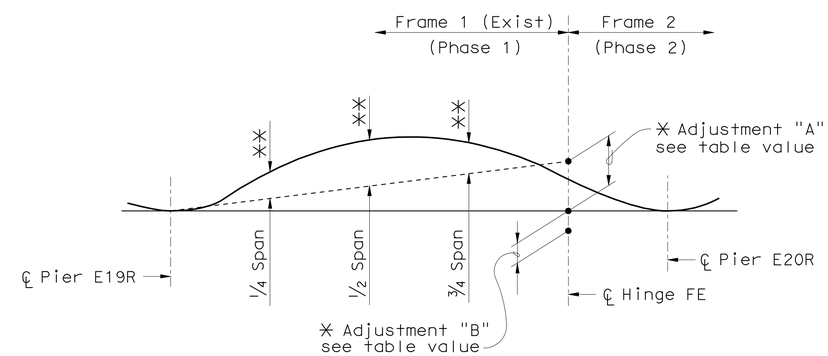

PART CAMBER DIAGRAM AT HINGE FE

No Scale

* See table for values to use - depends on period of time between prestressing of Frame 2 and load transfer from Frame 1.

** Adjusted values of camber taken from long cantilever values given in table. Decrease linearly back to pier for profile adjustment (add to profile grade).

SUBMITTAL - 12

ALL DIMENSIONS ARE IN MILLIMETERS UNLESS OTHERWISE SHOWN

DESIGN OVERSIGHT
HASAN EL-NATAR
SIGN OFF DATE

Rev. Date: 5-18-98

	BY	CHECKED
DESIGN	M. CHAR	T. DUDLEY
DETAILS	M. ANDRASEK	M. CHAR
QUANTITIES	Y. KIM	A. SIVATHASAN/T. DUDLEY

ORIGINAL SCALE IN MILLIMETERS FOR REDUCED PLANS 0 10 20 30 40 50 60 70 80 90 100

PREPARED FOR THE STATE OF CALIFORNIA DEPARTMENT OF TRANSPORTATION

MOHAN S. CHAR
PROJECT ENGINEER

CU 04
EA 0120M1

BRIDGE NO. 34-0006R
KILOMETER POST 2.1

SAN FRANCISCO OAKLAND BAY BRIDGE
EAST SPAN SEISMIC SAFETY PROJECT

OAKLAND APPROACH STRUCTURES - PHASE 2

EASTBOUND CAMBER DIAGRAMS

DISREGARD PRINTS BEARING EARLIER REVISION DATES

REVISION DATES (PRELIMINARY STAGE ONLY) 10/30/09 1/15/10 4/2/10 5/28/10 9/30/10 12/29/10 3/4/11 3/14/11 4/4/11 6/3/11

SHEET 50 OF 109

FILE => 04-0120m1-34-0006r-m-cam.dgn

USERNAME => s126614 DATE PLOTTED => 05-OCT-2011 TIME PLOTTED => 14:04

DIST.	COUNTY	ROUTE	KILOMETER POST TOTAL PROJECT	SHEET NO.	TOTAL SHEETS
04	Ala	80	1.6/2.7	623	744

REGISTERED ENGINEER - CIVIL

10-3-11

PLANS APPROVAL DATE

REGISTERED PROFESSIONAL ENGINEER MOHAN S. CHAR No. 57894 Exp. 6/30/12 CIVIL STATE OF CALIFORNIA

The State of California or its officers or agents shall not be responsible for the accuracy or completeness of electronic copies of this plan sheet.

T.Y. LIN / MOFFATT & NICHOL
TWO HARRISON STREET, SUITE 500
SAN FRANCISCO, CA 94105

AECOM TECHNICAL SERVICES INC.
999 TOWN & COUNTRY ROAD
ORANGE, CA 92868

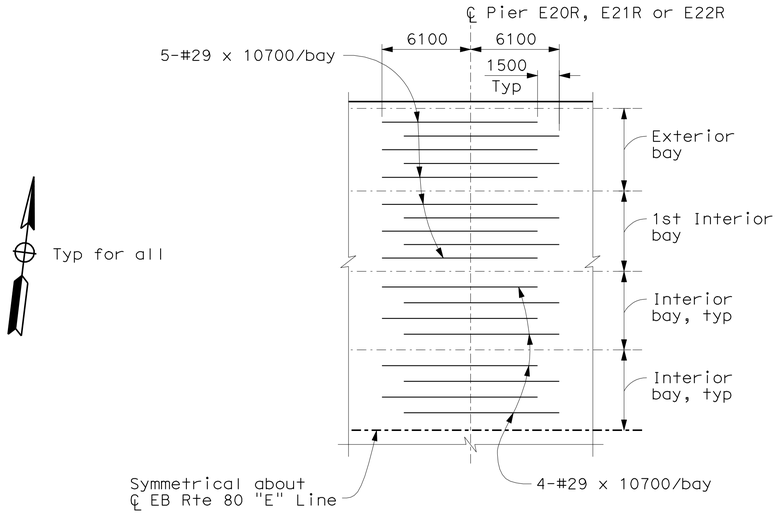

ADDITIONAL DECK REINFORCEMENT

No Scale
See "Note 1"

Notes:

1. For other Deck and Soffit reinforcement, see "Eastbound Part Typical Section" sheet.
2. Additional reinforcement is required at bays shown only.
3. All butt splices shall be service butt splice.

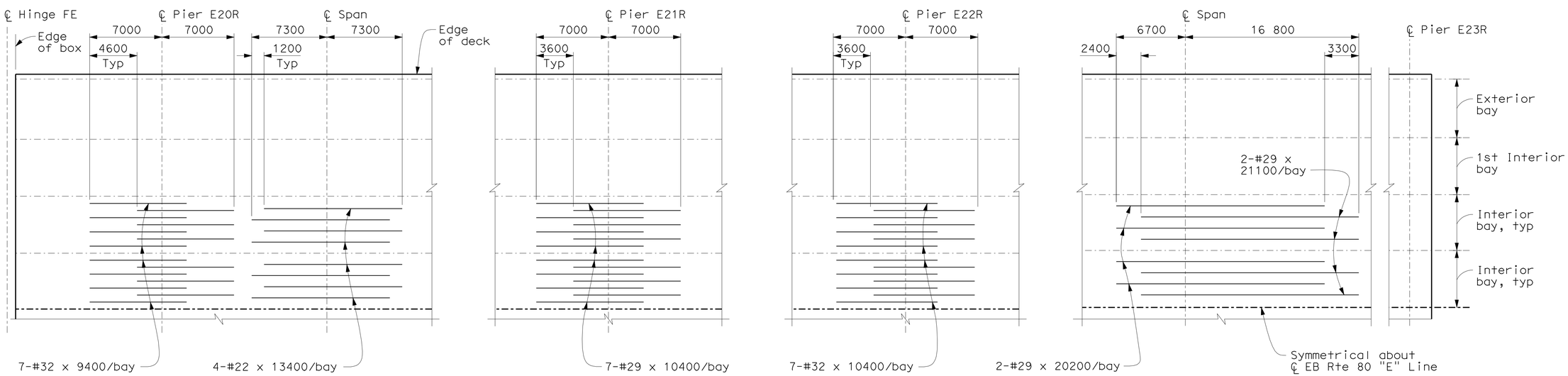

ADDITIONAL SOFFIT REINFORCEMENT

No Scale
See "Note 1"

ALL DIMENSIONS ARE IN MILLIMETERS UNLESS OTHERWISE SHOWN

SAN FRANCISCO OAKLAND BAY BRIDGE
EAST SPAN SEISMIC SAFETY PROJECT

OAKLAND APPROACH STRUCTURES - PHASE 2

EASTBOUND DECK DETAILS NO. 1

DESIGN OVERSIGHT
HASAN EL-NATAR
SIGN OFF DATE

Rev. Date: 5-18-98

	BY	CHECKED
DESIGN	M. CHAR	T. DUDLEY
DETAILS	M. ANDRASEK	M. CHAR
QUANTITIES	Y. KIM	A. SIVATHASAN/T. DUDLEY

PREPARED FOR THE STATE OF CALIFORNIA DEPARTMENT OF TRANSPORTATION

MOHAN S. CHAR
PROJECT ENGINEER

BRIDGE NO. 34-0006R
KILOMETER POST 2.1

ORIGINAL SCALE IN MILLIMETERS FOR REDUCED PLANS 0 10 20 30 40 50 60 70 80 90 100

CU 04
EA 0120M1

DISREGARD PRINTS BEARING EARLIER REVISION DATES

REVISION DATES (PRELIMINARY STAGE ONLY) 10/30/09 1/15/10 4/2/10 5/28/10 9/30/10 12/29/10 3/4/11 3/14/11 4/4/11 6/3/11

SHEET 51 OF 109

FILE => 04-0120m1-34-0006r-m-dkdt01.dgn

SUBMITTAL - 12

USERNAME => s121614 DATE PLOTTED => 05-OCT-2011 TIME PLOTTED => 14:04

DIST.	COUNTY	ROUTE	KILOMETER POST TOTAL PROJECT	SHEET NO.	TOTAL SHEETS
04	Ala	80	1.6/2.7	624	744

Caltrans Metric

REGISTERED ENGINEER - CIVIL

10-3-11

PLANS APPROVAL DATE

REGISTERED PROFESSIONAL ENGINEER MOHAN S. CHAR No. 57894 Exp. 6/30/12 CIVIL STATE OF CALIFORNIA

The State of California or its officers or agents shall not be responsible for the accuracy or completeness of electronic copies of this plan sheet.

T.Y. LIN / MOFFATT & NICHOL
TWO HARRISON STREET, SUITE 500
SAN FRANCISCO, CA 94105

AECOM TECHNICAL SERVICES INC.
999 TOWN & COUNTRY ROAD
ORANGE, CA 92868

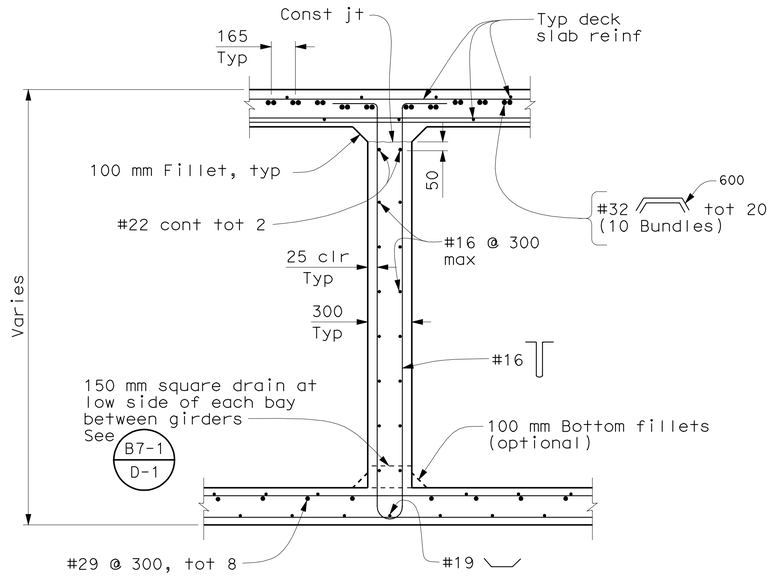

SECTION A-A
No Scale

Note:

1. No lap splices allowed in main diaphragm reinforcement.

LEGEND

Denotes bundled bars

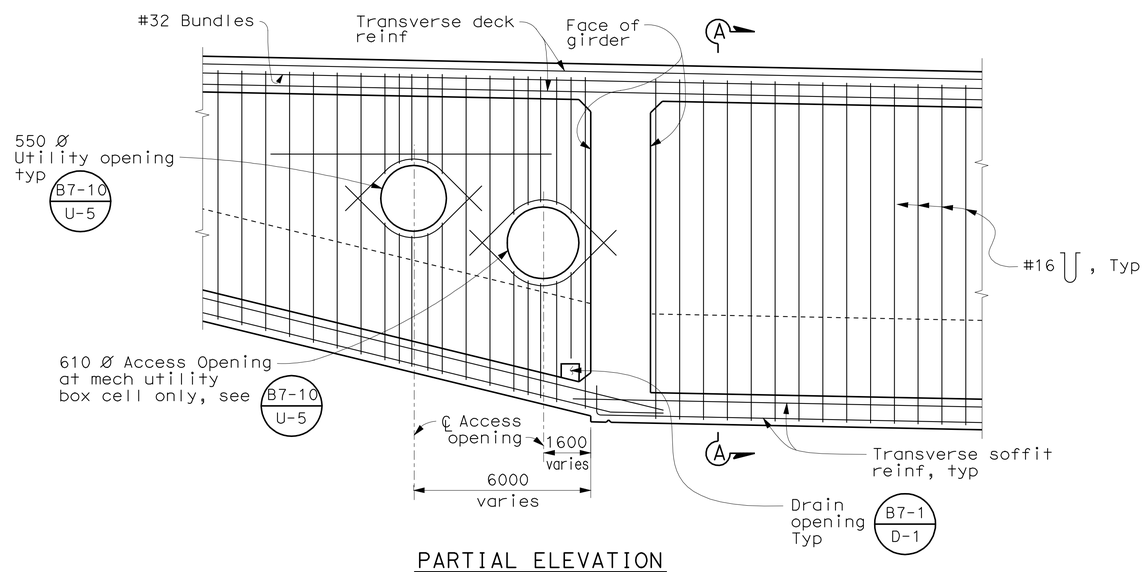

PARTIAL ELEVATION

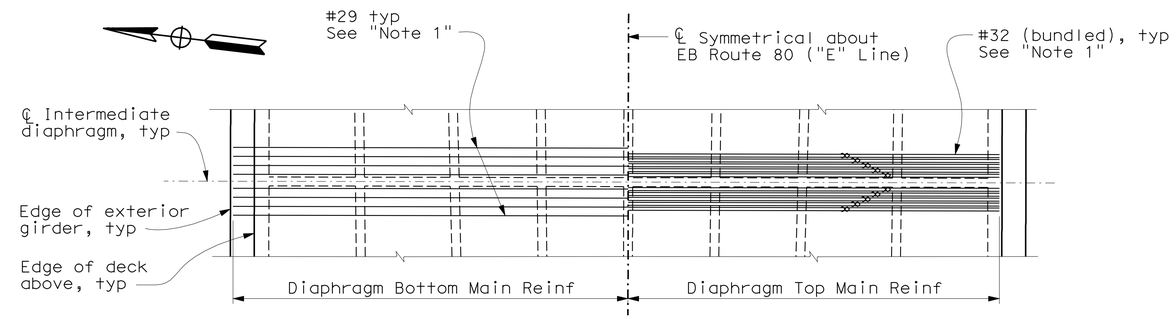

PLAN
1:100

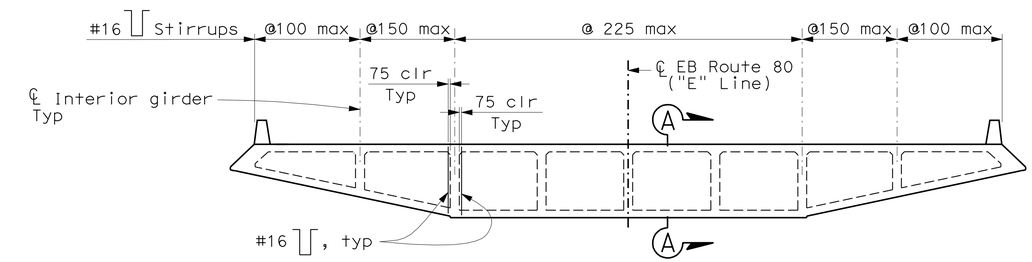

ELEVATION
1:100

INTERMEDIATE DIAPHRAGM DETAILS
1:25

Note:

For locations of intermediate diaphragm, see "Eastbound Girder Layout No. 1 thru 4" sheets.

ALL DIMENSIONS ARE IN MILLIMETERS UNLESS OTHERWISE SHOWN

SAN FRANCISCO OAKLAND BAY BRIDGE
EAST SPAN SEISMIC SAFETY PROJECT

OAKLAND APPROACH STRUCTURES - PHASE 2

EASTBOUND DECK DETAILS NO. 2

DESIGN OVERSIGHT
HASAN EL-NATER
SIGN OFF DATE

Rev. Date: 5-18-98

	BY	CHECKED
DESIGN	M. CHAR	T. DUDLEY
DETAILS	M. ANDRASEK	M. CHAR
QUANTITIES	Y. KIM	A. SIVATHASAN/T. DUDLEY

PREPARED FOR THE STATE OF CALIFORNIA DEPARTMENT OF TRANSPORTATION

MOHAN S. CHAR
PROJECT ENGINEER

BRIDGE NO. 34-0006R
KILOMETER POST 2.1

ORIGINAL SCALE IN MILLIMETERS FOR REDUCED PLANS 0 10 20 30 40 50 60 70 80 90 100

CU 04
EA 0120M1

DISREGARD PRINTS BEARING EARLIER REVISION DATES

REVISION DATES (PRELIMINARY STAGE ONLY): 10/30/09 1/15/10 4/2/10 5/28/10 9/30/10 12/29/10 3/4/11 3/14/11 4/4/11 6/3/11

SHEET 52 OF 109

FILE => 04-0120m1-34-0006r-m-dkdt02.dgn

SUBMITTAL - 12

USERNAME => s12161d DATE PLOTTED => 05-OCT-2011 TIME PLOTTED => 14:04

DIST.	COUNTY	ROUTE	KILOMETER POST TOTAL PROJECT	SHEET NO.	TOTAL SHEETS
04	Ala	80	1.6/2.7	625	744

Caltrans Metric

REGISTERED ENGINEER - CIVIL

10-3-11

PLANS APPROVAL DATE

REGISTERED PROFESSIONAL ENGINEER MOHAN S. CHAR No. 57894 Exp. 6/30/12 CIVIL STATE OF CALIFORNIA

The State of California or its officers or agents shall not be responsible for the accuracy or completeness of electronic copies of this plan sheet.

T.Y. LIN / MOFFATT & NICHOL
TWO HARRISON STREET, SUITE 500
SAN FRANCISCO, CA 94105

AECOM TECHNICAL SERVICES INC.
999 TOWN & COUNTRY ROAD
ORANGE, CA 92868

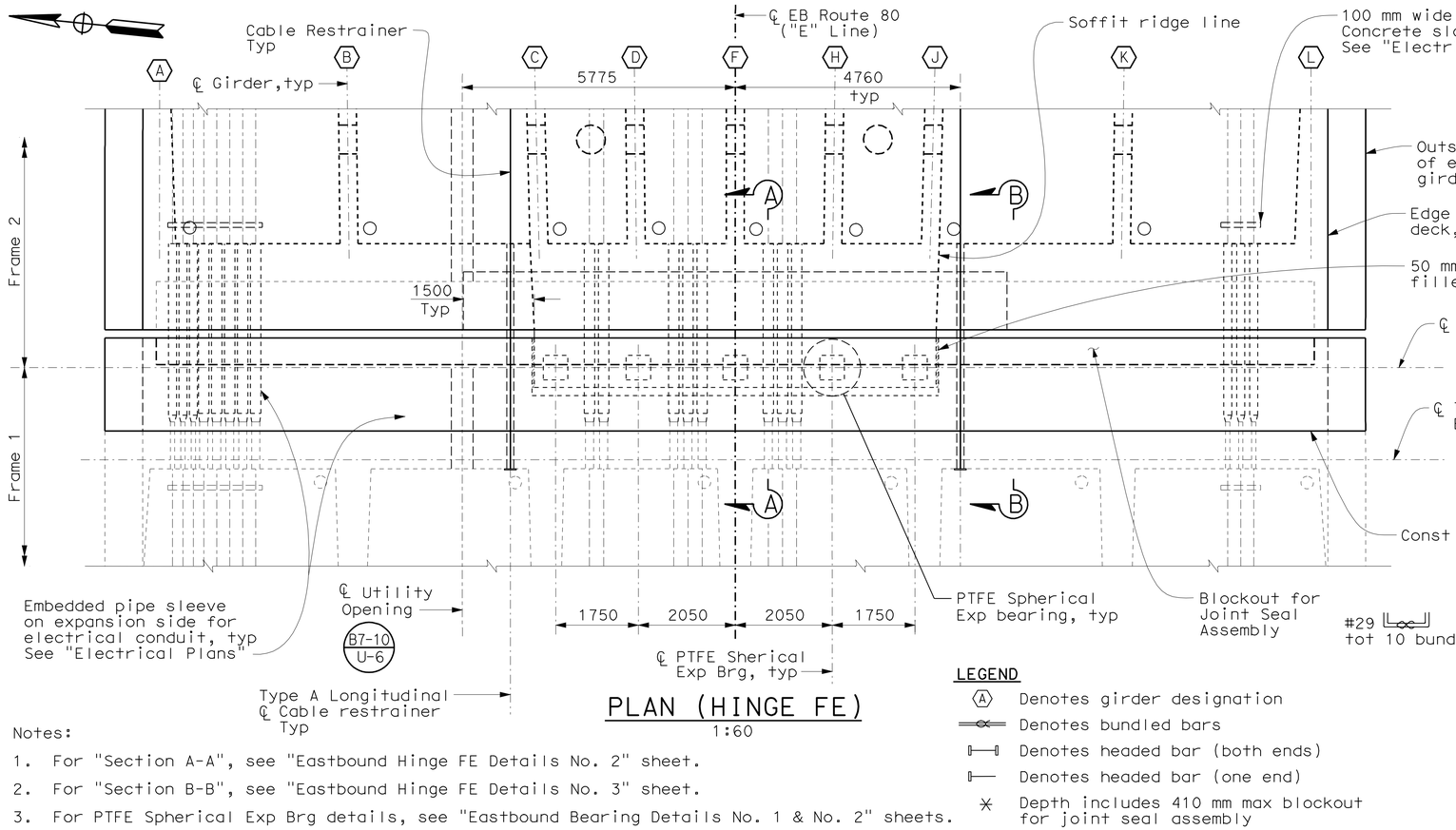

PLAN (HINGE FE)
1:60

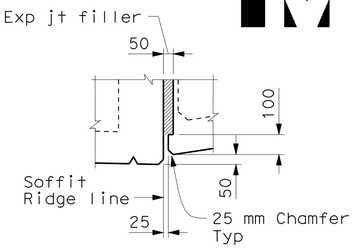

DETAIL 1
1:15

LEGEND

- (A) Denotes girder designation
- Denotes bundled bars
- Denotes headed bar (both ends)
- Denotes headed bar (one end)
- ✳ Depth includes 410 mm max blockout for joint seal assembly

Notes:

1. For "Section A-A", see "Eastbound Hinge FE Details No. 2" sheet.
2. For "Section B-B", see "Eastbound Hinge FE Details No. 3" sheet.
3. For PTFE Spherical Exp Brg details, see "Eastbound Bearing Details No. 1 & No. 2" sheets.
4. For longitudinal restrainer details, see "Restrainer Unit Details No. 1 & No. 2" sheets.
5. For Hinge cantilever & suspension end reinforcement layout, see "Eastbound Hinge Details No. 4" sheet.
6. For Access Openings, see "Eastbound Girder Layout No. 3 thru No. 7" & "Miscellaneous Details" sheets.

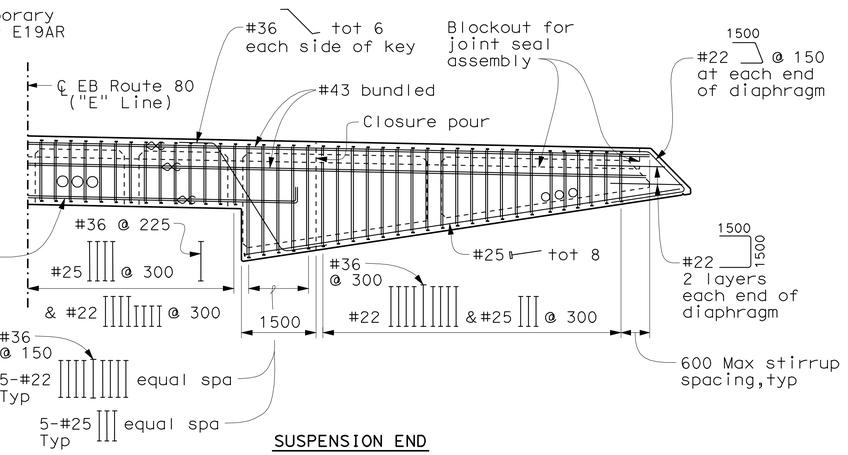

SUSPENSION END

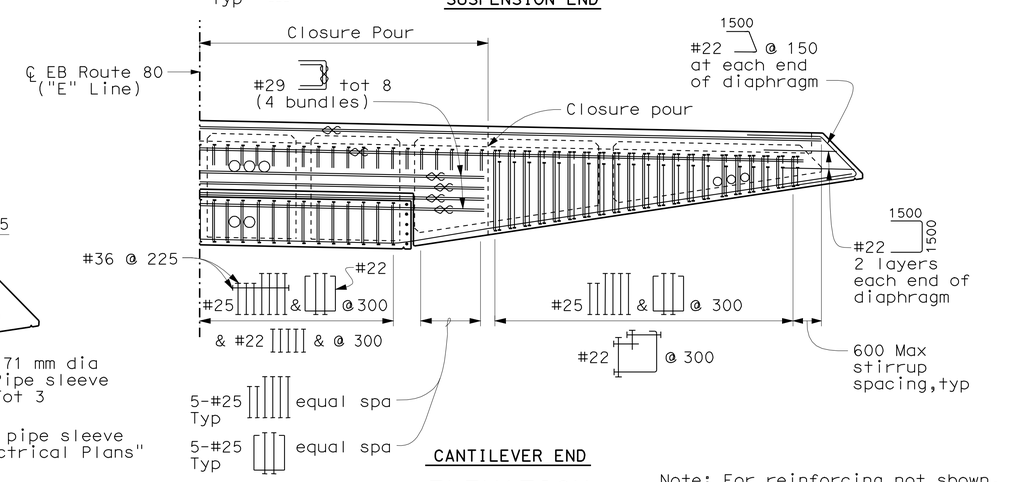

CANTILEVER END

ELEVATION
1:60

Note: For reinforcing not shown, see "Notes 1 thru 5".

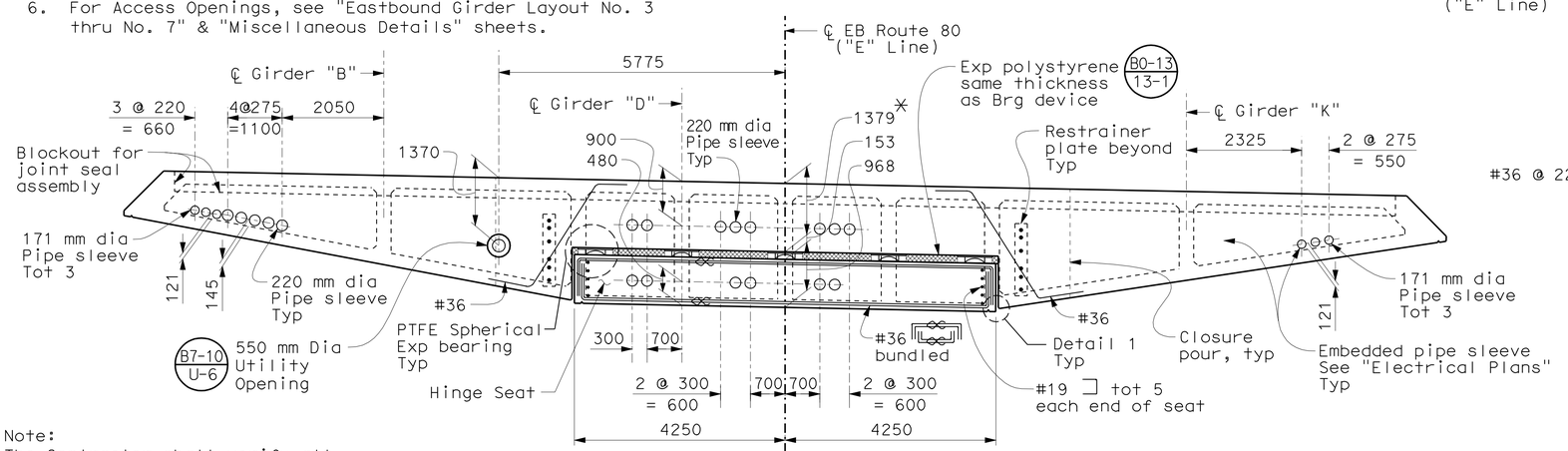

ELEVATION (HINGE FE)
1:60

Note:
The Contractor shall verify all controlling field dimensions before ordering or fabricating any material.

ALL DIMENSIONS ARE IN MILLIMETERS UNLESS OTHERWISE SHOWN

SAN FRANCISCO OAKLAND BAY BRIDGE
EAST SPAN SEISMIC SAFETY PROJECT

OAKLAND APPROACH STRUCTURES - PHASE 2

EASTBOUND HINGE FE DETAILS NO. 1

DESIGN OVERSIGHT
HASAN EL-NATAR
SIGN OFF DATE

	BY	CHECKED
DESIGN	M. CHAR	T. DUDLEY
DETAILS	M. ANDRASEK	M. CHAR
QUANTITIES	Y. KIM	A. SIVATHASAN/T. DUDLEY

PREPARED FOR THE STATE OF CALIFORNIA DEPARTMENT OF TRANSPORTATION

MOHAN S. CHAR
PROJECT ENGINEER

BRIDGE NO. 34-0006R
KILOMETER POST 2.1

Rev. Date: 5-18-98

ORIGINAL SCALE IN MILLIMETERS FOR REDUCED PLANS 0 10 20 30 40 50 60 70 80 90 100

CU 04
EA 0120M1

DISREGARD PRINTS BEARING EARLIER REVISION DATES

REVISION DATES (PRELIMINARY STAGE ONLY) 10/30/09 1/15/10 4/2/10 5/28/10 9/30/10 12/29/10 3/4/11 3/14/11 4/4/11 6/3/11

SHEET 53 OF 109

FILE => 04-0120m1-34-0006r-n-hingedt01.dgn

SUBMITTAL - 12

USERNAME => s121614 DATE PLOTTED => 05-OCT-2011 TIME PLOTTED => 14:04

Note:
The Contractor shall verify all controlling field dimensions before ordering or fabricating any material.

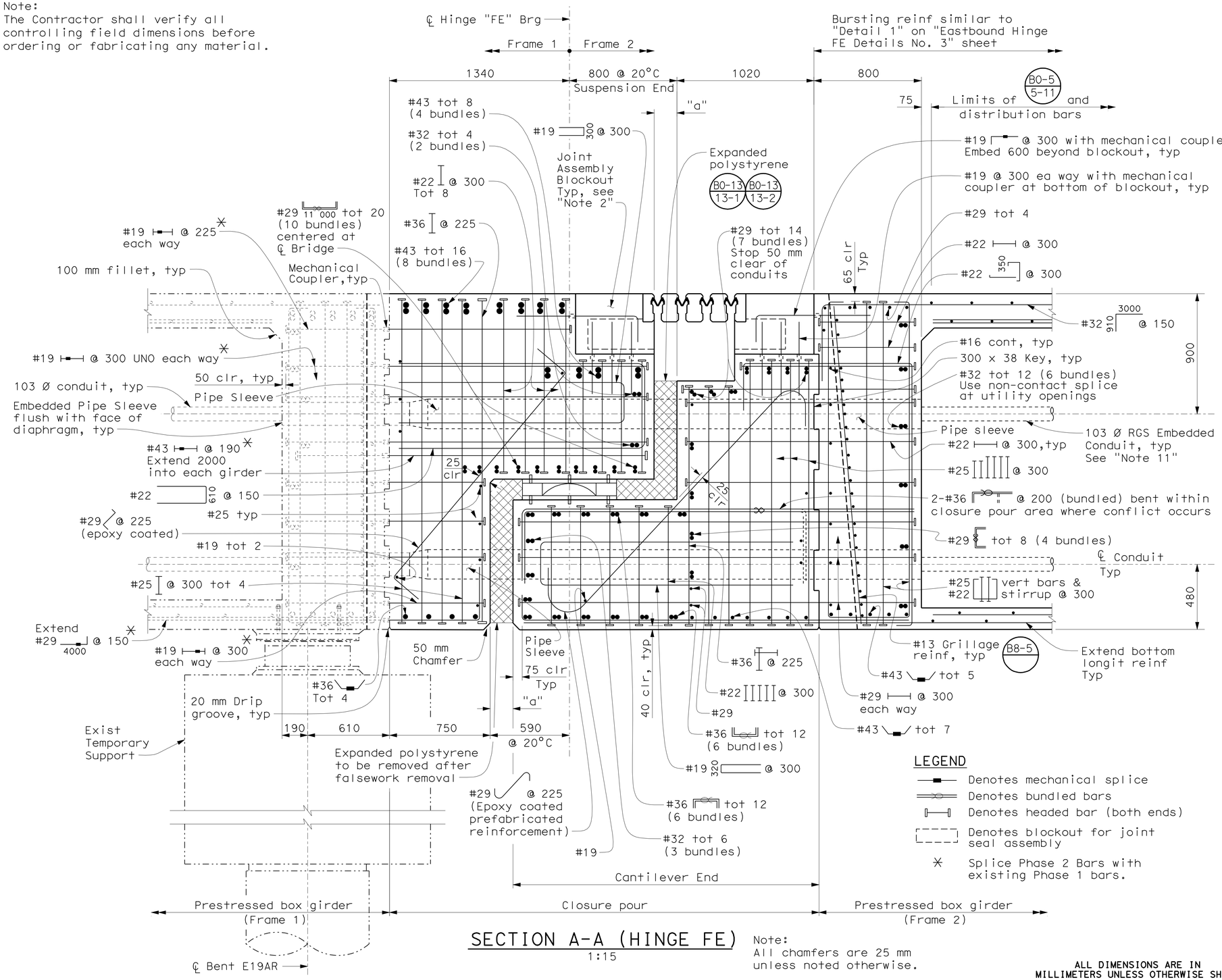

SECTION A-A (HINGE FE)

1:15

Note:
All chamfers are 25 mm unless noted otherwise.

LEGEND

- Denotes mechanical splice
- Denotes bundled bars
- Denotes headed bar (both ends)
- Denotes blockout for joint seal assembly
- ✳ Splice Phase 2 Bars with existing Phase 1 bars.

Notes:

1. For Channel Assembly Details, see "Seismic Joint (Hinges EW, EE & FE)" sheets.
2. For Blockout sizes, see "Deck Joint Details" sheet.
3. No lap splices allowed in main diaphragm reinforcing.
4. Closure pour, as indicated, shall be cast-in-place concrete and placed after cantilever end of hinge is constructed and bearing assemblies are properly positioned. Concrete shall be same strength as cast-in-place prestressed concrete. Falsework shall remain in place until prestress in box girder structure has been completed.
5. See Bridge Details B0-13 13-1 and B0-13 13-2
6. For "a" dimension, see "Deck Joint Details" sheet.
7. Blockout depth is 450 mm maximum.
8. 75 mm minimum clearance shall be maintained for longitudinal reinforcement at top layer of deck & diaphragm rebars & top end of vertical headed bars after deck ground off for seismic joint. Bend longitudinal reinforcement as required.
9. For reinforcement at deck joint blockouts, see "Modular Deck Joint" sheets.
10. If using drill & bond dowels at seismic joint blockouts, Contractor shall provide a permanent means for identifying locations for installing dowels after concreting.
11. The Contractor shall test mating of pipe sleeves from Frame 2 that represent future construction with pipe sleeves from Frame 1 to ensure that the overall alignment of the conduits is straight through the pipe sleeves. Grout pipe sleeves on the cantilever side after post-tensioning conduits are aligned.

Caltrans Metric

DIST.	COUNTY	ROUTE	KILOMETER POST TOTAL PROJECT	SHEET NO.	TOTAL SHEETS
04	Ala	80	1.6/2.7	626	744

REGISTERED ENGINEER - CIVIL
10-3-11
PLANS APPROVAL DATE
REGISTERED PROFESSIONAL ENGINEER MOHAN S. CHAR No. 57894 Exp. 6/30/12 CIVIL STATE OF CALIFORNIA
The State of California or its officers or agents shall not be responsible for the accuracy or completeness of electronic copies of this plan sheet.

T.Y. LIN / MOFFATT & NICHOL
TWO HARRISON STREET, SUITE 500
SAN FRANCISCO, CA 94105

AECOM TECHNICAL SERVICES INC.
999 TOWN & COUNTRY ROAD
ORANGE, CA 92868

SUBMITTAL - 12

ALL DIMENSIONS ARE IN MILLIMETERS UNLESS OTHERWISE SHOWN

SAN FRANCISCO OAKLAND BAY BRIDGE
EAST SPAN SEISMIC SAFETY PROJECT

OAKLAND APPROACH STRUCTURES - PHASE 2

EASTBOUND HINGE FE DETAILS NO. 2

DESIGN OVERSIGHT
HASAN EL-NATAR
SIGN OFF DATE
Rev. Date: 5-18-98

	BY	CHECKED
DESIGN	M. CHAR	T. DUDLEY
DETAILS	M. ANDRASEK	M. CHAR
QUANTITIES	Y. KIM	A. SIVATHASAN/T. DUDLEY

PREPARED FOR THE STATE OF CALIFORNIA DEPARTMENT OF TRANSPORTATION

MOHAN S. CHAR
PROJECT ENGINEER

BRIDGE NO. 34-0006R
KILOMETER POST 2.1

ORIGINAL SCALE IN MILLIMETERS FOR REDUCED PLANS 0 10 20 30 40 50 60 70 80 90 100

CU 04
EA 0120M1

DISREGARD PRINTS BEARING EARLIER REVISION DATES
REVISION DATES (PRELIMINARY STAGE ONLY) 10/30/09 1/15/10 4/2/10 5/28/10 9/30/10 12/29/10 3/4/11 3/14/11 4/14/11 6/3/11

SHEET 54 OF 109

FILE => 04-0120m1-34-0006r-n-hingedt02.dgn

USERNAME => s121614 DATE PLOTTED => 05-OCT-2011 TIME PLOTTED => 14:04

DIST.	COUNTY	ROUTE	KILOMETER POST TOTAL PROJECT	SHEET NO.	TOTAL SHEETS
04	Ala	80	1.6/2.7	627	744

REGISTERED ENGINEER - CIVIL

10-3-11

PLANS APPROVAL DATE

REGISTERED PROFESSIONAL ENGINEER MOHAN S. CHAR No. 57894 Exp. 6/30/12 CIVIL STATE OF CALIFORNIA

The State of California or its officers or agents shall not be responsible for the accuracy or completeness of electronic copies of this plan sheet.

T.Y. LIN / MOFFATT & NICHOL
TWO HARRISON STREET, SUITE 500
SAN FRANCISCO, CA 94105

AECOM TECHNICAL SERVICES INC.
999 TOWN & COUNTRY ROAD
ORANGE, CA 92868

LEGEND

- Denotes mechanical splice
- Denotes bundled bars
- Denotes headed bar (both ends)
- Denotes blockout for joint seal assembly
- ✳ Splice Phase 2 Bars with existing Phase 1 bars.

Note:
Additional bursting reinf shown @ end of Frame 1 is typical for each interior Girder, reinf for each interior Girder @ beginning of Frame 2 is similar but opposite hand.

Notes:

1. Reinforcement may be placed between support boxes, in 2 bar bundles or adjusted to clear utility openings and expansion joint assembly. Bend reinforcing to clear joint seal assembly as required.
2. For Blockout sizes, see "Deck Joint Details" sheet.
3. No lap splices allowed in main diaphragm reinforcing.
4. Closure pour, as indicated, shall be cast-in-place concrete and placed after cantilever end of hinge is constructed and bearing assemblies are properly positioned. Concrete shall be same strength as cast-in-place prestressed concrete. Falsework shall remain in place until prestress in box girder structure has been completed.
5. See Bridge Details B0-13 13-1 and B0-13 13-2
6. For "a" dimension, see "Deck Joint Details" sheet.
7. Blockout depth is 450 mm maximum.

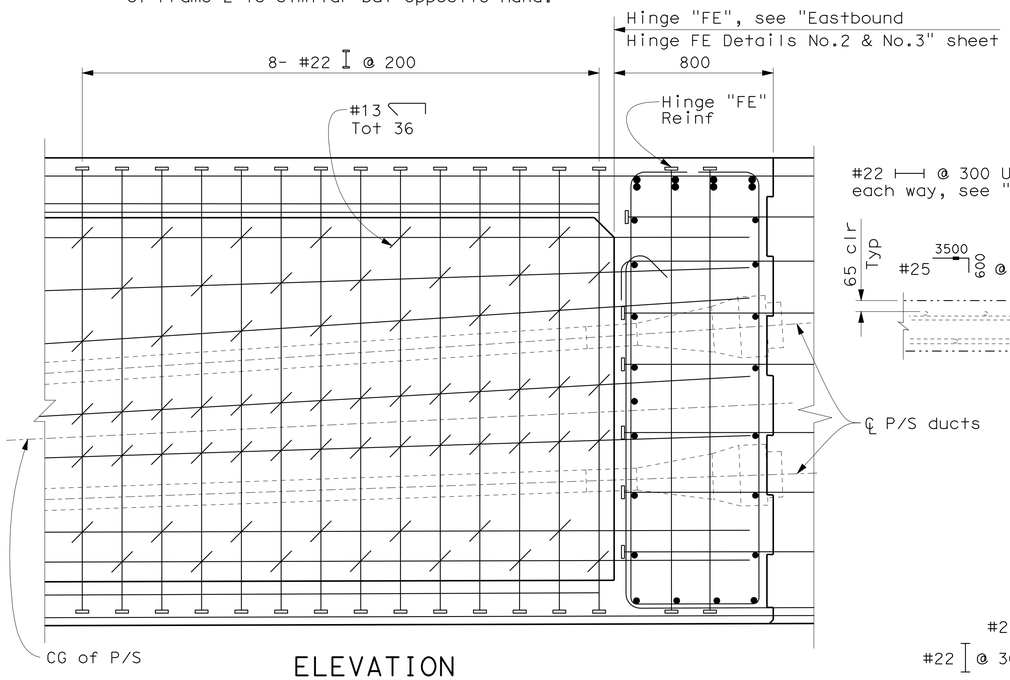

ELEVATION

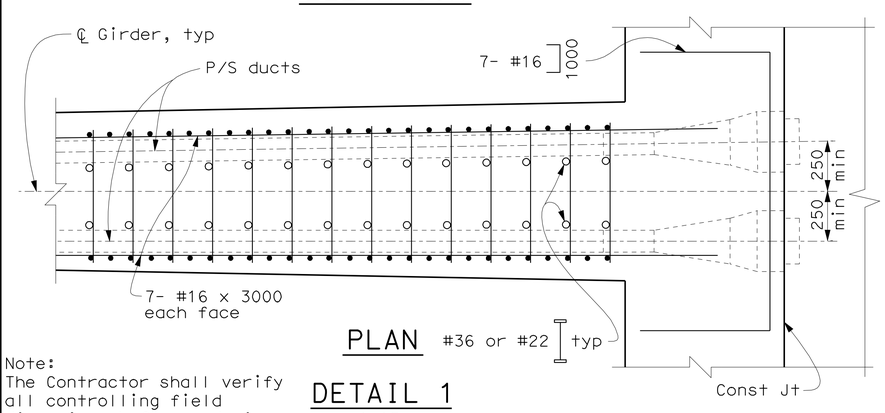

PLAN

DETAIL 1
1:15

Note:
The Contractor shall verify all controlling field dimensions before ordering or fabricating any material.

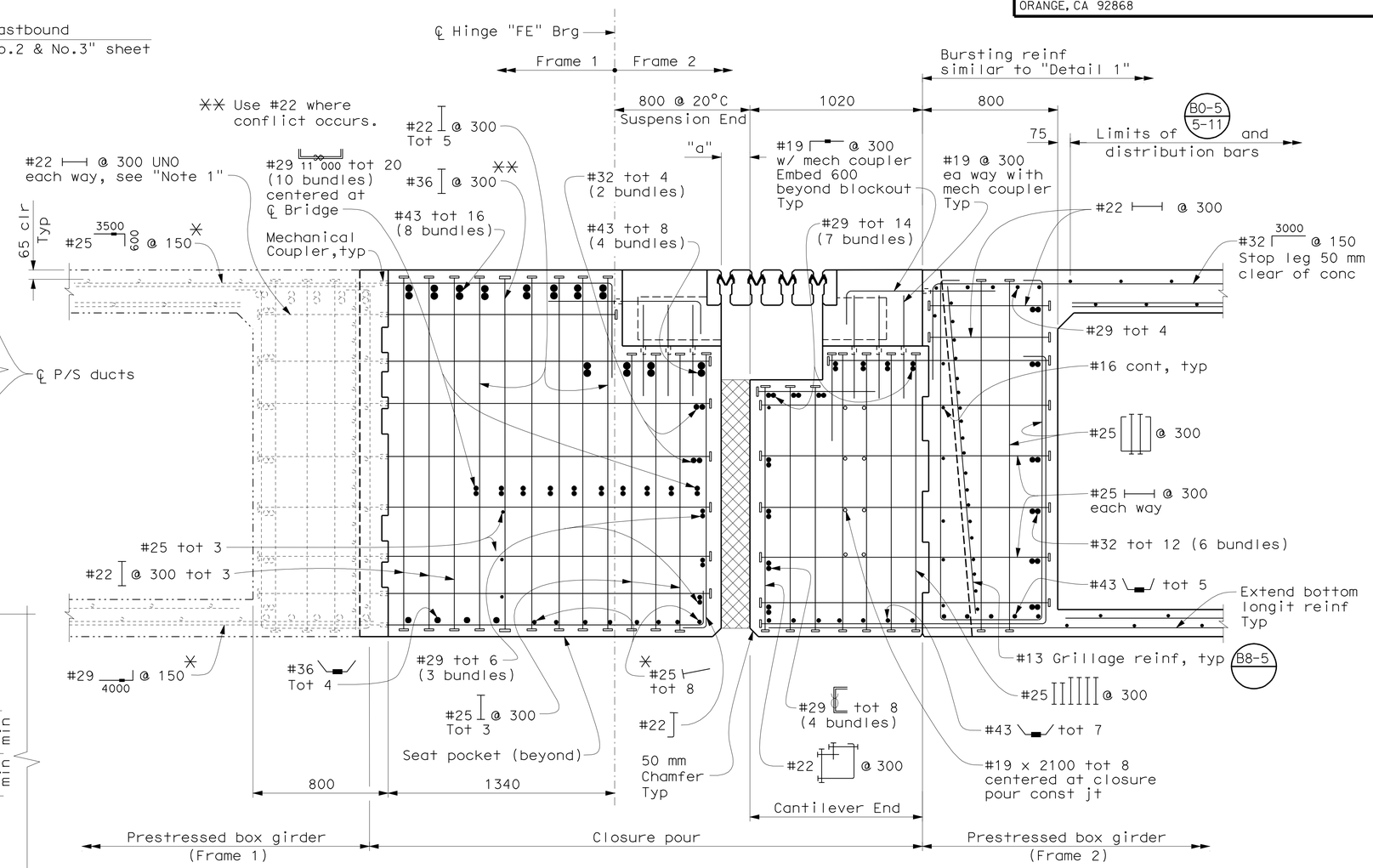

SECTION B-B (HINGE FE)
1:15

Note:
For "information not shown see "Section A-A" and "Notes 8, 9 & 10" on "Eastbound Hinge FE Details No. 2" sheet.

✳ Terminate bars at seat pocket. Field bend vertical leg to avoid conflict.

ALL DIMENSIONS ARE IN MILLIMETERS UNLESS OTHERWISE SHOWN

SAN FRANCISCO OAKLAND BAY BRIDGE
EAST SPAN SEISMIC SAFETY PROJECT

OAKLAND APPROACH STRUCTURES - PHASE 2

EASTBOUND HINGE FE DETAILS NO. 3

DESIGN OVERSIGHT
HASAN EL-NATAR
SIGN OFF DATE

Rev. Date: 5-18-98

	BY	CHECKED
DESIGN	M. CHAR	T. DUDLEY
DETAILS	M. ANDRASEK	M. CHAR
QUANTITIES	Y. KIM	A. SIVATHASAN/T. DUDLEY

PREPARED FOR THE STATE OF CALIFORNIA DEPARTMENT OF TRANSPORTATION

MOHAN S. CHAR
PROJECT ENGINEER

BRIDGE NO. 34-0006R
KILOMETER POST 2.1

ORIGINAL SCALE IN MILLIMETERS FOR REDUCED PLANS 0 10 20 30 40 50 60 70 80 90 100

CU 04
EA 0120M1

DISREGARD PRINTS BEARING EARLIER REVISION DATES

REVISION DATES (PRELIMINARY STAGE ONLY) 10/30/09 1/15/10 4/2/10 5/28/10 9/30/10 12/29/10 3/4/11 3/14/11 4/4/11 6/3/11

SHEET 55 OF 109

FILE => 04-0120m1-34-0006r-n-hingedt03.dgn

SUBMITTAL - 12

USERNAME => s12614 DATE PLOTTED => 05-OCT-2011 TIME PLOTTED => 14:04

Note:
The Contractor shall verify all controlling field dimensions before ordering or fabricating any material.

Notes:

1. No lap splices allowed in Hinge Diaphragm reinforcement. Splices in Hinge Diaphragm reinforcement shall be made by butt weld or mechanical coupler. Stagger adjacent splice locations at least 900mm, except otherwise noted.

2. For details not shown, see "Eastbound Hinge FE Details No. 1, 2 and 3" sheets.

LEGEND

- Blockout for joint seal assembly
- Denotes mechanical splice
- Denotes girder designation
- Denotes bundled bars
- Denotes headed bar (one end)
- Denotes headed bar (two ends)

Caltrans Metric

DIST.	COUNTY	ROUTE	KILOMETER POST TOTAL PROJECT	SHEET NO.	TOTAL SHEETS
04	Ala	80	1.6/2.7	628	744

REGISTERED ENGINEER - CIVIL
10-3-11
PLANS APPROVAL DATE
REGISTERED PROFESSIONAL ENGINEER MOHAN S. CHAR No. 57894 Exp. 6/30/12 CIVIL STATE OF CALIFORNIA

The State of California or its officers or agents shall not be responsible for the accuracy or completeness of electronic copies of this plan sheet.

T.Y. LIN / MOFFATT & NICHOL
TWO HARRISON STREET, SUITE 500
SAN FRANCISCO, CA 94105

AECOM TECHNICAL SERVICES INC.
999 TOWN & COUNTRY ROAD
ORANGE, CA 92868

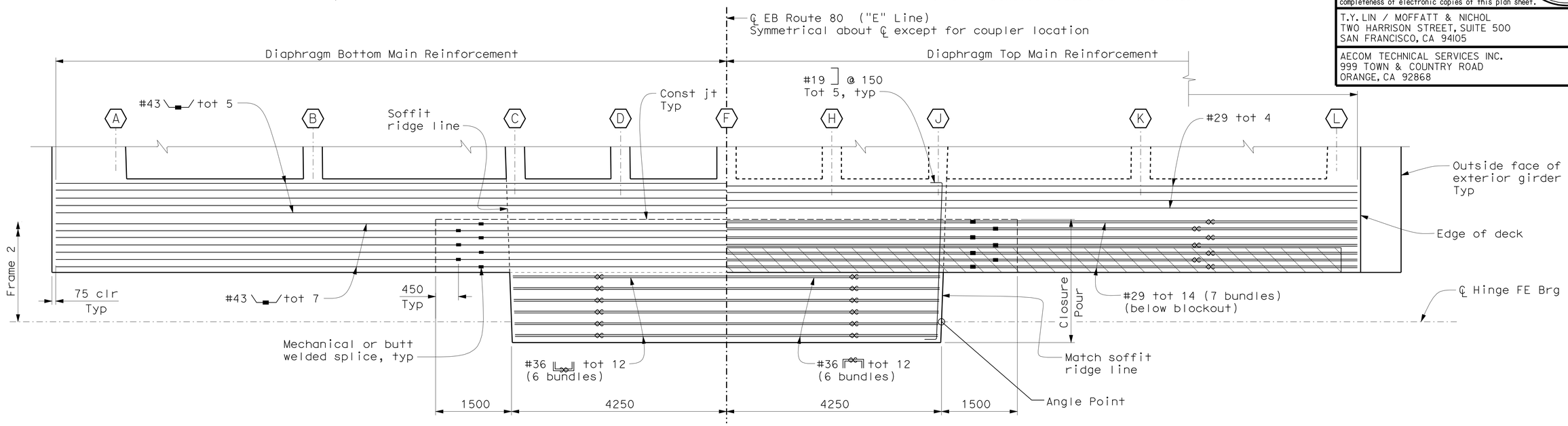

PLAN - HINGE CANTILEVER END

1:40

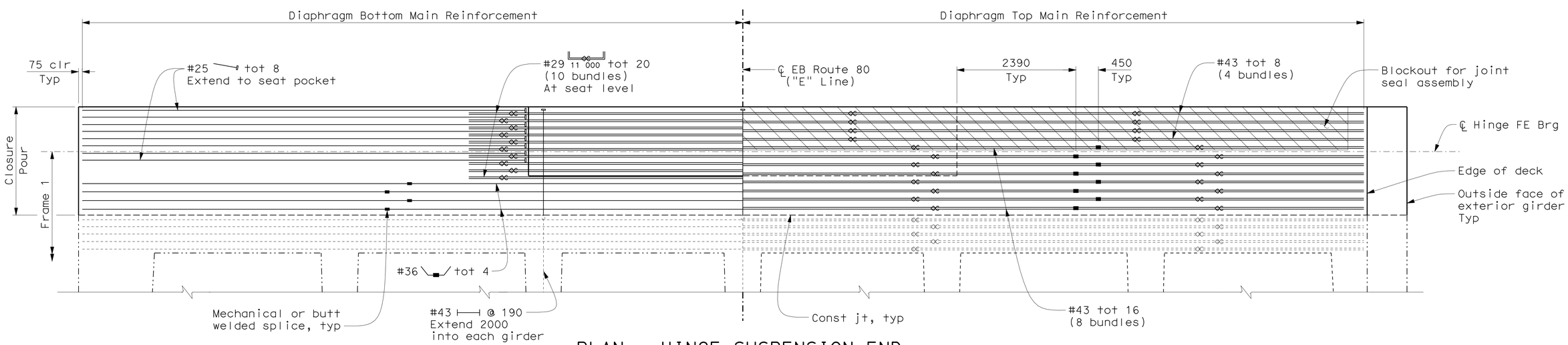

PLAN - HINGE SUSPENSION END

1:40

ALL DIMENSIONS ARE IN MILLIMETERS UNLESS OTHERWISE SHOWN

SUBMITTAL - 12

DESIGN OVERSIGHT
HASAN EL-NATAR
SIGN OFF DATE

Rev. Date: 5-18-98

	BY	CHECKED
DESIGN	M. CHAR	T. DUDLEY
DETAILS	M. ANDRASEK	M. CHAR
QUANTITIES	Y. KIM	A. SIVATHASAN/T. DUDLEY

ORIGINAL SCALE IN MILLIMETERS FOR REDUCED PLANS 0 10 20 30 40 50 60 70 80 90 100

PREPARED FOR THE STATE OF CALIFORNIA DEPARTMENT OF TRANSPORTATION

MOHAN S. CHAR
PROJECT ENGINEER

CU 04
EA 0120M1

BRIDGE NO. 34-0006R
KILOMETER POST 2.1

SAN FRANCISCO OAKLAND BAY BRIDGE
EAST SPAN SEISMIC SAFETY PROJECT

OAKLAND APPROACH STRUCTURES - PHASE 2

EASTBOUND HINGE FE DETAILS NO. 4

DISREGARD PRINTS BEARING EARLIER REVISION DATES → 10/30/09 1/15/10 4/2/10 5/28/10 9/30/10 12/29/10 3/14/11 3/14/11 4/14/11 6/3/11

SHEET 56 OF 109

FILE => 04-0120m1-34-0006r-n-hingedt04.dgn

USERNAME => s121614 DATE PLOTTED => 05-OCT-2011 TIME PLOTTED => 14:05

RELEASED 4-20-98

SUBMITTAL - 12

DIST.	COUNTY	ROUTE	KILOMETER POST TOTAL PROJECT	SHEET NO.	TOTAL SHEETS
04	Ala	80	1.6/2.7	629	744

Caltrans Metric

REGISTERED ENGINEER - CIVIL

10-3-11

PLANS APPROVAL DATE

REGISTERED PROFESSIONAL ENGINEER MOHAN S. CHAR No. 57894 Exp. 6/30/12 CIVIL STATE OF CALIFORNIA

The State of California or its officers or agents shall not be responsible for the accuracy or completeness of electronic copies of this plan sheet.

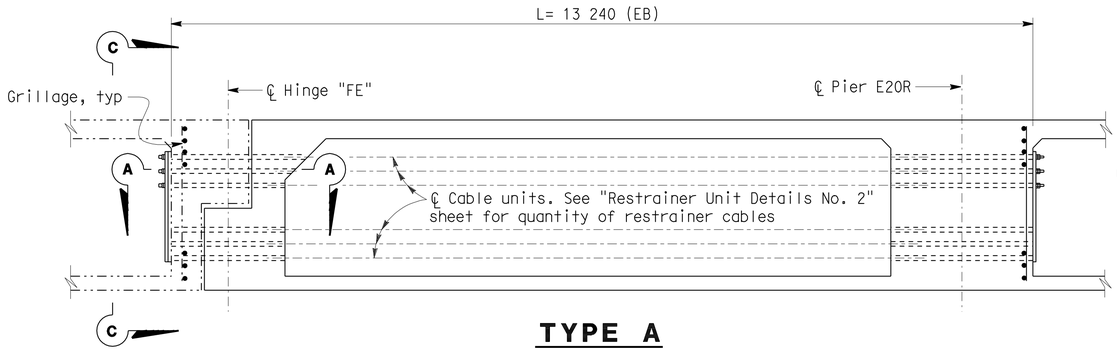

TYPE A

1 LONGITUDINAL HINGE RESTRAINER

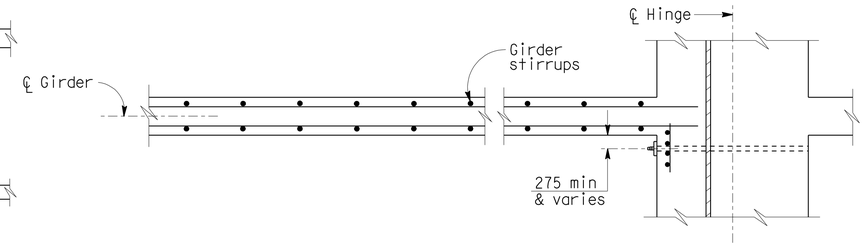

1 SECTION A-A

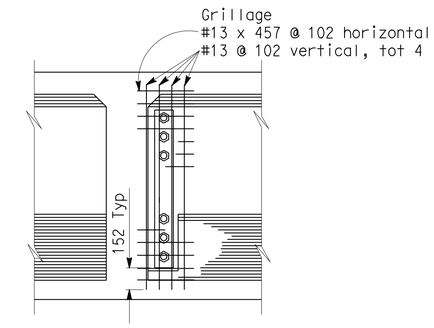

1 SECTION C-C

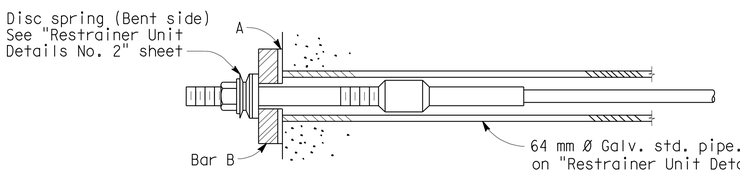

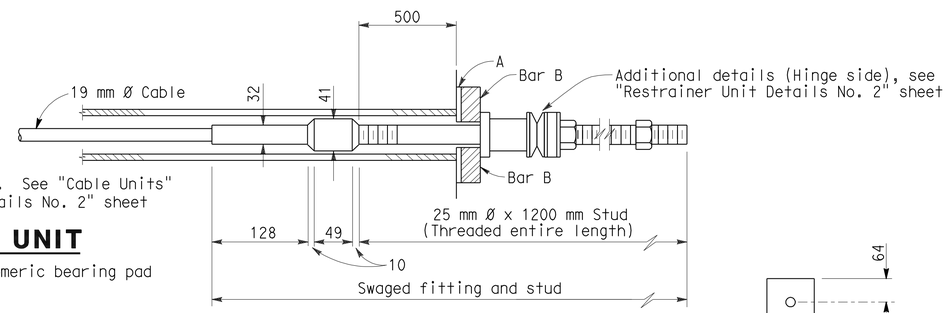

CABLE UNIT

A = 6 mm elastomeric bearing pad

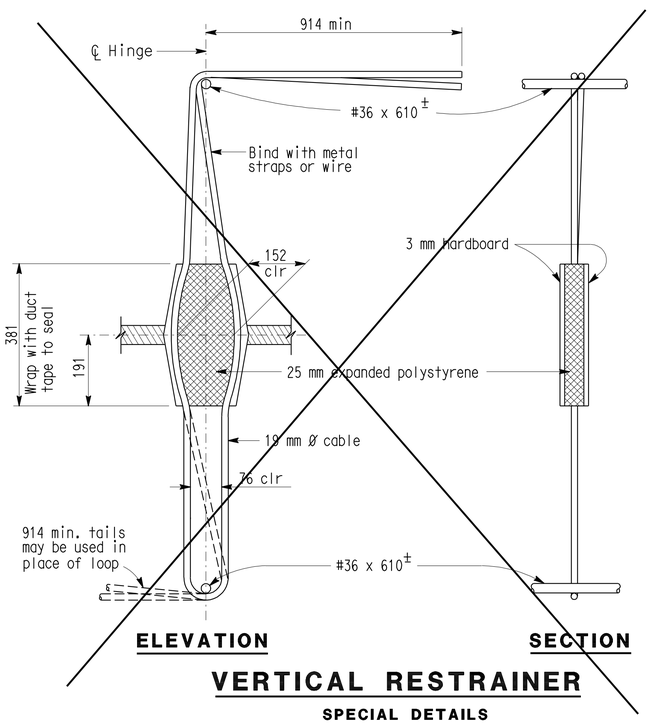

VERTICAL RESTRAINER

SPECIAL DETAILS

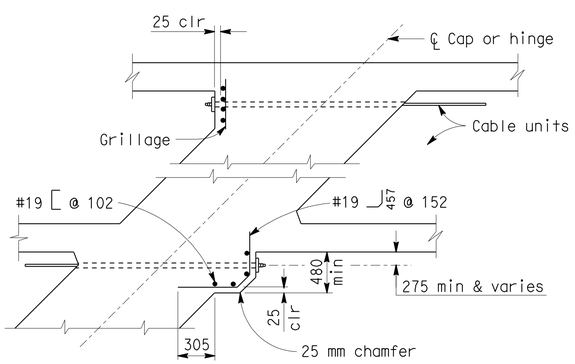

END ANCHORAGE DETAILS AT HINGE OR CAP PART PLAN

NOTES:

Restrainer units to be on tangent alignment.

Anchor nuts shall not be set until 30 days following completion of prestressing for CIP prestressed bridges.

See other sheets for location and number of hinge restrainers, and table of joint openings.

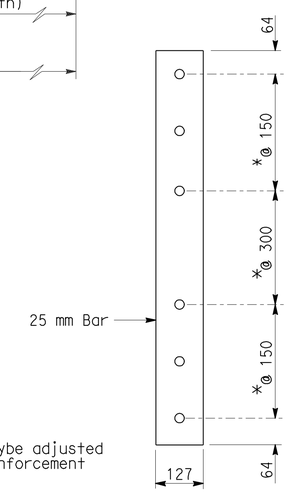

* Dimension maybe adjusted to clear reinforcement

DETAIL - BAR B

NO SCALE

ALL DIMENSIONS ARE IN MILLIMETERS UNLESS OTHERWISE SHOWN

STANDARD DRAWING				
FILE NO. XS 12-53	DESIGN BY O.H. DEGENKOLB	CHECKED PAT HIPLEY	APPROVAL RECOMMENDED BY	
DRAWING DATE REVISED	DETAILS BY R. YEE	CHECKED PAT HIPLEY		
	SUBMITTED BY R.J. ZELINSKI		DESIGN SUPERVISOR	

DS OSD 2147A (METRIC) (REV. 2/25/97)

1 All Details Revised & Delete Vertical Restrainer

STATE OF CALIFORNIA DEPARTMENT OF TRANSPORTATION

DIVISION OF STRUCTURES STRUCTURE DESIGN

BRIDGE NO. 34-0006R

KILOMETER POST 2.1

SAN FRANCISCO OAKLAND BAY BRIDGE EAST SPAN SEISMIC SAFETY PROJECT

OAKLAND APPROACH STRUCTURES - PHASE 2

RESTRAINER UNIT DETAILS NO.1

ORIGINAL SCALE IN MILLIMETERS FOR REDUCED PLANS 0 10 20 30 40 50 60 70 80 90 100

CU 04
EA 0120M1

DISREGARD PRINTS BEARING EARLIER REVISION DATES

REVISION DATES (PRELIMINARY STAGE ONLY) 10/30/09 1/15/10 4/22/10 5/28/10 9/30/10 12/29/10 3/4/11 3/14/11 4/4/11 6/3/11

SHEET 57 OF 109

USERNAME => s121614

04-0120m1-34-0006r-n-hngres01.dgn

DATE PLOTTED => 05-OCT-2011 TIME PLOTTED => 14:05 FILE=>$FILE

RELEASED 4-20-98

DIST.	COUNTY	ROUTE	KILOMETER POST TOTAL PROJECT	SHEET NO.	TOTAL SHEETS
04	Ala	80	1.6/2.7	630	744

Caltrans Metric

REGISTERED ENGINEER - CIVIL

10-3-11

PLANS APPROVAL DATE

REGISTERED PROFESSIONAL ENGINEER MOHAN S. CHAR No. 57894 Exp. 6/30/12 CIVIL STATE OF CALIFORNIA

The State of California or its officers or agents shall not be responsible for the accuracy or completeness of electronic copies of this plan sheet.

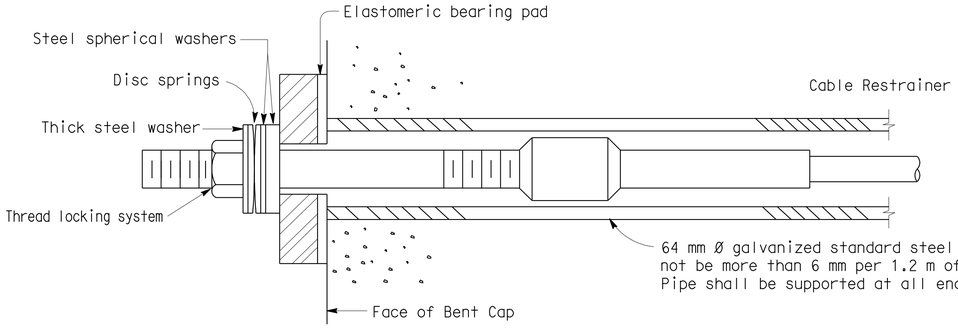

BENT SIDE

(Retrofit construction shown)

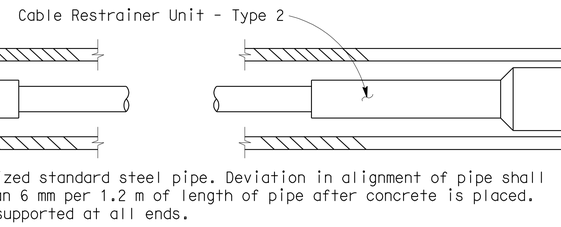

CABLE UNIT

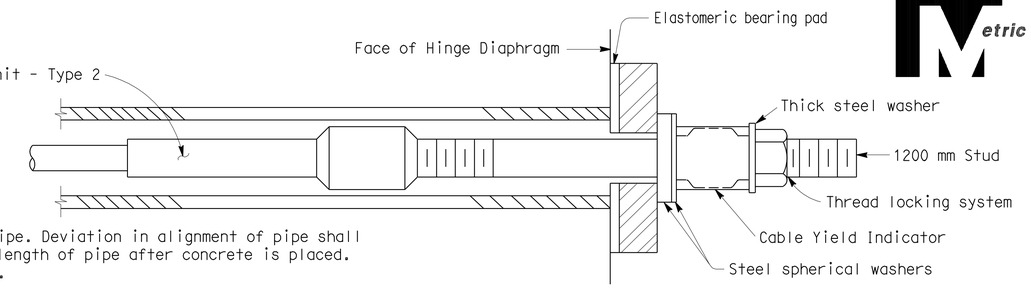

HINGE SIDE

(Retrofit construction shown)

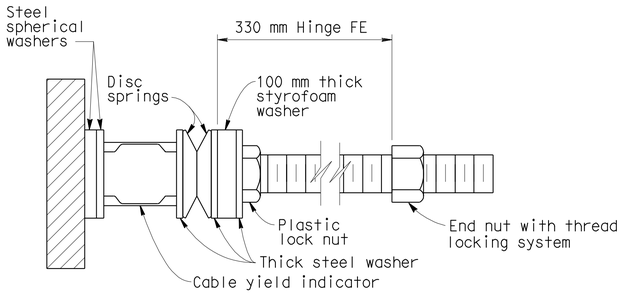

ADJUSTMENT END ◇1

(New construction shown)

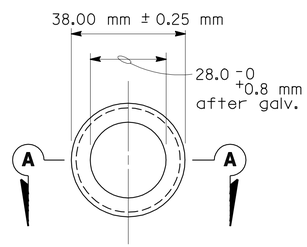

END VIEW

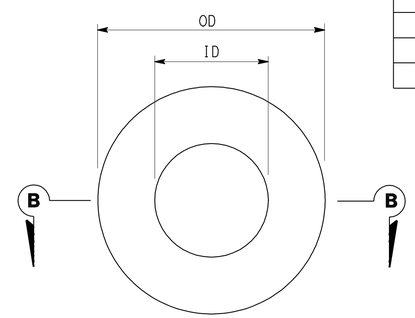

PLAN

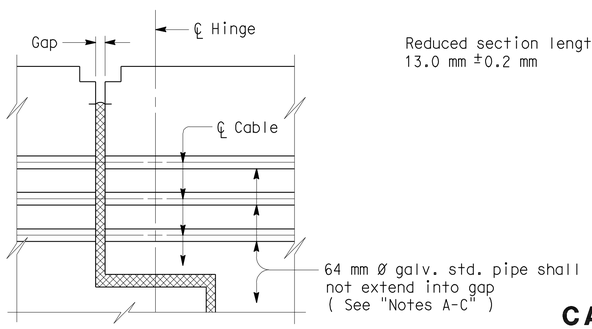

HINGE DETAIL

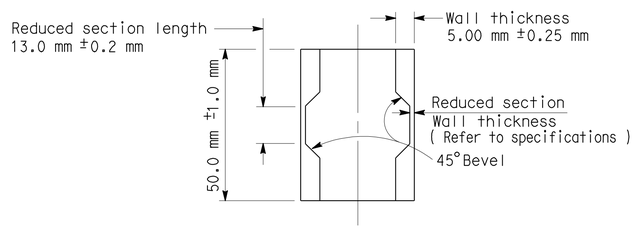

SECTION A-A

CABLE YIELD INDICATOR

All dimensions are before galvanizing except as noted.

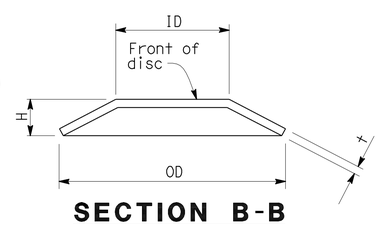

SECTION B-B

(Single spring)

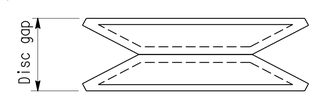

AS INSTALLED ON STUD

DISC SPRING

Note: For dimensions not shown, see table

NO SCALE

DISC SPRINGS AND WASHERS

"All dimensions in mm, except as noted"

	DISC SPRING					STEEL SPHERICAL WASHER			THICK WASHER		
L* (m)	ID	OD	t	H	COLOR CODE	ID	OD	Nom thick.	ID	OD	t**
0 - 7.6	25	50	1.6	3.3	WHITE	30	57	13	26	50	6.3
7.7 - 9.7	25	50	2.0	3.4	RED	30	57	13	26	50	6.3
9.8 - 11.5	25	50	2.4	3.6	BLUE	30	57	13	26	50	6.3
11.6 - 13.7	31	63	2.5	4.5	YELLOW	33	64	13	29	57	6.3

*For length L (m), see "Restrainer Unit Details No. 1" sheet **Minimum value

NOTE: All OD and ID dimensions for washers and disc springs shall meet the dimensional tolerances for harden steel washers, ASTM F436

RESTRAINER UNIT INSTALLATION PROCEDURE

◇2 **NEW CONSTRUCTION:**

1. Install spherical washers, Cable Yield Indicator, disk springs, thick steel washers, and end nut on the "adjustment end" of restrainers as shown in "Adjustment End" detail. Disc springs shall be installed front to front as shown in "Disc Spring" detail.
2. Place only nut and washer on end of restrainers that is opposite "adjustment end". Place thread locking system on stud at this end prior to installing nut and washers, and prior to setting the cable.
3. Tighten nut on the cable from the adjustment end of restrainer until the disc springs collapse and there is no disc gap remaining between the discs. The cable should be approximately straight with no sag. Remove end nut and install styrofoam washer and plastic nut, then re-install end nut. Place thread locking system on stud before re-installing end nut.
4. Final position of end nut is as shown on "Adjustment End" detail.

RETROFIT CONSTRUCTION:

1. Install disc springs on bent side of cable system using spherical washers to align discs to stud. Discs shall be installed front to front as shown in "Disc Spring" detail. detail. Install Cable Yield Indicator, spherical washers, nut and washer on the hinge side of restrainers as shown in "Cable Unit" detail.
2. If existing retrofit cables are being reused, 300 mm studs shall be installed.
3. Place thread locking system on bent side stud prior to installing nut and washers, and prior to setting the cable.
4. Tighten the cable from hinge side of restrainer until the disc springs at the opposite end collapse, and there is no disc gap remaining between the discs. The cable should be approximately straight with no sag.
5. Place thread locking system on hinge side stud after tightening the cable, but before backing off the nut. Back off the nut at hinge side a distance equal to maximum additional amount that the hinge joint is expected to open, relative to existing ambient conditions, as shown on the plans for movement rating.

NOTE: If the cable needs to be secured from turning while tightening, use double nut locking technique on the stud to protect the threads.

SPECIAL DETAILS

NOTES:

A. The ends of pipe shall be covered or capped to prevent concrete and debris from entering the pipe until hinge concrete is placed.

B. Care should be taken to align the pipes on each side of the hinge.

C. All ends of pipes must be flush with or slightly recessed from the concrete. The inside edges of the pipes must be smooth to prevent fraying of cables.

ALL DIMENSIONS ARE IN MILLIMETERS UNLESS OTHERWISE SHOWN

SUBMITTAL - 12

STANDARD DRAWING

FILE NO. XS 12-53.1	DESIGN BY S. SAHS	CHECKED R.J. ZELINSKI	APPROVAL RECOMMENDED BY
DRAWING DATE REVISED	DETAILS BY R. YEE	CHECKED R.J. ZELINSKI	DESIGN SUPERVISOR
	SUBMITTED BY R.J. ZELINSKI		

◇1 REVISED ADJUSTMENT END DETAIL

◇2 REVISED INSTALLATION PROCEDURE NOTES

STATE OF CALIFORNIA DEPARTMENT OF TRANSPORTATION

DIVISION OF STRUCTURES STRUCTURE DESIGN

BRIDGE NO. 34-0006R

KILOMETER POST 2.1

SAN FRANCISCO OAKLAND BAY BRIDGE EAST SPAN SEISMIC SAFETY PROJECT

OAKLAND APPROACH STRUCTURES - PHASE 2

RESTRAINER UNIT DETAILS NO. 2

DS OSD 2147A (METRIC) (REV. 2/25/97)

ORIGINAL SCALE IN MILLIMETERS FOR REDUCED PLANS 0 10 20 30 40 50 60 70 80 90 100

CU 04
EA 0120M1

DISREGARD PRINTS BEARING EARLIER REVISION DATES 10/30/09 1/15/10 4/2/10 5/28/10 9/30/10 12/29/10 3/4/11 3/14/11 4/4/11 6/3/11

SHEET 58 OF 109

USERNAME => s121614

04-0120m1-34-0006r-n-hngres02.dgn

DATE PLOTTED => 05-OCT-2011 TIME PLOTTED => 14:05 FILE => $FILE

DIST.	COUNTY	ROUTE	KILOMETER POST TOTAL PROJECT	SHEET NO.	TOTAL SHEETS
04	Ala	80	1.6/2.7	631	744

Caltrans Metric

REGISTERED ENGINEER - CIVIL

10-3-11

PLANS APPROVAL DATE

REGISTERED PROFESSIONAL ENGINEER MOHAN S. CHAR No. 57894 Exp. 6/30/12 CIVIL STATE OF CALIFORNIA

The State of California or its officers or agents shall not be responsible for the accuracy or completeness of electronic copies of this plan sheet.

T.Y. LIN / MOFFATT & NICHOL
TWO HARRISON STREET, SUITE 500
SAN FRANCISCO, CA 94105

AECOM TECHNICAL SERVICES INC.
999 TOWN & COUNTRY ROAD
ORANGE, CA 92868

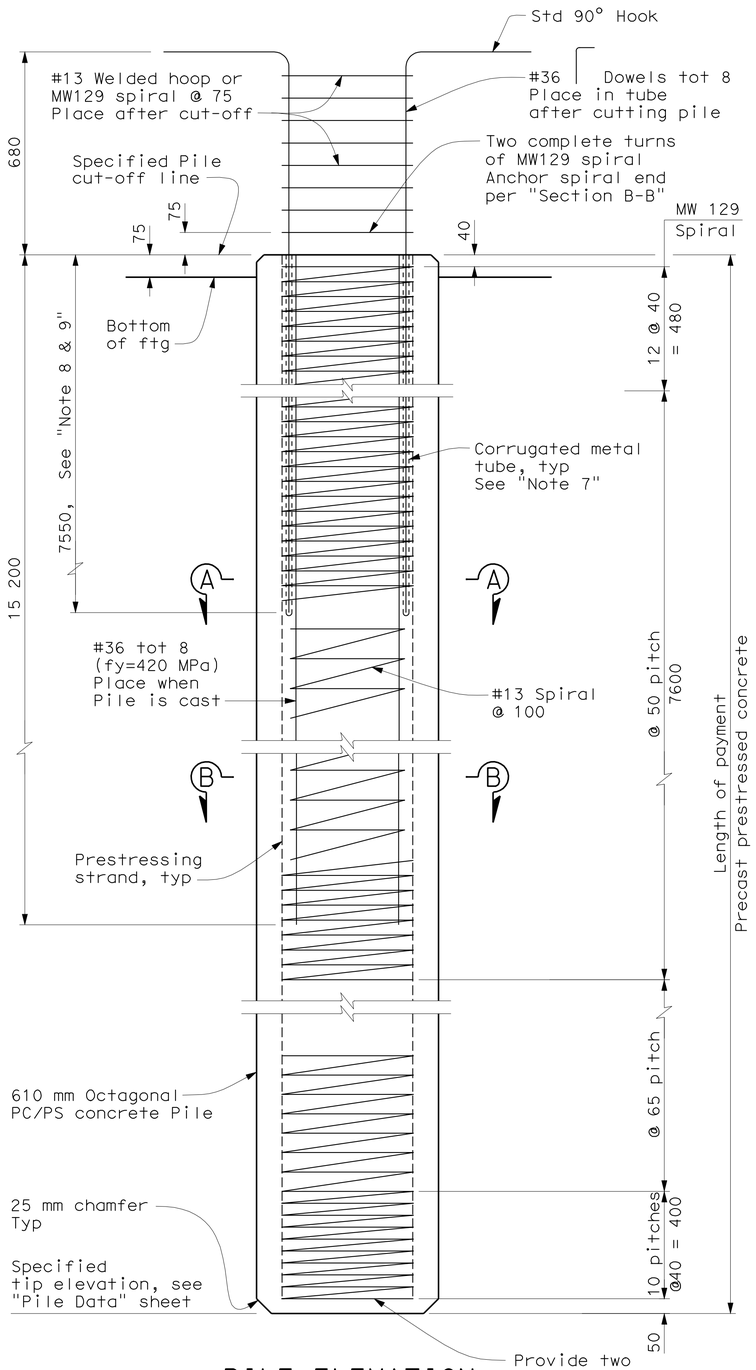

PILE ELEVATION
1:10

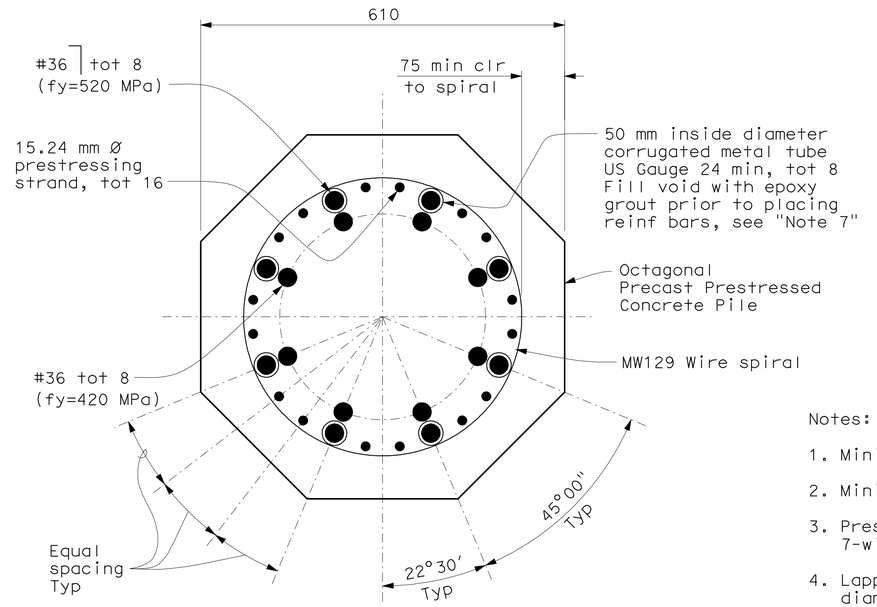

SECTION A-A
1:5

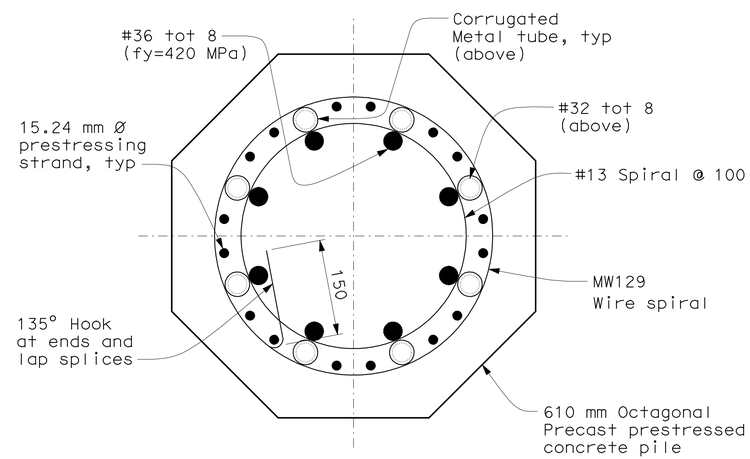

SECTION B-B
1:5

Notes:

1. Minimum prestressing force (after loss) Pf shall be 2350 kN.
2. Minimum concrete strength: f'c = 48 MPa, f'ci @ transfer = 28 MPa.
3. Prestressing steel shall be ASTM A416, 1860 MPa low relaxation 7-wire strands.
4. Lapped splices in spiral pile reinforcement shall be lapped 80 wire diameters minimum. Spiral pile reinforcement at splices and at ends shall be terminated by a 135° hook with 150 mm tail hooked around a longitudinal bar or strand.
5. All concrete in piles shall contain not less than 450 kilograms of cementitious material per cubic meter.
6. For specified pile tip elevation and pile design capacity, see "Pile Data" sheet.
7. Corrugated metal tubes shall be filled with epoxy grout within 600 mm from cut-off line prior to inserting dowel steel. Place dowels into holes immediately after grouting.
8. After pile is driven to the specified tip elevation, the Contractor shall saw cut perimeter of pile 25 mm in depth and remove top portion of pile to the specified cut-off line. Maximum pile cut-off length is 3.000 m. Portion of pile spiral reinforcement shall remain in place, undamaged and anchored as shown on the plans. Care shall be taken not to drop any laitance or concrete into the dowel metal tubes.
9. The embedment length of dowel steel below actual cut-off elevation shall not be less than 4.550 m.
10. For "Bar Spiral Splice and Spiral Anchor and Hoop Detail" see "Eastbound Pier Details No. 8" sheet.
11. #36 dowel reinforcement shall conform to ATSM A615 with minimum fy = 520 MPa. Other #36 reinforcement will be minimum fy = 420 MPa.

SUBMITTAL - 12

ALL DIMENSIONS ARE IN MILLIMETERS UNLESS OTHERWISE SHOWN

SAN FRANCISCO OAKLAND BAY BRIDGE
EAST SPAN SEISMIC SAFETY PROJECT

OAKLAND APPROACH STRUCTURES - PHASE 2

EASTBOUND PILE DETAILS

DESIGN OVERSIGHT
HASAN EL-NATAR
SIGN OFF DATE

	BY	CHECKED
DESIGN	M. CHAR	T. DUDLEY
DETAILS	M. ANDRASEK	M. CHAR
QUANTITIES	Y. KIM	A. SIVATHASAN/T. DUDLEY

PREPARED FOR THE STATE OF CALIFORNIA DEPARTMENT OF TRANSPORTATION

MOHAN S. CHAR
PROJECT ENGINEER

BRIDGE NO. 34-0006R
KILOMETER POST 2.1

Rev. Date: 5-18-98

ORIGINAL SCALE IN MILLIMETERS FOR REDUCED PLANS 0 10 20 30 40 50 60 70 80 90 100

CU 04
EA 0120M1

DISREGARD PRINTS BEARING EARLIER REVISION DATES

REVISION DATES (PRELIMINARY STAGE ONLY): 10/30/09 1/15/10 4/2/10 5/28/10 9/30/10 12/29/10 3/14/11 5/14/11 6/14/11 6/3/11

SHEET 59 OF 109

FILE => 04-0120m1-34-0006r-p-pdt.dgn

USERNAME => s121614 DATE PLOTTED => 05-OCT-2011 TIME PLOTTED => 14:05

DIST.	COUNTY	ROUTE	KILOMETER POST TOTAL PROJECT	SHEET NO.	TOTAL SHEETS
04	Ala	80	1.6/2.7	632	744

Caltrans Metric

REGISTERED ENGINEER - CIVIL

10-3-11

PLANS APPROVAL DATE

REGISTERED PROFESSIONAL ENGINEER MOHAN S. CHAR No. 57894 Exp. 6/30/12 CIVIL STATE OF CALIFORNIA

The State of California or its officers or agents shall not be responsible for the accuracy or completeness of electronic copies of this plan sheet.

T.Y. LIN / MOFFATT & NICHOL
TWO HARRISON STREET, SUITE 500
SAN FRANCISCO, CA 94105

AECOM TECHNICAL SERVICES INC.
999 TOWN & COUNTRY ROAD
ORANGE, CA 92868

EXPANSION BEARING TABLE

LOCATION	MAXIMUM VERTICAL LOAD (kN)	MINIMUM DEAD LOAD (kN)	DESIGN ROTATION (Radians)	CONCAVE PLATE						CONVEX PLATE		MASONRY PLATE			SOLE PLATE			ASSEMBLY HEIGHT
				WIDTH / LENGTH	FLAT PTFE AREA (m^2)	DIAMETER	SPHERICAL RADIUS	MINIMUM THICKNESS	MAXIMUM THICKNESS	DIAMETER	MAXIMUM THICKNESS	WIDTH	LENGTH	THICKNESS	WIDTH	LENGTH	THICKNESS	
				L_{cp}	A_{PTFE}	D_m	R_{act}	T_{min}	T_{max}	C_m	H_{act}	W_{mp}	L_{mp}	T_{mp}	W_{sp}	L_{sp}	T_{sp}	A_h
Hinge FE	2986	1744	0.035	440	0.126	410	915	20	50	470	50	520	520	28	550	1120 Min	55	153
Abut E23R	2202	1731	0.035	385	0.096	355	760	20	46	410	48	480	480	30	490	900 Min	40	138

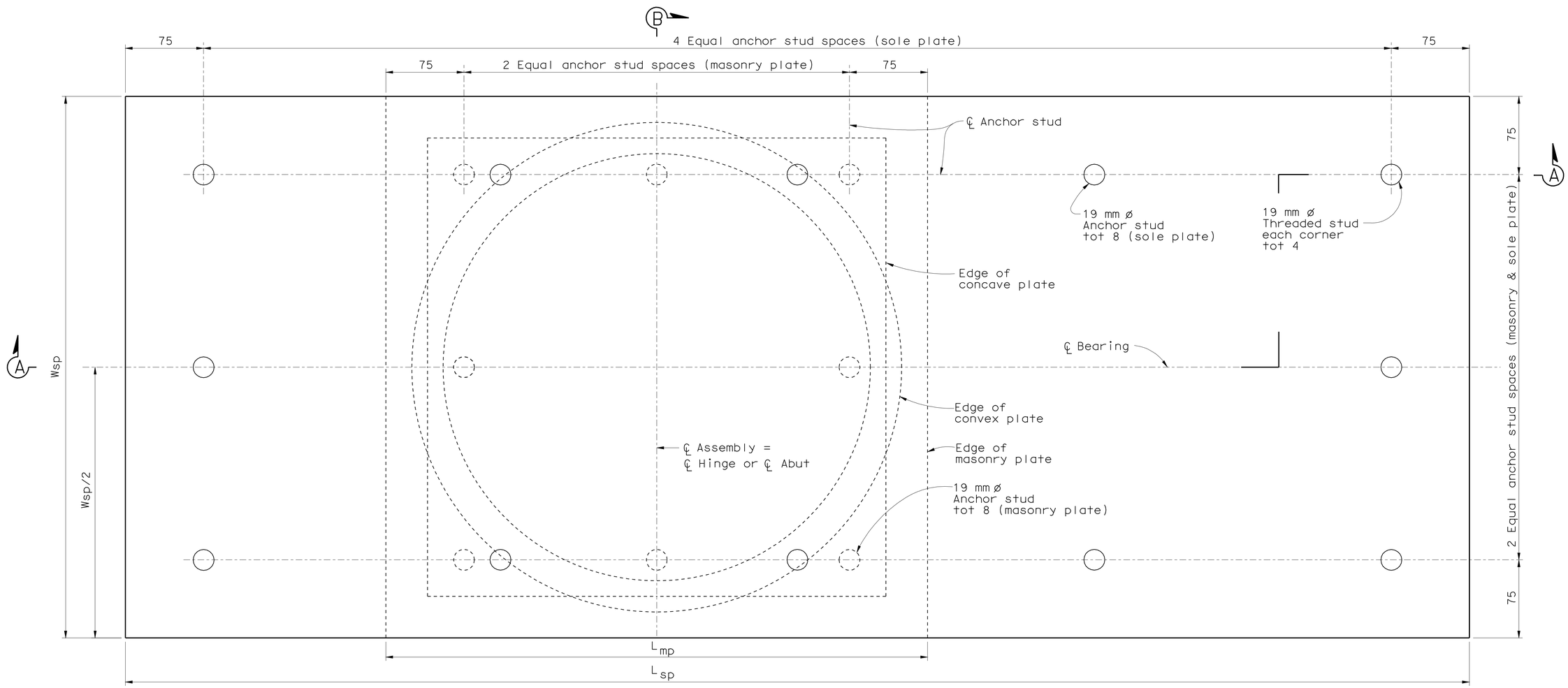

Notes:

1. For Sections "A-A" & "B-B", see "Eastbound Bearing Details No. 2" sheet.
2. All dimensions shown are to steel, unless noted otherwise.

PLAN
No Scale

ALL DIMENSIONS ARE IN MILLIMETERS UNLESS OTHERWISE SHOWN

SAN FRANCISCO OAKLAND BAY BRIDGE
EAST SPAN SEISMIC SAFETY PROJECT

OAKLAND APPROACH STRUCTURES - PHASE 2

EASTBOUND BEARING DETAILS NO. 1

DESIGN OVERSIGHT
HASAN EL-NATAR
SIGN OFF DATE

	BY	CHECKED
DESIGN	M. CHAR	T. DUDLEY
DETAILS	M. ANDRASEK	M. CHAR
QUANTITIES	Y. KIM	A. SIVATHASAN/T. DUDLEY

PREPARED FOR THE STATE OF CALIFORNIA DEPARTMENT OF TRANSPORTATION

MOHAN S. CHAR
PROJECT ENGINEER

BRIDGE NO. 34-0006R
KILOMETER POST 2.1

CU 04
EA 0120M1

DISREGARD PRINTS BEARING EARLIER REVISION DATES

REVISION DATES (PRELIMINARY STAGE ONLY): 10/30/09 1/15/10 4/2/10 5/28/10 9/30/10 12/29/10 3/4/11 3/14/11 4/4/11 6/3/11

SHEET 60 OF 109

Rev. Date: 5-18-98

ORIGINAL SCALE IN MILLIMETERS FOR REDUCED PLANS 0 10 20 30 40 50 60 70 80 90 100

FILE => 04-0120m1-34-0006r-q-brgdt01.dgn

SUBMITTAL - 12

USERNAME => s121614 DATE PLOTTED => 05-OCT-2011 TIME PLOTTED => 14:05

DIST.	COUNTY	ROUTE	KILOMETER POST TOTAL PROJECT	SHEET NO.	TOTAL SHEETS
04	Ala	80	1.6/2.7	633	744

Caltrans Metric

REGISTERED ENGINEER - CIVIL

10-3-11

PLANS APPROVAL DATE

REGISTERED PROFESSIONAL ENGINEER MOHAN S. CHAR No. 57894 Exp. 6/30/12 CIVIL STATE OF CALIFORNIA

The State of California or its officers or agents shall not be responsible for the accuracy or completeness of electronic copies of this plan sheet.

T.Y. LIN / MOFFATT & NICHOL
TWO HARRISON STREET, SUITE 500
SAN FRANCISCO, CA 94105

AECOM TECHNICAL SERVICES INC.
999 TOWN & COUNTRY ROAD
ORANGE, CA 92868

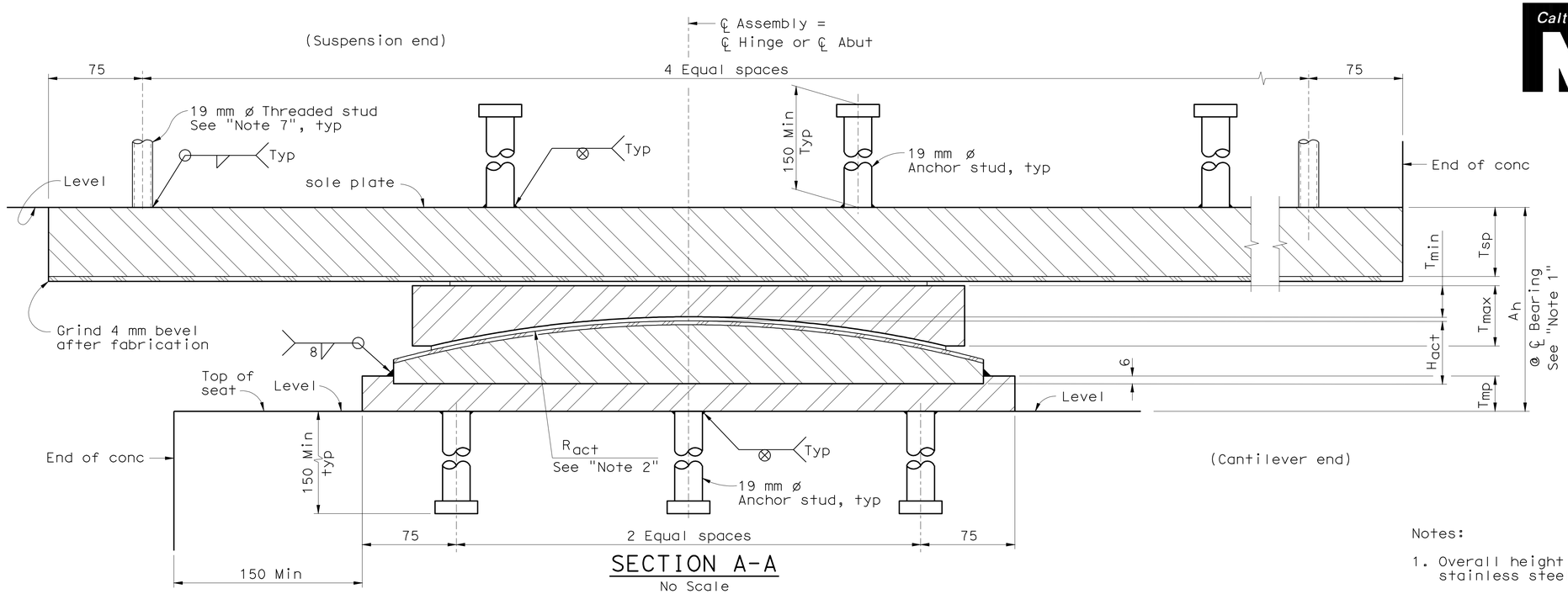

SECTION A-A

No Scale

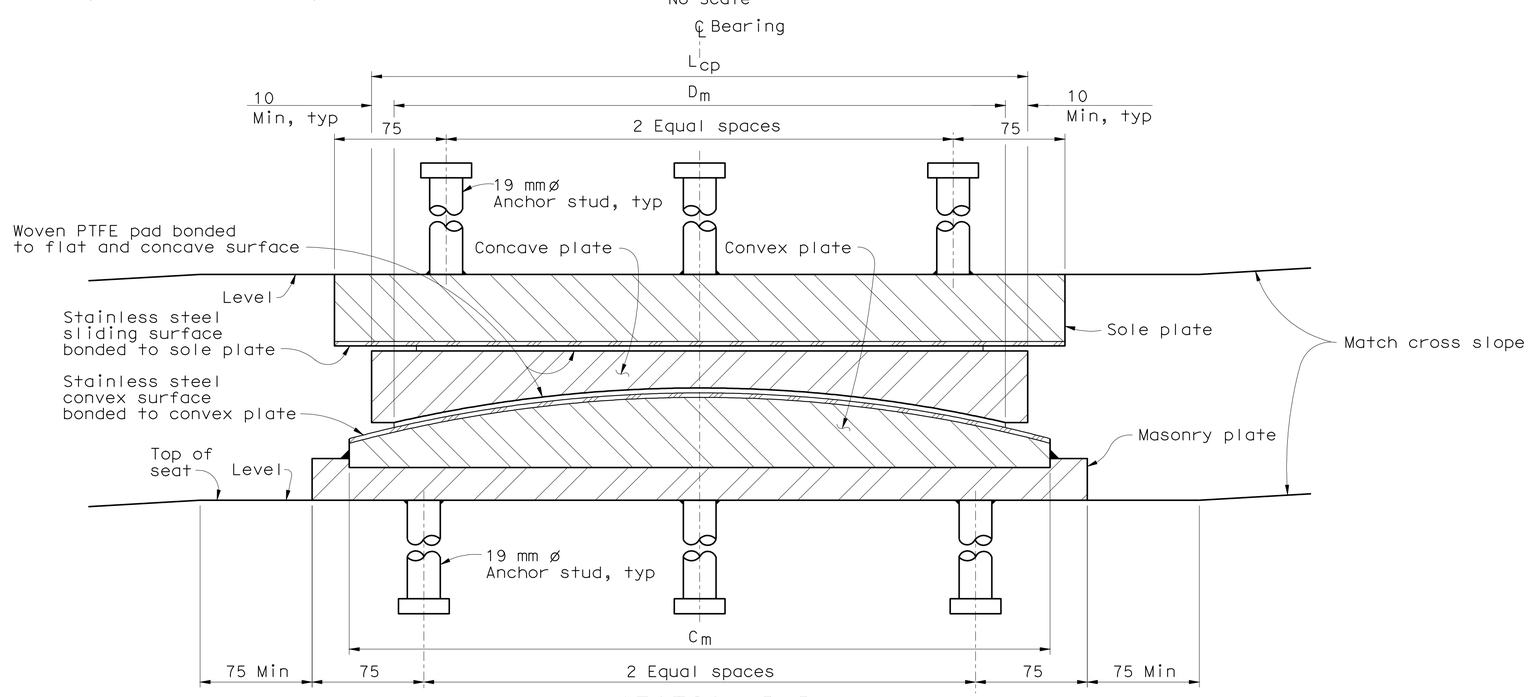

SECTION B-B

No Scale

Notes:

1. Overall height includes PTFE, substratum and stainless steel.
2. Radius measured along sliding surface.
3. All dimensions are to steel, unless otherwise shown.
4. For dimensions not shown, see "Expansion Bearing Table" on "Eastbound Bearing Details No. 1" sheet.
5. Sole plate, concave plate, convex plate and masonry plate shall conform to A36/A36M.
6. For "a" dimension, see "Deck Joint Details No. 1" sheet.
7. Contractor to determine the length of 19 mm ø threaded stud for assembly of sole plate.

ALL DIMENSIONS ARE IN MILLIMETERS UNLESS OTHERWISE SHOWN

SAN FRANCISCO OAKLAND BAY BRIDGE
EAST SPAN SEISMIC SAFETY PROJECT

OAKLAND APPROACH STRUCTURES - PHASE 2

EASTBOUND BEARING DETAILS NO. 2

DESIGN OVERSIGHT
HASAN EL-NATAR
SIGN OFF DATE

	BY	CHECKED
DESIGN	M. CHAR	T. DUDLEY
DETAILS	M. ANDRASEK	M. CHAR
QUANTITIES	Y. KIM	A. SIVATHASAN/T. DUDLEY

PREPARED FOR THE STATE OF CALIFORNIA DEPARTMENT OF TRANSPORTATION

MOHAN S. CHAR
PROJECT ENGINEER

BRIDGE NO. 34-0006R
KILOMETER POST 2.1

CU 04
EA 0120M1

DISREGARD PRINTS BEARING EARLIER REVISION DATES

REVISION DATES (PRELIMINARY STAGE ONLY): 10/30/09 1/15/10 4/2/10 5/28/10 9/30/10 12/29/10 3/4/11 3/14/11 4/4/11 6/3/11

SHEET 61 OF 109

Rev. Date: 5-18-98

ORIGINAL SCALE IN MILLIMETERS FOR REDUCED PLANS 0 10 20 30 40 50 60 70 80 90 100

FILE => 04-0120m1-34-0006r-q-brgdt02.dgn

SUBMITTAL - 12

USERNAME => s121614 DATE PLOTTED => 05-OCT-2011 TIME PLOTTED => 14:05

DIST.	COUNTY	ROUTE	KILOMETER POST TOTAL PROJECT	SHEET NO.	TOTAL SHEETS
04	Ala	80	1.6/2.7	634	744

Caltrans Metric

REGISTERED ENGINEER - CIVIL

10-3-11

PLANS APPROVAL DATE

REGISTERED PROFESSIONAL ENGINEER A.L. ELY No. 18880 Exp. 6-30-11 CIVIL STATE OF CALIFORNIA

The State of California or its officers or agents shall not be responsible for the accuracy or completeness of electronic copies of this plan sheet.

T.Y. LIN / MOFFATT & NICHOL
TWO HARRISON STREET, SUITE 500
SAN FRANCISCO, CA 94105

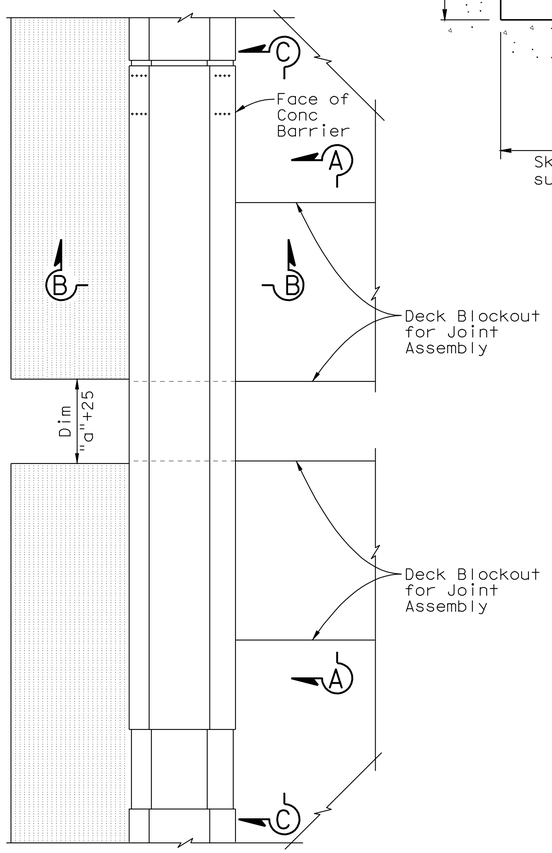

PARTIAL PLAN
No Scale

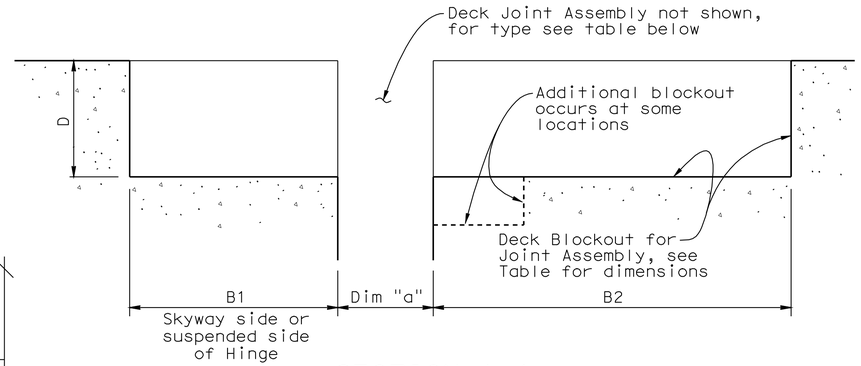

SECTION A-A
No Scale

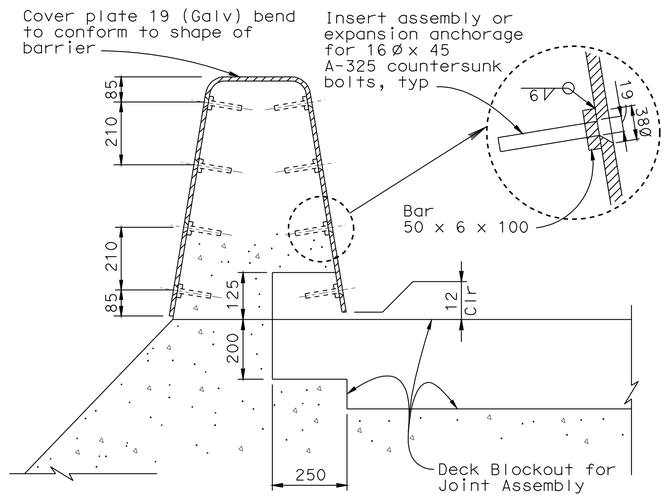

SECTION B-B
(Shown at typ concrete barrier, similar at concrete barrier adjacent to bike path)
No Scale

Note: Field verify dimensions of Barrier Cover Plates at Hinges EW, EE, FW and Abut E23L prior to fabrication.

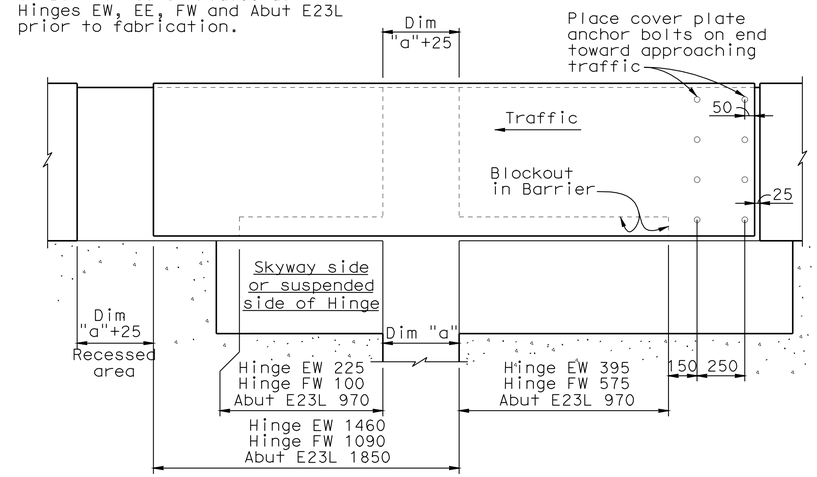

SECTION C-C, TRAFFIC FROM RIGHT
No Scale

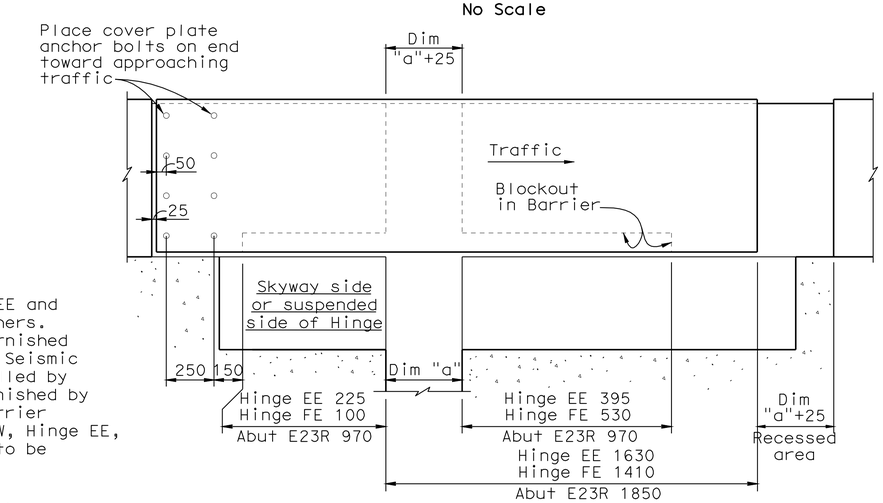

SECTION C-C, TRAFFIC FROM LEFT
No Scale

Deck Joint Information								"a" Dimension *		
Location		Joint Type	Deck Blockout Dimensions (mm)			Movement Rating (MR)	Skew	Winter	Summer	Spring & Fall
			D	B1	B2					
Westbound	Hinge EW	Modular				785	0	416	384	400
	Hinge FW	Modular				540	0	184	156	170
	Abut E23L	Seismic				425	0	137	123	130
Eastbound	Hinge EE	Modular				785	0	416	384	400
	Hinge FE	Modular	450	585	1020	590	0	184	156	170
	Abut E23R	Seismic	450	970	990	425	0	137	123	130

Note:
Modular expansion joints at Hinge EW, Hinge EE and Hinge FW to be furnished and installed by others. Modular Expansion Joint at Hinge FE to be furnished by others and installed under this contract. Seismic Joint at Abut E23L to be furnished and installed by others. Seismic Joint at Abut E23R to be furnished by others and installed under this contract. Barrier Cover Plates for Expansion Joints at Hinge EW, Hinge EE, Hinge FW, Hinge FE, Abut E23L and Abut E23R to be furnished and installed under this contract.

* Under SEE Seismic conditions, the maximum "a" dimension is expected to be the same as the Movement Rating (MR).

ALL DIMENSIONS ARE IN MILLIMETERS UNLESS OTHERWISE SHOWN

SAN FRANCISCO OAKLAND BAY BRIDGE
EAST SPAN SEISMIC SAFETY PROJECT

OAKLAND APPROACH STRUCTURES-PHASE 2

DECK JOINT DETAILS

DESIGN OVERSIGHT
HASAN EL-NATUR
SIGN OFF DATE

	BY	CHECKED
DESIGN	Birdy	Ely
DETAILS	Samson	Ely
QUANTITIES	Birdy	Ely

PREPARED FOR THE STATE OF CALIFORNIA DEPARTMENT OF TRANSPORTATION

Jal Birdy
PROJECT ENGINEER

BRIDGE NO. 34-0006 L/R
KILOMETER POST 1.6

Rev. Date: 5-18-98

ORIGINAL SCALE IN MILLIMETERS FOR REDUCED PLANS 0 10 20 30 40 50 60 70 80 90 100

CU 04
EA 0120M1

DISREGARD PRINTS BEARING EARLIER REVISION DATES

REVISION DATES (PRELIMINARY STAGE ONLY) 6/3/11 11/14/11

SHEET 62 OF 109

FILE => 04-0120m1-34-0006rl-q-dckjnt01.dgn

Nov 14, 2011

USERNAME => s128843 DATE PLOTTED => 01-MAR-2012 TIME PLOTTED => 13:51

DIST.	COUNTY	ROUTE	KILOMETER POST TOTAL PROJECT	SHEET NO.	TOTAL SHEETS
04	Ala	80	1.6/2.7	635	744

REGISTERED ENGINEER - CIVIL

10-3-11

PLANS APPROVAL DATE

REGISTERED PROFESSIONAL ENGINEER A.L. ELY No. 18880 Exp. 6-30-11 CIVIL STATE OF CALIFORNIA

The State of California or its officers or agents shall not be responsible for the accuracy or completeness of electronic copies of this plan sheet.

T.Y. LIN / MOFFATT & NICHOL
TWO HARRISON STREET, SUITE 500
SAN FRANCISCO, CA 94105

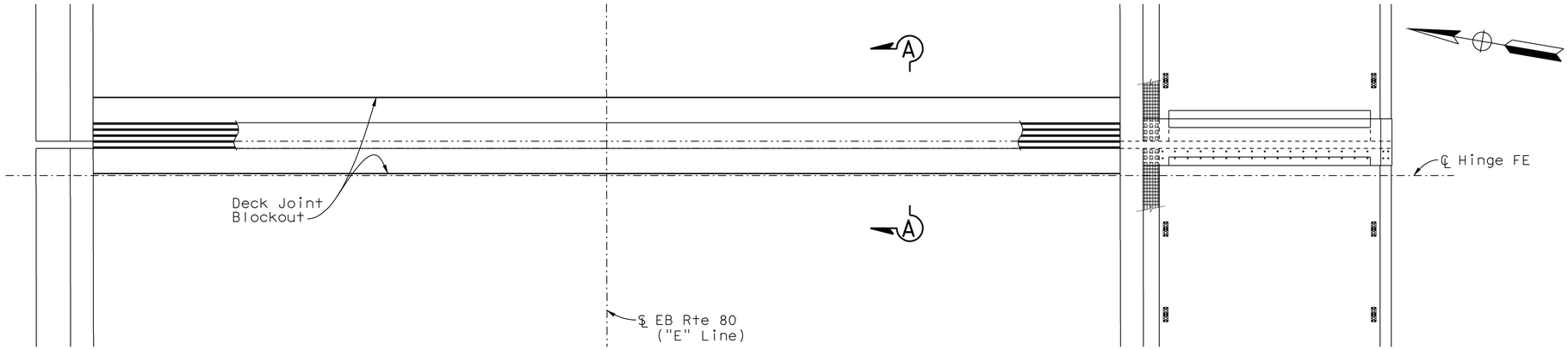

PLAN - DECK JOINT AT HINGE FE

1:60

Notes:

1. Modular deck joint assembly to be furnished by others and installed by Contractor.
2. At installation the closure capacity of the Joint Seal Assembly at Hinge FE shall be set 24 mm greater than dim "a" such that at full closure contact is between the concrete surfaces rather than the separation beams.

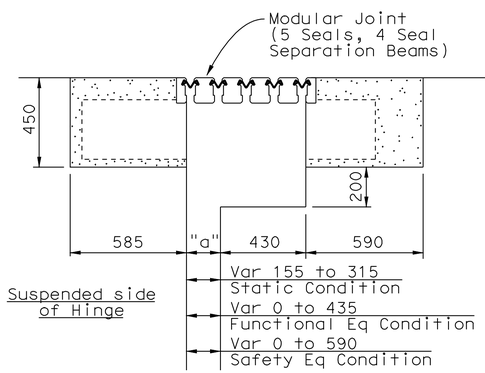

HINGE FE

SECTION A-A

1:15

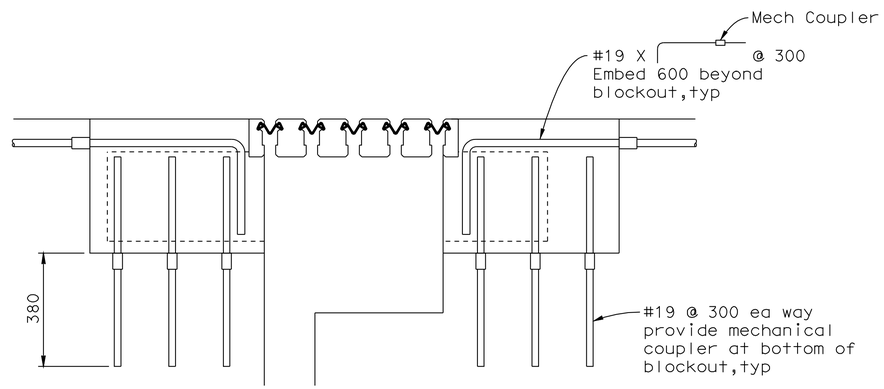

HINGE FE

TYPICAL REINFORCEMENT AT MODULAR JOINT BLOCKOUTS

1:10

ALL DIMENSIONS ARE IN MILLIMETERS UNLESS OTHERWISE SHOWN

SAN FRANCISCO OAKLAND BAY BRIDGE
EAST SPAN SEISMIC SAFETY PROJECT

OAKLAND APPROACH STRUCTURES-PHASE 2

MODULAR DECK JOINT DETAILS NO.1

DESIGN OVERSIGHT HASAN EL-NATUR

SIGN OFF DATE

Rev. Date: 5-18-98

	BY	CHECKED
DESIGN	Birdy	Ely
DETAILS	Samson	Ely
QUANTITIES	Birdy	Ely

PREPARED FOR THE STATE OF CALIFORNIA DEPARTMENT OF TRANSPORTATION

Jal Birdy
PROJECT ENGINEER

BRIDGE NO. 34-0006 L/R
KILOMETER POST 1.6

ORIGINAL SCALE IN MILLIMETERS FOR REDUCED PLANS 0 10 20 30 40 50 60 70 80 90 100

CU 04
EA 0120M1

DISREGARD PRINTS BEARING EARLIER REVISION DATES

REVISION DATES (PRELIMINARY STAGE ONLY) 12/1/11 11/14/11

SHEET 63 OF 109

FILE => 04-0120m1-34-0006r1-q-dckjnt02.dgn

Nov 14, 2011

USERNAME => s128843 DATE PLOTTED => 01-MAR-2012 TIME PLOTTED => 13:52

DIST.	COUNTY	ROUTE	KILOMETER POST TOTAL PROJECT	SHEET NO.	TOTAL SHEETS
04	Ala	80	1.6/2.7	636	744

Caltrans Metric

REGISTERED ENGINEER - CIVIL

10-3-11

PLANS APPROVAL DATE

REGISTERED PROFESSIONAL ENGINEER A.L. ELY No. 18880 Exp. 6-30-11 CIVIL STATE OF CALIFORNIA

The State of California or its officers or agents shall not be responsible for the accuracy or completeness of electronic copies of this plan sheet.

T.Y. LIN / MOFFATT & NICHOL
TWO HARRISON STREET, SUITE 500
SAN FRANCISCO, CA 94105

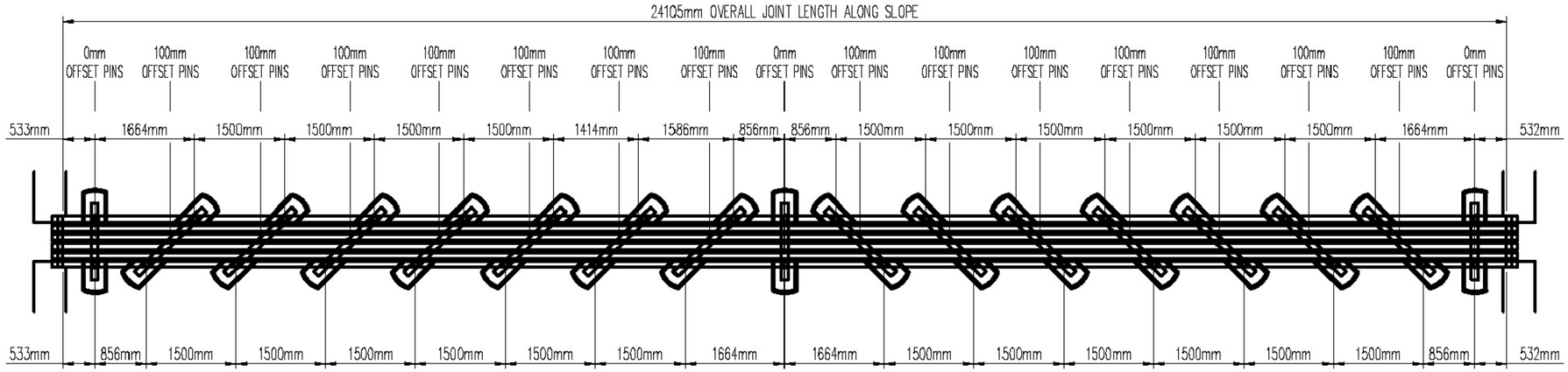

PLAN VIEW OF MAURER SYSTEM™ 'DS400B' SWIVEL EXPANSION JOINT BY THE D.S. BROWN COMPANY

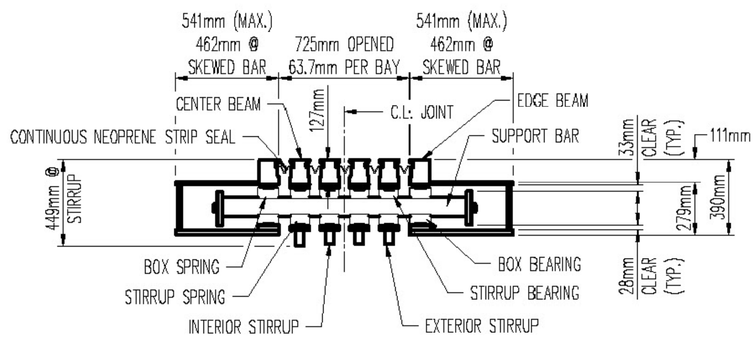

SECTION THRU MAURER SYSTEM™ 'DS400B' 5-CELL SWIVEL EXPANSION JOINT BY THE D.S. BROWN COMPANY

(127mm TALL EDGE & CENTER BEAMS)

NOTES:

JOINT SHALL ACCOMMODATE THE FOLLOWING MOVEMENTS:
-319mm (LONGITUDINAL)
+295mm (LONGITUDINAL)
±50mm (TRANSVERSE)

EDGE BEAMS ARE 102mm X 127mm
CENTER BEAMS ARE 102mm X 127mm
SUPPORT BARS ARE 117mm X 100mm

SUPPORT BAR LENGTHS =
1280mm @ 0mm PIN OFFSET
1560mm @ 100mm PIN OFFSET

MAX. CENTER BEAM PIVOT PIN SPACING = 1500mm

DIMENSIONS ARE BASED ON A 0° SKEW.

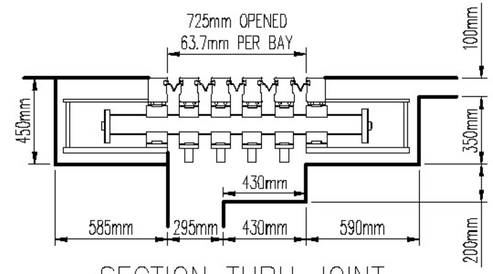

SECTION THRU JOINT SHOWING BLOCKOUT

DSB FILE NO:
2010/ENGINEERING/PROPOSALS/DECK JOINTS

THE D.S. BROWN COMPANY, INC.
NORTH BALTIMORE, OHIO 45872-0158

SFOBB — HINGE F

DRAWN BY: BLB	SCALE: VARIES	DATE: 2/15/11
CHECKED:	MAT'L: VARIES	DRAWING NO:
REVISION:		DECK JOINTS

PRELIMINARY JOINT ARRANGEMENT FOR REFERENCE ONLY

ALL DIMENSIONS ARE IN MILLIMETERS UNLESS OTHERWISE SHOWN

SAN FRANCISCO OAKLAND BAY BRIDGE
EAST SPAN SEISMIC SAFETY PROJECT

OAKLAND APPROACH STRUCTURES-PHASE 2

MODULAR DECK JOINT DETAILS NO.2

DESIGN OVERSIGHT: HASAN EL-NATUR
SIGN OFF DATE

	BY	CHECKED
DESIGN		
DETAILS		
QUANTITIES		

PREPARED FOR THE STATE OF CALIFORNIA DEPARTMENT OF TRANSPORTATION

Jal Birdy
PROJECT ENGINEER

BRIDGE NO. 34-0006 L/R
KILOMETER POST 1.6

CU 04
EA 0120M1

Rev. Date: 5-18-98

ORIGINAL SCALE IN MILLIMETERS FOR REDUCED PLANS 0 10 20 30 40 50 60 70 80 90 100

DISREGARD PRINTS BEARING EARLIER REVISION DATES

REVISION DATES (PRELIMINARY STAGE ONLY)

SHEET 64 OF 109

FILE => 04-0120m1-34-0006r1-q-dckjnt03.dgn

SUBMITTAL - 12 June 3, 2011

USERNAME => s6121614 DATE PLOTTED => 05-OCT-2011 TIME PLOTTED => 14:06

DIST.	COUNTY	ROUTE	KILOMETER POST TOTAL PROJECT	SHEET NO.	TOTAL SHEETS
04	Ala	80	1.6/2.7	637	744

REGISTERED ENGINEER - CIVIL

10-3-11

PLANS APPROVAL DATE

REGISTERED PROFESSIONAL ENGINEER A.L. ELY No. 18880 Exp. 6-30-11 CIVIL STATE OF CALIFORNIA

The State of California or its officers or agents shall not be responsible for the accuracy or completeness of electronic copies of this plan sheet.

T.Y. LIN / MOFFATT & NICHOL
TWO HARRISON STREET, SUITE 500
SAN FRANCISCO, CA 94105

THIS SHEET INTENTIONALLY LEFT BLANK

SUBMITTAL - 12 June 3, 2011

ALL DIMENSIONS ARE IN MILLIMETERS UNLESS OTHERWISE SHOWN

SAN FRANCISCO OAKLAND BAY BRIDGE
EAST SPAN SEISMIC SAFETY PROJECT

OAKLAND APPROACH STRUCTURES-PHASE 2

MODULAR DECK JOINT DETAILS NO.3

DESIGN OVERSIGHT
HASAN EL-NATUR
SIGN OFF DATE

	BY	CHECKED
DESIGN		
DETAILS		
QUANTITIES		

PREPARED FOR THE STATE OF CALIFORNIA DEPARTMENT OF TRANSPORTATION

Jal Birdy
PROJECT ENGINEER

BRIDGE NO. 34-0006 L/R
KILOMETER POST 1.6

Rev. Date: 5-18-98

ORIGINAL SCALE IN MILLIMETERS FOR REDUCED PLANS 0 10 20 30 40 50 60 70 80 90 100

CU 04
EA 0120M1

DISREGARD PRINTS BEARING EARLIER REVISION DATES

REVISION DATES (PRELIMINARY STAGE ONLY)

SHEET 65 OF 109

FILE => 04-0120m1-34-0006r1-q-dckjnt04.dgn

USERNAME => s121614 DATE PLOTTED => 05-OCT-2011 TIME PLOTTED => 14:06

DIST	COUNTY	ROUTE	KILOMETER POST TOTAL PROJECT	SHEET No	TOTAL SHEETS
04	Ala	80	1.6/2.7	638	744

REGISTERED CIVIL ENGINEER DATE

10-3-11
PLANS APPROVAL DATE

The State of California or its officers or agents shall not be responsible for the accuracy or completeness of electronic copies of this plan sheet.

REGISTERED PROFESSIONAL ENGINEER ENRICO C. MAGGENTI No. 46920 Exp. 6/30/11 CIVIL STATE OF CALIFORNIA

REGISTERED PROFESSIONAL ENGINEER EFTHYMIOS DELIS No. 51434 Exp. 6-30-12 CIVIL STATE OF CALIFORNIA

FOR REVISION 1 ONLY

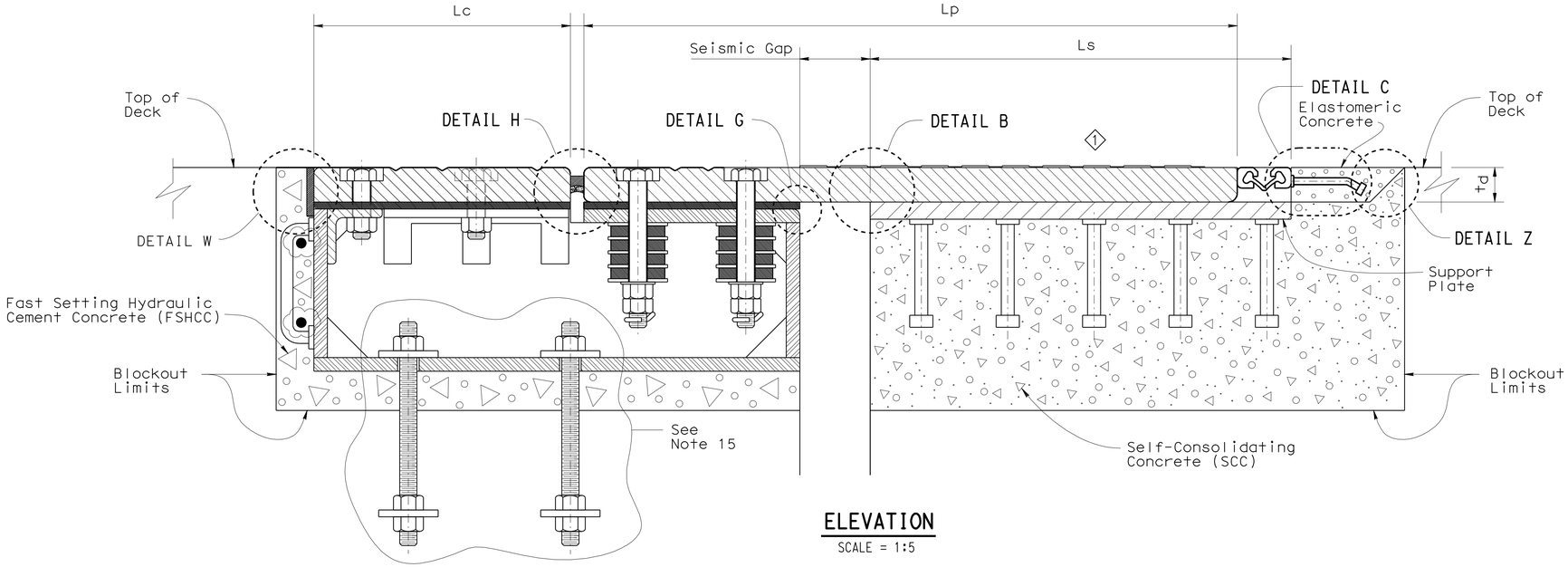

ELEVATION
SCALE = 1:5

Note: Seismic Joint at Abut E23L to be furnished and installed by others. Seismic Joint at Abut E23R to be furnished by others and installed under this contract.

JOINT INFORMATION			
LOCATION		ABUT E23L	ABUT E23R
SKEW (°)		0	0
DECK PLATE	Thickness td (mm)	64	64
	Length Lp (mm)	1210	1210
SUPPORT PLATE	Thickness ts (mm)	32	32
	Length Ls (mm)	780	780
COVER PLATE	Thickness tc (mm)	64	64
	Length Lc (mm)	475	475
SEISMIC GAP @ 20°	(mm)	130	130

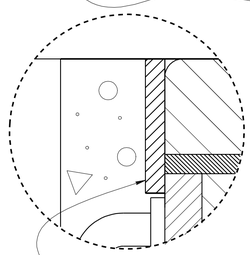

DETAIL W
SCALE = 1:2

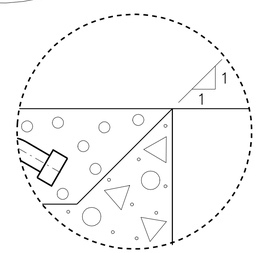

DETAIL Z
SCALE = 1:2

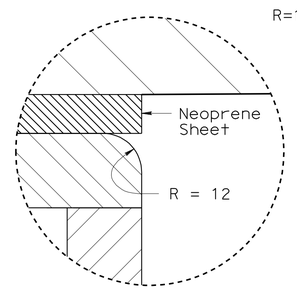

DETAIL G
SCALE = 1:1

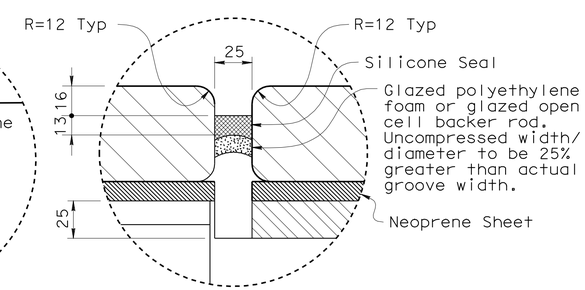

DETAIL H
SCALE = 1:2

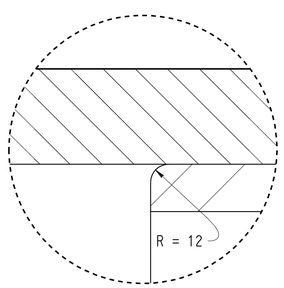

DETAIL B
SCALE = 1:2

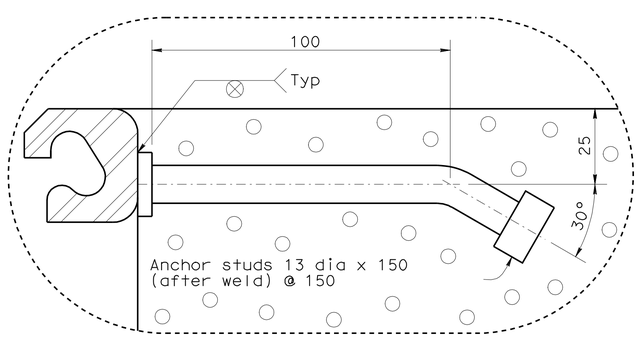

DETAIL C
SCALE = 1:1

NOTES:

1. Install Seismic Joint after erecting bike path, placing deck overlay up to the limit of the blockout if needed, utilities and barrier.
2. Top of deck plate, elastomeric and FSHCC concrete shall match top of deck profile.
3. For deck plate details see " DECK PLATE DETAILS NO. 1" and " DECK PLATE DETAILS NO. 2" sheets for TYPE I joint.
4. For mild reinforcement in blockout areas, see "REINFORCRMENT DETAILS" sheet for TYPE I joint Not all mild reinforcement is shown for clarity.
5. For channel assembly details, see "CHANNEL ASSEMBLY DETAILS NO 1" and "CHANNEL ASSEMBLY DETAILS NO 2" for TYPE I joint.
6. Place deck plate, support plate and channel assembly so that full bearing is achieved between i) deck, support plates and ii)deck plate and channel assembly.
7. Self-consolidating concrete shall be used in support plate blockout.
8. Fast setting hydraulic cement concrete shall be used in channel assembly blockout.
9. Maximum depth of edge beam in strip steel shall be 40 mm.
10. Strip seal shall be one continuous piece. No field splice shall be permitted.
11. Strip seal shall have a movement rating of 100mm, manufactured specifically for highway bridges.
12. The V-Grooves of the deck plates shall receive a nonskid surface consisting of epoxy mixed with grit.
13. For support plate details see "SUPPORT PLATE DETAILS" sheet for TYPE I joint.
14. Deck plate and elastomeric concrete have the same thickness (td = tc).
15. For ABUT E23L, anchor bolts installed field verify location before fabrication.

THE CONTRACTOR SHALL VERIFY ALL CONTROLLING FIELD DIMENSIONS BEFORE ORDERING OR FABRICATING ANY MATERIAL.

SAN FRANCISCO OAKLAND BAY BRIDGE
EAST SPAN SEISMIC SAFETY PROJECT

OAKLAND APPROACH STRUCTURES-PHASE 2

SEISMIC JOINT (TYPE I)

CROSS SECTION

Caltrans Metric

1 Revised some V-Grooves to traction ribs - 3/4/11

	BY	CHECKED
DESIGN	E DELIS	A KARTOUM
DETAILS	A R DUDSAK	A KARTOUM
QUANTITIES	E DELIS	A KARTOUM

STATE OF CALIFORNIA
DEPARTMENT OF TRANSPORTATION

DIVISION OF ENGINEERING SERVICES
STRUCTURE DESIGN
SPECIAL DESIGNS BRANCH

BRIDGE NO. 34-0006 L/R
KILOMETER POST 1.6

ALL DIMENSIONS ARE IN MILLIMETERS UNLESS OTHERWISE SHOWN

ORIGINAL SCALE IN MILLIMETERS FOR REDUCED PLANS 0 10 20 30 40 50 60 70 80 90 100

CU 04
EA 0120M1

DISREGARD PRINTS BEARING EARLIER REVISION DATES

REVISION DATES: 8/20/09 10/1/09 9/21/10 11/14/11

SHEET 66 OF 109

FILE => spec_des_br_proj/2009sd/04-0120M1/04-0120m1-66-u-sja1cross.dgn

STRUCTURES DESIGN DETAIL SHEET (METRIC) (REV.03-17-04)

Nov 14, 2011

DATE PLOTTED => 01-MAR-2012
TIME PLOTTED => 13:52

DIST	COUNTY	ROUTE	KILOMETER POST TOTAL PROJECT	SHEET No	TOTAL SHEETS
04	Ala	80	1.6/2.7	639	744

REGISTERED CIVIL ENGINEER DATE

10-3-11
PLANS APPROVAL DATE

REGISTERED PROFESSIONAL ENGINEER ENRICO C. MAGGENTI No. 46920 Exp. 6/30/11 CIVIL STATE OF CALIFORNIA

REGISTERED PROFESSIONAL ENGINEER EFTHYMIOS DELIS No. 51434 Exp. 6-30-12 CIVIL STATE OF CALIFORNIA

The State of California or its officers or agents shall not be responsible for the accuracy or completeness of electronic copies of this plan sheet.

FOR REVISION 1 ONLY

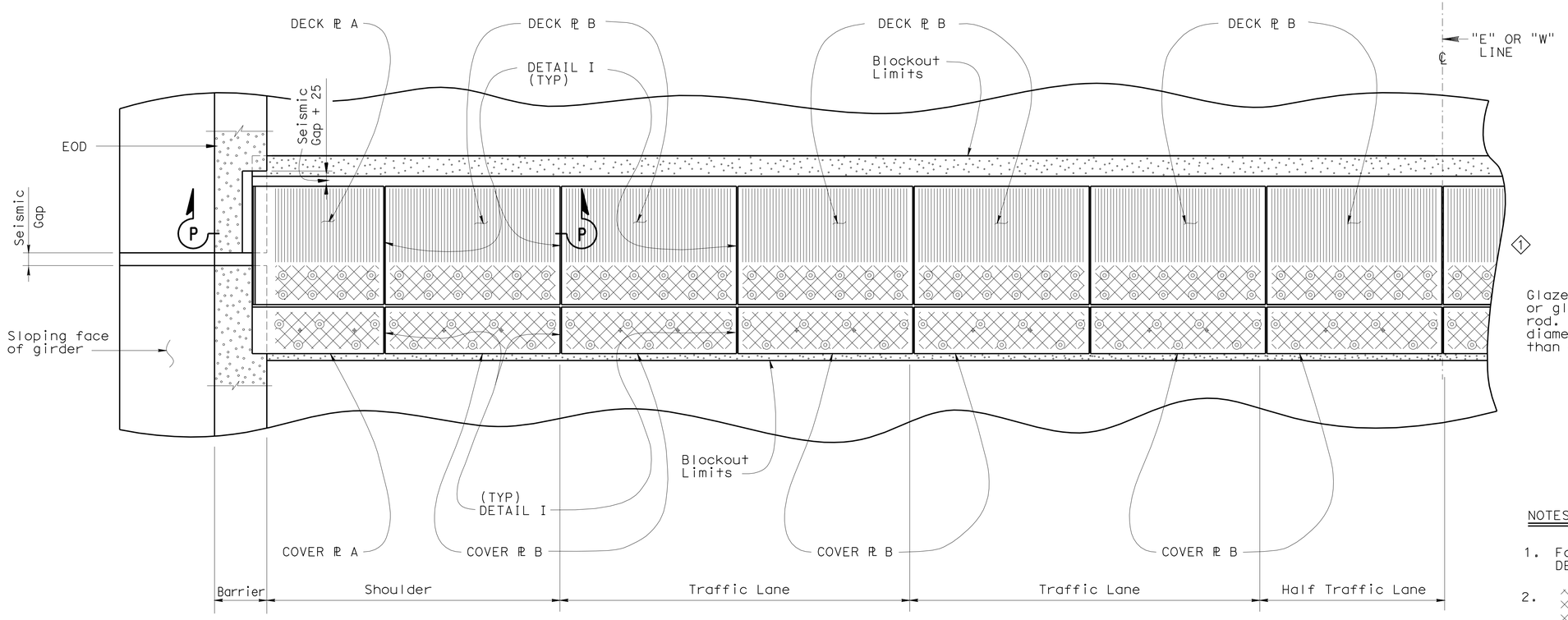

EASTBOUND/WESTBOUND EXPANSION JOINT (HALF) PLAN

SCALE 1:25

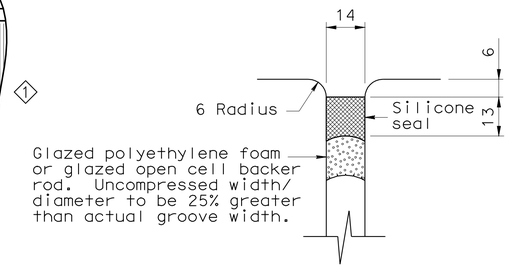

DETAIL I

SCALE = 1:1

NOTES:

1. For Plates A and B see "DECK PLATE DETAILS NO 2" sheet.
2. Denotes deck Steel Plate with V-grooves at 45°.
   1 Denotes traction ribs.
3. Deck Plate A matches with Support Plate A and the Channel Assembly A (Module A) Likewise for Module B. Channel assemblies are 14 mm wider than their corresponding deck plates.
4. One Module B is placed per half traffic lane.
5. Portions of barriers are not shown for clarity.
6. For SECTION P-P see "DECK PLATE DETAILS NO 2" sheet for TYPE I joint.

Note: Seismic Joint at Abut E23L to be furnished and installed by others. Seismic Joint at Abut E23R to be furnished by others and installed under this contract.

THE CONTRACTOR SHALL VERIFY ALL CONTROLLING FIELD DIMENSIONS BEFORE ORDERING OR FABRICATING ANY MATERIAL.

SAN FRANCISCO OAKLAND BAY BRIDGE
EAST SPAN SEISMIC SAFETY PROJECT

OAKLAND APPROACH STRUCTURES-PHASE 2

SEISMIC JOINT (TYPE I)

DECK PLATE DETAILS NO 1

Caltrans Metric

1 Revised some V-Grooves to traction ribs - 3/4/11

	BY	CHECKED
DESIGN	E DELIS	A KARTOUM
DETAILS	A R DUDSAK	A KARTOUM
QUANTITIES	E DELIS	A KARTOUM

STATE OF CALIFORNIA
DEPARTMENT OF TRANSPORTATION

DIVISION OF ENGINEERING SERVICES
STRUCTURE DESIGN
SPECIAL DESIGNS BRANCH

BRIDGE NO. 34-0006 L/R
KILOMETER POST 1.6

ALL DIMENSIONS ARE IN MILLIMETERS UNLESS OTHERWISE SHOWN

ORIGINAL SCALE IN MILLIMETERS FOR REDUCED PLANS 0 10 20 30 40 50 60 70 80 90 100

CU 04
EA 0120M1

DISREGARD PRINTS BEARING EARLIER REVISION DATES

REVISION DATES: 8/20/09 11/14/11

SHEET 67 OF 109

FILE => spec_des_br_proj/2009sd/04-0120M1/04-0120m1-67-u-sja2dp.dgn

STRUCTURES DESIGN DETAIL SHEET (METRIC) (REV.03-17-04)

Nov 14, 2011

DATE PLOTTED => 01-MAR-2012
TIME PLOTTED => 13:52

DIST	COUNTY	ROUTE	KILOMETER POST TOTAL PROJECT	SHEET No	TOTAL SHEETS
04	Ala	80	1.6/2.7	640	744

REGISTERED CIVIL ENGINEER DATE

10-3-11
PLANS APPROVAL DATE

REGISTERED PROFESSIONAL ENGINEER ENRICO C. MAGGENTI No. 46920 Exp. 6/30/11 CIVIL STATE OF CALIFORNIA

REGISTERED PROFESSIONAL ENGINEER EFTHYMIOS DELIS No. 51434 Exp. 6-30-12 CIVIL STATE OF CALIFORNIA

The State of California or its officers or agents shall not be responsible for the accuracy or completeness of electronic copies of this plan sheet.

FOR REVISION 1 ONLY

Note: Seismic Joint at Abut E23L to be furnished and installed by others. Seismic Joint at Abut E23R to be furnished by others and installed under this contract.

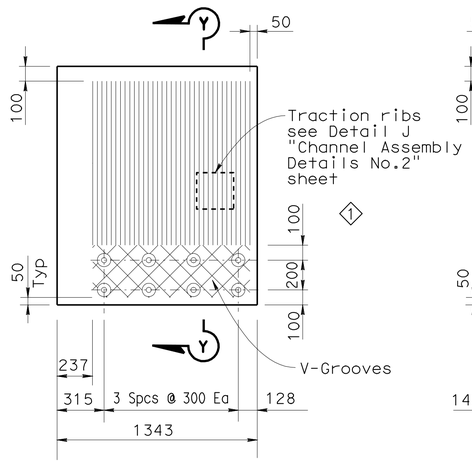

DECK PLATE A

SCALE = 1:20

Note: Barrier not shown for clarity

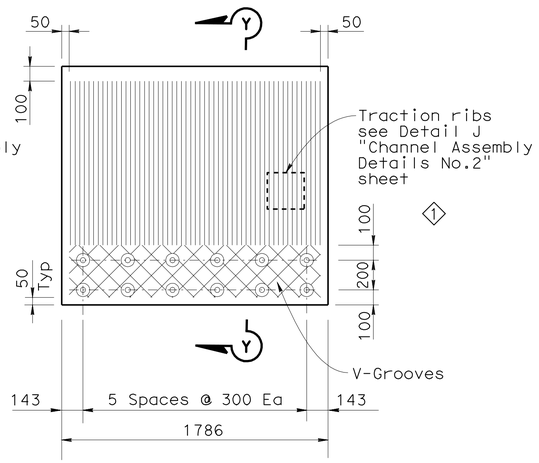

DECK PLATE B

SCALE = 1:20

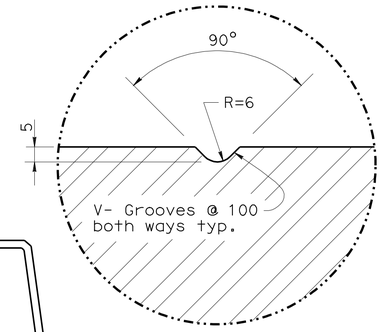

DETAIL K

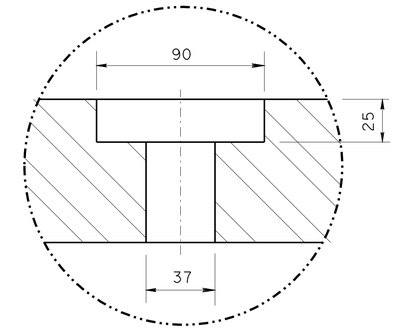

DETAIL L

NOTES:

1. V-Groove pattern is similar for all Plates
2. For deck plate plan see "DECK PLATE DETAILS NO 1" sheet for TYPE II joint.
3. In Section P-P, Y may vary from 10 mm (min) to 20 mm (max) at the thickest end of the deck ℙ (td). 1
4. Traction ribs to be machined.
5. For td, Lp, Lc, tc and Ls values see "CROSS SECTION" sheet for TYPE I joint.
6. Eye bolts can be used at set screw locations for lifting of cover plates.

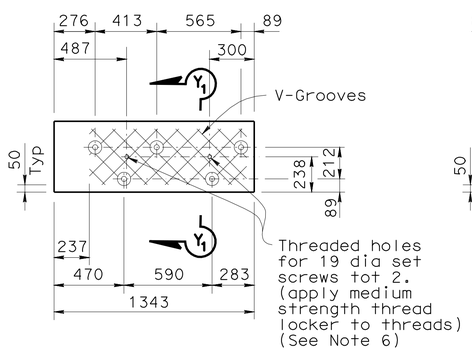

COVER PLATE A

SCALE = 1:20

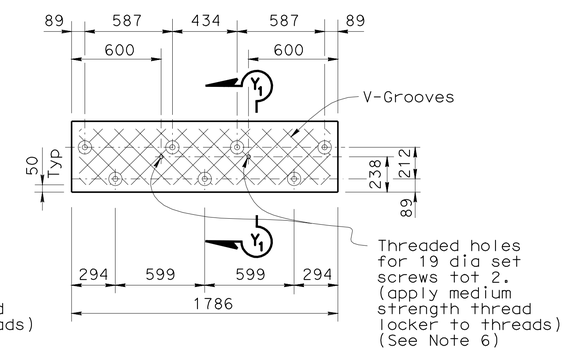

COVER PLATE B

SCALE = 1:20

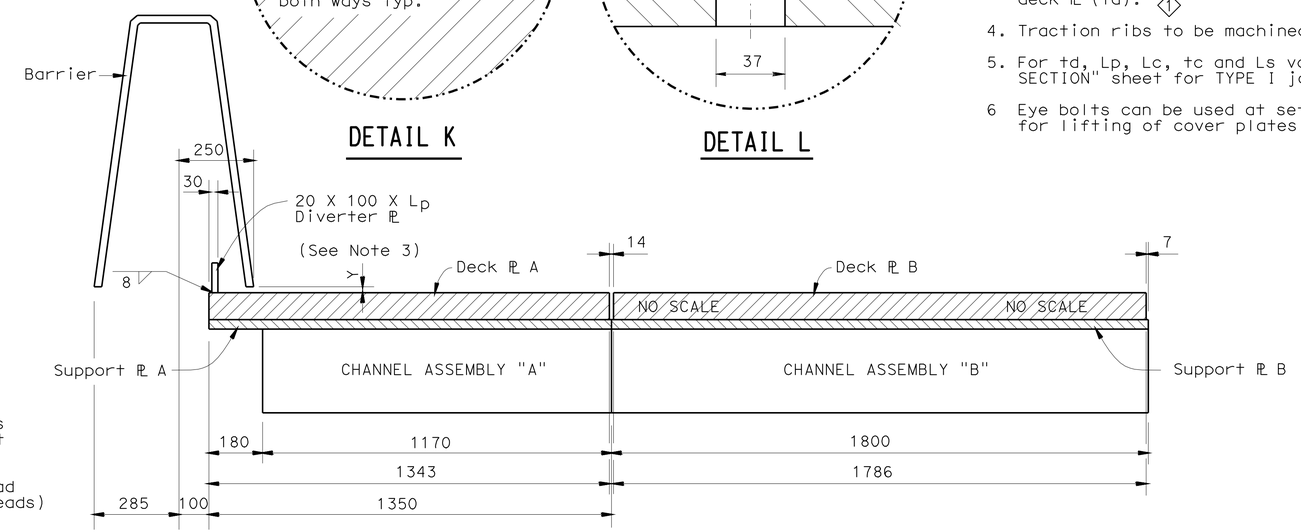

SECTION P-P

SCALE = 1:10

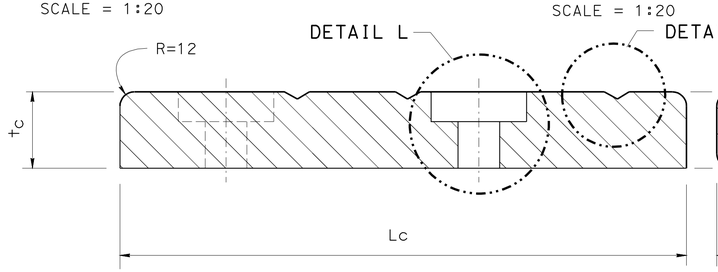

SECTION Y_1-Y_1

SCALE = 1:2.5

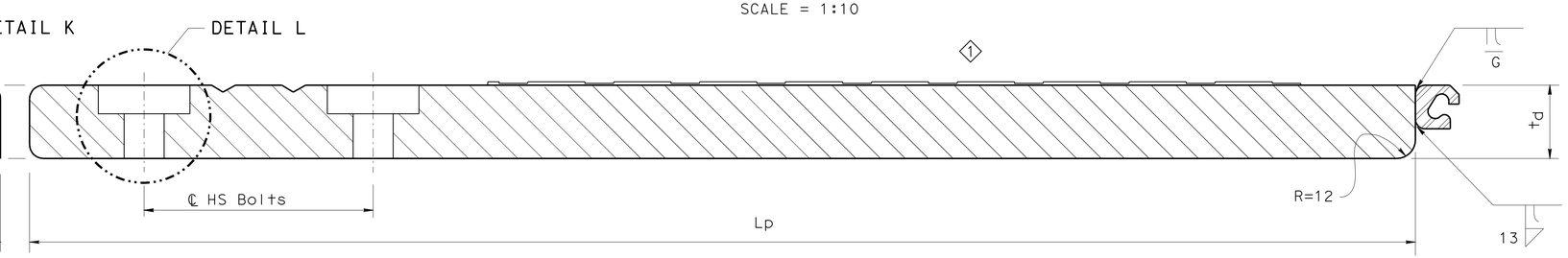

SECTION Y-Y

SCALE = 1:2.5

THE CONTRACTOR SHALL VERIFY ALL CONTROLLING FIELD DIMENSIONS BEFORE ORDERING OR FABRICATING ANY MATERIAL.

Caltrans Metric

1 Revised some V-Grooves to traction ribs - 3/4/11

ALL DIMENSIONS ARE IN MILLIMETERS UNLESS OTHERWISE SHOWN

	BY	CHECKED
DESIGN	E DELIS	A KARTOUM
DETAILS	A R DUDSAK	A KARTOUM
QUANTITIES	E DELIS	A KARTOUM

ORIGINAL SCALE IN MILLIMETERS FOR REDUCED PLANS 0 10 20 30 40 50 60 70 80 90 100

STATE OF CALIFORNIA
DEPARTMENT OF TRANSPORTATION

DIVISION OF ENGINEERING SERVICES
STRUCTURE DESIGN
SPECIAL DESIGNS BRANCH

CU 04
EA 0120M1

BRIDGE NO. 34-0006 L/R
KILOMETER POST 1.6

DISREGARD PRINTS BEARING EARLIER REVISION DATES

REVISION DATES: 8/20/09 11/14/11

SAN FRANCISCO OAKLAND BAY BRIDGE
EAST SPAN SEISMIC SAFETY PROJECT

OAKLAND APPROACH STRUCTURES-PHASE 2

SEISMIC JOINT (TYPE I)

DECK PLATE DETAILS NO 2

SHEET 68 OF 109

FILE => spec_des_br_proj/2009sd/04-0120M1/04-0120m1-68-u-sja3dp2.dgn

STRUCTURES DESIGN DETAIL SHEET (METRIC) (REV.03-17-04)

Nov 14, 2011

DATE PLOTTED => 01-MAR-2012
TIME PLOTTED => 13:52

DIST	COUNTY	ROUTE	KILOMETER POST TOTAL PROJECT	SHEET No	TOTAL SHEETS
04	Ala	80	1.6/2.7	641	744

REGISTERED CIVIL ENGINEER DATE

10-3-11
PLANS APPROVAL DATE

REGISTERED PROFESSIONAL ENGINEER
EFTHYMIOS DELIS
No. 51434
Exp. 6-30-12
CIVIL
STATE OF CALIFORNIA

The State of California or its officers or agents shall not be responsible for the accuracy or completeness of electronic copies of this plan sheet.

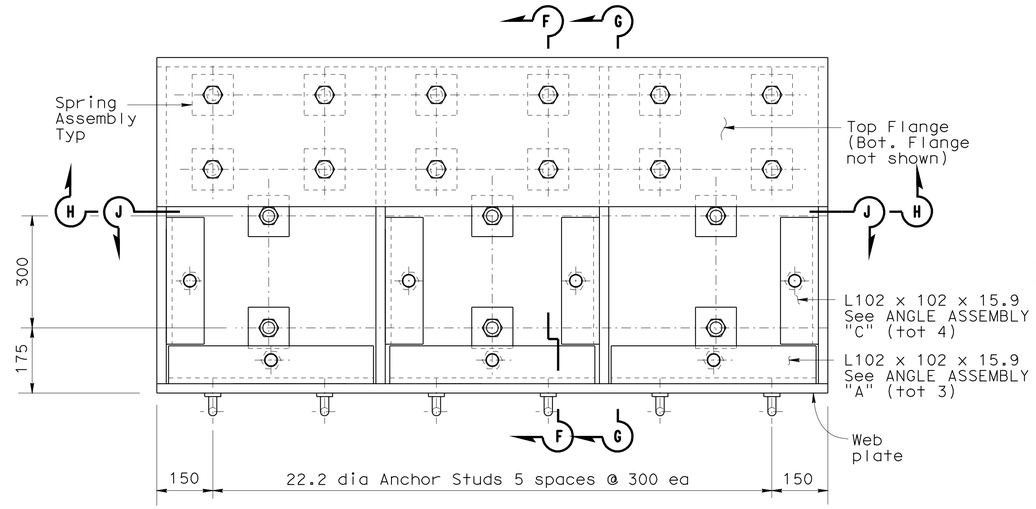

PLAN - BUILT UP CHANNEL ASSEMBLY "B" (TYP)

NO SCALE

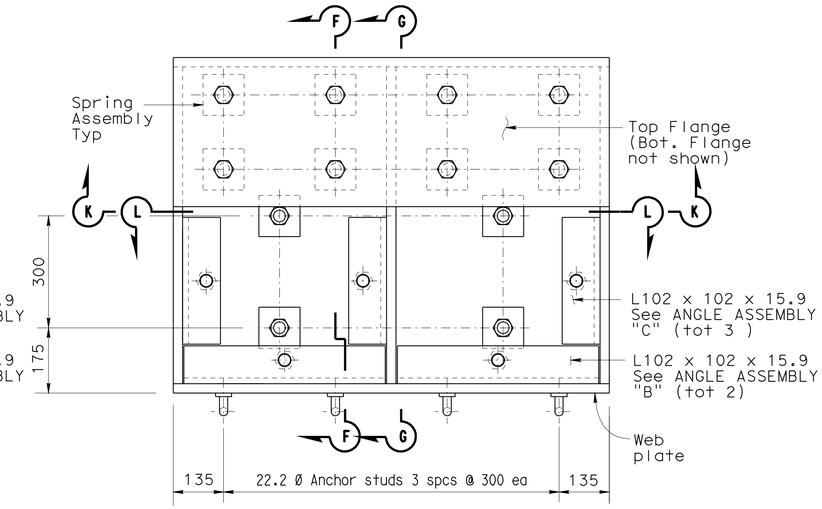

PLAN - BUILT UP CHANNEL ASSEMBLY "A" (TYP)

NO SCALE

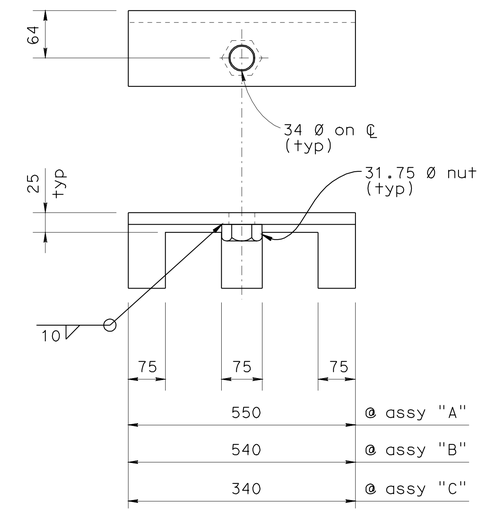

ANGLE ASSEMBLY (TYP)

NO SCALE

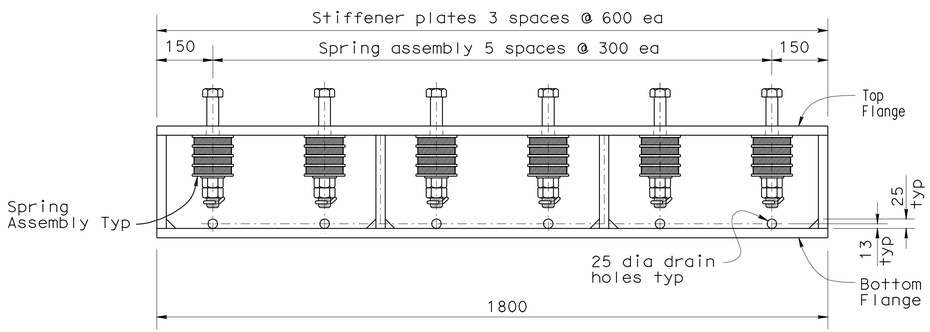

SECTION H-H - BUILT UP CHANNEL ASSEMBLY "B" (TYP)

NO SCALE

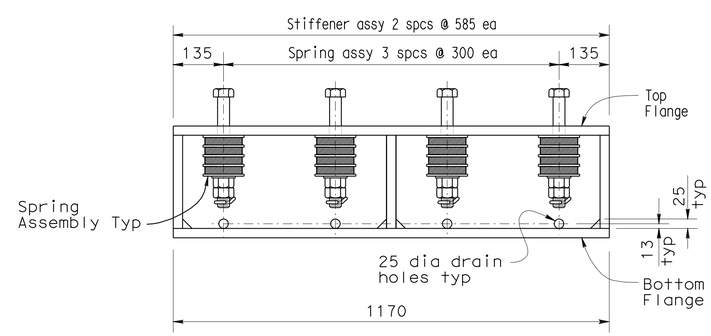

SECTION K-K - BUILT UP CHANNEL ASSEMBLY "A" (TYP)

NO SCALE

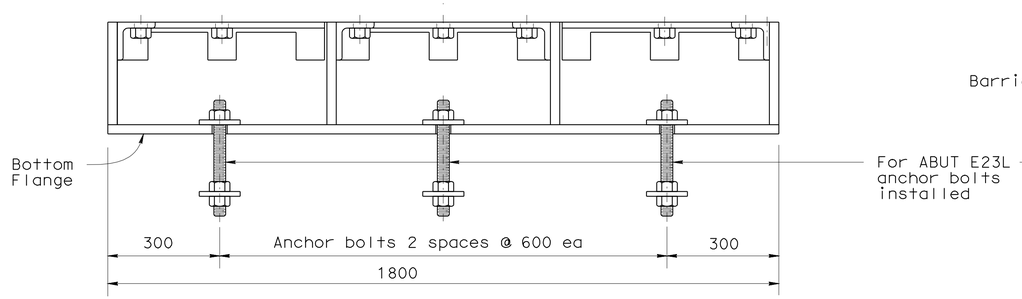

SECTION J-J - BUILT UP CHANNEL ASSEMBLY "B" (TYP)

NO SCALE

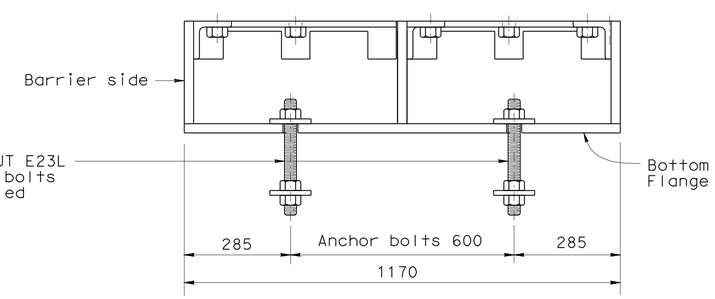

SECTION L-L - BUILT UP CHANNEL ASSEMBLY "A" (TYP)

NO SCALE

NOTES:

1. For SECTIONS F-F and G-G See "CHANNEL ASSEMBLY DETAILS NO. 2" sheet for TYPE I Joint.
2. Top surfaces of L 102 X 102 X 15.9 angles and 25mm steel PLs shall be on same level.

Note: Seismic Joint at Abut E23L to be furnished and installed by others. Seismic Joint at Abut E23R to be furnished by others and installed under this contract.

THE CONTRACTOR SHALL VERIFY ALL CONTROLLING FIELD DIMENSIONS BEFORE ORDERING OR FABRICATING ANY MATERIAL.

SAN FRANCISCO OAKLAND BAY BRIDGE
EAST SPAN SEISMIC SAFETY PROJECT

OAKLAND APPROACH STRUCTURES-PHASE 2

SEISMIC JOINT (TYPE I)

CHANNEL ASSEMBLY DETAILS NO 1

	BY	CHECKED
DESIGN	E DELIS	A KARTOUM
DETAILS	A R DUDSAK	A KARTOUM
QUANTITIES	E DELIS	A KARTOUM

STATE OF CALIFORNIA
DEPARTMENT OF TRANSPORTATION

DIVISION OF ENGINEERING SERVICES
STRUCTURE DESIGN
SPECIAL DESIGNS BRANCH

BRIDGE NO. 34-0006 L/R
KILOMETER POST 1.6

CU 04
EA 0120M1

ALL DIMENSIONS ARE IN MILLIMETERS UNLESS OTHERWISE SHOWN

ORIGINAL SCALE IN MILLIMETERS FOR REDUCED PLANS 0 10 20 30 40 50 60 70 80 90 100

DISREGARD PRINTS BEARING EARLIER REVISION DATES 8/20/09 10/1/09 11/14/11

REVISION DATES

SHEET 69 OF 109

FILE => spec_des_br_proj/2009sd/04-0120M1/04-0120m1-69-u-sja4cad1.dgn

STRUCTURES DESIGN DETAIL SHEET (METRIC) (REV.03-17-04)

Nov 14, 2011

DATE PLOTTED => 01-MAR-2012
TIME PLOTTED => 13:52

DIST	COUNTY	ROUTE	KILOMETER POST TOTAL PROJECT	SHEET No	TOTAL SHEETS
04	Ala	80	1.6/2.7	642	744

REGISTERED CIVIL ENGINEER DATE

10-3-11
PLANS APPROVAL DATE

REGISTERED PROFESSIONAL ENGINEER ENRICO C. MAGGENTI No. 46920 Exp. 6/30/11 CIVIL STATE OF CALIFORNIA

REGISTERED PROFESSIONAL ENGINEER EFTHYMIOS DELIS No. 51434 Exp. 6-30-12 CIVIL STATE OF CALIFORNIA

The State of California or its officers or agents shall not be responsible for the accuracy or completeness of electronic copies of this plan sheet.

FOR REVISION 1 ONLY

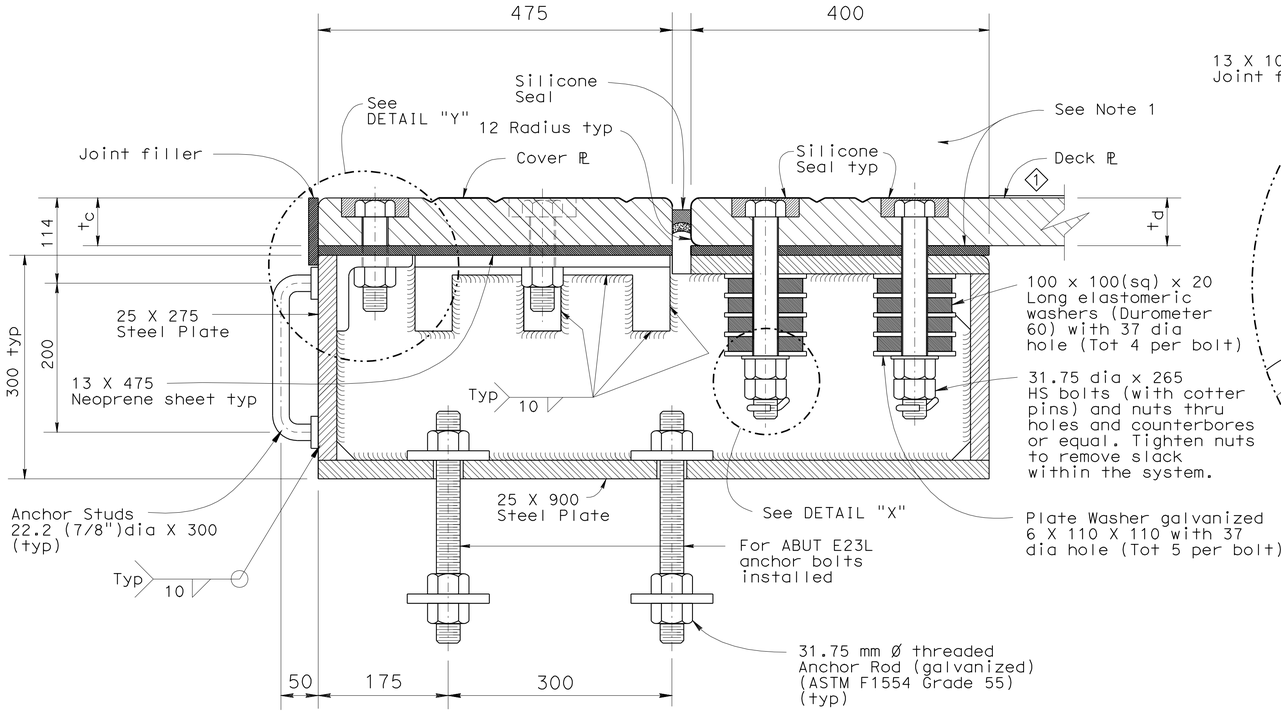

See DETAIL "X"

SECTION F-F

NO SCALE

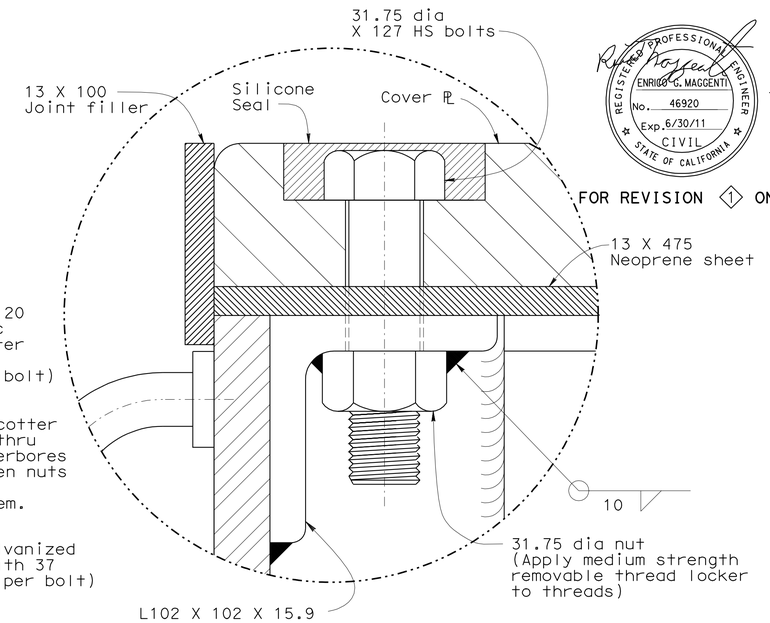

DETAIL Y

NO SCALE

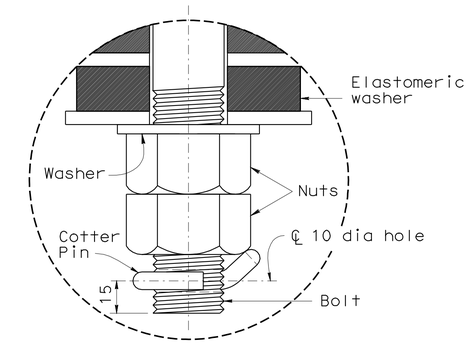

DETAIL X

NO SCALE

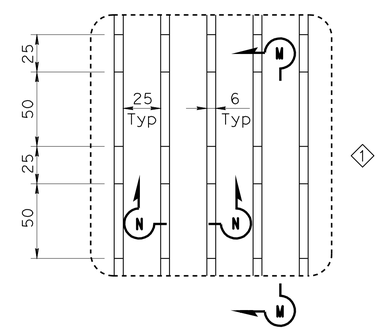

DETAIL J
TRACTION RIBS

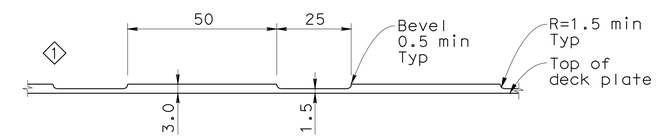

SECTION M-M

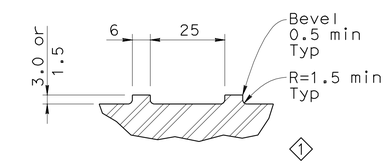

SECTION N-N

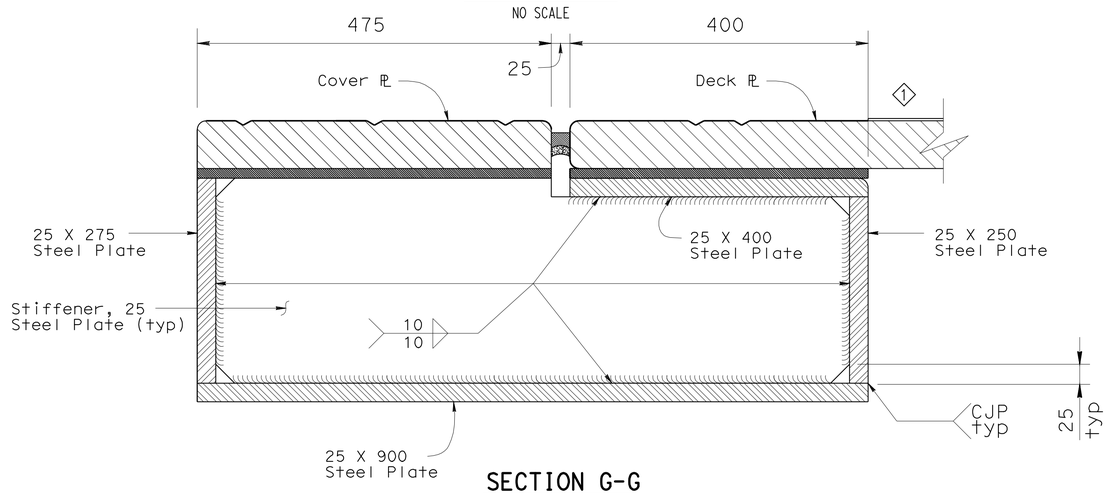

SECTION G-G

NO SCALE

Note: Seismic Joint at Abut E23L to be furnished and installed by others. Seismic Joint at Abut E23R to be furnished by others and installed under this contract.

NOTES:

1. Thirty-seven mm holes in neoprene sheets shall be drilled or punched so that the neoprene is not distorted at the time of installation.

2. For tc and td values see "CROSS SECTION" sheet for TYPE I joint.

THE CONTRACTOR SHALL VERIFY ALL CONTROLLING FIELD DIMENSIONS BEFORE ORDERING OR FABRICATING ANY MATERIAL.

SAN FRANCISCO OAKLAND BAY BRIDGE
EAST SPAN SEISMIC SAFETY PROJECT

OAKLAND APPROACH STRUCTURES-PHASE 2

SEISMIC JOINT (TYPE I)

CHANNEL ASSEMBLY DETAILS NO 2

Caltrans Metric

1 Revised some V-Grooves to traction ribs - 3/4/11

	BY	CHECKED
DESIGN	E DELIS	A KARTOUM
DETAILS	A R DUDSAK	A KARTOUM
QUANTITIES	E DELIS	A KARTOUM

STATE OF CALIFORNIA
DEPARTMENT OF TRANSPORTATION

DIVISION OF ENGINEERING SERVICES
STRUCTURE DESIGN
SPECIAL DESIGNS BRANCH

BRIDGE NO. 34-0006 L/R
KILOMETER POST 1.6

ALL DIMENSIONS ARE IN MILLIMETERS UNLESS OTHERWISE SHOWN

ORIGINAL SCALE IN MILLIMETERS FOR REDUCED PLANS 0 10 20 30 40 50 60 70 80 90 100

CU 04
EA 0120M1

DISREGARD PRINTS BEARING EARLIER REVISION DATES

REVISION DATES: 8/20/09 10/1/09 9/21/10 11/14/11

SHEET 70 OF 109

FILE => spec_des_br_proj/2009sd/04-0120M1/04-0120m1-70-u-sja5cad2.dgn

STRUCTURES DESIGN DETAIL SHEET (METRIC) (REV.03-17-04)

Nov 14, 2011

DATE PLOTTED => 01-MAR-2012
TIME PLOTTED => 13:52

DIST	COUNTY	ROUTE	KILOMETER POST TOTAL PROJECT	SHEET No	TOTAL SHEETS
04	Ala	80	1.6/2.7	643	744

REGISTERED CIVIL ENGINEER DATE

10-3-11
PLANS APPROVAL DATE

REGISTERED PROFESSIONAL ENGINEER
EFTHYMIOS DELIS
No. 51434
Exp. 6-30-12
CIVIL
STATE OF CALIFORNIA

The State of California or its officers or agents shall not be responsible for the accuracy or completeness of electronic copies of this plan sheet.

Nov 14, 2011

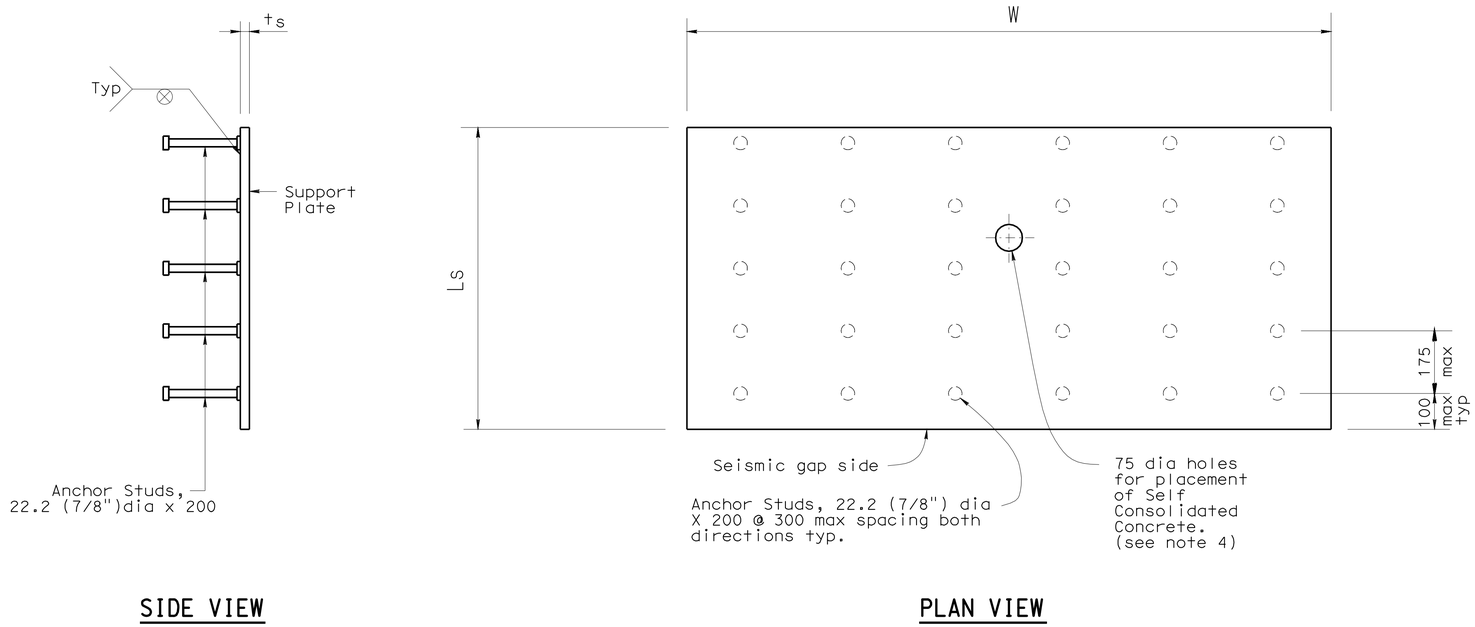

SIDE VIEW

PLAN VIEW

SUPPORT PLATE DETAIL

NO SCALE

Note: Seismic Joint at Abut E23L to be furnished and installed by others. Seismic Joint at Abut E23R to be furnished by others and installed under this contract.

SUPPORT PLATE WIDTH
MODULE A; W = 1350
MODULE B; W = 1800

NOTES:

1. For Ls and ts values see "CROSS SECTION" sheet for TYPE I joint.
2. Support Plate A shown, Support Plate B similar.
3. For V-Groove details see "DECK PLATE DETAILS NO 2" sheet for TYPE I Joint.
4. Exact location of 75 dia holes to be determined prior to support plate fabrication.

THE CONTRACTOR SHALL VERIFY ALL CONTROLLING FIELD DIMENSIONS BEFORE ORDERING OR FABRICATING ANY MATERIAL.

SAN FRANCISCO OAKLAND BAY BRIDGE
EAST SPAN SEISMIC SAFETY PROJECT

OAKLAND APPROACH STRUCTURES-PHASE 2

SEISMIC JOINT (TYPE I)

SUPPORT PLATE DETAILS

	BY	CHECKED
DESIGN	E DELIS	A KARTOUM
DETAILS	A R DUDSAK	A KARTOUM
QUANTITIES	E DELIS	A KARTOUM

STATE OF CALIFORNIA
DEPARTMENT OF TRANSPORTATION

DIVISION OF ENGINEERING SERVICES
STRUCTURE DESIGN
SPECIAL DESIGNS BRANCH

BRIDGE NO. 34-0006 L/R
KILOMETER POST 1.6

CU 04
EA 0120M1

ALL DIMENSIONS ARE IN MILLIMETERS UNLESS OTHERWISE SHOWN

ORIGINAL SCALE IN MILLIMETERS FOR REDUCED PLANS 0 10 20 30 40 50 60 70 80 90 100

DISREGARD PRINTS BEARING EARLIER REVISION DATES 8/20/09 11/14/11

REVISION DATES

SHEET 71 OF 109

FILE => spec_des_br_proj/2009sd/04-0120M1/04-0120m1-71-u-sjg6spd.dgn

STRUCTURES DESIGN DETAIL SHEET (METRIC) (REV.03-17-04)

DATE PLOTTED => 01-MAR-2012
TIME PLOTTED => 13:52

DIST	COUNTY	ROUTE	KILOMETER POST TOTAL PROJECT	SHEET No	TOTAL SHEETS
04	Ala	80	1.6/2.7	644	744

REGISTERED CIVIL ENGINEER DATE

10-3-11
PLANS APPROVAL DATE

The State of California or its officers or agents shall not be responsible for the accuracy or completeness of electronic copies of this plan sheet.

REGISTERED PROFESSIONAL ENGINEER ENRICO C. MAGGENTI No. 46920 Exp. 6/30/11 CIVIL STATE OF CALIFORNIA

REGISTERED PROFESSIONAL ENGINEER EFTHYMIOS DELIS No. 51434 Exp. 6-30-12 CIVIL STATE OF CALIFORNIA

FOR REVISION 1 ONLY

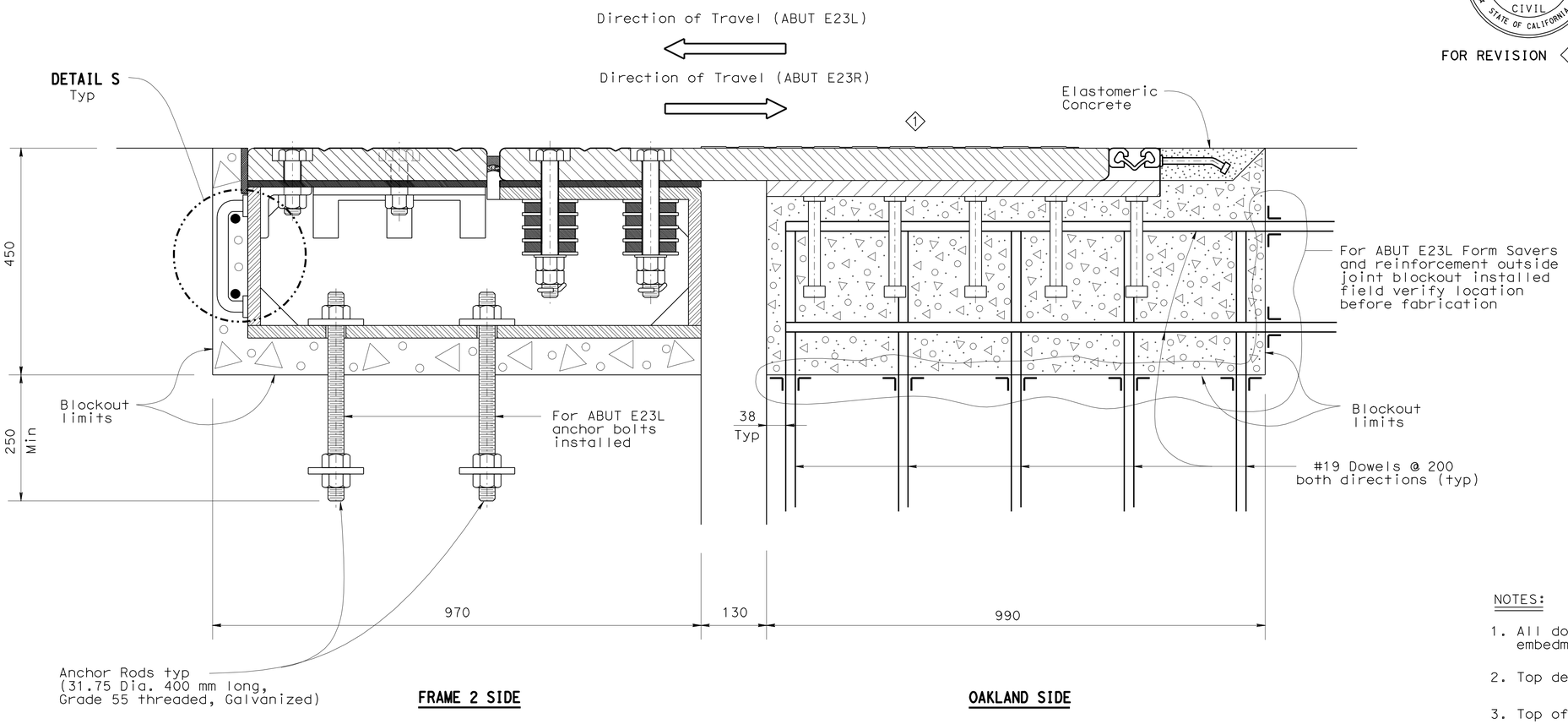

EASTBOUND / WESTBOUND ELEVATION

SCALE 1:5

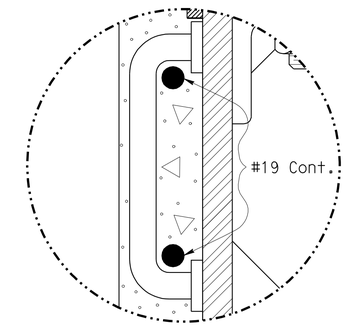

DETAIL S

NOTES:

1. All dowels are drill and bond with minimum embedment length of 200 mm.
2. Top deck plate placed at deck profile.
3. Top of support plate parallel to top deck plate.
4. For Frame 2 limits see "GENERAL NOTES NO. 1" sheet.
5. Seismic joint shown position at 20°C.

Note: Seismic Joint at Abut E23L to be furnished and installed by others. Seismic Joint at Abut E23R to be furnished by others and installed under this contract.

THE CONTRACTOR SHALL VERIFY ALL CONTROLLING FIELD DIMENSIONS BEFORE ORDERING OR FABRICATING ANY MATERIAL.

1 Revised some V-Grooves to traction ribs - 3/4/11

	BY	CHECKED
DESIGN	E DELIS	A KARTOUM
DETAILS	A R DUDSAK	A KARTOUM
QUANTITIES	E DELIS	A KARTOUM

STATE OF CALIFORNIA
DEPARTMENT OF TRANSPORTATION

DIVISION OF ENGINEERING SERVICES
STRUCTURE DESIGN
SPECIAL DESIGNS BRANCH

BRIDGE NO. 34-0006 L/R
KILOMETER POST 1.6

SAN FRANCISCO OAKLAND BAY BRIDGE
EAST SPAN SEISMIC SAFETY PROJECT

OAKLAND APPROACH STRUCTURES-PHASE 2

SEISMIC JOINT (TYPE I)

REINFORCEMENT DETAILS

ALL DIMENSIONS ARE IN MILLIMETERS UNLESS OTHERWISE SHOWN

ORIGINAL SCALE IN MILLIMETERS FOR REDUCED PLANS 0 10 20 30 40 50 60 70 80 90 100

CU 04
EA 0120M1

DISREGARD PRINTS BEARING EARLIER REVISION DATES

REVISION DATES: 8/20/09 10/5/09 9/21/10 11/14/11

SHEET 72 OF 109

FILE => spec_des_br_proj/2009sd/04-0120M1/04-0120m1-72-u-sja7.dgn

STRUCTURES DESIGN DETAIL SHEET (METRIC) (REV.03-17-04)

Nov 14, 2011

DATE PLOTTED => 01-MAR-2012
TIME PLOTTED => 13:53

DIST.	COUNTY	ROUTE	KILOMETER POST TOTAL PROJECT	SHEET NO.	TOTAL SHEETS
04	Ala	80	1.6/2.7	645	744

REGISTERED ENGINEER - CIVIL
10-3-11
PLANS APPROVAL DATE

REGISTERED PROFESSIONAL ENGINEER A.L. ELY No. 18880 Exp. 6-30-11 CIVIL STATE OF CALIFORNIA

The State of California or its officers or agents shall not be responsible for the accuracy or completeness of electronic copies of this plan sheet.

T.Y. LIN / MOFFATT & NICHOL
TWO HARRISON STREET, SUITE 500
SAN FRANCISCO, CA 94105

Caltrans Metric

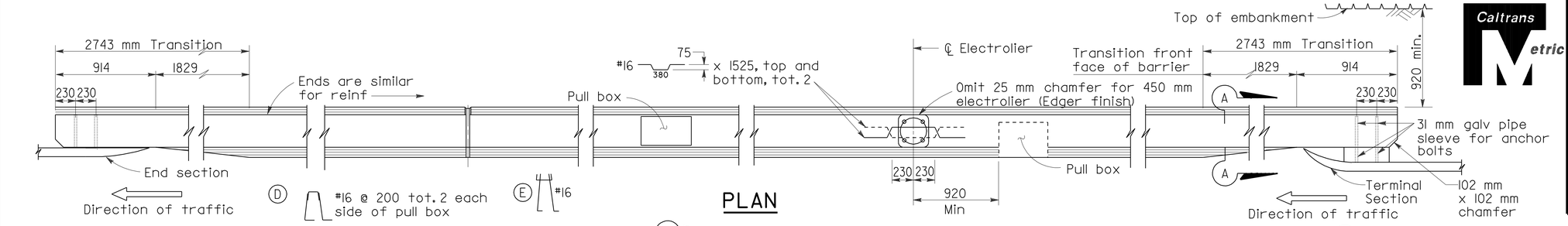

PLAN

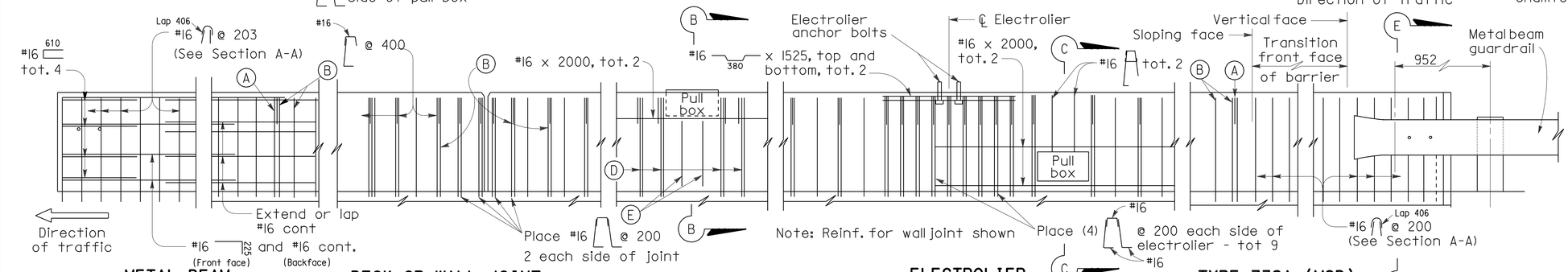

ELEVATION

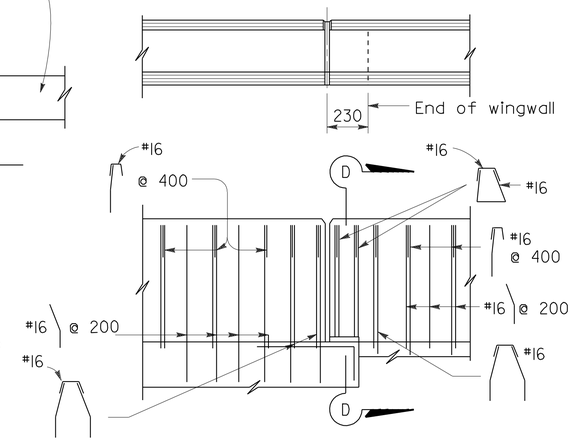

METAL BEAM GUARDRAIL CONNECTION

DECK OR WALL JOINT

ELECTROLIER (See Note F)

TYPE 732A (MOD)

TYPE 732A (MOD) **TYPE 732B (MOD)**

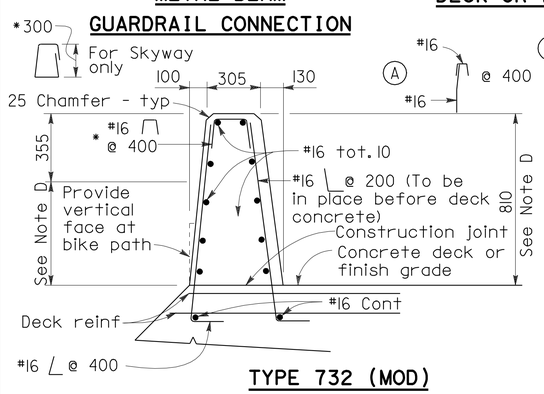

TYPE 732 (MOD)

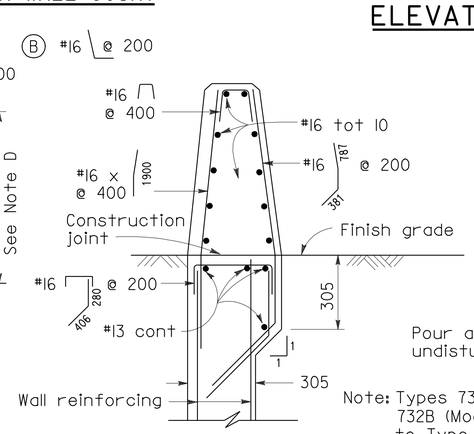

TYPE 732A (MOD)

Note: Types 732A (Mod) & 732B (Mod) are similar to Type 732 (Mod) except as noted

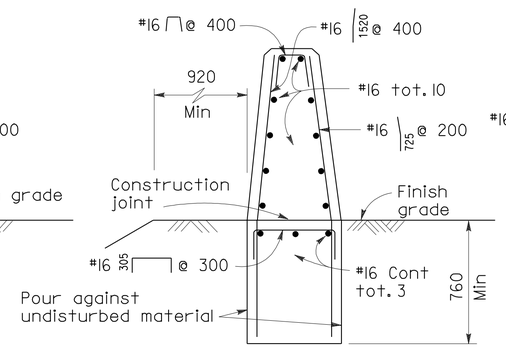

TYPE 732B (MOD)

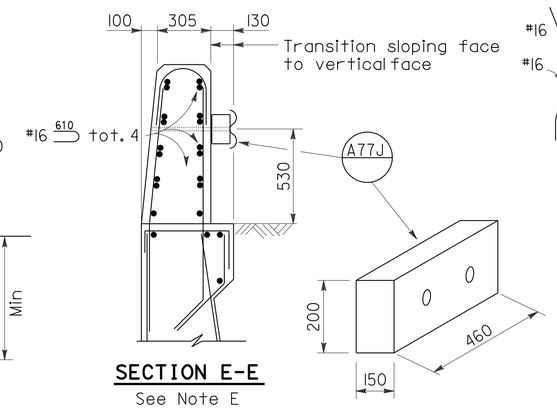

SECTION E-E
See Note E

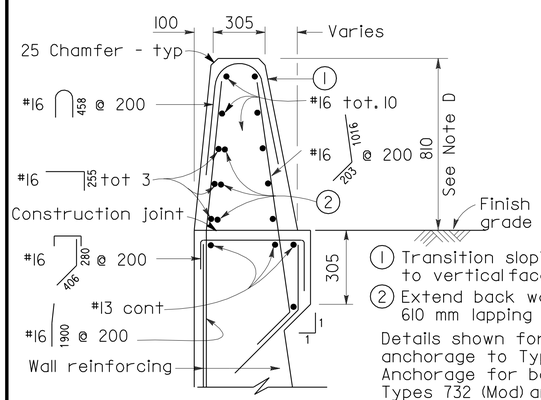

SECTION A-A

Details shown for barrier anchorage to Type 732A (Mod). Anchorage for barrier Types 732 (Mod) and 732B (Mod) are similar to their respective details.

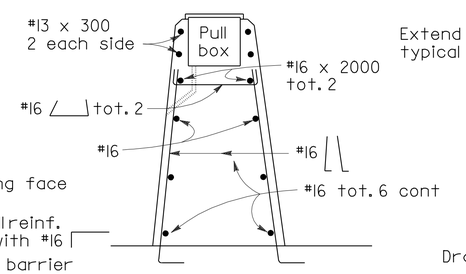

SECTION B-B

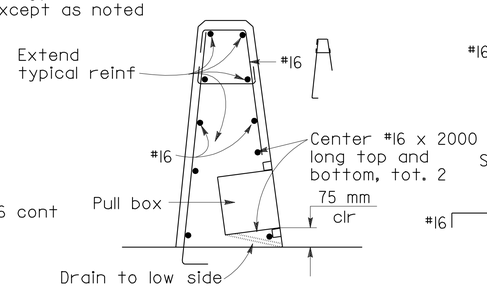

SECTION C-C
See Notes

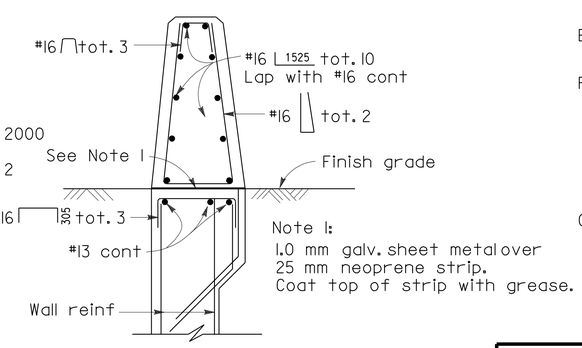

SECTION D-D

Note I:
1.0 mm galv. sheet metal over 25 mm neoprene strip. Coat top of strip with grease.

NOTES

A. Walls are to be backfilled before barrier is placed.

B. Clearance to reinforcing steel in barrier to be 25 mm, except as noted. Longitudinal reinforcement to stop at all expansion joints.

C. See project plans for locations of electroliers and pull boxes.

D. Dimensions may vary with roadway cross slope and with certain thickness of surfacing. See Project Plans.

E. For Metal Beam Guardrail Connection details not shown, see General Plan and Standard Plans.

F. Refer to Project Plans and Standard Plan Sheets ES-9A, ES-9C and ES-9D for electrical details concerning barriers. The maximum number of conduits in a barrier is limited to two (2) 50 mm conduits (max.) along with one (1) 75 mm conduit. When a 75 mm conduit is used, it is restricted to the base of barrier.

G. Minimum concrete edge distance to reinforcing shown, shall be maintained, edge distance may be adjusted to accomodate increase in concrete cover for architectural treatment. See Typical Section.

ALL DIMENSIONS ARE IN MILLIMETERS UNLESS OTHERWISE SHOWN

SAN FRANCISCO OAKLAND BAY BRIDGE
EAST SPAN SEISMIC SAFETY PROJECT

DESIGN OVERSIGHT - SAM AKKAD HASAN EL-NATUR
SIGN OFF DATE
Rev. Date: 5-18-98

	BY	CHECKED
DESIGN	Desai	Jain
DETAILS	van Ryn/Zucchi/Mai	Jain
QUANTITIES	Liao	E. Nichol

PREPARED FOR THE STATE OF CALIFORNIA DEPARTMENT OF TRANSPORTATION

Jal Birdy
PROJECT ENGINEER

BRIDGE NO. 34-0006 L/R
KILOMETER POST

OAKLAND APPROACH STRUCTURES-PHASE 2
CONCRETE BARRIER TYPE 732 (MOD)

ORIGINAL SCALE IN MILLIMETERS FOR REDUCED PLANS 0 10 20 30 40 50 60 70 80 90 100

CU 04
EA 0120M1

DISREGARD PRINTS BEARING EARLIER REVISION DATES
REVISION DATES (PRELIMINARY STAGE ONLY) 1/15/10 1/21/10 5/28/10 9/30/10 3/4/11 3/24/11 4/14/11 6/3/11 8/27/09 10/30/09

SHEET 73 OF 109

FILE => 04-0120m1-34-0006rl-t-conbrdt01.dgn

SUBMITTAL - 12
June 3, 2011
USERNAME => s121614 DATE PLOTTED => 05-OCT-2011 TIME PLOTTED => 14:07

DIST.	COUNTY	ROUTE	KILOMETER POST TOTAL PROJECT	SHEET NO.	TOTAL SHEETS
04	Ala	80	1.6/2.7	646	744

Caltrans Metric

REGISTERED ENGINEER - CIVIL

10-3-11

PLANS APPROVAL DATE

REGISTERED PROFESSIONAL ENGINEER MOHAN S. CHAR No. 57894 Exp. 6/30/12 CIVIL STATE OF CALIFORNIA

The State of California or its officers or agents shall not be responsible for the accuracy or completeness of electronic copies of this plan sheet.

T.Y. LIN / MOFFATT & NICHOL
TWO HARRISON STREET, SUITE 500
SAN FRANCISCO, CA 94105

AECOM TECHNICAL SERVICES INC.
999 TOWN & COUNTRY ROAD
ORANGE, CA 92868

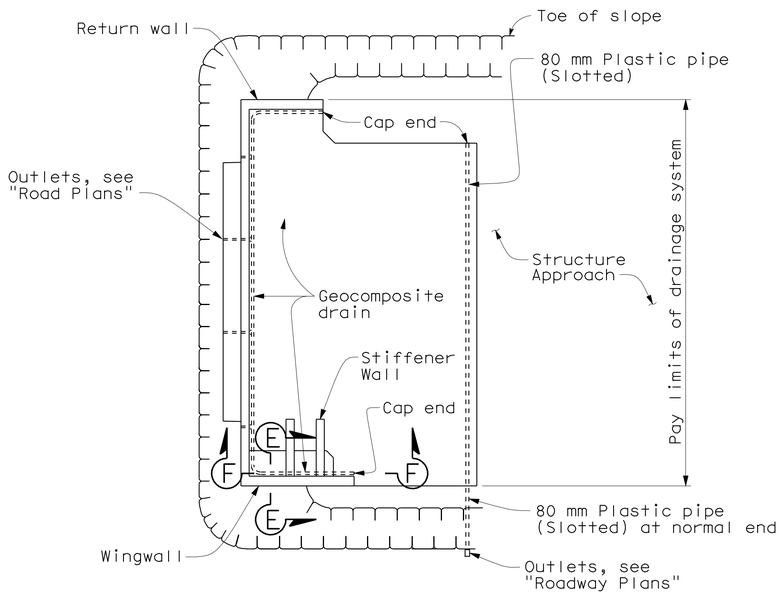

TYPICAL PLAN (EASTBOUND)
No Scale

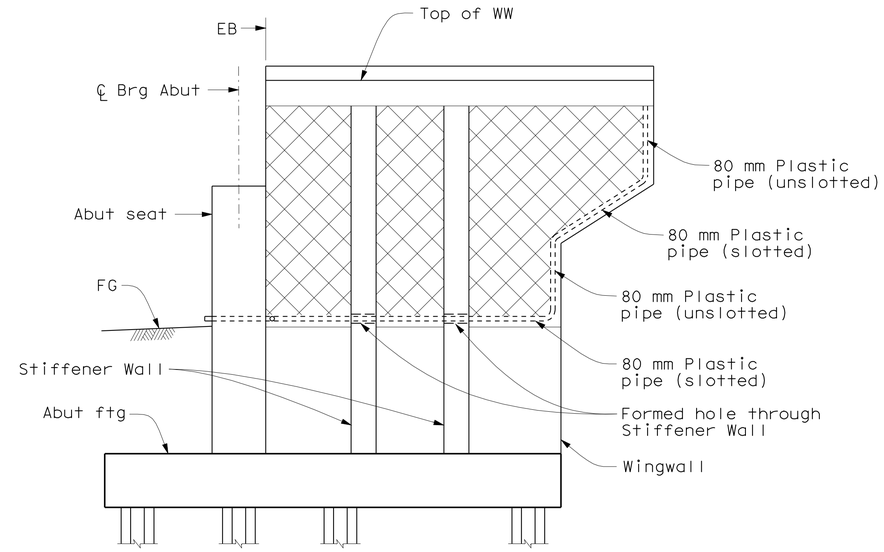

CANTILEVER WINGWALL (EASTBOUND)

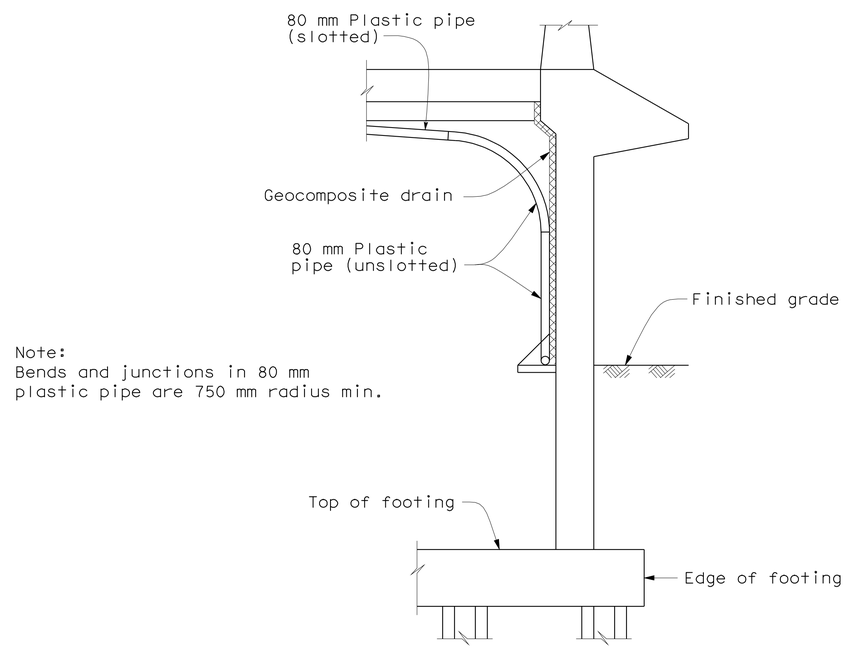

Note:
Bends and junctions in 80 mm plastic pipe are 750 mm radius min.

SECTION E-E
No Scale

SECTION F-F
No Scale

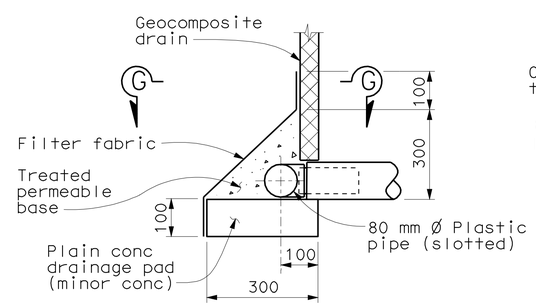

DRAINAGE DETAIL

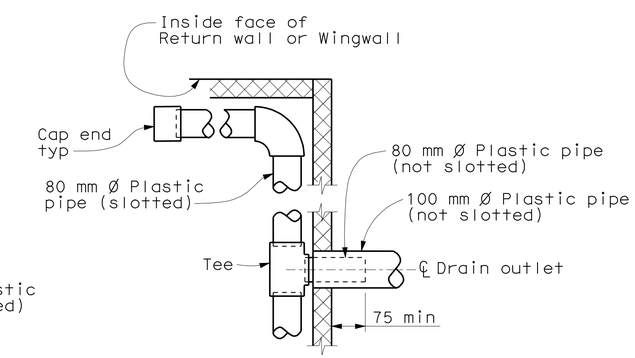

SECTION G-G

WEEP HOLE AND GEOCOMPOSITE DRAIN DETAILS
No Scale

ALL DIMENSIONS ARE IN MILLIMETERS UNLESS OTHERWISE SHOWN

SAN FRANCISCO OAKLAND BAY BRIDGE
EAST SPAN SEISMIC SAFETY PROJECT

OAKLAND APPROACH STRUCTURES - PHASE 2

STRUCTURE APPROACH DRAINAGE DETAILS

DESIGN OVERSIGHT
HASAN EL-NATAR
SIGN OFF DATE

	BY	CHECKED
DESIGN	M. CHAR	T. DUDLEY
DETAILS	M. ANDRASEK	M. CHAR
QUANTITIES	Y. KIM	A. SIVATHASAN/T. DUDLEY

PREPARED FOR THE STATE OF CALIFORNIA DEPARTMENT OF TRANSPORTATION

MOHAN S. CHAR
PROJECT ENGINEER

BRIDGE NO. 34-0006R
KILOMETER POST 2.1

Rev. Date: 5-18-98

ORIGINAL SCALE IN MILLIMETERS FOR REDUCED PLANS 0 10 20 30 40 50 60 70 80 90 100

CU 04
EA 0120M1

DISREGARD PRINTS BEARING EARLIER REVISION DATES

REVISION DATES (PRELIMINARY STAGE ONLY) 10/30/09 1/15/10 4/2/10 5/28/10 9/30/10 12/29/10 3/14/11 3/14/11 4/14/11 6/3/11

SHEET 74 OF 109

SUBMITTAL - 12

FILE => 04-0120m1-34-0006r-s-sadd.dgn

USERNAME => s12614 DATE PLOTTED => 05-OCT-2011 TIME PLOTTED => 14:07

RELEASED 4-23-98

SUBMITTAL - 12

DIST.	COUNTY	ROUTE	KILOMETER POST TOTAL PROJECT	SHEET NO.	TOTAL SHEETS
04	Ala	80	1.6/2.7	647	744

Caltrans Metric

REGISTERED ENGINEER - CIVIL

10-3-11

PLANS APPROVAL DATE

REGISTERED PROFESSIONAL ENGINEER MOHAN S. CHAR No. 57894 Exp. 6/30/12 CIVIL STATE OF CALIFORNIA

The State of California or its officers or agents shall not be responsible for the accuracy or completeness of electronic copies of this plan sheet.

T.Y. LIN / MOFFATT & NICHOL
TWO HARRISON STREET, SUITE 500
SAN FRANCISCO, CA 94105

AECOM TECHNICAL SERVICES INC.
999 TOWN & COUNTRY ROAD
ORANGE, CA 92868

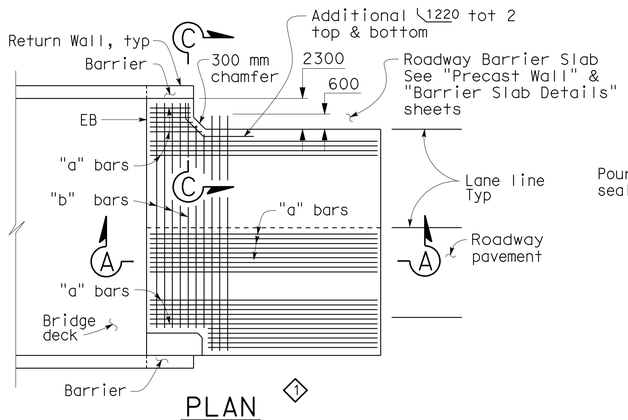

PLAN
No Scale

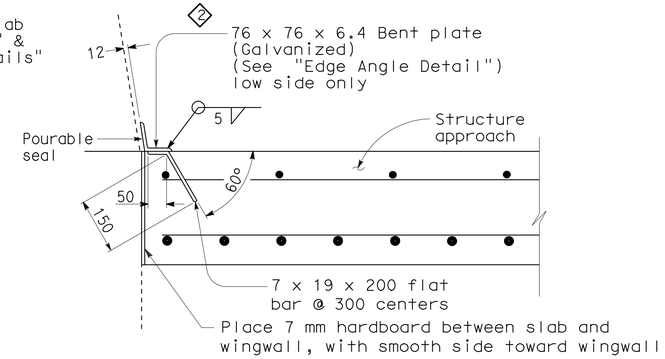

DETAIL B
No Scale

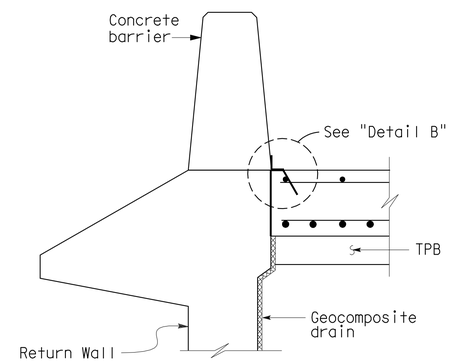

TYPE E-2

SECTION C-C
No Scale

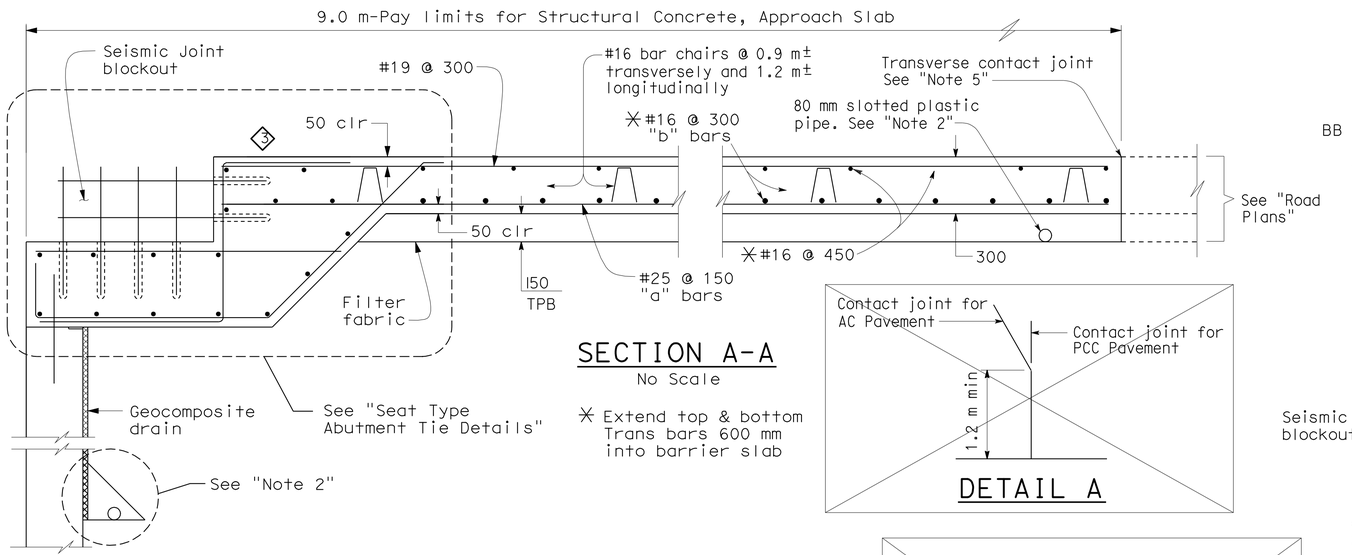

SECTION A-A
No Scale

✳ Extend top & bottom Trans bars 600 mm into barrier slab

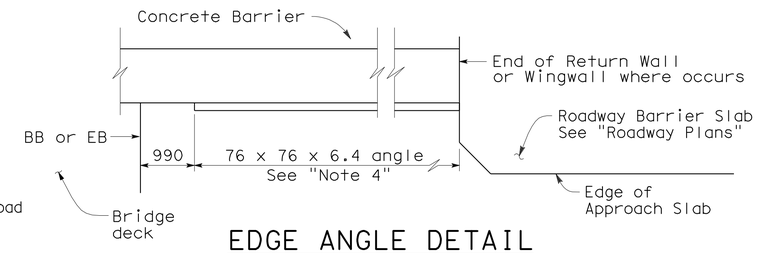

EDGE ANGLE DETAIL

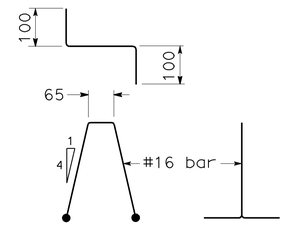

BAR CHAIR DETAIL

DETAIL A

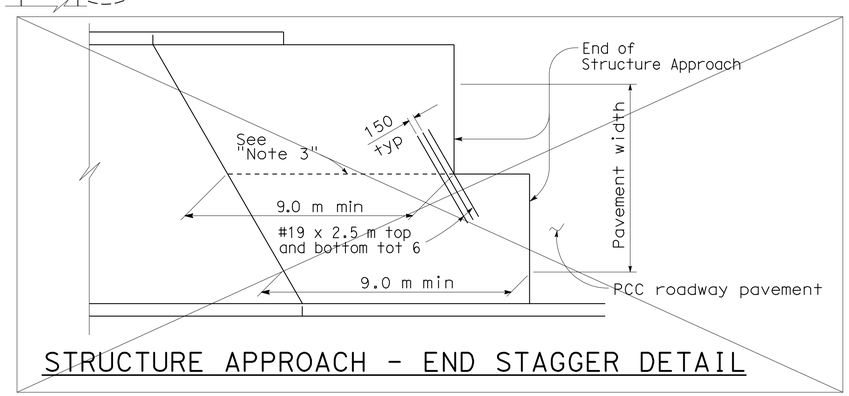

STRUCTURE APPROACH - END STAGGER DETAIL

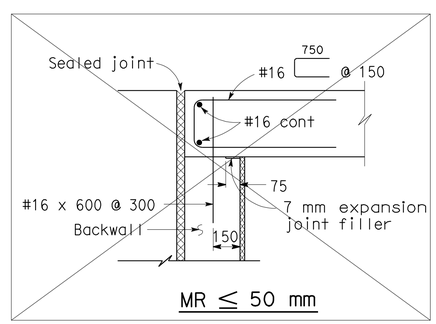

MR ≤ 50 mm

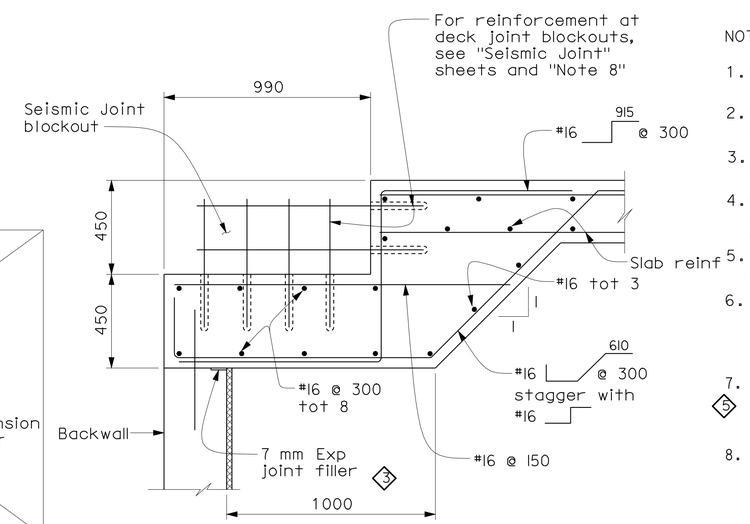

MR > 50 mm

SEAT TYPE ABUTMENT TIE DETAILS (SEE "NOTE 1")
No Scale

NOTES:

1. For MR ≤ 50 mm, adjust bar reinforcement to clear a sawcut for sealed joint, when required.
2. For drainage details, see "Structure Approach Drainage Details" sheet.
3. Longitudinal construction joints, when permitted by the Engineer, shall be located on lane lines.
4. End angle at beginning of barrier transition, end of wingwall or end of structure approach, as applicable.
5. For transverse contact joint with new PCC paving, refer to Standard Plan A35-A.
6. At the contractor's option, approach slab transverse reinforcement may be placed parallel to paving notch. Spacing of transverse reinforcement is measured along ℄ roadway.
7. Contractor shall prepare details for drill & bond dowel and threaded rod locations for Engineer's approval. (5)
8. If using drill & bond dowels at seismic joint blockouts, Contractor shall provide a permanent means of identifying locations for installing dowels after concreting.

Remove all polystyrene.

NO SCALE

ALL DIMENSIONS ARE IN MILLIMETERS UNLESS OTHERWISE SHOWN

SAN FRANCISCO OAKLAND BAY BRIDGE
EAST SPAN SEISMIC SAFETY PROJECT

OAKLAND APPROACH STRUCTURES - PHASE 2

STRUCTURE APPROACH TYPE N(9S)

STANDARD DRAWING

FILE NO. XS 22-18	DESIGN	BY M. TRAFFALIS	CHECKED E. THORKILDSEN	APPROVAL RECOMMENDED BY
DRAWING DATE REVISED	DETAILS	BY R. YEE	CHECKED E. THORKILDSEN	DESIGN SUPERVISOR
	SUBMITTED BY M. HA			

DS OSD 2147A (METRIC) (REV. 2/25/97)

1. Added Eastbound Plan view
2. Detail B modified
3. Modified Detail
4. Removed Joint Table
5. Added Note

STATE OF CALIFORNIA
DEPARTMENT OF TRANSPORTATION

DIVISION OF STRUCTURES
STRUCTURE DESIGN

BRIDGE NO. 34-0006R
KILOMETER POST 1.6

CU 04
EA 0120M1

ORIGINAL SCALE IN MILLIMETERS FOR REDUCED PLANS 0 10 20 30 40 50 60 70 80 90 100

DISREGARD PRINTS BEARING EARLIER REVISION DATES

REVISION DATES (PRELIMINARY STAGE ONLY) 10/30/09 1/18/10 4/22/10 5/28/10 9/30/10 12/29/10 3/4/11 3/14/11 4/4/11 6/3/11

SHEET 75 OF 109

USERNAME => s121614 DGN FILE => 04-0120m1-34-0006r-s-san9s.dgn

DATE PLOTTED => 06-OCT-2011 TIME PLOTTED => 10:55

DIST.	COUNTY	ROUTE	KILOMETER POST TOTAL PROJECT	SHEET NO.	TOTAL SHEETS
04	Ala	80	1.6/2.7	648	744

REGISTERED ENGINEER - CIVIL

10-3-11

PLANS APPROVAL DATE

REGISTERED PROFESSIONAL ENGINEER MOHAN S. CHAR No. 57894 Exp. 6/30/12 CIVIL STATE OF CALIFORNIA

The State of California or its officers or agents shall not be responsible for the accuracy or completeness of electronic copies of this plan sheet.

T.Y. LIN / MOFFATT & NICHOL
TWO HARRISON STREET, SUITE 500
SAN FRANCISCO, CA 94105

AECOM TECHNICAL SERVICES INC.
999 TOWN & COUNTRY ROAD
ORANGE, CA 92868

Abbreviation:

UNO Unless Noted Otherwise

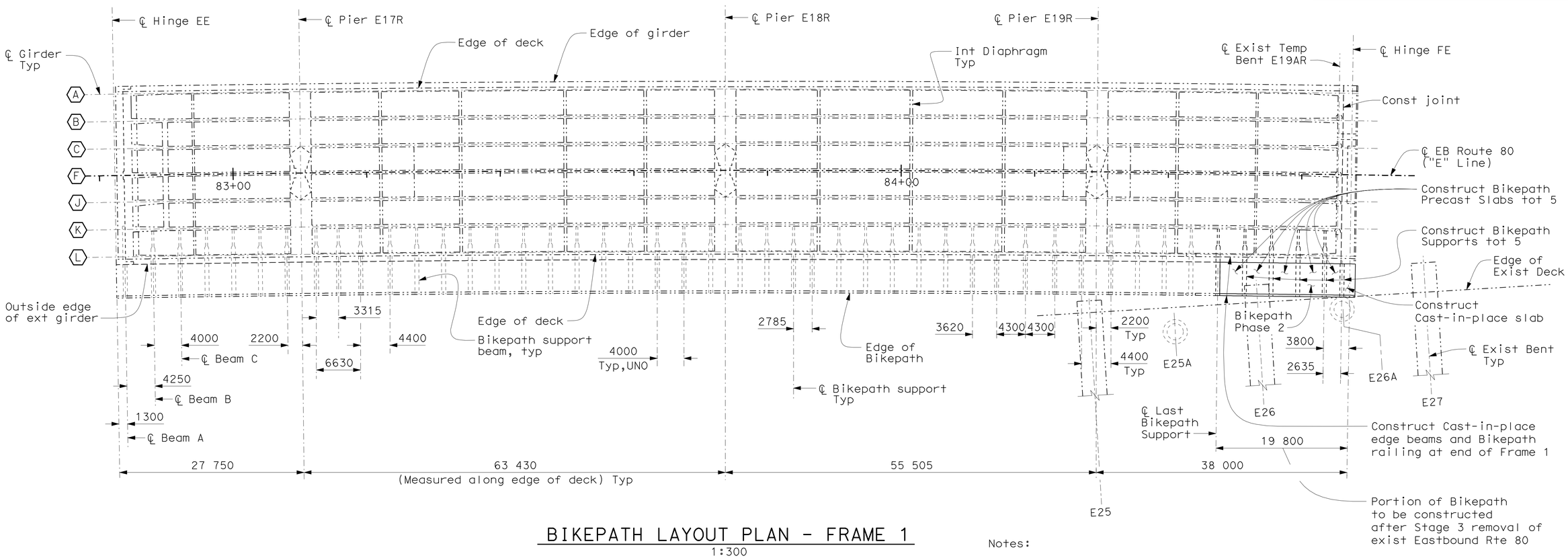

BIKEPATH LAYOUT PLAN - FRAME 1

1:300

Note:
For Information not shown, see "Eastbound Girder Layout No. 1 & No. 2" sheets.

Notes:

1. For Frame 2 Bikepath support beam layout, see "Eastbound Bikepath Details No. 2" sheet.
2. For Bikepath details, see "Eastbound Bikepath Details No. 2 thru No. 4" sheets.
3. Minimum Concrete Strength:
   for Precast Slab = 42 MPa
   for CIP Conc Beam = 35 MPa

Note:
The Contractor shall verify all controlling field dimensions before ordering or fabricating any material.

ALL DIMENSIONS ARE IN MILLIMETERS UNLESS OTHERWISE SHOWN

SAN FRANCISCO OAKLAND BAY BRIDGE
EAST SPAN SEISMIC SAFETY PROJECT

OAKLAND APPROACH STRUCTURES - PHASE 2

EASTBOUND BIKEPATH DETAILS NO. 1

DESIGN OVERSIGHT
HASAN EL-NATOR
SIGN OFF DATE

	BY	CHECKED
DESIGN	M. CHAR	T. DUDLEY
DETAILS	M. ANDRASEK	M. CHAR
QUANTITIES	Y. KIM	A. SIVATHASAN/T. DUDLEY

PREPARED FOR THE STATE OF CALIFORNIA DEPARTMENT OF TRANSPORTATION

MOHAN S. CHAR
PROJECT ENGINEER

BRIDGE NO. 34-0006R
KILOMETER POST 2.1

Rev. Date: 5-18-98

ORIGINAL SCALE IN MILLIMETERS FOR REDUCED PLANS 0 10 20 30 40 50 60 70 80 90 100

CU 04
EA 0120M1

DISREGARD PRINTS BEARING EARLIER REVISION DATES

REVISION DATES (PRELIMINARY STAGE ONLY) 10/30/09 1/15/10 4/22/10 5/28/10 9/30/10 12/29/10 3/14/11 3/14/11 4/14/11 6/3/11

SHEET 76 OF 109

SUBMITTAL - 12

USERNAME => s12614 DATE PLOTTED => 05-OCT-2011 TIME PLOTTED => 14:07

FILE => 04-0120m1-34-0006r-u-bikdt01.dgn

DIST.	COUNTY	ROUTE	KILOMETER POST TOTAL PROJECT	SHEET NO.	TOTAL SHEETS
04	Ala	80	1.6/2.7	649	744

REGISTERED ENGINEER - CIVIL

10-3-11

PLANS APPROVAL DATE

REGISTERED PROFESSIONAL ENGINEER MOHAN S. CHAR No. 57894 Exp. 6/30/12 CIVIL STATE OF CALIFORNIA

The State of California or its officers or agents shall not be responsible for the accuracy or completeness of electronic copies of this plan sheet.

T.Y. LIN / MOFFATT & NICHOL
TWO HARRISON STREET, SUITE 500
SAN FRANCISCO, CA 94105

AECOM TECHNICAL SERVICES INC.
999 TOWN & COUNTRY ROAD
ORANGE, CA 92868

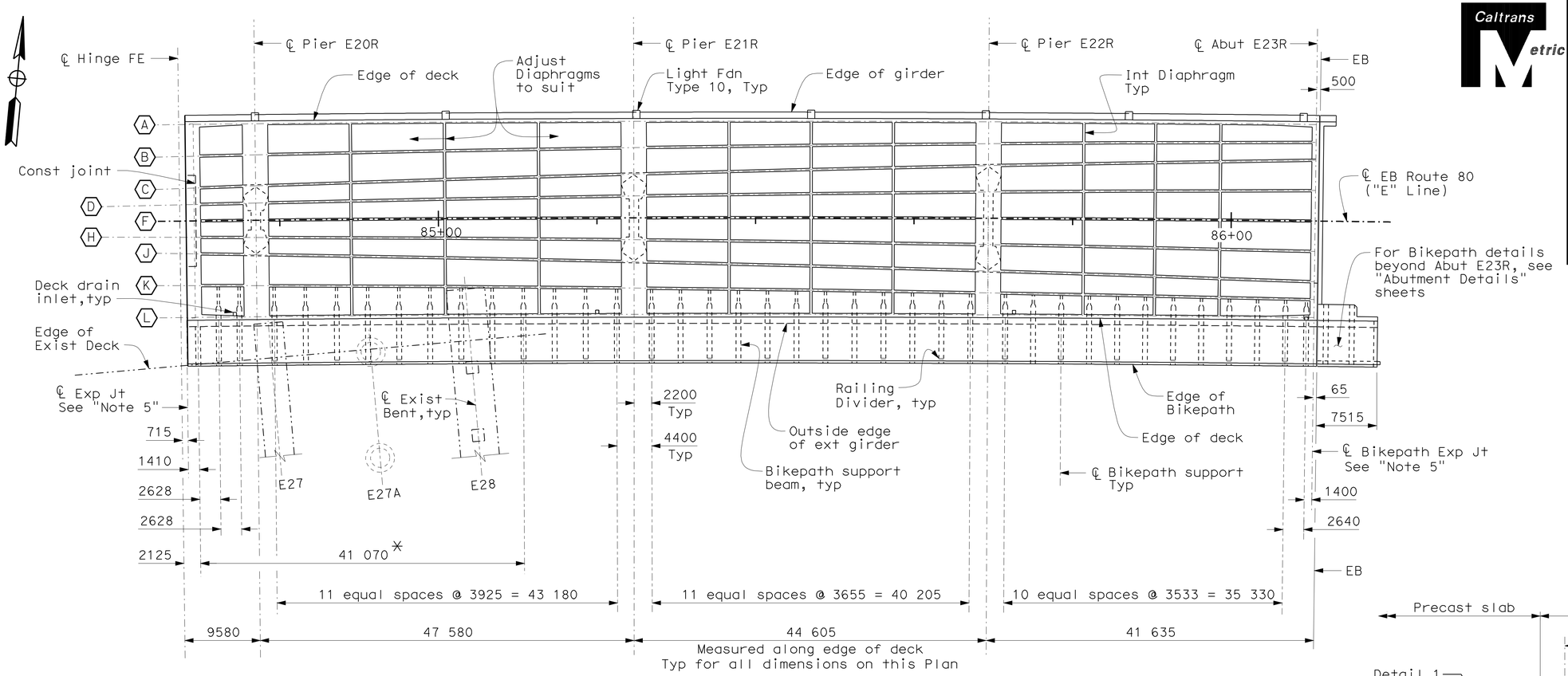

* Portion of Bikepath to be constructed after Stage 3 removal of exist Eastbound Rte 80

BIKEPATH LAYOUT PLAN - FRAME 2

1:300

Note:
For Information not shown, see "Eastbound Girder Layout No. 1 & No. 2" sheets.

Notes:

1. For Frame 1 Bikepath support beam layout, see "Eastbound Bikepath Details No. 1" sheet.
2. For Bikepath details, see "Eastbound Bikepath Details No. 3 & No. 4" sheets.
3. Minimum Concrete Strength:
   for Precast Slab = 42 MPa
   for CIP Conc Beam = 35 MPa
4. For railing and gate details, see "Bikepath Railing Details" sheets.
5. Expansion Joint centerlines are not coincident with Hinge or Abutment centerlines.

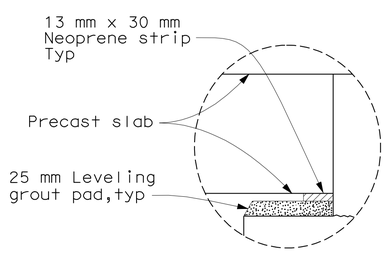

DETAIL 1

No Scale

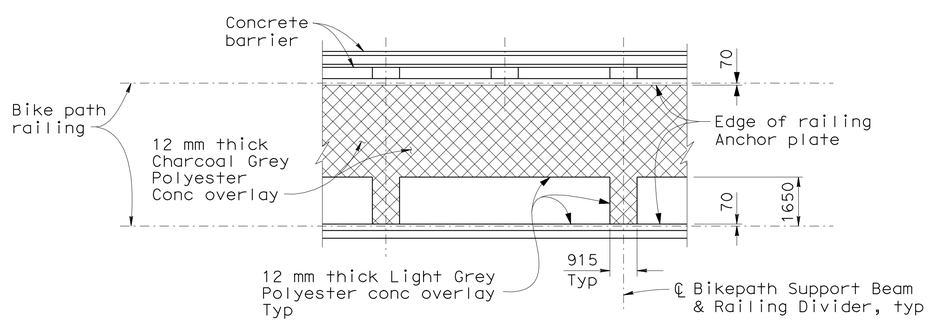

PLAN - BIKEPATH POLYESTER CONCRETE OVERLAY

1:100

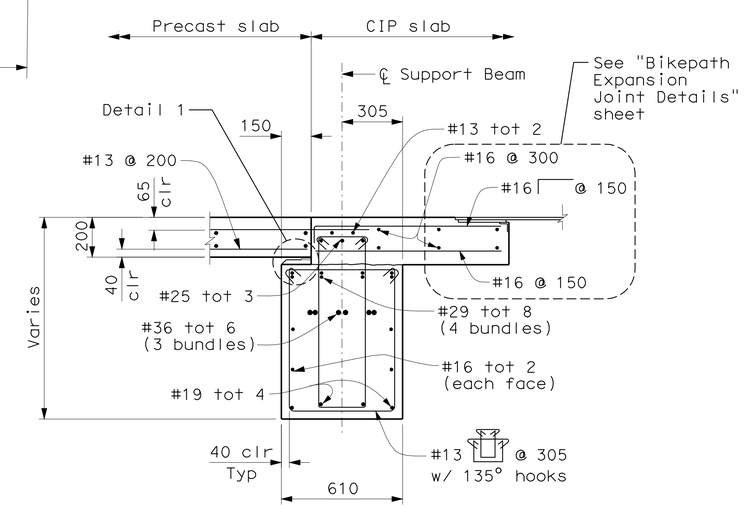

BIKEPATH BEAM SECTION AT HINGE EXPANSION JOINT

1:15

(Typical at beams adjacent to each Expansion Joint at Hinges)

Note:
The Contractor shall verify all controlling field dimensions before ordering or fabricating any material.

ALL DIMENSIONS ARE IN MILLIMETERS UNLESS OTHERWISE SHOWN

SAN FRANCISCO OAKLAND BAY BRIDGE
EAST SPAN SEISMIC SAFETY PROJECT

OAKLAND APPROACH STRUCTURES - PHASE 2

EASTBOUND BIKEPATH DETAILS NO. 2

	BY	CHECKED
DESIGN	M. CHAR	T. DUDLEY
DETAILS	M. ANDRASEK	M. CHAR
QUANTITIES	Y. KIM	A. SIVATHASAN/T. DUDLEY

DESIGN OVERSIGHT
HASAN EL-NATAR
SIGN OFF DATE

PREPARED FOR THE STATE OF CALIFORNIA DEPARTMENT OF TRANSPORTATION

MOHAN S. CHAR
PROJECT ENGINEER

BRIDGE NO. 34-0006R
KILOMETER POST 2.1

CU 04
EA 0120M1

DISREGARD PRINTS BEARING EARLIER REVISION DATES

REVISION DATES (PRELIMINARY STAGE ONLY): 10/30/09 1/15/10 4/2/10 5/28/10 9/30/10 12/29/10 3/4/11 3/14/11 4/4/11 6/3/11

SHEET 77 OF 109

Rev. Date: 5-18-98

ORIGINAL SCALE IN MILLIMETERS FOR REDUCED PLANS 0 10 20 30 40 50 60 70 80 90 100

FILE => 04-0120m1-34-0006r-u-bikdt02.dgn

SUBMITTAL - 12

USERNAME => s121614 DATE PLOTTED => 05-OCT-2011 TIME PLOTTED => 14:08

DIST.	COUNTY	ROUTE	KILOMETER POST TOTAL PROJECT	SHEET NO.	TOTAL SHEETS
04	Ala	80	1.6/2.7	650	744

REGISTERED ENGINEER - CIVIL

10-3-11

PLANS APPROVAL DATE

REGISTERED PROFESSIONAL ENGINEER MOHAN S. CHAR No. 57894 Exp. 6/30/12 CIVIL STATE OF CALIFORNIA

The State of California or its officers or agents shall not be responsible for the accuracy or completeness of electronic copies of this plan sheet.

T.Y. LIN / MOFFATT & NICHOL
TWO HARRISON STREET, SUITE 500
SAN FRANCISCO, CA 94105

AECOM TECHNICAL SERVICES INC.
999 TOWN & COUNTRY ROAD
ORANGE, CA 92868

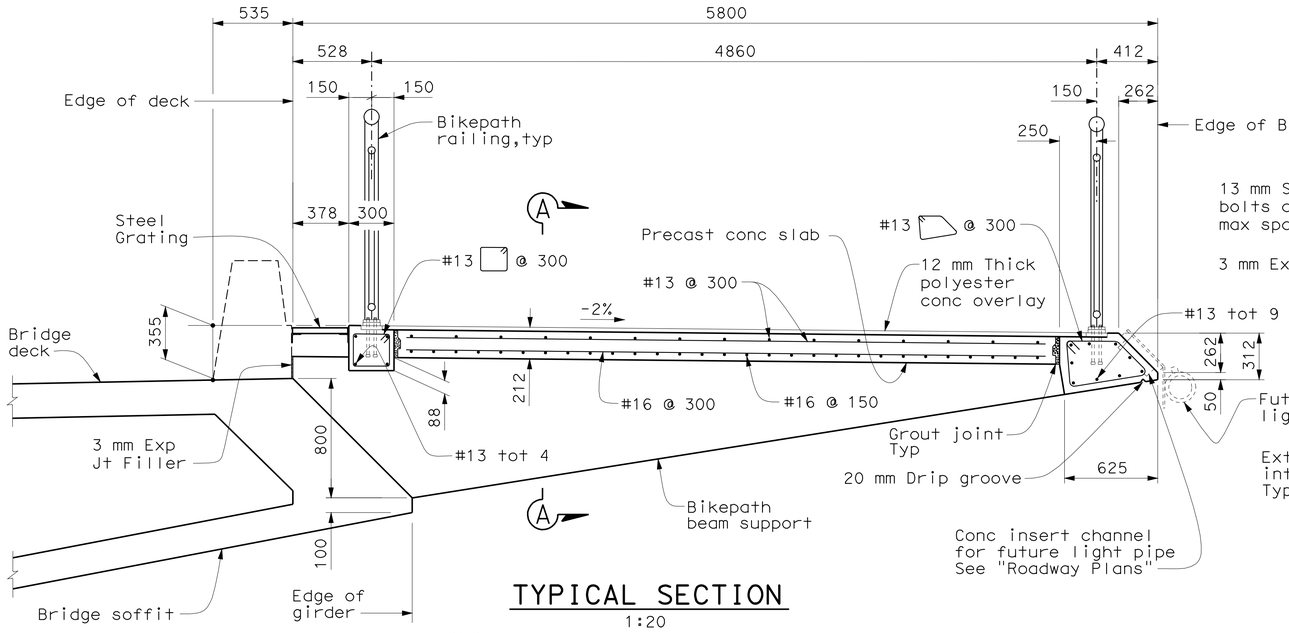

TYPICAL SECTION
1:20

Notes:

1. Place Bikepath slab and edge beams after stressing of Eastbound Approach Structure is completed.
2. For steel grating, see "Eastbound Bikepath Details No. 4" sheet.
3. For extent of bikepath grating, see "General Plan" sheet.

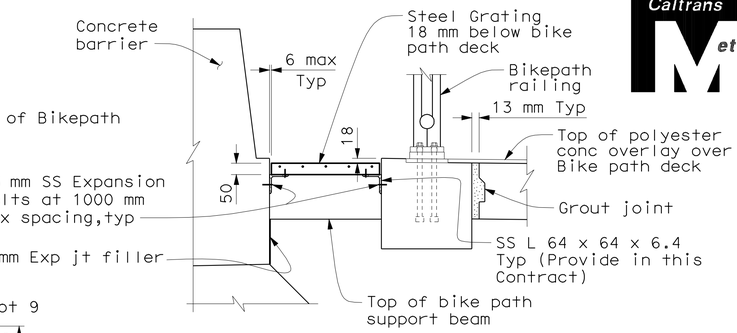

BIKEPATH GRATING DETAIL
1:10

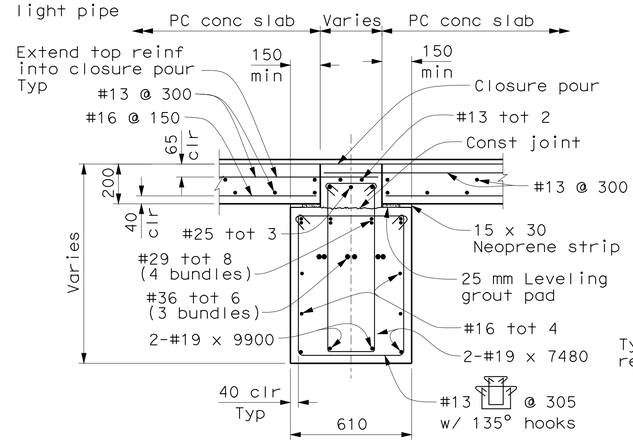

SECTION A-A
1:15

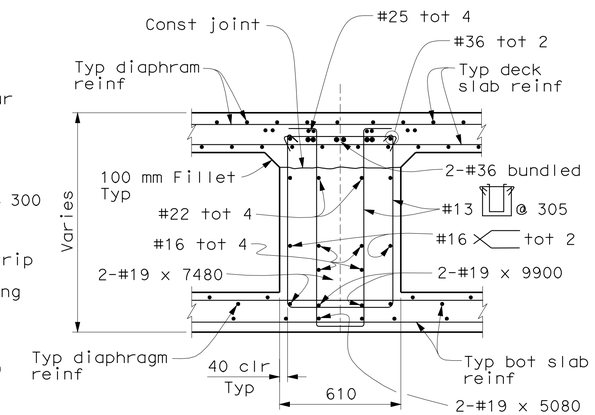

SECTION B-B
1:15

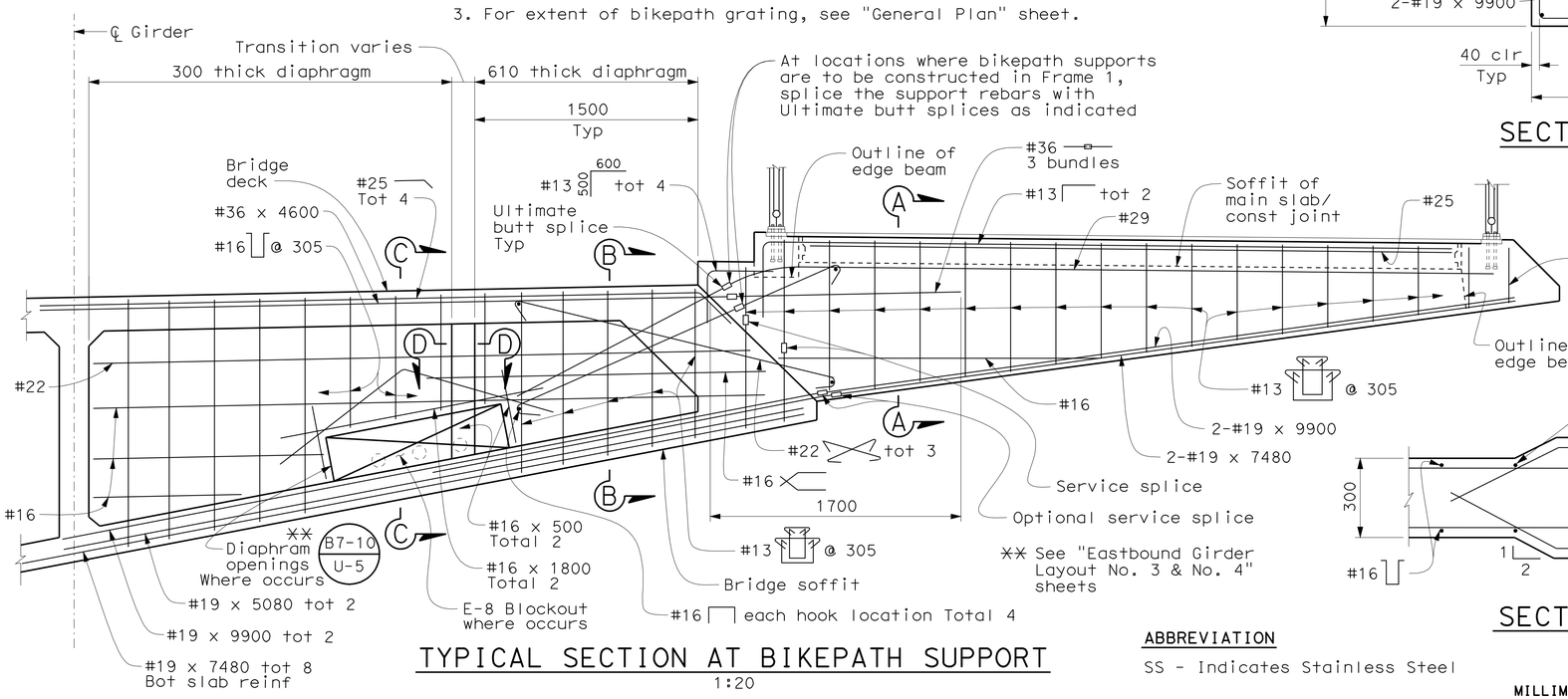

TYPICAL SECTION AT BIKEPATH SUPPORT
1:20

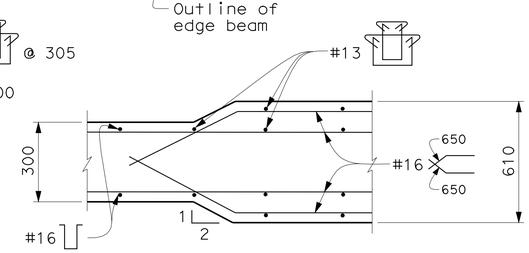

SECTION D-D
1:15

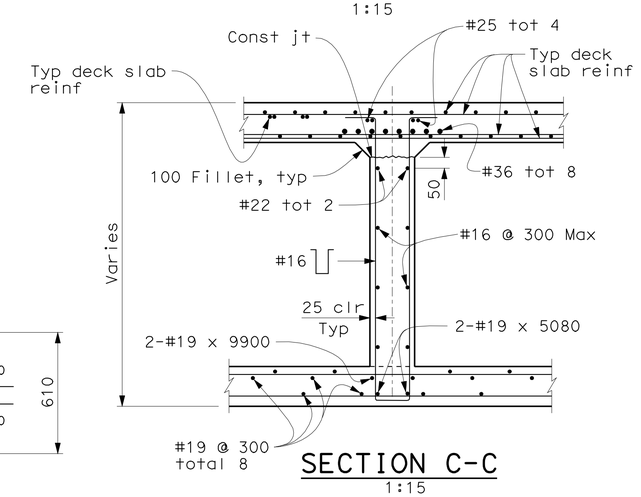

SECTION C-C
1:15

ABBREVIATION

SS - Indicates Stainless Steel

ALL DIMENSIONS ARE IN MILLIMETERS UNLESS OTHERWISE SHOWN

SAN FRANCISCO OAKLAND BAY BRIDGE
EAST SPAN SEISMIC SAFETY PROJECT

OAKLAND APPROACH STRUCTURES - PHASE 2

EASTBOUND BIKEPATH DETAILS NO. 3

DESIGN OVERSIGHT			
HASAN EL-NATAR			
SIGN OFF DATE			
DESIGN	BY M. CHAR	CHECKED T. DUDLEY	
DETAILS	BY M. ANDRASEK	CHECKED M. CHAR	
QUANTITIES	BY Y. KIM	CHECKED A. SIVATHASAN/T. DUDLEY	

PREPARED FOR THE STATE OF CALIFORNIA DEPARTMENT OF TRANSPORTATION

MOHAN S. CHAR
PROJECT ENGINEER

BRIDGE NO. 34-0006R
KILOMETER POST 2.1

CU 04
EA 0120M1

DISREGARD PRINTS BEARING EARLIER REVISION DATES

REVISION DATES (PRELIMINARY STAGE ONLY): 10/30/09 1/15/10 4/2/10 5/28/10 9/30/10 12/28/10 3/4/11 3/14/11 4/4/11 6/3/11

SHEET 78 OF 109

Rev. Date: 5-18-98

ORIGINAL SCALE IN MILLIMETERS FOR REDUCED PLANS 0 10 20 30 40 50 60 70 80 90 100

FILE => 04-0120m1-34-0006r-u-bikdt03.dgn

SUBMITTAL - 12

USERNAME => s6121614 DATE PLOTTED => 05-OCT-2011 TIME PLOTTED => 14:08

DIST.	COUNTY	ROUTE	KILOMETER POST TOTAL PROJECT	SHEET NO.	TOTAL SHEETS
04	Ala	80	1.6/2.7	651	744

Caltrans Metric

REGISTERED ENGINEER - CIVIL

10-3-11

PLANS APPROVAL DATE

REGISTERED PROFESSIONAL ENGINEER A.L. ELY No. 18880 Exp. 6-30-11 CIVIL STATE OF CALIFORNIA

The State of California or its officers or agents shall not be responsible for the accuracy or completeness of electronic copies of this plan sheet.

T.Y. LIN / MOFFATT & NICHOL
TWO HARRISON STREET
SAN FRANCISCO, CA 94105

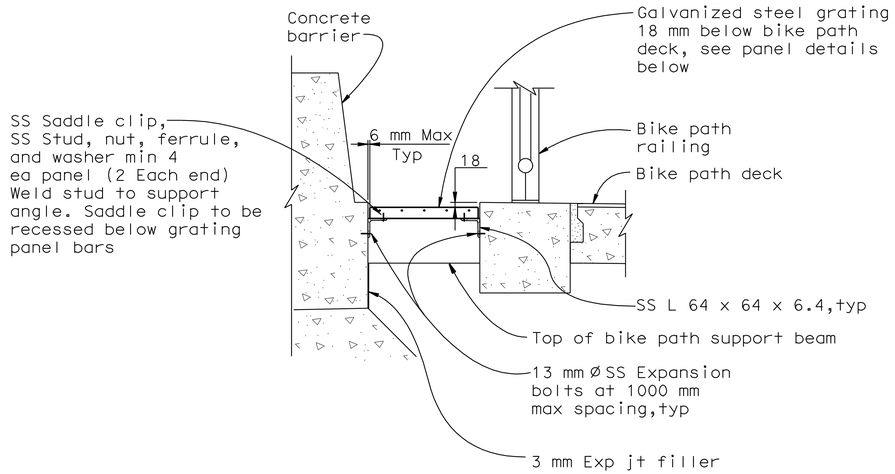

BIKE PATH GRATING DETAIL

1:10

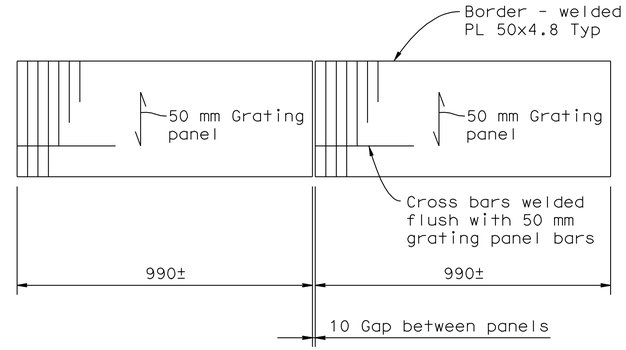

TYPICAL GRATING PANEL DETAIL

1:10

Grating Notes:

1. All material to be galvanized after fabrication.
2. 50 mm Grating panel bearing bars 50x4.8 at 30 mm OC.
3. Cross bars (10 mm dia) at 102 mm OC.

ALL DIMENSIONS ARE IN MILLIMETERS UNLESS OTHERWISE SHOWN

SAN FRANCISCO OAKLAND BAY BRIDGE
EAST SPAN SEISMIC SAFETY PROJECT

OAKLAND APPROACH STRUCTURES-PHASE 2

EASTBOUND BIKE PATH DETAILS NO.4

DESIGN OVERSIGHT
HASAN EL-NATUR

SIGN OFF DATE

Rev. Date: 5-18-98

	BY	CHECKED
DESIGN	Atiqullah	Ahn
DETAILS	van Ryn/Zucchi/Mai	Jain
QUANTITIES	Liao	E. Nichol

PREPARED FOR THE STATE OF CALIFORNIA DEPARTMENT OF TRANSPORTATION

Jal Birdy
PROJECT ENGINEER

BRIDGE NO. 34-0006 L/R
KILOMETER POST 12.8

ORIGINAL SCALE IN MILLIMETERS FOR REDUCED PLANS 0 10 20 30 40 50 60 70 80 90 100

CU 04
EA 0120M1

DISREGARD PRINTS BEARING EARLIER REVISION DATES

REVISION DATES (PRELIMINARY STAGE ONLY): 8/13/09 10/30/09 1/15/10 4/2/10 5/28/10 9/30/10 3/4/11 3/24/11 4/4/11 6/3/11

SHEET 79 OF 109

FILE => 04-0120m1-34-0006r1-u-bikpdt04.dgn

SUBMITTAL - 12 June 3, 2011

USERNAME => s121614 DATE PLOTTED => 05-OCT-2011 TIME PLOTTED => 14:08

DIST.	COUNTY	ROUTE	KILOMETER POST TOTAL PROJECT	SHEET NO.	TOTAL SHEETS
04	Ala	80	1.6/2.7	652	744

Caltrans Metric

REGISTERED ENGINEER - CIVIL

10-3-11
PLANS APPROVAL DATE

REGISTERED PROFESSIONAL ENGINEER A.L. ELY No. 18880 Exp. 6-30-11 CIVIL STATE OF CALIFORNIA

The State of California or its officers or agents shall not be responsible for the accuracy or completeness of electronic copies of this plan sheet.

T.Y. LIN / MOFFATT & NICHOL
TWO HARRISON STREET, SUITE 500
SAN FRANCISCO, CA 94105

NOTE:
Movement rating ("MR") and gap ("a") dimension to match that for adjacent roadway joint - See "Deck Joint Details No.1" sheet

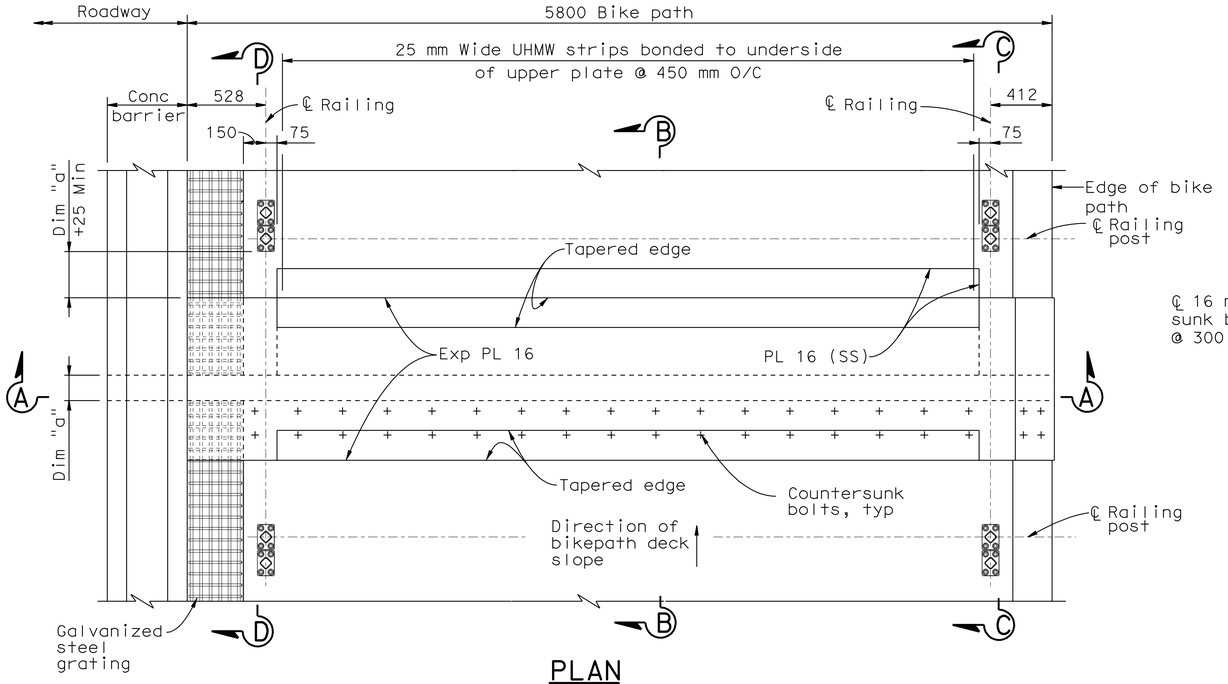

PLAN
1:20

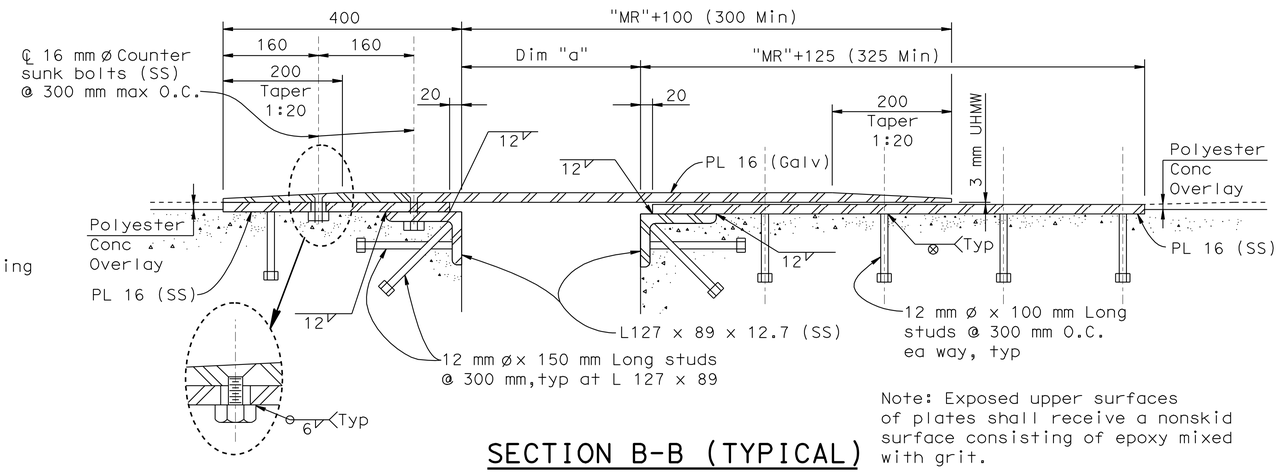

SECTION B-B (TYPICAL)
1:5

Note: Exposed upper surfaces of plates shall receive a nonskid surface consisting of epoxy mixed with grit.

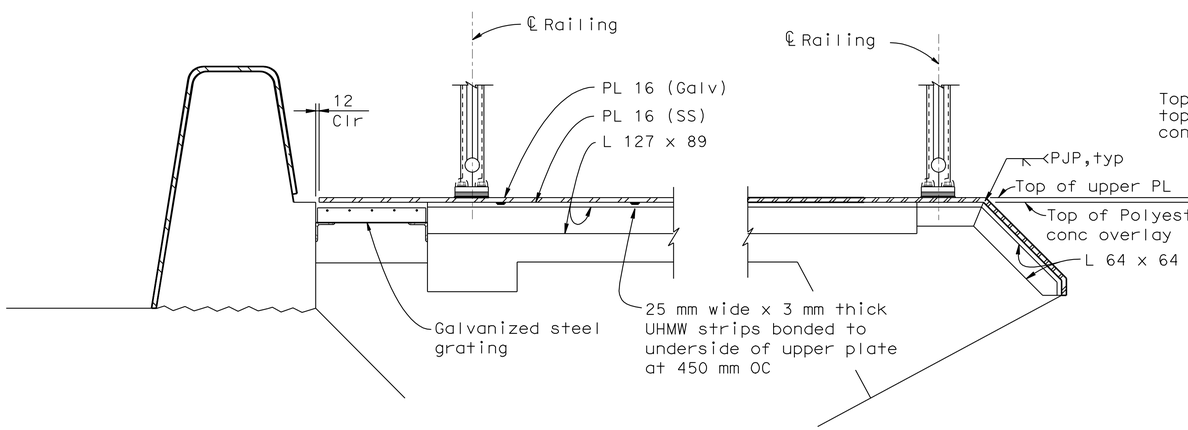

SECTION A-A
1:10

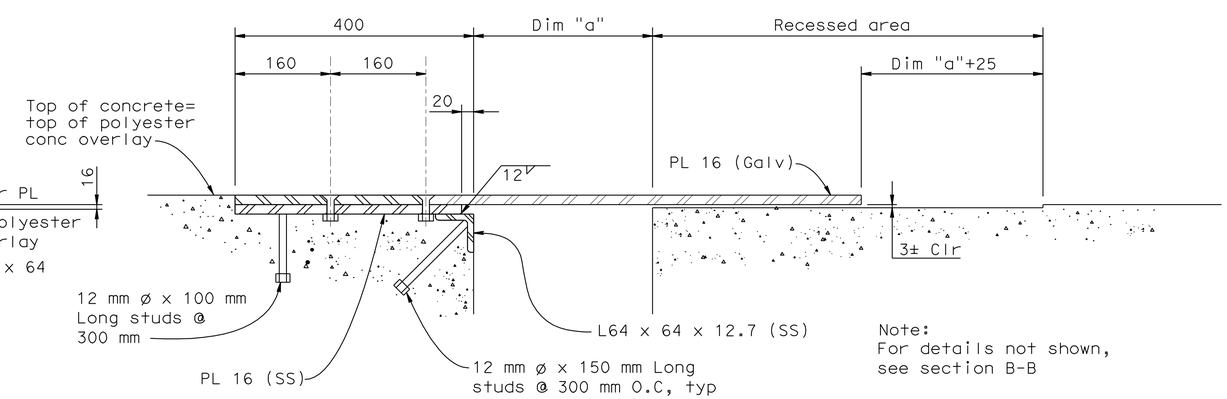

SECTION C-C
(SECTION D-D SIMILAR)
1:5

Note:
For details not shown, see section B-B

Note: Welding to stainless steel shall be in accordance with AWS D1.6-2007.

ALL DIMENSIONS ARE IN MILLIMETERS UNLESS OTHERWISE SHOWN

DESIGN OVERSIGHT - SAM AKKAD HASAN EL-NATUR

SIGN OFF DATE

Rev. Date: 5-18-98

	BY	CHECKED
DESIGN	Chan	Jain
DETAILS	van Ryn/Zucchi/Mai	Jain
QUANTITIES	Liao	E. Nichol

PREPARED FOR THE STATE OF CALIFORNIA DEPARTMENT OF TRANSPORTATION

Jal Birdy
PROJECT ENGINEER

BRIDGE NO. 34-0006 L/R
KILOMETER POST

SAN FRANCISCO OAKLAND BAY BRIDGE
EAST SPAN SEISMIC SAFETY PROJECT

OAKLAND APPROACH STRUCTURES-PHASE 2

BIKE PATH EXPANSION JOINT DETAILS

ORIGINAL SCALE IN MILLIMETERS FOR REDUCED PLANS 0 10 20 30 40 50 60 70 80 90 100

CU 04
EA 0120M1

DISREGARD PRINTS BEARING EARLIER REVISION DATES

REVISION DATES (PRELIMINARY STAGE ONLY) 1/15/10 4/2/10 5/28/10 9/30/10 3/4/11 3/24/11 4/8/11 6/8/11 7/21/11 10/30/09

SHEET 80 OF 109

FILE => 04-0120m1-34-0006r1-u-bikpdt05.dgn

SUBMITTAL - 12 July 21, 2011

USERNAME => s121614 DATE PLOTTED => 05-OCT-2011 TIME PLOTTED => 14:08

DIST.	COUNTY	ROUTE	KILOMETER POST TOTAL PROJECT	SHEET NO.	TOTAL SHEETS
04	Ala	80	1.6/2.7	653	744

Caltrans Metric

REGISTERED ENGINEER - CIVIL

10-3-11

PLANS APPROVAL DATE

REGISTERED PROFESSIONAL ENGINEER A.L. ELY No. 18880 Exp. 6-30-11 CIVIL STATE OF CALIFORNIA

The State of California or its officers or agents shall not be responsible for the accuracy or completeness of electronic copies of this plan sheet.

T.Y. LIN / MOFFATT & NICHOL
TWO HARRISON STREET, SUITE 500
SAN FRANCISCO, CA 94105

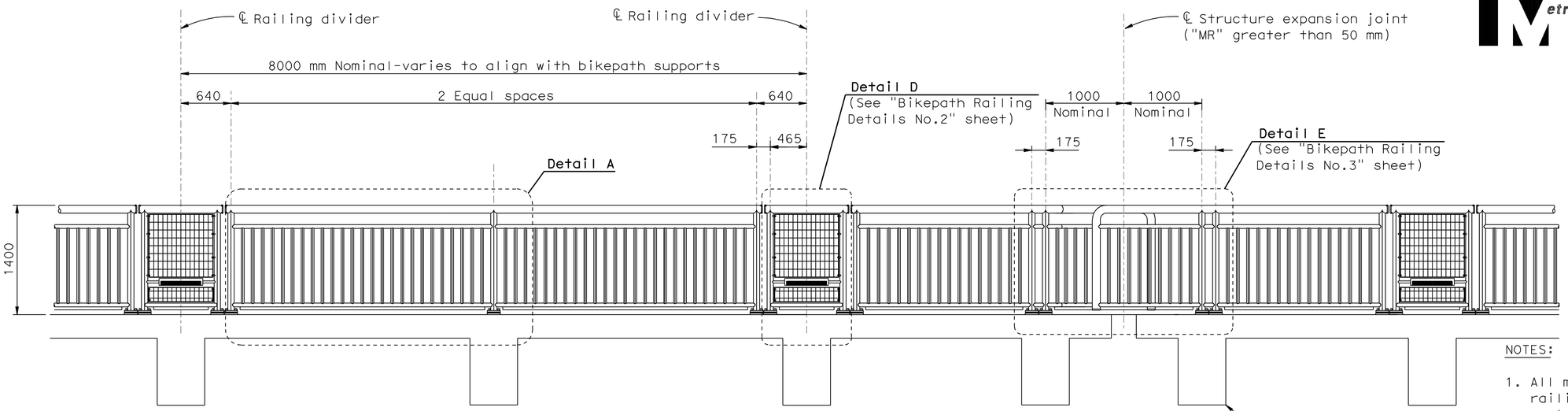

BIKEPATH RAILING-TYPICAL ELEVATION

1:30

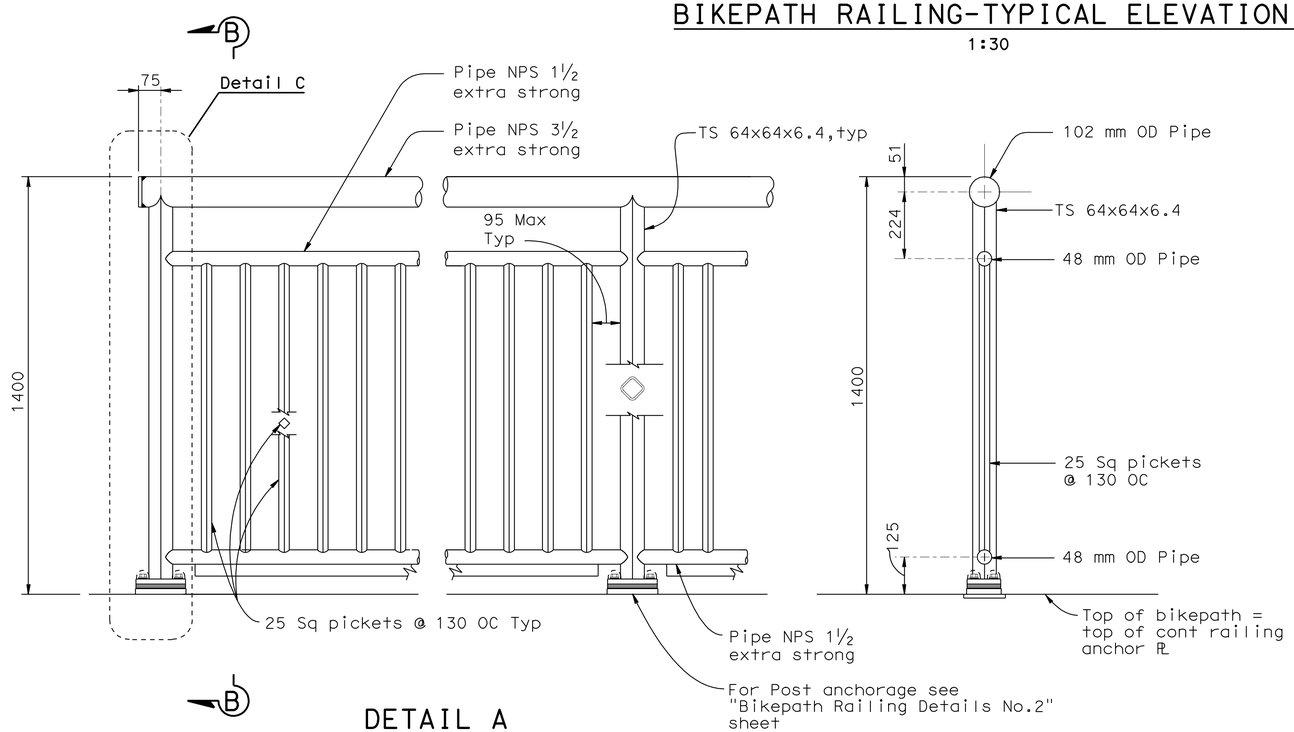

DETAIL A

1:10

SECTION B-B

1:10

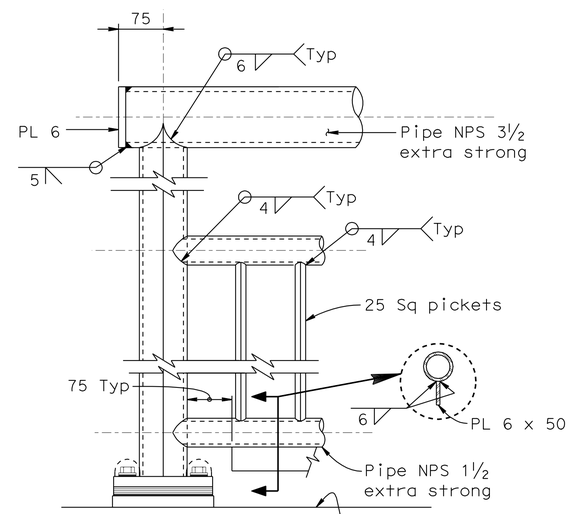

DETAIL C

1:5

NOTES:

1. All metal (except stainless steel) parts of railing assembly including grill shall be coated
2. Railing posts shall comform to ASTM A500 Grade C (Fy=345MPa).
3. Railing shall conform to vertical and horizontal alignment of bikepath.
4. Posts and pickets shall be perpendicular to the profile grade of the bikepath and vertical to the cross-slope of the bikepath. Rails shall be parallel to top of bikepath. Railing grill vertical bars shall be parallel to railing posts and grill horizontal bars shall be parallel to rails.
5. Rails shall be shop bent or fabricated to fit horizontal curve when radius is less than 300 m.
6. All exposed welds shall be ground smooth.
7. Expansion joints shall be located in the railing panel spanning deck or wall joints, see "Bikepath Railing Details No.3" sheet.
8. Emergency gate access shall be provided thru the inside bikepath railing (railing located nearest roadway) at intervals not exceeding 80 m.
9. Welding to stainless steel shall be in accordance with AWS D1.6-2007.
10. Shim stack beneath post base plate to be adjusted during installation as required to maintain railing alignment. Full width galv steel shims shall be utilized, tapered as necessary to maintain post verticality.

ALL DIMENSIONS ARE IN MILLIMETERS UNLESS OTHERWISE SHOWN

SAN FRANCISCO OAKLAND BAY BRIDGE
EAST SPAN SEISMIC SAFETY PROJECT

OAKLAND APPROACH STRUCTURES-PHASE 2

BIKEPATH RAILING DETAILS NO.1

DESIGN OVERSIGHT
SAM AKKAD FRANCISCO CARPIO BERNARD CHAN HASAN EL-NATUR

SIGN OFF DATE

Rev. Date: 5-18-98

	BY	CHECKED
DESIGN	Shangkuan	Atiqullah
DETAILS	van Ryn/Zucchi/Mai	Jain
QUANTITIES	Liao	E. Nichol

PREPARED FOR THE STATE OF CALIFORNIA DEPARTMENT OF TRANSPORTATION

Jal Birdy
PROJECT ENGINEER

BRIDGE NO. 34-0006 L/R
KILOMETER POST 1.6

ORIGINAL SCALE IN MILLIMETERS FOR REDUCED PLANS 0 10 20 30 40 50 60 70 80 90 100

CU 04
EA 0120M1

DISREGARD PRINTS BEARING EARLIER REVISION DATES

REVISION DATES (PRELIMINARY STAGE ONLY) 7/21/11 10/30/09 1/15/10 4/2/10 5/28/10 3/30/10 3/8/11 3/24/11 4/14/11 6/3/11

SHEET 81 OF 109

FILE => 04-0120m1-34-0006rl-u-bkrldet01.dgn

SUBMITTAL - 12 July 21, 2011

USERNAME => s121614 DATE PLOTTED => 05-OCT-2011 TIME PLOTTED => 14:08

DIST.	COUNTY	ROUTE	KILOMETER POST TOTAL PROJECT	SHEET NO.	TOTAL SHEETS
04	Ala	80	1.6/2.7	654	744

Caltrans Metric

REGISTERED ENGINEER - CIVIL

10-3-11

PLANS APPROVAL DATE

REGISTERED PROFESSIONAL ENGINEER A.L. ELY No. 18880 Exp. 6-30-11 CIVIL STATE OF CALIFORNIA

The State of California or its officers or agents shall not be responsible for the accuracy or completeness of electronic copies of this plan sheet.

T.Y. LIN / MOFFATT & NICHOL
TWO HARRISON STREET, SUITE 500
SAN FRANCISCO, CA 94105

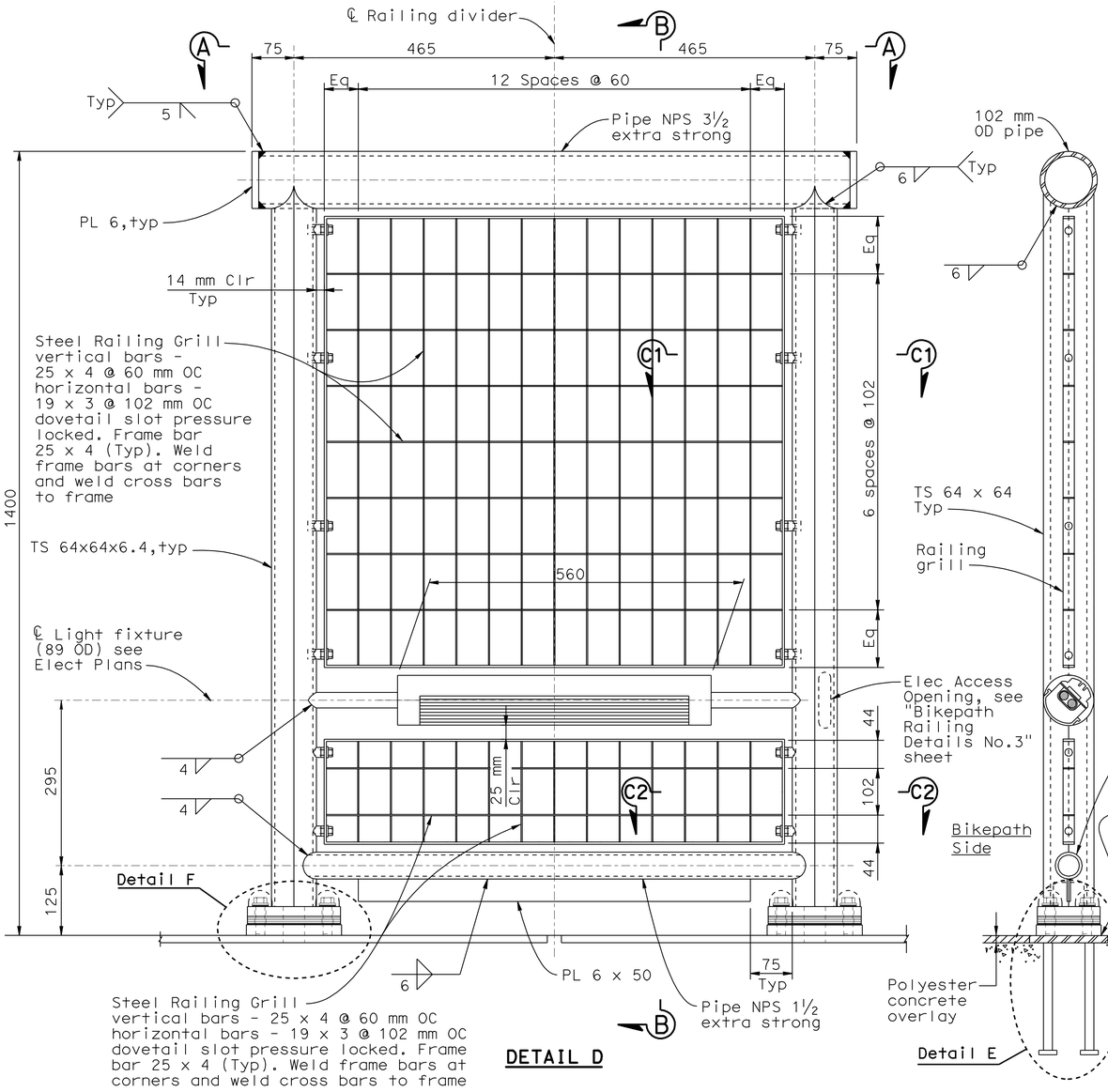

DETAIL D

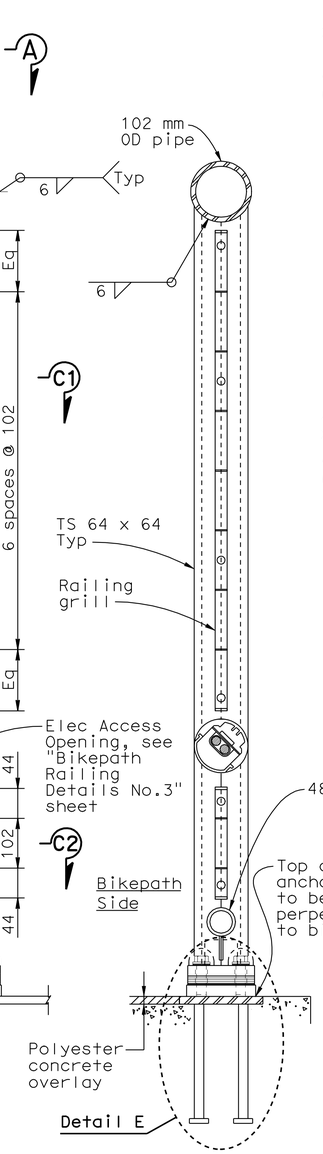

SECTION B-B

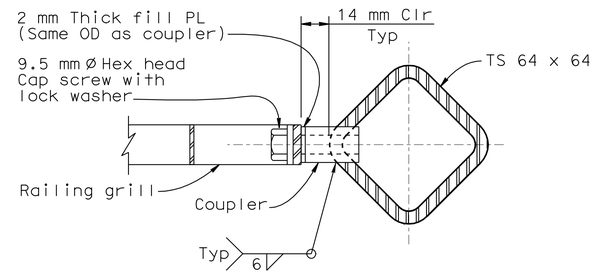

SECTION C1-C1
(Typ above light fixture)
1:1.5

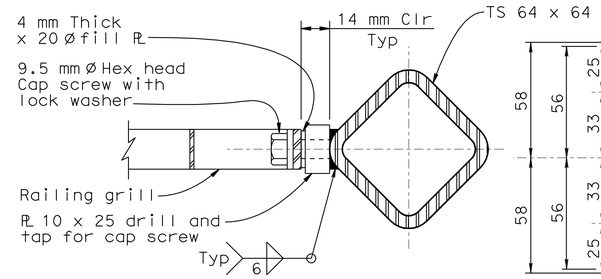

SECTION C2-C2
(Typ below light fixture)
1:1.5

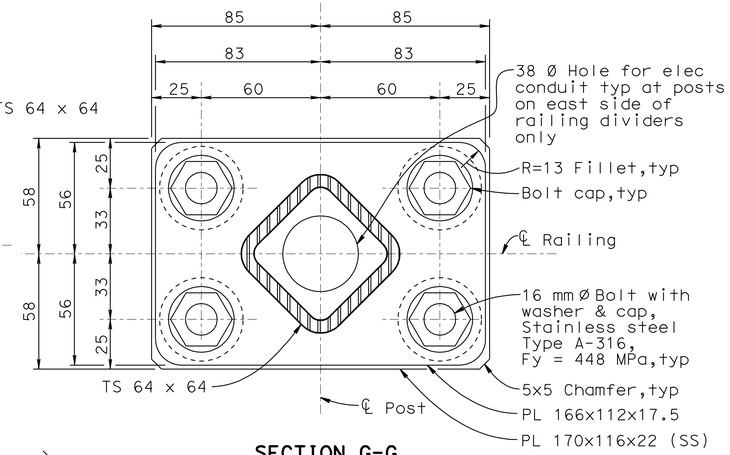

SECTION G-G

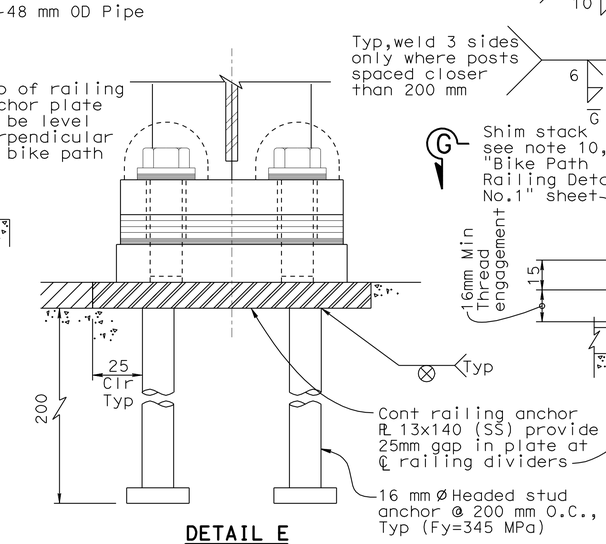

DETAIL E

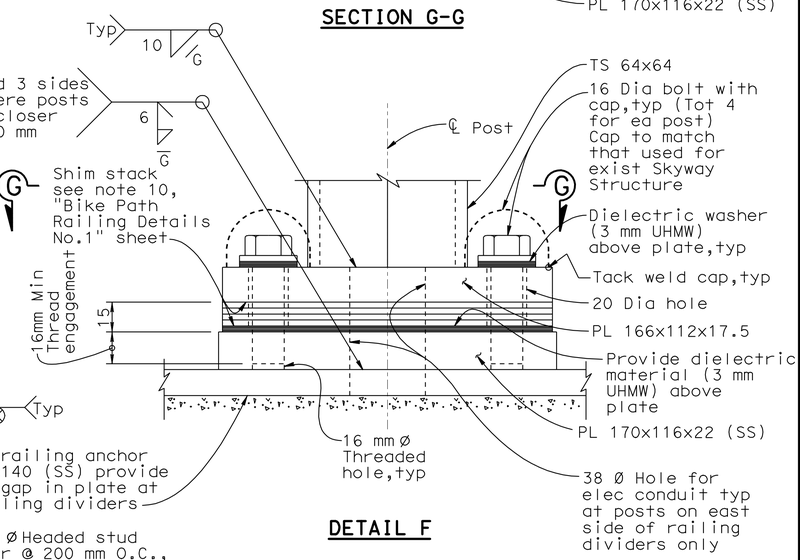

DETAIL F

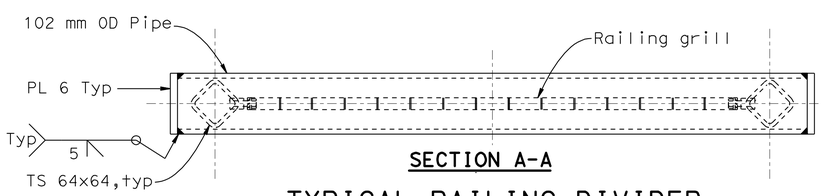

SECTION A-A

TYPICAL RAILING DIVIDER
1:5

TYPICAL POST ANCHORAGE
1:1.5

ALL DIMENSIONS ARE IN MILLIMETERS UNLESS OTHERWISE SHOWN

SAN FRANCISCO OAKLAND BAY BRIDGE
EAST SPAN SEISMIC SAFETY PROJECT

OAKLAND APPROACH STRUCTURES-PHASE 2

BIKEPATH RAILING DETAILS NO.2

DESIGN OVERSIGHT
SAM AKKAD FRANCISCO CARPIO BERNARD CHAN HASAN EL-NATUR

SIGN OFF DATE

Rev. Date: 5-18-98

	BY	CHECKED
DESIGN	Shangkuan	Atiqullah
DETAILS	van Ryn/Zucchi/Mai	Jain
QUANTITIES	Liao	E. Nichol

ORIGINAL SCALE IN MILLIMETERS FOR REDUCED PLANS 0 10 20 30 40 50 60 70 80 90 100

PREPARED FOR THE STATE OF CALIFORNIA DEPARTMENT OF TRANSPORTATION

Jal Birdy
PROJECT ENGINEER

BRIDGE NO. 34-0006 L/R
KILOMETER POST 1.6

CU 04
EA 0120M1

DISREGARD PRINTS BEARING EARLIER REVISION DATES

REVISION DATES (PRELIMINARY STAGE ONLY) 7/21/11 10/30/09 1/15/10 4/2/10 5/28/10 9/30/10 3/4/11 3/14/11 4/4/11 6/3/11

SHEET 82 OF 109

FILE => 04-0120m1-34-0006rl-u-bkrldet02.dgn

SUBMITTAL - 12 July 21, 2011

USERNAME => s121614 DATE PLOTTED => 05-OCT-2011 TIME PLOTTED => 14:08

DIST.	COUNTY	ROUTE	KILOMETER POST TOTAL PROJECT	SHEET NO.	TOTAL SHEETS
04	Ala	80	1.6/2.7	655	744

REGISTERED ENGINEER - CIVIL
10-3-11
PLANS APPROVAL DATE

REGISTERED PROFESSIONAL ENGINEER A.L. ELY No. 18880 Exp. 6-30-11 CIVIL STATE OF CALIFORNIA

The State of California or its officers or agents shall not be responsible for the accuracy or completeness of electronic copies of this plan sheet.

T.Y. LIN / MOFFATT & NICHOL
TWO HARRISON STREET, SUITE 500
SAN FRANCISCO, CA 94105

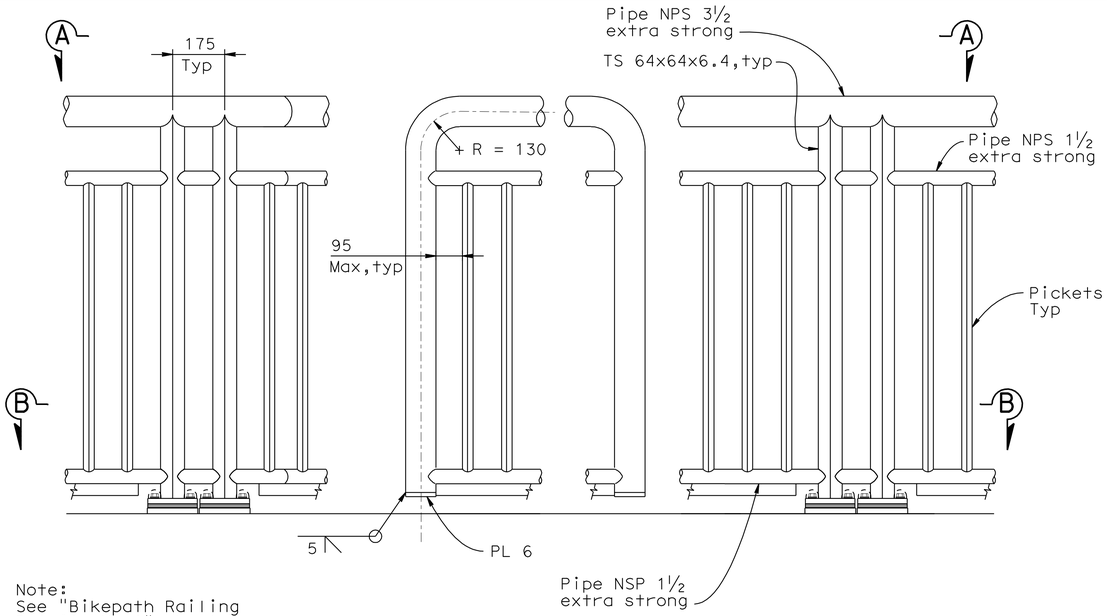

Note:
See "Bikepath Railing Details No.1" sheet for additional details.

DETAIL E

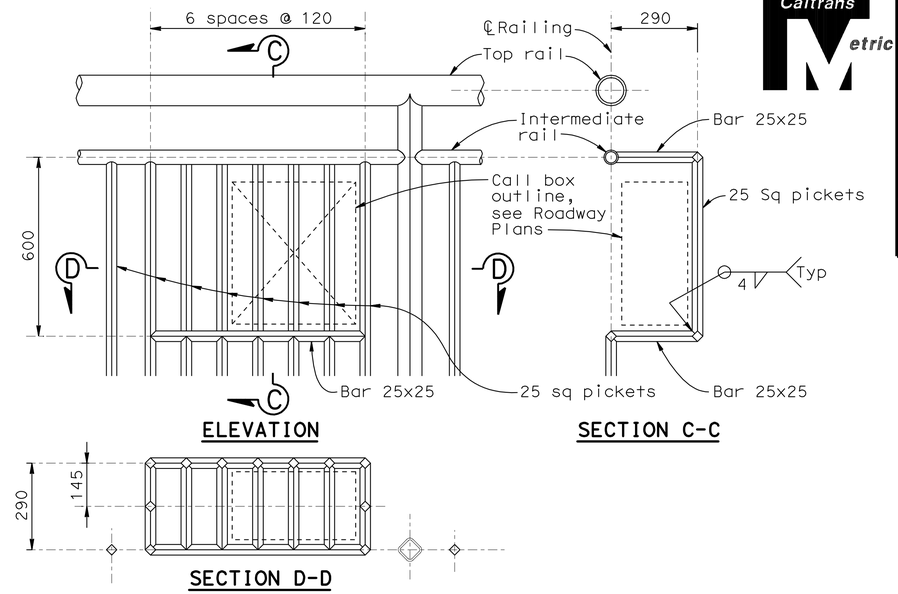

ELEVATION **SECTION C-C** **SECTION D-D**

CALL BOX MOUNTING DETAIL

1:10

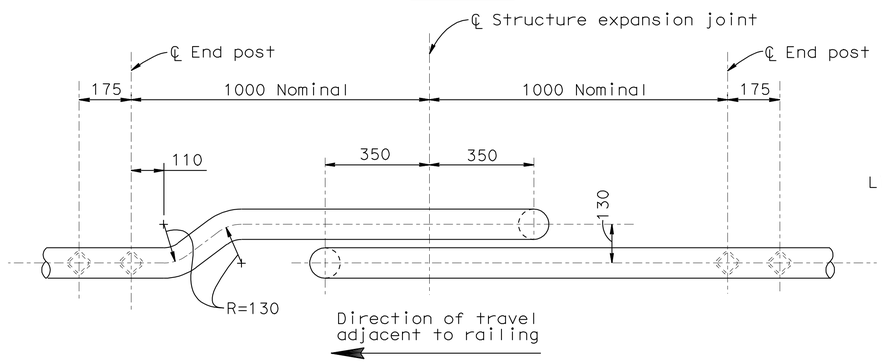

SECTION A-A

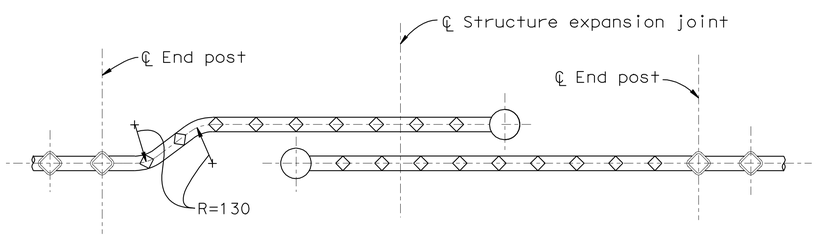

SECTION B-B

RAILING EXPANSION JOINT DETAILS MR > 50

(For use at structure expansion joints with "MR" greater than 50 mm)

1:10

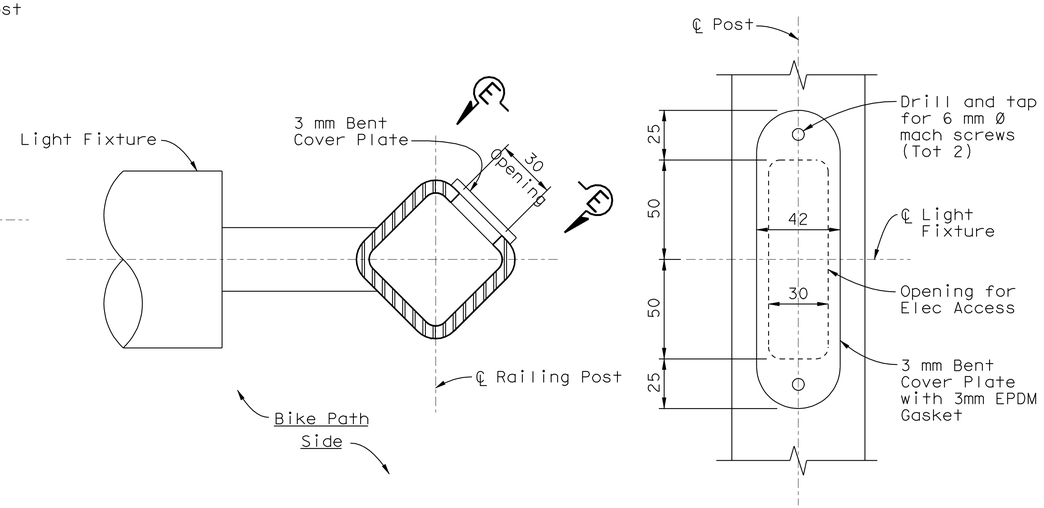

PLAN **SECTION E-E**

ELECTRICAL ACCESS OPENING AT BIKEPATH LIGHT FIXTURE

(Required at Posts on east side of Railing Dividers only)

1:1.5

ALL DIMENSIONS ARE IN MILLIMETERS UNLESS OTHERWISE SHOWN

SAN FRANCISCO OAKLAND BAY BRIDGE
EAST SPAN SEISMIC SAFETY PROJECT

OAKLAND APPROACH STRUCTURES-PHASE 2

BIKEPATH RAILING DETAILS NO.3

DESIGN OVERSIGHT
SAM AKKAD FRANCISCO CARPIO BERNARD CHAN HASAN EL-NATUR
SIGN OFF DATE

	BY	CHECKED
DESIGN	Shangkuan	Atiquallah
DETAILS	van Ryn/Zucchi/Mai	Jain
QUANTITIES	Liao	E. Nichol

PREPARED FOR THE STATE OF CALIFORNIA DEPARTMENT OF TRANSPORTATION

Jal Birdy
PROJECT ENGINEER

BRIDGE NO. 34-0006 L/R
KILOMETER POST 1.6

Rev. Date: 5-18-98

ORIGINAL SCALE IN MILLIMETERS FOR REDUCED PLANS 0 10 20 30 40 50 60 70 80 90 100

CU 04
EA 0120M1

DISREGARD PRINTS BEARING EARLIER REVISION DATES

REVISION DATES (PRELIMINARY STAGE ONLY) 7/21/11 10/30/09 1/15/10 4/2/10 5/28/10 9/30/10 3/4/11 3/14/11 4/14/11 6/3/11

SHEET 83 OF 109

FILE => 04-0120m1-34-0006rl-u-bkrldet03.dgn

SUBMITTAL - 12 July 21, 2011

USERNAME => s121614 DATE PLOTTED => 05-OCT-2011 TIME PLOTTED => 14:08

DIST.	COUNTY	ROUTE	KILOMETER POST TOTAL PROJECT	SHEET NO.	TOTAL SHEETS
04	Ala	80	1.6/2.7	656	744

Caltrans Metric

REGISTERED ENGINEER - CIVIL

10-3-11

PLANS APPROVAL DATE

REGISTERED PROFESSIONAL ENGINEER A.L. ELY No. 18880 Exp. 6-30-11 CIVIL STATE OF CALIFORNIA

The State of California or its officers or agents shall not be responsible for the accuracy or completeness of electronic copies of this plan sheet.

T.Y. LIN / MOFFATT & NICHOL
TWO HARRISON STREET, SUITE 500
SAN FRANCISCO, CA 94105

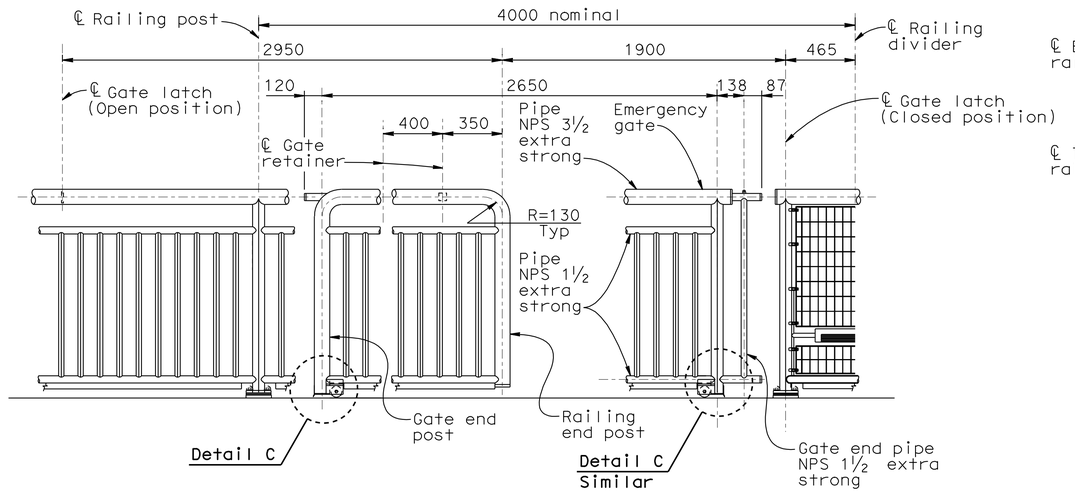

ELEVATION - EMERGENCY GATE

1:20

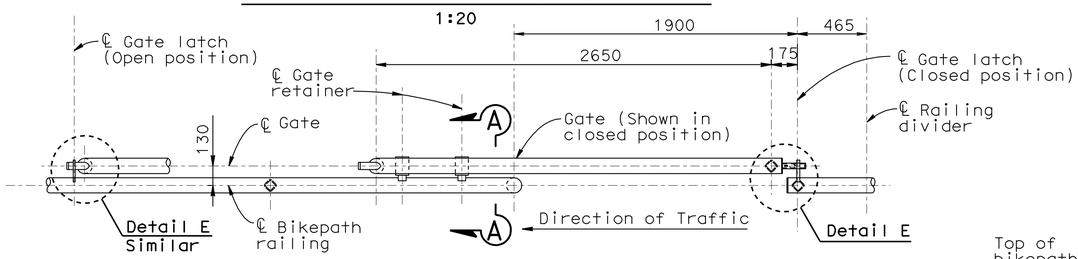

PLAN AT TOP RAIL

1:20

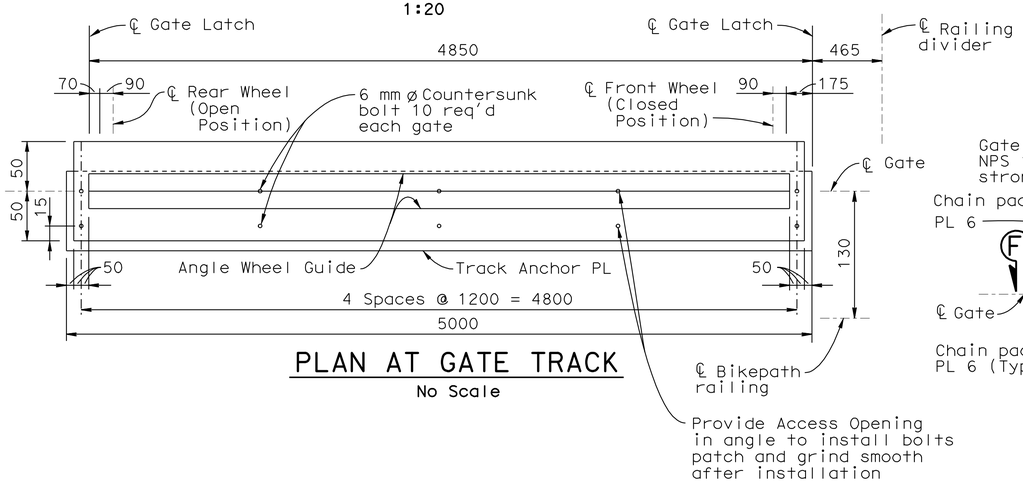

PLAN AT GATE TRACK

No Scale

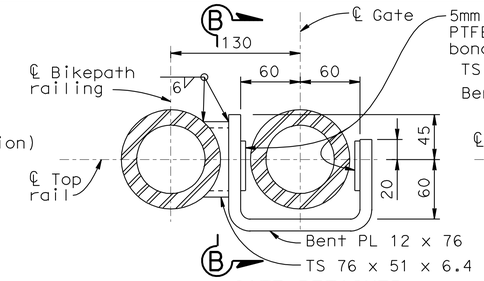

GATE RETAINER

SECTION A-A

1:3

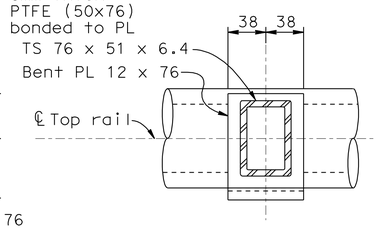

SECTION B-B

1:3

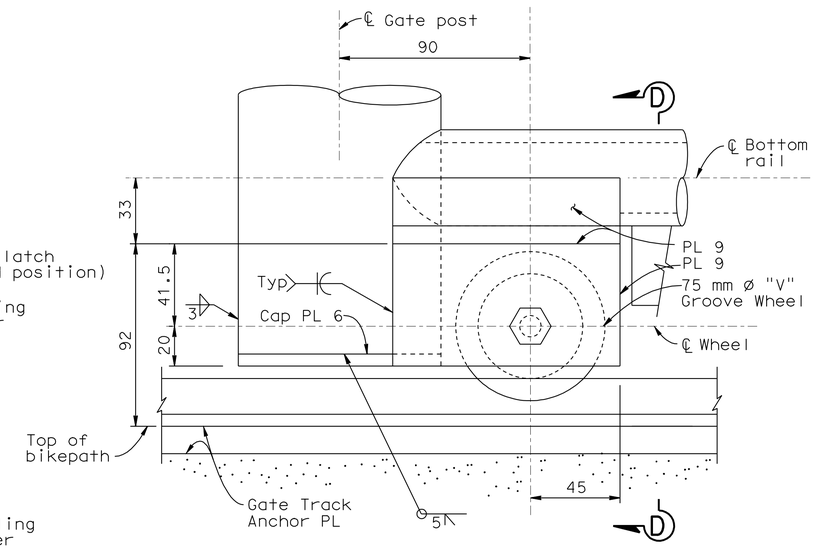

DETAIL C

1:1.5

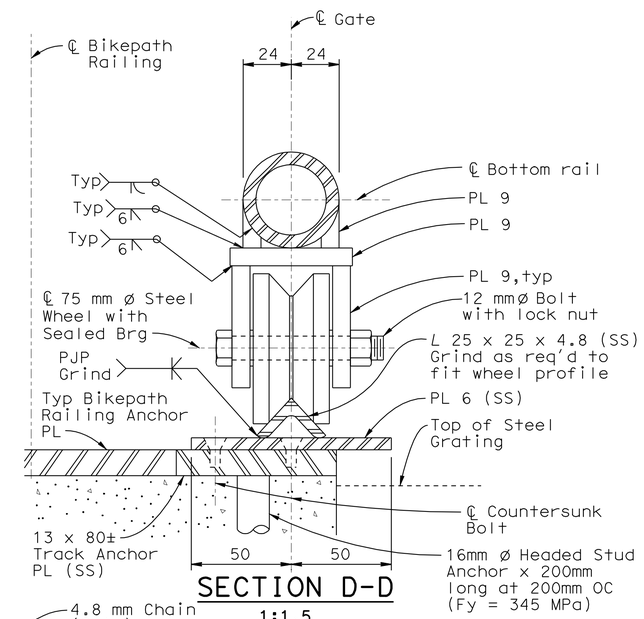

SECTION D-D

1:1.5

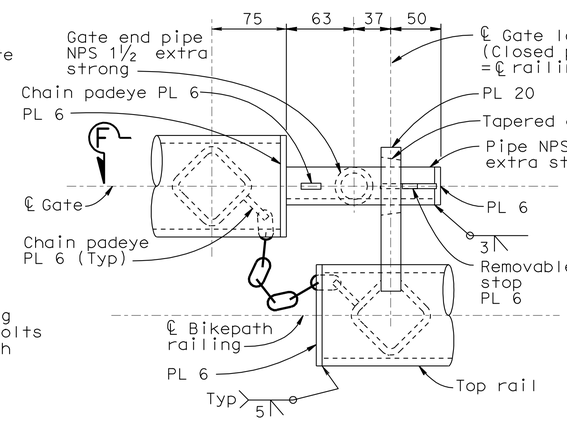

DETAIL E

1:3

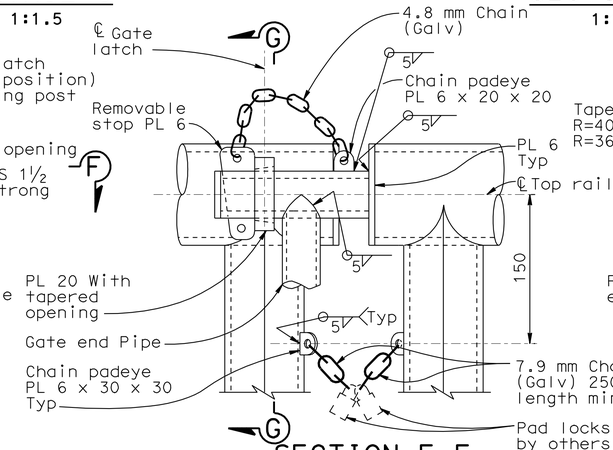

SECTION F-F

1:3

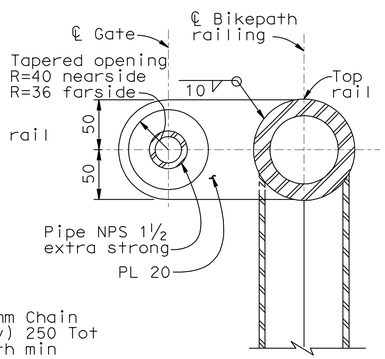

SECTION G-G

1:3

ALL DIMENSIONS ARE IN MILLIMETERS UNLESS OTHERWISE SHOWN

SAN FRANCISCO OAKLAND BAY BRIDGE
EAST SPAN SEISMIC SAFETY PROJECT

OAKLAND APPROACH STRUCTURES-PHASE 2

BIKEPATH RAILING DETAILS NO.4

DESIGN OVERSIGHT
SAM AKKAD FRANCISCO CARPIO BERNARD CHAN HASAN EL-NATUR

SIGN OFF DATE

Rev. Date: 5-18-98

	BY	CHECKED
DESIGN	Shangkuan	Atiqullah
DETAILS	van Ryn/Zucchi/Mai	Jain
QUANTITIES	Liao	E. Nichol

PREPARED FOR THE STATE OF CALIFORNIA DEPARTMENT OF TRANSPORTATION

Jal Birdy
PROJECT ENGINEER

BRIDGE NO. 34-0006 L/R
KILOMETER POST 1.6

CU 04
EA 0120M1

ORIGINAL SCALE IN MILLIMETERS FOR REDUCED PLANS 0 10 20 30 40 50 60 70 80 90 100

DISREGARD PRINTS BEARING EARLIER REVISION DATES

REVISION DATES (PRELIMINARY STAGE ONLY): 7/21/11 10/30/09 1/15/10 4/2/10 5/28/10 9/30/10 3/4/11 3/14/11 4/14/11 6/3/11

SHEET 84 OF 109

FILE => 04-0120m1-34-0006rl-u-bkrldet04.dgn

SUBMITTAL - 12 July 21, 2011

USERNAME => s121614 DATE PLOTTED => 05-OCT-2011 TIME PLOTTED => 14:08

DIST.	COUNTY	ROUTE	KILOMETER POST TOTAL PROJECT	SHEET NO.	TOTAL SHEETS
04	Ala	80	1.6/2.7	657	744

Caltrans Metric

REGISTERED ENGINEER - CIVIL

10-3-11

PLANS APPROVAL DATE

REGISTERED PROFESSIONAL ENGINEER MOHAN S. CHAR No. 57894 Exp. 6/30/12 CIVIL STATE OF CALIFORNIA

The State of California or its officers or agents shall not be responsible for the accuracy or completeness of electronic copies of this plan sheet.

T.Y. LIN / MOFFATT & NICHOL
TWO HARRISON STREET, SUITE 500
SAN FRANCISCO, CA 94105

AECOM TECHNICAL SERVICES INC.
999 TOWN & COUNTRY ROAD
ORANGE, CA 92868

Notes:
1. For further details, see "Roadway Plans".
2. Adjust reinforcing to clear anchor bolts, prestressing ducts and anchorage reinforcing.
3. Tack weld wire fabric to every other grate bar. Welded wire fabric shall contain opening 25 mm square or less.
4. Galvanize grated frame after fabrication.
5. For light pole foundations on new barriers on Skyway and Oakland Approach Structures, Phase 1, remove and replace all non-embedded epoxy coated reinforcement and repair damaged embedded epoxy coated reinforcement. Abrasive blast clean all other embedded reinforcement prior to concrete placement.

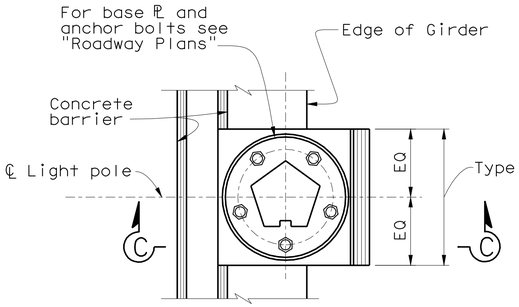

PLAN

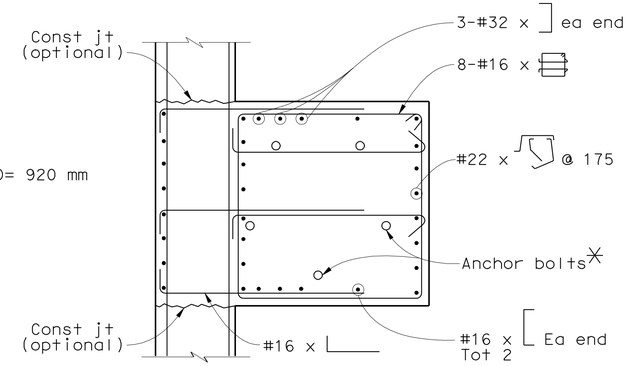

SECTION B-B

*Adjust reinforcing to clear Anchor Bolts

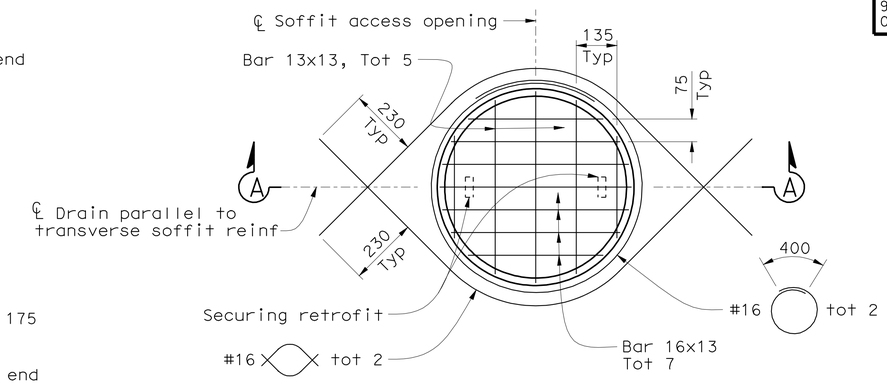

GRATED SOFFIT ACCESS OPENING
1:10

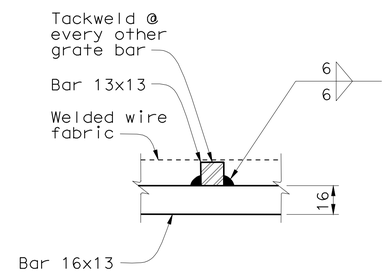

DETAIL 2
No Scale

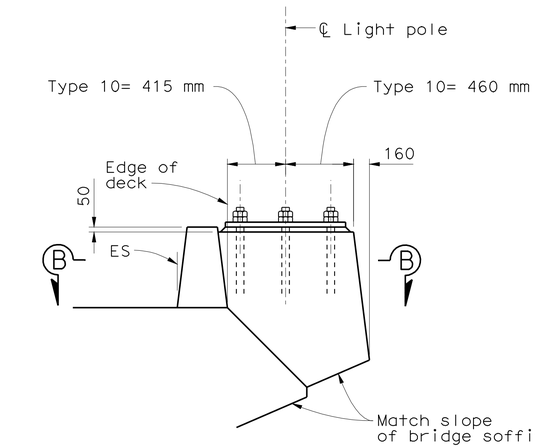

ELEVATION

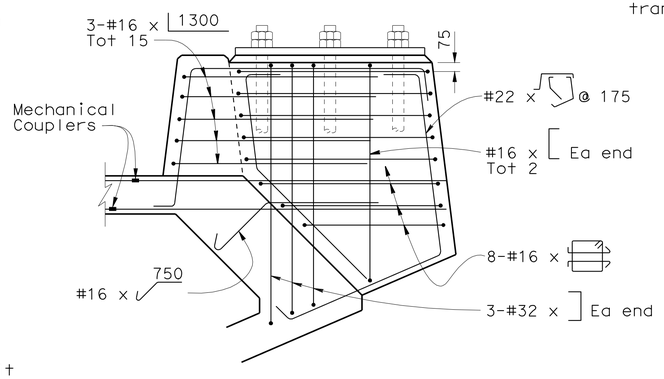

SECTION C-C

ROADWAY LIGHT POLE FOUNDATION - TYPICAL
No Scale
See "Note 5"

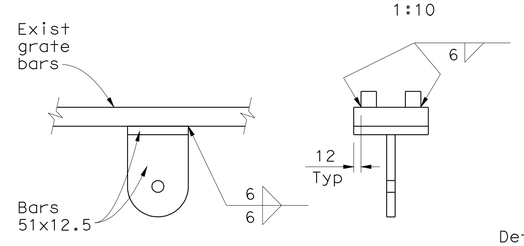

DETAIL 3
No Scale

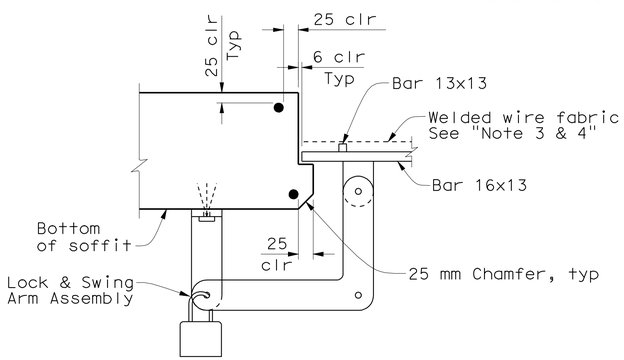

DETAIL 1
No Scale

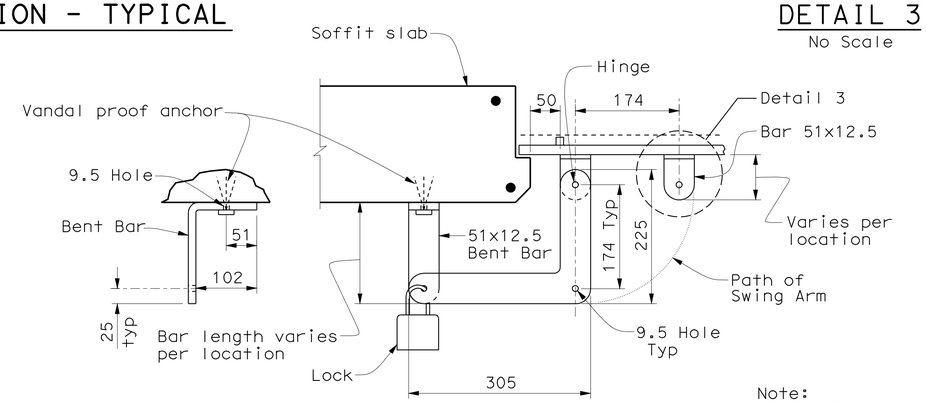

SWING ARM ASSEMBLY DETAIL
No Scale

Note:
All "swing arm" bars are 12.5 mm thick

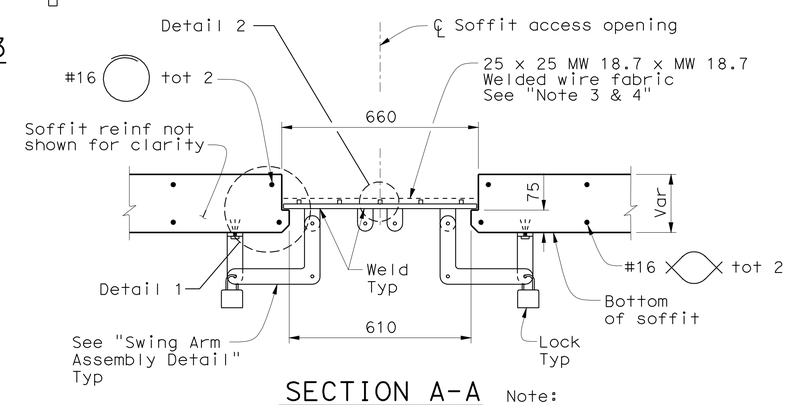

SECTION A-A
1:10

Note:
Swing Arm assembly to be placed along ℄ Opening.

ALL DIMENSIONS ARE IN MILLIMETERS UNLESS OTHERWISE SHOWN

SAN FRANCISCO OAKLAND BAY BRIDGE
EAST SPAN SEISMIC SAFETY PROJECT

OAKLAND APPROACH STRUCTURES - PHASE 2

MISCELLANEOUS DETAILS NO. 1

DESIGN OVERSIGHT			
HASAN EL-NATUR			
SIGN OFF DATE			
Rev. Date: 5-18-98			

	BY	CHECKED
DESIGN	M. CHAR	T. DUDLEY
DETAILS	M. ANDRASEK	M. CHAR
QUANTITIES	Y. KIM	A. SIVATHASAN/T. DUDLEY

PREPARED FOR THE STATE OF CALIFORNIA DEPARTMENT OF TRANSPORTATION

MOHAN S. CHAR
PROJECT ENGINEER

BRIDGE NO. 34-0006R
KILOMETER POST 2.1

ORIGINAL SCALE IN MILLIMETERS FOR REDUCED PLANS 0 10 20 30 40 50 60 70 80 90 100

CU 04
EA 0120M1

DISREGARD PRINTS BEARING EARLIER REVISION DATES

REVISION DATES (PRELIMINARY STAGE ONLY) 1/15/10 4/27/10 5/28/10 9/30/10 12/28/10 3/4/11 3/14/11 4/4/11 6/23/11 7/25/11

SHEET 85 OF 109

FILE => 04-0120m1-34-0006r-u-miscdt01.dgn

SUBMITTAL - 12

DATE: 27-Sep-02 10:43

USERNAME => s12614 DATE PLOTTED => 05-OCT-2011 TIME PLOTTED => 14:09

DIST.	COUNTY	ROUTE	KILOMETER POST TOTAL PROJECT	SHEET NO.	TOTAL SHEETS
04	Ala	80	1.6/2.7	658	744

Caltrans Metric

REGISTERED ENGINEER - CIVIL

10-3-11

PLANS APPROVAL DATE

REGISTERED PROFESSIONAL ENGINEER MOHAN S. CHAR No. 57894 Exp. 6/30/12 CIVIL STATE OF CALIFORNIA

The State of California or its officers or agents shall not be responsible for the accuracy or completeness of electronic copies of this plan sheet.

T.Y. LIN / MOFFATT & NICHOL
TWO HARRISON STREET, SUITE 500
SAN FRANCISCO, CA 94105

AECOM TECHNICAL SERVICES INC.
999 TOWN & COUNTRY ROAD
ORANGE, CA 92868

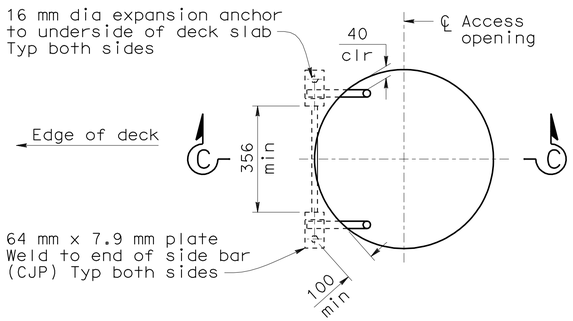

PLAN

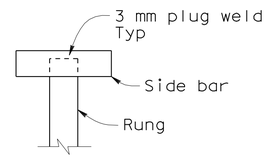

DETAIL 1
1:2

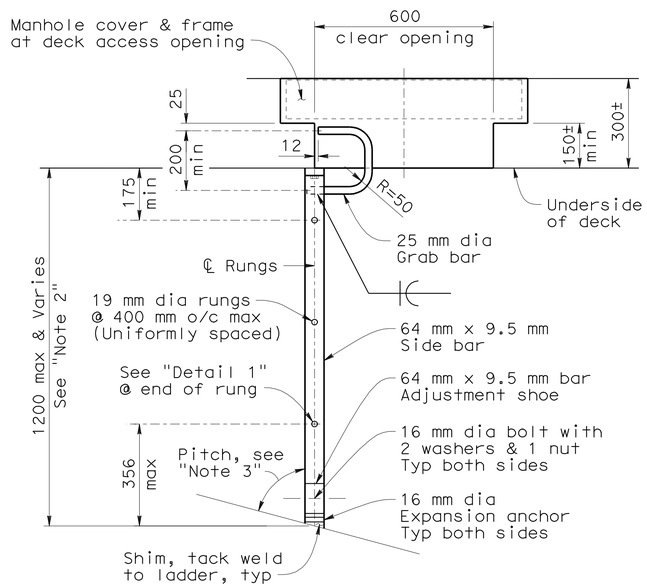

SECTION C-C

TYPICAL LADDER DETAILS AT DECK ACCESS OPENINGS
1:10

Manhole Ladder Notes:

1. All metal, including fasteners, shall be galvanized.
2. Verify all dimensions in the field prior to fabrication.
3. Pitch of ladder shall be between 75° and 90° where necessary to avoid utilities.
4. Ladders shall be provided for all deck access openings in Westbound and Eastbound structures from Hinge E to Abutment 23.

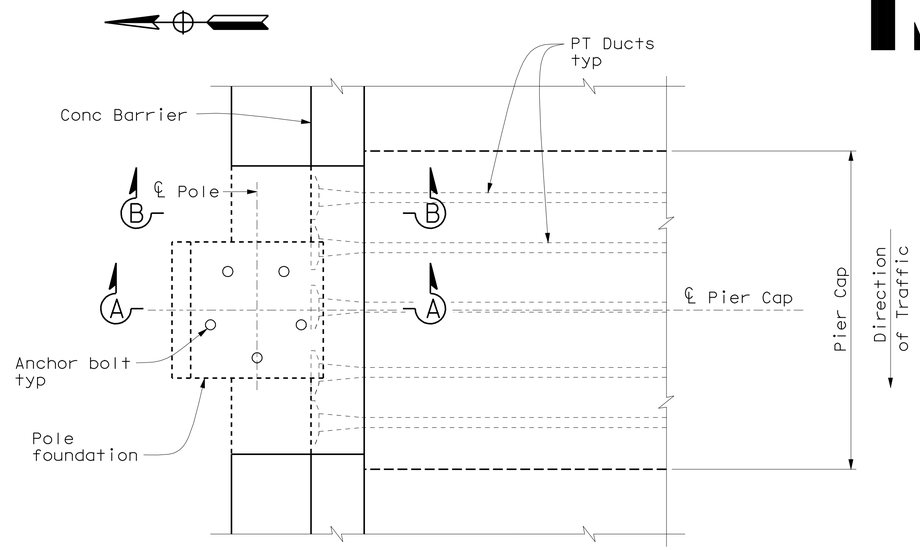

LIGHT POLE FOUNDATION AT PIER CAPS E20R, E21R & E22R
1:30

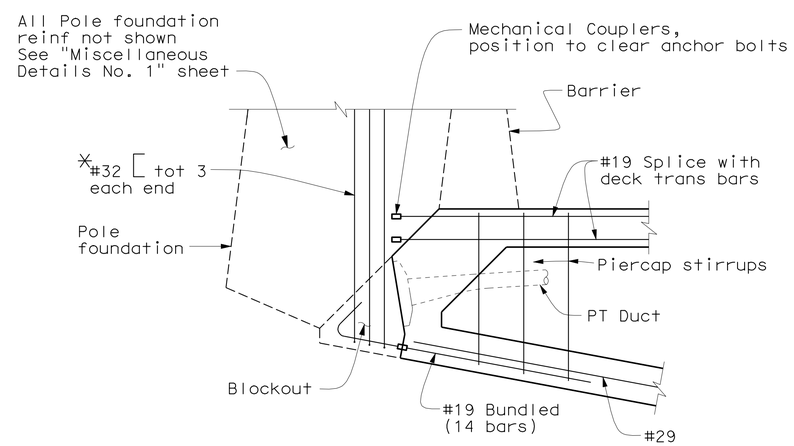

SECTION A-A
1:20

*Adjust location in field to avoid conflict with PT Anchorage as approved by the Engineer.

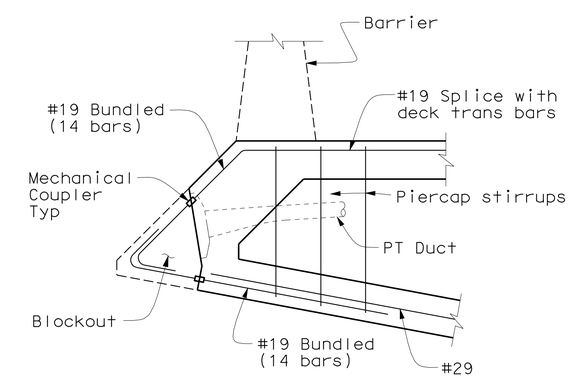

SECTION B-B
1:20

ALL DIMENSIONS ARE IN MILLIMETERS UNLESS OTHERWISE SHOWN

SAN FRANCISCO OAKLAND BAY BRIDGE
EAST SPAN SEISMIC SAFETY PROJECT

OAKLAND APPROACH STRUCTURES - PHASE 2

MISCELLANEOUS DETAILS NO. 2

DESIGN OVERSIGHT
HASAN EL-NATAR
SIGN OFF DATE

	BY	CHECKED
DESIGN	M. CHAR	T. DUDLEY
DETAILS	M. ANDRASEK	M. CHAR
QUANTITIES	Y. KIM	A. SIVATHASAN/T. DUDLEY

PREPARED FOR THE STATE OF CALIFORNIA DEPARTMENT OF TRANSPORTATION

MOHAN S. CHAR
PROJECT ENGINEER

BRIDGE NO. 34-0006R
KILOMETER POST 2.1

Rev. Date: 5-18-98

ORIGINAL SCALE IN MILLIMETERS FOR REDUCED PLANS 0 10 20 30 40 50 60 70 80 90 100

CU 04
EA 0120M1

DISREGARD PRINTS BEARING EARLIER REVISION DATES

REVISION DATES (PRELIMINARY STAGE ONLY): 10/30/09 1/15/10 4/2/10 5/28/10 9/30/10 12/29/10 3/4/11 3/14/11 4/4/11 6/3/11

SHEET 86 OF 109

FILE => 04-0120m1-34-0006r-u-miscdt02.dgn

SUBMITTAL - 12

USERNAME => s121614 DATE PLOTTED => 05-OCT-2011 TIME PLOTTED => 14:09

DIST.	COUNTY	ROUTE	KILOMETER POST TOTAL PROJECT	SHEET NO.	TOTAL SHEETS
04	Ala	80	1.6/2.7	659	744

Caltrans Metric

REGISTERED ENGINEER - CIVIL

10-3-11

PLANS APPROVAL DATE

REGISTERED PROFESSIONAL ENGINEER MOHAN S. CHAR No. 57894 Exp. 6/30/12 CIVIL STATE OF CALIFORNIA

The State of California or its officers or agents shall not be responsible for the accuracy or completeness of electronic copies of this plan sheet.

T.Y. LIN / MOFFATT & NICHOL
TWO HARRISON STREET, SUITE 500
SAN FRANCISCO, CA 94105

AECOM TECHNICAL SERVICES INC.
999 TOWN & COUNTRY ROAD
ORANGE, CA 92868

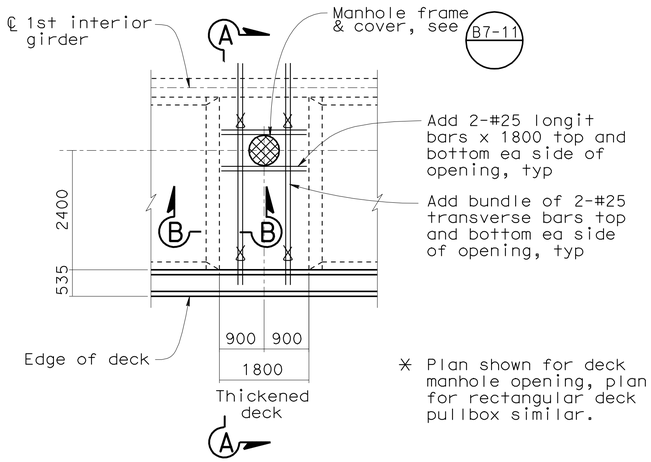

* Plan shown for deck manhole opening, plan for rectangular deck pullbox similar.

PLAN AT DECK ACCESS MANHOLE*

1:60

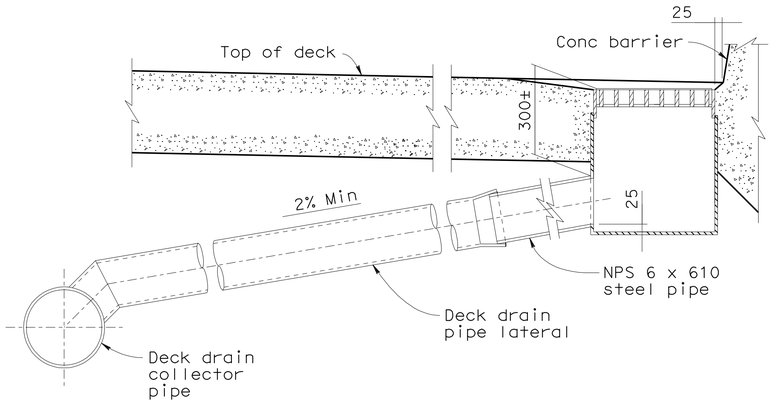

DECK DRAIN TYPE D-1 (MOD)

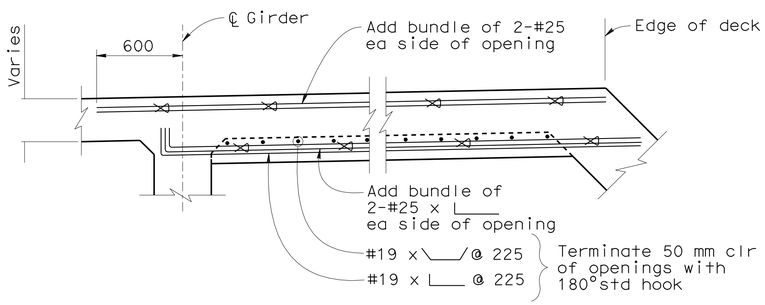

SECTION A-A

No Scale

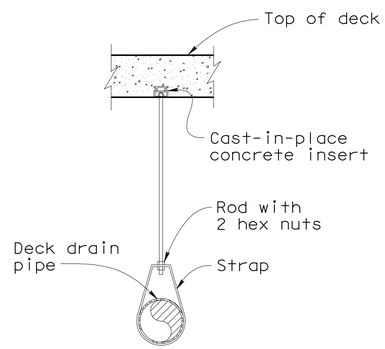

DECK DRAIN PIPE HANGER

Note: For details not shown, see B7-6

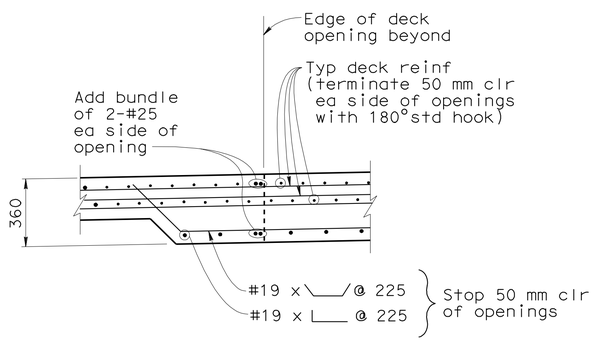

SECTION B-B

No Scale

PIPE SIZE	WALL THICKNESS	PIPE HANGER SPACING	HANGER ROD DIA	HANGER STRAP SIZE
NPS6	3.4 mm	3.0 m	16 mm	4.8 x 38 mm
NPS8	3.8 mm	3.0 m	19 mm	6.4 x 45 mm
NPS10	4.2 mm	3.0 m	22 mm	9.5 x 45 mm
NPS12	4.6 mm	3.0 m	22 mm	9.5 x 50 mm
NPS14	4.8 mm	2.4 m	22 mm	12.7 x 50 mm

DECK DRAINAGE DETAILS

No Scale

ALL DIMENSIONS ARE IN MILLIMETERS UNLESS OTHERWISE SHOWN

SAN FRANCISCO OAKLAND BAY BRIDGE
EAST SPAN SEISMIC SAFETY PROJECT

OAKLAND APPROACH STRUCTURES - PHASE 2

MISCELLANEOUS DETAILS NO. 3

BRIDGE NO. 34-0006R
KILOMETER POST 2.1

MOHAN S. CHAR
PROJECT ENGINEER

DESIGN OVERSIGHT
HASAN EL-NATAR
SIGN OFF DATE

	BY	CHECKED
DESIGN	M. CHAR	T. DUDLEY
DETAILS	M. ANDRASEK	M. CHAR
QUANTITIES	Y. KIM	A. SIVATHASAN/T. DUDLEY

PREPARED FOR THE STATE OF CALIFORNIA DEPARTMENT OF TRANSPORTATION

Rev. Date: 5-18-98

ORIGINAL SCALE IN MILLIMETERS FOR REDUCED PLANS 0 10 20 30 40 50 60 70 80 90 100

CU 04
EA 0120M1

DISREGARD PRINTS BEARING EARLIER REVISION DATES

REVISION DATES (PRELIMINARY STAGE ONLY) 10/30/09 1/15/10 4/2/10 5/28/10 9/30/10 12/29/10 3/4/11 3/14/11 4/4/11 6/3/11

SHEET 87 OF 109

FILE => 04-0120m1-34-0006r-u-miscdt03.dgn

SUBMITTAL - 12

DATE: 30-Sep-02 11:21

USERNAME => s121614 DATE PLOTTED => 05-OCT-2011 TIME PLOTTED => 14:09

DIST.	COUNTY	ROUTE	KILOMETER POST TOTAL PROJECT	SHEET NO.	TOTAL SHEETS
04	Ala	80	1.6/2.7	660	744

Caltrans Metric

REGISTERED ENGINEER - CIVIL

10-3-11

PLANS APPROVAL DATE

REGISTERED PROFESSIONAL ENGINEER MOHAN S. CHAR No. 57894 Exp. 6/30/12 CIVIL STATE OF CALIFORNIA

The State of California or its officers or agents shall not be responsible for the accuracy or completeness of electronic copies of this plan sheet.

T.Y. LIN / MOFFATT & NICHOL
TWO HARRISON STREET, SUITE 500
SAN FRANCISCO, CA 94105

AECOM TECHNICAL SERVICES INC.
999 TOWN & COUNTRY ROAD
ORANGE, CA 92868

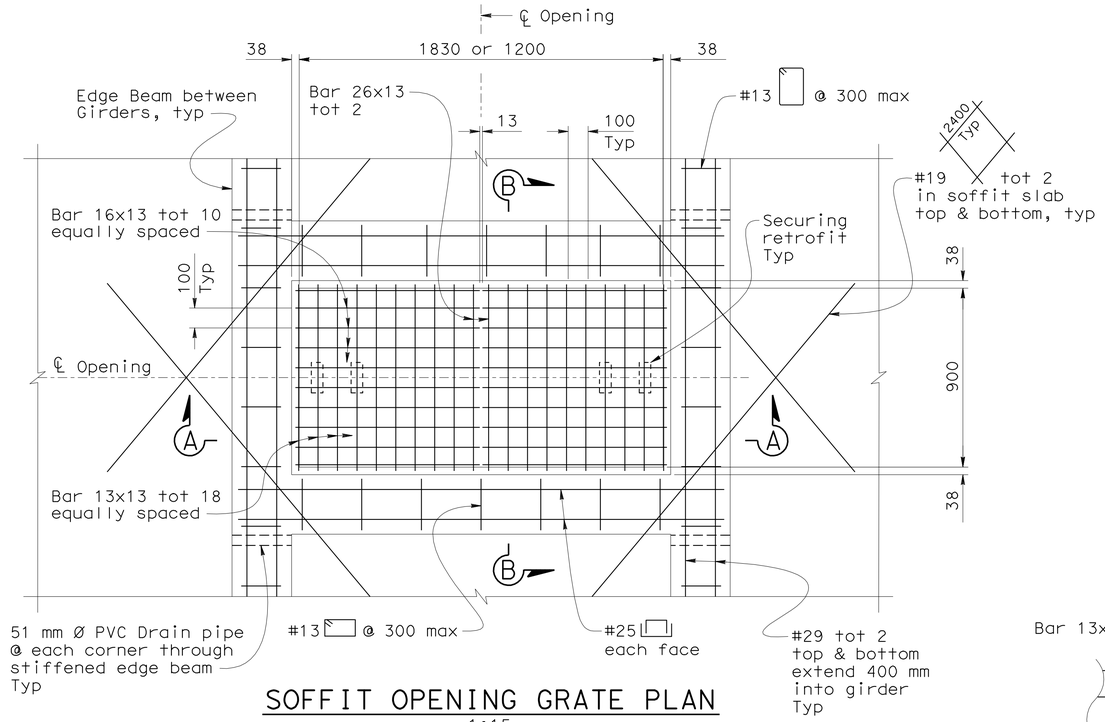

SOFFIT OPENING GRATE PLAN
1:15

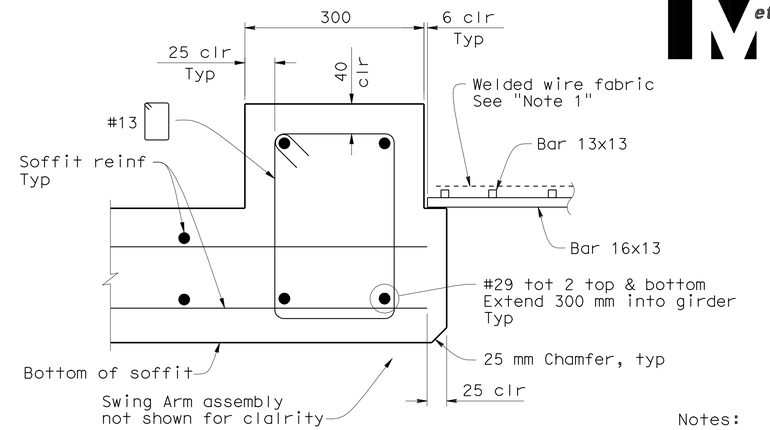

DETAIL 1
No Scale

Notes:

1. Tack weld wire fabric to every other gate bars. Welded wire fabric shall contain opening 25 mm square or less.
2. Galvanize grated frame after fabrication.
3. For Swing Arm Assembly Detail, see "Miscellaneous Details No. 1" sheet.

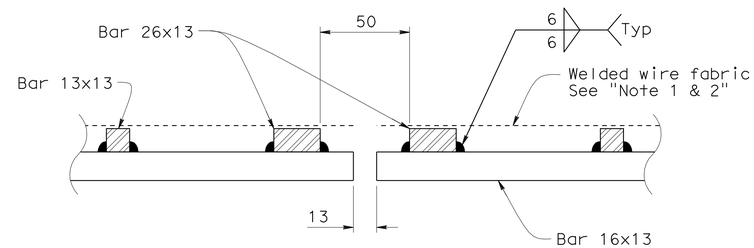

DETAIL 2
No Scale

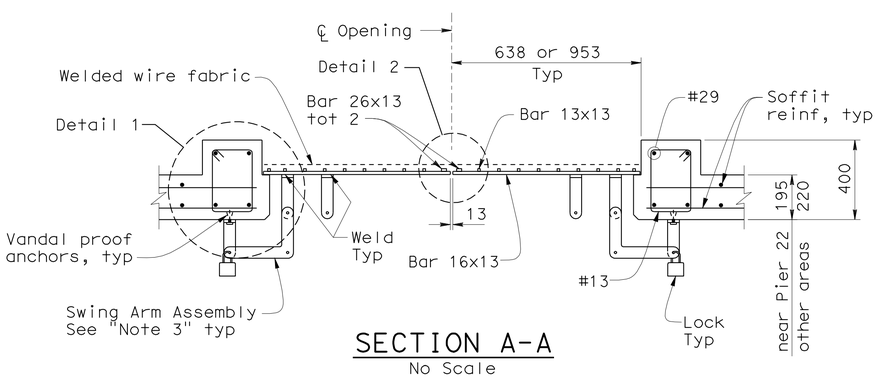

SECTION A-A
No Scale

Note:
Swing Arm assembly to be placed along ℄ Opening.

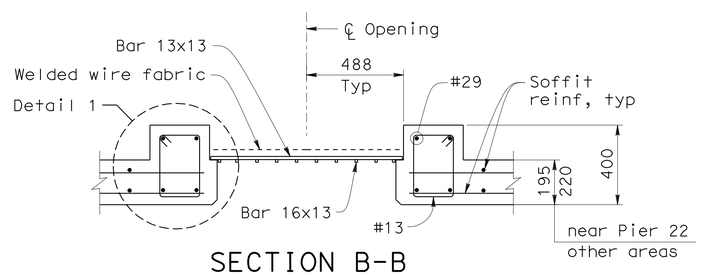

SECTION B-B
No Scale

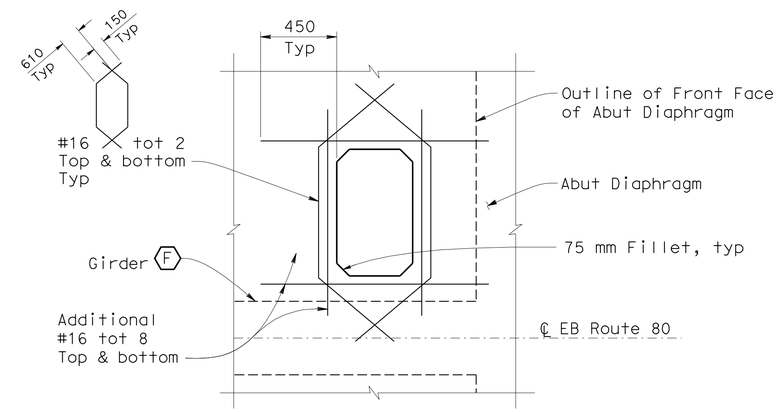

450x750 SOFFIT ACCESS OPENING
No Scale
Note: Soffit Reinforcement not shown for clarity.

ALL DIMENSIONS ARE IN MILLIMETERS UNLESS OTHERWISE SHOWN

SAN FRANCISCO OAKLAND BAY BRIDGE
EAST SPAN SEISMIC SAFETY PROJECT

OAKLAND APPROACH STRUCTURES - PHASE 2

MISCELLANEOUS DETAILS NO. 4

DESIGN OVERSIGHT
HASAN EL-NATAR
SIGN OFF DATE

	BY	CHECKED
DESIGN	M. CHAR	T. DUDLEY
DETAILS	M. ANDRASEK	M. CHAR
QUANTITIES	Y. KIM	A. SIVATHASAN/T. DUDLEY

PREPARED FOR THE STATE OF CALIFORNIA DEPARTMENT OF TRANSPORTATION

MOHAN S. CHAR
PROJECT ENGINEER

BRIDGE NO. 34-0006R
KILOMETER POST 2.1

CU 04
EA 0120M1

Rev. Date: 5-18-98

ORIGINAL SCALE IN MILLIMETERS FOR REDUCED PLANS 0 10 20 30 40 50 60 70 80 90 100

DISREGARD PRINTS BEARING EARLIER REVISION DATES

REVISION DATES (PRELIMINARY STAGE ONLY) 10/30/09 1/15/10 4/21/10 5/28/10 9/30/10 12/29/10 3/4/11 3/14/11 4/4/11 6/3/11

SHEET 88 OF 109

FILE => 04-0120m1-34-0006r-u-miscdt04.dgn

SUBMITTAL - 12

USERNAME => s121614 DATE PLOTTED => 05-OCT-2011 TIME PLOTTED => 14:09

DIST.	COUNTY	ROUTE	KILOMETER POST TOTAL PROJECT	SHEET NO.	TOTAL SHEETS
04	Ala	80	1.6/2.7	661	744

Caltrans Metric

REGISTERED ENGINEER - CIVIL

10-3-11

PLANS APPROVAL DATE

REGISTERED PROFESSIONAL ENGINEER MOHAN S. CHAR No. 57894 Exp. 6/30/12 CIVIL STATE OF CALIFORNIA

The State of California or its officers or agents shall not be responsible for the accuracy or completeness of electronic copies of this plan sheet.

T.Y. LIN / MOFFATT & NICHOL
TWO HARRISON STREET, SUITE 500
SAN FRANCISCO, CA 94105

AECOM TECHNICAL SERVICES INC.
999 TOWN & COUNTRY ROAD
ORANGE, CA 92868

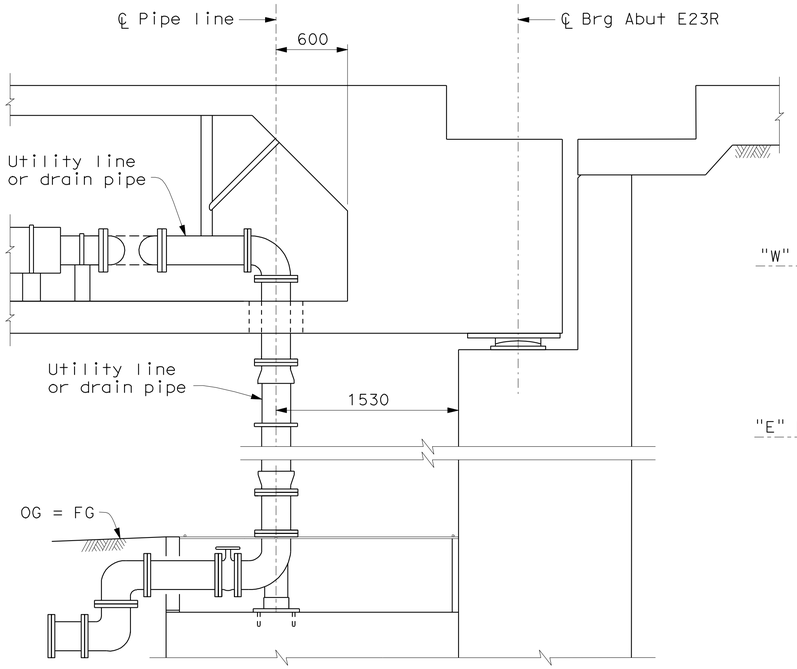

SECTION A-A
1:25

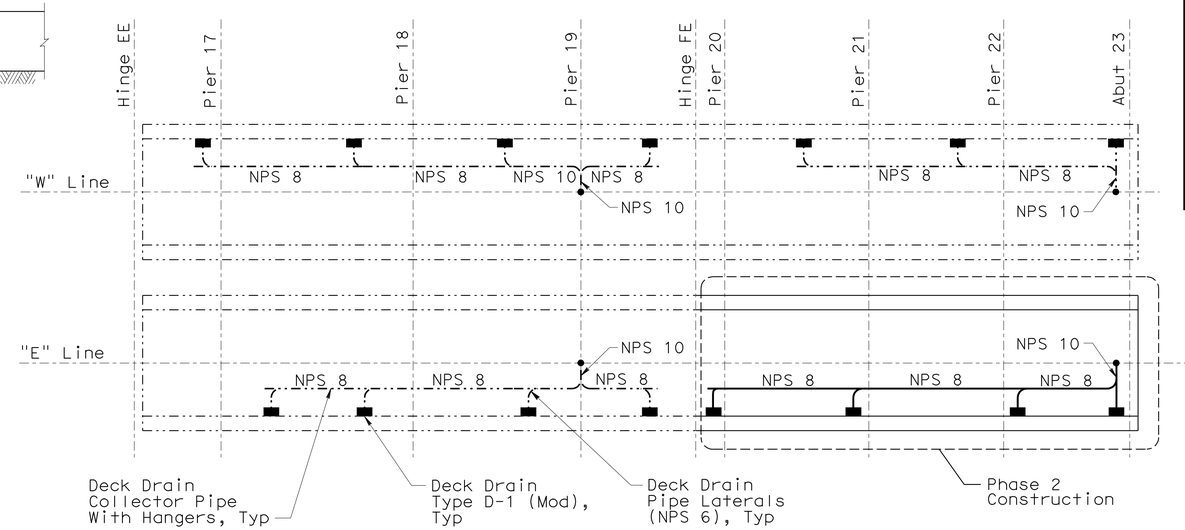

SCHEMATIC DECK DRAIN LAYOUT
No Scale

Notes:

1. For deck drain stationing, see "Eastbound Structure Plan No. 2" sheet.
2. For pipe supports, see "Mechanical Plans" sheets.
3. See "Miscellaneous Details No. 4" sheet.

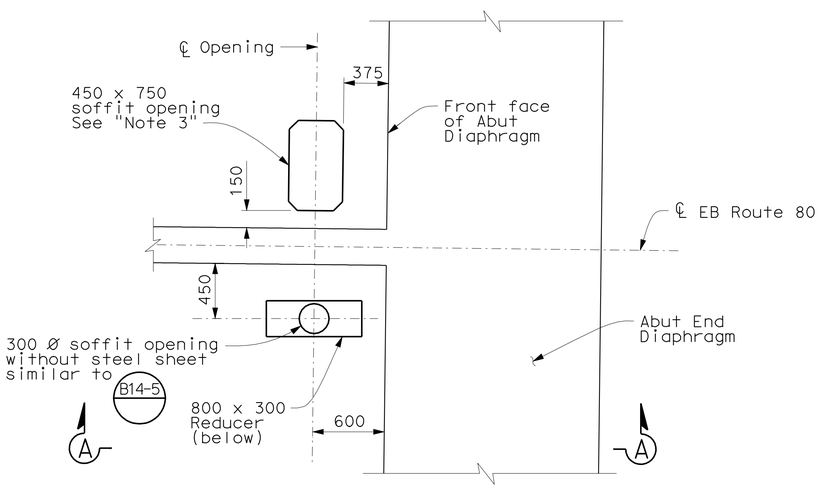

DETAIL 2
1:25

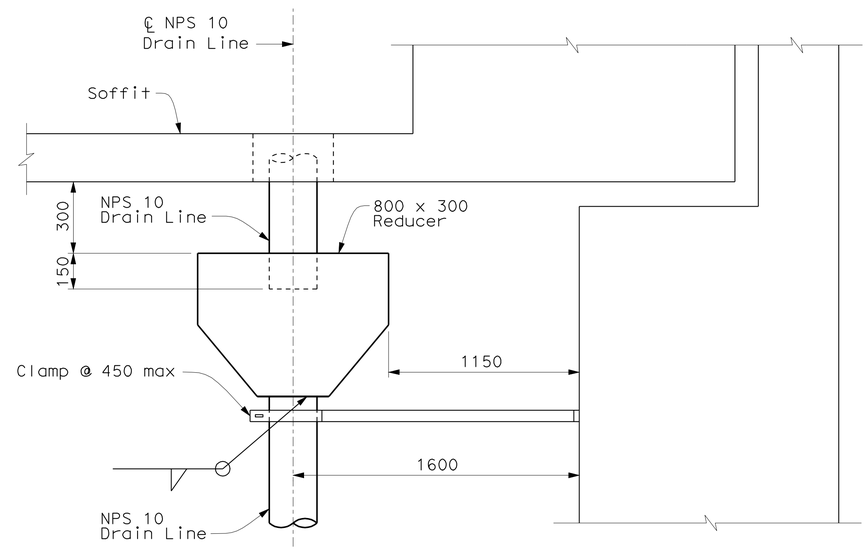

DRAIN LINE DETAIL
No Scale

ALL DIMENSIONS ARE IN MILLIMETERS UNLESS OTHERWISE SHOWN

SAN FRANCISCO OAKLAND BAY BRIDGE
EAST SPAN SEISMIC SAFETY PROJECT

OAKLAND APPROACH STRUCTURES - PHASE 2

MISCELLANEOUS DETAILS NO. 5

DESIGN OVERSIGHT
HASAN EL-NATAR
SIGN OFF DATE

	BY	CHECKED
DESIGN	M. CHAR	T. DUDLEY
DETAILS	M. ANDRASEK	M. CHAR
QUANTITIES	Y. KIM	A. SIVATHASAN/T. DUDLEY

PREPARED FOR THE STATE OF CALIFORNIA DEPARTMENT OF TRANSPORTATION

MOHAN S. CHAR
PROJECT ENGINEER

BRIDGE NO. 34-0006R
KILOMETER POST 2.1

Rev. Date: 5-18-98

ORIGINAL SCALE IN MILLIMETERS FOR REDUCED PLANS 0 10 20 30 40 50 60 70 80 90 100

CU 04
EA 0120M1

DISREGARD PRINTS BEARING EARLIER REVISION DATES

REVISION DATES (PRELIMINARY STAGE ONLY) 10/30/09 1/15/10 4/22/10 5/28/10 9/30/10 12/29/10 3/14/11 3/14/11 4/14/11 6/3/11

SHEET 89 OF 109

FILE => 04-0120m1-34-0006r-u-miscdt05.dgn

SUBMITTAL - 12

USERNAME => s121614 DATE PLOTTED => 05-OCT-2011 TIME PLOTTED => 14:09

DIST.	COUNTY	ROUTE	KILOMETER POST TOTAL PROJECT	SHEET NO.	TOTAL SHEETS
04	Ala	80	1.6/2.7	662	744

Caltrans Metric

REGISTERED ENGINEER - CIVIL

10-3-11

PLANS APPROVAL DATE

REGISTERED PROFESSIONAL ENGINEER MOHAN S. CHAR No. 57894 Exp. 6/30/12 CIVIL STATE OF CALIFORNIA

The State of California or its officers or agents shall not be responsible for the accuracy or completeness of electronic copies of this plan sheet.

T.Y. LIN / MOFFATT & NICHOL
TWO HARRISON STREET, SUITE 500
SAN FRANCISCO, CA 94105

AECOM TECHNICAL SERVICES INC.
999 TOWN & COUNTRY ROAD
ORANGE, CA 92868

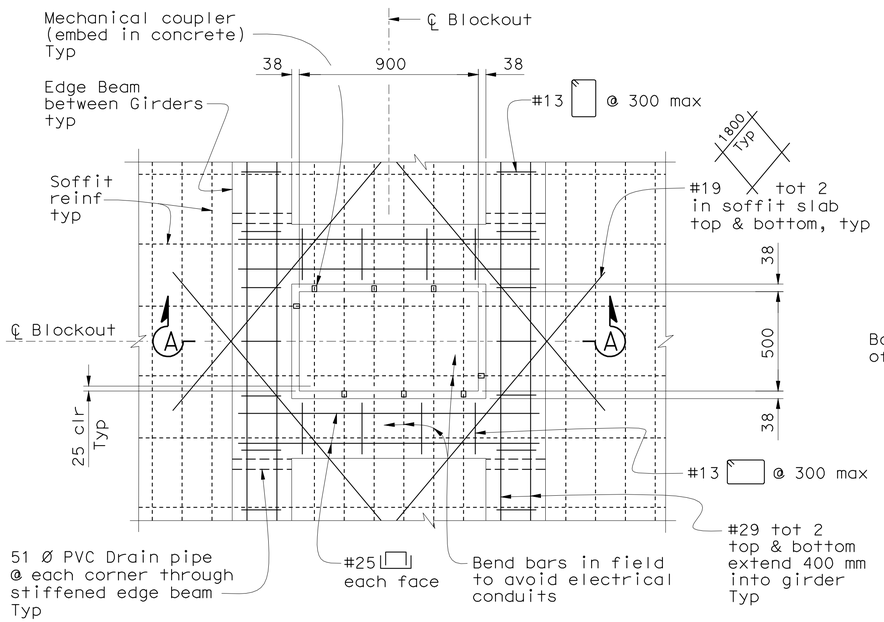

DETAIL 6
1:15

Note:
Electrical conduits not shown for clarity.

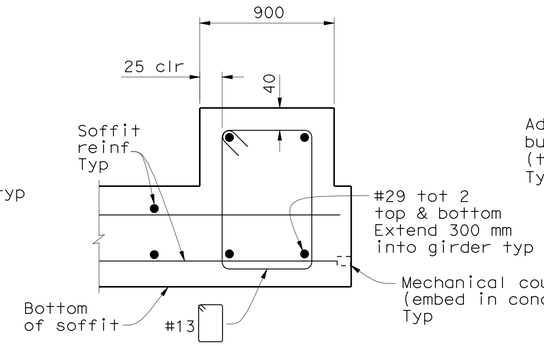

DETAIL 7
No Scale

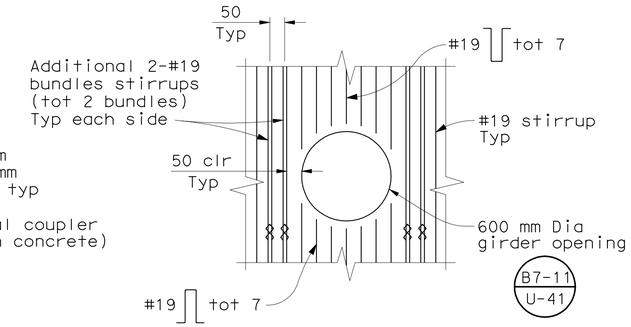

DETAIL 3
1:20

Note: For reinforcement & notes not shown, see B7-11 / U-41

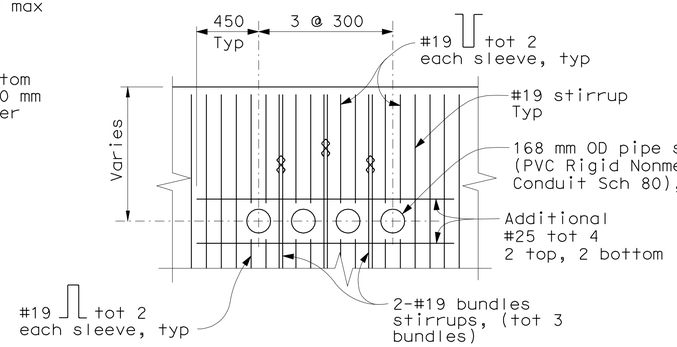

DETAIL 1
1:20

Note: Detail similar for 2, 3 & 5 pipe sleeves.

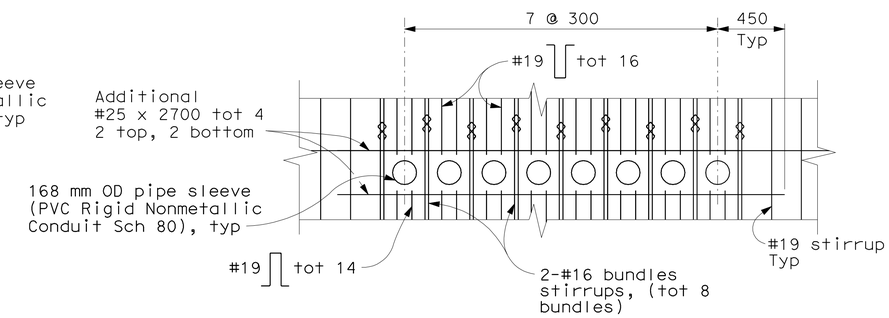

DETAIL 4
1:20

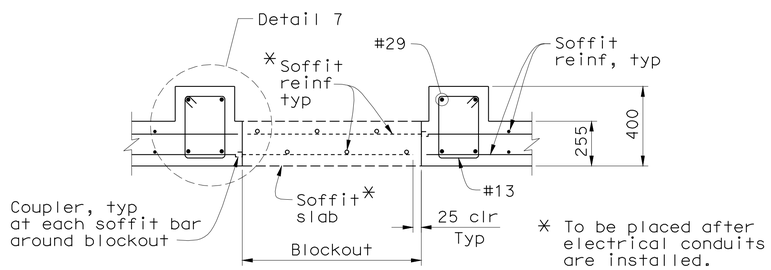

SECTION A-A
1:15

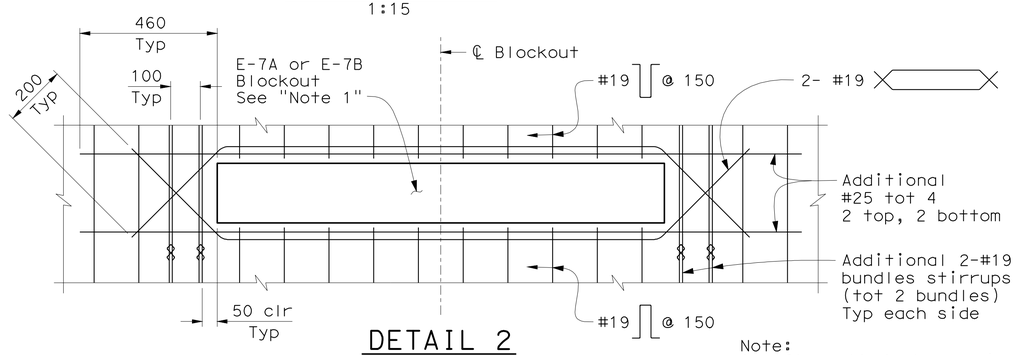

DETAIL 2
1:10

Note:
1. After all ducts are installed, fill blockout with grout.

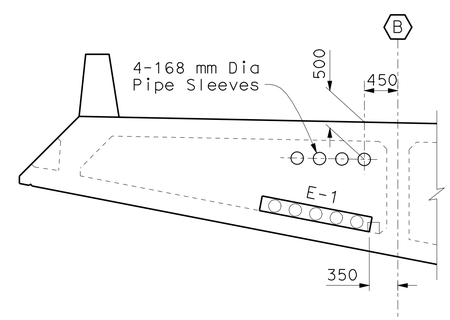

SECTION C-C
1:40

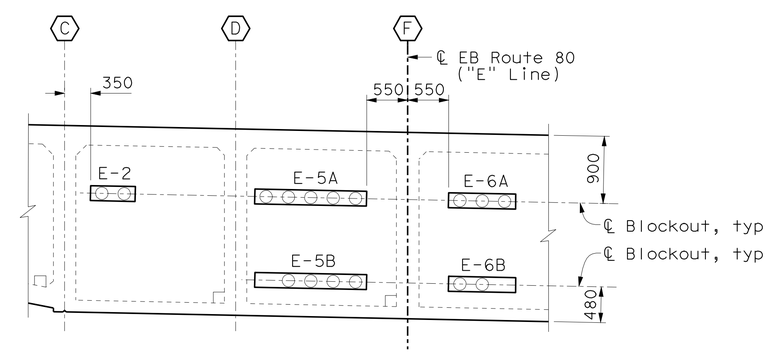

SECTION B-B
1:40

ALL DIMENSIONS ARE IN MILLIMETERS UNLESS OTHERWISE SHOWN

SAN FRANCISCO OAKLAND BAY BRIDGE
EAST SPAN SEISMIC SAFETY PROJECT

OAKLAND APPROACH STRUCTURES - PHASE 2

MISCELLANEOUS DETAILS NO. 6

DESIGN OVERSIGHT
HASAN EL-NATAR
SIGN OFF DATE

Rev. Date: 5-18-98

	BY	CHECKED
DESIGN	M. CHAR	T. DUDLEY
DETAILS	M. ANDRASEK	M. CHAR
QUANTITIES	Y. KIM	A. SIVATHASAN/T. DUDLEY

PREPARED FOR THE STATE OF CALIFORNIA DEPARTMENT OF TRANSPORTATION

MOHAN S. CHAR
PROJECT ENGINEER

BRIDGE NO. 34-0006R
KILOMETER POST 2.1

ORIGINAL SCALE IN MILLIMETERS FOR REDUCED PLANS 0 10 20 30 40 50 60 70 80 90 100

CU 04
EA 0120M1

DISREGARD PRINTS BEARING EARLIER REVISION DATES

REVISION DATES (PRELIMINARY STAGE ONLY): 10/30/09 1/15/10 4/23/10 5/28/10 9/30/10 12/29/10 3/14/11 3/14/11 4/14/11 6/3/11

SHEET 90 OF 109

FILE => 04-0120m1-34-0006r-u-miscdt06.dgn

SUBMITTAL - 12

USERNAME => s121614 DATE PLOTTED => 05-OCT-2011 TIME PLOTTED => 14:09

DIST.	COUNTY	ROUTE	KILOMETER POST TOTAL PROJECT	SHEET NO.	TOTAL SHEETS
04	Ala	80	1.6/2.7	663	744

REGISTERED ENGINEER - CIVIL

10-3-11

PLANS APPROVAL DATE

REGISTERED PROFESSIONAL ENGINEER MOHAN S. CHAR No. 57894 Exp. 6/30/12 CIVIL STATE OF CALIFORNIA

The State of California or its officers or agents shall not be responsible for the accuracy or completeness of electronic copies of this plan sheet.

T.Y. LIN / MOFFATT & NICHOL
TWO HARRISON STREET, SUITE 500
SAN FRANCISCO, CA 94105

AECOM TECHNICAL SERVICES INC.
999 TOWN & COUNTRY ROAD
ORANGE, CA 92868

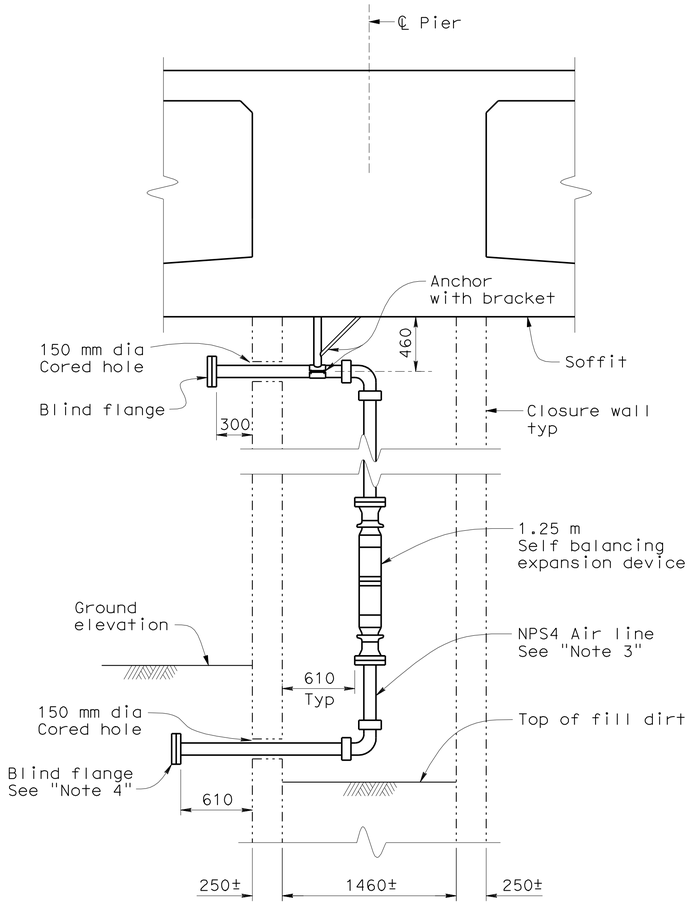

NPS4 AIR LINE DETAIL AT PIER E22R

1:25

Notes:

1. For pull box reinforcement, see "Plan at Deck Access Manhole" on "Miscellaneous Details No. 3" sheet and instead of bundle of 2-#25 use 3-#25 transverse bars top & bottom each side of opening, typical.
2. For deck access opening cover light hole and hold-down bolts, see ES-8 in Standard Plans.
3. For additional Air line information, see "Mechanical Plans".
4. Protect pipe and concrete penetration from contamination by dirt.

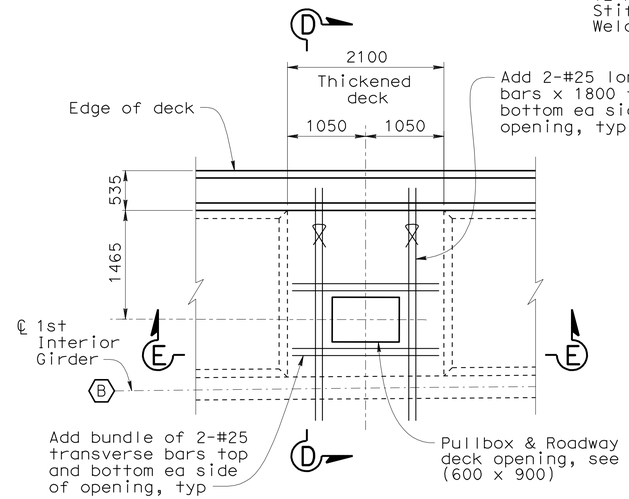

PULL BOX OPENING PLAN

1:40

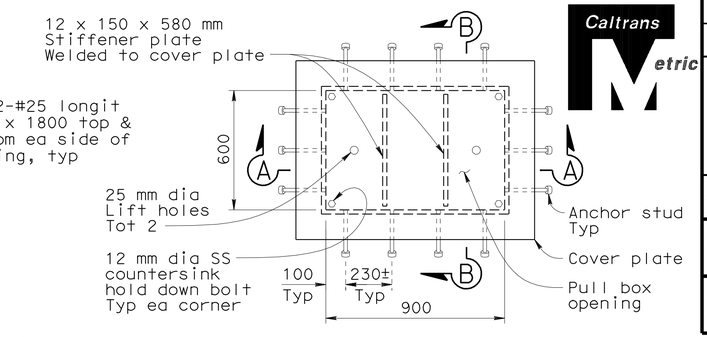

ANCHOR STUD LAYOUT

No Scale

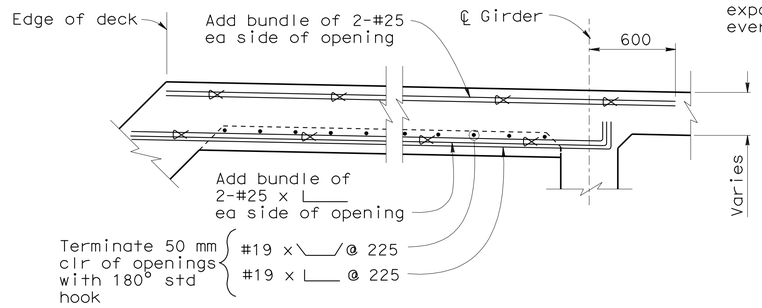

SECTION D-D

No Scale

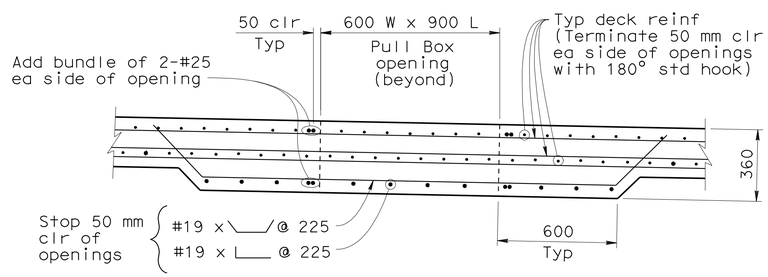

SECTION E-E

No Scale

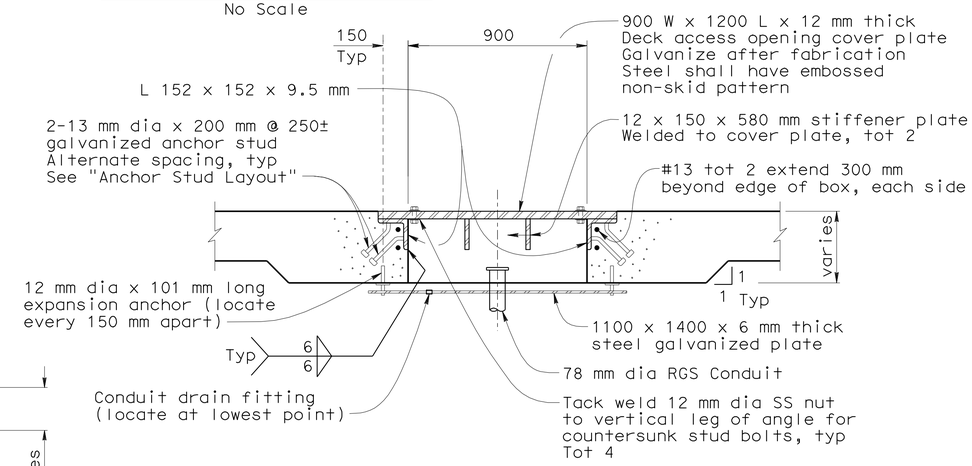

SECTION A-A

1:15

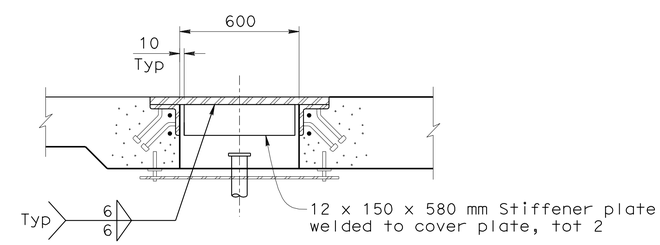

SECTION B-B

1:15

Note: For information not shown, see "Section A-A".

PULL BOX OPENING FOR PREFORMED LOOP

Note: Pull box cover shall be marked "CALTRANS TMS" indicating traffic monitoring station circuits.

ALL DIMENSIONS ARE IN MILLIMETERS UNLESS OTHERWISE SHOWN

DESIGN OVERSIGHT
HASAN EL-NATAR
SIGN OFF DATE

	BY	CHECKED
DESIGN	M. CHAR	T. DUDLEY
DETAILS	M. ANDRASEK	M. CHAR
QUANTITIES	Y. KIM	A. SIVATHASAN/T. DUDLEY

PREPARED FOR THE STATE OF CALIFORNIA DEPARTMENT OF TRANSPORTATION

MOHAN S. CHAR
PROJECT ENGINEER

BRIDGE NO. 34-0006R
KILOMETER POST 2.1

SAN FRANCISCO OAKLAND BAY BRIDGE
EAST SPAN SEISMIC SAFETY PROJECT

OAKLAND APPROACH STRUCTURES - PHASE 2

MISCELLANEOUS DETAILS NO. 7

Rev. Date: 5-18-98

ORIGINAL SCALE IN MILLIMETERS FOR REDUCED PLANS 0 10 20 30 40 50 60 70 80 90 100

CU 04
EA 0120M1

DISREGARD PRINTS BEARING EARLIER REVISION DATES

REVISION DATES (PRELIMINARY STAGE ONLY): 10/30/09 1/15/10 4/22/10 5/28/10 9/30/10 12/29/10 3/4/11 3/14/11 4/14/11 6/3/11

SHEET 91 OF 109

FILE => 04-0120m1-34-0006r-u-miscdt07.dgn

SUBMITTAL - 12

DATE: 30-Sep-02 11:21

USERNAME => s612614 DATE PLOTTED => 05-OCT-2011 TIME PLOTTED => 14:09

DIST.	COUNTY	ROUTE	KILOMETER POST TOTAL PROJECT	SHEET NO.	TOTAL SHEETS
04	Ala	80	1.6/2.7	664	744

Caltrans Metric

REGISTERED ENGINEER - CIVIL

10-3-11

PLANS APPROVAL DATE

REGISTERED PROFESSIONAL ENGINEER A.L. ELY No. 18880 Exp. 6-30-11 CIVIL STATE OF CALIFORNIA

The State of California or its officers or agents shall not be responsible for the accuracy or completeness of electronic copies of this plan sheet.

T.Y. LIN / MOFFATT & NICHOL
TWO HARRISON STREET, SUITE 500
SAN FRANCISCO, CA 94105

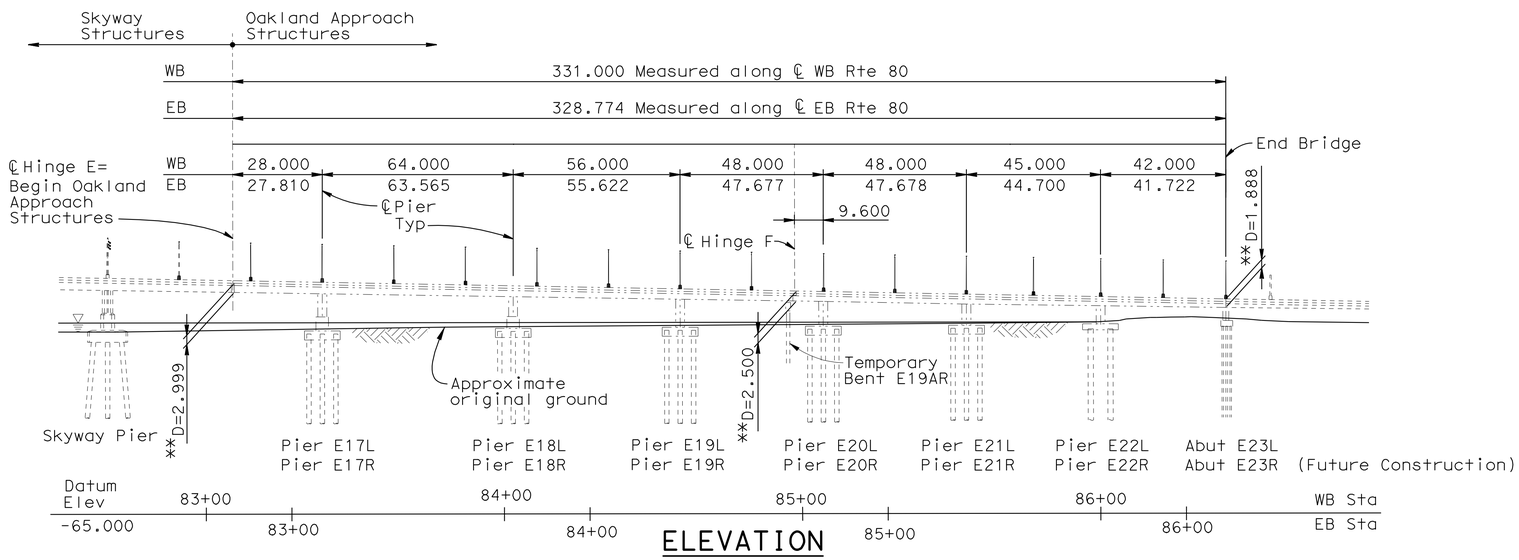

ELEVATION
1:1000

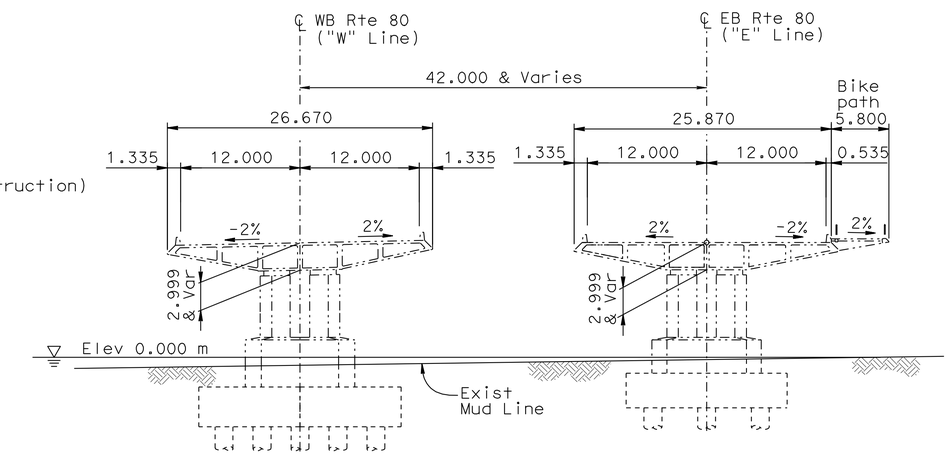

TYPICAL SECTION
(Shown Near Pier 18 L & R)
1:300

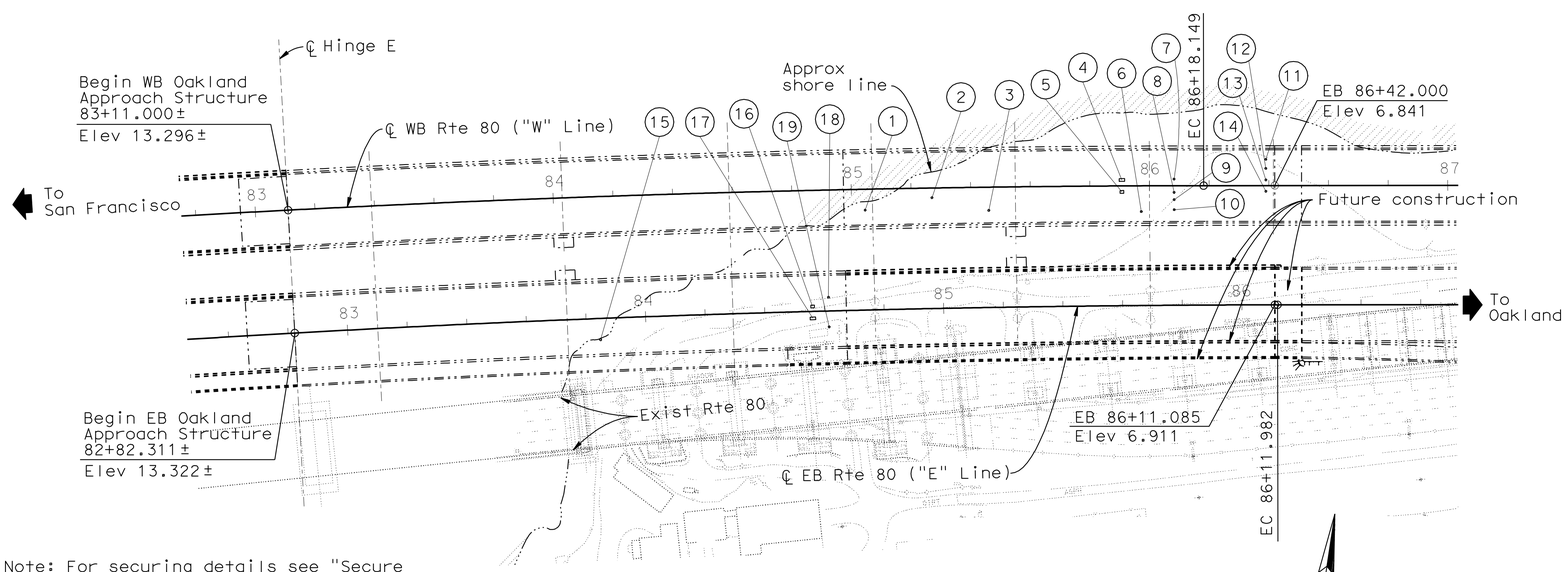

Note: For securing details see "Secure Soffit Access Openings No.2" sheet.

PLAN OF ACCESS OPENINGS TO BE SECURED
(See table for locations)
1:1000

SOFFIT ACCESS OPENINGS TO BE SECURED

ID#	Station	Size	ID#	Station	Size
1	85+04.50±	600 dia	11	86+39.00±	600 dia
2	85+27.00±	600 dia	12	86+39.00±	600 dia
3	85+46.00±	600 dia	13	86+39.00±	600 dia
4	85+90.75±	1830 x 900	14	86+39.00±	600 dia
5	85+90.75±	1200 x 900	15	83+84.60±	600 dia
6	85+97.20±	600 dia	16	84+56.00±	1200 x 900
7	86+08.25±	600 dia	17	84+56.00±	1830 x 900
8	86+08.25±	600 dia	18	84+61.50±	600 dia
9	86+08.25±	600 dia	19	84+61.50±	600 dia
10	86+08.25±	600 dia			

Stations shown are approximate

ALL DIMENSIONS ARE IN MILLIMETERS UNLESS OTHERWISE SHOWN

SAN FRANCISCO OAKLAND BAY BRIDGE
EAST SPAN SEISMIC SAFETY PROJECT

OAKLAND APPROACH STRUCTURES-PHASE 1

SECURE EXISTING SOFFIT ACCESS OPENINGS NO.1

DESIGN OVERSIGHT
HASAN EL-NATUR
SIGN OFF DATE

	BY	CHECKED
DESIGN	Birdy	Ely
DETAILS	Samson	Ely
QUANTITIES	Birdy	Ely

PREPARED FOR THE STATE OF CALIFORNIA DEPARTMENT OF TRANSPORTATION

Jal Birdy
PROJECT ENGINEER

BRIDGE NO. 34-0006 L/R
KILOMETER POST 1.6 / 2.7

Rev. Date: 5-18-98

ORIGINAL SCALE IN MILLIMETERS FOR REDUCED PLANS 0 10 20 30 40 50 60 70 80 90 100

CU 04
EA 0120M1

DISREGARD PRINTS BEARING EARLIER REVISION DATES

REVISION DATES (PRELIMINARY STAGE ONLY)

SHEET 91A OF 109

FILE => 04-0120m1-34-0006r1-y-aodt01.dgn

SUBMITTAL - 12 June 3, 2011

USERNAME => s121614 DATE PLOTTED => 05-OCT-2011 TIME PLOTTED => 14:09

DIST.	COUNTY	ROUTE	KILOMETER POST TOTAL PROJECT	SHEET NO.	TOTAL SHEETS
04	Ala	80	1.6/2.7	665	744

Caltrans Metric

REGISTERED ENGINEER - CIVIL

10-3-11

PLANS APPROVAL DATE

REGISTERED PROFESSIONAL ENGINEER A.L. ELY No. 18880 Exp. 6-30-11 CIVIL STATE OF CALIFORNIA

The State of California or its officers or agents shall not be responsible for the accuracy or completeness of electronic copies of this plan sheet.

T.Y. LIN / MOFFATT & NICHOL
TWO HARRISON STREET, SUITE 500
SAN FRANCISCO, CA 94105

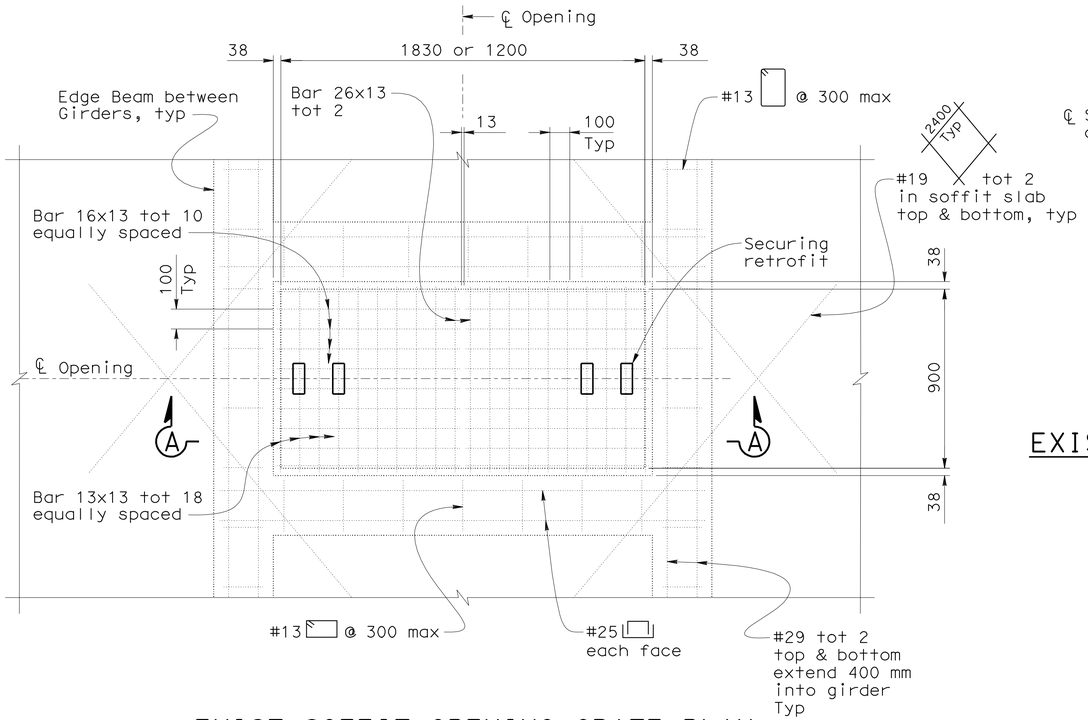

EXIST SOFFIT OPENING GRATE PLAN
1:15

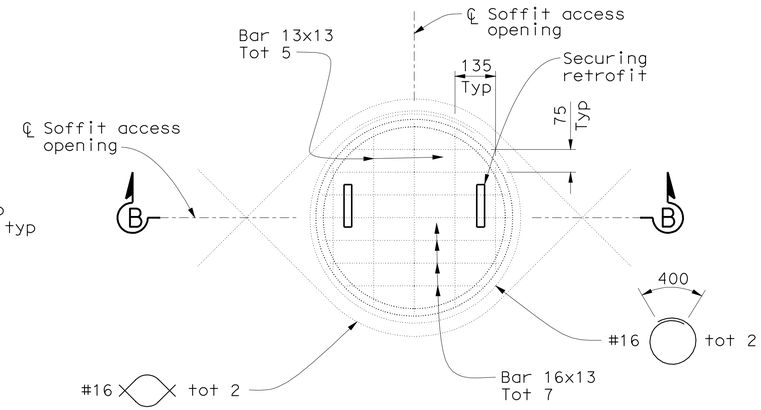

EXIST GRATED SOFFIT ACCESS OPENING (600 MM DIA)
1:10

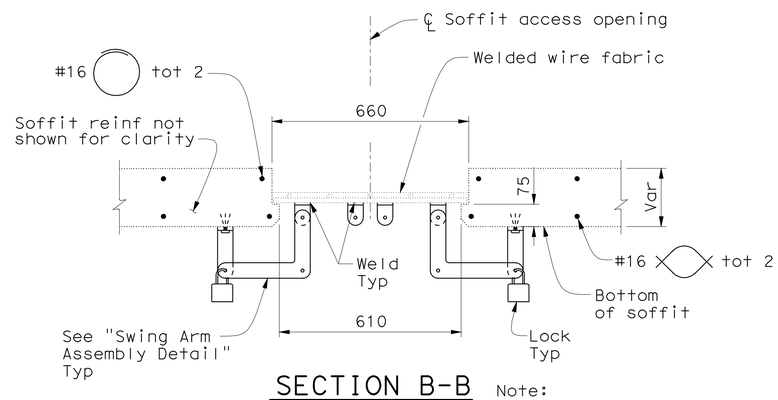

SECTION B-B
1:10

Note:
Swing Arm assembly to be placed along ℄ Opening.

NOTES:

1. Existing soffit access openings and grates are galvanized. Repair galvanizing after securing retrofit.
2. Clear cover to exist reinforcement is 25 mm±.
3. For locations of soffit access openings, see "Secure Soffit Access Openings No.1" sheet.
4. Exist structure and hardware is shown screened. Securing retrofit shown in bold.

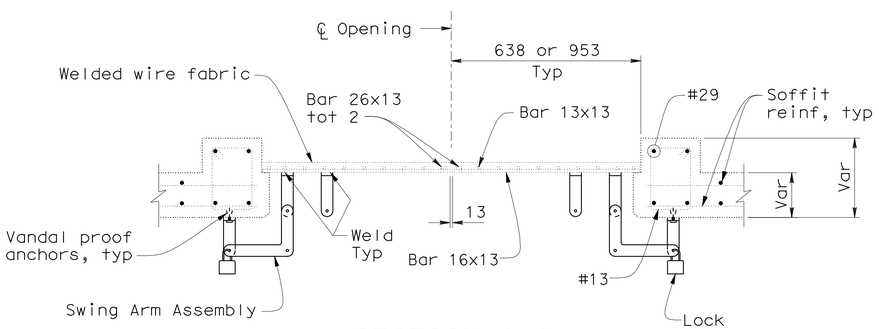

SECTION A-A
No Scale

Note:
Swing Arm assembly to be placed approximately along ℄ Opening.

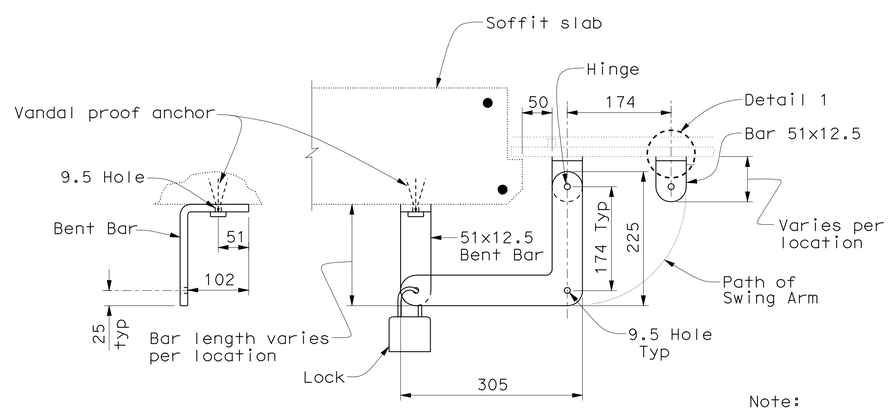

SWING ARM ASSEMBLY DETAIL
No Scale

Note:
All "swing arm" bars are 12.5 mm thick

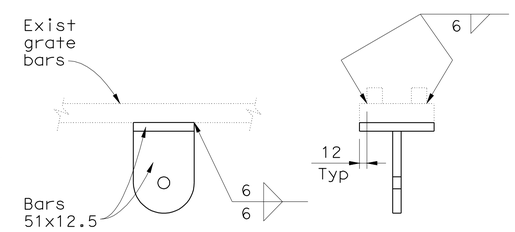

DETAIL 1
No Scale

ALL DIMENSIONS ARE IN MILLIMETERS UNLESS OTHERWISE SHOWN

SAN FRANCISCO OAKLAND BAY BRIDGE
EAST SPAN SEISMIC SAFETY PROJECT

OAKLAND APPROACH STRUCTURES-PHASE 1

SECURE EXISTING SOFFIT ACCESS OPENINGS NO.2

DESIGN OVERSIGHT	DESIGN BY Birdy	CHECKED Ely	PREPARED FOR THE STATE OF CALIFORNIA DEPARTMENT OF TRANSPORTATION
HASAN EL-NATUR	DETAILS BY Samson	CHECKED Ely	Jal Birdy, PROJECT ENGINEER
SIGN OFF DATE	QUANTITIES BY Birdy	CHECKED Ely	

BRIDGE NO. 34-0006 L/R
KILOMETER POST 1.6 / 2.7

Rev. Date: 5-18-98

ORIGINAL SCALE IN MILLIMETERS FOR REDUCED PLANS 0 10 20 30 40 50 60 70 80 90 100

CU 04
EA 0120M1

DISREGARD PRINTS BEARING EARLIER REVISION DATES

REVISION DATES (PRELIMINARY STAGE ONLY)

SHEET 91B OF 109

FILE => 04-0120m1-34-0006r1-y-aodt02.dgn

SUBMITTAL - 12 June 3, 2011

USERNAME => s8121614 DATE PLOTTED => 05-OCT-2011 TIME PLOTTED => 14:10

TO ACCOMPANY PLANS DATED 10-3-11

DIVISION OF ENGINEERING SERVICES - OFFICE OF GEOTECHNICAL SERVICES

As-Built Log of Test Borings sheet is considered an informational document only. As such, the State of California registration seal with signature, license number and registration certificate expiration date confirm that this is a true and accurate copy of the original document. It does not attest to the accuracy or validity of the information contained in the original document. This drawing is available and presented only for the convenience of any bidder, contractor or other interested party.

DIST.	COUNTY	ROUTE	KILOMETER POST - TOTAL PROJECT	Sheet No.	Total Sheets
04	Ala	80	1.6/2.7	666	744

REGISTERED ENGINEER - CIVIL

REGISTERED PROFESSIONAL ENGINEER MIKE KAPUSKAR NO. GE 2364 EXP. 12-31-10 GEOTECHNICAL STATE OF CALIFORNIA

DIST.	COUNTY	ROUTE	POST MILES TOTAL PROJECT	SHEET NO.	TOTAL SHEETS
04	Ala	80			

CERTIFIED ENGINEERING GEOLOGIST

REGISTERED GEOLOGIST J.K. BOWMAN No 1677 Exp 6-30-94 CERTIFIED ENGINEERING GEOLOGIST STATE OF CALIFORNIA

PLANS APPROVAL DATE

OAKLAND APPROACH STRUCTURES - PHASE 2

AS-BUILT LOG OF TEST BORINGS NO. 1

NOTE: A COPY OF THIS LOG OF TEST BORINGS IS AVAILABLE AT OFFICE OF STRUCTURE MAINTENANCE AND INVESTIGATIONS, SACRAMENTO, CALIFORNIA

CU: 04
EA: 0120M1

Bridge No. 34-0006R

Revisions made to this Log of Test Borings from the original 1994 Log of Test Borings are the addition of the following note:

Note:
1. Elevations shown on these plans are in feet and referred to Mean Lower Low Water (MLLW) Datum. MLLW Datum is 3.09 feet (0.942 m ±) lower than Mean Sea Level (MSL) Datum of 1929.

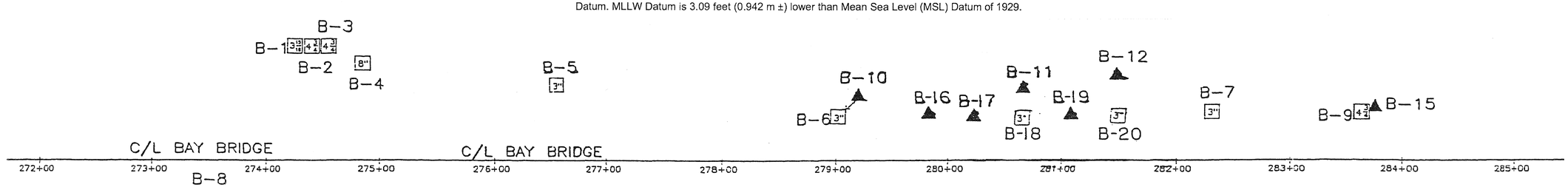

PLAN
1" = 50'

BENCH MARK

BM #50 Elev. 18.95
FD. COPPER NAIL ON N CURB OF LOWER DECK AT BENT 27 MARKED WITH ELEVATION 18.95'

TBM3 Elev. 8.95
SET AERIAL SURVEY TARGET #3 IN C/L OF N. FRONTAGE ROAD BETWEEN BENTS 27 AND 26.

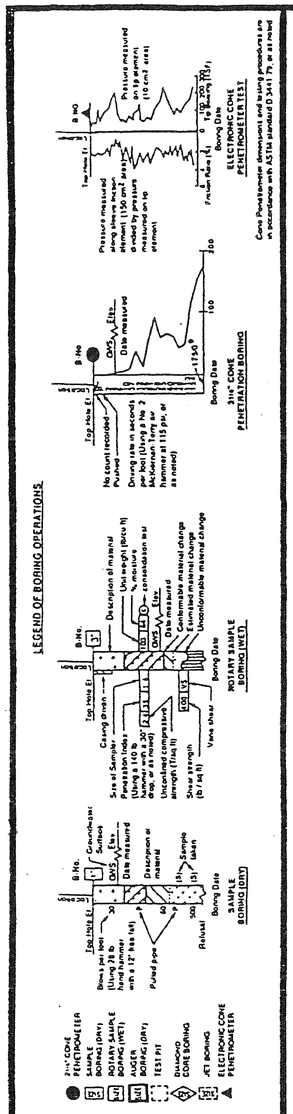

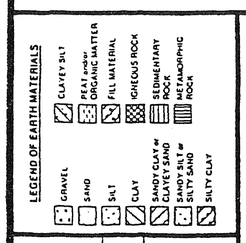

CONSISTENCY CLASSIFICATION FOR SOILS

According to the Standard Penetration Test

Penetration Index (Blows / Ft)	Granular	Cohesive
0-4	Very loose	Very soft
5-9	Loose	Soft
10-19	Slightly compact	Stiff
20-34	Compact	Very stiff
35-50	Dense	Hard
>50	Very dense	Very hard

NOTE Classification of earth material as shown on this sheet is based upon hand inspection and is not to be construed to imply mechanical analysis.

DIVISION OF NEW TECHNOLOGY, MATERIALS AND RESEARCH	OFFICE OF ENGINEERING GEOLOGY	FIELD INVESTIGATION BY:	State of CALIFORNIA DEPARTMENT OF TRANSPORTATION	DIVISION OF STRUCTURES STRUCTURE DESIGN	BRIDGE NO. 33-25	SFOBB-BENT E23 TO E39 RETROFIT
DRAWN BY I. GAMARRA 7/93		J. BOWMAN			POST MILE 1.0/1.3	LOG OF TEST BORINGS 1 OF 18
CHECKED BY						

ORIGINAL SCALE IN INCHES FOR REDUCED PLANS 0 1 2 3

CU 04
EA 04340K

DISREGARD PRINTS BEARING EARLIER REVISION DATES

REVISION DATES (PRELIMINARY STAGE ONLY) 9-3-93 4-17-94

SHEET CU

04-0120m1-34-0006r-z-1tb092.tif

TO ACCOMPANY PLANS DATED 10-3-11

DIST	COUNTY	ROUTE	POST MILES TOTAL PROJECT	SHEET NO.	TOTAL SHEETS
04	Ala	80			

CERTIFIED ENGINEERING GEOLOGIST

REGISTERED GEOLOGIST — J.K. BOWMAN — No. 1677 — Exp. 6-30-94 — CERTIFIED ENGINEERING GEOLOGIST — STATE OF CALIFORNIA

PLANS APPROVAL DATE

DIVISION OF ENGINEERING SERVICES - OFFICE OF GEOTECHNICAL SERVICES

As-Built Log of Test Borings sheet is considered an informational document only. As such, the State of California registration seal with signature, license number and registration certificate expiration date confirm that this is a true and accurate copy of the original document. It does not attest to the accuracy or validity of the information contained in the original document. This drawing is available and presented only for the convenience of any bidder, contractor or other interested party.

DIST.	COUNTY	ROUTE	KILOMETER POST - TOTAL PROJECT	Sheet No.	Total Sheets
04	Ala	80	1.6/2.7	667	744

REGISTERED ENGINEER - CIVIL

REGISTERED PROFESSIONAL ENGINEER — MIKE KAPUSKAR — NO. GE 2364 — EXP. 12-31-10 — GEOTECHNICAL — STATE OF CALIFORNIA

OAKLAND APPROACH STRUCTURES - PHASE 2

AS-BUILT LOG OF TEST BORINGS NO. 2

NOTE: A COPY OF THIS LOG OF TEST BORINGS IS AVAILABLE AT OFFICE OF STRUCTURE MAINTENANCE AND INVESTIGATIONS, SACRAMENTO, CALIFORNIA

CU: 04 EA: 0120M1

Bridge No. 34-0006R

Revisions made to this Log of Test Borings from the original 1994 Log of Test Borings are the addition of the following notes:

Notes:
1. Refer to AS-BUILT LOG OF TEST BORINGS NO. 1 for borehole locations and elevation datum.
2. Stations, dimensions and elevations shown on this plan are in English units.

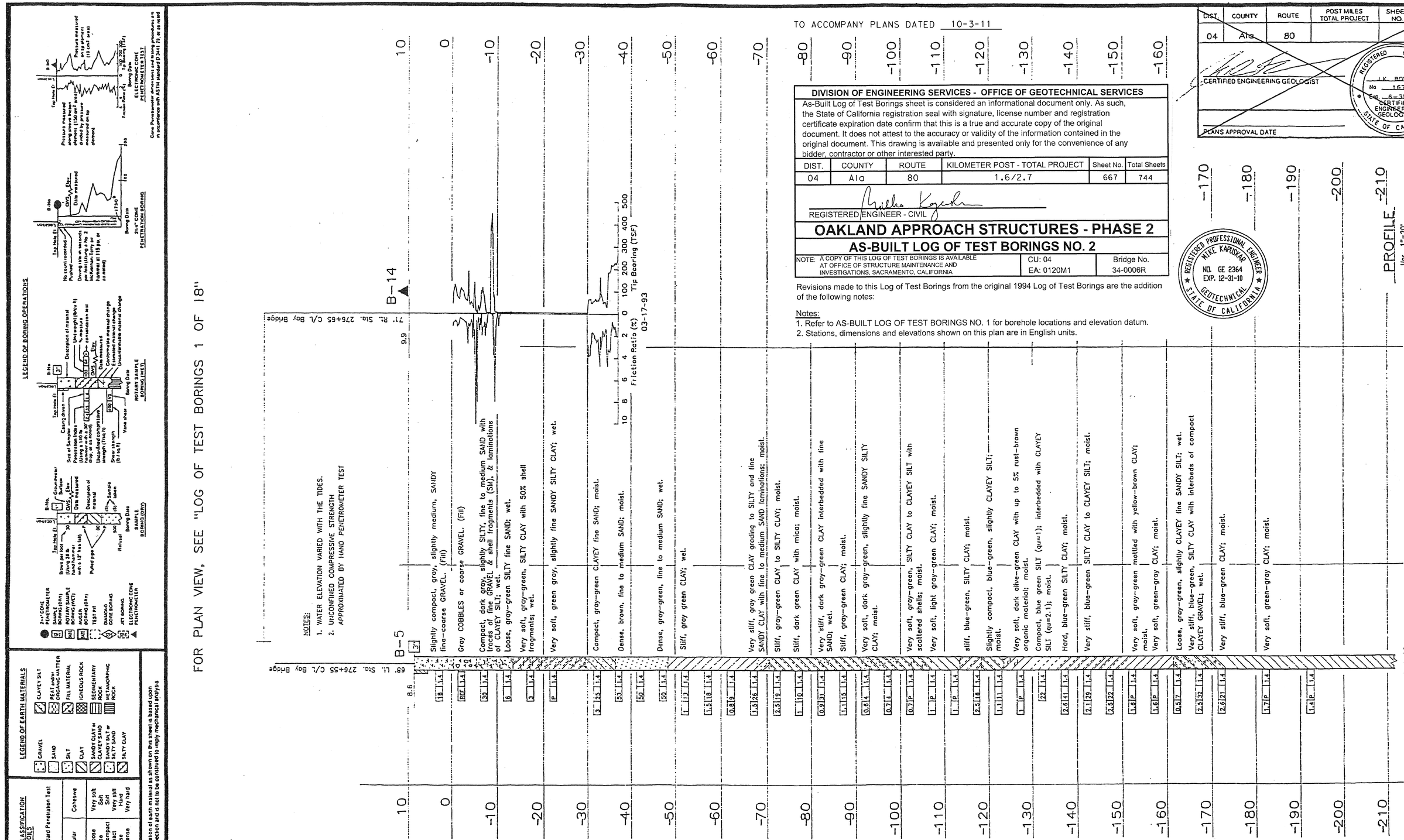

DIVISION OF NEW TECHNOLOGY, MATERIALS AND RESEARCH	OFFICE OF ENGINEERING GEOLOGY	FIELD INVESTIGATION BY:	State of CALIFORNIA DEPARTMENT OF TRANSPORTATION	DIVISION OF STRUCTURES STRUCTURE DESIGN	BRIDGE NO. 33-25	SFOBB-BENT E23 TO E39 RETROFIT
DRAWN BY IRMA GAMARRA 7/93		J. BOWMAN			POST MILE 1.0/1.3	LOG OF TEST BORINGS 8 OF 18
CHECKED BY				CU 04 EA 04343K		

ORIGINAL SCALE IN INCHES FOR REDUCED PLANS 0 1 2 3

DISREGARD PRINTS BEARING EARLIER REVISION DATES

REVISION DATES (PRELIMINARY STAGE ONLY) 9-3-93 4-17-94 SHEET OF

FILENAME => 04-0120m1-34-0006r-z-ltb093.tif

DIST	COUNTY	ROUTE	POST MILES TOTAL PROJECT	SHEET NO.	TOTAL SHEETS
04	Ala	80			

CERTIFIED ENGINEERING GEOLOGIST

REGISTERED GEOLOGIST J.K. BOWMAN No. 1677 Exp. 6-30-94 CERTIFIED ENGINEERING GEOLOGIST STATE OF CALIFORNIA

PLANS APPROVAL DATE

TO ACCOMPANY PLANS DATED 10-3-11

DIVISION OF ENGINEERING SERVICES - OFFICE OF GEOTECHNICAL SERVICES

As-Built Log of Test Borings sheet is considered an informational document only. As such, the State of California registration seal with signature, license number and registration certificate expiration date confirm that this is a true and accurate copy of the original document. It does not attest to the accuracy or validity of the information contained in the original document. This drawing is available and presented only for the convenience of any bidder, contractor or other interested party.

DIST.	COUNTY	ROUTE	KILOMETER POST - TOTAL PROJECT	Sheet No.	Total Sheets
04	Ala	80	1.6/2.7	668	744

REGISTERED ENGINEER - CIVIL

REGISTERED PROFESSIONAL ENGINEER MIKE KAPUSKAR NO. GE 2364 EXP. 12-31-10 GEOTECHNICAL STATE OF CALIFORNIA

OAKLAND APPROACH STRUCTURES - PHASE 2

AS-BUILT LOG OF TEST BORINGS NO. 3

NOTE: A COPY OF THIS LOG OF TEST BORINGS IS AVAILABLE AT OFFICE OF STRUCTURE MAINTENANCE AND INVESTIGATIONS, SACRAMENTO, CALIFORNIA

CU: 04 EA: 0120M1 Bridge No. 34-0006R

Revisions made to this Log of Test Borings from the original 1994 Log of Test Borings are the addition of the following notes:

Notes:
1. Refer to AS-BUILT LOG OF TEST BORINGS NO. 1 for borehole locations and elevation datum.
2. Stations, dimensions and elevations shown on this plan are in English units.

NOTES:
1. WATER ELEVATION VARIED WITH THE TIDES.
2. UNCONFINED COMPRESSIVE STRENGTH APPROXIMATED BY HAND PENETROMETER TEST

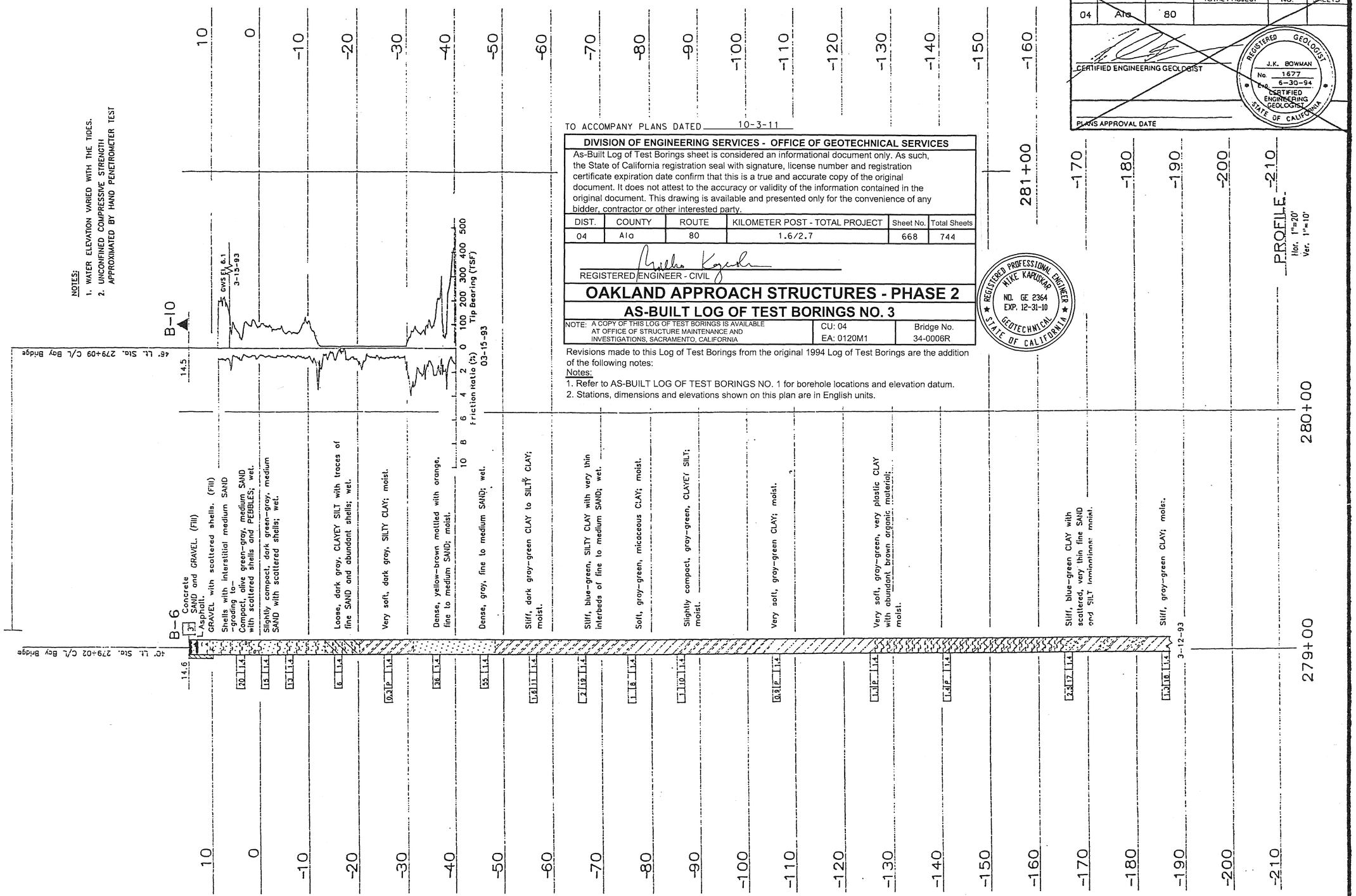

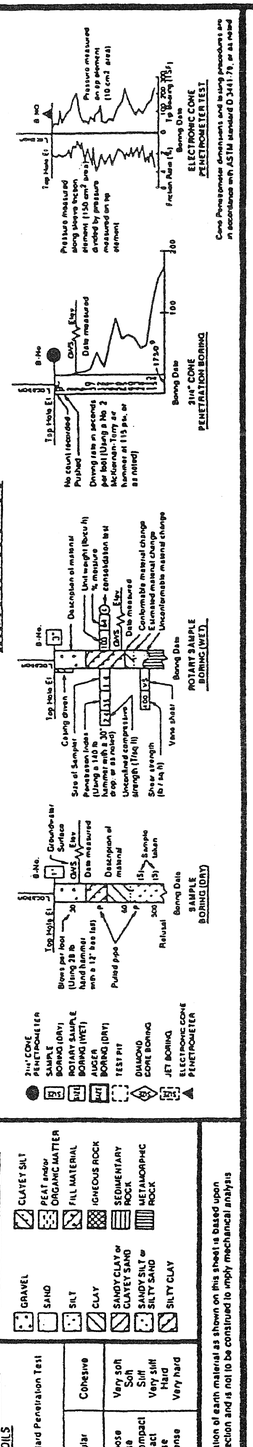

DIVISION OF NEW TECHNOLOGY, MATERIALS AND RESEARCH	OFFICE OF ENGINEERING GEOLOGY
DRAWN BY	IRMA GAMARRA 7/93
CHECKED BY	

FIELD INVESTIGATION BY: J. BOWMAN

State of CALIFORNIA DEPARTMENT OF TRANSPORTATION

DIVISION OF STRUCTURES STRUCTURE DESIGN

BRIDGE NO. 33-25 POST MILE 1.0/1.3

SFOBB—BENT E23 TO E39 RETROFIT

LOG OF TEST BORINGS 9 OF 18

ORIGINAL SCALE IN INCHES FOR REDUCED PLANS 0 1 2 3

CU 04 EA 0434 3K

DISREGARD PRINTS BEARING EARLIER REVISION DATES

REVISION DATES (PRELIMINARY STAGE ONLY) 9-23-93 4-17-94 SHEET

04-0120m1-34-0006r-z-1tb094.tif

TO ACCOMPANY PLANS DATED 10-3-11

DIVISION OF ENGINEERING SERVICES - OFFICE OF GEOTECHNICAL SERVICES

As-Built Log of Test Borings sheet is considered an informational document only. As such, the State of California registration seal with signature, license number and registration certificate expiration date confirm that this is a true and accurate copy of the original document. It does not attest to the accuracy or validity of the information contained in the original document. This drawing is available and presented only for the convenience of any bidder, contractor or other interested party.

DIST.	COUNTY	ROUTE	KILOMETER POST - TOTAL PROJECT	Sheet No.	Total Sheets
04	Ala	80	1.6/2.7	669	744

REGISTERED ENGINEER - CIVIL

REGISTERED PROFESSIONAL ENGINEER MIKE KAPUSKAR NO. GE 2364 EXP. 12-31-10 GEOTECHNICAL STATE OF CALIFORNIA

DIST	COUNTY	ROUTE	POST MILES TOTAL PROJECT	SHEET NO.	TOTAL SHEETS
04	Ala	80			

CERTIFIED ENGINEERING GEOLOGIST

REGISTERED GEOLOGIST J. K. BOWMAN No. 1677 Exp. 6-30-94 CERTIFIED ENGINEERING GEOLOGIST STATE OF CALIFORNIA

PLANS APPROVAL DATE

OAKLAND APPROACH STRUCTURES - PHASE 2

AS-BUILT LOG OF TEST BORINGS NO. 4

NOTE: A COPY OF THIS LOG OF TEST BORINGS IS AVAILABLE AT OFFICE OF STRUCTURE MAINTENANCE AND INVESTIGATIONS, SACRAMENTO, CALIFORNIA

CU: 04 EA: 0120M1 Bridge No. 34-0006R

Revisions made to this Log of Test Borings from the original 1994 Log of Test Borings are the addition of the following notes:

Notes:
1. Refer to AS-BUILT LOG OF TEST BORINGS NO. 1 for borehole locations and elevation datum.
2. Stations, dimensions and elevations shown on this plan are in English units.

FOR PLAN VIEW, SEE "LOG OF TEST BORINGS", SHEET 1 OF 18.

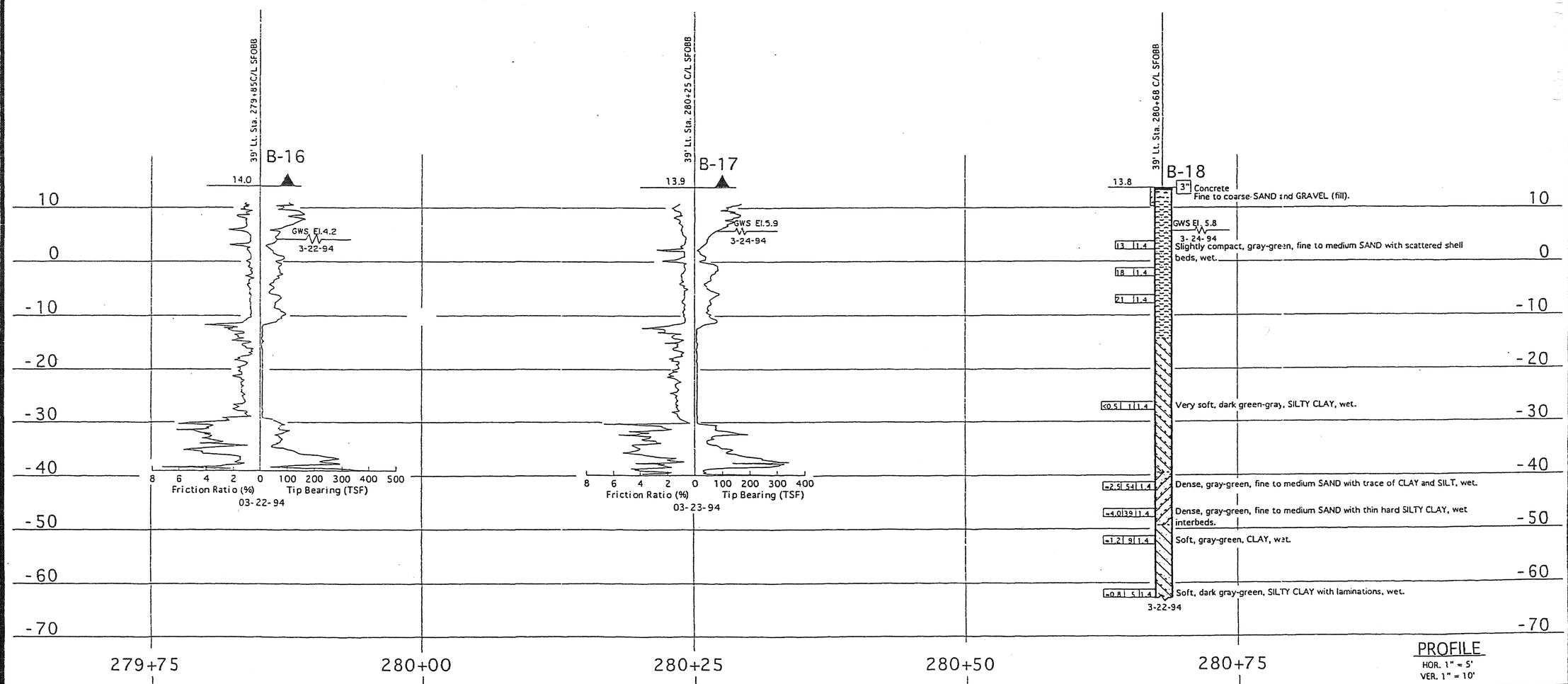

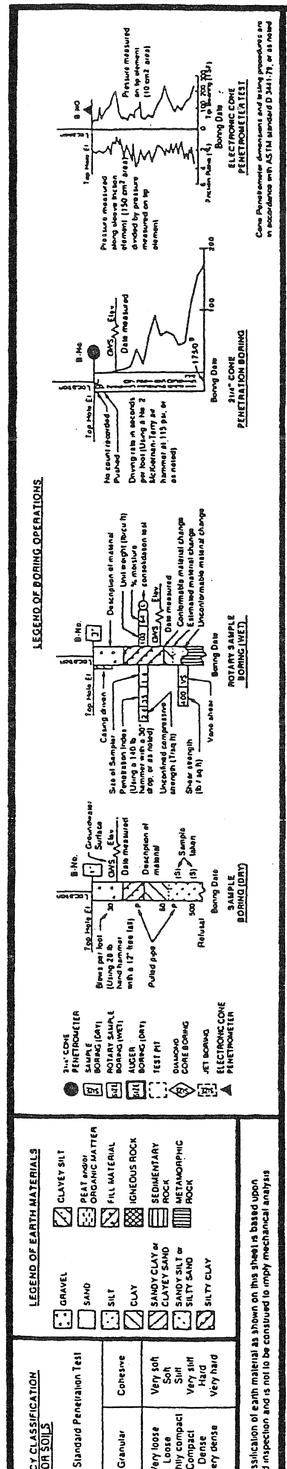

DIVISION OF NEW TECHNOLOGY, MATERIALS AND RESEARCH	OFFICE OF ENGINEERING GEOLOGY	FIELD INVESTIGATION BY:	State of CALIFORNIA DEPARTMENT OF TRANSPORTATION	DIVISION OF STRUCTURES STRUCTURE DESIGN	BRIDGE NO. 33-25	SFOBB - BENT E23 TO E39 RETROFIT
DRAWN BY Ken Wall 4/94		J. BOWMAN			POST MILE 1.0/1.3	LOG OF TEST BORINGS 10 OF 18.
CHECKED BY						

ORIGINAL SCALE IN INCHES FOR REDUCED PLANS 0 1 2 3

CU 04 EA 04343K

DISREGARD PRINTS BEARING EARLIER REVISION DATES

REVISION DATES (PRELIMINARY STAGE ONLY) SHEET OF

04-0120m1-34-0006r-z-1tb095.tif

DIST	COUNTY	ROUTE	POST MILES TOTAL PROJECT	SHEET NO	TOTAL SHEETS
04	Ala	80			

CERTIFIED ENGINEERING GEOLOGIST

REGISTERED GEOLOGIST — J.K. BOWMAN — No 1677 — Exp 6-30-94 — CERTIFIED ENGINEERING GEOLOGIST — STATE OF CALIFORNIA

PLANS APPROVAL DATE

LEGEND OF BORING OPERATIONS

LEGEND OF EARTH MATERIALS: GRAVEL; SAND; SILT; CLAY; SANDY CLAY or CLAYEY SAND; SANDY SILT or SILTY SAND; SILTY CLAY; CLAYEY SILT; PEAT and/or ORGANIC MATTER; FILL MATERIAL; IGNEOUS ROCK; SEDIMENTARY ROCK; METAMORPHIC ROCK

CONSISTENCY CLASSIFICATION FOR SOILS — According to the Standard Penetration Test

Penetration Index (Blows / Ft)	Granular	Cohesive
0-4	Very loose	Very soft
5-9	Loose	Soft
10-19	Slightly compact	Silt
20-34	Compact	Very stiff
35-69	Dense	Hard
>70	Very dense	Very hard

NOTE: Classification of earth material as shown on this sheet is based upon field inspection and is not to be construed to imply mechanical analysis.

FOR PLAN VIEW, SEE "LOG OF TEST BORINGS I OF 18"

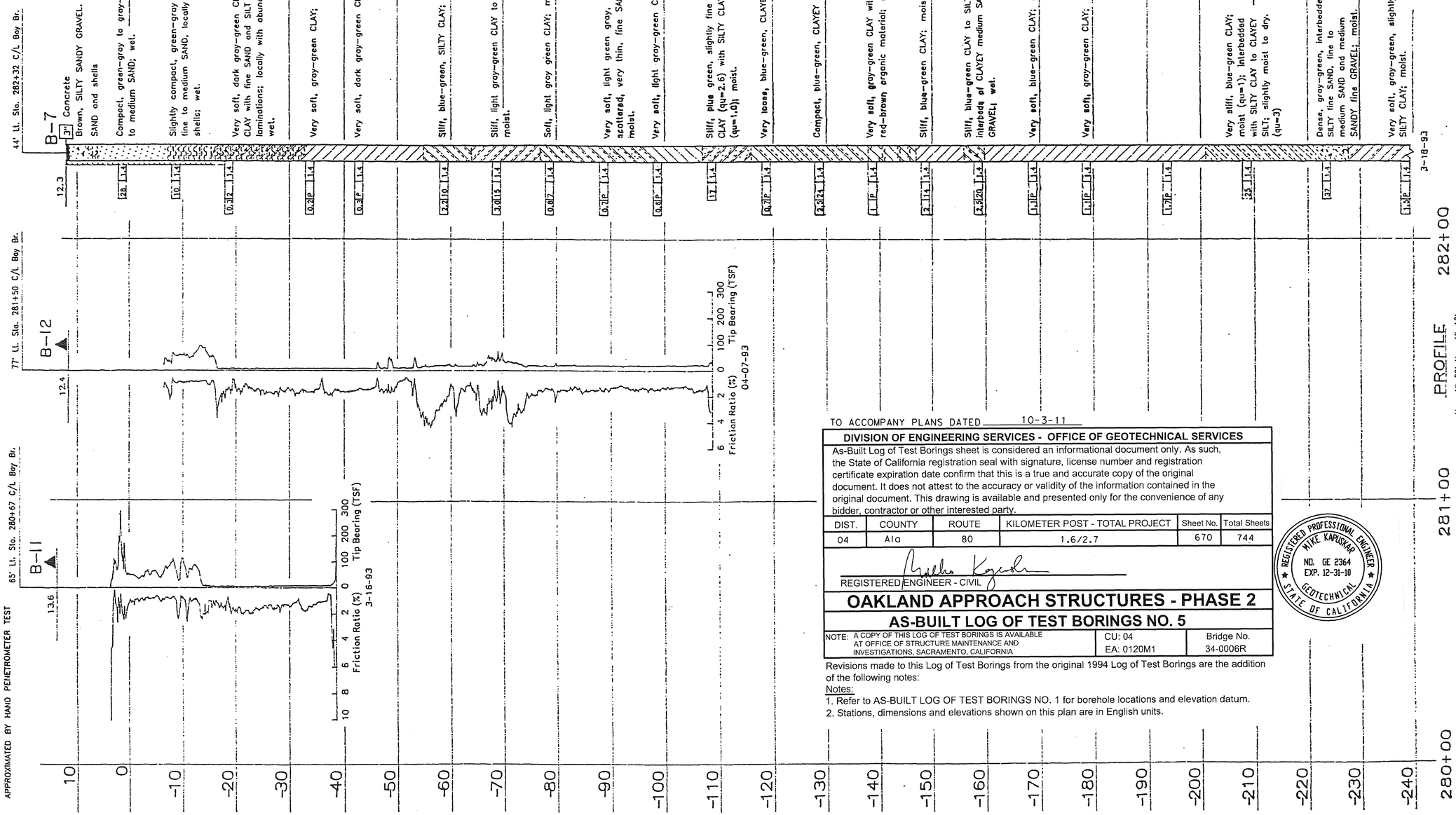

NOTES:
1. WATER ELEVATION VARIED WITH THE TIDES.
2. UNCONFINED COMPRESSIVE STRENGTH APPROXIMATED BY HAND PENETROMETER TEST

TO ACCOMPANY PLANS DATED 10-3-11

DIVISION OF ENGINEERING SERVICES - OFFICE OF GEOTECHNICAL SERVICES

As-Built Log of Test Borings sheet is considered an informational document only. As such, the State of California registration seal with signature, license number and registration certificate expiration date confirm that this is a true and accurate copy of the original document. It does not attest to the accuracy or validity of the information contained in the original document. This drawing is available and presented only for the convenience of any bidder, contractor or other interested party.

DIST.	COUNTY	ROUTE	KILOMETER POST - TOTAL PROJECT	Sheet No.	Total Sheets
04	Ala	80	1.6/2.7	670	744

REGISTERED ENGINEER - CIVIL

REGISTERED PROFESSIONAL ENGINEER — MIKE KARUSKAR — NO. GE 2364 — EXP. 12-31-10 — GEOTECHNICAL — STATE OF CALIFORNIA

OAKLAND APPROACH STRUCTURES - PHASE 2

AS-BUILT LOG OF TEST BORINGS NO. 5

NOTE: A COPY OF THIS LOG OF TEST BORINGS IS AVAILABLE AT OFFICE OF STRUCTURE MAINTENANCE AND INVESTIGATIONS, SACRAMENTO, CALIFORNIA

CU: 04	Bridge No.
EA: 0120M1	34-0006R

Revisions made to this Log of Test Borings from the original 1994 Log of Test Borings are the addition of the following notes:

Notes:
1. Refer to AS-BUILT LOG OF TEST BORINGS NO. 1 for borehole locations and elevation datum.
2. Stations, dimensions and elevations shown on this plan are in English units.

DIVISION OF NEW TECHNOLOGY, MATERIALS AND RESEARCH — OFFICE OF ENGINEERING GEOLOGY

DRAWN BY: IRMA GAMARRA 7/93

CHECKED BY:

FIELD INVESTIGATION BY: J. BOWMAN

State of CALIFORNIA DEPARTMENT OF TRANSPORTATION

DIVISION OF STRUCTURES — STRUCTURE DESIGN

BRIDGE NO. 33-25 — POST MILE 1.0/1.3

SFOBB-BENT E23 TO E39 RETROFIT

LOG OF TEST BORINGS II OF 18

ORIGINAL SCALE IN INCHES FOR REDUCED PLANS 0 1 2 3

CU 04 EA 04343K

DISREGARD PRINTS BEARING EARLIER REVISION DATES

REVISION DATES (PRELIMINARY STAGE ONLY) 9-2-93 4-17-94

SHEET CH

04-0120m1-34-0006r-z-1tb096.tif

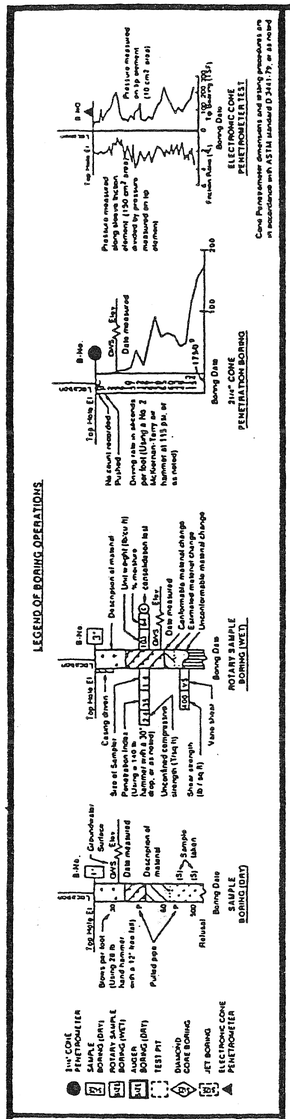

FOR PLAN VIEW, SEE "LOG OF TEST BORINGS", SHEET 1 OF 18.

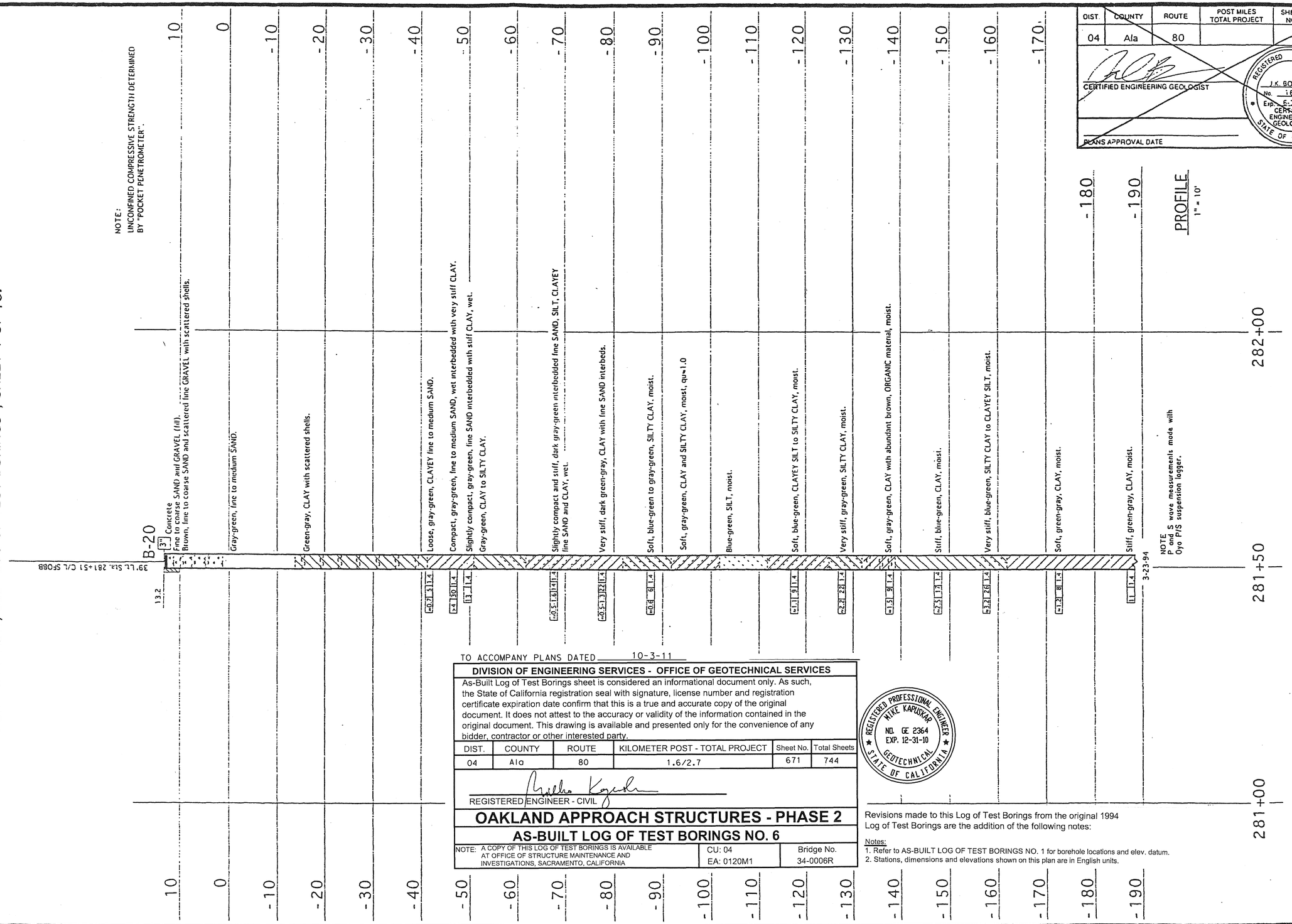

NOTE:
UNCONFINED COMPRESSIVE STRENGTH DETERMINED BY "POCKET PENETROMETER".

DIST.	COUNTY	ROUTE	POST MILES TOTAL PROJECT	SHEET NO	TOTAL SHEETS
04	Ala	80			

CERTIFIED ENGINEERING GEOLOGIST

REGISTERED GEOLOGIST J.K. BOWMAN No. 1677 Exp. 6-30-94 CERTIFIED ENGINEERING GEOLOGIST STATE OF CALIFORNIA

PLANS APPROVAL DATE

TO ACCOMPANY PLANS DATED 10-3-11

DIVISION OF ENGINEERING SERVICES - OFFICE OF GEOTECHNICAL SERVICES

As-Built Log of Test Borings sheet is considered an informational document only. As such, the State of California registration seal with signature, license number and registration certificate expiration date confirm that this is a true and accurate copy of the original document. It does not attest to the accuracy or validity of the information contained in the original document. This drawing is available and presented only for the convenience of any bidder, contractor or other interested party.

DIST.	COUNTY	ROUTE	KILOMETER POST - TOTAL PROJECT	Sheet No.	Total Sheets
04	Ala	80	1.6/2.7	671	744

REGISTERED ENGINEER - CIVIL

REGISTERED PROFESSIONAL ENGINEER MIKE KAPUSKAR NO. GE 2364 EXP. 12-31-10 GEOTECHNICAL STATE OF CALIFORNIA

OAKLAND APPROACH STRUCTURES - PHASE 2

AS-BUILT LOG OF TEST BORINGS NO. 6

NOTE: A COPY OF THIS LOG OF TEST BORINGS IS AVAILABLE AT OFFICE OF STRUCTURE MAINTENANCE AND INVESTIGATIONS, SACRAMENTO, CALIFORNIA

CU: 04	Bridge No.
EA: 0120M1	34-0006R

Revisions made to this Log of Test Borings from the original 1994 Log of Test Borings are the addition of the following notes:

Notes:
1. Refer to AS-BUILT LOG OF TEST BORINGS NO. 1 for borehole locations and elev. datum.
2. Stations, dimensions and elevations shown on this plan are in English units.

DIVISION OF NEW TECHNOLOGY, MATERIALS AND RESEARCH | OFFICE OF ENGINEERING GEOLOGY

DRAWN BY Ken Wall 4/94

CHECKED BY

FIELD INVESTIGATION BY: J. BOWMAN

State of CALIFORNIA DEPARTMENT OF TRANSPORTATION

DIVISION OF STRUCTURES STRUCTURE DESIGN

BRIDGE NO. 33.25

POST MILE 1.0/1.3

SFOBB - BENT E23 TO E39 RETROFIT

LOG OF TEST BORINGS 12 OF 18

ORIGINAL SCALE IN INCHES FOR REDUCED PLANS 0 1 2 3

CU 04 EA 04343K

DISREGARD PRINTS BEARING EARLIER REVISION DATES

REVISION DATES (PRELIMINARY STAGE ONLY)

04-0120m1-34-0006r-z-1tb097.tif

CONSISTENCY CLASSIFICATION FOR SOILS

According to the Standard Penetration Test

Penetration Index (Blows / Ft)	Granular	Cohesive
0-4	Very loose	Very soft
5-9	Loose	Soft
10-19	Slightly compact	Stiff
20-34	Compact	Very stiff
35-69	Dense	Hard
>70	Very dense	Very hard

LEGEND OF EARTH MATERIALS

GRAVEL; SAND; SILT; CLAY; SANDY CLAY or CLAYEY SAND; SANDY SILT or SILTY SAND; SILTY CLAY; CLAYEY SILT; PEAT and/or ORGANIC MATTER; FILL MATERIAL; IGNEOUS ROCK; SEDIMENTARY ROCK; METAMORPHIC ROCK

NOTE: Classification of earth material as shown on this sheet is based upon field inspection and is not to be construed to imply mechanical analysis.

LEGEND OF BORING OPERATIONS

2½" CONE PENETROMETER; SAMPLE BORING (DRY); ROTARY SAMPLE BORING (WET); AUGER BORING (DRY); TEST PIT; DIAMOND CORE BORING; JET BORING; ELECTRONIC CONE PENETROMETER

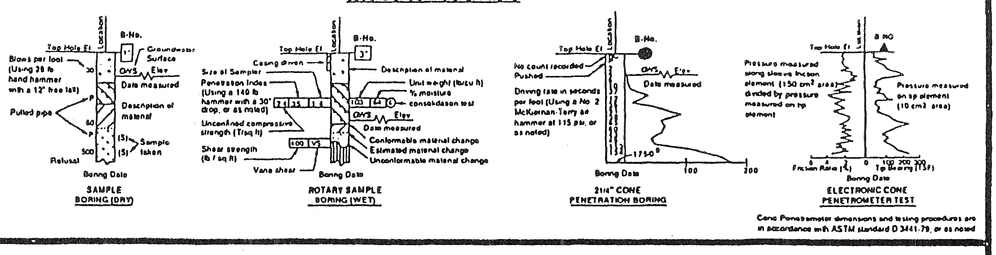

FOR PLAN VIEW, SEE "LOG OF TEST BORINGS 1 OF 18"

NOTES:

1. WATER ELEVATION VARIED WITH THE TIDES.
2. UNCONFINED COMPRESSIVE STRENGTH APPROXIMATED BY HAND PENETROMETER TEST
3. BORING REAMED OUT TO 10.5". 5" PVC CASING INSTALLED.

43' Lt. Sta. 283+64 ±, C/L Bay Bridge

B-9

14.6 | 4.2 Concrete

Elev.	Description
10	SAND, GRAVEL, COBBLES. (Fill)
	Light gray SILTY SAND with abundant shells.
0	Slightly compact, gray, medium to fine SAND; wet.
	Slightly compact, dark green-gray, medium SAND with up to 10% shells; wet.
-10	Compact, gray-green, fine to medium SAND with trace of shells; wet.
-20	Very soft, dark green-gray SILTY CLAY to CLAYEY SILT with scattered shells.
-30	Very soft, gray-green CLAY to SILTY CLAY; wet.
-40	Very soft, gray-green CLAY; wet.
-50	
-60	Interbedded very soft, gray-green CLAY and very loose gray-green, fine SAND; wet.
-70	Very stiff, blue green, SILTY CLAY; moist.
-80	Stiff, light gray-green, interbedded CLAY and SILTY CLAY with very thin fine SAND laminations; moist.
-90	Stiff, light gray-green CLAY; moist.
-100	
-110	Very stiff, gray-green to blue-green, SILTY CLAY to CLAY; moist.
-120	Stiff, blue green CLAY, locally with rust-brown organic material; moist.
-130	Stiff, blue-green CLAY; moist.
-140	Soft, gray-green CLAY with up to 5% fibrous organic material; moist.
-150	Hard, blue-green, fine SANDY SILTY CLAY; slightly moist.
	Medium SAND with trace of fine GRAVEL.
-160	Stiff, blue-green, slightly SILTY CLAY locally micaceous; moist.
-170	Soft, gray, slightly SILTY CLAY; moist.
-180	Stiff, gray CLAY; moist.
-190	Stiff, blue-gray CLAY; moist.
-200	
-210	
-220	GRAVELLY medium to coarse SAND.
-230	

Elev.	Description
-230	SANDY CLAYEY SILT
	Very stiff, gray, mottled white, SILTY CLAY; moist. qu=3.5 TSF
-240	Gray SILTY CLAY interbedded with brown SILTY CLAY with a trace of fibrous material.
-250	
-260	Gray SANDY SILTY CLAY.
	Hard, blue-gray, SILTY CLAY; moist. qu= 4.5 TSF
-270	Gray SANDY CLAY.
	SANDY SILT with abundant shells.
-280	SILTY SAND with traces of GRAVEL and shell fragments.
-290	Slightly CLAYEY SANDY SILT.
	Hard, gray, SILTY CLAY with traces of fine SAND; moist. qu=2.5 TSF
-300	SILTY coarse SAND with scattered fine GRAVEL.
	CLAYEY SILT.
-310	Medium to coarse SAND with scattered fine GRAVEL lenses.
-320	Olive green-brown, slightly SILTY CLAY; moist. qu=4 TSF
-330	
-340	
-350	Olive green, slightly fine SANDY CLAY.
-360	Olive green CLAY with fine GRAVEL and SAND interbeds.
-370	Olive green CLAY to fine SANDY CLAY.
-380	Orange-brown, SILTY CLAY with trace of fine SAND.
-390	
-400	Interbedded, orange-brown, SILTY CLAY grading to fine SANDY CLAY and CLAYEY fine to medium SAND.
-410	Orange-brown CLAY to fine SANDY CLAY grading to orange-brown CLAY.
-420	
-430	Orange-brown, SILTY CLAY grading to CLAYEY SILT with scattered SANDSTONE and SILTSTONE fragments.
-440	Orange-brown, CLAYEY fine SANDY SILT with abundant, highly weathered brown SANDSTONE and SILTSTONE fragments.
-450	
-460	

Elev.	Description
-460	Orange brown SANDSTONE and SILTSTONE; highly weathered and decomposed to CLAYEY SILT with rock fragments, becoming less weathered with depth.
-470	
-480	
-490	
-500	Dark gray SILTSTONE and SANDSTONE with thin slate beds.
-510	
-520	
-530	4-23-93

283+50 | 284+00

PROFILE

Hor. 1" = 20'
Ver. 1" = 10'

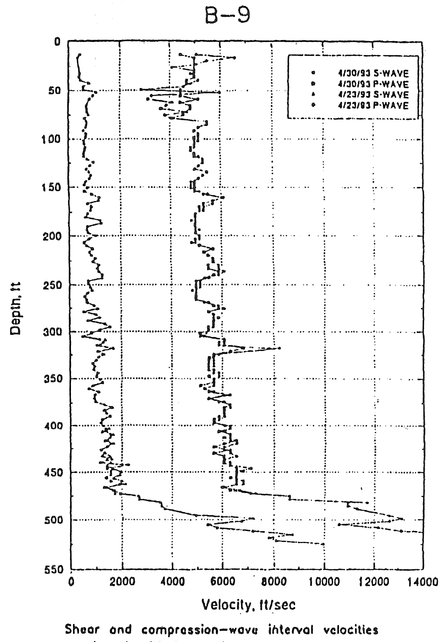

Shear and compression-wave interval velocities acquired by PS Suspension logger.

TO ACCOMPANY PLANS DATED 10-3-11

DIVISION OF ENGINEERING SERVICES - OFFICE OF GEOTECHNICAL SERVICES

As-Built Log of Test Borings sheet is considered an informational document only. As such, no statement of certification, registration, license number and registration certificate of certification are required. Information that is signature, license number and registration certificate of certification are required only on the original document. This drawing is available and presented only for the convenience of any bidder contractor or other interested party.

DIST	COUNTY	ROUTE	KILOMETER POST - TOTAL PROJECT	Sheet No.	Total Sheets
04	Ala	80	1.6/2.7	672	744

REGISTERED ENGINEER - CIVIL

OAKLAND APPROACH STRUCTURES - PHASE 2

AS-BUILT LOG OF TEST BORINGS NO. 7

NOTE: A COPY OF THE AS-BUILT TEST BORING STORE TABLE AT OFFICE OF STRUCTURE MAINTENANCE AND INVESTIGATIONS, SACRAMENTO, CALIFORNIA

Bridge No. 33-0F0001

Revisions: Replaced Log of Test Borings from the original 1994 Log of Test Borings are the addition of the following notes:

Notes:
1. Refer to AS-BUILT LOG OF TEST BORINGS NO. 1 for borehole locations and elevation datum.
2. Stations, dimensions and elevations shown on this plan are in English units.

REGISTERED PROFESSIONAL ENGINEER MIKE KARAPATAR NO. GE 2364 EXP. 12-31-10 GEOTECHNICAL STATE OF CALIFORNIA

BRIDGE APPROVAL DATE

CERTIFIED ENGINEERING GEOLOGIST

REGISTERED GEOLOGIST J.K. BOWMAN No. 1677 Exp. 6-30-94 CERTIFIED ENGINEERING GEOLOGIST STATE OF CALIFORNIA

Dist.	COUNTY	ROUTE	POST MILES TOTAL PROJECT	SHEET NO.	TOTAL SHEETS
04	Ala	80			

DIVISION OF NEW TECHNOLOGY, MATERIALS AND RESEARCH

DRAWN BY: IRMA GAMARRA 7/93

CHECKED BY:

OFFICE OF ENGINEERING GEOLOGY

FIELD INVESTIGATION BY: J. BOWMAN

ORIGINAL SCALE IN INCHES FOR REDUCED PLANS 0 1 2 3

State of CALIFORNIA DEPARTMENT OF TRANSPORTATION

DIVISION OF STRUCTURES STRUCTURE DESIGN

CU 04 EA 0K343K

BRIDGE NO. 33-25 POST MILE 1.0/1.3

DISREGARD PRINTS BEARING EARLIER REVISION DATES

REVISION DATES (PRELIMINARY STAGE ONLY)

SFOBB-BENT E23 TO E39 RETROFIT

LOG OF TEST BORINGS 13 OF 18

SHEET 01

04-0120m1-34-0006r-z-1tb098.tif

DIST.	COUNTY	ROUTE	POST MILES TOTAL PROJECT	SHEET NO	TOTAL SHEETS
04	Ala	80			

CERTIFIED ENGINEERING GEOLOGIST

REGISTERED GEOLOGIST J. K. BOWMAN No. 1677 Exp. 6-30-94 CERTIFIED ENGINEERING GEOLOGIST STATE OF CALIFORNIA

PLANS APPROVAL DATE

FOR PLAN VIEW, SEE "LOG OF TEST BORINGS", SHEET 1 OF 18.

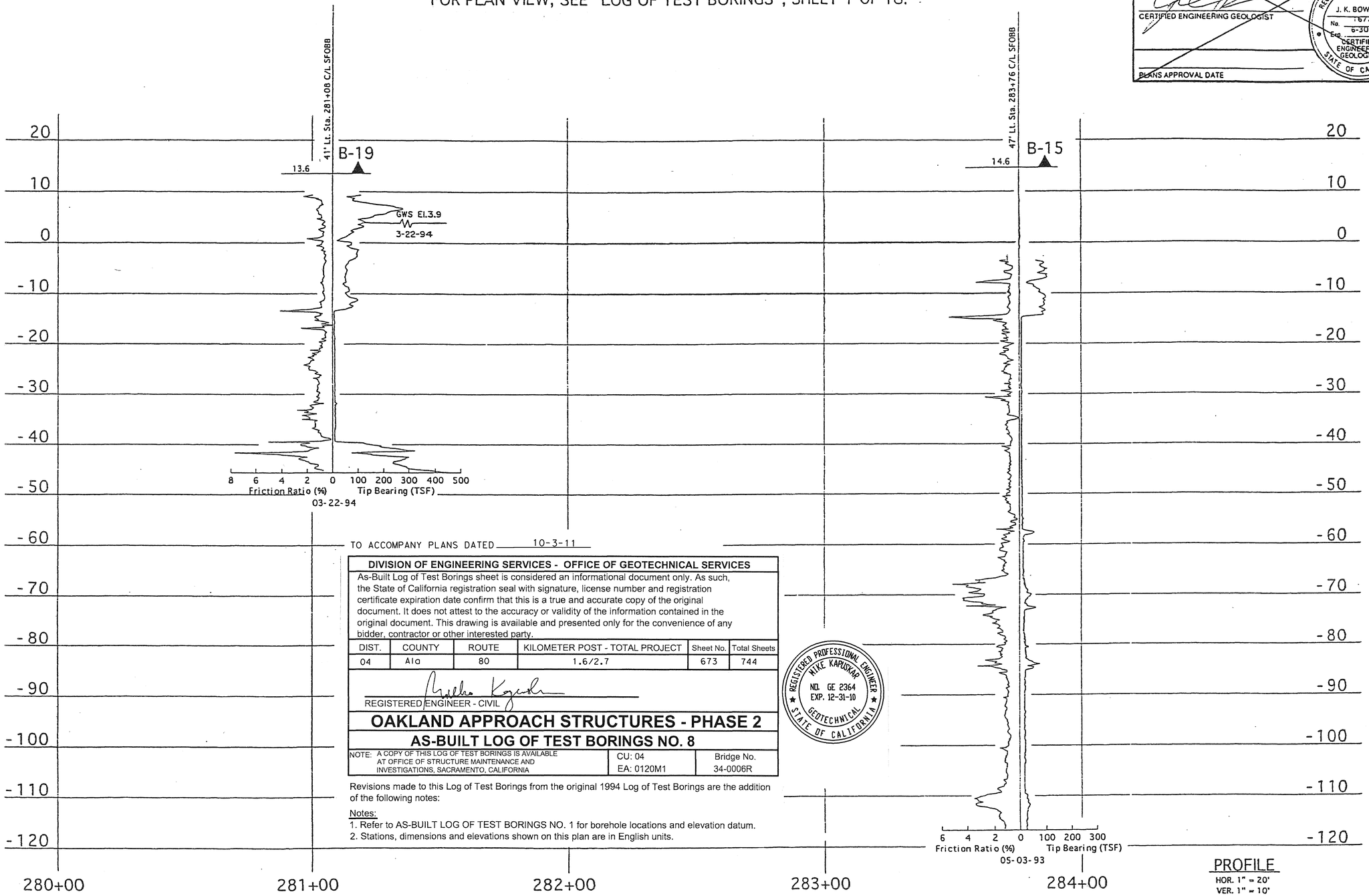

PROFILE
HOR. 1" = 20'
VER. 1" = 10'

TO ACCOMPANY PLANS DATED 10-3-11

DIVISION OF ENGINEERING SERVICES - OFFICE OF GEOTECHNICAL SERVICES

As-Built Log of Test Borings sheet is considered an informational document only. As such, the State of California registration seal with signature, license number and registration certificate expiration date confirm that this is a true and accurate copy of the original document. It does not attest to the accuracy or validity of the information contained in the original document. This drawing is available and presented only for the convenience of any bidder, contractor or other interested party.

DIST.	COUNTY	ROUTE	KILOMETER POST - TOTAL PROJECT	Sheet No.	Total Sheets
04	Ala	80	1.6/2.7	673	744

REGISTERED ENGINEER - CIVIL

REGISTERED PROFESSIONAL ENGINEER MIKE KAPUSKAR NO. GE 2364 EXP. 12-31-10 GEOTECHNICAL STATE OF CALIFORNIA

OAKLAND APPROACH STRUCTURES - PHASE 2

AS-BUILT LOG OF TEST BORINGS NO. 8

NOTE: A COPY OF THIS LOG OF TEST BORINGS IS AVAILABLE AT OFFICE OF STRUCTURE MAINTENANCE AND INVESTIGATIONS, SACRAMENTO, CALIFORNIA

CU: 04	Bridge No.
EA: 0120M1	34-0006R

Revisions made to this Log of Test Borings from the original 1994 Log of Test Borings are the addition of the following notes:

Notes:
1. Refer to AS-BUILT LOG OF TEST BORINGS NO. 1 for borehole locations and elevation datum.
2. Stations, dimensions and elevations shown on this plan are in English units.

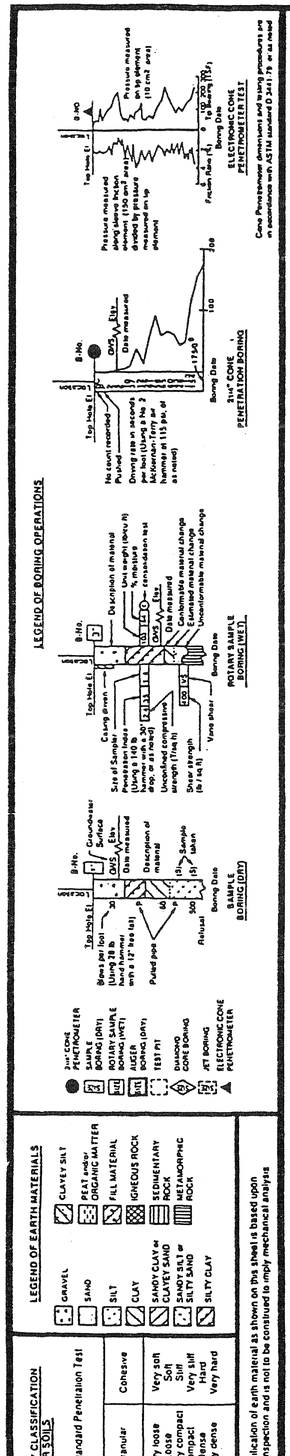

NOTE Classification of earth material as shown on this sheet is based upon field inspection and is not to be construed to imply mechanical analysis

DIVISION OF NEW TECHNOLOGY, MATERIALS AND RESEARCH	OFFICE OF ENGINEERING GEOLOGY	FIELD INVESTIGATION BY:	State of CALIFORNIA DEPARTMENT OF TRANSPORTATION	DIVISION OF STRUCTURES STRUCTURE DESIGN	BRIDGE NO. 33-25	SFOBB - BENT E23 TO E39 RETROFIT
DRAWN BY Ken Wall 4/94		J. BOWMAN			POST MILE 1.0/1.3	LOG OF TEST BORINGS 14 OF 18
CHECKED BY						

ORIGINAL SCALE IN INCHES FOR REDUCED PLANS 0 1 2 3

CU 04
EA 04343K

DISREGARD PRINTS BEARING EARLIER REVISION DATES

REVISION DATES (PRELIMINARY STAGE ONLY) SHEET OF

04-0120m1-34-0006r-z-1tb099.tif

TO ACCOMPANY PLANS DATED 10-3-11

DIVISION OF ENGINEERING SERVICES - OFFICE OF GEOTECHNICAL SERVICES

As-Built Log of Test Borings sheet is considered an informational document only. As such, the State of California registration seal with signature, license number and registration certificate expiration date confirm that this is a true and accurate copy of the original document. It does not attest to the accuracy or validity of the information contained in the original document. This drawing is available and presented only for the convenience of any bidder, contractor or other interested party.

DIST.	COUNTY	ROUTE	KILOMETER POST - TOTAL PROJECT	Sheet No.	Total Sheets
04	Ala	80	1.6/2.7	674	744

REGISTERED ENGINEER - CIVIL

REGISTERED PROFESSIONAL ENGINEER MIKE KAPUSKAR NO. GE 2364 EXP. 12-31-10 GEOTECHNICAL STATE OF CALIFORNIA

DIST.	COUNTY	ROUTE	POST MILES TOTAL PROJECT	SHEET NO	TOTAL SHEETS
04	Ala	80			

CERTIFIED ENGINEERING GEOLOGIST

REGISTERED GEOLOGIST J.K. BOWMAN No. 1677 Exp. 6-30-94 CERTIFIED ENGINEERING GEOLOGIST STATE OF CALIFORNIA

PLANS APPROVAL DATE

OAKLAND APPROACH STRUCTURES - PHASE 2

AS-BUILT LOG OF TEST BORINGS NO. 9

NOTE: A COPY OF THIS LOG OF TEST BORINGS IS AVAILABLE AT OFFICE OF STRUCTURE MAINTENANCE AND INVESTIGATIONS, SACRAMENTO, CALIFORNIA

CU: 04 EA: 0120M1

Bridge No. 34-0006R

Revisions made to this Log of Test Borings from the original 1994 Log of Test Borings are the addition of the following note:

Notes:

1. Refer to AS-BUILT LOG OF TEST BORINGS NO. 1 for borehole locations and elevation datum.
2. Stations, dimensions and elevations shown on this plan are in English units.

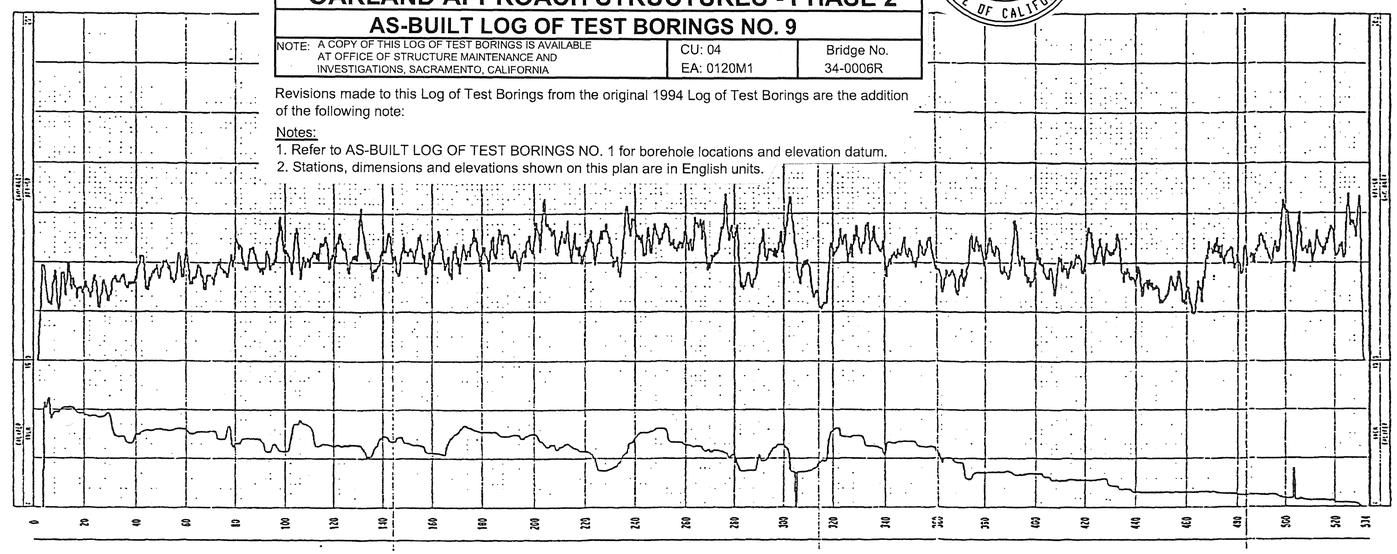

B-9

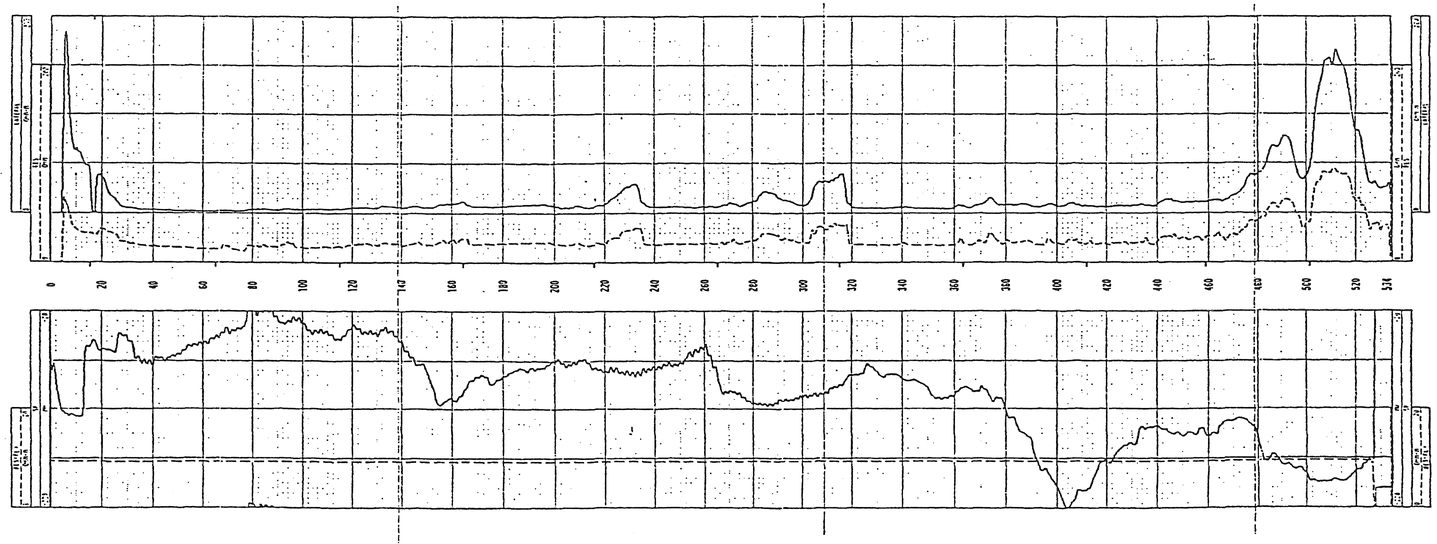

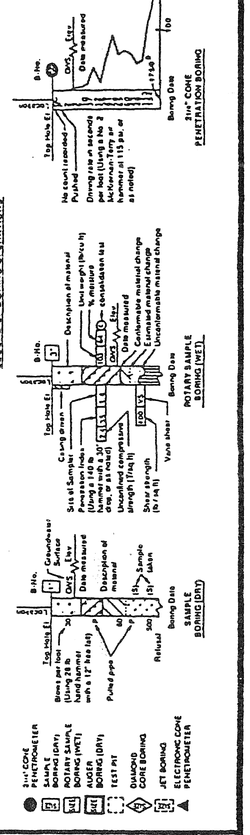

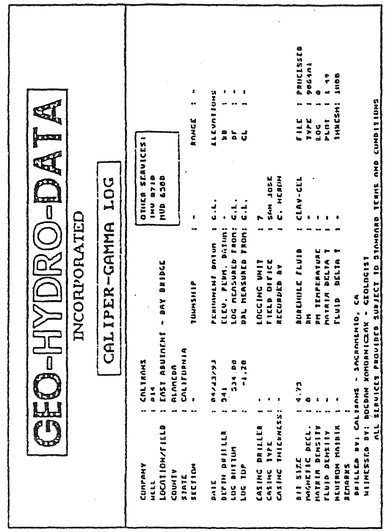

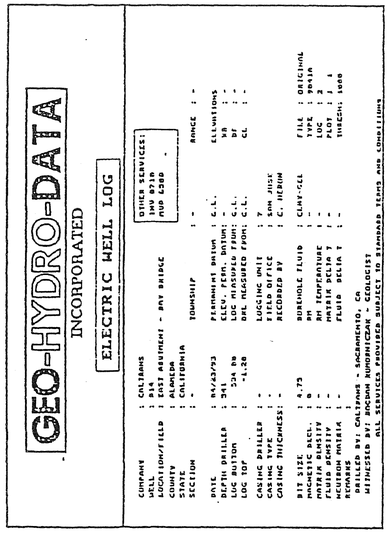

DIVISION OF NEW TECHNOLOGY, MATERIALS AND RESEARCH	OFFICE OF ENGINEERING GEOLOGY
DRAWN BY	7/93
CHECKED BY	

FIELD INVESTIGATION BY: J. BOWMAN

State of CALIFORNIA DEPARTMENT OF TRANSPORTATION

DIVISION OF STRUCTURES STRUCTURE DESIGN

CU 04 EA 04343K

BRIDGE NO. 33-25 POST MILE 1.0/1.3

SFOBB–BENT E23 TO E39 RETROFIT

LOG OF TEST BORINGS 15 OF 18

ORIGINAL SCALE IN INCHES FOR REDUCED PLANS 0 1 2 3

DISREGARD PRINTS BEARING EARLIER REVISION DATES

REVISION DATES (PRELIMINARY STAGE ONLY) 9-3-93 6-17-94 SHEET OF

04-0120m1-34-0006r-z-1tb100.tif

DIST.	COUNTY	ROUTE	POST MILES TOTAL PROJECT	SHEET NO.	TOTAL SHEETS
04	Ala	80			

CERTIFIED ENGINEERING GEOLOGIST

REGISTERED GEOLOGIST J.K. BOWMAN No. 1677 Exp. 6-30-94 CERTIFIED ENGINEERING GEOLOGIST STATE OF CALIFORNIA

PLANS APPROVAL DATE

INTERPRETED B-9 LOG
GAMMA RAY RESISTIVITY

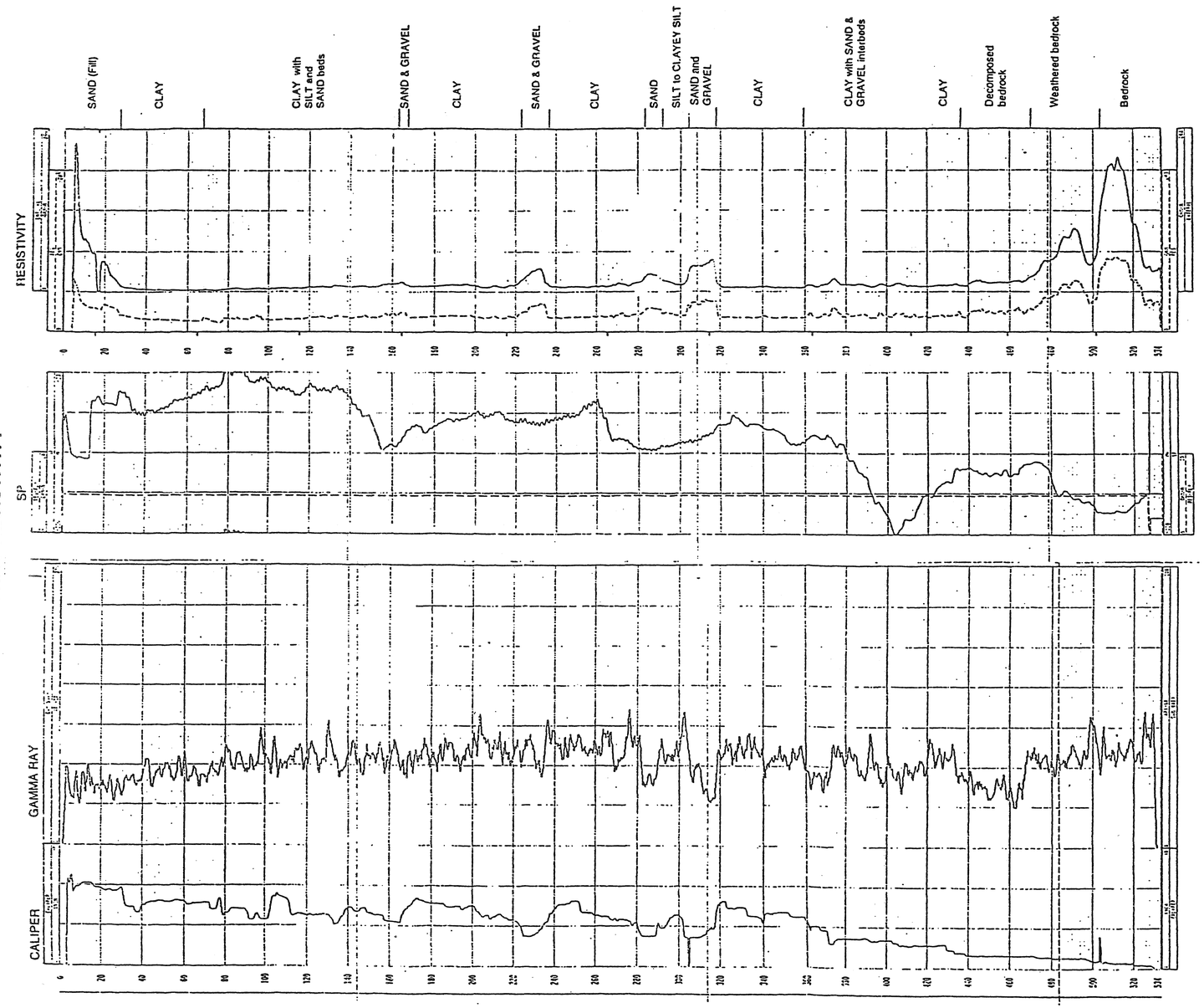

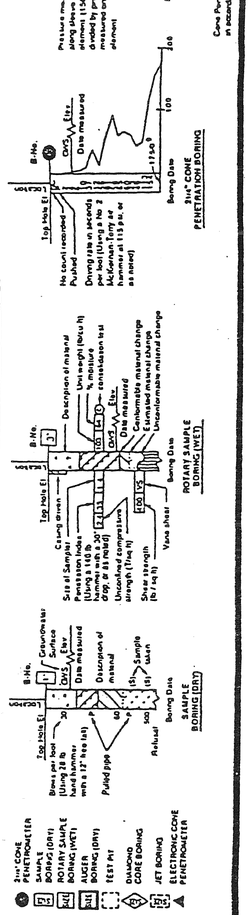

LEGEND OF EARTH MATERIALS

GRAVEL, SAND, SILT, CLAY, SANDY CLAY or CLAYEY SAND, SANDY SILT or SILTY SAND, SILTY CLAY, CLAYEY SILT, PEAT and/or ORGANIC MATTER, FILL MATERIAL, COHESIVE ROCK, SEDIMENTARY ROCK, METAMORPHIC ROCK

CONSISTENCY CLASSIFICATION FOR SOILS

According to the Standard Penetration Test

Penetration Index (Blows / Ft)	Granular	Cohesive
0-4	Very loose	Very soft
5-9	Loose	Soft
10-19	Slightly compact	Stiff
20-34	Compact	Very stiff
35-69	Dense	Hard
>70	Very dense	Very hard

NOTE: Classification of earth material as shown on this sheet is based upon field inspection and is not to be construed to imply mechanical analysis.

TO ACCOMPANY PLANS DATED 10-3-11

DIVISION OF ENGINEERING SERVICES - OFFICE OF GEOTECHNICAL SERVICES

As-Built Log of Test Borings sheet is considered an informational document only. As such, the State of California registration seal with signature, license number and registration certificate expiration date confirm that this is a true and accurate copy of the original document. It does not attest to the accuracy or validity of the information contained in the original document. This drawing is available and presented only for the convenience of any bidder, contractor or other interested party.

DIST.	COUNTY	ROUTE	KILOMETER POST - TOTAL PROJECT	Sheet No.	Total Sheets
04	Ala	80	1.6/2.7	675	744

REGISTERED ENGINEER - CIVIL

OAKLAND APPROACH STRUCTURES - PHASE 2
AS-BUILT LOG OF TEST BORINGS NO. 10

NOTE: A COPY OF THIS LOG OF TEST BORINGS IS AVAILABLE AT OFFICE OF STRUCTURE MAINTENANCE AND INVESTIGATIONS, SACRAMENTO, CALIFORNIA

CU: 04 EA: 0120M1 | Bridge No. 34-0006R

Revisions made to this Log of Test Borings from the original 1994 Log of Test Borings are the addition of the following notes:

Notes:
1. Refer to AS-BUILT LOG OF TEST BORINGS NO. 1 for borehole locations and elevation datum.
2. Stations, dimensions and elevations shown on this plan are in English units.

REGISTERED PROFESSIONAL ENGINEER MIKE KAPUSKAR NO. GE 2364 EXP. 12-31-10 GEOTECHNICAL STATE OF CALIFORNIA

DIVISION OF NEW TECHNOLOGY, MATERIALS AND RESEARCH | OFFICE OF ENGINEERING GEOLOGY

DRAWN BY 7/93

CHECKED BY

FIELD INVESTIGATION BY: J. BOWMAN

State of CALIFORNIA DEPARTMENT OF TRANSPORTATION

DIVISION OF STRUCTURES STRUCTURE DESIGN

BRIDGE NO. 33-25 | POST MILE 1.0/1.3

SFOBB-BENT E23 TO E39 RETROFIT

LOG OF TEST BORINGS 16 OF 18

ORIGINAL SCALE IN INCHES FOR REDUCED PLANS 0 1 2 3

CU 04 EA 04343K

DISREGARD PRINTS BEARING EARLIER REVISION DATES

REVISION DATES (PRELIMINARY STAGE ONLY) 9-3-93 4-17-94 SHEET OF

FILENAME => 04-0120m1-34-0006r-z-1tb101.tif

DIST	COUNTY	ROUTE	POST MILES TOTAL PROJECT	SHEET NO	TOTAL SHEETS
04	Ala	80			

CERTIFIED ENGINEERING GEOLOGIST

REGISTERED GEOLOGIST — J. BOWMAN — No. 1677 — Exp. 6-30-94 — CERTIFIED ENGINEERING GEOLOGIST — STATE OF CALIFORNIA

PLANS APPROVAL DATE

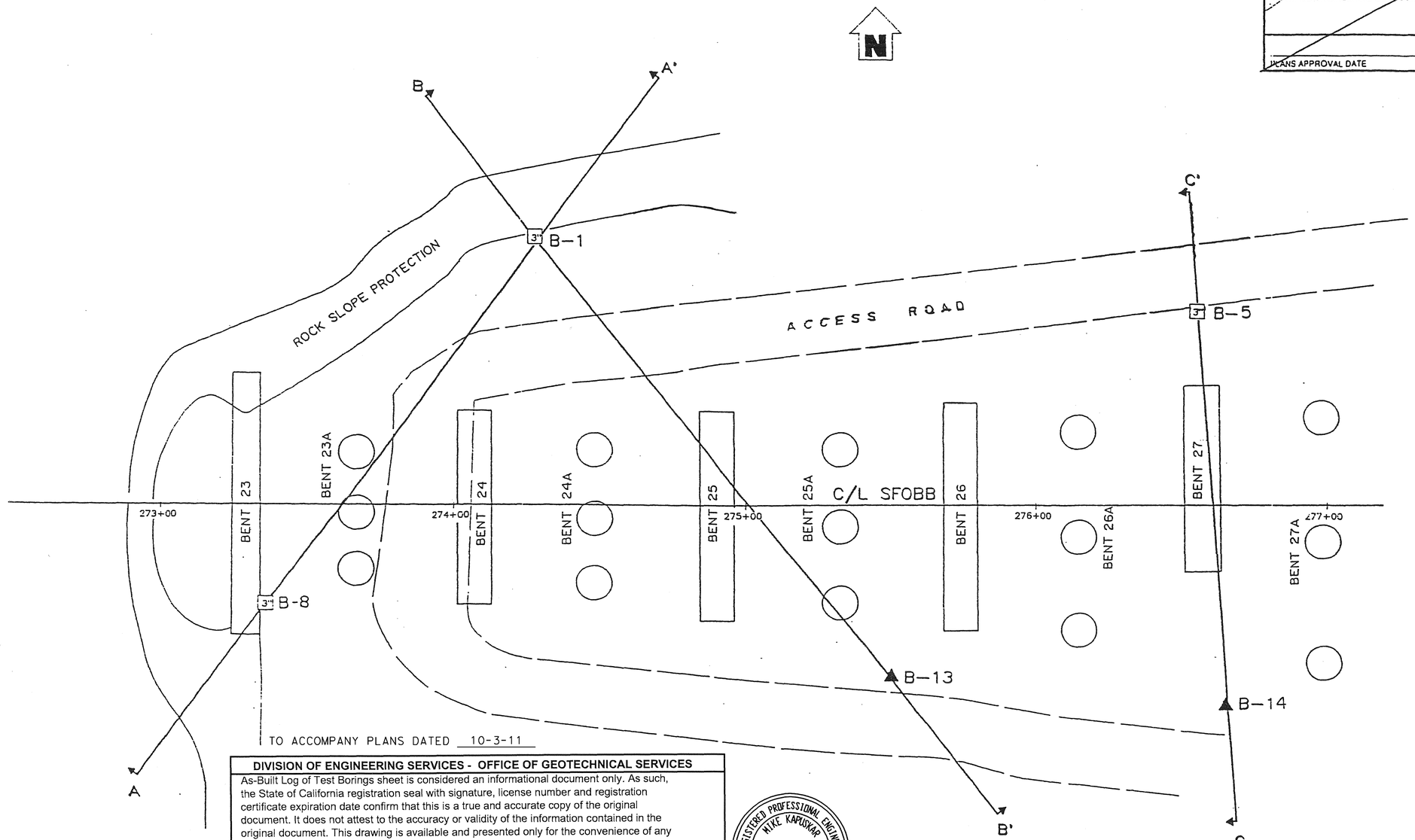

PLAN
1" = 20'

TO ACCOMPANY PLANS DATED 10-3-11

DIVISION OF ENGINEERING SERVICES - OFFICE OF GEOTECHNICAL SERVICES

As-Built Log of Test Borings sheet is considered an informational document only. As such, the State of California registration seal with signature, license number and registration certificate expiration date confirm that this is a true and accurate copy of the original document. It does not attest to the accuracy or validity of the information contained in the original document. This drawing is available and presented only for the convenience of any bidder, contractor or other interested party.

DIST.	COUNTY	ROUTE	KILOMETER POST - TOTAL PROJECT	Sheet No.	Total Sheets
04	Ala	80	1.6/2.7	676	744

REGISTERED ENGINEER - CIVIL

REGISTERED PROFESSIONAL ENGINEER — MIKE KAPUSKAR — NO. GE 2364 — EXP. 12-31-10 — GEOTECHNICAL — STATE OF CALIFORNIA

OAKLAND APPROACH STRUCTURES - PHASE 2

AS-BUILT LOG OF TEST BORINGS NO. 11

NOTE: A COPY OF THIS LOG OF TEST BORINGS IS AVAILABLE AT OFFICE OF STRUCTURE MAINTENANCE AND INVESTIGATIONS, SACRAMENTO, CALIFORNIA

CU: 04
EA: 0120M1

Bridge No. 34-0006R

Revisions made to this Log of Test Borings from the original 1994 Log of Test Borings are the addition of the following notes:

Notes:
1. Refer to AS-BUILT LOG OF TEST BORINGS NO. 1 for borehole locations and elevation datum.
2. Stations, dimensions and elevations shown on this plan are in English units.

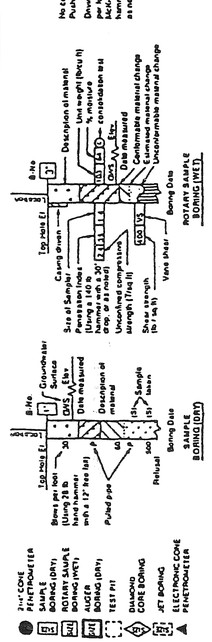

LEGEND OF EARTH MATERIALS

GRAVEL · SAND · SILT · CLAY · SANDY CLAY or CLAYEY SAND · SANDY SILT or SILTY SAND · SILTY CLAY · CLAYEY SILT · PEAT and ORGANIC MATTER · FILL MATERIAL · IGNEOUS ROCK · SEDIMENTARY ROCK · METAMORPHIC ROCK

CONSISTENCY CLASSIFICATION FOR SOILS

According to the Standard Penetration Test

Penetration Index (Blows/Ft)	Granular	Cohesive
0-4	Very loose	Very soft
5-9	Loose	Soft
10-19	Slightly compact	Stiff
20-34	Compact	Very stiff
35-69	Dense	Hard
>70	Very dense	Very hard

NOTE: Classification of earth material as shown on this sheet is based upon field inspection and is not to be construed to imply mechanical analysis.

DIVISION OF NEW TECHNOLOGY, MATERIALS AND RESEARCH	OFFICE OF ENGINEERING GEOLOGY	FIELD INVESTIGATION BY:	State of CALIFORNIA DEPARTMENT OF TRANSPORTATION	DIVISION OF STRUCTURES STRUCTURE DESIGN	BRIDGE NO. 33-25	SFOBB - BENT E23 TO E39 RETROFIT
DRAWN BY IRMA GAMARRA 2/94		J. BOWMAN			POST MILE 1.0/1.3	CROSS SECTIONS 17 OF 18
CHECKED BY						

ORIGINAL SCALE IN INCHES FOR REDUCED PLANS 0 1 2 3

CU 04
EA 04343K

DISREGARD PRINTS BEARING EARLIER REVISION DATES

REVISION DATES (PRELIMINARY STAGE ONLY) 4-17-94 SHEET

FILENAME => 04-0120m1-34-0006r-z-1tb102.tif

DIST	COUNTY	ROUTE	POST MILES TOTAL PROJECT	SHEET NO.	TOTAL SHEETS
04	Ala	80			

CERTIFIED ENGINEERING GEOLOGIST

REGISTERED GEOLOGIST J. BOWMAN No 1677 Exp. 6-30-94 CERTIFIED ENGINEERING GEOLOGIST STATE OF CALIFORNIA

PLANS APPROVAL DATE

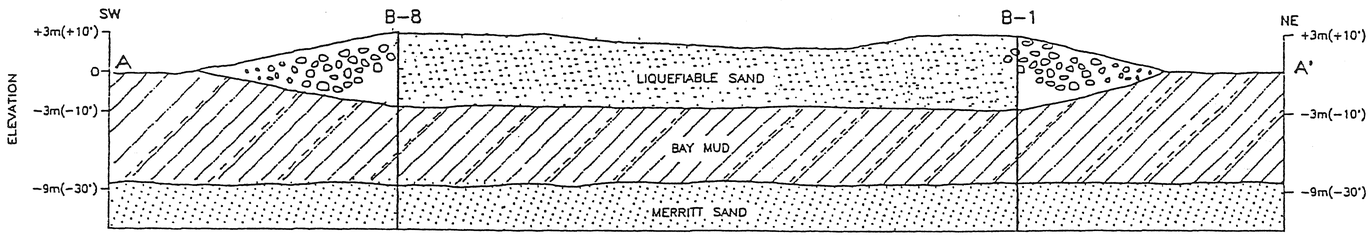

CROSS SECTION A–A'

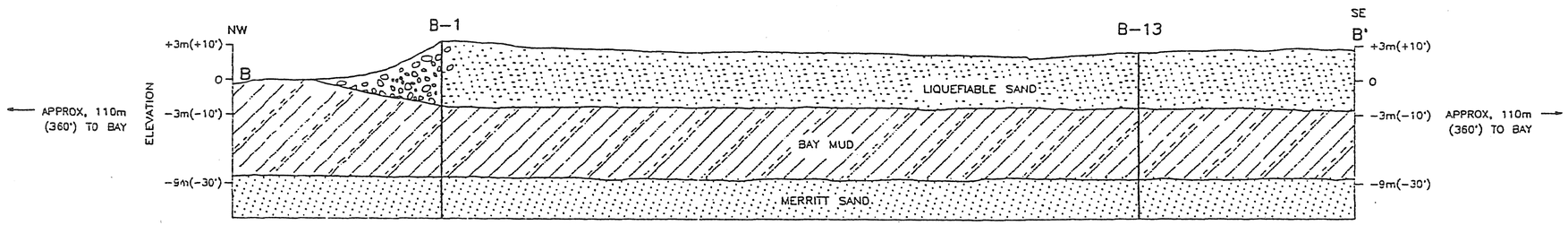

CROSS SECTION B–B'

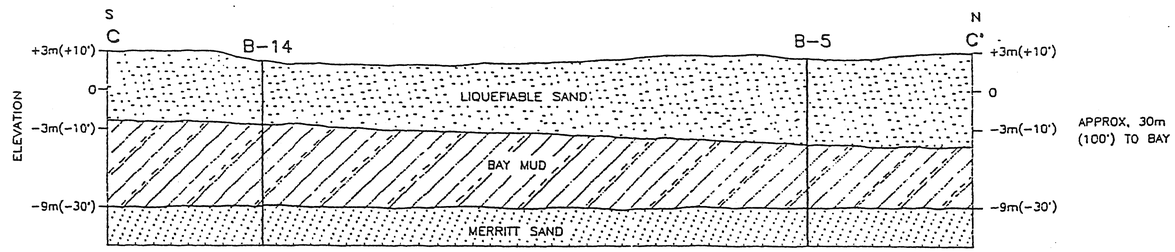

CROSS SECTION C–C'

SCALE 1:240

EXPLANATION

- RIPRAP COMPOSED OF BOULDERS AVERAGE DIAMETER APPROX. 1m (3')
- LIQUEFIABLE SAND; FINE TO MEDIUM GRAINED, POORLY GRADED N=6 TO 30 (CONSIDERABLE DEBRIS IN UPPER PART.) BECOMES LOOSER WITH DEPTH.
- BAY MUD; CLAY TO SILTY CLAY; $q_u \simeq .25$ TSF.
- MERRITT SAND; FINE TO MEDIUM SAND; POORLY GRADED, N≥35 IN UPPER 2 m (6'); n=50 to 100+ below top 2 m (6')

NOTE: GROUND WATER LEVEL VARIES WITH THE TIDES APPROX. −1 TO +2 m (−3 to +6 feet)

TO ACCOMPANY PLANS DATED 10-3-11

DIVISION OF ENGINEERING SERVICES - OFFICE OF GEOTECHNICAL SERVICES

As-Built Log of Test Borings sheet is considered an informational document only. As such, the State of California registration seal with signature, license number and registration certificate expiration date confirm that this is a true and accurate copy of the original document. It does not attest to the accuracy or validity of the information contained in the original document. This drawing is available and presented only for the convenience of any bidder, contractor or other interested party.

DIST.	COUNTY	ROUTE	KILOMETER POST - TOTAL PROJECT	Sheet No.	Total Sheets
04	Ala	80	1.6/2.7	677	744

REGISTERED ENGINEER - CIVIL

REGISTERED PROFESSIONAL ENGINEER MIKE KAPUSKAR NO. GE 2364 EXP. 12-31-10 GEOTECHNICAL STATE OF CALIFORNIA

OAKLAND APPROACH STRUCTURES - PHASE 2

AS-BUILT LOG OF TEST BORINGS NO. 12

NOTE: A COPY OF THIS LOG OF TEST BORINGS IS AVAILABLE AT OFFICE OF STRUCTURE MAINTENANCE AND INVESTIGATIONS, SACRAMENTO, CALIFORNIA	CU: 04 EA: 0120M1	Bridge No. 34-0006R

Revisions made to this Log of Test Borings from the original 1994 Log of Test Borings are the addition of the following notes:

Notes:
1. Refer to AS-BUILT LOG OF TEST BORINGS NO. 1 for borehole locations and elevation datum.
2. Stations, dimensions and elevations shown on this plan are in English units.

LEGEND OF BORING OPERATIONS

LEGEND OF EARTH MATERIALS: GRAVEL, SAND, SILT, CLAY, SANDY CLAY or CLAYEY SAND, SANDY SILT or SILTY SAND, SILTY CLAY, CLAYEY SILT, PEAT and/or ORGANIC MATTER, FILL MATERIAL, IGNEOUS ROCK, SEDIMENTARY ROCK, METAMORPHIC ROCK

CONSISTENCY CLASSIFICATION FOR SOILS — According to the Standard Penetration Test

Penetration Index (Blows / Ft)	Granular	Cohesive
0-4	Very loose	Very soft
5-9	Loose	Soft
10-19	Slightly compact	Stiff
20-34	Compact	Very stiff
35-69	Dense	Hard
>70	Very dense	Very hard

NOTE: Classification of earth material as shown on this sheet is based upon field inspection and is not to be construed to imply mechanical analysis.

DIVISION OF NEW TECHNOLOGY, MATERIALS AND RESEARCH	OFFICE OF ENGINEERING GEOLOGY	FIELD INVESTIGATION BY:	State of CALIFORNIA DEPARTMENT OF TRANSPORTATION	DIVISION OF STRUCTURES STRUCTURE DESIGN	BRIDGE NO. 33-25	SFOBB - BENT E23 TO E39 RETROFIT
DRAWN BY IRMA GAMARRA 2/94		J. BOWMAN			POST MILE 1.0/1.3	CROSS SECTIONS 18 OF 18
CHECKED BY						

ORIGINAL SCALE IN INCHES FOR REDUCED PLANS 0 1 2 3

CU 04 EA 04343K

DISREGARD PRINTS BEARING EARLIER REVISION DATES

REVISION DATES (PRELIMINARY STAGE ONLY) 4-17-94

SHEET LIT

FILENAME => 04-0120m1-34-0006r-z-ltb103.tif

DIST	COUNTY	ROUTE	KILOMETER POST TOTAL PROJECT	SHEET NO.	TOTAL SHEETS
04	Ala	80	1.6/2.7	678	744

GEOTECHNICAL PROFESSIONAL

10-3-11
PLANS APPROVAL DATE

REGISTERED PROFESSIONAL ENGINEER T.W. MCNEILAN No. 0583 Exp. 12/31/10 Geotechnical STATE OF CALIFORNIA

FUGRO-EARTH MECHANICS,
A JOINT VENTURE
1000 Broadway, Suite 200
Oakland, CA 94607
(510) 268-0461

The State of California or its officers or agents shall not be responsible for the accuracy or completeness of electronic copies of this plan sheet.

Metric

SOIL AND ROCK TYPES

- Well graded GRAVEL (GW)
- Poorly graded GRAVEL (GP)
- GRAVEL with sand (GP or GW)
- GRAVEL with clay (GP or GW)
- Clayey GRAVEL (GC)
- GRAVEL with silt (GP or GW)
- Silty GRAVEL (GM)
- Well graded SAND (SW)
- Poorly graded SAND (SP)
- SAND with gravel (SP or SW)
- SAND with clay (SP-SC)
- Clayey SAND (SC)
- Silty SAND (SM)
- SAND with silt (SP-SM)
- Fat CLAY (CH)
- Sandy fat CLAY (CH)
- Lean CLAY (CL)
- Sandy lean CLAY (CL)
- Silty CLAY (CL-ML)
- Elastic SILT (MH)
- SILT (ML)
- Sandy SILT (ML)
- Clayey silt (ML/CL)
- Highly plastic ORGANICS (OH)
- Low plasticity ORGANICS (OL)
- SANDSTONE (Rx)
- SILTSTONE (Rx)
- CLAYSTONE (Rx)
- Interbedded Rock Strata (Rx)
- PAVEMENT

SAMPLERS

- 76mm-OD, 72mm-ID Thin Walled Tube
- 57mm-OD, 54mm-ID* Thin Walled Driven Tube
- 63.5mm-OD, 54mm-ID Offshore Liner
- 76mm-OD, 60mm-ID Modified California Liner
- 51mm-OD, 35mm-ID SPT Split Spoon Sampler
- Rock Core (Inset symbol represents recovery (%)

* A variable-OD, 54-mm-ID tapered driven tube was used to sample coarse sand, gravel and rock

STANDARD PENETRATION TEST (SPT) AND MODIFIED CALIFORNIA (MC) LINER SAMPLERS

Samplers were driven with a 63.5 kg hammer dropped approximately 760 mm.

20	Number of blows to produce 30 cm of penetration after the initial 15 cm of seating.
86/28cm	Number of blows required to produce the indicated penetration after an initial 15 cm seating.
Ref/8cm	50 blows produced the indicated penetration during the initial 15 cm interval.

Note: In rock coring interval recovery(%)-RQD are shown in the Blow Count column.

TUBE AND OFFSHORE LINER SAMPLERS

WOH	Offshore Liner sample advanced with the weight of an 80 kg hammer.
PUSH or SAVE	Pushed thin-walled 76mm-OD-tube.
15/60cm	Number of blows required to produce the indicated penetration using a 54mm-ID-tube sampler. The sampler was driven with an 80 kg downhole hammer dropped approximately 1.5 m.

CLASSIFICATION TESTS BLOW COUNTS AND ROCK QUALITY

- ■ PERCENT PASSING #200 SIEVE
- ● WATER CONTENT (%)
- □ UNIT WEIGHT (kN/m³)
- ○ THEORETICAL UNIT WEIGHT (kN/m³)
- PLASTIC LIMIT LIQUID LIMIT
- EQUIVALENT SPT BLOW COUNT = (MC BLOWCOUNT/1.6) OR SPT BLOWCOUNT
- ROCK QUALITY DESIGNATION (RQD)
- ROCK RECOVERY PERCENT
- ROCK CORING RATE

STRENGTH TESTS

- POCKET PENETROMETER
- TORVANE
- REMOTE VANE
- MINIATURE VANE (RESIDUAL VANE)
- UNCONSOLIDATED UNDRAINED TRIAXIAL
- SWEDISH FALL CONE
- UNCONFINED COMPRESSION (SOIL)
- (Open symbols indicate remolded tests)
- Shear Strength Interpreted from CPT Tip Resistance (Nk = 12-15)
- POINT LOAD TEST (ROCK-INTACT SPECIMEN)
- POINT LOAD TEST (ROCK-ALONG WEAK PLANE)
- UNCONFINED COMPRESSION (ROCK)
- Soil: Strength Exceeds Capacity of Measuring Device
- Rock: Sample broke along discontinuity; Intact sample would have greater strength
- FRACTURE DENSITY (ROCK)

STRENGTH OF COHESIVE SOILS

Consistency	Undrained Shear Strength kPa
Very Soft	less than 12
Soft	12 to 25
Firm	25 to 50
Stiff	50 to 100
Very Stiff	100 to 200
Hard	greater than 200

DENSITY OF GRANULAR SOILS

Descriptive Term	Relative Density (%)*
Very Loose	less than 15
Loose	15 to 35
Medium Dense	35 to 65
Dense	65 to 85
Very Dense	greater than 85

*Estimated from sampler driving record and CPT tip resistance.

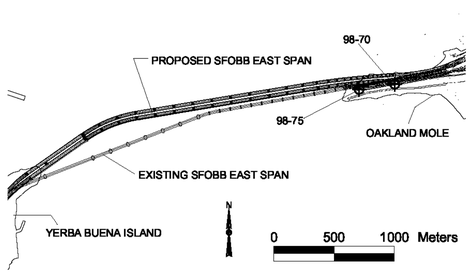

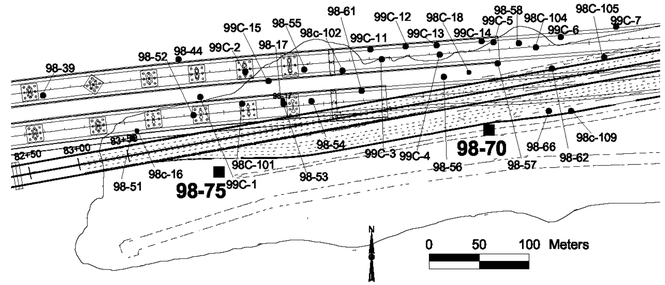

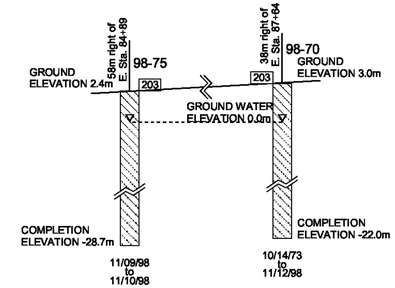

NOTE: GROUND WATER ELEVATION IS EFFECTED BY TIDAL VARIATIONS. IN GENERAL, GROUND WATER TABLE IS AT APPROXIMATELY ELEVATION 0m MSL.

BORING 98-75

COORDINATES: E1838987 N648200
CA State Plane Zone 3, NAD83, Meters
GROUND ELEVATION: 2.4m (MSL)
START DATE: 11/09/98

STATION: 58m right of E. Sta. 84+89
COMPLETION ELEVATION: -28.7m (MSL)
END DATE: 11/10/98

BLOW COUNT	MATERIAL DESCRIPTION (GROUND ELEVATION: 2.4m (MSL))	STR. NO.
36 7	PAVEMENT, 3 Asphalt Concrete over 3 of Concrete (0.2m) (2.4m)	I
14 20 13	Silty Fine GRAVEL with sand (GM), medium dense, brown (4.6m)	II
49 34 7	Fine to Coarse GRAVEL (GW), medium dense to dense, gray to greenish gray -sand with gravel, below 7.6m (9.1m)	III
PUSH	Fat CLAY (CH), firm to stiff, olive gray -lean clay to 10.1m (11.9m)	IV
PUSH	Lean CLAY with sand (CL), hard, greenish gray (13.7m)	V
90/30cm 90/30cm 81 40	Silty Fine SAND (SM), very dense, brown -fine sand with silt, to 14.6m (18.6m)	VI
PUSH SAVE PUSH PUSH	Fat CLAY (CH), very stiff, greenish gray -sandy lean clay to 19.2m -with black organic partings, silt partings, and a few desiccated pockets, at 20.1m (22.9m) -with many sand pockets and calcareous nodules, at 21.6m	VII
SAVE PUSH PUSH SAVE	Fat CLAY (CH), very stiff, greenish gray -with sand seams and calcareous nodules, at 23.2m -clayey sand, 24.4m to 25.0m -with silt partings at 26.2m -with silt partings, sand seams and pockets, and organic pockets, 27.4m to 29.6m -mottled with olive gray, at 29.3m -with a few sand pockets at 30.8m	VIII

TOTAL DEPTH: 31.1m BACKFILLED WITH: Cement Grout

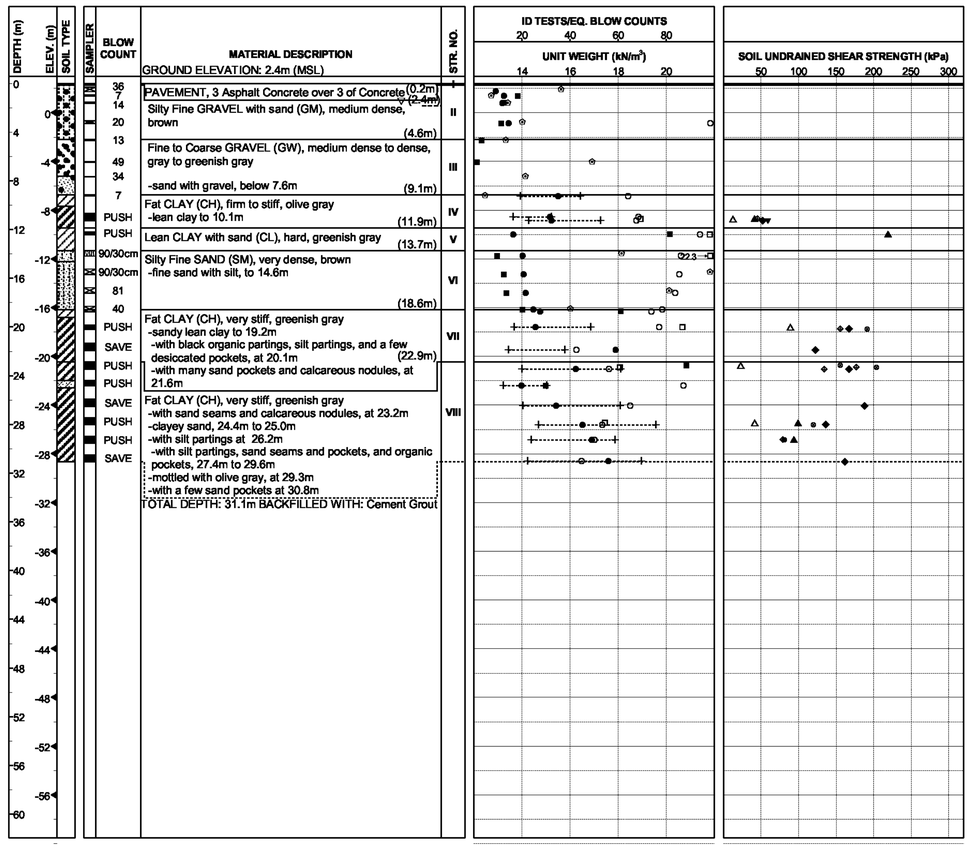

BORING 98-70

COORDINATES: E1839259 N648242
CA State Plane Zone 3, NAD83, Meters
GROUND ELEVATION: 3.0m (MSL)
START DATE: 10/14/73

STATION: 38m right of E. Sta. 87+64
COMPLETION ELEVATION: -22.0m (MSL)
END DATE: 11/12/98

BLOW COUNT	MATERIAL DESCRIPTION (GROUND ELEVATION: 3.0m (MSL))	STR. NO.
42 21	PAVEMENT, 0.3m AC over 0.2m of Aggregate Base (0.5m)	
40	Fine GRAVEL with silt and sand (GW-GM), dense, brown to gray (1.2m)	I
48	Fine SAND (SP), medium dense, brown, moist (3.0m)	II
63 NR 34	Fine SAND with silt (SP-SM), dense, brown, slightly cemented (6.1m)	
10	Coarse GRAVEL (GP), very dense, gray (10.1m)	III
PUSH PUSH SAVE	Fat CLAY (CH), firm to stiff, olive gray -sandy clay, 12.6m to 13.0m (15.5m)	IV
23	Fine SAND with silt (SP-SM), medium dense, gray to olive gray (17.1m)	V
PUSH	Lean CLAY (CL), stiff to very stiff, greenish gray (19.2m)	VI
50/15cm 8	Fine SAND (SP), very dense, brown -greenish gray, clayey sand, below 21.0m (21.5m)	VII
PUSH SAVE	Fat CLAY (CH), stiff to very stiff, greenish gray -lean clay with sand pockets below 24.4m	VIII

TOTAL DEPTH: 25.0m BACKFILLED WITH: Cement Grout

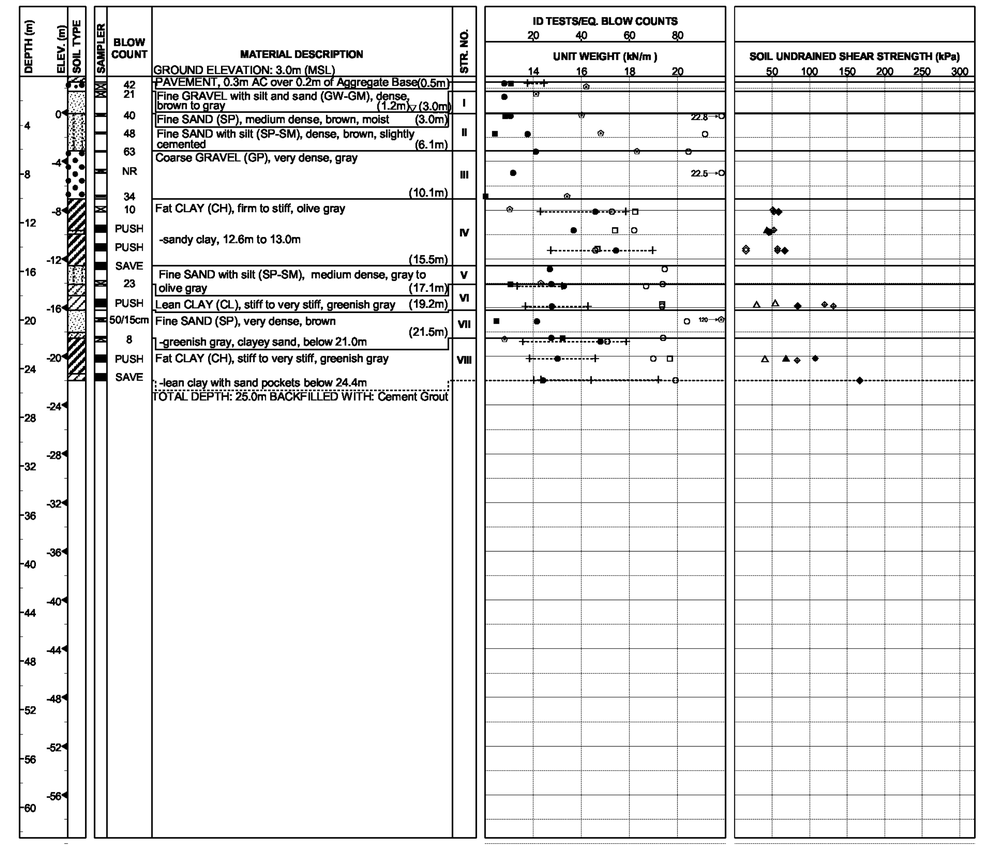

SAN FRANCISCO OAKLAND BAY BRIDGE
EAST SPAN SEISMIC SAFETY PROJECT

OAKLAND APPROACH STRUCTURES - PHASE 2

LOG OF TEST BORINGS NO. 1

SABA MOHAN (DESIGN OVERSIGHT)	DRAWN BY: JODY PALMER	M.BAILLIE/N.MILLER/M.NG/M.MEDINA (FIELD INVESTIGATOR)	PREPARED FOR THE STATE OF CALIFORNIA DEPARTMENT OF TRANSPORTATION
	CHECKED BY: ROGER HOWARD	DATE: SEE ABOVE	

T.W.McNEILAN
PROJECT ENGINEER

BRIDGE NO. 34-0006R/L
KM POST 2.1
POST MILE

ORIGINAL SCALE IN CENTIMETERS FOR REDUCED PLANS 0 1 2 4 5 6 7 8 9 10

CU 04
EA 012041

DISREGARD PRINTS BEARING EARLIER REVISION DATES → REVISION DATES (PRELIMINARY STAGE ONLY) 9/8/00 4/18/03 10/20/03 6/24/05

SHEET 104 OF 109

FILENAME => 04-0120m1-34-0006r-z-ltb104.tif

DIST	COUNTY	ROUTE	KILOMETER POST TOTAL PROJECT	SHEET NO.	TOTAL SHEETS
04	Ala	80	1.6/2.7	679	744

GEOTECHNICAL PROFESSIONAL

10-3-11
PLANS APPROVAL DATE

REGISTERED PROFESSIONAL ENGINEER
T.W. MCNEILAN
No. 0583
Exp. 12/31/10
Geotechnical
STATE OF CALIFORNIA

FUGRO-EARTH MECHANICS,
A JOINT VENTURE
1000 Broadway, Suite 200
Oakland, CA 94607
(510) 268-0461

The State of California or its officers or agents shall not be responsible for the accuracy or completeness of electronic copies of this plan sheet.

Metric

SOIL AND ROCK TYPES

- Well graded GRAVEL (GW)
- Poorly graded GRAVEL (GP)
- GRAVEL with sand (GP or GW)
- GRAVEL with clay (GP or GW)
- Clayey GRAVEL (GC)
- GRAVEL with silt (GP or GW)
- Silty GRAVEL (GM)
- Well graded SAND (SW)
- Poorly graded SAND (SP)
- SAND with gravel (SP or SW)
- SAND with clay (SP-SC)
- Clayey SAND (SC)
- Silty SAND (SM)
- SAND with silt (SP-SM)
- Fat CLAY (CH)
- Sandy fat CLAY (CH)
- Lean CLAY (CL)
- Sandy lean CLAY (CL)
- Silty CLAY (CL-ML)
- Elastic SILT (MH)
- SILT (ML)
- Sandy SILT (ML)
- Clayey silt (ML/CL)
- Highly plastic ORGANICS (OH)
- Low plasticity ORGANICS (OL)
- SANDSTONE (Rx)
- SILTSTONE (Rx)
- CLAYSTONE (Rx)
- Interbedded Rock Strata (Rx)
- PAVEMENT

SAMPLERS

- 76mm-OD, 72mm-ID Thin Walled Tube
- 57mm-OD, 54mm-ID* Thin Walled Driven Tube
- 63.5mm-OD, 54mm-ID Offshore Liner
- 76mm-OD, 60mm-ID Modified California Liner
- 51mm-OD, 35mm-ID SPT Split Spoon Sampler
- Rock Core (Inset symbol represents recovery (%)

* A variable-OD, 54-mm-ID tapered driven tube was used to sample coarse sand, gravel and rock

STANDARD PENETRATION TEST (SPT) AND MODIFIED CALIFORNIA (MC) LINER SAMPLERS

Samplers were driven with a 63.5 kg hammer dropped approximately 760 mm.

20	Number of blows to produce 30 cm of penetration after the initial 15 cm of seating.
86/28cm	Number of blows required to produce the indicated penetration after an initial 15 cm seating.
Ref/8cm	50 blows produced the indicated penetration during the initial 15 cm interval.

Note: In rock coring interval recovery(%)-RQD are shown in the Blow Count column.

TUBE AND OFFSHORE LINER SAMPLERS

WOH	Offshore Liner sample advanced with the weight of an 80 kg hammer.
PUSH or SAVE	Pushed thin-walled 76mm-OD-tube.
15/60cm	Number of blows required to produce the indicated penetration using a 54mm-ID-tube sampler. The sampler was driven with an 80 kg downhole hammer dropped approximately 1.5 m.

CLASSIFICATION TESTS BLOW COUNTS AND ROCK QUALITY

- ■ PERCENT PASSING #200 SIEVE
- ● WATER CONTENT (%)
- □ SUBMERGED UNIT WEIGHT (KN/m³)
- ○ THEORETICAL SUBMERGED UNIT WEIGHT (KN/m³)
- PLASTIC LIMIT +----------+ LIQUID LIMIT
- EQUIVALENT SPT BLOW COUNT = (MC BLOWCOUNT/1.6) OR SPT BLOWCOUNT
- ROCK QUALITY DESIGNATION (RQD)
- ROCK RECOVERY PERCENT
- ROCK CORING RATE

STRENGTH TESTS

- POCKET PENETROMETER
- TORVANE
- REMOTE VANE
- MINIATURE VANE (▷ RESIDUAL VANE)
- UNCONSOLIDATED UNDRAINED TRIAXIAL
- SWEDISH FALL CONE
- UNCONFINED COMPRESSION (SOIL)
- ◇△ (Open symbols indicate remolded tests)
- Shear Strength Interpreted from CPT Tip Resistance (Nk = 12-15)
- POINT LOAD TEST (ROCK-INTACT SPECIMEN)
- POINT LOAD TEST (ROCK-ALONG WEAK PLANE)
- UNCONFINED COMPRESSION (ROCK)
- \+ Soil: Strength Exceeds Capacity of Measuring Device; Rock: Sample broke along discontinuity; Intact sample would have greater strength
- FRACTURE DENSITY (ROCK)

STRENGTH OF COHESIVE SOILS

Consistency	Undrained Shear Strength kPa
Very Soft	less than 12
Soft	12 to 25
Firm	25 to 50
Stiff	50 to 100
Very Stiff	100 to 200
Hard	greater than 200

DENSITY OF GRANULAR SOILS

Descriptive Term	Relative Density (%)*
Very Loose	less than 15
Loose	15 to 35
Medium Dense	35 to 65
Dense	65 to 85
Very Dense	greater than 85

*Estimated from sampler driving record and CPT tip resistance.

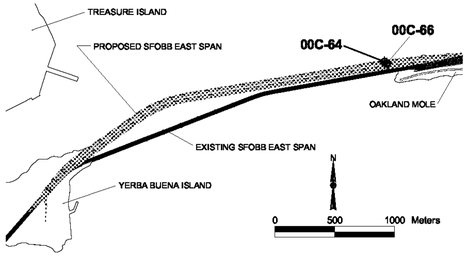

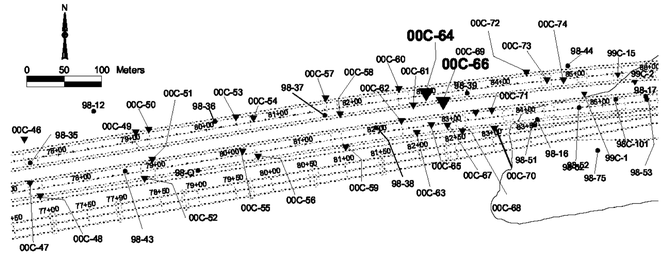

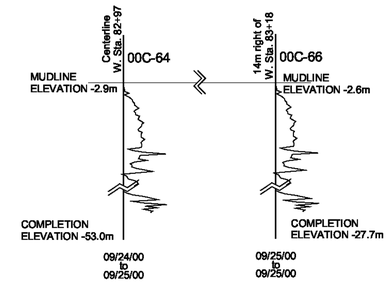

NOTES:

1. Pore pressures are relative to hydrostatic pressure at the mudline.
2. Breaks in the data are due to pauses in the sounding during installation of casing.

CPT 00C-64

COORDINATES: E1838758 N648273
CA State Plane Zone 3, NAD83, meters
MUDLINE ELEVATION: -2.9m (MSL)
START DATE: 09/24/00

STATION: Centerline W. Sta. 82+97
COMPLETION ELEVATION: -53.0m (MSL)
CONE END AREA: 15.03 sq. cm (Area Ratio = 0.56)

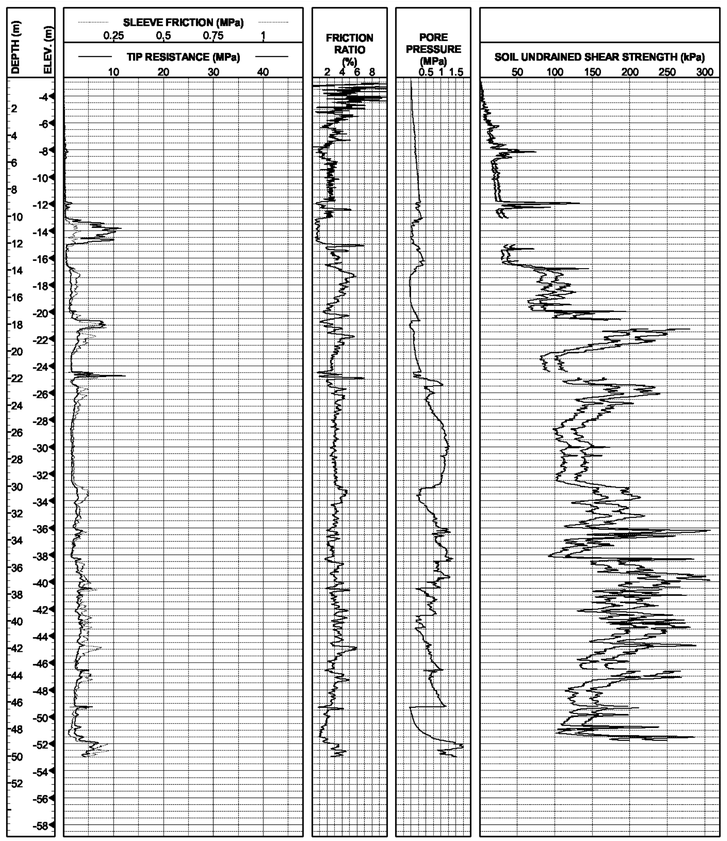

CPT 00C-66

COORDINATES: E1838780 N648262
CA State Plane Zone 3, NAD83, meters
MUDLINE ELEVATION: -2.6m (MSL)
START DATE: 09/25/00

STATION: 14m right of W. Sta. 83+18
COMPLETION ELEVATION: -27.7m (MSL)
CONE END AREA: 15.03 sq. cm (Area Ratio = 0.56)

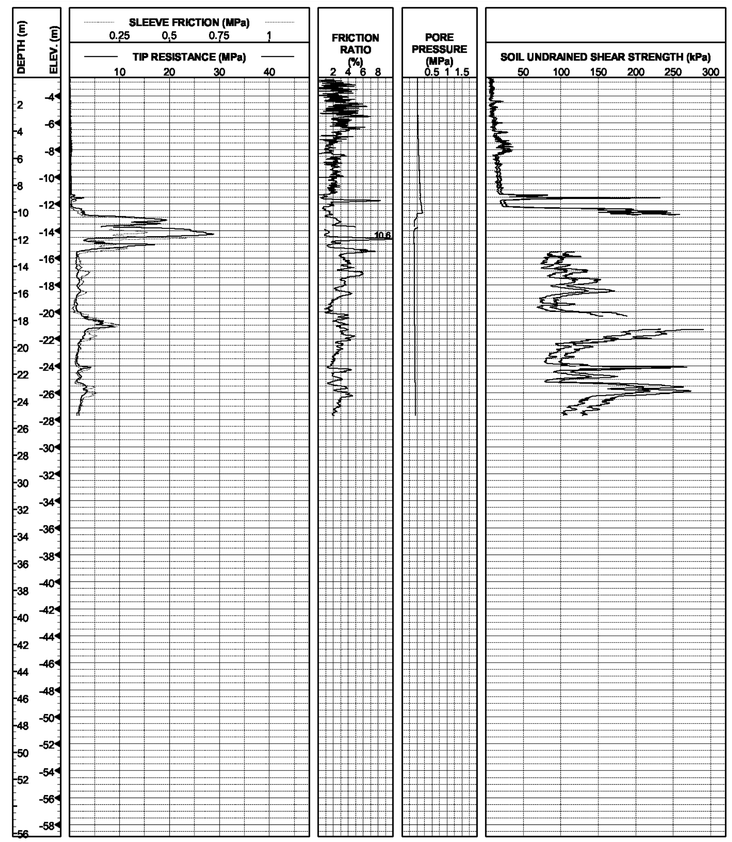

SABA MOHAN
DESIGN OVERSIGHT

DRAWN BY	S.DESHPANDE
CHECKED BY	J.CHACKO

PR/RH
FIELD INVESTIGATOR
DATE SEE ABOVE

PREPARED FOR THE
STATE OF CALIFORNIA
DEPARTMENT OF TRANSPORTATION

T.W.McNEILAN
PROJECT ENGINEER

ORIGINAL SCALE IN CENTIMETERS FOR REDUCED PLANS 1 2 3 4 5 6 7 8 9 10

CU 04
EA 012041

BRIDGE NO.
34-0006R/L
KM POST
2.1
POST MILE

SAN FRANCISCO OAKLAND BAY BRIDGE
EAST SPAN SEISMIC SAFETY PROJECT

OAKLAND APPROACH STRUCTURES - PHASE 2

LOG OF TEST BORINGS NO. 2

DISREGARD PRINTS BEARING EARLIER REVISION DATES → REVISION DATES (PRELIMINARY STAGE ONLY) 11/17/00 1/15/03 10/30/03 6/24/05

SHEET 105 OF 109

FILENAME => 04-0120m1-34-0006r-z-ltb105.tif

DIST	COUNTY	ROUTE	KILOMETER POST TOTAL PROJECT	SHEET NO.	TOTAL SHEETS
04	Ala	80	1.6/2.7	680	744

GEOTECHNICAL PROFESSIONAL

10-3-11
PLANS APPROVAL DATE

REGISTERED PROFESSIONAL ENGINEER
T.W. MCNEILAN
No. 0583
Exp. 12/31/10
Geotechnical
STATE OF CALIFORNIA

FUGRO-EARTH MECHANICS,
A JOINT VENTURE
1000 Broadway, Suite 200
Oakland, CA 94607
(510) 268-0461

The State of California or its officers or agents shall not be responsible for the accuracy or completeness of electronic copies of this plan sheet.

SOIL AND ROCK TYPES

- Well graded GRAVEL (GW)
- Poorly graded GRAVEL (GP)
- GRAVEL with sand (GP or GW)
- GRAVEL with clay (GP or GW)
- Clayey GRAVEL (GC)
- GRAVEL with silt (GP or GW)
- Silty GRAVEL (GM)
- Well graded SAND (SW)
- Poorly graded SAND (SP)
- SAND with gravel (SP or SW)
- SAND with clay (SP-SC)
- Clayey SAND (SC)
- Silty SAND (SM)
- SAND with silt (SP-SM)
- Fat CLAY (CH)
- Sandy fat CLAY (CH)
- Lean CLAY (CL)
- Sandy lean CLAY (CL)
- Silty CLAY (CL-ML)
- Elastic SILT (MH)
- SILT (ML)
- Sandy SILT (ML)
- Clayey silt (ML/CL)
- Highly plastic ORGANICS (OH)
- Low plasticity ORGANICS (OL)
- SANDSTONE (Rx)
- SILTSTONE (Rx)
- CLAYSTONE (Rx)
- Interbedded Rock Strata (Rx)
- PAVEMENT

SAMPLERS

- 76mm-OD, 72mm-ID Thin Walled Tube
- 57mm-OD, 54mm-ID* Thin Walled Driven Tube
- 63.5mm-OD, 54mm-ID Offshore Liner
- 76mm-OD, 60mm-ID Modified California Liner
- 51mm-OD, 35mm-ID SPT Split Spoon Sampler
- Rock Core (Inset symbol represents recovery (%)

* A variable-OD, 54-mm-ID tapered driven tube was used to sample coarse sand, gravel and rock

STANDARD PENETRATION TEST (SPT) AND MODIFIED CALIFORNIA (MC) LINER SAMPLERS

Samplers were driven with a 63.5 kg hammer dropped approximately 760 mm.

20	Number of blows to produce 30 cm of penetration after the initial 15 cm of seating.
86/28cm	Number of blows required to produce the indicated penetration after an initial 15 cm seating.
Ref/8cm	50 blows produced the indicated penetration during the initial 15 cm interval.

Note: In rock coring interval recovery(%)-RQD are shown in the Blow Count column.

TUBE AND OFFSHORE LINER SAMPLERS

WOH	Offshore Liner sample advanced with the weight of an 80 kg hammer.
PUSH or SAVE	Pushed thin-walled 76mm-OD-tube.
15/60cm	Number of blows required to produce the indicated penetration using a 54mm-ID-tube sampler. The sampler was driven with an 80 kg downhole hammer dropped approximately 1.5 m.

CLASSIFICATION TESTS BLOW COUNTS AND ROCK QUALITY

- PERCENT PASSING #200 SIEVE
- WATER CONTENT (%)
- SUBMERGED UNIT WEIGHT (KN/m³)
- THEORETICAL SUBMERGED UNIT WEIGHT (KN/m³)

PLASTIC LIMIT LIQUID LIMIT

- EQUIVALENT SPT BLOW COUNT = (MC BLOWCOUNT/1.6) OR SPT BLOWCOUNT
- ROCK QUALITY DESIGNATION (RQD)
- ROCK RECOVERY PERCENT
- ROCK CORING RATE

STRENGTH TESTS

- POCKET PENETROMETER
- TORVANE
- REMOTE VANE
- MINIATURE VANE (RESIDUAL VANE)
- UNCONSOLIDATED UNDRAINED TRIAXIAL
- SWEDISH FALL CONE
- UNCONFINED COMPRESSION (SOIL)
- (Open symbols indicate remolded tests)
- Shear Strength Interpreted from CPT Tip Resistance (Nk = 12-15)
- POINT LOAD TEST (ROCK-INTACT SPECIMEN)
- POINT LOAD TEST (ROCK-ALONG WEAK PLANE)
- UNCONFINED COMPRESSION (ROCK)
- Soil: Strength Exceeds Capacity of Measuring Device
  Rock: Sample broke along discontinuity; Intact sample would have greater strength
- FRACTURE DENSITY (ROCK)

STRENGTH OF COHESIVE SOILS

Consistency	Undrained Shear Strength kPa
Very Soft	less than 12
Soft	12 to 25
Firm	25 to 50
Stiff	50 to 100
Very Stiff	100 to 200
Hard	greater than 200

DENSITY OF GRANULAR SOILS

Descriptive Term	Relative Density (%)*
Very Loose	less than 15
Loose	15 to 35
Medium Dense	35 to 65
Dense	65 to 85
Very Dense	greater than 85

*Estimated from sampler driving record and CPT tip resistance.

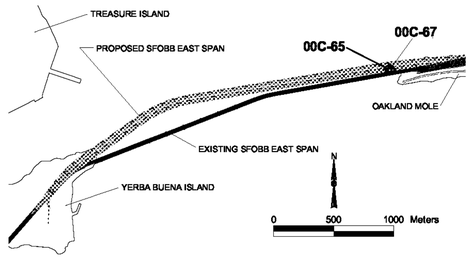

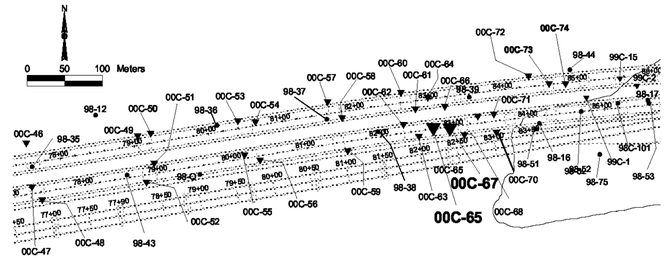

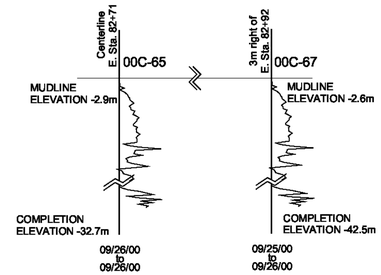

NOTES:

1. Pore pressures are relative to hydrostatic pressure at the mudline.
2. Breaks in the data are due to pauses in the sounding during installation of casing.

CPT 00C-65

COORDINATES: E1838765 N648233
CA State Plane Zone 3, NAD83, meters
MUDLINE ELEVATION: -2.9m (MSL.)
START DATE: 09/26/00

STATION: Centerline E. Sta. 82+71
COMPLETION ELEVATION: -32.7m (MSL)
CONE END AREA: 15.03 sq. cm (Area Ratio = 0.56)

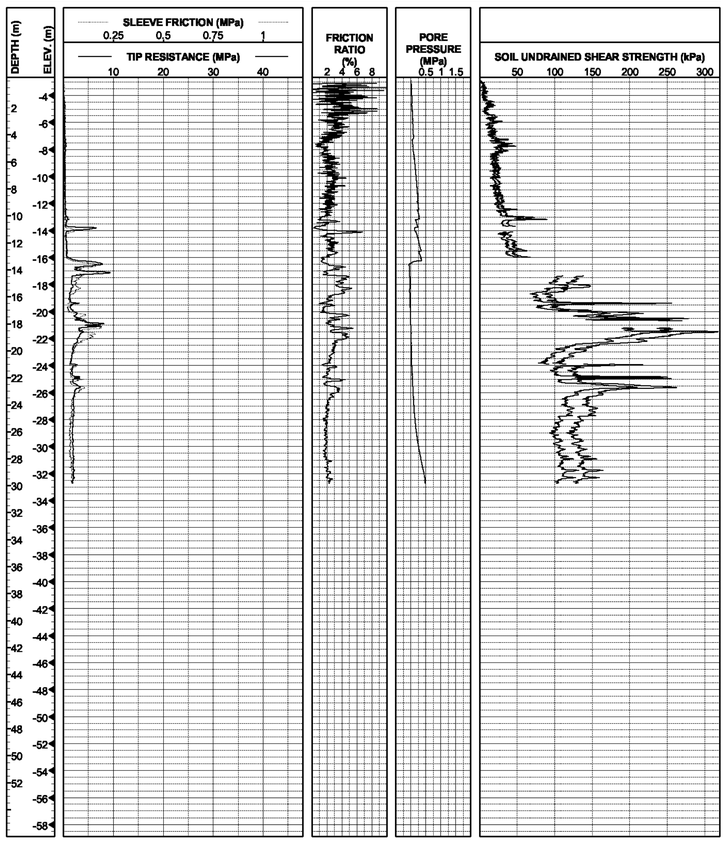

CPT 00C-67

COORDINATES: E1838787 N648232
CA State Plane Zone 3, NAD83, meters
MUDLINE ELEVATION: -2.6m (MSL)
START DATE: 09/25/00

STATION: 3m right of E. Sta. 82+92
COMPLETION ELEVATION: -42.5m (MSL)
CONE END AREA: 15.03 sq. cm (Area Ratio = 0.56)

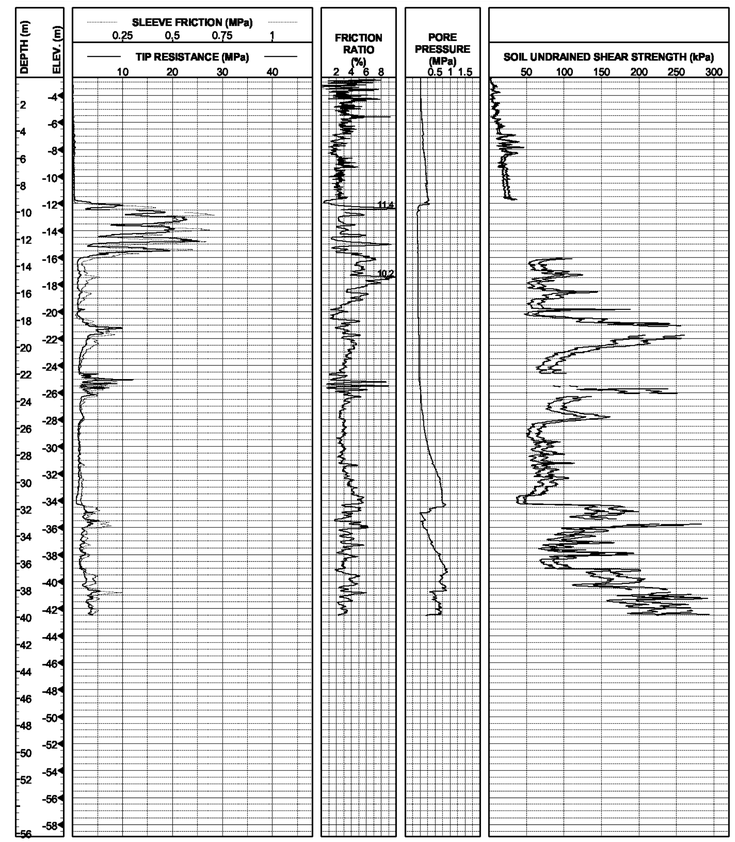

SABA MOHAN
DESIGN OVERSIGHT

DRAWN BY S.DESHPANDE
CHECKED BY J.CHACKO

PR/RH
FIELD INVESTIGATOR
DATE SEE ABOVE

PREPARED FOR THE
STATE OF CALIFORNIA
DEPARTMENT OF TRANSPORTATION

T.W.McNEILAN
PROJECT ENGINEER

BRIDGE NO. 34-0006R/L
KM POST 2.1
POST MILE

SAN FRANCISCO OAKLAND BAY BRIDGE
EAST SPAN SEISMIC SAFETY PROJECT

OAKLAND APPROACH STRUCTURES - PHASE 2

LOG OF TEST BORINGS NO. 3

ORIGINAL SCALE IN CENTIMETERS FOR REDUCED PLANS 1 2 3 4 5 6 7 8 9 10

CU 04
EA 012041

DISREGARD PRINTS BEARING EARLIER REVISION DATES → 11/17/00 4/18/03 10/20/03 6/24/05

REVISION DATES (PRELIMINARY STAGE ONLY)

SHEET 106 OF 109

FILENAME => 04-0120m1-34-0006r-z-ltb106.tif

DIST	COUNTY	ROUTE	KILOMETER POST TOTAL PROJECT	SHEET NO.	TOTAL SHEETS
04	Ala	80	1.6/2.7	681	744

GEOTECHNICAL PROFESSIONAL

10-3-11
PLANS APPROVAL DATE

REGISTERED PROFESSIONAL ENGINEER
T.W. MCNEILAN
No. 0583
Exp. 12/31/10
Geotechnical
STATE OF CALIFORNIA

FUGRO-EARTH MECHANICS,
A JOINT VENTURE
1000 Broadway, Suite 200
Oakland, CA 94607
(510) 268-0461

The State of California or its officers or agents shall not be responsible for the accuracy or completeness of electronic copies of this plan sheet.

SOIL AND ROCK TYPES

- Well graded GRAVEL (GW)
- Poorly graded GRAVEL (GP)
- GRAVEL with sand (GP or GW)
- GRAVEL with clay (GP or GW)
- Clayey GRAVEL (GC)
- GRAVEL with silt (GP or GW)
- Silty GRAVEL (GM)
- Well graded SAND (SW)
- Poorly graded SAND (SP)
- SAND with gravel (SP or SW)
- SAND with clay (SP-SC)
- Clayey SAND (SC)
- Silty SAND (SM)
- SAND with silt (SP-SM)
- Fat CLAY (CH)
- Sandy fat CLAY (CH)
- Lean CLAY (CL)
- Sandy lean CLAY (CL)
- Silty CLAY (CL-ML)
- Elastic SILT (MH)
- SILT (ML)
- Sandy SILT (ML)
- Clayey silt (ML/CL)
- Highly plastic ORGANICS (OH)
- Low plasticity ORGANICS (OL)
- SANDSTONE (Rx)
- SILTSTONE (Rx)
- CLAYSTONE (Rx)
- Interbedded Rock Strata (Rx)
- PAVEMENT

SAMPLERS

- 76mm-OD, 72mm-ID Thin Walled Tube
- 57mm-OD, 54mm-ID* Thin Walled Driven Tube
- 63.5mm-OD, 54mm-ID Offshore Liner
- 76mm-OD, 60mm-ID Modified California Liner
- 51mm-OD, 35mm-ID SPT Split Spoon Sampler
- Rock Core (Inset symbol represents recovery (%)

* A variable-OD, 54-mm-ID tapered driven tube was used to sample coarse sand, gravel and rock

STANDARD PENETRATION TEST (SPT) AND MODIFIED CALIFORNIA (MC) LINER SAMPLERS

Samplers were driven with a 63.5 kg hammer dropped approximately 760 mm.

20	Number of blows to produce 30 cm of penetration after the initial 15 cm of seating.
86/28cm	Number of blows required to produce the indicated penetration after an initial 15 cm seating.
Ref/8cm	50 blows produced the indicated penetration during the initial 15 cm interval.

Note: In rock coring interval recovery(%)-RQD are shown in the Blow Count column.

TUBE AND OFFSHORE LINER SAMPLERS

WOH	Offshore Liner sample advanced with the weight of an 80 kg hammer.
PUSH or SAVE	Pushed thin-walled 76mm-OD-tube.
15/60cm	Number of blows required to produce the indicated penetration using a 54mm-ID-tube sampler. The sampler was driven with an 80 kg downhole hammer dropped approximately 1.5 m.

CLASSIFICATION TESTS BLOW COUNTS AND ROCK QUALITY

- PERCENT PASSING #200 SIEVE
- WATER CONTENT (%)
- SUBMERGED UNIT WEIGHT (KN/m³)
- THEORETICAL SUBMERGED UNIT WEIGHT (KN/m³)

PLASTIC LIMIT LIQUID LIMIT

- EQUIVALENT SPT BLOW COUNT = (MC BLOWCOUNT/1.6) OR SPT BLOWCOUNT
- ROCK QUALITY DESIGNATION (RQD)
- ROCK RECOVERY PERCENT
- ROCK CORING RATE

STRENGTH TESTS

- POCKET PENETROMETER
- TORVANE
- REMOTE VANE
- MINIATURE VANE (◊ RESIDUAL VANE)
- UNCONSOLIDATED UNDRAINED TRIAXIAL
- SWEDISH FALL CONE
- UNCONFINED COMPRESSION (SOIL)
- ◇△ (Open symbols indicate remolded tests)
- Shear Strength Interpreted from CPT Tip Resistance (Nk = 12-15)
- POINT LOAD TEST (ROCK-INTACT SPECIMEN)
- POINT LOAD TEST (ROCK-ALONG WEAK PLANE)
- UNCONFINED COMPRESSION (ROCK)
- Soil: Strength Exceeds Capacity of Measuring Device
  Rock: Sample broke along discontinuity; Intact sample would have greater strength
- FRACTURE DENSITY (ROCK)

STRENGTH OF COHESIVE SOILS

Consistency	Undrained Shear Strength kPa
Very Soft	less than 12
Soft	12 to 25
Firm	25 to 50
Stiff	50 to 100
Very Stiff	100 to 200
Hard	greater than 200

DENSITY OF GRANULAR SOILS

Descriptive Term	Relative Density (%)*
Very Loose	less than 15
Loose	15 to 35
Medium Dense	35 to 65
Dense	65 to 85
Very Dense	greater than 85

*Estimated from sampler driving record and CPT tip resistance.

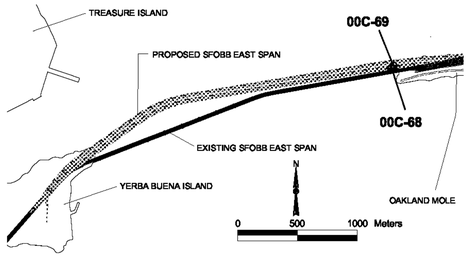

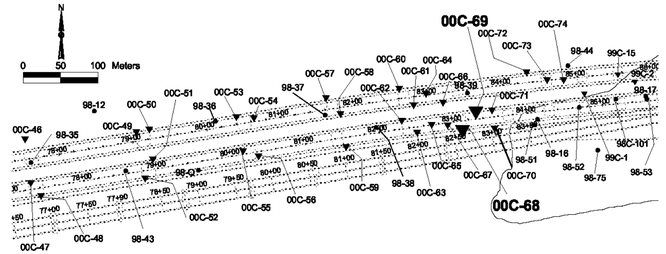

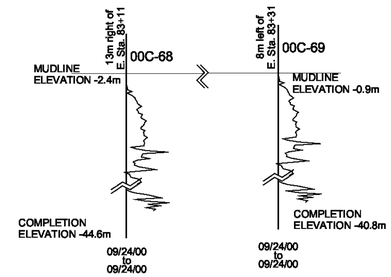

NOTES:

1. Pore pressures are relative to hydrostatic pressure at the mudline.
2. Breaks in the data are due to pauses in the sounding during installation of casing.

CPT 00C-68

COORDINATES: E1838806 N648225
CA State Plane Zone 3, NAD83, meters
MUDLINE ELEVATION: -2.4m (MSL)
START DATE: 09/24/00

STATION: 13m right of E. Sta. 83+11
COMPLETION ELEVATION: -44.6m (MSL)
CONE END AREA: 15.03 sq. cm (Area Ratio = 0.56)

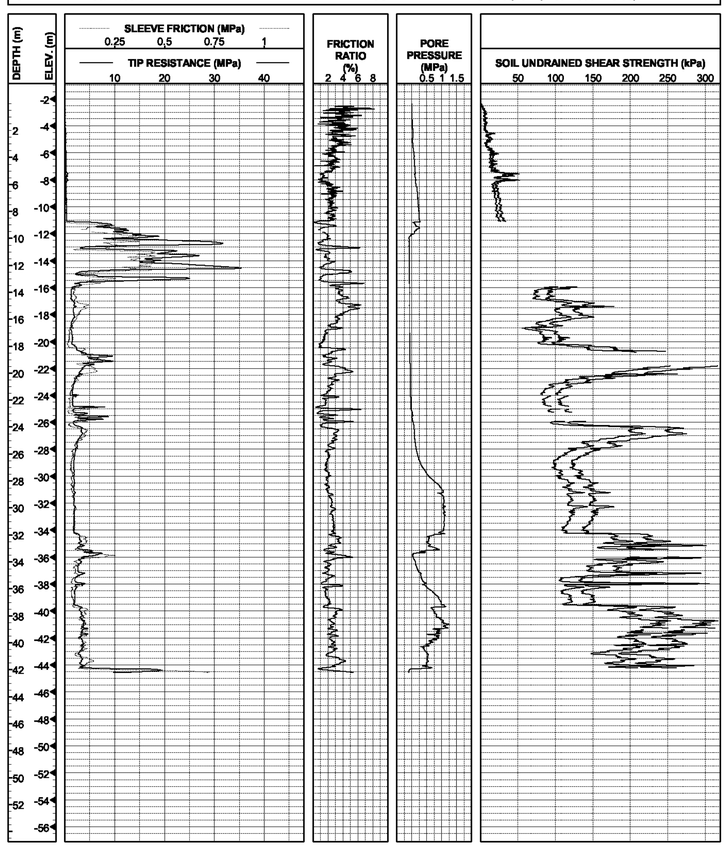

CPT 00C-69

COORDINATES: E1838824 N648249
CA State Plane Zone 3, NAD83, meters
MUDLINE ELEVATION: -0.9m (MSL)
START DATE: 09/24/00

STATION: 8m left of E. Sta. 83+31
COMPLETION ELEVATION: -40.8m (MSL)
CONE END AREA: 15.03 sq. cm (Area Ratio = 0.56)

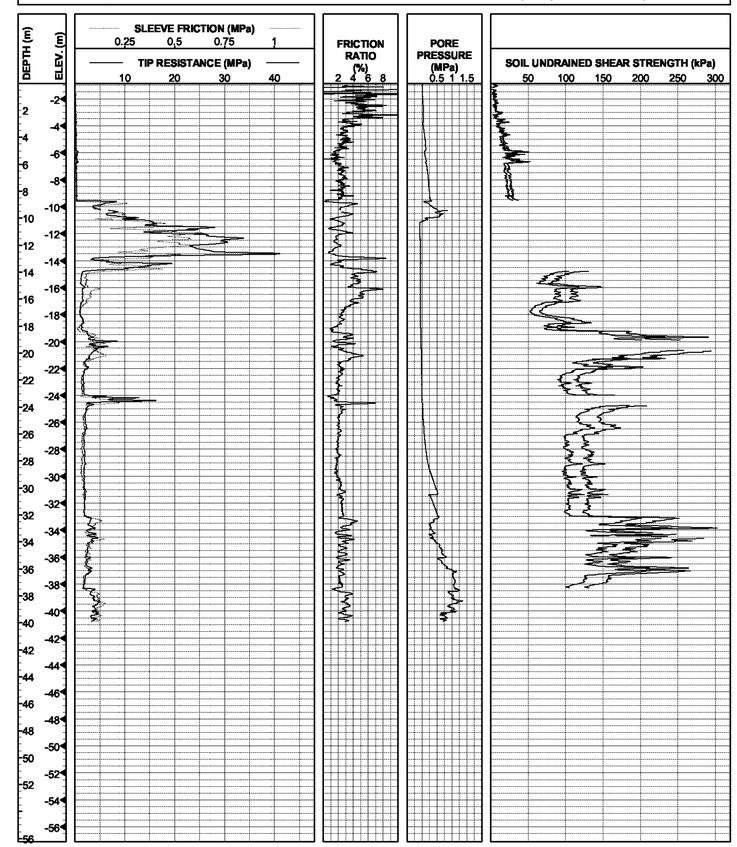

SABA MOHAN (DESIGN OVERSIGHT)	DRAWN BY	S.DESHPANDE	PR/RH (FIELD INVESTIGATOR)	PREPARED FOR THE STATE OF CALIFORNIA DEPARTMENT OF TRANSPORTATION	T.W.McNEILAN (PROJECT ENGINEER)
	CHECKED BY	J.CHACKO	DATE SEE ABOVE		

ORIGINAL SCALE IN CENTIMETERS FOR REDUCED PLANS 1 2 3 4 5 6 7 8 9 10

CU 04
EA 012041

BRIDGE NO. 34-0006R/L
KM POST 2.1
POST MILE

SAN FRANCISCO OAKLAND BAY BRIDGE
EAST SPAN SEISMIC SAFETY PROJECT

OAKLAND APPROACH STRUCTURES - PHASE 2

LOG OF TEST BORINGS NO. 4

DISREGARD PRINTS BEARING EARLIER REVISION DATES → REVISION DATES (PRELIMINARY STAGE ONLY) 11/17/00 4/16/03 10/20/03 6/24/05

SHEET 107 OF 109

FILENAME => 04-0120m1-34-0006r-z-l+b107.tif

DIST	COUNTY	ROUTE	KILOMETER POST TOTAL PROJECT	SHEET NO.	TOTAL SHEETS
04	Ala	80	1.6/2.7	682	744

GEOTECHNICAL PROFESSIONAL

10-3-11
PLANS APPROVAL DATE

REGISTERED PROFESSIONAL ENGINEER
T.W. MCNEILAN
No. 0583
Exp. 12/31/10
Geotechnical
STATE OF CALIFORNIA

FUGRO-EARTH MECHANICS,
A JOINT VENTURE
1000 Broadway, Suite 200
Oakland, CA 94607
(510) 268-0461

The State of California or its officers or agents shall not be responsible for the accuracy or completeness of electronic copies of this plan sheet.

NOTES:

1. Pore pressures are relative to hydrostatic pressure at the mudline.
2. Breaks in the data are due to pauses in the sounding during installation of casing.

SOIL AND ROCK TYPES

- Well graded GRAVEL (GW)
- Poorly graded GRAVEL (GP)
- GRAVEL with sand (GP or GW)
- GRAVEL with clay (GP or GW)
- Clayey GRAVEL (GC)
- GRAVEL with silt (GP or GW)
- Silty GRAVEL (GM)
- Well graded SAND (SW)
- Poorly graded SAND (SP)
- SAND with gravel (SP or SW)
- SAND with clay (SP-SC)
- Clayey SAND (SC)
- Silty SAND (SM)
- SAND with silt (SP-SM)
- Fat CLAY (CH)
- Sandy fat CLAY (CH)
- Lean CLAY (CL)
- Sandy lean CLAY (CL)
- Silty CLAY (CL-ML)
- Elastic SILT (MH)
- SILT (ML)
- Sandy SILT (ML)
- Clayey silt (ML/CL)
- Highly plastic ORGANICS (OH)
- Low plasticity ORGANICS (OL)
- SANDSTONE (Rx)
- SILTSTONE (Rx)
- CLAYSTONE (Rx)
- Interbedded Rock Strata (Rx)
- PAVEMENT

SAMPLERS

- 76mm-OD, 72mm-ID Thin Walled Tube
- 57mm-OD, 54mm-ID* Thin Walled Driven Tube
- 63.5mm-OD, 54mm-ID Offshore Liner
- 76mm-OD, 60mm-ID Modified California Liner
- 51mm-OD, 35mm-ID SPT Split Spoon Sampler
- Rock Core (Inset symbol represents recovery (%))

* A variable-OD, 54-mm-ID tapered driven tube was used to sample coarse sand, gravel and rock

STANDARD PENETRATION TEST (SPT) AND MODIFIED CALIFORNIA (MC) LINER SAMPLERS

Samplers were driven with a 63.5 kg hammer dropped approximately 760 mm.

20	Number of blows to produce 30 cm of penetration after the initial 15 cm of seating.
86/28cm	Number of blows required to produce the indicated penetration after an initial 15 cm seating.
Ref/8cm	50 blows produced the indicated penetration during the initial 15 cm interval.

Note: In rock coring interval recovery(%)-RQD are shown in the Blow Count column.

TUBE AND OFFSHORE LINER SAMPLERS

WOH	Offshore Liner sample advanced with the weight of an 80 kg hammer.
PUSH or SAVE	Pushed thin-walled 76mm-OD-tube.
15/60cm	Number of blows required to produce the indicated penetration using a 54mm-ID-tube sampler. The sampler was driven with an 80 kg downhole hammer dropped approximately 1.5 m.

CLASSIFICATION TESTS BLOW COUNTS AND ROCK QUALITY

- PERCENT PASSING #200 SIEVE
- WATER CONTENT (%)
- SUBMERGED UNIT WEIGHT (KN/m³)
- THEORETICAL SUBMERGED UNIT WEIGHT (KN/m³)

PLASTIC LIMIT LIQUID LIMIT

- EQUIVALENT SPT BLOW COUNT = (MC BLOWCOUNT/1.6) OR SPT BLOWCOUNT
- ROCK QUALITY DESIGNATION (RQD)
- ROCK RECOVERY PERCENT
- ROCK CORING RATE

STRENGTH TESTS

- POCKET PENETROMETER
- TORVANE
- REMOTE VANE
- MINIATURE VANE (RESIDUAL VANE)
- UNCONSOLIDATED UNDRAINED TRIAXIAL
- SWEDISH FALL CONE
- UNCONFINED COMPRESSION (SOIL)
- (Open symbols indicate remolded tests)
- Shear Strength Interpreted from CPT Tip Resistance (Nk = 12-15)
- POINT LOAD TEST (ROCK-INTACT SPECIMEN)
- POINT LOAD TEST (ROCK-ALONG WEAK PLANE)
- UNCONFINED COMPRESSION (ROCK)
- Soil: Strength Exceeds Capacity of Measuring Device Rock: Sample broke along discontinuity; Intact sample would have greater strength
- FRACTURE DENSITY (ROCK)

STRENGTH OF COHESIVE SOILS

Consistency	Undrained Shear Strength kPa
Very Soft	less than 12
Soft	12 to 25
Firm	25 to 50
Stiff	50 to 100
Very Stiff	100 to 200
Hard	greater than 200

DENSITY OF GRANULAR SOILS

Descriptive Term	Relative Density (%)*
Very Loose	less than 15
Loose	15 to 35
Medium Dense	35 to 65
Dense	65 to 85
Very Dense	greater than 85

*Estimated from sampler driving record and CPT tip resistance.

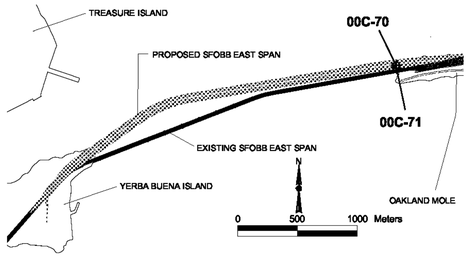

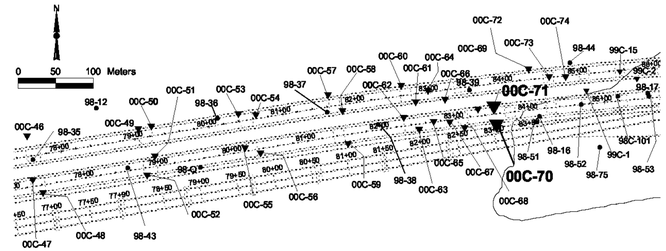

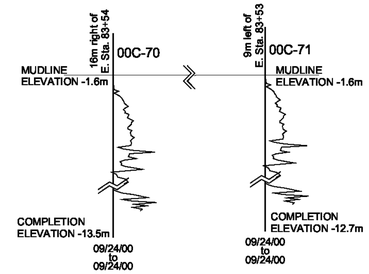

CPT 00C-70

COORDINATES: E1838849 N648228
CA State Plane Zone 3, NAD83, meters
MUDLINE ELEVATION: -1.6m (MSL.)
START DATE: 09/24/00

STATION: 16m right of E. Sta. 83+54
COMPLETION ELEVATION: -13.5m (MSL)
CONE END AREA: 15.03 sq. cm (Area Ratio = 0.56)

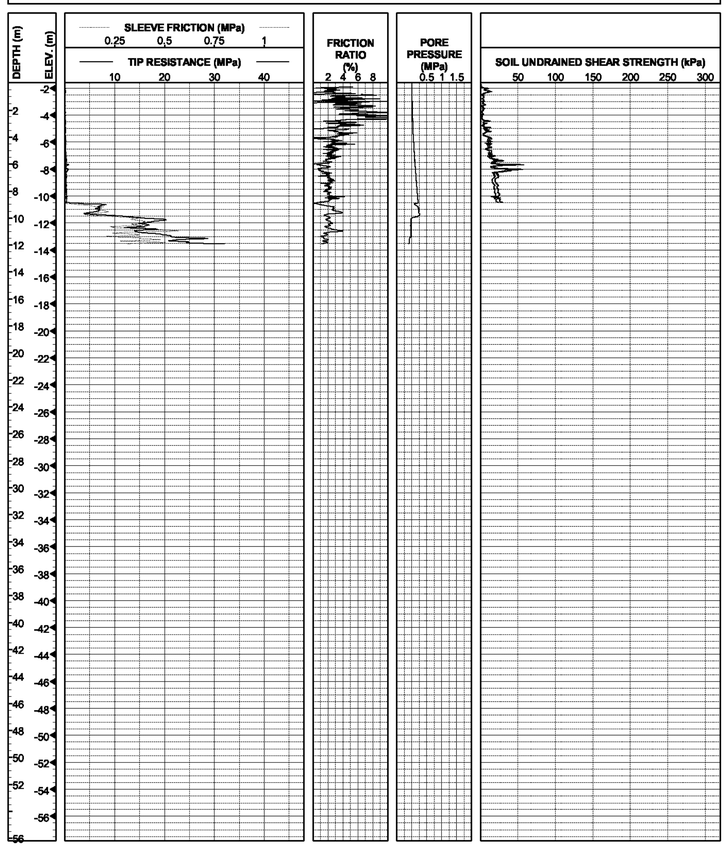

CPT 00C-71

COORDINATES: E1838846 N648252
CA State Plane Zone 3, NAD83, meters
MUDLINE ELEVATION: -1.6m (MSL.)
START DATE: 09/24/00

STATION: 9m left of E. Sta. 83+53
COMPLETION ELEVATION: -12.7m (MSL)
CONE END AREA: 15.03 sq. cm (Area Ratio = 0.56)

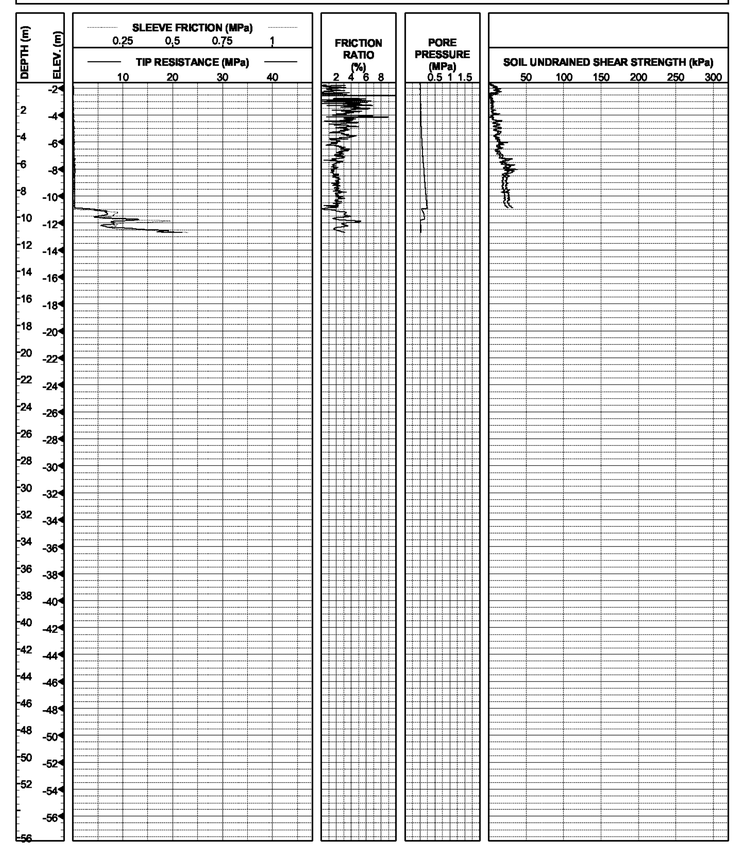

SABA MOHAN
DESIGN OVERSIGHT

DRAWN BY S.DESHPANDE
CHECKED BY J.CHACKO

P.ROBINS
FIELD INVESTIGATOR
DATE SEE ABOVE

PREPARED FOR THE
STATE OF CALIFORNIA
DEPARTMENT OF TRANSPORTATION

T.W.McNEILAN
PROJECT ENGINEER

BRIDGE NO. 34-0006R/L
KM POST 2.1
POST MILE

ORIGINAL SCALE IN CENTIMETERS FOR REDUCED PLANS 1 2 3 4 5 6 7 8 9 10

CU 04
EA 012041

SAN FRANCISCO OAKLAND BAY BRIDGE
EAST SPAN SEISMIC SAFETY PROJECT

OAKLAND APPROACH STRUCTURES - PHASE 2

LOG OF TEST BORINGS NO. 5

DISREGARD PRINTS BEARING EARLIER REVISION DATES → 11/17/00 4/18/03 10/20/03 6/24/05

REVISION DATES (PRELIMINARY STAGE ONLY) | SHEET 108 | OF 109

FILENAME => 04-0120m1-34-0006r-z-1tb108.tif

DIST	COUNTY	ROUTE	KILOMETER POST TOTAL PROJECT	SHEET NO.	TOTAL SHEETS
04	Ala	80	1.6/2.7	683	744

GEOTECHNICAL PROFESSIONAL

10-3-11
PLANS APPROVAL DATE

REGISTERED PROFESSIONAL ENGINEER T.W. MCNEILAN No. 0583 Exp. 12/31/10 Geotechnical STATE OF CALIFORNIA

FUGRO-EARTH MECHANICS,
A JOINT VENTURE
1000 Broadway, Suite 200
Oakland, CA 94607
(510) 268-0461

The State of California or its officers or agents shall not be responsible for the accuracy or completeness of electronic copies of this plan sheet.

Metric

SOIL AND ROCK TYPES

- Well graded GRAVEL (GW)
- Poorly graded GRAVEL (GP)
- GRAVEL with sand (GP or GW)
- GRAVEL with clay (GP or GW)
- Clayey GRAVEL (GC)
- GRAVEL with silt (GP or GW)
- Silty GRAVEL (GM)
- Well graded SAND (SW)
- Poorly graded SAND (SP)
- SAND with gravel (SP or SW)
- SAND with clay (SP-SC)
- Clayey SAND (SC)
- Silty SAND (SM)
- SAND with silt (SP-SM)
- Fat CLAY (CH)
- Sandy fat CLAY (CH)
- Lean CLAY (CL)
- Sandy lean CLAY (CL)
- Silty CLAY (CL-ML)
- Elastic SILT (MH)
- SILT (ML)
- Sandy SILT (ML)
- Clayey silt (ML/CL)
- Highly plastic ORGANICS (OH)
- Low plasticity ORGANICS (OL)
- SANDSTONE (Rx)
- SILTSTONE (Rx)
- CLAYSTONE (Rx)
- Interbedded Rock Strata (Rx)
- PAVEMENT

SAMPLERS

- 76mm-OD, 72mm-ID Thin Walled Tube
- 57mm-OD, 54mm-ID* Thin Walled Driven Tube
- 63.5mm-OD, 54mm-ID Offshore Liner
- 76mm-OD, 60mm-ID Modified California Liner
- 51mm-OD, 35mm-ID SPT Split Spoon Sampler
- Rock Core (Inset symbol represents recovery (%))

* A variable-OD, 54-mm-ID tapered driven tube was used to sample coarse sand, gravel and rock

STANDARD PENETRATION TEST (SPT) AND MODIFIED CALIFORNIA (MC) LINER SAMPLERS

Samplers were driven with a 63.5 kg hammer dropped approximately 760 mm.

20	Number of blows to produce 30 cm of penetration after the initial 15 cm of seating.
86/28cm	Number of blows required to produce the indicated penetration after an initial 15 cm seating.
Ref/8cm	50 blows produced the indicated penetration during the initial 15 cm interval.

Note: In rock coring interval recovery(%)-RQD are shown in the Blow Count column.

TUBE AND OFFSHORE LINER SAMPLERS

WOH	Offshore Liner sample advanced with the weight of an 80 kg hammer.
PUSH or SAVE	Pushed thin-walled 76mm-OD-tube.
15/60cm	Number of blows required to produce the indicated penetration using a 54mm-ID-tube sampler. The sampler was driven with an 80 kg downhole hammer dropped approximately 1.5 m.

CLASSIFICATION TESTS BLOW COUNTS AND ROCK QUALITY

- PERCENT PASSING #200 SIEVE
- WATER CONTENT (%)
- SUBMERGED UNIT WEIGHT (KN/m³)
- THEORETICAL SUBMERGED UNIT WEIGHT (KN/m³)

PLASTIC LIMIT LIQUID LIMIT

- EQUIVALENT SPT BLOW COUNT = (MC BLOWCOUNT/1.6) OR SPT BLOWCOUNT
- ROCK QUALITY DESIGNATION (RQD)
- ROCK RECOVERY PERCENT
- ROCK CORING RATE

STRENGTH TESTS

- POCKET PENETROMETER
- TORVANE
- REMOTE VANE
- MINIATURE VANE (& RESIDUAL VANE)
- UNCONSOLIDATED UNDRAINED TRIAXIAL
- SWEDISH FALL CONE
- UNCONFINED COMPRESSION (SOIL)
- (Open symbols indicate remolded tests)
- Shear Strength Interpreted from CPT Tip Resistance (Nk = 12-15)
- POINT LOAD TEST (ROCK-INTACT SPECIMEN)
- POINT LOAD TEST (ROCK-ALONG WEAK PLANE)
- UNCONFINED COMPRESSION (ROCK)
- Soil: Strength Exceeds Capacity of Measuring Device
  Rock: Sample broke along discontinuity; Intact sample would have greater strength
- FRACTURE DENSITY (ROCK)

STRENGTH OF COHESIVE SOILS

Consistency	Undrained Shear Strength kPa
Very Soft	less than 12
Soft	12 to 25
Firm	25 to 50
Stiff	50 to 100
Very Stiff	100 to 200
Hard	greater than 200

DENSITY OF GRANULAR SOILS

Descriptive Term	Relative Density (%)*
Very Loose	less than 15
Loose	15 to 35
Medium Dense	35 to 65
Dense	65 to 85
Very Dense	greater than 85

*Estimated from sampler driving record and CPT tip resistance.

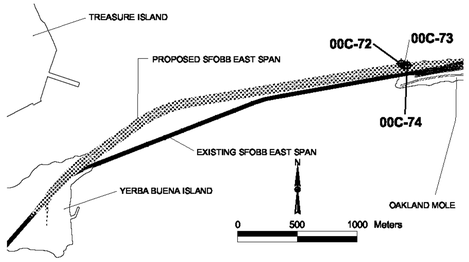

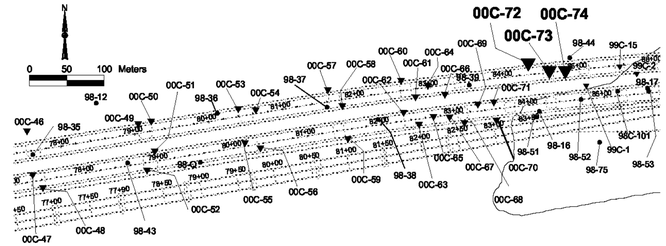

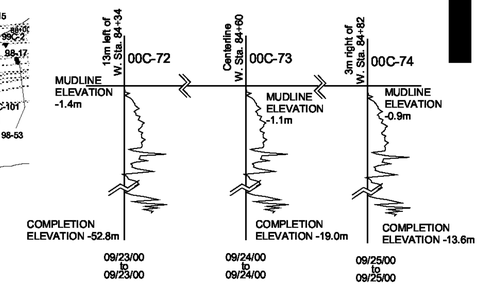

NOTES:

1. Pore pressures are relative to hydrostatic pressure at the mudline.
2. Breaks in the data are due to pauses in the sounding during installation of casing.

CPT 00C-72

COORDINATES: E1838892 N648302
CA State Plane Zone 3, NAD83, meters
MUDLINE ELEVATION: -1.4m (MSL)
START DATE: 09/23/00

STATION: 13m left of W. Sta. 84+34
COMPLETION ELEVATION: -52.8m (MSL)
CONE END AREA: 15.03 sq. cm (Area Ratio = 0.56)

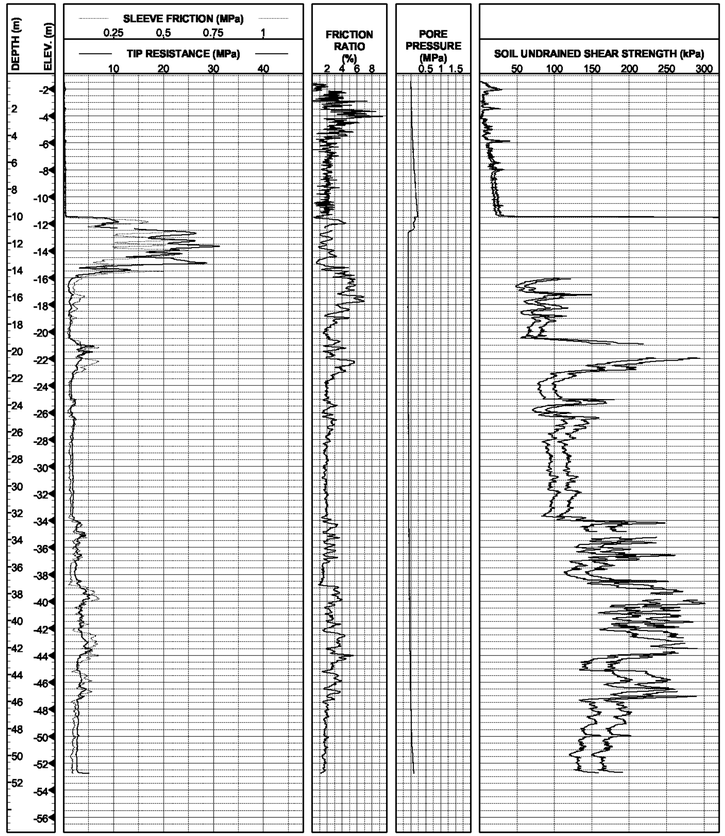

CPT 00C-73

COORDINATES: E1838919 N648292
CA State Plane Zone 3, NAD83, meters
MUDLINE ELEVATION: -1.1m (MSL)
START DATE: 09/24/00

STATION: Centerline W. Sta. 84+60
COMPLETION ELEVATION: -19.0m (MSL)
CONE END AREA: 15.03 sq. cm (Area Ratio = 0.56)

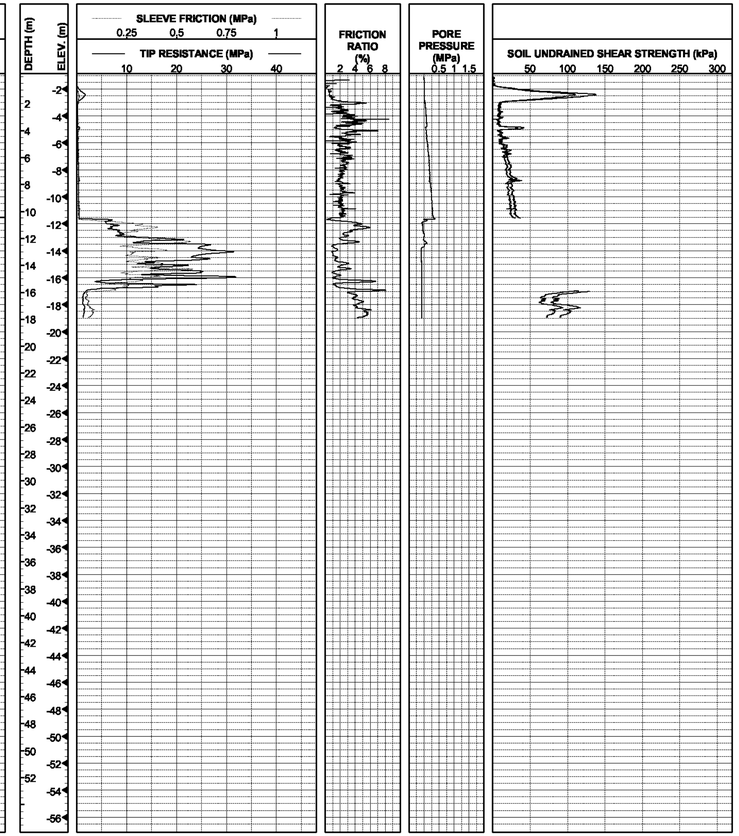

CPT 00C-74

COORDINATES: E1838941 N648292
CA State Plane Zone 3, NAD83, meters
MUDLINE ELEVATION: -0.9m (MSL)
START DATE: 09/25/00

STATION: 3m right of W. Sta. 84+82
COMPLETION ELEVATION: -13.6m (MSL)
CONE END AREA: 15.03 sq. cm (Area Ratio = 0.56)

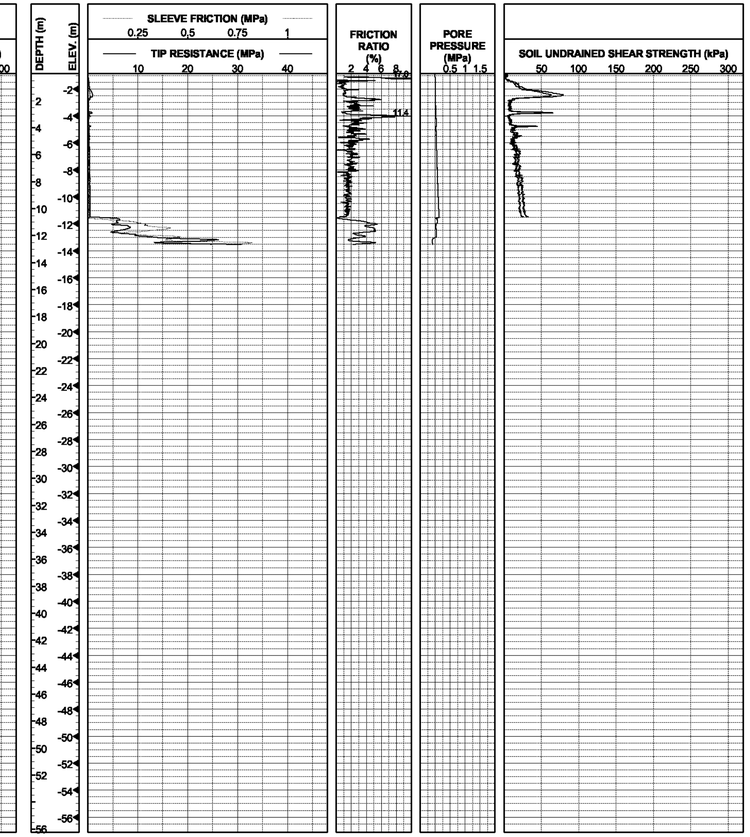

SABA MOHAN
DESIGN OVERSIGHT

DRAWN BY S.DESHPANDE
CHECKED BY J.CHACKO

P.ROBINS
FIELD INVESTIGATOR
DATE SEE ABOVE

PREPARED FOR THE
STATE OF CALIFORNIA
DEPARTMENT OF TRANSPORTATION

T.W.McNEILAN
PROJECT ENGINEER

BRIDGE NO. 34-0006R/L
KM POST 2.1
POST MILE

SAN FRANCISCO OAKLAND BAY BRIDGE
EAST SPAN SEISMIC SAFETY PROJECT

OAKLAND APPROACH STRUCTURES - PHASE 2

LOG OF TEST BORINGS NO. 6

ORIGINAL SCALE IN CENTIMETERS FOR REDUCED PLANS 1 2 3 4 5 6 7 8 9 10

CU 04
EA 012041

DISREGARD PRINTS BEARING EARLIER REVISION DATES → REVISION DATES (PRELIMINARY STAGE ONLY) 11/17/00 4/16/03 10/20/03 6/24/05

SHEET 109 OF 109

FILENAME => 04-0120m1-34-0006r-z-1tb109.tif

DIST.	COUNTY	ROUTE	KILOMETER POST TOTAL PROJECT	SHEET NO.	TOTAL SHEETS
04	Ala	80	1.6/2.7	684	744

Caltrans Metric

REGISTERED ENGINEER - CIVIL

10-3-11
PLANS APPROVAL DATE

REGISTERED PROFESSIONAL ENGINEER A.L. ELY No. 18880 Exp. 6-30-11 CIVIL STATE OF CALIFORNIA

The State of California or its officers or agents shall not be responsible for the accuracy or completeness of electronic copies of this plan sheet.

T.Y. LIN / MOFFATT & NICHOL
TWO HARRISON STREET, SUITE 500
SAN FRANCISCO, CA 94105

INDEX TO PLANS:

SHEET NO.	DESCRIPTION
1	GENERAL PLAN
2	CABLE RAILING REMOVAL
3	DECK SURFACE TREATMENT NO. 1
4	DECK SURFACE TREATMENT NO. 2

QUANTITIES

CLEAN BRIDGE DECK	113 300 m^2
BRIDGE REMOVAL (PORTION), LOCATION D	LUMP SUM
TREAT BRIDGE DECK	113 285 m^2
FURNISH BRIDGE DECK TREATMENT MATERIAL	51 495 L

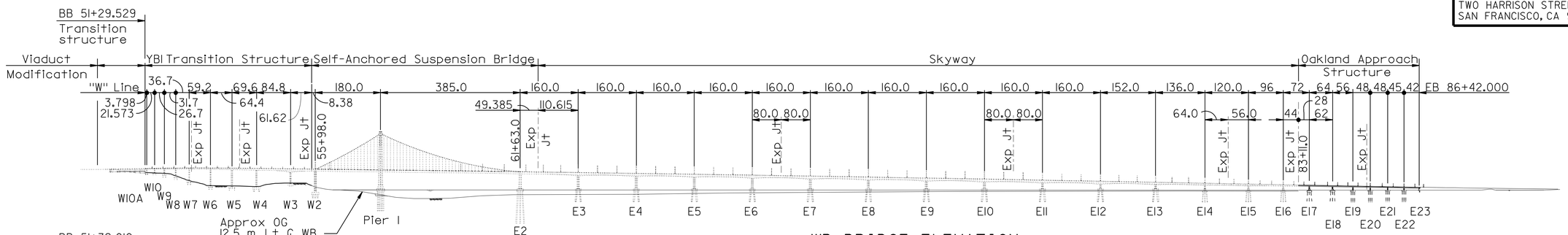

WB BRIDGE ELEVATION

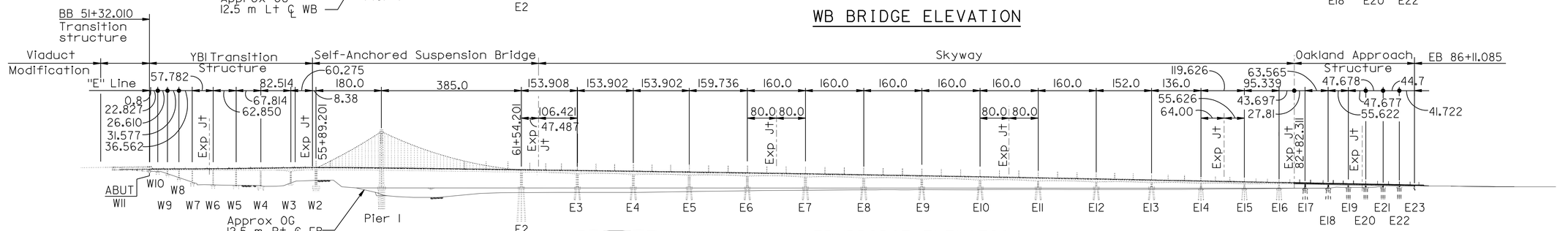

EB BRIDGE ELEVATION

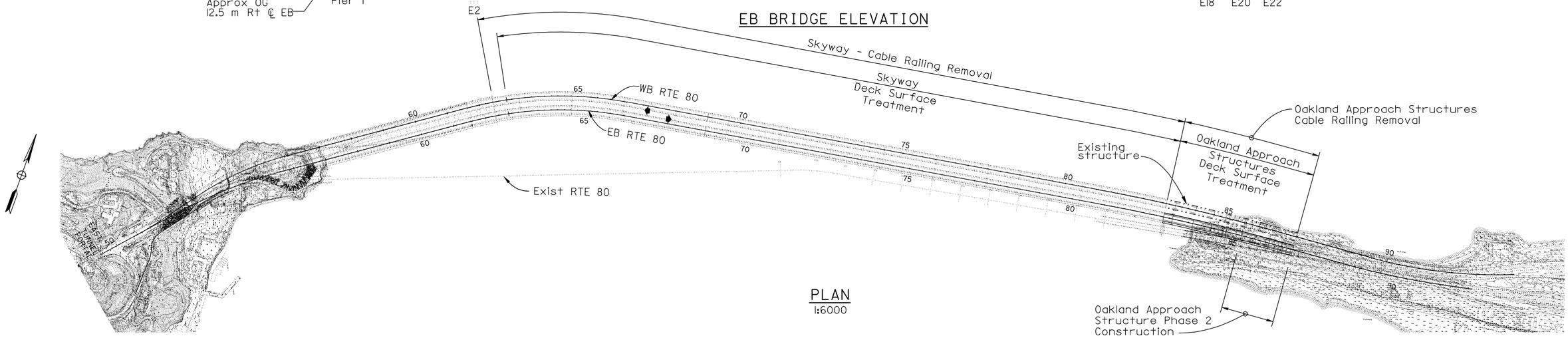

PLAN
1:6000

ALL DIMENSIONS ARE IN METERS UNLESS OTHERWISE SHOWN

SAN FRANCISCO OAKLAND BAY BRIDGE
EAST SPAN SEISMIC SAFETY PROJECT

EAST SPAN SFOBB STRUCTURE

CABLE RAILING REMOVAL AND DECK SURFACE TREATMENT

GENERAL PLAN

DESIGN OVERSIGHT-SAM AKKAD HASSAN EL-NATUR	DESIGN	BY Shangkuan	CHECKED Birdy	LOAD FACTOR DESIGN	LIVE LOADING: HS20-44 AND ALTERNATIVE AND PERMIT DESIGN LOAD		
SIGN OFF DATE	DETAILS	BY van Ryn/Zucchi/Mai	CHECKED Birdy	LAYOUT	BY Joyce	CHECKED Kashuba	
Rev. Date: 5-18-98	QUANTITIES	BY Haroun/Char	CHECKED Jaradat/Dudley	SPECIFICATIONS	BY Trinh	PLANS AND SPECS COMPARED A. Wang	

PREPARED FOR THE STATE OF CALIFORNIA DEPARTMENT OF TRANSPORTATION

Jal Birdy
PROJECT ENGINEER

BRIDGE NO. 34-0006 L/R
KILOMETER POST

ORIGINAL SCALE IN MILLIMETERS FOR REDUCED PLANS 0 10 20 30 40 50 60 70 80 90 100

CU 04
EA 0120M1

DISREGARD PRINTS BEARING EARLIER REVISION DATES

REVISION DATES (PRELIMINARY STAGE ONLY): 8/13/09 10/30/09 1/18/10 4/2/10 5/28/10 9/30/10 3/14/11 4/4/11 6/3/11

SHEET 1 OF 4

FILE => 04-0120m1-34-0006r1-a-pp02.dgn

SUBMITTAL - 12

June 3, 2011

USERNAME => s121614 DATE PLOTTED => 05-OCT-2011 TIME PLOTTED => 14:10

DIST.	COUNTY	ROUTE	KILOMETER POST TOTAL PROJECT	SHEET NO.	TOTAL SHEETS
04	Ala	80	1.6/2.7	685	744

REGISTERED ENGINEER - CIVIL

10-3-11

PLANS APPROVAL DATE

REGISTERED PROFESSIONAL ENGINEER A.L. ELY No. 18880 Exp. 6-30-11 CIVIL STATE OF CALIFORNIA

The State of California or its officers or agents shall not be responsible for the accuracy or completeness of electronic copies of this plan sheet.

T.Y. LIN / MOFFATT & NICHOL
TWO HARRISON STREET, SUITE 500
SAN FRANCISCO, CA 94105

Caltrans Metric

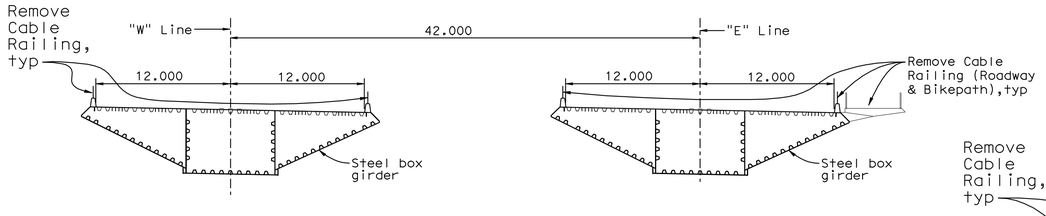

TYPICAL SECTION - SKYWAY (STEEL)

No Scale

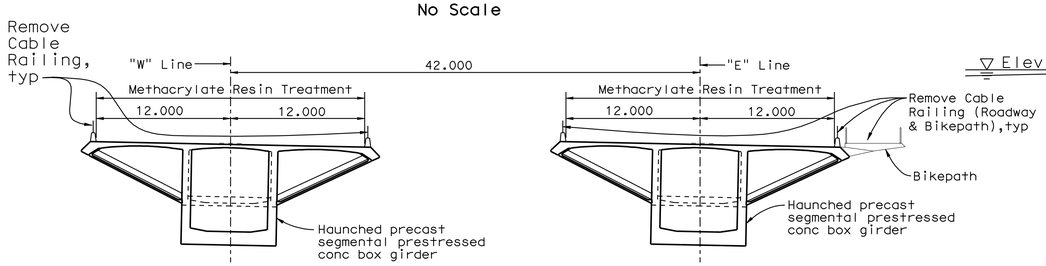

TYPICAL SECTION - SKYWAY (CONCRETE)

No Scale

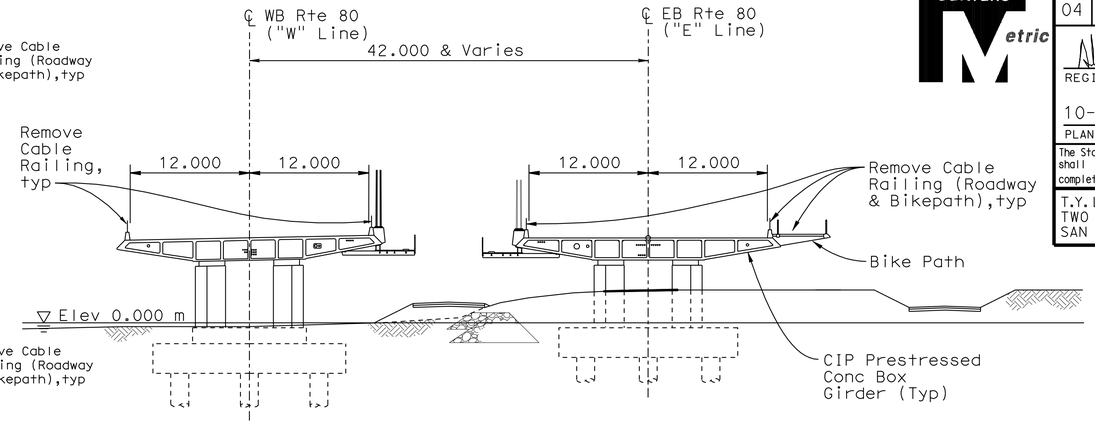

TYPICAL SECTION - OAKLAND APPROACH STRUCTURES

(Shown Near Pier E21R)

1:300

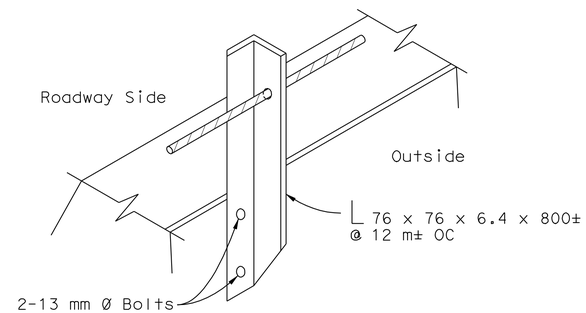

STEEL BARRIER

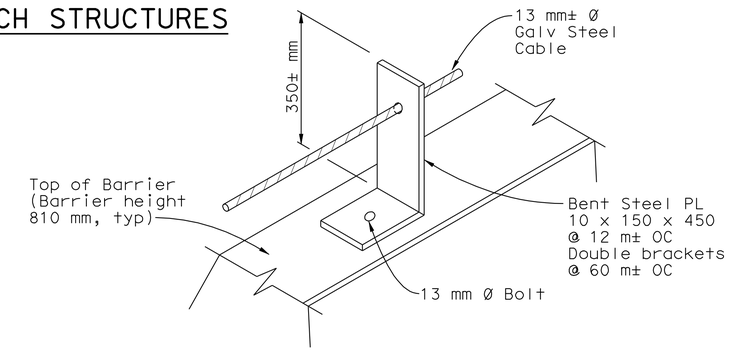

CONCRETE BARRIER

TYPICAL CABLE RAILING DETAILS

No Scale

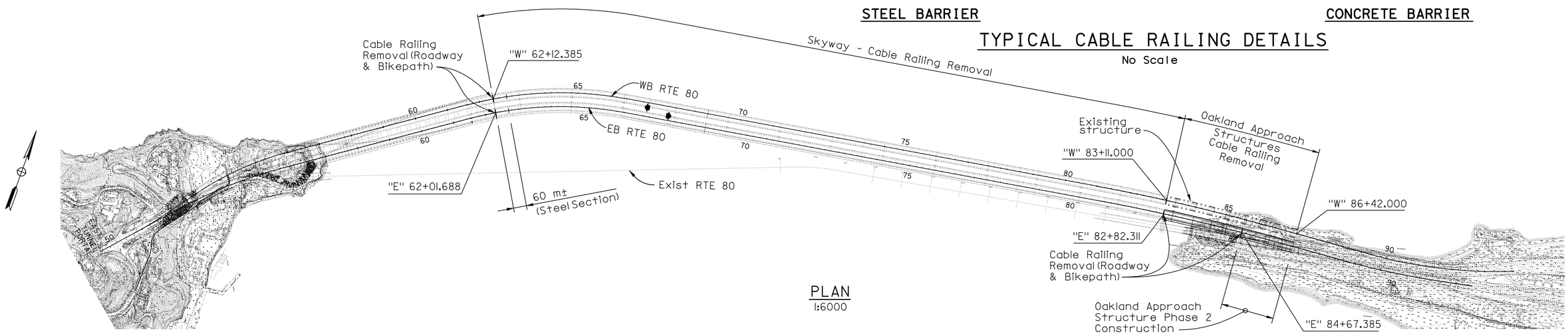

PLAN

1:6000

Note:
Patch bolt holes with epoxy mortar to match adjoining surface after removal of cable railing.

ALL DIMENSIONS ARE IN METERS UNLESS OTHERWISE SHOWN

SAN FRANCISCO OAKLAND BAY BRIDGE
EAST SPAN SEISMIC SAFETY PROJECT

EAST SPAN SFOBB STRUCTURE

CABLE RAILING REMOVAL AND DECK SURFACE TREATMENT

CABLE RAILING REMOVAL

DESIGN OVERSIGHT-SAM AKKAD HASSAN EL-NATUR	DESIGN	BY Shangkuan	CHECKED Birdy	LOAD FACTOR DESIGN	LIVE LOADING: HS20-44 AND ALTERNATIVE AND PERMIT DESIGN LOAD
SIGN OFF DATE	DETAILS	BY van Ryn/Zucchi/Mai	CHECKED Birdy	LAYOUT	BY Joyce / CHECKED Kashuba
Rev. Date: 5-18-98	QUANTITIES	BY Haroun/Char	CHECKED Jaradat/Dudley	SPECIFICATIONS	BY Trinh / PLANS AND SPECS COMPARED A. Wang

PREPARED FOR THE STATE OF CALIFORNIA DEPARTMENT OF TRANSPORTATION

Jal Birdy
PROJECT ENGINEER

BRIDGE NO. 34-0006 L/R
KILOMETER POST

ORIGINAL SCALE IN MILLIMETERS FOR REDUCED PLANS 0 10 20 30 40 50 60 70 80 90 100

CU 04
EA 0120M1

DISREGARD PRINTS BEARING EARLIER REVISION DATES

REVISION DATES (PRELIMINARY STAGE ONLY) 10/30/09 1/15/10 4/23/10 5/28/10 9/30/10 3/14/11 3/14/11 3/14/11 6/3/11

SHEET 2 OF 4

FILE => 04-0120m1-34-0006r1-u-cb1r1rem.dgn

SUBMITTAL - 12

June 3, 2011

USERNAME => s12614 DATE PLOTTED => 05-OCT-2011 TIME PLOTTED => 14:11

DIST.	COUNTY	ROUTE	KILOMETER POST TOTAL PROJECT	SHEET NO.	TOTAL SHEETS
04	Ala	80	1.6/2.7	686	744

Caltrans Metric

REGISTERED ENGINEER - CIVIL

10-3-11

PLANS APPROVAL DATE

REGISTERED PROFESSIONAL ENGINEER A.L. ELY No. 18880 Exp. 6-30-11 CIVIL STATE OF CALIFORNIA

The State of California or its officers or agents shall not be responsible for the accuracy or completeness of electronic copies of this plan sheet.

T.Y. LIN / MOFFATT & NICHOL
TWO HARRISON STREET, SUITE 500
SAN FRANCISCO, CA 94105

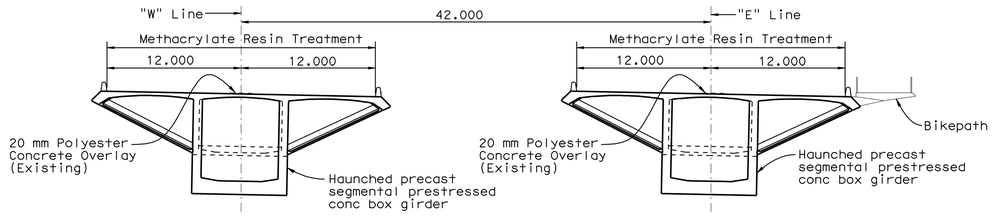

TYPICAL SECTION - SKYWAY

No Scale

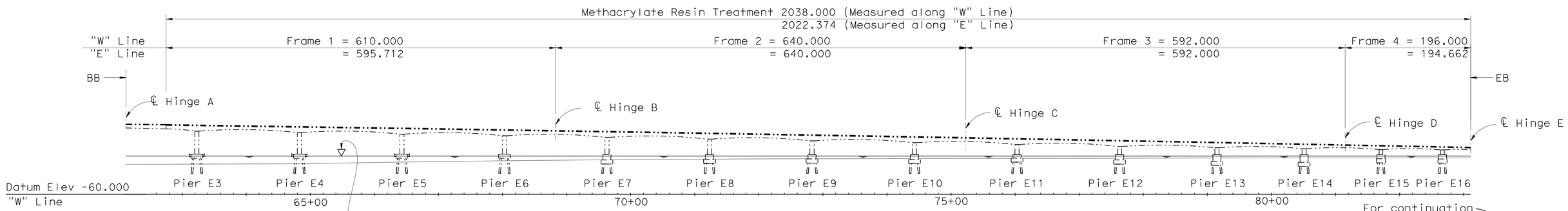

DEVELOPED ELEVATION - SKYWAY

1:3000

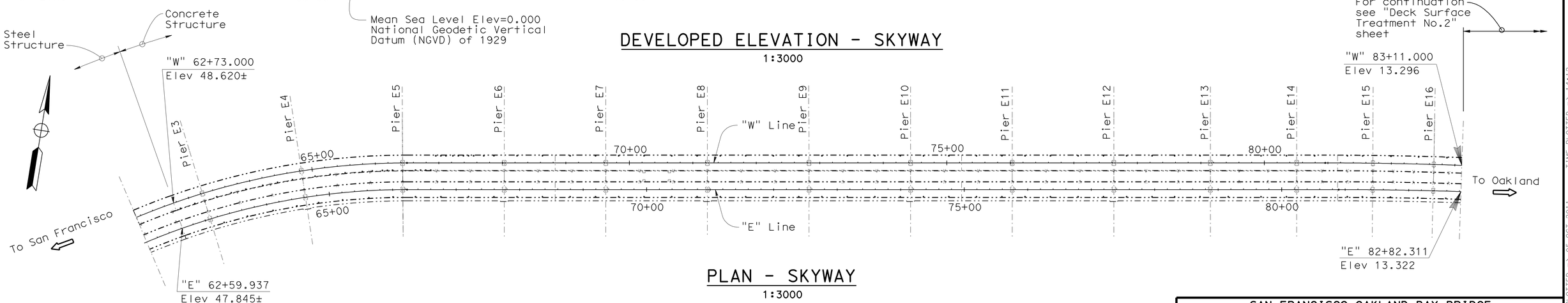

PLAN - SKYWAY

1:3000

ALL DIMENSIONS ARE IN METERS UNLESS OTHERWISE SHOWN

SAN FRANCISCO OAKLAND BAY BRIDGE
EAST SPAN SEISMIC SAFETY PROJECT

EAST SPAN SFOBB STRUCTURES

CABLE RAILING REMOVAL AND DECK SURFACE TREATMENT

DECK SURFACE TREATMENT NO.1

DESIGN OVERSIGHT
HASAN ELMATUR
SIGN OFF DATE

	BY	CHECKED
DESIGN		
DETAILS		
QUANTITIES		

PREPARED FOR THE STATE OF CALIFORNIA DEPARTMENT OF TRANSPORTATION

Jal Birdy
PROJECT ENGINEER

BRIDGE NO. 34-0006 L/R
KILOMETER POST 1.6

Rev. Date: 5-18-98

ORIGINAL SCALE IN MILLIMETERS FOR REDUCED PLANS 0 10 20 30 40 50 60 70 80 90 100

CU 04
EA 0120M1

DISREGARD PRINTS BEARING EARLIER REVISION DATES

REVISION DATES (PRELIMINARY STAGE ONLY): 8/13/09 10/30/09 1/15/10 1/21/10 5/28/10 9/30/10 3/4/11 3/14/11 4/4/11 6/3/11

SHEET 3 OF 4

FILE => 04-0120m1-34-0006r1-u-dcksur01.dgn

SUBMITTAL - 12 June 3, 2011

USERNAME => s121614 DATE PLOTTED => 05-OCT-2011 TIME PLOTTED => 14:12

DIST.	COUNTY	ROUTE	KILOMETER POST TOTAL PROJECT	SHEET NO.	TOTAL SHEETS
04	Ala	80	1.6/2.7	687	744

Caltrans Metric

REGISTERED ENGINEER - CIVIL

10-3-11
PLANS APPROVAL DATE

REGISTERED PROFESSIONAL ENGINEER A.L. ELY No. 18880 Exp. 6-30-11 CIVIL STATE OF CALIFORNIA

The State of California or its officers or agents shall not be responsible for the accuracy or completeness of electronic copies of this plan sheet.

T.Y. LIN / MOFFATT & NICHOL
TWO HARRISON STREET, SUITE 500
SAN FRANCISCO, CA 94105

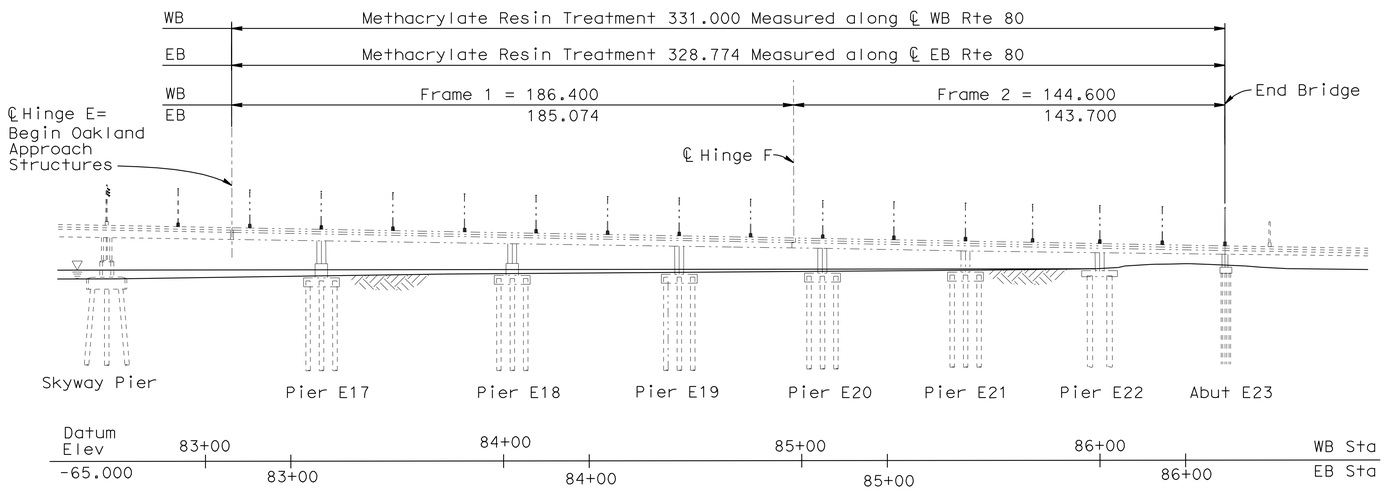

ELEVATION - OAKLAND APPROACH STRUCTURES

1:1000

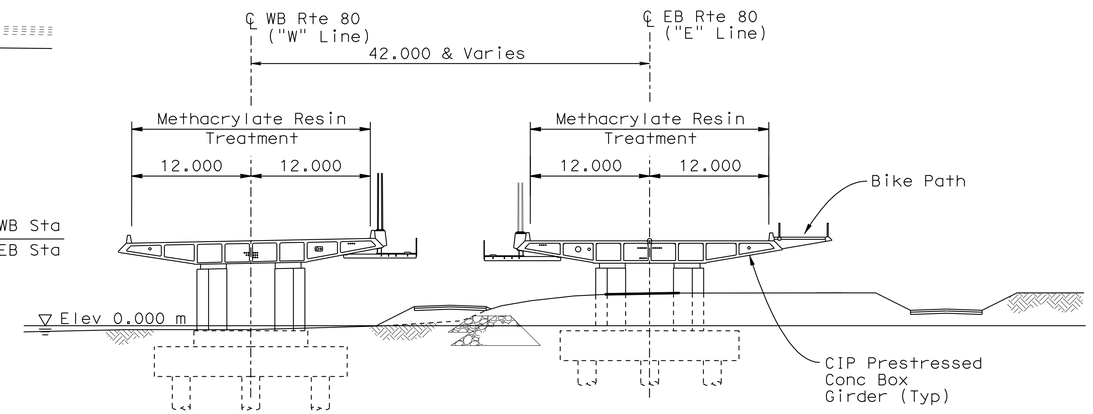

TYPICAL SECTION

(Shown Near Pier E2IR)

1:300

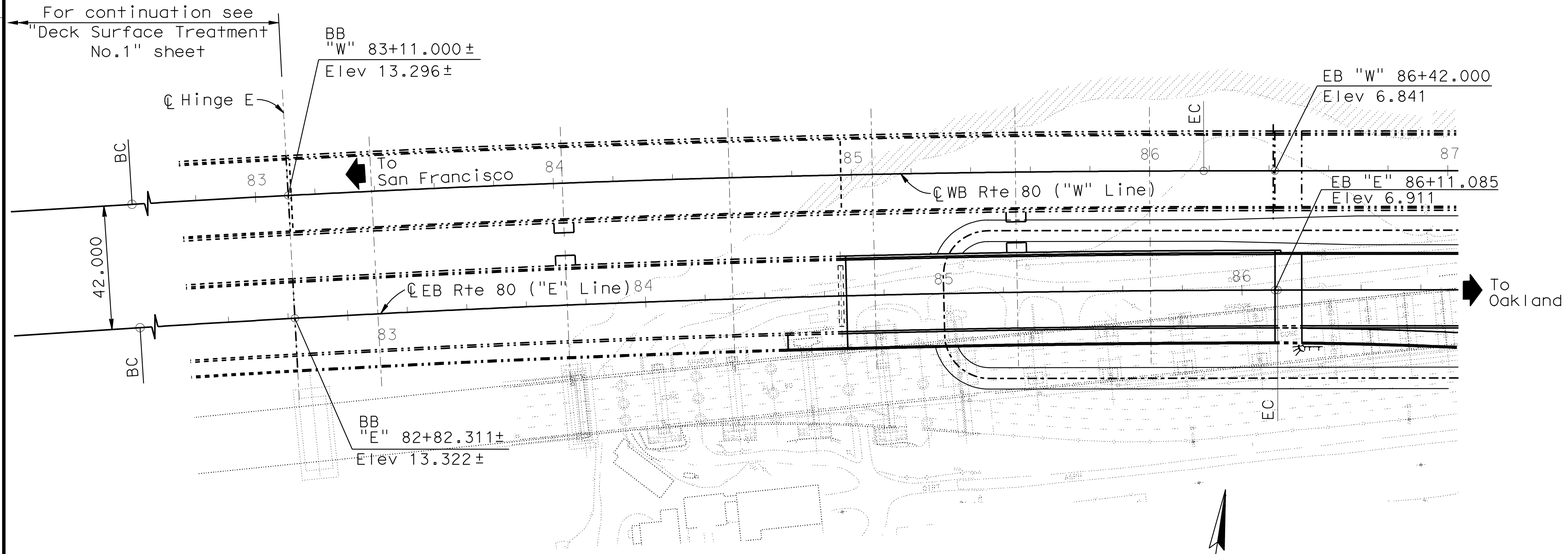

PLAN - OAKLAND APPROACH STRUCTURES

1:1000

ALL DIMENSIONS ARE IN METERS UNLESS OTHERWISE SHOWN

SAN FRANCISCO OAKLAND BAY BRIDGE
EAST SPAN SEISMIC SAFETY PROJECT

EAST SPAN SFOBB STRUCTURE

CABLE RAILING REMOVAL AND DECK SURFACE TREATMENT

DECK SURFACE TREATMENT NO.2

DESIGN OVERSIGHT
HASAN EL-NATUR
SIGN OFF DATE

	BY	CHECKED
DESIGN		
DETAILS		
QUANTITIES		

PREPARED FOR THE STATE OF CALIFORNIA DEPARTMENT OF TRANSPORTATION

Jal Birdy
PROJECT ENGINEER

BRIDGE NO. 34-0006 L/R
KILOMETER POST 1.6

CU 04
EA 0120M1

Rev. Date: 5-18-98

ORIGINAL SCALE IN MILLIMETERS FOR REDUCED PLANS 0 10 20 30 40 50 60 70 80 90 100

DISREGARD PRINTS BEARING EARLIER REVISION DATES

REVISION DATES (PRELIMINARY STAGE ONLY): 8/13/09 10/30/09 1/15/10 4/2/10 5/28/10 9/30/10 3/4/11 3/14/11 4/4/11 6/3/11

SHEET 4 OF 4

FILE => 04-0120m1-34-0006rl-u-dcksur02.dgn

SUBMITTAL - 12 June 3, 2011

USERNAME => s12:614 DATE PLOTTED => 05-OCT-2011 TIME PLOTTED => 14:12

DIST.	COUNTY	ROUTE	KILOMETER POST TOTAL PROJECT	SHEET NO.	TOTAL SHEETS
04	Ala	80	1.6/2.7	688	744

Caltrans Metric

REGISTERED ENGINEER - CIVIL

10-3-11

PLANS APPROVAL DATE

REGISTERED PROFESSIONAL ENGINEER A.L. ELY No. 18880 Exp. 6-30-11 CIVIL STATE OF CALIFORNIA

The State of California or its officers or agents shall not be responsible for the accuracy or completeness of electronic copies of this plan sheet.

T.Y. LIN / MOFFATT & NICHOL
TWO HARRISON STREET
SAN FRANCISCO, CA 94105

QUANTITIES

MINOR CONCRETE (MINOR STRUCTURE)	286	m^3
FURNISH POLYESTER CONCRETE OVERLAY (12 MM)	16	m^3
PLACE POLYESTER CONCRETE OVERLAY (12 MM)	1 347	m^2
MISCELLANEOUS METAL (BRIDGE)	1 920	kg
BIKEPATH RAILING	322	m

Notes:

1. Concrete for bike path ramp and landing shall have a minimum 28 day compressive strength of 25 MPa.
2. Bar reinforcement shall conform to ASTM A615/A Grade 420.

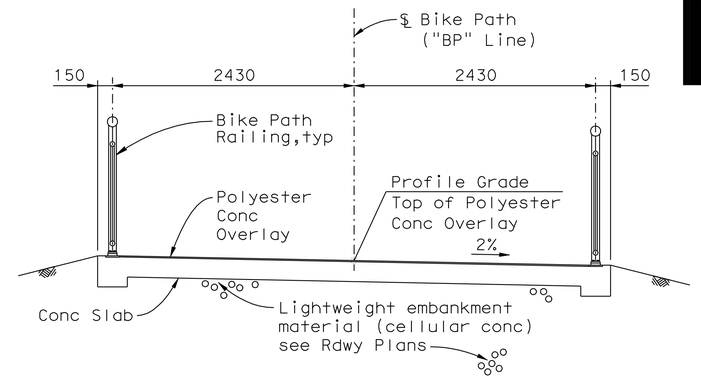

TYPICAL SECTION - BIKE PATH RAMP

1:30

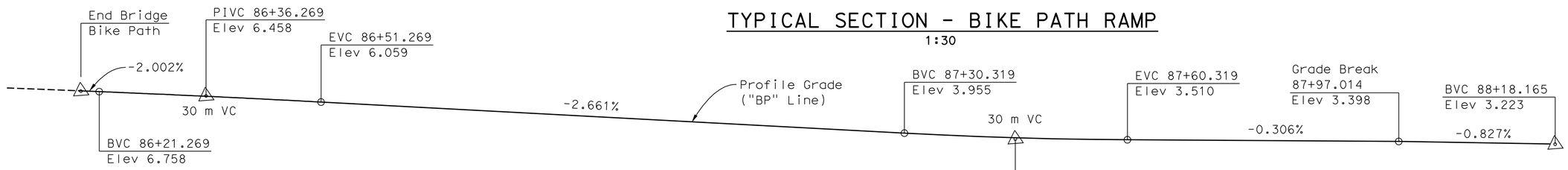

PROFILE GRADE

No Scale

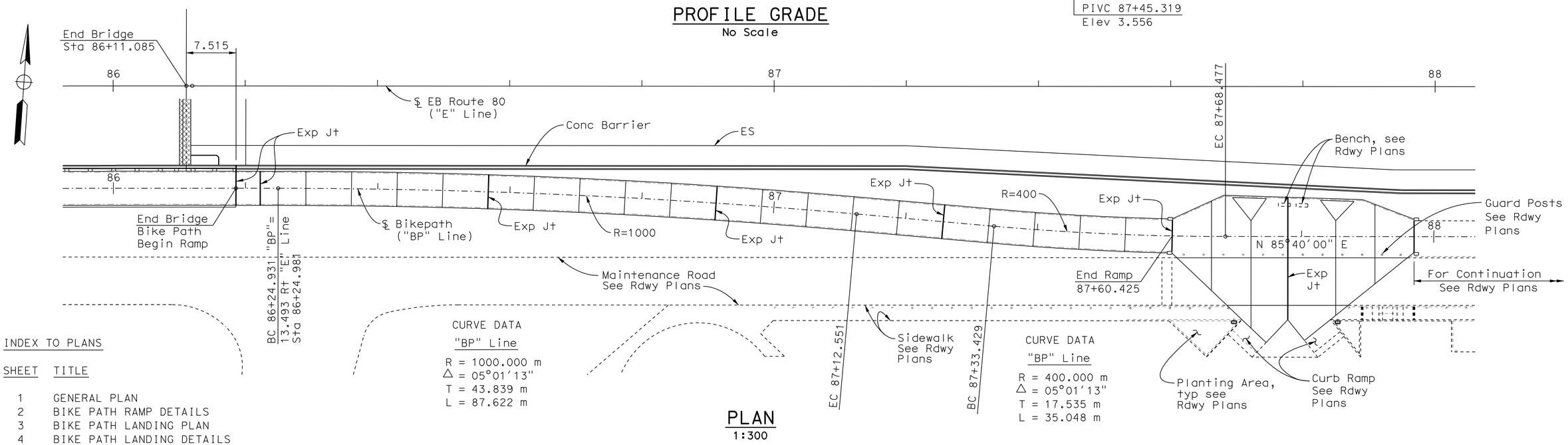

CURVE DATA
"BP" Line
R = 1000.000 m
Δ = 05°01'13"
T = 43.839 m
L = 87.622 m

CURVE DATA
"BP" Line
R = 400.000 m
Δ = 05°01'13"
T = 17.535 m
L = 35.048 m

PLAN

1:300

INDEX TO PLANS

SHEET	TITLE
1	GENERAL PLAN
2	BIKE PATH RAMP DETAILS
3	BIKE PATH LANDING PLAN
4	BIKE PATH LANDING DETAILS
5	PEDESTAL DETAILS
6	PEDESTAL FOUNDATION DETAILS
7	BIKE PATH RAILING DETAILS NO.1
8	BIKE PATH RAILING DETAILS NO.2
9	BIKE PATH RAILING DETAILS NO.3

LEGEND:

Standard Plan Sheet No.
Detail No.

ALL DIMENSIONS ARE IN MILLIMETERS UNLESS OTHERWISE SHOWN

SAN FRANCISCO OAKLAND BAY BRIDGE
EAST SPAN SEISMIC SAFETY PROJECT

OAKLAND APPROACH BIKE PATH RAMP & LANDING

GENERAL PLAN

DESIGN OVERSIGHT
HASAN EK-NATUR
SIGN OFF DATE

	BY	CHECKED
DESIGN	Birdy	Ely
DETAILS	Samson	Birdy
QUANTITIES	Birdy	Fellows

PREPARED FOR THE STATE OF CALIFORNIA DEPARTMENT OF TRANSPORTATION

Jal Birdy
PROJECT ENGINEER

BRIDGE NO. 34-0006
KILOMETER POST

Rev. Date: 5-18-98

ORIGINAL SCALE IN MILLIMETERS FOR REDUCED PLANS 0 10 20 30 40 50 60 70 80 90 100

CU 04251
EA 0120M1

DISREGARD PRINTS BEARING EARLIER REVISION DATES

REVISION DATES (PRELIMINARY STAGE ONLY) 12/23/10 4/4/11 6/3/11

SHEET 1 OF 9

FILE => 04-0120m1-34-0006r1-u-bkptgp.dgn

June 3, 2011

USERNAME => s121614 DATE PLOTTED => 05-OCT-2011 TIME PLOTTED => 14:12

DIST.	COUNTY	ROUTE	KILOMETER POST TOTAL PROJECT	SHEET NO.	TOTAL SHEETS
04	Ala	80	1.6/2.7	689	744

Caltrans Metric

REGISTERED ENGINEER - CIVIL

10-3-11

PLANS APPROVAL DATE

REGISTERED PROFESSIONAL ENGINEER A.L. ELY No. 18880 Exp. 6-30-11 CIVIL STATE OF CALIFORNIA

The State of California or its officers or agents shall not be responsible for the accuracy or completeness of electronic copies of this plan sheet.

T.Y. LIN / MOFFATT & NICHOL
TWO HARRISON STREET
SAN FRANCISCO, CA 94105

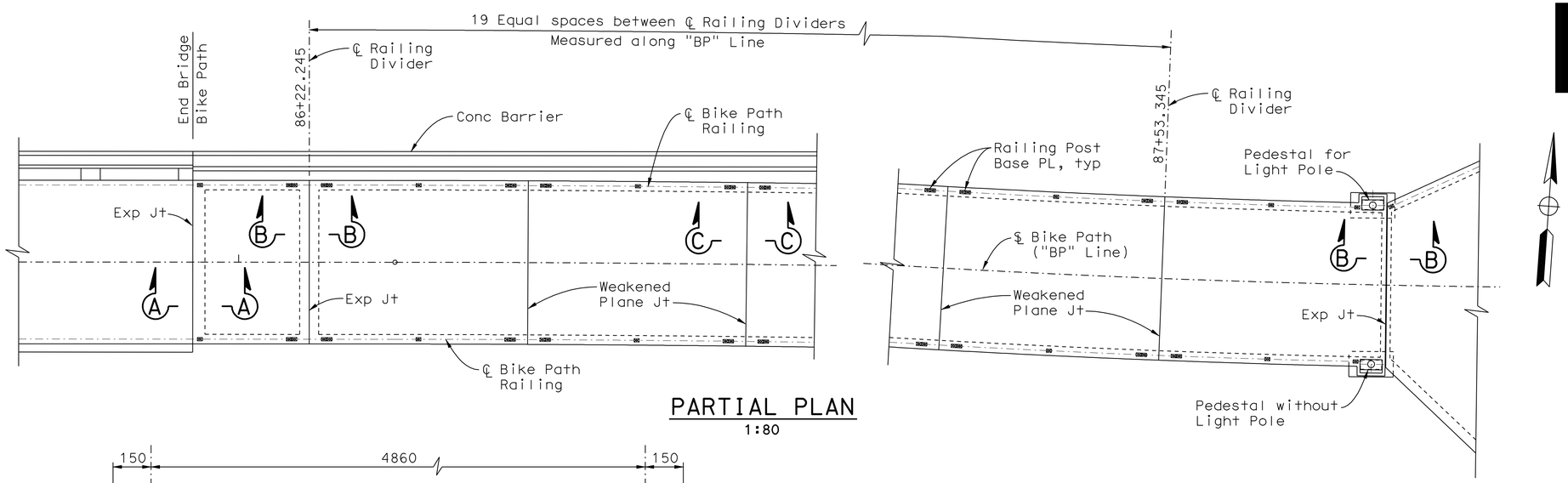

PARTIAL PLAN
1:80

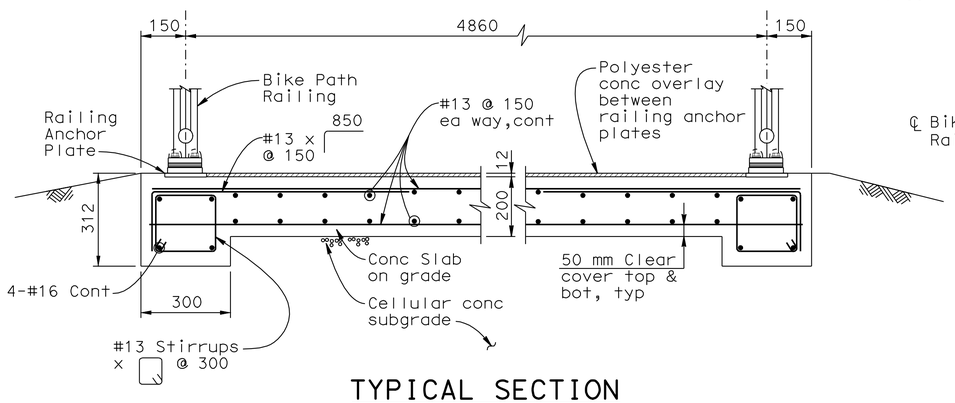

TYPICAL SECTION
1:10

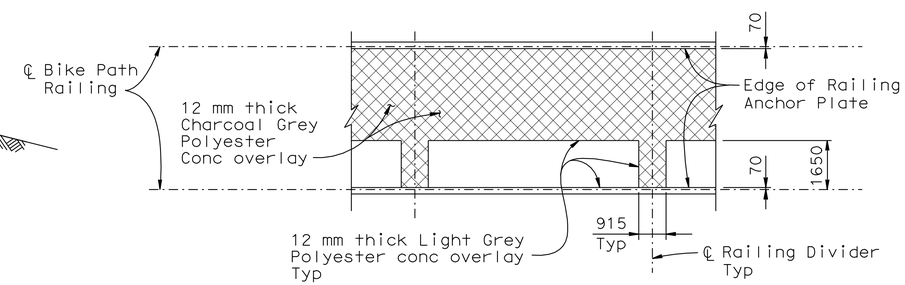

PLAN - BIKE PATH RAMP POLYESTER CONCRETE OVERLAY
1:100

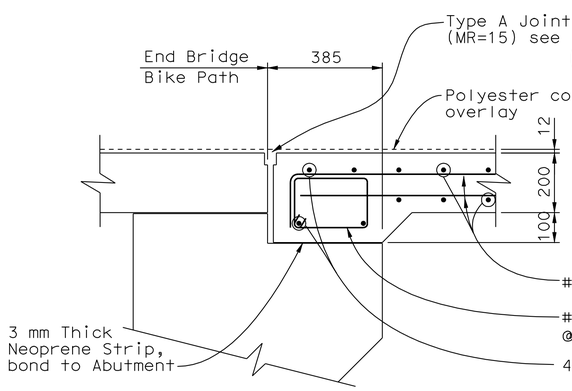

SECTION A-A
1:10

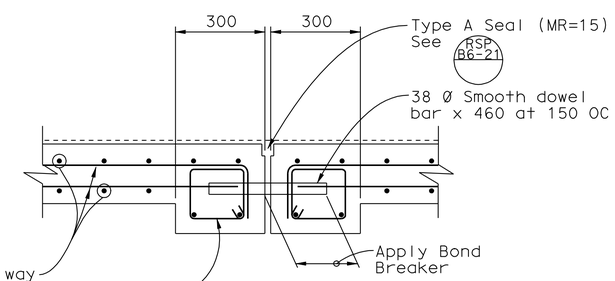

SECTION B-B TYP RAMP EXP JT
1:10

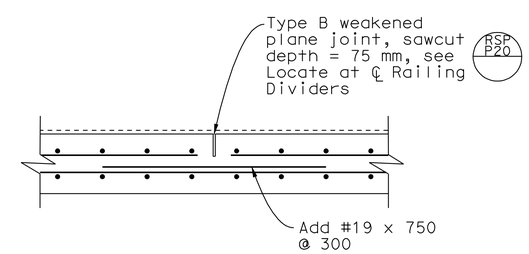

SECTION C-C TYP RAMP WEAKENED PLANE JT
1:10

ALL DIMENSIONS ARE IN MILLIMETERS UNLESS OTHERWISE SHOWN

DESIGN OVERSIGHT
HASAN EL-NATUR
SIGN OFF DATE

Rev. Date: 5-18-98

	BY	CHECKED
DESIGN	Birdy	Ely
DETAILS	Samson	Birdy
QUANTITIES	Birdy	Fellows

PREPARED FOR THE STATE OF CALIFORNIA DEPARTMENT OF TRANSPORTATION

Jal Birdy
PROJECT ENGINEER

BRIDGE NO. 34-0006
KILOMETER POST

SAN FRANCISCO OAKLAND BAY BRIDGE
EAST SPAN SEISMIC SAFETY PROJECT

OAKLAND APPROACH BIKE PATH RAMP & LANDING

BIKE PATH RAMP DETAILS

ORIGINAL SCALE IN MILLIMETERS FOR REDUCED PLANS 0 10 20 30 40 50 60 70 80 90 100

CU 04251
EA 0120M1

DISREGARD PRINTS BEARING EARLIER REVISION DATES

REVISION DATES (PRELIMINARY STAGE ONLY) 12/23/10 4/4/11 6/3/11 7/21/11

SHEET 2 OF 9

FILE => 04-0120m1-34-0006r1-u-bkptrmpdet.dgn

USERNAME => s121614 DATE PLOTTED => 05-OCT-2011 TIME PLOTTED => 14:12

July 21, 2011

DIST.	COUNTY	ROUTE	KILOMETER POST TOTAL PROJECT	SHEET NO.	TOTAL SHEETS
04	Ala	80	1.6/2.7	690	744

REGISTERED ENGINEER - CIVIL

10-3-11

PLANS APPROVAL DATE

REGISTERED PROFESSIONAL ENGINEER A.L. ELY No. 18880 Exp. 6-30-11 CIVIL STATE OF CALIFORNIA

The State of California or its officers or agents shall not be responsible for the accuracy or completeness of electronic copies of this plan sheet.

T.Y. LIN / MOFFATT & NICHOL
TWO HARRISON STREET
SAN FRANCISCO, CA 94105

Caltrans Metric

Note: For Details A & B, see "Pedestal Foundation Details" sheet.

For typ Edge Beam see "Bike Path Landing Details" sheet.

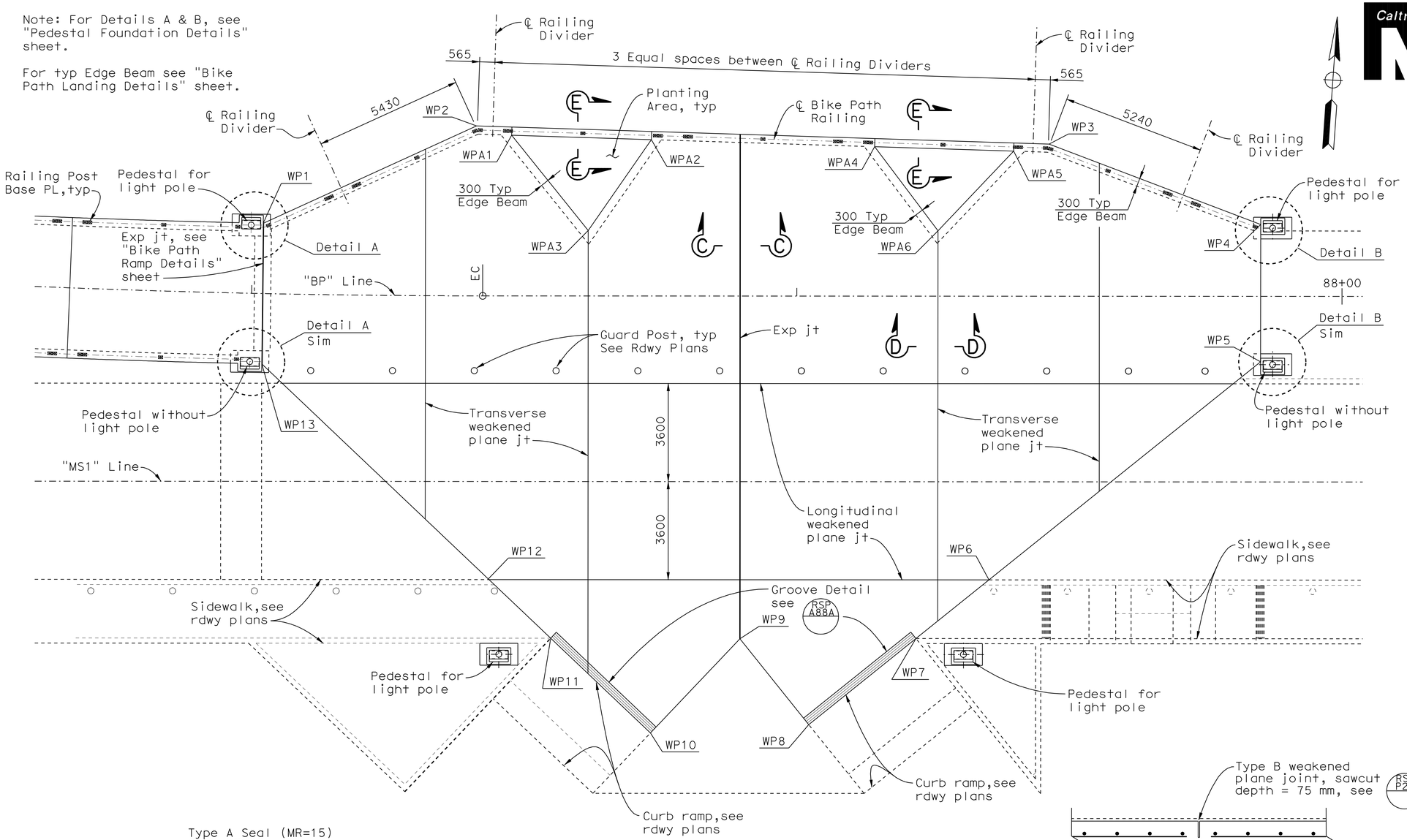

PLAN
1:80

LANDING LAYOUT DATA

Working Point No.	Offset	Lt/Rt	Tie Station	** Elev
WP1	2.580	Lt	BP 87+60.374	3.561
WP2	6.238	Lt	BP 87+68.246	3.611
WP3	5.584	Lt	BP 87+89.248	3.533
WP4	2.635	Lt	BP 87+97.014	3.450
WP5	2.400	Rt	BP 87+97.014	3.350
WP6	3.600	Rt	MS1 87+94.888	3.220
WP7	5.750	Rt	MS1 87+92.214	3.185
WP8	8.912	Rt	MS1 87+88.282	3.134
WP9	5.766	Rt	MS1 87+85.752	3.204
WP10	9.223	Rt	MS1 87+82.471	3.145
WP11	5.750	Rt	MS1 87+78.812	3.225
WP12	3.600	Rt	MS1 87+76.546	3.275
WP13	2.580	Rt	BP 87+60.425	3.458
WPA1	5.898	Lt	BP 87+69.536	3.600
WPA2	5.738	Lt	BP 87+74.661	3.581
WPA3	2.400	Lt	BP 87+72.349	3.521
WPA4	5.483	Lt	BP 87+82.852	3.551
WPA5	5.324	Lt	BP 87+87.949	3.532
WPA6	2.400	Lt	BP 87+85.174	3.482

** Indicates elevation at top of Polyester Concrete Overlay.

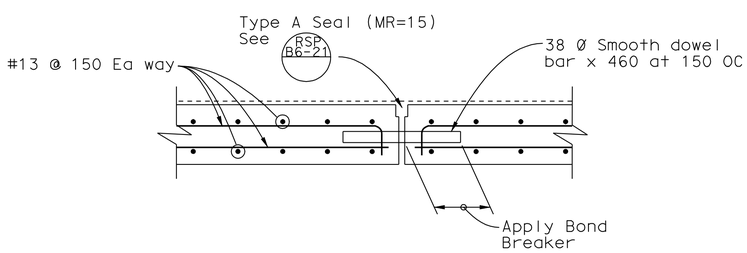

SECTION C-C LANDING EXP JT
1:10

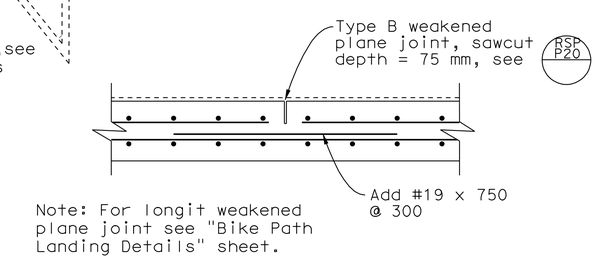

Note: For longit weakened plane joint see "Bike Path Landing Details" sheet.

SECTION D-D TYP LANDING TRANSVERSE WEAKENED PLANE JT
1:10

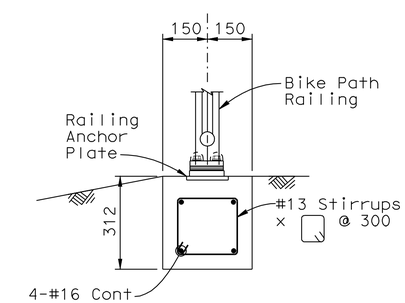

SECTION E-E
(Provide Weakened Plane Jt ea end of Beam (30 mm deep sawcut))
1:10

ALL DIMENSIONS ARE IN MILLIMETERS UNLESS OTHERWISE SHOWN

DESIGN OVERSIGHT
HASAN EL-NATUR
SIGN OFF DATE

Rev. Date: 5-18-98

	BY	CHECKED
DESIGN	Birdy	Ely
DETAILS	Samson	Birdy
QUANTITIES	Birdy	Fellows

PREPARED FOR THE STATE OF CALIFORNIA DEPARTMENT OF TRANSPORTATION

Jal Birdy
PROJECT ENGINEER

BRIDGE NO. 34-0006
KILOMETER POST

SAN FRANCISCO OAKLAND BAY BRIDGE
EAST SPAN SEISMIC SAFETY PROJECT

OAKLAND APPROACH BIKE PATH RAMP & LANDING

BIKE PATH LANDING PLAN

ORIGINAL SCALE IN MILLIMETERS FOR REDUCED PLANS 0 10 20 30 40 50 60 70 80 90 100

CU 04251
EA 0120M1

DISREGARD PRINTS BEARING EARLIER REVISION DATES

REVISION DATES (PRELIMINARY STAGE ONLY) 12/23/10 1/21/11 6/3/11 7/21/11

SHEET 3 OF 9

FILE => 04-0120m1-34-0006rl-u-bkptlpl.dgn

July 21, 2011

USERNAME => s12614 DATE PLOTTED => 05-OCT-2011 TIME PLOTTED => 14:12

DIST.	COUNTY	ROUTE	KILOMETER POST TOTAL PROJECT	SHEET NO.	TOTAL SHEETS
04	Ala	80	1.6/2.7	691	744

Caltrans Metric

REGISTERED ENGINEER - CIVIL

10-3-11

PLANS APPROVAL DATE

REGISTERED PROFESSIONAL ENGINEER A.L. ELY No. 18880 Exp. 6-30-11 CIVIL STATE OF CALIFORNIA

The State of California or its officers or agents shall not be responsible for the accuracy or completeness of electronic copies of this plan sheet.

T.Y. LIN / MOFFATT & NICHOL
TWO HARRISON STREET
SAN FRANCISCO, CA 94105

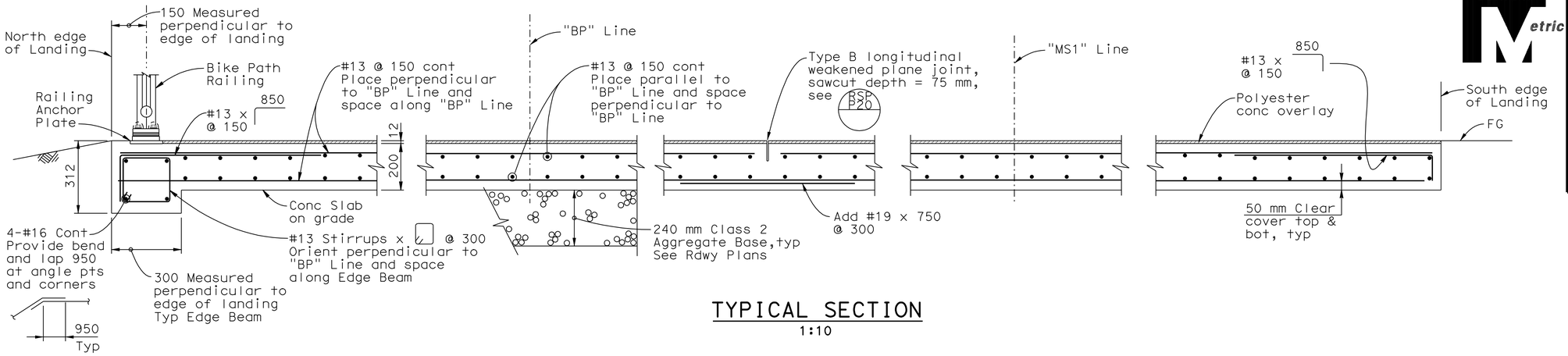

TYPICAL SECTION

1:10

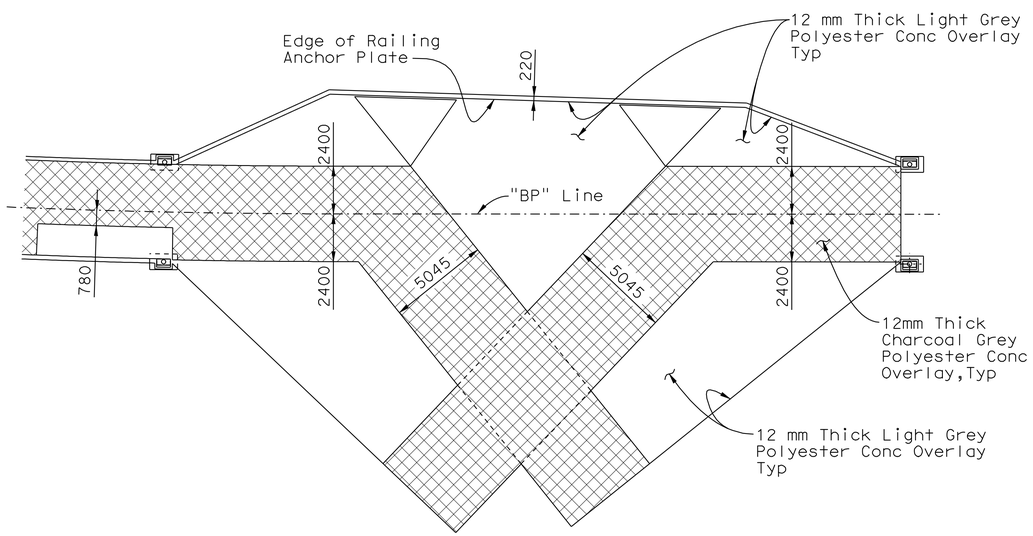

PLAN - BIKE PATH LANDING POLYESTER CONCRETE OVERLAY

No Scale

ALL DIMENSIONS ARE IN MILLIMETERS UNLESS OTHERWISE SHOWN

SAN FRANCISCO OAKLAND BAY BRIDGE
EAST SPAN SEISMIC SAFETY PROJECT

OAKLAND APPROACH BIKE PATH RAMP & LANDING

BIKE PATH LANDING DETAILS

DESIGN OVERSIGHT
HASAN EL-NATUR
SIGN OFF DATE

Rev. Date: 5-18-98

	BY	CHECKED
DESIGN	Birdy	Ely
DETAILS	Samson	Birdy
QUANTITIES	Birdy	Fellows

PREPARED FOR THE STATE OF CALIFORNIA DEPARTMENT OF TRANSPORTATION

Jal Birdy
PROJECT ENGINEER

BRIDGE NO. 34-0006
KILOMETER POST

ORIGINAL SCALE IN MILLIMETERS FOR REDUCED PLANS 0 10 20 30 40 50 60 70 80 90 100

CU 04251
EA 0120M1

DISREGARD PRINTS BEARING EARLIER REVISION DATES

REVISION DATES (PRELIMINARY STAGE ONLY) 12/23/10 1/4/11 6/3/11 7/21/11

SHEET 4 OF 9

FILE => 04-0120m1-34-0006r1-u-bkptldet.dgn

July 21, 2011

USERNAME => s12614 DATE PLOTTED => 05-OCT-2011 TIME PLOTTED => 14:12

DIST.	COUNTY	ROUTE	KILOMETER POST TOTAL PROJECT	SHEET NO.	TOTAL SHEETS
04	Ala	80	1.6/2.7	692	744

Caltrans Metric

REGISTERED ENGINEER - CIVIL

10-3-11
PLANS APPROVAL DATE

REGISTERED PROFESSIONAL ENGINEER A.L. ELY No. 18880 Exp. 6-30-11 CIVIL STATE OF CALIFORNIA

The State of California or its officers or agents shall not be responsible for the accuracy or completeness of electronic copies of this plan sheet.

T.Y. LIN / MOFFATT & NICHOL
TWO HARRISON STREET
SAN FRANCISCO, CA 94105

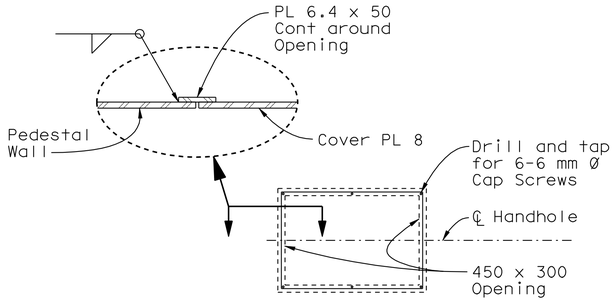

HANDHOLE DETAIL
No Scale

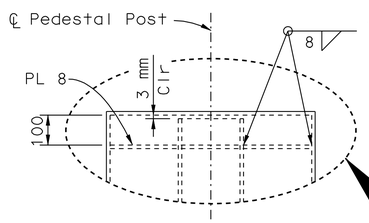

DETAIL AT TOP OF PEDESTAL WITHOUT LIGHT POLE

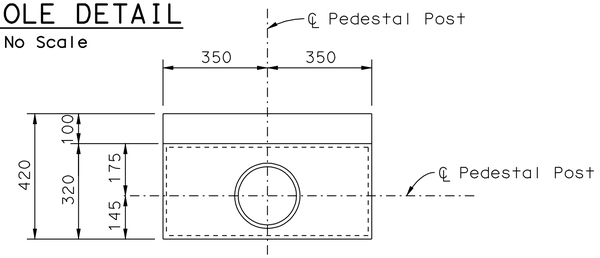

PLAN AT TOP
1:10

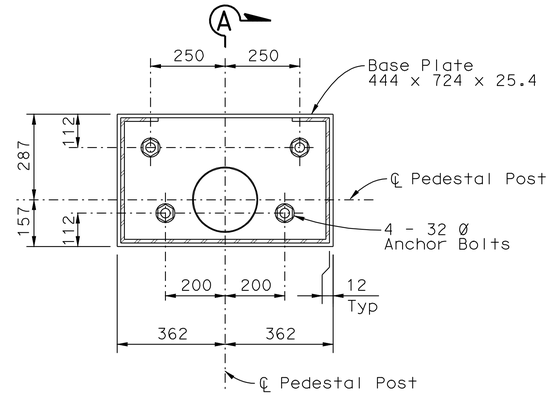

PLAN AT BASE PLATE
1:10

Notes:

1. All metal parts of pedestal shall be Galv and painted.
2. Pedestal steel plates and shapes shall conform to ASTM - A500 (Fy=345 MPa).
3. Pedestal Posts shall conform to ASTM - A500 (Fy=345 MPa).
4. All exposed welds shall be ground smooth.
5. Pedestals shall be vertical.

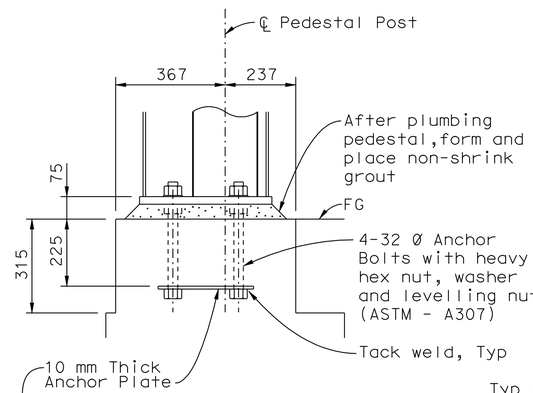

SECTION A-A
1:10

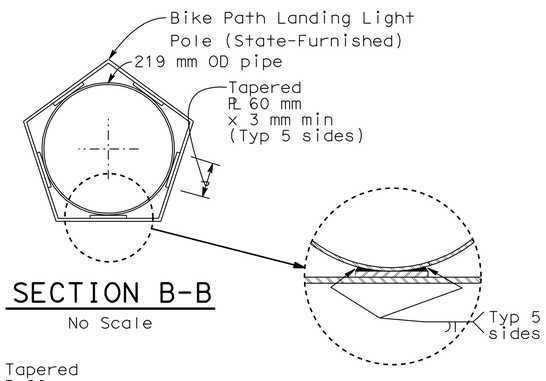

SECTION B-B
No Scale

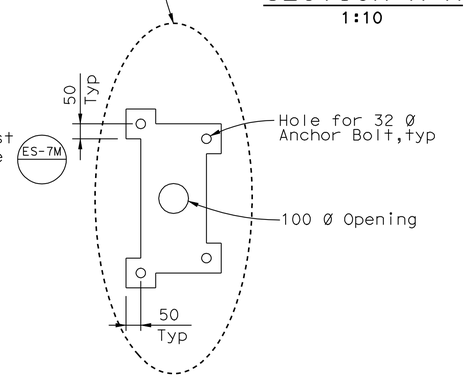

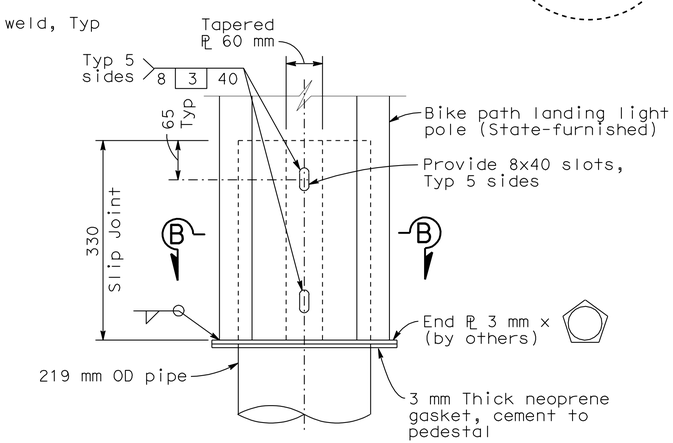

SLIP JOINT DETAIL
No Scale

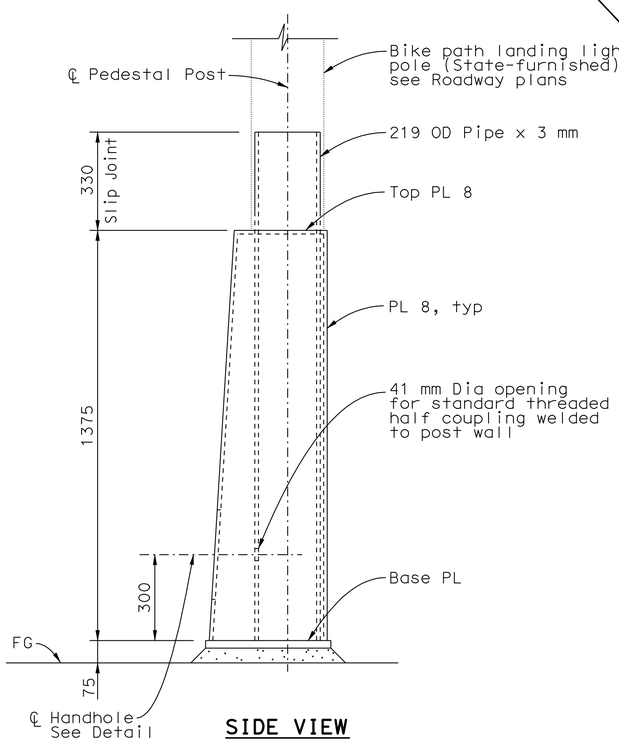

SIDE VIEW

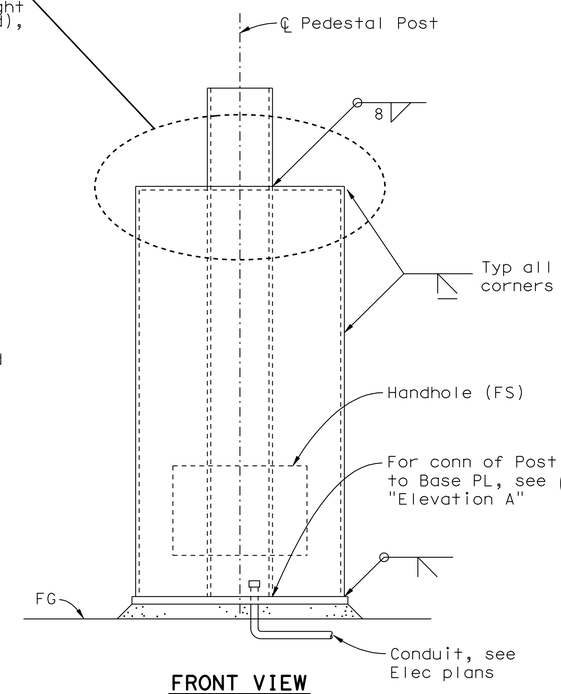

FRONT VIEW

TYPICAL PEDESTAL DETAIL
(Pedestal with Light Pole shown,
Pedestal without Light Pole similar)
1:10

ALL DIMENSIONS ARE IN MILLIMETERS UNLESS OTHERWISE SHOWN

SAN FRANCISCO OAKLAND BAY BRIDGE
EAST SPAN SEISMIC SAFETY PROJECT

OAKLAND APPROACH BIKE PATH RAMP & LANDING

PEDESTAL DETAILS

DESIGN OVERSIGHT
HASAN EL-NATUR
SIGN OFF DATE

	BY	CHECKED
DESIGN	Birdy	Ely
DETAILS	Samson	Birdy
QUANTITIES	Birdy	Fellows

PREPARED FOR THE STATE OF CALIFORNIA DEPARTMENT OF TRANSPORTATION

Jal Birdy
PROJECT ENGINEER

BRIDGE NO. 34-0006
KILOMETER POST

CU 04251
EA 0120M1

Rev. Date: 5-18-98

ORIGINAL SCALE IN MILLIMETERS FOR REDUCED PLANS 0 10 20 30 40 50 60 70 80 90 100

DISREGARD PRINTS BEARING EARLIER REVISION DATES

REVISION DATES (PRELIMINARY STAGE ONLY) 12/13/10 4/4/11 6/13/11

SHEET 5 OF 9

FILE => 04-0120m1-34-0006rl-u-bkptpedet.dgn

USERNAME => s121614 DATE PLOTTED => 05-OCT-2011 TIME PLOTTED => 14:13

DIST.	COUNTY	ROUTE	KILOMETER POST TOTAL PROJECT	SHEET NO.	TOTAL SHEETS
04	Ala	80	1.6/2.7	693	744

Caltrans Metric

REGISTERED ENGINEER - CIVIL

10-3-11

PLANS APPROVAL DATE

REGISTERED PROFESSIONAL ENGINEER A.L. ELY No. 18880 Exp. 6-30-11 CIVIL STATE OF CALIFORNIA

The State of California or its officers or agents shall not be responsible for the accuracy or completeness of electronic copies of this plan sheet.

T.Y. LIN / MOFFATT & NICHOL
TWO HARRISON STREET
SAN FRANCISCO, CA 94105

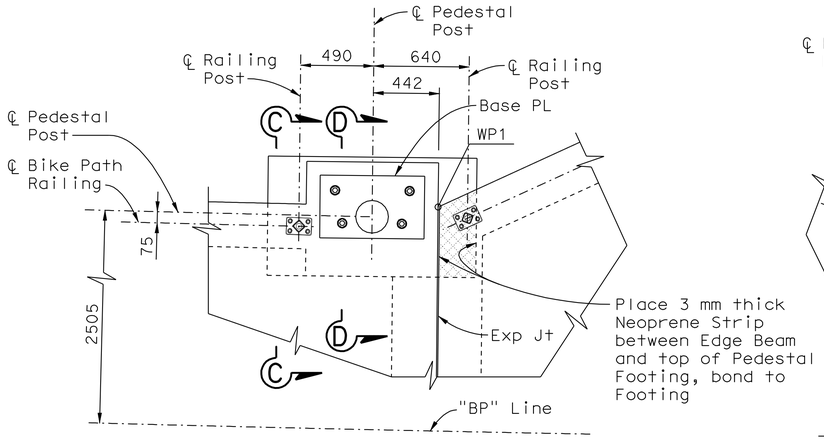

DETAIL A
1:20

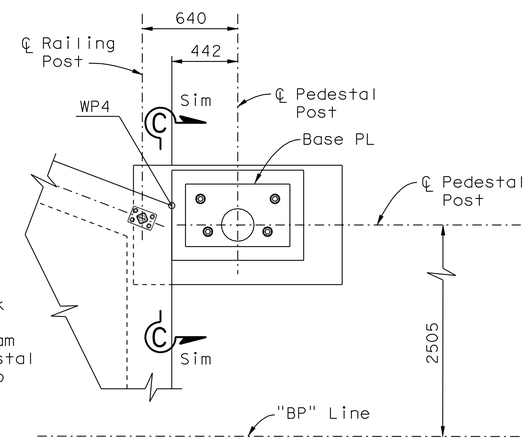

DETAIL B
1:20

Note: For location of Details A & B see "Bike Path Landing Plan" sheet.

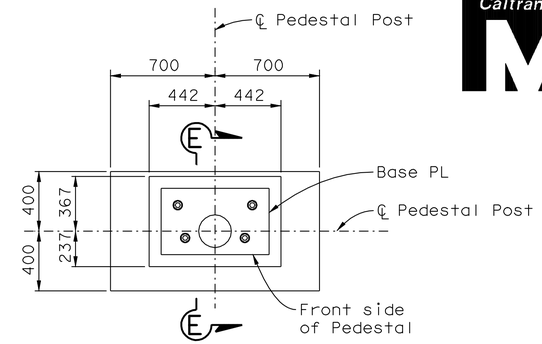

TYPICAL FOOTING PLAN
1:20

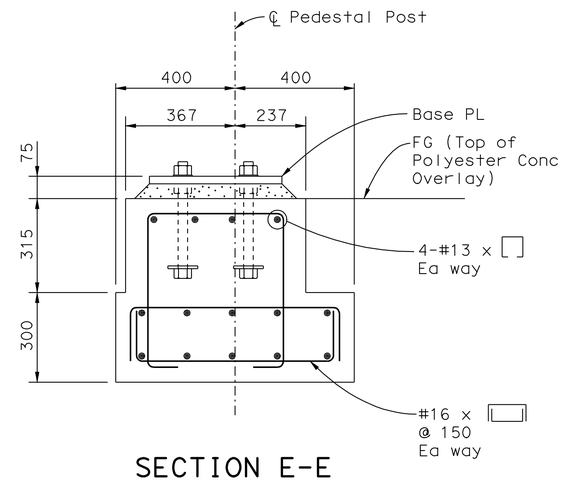

SECTION E-E
1:10

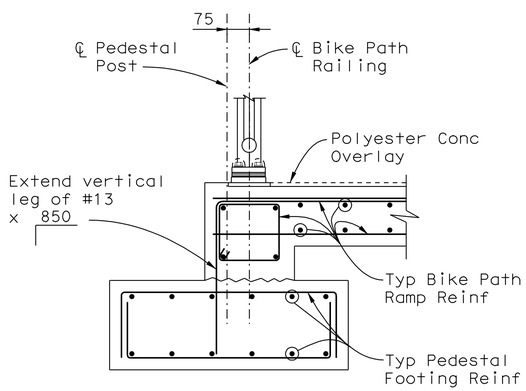

SECTION C-C
1:10

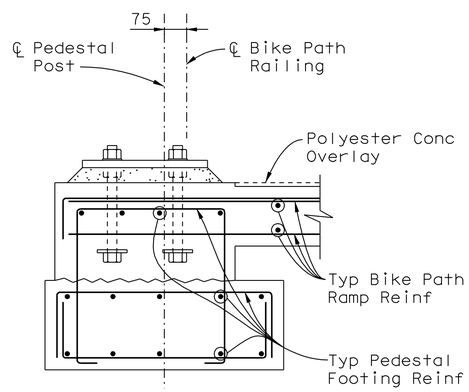

SECTION D-D
1:10

ALL DIMENSIONS ARE IN MILLIMETERS UNLESS OTHERWISE SHOWN

SAN FRANCISCO OAKLAND BAY BRIDGE
EAST SPAN SEISMIC SAFETY PROJECT

OAKLAND APPROACH BIKE PATH RAMP & LANDING

PEDESTAL FOUNDATION DETAILS

DESIGN OVERSIGHT
HASAN EL-NATUR

SIGN OFF DATE

Rev. Date: 5-18-98

	BY	CHECKED
DESIGN	Birdy	Ely
DETAILS	Samson	Birdy
QUANTITIES	Birdy	Fellows

PREPARED FOR THE STATE OF CALIFORNIA DEPARTMENT OF TRANSPORTATION

Jal Birdy
PROJECT ENGINEER

BRIDGE NO. 34-0006
KILOMETER POST

ORIGINAL SCALE IN MILLIMETERS FOR REDUCED PLANS 0 10 20 30 40 50 60 70 80 90 100

CU 04251
EA 0120M1

DISREGARD PRINTS BEARING EARLIER REVISION DATES

REVISION DATES (PRELIMINARY STAGE ONLY) 12/23/10 5/4/11 6/3/11 7/21/11

SHEET 6 OF 9

FILE => 04-0120m1-34-0006r1-u-bkptpedfdndet.dgn

July 21, 2011

USERNAME => s121614 DATE PLOTTED => 05-OCT-2011 TIME PLOTTED => 14:13

DIST.	COUNTY	ROUTE	KILOMETER POST TOTAL PROJECT	SHEET NO.	TOTAL SHEETS
04	Ala	80	1.6/2.7	694	744

Caltrans Metric

REGISTERED ENGINEER - CIVIL

10-3-11

PLANS APPROVAL DATE

REGISTERED PROFESSIONAL ENGINEER A.L. ELY No. 18880 Exp. 6-30-11 CIVIL STATE OF CALIFORNIA

The State of California or its officers or agents shall not be responsible for the accuracy or completeness of electronic copies of this plan sheet.

T.Y. LIN / MOFFATT & NICHOL
TWO HARRISON STREET
SAN FRANCISCO, CA 94105

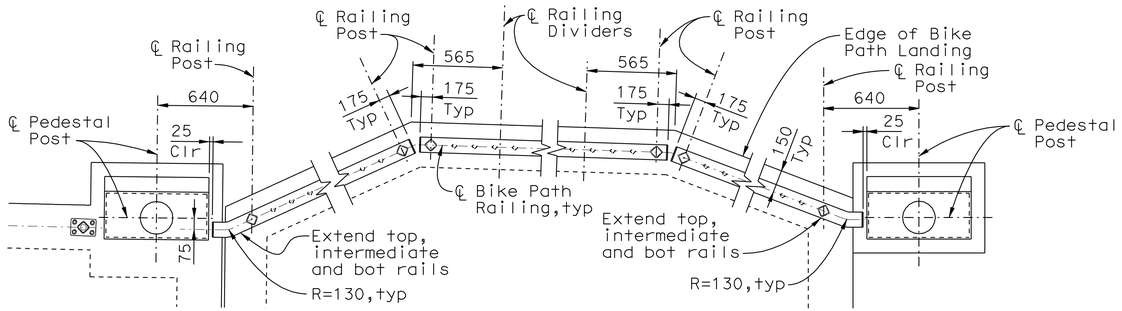

PARTIAL PLAN AT NORTH EDGE OF BIKE PATH LANDING

1:20

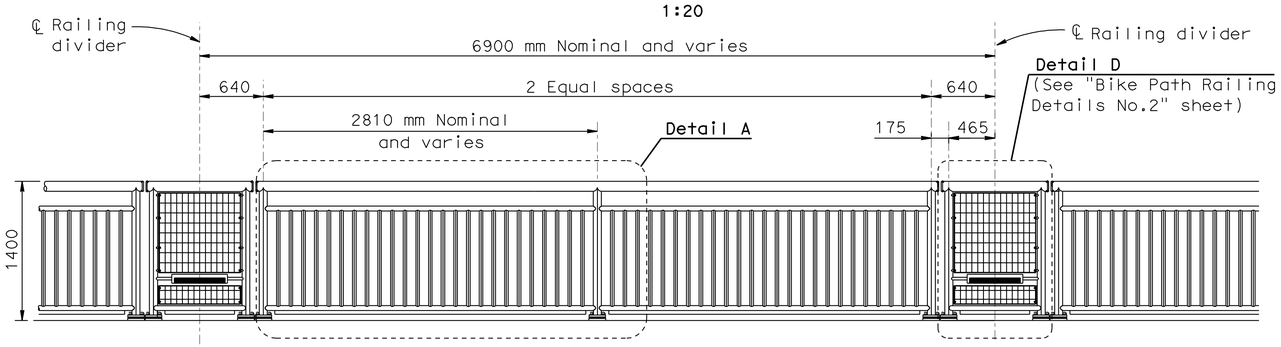

BIKE PATH RAILING-TYPICAL ELEVATION

1:30

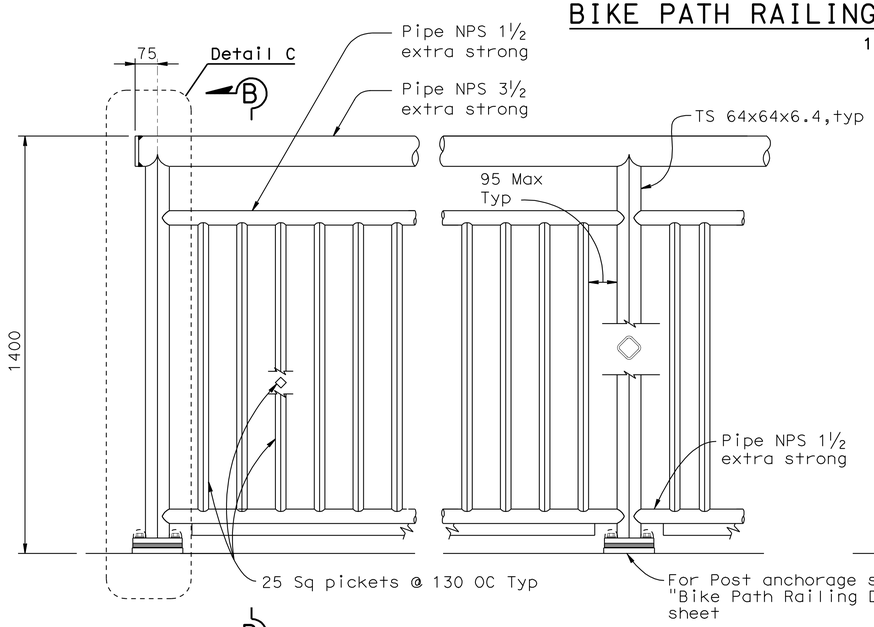

DETAIL A

1:10

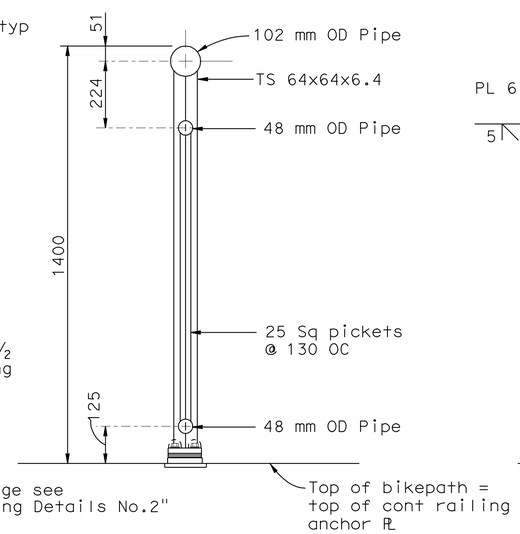

SECTION B-B

1:10

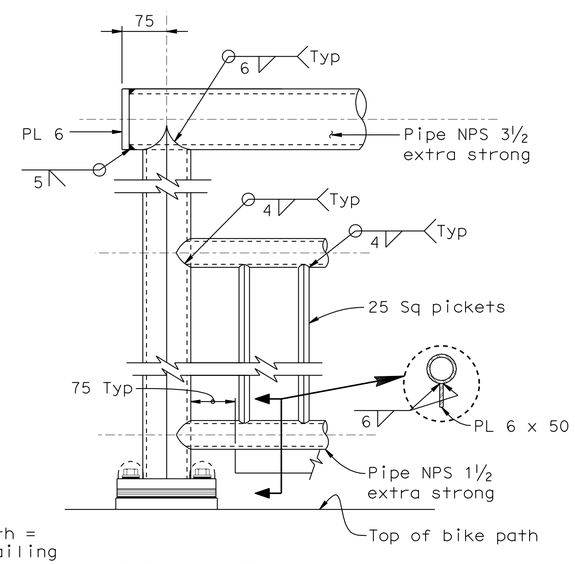

DETAIL C

1:5

ALL DIMENSIONS ARE IN MILLIMETERS UNLESS OTHERWISE SHOWN

NOTES:

1. All metal (except stainless steel) parts of railing assembly including grill shall be coated
2. Railing posts shall comform to ASTM A500 Grade C (Fy=345MPa).
3. Railing shall conform to vertical and horizontal alignment of bike path.
4. Posts and pickets shall be perpendicular to the profile grade of the bikepath and vertical to the cross-slope of the bikepath. Rails shall be parallel to top of bikepath. Railing grill vertical bars shall be parallel to railing posts and grill horizontal bars shall be parallel to rails.
5. Rails shall be shop bent or fabricated to fit horizontal curve when radius is less than 300 m.
6. All exposed welds shall be ground smooth.
7. Expansion joints shall be located in the railing panel spanning deck or wall joints, see "Bike Path Railing Details No.3" sheet.
8. Welding to stainless steel shall be in accordance with AWS D1.6-1999.
9. Shim stack beneath post base plate to be adjusted during installation as required to maintain railing alignment. Full width galv steel shims shall be utilized, tapered as necessary to maintain post verticality.

SAN FRANCISCO OAKLAND BAY BRIDGE
EAST SPAN SEISMIC SAFETY PROJECT

OAKLAND APPROACH BIKE PATH RAMP & LANDING

BIKE PATH RAILING DETAILS NO.1

DESIGN OVERSIGHT: HASAN EL-NATUR
SIGN OFF DATE

Rev. Date: 5-18-98

	BY	CHECKED
DESIGN	Birdy	Ely
DETAILS	Samson	Birdy
QUANTITIES	Birdy	Fellows

PREPARED FOR THE STATE OF CALIFORNIA DEPARTMENT OF TRANSPORTATION

Jal Birdy
PROJECT ENGINEER

BRIDGE NO. 34-0006
KILOMETER POST

ORIGINAL SCALE IN MILLIMETERS FOR REDUCED PLANS 0 10 20 30 40 50 60 70 80 90 100

CU 04251
EA 0120M1

DISREGARD PRINTS BEARING EARLIER REVISION DATES

REVISION DATES (PRELIMINARY STAGE ONLY) 12/13/10 4/4/11 6/3/11 7/21/11

SHEET 7 OF 9

FILE => 04-0120m1-34-0006r1-u-bkptrldt01.dgn

July 21, 2011

USERNAME => s121614 DATE PLOTTED => 05-OCT-2011 TIME PLOTTED => 14:13

DIST.	COUNTY	ROUTE	KILOMETER POST TOTAL PROJECT	SHEET NO.	TOTAL SHEETS
04	Ala	80	1.6/2.7	695	744

Caltrans Metric

REGISTERED ENGINEER - CIVIL

10-3-11

PLANS APPROVAL DATE

REGISTERED PROFESSIONAL ENGINEER A.L. ELY No. 18880 Exp. 6-30-11 CIVIL STATE OF CALIFORNIA

The State of California or its officers or agents shall not be responsible for the accuracy or completeness of electronic copies of this plan sheet.

T.Y. LIN / MOFFATT & NICHOL
TWO HARRISON STREET
SAN FRANCISCO, CA 94105

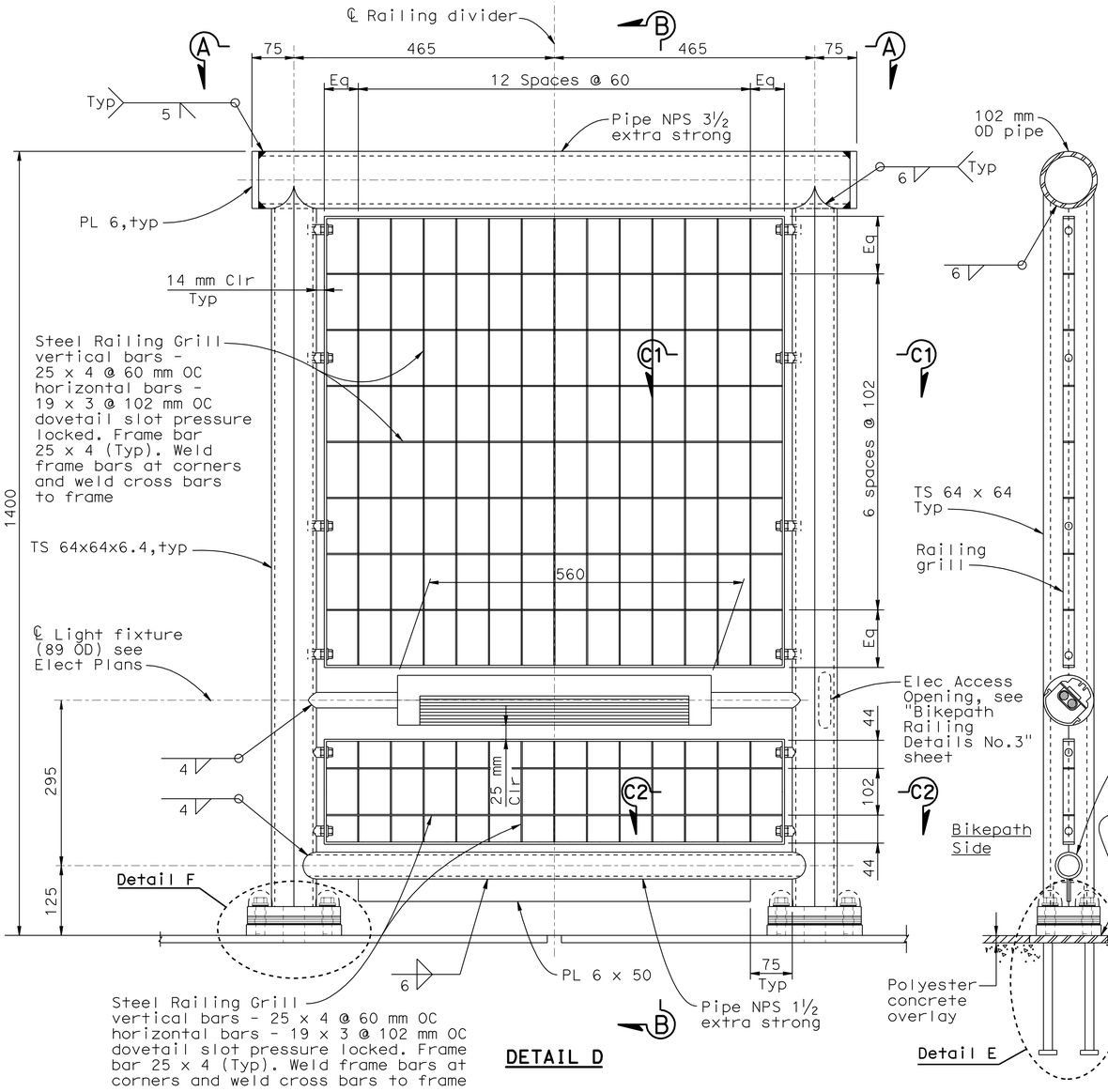

DETAIL D

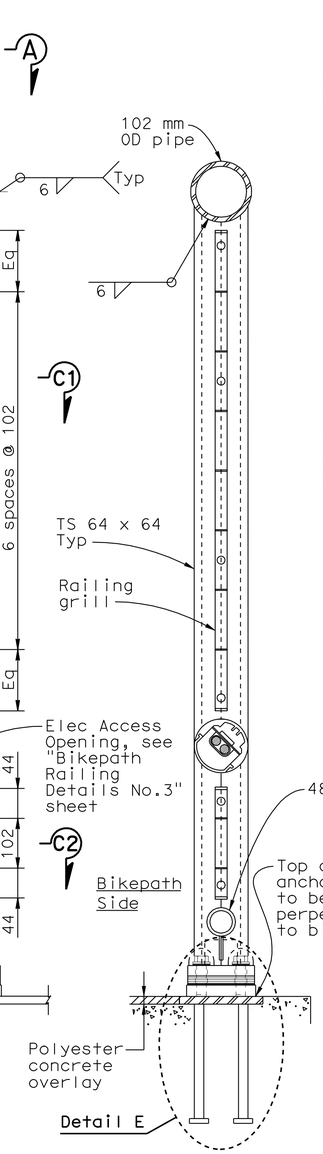

SECTION B-B

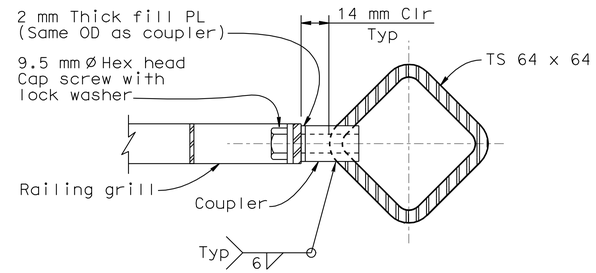

SECTION C1-C1
(Typ above light fixture)
1:1.5

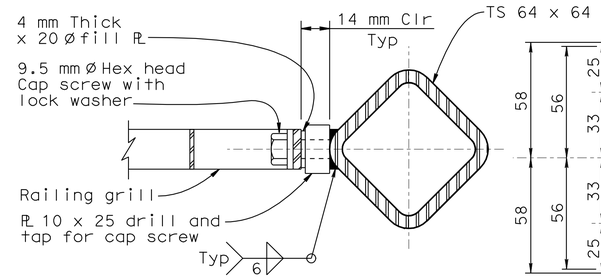

SECTION C2-C2
(Typ below light fixture)
1:1.5

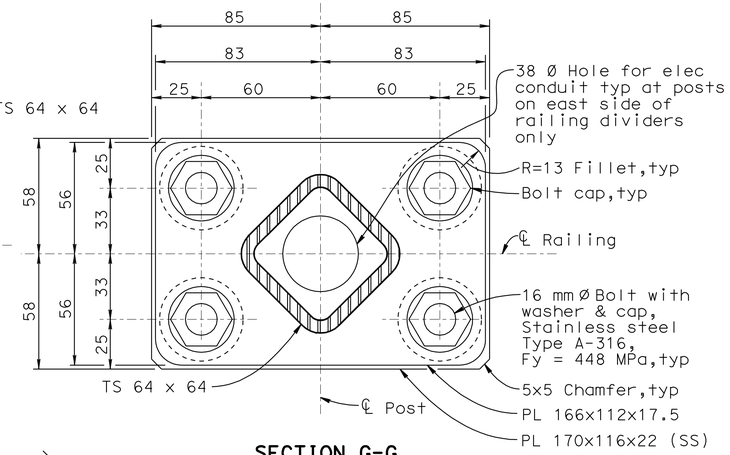

SECTION G-G

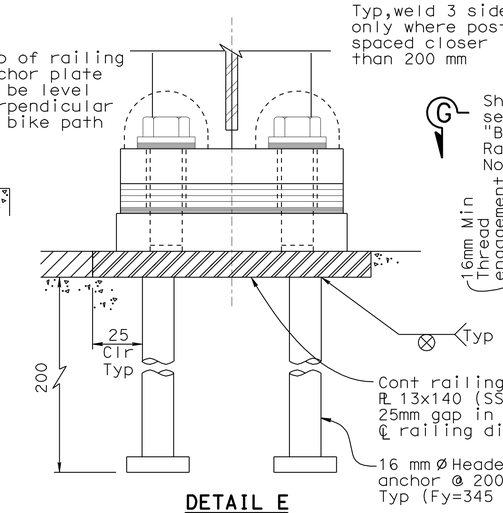

DETAIL E

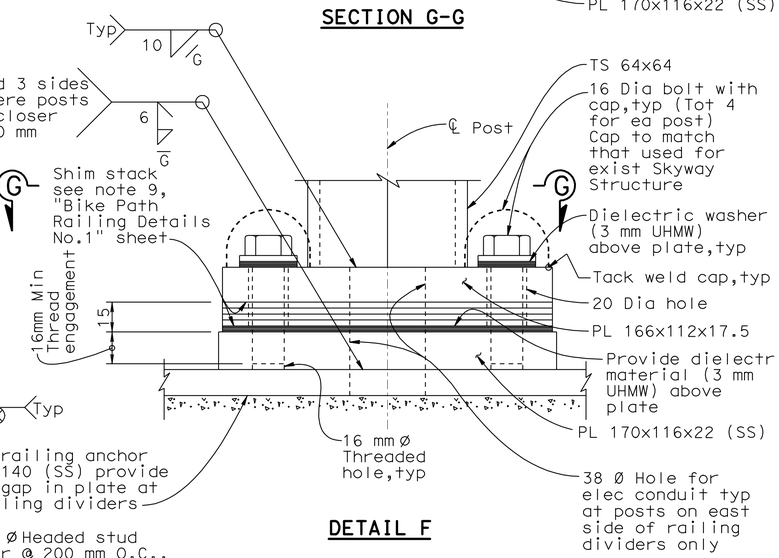

DETAIL F

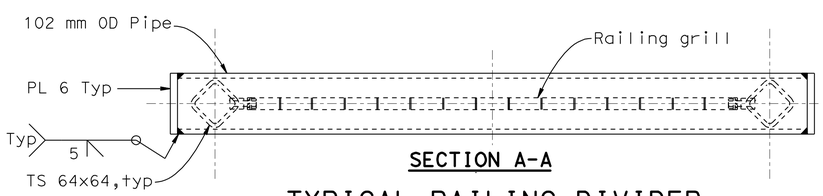

SECTION A-A

TYPICAL RAILING DIVIDER
1:5

TYPICAL POST ANCHORAGE
1:1.5

ALL DIMENSIONS ARE IN MILLIMETERS UNLESS OTHERWISE SHOWN

SAN FRANCISCO OAKLAND BAY BRIDGE
EAST SPAN SEISMIC SAFETY PROJECT

OAKLAND APPROACH BIKE PATH RAMP & LANDING

BIKEPATH RAILING DETAILS NO.2

DESIGN OVERSIGHT: HASAN EL-NATUR
SIGN OFF DATE

Rev. Date: 5-18-98

	BY	CHECKED
DESIGN	Birdy	Ely
DETAILS	Samson	Birdy
QUANTITIES	Birdy	Fellows

PREPARED FOR THE STATE OF CALIFORNIA DEPARTMENT OF TRANSPORTATION

Jal Birdy
PROJECT ENGINEER

BRIDGE NO. 34-0006
KILOMETER POST

CU 04251
EA 0120M1

ORIGINAL SCALE IN MILLIMETERS FOR REDUCED PLANS 0 10 20 30 40 50 60 70 80 90 100

DISREGARD PRINTS BEARING EARLIER REVISION DATES

REVISION DATES (PRELIMINARY STAGE ONLY): 12/23/10 4/4/11 6/3/11 7/21/11

SHEET 8 OF 9

FILE => 04-0120m1-34-0006r1-u-bkptrldt02.dgn

July 21, 2011

USERNAME => s121614 DATE PLOTTED => 05-OCT-2011 TIME PLOTTED => 14:13

DIST.	COUNTY	ROUTE	KILOMETER POST TOTAL PROJECT	SHEET NO.	TOTAL SHEETS
04	Ala	80	1.6/2.7	696	744

Caltrans Metric

REGISTERED ENGINEER - CIVIL

10-3-11

PLANS APPROVAL DATE

REGISTERED PROFESSIONAL ENGINEER A.L. ELY No. 18880 Exp. 6-30-11 CIVIL STATE OF CALIFORNIA

The State of California or its officers or agents shall not be responsible for the accuracy or completeness of electronic copies of this plan sheet.

T.Y. LIN / MOFFATT & NICHOL
TWO HARRISON STREET
SAN FRANCISCO, CA 94105

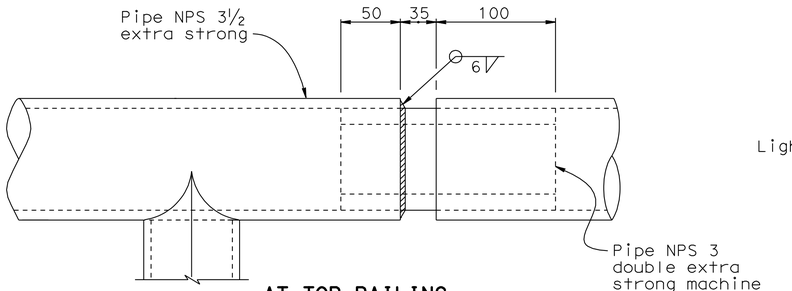

AT TOP RAILING

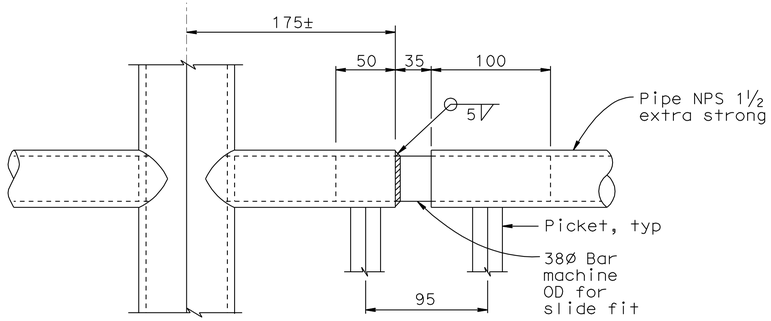

AT INTERMEDIATE AND BOTTOM RAILING

RAILING EXPANSION JOINT DETAILS MR ≤ 50

(For use where Rails span expansion joints in Bike Path Ramp and Landing)

1:2.5

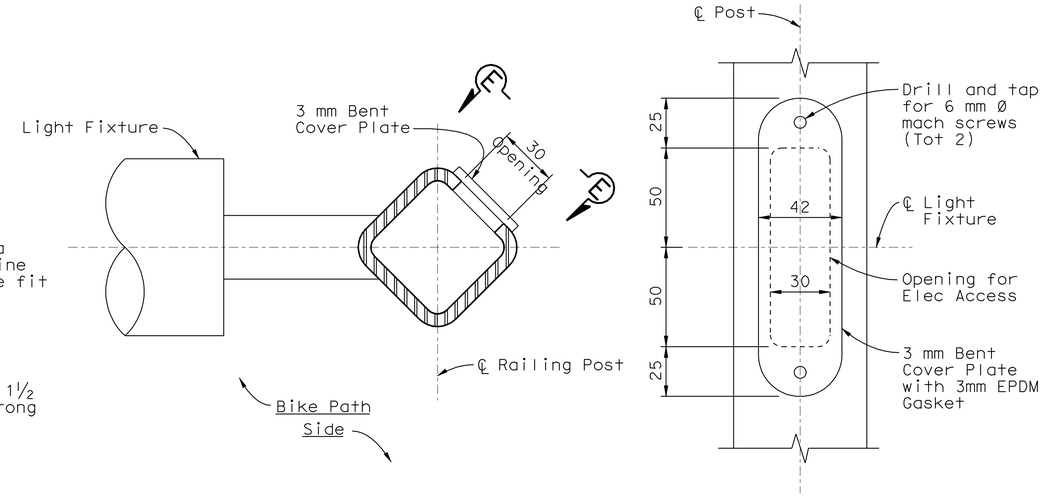

PLAN

SECTION E-E

ELECTRICAL ACCESS OPENING AT BIKEPATH LIGHT FIXTURE

(Required at Posts on east side of Railing Dividers only)

1:1.5

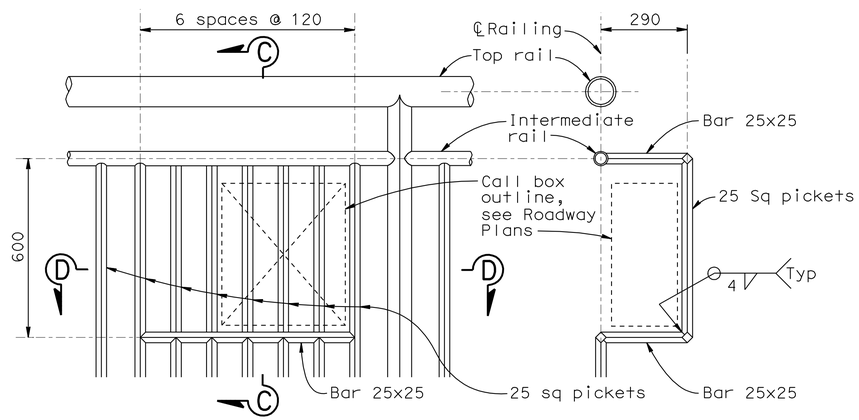

ELEVATION

SECTION C-C

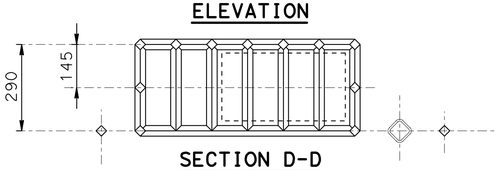

SECTION D-D

CALL BOX MOUNTING DETAIL

1:10

ALL DIMENSIONS ARE IN MILLIMETERS UNLESS OTHERWISE SHOWN

SAN FRANCISCO OAKLAND BAY BRIDGE
EAST SPAN SEISMIC SAFETY PROJECT

OAKLAND APPROACH BIKE PATH RAMP & LANDING

BIKEPATH RAILING DETAILS NO.3

DESIGN OVERSIGHT
HASAN EL-NATUR
SIGN OFF DATE

Rev. Date: 5-18-98

	BY	CHECKED
DESIGN	Birdy	Ely
DETAILS	Samson	Birdy
QUANTITIES	Birdy	Fellows

PREPARED FOR THE STATE OF CALIFORNIA DEPARTMENT OF TRANSPORTATION

Jal Birdy
PROJECT ENGINEER

BRIDGE NO. 34-0006
KILOMETER POST

ORIGINAL SCALE IN MILLIMETERS FOR REDUCED PLANS 0 10 20 30 40 50 60 70 80 90 100

CU 04251
EA 0120M1

DISREGARD PRINTS BEARING EARLIER REVISION DATES

REVISION DATES (PRELIMINARY STAGE ONLY) 12/23/10 4/4/11 6/3/11 7/21/11

SHEET 9 OF 9

FILE => 04-0120m1-34-0006r1-u-bkptrldt03.dgn

July 21, 2011

USERNAME => s121614 DATE PLOTTED => 05-OCT-2011 TIME PLOTTED => 14:13

DIST	COUNTY	ROUTE	KILOMETER POST TOTAL PROJECT	SHEET No	TOTAL SHEETS
04	Ala	80	1.6/2.7	697	744

REGISTERED CIVIL ENGINEER — DATE 06-06-11

PLANS APPROVAL DATE 10-3-11

REGISTERED PROFESSIONAL ENGINEER — ALIREZA YAZDANI MOTLAGH — No. 69601 — Exp. 6-30-12 — CIVIL — STATE OF CALIFORNIA

The State of California or its officers or agents shall not be responsible for the accuracy or completeness of electronic copies of this plan sheet.

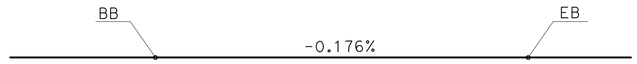

PROFILE GRADE

NO SCALE

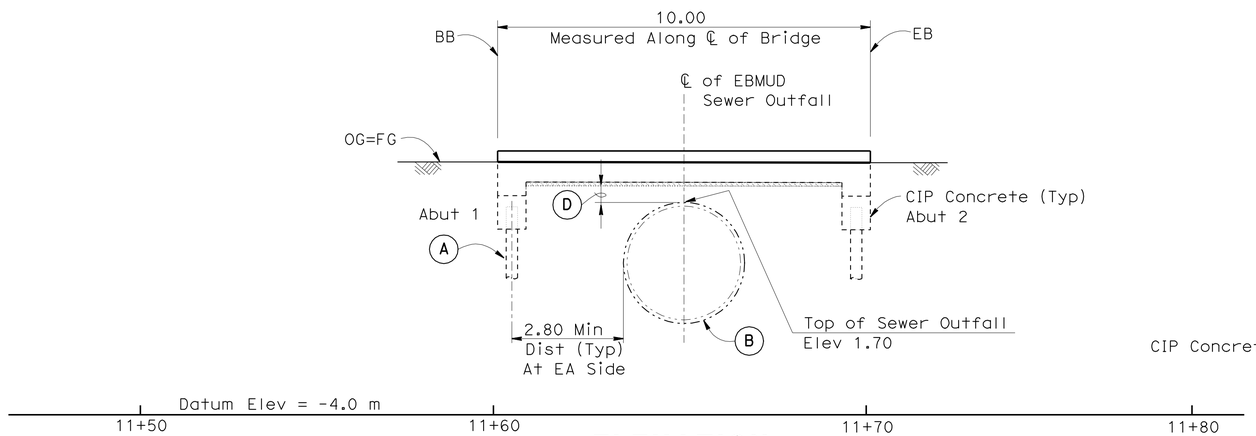

ELEVATION

1:80

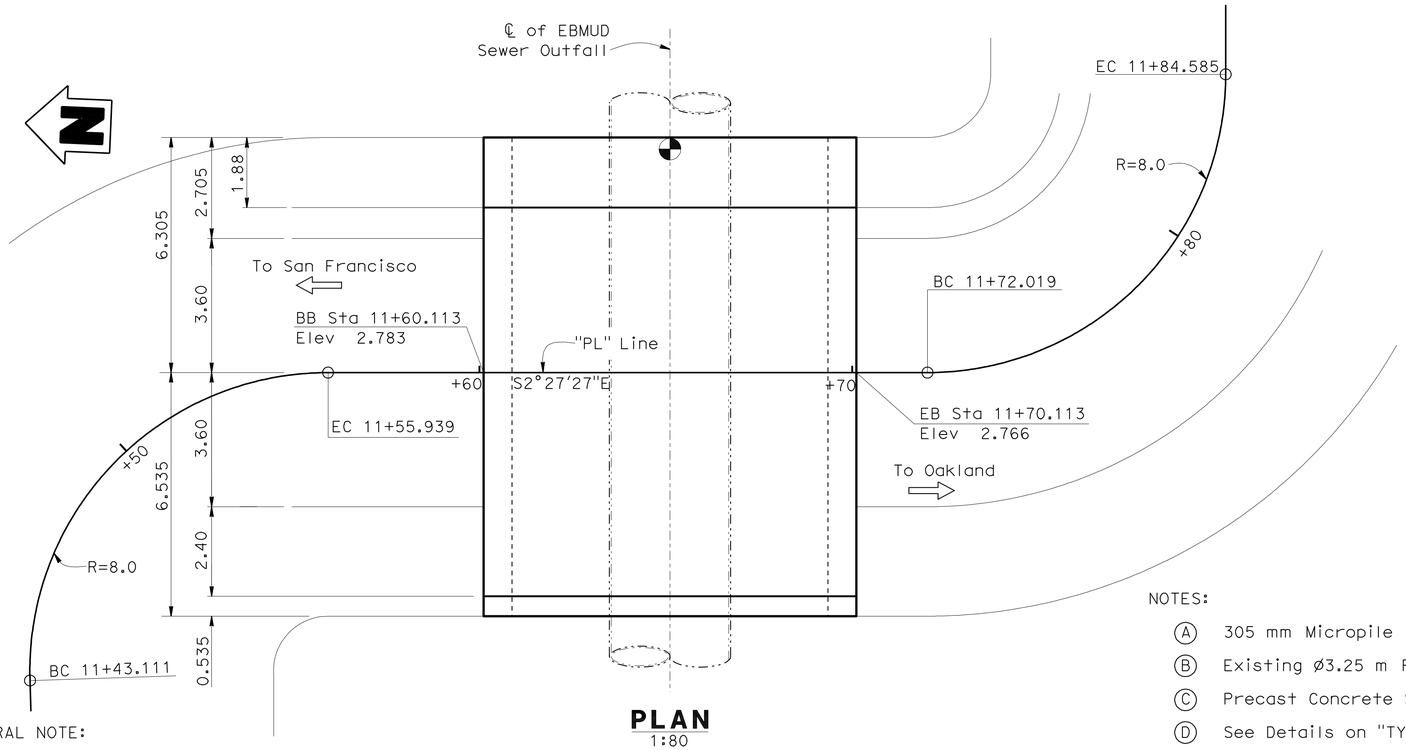

PLAN

1:80

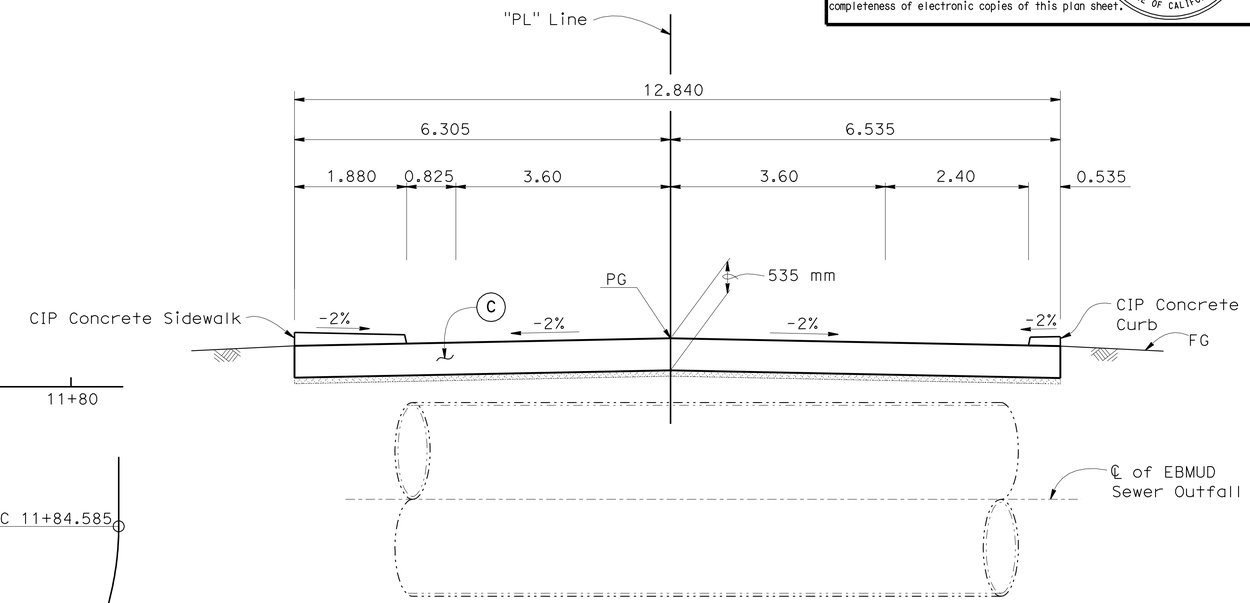

TYPICAL SECTION

1:50

QUANTITIES

EBMUD OUTFALL SLAB BRIDGE

STRUCTURE EXCAVATION (BRIDGE)	122	m^3
STRUCTURE BACKFILL (BRIDGE)	26	m^3
MICROPILE	23	EA
STRUCTURAL CONCRETE, BRIDGE	24	m^3
FURNISH PRECAST CONCRETE SLAB	1	EA
ERECT PRECAST CONCRETE SLAB	1	EA
BAR REINFORCING STEEL (EPOXY COATED) (BRIDGE)	2450	kg

NOTES:

(A) 305 mm Micropile (Typ)

(B) Existing Ø3.25 m Reinforced Concrete Pipe

(C) Precast Concrete Slab

(D) See Details on "TYPICAL SECTION" Sheet

LEGEND:

- Indicates Point of Minimum Vertical Clearance

- 100 mm Expanded Polystyrene, See "DETAIL-3" on "TYPICAL SECTION" Sheet

GENERAL NOTE:

THE CONTRACTOR SHALL VERIFY ALL CONTROLLING FIELD DIMENSIONS BEFORE ORDERING OR FABRICATING ANY MATERIAL

Caltrans Metric

06-06-11 Samad Hamoud
DESIGN ENGINEER

	BY	CHECKED
DESIGN	A. Yazdani/T. Kishwar	S. Hamoud
DETAILS	Min Yu	S. Hamoud
QUANTITIES	A. Perez	S. Kotalawala

LOAD & RESISTANCE FACTOR DESIGN — LIVE LOADING: HL93 W/"LOW-BOY"; PERMIT DESIGN VEHICLE

	BY	CHECKED
LAYOUT	A. Yazdani	S. Hamoud
SPECIFICATIONS	Laura Rubalcaba	PLANS AND SPECS COMPARED Laura Rubalcaba

STATE OF CALIFORNIA
DEPARTMENT OF TRANSPORTATION

DIVISION OF ENGINEERING SERVICES
STRUCTURE DESIGN
DESIGN BRANCH 16

BRIDGE NO. 33-0742Y
KILOMETER POST 2.1

SAN FRANCISCO OAKLAND BAY BRIDGE
EAST SPAN SEISMIC SAFETY PROJECT

OUTFALL BRIDGE AT WEST END MAINTENANCE YARD

GENERAL PLAN

ALL DIMENSIONS ARE IN METERS UNLESS OTHERWISE SHOWN

ORIGINAL SCALE IN MILLIMETERS FOR REDUCED PLANS 0 10 20 30 40 50 60 70 80 90 100

CU 04
EA 0120M1

DISREGARD PRINTS BEARING EARLIER REVISION DATES

REVISION DATES: 10-25-08 | 05-04-09 | 08-24-09 | 10-22-09 | 12-07-09 | 08-25-10 | 03-02-11 | 03-17-11 | 03-23-11 | 05-24-11

SHEET 1 OF 10

FILE => 33-0742Y-a-gp.dgn

STRUCTURES DESIGN GENERAL PLAN SHEET (METRIC) (REV.07-24-06)

USERNAME => s12614 DATE PLOTTED => 06-OCT-2011 TIME PLOTTED => 10:55

DIST	COUNTY	ROUTE	KILOMETER POST TOTAL PROJECT	SHEET No	TOTAL SHEETS
04	Ala	80	1.6/2.7	698	744

REGISTERED CIVIL ENGINEER 06-06-11 DATE

10-3-11
PLANS APPROVAL DATE

REGISTERED PROFESSIONAL ENGINEER ALIREZA YAZDANI MOTLAGH No. 69601 Exp. 6-30-12 CIVIL STATE OF CALIFORNIA

The State of California or its officers or agents shall not be responsible for the accuracy or completeness of electronic copies of this plan sheet.

INDEX TO PLANS

SHEET NO.	TITLE
1	GENERAL PLAN
2	INDEX TO PLANS
3	DECK CONTOURS
4	FOUNDATION PLAN
5	ABUTMENT LAYOUT AND DETAILS
6	TYPICAL SECTION
7	DECK REINFORCEMENT
8	MICROPILE DETAILS
9	LOG OF TEST BORINGS 1 OF 2
10	LOG OF TEST BORINGS 2 OF 2

STANDARD PLANS DATED JULY 2004

A10A	ACRONYMS AND ABBREVIATIONS (A-L)
A10B	ACRONYMS AND ABBREVIATIONS (M-Z)

GENERAL NOTES
LRFD DESIGN

DESIGN: AASHTO LRFD BRIDGE DESIGN SPECIFICATIONS, 4th EDITION 2007, WITH CALTRANS AMENDMENTS DATED December 2008

DEAD LOAD: Includes 1.67 KPa for future wearing surface.

LIVE LOADING: HL93 design load.

REINFORCED CONCRETE (CIP&PC): fy = 420 MPa
f'c = 22.5 MPa
n = 9.0
USE EPOXY COATED REBARS

PILES: See "PILE DATA TABLE"

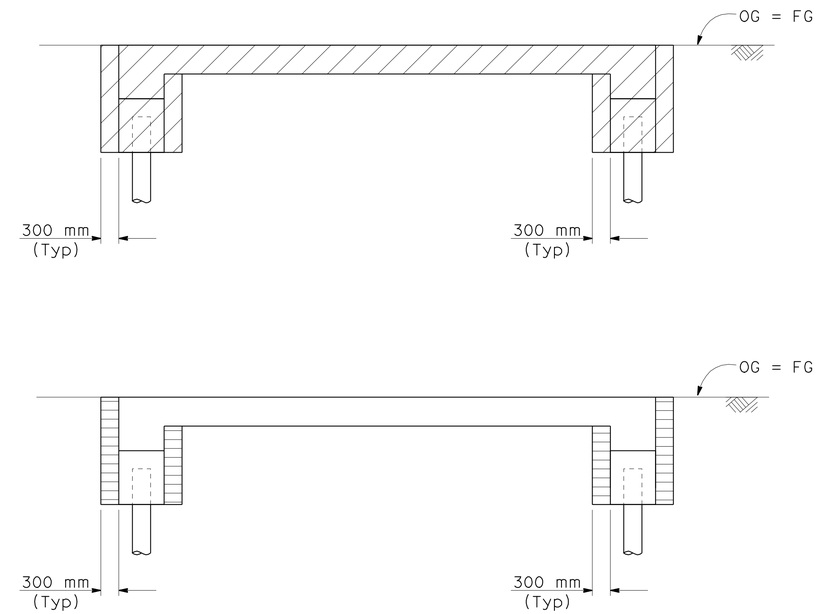

LIMITS OF PAYMENT FOR EXCAVATION AND BACKFILL

NO SCALE

STRUCTURE EXCAVATION

STRUCTURE BACKFILL

PILE DATA TABLE

LOCATION	PILE TYPE	Design Load (KN) Service - I Limit State	Nominal Resistance (KN)		Design Tip Elevation (m)	Specified Tip Elevation (m)	Nominal Resistance for Test (KN)
			Compression	Tension			
Abut 1	305 mm Micropile	360	720	N/A	-35.4 (a) N/A (b) -18.0 (c) N/A (d)	-35.4*	1090
Abut 2	305 mm Micropile	360	720	N/A	-35.4 (a) N/A (b) -18.0 (c) N/A (d)	-35.4*	1090

NOTES:

1. Design Tip Elevation Controlled by: (a) Compression, (b) Tension, (c) Settlement, (d) Lateral Load
2. (*) The specified Tip elevations are shown for estimating purposes only, The bond zone length to be determined by Contractor

Caltrans Metric

ALL DIMENSIONS ARE IN MILLIMETERS UNLESS OTHERWISE SHOWN

ORIGINAL SCALE IN MILLIMETERS FOR REDUCED PLANS 0 10 20 30 40 50 60 70 80 90 100

	BY	CHECKED
DESIGN	A. Yazdani/T. Kishwar	S. Hamoud
DETAILS	Min Yu	S. Hamoud
QUANTITIES	A. Perez	S. Kotalawala

STATE OF CALIFORNIA
DEPARTMENT OF TRANSPORTATION

DIVISION OF ENGINEERING SERVICES
STRUCTURE DESIGN
DESIGN BRANCH 16

CU 04
EA 0120M1

BRIDGE NO. 33-0742Y
KILOMETER POST 2.1

DISREGARD PRINTS BEARING EARLIER REVISION DATES

REVISION DATES: 10-25-08 05-26-11 12-07-09 06-07-10 08-25-10 03-02-11 03-17-11 03-23-11 05-17-11

SHEET 2 OF 10

SAN FRANCISCO OAKLAND BAY BRIDGE
EAST SPAN SEISMIC SAFETY PROJECT

OUTFALL BRIDGE AT WEST END MAINTENANCE YARD

INDEX TO PLANS

FILE => 33-0742Y-a-ttp.dgn

STRUCTURES DESIGN DETAIL SHEET (METRIC) (REV.03-17-04)

USERNAME => s121614 DATE PLOTTED => 06-OCT-2011 TIME PLOTTED => 10:55

DIST	COUNTY	ROUTE	KILOMETER POST TOTAL PROJECT	SHEET No	TOTAL SHEETS
04	Ala	80	1.6/2.7	699	744

REGISTERED CIVIL ENGINEER 06-06-11 DATE

10-3-11
PLANS APPROVAL DATE

REGISTERED PROFESSIONAL ENGINEER ALIREZA YAZDANI MOTLAGH No. 69601 Exp. 6-30-12 CIVIL STATE OF CALIFORNIA

The State of California or its officers or agents shall not be responsible for the accuracy or completeness of electronic copies of this plan sheet.

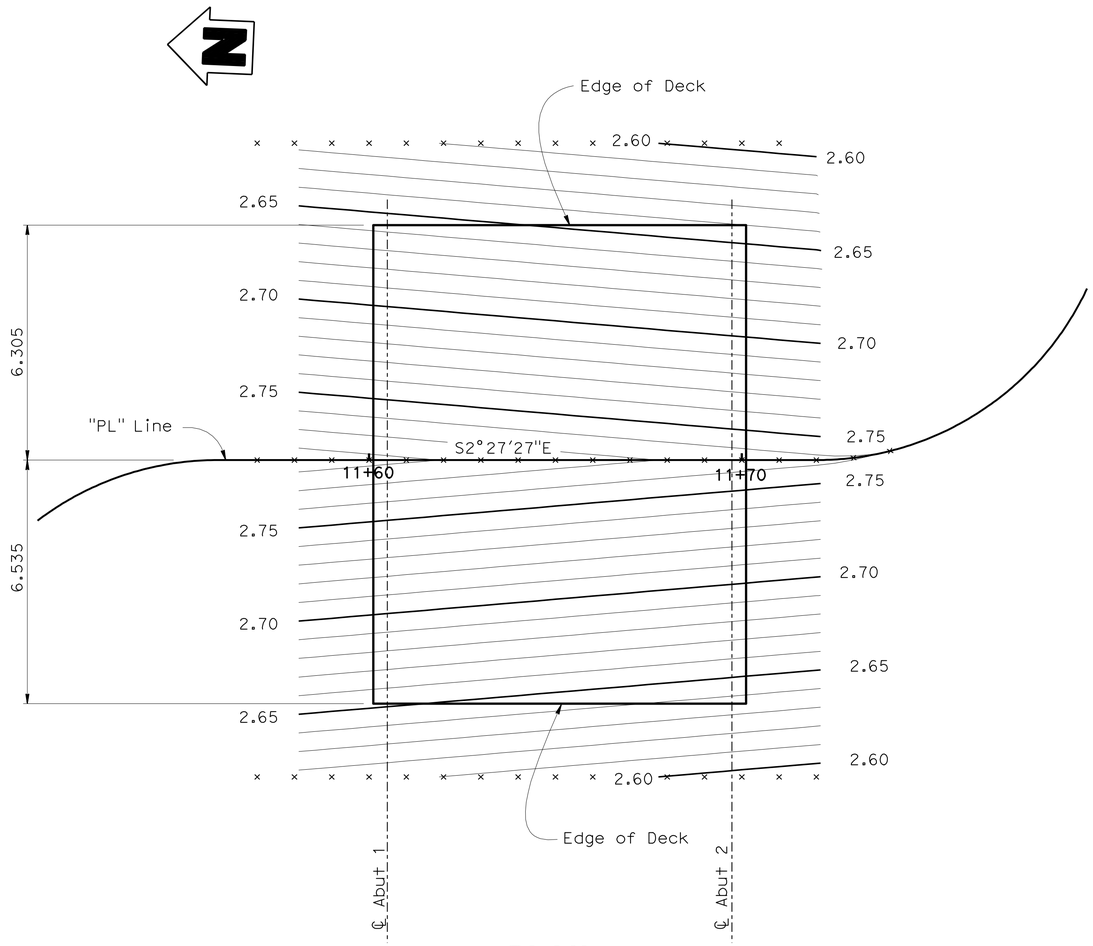

PLAN
1:80

LEGEND:

× - Indicates 1.0 meter Intervals Along Station Line

NOTES:

1. Contours Interval = 0.01 meter
2. Contours do not Include Camber
3. ℄ Abut 1 and ℄ Abut 2 is Parallel to ℄ of EBMUD Sewer Outfall

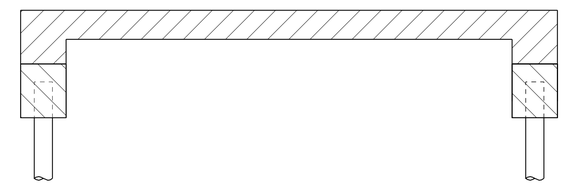

CONCRETE STRENGTH AND TYPE LIMITS
NO SCALE

LEGEND:

Precast Concrete Slab (f_c' =22.5 MPa at 28 days)

Structural Concrete, Bridge

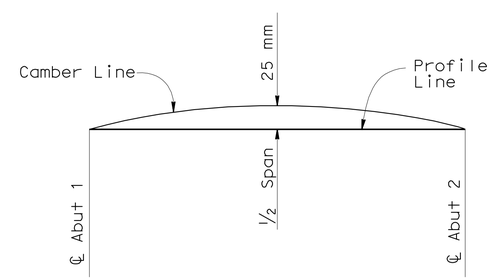

CAMBER DIAGRAM

DESIGN	BY A. Yazdani/T. Kishwar	CHECKED S. Hamoud	
DETAILS	BY Min Yu	CHECKED S. Hamoud	
QUANTITIES	BY A. Perze	CHECKED S. Kotalawala	

STATE OF CALIFORNIA
DEPARTMENT OF TRANSPORTATION

DIVISION OF ENGINEERING SERVICES
STRUCTURE DESIGN
DESIGN BRANCH 16

BRIDGE NO. 33-0742Y
KILOMETER POST 2.1

SAN FRANCISCO OAKLAND BAY BRIDGE
EAST SPAN SEISMIC SAFETY PROJECT
OUTFALL BRIDGE AT WEST END MAINTENANCE YARD
DECK CONTOURS

Caltrans Metric

ALL DIMENSIONS ARE IN METERS UNLESS OTHERWISE SHOWN

ORIGINAL SCALE IN MILLIMETERS FOR REDUCED PLANS 0 10 20 30 40 50 60 70 80 90 100

CU 04
EA 0120M1

DISREGARD PRINTS BEARING EARLIER REVISION DATES

REVISION DATES: 10-25-08 05-04-09 08-24-09 11-30-09 12-07-09 05-17-10 03-03-11 03-17-11 03-23-11 05-25-11

SHEET 3 OF 10

STRUCTURES DESIGN DETAIL SHEET (METRIC) (REV.03-17-04)

FILE => 33-0742Y-d-dc01.dgn

USERNAME => s6121614 DATE PLOTTED => 05-OCT-2011 TIME PLOTTED => 14:14

DIST	COUNTY	ROUTE	KILOMETER POST TOTAL PROJECT	SHEET No	TOTAL SHEETS
04	Ala	80	1.6/2.7	700	744

Caltrans Metric

REGISTERED CIVIL ENGINEER — DATE 06-06-11

10-3-11
PLANS APPROVAL DATE

REGISTERED PROFESSIONAL ENGINEER — ALIREZA YAZDANI MOTLAGH — No. 69601 — Exp. 6-30-12 — CIVIL — STATE OF CALIFORNIA

The State of California or its officers or agents shall not be responsible for the accuracy or completeness of electronic copies of this plan sheet.

CURVE DATA

No.	R	Δ	T	L
A	200.000	2°57'39"	5.169	10.335
B	8.000	91°52'34"	8.266	12.828
C	8.000	90°00'00"	8.000	12.566

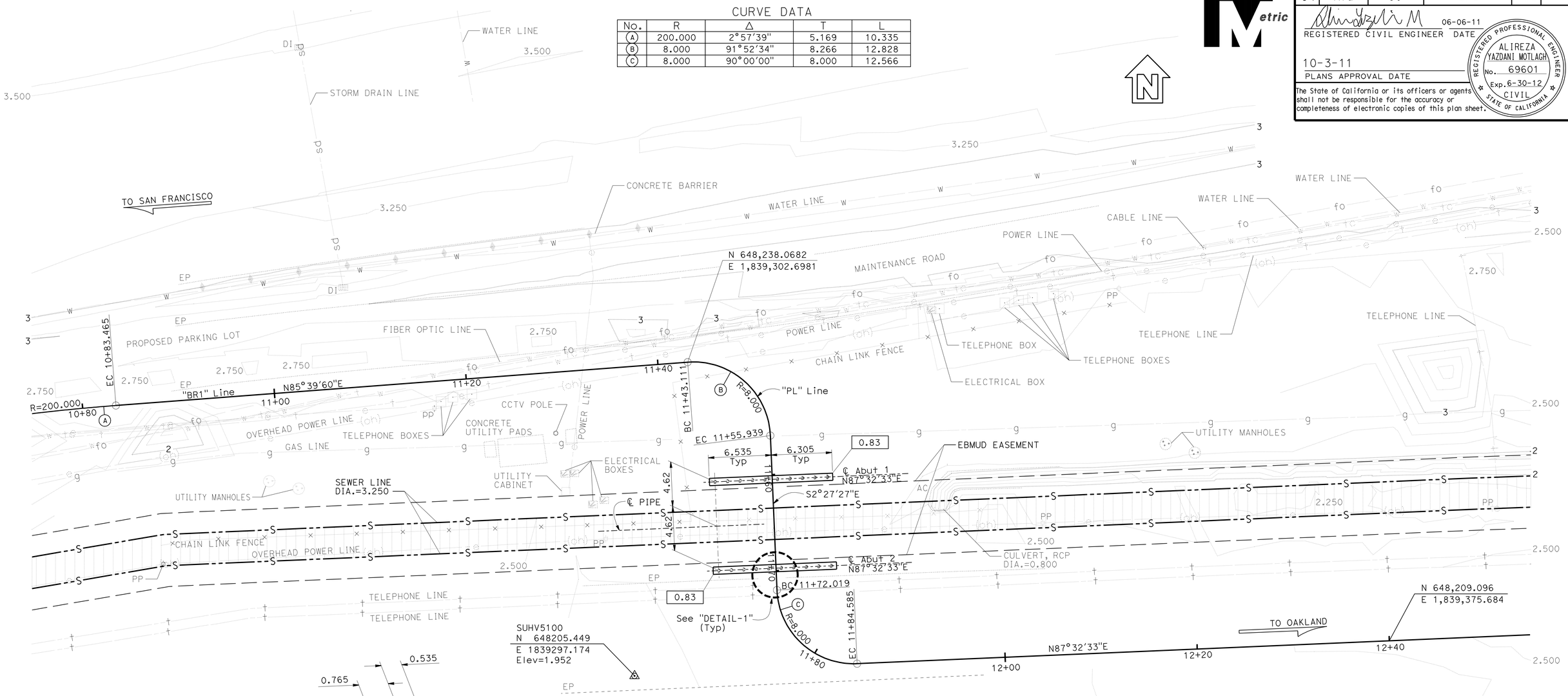

SURVEY CONTROL

SUHV5099 (NOT SHOWN ON PLAN)
Fnd PKSH PORT/OAK NEAR BILLBRD
7.854 M Lt. "BR1" LINE
Sta. 12+81.069
N 648218.704
E 1839416.379
Elev. = 2.500

SUHV5100
Fnd PK/TGT PORT/OAK
16.613 M Rt. "BR1" LINE
Sta. 11+74.762
N 648205.449
E 1839297.174
Elev. = 1.952

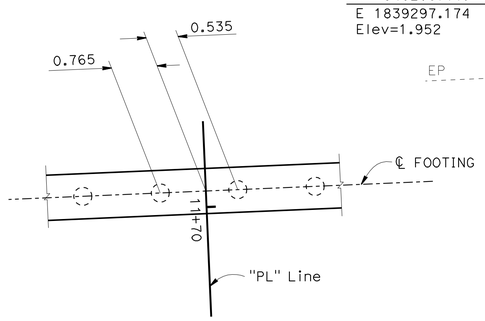

DETAIL - 1
NO SCALE

LEGEND:

- INDICATES EXISTING SEWER OUTFALL
- INDICATES BOTTOM OF FOOTING ELEVATION

NOTE:
ALL UTILITIES SHOWN ARE PER DISTRICT UTILITY PLAN

ALL DIMENSIONS ARE IN METERS UNLESS OTHERWISE SHOWN

PRELIMINARY INVESTIGATION SECTION

SCALE	VERT. DATUM NGVD29	PHOTOGRAMMETRY AS OF:		
1:200	HORZ. DATUM NAD83 (1991.35)	SURVEYED	BY DISTRICT	CHECKED BY J.PALLARES 11/2008
ALIGNMENT TIES DIST.TRAVERSE SHEET		DRAFTED	BY J.MARTINEZ 11/2008	CHECKED BY T.ZOLNIKOVA 11/2008

	BY	CHECKED
DESIGN	A. Yazdani/T. Kishwar	S. Hamoud
DETAILS	Min Yu	S. Hamoud
QUANTITIES	A. Perez	S. Katalawala

STATE OF CALIFORNIA
DEPARTMENT OF TRANSPORTATION

DIVISION OF ENGINEERING SERVICES
STRUCTURE DESIGN
DESIGN BRANCH 16

BRIDGE NO. 33-0742Y
KILOMETER POST 2.1

SAN FRANCISCO OAKLAND BAY BRIDGE EAST SPAN SEISMIC SAFETY PROJECT
OUTFALL BRIDGE AT WEST END MAINTENANCE YARD
FOUNDATION PLAN

STRUCTURES FOUNDATION PLAN SHEET (METRIC) (REV.10-27-05)

ORIGINAL SCALE IN MILLIMETERS FOR REDUCED PLANS 0 10 20 30 40 50 60 70 80 90 100

CU 04
EA 0120M1

DISREGARD PRINTS BEARING EARLIER REVISION DATES

REVISION DATES (PRELIMINARY STAGE ONLY): 11-14-08 | 4-21-09 | 05-04-09 | 11-30-09 | 12-07-09 | 03-01-10 | 07-06-10 | 03-04-11 | 03-23-11 | 05-26-11

SHEET 4 OF 10

FILE => 33-0742Y-e-fp101.dgn

USERNAME => s121614 DATE PLOTTED => 05-OCT-2011 TIME PLOTTED => 14:14