| Dist | COUNTY | ROUTE | KILOMETER POST TOTAL PROJECT | SHEET No. | TOTAL SHEETS |
|---|---|---|---|---|---|
| 04 | Ala | 80 | 1.6/2.7 | 501 | 744 |

REGISTERED ELECTRICAL ENGINEER 05/02/11

10-3-11
PLANS APPROVAL DATE

REGISTERED PROFESSIONAL ENGINEER DAVID H. OTO No. 10699 Exp. 06/30/2013 ELECTRICAL STATE OF CALIFORNIA

*THE STATE OF CALIFORNIA OR ITS OFFICERS OR AGENTS SHALL NOT BE RESPONSIBLE FOR THE ACCURACY OR COMPLETENESS OF ELECTRONIC COPIES OF THIS PLAN SHEET.*

PB AMERICAS, Inc.
303 Second St., Suite 700N
San Francisco, CA 94107-1317

Caltrans Metric

Cable/Ckt #: 2489-ID-A
Reference:
Function: TOS Innerduct
Conductor Type: 25.4 mm, Black, Smooth innerduct, HDPE w/ pull rope
From: TOS/COM cell at Pier E21R
To: Fiberoptic Splice Closure FSC 23ES
Remarks:
Description Of Changes:

| Route | Conduit No. | Route | Conduit No. | Route | Conduit No. | Route | Conduit No. |
|---|---|---|---|---|---|---|---|
| 1 | 5377 | | | | | | |

Cable/Ckt #: 2489-ID-B
Reference:
Function: TOS Innerduct
Conductor Type: 25.4 mm, Brown, Smooth innerduct, HDPE w/ pull rope
From: TOS/COM cell at Pier E21R
To: Fiberoptic Splice Closure FSC 23ES
Remarks:
Description Of Changes:

| Route | Conduit No. | Route | Conduit No. | Route | Conduit No. | Route | Conduit No. |
|---|---|---|---|---|---|---|---|
| 1 | 5377 | | | | | | |

Cable/Ckt #: 2489-ID-C
Reference:
Function: TOS Innerduct
Conductor Type: 12.70 mm, White, Smooth innerduct, HDPE w/ pull rope
From: TOS/COM cell at Pier E21R
To: Fiberoptic Splice Closure FSC 23ES
Remarks:
Description Of Changes:

| Route | Conduit No. | Route | Conduit No. | Route | Conduit No. | Route | Conduit No. |
|---|---|---|---|---|---|---|---|
| 1 | 5377 | | | | | | |

Cable/Ckt #: 2489-ID-D
Reference:
Function: TOS Innerduct
Conductor Type: 12.70 mm, Blue, Smooth innerduct, HDPE w/ pull rope
From: TOS/COM cell at Pier E21R
To: Fiberoptic Splice Closure FSC 23ES
Remarks:
Description Of Changes:

| Route | Conduit No. | Route | Conduit No. | Route | Conduit No. | Route | Conduit No. |
|---|---|---|---|---|---|---|---|
| 1 | 5377 | | | | | | |

Cable/Ckt #: 2490-ID-A
Reference:
Function: TOS Innerduct
Conductor Type: 25.4 mm, Black, Smooth innerduct, HDPE w/ pull rope
From: *7678
To: TOS/COM Vault at Pier E18R
Remarks:
Description Of Changes:

| Route | Conduit No. | Route | Conduit No. | Route | Conduit No. | Route | Conduit No. |
|---|---|---|---|---|---|---|---|
| 1 | *7678 | 2 | *7936 | 3 | *7940 | 4 | *5952 |
| 5 | TOS/COM Vault | 6 | *5370 | | | | |

Cable/Ckt #: 2490-ID-B
Reference:
Function: TOS Innerduct
Conductor Type: 25.4 mm, Brown, Smooth innerduct, HDPE w/ pull rope
From: *7678
To: TOS/COM Vault at Pier E18R
Remarks:
Description Of Changes:

| Route | Conduit No. | Route | Conduit No. | Route | Conduit No. | Route | Conduit No. |
|---|---|---|---|---|---|---|---|
| 1 | *7678 | 2 | *7936 | 3 | *7940 | 4 | *5952 |
| 5 | TOS/COM Vault | 6 | *5370 | | | | |

Cable/Ckt #: 2490-ID-C
Reference:
Function: TOS Innerduct
Conductor Type: 25.4 mm, White, Smooth innerduct, HDPE w/ pull rope
From: *7678
To: TOS/COM Vault at Pier E18R
Remarks:
Description Of Changes:

| Route | Conduit No. | Route | Conduit No. | Route | Conduit No. | Route | Conduit No. |
|---|---|---|---|---|---|---|---|
| 1 | *7678 | 2 | *7936 | 3 | *7940 | 4 | *5952 |
| 5 | TOS/COM Vault | 6 | *5370 | | | | |

Cable/Ckt #: 2490-ID-D
Reference:
Function: TOS Innerduct
Conductor Type: 25.4 mm, Blue, Smooth innerduct, HDPE w/ pull rope
From: *7678
To: TOS/COM Vault at Pier E18R
Remarks:
Description Of Changes:

| Route | Conduit No. | Route | Conduit No. | Route | Conduit No. | Route | Conduit No. |
|---|---|---|---|---|---|---|---|
| 1 | *7678 | 2 | *7936 | 3 | *7940 | 4 | *5952 |
| 5 | TOS/COM Vault | 6 | *5370 | | | | |

# CABLE AND CIRCUIT SCHEDULE

E-311

THIS PLAN IS ACCURATE FOR ELECTRICAL WORK ONLY.

STATE OF CALIFORNIA - DEPARTMENT OF TRANSPORTATION
Caltrans

CONSULTANT FUNCTIONAL SUPERVISOR: BRADY NADELL
CALCULATED-DESIGNED BY: JEFFRI HALIM
CHECKED BY: ELLERY LUCAS
REVISED BY
DATE REVISED

LAST REVISION 08-17-09
DATE PLOTTED => 06-OCT-2011
TIME PLOTTED => 07:31

| Dist | COUNTY | ROUTE | KILOMETER POST TOTAL PROJECT | SHEET No. | TOTAL SHEETS |
|---|---|---|---|---|---|
| 04 | Ala | 80 | 1.6/2.7 | 502 | 744 |

Caltrans Metric

05/02/11
REGISTERED ELECTRICAL ENGINEER

10-3-11
PLANS APPROVAL DATE

REGISTERED PROFESSIONAL ENGINEER
DAVID H. OTO
No. 10699
Exp. 06/30/2013
ELECTRICAL
STATE OF CALIFORNIA

*THE STATE OF CALIFORNIA OR ITS OFFICERS OR AGENTS SHALL NOT BE RESPONSIBLE FOR THE ACCURACY OR COMPLETENESS OF ELECTRONIC COPIES OF THIS PLAN SHEET.*

PB AMERICAS, Inc.
303 Second St., Suite 700N
San Francisco, CA 94107-1317

Cable/Ckt #: 2491-ID-A
Reference:
Function: TOS Innerduct
Conductor Type: 25.4 mm, Black, Smooth innerduct, HDPE w/ pull rope
From: TOS/COM Vault at Pier E18R
To: TOS/COM cell at Pier E21R
Remarks:
Description Of Changes:

| Route | Conduit No. | Route | Conduit No. | Route | Conduit No. | Route | Conduit No. |
|---|---|---|---|---|---|---|---|
| 1 | *5371 | 2 | TOS/COM Vault | 3 | 5328 | | |

Cable/Ckt #: 2491-ID-B
Reference:
Function: TOS Innerduct
Conductor Type: 25.4 mm, Brown, Smooth innerduct, HDPE w/ pull rope
From: TOS/COM Vault at Pier E18R
To: TOS/COM cell at Pier E21R
Remarks:
Description Of Changes:

| Route | Conduit No. | Route | Conduit No. | Route | Conduit No. | Route | Conduit No. |
|---|---|---|---|---|---|---|---|
| 1 | *5371 | 2 | TOS/COM Vault | 3 | 5328 | | |

Cable/Ckt #: 2491-ID-C
Reference:
Function: TOS Innerduct
Conductor Type: 25.4 mm, White, Smooth innerduct, HDPE w/ pull rope
From: TOS/COM Vault at Pier E18R
To: TOS/COM cell at Pier E21R
Remarks:
Description Of Changes:

| Route | Conduit No. | Route | Conduit No. | Route | Conduit No. | Route | Conduit No. |
|---|---|---|---|---|---|---|---|
| 1 | *5371 | 2 | TOS/COM Vault | 3 | 5328 | | |

Cable/Ckt #: 2491-ID-D
Reference:
Function: TOS Innerduct
Conductor Type: 25.4 mm, Blue, Smooth innerduct, HDPE w/ pull rope
From: TOS/COM Vault at Pier E18R
To: TOS/COM cell at Pier E21R
Remarks:
Description Of Changes:

| Route | Conduit No. | Route | Conduit No. | Route | Conduit No. | Route | Conduit No. |
|---|---|---|---|---|---|---|---|
| 1 | *5371 | 2 | TOS/COM Vault | 3 | 5328 | | |

Cable/Ckt #: 2492-ID-A
Reference:
Function: TOS Innerduct
Conductor Type: 25.4 mm, Black, Smooth innerduct, HDPE w/ pull rope
From: TOS/COM cell at Pier E21R
To: *Manhole MH-12
Remarks:
Description Of Changes:

| Route | Conduit No. | Route | Conduit No. | Route | Conduit No. | Route | Conduit No. |
|---|---|---|---|---|---|---|---|
| 1 | 5346 | 2 | TOS/COM Vault | 3 | 5355 | 4 | *0349 |

Cable/Ckt #: 2492-ID-B
Reference:
Function: TOS Innerduct
Conductor Type: 25.4 mm, Brown, Smooth innerduct, HDPE w/ pull rope
From: TOS/COM cell at Pier E21R
To: *Manhole MH-12
Remarks:
Description Of Changes:

| Route | Conduit No. | Route | Conduit No. | Route | Conduit No. | Route | Conduit No. |
|---|---|---|---|---|---|---|---|
| 1 | 5346 | 2 | TOS/COM Vault | 3 | 5355 | 4 | *0349 |

Cable/Ckt #: 2492-ID-C
Reference:
Function: TOS Innerduct
Conductor Type: 25.4 mm, White, Smooth innerduct, HDPE w/ pull rope
From: TOS/COM cell at Pier E21R
To: *Manhole MH-12
Remarks:
Description Of Changes:

| Route | Conduit No. | Route | Conduit No. | Route | Conduit No. | Route | Conduit No. |
|---|---|---|---|---|---|---|---|
| 1 | 5346 | 2 | TOS/COM Vault | 3 | 5355 | 4 | *0349 |

Cable/Ckt #: 2492-ID-D
Reference:
Function: TOS Innerduct
Conductor Type: 25.4 mm, Blue, Smooth innerduct, HDPE w/ pull rope
From: TOS/COM cell at Pier E21R
To: *Manhole MH-12
Remarks:
Description Of Changes:

| Route | Conduit No. | Route | Conduit No. | Route | Conduit No. | Route | Conduit No. |
|---|---|---|---|---|---|---|---|
| 1 | 5346 | 2 | TOS/COM Vault | 3 | 5355 | 4 | *0349 |

# CABLE AND CIRCUIT SCHEDULE

THIS PLAN IS ACCURATE FOR ELECTRICAL WORK ONLY.

E-312

| REVISED BY | DATE REVISED |
|---|---|
| | |

CALCULATED-DESIGNED BY: JEFFRI HALIM
CHECKED BY: ELLERY LUCAS
CONSULTANT FUNCTIONAL SUPERVISOR: BRADY NADELL

STATE OF CALIFORNIA - DEPARTMENT OF TRANSPORTATION
Caltrans

LAST REVISION 08-17-09
DATE PLOTTED => 06-OCT-2011
TIME PLOTTED => 07:32

| Dist | COUNTY | ROUTE | KILOMETER POST TOTAL PROJECT | SHEET No. | TOTAL SHEETS |
|---|---|---|---|---|---|
| 04 | Ala | 80 | 1.6/2.7 | 503 | 744 |

Caltrans Metric

05/02/11
REGISTERED ELECTRICAL ENGINEER

10-3-11
PLANS APPROVAL DATE

REGISTERED PROFESSIONAL ENGINEER DAVID H. OTO No. 10699 Exp. 06/30/2013 ELECTRICAL STATE OF CALIFORNIA

*THE STATE OF CALIFORNIA OR ITS OFFICERS OR AGENTS SHALL NOT BE RESPONSIBLE FOR THE ACCURACY OR COMPLETENESS OF ELECTRONIC COPIES OF THIS PLAN SHEET.*

PB AMERICAS, Inc.
303 Second St., Suite 700N
San Francisco, CA 94107-1317

Cable/Ckt #: 2496-ID-A
Reference:
Function: TOS Innerduct
Conductor Type: 25.4 mm, Black, Smooth innerduct, HDPE w/ pull rope
From: *Manhole MH-19
To: *ATOS-A04
Remarks:
Description Of Changes:

| Route | Conduit No. | Route | Conduit No. | Route | Conduit No. | Route | Conduit No. |
|---|---|---|---|---|---|---|---|
| 1 | *0604 | 2 | MH-21 | 3 | *0608 | 4 | MH-23 |
| 5 | *0612 | 6 | MH-25 | 7 | *0616 | 8 | MH-27 |
| 9 | *0620 | 10 | MH-29 | 11 | *0624 | 12 | MH-31 |
| 13 | *0628 | 14 | MH-33 | 15 | *0632 | 16 | MH-35 |
| 17 | *0636 | 18 | MH-37 | 19 | *0640 | 20 | MH-39 |
| 21 | *0644 | 22 | MH-41 | 23 | *0648 | 24 | MH-2 |
| 25 | *268 | 26 | *1T1 | 27 | FIELD | | |

Cable/Ckt #: 2496-ID-B
Reference:
Function: TOS Innerduct
Conductor Type: 25.4 mm, Brown, Smooth innerduct, HDPE w/ pull rope
From: *Manhole MH-19
To: *1T1
Remarks:
Description Of Changes:

| Route | Conduit No. | Route | Conduit No. | Route | Conduit No. | Route | Conduit No. |
|---|---|---|---|---|---|---|---|
| 1 | *0604 | 2 | MH-21 | 3 | *0608 | 4 | MH-23 |
| 5 | *0612 | 6 | MH-25 | 7 | *0616 | 8 | MH-27 |
| 9 | *0620 | 10 | MH-29 | 11 | *0624 | 12 | MH-31 |
| 13 | *0628 | 14 | MH-33 | 15 | *0632 | 16 | MH-35 |
| 17 | *0636 | 18 | MH-37 | 19 | *0640 | 20 | MH-39 |
| 21 | *0644 | 22 | MH-41 | 23 | *0648 | 24 | MH-2 |
| 25 | *268 | | | | | | |

Cable/Ckt #: 2496-ID-C
Reference:
Function: TOS Innerduct
Conductor Type: 25.4 mm, White, Smooth innerduct, HDPE w/ pull rope
From: *Manhole MH-19
To: *1T1
Remarks:
Description Of Changes:

| Route | Conduit No. | Route | Conduit No. | Route | Conduit No. | Route | Conduit No. |
|---|---|---|---|---|---|---|---|
| 1 | *0604 | 2 | MH-21 | 3 | *0608 | 4 | MH-23 |
| 5 | *0612 | 6 | MH-25 | 7 | *0616 | 8 | MH-27 |
| 9 | *0620 | 10 | MH-29 | 11 | *0624 | 12 | MH-31 |
| 13 | *0628 | 14 | MH-33 | 15 | *0632 | 16 | MH-35 |
| 17 | *0636 | 18 | MH-37 | 19 | *0640 | 20 | MH-39 |
| 21 | *0644 | 22 | MH-41 | 23 | *0648 | 24 | MH-2 |
| 25 | *268 | | | | | | |

Cable/Ckt #: 2496-ID-D
Reference:
Function: TOS Innerduct
Conductor Type: 25.4 mm, Blue, Smooth innerduct, HDPE w/ pull rope
From: *Manhole MH-19
To: *1T1
Remarks:
Description Of Changes:

| Route | Conduit No. | Route | Conduit No. | Route | Conduit No. | Route | Conduit No. |
|---|---|---|---|---|---|---|---|
| 1 | *0604 | 2 | MH-21 | 3 | *0608 | 4 | MH-23 |
| 5 | *0612 | 6 | MH-25 | 7 | *0616 | 8 | MH-27 |
| 9 | *0620 | 10 | MH-29 | 11 | *0624 | 12 | MH-31 |
| 13 | *0628 | 14 | MH-33 | 15 | *0632 | 16 | MH-35 |
| 17 | *0636 | 18 | MH-37 | 19 | *0640 | 20 | MH-39 |
| 21 | *0644 | 22 | MH-41 | 23 | *0648 | 24 | MH-2 |
| 25 | *268 | | | | | | |

Cable/Ckt #: 2497-ID-A
Reference:
Function: TOS Innerduct
Conductor Type: 25.4 mm, Black, Smooth innerduct, HDPE w/ pull rope
From: *Manhole MH-12
To: Manhole MH-49
Remarks:
Description Of Changes:

| Route | Conduit No. | Route | Conduit No. | Route | Conduit No. | Route | Conduit No. |
|---|---|---|---|---|---|---|---|
| 1 | *0358 | 2 | 0358 | 3 | MH-45 | 4 | 0362 |
| 5 | MH-47 | 6 | 0366 | | | | |

Cable/Ckt #: 2497-ID-B
Reference:
Function: TOS Innerduct
Conductor Type: 25.4 mm, Brown, Smooth innerduct, HDPE w/ pull rope
From: *Manhole MH-12
To: Manhole MH-49
Remarks:
Description Of Changes:

| Route | Conduit No. | Route | Conduit No. | Route | Conduit No. | Route | Conduit No. |
|---|---|---|---|---|---|---|---|
| 1 | *0358 | 2 | 0358 | 3 | MH-45 | 4 | 0362 |
| 5 | MH-47 | 6 | 0366 | | | | |

# CABLE AND CIRCUIT SCHEDULE

THIS PLAN IS ACCURATE FOR ELECTRICAL WORK ONLY.

E-313

REVISED BY | DATE REVISED
JEFFRI HALIM | ELLERY LUCAS
CALCULATED-DESIGNED BY | CHECKED BY
CONSULTANT FUNCTIONAL SUPERVISOR
BRADY NADELL
STATE OF CALIFORNIA - DEPARTMENT OF TRANSPORTATION
Caltrans

LAST REVISION 08-17-09 | DATE PLOTTED => 06-OCT-2011 | TIME PLOTTED => 07:32

| Dist | COUNTY | ROUTE | KILOMETER POST TOTAL PROJECT | SHEET No. | TOTAL SHEETS |
|---|---|---|---|---|---|
| 04 | Ala | 80 | 1.6/2.7 | 504 | 744 |

REGISTERED ELECTRICAL ENGINEER 05/02/11

10-3-11
PLANS APPROVAL DATE

REGISTERED PROFESSIONAL ENGINEER DAVID H. OTO No. 10699 Exp. 06/30/2013 ELECTRICAL STATE OF CALIFORNIA

*THE STATE OF CALIFORNIA OR ITS OFFICERS OR AGENTS SHALL NOT BE RESPONSIBLE FOR THE ACCURACY OR COMPLETENESS OF ELECTRONIC COPIES OF THIS PLAN SHEET.*

PB AMERICAS, Inc.
303 Second St., Suite 700N
San Francisco, CA 94107-1317

Caltrans Metric

**Cable/Ckt #:** 2497-ID-C
**Reference:**
**Function:** TOS Innerduct
**Conductor Type:** 12.70 mm, White, Smooth innerduct, HDPE w/ pull rope
**From:** *Manhole MH-12
**To:** Manhole MH-49
**Remarks:**
**Description Of Changes:**

| Route | Conduit No. | Route | Conduit No. | Route | Conduit No. | Route | Conduit No. |
|---|---|---|---|---|---|---|---|
| 1 | *0358 | 2 | 0358 | 3 | MH-45 | 4 | 0362 |
| 5 | MH-47 | 6 | 0366 | | | | |

**Cable/Ckt #:** 2497-ID-D
**Reference:**
**Function:** TOS Innerduct
**Conductor Type:** 12.70 mm, Blue, Smooth innerduct, HDPE w/ pull rope
**From:** *Manhole MH-12
**To:** Manhole MH-49
**Remarks:**
**Description Of Changes:**

| Route | Conduit No. | Route | Conduit No. | Route | Conduit No. | Route | Conduit No. |
|---|---|---|---|---|---|---|---|
| 1 | *0358 | 2 | 0358 | 3 | MH-45 | 4 | 0362 |
| 5 | MH-47 | 6 | 0366 | | | | |

**Cable/Ckt #:** 2498-ID-A
**Reference:**
**Function:** TOS Innerduct
**Conductor Type:** 25.4 mm, Black, Smooth innerduct, HDPE w/ pull rope
**From:** Manhole MH-49
**To:** Manhole MH-53
**Remarks:**
**Description Of Changes:**

| Route | Conduit No. | Route | Conduit No. | Route | Conduit No. | Route | Conduit No. |
|---|---|---|---|---|---|---|---|
| 1 | 0373 | 2 | MH-51 | 3 | 0393 | | |

**Cable/Ckt #:** 2498-ID-B
**Reference:**
**Function:** TOS Innerduct
**Conductor Type:** 25.4 mm, Brown, Smooth innerduct, HDPE w/ pull rope
**From:** Manhole MH-49
**To:** Manhole MH-53
**Remarks:**
**Description Of Changes:**

| Route | Conduit No. | Route | Conduit No. | Route | Conduit No. | Route | Conduit No. |
|---|---|---|---|---|---|---|---|
| 1 | 0373 | 2 | MH-51 | 3 | 0393 | | |

**Cable/Ckt #:** 2498-ID-C
**Reference:**
**Function:** TOS Innerduct
**Conductor Type:** 12.70 mm, White, Smooth innerduct, HDPE w/ pull rope
**From:** Manhole MH-49
**To:** Manhole MH-53
**Remarks:**
**Description Of Changes:**

| Route | Conduit No. | Route | Conduit No. | Route | Conduit No. | Route | Conduit No. |
|---|---|---|---|---|---|---|---|
| 1 | 0373 | 2 | MH-51 | 3 | 0393 | | |

**Cable/Ckt #:** 2498-ID-D
**Reference:**
**Function:** TOS Innerduct
**Conductor Type:** 12.70 mm, Blue, Smooth innerduct, HDPE w/ pull rope
**From:** Manhole MH-49
**To:** Manhole MH-53
**Remarks:**
**Description Of Changes:**

| Route | Conduit No. | Route | Conduit No. | Route | Conduit No. | Route | Conduit No. |
|---|---|---|---|---|---|---|---|
| 1 | 0373 | 2 | MH-51 | 3 | 0393 | | |

**Cable/Ckt #:** 2506-12A
**Reference:** E-188
**Function:** Low Level Signal
**Conductor Type:** 4 pair #22, shielded pairs, FEP insulation (Type SSC)
**From:** Strong Motion Recorder #1
**To:** *Sensor Enclosure 2-1
**Remarks:**
**Description Of Changes:**

| Route | Conduit No. | Route | Conduit No. | Route | Conduit No. | Route | Conduit No. |
|---|---|---|---|---|---|---|---|
| 1 | *9030 | 2 | 2T25 | 3 | 9061 | 4 | TOS/COM Vault |
| 5 | 9060 | 6 | TOS/COM Cell | 7 | 9027 | 8 | *9027 |
| 9 | Junction Box | 10 | *9026 | 11 | TOS/COM Cell | 12 | *9025B |
| 13 | Transition Cell | 14 | *9002 | 15 | Junction Box | 16 | 9014 |

**Cable/Ckt #:** 2506-12B
**Reference:** E-188
**Function:** Low Level Signal
**Conductor Type:** 4 pair #22, shielded pairs, FEP insulation (Type SSC)
**From:** Strong Motion Recorder #1
**To:** *Sensor Enclosure 2-1
**Remarks:**
**Description Of Changes:**

| Route | Conduit No. | Route | Conduit No. | Route | Conduit No. | Route | Conduit No. |
|---|---|---|---|---|---|---|---|
| 1 | *9030 | 2 | 2T25 | 3 | 9061 | 4 | TOS/COM Vault |
| 5 | 9060 | 6 | TOS/COM Cell | 7 | 9027 | 8 | *9027 |
| 9 | Junction Box | 10 | *9026 | 11 | TOS/COM Cell | 12 | *9025B |
| 13 | Transition Cell | 14 | *9002 | 15 | Junction Box | 16 | 9014 |

# CABLE AND CIRCUIT SCHEDULE

THIS PLAN IS ACCURATE FOR ELECTRICAL WORK ONLY.

E-314

REVISED BY | DATE REVISED
JEFFRI HALIM | ELLERY LUCAS
CALCULATED-DESIGNED BY | CHECKED BY
CONSULTANT FUNCTIONAL SUPERVISOR
BRADY NADELL
STATE OF CALIFORNIA - DEPARTMENT OF TRANSPORTATION
Caltrans

LAST REVISION 08-17-09 | DATE PLOTTED => 06-OCT-2011 | TIME PLOTTED => 07:32

| Dist | COUNTY | ROUTE | KILOMETER POST TOTAL PROJECT | SHEET No. | TOTAL SHEETS |
|---|---|---|---|---|---|
| 04 | Ala | 80 | 1.6/2.7 | 505 | 744 |

REGISTERED ELECTRICAL ENGINEER 05/02/11

10-3-11
PLANS APPROVAL DATE

REGISTERED PROFESSIONAL ENGINEER DAVID H. OTO No. 10699 Exp. 06/30/2013 ELECTRICAL STATE OF CALIFORNIA

*THE STATE OF CALIFORNIA OR ITS OFFICERS OR AGENTS SHALL NOT BE RESPONSIBLE FOR THE ACCURACY OR COMPLETENESS OF ELECTRONIC COPIES OF THIS PLAN SHEET.*

PB AMERICAS, Inc.
303 Second St., Suite 700N
San Francisco, CA 94107-1317

Caltrans Metric

Cable/Ckt #: 2506-12C
Reference: E-188
Function: Low Level Signal
Conductor Type: 4 pair #22, shielded pairs, FEP insulation (Type SSC)
From: Strong Motion Recorder #1
To: *Sensor Enclosure 2-1
Remarks:
Description Of Changes:

| Route | Conduit No. | Route | Conduit No. | Route | Conduit No. | Route | Conduit No. |
|---|---|---|---|---|---|---|---|
| 1 | *9030 | 2 | 2T25 | 3 | 9061 | 4 | TOS/COM Vault |
| 5 | 9060 | 6 | TOS/COM Cell | 7 | 9027 | 8 | *9027 |
| 9 | Junction Box | 10 | *9026 | 11 | TOS/COM Cell | 12 | *9025B |
| 13 | Transition Cell | 14 | *9002 | 15 | Junction Box | 16 | 9014 |

Cable/Ckt #: 2506-12D
Reference: E-188
Function: Low Level Signal
Conductor Type: 4 pair #22, shielded pairs, FEP insulation (Type SSC)
From: Strong Motion Recorder #1
To: *Sensor Enclosure 2-1
Remarks:
Description Of Changes:

| Route | Conduit No. | Route | Conduit No. | Route | Conduit No. | Route | Conduit No. |
|---|---|---|---|---|---|---|---|
| 1 | *9030 | 2 | 2T25 | 3 | 9061 | 4 | TOS/COM Vault |
| 5 | 9060 | 6 | TOS/COM Cell | 7 | 9027 | 8 | *9027 |
| 9 | Junction Box | 10 | *9026 | 11 | TOS/COM Cell | 12 | *9025B |
| 13 | Transition Cell | 14 | *9002 | 15 | Junction Box | 16 | 9014 |

Cable/Ckt #: 2506-13A
Reference: E-188
Function: Low Level Signal
Conductor Type: 4 pair #22, shielded pairs, FEP insulation (Type SSC)
From: Strong Motion Recorder #1
To: *Sensor Enclosure 3-1
Remarks:
Description Of Changes:

| Route | Conduit No. | Route | Conduit No. | Route | Conduit No. | Route | Conduit No. |
|---|---|---|---|---|---|---|---|
| 1 | *9030 | 2 | 2T25 | 3 | 9061 | 4 | TOS/COM Vault |
| 5 | 9060 | 6 | TOS/COM Cell | 7 | 9027 | 8 | *9027 |
| 9 | Junction Box | 10 | *9026 | 11 | TOS/COM Cell | 12 | *9025A |
| 13 | Transition Cell | 14 | *9004 | | | | |

Cable/Ckt #: 2506-14A
Reference: E-188
Function: Low Level Signal
Conductor Type: 4 pair #22, shielded pairs, FEP insulation (Type SSC)
From: Strong Motion Recorder #1
To: *Sensor Enclosure 4-1
Remarks:
Description Of Changes:

| Route | Conduit No. | Route | Conduit No. | Route | Conduit No. | Route | Conduit No. |
|---|---|---|---|---|---|---|---|
| 1 | *9030 | 2 | 2T25 | 3 | 9061 | 4 | TOS/COM Vault |
| 5 | 9060 | 6 | TOS/COM Cell | 7 | 9027 | 8 | *9027 |
| 9 | Junction Box | 10 | *9026 | 11 | TOS/COM Cell | 12 | *9025A |
| 13 | Transition Cell | 14 | *9006 | | | | |

Cable/Ckt #: 2506-14B
Reference: E-188
Function: Low Level Signal
Conductor Type: 4 pair #22, shielded pairs, FEP insulation (Type SSC)
From: Strong Motion Recorder #1
To: *Sensor Enclosure 4-1
Remarks:
Description Of Changes:

| Route | Conduit No. | Route | Conduit No. | Route | Conduit No. | Route | Conduit No. |
|---|---|---|---|---|---|---|---|
| 1 | *9030 | 2 | 2T25 | 3 | 9061 | 4 | TOS/COM Vault |
| 5 | 9060 | 6 | TOS/COM Cell | 7 | 9027 | 8 | *9027 |
| 9 | Junction Box | 10 | *9026 | 11 | TOS/COM Cell | 12 | *9025A |
| 13 | Transition Cell | 14 | *9006 | | | | |

Cable/Ckt #: 2506-15A
Reference: E-188
Function: Low Level Signal
Conductor Type: 4 pair #22, shielded pairs, FEP insulation (Type SSC)
From: Strong Motion Recorder #1
To: *Sensor Enclosure 5-1
Remarks:
Description Of Changes:

| Route | Conduit No. | Route | Conduit No. | Route | Conduit No. | Route | Conduit No. |
|---|---|---|---|---|---|---|---|
| 1 | *9030 | 2 | 2T25 | 3 | 9061 | 4 | TOS/COM Vault |
| 5 | 9060 | 6 | TOS/COM Cell | 7 | 9027 | 8 | *9027 |
| 9 | Junction Box | 10 | *9026 | 11 | TOS/COM Cell | 12 | *9008 |

# CABLE AND CIRCUIT SCHEDULE

THIS PLAN IS ACCURATE FOR ELECTRICAL WORK ONLY.

E-315

STATE OF CALIFORNIA - DEPARTMENT OF TRANSPORTATION
Caltrans

CONSULTANT FUNCTIONAL SUPERVISOR: BRADY NADELL
CALCULATED-DESIGNED BY: JEFFRI HALIM
CHECKED BY: ELLERY LUCAS
REVISED BY / DATE REVISED

LAST REVISION 08-17-09
DATE PLOTTED => 06-OCT-2011
TIME PLOTTED => 07:32

| Dist | COUNTY | ROUTE | KILOMETER POST TOTAL PROJECT | SHEET No. | TOTAL SHEETS |
|---|---|---|---|---|---|
| 04 | Ala | 80 | 1.6/2.7 | 506 | 744 |

Caltrans Metric

05/02/11
REGISTERED ELECTRICAL ENGINEER

10-3-11
PLANS APPROVAL DATE

REGISTERED PROFESSIONAL ENGINEER DAVID H. OTO No. 10699 Exp. 06/30/2013 ELECTRICAL STATE OF CALIFORNIA

*THE STATE OF CALIFORNIA OR ITS OFFICERS OR AGENTS SHALL NOT BE RESPONSIBLE FOR THE ACCURACY OR COMPLETENESS OF ELECTRONIC COPIES OF THIS PLAN SHEET.*

PB AMERICAS, Inc.
303 Second St., Suite 700N
San Francisco, CA 94107-1317

**Cable/Ckt #:** 2506-16A **Reference:** E-188
**Function:** Low Level Signal **Conductor Type:** 4 pair #22, shielded pairs, FEP insulation (Type SSC)
**From:** Strong Motion Recorder #1 **To:** *Sensor Enclosure 6-1
**Remarks:**
**Description Of Changes:**

| Route | Conduit No. | Route | Conduit No. | Route | Conduit No. | Route | Conduit No. |
|---|---|---|---|---|---|---|---|
| 1 | *9030 | 2 | 2T25 | 3 | 9061 | 4 | TOS/COM Vault |
| 5 | 9060 | 6 | TOS/COM Cell | 7 | 9027 | 8 | *9027 |
| 9 | Junction Box | 10 | *9026 | 11 | TOS/COM Cell | 12 | *9011 |

**Cable/Ckt #:** 2506-17A **Reference:** E-188
**Function:** Low Level Signal **Conductor Type:** 4 pair #22, shielded pairs, FEP insulation (Type SSC)
**From:** Strong Motion Recorder #1 **To:** *Sensor Enclosure 7-1
**Remarks:**
**Description Of Changes:**

| Route | Conduit No. | Route | Conduit No. | Route | Conduit No. | Route | Conduit No. |
|---|---|---|---|---|---|---|---|
| 1 | *9030 | 2 | 2T25 | 3 | 9061 | 4 | TOS/COM Vault |
| 5 | 9060 | 6 | TOS/COM Cell | 7 | 9027 | 8 | *9027 |
| 9 | Junction Box | 10 | *9012 | | | | |

**Cable/Ckt #:** 2506-18A **Reference:** E-188
**Function:** Low Level Signal **Conductor Type:** 4 pair #22, shielded pairs, FEP insulation (Type SSC)
**From:** Strong Motion Recorder #1 **To:** *Sensor Enclosure 8-1
**Remarks:**
**Description Of Changes:**

| Route | Conduit No. | Route | Conduit No. | Route | Conduit No. | Route | Conduit No. |
|---|---|---|---|---|---|---|---|
| 1 | *9030 | 2 | 2T25 | 3 | 9061 | 4 | TOS/COM Vault |
| 5 | 9060 | 6 | TOS/COM Cell | 7 | 9027 | 8 | *9027 |
| 9 | Junction Box | 10 | *9013 | | | | |

**Cable/Ckt #:** 2506-19A **Reference:** E-188
**Function:** Low Level Signal **Conductor Type:** 4 pair #22, shielded pairs, FEP insulation (Type SSC)
**From:** Strong Motion Recorder #1 **To:** *Sensor Enclosure 1-1
**Remarks:**
**Description Of Changes:**

| Route | Conduit No. | Route | Conduit No. | Route | Conduit No. | Route | Conduit No. |
|---|---|---|---|---|---|---|---|
| 1 | *9030 | 2 | 2T25 | 3 | 9061 | 4 | TOS/COM Vault |
| 5 | 9060 | 6 | TOS/COM Cell | 7 | 9027 | 8 | *9027 |
| 9 | Junction Box | 10 | *9026 | 11 | TOS/COM Cell | 12 | *9025B |
| 13 | Transition Cell | 14 | *9001 | | | | |

**Cable/Ckt #:** 2506-19B **Reference:** E-188
**Function:** Low Level Signal **Conductor Type:** 4 pair #22, shielded pairs, FEP insulation (Type SSC)
**From:** Strong Motion Recorder #1 **To:** *Sensor Enclosure 1-1
**Remarks:**
**Description Of Changes:**

| Route | Conduit No. | Route | Conduit No. | Route | Conduit No. | Route | Conduit No. |
|---|---|---|---|---|---|---|---|
| 1 | *9030 | 2 | 2T25 | 3 | 9061 | 4 | TOS/COM Vault |
| 5 | 9060 | 6 | TOS/COM Cell | 7 | 9027 | 8 | *9027 |
| 9 | Junction Box | 10 | *9026 | 11 | TOS/COM Cell | 12 | *9025B |
| 13 | Transition Cell | 14 | *9001 | | | | |

**Cable/Ckt #:** 2506-20A **Reference:** E-188
**Function:** Low Level Signal **Conductor Type:** 4 pair #22, shielded pairs, FEP insulation (Type SSC)
**From:** *Sensor Enclosure 2-1 **To:** *Sensor Enclosure 29-2
**Remarks:**
**Description Of Changes:**

| Route | Conduit No. | Route | Conduit No. | Route | Conduit No. | Route | Conduit No. |
|---|---|---|---|---|---|---|---|
| 1 | 9014 | 2 | Junction Box | 3 | 9015 | 4 | *7686 |
| 5 | 9016 | 6 | 9017 | | | | |

**Cable/Ckt #:** 2506-21A **Reference:** E-188
**Function:** Low Level Signal **Conductor Type:** 4 pair #22, shielded pairs, FEP insulation (Type SSC)
**From:** Strong Motion Recorder #1 **To:** Strong Motion Recorder #2
**Remarks:**
**Description Of Changes:**

| Route | Conduit No. | Route | Conduit No. | Route | Conduit No. | Route | Conduit No. |
|---|---|---|---|---|---|---|---|
| 1 | FIELD | 2 | *9036 | 3 | SMD-PB #1 | 4 | *9041 |
| 5 | MH-12 | 6 | *0323 | 7 | MH-8 | 8 | *0311 |
| 9 | MH-4 | 10 | *9052 | 11 | FIELD | | |

# CABLE AND CIRCUIT SCHEDULE

THIS PLAN IS ACCURATE FOR ELECTRICAL WORK ONLY.

E-316

REVISED BY | DATE REVISED
JEFFRI HALIM | ELLERY LUCAS
CALCULATED-DESIGNED BY | CHECKED BY
CONSULTANT FUNCTIONAL SUPERVISOR
BRADY NADELL
STATE OF CALIFORNIA - DEPARTMENT OF TRANSPORTATION
Caltrans

LAST REVISION 08-17-09 | DATE PLOTTED => 06-OCT-2011 | TIME PLOTTED => 07:32

| Dist | COUNTY | ROUTE | KILOMETER POST TOTAL PROJECT | SHEET No. | TOTAL SHEETS |
|---|---|---|---|---|---|
| 04 | Ala | 80 | 1.6/2.7 | 507 | 744 |

REGISTERED ELECTRICAL ENGINEER 05/02/11

10-3-11
PLANS APPROVAL DATE

REGISTERED PROFESSIONAL ENGINEER DAVID H. OTO No. 10699 Exp. 06/30/2013 ELECTRICAL STATE OF CALIFORNIA

*THE STATE OF CALIFORNIA OR ITS OFFICERS OR AGENTS SHALL NOT BE RESPONSIBLE FOR THE ACCURACY OR COMPLETENESS OF ELECTRONIC COPIES OF THIS PLAN SHEET.*

PB AMERICAS, Inc.
303 Second St., Suite 700N
San Francisco, CA 94107-1317

Caltrans Metric

**Cable/Ckt #:** 2506-5 **Reference:** E-188
**Function:** Low Level Signal **Conductor Type:** 4 pair #22, shielded pairs, 300 V, PE insulation (Type ISDN)
**From:** *Telephone Backboard TEL-MOLE **To:** Strong Motion Recorder #1
**Remarks:**
**Description Of Changes:**

| Route | Conduit No. | Route | Conduit No. | Route | Conduit No. | Route | Conduit No. |
|---|---|---|---|---|---|---|---|
| 1 | *651A | 2 | PB-COM | 3 | *0302 | 4 | MH-4 |
| 5 | *0311 | 6 | MH-8 | 7 | *0323 | 8 | MH-12 |
| 9 | *9041 | 10 | SMD-PB #1 | 11 | *9036 | 12 | FIELD |

**Cable/Ckt #:** 2506-6 **Reference:** E-188
**Function:** Low Level Signal **Conductor Type:** 4 pair #24, overall shielded, 300 V, PE insulation (Type IC)
**From:** Strong Motion Recorder #1 **To:** *Sensor Enclosure 2-1
**Remarks:**
**Description Of Changes:**

| Route | Conduit No. | Route | Conduit No. | Route | Conduit No. | Route | Conduit No. |
|---|---|---|---|---|---|---|---|
| 1 | *9030 | 2 | 2T25 | 3 | 9061 | 4 | TOS/COM Vault |
| 5 | 9060 | 6 | TOS/COM Cell | 7 | 9027 | 8 | *9027 |
| 9 | Junction Box | 10 | *9026 | 11 | TOS/COM Cell | 12 | *9025B |
| 13 | Transition Cell | 14 | *9002 | 15 | Junction Box | 16 | 9014 |

**Cable/Ckt #:** 2506-7 **Reference:** E-188
**Function:** Low Level Signal **Conductor Type:** 4 pair #24, overall shielded, 300 V, PE insulation (Type IC)
**From:** *Sensor Enclosure 2-1 **To:** *Sensor Enclosure 29-2
**Remarks:**
**Description Of Changes:**

| Route | Conduit No. | Route | Conduit No. | Route | Conduit No. | Route | Conduit No. |
|---|---|---|---|---|---|---|---|
| 1 | 9014 | 2 | Junction Box | 3 | 9015 | 4 | *7686 |
| 5 | 9016 | 6 | 9017 | | | | |

**Cable/Ckt #:** 2506-8 **Reference:** E-188
**Function:** Low Level Signal **Conductor Type:** 4 pair #24, overall shielded, 300 V, PE insulation (Type IC)
**From:** Strong Motion Recorder #1 **To:** Strong Motion Recorder #2
**Remarks:**
**Description Of Changes:**

| Route | Conduit No. | Route | Conduit No. | Route | Conduit No. | Route | Conduit No. |
|---|---|---|---|---|---|---|---|
| 1 | FIELD | 2 | *9036 | 3 | SMD-PB #1 | 4 | *9041 |
| 5 | MH-12 | 6 | *0323 | 7 | MH-8 | 8 | *0311 |
| 9 | MH-4 | 10 | *9052 | 11 | FIELD | | |

**Cable/Ckt #:** 2610 **Reference:** E-136, E-147
**Function:** 480 V Power **Conductor Type:** 1-2/C + Gnd, #4, 600 V, EPR insulation
**From:** *480 V LVCC-B Cubicle #22 **To:** Overhead Sign #01622
**Remarks:**
**Description Of Changes:**

| Route | Conduit No. | Route | Conduit No. | Route | Conduit No. | Route | Conduit No. |
|---|---|---|---|---|---|---|---|
| 1 | *601 | 2 | *T22 | 3 | *T23 | 4 | *T24 |
| 5 | PB-600 V | 6 | *0408 | 7 | MH-2 | 8 | *0422 |
| 9 | MH-6 | 10 | *0436 | 11 | MH-10 | 12 | *0460A |
| 13 | 0460A | 14 | MH-44 | 15 | 0464A | 16 | MH-46 |
| 17 | 0468A | 18 | MH-48 | 19 | 0472A | 20 | MH-50 |
| 21 | 0483A | 22 | MH-52 | 23 | 0488B | 24 | MH-54 |
| 25 | 0492A | 26 | MH-56 | 27 | 0494 | | |

**Cable/Ckt #:** 2621 **Reference:** E-51, E-136
**Function:** 480 V Power **Conductor Type:** 1-3/C + Gnd, #4, 600 V, EPR insulation
**From:** *480 V LVCC-B Cubicle #12 **To:** 480 V Circuit Breaker
**Remarks:**
**Description Of Changes:**

| Route | Conduit No. | Route | Conduit No. | Route | Conduit No. | Route | Conduit No. |
|---|---|---|---|---|---|---|---|
| 1 | *603 | 2 | *T22 | 3 | *T23 | 4 | *T24 |
| 5 | PB-600 V | 6 | *0405 | 7 | MH-2 | 8 | *0418 |
| 9 | MH-6 | 10 | *0433 | 11 | MH-10 | 12 | *0455 |
| 13 | 2T40 | 14 | 5450 | 15 | Transition Cell | 16 | 5429 |
| 17 | 600 V Cell | 18 | 5417 | 19 | *5417 | 20 | 600 V Cell |
| 21 | *5811 | 22 | *Wireway 22E | 23 | *5823 | | |

# CABLE AND CIRCUIT SCHEDULE

E-317

THIS PLAN IS ACCURATE FOR ELECTRICAL WORK ONLY.

REVISED BY | DATE REVISED
JEFFRI HALIM | ELLERY LUCAS
CALCULATED-DESIGNED BY | CHECKED BY
CONSULTANT FUNCTIONAL SUPERVISOR
BRADY NADELL

STATE OF CALIFORNIA - DEPARTMENT OF TRANSPORTATION
Caltrans

LAST REVISION 08-17-09 | DATE PLOTTED => 06-OCT-2011 | TIME PLOTTED => 07:32

| Dist | COUNTY | ROUTE | KILOMETER POST TOTAL PROJECT | SHEET No. | TOTAL SHEETS |
|---|---|---|---|---|---|
| 04 | Ala | 80 | 1.6/2.7 | 508 | 744 |

REGISTERED ELECTRICAL ENGINEER 05/02/11

PLANS APPROVAL DATE 10-3-11

REGISTERED PROFESSIONAL ENGINEER DAVID H. OTO No. 10699 Exp. 06/30/2013 ELECTRICAL STATE OF CALIFORNIA

*THE STATE OF CALIFORNIA OR ITS OFFICERS OR AGENTS SHALL NOT BE RESPONSIBLE FOR THE ACCURACY OR COMPLETENESS OF ELECTRONIC COPIES OF THIS PLAN SHEET.*

PB AMERICAS, Inc.
303 Second St., Suite 700N
San Francisco, CA 94107-1317

Caltrans Metric

Cable/Ckt #: 2621-1 | Reference: E-51
Function: 480 V Power | Conductor Type: 1-3/C + Gnd, #4, 600 V, EPR insulation
From: 480 V Circuit Breaker | To: 15 kVA Transformer 480 V-208/120 V
Remarks:
Description Of Changes:

| Route | Conduit No. | Route | Conduit No. | Route | Conduit No. | Route | Conduit No. |
|---|---|---|---|---|---|---|---|
| 1 | *5823 | 2 | *Wireway 22E | 3 | *5822 | | |

Cable/Ckt #: 2621-2 | Reference: E-51
Function: 208/120 V Power | Conductor Type: 1-4/C + Gnd, #2, 600 V, EPR insulation
From: 15 kVA Transformer 480 V-208/120 V | To: *Lighting Panel LP-281
Remarks:
Description Of Changes:

| Route | Conduit No. | Route | Conduit No. | Route | Conduit No. | Route | Conduit No. |
|---|---|---|---|---|---|---|---|
| 1 | *5822A | 2 | *Wireway 22E | 3 | *5804 | | |

Cable/Ckt #: 2622 | Reference: E-51, E-136
Function: 480 V Power | Conductor Type: 1-3/C + Gnd, #4, 600 V, EPR insulation
From: *480 V LVCC-B Cubicle #20 | To: 480 V Circuit Breaker
Remarks:
Description Of Changes:

| Route | Conduit No. | Route | Conduit No. | Route | Conduit No. | Route | Conduit No. |
|---|---|---|---|---|---|---|---|
| 1 | *602 | 2 | *T22 | 3 | *T23 | 4 | *T24 |
| 5 | PB-600 V | 6 | *0405 | 7 | MH-2 | 8 | *0418 |
| 9 | MH-6 | 10 | *0433 | 11 | MH-10 | 12 | *0455 |
| 13 | 2T40 | 14 | 5450 | 15 | Transition Cell | 16 | 5429 |
| 17 | 600 V Cell | 18 | 5842 | 19 | Wireway 23E | 20 | 5827 |

Cable/Ckt #: 2622-1 | Reference: E-51
Function: 480 V Power | Conductor Type: 1-3/C + Gnd, #4, 600 V, EPR insulation
From: 480 V Circuit Breaker | To: 15 kVA Transformer 480 V-208/120 V
Remarks:
Description Of Changes:

| Route | Conduit No. | Route | Conduit No. | Route | Conduit No. | Route | Conduit No. |
|---|---|---|---|---|---|---|---|
| 1 | 5827 | 2 | Wireway 23E | 3 | 5826 | | |

Cable/Ckt #: 2622-2 | Reference: E-51
Function: 208/120 V Power | Conductor Type: 1-4/C + Gnd, #2, 600 V, EPR insulation
From: 15 kVA Transformer 480 V-208/120 V | To: Lighting Panel LP-282
Remarks:
Description Of Changes:

| Route | Conduit No. | Route | Conduit No. | Route | Conduit No. | Route | Conduit No. |
|---|---|---|---|---|---|---|---|
| 1 | 5826A | 2 | Wireway 23E | 3 | 5835 | | |

Cable/Ckt #: 2626 | Reference: E-50, E-136
Function: 480 V Power | Conductor Type: 1-3/C + Gnd, #4, 600 V, EPR insulation
From: *480 V LVCC-B Cubicle #7A | To: 480 V Circuit Breaker
Remarks:
Description Of Changes:

| Route | Conduit No. | Route | Conduit No. | Route | Conduit No. | Route | Conduit No. |
|---|---|---|---|---|---|---|---|
| 1 | *605 | 2 | *T22 | 3 | *T23 | 4 | *T24 |
| 5 | PB-600 V | 6 | *0405 | 7 | MH-2 | 8 | *0418 |
| 9 | MH-6 | 10 | *0433 | 11 | MH-10 | 12 | *0455 |
| 13 | 2T40 | 14 | 5450 | 15 | Transition Cell | 16 | 5429 |
| 17 | 600 V Cell | 18 | 5417 | 19 | *5417 | 20 | 600 V Cell |
| 21 | *5811 | 22 | *Wireway 22E | 23 | *5821 | | |

Cable/Ckt #: 2626-1 | Reference: E-50
Function: 480 V Power | Conductor Type: 1-3/C + Gnd, #4, 600 V, EPR insulation
From: 480 V Circuit Breaker | To: 15 kVA Transformer 480 V-208/120 V
Remarks:
Description Of Changes:

| Route | Conduit No. | Route | Conduit No. | Route | Conduit No. | Route | Conduit No. |
|---|---|---|---|---|---|---|---|
| 1 | *5821 | 2 | *Wireway 22E | 3 | *5820 | | |

# CABLE AND CIRCUIT SCHEDULE

THIS PLAN IS ACCURATE FOR ELECTRICAL WORK ONLY.

E-318

REVISED BY | DATE REVISED
JEFFRI HALIM | ELLERY LUCAS
CALCULATED-DESIGNED BY | CHECKED BY
CONSULTANT FUNCTIONAL SUPERVISOR
BRADY NADELL
STATE OF CALIFORNIA - DEPARTMENT OF TRANSPORTATION
Caltrans

LAST REVISION 08-17-09 | DATE PLOTTED => 06-OCT-2011 | TIME PLOTTED => 07:32

| Dist | COUNTY | ROUTE | KILOMETER POST TOTAL PROJECT | SHEET No. | TOTAL SHEETS |
|---|---|---|---|---|---|
| 04 | Ala | 80 | 1.6/2.7 | 509 | 744 |

Caltrans Metric

05/02/11
REGISTERED ELECTRICAL ENGINEER

10-3-11
PLANS APPROVAL DATE

REGISTERED PROFESSIONAL ENGINEER DAVID H. OTO No. 10699 Exp. 06/30/2013 ELECTRICAL STATE OF CALIFORNIA

*THE STATE OF CALIFORNIA OR ITS OFFICERS OR AGENTS SHALL NOT BE RESPONSIBLE FOR THE ACCURACY OR COMPLETENESS OF ELECTRONIC COPIES OF THIS PLAN SHEET.*

PB AMERICAS, Inc.
303 Second St., Suite 700N
San Francisco, CA 94107-1317

**Cable/Ckt #:** 2626-2 **Reference:** E-50
**Function:** 208/120 V Power **Conductor Type:** 1-4/C + Gnd, #2, 600 V, EPR insulation
**From:** 15 kVA Transformer 480 V-208/120 V **To:** *Utility Panel UP-271
**Remarks:**
**Description Of Changes:**

| Route | Conduit No. | Route | Conduit No. | Route | Conduit No. | Route | Conduit No. |
|---|---|---|---|---|---|---|---|
| 1 | *5820A | 2 | *Wireway 22E | 3 | *5803 | | |

**Cable/Ckt #:** 2627 **Reference:** E-50, E-136
**Function:** 480 V Power **Conductor Type:** 1-3/C + Gnd, #4, 600 V, EPR insulation
**From:** *480 V LVCC-B Cubicle #7B **To:** 480 V Circuit Breaker
**Remarks:**
**Description Of Changes:**

| Route | Conduit No. | Route | Conduit No. | Route | Conduit No. | Route | Conduit No. |
|---|---|---|---|---|---|---|---|
| 1 | *605 | 2 | *T22 | 3 | *T23 | 4 | *T24 |
| 5 | PB-600 V | 6 | *0405 | 7 | MH-2 | 8 | *0418 |
| 9 | MH-6 | 10 | *0433 | 11 | MH-10 | 12 | *0455 |
| 13 | 2T40 | 14 | 5450 | 15 | Transition Cell | 16 | 5429 |
| 17 | 600 V Cell | 18 | 5842 | 19 | Wireway 23E | 20 | 5825 |

**Cable/Ckt #:** 2627-1 **Reference:** E-50
**Function:** 480 V Power **Conductor Type:** 1-3/C + Gnd, #4, 600 V, EPR insulation
**From:** 480 V Circuit Breaker **To:** 15 kVA Transformer 480 V-208/120 V
**Remarks:**
**Description Of Changes:**

| Route | Conduit No. | Route | Conduit No. | Route | Conduit No. | Route | Conduit No. |
|---|---|---|---|---|---|---|---|
| 1 | 5825 | 2 | Wireway 23E | 3 | 5824 | | |

**Cable/Ckt #:** 2627-2 **Reference:** E-50
**Function:** 208/120 V Power **Conductor Type:** 1-4/C + Gnd, #2, 600 V, EPR insulation
**From:** 15 kVA Transformer 480 V-208/120 V **To:** Utility Panel UP-272
**Remarks:**
**Description Of Changes:**

| Route | Conduit No. | Route | Conduit No. | Route | Conduit No. | Route | Conduit No. |
|---|---|---|---|---|---|---|---|
| 1 | 5824A | 2 | Wireway 23E | 3 | 5831 | | |

**Cable/Ckt #:** 2629 **Reference:** E-136, E-142
**Function:** 480 V Power **Conductor Type:** 1-2/C + Gnd, #1/0, 600 V, EPR insulation
**From:** *480 V LVCC-B Cubicle #8B **To:** Utility Panel UP-274
**Remarks:**
**Description Of Changes:**

| Route | Conduit No. | Route | Conduit No. | Route | Conduit No. | Route | Conduit No. |
|---|---|---|---|---|---|---|---|
| 1 | *606 | 2 | *T22 | 3 | *T23 | 4 | *T24 |
| 5 | PB-600 V | 6 | *0405 | 7 | MH-2 | 8 | *0418 |
| 9 | MH-6 | 10 | *0433 | 11 | MH-10 | 12 | *0460A |
| 13 | 0460A | 14 | MH-44 | 15 | 0464A | 16 | MH-46 |
| 17 | 0468A | 18 | MH-48 | 19 | 0472A | 20 | MH-50 |
| 21 | 0483A | 22 | MH-52 | 23 | 0495A | 24 | PB-10 |
| 25 | 0495 | | | | | | |

**Cable/Ckt #:** 2656-1 **Reference:** E-164
**Function:** 120 V DI **Conductor Type:** 1-3/C #16, 600 V, EPR insulation
**From:** *Controller Cabinet #TOS-22EA **To:** *Remote Terminal Unit RTU #16
**Remarks:** Cabinet door switch input
**Description Of Changes:**

| Route | Conduit No. | Route | Conduit No. | Route | Conduit No. | Route | Conduit No. |
|---|---|---|---|---|---|---|---|
| 1 | FIELD | 2 | *Wireway 22E | 3 | *5813 | 4 | 600 V Cell |
| 5 | *5417 | 6 | 5417 | 7 | 600 V Cell | 8 | 5429 |
| 9 | Transition Cell | 10 | 5450 | 11 | 2T40 | 12 | *0455 |
| 13 | MH-10 | 14 | *0437 | 15 | MH-6 | 16 | *0421 |
| 17 | MH-2 | 18 | *0407 | 19 | PB-600 V | 20 | *T24 |
| 21 | *T23 | 22 | *T22 | 23 | *T20 | 24 | *714A |

# CABLE AND CIRCUIT SCHEDULE

THIS PLAN IS ACCURATE FOR ELECTRICAL WORK ONLY.

E-319

REVISED BY | DATE REVISED
JEFFRI HALIM | ELLERY LUCAS
CALCULATED-DESIGNED BY | CHECKED BY
CONSULTANT FUNCTIONAL SUPERVISOR | BRADY NADELL
STATE OF CALIFORNIA - DEPARTMENT OF TRANSPORTATION
Caltrans

LAST REVISION 08-17-09 | DATE PLOTTED => 06-OCT-2011 | TIME PLOTTED => 07:32

| Dist | COUNTY | ROUTE | KILOMETER POST TOTAL PROJECT | SHEET No. | TOTAL SHEETS |
|---|---|---|---|---|---|
| 04 | Ala | 80 | 1.6/2.7 | 510 | 744 |

REGISTERED ELECTRICAL ENGINEER 05/02/11

10-3-11
PLANS APPROVAL DATE

REGISTERED PROFESSIONAL ENGINEER DAVID H. OTO No. 10699 Exp. 06/30/2013 ELECTRICAL STATE OF CALIFORNIA

*THE STATE OF CALIFORNIA OR ITS OFFICERS OR AGENTS SHALL NOT BE RESPONSIBLE FOR THE ACCURACY OR COMPLETENESS OF ELECTRONIC COPIES OF THIS PLAN SHEET.*

PB AMERICAS, Inc.
303 Second St., Suite 700N
San Francisco, CA 94107-1317

Caltrans Metric

**Cable/Ckt #:** 2656-2 **Reference:** E-164
**Function:** 120 V DI **Conductor Type:** 1-3/C #16, 600 V, EPR insulation
**From:** Controller Cabinet #TOS-23EA **To:** *Remote Terminal Unit RTU #16
**Remarks:** Cabinet door switch input
**Description Of Changes:**

| Route | Conduit No. | Route | Conduit No. | Route | Conduit No. | Route | Conduit No. |
|---|---|---|---|---|---|---|---|
| 1 | FIELD | 2 | Wireway 23E | 3 | 5843 | 4 | 600 V Cell |
| 5 | 5429 | 6 | Transition Cell | 7 | 5450 | 8 | 2T40 |
| 9 | *0455 | 10 | MH-10 | 11 | *0437 | 12 | MH-6 |
| 13 | *0421 | 14 | MH-2 | 15 | *0407 | 16 | PB-600 V |
| 17 | *T24 | 18 | *T23 | 19 | *T22 | 20 | *T20 |
| 21 | *714A | | | | | | |

**Cable/Ckt #:** 2802 **Reference:** E-163, E-176
**Function:** Low Level Signal **Conductor Type:** 1 - 2 pair, shielded #18 with IS/OA, 600 V, PVC jacket
**From:** Call Box CB-256C **To:** *Remote Terminal Unit RTU #16
**Remarks:** Install in Stage 3. See sheet E-175.
**Description Of Changes:**

| Route | Conduit No. | Route | Conduit No. | Route | Conduit No. | Route | Conduit No. |
|---|---|---|---|---|---|---|---|
| 1 | FIELD | 2 | *2603 | 3 | *2605 | 4 | *5390 |
| 5 | 5390 | 6 | 2615 | 7 | 2616 | 8 | 2617 |
| 9 | 2618 | 10 | 5446 | 11 | PB-2C | 12 | *0346 |
| 13 | MH-12 | 14 | *0325 | 15 | MH-8 | 16 | *0310 |
| 17 | MH-4 | 18 | *0306 | 19 | PB-COM | 20 | *657 |

**Cable/Ckt #:** 2804 **Reference:** E-176
**Function:** Low Level Signal **Conductor Type:** 1 - 2 pair, shielded #18 with IS/OA, 600 V, PVC jacket
**From:** Call Box CB-257A **To:** Call Box CB-257B
**Remarks:** Install in Stage 3. See sheet E-175.
**Description Of Changes:**

| Route | Conduit No. | Route | Conduit No. | Route | Conduit No. | Route | Conduit No. |
|---|---|---|---|---|---|---|---|
| 1 | FIELD | 2 | 5352 | 3 | FIELD | | |

**Cable/Ckt #:** 2806 **Reference:** E-163, E-176
**Function:** Low Level Signal **Conductor Type:** 1 - 2 pair, shielded #18 with IS/OA, 600 V, PVC jacket
**From:** Call Box CB-257A **To:** *Remote Terminal Unit RTU #16
**Remarks:** Install in Stage 3. See sheet E-175.
**Description Of Changes:**

| Route | Conduit No. | Route | Conduit No. | Route | Conduit No. | Route | Conduit No. |
|---|---|---|---|---|---|---|---|
| 1 | FIELD | 2 | 2216 | 3 | 2217 | 4 | 5445 |
| 5 | PB-2C | 6 | *0346 | 7 | MH-12 | 8 | *0325 |
| 9 | MH-8 | 10 | *0310 | 11 | MH-4 | 12 | *0306 |
| 13 | PB-COM | 14 | *657 | | | | |

**Cable/Ckt #:** 2807 **Reference:** E-163, E-178
**Function:** Low Level Signal **Conductor Type:** 1 - 2 pair, shielded #18 with IS/OA, 600 V, PVC jacket
**From:** Call Box CB-259A **To:** *Remote Terminal Unit RTU #16
**Remarks:** Install in Stage 3. See sheet E-175.
**Description Of Changes:**

| Route | Conduit No. | Route | Conduit No. | Route | Conduit No. | Route | Conduit No. |
|---|---|---|---|---|---|---|---|
| 1 | FIELD | 2 | 2254 | 3 | 2255 | 4 | 2256 |
| 5 | 0394 | 6 | MH-53 | 7 | 0390 | 8 | MH-51 |
| 9 | 0370 | 10 | MH-49 | 11 | 0363 | 12 | MH-47 |
| 13 | 0360 | 14 | MH-45 | 15 | 0356 | 16 | *0356 |
| 17 | MH-12 | 18 | *0325 | 19 | MH-8 | 20 | *0310 |
| 21 | MH-4 | 22 | *0306 | 23 | PB-COM | 24 | *657 |

**Cable/Ckt #:** 2808 **Reference:** E-163, E-178
**Function:** Low Level Signal **Conductor Type:** 1 - 2 pair, shielded #18 with IS/OA, 600 V, PVC jacket
**From:** Call Box CB-259B **To:** *Remote Terminal Unit RTU #16
**Remarks:** Install in Stage 3. See sheet E-175.
**Description Of Changes:**

| Route | Conduit No. | Route | Conduit No. | Route | Conduit No. | Route | Conduit No. |
|---|---|---|---|---|---|---|---|
| 1 | FIELD | 2 | 2654 | 3 | 2655 | 4 | 2656 |
| 5 | *0396 | 6 | 0396 | 7 | 0394 | 8 | MH-53 |
| 9 | 0390 | 10 | MH-51 | 11 | 0370 | 12 | MH-49 |
| 13 | 0363 | 14 | MH-47 | 15 | 0360 | 16 | MH-45 |
| 17 | 0356 | 18 | *0356 | 19 | MH-12 | 20 | *0325 |
| 21 | MH-8 | 22 | *0310 | 23 | MH-4 | 24 | *0306 |
| 25 | PB-COM | 26 | *657 | | | | |

# CABLE AND CIRCUIT SCHEDULE

# E-320

THIS PLAN IS ACCURATE FOR ELECTRICAL WORK ONLY.

STATE OF CALIFORNIA - DEPARTMENT OF TRANSPORTATION
Caltrans

CONSULTANT FUNCTIONAL SUPERVISOR: BRADY NADELL
CALCULATED-DESIGNED BY: JEFFRI HALIM
CHECKED BY: ELLERY LUCAS
REVISED BY / DATE REVISED

LAST REVISION 08-17-09
DATE PLOTTED => 06-OCT-2011
TIME PLOTTED => 07:53

| Dist | COUNTY | ROUTE | KILOMETER POST TOTAL PROJECT | SHEET No. | TOTAL SHEETS |
|---|---|---|---|---|---|
| 04 | Ala | 80 | 1.6/2.7 | 511 | 744 |

Caltrans Metric

05/02/11
REGISTERED ELECTRICAL ENGINEER

10-3-11
PLANS APPROVAL DATE

REGISTERED PROFESSIONAL ENGINEER DAVID H. OTO No. 10699 Exp. 06/30/2013 ELECTRICAL STATE OF CALIFORNIA

*THE STATE OF CALIFORNIA OR ITS OFFICERS OR AGENTS SHALL NOT BE RESPONSIBLE FOR THE ACCURACY OR COMPLETENESS OF ELECTRONIC COPIES OF THIS PLAN SHEET.*

PB AMERICAS, Inc.
303 Second St., Suite 700N
San Francisco, CA 94107-1317

Cable/Ckt #: 2813 | Reference: E-178
Function: Low Level Signal | Conductor Type: 1 - 2 pair, shielded #18 with IS/OA, 600 V, PVC jacket
From: Call Box CB-259A | To: Call Box CB-261A
Remarks: Install in Stage 3. See sheet E-175.
Description Of Changes:

| Route | Conduit No. | Route | Conduit No. | Route | Conduit No. | Route | Conduit No. |
|---|---|---|---|---|---|---|---|
| 1 | FIELD | 2 | 2254 | 3 | 2255 | 4 | 2256 |
| 5 | 2257 | 6 | 2258 | 7 | 2259 | 8 | 2260 |
| 9 | FIELD | | | | | | |

Cable/Ckt #: 2814 | Reference: E-178
Function: Low Level Signal | Conductor Type: 1 - 2 pair, shielded #18 with IS/OA, 600 V, PVC jacket
From: Call Box CB-259B | To: Call Box CB-261B
Remarks: Install in Stage 3. See sheet E-175.
Description Of Changes:

| Route | Conduit No. | Route | Conduit No. | Route | Conduit No. | Route | Conduit No. |
|---|---|---|---|---|---|---|---|
| 1 | FIELD | 2 | 2654 | 3 | 2655 | 4 | 2656 |
| 5 | 2657 | 6 | 2658 | 7 | 2659 | 8 | 2660 |
| 9 | FIELD | | | | | | |

Cable/Ckt #: 2851-5 | Reference: E-148
Function: Low Level Signal | Conductor Type: TOS Hybrid Camera Cable (HCC)
From: *Controller Cabinet #TOS-22EA | To: CCTV-E03
Remarks:
Description Of Changes:

| Route | Conduit No. | Route | Conduit No. | Route | Conduit No. | Route | Conduit No. |
|---|---|---|---|---|---|---|---|
| 1 | *5430 | | | | | | |

Cable/Ckt #: 2856-1 | Reference: E-148
Function: Low Level Signal | Conductor Type: Harness #4
From: Controller Cabinet #TOS-24C | To: CMS-E03
Remarks:
Description Of Changes:

| Route | Conduit No. | Route | Conduit No. | Route | Conduit No. | Route | Conduit No. |
|---|---|---|---|---|---|---|---|
| 1 | 0382 | 2 | PB-11 | 3 | 0388A | 4 | MH-49 |
| 5 | 0376 | 6 | PB-11 | 7 | FIELD | | |

Cable/Ckt #: 2856-2 | Reference: E-148
Function: Low Level Signal | Conductor Type: Harness #5
From: Controller Cabinet #TOS-24C | To: CMS-E03
Remarks:
Description Of Changes:

| Route | Conduit No. | Route | Conduit No. | Route | Conduit No. | Route | Conduit No. |
|---|---|---|---|---|---|---|---|
| 1 | 0382 | 2 | PB-11 | 3 | 0388A | 4 | MH-49 |
| 5 | 0376 | 6 | PB-11 | 7 | FIELD | | |

Cable/Ckt #: 2861 | Reference: E-148, E-195
Function: Low Level Signal | Conductor Type: 10 DLC
From: Controller Cabinet #TOS-23EA | To: PL-E10
Remarks:
Description Of Changes:

| Route | Conduit No. | Route | Conduit No. | Route | Conduit No. | Route | Conduit No. |
|---|---|---|---|---|---|---|---|
| 1 | 5442 | 2 | PB-4D | 3 | FIELD | | |

Cable/Ckt #: 2862 | Reference: E-148, E-196
Function: Low Level Signal | Conductor Type: 10 DLC
From: Controller Cabinet #TOS-24A | To: PL-E11
Remarks:
Description Of Changes:

| Route | Conduit No. | Route | Conduit No. | Route | Conduit No. | Route | Conduit No. |
|---|---|---|---|---|---|---|---|
| 1 | 0381 | 2 | PB-11 | 3 | 0388B | 4 | MH-49 |
| 5 | 0516 | 6 | PB-11 | 7 | FIELD | | |

# CABLE AND CIRCUIT SCHEDULE

THIS PLAN IS ACCURATE FOR ELECTRICAL WORK ONLY.

E-321

REVISED BY | DATE REVISED
JEFFRI HALIM | ELLERY LUCAS
CALCULATED-DESIGNED BY | CHECKED BY
CONSULTANT FUNCTIONAL SUPERVISOR
BRADY NADELL
STATE OF CALIFORNIA - DEPARTMENT OF TRANSPORTATION
Caltrans

LAST REVISION 08-17-09 | DATE PLOTTED => 06-OCT-2011 | TIME PLOTTED => 07:33

| Dist | COUNTY | ROUTE | KILOMETER POST TOTAL PROJECT | SHEET No. | TOTAL SHEETS |
|---|---|---|---|---|---|
| 04 | Ala | 80 | 1.6/2.7 | 512 | 744 |

Caltrans Metric

05/02/11
REGISTERED ELECTRICAL ENGINEER

10-3-11
PLANS APPROVAL DATE

REGISTERED PROFESSIONAL ENGINEER DAVID H. OTO No. 10699 Exp. 06/30/2013 ELECTRICAL STATE OF CALIFORNIA

*THE STATE OF CALIFORNIA OR ITS OFFICERS OR AGENTS SHALL NOT BE RESPONSIBLE FOR THE ACCURACY OR COMPLETENESS OF ELECTRONIC COPIES OF THIS PLAN SHEET.*

PB AMERICAS, Inc.
303 Second St., Suite 700N
San Francisco, CA 94107-1317

Cable/Ckt #: 2871 | Reference: E-148, E-195
Function: Low Level Signal | Conductor Type: 10 DLC
From: *Controller Cabinet #TOS-22EA | To: *PL-E09
Remarks:
Description Of Changes:

| Route | Conduit No. | Route | Conduit No. | Route | Conduit No. | Route | Conduit No. |
|---|---|---|---|---|---|---|---|
| 1 | *5845 | 2 | PB-4D | 3 | FIELD | | |

Cable/Ckt #: 2872 | Reference: E-148, E-196
Function: Low Level Signal | Conductor Type: 12 DLC
From: Controller Cabinet #TOS-25A | To: PL-E12
Remarks:
Description Of Changes:

| Route | Conduit No. | Route | Conduit No. | Route | Conduit No. | Route | Conduit No. |
|---|---|---|---|---|---|---|---|
| 1 | 0378 | 2 | PB-11 | 3 | 0387A | 4 | MH-55 |
| 5 | 0519 | 6 | PB-11 | 7 | FIELD | | |

Cable/Ckt #: A-2005 | Reference: E-53, E-136
Function: 480 V Power | Conductor Type: 1-3/C + Gnd, #6, 600 V, EPR insulation
From: *480 V LVCC-B Cubicle #17 | To: PB-LTG
Remarks:
Description Of Changes:

| Route | Conduit No. | Route | Conduit No. | Route | Conduit No. | Route | Conduit No. |
|---|---|---|---|---|---|---|---|
| 1 | *603 | 2 | *T22 | 3 | *T23 | 4 | *T24 |
| 5 | PB-600 V | 6 | *0404 | 7 | MH-2 | 8 | *0419 |
| 9 | MH-6 | 10 | *0432 | 11 | MH-10 | 12 | *0458 |
| 13 | 2T40 | 14 | 5451 | 15 | Transition Cell | 16 | 5433 |

Cable/Ckt #: A-2005-1 | Reference: E-53
Function: 480 V Power | Conductor Type: 3-1/C #6, 600 V, RHH/RHW insulation
From: PB-LTG | To: PB-LTG
Remarks: Ltg. Poles 2602-1 to 2602-4
Description Of Changes:

| Route | Conduit No. | Route | Conduit No. | Route | Conduit No. | Route | Conduit No. |
|---|---|---|---|---|---|---|---|
| 1 | 2319 | 2 | 2318 | 3 | 2317 | 4 | 2316 |
| 5 | 2314 | 6 | 2315 | | | | |

Cable/Ckt #: A-2005-1-1 | Reference: E-53
Function: 480 V Power | Conductor Type: 3-1/C #6, 600 V, RHH/RHW insulation
From: PB-LTG | To: PB-LTG
Remarks: Ltg. Poles 2602-5 to 2602-7
Description Of Changes:

| Route | Conduit No. | Route | Conduit No. | Route | Conduit No. | Route | Conduit No. |
|---|---|---|---|---|---|---|---|
| 1 | 2320 | 2 | 2321 | 3 | 2322 | | |

Cable/Ckt #: A-2005-2 | Reference: E-52, E-53
Function: 480 V Power | Conductor Type: 3-1/C #6, 600 V, RHH/RHW insulation
From: PB-LTG | To: PB-LTG
Remarks: Ltg. Poles 2601-1 to 2601-8
Description Of Changes:

| Route | Conduit No. | Route | Conduit No. | Route | Conduit No. | Route | Conduit No. |
|---|---|---|---|---|---|---|---|
| 1 | 5412 | 2 | *5412 | 3 | *2309 | 4 | *2308 |
| 5 | *2307 | 6 | *2306 | 7 | *2305 | 8 | *2304 |
| 9 | *2303 | 10 | *2302 | 11 | *2300 | | |

Cable/Ckt #: A-2006 | Reference: E-54, E-136
Function: 480 V Power | Conductor Type: 1-3/C + Gnd, #8, 600 V, EPR insulation
From: *480 V LVCC-B Cubicle #11 | To: PB-LTG
Remarks:
Description Of Changes:

| Route | Conduit No. | Route | Conduit No. | Route | Conduit No. | Route | Conduit No. |
|---|---|---|---|---|---|---|---|
| 1 | *605 | 2 | *T22 | 3 | *T23 | 4 | *T24 |
| 5 | PB-600 V | 6 | *0404 | 7 | MH-2 | 8 | *0419 |
| 9 | MH-6 | 10 | *0432 | 11 | MH-10 | 12 | *0458 |
| 13 | 2T40 | 14 | 5452 | 15 | Junction Box | 16 | 5427 |

# CABLE AND CIRCUIT SCHEDULE

THIS PLAN IS ACCURATE FOR ELECTRICAL WORK ONLY.

E-322

| REVISED BY | DATE REVISED |
|---|---|
| | |

CALCULATED-DESIGNED BY: JEFFRI HALIM
CHECKED BY: ELLERY LUCAS
CONSULTANT FUNCTIONAL SUPERVISOR: BRADY NADELL

STATE OF CALIFORNIA - DEPARTMENT OF TRANSPORTATION
Caltrans

LAST REVISION 08-17-09 | DATE PLOTTED => 06-OCT-2011 | TIME PLOTTED => 07:33

| Dist | COUNTY | ROUTE | KILOMETER POST TOTAL PROJECT | SHEET No. | TOTAL SHEETS |
|---|---|---|---|---|---|
| 04 | Ala | 80 | 1.6/2.7 | 513 | 744 |

REGISTERED ELECTRICAL ENGINEER 05/02/11

10-3-11
PLANS APPROVAL DATE

REGISTERED PROFESSIONAL ENGINEER DAVID H. OTO No. 10699 Exp. 06/30/2013 ELECTRICAL STATE OF CALIFORNIA

*THE STATE OF CALIFORNIA OR ITS OFFICERS OR AGENTS SHALL NOT BE RESPONSIBLE FOR THE ACCURACY OR COMPLETENESS OF ELECTRONIC COPIES OF THIS PLAN SHEET.*

PB AMERICAS, Inc.
303 Second St., Suite 700N
San Francisco, CA 94107-1317

Caltrans Metric

Cable/Ckt #: A-2006-1 | Reference: E-54
Function: 480 V Power | Conductor Type: 3 + 1 Gnd, #8, #10, 600 V, RHH/RHW insulation
From: PB-LTG | To: PB-LTG
Remarks: Loop conductors inside each PB-LTG for future connection of light pipe.
Description Of Changes:

| Route | Conduit No. | Route | Conduit No. | Route | Conduit No. | Route | Conduit No. |
|---|---|---|---|---|---|---|---|
| 1 | 2721 | 2 | 2719 | 3 | 2718 | 4 | 2717 |
| 5 | 2716 | 6 | 2720 | 7 | 2715 | 8 | 5391 |
| 9 | *5391 | 10 | *2823A | 11 | *2823 | 12 | *2806A |
| 13 | *2806 | 14 | *2805 | 15 | *2803 | 16 | PB-LTG |
| 17 | *2802B | 18 | PB-LTG | 19 | *2802A | 20 | PB-LTG |
| 21 | *2802 | 22 | PB-LTG | 23 | *2800 | 24 | PB-LTG |

Cable/Ckt #: A-2006-2 | Reference: E-54
Function: 480 V Power | Conductor Type: 3-1/C #10, 600 V, RHH/RHW insulation
From: PB-LTG | To: Light Pipe Housing
Remarks: Cables installed by others.
Description Of Changes:

| Route | Conduit No. | Route | Conduit No. | Route | Conduit No. | Route | Conduit No. |
|---|---|---|---|---|---|---|---|
| 1 | FIELD | | | | | | |

Cable/Ckt #: A-2007 | Reference: E-54, E-136
Function: 480 V Power | Conductor Type: 1-3/C + Gnd, #8, 600 V, EPR insulation
From: *480 V LVCC-B Cubicle #3 | To: PB-LTG
Remarks:
Description Of Changes:

| Route | Conduit No. | Route | Conduit No. | Route | Conduit No. | Route | Conduit No. |
|---|---|---|---|---|---|---|---|
| 1 | *607 | 2 | *T22 | 3 | *T23 | 4 | *T24 |
| 5 | PB-600 V | 6 | *0404 | 7 | MH-2 | 8 | *0419 |
| 9 | MH-6 | 10 | *0432 | 11 | MH-10 | 12 | *0458 |
| 13 | 2T40 | 14 | 5452 | 15 | Junction Box | 16 | 5427 |

Cable/Ckt #: A-2007-1 | Reference: E-54
Function: 480 V Power | Conductor Type: 3 + 1 Gnd, #8, #10, 600 V, RHH/RHW insulation
From: PB-LTG | To: PB-LTG
Remarks: Loop conductors inside each PB-LTG for future connection of light pipe.
Description Of Changes:

| Route | Conduit No. | Route | Conduit No. | Route | Conduit No. | Route | Conduit No. |
|---|---|---|---|---|---|---|---|
| 1 | 2721 | 2 | 2719 | 3 | 2718 | 4 | 2717 |
| 5 | 2716 | 6 | 2720 | 7 | 2715 | 8 | 5391 |
| 9 | *5391 | 10 | PB-LTG | 11 | *2823A | 12 | PB-LTG |
| 13 | *2823 | 14 | PB-LTG | 15 | *2806A | 16 | PB-LTG |
| 17 | *2806 | 18 | PB-LTG | 19 | *2805 | 20 | PB-LTG |

Cable/Ckt #: A-2007-2 | Reference: E-54
Function: 480 V Power | Conductor Type: 3-1/C #10, 600 V, RHH/RHW insulation
From: PB-LTG | To: Light Pipe Housing
Remarks: Cables installed by others.
Description Of Changes:

| Route | Conduit No. | Route | Conduit No. | Route | Conduit No. | Route | Conduit No. |
|---|---|---|---|---|---|---|---|
| 1 | FIELD | | | | | | |

Cable/Ckt #: A-2008 | Reference: E-55, E-136
Function: 480 V Power | Conductor Type: 1-3/C + Gnd, #6, 600 V, EPR insulation
From: *480 V LVCC-B Cubicle #4 | To: PB-LTG
Remarks:
Description Of Changes:

| Route | Conduit No. | Route | Conduit No. | Route | Conduit No. | Route | Conduit No. |
|---|---|---|---|---|---|---|---|
| 1 | *607 | 2 | *T22 | 3 | *T23 | 4 | *T24 |
| 5 | PB-600 V | 6 | *0404 | 7 | MH-2 | 8 | *0419 |
| 9 | MH-6 | 10 | *0432 | 11 | MH-10 | 12 | *0456 |
| 13 | PB-2D | 14 | 5444 | | | | |

Cable/Ckt #: A-2008-1 | Reference: E-55
Function: 480 V Power | Conductor Type: 3 + 1 Gnd, #6, #8, 600 V, RHH/RHW insulation
From: PB-LTG | To: PB-LTG
Remarks: Loop conductors inside each PB-LTG for future connection of light pipe.
Description Of Changes:

| Route | Conduit No. | Route | Conduit No. | Route | Conduit No. | Route | Conduit No. |
|---|---|---|---|---|---|---|---|
| 1 | 2825 | 2 | PB-LTG | 3 | 2824 | 4 | PB-LTG |
| 5 | 2822 | 6 | PB-LTG | 7 | 2821 | 8 | PB-LTG |
| 9 | 2819 | 10 | PB-LTG | 11 | 2818 | 12 | PB-LTG |
| 13 | 2817 | 14 | PB-LTG | 15 | 2816 | 16 | PB-LTG |
| 17 | 2820 | 18 | PB-LTG | 19 | 2815 | | |

# CABLE AND CIRCUIT SCHEDULE

THIS PLAN IS ACCURATE FOR ELECTRICAL WORK ONLY.

E-323

| REVISED BY | DATE REVISED |
|---|---|
| JEFFRI HALIM | ELLERY LUCAS |
| CALCULATED-DESIGNED BY | CHECKED BY |
| CONSULTANT FUNCTIONAL SUPERVISOR | BRADY NADELL |

STATE OF CALIFORNIA - DEPARTMENT OF TRANSPORTATION
Caltrans

LAST REVISION 08-17-09 DATE PLOTTED => 06-OCT-2011 TIME PLOTTED => 07:33

| Dist | COUNTY | ROUTE | KILOMETER POST TOTAL PROJECT | SHEET No. | TOTAL SHEETS |
|---|---|---|---|---|---|
| 04 | Ala | 80 | 1.6/2.7 | 514 | 744 |

REGISTERED ELECTRICAL ENGINEER 05/02/11

10-3-11
PLANS APPROVAL DATE

REGISTERED PROFESSIONAL ENGINEER DAVID H. OTO No. 10699 Exp. 06/30/2013 ELECTRICAL STATE OF CALIFORNIA

*THE STATE OF CALIFORNIA OR ITS OFFICERS OR AGENTS SHALL NOT BE RESPONSIBLE FOR THE ACCURACY OR COMPLETENESS OF ELECTRONIC COPIES OF THIS PLAN SHEET.*

PB AMERICAS, Inc.
303 Second St., Suite 700N
San Francisco, CA 94107-1317

Caltrans Metric

**Cable/Ckt #:** A-2008-2 **Reference:** E-55
**Function:** 480 V Power **Conductor Type:** 3-1/C #10, 600 V, RHH/RHW insulation
**From:** PB-LTG **To:** Light Pipe Housing
**Remarks:** Cables installed by others.
**Description Of Changes:**

| Route | Conduit No. | Route | Conduit No. | Route | Conduit No. | Route | Conduit No. |
|---|---|---|---|---|---|---|---|
| 1 | FIELD | | | | | | |

**Cable/Ckt #:** A-2009 **Reference:** E-136, E-146
**Function:** 480 V Lighting **Conductor Type:** 1-3/C + Gnd, #6, 600 V, EPR insulation
**From:** *480 V LVCC-B Cubicle #5 **To:** PB-LTG
**Remarks:** Bikeway Ltg. Poles 2009-1 to 2009-17
**Description Of Changes:**

| Route | Conduit No. | Route | Conduit No. | Route | Conduit No. | Route | Conduit No. |
|---|---|---|---|---|---|---|---|
| 1 | *607 | 2 | *T22 | 3 | *T23 | 4 | *T24 |
| 5 | PB-600 V | 6 | *0408 | 7 | MH-2 | 8 | *0422 |
| 9 | MH-6 | 10 | *0413A | 11 | PB-10 | 12 | *0414 |
| 13 | PB-10 | 14 | *0487C | 15 | PB-10 | 16 | 0487B |
| 17 | PB-10 | 18 | 0487 | 19 | 2844 | 20 | 2845 |
| 21 | 2846 | 22 | 2847 | 23 | 2848 | 24 | 2849 |
| 25 | 2850 | 26 | 2851 | 27 | 2852 | 28 | 2853 |

**Cable/Ckt #:** A-2009-1 **Reference:** E-146
**Function:** 480 V Lighting **Conductor Type:** 3 + 1 Gnd, #6, #8, 600 V, RHH/RHW insulation
**From:** PB-LTG **To:** PB-LTG
**Remarks:** Loop conductors inside each PB-LTG.
**Description Of Changes:**

| Route | Conduit No. | Route | Conduit No. | Route | Conduit No. | Route | Conduit No. |
|---|---|---|---|---|---|---|---|
| 1 | 2854 | 2 | PB-LTG | 3 | 2855 | 4 | PB-LTG |
| 5 | 2856 | 6 | PB-LTG | 7 | 2857 | 8 | PB-LTG |
| 9 | 2858 | 10 | PB-LTG | 11 | 2859 | 12 | PB-LTG |
| 13 | 2860 | 14 | PB-LTG | 15 | 2861 | 16 | PB-LTG |
| 17 | 2862 | 18 | PB-LTG | 19 | 2863 | 20 | PB-LTG |
| 21 | 2864 | 22 | PB-LTG | 23 | 2865 | 24 | PB-LTG |
| 25 | 2866 | 26 | PB-LTG | 27 | 2867 | 28 | PB-LTG |
| 29 | 2868 | 30 | PB-LTG | 31 | 2869 | 32 | PB-LTG |
| 33 | 2870 | 34 | PB-LTG | 35 | 2871 | 36 | PB-LTG |
| 37 | 2872 | 38 | PB-LTG | 39 | 2873 | 40 | PB-LTG |
| 41 | 2874 | | | | | | |

**Cable/Ckt #:** A-2009-2 **Reference:** E-146
**Function:** 480 V Lighting **Conductor Type:** 2 + 1 Gnd, #10, #10, 600 V, RHH/RHW insulation
**From:** PB-LTG **To:** Bikeway Ltg. Pole
**Remarks:** Lighting poles 2009-1 thru 2009-17
**Description Of Changes:**

| Route | Conduit No. | Route | Conduit No. | Route | Conduit No. | Route | Conduit No. |
|---|---|---|---|---|---|---|---|
| 1 | FIELD | | | | | | |

**Cable/Ckt #:** LP281-1 **Reference:** E-9, E-56
**Function:** 120 V Power **Conductor Type:** 2 + 1 Gnd, #12, #12, 600 V, RHH/RHW insulation
**From:** Junction Box - Bike Path **To:** Bike Path Light
**Remarks:**
**Description Of Changes:**

| Route | Conduit No. | Route | Conduit No. | Route | Conduit No. | Route | Conduit No. |
|---|---|---|---|---|---|---|---|
| 1 | FIELD | | | | | | |

**Cable/Ckt #:** LP281-1/3 **Reference:** E-51, E-56
**Function:** 120 V Power **Conductor Type:** 3 + 1 Gnd, #8, #10, 600 V, RHH/RHW insulation
**From:** *Lighting Panel LP-281 **To:** Junction Box - Bike Path
**Remarks:**
**Description Of Changes:**

| Route | Conduit No. | Route | Conduit No. | Route | Conduit No. | Route | Conduit No. |
|---|---|---|---|---|---|---|---|
| 1 | *5805 | 2 | *Wireway 22E | 3 | *5812 | 4 | 600 V Cell |
| 5 | *5405 | 6 | *2705 | 7 | *2714 | | |

# CABLE AND CIRCUIT SCHEDULE

THIS PLAN IS ACCURATE FOR ELECTRICAL WORK ONLY.

E-324

| REVISED BY | DATE REVISED |
|---|---|
| JEFFRI HALIM | ELLERY LUCAS |
| CALCULATED-DESIGNED BY | CHECKED BY |
| CONSULTANT FUNCTIONAL SUPERVISOR | BRADY NADELL |

STATE OF CALIFORNIA - DEPARTMENT OF TRANSPORTATION
Caltrans

LAST REVISION 08-17-09 | DATE PLOTTED => 06-OCT-2011 | TIME PLOTTED => 07:33

| Dist | COUNTY | ROUTE | KILOMETER POST TOTAL PROJECT | SHEET No. | TOTAL SHEETS |
|---|---|---|---|---|---|
| 04 | Ala | 80 | 1.6/2.7 | 515 | 744 |

REGISTERED ELECTRICAL ENGINEER 05/02/11

10-3-11
PLANS APPROVAL DATE

REGISTERED PROFESSIONAL ENGINEER DAVID H. OTO No. 10699 Exp. 06/30/2013 ELECTRICAL STATE OF CALIFORNIA

*THE STATE OF CALIFORNIA OR ITS OFFICERS OR AGENTS SHALL NOT BE RESPONSIBLE FOR THE ACCURACY OR COMPLETENESS OF ELECTRONIC COPIES OF THIS PLAN SHEET.*

PB AMERICAS, Inc.
303 Second St., Suite 700N
San Francisco, CA 94107-1317

Caltrans Metric

Cable/Ckt #: LP281-3 | Reference: E-9, E-56
Function: 120 V Power | Conductor Type: 2 + 1 Gnd, #12, #12, 600 V, RHH/RHW insulation
From: Junction Box - Bike Path | To: Bike Path Light
Remarks:
Description Of Changes:

| Route | Conduit No. | Route | Conduit No. | Route | Conduit No. | Route | Conduit No. |
|---|---|---|---|---|---|---|---|
| 1 | FIELD | | | | | | |

Cable/Ckt #: LP281-6 | Reference: E-8, E-56
Function: 120 V Power | Conductor Type: 2 + 1 Gnd, #12, #12, 600 V, RHH/RHW insulation
From: Junction Box - Bike Path | To: Bike Path Light
Remarks:
Description Of Changes:

| Route | Conduit No. | Route | Conduit No. | Route | Conduit No. | Route | Conduit No. |
|---|---|---|---|---|---|---|---|
| 1 | FIELD | | | | | | |

Cable/Ckt #: LP281-6/8 | Reference: E-51, E-56
Function: 120 V Power | Conductor Type: 3 + 1 Gnd, #8, #10, 600 V, RHH/RHW insulation
From: *Lighting Panel LP-281 | To: Junction Box - Bike Path
Remarks:
Description Of Changes:

| Route | Conduit No. | Route | Conduit No. | Route | Conduit No. | Route | Conduit No. |
|---|---|---|---|---|---|---|---|
| 1 | *5805 | 2 | *Wireway 22E | 3 | *5812 | 4 | 600 V Cell |
| 5 | *5405 | 6 | *2709 | | | | |

Cable/Ckt #: LP281-8 | Reference: E-8, E-56
Function: 120 V Power | Conductor Type: 2 + 1 Gnd, #12, #12, 600 V, RHH/RHW insulation
From: Junction Box - Bike Path | To: Bike Path Light
Remarks:
Description Of Changes:

| Route | Conduit No. | Route | Conduit No. | Route | Conduit No. | Route | Conduit No. |
|---|---|---|---|---|---|---|---|
| 1 | FIELD | | | | | | |

Cable/Ckt #: LP282-1 | Reference: E-10, E-11, E-56
Function: 120 V Power | Conductor Type: 2 + 1 Gnd, #12, #12, 600 V, RHH/RHW insulation
From: Junction Box - Bike Path | To: Bike Path Light
Remarks:
Description Of Changes:

| Route | Conduit No. | Route | Conduit No. | Route | Conduit No. | Route | Conduit No. |
|---|---|---|---|---|---|---|---|
| 1 | FIELD | | | | | | |

Cable/Ckt #: LP282-1/3 | Reference: E-51, E-56
Function: 120 V Power | Conductor Type: 3 + 1 Gnd, #8, #10, 600 V, RHH/RHW insulation
From: Lighting Panel LP-282 | To: Junction Box - Bike Path
Remarks:
Description Of Changes:

| Route | Conduit No. | Route | Conduit No. | Route | Conduit No. | Route | Conduit No. |
|---|---|---|---|---|---|---|---|
| 1 | 5834 | 2 | Wireway 23E | 3 | 5841 | 4 | 600 V Cell |
| 5 | 5358 | 6 | 2819 | 7 | 2821 | 8 | 2822 |
| 9 | 2825 | 10 | 2713 | | | | |

Cable/Ckt #: LP282-3 | Reference: E-10, E-11, E-56
Function: 120 V Power | Conductor Type: 2 + 1 Gnd, #12, #12, 600 V, RHH/RHW insulation
From: Junction Box - Bike Path | To: Bike Path Light
Remarks:
Description Of Changes:

| Route | Conduit No. | Route | Conduit No. | Route | Conduit No. | Route | Conduit No. |
|---|---|---|---|---|---|---|---|
| 1 | FIELD | | | | | | |

Cable/Ckt #: LP282-6 | Reference: E-10, E-56
Function: 120 V Power | Conductor Type: 2 + 1 Gnd, #12, #12, 600 V, RHH/RHW insulation
From: Junction Box - Bike Path | To: Bike Path Light
Remarks:
Description Of Changes:

| Route | Conduit No. | Route | Conduit No. | Route | Conduit No. | Route | Conduit No. |
|---|---|---|---|---|---|---|---|
| 1 | FIELD | | | | | | |

# CABLE AND CIRCUIT SCHEDULE

THIS PLAN IS ACCURATE FOR ELECTRICAL WORK ONLY.

E-325

STATE OF CALIFORNIA - DEPARTMENT OF TRANSPORTATION
Caltrans
CONSULTANT FUNCTIONAL SUPERVISOR: BRADY NADELL
CALCULATED-DESIGNED BY: JEFFRI HALIM
CHECKED BY: ELLERY LUCAS
REVISED BY | DATE REVISED

LAST REVISION 08-17-09 | DATE PLOTTED => 06-OCT-2011 | TIME PLOTTED => 07:33

| Dist | COUNTY | ROUTE | KILOMETER POST TOTAL PROJECT | SHEET No. | TOTAL SHEETS |
|---|---|---|---|---|---|
| 04 | Ala | 80 | 1.6/2.7 | 516 | 744 |

Caltrans Metric

05/02/11
REGISTERED ELECTRICAL ENGINEER

10-3-11
PLANS APPROVAL DATE

REGISTERED PROFESSIONAL ENGINEER DAVID H. OTO No. 10699 Exp. 06/30/2013 ELECTRICAL STATE OF CALIFORNIA

*THE STATE OF CALIFORNIA OR ITS OFFICERS OR AGENTS SHALL NOT BE RESPONSIBLE FOR THE ACCURACY OR COMPLETENESS OF ELECTRONIC COPIES OF THIS PLAN SHEET.*

PB AMERICAS, Inc.
303 Second St., Suite 700N
San Francisco, CA 94107-1317

Cable/Ckt #: LP282-6/8 | Reference: E-51, E-56
Function: 120 V Power | Conductor Type: 3 + 1 Gnd, #8, #10, 600 V, RHH/RHW insulation
From: Lighting Panel LP-282 | To: Junction Box - Bike Path
Remarks:
Description Of Changes:

| Route | Conduit No. | Route | Conduit No. | Route | Conduit No. | Route | Conduit No. |
|---|---|---|---|---|---|---|---|
| 1 | 5834 | 2 | Wireway 23E | 3 | 5841 | 4 | 600 V Cell |
| 5 | 5358 | 6 | 2711 | | | | |

Cable/Ckt #: LP282-8 | Reference: E-10, E-56
Function: 120 V Power | Conductor Type: 2 + 1 Gnd, #12, #12, 600 V, RHH/RHW insulation
From: Junction Box - Bike Path | To: Bike Path Light
Remarks:
Description Of Changes:

| Route | Conduit No. | Route | Conduit No. | Route | Conduit No. | Route | Conduit No. |
|---|---|---|---|---|---|---|---|
| 1 | FIELD | | | | | | |

Cable/Ckt #: LP283-1 | Reference: E-145
Function: 120 V Power | Conductor Type: 2 + 1 Gnd, #12, #12, 600 V, RHH/RHW insulation
From: PB-LTG | To: Bike Path Ramp Light
Remarks:
Description Of Changes:

| Route | Conduit No. | Route | Conduit No. | Route | Conduit No. | Route | Conduit No. |
|---|---|---|---|---|---|---|---|
| 1 | FIELD | | | | | | |

Cable/Ckt #: LP283-1/3 | Reference: E-144, E-145
Function: 120 V Power | Conductor Type: 3 + 1 Gnd, #6, #8, 600 V, RHH/RHW insulation
From: Lighting Panel LP-283 | To: PB-LTG
Remarks:
Description Of Changes:

| Route | Conduit No. | Route | Conduit No. | Route | Conduit No. | Route | Conduit No. |
|---|---|---|---|---|---|---|---|
| 1 | *0427 | 2 | PB-10 | 3 | *0478C | 4 | PB-10 |
| 5 | 0478B | 6 | PB-10 | 7 | 0478 | 8 | PB-LTG |
| 9 | 2743 | 10 | PB-LTG | 11 | 2742 | 12 | PB-LTG |
| 13 | 2741 | 14 | PB-LTG | 15 | 2740 | 16 | PB-LTG |
| 17 | 2744 | 18 | PB-LTG | 19 | 2745 | | |

Cable/Ckt #: LP283-3 | Reference: E-145
Function: 120 V Power | Conductor Type: 2 + 1 Gnd, #12, #12, 600 V, RHH/RHW insulation
From: PB-LTG | To: Bike Path Ramp Light
Remarks:
Description Of Changes:

| Route | Conduit No. | Route | Conduit No. | Route | Conduit No. | Route | Conduit No. |
|---|---|---|---|---|---|---|---|
| 1 | FIELD | | | | | | |

Cable/Ckt #: LP283-6 | Reference: E-145
Function: 120 V Power | Conductor Type: 2 + 1 Gnd, #12, #12, 600 V, RHH/RHW insulation
From: PB-LTG | To: Bike Path Ramp Light
Remarks:
Description Of Changes:

| Route | Conduit No. | Route | Conduit No. | Route | Conduit No. | Route | Conduit No. |
|---|---|---|---|---|---|---|---|
| 1 | FIELD | | | | | | |

Cable/Ckt #: LP283-6/8 | Reference: E-144, E-145
Function: 120 V Power | Conductor Type: 3 + 1 Gnd, #6, #8, 600 V, RHH/RHW insulation
From: Lighting Panel LP-283 | To: PB-LTG
Remarks:
Description Of Changes:

| Route | Conduit No. | Route | Conduit No. | Route | Conduit No. | Route | Conduit No. |
|---|---|---|---|---|---|---|---|
| 1 | *0427 | 2 | PB-10 | 3 | 0478B | 4 | PB-10 |
| 5 | 0478 | 6 | PB-LTG | 7 | 2744 | 8 | PB-LTG |
| 9 | 2745 | 10 | PB-LTG | 11 | 2746 | 12 | PB-LTG |
| 13 | 2747 | 14 | PB-LTG | 15 | 2748 | 16 | PB-LTG |
| 17 | 2749 | 18 | PB-LTG | 19 | 2750 | 20 | PB-LTG |
| 21 | 2751 | 22 | PB-LTG | 23 | 2752 | 24 | PB-LTG |
| 25 | 2753 | | | | | | |

# CABLE AND CIRCUIT SCHEDULE

E-326

THIS PLAN IS ACCURATE FOR ELECTRICAL WORK ONLY.

REVISED BY | DATE REVISED
JEFFRI HALIM | ELLERY LUCAS
CALCULATED-DESIGNED BY | CHECKED BY
CONSULTANT FUNCTIONAL SUPERVISOR
BRADY NADELL
STATE OF CALIFORNIA - DEPARTMENT OF TRANSPORTATION
Caltrans

LAST REVISION 08-17-09 | DATE PLOTTED => 06-OCT-2011 | TIME PLOTTED => 07:33

| Dist | COUNTY | ROUTE | KILOMETER POST TOTAL PROJECT | SHEET No. | TOTAL SHEETS |
|---|---|---|---|---|---|
| 04 | Ala | 80 | 1.6/2.7 | 517 | 744 |

REGISTERED ELECTRICAL ENGINEER 05/02/11

PLANS APPROVAL DATE 10-3-11

REGISTERED PROFESSIONAL ENGINEER DAVID H. OTO No. 10699 Exp. 06/30/2013 ELECTRICAL STATE OF CALIFORNIA

*THE STATE OF CALIFORNIA OR ITS OFFICERS OR AGENTS SHALL NOT BE RESPONSIBLE FOR THE ACCURACY OR COMPLETENESS OF ELECTRONIC COPIES OF THIS PLAN SHEET.*

PB AMERICAS, Inc.
303 Second St., Suite 700N
San Francisco, CA 94107-1317

Caltrans Metric

Cable/Ckt #: LP283-8 | Reference: E-145
Function: 120 V Power | Conductor Type: 2 + 1 Gnd, #12, #12, 600 V, RHH/RHW insulation
From: PB-LTG | To: Bike Path Ramp Light
Remarks:
Description Of Changes:

| Route | Conduit No. | Route | Conduit No. | Route | Conduit No. | Route | Conduit No. |
|---|---|---|---|---|---|---|---|
| 1 | FIELD | | | | | | |

Cable/Ckt #: LPA-28 | Reference: E-141
Function: 120 V Power | Conductor Type: 2 + 1 Gnd, #12, #12, 600 V, RHH/RHW insulation
From: Lighting Panel LP-A | To: Irrigation Controller Cabinet
Remarks:
Description Of Changes:

| Route | Conduit No. | Route | Conduit No. | Route | Conduit No. | Route | Conduit No. |
|---|---|---|---|---|---|---|---|
| 1 | FIELD | | | | | | |

Cable/Ckt #: S-2601 | Reference: E-52, E-136
Function: 480 V Power | Conductor Type: 1-3/C + Gnd, #6, 600 V, EPR insulation
From: *480 V LVCC-B Cubicle #9 | To: PB-LTG
Remarks: Ltg. Poles 2601-1 to 2601-8
Description Of Changes:

| Route | Conduit No. | Route | Conduit No. | Route | Conduit No. | Route | Conduit No. |
|---|---|---|---|---|---|---|---|
| 1 | *605 | 2 | *T22 | 3 | *T23 | 4 | *T24 |
| 5 | PB-600 V | 6 | *0404 | 7 | MH-2 | 8 | *0419 |
| 9 | MH-6 | 10 | *0432 | 11 | MH-10 | 12 | *0458 |
| 13 | 2T40 | 14 | 5451 | 15 | Transition Cell | 16 | 5419 |
| 17 | 600 V Cell | 18 | 5407 | 19 | *5407 | 20 | 600 V Cell |
| 21 | *5401 | | | | | | |

Cable/Ckt #: S-2601-1 | Reference: E-52
Function: 480 V Power | Conductor Type: 3 + 1 Gnd, #6, #8, 600 V, RHH/RHW insulation
From: PB-LTG | To: PB-LTG
Remarks: Ltg. Poles 2601-1 to 2601-4
Description Of Changes:

| Route | Conduit No. | Route | Conduit No. | Route | Conduit No. | Route | Conduit No. |
|---|---|---|---|---|---|---|---|
| 1 | *2304 | 2 | *2303 | 3 | *2302 | 4 | *2300 |

Cable/Ckt #: S-2601-2 | Reference: E-52
Function: 480 V Power | Conductor Type: 3 + 1 Gnd, #6, #8, 600 V, RHH/RHW insulation
From: PB-LTG | To: PB-LTG
Remarks: Ltg. Poles 2601-5 to 2601-8
Description Of Changes:

| Route | Conduit No. | Route | Conduit No. | Route | Conduit No. | Route | Conduit No. |
|---|---|---|---|---|---|---|---|
| 1 | *2305 | 2 | *2306 | 3 | *2307 | 4 | *2308 |

Cable/Ckt #: S-2602 | Reference: E-53, E-136
Function: 480 V Power | Conductor Type: 1-3/C + Gnd, #6, 600 V, EPR insulation
From: *480 V LVCC-B Cubicle #10 | To: PB-LTG
Remarks: Ltg. Poles 2602-1 to 2602-7
Description Of Changes:

| Route | Conduit No. | Route | Conduit No. | Route | Conduit No. | Route | Conduit No. |
|---|---|---|---|---|---|---|---|
| 1 | *605 | 2 | *T22 | 3 | *T23 | 4 | *T24 |
| 5 | PB-600 V | 6 | *0404 | 7 | MH-2 | 8 | *0419 |
| 9 | MH-6 | 10 | *0432 | 11 | MH-10 | 12 | *0458 |
| 13 | 2T40 | 14 | 5451 | 15 | Transition Cell | 16 | 5432 |

Cable/Ckt #: S-2602-1 | Reference: E-53
Function: 480 V Power | Conductor Type: 3 + 1 Gnd, #6, #8, 600 V, RHH/RHW insulation
From: PB-LTG | To: PB-LTG
Remarks: Ltg. Poles 2602-1 to 2602-4
Description Of Changes:

| Route | Conduit No. | Route | Conduit No. | Route | Conduit No. | Route | Conduit No. |
|---|---|---|---|---|---|---|---|
| 1 | 2319 | 2 | 2318 | 3 | 2317 | 4 | 2316 |
| 5 | 2314 | 6 | 2315 | | | | |

# CABLE AND CIRCUIT SCHEDULE

E-327

THIS PLAN IS ACCURATE FOR ELECTRICAL WORK ONLY.

| REVISED BY | DATE REVISED |
|---|---|
| | |

JEFFRI HALIM — CALCULATED-DESIGNED BY
ELLERY LUCAS — CHECKED BY
CONSULTANT FUNCTIONAL SUPERVISOR
BRADY NADELL

STATE OF CALIFORNIA - DEPARTMENT OF TRANSPORTATION
Caltrans

LAST REVISION 08-17-09 | DATE PLOTTED => 06-OCT-2011 | TIME PLOTTED => 07:33

| Dist | COUNTY | ROUTE | KILOMETER POST TOTAL PROJECT | SHEET No. | TOTAL SHEETS |
|---|---|---|---|---|---|
| 04 | Ala | 80 | 1.6/2.7 | 518 | 744 |

Caltrans Metric

REGISTERED ELECTRICAL ENGINEER 05/02/11

10-3-11
PLANS APPROVAL DATE

REGISTERED PROFESSIONAL ENGINEER DAVID H. OTO No. 10699 Exp. 06/30/2013 ELECTRICAL STATE OF CALIFORNIA

*THE STATE OF CALIFORNIA OR ITS OFFICERS OR AGENTS SHALL NOT BE RESPONSIBLE FOR THE ACCURACY OR COMPLETENESS OF ELECTRONIC COPIES OF THIS PLAN SHEET.*

PB AMERICAS, Inc.
303 Second St., Suite 700N
San Francisco, CA 94107-1317

**Cable/Ckt #:** S-2602-2 **Reference:** E-53
**Function:** 480 V Power **Conductor Type:** 3 + 1 Gnd, #6, #8, 600 V, RHH/RHW insulation
**From:** PB-LTG **To:** PB-LTG
**Remarks:** Ltg. Poles 2602-5 to 2602-7
**Description Of Changes:**

| Route | Conduit No. | Route | Conduit No. | Route | Conduit No. | Route | Conduit No. |
|---|---|---|---|---|---|---|---|
| 1 | 2320 | 2 | 2321 | 3 | 2322 | | |

**Cable/Ckt #:** S-2606 **Reference:** E-136, E-147
**Function:** 480 V Lighting **Conductor Type:** 1-3/C + Gnd, #4, 600 V, EPR insulation
**From:** *480 V LVCC-B Cubicle #15 **To:** Hi-Mast Lighting Pole 2606
**Remarks:**
**Description Of Changes:**

| Route | Conduit No. | Route | Conduit No. | Route | Conduit No. | Route | Conduit No. |
|---|---|---|---|---|---|---|---|
| 1 | *603 | 2 | *T22 | 3 | *T23 | 4 | *T24 |
| 5 | PB-600 V | 6 | *0408 | 7 | MH-2 | 8 | *0422 |
| 9 | MH-6 | 10 | *0436 | 11 | MH-10 | 12 | *0460 |
| 13 | 0460 | 14 | MH-44 | 15 | 0464 | 16 | MH-46 |
| 17 | 0468 | 18 | MH-48 | 19 | 0472 | 20 | MH-50 |
| 21 | 0483 | 22 | MH-52 | 23 | 0488A | 24 | MH-54 |
| 25 | 0492B | 26 | MH-56 | 27 | 0805 | 28 | PB-12 |
| 29 | FIELD | | | | | | |

**Cable/Ckt #:** S-2607 **Reference:** E-136, E-147
**Function:** 480 V Lighting **Conductor Type:** 1-3/C + Gnd, #4, 600 V, EPR insulation
**From:** *480 V LVCC-B Cubicle #16 **To:** Hi-Mast Lighting Pole 2607
**Remarks:**
**Description Of Changes:**

| Route | Conduit No. | Route | Conduit No. | Route | Conduit No. | Route | Conduit No. |
|---|---|---|---|---|---|---|---|
| 1 | *603 | 2 | *T22 | 3 | *T23 | 4 | *T24 |
| 5 | PB-600 V | 6 | *0408 | 7 | MH-2 | 8 | *0422 |
| 9 | MH-6 | 10 | *0436 | 11 | MH-10 | 12 | *0460 |
| 13 | 0460 | 14 | MH-44 | 15 | 0464 | 16 | MH-46 |
| 17 | 0468 | 18 | MH-48 | 19 | 0472 | 20 | MH-50 |
| 21 | 0483 | 22 | MH-52 | 23 | 0804 | 24 | PB-12 |
| 25 | FIELD | | | | | | |

**Cable/Ckt #:** S-2608 **Reference:** E-136, E-147
**Function:** 480 V Lighting **Conductor Type:** 1-3/C + Gnd, #4, 600 V, EPR insulation
**From:** *480 V LVCC-B Cubicle #14 **To:** Hi-Mast Lighting Pole 2608
**Remarks:**
**Description Of Changes:**

| Route | Conduit No. | Route | Conduit No. | Route | Conduit No. | Route | Conduit No. |
|---|---|---|---|---|---|---|---|
| 1 | *603 | 2 | *T22 | 3 | *T23 | 4 | *T24 |
| 5 | PB-600 V | 6 | *0408 | 7 | MH-2 | 8 | *0422 |
| 9 | MH-6 | 10 | *0436 | 11 | MH-10 | 12 | *0460 |
| 13 | 0460 | 14 | MH-44 | 15 | 0464 | 16 | MH-46 |
| 17 | 0468 | 18 | MH-48 | 19 | 0806 | 20 | PB-12 |
| 21 | FIELD | | | | | | |

**Cable/Ckt #:** S-2609 **Reference:** E-136, E-147
**Function:** 480 V Lighting **Conductor Type:** 1-3/C + Gnd, #4, 600 V, EPR insulation
**From:** *480 V LVCC-B Cubicle #23 **To:** Hi-Mast Lighting Pole 2609
**Remarks:**
**Description Of Changes:**

| Route | Conduit No. | Route | Conduit No. | Route | Conduit No. | Route | Conduit No. |
|---|---|---|---|---|---|---|---|
| 1 | *602 | 2 | *T22 | 3 | *T23 | 4 | *T24 |
| 5 | PB-600 V | 6 | *0408 | 7 | MH-2 | 8 | *0422 |
| 9 | MH-6 | 10 | *0436 | 11 | MH-10 | 12 | *0460 |
| 13 | 0460 | 14 | MH-44 | 15 | 0800 | 16 | PB-12 |
| 17 | FIELD | | | | | | |

# CABLE AND CIRCUIT SCHEDULE

THIS PLAN IS ACCURATE FOR ELECTRICAL WORK ONLY.

E-328

REVISED BY | DATE REVISED
JEFFRI HALIM | ELLERY LUCAS
CALCULATED-DESIGNED BY | CHECKED BY
CONSULTANT FUNCTIONAL SUPERVISOR
BRADY NADELL
STATE OF CALIFORNIA - DEPARTMENT OF TRANSPORTATION
Caltrans

LAST REVISION 08-17-09 | DATE PLOTTED => 06-OCT-2011 | TIME PLOTTED => 07:33

| Dist | COUNTY | ROUTE | KILOMETER POST TOTAL PROJECT | SHEET No. | TOTAL SHEETS |
|---|---|---|---|---|---|
| 04 | Ala | 80 | 1.6/2.7 | 519 | 744 |

REGISTERED ELECTRICAL ENGINEER 05/02/11

10-3-11
PLANS APPROVAL DATE

REGISTERED PROFESSIONAL ENGINEER DAVID H. OTO No. 10699 Exp. 06/30/2013 ELECTRICAL STATE OF CALIFORNIA

*THE STATE OF CALIFORNIA OR ITS OFFICERS OR AGENTS SHALL NOT BE RESPONSIBLE FOR THE ACCURACY OR COMPLETENESS OF ELECTRONIC COPIES OF THIS PLAN SHEET.*

PB AMERICAS, Inc.
303 Second St., Suite 700N
San Francisco, CA 94107-1317

Caltrans Metric

**Cable/Ckt #:** UP004-2 **Reference:** E-141, E-188
**Function:** 120 V Power **Conductor Type:** 1-2/C + Gnd, #6, 600 V, EPR insulation
**From:** *Utility Panel UP-004 **To:** Strong Motion Recorder #1
**Remarks:**
**Description Of Changes:**

| Route | Conduit No. | Route | Conduit No. | Route | Conduit No. | Route | Conduit No. |
|---|---|---|---|---|---|---|---|
| 1 | *623A | 2 | *T25 | 3 | *T24 | 4 | PB-600 V |
| 5 | *0403 | 6 | MH-2 | 7 | *0417 | 8 | MH-6 |
| 9 | *0435 | 10 | MH-10 | 11 | *9043 | 12 | SMD-PB #3 |
| 13 | *9035 | 14 | FIELD | | | | |

**Cable/Ckt #:** UP173-1/3 **Reference:** E-142, E-148
**Function:** 120/240 V power **Conductor Type:** 3 + 1 Gnd, #2, #6, 600 V, RHH/RHW insulation
**From:** Utility Panel UP-173 **To:** CMS-W03
**Remarks:**
**Description Of Changes:**

| Route | Conduit No. | Route | Conduit No. | Route | Conduit No. | Route | Conduit No. |
|---|---|---|---|---|---|---|---|
| 1 | 0441 | 2 | PB-10 | 3 | 0442B | 4 | MH-48 |
| 5 | 0801 | 6 | PB-10 | 7 | FIELD | | |

**Cable/Ckt #:** UP173-12 **Reference:** E-142, E-148
**Function:** 120 V Power **Conductor Type:** 3 + 1 Gnd, #10, #10, 600 V, RHH/RHW insulation
**From:** Utility Panel UP-173 **To:** Controller Cabinet #TOS-24B
**Remarks:**
**Description Of Changes:**

| Route | Conduit No. | Route | Conduit No. | Route | Conduit No. | Route | Conduit No. |
|---|---|---|---|---|---|---|---|
| 1 | 0444 | | | | | | |

**Cable/Ckt #:** UP173-13 **Reference:** E-142, E-148
**Function:** 120 V Power **Conductor Type:** 2 + 1 Gnd, #10, #10, 600 V, RHH/RHW insulation
**From:** Utility Panel UP-173 **To:** Controller Cabinet #TOS-24C
**Remarks:**
**Description Of Changes:**

| Route | Conduit No. | Route | Conduit No. | Route | Conduit No. | Route | Conduit No. |
|---|---|---|---|---|---|---|---|
| 1 | 0448 | | | | | | |

**Cable/Ckt #:** UP173-16 **Reference:** E-142, E-176
**Function:** 120 V Power **Conductor Type:** 2 + 1 Gnd, #12, #12, 600 V, RHH/RHW insulation
**From:** PB-LTG **To:** Call Box CB-159B, CB-161B
**Remarks:** Call box power for CB-159B, CB-161B
**Description Of Changes:**

| Route | Conduit No. | Route | Conduit No. | Route | Conduit No. | Route | Conduit No. |
|---|---|---|---|---|---|---|---|
| 1 | FIELD | | | | | | |

**Cable/Ckt #:** UP173-16A **Reference:** E-142, E-176
**Function:** 120 V Power **Conductor Type:** 2 + 1 Gnd, #8, #10, 600 V, RHH/RHW insulation
**From:** Utility Panel UP-173 **To:** PB-LTG
**Remarks:** Call box power for CB-159B, CB-161B
**Description Of Changes:**

| Route | Conduit No. | Route | Conduit No. | Route | Conduit No. | Route | Conduit No. |
|---|---|---|---|---|---|---|---|
| 1 | 0441 | 2 | PB-10 | 3 | 0442B | 4 | MH-48 |
| 5 | 0374 | 6 | *0374 | | | | |

**Cable/Ckt #:** UP173-16B **Reference:** E-142, E-176
**Function:** 120 V Power **Conductor Type:** 2 + 1 Gnd, #8, #10, 600 V, RHH/RHW insulation
**From:** PB-LTG **To:** PB-LTG
**Remarks:** Loop conductors inside each PB-LTG . Install in Stage 1 and 3. See sheet E-70 and E-95.
**Description Of Changes:**

| Route | Conduit No. | Route | Conduit No. | Route | Conduit No. | Route | Conduit No. |
|---|---|---|---|---|---|---|---|
| 1 | *1753 | 2 | 1753 | 3 | FIELD | 4 | 1754 |
| 5 | 1755 | 6 | 1756 | 7 | 1757 | 8 | 1758 |
| 9 | 1759 | 10 | 1760 | 11 | FIELD | | |

# CABLE AND CIRCUIT SCHEDULE

THIS PLAN IS ACCURATE FOR ELECTRICAL WORK ONLY.

E-329

REVISED BY | DATE REVISED
JEFFRI HALIM | ELLERY LUCAS
CALCULATED-DESIGNED BY | CHECKED BY
CONSULTANT FUNCTIONAL SUPERVISOR
BRADY NADELL
STATE OF CALIFORNIA - DEPARTMENT OF TRANSPORTATION
Caltrans

LAST REVISION 08-17-09 | DATE PLOTTED => 06-OCT-2011 | TIME PLOTTED => 07:33

| Dist | COUNTY | ROUTE | KILOMETER POST TOTAL PROJECT | SHEET No. | TOTAL SHEETS |
|---|---|---|---|---|---|
| 04 | Ala | 80 | 1.6/2.7 | 520 | 744 |

Caltrans Metric

REGISTERED ELECTRICAL ENGINEER 05/02/11

10-3-11
PLANS APPROVAL DATE

REGISTERED PROFESSIONAL ENGINEER DAVID H. OTO No. 10699 Exp. 06/30/2013 ELECTRICAL STATE OF CALIFORNIA

*THE STATE OF CALIFORNIA OR ITS OFFICERS OR AGENTS SHALL NOT BE RESPONSIBLE FOR THE ACCURACY OR COMPLETENESS OF ELECTRONIC COPIES OF THIS PLAN SHEET.*

PB AMERICAS, Inc.
303 Second St., Suite 700N
San Francisco, CA 94107-1317

**Cable/Ckt #:** UP173-2 **Reference:** E-142, E-148
**Function:** 120 V Power **Conductor Type:** 2 + 1 Gnd, #10, #10, 600 V, RHH/RHW insulation
**From:** Utility Panel UP-173 **To:** CMS-W03
**Remarks:**
**Description Of Changes:**

| Route | Conduit No. | Route | Conduit No. | Route | Conduit No. | Route | Conduit No. |
|---|---|---|---|---|---|---|---|
| 1 | 0441 | 2 | PB-10 | 3 | 0442B | 4 | MH-48 |
| 5 | 0801 | 6 | PB-10 | 7 | FIELD | | |

**Cable/Ckt #:** UP173-4 **Reference:** E-142, E-148
**Function:** 120 V Power **Conductor Type:** 2 + 1 Gnd, #10, #10, 600 V, RHH/RHW insulation
**From:** Utility Panel UP-173 **To:** Controller Cabinet #TOS-24A
**Remarks:**
**Description Of Changes:**

| Route | Conduit No. | Route | Conduit No. | Route | Conduit No. | Route | Conduit No. |
|---|---|---|---|---|---|---|---|
| 1 | 0443 | | | | | | |

**Cable/Ckt #:** UP173-5/7 **Reference:** E-142, E-148
**Function:** 120/240 V power **Conductor Type:** 3 + 1 Gnd, #2, #6, 600 V, RHH/RHW insulation
**From:** Utility Panel UP-173 **To:** CMS-E03
**Remarks:**
**Description Of Changes:**

| Route | Conduit No. | Route | Conduit No. | Route | Conduit No. | Route | Conduit No. |
|---|---|---|---|---|---|---|---|
| 1 | 0441 | 2 | PB-10 | 3 | 0442B | 4 | MH-48 |
| 5 | 0476 | 6 | PB-10 | 7 | FIELD | | |

**Cable/Ckt #:** UP173-6 **Reference:** E-142, E-148
**Function:** 120 V Power **Conductor Type:** 2 + 1 Gnd, #10, #10, 600 V, RHH/RHW insulation
**From:** Utility Panel UP-173 **To:** CMS-E03
**Remarks:**
**Description Of Changes:**

| Route | Conduit No. | Route | Conduit No. | Route | Conduit No. | Route | Conduit No. |
|---|---|---|---|---|---|---|---|
| 1 | 0441 | 2 | PB-10 | 3 | 0442B | 4 | MH-48 |
| 5 | 0476 | 6 | PB-10 | 7 | FIELD | | |

**Cable/Ckt #:** UP173-8 **Reference:** E-142, E-177
**Function:** 120 V Power **Conductor Type:** 2 + 1 Gnd, #12, #12, 600 V, RHH/RHW insulation
**From:** PB-LTG **To:** Call Box CB-159A, CB-161A
**Remarks:** Call box power for CB-159A, CB-161A
**Description Of Changes:**

| Route | Conduit No. | Route | Conduit No. | Route | Conduit No. | Route | Conduit No. |
|---|---|---|---|---|---|---|---|
| 1 | FIELD | | | | | | |

**Cable/Ckt #:** UP173-8A **Reference:** E-142, E-177
**Function:** 120 V Power **Conductor Type:** 2 + 1 Gnd, #8, #10, 600 V, RHH/RHW insulation
**From:** Utility Panel UP-173 **To:** PB-LTG
**Remarks:** Call box power for CB-159A, CB-161A. Splice to the existing coiled cable inside PB-LTG.
**Description Of Changes:**

| Route | Conduit No. | Route | Conduit No. | Route | Conduit No. | Route | Conduit No. |
|---|---|---|---|---|---|---|---|
| 1 | 0441 | 2 | PB-10 | 3 | 0442B | 4 | MH-48 |
| 5 | 0374 | 6 | *0374 | | | | |

**Cable/Ckt #:** UP173-9 **Reference:** E-142
**Function:** 120 V Power **Conductor Type:** 2 + 1 Gnd, #12, #12, 600 V, RHH/RHW insulation
**From:** Utility Panel UP-173 **To:** Pad #24 Receptacles
**Remarks:**
**Description Of Changes:**

| Route | Conduit No. | Route | Conduit No. | Route | Conduit No. | Route | Conduit No. |
|---|---|---|---|---|---|---|---|
| 1 | FIELD | | | | | | |

# CABLE AND CIRCUIT SCHEDULE

THIS PLAN IS ACCURATE FOR ELECTRICAL WORK ONLY.

E-330

| REVISED BY | DATE REVISED |
|---|---|
| | |

JEFFRI HALIM
ELLERY LUCAS
CALCULATED-DESIGNED BY
CHECKED BY
CONSULTANT FUNCTIONAL SUPERVISOR
BRADY NADELL

STATE OF CALIFORNIA - DEPARTMENT OF TRANSPORTATION
Caltrans

LAST REVISION 08-17-09
DATE PLOTTED => 06-OCT-2011
TIME PLOTTED => 07:34

| Dist | COUNTY | ROUTE | KILOMETER POST TOTAL PROJECT | SHEET No. | TOTAL SHEETS |
|---|---|---|---|---|---|
| 04 | Ala | 80 | 1.6/2.7 | 521 | 744 |

Caltrans Metric

REGISTERED ELECTRICAL ENGINEER 05/02/11

10-3-11
PLANS APPROVAL DATE

REGISTERED PROFESSIONAL ENGINEER DAVID H. OTO No. 10699 Exp. 06/30/2013 ELECTRICAL STATE OF CALIFORNIA

*THE STATE OF CALIFORNIA OR ITS OFFICERS OR AGENTS SHALL NOT BE RESPONSIBLE FOR THE ACCURACY OR COMPLETENESS OF ELECTRONIC COPIES OF THIS PLAN SHEET.*

PB AMERICAS, Inc.
303 Second St., Suite 700N
San Francisco, CA 94107-1317

| Cable/Ckt #: | UP271-10 | Reference: | E-50, E-148 |
|---|---|---|---|
| Function: | 120 V Power | Conductor Type: | 1-2/C + Gnd, #10, 600 V, EPR insulation |
| From: | *Utility Panel UP-271 | To: | *Controller Cabinet #TOS-22EA |
| Remarks: | | | |
| Description Of Changes: | | | |

| Route | Conduit No. | Route | Conduit No. | Route | Conduit No. | Route | Conduit No. |
|---|---|---|---|---|---|---|---|
| 1 | *5802 | 2 | *Wireway 22E | 3 | Nipple | | |

| Cable/Ckt #: | UP271-2 | Reference: | E-50, E-176 |
|---|---|---|---|
| Function: | 120 V Power | Conductor Type: | 2 + 1 Gnd, #12, #12, 600 V, RHH/RHW insulation |
| From: | PB-LTG | To: | Call Box CB-256C |
| Remarks: | Call box power for CB-256C | | |
| Description Of Changes: | | | |

| Route | Conduit No. | Route | Conduit No. | Route | Conduit No. | Route | Conduit No. |
|---|---|---|---|---|---|---|---|
| 1 | FIELD | | | | | | |

| Cable/Ckt #: | UP271-2A | Reference: | E-50, E-176 |
|---|---|---|---|
| Function: | 120 V Power | Conductor Type: | 2 + 1 Gnd, #8, #10, 600 V, RHH/RHW insulation |
| From: | *Utility Panel UP-271 | To: | PB-LTG |
| Remarks: | Call box power for CB-256C | | |
| Description Of Changes: | | | |

| Route | Conduit No. | Route | Conduit No. | Route | Conduit No. | Route | Conduit No. |
|---|---|---|---|---|---|---|---|
| 1 | *5801 | 2 | *Wireway 22E | 3 | *5812 | 4 | *5405 |

| Cable/Ckt #: | UP271-5 | Reference: | E-50 |
|---|---|---|---|
| Function: | 120 V Power | Conductor Type: | 1-2/C + Gnd, #12, 600 V, EPR insulation |
| From: | *Utility Panel UP-271 | To: | Platform #22E receptacles |
| Remarks: | | | |
| Description Of Changes: | | | |

| Route | Conduit No. | Route | Conduit No. | Route | Conduit No. | Route | Conduit No. |
|---|---|---|---|---|---|---|---|
| 1 | *5801 | 2 | *Wireway 22E | 3 | FIELD | | |

| Cable/Ckt #: | UP272-10 | Reference: | E-50, E-148 |
|---|---|---|---|
| Function: | 120 V Power | Conductor Type: | 1-2/C + Gnd, #10, 600 V, EPR insulation |
| From: | Utility Panel UP-272 | To: | Controller Cabinet #TOS-23EA |
| Remarks: | | | |
| Description Of Changes: | | | |

| Route | Conduit No. | Route | Conduit No. | Route | Conduit No. | Route | Conduit No. |
|---|---|---|---|---|---|---|---|
| 1 | 5833 | 2 | Wireway 23E | 3 | Nipple | | |

| Cable/Ckt #: | UP272-2 | Reference: | E-50, E-176 |
|---|---|---|---|
| Function: | 120 V Power | Conductor Type: | 2 + 1 Gnd, #12, #12, 600 V, RHH/RHW insulation |
| From: | PB-LTG | To: | Call Box CB-257A, Call Box CB-257B |
| Remarks: | Call box power for CB-257A, Call Box CB-257B | | |
| Description Of Changes: | | | |

| Route | Conduit No. | Route | Conduit No. | Route | Conduit No. | Route | Conduit No. |
|---|---|---|---|---|---|---|---|
| 1 | FIELD | | | | | | |

| Cable/Ckt #: | UP272-2A | Reference: | E-50, E-176 |
|---|---|---|---|
| Function: | 120 V Power | Conductor Type: | 2 + 1 Gnd, #8, #10, 600 V, RHH/RHW insulation |
| From: | Utility Panel UP-272 | To: | PB-LTG |
| Remarks: | Call box power for CB-257A, Call Box CB-257B | | |
| Description Of Changes: | | | |

| Route | Conduit No. | Route | Conduit No. | Route | Conduit No. | Route | Conduit No. |
|---|---|---|---|---|---|---|---|
| 1 | 5832 | 2 | Wireway 23E | 3 | 5844 | 4 | 5422 |
| 5 | 5358 | | | | | | |

| Cable/Ckt #: | UP272-2B | Reference: | E-50, E-176 |
|---|---|---|---|
| Function: | 120 V Power | Conductor Type: | 2 + 1 Gnd, #8, #10, 600 V, RHH/RHW insulation |
| From: | PB-LTG | To: | PB-LTG |
| Remarks: | Loop conductors inside each PB-LTG. | | |
| Description Of Changes: | | | |

| Route | Conduit No. | Route | Conduit No. | Route | Conduit No. | Route | Conduit No. |
|---|---|---|---|---|---|---|---|
| 1 | 2317 | 2 | 2316 | 3 | 2818 | 4 | 2817 |
| 5 | 2816 | | | | | | |

# CABLE AND CIRCUIT SCHEDULE

THIS PLAN IS ACCURATE FOR ELECTRICAL WORK ONLY.

E-331

| REVISED BY | DATE REVISED |
|---|---|
| JEFFRI HALIM | ELLERY LUCAS |
| CALCULATED-DESIGNED BY | CHECKED BY |
| BRADY NADELL | |
| CONSULTANT FUNCTIONAL SUPERVISOR | |

STATE OF CALIFORNIA - DEPARTMENT OF TRANSPORTATION
Caltrans

LAST REVISION 08-17-09 | DATE PLOTTED => 06-OCT-2011 | TIME PLOTTED => 07:34

| Dist | COUNTY | ROUTE | KILOMETER POST TOTAL PROJECT | SHEET No. | TOTAL SHEETS |
|---|---|---|---|---|---|
| 04 | Ala | 80 | 1.6/2.7 | 522 | 744 |

Caltrans Metric

05/02/11
REGISTERED ELECTRICAL ENGINEER

10-3-11
PLANS APPROVAL DATE

REGISTERED PROFESSIONAL ENGINEER DAVID H. OTO No. 10699 Exp. 06/30/2013 ELECTRICAL STATE OF CALIFORNIA

*THE STATE OF CALIFORNIA OR ITS OFFICERS OR AGENTS SHALL NOT BE RESPONSIBLE FOR THE ACCURACY OR COMPLETENESS OF ELECTRONIC COPIES OF THIS PLAN SHEET.*

PB AMERICAS, Inc.
303 Second St., Suite 700N
San Francisco, CA 94107-1317

**Cable/Ckt #:** UP272-5 **Reference:** E-50
**Function:** 120 V Power **Conductor Type:** 1-2/C + Gnd, #12, 600 V, EPR insulation
**From:** Utility Panel UP-272 **To:** Platform #23E receptacles
**Remarks:**
**Description Of Changes:**

| Route | Conduit No. | Route | Conduit No. | Route | Conduit No. | Route | Conduit No. |
|---|---|---|---|---|---|---|---|
| 1 | 5833 | 2 | Wireway 23E | 3 | FIELD | | |

**Cable/Ckt #:** UP274-1 **Reference:** E-142, E-148
**Function:** 120 V Power **Conductor Type:** 2 + 1 Gnd, #10, #10, 600 V, RHH/RHW insulation
**From:** Utility Panel UP-274 **To:** Controller Cabinet #TOS-25A
**Remarks:**
**Description Of Changes:**

| Route | Conduit No. | Route | Conduit No. | Route | Conduit No. | Route | Conduit No. |
|---|---|---|---|---|---|---|---|
| 1 | 0497 | | | | | | |

**Cable/Ckt #:** UP274-12 **Reference:** E-142
**Function:** 120 V Power **Conductor Type:** 2 + 1 Gnd, #8, #10, 600 V, RHH/RHW insulation
**From:** Utility Panel UP-274 **To:** CCTV-W03
**Remarks:** Power for lowering device.
**Description Of Changes:**

| Route | Conduit No. | Route | Conduit No. | Route | Conduit No. | Route | Conduit No. |
|---|---|---|---|---|---|---|---|
| 1 | 0493 | 2 | PB-10 | 3 | 0493A | 4 | MH-52 |
| 5 | 0479 | 6 | PB-10 | 7 | FIELD | | |

**Cable/Ckt #:** UP274-3 **Reference:** E-142
**Function:** 120 V Power **Conductor Type:** 2 + 1 Gnd, #12, #12, 600 V, RHH/RHW insulation
**From:** Utility Panel UP-274 **To:** Pad #25 Receptacles
**Remarks:**
**Description Of Changes:**

| Route | Conduit No. | Route | Conduit No. | Route | Conduit No. | Route | Conduit No. |
|---|---|---|---|---|---|---|---|
| 1 | FIELD | | | | | | |

**Cable/Ckt #:** UP274-4 **Reference:** E-142, E-178
**Function:** 120 V Power **Conductor Type:** 2 + 1 Gnd, #12, #12, 600 V, RHH/RHW insulation
**From:** PB-LTG **To:** Call Box CB-259A, Call Box CB-261A
**Remarks:** Call box power for CB-259A, Call Box CB-261A
**Description Of Changes:**

| Route | Conduit No. | Route | Conduit No. | Route | Conduit No. | Route | Conduit No. |
|---|---|---|---|---|---|---|---|
| 1 | FIELD | | | | | | |

**Cable/Ckt #:** UP274-4A **Reference:** E-142, E-178
**Function:** 120 V Power **Conductor Type:** 2 + 1 Gnd, #8, #10, 600 V, RHH/RHW insulation
**From:** Utility Panel UP-274 **To:** PB-LTG
**Remarks:** Call box power for CB-259A, Call Box CB-261A
**Description Of Changes:**

| Route | Conduit No. | Route | Conduit No. | Route | Conduit No. | Route | Conduit No. |
|---|---|---|---|---|---|---|---|
| 1 | 0493 | 2 | PB-10 | 3 | 0493A | 4 | MH-52 |
| 5 | 0496 | | | | | | |

**Cable/Ckt #:** UP274-4B **Reference:** E-142, E-178
**Function:** 120 V Power **Conductor Type:** 2 + 1 Gnd, #8, #10, 600 V, RHH/RHW insulation
**From:** PB-LTG **To:** PB-LTG
**Remarks:** Loop conductors inside each PB-LTG. Install in Stage 1 and 3. See sheet E-69 and E-94.
**Description Of Changes:**

| Route | Conduit No. | Route | Conduit No. | Route | Conduit No. | Route | Conduit No. |
|---|---|---|---|---|---|---|---|
| 1 | 2356 | 2 | 2355 | 3 | 2354 | 4 | 2357 |
| 5 | 2358 | 6 | 2359 | 7 | 2360 | | |

**Cable/Ckt #:** UP274-8 **Reference:** E-142, E-178
**Function:** 120 V Power **Conductor Type:** 2 + 1 Gnd, #12, #12, 600 V, RHH/RHW insulation
**From:** PB-LTG **To:** Call Box CB-259B, Call Box CB-261B
**Remarks:**
**Description Of Changes:**

| Route | Conduit No. | Route | Conduit No. | Route | Conduit No. | Route | Conduit No. |
|---|---|---|---|---|---|---|---|
| 1 | FIELD | | | | | | |

# CABLE AND CIRCUIT SCHEDULE

THIS PLAN IS ACCURATE FOR ELECTRICAL WORK ONLY.

E-332

STATE OF CALIFORNIA - DEPARTMENT OF TRANSPORTATION
Caltrans

CONSULTANT FUNCTIONAL SUPERVISOR: BRADY NADELL
CALCULATED-DESIGNED BY: JEFFRI HALIM
CHECKED BY: ELLERY LUCAS
REVISED BY / DATE REVISED

LAST REVISION 08-17-09
DATE PLOTTED => 06-OCT-2011
TIME PLOTTED => 07:34

| Dist | COUNTY | ROUTE | KILOMETER POST TOTAL PROJECT | SHEET No. | TOTAL SHEETS |
|---|---|---|---|---|---|
| 04 | Ala | 80 | 1.6/2.7 | 523 | 744 |

Caltrans Metric

REGISTERED ELECTRICAL ENGINEER 05/02/11

10-3-11
PLANS APPROVAL DATE

REGISTERED PROFESSIONAL ENGINEER DAVID H. OTO No. 10699 Exp. 06/30/2013 ELECTRICAL STATE OF CALIFORNIA

*THE STATE OF CALIFORNIA OR ITS OFFICERS OR AGENTS SHALL NOT BE RESPONSIBLE FOR THE ACCURACY OR COMPLETENESS OF ELECTRONIC COPIES OF THIS PLAN SHEET.*

PB AMERICAS, Inc.
303 Second St., Suite 700N
San Francisco, CA 94107-1317

**Cable/Ckt #:** UP274-8A
**Reference:** E-142, E-178
**Function:** 120 V Power
**Conductor Type:** 2 + 1 Gnd, #8, #10, 600 V, RHH/RHW insulation
**From:** Utility Panel UP-274
**To:** PB-LTG
**Remarks:** Install in Stage 1 and 3. See sheet E-69 and E-94.
**Description Of Changes:**

| Route | Conduit No. | Route | Conduit No. | Route | Conduit No. | Route | Conduit No. |
|---|---|---|---|---|---|---|---|
| 1 | 0493 | 2 | PB-10 | 3 | 0493A | 4 | MH-52 |
| 5 | 0496 | 6 | *0499 | 7 | 0499 | | |

**Cable/Ckt #:** UP274-8B
**Reference:** E-142, E-178
**Function:** 120 V Power
**Conductor Type:** 2 + 1 Gnd, #8, #10, 600 V, RHH/RHW insulation
**From:** PB-LTG
**To:** PB-LTG
**Remarks:** Loop conductors inside each PB-LTG.
**Description Of Changes:**

| Route | Conduit No. | Route | Conduit No. | Route | Conduit No. | Route | Conduit No. |
|---|---|---|---|---|---|---|---|
| 1 | 2760 | 2 | 2759 | 3 | 2758 | 4 | 2757 |
| 5 | 2756 | 6 | 2761 | 7 | 2762 | 8 | 2763 |
| 9 | 2764 | 10 | 2765 | 11 | 2766 | 12 | 2767 |
| 13 | 2768 | | | | | | |

# CABLE AND CIRCUIT SCHEDULE

THIS PLAN IS ACCURATE FOR ELECTRICAL WORK ONLY.

E-333

REVISED BY | DATE REVISED
JEFFRI HALIM | ELLERY LUCAS
CALCULATED-DESIGNED BY | CHECKED BY
CONSULTANT FUNCTIONAL SUPERVISOR
BRADY NADELL

STATE OF CALIFORNIA - DEPARTMENT OF TRANSPORTATION
Caltrans

LAST REVISION 08-17-09 | DATE PLOTTED => 06-OCT-2011 | TIME PLOTTED => 07:34

| DIST | COUNTY | ROUTE | KILOMETER POST TOTAL PROJECT | SHEET NO. | TOTAL SHEETS |
|---|---|---|---|---|---|
| 04 | Ala | 80 | 1.6/2.7 | 524 | 744 |

Caltrans Metric

Donald E Howe
REGISTERED CIVIL ENGINEER

June 6, 2008
PLANS APPROVAL DATE

REGISTERED PROFESSIONAL ENGINEER Donald E. Howe No. C46402 Exp. 3-31-09 CIVIL STATE OF CALIFORNIA

*The State of California or its officers or agents shall not be responsible for the accuracy or completeness of electronic copies of this plan sheet.*

*To get to the Caltrans web site, go to: http://www.dot.ca.gov*

*To accompany plans dated* 10-3-11

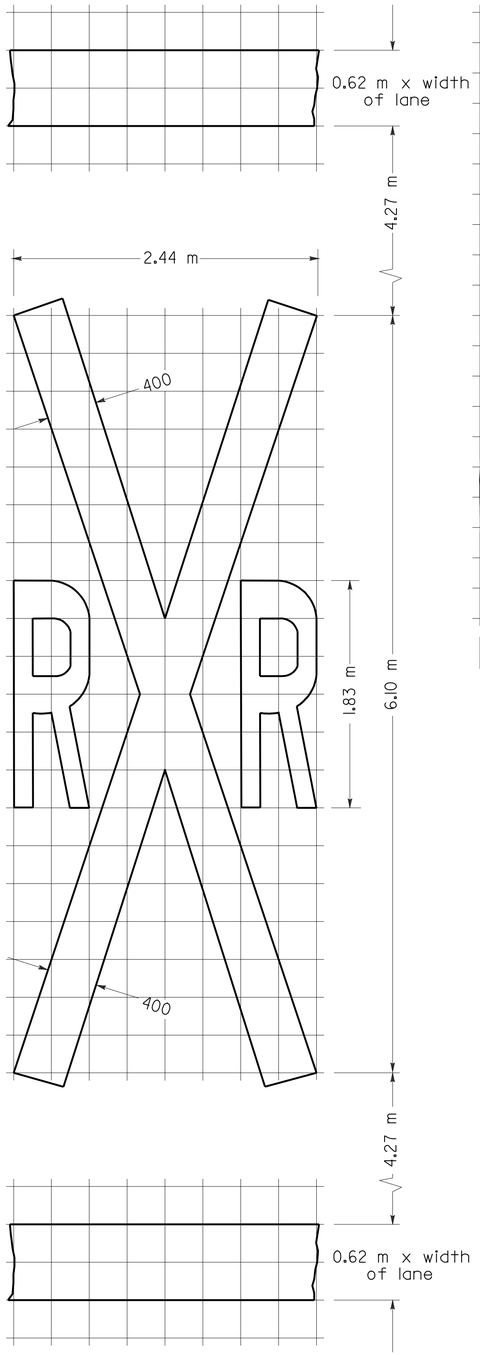


RAILROAD CROSSING SYMBOL

✳6.5 $m^2$ DOES NOT INCLUDE THE 0.6 m x VARIABLE WIDTH TRANSVERSE LINES.

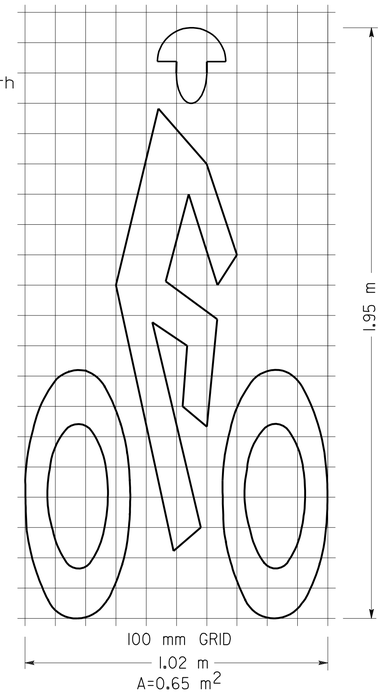


BIKE LANE SYMBOL

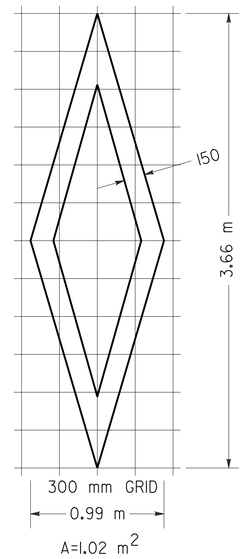


DIAMOND SYMBOL

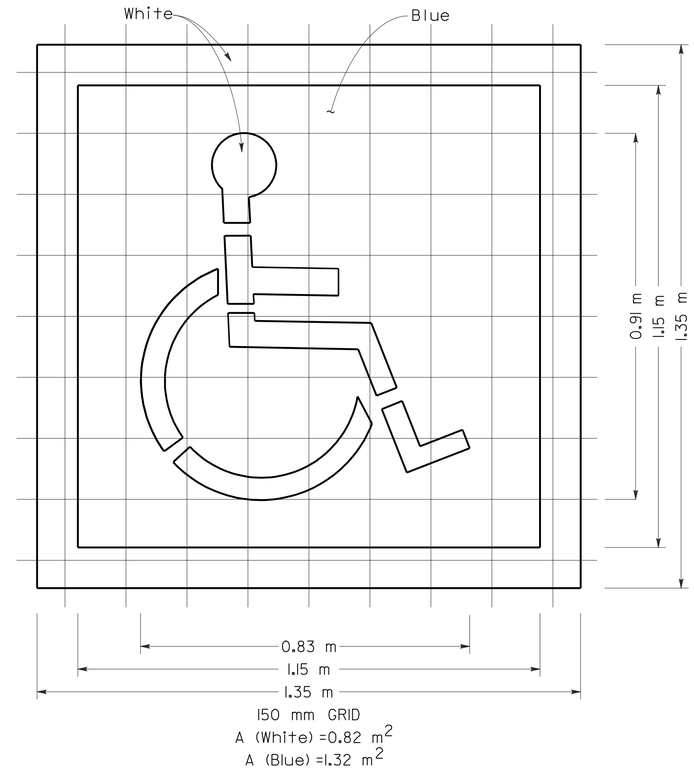


INTERNATIONAL SYMBOL OF ACCESSIBILITY MARKING

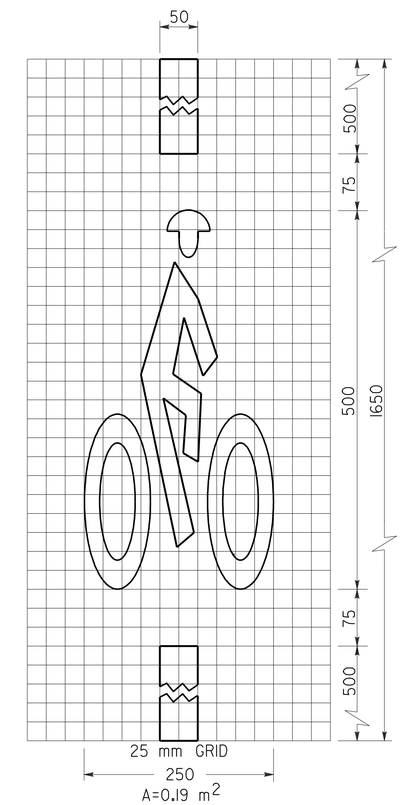


BICYCLE LOOP DETECTOR SYMBOL

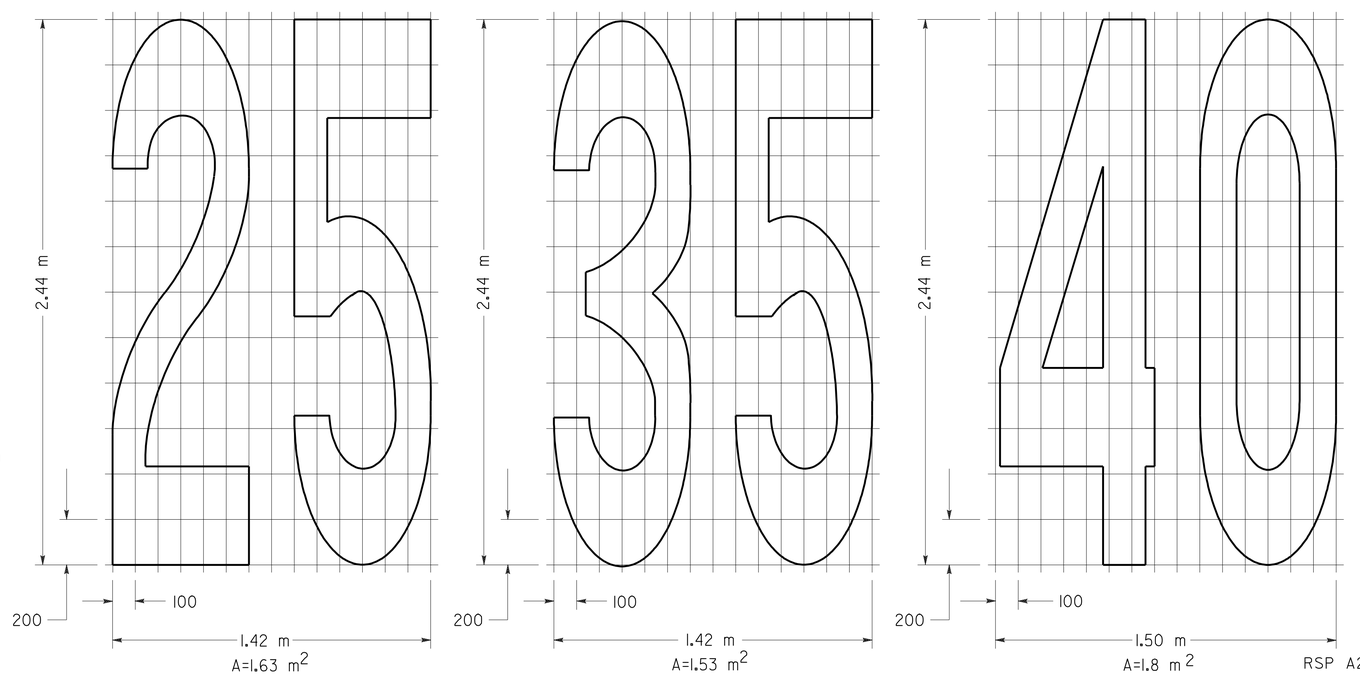


NUMERALS

NOTE:

1. Minor variations in dimensions may be accepted by the Engineer.

STATE OF CALIFORNIA
DEPARTMENT OF TRANSPORTATION

# PAVEMENT MARKINGS SYMBOLS AND NUMERALS

NO SCALE

ALL DIMENSIONS ARE IN MILLIMETERS UNLESS OTHERWISE SHOWN

RSP A24C DATED JUNE 6, 2008 SUPERSEDES STANDARD PLAN A24C DATED July 1, 2004 - PAGE 11 OF THE STANDARD PLANS BOOK DATED July 2004.

**REVISED STANDARD PLAN RSP A24C**

**2004 REVISED Std PLAN RSP A24C**



5-27-08

| DIST | COUNTY | ROUTE | KILOMETER POST TOTAL PROJECT | SHEET NO. | TOTAL SHEETS |
|---|---|---|---|---|---|
| 04 | Ala | 80 | 1.6/2.7 | 525 | 744 |

Caltrans Metric

REGISTERED CIVIL ENGINEER

November 17, 2006
PLANS APPROVAL DATE

REGISTERED PROFESSIONAL ENGINEER Michael Janzen No. 44788 Exp. 03-31-08 CIVIL STATE OF CALIFORNIA

*The State of California or its officers or agents shall not be responsible for the accuracy or completeness of electronic copies of this plan sheet.*

*To get to the Caltrans web site, go to: http://www.dot.ca.gov*

*To accompany plans dated* 10-3-11

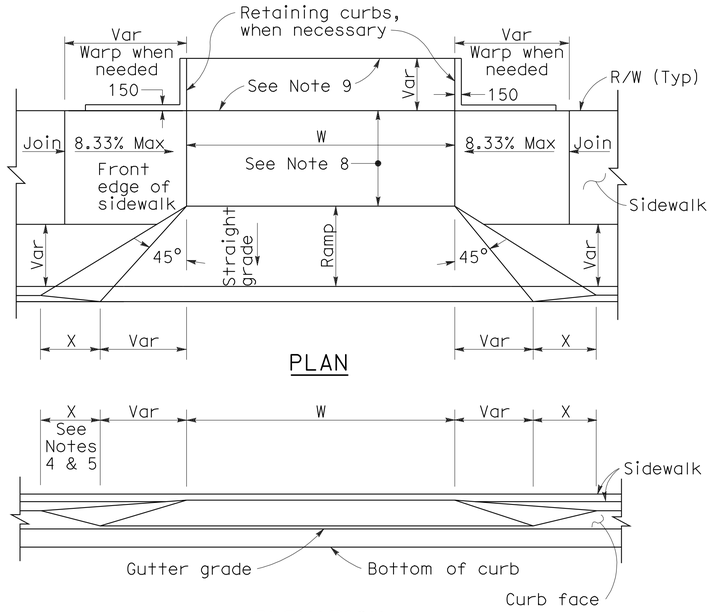


PLAN

ELEVATION

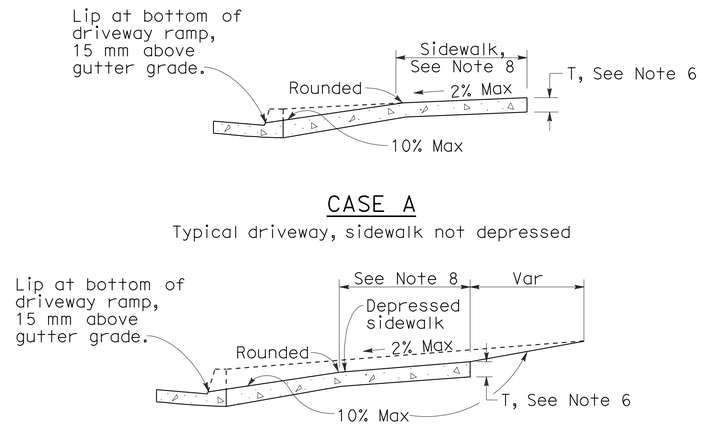


CASE A

Typical driveway, sidewalk not depressed

CASE B

Driveway with depressed sidewalk

SECTIONS

## DRIVEWAYS

## CURB QUANTITIES

| TYPE | CUBIC METERS PER METER |
|---|---|
| A1-150 | 0.064 |
| A1-200 | 0.075 |
| A2-150 | 0.144 |
| A2-200 | 0.155 |
| A3-150 | 0.025 |
| A3-200 | 0.035 |
| B1-100 | 0.056 |
| B1-150 | 0.073 |
| B2-100 | 0.137 |
| B2-150 | 0.152 |
| B3-100 | 0.017 |
| B3-150 | 0.027 |
| B4 | 0.142 |
| D-100 | 0.100 |
| D-150 | 0.162 |
| E | 0.161 |

## TABLE A

| CURB TYPE | DIMENSIONS "H1" | "H2" | "W1" | "W2" |
|---|---|---|---|---|
| A1-150 | 350 | 150 | 190 | 40 |
| A1-200 | 400 | 200 | 200 | 50 |
| A2-150 | 300 | 150 | 790 | 40 |
| A2-200 | 350 | 200 | 800 | 50 |
| A3-150 | 150 | 130 | 185 | 35 |
| A3-200 | 200 | 180 | 198 | 48 |
| B1-100 | 300 | 100 | 200 | 70 |
| B1-150 | 350 | 150 | 230 | 100 |
| B2-100 | 250 | 100 | 800 | 70 |
| B2-150 | 300 | 150 | 830 | 100 |
| B3-100 | 100 | 80 | 185 | 55 |
| B3-150 | 150 | 130 | 217 | 87 |
| D-100 | 250 | 100 | 452 | 322 |
| D-150 | 300 | 150 | 652 | 522 |

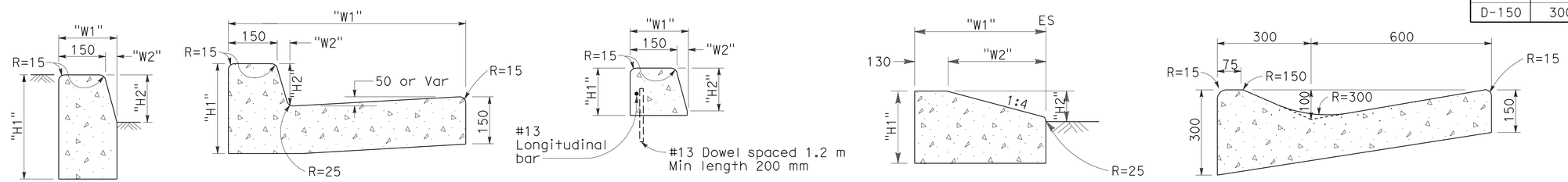


TYPE A1 CURBS
See Table A

TYPE A2 CURBS
See Table A

TYPE A3 CURBS
Superimposed on existing pavement
See Table A

TYPE D CURBS
See Table A

TYPE E CURB

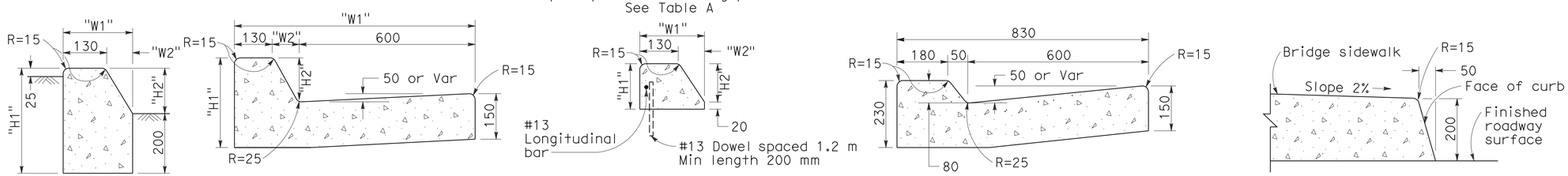


TYPE B1 CURBS
See Table A

TYPE B2 CURBS
See Table A

TYPE B3 CURBS
Superimposed on existing pavement
See Table A

TYPE B4 CURBS

TYPE H CURB
On Bridges

## CURBS

## NOTES

1. Case A driveway section typically applies.
2. Use Case B driveway section when ramp slopes would exceed 10% in Case A.
3. Use Case B driveway section when sidewalk cross slope would exceed 2% in Case A.
4. X=900 mm except for curb heights over 250 mm where 1:4 slopes shall be used on curb slope.
5. X is a variable when sidewalk is located where wheelchairs may traverse the surface. Slopes shall not exceed 8.33%.
6. Sidewalk and ramp thickness ``T'' at driveway shall be 100 mm for residental and 150 mm for commercial.
7. Difference in slope of the driveway ramp and the slope of a line between the gutter and a point on the roadway 1.5 meters from gutter line shall not exceed 15%. Reduce driveway ramp slope, not gutter slope, where required.
8. Minimum width of clear passageway for sidewalk shall be 1.22 meters.
9. Retaining curbs and acquisition of construction easement may be necessary for narrow sidewalks or curb heights in excess of 150 mm.
10. Across the pedestrian route at curb ramp locations, the gutter pan slope shall not exceed 25 mm of depth for each 600 mm of width.

STATE OF CALIFORNIA
DEPARTMENT OF TRANSPORTATION

# CURBS AND DRIVEWAYS

NO SCALE

ALL DIMENSIONS ARE IN MILLIMETERS UNLESS OTHERWISE SHOWN

RSP A87A DATED NOVEMBER 17, 2006 SUPERSEDES STANDARD PLAN A87A DATED JULY 1, 2004-PAGE 115 OF THE STANDARD PLANS BOOK DATED JULY 2004.

**REVISED STANDARD PLAN RSP A87A**

**2004 REVISED Std PLAN RSP A87A**

10-25-06

| DIST | COUNTY | ROUTE | KILOMETER POST TOTAL PROJECT | SHEET NO. | TOTAL SHEETS |
|---|---|---|---|---|---|
| 04 | Ala | 80 | 1.6/2.7 | 526 | 744 |

REGISTERED CIVIL ENGINEER

December 16, 2005
PLANS APPROVAL DATE

REGISTERED PROFESSIONAL ENGINEER Hector David Cordova No. C41957 Exp. 3-31-06 CIVIL STATE OF CALIFORNIA

*The State of California or its officers or agents shall not be responsible for the accuracy or completeness of electronic copies of this plan sheet.*

*To get to the Caltrans web site, go to: http://www.dot.ca.gov*

*To accompany plans dated* 10-3-11

Caltrans Metric

**2004 REVISED Std PLAN RSP A88A**

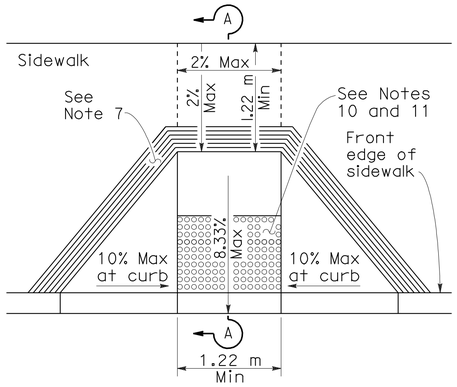


CASE A

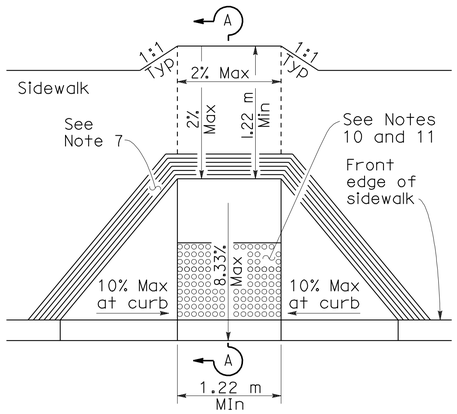


CASE D

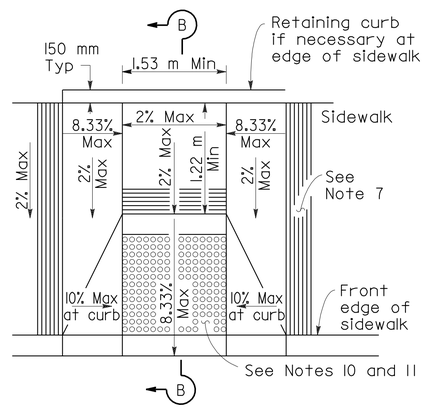


CASE B

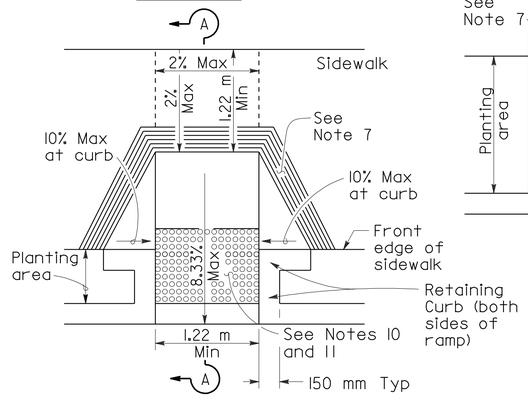


CASE E

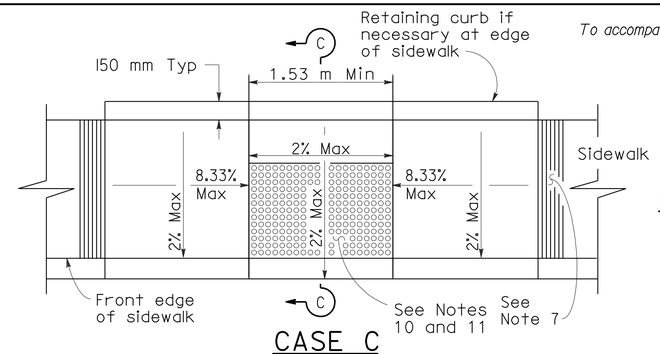


CASE C

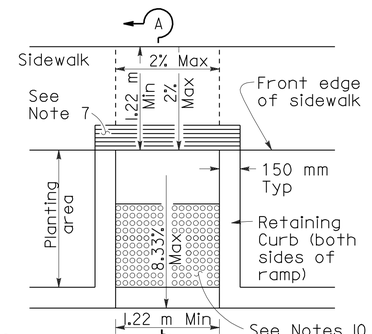


CASE F

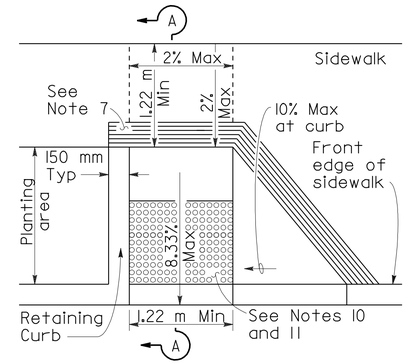


CASE G
See Note 4

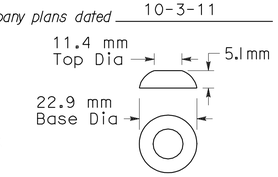


RAISED TRUNCATED DOME

## NOTES

1. As site conditions dictate, Case A through Case G curb ramps may be used for corner installations similar to those shown in Detail A and Detail B. The case of curb ramps used in Detail A do not have to be the same. Case A through Case G curb ramps also may be used at mid block locations, as site conditions dictate. For Cases B and C, the side of the curb ramp should always be perpendicular to curb face.
2. If distance from curb to back of sidewalk is too short to accommodate ramp and 1.22 m platform (landing) as shown in Case A, the sidewalk may be depressed longitudinally as in Case B, or C or may be widened as in Case D.
3. When ramp is located in center of curb return, crosswalk configuration must be similar to that shown for Detail B.
4. As site conditions dictate, the retaining curb side and the flared side of the Case G ramp shall be constructed in reversed position.
5. If located on a curve, the sides of the ramp need not be parallel, but the minimum width of the ramp shall be 1.22 m.
6. Side slope of ramp flares vary uniformly from a maximum of 10% at curb to conform with longitudinal sidewalk slope adjacent to top of the ramp, except in Case C and Case F.
7. The curb ramp shall be outlined, as shown, with a 305 mm wide border with 6 mm grooves approximately 19 mm on center. See grooving detail.
8. Transitions from ramps and landings to walks, gutters or streets shall be flush and free of abrupt changes.
9. Maximum slopes of adjoining gutters, the road surface immediately adjacent to the curb ramp, or accessible route shall not exceed 5 percent within 1.22 m of the top and bottom of the curb ramp.
10. Curb ramps shall have a detectable warning surface that extends the full width and 914 mm depth of the ramp. Detectable Warning Surfaces shall conform to the details on this plan and the requirements in the Special Provisions.
11. The edge of the detectable warning surface nearest the street shall be between 150 mm and 205 mm from the gutter flowline.
12. Sidewalk and ramp thickness, "T", shall be 90 mm minimum.
13. Utility pull boxes, manholes, vaults and all other utility facilities within the boundaries of the curb ramp will be relocated or adjusted to grade by the owner prior to, or in conjunction with, curb ramp construction.
14. For retrofit conditions, removal and replacement of curb apron will be at the Contractor's option, unless otherwise shown on project plans.

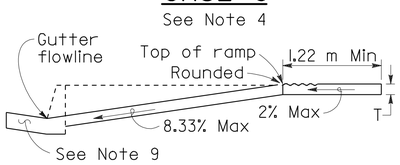


SECTION A-A

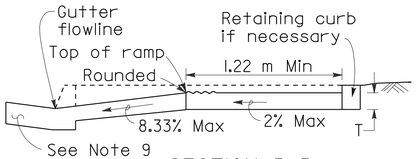


SECTION B-B
Depress entire sidewalk as required

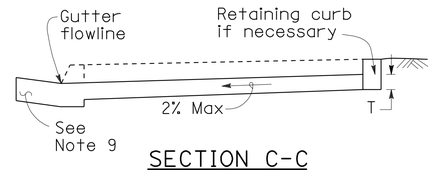


SECTION C-C

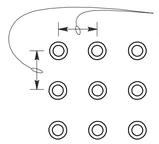


RAISED TRUNCATED DOME PATTERN (IN-LINE)
DETECTABLE WARNING SURFACE
See Note 10

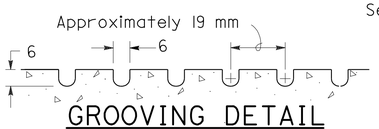


GROOVING DETAIL

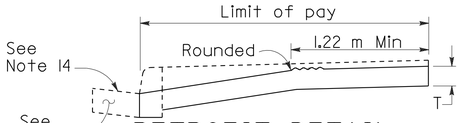


RETROFIT DETAIL
Existing curb and sidewalk

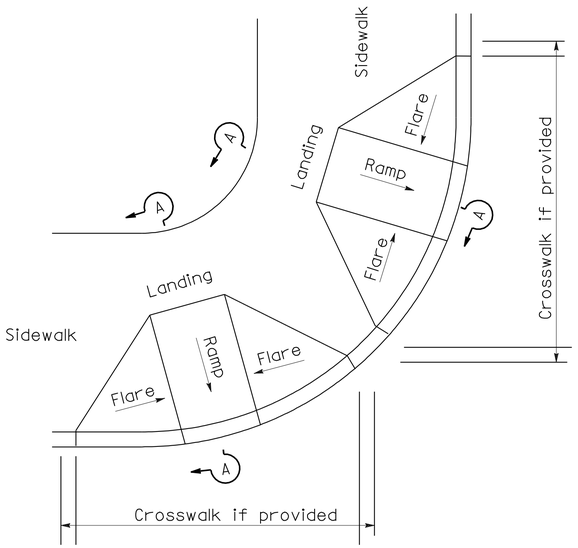


DETAIL A

TYPICAL TWO-RAMP CORNER INSTALLATION
See Note 1

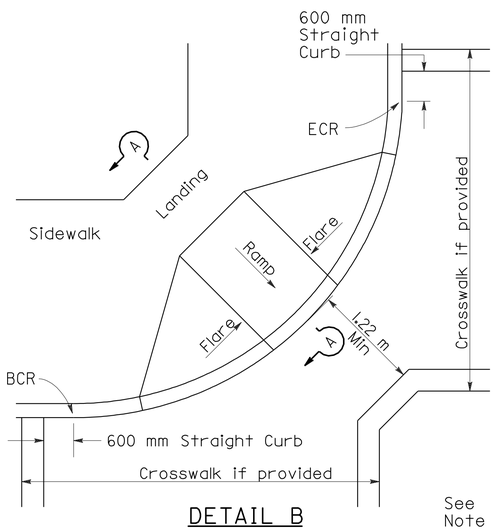


DETAIL B
TYPICAL ONE-RAMP CORNER INSTALLATION
See Notes 1 and 3

STATE OF CALIFORNIA
DEPARTMENT OF TRANSPORTATION

# CURB RAMP DETAILS

NO SCALE

ALL DIMENSIONS ARE IN MILLIMETERS UNLESS OTHERWISE SHOWN

RSP A88A DATED DECEMBER 16, 2005 SUPERSEDES STANDARD PLAN A88A DATED JULY 1, 2004-PAGE 117 OF THE STANDARD PLANS BOOK DATED JULY 2004.

**REVISED STANDARD PLAN RSP A88A**

12-16-05

| DIST | COUNTY | ROUTE | KILOMETER POST TOTAL PROJECT | SHEET NO. | TOTAL SHEETS |
|---|---|---|---|---|---|
| 04 | Ala | 80 | 1.6/2.7 | 527 | 744 |

Caltrans Metric

REGISTERED CIVIL ENGINEER

June 6, 2008
PLANS APPROVAL DATE

REGISTERED PROFESSIONAL ENGINEER — Hector David Cordova — No. C41957 — Exp. 3-31-10 — CIVIL — STATE OF CALIFORNIA

*The State of California or its officers or agents shall not be responsible for the accuracy or completeness of electronic copies of this plan sheet.*

*To get to the Caltrans web site, go to: http://www.dot.ca.gov*

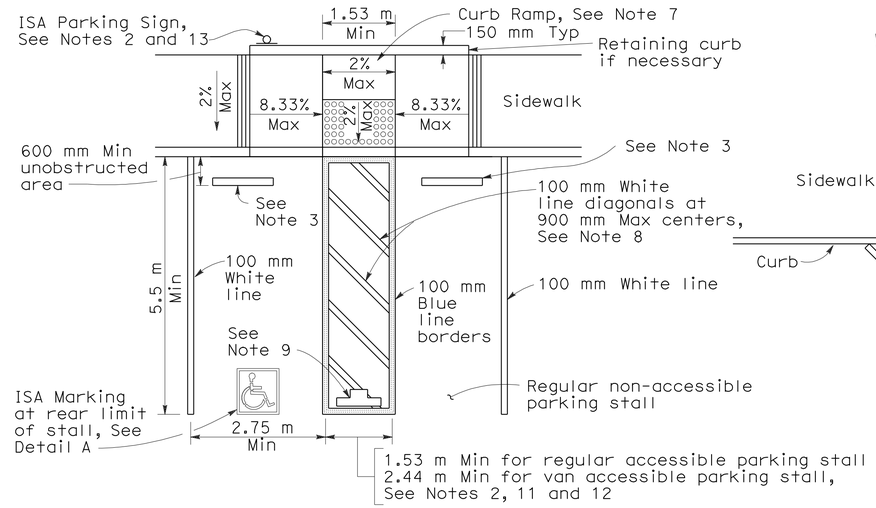


SINGLE PARKING STALL

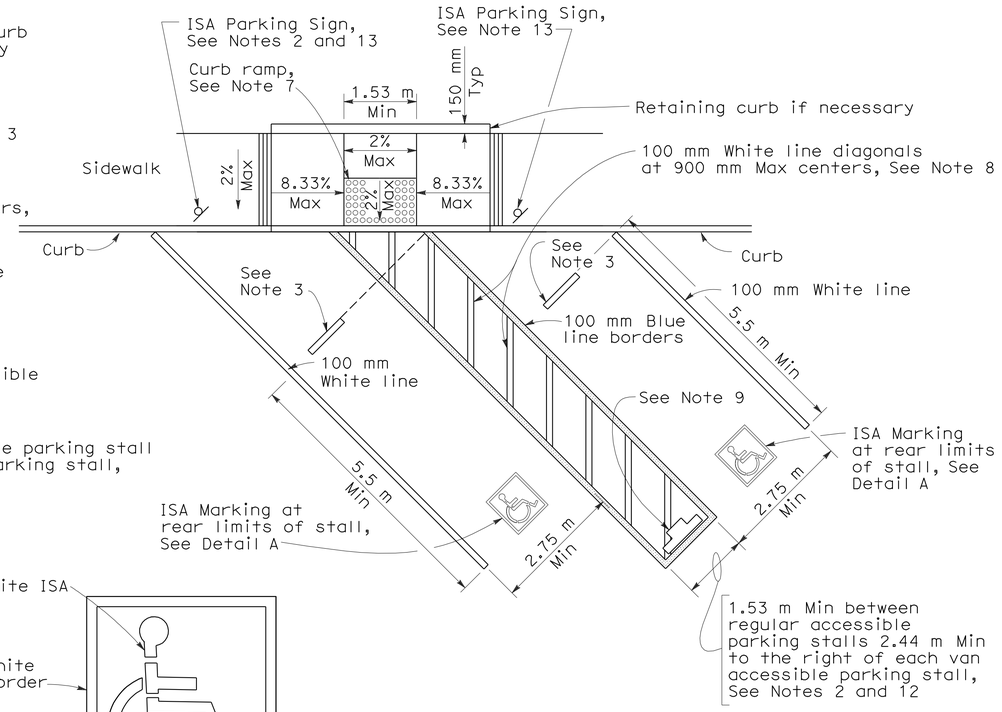


DIAGONAL DOUBLE PARKING STALLS

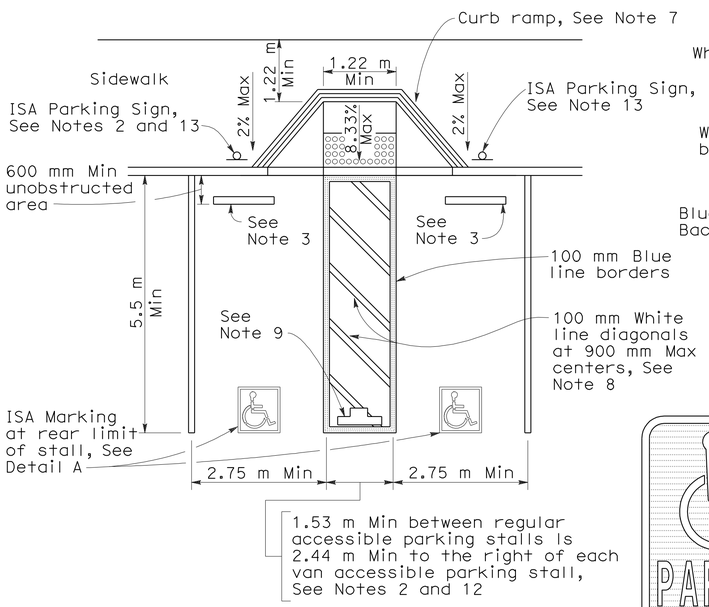


DOUBLE PARKING STALL

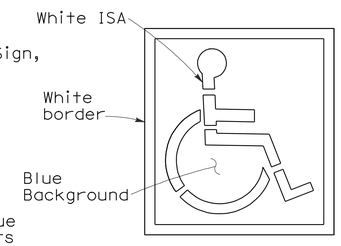


ISA MARKING
See Revised Std Plan RSP A24C

DETAIL A

TABLE A

| Total Number of Parking Spaces or Stalls | Minimum Number of Disabled Accessible Parking Spaces or Stalls |
|---|---|
| 1-25 | 1 |
| 26-50 | 2 |
| 51-75 | 3 |
| 76-100 | 4 |
| 101-150 | 5 |
| 151-200 | 6 |
| 201-300 | 7 |
| 301-400 | 8 |
| 401-500 | 9 |
| 501-1000 | 2 percent of total |
| Greater than 1001 | 20 plus 1 for each 100 or fraction thereof over 1001 |

SIGN R99 (CA)

PLAQUE R99B (CA)

SIGN R99 (CA) with PLAQUE R99B (CA)
See Note 6

SIGN R99C (CA)
See Note 6

SIGN R100B (CA)
See Note 10

SIGN R7-8b
See Notes 2 and 6

OFF-STREET PARKING SIGNS
(Parking lot or garage)
See Note 6

ISA = International Symbol of Accessibility

## NOTES:

*To accompany plans dated* 10-3-11

1. Accessible parking spaces serving a particular building shall be located on the shortest accessible route of travel from adjacent parking to an accessible entrance. In parking facilities that do not serve a particular building, accessible parking shall be located on the shortest accessible route of travel to an accessible pedestrian entrance of the parking facility.
2. One in every eight accessible off-street parking stalls, but not less than one, shall be served by an accessible aisle of 2.44 m minimum width and shall be signed van accessible. The R7-8b sign shall be mounted below the R99B (CA) plaque or the R99C (CA) sign.
3. In each parking stall, a curb or bumper shall be provided and located to prevent encroachment of vehicles over the required width of walkways. Parking stalls shall be so located that persons with disabilities are not compelled to wheel or walk behind parked cars other than their own.
4. Surface slopes of accessible off-street parking stalls shall be the minimum possible and shall not exceed 2 percent in any direction.
5. Table A shall be used to determine the required number of accessible parking stalls in each parking lot or garage.
6. Where Plaque R99B (CA), Sign R99C (CA) or Sign R7-8b are installed, the bottom of the sign or plaque panel shall be a minimum of 2.1 m above the surrounding surface.
7. Curb ramps shall conform to the details shown on Revised Standard Plan RSP A88A.
8. Blue paint, instead of white may be used for marking accessibility aisles in areas where snow may cause white markings to not be visible.
9. The words "NO PARKING", shall be painted in white letters no less than 305 mm high and located so that it is visible to traffic enforcement officials. See Revised Standard Plan RSP A90B for details of the "NO PARKING" pavement marking.
10. A R100B (CA) sign shall be posted in a conspicuous place at each entrance to off-street parking facilities or immediately adjacent to and visible from each stall. The sign shall include the address where the towed vehicle may be reclaimed and the telephone number of the local traffic law enforcement agency.
11. Where a single (non-van) accessible parking space is provided, the loading and unloading access aisle shall be on the passenger side of the vehicle as the vehicle is going forward into the parking space.
12. Where a van accessible parking space is provided, the loading and unloading access aisle shall be 2.44 m wide minimum, and shall be on the passenger side of the vehicle as the vehicle is going forward into the parking space.
13. Accessible Parking Only Sign shall be Sign R99C (CA) or Sign R99 (CA) with Plaque R99B (CA).

STATE OF CALIFORNIA
DEPARTMENT OF TRANSPORTATION

# ACCESSIBLE PARKING OFF-STREET

NO SCALE

ALL DIMENSIONS ARE IN MILLIMETERS UNLESS OTHERWISE SHOWN

RSP A90A DATED JUNE 6, 2008 SUPERSEDES RSP A90A DATED DECEMBER 16, 2005 AND STANDARD PLAN A90A DATED JULY 1, 2004-PAGE 119 OF THE STANDARD PLANS BOOK DATED JULY 2004.

**REVISED STANDARD PLAN RSP A90A**

**2004 REVISED Std PLAN RSP A90A**



6-3-08

| DIST | COUNTY | ROUTE | KILOMETER POST TOTAL PROJECT | SHEET NO. | TOTAL SHEETS |
|---|---|---|---|---|---|
| 04 | Ala | 80 | 1.6/2.7 | 528 | 744 |

Caltrans Metric

REGISTERED CIVIL ENGINEER

June 6, 2008
PLANS APPROVAL DATE

REGISTERED PROFESSIONAL ENGINEER
Hector David Cordova
No. C41957
Exp. 3-31-10
CIVIL
STATE OF CALIFORNIA

*The State of California or its officers or agents shall not be responsible for the accuracy or completeness of electronic copies of this plan sheet.*

*To get to the Caltrans web site, go to: http://www.dot.ca.gov*

*To accompany plans dated* 10-3-11

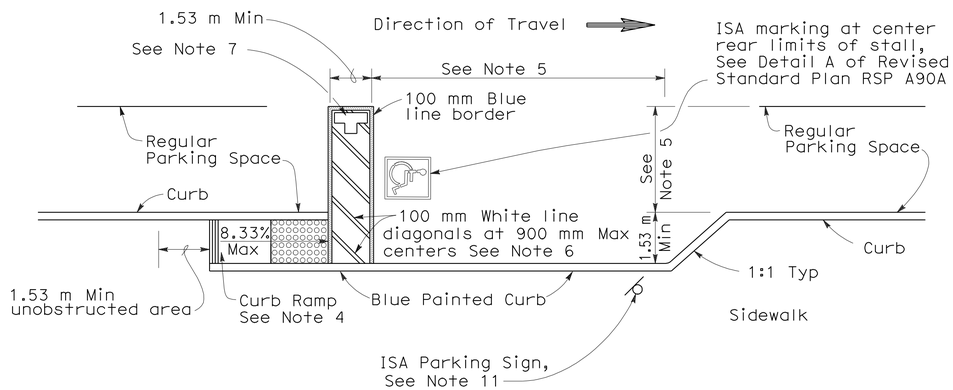


CONVENTIONAL

(See Note 9)

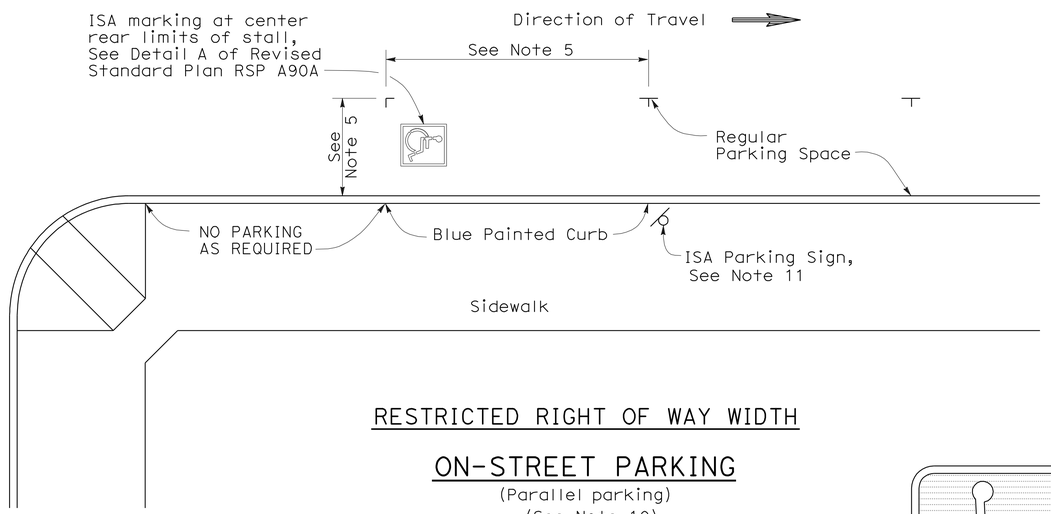


RESTRICTED RIGHT OF WAY WIDTH

ON-STREET PARKING

(Parallel parking)
(See Note 10)

PAVEMENT MARKING

See Note 7

SIGN R99 (CA)

SIGN R99C (CA)
See Note 3

PLAQUE R99B (CA)

SIGN R99 (CA) with PLAQUE R99B (CA)
See Note 3

ISA = International Symbol of Accessibility

## NOTES:

1. Parking spaces shall be so located that persons with disabilities are not compelled to wheel or walk behind parked cars other than their own.
2. Surface slopes of accessible on-street parking spaces shall be the minimum feasible.
3. Where Plaque R99B (CA) or Sign R99C (CA) are installed, the bottom of the sign or plaque panel shall be a minimum of 2.1 m above the surrounding surface.
4. Curb ramps shall conform to the details shown on Revised Standard Plan RSP A88A.
5. Accessible on-street parking spaces shall not be smaller in length or width than that specified by the local jurisdiction for other parking spaces, but not less than 6.1 m in length and not less than 2.4 m in width.
6. Blue paint, instead of white may be used for marking accessibility aisles in areas where snow may cause white markings to not be visible.
7. The words "NO PARKING", shall be painted in white letters no less than 305 mm high on a contrasting background and located so that it is visible to traffic enforcement officials. See Standard Plan A24E for square foot area for painting the words "NO PARKING".
8. There shall be no obstructions on the sidewalk adjacent to and for the full length of the parking space, except for the ISA parking sign shown.
9. The Conventional detail should be the primary choice of accessible on-street parking. However, if the sidewalk lacks adequate space to construct a standard curb ramp, the Restricted Right of Way detail should be used.
10. If the Restricted Right of Way width detail is selected and it conflicts with a bus stop or other uses, this detail may apply to the other end of the block.
11. Accessible Parking Only Sign shall be Sign R99C (CA) or Sign R99 (CA) with Plaque R99B (CA).

STATE OF CALIFORNIA
DEPARTMENT OF TRANSPORTATION

# ACCESSIBLE PARKING ON-STREET

NO SCALE

RSP A90B DATED JUNE 6, 2008 SUPERSEDES RSP A90B DATED DECEMBER 16, 2005 AND STANDARD PLAN A90B DATED JULY 1, 2004-PAGE 120 OF THE STANDARD PLANS BOOK DATED JULY 2004.

**REVISED STANDARD PLAN RSP A90B**

**2004 REVISED Std PLAN RSP A90B**



6-3-08

NOTE

1. Tie bars, dowel bars, and reinforcement are not shown in joint seal details, see Revised Std Plan RSP P1, New Std Plan NSP P3, Revised Std Plan RSP P10, Std Plan P35, Std Plan P45, or Std Plan P46 as applicable.

*To accompany plans dated* 10-3-11

Caltrans Metric

| DIST | COUNTY | ROUTE | KILOMETER POST TOTAL PROJECT | SHEET NO. | TOTAL SHEETS |
|---|---|---|---|---|---|
| 04 | Ala | 80 | 1.6/2.7 | 529 | 744 |

REGISTERED CIVIL ENGINEER

November 17, 2006
PLANS APPROVAL DATE

REGISTERED PROFESSIONAL ENGINEER William K. Farnbach No. 49042 Exp. 09-30-08 CIVIL STATE OF CALIFORNIA

*The State of California or its officers or agents shall not be responsible for the accuracy or completeness of electronic copies of this plan sheet.*

*To get to the Caltrans web site, go to: http://www.dot.ca.gov*

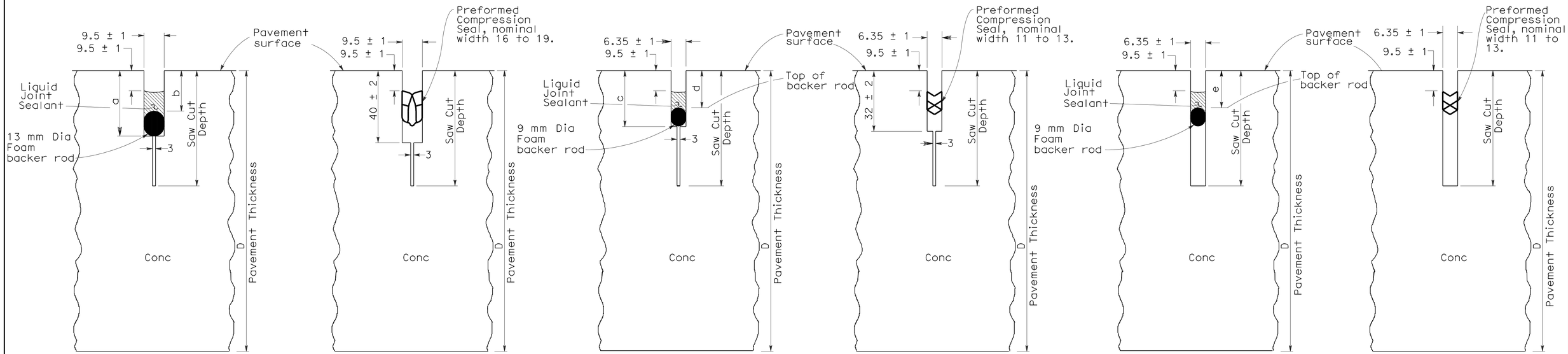


LIQUID SEALANT — COMPRESSION SEAL

## TYPE A1

Transverse Weakened Plane Joints

LIQUID SEALANT — COMPRESSION SEAL

## TYPE A2

Longitudinal Weakened Plane Joints

LIQUID SEALANT — COMPRESSION SEAL

## TYPE B

Longitudinal or Transverse Weakened Plane Joints

## LIQUID SEALANT RESERVOIR DEPTH

| LIQUID SEALANT MATERIAL | 9.5 mm Joint Width Type A1 | | 6.35 mm Joint Width Type A2 | | 6.35 mm Joint Width Type B |
|---|---|---|---|---|---|
| | DIMENSION | | DIMENSION | | DIMENSION |
| | a | b | c | d | e |
| SILICONE | 26 ± 1 | 15 ± 1 | 23 ± 1 | 14 ± 1 | 14 ± 1 |
| ASPHALT RUBBER | 30 ± 1 | 19 ± 1 | 26 ± 1 | 17 ± 1 | 17 ± 1 |

## TABLE A

| Sawn Joint Width | Backer Rod Diameter | Dimension "c" | Dimension "d" |
|---|---|---|---|
| mm | mm ± 1 | mm | mm |
| 25 | 33 | 22 | 55 |
| 22 | 30 | 20 | 50 |
| 19 | 25 | 19 | 44 |
| 16 | 22 | 18 | 40 |
| 13 | 17 | 16 | 33 |

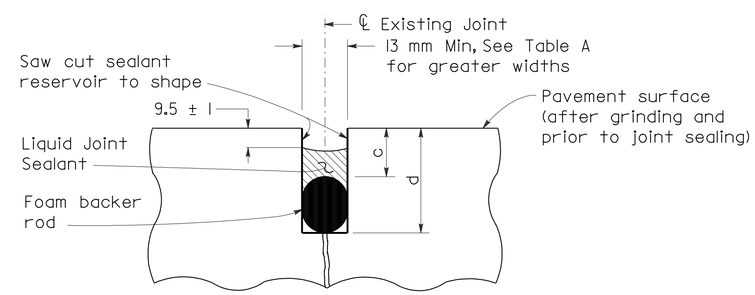


## LIQUID SEALANT TYPE R

Retrofit Transverse and Longitudinal Joints

STATE OF CALIFORNIA
DEPARTMENT OF TRANSPORTATION

# CONCRETE PAVEMENT-JOINT DETAILS

NO SCALE

ALL DIMENSIONS ARE IN MILLIMETERS UNLESS OTHERWISE SHOWN

RSP P20 DATED NOVEMBER 17, 2006 SUPERSEDES STANDARD PLAN P20 DATED JULY 1, 2004-PAGE 129 OF THE STANDARD PLANS BOOK DATED JULY 2004.

**REVISED STANDARD PLAN RSP P20**

**2004 REVISED Std PLAN RSP P20**

10-24-06

| DIST | COUNTY | ROUTE | KILOMETER POST TOTAL PROJECT | SHEET NO. | TOTAL SHEETS |
|---|---|---|---|---|---|
| 04 | Ala | 80 | 1.6/2.7 | 530 | 744 |

Caltrans Metric

REGISTERED CIVIL ENGINEER

January 18, 2008
PLANS APPROVAL DATE

REGISTERED PROFESSIONAL ENGINEER Raymond Don Tsztoo No. C37332 Exp. 6-30-08 CIVIL STATE OF CALIFORNIA

*The State of California or its officers or agents shall not be responsible for the accuracy or completeness of electronic copies of this plan sheet.*

*To get to the Caltrans web site, go to: http://www.dot.ca.gov*

*To accompany plans dated* 10-3-11

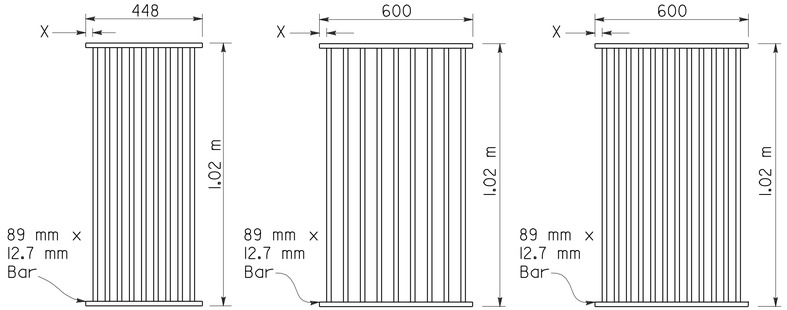


TYPE 450-9

35 mm Clear spacing. Use within the roadbed on highways where bicycles and pedestrians are excluded.

TYPE 600-9

51 mm Clear spacing. Use in locations off the roadbed on all types of highways.

TYPE 600-12

35 mm Clear spacing. Use within the roadbed on highways where bicycles and pedestrians are excluded.

## RECTANGULAR GRATE DETAILS

(See table below)

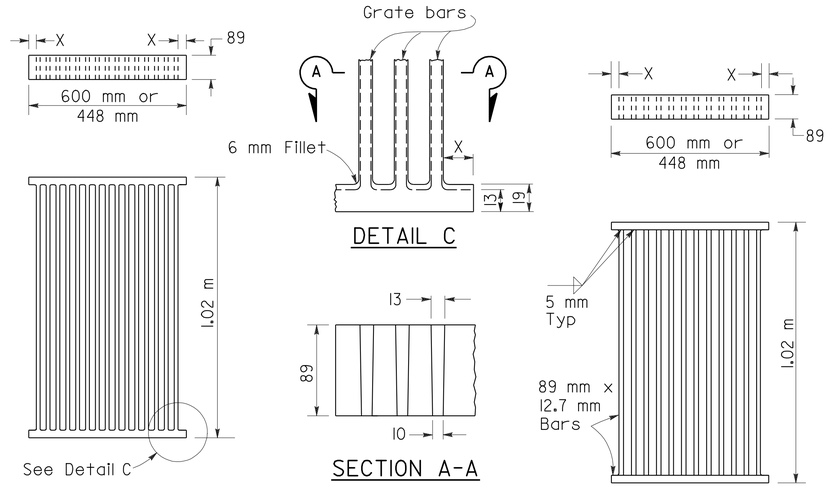


DETAIL C

SECTION A-A

## ALTERNATIVE CAST NODULAR IRON GRATE OR CAST STEEL GRATE

## ALTERNATIVE WELDED GRATE

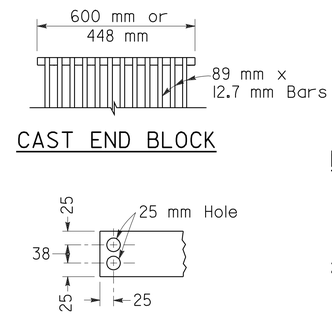


CAST END BLOCK

END OF BAR

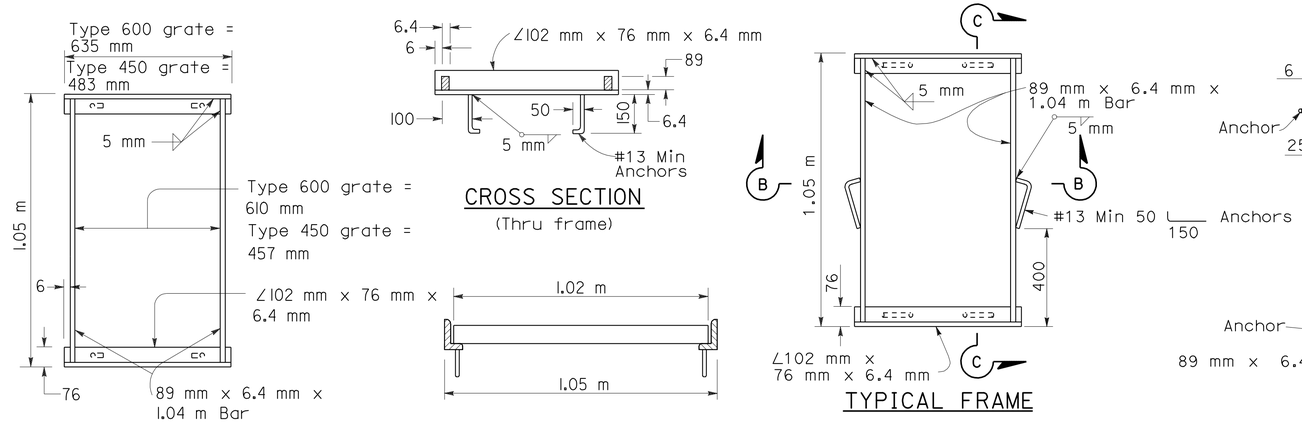


TYPICAL FRAME

CROSS SECTION

(Thru frame)

LONGITUDINAL SECTION

(Thru frame and grate)

TYPICAL FRAME

## RECTANGULAR FRAME DETAILS

(For all rectangular grates)

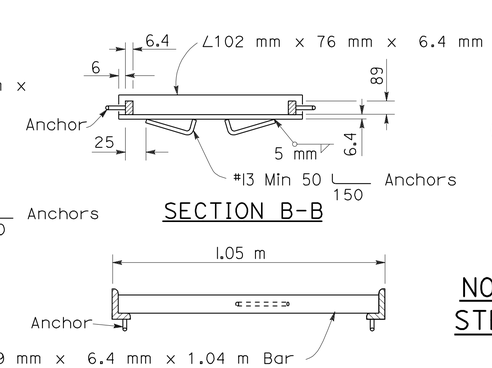


SECTION B-B

SECTION C-C

## ALTERNATIVE ANCHOR FOR RECTANGULAR FRAME

(For details not shown, See Rectangular Frame Details)

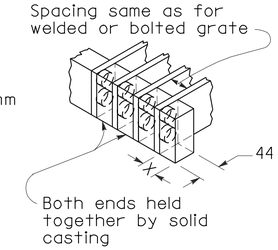


## ALTERNATIVE CAST NODULAR IRON OR CAST STEEL END BLOCK GRATE

## NOTES

1. Grate type numbers refer to approximate width of grate in millimeters and number of bars, respectively.
2. Contractor has the option of using cast nodular iron, cast steel, welded, bolted, or cast end block grate.
3. See Special Provisions for requirements pertaining to galvanizing or asphalt dipping of grates and frames.
4. Rounded top of bars optional on all grates.
5. Pipe inlets with a grate shall be placed so that bars parallel direction of principle surface flow.
6. Full penetration butt welds may be substituted for the fillet welds on all anchors.
7. Standard square, hexagon, round or equivalent headed anchors may be substituted for the right angle hooks on the anchors shown on this plan.
8. Grate and frame weights are based on welded grates (weights of face angles, steps, protection bars, etc. are not included).

### GRATE BAR SPACING TABLE

| TYPE | No. OF BARS | CLEAR BAR SPACING (mm) | X (mm) |
|---|---|---|---|
| 450-9 | 9 | 35 | 27 |
| 600-9 | 9 | 51 | 40 |
| 600-12 | 12 | 35 | 32 |

| INLET TYPE | COVER TYPE | MASS (kg) |
|---|---|---|
| OS | PLATE | 79 |
| OL-2.1 | PLATE | 77 |
| OL-3.0 | PLATE | 77 |
| OL-4.3 | PLATE | 77 |
| OL-6.4 | PLATE | 77 |
| OCP | PLATE | 51 |
| OCPI | PLATE | 51 |
| OCPI | REDWOOD | 19 |
| OMP | PLATE | 80 |
| OMPI | PLATE | 80 |

| INLET TYPE | GRATE TYPE | No. OF GRATES | MASS (kg) |
|---|---|---|---|
| GDO | 600-12 | 2 | 288 |
| | | | |
| GOL-2.1 | 600-12 | 1 | 148 |
| | | | |
| GOL-3.0 | 600-12 | 1 | 148 |
| | | | |
| GO,G1,G2,G3,G4(TYPE 600) | 600-9 | 1 | 119 |
| | 600-12 | 1 | 148 |
| | | | |
| G4(TYPE 450),G5,G6 | 450-9 | 1 | 113 |
| GT-1 | 450-9 | 2 | 226 |
| GT-2 | 450-9 | 2 | 226 |
| GT-3 | 600-12 | 2 | 296 |
| | | | |
| GT-4 | 600-12 | 2 | 296 |
| | | | |
| TRASH RACK | | | 10 |

## BASIS FOR MISC IRON & STEEL FINAL PAY MASSES FOR DRAINAGE INLETS

(See General Notes, No. 8)

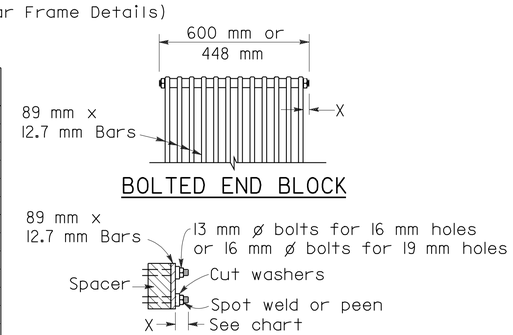


BOLTED END BLOCK

BOLTING DETAIL

## ALTERNATIVE BOLTED GRATE

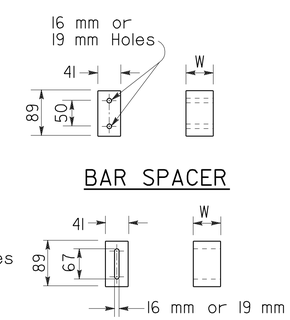


BAR SPACER

ALTERNATIVE SPACER

35 mm or 50 mm

STATE OF CALIFORNIA
DEPARTMENT OF TRANSPORTATION

# GRATE DETAILS

NO SCALE

ALL DIMENSIONS ARE IN MILLIMETERS UNLESS OTHERWISE SHOWN

RSP D77A DATED JANUARY 18, 2008 SUPERSEDES STANDARD PLAN D77A DATED JULY 1, 2004 - PAGE 155 OF THE STANDARD PLANS BOOK DATED JULY 2004.

**REVISED STANDARD PLAN RSP D77A**

**2004 REVISED Std PLAN RSP D77A**

| DIST | COUNTY | ROUTE | KILOMETER POST TOTAL PROJECT | SHEET NO. | TOTAL SHEETS |
|---|---|---|---|---|---|
| 04 | Ala | 80 | 1.6/2.7 | 531 | 744 |

Caltrans Metric

LICENSED LANDSCAPE ARCHITECT

March 7, 2008
PLANS APPROVAL DATE

LICENSED LANDSCAPE ARCHITECT Gregory A. Balzer 2576 Signature 02-28-2009 Renewal Date 02-21-08 Date STATE OF CALIFORNIA

*The State of California or its officers or agents shall not be responsible for the accuracy or completeness of electronic copies of this plan sheet.*

*To get to the Caltrans web site, go to: http://www.dot.ca.gov*

*To accompany plans dated* 10-3-11

**2004 REVISED Std PLAN RSP H2**

| EXISTING | PROPOSED | ITEM DESCRIPTION |
|---|---|---|
| | | WATER METER (WM) |
| | | BACKFLOW PREVENTER ASSEMBLY (BPA) |
| | | BACKFLOW PREVENTER ASSEMBLY IN ENCLOSURE (BPAE) |
| | | BACKFLOW PREVENTER ENCLOSURE (BPE) |
| | | BOOSTER PUMP (BP) |
| | | TRUCK LOADING STANDPIPE (TLS) |
| fs | FS | FLOW SENSOR (FS) |
| | | MASTER IRRIGATION CONTROLLER (MIC) |
| | | AUXILIARY IRRIGATION CONTROLLER (AIC) |
| | | IRRIGATION CONTROLLER (IC)/ IRRIGATION CONTROLLER (IC) (BATTERY) |
| | | IRRIGATION CONTROLLER(S) IN CONTROLLER ENCLOSURE CABINET (ICC) |
| | | CONTROL AND NEUTRAL CONDUCTORS (CNC) |
| scc | SCC | SPRINKLER CONTROL CONDUIT (SCC) |
| | | CONDUIT (COND) |
| | | IRRIGATION SLEEVE |
| dip | DIP | DUCTILE IRON PIPE (SUPPLY LINE) (MAIN) (DIP) |
| | | GALVANIZED STEEL PIPE (SUPPLY LINE) (MAIN) (GSP) |
| | | GALVANIZED STEEL PIPE (SUPPLY LINE) (LATERAL) (GSP) |
| | | PLASTIC PIPE (PR 200) (SUPPLY LINE) (MAIN) |
| | | PLASTIC PIPE (PR 200) (SUPPLY LINE) (LATERAL) |
| | | PLASTIC PIPE (IRRIGATION LINE) |
| | | REMOTE CONTROL VALVE (RCV) REMOTE CONTROL VALVE (MASTER) (RCVM) |
| | | MANUAL CONTROL VALVE (MCV) |
| | | VALVE ASSEMBLY UNIT (VAU) |
| | | WYE STRAINER (WS) |
| | | FILTER ASSEMBLY UNIT (FAU) |
| | | GATE VALVE (GV) |
| | | BALL VALVE (BV) |

| EXISTING | PROPOSED | ITEM DESCRIPTION |
|---|---|---|
| | | QUICK COUPLING VALVE (QCV) |
| | | CAM COUPLING ASSEMBLY (CCA) |
| | | PRESSURE REDUCING VALVE (PRV) |
| | | PRESSURE RELIEF VALVE (PRLV) |
| | | FLOW CONTROL VALVE (FCV) |
| | | COMBINATION AIR RELEASE VALVE (CARV) |
| | | CHECK VALVE (CV) |
| | | FLUSH VALVE (FV) |
| | | NOZZLE LINE W/TURNING UNION |
| | | IRRIGATION SYSTEM |
| | | IRRIGATION SYSTEM TO BE REMOVED |
| | | CHAIN LINK GATE |
| | | QUICK COUPLING VALVE W/SPRINKLER PROTECTOR |
| 3 | 3 | SPRINKLER W/SPRINKLER PROTECTOR |
| | C | CONNECT TO EXISTING SYSTEM |
| | | CAP |
| | | CAP EXISTING |

## VALVE CODE

RCV SIZE (mm)
IRRIGATION CONTROLLER
CONTROLLER STATION
VALVE IN PARALLEL (IF APPLICABLE)
L/min
QUANTITY OF SPRINKLERS (WHEN SHOWN)

* 63.5-A-2b-151.4-60

MCV SIZE (mm)
VALVE NUMBER
L/min
QUANTITY OF TYPE SPRINKLERS (WHEN SHOWN)

* 50.8-3-113.5-50

* VALVE CODES FOR EXISTING VALVES ARE SHOWN IN A DASHED ENCLOSURE.

STATE OF CALIFORNIA
DEPARTMENT OF TRANSPORTATION

# PLANTING AND IRRIGATION SYMBOLS

NO SCALE

ALL DIMENSIONS ARE IN MILLIMETERS UNLESS OTHERWISE SHOWN

RSP H2 DATED MARCH 7, 2008 SUPERSEDES STANDARD PLAN H2 DATED JULY 1, 2004 - PAGE 202 OF THE STANDARD PLANS BOOK DATED JULY 2004.

**REVISED STANDARD PLAN RSP H2**

2-20-08

| DIST | COUNTY | ROUTE | KILOMETER POST TOTAL PROJECT | SHEET NO. | TOTAL SHEETS |
|---|---|---|---|---|---|
| 04 | Ala | 80 | 1.6/2.7 | 532 | 744 |

Caltrans Metric

LICENSED LANDSCAPE ARCHITECT

December 1, 2006
PLANS APPROVAL DATE

LICENSED LANDSAPE ARCHITECT
Gregory A. Balzer 3878
Signature
02-28-2007
Renewal Date
11-27-06
Date
STATE OF CALIFORNIA

*The State of California or its officers or agents shall not be responsible for the accuracy or completeness of electronic copies of this plan sheet.*

*To get to the Caltrans web site, go to: http://www.dot.ca.gov*

*To accompany Plans dated* 10-3-11

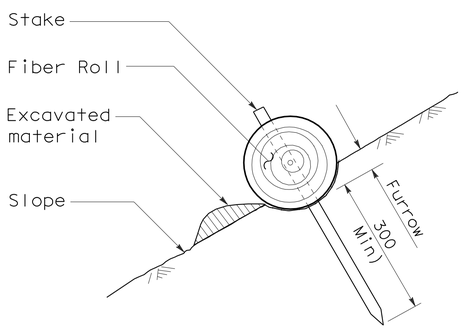


SECTION

FIBER ROLL (TYPE 1)

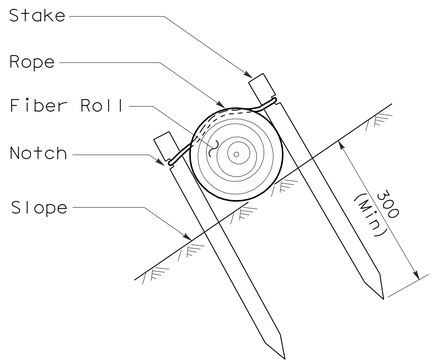


SECTION

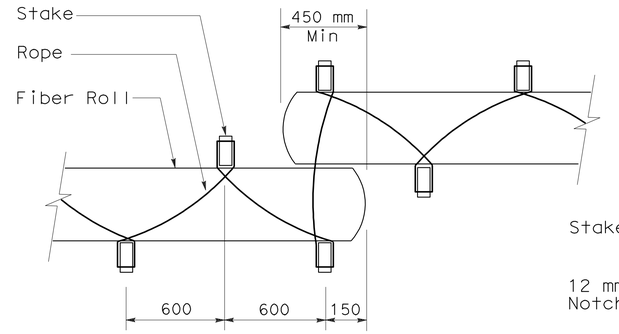


PLAN

FIBER ROLL (TYPE 2)

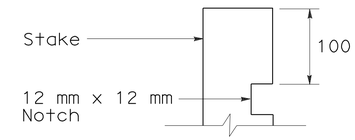


ELEVATION

STAKE NOTCH DETAIL

NOTE

1. Fiber roll spacing varies depending upon slope inclination.
2. Installations shown in the perspectives are for slope inclination of 1:10 and steeper.

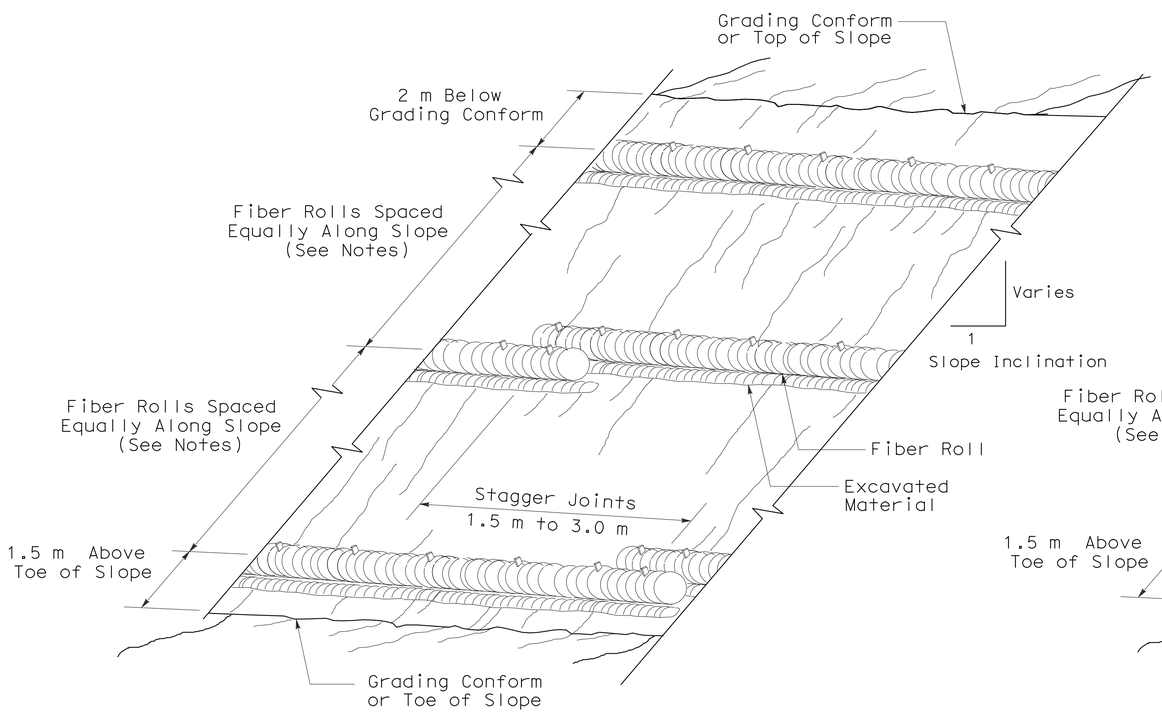


PERSPECTIVE

FIBER ROLL (TYPE 1)

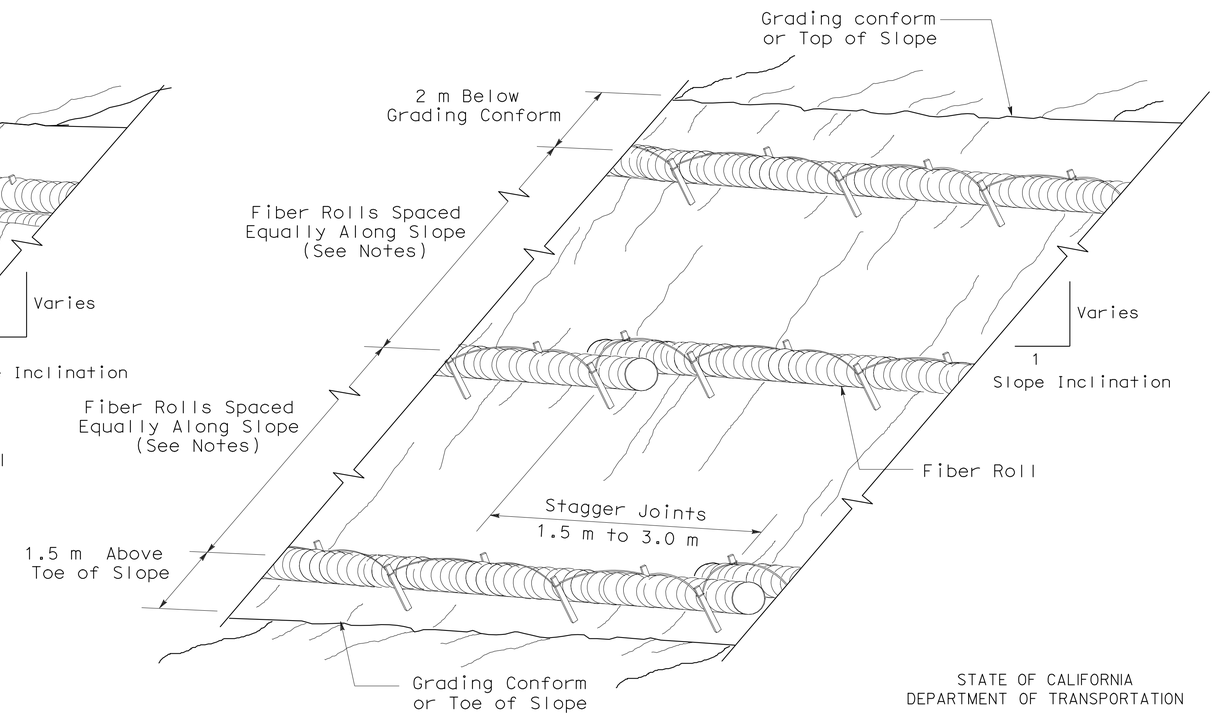


PERSPECTIVE

FIBER ROLL (TYPE 2)

STATE OF CALIFORNIA
DEPARTMENT OF TRANSPORTATION

# EROSION CONTROL DETAILS (FIBER ROLL)

NO SCALE

ALL DIMENSIONS ARE IN MILLIMETERS UNLESS OTHERWISE SHOWN

NSP H51 DATED DECEMBER 1, 2006 SUPPLEMENTS THE STANDARD PLANS BOOK DATED JULY 2004.

**NEW STANDARD PLAN NSP H51**

**2004 NEW Std PLAN NSP H51**

10-5-06

| DIST | COUNTY | ROUTE | KILOMETER POST TOTAL PROJECT | SHEET NO. | TOTAL SHEETS |
|---|---|---|---|---|---|
| 04 | Ala | 80 | 1.6/2.7 | 533 | 744 |

Caltrans Metric

Randell D. Hiatt
REGISTERED CIVIL ENGINEER

June 6, 2008
PLANS APPROVAL DATE

REGISTERED PROFESSIONAL ENGINEER
Randell D. Hiatt
No. C50200
Exp. 6-30-09
CIVIL
STATE OF CALIFORNIA

*The State of California or its officers or agents shall not be responsible for the accuracy or completeness of electronic copies of this plan sheet.*

*To get to the Caltrans web site, go to: http://www.dot.ca.gov*

*To accompany plans dated* 10-3-11

**2004 REVISED Std PLAN RSP T1A**

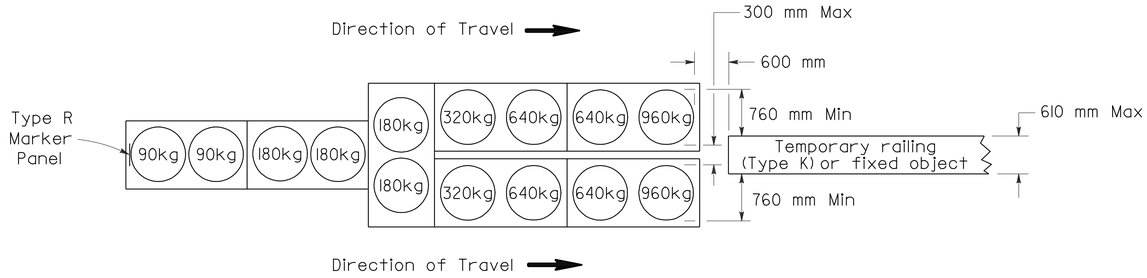


## ARRAY 'TU14'

Approach speed 70 km/h or more

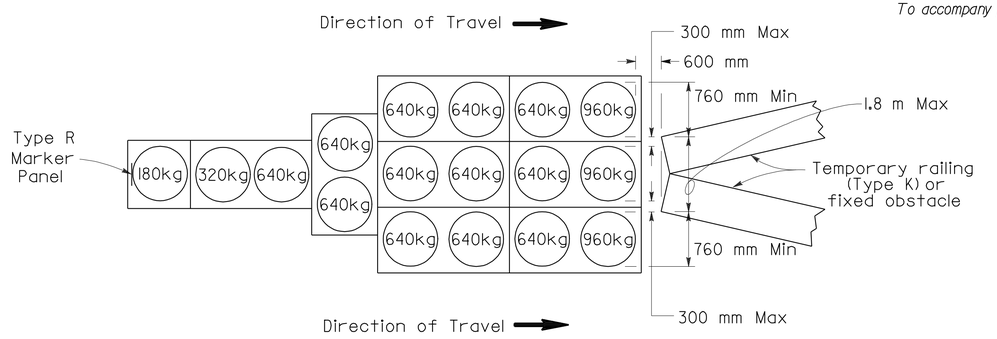


## ARRAY 'TU17'

Approach speed less than 70 km/h

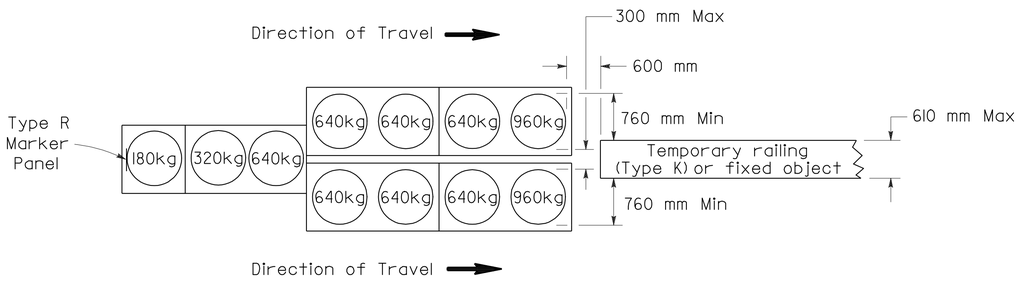


## ARRAY 'TU11'

Approach speed less than 70 km/h

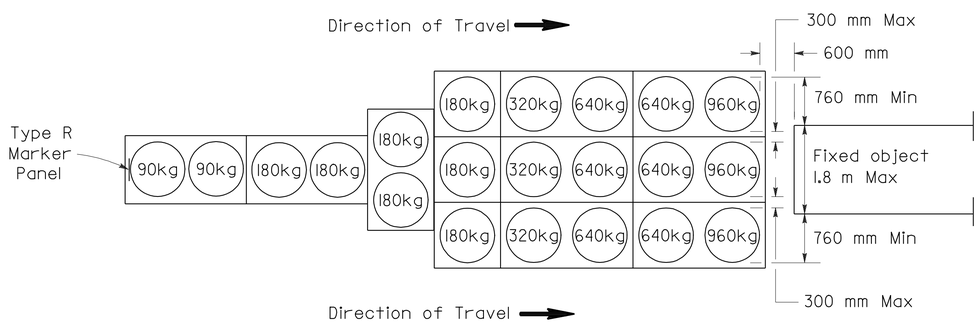


## ARRAY 'TU21'

Approach speed 70 km/h or more

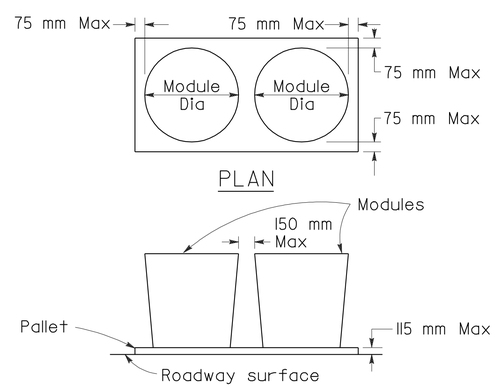


## CRASH CUSHION PALLET DETAIL

See Note 7

## NOTES

1. (XXX) Indicates sand filled module location and mass of sand in kilograms for each module. Module spacing is based on the greater diameter of the module.
2. All sand masses are nominal.
3. Temporary crash cushion arrays shall not encroach on the traveled way.
4. Place the top of Type R marker panel 25 mm below the module lid.
5. Refer to Standard Plan A73B for marker details.
6. Approach speeds indicated conform to NCHRP 350 Report criteria.
7. Use of Pallets is optional.

STATE OF CALIFORNIA
DEPARTMENT OF TRANSPORTATION

# TEMPORARY CRASH CUSHION, SAND FILLED (UNIDIRECTIONAL)

NO SCALE

ALL DIMENSIONS ARE IN MILLIMETERS UNLESS OTHERWISE SHOWN

RSP T1A DATED JUNE 6, 2008 SUPERSEDES STANDARD PLAN T1A
DATED July 1, 2004 - PAGE 211 OF THE STANDARD PLANS BOOK DATED July 2004.

**REVISED STANDARD PLAN RSP T1A**

| DIST | COUNTY | ROUTE | KILOMETER POST TOTAL PROJECT | SHEET NO. | TOTAL SHEETS |
|---|---|---|---|---|---|
| 04 | Ala | 80 | 1.6/2.7 | 534 | 744 |

Caltrans Metric

Randell D. Hiatt
REGISTERED CIVIL ENGINEER

June 6, 2008
PLANS APPROVAL DATE

REGISTERED PROFESSIONAL ENGINEER
Randell D. Hiatt
No. C50200
Exp. 6-30-09
CIVIL
STATE OF CALIFORNIA

*The State of California or its officers or agents shall not be responsible for the accuracy or completeness of electronic copies of this plan sheet.*

*To get to the Caltrans web site, go to: http://www.dot.ca.gov*

*To accompany plans dated* 10-3-11

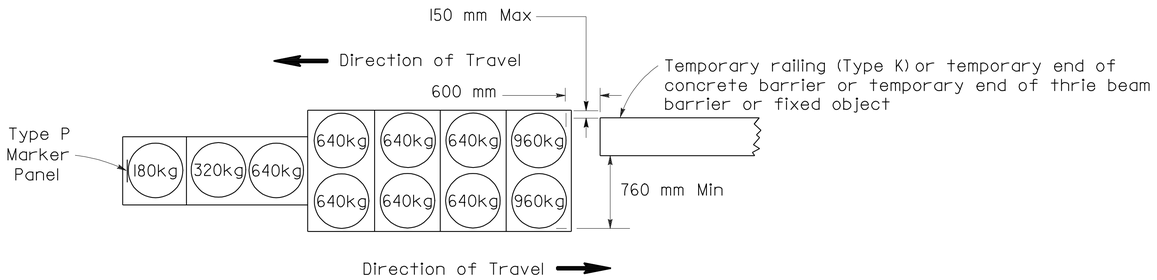


## ARRAY 'TBI1'

Approach speed less than 70 km/h

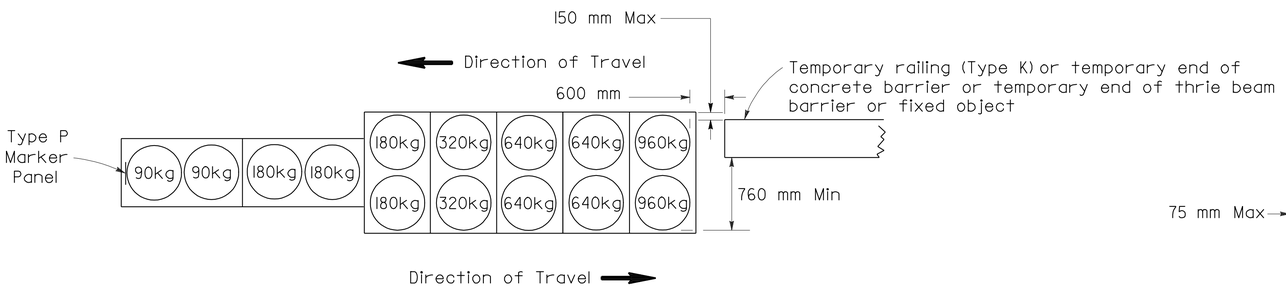


## ARRAY 'TBI4'

Approach speed 70 km/h or more

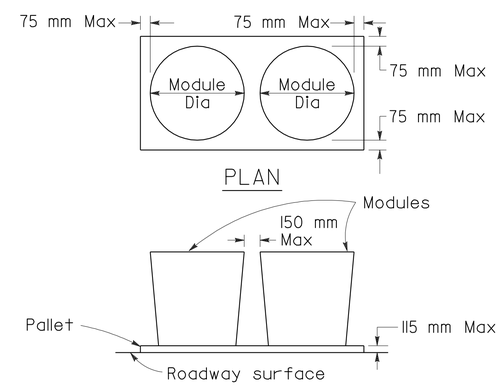


## CRASH CUSHION PALLET DETAIL

See Note 7

## NOTES

1. (XXX) Indicates sand filled module location and mass of sand in kilograms for each module. Module spacing is based on the greater diameter of the module.
2. All sand masses are nominal.
3. Temporary crash cushion arrays shall not encroach on the traveled way.
4. Place the Type P marker panel so that the bottom of the panel rests upon the pallet.
5. Refer to Standard Plan A73B for marker details.
6. Approach speeds indicated conform to NCHRP 350 Report criteria.
7. Use of Pallets is optional.

STATE OF CALIFORNIA
DEPARTMENT OF TRANSPORTATION

# TEMPORARY CRASH CUSHION, SAND FILLED (BIDIRECTIONAL)

NO SCALE

ALL DIMENSIONS ARE IN MILLIMETERS UNLESS OTHERWISE SHOWN

RSP T1B DATED JUNE 6, 2008 SUPERSEDES STANDARD PLAN T1B DATED July 1, 2004 - PAGE 212 OF THE STANDARD PLANS BOOK DATED July 2004.

**REVISED STANDARD PLAN RSP T1B**

**2004 REVISED Std PLAN RSP T1B**

5-16-08

| DIST | COUNTY | ROUTE | KILOMETER POST TOTAL PROJECT | SHEET NO. | TOTAL SHEETS |
|---|---|---|---|---|---|
| 04 | Ala | 80 | 1.6/2.7 | 535 | 744 |

Caltrans Metric

Randell D. Hiatt
REGISTERED CIVIL ENGINEER

June 6, 2008
PLANS APPROVAL DATE

REGISTERED PROFESSIONAL ENGINEER
Randell D. Hiatt
No. C50200
Exp. 6-30-09
CIVIL
STATE OF CALIFORNIA

*The State of California or its officers or agents shall not be responsible for the accuracy or completeness of electronic copies of this plan sheet.*

*To get to the Caltrans web site, go to: http://www.dot.ca.gov*

*To accompany plans dated* 10-3-11

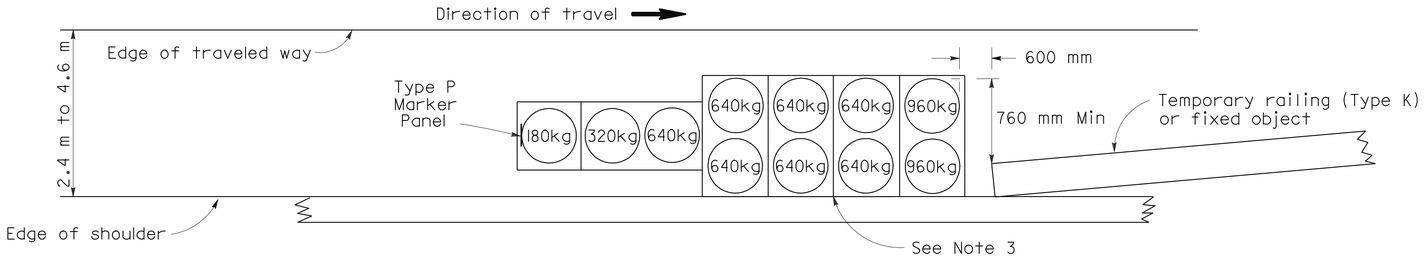


## ARRAY 'TSI1'

Approach speed less than 70 km/h
See Note 9

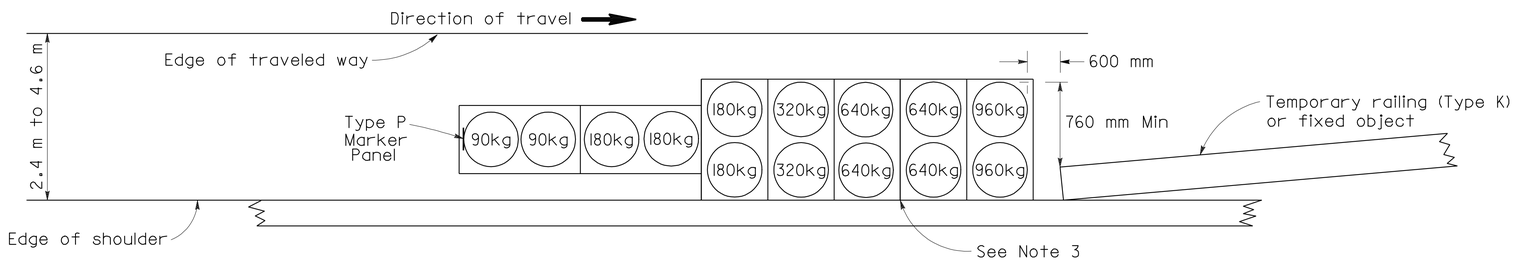


## ARRAY 'TSI4'

Approach speed 70 km/h or more
See Note 9

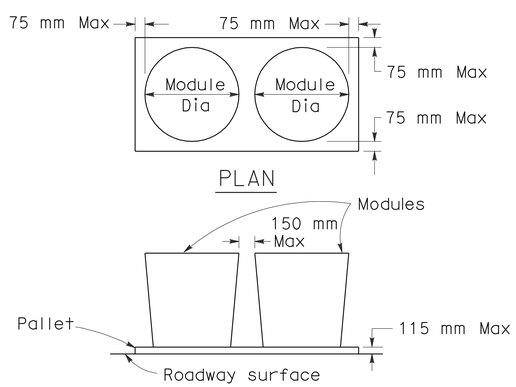


## CRASH CUSHION PALLET DETAIL

See Note 11

## NOTES

1. (XXX) Indicates sand filled module location and mass of sand in kilograms for each module. Module spacing is based on the greater diameter of the module.
2. All sand masses are nominal.
3. The temporary crash cushion arrays shown on this plan shall be used only in locations where there will be traffic on one side of the temporary crash cushion array.
4. If the fixed object or approach end of the temporary railing is less than 4.60 meters from the edge of traveled way, a temporary crash cushion is required.
5. Temporary crash cushion arrays shall not encroach on the traveled way.
6. Arrays for median shoulders shall conform to details shown on this plan for outside shoulders.
7. Place the Type P marker panel so that the bottom of the panel rest upon the pallet and faces traffic.
8. Refer to Standard Plan A73B for marker details.
9. For shoulder widths less than 2.4 m, appropriate approved crash cushion protection, other than sand filled modules, shall be provided at fixed objects and at approach ends of temporary railing. The specific type of crash cushion shall be as shown on the project plans or as specified in the Special Provisions, or if not shown on the project plans or specified in the Special Provisions, shall be as approved by the Engineer.
10. Approach speeds indicated conform to NCHRP 350 Report criteria.
11. Use of Pallets is optional.

STATE OF CALIFORNIA
DEPARTMENT OF TRANSPORTATION

# TEMPORARY CRASH CUSHION, SAND FILLED (SHOULDER INSTALLATIONS)

NO SCALE

ALL DIMENSIONS ARE IN MILLIMETERS UNLESS OTHERWISE SHOWN

RSP T2 DATED JUNE 6, 2008 SUPERSEDES STANDARD PLAN T2
DATED July 1, 2004 - PAGE 213 OF THE STANDARD PLANS BOOK DATED July 2004.

**REVISED STANDARD PLAN RSP T2**

**2004 REVISED Std PLAN RSP T2**

5-16-08

| DIST | COUNTY | ROUTE | KILOMETER POST TOTAL PROJECT | SHEET NO. | TOTAL SHEETS |
|---|---|---|---|---|---|
| 04 | Ala | 80 | 1.6/2.7 | 536 | 744 |

REGISTERED CIVIL ENGINEER

April 28, 2005
PLANS APPROVAL DATE

REGISTERED PROFESSIONAL ENGINEER Greg W. Edwards No. C36386 Exp. 6-30-06 CIVIL STATE OF CALIFORNIA

*The State of California or its officers or agents shall not be responsible for the accuracy or completeness of electronic copies of this plan sheet.*

*To get to the Caltrans web site, go to: http://www.dot.ca.gov*

*To accompany plans dated* 10-3-11

Caltrans Metric

## NOTES

Unless otherwise specified in the special provisions, all temporary warning signs shall have black legend on orange background.

California code are designated by (CA). Otherwise, Federal codes are shown.

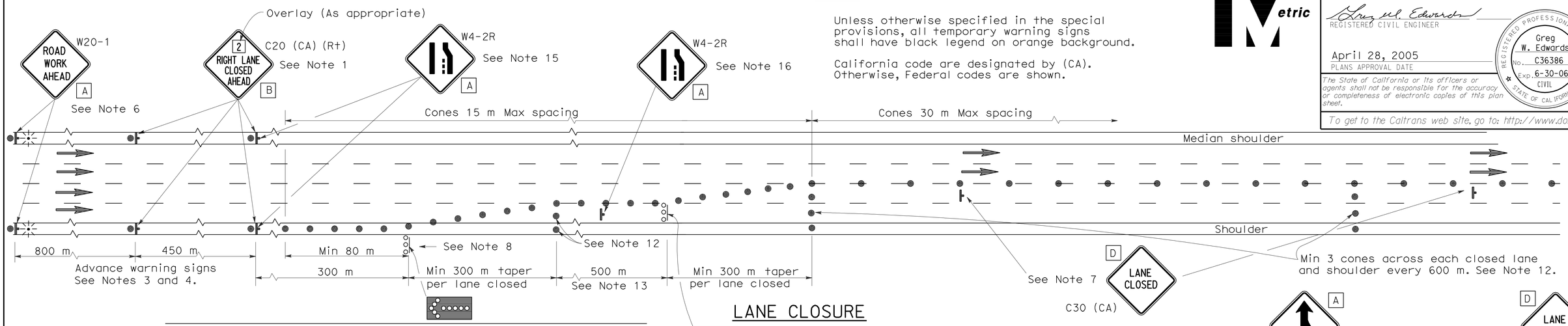


## LANE CLOSURE

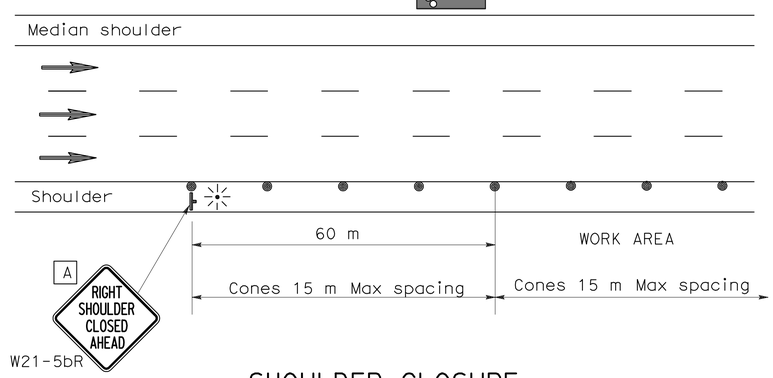


## SHOULDER CLOSURE

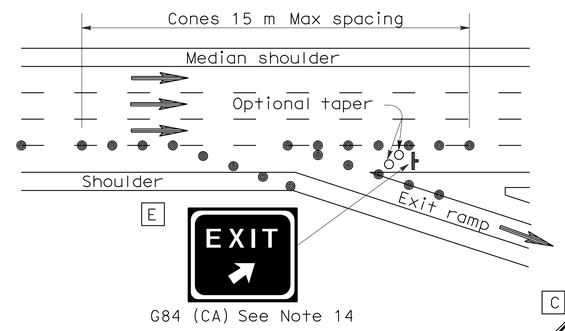


## LANE CLOSURE AT EXIT RAMP

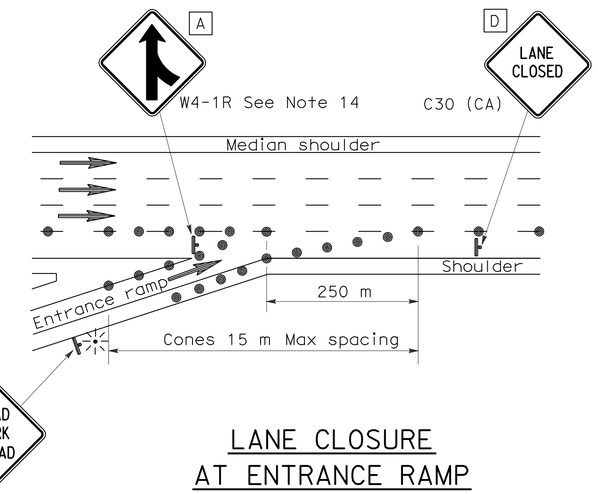


## LANE CLOSURE AT ENTRANCE RAMP

## NOTES

1. Median lane closures shall conform to the details for outside lane closures except that C20 (CA) (Lt) signs shall be used.
2. At least one person shall be assigned to provide full time maintenance of traffic control devices for lane closures.
3. Duplicate sign installations are not required:
   a) On opposite shoulder if at least one-half of the available lanes remain open to traffic.
   b) In the median if the width of the median shoulder is less than 2.4 m and the outside lanes are to be closed.
4. Each advance warning sign on each side of the roadway shall be equipped with at least two flags for daytime closure. Each flag shall be at least 400 mm x 400 mm in size and shall be orange or fluorescent red-orange in color. Flashing beacons shall be placed at the locations indicated for lane closure during hours of darkness.
5. A C14 (CA) "END ROAD WORK" sign, as appropriate, shall be placed at the end of the lane closure unless the end of work area is obvious or ends within a larger project's limits.
6. If the W20-1 sign would follow within 600 m of a stationary W20-1 or C11 (CA) "ROAD WORK NEXT _____ MILES", use a C20 (CA) sign for the first advance warning sign.
7. Place a C30 (CA) sign every 600 m throughout length of lane closure.
8. One flashing arrow sign for each lane closed. The first flashing arrow sign shall be Type I. All others may be either Type I or Type II.
9. A minimum 450 m of sight distance shall be provided where possible for vehicles approaching the first flashing arrow sign. Lane closures shall not begin at top of crest vertical curve or on a horizontal curve.
10. All cones used for lane closures during the hours of darkness shall be fitted with retroreflective bands (or sleeves) as specified in the specifications.
11. Portable delineators, placed at one-half the spacing indicated for traffic cones may be used instead of cones for daytime closures only.
12. Unless otherwise specified in the special provisions, a minimum of 3 cones shall be placed transversely across each closed lane and shoulder at each location where a taper across a traffic lane ends and every 600 m as shown on the "Lane Closure" detail. Two Type II barricades may be used instead of the 3 cones. The transverse alignment of the cones or barricades on the closed shoulder may be shifted from the transverse alignment to provide access to the work.
13. Unless otherwise specified in the special provisions, the 500 m tangent shown along lane lines shall be used between the 300 m tapers required for each closed traffic lane.
14. Unless otherwise specified in the special provisions, the G84 (CA) and W4-1 signs shall be used as shown.
15. When specified in the special provisions, a W4-2 "LANE ENDS" symbol sign is to be used in place of the C20 (CA) "RIGHT LANE CLOSED AHEAD" sign.
16. The W4-2 "LANE ENDS" symbol sign shown at this location is to be used where the W4-2 sign is used as advance warning as described in Note 15.

## SIGN PANEL SIZE (Min)

| | |
|---|---|
| A | 1200 mm x 1200 mm |
| B | 1219 mm x 1219 mm |
| C | 750 mm x 750 mm |
| D | 762 mm x 762 mm |
| E | 1372 mm x 1219 mm |

## LEGEND

- Traffic Cone
- Traffic Cone (optional taper)
- Temporary Sign
- Flashing Arrow Sign (FAS)
- FAS Support or Trailer
- Direction of Travel
- Portable Flashing Beacon

STATE OF CALIFORNIA
DEPARTMENT OF TRANSPORTATION

# TRAFFIC CONTROL SYSTEM FOR LANE CLOSURE ON FREEWAYS AND EXPRESSWAYS

NO SCALE

ALL DIMENSIONS ARE IN MILLIMETERS UNLESS OTHERWISE SHOWN

RSP T10 DATED APRIL 28, 2005 SUPERSEDES STANDARD PLAN T10 DATED JULY 1, 2004-PAGE 218 OF THE STANDARD PLANS BOOK DATED JULY 2004.

**REVISED STANDARD PLAN RSP T10**

**2004 REVISED Std PLAN RSP T10**

| DIST | COUNTY | ROUTE | KILOMETER POST TOTAL PROJECT | SHEET NO. | TOTAL SHEETS |
|---|---|---|---|---|---|
| 04 | Ala | 80 | 1.6/2.7 | 537 | 744 |

Caltrans Metric

REGISTERED CIVIL ENGINEER

April 28, 2005
PLANS APPROVAL DATE

REGISTERED PROFESSIONAL ENGINEER — Greg W. Edwards No. C36386 Exp. 6-30-06 CIVIL — STATE OF CALIFORNIA

*The State of California or its officers or agents shall not be responsible for the accuracy or completeness of electronic copies of this plan sheet.*

*To get to the Caltrans web site, go to: http://www.dot.ca.gov*

*To accompany plans dated* 10-3-11

# TYPICAL RAMP CLOSURES

## LEGEND

- Traffic Cone
- Temporary Sign
- Barricades
- Direction of Travel
- Turn Arrow

## SIGN PANEL SIZE (Min)

| | |
|---|---|
| A | 1200 mm x 1200 mm |
| B | 1200 mm x 750 mm |
| C | 750 mm x 750 mm |
| D | 762 mm x 762 mm |
| E | 900 mm x 900 mm |
| F | 1219 mm x 914 mm |

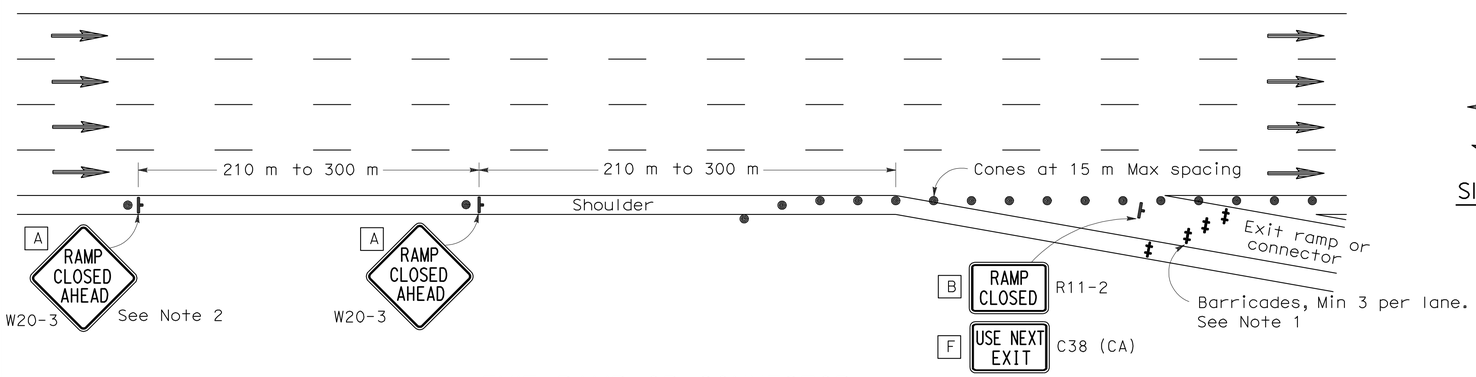


## EXIT RAMP OR CONNECTOR

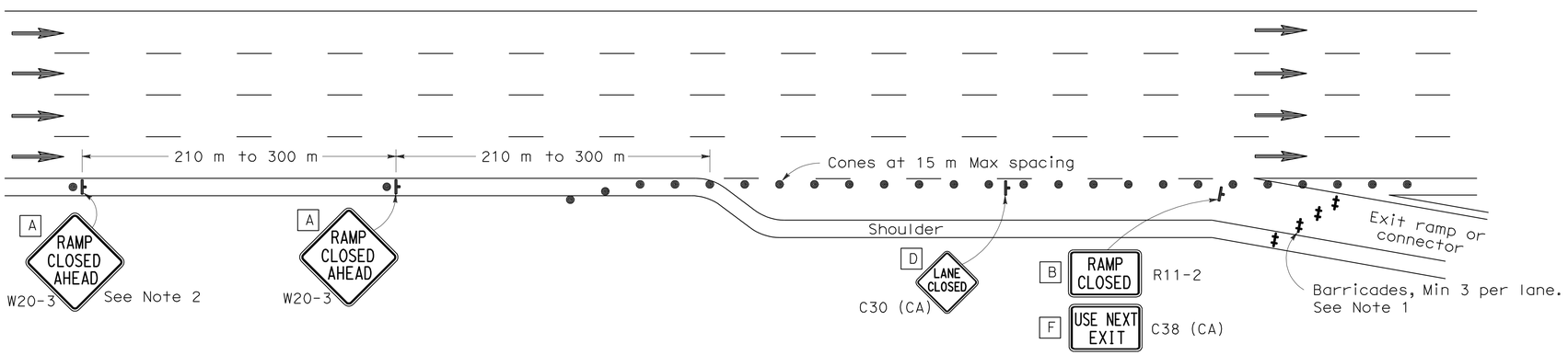


## EXIT RAMP OR CONNECTOR WITH ADDITIONAL LANE

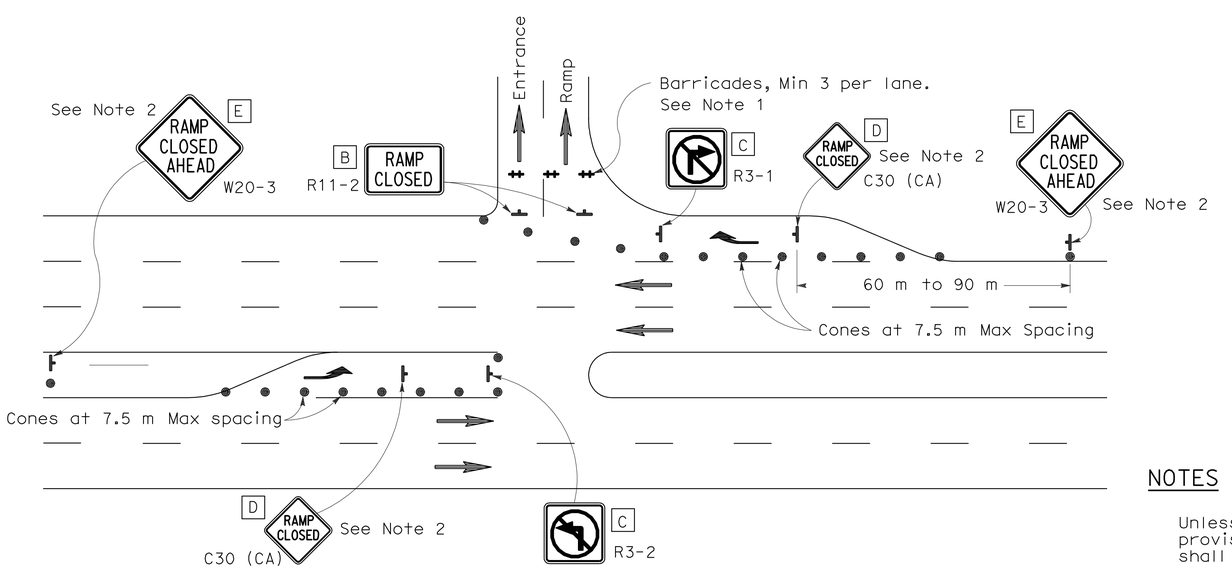


## ENTRANCE RAMP WITH TURNING POCKETS

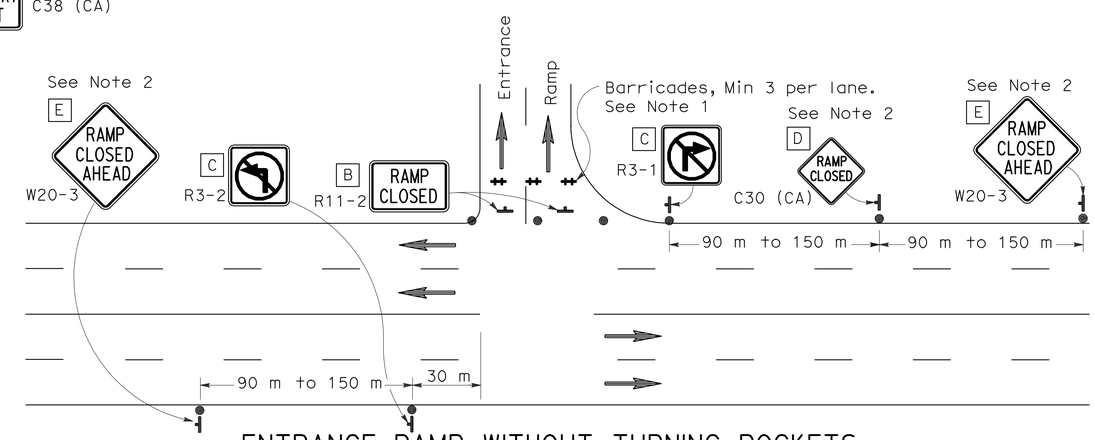


## ENTRANCE RAMP WITHOUT TURNING POCKETS

## NOTES

1. Barricades shall be Type I, II, or III for closures lasting one week or less and Type III for closures lasting longer than one week.
2. Instead of placing the W20-3 "RAMP CLOSED AHEAD" and C30 (CA) "RAMP CLOSED" signs, black on orange overlay plates with the word "CLOSED" may be mounted, as directed by the Engineer, on all guide signs that refer to the closed ramp. The letter size on the overlay shall be the same as the guide sign.
3. Each advance W20-3 "RAMP CLOSED AHEAD" sign shall be equipped with at least two flags for daytime closure. Each flag shall be at least 400 mm x 400 mm in size and shall be orange or fluorescent red-orange in color.
4. All cones used for ramp closures during the hours of darkness shall be fitted with retroreflective bands (or sleeves) as specified in the specifications.
5. Portable delineators, placed at one-half the spacing indicated for traffic cones, may be used instead of cones for daytime ramp closures only.
6. At least one person shall be assigned to provide full time maintenance of traffic control devices, unless otherwise directed by the Engineer.
7. The existing "EXIT" sign in the gore area shall be covered during ramp closures.

## NOTES

Unless otherwise specified in the special provisions, all temporary warning signs shall have black legend on orange background.

California code are designated by (CA). Otherwise, Federal codes are shown.

STATE OF CALIFORNIA
DEPARTMENT OF TRANSPORTATION

# TRAFFIC CONTROL SYSTEM FOR RAMP CLOSURE

NO SCALE

ALL DIMENSIONS ARE IN MILLIMETERS UNLESS OTHERWISE SHOWN

RSP T14 DATED APRIL 28, 2005 SUPERSEDES STANDARD PLAN T14 DATED JULY 1, 2004-PAGE 223 OF THE STANDARD PLANS BOOK DATED JULY 2004.

**REVISED STANDARD PLAN RSP T14**

**2004 REVISED Std PLAN RSP T14**

| DIST | COUNTY | ROUTE | KILOMETER POST TOTAL PROJECT | SHEET NO. | TOTAL SHEETS |
|---|---|---|---|---|---|
| 04 | Ala | 80 | 1.6/2.7 | 538 | 744 |

REGISTERED CIVIL ENGINEER

October 5, 2007
PLANS APPROVAL DATE

REGISTERED PROFESSIONAL ENGINEER Efthymios Delis No. C51434 Exp. 6-30-08 CIVIL STATE OF CALIFORNIA

*The State of California or its officers or agents shall not be responsible for the accuracy or completeness of electronic copies of this plan sheet.*

*To get to the Caltrans web site, go to: http://www.dot.ca.gov*

Caltrans Metric

*To accompany plans dated* 10-3-11

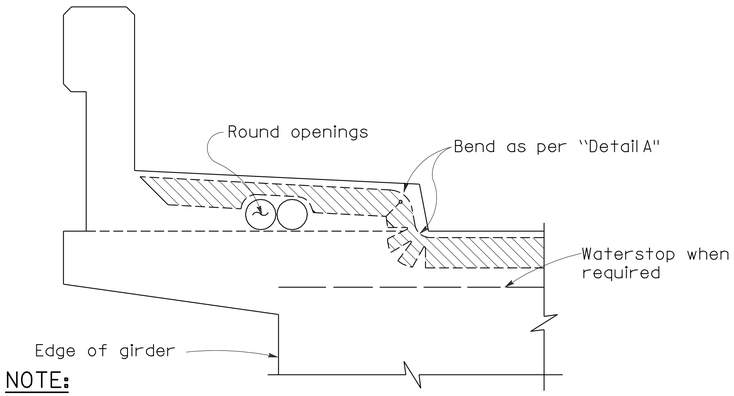


NOTE:

Type "B" seal shown. Type "A" seals to comform to the general path of seal shown, cuts for bending not required. Bend Type "A" seals 75 mm up into curb or barrier rail on only the low end of the seal.

CONCRETE BARRIER AND SIDEWALK

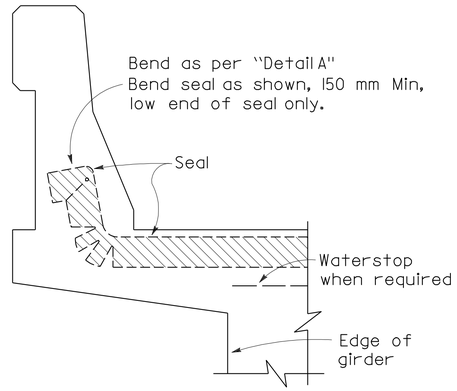


CONCRETE BARRIER

JOINT SEALS DETAILS

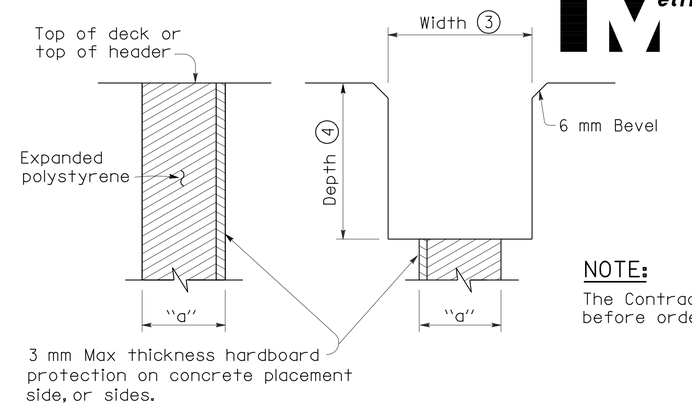


FORMING DETAIL SAWCUT DETAIL

NOTE:

The Contractor shall verify all controlling field dimensions before ordering or fabricating any material.

NOTES:

① Make smooth cuts from the bottom of seal to 40 mm clear of top leaving at least one complete cell between the top of the cut and top of the seal. When necessary cut back of seal to clear conduit and round openings.

② Opening in barrier to match width of sawn deck joint.

③ Sawcut groove widths shall be as ordered by the Engineer.

④ Depth of sawcut: Type A - Depth to be 50 mm minimum.
Type B - Depth to be equal to or greater than the depth of seal measured along the contact surface, when compressed to minimum width position ($W_2$) plus dimensions shown above.

⑤ MR (movement rating) as shown on other plan sheets.

⑥ Other depths must be approved by the Engineer.

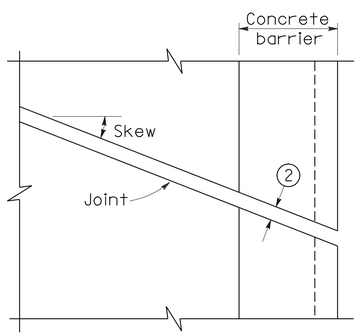


PLAN OF JOINT (SKEW ≤ 20°)

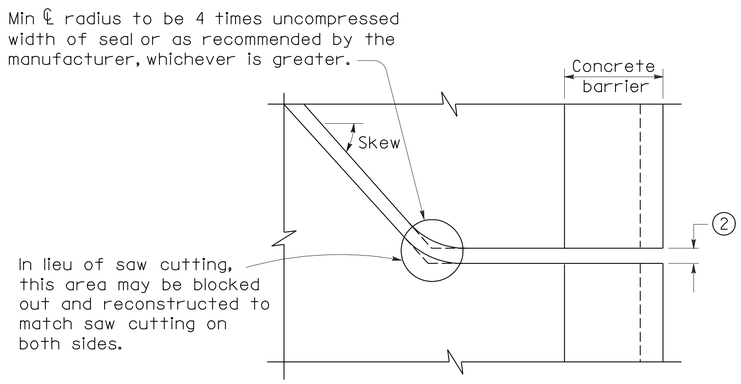


PLAN OF JOINT (SKEW > 20°)

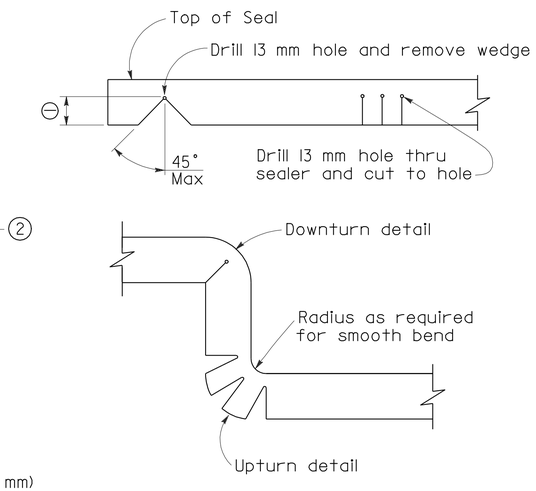


DETAIL A

DIMENSIONS "a" OF JOINT REQUIRED

| Movement Rating (MR) ⑤ | Bridge Type | "a" Dimension Deck Concrete Placed | | |
|---|---|---|---|---|
| | | Winter | Fall-Spring | Summer |
| 50 mm | All except CIP/PS | 40 mm | 30 mm | 20 mm |
| | CIP/PS | 30 mm | 25 mm | 13 mm |
| 40 mm | All except CIP/PS | 30 mm | 25 mm | 13 mm |
| | CIP/PS | 25 mm | 20 mm | 13 mm |
| 25 mm | All except CIP/PS | 25 mm | 20 mm | 13 mm |
| | CIP/PS | 20 mm | 13 mm | 13 mm |
| 13 mm | All except CIP/PS | 20 mm | 20 mm | 13 mm |
| | CIP/PS | 13 mm | 13 mm | 13 mm |

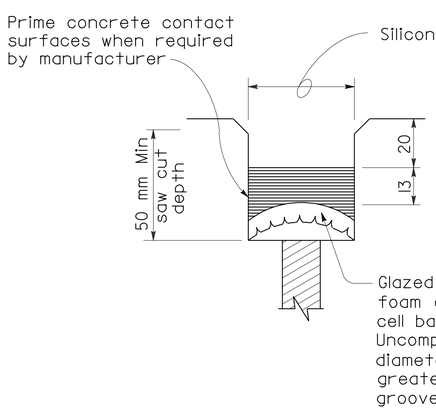


TYPE A SEAL

Movement rating : Silicone = 25 mm Max

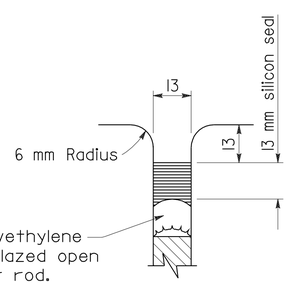


TYPE AL SEAL

Longitudinal joints only

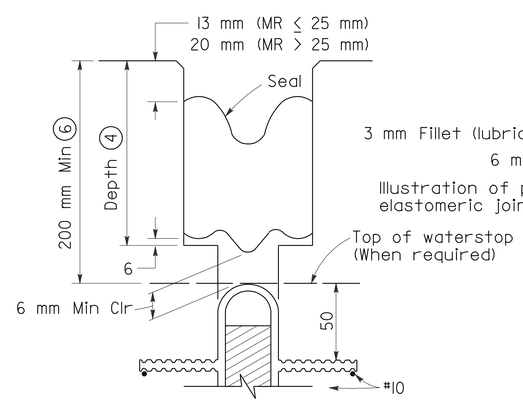


TYPE B JOINT SEAL
IN MINIMUM WIDTH POSITION ($W_2$)

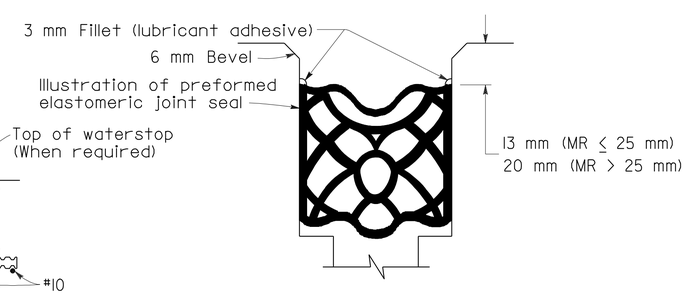


TYPE B SEAL

Movement Rating ≤ 50 mm

STATE OF CALIFORNIA
DEPARTMENT OF TRANSPORTATION

**JOINT SEALS (MAXIMUM MOVEMENT RATING = 50 mm)**

NO SCALE

ALL DIMENSIONS ARE IN MILLIMETERS UNLESS OTHERWISE SHOWN

RSP B6-21 DATED OCTOBER 5, 2007 SUPERSEDES RSP B6-21 DATED JANUARY 26, 2005 AND STANDARD PLAN B6-21 DATED JULY 1, 2004-PAGE 258 OF THE STANDARD PLANS BOOK DATED JULY 2004.

**REVISED STANDARD PLAN RSP B6-21**

**2004 REVISED Std PLAN RSP B6-21**

5-17-07

To accompany plans dated 10-3-11

Caltrans Metric

| DIST | COUNTY | ROUTE | KILOMETER POST TOTAL PROJECT | SHEET NO. | TOTAL SHEETS |
|---|---|---|---|---|---|
| 04 | Ala | 80 | 1.6/2.7 | 539 | 744 |

REGISTERED CIVIL ENGINEER

April 28, 2005
PLANS APPROVAL DATE

REGISTERED PROFESSIONAL ENGINEER Michael Pope No. C54503 Exp. 12-31-05 CIVIL STATE OF CALIFORNIA

*The State of California or its officers or agents shall not be responsible for the accuracy or completeness of electronic copies of this plan sheet.*

*To get to the Caltrans web site, go to: http://www.dot.ca.gov*

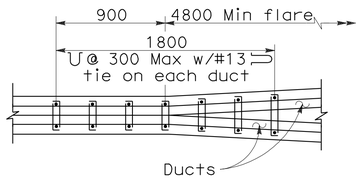


PLAN

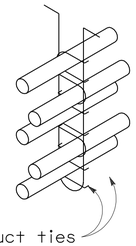


NOTE

Place closed end of duct ties in direction of flare.

## STIRRUP REINFORCEMENT AT FLARE OF GIRDER STEM

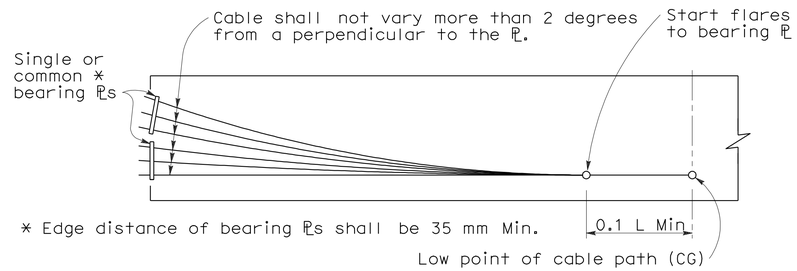


## BEARING PLATE PRESTRESSING PATH

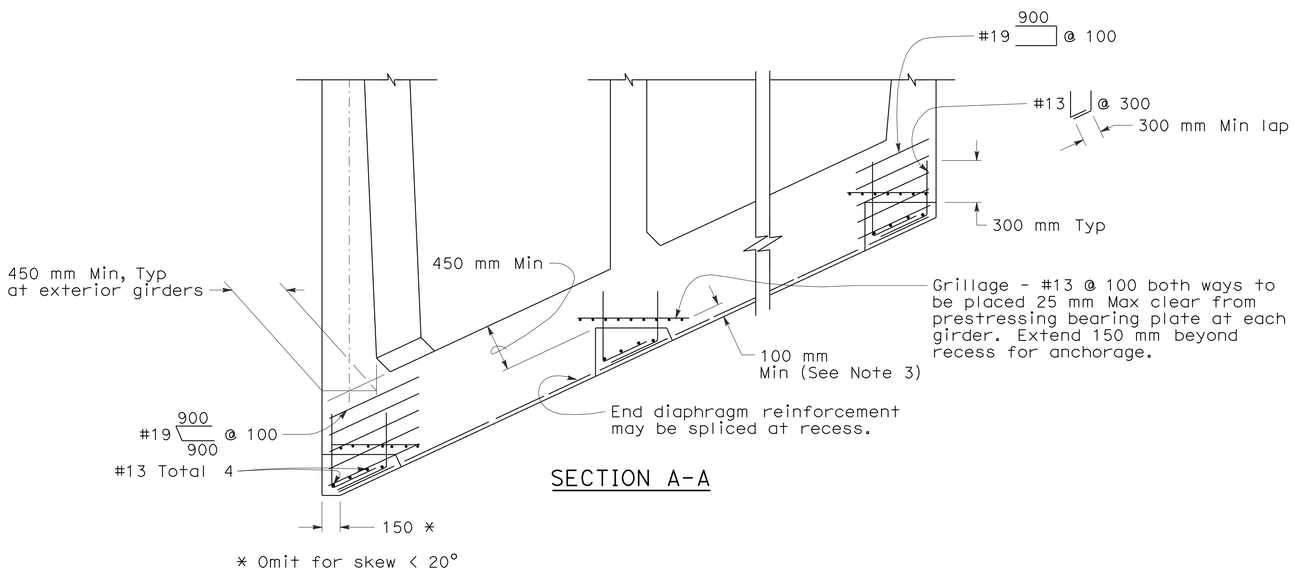


SECTION A-A

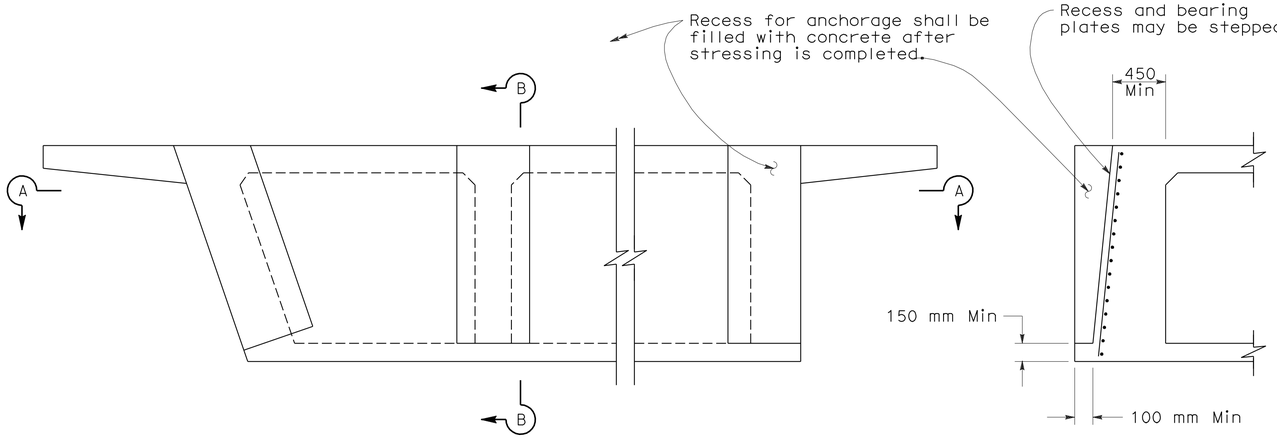


PRESTRESS ANCHORAGE DETAILS AT SEAT TYPE ABUTMENTS

SECTION B-B

## NOTES

Distribution of prestressing force:

Unless otherwise noted, the prestressing force shall be distributed with an approximately equal amount in each girder and shall be placed symmetrically about the center line of the structure. In slabs, the prestressing force shall be uniformly distributed across the slab.

Stressing sequence:

No more than ½ of the prestressing force in any girder may be applied before an equal force is applied in the adjacent girders. The maximum force variation between girders shall also not exceed the prestressing force of the largest tendon used in all girders. At no time during stressing operations will more than 1/6 of total prestressing force be applied eccentrically about the centerline of the structure.

Girder stem may be flared near anchorage to provide clearances for the particular anchorage system.

Place duct ties, as shown for flare girder stem, at each location where ducts change horizontal direction.

Bar reinforcement interfering with the prestressing tendon alignment shall be adjusted, as approved by the Engineer.

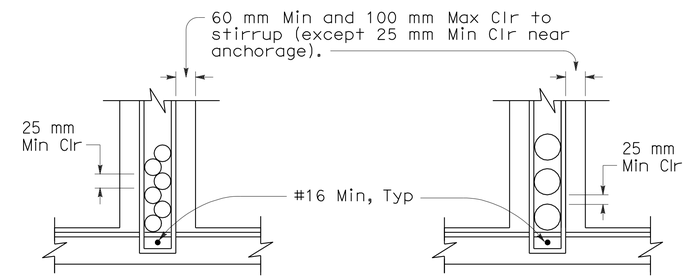


DUCTS 114 mm OD AND LESS

DUCTS OVER 114 mm OD

## CLEARANCE REQUIREMENTS FOR DUCTS

## NOTES

1. Duct patterns shown are for a 300 mm wide girder stem. For other widths the minimum clearances must be maintained.
2. ⊔ Stirrups may also be used. For continuous stirrups in girder stems greater than 400 mm wide (ie: at flares) use 2-#16 minimum ⊔ or ⊔.
3. 100 mm minimum is not required if this detail is used at hinge location.
4. For additional details, see Standard Plan B7-1.
5. Approval of the Engineer is required for deviations.

STATE OF CALIFORNIA
DEPARTMENT OF TRANSPORTATION

# CAST-IN-PLACE PRESTRESSED GIRDER DETAILS

NO SCALE

ALL DIMENSIONS ARE IN MILLIMETERS UNLESS OTHERWISE SHOWN

RSP B8-5 DATED APRIL 28, 2005 SUPERSEDES STANDARD PLAN B8-5 DATED JULY 1, 2004-PAGE 266 OF THE STANDARD PLANS BOOK DATED JULY 2004.

**REVISED STANDARD PLAN RSP B8-5**

**2004 REVISED Std PLAN RSP B8-5**

| DIST | COUNTY | ROUTE | KILOMETER POST TOTAL PROJECT | SHEET NO. | TOTAL SHEETS |
|---|---|---|---|---|---|
| 04 | Ala | 80 | 1.6/2.7 | 540 | 744 |

REGISTERED CIVIL ENGINEER

January 24, 2005
PLANS APPROVAL DATE

REGISTERED PROFESSIONAL ENGINEER Tillat Sattar No. C42892 Exp. 03-31-2006 CIVIL STATE OF CALIFORNIA

*The State of California or its officers or agents shall not be responsible for the accuracy or completeness of electronic copies of this plan sheet.*

*To get to the Caltrans web site, go to: http://www.dot.ca.gov*

*To accompany plans dated* 10-3-11

## INSTRUCTIONS TO FABRICATOR

PROJECT PLANS SHOW:

1. Sign structure location.
2. Length of structure frame.
3. Panel size and locations on structure.
4. Walkway length for two post signs.
5. Post type and height to bottom of frame.
6. Base plate elevation.
7. Footing elevation or location of pile foundation.
8. Photoelectric unit location if required.

REFER TO THE FOLLOWING STANDARD PLANS FOR DETAILS NOT SHOWN ON PROJECT PLANS:

| Sheet # | SHEET NAME |
|---|---|
| RSP S1 | Overhead Signs-Truss, Instructions and Examples |
| RSP S2 | Overhead Signs-Truss, Single Post Type, Post Types II to IX |
| RSP S3 | Overhead Signs-Truss, Single Post Type, Base Plate and Anchorage Details |
| RSP S4 | Overhead Signs-Truss, Single Post Type, Structural Frame Members Details No. 1 |
| RSP S5 | Overhead Signs-Truss, Single Post Type, Structural Frame Members Details No. 2 |
| RSP S6 | Overhead Signs-Truss, Gusset Plate Details |
| RSP S7 | Overhead Signs-Truss, Single Post Type, Square Pedestal Pile Foundation |
| RSP S8 | Overhead Signs-Truss, Single Post Type, Round Pedestal Pile Foundation |
| RSP S9 | Overhead Signs-Truss, Two Post Type, Post Types I-S through VII-S |
| RSP S10 | Overhead Signs-Truss, Two Post Type, Base Plate and Anchorage Details |
| RSP S11 | Overhead Signs-Truss, Two Post Type, Structural Frame Members |
| RSP S12 | Overhead Signs-Truss, Structural Frame Details |
| RSP S13 | Overhead Signs-Truss, Frame Juncture Details |
| RSP S14 | Overhead Signs-Truss, Two Post Type, Square Pedestal Pile Foundation |
| RSP S15 | Overhead Signs-Truss, Two Post Type, Round Pedestal Pile Foundation |
| RSP S16 | Overhead Signs, Walkway Details No. 1 |
| RSP S17 | Overhead Signs, Walkway Details No. 2 |
| NSP S17A | Overhead Signs, Walkway Details No. 3 |
| RSP S18 | Overhead Signs, Walkway Safety Railing Details |
| RSP S19 | Overhead Signs-Truss, Sign Mounting Details, Laminated Panel-Type A |
| RSP S20 | Overhead Signs, Steel Frames, Removable Sign Panel Frames |
| RSP S21 | Overhead Signs, Removable Sign Panel Frames, Mounting Details |
| RSP S22 | Overhead Signs-Truss, Removable Sign Panel Frames, 2794 mm and 3048 mm Sign Panels |

WALKWAY BRACKETS:

Space all walkway brackets maintaining uniform spacing where possible. Maximum spacing shall not exceed 1676 mm.

LIGHTING FIXTURE SUPPORTS:

Where distance from walkway bracket to end of sign panel exceeds 406 mm, extend lighting fixture supports to next walkway bracket. See Example No. 2.

WALKWAY AND SAFETY RAILING:

Walkway to be continuous for entire length of frame for single post signs. For two post signs, see Project Plans. Safety railing to protect entire walkway, but continuous for no more than 3353 mm in one unit.

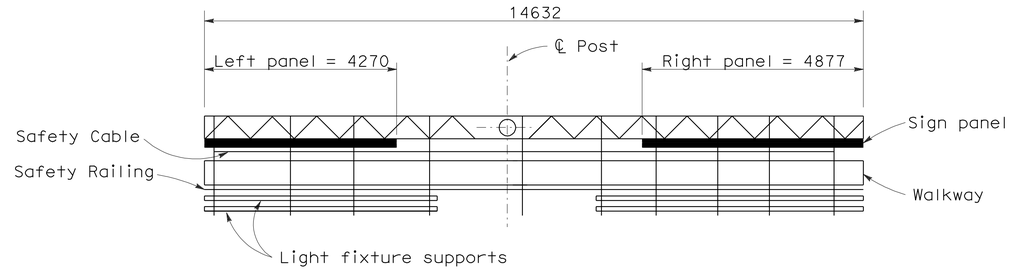


PLAN

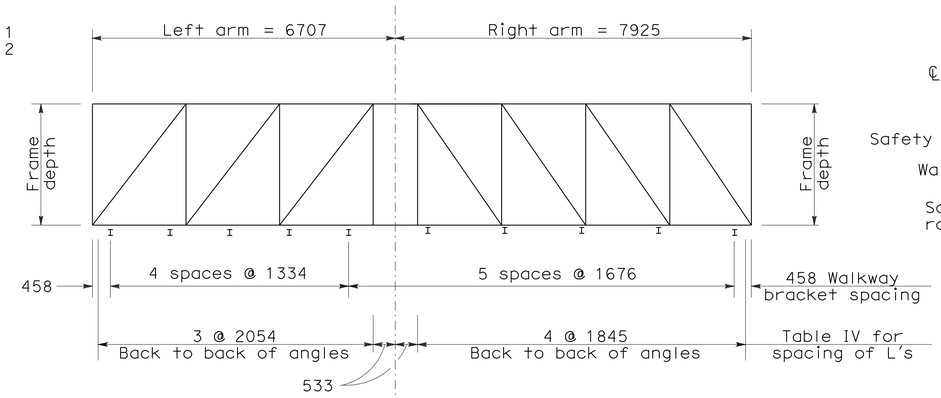


UNBALANCED SINGLE POST TYPE

Example No. 1

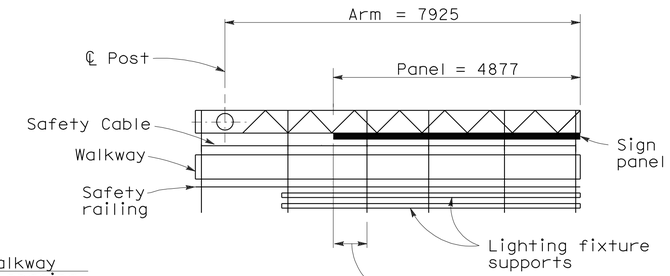


PLAN

CANTILEVER SINGLE POST TYPE

Example No. 2

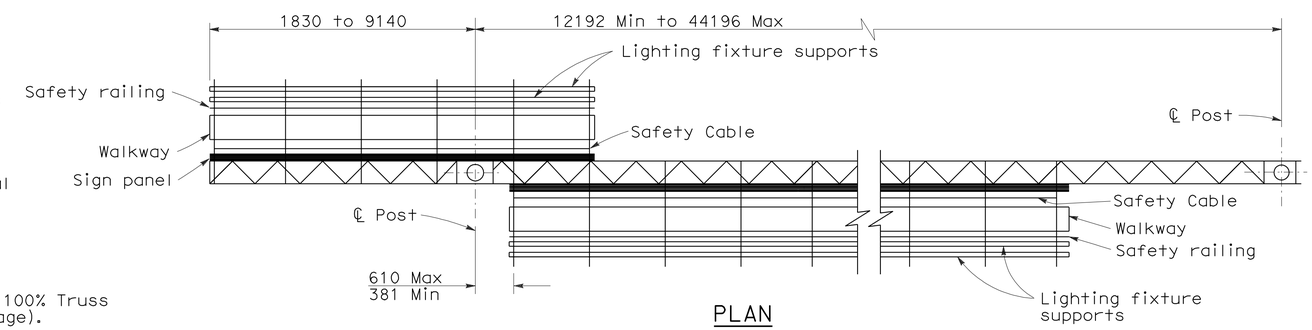


PLAN

TWO POST TYPE WITH CANTILEVER (PART DOUBLE-FACED)

Example No. 3

## GENERAL NOTES

DESIGN:

AASHTO Specifications for Structural Supports for Highway Signs, Luminaires and Traffic Signals, dated 2001.

CONSTRUCTION:

Standard Specifications and the Special Provisions.

LOADING:

WIND LOADING:

Normal to face of sign: 1930 Pa on 100% Truss surface area (i.e. 100% panel coverage).

Transverse to face of sign: 20% of normal force.

WALKWAY LOADING:

Dead load +229 kg concentrated live load.

UNIT STRESSES:

STRUCTURAL STEEL: fy = 250 MPa
REINFORCED CONCRETE: fy = 415 MPa
f'c = 25 MPa

FOOTING SOIL PRESSURE: 120 kPa (spread footing)

MINIMUM CLEARANCE

Vertical roadway clearance 5500 mm.

WELDING:

All welding continuous unless otherwise noted on the plans. All welding to be done in accordance with the Standard Specifications.

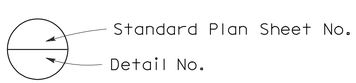


NOTE

Signs are shown and dimensioned looking in the direction of traffic. Double faced signs are shown and dimensioned looking ahead along stationing.

STATE OF CALIFORNIA
DEPARTMENT OF TRANSPORTATION

# OVERHEAD SIGNS-TRUSS INSTRUCTIONS AND EXAMPLES

NO SCALE

ALL DIMENSIONS ARE IN MILLIMETERS UNLESS OTHERWISE SHOWN

RSP S1 DATED JANUARY 24, 2005 SUPERSEDES STANDARD PLAN S1 DATED JULY 1, 2004-PAGE 310 OF THE STANDARD PLANS BOOK DATED JULY 2004.

**REVISED STANDARD PLAN RSP S1**

**2004 REVISED Std PLAN RSP S1**

| DIST | COUNTY | ROUTE | KILOMETER POST TOTAL PROJECT | SHEET NO. | TOTAL SHEETS |
|---|---|---|---|---|---|
| 04 | Ala | 80 | 1.6/2.7 | 541 | 744 |

REGISTERED CIVIL ENGINEER

April 28, 2005
PLANS APPROVAL DATE

REGISTERED PROFESSIONAL ENGINEER
Tillat Sattar
No. C42892
Exp. 03-31-2006
CIVIL
STATE OF CALIFORNIA

*The State of California or its officers or agents shall not be responsible for the accuracy or completeness of electronic copies of this plan sheet.*

*To get to the Caltrans web site, go to: http://www.dot.ca.gov*

*To accompany plans dated* 10-3-11

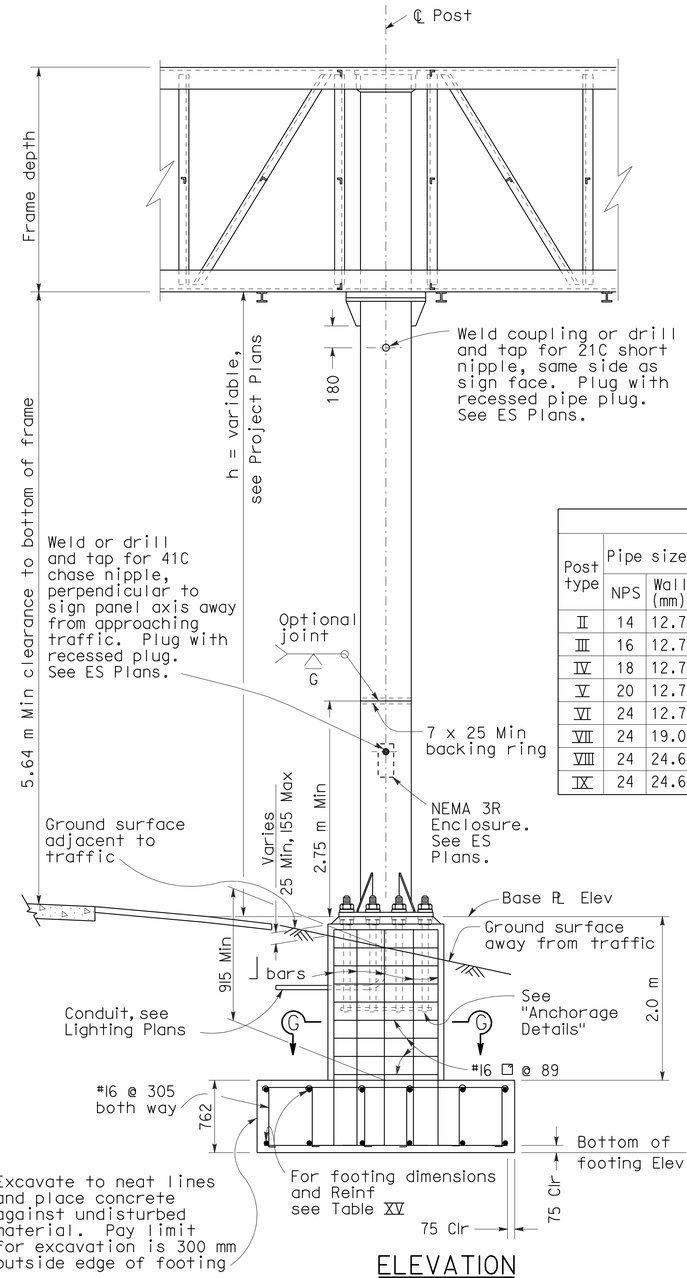


ELEVATION

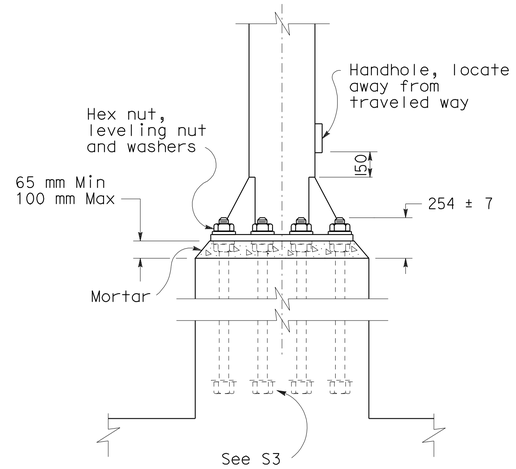


ANCHORAGE DETAILS

TABLE XV

| Post type | Pipe size NPS | Pipe size Wall (mm) | Cap Plate for L 127x127 (mm) | Cap Plate for L 152x152 (mm) | Round Pedestal: Pedestal Size Dia (mm) | Round Pedestal: Vertical ⌋-Bars Equally spaced total | Round Pedestal: Vertical ⌋-Bars Bar Size | Round Pedestal: Vertical ⌋-Bars Bar B.C. (mm) | Round Pedestal: Spiral Bar Size | Round Pedestal: Spiral Pitch (mm) | Square Pedestal: Pedestal Size Square (mm) | Square Pedestal: Vertical ⌋-Bars Equally spaced total | Square Pedestal: Vertical ⌋-Bars Bar Size | Square Pedestal: Vertical ⌋-Bars Spacing ea face (mm) | Square Pedestal: Hoop Bar Size | Square Pedestal: Hoop Spacing (mm) | Pile footing Dia (mm) | Pile footing Depth (m) | Alternate: Spread Footing See note 2 (mm) | Alternate: Spread Footing Reinforcement: Width Top | Alternate: Spread Footing Reinforcement: Width Bottom | Alternate: Spread Footing Reinforcement: Longitudinal Top | Alternate: Spread Footing Reinforcement: Longitudinal Bottom | Alternate: Spread Footing Reinforcement: Footing Stirrups |
|---|---|---|---|---|---|---|---|---|---|---|---|---|---|---|---|---|---|---|---|---|---|---|---|---|
| II | 14 | 12.7 | 610 x 610 x 25 | 660 x 660 x 25 | 1600 | 16 | 32 | 1372 | 16 | 89 | 1600 | 16 | 32 | 346 | 16 | 89 | 1372 | 4.5 | 3658 x 4267 x 762 | 14-#19 | 14-#22 | 13-#29 | 13-#29 | #16 @ 305 |
| III | 16 | 12.7 | 660 x 660 x 25 | 711 x 711 x 25 | 1600 | 16 | 32 | 1372 | 16 | 89 | 1600 | 16 | 32 | 346 | 16 | 89 | 1372 | 4.9 | 3658 x 4267 x 762 | 15-#19 | 15-#22 | 13-#29 | 13-#29 | #16 @ 305 |
| IV | 18 | 12.7 | 711 x 711 x 25 | 762 x 762 x 25 | 1600 | 16 | 32 | 1372 | 16 | 89 | 1600 | 16 | 32 | 346 | 16 | 89 | 1372 | 5.5 | 3658 x 4267 x 762 | 15-#19 | 15-#22 | 13-#29 | 13-#29 | #16 @ 305 |
| V | 20 | 12.7 | 762 x 762 x 25 | 813 x 813 x 25 | 1600 | 16 | 32 | 1372 | 16 | 89 | 1600 | 16 | 32 | 346 | 16 | 89 | 1372 | 5.8 | 3962 x 4267 x 762 | 15-#19 | 15-#22 | 14-#29 | 14-#29 | #16 @ 305 |
| VI | 24 | 12.7 | 864 x 864 x 25 | 914 x 914 x 25 | 1753 | 16 | 36 | 1534 | 16 | 89 | 1753 | 16 | 36 | 381 | 16 | 89 | 1524 | 6.7 | 3962 x 4877 x 762 | 17-#22 | 17-#22 | 14-#29 | 14-#36 | #16 @ 305 |
| VII | 24 | 19.0 | 864 x 864 x 25 | 914 x 914 x 25 | 1753 | 16 | 36 | 1534 | 16 | 89 | 1753 | 16 | 36 | 381 | 16 | 89 | 1524 | 7.0 | 3962 x 5182 x 762 | 18-#22 | 18-#22 | 14-#29 | 14-#36 | #16 @ 305 |
| VIII | 24 | 24.6 | 864 x 864 x 25 | 914 x 914 x 25 | 1753 | 16 | 36 | 1534 | 16 | 89 | 1753 | 16 | 36 | 381 | 16 | 89 | 1524 | 7.6 | 3962 x 5486 x 762 | 19-#22 | 19-#22 | 14-#29 | 14-#36 | #16 @ 305 |
| IX | 24 | 24.6 | 864 x 864 x 25 | 914 x 914 x 25 | 1753 | 16 | 36 | 1534 | 16 | 89 | 1753 | 16 | 36 | 381 | 16 | 89 | 1524 | 7.6 | 3962 x 5486 x 762 | 19-#22 | 19-#22 | 14-#29 | 14-#36 | #16 @ 305 |

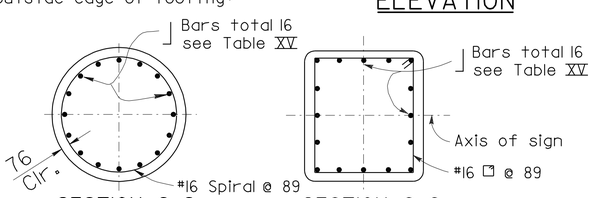


SECTION G-G
ROUND PEDESTAL

SECTION G-G
RECTANGLE PEDESTAL

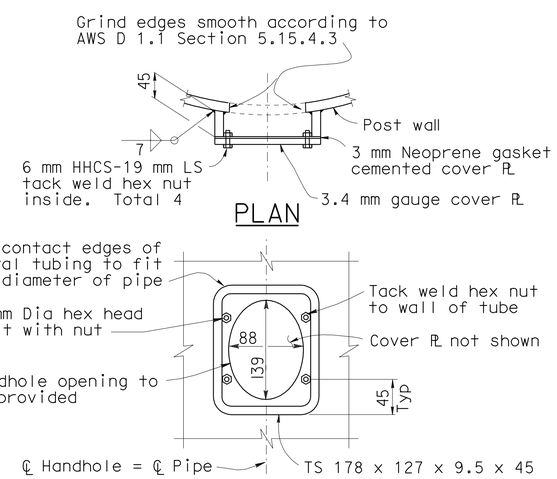


PLAN

ELEVATION

TYPICAL DETAILS OF HANDHOLE AND COVER

**Notes:**

1. For "General Notes" see Revised Standard Plan RSP S1.
2. Longer side of footing shall be normal to axis of sign.
3. Backfill shall be in place prior to erection of post.
4. Thread upper 254 mm of anchor bolts and galvanize upper 305 mm.
5. Spread footing shown, use Pile Foundation when shown on the Project Plans.
6. Anchor plates may be retained with hexagon nut or formed head as alternatives to details shown.
7. On single post sign structures, the post shall be raked out of plumb, with the use of the leveling nuts to make the bottom of the sign frame level.
8. At final position of post all top and bottom nuts shall be tightened against base plate.
9. When foundation is located on a steep slope with exposed face of concrete adjacent to traffic, see "Detail C" on Revised Standard Plan RSP S7 or RSP S8, as applicable.
10. Slope protection required when indicated on the Project Plans.

STATE OF CALIFORNIA
DEPARTMENT OF TRANSPORTATION

# OVERHEAD SIGNS-TRUSS SINGLE POST TYPE POST TYPES II THROUGH IX

NO SCALE

ALL DIMENSIONS ARE IN MILLIMETERS UNLESS OTHERWISE SHOWN

RSP S2 DATED APRIL 28, 2005 SUPERSEDES RSP S2 DATED JANUARY 24,2005 AND STANDARD PLAN S2 DATED JULY 1, 2004-PAGE 311 OF THE STANDARD PLANS BOOK DATED JULY 2004.

**REVISED STANDARD PLAN RSP S2**

**2004 REVISED Std PLAN RSP S2**

| DIST | COUNTY | ROUTE | KILOMETER POST TOTAL PROJECT | SHEET NO. | TOTAL SHEETS |
|---|---|---|---|---|---|
| 04 | Ala | 80 | 1.6/2.7 | 542 | 744 |

To accompany plans dated 10-3-11

Caltrans Metric

REGISTERED CIVIL ENGINEER

January 24, 2005
PLANS APPROVAL DATE

REGISTERED PROFESSIONAL ENGINEER
Tillat Sattar
No. C42892
Exp. 03-31-2006
CIVIL
STATE OF CALIFORNIA

*The State of California or its officers or agents shall not be responsible for the accuracy or completeness of electronic copies of this plan sheet.*

*To get to the Caltrans web site, go to: http://www.dot.ca.gov*

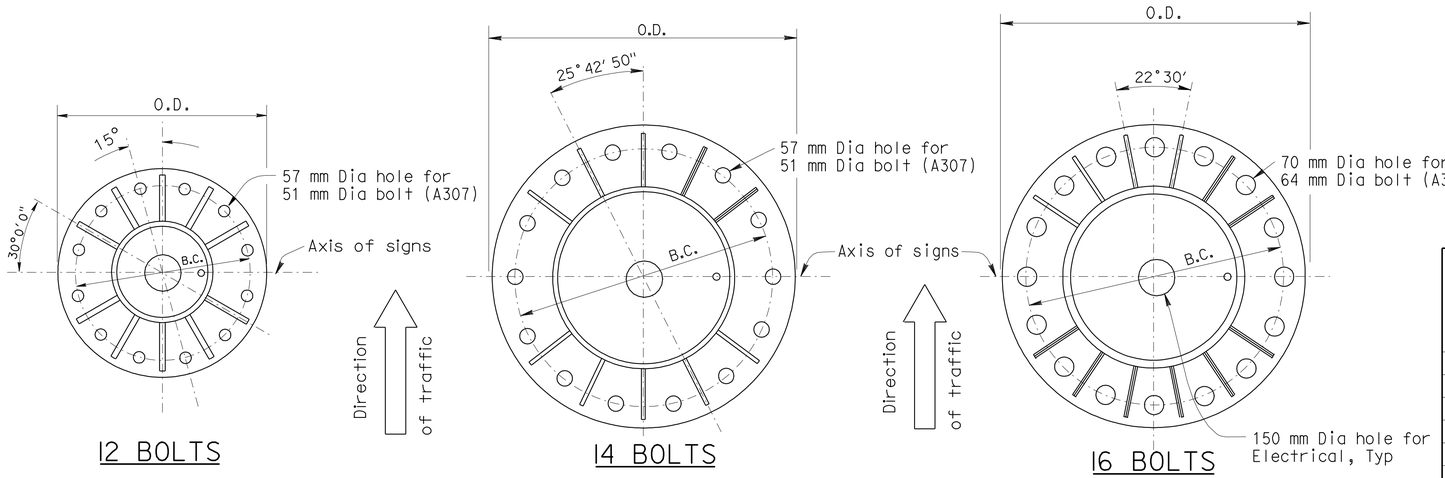


## SINGLE POST TYPE BASE PLATE DETAILS

| Post Type No. | Nominal Pipe Size (NPS) | Pipe Thickness (mm) | Base ℄ OD & Thickness (mm) | Anchor: Bolt Circle (mm) | Anchor: Bolts Total & Dia (mm) | CIDH: Pile Dia (mm) | CIDH: Pile Depth (m) | CIDH: Vertical Reinforcing: Total | CIDH: Vertical Reinforcing: Bar Size | CIDH: Vertical Reinforcing: Bar Circle (mm) | CIDH: Spiral: Bar Size | CIDH: Spiral: Pitch (mm) |
|---|---|---|---|---|---|---|---|---|---|---|---|---|
| II | 14 | 12.7 | 864 x 51 | 610 | 12-51 | 1372 | 4.5 | 26 | 32 | 1143 | 16 | 89 |
| III | 16 | 12.7 | 864 x 51 | 610 | 12-51 | 1372 | 4.9 | 26 | 32 | 1143 | 16 | 89 |
| IV | 18 | 12.7 | 864 x 51 | 610 | 12-51 | 1372 | 5.5 | 26 | 32 | 1143 | 16 | 89 |
| V | 20 | 12.7 | 1016 x 64 | 864 | 14-51 | 1372 | 5.8 | 26 | 32 | 1143 | 16 | 89 |
| VI | 24 | 12.7 | 1016 x 64 | 864 | 16-64 | 1524 | 6.7 | 28 | 36 | 1295 | 16 | 89 |
| VII | 24 | 19.0 | 1016 x 64 | 864 | 16-64 | 1524 | 7.0 | 28 | 36 | 1295 | 16 | 89 |
| VIII | 24 | 24.6 | 1016 x 89 | 864 | 16-64 | 1524 | 7.6 | 28 | 36 | 1295 | 16 | 89 |
| IX | 24 | 24.6 | 1016 x 89 | 864 | 16-64 | 1524 | 7.6 | 28 | 36 | 1295 | 16 | 89 |

## SINGLE POST TABLE

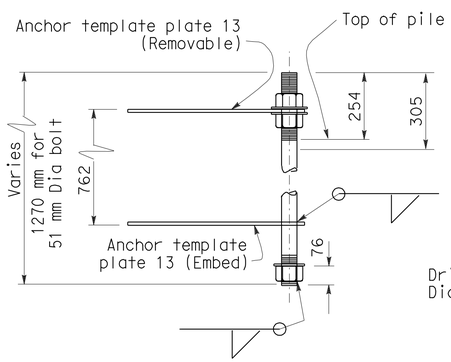


FOR POST II THRU IV
12 BOLTS PATTERN

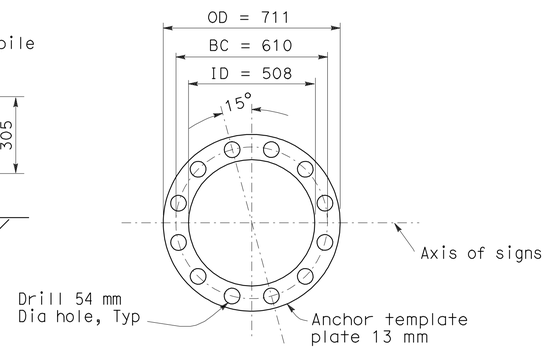


12 BOLTS

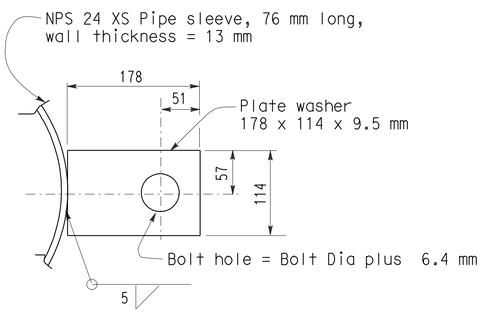


PLATE WASHER FOR
14 &16 BOLT PATTERN

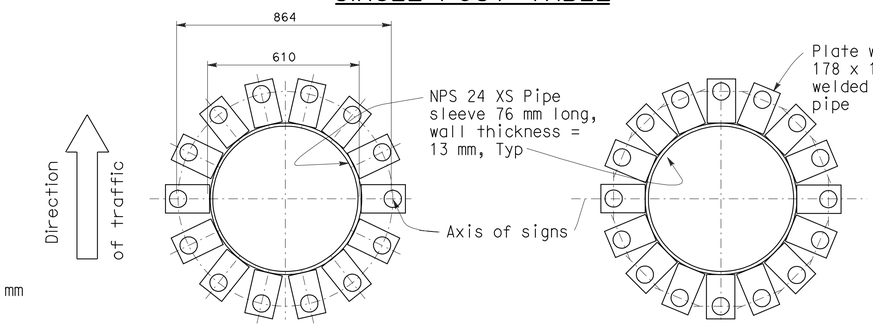


14 BOLTS
ANCHOR BOLT TEMPLATE
Template to match base plate anchor bolt layouts

16 BOLTS
(Option: Permanent template similar to ring plate type can be used in lieu of plate washer type).

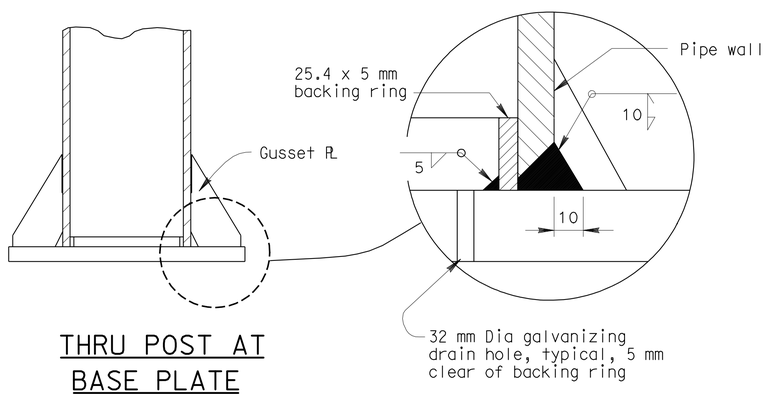


THRU POST AT
BASE PLATE

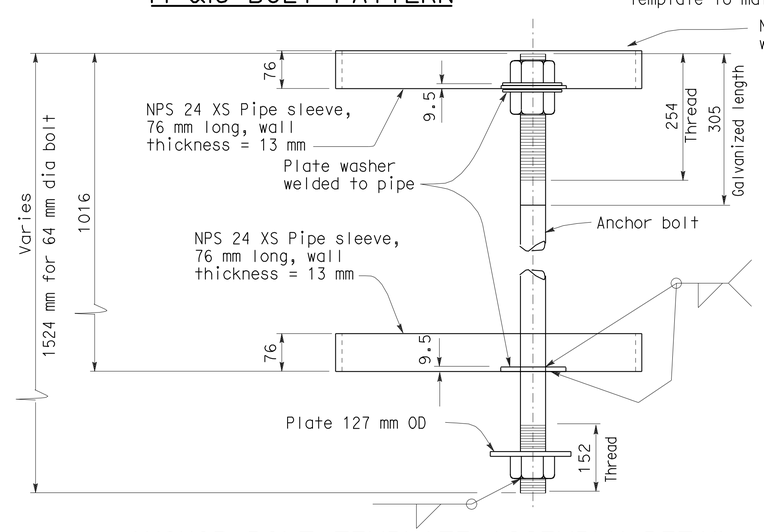


ANCHOR BOLT TEMPLATE ASSEMBLY DETAIL
Note: One bolt shown only. Other bolts not shown.

STATE OF CALIFORNIA
DEPARTMENT OF TRANSPORTATION

# OVERHEAD SIGNS-TRUSS SINGLE POST TYPE BASE PLATE AND ANCHORAGE DETAILS

NO SCALE

ALL DIMENSIONS ARE IN
MILLIMETERS UNLESS OTHERWISE SHOWN

RSP S3 DATED JANUARY 24, 2005 SUPERSEDES STANDARD PLAN S3
DATED JULY 1, 2004-PAGE 312 OF THE STANDARD PLANS BOOK DATED JULY 2004.

**REVISED STANDARD PLAN RSP S3**

**2004 REVISED Std PLAN RSP S3**

To accompany plans dated 10-3-11

Caltrans Metric

| DIST | COUNTY | ROUTE | KILOMETER POST TOTAL PROJECT | SHEET NO. | TOTAL SHEETS |
|---|---|---|---|---|---|
| 04 | Ala | 80 | 1.6/2.7 | 543 | 744 |

REGISTERED CIVIL ENGINEER

January 24, 2005
PLANS APPROVAL DATE

REGISTERED PROFESSIONAL ENGINEER Tillat Sattar No. C42892 Exp. 03-31-2006 CIVIL STATE OF CALIFORNIA

*The State of California or its officers or agents shall not be responsible for the accuracy or completeness of electronic copies of this plan sheet.*

*To get to the Caltrans web site, go to: http://www.dot.ca.gov*

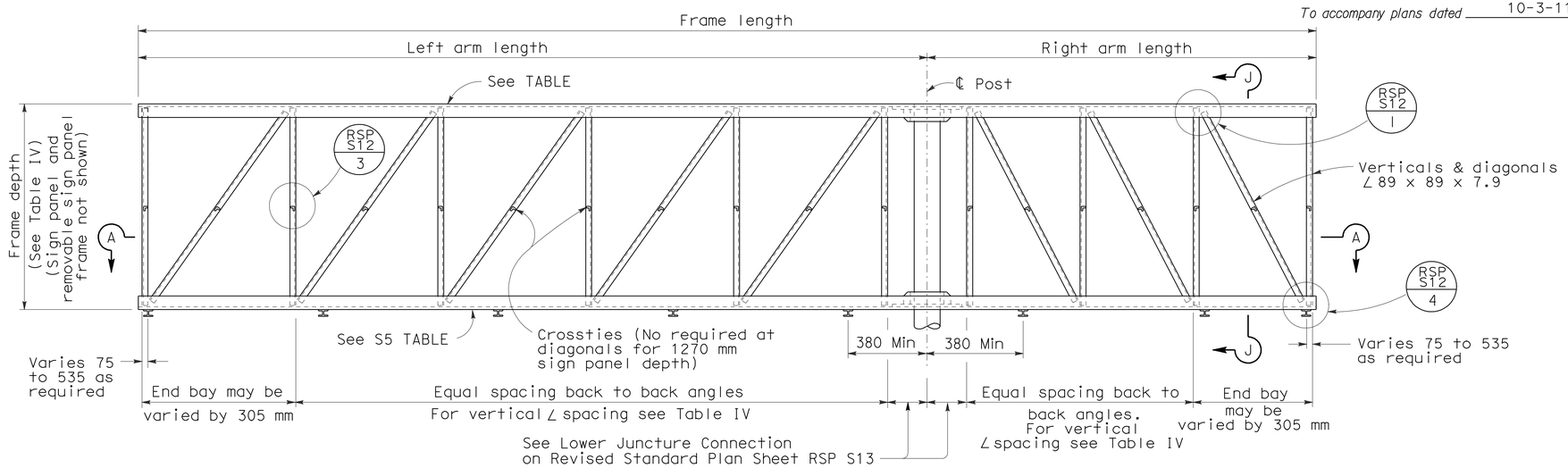


**Note:**

Left arm may be shorter, longer or equal to right arm length

ELEVATION

## TABLE IV

| Sign Panel Depth (mm) | Frame Depth (mm) | Maximum Vertical ∠ Spacing (mm) | See Note 6 (mm) |
|---|---|---|---|
| 1270 | 1423 | 1372 | 1220 |
| 1524 | 1675 | 1524 | 1220 |
| 1778 | 1931 | 1676 | 1220 |
| 2032 | 2185 | 1829 | 1525 |
| 2286 | 2439 | 2134 | 1525 |
| 2540 | 2693 | 2134 | 1830 |
| 2794 | 2693 | 2134 | 1830 |
| 3048 | 2693 | 2134 | 1830 |

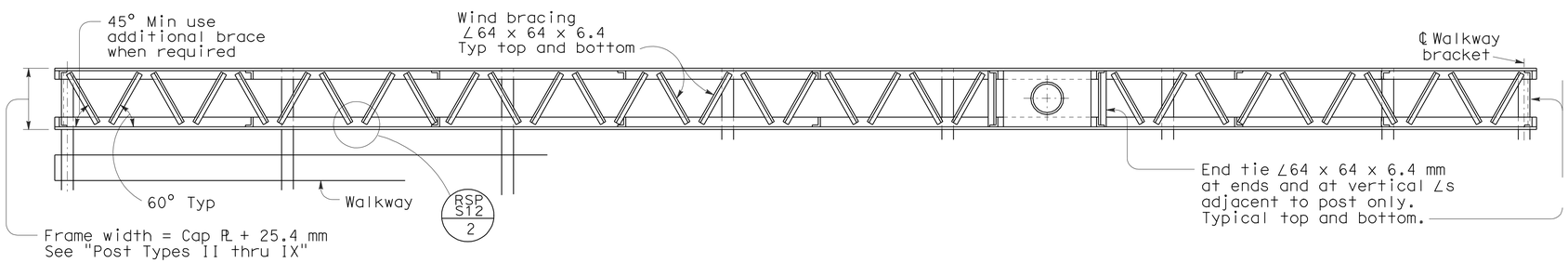


SECTION A-A

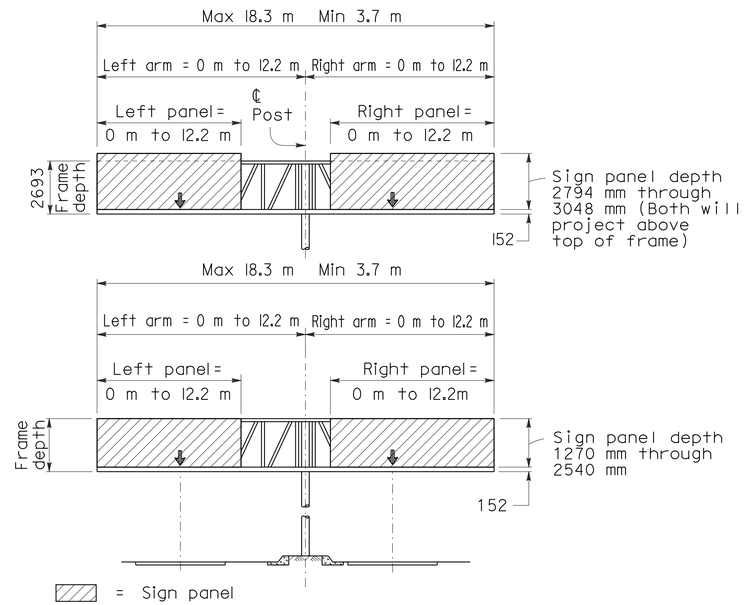


RANGE OF STRUCTURE SIZES

**Notes:**

1. For connection of frame to post see RSP S13.
2. For walkway see RSP S16 and RSP S17.
3. For walkway length see RSP S1.
4. Minimum length of frame = 3660 mm.
5. Maximum length of frame = 18 290 mm.
6. Diagonal not required if arm length is equal to or less than shown in this column see table IV.

Standard Plan sheet number
Detail number

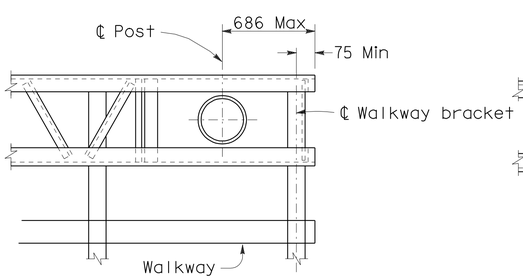


PART PLAN OF CANTILEVER TYPE AT POST

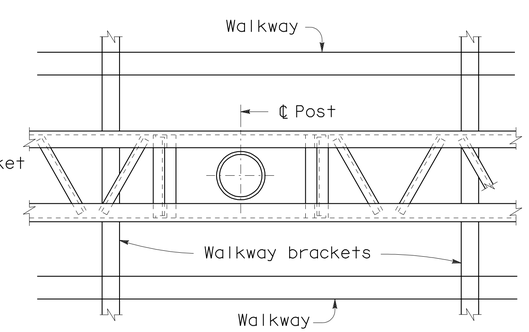


PART PLAN OF DOUBLE FACED TYPE AT POST

STATE OF CALIFORNIA
DEPARTMENT OF TRANSPORTATION

# OVERHEAD SIGNS-TRUSS SINGLE POST TYPE STRUCTURAL FRAME MEMBERS DETAILS No.1

NO SCALE

ALL DIMENSIONS ARE IN MILLIMETERS UNLESS OTHERWISE SHOWN

RSP S4 DATED JANUARY 24, 2005 SUPERSEDES STANDARD PLAN S4 DATED JULY 1, 2004-PAGE 313 OF THE STANDARD PLANS BOOK DATED JULY 2004.

**REVISED STANDARD PLAN RSP S4**

**2004 REVISED Std PLAN RSP S4**

| DIST | COUNTY | ROUTE | KILOMETER POST TOTAL PROJECT | SHEET NO. | TOTAL SHEETS |
|---|---|---|---|---|---|
| 04 | Ala | 80 | 1.6/2.7 | 544 | 744 |

REGISTERED CIVIL ENGINEER

January 24, 2005
PLANS APPROVAL DATE

REGISTERED PROFESSIONAL ENGINEER
Tillat Sattar
No. C42892
Exp. 03-31-2006
CIVIL
STATE OF CALIFORNIA

*The State of California or its officers or agents shall not be responsible for the accuracy or completeness of electronic copies of this plan sheet.*

*To get to the Caltrans web site, go to: http://www.dot.ca.gov*

*To accompany plans dated* 10-3-11

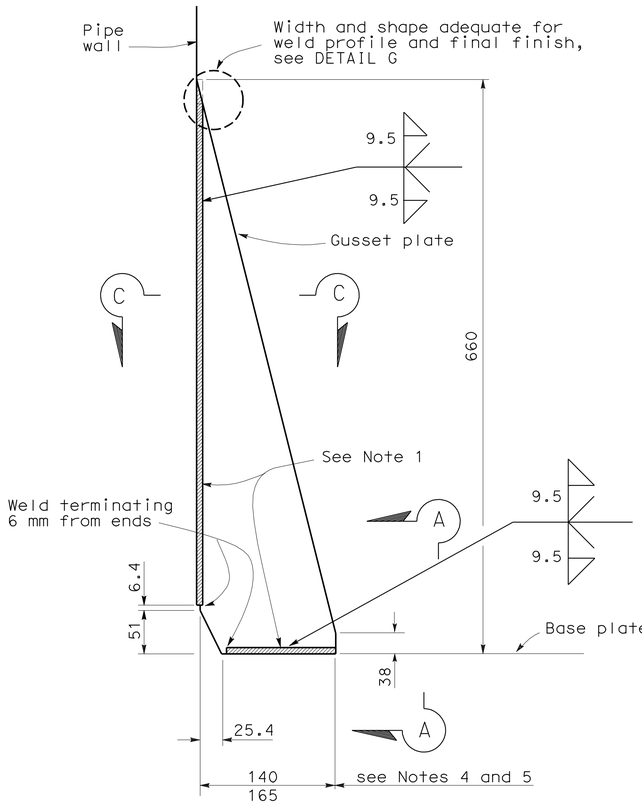


WELD DETAILS

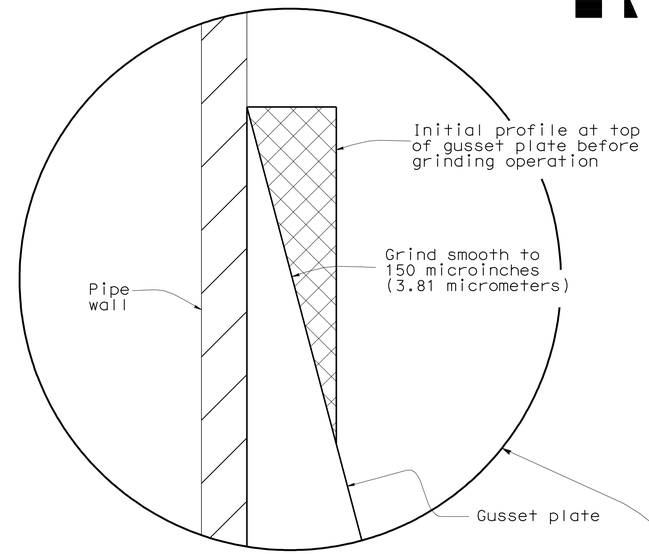


DETAIL G

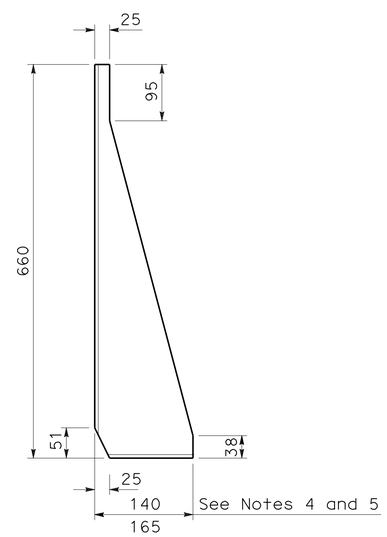


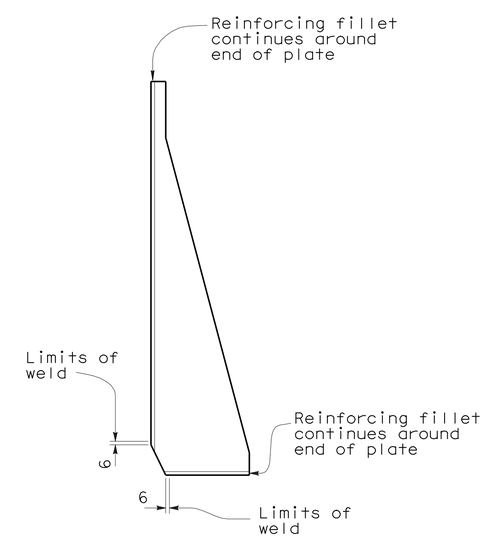


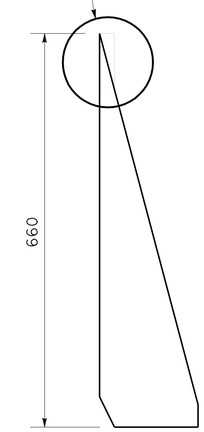


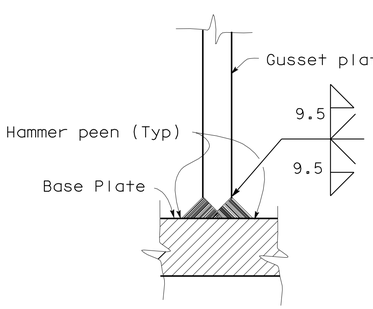


SECTION A-A

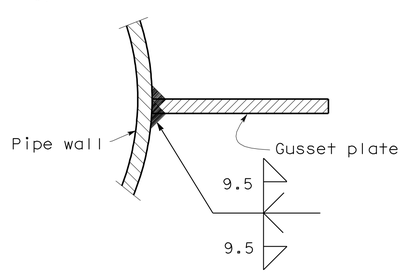


SECTION C-C

NOTES

1. All welding details shall conform to the requirements of AWS D1.1 and special provisions.
2. All gussets to be same height.
3. Provide a smooth transition from gusset plate to tube.
4. 140 mm for post Types I-S through V-S and single post with 12 and 14 bolts pattern.
5. 165 mm for post Type VI-S and VII-S and single post with 16 bolts pattern.

STATE OF CALIFORNIA
DEPARTMENT OF TRANSPORTATION

# OVERHEAD SIGNS-TRUSS GUSSET PLATE DETAILS

NO SCALE

ALL DIMENSIONS ARE IN MILLIMETERS UNLESS OTHERWISE SHOWN

RSP S6 DATED JANUARY 24, 2005 SUPERSEDES STANDARD PLAN S6 DATED JULY 1, 2004-PAGE 315 OF THE STANDARD PLANS BOOK DATED JULY 2004.

**REVISED STANDARD PLAN RSP S6**

**2004 REVISED Std PLAN RSP S6**

| DIST | COUNTY | ROUTE | KILOMETER POST TOTAL PROJECT | SHEET NO. | TOTAL SHEETS |
|---|---|---|---|---|---|
| 04 | Ala | 80 | 1.6/2.7 | 545 | 744 |

Caltrans Metric

REGISTERED CIVIL ENGINEER

January 24, 2005
PLANS APPROVAL DATE

REGISTERED PROFESSIONAL ENGINEER
Tillat Sattar
No. C42892
Exp. 03-31-2006
CIVIL
STATE OF CALIFORNIA

*The State of California or its officers or agents shall not be responsible for the accuracy or completeness of electronic copies of this plan sheet.*

*To get to the Caltrans web site, go to: http://www.dot.ca.gov*

*To accompany plans dated* 10-3-11

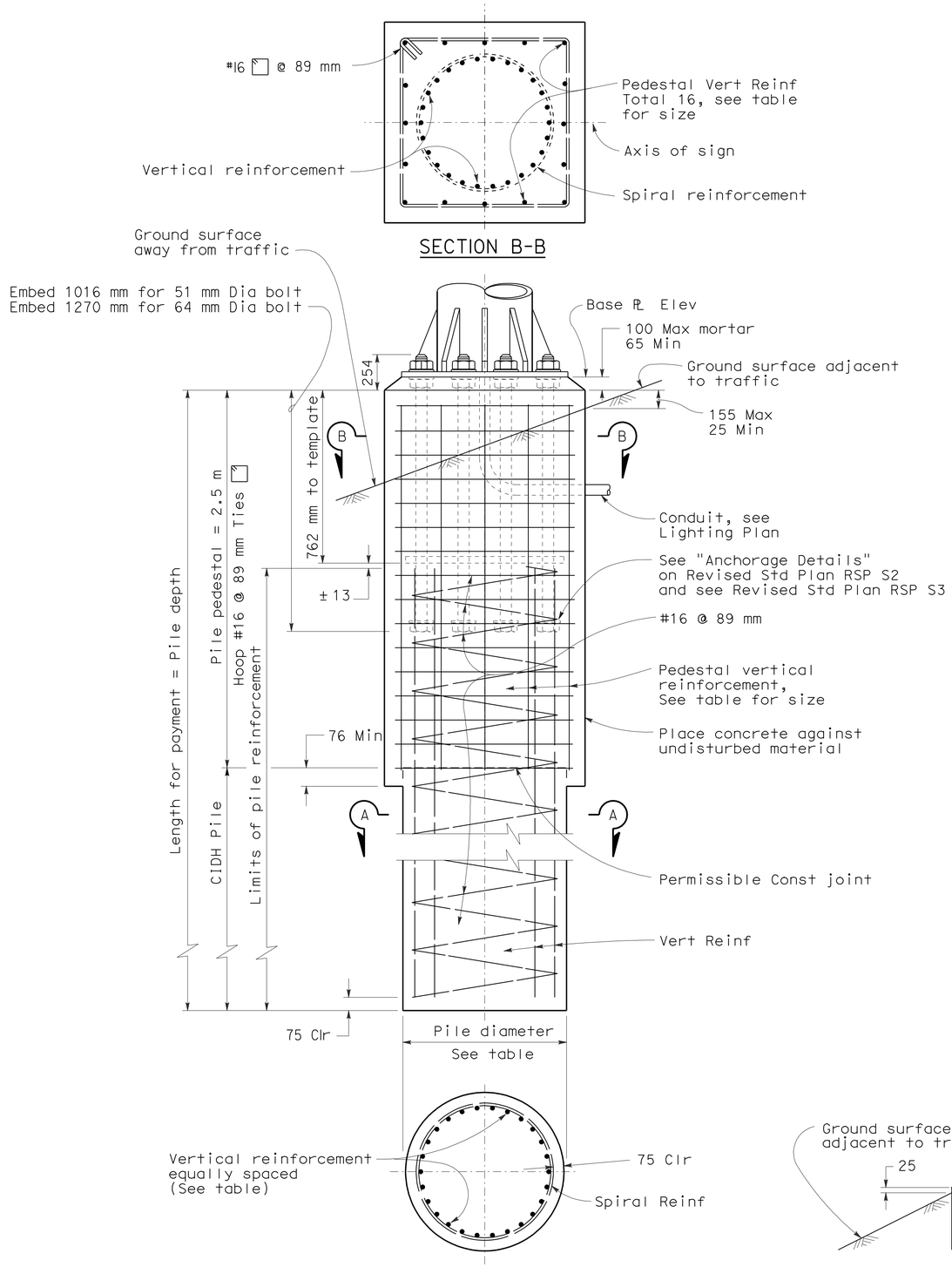


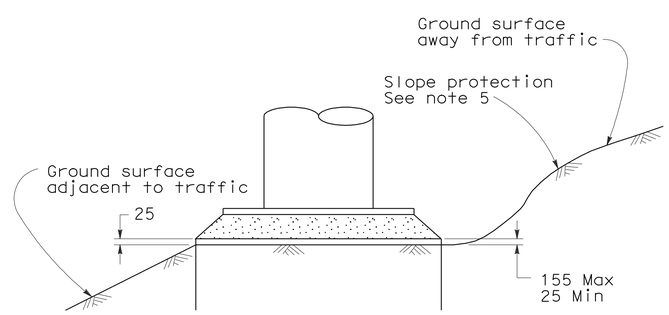


| Post Type No. | Anchor Bolts: Bolt Circle (mm) | Anchor Bolts: Bolts Total & Dia (mm) | Anchor Bolts: Total Length (mm) | Square Pedestal: Pedestal Square one side (mm) | Square Pedestal: Reinforcing Total | Square Pedestal: Reinforcing Bar Size | Square Pedestal: Reinforcing # of bars each face | Square Pedestal: Hoop Bar Size | Square Pedestal: Hoop Pitch (mm) | CIDH: Pile Dia (mm) | CIDH: ✱✱ Pile Depth (m) | CIDH: Vertical Reinforcing Total | CIDH: Vertical Reinforcing Bar Size | CIDH: Vertical Reinforcing Bar Circle (mm) | CIDH: Spiral Bar Size | CIDH: Spiral Pitch (mm) |
|---|---|---|---|---|---|---|---|---|---|---|---|---|---|---|---|---|
| II | 610 | 12-51 | 1270 | 1600 | 16 | #32 | 5 | #16 | 89 | 1372 | 4.5 | 26 | #32 | 1143 | #16 | 89 |
| III | 610 | 12-51 | 1270 | 1600 | 16 | #32 | 5 | #16 | 89 | 1372 | 4.9 | 26 | #32 | 1143 | #16 | 89 |
| IV | 610 | 12-51 | 1270 | 1600 | 16 | #32 | 5 | #16 | 89 | 1372 | 5.5 | 26 | #32 | 1143 | #16 | 89 |
| V | 864 | 14-51 | 1270 | 1600 | 16 | #32 | 5 | #16 | 89 | 1372 | 5.8 | 26 | #32 | 1143 | #16 | 89 |
| VI | 864 | 16-64 | 1524 | 1753 | 16 | #36 | 5 | #16 | 89 | 1524 | 6.7 | 28 | #36 | 1295 | #16 | 89 |
| VII | 864 | 16-64 | 1524 | 1753 | 16 | #36 | 5 | #16 | 89 | 1524 | 7.0 | 28 | #36 | 1295 | #16 | 89 |
| VIII | 864 | 16-64 | 1524 | 1753 | 16 | #36 | 5 | #16 | 89 | 1524 | 7.6 | 28 | #36 | 1295 | #16 | 89 |
| IX | 864 | 16-64 | 1524 | 1753 | 16 | #36 | 5 | #16 | 89 | 1524 | 7.6 | 28 | #36 | 1295 | #16 | 89 |

✱✱ Use Foundation Depth shown in table unless otherwise shown on the Project Plans.

## NOTES

1. For anchor bolt layout see post sheet.
2. For "Base ℞ elevation" see Project Plans.
3. Prior to erection of the post, backfill which is equivalent to the surrounding material shall be in place.
4. Pedestal shall be formed 150 mm minimum below ground surface Remainder to be placed against undisturbed material.
5. Slope protection required when indicated on the Project Plans.
6. Foundation design is based on 2001 AASHTO article 13.6 Broms' approximate procedure assuming a cohesionless material. The angle of internal friction used is 30 degree and unit weight of soil used is 1922 kg/m³.

STATE OF CALIFORNIA
DEPARTMENT OF TRANSPORTATION

# OVERHEAD SIGNS-TRUSS SINGLE POST TYPE SQUARE PEDESTAL PILE FOUNDATION

NO SCALE

ALL DIMENSIONS ARE IN MILLIMETERS UNLESS OTHERWISE SHOWN

RSP S7 DATED JANUARY 24, 2005 SUPERSEDES STANDARD PLAN S7 DATED JULY 1, 2004-PAGE 316 OF THE STANDARD PLANS BOOK DATED JULY 2004.

**REVISED STANDARD PLAN RSP S7**

**2004 REVISED Std PLAN RSP S7**

| DIST | COUNTY | ROUTE | KILOMETER POST TOTAL PROJECT | SHEET NO. | TOTAL SHEETS |
|---|---|---|---|---|---|
| 04 | Ala | 80 | 1.6/2.7 | 546 | 744 |

Caltrans Metric

REGISTERED CIVIL ENGINEER

January 24, 2005
PLANS APPROVAL DATE

REGISTERED PROFESSIONAL ENGINEER
Tillat Sattar
No. C42892
Exp. 03-31-2006
CIVIL
STATE OF CALIFORNIA

*The State of California or its officers or agents shall not be responsible for the accuracy or completeness of electronic copies of this plan sheet.*

*To get to the Caltrans web site, go to: http://www.dot.ca.gov*

*To accompany plans dated* 10-3-11

**2004 REVISED Std PLAN RSP S8**

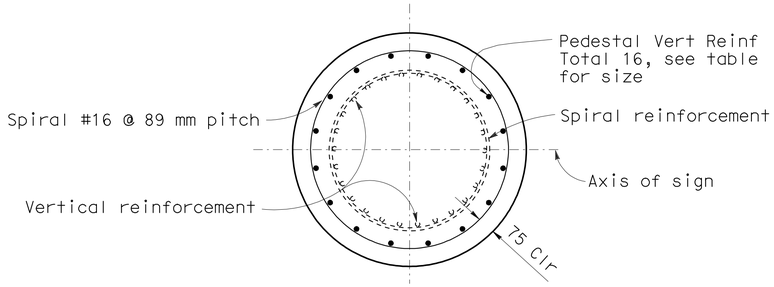


SECTION B-B

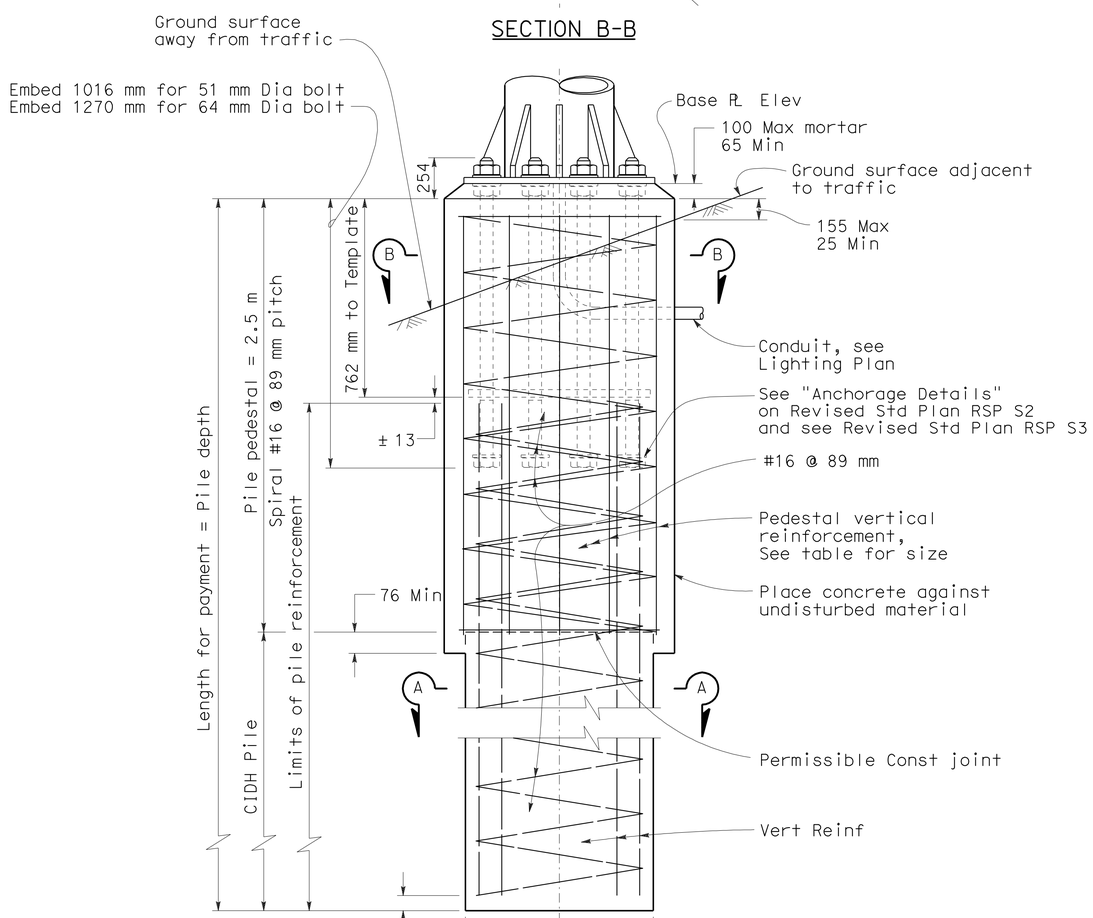


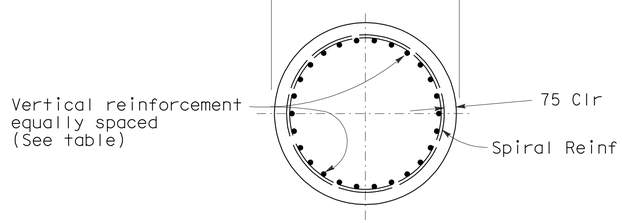


SECTION A-A

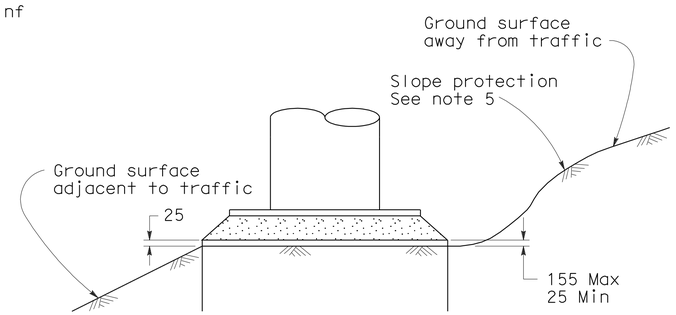


DETAIL C

| Post Type No. | Anchor Bolts | | | Round Pedestal | | | | | | CIDH | | | | | | |
|---|---|---|---|---|---|---|---|---|---|---|---|---|---|---|---|---|
| | | | | | Reinforcing | | | Spiral | | | ** | Vertical Reinforcing | | | Spiral | |
| | Bolt Circle (mm) | Bolts Total & Dia (mm) | Total Length (mm) | Dia (mm) | Total | Bar Size | Loop Circle (mm) | Bar Size | Pitch (mm) | Pile Dia (mm) | Pile Depth (m) | Total | Bar Size | Bar Circle (mm) | Bar Size | Pitch (mm) |
| II | 610 | 12-51 | 1270 | 1600 | 16 | #32 | 1435 | #16 | 89 | 1372 | 4.5 | 26 | #32 | 1143 | #16 | 89 |
| III | 610 | 12-51 | 1270 | 1600 | 16 | #32 | 1435 | #16 | 89 | 1372 | 4.9 | 26 | #32 | 1143 | #16 | 89 |
| IV | 610 | 12-51 | 1270 | 1600 | 16 | #32 | 1435 | #16 | 89 | 1372 | 5.5 | 26 | #32 | 1143 | #16 | 89 |
| V | 864 | 14-51 | 1270 | 1600 | 16 | #32 | 1435 | #16 | 89 | 1372 | 5.8 | 26 | #32 | 1143 | #16 | 89 |
| VI | 864 | 16-64 | 1524 | 1753 | 16 | #36 | 1581 | #16 | 89 | 1524 | 6.7 | 28 | #36 | 1295 | #16 | 89 |
| VII | 864 | 16-64 | 1524 | 1753 | 16 | #36 | 1581 | #16 | 89 | 1524 | 7.0 | 28 | #36 | 1295 | #16 | 89 |
| VIII | 864 | 16-64 | 1524 | 1753 | 16 | #36 | 1581 | #16 | 89 | 1524 | 7.6 | 28 | #36 | 1295 | #16 | 89 |
| IX | 864 | 16-64 | 1524 | 1753 | 16 | #36 | 1581 | #16 | 89 | 1524 | 7.6 | 28 | #36 | 1295 | #16 | 89 |

** Use Foundation Depth shown in table unless otherwise shown on the Project Plans.

## NOTES

1. For anchor bolt layout see post sheet.
2. For "Base ℞ elevation" see Project Plans.
3. Prior to erection of the post, backfill which is equivalent to the surrounding material shall be in place.
4. Pedestal shall be formed 150 mm minimum below ground surface Remainder to be placed against undisturbed material.
5. Slope protection required when indicated on the Project Plans.
6. Foundation design is based on 2001 AASHTO article 13.6 Broms' approximate procedure assuming a cohesionless material. The angle of internal friction used is 30 degree and unit weight of soil used is 1922 kg/m$^3$.

STATE OF CALIFORNIA
DEPARTMENT OF TRANSPORTATION

# OVERHEAD SIGNS-TRUSS SINGLE POST TYPE ROUND PEDESTAL PILE FOUNDATION

NO SCALE

ALL DIMENSIONS ARE IN MILLIMETERS UNLESS OTHERWISE SHOWN

RSP S8 DATED JANUARY 24, 2005 SUPERSEDES STANDARD PLAN S8 DATED JULY 1, 2004-PAGE 317 OF THE STANDARD PLANS BOOK DATED JULY 2004.

**REVISED STANDARD PLAN RSP S8**

| DIST | COUNTY | ROUTE | KILOMETER POST TOTAL PROJECT | SHEET NO. | TOTAL SHEETS |
|---|---|---|---|---|---|
| 04 | Ala | 80 | 1.6/2.7 | 547 | 744 |

REGISTERED CIVIL ENGINEER

January 24, 2005
PLANS APPROVAL DATE

REGISTERED PROFESSIONAL ENGINEER — Tillat Sattar — No. C42892 — Exp. 03-31-2006 — CIVIL — STATE OF CALIFORNIA

*The State of California or its officers or agents shall not be responsible for the accuracy or completeness of electronic copies of this plan sheet.*

*To get to the Caltrans web site, go to: http://www.dot.ca.gov*

*To accompany plans dated* 10-3-11

Caltrans Metric

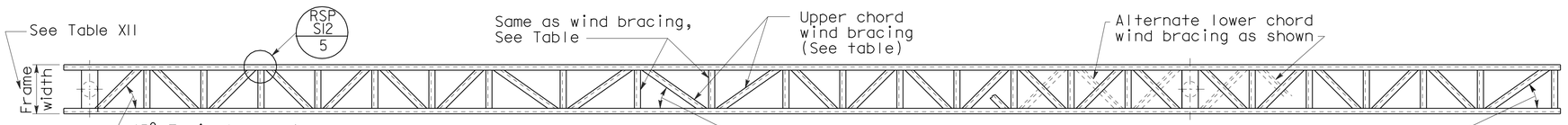


PLAN

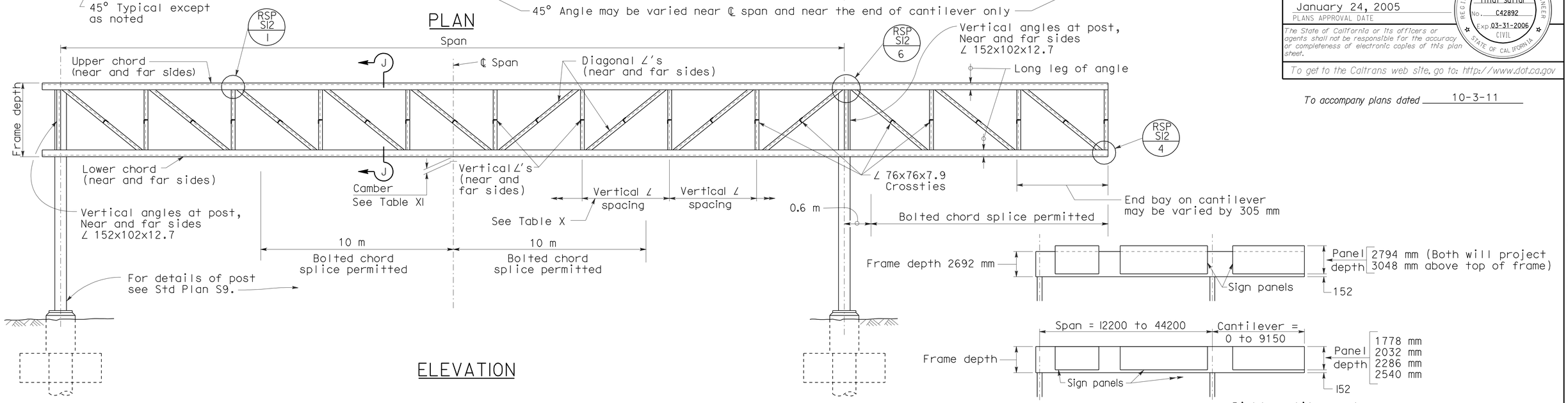


ELEVATION

| Span (m) | 1778 mm Panel Depth | | | | | 2032 mm Panel Depth | | | | | 2286 mm Panel Depth | | | | |
|---|---|---|---|---|---|---|---|---|---|---|---|---|---|---|---|
| | Frame Width (mm) | Chord ∠'s | Vertical ∠'s | Diagonal ∠'s | Wind Bracing ∠'s | Frame Width (mm) | Chord ∠'s | Vertical ∠'s | Diagonal ∠'s | Wind Bracing ∠'s | Frame Width (mm) | Chord ∠'s | Vertical ∠'s | Diagonal ∠'s | Wind Bracing ∠'s |
| 12.2-15.4 | 915 | 127x89x9.5 | 89x89x7.9 | 89x89x7.9 | 64x64x6.4 | 915 | 127x89x9.5 | 89x89x7.9 | 89x89x7.9 | 64x64x6.4 | 915 | 127x89x9.5 | 89x89x7.9 | 89x89x7.9 | 64x64x6.4 |
| 15.5-18.5 | 915 | 127x89x9.5 | | | 64x64x6.4 | 915 | 127x89x9.5 | | | 64x64x6.4 | 915 | 127x89x9.5 | | | 64x64x6.4 |
| 18.6-21.5 | 915 | 127x89x9.5 | | | 64x64x6.4 | 915 | 127x89x9.5 | | | 64x64x6.4 | 915 | 127x89x9.5 | | | 64x64x6.4 |
| 21.6-24.6 | 915 | 152x102x12.7 | | | 64x64x6.4 | 915 | 152x102x12.7 | | | 64x64x6.4 | 915 | 152x102x12.7 | | | 64x64x6.4 |
| 24.7-27.6 | 915 | 152x102x12.7 | | | 64x64x6.4 | 915 | 152x102x12.7 | | | 64x64x6.4 | 915 | 152x102x12.7 | | | 64x64x6.4 |
| 27.7-30.7 | 915 | 152x102x12.7 | | | 64x64x6.4 | 915 | 152x102x12.7 | | | 64x64x6.4 | 915 | 152x102x12.7 | | | 64x64x6.4 |
| 30.8-33.7 | 915 | 203x102x19.0 | | | 64x64x6.4 | 915 | 203x102x19.0 | | | 64x64x6.4 | 915 | 203x102x19.0 | | | 76x76x9.5 |
| 33.8-36.8 | 915 | 203x102x19.0 | | | 64x64x6.4 | 915 | 203x102x19.0 | | | 64x64x6.4 | 915 | 203x102x19.0 | | | 76x76x9.5 |
| 36.9-39.8 | 915 | 203x102x19.0 | | | 64x64x6.4 | 915 | 203x102x19.0 | | | 64x64x6.4 | 1067 | 203x102x19.0 | | | 76x76x9.5 |
| 39.9-44.2 | 915 | 203x102x19.0 | | | 64x64x6.4 | 915 | 203x102x19.0 | | | 64x64x6.4 | 1067 | 203x102x19.0 | | | 76x76x9.5 |

| Span (m) | 2540 mm Panel Depth | | | | |
|---|---|---|---|---|---|
| | Frame Width (mm) | Chord ∠'s | Vertical ∠'s | Diagonal ∠'s | Wind Bracing ∠'s |
| 12.2-15.4 | 915 | 127x89x9.5 | 89x89x7.9 | 89x89x7.9 | 64x64x6.4 |
| 15.5-18.5 | 915 | 127x89x9.5 | | | 64x64x6.4 |
| 18.6-21.5 | 915 | 127x89x9.5 | | | 64x64x6.4 |
| 21.6-24.6 | 915 | 152x102x12.7 | | | 64x64x6.4 |
| 24.7-27.6 | 915 | 152x102x12.7 | | | 64x64x6.4 |
| 27.7-30.7 | 915 | 152x102x12.7 | | | 64x64x6.4 |
| 30.8-33.7 | 1067 | 203x102x19.0 | | | 76x76x9.5 |
| 33.8-36.8 | 1067 | 203x102x19.0 | | | 76x76x9.5 |
| 36.9-39.8 | 1067 | 203x102x19.0 | | | 76x76x9.5 |
| 39.9-44.2 | 1067 | 203x102x19.0 | | | 76x76x9.5 |

| Span (m) | 2794 mm and 3048 mm Panel Depth | | | | |
|---|---|---|---|---|---|
| | Frame Width (mm) | Chord ∠'s | Vertical ∠'s | Diagonal ∠'s | Wind Bracing ∠'s |
| 12.2-15.4 | 915 | 127x89x9.5 | 89x89x7.9 | 89x89x7.9 | 64x64x6.4 |
| 15.5-18.5 | 915 | 127x89x9.5 | | | 64x64x6.4 |
| 18.6-21.5 | 915 | 127x89x9.5 | | | 64x64x6.4 |
| 21.6-24.6 | 915 | 152x102x12.7 | | | 76x76x9.5 |
| 24.7-27.6 | 915 | 152x102x12.7 | | | 76x76x9.5 |
| 27.7-30.7 | 1067 | 152x102x12.7 | | | 76x76x9.5 |
| 30.8-33.7 | 1067 | 203x102x19.0 | | | 76x76x9.5 |
| 33.8-36.8 | 1067 | 203x102x19.0 | | | 76x76x9.5 |
| 36.9-39.8 | 1067 | 203x102x19.0 | | | 76x76x9.5 |
| 39.9-44.2 | 1067 | 203x152x19.0 | 89x89x9.5 | 89x89x9.5 | 76x76x9.5 |

TABLE XII

## RANGE OF STRUCTURE SIZES

| Panel Depth (mm) | Frame Depth (mm) | Max Vertical ∠ Spacing (mm) |
|---|---|---|
| 1778 | 1931 | 1829 |
| 2032 | 2185 | 1829 |
| 2286 | 2439 | 2286 |
| 2540 | 2693 | 2286 |
| 2794 | 2693 | 2286 |
| 3048 | 2693 | 2286 |

TABLE X

| Camber For Fabrication At ℄ Span | |
|---|---|
| Span (m) | Camber (mm) |
| 12.19 - 15.24 | 27 |
| 15.25 - 30.48 | 54 |
| 30.49 - 44.20 | 83 |

Camber to approximate parabola.
Camber of cantilever arm = +13 mm for arms greater than 3050 mm

TABLE XI

## NOTES

1. Frame widths shown are nominal. These widths may be varied by 6.4 mm to standardize fabrication methods.
2. Walkway brackets not shown. Locate first interior bracket 813 mm Max from ℄ of post.

Standard Plan Sheet No.
Detail No.

STATE OF CALIFORNIA
DEPARTMENT OF TRANSPORTATION

# OVERHEAD SIGNS-TRUSS TWO POST TYPE STRUCTURAL FRAME MEMBERS

NO SCALE

ALL DIMENSIONS ARE IN MILLIMETERS UNLESS OTHERWISE SHOWN

RSP S11 DATED JANUARY 24, 2005 SUPERSEDES STANDARD PLAN S11 DATED JULY 1, 2004-PAGE 320 OF THE STANDARD PLANS BOOK DATED JULY 2004.

**REVISED STANDARD PLAN RSP S11**

**2004 REVISED Std PLAN RSP S11**

| DIST | COUNTY | ROUTE | KILOMETER POST TOTAL PROJECT | SHEET NO. | TOTAL SHEETS |
|---|---|---|---|---|---|
| 04 | Ala | 80 | 1.6/2.7 | 548 | 744 |

REGISTERED CIVIL ENGINEER

January 24, 2005
PLANS APPROVAL DATE

REGISTERED PROFESSIONAL ENGINEER Tillat Sattar No. C42892 Exp. 03-31-2006 CIVIL STATE OF CALIFORNIA

*The State of California or its officers or agents shall not be responsible for the accuracy or completeness of electronic copies of this plan sheet.*

*To get to the Caltrans web site, go to: http://www.dot.ca.gov*

*To accompany plans dated* 10-3-11

Caltrans Metric

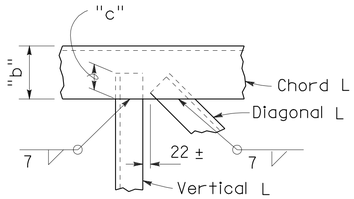


DETAIL ①

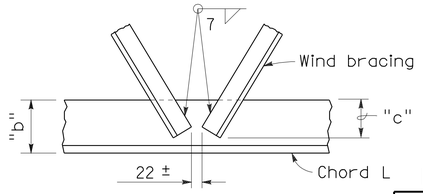


DETAIL ②

OVERLAP DISTANCES

| "b" | "c" |
|---|---|
| 89 | 57 |
| 102 | 70 |
| 127 | 83 |
| 152 | 102 |
| 203 | 127 |

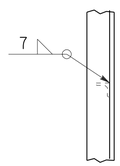


DETAIL ③

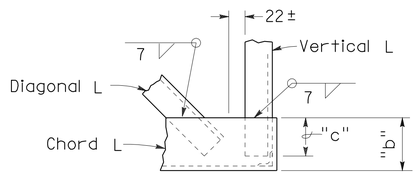


DETAIL ④

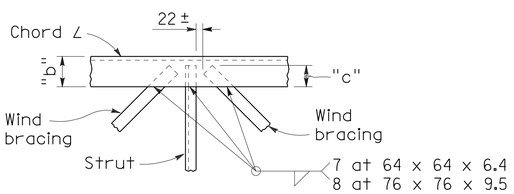


DETAIL ⑤

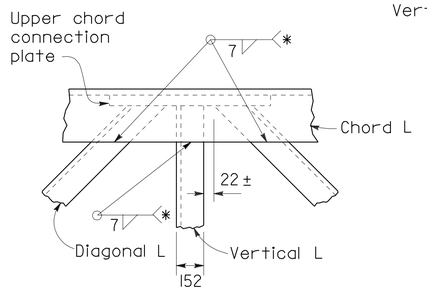


DETAIL ⑥

* Welds are to upper chord connection plate and chord angle

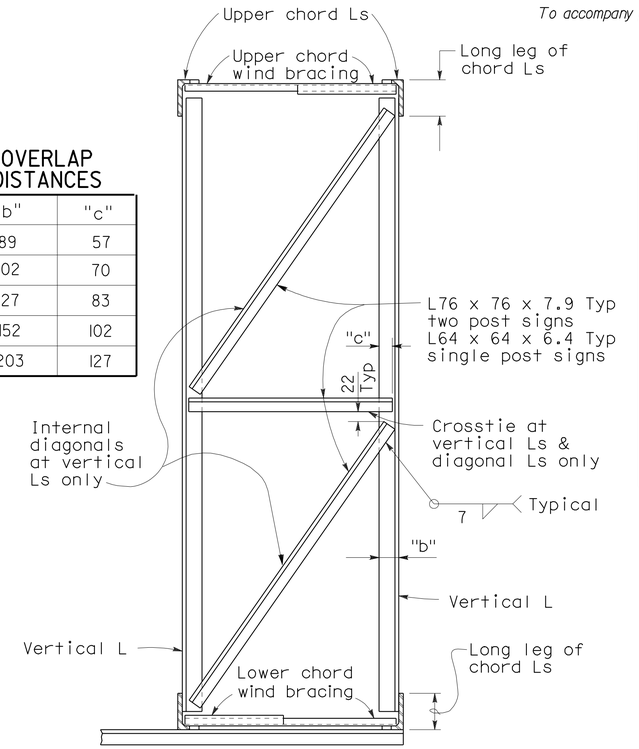


TYPICAL SECTION J-J

**Note:**

Diagonal Ls in plane of truss not shown. Bracing shown is at all vertical Ls of truss.

BOLTED CHORD SPLICE

| TWO POST SIGNS | | |
|---|---|---|
| Chord ∠ | Nominal Bolt Diameter | "a" mm Min |
| 127 x 89 x 9.5 | M20 x 2.5 | 64 |
| 152 x 102 x 12.7 | M22 x 2.5 | 76 |
| 203 x 102 x 19.0 | M30 x 3.5 | 96 |
| 203 x 152 x 19.0 | M30 x 3.5 | 96 |
| **SINGLE POST SIGNS** | | |
| Chord ∠ | Nominal Bolt Diameter | "a" mm Min |
| 127 x 127 x 12.7 | M22 x 2.5 | 76 |
| 152 x 152 x 12.7 | M22 x 2.5 | 76 |

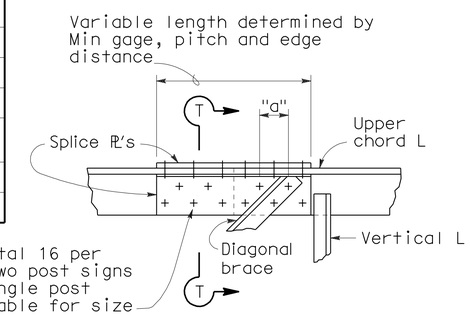


SPLICE WITH DIAGONAL ANGLE

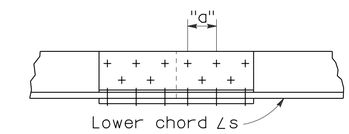


SPLICE WITHOUT DIAGONAL ANGLE

BOLTED CHORD SPLICE

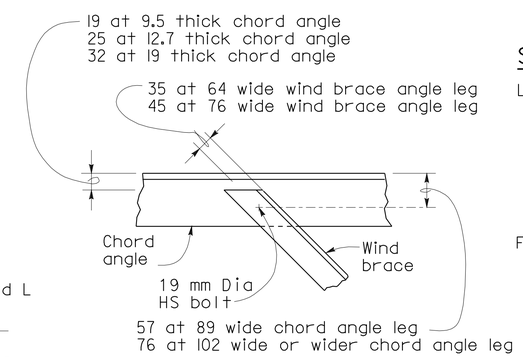


BOLTED WIND BRACE DETAIL

Each end of wind brace at bolted chord splice

SPLICE NOTES

Location of Splices:

The splice shall be located so as not to interfere with mounting the walkway brackets or the clip angles for the removable sign panel frame. For two post type see also S11.

Filler PL :

The plates welded to the angle legs on the inside shall be welded before drilling the bolt holes. The plates shall be the same length as the cover plates. The plates are not necessary on the single post signs if the splice is located over 1/3 of the cantilever length from the post. Alternative splice details may be used if approved by the Engineer.

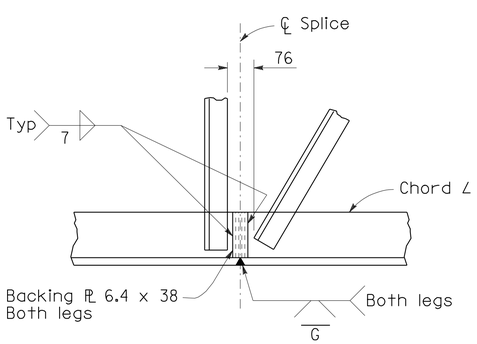


WELDED CHORD SPLICE

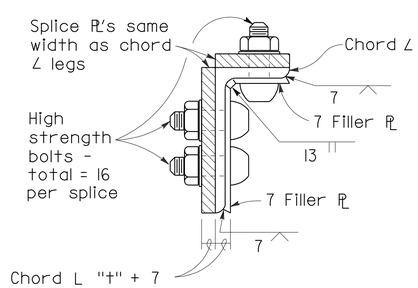


SECTION T-T
TWO POST SIGNS

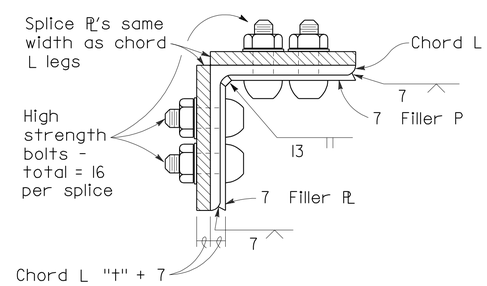


SECTION T-T
SINGLE POST SIGNS

STATE OF CALIFORNIA
DEPARTMENT OF TRANSPORTATION

# OVERHEAD SIGNS-TRUSS STRUCTURAL FRAME DETAILS

NO SCALE

ALL DIMENSIONS ARE IN MILLIMETERS UNLESS OTHERWISE SHOWN

RSP S12 DATED JANUARY 24, 2005 SUPERSEDES STANDARD PLAN S12 DATED JULY 1, 2004-PAGE 321 OF THE STANDARD PLANS BOOK DATED JULY 2004.

**REVISED STANDARD PLAN RSP S12**

**2004 REVISED Std PLAN RSP S12**

| DIST | COUNTY | ROUTE | KILOMETER POST TOTAL PROJECT | SHEET NO. | TOTAL SHEETS |
|---|---|---|---|---|---|
| 04 | Ala | 80 | 1.6/2.7 | 549 | 744 |

To accompany plans dated 10-3-11

Caltrans Metric

REGISTERED CIVIL ENGINEER

April 28, 2005
PLANS APPROVAL DATE

REGISTERED PROFESSIONAL ENGINEER Tillat Sattar No. C42892 Exp. 03-31-2006 CIVIL STATE OF CALIFORNIA

*The State of California or its officers or agents shall not be responsible for the accuracy or completeness of electronic copies of this plan sheet.*

*To get to the Caltrans web site, go to: http://www.dot.ca.gov*

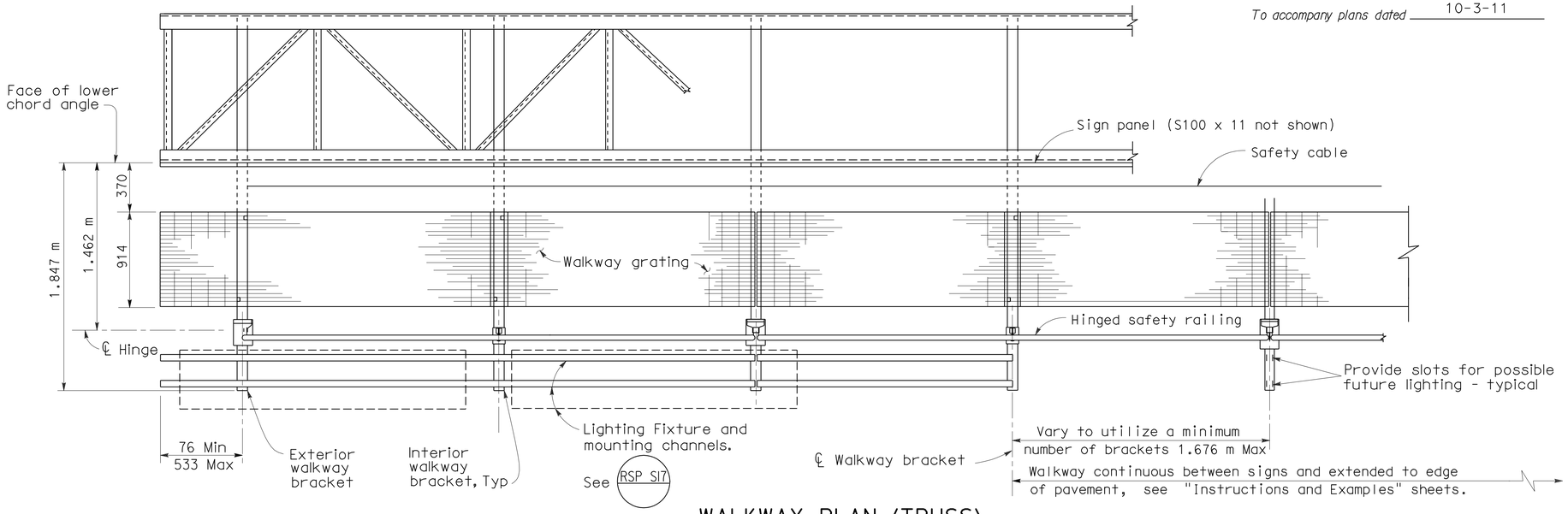


WALKWAY PLAN (TRUSS)

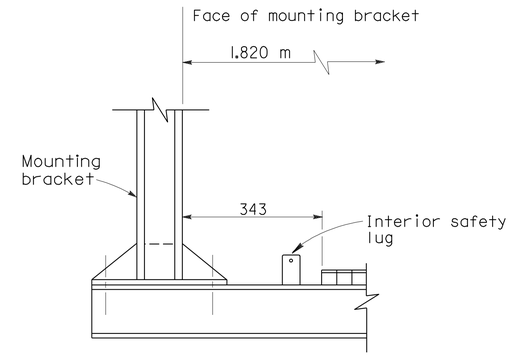


TUBULAR MOUNTED

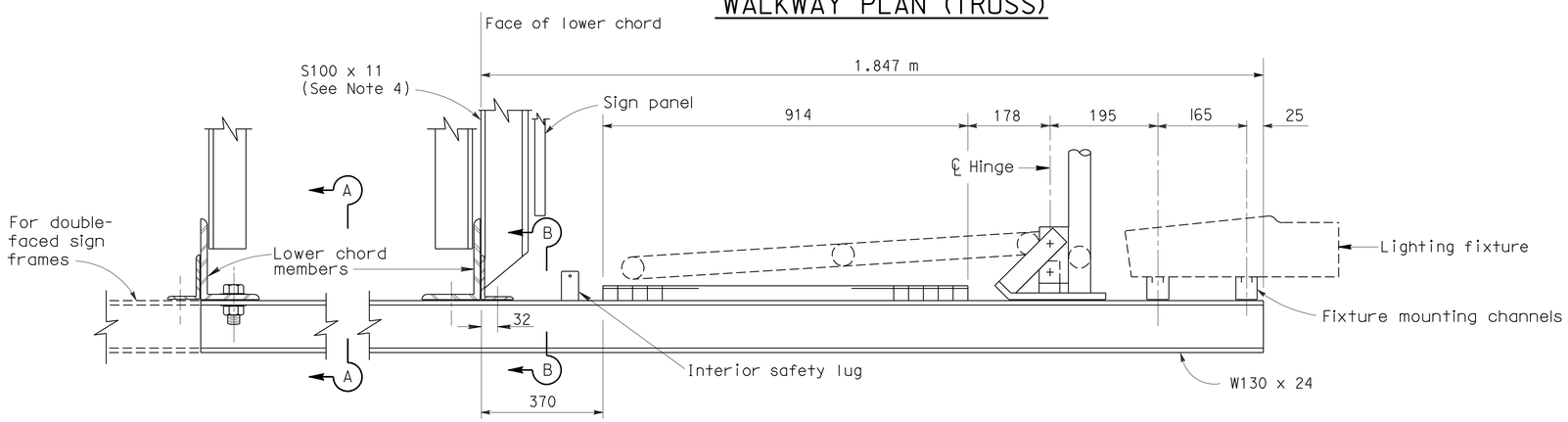


TRUSS

TYPICAL WALKWAY SECTION

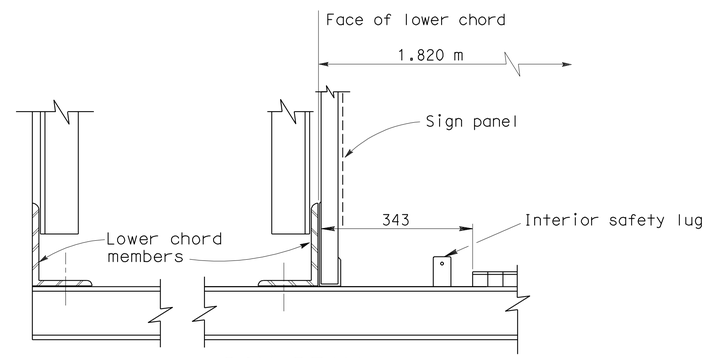


BOX BEAM
CLOSED TRUSS

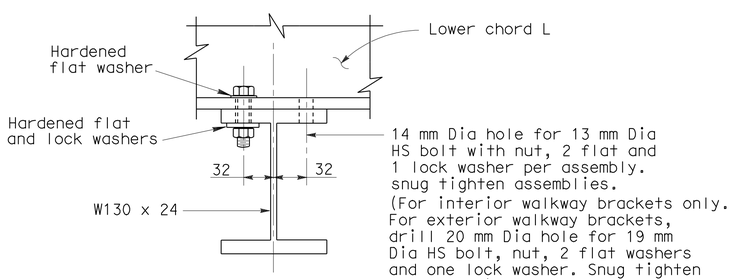


SECTION A-A

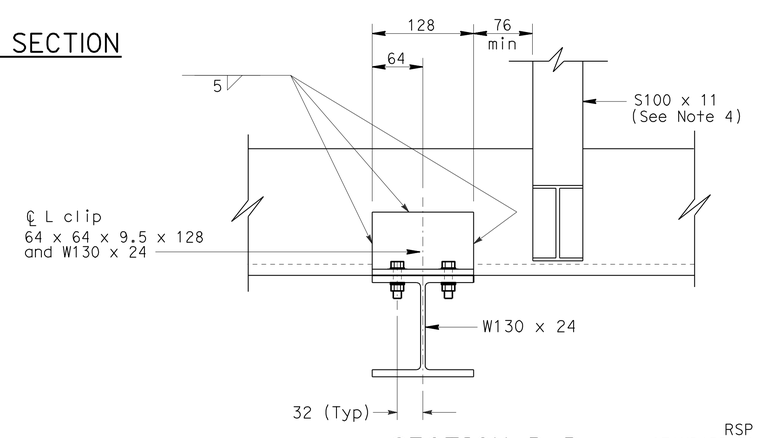


SECTION B-B

NOTES:

1. For spacing of lighting fixtures, see Standard Plan ES-15A.
2. For safety lug details, see Revised Standard Plan RSP S17.
3. For double faced sign frames with double walkways, use a total 8 bolt assemblies per bracket.
4. S100 x 11 to be used with laminated Type A panels. See Revised Standard Plan RSP S19.

STATE OF CALIFORNIA
DEPARTMENT OF TRANSPORTATION

# OVERHEAD SIGNS
# WALKWAY DETAILS No.1

NO SCALE

ALL DIMENSIONS ARE IN MILLIMETERS UNLESS OTHERWISE SHOWN

RSP S16 DATED APRIL 28, 2005 SUPERSEDES RSP S16 DATED JANUARY 24,2005 AND STANDARD PLAN S16 DATED JULY 1, 2004-PAGE 325 OF THE STANDARD PLANS BOOK DATED JULY 2004.

**REVISED STANDARD PLAN RSP S16**

**2004 REVISED Std PLAN RSP S16**

| DIST | COUNTY | ROUTE | KILOMETER POST TOTAL PROJECT | SHEET NO. | TOTAL SHEETS |
|---|---|---|---|---|---|
| 04 | Ala | 80 | 1.6/2.7 | 550 | 744 |

REGISTERED CIVIL ENGINEER

January 24, 2005
PLANS APPROVAL DATE

REGISTERED PROFESSIONAL ENGINEER Tillat Sattar No. C42892 Exp. 03-31-2006 CIVIL STATE OF CALIFORNIA

*The State of California or its officers or agents shall not be responsible for the accuracy or completeness of electronic copies of this plan sheet.*

*To get to the Caltrans web site, go to: http://www.dot.ca.gov*

*To accompany plans dated* 10-3-11

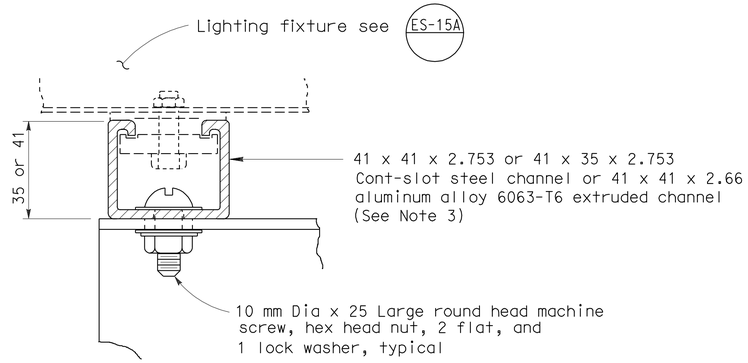


## LIGHTING FIXTURE MOUNTING CHANNEL DETAILS 1

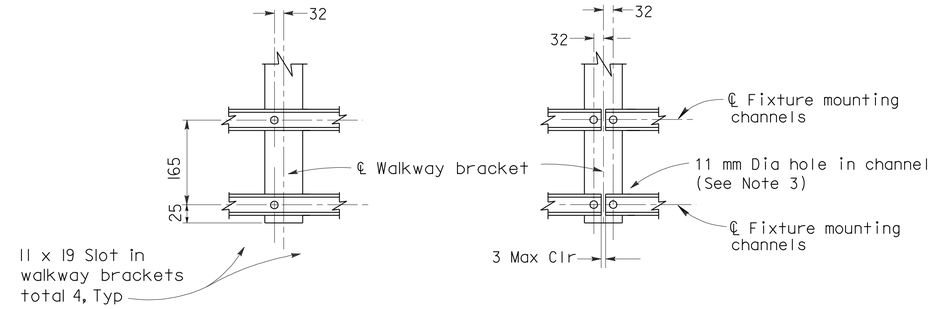


TYPICAL CONNECTION  CONNECTION AT SPLICE

## LIGHTING FIXTURE MOUNTING CHANNEL DETAILS 2

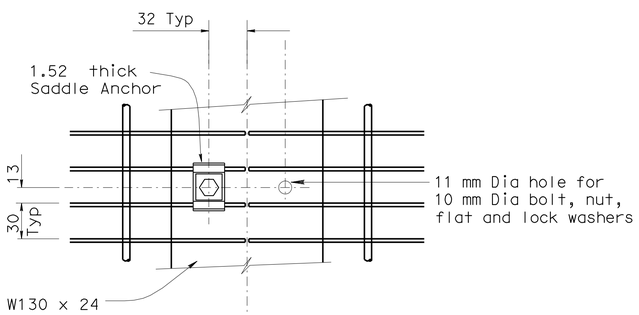


PLAN

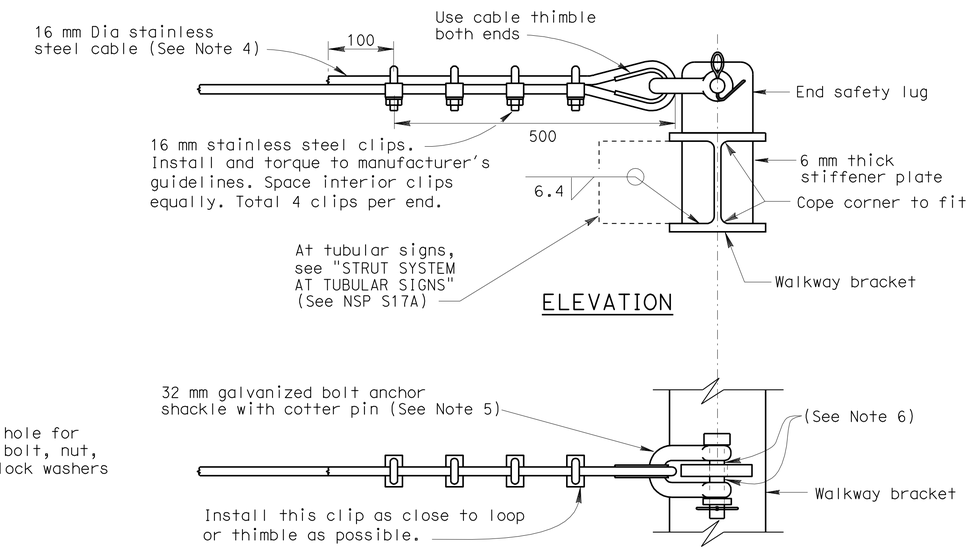


ELEVATION

PLAN

## END SAFETY CABLE

## NOTES

1. Welded type grating shall have 32 x 3 bearing bars at 30 mm centers with 6 mm diameter (or equal) cross bars at 102 mm centers. If mechanical lock grating is used, it shall be equal in strength to the welded type. Alternate hold-down clips may be submitted for approval.
2. Walkway grating and light fixture mounting channels to be continuous (no splices) over as many walkway brackets as practical and consistent with fabrication, ease of handling and assembly.
3. Contractor may substitute 41 x 41 x 2.753 cont-slot steel channel with pre-punched slots not larger than 10 mm x 77 mm. Slots shall be at bottom of channel and shall be parallel to channel. Slots shall be spaced not closer than 100 mm center to center.
4. Stainless steel cable shall be plain with 6 x 19 IWRC construction using Type 302 or 304 stainless steel strands. Minimun cable breaking strength shall exceed 155 kN. Cable shall be free of kinks, knots, or deformation and shall be continuous between end lugs. Splices not allowed.
5. Shackle shall be galvanized steel with working load limit of 107 kN.
6. Place an equal amount of washers on each side to align cable with end lug without restricting shakle bolt rotation or contacting cable.
7. Cable shall be installed with a deflection not to exceed 25 mm, measure from taut position, when pulled with an upward force of 0.13 kN at midpoint between any two walkway brackets.

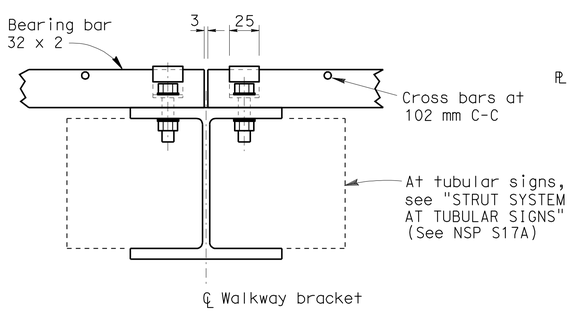


SECTION A-A

## WALKWAY GRATING DETAILS

Shown at splice

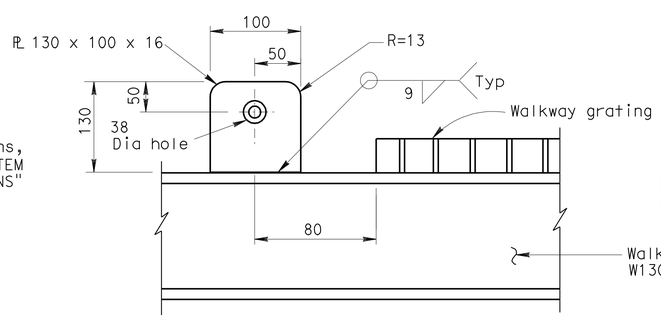


## INTERIOR SAFETY LUG DETAIL

(At every walkway bracket between exterior walkway brackets)

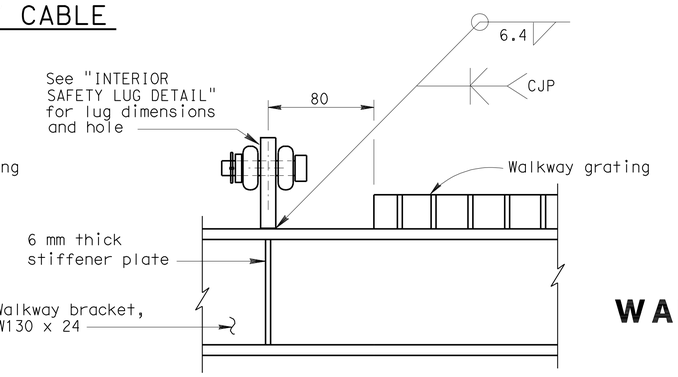


## END SAFETY LUG DETAIL

(At exterior walkway brackets)

STATE OF CALIFORNIA
DEPARTMENT OF TRANSPORTATION

# OVERHEAD SIGNS WALKWAY DETAILS No.2

NO SCALE

ALL DIMENSIONS ARE IN MILLIMETERS UNLESS OTHERWISE SHOWN

RSP S17 DATED JANUARY 24, 2005 SUPERSEDES STANDARD PLAN S17 DATED JULY 1, 2004-PAGE 326 OF THE STANDARD PLANS BOOK DATED JULY 2004.

**REVISED STANDARD PLAN RSP S17**

**2004 REVISED Std PLAN RSP S17**

| DIST | COUNTY | ROUTE | KILOMETER POST TOTAL PROJECT | SHEET NO. | TOTAL SHEETS |
|---|---|---|---|---|---|
| 04 | Ala | 80 | 1.6/2.7 | 551 | 744 |

REGISTERED CIVIL ENGINEER

January 24, 2005
PLANS APPROVAL DATE

REGISTERED PROFESSIONAL ENGINEER
Tillat Sattar
No. C42892
Exp. 03-31-2006
CIVIL
STATE OF CALIFORNIA

*The State of California or its officers or agents shall not be responsible for the accuracy or completeness of electronic copies of this plan sheet.*

*To get to the Caltrans web site, go to: http://www.dot.ca.gov*

*To accompany plans dated* 10-3-11

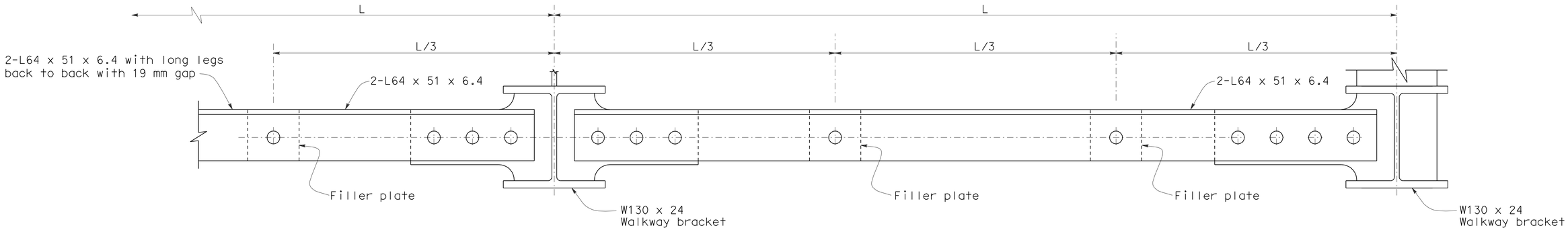


## STRUT SYSTEM AT TUBULAR SIGNS

(Continuous between end safety lug locations)

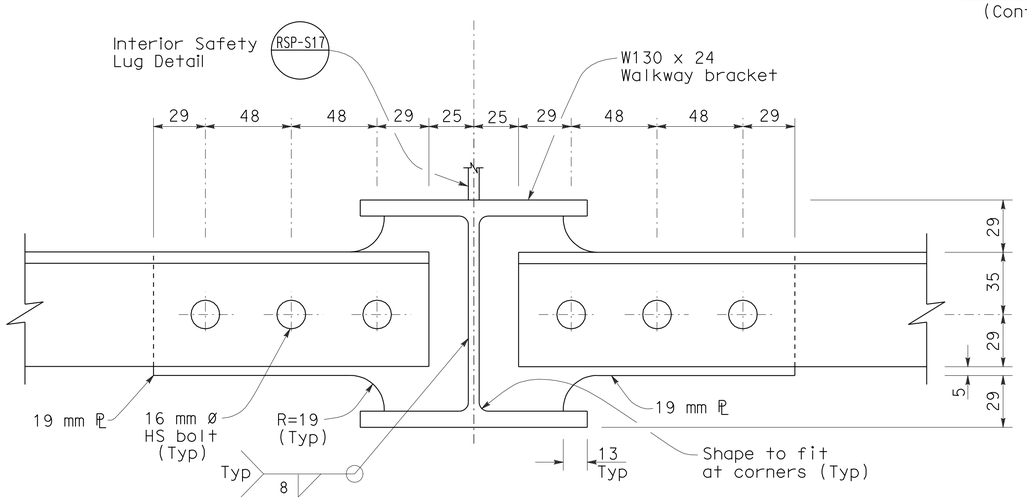


## INTERIOR SAFETY LUG LOCATION

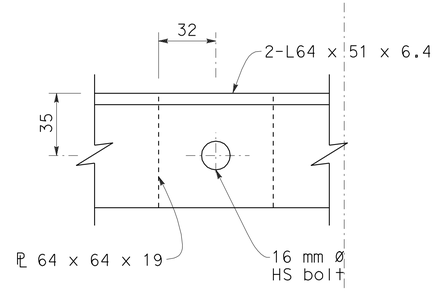


## FILLER PLATE

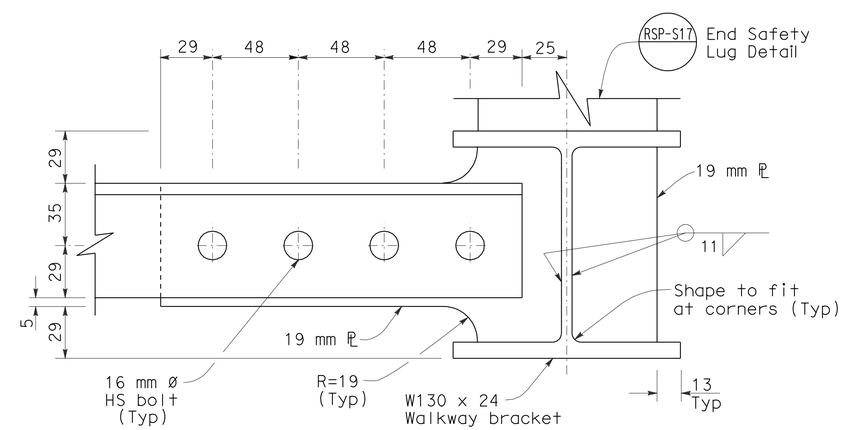


## END SAFETY LUG LOCATION

STATE OF CALIFORNIA
DEPARTMENT OF TRANSPORTATION

# OVERHEAD SIGNS WALKWAY DETAILS No.3

NO SCALE

ALL DIMENSIONS ARE IN MILLIMETERS UNLESS OTHERWISE SHOWN

NSP S17A DATED JANUARY 24, 2005
SUPPLEMENTS THE STANDARD PLANS BOOK DATED JULY 2004.

**NEW STANDARD PLAN NSP S17A**

**2004 NEW Std PLAN NSP S17A**

| DIST | COUNTY | ROUTE | KILOMETER POST TOTAL PROJECT | SHEET NO. | TOTAL SHEETS |
|---|---|---|---|---|---|
| 04 | Ala | 80 | 1.6/2.7 | 552 | 744 |

REGISTERED CIVIL ENGINEER

January 24, 2005
PLANS APPROVAL DATE

REGISTERED PROFESSIONAL ENGINEER
Tillat Sattar
No. C42892
Exp. 03-31-2006
CIVIL
STATE OF CALIFORNIA

*The State of California or its officers or agents shall not be responsible for the accuracy or completeness of electronic copies of this plan sheet.*

*To get to the Caltrans web site, go to: http://www.dot.ca.gov*

*To accompany plans dated* 10-3-11

Caltrans Metric

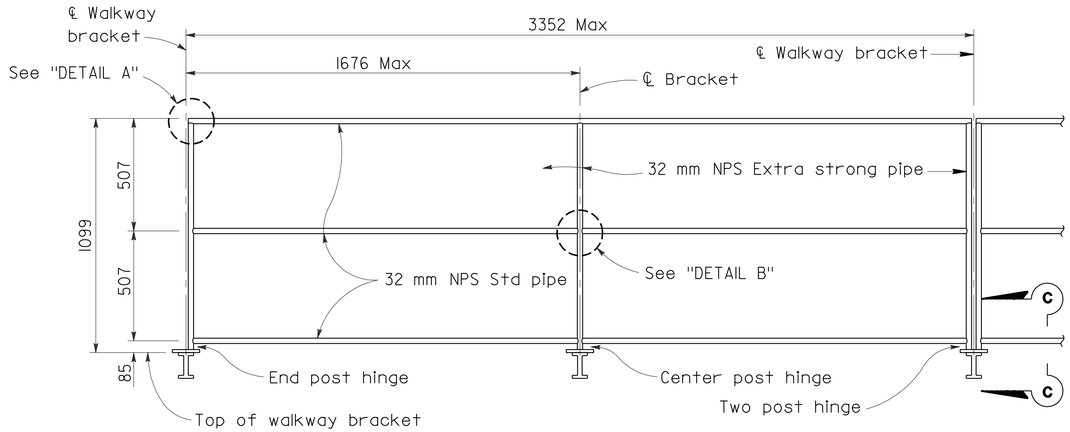


SAFETY RAILING ELEVATION

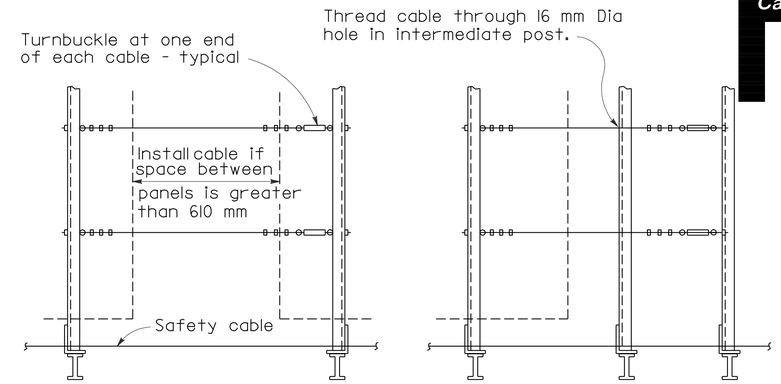


BETWEEN PANELS BEYOND PANELS

UPPER SAFETY CABLE ELEVATION

For tubular structures

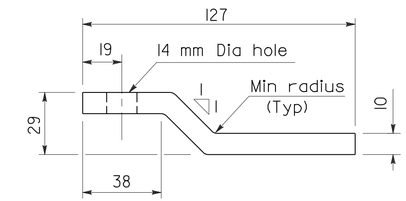


PLAN - KICKER BAR

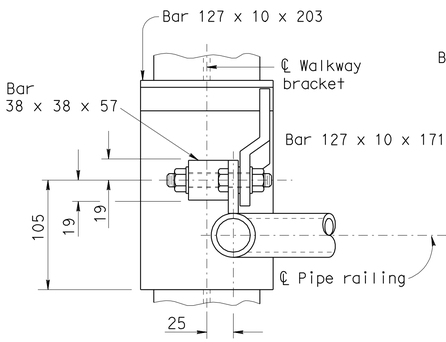


END POST

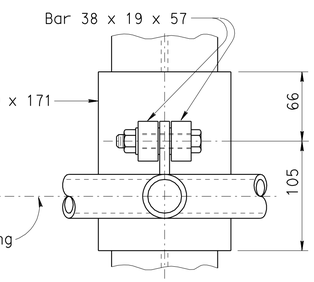


CENTER POST
WELDED HINGE - PLAN

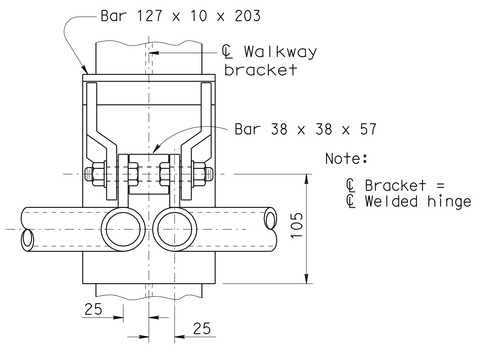


TWO POST

Note:
℄ Bracket = ℄ Welded hinge

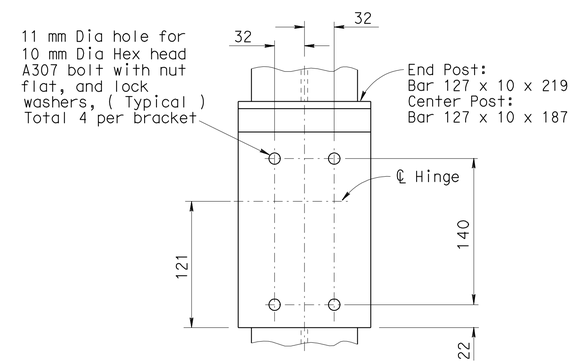


TYPICAL BOLTED (ALTERNATIVE)
HINGED CONNECTION

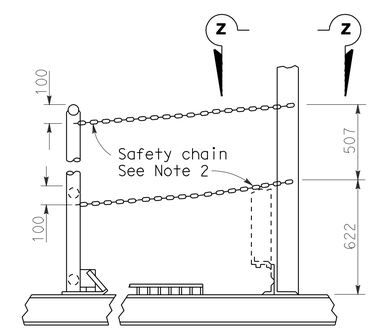


CHAIN ASSEMBLY

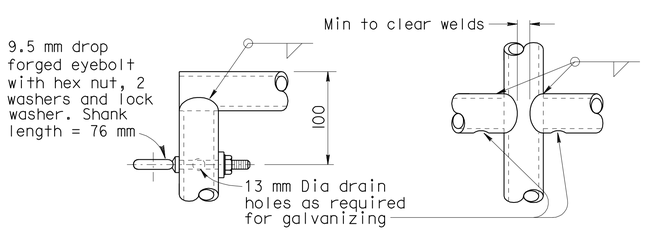


DETAIL A DETAIL B

Note: Alternative venting methods may be used if approved by the Engineer.

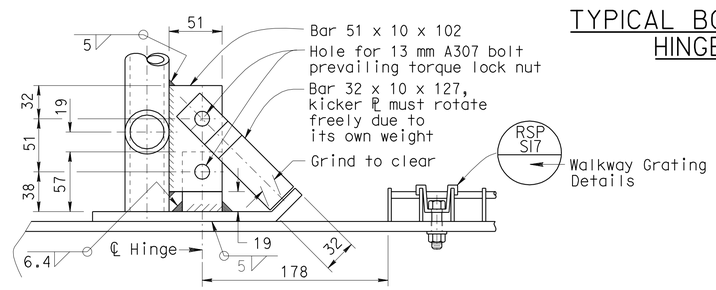


DETAIL C

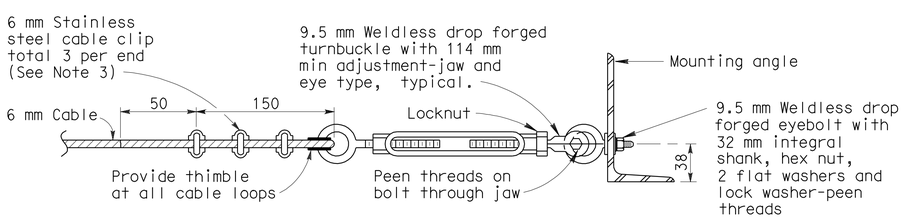


TURNBUCKLE DETAILS

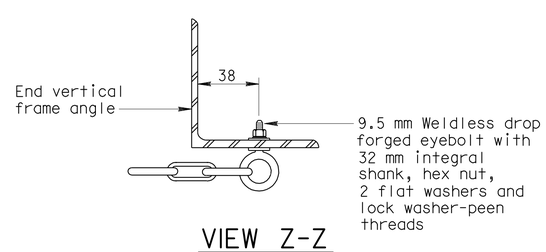


VIEW Z-Z

## NOTES

1. Special care shall be taken to insure that the complete hinge and latch assembly will hold the safety railing in a steady manner, free of wobble while in the raised position. Maximum allowable displacement from vertical at top of railing when latched shall be 12 mm.
2. Safety chain shall be 9.5 mm galvanized steel coil chain, approximately 39.4 links per meter. Length shall be minimum which allows lock-up of safety railing. Minimum of two safety chains per safety railing. Material shall be Grade 43 high test chain ASTM A413.
3. Cable clips shall be installed according to manufacturer's recommendation.

STATE OF CALIFORNIA
DEPARTMENT OF TRANSPORTATION

# OVERHEAD SIGNS WALKWAY SAFETY RAILING DETAILS

NO SCALE

ALL DIMENSIONS ARE IN MILLIMETERS UNLESS OTHERWISE SHOWN

RSP S18 DATED JANUARY 24, 2005 SUPERSEDES STANDARD PLAN S18 DATED JULY 1, 2004-PAGE 327 OF THE STANDARD PLANS BOOK DATED JULY 2004.

**REVISED STANDARD PLAN RSP S18**

**2004 REVISED Std PLAN RSP S18**

To accompany plans dated 10-3-11

Caltrans Metric

| DIST | COUNTY | ROUTE | KILOMETER POST TOTAL PROJECT | SHEET NO. | TOTAL SHEETS |
|---|---|---|---|---|---|
| 04 | Ala | 80 | 1.6/2.7 | 553 | 744 |

REGISTERED CIVIL ENGINEER

January 24, 2005
PLANS APPROVAL DATE

REGISTERED PROFESSIONAL ENGINEER Tillat Sattar No. C42892 Exp. 03-31-2006 CIVIL STATE OF CALIFORNIA

*The State of California or its officers or agents shall not be responsible for the accuracy or completeness of electronic copies of this plan sheet.*

*To get to the Caltrans web site, go to: http://www.dot.ca.gov*

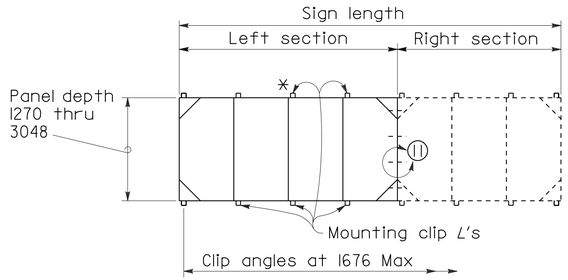


## REMOVABLE FRAME GREATER THAN 6.10 m

* 2794 & 3048 sign panel frames will project above the top chord of the truss. In these cases the top clips shall be bolted to vertical frame members. See Standard Plan S22 for details.

| Sign Length (m) | Left Section (m) | Right Section (m) |
|---|---|---|
| 6.71 | 3.66 | 3.05 |
| 7.32 | 3.66 | 3.66 |
| 7.93 | 3.66 | 4.27 |
| 8.54 | 4.88 | 3.66 |
| 9.15 | 4.88 | 4.27 |
| 9.76 | 4.88 | 4.88 |
| 10.37 | 4.88 | 5.49 |
| 10.98 | 6.10 | 4.88 |
| 11.59 | 6.10 | 5.49 |
| 12.20 | 6.10 | 6.10 |

## NOTES

Frames for signs greater than 6.10 m in length shall be fabricated in two sections with left section a multiple of 1220 in length. See table above.

Sections shall be hoisted into place individually and bolted together as per detail 11 prior to tightening of mounting clip bolts.

Bolting two sections together and hoisting simultaneously will not be permitted.

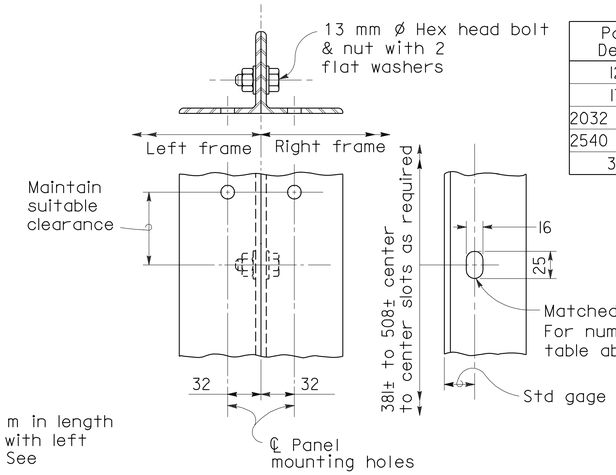


| Panel Depth | No of slots |
|---|---|
| 1270 | 2 |
| 1778 | 3 |
| 2032 & 2286 | 4 |
| 2540 & 2794 | 5 |
| 3048 | 6 |

## NOTE

Panel mounting holes not shown. Panel lengths available in 610 increments.

## DETAIL 11

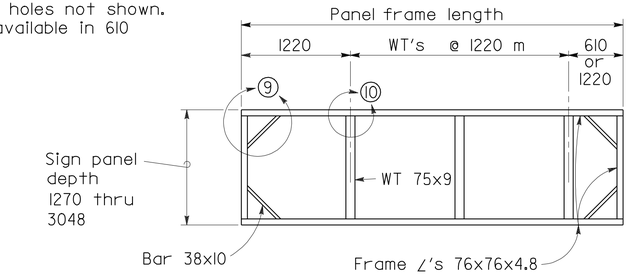


## TYPICAL REMOVABLE FRAME

(1220 thru 6096)

## NOTES

1. Frames shall be all-welded construction.
2. Panel mounting holes shall be drilled by template. Sign panel may be considered a template.
3. Drilled and tapped holes 6.34 mm may be used where interference due to welds or structural members is encountered.
4. WT 75 x 9 shall be flush with faces of frame angles.
5. Mounting clip angles shall be located such as to allow the top and bottom frame angles of the removable sign panel to lie on a straight horizontal line.
6. Holes for mounting removable sign panel frame may be slotted 25 mm maximum parallel to the axis of the sign.
7. WT 75 x 9 may be crimped at ends to join frame angles. Fillet weld all around.

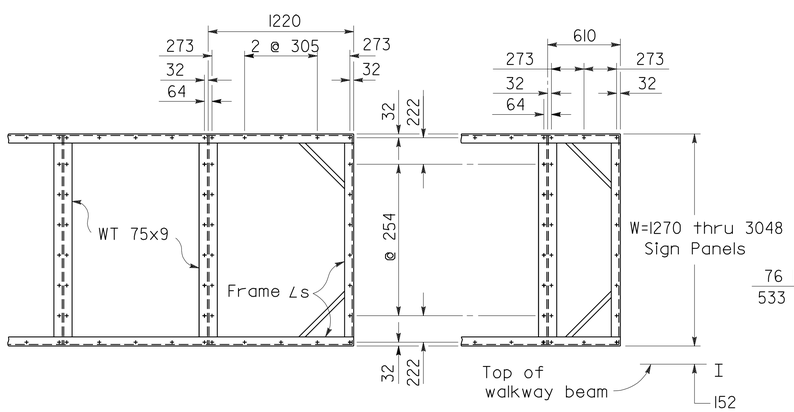


TYPICAL 1220 PANEL  TYPICAL 610 PANEL

All holes 13 diameter maximum.

## MOUNTING HOLE SPACING SIGN PANEL & FRAME

Hole spacing is for single sheet sign panels.
For Overhead Formed Panels refer to
"Removable Sign Panel Frames, Mounting Details" Sheet.

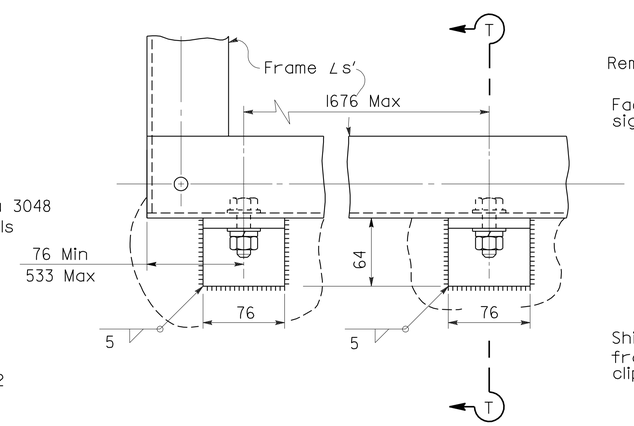


## FRAME MOUNTING DETAILS

Details shown apply for sign panel frames ≤ 2540 mm deep. Mounting details for deeper panels shown on Standard Plan S22.

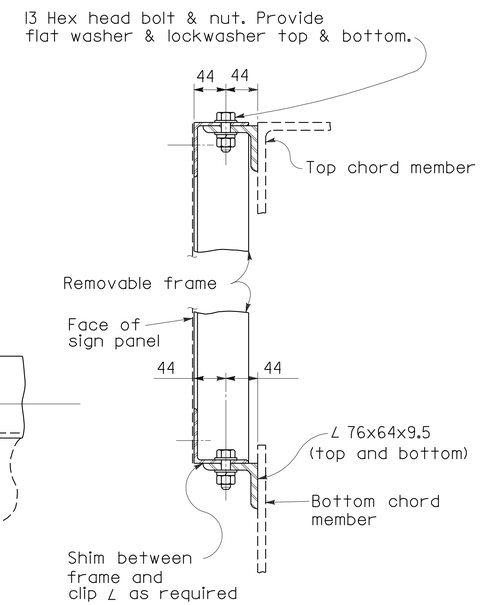


## SECTION T-T

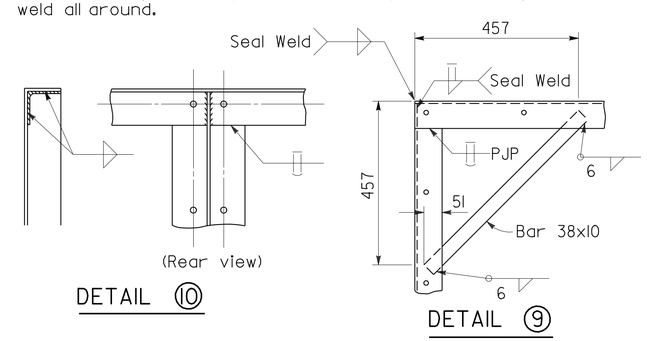


## TYPICAL JOINT DETAILS

STATE OF CALIFORNIA
DEPARTMENT OF TRANSPORTATION

# OVERHEAD SIGNS
# STEEL FRAMES
# REMOVABLE SIGN PANEL FRAMES

NO SCALE

ALL DIMENSIONS ARE IN
MILLIMETERS UNLESS OTHERWISE SHOWN

RSP S20 DATED JANUARY 24, 2005 SUPERSEDES STANDARD PLAN S20
DATED JULY 1, 2004-PAGE 329 OF THE STANDARD PLANS BOOK DATED JULY 2004.

**REVISED STANDARD PLAN RSP S20**

**2004 REVISED Std PLAN RSP S20**

| DIST | COUNTY | ROUTE | KILOMETER POST TOTAL PROJECT | SHEET NO. | TOTAL SHEETS |
|---|---|---|---|---|---|
| 04 | Ala | 80 | 1.6/2.7 | 554 | 744 |

To accompany plans dated 10-3-11

Caltrans Metric

REGISTERED CIVIL ENGINEER

January 24, 2005
PLANS APPROVAL DATE

REGISTERED PROFESSIONAL ENGINEER
Tillat Sattar
No. C42892
Exp. 03-31-2006
CIVIL
STATE OF CALIFORNIA

*The State of California or its officers or agents shall not be responsible for the accuracy or completeness of electronic copies of this plan sheet.*

*To get to the Caltrans web site, go to: http://www.dot.ca.gov*

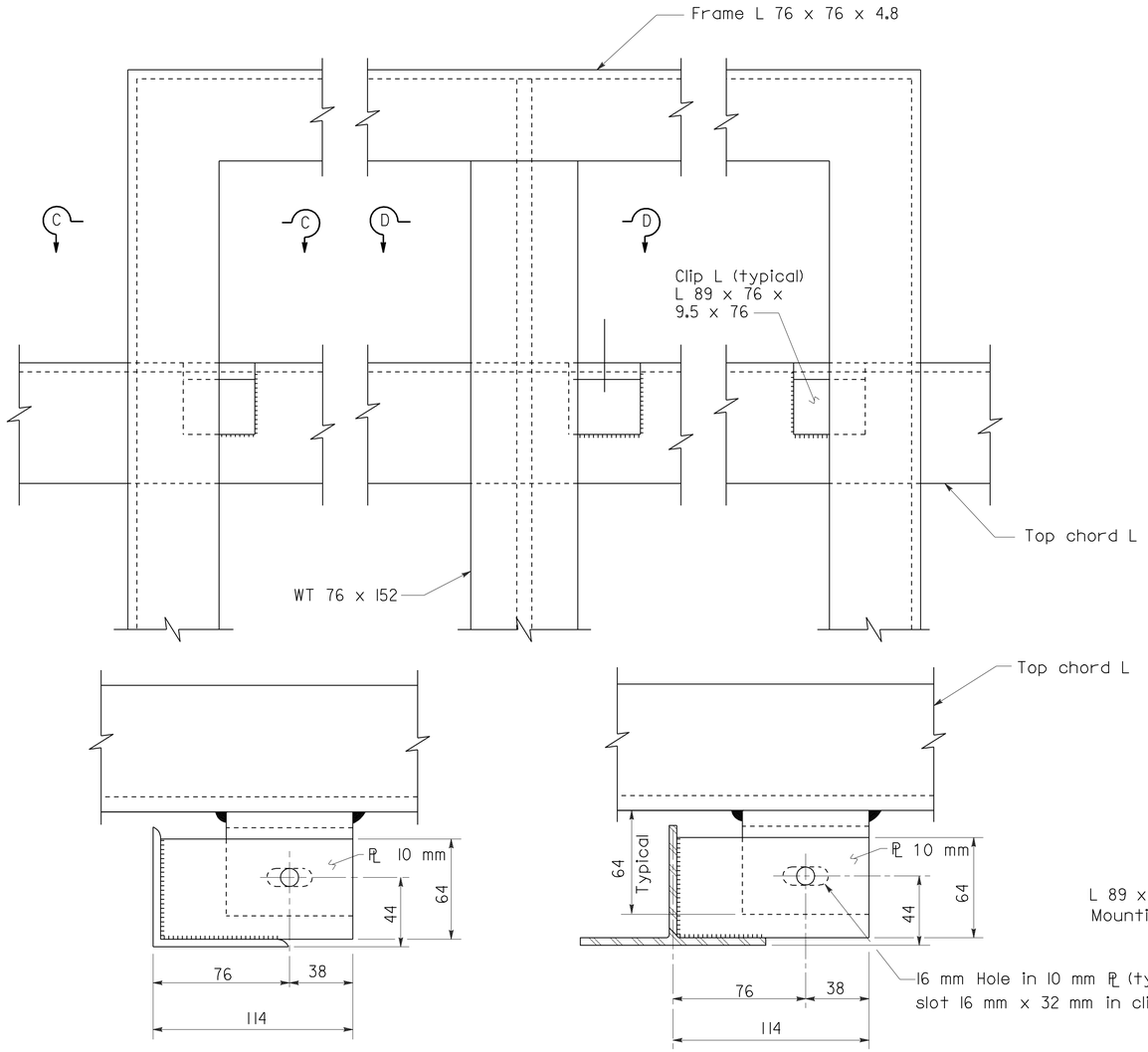


SECTION C-C SECTION D-D

ALTERNATIVE CONNECTION AT TOP CHORD

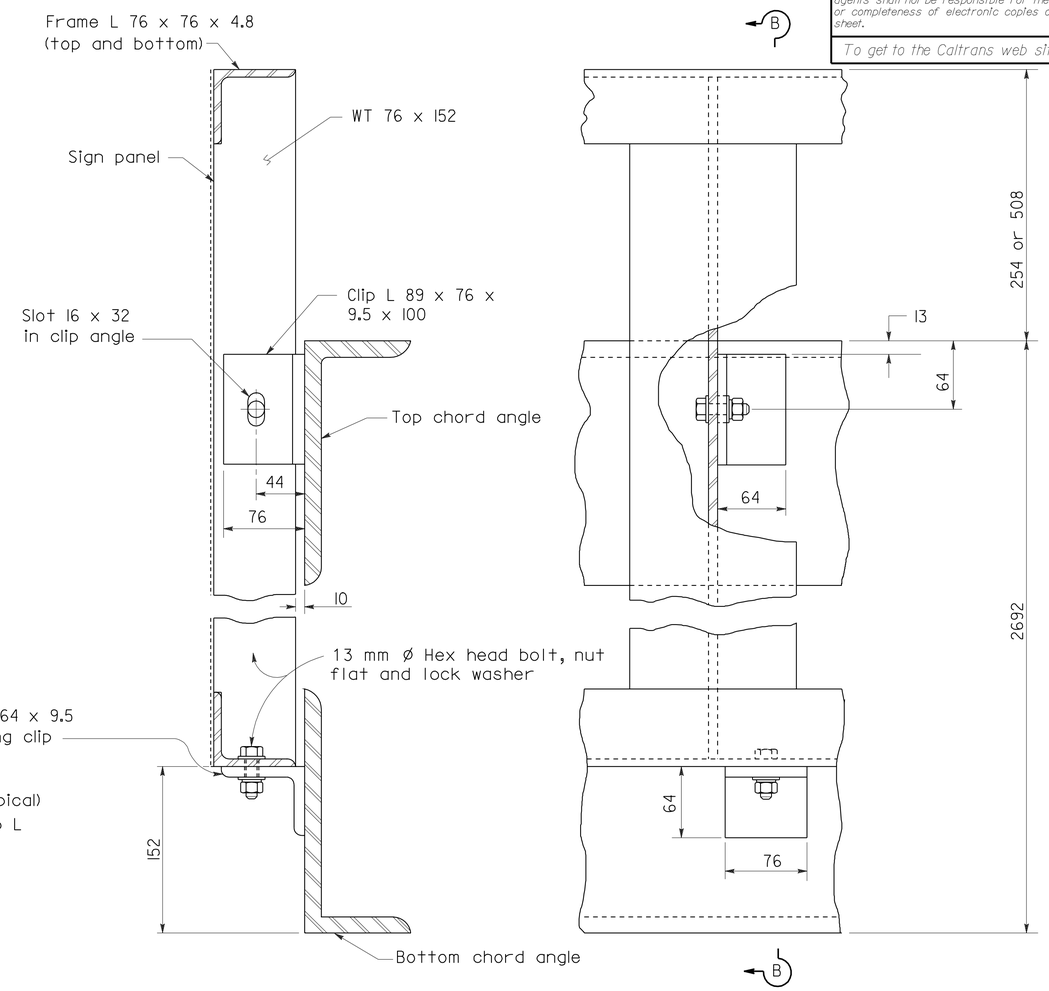


SECTION B-B ELEVATION VIEW

STEEL REMOVABLE SIGN PANEL FRAMES

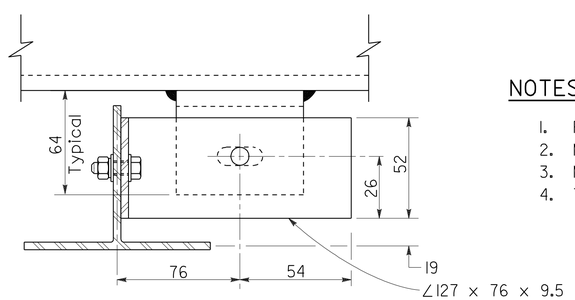


BOLTED ALTERNATIVE CONNECTION AT TOP CHORD

For details not shown, see Sections C-C and D-D.

NOTES

1. For Steel Removable Sign Panel Frame details see Revised Standard Plan RSP S20.
2. Minimum fillet weld is 7 for clip angles welded to chord member of truss.
3. Maximum spacing of bottom clip angle is 1676.
4. Top clips required for each vertical member of Removable Sign Panel Frame.

STATE OF CALIFORNIA
DEPARTMENT OF TRANSPORTATION

# OVERHEAD SIGNS-TRUSS REMOVABLE SIGN PANEL FRAMES 2794 mm AND 3048 mm SIGN PANELS

NO SCALE

ALL DIMENSIONS ARE IN MILLIMETERS UNLESS OTHERWISE SHOWN

RSP S22 DATED JANUARY 24, 2005 SUPERSEDES STANDARD PLAN S22 DATED JULY 1, 2004-PAGE 331 OF THE STANDARD PLANS BOOK DATED JULY 2004.

**REVISED STANDARD PLAN RSP S22**

**2004 REVISED Std PLAN RSP S22**

| DIST | COUNTY | ROUTE | KILOMETER POST TOTAL PROJECT | SHEET NO. | TOTAL SHEETS |
|---|---|---|---|---|---|
| 04 | Ala | 80 | 1.6/2.7 | 555 | 744 |

Caltrans Metric

REGISTERED CIVIL ENGINEER

January 24, 2005
PLANS APPROVAL DATE

REGISTERED PROFESSIONAL ENGINEER Tillat Sattar No. C42892 Exp. 03-31-2006 CIVIL STATE OF CALIFORNIA

*The State of California or its officers or agents shall not be responsible for the accuracy or completeness of electronic copies of this plan sheet.*

*To get to the Caltrans web site, go to: http://www.dot.ca.gov*

*To accompany plans dated* 10-3-11

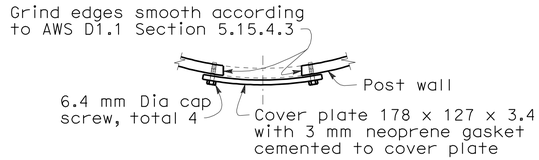


PLAN

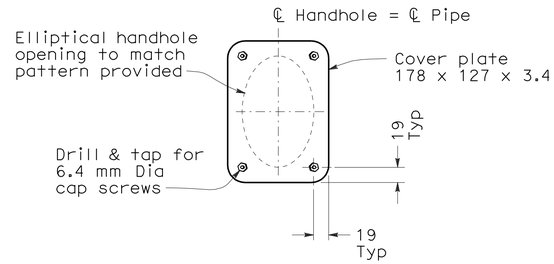


ELEVATION

## UPPER HANDHOLE AND COVER DETAILS

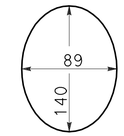


PATTERN OF ELLIPTICAL HANDHOLE CUT OUT

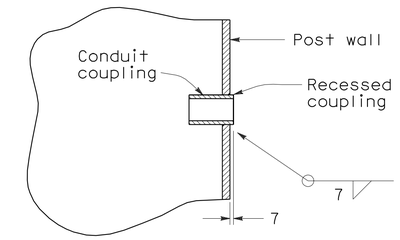


RECESSED COUPLING DETAIL

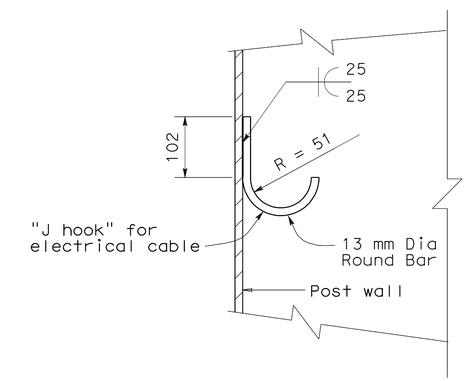


J HOOK DETAIL

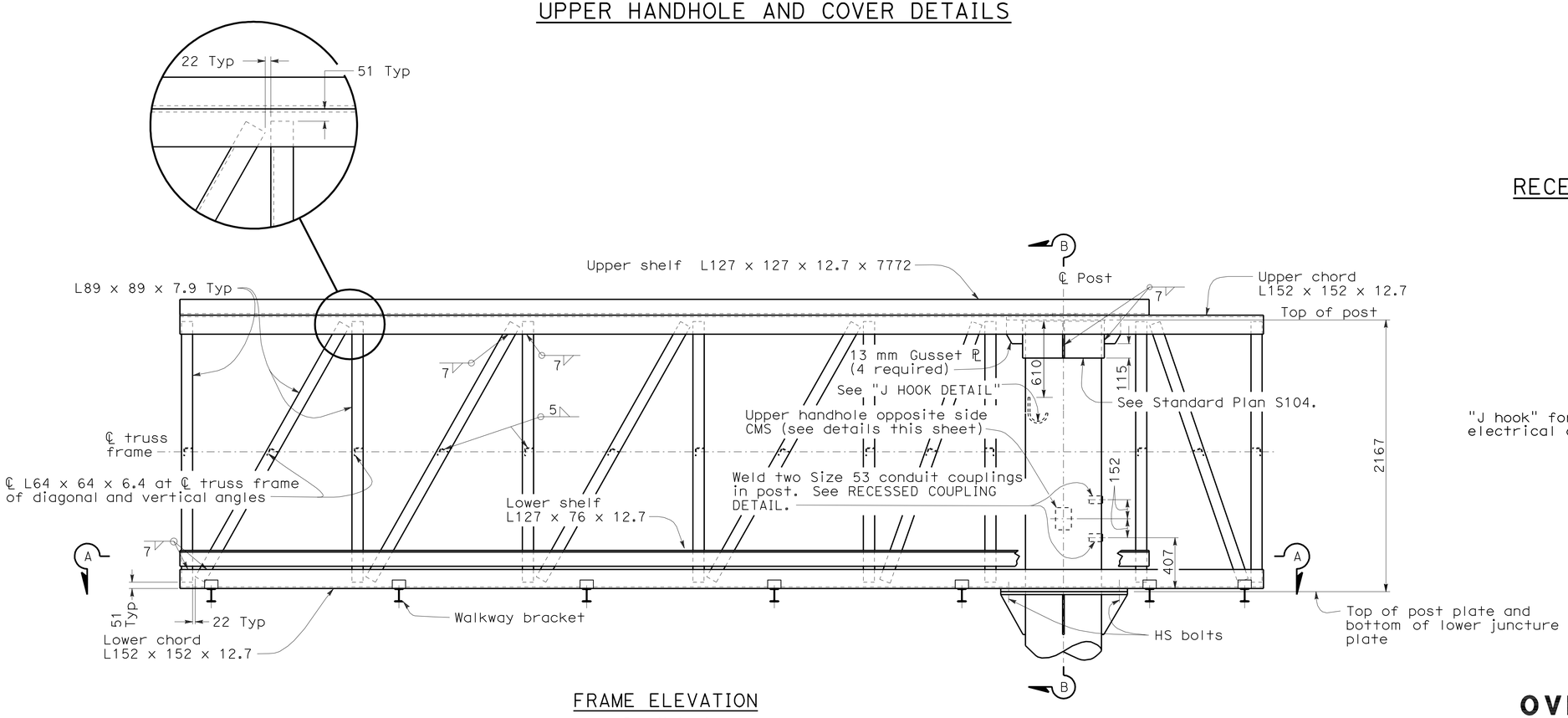


FRAME ELEVATION

See Note 1

NOTES

1. Walkways and safety anchorages not shown for clarity.
2. For Section B-B details, see Standard Plan S104.
3. For Section A-A details, including vertical angle spacing, see Standard Plan S104.

STATE OF CALIFORNIA
DEPARTMENT OF TRANSPORTATION

# OVERHEAD SIGN-TRUSS SINGLE POST TYPE STRUCTURAL FRAME DETAILS UNBALANCED BUTTERFLY CHANGEABLE MESSAGE SIGNS MODEL 500

NO SCALE

ALL DIMENSIONS ARE IN MILLIMETERS UNLESS OTHERWISE SHOWN

RSP S102 DATED JANUARY 24, 2005 SUPERSEDES STANDARD PLAN S102 DATED JULY 1, 2004-PAGE 379 OF THE STANDARD PLANS BOOK DATED JULY 2004.

**REVISED STANDARD PLAN RSP S102**

**2004 REVISED Std PLAN RSP S102**

| DIST | COUNTY | ROUTE | KILOMETER POST TOTAL PROJECT | SHEET NO. | TOTAL SHEETS |
|---|---|---|---|---|---|
| 04 | Ala | 80 | 1.6/2.7 | 556 | 744 |

REGISTERED CIVIL ENGINEER

January 24, 2005
PLANS APPROVAL DATE

REGISTERED PROFESSIONAL ENGINEER
Tillat Sattar
No. C42892
Exp. 03-31-2006
CIVIL
STATE OF CALIFORNIA

*The State of California or its officers or agents shall not be responsible for the accuracy or completeness of electronic copies of this plan sheet.*

*To get to the Caltrans web site, go to: http://www.dot.ca.gov*

*To accompany plans dated* 10-3-11

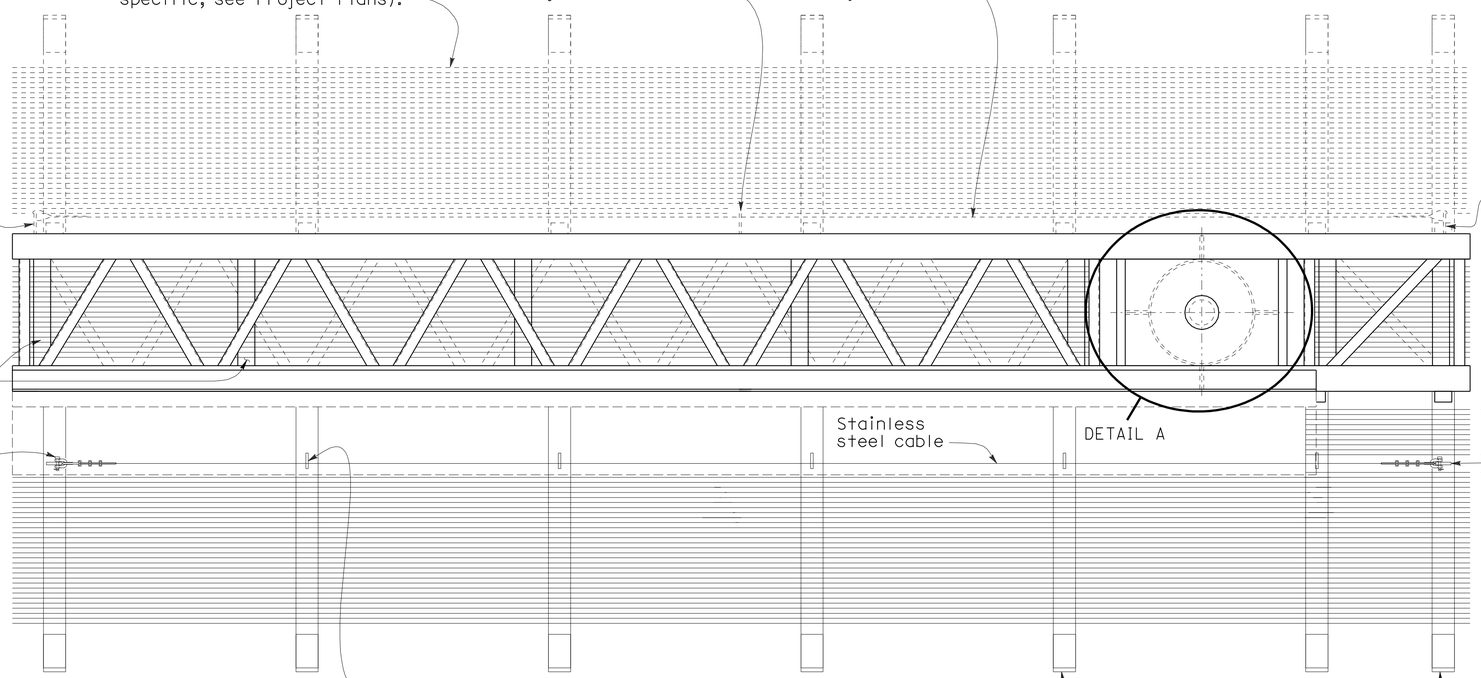


PLAN

NOTES:

1. Crossties at vertical and diagonal Ls and internal diagonals not shown for clarity.
2. Interior grating and backside weld lugs shall be installed only for projects requiring backside walkways.

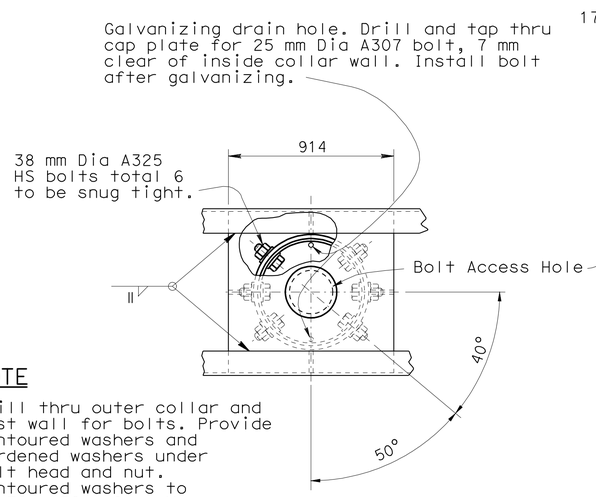


NOTE

Drill thru outer collar and post wall for bolts. Provide contoured washers and hardened washers under bolt head and nut. Contoured washers to be 76 x 76 x 8 mm Min. Grind face to fit.

DETAIL A

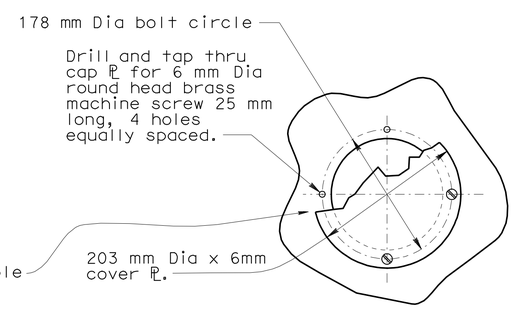


PLAN

BOLT-ACCESS HOLE

Single Post Type

STATE OF CALIFORNIA
DEPARTMENT OF TRANSPORTATION

# OVERHEAD SIGN-TRUSS SINGLE POST TYPE PLAN AND UPPER BOLT DETAILS UNBALANCED BUTTERFLY CHANGABLE MESSAGE SIGNS MODEL 500

NO SCALE

ALL DIMENSIONS ARE IN MILLIMETERS UNLESS OTHERWISE SHOWN

RSP S103 DATED JANUARY 24, 2005 SUPERSEDES STANDARD PLAN S103 DATED JULY 1, 2004-PAGE 308 OF THE STANDARD PLANS BOOK DATED JULY 2004.

**REVISED STANDARD PLAN RSP S103**

**2004 REVISED Std PLAN RSP S103**

| DIST | COUNTY | ROUTE | KILOMETER POST TOTAL PROJECT | SHEET NO. | TOTAL SHEETS |
|---|---|---|---|---|---|
| 04 | Ala | 80 | 1.6/2.7 | 557 | 744 |

REGISTERED CIVIL ENGINEER

January 24, 2005
PLANS APPROVAL DATE

REGISTERED PROFESSIONAL ENGINEER
Tillat Sattar
No. C42892
Exp. 03-31-2006
CIVIL
STATE OF CALIFORNIA

*The State of California or its officers or agents shall not be responsible for the accuracy or completeness of electronic copies of this plan sheet.*

*To get to the Caltrans web site, go to: http://www.dot.ca.gov*

*To accompany plans dated* 10-3-11

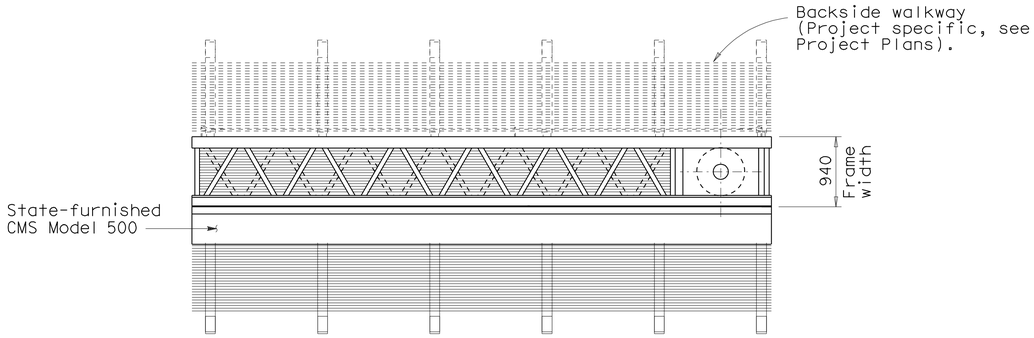


PLAN

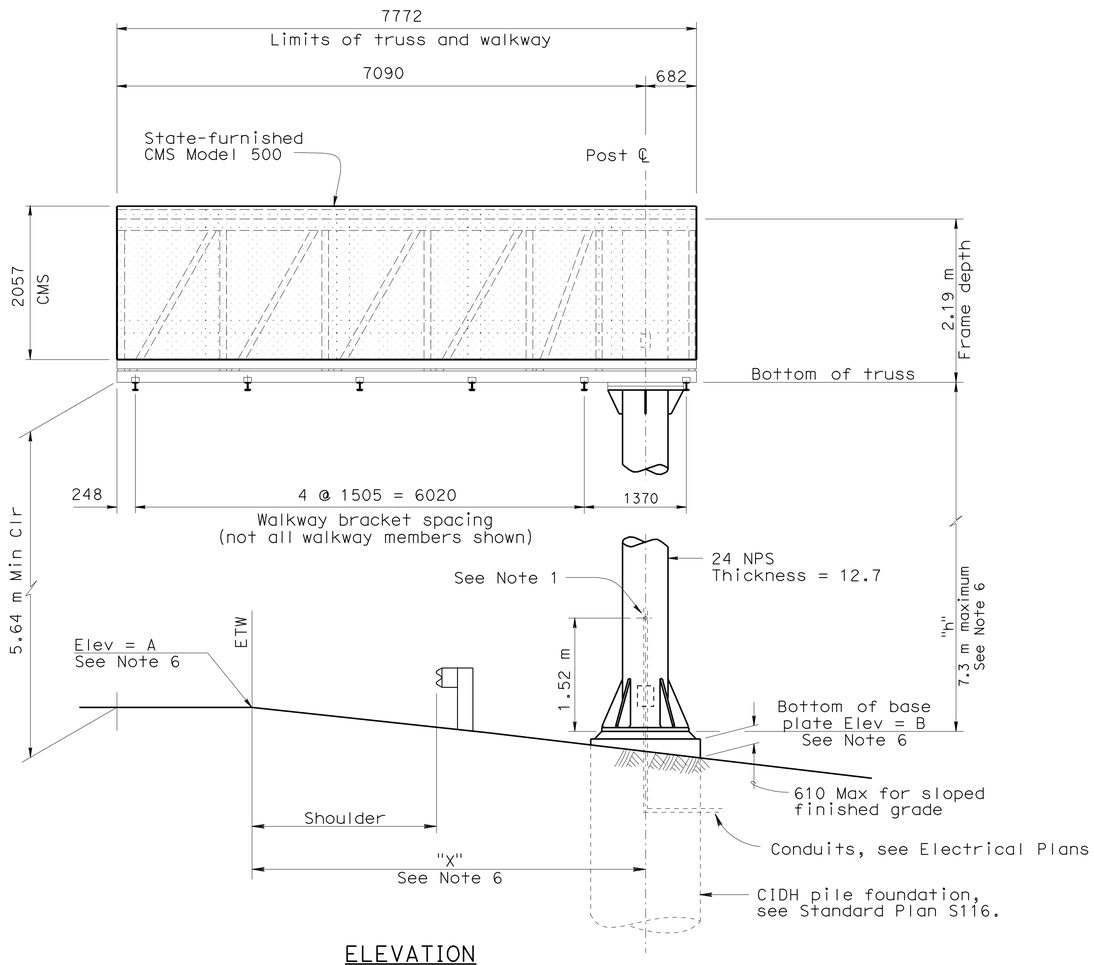


ELEVATION

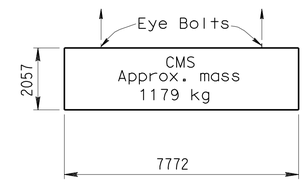


LIFTING DIAGRAM

NOTES

1. Drill and tap for Size 63 recessed pipe plug.
2. Changeable Message Sign will be State-furnished.
3. For location and elevation of sign structure see Project Plans.
4. Sign support post shall be raked out of plumb with leveling nuts to make the bottom of the sign frame level.
5. At final position of post top and bottom nuts shall be tightened against base plate.
6. See Project Plans.
7. For "General Notes", see Revised Standard Plan RSP S101.

STATE OF CALIFORNIA
DEPARTMENT OF TRANSPORTATION

# OVERHEAD SIGN-TRUSS SINGLE POST TYPE LAYOUT FULL CANTILEVER CHANGEABLE MESSAGE SIGNS MODEL 500

NO SCALE

ALL DIMENSIONS ARE IN
MILLIMETERS UNLESS OTHERWISE SHOWN

RSP S109 DATED JANUARY 24, 2005 SUPERSEDES STANDARD PLAN S109
DATED JULY 1, 2004-PAGE 386 OF THE STANDARD PLANS BOOK DATED JULY 2004.

**REVISED STANDARD PLAN RSP S109**

**2004 REVISED Std PLAN RSP S109**

| DIST | COUNTY | ROUTE | KILOMETER POST TOTAL PROJECT | SHEET NO. | TOTAL SHEETS |
|---|---|---|---|---|---|
| 04 | Ala | 80 | 1.6/2.7 | 558 | 744 |

REGISTERED CIVIL ENGINEER

January 24, 2005
PLANS APPROVAL DATE

REGISTERED PROFESSIONAL ENGINEER
Tillat Sattar
No. C42892
Exp. 03-31-2006
CIVIL
STATE OF CALIFORNIA

*The State of California or its officers or agents shall not be responsible for the accuracy or completeness of electronic copies of this plan sheet.*

*To get to the Caltrans web site, go to: http://www.dot.ca.gov*

*To accompany plans dated* 10-3-11

Caltrans Metric

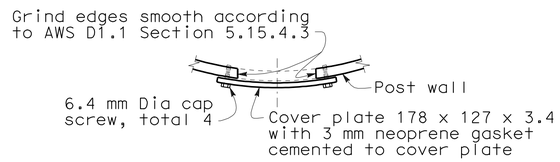


PLAN

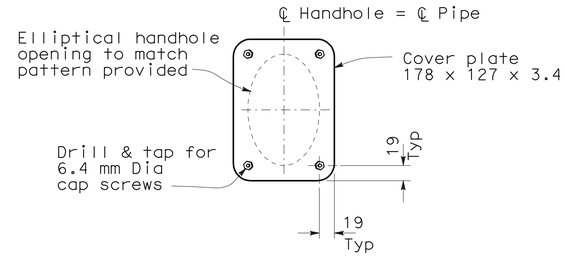


ELEVATION

## UPPER HANDHOLE AND COVER DETAILS

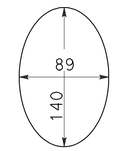


PATTERN OF ELLIPTICAL HANDHOLE CUT OUT

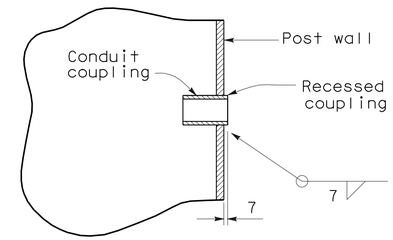


RECESSED COUPLING DETAIL

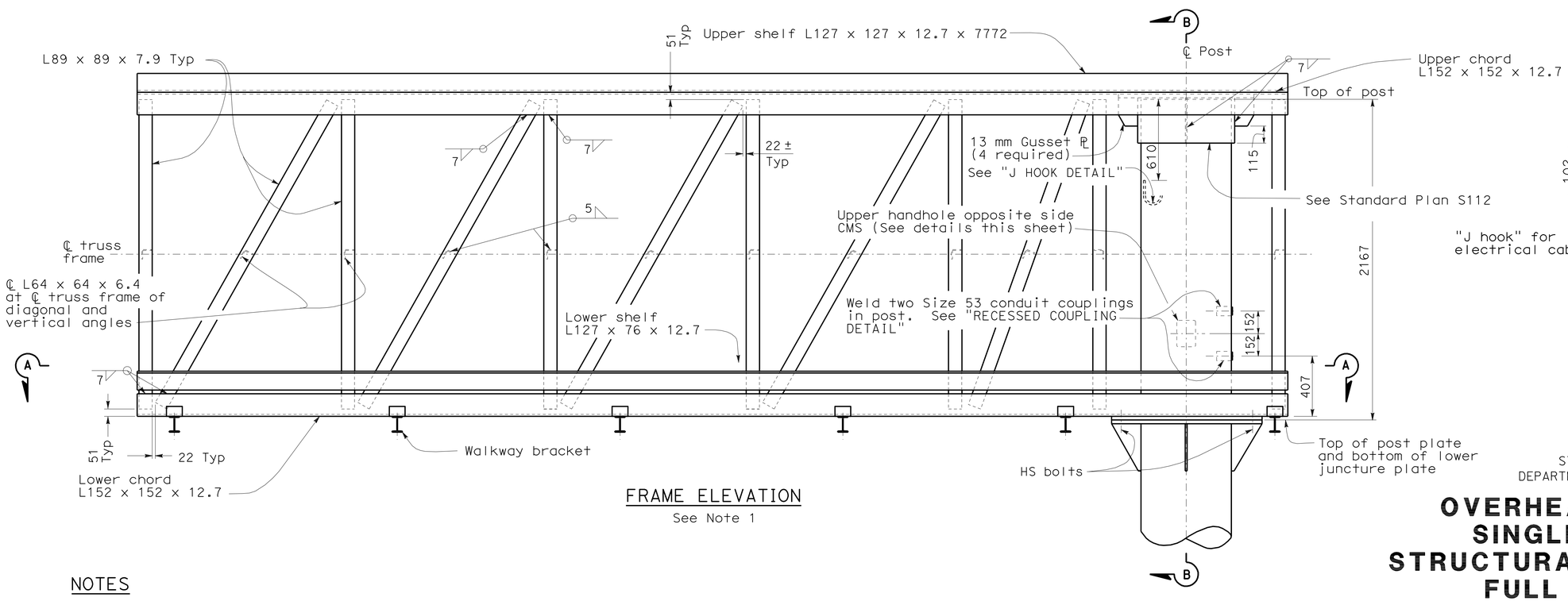


FRAME ELEVATION

See Note 1

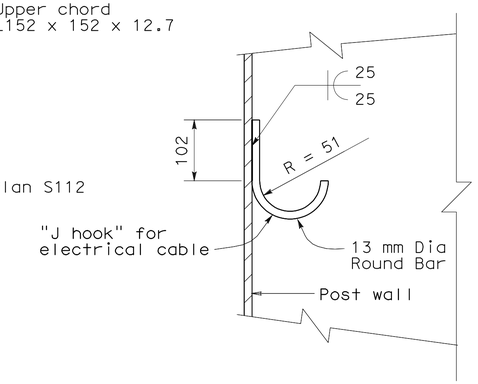


J HOOK DETAIL

## NOTES

1. Walkways and safety anchorages not shown for clarity.
2. For Section B-B details, see Standard Plan S112.
3. For Section A-A details, including vertical angle spacing, see Standard Plan S112.

STATE OF CALIFORNIA
DEPARTMENT OF TRANSPORTATION

# OVERHEAD SIGN-TRUSS SINGLE POST TYPE STRUCTURAL FRAME DETAILS FULL CANTILEVER CHANGEABLE MESSAGE SIGNS MODEL 500

NO SCALE

ALL DIMENSIONS ARE IN MILLIMETERS UNLESS OTHERWISE SHOWN

RSP S110 DATED JANUARY 24, 2005 SUPERSEDES STANDARD PLAN S110 DATED JULY 1, 2004-PAGE 387 OF THE STANDARD PLANS BOOK DATED JULY 2004.

**REVISED STANDARD PLAN RSP S110**

**2004 REVISED Std PLAN RSP S110**

| DIST | COUNTY | ROUTE | KILOMETER POST TOTAL PROJECT | SHEET NO. | TOTAL SHEETS |
|---|---|---|---|---|---|
| 04 | Ala | 80 | 1.6/2.7 | 559 | 744 |

REGISTERED CIVIL ENGINEER

January 24, 2005
PLANS APPROVAL DATE

REGISTERED PROFESSIONAL ENGINEER
Tillat Sattar
No. C42892
Exp. 03-31-2006
CIVIL
STATE OF CALIFORNIA

*The State of California or its officers or agents shall not be responsible for the accuracy or completeness of electronic copies of this plan sheet.*

*To get to the Caltrans web site, go to: http://www.dot.ca.gov*

*To accompany plans dated* 10-3-11

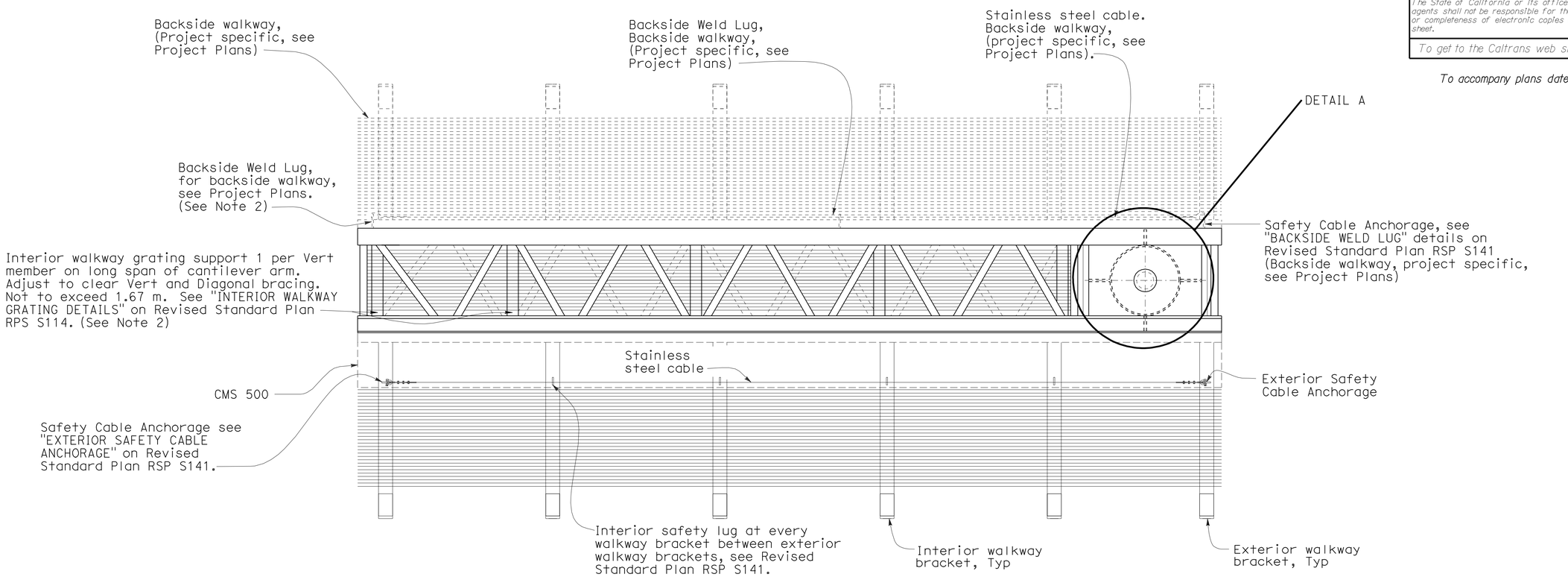


PLAN

## NOTES:

1. Crossties at vertical and diagonal Ls and internal diagonals not shown for clarity.
2. Interior grating and backside weld lugs shall be installed only for projects requiring backside walkways.

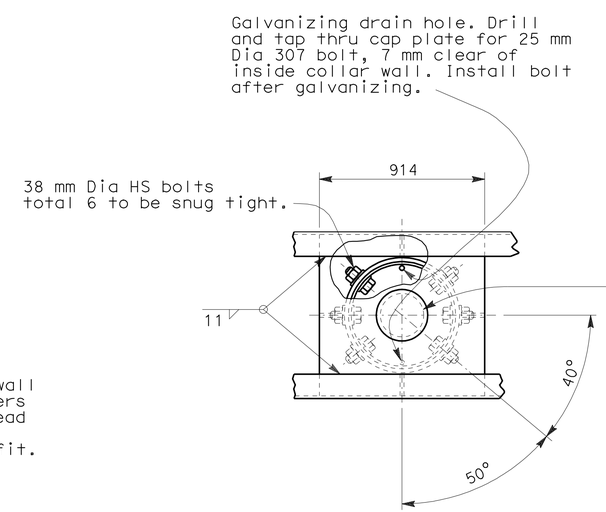


DETAIL A

## NOTE

Drill thru outer collar and post wall for bolts. Provide contoured washers and hardened washers under bolt head and nut. Contoured washers to be 76 x 76 x 8 mm Min Grind face to fit.

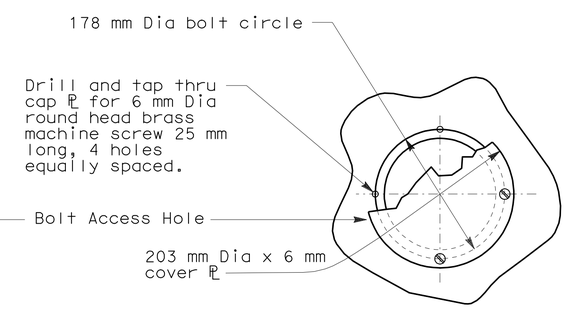


PLAN

BOLT-ACCESS HOLE

Single Post Type

STATE OF CALIFORNIA
DEPARTMENT OF TRANSPORTATION

# OVERHEAD SIGN-TRUSS SINGLE POST TYPE PLAN AND UPPER BOLT DETAILS FULL CANTILEVER CHANGEABLE MESSAGE SIGNS MODEL 500

NO SCALE

ALL DIMENSIONS ARE IN MILLIMETERS UNLESS OTHERWISE SHOWN

RSP S111 DATED JANUARY 24, 2005 SUPERSEDES STANDARD PLAN S111 DATED JULY 1, 2004-PAGE 388 OF THE STANDARD PLANS BOOK DATED JULY 2004.

**REVISED STANDARD PLAN RSP S111**

**2004 REVISED Std PLAN RSP S111**

| DIST | COUNTY | ROUTE | KILOMETER POST TOTAL PROJECT | SHEET NO. | TOTAL SHEETS |
|---|---|---|---|---|---|
| 04 | Ala | 80 | 1.6/2.7 | 560 | 744 |

REGISTERED CIVIL ENGINEER

January 24, 2005
PLANS APPROVAL DATE

REGISTERED PROFESSIONAL ENGINEER Tillat Sattar No. C42892 Exp. 03-31-2006 CIVIL STATE OF CALIFORNIA

*The State of California or its officers or agents shall not be responsible for the accuracy or completeness of electronic copies of this plan sheet.*

*To get to the Caltrans web site, go to: http://www.dot.ca.gov*

*To accompany plans dated* 10-3-11

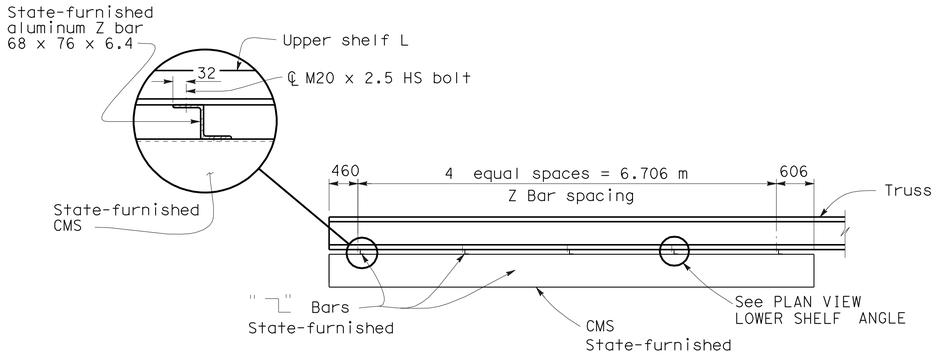


## ALUMINUM Z BAR SPACING

**NOTE**

Contractor shall verify Z bar spacing prior to drilling holes in shelf angle

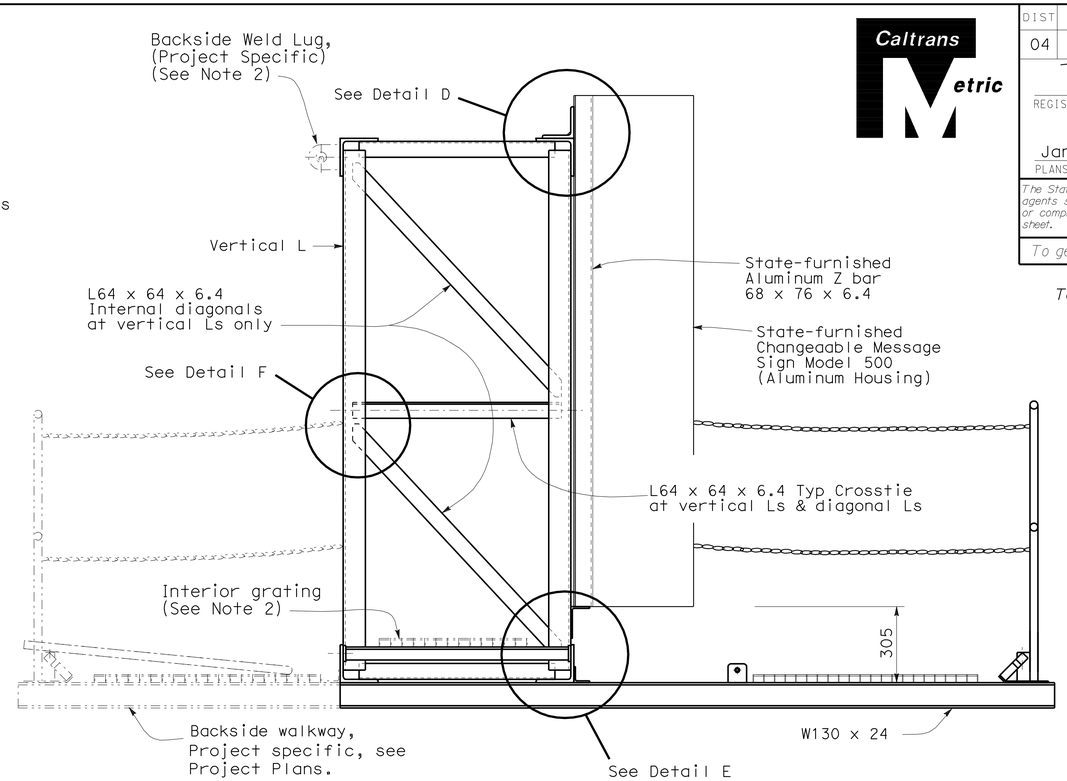


## TYPICAL SECTION FRAME

**NOTES:**

1. Diagonal Ls in plane of truss not shown. Bracing shown is at all vertical Ls of truss.
2. Interior grating and backside weld lugs shall be installed only for projects requiring backside walkways.

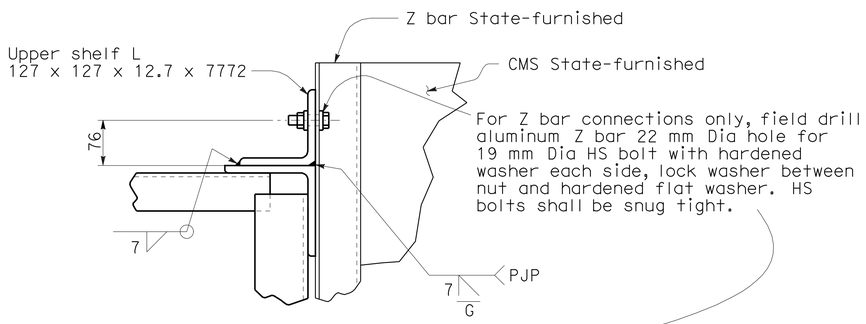


## DETAIL D

No Scale

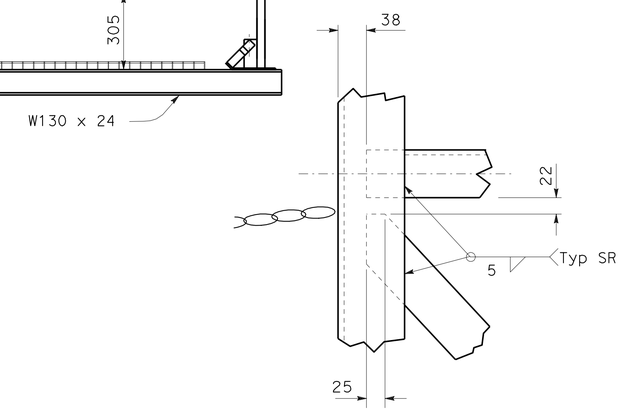


## DETAIL F

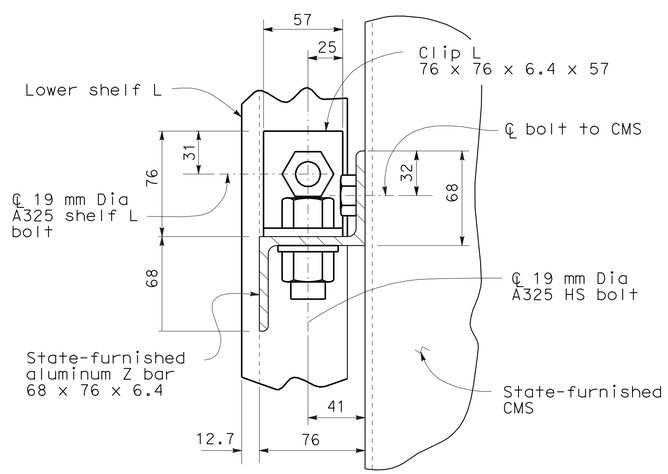


## PLAN VIEW Z BAR AT LOWER SHELF ANGLE

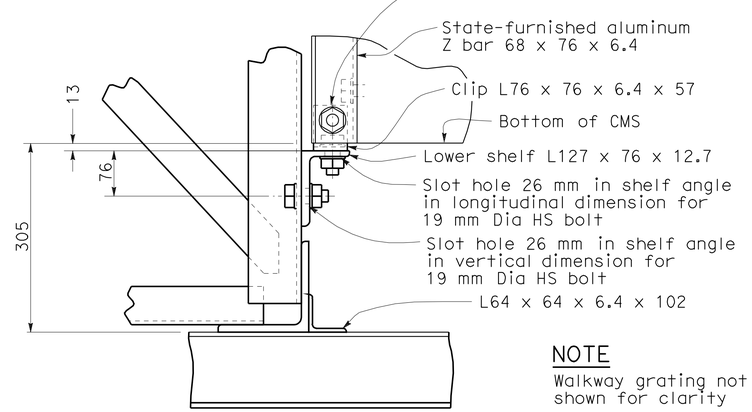


**NOTE**

Walkway grating not shown for clarity

## DETAIL E

STATE OF CALIFORNIA
DEPARTMENT OF TRANSPORTATION

# OVERHEAD SIGN-TRUSS SINGLE POST TYPE MOUNTING DETAILS CHANGEABLE MESSAGE SIGNS MODEL 500

NO SCALE

ALL DIMENSIONS ARE IN MILLIMETERS UNLESS OTHERWISE SHOWN

RSP S113 DATED JANUARY 24, 2005 SUPERSEDES STANDARD PLAN S113 DATED JULY 1, 2004-PAGE 390 OF THE STANDARD PLANS BOOK DATED JULY 2004.

**REVISED STANDARD PLAN RSP S113**

**2004 REVISED Std PLAN RSP S113**

| DIST | COUNTY | ROUTE | KILOMETER POST TOTAL PROJECT | SHEET NO. | TOTAL SHEETS |
|---|---|---|---|---|---|
| 04 | Ala | 80 | 1.6/2.7 | 561 | 744 |

REGISTERED CIVIL ENGINEER

January 24, 2005
PLANS APPROVAL DATE

REGISTERED PROFESSIONAL ENGINEER Tillat Sattar No. C42892 Exp. 03-31-2006 CIVIL STATE OF CALIFORNIA

*The State of California or its officers or agents shall not be responsible for the accuracy or completeness of electronic copies of this plan sheet.*

*To get to the Caltrans web site, go to: http://www.dot.ca.gov*

*To accompany plans dated* 10-3-11

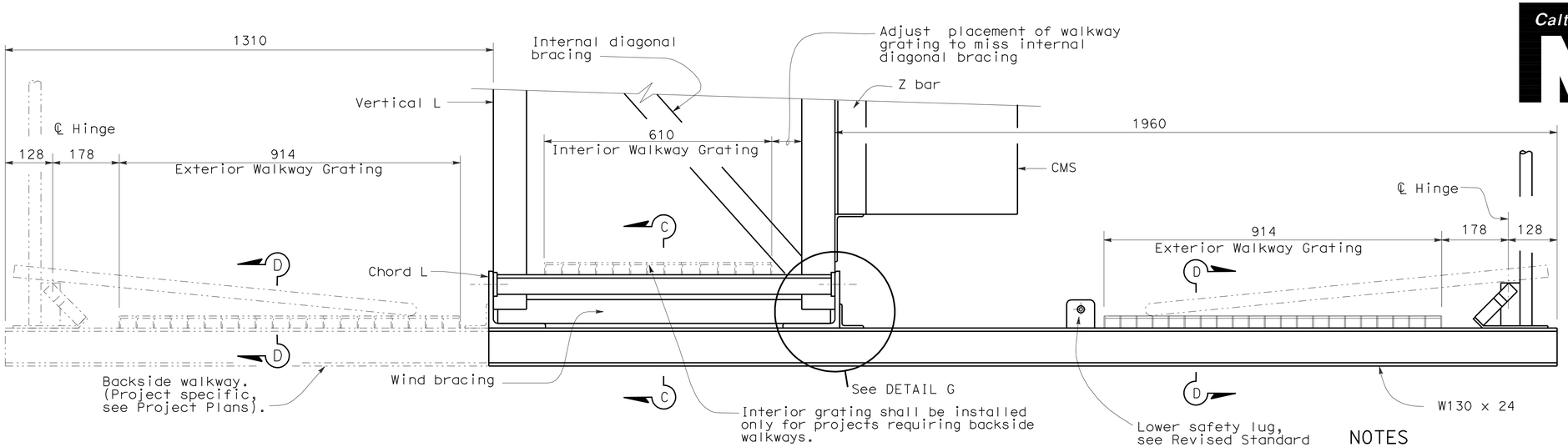


TYPICAL WALKWAY SECTION

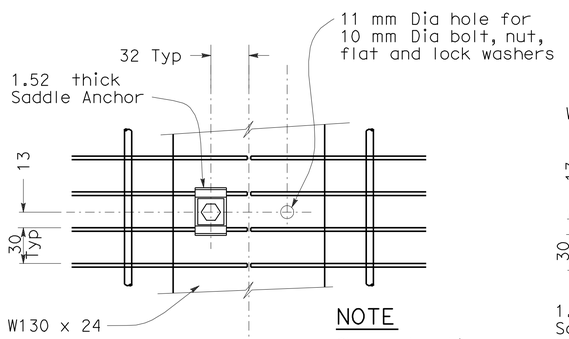


NOTE
Shown at splice

PLAN

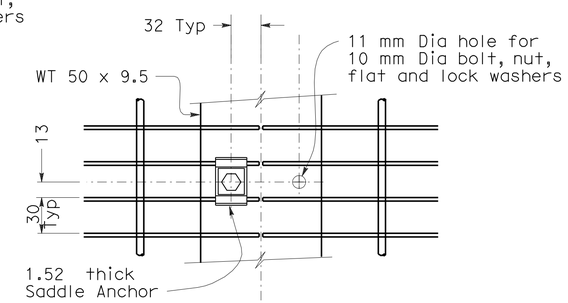


PLAN

NOTE
Shown at splice

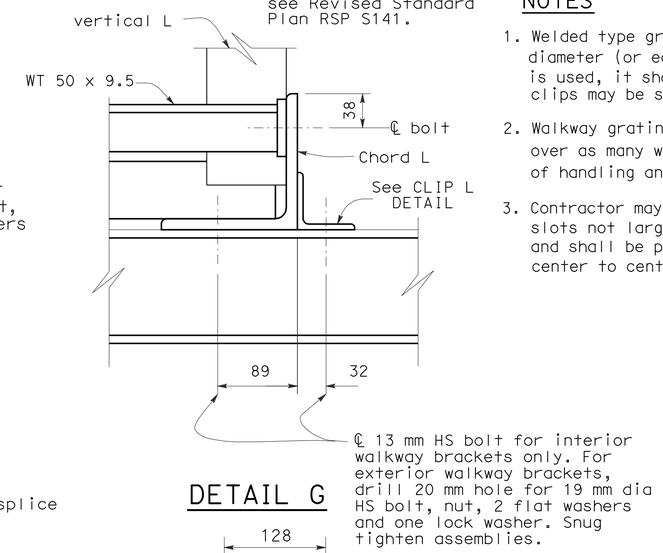


DETAIL G

## NOTES

1. Welded type grating shall have 32 x 3 bearing bars at 30 mm centers with 6 mm diameter (or equal) cross bars at 102 mm centers. If mechanical lock grating is used, it shall be equal in strength to the welded type. Alternate hold-down clips may be submitted forapproval.
2. Walkway grating and light fixture mounting channels to be continuous (no splices) over as many walkway brackets as practical and consistent with fabrication, ease of handling and assembly.
3. Contractor may substitute 41 x 41 x 2.753 cont-slot steel channel with pre-punched slots not larger than 10 mm x 77 mm. Slots shall be at bottom of channel and shall be parallel to channel. Slots shall be spaced not closer than 100 mm center to center.

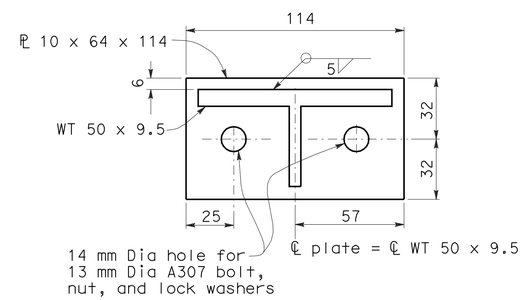


END PLATE CONNECTOR DETAIL

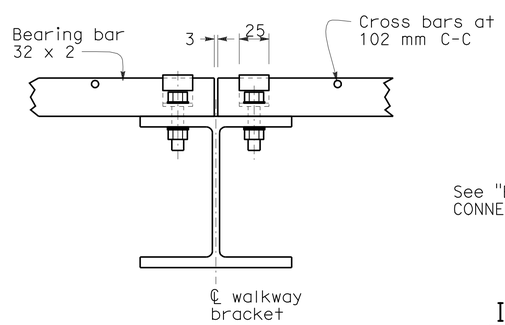


SECTION C-C

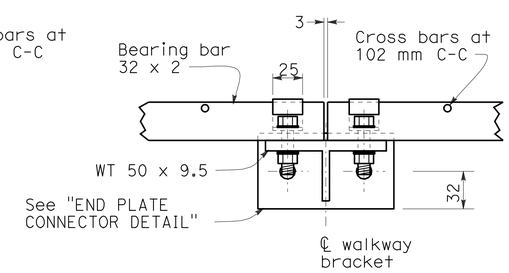


SECTION D-D

INTERIOR WALKWAY GRATING DETAILS

EXTERIOR WALKWAY GRATING DETAILS

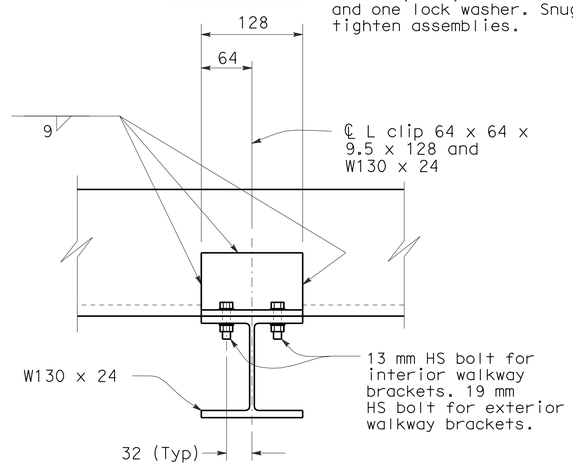


CLIP L DETAIL

STATE OF CALIFORNIA
DEPARTMENT OF TRANSPORTATION

# OVERHEAD SIGN-TRUSS SINGLE POST TYPE WALKWAY DETAILS CHANGEABLE MESSAGE SIGNS MODEL 500

NO SCALE

ALL DIMENSIONS ARE IN MILLIMETERS UNLESS OTHERWISE SHOWN

RSP S114 DATED JANUARY 24, 2005 SUPERSEDES STANDARD PLAN S114 DATED JULY 1, 2004-PAGE 391 OF THE STANDARD PLANS BOOK DATED JULY 2004.

**REVISED STANDARD PLAN RSP S114**

**2004 REVISED Std PLAN RSP S114**

| DIST | COUNTY | ROUTE | KILOMETER POST TOTAL PROJECT | SHEET NO. | TOTAL SHEETS |
|---|---|---|---|---|---|
| 04 | Ala | 80 | 1.6/2.7 | 562 | 744 |

Caltrans Metric

REGISTERED ELECTRICAL ENGINEER

October 5, 2007
PLANS APPROVAL DATE

REGISTERED PROFESSIONAL ENGINEER Jeffery G. McRae No. E14512 Exp. 6-30-08 ELECTRICAL STATE OF CALIFORNIA

*The State of California or its officers or agents shall not be responsible for the accuracy or completeness of electronic copies of this plan sheet.*

*To get to the Caltrans web site, go to: http://www.dot.ca.gov*

*To accompany plans dated* 10-3-11

## ELECTROLIERS

| STANDARD TYPES |
|---|
| 15, 15D |
| 15 STRUCTURE |
| 21, 21D STRUCTURE |
| 30 |
| 31 |
| 32 |
| 35 |
| 36-20A |

High mast lighting standard

Double arm lighting standard

Existing electrolier

Electrolier foundation (Future installation)

### NOTES

1. Luminaires shall be 310 W HPS when installed on Type 21, 21D, 30, 31, 32, 35 and 36-20A Standards, unless otherwise specified. Luminaires shall be 200 W HPS when installed on other type standards or poles, unless otherwise specified.
2. Luminaires shall be the cutoff type, ANSI Type III medium cutoff lighting distribution, unless otherwise specified.
3. Variations noted adjacent to symbol on project plans.

Electrolier (see project notes or project plans)

Luminaire on wood pole

## STANDARD NOTES

- AB — Abandon. If applied to conduit, remove conductors.
- BC — Install pull box in existing conduit run.
- BP — Pedestrian barricade, type as indicated on plan.
- CB — Install conduit into existing pull box.
- CC — Connect new and existing conduit. Remove existing conductors and install conductors as indicated.
- CF — Conduit to remain for future use. Remove conductors. Install pull wire or rope.
- DH — Detector handhole.
- FA — Foundation to be abandoned.
- IS — Install sign on signal mast arm.
- NS — No slip base on standard.
- PEC — Photoelectric control.
- PEU — Photoelectric unit.
- RC — Equipment or material to be removed and become the property of the Contractor.
- RE — Remove electrolier, fuses and ballast. Tape ends of conductors.
- RL — Relocate equipment.
- RR — Remove and reuse equipment.
- RS — Remove and salvage equipment.
- SC — Splice new to existing conductors.
- SD — Service disconnect.
- SF — Standard to remain for future use. Remove luminaire, pole conductors, fuses and ballast. Tape disconnects.
- TSP — Telephone service point.

## ABBREVIATIONS AND EQUIPMENT DESIGNATIONS

| PROPOSED | EXISTING | |
|---|---|---|
| BBS | bbs | Battery backup system |
| BC | bc | Bolt circle |
| C | C | Conduit |
| CCTV | cctv | Closed circuit television |
| CKT | ckt | Circuit |
| CMS | cms | Changeable message sign |
| DLC | dlc | Loop detector lead-in cable |
| EMS | ems | Extinguishable message sign |
| EVC | evc | Emergency vehicle cable |
| EVD | evd | Emergency vehicle detector |
| FB | fb | Flashing beacon |
| FBCA | fbca | Flashing beacon control assembly |
| FBS | fbs | Flashing beacon with slip base |
| FO | fo | Fiber optic |
| G | G | Ground (Equipment Grounding Conductor) |
| GFCI | GFCI | Ground fault circuit interrupt |
| HAR | har | Highway advisory radio |
| HEX | hex | Hexagonal |
| HPS | hps | High pressure sodium |
| IISNS | iisns | Internally illuminated street name sign |
| ISL | isl | Induction sign lighting |
| LED | led | Light emitting diode |
| LMA | lma | Luminaire mast arm |
| LPS | lps | Low pressure sodium |
| LTG | ltg | Lighting |
| LUM | lum | Luminaire |
| MAT | mat | Mast arm mounted vehicle signal faces, top attachment |
| MAS | mas | Mast arm mounted vehicle signal faces, side attachment |
| MAS-4A | mas-4A | Mast arm mounted vehicle signal faces, side attachment - 4 signal section |
| MAS-4B | mas-4B | |
| MAS-4C | mas-4C | |
| MAS-5A | mas-5A | Mast arm mounted vehicle signal faces, side attachment - 5 signal section |
| MAS-5B | mas-5B | |
| MC | mc | Mercury contactor |
| M/M | m/m | Multiple to multiple transformer |
| MT | mt | Conduit with pull wire or rope only |
| MTG | mtg | Mounting |
| | mv | Mercury vapor lighting fixture |
| N | N | Neutral (Grounded Conductor) |
| NC | NC | Normally closed |
| NO | NO | Normally open |
| PB | pb | Pull box |
| PEC | pec | Photoelectric control (Type I, II, III, IV or V as shown) |
| PED | ped | Pedestrian |
| PEU | peu | Photoelectric unit |
| PPB | ppb | Pedestrian push button |
| RL | RL | Relocated equipment |
| RM | rm | Ramp metering |
| SB | sb | Slip base |
| SIC | sic | Signal interconnect cable |
| SIG | sig | Signal |
| SMA | sma | Signal mast arm |
| SNS | sns | Street name sign |
| SP | sp | Service point |
| TDC | tdc | Telephone demarcation cabinet |
| TMS | tms | Traffic monitoring station |
| TOS | tos | Traffic Operations System |
| VEH | veh | Vehicle |
| XFMR | xfmr | Transformer |
| COMM | comm | Communication |
| RWIS | rwis | Roadway weather information system |

## SOFFIT AND WALL MOUNTED LUMINAIRES

Pendant, 70 W HPS unless otherwise specified.

Flush, 70 W HPS unless otherwise specified.

Wall surface, 70 W HPS unless otherwise specified.

Existing soffit or wall luminaire to remain unmodified.

Existing soffit or wall luminaire to be modified as specified.

### NOTE

Arrow indicates "street side" of luminaire.

STATE OF CALIFORNIA
DEPARTMENT OF TRANSPORTATION

# ELECTRICAL SYSTEMS (SYMBOLS AND ABBREVIATIONS)

NO SCALE

ALL DIMENSIONS ARE IN MILLIMETERS UNLESS OTHERWISE SHOWN

RSP ES-1A DATED OCTOBER 5, 2007 SUPERSEDES STANDARD PLAN ES-1A DATED JULY 1, 2004-PAGE 413 OF THE STANDARD PLANS BOOK DATED JULY 2004.

**REVISED STANDARD PLAN RSP ES-1A**

**2004 REVISED Std PLAN RSP ES-1A**

6-27-07

| DIST | COUNTY | ROUTE | KILOMETER POST TOTAL PROJECT | SHEET NO. | TOTAL SHEETS |
|---|---|---|---|---|---|
| 04 | Ala | 80 | 1.6/2.7 | 563 | 744 |

REGISTERED ELECTRICAL ENGINEER

October 5, 2007
PLANS APPROVAL DATE

REGISTERED PROFESSIONAL ENGINEER Jeffery G. McRae No. E14512 Exp. 6-30-08 ELECTRICAL STATE OF CALIFORNIA

*The State of California or its officers or agents shall not be responsible for the accuracy or completeness of electronic copies of this plan sheet.*

*To get to the Caltrans web site, go to: http://www.dot.ca.gov*

*To accompany plans dated* 10-3-11

## CONDUIT

| PROPOSED | EXISTING | |
|---|---|---|
| | | Lighting conduit, unless otherwise indicated or noted |
| | | Traffic signal conduit |
| C | c | Communication conduit |
| T | t | Telephone conduit |
| F | f | Fire alarm conduit |
| FO | fo | Fiber optic conduit |
| | | Conduit termination (RSP ES-9A C) |
| R | r | Conduit riser in/on structure or Service pole |

## SERVICE EQUIPMENT

| PROPOSED | EXISTING | |
|---|---|---|
| OH | oh | Overhead lines |
| U | u | Wood pole "U" indicates utility owned |
| | | Pole guy-with anchor |
| | | Utility transformer-ground mounted |
| III | | Service equipment enclosure type |
| | | Service equipment enclosure door indicates front of enclosure |
| T | t | Telephone demarcation cabinet |

## POLE-MOUNTED SERVICE DESIGNATION

TYPE H SERVICE - 8.8 m

Type of installation

Pole height above grade

## ILLUMINATED OVERHEAD SIGN

| PROPOSED | EXISTING | |
|---|---|---|
| | | Overhead sign - Single post |
| | | Overhead sign - Two post |
| | | Overhead sign - Mounted on structure |
| | | Overhead sign with electrolier |

## SIGNAL EQUIPMENT

| PROPOSED | EXISTING | |
|---|---|---|
| | | Pedestrian signal face |
| | | Pedestrian push button post |
| | | Pedestrian barricade |
| | | Vehicle signal face (with backplate, 3-Section: red, yellow and green) |
| | | Vehicle signal face with angle visors |
| PV | PV | Modifications of basic symbols: "L" Indicates all non-arrow sections louvered "LG" Indicates louvered green section only "PV" indicates 300 mm programmed visibility sections "200" indicates all 200 mm sections (only when specified) |
| | | Type 15TS and Vehicle signal face |
| | | Vehicle signal face with red, yellow and green left arrow sections |
| | | Vehicle signal face with red and yellow sections and up green arrow |
| | | Vehicle signal face (5 Section) with red, yellow and green sections and yellow and green right arrows |
| | | Type 1 Standard and attached vehicle signal faces |
| | | Standard with signal mast arm only and attached vehicle signal faces and internally illuminated street name sign |
| | | Type 33 Standard, Left-turn vehicle signal face and sign |
| | | Standard with luminaire and signal mast arms and attached vehicle signal faces |
| | | Cantilever flashing beacon Type 9 Frame, with a sign unless otherwise specified or indicated |
| Y Y | Y Y | Type 15-FBS Standard with two vehicle signal face sections with lens, backplate and visor with a sign |
| R | Y | Flashing beacon. One vehicle signal face section with lens, backplate and visor. "R" indicates red indication, "Y" indicates yellow indication |
| | | Controller assembly. Door indicates front of cabinet |
| | | Guard post |
| | | Type 1 Standard with "Meter On" sign |
| | | Emergency vehicle detector |

## NOTES

1. All signal sections shall be 300 mm unless shown otherwise.
2. Signal heads shall be provided with backplates unless shown otherwise.
3. Signal indication shall be LED.

STATE OF CALIFORNIA
DEPARTMENT OF TRANSPORTATION

# ELECTRICAL SYSTEMS (SYMBOLS AND ABBREVIATIONS)

NO SCALE

ALL DIMENSIONS ARE IN MILLIMETERS UNLESS OTHERWISE SHOWN

RSP ES-1B DATED OCTOBER 5, 2007 SUPERSEDES STANDARD PLAN ES-1B DATED JULY 1, 2004-PAGE 414 OF THE STANDARD PLANS BOOK DATED JULY 2004.

**REVISED STANDARD PLAN RSP ES-1B**

**2004 REVISED Std PLAN RSP ES-1B**

8-9-07

| DIST | COUNTY | ROUTE | KILOMETER POST TOTAL PROJECT | SHEET NO. | TOTAL SHEETS |
|---|---|---|---|---|---|
| 04 | Ala | 80 | 1.6/2.7 | 564 | 744 |

Caltrans Metric

Jeffery G. McRae
REGISTERED ELECTRICAL ENGINEER

October 5, 2007
PLANS APPROVAL DATE

REGISTERED PROFESSIONAL ENGINEER
Jeffery G. McRae
No. E14512
Exp. 6-30-08
ELECTRICAL
STATE OF CALIFORNIA

*The State of California or its officers or agents shall not be responsible for the accuracy or completeness of electronic copies of this plan sheet.*

*To get to the Caltrans web site, go to: http://www.dot.ca.gov*

*To accompany plans dated* 10-3-11

# EQUIPMENT IDENTIFICATION

## ILLUMINATED SIGN IDENTIFICATION NUMBER:

Sign No. 12345 — Sign number - Place on post or structure

10 ISL SCI 1.0

- 1.0 — Transformer rating (kVA)
- SCI — Lighting control type
- ISL — Number and type of fixtures

Do NOT place on standard or structure

## ELECTROLIER OR EQUIPMENT IDENTIFICATION NUMBER:

12345 - 4.6

- 4.6 — Mast arm length in meters, if shown. Do not place on standard or structure.
- 12345 — Equipment number - Place on standard or structure. Existing equipment numbers are shown in parenthesis

## CONDUIT AND CONDUCTOR IDENTIFICATION:

41C, 2#10, 15#14, 2 DLC

- 2#10, 15#14, 2 DLC — Number and size of conductors and cables
- 41C — Size of conduit in millimeters

| | |
|---|---|
| Ø1, Ø2, Ø2P, etc. | Traffic phase identification for signal faces, detectors and phase diagrams |
| 1 2 3 | Project note numbers |
| A B C | Equipment description, installation or item numbers |
| 1 2 3 | Conduit run numbers |

## SIGNAL AND LIGHTING STANDARD (TYPICAL DESIGNATION):

19A - 3 - 161

- 161 — Wind velocity=161 km/h
- 3 — Case 3 arm loading
- 19A — Standard type
- Standard Plan sheet number
- Detail number or letter

## WIRING DIAGRAM LEGEND

| | |
|---|---|
| P | Pole |
| CB | Circuit breaker |
| A | Ampere |
| V | Volt |
| M | Metered |
| UM | Unmetered |
| NB | Neutral bus |
| GB | Ground bus |
| G | Equipment grounding conductor |
| N | Grounded conductor (Neutral) |

- External conductor
- Conductor or bus
- Tie point
- Contactor coil
- Contactor, Contact NO
- Terminal blocks
- Contactor, Contact NC
- Enclosure bond
- Grounding electrode
- Circuit breaker
- Receptacle

## PULL BOXES

PROPOSED EXISTING

Pull box-No. 5 unless otherwise indicated or noted.

3 / 9A(21)

Pull box-Additional designations or descriptions

3 = No. 3½ pull box
5 = No. 5 pull box
6 = No. 6 pull box
7 = No. 7 (Ceiling pull box)
8 = No. 8 (Pendant soffit pull box)
9 = No. 9 pull box
9A = No. 9A pull box

(C) = Communications pull box
(E) = Pull box with extension
(S) = Sprinkler control pull box
(21) = Anchor bolts and conduit for future installation of Type 21 Standard
(T) = Traffic pull box

## MISCELLANEOUS EQUIPMENT

| PROPOSED | EXISTING | |
|---|---|---|
| CMS | cms | Changeable message sign |
| | | Closed circuit television camera |
| | | Highway advisory radio pole and antenna |
| EMS | ems | Extinguishable message sign |
| | | Detection device |
| M V | m v | M = Microwave sensor<br>V = Video image sensor |

## VEHICLE DETECTORS

5 J 9 U

- Vehicle detector designation
- U = Upper, L = Lower
- Slot number in input file
- Input file (I or J)
- Phase

| PROPOSED | EXISTING | |
|---|---|---|
| | | Type A detector loop. Outline of sawcut shown. |
| | | Type B detector loop. Outline of sawcut shown. |
| | | Type C detector loop. Outline of sawcut shown. |
| | | Type D detector loop. Outline of sawcut shown. |
| | | Type E detector loop. Outline of sawcut shown. |
| | | Type Q detector loop. Outline of sawcut shown. |
| | | Magnetic detector |
| DH | dh | Detector handhole |
| | | Microwave or video detection zone |

STATE OF CALIFORNIA
DEPARTMENT OF TRANSPORTATION

# ELECTRICAL SYSTEMS (SYMBOLS AND ABBREVIATIONS)

NO SCALE

ALL DIMENSIONS ARE IN MILLIMETERS UNLESS OTHERWISE SHOWN

RSP ES-1C DATED OCTOBER 5, 2007 SUPERSEDES STANDARD PLAN ES-1C DATED JULY 1, 2004-PAGE 415 OF THE STANDARD PLANS BOOK DATED JULY 2004.

**REVISED STANDARD PLAN RSP ES-1C**

**2004 REVISED Std PLAN RSP ES-1C**

10-1-07

| DIST | COUNTY | ROUTE | KILOMETER POST TOTAL PROJECT | SHEET NO. | TOTAL SHEETS |
|---|---|---|---|---|---|
| 04 | Ala | 80 | 1.6/2.7 | 565 | 744 |

Caltrans Metric

REGISTERED ELECTRICAL ENGINEER

October 5, 2007
PLANS APPROVAL DATE

REGISTERED PROFESSIONAL ENGINEER
Jeffery G. McRae
No. E14512
Exp. 6-30-08
ELECTRICAL
STATE OF CALIFORNIA

*The State of California or its officers or agents shall not be responsible for the accuracy or completeness of electronic copies of this plan sheet.*

*To get to the Caltrans web site, go to: http://www.dot.ca.gov*

*To accompany plans dated* 10-3-11

2004 REVISED Std PLAN RSP ES-2C

## NOTES-TYPE III SERVICE EQUIPMENT ENCLOSURES:

1. Service equipment enclosure and metering equipment shall meet the requirements of the service utility. The meter area shall have a sealable, lockable, weathertight cover that can be removed without the use of tools.

2. Service equipment enclosures shall be factory wired and conform to NEMA standards.

3. Dimensions of service equipment enclosures shall meet the requirements of the service utility.

4. The dead front panels on Type III-A service equipment enclosures shall have a continuous stainless steel or aluminum piano hinge. The panel in front of the breakers shall be secured with a latch or captive screws. No live parts shall be mounted on the dead front panel.

5. The exterior door shall have provisions for padlocking. The padlock hole shall be a minimum diameter of 11 mm.

6. Enclosures housing transformers of more than one kVA shall have effective screened ventilation louvers of not less than 32 000 $mm^2$. Screen shall be stainless steel No. 304, with a No. 10 size mesh. Framed screen shall be secured with at least four bolts.

7. Fasteners on the exterior of the enclosure shall be vandal-resistant and shall not be removable from the exterior. Screws, nuts, bolts and washers shall be stainless steel.

8. Landing lugs for incoming service conductors shall be compatible with either copper or aluminum conductors sized to suit the conductors shown on the plan. Landing lugs shall be copper or tin-plated aluminum. Neutral bus shall be rated for 125 A and be suitable for copper or aluminum conductors unless otherwise specified. The terminal shall include but not be limited to:

   a) Incoming terminals (landing lugs)
   b) Neutral lugs
   c) Solid neutral terminal strip

9. At least 6 standard single pole circuit breaker spaces, 20 mm nominal, shall be provided for branch circuits. Circuit breaker interiors shall be copper. Interiors of enclosure shall accept plug-in or cable-in/cable-out circuit breakers.

10. Control wiring shall be 600 V, 14 stranded machine tool wire. Where subject to flexing, 19 strand wire shall be used.

11. Main bus shall be rated for 125 A and shall be tin-plated copper.

12. A plastic laminated wiring diagram shall be provided with brass mounting eyelets and attached to the inside of the enclosure and the wiring diagram shall affixed to the interior with a UL or ETL approved method.

13. An engraved phenolic nameplate on the dead front panel indicating the function of each circuit or device shall be installed with stainless steel rivets or stainless steel screws:

    a) Adjacent to the breaker or device with character size a minimum of 3 mm.

    b) At the top of the exterior door panel indicating system number, voltage level and number of phases with character size a minimum of 5 mm.

14. The plan shows the approximate location of devices within the enclosure. Components may be rearranged, however, the "working" clearances within the service equipment enclosure shall be maintained.

15. In unpaved areas a raised portland cement concrete pad 600 mm x 100 mm x width of foundation shall be constructed in front of new service equipment enclosure installation. Pad shall be set to elevation of foundation.

16. Foundation shall extend 50 mm minimum beyond edge of service equipment enclosure.

17. Internal bus, where shown, is typical only. Alternative design of proposed service equipment enclosure shall be submitted to the Engineer for approval.

18. Plug-in circuit breakers may be mounted in the vertical or horizontal position. Cable-in/cable-out circuit breakers shall be mounted in the vertical position.

19. Type III-AF and Type III-BF service equipment enclosures shall have the meter viewing windows located on the front side of the service equipment enclosures.

20. Type III-AR and Type III-BR service equipment enclosures shall be similarly constructed as Type III-AF and Type III-BF respectively, except the meter viewing windows shall be located on the back side of the service equipment enclosures.

21. Minimum clearance shall be required for front and back of service equipment enclosure per National Electrical Code, Article 110.26, "Spaces About Electric Equipment (600 Volts, Nominal, or Less)".

STATE OF CALIFORNIA
DEPARTMENT OF TRANSPORTATION

# ELECTRICAL SYSTEMS (SERVICE EQUIPMENT NOTES TYPE III SERIES)

NO SCALE

ALL DIMENSIONS ARE IN MILLIMETERS UNLESS OTHERWISE SHOWN

RSP ES-2C DATED OCTOBER 5, 2007 SUPERSEDES STANDARD PLAN ES-2C DATED JULY 1, 2004-PAGE 418 OF THE STANDARD PLANS BOOK DATED JULY 2004.

**REVISED STANDARD PLAN RSP ES-2C**

| DIST | COUNTY | ROUTE | KILOMETER POST TOTAL PROJECT | SHEET NO. | TOTAL SHEETS |
|---|---|---|---|---|---|
| 04 | Ala | 80 | 1.6/2.7 | 566 | 744 |

Caltrans Metric

REGISTERED ELECTRICAL ENGINEER

October 5, 2007
PLANS APPROVAL DATE

REGISTERED PROFESSIONAL ENGINEER Jeffery G. McRae No. E14512 Exp. 6-30-08 ELECTRICAL STATE OF CALIFORNIA

*The State of California or its officers or agents shall not be responsible for the accuracy or completeness of electronic copies of this plan sheet.*

*To get to the Caltrans web site, go to: http://www.dot.ca.gov*

*To accompany plans dated* 10-3-11

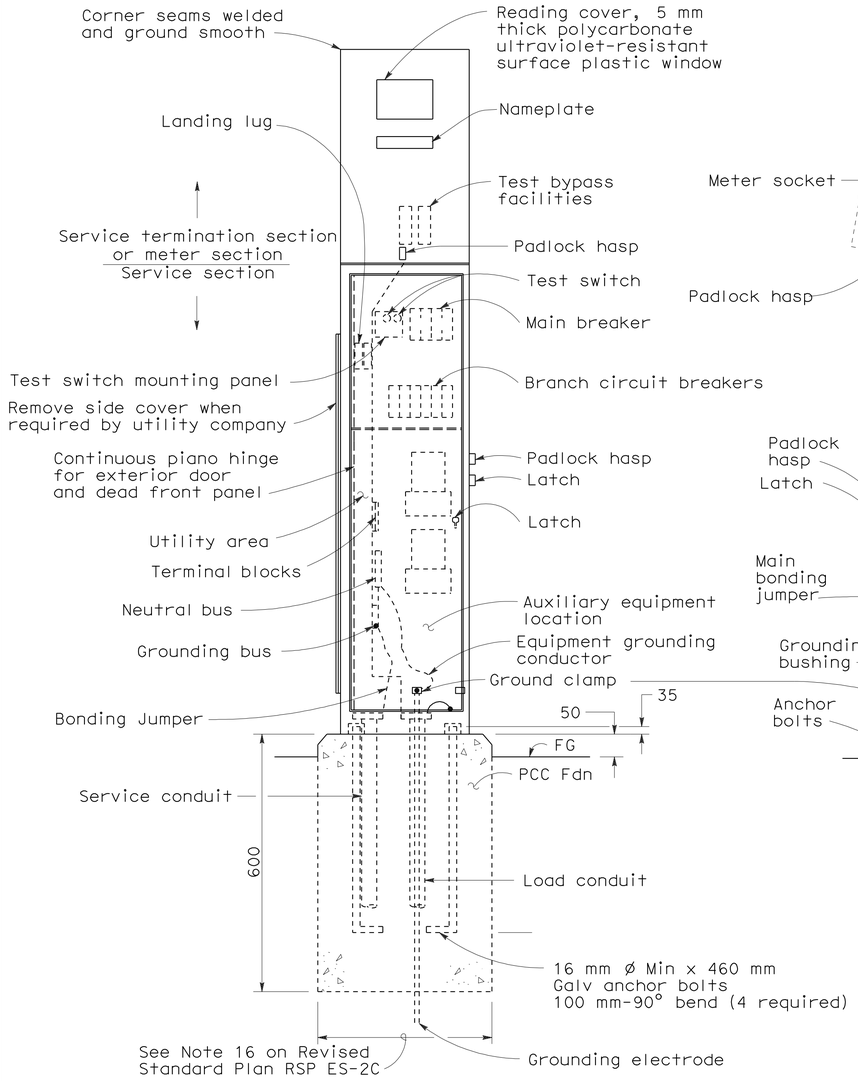


FRONT VIEW

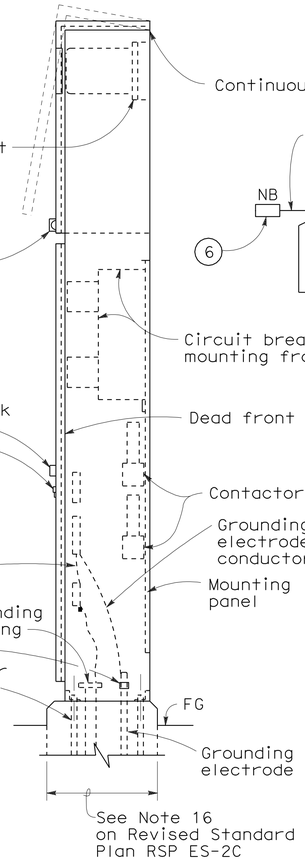


SIDE VIEW

## TYPE III-AF SERVICE EQUIPMENT ENCLOSURE (TYPICAL)

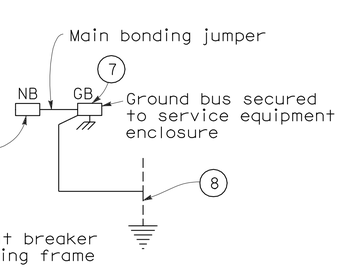


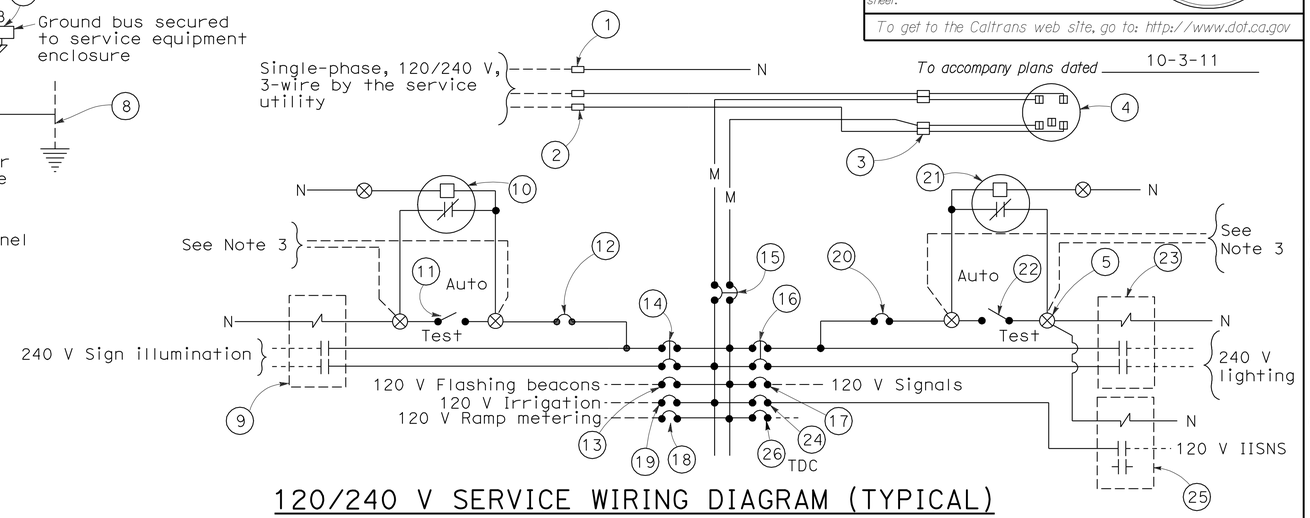


## 120/240 V SERVICE WIRING DIAGRAM (TYPICAL)

TYPE III-A SERVICE (120/240 V) EQUIPMENT LEGEND

| ITEM No. | COMPONENT | NAME PLATE DESCRIPTION | ITEM No. | COMPONENT | NAME PLATE DESCRIPTION |
|---|---|---|---|---|---|
| 1 | Neutral lug | | 14 | 30 A, 240 V, 2P, CB | Sign Illumination |
| 2 | Landing lug (Note 6) | | 15 | 100 A, 240 V, 2P, CB | Main Breaker |
| 3 | Test bypass facility | | 16 | 30 A, 240 V, 2P, CB | Lighting |
| 4 | Meter socket and support | | 17 | 50 A, 120 V, 1P, CB | Signals |
| 5 | Terminal blocks | | 18 | 30 A, 120 V, 1P, CB | Ramp Metering |
| 6 | Neutral bus | | 19 | 20 A, 120 V, 1P, CB | Irrigation |
| 7 | Ground bus | | 20 | 15 A, 120 V, 1P, CB | Lighting Control |
| 8 | Grounding electrode | | 21 | Photoelectric unit (Note 7) | |
| 9 | 30 A, 2PNO Contactor | Sign Illumination | 22 | 15 A, 1P, Test switch | Lighting Test Switch |
| 10 | Photoelectric unit (Note 7) | | 23 | 60 A, 2PNO Contactor | Lighting |
| 11 | 15 A, 1P, Test switch | Sign Illumination Test Switch | 24 | 15 A, 120 V, 1P, CB | IISNS |
| 12 | 15 A, 120 V, 1P, CB | Sign Illumination Control | 25 | 30 A, 2PNO Contactor | IISNS |
| 13 | 15 A, 120 V, 1P, CB | Flashing Beacon | 26 | 20 A, 120 V, 1P, CB | Telephone Demarcation Cabinet |

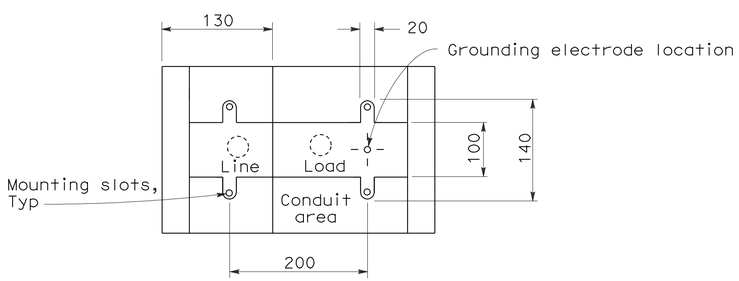


## BASE FOR TYPE III-A SERVICE EQUIPMENT ENCLOSURE

NOTES: (FOR SERVICE EQUIPMENT ENCLOSURE)

1. Voltage ratings of service equipment shall conform to the service voltages indicated on the plans.
2. Unless otherwise indicated on the plans, service equipment items shall be provided for each service equipment enclosure as shown.
3. Connect to remote test switch mounted on lighting standards, sign post or structure when required.
4. Items No. 1 and 6 shall be isolated from the service equipment enclosure.
5. Meter sockets shall be 5 clip type.
6. The landing lug shall be suitable for multiple conductors.
7. Type V photoelectric control shall be used unless otherwise indicated on the plans.

STATE OF CALIFORNIA
DEPARTMENT OF TRANSPORTATION

# ELECTRICAL SYSTEMS (SERVICE EQUIPMENT AND TYPICAL WIRING DIAGRAM, TYPE III -A SERIES)

NO SCALE

ALL DIMENSIONS ARE IN MILLIMETERS UNLESS OTHERWISE SHOWN

RSP ES-2D DATED OCTOBER 5, 2007 SUPERSEDES STANDARD PLAN ES-2D DATED JULY 1, 2004-PAGE 419 OF THE STANDARD PLANS BOOK DATED JULY 2004.

**REVISED STANDARD PLAN RSP ES-2D**

**2004 REVISED Std PLAN RSP ES-2D**

10-1-07

| DIST | COUNTY | ROUTE | KILOMETER POST TOTAL PROJECT | SHEET NO. | TOTAL SHEETS |
|---|---|---|---|---|---|
| 04 | Ala | 80 | 1.6/2.7 | 567 | 744 |

Caltrans Metric

Jeffery G. McRae
REGISTERED ELECTRICAL ENGINEER

October 5, 2007
PLANS APPROVAL DATE

REGISTERED PROFESSIONAL ENGINEER
Jeffery G. McRae
No. E14512
Exp. 6-30-08
ELECTRICAL
STATE OF CALIFORNIA

*The State of California or its officers or agents shall not be responsible for the accuracy or completeness of electronic copies of this plan sheet.*

*To get to the Caltrans web site, go to: http://www.dot.ca.gov*

*To accompany plans dated* 10-3-11

## NOTES - CONTROLLER CABINETS

1. Cabinet dimensions are nominal.
2. Foundations shall be located to provide 600 mm minimum clearance between face of curb and any portion of cabinet.
3. Type G, M, P, R, S and Model 336 cabinets shall be installed with the back toward the nearest lane of traffic.
4. The controller cabinet ground bus shall be bonded to the controller equipment enclosure.
5. In unpaved areas, a raised portland cement concrete pad shall be constructed in front of each controller cabinet. Pad shall be 900 mm x 900 mm x 100 mm for Type G cabinets and shall be 900 mm x 100 mm thick x width of foundation for Types M, P, R, S and Model 336 cabinets.
6. In unpaved areas, the top of foundation for Type G, P, R and S cabinets shall be 150 mm above surrounding grade. Top of foundation for Type M or Model 336 cabinet shall be 460 mm above surrounding grade.
7. In sidewalks and other paved areas, top of foundation for Type G cabinet shall be level with surrounding grade. Top of foundation for Type P, R and S cabinets shall be 90 mm above surrounding grade.
8. The steel pedestal, base plate, bolt circle and foundation for Type G cabinet shall be the same as that shown for a Type 1-C Standard. Pedestal shall be 640 mm - 760 mm in length. Anchor bolts shall be 19 mm ø x 460 mm with a 50 mm - 90° bend. Four bolts required per cabinet.
9. Type G cabinet shall be provided with a slipfitter to permit mounting an 114 mm outside diameter pedestal. Slipfitter shall be bolted to bottom of the cabinet.
10. Type G cabinet shall be provided with 8 screened, raintight holes, 13 mm diameter or larger, in the bottom of the cabinet.
11. A 25 mm drain shall be provided through the foundation of a Type M or Model 336 cabinet. Drain pipe shall be screened.
12. See Table for cabinet and foundation dimensions; "D" = Depth, "H" = Height and "W" = Width.
13. Cabinet shelves shall be adjustable for vertical spacing and shall be removable. Type M, P, R and S cabinets shall be provided with a minimum of two shelves.
14. Anchor bolts for Type M, P, R, S and Model 336 cabinets shall be 19 mm ø x 460 mm with a 50 mm - 90° bend.
15. An approved mastic or caulking compound shall be placed on the foundation prior to placing the cabinet to seal openings between bottom of cabinet and foundation.
16. Controller units, plug-mounted equipment, shelf-mounted equipment and wall-mounted equipment shall be located to permit safe and easy removal or replacement without removing any other piece of equipment.
17. Cabinet fan may be installed at an alternate location near the top of the cabinet when approved by the Engineer.
18. Where telephone interconnect is required, a minimum of 130 mm clear vertical space shall be provided inside the cabinet for the equipment.
19. Telephone interconnect conductors shall be enclosed in a 21C or larger conduit through the foundation. Type 4 metal conduit shall be used to separate telephone and power conductors in cabinets and pedestals.
20. For Model 332, 334 and 336 cabinet details, see "Traffic signal controller equipment specifications".

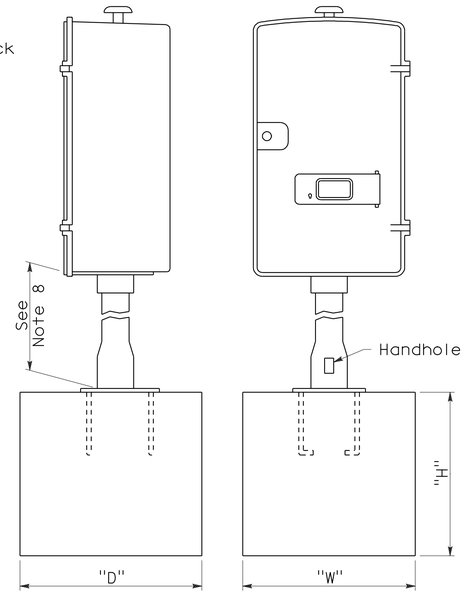


FOUNDATION FOR TYPE G CABINET

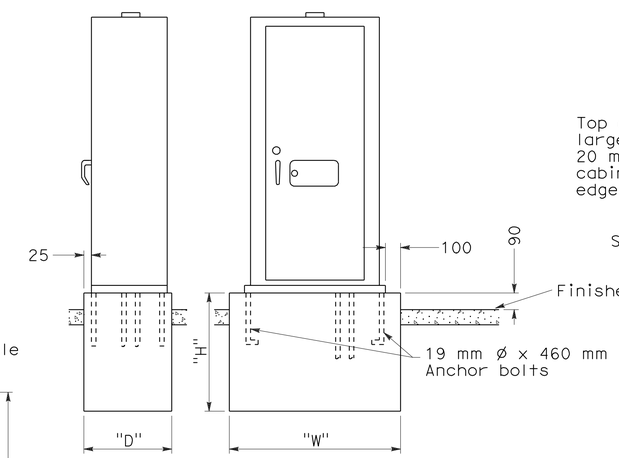


FOUNDATION FOR TYPE P, R AND S CABINETS

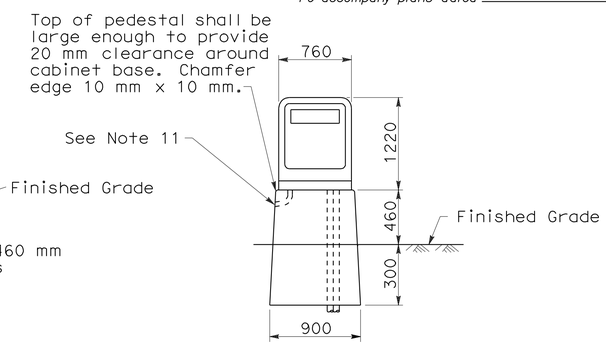


PEDESTAL FOUNDATION FOR TYPE M OR MODEL 336 CABINET

| CABINET | FOUNDATION | | |
|---|---|---|---|
| TYPE/ MODEL | H (mm) | W (mm) | D (mm) |
| G | 900 | 600 | 600 |
| M 336 | 760 | 900 | 560 |
| P | 460 | 1330 | 710 |
| R | 460 | 1330 | 710 |
| S | 460 | 1820 | 710 |

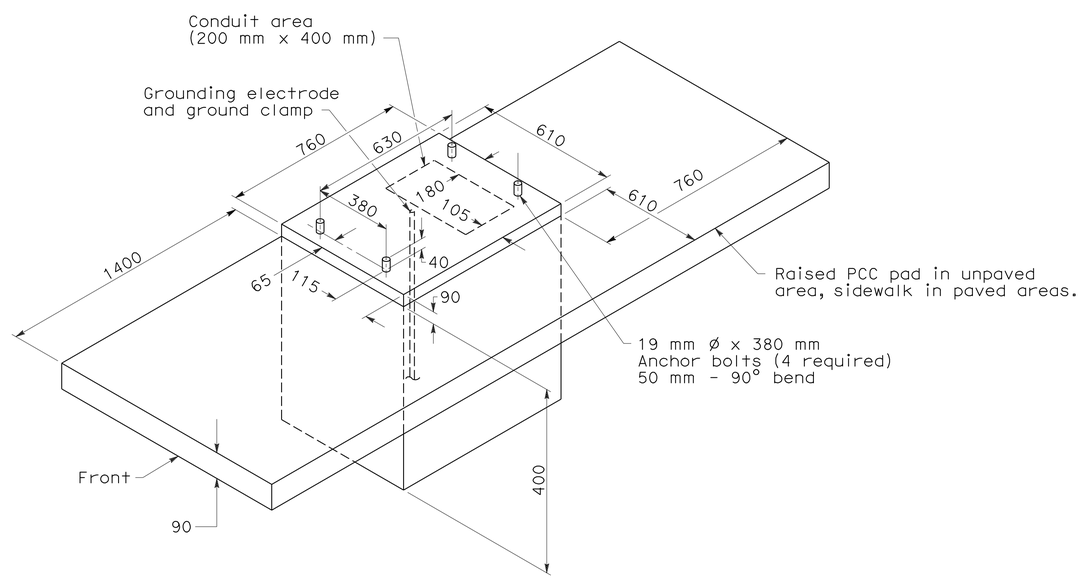


FOUNDATION DETAILS
For Model 332 and 334 cabinets

STATE OF CALIFORNIA
DEPARTMENT OF TRANSPORTATION

# ELECTRICAL SYSTEMS (CONTROLLER CABINET DETAILS)

NO SCALE

ALL DIMENSIONS ARE IN MILLIMETERS UNLESS OTHERWISE SHOWN

RSP ES-3C DATED OCTOBER 5, 2007 SUPERSEDES STANDARD PLAN ES-3C DATED JULY 1, 2004-PAGE 425 OF THE STANDARD PLANS BOOK DATED JULY 2004.

**REVISED STANDARD PLAN RSP ES-3C**

**2004 REVISED Std PLAN RSP ES-3C**

6-27-07

| DIST | COUNTY | ROUTE | KILOMETER POST TOTAL PROJECT | SHEET NO. | TOTAL SHEETS |
|---|---|---|---|---|---|
| 04 | Ala | 80 | 1.6/2.7 | 568 | 744 |

Caltrans Metric

REGISTERED ELECTRICAL ENGINEER

October 5, 2007
PLANS APPROVAL DATE

REGISTERED PROFESSIONAL ENGINEER
Jeffery G. McRae
No. E14512
Exp. 6-30-08
ELECTRICAL
STATE OF CALIFORNIA

*The State of California or its officers or agents shall not be responsible for the accuracy or completeness of electronic copies of this plan sheet.*

*To get to the Caltrans web site, go to: http://www.dot.ca.gov*

*To accompany plans dated* 10-3-11

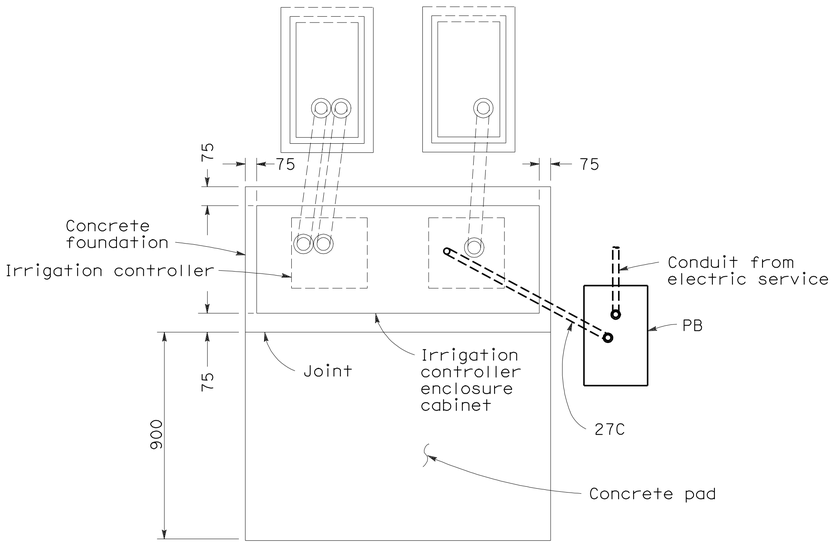


PLAN

NOTE:

See Standard Plan H10 for other details.

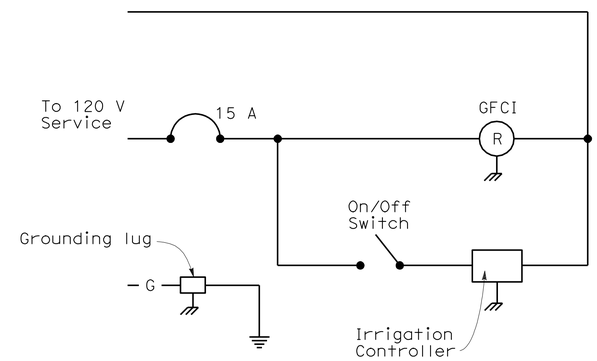


IRRIGATION CONTROLLER ENCLOSURE CABINET WIRING DIAGRAM (TYPICAL)

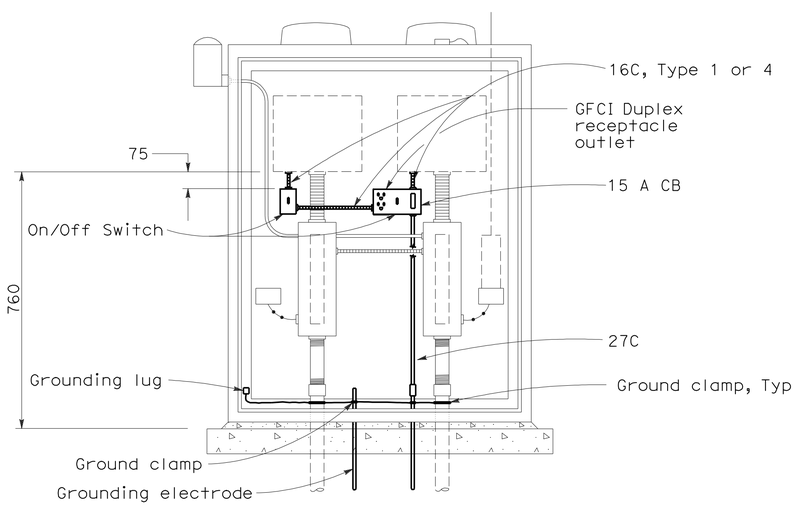


ELEVATION

STATE OF CALIFORNIA
DEPARTMENT OF TRANSPORTATION

# ELECTRICAL SYSTEMS (IRRIGATION CONTROLLER ENCLOSURE CABINET)

NO SCALE

ALL DIMENSIONS ARE IN MILLIMETERS UNLESS OTHERWISE SHOWN

RSP ES-3H DATED OCTOBER 5, 2007 SUPERSEDES STANDARD PLAN ES-3H DATED JULY 1, 2004-PAGE 430 OF THE STANDARD PLANS BOOK DATED JULY 2004.

**REVISED STANDARD PLAN RSP ES-3H**

**2004 REVISED Std PLAN RSP ES-3H**

8-9-07

| DIST | COUNTY | ROUTE | KILOMETER POST TOTAL PROJECT | SHEET NO. | TOTAL SHEETS |
|---|---|---|---|---|---|
| 04 | Ala | 80 | 1.6/2.7 | 569 | 744 |

Caltrans Metric

REGISTERED ELECTRICAL ENGINEER

October 5, 2007
PLANS APPROVAL DATE

REGISTERED PROFESSIONAL ENGINEER Jeffery G. McRae No. E14512 Exp. 6-30-08 ELECTRICAL STATE OF CALIFORNIA

*The State of California or its officers or agents shall not be responsible for the accuracy or completeness of electronic copies of this plan sheet.*

*To get to the Caltrans web site, go to: http://www.dot.ca.gov*

*To accompany plans dated* 10-3-11

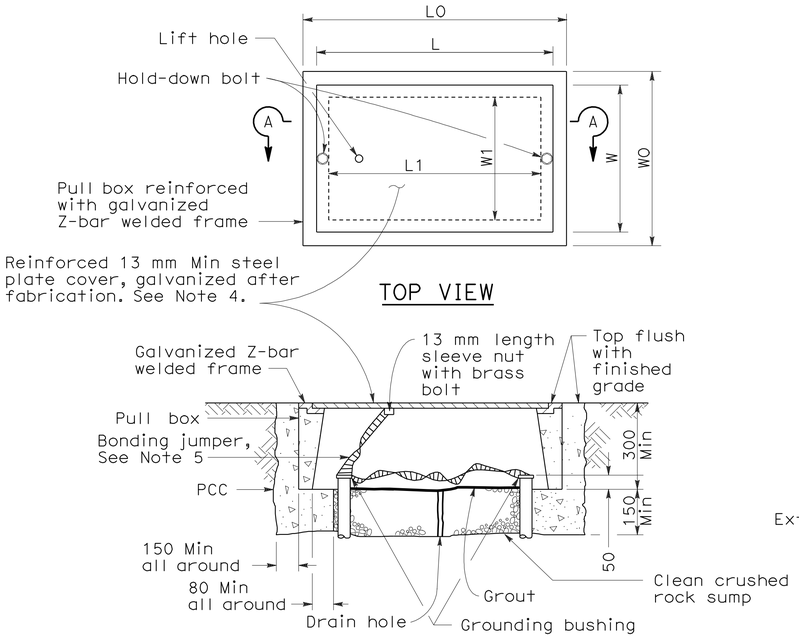


SECTION A-A

## No. 3½(T), No. 5(T) AND No. 6(T) TRAFFIC PULL BOX

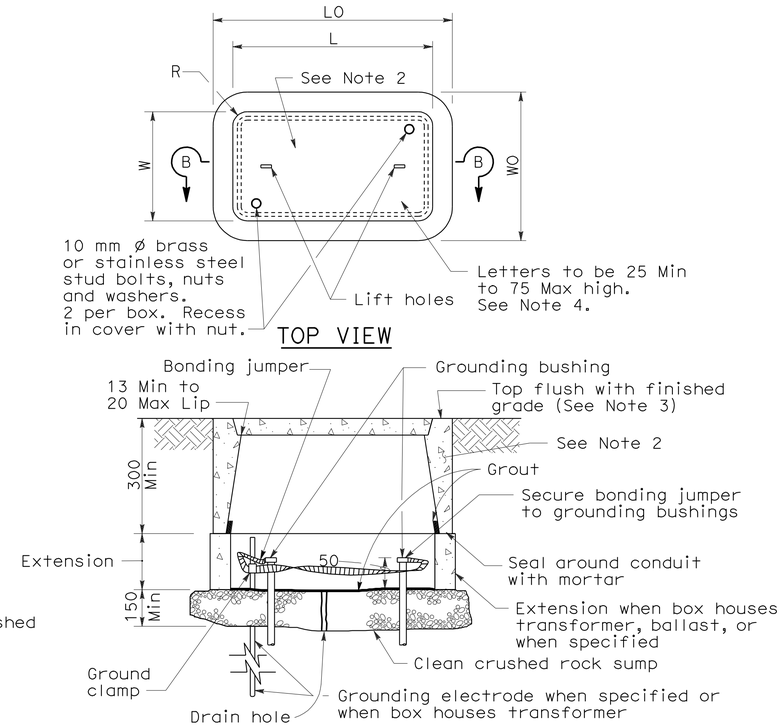


SECTION B-B

## INSTALLATION DETAILS

### DIMENSION TABLE

| PULL BOX | CONCRETE BOX | | | | NON-PCC BOX | | CONCRETE OR NON-PCC COVERS | | | | |
|---|---|---|---|---|---|---|---|---|---|---|---|
| | Minimum * Thickness | Minimum Depth Box and Extension | LO (mm) | WO (mm) | Minimum ** Thickness | Minimum Depth Box and Extension | L ** (mm) | W ** (mm) | R (mm) | Edge Thickness | Edge Taper |
| No. 3½ | 25 mm | No Extension | 457 | 330 | 8 mm | No Extension | 390 | 260 | 27 | 45 mm | 3 mm |
| No. 5 | 25 mm | 560 mm | 666 | 425 | 8 mm | 510 mm | 590 | 350 | 32 | 50 mm | 3 mm |
| No. 6 | 40 mm | 610 mm | 854 | 524 | 10 mm | 510 mm | 775 | 444 | 32 | 50 mm | 3 mm |

* Excluding conduit web ** Top dimension

### DIMENSION TABLE

| PULL BOX | CONCRETE BOX | | | | | | NON-PCC BOX | | CONCRETE OR NON-PCC COVERS | | | | |
|---|---|---|---|---|---|---|---|---|---|---|---|---|---|
| | Minimum * Thickness | Minimum Depth Box and Extension | LO (mm) | WO (mm) | L1 (mm) | W1 (mm) | Minimum ** Thickness | Minimum Depth Box and Extension | L ** (mm) | W ** (mm) | R (mm) | Edge Thickness | Edge Taper |
| No. 3½(T) | 40 mm | 305 mm | 530 ± | 430 ± 25 | 370 ± | 270 ± 25 | Does Not Apply | | 510 ± | 350 ± | 0 | 13 mm | None |
| No. 5(T) | 45 mm | 305 mm | 750 ± | 600 ± 25 | 480 ± | 330 ± 25 | Does Not Apply | | 690 ± | 410 ± | 0 | 13 mm | None |
| No. 6(T) | 50 mm | 305 mm | 900 ± | 760 ± 25 | 600 ± | 430 ± 25 | Does Not Apply | | 840 ± | 510 ± | 0 | 13 mm | None |

* Excluding conduit web ** Top dimension

## NOTES ON PULL BOXES:

1. Traffic pull box shall be provided with steel cover and special concrete footing. Steel cover shall have embossed non-skid pattern.

2. Steel reinforcing shall be as regularly used in the standard products of the respective manufacturer.

3. Top of pull boxes shall be flush with surrounding grade or top of adjacent curb, except that in unpaved areas where pull box is not immediately adjacent to and protected by a concrete foundation, pole or other protective construction, the box shall be placed with its top 30 mm above surrounding grade. Where practicable, pull boxes shown in the vicinity of curbs shall be placed adjacent to the back of curb, and pull boxes shown adjacent to standards shall be placed on side of foundation facing away from traffic, unless otherwise noted. When pull box is installed in sidewalk area, the depth of the pull box shall be adjusted so that the top of the pull box is flush with the sidewalk.

4. Pull box covers shall be marked as follows: "SERVICE" Service circuits between service point and service disconnect; "SPRINKLER-CONTROL" Sprinkler control circuits, 50 V or less; "CALTRANS" On all pull boxes, except pull boxes marked "SPRINKLER-CONTROL"; and "TELEPHONE" Telephone service.

   a) No. 3½ pull box.

      1) "SIGNAL" Traffic signal circuits with or without street or sign lighting circuits.

      2) "ST LIGHTING" Street or sign lighting circuits where voltage is under 600 V.

   b) No. 5, 6, 9 or 9A pull box.

      1) "TRAFFIC SIGNAL" Traffic signal circuits with or without street or sign lighting circuits.

      2) "STREET LIGHTING" Street or sign lighting circuits where voltage is under 600 V.

      3) "STREET LIGHTING-HIGH VOLTAGE" Street or sign lighting circuits where voltage is above 600 V.

      4) "IRRIGATION" Circuits to irrigation controller 120 V or more.

      5) "RAMP METER" Ramp meter circuits.

      6) "COUNT STATION" Count or speed monitor circuits.

      7) "COMMUNICATION" Communication circuits.

      8) "TOS COMMUNICATIONS" TOS communications line.

      9) "TOS POWER" TOS power.

      10) "TDC POWER" Telephone demarcation cabinet power.

      11) "CCTV" Closed circuit television circuits.

      12) "TMS" Traffic monitoring station circuits.

      13) "CMS" Changeable message sign circuits.

      14) "HAR" Highway advisory radio circuits.

5. Bonding jumper for metal covers shall be 1 m long, minimum.

6. The nominal dimensions of the opening in which the cover sets shall be the same as the cover dimensions except the length and width dimensions shall be 3 mm greater.

7. Covers and boxes shall be interchangeable with California standard male and female gages. When interchanged with a standard male or female gage, the top surfaces shall be flush within 3 mm. Top outside edge of concrete covers and pull boxes shall have a 6 mm minimum radius.

8. Pull box shall not be installed within the boundaries of new or existing curb ramps.

9. Pull boxes for electroliers, post and signal standards shall be located ± 1.5 m from the station of the adjacent electrolier, post or signal standard. Pull boxes shall be placed adjacent to back of curb or edge of shoulder except where this is impractical, a box may be placed in another suitable protected and accessible location.

STATE OF CALIFORNIA
DEPARTMENT OF TRANSPORTATION

# ELECTRICAL SYSTEMS (PULL BOX DETAILS)

NO SCALE

ALL DIMENSIONS ARE IN MILLIMETERS UNLESS OTHERWISE SHOWN

RSP ES-8 DATED OCTOBER 5, 2007 SUPERSEDES STANDARD PLAN ES-8 DATED JULY 1, 2004-PAGE 467 OF THE STANDARD PLANS BOOK DATED JULY 2004.

**REVISED STANDARD PLAN RSP ES-8**

**2004 REVISED Std PLAN RSP ES-8**

7-3-07

| DIST | COUNTY | ROUTE | KILOMETER POST TOTAL PROJECT | SHEET NO. | TOTAL SHEETS |
|---|---|---|---|---|---|
| 04 | Ala | 80 | 1.6/2.7 | 570 | 744 |

Caltrans Metric

Jeffery G. McRae
REGISTERED ELECTRICAL ENGINEER

October 5, 2007
PLANS APPROVAL DATE

REGISTERED PROFESSIONAL ENGINEER
Jeffery G. McRae
No. E14512
Exp. 6-30-08
ELECTRICAL
STATE OF CALIFORNIA

*The State of California or its officers or agents shall not be responsible for the accuracy or completeness of electronic copies of this plan sheet.*

*To get to the Caltrans web site, go to: http://www.dot.ca.gov*

*To accompany plans dated* 10-3-11

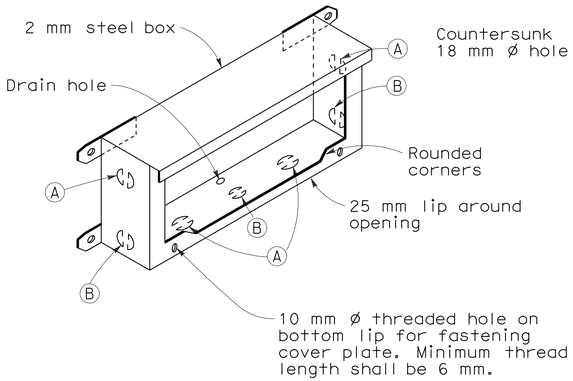


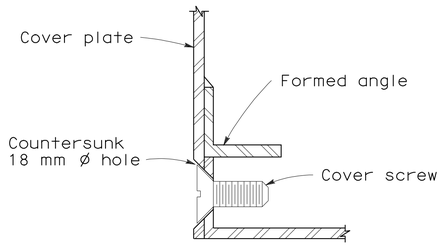


DETAIL J

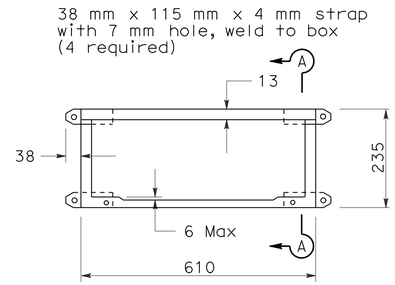


PLAN

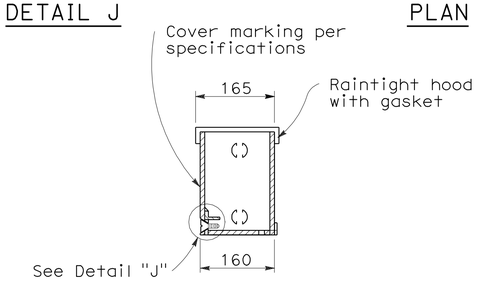


SECTION A-A

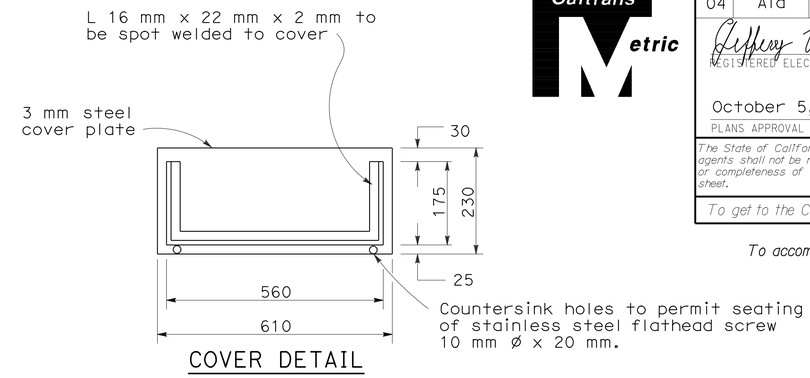


COVER DETAIL

## INSTALLATION NOTE

Box shall be parallel to top of railing. Close cover box during pouring with 6 mm plywood of sufficient size to provide 1:1 chamfer on 3 sides of cover. Upper edge of plywood shall fit against lower edge of raintight hood.

## No. 9 STRUCTURE PULL BOX

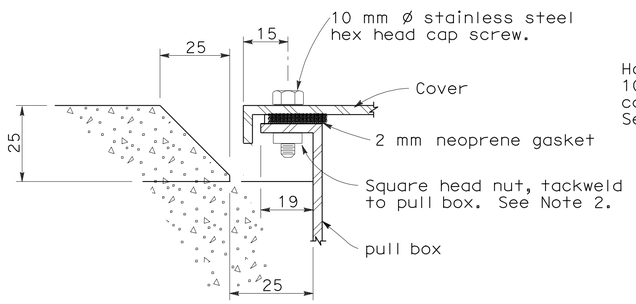


SECTION C-C

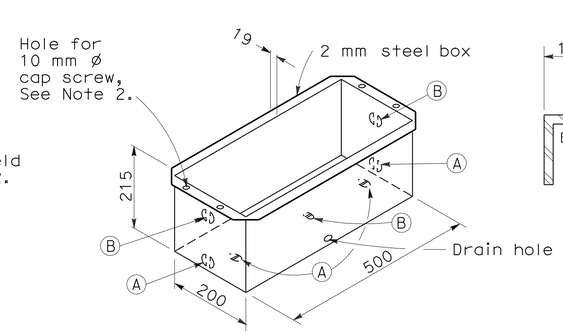


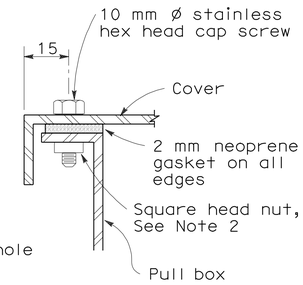


DETAIL A

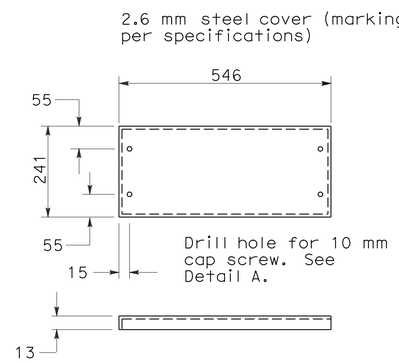


COVER DETAIL

## No. 9A STRUCTURE PULL BOX

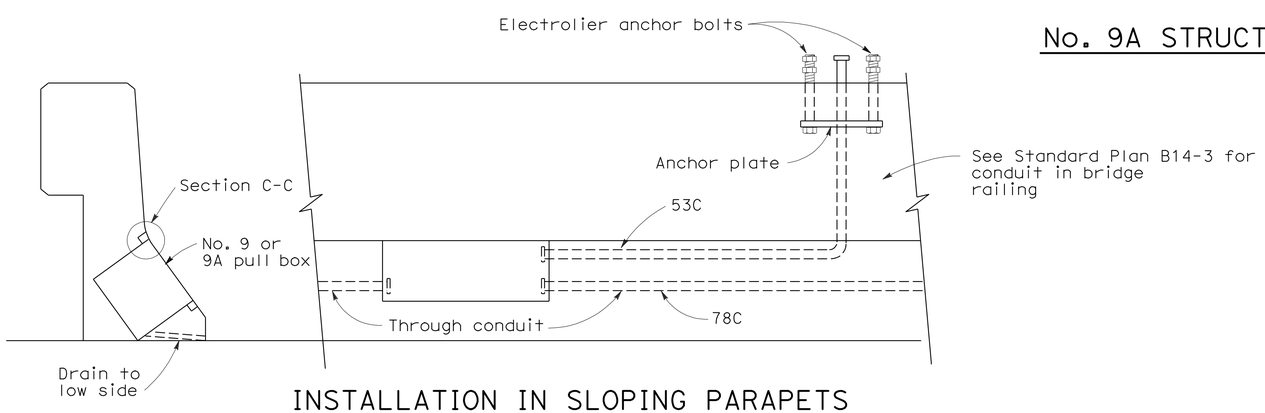


## INSTALLATION IN SLOPING PARAPETS

For reinforcement in area of electrolier, see railing sheets. For electrolier anchor bolts, see Standard Plan ES-6B.

## NOTES: No. 9 and 9A Pull Box

1. Corner joints shall be lapped and secured by spot welding or riveting.
2. Where cap screws are used to attach cover to box, either of the following methods of providing adequate threading may be used:
   a. Tack weld square nut to bottom of flange (Total 4), or
   b. Tack weld a 6 mm x 16 mm x 200 mm bar beneath flange (Total 2).
3. Pound knockouts flat after punching.
4. Multiple size knockouts shall not be permitted.
5. Pull box covers shall be marked as shown on Revised Standard Plan RSP ES-8.

## KNOCKOUT SCHEDULE
## No. 9 AND 9A PULL BOX

(A) 53C, 1 each end, 2 on bottom.

(B) 78C, 1 each end, 1 on bottom.

STATE OF CALIFORNIA
DEPARTMENT OF TRANSPORTATION

# ELECTRICAL SYSTEMS (ELECTRICAL DETAILS STRUCTURE INSTALLATIONS)

NO SCALE

ALL DIMENSIONS ARE IN MILLIMETERS UNLESS OTHERWISE SHOWN

RSP ES-9C DATED OCTOBER 5, 2007 SUPERSEDES STANDARD PLAN ES-9C DATED JULY 1, 2004-PAGE 470 OF THE STANDARD PLANS BOOK DATED JULY 2004.

**REVISED STANDARD PLAN RSP ES-9C**

**2004 REVISED Std PLAN RSP ES-9C**

7-26-07

| Pole Type | Pole Data | | | | Base Plate Data | | | | "d" 610 mm ø CIDH Pile (m) | Structural Steel kg plus 3.5% Galvanizing |
|---|---|---|---|---|---|---|---|---|---|---|
| | Height "h" (m) | Min OD (mm) | | Thickness (mm) | "C" (mm) | Thickness (mm) | Anchor Bolts (mm) | | | |
| | | BASE | TOP | | | | SIZE | BC=BOLT CIRCLE | | |
| CCTV 25 | 7.62 | 187 | 98 | 4.55 | 305 | 25.4 | 25 x 920 x 102 | 267 | 1.83 | 180 |
| CCTV 30 | 9.14 | 203 | 98 | 4.55 | 305 | 25.4 | 25 x 920 x 102 | 279 | 2.13 | 215 |
| CCTV 35 | 10.67 | 219 | 98 | 4.55 | 305 | 25.4 | 25 x 920 x 102 | 305 | 2.13 | 250 |
| CCTV 40 | 12.19 | 238 | 98 | 4.55 | 330 | 25.4 | 32 x 920 x 102 | 330 | 2.13 | 295 |
| CCTV 45 | 13.72 | 254 | 98 | 4.55 | 330 | 25.4 | 32 x 920 x 102 | 343 | 2.44 | 340 |

Caltrans Metric

| DIST | COUNTY | ROUTE | KILOMETER POST TOTAL PROJECT | SHEET NO. | TOTAL SHEETS |
|---|---|---|---|---|---|
| 04 | Ala | 80 | 1.6/2.7 | 571 | 744 |

REGISTERED CIVIL ENGINEER

January 24, 2005
PLANS APPROVAL DATE

REGISTERED PROFESSIONAL ENGINEER
Tillat Sattar
No. C42892
Exp. 03-31-2006
CIVIL
STATE OF CALIFORNIA

*The State of California or its officers or agents shall not be responsible for the accuracy or completeness of electronic copies of this plan sheet.*

*To get to the Caltrans web site, go to: http://www.dot.ca.gov*

*To accompany plans dated* 10-3-11

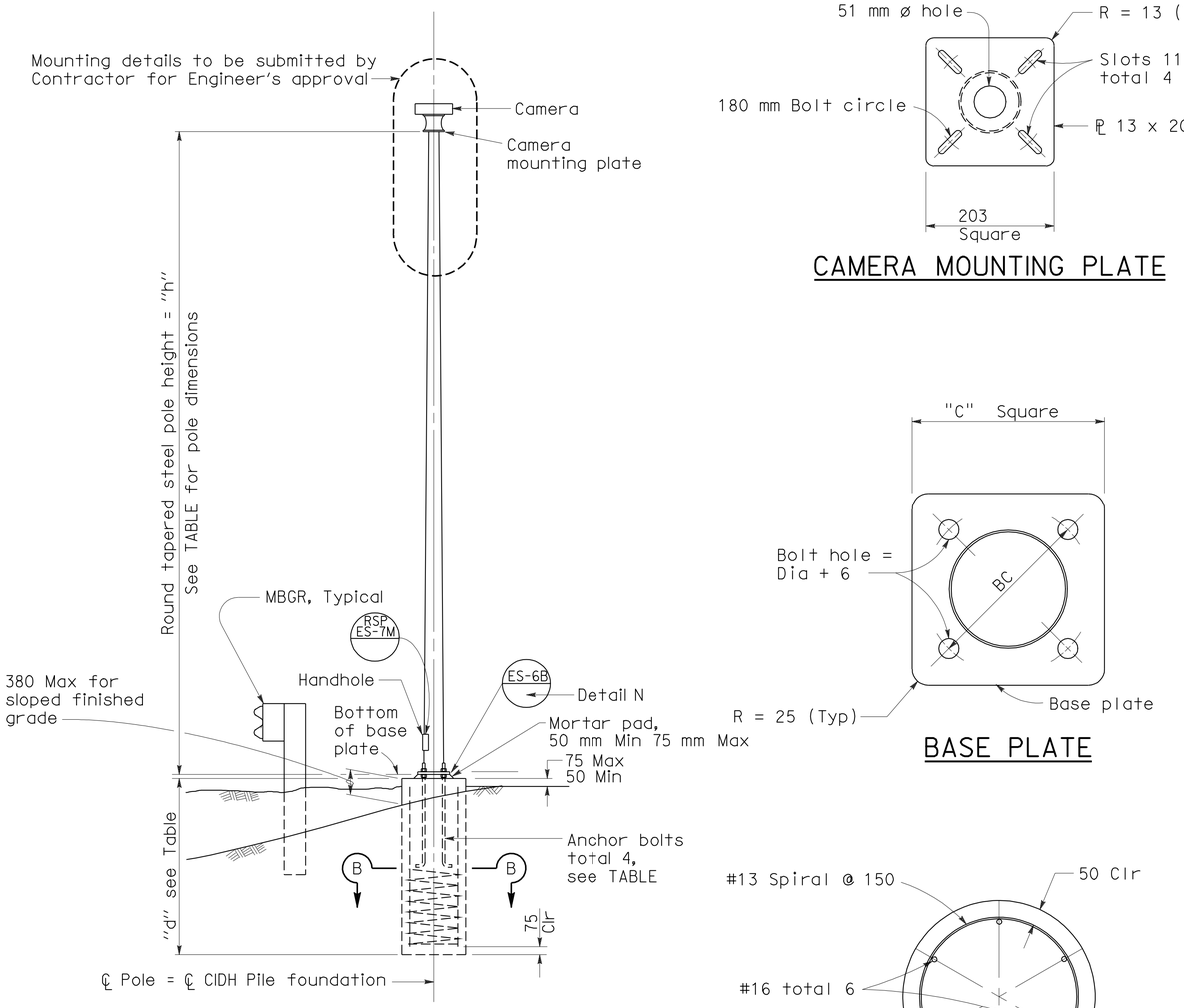


ELEVATION

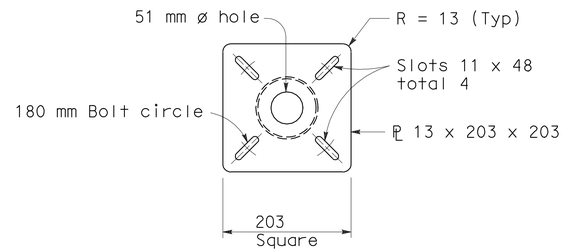


CAMERA MOUNTING PLATE




BASE PLATE

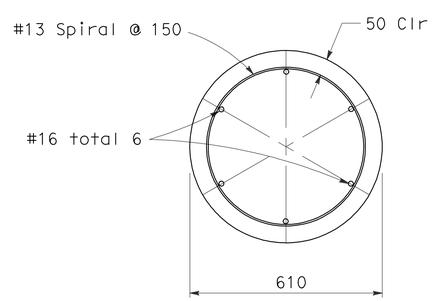


SECTION B-B

## GENERAL NOTES:

SPECIFICATIONS

Design : AASHTO Standard specifications for structural supports for highway signs, luminaires and traffic signals dated 2001.

LOADING

Wind Loadings : 161km/h

UNIT STRESSES

Structural Steel : fy = 330 MPa tapered steel tube
fy = 250 MPa unless otherwise noted
Anchor bolts = A307
Reinforced Concrete : f'c = 25 MPa
fy = 415 MPa

## NOTES:

1. The Contractor shall verify controlling field dimensions before ordering or fabricating any material.
2. All steel shall be galvanized after fabrication.
3. During pole erection, the post shall be raked as necessary with the use of leveling nuts to provide a plumb pole axis.

STATE OF CALIFORNIA
DEPARTMENT OF TRANSPORTATION

# ELECTRICAL SYSTEMS (CLOSED CIRCUIT TELEVISION POLE DETAILS)

NO SCALE

ALL DIMENSIONS ARE IN MILLIMETERS UNLESS OTHERWISE SHOWN

RSP ES-16A DATED JANUARY 24, 2005 SUPERSEDES STANDARD PLAN ES-16A DATED JULY 1, 2004-PAGE 487 OF THE STANDARD PLANS BOOK DATED JULY 2004.

**REVISED STANDARD PLAN RSP ES-16A**

**2004 REVISED Std PLAN RSP ES-16A**

| Post Type | Pole Data | | | | Base Plate Data (mm) | | | | | CIDH Pile Data | | |
|---|---|---|---|---|---|---|---|---|---|---|---|---|
| | Height "h" (m) | Min OD | | Min Thickness | Dia | Thickness | Anchor Bolts | | | "D" (mm) | "L" (m) | Pile Reinf |
| | | BASE | TOP | | | | Total | Size "d" | BC | | | |
| CCTV 90 | 27.4 | 610 | 281 | 4.55* | 914 | 51 | 6 | 51 | 737 | 1067 | 3.6 | 15 - #22 |
| CCTV 80 | 24.3 | 559 | 256 | 4.55* | 864 | 51 | 6 | 51 | 686 | 1067 | 3.3 | 15 - #22 |
| CCTV 70 | 21.3 | 508 | 260 | 4.55 | 813 | 51 | 6 | 51 | 635 | 1067 | 3.0 | 15 - #22 |
| CCTV 60 | 18.2 | 457 | 248 | 4.55 | 762 | 51 | 6 | 51 | 584 | 1067 | 2.7 | 15 - #22 |

*Lower pole segment thickness, see Pole Details

| DIST | COUNTY | ROUTE | KILOMETER POST TOTAL PROJECT | SHEET NO. | TOTAL SHEETS |
|---|---|---|---|---|---|
| 04 | Ala | 80 | 1.6/2.7 | 572 | 744 |

REGISTERED CIVIL ENGINEER

January 24, 2005
PLANS APPROVAL DATE

REGISTERED PROFESSIONAL ENGINEER Tillat Sattar No. C42892 Exp. 03-31-2006 CIVIL STATE OF CALIFORNIA

*The State of California or its officers or agents shall not be responsible for the accuracy or completeness of electronic copies of this plan sheet.*

*To get to the Caltrans web site, go to: http://www.dot.ca.gov*

*To accompany plans dated* 10-3-11

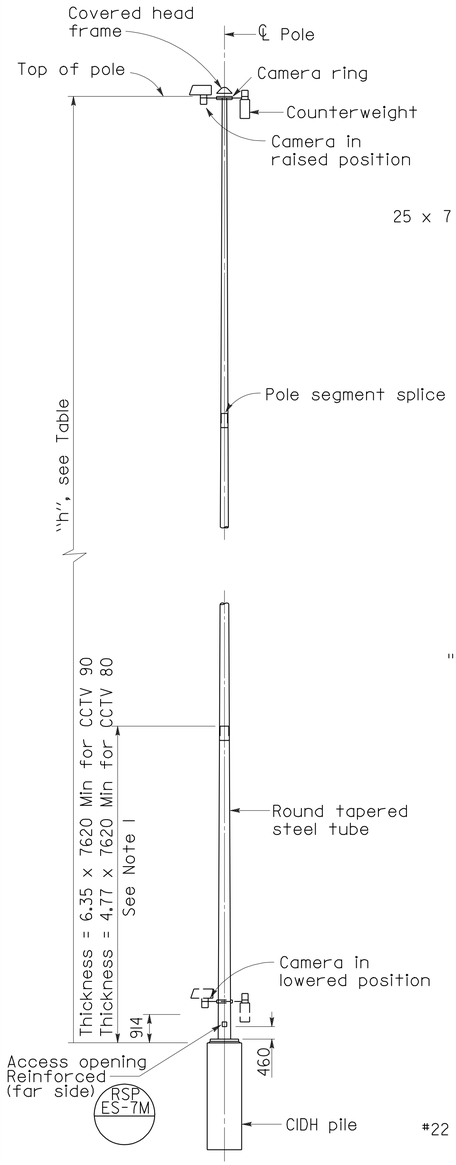


POLE DETAILS

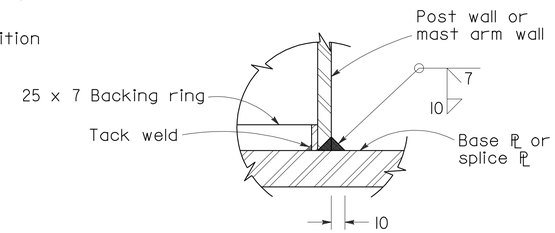


WELD DETAIL

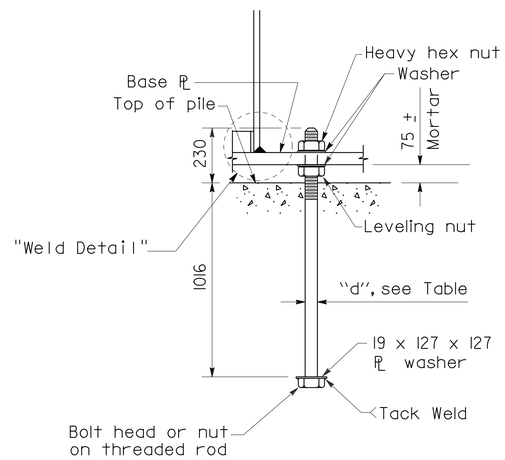


ANCHOR BOLT DETAIL

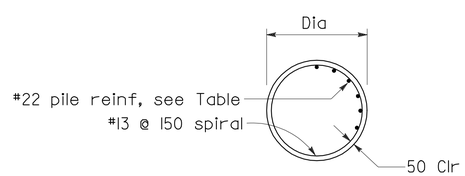


SECTION A-A

CIDH PILE DETAILS

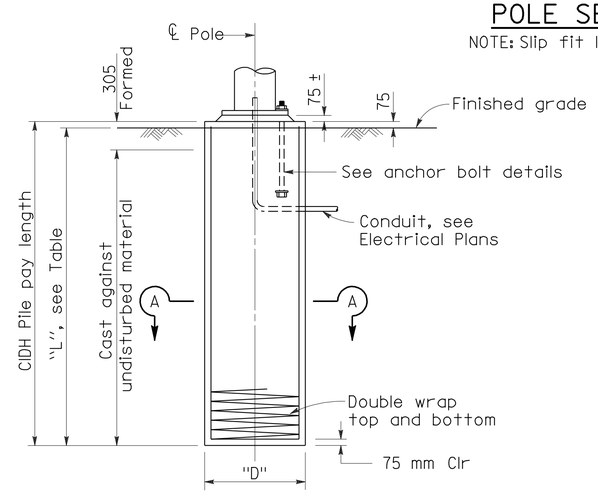


TYPICAL ELEVATION

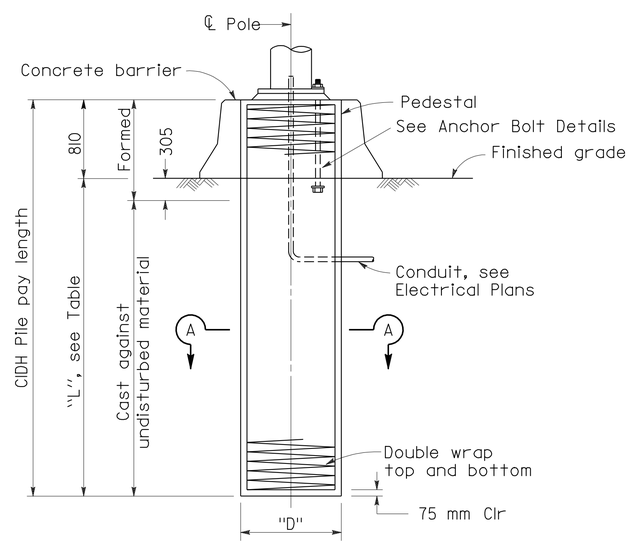


MEDIAN LOCATION

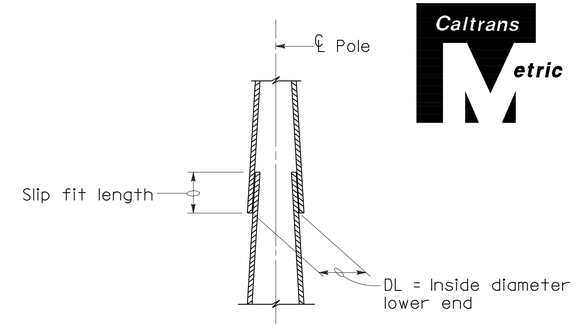


POLE SEGMENT SPLICE DETAIL

NOTE: Slip fit length shall not be less than 1.5 DL.

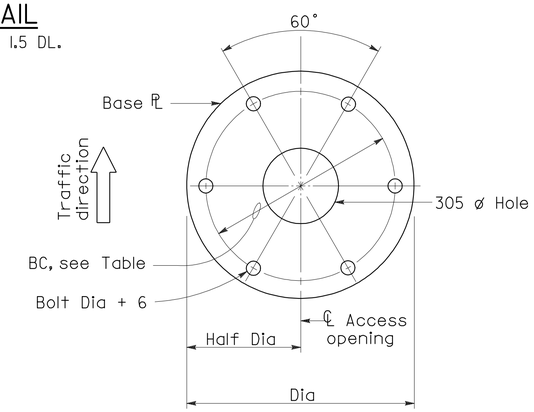


BASE PLATE DETAILS

## GENERAL NOTES:

SPECIFICATIONS

Design : AASHTO Standard specifications for structural supports for highway signs, luminaires and traffic signals dated 1994.

LOADING

Wind Loadings : 129 km/h

UNIT STRESSES

Structural Steel : $f_s$ Maximum allowed for design of tapered steel tube (pole) to be 379 MPa.

## NOTES

1. Pole details shall suit the lowering device and this foundation plan. Pole details shall be submitted to the Engineer for approval.
2. Pole finishes shall be galvanized.
3. For camera details, see Electrical Plans.
4. Foundation design is based on a maximum wind velocity of 129 km/h.

STATE OF CALIFORNIA
DEPARTMENT OF TRANSPORTATION

# ELECTRICAL SYSTEMS (CLOSED CIRCUIT TELEVISION 18.2 m TO 27.4 m HIGH MAST POLE FOUNDATION DETAILS)

NO SCALE

ALL DIMENSIONS ARE IN MILLIMETERS UNLESS OTHERWISE SHOWN

RSP ES-16C DATED JANUARY 24, 2005 SUPERSEDES STANDARD PLAN ES-16C DATED JULY 1, 2004-PAGE 489 OF THE STANDARD PLANS BOOK DATED JULY 2004.

**REVISED STANDARD PLAN RSP ES-16C**

**2004 REVISED Std PLAN RSP ES-16C**

| DIST. | COUNTY | ROUTE | KILOMETER POST TOTAL PROJECT | SHEET NO. | TOTAL SHEETS |
|---|---|---|---|---|---|
| 04 | Ala | 80 | 1.6/2.7 | 573 | 744 |

Caltrans Metric

REGISTERED ENGINEER - CIVIL

10-3-11
PLANS APPROVAL DATE

REGISTERED PROFESSIONAL ENGINEER A.L. ELY No. 18880 Exp. 6-30-11 CIVIL STATE OF CALIFORNIA

The State of California or its officers or agents shall not be responsible for the accuracy or completeness of electronic copies of this plan sheet.

T.Y. LIN / MOFFATT & NICHOL
TWO HARRISON STREET, SUITE 500
SAN FRANCISCO, CA 94105

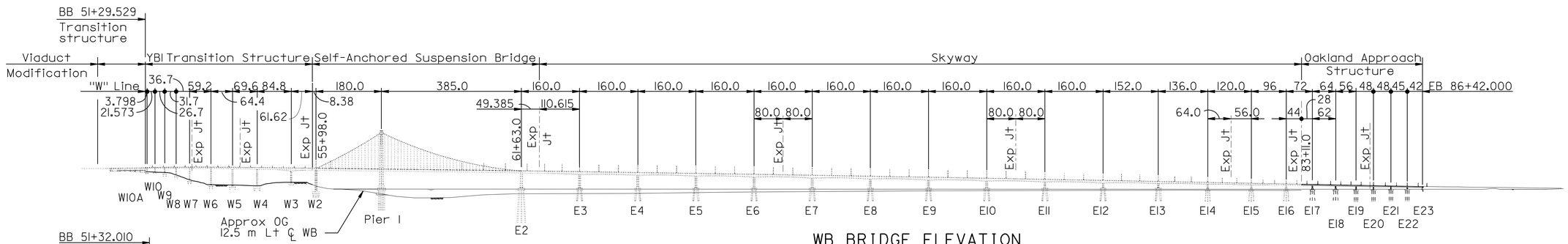


WB BRIDGE ELEVATION

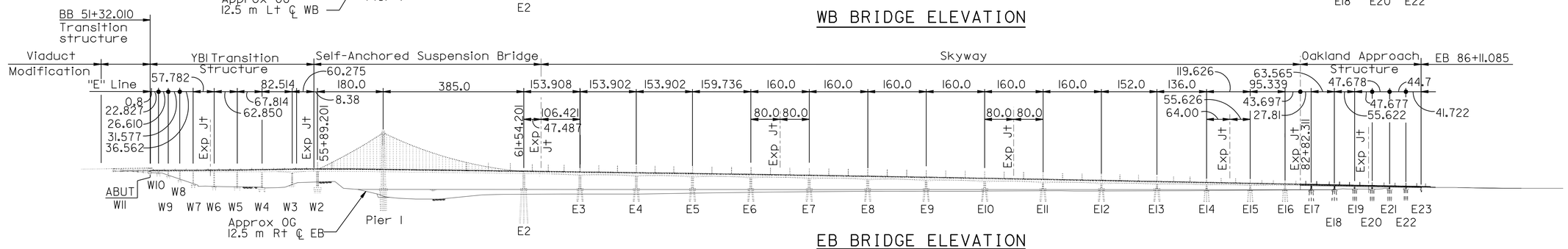


EB BRIDGE ELEVATION

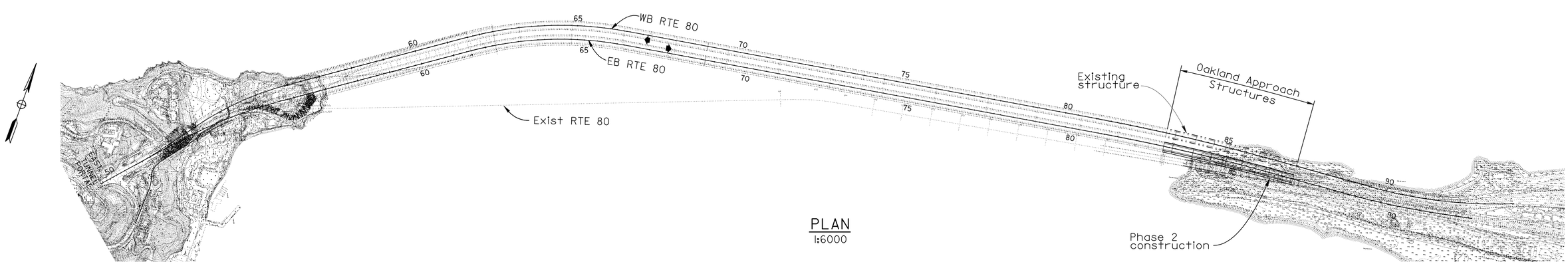


PLAN
1:6000

ALL DIMENSIONS ARE IN METERS UNLESS OTHERWISE SHOWN

SAN FRANCISCO OAKLAND BAY BRIDGE
EAST SPAN SEISMIC SAFETY PROJECT

# OAKLAND APPROACH STRUCTURES-PHASE 2

# PROJECT PLAN

| | | | | | | | |
|---|---|---|---|---|---|---|---|
| DESIGN | BY Shangkuan | CHECKED Birdy | LOAD FACTOR DESIGN | LIVE LOADING: HS20-44 AND ALTERNATIVE AND PERMIT DESIGN LOAD | | | |
| DETAILS | BY van Ryn/Zucchi/Mai | CHECKED Birdy | LAYOUT | BY Joyce | CHECKED Kashuba | | |
| QUANTITIES | BY Haroun/Char | CHECKED Jaradat/Dudley | SPECIFICATIONS | BY Trinh | PLANS AND SPECS COMPARED A. Wang | | |

DESIGN OVERSIGHT-SAM AKKAD HASSAN EL-NATUR

SIGN OFF DATE

Rev. Date: 5-18-98

PREPARED FOR THE STATE OF CALIFORNIA DEPARTMENT OF TRANSPORTATION

Jal Birdy
PROJECT ENGINEER

BRIDGE NO. 34-0006 L/R
KILOMETER POST

CU 04
EA 0120M1

ORIGINAL SCALE IN MILLIMETERS FOR REDUCED PLANS 0 10 20 30 40 50 60 70 80 90 100

DISREGARD PRINTS BEARING EARLIER REVISION DATES

REVISION DATES (PRELIMINARY STAGE ONLY): 1/15/10 4/2/10 5/28/10 9/30/10 3/4/11 3/14/11 4/8/11 6/3/11 8/17/09 10/30/09

SHEET 1 OF 109

FILE => 04-0120m1-34-0006r1-a-pp01.dgn

SUBMITTAL - 12 June 3, 2011

USERNAME => s121614 DATE PLOTTED => 05-OCT-2011 TIME PLOTTED => 13:56

| DIST. | COUNTY | ROUTE | KILOMETER POST TOTAL PROJECT | SHEET NO. | TOTAL SHEETS |
|---|---|---|---|---|---|
| 04 | Ala | 80 | 1.6/2.7 | 574 | 744 |

Caltrans Metric

REGISTERED ENGINEER - CIVIL

10-3-11
PLANS APPROVAL DATE

REGISTERED PROFESSIONAL ENGINEER A.L. ELY No. 18880 Exp. 6-30-11 CIVIL STATE OF CALIFORNIA

The State of California or its officers or agents shall not be responsible for the accuracy or completeness of electronic copies of this plan sheet.

T.Y. LIN / MOFFATT & NICHOL
TWO HARRISON STREET, SUITE 500
SAN FRANCISCO, CA 94105

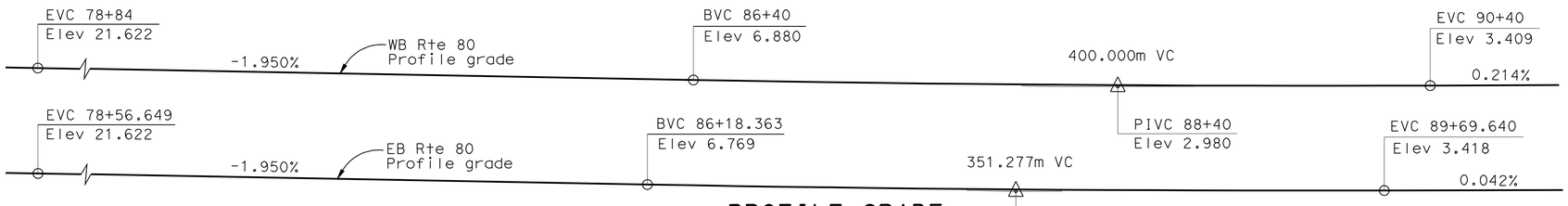


## PROFILE GRADE
NO SCALE

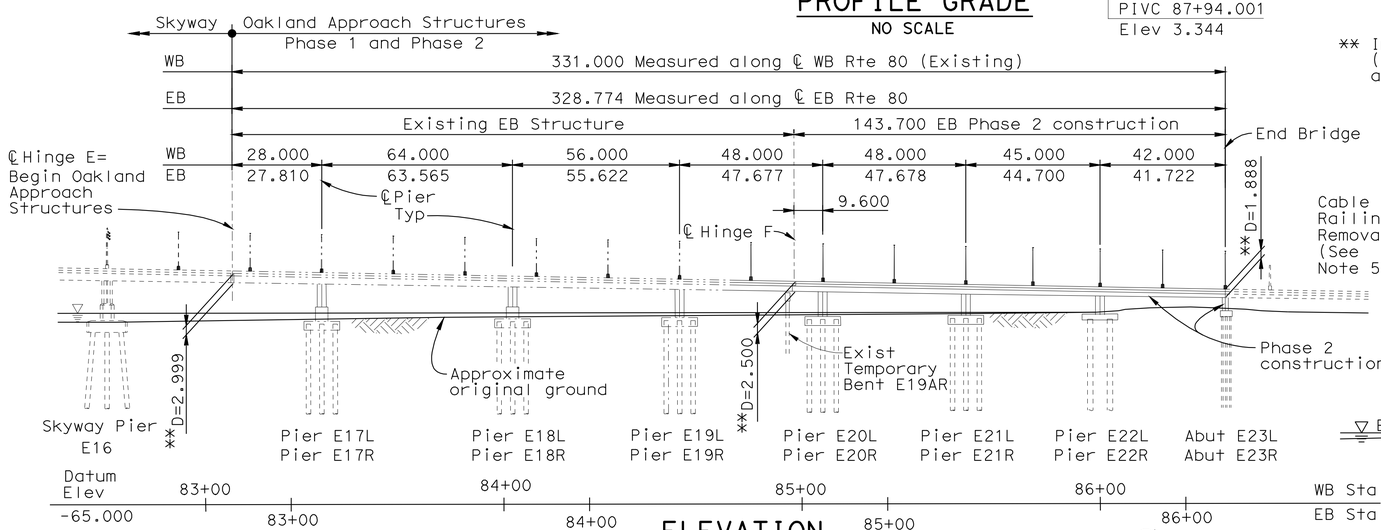


## ELEVATION
1:1000

** Indicates structure depth
(top of deck to soffit)
at ℄ WB and ℄ EB Rte 80

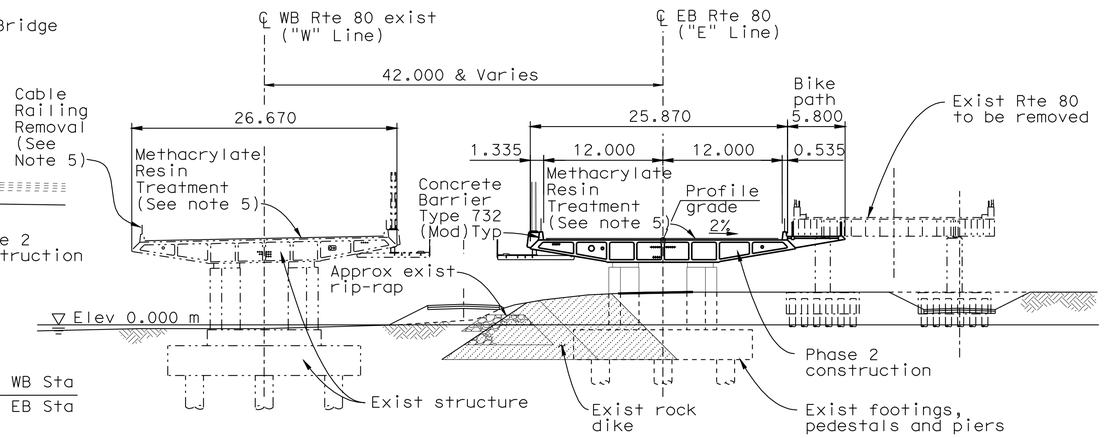


## TYPICAL SECTION
(Shown Near Pier E21R)
1:300

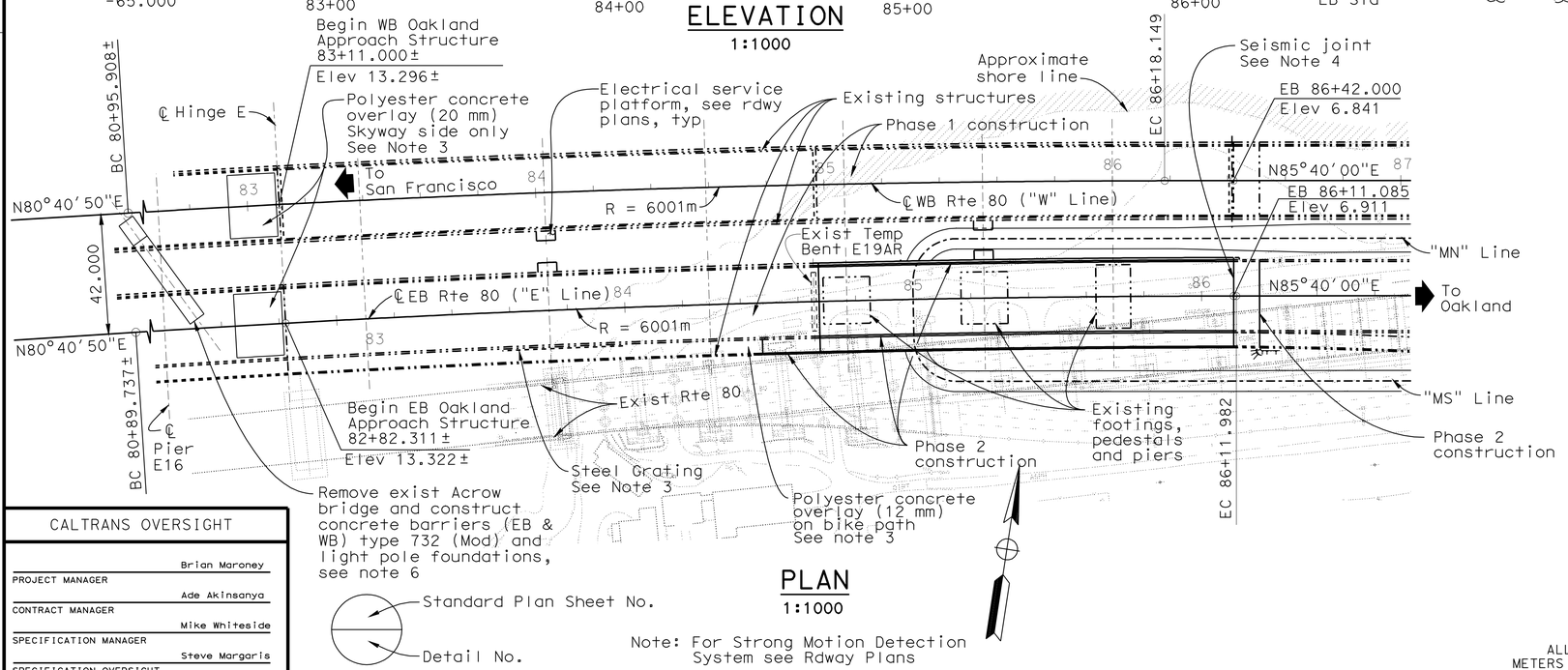


## PLAN
1:1000

Note: For Strong Motion Detection System see Rdway Plans

## CURVE DATA

"W" Line

R = 6001.000 m
Δ = 04°59'10"
T = 261.285 m
L = 522.241 m

"E" Line

R = 6001.000 m
Δ = 04°59'10"
T = 261.287 m
L = 522.245 m

Notes:

1. For approximate bridge quantities, see "General Notes No.2" sheet.
2. For pile data table, see "Pile Data" sheet.
3. Polyester concrete overlay (12 mm) and steel grating on the bike path from Hinge EE to Abut E23R shall be constructed under this contract. Polyester concrete overlay (20 mm) shall be constructed on Skyway where shown under this contract. See "Eastbound Structure Plan No.1" sheet for location.
4. Seismic joint at Abut E23R to be furnished by others and installed under this contract. Modular expansion joint at Hinge FE to be furnished by others and installed under this contract. Barrier cover plates for expansion joints at Hinge EW, Hinge EE, Hinge FW, Hinge FE, Abut E23L and Abut E23R to be furnished and installed under this contract.
5. For Methacrylate Resin Treatment and Cable Railing Removal, see other bridge plans.
6. Barriers and light pole foundations on Skyway and Oakland Approach Structures (Phase 1) shall be constructed where shown under this contract. See "Eastbound Structure Plan No.1" sheet for location.

ALL DIMENSIONS ARE IN METERS UNLESS OTHERWISE SHOWN

CALTRANS OVERSIGHT

| | |
|---|---|
| PROJECT MANAGER | Brian Maroney |
| CONTRACT MANAGER | Ade Akinsanya |
| SPECIFICATION MANAGER | Mike Whiteside |
| SPECIFICATION OVERSIGHT | Steve Margaris |

DESIGN OVERSIGHT-SAM AKKAD HASAN EL-NATUR

SIGN OFF DATE

Rev. Date: 5-18-98

| | BY | CHECKED | LOAD FACTOR DESIGN | LIVE LOADING: HS20-44 AND ALTERNATIVE AND PERMIT DESIGN LOAD | |
|---|---|---|---|---|---|
| DESIGN | Shangkuan | Birdy | | | |
| DETAILS | van Ryn/Zucchi/Mai | Birdy | LAYOUT | Joyce | Kashuba |
| QUANTITIES | Haroun/Char | Jaradat/Dudley | SPECIFICATIONS | Trinh | PLANS AND SPECS COMPARED A. Wang |

ORIGINAL SCALE IN MILLIMETERS FOR REDUCED PLANS 0 10 20 30 40 50 60 70 80 90 100

PREPARED FOR THE STATE OF CALIFORNIA DEPARTMENT OF TRANSPORTATION

Jal Birdy
PROJECT ENGINEER

BRIDGE NO. 34-0006 L/R
KILOMETER POST

SAN FRANCISCO OAKLAND BAY BRIDGE
EAST SPAN SEISMIC SAFETY PROJECT

# OAKLAND APPROACH STRUCTURES-PHASE 2

# GENERAL PLAN

CU 04
EA 0120M1

DISREGARD PRINTS BEARING EARLIER REVISION DATES

REVISION DATES (PRELIMINARY STAGE ONLY) 7/25/11 11/14/11 1/13/10 4/2/10 5/28/10 9/28/10 3/4/11 3/14/11 4/4/11 6/3/11

SHEET 2 OF 109

FILE => 04-0120m1-34-0006rl-a-gp01.dgn

Nov 14, 2011

USERNAME => s128843 DATE PLOTTED => 01-MAR-2012 TIME PLOTTED => 13:51

| DIST. | COUNTY | ROUTE | KILOMETER POST TOTAL PROJECT | SHEET NO. | TOTAL SHEETS |
|---|---|---|---|---|---|
| 04 | Ala | 80 | 1.6/2.7 | 575 | 744 |

REGISTERED ENGINEER - CIVIL

10-3-11
PLANS APPROVAL DATE

REGISTERED PROFESSIONAL ENGINEER MOHAN S. CHAR No. 57894 Exp. 6/30/12 CIVIL STATE OF CALIFORNIA

The State of California or its officers or agents shall not be responsible for the accuracy or completeness of electronic copies of this plan sheet.

T.Y. LIN / MOFFATT & NICHOL
TWO HARRISON STREET, SUITE 500
SAN FRANCISCO, CA 94105

AECOM TECHNICAL SERVICES INC.
999 TOWN & COUNTRY ROAD
ORANGE, CA 92868

# INDEX TO PLANS


| SHEET NO. | DESCRIPTION |
|---|---|
| | TITLE SHEET |
| 1 | PROJECT PLAN |
| 2 | GENERAL PLAN |
| 3 | INDEX TO PLANS |
| 4 | GENERAL NOTES NO. 1 |
| 5 | GENERAL NOTES NO. 2 |
| 6 | GENERAL PLAN - DEMOLITION |
| 7 | STRUCTURE PLAN NO. 1 - DEMOLITION |
| 8 | STRUCTURE PLAN NO. 2 - DEMOLITION |
| 9 | BENT DETAILS NO. 1 - DEMOLITION |
| 10 | BENT DETAILS NO. 2 - DEMOLITION |
| 11 | BENT DETAILS NO. 3 - DEMOLITION |
| 12 | BENT DETAILS NO. 4 - DEMOLITION |
| 13 | EASTBOUND TEMPORARY BENT E19AR - DEMOLITION |
| 14 | EXISTING ACROW BRIDGE - REMOVAL |
| 15 | EASTBOUND STRUCTURE PLAN NO. 1 |
| 16 | EASTBOUND STRUCTURE PLAN NO. 2 |
| 17 | EASTBOUND DECK CONTOURS |
| 18 | FOUNDATION PLAN |
| 19 | PILE DATA |
| 20 | EASTBOUND ABUTMENT DETAILS NO. 1 |
| 21 | EASTBOUND ABUTMENT DETAILS NO. 2 |
| 22 | EASTBOUND ABUTMENT DETAILS NO. 3 |
| 23 | EASTBOUND ABUTMENT DETAILS NO. 4 |
| 24 | EASTBOUND ABUTMENT DETAILS NO. 5 |
| 25 | EASTBOUND ABUTMENT DETAILS NO. 6 |
| 26 | EASTBOUND ABUTMENT DETAILS NO. 7 |
| 27 | EASTBOUND ABUTMENT DETAILS NO. 8 |
| 28 | PIER ELEVATIONS NO. 1 |
| 29 | PIER ELEVATIONS NO. 2 |
| 30 | EASTBOUND PIER DETAILS NO. 1 |
| 31 | EASTBOUND PIER DETAILS NO. 2 |
| 32 | EASTBOUND PIER DETAILS NO. 3 |
| 33 | EASTBOUND PIER DETAILS NO. 4 |
| 34 | EASTBOUND PIER DETAILS NO. 5 |
| 35 | EASTBOUND PIER DETAILS NO. 6 |
| 36 | EASTBOUND PIER DETAILS NO. 7 |
| 37 | EASTBOUND PIER DETAILS NO. 8 |
| 38 | EASTBOUND PIER DETAILS NO. 9 |
| 39 | EASTBOUND TYPICAL SECTION NO. 1 |
| 40 | EASTBOUND TYPICAL SECTION NO. 2 |
| 41 | EASTBOUND PART TYPICAL SECTION |
| 42 | EASTBOUND GIRDER LAYOUT NO. 1 |
| 43 | EASTBOUND GIRDER LAYOUT NO. 2 |
| 44 | EASTBOUND GIRDER LAYOUT NO. 3 |
| 45 | EASTBOUND GIRDER LAYOUT NO. 4 |
| 46 | EASTBOUND GIRDER LAYOUT NO. 5 |
| 47 | EASTBOUND GIRDER LAYOUT NO. 6 |
| 48 | EASTBOUND GIRDER LAYOUT NO. 7 |
| 49 | EASTBOUND GIRDER DETAILS |
| 50 | EASTBOUND CAMBER DIAGRAMS |
| 51 | EASTBOUND DECK DETAILS NO. 1 |
| 52 | EASTBOUND DECK DETAILS NO. 2 |
| 53 | EASTBOUND HINGE FE DETAILS NO. 1 |
| 54 | EASTBOUND HINGE FE DETAILS NO. 2 |
| 55 | EASTBOUND HINGE FE DETAILS NO. 3 |
| 56 | EASTBOUND HINGE FE DETAILS NO. 4 |
| 57 | RESTRAINER UNIT DETAILS NO. 1 |
| 58 | RESTRAINER UNIT DETAILS NO. 2 |
| 59 | EASTBOUND PILE DETAILS |
| 60 | EASTBOUND BEARING DETAILS NO. 1 |
| 61 | EASTBOUND BEARING DETAILS NO. 2 |
| 62 | DECK JOINT DETAILS |
| 63 | MODULAR DECK JOINT DETAILS NO. 1 |
| 64 | MODULAR DECK JOINT DETAILS NO. 2 |
| 65 | MODULAR DECK JOINT DETAILS NO. 3 |
| 66 | SEISMIC JOINT (TYPE I) - CROSS SECTION |
| 67 | SEISMIC JOINT (TYPE I) - DECK PLATE DETAILS NO. 1 |
| 68 | SEISMIC JOINT (TYPE I) - DECK PLATE DETAILS NO. 2 |
| 69 | SEISMIC JOINT (TYPE I) - CHANNEL ASSEMBLY DETAILS NO. 1 |
| 70 | SEISMIC JOINT (TYPE I) - CHANNEL ASSEMBLY DETAILS NO. 2 |
| 71 | SEISMIC JOINT (TYPE I) - SUPPORT PLATE DETAILS |
| 72 | SEISMIC JOINT (TYPE I) - REINFORCEMENT DETAILS |
| 73 | CONCRETE BARRIER TYPE 732 (MOD) |
| 74 | STRUCTURE APPROACH DRAINAGE DETAILS |
| 75 | STRUCTURE APPROACH TYPE N (9S) |
| 76 | EASTBOUND BIKEPATH DETAILS NO. 1 |
| 77 | EASTBOUND BIKEPATH DETAILS NO. 2 |
| 78 | EASTBOUND BIKEPATH DETAILS NO. 3 |
| 79 | EASTBOUND BIKEPATH DETAILS NO. 4 |
| 80 | BIKEPATH EXPANSION JOINT DETAILS |
| 81 | BIKEPATH RAILING DETAILS NO. 1 |
| 82 | BIKEPATH RAILING DETAILS NO. 2 |
| 83 | BIKEPATH RAILING DETAILS NO. 3 |
| 84 | BIKEPATH RAILING DETAILS NO. 4 |
| 85 | MISCELLANEOUS DETAILS NO. 1 |
| 86 | MISCELLANEOUS DETAILS NO. 2 |
| 87 | MISCELLANEOUS DETAILS NO. 3 |
| 88 | MISCELLANEOUS DETAILS NO. 4 |
| 89 | MISCELLANEOUS DETAILS NO. 5 |
| 90 | MISCELLANEOUS DETAILS NO. 6 |
| 91 | MISCELLANEOUS DETAILS NO. 7 |
| 92 | AS-BUILT LOG OF TEST BORINGS NO. 1 |
| 93 | AS-BUILT LOG OF TEST BORINGS NO. 2 |
| 94 | AS-BUILT LOG OF TEST BORINGS NO. 3 |
| 95 | AS-BUILT LOG OF TEST BORINGS NO. 4 |
| 96 | AS-BUILT LOG OF TEST BORINGS NO. 5 |
| 97 | AS-BUILT LOG OF TEST BORINGS NO. 6 |
| 98 | AS-BUILT LOG OF TEST BORINGS NO. 7 |
| 99 | AS-BUILT LOG OF TEST BORINGS NO. 8 |
| 100 | AS-BUILT LOG OF TEST BORINGS NO. 9 |
| 101 | AS-BUILT LOG OF TEST BORINGS NO. 10 |
| 102 | AS-BUILT LOG OF TEST BORINGS NO. 11 |
| 103 | AS-BUILT LOG OF TEST BORINGS NO. 12 |
| 104 | LOG OF TEST BORINGS NO. 1 |
| 105 | LOG OF TEST BORINGS NO. 2 |
| 106 | LOG OF TEST BORINGS NO. 3 |
| 107 | LOG OF TEST BORINGS NO. 4 |
| 108 | LOG OF TEST BORINGS NO. 5 |
| 109 | LOG OF TEST BORINGS NO. 6 |


## INDEX TO STANDARD PLANS (DATED JULY 2004)

| | |
|---|---|
| A10A | ACRONYMS AND ABBREVIATION (A-L) |
| A10B | ACRONYMS AND ABBREVIATION (M-Z) |
| A10C | SYMBOLS (SHEET 1 OF 2) |
| A10D | SYMBOLS (SHEET 2 OF 2) |
| A62C | LIMITS OF PAYMENT FOR EXCAVATION AND BACKFILL - BRIDGE |
| B0-1 | BRIDGE DETAILS |
| B0-3 | BRIDGE DETAILS |
| B0-5 | BRIDGE DETAILS |
| B0-13 | BRIDGE DETAILS |
| RSP B6-21 | JOINT SEALS (MAXIMUM MOVEMENT RATING = 50 mm) |
| B7-1 | BOX GIRDER DETAILS |
| B7-6 | DECK DRAINS TYPES D-1 AND D-2 |
| B7-10 | UTILITY OPENING-BOX GIRDER |
| B7-11 | UTILITY DETAILS |
| RSP B8-5 | CAST-IN-PLACE PRESTRESSED GIRDER DETAILS |
| B14-5 | WATER SUPPLY LINE (DETAILS) (PIPE SIZES LESS THAN NPS 4) |

Standard Plan Sheet Number

Detail Number

## ABBREVIATIONS

CJ - Construction Joint = (Const Jt)
EB - Eastbound
EQ - Equal
UNO - Unless noted otherwise
WB - Westbound
WP - Working point

SUBMITTAL - 12

ALL DIMENSIONS ARE IN MILLIMETERS UNLESS OTHERWISE SHOWN

DESIGN OVERSIGHT
HASAN EL-NATAR
SIGN OFF DATE

| | BY | CHECKED |
|---|---|---|
| DESIGN | M. CHAR | T. DUDLEY |
| DETAILS | M. ANDRASEK | M. CHAR |
| QUANTITIES | Y. KIM | A. SIVATHASAN/T. DUDLEY |

PREPARED FOR THE STATE OF CALIFORNIA DEPARTMENT OF TRANSPORTATION

MOHAN S. CHAR
PROJECT ENGINEER

BRIDGE NO. 34-0006R
KILOMETER POST 2.1

SAN FRANCISCO OAKLAND BAY BRIDGE
EAST SPAN SEISMIC SAFETY PROJECT

OAKLAND APPROACH STRUCTURES - PHASE 2

INDEX TO PLANS

Rev. Date: 5-18-98

ORIGINAL SCALE IN MILLIMETERS FOR REDUCED PLANS 0 10 20 30 40 50 60 70 80 90 100

CU 04
EA 0120M1

DISREGARD PRINTS BEARING EARLIER REVISION DATES

REVISION DATES (PRELIMINARY STAGE ONLY) 10/30/09 1/15/10 4/2/10 5/28/10 9/30/10 12/29/10 3/4/11 3/14/11 4/4/11 6/3/11

SHEET 3 OF 109

FILE => 04-0120m1-34-0006r-a-itp.dgn

USERNAME => s121614 DATE PLOTTED => 05-OCT-2011 TIME PLOTTED => 13:58

| DIST. | COUNTY | ROUTE | KILOMETER POST TOTAL PROJECT | SHEET NO. | TOTAL SHEETS |
|---|---|---|---|---|---|
| 04 | Ala | 80 | 1.6/2.7 | 576 | 744 |

REGISTERED ENGINEER - CIVIL

10-3-11
PLANS APPROVAL DATE

REGISTERED PROFESSIONAL ENGINEER MOHAN S. CHAR No. 57894 Exp. 6/30/12 CIVIL STATE OF CALIFORNIA

The State of California or its officers or agents shall not be responsible for the accuracy or completeness of electronic copies of this plan sheet.

T.Y. LIN / MOFFATT & NICHOL
TWO HARRISON STREET, SUITE 500
SAN FRANCISCO, CA 94105

AECOM TECHNICAL SERVICES INC.
999 TOWN & COUNTRY ROAD
ORANGE, CA 92868

# GENERAL NOTES

Load Factor Design

Design: Bridge Design Specifications-April 2000 (LFD)
(1996 AASHTO with interims and revisions by Caltrans)
Dead Load: Includes 1675 N/m$^2$ for future wearing surface
Live Load: HS20-44 and alternative and permit design load
Future Mass Transit Loading:

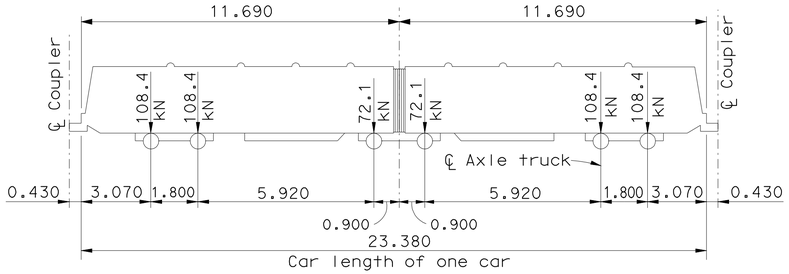


Seismic Loading: Refer to design criteria for San Francisco Bay Bridge East Span Seismic Safety Project Dated 05-01-99. See "Design ARS Curve"

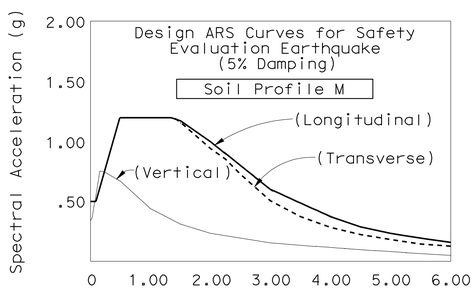


Piers E17R thru E22R

Reinforced Concrete: Transverse Deck Slabs
(Working Stress Design)
Fs = 140 MPa
F'c = 8 MPa
n = 10

Headed Bars: At all locations round plates shall be substituted for square plates at the ends of headed reinforcement shown on the plans, unless the Contractor can demonstrate that square plates will provide adequate clearances for placing and compaction of concrete.

Epoxy Coated Reinforcement: All reinforcement in barrier and inclined bars as shown in Hinge "FE" shall be epoxy coated prefabicated reinforcement with purple coating.

Prestressed Concrete: See "Prestressing Notes" on "Eastbound Girder Layout No. 2" & "Eastbound Pile Details" sheets

Pile Data: See "Pile Data" sheet

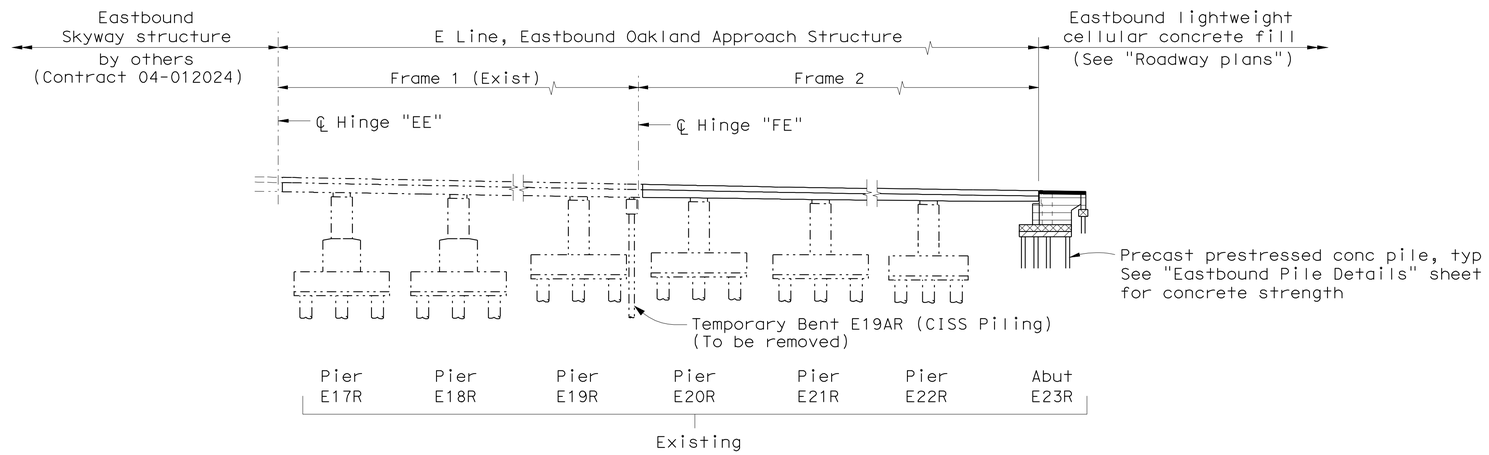


## ELEVATION - EASTBOUND STRUCTURE

## CONCRETE STRENGTH, TYPE LIMITS AND LOCATIONS

No Scale

Notes:

1. Not all piles shown.
2. Concrete strength for bikepath, see "Eastbound Bikepath Details No. 1" sheet.

LEGEND

- Structural Concrete, Bridge (38 Mpa at 28 days)
- Structural Concrete, Bridge (35 MPa at 28 days)
- Structural Concrete, Bridge Footing (25 MPa at 28 days, 30 MPa at 56 days)
- Leveling Concrete (25 MPa @ 28 days)
- Structural Concrete, Approach Slab Type N (25 MPa at 28 days)

ALL DIMENSIONS ARE IN METERS UNLESS OTHERWISE SHOWN

SAN FRANCISCO OAKLAND BAY BRIDGE
EAST SPAN SEISMIC SAFETY PROJECT

OAKLAND APPROACH STRUCTURES - PHASE 2

GENERAL NOTES NO. 1

DESIGN OVERSIGHT
HASAN EL-NATAR
SIGN OFF DATE

| | BY | CHECKED |
|---|---|---|
| DESIGN | M. CHAR | T. DUDLEY |
| DETAILS | M. ANDRASEK | M. CHAR |
| QUANTITIES | Y. KIM | A. SIVATHASAN/T. DUDLEY |

PREPARED FOR THE STATE OF CALIFORNIA DEPARTMENT OF TRANSPORTATION

MOHAN S. CHAR
PROJECT ENGINEER

BRIDGE NO. 34-0006R
KILOMETER POST 2.1

CU 04
EA 0120M1

DISREGARD PRINTS BEARING EARLIER REVISION DATES

REVISION DATES (PRELIMINARY STAGE ONLY): 10/30/09 1/15/10 4/2/10 5/28/10 9/30/10 12/29/10 3/4/11 3/14/11 4/4/11 6/3/11

SHEET 4 OF 109

Rev. Date: 5-18-98

ORIGINAL SCALE IN MILLIMETERS FOR REDUCED PLANS 0 10 20 30 40 50 60 70 80 90 100

FILE => 04-0120m1-34-0006r-b-gnote01.dgn

SUBMITTAL - 12

USERNAME => s121614 DATE PLOTTED => 05-OCT-2011 TIME PLOTTED => 13:58

| DIST. | COUNTY | ROUTE | KILOMETER POST TOTAL PROJECT | SHEET NO. | TOTAL SHEETS |
|---|---|---|---|---|---|
| 04 | Ala | 80 | 1.6/2.7 | 577 | 744 |

REGISTERED ENGINEER - CIVIL

10-3-11

PLANS APPROVAL DATE

REGISTERED PROFESSIONAL ENGINEER MOHAN S. CHAR No. 57894 Exp. 6/30/12 CIVIL STATE OF CALIFORNIA

The State of California or its officers or agents shall not be responsible for the accuracy or completeness of electronic copies of this plan sheet.

T.Y. LIN / MOFFATT & NICHOL
TWO HARRISON STREET, SUITE 500
SAN FRANCISCO, CA 94105

AECOM TECHNICAL SERVICES INC.
999 TOWN & COUNTRY ROAD
ORANGE, CA 92868

QUANTITIES

| | | |
|---|---|---|
| PREPARE CONCRETE BRIDGE DECK SURFACE | 4 210 | $m^2$ |
| BRIDGE REMOVAL (PORTION), LOCATION A | LUMP SUM | |
| BRIDGE REMOVAL (PORTION), LOCATION B | LUMP SUM | |
| BRIDGE REMOVAL (PORTION), LOCATION C | LUMP SUM | |
| JACKING SUPERSTRUCTURE | LUMP SUM | |
| STRUCTURE EXCAVATION (BRIDGE) | 72 | $m^3$ |
| STRUCTURE EXCAVATION (TYPE H) | 163 | $m^3$ |
| STRUCTURE EXCAVATION (CLASS II) | 325 | $m^3$ |
| STRUCTURE BACKFILL (BRIDGE) | 589 | $m^3$ |
| FURNISH PRECAST PRESTRESSED PILING (0.610 m OCTAGONAL) | 1 327 | m |
| DRIVE PRECAST PRESTRESSED PILE (0.610 m OCTAGONAL) | 49 | EA |
| PRESTRESSING, LONGITUDINAL | LUMP SUM | |
| PRESTRESSING, TRANSVERSE | LUMP SUM | |
| LEVELING CONCRETE | 54 | $m^3$ |
| STRUCTURAL CONCRETE, BRIDGE FOOTING | 172 | $m^3$ |
| STRUCTURAL CONCRETE, BRIDGE | 2 920 | $m^3$ |
| STRUCTURAL CONCRETE, BIKEPATH | 172 | $m^3$ |
| STRUCTURAL CONCRETE, APPROACH SLAB (TYPE N) | 70 | $m^3$ |
| FRACTURED RIB TEXTURE | 72 | $m^2$ |
| EPOXY GROUT DOWEL | 1 675 | m |
| FURNISH PRECAST CONCRETE SLAB (BIKEPATH) | 42 | EA |
| ERECT PRECAST CONCRETE SLAB (BIKEPATH) | 42 | EA |
| FURNISH POLYESTER CONCRETE OVERLAY (12 MM) | 19 | $m^3$ |
| PLACE POLYESTER CONCRETE OVERLAY (12 MM) | 1 548 | $m^2$ |
| FURNISH POLYESTER CONCRETE OVERLAY (20 MM) | 53 | $m^3$ |
| PLACE POLYESTER CONCRETE OVERLAY (20 MM) | 2 664 | $m^2$ |
| CORE CONCRETE (101 MM - 150 MM) | 100 | m |
| PTFE SPHERICAL BEARING | 10 | EA |
| INSTALL SEISMIC JOINT (ABUTMENT E23R) | LUMP SUM | |
| BIKEPATH EXPANSION JOINT | 12 | m |
| INSTALL MODULAR JOINT SEAL ASSEMBLY | 1 | EA |
| BAR REINFORCING STEEL (BRIDGE) | 620 000 | kg |
| BAR REINFORCING STEEL (EPOXY COATED) (BRIDGE) | 1 100 | kg |
| HEADED BAR REINFORCEMENT | 4 920 | EA |
| MISCELLANEOUS METAL (RESTRAINER - CABLE TYPE) | 330 | kg |
| MISCELLANEOUS METAL (BRIDGE) | 26 500 | kg |
| BRIDGE DECK DRAINAGE SYSTEM | 4 200 | kg |
| BIKEPATH RAILING | 302 | m |
| CONCRETE BARRIER (TYPE 732 MODIFIED) | 601 | m |

SUBMITTAL - 12

ALL DIMENSIONS ARE IN METERS UNLESS OTHERWISE SHOWN

SAN FRANCISCO OAKLAND BAY BRIDGE
EAST SPAN SEISMIC SAFETY PROJECT

OAKLAND APPROACH STRUCTURES - PHASE 2

GENERAL NOTES NO. 2

DESIGN OVERSIGHT
HASAN EL-NATAR
SIGN OFF DATE

| | BY | CHECKED |
|---|---|---|
| DESIGN | M. CHAR | T. DUDLEY |
| DETAILS | M. ANDRASEK | M. CHAR |
| QUANTITIES | Y. KIM | A. SIVATHASAN/T. DUDLEY |

PREPARED FOR THE STATE OF CALIFORNIA DEPARTMENT OF TRANSPORTATION

MOHAN S. CHAR
PROJECT ENGINEER

BRIDGE NO. 34-0006R
KILOMETER POST 2.1

CU 04
EA 0120M1

DISREGARD PRINTS BEARING EARLIER REVISION DATES

REVISION DATES (PRELIMINARY STAGE ONLY): 10/30/09 1/15/10 4/22/10 5/28/10 9/30/10 12/29/10 3/4/11 3/14/11 4/4/11 6/3/11

SHEET 5 OF 109

Rev. Date: 5-18-98

ORIGINAL SCALE IN MILLIMETERS FOR REDUCED PLANS 0 10 20 30 40 50 60 70 80 90 100

FILE => 04-0120m1-34-0006r-b-gnote02.dgn

USERNAME => s128843 DATE PLOTTED => 01-MAR-2012 TIME PLOTTED => 13:51

| DIST. | COUNTY | ROUTE | KILOMETER POST TOTAL PROJECT | SHEET NO. | TOTAL SHEETS |
|---|---|---|---|---|---|
| 04 | Ala | 80 | 1.6/2.7 | 578 | 744 |

REGISTERED ENGINEER - CIVIL

10-3-11

PLANS APPROVAL DATE

REGISTERED PROFESSIONAL ENGINEER MOHAN S. CHAR No. 57894 Exp. 6/30/12 CIVIL STATE OF CALIFORNIA

The State of California or its officers or agents shall not be responsible for the accuracy or completeness of electronic copies of this plan sheet.

T.Y. LIN / MOFFATT & NICHOL
TWO HARRISON STREET, SUITE 500
SAN FRANCISCO, CA 94105

AECOM TECHNICAL SERVICES INC.
999 TOWN & COUNTRY ROAD
ORANGE, CA 92868

Caltrans Metric

## LEGEND

- Denotes minimum vertical clearance
- F Denotes fixed
- E Denotes expansion
- RC Denotes reinforced concrete

## LEGEND (cont'd)

- Denotes new (EB) structure
- Denotes existing structure
- Denotes limits of existing structure to remain
- Denotes limits of removal (By others) during Bridge closure
- Denotes limits of removal under this contract after new bridge is open to traffic

Notes:

1. Stations & dimensions in parentheses are shown in English units.
2. Bikepath between existing Bents E25A and E28 shall be constructed after Stage 2 removal.
3. For utilities and other roadway items not shown, but to be removed, see "Roadway Plans".
4. For Stage Construction, see "Roadway Plans".
5. Elevations shown on these demolition plans may be obtained from "as-built" structure plans by subtracting approximately 0.930 m (3.05± ft) from elevations shown on as-built plans.

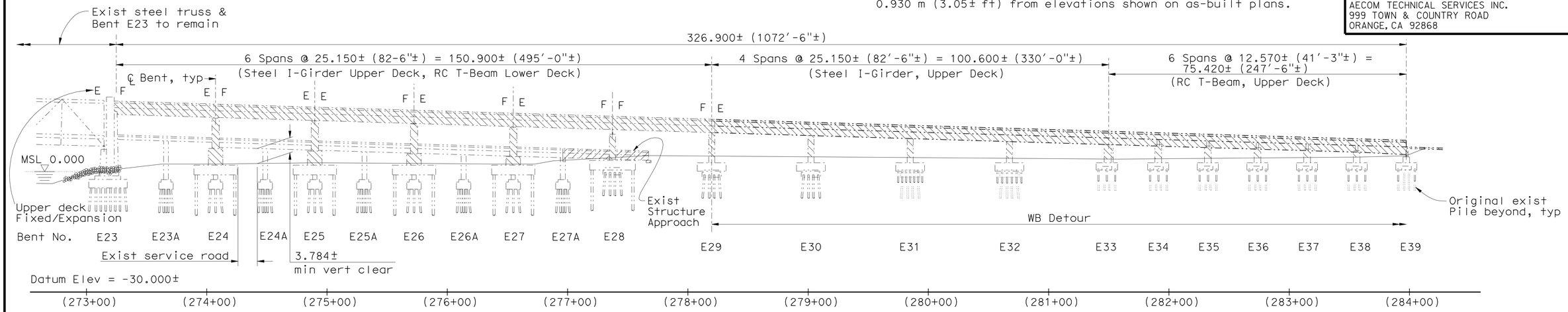


ELEVATION
1:500

Note:
New EB structure not shown for clarity

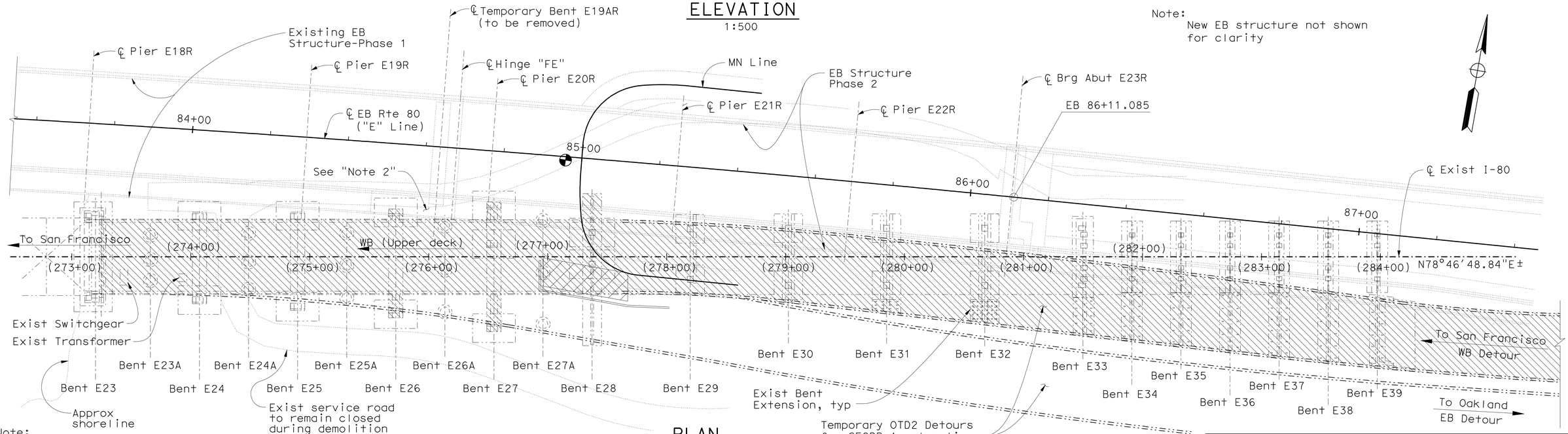


PLAN
1:500

Note:
The Contractor shall verify all controlling field dimensions before ordering or fabricating any material.

ALL DIMENSIONS ARE IN METERS UNLESS OTHERWISE SHOWN

SAN FRANCISCO OAKLAND BAY BRIDGE
EAST SPAN SEISMIC SAFETY PROJECT

# OAKLAND APPROACH STRUCTURES - PHASE 2

# GENERAL PLAN - DEMOLITION

DESIGN OVERSIGHT
HASAN EL-NATAR
SIGN OFF DATE

Rev. Date: 5-18-98

| | BY | CHECKED |
|---|---|---|
| DESIGN | M. CHAR | T. DUDLEY |
| DETAILS | M. ANDRASEK | M. CHAR |
| QUANTITIES | Y. KIM | V.SIVAKOLUNDU/T.DUDLEY |

ORIGINAL SCALE IN MILLIMETERS FOR REDUCED PLANS 0 10 20 30 40 50 60 70 80 90 100

PREPARED FOR THE STATE OF CALIFORNIA DEPARTMENT OF TRANSPORTATION

MOHAN S. CHAR
PROJECT ENGINEER

BRIDGE NO. 34-0006R
KILOMETER POST 2.1

CU 04
EA 0120M1

DISREGARD PRINTS BEARING EARLIER REVISION DATES

REVISION DATES (PRELIMINARY STAGE ONLY) 1/15/10 4/2/10 5/28/10 9/30/10 12/28/10 3/4/11 3/14/11 4/4/11 6/3/11

SHEET 6 OF 109

SUBMITTAL - 12

FILE => 04-0120m1-34-0006r-c-gp-demo.dgn

USERNAME => s121614 DATE PLOTTED => 05-OCT-2011 TIME PLOTTED => 13:58

| DIST. | COUNTY | ROUTE | KILOMETER POST TOTAL PROJECT | SHEET NO. | TOTAL SHEETS |
|---|---|---|---|---|---|
| 04 | Ala | 80 | 1.6/2.7 | 579 | 744 |

REGISTERED ENGINEER - CIVIL

10-3-11
PLANS APPROVAL DATE

REGISTERED PROFESSIONAL ENGINEER MOHAN S. CHAR No. 57894 Exp. 6/30/12 CIVIL STATE OF CALIFORNIA

The State of California or its officers or agents shall not be responsible for the accuracy or completeness of electronic copies of this plan sheet.

T.Y. LIN / MOFFATT & NICHOL
TWO HARRISON STREET, SUITE 500
SAN FRANCISCO, CA 94105

AECOM TECHNICAL SERVICES INC.
999 TOWN & COUNTRY ROAD
ORANGE, CA 92868

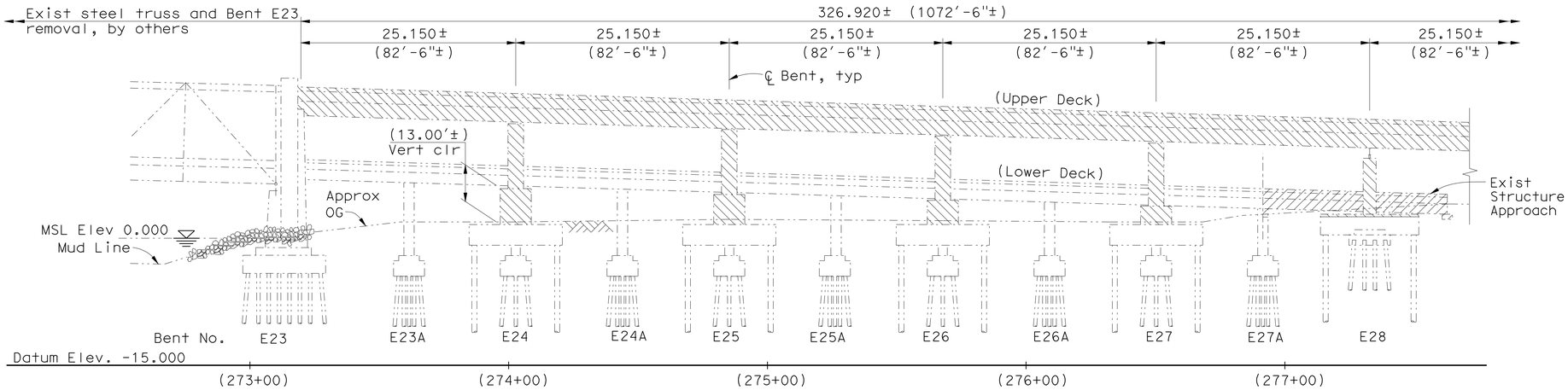


Note:
New EB Structure not shown for clarity.

## ELEVATION
1:300

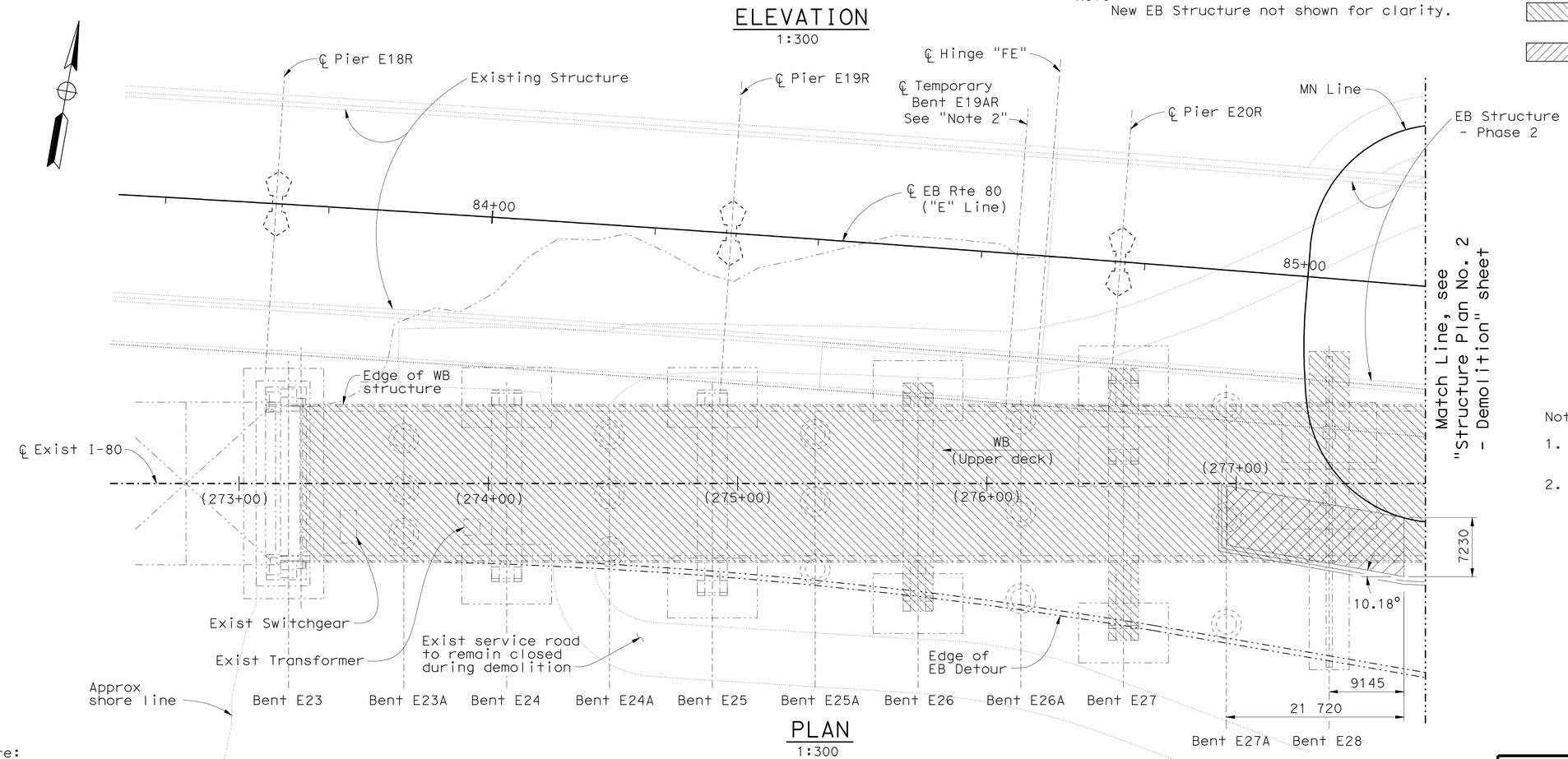


## PLAN
1:300

Note:
The Contractor shall verify all controlling field dimensions before ordering or fabricating any material.

ALL DIMENSIONS ARE IN METERS UNLESS OTHERWISE SHOWN

## LEGEND

- Denotes existing structure
- Denotes new (EB) structure
- Denotes limits of existing structure to remain
- Denotes limits of removal (By others) during Bridge closure
- Denotes limits of removal under this contract after new bridge is open to traffic

Notes:

1. Stations & dimensions in parentheses are shown in English units.
2. Temporary bent E19AR shall be removed after EB Structure - Phase 2 Construction has been completed. See "Eastbound Temporary Bent E19AR - Demolition" sheet.

SUBMITTAL - 12

| | | | |
|---|---|---|---|
| DESIGN OVERSIGHT HASAN EL-NATAR | DESIGN | BY M. CHAR | CHECKED T. DUDLEY |
| SIGN OFF DATE | DETAILS | BY M. ANDRASEK | CHECKED M. CHAR |
| Rev. Date: 5-18-98 | QUANTITIES | BY Y. KIM | CHECKED V.SIVAKOLUNDU/T.DUDLEY |

PREPARED FOR THE STATE OF CALIFORNIA DEPARTMENT OF TRANSPORTATION

MOHAN S. CHAR
PROJECT ENGINEER

BRIDGE NO. 34-0006R
KILOMETER POST 2.1

CU 04
EA 0120M1

ORIGINAL SCALE IN MILLIMETERS FOR REDUCED PLANS 0 10 20 30 40 50 60 70 80 90 100

DISREGARD PRINTS BEARING EARLIER REVISION DATES

REVISION DATES (PRELIMINARY STAGE ONLY): 10/30/09 1/15/10 4/2/10 5/28/10 9/30/10 12/28/10 3/4/11 3/14/11 4/4/11 6/3/11

SHEET 7 OF 109

SAN FRANCISCO OAKLAND BAY BRIDGE
EAST SPAN SEISMIC SAFETY PROJECT

OAKLAND APPROACH STRUCTURES - PHASE 2

STRUCTURE PLAN NO.1 - DEMOLITION

FILE => 04-0120m1-34-0006r-c1-sp01-demo.dgn

USERNAME => s12161 4 DATE PLOTTED => 05-OCT-2011 TIME PLOTTED => 13:58

| DIST. | COUNTY | ROUTE | KILOMETER POST TOTAL PROJECT | SHEET NO. | TOTAL SHEETS |
|---|---|---|---|---|---|
| 04 | Ala | 80 | 1.6/2.7 | 580 | 744 |

Caltrans Metric

REGISTERED ENGINEER - CIVIL

10-3-11

PLANS APPROVAL DATE

REGISTERED PROFESSIONAL ENGINEER MOHAN S. CHAR No. 57894 Exp. 6/30/12 CIVIL STATE OF CALIFORNIA

The State of California or its officers or agents shall not be responsible for the accuracy or completeness of electronic copies of this plan sheet.

T.Y. LIN / MOFFATT & NICHOL
TWO HARRISON STREET, SUITE 500
SAN FRANCISCO, CA 94105

AECOM TECHNICAL SERVICES INC.
999 TOWN & COUNTRY ROAD
ORANGE, CA 92868

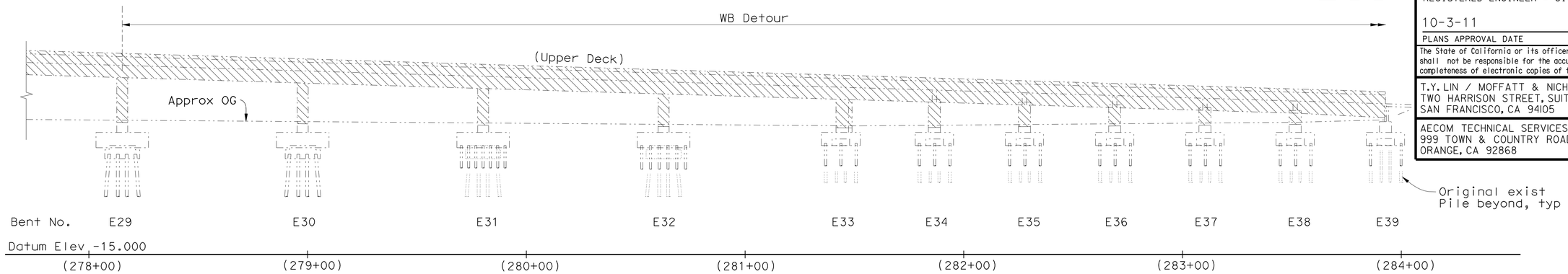


Note:
New EB structure not shown for clarity.

## ELEVATION
1:300

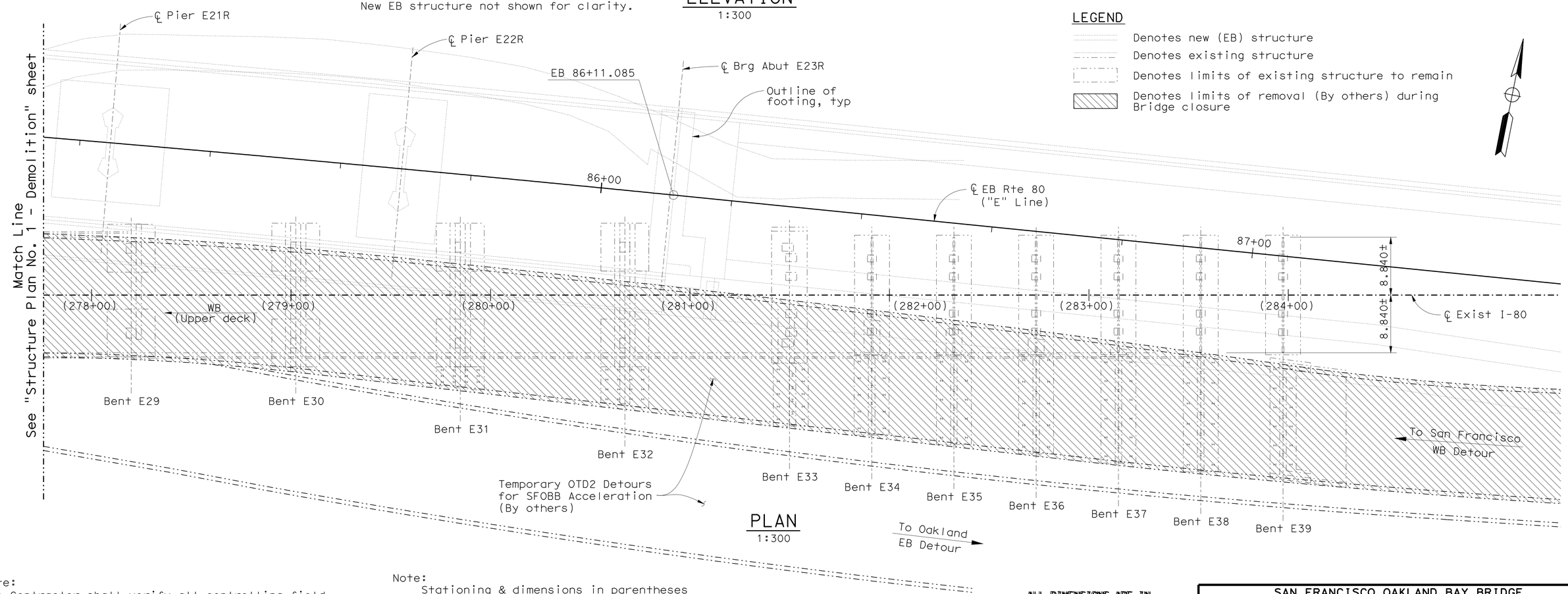


## PLAN
1:300

### LEGEND

- Denotes new (EB) structure
- Denotes existing structure
- Denotes limits of existing structure to remain
- Denotes limits of removal (By others) during Bridge closure

Note:
The Contractor shall verify all controlling field dimensions before ordering or fabricating any material.

Note:
Stationing & dimensions in parentheses are shown in English units.

ALL DIMENSIONS ARE IN METERS UNLESS OTHERWISE SHOWN

SAN FRANCISCO OAKLAND BAY BRIDGE
EAST SPAN SEISMIC SAFETY PROJECT

# OAKLAND APPROACH STRUCTURES - PHASE 2
# STRUCTURE PLAN NO.2 - DEMOLITION

DESIGN OVERSIGHT
HASAN EL-NATAR
SIGN OFF DATE

| | BY | CHECKED |
|---|---|---|
| DESIGN | M. CHAR | T. DUDLEY |
| DETAILS | M. ANDRASEK | M. CHAR |
| QUANTITIES | Y. KIM | V.SIVAKOLUNDU/T.DUDLEY |

PREPARED FOR THE STATE OF CALIFORNIA DEPARTMENT OF TRANSPORTATION

MOHAN S. CHAR
PROJECT ENGINEER

BRIDGE NO. 34-0006R
KILOMETER POST 2.1

CU 04
EA 0120M1

DISREGARD PRINTS BEARING EARLIER REVISION DATES

REVISION DATES (PRELIMINARY STAGE ONLY): 1/15/10 4/22/10 5/28/10 9/30/10 12/28/10 3/4/11 3/14/11 4/4/11 6/3/11

SHEET 8 OF 109

Rev. Date: 5-18-98

ORIGINAL SCALE IN MILLIMETERS FOR REDUCED PLANS 0 10 20 30 40 50 60 70 80 90 100

FILE => 04-0120m1-34-0006r-c1-sp02-demo.dgn

SUBMITTAL - 12

USERNAME => s121614 DATE PLOTTED => 05-OCT-2011 TIME PLOTTED => 13:58

| DIST. | COUNTY | ROUTE | KILOMETER POST TOTAL PROJECT | SHEET NO. | TOTAL SHEETS |
|---|---|---|---|---|---|
| 04 | Ala | 80 | 1.6/2.7 | 581 | 744 |

Caltrans Metric

REGISTERED ENGINEER - CIVIL

10-3-11

PLANS APPROVAL DATE

REGISTERED PROFESSIONAL ENGINEER MOHAN S. CHAR No. 57894 Exp. 6/30/12 CIVIL STATE OF CALIFORNIA

The State of California or its officers or agents shall not be responsible for the accuracy or completeness of electronic copies of this plan sheet.

T.Y. LIN / MOFFATT & NICHOL
TWO HARRISON STREET, SUITE 500
SAN FRANCISCO, CA 94105

AECOM TECHNICAL SERVICES INC.
999 TOWN & COUNTRY ROAD
ORANGE, CA 92868

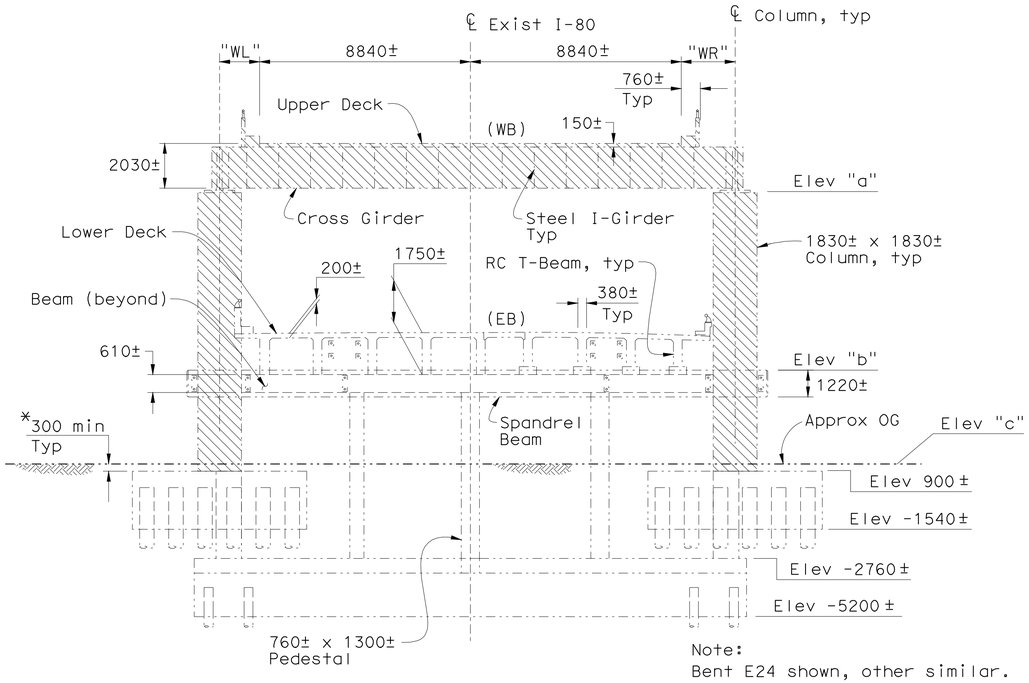


Note:
Bent E24 shown, other similar.

## ELEVATION - BENTS E24, E25 AND E26

No Scale

| Bent Number | Dimensions | | | | | | Elevations | | |
|---|---|---|---|---|---|---|---|---|---|
| | WL | WR | A | B | C | D | a | b | c |
| E23A | — | — | 3530 ± | 6400 ± | 6100 ± | 2140 ± | — | 5280 ± | 2000 ± |
| E24A | — | — | 3200 ± | 7310 ± | 7010 ± | 1440 ± | — | 4590 ± | 1240 ± |
| E25A | — | — | 3180 ± | 8230 ± | 8230 ± | 1600 ± | — | 3900 ± | 1000 ± |
| E26A | — | — | 3710 ± | 11 280 ± | 10 060 ± | 1070 ± | — | 3210 ± | 0 ± |
| E27A | — | — | 4110 ± | 13 410 ± | 13 110 ± | 1470 ± | — | 2550 ± | 1500 ± |
| E24 | 1680± | 2260± | — | — | — | — | 12 790± | 4930 ± | 1000 ± |
| E25 | 1680± | 3960± | — | — | — | — | 12 110± | 4250 ± | 1500 ± |
| E26 | 2520± | 5860± | — | — | — | — | 11 420± | 3500 ± | 1000 ± |

LEGEND

Denotes existing structure

Denotes limits of existing structure to remain

Denotes limits of removal (By others) during Bridge closure

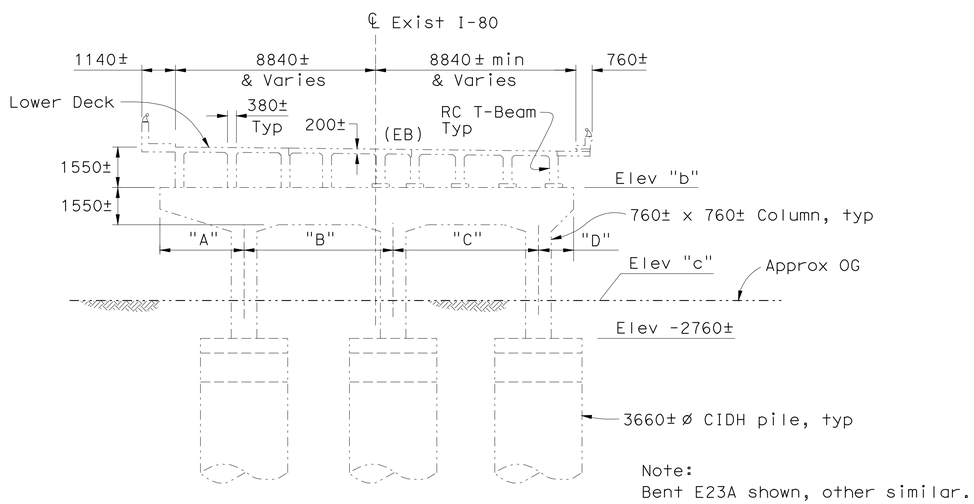


Note:
Bent E23A shown, other similar.

## ELEVATION - BENTS E23A, E24A, E25A, E26A AND E27A

No Scale

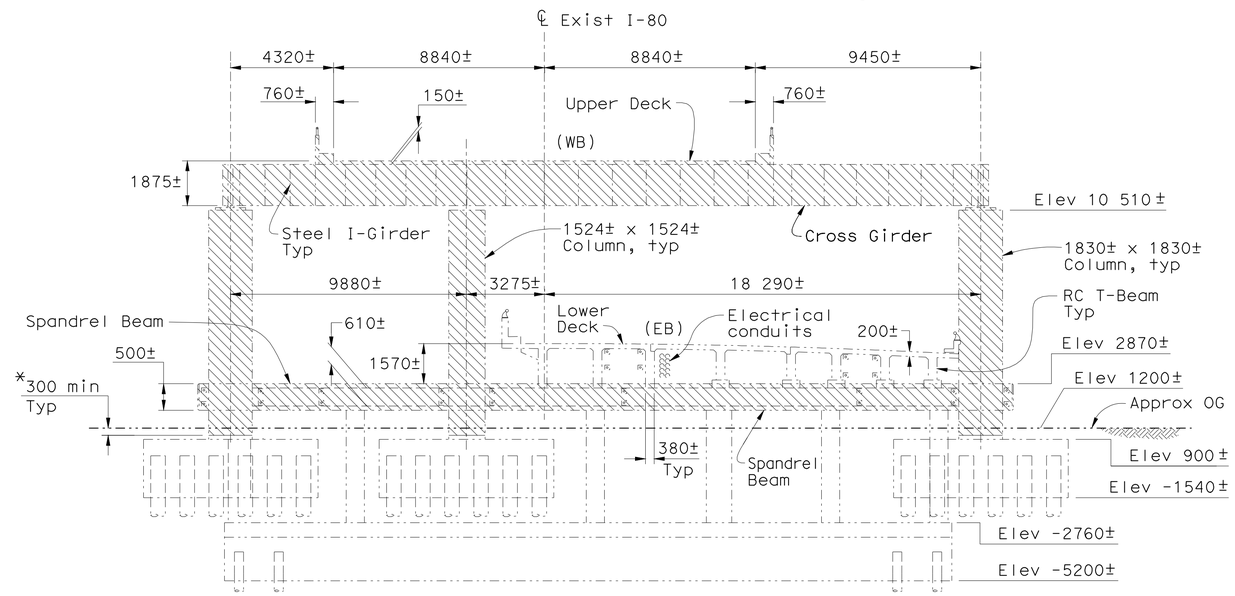


## ELEVATION - BENT E27

No Scale

Note:
The Contractor shall verify all controlling field dimensions before ordering or fabricating any material.

*Additional removal may be required for Maintenance Road Construction, see "Roadway Plans".

ALL DIMENSIONS ARE IN MILLIMETERS UNLESS OTHERWISE SHOWN

SAN FRANCISCO OAKLAND BAY BRIDGE
EAST SPAN SEISMIC SAFETY PROJECT

OAKLAND APPROACH STRUCTURES - PHASE 2

BENT DETAILS NO. 1 - DEMOLITION

DESIGN OVERSIGHT
HASAN EL-NATER
SIGN OFF DATE

| | BY | CHECKED |
|---|---|---|
| DESIGN | M. CHAR | T. DUDLEY |
| DETAILS | M. ANDRASEK | M. CHAR |
| QUANTITIES | Y. KIM | V. SIVAKOLUNDU/T. DUDLEY |

PREPARED FOR THE STATE OF CALIFORNIA DEPARTMENT OF TRANSPORTATION

MOHAN S. CHAR
PROJECT ENGINEER

CU 04
EA 0120M1

BRIDGE NO. 34-0006R
KILOMETER POST 2.1

DISREGARD PRINTS BEARING EARLIER REVISION DATES

REVISION DATES (PRELIMINARY STAGE ONLY): 10/30/09 1/15/10 4/2/10 5/28/10 9/30/10 12/29/10 3/4/11 3/14/11 4/4/11 6/3/11

SHEET 9 OF 109

Rev. Date: 5-18-98

ORIGINAL SCALE IN MILLIMETERS FOR REDUCED PLANS 0 10 20 30 40 50 60 70 80 90 100

FILE => 04-0120m1-34-0006r-c2-b01dt01-demo.dgn

SUBMITTAL - 12

USERNAME => s121614 DATE PLOTTED => 05-OCT-2011 TIME PLOTTED => 13:53

| DIST. | COUNTY | ROUTE | KILOMETER POST TOTAL PROJECT | SHEET NO. | TOTAL SHEETS |
|---|---|---|---|---|---|
| 04 | Ala | 80 | 1.6/2.7 | 582 | 744 |

Caltrans Metric

REGISTERED ENGINEER - CIVIL

10-3-11

PLANS APPROVAL DATE

REGISTERED PROFESSIONAL ENGINEER MOHAN S. CHAR No. 57894 Exp. 6/30/12 CIVIL STATE OF CALIFORNIA

The State of California or its officers or agents shall not be responsible for the accuracy or completeness of electronic copies of this plan sheet.

T.Y. LIN / MOFFATT & NICHOL
TWO HARRISON STREET, SUITE 500
SAN FRANCISCO, CA 94105

AECOM TECHNICAL SERVICES INC.
999 TOWN & COUNTRY ROAD
ORANGE, CA 92868

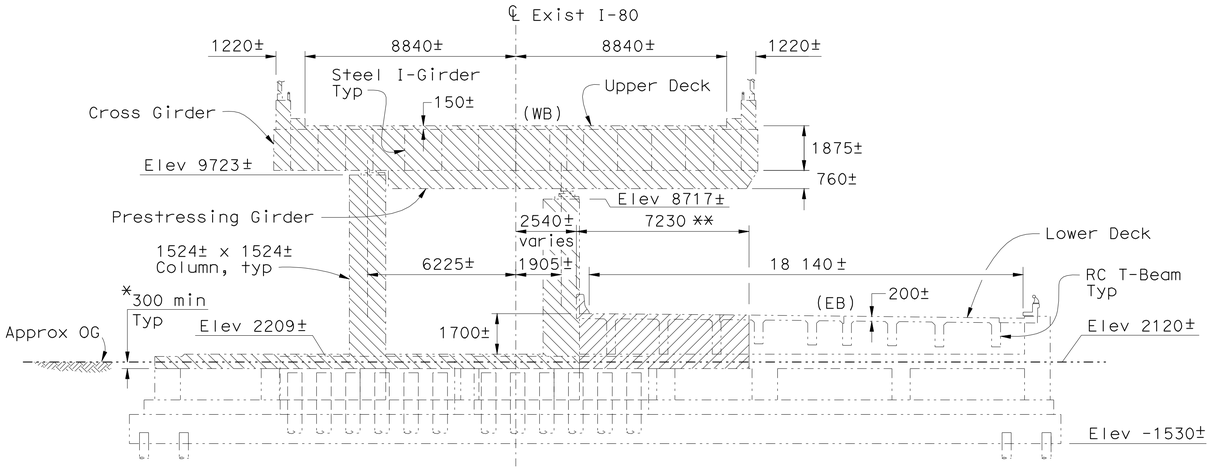


## ELEVATION - BENT E28

No Scale

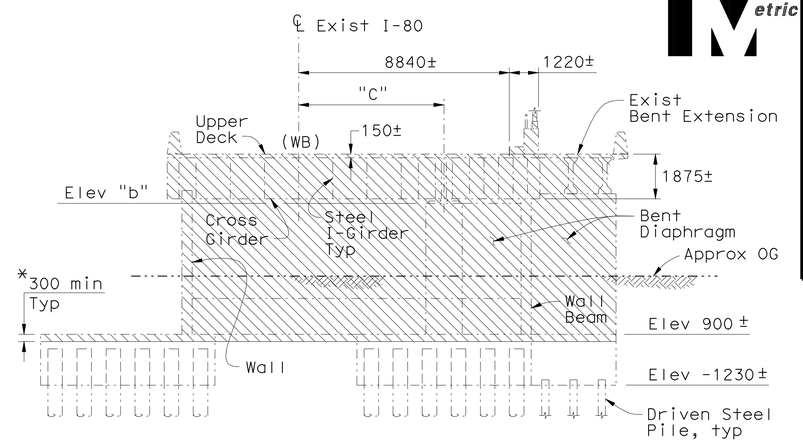


Note:
Bent E31 shown, other similar.

## ELEVATION - BENTS E29 TO E31

No Scale

** Removal of existing Bridge (Portion) from Bent 27A to end of structure approach for Maintenance Road Construction, see "Roadway Plans"

*Additional removal may be required for Maintenance Road Construction, see "Roadway Plans".

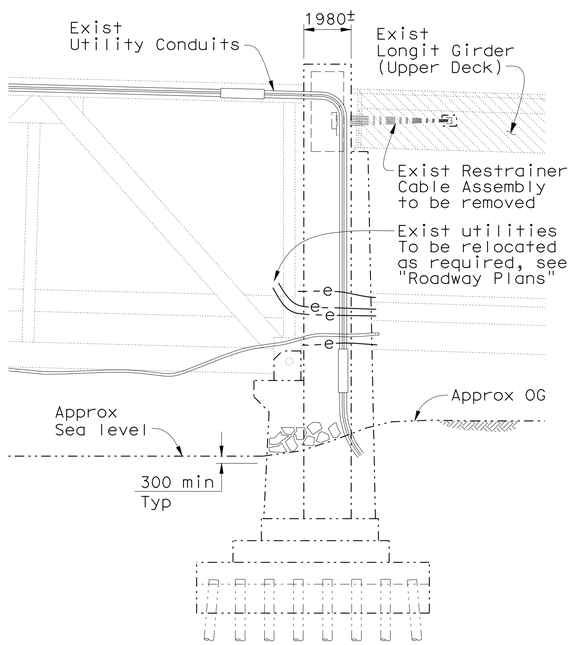


## SIDE ELEVATION - BENT E23

1:125

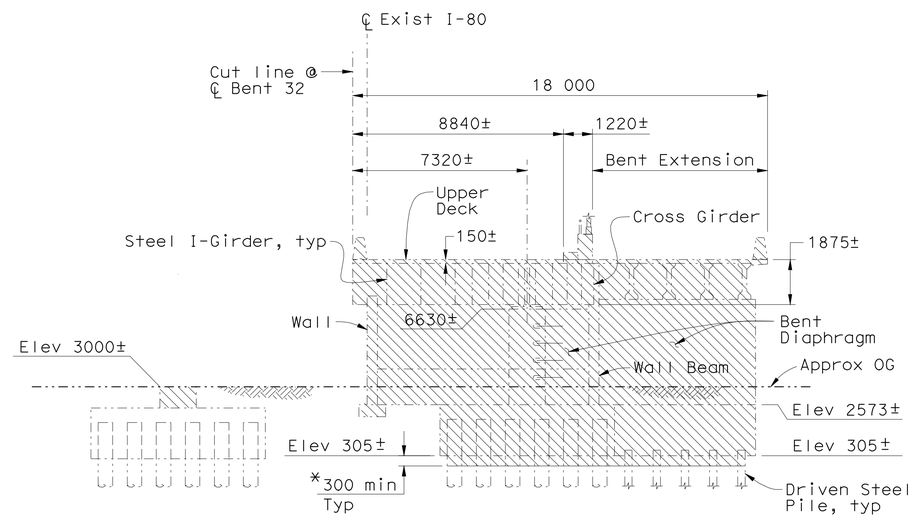


## ELEVATION - BENT E32

No Scale

### LEGEND

- Denotes existing structure
- Denotes limits of existing structure to remain
- Denotes limits of removal (By others) during Bridge closure
- Denotes limits of removal under this contract after new bridge is open to traffic

| Bent Number | Dimensions | Elevations |
|---|---|---|
| | C | b |
| E29 | 6100 ± | 8720 ± |
| E30 | 7320 ± | 7710 ± |
| E31 | 7320 ± | 6700 ± |

Note:
The Contractor shall verify all controlling field dimensions before ordering or fabricating any material.

ALL DIMENSIONS ARE IN MILLIMETERS UNLESS OTHERWISE SHOWN

SAN FRANCISCO OAKLAND BAY BRIDGE
EAST SPAN SEISMIC SAFETY PROJECT

OAKLAND APPROACH STRUCTURES - PHASE 2

BENT DETAILS NO. 2 - DEMOLITION

DESIGN OVERSIGHT
HASAN EL-NATAR
SIGN OFF DATE

Rev. Date: 5-18-98

| | BY | CHECKED |
|---|---|---|
| DESIGN | M. CHAR | T. DUDLEY |
| DETAILS | M. ANDRASEK | M. CHAR |
| QUANTITIES | Y. KIM | V. SIVAKOLUNDU/T. DUDLEY |

PREPARED FOR THE STATE OF CALIFORNIA DEPARTMENT OF TRANSPORTATION

MOHAN S. CHAR
PROJECT ENGINEER

BRIDGE NO. 34-0006R
KILOMETER POST 2.1

ORIGINAL SCALE IN MILLIMETERS FOR REDUCED PLANS 0 10 20 30 40 50 60 70 80 90 100

CU 04
EA 0120M1

DISREGARD PRINTS BEARING EARLIER REVISION DATES

REVISION DATES (PRELIMINARY STAGE ONLY) 10/30/09 1/15/10 4/2/10 5/28/10 9/30/10 12/29/10 3/4/11 3/14/11 4/4/11 6/3/11

SHEET 10 OF 109

FILE => 04-0120m1-34-0006r-c2-b01dt02-demo.dgn

SUBMITTAL - 12

USERNAME => s12614 DATE PLOTTED => 05-OCT-2011 TIME PLOTTED => 13:59

| DIST. | COUNTY | ROUTE | KILOMETER POST TOTAL PROJECT | SHEET NO. | TOTAL SHEETS |
|---|---|---|---|---|---|
| 04 | Ala | 80 | 1.6/2.7 | 583 | 744 |

Caltrans Metric

REGISTERED ENGINEER - CIVIL

10-3-11

PLANS APPROVAL DATE

REGISTERED PROFESSIONAL ENGINEER MOHAN S. CHAR No. 57894 Exp. 6/30/12 CIVIL STATE OF CALIFORNIA

The State of California or its officers or agents shall not be responsible for the accuracy or completeness of electronic copies of this plan sheet.

T.Y. LIN / MOFFATT & NICHOL
TWO HARRISON STREET, SUITE 500
SAN FRANCISCO, CA 94105

AECOM TECHNICAL SERVICES INC.
999 TOWN & COUNTRY ROAD
ORANGE, CA 92868

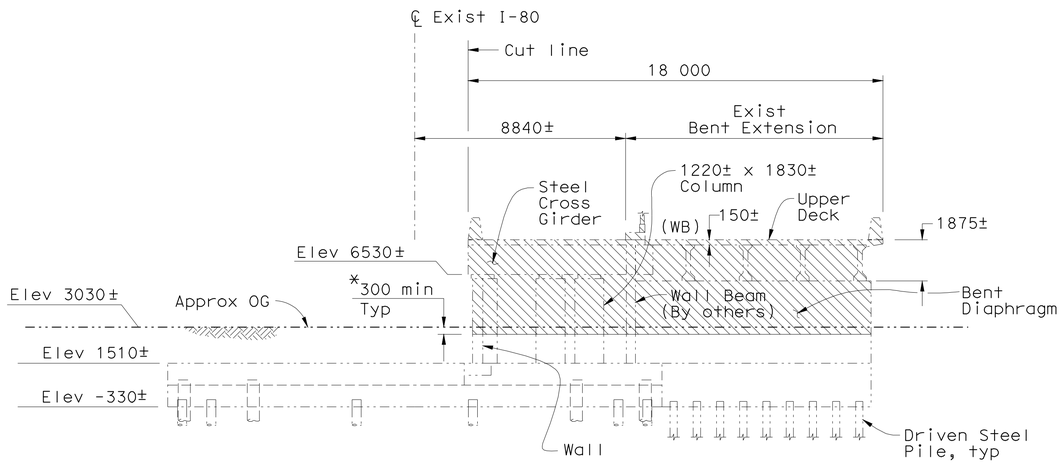


## ELEVATION - BENT E33

No Scale

## LEGEND

Denotes existing structure

Denotes limits of existing structure to remain

Denotes limits of removal (By others) during Bridge closure

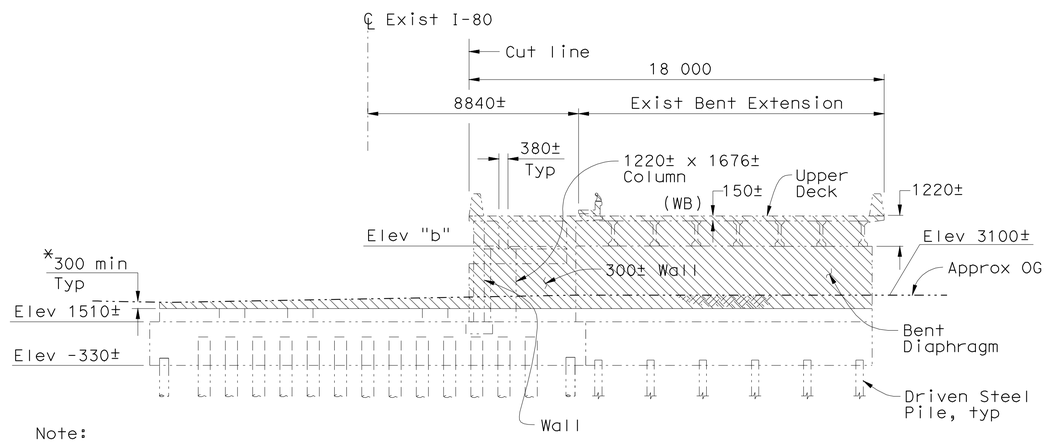


Note:
Bent E34 shown, Bent E35 similar

## ELEVATION - BENTS E34 AND E35

No Scale

*Additional removal may be required for Maintenance Road Construction, see "Roadway Plans".

| Bent Number | Elevations |
|---|---|
| | b |
| E34 | 5170± |
| E35 | 4740± |

Note:
The Contractor shall verify all controlling field dimensions before ordering or fabricating any material.

ALL DIMENSIONS ARE IN MILLIMETERS UNLESS OTHERWISE SHOWN

SAN FRANCISCO OAKLAND BAY BRIDGE
EAST SPAN SEISMIC SAFETY PROJECT

OAKLAND APPROACH STRUCTURES - PHASE 2

BENT DETAILS NO. 3 - DEMOLITION

| | BY | CHECKED |
|---|---|---|
| DESIGN | M. CHAR | T. DUDLEY |
| DETAILS | M. ANDRASEK | M. CHAR |
| QUANTITIES | Y. KIM | V. SIVAKOLUNDU/T. DUDLEY |

DESIGN OVERSIGHT
HASAN EL-NATAR
SIGN OFF DATE

Rev. Date: 5-18-98

PREPARED FOR THE STATE OF CALIFORNIA DEPARTMENT OF TRANSPORTATION

MOHAN S. CHAR
PROJECT ENGINEER

BRIDGE NO. 34-0006R
KILOMETER POST 2.1

ORIGINAL SCALE IN MILLIMETERS FOR REDUCED PLANS 0 10 20 30 40 50 60 70 80 90 100

CU 04
EA 0120M1

DISREGARD PRINTS BEARING EARLIER REVISION DATES

REVISION DATES (PRELIMINARY STAGE ONLY): 10/30/09 1/15/10 4/2/10 5/28/10 9/30/10 12/29/10 3/4/11 3/14/11 4/4/11 6/3/11

SHEET 11 OF 109

FILE => 04-0120m1-34-0006r-c2-b01dt03-demo.dgn

SUBMITTAL - 12

USERNAME => s121614 DATE PLOTTED => 05-OCT-2011 TIME PLOTTED => 13:59

| DIST. | COUNTY | ROUTE | KILOMETER POST TOTAL PROJECT | SHEET NO. | TOTAL SHEETS |
|---|---|---|---|---|---|
| 04 | Ala | 80 | 1.6/2.7 | 584 | 744 |

REGISTERED ENGINEER - CIVIL

10-3-11

PLANS APPROVAL DATE

REGISTERED PROFESSIONAL ENGINEER MOHAN S. CHAR No. 57894 Exp. 6/30/12 CIVIL STATE OF CALIFORNIA

The State of California or its officers or agents shall not be responsible for the accuracy or completeness of electronic copies of this plan sheet.

T.Y. LIN / MOFFATT & NICHOL
TWO HARRISON STREET, SUITE 500
SAN FRANCISCO, CA 94105

AECOM TECHNICAL SERVICES INC.
999 TOWN & COUNTRY ROAD
ORANGE, CA 92868

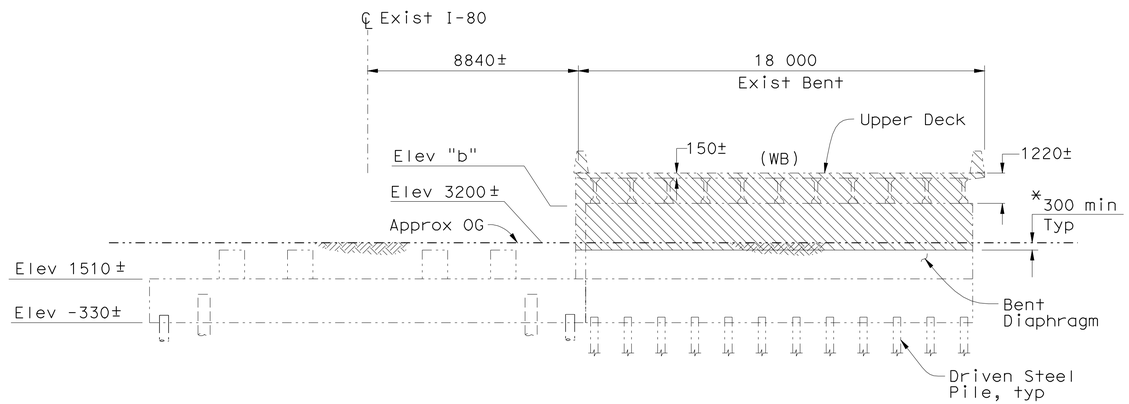


| Bent Number | Elevations |
|---|---|
| | b |
| E36 | 4190± |
| E37 | 3760± |
| E38 | 3370± |

## ELEVATION - BENTS E36 TO E38

No Scale

Note:
Bent E37 shown, others similar

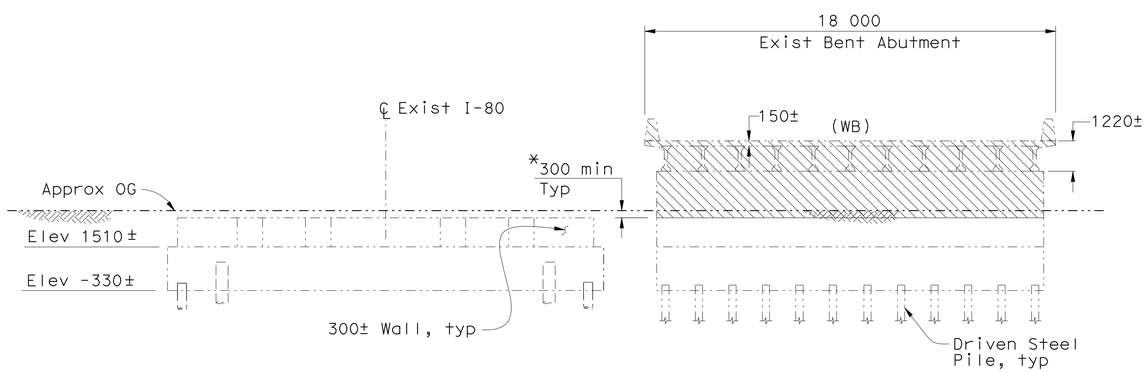


## ELEVATION - BENT E39

No Scale

## LEGEND

Denotes existing structure

Denotes limits of existing structure to remain

Denotes limits of removal (By others) during Bridge closure

*Additional removal may be required for Maintenance Road Construction, see "Roadway Plans".

Note:
The Contractor shall verify all controlling field dimensions before ordering or fabricating any material.

ALL DIMENSIONS ARE IN MILLIMETERS UNLESS OTHERWISE SHOWN

SAN FRANCISCO OAKLAND BAY BRIDGE
EAST SPAN SEISMIC SAFETY PROJECT

OAKLAND APPROACH STRUCTURES - PHASE 2

BENT DETAILS NO. 4 - DEMOLITION

DESIGN OVERSIGHT
HASAN EL-NATAR
SIGN OFF DATE

| | BY | CHECKED |
|---|---|---|
| DESIGN | M. CHAR | T. DUDLEY |
| DETAILS | M. ANDRASEK | M. CHAR |
| QUANTITIES | Y. KIM | V. SIVAKOLUNDU/T. DUDLEY |

PREPARED FOR THE STATE OF CALIFORNIA DEPARTMENT OF TRANSPORTATION

MOHAN S. CHAR
PROJECT ENGINEER

BRIDGE NO. 34-0006R
KILOMETER POST 2.1

Rev. Date: 5-18-98

ORIGINAL SCALE IN MILLIMETERS FOR REDUCED PLANS 0 10 20 30 40 50 60 70 80 90 100

CU 04
EA 0120M1

DISREGARD PRINTS BEARING EARLIER REVISION DATES

REVISION DATES (PRELIMINARY STAGE ONLY) 10/30/09 1/15/10 4/22/10 5/28/10 9/30/10 12/29/10 3/4/11 3/14/11 4/4/11 6/3/11

SHEET 12 OF 109

SUBMITTAL - 12

USERNAME => s121614 DATE PLOTTED => 05-OCT-2011 TIME PLOTTED => 13:59

FILE => 04-0120m1-34-0006r-c2-b01dt04-demo.dgn

| DIST. | COUNTY | ROUTE | KILOMETER POST TOTAL PROJECT | SHEET NO. | TOTAL SHEETS |
|---|---|---|---|---|---|
| 04 | Ala | 80 | 1.6/2.7 | 585 | 744 |

Caltrans Metric

REGISTERED ENGINEER - CIVIL

10-3-11

PLANS APPROVAL DATE

REGISTERED PROFESSIONAL ENGINEER MOHAN S. CHAR No. 57894 Exp. 6/30/12 CIVIL STATE OF CALIFORNIA

The State of California or its officers or agents shall not be responsible for the accuracy or completeness of electronic copies of this plan sheet.

T.Y. LIN / MOFFATT & NICHOL
TWO HARRISON STREET, SUITE 500
SAN FRANCISCO, CA 94105

AECOM TECHNICAL SERVICES INC.
999 TOWN & COUNTRY ROAD
ORANGE, CA 92868

Jacking Notes:

1. After prestressing of Frame 2, prior to completion of closure pour at Hinge FE and removal of Falsework for Frame 2, Contractor shall jack superstructure at Hinge FE if required by the Engineer to compensate for any settlement of Bent E19AR should it occur. Jacking shall raise bridge to elevation of initial deck construction, as shown on the plans.
2. Jacks shall be clustered as close as possible to each bearing, within the limits of jack placement, as shown in the "Plan", and the center of the jacking force shall be at the centerline of bent, +/- 100 mm.
3. Jacking capacity required for interior bearing shall be divided equally on each side of bearing.
4. The concrete barrier shall be constructed (or equivalent load shall be in place) prior to the jacking operation.
5. The Contractor shall remove all unnecessary construction equipment & other non-permanent loads from Bent between Bents E19R & E19AR during jacking operation.
5. Temporary Bent E19AR shall be removed not less than 45 days after placement of closure pour.

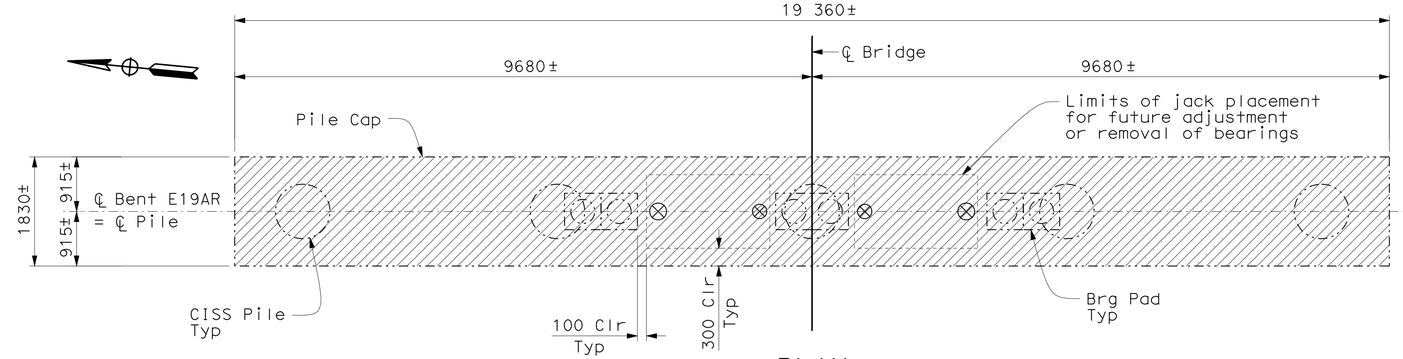


PLAN
1:50

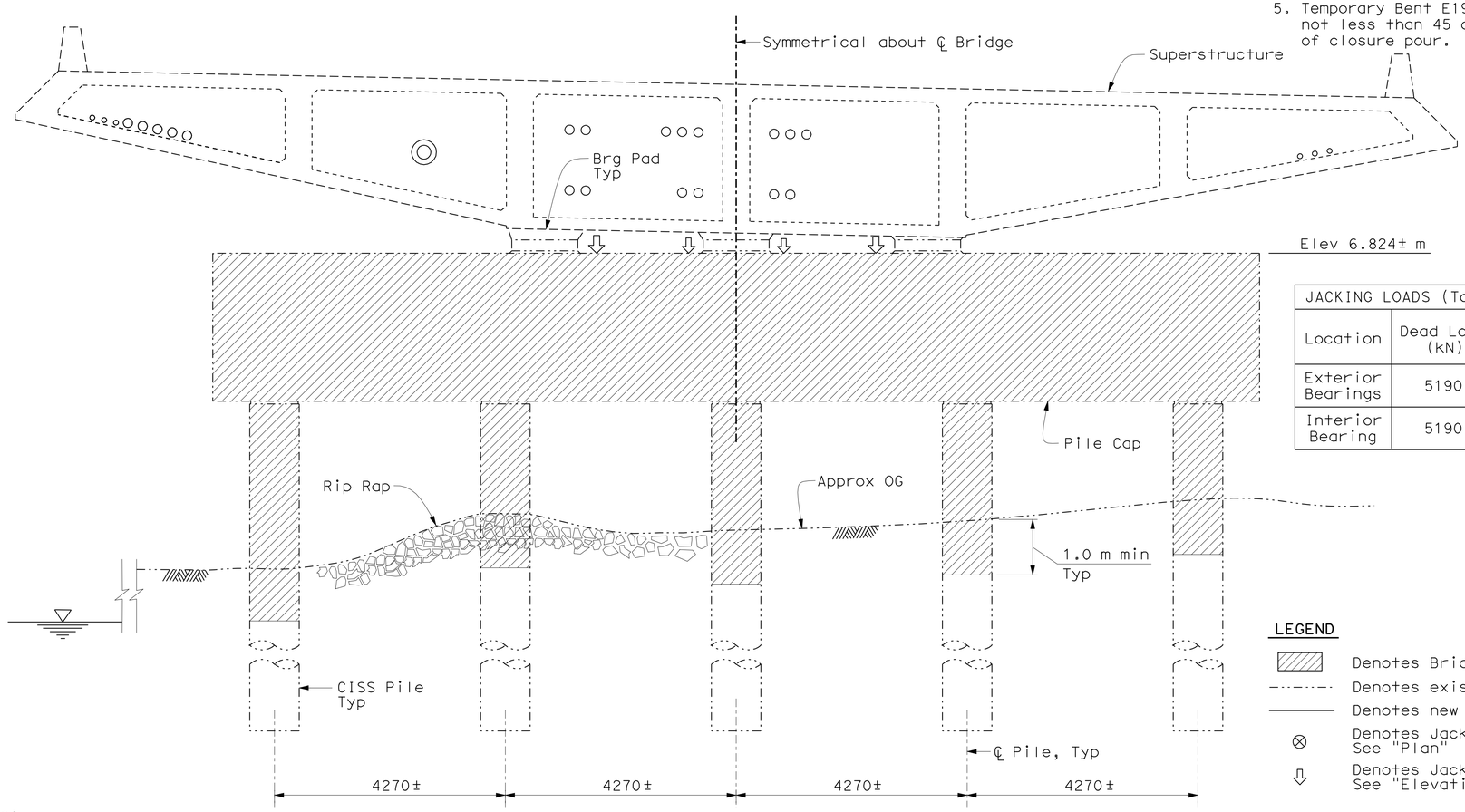


ELEVATION
1:50

| JACKING LOADS (Total Per Bearing) | | |
|---|---|---|
| Location | Dead Load (kN) | Live Load (Construction) (kN) |
| Exterior Bearings | 5190 | 740 |
| Interior Bearing | 5190 | 740 |

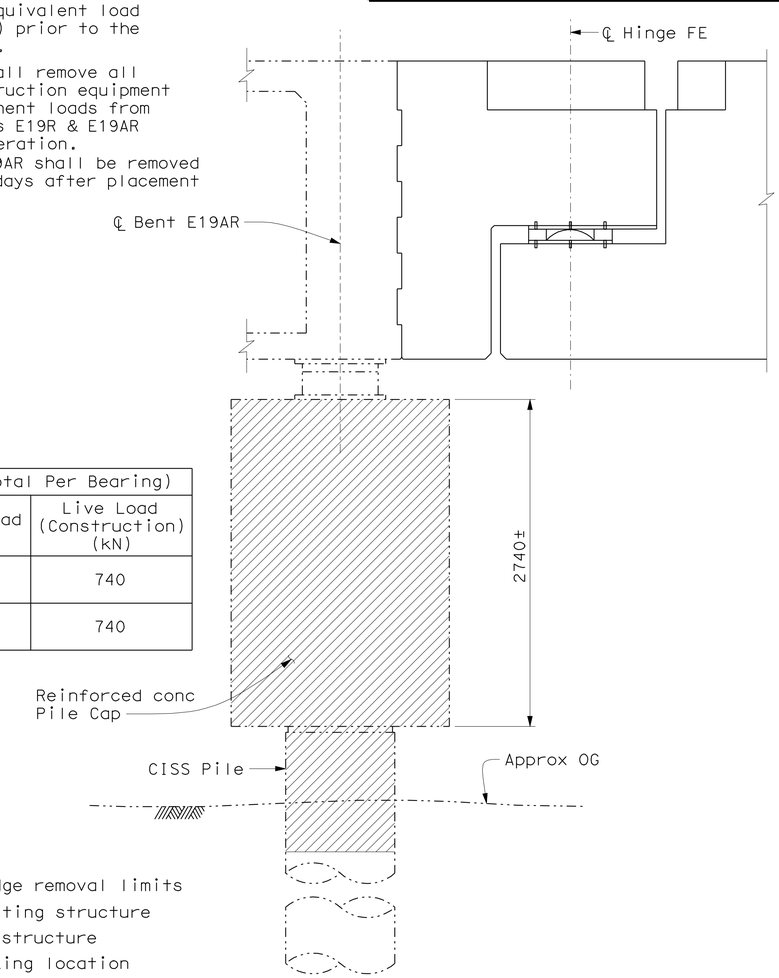


PILE CAP SECTION
1:25

LEGEND

- Denotes Bridge removal limits
- Denotes existing structure
- Denotes new structure
- Denotes Jacking location See "Plan"
- Denotes Jacking location See "Elevation"

Note:
The Contractor shall verify all controlling field dimensions before ordering or fabricating any material.

ALL DIMENSIONS ARE IN MILLIMETERS UNLESS OTHERWISE SHOWN

SAN FRANCISCO OAKLAND BAY BRIDGE
EAST SPAN SEISMIC SAFETY PROJECT

OAKLAND APPROACH STRUCTURES - PHASE 2

EASTBOUND TEMPORARY BENT E19AR-DEMOLITION

DESIGN OVERSIGHT
HASAN EL-NATAR
SIGN OFF DATE

Rev. Date: 5-18-98

| | BY | CHECKED |
|---|---|---|
| DESIGN | M. CHAR | T. DUDLEY |
| DETAILS | M. ANDRASEK | M. CHAR |
| QUANTITIES | Y. KIM | A. SIVATHASAN/T. DUDLEY |

PREPARED FOR THE STATE OF CALIFORNIA DEPARTMENT OF TRANSPORTATION

MOHAN S. CHAR
PROJECT ENGINEER

BRIDGE NO. 34-0006R
KILOMETER POST 2.1

ORIGINAL SCALE IN MILLIMETERS FOR REDUCED PLANS 0 10 20 30 40 50 60 70 80 90 100

CU 04
EA 0120M1

DISREGARD PRINTS BEARING EARLIER REVISION DATES

REVISION DATES (PRELIMINARY STAGE ONLY): 10/30/09 1/15/10 4/2/10 5/28/10 9/30/10 12/29/10 3/4/11 3/14/11 4/4/11 6/3/11

SHEET 13 OF 109

FILE => 04-0120m1-34-0006r-c2-b01dt05-demo.dgn

SUBMITTAL - 12

USERNAME => s8121614 DATE PLOTTED => 05-OCT-2011 TIME PLOTTED => 13:53

| DIST. | COUNTY | ROUTE | KILOMETER POST TOTAL PROJECT | SHEET NO. | TOTAL SHEETS |
|---|---|---|---|---|---|
| 04 | Ala | 80 | 1.6/2.7 | 586 | 744 |

Caltrans Metric

REGISTERED ENGINEER - CIVIL

10-3-11

PLANS APPROVAL DATE

REGISTERED PROFESSIONAL ENGINEER A.L. ELY No. 18880 Exp. 6-30-11 CIVIL STATE OF CALIFORNIA

The State of California or its officers or agents shall not be responsible for the accuracy or completeness of electronic copies of this plan sheet.

T.Y. LIN / MOFFATT & NICHOL
TWO HARRISON STREET, SUITE 500
SAN FRANCISCO, CA 94105

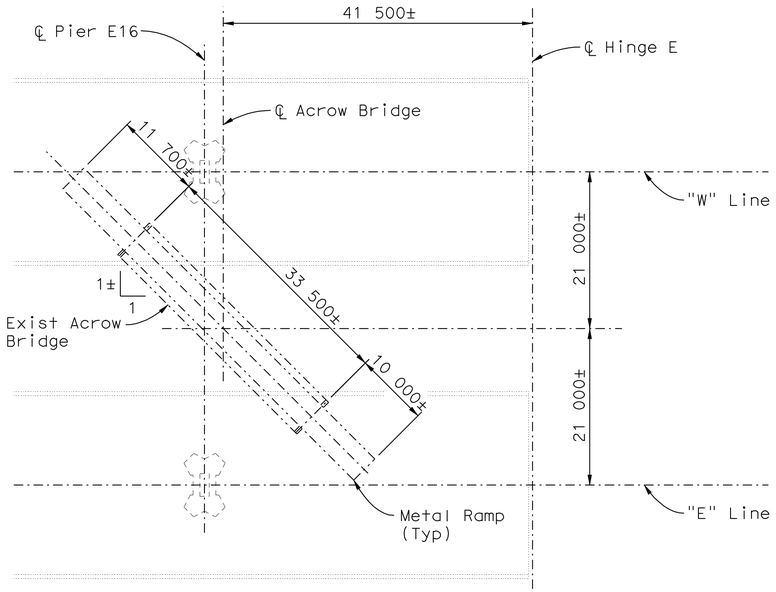


## PLAN - APPROXIMATE LOCATION OF ACROW BRIDGE
1:400

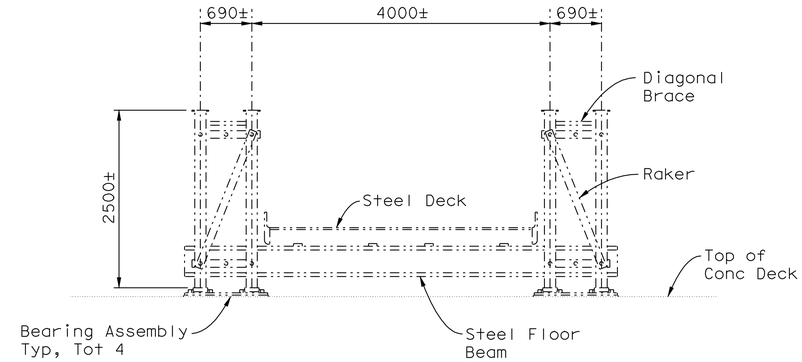


## SECTION
1:40

Total Weight of Bridge (Including Steel Deck)

580 kN (Approx)

Notes:

1. Remove anchor bolts 25 mm below concrete surface and patch with grout.
2. Bridge removal shall include removal of ramps at each end of Acrow Bridge, bearing assemblies and grout pads.

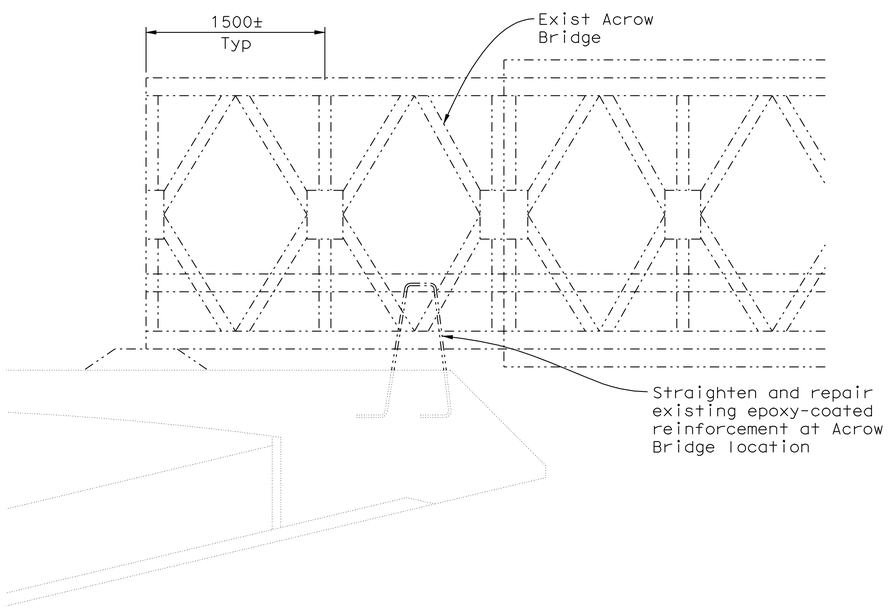


## PARTIAL ELEVATION
1:25

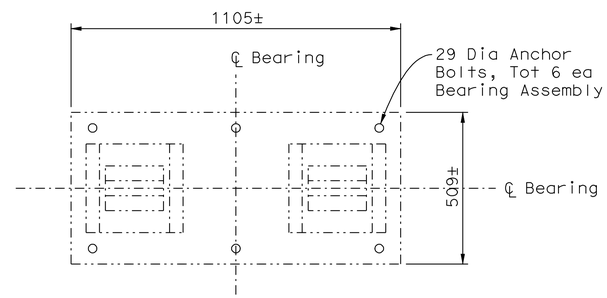


## PLAN

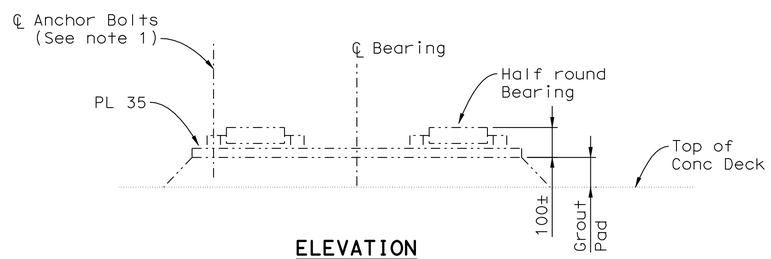


## ELEVATION

## BEARING ASSEMBLY DETAILS
1:10

ALL DIMENSIONS ARE IN MILLIMETERS UNLESS OTHERWISE SHOWN

SAN FRANCISCO OAKLAND BAY BRIDGE
EAST SPAN SEISMIC SAFETY PROJECT

OAKLAND APPROACH STRUCTURES-PHASE 2

EXISTING ACROW BRIDGE REMOVAL

DESIGN OVERSIGHT: HASAN ELNATUR

SIGN OFF DATE

Rev. Date: 5-18-98

| | BY | CHECKED |
|---|---|---|
| DESIGN | | |
| DETAILS | | |
| QUANTITIES | | |

PREPARED FOR THE STATE OF CALIFORNIA DEPARTMENT OF TRANSPORTATION

Jal Birdy
PROJECT ENGINEER

BRIDGE NO. 34-0006 L/R
KILOMETER POST 1.6

ORIGINAL SCALE IN MILLIMETERS FOR REDUCED PLANS 0 10 20 30 40 50 60 70 80 90 100

CU 04
EA 0120M1

DISREGARD PRINTS BEARING EARLIER REVISION DATES

REVISION DATES (PRELIMINARY STAGE ONLY) 7/25/11 10/30/09 1/15/10 4/2/10 5/28/10 9/30/10 3/4/11 3/14/11 4/4/11 6/3/11

SHEET 14 OF 109

FILE => 04-0120m1-34-0006r1-c-brgrem01.dgn

SUBMITTAL - 12 July 25, 2011

USERNAME => s121614 DATE PLOTTED => 05-OCT-2011 TIME PLOTTED => 13:59

| DIST. | COUNTY | ROUTE | KILOMETER POST TOTAL PROJECT | SHEET NO. | TOTAL SHEETS |
|---|---|---|---|---|---|
| 04 | Ala | 80 | 1.6/2.7 | 587 | 744 |

REGISTERED ENGINEER - CIVIL

10-3-11

PLANS APPROVAL DATE

REGISTERED PROFESSIONAL ENGINEER MOHAN S. CHAR No. 57894 Exp. 6/30/12 CIVIL STATE OF CALIFORNIA

The State of California or its officers or agents shall not be responsible for the accuracy or completeness of electronic copies of this plan sheet.

T.Y. LIN / MOFFATT & NICHOL
TWO HARRISON STREET, SUITE 500
SAN FRANCISCO, CA 94105

AECOM TECHNICAL SERVICES INC.
999 TOWN & COUNTRY ROAD
ORANGE, CA 92868

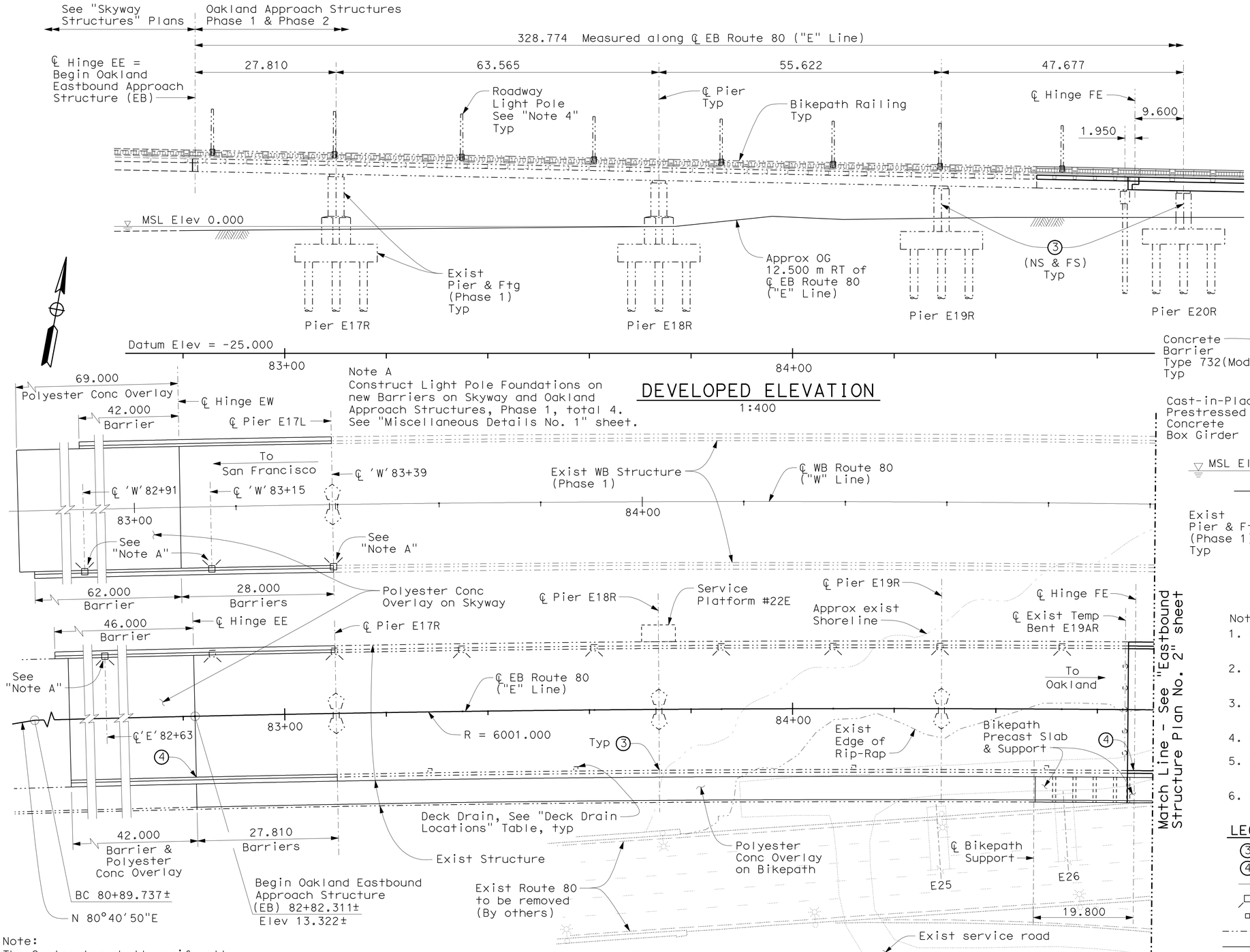


DEVELOPED ELEVATION
1:400

PLAN
1:400

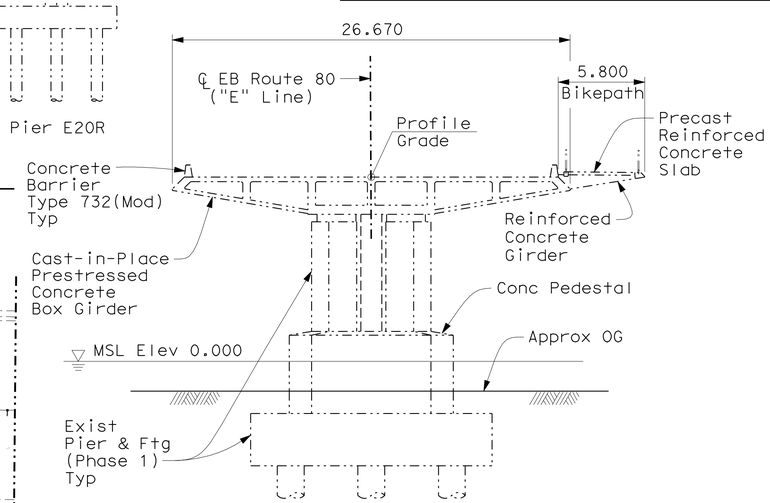


TYPICAL SECTION
1:200
See "Note 1"

Notes:

1. Pier E17R shown for information only. Piers E18R & E19R similar unless noted otherwise.
2. For Deck Drain Details see "Miscellaneous Details No. 3 & No. 5" sheets.
3. For Roadway Light Pole Supports, see "Miscellaneous Details No. 1 & No. 2" sheets.
4. For Roadway Light Pole Locations, see "Roadway Plans".
5. For exist I-80 removal, see "General Plan - Demolition" and "Demolition" detail sheets.
6. For Polyester Concrete and Barriers, see "Note 3" and "Note 6" on "General Plan" sheet.

LEGEND

- (3) Paint Pier Number (NS & FS)
- (4) Paint hinge name "Hinge FE"
- Denotes Direction of Travel
- Denotes Roadway Light Pole
- Denotes Deck Drain, Type D-1 (Mod)
- Denotes existing structure
- Denotes new structure

Note:
The Contractor shall verify all controlling field dimensions before ordering or fabricating any material.

ALL DIMENSIONS ARE IN METERS UNLESS OTHERWISE SHOWN

SAN FRANCISCO OAKLAND BAY BRIDGE
EAST SPAN SEISMIC SAFETY PROJECT

OAKLAND APPROACH STRUCTURES - PHASE 2

EASTBOUND STRUCTURE PLAN NO. 1

| DESIGN OVERSIGHT | | DESIGN | BY M. CHAR | CHECKED T. DUDLEY |
|---|---|---|---|---|
| HASAN EL-NATUR | | DETAILS | BY M. ANDRASEK | CHECKED M. CHAR |
| SIGN OFF DATE | | QUANTITIES | BY Y. KIM | CHECKED A. SIVATHASAN/T. DUDLEY |

PREPARED FOR THE STATE OF CALIFORNIA DEPARTMENT OF TRANSPORTATION

MOHAN S. CHAR
PROJECT ENGINEER

BRIDGE NO. 34-0006R
KILOMETER POST 2.1

Rev. Date: 5-18-98

ORIGINAL SCALE IN MILLIMETERS FOR REDUCED PLANS 0 10 20 30 40 50 60 70 80 90 100

CU 04
EA 0120M1

DISREGARD PRINTS BEARING EARLIER REVISION DATES

REVISION DATES (PRELIMINARY STAGE ONLY) 1/15/10 4/27/10 5/28/10 9/30/10 12/28/10 3/1/11 3/14/11 4/14/11 6/23/11 7/25/11

SHEET 15 OF 109

FILE => 04-0120m1-34-0006r-c3-sp01.dgn

SUBMITTAL - 12

USERNAME => s121614 DATE PLOTTED => 05-OCT-2011 TIME PLOTTED => 13:59

| DIST. | COUNTY | ROUTE | KILOMETER POST TOTAL PROJECT | SHEET NO. | TOTAL SHEETS |
|---|---|---|---|---|---|
| 04 | Ala | 80 | 1.6/2.7 | 588 | 744 |

Caltrans Metric

REGISTERED ENGINEER - CIVIL

10-3-11

PLANS APPROVAL DATE

REGISTERED PROFESSIONAL ENGINEER MOHAN S. CHAR No. 57894 Exp. 6/30/12 CIVIL STATE OF CALIFORNIA

The State of California or its officers or agents shall not be responsible for the accuracy or completeness of electronic copies of this plan sheet.


T.Y. LIN / MOFFATT & NICHOL
TWO HARRISON STREET, SUITE 500
SAN FRANCISCO, CA 94105

AECOM TECHNICAL SERVICES INC.
999 TOWN & COUNTRY ROAD
ORANGE, CA 92868


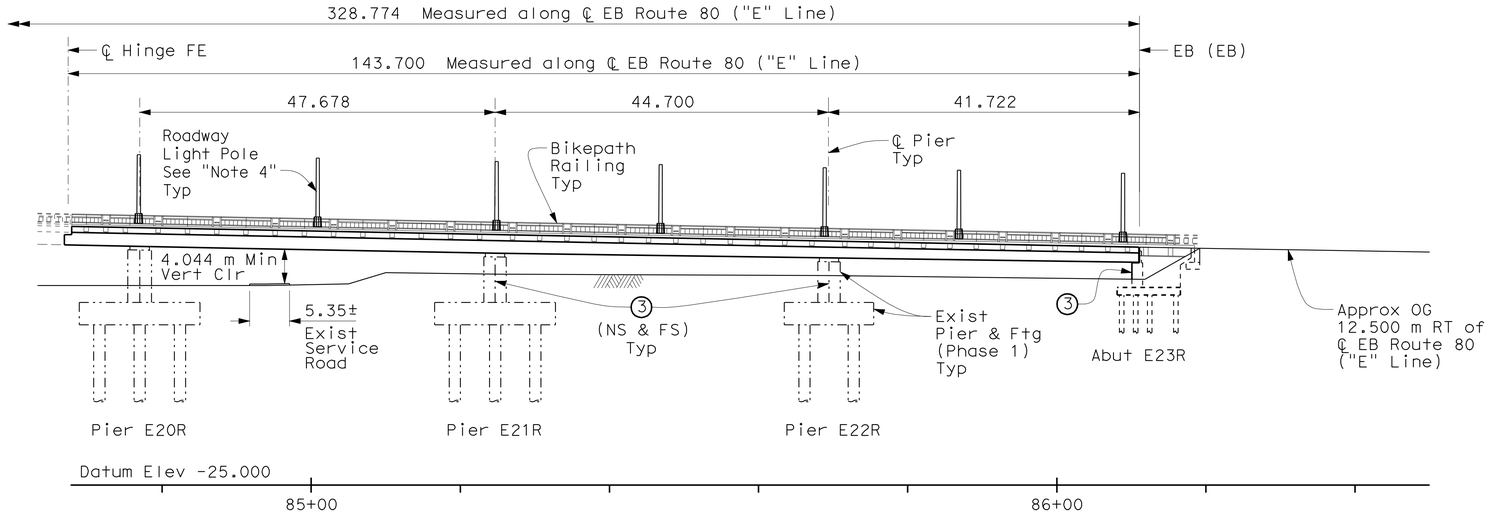


## DEVELOPED ELEVATION

1:400

| DECK DRAIN LOCATIONS ✳ | |
|---|---|
| Station | Side |
| 84+74.200 | Rt |
| 85+20.000 | Rt |
| 85+72.650 | Rt |
| 85+95.850 | Rt |

✳ See "Note 8"

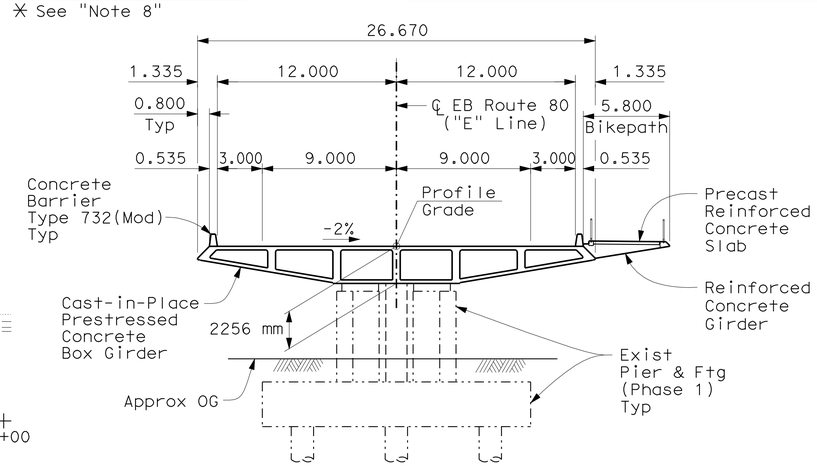


## TYPICAL SECTION

1:200

See "Note 1"

Notes:

1. Pier E21R shown for information only. Piers E20R & E22R similar unless noted otherwise.
2. For Deck Drain Details, see "Miscellaneous Details No. 3 & No. 5" sheets.
3. For Roadway Light Pole Supports, see "Miscellaneous Details No. 1 & No. 2" sheets.
4. For Roadway Light Pole Locations, see "Roadway Plans".
5. For exist I-80 removal, see "General Plan - Demolition" and "Demolition" detail sheets.
6. Utilities not shown. See "Eastbound Typical Section No. 1 & No. 2" sheets.
7. For Service Platform Connection Details, See "Roadway Plans".
8. For Schematic Deck Drain Layout, see "Miscellaneous Details No. 5" sheet.

LEGEND

- Denotes Direction of Travel
- Denotes Roadway Light Pole
- Denotes Deck Drain, Type D-1
- (3) Paint Pier number or Abutment number (NS & FS)
- (4) Structure Approach Type N(9S)

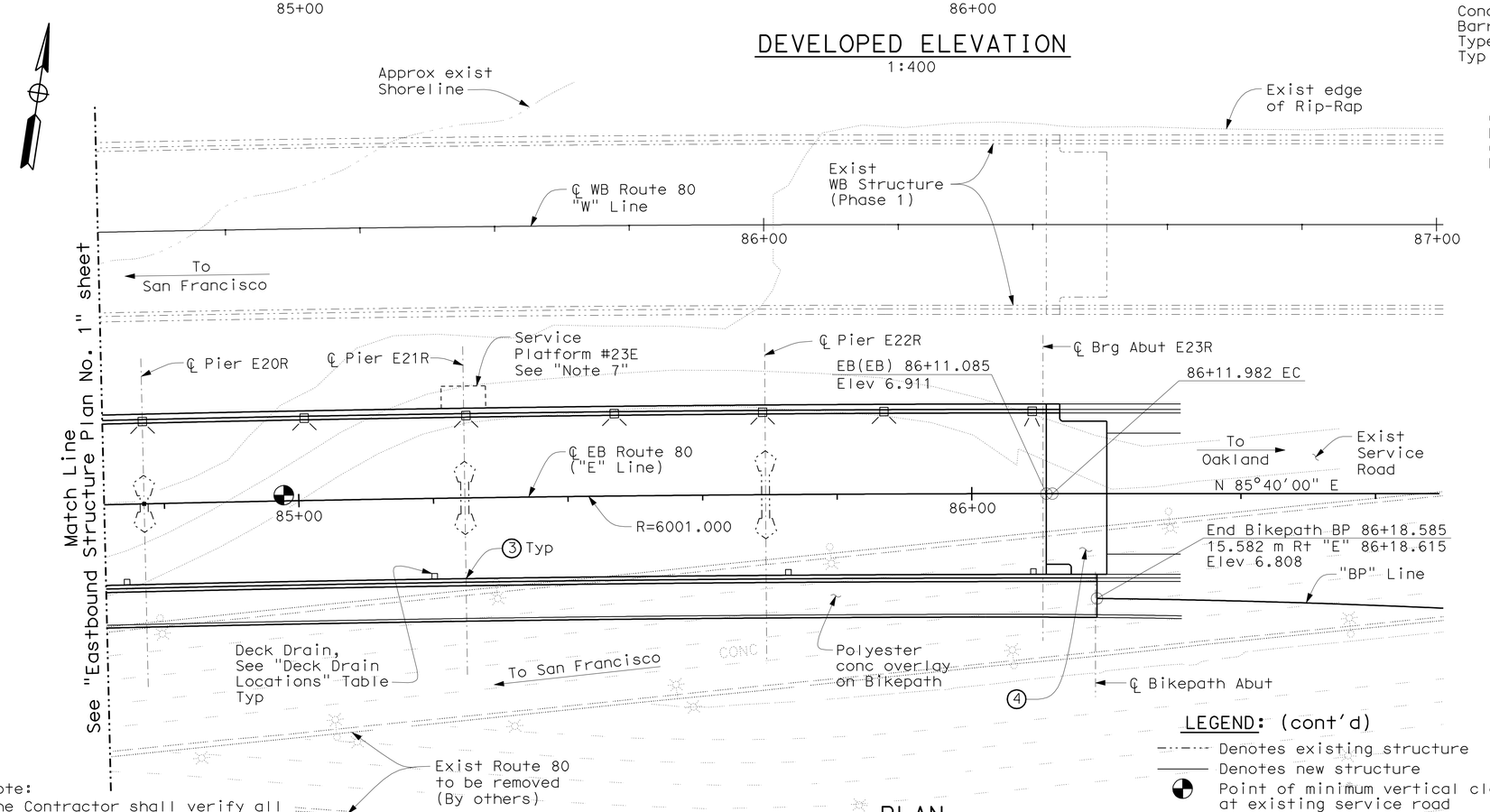


## PLAN

1:400

LEGEND: (cont'd)

- Denotes existing structure
- Denotes new structure
- Point of minimum vertical clearance at existing service road

Note:
The Contractor shall verify all controlling field dimensions before ordering or fabricating any material.

ALL DIMENSIONS ARE IN METERS UNLESS OTHERWISE SHOWN

SAN FRANCISCO OAKLAND BAY BRIDGE
EAST SPAN SEISMIC SAFETY PROJECT

OAKLAND APPROACH STRUCTURES - PHASE 2

EASTBOUND STRUCTURE PLAN NO. 2

| | | | |
|---|---|---|---|
| DESIGN OVERSIGHT HASAN EL-NATAR | | | |
| SIGN OFF DATE | | | |
| DESIGN | BY M. CHAR | CHECKED T. DUDLEY | |
| DETAILS | BY M. ANDRASEK | CHECKED M. CHAR | |
| QUANTITIES | BY Y. KIM | CHECKED A. SIVATHASAN/T. DUDLEY | |

PREPARED FOR THE STATE OF CALIFORNIA DEPARTMENT OF TRANSPORTATION

MOHAN S. CHAR
PROJECT ENGINEER

BRIDGE NO. 34-0006R
KILOMETER POST 2.1

CU 04
EA 0120M1

DISREGARD PRINTS BEARING EARLIER REVISION DATES

REVISION DATES (PRELIMINARY STAGE ONLY): 1/15/10 4/22/10 5/28/10 9/30/10 12/28/10 3/4/11 3/14/11 4/4/11 6/27/11 7/20/11

SHEET 16 OF 109

Rev. Date: 5-18-98

ORIGINAL SCALE IN MILLIMETERS FOR REDUCED PLANS 0 10 20 30 40 50 60 70 80 90 100

FILE => 04-0120m1-34-0006r-c3-sp02.dgn

SUBMITTAL - 12

USERNAME => s121614 DATE PLOTTED => 05-OCT-2011 TIME PLOTTED => 13:59

| DIST. | COUNTY | ROUTE | KILOMETER POST TOTAL PROJECT | SHEET NO. | TOTAL SHEETS |
|---|---|---|---|---|---|
| 04 | Ala | 80 | 1.6/2.7 | 589 | 744 |

REGISTERED ENGINEER - CIVIL

10-3-11

PLANS APPROVAL DATE

REGISTERED PROFESSIONAL ENGINEER MOHAN S. CHAR No. 57894 Exp. 6/30/12 CIVIL STATE OF CALIFORNIA

The State of California or its officers or agents shall not be responsible for the accuracy or completeness of electronic copies of this plan sheet.

T.Y. LIN / MOFFATT & NICHOL
TWO HARRISON STREET, SUITE 500
SAN FRANCISCO, CA 94105

AECOM TECHNICAL SERVICES INC.
999 TOWN & COUNTRY ROAD
ORANGE, CA 92868

Caltrans Metric

## LEGEND

Deck Contour

Bikepath contour

Notes:

1. Contour interval at 0.05 meter.
2. Contours do not include camber.
3. x - Indicates 5.00 meter interval along station line.
4. ☐ - Indicates even meter contour.
5. Contours are for top of deck and top of Bikepath.

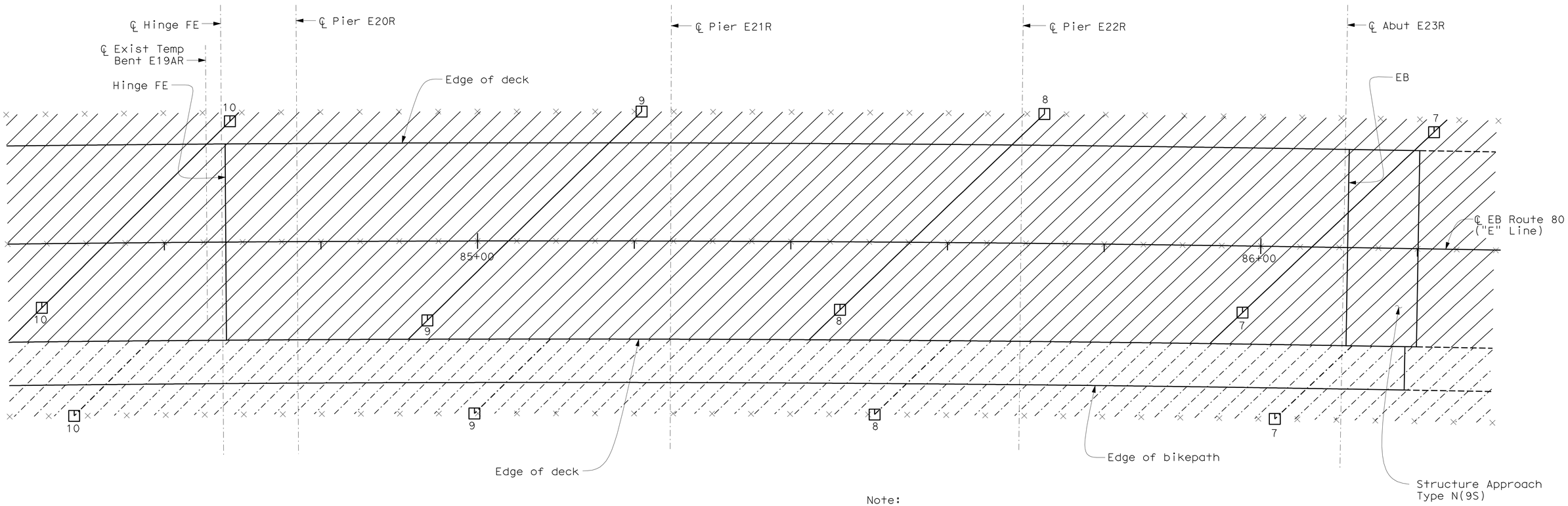


## PARTIAL PLAN

1:250

Note:

Changes to deck contours may be needed to match as-built deck elevations of Frame 1 at temporary Bent E19AR.

Note:
The Contractor shall verify all controlling field dimensions before ordering or fabricating any material.

ALL DIMENSIONS ARE IN

DESIGN OVERSIGHT

HASAN EL-NATAR

SIGN OFF DATE

Rev. Date: 5-18-98

| | BY | CHECKED |
|---|---|---|
| DESIGN | M. CHAR | T. DUDLEY |
| DETAILS | M. ANDRASEK | M. CHAR |
| QUANTITIES | Y. KIM | A. SIVATHASAN/T. DUDLEY |

PREPARED FOR THE STATE OF CALIFORNIA DEPARTMENT OF TRANSPORTATION

MOHAN S. CHAR
PROJECT ENGINEER

BRIDGE NO. 34-0006R
KILOMETER POST 2.1

SAN FRANCISCO OAKLAND BAY BRIDGE
EAST SPAN SEISMIC SAFETY PROJECT

OAKLAND APPROACH STRUCTURES - PHASE 2

EASTBOUND DECK CONTOURS

ORIGINAL SCALE IN MILLIMETERS FOR REDUCED PLANS 0 10 20 30 40 50 60 70 80 90 100

CU 04
EA 0120M1

DISREGARD PRINTS BEARING EARLIER REVISION DATES

REVISION DATES (PRELIMINARY STAGE ONLY): 10/30/09 1/15/10 4/2/10 5/28/10 9/30/10 12/29/10 3/4/11 3/14/11 4/4/11 6/3/11

SHEET 17 OF 109

FILE => 04-0120m1-34-0006r-d-dc.dgn

SUBMITTAL - 12

USERNAME => s121614 DATE PLOTTED => 05-OCT-2011 TIME PLOTTED => 13:59

| DIST. | COUNTY | ROUTE | KILOMETER POST TOTAL PROJECT | SHEET NO. | TOTAL SHEETS |
|---|---|---|---|---|---|
| 04 | Ala | 80 | 1.6/2.7 | 590 | 744 |

REGISTERED ENGINEER - CIVIL

10-3-11
PLANS APPROVAL DATE

REGISTERED PROFESSIONAL ENGINEER A.L. ELY No. 18880 Exp. 6-30-11 CIVIL STATE OF CALIFORNIA

The State of California or its officers or agents shall not be responsible for the accuracy or completeness of electronic copies of this plan sheet.

T.Y. LIN / MOFFATT & NICHOL
TWO HARRISON STREET, SUITE 500
SAN FRANCISCO, CA 94105

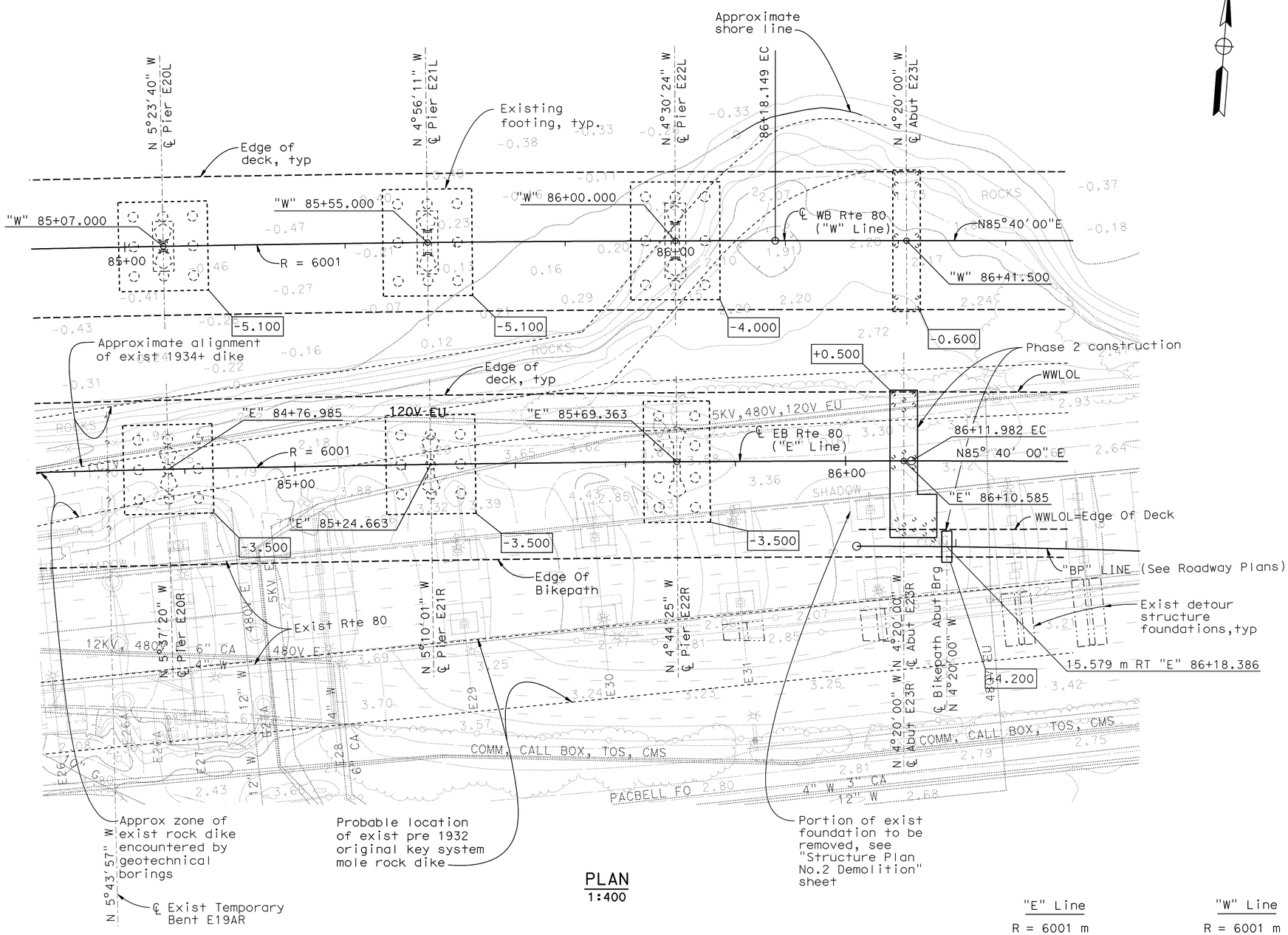


PLAN
1:400

NOTES:

Utility locations shown are approximate, for utility relocations and abandonments see Rdwy Plans.

For limits of payment for structure excavation and backfill see "Pile Data" sheet.

LEGEND:

Denotes bottom of footing elevation

| "E" Line | "W" Line |
|---|---|
| R = 6001 m | R = 6001 m |
| Δ = 4°59'10" | Δ = 4°59'10" |
| T = 261.287 m | T = 261.285 m |
| L = 522.245 m | L = 522.241 m |

ALL DIMENSIONS ARE IN METERS UNLESS OTHERWISE SHOWN

SAN FRANCISCO OAKLAND BAY BRIDGE
EAST SPAN SEISMIC SAFETY PROJECT

OAKLAND APPROACH STRUCTURES-PHASE 2

FOUNDATION PLAN

BRIDGE NO. 34-0006 L/R
KILOMETER POST

Jal N. Birdy
PROJECT ENGINEER

PREPARED FOR THE STATE OF CALIFORNIA DEPARTMENT OF TRANSPORTATION

| | BY | CHECKED |
|---|---|---|
| DESIGN | Wu/Char | Trinh/Dudley |
| DETAILS | van Ryn/Zucchi/Mai | Trinh/Char |
| QUANTITIES | Haroun/Char | Jaradat/Dudley |

SCALE: VERT.DATUM NGVD 29 HORZ.DATUM NAD 83
PHOTOGRAMMETRY AS OF: ALIGNMENT TIES
SURVEYED BY DRAFTED BY
FIELD CHECKED BY CHECKED BY

DESIGN OVERSIGHT-SAM AKKAD HASAN EL-NATUR
SIGN OFF DATE

Rev. Date: 5-18-98

ORIGINAL SCALE IN MILLIMETERS FOR REDUCED PLANS 0 10 20 30 40 50 60 70 80 90 100

CU 04
EA 0120M1

DISREGARD PRINTS BEARING EARLIER REVISION DATES

REVISION DATES (PRELIMINARY STAGE ONLY) 7/21/11 10/30/09 1/15/10 4/2/10 5/28/10 9/30/10 3/4/11 3/24/11 4/4/11 6/3/11

SHEET 18 OF 109

FILE => 04-0120m1-34-0006rl-e-fp101.dgn

FILE => 04-0120m1-34-0006rl-e-fp101.dgn

SUBMITTAL - 12

July 21, 2011

GEOTECHNICAL/PROFESSIONAL APPROVAL DATE 11/14/05

USERNAME => s121614 DATE PLOTTED => 05-OCT-2011 TIME PLOTTED => 14:00

| DIST. | COUNTY | ROUTE | KILOMETER POST TOTAL PROJECT | SHEET NO. | TOTAL SHEETS |
|---|---|---|---|---|---|
| 04 | Ala | 80 | 1.6/2.7 | 591 | 744 |

Caltrans Metric

REGISTERED ENGINEER - CIVIL

10-3-11
PLANS APPROVAL DATE

REGISTERED PROFESSIONAL ENGINEER A.L. ELY No. 18880 Exp. 6-30-11 CIVIL STATE OF CALIFORNIA

The State of California or its officers or agents shall not be responsible for the accuracy or completeness of electronic copies of this plan sheet.

T.Y. LIN / MOFFATT & NICHOL
TWO HARRISON STREET, SUITE 500
SAN FRANCISCO, CA 94105

## PILE DATA

| Location | Type | Design Loading (Service) (kN) | Nominal Resistance (kN) | | Design Tip Elevation | Specified Tip Elevation |
|---|---|---|---|---|---|---|
| | | | Compression | Tension | | |
| Abut E23R * | 0.610 m PC/PS Pile | 900 | 1800 | 0 | -26.5(1)&(4);-20.0(3) | -26.5 |

Design tip elevation is controlled by the following demands: (1) Compression; (2) Tension;(3) Lateral; (4) Downdrag; (5) Liquefaction; (6) Scour potential; (7) Caltrans "Safe Load" is Design Load + (Downdrag + Driving resistance in Downdrag zone)/2. Downdrag + Driving resistance in Downdrag zone is 2100 kN at Abut E23R.

* Includes Bikepath Abutment

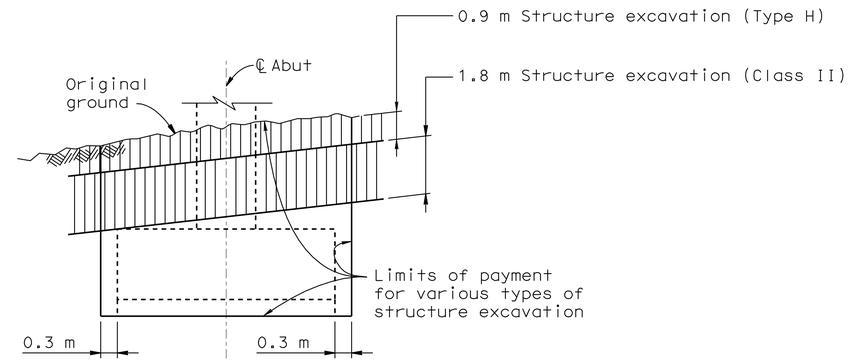


**EXCAVATION**

## LIMITS OF PAYMENT FOR STRUCTURE EXCAVATION WITH RESTRICTED DISPOSAL

NO SCALE

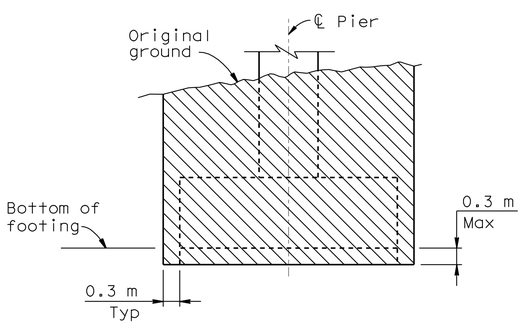


**EXCAVATION**

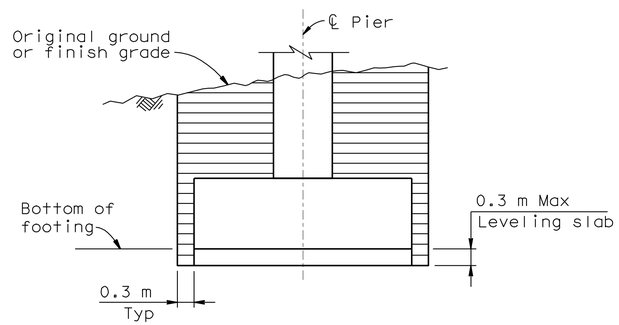


**BACKFILL**

## LIMITS OF PAYMENT FOR STRUCTURE EXCAVATION AND BACKFILL

NO SCALE

LEGEND

STRUCTURE EXCAVATION (BRIDGE)

STRUCTURE BACKFILL (BRIDGE)

SOIL WITH RESTRICTED DISPOSAL REQUIREMENTS

Note: For details not shown see A62C

ALL DIMENSIONS ARE IN METERS UNLESS OTHERWISE SHOWN

SAN FRANCISCO OAKLAND BAY BRIDGE
EAST SPAN SEISMIC SAFETY PROJECT

OAKLAND APPROACH STRUCTURES-PHASE 2

PILE DATA

DESIGN OVERSIGHT - SAM AKKAD HASAN EL-NATUR

SIGN OFF DATE

Rev. Date: 5-18-98

| | BY | CHECKED |
|---|---|---|
| DESIGN | | Birdy |
| DETAILS | van Ryn/Zucchi/Mai | Birdy |
| QUANTITIES | Haroun/Char | Jaradat/Dudley |

Jaradat/Char

ORIGINAL SCALE IN MILLIMETERS FOR REDUCED PLANS 0 10 20 30 40 50 60 70 80 90 100

PREPARED FOR THE STATE OF CALIFORNIA DEPARTMENT OF TRANSPORTATION

Jal Birdy
PROJECT ENGINEER

CU 04
EA 0120M1

BRIDGE NO. 34-0006 L/R
KILOMETER POST

DISREGARD PRINTS BEARING EARLIER REVISION DATES

REVISION DATES (PRELIMINARY STAGE ONLY) 8/17/09 10/30/09 1/15/10 4/2/10 5/28/10 9/28/10 3/14/11 3/14/11 3/14/11 6/3/11

SHEET 19 OF 109

FILE => 04-0120m1-34-0006r1-e-fdat01.dgn

SUBMITTAL - 12

June 3, 2011

USERNAME => s12614 DATE PLOTTED => 05-OCT-2011 TIME PLOTTED => 14:00

| DIST. | COUNTY | ROUTE | KILOMETER POST TOTAL PROJECT | SHEET NO. | TOTAL SHEETS |
|---|---|---|---|---|---|
| 04 | Ala | 80 | 1.6/2.7 | 592 | 744 |

REGISTERED ENGINEER - CIVIL
10-3-11
PLANS APPROVAL DATE

REGISTERED PROFESSIONAL ENGINEER MOHAN S. CHAR No. 57894 Exp. 6/30/12 CIVIL STATE OF CALIFORNIA

The State of California or its officers or agents shall not be responsible for the accuracy or completeness of electronic copies of this plan sheet.

T.Y. LIN / MOFFATT & NICHOL
TWO HARRISON STREET, SUITE 500
SAN FRANCISCO, CA 94105

AECOM TECHNICAL SERVICES INC.
999 TOWN & COUNTRY ROAD
ORANGE, CA 92868

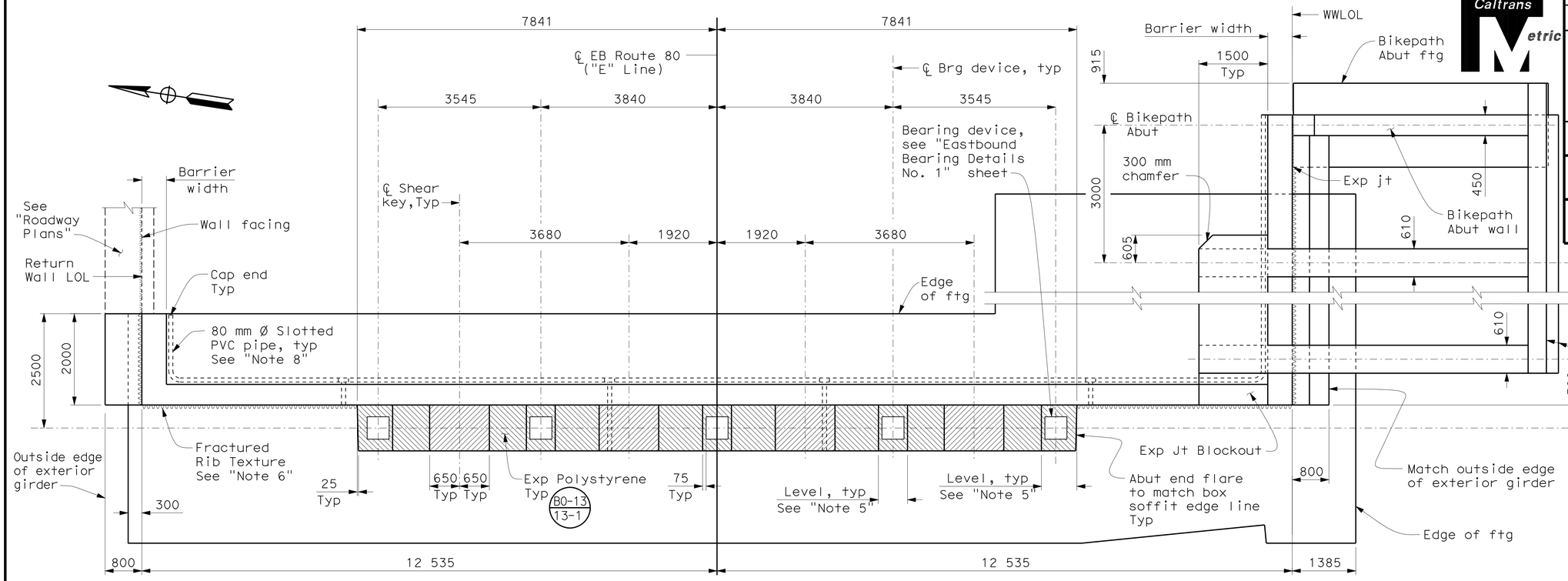


PLAN
1:50

Note: Bikepath slab not shown.

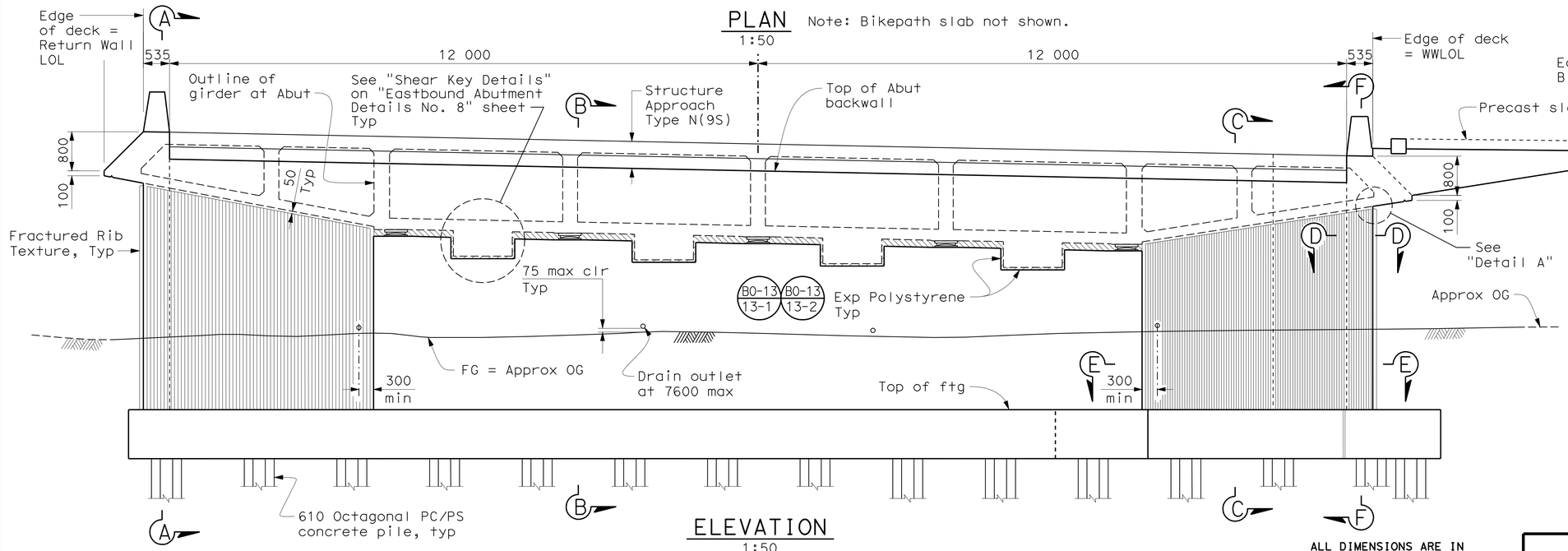


ELEVATION
1:50

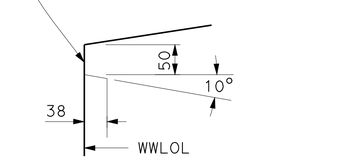


DETAIL A
1:5

Notes:

1. For "Pile Layout", see "Eastbound Abutment Details No. 2" sheet.
2. For "Section A-A" see "Eastbound Abutment Details No.7" sheet.
3. For "Section D-D, E-E & F-F" see "Eastbound Abutment Details No. 5" sheet.
4. For "Section B-B and C-C" see "Eastbound Abutment Details No. 3" sheet.
5. See "Eastbound Bearing Details No. 2" sheet.
6. For Fractured Rib Texture details, see "Eastbound Abutment Details No. 5" sheet.
7. For Bikepath Geometry, see "Eastbound Bikepath Details No. 3" sheet.
8. For abutment drainage details, see "Structure Approach Drainage Details" sheet.

ALL DIMENSIONS ARE IN MILLIMETERS UNLESS OTHERWISE SHOWN

SAN FRANCISCO OAKLAND BAY BRIDGE
EAST SPAN SEISMIC SAFETY PROJECT

OAKLAND APPROACH STRUCTURES - PHASE 2

EASTBOUND ABUTMENT DETAILS NO. 1

DESIGN OVERSIGHT
HASAN EL-NATAR
SIGN OFF DATE

Rev. Date: 5-18-98

| | BY | CHECKED |
|---|---|---|
| DESIGN | M. CHAR | T. DUDLEY |
| DETAILS | M. ANDRASEK | M. CHAR |
| QUANTITIES | Y. KIM | A. SIVATHASAN/T. DUDLEY |

ORIGINAL SCALE IN MILLIMETERS FOR REDUCED PLANS 0 10 20 30 40 50 60 70 80 90 100

PREPARED FOR THE STATE OF CALIFORNIA DEPARTMENT OF TRANSPORTATION

MOHAN S. CHAR
PROJECT ENGINEER

CU 04
EA 0120M1

BRIDGE NO. 34-0006R
KILOMETER POST 2.1

DISREGARD PRINTS BEARING EARLIER REVISION DATES

REVISION DATES (PRELIMINARY STAGE ONLY): 1/15/10 4/2/10 5/28/10 9/30/10 12/28/10 3/4/11 3/14/11 4/4/11 6/3/11

SHEET 20 OF 109

FILE => 04-0120m1-34-0006r-f-a01dt01.dgn

SUBMITTAL - 12

USERNAME => s121614 DATE PLOTTED => 05-OCT-2011 TIME PLOTTED => 14:00

| DIST. | COUNTY | ROUTE | KILOMETER POST TOTAL PROJECT | SHEET NO. | TOTAL SHEETS |
|---|---|---|---|---|---|
| 04 | Ala | 80 | 1.6/2.7 | 593 | 744 |

Caltrans Metric

REGISTERED ENGINEER - CIVIL

10-3-11

PLANS APPROVAL DATE

REGISTERED PROFESSIONAL ENGINEER MOHAN S. CHAR No. 57894 Exp. 6/30/12 CIVIL STATE OF CALIFORNIA

The State of California or its officers or agents shall not be responsible for the accuracy or completeness of electronic copies of this plan sheet.

T.Y. LIN / MOFFATT & NICHOL
TWO HARRISON STREET, SUITE 500
SAN FRANCISCO, CA 94105

AECOM TECHNICAL SERVICES INC.
999 TOWN & COUNTRY ROAD
ORANGE, CA 92868

Notes:

1. Construct Bikepath Abutment with Bikepath superstructure.
2. For additional information, see "Eastbound Abutment Details No. 3" sheet.

LEGEND

Denotes 610 mm Octagonal Prestressed Concrete Piling

* Measured along ℄ Bikepath Abutment Bearing

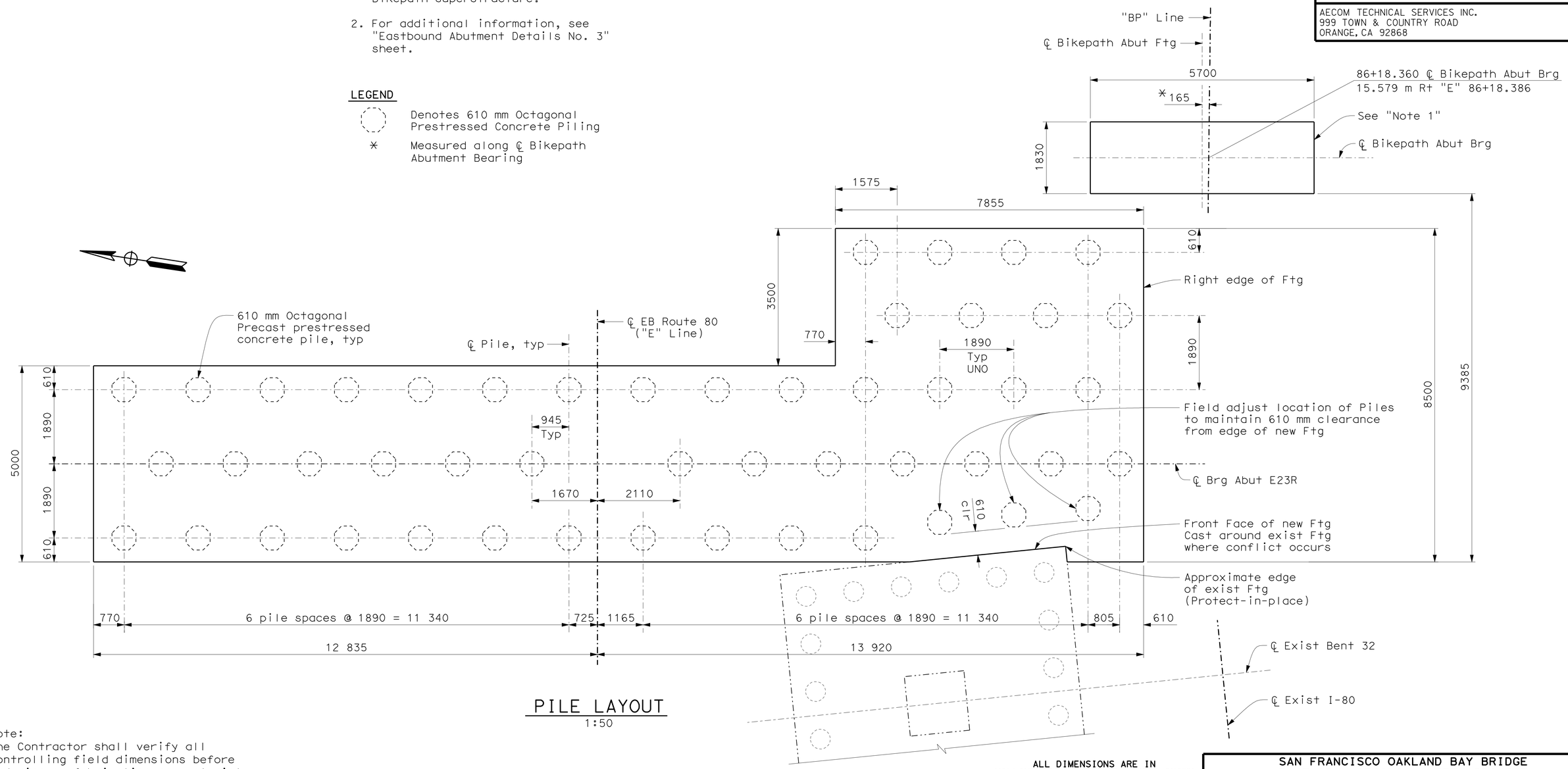


PILE LAYOUT
1:50

Note:
The Contractor shall verify all controlling field dimensions before ordering or fabricating any material.

ALL DIMENSIONS ARE IN MILLIMETERS UNLESS OTHERWISE SHOWN

SUBMITTAL - 12

DESIGN OVERSIGHT
HASAN EL-NATAR
SIGN OFF DATE

Rev. Date: 5-18-98

| | BY | CHECKED |
|---|---|---|
| DESIGN | M. CHAR | T. DUDLEY |
| DETAILS | M. ANDRASEK | M. CHAR |
| QUANTITIES | Y. KIM | A. SIVATHASAN/T. DUDLEY |

ORIGINAL SCALE IN MILLIMETERS FOR REDUCED PLANS 0 10 20 30 40 50 60 70 80 90 100

PREPARED FOR THE STATE OF CALIFORNIA DEPARTMENT OF TRANSPORTATION

MOHAN S. CHAR
PROJECT ENGINEER

CU 04
EA 0120M1

BRIDGE NO. 34-0006R
KILOMETER POST 2.1

SAN FRANCISCO OAKLAND BAY BRIDGE
EAST SPAN SEISMIC SAFETY PROJECT

OAKLAND APPROACH STRUCTURES - PHASE 2

EASTBOUND ABUTMENT DETAILS NO. 2

DISREGARD PRINTS BEARING EARLIER REVISION DATES

REVISION DATES (PRELIMINARY STAGE ONLY): 1/15/10 4/2/10 5/28/10 9/30/10 12/28/10 3/4/11 3/14/11 4/4/11 6/3/11

SHEET 21 OF 109

FILE => 04-0120m1-34-0006r-f-a01dt02.dgn

USERNAME => s121614 DATE PLOTTED => 05-OCT-2011 TIME PLOTTED => 14:00

| DIST. | COUNTY | ROUTE | KILOMETER POST TOTAL PROJECT | SHEET NO. | TOTAL SHEETS |
|---|---|---|---|---|---|
| 04 | Ala | 80 | 1.6/2.7 | 594 | 744 |

Caltrans Metric

REGISTERED ENGINEER - CIVIL

10-3-11

PLANS APPROVAL DATE

REGISTERED PROFESSIONAL ENGINEER MOHAN S. CHAR No. 57894 Exp. 6/30/12 CIVIL STATE OF CALIFORNIA

The State of California or its officers or agents shall not be responsible for the accuracy or completeness of electronic copies of this plan sheet.

T.Y. LIN / MOFFATT & NICHOL
TWO HARRISON STREET, SUITE 500
SAN FRANCISCO, CA 94105

AECOM TECHNICAL SERVICES INC.
999 TOWN & COUNTRY ROAD
ORANGE, CA 92868

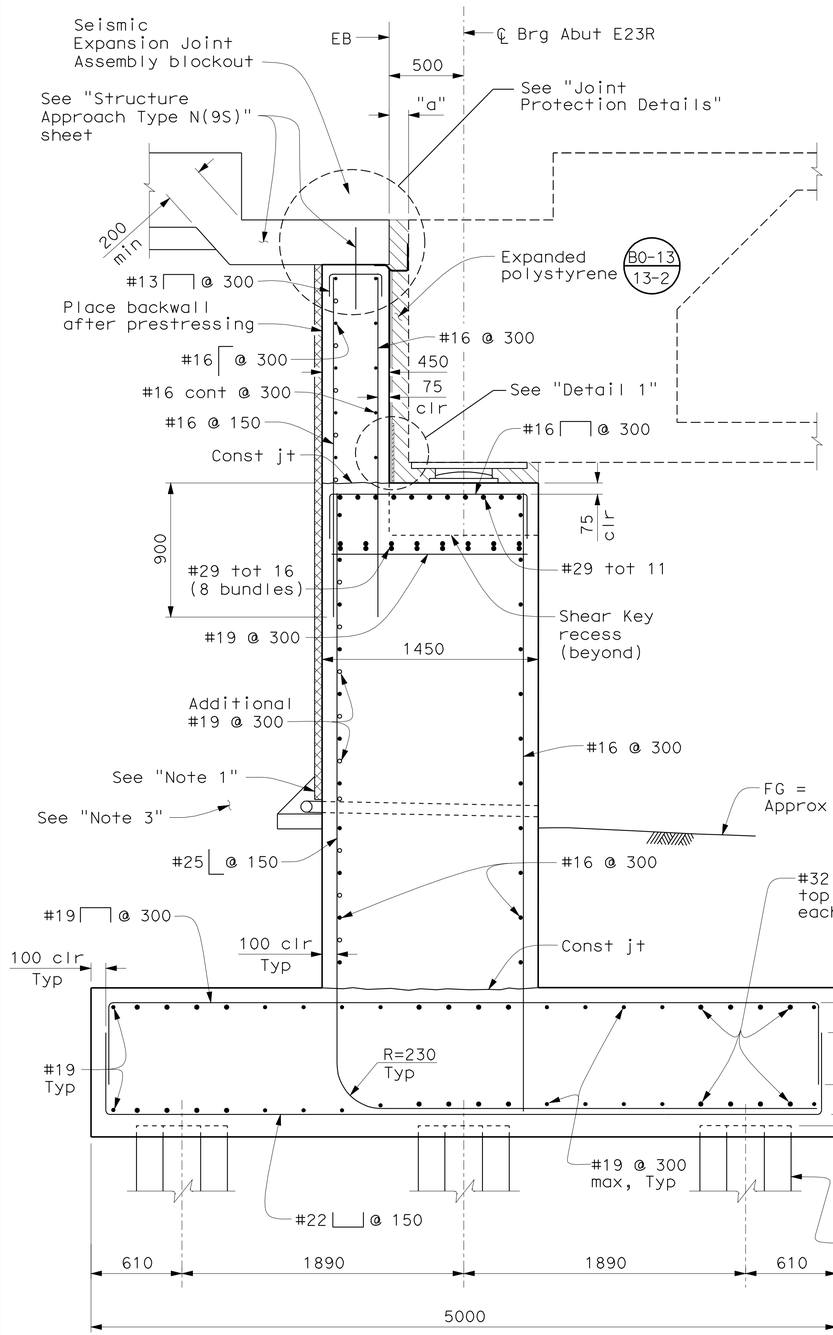


SECTION B-B
1:20

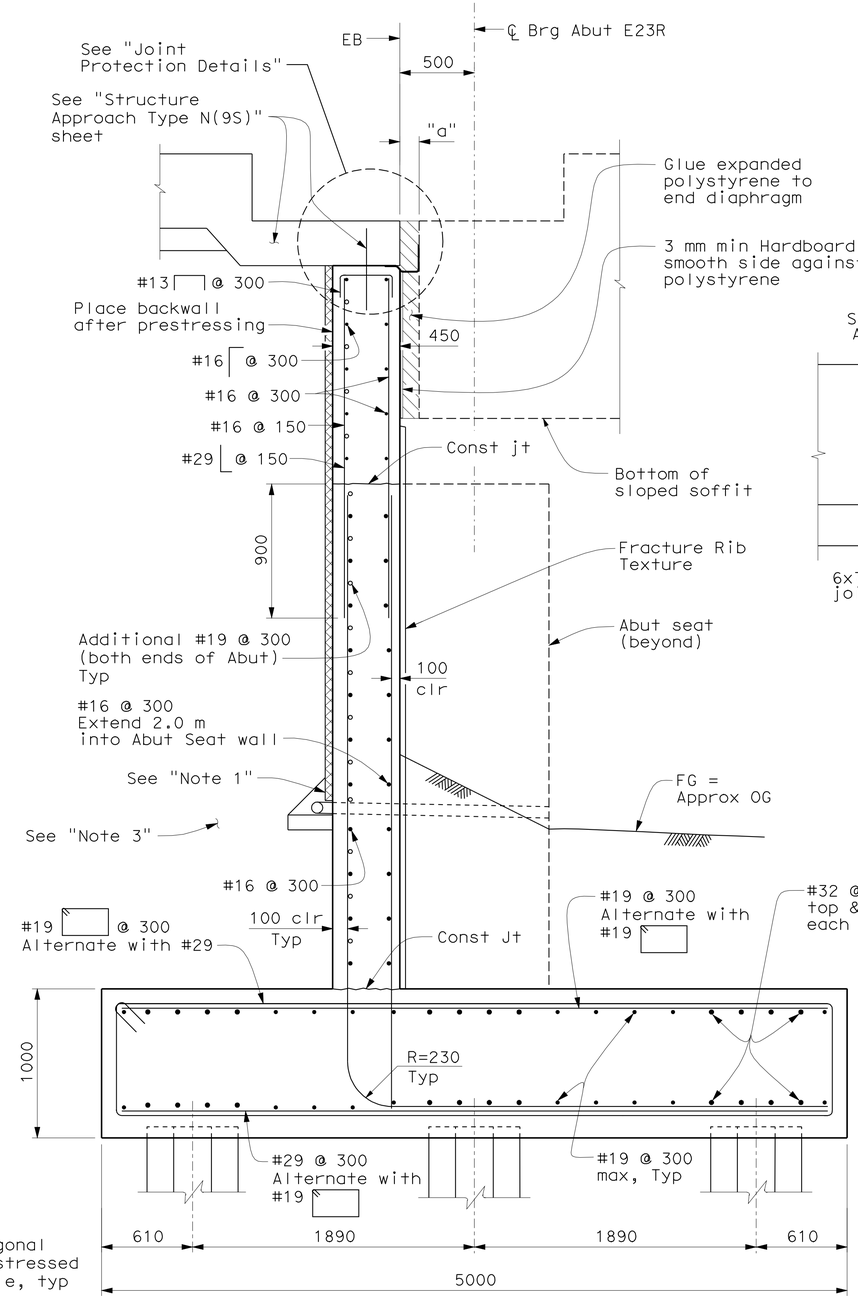


SECTION C-C
1:20

Note:
For information not shown see "Section B-B"

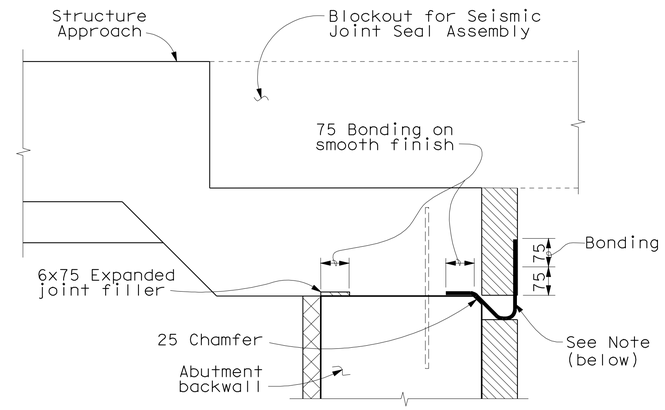


JOINT PROTECTION DETAILS
No Scale

Note:
3 x 300 Neoprene strip bonded 75 mm minimum width each side of joint. Place prior to backfilling the abutment backwall. (Fold neoprene into chamfer.)

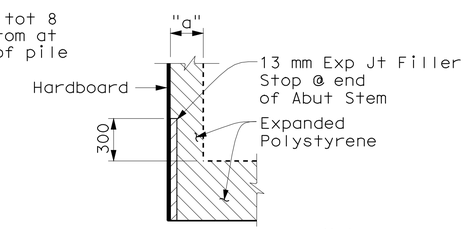


DETAIL 1
No Scale

Note:
For "a" dimension, See "Note 2"

Notes:

1. For Abutment drainage details, see "Structure Approach Drainage Details" sheet.
2. For "a" dimensions and blockout details, see "Deck Joint Details No. 1" sheet.
3. Lightweight cellular concrete fill behind Abutment. See "Road Plans".

ALL DIMENSIONS ARE IN MILLIMETERS UNLESS OTHERWISE SHOWN

SAN FRANCISCO OAKLAND BAY BRIDGE
EAST SPAN SEISMIC SAFETY PROJECT

OAKLAND APPROACH STRUCTURES - PHASE 2

EASTBOUND ABUTMENT DETAILS NO. 3

DESIGN OVERSIGHT
HASAN EL-NATAR
SIGN OFF DATE

Rev. Date: 5-18-98

| | BY | CHECKED |
|---|---|---|
| DESIGN | M. CHAR | T. DUDLEY |
| DETAILS | M. ANDRASEK | M. CHAR |
| QUANTITIES | Y. KIM | A. SIVATHASAN/T. DUDLEY |

ORIGINAL SCALE IN MILLIMETERS FOR REDUCED PLANS 0 10 20 30 40 50 60 70 80 90 100

PREPARED FOR THE STATE OF CALIFORNIA DEPARTMENT OF TRANSPORTATION

MOHAN S. CHAR
PROJECT ENGINEER

CU 04
EA 0120M1

BRIDGE NO. 34-0006R
KILOMETER POST 2.1

DISREGARD PRINTS BEARING EARLIER REVISION DATES

REVISION DATES (PRELIMINARY STAGE ONLY): 10/30/09 1/18/10 4/2/10 5/28/10 9/30/10 12/29/10 3/4/11 3/14/11 4/4/11 6/3/11

SHEET 22 OF 109

FILE => 04-0120m1-34-0006r-f-a01dt03.dgn

SUBMITTAL - 12

USERNAME => s121614 DATE PLOTTED => 05-OCT-2011 TIME PLOTTED => 14:00

| DIST. | COUNTY | ROUTE | KILOMETER POST TOTAL PROJECT | SHEET NO. | TOTAL SHEETS |
|---|---|---|---|---|---|
| 04 | Ala | 80 | 1.6/2.7 | 595 | 744 |

Caltrans Metric

REGISTERED ENGINEER - CIVIL

10-3-11

PLANS APPROVAL DATE

REGISTERED PROFESSIONAL ENGINEER MOHAN S. CHAR No. 57894 Exp. 6/30/12 CIVIL STATE OF CALIFORNIA

The State of California or its officers or agents shall not be responsible for the accuracy or completeness of electronic copies of this plan sheet.

T.Y. LIN / MOFFATT & NICHOL
TWO HARRISON STREET, SUITE 500
SAN FRANCISCO, CA 94105

AECOM TECHNICAL SERVICES INC.
999 TOWN & COUNTRY ROAD
ORANGE, CA 92868

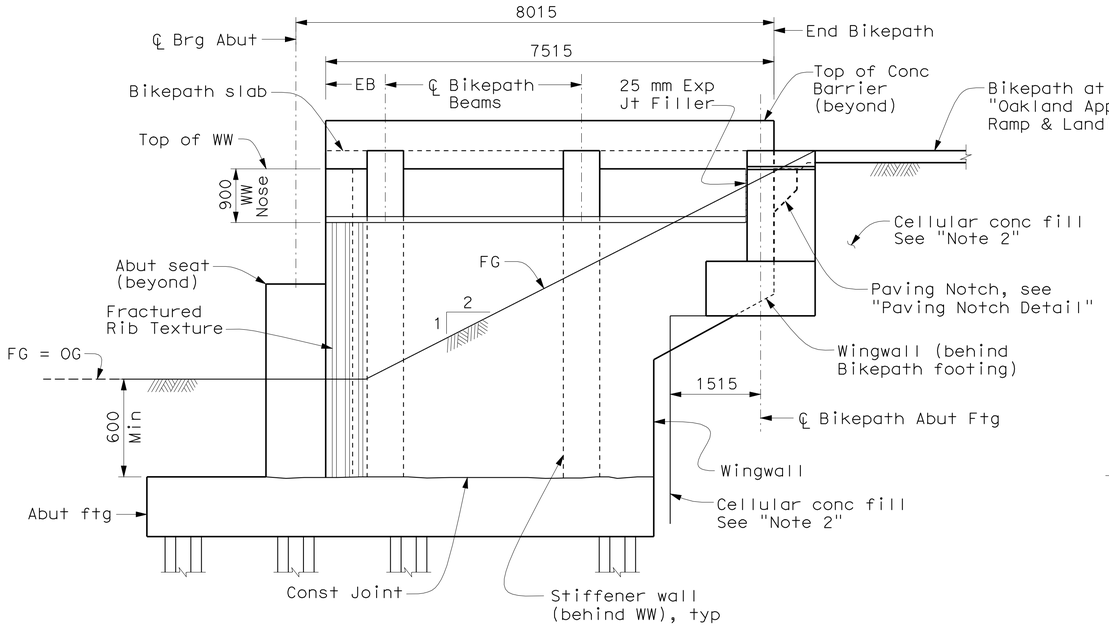


VIEW Q-Q
1:50

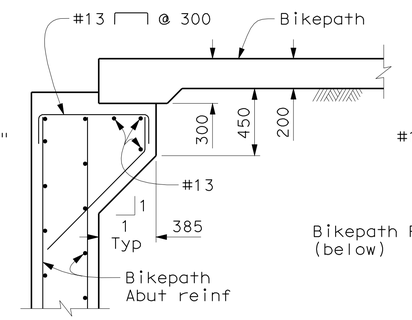


PAVING NOTCH DETAIL
1:20

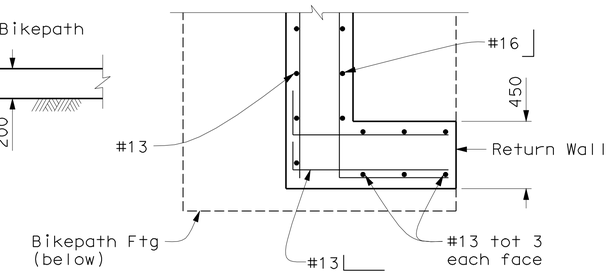


SECTION G-G
1:20

Notes:

1. For South Wingwall details, see "EB Abutment Details No. 5" sheet.
2. For lightweight embankment material (cellular concrete) fill limits, see "Roadway Plans".
3. For finish grade elevations, see "Roadway Plans".

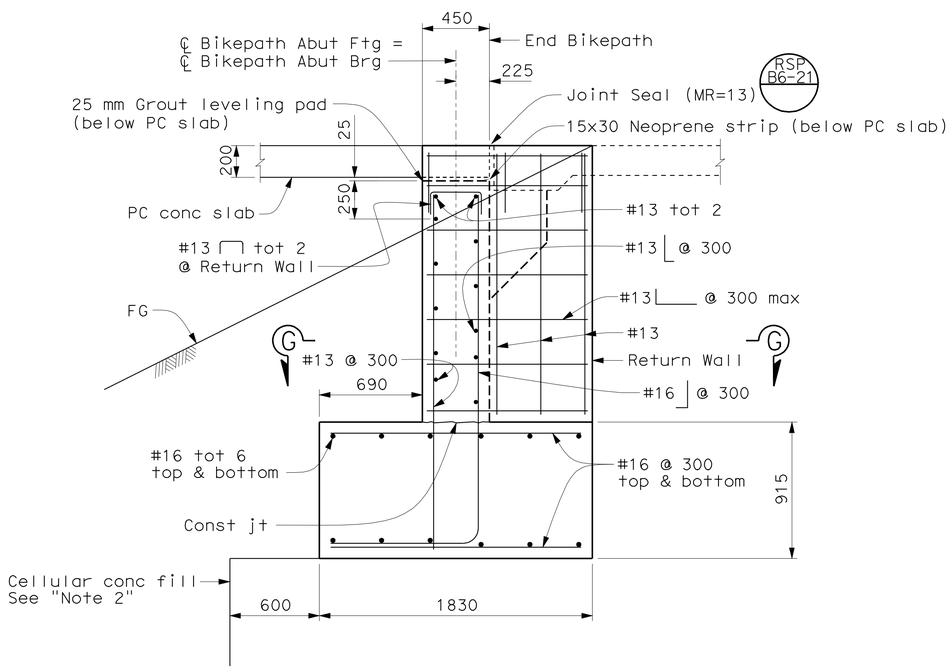


BIKEPATH ABUTMENT SECTION
1:20

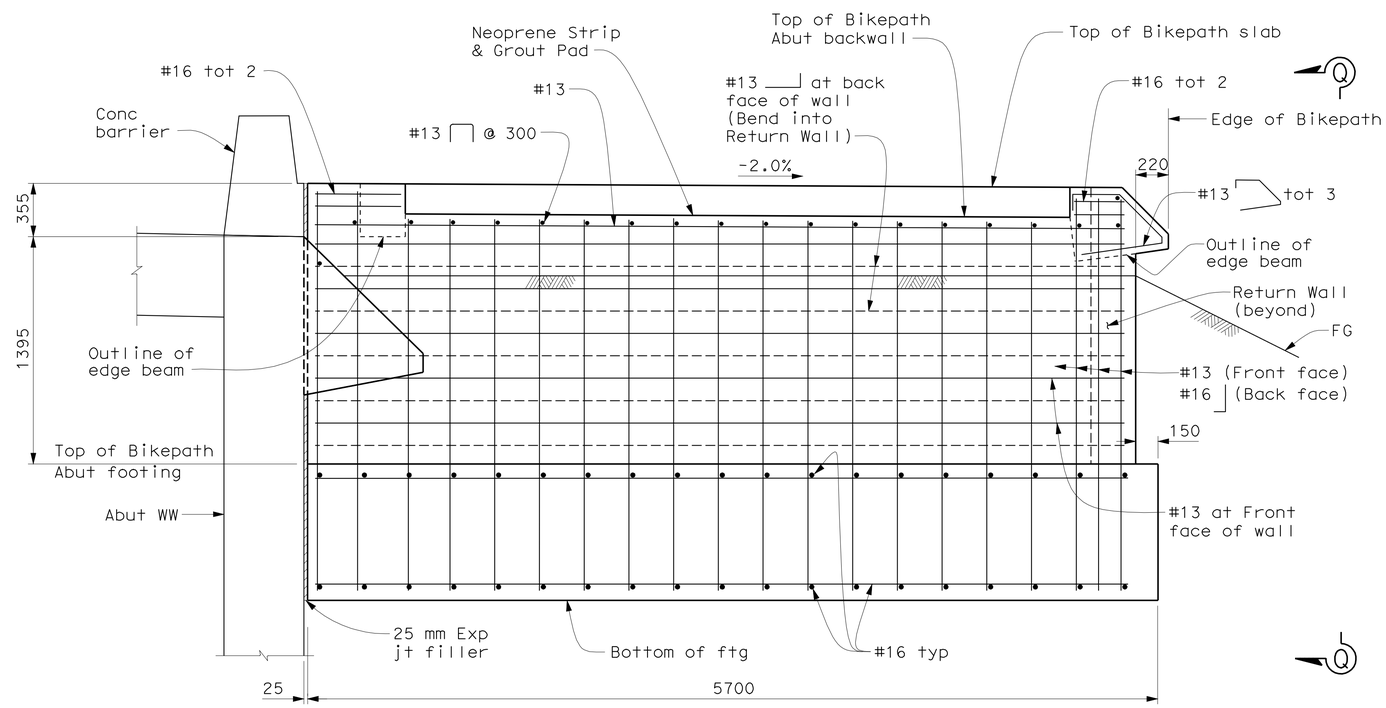


BIKEPATH ABUTMENT ELEVATION
1:20
Note: FG & Cellular concrete fill not shown.

ALL DIMENSIONS ARE IN MILLIMETERS UNLESS OTHERWISE SHOWN

SAN FRANCISCO OAKLAND BAY BRIDGE
EAST SPAN SEISMIC SAFETY PROJECT

OAKLAND APPROACH STRUCTURES - PHASE 2

EASTBOUND ABUTMENT DETAILS NO. 4

DESIGN OVERSIGHT
HASAN EL-NATAR
SIGN OFF DATE

| | BY | CHECKED |
|---|---|---|
| DESIGN | M. CHAR | T. DUDLEY |
| DETAILS | M. ANDRASEK | M. CHAR |
| QUANTITIES | Y. KIM | A. SIVATHASAN/T. DUDLEY |

PREPARED FOR THE STATE OF CALIFORNIA DEPARTMENT OF TRANSPORTATION

MOHAN S. CHAR
PROJECT ENGINEER

BRIDGE NO. 34-0006R
KILOMETER POST 2.1

CU 04
EA 0120M1

Rev. Date: 5-18-98

ORIGINAL SCALE IN MILLIMETERS FOR REDUCED PLANS 0 10 20 30 40 50 60 70 80 90 100

DISREGARD PRINTS BEARING EARLIER REVISION DATES

REVISION DATES (PRELIMINARY STAGE ONLY) 1/15/10 4/2/10 5/28/10 9/30/10 12/28/10 3/1/11 3/14/11 4/4/11 6/22/11 7/20/11

SHEET 23 OF 109

SUBMITTAL - 12

FILE => 04-0120m1-34-0006r-f-a01dt04.dgn

USERNAME => s12614 DATE PLOTTED => 05-OCT-2011 TIME PLOTTED => 14:00

| DIST. | COUNTY | ROUTE | KILOMETER POST TOTAL PROJECT | SHEET NO. | TOTAL SHEETS |
|---|---|---|---|---|---|
| 04 | Ala | 80 | 1.6/2.7 | 596 | 744 |

REGISTERED ENGINEER - CIVIL

10-3-11

PLANS APPROVAL DATE

REGISTERED PROFESSIONAL ENGINEER MOHAN S. CHAR No. 57894 Exp. 6/30/12 CIVIL STATE OF CALIFORNIA

The State of California or its officers or agents shall not be responsible for the accuracy or completeness of electronic copies of this plan sheet.

T.Y. LIN / MOFFATT & NICHOL
TWO HARRISON STREET, SUITE 500
SAN FRANCISCO, CA 94105

AECOM TECHNICAL SERVICES INC.
999 TOWN & COUNTRY ROAD
ORANGE, CA 92868

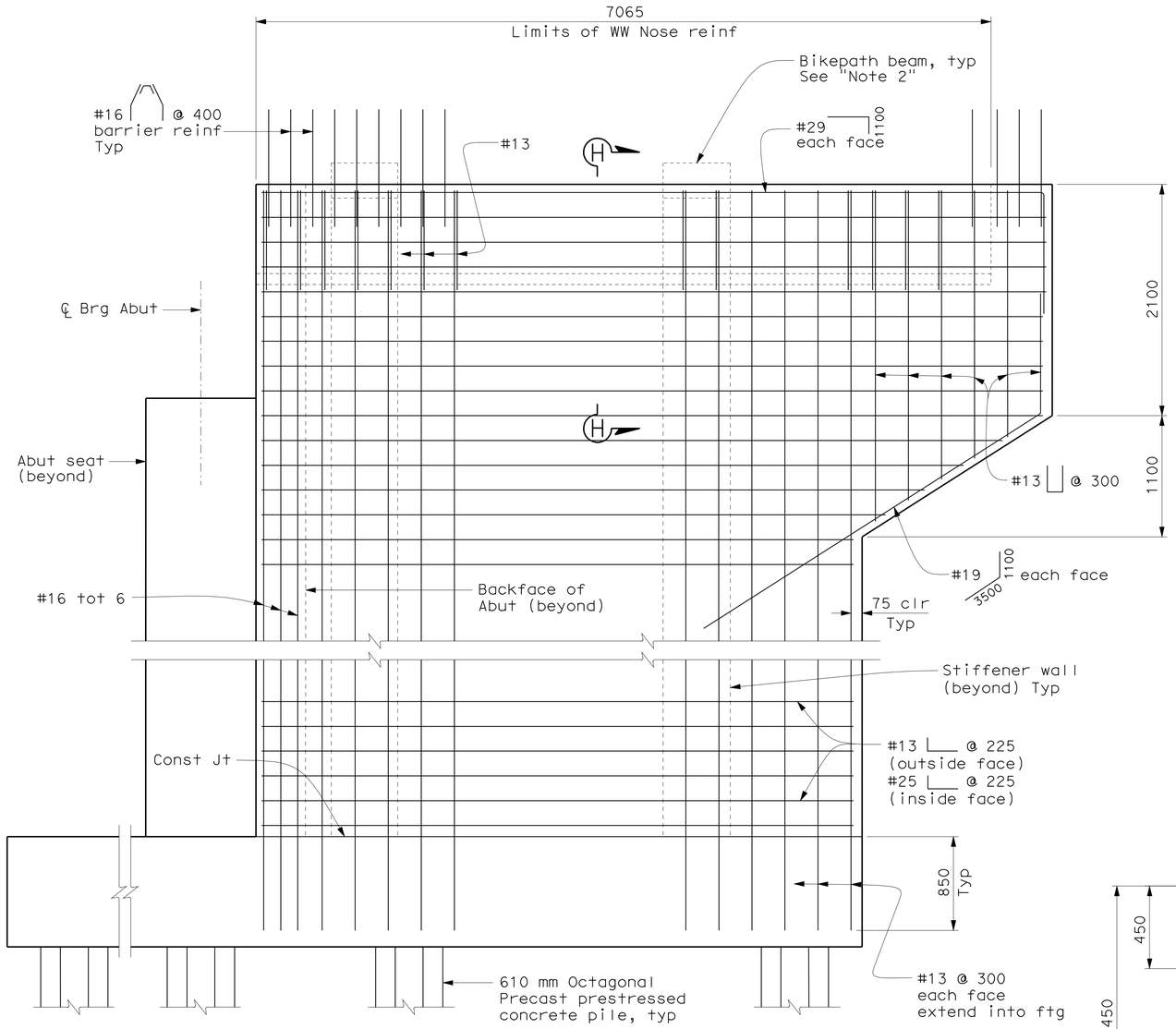


## SECTION F-F
1:25

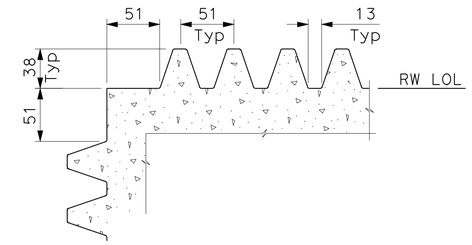


## FRACTURED RIB TEXTURE
No Scale

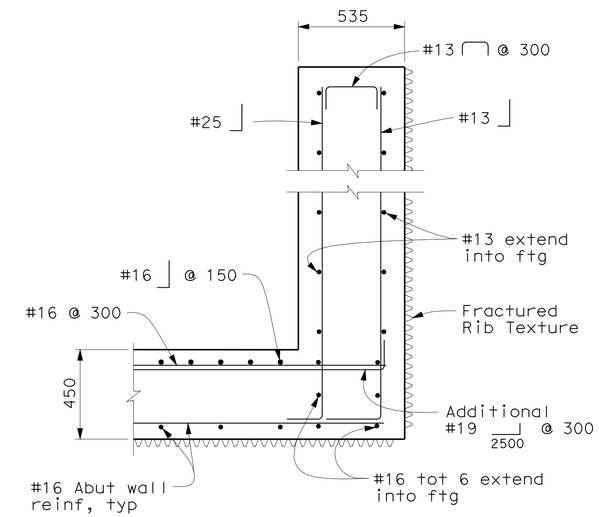


## SECTION D-D
1:15

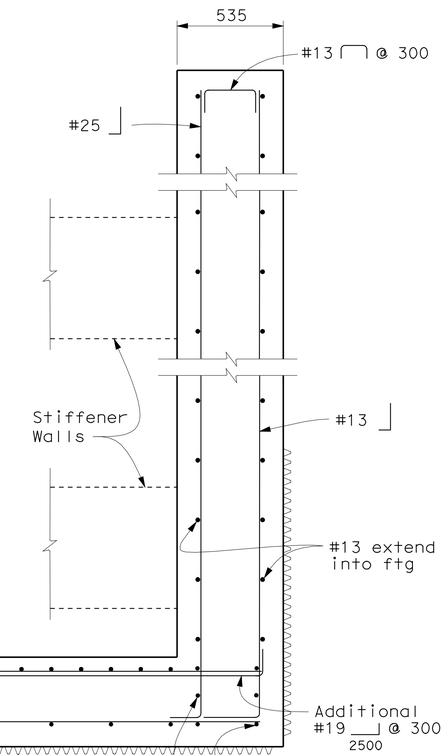


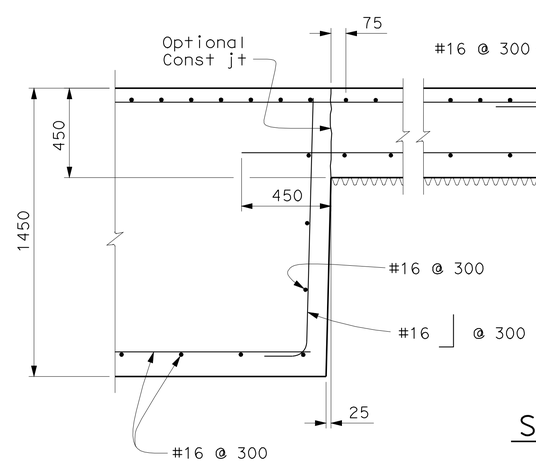


## SECTION E-E
1:15

Notes:

1. For information not shown, see "South Abutment Elevation" on "Eastbound Abutment Details No. 4" sheet.
2. For Bikepath beam details, see "Eastbound Abutment Details No. 6 & No. 7" sheets.
3. For "Section H-H", see "Eastbound Abutment Details No. 7" sheet.
4. Falsework for bikepath shall be removed only after the concrete has reached specified strength.

ALL DIMENSIONS ARE IN MILLIMETERS UNLESS OTHERWISE SHOWN

SAN FRANCISCO OAKLAND BAY BRIDGE
EAST SPAN SEISMIC SAFETY PROJECT

OAKLAND APPROACH STRUCTURES - PHASE 2

EASTBOUND ABUTMENT DETAILS NO. 5

DESIGN OVERSIGHT
HASAN EL-NATAR
SIGN OFF DATE

| | BY | CHECKED |
|---|---|---|
| DESIGN | M. CHAR | T. DUDLEY |
| DETAILS | M. ANDRASEK | M. CHAR |
| QUANTITIES | Y. KIM | A. SIVATHASAN/T. DUDLEY |

PREPARED FOR THE STATE OF CALIFORNIA DEPARTMENT OF TRANSPORTATION

MOHAN S. CHAR
PROJECT ENGINEER

BRIDGE NO. 34-0006R
KILOMETER POST 2.1

Rev. Date: 5-18-98

ORIGINAL SCALE IN MILLIMETERS FOR REDUCED PLANS 0 10 20 30 40 50 60 70 80 90 100

CU 04
EA 0120M1

DISREGARD PRINTS BEARING EARLIER REVISION DATES

REVISION DATES (PRELIMINARY STAGE ONLY) 10/30/09 1/15/10 4/2/10 5/28/10 9/30/10 12/29/10 3/4/11 3/14/11 4/14/11 6/3/11

SHEET 24 OF 109

FILE => 04-0120m1-34-0006r-f-a01dt05.dgn

SUBMITTAL - 12

USERNAME => s121614 DATE PLOTTED => 05-OCT-2011 TIME PLOTTED => 14:00

| DIST. | COUNTY | ROUTE | KILOMETER POST TOTAL PROJECT | SHEET NO. | TOTAL SHEETS |
|---|---|---|---|---|---|
| 04 | Ala | 80 | 1.6/2.7 | 597 | 744 |

Caltrans Metric

REGISTERED ENGINEER - CIVIL

10-3-11

PLANS APPROVAL DATE

REGISTERED PROFESSIONAL ENGINEER MOHAN S. CHAR No. 57894 Exp. 6/30/12 CIVIL STATE OF CALIFORNIA

The State of California or its officers or agents shall not be responsible for the accuracy or completeness of electronic copies of this plan sheet.

T.Y. LIN / MOFFATT & NICHOL
TWO HARRISON STREET, SUITE 500
SAN FRANCISCO, CA 94105

AECOM TECHNICAL SERVICES INC.
999 TOWN & COUNTRY ROAD
ORANGE, CA 92868

Notes:

1. For "Sections J-J & K-K", see "Eastbound Abutment Details No. 7" sheet.
2. For edge beam geometry & information not shown, see "Eastbound Bikepath Details No. 3" sheet.

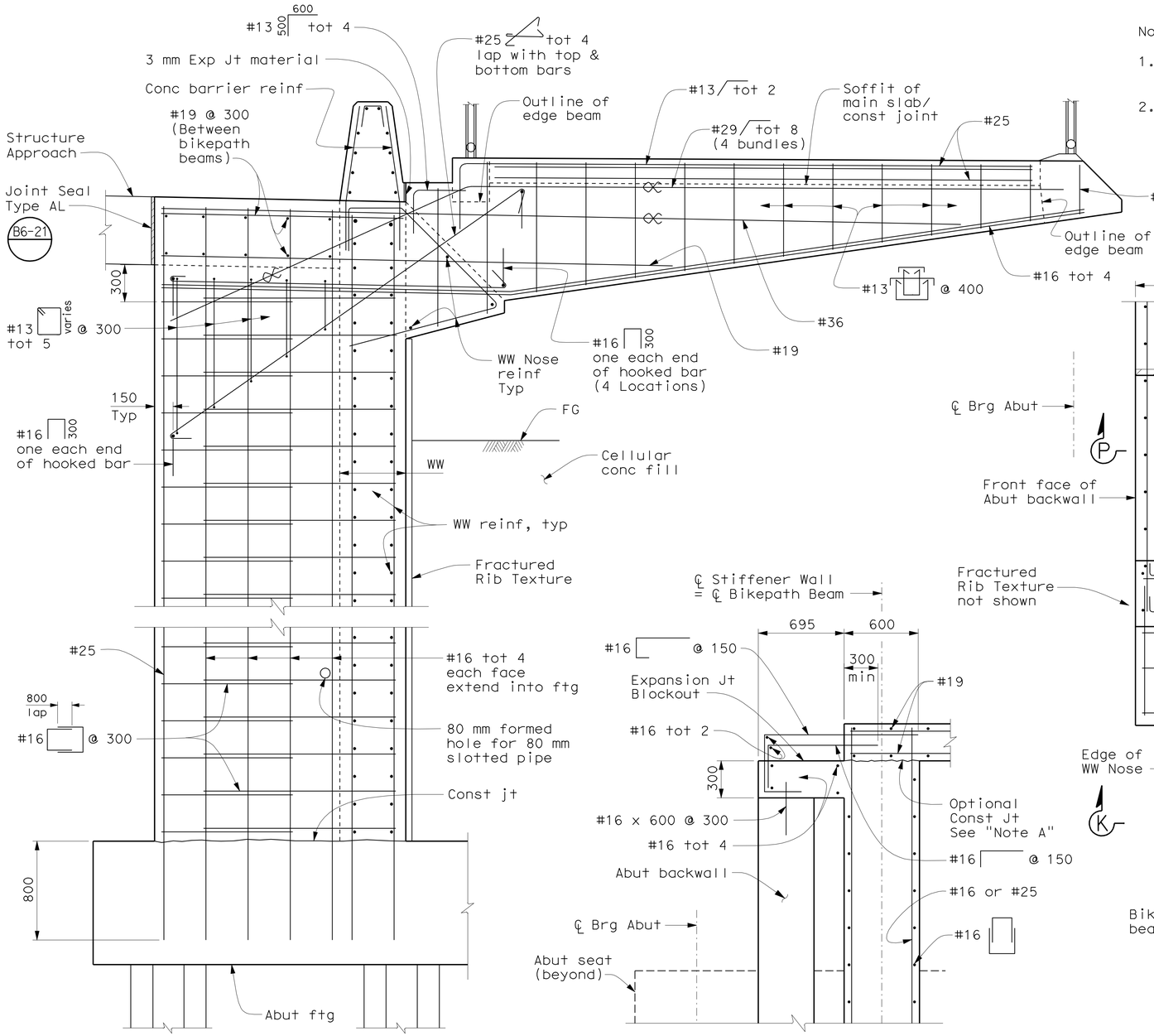


SECTION L-L
1:20

Note:
Bikepath Beam #2 shown,
Bikepath Beam #1 similar.

SECTION P-P
1:20

Note A:
Provide Optional Construction Joint at Top of Stiffer Wall at Bikepath Beam #2, similar to Bikepath Beam #1.

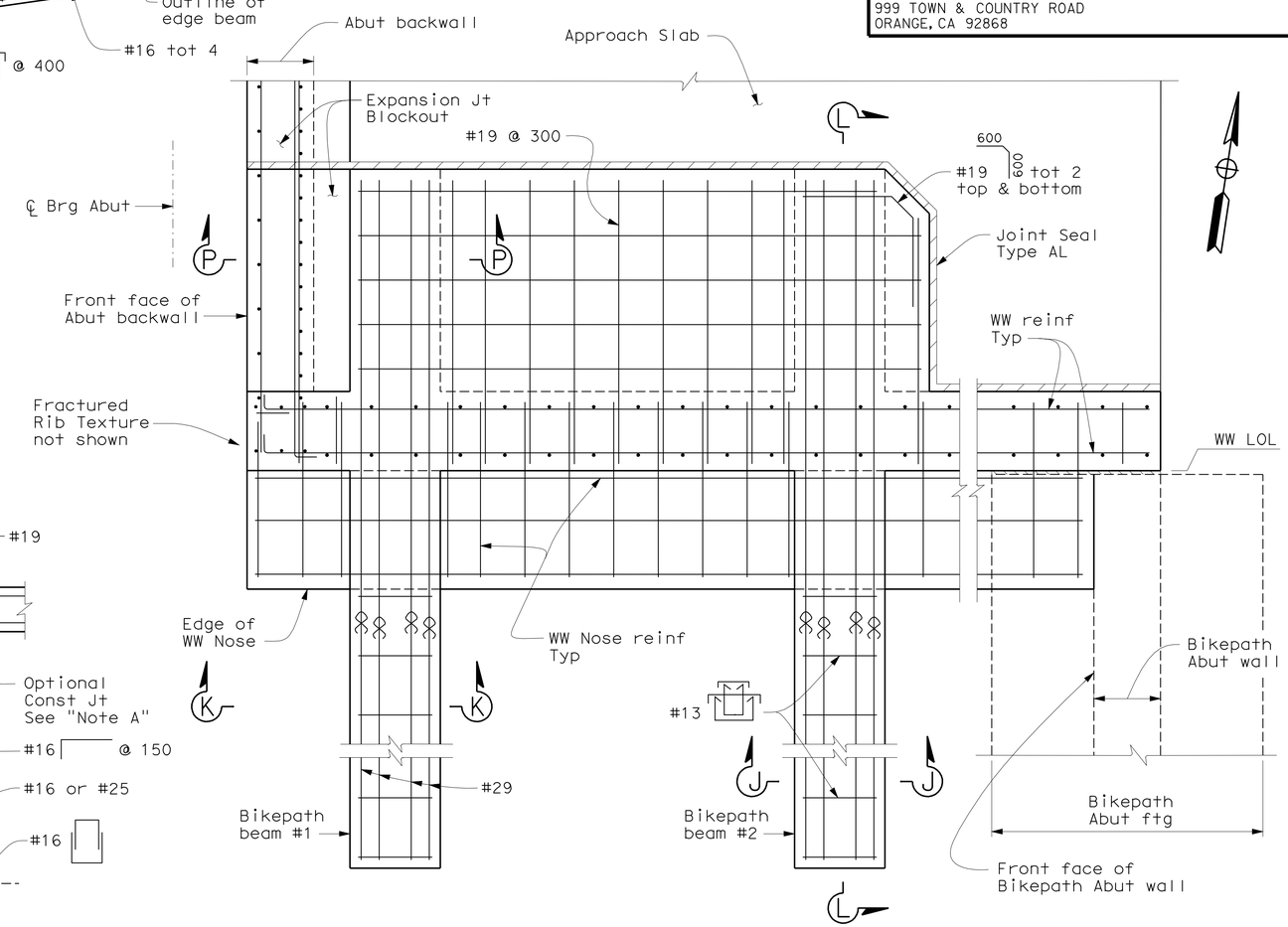


SOUTH WINGWALL PLAN
1:20

Wingwall Notes:

1. Reinforcing typical for each beam.
2. Abutment and Bikepath slab not shown for clarity.

ALL DIMENSIONS ARE IN MILLIMETERS UNLESS OTHERWISE SHOWN

SAN FRANCISCO OAKLAND BAY BRIDGE
EAST SPAN SEISMIC SAFETY PROJECT

OAKLAND APPROACH STRUCTURES - PHASE 2

EASTBOUND ABUTMENT DETAILS NO. 6

| DESIGN OVERSIGHT | | | |
|---|---|---|---|
| HASAN EL-NATAR | DESIGN | BY M. CHAR | CHECKED T. DUDLEY |
| SIGN OFF DATE | DETAILS | BY M. ANDRASEK | CHECKED M. CHAR |
| | QUANTITIES | BY Y. KIM | CHECKED A. SIVATHASAN/T. DUDLEY |

PREPARED FOR THE STATE OF CALIFORNIA DEPARTMENT OF TRANSPORTATION

MOHAN S. CHAR
PROJECT ENGINEER

BRIDGE NO. 34-0006R
KILOMETER POST 2.1

CU 04
EA 0120M1

DISREGARD PRINTS BEARING EARLIER REVISION DATES

REVISION DATES (PRELIMINARY STAGE ONLY): 1/15/10 4/2/10 5/28/10 9/30/10 12/28/10 3/4/11 3/14/11 4/4/11 6/27/11 7/20/11

SHEET 25 OF 109

Rev. Date: 5-18-98

ORIGINAL SCALE IN MILLIMETERS FOR REDUCED PLANS 0 10 20 30 40 50 60 70 80 90 100

FILE => 04-0120m1-34-0006r-f-a01dt06.dgn

SUBMITTAL - 12

USERNAME => s121614 DATE PLOTTED => 05-OCT-2011 TIME PLOTTED => 14:01

| DIST. | COUNTY | ROUTE | KILOMETER POST TOTAL PROJECT | SHEET NO. | TOTAL SHEETS |
|---|---|---|---|---|---|
| 04 | Ala | 80 | 1.6/2.7 | 598 | 744 |

Caltrans Metric

REGISTERED ENGINEER - CIVIL

10-3-11

PLANS APPROVAL DATE

REGISTERED PROFESSIONAL ENGINEER MOHAN S. CHAR No. 57894 Exp. 6/30/12 CIVIL STATE OF CALIFORNIA

The State of California or its officers or agents shall not be responsible for the accuracy or completeness of electronic copies of this plan sheet.

T.Y. LIN / MOFFATT & NICHOL
TWO HARRISON STREET, SUITE 500
SAN FRANCISCO, CA 94105

AECOM TECHNICAL SERVICES INC.
999 TOWN & COUNTRY ROAD
ORANGE, CA 92868

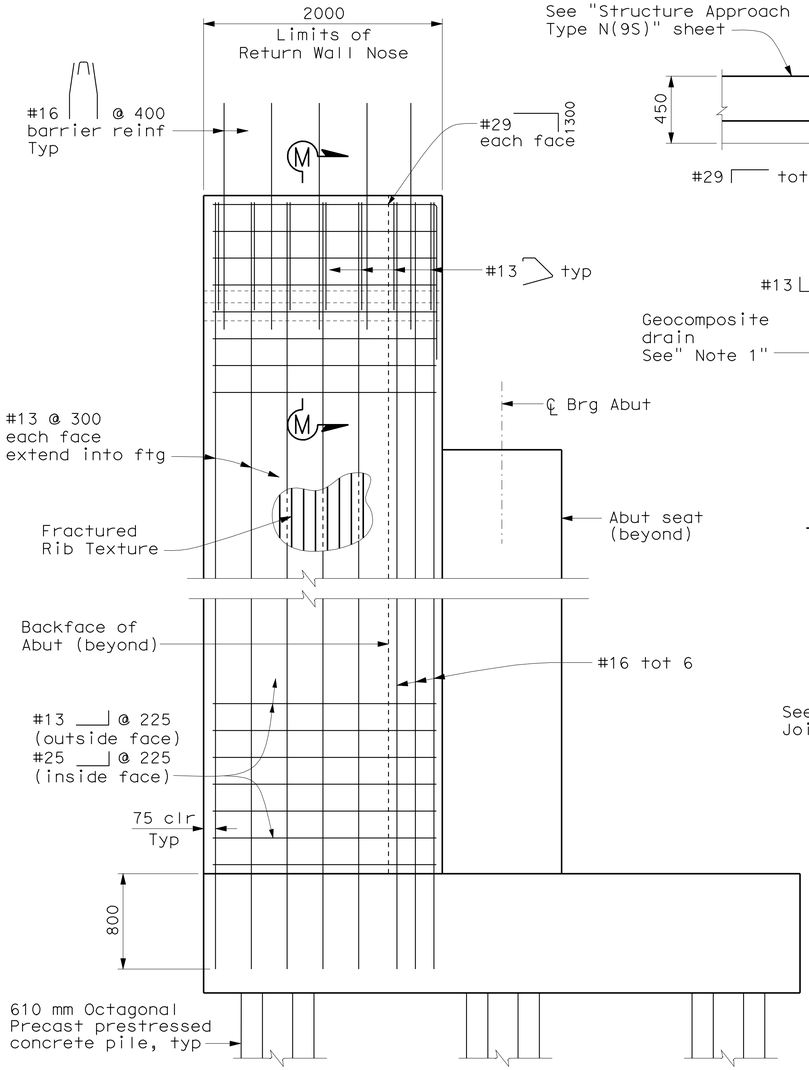


SECTION A-A
1:25

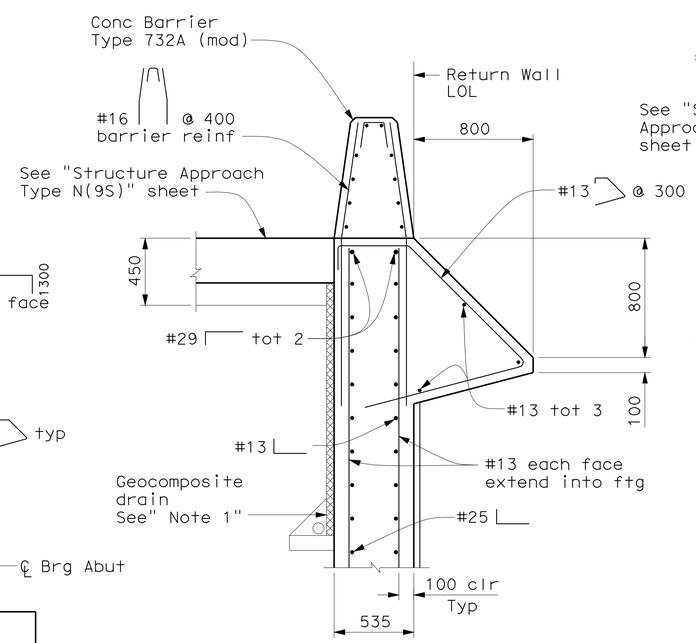


SECTION M-M
1:20

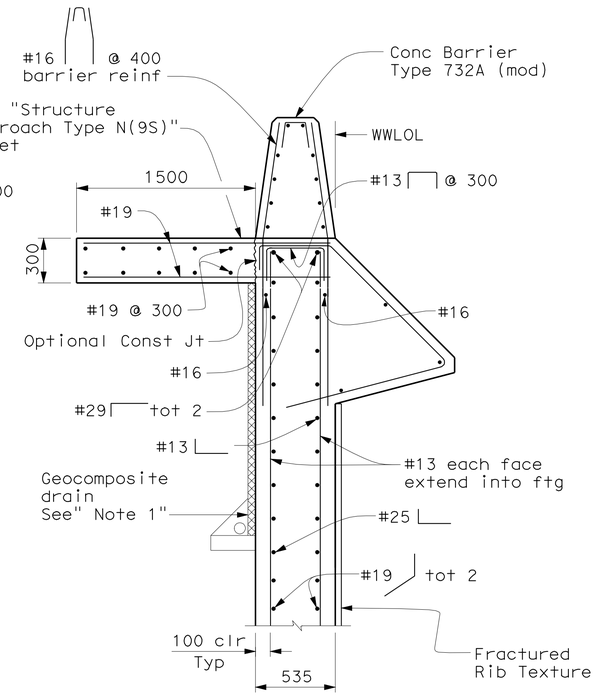


SECTION H-H
1:20

Note:

1. For Geocomposite drain, see "Structure Approach Drainage Details" sheet.

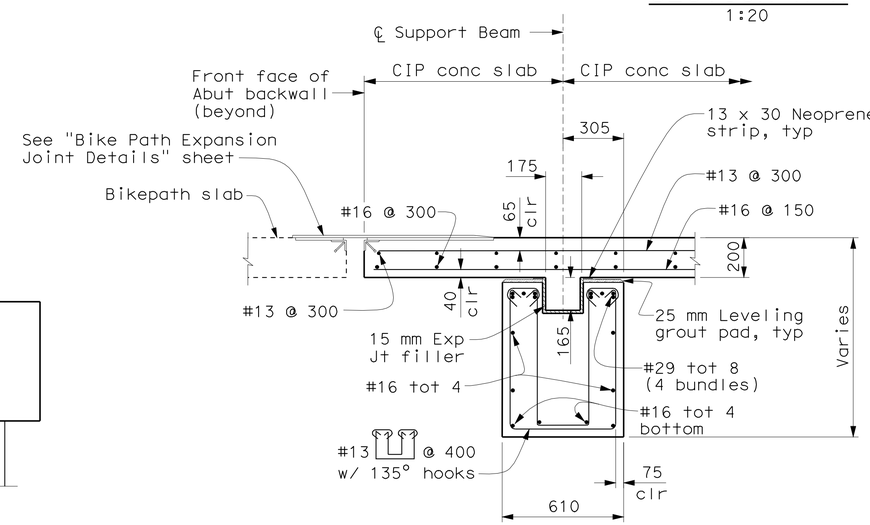


BIKE PATH BEAM #1

SECTION K-K
1:15

Note:
Polyester conc overlay not shown.

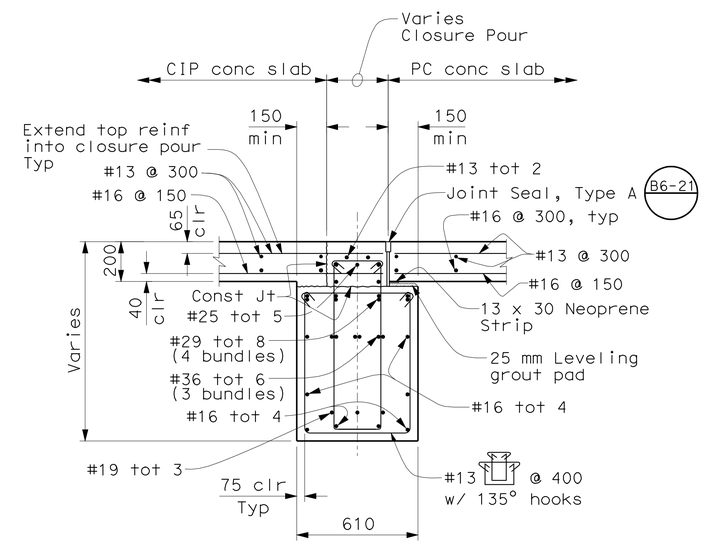


BIKE PATH BEAM #2

SECTION J-J
1:15

ALL DIMENSIONS ARE IN MILLIMETERS UNLESS OTHERWISE SHOWN

SAN FRANCISCO OAKLAND BAY BRIDGE
EAST SPAN SEISMIC SAFETY PROJECT

OAKLAND APPROACH STRUCTURES - PHASE 2

EASTBOUND ABUTMENT DETAILS NO. 7

DESIGN OVERSIGHT
HASAN EL-NATOR
SIGN OFF DATE

Rev. Date: 5-18-98

| | BY | CHECKED |
|---|---|---|
| DESIGN | M. CHAR | T. DUDLEY |
| DETAILS | M. ANDRASEK | M. CHAR |
| QUANTITIES | Y. KIM | A. SIVATHASAN/T. DUDLEY |

PREPARED FOR THE STATE OF CALIFORNIA DEPARTMENT OF TRANSPORTATION

MOHAN S. CHAR
PROJECT ENGINEER

BRIDGE NO. 34-0006R
KILOMETER POST 2.1

ORIGINAL SCALE IN MILLIMETERS FOR REDUCED PLANS 0 10 20 30 40 50 60 70 80 90 100

CU 04
EA 0120M1

DISREGARD PRINTS BEARING EARLIER REVISION DATES

REVISION DATES (PRELIMINARY STAGE ONLY) 1/15/10 4/22/10 5/28/10 9/30/10 12/28/10 3/4/11 3/14/11 4/4/11 6/22/11 7/20/11

SHEET 26 OF 109

FILE => 04-0120m1-34-0006r-f-a01dt07.dgn

SUBMITTAL - 12

USERNAME => s121614 DATE PLOTTED => 05-OCT-2011 TIME PLOTTED => 14:01

| DIST. | COUNTY | ROUTE | KILOMETER POST TOTAL PROJECT | SHEET NO. | TOTAL SHEETS |
|---|---|---|---|---|---|
| 04 | Ala | 80 | 1.6/2.7 | 599 | 744 |

Caltrans Metric

REGISTERED ENGINEER - CIVIL

10-3-11

PLANS APPROVAL DATE

REGISTERED PROFESSIONAL ENGINEER MOHAN S. CHAR No. 57894 Exp. 6/30/12 CIVIL STATE OF CALIFORNIA

The State of California or its officers or agents shall not be responsible for the accuracy or completeness of electronic copies of this plan sheet.

T.Y. LIN / MOFFATT & NICHOL
TWO HARRISON STREET, SUITE 500
SAN FRANCISCO, CA 94105

AECOM TECHNICAL SERVICES INC.
999 TOWN & COUNTRY ROAD
ORANGE, CA 92868

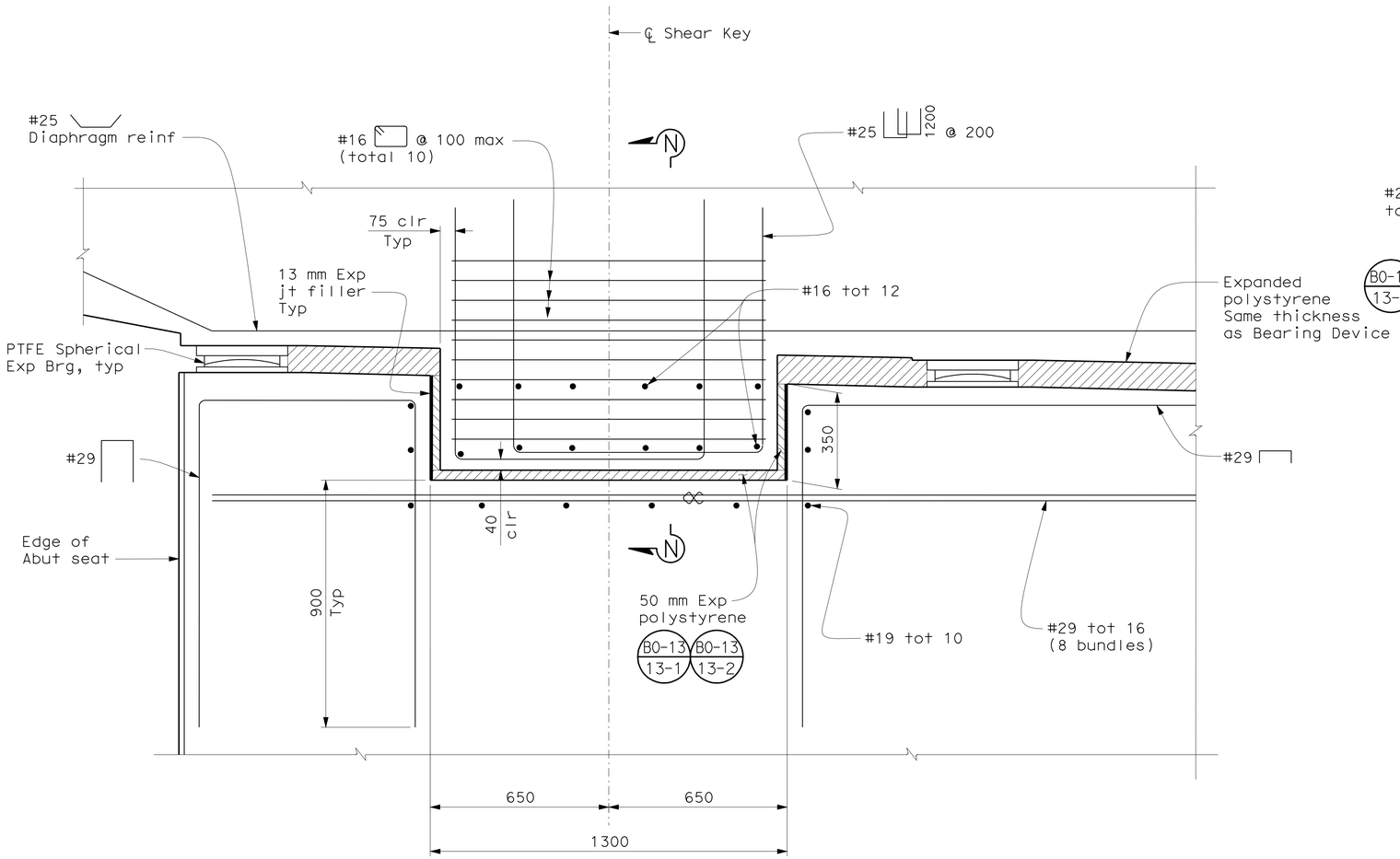


## SHEAR KEY DETAIL

1:10

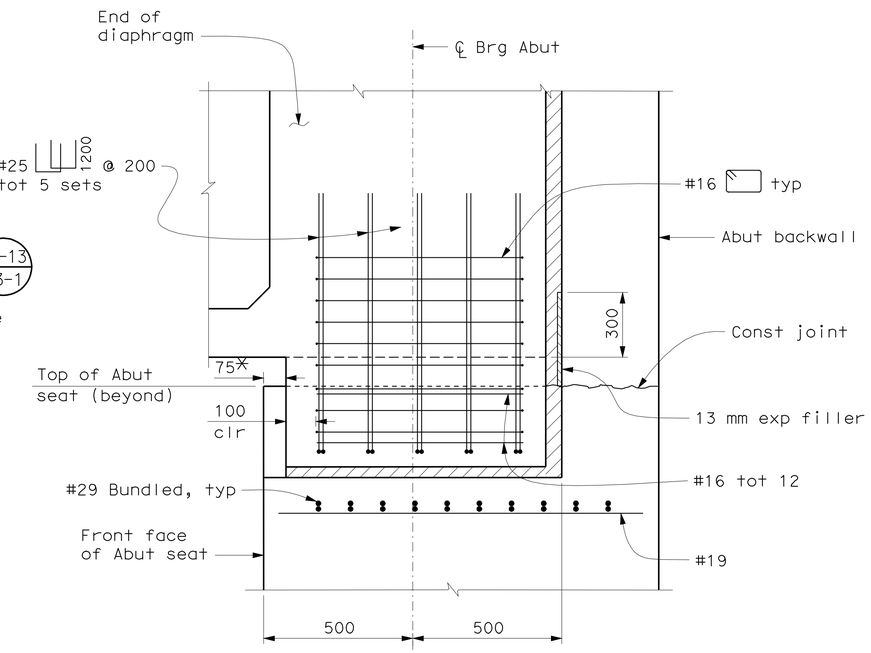


## SECTION N-N

1:10

* Inset face of shear key 75 mm to allow for prestress shortening

LEGEND

Denotes bundled bars

Note:
Not all reinforcement shown. For additional reinforcement, see "Eastbound Abutment Details No. 3" sheet.

ALL DIMENSIONS ARE IN MILLIMETERS UNLESS OTHERWISE SHOWN

SAN FRANCISCO OAKLAND BAY BRIDGE
EAST SPAN SEISMIC SAFETY PROJECT

OAKLAND APPROACH STRUCTURES - PHASE 2

EASTBOUND ABUTMENT DETAILS NO. 8

DESIGN OVERSIGHT
HASAN EL-NATAR
SIGN OFF DATE

Rev. Date: 5-18-98

| | BY | CHECKED |
|---|---|---|
| DESIGN | M. CHAR | T. DUDLEY |
| DETAILS | M. ANDRASEK | M. CHAR |
| QUANTITIES | Y. KIM | A. SIVATHASAN/T. DUDLEY |

PREPARED FOR THE STATE OF CALIFORNIA DEPARTMENT OF TRANSPORTATION

MOHAN S. CHAR
PROJECT ENGINEER

CU 04
EA 0120M1

BRIDGE NO. 34-0006R
KILOMETER POST 2.1

ORIGINAL SCALE IN MILLIMETERS FOR REDUCED PLANS 0 10 20 30 40 50 60 70 80 90 100

DISREGARD PRINTS BEARING EARLIER REVISION DATES

REVISION DATES (PRELIMINARY STAGE ONLY): 10/30/09 1/15/10 4/2/10 5/28/10 9/30/10 12/29/10 3/4/11 3/14/11 4/4/11 6/3/11

SHEET 27 OF 109

FILE => 04-0120m1-34-0006r-f-a01dt08.dgn

SUBMITTAL - 12

USERNAME => s8121614 DATE PLOTTED => 05-OCT-2011 TIME PLOTTED => 14:01

| DIST. | COUNTY | ROUTE | KILOMETER POST TOTAL PROJECT | SHEET NO. | TOTAL SHEETS |
|---|---|---|---|---|---|
| 04 | Ala | 80 | 1.6/2.7 | 600 | 744 |

Caltrans Metric

REGISTERED ENGINEER - CIVIL

10-3-11

PLANS APPROVAL DATE

REGISTERED PROFESSIONAL ENGINEER A.L. ELY No. 18880 Exp. 6-30-11 CIVIL STATE OF CALIFORNIA

The State of California or its officers or agents shall not be responsible for the accuracy or completeness of electronic copies of this plan sheet.

T.Y. LIN / MOFFATT & NICHOL
TWO HARRISON STREET, SUITE 500
SAN FRANCISCO, CA 94105

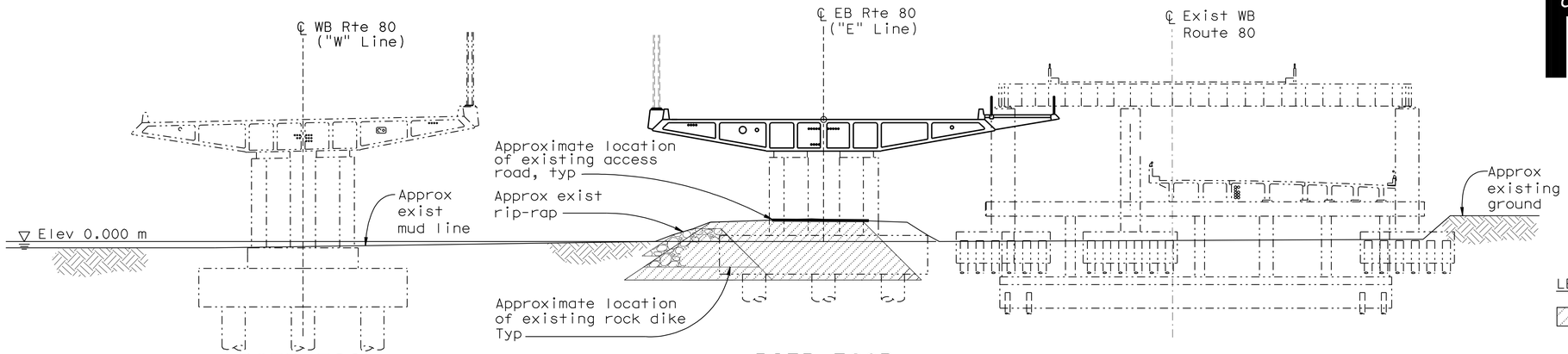


PIER E20L
1:200

PIER E20R
1:200

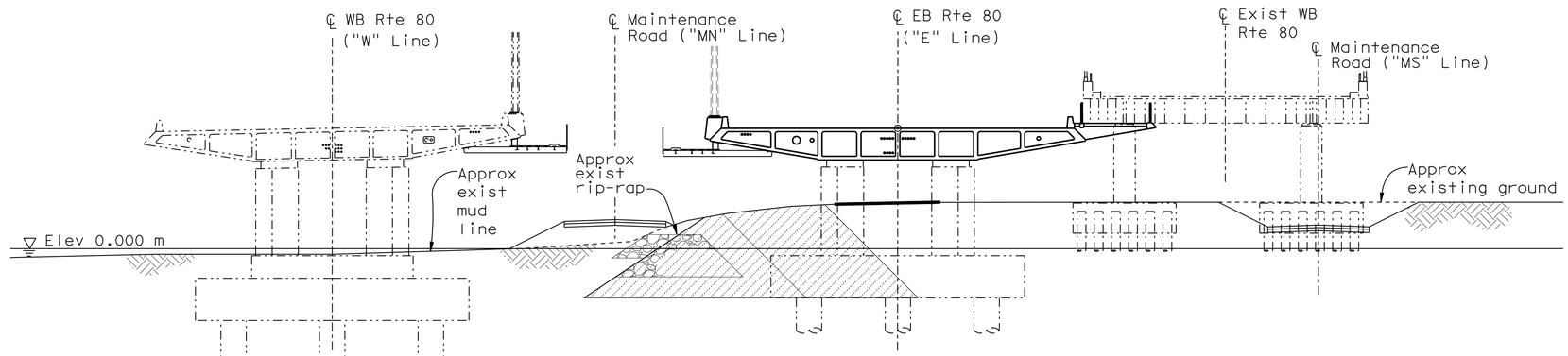


PIER E21L
1:200

PIER E21R
1:200

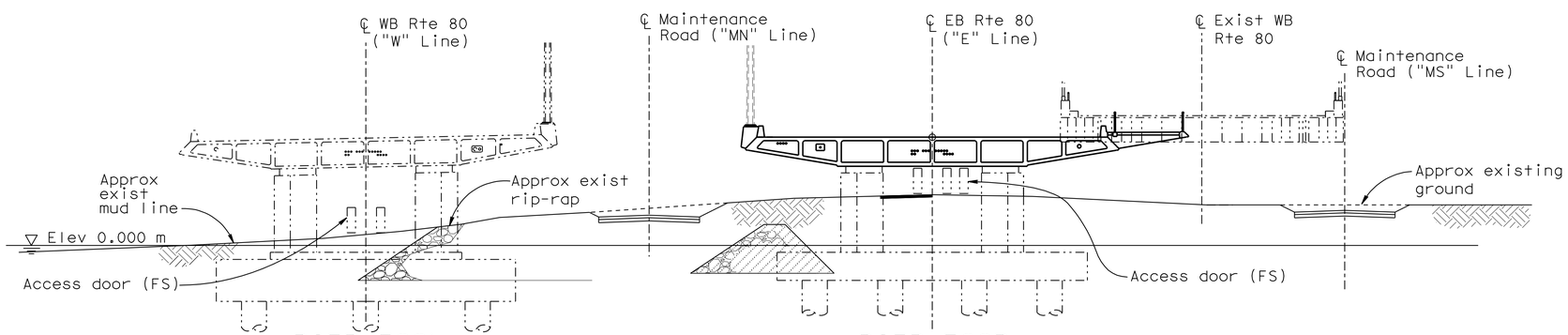


PIER E22L
1:200

PIER E22R
1:200

LEGEND

Indicates approximate zone of existing rock dike

Existing structure

New construction

NOTE:
At foundations where existing rock dike is indicated, probe pile locations (prior to pile driving) a minimum of 3 m below bottom of footing to ascertain if rock exists at greater depth than shown here.

ALL DIMENSIONS ARE IN MILLIMETERS UNLESS OTHERWISE SHOWN

SAN FRANCISCO OAKLAND BAY BRIDGE
EAST SPAN SEISMIC SAFETY PROJECT

OAKLAND APPROACH STRUCTURES-PHASE 2

PIER ELEVATIONS NO. 1

DESIGN OVERSIGHT - SAM AKKAD HASAN EL-NATUR

SIGN OFF DATE

Rev. Date: 5-18-98

| | BY | CHECKED |
|---|---|---|
| DESIGN | Shangkuan | Birdy |
| DETAILS | van Ryn/Zucchi/Mai | Birdy |
| QUANTITIES | Haroun/Char | Jaradat/Dudley |

PREPARED FOR THE STATE OF CALIFORNIA DEPARTMENT OF TRANSPORTATION

Jal Birdy
PROJECT ENGINEER

BRIDGE NO. 34-0006 L/R
KILOMETER POST

ORIGINAL SCALE IN MILLIMETERS FOR REDUCED PLANS 0 10 20 30 40 50 60 70 80 90 100

CU 04
EA 0120M1

DISREGARD PRINTS BEARING EARLIER REVISION DATES

REVISION DATES (PRELIMINARY STAGE ONLY) 10/30/09 1/15/10 4/12/10 5/28/10 9/30/10 3/14/11 3/24/11 4/14/11 6/3/11

SHEET 28 OF 109

FILE => 04-0120m1-34-0006r1-i-pdt01.dgn

SUBMITTAL - 12 June 3, 2011

USERNAME => s126614 DATE PLOTTED => 05-OCT-2011 TIME PLOTTED => 14:01