Dist	COUNTY	ROUTE	POST MILES TOTAL PROJECT	SHEET No.	TOTAL SHEETS
04	Ala	80	1.6/2.7	1	744

STATE OF CALIFORNIA

DEPARTMENT OF TRANSPORTATION

PROJECT PLANS FOR CONSTRUCTION ON

STATE HIGHWAY

IN ALAMEDA COUNTY
IN OAKLAND
FROM 1.6 KM WEST OF THE TOLL PLAZA
TO 0.3 KM WEST OF THE TOLL PLAZA

TO BE SUPPLEMENTED BY STANDARD PLANS DATED JULY 2004

INDEX OF PLANS

SHEET No.	DESCRIPTION
1	TITLE AND LOCATION MAP
2-10	TYPICAL CROSS SECTIONS
11-14	LAYOUTS
15-33	PROFILES AND SUPERELEVATION DIAGRAMS
34-51	CONSTRUCTION DETAILS
52-55	TEMPORARY WATER POLLUTION CONTROL PLANS, DETAILS AND QUANTITIES
56-61	EROSION CONTROL PLANS, DETAILS AND QUANTITIES
62-64	CONTOUR GRADING
65-85	DRAINAGE PLANS, PROFILES, DETAILS AND QUANTITIES
86-90	UTILITY PLANS
91	CONSTRUCTION AREA SIGNS
92-105	MOTORIST INFORMATION PLANS AND QUANTITIES
106-131	STAGE CONSTRUCTION PLANS AND QUANTITIES
132-147	PAVEMENT DELINEATION PLANS, DETAILS AND QUANTITIES
148-159	SIGN PLANS, DETAILS AND QUANTITIES
160-162	SUMMARY OF QUANTITIES
163-190	HIGHWAY PLANTING PLANS
191-523	ELECTRICAL PLANS
524-572	REVISED AND NEW STANDARD PLANS

STRUCTURE PLANS

573-683	OAKLAND APPROACH STRUCTURE - PHASE 2 Br No. 34-0006R
684-687	EAST SPAN SFOBB STRUCTURE Br No. 34-0006L/R
688-696	OAKLAND APPROACH BIKE PATH RAMP AND LANDING Br No. 34-0006
697-706	OUTFALL BRIDGE AT WEST END MAINTENANCE YARD Br No. 33-0742Y
707-716	PRECAST WALL, UTILITY VAULT AND SIGN FOUNDATION Br No. 34-0006L
717-729	SERVICE PLATFORMS Br No. 34-0006R
730-744	MECHANICAL PLANS

THE STANDARD PLANS LIST APPLICABLE TO THIS CONTRACT IS INCLUDED IN THE NOTICE TO BIDDERS AND SPECIAL PROVISIONS BOOK.

LOCATION MAP

Caltrans

Caltrans Metric

BEGIN CONSTRUCTION
Sta E 83+72 KP 1.6 PM 1.0

END CONSTRUCTION
Sta E 95+00 KP 2.7 PM 1.7

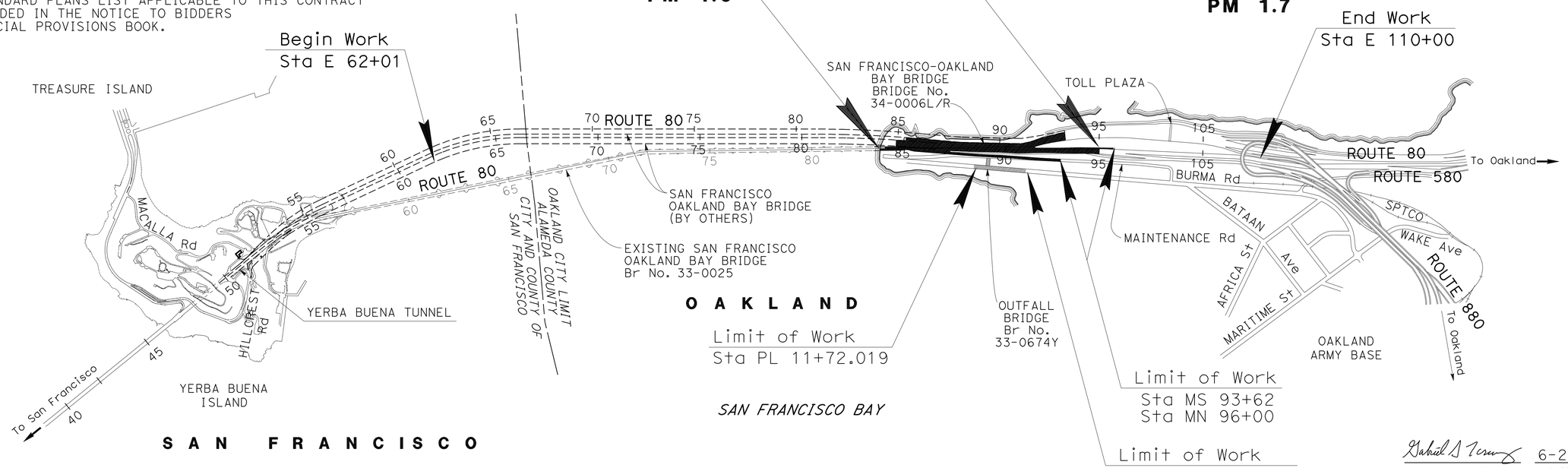

NO SCALE

Approved as to impact on State facilities and conformance with applicable State standards and practices and that technical oversight was performed as described in the California Department of Transportation A & E Consultant Service Manual.

PROJECT MANAGER KEN TERPSTRA

DESIGN ENGINEER GABRIEL TCRUZ

Gabriel S Tcruz 6-2-11
PROJECT ENGINEER DATE
REGISTERED CIVIL ENGINEER

October 3, 2011
PLANS APPROVAL DATE

REGISTERED PROFESSIONAL ENGINEER Gabriel Tcruz No. 68108 Exp. 6-30-11 CIVIL STATE OF CALIFORNIA

THE STATE OF CALIFORNIA OR ITS OFFICERS OR AGENTS SHALL NOT BE RESPONSIBLE FOR THE ACCURACY OR COMPLETENESS OF SCANNED COPIES OF THIS PLAN SHEET.

THE CONTRACTOR SHALL POSSESS THE CLASS (OR CLASSES) OF LICENSE AS SPECIFIED IN THE "NOTICE TO BIDDERS."

CONTRACT No.	04-0120M4
PROJECT ID	0400000022

LAST REVISION 08-05-11 DATE PLOTTED => 01-MAR-2012 TIME PLOTTED => 13:48

Dist	COUNTY	ROUTE	KILOMETER POST TOTAL PROJECT	SHEET No.	TOTAL SHEETS
04	Ala	80	1.6/2.7	2	744

Gabriel D Tcruz 6-2-11
REGISTERED CIVIL ENGINEER DATE

10-3-11
PLANS APPROVAL DATE

REGISTERED PROFESSIONAL ENGINEER Gabriel Tcruz No. 68108 Exp. 6-30-11 CIVIL STATE OF CALIFORNIA

THE STATE OF CALIFORNIA OR ITS OFFICERS OR AGENTS SHALL NOT BE RESPONSIBLE FOR THE ACCURACY OR COMPLETENESS OF SCANNED COPIES OF THIS PLAN SHEET.

Caltrans Metric

NOTES:

1. DIMENSIONS OF THE STRUCTURAL SECTIONS ARE SUBJECT TO TOLERANCES SPECIFIED IN THE STANDARD SPECIFICATIONS.
2. SUPERELEVEATION AS SHOWN ON PS- SHEETS OR AS DIRECTED BY THE ENGINEER.
3. FOR LIGHTWEIGHT EMBANKMENT MATERIAL (CELLULAR CONCRETE) AND IMPORTED BORROW (LIGHTWEIGHT AGGREGATE) LIMITS AND DETAILS, SEE C- SHEETS.
4. FOR LIMITS OF Conc BARRIER AND BARRIER SLAB, SEE L- SHEETS.
5. FOR Conc BARRIER TYPE 732 (MOD), BIKE PATH RAILING, PRECAST WALL PANEL, BARRIER SLAB, FRACTURE RIB TEXTURE, ABUTMENT WINGWALL, BIKE PATH SLAB, BIKE PATH BEAM SUPPORT, AND APPROACH SLAB DETAILS, SEE STRUCTURE PLANS.
6. FOR WELDED WIRE STEEL RAILING, SEE C- SHEETS.
7. FOR BIKE PATH LANDING AND PARKING LOT CROSS SECTIONS, SEE C- SHEETS.
8. FOR IMPORTED TOPSOIL AND ROCK BLANKET LIMITS, SEE PP- SHEETS.

TYPICAL STRUCTURAL SECTIONS:

1 — 195 mm HMA (TYPE A)
240 mm CLASS 2 AB

2 — 30 mm HMA (OG)
240 mm HMA (TYPE A)
300 mm CLASS 2 AB

3 — 150 mm CLASS 2 AB

4 — 90 mm HMA (TYPE A)
180 mm CLASS 2 AB

5 — 30 mm HMA (OG)
Var HMA (TYPE A)

6 — 150 mm MINOR CONCRETE (Misc CONSTRUCTION)
150 MM CLASS 2 AB

7 — SEE X-8 FOR DETAIL

ABBREVIATIONS:

HMA (OG)	HOT MIX ASPHALT (OPEN GRADED)
HMA (TYPE A)	HOT MIX ASPHALT (TYPE A)
LCBRS	LEAN CONCRETE BASE RAPID SET

DESIGN DESIGNATION (ROUTE 80):

2009 ADT = 336,900 D = 55.22%
2034 ADT = 407,900 T = 2.58%
DHV = 25,620 V = 90 KM/H

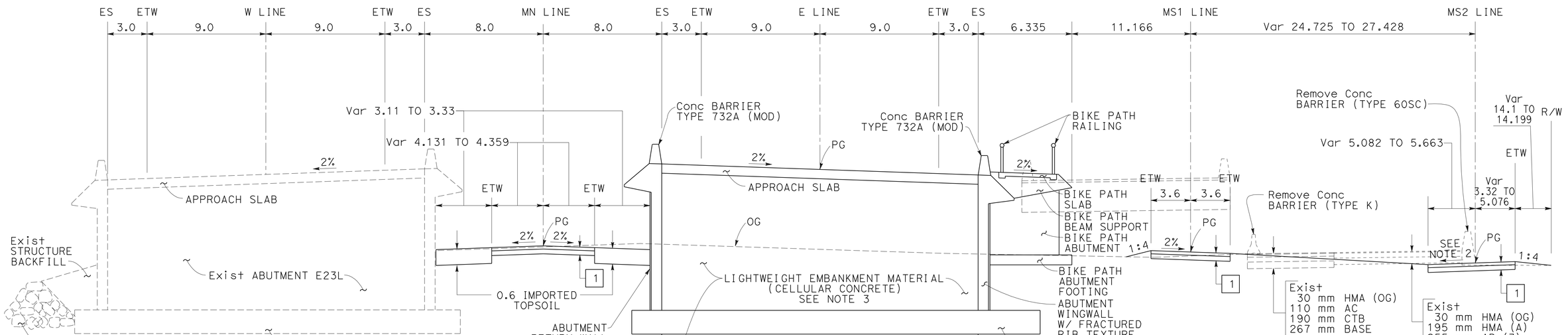

W 86+42.453 TO 86+51.006

MN 86+39.983 TO 86+48.534

E 86+11.535 TO 86+20.085

MS1 86+19.559 TO 86+28.107

MS2 11+78.571 TO 11+87.667

TYPICAL CROSS SECTIONS

NO SCALE

ALL DIMENSIONS ARE IN METERS UNLESS OTHERWISE SHOWN

X-1

STATE OF CALIFORNIA - DEPARTMENT OF TRANSPORTATION
Caltrans TOLL BRIDGE

FUNCTIONAL SUPERVISOR: JAIME E. GUTIERREZ
CALCULATED-DESIGNED BY: GABRIEL TCRUZ
CHECKED BY: RAFAEL RAVELO
REVISED BY / DATE REVISED

LAST REVISION 06-03-11 DATE PLOTTED => 06-OCT-2011 TIME PLOTTED => 10:34

Dist	COUNTY	ROUTE	KILOMETER POST TOTAL PROJECT	SHEET No.	TOTAL SHEETS
04	Ala	80	1.6/2.7	3	744

Gabriel D Tcruz 6-2-11
REGISTERED CIVIL ENGINEER DATE

10-3-11
PLANS APPROVAL DATE

REGISTERED PROFESSIONAL ENGINEER Gabriel Tcruz No. 68108 Exp. 6-30-11 CIVIL STATE OF CALIFORNIA

THE STATE OF CALIFORNIA OR ITS OFFICERS OR AGENTS SHALL NOT BE RESPONSIBLE FOR THE ACCURACY OR COMPLETENESS OF SCANNED COPIES OF THIS PLAN SHEET.

Caltrans Metric

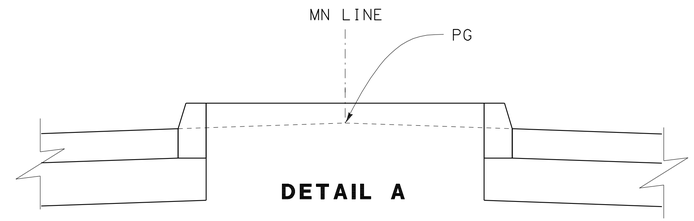

DETAIL A

MN 92+50.543 TO 95+62.300
MN 90+00.000 TO 92+30.548
MN 87+69.150 TO 89+80.000
MN 86+65.750 TO 87+49.150

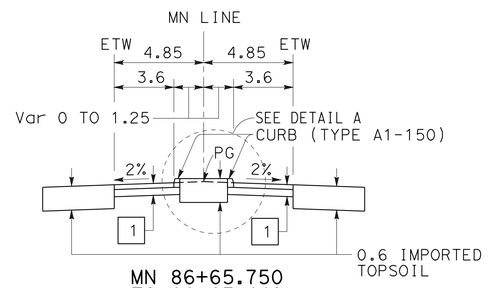

MN 86+65.750
TO 86+67.449

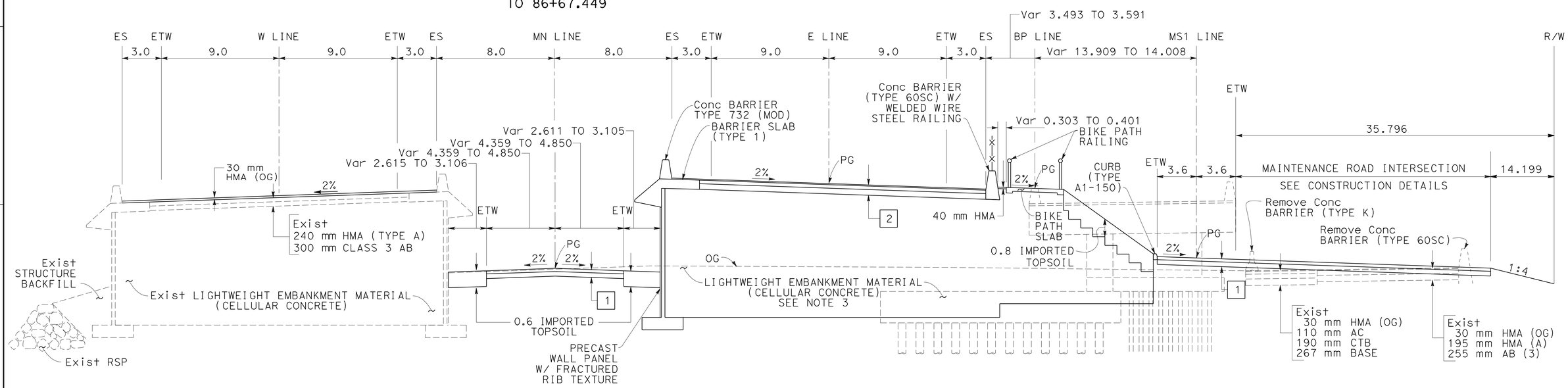

W 86+51.006
TO 86+69.921

MN 86+48.534
TO 86+67.449

E 86+20.085
TO 86+39.000

BP 86+20.035
TO 86+38.950

MS1 86+28.107
TO 86+47.022

MS2 11+87.667
TO MS1 86+47.022

TYPICAL CROSS SECTIONS

NO SCALE

FOR NOTES, ABBREVIATIONS &/OR LEGEND, SEE SHEET X-1

ALL DIMENSIONS ARE IN METERS UNLESS OTHERWISE SHOWN

X-2

STATE OF CALIFORNIA - DEPARTMENT OF TRANSPORTATION
Caltrans **TOLL BRIDGE**

FUNCTIONAL SUPERVISOR: JAIME E. GUTIERREZ
CALCULATED-DESIGNED BY: GABRIEL TCRUZ
CHECKED BY: RAFAEL RAVELO
REVISED BY / DATE REVISED

LAST REVISION 06-03-11
DATE PLOTTED => 06-OCT-2011
TIME PLOTTED => 06:05

Dist	COUNTY	ROUTE	KILOMETER POST TOTAL PROJECT	SHEET No.	TOTAL SHEETS
04	Ala	80	1.6/2.7	4	744

Caltrans Metric

REGISTERED CIVIL ENGINEER 6-2-11 DATE

10-3-11
PLANS APPROVAL DATE

REGISTERED PROFESSIONAL ENGINEER Gabriel Tcruz No. 68108 Exp. 6-30-11 CIVIL STATE OF CALIFORNIA

THE STATE OF CALIFORNIA OR ITS OFFICERS OR AGENTS SHALL NOT BE RESPONSIBLE FOR THE ACCURACY OR COMPLETENESS OF SCANNED COPIES OF THIS PLAN SHEET.

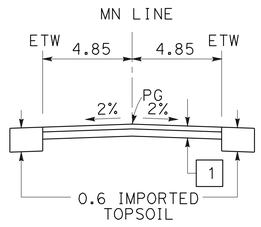

MN 87+49.150
TO 87+69.150

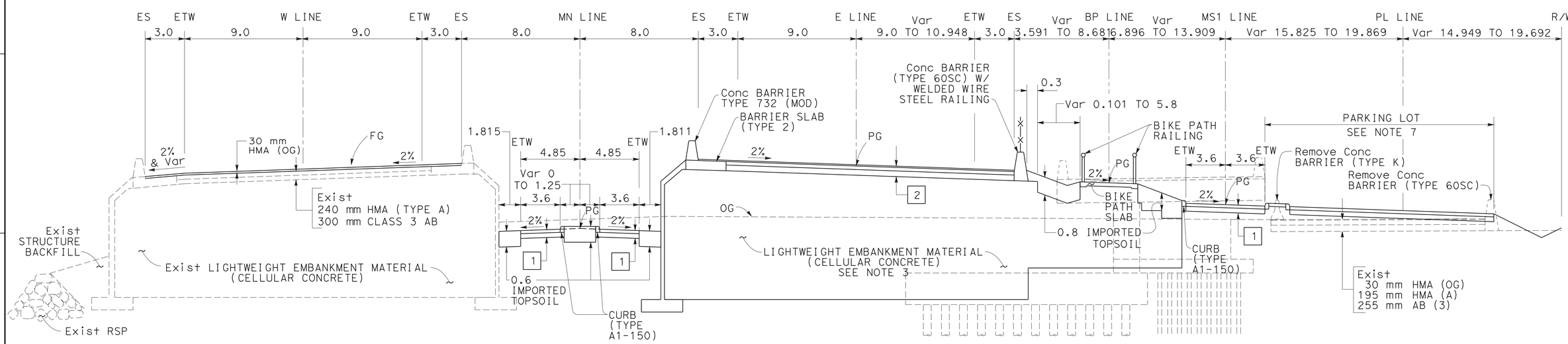

W 86+69.921
TO 87+90.921

MN 87+69.150 TO 87+88.449
MN 86+67.449 TO 87+49.150

E 86+39.000
TO 87+60.000

BP 86+38.950
TO 87+60.186

MS1 86+47.022
TO 87+68.022

PL 10+00.000
TO 10+95.503

TYPICAL CROSS SECTIONS

NO SCALE

FOR NOTES, ABBREVIATIONS &/OR LEGEND, SEE SHEET X-1

ALL DIMENSIONS ARE IN METERS UNLESS OTHERWISE SHOWN

X-3

STATE OF CALIFORNIA - DEPARTMENT OF TRANSPORTATION
Caltrans TOLL BRIDGE

FUNCTIONAL SUPERVISOR: JAIME E. GUTIERREZ
CALCULATED-DESIGNED BY: GABRIEL TCRUZ
CHECKED BY: RAFAEL RAVELO
REVISED BY
DATE REVISED

LAST REVISION 06-02-11
DATE PLOTTED => 06-OCT-2011
TIME PLOTTED => 10:34

Dist	COUNTY	ROUTE	KILOMETER POST TOTAL PROJECT	SHEET No.	TOTAL SHEETS
04	Ala	80	1.6/2.7	5	744

Caltrans Metric

REGISTERED CIVIL ENGINEER 6-2-11 DATE

10-3-11
PLANS APPROVAL DATE

REGISTERED PROFESSIONAL ENGINEER Gabriel Tcruz No. 68108 Exp. 6-30-11 CIVIL STATE OF CALIFORNIA

THE STATE OF CALIFORNIA OR ITS OFFICERS OR AGENTS SHALL NOT BE RESPONSIBLE FOR THE ACCURACY OR COMPLETENESS OF SCANNED COPIES OF THIS PLAN SHEET.

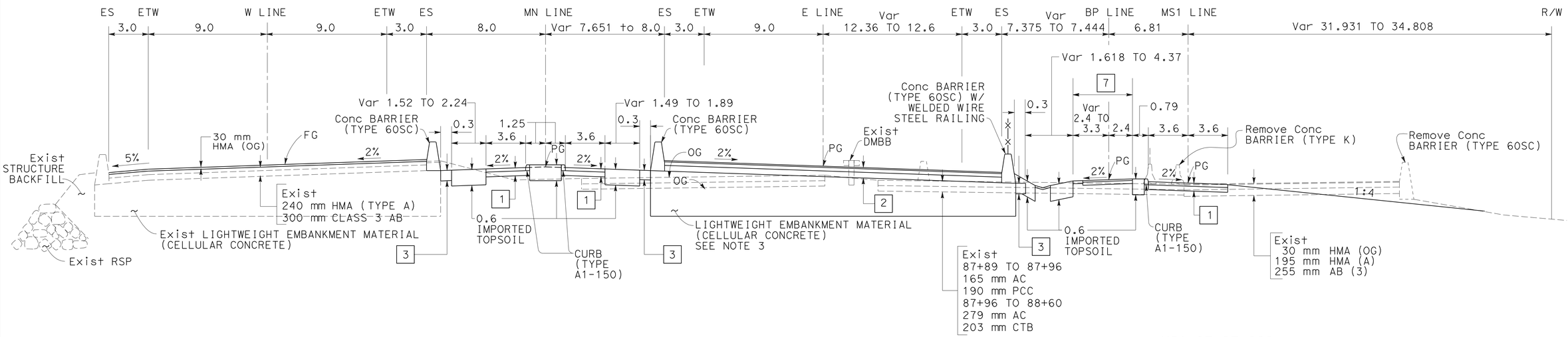

W 88+19.921 TO 88+90.313 | MN 88+17.449 TO 88+88.147 | E 87+89.000 TO 88+60.000 | BP 87+89.187 TO 88+60.538 | MS1 87+97.022 TO 88+68.477

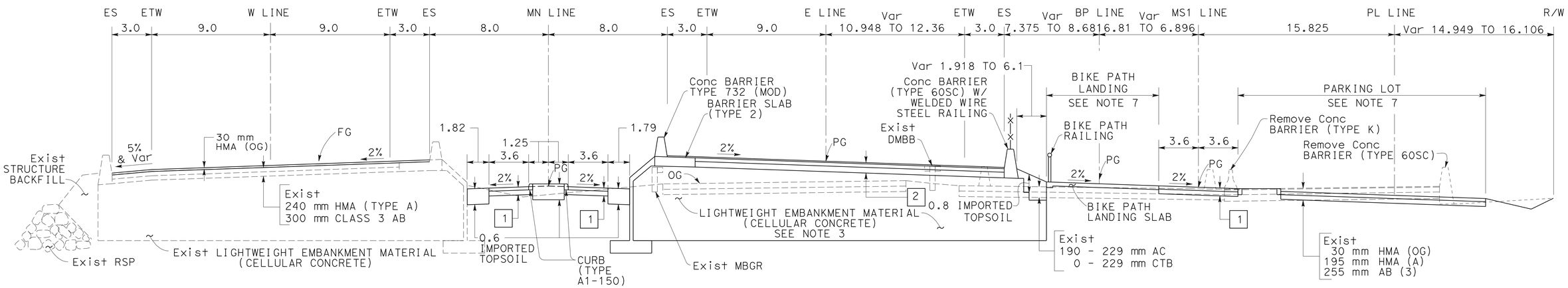

W 87+90.921 TO 88+19.921 | MN 87+88.449 TO 88+17.449 | E 87+60.000 TO 87+89.000 | BP 87+60.186 TO 87+89.187 | MS1 87+68.022 TO 87+97.022

TYPICAL CROSS SECTIONS

NO SCALE

FOR NOTES, ABBREVIATIONS &/OR LEGEND, SEE SHEET X-1

ALL DIMENSIONS ARE IN METERS UNLESS OTHERWISE SHOWN

X-4

STATE OF CALIFORNIA - DEPARTMENT OF TRANSPORTATION
Caltrans TOLL BRIDGE

FUNCTIONAL SUPERVISOR JAIME E. GUTIERREZ
CALCULATED-DESIGNED BY GABRIEL TCRUZ
CHECKED BY RAFAEL RAVELO
REVISED BY
DATE REVISED

LAST REVISION 06-03-11 DATE PLOTTED => 06-OCT-2011 TIME PLOTTED => 10:34

Dist	COUNTY	ROUTE	KILOMETER POST TOTAL PROJECT	SHEET No.	TOTAL SHEETS
04	Ala	80	1.6/2.7	6	744

Caltrans Metric

Gabriel D Tcruz 6-2-11
REGISTERED CIVIL ENGINEER DATE

10-3-11
PLANS APPROVAL DATE

REGISTERED PROFESSIONAL ENGINEER Gabriel Tcruz No. 68108 Exp. 6-30-11 CIVIL STATE OF CALIFORNIA

THE STATE OF CALIFORNIA OR ITS OFFICERS OR AGENTS SHALL NOT BE RESPONSIBLE FOR THE ACCURACY OR COMPLETENESS OF SCANNED COPIES OF THIS PLAN SHEET.

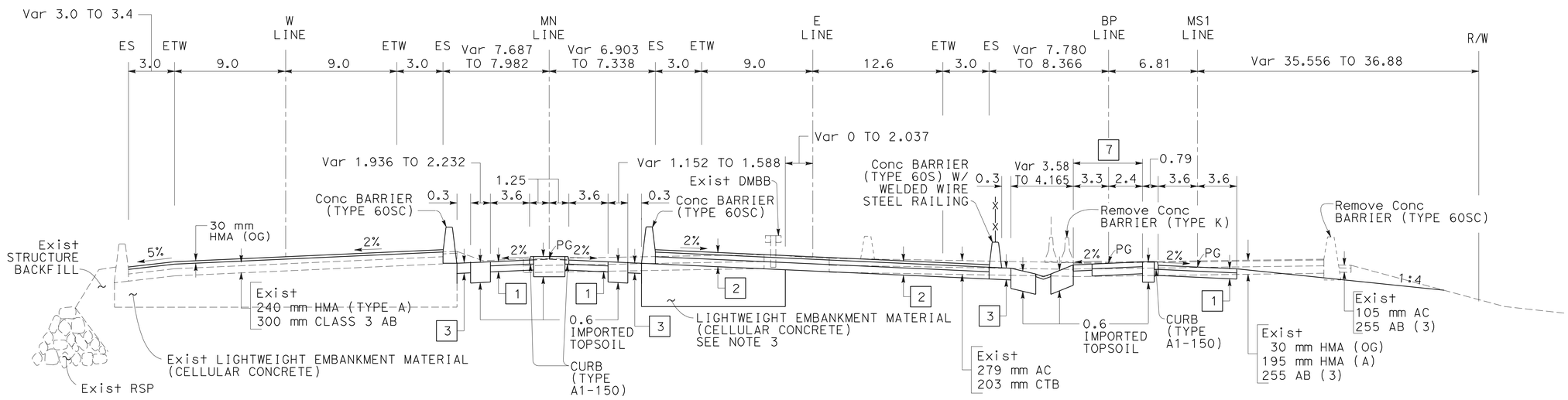

W 89+08.293 TO 89+36.231 | MN 89+06.248 TO 89+34.367 | E 88+78.217 TO 89+06.513 | BP 88+78.899 TO 89+07.424 | MS1 88+86.879 TO 89+15.469

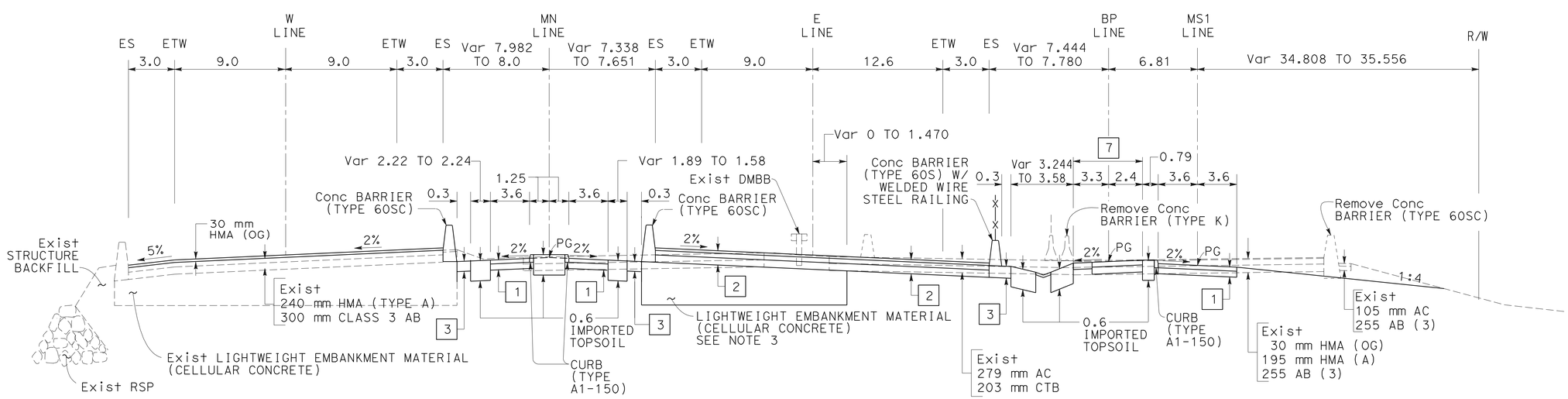

W 88+90.313 TO 89+08.293 | MN 88+88.147 TO 89+06.248 | E 88+60.000 TO 88+78.217 | BP 88+60.538 TO 88+78.899 | MS1 88+68.477 TO 88+86.879

FOR NOTES, ABBREVIATIONS &/OR LEGEND, SEE SHEET X-1

ALL DIMENSIONS ARE IN METERS UNLESS OTHERWISE SHOWN

TYPICAL CROSS SECTIONS

NO SCALE

X-5

STATE OF CALIFORNIA - DEPARTMENT OF TRANSPORTATION
Caltrans TOLL BRIDGE

FUNCTIONAL SUPERVISOR: JAIME E. GUTIERREZ
CALCULATED-DESIGNED BY: GABRIEL TCRUZ
CHECKED BY: RAFAEL RAVELO
REVISED BY | DATE REVISED

LAST REVISION 06-06-11
DATE PLOTTED => 06-OCT-2011
TIME PLOTTED => 10:34

Dist	COUNTY	ROUTE	KILOMETER POST TOTAL PROJECT	SHEET No.	TOTAL SHEETS
04	Ala	80	1.6/2.7	7	744

Gabriel D Tcruz 6-2-11
REGISTERED CIVIL ENGINEER DATE

10-3-11
PLANS APPROVAL DATE

REGISTERED PROFESSIONAL ENGINEER Gabriel Tcruz No. 68108 Exp. 6-30-11 CIVIL STATE OF CALIFORNIA

THE STATE OF CALIFORNIA OR ITS OFFICERS OR AGENTS SHALL NOT BE RESPONSIBLE FOR THE ACCURACY OR COMPLETENESS OF SCANNED COPIES OF THIS PLAN SHEET.

Caltrans Metric

TABLE A - EXISTING PAVEMENT STRUCTURAL SECTIONS

STATION LIMITS	LAYER a	LAYER b	LAYER c	LAYER d	LAYER e	LAYER f
E 89+40.300 TO 89+50.000	279 mm AC					
E 89+50.000 TO 89+91.500	165 mm AC	241 ATPB	203 mm AC	178 mm AB		
E 89+91.500 TO 90+12.200	172 mm AC	216 ATPB	108 mm AC			
E 90+12.200 TO 90+32.400	32 mm OGAC	159 mm AC	191 ATPB	152 mm AC	64 mm AC Base	178 mm AB
E 90+32.400 TO 90+57.600	203 mm AC	146 ATPB	140 mm AC			
E 90+57.600 TO 90+72.526	38 mm OGAC	140 mm AC	127 ATPB	229 mm AC		

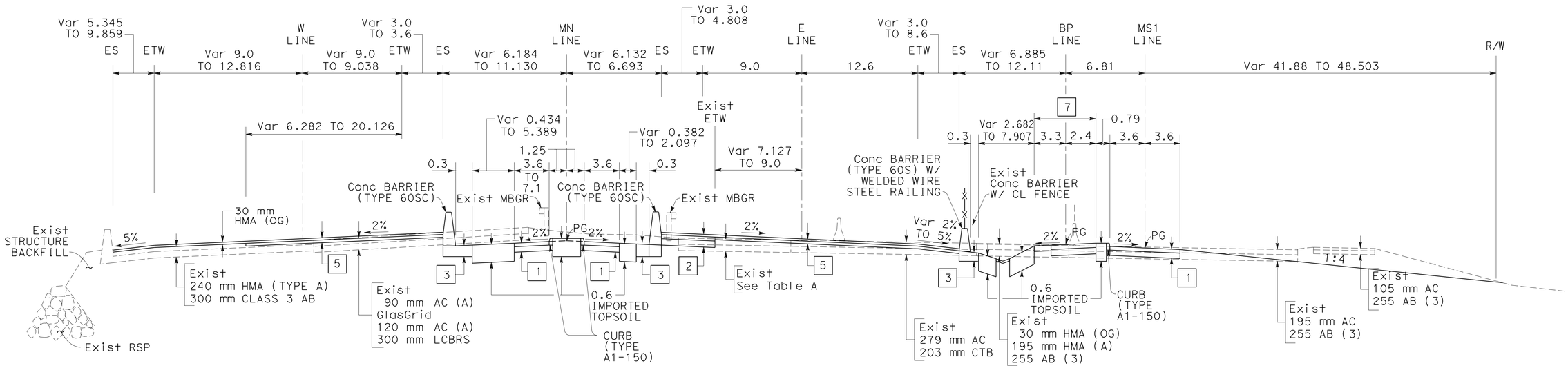

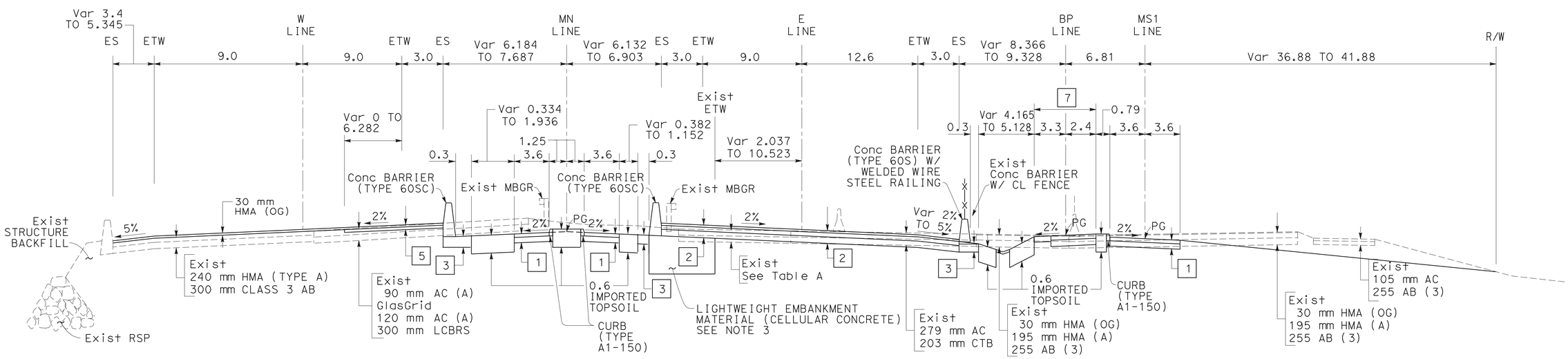

TYPICAL CROSS SECTIONS

NO SCALE

FOR NOTES, ABBREVIATIONS &/OR LEGEND, SEE SHEET X-1

ALL DIMENSIONS ARE IN METERS UNLESS OTHERWISE SHOWN

X-6

STATE OF CALIFORNIA - DEPARTMENT OF TRANSPORTATION
Caltrans TOLL BRIDGE

FUNCTIONAL SUPERVISOR: JAIME E. GUTIERREZ
CALCULATED-DESIGNED BY: GABRIEL TCRUZ
CHECKED BY: RAFAEL RAVELO
REVISED BY / DATE REVISED

LAST REVISION 06-06-11
DATE PLOTTED => 06-OCT-2011
TIME PLOTTED => 10:34

Dist	COUNTY	ROUTE	KILOMETER POST TOTAL PROJECT	SHEET No.	TOTAL SHEETS
04	Ala	80	1.6/2.7	8	744

Gabriel D Tcruz 6-2-11
REGISTERED CIVIL ENGINEER DATE

10-3-11
PLANS APPROVAL DATE

REGISTERED PROFESSIONAL ENGINEER Gabriel Tcruz No. 68108 Exp. 6-30-11 CIVIL STATE OF CALIFORNIA

THE STATE OF CALIFORNIA OR ITS OFFICERS OR AGENTS SHALL NOT BE RESPONSIBLE FOR THE ACCURACY OR COMPLETENESS OF SCANNED COPIES OF THIS PLAN SHEET.

Caltrans Metric

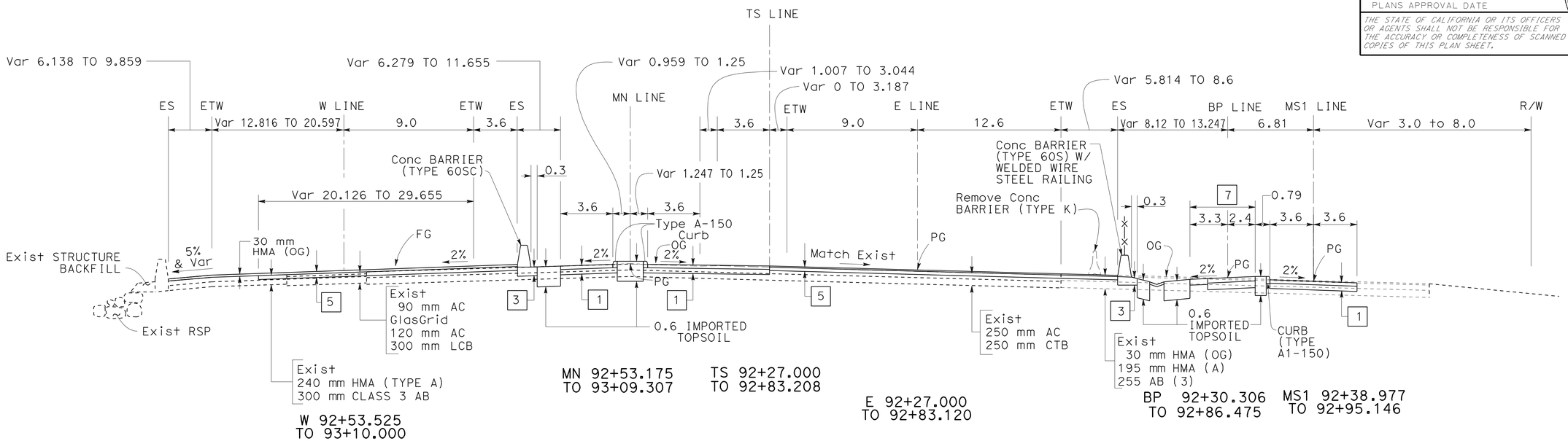

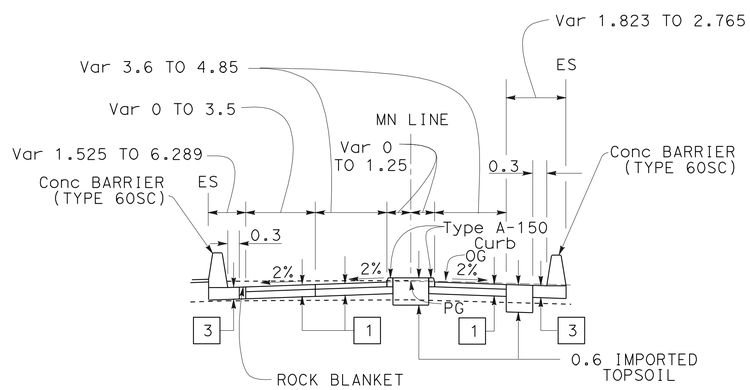

MN 92+27.562 TO 92+53.175

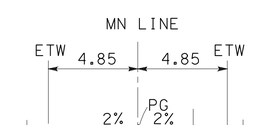

MN 89+80 TO 90+00

FOR NOTES, ABBREVIATIONS &/OR LEGEND, SEE SHEET X-1

ALL DIMENSIONS ARE IN METERS UNLESS OTHERWISE SHOWN

TYPICAL CROSS SECTIONS

NO SCALE

X-7

STATE OF CALIFORNIA - DEPARTMENT OF TRANSPORTATION
Caltrans TOLL BRIDGE

FUNCTIONAL SUPERVISOR: JAIME E. GUTIERREZ
CALCULATED-DESIGNED BY: GABRIEL TCRUZ
CHECKED BY: RAFAEL RAVELO
REVISED BY / DATE REVISED

LAST REVISION 06-06-11
DATE PLOTTED => 06-OCT-2011
TIME PLOTTED => 10:34

Dist	COUNTY	ROUTE	KILOMETER POST TOTAL PROJECT	SHEET No.	TOTAL SHEETS
04	Ala	80	1.6/2.7	9	744

Gabriel D Tcruz 6-2-11
REGISTERED CIVIL ENGINEER DATE

10-3-11
PLANS APPROVAL DATE

REGISTERED PROFESSIONAL ENGINEER Gabriel Tcruz No. 68108 Exp. 6-30-11 CIVIL STATE OF CALIFORNIA

THE STATE OF CALIFORNIA OR ITS OFFICERS OR AGENTS SHALL NOT BE RESPONSIBLE FOR THE ACCURACY OR COMPLETENESS OF SCANNED COPIES OF THIS PLAN SHEET.

Caltrans Metric

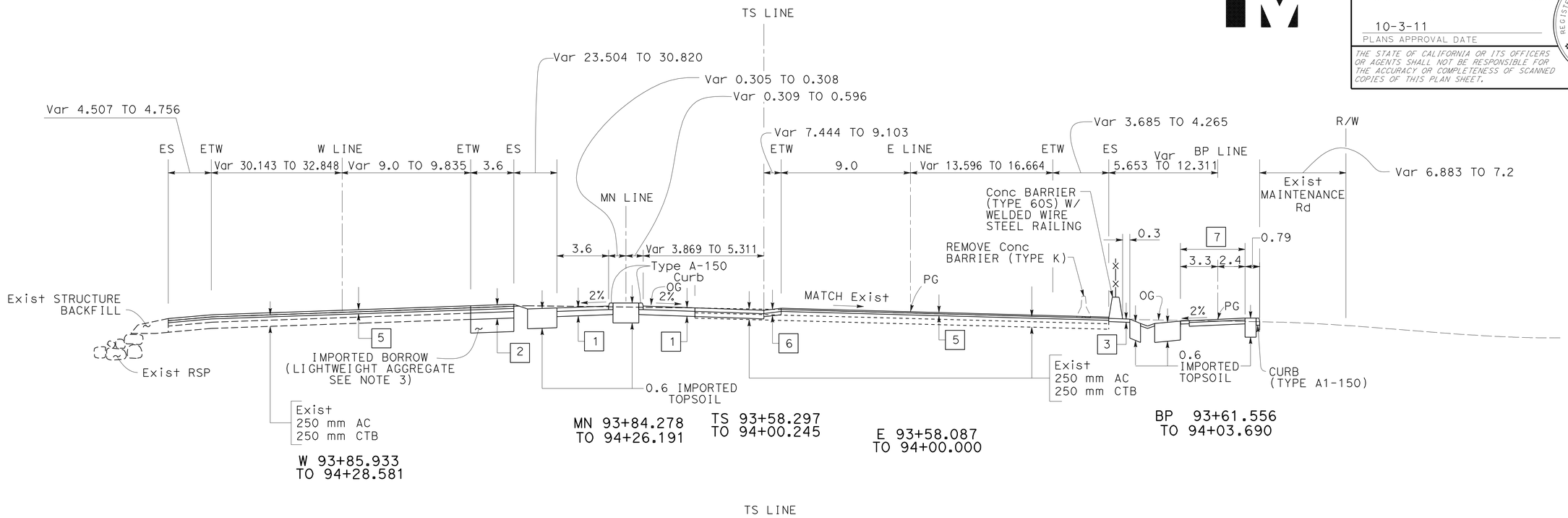

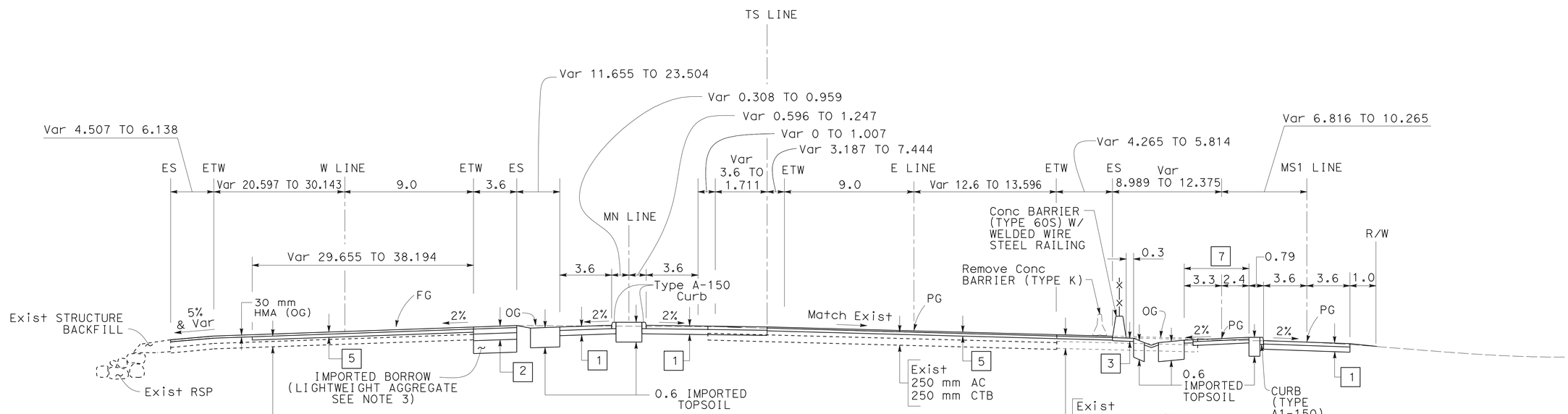

TYPICAL CROSS SECTIONS

NO SCALE

FOR NOTES, ABBREVIATIONS &/OR LEGEND, SEE SHEET X-1

ALL DIMENSIONS ARE IN METERS UNLESS OTHERWISE SHOWN

X-8

STATE OF CALIFORNIA - DEPARTMENT OF TRANSPORTATION
Caltrans TOLL BRIDGE

FUNCTIONAL SUPERVISOR: JAIME E. GUTIERREZ
CALCULATED-DESIGNED BY: GABRIEL TCRUZ
CHECKED BY: RAFAEL RAVELO
REVISED BY / DATE REVISED

LAST REVISION 06-06-11
DATE PLOTTED => 06-OCT-2011
TIME PLOTTED => 10:34

Dist	COUNTY	ROUTE	KILOMETER POST TOTAL PROJECT	SHEET No.	TOTAL SHEETS
04	Ala	80	1.6/2.7	10	744

REGISTERED CIVIL ENGINEER 6-2-11 DATE

10-3-11
PLANS APPROVAL DATE

REGISTERED PROFESSIONAL ENGINEER Gabriel Tcruz No. 68108 Exp. 6-30-11 CIVIL STATE OF CALIFORNIA

THE STATE OF CALIFORNIA OR ITS OFFICERS OR AGENTS SHALL NOT BE RESPONSIBLE FOR THE ACCURACY OR COMPLETENESS OF SCANNED COPIES OF THIS PLAN SHEET.

Caltrans Metric

NOTES:

1. FOR MORE DETAIL INFORMATION, SEE SHEETS X-1 TO X-8.
2. FOR ADDITIONAL TYPICAL CROSS SECTIONS OF BP AND PL LINES, SEE SHEET C-7.

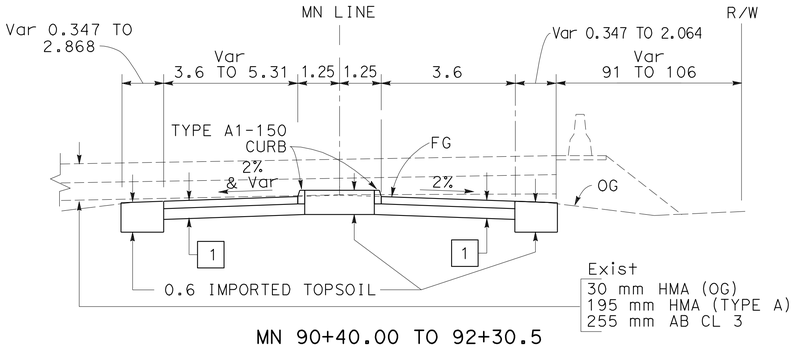

MN 90+40.00 TO 92+30.5

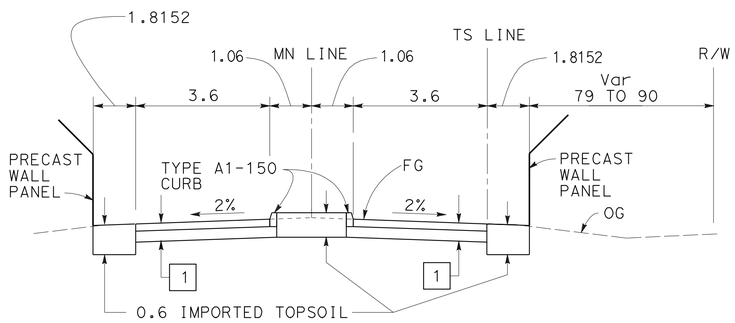

MN 86+68.00 TO 87+47.90
MN 87+70.00 TO 88+17.44

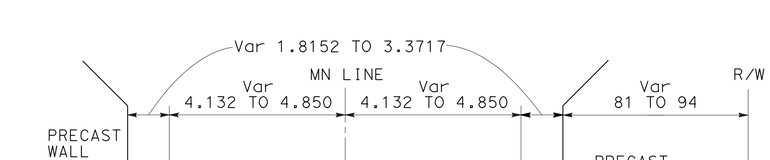

MN 86+40.00 TO 86+65.75
MN 87+49.00 TO 87+69.00

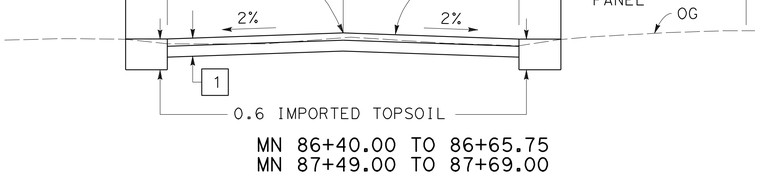

MN 85+00 TO 86+39.000

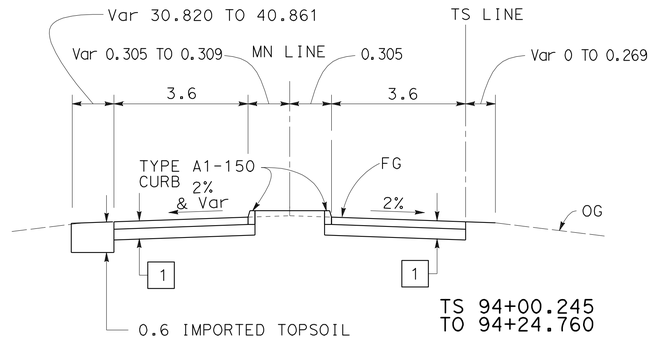

TS 94+00.245
TO 94+24.760

MN 94+26.191 TO 94+84.000

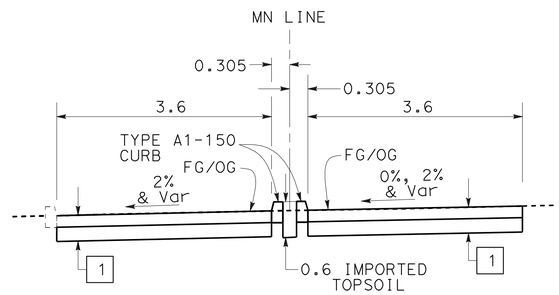

MN 94+84 TO 95+62.000

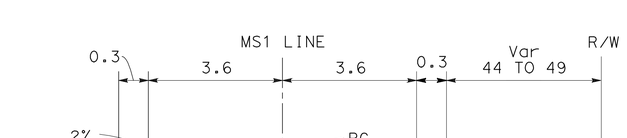

MS1 85+65.000 TO 86+19.559

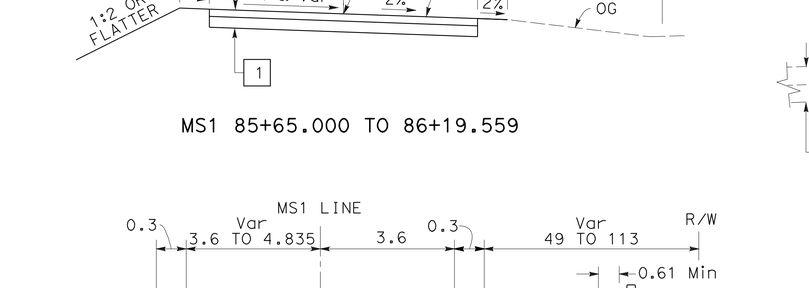

MS1 85+00.000 TO 85+65.000

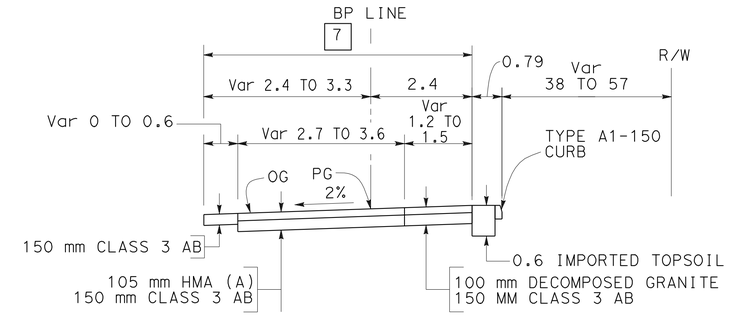

BP 87+96.315 TO 94+20

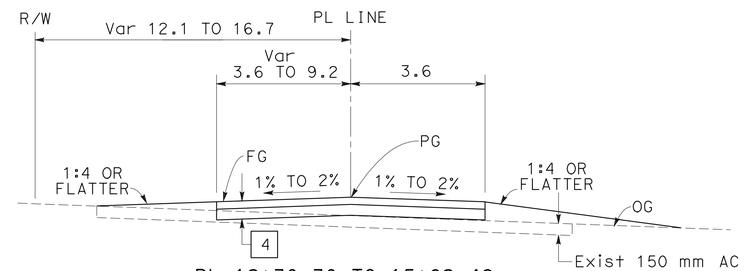

PL 12+30.30 TO 15+82.46

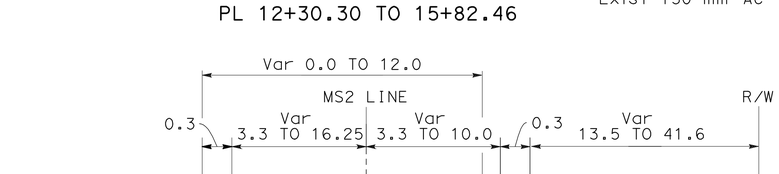

MS2 11+50.752 TO 12+06.282

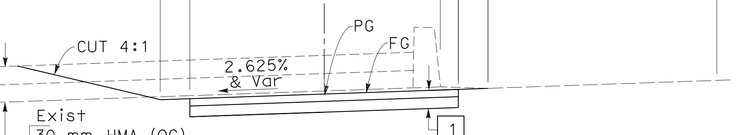

MS2 11+39.323 TO 11+50.752

TYPICAL CROSS SECTIONS

NO SCALE

FOR NOTES, ABBREVIATIONS &/OR LEGEND, SEE SHEET X-1

ALL DIMENSIONS ARE IN METERS UNLESS OTHERWISE SHOWN

X-9

REVISED BY	DATE REVISED

CALCULATED-DESIGNED BY: GABRIEL TCRUZ
CHECKED BY: RAFAEL RAVELO
FUNCTIONAL SUPERVISOR: JAIME E. GUTIERREZ

STATE OF CALIFORNIA - DEPARTMENT OF TRANSPORTATION
Caltrans TOLL BRIDGE

LAST REVISION 09-13-11 DATE PLOTTED => 06-OCT-2011 TIME PLOTTED => 10:34

Dist	COUNTY	ROUTE	KILOMETER POST TOTAL PROJECT	SHEET No.	TOTAL SHEETS
04	Ala	80	1.6/2.7	11	744

REGISTERED CIVIL ENGINEER 6-2-11 DATE

10-3-11
PLANS APPROVAL DATE

REGISTERED PROFESSIONAL ENGINEER Gabriel Tcruz No. 68108 Exp. 6-30-11 CIVIL STATE OF CALIFORNIA

THE STATE OF CALIFORNIA OR ITS OFFICERS OR AGENTS SHALL NOT BE RESPONSIBLE FOR THE ACCURACY OR COMPLETENESS OF SCANNED COPIES OF THIS PLAN SHEET.

Caltrans Metric

FOR COMPLETE RIGHT OF WAY AND ACCURATE ACCESS DATA, SEE RIGHT OF WAY RECORD MAPS AT DISTRICT OFFICE.

NOTES:

1. COORDINATES, DISTANCES AND BEARINGS ARE ON CCS' 83, ZONE 3, HIGH PRECISION GEODETIC NETWORK (1991.35 EPOCH). DIVIDE GRID DISTANCES SHOWN BY 0.9999320 TO OBTAIN GROUND LEVEL DISTANCES.
2. FOR ESA LOCATION, SEE C-SHEETS.
3. FOR PAVEMENT CONFORM DETAILS, SEE C-SHEETS.
4. FOR SERVICE PLATFORM AND SERVICE PAD DETAILS, SEE ELECTRICAL PLANS.
5. FOR LIGHTWEIGHT FILL LIMITS AND DETAILS, SEE C-SHEETS.
6. FOR CONCRETE BARRIER TYPE 732 (MOD) AND BARRIER SLAB DETAILS, SEE STRUCTURE PLANS.
7. FOR PARKING LOT DETAILS, SEE C-SHEETS.
8. FOR LOCATIONS OF KNOWN BURIED MAN-MADE OBJECTS (ROCK DIKE), SEE C-SHEETS.
9. FOR ROCK BLANKET LOCATIONS, SEE PLANTING PLANS (PP SHEETS).

ABBREVIATION:

TCE - TEMPORARY CONSTRUCTION EASEMENT

LEGEND:

- 30 mm HMA (OG)
- PAVEMENT CONFORM
- COLD PLANE AC PAVEMENT
- BCDC (BAY CONSERVATION AND DEVELOPMENT COMMISSION) JURISDICTION
- MHW — MEAN HIGH WATER
- W — IRRIGATION CROSSOVER
- S — IRRIGATION SLEEVE
- REMOVE BASE AND SURFACING
- MINOR CONCRETE (PAVING)
- No. — STRUCTURAL SECTION NUMBER
- No. — CURVE DATA NUMBER

``COORDINATE VALUES SHOWN ARE CCS M ZONE 3W''

O A K L A N D

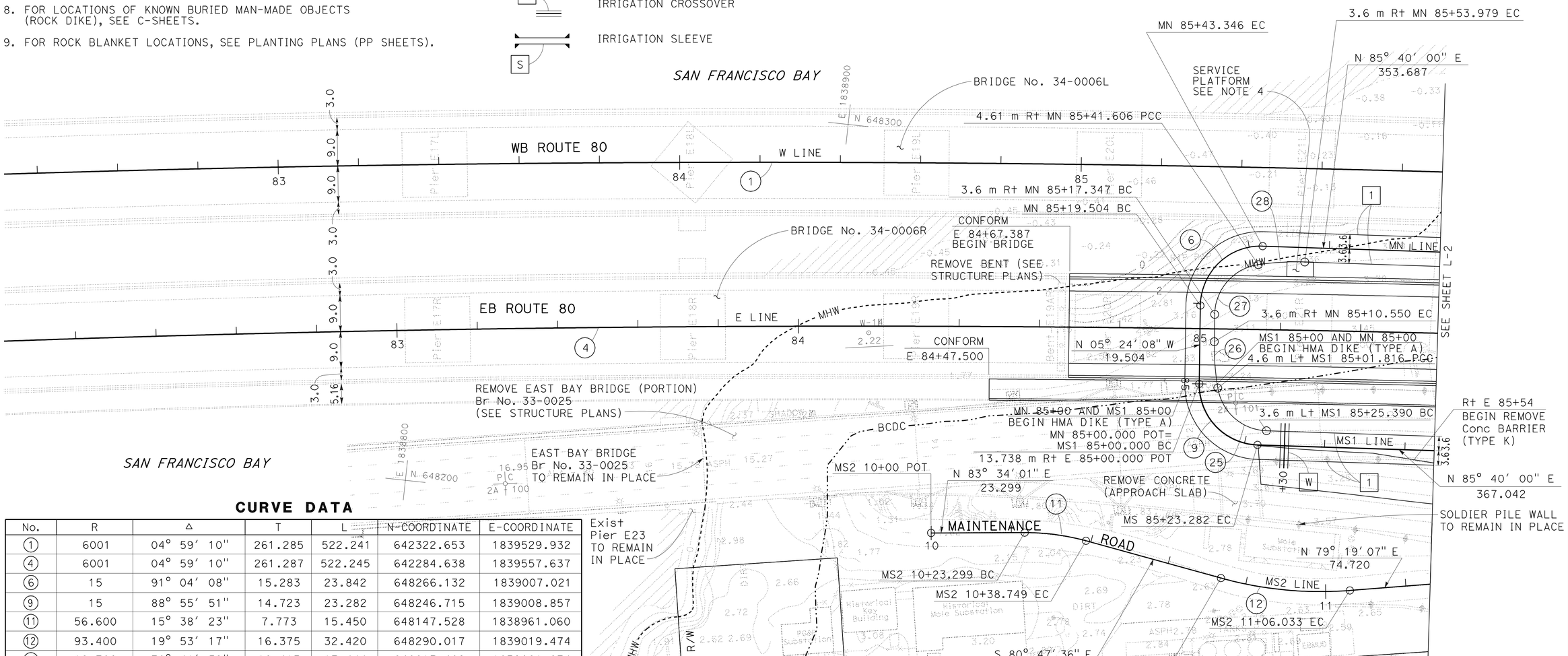

CURVE DATA

No.	R	Δ	T	L	N-COORDINATE	E-COORDINATE
1	6001	04° 59' 10"	261.285	522.241	642322.653	1839529.932
4	6001	04° 59' 10"	261.287	522.245	642284.638	1839557.637
6	15	91° 04' 08"	15.283	23.842	648266.132	1839007.021
9	15	88° 55' 51"	14.723	23.282	648246.715	1839008.857
11	56.600	15° 38' 23"	7.773	15.450	648147.528	1838961.060
12	93.400	19° 53' 17"	16.375	32.420	648290.017	1839019.474
25	12.700	78° 41' 59"	10.413	17.444	648213.489	1839021.674
26	65	10° 13' 52"	5.819	11.607	648262.265	1839061.226
27	12.700	80° 49' 59"	10.815	17.917	648264.107	1839008.518
28	65	10° 14' 09"	5.822	11.612	648213.489	1839021.674

ALL DIMENSIONS ARE IN METERS UNLESS OTHERWISE SHOWN

LAYOUT

SCALE 1:500

L-1

STATE OF CALIFORNIA - DEPARTMENT OF TRANSPORTATION
Caltrans TOLL BRIDGE

FUNCTIONAL SUPERVISOR: JAIME E. GUTIERREZ
CALCULATED-DESIGNED BY: GABRIEL TCRUZ
CHECKED BY: JAIME E. GUTIERREZ
REVISED BY / DATE REVISED

LAST REVISION 08-02-11 DATE PLOTTED => 06-OCT-2011 TIME PLOTTED => 10:35

Dist	COUNTY	ROUTE	KILOMETER POST TOTAL PROJECT	SHEET No.	TOTAL SHEETS
04	Ala	80	1.6/2.7	12	744

REGISTERED CIVIL ENGINEER 6-2-11 DATE

10-3-11
PLANS APPROVAL DATE

REGISTERED PROFESSIONAL ENGINEER Gabriel Tcruz No. 68108 Exp. 6-30-11 CIVIL STATE OF CALIFORNIA

THE STATE OF CALIFORNIA OR ITS OFFICERS OR AGENTS SHALL NOT BE RESPONSIBLE FOR THE ACCURACY OR COMPLETENESS OF SCANNED COPIES OF THIS PLAN SHEET.

Caltrans Metric

FOR COMPLETE RIGHT OF WAY AND ACCURATE ACCESS DATA, SEE RIGHT OF WAY RECORD MAPS AT DISTRICT OFFICE.

CURVE DATA

No.	R	Δ	T	L	N-Coordinate	E-Coordinate
1	6001	04° 59′ 10″	261.285	522.241	642322.653	1839529.932
4	6001	04° 59′ 10″	261.287	522.245	642284.638	1839557.637
5	3000	07° 02′ 04″	184.392	368.320	651275.179	1839079.083
7	2200	08° 12′ 30″	157.859	315.177	650501.525	1839192.334
10	2000	04° 38′ 46″	81.134	162.179	650253.774	1839224.865
13	13.400	68° 39′ 07″	9.150	16.056	648225.253	1839107.727

CURVE DATA

No.	R	Δ	T	L	N-Coordinate	E-Coordinate
14	1000	05° 01′ 13″	43.839	87.622	647256.875	1839193.899
15	400	05° 01′ 13″	17.535	35.048	648656.523	1839231.559
16	2000	04° 38′ 46″	81.134	162.179	650260.544	1839224.075
20	200	02° 57′ 39″	5.169	10.335	648034.133	1839258.335
21	8	91° 52′ 32″	8.266	12.828	648230.091	1839303.303
22	8	90° 00′ 00″	8.000	12.566	648214.712	1839319.977

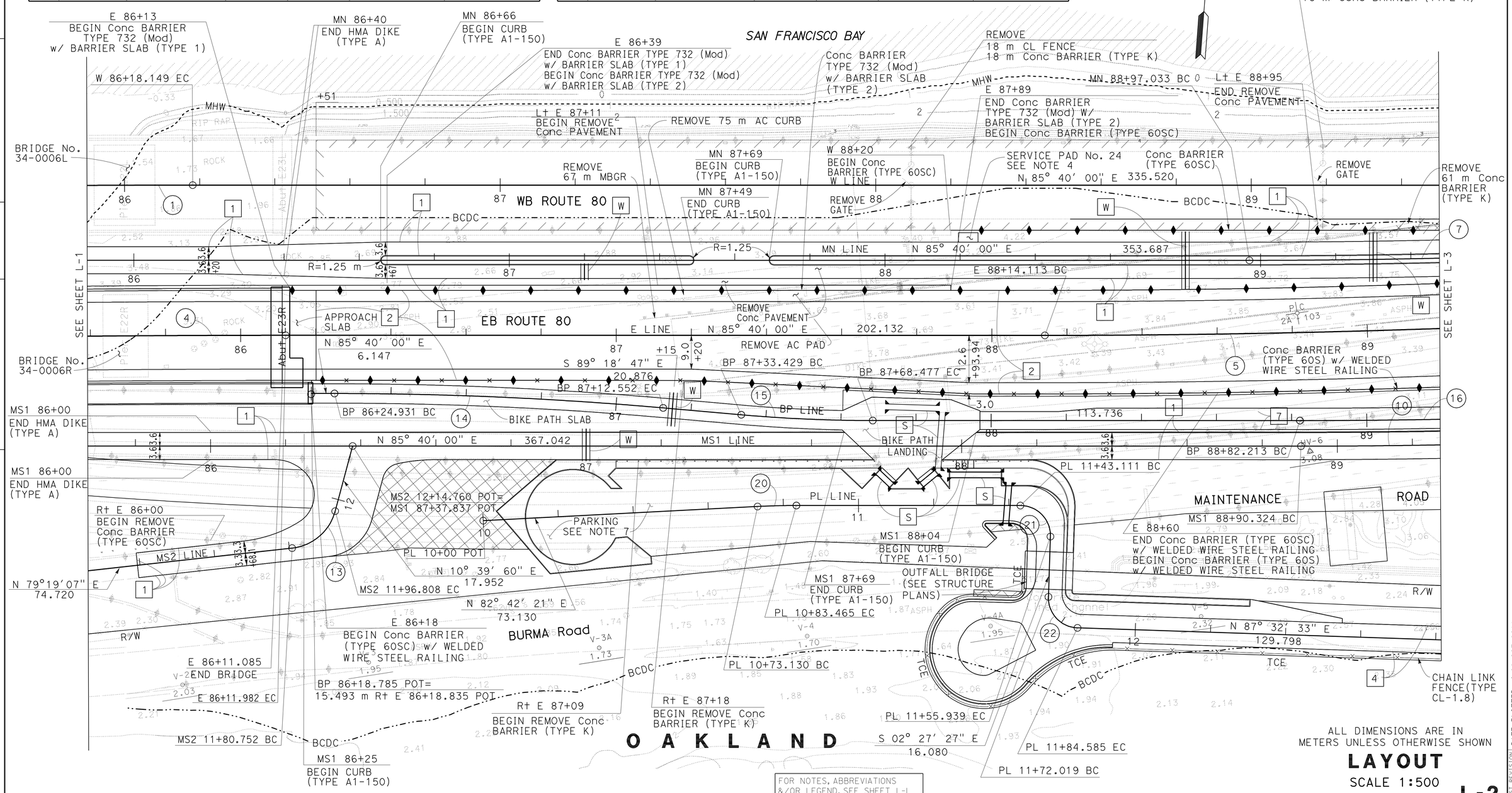

FOR NOTES, ABBREVIATIONS &/OR LEGEND, SEE SHEET L-1

ALL DIMENSIONS ARE IN METERS UNLESS OTHERWISE SHOWN

LAYOUT

SCALE 1:500

L-2

STATE OF CALIFORNIA - DEPARTMENT OF TRANSPORTATION
Caltrans TOLL BRIDGE

FUNCTIONAL SUPERVISOR: JAIME E. GUTIERREZ
CALCULATED-DESIGNED BY: GABRIEL TCRUZ
CHECKED BY: JAIME E. GUTIERREZ
REVISED BY / DATE REVISED

LAST REVISION 08-04-11
DATE PLOTTED => 06-OCT-2011
TIME PLOTTED => 10:35

Dist	COUNTY	ROUTE	KILOMETER POST TOTAL PROJECT	SHEET No.	TOTAL SHEETS
04	Ala	80	1.6/2.7	13	744

REGISTERED CIVIL ENGINEER 6-2-11 DATE

10-3-11
PLANS APPROVAL DATE

REGISTERED PROFESSIONAL ENGINEER Gabriel Tcruz No. 68108 Exp. 6-30-11 CIVIL STATE OF CALIFORNIA

THE STATE OF CALIFORNIA OR ITS OFFICERS OR AGENTS SHALL NOT BE RESPONSIBLE FOR THE ACCURACY OR COMPLETENESS OF SCANNED COPIES OF THIS PLAN SHEET.

Caltrans Metric

FOR COMPLETE RIGHT OF WAY AND ACCURATE ACCESS DATA, SEE RIGHT OF WAY RECORD MAPS AT DISTRICT OFFICE.

CURVE DATA

No.	R	Δ	T	L	N-Coordinate	E-Coordinate
2	1400	17° 41′ 26"	217.866	432.265	649727.847	1839305.278
5	3000	07° 02′ 04"	184.392	368.320	651275.179	1839079.083
7	2200	08° 12′ 30"	157.859	315.177	650501.525	1839192.334
10	2000	04° 38′ 46"	81.134	162.179	650253.774	1839224.865

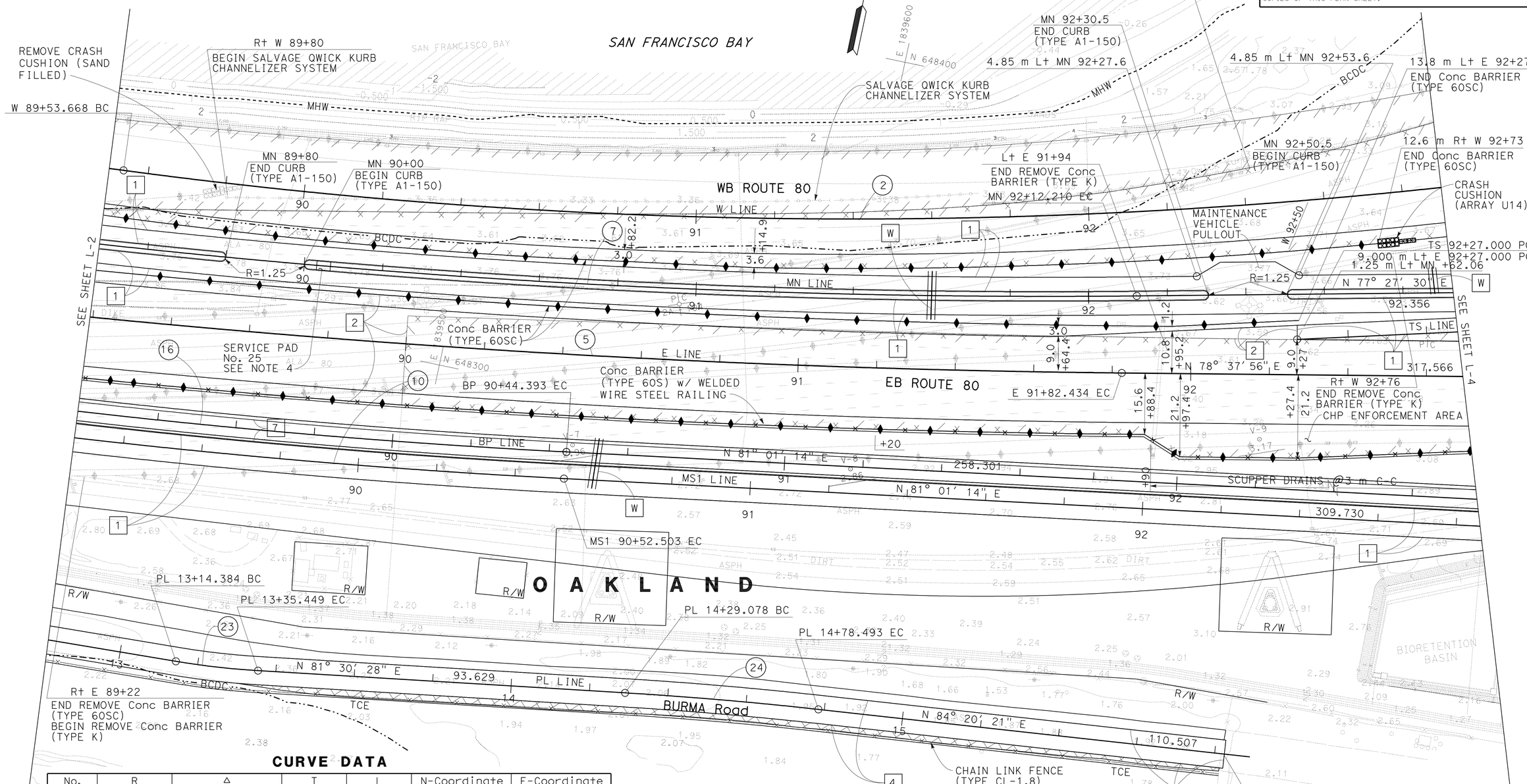

CURVE DATA

No.	R	Δ	T	L	N-Coordinate	E-Coordinate
16	2000	04° 38′ 36"	81.134	162.179	650260.542	1839224.075
23	200	06° 02′ 06"	10.542	21.065	648412.101	1839441.424
24	1000	02° 49′ 52"	24.712	49.415	647239.085	1839711.236

FOR NOTES, ABBREVIATIONS &/OR LEGEND, SEE SHEET L-1

ALL DIMENSIONS ARE IN METERS UNLESS OTHERWISE SHOWN

LAYOUT

SCALE 1:500

L-3

STATE OF CALIFORNIA - DEPARTMENT OF TRANSPORTATION
Caltrans TOLL BRIDGE

FUNCTIONAL SUPERVISOR: JAIME E. GUTIERREZ
CALCULATED-DESIGNED BY: GABRIEL TCRUZ
CHECKED BY: JAIME E. GUTIERREZ
REVISED BY / DATE REVISED

LAST REVISION 06-01-11
DATE PLOTTED => 06-OCT-2011
TIME PLOTTED => 06:06

Dist	COUNTY	ROUTE	KILOMETER POST TOTAL PROJECT	SHEET No.	TOTAL SHEETS
04	Ala	80	1.6/2.7	14	744

Caltrans Metric

Gabriel D Tcruz 6-2-11
REGISTERED CIVIL ENGINEER DATE

10-3-11
PLANS APPROVAL DATE

REGISTERED PROFESSIONAL ENGINEER Gabriel Tcruz No. 68108 Exp. 6-30-11 CIVIL STATE OF CALIFORNIA

THE STATE OF CALIFORNIA OR ITS OFFICERS OR AGENTS SHALL NOT BE RESPONSIBLE FOR THE ACCURACY OR COMPLETENESS OF SCANNED COPIES OF THIS PLAN SHEET.

FOR COMPLETE RIGHT OF WAY AND ACCURATE ACCESS DATA, SEE RIGHT OF WAY RECORD MAPS AT DISTRICT OFFICE.

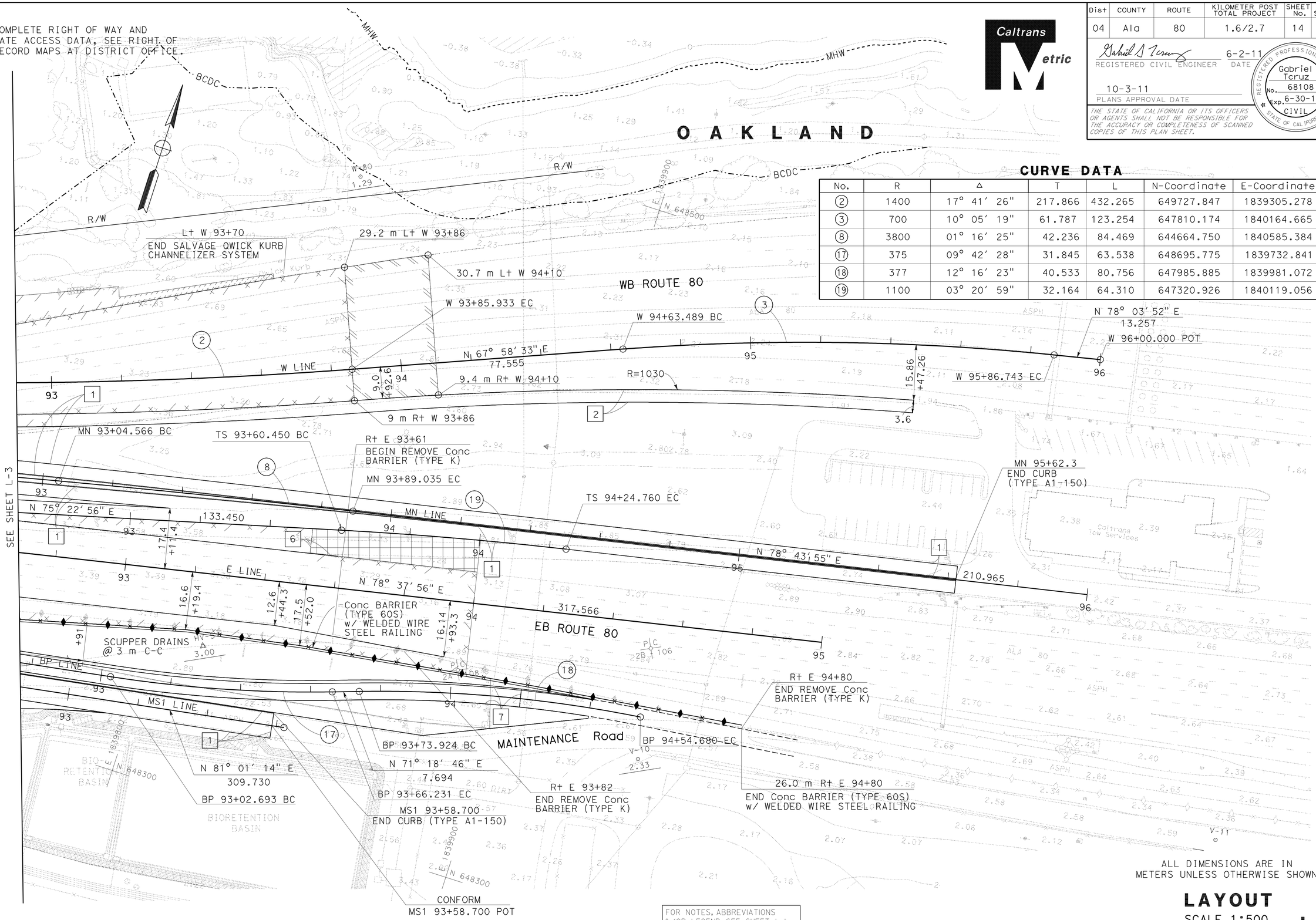

CURVE DATA

No.	R	Δ	T	L	N-Coordinate	E-Coordinate
2	1400	17° 41′ 26″	217.866	432.265	649727.847	1839305.278
3	700	10° 05′ 19″	61.787	123.254	647810.174	1840164.665
8	3800	01° 16′ 25″	42.236	84.469	644664.750	1840585.384
17	375	09° 42′ 28″	31.845	63.538	648695.775	1839732.841
18	377	12° 16′ 23″	40.533	80.756	647985.885	1839981.072
19	1100	03° 20′ 59″	32.164	64.310	647320.926	1840119.056

FOR NOTES, ABBREVIATIONS &/OR LEGEND, SEE SHEET L-1

ALL DIMENSIONS ARE IN METERS UNLESS OTHERWISE SHOWN

LAYOUT

SCALE 1:500

L-4

STATE OF CALIFORNIA - DEPARTMENT OF TRANSPORTATION
Caltrans TOLL BRIDGE

FUNCTIONAL SUPERVISOR: JAIME E. GUTIERREZ
CALCULATED-DESIGNED BY: GABRIEL TCRUZ
CHECKED BY: JAIME E. GUTIERREZ
REVISED BY / DATE REVISED

LAST REVISION 06-03-11 DATE PLOTTED => 06-OCT-2011 TIME PLOTTED => 06:06

Dist	COUNTY	ROUTE	KILOMETER POST TOTAL PROJECT	SHEET No.	TOTAL SHEETS
04	Ala	80	1.6/2.7	15	744

REGISTERED CIVIL ENGINEER 6-2-11 DATE

10-3-11
PLANS APPROVAL DATE

REGISTERED PROFESSIONAL ENGINEER Anna G. Ureta No. 67663 Exp. 6-30-11 CIVIL STATE OF CALIFORNIA

THE STATE OF CALIFORNIA OR ITS OFFICERS OR AGENTS SHALL NOT BE RESPONSIBLE FOR THE ACCURACY OR COMPLETENESS OF SCANNED COPIES OF THIS PLAN SHEET.

Caltrans Metric

NOTE:

1. ELEVATION IS BASED ON 1929 NATIONAL GEODETIC VERTICAL DATUM

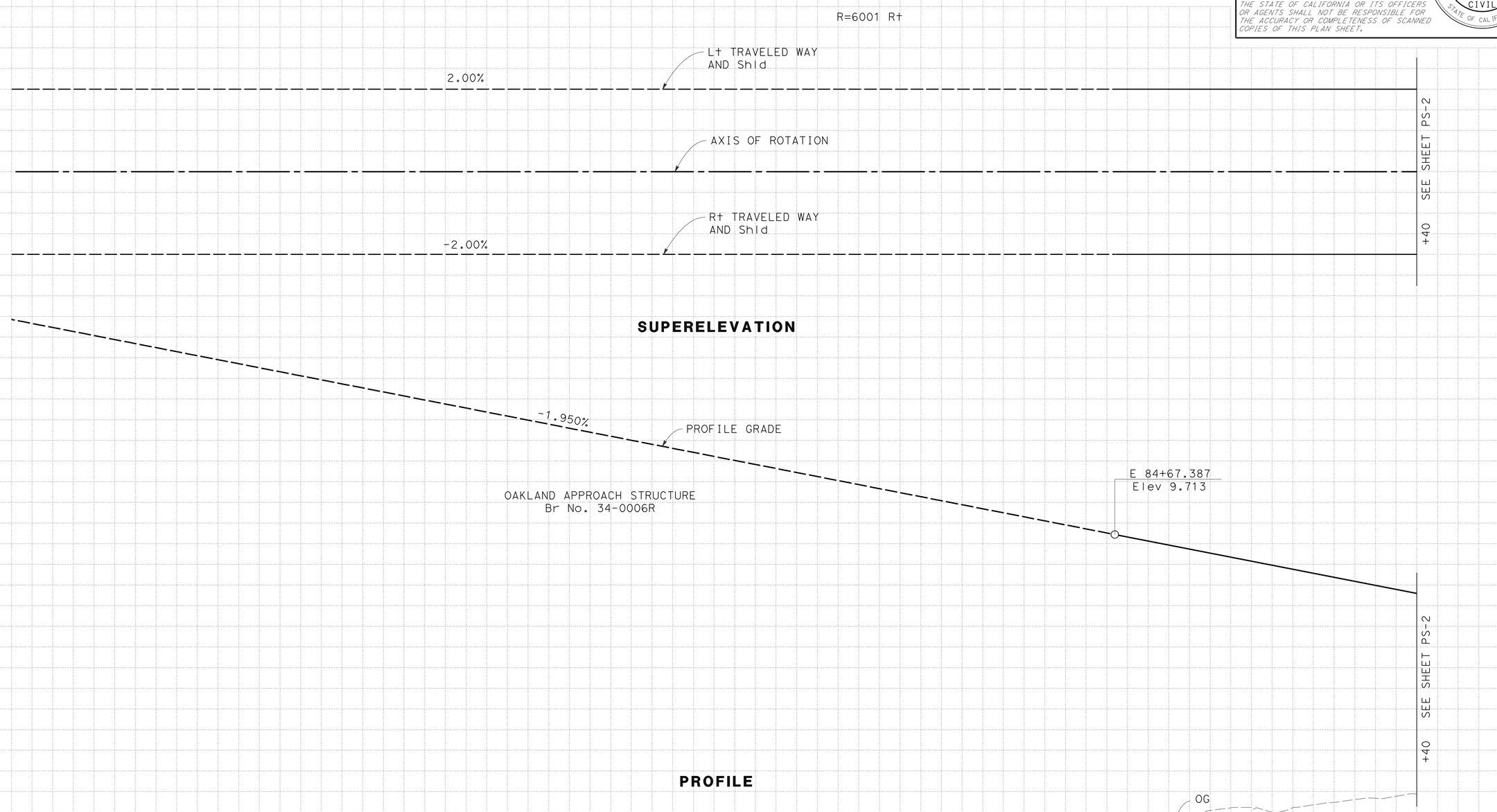

ALL DIMENSIONS ARE IN METERS UNLESS OTHERWISE SHOWN

PROFILE AND SUPERELEVATION DIAGRAM
(E LINE)

SCALE Horiz 1:500
Vert 1:50

PS-1

REVISED BY | DATE REVISED

ANNA URETA | GABRIEL TCRUZ

CALCULATED-DESIGNED BY | CHECKED BY

FUNCTIONAL SUPERVISOR | JAIME E. GUTIERREZ

STATE OF CALIFORNIA - DEPARTMENT OF TRANSPORTATION

Caltrans **TOLL BRIDGE**

LAST REVISION 07-20-11 | DATE PLOTTED => 06-OCT-2011 | TIME PLOTTED => 06:07

Dist	COUNTY	ROUTE	KILOMETER POST TOTAL PROJECT	SHEET No.	TOTAL SHEETS
04	Ala	80	1.6/2.7	16	744

REGISTERED CIVIL ENGINEER — DATE 6-2-11

PLANS APPROVAL DATE 10-3-11

REGISTERED PROFESSIONAL ENGINEER — Anna G. Ureta — No. 67663 — Exp. 6-30-11 — CIVIL — STATE OF CALIFORNIA

THE STATE OF CALIFORNIA OR ITS OFFICERS OR AGENTS SHALL NOT BE RESPONSIBLE FOR THE ACCURACY OR COMPLETENESS OF SCANNED COPIES OF THIS PLAN SHEET.

Caltrans Metric

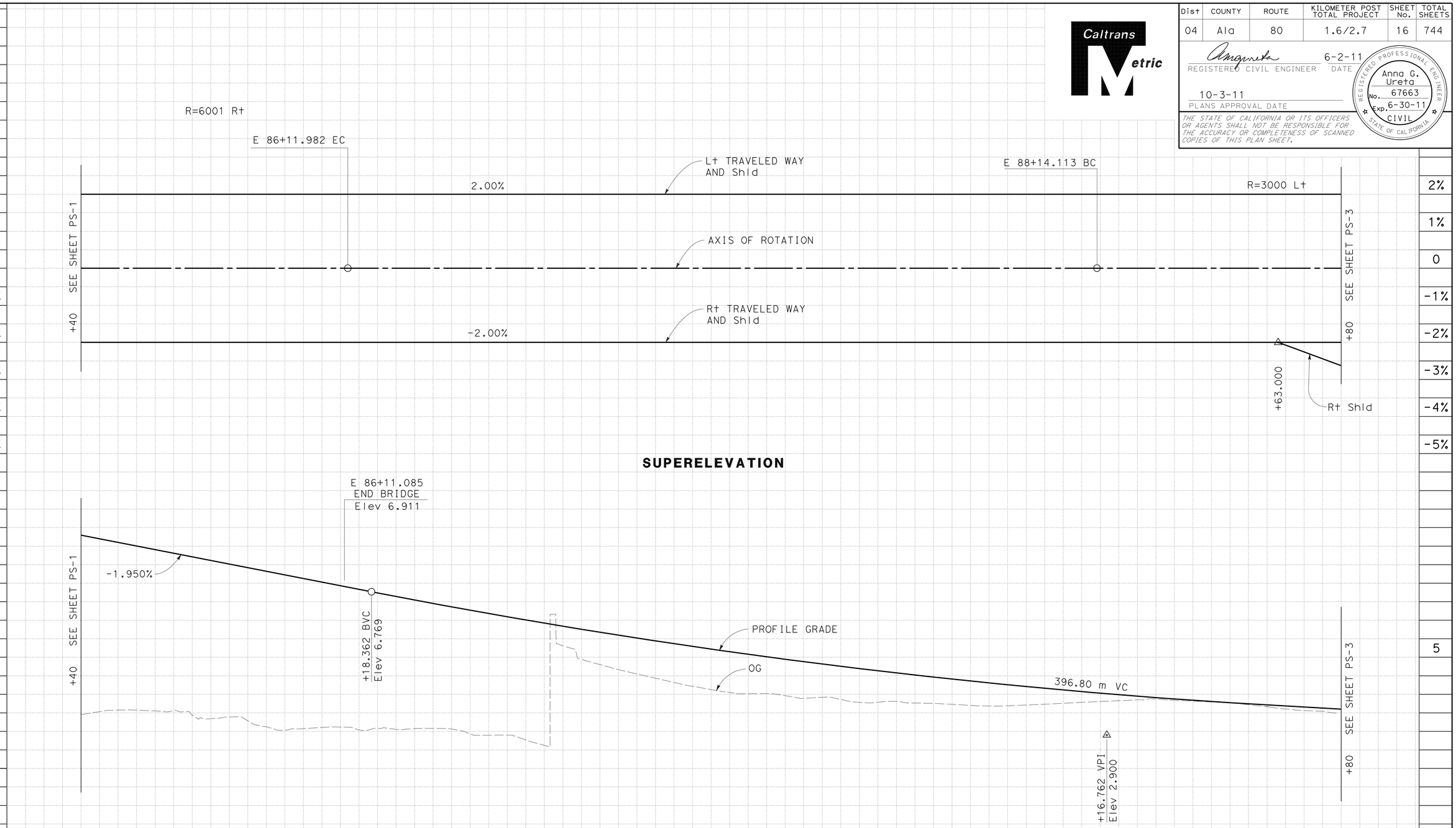

ALL DIMENSIONS ARE IN METERS UNLESS OTHERWISE SHOWN

PROFILE AND SUPERELEVATION DIAGRAM
(E LINE)

SCALE Horiz 1:500
Vert 1:50

PS-2

Station	86	87	88
m^3 Exc			
m^3 Emb			

STATE OF CALIFORNIA - DEPARTMENT OF TRANSPORTATION
Caltrans
TOLL BRIDGE

FUNCTIONAL SUPERVISOR: JAIME E. GUTIERREZ
CALCULATED-DESIGNED BY: ANNA URETA
CHECKED BY: GABRIEL TORRUZ
REVISED BY / DATE REVISED

LAST REVISION 07-20-11 DATE PLOTTED => 06-OCT-2011 TIME PLOTTED => 06:07

Dist	COUNTY	ROUTE	KILOMETER POST TOTAL PROJECT	SHEET No.	TOTAL SHEETS
04	Ala	80	1.6/2.7	17	744

REGISTERED CIVIL ENGINEER 6-2-11 DATE

10-3-11
PLANS APPROVAL DATE

REGISTERED PROFESSIONAL ENGINEER Anna G. Ureta No. 67663 Exp. 6-30-11 CIVIL STATE OF CALIFORNIA

THE STATE OF CALIFORNIA OR ITS OFFICERS OR AGENTS SHALL NOT BE RESPONSIBLE FOR THE ACCURACY OR COMPLETENESS OF SCANNED COPIES OF THIS PLAN SHEET.

Caltrans Metric

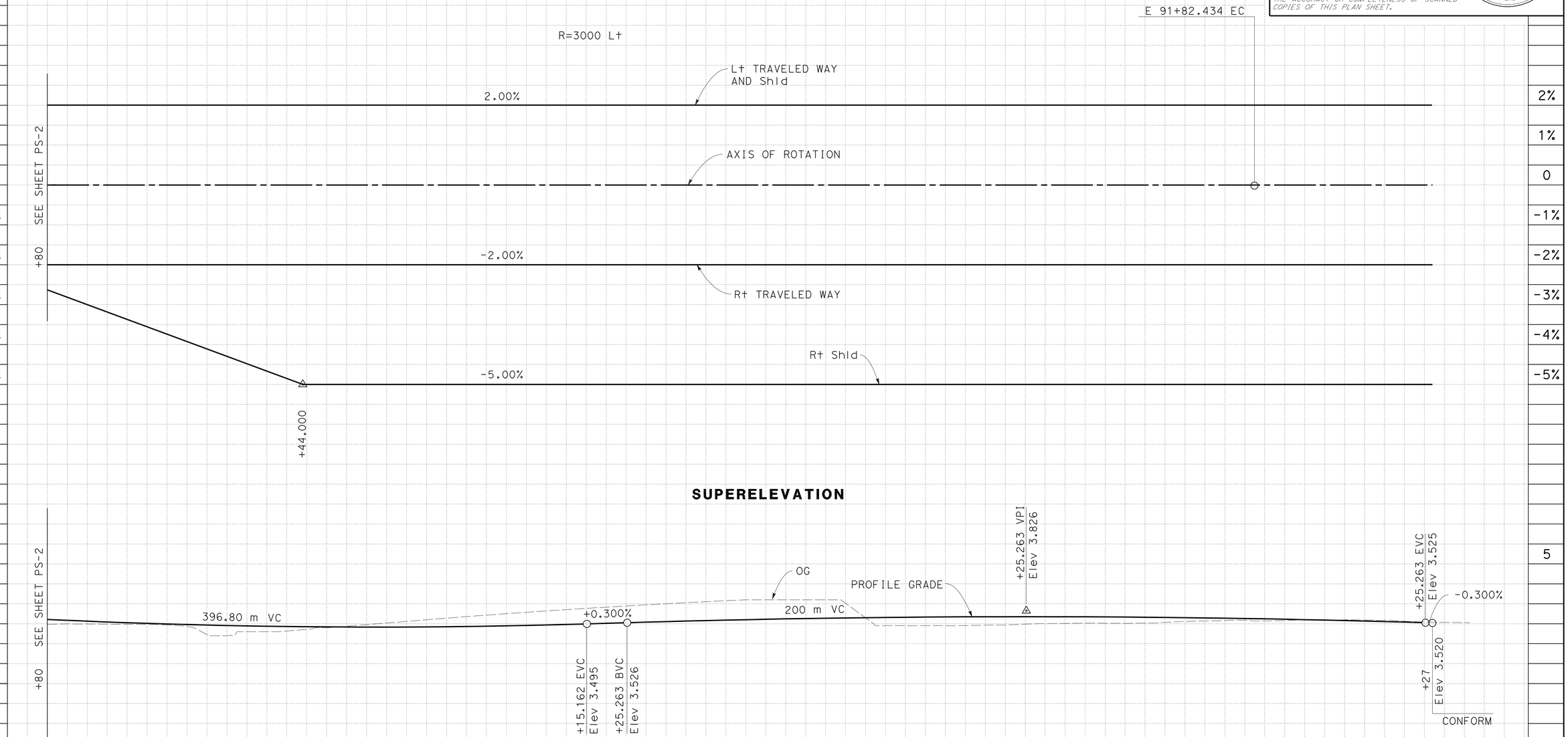

PROFILE AND SUPERELEVATION DIAGRAM
(E LINE)

SCALE Horiz 1:500
Vert 1:50

ALL DIMENSIONS ARE IN METERS UNLESS OTHERWISE SHOWN

PS-3

STATE OF CALIFORNIA - DEPARTMENT OF TRANSPORTATION
Caltrans
TOLL BRIDGE

FUNCTIONAL SUPERVISOR: JAIME E. GUTIERREZ
CALCULATED-DESIGNED BY: ANNA URETA
CHECKED BY: GABRIEL TCRUZ
REVISED BY / DATE REVISED

LAST REVISION 07-20-11 DATE PLOTTED => 06-OCT-2011 TIME PLOTTED => 06:07

Dist	COUNTY	ROUTE	KILOMETER POST TOTAL PROJECT	SHEET No.	TOTAL SHEETS
04	Ala	80	1.6/2.7	18	744

REGISTERED CIVIL ENGINEER 6-2-11 DATE

10-3-11
PLANS APPROVAL DATE

REGISTERED PROFESSIONAL ENGINEER Anna G. Ureta No. 67663 Exp. 6-30-11 CIVIL STATE OF CALIFORNIA

THE STATE OF CALIFORNIA OR ITS OFFICERS OR AGENTS SHALL NOT BE RESPONSIBLE FOR THE ACCURACY OR COMPLETENESS OF SCANNED COPIES OF THIS PLAN SHEET.

Caltrans Metric

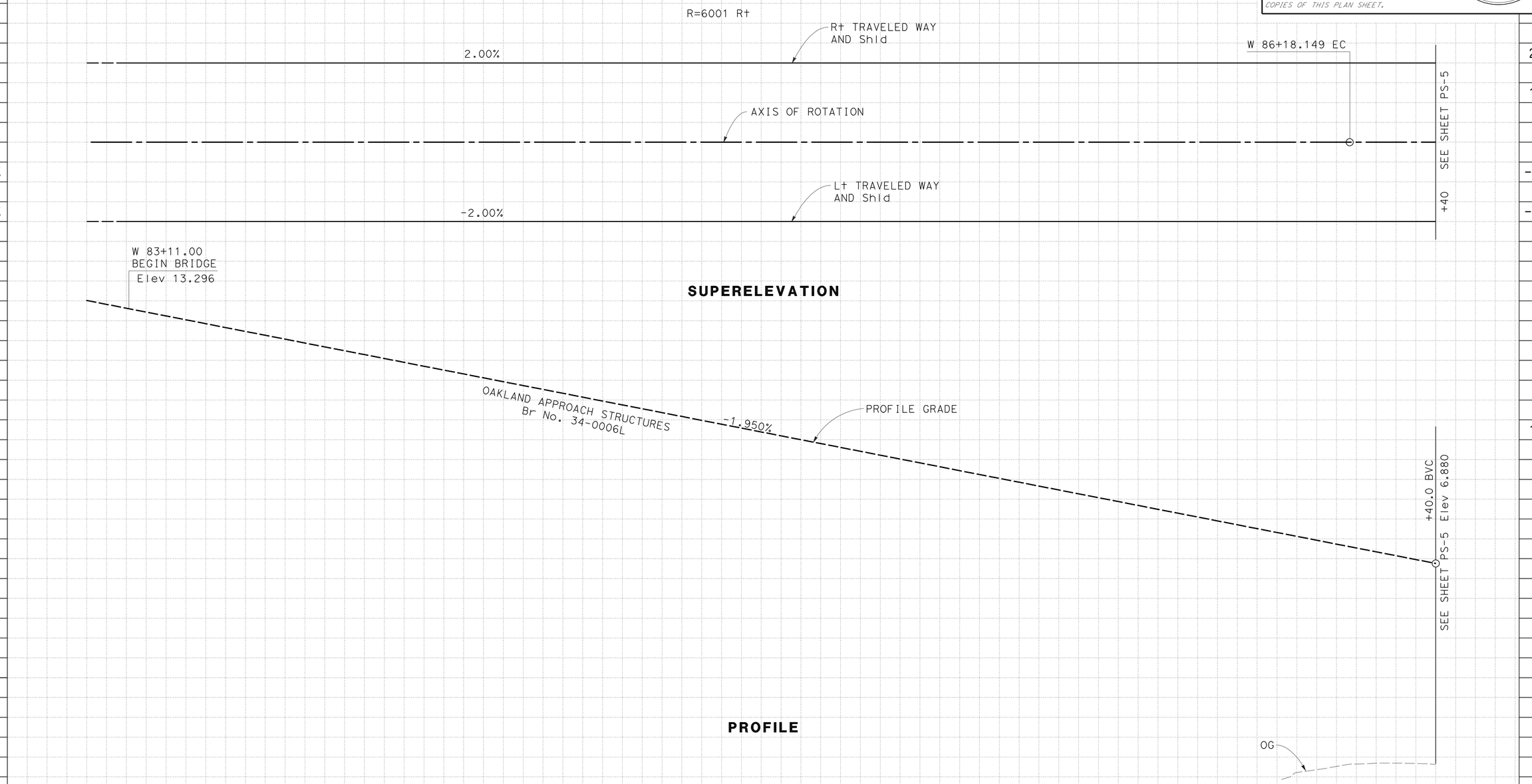

PROFILE AND SUPERELEVATION DIAGRAM
(W LINE)

SCALE Horiz 1:500
Vert 1:50

ALL DIMENSIONS ARE IN METERS UNLESS OTHERWISE SHOWN

PS-4

Station	83	84	85	86
m^3 Exc				
m^3 Emb				

STATE OF CALIFORNIA - DEPARTMENT OF TRANSPORTATION
Caltrans **TOLL BRIDGE**

FUNCTIONAL SUPERVISOR: JAIME E. GUTIERREZ
CALCULATED-DESIGNED BY: ANNA URETA
CHECKED BY: GABRIEL TORRUZ
REVISED BY / DATE REVISED

LAST REVISION 07-20-11
DATE PLOTTED => 06-OCT-2011
TIME PLOTTED => 06:07

Dist	COUNTY	ROUTE	KILOMETER POST TOTAL PROJECT	SHEET No.	TOTAL SHEETS
04	Ala	80	1.6/2.7	19	744

REGISTERED CIVIL ENGINEER 6-2-11 DATE

10-3-11
PLANS APPROVAL DATE

REGISTERED PROFESSIONAL ENGINEER Anna G. Ureta No. 67663 Exp. 6-30-11 CIVIL STATE OF CALIFORNIA

THE STATE OF CALIFORNIA OR ITS OFFICERS OR AGENTS SHALL NOT BE RESPONSIBLE FOR THE ACCURACY OR COMPLETENESS OF SCANNED COPIES OF THIS PLAN SHEET.

Caltrans Metric

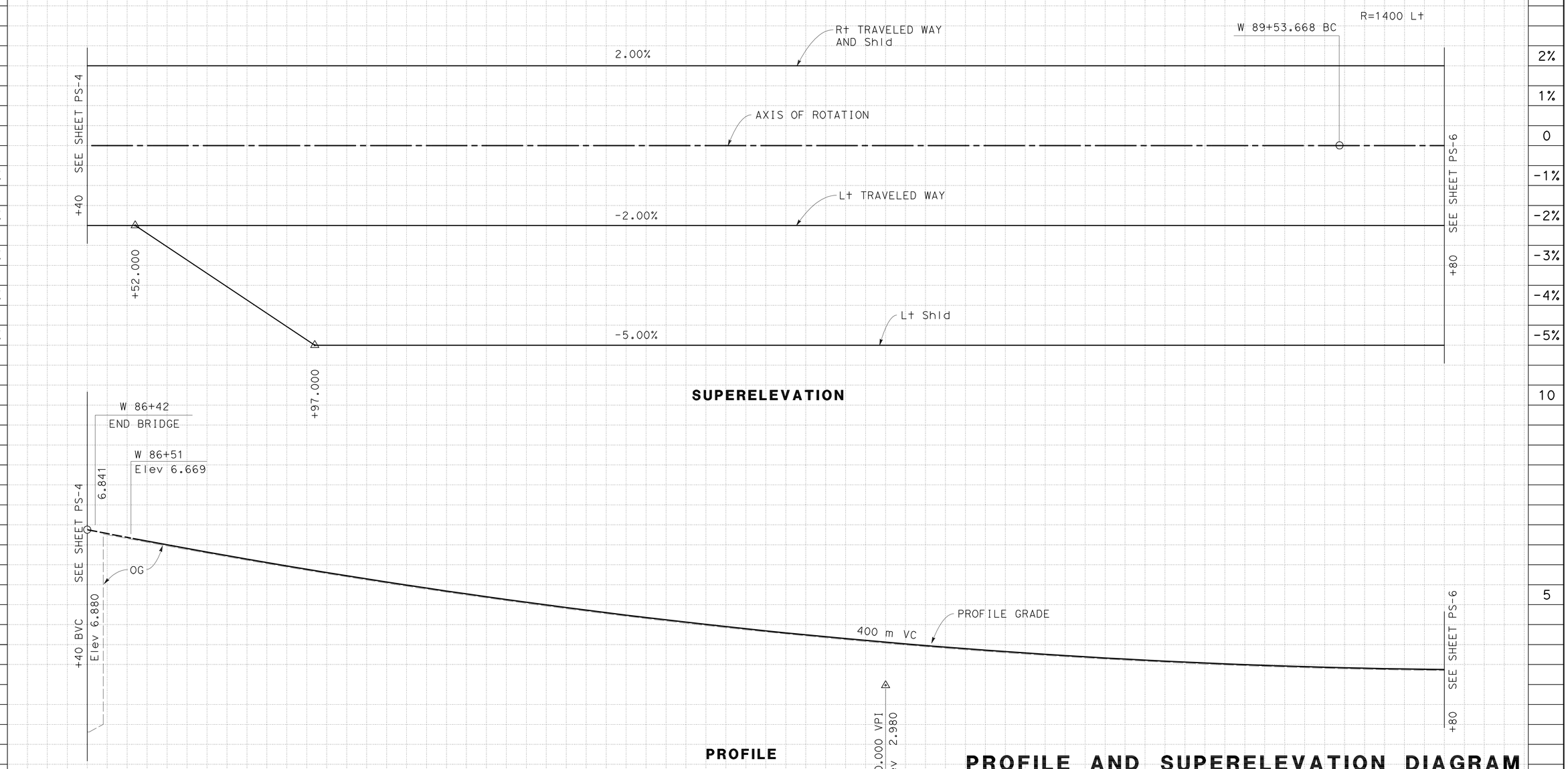

ALL DIMENSIONS ARE IN METERS UNLESS OTHERWISE SHOWN

PROFILE AND SUPERELEVATION DIAGRAM
(W LINE)

SCALE Horiz 1:500
Vert 1:50

PS-5

REVISED BY | DATE REVISED

ANNA URETA | GABRIEL TCRUZ

CALCULATED-DESIGNED BY | CHECKED BY

FUNCTIONAL SUPERVISOR: JAIME E. GUTIERREZ

STATE OF CALIFORNIA - DEPARTMENT OF TRANSPORTATION

Caltrans

TOLL BRIDGE

LAST REVISION 07-20-11 DATE PLOTTED => 06-OCT-2011 TIME PLOTTED => 06:07

Dist	COUNTY	ROUTE	KILOMETER POST TOTAL PROJECT	SHEET No.	TOTAL SHEETS
04	Ala	80	1.6/2.7	20	744

REGISTERED CIVIL ENGINEER — DATE 6-2-11

PLANS APPROVAL DATE 10-3-11

REGISTERED PROFESSIONAL ENGINEER Anna G. Ureta No. 67663 Exp. 6-30-11 CIVIL STATE OF CALIFORNIA

THE STATE OF CALIFORNIA OR ITS OFFICERS OR AGENTS SHALL NOT BE RESPONSIBLE FOR THE ACCURACY OR COMPLETENESS OF SCANNED COPIES OF THIS PLAN SHEET.

Caltrans Metric

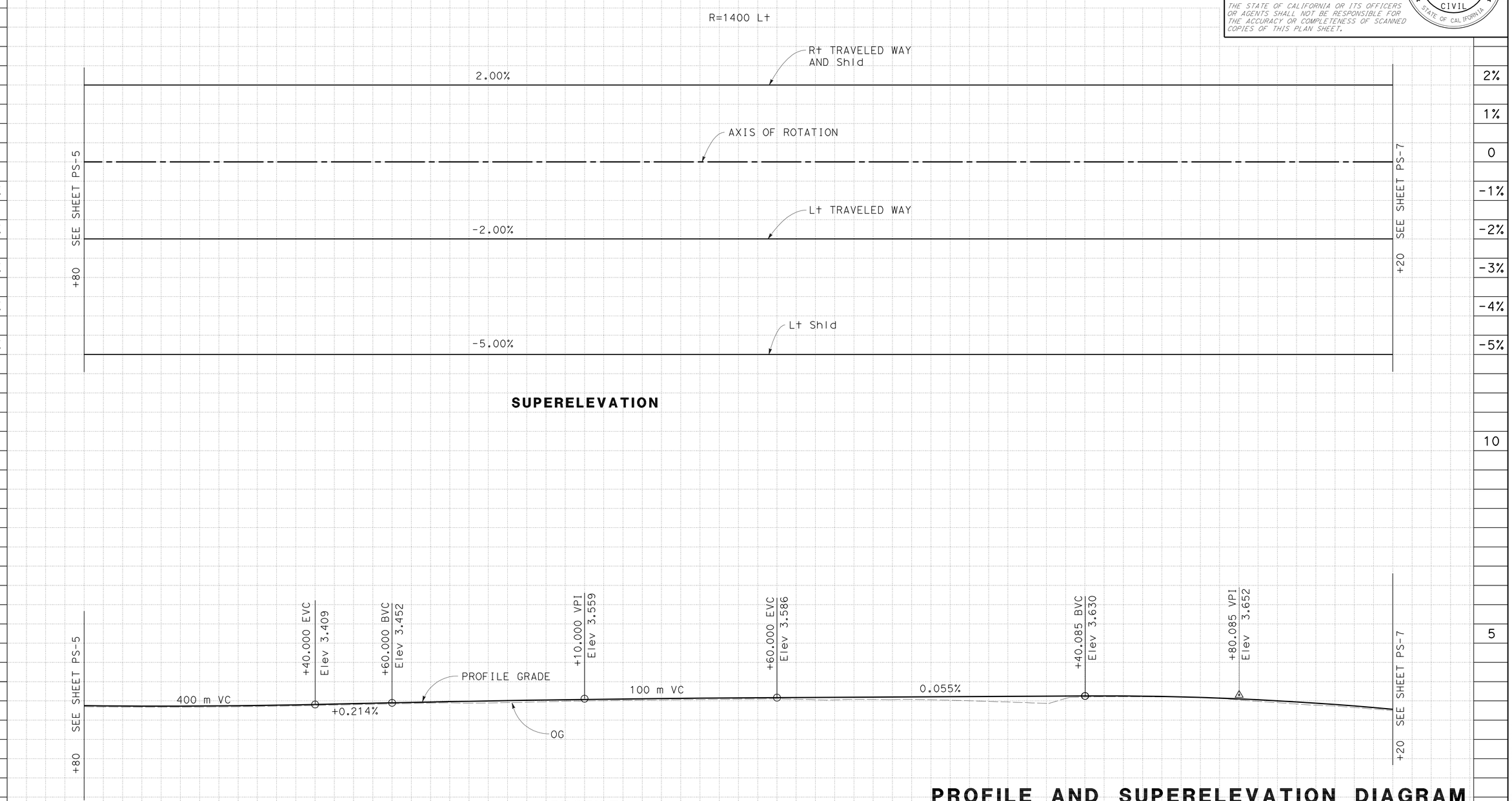

ALL DIMENSIONS ARE IN METERS UNLESS OTHERWISE SHOWN

PROFILE AND SUPERELEVATION DIAGRAM
(W LINE)

SCALE Horiz 1:500
Vert 1:50

PS-6

STATE OF CALIFORNIA - DEPARTMENT OF TRANSPORTATION
Caltrans
TOLL BRIDGE

FUNCTIONAL SUPERVISOR: JAIME E. GUTIERREZ

CALCULATED-DESIGNED BY: ANNA URETA
CHECKED BY: GABRIEL TCRUZ

REVISED BY | DATE REVISED

LAST REVISION 07-20-11 | DATE PLOTTED => 06-OCT-2011 | TIME PLOTTED => 06:07

Dist	COUNTY	ROUTE	KILOMETER POST TOTAL PROJECT	SHEET No.	TOTAL SHEETS
04	Ala	80	1.6/2.7	21	744

REGISTERED CIVIL ENGINEER 6-2-11 DATE

10-3-11
PLANS APPROVAL DATE

REGISTERED PROFESSIONAL ENGINEER Anna G. Ureta No. 67663 Exp. 6-30-11 CIVIL STATE OF CALIFORNIA

THE STATE OF CALIFORNIA OR ITS OFFICERS OR AGENTS SHALL NOT BE RESPONSIBLE FOR THE ACCURACY OR COMPLETENESS OF SCANNED COPIES OF THIS PLAN SHEET.

Caltrans Metric

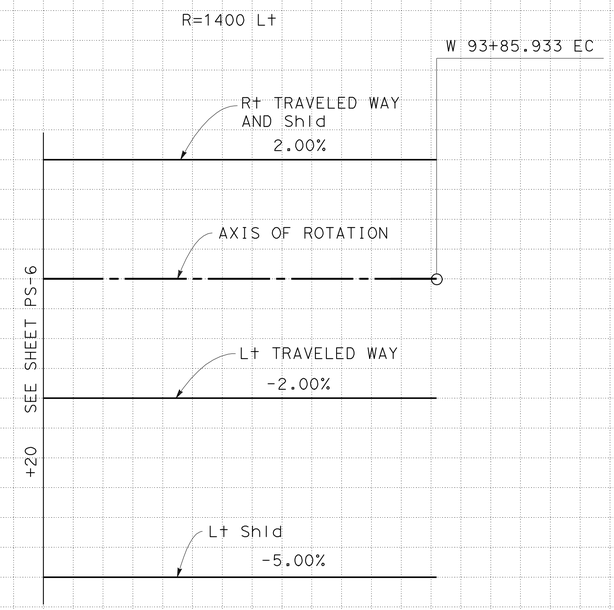

SUPERELEVATION

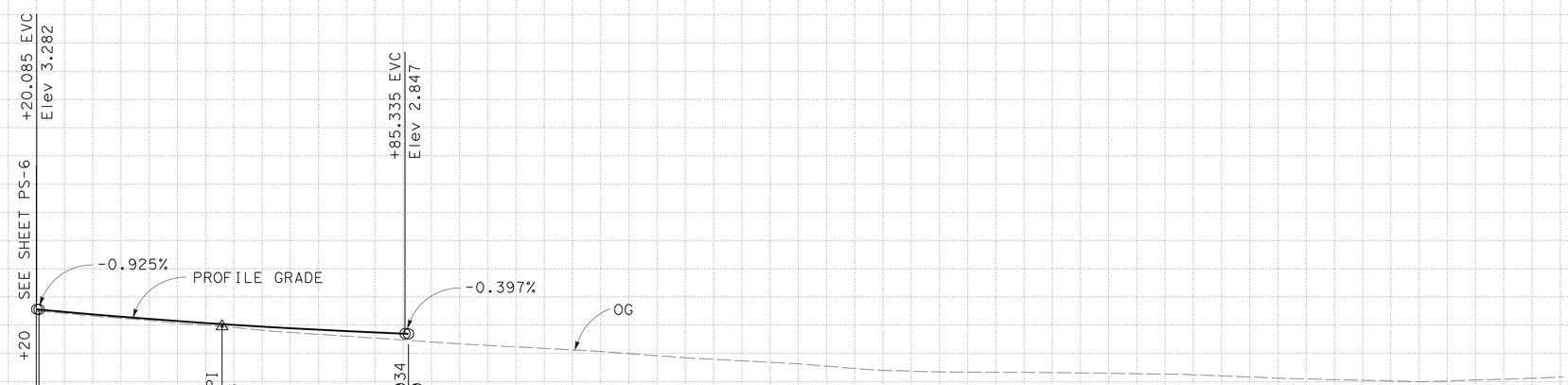

PROFILE

ALL DIMENSIONS ARE IN METERS UNLESS OTHERWISE SHOWN

PROFILE AND SUPERELEVATION DIAGRAM
(W LINE)

SCALE Horiz 1:500
Vert 1:50

PS-7

Station	94	95	96
m^3 Exc			
m^3 Emb			

STATE OF CALIFORNIA - DEPARTMENT OF TRANSPORTATION
Caltrans **TOLL BRIDGE**

FUNCTIONAL SUPERVISOR: JAIME E. GUTIERREZ
CALCULATED-DESIGNED BY: ANNA URETA
CHECKED BY: GABRIEL TORRUZ
REVISED BY / DATE REVISED

LAST REVISION 07-20-11 DATE PLOTTED => 06-OCT-2011 TIME PLOTTED => 06:07

Dist	COUNTY	ROUTE	KILOMETER POST TOTAL PROJECT	SHEET No.	TOTAL SHEETS
04	Ala	80	1.6/2.7	22	744

REGISTERED CIVIL ENGINEER 6-2-11 DATE

10-3-11
PLANS APPROVAL DATE

REGISTERED PROFESSIONAL ENGINEER Anna G. Ureta No. 67663 Exp. 6-30-11 CIVIL STATE OF CALIFORNIA

THE STATE OF CALIFORNIA OR ITS OFFICERS OR AGENTS SHALL NOT BE RESPONSIBLE FOR THE ACCURACY OR COMPLETENESS OF SCANNED COPIES OF THIS PLAN SHEET.

Caltrans Metric

REVISED BY | DATE REVISED

ANNA URETA | GABRIEL TCRUZ

CALCULATED-DESIGNED BY | CHECKED BY

FUNCTIONAL SUPERVISOR: JAIME E. GUTIERREZ

STATE OF CALIFORNIA - DEPARTMENT OF TRANSPORTATION

Caltrans **TOLL BRIDGE**

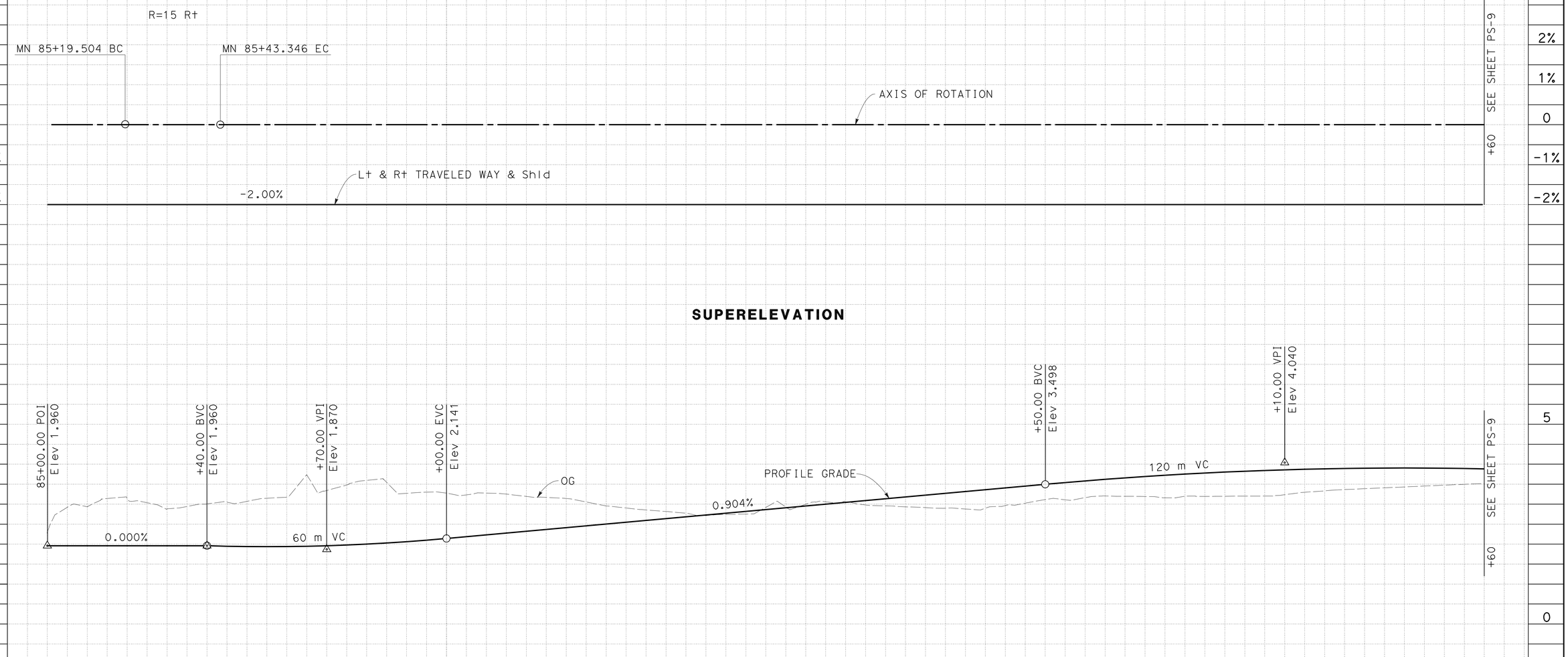

PROFILE AND SUPERELEVATION DIAGRAM
(MN LINE)

SCALE Horiz 1:500
Vert 1:50

ALL DIMENSIONS ARE IN METERS UNLESS OTHERWISE SHOWN

PS-8

Station	85	86	87	88
m^3 Exc				
m^3 Emb				

LAST REVISION 07-20-11 DATE PLOTTED => 06-OCT-2011 TIME PLOTTED => 06:07

Dist	COUNTY	ROUTE	KILOMETER POST TOTAL PROJECT	SHEET No.	TOTAL SHEETS
04	Ala	80	1.6/2.7	23	744

REGISTERED CIVIL ENGINEER 6-2-11 DATE

10-3-11
PLANS APPROVAL DATE

REGISTERED PROFESSIONAL ENGINEER Anna G. Ureta No. 67663 Exp. 6-30-11 CIVIL STATE OF CALIFORNIA

THE STATE OF CALIFORNIA OR ITS OFFICERS OR AGENTS SHALL NOT BE RESPONSIBLE FOR THE ACCURACY OR COMPLETENESS OF SCANNED COPIES OF THIS PLAN SHEET.

Caltrans Metric

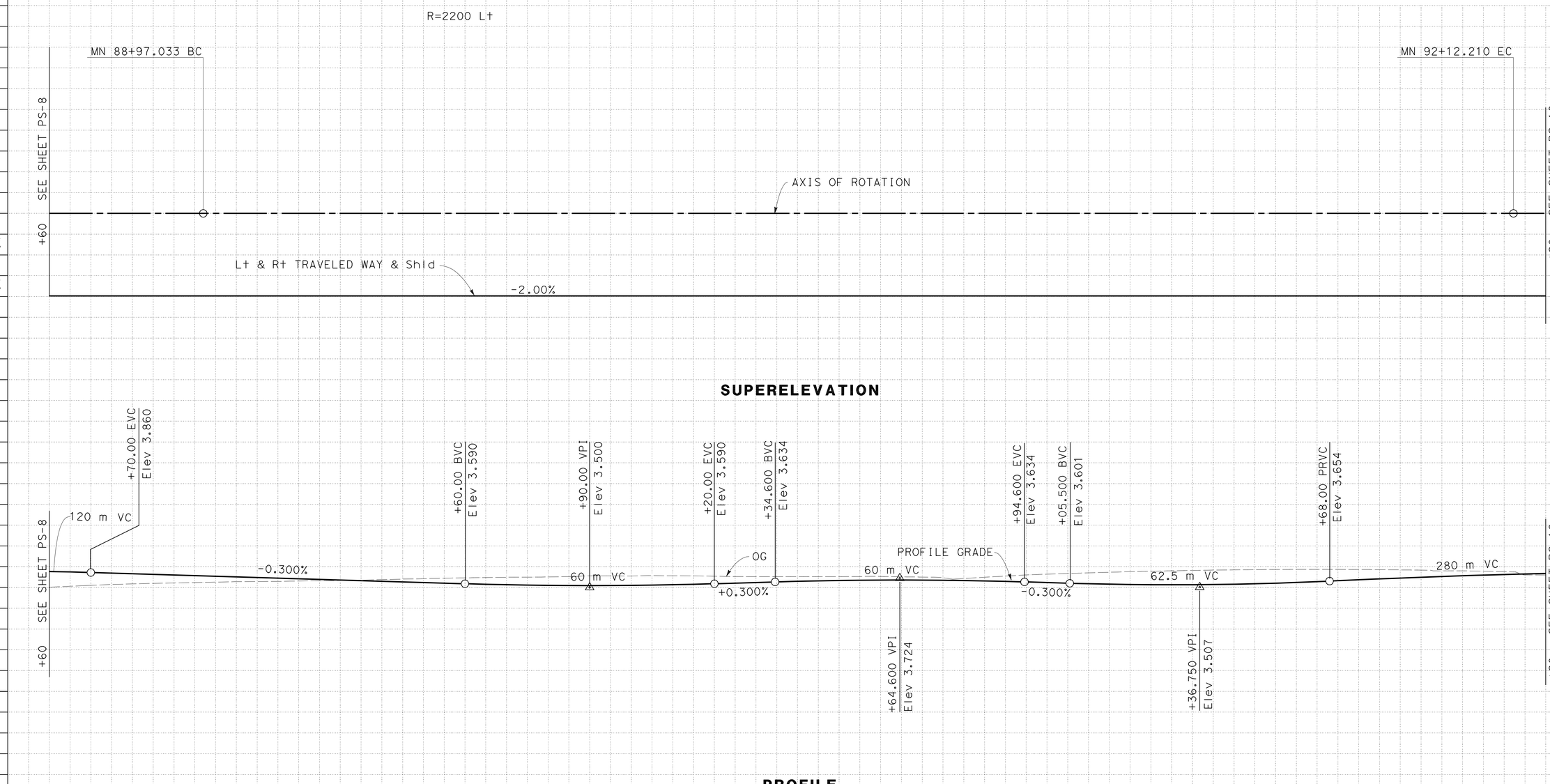

PROFILE AND SUPERELEVATION DIAGRAM
(MN LINE)

SCALE Horiz 1:500
Vert 1:50

ALL DIMENSIONS ARE IN METERS UNLESS OTHERWISE SHOWN

PS-9

Station	89	90	91	92
m^3 Exc				
m^3 Emb				

STATE OF CALIFORNIA - DEPARTMENT OF TRANSPORTATION
Caltrans
TOLL BRIDGE

FUNCTIONAL SUPERVISOR: JAIME E. GUTIERREZ
CALCULATED-DESIGNED BY: ANNA URETA
CHECKED BY: GABRIEL TORRUZ
REVISED BY / DATE REVISED

LAST REVISION 07-20-11
DATE PLOTTED => 06-OCT-2011
TIME PLOTTED => 06:07

Dist	COUNTY	ROUTE	KILOMETER POST TOTAL PROJECT	SHEET No.	TOTAL SHEETS
04	Ala	80	1.6/2.7	24	744

REGISTERED CIVIL ENGINEER — DATE 6-2-11

10-3-11
PLANS APPROVAL DATE

REGISTERED PROFESSIONAL ENGINEER — Anna G. Ureta — No. 67663 — Exp. 6-30-11 — CIVIL — STATE OF CALIFORNIA

THE STATE OF CALIFORNIA OR ITS OFFICERS OR AGENTS SHALL NOT BE RESPONSIBLE FOR THE ACCURACY OR COMPLETENESS OF SCANNED COPIES OF THIS PLAN SHEET.

Caltrans Metric

NOTE:
TS LINE PROFILE AND SUPERELEVATION ARE CONTROLLED BY MN LINE

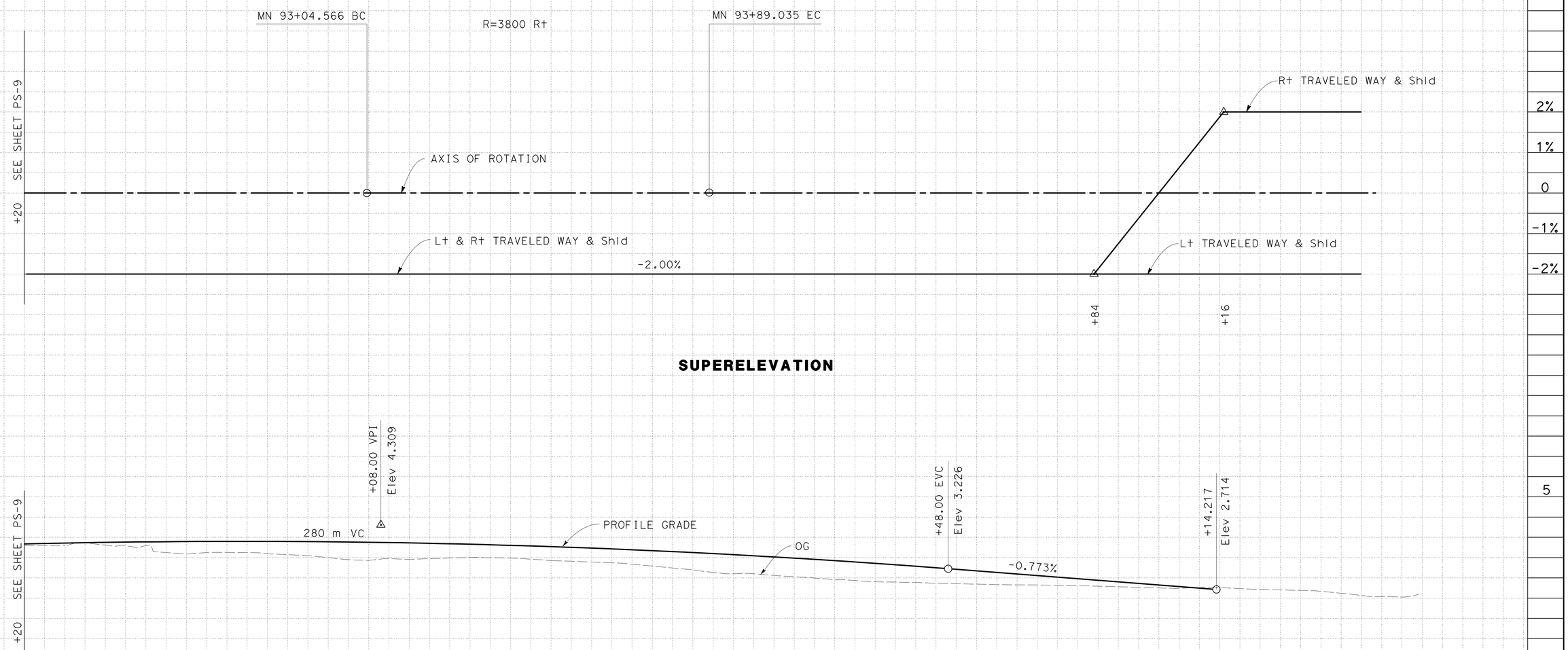

PROFILE AND SUPERELEVATION DIAGRAM
(MN LINE)

SCALE Horiz 1:500
Vert 1:50

ALL DIMENSIONS ARE IN METERS UNLESS OTHERWISE SHOWN

PS-10

Station	93	94	95
m^3 Exc			
m^3 Emb			

ANNA URETA — REVISED BY
GABRIEL TCRUZ — DATE REVISED
CALCULATED-DESIGNED BY
CHECKED BY
FUNCTIONAL SUPERVISOR
JAIME E. GUTIERREZ

STATE OF CALIFORNIA - DEPARTMENT OF TRANSPORTATION
Caltrans
TOLL BRIDGE

LAST REVISION 07-20-11
DATE PLOTTED => 06-OCT-2011
TIME PLOTTED => 06:07

Dist	COUNTY	ROUTE	KILOMETER POST TOTAL PROJECT	SHEET No.	TOTAL SHEETS
04	Ala	80	1.6/2.7	25	744

REGISTERED CIVIL ENGINEER 6-2-11 DATE

10-3-11
PLANS APPROVAL DATE

REGISTERED PROFESSIONAL ENGINEER Anna G. Ureta No. 67663 Exp. 6-30-11 CIVIL STATE OF CALIFORNIA

THE STATE OF CALIFORNIA OR ITS OFFICERS OR AGENTS SHALL NOT BE RESPONSIBLE FOR THE ACCURACY OR COMPLETENESS OF SCANNED COPIES OF THIS PLAN SHEET.

Caltrans Metric

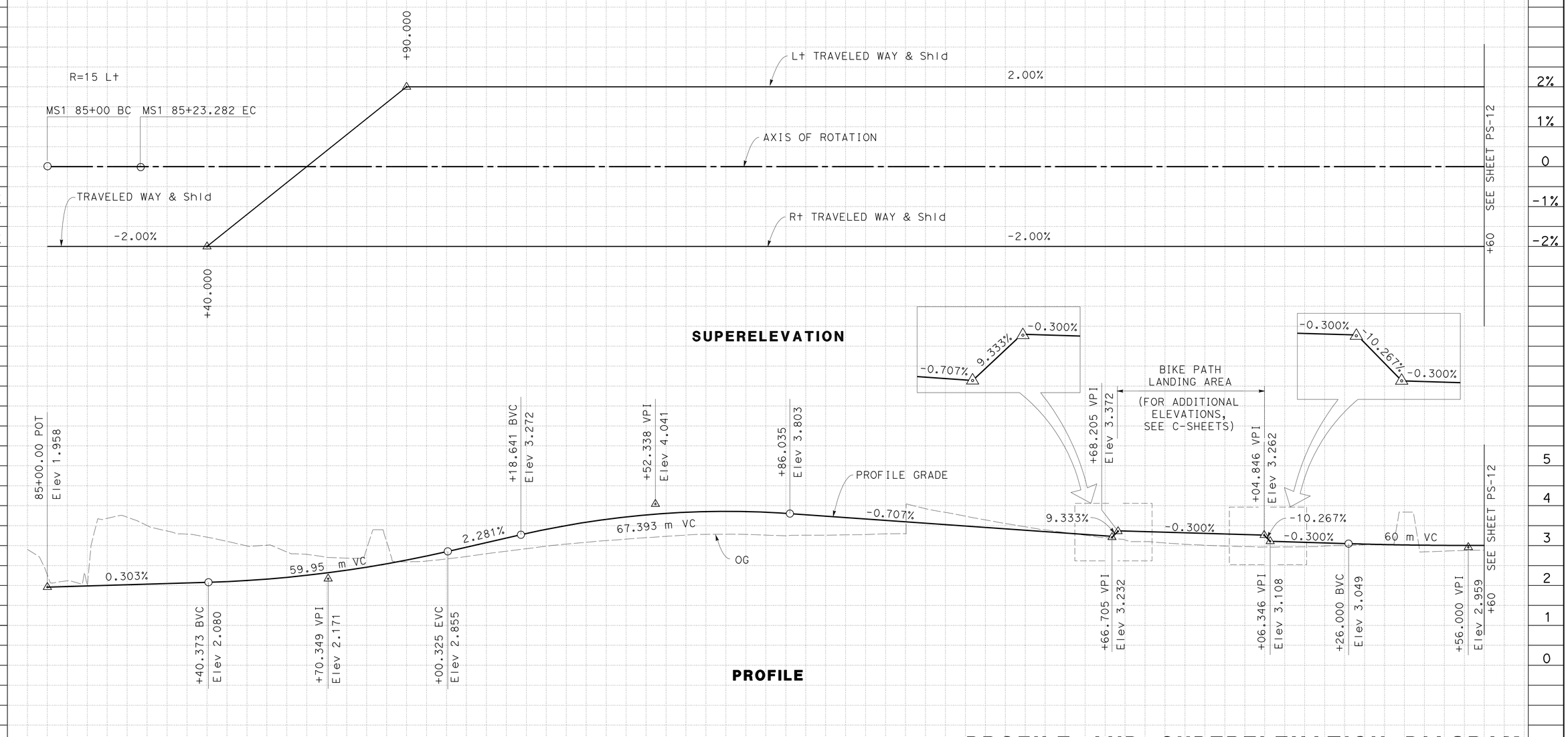

PROFILE AND SUPERELEVATION DIAGRAM
(MS1 LINE)

SCALE Horiz 1:500
Vert 1:50

ALL DIMENSIONS ARE IN METERS UNLESS OTHERWISE SHOWN

PS-11

STATE OF CALIFORNIA - DEPARTMENT OF TRANSPORTATION
Caltrans
TOLL BRIDGE

FUNCTIONAL SUPERVISOR: JAIME E. GUTIERREZ
CALCULATED-DESIGNED BY: ANNA URETA
CHECKED BY: GABRIEL TCRUZ
REVISED BY / DATE REVISED

LAST REVISION 07-20-11 | DATE PLOTTED => 06-OCT-2011 | TIME PLOTTED => 06:07

Dist	COUNTY	ROUTE	KILOMETER POST TOTAL PROJECT	SHEET No.	TOTAL SHEETS
04	Ala	80	1.6/2.7	26	744

REGISTERED CIVIL ENGINEER 6-2-11 DATE

10-3-11
PLANS APPROVAL DATE

REGISTERED PROFESSIONAL ENGINEER Anna G. Ureta No. 67663 Exp. 6-30-11 CIVIL STATE OF CALIFORNIA

THE STATE OF CALIFORNIA OR ITS OFFICERS OR AGENTS SHALL NOT BE RESPONSIBLE FOR THE ACCURACY OR COMPLETENESS OF SCANNED COPIES OF THIS PLAN SHEET.

Caltrans Metric

REVISED BY | DATE REVISED

ANNA URETA | GABRIEL TCRUZ

CALCULATED-DESIGNED BY | CHECKED BY

FUNCTIONAL SUPERVISOR: JAIME E. GUTIERREZ

STATE OF CALIFORNIA - DEPARTMENT OF TRANSPORTATION

Caltrans **TOLL BRIDGE**

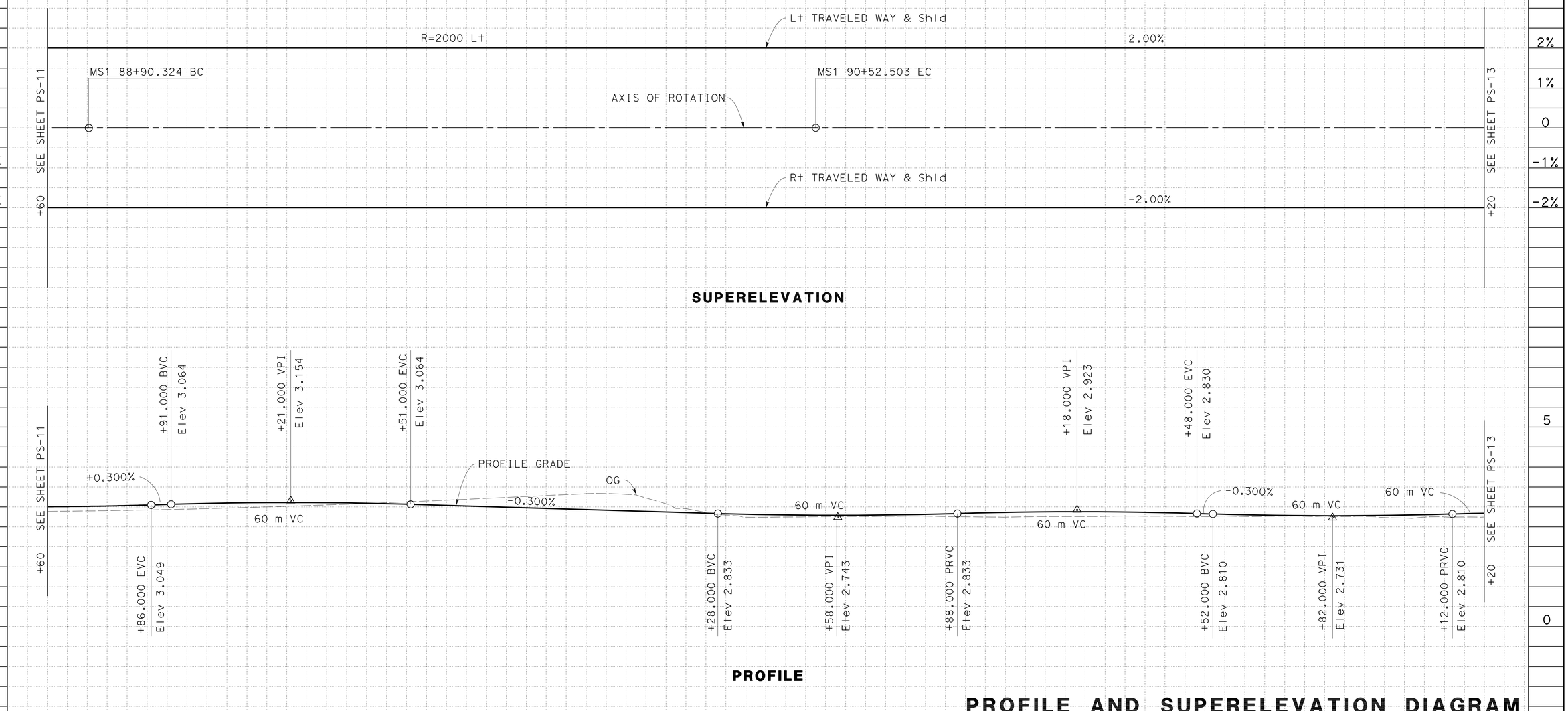

PROFILE AND SUPERELEVATION DIAGRAM
(MS1 LINE)

SCALE Horiz 1:500
Vert 1:50

ALL DIMENSIONS ARE IN METERS UNLESS OTHERWISE SHOWN

PS-12

LAST REVISION 07-20-11 | DATE PLOTTED => 06-OCT-2011 | TIME PLOTTED => 06:08

Dist	COUNTY	ROUTE	KILOMETER POST TOTAL PROJECT	SHEET No.	TOTAL SHEETS
04	Ala	80	1.6/2.7	27	744

REGISTERED CIVIL ENGINEER 6-2-11 DATE

10-3-11
PLANS APPROVAL DATE

REGISTERED PROFESSIONAL ENGINEER Anna G. Ureta No. 67663 Exp. 6-30-11 CIVIL STATE OF CALIFORNIA

THE STATE OF CALIFORNIA OR ITS OFFICERS OR AGENTS SHALL NOT BE RESPONSIBLE FOR THE ACCURACY OR COMPLETENESS OF SCANNED COPIES OF THIS PLAN SHEET.

Caltrans Metric

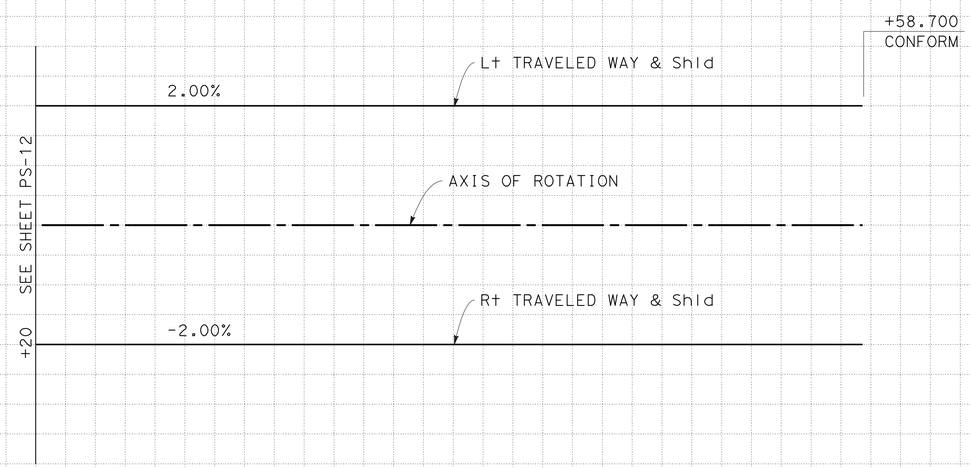

SUPERELEVATION

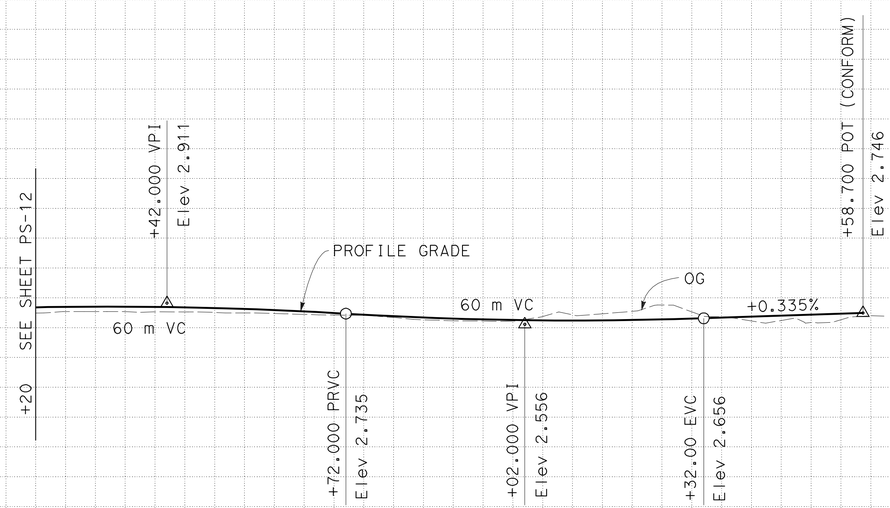

PROFILE

ALL DIMENSIONS ARE IN METERS UNLESS OTHERWISE SHOWN

PROFILE AND SUPERELEVATION DIAGRAM
(MS1 LINE)

SCALE Horiz 1:500
Vert 1:50

PS-13

Station	93	94
m^3 Exc		
m^3 Emb		

REVISED BY / DATE REVISED

ANNA URETA / GABRIEL TORRUZ

CALCULATED-DESIGNED BY / CHECKED BY

FUNCTIONAL SUPERVISOR: JAIME E. GUTIERREZ

STATE OF CALIFORNIA - DEPARTMENT OF TRANSPORTATION

Caltrans

TOLL BRIDGE

LAST REVISION 07-20-11 DATE PLOTTED => 06-OCT-2011 TIME PLOTTED => 06:08

Dist	COUNTY	ROUTE	KILOMETER POST TOTAL PROJECT	SHEET No.	TOTAL SHEETS
04	Ala	80	1.6/2.7	28	744

REGISTERED CIVIL ENGINEER — DATE 6-2-11

PLANS APPROVAL DATE 10-3-11

REGISTERED PROFESSIONAL ENGINEER — Anna G. Ureta — No. 67663 — Exp. 6-30-11 — CIVIL — STATE OF CALIFORNIA

THE STATE OF CALIFORNIA OR ITS OFFICERS OR AGENTS SHALL NOT BE RESPONSIBLE FOR THE ACCURACY OR COMPLETENESS OF SCANNED COPIES OF THIS PLAN SHEET.

Caltrans Metric

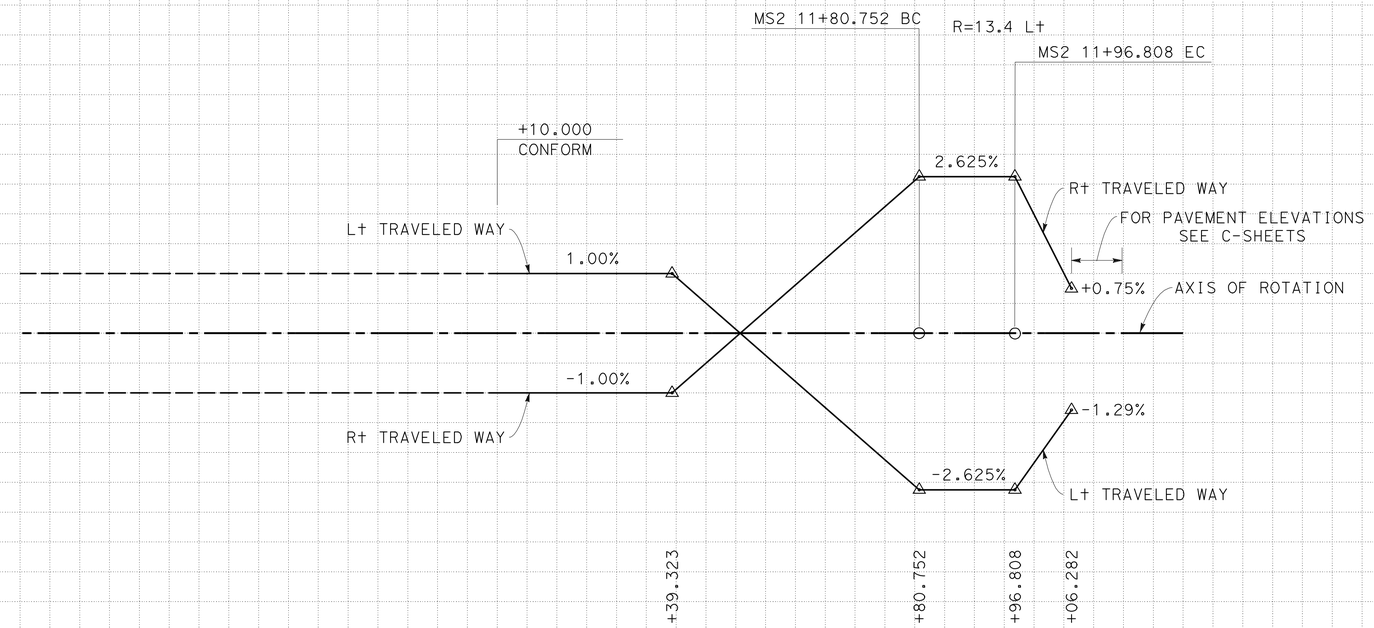

SUPERELEVATION

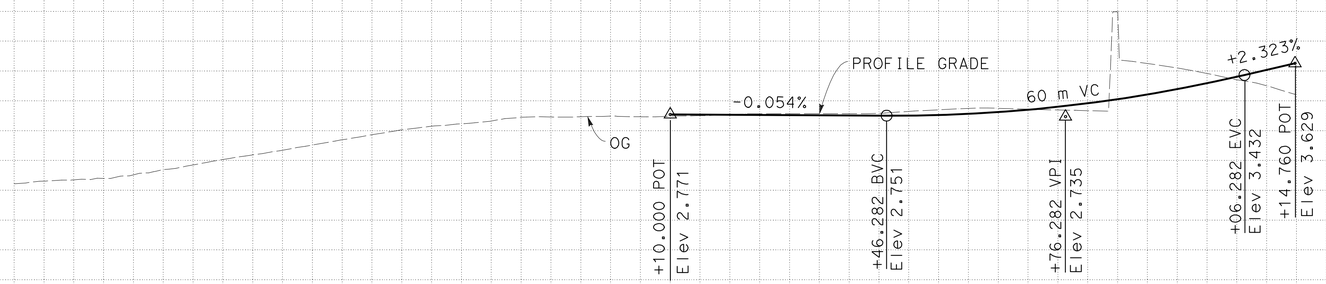

PROFILE

PROFILE AND SUPERELEVATION DIAGRAM
(MS2 LINE)

SCALE Horiz 1:500
Vert 1:50

ALL DIMENSIONS ARE IN METERS UNLESS OTHERWISE SHOWN

PS-14

Station	10	11	12
m^3 Exc			
m^3 Emb			

REVISED BY	DATE REVISED
ANNA URETA	GABRIEL TCRUZ

CALCULATED-DESIGNED BY / CHECKED BY

FUNCTIONAL SUPERVISOR: JAIME E. GUTIERREZ

STATE OF CALIFORNIA - DEPARTMENT OF TRANSPORTATION — Caltrans — TOLL BRIDGE

LAST REVISION 07-20-11 — DATE PLOTTED => 06-OCT-2011 — TIME PLOTTED => 06:08

Dist	COUNTY	ROUTE	KILOMETER POST TOTAL PROJECT	SHEET No.	TOTAL SHEETS
04	Ala	80	1.6/2.7	29	744

REGISTERED CIVIL ENGINEER 6-2-11 DATE

10-3-11
PLANS APPROVAL DATE

REGISTERED PROFESSIONAL ENGINEER Esmaeil Nemati No. 65959 Exp. 6-30-12 CIVIL STATE OF CALIFORNIA

THE STATE OF CALIFORNIA OR ITS OFFICERS OR AGENTS SHALL NOT BE RESPONSIBLE FOR THE ACCURACY OR COMPLETENESS OF SCANNED COPIES OF THIS PLAN SHEET.

Caltrans Metric

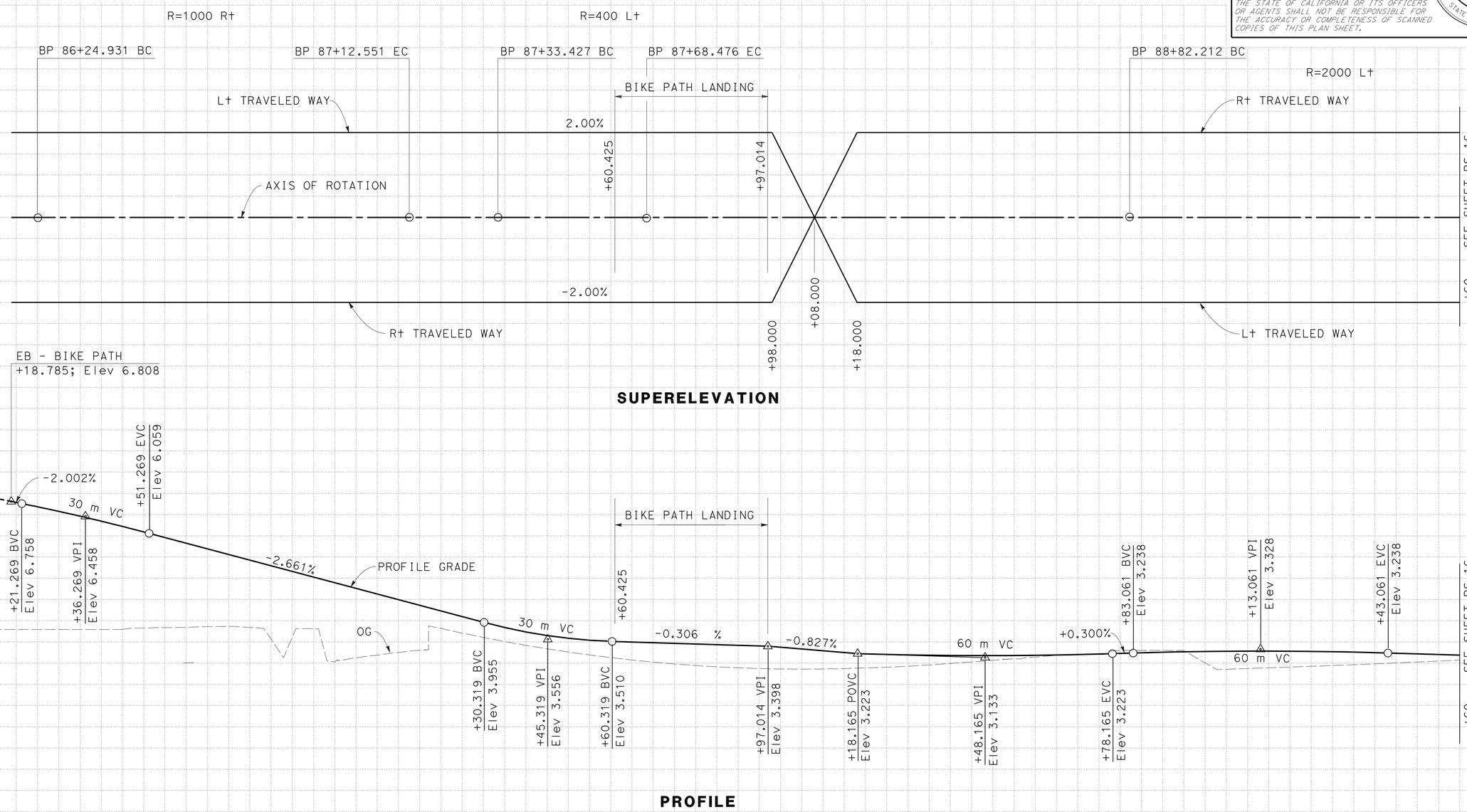

PROFILE AND SUPERELEVATION DIAGRAM
(BP LINE)

SCALE Horiz 1:500
Vert 1:50

ALL DIMENSIONS ARE IN METERS UNLESS OTHERWISE SHOWN

PS-15

Station	86	87	88	89
m^3 Exc				
m^3 Emb				

STATE OF CALIFORNIA - DEPARTMENT OF TRANSPORTATION
Caltrans
TOLL BRIDGE

FUNCTIONAL SUPERVISOR: JAIME E. GUTIERREZ
CALCULATED-DESIGNED BY: ANNA URETA
CHECKED BY: GABRIEL TORUZ
REVISED BY / DATE REVISED

LAST REVISION 07-20-11
DATE PLOTTED => 06-OCT-2011
TIME PLOTTED => 06:08

Dist	COUNTY	ROUTE	KILOMETER POST TOTAL PROJECT	SHEET No.	TOTAL SHEETS
04	Ala	80	1.6/2.7	30	744

REGISTERED CIVIL ENGINEER 6-2-11 DATE

10-3-11
PLANS APPROVAL DATE

REGISTERED PROFESSIONAL ENGINEER Esmaeil Nemati No. 65959 Exp. 6-30-12 CIVIL STATE OF CALIFORNIA

THE STATE OF CALIFORNIA OR ITS OFFICERS OR AGENTS SHALL NOT BE RESPONSIBLE FOR THE ACCURACY OR COMPLETENESS OF SCANNED COPIES OF THIS PLAN SHEET.

Caltrans Metric

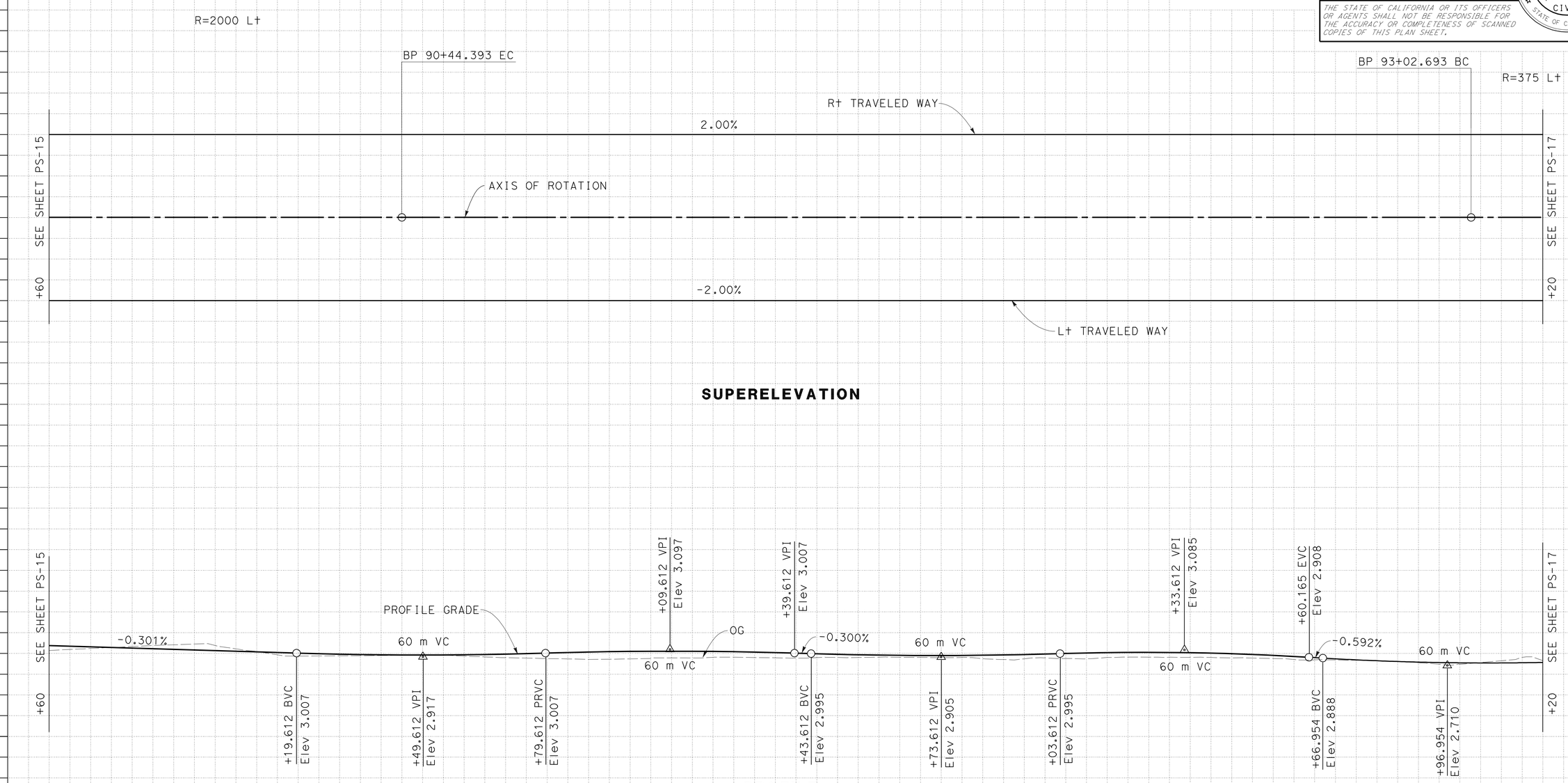

PROFILE AND SUPERELEVATION DIAGRAM
(BP LINE)

SCALE Horiz 1:500
Vert 1:50

ALL DIMENSIONS ARE IN METERS UNLESS OTHERWISE SHOWN

PS-16

REVISED BY	DATE REVISED
ANNA URETA	GABRIEL TCRUZ

CALCULATED-DESIGNED BY
CHECKED BY

FUNCTIONAL SUPERVISOR
JAIME E. GUTIERREZ

STATE OF CALIFORNIA - DEPARTMENT OF TRANSPORTATION
Caltrans
TOLL BRIDGE

LAST REVISION 07-20-11 DATE PLOTTED => 06-OCT-2011 TIME PLOTTED => 06:08

Dist	COUNTY	ROUTE	KILOMETER POST TOTAL PROJECT	SHEET No.	TOTAL SHEETS
04	Ala	80	1.6/2.7	31	744

REGISTERED CIVIL ENGINEER 6-2-11 DATE

10-3-11
PLANS APPROVAL DATE

REGISTERED PROFESSIONAL ENGINEER Esmaeil Nemati No. 65959 Exp. 6-30-12 CIVIL STATE OF CALIFORNIA

THE STATE OF CALIFORNIA OR ITS OFFICERS OR AGENTS SHALL NOT BE RESPONSIBLE FOR THE ACCURACY OR COMPLETENESS OF SCANNED COPIES OF THIS PLAN SHEET.

Caltrans Metric

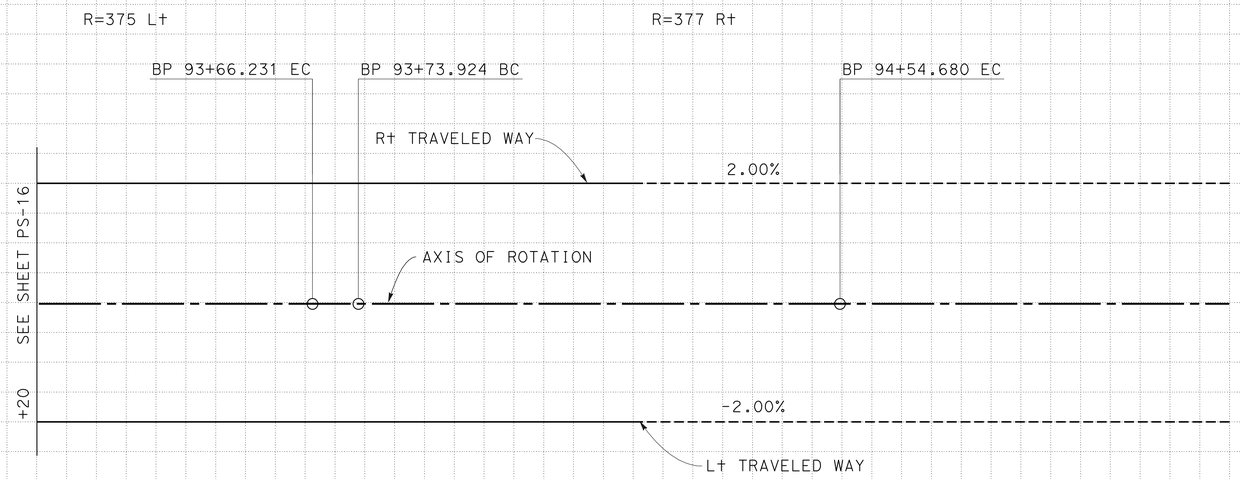

SUPERELEVATION

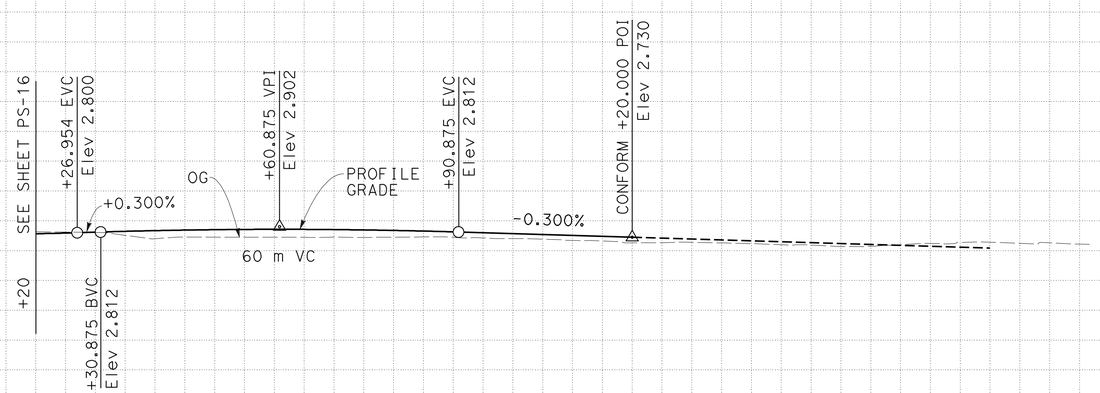

PROFILE

ALL DIMENSIONS ARE IN METERS UNLESS OTHERWISE SHOWN

PROFILE AND SUPERELEVATION DIAGRAM
(BP LINE)

SCALE Horiz 1:500
Vert 1:50

PS-17

Station	94	95	96
m^3 Exc			
m^3 Emb			

REVISED BY | DATE REVISED
ANNA URETA | GABRIEL TORUZ
CALCULATED-DESIGNED BY | CHECKED BY
FUNCTIONAL SUPERVISOR: JAIME E. GUTIERREZ

STATE OF CALIFORNIA - DEPARTMENT OF TRANSPORTATION
Caltrans
TOLL BRIDGE

LAST REVISION 07-20-11 DATE PLOTTED => 06-OCT-2011 TIME PLOTTED => 06:08

Dist	COUNTY	ROUTE	KILOMETER POST TOTAL PROJECT	SHEET No.	TOTAL SHEETS
04	Ala	80	1.6/2.7	32	744

REGISTERED CIVIL ENGINEER 6-2-11 DATE

10-3-11
PLANS APPROVAL DATE

REGISTERED PROFESSIONAL ENGINEER Esmaeil Nemati No. 65959 Exp. 6-30-12 CIVIL STATE OF CALIFORNIA

THE STATE OF CALIFORNIA OR ITS OFFICERS OR AGENTS SHALL NOT BE RESPONSIBLE FOR THE ACCURACY OR COMPLETENESS OF SCANNED COPIES OF THIS PLAN SHEET.

Caltrans Metric

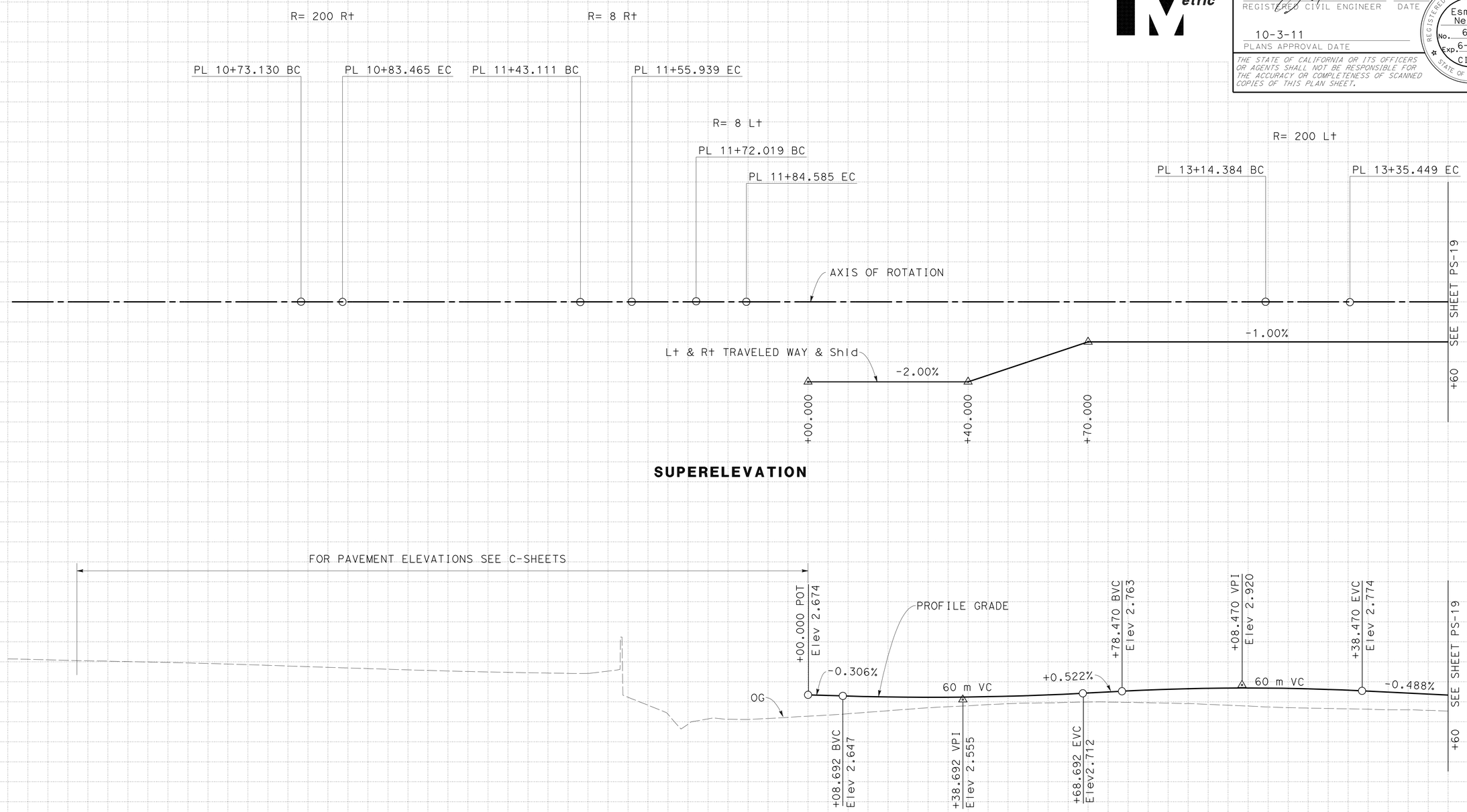

PROFILE AND SUPERELEVATION DIAGRAM
(PL LINE)

SCALE Horiz 1:500
Vert 1:50

ALL DIMENSIONS ARE IN METERS UNLESS OTHERWISE SHOWN

PS-18

Station	10	11	12	13
m^3 Exc				
m^3 Emb				

REVISED BY | DATE REVISED

ANNA URETA | GABRIEL TCRUZ

CALCULATED-DESIGNED BY | CHECKED BY

FUNCTIONAL SUPERVISOR: JAIME E. GUTIERREZ

STATE OF CALIFORNIA - DEPARTMENT OF TRANSPORTATION
Caltrans
TOLL BRIDGE

LAST REVISION 07-20-11 | DATE PLOTTED => 06-OCT-2011 | TIME PLOTTED => 06:08

Dist	COUNTY	ROUTE	KILOMETER POST TOTAL PROJECT	SHEET No.	TOTAL SHEETS
04	Ala	80	1.6/2.7	33	744

REGISTERED CIVIL ENGINEER 6-2-11 DATE

10-3-11
PLANS APPROVAL DATE

REGISTERED PROFESSIONAL ENGINEER Esmaeil Nemati No. 65959 Exp. 6-30-12 CIVIL STATE OF CALIFORNIA

THE STATE OF CALIFORNIA OR ITS OFFICERS OR AGENTS SHALL NOT BE RESPONSIBLE FOR THE ACCURACY OR COMPLETENESS OF SCANNED COPIES OF THIS PLAN SHEET.

Caltrans Metric

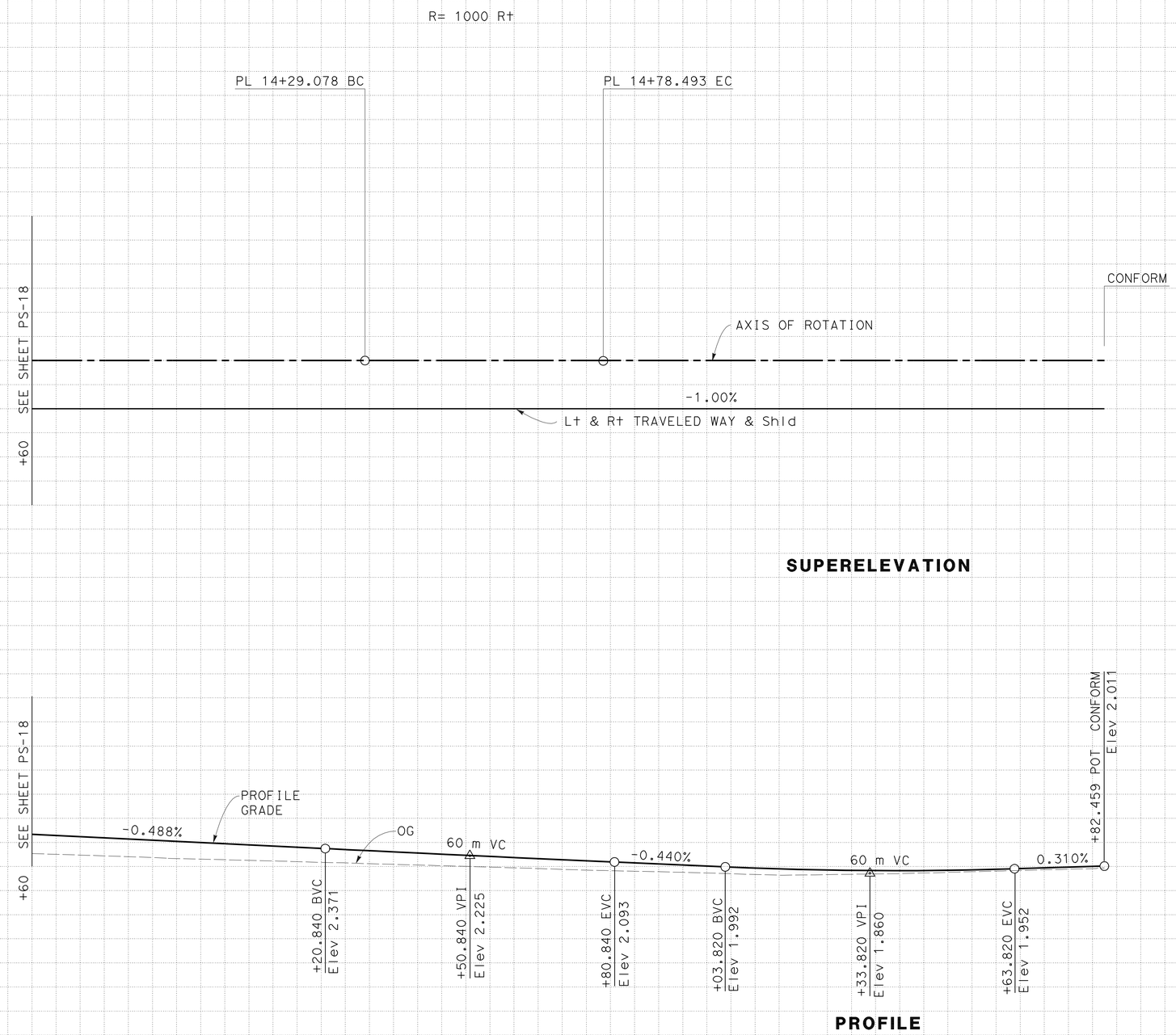

PROFILE AND SUPERELEVATION DIAGRAM
(PL LINE)

SCALE Horiz 1:500
Vert 1:50

ALL DIMENSIONS ARE IN METERS UNLESS OTHERWISE SHOWN

PS-19

Station	14	15
m^3 Exc		
m^3 Emb		

REVISED BY | DATE REVISED

ANNA URETA | GABRIEL TCRUZ

CALCULATED-DESIGNED BY | CHECKED BY

FUNCTIONAL SUPERVISOR: JAIME E. GUTIERREZ

STATE OF CALIFORNIA - DEPARTMENT OF TRANSPORTATION
Caltrans
TOLL BRIDGE

LAST REVISION 07-20-11 | DATE PLOTTED => 06-OCT-2011 | TIME PLOTTED => 06:08

Dist	COUNTY	ROUTE	KILOMETER POST TOTAL PROJECT	SHEET No.	TOTAL SHEETS
04	Ala	80	1.6/2.7	34	744

REGISTERED CIVIL ENGINEER 6-2-11 DATE

10-3-11
PLANS APPROVAL DATE

REGISTERED PROFESSIONAL ENGINEER Gabriel Tcruz No. 68108 Exp. 6-30-11 CIVIL STATE OF CALIFORNIA

THE STATE OF CALIFORNIA OR ITS OFFICERS OR AGENTS SHALL NOT BE RESPONSIBLE FOR THE ACCURACY OR COMPLETENESS OF SCANNED COPIES OF THIS PLAN SHEET.

Caltrans Metric

FOR COMPLETE RIGHT OF WAY AND ACCURATE ACCESS DATA, SEE RIGHT OF WAY RECORD MAPS AT DISTRICT OFFICE.

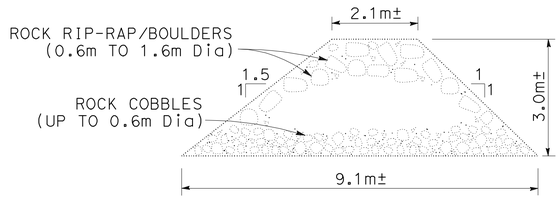

SECTION A-A
EXISTING ROCK DIKE (TYPICAL)
NO SCALE

NOTE: ABUTMENT E23R NOT SHOWN FOR CLARITY.

LEGEND:

EXISTING ROCK DIKE LOCATION (APPROXIMATE)

LIGHTWEIGHT EMBANKMENT MATERIAL (CELLULAR CONCRETE)

IMPORTED BORROW (LIGHTWEIGHT AGGREGATE)

SAN FRANCISCO BAY

APPROXIMATE LOCATION OF EXISTING ROCK DIKE

DETAIL A, SHEET C-4

13.335 m Lt E 86+39.00

13.335 m Lt E 87+89.00

12.700 m Lt E 87+89.00

W LINE

WB ROUTE 80

12.535 m Lt E 86+39.00

MN LINE

12.535 m Lt E 86+11.535

E LINE

SAWCUT LINE (ETW)

1.460 m Rt E 88+60.00

12.535 m Rt E 86+11.535

BP LINE

MST LINE

25.71 m Rt E 86+18.835

16.51 m Rt E 88+60.00

PL LINE

APPROXIMATE LOCATION OF EXISTING ROCK DIKE

14.84 m Rt E 87+60.00

25.71 m Rt E 87+59.74

BURMA ROAD

R/W

SEE SHEET C-2

CONSTRUCTION DETAILS
LIGHTWEIGHT FILL

SCALE 1:500

ALL DIMENSIONS ARE IN METERS UNLESS OTHERWISE SHOWN

C-1

STATE OF CALIFORNIA - DEPARTMENT OF TRANSPORTATION
Caltrans TOLL BRIDGE

FUNCTIONAL SUPERVISOR: JAIME E. GUTIERREZ
CALCULATED-DESIGNED BY: GABRIEL TCRUZ
CHECKED BY: RAFAEL RAVELO
REVISED BY / DATE REVISED

LAST REVISION 07-20-11
DATE PLOTTED => 06-OCT-2011
TIME PLOTTED => 07:56

Dist	COUNTY	ROUTE	KILOMETER POST TOTAL PROJECT	SHEET No.	TOTAL SHEETS
04	Ala	80	1.6/2.7	35	744

REGISTERED CIVIL ENGINEER 6-2-11 DATE

10-3-11
PLANS APPROVAL DATE

REGISTERED PROFESSIONAL ENGINEER Gabriel Tcruz No. 68108 Exp. 6-30-11 CIVIL STATE OF CALIFORNIA

THE STATE OF CALIFORNIA OR ITS OFFICERS OR AGENTS SHALL NOT BE RESPONSIBLE FOR THE ACCURACY OR COMPLETENESS OF SCANNED COPIES OF THIS PLAN SHEET.

Caltrans Metric

FOR COMPLETE RIGHT OF WAY AND ACCURATE ACCESS DATA, SEE RIGHT OF WAY RECORD MAPS AT DISTRICT OFFICE.

CONSTRUCTION DETAILS
LIGHTWEIGHT FILL

SCALE 1:500

ALL DIMENSIONS ARE IN METERS UNLESS OTHERWISE SHOWN

C-2

STATE OF CALIFORNIA - DEPARTMENT OF TRANSPORTATION
Caltrans TOLL BRIDGE

FUNCTIONAL SUPERVISOR: JAIME E. GUTIERREZ
CALCULATED-DESIGNED BY: GABRIEL TCRUZ
CHECKED BY: RAFAEL RAVELO
REVISED BY / DATE REVISED

LAST REVISION 07-20-11
DATE PLOTTED => 06-OCT-2011
TIME PLOTTED => 06:09

Dist	COUNTY	ROUTE	KILOMETER POST TOTAL PROJECT	SHEET No.	TOTAL SHEETS
04	Ala	80	1.6/2.7	36	744

Gabriel D Tcruz 6-2-11
REGISTERED CIVIL ENGINEER DATE

10-3-11
PLANS APPROVAL DATE

REGISTERED PROFESSIONAL ENGINEER Gabriel Tcruz No. 68108 Exp. 6-30-11 CIVIL STATE OF CALIFORNIA

THE STATE OF CALIFORNIA OR ITS OFFICERS OR AGENTS SHALL NOT BE RESPONSIBLE FOR THE ACCURACY OR COMPLETENESS OF SCANNED COPIES OF THIS PLAN SHEET.

Caltrans Metric

ABBREVIATIONS:

MHHW	MEAN HIGHER HIGH WATER
MHW	MEAN HIGH WATER
MSL	MEAN SEA LEVEL
LES	LEFT EDGE OF SHOULDER
CL	CENTER LINE

NOTES:

1. THE CONTRACTOR IS RESPONSIBLE FOR VERIFYING THE GROUNDWATER LEVEL DURING CONSTRUCTION AS IT IS EXPECTED TO FLUCTUATE WITH SEASONAL AND TIDAL CONDITIONS. THE FOLLOWING TIDE DATA IS PER THE ALAMEDA TIDAL STATION PER THE MOST CURRENT TIDAL DATUM EPOCH (1983-2001): MHHW = 1.12 m, MHW = 0.93 m, MSL = 0.16 m WITH ELEVATIONS PER NGVD DATUM.
2. EXISTING FOUNDATIONS TO REMAIN IN PLACE AS SHOWN IN DEMOLITION STRUCTURE PLANS.

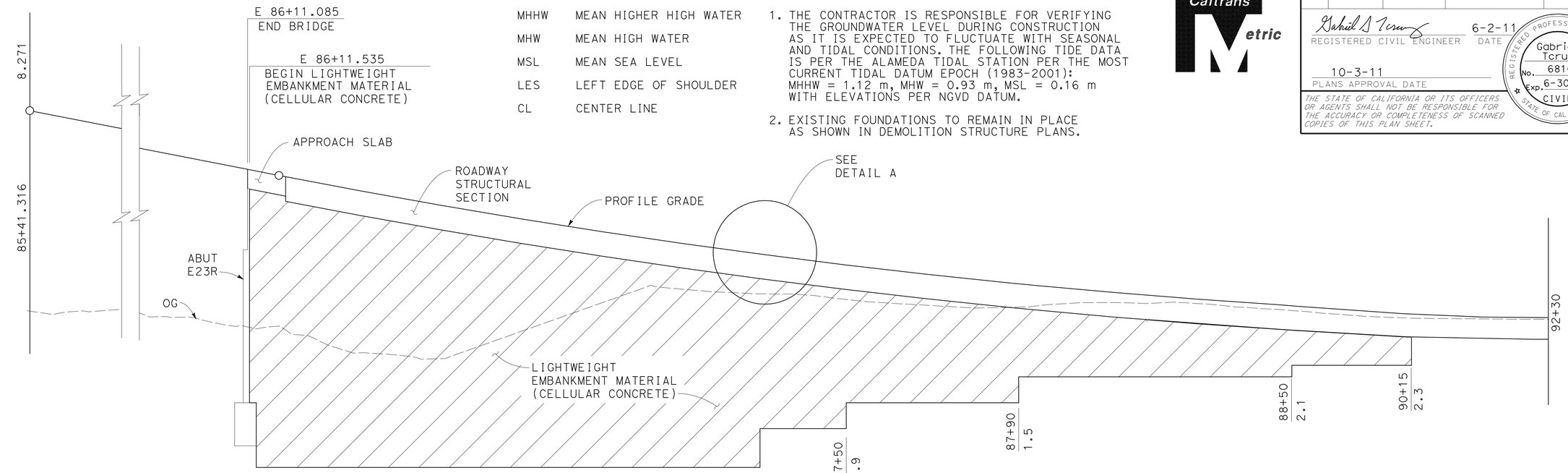

LES PROFILE
E 86+11.535 TO 90+15

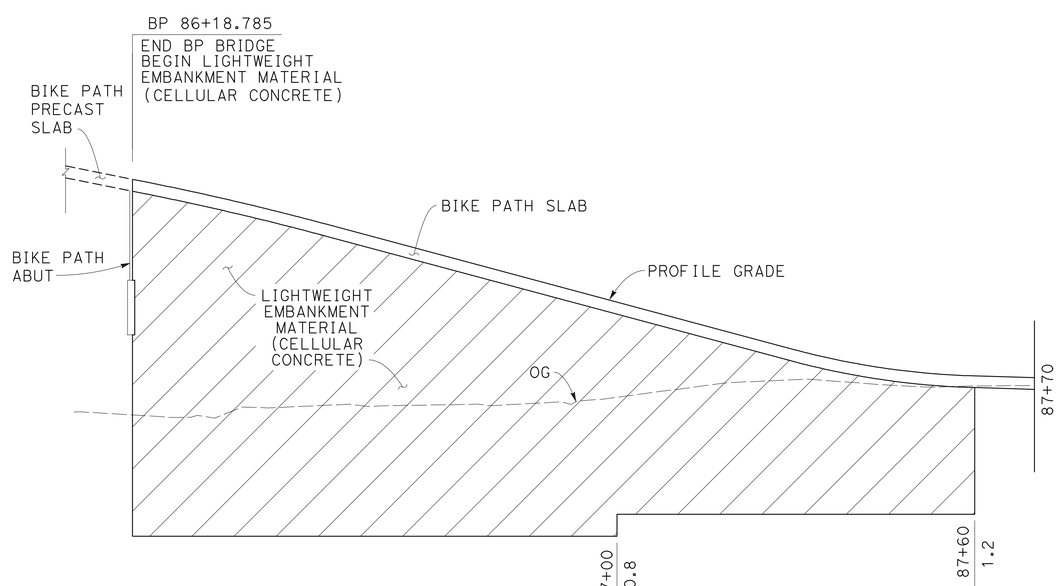

CL PROFILE
BP 86+18.785 TO 87+60

FILL STEPS WITH CL 2 AB

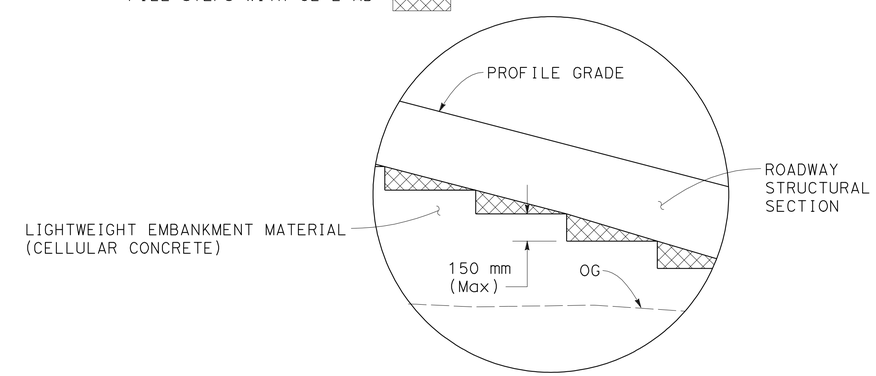

DETAIL A

``CONTRACTOR SHALL FIELD VERIFY ALL CONTROLLING FIELD DIMENSIONS BEFORE ORDERING OR FABRICATING ANY MATERIALS''.

ALL DIMENSIONS ARE IN METERS UNLESS OTHERWISE SHOWN

CONSTRUCTION DETAILS
LIGHTWEIGHT FILL

NO SCALE

C-3

Station	
m^3 Exc	
m^3 Emb	

STATE OF CALIFORNIA - DEPARTMENT OF TRANSPORTATION
Caltrans TOLL BRIDGE

FUNCTIONAL SUPERVISOR: JAIME E. GUTIERREZ
CALCULATED-DESIGNED BY: GABRIEL TCRUZ
CHECKED BY: RAFAEL RAVELO
REVISED BY / DATE REVISED

LAST REVISION 07-20-11
DATE PLOTTED => 06-OCT-2011
TIME PLOTTED => 06:09

Dist	COUNTY	ROUTE	KILOMETER POST TOTAL PROJECT	SHEET No.	TOTAL SHEETS
04	Ala	80	1.6/2.7	37	744

Caltrans Metric

REGISTERED CIVIL ENGINEER 6-2-11 DATE

10-3-11
PLANS APPROVAL DATE

REGISTERED PROFESSIONAL ENGINEER Rafael A. Ravelo No. 68941 Exp. 12-31-11 CIVIL STATE OF CALIFORNIA

THE STATE OF CALIFORNIA OR ITS OFFICERS OR AGENTS SHALL NOT BE RESPONSIBLE FOR THE ACCURACY OR COMPLETENESS OF SCANNED COPIES OF THIS PLAN SHEET.

LEGEND:

REMOVE SIGN STRUCTURE LIMITS

IMPORTED BORROW (LIGHTWEIGHT AGGREGATE)

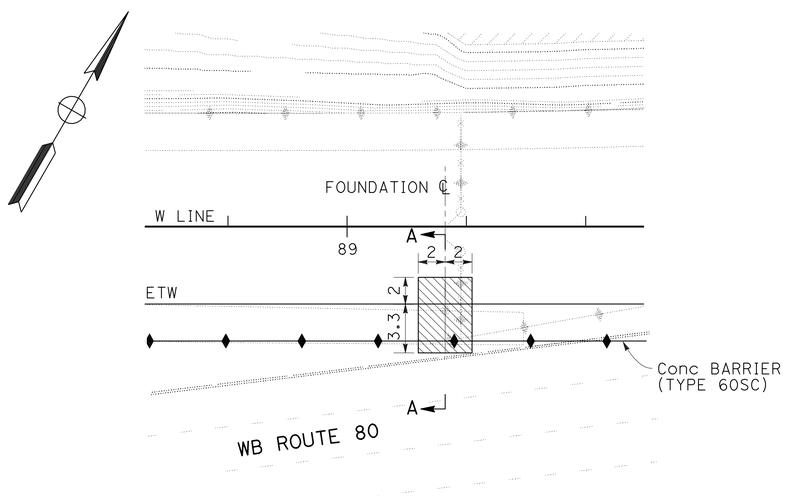

DETAIL A
PARTIAL PLAN

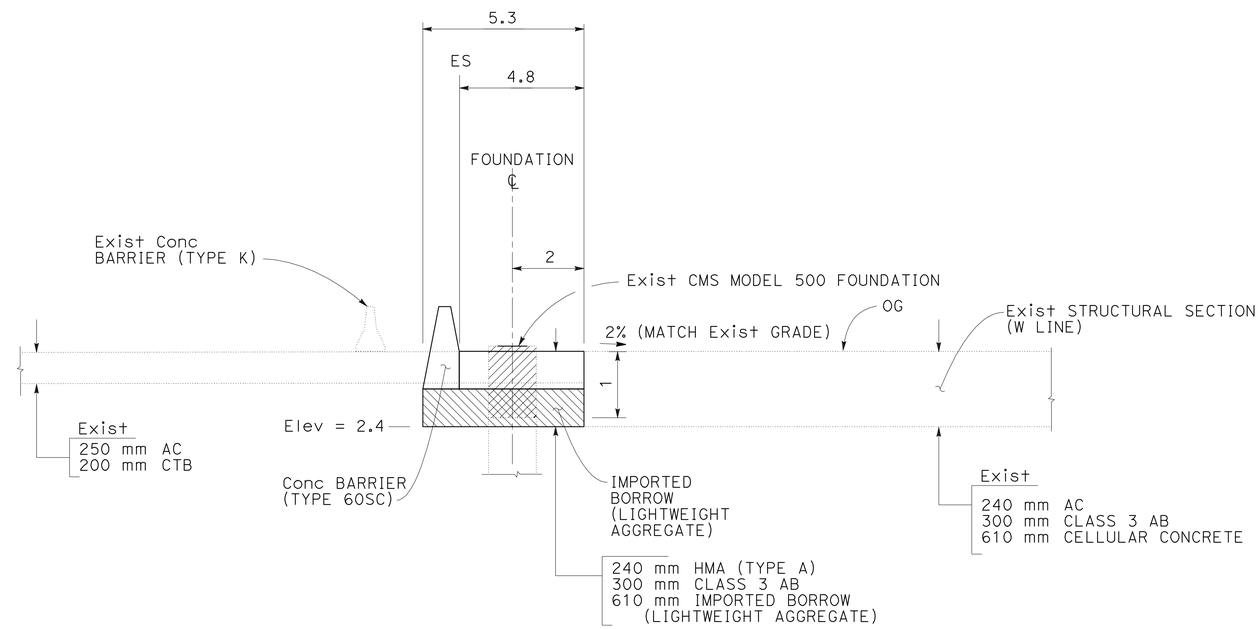

SECTION A-A

ALL DIMENSIONS ARE IN METERS
UNLESS OTHERWISE SHOWN

CONSTRUCTION DETAILS
LIGHTWEIGHT FILL

NO SCALE

C-4

REVISED BY	DATE REVISED

RAFAEL RAVELO
GABRIEL TORRUZ

CALCULATED-DESIGNED BY
CHECKED BY

FUNCTIONAL SUPERVISOR
JAIME E. GUTIERREZ

STATE OF CALIFORNIA - DEPARTMENT OF TRANSPORTATION
Caltrans
TOLL BRIDGE

LAST REVISION 06-02-11
DATE PLOTTED => 06-OCT-2011
TIME PLOTTED => 06:09

Dist	COUNTY	ROUTE	KILOMETER POST TOTAL PROJECT	SHEET No.	TOTAL SHEETS
04	Ala	80	1.6/2.7	38	744

REGISTERED CIVIL ENGINEER 6-2-11 DATE

10-3-11
PLANS APPROVAL DATE

REGISTERED PROFESSIONAL ENGINEER Gabriel Tcruz No. 68108 Exp. 6-30-11 CIVIL STATE OF CALIFORNIA

THE STATE OF CALIFORNIA OR ITS OFFICERS OR AGENTS SHALL NOT BE RESPONSIBLE FOR THE ACCURACY OR COMPLETENESS OF SCANNED COPIES OF THIS PLAN SHEET.

Caltrans Metric

FOR COMPLETE RIGHT OF WAY AND ACCURATE ACCESS DATA, SEE RIGHT OF WAY RECORD MAPS AT DISTRICT OFFICE.

CURVE DATA

No.	R	Δ	T	L	N	E
1	12.000	296°36′9.91"	7.411	62.120	648226.008	1839184.159
20	200.000	2°57′38.77"	5.169	10.335	648034.133	1839258.335

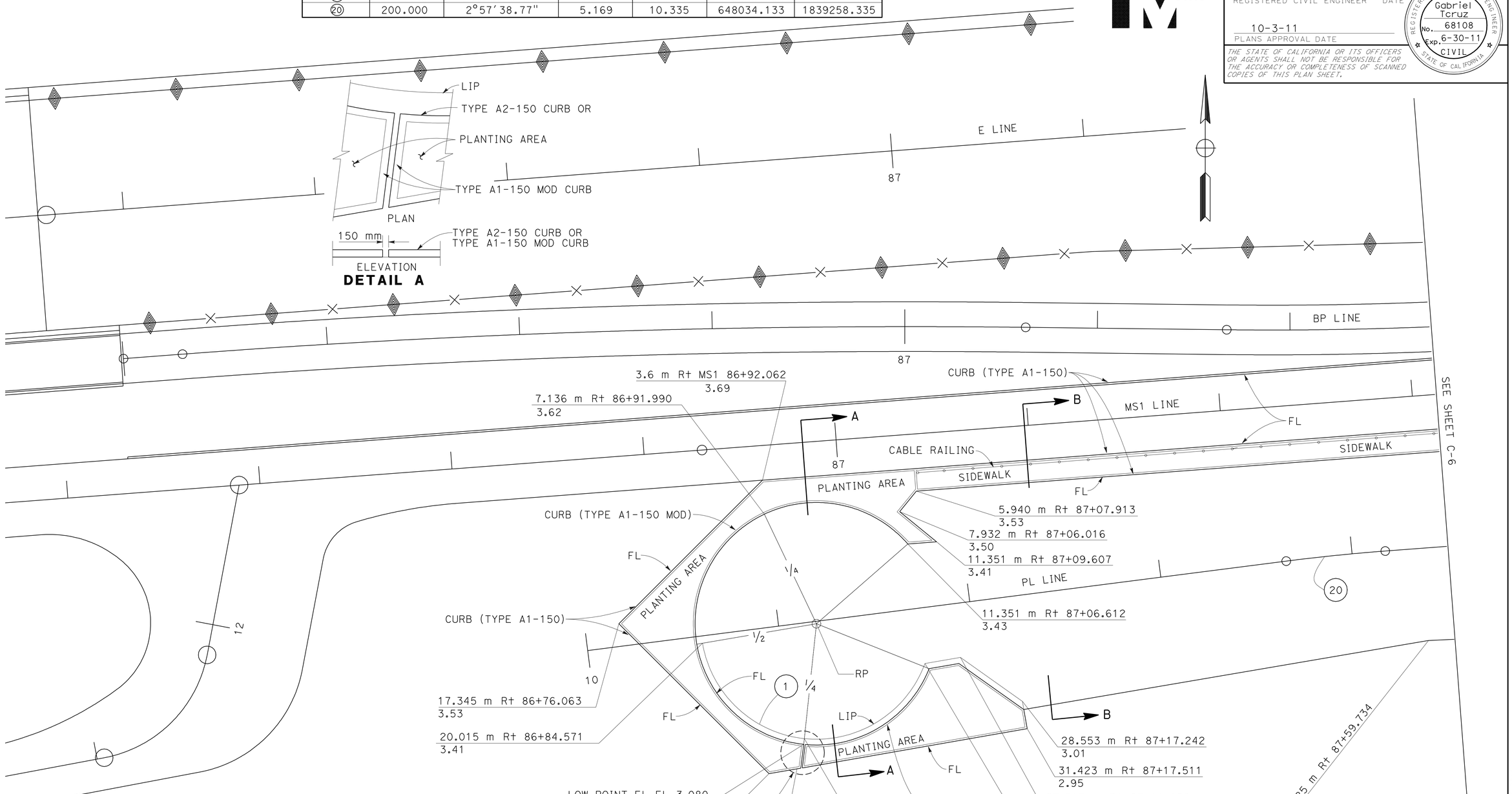

NOTES:

1. UNLESS OTHERWISE NOTED, ALL STATION OFFSETS ARE FROM MS1 LINE.
2. UNLESS OTHERWISE NOTED, FL ELEVATIONS OF TYPE A2-150 CURBS ARE 50 mm LOWER THAN LIP ELEVATIONS SHOWN.
3. UNLESS OTHERWISE NOTED, ELEVATIONS ARE AT 20 m INTERVALS, AT CURVES BCs AND ECs, AND AT CURVES MID-LENGTH ARCH POINTS.
4. FOR BIKE PATH LANDING DETAILS, SEE STRUCTURE PLAN.
5. SEE C-7 FOR SECTION DETAIL.

CONSTRUCTION DETAILS
PAVEMENT ELEVATIONS
PARKING LOT

SCALE 1:200

THIS PLAN ACCURATE FOR PAVEMENT ELEVATION WORK ONLY

C-5

REVISED BY | DATE REVISED
GABRIEL TCRUZ | RAFAEL RAVELO
CALCULATED-DESIGNED BY | CHECKED BY
FUNCTIONAL SUPERVISOR: JAIME E. GUTIERREZ

STATE OF CALIFORNIA - DEPARTMENT OF TRANSPORTATION
Caltrans
TOLL BRIDGE

LAST REVISION 07-20-11 | DATE PLOTTED => 06-OCT-2011 | TIME PLOTTED => 06:09

Dist	COUNTY	ROUTE	KILOMETER POST TOTAL PROJECT	SHEET No.	TOTAL SHEETS
04	Ala	80	1.6/2.7	39	744

Gabriel Tcruz 6-2-11
REGISTERED CIVIL ENGINEER DATE

10-3-11
PLANS APPROVAL DATE

REGISTERED PROFESSIONAL ENGINEER Gabriel Tcruz No. 68108 Exp. 6-30-11 CIVIL STATE OF CALIFORNIA

THE STATE OF CALIFORNIA OR ITS OFFICERS OR AGENTS SHALL NOT BE RESPONSIBLE FOR THE ACCURACY OR COMPLETENESS OF SCANNED COPIES OF THIS PLAN SHEET.

Caltrans Metric

FOR COMPLETE RIGHT OF WAY AND ACCURATE ACCESS DATA, SEE RIGHT OF WAY RECORD MAPS AT DISTRICT OFFICE.

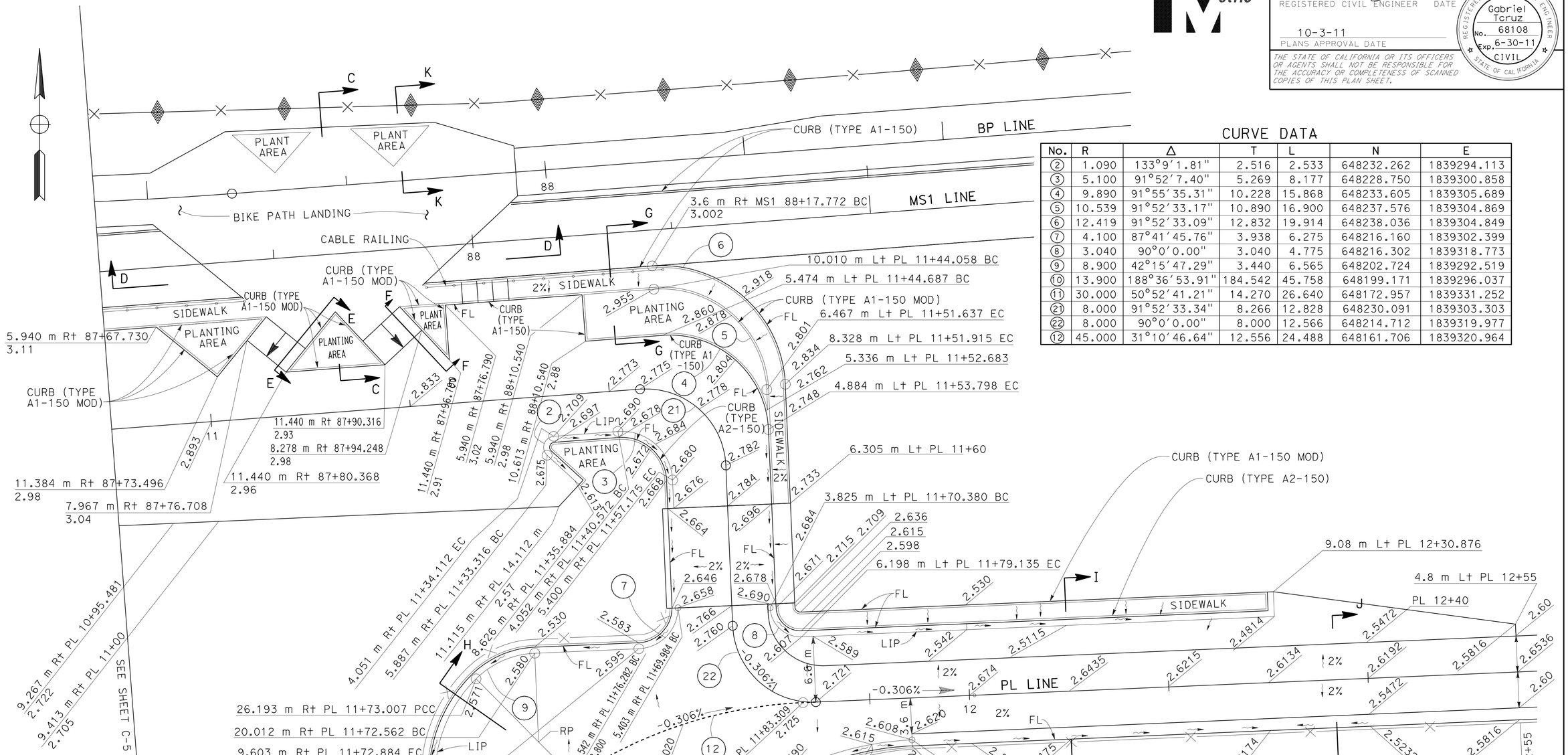

CURVE DATA

No.	R	Δ	T	L	N	E
2	1.090	133°9′1.81"	2.516	2.533	648232.262	1839294.113
3	5.100	91°52′7.40"	5.269	8.177	648228.750	1839300.858
4	9.890	91°55′35.31"	10.228	15.868	648233.605	1839305.689
5	10.539	91°52′33.17"	10.890	16.900	648237.576	1839304.869
6	12.419	91°52′33.09"	12.832	19.914	648238.036	1839304.849
7	4.100	87°41′45.76"	3.938	6.275	648216.160	1839302.399
8	3.040	90°0′0.00"	3.040	4.775	648216.302	1839318.773
9	8.900	42°15′47.29"	3.440	6.565	648202.724	1839292.519
10	13.900	188°36′53.91"	184.542	45.758	648199.171	1839296.037
11	30.000	50°52′41.21"	14.270	26.640	648172.957	1839331.252
21	8.000	91°52′33.34"	8.266	12.828	648230.091	1839303.303
22	8.000	90°0′0.00"	8.000	12.566	648214.712	1839319.977
12	45.000	31°10′46.64"	12.556	24.488	648161.706	1839320.964

FOR NOTES, ABBREVIATIONS &/OR LEGEND, SEE SHEET C-5

THIS PLAN ACCURATE FOR PAVEMENT ELEVATION WORK ONLY

CONSTRUCTION DETAILS
PAVEMENT ELEVATIONS
PARKING LOT

SCALE 1:200

C-6

STATE OF CALIFORNIA - DEPARTMENT OF TRANSPORTATION
Caltrans TOLL BRIDGE

FUNCTIONAL SUPERVISOR: JAIME E. GUTIERREZ
CALCULATED-DESIGNED BY: GABRIEL TCRUZ
CHECKED BY: RAFAEL RAVELO
REVISED BY / DATE REVISED

LAST REVISION 07-20-11
DATE PLOTTED => 06-OCT-2011
TIME PLOTTED => 10:35

Dist	COUNTY	ROUTE	KILOMETER POST TOTAL PROJECT	SHEET No.	TOTAL SHEETS
04	Ala	80	1.6/2.7	40	744

REGISTERED CIVIL ENGINEER 6-2-11 DATE

10-3-11
PLANS APPROVAL DATE

REGISTERED PROFESSIONAL ENGINEER Esmaeil Nemati No. 65959 Exp. 6-30-12 CIVIL STATE OF CALIFORNIA

THE STATE OF CALIFORNIA OR ITS OFFICERS OR AGENTS SHALL NOT BE RESPONSIBLE FOR THE ACCURACY OR COMPLETENESS OF SCANNED COPIES OF THIS PLAN SHEET.

Caltrans Metric

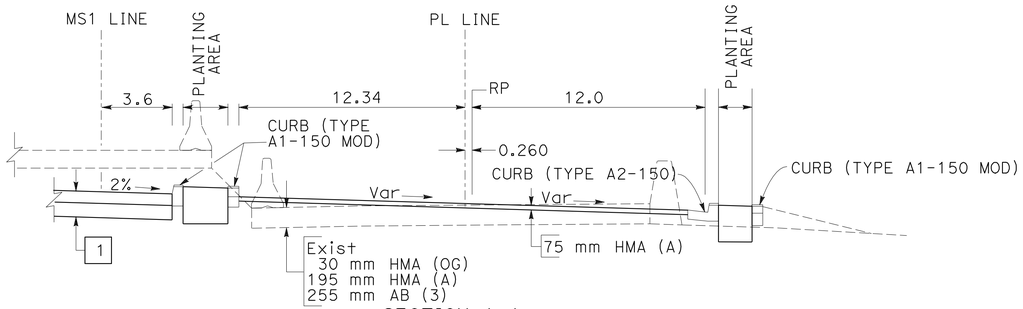

SECTION A-A

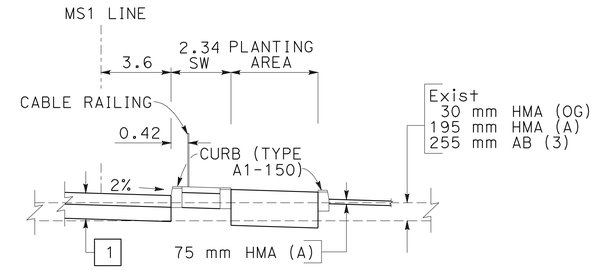

SECTION G-G

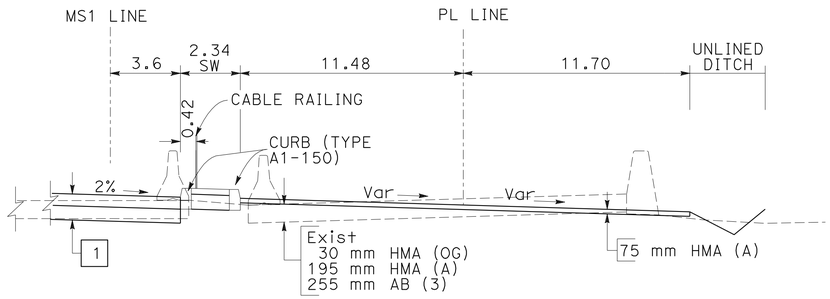

SECTION B-B

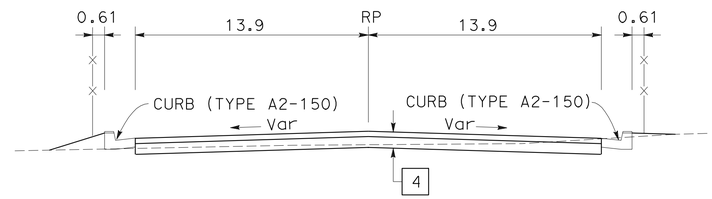

SECTION H-H (PL-LINE BUS TURN)

NOTE:

1. FOR DIMENSIONS/DETAILS NOT SHOWN, SEE REVISED STANDARD PLAN RSP A87A.
2. FOR ADDITIONAL TYPICAL CROSS SECTIONS OF BP, MS1 AND PL LINES, SEE SHEET X-9.
3. FOR BIKE PATH LANDING DETAILS, SEE STRUCTURAL PLANS.
4. TYPICAL STRUCTURAL SECTIONS:

1 — 195 mm HMA (TYPE A)
240 mm CLASS 2 AB

4 — 90 mm HMA (TYPE A)
180 mm CLASS 2 AB

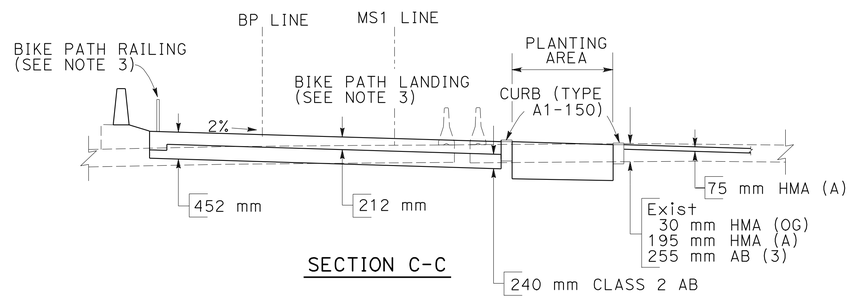

SECTION C-C

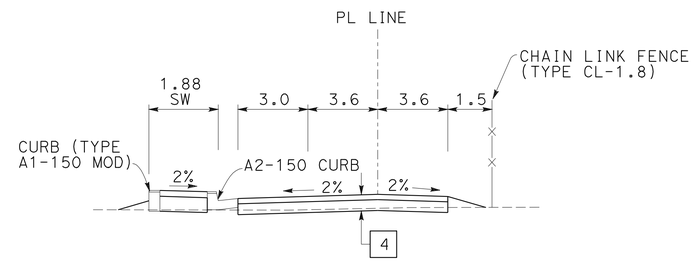

SECTION I-I

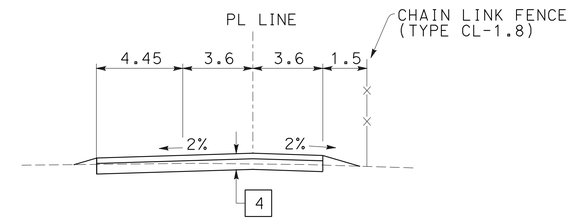

SECTION J-J

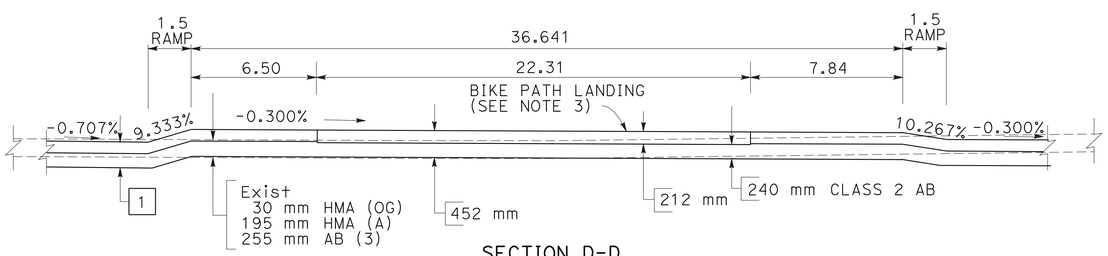

SECTION D-D

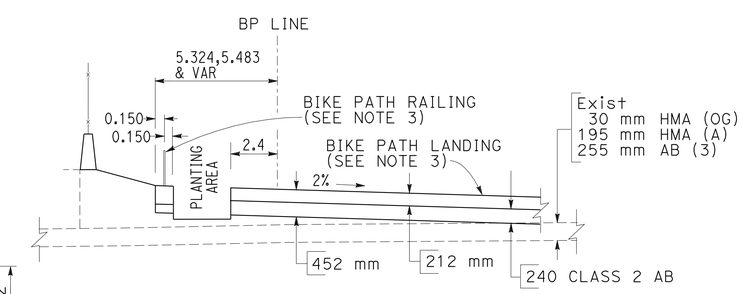

SECTION K-K

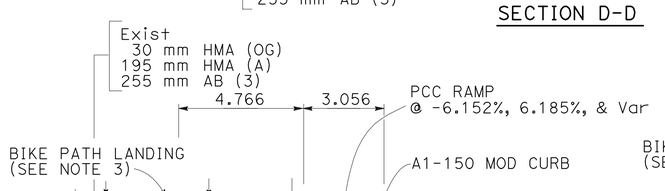

SECTION E-E

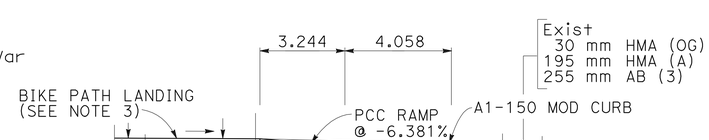

SECTION F-F

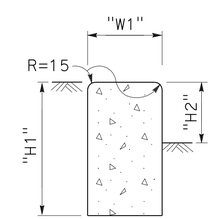

TYPE A1-150 MOD CURBS

ALL DIMENSIONS ARE IN METERS
UNLESS OTHERWISE SHOWN

CONSTRUCTION DETAILS
PARKING LOT
NO SCALE

C-7

STATE OF CALIFORNIA - DEPARTMENT OF TRANSPORTATION
Caltrans TOLL BRIDGE

FUNCTIONAL SUPERVISOR: JAIME E. GUTIERREZ
CALCULATED-DESIGNED BY: ESMAEIL NEMATI
CHECKED BY: RAFAEL RAVELO
REVISED BY / DATE REVISED

LAST REVISION 08-26-11
DATE PLOTTED => 06-OCT-2011
TIME PLOTTED => 06:09

Dist	COUNTY	ROUTE	KILOMETER POST TOTAL PROJECT	SHEET No.	TOTAL SHEETS
04	Ala	80	1.6/2.7	41	744

REGISTERED CIVIL ENGINEER 6-2-11 DATE

10-3-11
PLANS APPROVAL DATE

REGISTERED PROFESSIONAL ENGINEER Gabriel Tcruz No. 68108 Exp. 6-30-11 CIVIL STATE OF CALIFORNIA

THE STATE OF CALIFORNIA OR ITS OFFICERS OR AGENTS SHALL NOT BE RESPONSIBLE FOR THE ACCURACY OR COMPLETENESS OF SCANNED COPIES OF THIS PLAN SHEET.

Caltrans Metric

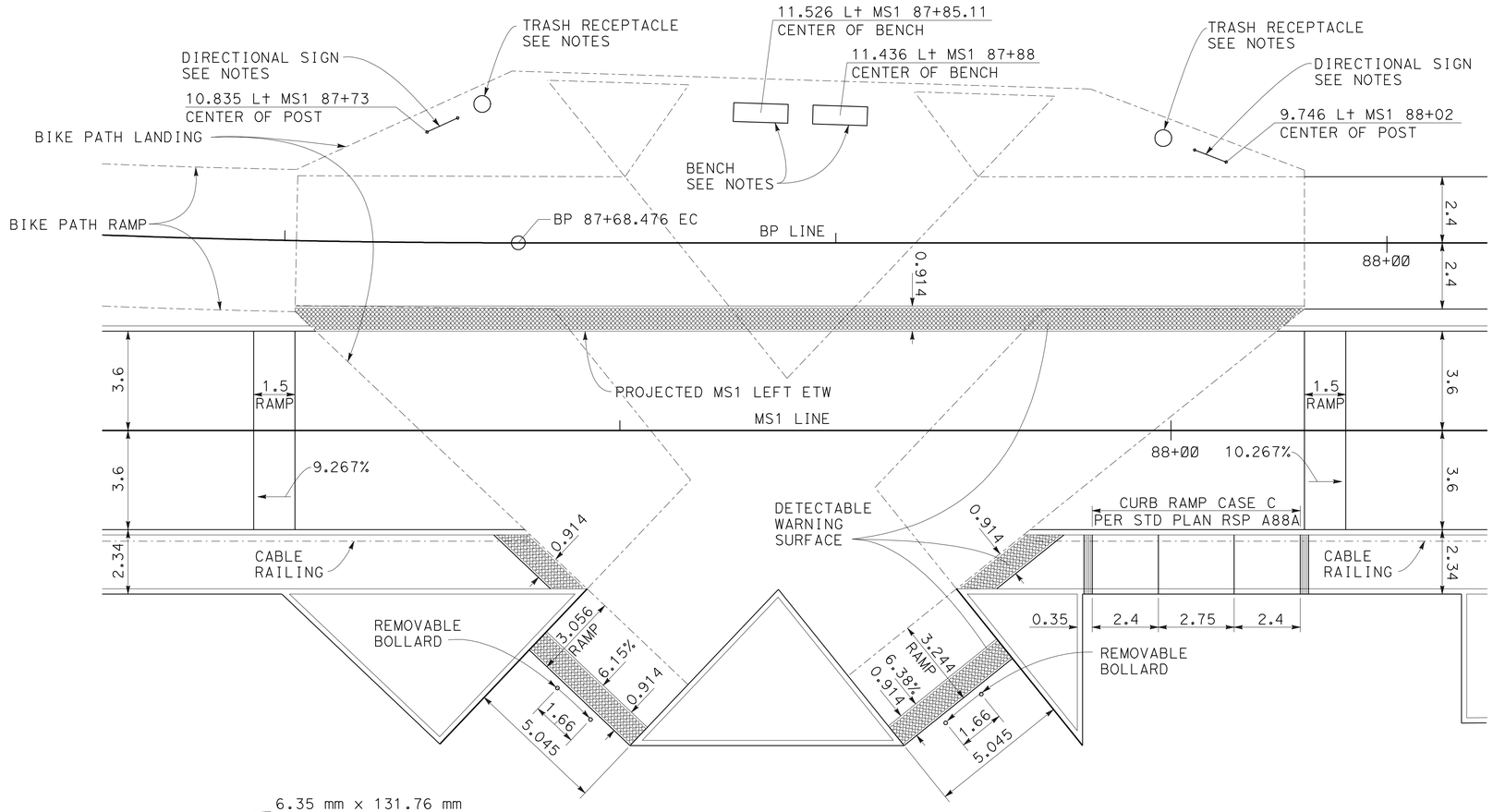

BIKE PATH LANDING
PLAN

NOTES:

1. FOR BIKE PATH RAMP AND LANDING DETAILS, SEE STRUCTURE PLANS.
2. FOR ADDITIONAL PAVEMENT ELEVATIONS, SEE C- SHEETS.
3. FOR CURB RAMP DETAILS, SEE REVISED Std PLAN RSP A88A.
4. PLACE DIRECTIONAL SIGN AND BENCH PARALLEL TO EDGE OF BIKE PATH LANDING.
5. EXACT LOCATION OF TRASH RECEPTACLE TO BE DETERMINED BY THE ENGINEER.

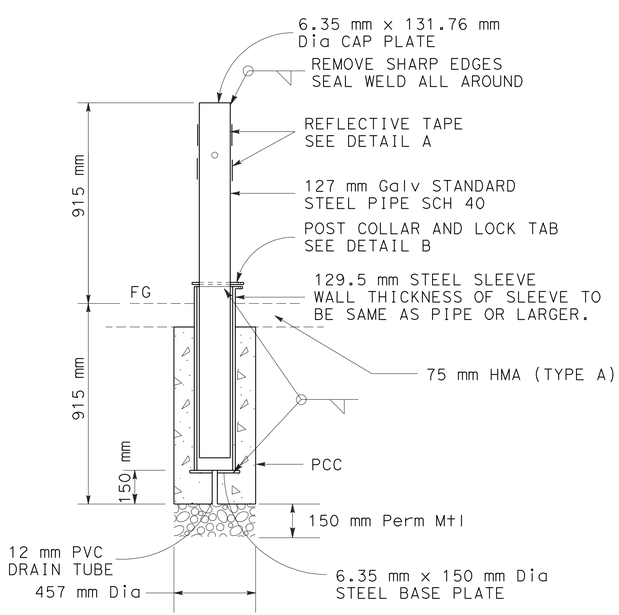

REMOVABLE BOLLARD
NO SCALE

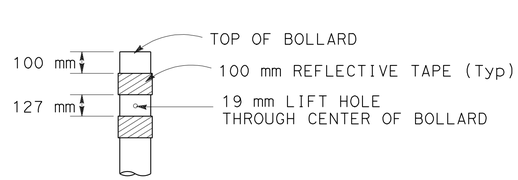

REFLECTIVE TAPE
DETAIL A
NO SCALE

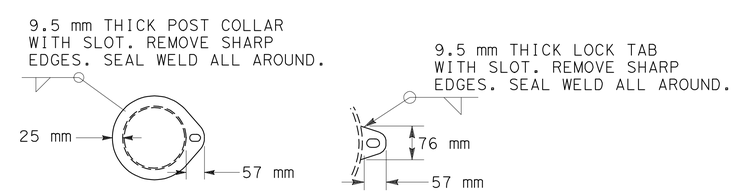

SECTION A-A

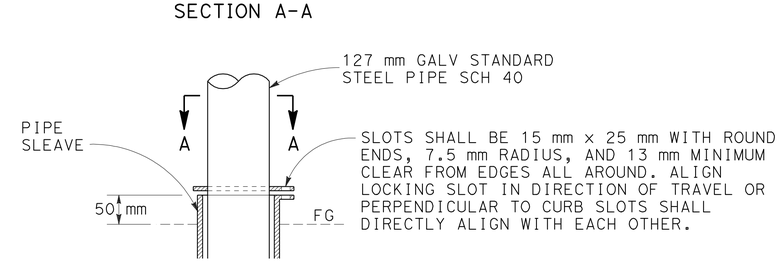

ELEVATION

POST COLLAR AND LOCK TAB
NO SCALE

ALL DIMENSIONS ARE IN METERS UNLESS OTHERWISE SHOWN

CONSTRUCTION DETAILS
BIKE PATH LANDING

SCALE 1:100

C-8

STATE OF CALIFORNIA - DEPARTMENT OF TRANSPORTATION
Caltrans TOLL BRIDGE

FUNCTIONAL SUPERVISOR JAIME E. GUTIERREZ
CALCULATED-DESIGNED BY GABRIEL TCRUZ
CHECKED BY RAFAEL RAVELO
REVISED BY
DATE REVISED

LAST REVISION 07-20-11
DATE PLOTTED => 06-OCT-2011
TIME PLOTTED => 06:09

Dist	COUNTY	ROUTE	KILOMETER POST TOTAL PROJECT	SHEET No.	TOTAL SHEETS
04	Ala	80	1.6/2.7	42	744

Caltrans Metric

Al Ely 6-2-11
REGISTERED CIVIL ENGINEER DATE

10-3-11
PLANS APPROVAL DATE

REGISTERED PROFESSIONAL ENGINEER A. L. ELY No. 18880 Exp. 9-30-11 CIVIL STATE OF CALIFORNIA

THE STATE OF CALIFORNIA OR ITS OFFICERS OR AGENTS SHALL NOT BE RESPONSIBLE FOR THE ACCURACY OR COMPLETENESS OF SCANNED COPIES OF THIS PLAN SHEET.

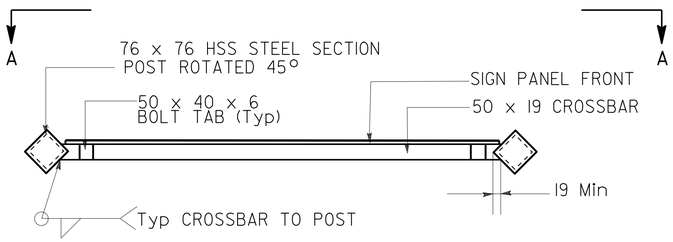

PLAN VIEW

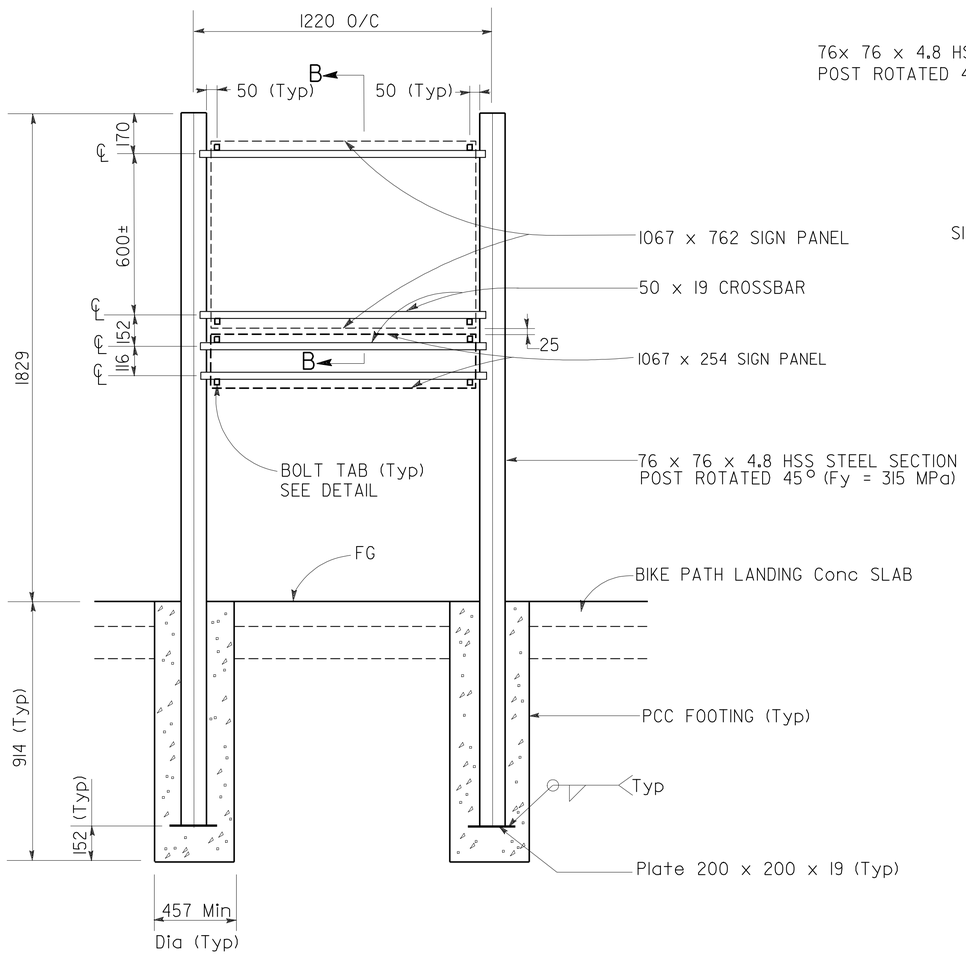

ELEVATION A-A

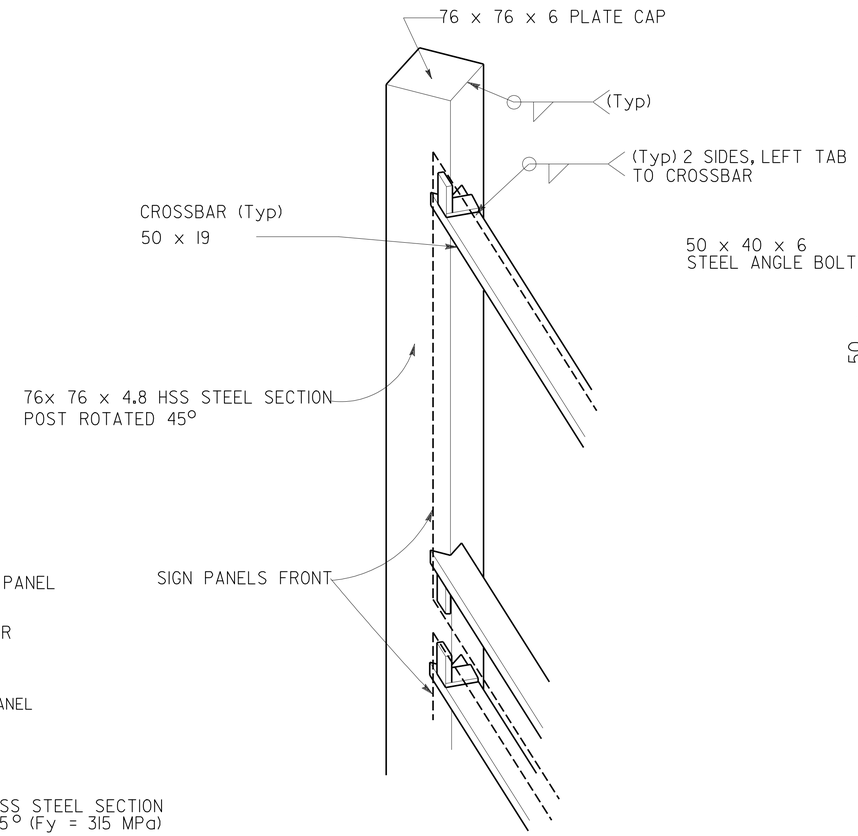

CROSSBAR TO POST B-B

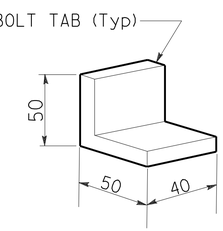

BOLT TAB

ALL DIMENSIONS ARE IN MILLIMETERS
UNLESS OTHERWISE SHOWN

CONSTRUCTION DETAILS
DIRECTIONAL SIGN
STEEL POST AND FRAME

NO SCALE

C-9

STATE OF CALIFORNIA - DEPARTMENT OF TRANSPORTATION
Caltrans TOLL BRIDGE

FUNCTIONAL SUPERVISOR: AL ELY
CALCULATED-DESIGNED BY: AI ELY
CHECKED BY: TI LEE
REVISED BY
DATE REVISED

LAST REVISION 07-20-11
DATE PLOTTED => 06-OCT-2011
TIME PLOTTED => 06:10

Dist	COUNTY	ROUTE	KILOMETER POST TOTAL PROJECT	SHEET No.	TOTAL SHEETS
04	Ala	80	1.6/2.7	43	744

REGISTERED CIVIL ENGINEER 6-2-11 DATE

10-3-11
PLANS APPROVAL DATE

REGISTERED PROFESSIONAL ENGINEER Gabriel Tcruz No. 68108 Exp. 6-30-11 CIVIL STATE OF CALIFORNIA

THE STATE OF CALIFORNIA OR ITS OFFICERS OR AGENTS SHALL NOT BE RESPONSIBLE FOR THE ACCURACY OR COMPLETENESS OF SCANNED COPIES OF THIS PLAN SHEET.

Caltrans Metric

FOR COMPLETE RIGHT OF WAY AND ACCURATE ACCESS DATA, SEE RIGHT OF WAY RECORD MAPS AT DISTRICT OFFICE.

LEGEND:

40 mm HMA (TYPE A)

CURVE DATA

No.	R	Δ	T	L	N	E
1	35.000	25°42′01″	7.984	15.699	608728.458	1906933.175
2	8.500	103°10′29″	10.719	15.306	608707.123	1906948.893
3	11.500	44°46′38″	4.737	8.987	608704.840	1906946.947
4	13.400	68°39′07″	9.150	16.056	608704.819	1906959.991
5	5.000	62°53′55″	3.058	5.489	608712.878	1906980.232
6	50.000	12°6′05″	5.300	10.560	608669.717	1906992.964

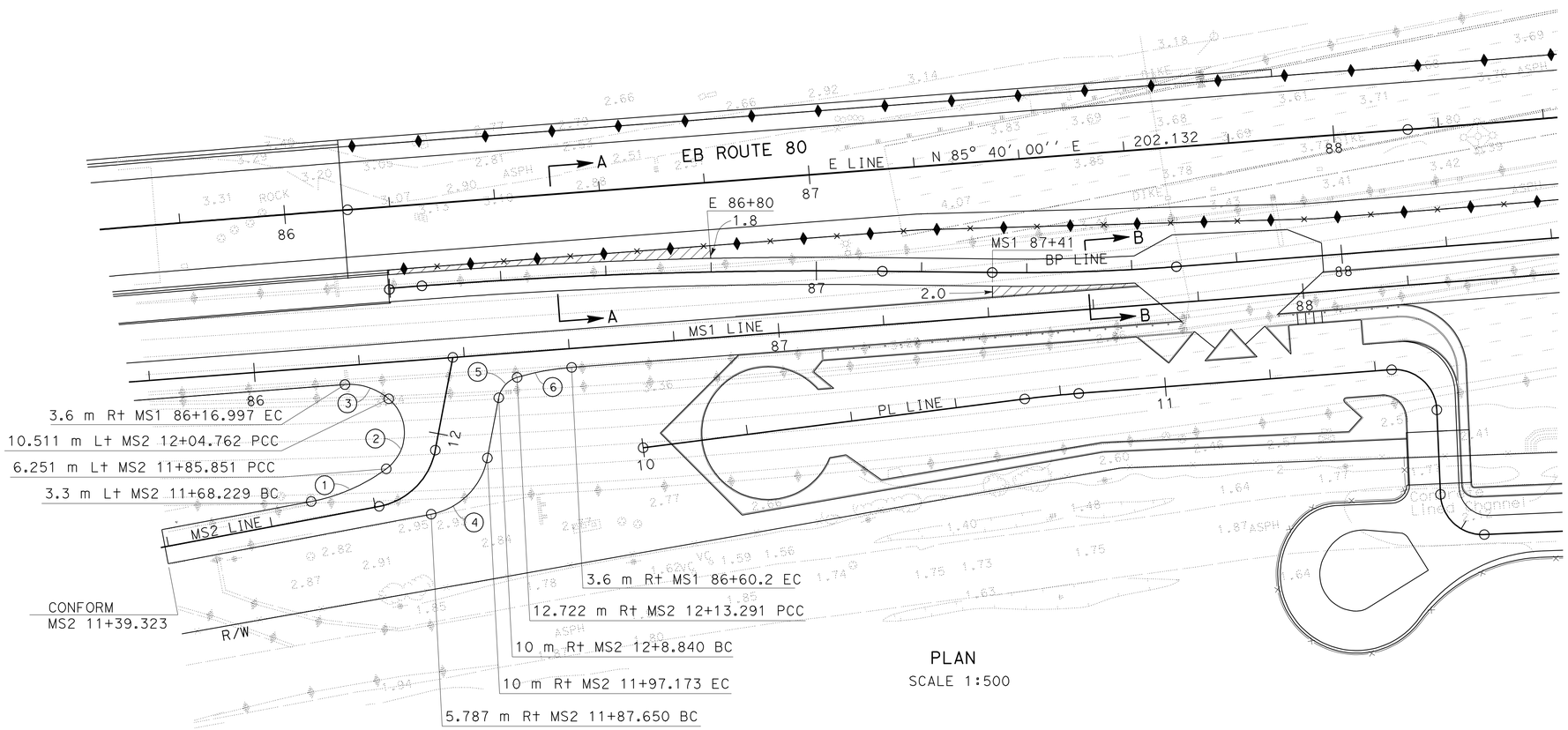

PLAN
SCALE 1:500

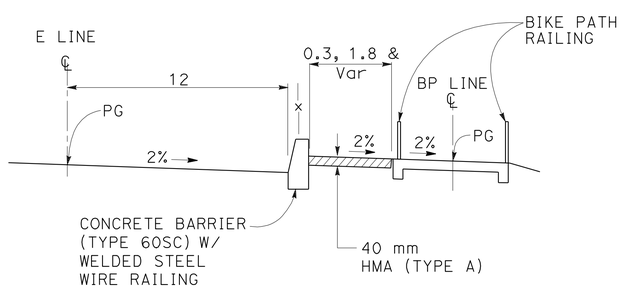

SECTION A-A
NO SCALE
NOTE: OTHER DETAILS AND DIMENSIONS ARE NOT SHOWN FOR CLARITY.

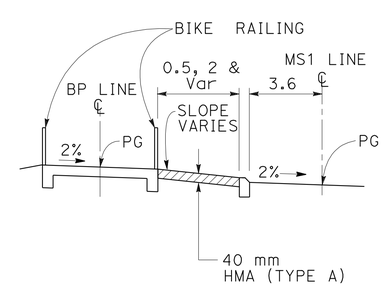

SECTION B-B
NO SCALE
NOTE: OTHER DETAILS AND DIMENSIONS ARE NOT SHOWN FOR CLARITY.

CONSTRUCTION DETAILS
MAINTENANCE ROAD AND MISCELLANEOUS AREAS

SCALE AS SHOWN

ALL DIMENSIONS ARE IN METERS UNLESS OTHERWISE SHOWN

C-10

STATE OF CALIFORNIA - DEPARTMENT OF TRANSPORTATION
Caltrans
TOLL BRIDGE

FUNCTIONAL SUPERVISOR: JAIME E. GUTIERREZ
CALCULATED-DESIGNED BY: GABRIEL TCRUZ
CHECKED BY: RAFAEL RAVELO
REVISED BY
DATE REVISED

LAST REVISION 06-01-11
DATE PLOTTED => 06-OCT-2011
TIME PLOTTED => 06:10

Dist	COUNTY	ROUTE	KILOMETER POST TOTAL PROJECT	SHEET No.	TOTAL SHEETS
04	Ala	80	1.6/2.7	44	744

REGISTERED CIVIL ENGINEER — DATE: 6-2-11

PLANS APPROVAL DATE: 10-3-11

REGISTERED PROFESSIONAL ENGINEER — Rafael A. Ravelo — No. 68941 — Exp. 12-31-11 — CIVIL — STATE OF CALIFORNIA

THE STATE OF CALIFORNIA OR ITS OFFICERS OR AGENTS SHALL NOT BE RESPONSIBLE FOR THE ACCURACY OR COMPLETENESS OF SCANNED COPIES OF THIS PLAN SHEET.

Caltrans Metric

FOR COMPLETE RIGHT OF WAY AND ACCURATE ACCESS DATA, SEE RIGHT OF WAY RECORD MAPS AT DISTRICT OFFICE.

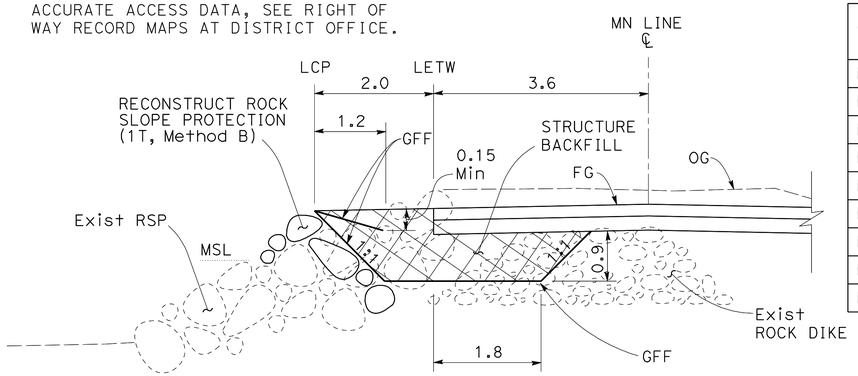

SECTION A-A
NO SCALE

STATION	ELEVATION			
	LCP	LETW	CL	Bot OF BACKFILL
MN 85+20	1.848	1.888	1.960	0.553
MN 85+30	1.848	1.888	1.960	0.553
MN 85+40	1.848	1.888	1.960	0.553
MN 85+50	1.828	1.868	1.940	0.533
MN 85+60	1.828	1.868	1.940	0.533
MN 85+70	1.848	1.888	1.960	0.553
MN 85+80	1.961	2.001	1.929	0.666
MN 85+90	2.021	2.061	1.989	0.726
MN 86+00	2.101	2.141	2.069	0.806

LEGEND:

- EXISTING ROCK DIKE LOCATION (APPROXIMATE)
- RECONSTRUCT ROCK SLOPE PROTECTION (1T, METHOD B)
- EXISTING ROCK SLOPE PROTECTION
- STRUCTURE BACKFILL

ABBREVIATIONS:

LCP	LEFT CATCH POINT
LETW	LEFT EDGE OF TRAVEL WAY
CL	CENTER LINE
MSL	MEAN SEA LEVEL
GFF	GEOTEXTILE FILTER FABRIC

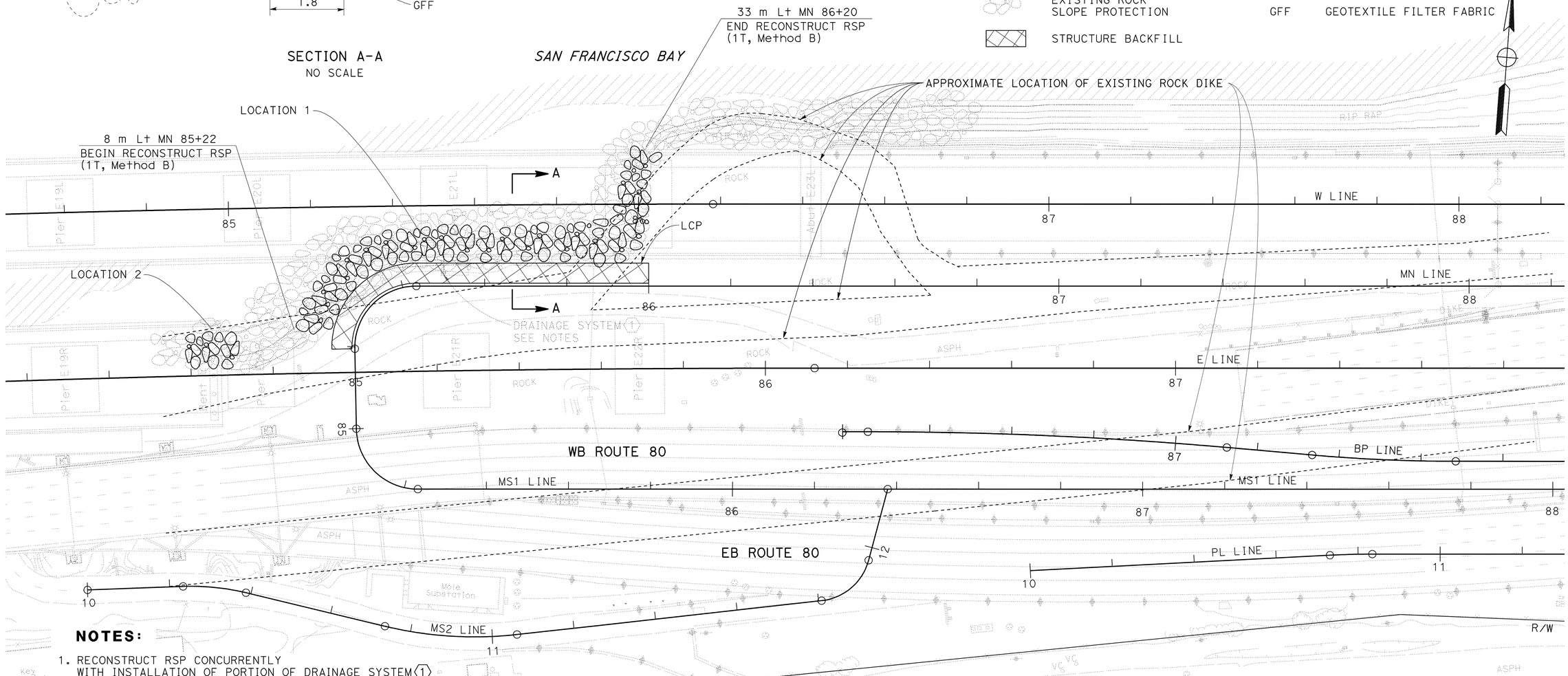

NOTES:

1. RECONSTRUCT RSP CONCURRENTLY WITH INSTALLATION OF PORTION OF DRAINAGE SYSTEM (1)
2. FOR ROCK DIKE DIMENSIONS, SEE C-1.

CONSTRUCTION DETAIL
RECONSTRUCT ROCK SLOPE PROTECTION

SCALE 1:500

C-11

STATE OF CALIFORNIA - DEPARTMENT OF TRANSPORTATION
Caltrans
TOLL BRIDGE

FUNCTIONAL SUPERVISOR: JAIME E. GUTIERREZ
CALCULATED-DESIGNED BY: RAFAEL RAVELO
CHECKED BY: GABRIEL TCRUZ
REVISED BY / DATE REVISED

LAST REVISION 07-20-11 | DATE PLOTTED => 06-OCT-2011 | TIME PLOTTED => 06:10

Dist	COUNTY	ROUTE	KILOMETER POST TOTAL PROJECT	SHEET No.	TOTAL SHEETS
04	Ala	80	1.6/2.7	45	744

REGISTERED CIVIL ENGINEER 6-2-11 DATE

10-3-11
PLANS APPROVAL DATE

REGISTERED PROFESSIONAL ENGINEER Gabriel Tcruz No. 68108 Exp. 6-30-11 CIVIL STATE OF CALIFORNIA

THE STATE OF CALIFORNIA OR ITS OFFICERS OR AGENTS SHALL NOT BE RESPONSIBLE FOR THE ACCURACY OR COMPLETENESS OF SCANNED COPIES OF THIS PLAN SHEET.

FOR COMPLETE RIGHT OF WAY AND ACCURATE ACCESS DATA, SEE RIGHT OF WAY RECORD MAPS AT DISTRICT OFFICE.

BIKEWAY LIGHTING FOUNDATION	BP STATION	OFFSET
2009-1	88+32.80	3.60
2009-2	88+69.30	3.60
2009-3	89+05.80	3.60
2009-4	89+42.30	3.60
2009-5	89+78.80	3.60
2009-6	90+15.30	3.60
2009-7	90+51.80	3.60
2009-8	90+88.30	3.60
2009-9	91.24.80	3.60
2009-10	91+61.30	3.60
2009-11	91+99.02	3.60
2009-12	92+34.30	3.60
2009-13	92+70.80	3.60
2009-14	93+07.31	3.60
2009-15	93+43.80	3.60
2009-16	93+80.30	3.51
2009-17	94+16.80	3.10

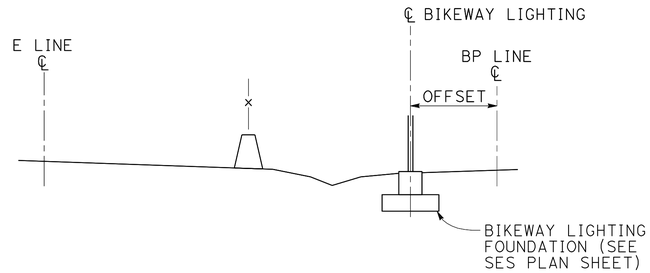

TYPICAL SECTION

NOTE: OTHER DETAILS AND DIMENSIONS NOT SHOWN FOR CLARITY

NO SCALE

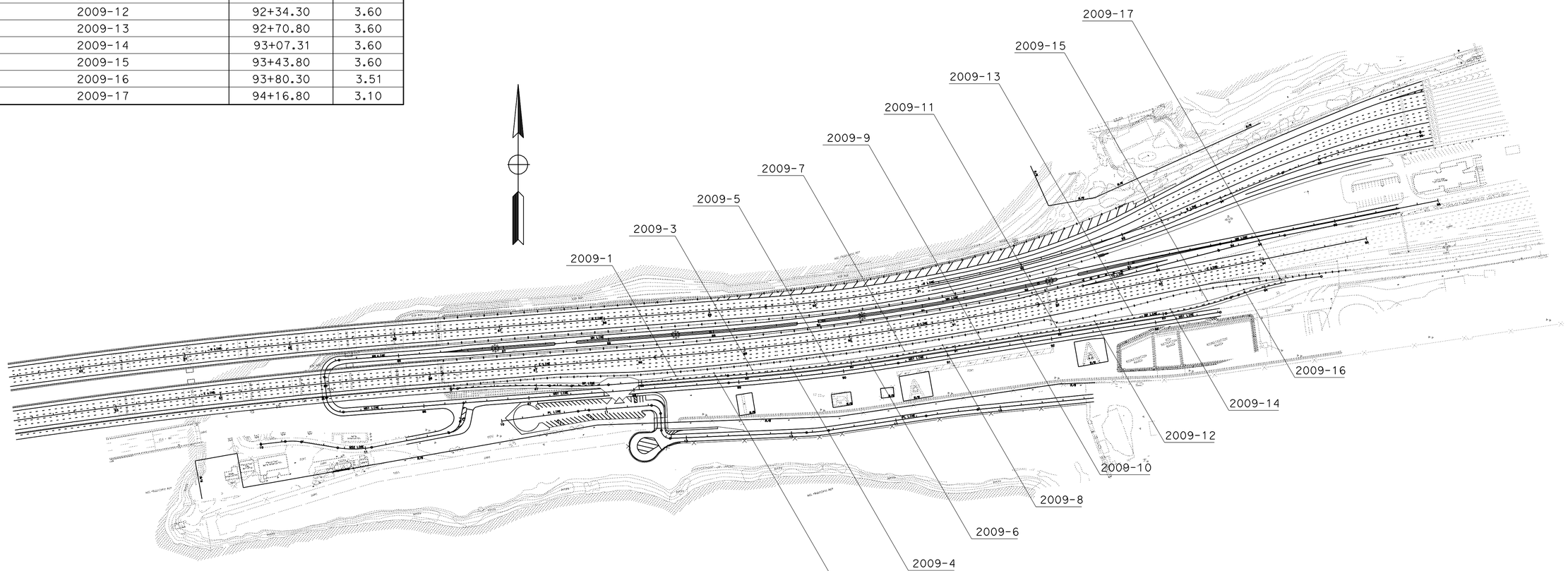

ALL DIMENSIONS ARE IN METERS UNLESS OTHERWISE SHOWN

CONSTRUCTION DETAIL
BIKEWAY LIGHTING FOUNDATION LOCATION

NO SCALE

C-12

STATE OF CALIFORNIA - DEPARTMENT OF TRANSPORTATION
Caltrans TOLL BRIDGE

FUNCTIONAL SUPERVISOR: JAIME E. GUTIERREZ
CALCULATED-DESIGNED BY: GABRIEL TCRUZ
CHECKED BY: RAFAEL RAVELO
REVISED BY / DATE REVISED

LAST REVISION 06-00-11 DATE PLOTTED => 06-OCT-2011 TIME PLOTTED => 08:00

Dist	COUNTY	ROUTE	KILOMETER POST TOTAL PROJECT	SHEET No.	TOTAL SHEETS
04	Ala	80	1.6/2.7	46	744

Caltrans Metric

REGISTERED CIVIL ENGINEER 6-2-11 DATE

10-3-11
PLANS APPROVAL DATE

REGISTERED PROFESSIONAL ENGINEER Gabriel Tcruz No. 68108 Exp. 6-30-11 CIVIL STATE OF CALIFORNIA

THE STATE OF CALIFORNIA OR ITS OFFICERS OR AGENTS SHALL NOT BE RESPONSIBLE FOR THE ACCURACY OR COMPLETENESS OF SCANNED COPIES OF THIS PLAN SHEET.

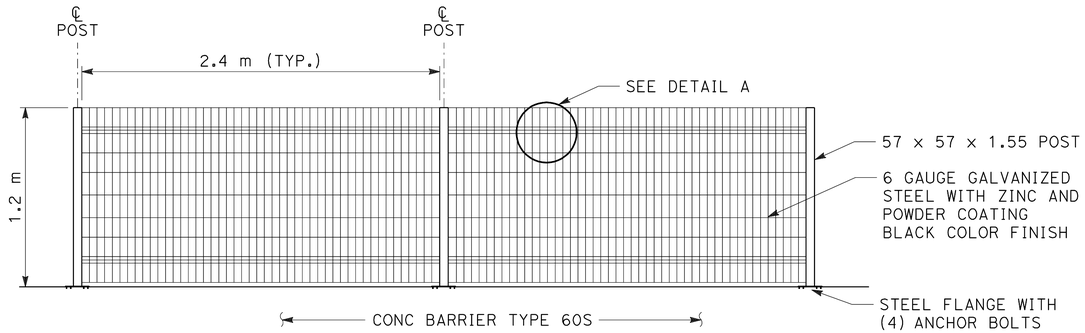

WELDED WIRE STEEL RAILING DETAIL

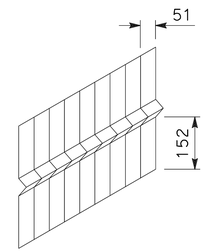

DETAIL A

NOTES:

1. PLATE AND TUBE STEEL (TS) TO BE PAINTED AND FINISHED TO MATCH FENCE POST.
2. PROVIDE A STEEL SHIM BETWEEN POST AND TUBE STEEL TO PROVIDE A SNUG, TIGHT FIT.
3. REINFORCEMENT BARS SHALL BE ADJUSTED TO CLEAR SCUPPER OPENINGS.
4. FOR DETAILS NOT SHOWN, SEE STANDARD PLANS A76G.
5. PROVIDE SCUPPER OPENINGS WITH 3 m CENTER TO CENTER BETWEEN Sta E 91+90 TO E 92+91.

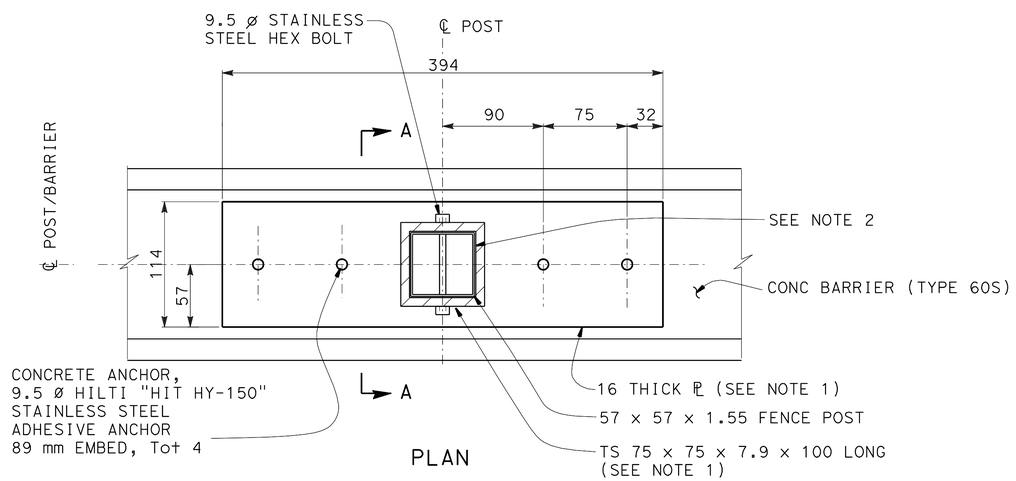

TYPICAL FENCE POST CONNECTION

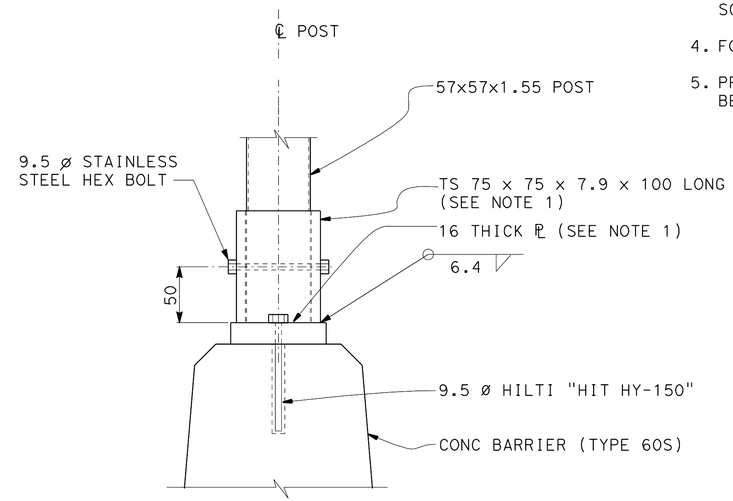

SECTION A-A

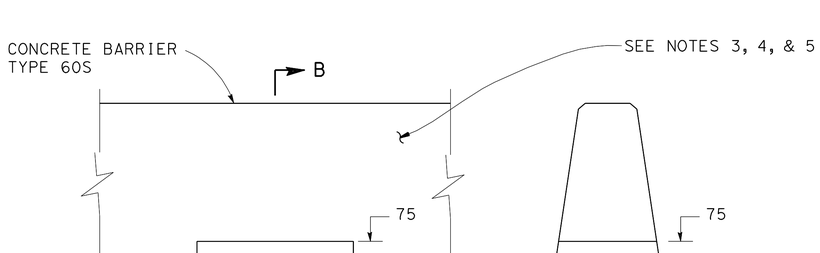

SCUPPER DRAIN

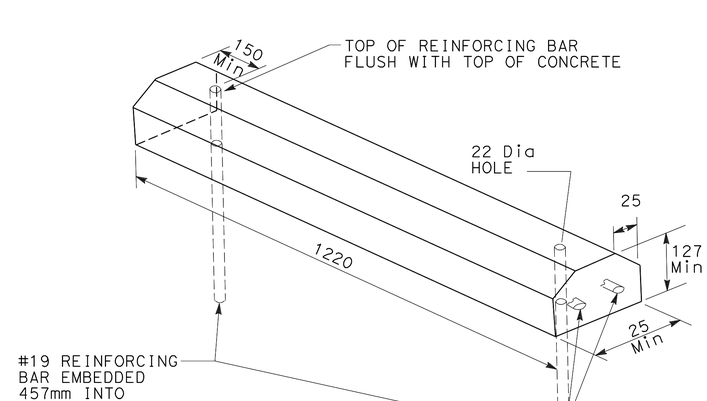

PARKING BUMPER

ALL DIMENSIONS ARE IN MILLIMETERS UNLESS OTHERWISE SHOWN

CONSTRUCTION DETAILS

NO SCALE

C-13

REVISED BY	DATE REVISED

CALCULATED-DESIGNED BY: GABRIEL TCRUZ
CHECKED BY: RAFAEL RAVELO
FUNCTIONAL SUPERVISOR: JAIME E. GUTIERREZ

STATE OF CALIFORNIA - DEPARTMENT OF TRANSPORTATION
Caltrans TOLL BRIDGE

LAST REVISION 06-03-11 | DATE PLOTTED => 06-OCT-2011 | TIME PLOTTED => 06:10

Dist	COUNTY	ROUTE	KILOMETER POST TOTAL PROJECT	SHEET No.	TOTAL SHEETS
04	Ala	80	1.6/2.7	47	744

Marisol E. Marin 6-2-11
REGISTERED CIVIL ENGINEER DATE

10-3-11
PLANS APPROVAL DATE

REGISTERED PROFESSIONAL ENGINEER Marisol E. Marin No. 64950 Exp. 6-30-13 CIVIL STATE OF CALIFORNIA

THE STATE OF CALIFORNIA OR ITS OFFICERS OR AGENTS SHALL NOT BE RESPONSIBLE FOR THE ACCURACY OR COMPLETENESS OF SCANNED COPIES OF THIS PLAN SHEET.

Caltrans Metric

FOR COMPLETE RIGHT OF WAY AND ACCURATE ACCESS DATA, SEE RIGHT OF WAY RECORD MAPS AT DISTRICT OFFICE.

LEGEND:

ROADWAY EXCAVATION (TYPE H)

ROADWAY EXCAVATION (CLASS II)

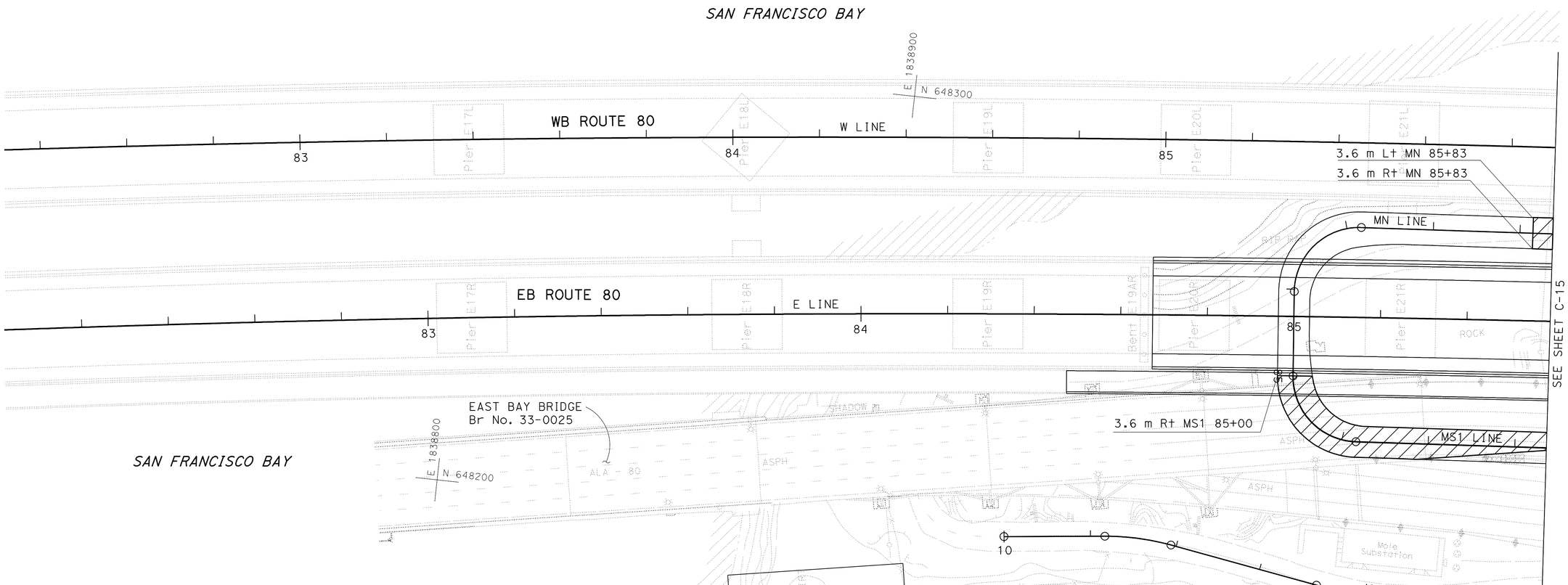

CONSTRUCTION DETAILS
CONTAMINATED MATERIAL

SCALE 1:500

THIS PLAN ACCURATE FOR CONTAMINATED MATERIAL ONLY

ALL DIMENSIONS ARE IN METERS UNLESS OTHERWISE SHOWN

C-14

STATE OF CALIFORNIA - DEPARTMENT OF TRANSPORTATION
Caltrans **TOLL BRIDGE**

FUNCTIONAL SUPERVISOR: JAIME E. GUTIERREZ

CALCULATED-DESIGNED BY: MARISOL E. MARIN
CHECKED BY: GABRIEL TORRUZ

REVISED BY | DATE REVISED

LAST REVISION 06-00-11 | DATE PLOTTED => 06-OCT-2011 | TIME PLOTTED => 06:11

Dist	COUNTY	ROUTE	KILOMETER POST TOTAL PROJECT	SHEET No.	TOTAL SHEETS
04	Ala	80	1.6/2.7	48	744

Marisol E. Marin 6-2-11
REGISTERED CIVIL ENGINEER DATE

10-3-11
PLANS APPROVAL DATE

REGISTERED PROFESSIONAL ENGINEER Marisol E. Marin No. 64950 Exp. 6-30-13 CIVIL STATE OF CALIFORNIA

THE STATE OF CALIFORNIA OR ITS OFFICERS OR AGENTS SHALL NOT BE RESPONSIBLE FOR THE ACCURACY OR COMPLETENESS OF SCANNED COPIES OF THIS PLAN SHEET.

Caltrans Metric

FOR COMPLETE RIGHT OF WAY AND ACCURATE ACCESS DATA, SEE RIGHT OF WAY RECORD MAPS AT DISTRICT OFFICE.

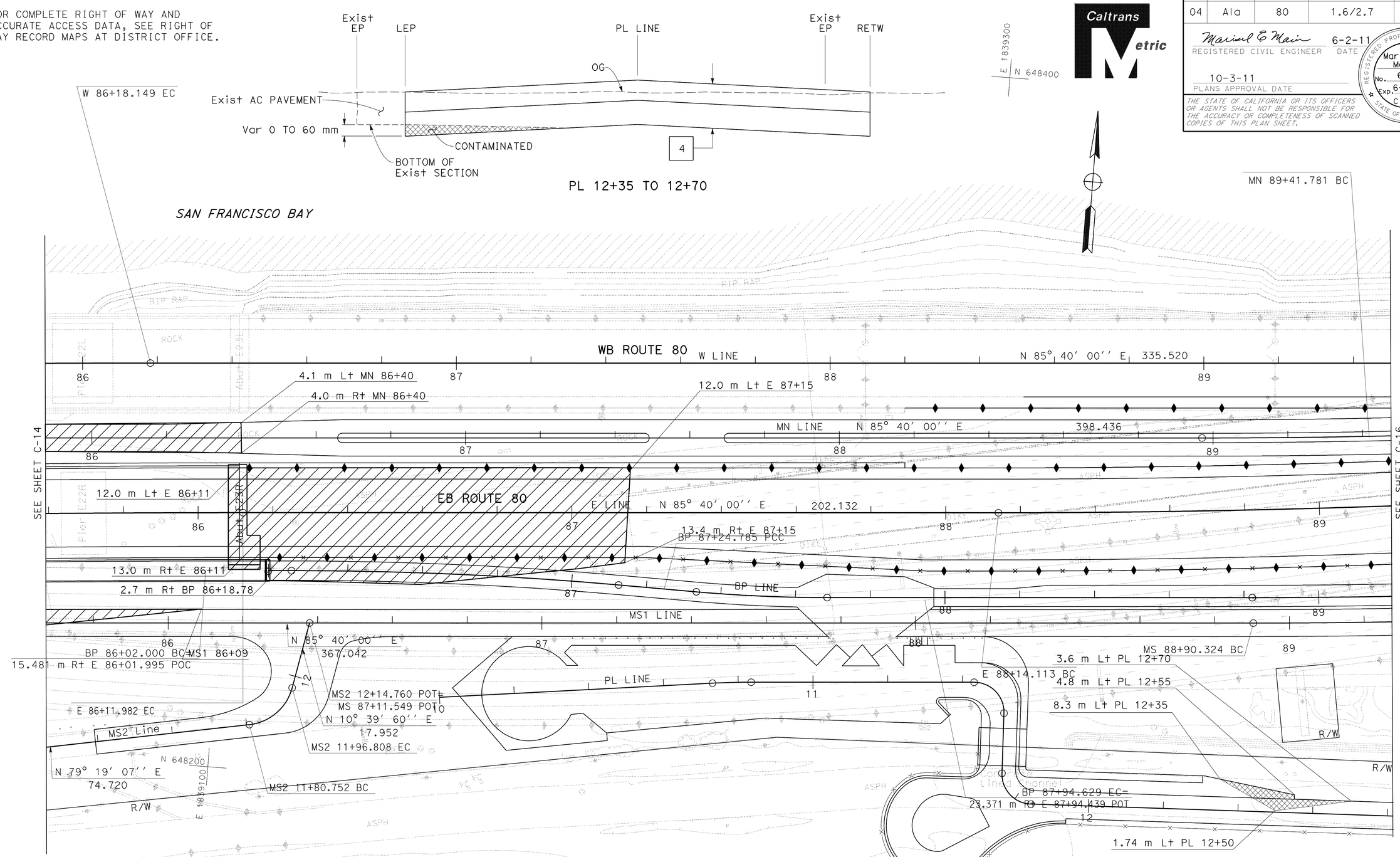

ALL DIMENSIONS ARE IN METERS UNLESS OTHERWISE SHOWN

CONSTRUCTION DETAILS
CONTAMINATED MATERIAL

SCALE 1:500

FOR NOTES, ABBREVIATIONS &/OR LEGEND, SEE SHEET C-13

THIS PLAN ACCURATE FOR CONTAMINATED MATERIAL WORK ONLY

C-15

STATE OF CALIFORNIA - DEPARTMENT OF TRANSPORTATION
Caltrans TOLL BRIDGE

FUNCTIONAL SUPERVISOR: JAIME E. GUTIERREZ
CALCULATED-DESIGNED BY: MARISOL E. MARIN
CHECKED BY: GABRIEL TCRUZ
REVISED BY / DATE REVISED

LAST REVISION 07-28-11
DATE PLOTTED => 06-OCT-2011
TIME PLOTTED => 06:11

Dist	COUNTY	ROUTE	KILOMETER POST TOTAL PROJECT	SHEET No.	TOTAL SHEETS
04	Ala	80	1.6/2.7	49	744

Marisol E. Marin 6-2-11
REGISTERED CIVIL ENGINEER DATE

10-3-11
PLANS APPROVAL DATE

REGISTERED PROFESSIONAL ENGINEER Marisol E. Marin No. 64950 Exp. 6-30-13 CIVIL STATE OF CALIFORNIA

THE STATE OF CALIFORNIA OR ITS OFFICERS OR AGENTS SHALL NOT BE RESPONSIBLE FOR THE ACCURACY OR COMPLETENESS OF SCANNED COPIES OF THIS PLAN SHEET.

Caltrans Metric

FOR COMPLETE RIGHT OF WAY AND ACCURATE ACCESS DATA, SEE RIGHT OF WAY RECORD MAPS AT DISTRICT OFFICE.

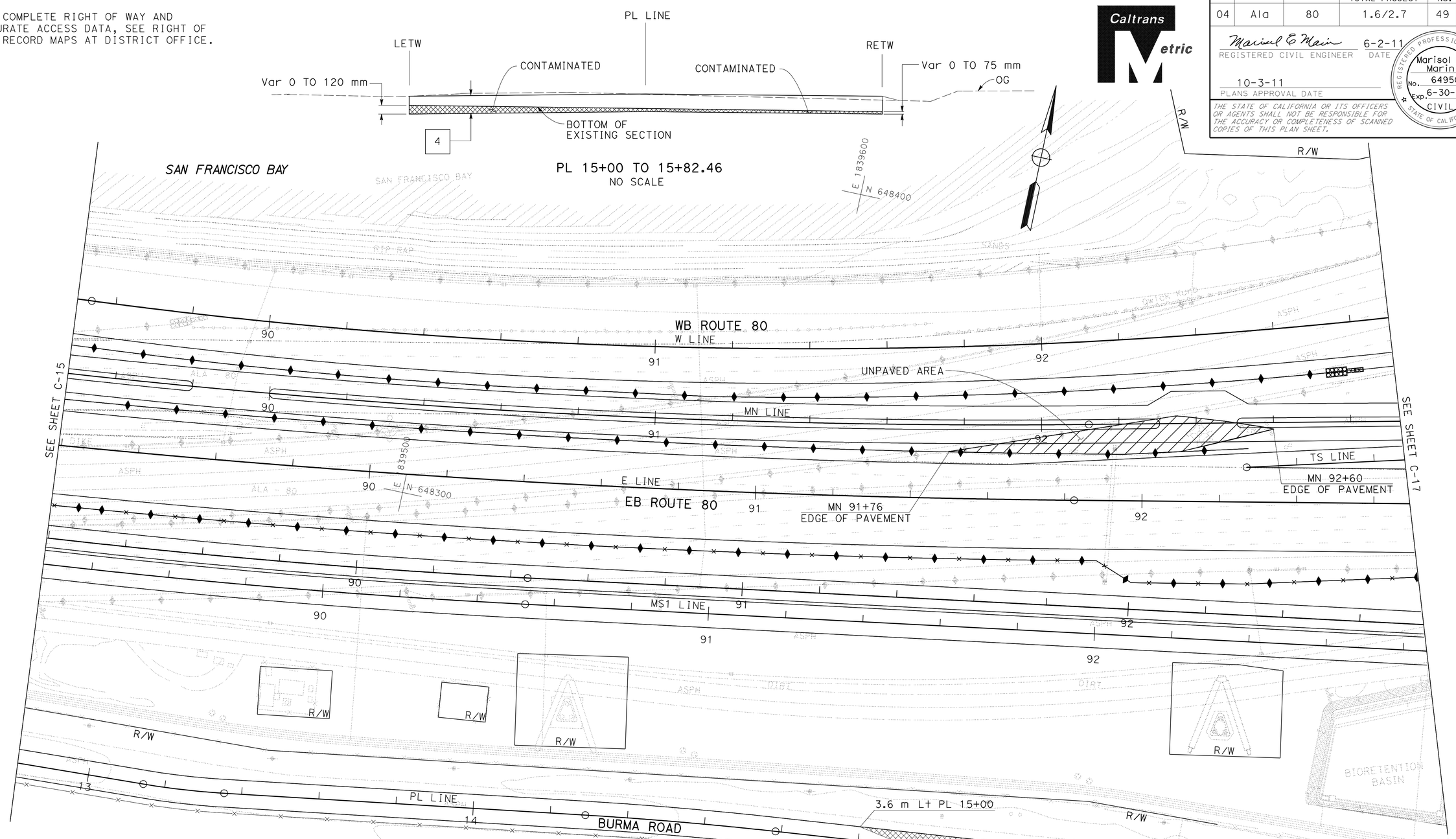

CONSTRUCTION DETAILS
CONTAMINATED MATERIAL

SCALE 1:500

FOR NOTES, ABBREVIATIONS &/OR LEGEND, SEE SHEET C-13

THIS PLAN ACCURATE FOR CONTAMINATED MATERIAL WORK ONLY

ALL DIMENSIONS ARE IN METERS UNLESS OTHERWISE SHOWN

C-16

REVISED BY | DATE REVISED

MARISOL E. MARIN | GABRIEL TCRUZ

CALCULATED-DESIGNED BY | CHECKED BY

FUNCTIONAL SUPERVISOR: JAIME E. GUTIERREZ

STATE OF CALIFORNIA - DEPARTMENT OF TRANSPORTATION
Caltrans TOLL BRIDGE

LAST REVISION 07-20-11 | DATE PLOTTED => 06-OCT-2011 | TIME PLOTTED => 06:11

Dist	COUNTY	ROUTE	KILOMETER POST TOTAL PROJECT	SHEET No.	TOTAL SHEETS
04	Ala	80	1.6/2.7	50	744

Marisol E. Marin 6-2-11
REGISTERED CIVIL ENGINEER DATE

10-3-11
PLANS APPROVAL DATE

REGISTERED PROFESSIONAL ENGINEER Marisol E. Marin No. 64950 Exp. 6-30-13 CIVIL STATE OF CALIFORNIA

THE STATE OF CALIFORNIA OR ITS OFFICERS OR AGENTS SHALL NOT BE RESPONSIBLE FOR THE ACCURACY OR COMPLETENESS OF SCANNED COPIES OF THIS PLAN SHEET.

Caltrans Metric

FOR COMPLETE RIGHT OF WAY AND ACCURATE ACCESS DATA, SEE RIGHT OF WAY RECORD MAPS AT DISTRICT OFFICE.

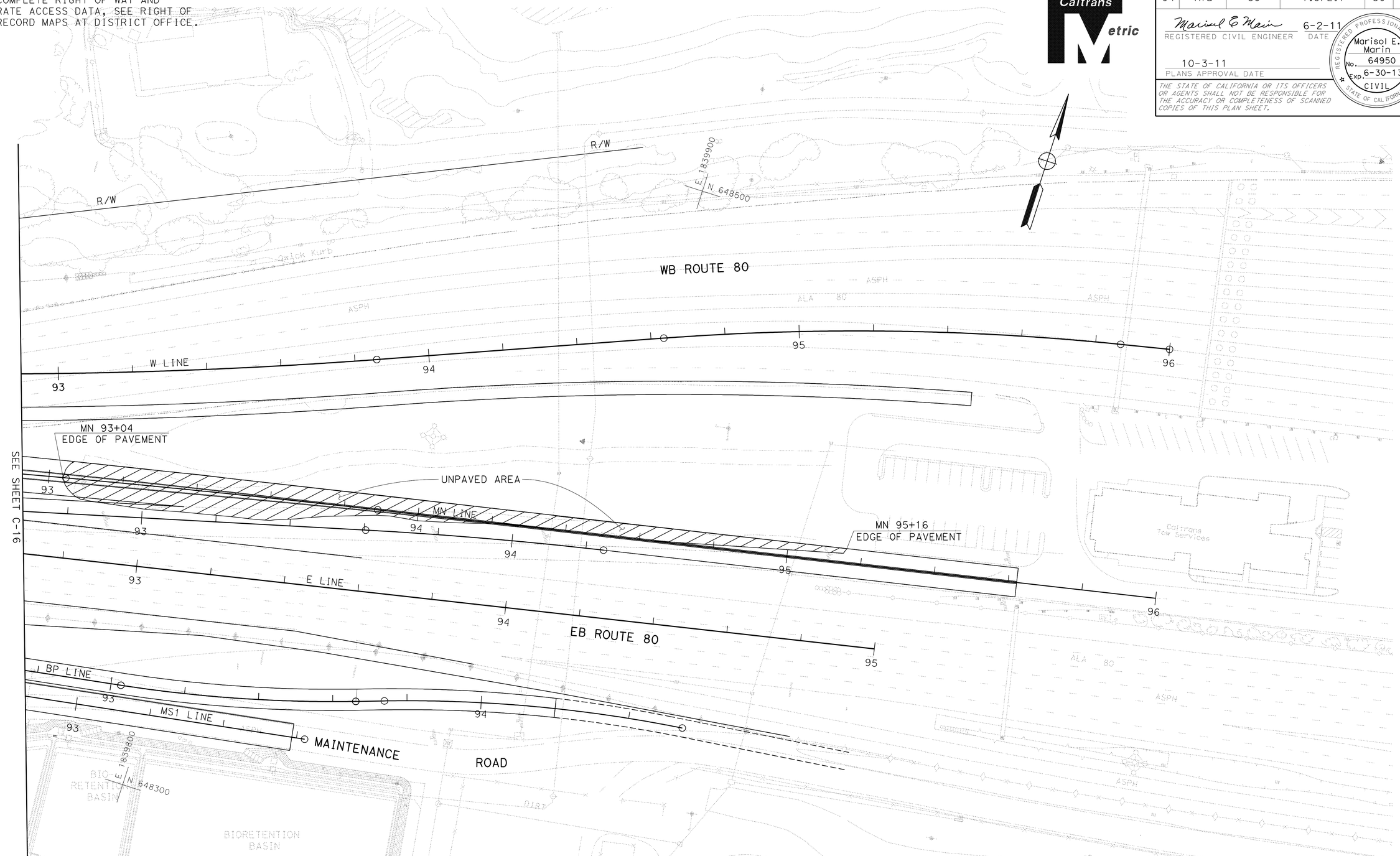

FOR NOTES, ABBREVIATIONS &/OR LEGEND, SEE SHEET C-13

THIS PLAN ACCURATE FOR CONTAMINATED MATERIAL WORK ONLY

ALL DIMENSIONS ARE IN METERS UNLESS OTHERWISE SHOWN

CONSTRUCTION DETAILS
CONTAMINATED MATERIAL

SCALE 1:500

C-17

STATE OF CALIFORNIA - DEPARTMENT OF TRANSPORTATION
Caltrans TOLL BRIDGE

FUNCTIONAL SUPERVISOR: JAIME E. GUTIERREZ
CALCULATED-DESIGNED BY: MARISOL E. MARIN
CHECKED BY: GABRIEL TCRUZ
REVISED BY / DATE REVISED

LAST REVISION 06-00-11 | DATE PLOTTED => 06-OCT-2011 | TIME PLOTTED => 06:11

Dist	COUNTY	ROUTE	KILOMETER POST TOTAL PROJECT	SHEET No.	TOTAL SHEETS
04	Ala	80	1.6/2.7	51	744

REGISTERED CIVIL ENGINEER 6-2-11 DATE

10-3-11
PLANS APPROVAL DATE

REGISTERED PROFESSIONAL ENGINEER Rafael A. Ravelo No. 68941 Exp. 12-31-11 CIVIL STATE OF CALIFORNIA

THE STATE OF CALIFORNIA OR ITS OFFICERS OR AGENTS SHALL NOT BE RESPONSIBLE FOR THE ACCURACY OR COMPLETENESS OF SCANNED COPIES OF THIS PLAN SHEET.

Caltrans Metric

ESA LIMIT

	N	E
1	648328.3	1839084.6
2	648323.6	1839036.8
3	648361.6	1839033.9
4	648338.4	1838803.8
5	648390.3	1838797.5
6	648419.7	1838798.5
7	648453.1	1838788.7
8	648495.2	1838787.8
9	648539.2	1838784.8
10	648601.9	1838790.7
11	648622.5	1838811.3
12	648709.0	1838843.5
13	648940.6	1839075.1
14	648940.6	1839414.0
15	648817.2	1839537.3
16	648817.2	1839672.3
17	648904.9	1839759.9
18	648904.9	1839888.4
19	648843.7	1839949.5

LEGEND:

- ESA — ENVIRONMENTALLY SENSITIVE AREA
- -X-TFESA- TEMPORARY FENCE (TYPE ESA)
- -O-ESA- ESA 1 BOUNDARY (SEE ESA LIMIT)
- Exist "KEEP OUT" SIGNS (ESA) MAINTAINED BY OTHERS
- TCE — TEMPORARY CONSTRUCTION EASEMENT
- EELGRASS COLONIES
- NON-TIDAL WETLANDS

NOTE:

1. TEMPORARY FENCE (TYPE ESA) LOCATION TO BE DETERMINED BY THE ENGINEER

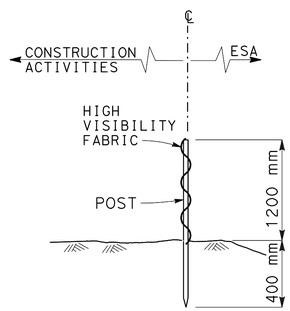

SECTION
TEMPORARY FENCE (TYPE ESA)

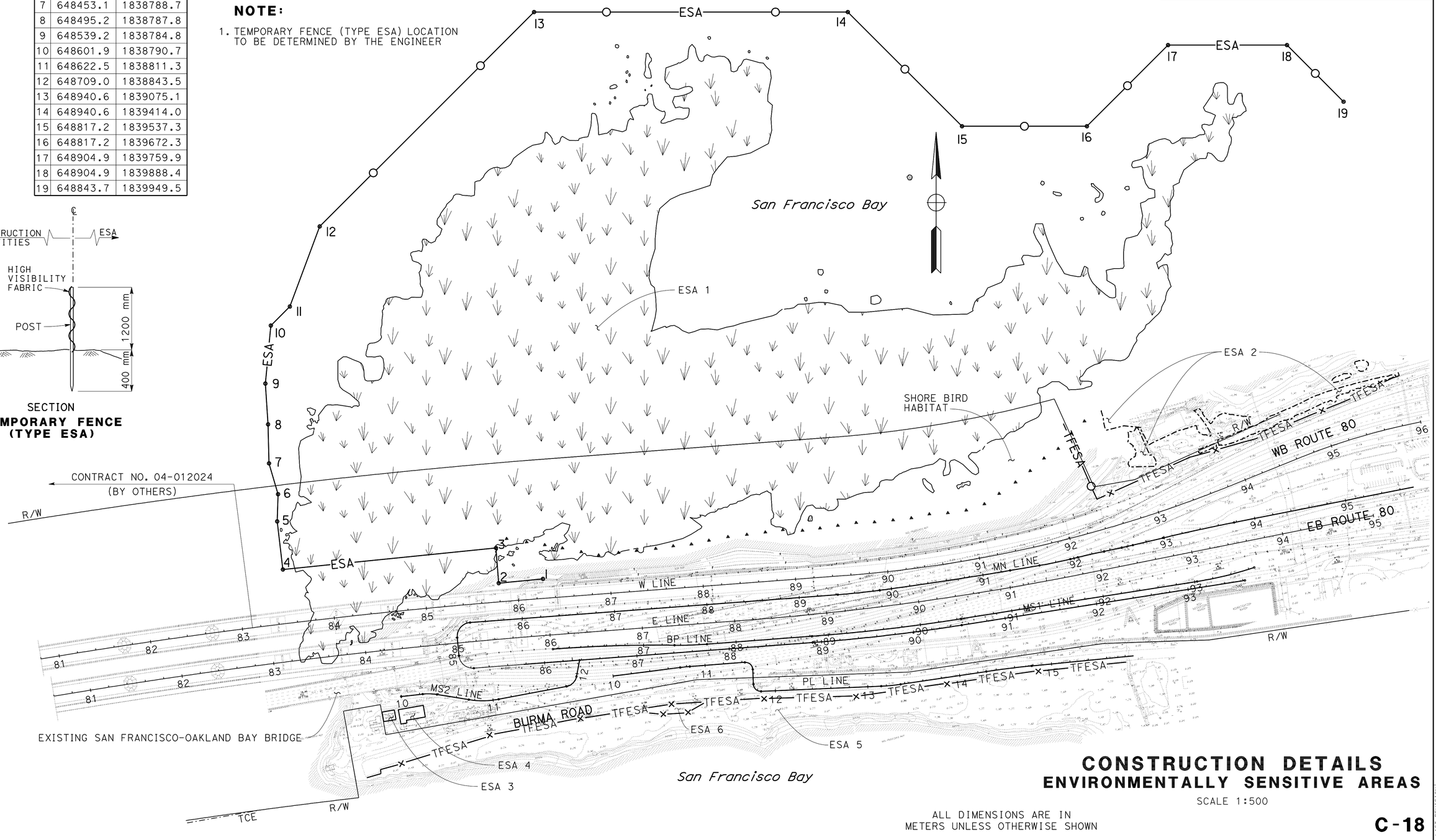

CONSTRUCTION DETAILS
ENVIRONMENTALLY SENSITIVE AREAS

SCALE 1:500

ALL DIMENSIONS ARE IN METERS UNLESS OTHERWISE SHOWN

C-18

STATE OF CALIFORNIA - DEPARTMENT OF TRANSPORTATION
Caltrans **TOLL BRIDGE**

FUNCTIONAL SUPERVISOR: JAIME E. GUTIERREZ
CALCULATED-DESIGNED BY: RAFAEL RAVELO
CHECKED BY: GABRIEL TCRUZ
REVISED BY / DATE REVISED

LAST REVISION 06-01-11 | DATE PLOTTED => 06-OCT-2011 | TIME PLOTTED => 06:14

REF SSP 07-490

Dist	COUNTY	ROUTE	KILOMETER POST TOTAL PROJECT	SHEET No.	TOTAL SHEETS
04	Ala	80	1.6/2.7	52	744

Jeng Tsai 6-2-11
REGISTERED CIVIL ENGINEER DATE

10-3-11
PLANS APPROVAL DATE

REGISTERED PROFESSIONAL ENGINEER Jeng G. Tsai No. 62753 Exp. 6-30-12 CIVIL STATE OF CALIFORNIA

THE STATE OF CALIFORNIA OR ITS OFFICERS OR AGENTS SHALL NOT BE RESPONSIBLE FOR THE ACCURACY OR COMPLETENESS OF SCANNED COPIES OF THIS PLAN SHEET.

Caltrans Metric

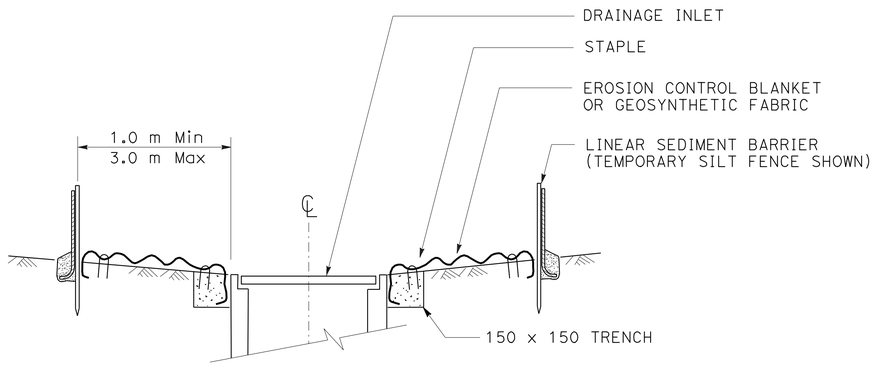

SECTION A-A

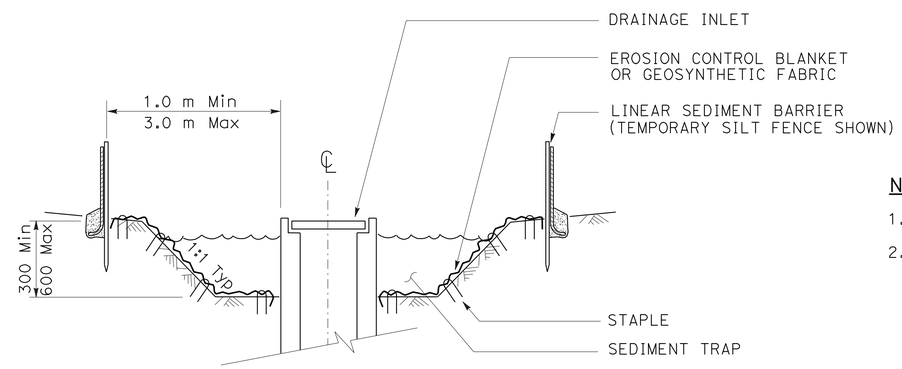

SECTION B-B

NOTES:

1. SEE STANDARD PLAN T51 FOR TEMPORARY SILT FENCE.
2. DIMENSIONS MAY VARY TO FIT FIELD CONDITIONS.

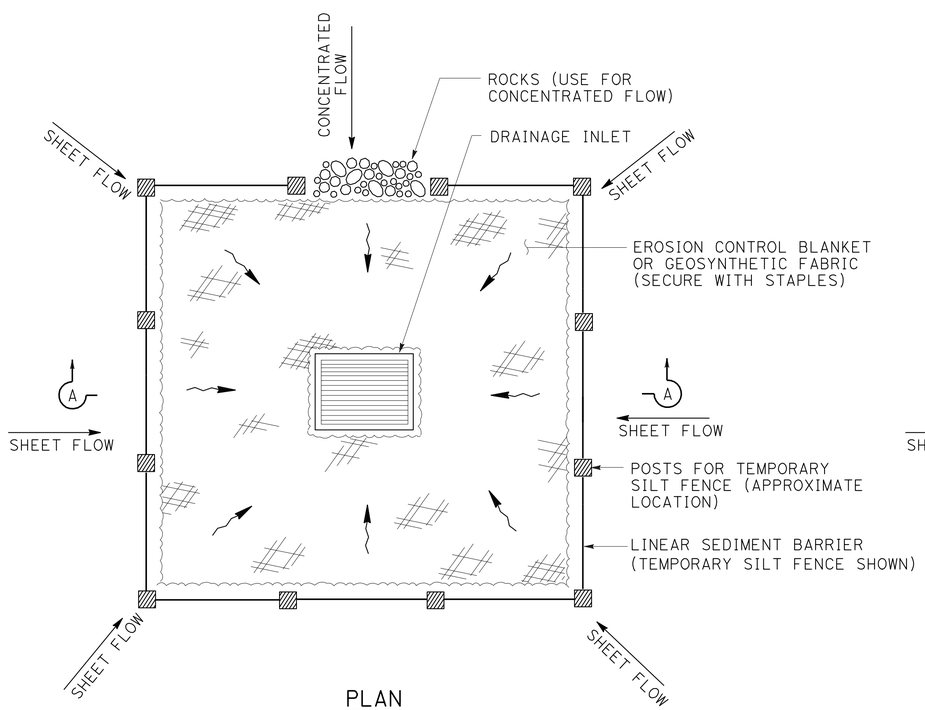

PLAN

TEMPORARY DRAINAGE INLET PROTECTION (TYPE I)

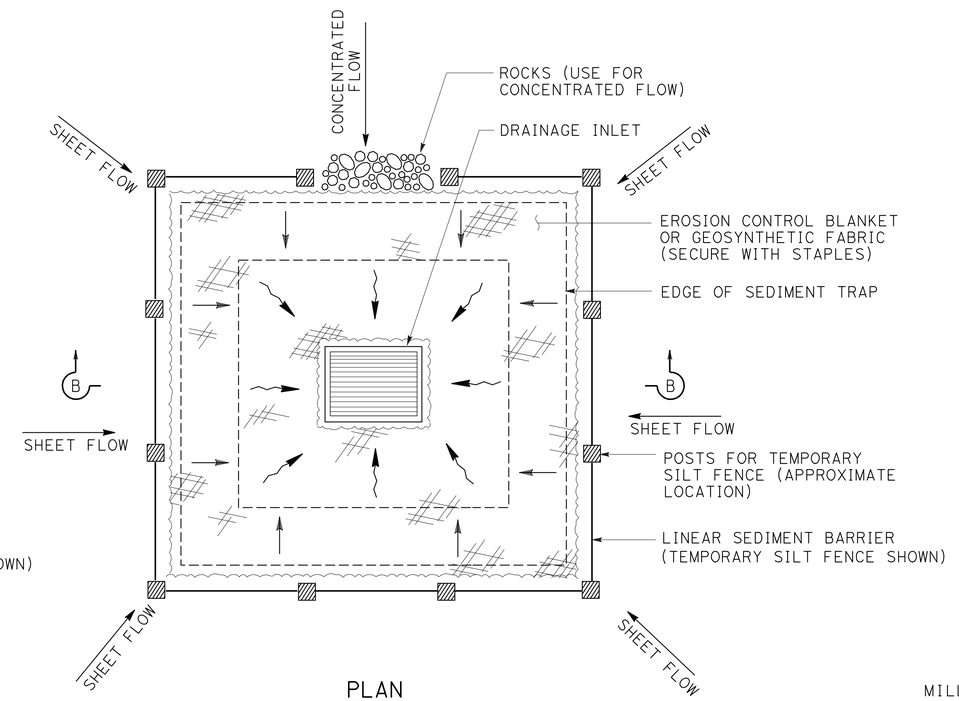

PLAN

TEMPORARY DRAINAGE INLET PROTECTION (TYPE 2) (EXCAVATED SEDIMENT TRAP)

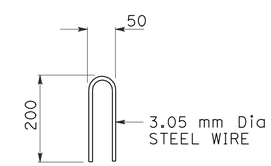

STAPLE DETAIL

ALL DIMENSIONS ARE IN MILLIMETERS UNLESS OTHERWISE SHOWN

TEMPORARY WATER POLLUTION CONTROL DETAILS (TEMPORARY DRAINAGE INLET PROTECTION)

NO SCALE

WPCD-1

STATE OF CALIFORNIA - DEPARTMENT OF TRANSPORTATION
Caltrans
TOLL BRIDGE

FUNCTIONAL SUPERVISOR: JAIME E. GUTIERREZ
CALCULATED-DESIGNED BY: ROBERT SCHOTT
CHECKED BY: JENG TSAI
REVISED BY
DATE REVISED

LAST REVISION 04-26-11
DATE PLOTTED => 06-OCT-2011
TIME PLOTTED => 06:15

Dist	COUNTY	ROUTE	KILOMETER POST TOTAL PROJECT	SHEET No.	TOTAL SHEETS
04	Ala	80	1.6/2.7	53	744

REGISTERED CIVIL ENGINEER 6-2-11 DATE

10-3-11
PLANS APPROVAL DATE

REGISTERED PROFESSIONAL ENGINEER Jeng G. Tsai No. 62753 Exp. 6-30-12 CIVIL STATE OF CALIFORNIA

THE STATE OF CALIFORNIA OR ITS OFFICERS OR AGENTS SHALL NOT BE RESPONSIBLE FOR THE ACCURACY OR COMPLETENESS OF SCANNED COPIES OF THIS PLAN SHEET.

Caltrans Metric

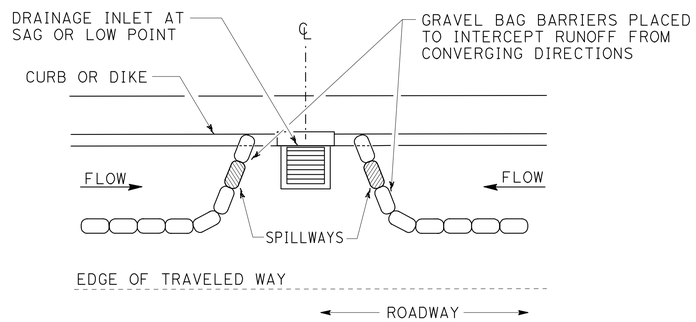

PLAN

CONFIGURATION FOR SAG POINT INLET (GRAVEL BAG BERM)

GRAVEL BAG BARRIER (TYPE 3A) SPACING TABLE

SLOPE OF ROADWAY (PERCENT)	1 TO 3.9	4 TO 5.9	6 TO 7.9	8 TO 10	10 +
INTERVAL BETWEEN BARRIERS (m)	30.0	22.5	15.0	7.5	4.0

FOR SLOPE OF LESS THAN 1%, INSTALL BARRIERS ONLY IF EROSION/SEDIMENT IS PREVALENT

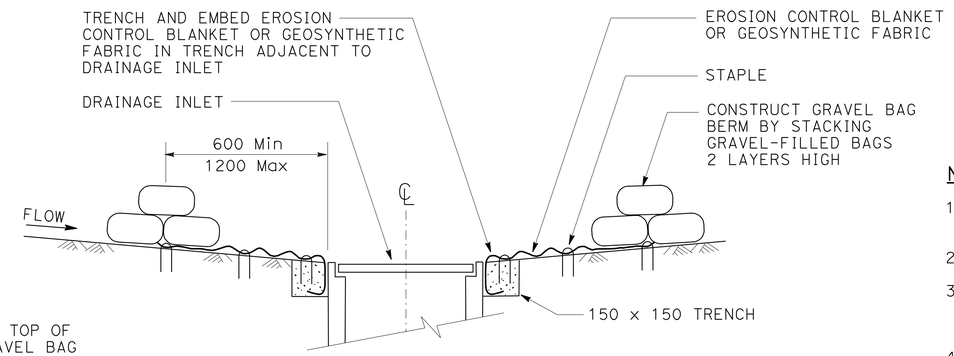

SECTION A-A

NOTES:

1. PLACE SAFETY CONES ADJACENT TO DRAINAGE INLET PROTECTION.
2. DIMENSIONS MAY VARY TO FIT FIELD CONDITIONS.
3. INSTALL A MINIMUM OF 3 GRAVEL BAG BARRIERS UPSTREAM OF EACH DRAINAGE INLET TO BE PROTECTED.
4. POSITION EROSION CONTROL BLANKET OR GEOSYNTHETIC FABRIC AT EDGE OF CONCRETE APRON AND SECURE IN TRENCH.
5. EROSION CONTROL BLANKET/GEOSYNTHETIC FABRIC IS NOT REQUIRED IF THE AREA ADJACENT TO THE DRAINAGE INLET IS VEGETATED OR PAVED.

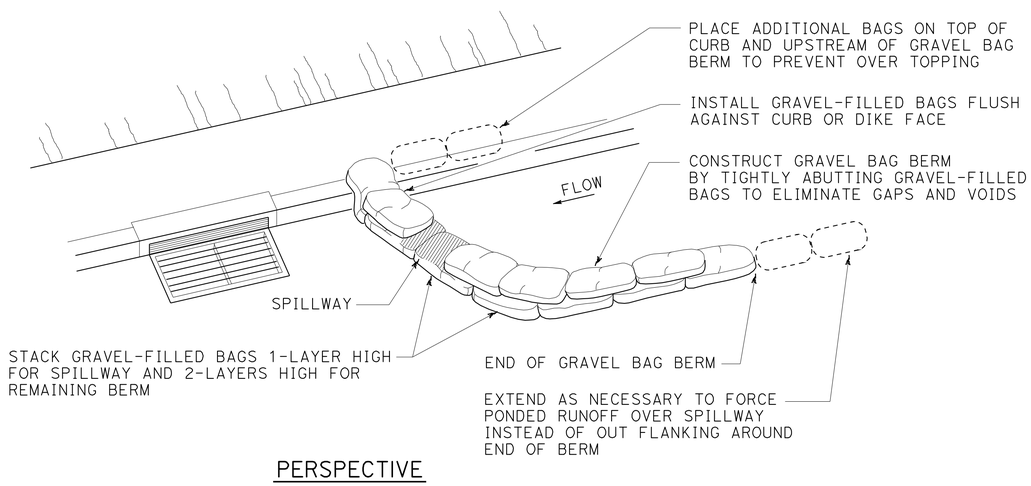

PERSPECTIVE

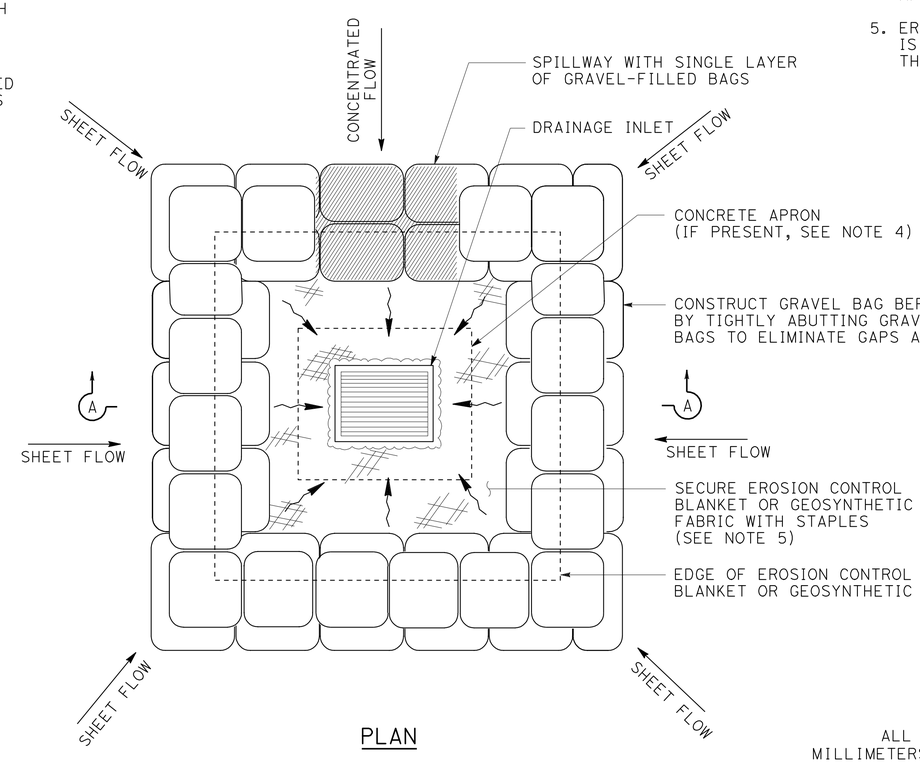

PLAN

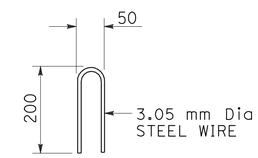

STAPLE DETAIL

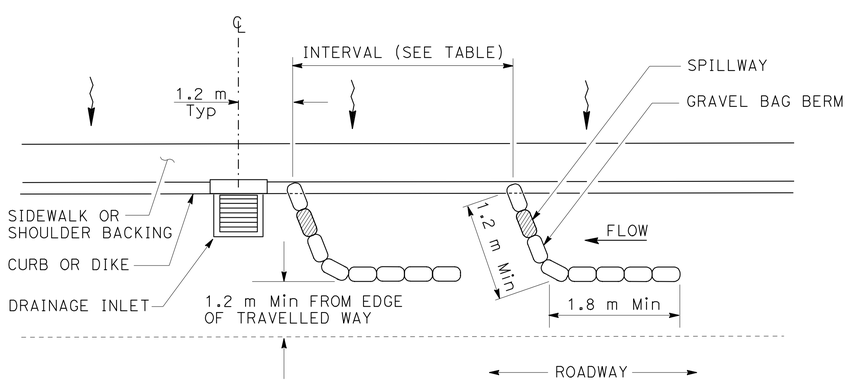

PLAN

TEMPORARY DRAINAGE INLET PROTECTION (TYPE 3A) (GRAVEL BAG BERM)

TEMPORARY DRAINAGE INLET PROTECTION (TYPE 3B)

ALL DIMENSIONS ARE IN MILLIMETERS UNLESS OTHERWISE SHOWN

TEMPORARY WATER POLLUTION CONTROL DETAILS (TEMPORARY DRAINAGE INLET PROTECTION)

NO SCALE

WPCD-2

STATE OF CALIFORNIA - DEPARTMENT OF TRANSPORTATION
Caltrans
TOLL BRIDGE

FUNCTIONAL SUPERVISOR: JAIME E. GUTIERREZ
CALCULATED-DESIGNED BY: ROBERT SCHOTT
CHECKED BY: JENG TSAI
REVISED BY
DATE REVISED

LAST REVISION 04-26-11
DATE PLOTTED => 06-OCT-2011
TIME PLOTTED => 06:15

Dist	COUNTY	ROUTE	KILOMETER POST TOTAL PROJECT	SHEET No.	TOTAL SHEETS
04	Ala	80	1.6/2.7	54	744

REGISTERED CIVIL ENGINEER Jeng Tsai DATE 6-2-11

PLANS APPROVAL DATE 10-3-11

REGISTERED PROFESSIONAL ENGINEER Jeng G. Tsai No. 62753 Exp. 6-30-12 CIVIL STATE OF CALIFORNIA

THE STATE OF CALIFORNIA OR ITS OFFICERS OR AGENTS SHALL NOT BE RESPONSIBLE FOR THE ACCURACY OR COMPLETENESS OF SCANNED COPIES OF THIS PLAN SHEET.

Caltrans Metric

FLEXIBLE SEDIMENT BARRIER SPACING TABLE

SLOPE OF ROADWAY (PERCENT)	0 TO 0.9	1 TO 1.9	2 TO 2.9	3 TO 4	5 +
INTERVAL BETWEEN BARRIERS (m)	15.24	10.67	9.14	7.62	6.10
ANGLE FROM FACE OF CURB (DEGREES)	70	70	70	45	45
SUGGESTED BARRIER LENGTH (m)	1.82	1.82	1.82	1.82	1.82

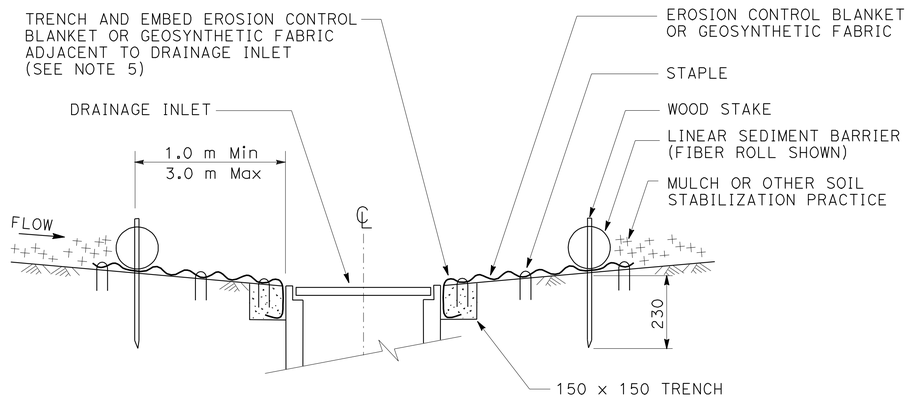

SECTION A-A

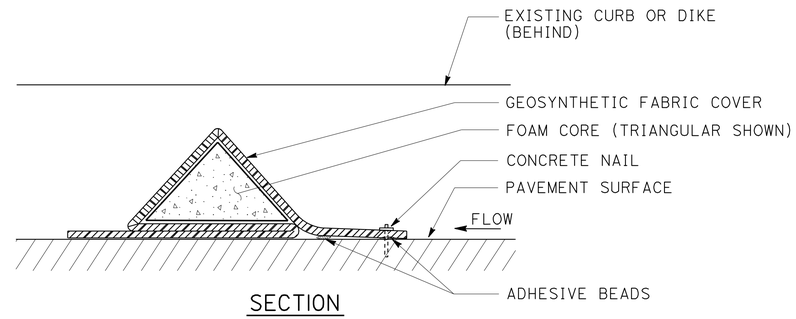

SECTION

FLEXIBLE SEDIMENT BARRIER DETAIL
FOAM BARRIER SHOWN

NOTES:

1. SEE STANDARD PLAN T51 FOR TEMPORARY SILT FENCE.
2. DIMENSIONS MAY VARY TO FIT FIELD CONDITIONS.
3. INSTALL A MINIMUM OF 3 FLEXIBLE SEDIMENT BARRIERS UPSTREAM OF EACH DRAINAGE INLET TO BE PROTECTED.
4. POSITION EROSION CONTROL BLANKET OR GEOSYNTHETIC FABRIC AT EDGE OF CONCRETE APRON AND SECURE IN TRENCH.
5. EROSION CONTROL BLANKET/GEOSYNTHETIC FABRIC IS NOT REQUIRED IF THE AREA ADJACENT TO THE DRAINAGE INLET IS VEGETATED.

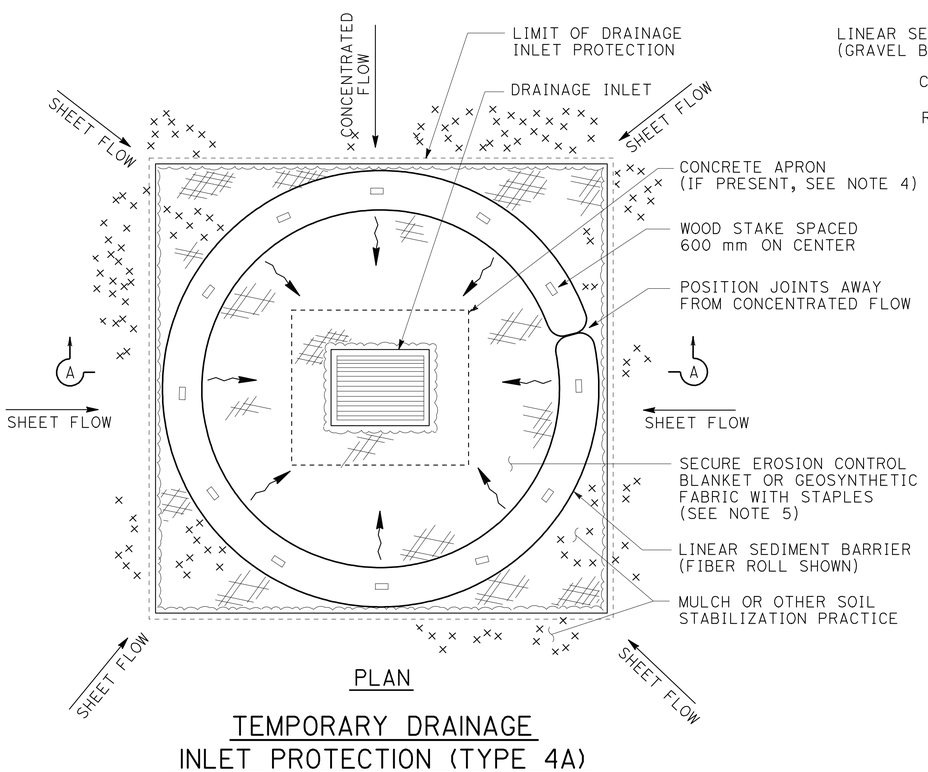

PLAN

TEMPORARY DRAINAGE INLET PROTECTION (TYPE 4A) (FIBER ROLLS)

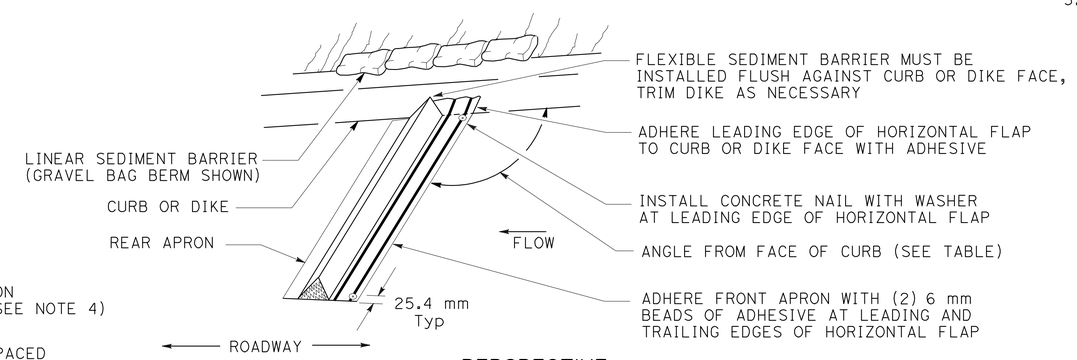

PERSPECTIVE

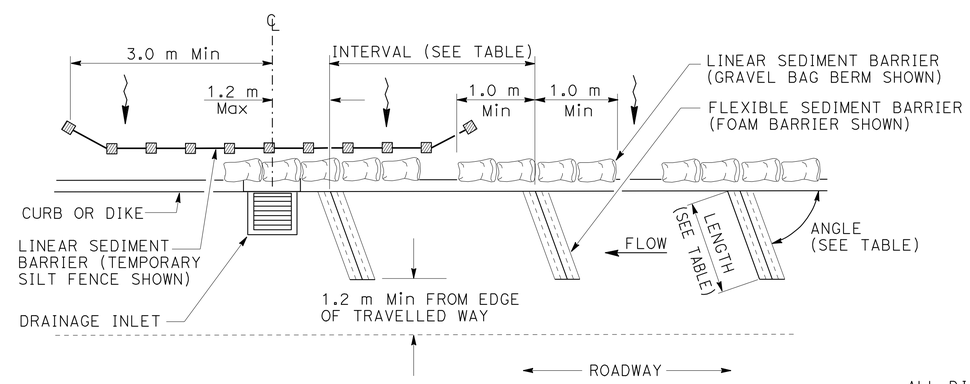

PLAN

TEMPORARY DRAINAGE INLET PROTECTION (TYPE 4B) FLEXIBLE SEDIMENT BARRIER

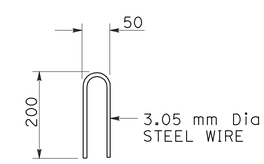

STAPLE DETAIL

ALL DIMENSIONS ARE IN MILLIMETERS UNLESS OTHERWISE SHOWN

TEMPORARY WATER POLLUTION CONTROL DETAILS (TEMPORARY DRAINAGE INLET PROTECTION)

NO SCALE

WPCD-3

STATE OF CALIFORNIA - DEPARTMENT OF TRANSPORTATION
Caltrans
TOLL BRIDGE

FUNCTIONAL SUPERVISOR: JAIME E. GUTIERREZ
CALCULATED-DESIGNED BY: ROBERT SCHOTT
CHECKED BY: JENG TSAI
REVISED BY
DATE REVISED

LAST REVISION 04-27-11 DATE PLOTTED => 06-OCT-2011 TIME PLOTTED => 06:15

REF SSP 07-490

Dist	COUNTY	ROUTE	KILOMETER POST TOTAL PROJECT	SHEET No.	TOTAL SHEETS
04	Ala	80	1.6/2.7	55	744

REGISTERED CIVIL ENGINEER 6-2-11 DATE

10-3-11
PLANS APPROVAL DATE

REGISTERED PROFESSIONAL ENGINEER Jeng G. Tsai No. 62753 Exp. 6-30-12 CIVIL STATE OF CALIFORNIA

THE STATE OF CALIFORNIA OR ITS OFFICERS OR AGENTS SHALL NOT BE RESPONSIBLE FOR THE ACCURACY OR COMPLETENESS OF SCANNED COPIES OF THIS PLAN SHEET.

Caltrans Metric

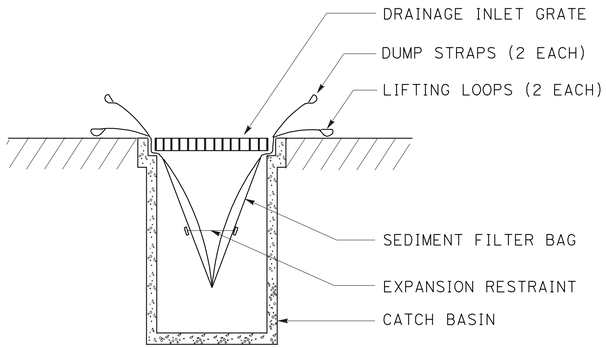

SECTION B-B

SEDIMENT FILTER BAG DETAIL

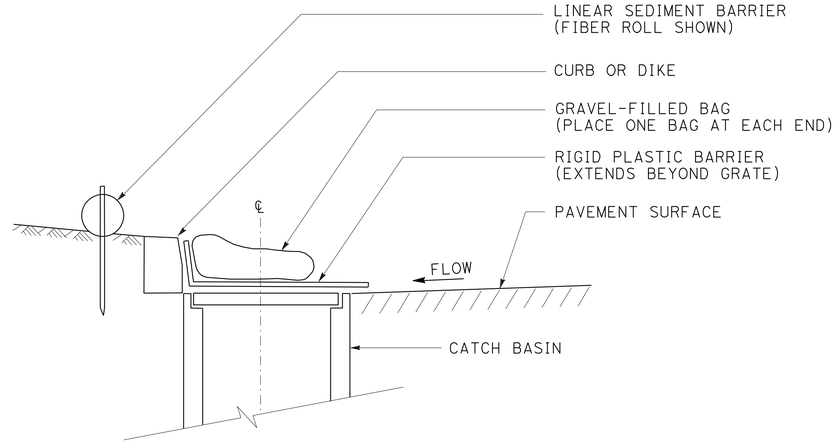

SECTION

TEMPORARY DRAINAGE INLET PROTECTION (TYPE 6A) (CATCH BASIN WITH GRATE)

NOTES:

1. SEE Std PLAN T51 FOR TEMPORARY SILT FENCE.
2. DIMENSIONS MAY VARY TO FIT FIELD CONDITIONS.

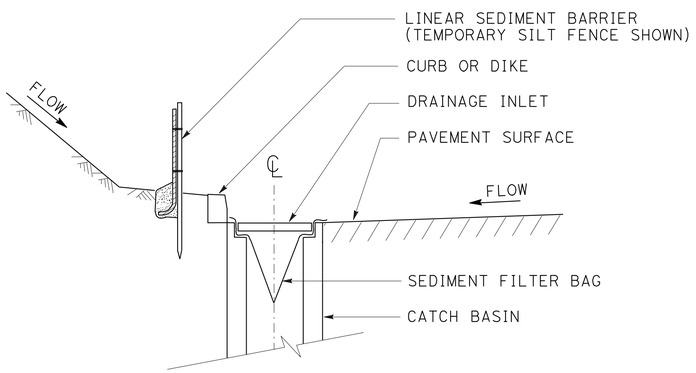

SECTION A-A

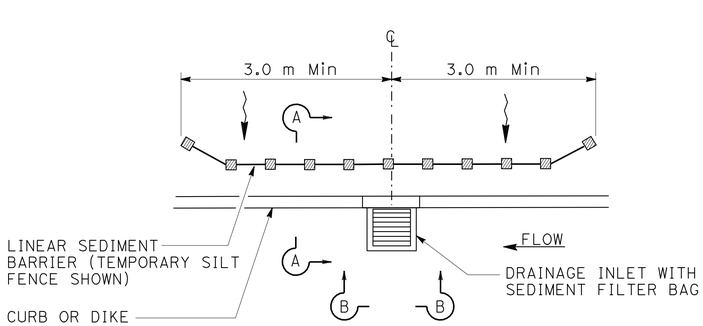

PLAN

TEMPORARY DRAINAGE INLET PROTECTION (TYPE 5) (SEDIMENT FILTER BAG)

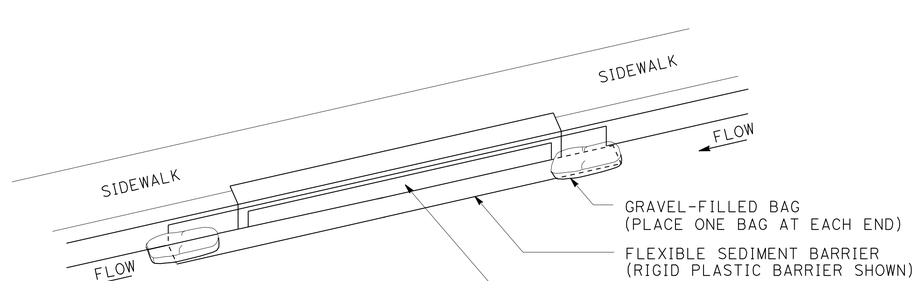

PERSPECTIVE

TEMPORARY DRAINAGE INLET PROTECTION (TYPE 6B) (CURB INLET WITHOUT GRATE)

ALL DIMENSIONS ARE IN MILLIMETERS UNLESS OTHERWISE SHOWN

TEMPORARY WATER POLLUTION CONTROL DETAILS (TEMPORARY DRAINAGE INLET PROTECTION)

NO SCALE

WPCD-4

STATE OF CALIFORNIA - DEPARTMENT OF TRANSPORTATION
Caltrans
TOLL BRIDGE

FUNCTIONAL SUPERVISOR: JAIME E. GUTIERREZ
CALCULATED-DESIGNED BY: ROBERT SCHOTT
CHECKED BY: JENG TSAI
REVISED BY
DATE REVISED

LAST REVISION 04-27-11
DATE PLOTTED => 06-OCT-2011
TIME PLOTTED => 06:15

Dist	COUNTY	ROUTE	KILOMETER POST TOTAL PROJECT	SHEET No.	TOTAL SHEETS
04	Ala	80	1.6/2.7	56	744

Sally Bang
LICENSED LANDSCAPE ARCHITECT

10-3-11
PLANS APPROVAL DATE

LICENSED LANDSCAPE ARCHITECT
SALLY BANG No. 5020
Sally Bang
Signature
11-30-11
Renewal Date
6-3-11
Date
STATE OF CALIFORNIA

THE STATE OF CALIFORNIA OR ITS OFFICERS OR AGENTS SHALL NOT BE RESPONSIBLE FOR THE ACCURACY OR COMPLETENESS OF ELECTRONIC COPIES OF THIS PLAN SHEET.

Caltrans Metric

FOR COMPLETE RIGHT OF WAY AND ACCURATE ACCESS DATA, SEE RIGHT OF WAY RECORD MAPS AT DISTRICT OFFICE.

LEGEND:

- FIBER ROLL
- EROSION CONTROL (NETTING)
- COMPOST, INCORPORATE
- EROSION CONTROL (TYPE D) SEED MIX 1
- EROSION CONTROL (TYPE D) SEED MIX 2

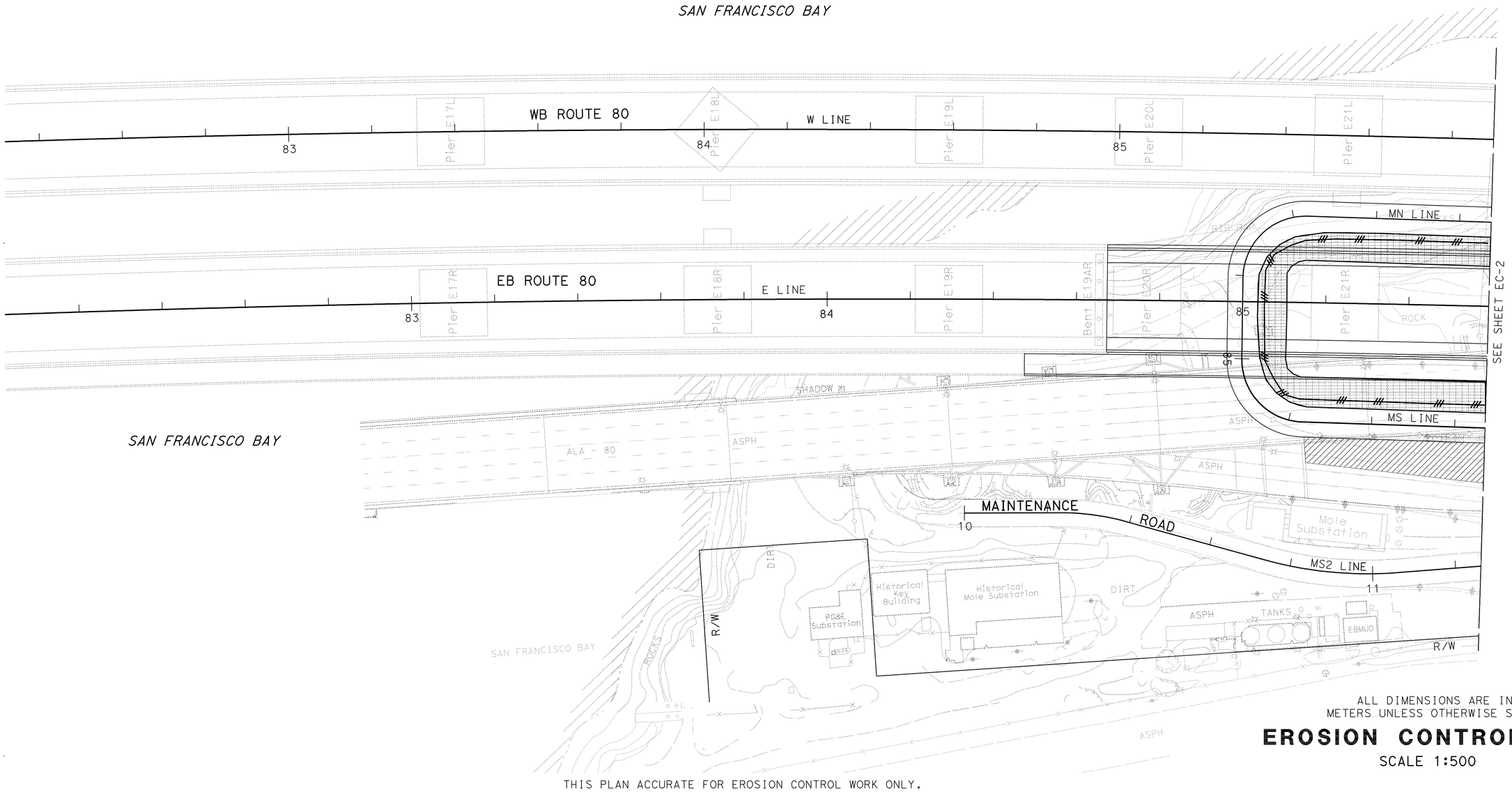

ALL DIMENSIONS ARE IN METERS UNLESS OTHERWISE SHOWN

EROSION CONTROL PLAN

SCALE 1:500

EC-1

THIS PLAN ACCURATE FOR EROSION CONTROL WORK ONLY.

STATE OF CALIFORNIA - DEPARTMENT OF TRANSPORTATION
Caltrans
WATER QUALITY

SENIOR LANDSCAPE ARCHITECT: DAVID W YAM

CALCULATED-DESIGNED BY: Angela Kwan
CHECKED BY: Sally Bang

REVISED BY | DATE REVISED

LAST REVISION 08-03-11 | DATE PLOTTED => 06-OCT-2011 | TIME PLOTTED => 06:16

Dist	COUNTY	ROUTE	KILOMETER POST TOTAL PROJECT	SHEET No.	TOTAL SHEETS
04	Ala	80	1.6/2.7	57	744

Sally Bang
LICENSED LANDSCAPE ARCHITECT

10-3-11
PLANS APPROVAL DATE

LICENSED LANDSCAPE ARCHITECT
SALLY BANG No. 5060
Sally Bang
Expiration Date
11-30-11
Renewal Date
6-3-11
Date
STATE OF CALIFORNIA

THE STATE OF CALIFORNIA OR ITS OFFICERS OR AGENTS SHALL NOT BE RESPONSIBLE FOR THE ACCURACY OR COMPLETENESS OF ELECTRONIC COPIES OF THIS PLAN SHEET.

FOR COMPLETE RIGHT OF WAY AND ACCURATE ACCESS DATA, SEE RIGHT OF WAY RECORD MAPS AT DISTRICT OFFICE.

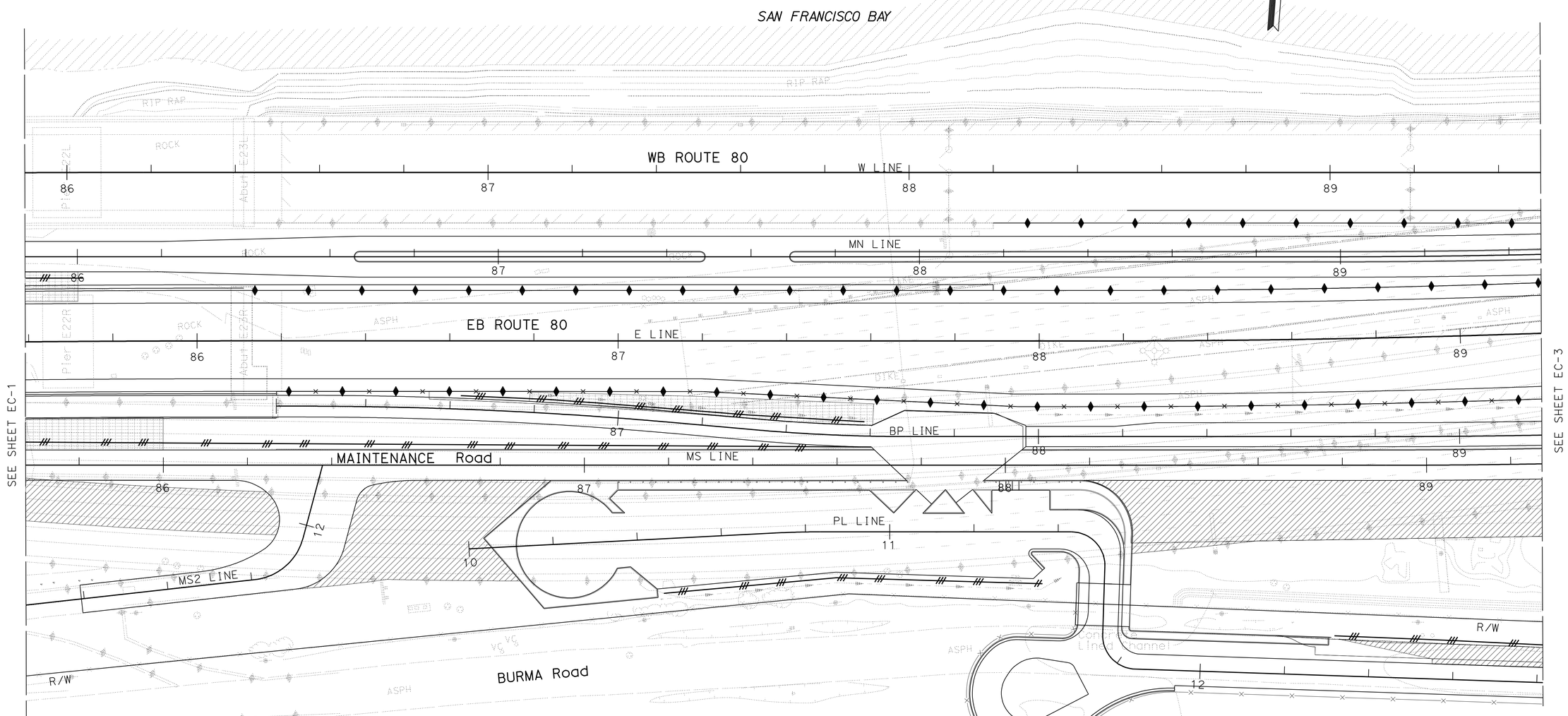

O A K L A N D

ALL DIMENSIONS ARE IN METERS UNLESS OTHERWISE SHOWN

EROSION CONTROL PLAN

SCALE 1:500

EC-2

THIS PLAN ACCURATE FOR EROSION CONTROL WORK ONLY.

Caltrans Metric

REVISED BY | DATE REVISED

Angela Kwan | Sally Bang

CALCULATED-DESIGNED BY | CHECKED BY

SENIOR LANDSCAPE ARCHITECT: DAVID W YAM

STATE OF CALIFORNIA - DEPARTMENT OF TRANSPORTATION
Caltrans
WATER QUALITY

LAST REVISION 08-03-11 | DATE PLOTTED => 06-OCT-2011 | TIME PLOTTED => 08:03

Dist	COUNTY	ROUTE	KILOMETER POST TOTAL PROJECT	SHEET No.	TOTAL SHEETS
04	Ala	80	1.6/2.7	58	744

Sally Bang
LICENSED LANDSCAPE ARCHITECT

10-3-11
PLANS APPROVAL DATE

LICENSED LANDSCAPE ARCHITECT
SALLY BANG No. 5020
Sally Bang
Expiration Date
11-30-11
Renewal Date
6-3-11
Date
STATE OF CALIFORNIA

THE STATE OF CALIFORNIA OR ITS OFFICERS OR AGENTS SHALL NOT BE RESPONSIBLE FOR THE ACCURACY OR COMPLETENESS OF ELECTRONIC COPIES OF THIS PLAN SHEET.

FOR COMPLETE RIGHT OF WAY AND ACCURATE ACCESS DATA, SEE RIGHT OF WAY RECORD MAPS AT DISTRICT OFFICE.

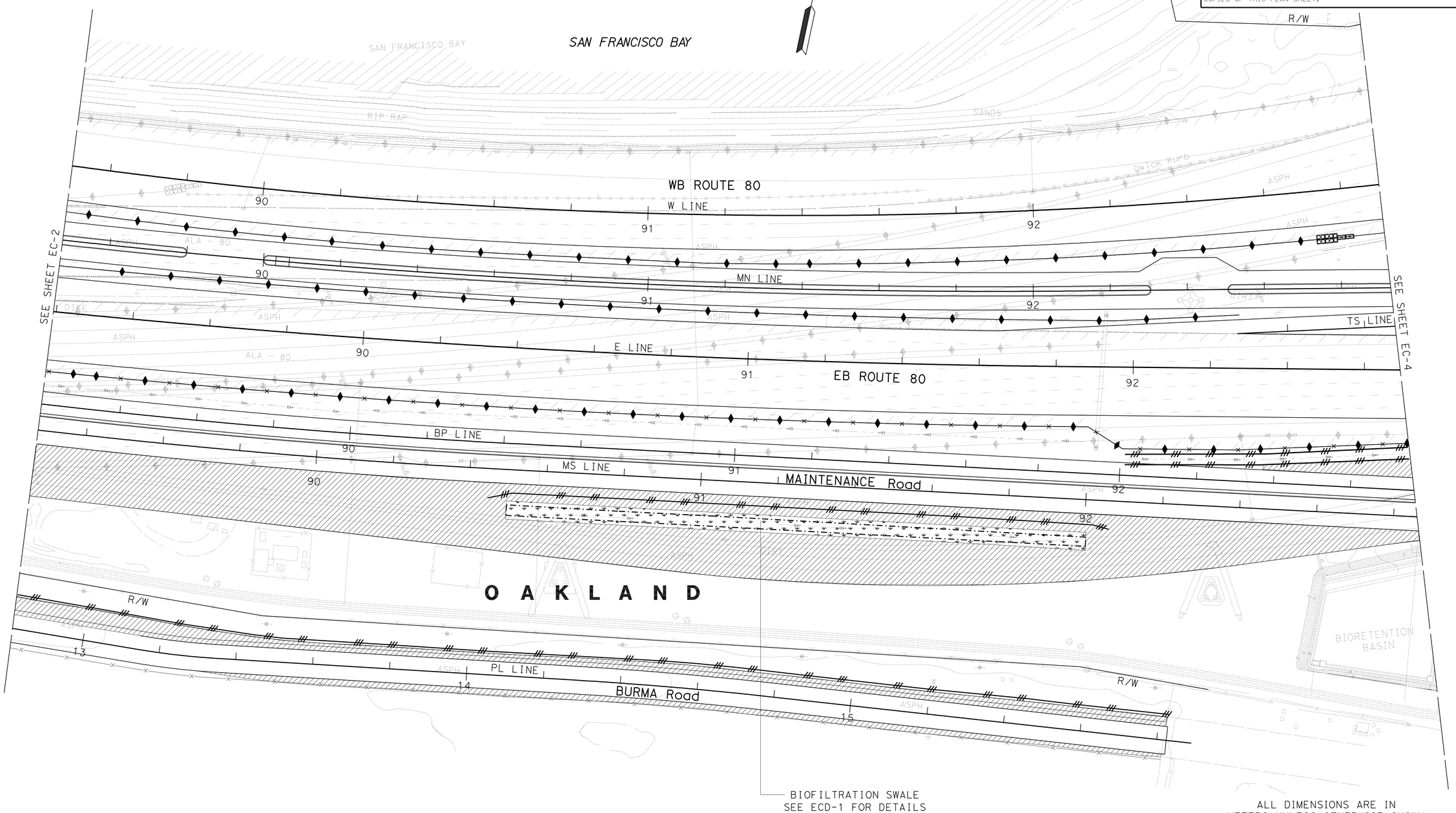

BIOFILTRATION SWALE
SEE ECD-1 FOR DETAILS

ALL DIMENSIONS ARE IN METERS UNLESS OTHERWISE SHOWN

EROSION CONTROL PLAN

SCALE 1:500

EC-3

THIS PLAN ACCURATE FOR EROSION CONTROL WORK ONLY.

STATE OF CALIFORNIA - DEPARTMENT OF TRANSPORTATION
Caltrans
WATER QUALITY

SENIOR LANDSCAPE ARCHITECT: DAVID W YAM
CALCULATED-DESIGNED BY: Angela Kwan
CHECKED BY: Sally Bang
REVISED BY
DATE REVISED

LAST REVISION 05-17-11
DATE PLOTTED => 06-OCT-2011
TIME PLOTTED => 06:16

Dist	COUNTY	ROUTE	KILOMETER POST TOTAL PROJECT	SHEET No.	TOTAL SHEETS
04	Ala	80	1.6/2.7	59	744

Sally Bang
LICENSED LANDSCAPE ARCHITECT

10-3-11
PLANS APPROVAL DATE

LICENSED LANDSCAPE ARCHITECT
SALLY BANG No. 5020
Sally Bang
Expires
11-30-11
Renewal Date
6-3-11
Date
STATE OF CALIFORNIA

THE STATE OF CALIFORNIA OR ITS OFFICERS OR AGENTS SHALL NOT BE RESPONSIBLE FOR THE ACCURACY OR COMPLETENESS OF ELECTRONIC COPIES OF THIS PLAN SHEET.

Caltrans Metric

FOR COMPLETE RIGHT OF WAY AND ACCURATE ACCESS DATA, SEE RIGHT OF WAY RECORD MAPS AT DISTRICT OFFICE.

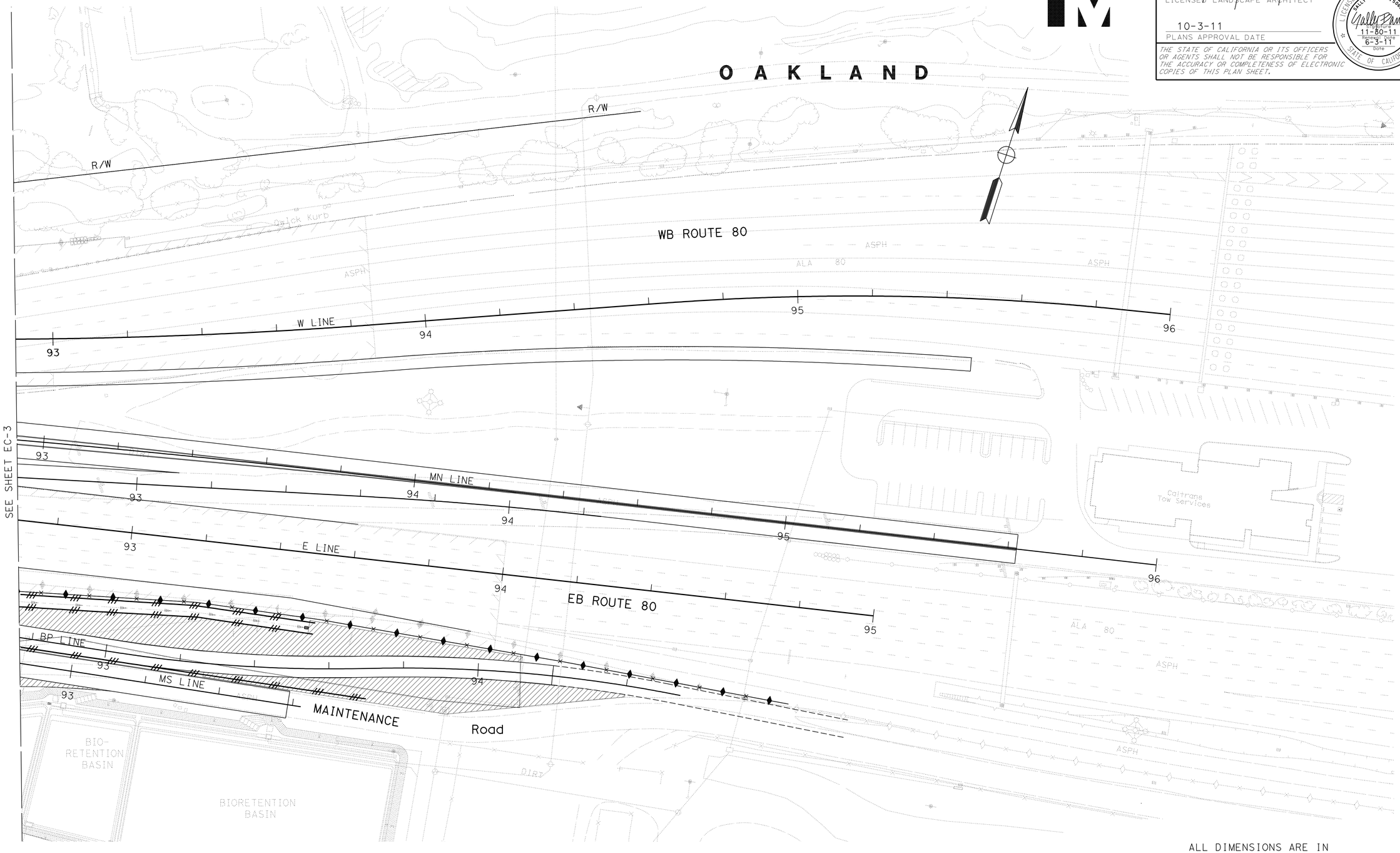

ALL DIMENSIONS ARE IN METERS UNLESS OTHERWISE SHOWN

EROSION CONTROL PLAN

SCALE 1:500

EC-4

THIS PLAN ACCURATE FOR EROSION CONTROL WORK ONLY.

STATE OF CALIFORNIA - DEPARTMENT OF TRANSPORTATION
Caltrans
WATER QUALITY

SENIOR LANDSCAPE ARCHITECT: DAVID W YAM

CALCULATED-DESIGNED BY: Angela Kwan
CHECKED BY: Sally Bang

REVISED BY
DATE REVISED

LAST REVISION 05-17-11
DATE PLOTTED => 06-OCT-2011
TIME PLOTTED => 06:16

Dist	COUNTY	ROUTE	KILOMETER POST TOTAL PROJECT	SHEET No.	TOTAL SHEETS
04	Ala	80	1.6/2.7	60	744

Caltrans Metric

LICENSED LANDSCAPE ARCHITECT

10-3-11
PLANS APPROVAL DATE

LICENSED LANDSCAPE ARCHITECT SALLY BANG No. 3020 STATE OF CALIFORNIA
Expiration 11-30-11
Renewal Date 6-3-11
Date

THE STATE OF CALIFORNIA OR ITS OFFICERS OR AGENTS SHALL NOT BE RESPONSIBLE FOR THE ACCURACY OR COMPLETENESS OF ELECTRONIC COPIES OF THIS PLAN SHEET.

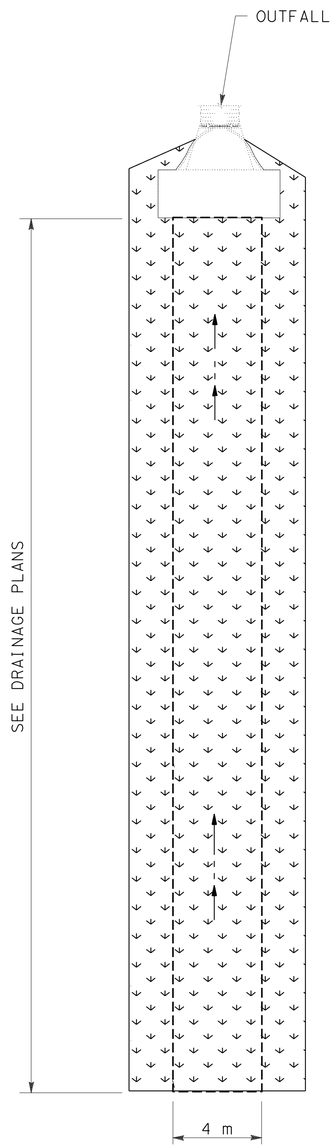

PLAN

BIOFILTRATION SWALE TREATMENT Typ

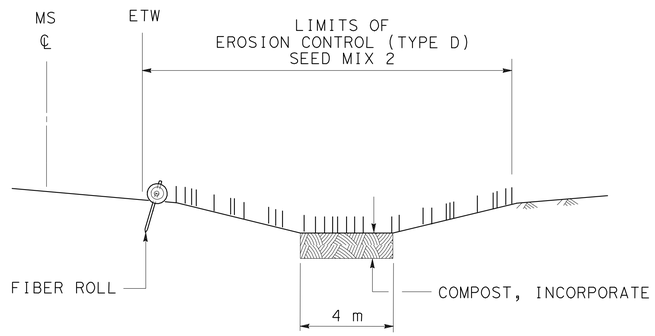

SECTION

BIOFILTRATION SWALE Typ

LEGEND:

EROSION CONTROL (TYPE D)
SEED MIX 2

COMPOST, INCORPORATE

EROSION CONTROL QUANTITIES

SHEET No.	COMPOST, INCORPORATE m^2	EROSION CONTROL (NETTING) m^2	EROSION CONTROL (TYPE D) SEED MIX 1 m^2	EROSION CONTROL (TYPE D) SEED MIX 2 m^2	FIBER ROLL m
EC-1	-	1050	350	-	150
EC-2	-	700	3150	-	440
EC-3	-	-	7035	-	450
EC-4	-	-	1500	-	250
BIOFILTRATION SWALE AREA (N)					
EC-3	600	-	-	900	170
SUBTOTAL			12,035	900	
TOTAL	600	1750	12,935		1460

(N) - NOT A SEPARATE PAY ITEM, FOR INFORMATION ONLY.

ALL DIMENSIONS ARE IN METERS UNLESS OTHERWISE SHOWN

EROSION CONTROL DETAILS

NO SCALE

THIS PLAN ACCURATE FOR EROSION CONTROL WORK ONLY.

ECD-1

STATE OF CALIFORNIA - DEPARTMENT OF TRANSPORTATION
Caltrans
WATER QUALITY

SENIOR LANDSCAPE ARCHITECT: DAVID W YAM
CALCULATED-DESIGNED BY: Angela Kwan
CHECKED BY: Sally Bang
REVISED BY
DATE REVISED

LAST REVISION 08-03-11
DATE PLOTTED => 06-OCT-2011
TIME PLOTTED => 06:16

Dist	COUNTY	ROUTE	KILOMETER POST TOTAL PROJECT	SHEET No.	TOTAL SHEETS
04	Ala	80	1.6/2.7	61	744

Caltrans Metric

LICENSED LANDSCAPE ARCHITECT

10-3-11
PLANS APPROVAL DATE

LICENSED LANDSCAPE ARCHITECT SALLY BANG No. 3020 STATE OF CALIFORNIA Expiration 11-30-11 Renewal date 6-3-11 Date

THE STATE OF CALIFORNIA OR ITS OFFICERS OR AGENTS SHALL NOT BE RESPONSIBLE FOR THE ACCURACY OR COMPLETENESS OF ELECTRONIC COPIES OF THIS PLAN SHEET.

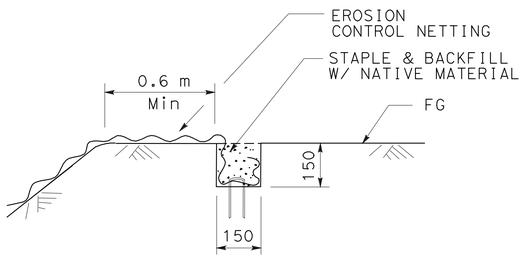

SECTION

KEY TRENCH

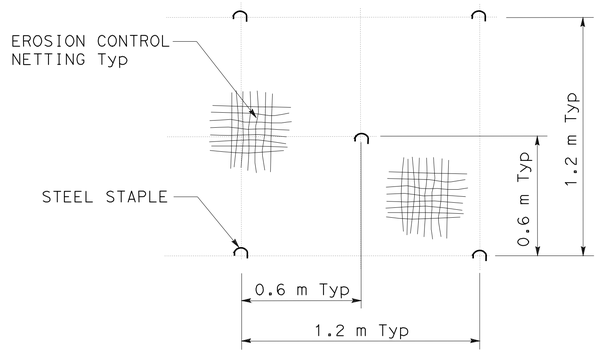

STAPLE PATTERN

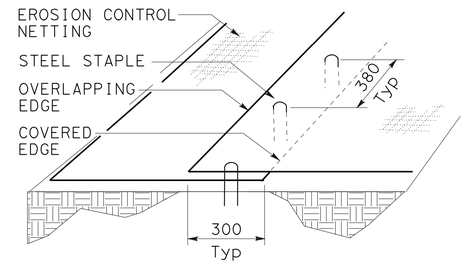

NETTING OVERLAP AND STAPLE PATTERN

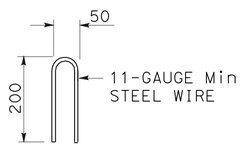

STAPLE DETAIL

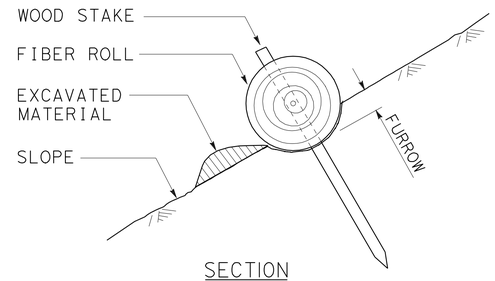

SECTION

FIBER ROLLS (TYPE I)
(FURROW METHOD)

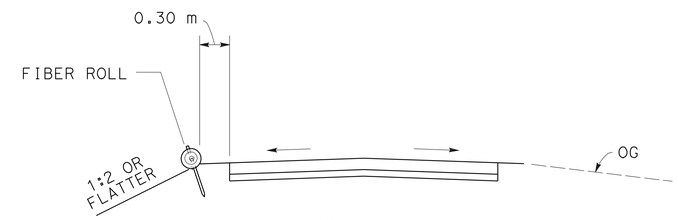

MS LINE

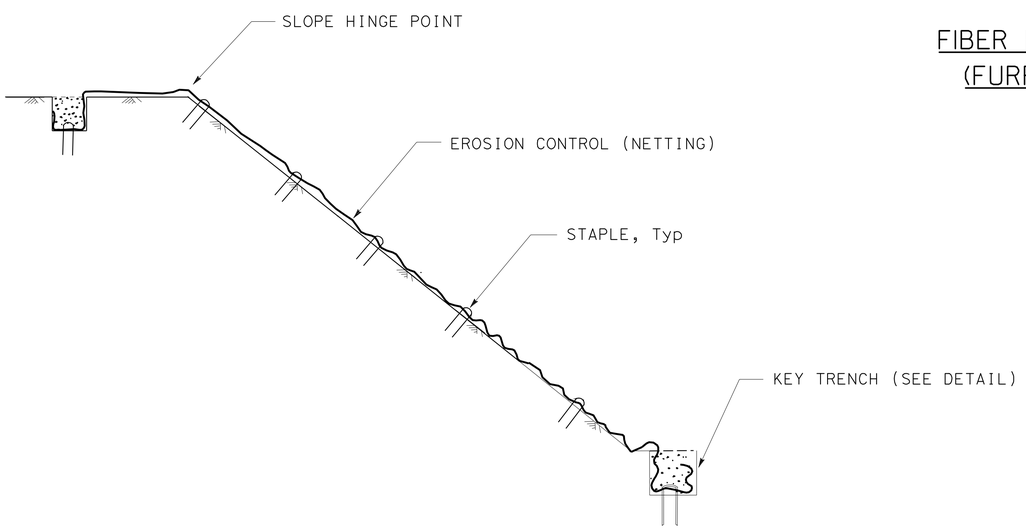

SECTION

EROSION CONTROL (NETTING)

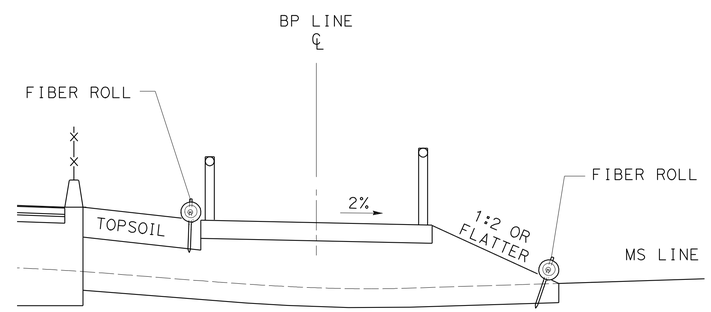

BP LINE

SECTION

FIBER ROLL INSTALLATION Typ

ALL DIMENSIONS ARE IN MILLIMETERS UNLESS OTHERWISE SHOWN

EROSION CONTROL DETAILS

NO SCALE

ECD-2

THIS PLAN ACCURATE FOR EROSION CONTROL WORK ONLY.

STATE OF CALIFORNIA - DEPARTMENT OF TRANSPORTATION
Caltrans
WATER QUALITY

SENIOR LANDSCAPE ARCHITECT: DAVID W YAM

CALCULATED-DESIGNED BY: Angela Kwan
CHECKED BY: Sally Bang

REVISED BY
DATE REVISED

LAST REVISION 04-22-11
DATE PLOTTED => 06-OCT-2011
TIME PLOTTED => 06:16

Dist	COUNTY	ROUTE	KILOMETER POST TOTAL PROJECT	SHEET No.	TOTAL SHEETS
04	Ala	80	1.6/2.7	62	744

REGISTERED CIVIL ENGINEER 9-13-11 DATE

10-3-11
PLANS APPROVAL DATE

REGISTERED PROFESSIONAL ENGINEER Esmaeil Nemati No. 65959 Exp. 6-30-12 CIVIL STATE OF CALIFORNIA

THE STATE OF CALIFORNIA OR ITS OFFICERS OR AGENTS SHALL NOT BE RESPONSIBLE FOR THE ACCURACY OR COMPLETENESS OF SCANNED COPIES OF THIS PLAN SHEET.

Caltrans Metric

FOR COMPLETE RIGHT OF WAY AND ACCURATE ACCESS DATA, SEE RIGHT OF WAY RECORD MAPS AT DISTRICT OFFICE.

``COORDINATE VALUES SHOWN ARE CCS _____ ZONE 3W ''

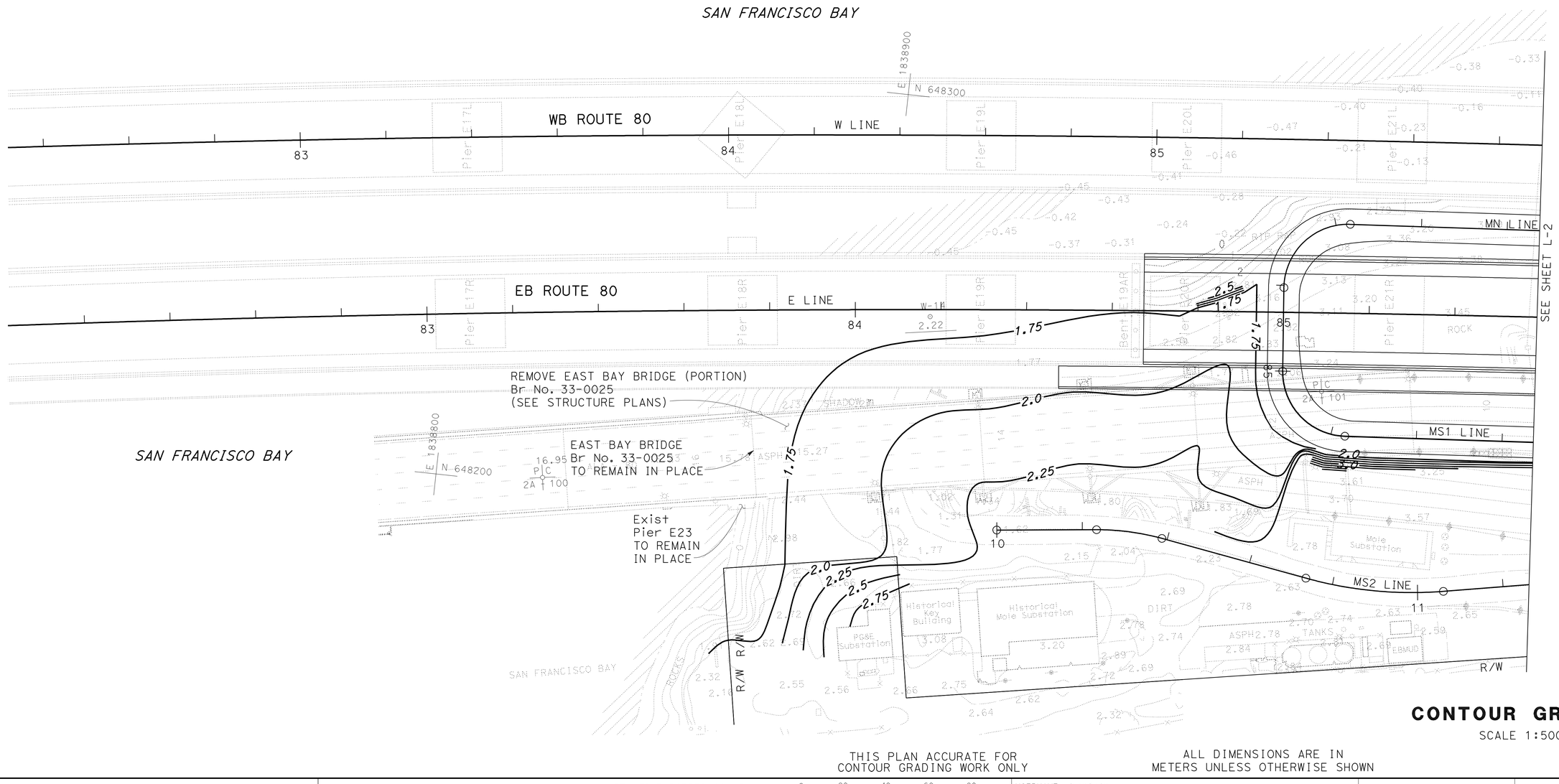

CONTOUR GRADING

SCALE 1:500

THIS PLAN ACCURATE FOR CONTOUR GRADING WORK ONLY

ALL DIMENSIONS ARE IN METERS UNLESS OTHERWISE SHOWN

G-1

STATE OF CALIFORNIA - DEPARTMENT OF TRANSPORTATION
Caltrans TOLL BRIDGE

FUNCTIONAL SUPERVISOR: JAIME E. GUTIERREZ
CALCULATED-DESIGNED BY: ESMAEIL NEMATI
CHECKED BY: ANNA G. URETA
REVISED BY
DATE REVISED

LAST REVISION 09-13-11
DATE PLOTTED => 06-OCT-2011
TIME PLOTTED => 06:16

Dist	COUNTY	ROUTE	KILOMETER POST TOTAL PROJECT	SHEET No.	TOTAL SHEETS
04	Ala	80	1.6/2.7	63	744

REGISTERED CIVIL ENGINEER 9-13-11 DATE

10-3-11
PLANS APPROVAL DATE

REGISTERED PROFESSIONAL ENGINEER Esmaeil Nemati No. 65959 Exp. 6-30-12 CIVIL STATE OF CALIFORNIA

THE STATE OF CALIFORNIA OR ITS OFFICERS OR AGENTS SHALL NOT BE RESPONSIBLE FOR THE ACCURACY OR COMPLETENESS OF SCANNED COPIES OF THIS PLAN SHEET.

Caltrans Metric

FOR COMPLETE RIGHT OF WAY AND ACCURATE ACCESS DATA, SEE RIGHT OF WAY RECORD MAPS AT DISTRICT OFFICE.

E 1839300 N 648400

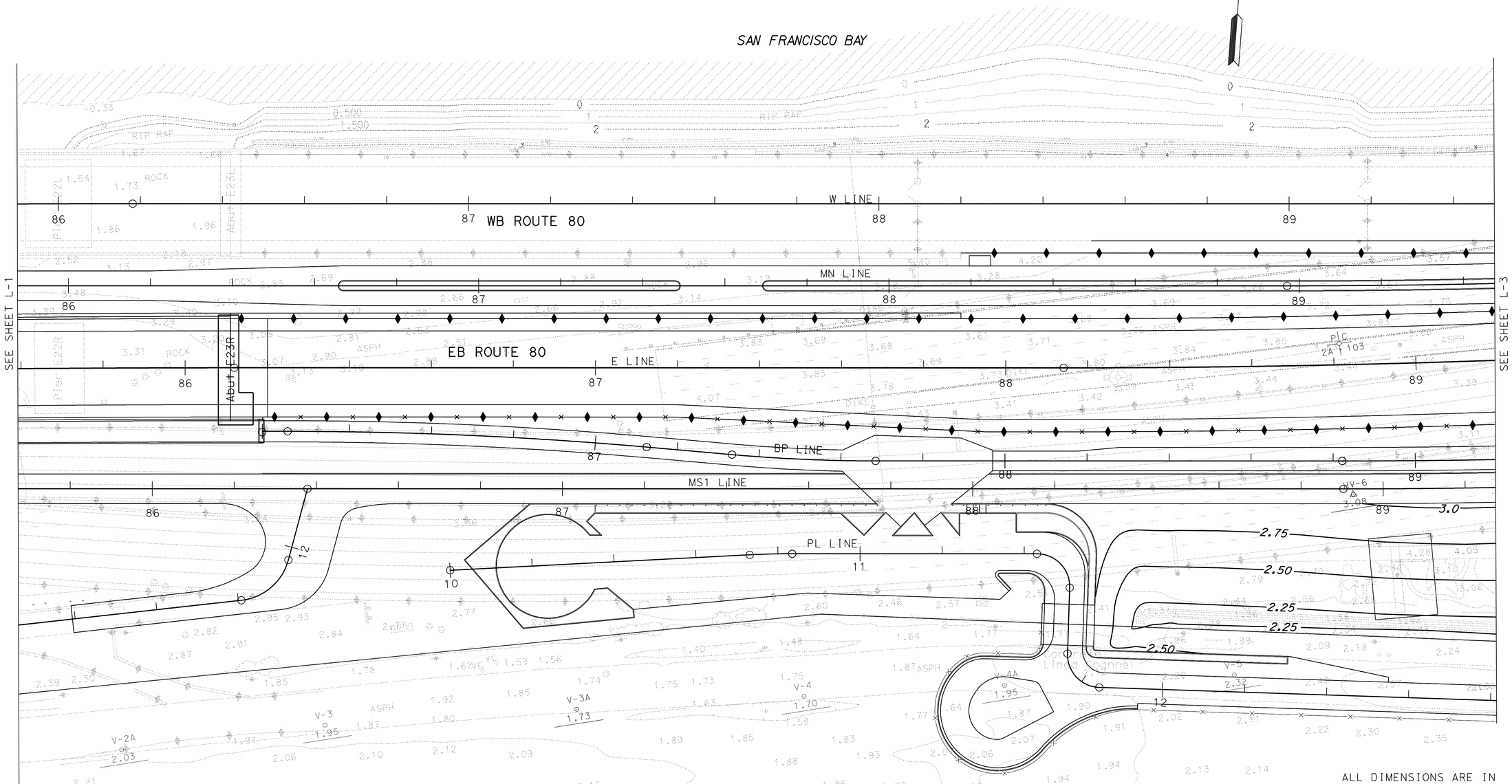

ALL DIMENSIONS ARE IN METERS UNLESS OTHERWISE SHOWN

CONTOUR GRADING

SCALE 1:500

FOR NOTES, ABBREVIATIONS &/OR LEGEND, SEE SHEET G-1

THIS PLAN ACCURATE FOR CONTOUR GRADING WORK ONLY

G-2

STATE OF CALIFORNIA - DEPARTMENT OF TRANSPORTATION
Caltrans
TOLL BRIDGE

FUNCTIONAL SUPERVISOR: JAIME E. GUTIERREZ
CALCULATED-DESIGNED BY: ESMAEIL NEMATI
CHECKED BY: ANNA G. URETA
REVISED BY
DATE REVISED

LAST REVISION 09-13-11
DATE PLOTTED => 06-OCT-2011
TIME PLOTTED => 06:16

Dist	COUNTY	ROUTE	KILOMETER POST TOTAL PROJECT	SHEET No.	TOTAL SHEETS
04	Ala	80	1.6/2.7	64	744

REGISTERED CIVIL ENGINEER 9-13-11 DATE

10-3-11
PLANS APPROVAL DATE

REGISTERED PROFESSIONAL ENGINEER
Esmaeil Nemati
No. 65959
Exp. 6-30-12
CIVIL
STATE OF CALIFORNIA

THE STATE OF CALIFORNIA OR ITS OFFICERS OR AGENTS SHALL NOT BE RESPONSIBLE FOR THE ACCURACY OR COMPLETENESS OF SCANNED COPIES OF THIS PLAN SHEET.

Caltrans Metric

FOR COMPLETE RIGHT OF WAY AND ACCURATE ACCESS DATA, SEE RIGHT OF WAY RECORD MAPS AT DISTRICT OFFICE.

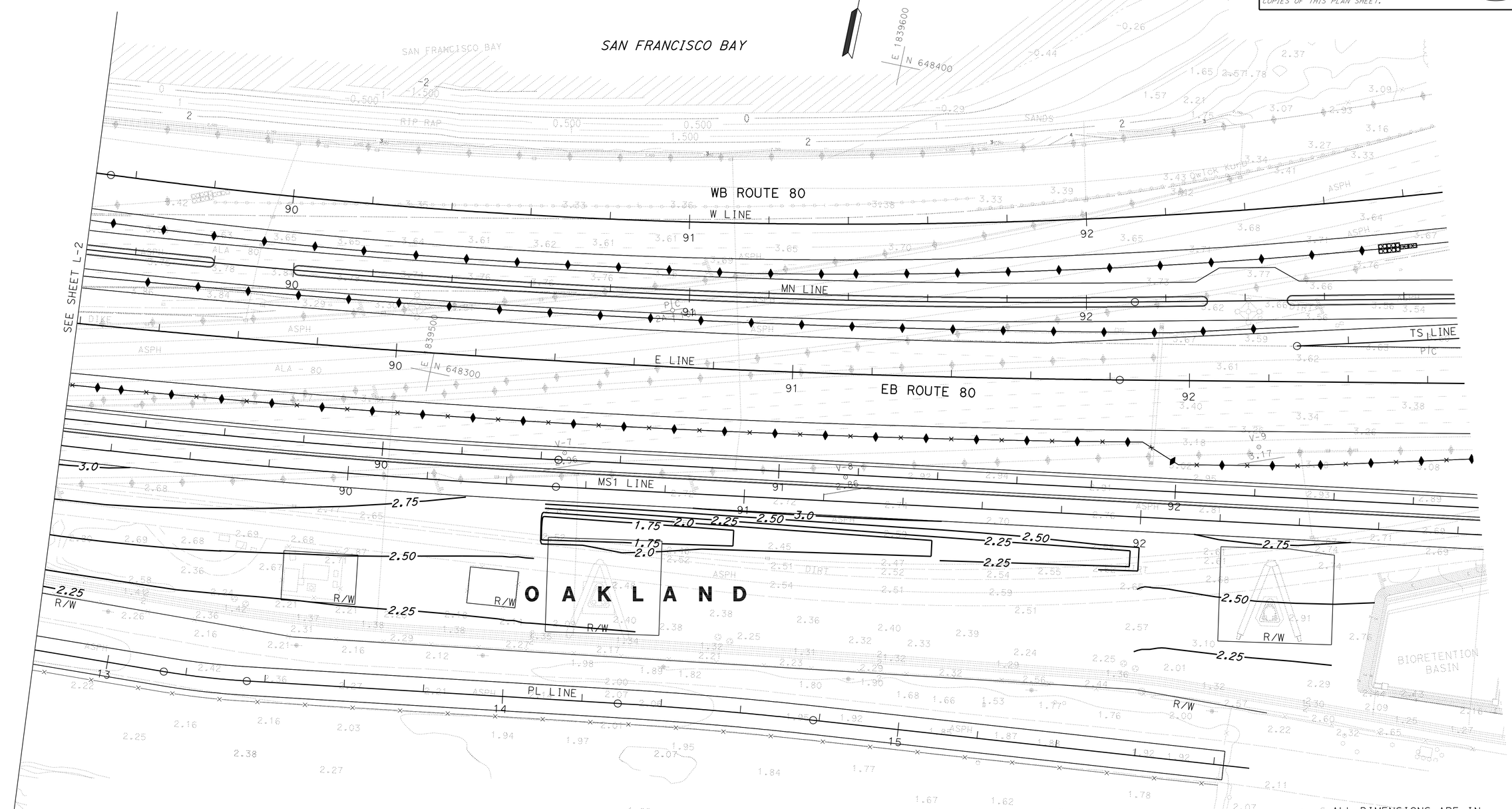

ALL DIMENSIONS ARE IN METERS UNLESS OTHERWISE SHOWN

FOR NOTES, ABBREVIATIONS &/OR LEGEND, SEE SHEET G-1

THIS PLAN ACCURATE FOR CONTOUR GRADING WORK ONLY

CONTOUR GRADING

SCALE 1:500

G-3

STATE OF CALIFORNIA - DEPARTMENT OF TRANSPORTATION
Caltrans
TOLL BRIDGE

FUNCTIONAL SUPERVISOR: JAIME E. GUTIERREZ

CALCULATED-DESIGNED BY: ESMAEIL NEMATI
CHECKED BY: ANNA G. URETA

REVISED BY / DATE REVISED

LAST REVISION 09-13-11 | DATE PLOTTED => 06-OCT-2011 | TIME PLOTTED => 06:17

Dist	COUNTY	ROUTE	KILOMETER POST TOTAL PROJECT	SHEET No.	TOTAL SHEETS
04	Ala	80	1.6/2.7	65	744

REGISTERED CIVIL ENGINEER 6-2-11 DATE

10-3-11
PLANS APPROVAL DATE

REGISTERED PROFESSIONAL ENGINEER Garjohn Fong No. 52275 Exp. 12-31-12 CIVIL STATE OF CALIFORNIA

THE STATE OF CALIFORNIA OR ITS OFFICERS OR AGENTS SHALL NOT BE RESPONSIBLE FOR THE ACCURACY OR COMPLETENESS OF SCANNED COPIES OF THIS PLAN SHEET.

Caltrans Metric

FOR COMPLETE RIGHT OF WAY AND ACCURATE ACCESS DATA, SEE RIGHT OF WAY RECORD MAPS AT DISTRICT OFFICE.

NOTES:

1. FOR ALL INLETS WITHIN THE ROADBED, SGD SHALL REFER TO INLET DEPRESSIONS AS SHOWN ON Std PLANS D78B WITH THICKNESS OF 200 mm UNLESS OTHERWISE NOTED. NOTE 4 IN Std PLAN D78B REGARDING ISOLATION JOINTS SHALL BE DELETED.
2. ALL TIES TO INLETS ARE TO THE GUTTER FLOWLINE OF GRATE (i.e., ES OF ROADWAY) UNLESS OTHERWISE NOTED. SEE SHEET DD-1.
3. ALL TIES TO MANHOLES AND JUNCTION BOXES ARE TO BE AT THE CENTER OF THE BASE UNLESS OTHERWISE NOTED.
4. TOP OF GRATE (TG) ELEVATIONS INCLUDE 30 mm DEPRESSION UNLESS OTHERWISE NOTED.
5. DATUM IS NATIONAL GEODETIC VERTICAL DATUM OF 1929 (NGVD).
6. UNLESS OTHERWISE NOTED, ENTRANCE FLOW LINES FOR DRAINAGE INLETS SHALL BE IDENTICAL TO THE OUTLET FLOW LINE.
7. SEE STAGE CONSTRUCTION PLANS FOR DRAINAGE SYSTEMS (1), (8) AND (14) INSTALLATION SEQUENCE.

LEGEND:

- (No.) DRAINAGE SYSTEM NUMBER
- (a) DRAINAGE UNIT
- BASIN/SWALE
- GRADE TO DRAIN

ABBREVIATIONS:

DEPR APRON	DEPRESSED APRON
SGD	STANDARD GUTTER DEPRESSION
ASP	ALTERNATIVE SLOTTED PIPE
PP	PLASTIC PIPE
PFES	PLASTIC FLARED END SECTION

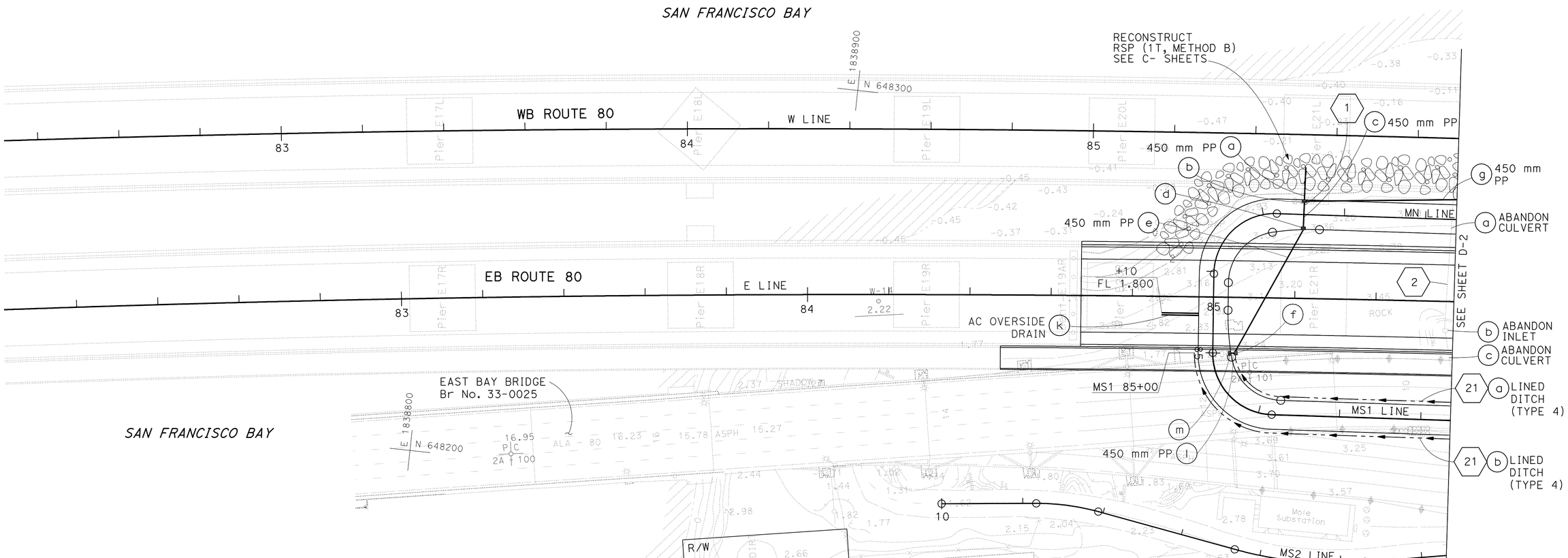

ALL DIMENSIONS ARE IN METERS UNLESS OTHERWISE SHOWN

DRAINAGE PLAN

SCALE 1:500

THIS PLAN ACCURATE FOR DRAINAGE WORK ONLY

D-1

STATE OF CALIFORNIA - DEPARTMENT OF TRANSPORTATION
Caltrans TOLL BRIDGE

FUNCTIONAL SUPERVISOR: JAIME E. GUTIERREZ
CALCULATED-DESIGNED BY: GARJOHN FONG
CHECKED BY: ISAAC PEREZ
REVISED BY / DATE REVISED

LAST REVISION 07-20-11 DATE PLOTTED => 06-OCT-2011 TIME PLOTTED => 06:17

Dist	COUNTY	ROUTE	KILOMETER POST TOTAL PROJECT	SHEET No.	TOTAL SHEETS
04	Ala	80	1.6/2.7	66	744

REGISTERED CIVIL ENGINEER 6-2-11 DATE

10-3-11
PLANS APPROVAL DATE

REGISTERED PROFESSIONAL ENGINEER Garjohn Fong No. 52275 Exp. 12-31-12 CIVIL STATE OF CALIFORNIA

THE STATE OF CALIFORNIA OR ITS OFFICERS OR AGENTS SHALL NOT BE RESPONSIBLE FOR THE ACCURACY OR COMPLETENESS OF SCANNED COPIES OF THIS PLAN SHEET.

Caltrans Metric

FOR COMPLETE RIGHT OF WAY AND ACCURATE ACCESS DATA, SEE RIGHT OF WAY RECORD MAPS AT DISTRICT OFFICE.

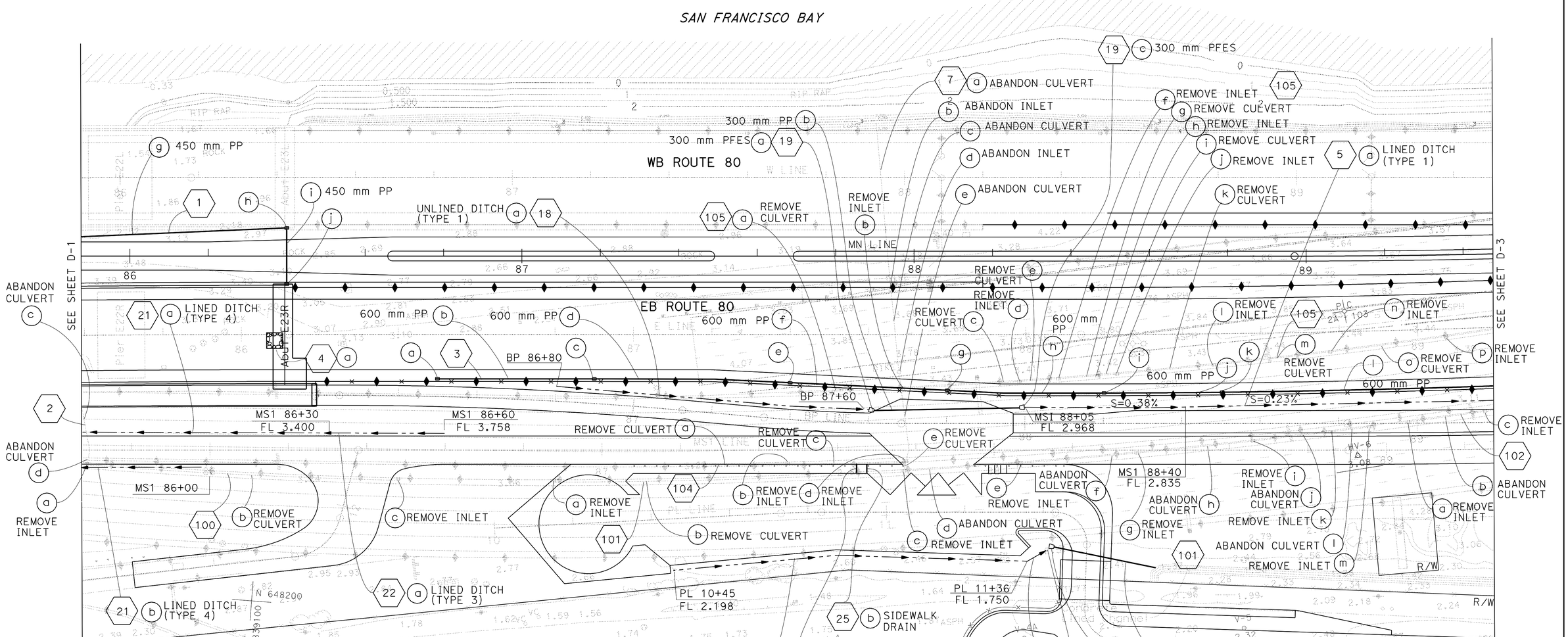

ALL DIMENSIONS ARE IN METERS UNLESS OTHERWISE SHOWN

DRAINAGE PLAN

SCALE 1:500

D-2

FOR NOTES, ABBREVIATIONS &/OR LEGEND, SEE SHEET D-1

THIS PLAN ACCURATE FOR DRAINAGE WORK ONLY

STATE OF CALIFORNIA - DEPARTMENT OF TRANSPORTATION
Caltrans **TOLL BRIDGE**

FUNCTIONAL SUPERVISOR: JAIME E. GUTIERREZ
CALCULATED-DESIGNED BY: GARJOHN FONG
CHECKED BY: ISAAC PEREZ
REVISED BY / DATE REVISED

LAST REVISION 07-28-11 | DATE PLOTTED => 06-OCT-2011 | TIME PLOTTED => 06:17

Dist	COUNTY	ROUTE	KILOMETER POST TOTAL PROJECT	SHEET No.	TOTAL SHEETS
04	Ala	80	1.6/2.7	67	744

REGISTERED CIVIL ENGINEER 6-2-11 DATE

10-3-11
PLANS APPROVAL DATE

REGISTERED PROFESSIONAL ENGINEER Garjohn Fong No. 52275 Exp. 12-31-12 CIVIL STATE OF CALIFORNIA

THE STATE OF CALIFORNIA OR ITS OFFICERS OR AGENTS SHALL NOT BE RESPONSIBLE FOR THE ACCURACY OR COMPLETENESS OF SCANNED COPIES OF THIS PLAN SHEET.

Caltrans Metric

FOR COMPLETE RIGHT OF WAY AND ACCURATE ACCESS DATA, SEE RIGHT OF WAY RECORD MAPS AT DISTRICT OFFICE.

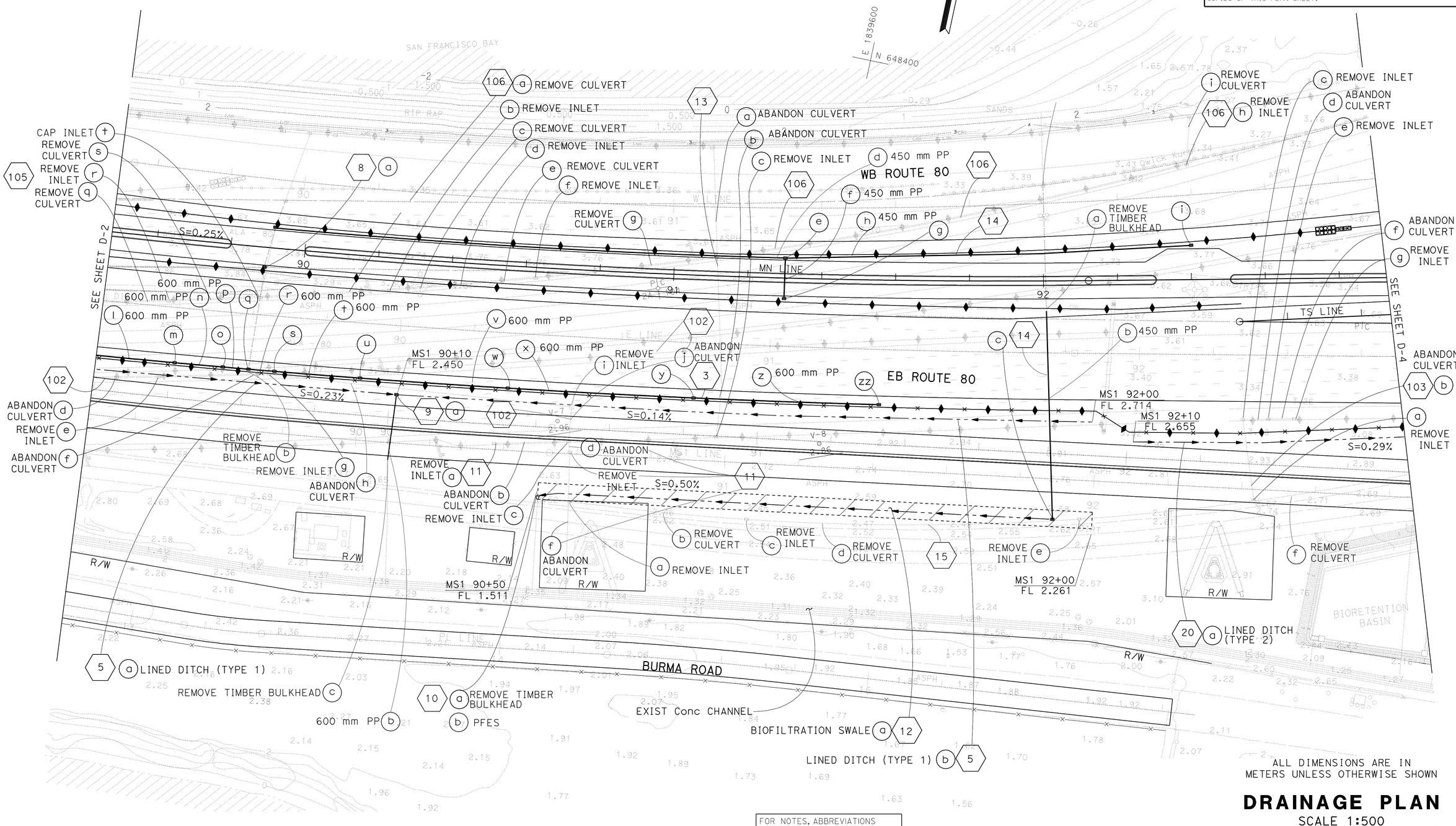

ALL DIMENSIONS ARE IN METERS UNLESS OTHERWISE SHOWN

DRAINAGE PLAN

SCALE 1:500

D-3

FOR NOTES, ABBREVIATIONS &/OR LEGEND, SEE SHEET D-1

THIS PLAN ACCURATE FOR DRAINAGE WORK ONLY

STATE OF CALIFORNIA - DEPARTMENT OF TRANSPORTATION
Caltrans **TOLL BRIDGE**

FUNCTIONAL SUPERVISOR: JAIME E. GUTIERREZ
CALCULATED-DESIGNED BY: GARJOHN FONG
CHECKED BY: ISAAC PEREZ
REVISED BY / DATE REVISED

LAST REVISION 07-20-11
DATE PLOTTED => 06-OCT-2011
TIME PLOTTED => 10:35

Dist	COUNTY	ROUTE	KILOMETER POST TOTAL PROJECT	SHEET No.	TOTAL SHEETS
04	Ala	80	1.6/2.7	68	744

REGISTERED CIVIL ENGINEER — DATE 6-2-11

PLANS APPROVAL DATE 10-3-11

REGISTERED PROFESSIONAL ENGINEER Garjohn Fong No. 52275 Exp. 12-31-12 CIVIL STATE OF CALIFORNIA

THE STATE OF CALIFORNIA OR ITS OFFICERS OR AGENTS SHALL NOT BE RESPONSIBLE FOR THE ACCURACY OR COMPLETENESS OF SCANNED COPIES OF THIS PLAN SHEET.

Caltrans Metric

FOR COMPLETE RIGHT OF WAY AND ACCURATE ACCESS DATA, SEE RIGHT OF WAY RECORD MAPS AT DISTRICT OFFICE.

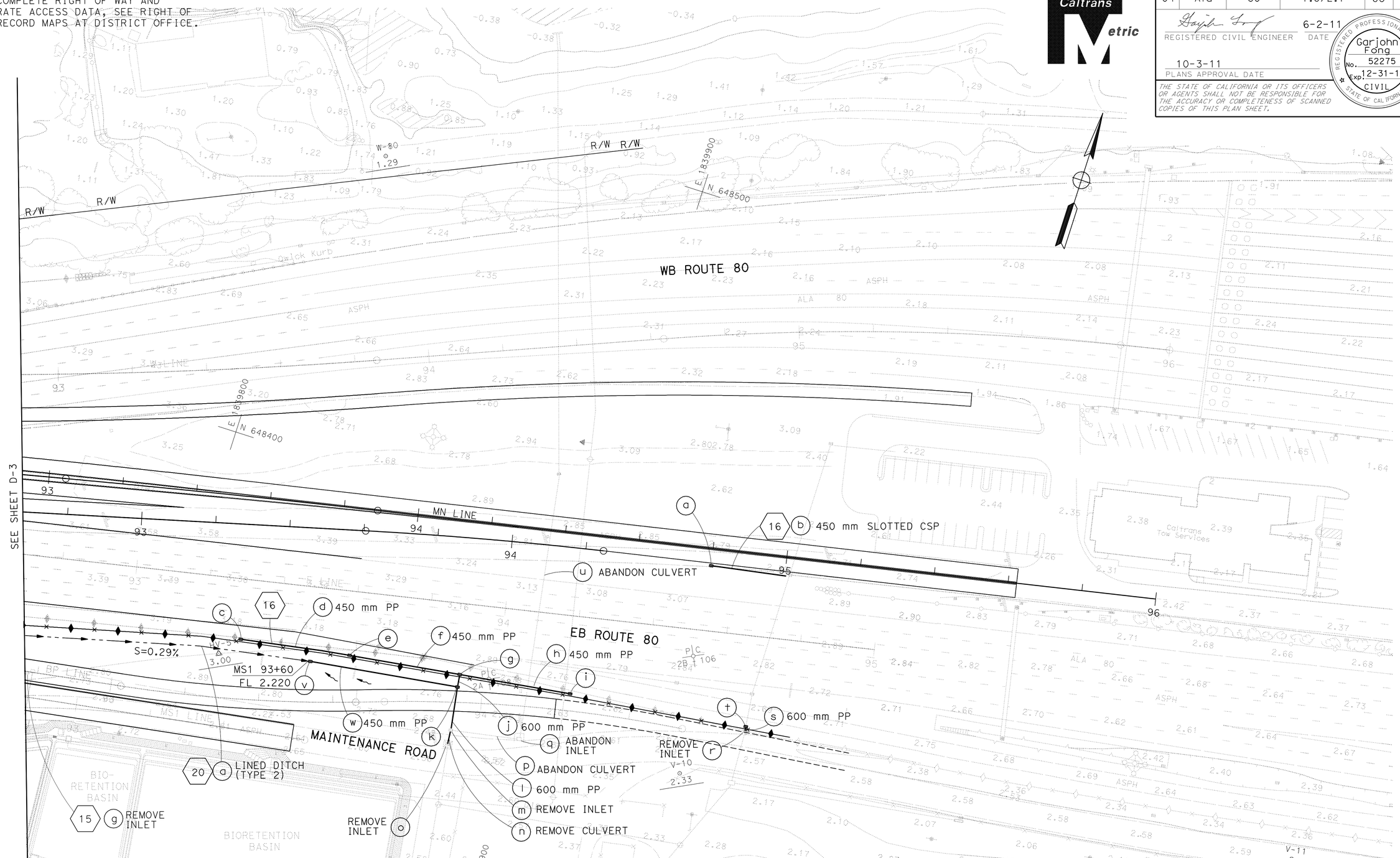

ALL DIMENSIONS ARE IN METERS UNLESS OTHERWISE SHOWN

DRAINAGE PLAN

SCALE 1:500

FOR NOTES, ABBREVIATIONS &/OR LEGEND, SEE SHEET D-1

THIS PLAN ACCURATE FOR DRAINAGE WORK ONLY

D-4

STATE OF CALIFORNIA - DEPARTMENT OF TRANSPORTATION

Caltrans **TOLL BRIDGE**

FUNCTIONAL SUPERVISOR: JAIME E. GUTIERREZ

CALCULATED-DESIGNED BY: GARJOHN FONG

CHECKED BY: ISAAC PEREZ

REVISED BY — DATE REVISED

LAST REVISION DATE PLOTTED => 06-OCT-2011 TIME PLOTTED => 06:18

07-20-11

BORDER LAST REVISED 3/1/2007

RELATIVE BORDER SCALE IS IN MILLIMETERS 0 20 40 60 80

USERNAME => s121614
DGN FILE => 40120mia004.dgn

CU 04251

EA 0120M1

Dist	COUNTY	ROUTE	KILOMETER POST TOTAL PROJECT	SHEET No.	TOTAL SHEETS
04	Ala	80	1.6/2.7	69	744

REGISTERED CIVIL ENGINEER 6-2-11 DATE

10-3-11
PLANS APPROVAL DATE

REGISTERED PROFESSIONAL ENGINEER Anna G. Ureta No. 67663 Exp. 6-30-11 CIVIL STATE OF CALIFORNIA

THE STATE OF CALIFORNIA OR ITS OFFICERS OR AGENTS SHALL NOT BE RESPONSIBLE FOR THE ACCURACY OR COMPLETENESS OF SCANNED COPIES OF THIS PLAN SHEET.

Caltrans Metric

ABBREVIATIONS:

DEPR APRON	DEPRESSED APRON
SGD	STANDARD GUTTER DEPRESSION
ASP	ALTERNATIVE SLOTTED PIPE
PP	PLASTIC PIPE
MOD APRON	MODIFIED APRON
PFES	PLASTIC FLARED END SECTION

NOTE:

ALL UTILITIES INTERSECTING DRAINAGESYSTEMS SHALL BR PROTECTED IN PLACE.

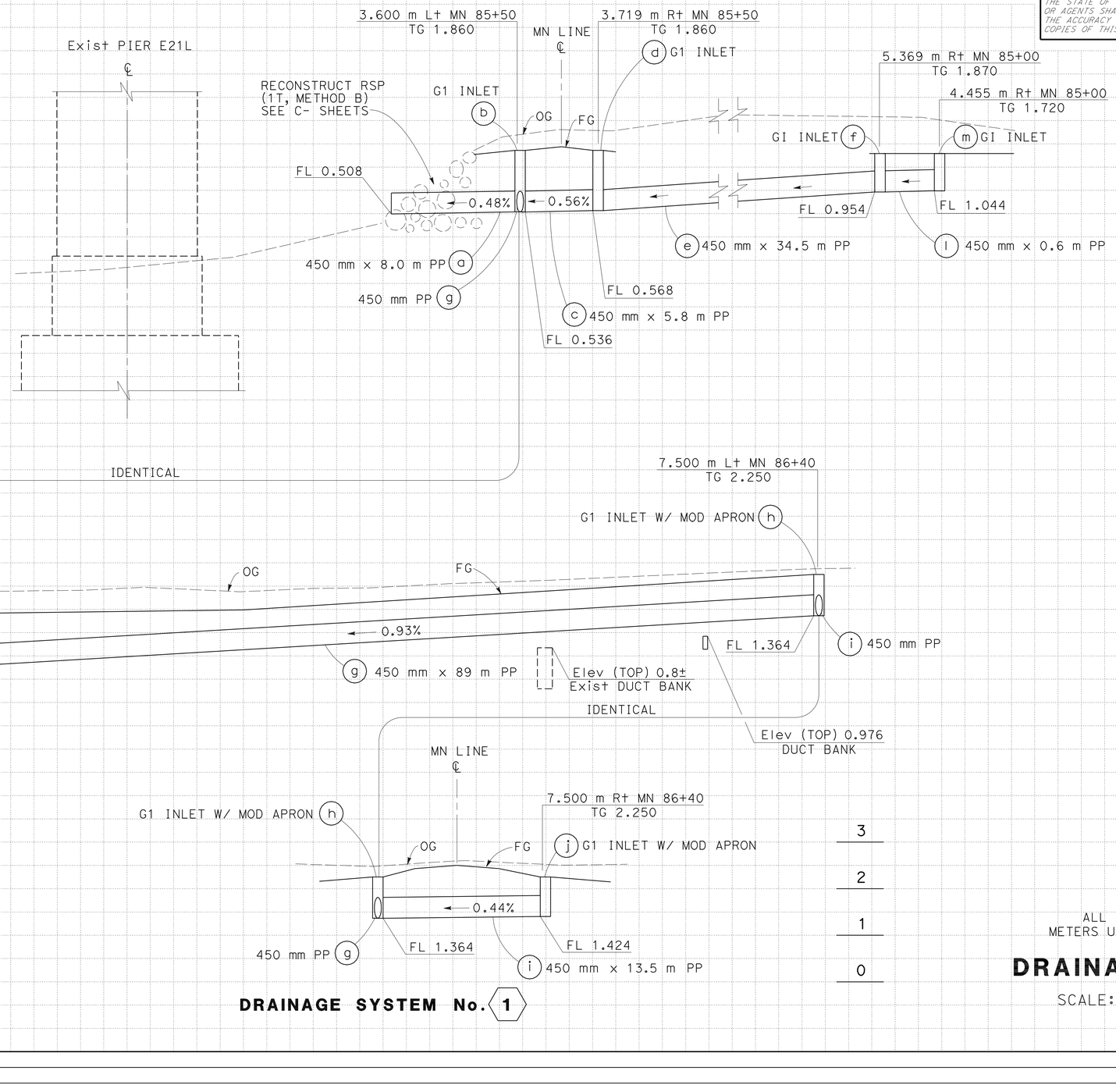

DRAINAGE SYSTEM No. 1

ALL DIMENSIONS ARE IN METERS UNLESS OTHERWISE SHOWN

DRAINAGE PROFILES

SCALE: Horiz 1:200
Vert 1:50

DP-1

REVISED BY	DATE REVISED

ANNA URETA
GABRIEL TCRUZ
CALCULATED-DESIGNED BY
CHECKED BY
FUNCTIONAL SUPERVISOR
JAIME E. GUTIERREZ

STATE OF CALIFORNIA - DEPARTMENT OF TRANSPORTATION
Caltrans
TOLL BRIDGE

Station	
m^3	Exc
	Emb

LAST REVISION 07-29-11
DATE PLOTTED => 06-OCT-2011
TIME PLOTTED => 06:18

Dist	COUNTY	ROUTE	KILOMETER POST TOTAL PROJECT	SHEET No.	TOTAL SHEETS
04	Ala	80	1.6/2.7	70	744

REGISTERED CIVIL ENGINEER 6-2-11 DATE

10-3-11
PLANS APPROVAL DATE

REGISTERED PROFESSIONAL ENGINEER Anna G. Ureta No. 67663 Exp. 6-30-11 CIVIL STATE OF CALIFORNIA

THE STATE OF CALIFORNIA OR ITS OFFICERS OR AGENTS SHALL NOT BE RESPONSIBLE FOR THE ACCURACY OR COMPLETENESS OF SCANNED COPIES OF THIS PLAN SHEET.

Caltrans Metric

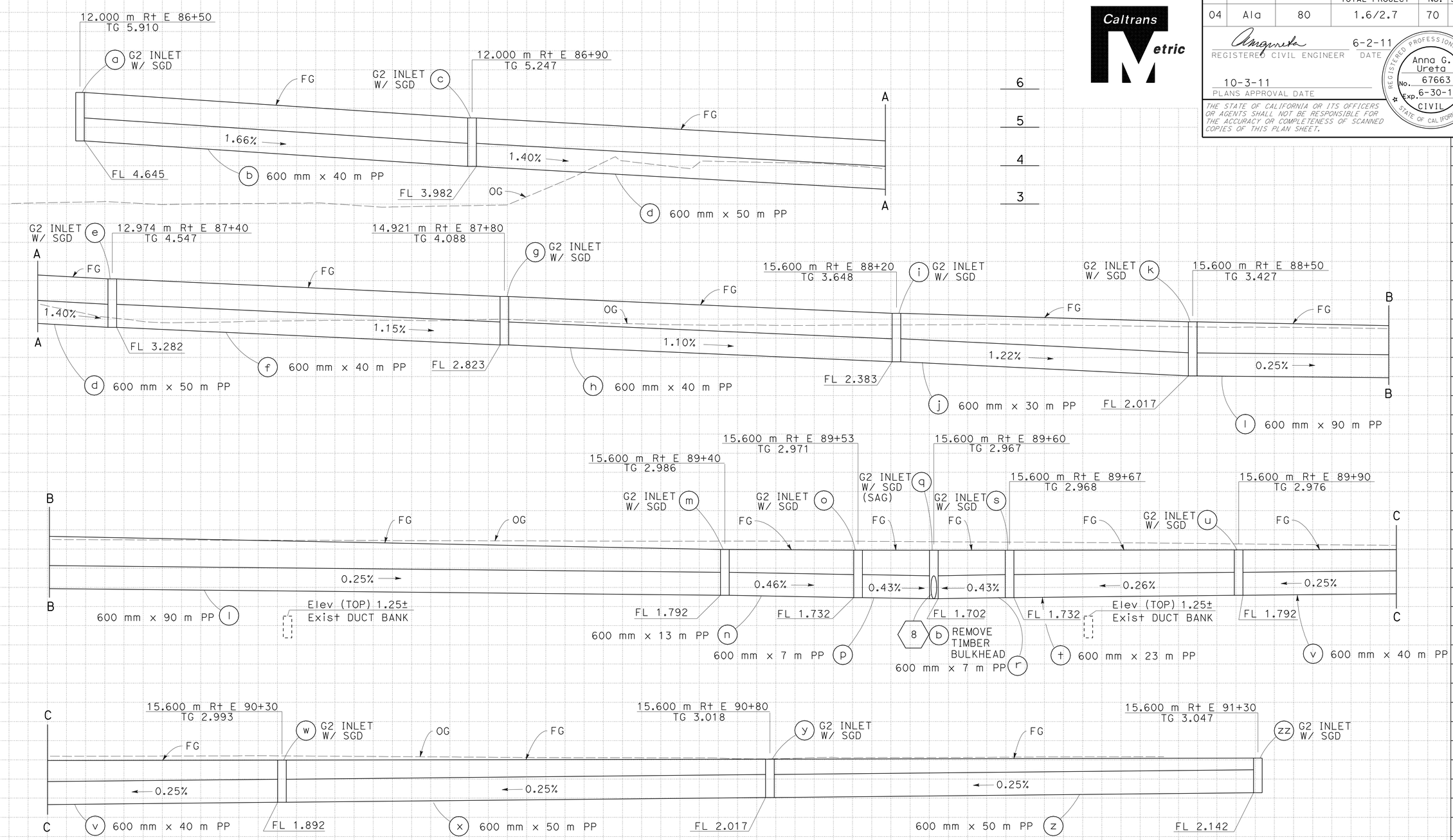

ALL DIMENSIONS ARE IN METERS UNLESS OTHERWISE SHOWN

DRAINAGE SYSTEM No. 3

DRAINAGE PROFILES

SCALE: Horiz 1:200
Vert 1:50

DP-2

Station	
m^3 Exc	
m^3 Emb	

STATE OF CALIFORNIA - DEPARTMENT OF TRANSPORTATION
Caltrans
TOLL BRIDGE

FUNCTIONAL SUPERVISOR: JAIME E. GUTIERREZ
CALCULATED-DESIGNED BY: ANNA URETA
CHECKED BY: GABRIEL TCRUZ
REVISED BY / DATE REVISED

LAST REVISION 09-29-10 DATE PLOTTED => 06-OCT-2011 TIME PLOTTED => 10:35

Dist	COUNTY	ROUTE	KILOMETER POST TOTAL PROJECT	SHEET No.	TOTAL SHEETS
04	Ala	80	1.6/2.7	71	744

REGISTERED CIVIL ENGINEER 6-2-11 DATE

10-3-11
PLANS APPROVAL DATE

REGISTERED PROFESSIONAL ENGINEER Anna G. Ureta No. 67663 Exp. 6-30-11 CIVIL STATE OF CALIFORNIA

THE STATE OF CALIFORNIA OR ITS OFFICERS OR AGENTS SHALL NOT BE RESPONSIBLE FOR THE ACCURACY OR COMPLETENESS OF SCANNED COPIES OF THIS PLAN SHEET.

Caltrans Metric

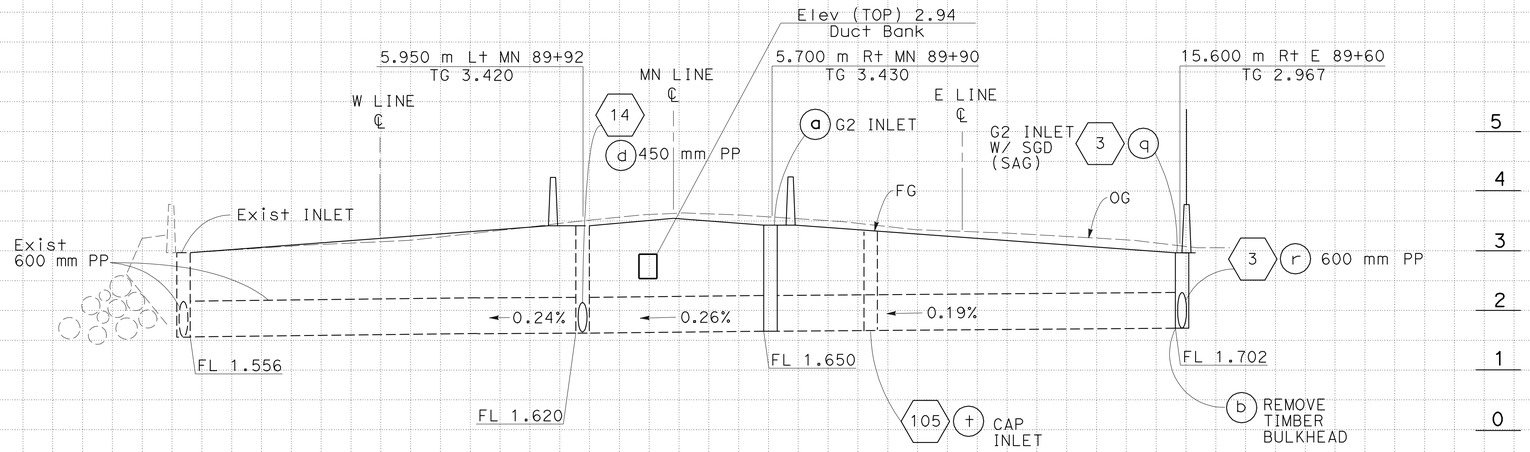

DRAINAGE SYSTEM No. 8

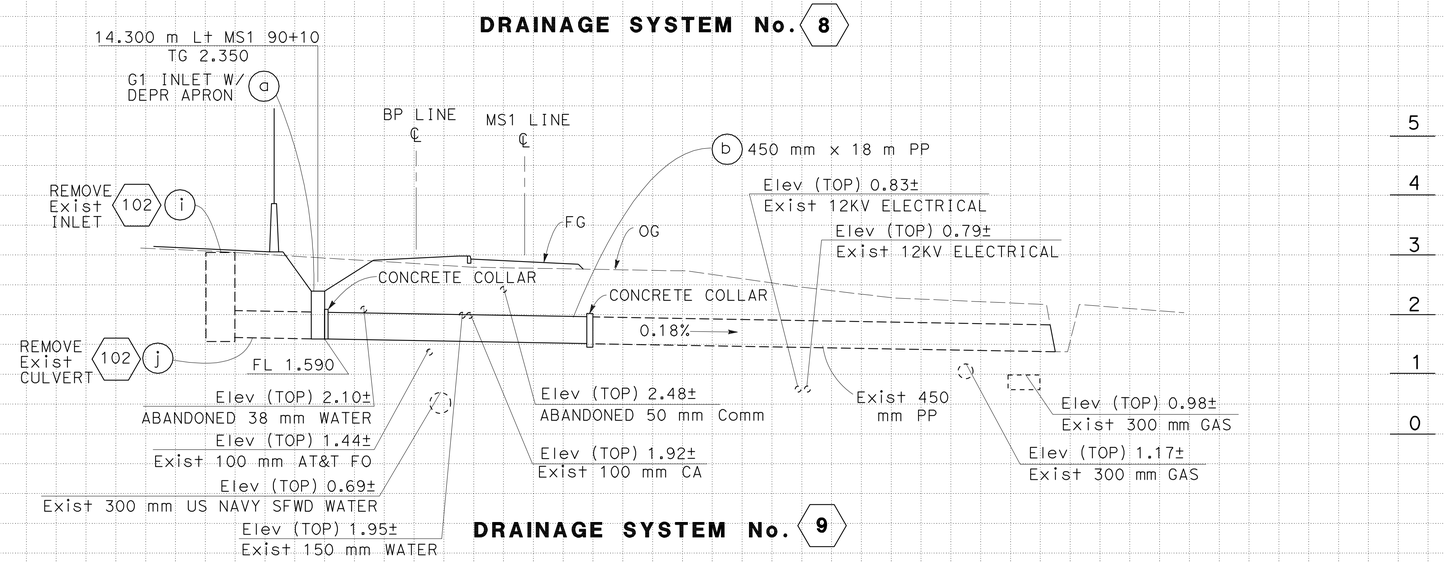

DRAINAGE SYSTEM No. 9

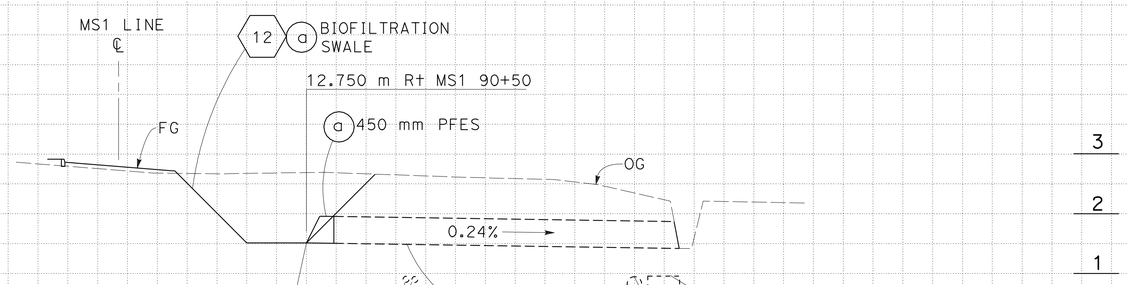

DRAINAGE SYSTEM No. 10

FOR NOTES AND ABBREVIATIONS SEE SHEET DP-1

ALL DIMENSIONS ARE IN METERS UNLESS OTHERWISE SHOWN

DRAINAGE PROFILES

SCALE: Horiz 1:200
Vert 1:50

DP-3

ANNA URETA — GABRIEL TORUZ — JAIME E. GUTIERREZ

REVISED BY — DATE REVISED — CALCULATED-DESIGNED BY — CHECKED BY — FUNCTIONAL SUPERVISOR

STATE OF CALIFORNIA - DEPARTMENT OF TRANSPORTATION
Caltrans
TOLL BRIDGE

Station		
m^3	Exc	
	Emb	

LAST REVISION 08-04-11 | DATE PLOTTED => 06-OCT-2011 | TIME PLOTTED => 10:35

Dist	COUNTY	ROUTE	KILOMETER POST TOTAL PROJECT	SHEET No.	TOTAL SHEETS
04	Ala	80	1.6/2.7	72	744

REGISTERED CIVIL ENGINEER 6-2-11 DATE

10-3-11
PLANS APPROVAL DATE

REGISTERED PROFESSIONAL ENGINEER Anna G. Ureta No. 67663 Exp. 6-30-11 CIVIL STATE OF CALIFORNIA

THE STATE OF CALIFORNIA OR ITS OFFICERS OR AGENTS SHALL NOT BE RESPONSIBLE FOR THE ACCURACY OR COMPLETENESS OF SCANNED COPIES OF THIS PLAN SHEET.

Caltrans Metric

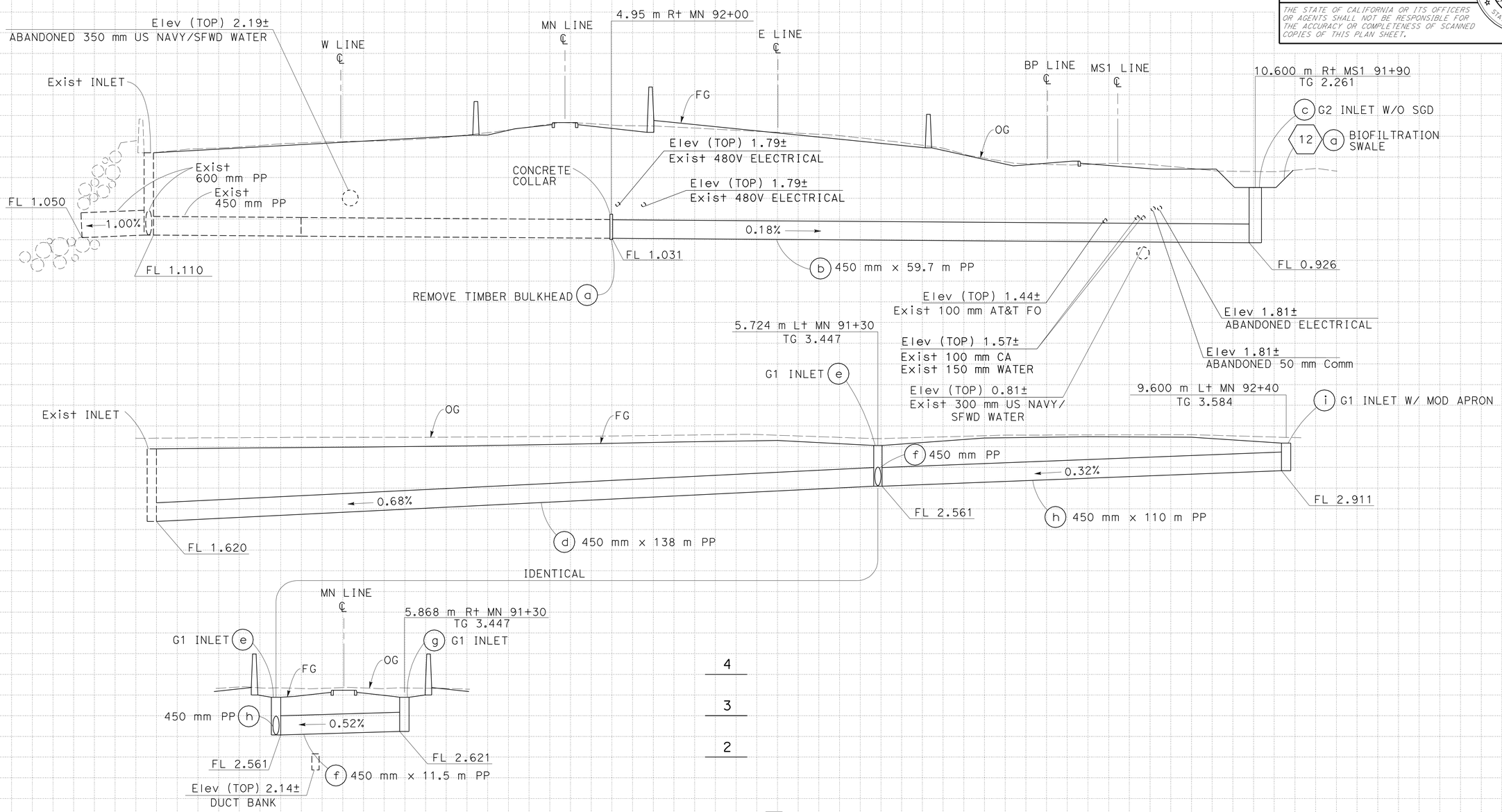

DRAINAGE SYSTEM No. 14

ALL DIMENSIONS ARE IN METERS UNLESS OTHERWISE SHOWN

DRAINAGE PROFILES

SCALE: Horiz 1:200
Vert 1:50

DP-4

Station	
m^3	Exc
	Emb

STATE OF CALIFORNIA - DEPARTMENT OF TRANSPORTATION
Caltrans
TOLL BRIDGE

FUNCTIONAL SUPERVISOR: JAIME E. GUTIERREZ
CALCULATED-DESIGNED BY: ANNA URETA
CHECKED BY: GABRIEL TCRUZ
REVISED BY / DATE REVISED

LAST REVISION 07-20-11
DATE PLOTTED => 06-OCT-2011
TIME PLOTTED => 10:36

Dist	COUNTY	ROUTE	KILOMETER POST TOTAL PROJECT	SHEET No.	TOTAL SHEETS
04	Ala	80	1.6/2.7	73	744

REGISTERED CIVIL ENGINEER 6-2-11 DATE

10-3-11
PLANS APPROVAL DATE

REGISTERED PROFESSIONAL ENGINEER Anna G. Ureta No. 67663 Exp. 6-30-11 CIVIL STATE OF CALIFORNIA

THE STATE OF CALIFORNIA OR ITS OFFICERS OR AGENTS SHALL NOT BE RESPONSIBLE FOR THE ACCURACY OR COMPLETENESS OF SCANNED COPIES OF THIS PLAN SHEET.

Caltrans Metric

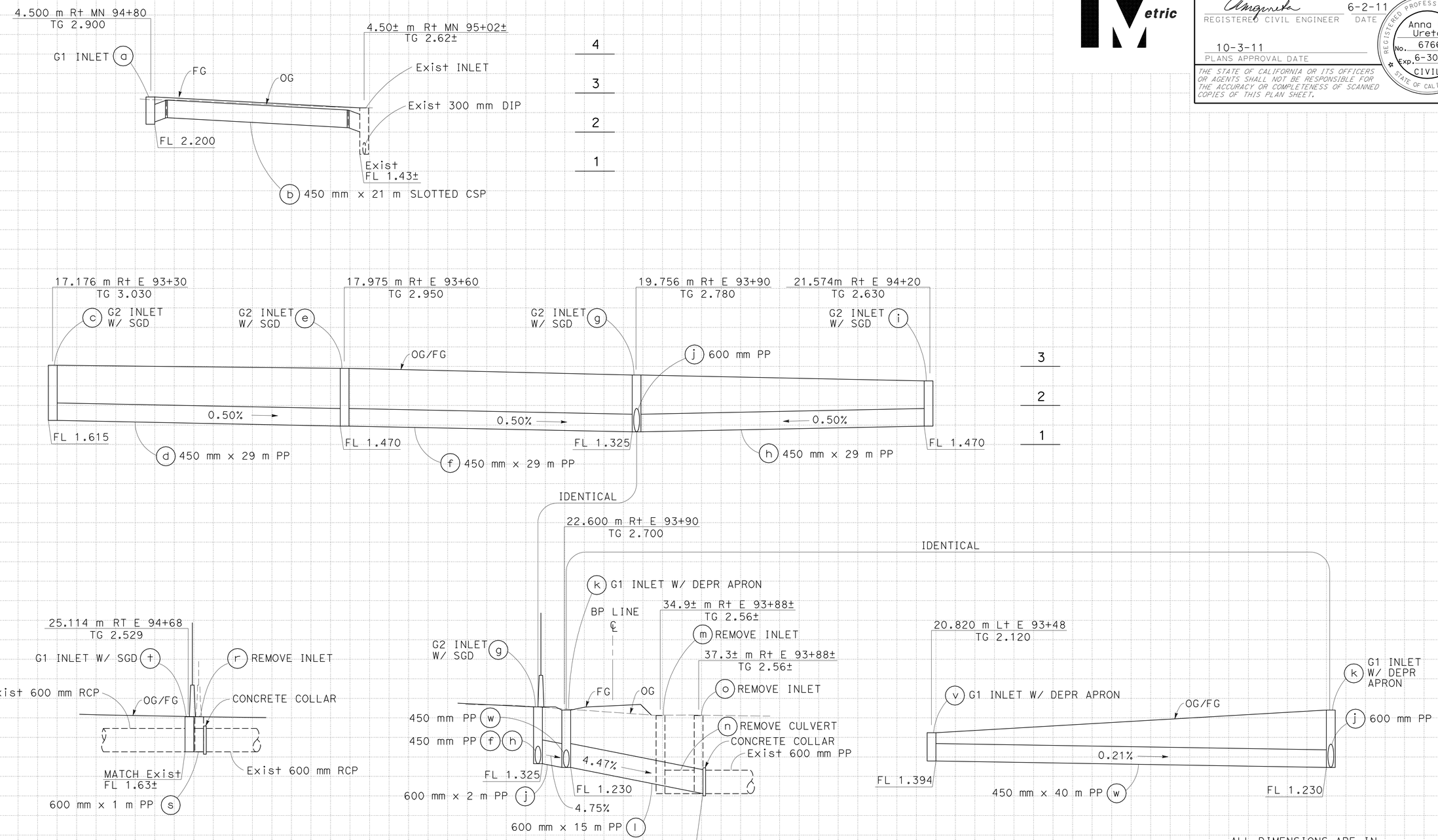

ALL DIMENSIONS ARE IN METERS UNLESS OTHERWISE SHOWN

DRAINAGE SYSTEM No. 16

DRAINAGE PROFILES

SCALE: Horiz 1:200
Vert 1:50

DP-5

REVISED BY	DATE REVISED

ANNA URETA — GABRIEL TORUZ

CALCULATED-DESIGNED BY — CHECKED BY

FUNCTIONAL SUPERVISOR — JAIME E. GUTIERREZ

STATE OF CALIFORNIA - DEPARTMENT OF TRANSPORTATION

Caltrans

TOLL BRIDGE

Station	
m^3	Exc
	Emb

LAST REVISION 07-20-11 DATE PLOTTED => 06-OCT-2011 TIME PLOTTED => 06:18

Dist	COUNTY	ROUTE	KILOMETER POST TOTAL PROJECT	SHEET No.	TOTAL SHEETS
04	Ala	80	1.6/2.7	74	744

REGISTERED CIVIL ENGINEER 6-2-11 DATE

10-3-11
PLANS APPROVAL DATE

REGISTERED PROFESSIONAL ENGINEER Anna G. Ureta No. 67663 Exp. 6-30-11 CIVIL STATE OF CALIFORNIA

THE STATE OF CALIFORNIA OR ITS OFFICERS OR AGENTS SHALL NOT BE RESPONSIBLE FOR THE ACCURACY OR COMPLETENESS OF SCANNED COPIES OF THIS PLAN SHEET.

Caltrans Metric

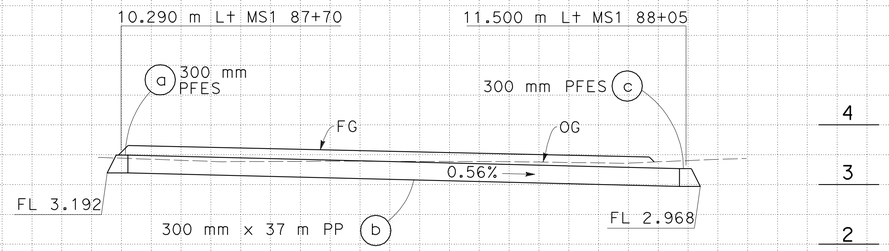

DRAINAGE SYSTEM No. 19

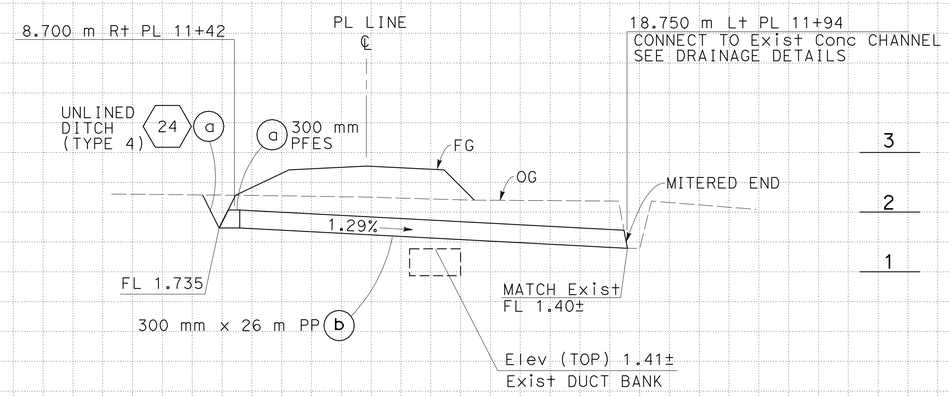

DRAINAGE SYSTEM No. 26

ALL DIMENSIONS ARE IN METERS UNLESS OTHERWISE SHOWN

DRAINAGE PROFILES

SCALE: Horiz 1:200
Vert 1:50

DP-6

REVISED BY	DATE REVISED
ANNA URETA	GABRIEL TCRUZ
CALCULATED-DESIGNED BY	CHECKED BY
FUNCTIONAL SUPERVISOR	JAIME E. GUTIERREZ

STATE OF CALIFORNIA - DEPARTMENT OF TRANSPORTATION
Caltrans
TOLL BRIDGE

Station		
m^3	Exc	
	Emb	

LAST REVISION 07-20-11 DATE PLOTTED => 06-OCT-2011 TIME PLOTTED => 06:18

Dist	COUNTY	ROUTE	KILOMETER POST TOTAL PROJECT	SHEET No.	TOTAL SHEETS
04	Ala	80	1.6/2.7	75	744

REGISTERED CIVIL ENGINEER 6-2-11 DATE

10-3-11
PLANS APPROVAL DATE

REGISTERED PROFESSIONAL ENGINEER Garjohn Fong No. 52275 Exp. 12-31-12 CIVIL STATE OF CALIFORNIA

THE STATE OF CALIFORNIA OR ITS OFFICERS OR AGENTS SHALL NOT BE RESPONSIBLE FOR THE ACCURACY OR COMPLETENESS OF SCANNED COPIES OF THIS PLAN SHEET.

Caltrans Metric

NOTE:

1. FOR INFORMATION NOT SHOWN, SEE STD PLANS D73 THRU D74B.

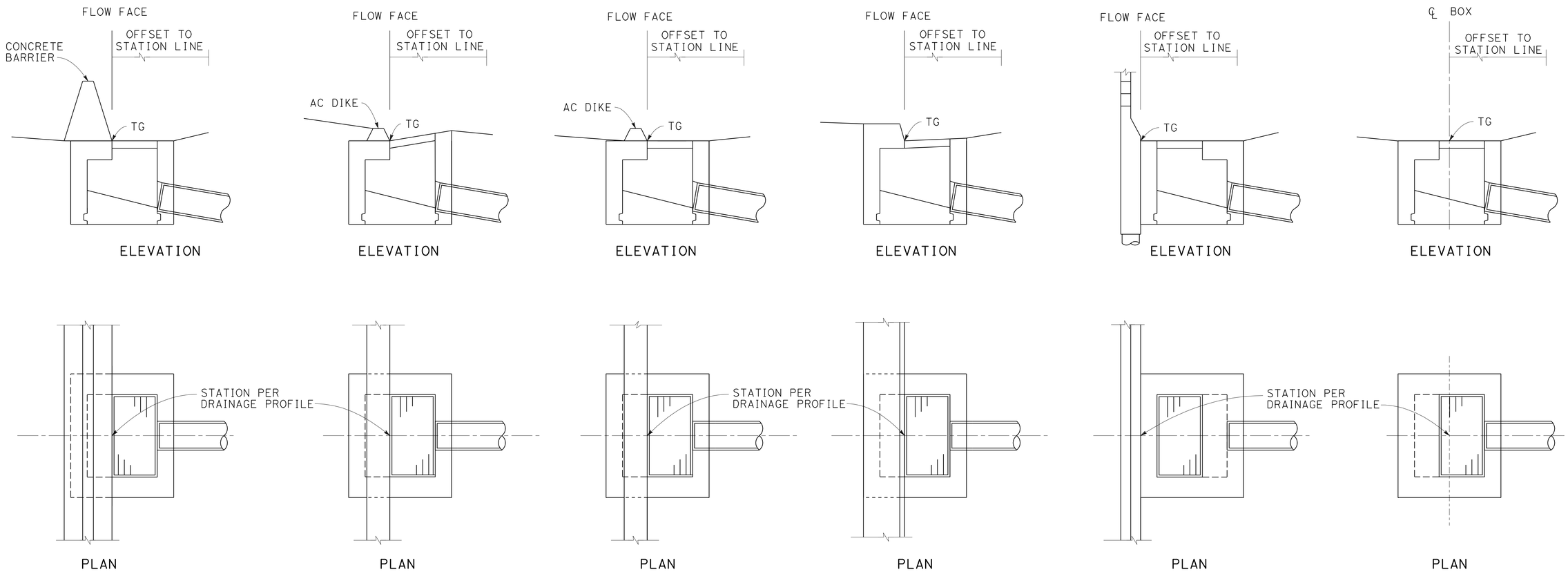

INLET ADJACENT TO CONCRETE BARRIER | **INLET WITHIN AC SIDE GUTTER** | **INLET ADJACENT TO AC DIKE** | **INLET ADJACENT TO CURB** | **INLET ADJACENT TO SOUNDWALL** | **FIELD INLET**

DRAINAGE DETAILS

NO SCALE

DD-1

STATE OF CALIFORNIA - DEPARTMENT OF TRANSPORTATION
Caltrans **TOLL BRIDGE**

FUNCTIONAL SUPERVISOR: JAIME E. GUTIERREZ
CALCULATED-DESIGNED BY: GARJOHN FONG
CHECKED BY: ISAAC PEREZ
REVISED BY
DATE REVISED

LAST REVISION 06-03-11
DATE PLOTTED => 06-OCT-2011
TIME PLOTTED => 06:18

Dist	COUNTY	ROUTE	KILOMETER POST TOTAL PROJECT	SHEET No.	TOTAL SHEETS
04	Ala	80	1.6/2.7	76	744

REGISTERED CIVIL ENGINEER — DATE 6-2-11

10-3-11
PLANS APPROVAL DATE

REGISTERED PROFESSIONAL ENGINEER — Garjohn Fong — No. 52275 — Exp. 12-31-12 — CIVIL — STATE OF CALIFORNIA

THE STATE OF CALIFORNIA OR ITS OFFICERS OR AGENTS SHALL NOT BE RESPONSIBLE FOR THE ACCURACY OR COMPLETENESS OF SCANNED COPIES OF THIS PLAN SHEET.

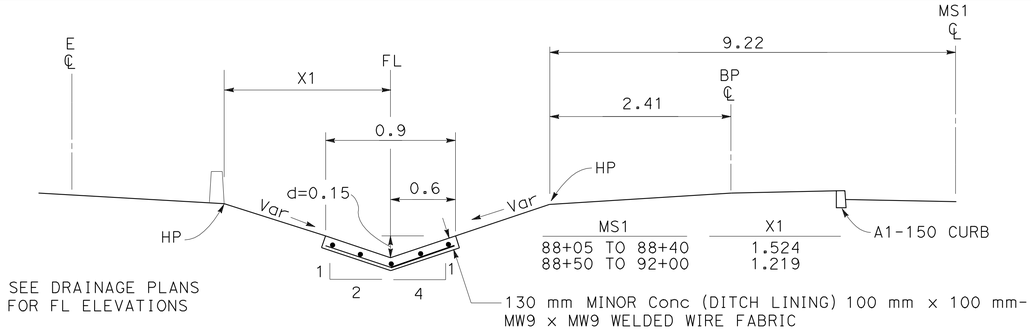

LINED DITCH (TYPE 1)

5 a b

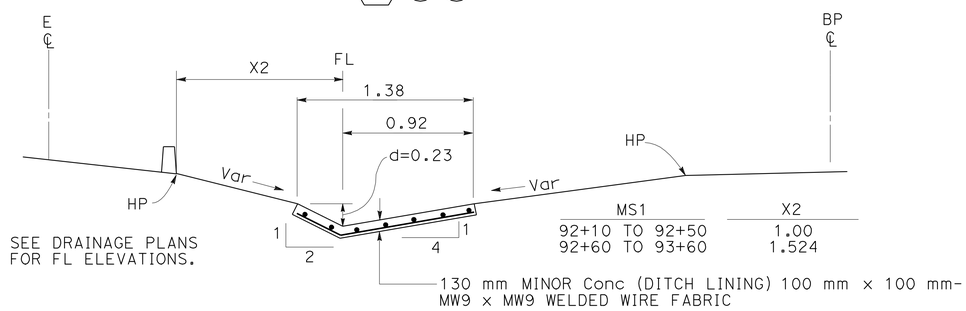

LINED DITCH (TYPE 2)

20 a

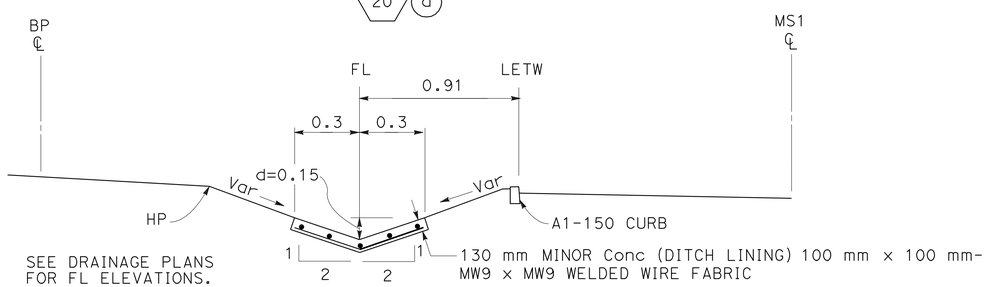

LINED DITCH (TYPE 3)

22 a

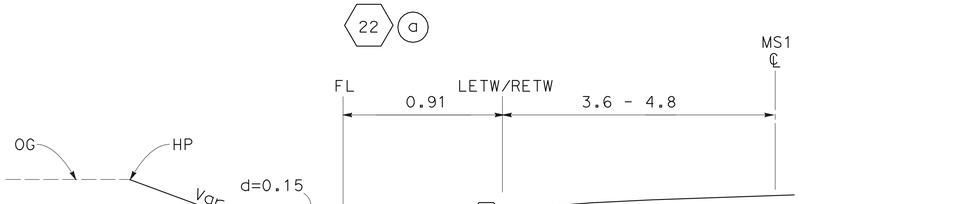

LINED DITCH (TYPE 4)

21 a b

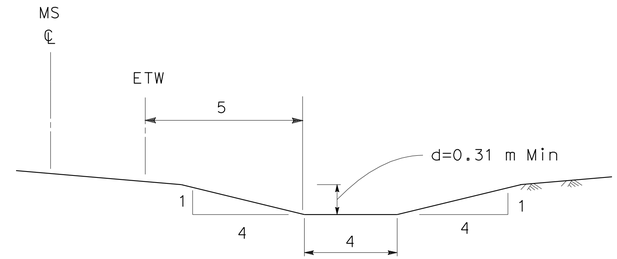

BIOFILTRATION SWALE

12 a

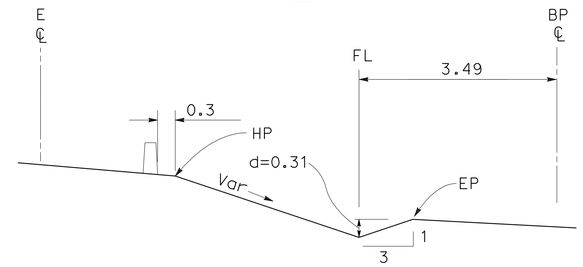

UNLINED DITCH (TYPE 1)

18 a

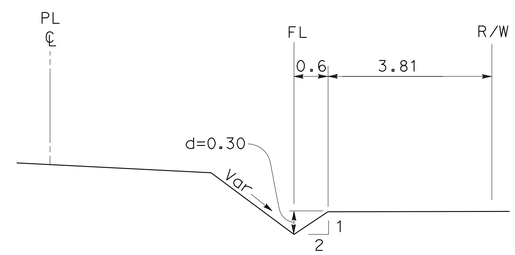

UNLINED DITCH (TYPE 2)

23 a

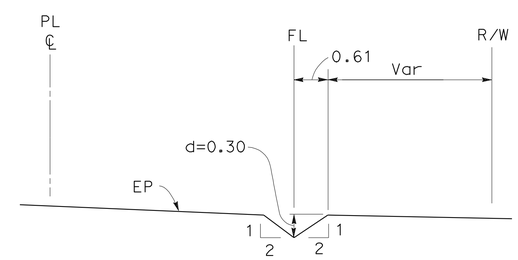

UNLINED DITCH (TYPE 3)

24 a

SEE DRAINAGE PLANS FOR FL ELEVATIONS

ALL DIMENSIONS ARE IN METERS UNLESS OTHERWISE SHOWN

DRAINAGE DETAILS

NO SCALE

DD-2

STATE OF CALIFORNIA - DEPARTMENT OF TRANSPORTATION
Caltrans
TOLL BRIDGE

FUNCTIONAL SUPERVISOR: JAIME E. GUTIERREZ
CALCULATED-DESIGNED BY: GARJOHN FONG
CHECKED BY: ISAAC PEREZ
REVISED BY / DATE REVISED

LAST REVISION 07-20-11 | DATE PLOTTED => 06-OCT-2011 | TIME PLOTTED => 06:18

Dist	COUNTY	ROUTE	KILOMETER POST TOTAL PROJECT	SHEET No.	TOTAL SHEETS
04	Ala	80	1.6/2.7	77	744

REGISTERED CIVIL ENGINEER 6-2-11 DATE

10-3-11
PLANS APPROVAL DATE

REGISTERED PROFESSIONAL ENGINEER Garjohn Fong No. 52275 Exp. 12-31-12 CIVIL STATE OF CALIFORNIA

THE STATE OF CALIFORNIA OR ITS OFFICERS OR AGENTS SHALL NOT BE RESPONSIBLE FOR THE ACCURACY OR COMPLETENESS OF SCANNED COPIES OF THIS PLAN SHEET.

Caltrans Metric

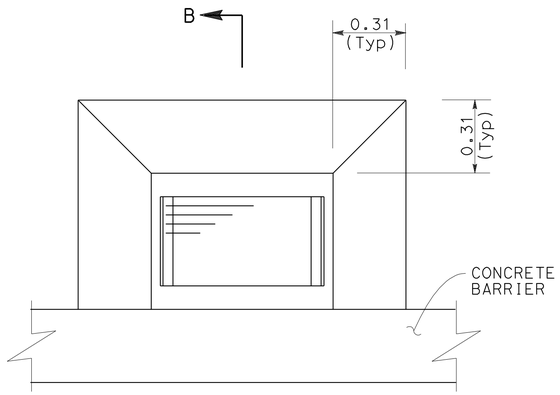

PLAN

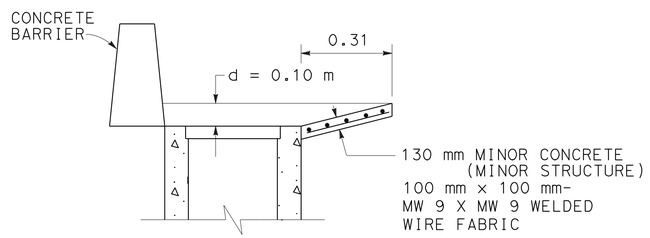

SECTION B-B

MODIFIED APRON

1 h j 14 i

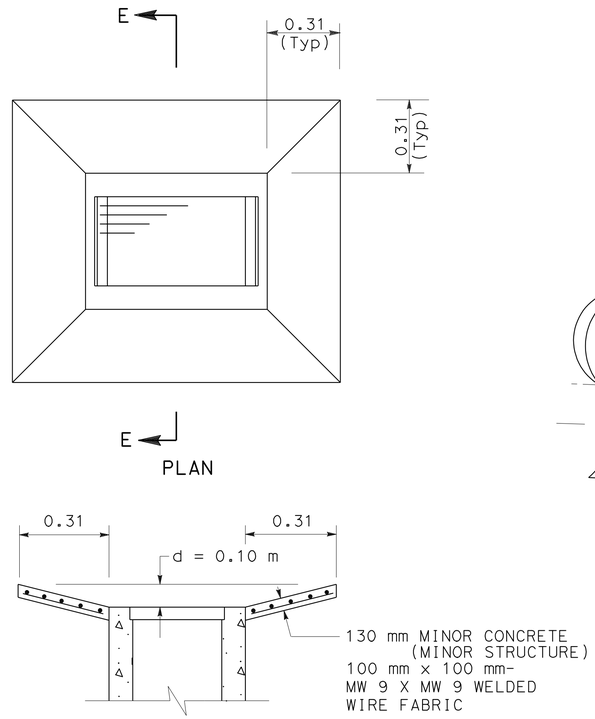

PLAN

SECTION E-E

DEPRESSED APRON

9 a 16 k v

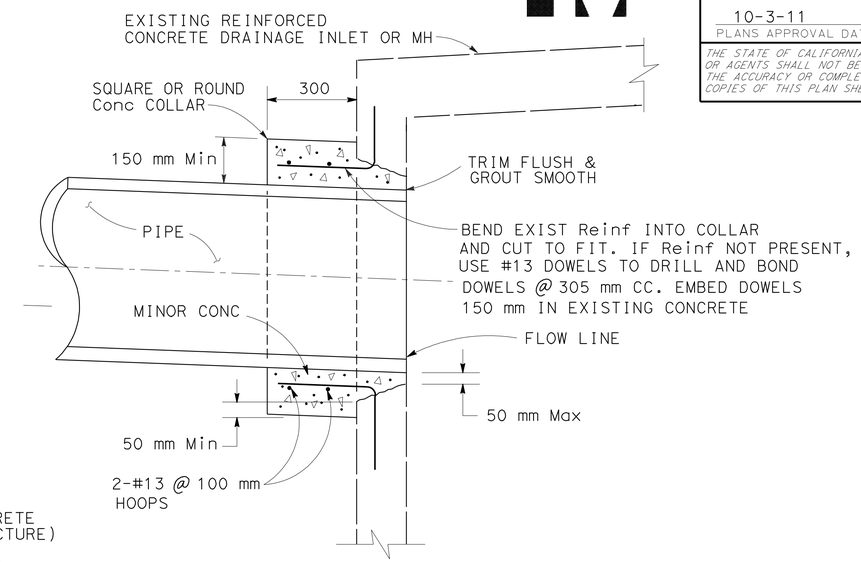

PIPE CONNECTION TO EXISTING INLET

16 b

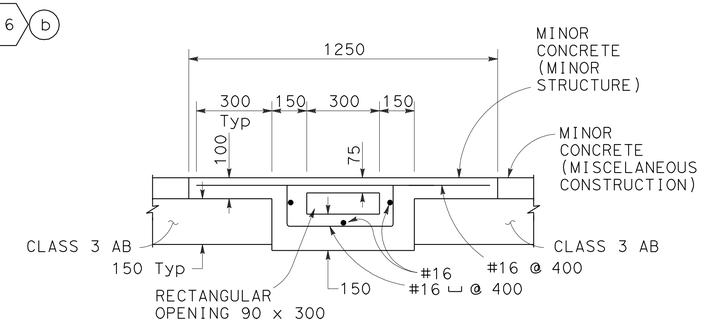

SECTION A-A

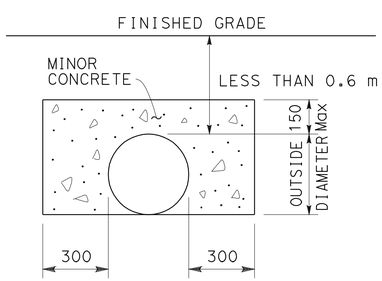

MINOR CONCRETE (BACKFILL)

(PIPE WITH LESS THAN 0.6 m COVER)

1 j 14 f

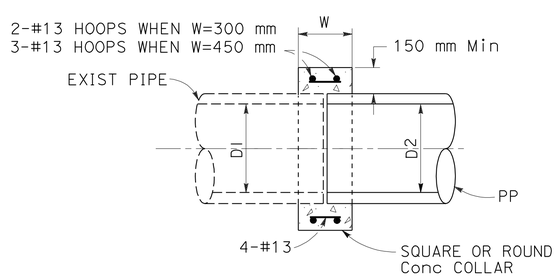

W=300 mm WHERE D2 < 600 mm
W=450 mm WHERE D2 > 600 mm

CONCRETE COLLAR
PIPE CONNECTION TO EXISTING PIPE

8 b 14 b

16 l 16 s

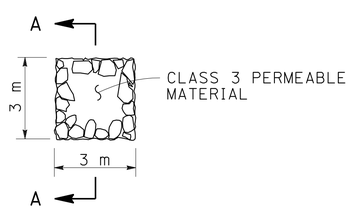

PLAN

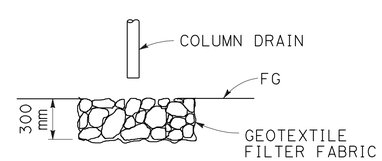

SECTION A-A

RSP SPLASH PAD

4 a

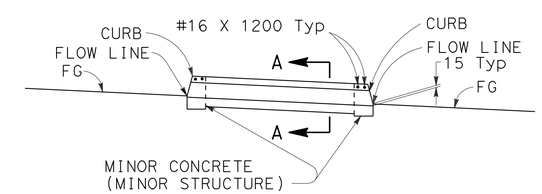

SIDEWALK DRAIN

25 a b

NOTES:

1. FOR CURB DETAILS NOT SHOWN, SEE REVISED STANDARD PLAN RSP A87A CURB (TYPE A1-150).
2. FOR SIDEWALK DRAIN DETAILS NOT SHOWN, SEE STANDARD PLANS B3-9.

ALL DIMENSIONS ARE IN MILLIMETERS UNLESS OTHERWISE SHOWN

DRAINAGE DETAILS

NO SCALE

DD-3

STATE OF CALIFORNIA - DEPARTMENT OF TRANSPORTATION
Caltrans TOLL BRIDGE

FUNCTIONAL SUPERVISOR: JAIME E. GUTIERREZ
CALCULATED-DESIGNED BY: GARJOHN FONG
CHECKED BY: ISAAC PEREZ
REVISED BY / DATE REVISED

LAST REVISION 08-04-11 | DATE PLOTTED => 06-OCT-2011 | TIME PLOTTED => 06:19

Dist	COUNTY	ROUTE	KILOMETER POST TOTAL PROJECT	SHEET No.	TOTAL SHEETS
04	Ala	80	1.6/2.7	78	744

REGISTERED CIVIL ENGINEER 6-2-11 DATE

10-3-11
PLANS APPROVAL DATE

REGISTERED PROFESSIONAL ENGINEER Gabriel Tcruz No. 68108 Exp. 6-30-11 CIVIL STATE OF CALIFORNIA

THE STATE OF CALIFORNIA OR ITS OFFICERS OR AGENTS SHALL NOT BE RESPONSIBLE FOR THE ACCURACY OR COMPLETENESS OF SCANNED COPIES OF THIS PLAN SHEET.

Caltrans Metric

NOTE:

1. FOR INFORMATION NOT SHOWN, SEE STD PLANS D73 THRU D74B.

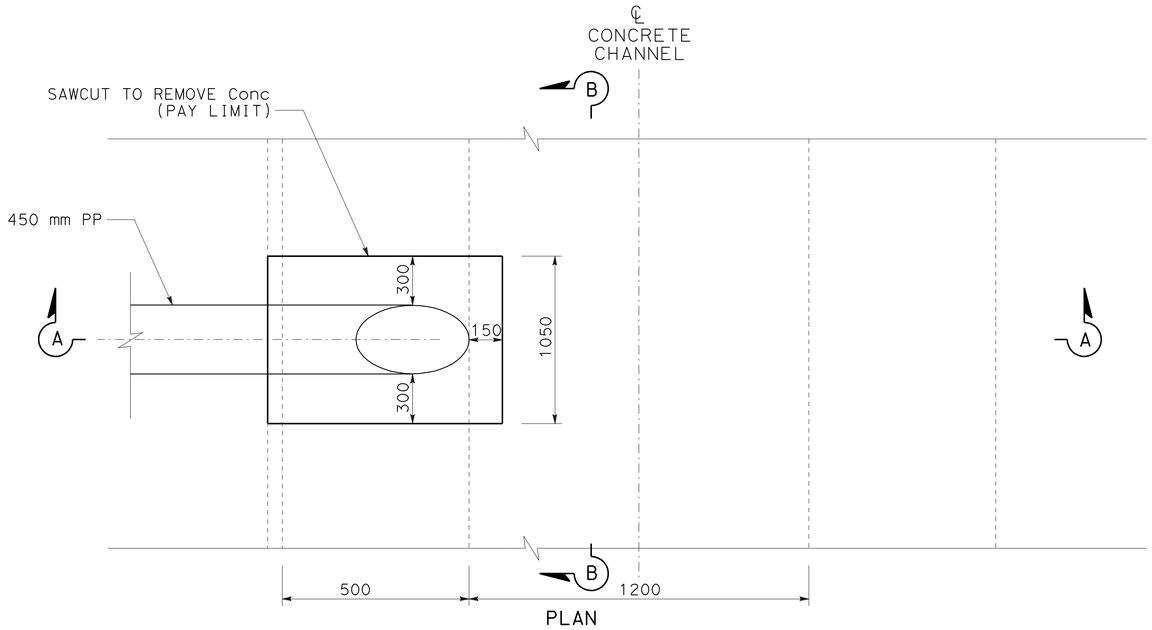

PLAN

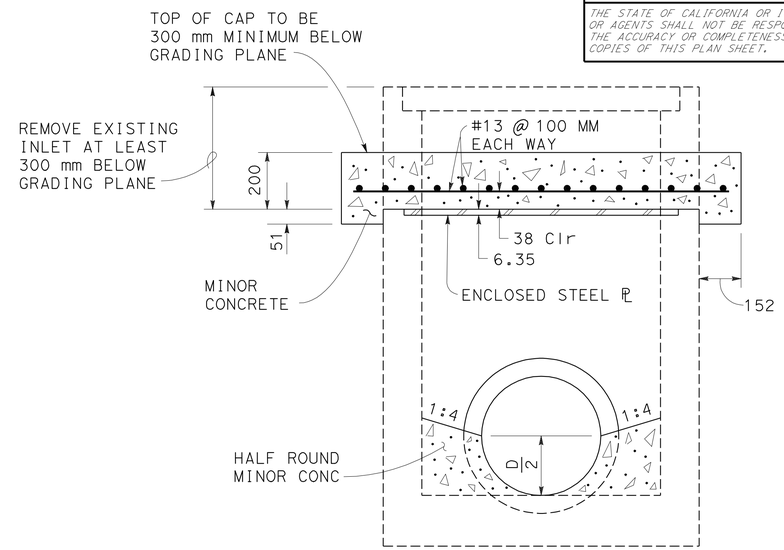

CAP INLET DETAIL

105 †

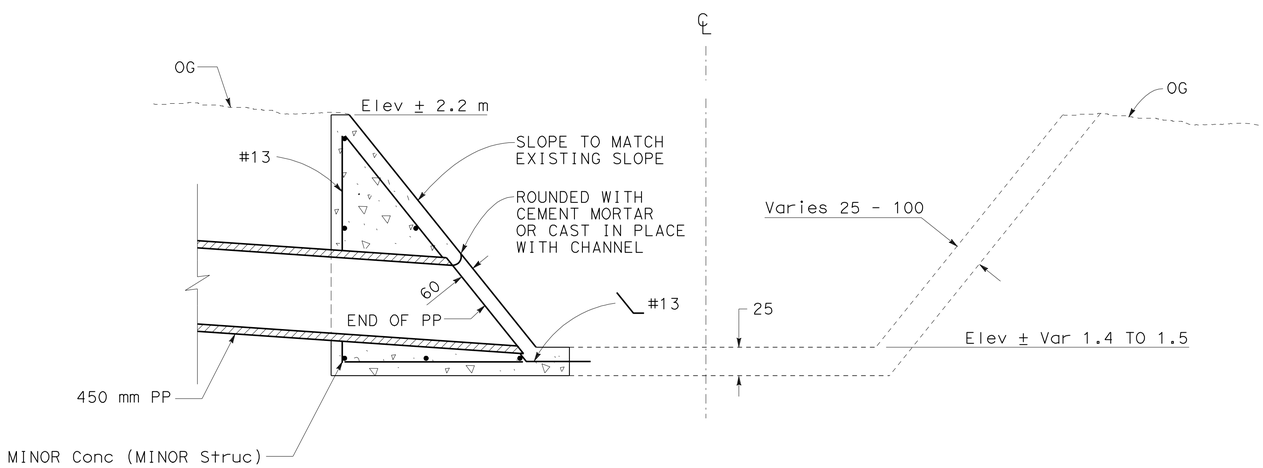

SECTION A-A

PIPE CONNECTION TO EXISTING CONCRETE CHANNEL

26 b

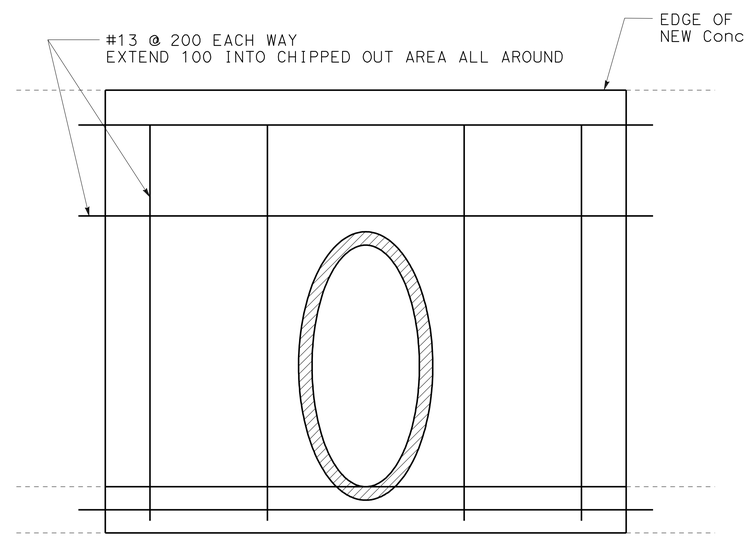

SECTION B-B

REINFORCEMENT DETAIL

ALL DIMENSIONS ARE IN MILLIMETERS UNLESS OTHERWISE SHOWN

DRAINAGE DETAILS

NO SCALE

DD-4

STATE OF CALIFORNIA - DEPARTMENT OF TRANSPORTATION
Caltrans
TOLL BRIDGE

FUNCTIONAL SUPERVISOR: JAIME E. GUTIERREZ
CALCULATED-DESIGNED BY: GABRIEL TCRUZ
CHECKED BY: RAFAEL RAVELO
REVISED BY / DATE REVISED

LAST REVISION 09-01-11 DATE PLOTTED => 06-OCT-2011 TIME PLOTTED => 06:19

Dist	COUNTY	ROUTE	KILOMETER POST TOTAL PROJECT	SHEET No.	TOTAL SHEETS
04	Ala	80	1.6/2.7	79	744

Rodrigo Puente 6-2-11
REGISTERED CIVIL ENGINEER DATE

10-3-11
PLANS APPROVAL DATE

REGISTERED PROFESSIONAL ENGINEER Rodrigo Puente No. 58612 Exp. 12-31-12 CIVIL STATE OF CALIFORNIA

THE STATE OF CALIFORNIA OR ITS OFFICERS OR AGENTS SHALL NOT BE RESPONSIBLE FOR THE ACCURACY OR COMPLETENESS OF SCANNED COPIES OF THIS PLAN SHEET.

Caltrans Metric

DRAINAGE QUANTITIES

DRAINAGE SYSTEM No. ⬡	DRAINAGE UNIT ◯	ABANDON CULVERT (m)	SAND BACKFILL (m^3)	ABANDON INLET (EA)	REMOVE CULVERT (m)	REMOVE INLET (EA)	CAP INLET (EA)	MINOR CONCRETE (BACKFILL) (m^3)	MINOR CONCRETE (MINOR STRUCTURE) (m^3)	MINOR CONCRETE (DITCH LINING) (m^3)	MINOR CONCRETE (MISCELLANEOUS CONSTRUCTION) (m^3)	MISCELLANEOUS IRON & STEEL (kg)	FRAME, GRATE & COVER [N] 600-12 (EA)	FRAME, GRATE & COVER [N] 600-12X (EA)	FRAME, GRATE & COVER [N] 900R (EA)	900 mm RCP (m)	PP 300 mm (m)	PP 450 mm (m)	PP 600 mm (m)	450 mm SLOTTED CSP (m)	300 mm PFES (EA)	450 mm PFES (EA)	ROADWAY EXCAVATION (m^3)	AC OVERSIDE DRAIN [N] (m)	CONCRETE COLLAR [N] (EA)	RSP SPLASH PAD CLASS 3 PERMEABLE MATERIAL (m^3)	RSP SPLASH PAD GEOTEXTILE FILTER FABRIC (m^2)	REMOVE TIMBER BULKHEAD [N] (EA)	HEIGHT OF INLET ''H'' [N] (m)	MAXIMUM COVER [N] (m)	HOT MIX ASPHALT (TYPE A) (TONNE)	DESCRIPTION	STATION	DRAINAGE PLAN SHEET No.	DRAINAGE SYSTEM No. ⬡	DRAINAGE UNIT ◯
1	a																	8.0												0.87		450 mm x 8.0 m PP, RSP 1T, METHOD B	3.60 m L+ MN 85+50	D-1	1	a
	b								0.92			148	1																1.32			G1 INLET	3.60 m L+ MN 85+50	D-1		b
	c																	5.8												0.90		450 mm x 5.8 m PP	3.60 m L+ MN 85+50	D-1		c
	d								0.91			148	1																1.29			G1 INLET	3.72 m R+ MN 85+50	D-1		d
	e																	34.5												0.84		450 mm x 34.5 m PP	3.72 m R+ MN 85+50	D-1		e
	f								0.70			148	1																0.92			G1 INLET	5.37 m R+ MN 85+00	D-1		f
	g																	89												0.87		450 mm x 89 m PP	3.60 m L+ MN 85+50	D-1 D-2		g
	h								0.84			148	1																0.89			G1 INLET W/ MOD APRON	7.50 m L+ MN 86+40	D-2		h
	i							4.98										13.5												0.68		450 mm x 13.5 m PP	7.50 m L+ MN 86+40	D-2		i
	j								0.84			148	1																0.83			G1 INLET W/ MOD APRON	7.50 m R+ MN 86+40	D-2		j
	k																							12							1	AC OVERSIDE DRAIN	3.60 m L+ MN 85+10	D-1		k
	l																	0.6												0.47		450 mm x 0.6 m PP	5.37 m R+ MN 85+00	D-1		l
	m								0.69			148	1																0.68			G1 INLET	4.46 m R+ MN 85+00	D-1		m
2	a	42																														ABANDON CULVERT, 600 mm CMP	36.00 m L+ E 85+59	D-1	2	a
	b			1																												ABANDON INLET	7.00 m R+ E 85+57	D-1		b
	c	23																														ABANDON CULVERT, 600 mm PP	7.00 m R+ E 85+57	D-2		c
	d	3																														ABANDON CULVERT, 600 mm PP	30.00 m R+ E 85+61	D-2		d
3	a								1.24		0.88	148	1																1.27			G2 INLET w/ SGD	12.00 m R+ E 86+50	D-2	3	a
	b																		40											0.70		600 mm x 40 m PP	12.00 m R+ E 86+50	D-2		b
	c								1.24		0.88	148	1																1.27			G2 INLET w/ SGD	12.00 m R+ E 86+90			c
	d																		50											0.70		600 mm x 50 m PP	12.00 m R+ E 86+90			d
	e								1.24		0.88	148	1																1.27			G2 INLET w/ SGD	12.97 m R+ E 87+40			e
	f																		40											0.70		600 mm x 40 m PP	12.97 m R+ E 87+40			f
	g								1.24		0.88	148	1																1.27			G2 INLET w/ SGD	14.92 m R+ E 87+80			g
	h																		40											0.70		600 mm x 40 m PP	14.92 m R+ E 87+80			h
	i								1.24		0.88	148	1																1.27			G2 INLET w/ SGD	15.60 m R+ E 88+20			i
	j																		30											0.80		600 mm x 30 m PP	15.60 m R+ E 88+20			j
	k								1.33		0.88	148	1																1.41			G2 INLET w/ SGD	15.60 m R+ E 88+50			k
	l																		90											0.80		600 mm x 90 m PP	15.60 m R+ E 88+50	D-2		l
	m								1.20		0.88	148	1																1.19			G2 INLET w/ SGD	15.60 m R+ E 89+40	D-3		m
	n																		13											0.60		600 mm x 13 m PP	15.60 m R+ E 89+40			n
	o								1.22		0.88	148	1																1.24			G2 INLET w/ SGD	15.60 m R+ E 89+53			o
	p																		7											0.70		600 mm x 7 m PP	15.60 m R+ E 89+53			p
	q								1.24		0.88	148	1																1.27			G2 INLET w/ SGD	15.60 m R+ E 89+60			q
	r																		7											0.70		600 mm x 7 m PP	15.60 m R+ E 89+60			r
	s								1.22		0.88	148	1																1.24			G2 INLET w/SGD	15.60 m R+ E 89+67			s
	t																		23											0.60		600 mm x 23 m PP	15.60 m R+ E 89+67			t
SHEET TOTAL		68		1				4.98	17.31		8.8	2368	16					151.4	340					12							1	SHEET TOTAL				

[N] NOT A SEPARATE PAY ITEM. FOR INFORMATION ONLY.

DRAINAGE QUANTITIES DQ-1

RODRIGO PUENTE — REVISED BY
GABRIEL TCRUZ — DATE REVISED
CALCULATED-DESIGNED BY
CHECKED BY
FUNCTIONAL SUPERVISOR
JAIME E. GUTIERREZ

STATE OF CALIFORNIA - DEPARTMENT OF TRANSPORTATION
Caltrans TOLL BRIDGE

LAST REVISION 08-08-11 DATE PLOTTED => 06-OCT-2011 TIME PLOTTED => 06:19

Dist	COUNTY	ROUTE	KILOMETER POST TOTAL PROJECT	SHEET No.	TOTAL SHEETS
04	Ala	80	1.6/2.7	80	744

Rodrigo Puente 6-2-11
REGISTERED CIVIL ENGINEER DATE

10-3-11
PLANS APPROVAL DATE

REGISTERED PROFESSIONAL ENGINEER Rodrigo Puente No. 58612 Exp. 12-31-12 CIVIL STATE OF CALIFORNIA

THE STATE OF CALIFORNIA OR ITS OFFICERS OR AGENTS SHALL NOT BE RESPONSIBLE FOR THE ACCURACY OR COMPLETENESS OF SCANNED COPIES OF THIS PLAN SHEET.

Caltrans Metric

DRAINAGE QUANTITIES

DRAINAGE SYSTEM No.	DRAINAGE UNIT	ABANDON CULVERT (m)	SAND BACKFILL (m^3)	ABANDON INLET (EA)	REMOVE CULVERT (m)	REMOVE INLET (EA)	CAP INLET (EA)	MINOR CONCRETE (BACKFILL) (m^3)	MINOR CONCRETE (MINOR STRUCTURE) (m^3)	MINOR CONCRETE (DITCH LINING) (m^3)	MINOR CONCRETE (MISCELLANEOUS CONSTRUCTION) (m^3)	MISCELLANEOUS IRON & STEEL (kg)	FRAME, GRATE & COVER [N] 600-12 (EA)	FRAME, GRATE & COVER [N] 600-12X (EA)	FRAME, GRATE & COVER [N] 900R (EA)	900 mm RCP (m)	PP 300 mm (m)	PP 450 mm (m)	PP 600 mm (m)	450 mm SLOTTED CSP (m)	300 mm PFES (EA)	450 mm PFES (EA)	ROADWAY EXCAVATION (m^3)	AC OVERSIDE DRAIN [N] (m)	CONCRETE COLLAR [N] (EA)	RSP SPLASH PAD CLASS 3 PERMEABLE MATERIAL (m^3)	RSP SPLASH PAD GEOTEXTILE FILTER FABRIC (m^2)	REMOVE TIMBER BULKHEAD [N] (EA)	HEIGHT OF INLET ``H'' [N] (m)	MAXIMUM COVER [N] (m)	HOT MIX ASPHALT (TYPE A) (TONNE)	DESCRIPTION	STATION	DRAINAGE PLAN SHEET No.	DRAINAGE SYSTEM No.	DRAINAGE UNIT
3	u								1.19		0.88	148	1																1.18			G2 INLET w/ SGD	15.60 m Rt E 89+90	D-3	3	u
	v																		40											0.60		600 mm x 40 m PP	15.60 m Rt E 89+90			v
	w								1.14		0.88	148	1																1.10			G2 INLET w/ SGD	15.60 m Rt E 90+30			w
	x																		50											0.50		600 mm x 50 m PP	15.60 m Rt E 90+30			x
	y								1.07		0.88	148	1																1.00			G2 INLET w/SGD	15.60 m Rt E 90+80			y
	z																		50											0.40		600 mm x 50 m PP	15.60 m Rt E 90+80			z
	zz								1.01		0.88	148	1																0.91			G2 INLET w/ SGD	15.60 m Rt E 91+30			zz
4	a																									2.70	13					RSP CLASS 3 PERMEABLE MTL, METHOD B	0 m Rt E 86+10	D-2	4	a
5	a									26.19																						LINED DITCH (TYPE 1)	SEE DRAINAGE DETAILS	D-2 D-3	5	a
	b									24.80																						LINED DITCH (TYPE 1)	SEE DRAINAGE DETAILS	D-3		b
7	a	42																														ABANDON CULVERT, 450 mm CMP	53.59 m Lt E 87+62	D-2	7	a
	b			1																												ABANDON INLET	11.00 m Lt E 87+66			b
	c	21																														ABANDON CULVERT, 450 mm CMP	11.00 m Lt E 87+66			c
	d			1																												ABANDON INLET	9.50 m Rt E 87+67			d
	e	19																														ABANDON CULVERT, 450 mm CMP	9.50 m Rt E 87+67			e
8	a								1.56			148	1																1.78			G2 INLET	5.70 m Rt MN 89+90	D-3	8	a
	b																											1				REMOVE TIMBER BULKHEAD	15.60 m Rt E 89+60			b
9	a								0.92			148	1																0.76			G1 INLET w/ DEPR APRON	14.30 m Lt MS1 90+10	D-3	9	a
	b																18							1						1.00		450 mm x 18 m PP	14.30 m Lt MS1 90+10	D-3		b
	c																											1				REMOVE TIMBER BULKHEAD	4.70 m Rt MS1 90+05	D-3		c
SHEET TOTAL		82		2					6.89	50.99	3.52	888	6				18	140						1	2.70	13	2					SHEET TOTAL				

[N] NOT A SEPARATE PAY ITEM. FOR INFORMATION ONLY.

RODRIGO PUENTE — REVISED BY — DATE REVISED
GABRIEL TCRUZ — CALCULATED-DESIGNED BY — CHECKED BY
JAIME E. GUTIERREZ — FUNCTIONAL SUPERVISOR

STATE OF CALIFORNIA - DEPARTMENT OF TRANSPORTATION
Caltrans TOLL BRIDGE

LAST REVISION 08-08-11 DATE PLOTTED => 01-MAR-2012 TIME PLOTTED => 13:49

Dist	COUNTY	ROUTE	KILOMETER POST TOTAL PROJECT	SHEET No.	TOTAL SHEETS
04	Ala	80	1.6/2.7	81	744

Rodrigo Puente 6-2-11
REGISTERED CIVIL ENGINEER DATE

10-3-11
PLANS APPROVAL DATE

REGISTERED PROFESSIONAL ENGINEER Rodrigo Puente No. 58612 Exp. 12-31-12 CIVIL STATE OF CALIFORNIA

THE STATE OF CALIFORNIA OR ITS OFFICERS OR AGENTS SHALL NOT BE RESPONSIBLE FOR THE ACCURACY OR COMPLETENESS OF SCANNED COPIES OF THIS PLAN SHEET.

Caltrans Metric

DRAINAGE QUANTITIES

DRAINAGE SYSTEM No.	DRAINAGE UNIT	ABANDON CULVERT	SAND BACKFILL	ABANDON INLET	REMOVE CULVERT	REMOVE INLET	CAP INLET	MINOR CONCRETE (BACKFILL)	MINOR CONCRETE (MINOR STRUCTURE)	MINOR CONCRETE (DITCH LINING)	MINOR CONCRETE (MISCELLANEOUS CONSTRUCTION)	MISCELLANEOUS IRON & STEEL	FRAME, GRATE & COVER [N] 600-12	FRAME, GRATE & COVER [N] 600-12X	FRAME, GRATE & COVER [N] 900R	900 mm RCP	PP 300 mm	PP 450 mm	PP 600 mm	450 mm SLOTTED CSP	300 mm PFES	450 mm PFES	ROADWAY EXCAVATION	AC OVERSIDE DRAIN [N]	CONCRETE COLLAR [N]	RSP SPLASH PAD CLASS 3 PERMEABLE MATERIAL	RSP SPLASH PAD GEOTEXTILE FILTER FABRIC	REMOVE TIMBER BULKHEAD [N]	HEIGHT OF INLET ''H'' [N]	MAXIMUM COVER [N]	HOT MIX ASPHALT (TYPE A)	DESCRIPTION	STATION	DRAINAGE PLAN SHEET No.	DRAINAGE SYSTEM No.	DRAINAGE UNIT
		m	m³	EA	m	EA		m³				kg	EA			m					EA		m³	m	EA	m³	m²	EA	m		TONNE				
10	a																											1				REMOVE TIMBER BULKHEAD	12.75 m Rt MS1 90+50	D-3	10	a
	b																					1										450 mm PFES	12.75 m Rt MS1 90+50	D-3	10	b
11	a					1																										REMOVE INLET	1.30 m Lt MS1 90+38	D-3	11	a
	b	20																														ABANDON CULVERT, 450 mm RCP	1.30 m Lt MS1 90+38			b
	c					1																										REMOVE INLET	3.0 m Lt MS1 90+58			c
	d	5																														ABANDON CULVERT, 2-300 MM PP	3.0 m Lt MS1 90+58			d
	e					1																										REMOVE INLET	MS1 90+58			e
	f	40																														ABANDON CULVERT, 450 mm RCP	MS1 90+58			f
12	a																						696									BIOFILTRATION SWALE	SEE DRAINAGE DETAILS	D-3	12	a
13	a	73																														ABANDON CULVERT, 450 mm CSP	54.00 m Lt E 90+83	D-3	13	a
	b	11																														ABANDON CULVERT, 450 mm PP	25.00 m Rt E 90+86			b
	c					1																										REMOVE INLET	25.00 m Rt E 90+86			c
14	a																											1				REMOVE TIMBER BULKHEAD	4.95 m Rt MN 92+00	D-3	14	a
	b																59.7							1					2.00		450 mm x 59.7 m PP W/ Conc COLLAR	4.95 m Rt MN 92+00			b
	c								1.28			148	1																1.34		G2 INLET w/o SGD	10.60 m Rt MS1 91+90			c
	d																138												2.00		450 mm x 138 m PP	5.95 m Lt MN 89+92			d
	e								0.69			148	1																0.89		G1 INLET	5.72 m Lt MN 91+30			e
	f							5.82									11.50														450 mm x 11.5 m PP	5.72 m Lt MN 91+30			f
	g								0.69			148	1																0.83		G1 INLET	5.87 m Rt MN 91+30			g
	h																110												0.44		450 mm x 110 m PP	5.72 m Lt MN 91+30			h
	i								0.84			148	1																0.67		G1 INLET w/ MOD APRON	9.60 m Lt MN 92+40			i
SHEET TOTAL		149				4		5.82	3.50			592	4				319.2				1	696		1				2				SHEET TOTAL				

[N] NOT A SEPARATE PAY ITEM. FOR INFORMATION ONLY.

RODRIGO PUENTE — REVISED BY — DATE REVISED
GABRIEL TCRUZ — CALCULATED-DESIGNED BY — CHECKED BY
JAIME E. GUTIERREZ — FUNCTIONAL SUPERVISOR

STATE OF CALIFORNIA - DEPARTMENT OF TRANSPORTATION
Caltrans TOLL BRIDGE

DRAINAGE QUANTITIES DQ-3

LAST REVISION 08-08-11 DATE PLOTTED => 06-OCT-2011 TIME PLOTTED => 10:36

Dist	COUNTY	ROUTE	KILOMETER POST TOTAL PROJECT	SHEET No.	TOTAL SHEETS
04	Ala	80	1.6/2.7	82	744

Rodrigo Puente 6-2-11
REGISTERED CIVIL ENGINEER DATE

10-3-11
PLANS APPROVAL DATE

REGISTERED PROFESSIONAL ENGINEER Rodrigo Puente No. 58612 Exp. 12-31-12 CIVIL STATE OF CALIFORNIA

THE STATE OF CALIFORNIA OR ITS OFFICERS OR AGENTS SHALL NOT BE RESPONSIBLE FOR THE ACCURACY OR COMPLETENESS OF SCANNED COPIES OF THIS PLAN SHEET.

Caltrans Metric

DRAINAGE QUANTITIES

DRAINAGE SYSTEM No.	DRAINAGE UNIT	ABANDON CULVERT (m)	SAND BACKFILL (m^3)	ABANDON INLET (EA)	REMOVE CULVERT (m)	REMOVE INLET (EA)	CAP INLET (EA)	MINOR CONCRETE (BACKFILL) (m^3)	MINOR CONCRETE (MINOR STRUCTURE) (m^3)	MINOR CONCRETE (DITCH LINING) (m^3)	MINOR CONCRETE (MISCELLANEOUS CONSTRUCTION) (m^3)	MISCELLANEOUS IRON & STEEL (kg)	FRAME, GRATE & COVER [N] 600-12 (EA)	FRAME, GRATE & COVER [N] 600-12X (EA)	FRAME, GRATE & COVER [N] 900R (EA)	900 mm RCP (m)	PP 300 mm (m)	PP 450 mm (m)	PP 600 mm (m)	450 mm SLOTTED CSP (m)	300 mm PFES (EA)	450 mm PFES (EA)	ROADWAY EXCAVATION (m^3)	AC OVERSIDE DRAIN [N] (m)	CONCRETE COLLAR [N] (EA)	RSP SPLASH PAD CLASS 3 PERMEABLE MATERIAL (m^3)	RSP SPLASH PAD GEOTEXTILE FILTER FABRIC (m^2)	REMOVE TIMBER BULKHEAD [N] (EA)	HEIGHT OF INLET ``H'' [N] (m)	MAXIMUM COVER [N] (m)	HOT MIX ASPHALT (TYPE A) (TONNE)	DESCRIPTION	STATION	DRAINAGE PLAN SHEET No.	DRAINAGE SYSTEM No.	DRAINAGE UNIT
15	a					1																										REMOVE INLET	13.01 m Rt MS1 90+59.11		15	a
	b				47																											REMOVE CULVERT, 450 mm ASP	13.01 m Rt MS1 90+59.11			b
	c					1																										REMOVE INLET	15.25 m Rt MS1 91+07.20			c
	d				90																											REMOVE CULVERT, 450 mm ASP	15.25 m Rt MS1 91+07.20			d
	e					1																										REMOVE INLET	10.43 m Rt MS1 91+97.04			e
	f				93																											REMOVE CULVERT, 450 mm ASP	10.43 m Rt MS1 91+97.04	D-3 D-4		f
	g					1																										REMOVE INLET	6.75 m Lt MS1 92+86.98	D-4		g
16	a								0.69			148	1																0.70			G1 INLET	4.50 m Rt MN 94+80	D-4	16	a
	b																			21												450 mm x 21 m SLOTTED CSP	4.50 m Rt MN 94+80			b
	c								1.33		0.88	148	1																1.42			G2 INLET w/ SGD	16.89 m Rt E 93+30			c
	d																29													1.00		450 mm x 29 m PP	16.89 m Rt E 93+30			d
	e								1.38		0.88	148	1																1.48			G2 INLET w/ SGD	18.03 m Rt E 93+60			e
	f																29													1.00		450 mm x 29 m PP	18.03 m Rt E 93+60			f
	g								1.36		0.88	148	1																1.46			G2 INLET w/ SGD	20.02 m Rt E 93+90			g
	h																29													1.00		450 mm x 29 m PP	20.02 m Rt E 93+90			h
	i								1.17		0.88	148	1																1.16			G2 INLET w/ SGD	22.02 m Rt E 94+20			i
	j																	2												0.86		600 mm x 2 m PP	20.02 m Rt E 93+90			j
	k								1.23			148	1																1.47			G1 INLET w/ DEPR APRON	22.60 m Rt E 93+90			k
	l																	15							1					1.16		600 mm x 15 m PP w/Conc COLLAR	22.60 m Rt E 93+90			l
	m					1																										REMOVE INLET	34.90 m Rt E 93+88			m
	n				4																											REMOVE CULVERT, 600 mm PP	34.90 m Rt E 93+88			n
	o					1																										REMOVE INLET	37.30 m Rt E 93+88			o
	p	18																														ABANDON CULVERT, 600 mm PP	34.90 m Rt E 93+88			p
	q			1																												ABANDON INLET	34.90 m Rt E 94+08			q
	r					1																										REMOVE INLET	26.21 m Rt E 94+68			r
	s																	1							1					0.30		600 mm x 1 m PP w/ Conc COLLAR	25.20 m Rt E 94+68			s
	t								0.69		0.88	148	1																0.90			G1 INLET w/ SGD	25.20 m Rt E 94+68			t
	u	72																														ABANDON CULVERT, 600 mm CSP	34.90 m Rt E 94+08			u
	v								0.92			148	1																0.73			G1 INLET w/ DEPR APRON	20.80 m Rt E 93+48			v
	w																40													1.00		450 mm x 40 m PP	20.80 m Rt E 93+48			w
SHEET TOTAL		90		1	234	7			8.77		4.40	1184	8				127	18	21						2								SHEET	TOTAL			

[N] NOT A SEPARATE PAY ITEM. FOR INFORMATION ONLY.

DRAINAGE QUANTITIES DQ-4

STATE OF CALIFORNIA - DEPARTMENT OF TRANSPORTATION
Caltrans TOLL BRIDGE

FUNCTIONAL SUPERVISOR: JAIME E. GUTIERREZ
CALCULATED-DESIGNED BY: RODRIGO PUENTE
CHECKED BY: GABRIEL TCRUZ
REVISED BY / DATE REVISED

LAST REVISION 08-08-11
DATE PLOTTED => 06-OCT-2011
TIME PLOTTED => 06:19

Dist	COUNTY	ROUTE	KILOMETER POST TOTAL PROJECT	SHEET No.	TOTAL SHEETS
04	Ala	80	1.6/2.7	83	744

Rodrigo Puente 6-2-11
REGISTERED CIVIL ENGINEER DATE

10-3-11
PLANS APPROVAL DATE

REGISTERED PROFESSIONAL ENGINEER Rodrigo Puente No. 58612 Exp. 12-31-12 CIVIL STATE OF CALIFORNIA

THE STATE OF CALIFORNIA OR ITS OFFICERS OR AGENTS SHALL NOT BE RESPONSIBLE FOR THE ACCURACY OR COMPLETENESS OF SCANNED COPIES OF THIS PLAN SHEET.

Caltrans Metric

DRAINAGE QUANTITIES

DRAINAGE SYSTEM No.	DRAINAGE UNIT	ABANDON CULVERT (m)	SAND BACKFILL (m^3)	ABANDON INLET (EA)	REMOVE CULVERT (m)	REMOVE INLET (EA)	CAP INLET (EA)	MINOR CONCRETE (BACKFILL) (m^3)	MINOR CONCRETE (MINOR STRUCTURE) (m^3)	MINOR CONCRETE (DITCH LINING) (m^3)	MINOR CONCRETE (MISCELLANEOUS CONSTRUCTION) (m^3)	MISCELLANEOUS IRON & STEEL (kg)	FRAME, GRATE & COVER [N] 600-12 (EA)	FRAME, GRATE & COVER [N] 600-12X (EA)	FRAME, GRATE & COVER [N] 900R (EA)	900 mm RCP (m)	PP 300 mm (m)	PP 450 mm (m)	PP 600 mm (m)	450 mm SLOTTED CSP (m)	300 mm PFES (EA)	450 mm PFES (EA)	ROADWAY EXCAVATION (m^3)	AC OVERSIDE DRAIN [N] (m)	CONCRETE COLLAR [N] (EA)	RSP SPLASH PAD CLASS 3 PERMEABLE MATERIAL (m^3)	RSP SPLASH PAD GEOTEXTILE FILTER FABRIC (m^2)	REMOVE TIMBER BULKHEAD [N] (EA)	HEIGHT OF INLET ''H'' [N] (m)	MAXIMUM COVER [N] (m)	HOT MIX ASPHALT (TYPE A) (TONNE)	DESCRIPTION	STATION	DRAINAGE PLAN SHEET No.	DRAINAGE SYSTEM No.	DRAINAGE UNIT
18	a																															UNLINED DITCH (TYPE 1)	SEE DRAINAGE DETAILS	D-2	18	a
19	a																				1											300 mm PFES	10.29 m Lt MS1 87+70	D-2	19	a
↓	b																37												0.20			300 mm x 37 m PP	10.29 m Lt MS1 87+70		↓	b
	c																				1											300 mm PFES	11.50 m Lt MS1 88+05			c
20	a									28.25																						LINED DITCH (TYPE 2)	SEE DRAINAGE DETAILS	D-3 D-4	20	a
21	a									10.28																						LINED DITCH (TYPE 4)	SEE DRAINAGE DETAILS	D-1 D-2	21	a
↓	b									10.22																						LINED DITCH (TYPE 4)	SEE DRAINAGE DETAILS	↓	↓	b
22	a									2.87																						LINED DITCH (TYPE 3)	SEE DRAINAGE DETAILS	D-2	22	a
23	a																															UNLINED DITCH (TYPE 2)	SEE DRAINAGE DETAILS	D-2	23	a
24	a																															UNLINED DITCH (TYPE 3)	SEE DRAINAGE DETAILS	D-2	24	a
25	a								0.53																							SIDEWALK DRAIN	3.6 m Rt MSI 87+65	D-2	25	a
↓	b								0.53																							SIDEWALK DRAIN	3.6 m Rt MSI 87+68	↓	↓	b
26	a																				1											300 mm PFES	8.70 m Rt PL 11+42	D-2	26	a
↓	b								4.56								26												0.50			300 mm x 26 m PP	18.75 m Lt PL 11+94	↓	↓	b
SHEET TOTAL									5.62	51.62							63				3											SHEET TOTAL				

[N] NOT A SEPARATE PAY ITEM. FOR INFORMATION ONLY.

DRAINAGE QUANTITIES DQ-5

STATE OF CALIFORNIA - DEPARTMENT OF TRANSPORTATION
Caltrans TOLL BRIDGE

RODRIGO PUENTE — CALCULATED-DESIGNED BY
GABRIEL TCRUZ — CHECKED BY
JAIME E. GUTIERREZ — FUNCTIONAL SUPERVISOR
REVISED BY — DATE REVISED

LAST REVISION 08-08-11 DATE PLOTTED => 06-OCT-2011 TIME PLOTTED => 08:19

Dist	COUNTY	ROUTE	KILOMETER POST TOTAL PROJECT	SHEET No.	TOTAL SHEETS
04	Ala	80	1.6/2.7	84	744

Rodrigo Puente 6-2-11
REGISTERED CIVIL ENGINEER DATE

10-3-11
PLANS APPROVAL DATE

REGISTERED PROFESSIONAL ENGINEER Rodrigo Puente No. 58612 Exp. 12-31-12 CIVIL STATE OF CALIFORNIA

THE STATE OF CALIFORNIA OR ITS OFFICERS OR AGENTS SHALL NOT BE RESPONSIBLE FOR THE ACCURACY OR COMPLETENESS OF SCANNED COPIES OF THIS PLAN SHEET.

Caltrans Metric

DRAINAGE QUANTITIES

DRAINAGE SYSTEM No.	DRAINAGE UNIT	ABANDON CULVERT	SAND BACKFILL	ABANDON INLET	REMOVE CULVERT	REMOVE INLET	CAP INLET	MINOR CONCRETE (BACKFILL)	MINOR CONCRETE (MINOR STRUCTURE)	MINOR CONCRETE (DITCH LINING)	MINOR CONCRETE (MISCELLANEOUS CONSTRUCTION)	MISCELLANEOUS IRON & STEEL	FRAME, GRATE & COVER [N] 600-12	FRAME, GRATE & COVER [N] 600-12X	FRAME, GRATE & COVER [N] 900R	900 mm RCP	PP 300 mm	PP 450 mm	PP 600 mm	450 mm SLOTTED CSP	300 mm PFES	450 mm PFES	ROADWAY EXCAVATION	AC OVERSIDE DRAIN [N]	CONCRETE COLLAR [N]	RSP SPLASH PAD CLASS 3 PERMEABLE MATERIAL	RSP SPLASH PAD GEOTEXTILE FILTER FABRIC	REMOVE TIMBER BULKHEAD [N]	HEIGHT OF INLET ``H'' [N]	MAXIMUM COVER [N]	HOT MIX ASPHALT (TYPE A)	DESCRIPTION	STATION	DRAINAGE PLAN SHEET No.	DRAINAGE SYSTEM No.	DRAINAGE UNIT
		m	m^3	EA	m	EA		m^3				kg	EA			m				EA			m^3	m	EA	m^3	m^2	EA	m		TONNE				
100	a					1																							0.84			REMOVE INLET	3.00 m R+ MS1 85+69	D-2	100	a
	b				75																									0.0		REMOVE CULVERT, 450 mm CSP	3.00 m R+ MS1 85+69	D-2		b
	c					1																							0.88			REMOVE INLET	7.00 m R+ MS1 86+48	D-2		c
101	a					1																							0.89			REMOVE INLET	7.50 m R+ MS1 86+87	D-2	101	a
	b				89																									0.0		REMOVE CULVERT, 450 mm CSP	7.50 m R+ MS1 86+87			b
	c					1																							1.14			REMOVE INLET	5.00 m R+ MS1 87+77			c
	d	29																												0.6		ABANDON CULVERT, 450 mm PP	5.00 m R+ MS1 87+77			d
	e					1																							0.97			REMOVE INLET	3.00 m R+ MS1 88+06			e
	f	29																												0.6		ABANDON CULVERT, 450 mm PP	3.00 m R+ MS1 88+06			f
	g					1																							0.83			REMOVE INLET	0.50 m R+ MS1 88+57			g
	h	29																												0.5		ABANDON CULVERT, 450 mm PP	0.50 m R+ MS1 88+57			h
	i					1																							0.72			REMOVE INLET	2.00 m L+ MS1 88+66			i
	j	19																												0.4		ABANDON CULVERT, 450 mm PP	2.00 m L+ MS1 88+66			j
	k					1																							0.67			REMOVE INLET	4.00 m L+ MS1 88+86			k
	l	9																												0.3		REMOVE CULVERT, 450 mm PP	4.00 m L+ MS1 88+86			l
	m					1																							0.65			REMOVE INLET	6.00 m L+ MS1 88+96			m
102	a					1																							0.8			REMOVE INLET	7.00 m L+ MS1 89+06	D-2	102	a
	b	19																												0.6		ABANDON CULVERT, 450 mm PP	7.00 m L+ MS1 89+06			b
	c					1																							0.88			REMOVE INLET	9.00 m L+ MS1 89+25			c
	d	19																												0.7		ABANDON CULVERT, 450 mm PP	9.00 m L+ MS1 89+25			d
	e					1																							0.98			REMOVE INLET	12.00 m L+ MS1 89+45	D-3		e
	f	29																												0.7		ABANDON CULVERT, 450 mm PP	12.00 m L+ MS1 89+45			f
	g					1																							1.14			REMOVE INLET	15.00 m L+ MS1 89+75			g
	h	34																												1.1		ABANDON CULVERT, 450 mm PP	15.00 m L+ MS1 89+75			h
	i					1																										REMOVE INLET	13.00 m L+ MS1 90+58			i
	j	9																														ABANDON CULVERT, 450 mm PP	13.00 m L+ MS1 90+58			j
103	a					1																							0.53			REMOVE INLET	2.00 m R+ MS1 92+43	D-3	103	a
	b	22																												0.3		ABANDON CULVERT, 450 mm PP	2.00 m R+ MS1 92+43			b
	c					1																							0.72			REMOVE INLET	18.00 m L+ MS1 92+40			c
	d	6																												0.3		ABANDON CULVERT, 450 mm PP	18.00 m L+ MS1 92+40			d
	e					1																							0.69			REMOVE INLET	19.00 m L+ MS1 92+46			e
	f	6																												0.3		ABANDON CULVERT, 450 mm PP	19.00 m L+ MS1 92+46			f
	g					1																							0.67			REMOVE INLET	19.00 m L+ MS1 92+53			g
SHEET TOTAL		259			164	18																										SHEET TOTAL				

[N] NOT A SEPARATE PAY ITEM. FOR INFORMATION ONLY.

STATE OF CALIFORNIA - DEPARTMENT OF TRANSPORTATION
Caltrans TOLL BRIDGE

FUNCTIONAL SUPERVISOR: JAIME E. GUTIERREZ
CALCULATED-DESIGNED BY: RODRIGO PUENTE
CHECKED BY: GABRIEL TCRUZ
REVISED BY / DATE REVISED

DRAINAGE QUANTITIES DQ-6

LAST REVISION 08-08-11
DATE PLOTTED => 06-OCT-2011
TIME PLOTTED => 06:19

Dist	COUNTY	ROUTE	KILOMETER POST TOTAL PROJECT	SHEET No.	TOTAL SHEETS
04	Ala	80	1.6/2.7	85	744

Caltrans Metric

Rodrigo Puente 6-2-11
REGISTERED CIVIL ENGINEER DATE

10-3-11
PLANS APPROVAL DATE

REGISTERED PROFESSIONAL ENGINEER Rodrigo Puente No. 58612 Exp. 12-31-12 CIVIL STATE OF CALIFORNIA

THE STATE OF CALIFORNIA OR ITS OFFICERS OR AGENTS SHALL NOT BE RESPONSIBLE FOR THE ACCURACY OR COMPLETENESS OF SCANNED COPIES OF THIS PLAN SHEET.

DRAINAGE QUANTITIES

DRAINAGE SYSTEM No.	DRAINAGE UNIT	ABANDON CULVERT	SAND BACKFILL	ABANDON INLET	REMOVE CULVERT	REMOVE INLET	CAP INLET	MINOR CONCRETE (BACKFILL)	MINOR CONCRETE (MINOR STRUCTURE)	MINOR CONCRETE (DITCH LINING)	MINOR CONCRETE (MISCELLANEOUS CONSTRUCTION)	MISCELLANEOUS IRON & STEEL	FRAME, GRATE & COVER [N] 600-12	FRAME, GRATE & COVER [N] 600-12X	FRAME, GRATE & COVER [N] 900R	900 mm RCP	PP 300 mm	PP 450 mm	PP 600 mm	450 mm SLOTTED CSP	300 mm PFES	450 mm PFES	ROADWAY EXCAVATION	AC OVERSIDE DRAIN [N]	CONCRETE COLLAR [N]	RSP SPLASH PAD CLASS 3 PERMEABLE MATERIAL	RSP SPLASH PAD GEOTEXTILE FILTER FABRIC	REMOVE TIMBER BULKHEAD [N]	HEIGHT OF INLET ``H'' [N]	MAXIMUM COVER [N]	HOT MIX ASPHALT (TYPE A)	DESCRIPTION	STATION	DRAINAGE PLAN SHEET No.	DRAINAGE SYSTEM No.	DRAINAGE UNIT
		m	m^3	EA	m	EA		m^3				kg	EA				m				EA		m^3	m	EA	m^3	m^2	EA	m		TONNE				
104	a				20																								0.0		REMOVE CULVERT, 450 mm CSP	3.80 m Rt MS1 87+27	D-2	104	a
	b					1																						0.83			REMOVE INLET	3.50 m Rt MS1 87+47	D-2		b
	c				30																								0.5		REMOVE CULVERT, 450 mm PP	3.50 m Rt MS1 87+47	D-2		c
	d					1																						0.83			REMOVE INLET	2.00 m Rt MS1 87+77	D-2		d
	e					2																									REMOVE CULVERT, 450 mm PP	3.00 m Rt MS1 87+77	D-2		e
105	a				29																								0.0		REMOVE CULVERT, 450 mm CSP	15.00 m Rt E 87+39	D-2	105	a
	b					1																						0.83			REMOVE INLET	13.50 m Rt E 87+68			b
	c				29																								0.5		REMOVE CULVERT, 450 mm PP	13.50 m Rt E 87+68			c
	d					1																						0.72			REMOVE INLET	11.50 m Rt E 87+98			d
	e				9																								0.5		REMOVE CULVERT, 450 mm PP	11.50 m Rt E 87+98			e
	f					1																						0.75			REMOVE INLET	11.00 m Rt E 88+08			f
	g				9																								0.5		REMOVE CULVERT, 450 mm PP	11.00 m Rt E 88+08			g
	h					1																						0.80			REMOVE INLET	10.50 m Rt E 88+18			h
	i				4																								0.5		REMOVE CULVERT, 450 mm PP	10.50 m Rt E 88+18			i
	j					1																						0.84			REMOVE INLET	10.00 m Rt E 88+23			j
	k				24																								0.5		REMOVE CULVERT, 450 mm PP	10.00 m Rt E 88+23			k
	l					1																						0.93			REMOVE INLET	8.00 m Rt E 88+48			l
	m				29																								0.5		REMOVE CULVERT, 450 mm PP	8.00 m Rt E 88+48			m
	n					1																						1.16			REMOVE INLET	5.00 m Rt E 88+78			n
	o				29																								0.5		REMOVE CULVERT, 450 mm PP	5.00 m Rt E 88+78			o
	p					1																						1.35			REMOVE INLET	1.50 m Rt E 89+07			p
	q				29																								0.5		REMOVE CULVERT, 450 mm PP	1.50 m Rt E 89+07	D-2 D-3	105	q
	r					1																						1.54			REMOVE INLET	1.50 m Lt E 89+37			r
	s				24																								0.5		REMOVE CULVERT, 450 mm PP	1.50 m Lt E 89+37			s
	t						1																								CAP INLET	4.00 m Lt E 89+62			t
106	a				34																								0.6		REMOVE CULVERT, 450 mm PP	4.00 m Lt E 89+62	D-3	106	a
	b					1																						1.31			REMOVE INLET	9.50 m Lt E 89+97			b
	c				19																								0.7		REMOVE CULVERT, 450 mm PP	9.50 m Lt E 89+97			c
	d					1																						1.07			REMOVE INLET	12.00 m Lt E 90+17			d
	e				19																								0.7		REMOVE CULVERT, 450 mm PP	12.00 m Lt E 90+17			e
	f					1																						0.83			REMOVE INLET	15.00 m Lt E 90+37			f
	g				178																								0.0		REMOVE CULVERT, 450 mm CSP	15.00 m Lt E 90+37			g
	h					1																						1.13			REMOVE INLET	51.00 m Lt E 90+13			h
	i				13																								0.7		REMOVE CULVERT, 450 mm PP	51.00 m Lt E 90+13			i
SHEET TOTAL					530	15	1																								SHEET TOTAL				
GRAND TOTAL		648		4	928	44	1	10.8	42.09	102.61	16.72	5032	34				63	615.6	498	21	3	1	696	12	4	2.70	13	4			1	GRAND TOTAL				

[N] NOT A SEPARATE PAY ITEM. FOR INFORMATION ONLY.

STATE OF CALIFORNIA - DEPARTMENT OF TRANSPORTATION
Caltrans TOLL BRIDGE

FUNCTIONAL SUPERVISOR: JAIME E. GUTIERREZ
CALCULATED-DESIGNED BY: RODRIGO PUENTE
CHECKED BY: GABRIEL TORRUZ
REVISED BY / DATE REVISED

DRAINAGE QUANTITIES DQ-7

LAST REVISION 08-08-11 | DATE PLOTTED => 06-OCT-2011 | TIME PLOTTED => 13:22

Dist	COUNTY	ROUTE	KILOMETER POST TOTAL PROJECT	SHEET No.	TOTAL SHEETS
04	Ala	80	1.6/2.7	86	744

REGISTERED CIVIL ENGINEER 6-2-11 DATE

10-3-11
PLANS APPROVAL DATE

REGISTERED PROFESSIONAL ENGINEER Gabriel Tcruz No. 68108 Exp. 6-30-11 CIVIL STATE OF CALIFORNIA

THE STATE OF CALIFORNIA OR ITS OFFICERS OR AGENTS SHALL NOT BE RESPONSIBLE FOR THE ACCURACY OR COMPLETENESS OF SCANNED COPIES OF THIS PLAN SHEET.

LEGEND:

SYMBOLS	UTILITY	OWNERSHIP
comm	COMMUNICATIONS, CALL BOX, TMS CMS, CCTV.....Etc.	CALTRANS
ca	COMPRESSED AIR	CALTRANS
w	WATER	CALTRANS/ SFWD/ US NAVY (UNLESS OTHERWISE NOTED)
f	FIRE ALARM SYSTEM	ARMY/CCSF
s	SANITARY SEWER	EBMUD (UNLESS OTHERWISE NOTED)
e	ELECTRIC	CALTRANS (UNLESS OTHERWISE NOTED)
t	TELEPHONE	SBC/ AT&T (UNLESS OTHERWISE NOTED)
fo	FIBER OPTIC	SBC/ AT&T (UNLESS OTHERWISE NOTED)
g	GAS (HIGH PRESSURE)	PG&E
sd	STORM DRAIN	CALTRANS

SYMBOLS	DESCRIPTION
///	ABANDONED UTILITY LINE
X	REMOVE UTILITY LINE
	FOOTING
	POWER POLE
	LIGHT
	HIGH MAST LIGHT
	FIRE HYDRANT
	PULL BOX
	DRAIN INLET
UV	UTILITY VAULT
or	MANHOLE
	CABINET OR CALL BOX
	RISER PIPE
	CAMERA ON STEEL POLE

X HP/LP OR DESCRIPTION (OWNERSHIP, TYPE OF PIPE, LOCATION,..ETC.)

HP = HIGH PRESSURE, LP = LOW PRESSURE

PIPE DIAMETER IN MILLIMETERS OR ELECTRICAL POTENTIAL TO GROUND

ABBREVIATIONS:

ACP	ASBESTOS CEMENT PIPE
AT&T	AMERICAN TELEPHONE & TELEGRAPH
CALTRANS or CT	STATE OF CALIFORNIA, DEPT OF TRANSPORTATION
CCSF	CITY AND COUNTY OF SAN FRANCISCO
CCTV	CLOSED CIRCUIT TELEVISION
CI	CAST IRON
CM	CAST IRON MORTAR LINED
CMP	CORRUGATED METAL PIPE
CMS	CHANGEABLE MESSAGE SIGN
COMMUNICATION OR COMM	CALL-BOXES AND CONTROL COMMUNICATIONS
DI	DRAINAGE INLET
DIP	DUCTILE IRON PIPE
EBMUD	EAST BAY MUNICIPAL UTILITY DISTRICT
FM	FORCED MAIN
HP	HIGH PRESSURE
KV	KILO VOLTAGE
MH	MANHOLE
OH	UTILITY SUPPORTED OVERHEAD
PCC	PORTLAND CEMENT CONCRETE
PG&E	PACIFIC GAS & ELECTRIC COMPANY
PH	POTHOLE
RCP	REINFORCED CONCRETE PIPE
SBC	SOUTHERN BELL COMPANY
SFPUC	SAN FRANCISCO PUBLIC UTILITIES COMMISSION
SFWD	SAN FRANCISCO WATER DISTRICT
TMS	TRAFFIC MANAGEMENT SYSTEM
V	VOLTAGE
W.A.P.A.	WESTERN AREA POWER ADMINISTRATION

POTHOLE LOCATION TABLE

PH-NUMBER	LOCATION		ELEVATION TO TOP OF PIPE	REMARKS
	N	E	m	
1	648239.82	1838930.18	0.31	250 mm HP GAS LINE
2	648216.18	1838937.86	-0.17	250 mm HP GAS LINE
3	648207.39	1838939.59	0.21	250 mm HP GAS LINE
4	648182.55	1838993.59	0.81	300 mm HP GAS LINE
5	648195.83	1839068.01	0.92	300 mm HP GAS LINE
6	648199.97	1839091.14	0.91	300 mm HP GAS LINE
7	648201.90	1839101.20	0.85	300 mm HP GAS LINE
8	648204.60	1839115.10	0.85	300 mm HP GAS LINE
9	648207.74	1839134.00	1.38	300 mm HP GAS LINE
10	648209.74	1839144.54	0.85	300 mm HP GAS LINE
11	648220.65	1839210.36	1.16	300 mm HP GAS LINE
12	648226.60	1839241.28	1.11	300 mm HP GAS LINE
13	648229.17	1839277.14	1.12	300 mm HP GAS LINE
14	648230.39	1839306.93	0.92	300 mm HP GAS LINE
15	648231.80	1839352.40	0.99	300 mm HP GAS LINE
16	648232.31	1839366.99	1.15	300 mm HP GAS LINE
17	648232.84	1839381.96	1.15	300 mm HP GAS LINE
18	648234.07	1839416.02	1.14	300 mm HP GAS LINE
19	648236.22	1839471.61	0.86	300 mm HP GAS LINE
20	648236.65	1839494.26	1.03	300 mm HP GAS LINE
21	648242.62	1839520.24	0.75	300 mm HP GAS LINE
22	648244.87	1839535.77	0.56	300 mm HP GAS LINE
23	648251.90	1839585.00	0.57	300 mm HP GAS LINE
24	648269.55	1839759.47	0.99	300 mm HP GAS LINE
25	648270.53	1839787.46	0.98	300 mm HP GAS LINE
26	648277.45	1839848.19	0.96	300 mm HP GAS LINE

GENERAL NOTES:

1. LOCATIONS OF UTILITY FACILITIES SHOWN ON THESE PLANS ARE APPROXIMATE AND SHALL BE VERIFIED BY THE CONTRACTOR PRIOR TO CONSTRUCTION.
2. ALL EXISTING UTILITIES ARE UNDERGROUND UNLESS OTHERWISE NOTED.
3. ALL GAS LINES ARE STEEL PIPE UNLESS OTHERWISE NOTED.
4. ELEVATIONS ARE BASED ON NGVD 1929.
5. FOR CALTRANS ELECTRICAL AND COMMUNICATION LINES TO BE ABANDONED OR REMOVED, SEE ELECTRICAL PLANS FOR DETAILS.
6. CONTRACTOR TO NOTIFY UTILITY COMPANIES AND THE ENGINEER WHEN REQUIRED TO SCHEDULE UTILITY RELOCATIONS.
7. CONTRACTOR TO SCHEDULE CONSTRUCTION OPERATIONS SO THAT UTILITIES ARE KEPT IN SERVICE AT ALL TIMES.
8. ALL UTILITIES SHALL REMAIN IN PLACE UNLESS OTHERWISE NOTED ON PLANS.
9. UTILITY PLANS ARE ACCURATE FOR UTILITY WORK ONLY.

UTILITY PLAN

NO SCALE

U-1

REVISED BY | DATE REVISED

GABRIEL TCRUZ | RAFAEL RAVELO

CALCULATED-DESIGNED BY | CHECKED BY

FUNCTIONAL SUPERVISOR

JAIME E. GUTIERREZ

STATE OF CALIFORNIA - DEPARTMENT OF TRANSPORTATION

Caltrans TOLL BRIDGE

LAST REVISION 09-01-11 | DATE PLOTTED => 06-OCT-2011 | TIME PLOTTED => 06:20

Dist	COUNTY	ROUTE	KILOMETER POST TOTAL PROJECT	SHEET No.	TOTAL SHEETS
04	Ala	80	1.6/2.7	87	744

REGISTERED CIVIL ENGINEER — DATE 6-2-11

PLANS APPROVAL DATE 10-3-11

REGISTERED PROFESSIONAL ENGINEER Gabriel Tcruz No. 68108 Exp. 6-30-11 CIVIL STATE OF CALIFORNIA

THE STATE OF CALIFORNIA OR ITS OFFICERS OR AGENTS SHALL NOT BE RESPONSIBLE FOR THE ACCURACY OR COMPLETENESS OF SCANNED COPIES OF THIS PLAN SHEET.

FOR COMPLETE RIGHT OF WAY AND ACCURATE ACCESS DATA, SEE RIGHT OF WAY RECORD MAPS AT DISTRICT OFFICE.

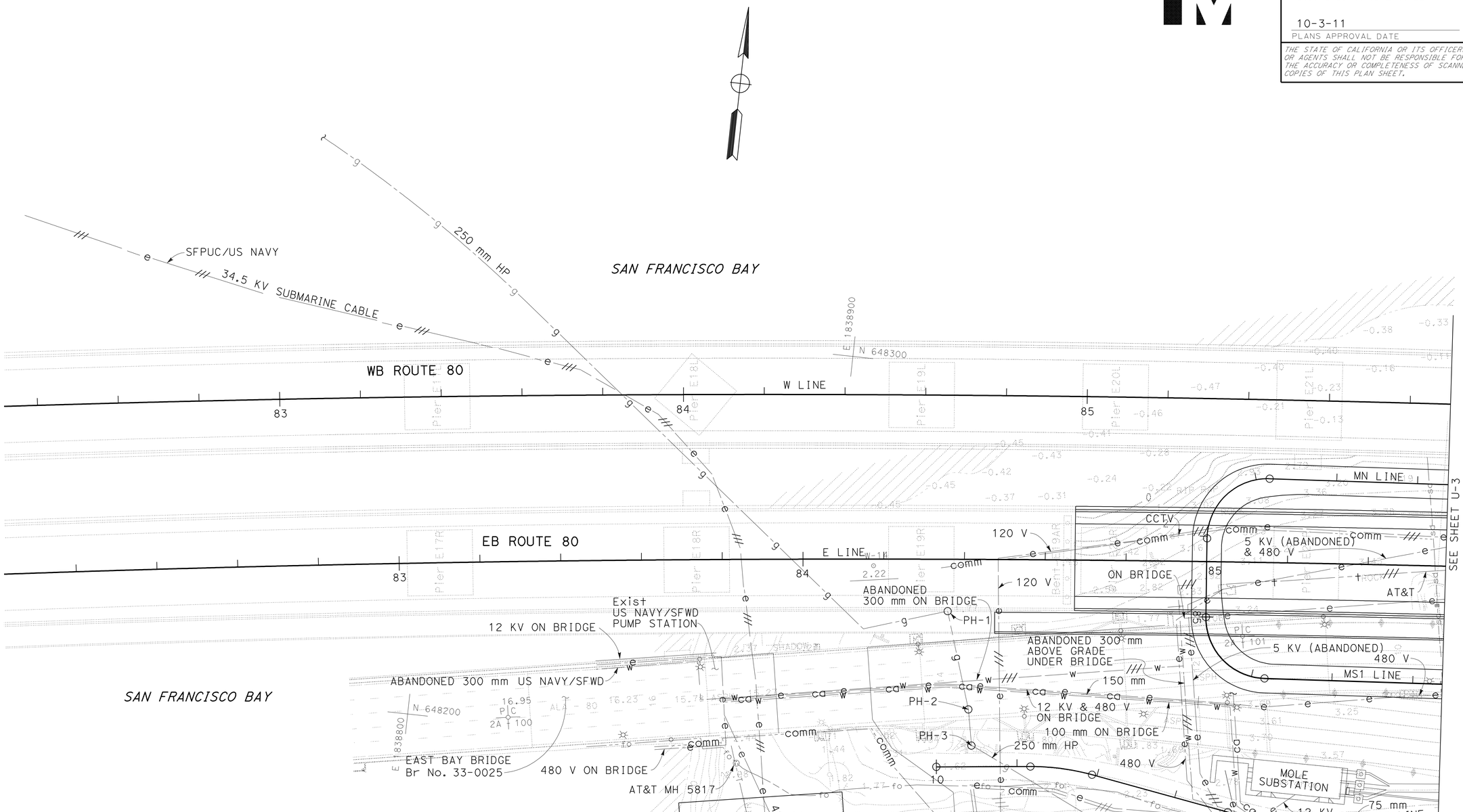

FOR NOTES, ABBREVIATIONS &/OR LEGEND, SEE SHEET U-1

ALL DIMENSIONS ARE IN METERS UNLESS OTHERWISE SHOWN

THIS PLAN FOR UTILITY WORK ONLY

UTILITY PLAN

SCALE 1:500

U-2

LAST REVISION 07-20-11 DATE PLOTTED => 06-OCT-2011 TIME PLOTTED => 06:20

STATE OF CALIFORNIA - DEPARTMENT OF TRANSPORTATION

Caltrans TOLL BRIDGE

FUNCTIONAL SUPERVISOR JAIME E. GUTIERREZ

CALCULATED-DESIGNED BY GABRIEL TCRUZ

CHECKED BY RAFAEL RAVELO

REVISED BY

DATE REVISED

Dist	COUNTY	ROUTE	KILOMETER POST TOTAL PROJECT	SHEET No.	TOTAL SHEETS
04	Ala	80	1.6/2.7	88	744

REGISTERED CIVIL ENGINEER 6-2-11 DATE

10-3-11
PLANS APPROVAL DATE

REGISTERED PROFESSIONAL ENGINEER Gabriel Tcruz No. 68108 Exp. 6-30-11 CIVIL STATE OF CALIFORNIA

THE STATE OF CALIFORNIA OR ITS OFFICERS OR AGENTS SHALL NOT BE RESPONSIBLE FOR THE ACCURACY OR COMPLETENESS OF SCANNED COPIES OF THIS PLAN SHEET.

Caltrans Metric

FOR COMPLETE RIGHT OF WAY AND ACCURATE ACCESS DATA, SEE RIGHT OF WAY RECORD MAPS AT DISTRICT OFFICE.

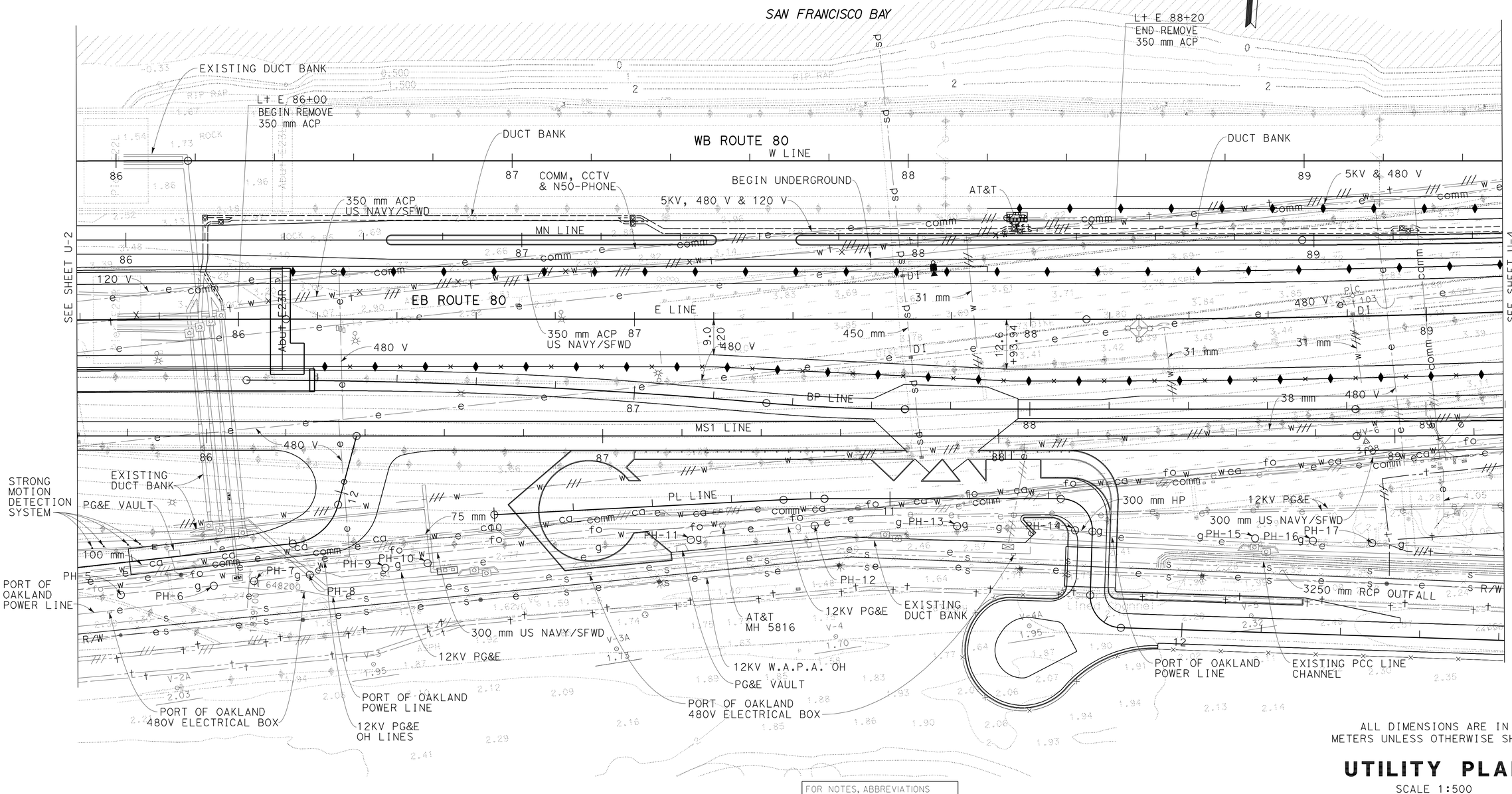

ALL DIMENSIONS ARE IN METERS UNLESS OTHERWISE SHOWN

UTILITY PLAN

SCALE 1:500

THIS PLAN FOR UTILITY WORK ONLY

U-3

FOR NOTES, ABBREVIATIONS &/OR LEGEND, SEE SHEET U-1

STATE OF CALIFORNIA - DEPARTMENT OF TRANSPORTATION
Caltrans TOLL BRIDGE

FUNCTIONAL SUPERVISOR: JAIME E. GUTIERREZ
CALCULATED-DESIGNED BY: GABRIEL TCRUZ
CHECKED BY: RAFAEL RAVELO
REVISED BY
DATE REVISED

LAST REVISION 08-30-11
DATE PLOTTED => 06-OCT-2011
TIME PLOTTED => 06:20

Dist	COUNTY	ROUTE	KILOMETER POST TOTAL PROJECT	SHEET No.	TOTAL SHEETS
04	Ala	80	1.6/2.7	89	744

REGISTERED CIVIL ENGINEER 6-2-11 DATE

10-3-11
PLANS APPROVAL DATE

REGISTERED PROFESSIONAL ENGINEER Gabriel Tcruz No. 68108 Exp. 6-30-11 CIVIL STATE OF CALIFORNIA

THE STATE OF CALIFORNIA OR ITS OFFICERS OR AGENTS SHALL NOT BE RESPONSIBLE FOR THE ACCURACY OR COMPLETENESS OF SCANNED COPIES OF THIS PLAN SHEET.

Caltrans Metric

FOR COMPLETE RIGHT OF WAY AND ACCURATE ACCESS DATA, SEE RIGHT OF WAY RECORD MAPS AT DISTRICT OFFICE.

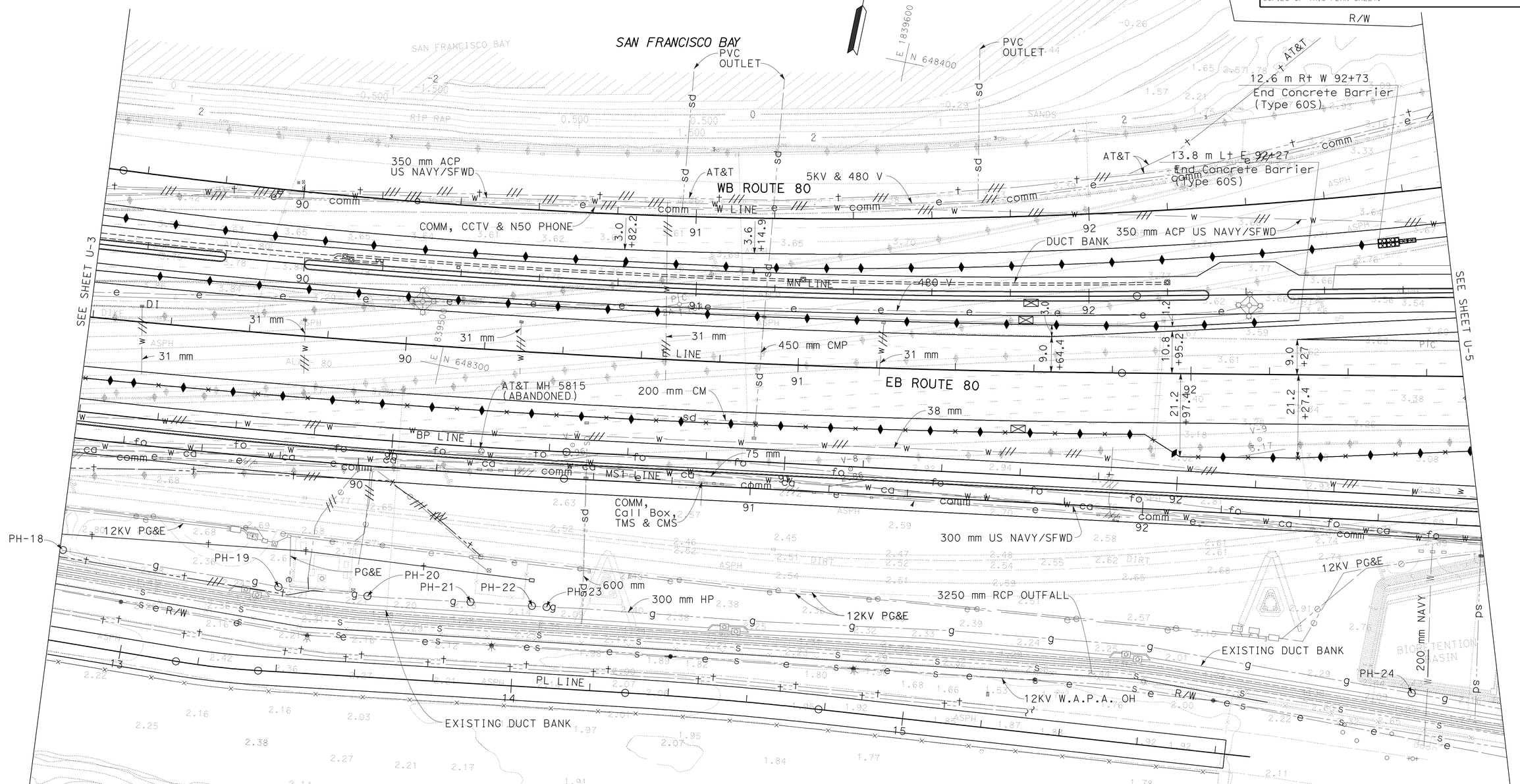

ALL DIMENSIONS ARE IN METERS UNLESS OTHERWISE SHOWN

FOR NOTES, ABBREVIATIONS &/OR LEGEND, SEE SHEET U-1

THIS PLAN FOR UTILITY WORK ONLY

UTILITY PLAN

SCALE 1:500

U-4

STATE OF CALIFORNIA - DEPARTMENT OF TRANSPORTATION
Caltrans TOLL BRIDGE

FUNCTIONAL SUPERVISOR: JAIME E. GUTIERREZ
CALCULATED-DESIGNED BY: GABRIEL TCRUZ
CHECKED BY: RAFAEL RAVELO
REVISED BY / DATE REVISED

LAST REVISION 08-30-11
DATE PLOTTED => 06-OCT-2011
TIME PLOTTED => 06:20

Dist	COUNTY	ROUTE	KILOMETER POST TOTAL PROJECT	SHEET No.	TOTAL SHEETS
04	Ala	80	1.6/2.7	90	744

REGISTERED CIVIL ENGINEER — DATE 6-2-11

PLANS APPROVAL DATE 10-3-11

REGISTERED PROFESSIONAL ENGINEER Gabriel Tcruz No. 68108 Exp. 6-30-11 CIVIL STATE OF CALIFORNIA

THE STATE OF CALIFORNIA OR ITS OFFICERS OR AGENTS SHALL NOT BE RESPONSIBLE FOR THE ACCURACY OR COMPLETENESS OF SCANNED COPIES OF THIS PLAN SHEET.

Caltrans Metric

FOR COMPLETE RIGHT OF WAY AND ACCURATE ACCESS DATA, SEE RIGHT OF WAY RECORD MAPS AT DISTRICT OFFICE.

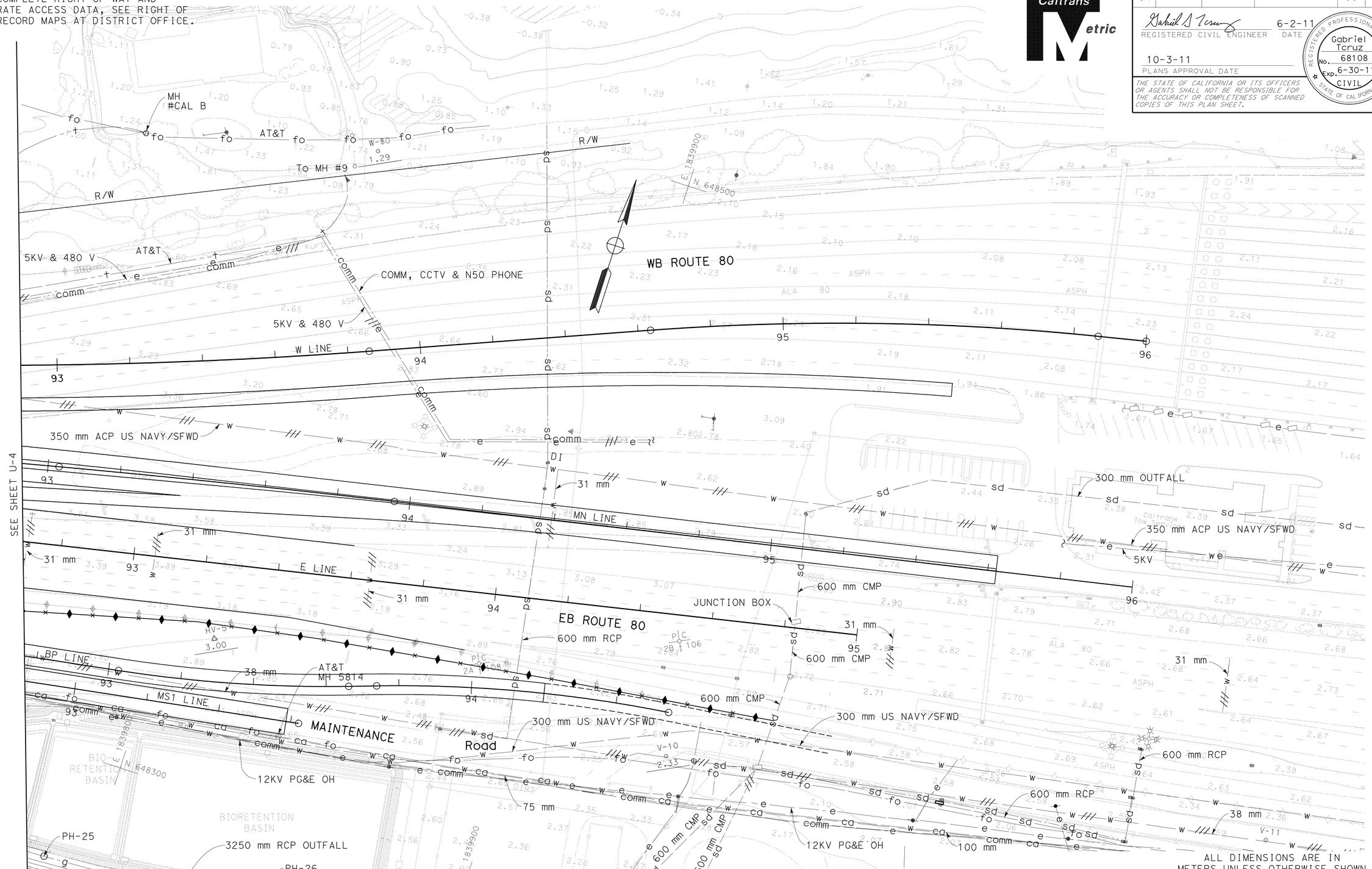

FOR NOTES, ABBREVIATIONS &/OR LEGEND, SEE SHEET U-I

THIS PLAN FOR UTILITY WORK ONLY

UTILITY PLAN

SCALE 1:500

U-5

STATE OF CALIFORNIA - DEPARTMENT OF TRANSPORTATION

Caltrans TOLL BRIDGE

FUNCTIONAL SUPERVISOR: JAIME E. GUTIERREZ

CALCULATED-DESIGNED BY: GABRIEL TCRUZ

CHECKED BY: RAFAEL RAVELO

REVISED BY / DATE REVISED

LAST REVISION 08-30-11 | DATE PLOTTED => 06-OCT-2011 | TIME PLOTTED => 06:21

BORDER LAST REVISED 3/1/2007

RELATIVE BORDER SCALE IS IN MILLIMETERS 0 20 40 60 80

USERNAME => s121614
DGN FILE => 40120mka005.dgn

CU 04251

EA 0120M1

Dist	COUNTY	ROUTE	KILOMETER POST TOTAL PROJECT	SHEET No.	TOTAL SHEETS
04	Ala	80	1.6/2.7	91	744

REGISTERED CIVIL ENGINEER 5-31-11 DATE

10-3-11
PLANS APPROVAL DATE

REGISTERED PROFESSIONAL ENGINEER Jerilyn L. Struven No. 49964 Exp. 12-31-12 CIVIL STATE OF CALIFORNIA

THE STATE OF CALIFORNIA OR ITS OFFICERS OR AGENTS SHALL NOT BE RESPONSIBLE FOR THE ACCURACY OR COMPLETENESS OF SCANNED COPIES OF THIS PLAN SHEET.

Caltrans Metric

FOR COMPLETE RIGHT OF WAY AND ACCURATE ACCESS DATA, SEE RIGHT OF WAY RECORD MAPS AT DISTRICT OFFICE.

LEGEND:

No. CONSTRUCTION AREA SIGN NUMBER

NOTES:

1. EXACT LOCATION AND POSITION OF CONSTRUCTION AREA SIGNS TO BE DETERMINED BY THE ENGINEER.
2. CONSTRUCTION AREA SIGNS TO BE STATIONARY MOUNTED.

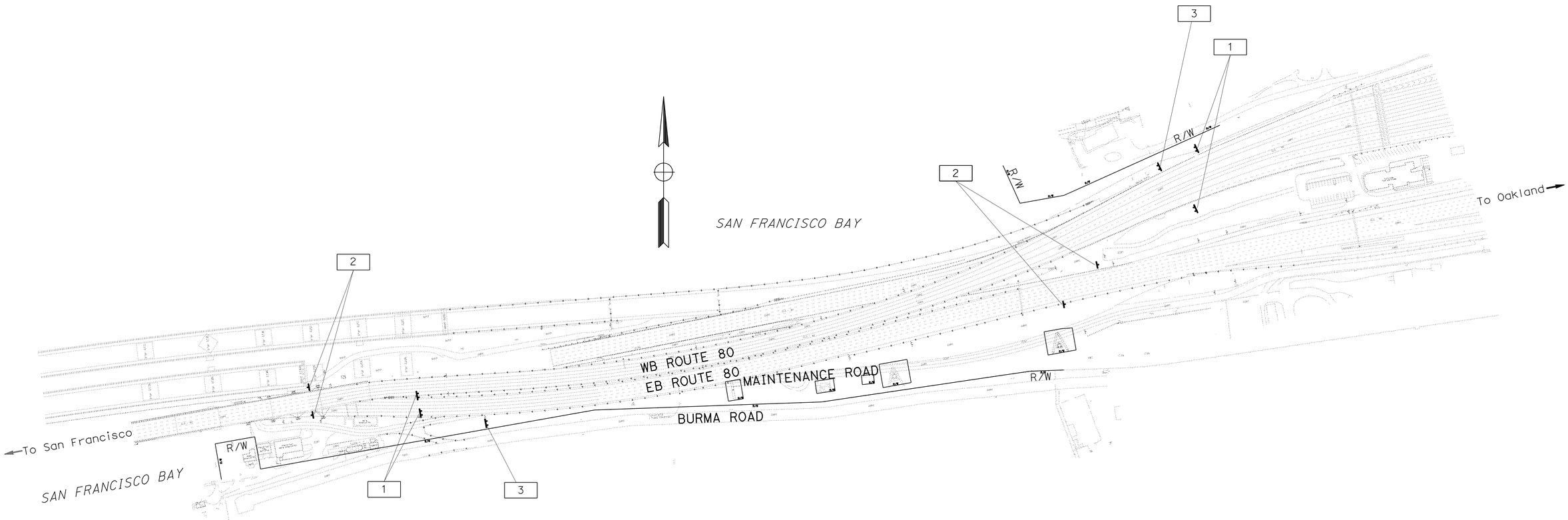

CONSTRUCTION AREA SIGNS

SIGN No.	CODE	SIGN MESSAGE	PANEL SIZE (mm)	No. OF POSTS & SIZE (mm)	QUANTITY (EA)	REMARKS
1	W20-1	ROAD WORK AHEAD	1800 x 1800	2-89 x 140	4	
2	G20-2	END ROAD WORK	1500 x 600	2-89 x 89	4	
3	C40 (CA)	TRAFFIC FINES DOUBLED IN CONSTRUCTION ZONE	1800 x 900	2-140 x 140	2	

CONSTRUCTION AREA SIGNS

NO SCALE

THIS PLAN ACCURATE FOR CONSTRUCTION AREA SIGN WORK ONLY

CS-1

STATE OF CALIFORNIA - DEPARTMENT OF TRANSPORTATION
Caltrans
TRAFFIC

FUNCTIONAL SUPERVISOR: JERILYN L. STRUVEN
CALCULATED-DESIGNED BY: HERMINIO RUIDERA
CHECKED BY: JERILYN L. STRUVEN
REVISED BY
DATE REVISED

LAST REVISION 07-20-11
DATE PLOTTED => 06-OCT-2011
TIME PLOTTED => 06:21

Dist	COUNTY	ROUTE	KILOMETER POST TOTAL PROJECT	SHEET No.	TOTAL SHEETS
04	Ala	80	1.6/2.7	92	744

REGISTERED CIVIL ENGINEER 6-2-11 DATE

10-3-11
PLANS APPROVAL DATE

REGISTERED PROFESSIONAL ENGINEER Rafael A. Ravelo No. 68941 Exp. 12-31-11 CIVIL STATE OF CALIFORNIA

THE STATE OF CALIFORNIA OR ITS OFFICERS OR AGENTS SHALL NOT BE RESPONSIBLE FOR THE ACCURACY OR COMPLETENESS OF SCANNED COPIES OF THIS PLAN SHEET.

Caltrans Metric

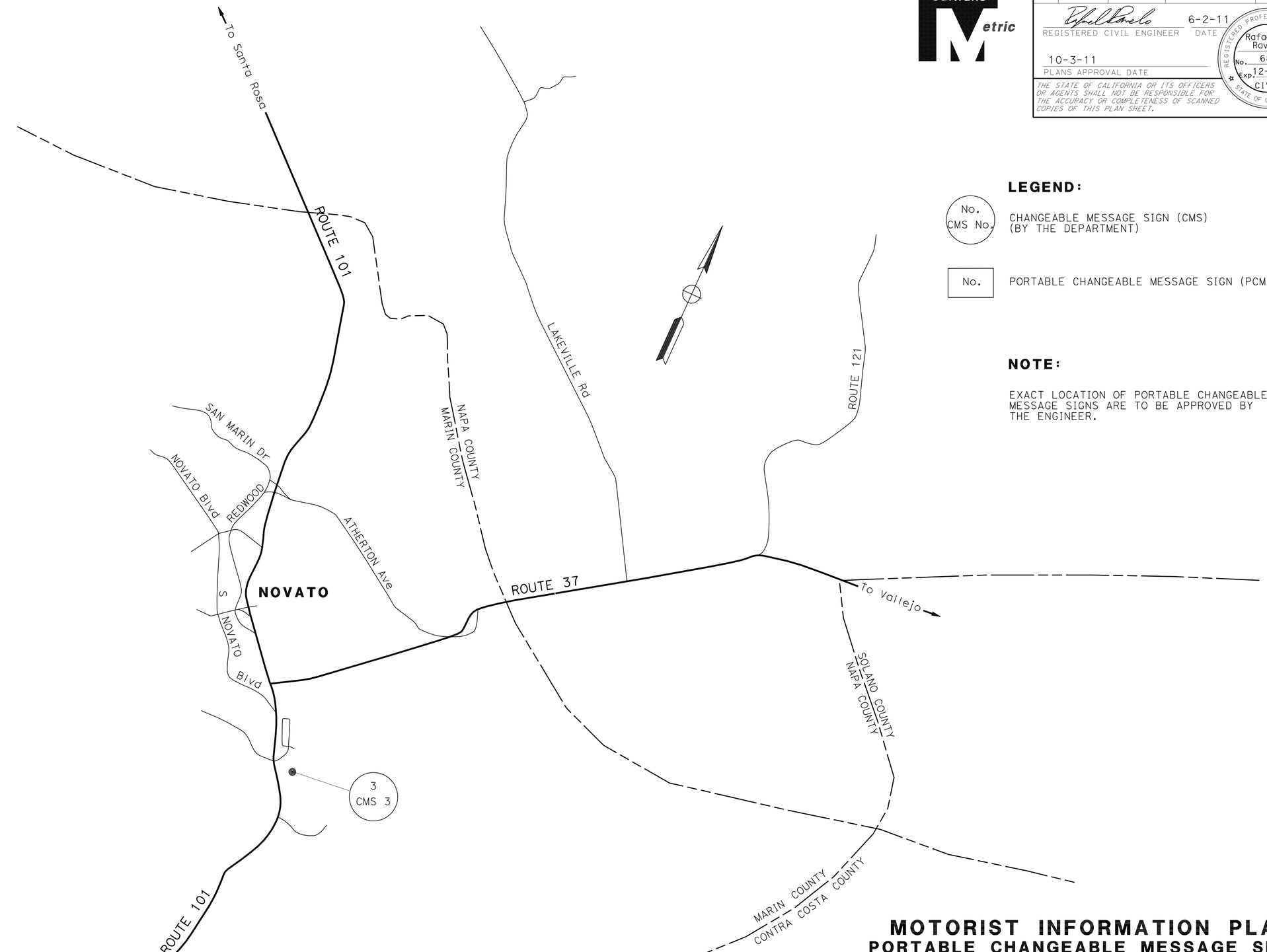

SEE SHEET MI-2

LEGEND:

No. / CMS No. — CHANGEABLE MESSAGE SIGN (CMS) (BY THE DEPARTMENT)

No. — PORTABLE CHANGEABLE MESSAGE SIGN (PCMS)

NOTE:

EXACT LOCATION OF PORTABLE CHANGEABLE MESSAGE SIGNS ARE TO BE APPROVED BY THE ENGINEER.

MOTORIST INFORMATION PLAN
PORTABLE CHANGEABLE MESSAGE SIGNS (FULL BRIDGE CLOSURE)

NO SCALE

THIS PLAN ACCURATE FOR MOTORIST INFORMATION WORK ONLY

MI-1

STATE OF CALIFORNIA - DEPARTMENT OF TRANSPORTATION
Caltrans TOLL BRIDGE

FUNCTIONAL SUPERVISOR: JAIME E. GUTIERREZ
CALCULATED-DESIGNED BY: RAFAEL RAVELO
CHECKED BY: GABRIEL TORRUZ
REVISED BY
DATE REVISED

LAST REVISION 05-26-11
DATE PLOTTED => 06-OCT-2011
TIME PLOTTED => 06:21

Dist	COUNTY	ROUTE	KILOMETER POST TOTAL PROJECT	SHEET No.	TOTAL SHEETS
04	Ala	80	1.6/2.7	93	744

REGISTERED CIVIL ENGINEER 6-2-11 DATE

10-3-11
PLANS APPROVAL DATE

REGISTERED PROFESSIONAL ENGINEER Rafael A. Ravelo No. 68941 Exp. 12-31-11 CIVIL STATE OF CALIFORNIA

THE STATE OF CALIFORNIA OR ITS OFFICERS OR AGENTS SHALL NOT BE RESPONSIBLE FOR THE ACCURACY OR COMPLETENESS OF SCANNED COPIES OF THIS PLAN SHEET.

Caltrans Metric

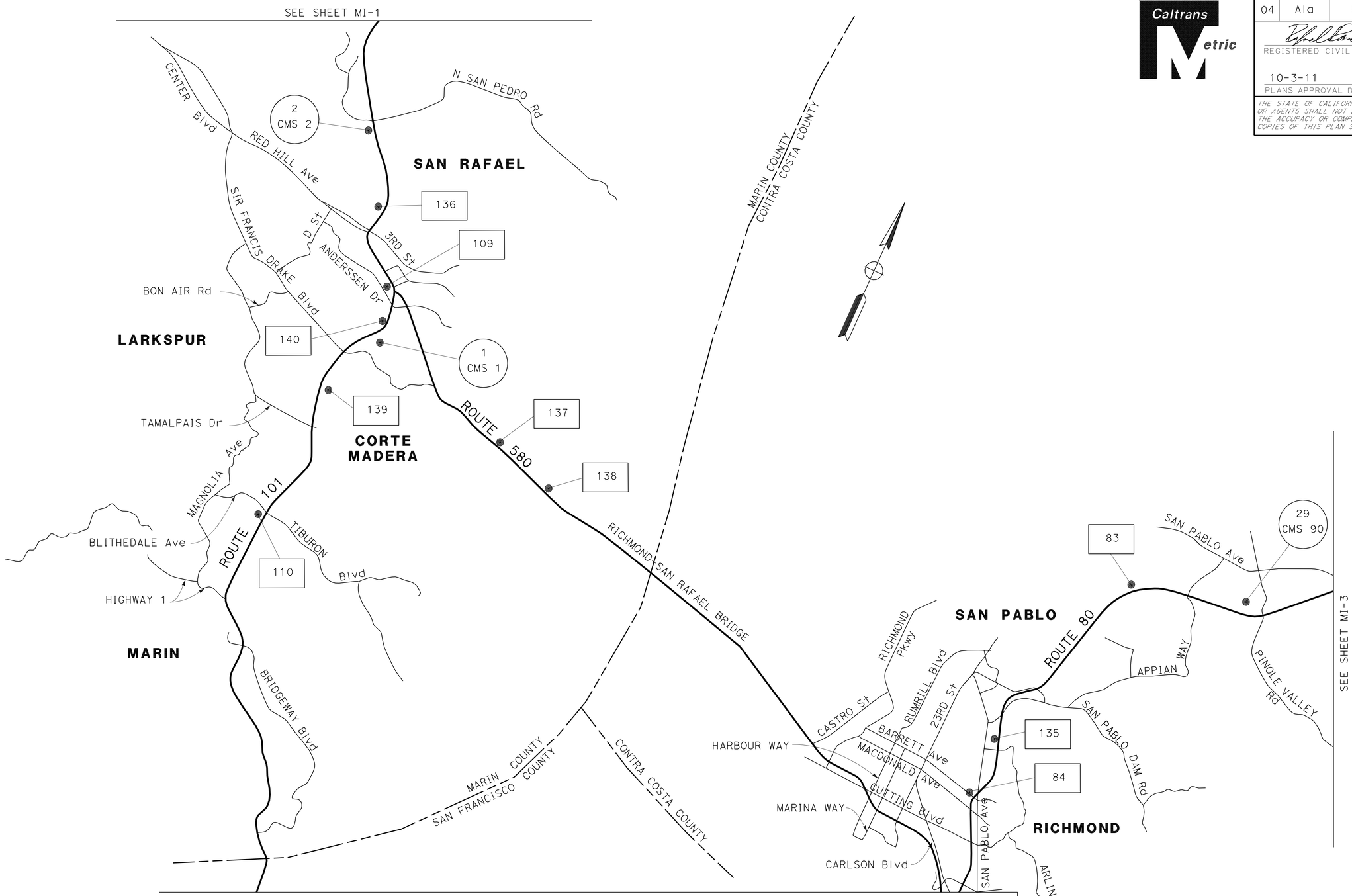

FOR NOTES, ABBREVIATIONS &/OR LEGEND, SEE SHEET MI-1

THIS PLAN ACCURATE FOR MOTORIST INFORMATION WORK ONLY

MOTORIST INFORMATION PLAN
PORTABLE CHANGEABLE MESSAGE SIGNS (FULL BRIDGE CLOSURE)

NO SCALE

MI-2

STATE OF CALIFORNIA - DEPARTMENT OF TRANSPORTATION
Caltrans **TOLL BRIDGE**

FUNCTIONAL SUPERVISOR: JAIME E. GUTIERREZ
CALCULATED-DESIGNED BY: RAFAEL RAVELO
CHECKED BY: GABRIEL TCRUZ
REVISED BY / DATE REVISED

LAST REVISION 07-20-11 | DATE PLOTTED => 06-OCT-2011 | TIME PLOTTED => 06:21

BORDER LAST REVISED 3/1/2007 | RELATIVE BORDER SCALE IS IN MILLIMETERS 0 20 40 60 80 | USERNAME => s121614 | DGN FILE => 40120mlb002.dgn | CU 04251 | EA 0120M1

Dist	COUNTY	ROUTE	KILOMETER POST TOTAL PROJECT	SHEET No.	TOTAL SHEETS
04	Ala	80	1.6/2.7	94	744

REGISTERED CIVIL ENGINEER 6-2-11 DATE

10-3-11
PLANS APPROVAL DATE

REGISTERED PROFESSIONAL ENGINEER Rafael A. Ravelo No. 68941 Exp. 12-31-11 CIVIL STATE OF CALIFORNIA

THE STATE OF CALIFORNIA OR ITS OFFICERS OR AGENTS SHALL NOT BE RESPONSIBLE FOR THE ACCURACY OR COMPLETENESS OF SCANNED COPIES OF THIS PLAN SHEET.

Caltrans Metric

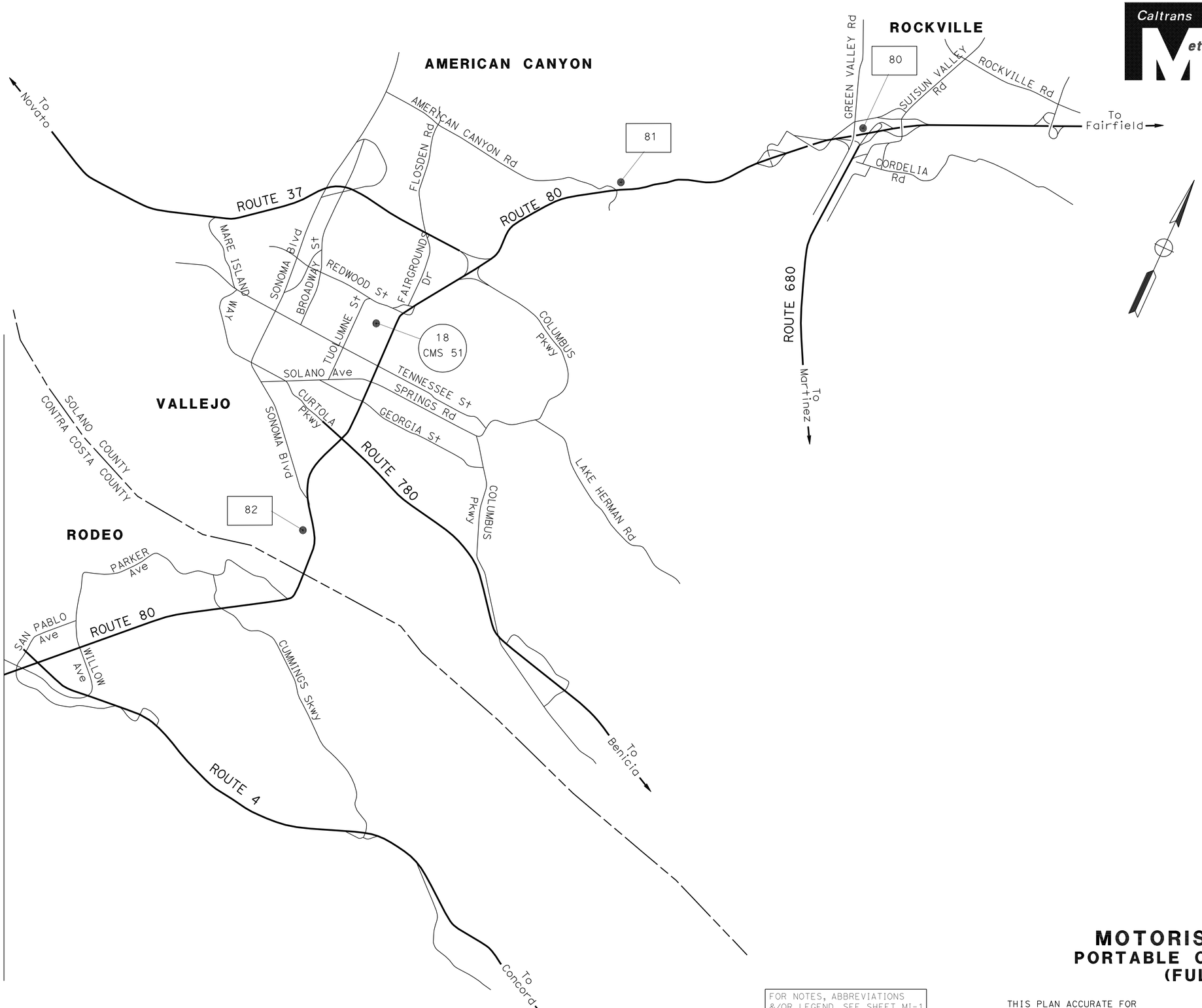

FOR NOTES, ABBREVIATIONS &/OR LEGEND, SEE SHEET MI-1

THIS PLAN ACCURATE FOR MOTORIST INFORMATION WORK ONLY

MOTORIST INFORMATION PLAN
PORTABLE CHANGEABLE MESSAGE SIGNS (FULL BRIDGE CLOSURE)

NO SCALE

MI-3

STATE OF CALIFORNIA - DEPARTMENT OF TRANSPORTATION
Caltrans **TOLL BRIDGE**

FUNCTIONAL SUPERVISOR: JAIME E. GUTIERREZ
CALCULATED-DESIGNED BY: RAFAEL RAVELO
CHECKED BY: GABRIEL TCRUZ
REVISED BY
DATE REVISED

LAST REVISION DATE PLOTTED => 06-OCT-2011
TIME PLOTTED => 06:21
07-20-11

BORDER LAST REVISED 3/1/2007
RELATIVE BORDER SCALE IS IN MILLIMETERS 0 20 40 60 80
USERNAME => s121614
DGN FILE => 40120mlb003.dgn
CU 04251
EA 0120M1

Dist	COUNTY	ROUTE	KILOMETER POST TOTAL PROJECT	SHEET No.	TOTAL SHEETS
04	Ala	80	1.6/2.7	95	744

REGISTERED CIVIL ENGINEER — DATE 6-2-11

10-3-11
PLANS APPROVAL DATE

REGISTERED PROFESSIONAL ENGINEER — Rafael A. Ravelo — No. 68941 — Exp. 12-31-11 — CIVIL — STATE OF CALIFORNIA

THE STATE OF CALIFORNIA OR ITS OFFICERS OR AGENTS SHALL NOT BE RESPONSIBLE FOR THE ACCURACY OR COMPLETENESS OF SCANNED COPIES OF THIS PLAN SHEET.

Caltrans Metric

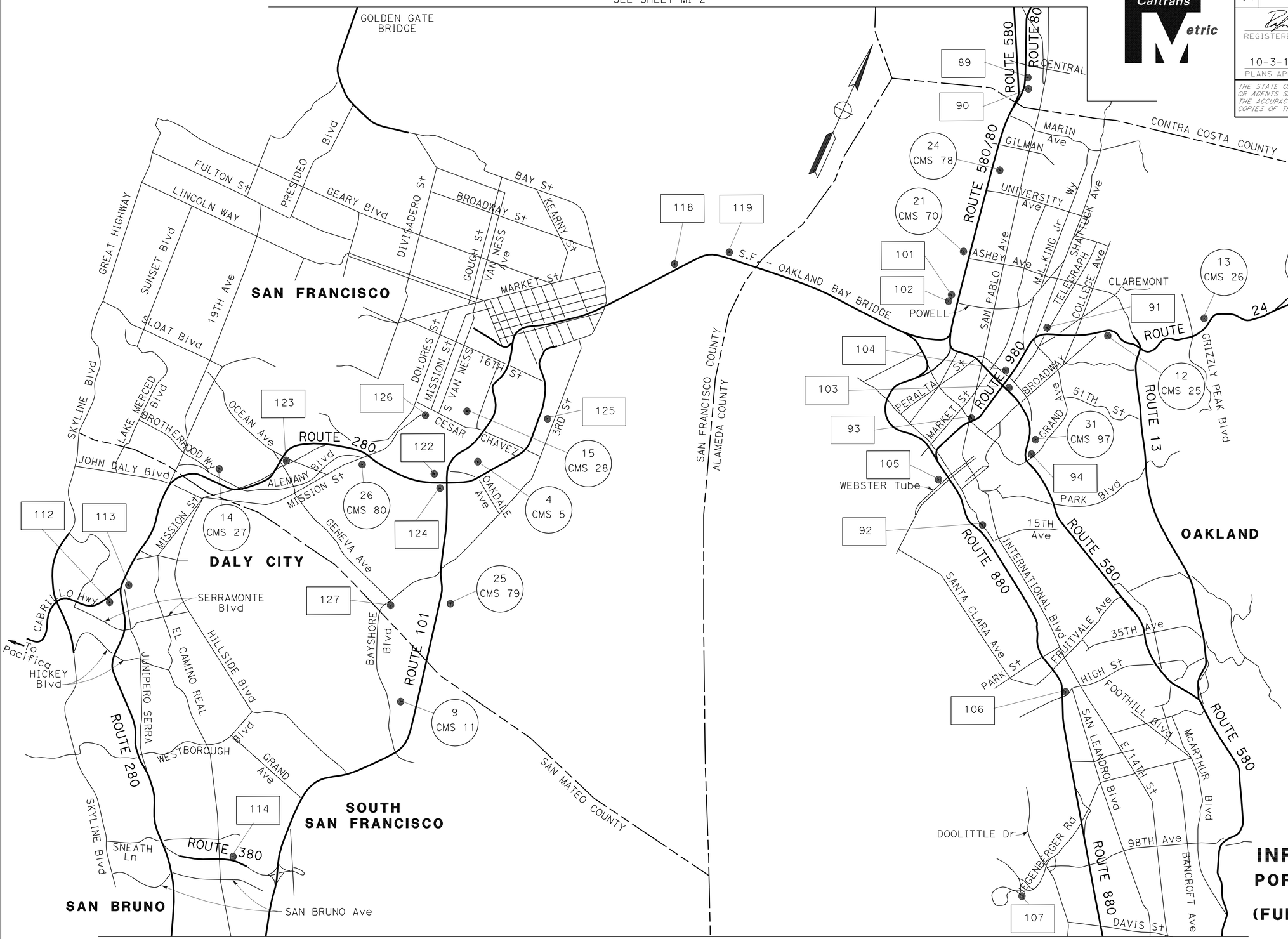

SEE SHEET MI-5

FOR NOTES, ABBREVIATIONS &/OR LEGEND, SEE SHEET MI-1

THIS PLAN ACCURATE FOR MOTORIST INFORMATION WORK ONLY

MOTORIST INFORMATION PLAN

PORTABLE CHANGEABLE MESSAGE SIGNS (FULL BRIDGE CLOSURE)

NO SCALE

MI-4

LAST REVISION 07-20-11 | DATE PLOTTED => 06-OCT-2011 | TIME PLOTTED => 06:21

STATE OF CALIFORNIA - DEPARTMENT OF TRANSPORTATION
Caltrans TOLL BRIDGE

FUNCTIONAL SUPERVISOR: JAIME E. GUTIERREZ
CALCULATED-DESIGNED BY: RAFAEL RAVELO
CHECKED BY: GABRIEL TCRUZ
REVISED BY / DATE REVISED

BORDER LAST REVISED 3/1/2007 | RELATIVE BORDER SCALE IS IN MILLIMETERS 0 20 40 60 80 | USERNAME => s121614 | DGN FILE => 40120mlb004.dgn | CU 04251 | EA 0120M1

Dist	COUNTY	ROUTE	KILOMETER POST TOTAL PROJECT	SHEET No.	TOTAL SHEETS
04	Ala	80	1.6/2.7	96	744

REGISTERED CIVIL ENGINEER — DATE: 6-2-11

PLANS APPROVAL DATE: 10-3-11

REGISTERED PROFESSIONAL ENGINEER — Rafael A. Ravelo — No. 68941 — Exp. 12-31-11 — CIVIL — STATE OF CALIFORNIA

THE STATE OF CALIFORNIA OR ITS OFFICERS OR AGENTS SHALL NOT BE RESPONSIBLE FOR THE ACCURACY OR COMPLETENESS OF SCANNED COPIES OF THIS PLAN SHEET.

Caltrans Metric

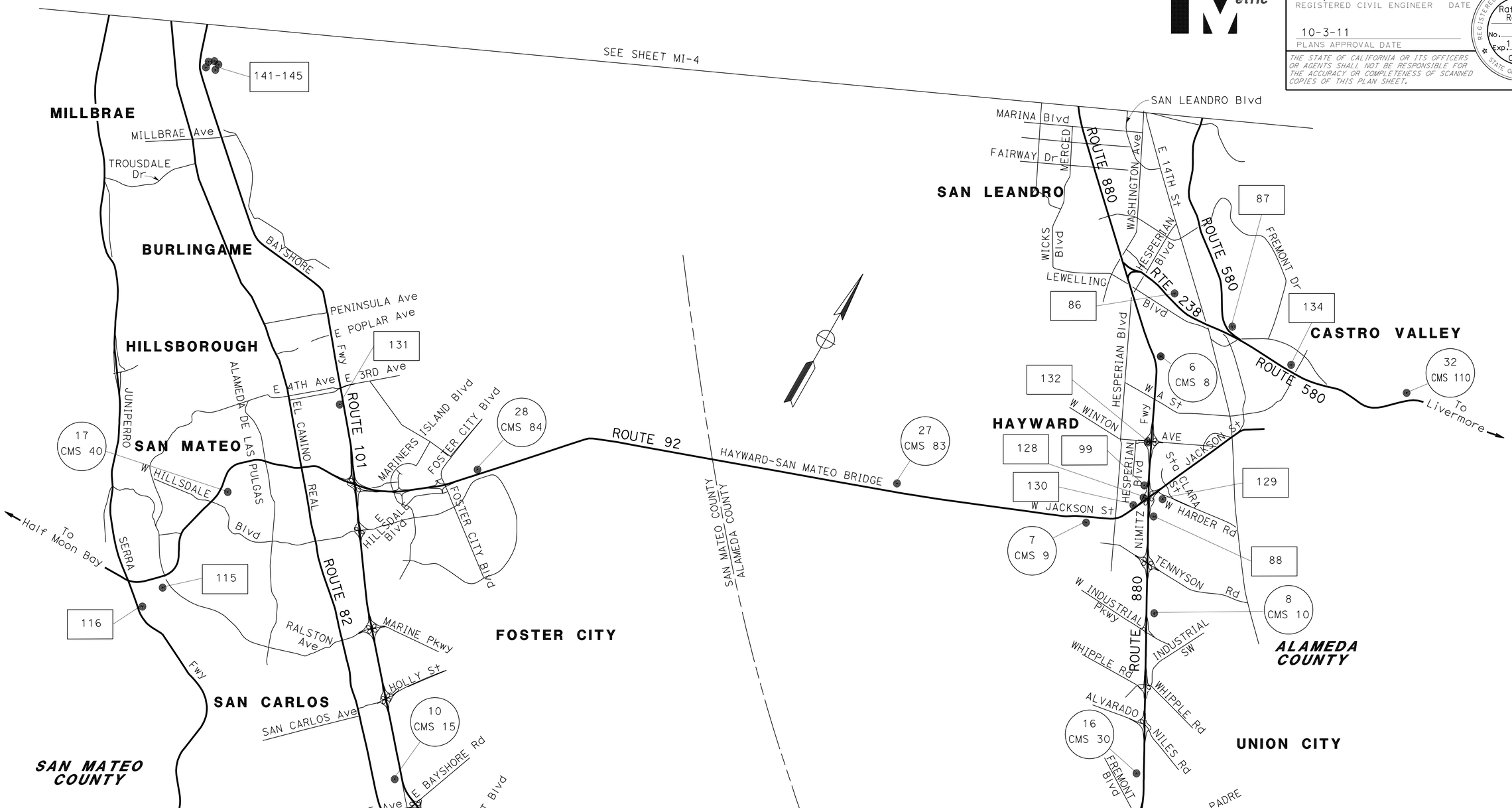

MOTORIST INFORMATION PLAN
PORTABLE CHANGEABLE MESSAGE SIGNS
(FULL BRIDGE CLOSURE)

NO SCALE

FOR NOTES, ABBREVIATIONS &/OR LEGEND, SEE SHEET MI-1

THIS PLAN ACCURATE FOR MOTORIST INFORMATION WORK ONLY

MI-5

STATE OF CALIFORNIA - DEPARTMENT OF TRANSPORTATION
Caltrans TOLL BRIDGE

FUNCTIONAL SUPERVISOR: JAIME E. GUTIERREZ
CALCULATED-DESIGNED BY: RAFAEL RAVELO
CHECKED BY: GABRIEL TCRUZ
REVISED BY / DATE REVISED

LAST REVISION 07-20-11 | DATE PLOTTED => 06-OCT-2011 | TIME PLOTTED => 06:21

BORDER LAST REVISED 3/1/2007 | RELATIVE BORDER SCALE IS IN MILLIMETERS 0 20 40 60 80 | USERNAME => s121614 | DGN FILE => 40120mlb005.dgn | CU 04251 | EA 0120M1

Dist	COUNTY	ROUTE	KILOMETER POST TOTAL PROJECT	SHEET No.	TOTAL SHEETS
04	Ala	80	1.6/2.7	97	744

REGISTERED CIVIL ENGINEER 6-2-11 DATE

10-3-11
PLANS APPROVAL DATE

REGISTERED PROFESSIONAL ENGINEER Rafael A. Ravelo No. 68941 Exp. 12-31-11 CIVIL STATE OF CALIFORNIA

THE STATE OF CALIFORNIA OR ITS OFFICERS OR AGENTS SHALL NOT BE RESPONSIBLE FOR THE ACCURACY OR COMPLETENESS OF SCANNED COPIES OF THIS PLAN SHEET.

Caltrans Metric

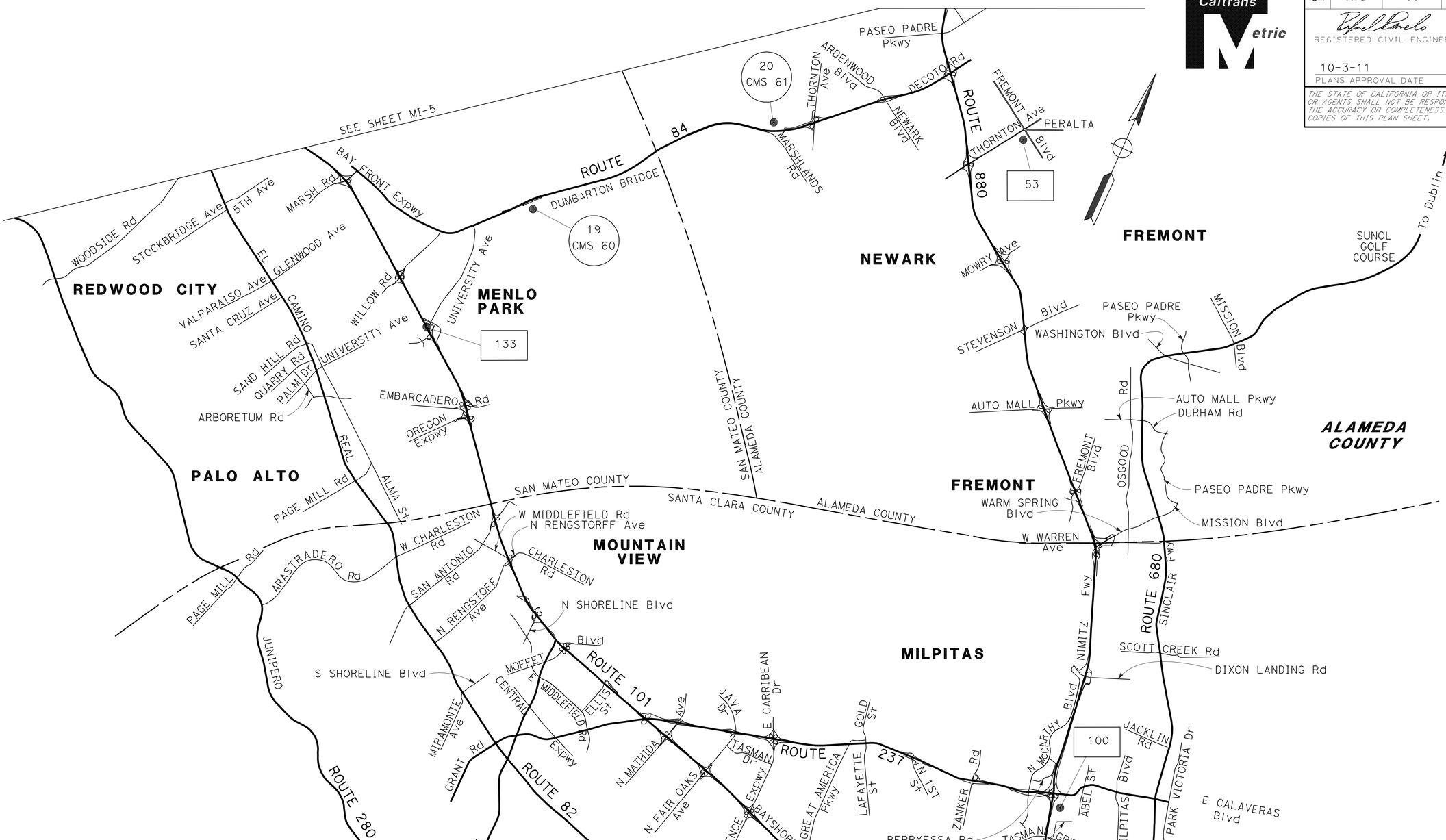

MOTORIST INFORMATION PLAN
PORTABLE CHANGEABLE MESSAGE SIGNS
(FULL BRIDGE CLOSURE)

FOR NOTES, ABBREVIATIONS &/OR LEGEND, SEE SHEET MI-1

THIS PLAN ACCURATE FOR MOTORIST INFORMATION WORK ONLY

NO SCALE

MI-6

STATE OF CALIFORNIA - DEPARTMENT OF TRANSPORTATION
Caltrans **TOLL BRIDGE**

FUNCTIONAL SUPERVISOR: JAIME E. GUTIERREZ
CALCULATED-DESIGNED BY: RAFAEL RAVELO
CHECKED BY: GABRIEL TCRUZ
REVISED BY
DATE REVISED

LAST REVISION 07-20-11
DATE PLOTTED => 06-OCT-2011
TIME PLOTTED => 06:22

Dist	COUNTY	ROUTE	KILOMETER POST TOTAL PROJECT	SHEET No.	TOTAL SHEETS
04	Ala	80	1.6/2.7	98	744

REGISTERED CIVIL ENGINEER — DATE 6-2-11

10-3-11
PLANS APPROVAL DATE

REGISTERED PROFESSIONAL ENGINEER Rafael A. Ravelo No. 68941 Exp. 12-31-11 CIVIL STATE OF CALIFORNIA

THE STATE OF CALIFORNIA OR ITS OFFICERS OR AGENTS SHALL NOT BE RESPONSIBLE FOR THE ACCURACY OR COMPLETENESS OF SCANNED COPIES OF THIS PLAN SHEET.

Caltrans Metric

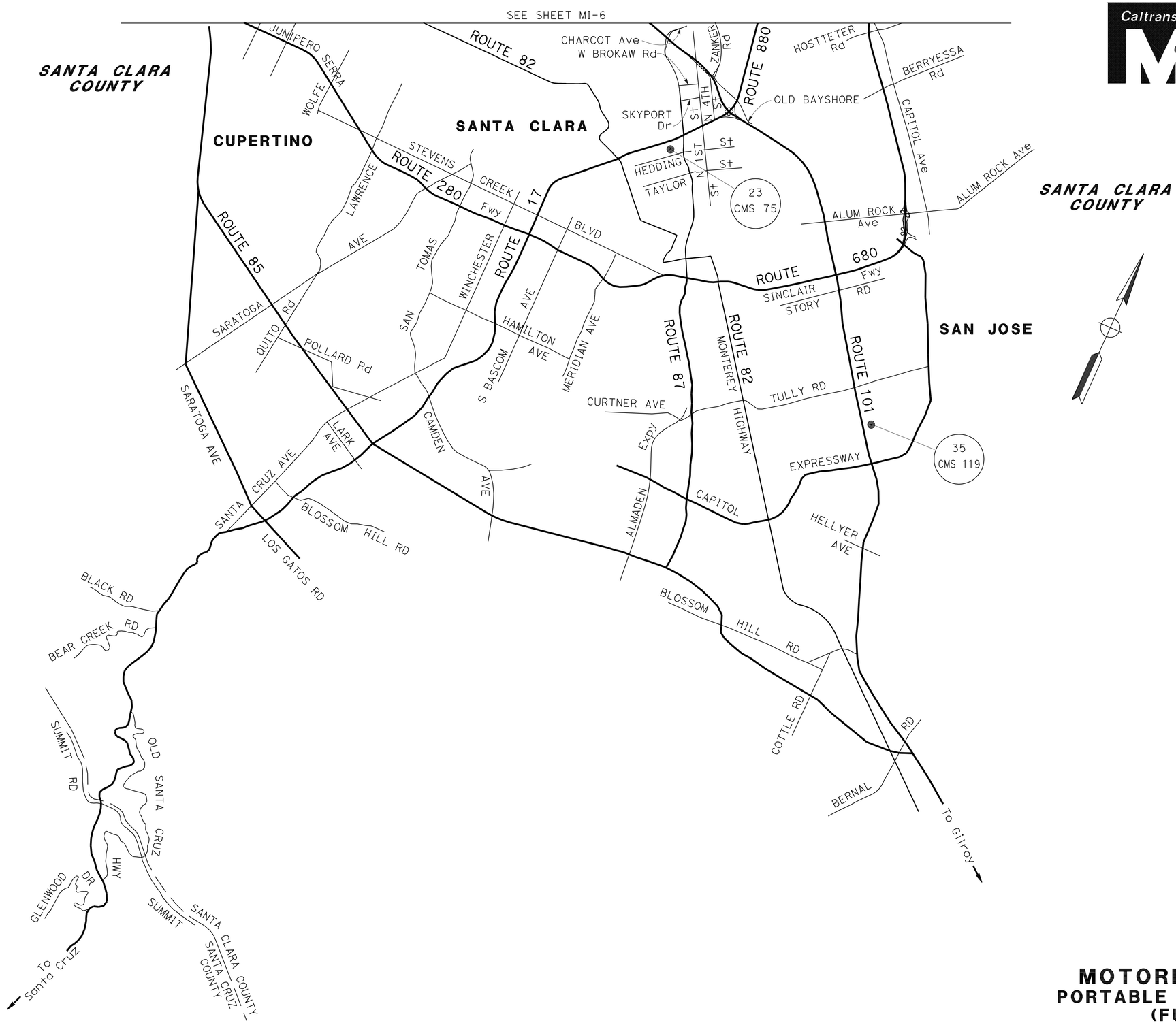

MOTORIST INFORMATION PLAN
PORTABLE CHANGEABLE MESSAGE SIGNS (FULL BRIDGE CLOSURE)

NO SCALE

FOR NOTES, ABBREVIATIONS &/OR LEGEND, SEE SHEET MI-1

THIS PLAN ACCURATE FOR MOTORIST INFORMATION WORK ONLY

MI-7

STATE OF CALIFORNIA - DEPARTMENT OF TRANSPORTATION
Caltrans **TOLL BRIDGE**

FUNCTIONAL SUPERVISOR: JAIME E. GUTIERREZ
CALCULATED-DESIGNED BY: RAFAEL RAVELO
CHECKED BY: GABRIEL TCRUZ
REVISED BY / DATE REVISED

LAST REVISION 05-18-11 | DATE PLOTTED => 06-OCT-2011 | TIME PLOTTED => 06:22

BORDER LAST REVISED 3/1/2007 | RELATIVE BORDER SCALE IS IN MILLIMETERS 0 20 40 60 80 | USERNAME => s121614 | DGN FILE => 40120mlb007.dgn | CU 04251 | EA 0120M1

Dist	COUNTY	ROUTE	KILOMETER POST TOTAL PROJECT	SHEET No.	TOTAL SHEETS
04	Ala	80	1.6/2.7	99	744

REGISTERED CIVIL ENGINEER 6-2-11 DATE

10-3-11
PLANS APPROVAL DATE

REGISTERED PROFESSIONAL ENGINEER Rafael A. Ravelo No. 68941 Exp. 12-31-11 CIVIL STATE OF CALIFORNIA

THE STATE OF CALIFORNIA OR ITS OFFICERS OR AGENTS SHALL NOT BE RESPONSIBLE FOR THE ACCURACY OR COMPLETENESS OF SCANNED COPIES OF THIS PLAN SHEET.

Caltrans Metric

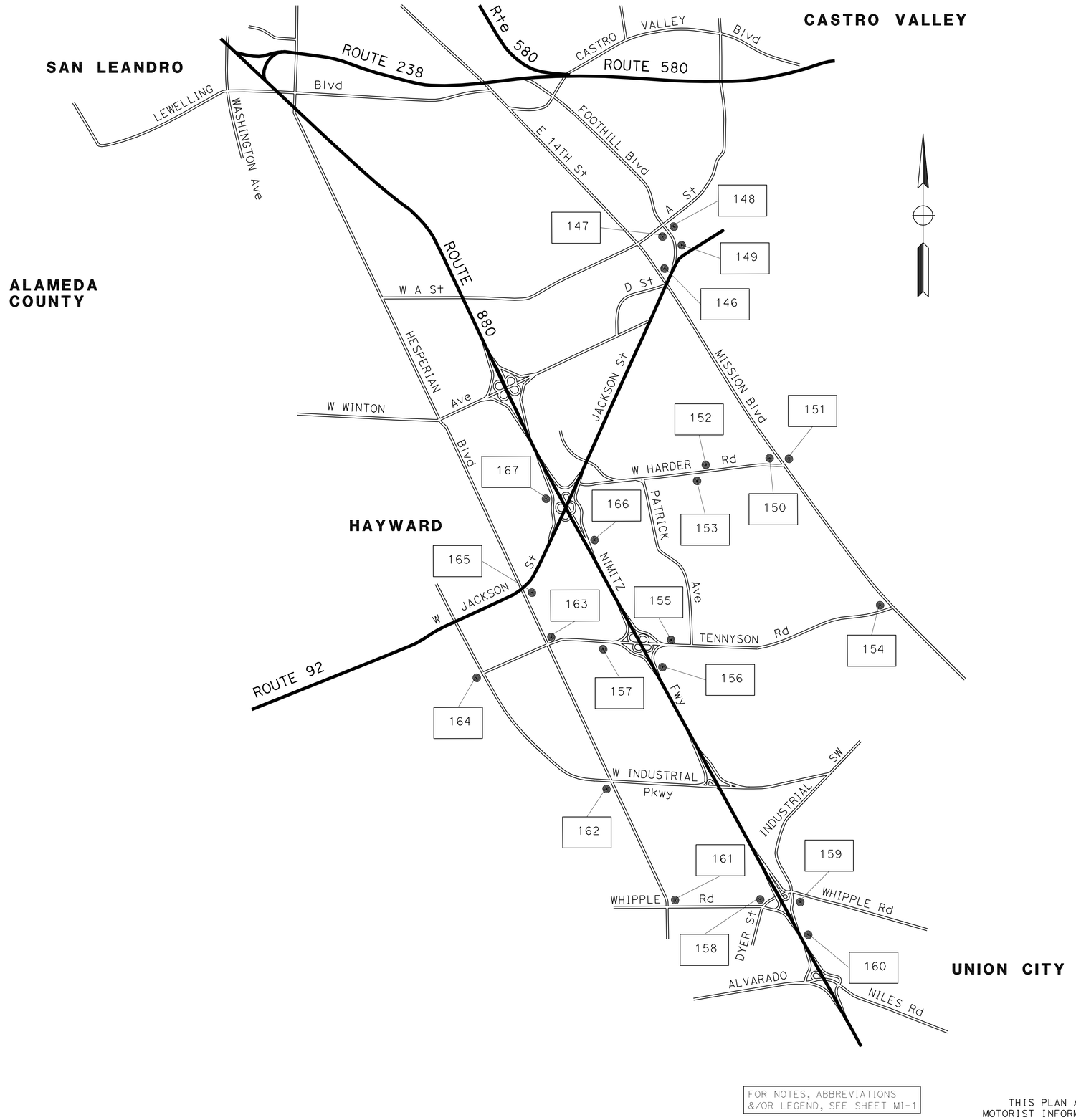

FOR NOTES, ABBREVIATIONS &/OR LEGEND, SEE SHEET MI-1

THIS PLAN ACCURATE FOR MOTORIST INFORMATION WORK ONLY

NO SCALE

MOTORIST INFORMATION PLAN
PORTABLE CHANGEABLE MESSAGE SIGNS (FULL BRIDGE CLOSURE)

MI-8

LAST REVISION 07-27-11 | DATE PLOTTED => 06-OCT-2011 | TIME PLOTTED => 06:22

STATE OF CALIFORNIA - DEPARTMENT OF TRANSPORTATION
Caltrans **TOLL BRIDGE**

FUNCTIONAL SUPERVISOR: JAIME E. GUTIERREZ
CALCULATED-DESIGNED BY: RAFAEL RAVELO
CHECKED BY: GABRIEL TCRUZ
REVISED BY | DATE REVISED

Dist	COUNTY	ROUTE	KILOMETER POST TOTAL PROJECT	SHEET No.	TOTAL SHEETS
04	Ala	80	1.6/2.7	100	744

REGISTERED CIVIL ENGINEER 6-2-11 DATE

10-3-11
PLANS APPROVAL DATE

REGISTERED PROFESSIONAL ENGINEER Rafael A. Ravelo No. 68941 Exp. 12-31-11 CIVIL STATE OF CALIFORNIA

THE STATE OF CALIFORNIA OR ITS OFFICERS OR AGENTS SHALL NOT BE RESPONSIBLE FOR THE ACCURACY OR COMPLETENESS OF SCANNED COPIES OF THIS PLAN SHEET.

Caltrans Metric

MOTORIST INFORMATION QUANTITIES [N]

No.	CMS No.	COUNTY	CITY	DIRECTION	ROUTE	POST MILE	SIGN LOCATION	CMS DISPLAY		
								3 WEEKS PRIOR TO CLOSURE	1 WEEK PRIOR TO CLOSURE	7-8 PM DAY OF CLOSURE
1	1	MRN	CORTE MADERA	NB	101	7.59	N 101 SOUTH OF SIR FRANCIS DRAKE			I-80 BAY BRIDGE CLOSED UNTIL DATE AND TIME
2	2	MRN	SAN RAFAEL	SB	101	12.64	S 101 SOUTH OF SAN PEDRO Rd UC			I-80 BAY BRIDGE CLOSED UNTIL DATE AND TIME
3	3	MRN	NOVATO	NB	101	16.86	N 101 NORTH OF PACHECO Cr OC			I-80 BAY BRIDGE CLOSED UNTIL DATE AND TIME
4	5	SF	SAN FRANCISCO	SB	280	5.04	SB 280 JNO 101	I-80 BAY BRIDGE WILL BE CLOSED LABOR DAY WEEKEND	I-80 BAY BRIDGE CLOSED DATE & TIME THRU DATE & TIME	I-80 BAY BRIDGE CLOSED UNTIL DATE AND TIME
5	6	CC	LAFAYETTE	WB	24	6.05	W 24 150 FT EAST OF HAPPY VALLEY Rd UC	I-80 BAY BRIDGE WILL BE CLOSED LABOR DAY WEEKEND	I-80 BAY BRIDGE CLOSED DATE & TIME THRU DATE & TIME	I-80 BAY BRIDGE CLOSED UNTIL DATE AND TIME
6	8	ALA	HAYWARD	NB	880	19.12	N 880 900F SOUTH OF HACIENDA Ave	I-80 BAY BRIDGE WILL BE CLOSED LABOR DAY WEEKEND	I-80 BAY BRIDGE CLOSED DATE & TIME THRU DATE & TIME	I-80 BAY BRIDGE CLOSED UNTIL DATE AND TIME
7	9	ALA	HAYWARD	EB	92	5.32	E 92 1000F NORTH OF INDUSTRIAL Pkwy	I-80 BAY BRIDGE WILL BE CLOSED LABOR DAY WEEKEND	I-80 BAY BRIDGE CLOSED DATE & TIME THRU DATE & TIME	I-80 BAY BRIDGE CLOSED UNTIL DATE AND TIME
8	10	ALA	HAYWARD	NB	880	14.75	N 880 1000F NORTH OF INDUSTRIAL Pkwy			I-80 BAY BRIDGE CLOSED UNTIL DATE AND TIME
9	11	SM	SOUTH SAN FRANCISCO	SB	101	24.77	S 101 1000F SOUTH OF LAGOON WAY		I-80 BAY BRIDGE CLOSED DATE & TIME THRU DATE & TIME	I-80 BAY BRIDGE CLOSED UNTIL DATE AND TIME
10	15	SM	SAN CARLOS	SB	101	7.65	S 101 SOUTH OFF BRITTAIN Ave OFF RAMP			I-80 BAY BRIDGE CLOSED UNTIL DATE AND TIME
11	20	SCL	MORGAN HILL	NB	101	16.61	N 101 SOUTH OF E MAIN Ave UC	I-80 BAY BRIDGE WILL BE CLOSED LABOR DAY WEEKEND	I-80 BAY BRIDGE CLOSED DATE & TIME THRU DATE & TIME	I-80 BAY BRIDGE CLOSED UNTIL DATE AND TIME
12	25	ALA	OAKLAND	EB	24	3.50	E 24 WEST OF BROADWAY OFF RAMP			I-80 BAY BRIDGE CLOSED UNTIL DATE AND TIME
13	26	CC	ORINDA	WB	24	2.28	W 24 WEST OF CAMINO PABLO Rd	I-80 BAY BRIDGE WILL BE CLOSED LABOR DAY WEEKEND	I-80 BAY BRIDGE CLOSED DATE & TIME THRU DATE & TIME	I-80 BAY BRIDGE CLOSED UNTIL DATE AND TIME
14	27	SF	SAN FRANCISCO	SB	280	0.56	S 280 NORTH OF JOHN DAILY Blvd	I-80 BAY BRIDGE WILL BE CLOSED LABOR DAY WEEKEND	I-80 BAY BRIDGE CLOSED DATE & TIME THRU DATE & TIME	I-80 BAY BRIDGE CLOSED UNTIL DATE AND TIME
15	28	SF	SAN FRANCISCO	SB	101	3.20	S 101 NORTH OF ARMY St			I-80 BAY BRIDGE CLOSED UNTIL DATE AND TIME
16	30	ALA	UNION CITY	SB	880	12.30	S 880 NORTH OF ALVARADO Blvd			I-80 BAY BRIDGE CLOSED UNTIL DATE AND TIME
17	40	SM	SAN MATEO	EB	92	9.88	E 92 3000F NORTH OF W HILLSDALE Blvd		I-80 BAY BRIDGE CLOSED DATE & TIME THRU DATE & TIME	I-80 BAY BRIDGE CLOSED UNTIL DATE AND TIME
18	51	SOL	VALLEJO	WB	80	4.20	W 80 SOUTH OF REDWOOD Pkwy		I-80 BAY BRIDGE CLOSED DATE & TIME THRU DATE & TIME	I-80 BAY BRIDGE CLOSED UNTIL DATE AND TIME
19	60	SM	MENLO PARK	NB	84	28.70	N 84 PG & E SUBSTATION	I-80 BAY BRIDGE WILL BE CLOSED LABOR DAY WEEKEND	I-80 BAY BRIDGE CLOSED DATE & TIME THRU DATE & TIME	I-80 BAY BRIDGE CLOSED UNTIL DATE AND TIME
20	61	ALA	FREMONT	NB	84	1.70	S 84 AT KGO STATION	I-80 BAY BRIDGE WILL BE CLOSED LABOR DAY WEEKEND	I-80 BAY BRIDGE CLOSED DATE & TIME THRU DATE & TIME	I-80 BAY BRIDGE CLOSED UNTIL DATE AND TIME
21	70	ALA	EMERYVILLE	WB	80	4.58	W 80 NORTH OF ASHBY Ave	I-80 BAY BRIDGE WILL BE CLOSED LABOR DAY WEEKEND	I-80 BAY BRIDGE CLOSED DATE & TIME THRU DATE & TIME	I-80 BAY BRIDGE CLOSED UNTIL DATE AND TIME
22	71	CC	DUBLIN	SB	680	1.30	S 680 NORTH OF ALCOSTA Blvd OC			I-80 BAY BRIDGE CLOSED UNTIL DATE AND TIME
23	75	SCL	SAN JOSE	NB	880	2.90	N 880 NORTH OF COLEMAN Ave OC	I-80 BAY BRIDGE WILL BE CLOSED LABOR DAY WEEKEND	I-80 BAY BRIDGE CLOSED DATE & TIME THRU DATE & TIME	I-80 BAY BRIDGE CLOSED UNTIL DATE AND TIME
24	78	ALA	BERKELEY	EB	80	6.19	E 80 2200F WEST OF GILMAN St OC	I-80 BAY BRIDGE WILL BE CLOSED LABOR DAY WEEKEND	I-80 BAY BRIDGE CLOSED DATE & TIME THRU DATE & TIME	I-80 BAY BRIDGE CLOSED UNTIL DATE AND TIME
25	79	SF	SAN FRANCISCO	NB	101	0.17	N 101 NORTH OF CANDLESTIC OFF RAMP		I-80 BAY BRIDGE CLOSED DATE & TIME THRU DATE & TIME	I-80 BAY BRIDGE CLOSED UNTIL DATE AND TIME
26	80	SF	SAN FRANCISCO	NB	280	3.12	N 280 MISSION St OC	I-80 BAY BRIDGE WILL BE CLOSED LABOR DAY WEEKEND	I-80 BAY BRIDGE CLOSED DATE & TIME THRU DATE & TIME	I-80 BAY BRIDGE CLOSED UNTIL DATE AND TIME
27	83	ALA	HAYWARD	WB	92	1.50	W 92 SAN MATEO BRIDGE PLAZA	I-80 BAY BRIDGE WILL BE CLOSED LABOR DAY WEEKEND	I-80 BAY BRIDGE CLOSED DATE & TIME THRU DATE & TIME	I-80 BAY BRIDGE CLOSED UNTIL DATE AND TIME
28	84	SM	FOSTER CITY	WB	92	14.00	W 92 EAST OF FOSTER CITY Blvd		I-80 BAY BRIDGE CLOSED DATE & TIME THRU DATE & TIME	I-80 BAY BRIDGE CLOSED UNTIL DATE AND TIME
29	90	CC	PINOLE	WB	80	7.60	W 80 EAST OF APPIAN WAY		I-80 BAY BRIDGE CLOSED DATE & TIME THRU DATE & TIME	I-80 BAY BRIDGE CLOSED UNTIL DATE AND TIME
30	93	CC	PLEASANT HILL	SB	680	17.68	S 680 SOUTH OF MONUMENT	I-80 BAY BRIDGE WILL BE CLOSED LABOR DAY WEEKEND	I-80 BAY BRIDGE CLOSED DATE & TIME THRU DATE & TIME	I-80 BAY BRIDGE CLOSED UNTIL DATE AND TIME
31	97	ALA	OAKLAND	WB	580	44.07	W 580 CHETWOOD St OC	I-80 BAY BRIDGE WILL BE CLOSED LABOR DAY WEEKEND	I-80 BAY BRIDGE CLOSED DATE & TIME THRU DATE & TIME	I-80 BAY BRIDGE CLOSED UNTIL DATE AND TIME
32	110	ALA	CASTRO VALLEY	WB	580	27.30	W 580 EAST OF CASTRO VALLEY Blvd OFF RAMP		I-80 BAY BRIDGE CLOSED DATE & TIME THRU DATE & TIME	I-80 BAY BRIDGE CLOSED UNTIL DATE AND TIME
33	111	ALA	PLEASANTON	WB	580	18.40	W 580 HACIENDA Rd OFF RAMP			I-80 BAY BRIDGE CLOSED UNTIL DATE AND TIME
34	118	SCL	SANTA CLARA	NB	101	41.10	N 101 NORTH OF LAFAYETTE St OC	I-80 BAY BRIDGE WILL BE CLOSED LABOR DAY WEEKEND	I-80 BAY BRIDGE CLOSED DATE & TIME THRU DATE & TIME	I-80 BAY BRIDGE CLOSED UNTIL DATE AND TIME
35	119	SCL	SAN JOSE	NB	101	32.40	N 101 SOUTH OF TULLY Rd OC	I-80 BAY BRIDGE WILL BE CLOSED LABOR DAY WEEKEND	I-80 BAY BRIDGE CLOSED DATE & TIME THRU DATE & TIME	I-80 BAY BRIDGE CLOSED UNTIL DATE AND TIME
36	124	SOL	SUISUN CITY	WB	80	17.10	W 80 AT OLIVER Rd	I-80 BAY BRIDGE WILL BE CLOSED LABOR DAY WEEKEND	I-80 BAY BRIDGE CLOSED DATE & TIME THRU DATE & TIME	I-80 BAY BRIDGE CLOSED UNTIL DATE AND TIME
37	126	ALA	PLEASANTON	EB	580	21.80	E 580 WEST OF FOOTHILL Blvd	I-80 BAY BRIDGE WILL BE CLOSED LABOR DAY WEEKEND	I-80 BAY BRIDGE CLOSED DATE & TIME THRU DATE & TIME	I-80 BAY BRIDGE CLOSED UNTIL DATE AND TIME
38	127	ALA	PLEASANTON	EB	580	15.90	E 580 EAST OF EL CHARRO Rd			I-80 BAY BRIDGE CLOSED UNTIL DATE AND TIME
39	128	ALA	LIVERMORE	WB	580	12.60	W 580 EAST OF PORTOLA Ave	I-80 BAY BRIDGE WILL BE CLOSED LABOR DAY WEEKEND	I-80 BAY BRIDGE CLOSED DATE & TIME THRU DATE & TIME	I-80 BAY BRIDGE CLOSED UNTIL DATE AND TIME

[N] NOT A SEPARATE PAY ITEM. FOR INFORMATION ONLY.

NOTE:

ALL CMS BELONG TO THE DEPARTMENT.

PORTABLE CHANGEABLE MESSAGE SIGN

LOCATION	EA
VARIOUS (FULL BRIDGE CLOSURE)	200
TOTAL	200

MOTORIST INFORMATION QUANTITIES

MIQ-1

REVISED BY | DATE REVISED
RAFAEL RAVELO | GABRIEL TCRUZ
CALCULATED-DESIGNED BY | CHECKED BY
FUNCTIONAL SUPERVISOR
JAIME E. GUTIERREZ

STATE OF CALIFORNIA - DEPARTMENT OF TRANSPORTATION
Caltrans TOLL BRIDGE

LAST REVISION 05-20-11 | DATE PLOTTED => 06-OCT-2011 | TIME PLOTTED => 08:22