Dist	COUNTY	ROUTE	POST MILES TOTAL PROJECT	SHEET No.	TOTAL SHEETS
04	CC,Sol	680,780	24.2/24.8,0.3/0.7, 0.6/1.2	1	46

INDEX OF PLANS

SHEET No.	DESCRIPTION
1	TITLE AND LOCATION MAP
2	KEY MAP
3	CONSTRUCTION AREA SIGNS
4	PLANT LIST
5-6	ROADSIDE CLEARING
7-15	PLANTING PLANS
16	IRRIGATION REMOVAL PLAN
17-25	IRRIGATION PLANS
26	LANDSCAPE DETAILS
27-30	IRRIGATION QUANTITIES
31-35	ELECTRICAL SERVICE (IRRIGATION)
36-46	REVISED STANDARD PLANS

THE STANDARD PLANS LIST APPLICABLE TO THIS CONTRACT IS INCLUDED IN THE NOTICE TO BIDDERS AND SPECIAL PROVISIONS BOOK.

STATE OF CALIFORNIA

DEPARTMENT OF TRANSPORTATION

PROJECT PLANS FOR CONSTRUCTION ON

STATE HIGHWAY

IN CONTRA COSTA AND SOLANO COUNTIES IN MARTINEZ AND BENICIA ON ROUTE 680 FROM MOCOCO ROAD OVERHEAD TO 0.3 MILE SOUTH OF BAYSHORE ROAD UNDERCROSSING AND ON ROUTE 780 FROM 680/780 SEPARATION TO HOSPITAL ROAD UNDERCROSSING

TO BE SUPPLEMENTED BY STANDARD PLANS DATED MAY 2006

LOCATION MAP

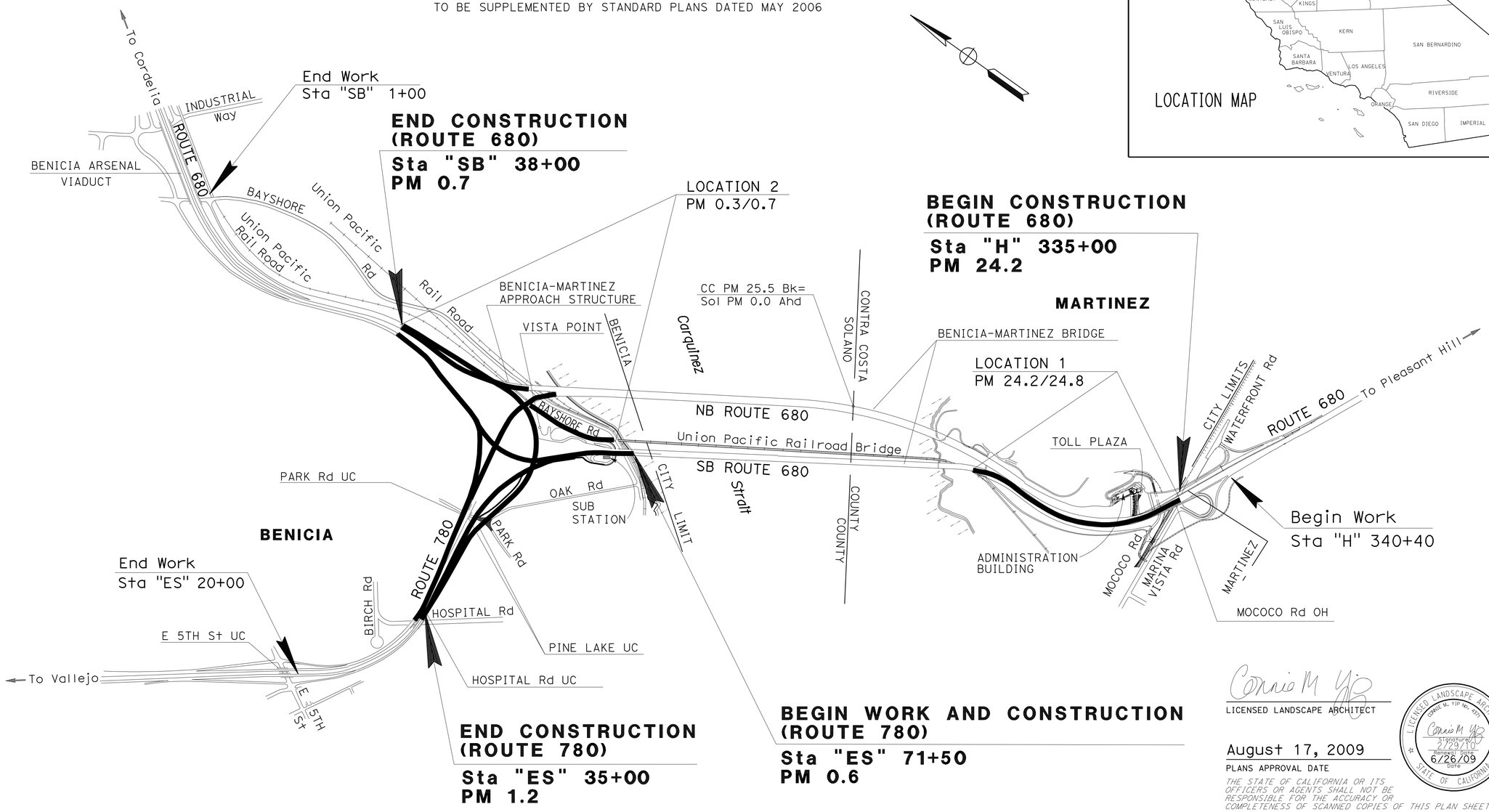

NO SCALE

THE CONTRACTOR SHALL POSSESS THE CLASS (OR CLASSES) OF LICENSE AS SPECIFIED IN THE "NOTICE TO BIDDERS."

Connie M. Yip

LICENSED LANDSCAPE ARCHITECT

August 17, 2009

PLANS APPROVAL DATE

THE STATE OF CALIFORNIA OR ITS OFFICERS OR AGENTS SHALL NOT BE RESPONSIBLE FOR THE ACCURACY OR COMPLETENESS OF SCANNED COPIES OF THIS PLAN SHEET.

LICENSED LANDSCAPE ARCHITECT — CONNIE M. YIP NO. 4371 — STATE OF CALIFORNIA — Signature 2/23/10 — Renewal Date 6/26/09 — Date

PROJECT MANAGER: MO PAZOOKI

SENIOR LANDSCAPE ARCHITECT: JEANNE GORHAM

LAST REVISION 05-06-09 — DATE PLOTTED => 24-AUG-2009 — TIME PLOTTED => 13:03

CONTRACT No. 04-0060C4

Dist	COUNTY	ROUTE	POST MILES TOTAL PROJECT	SHEET No.	TOTAL SHEETS
04	CC,Sol	680,780	24.2/24.8,0.3/0.7, 0.6/1.2	2	46

LICENSED LANDSCAPE ARCHITECT

8-17-09
PLANS APPROVAL DATE

LICENSED LANDSCAPE ARCHITECT
CONNIE M. YIP No. 4571
Signature 02-29-10
Renewal Date
06-26-09
Date
STATE OF CALIFORNIA

THE STATE OF CALIFORNIA OR ITS OFFICERS OR AGENTS SHALL NOT BE RESPONSIBLE FOR THE ACCURACY OR COMPLETENESS OF SCANNED COPIES OF THIS PLAN SHEET.

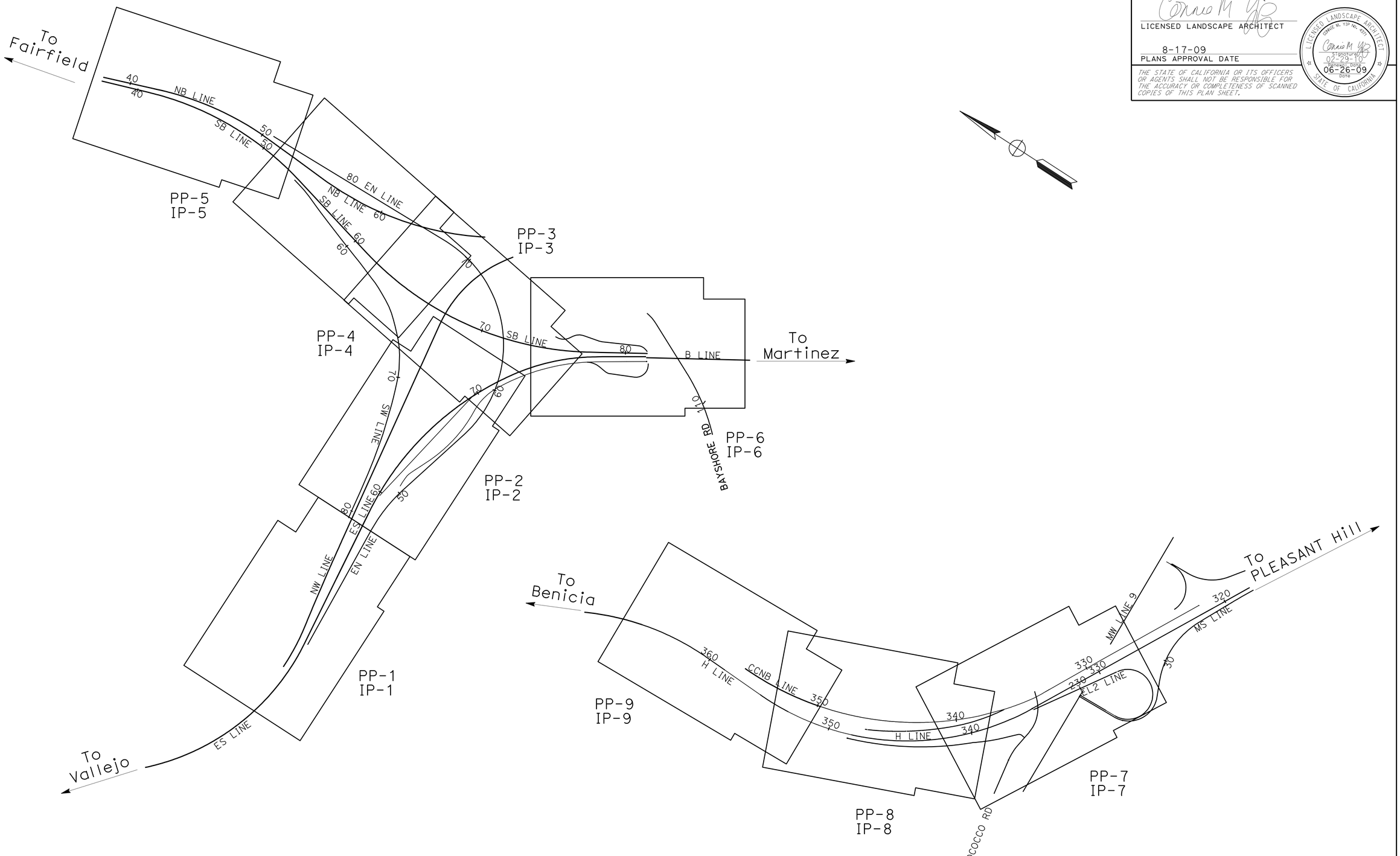

KEY MAP

NO SCALE

K-1

STATE OF CALIFORNIA - DEPARTMENT OF TRANSPORTATION
Caltrans® LANDSCAPE ARCHITECTURE

SENIOR LANDSCAPE ARCHITECT: JEANNE GORHAM

CALCULATED-DESIGNED BY: CONNIE YIP
CHECKED BY: JEANNE GORHAM
REVISED BY
DATE REVISED

LAST REVISION 00-00-00
DATE PLOTTED => 24-AUG-2009
TIME PLOTTED => 13:04

Dist	COUNTY	LOCATION CODE	POST MILES TOTAL PROJECT	SHEET No.	TOTAL SHEETS
04	CC,Sol	680,780	24.2/24.8,0.3/0.7, 0.6/1.2	3	46

REGISTERED CIVIL ENGINEER 4-20-09 DATE

8-17-09
PLANS APPROVAL DATE

REGISTERED PROFESSIONAL ENGINEER Florante P. Perez No. 41030 Exp. 3-31-10 CIVIL STATE OF CALIFORNIA

THE STATE OF CALIFORNIA OR ITS OFFICERS OR AGENTS SHALL NOT BE RESPONSIBLE FOR THE ACCURACY OR COMPLETENESS OF SCANNED COPIES OF THIS PLAN SHEET.

STATIONARY MOUNTED CONSTRUCTION AREA SIGNS

SIGN	CODE	PANEL SIZE INCH x INCH	MESSAGE	No. OF POST AND SIZE	NO.OF SIGNS	REMARKS
A	W20-1	60 x 60	ROAD WORK AHEAD	2-4'' x 6''	3	-
B	G20-2	36 x 18	END ROAD WORK	1-4'' x 4''	9	-
C	W20-1	48 X 48	ROAD WORK AHEAD	1-4'' x 6''	7	-

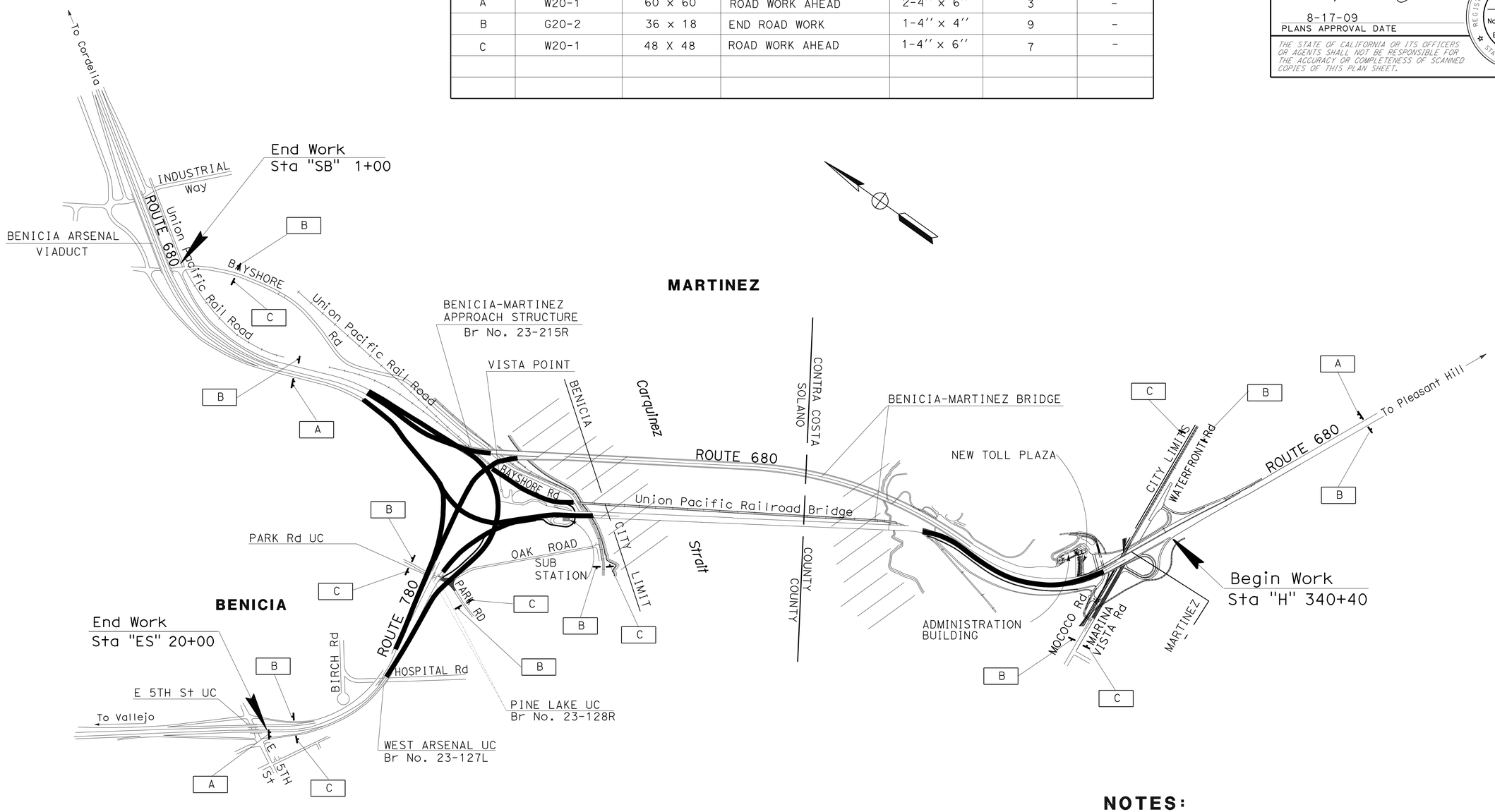

NOTES:

1. LOCATION OF CONSTRUCTION AREA SIGNS SHOWN ARE APPROXIMATE, EXACT LOCATION TO BE DETERMINED BY THE ENGINEER.

LEGEND:

CONSTRUCTION AREA SIGN LETTER

CONSTRUCTION AREA SIGNS

NO SCALE

CS-1

STATE OF CALIFORNIA - DEPARTMENT OF TRANSPORTATION
Caltrans
TRAFFIC

FUNCTIONAL SUPERVISOR: LOURDES DAVID
CALCULATED-DESIGNED BY: Ramon N.Cruz
CHECKED BY: Flor Perez
REVISED BY
DATE REVISED

LAST REVISION 02-19-09
DATE PLOTTED => 24-AUG-2009
TIME PLOTTED => 13:04

Dist	COUNTY	ROUTE	POST MILES TOTAL PROJECT	SHEET No.	TOTAL SHEETS
04	CC,Sol	680,780	24.2/24.8,0.3/0.7, 0.6/1.2	4	46

LICENSED LANDSCAPE ARCHITECT

8-17-09
PLANS APPROVAL DATE

LICENSED LANDSCAPE ARCHITECT — CONNIE M. YIP No. 4071 — Signature — 02-29-10 Renewal Date — 06-26-09 Date — STATE OF CALIFORNIA

THE STATE OF CALIFORNIA OR ITS OFFICERS OR AGENTS SHALL NOT BE RESPONSIBLE FOR THE ACCURACY OR COMPLETENESS OF SCANNED COPIES OF THIS PLAN SHEET.

ABBREVIATIONS

AMEND — amendment
B & B — balled and burlapped
Dia — diameter
EA — each
LB — pound
Oz — ounce
Ft — foot/feet
SQFT — square feet
SQYD — square yard
CF — cubic feet
Max — maximum
Min — minimum
NCN — no common name
No. — number
Pkt — packet
PLT ESTB — plant establishment
Pvmt — pavement
R/W — right of way
SF — state furnished
TRVD — traveled

PLANT LIST AND PLANTING SPECIFICATIONS

PLANT GROUP	PLANT No.	SYMBOL	BOTANICAL NAME	COMMON NAME	SIZE	QUANTITY EACH	HOLE SIZE (INCH) Dia	HOLE SIZE (INCH) DEPTH	BASIN TYPE	IRON SULFATE	SOIL AMEND ①	COMMERCIAL FERTILIZER ① PLANTING	COMMERCIAL FERTILIZER ① PLT ESTB	BASIN MULCH	STAKING	PLANTING LIMITS MINIMUM DISTANCE (Ft) FROM TRVD WAY	PVMT	FENCE	WALL	PAVED DITCH	EARTH DITCH	ON CENTER (Ft)	REMARKS
A	1		ACACIA REDOLENS 'LOW BOY'	PROSTRATE ACACIA	No. 1	1709	24"	24"	I	-	2 CF	2 oz	2 oz	1.8 CF	-	-	10	10	10	10	11	10	GROUND COVER
	2		HARDENBERGIA VIOLACEA 'HAPPY WANDERER'	LILAC VINE	No. 1	19	24"	24"	III	-	2 CF	2 oz	2 oz	1.8 CF	⑥	-	-	-	-	6	8	8	VINE
	3		QUERCUS AGRIFOLIA	COAST LIVE OAK	No. 1	391	24"	24"	II	-	2 CF	2 oz	3 oz	1.8 CF	⑥	30	-	15	15	15	22	④	⑧ TREE
	4		QUERCUS LOBATA	VALLEY OAK	No. 1	433	24"	24"	II	-	2 CF	2 oz	3 oz	1.8 CF	⑥	30	-	15	15	15	22	④	⑧ TREE
B	5		CALOCEDRUS DECURRENS	INCENSE CEDAR	No. 5	355	30"	30"	II	-	3 CF	3 oz	3 oz	2 CF	⑥	30	-	20	20	20	22	④	⑧ TREE
	6		CERCIS OCCIDENTALIS	WESTERN REDBUD	No. 5	126	30"	30"	II	-	3 CF	3 oz	3 oz	2 CF	-	-	-	10	15	15	15	10	⑧ SHRUB
	7		COTINUS COGGYRIA 'ROYAL PURPLE'	PURPLE SMOKE TREE	No. 5	13	30"	30"	II	-	3 CF	3 oz	3 oz	2 CF	-	-	-	10	15	15	17	6	⑧ SHRUB
	8		PISTACHIA CHINENSIS	CHINESE PISTACHE	No. 5	58	30"	30"	II	-	3 CF	3 oz	3 oz	2 CF	⑥	30	-	20	20	20	22	④	⑧ TREE
	9		PLUMBAGO AURICULATA 'ROYAL CAPE'	ROYAL CAPE PLUMBAGO	No. 5	93	30"	30"	II	-	3 CF	3 oz	3 oz	2 CF	-	-	-	15	15	15	17	6	⑧ SHRUB
	10		RHUS INTEGRIFOLIA	LEMONADE BERRY	No. 5	141	30"	30"	II	-	3 CF	3 oz	3 oz	2 CF	-	-	-	10	10	10	12	6	⑧ SHRUB
	11		SCHINUS MOLLE	CALIFORNIA PEPPER	No. 5	38	30"	30"	II	-	3 CF	3 oz	3 oz	2 CF	⑥	30	-	20	25	20	22	④	⑧ TREE
K	12		GINKGO BILOBA 'FAIRMOUNT'	MAIDENHAIR TREE	24" BOX	1	48"	48"	II	-	4 CF	6 oz	6 oz	3 CF	⑥	-	④	-	-	-	-	④	⑧ TREE

APPLICABLE WHEN CIRCLED:

1 - Quantities shown are "per plant" unless shown as SQFT or SQYD application rates.
2 - Sufficient to receive root ball.
3 - Does not apply to mulch areas.
4 - As shown on plans.
5 - Unless otherwise shown on plans.
6 - See detail.
7 - See Special Provisions.
8 - Install foliage protector

Maintenance Vehicle Pullout (MVP) (Existing)

WILDFLOWER SEEDING AREA

MULCH AREA

NOTE:

Underlined portions of botanical name indicate abbreviations used on Planting Plans.

PLANT LIST

PL-1

REVISED BY | DATE REVISED
CONNIE YIP | JEANNE GORHAM
CALCULATED-DESIGNED BY | CHECKED BY
SENIOR LANDSCAPE ARCHITECT | JEANNE GORHAM
STATE OF CALIFORNIA - DEPARTMENT OF TRANSPORTATION
Caltrans LANDSCAPE ARCHITECTURE

LAST REVISION 00-00-00 | DATE PLOTTED => 24-AUG-2009 | TIME PLOTTED => 13:04

Dist	COUNTY	ROUTE	POST MILES TOTAL PROJECT	SHEET No.	TOTAL SHEETS
04	CC,Sol	680,780	24.2/24.8,0.3/0.7, 0.6/1.2	5	46

LICENSED LANDSCAPE ARCHITECT

8-17-09
PLANS APPROVAL DATE

LICENSED LANDSCAPE ARCHITECT
CONNIE M. YIP No. 4011
Signature
02-29-10
Renewal Date
00-00-00
Date
STATE OF CALIFORNIA

THE STATE OF CALIFORNIA OR ITS OFFICERS OR AGENTS SHALL NOT BE RESPONSIBLE FOR THE ACCURACY OR COMPLETENESS OF SCANNED COPIES OF THIS PLAN SHEET.

NOTE:

FOR COMPLETE RIGHT OF WAY AND ACCURATE ACCESS DATA, SEE RIGHT OF WAY RECORD MAPS AT DISTRICT OFFICE.

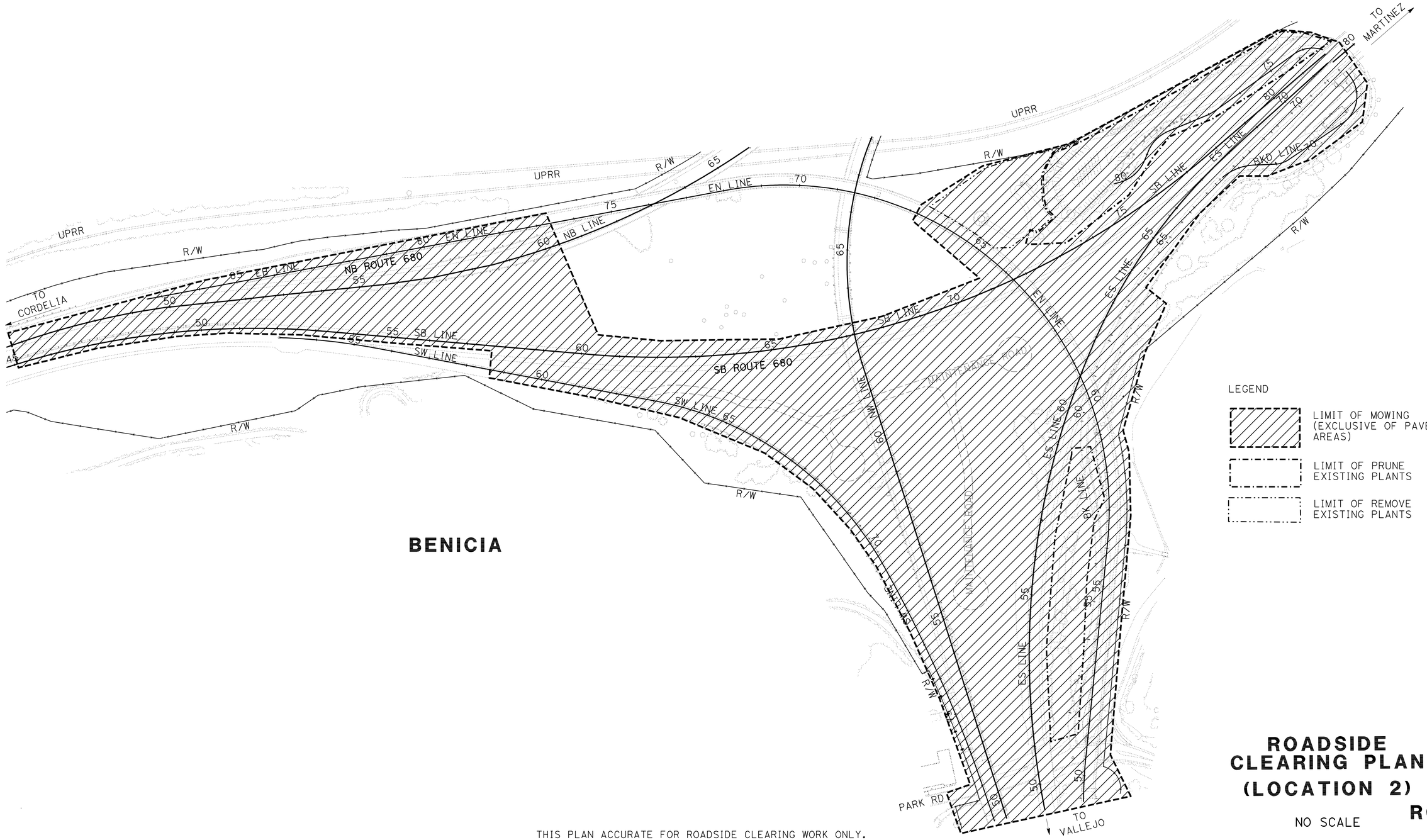

LEGEND

- LIMIT OF MOWING (EXCLUSIVE OF PAVED AREAS)
- LIMIT OF PRUNE EXISTING PLANTS
- LIMIT OF REMOVE EXISTING PLANTS

THIS PLAN ACCURATE FOR ROADSIDE CLEARING WORK ONLY.

ROADSIDE CLEARING PLAN (LOCATION 2)

NO SCALE

RC-1

STATE OF CALIFORNIA - DEPARTMENT OF TRANSPORTATION
Caltrans® LANDSCAPE ARCHITECTURE

SENIOR LANDSCAPE ARCHITECT: JEANNE GORHAM

CALCULATED-DESIGNED BY: CONNIE YIP
CHECKED BY: JEANNE GORHAM

REVISED BY
DATE REVISED

LAST REVISION 00-00-00
DATE PLOTTED => 24-AUG-2009
TIME PLOTTED => 13:04

Dist	COUNTY	ROUTE	POST MILES TOTAL PROJECT	SHEET No.	TOTAL SHEETS
04	CC,Sol	680,780	24.2/24.8,0.3/0.7, 0.6/1.2	6	46

LICENSED LANDSCAPE ARCHITECT

8-17-09
PLANS APPROVAL DATE

LICENSED LANDSCAPE ARCHITECT
CONNIE M. YIP No. 4371
Signature
02-29-10
Renewal Date
06-26-09
Date
STATE OF CALIFORNIA

THE STATE OF CALIFORNIA OR ITS OFFICERS OR AGENTS SHALL NOT BE RESPONSIBLE FOR THE ACCURACY OR COMPLETENESS OF SCANNED COPIES OF THIS PLAN SHEET.

NOTE: FOR COMPLETE RIGHT OF WAY AND ACCURATE ACCESS DATA, SEE RIGHT OF WAY RECORD MAPS AT DISTRICT OFFICE.

MARTINEZ

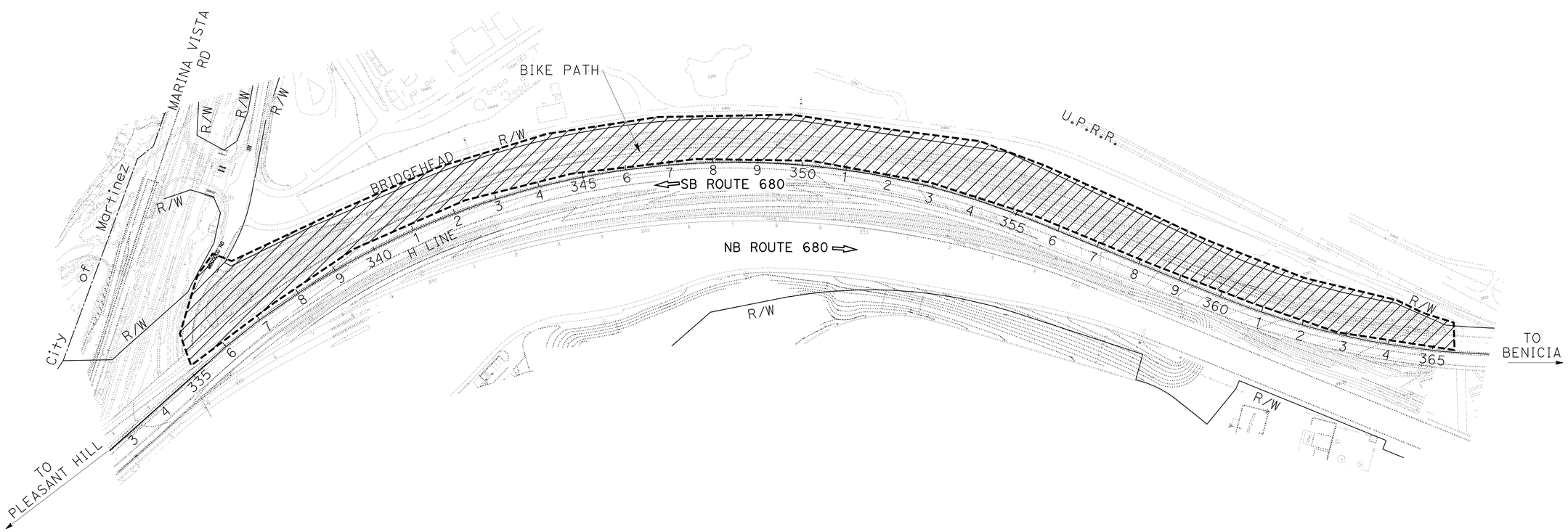

ROADSIDE CLEARING PLAN (LOCATION 1)

NO SCALE **RC-2**

THIS PLAN ACCURATE FOR ROADSIDE CLEARING WORK ONLY.

STATE OF CALIFORNIA - DEPARTMENT OF TRANSPORTATION
Caltrans® LANDSCAPE ARCHITECTURE

SENIOR LANDSCAPE ARCHITECT: JEANNE GORHAM
CALCULATED-DESIGNED BY: CONNIE YIP
CHECKED BY: JEANNE GORHAM
REVISED BY
DATE REVISED

LAST REVISION 00-00-00
DATE PLOTTED => 24-AUG-2009
TIME PLOTTED => 13:04

Dist	COUNTY	ROUTE	POST MILES TOTAL PROJECT	SHEET No.	TOTAL SHEETS
04	CC,Sol	680,780	24.2/24.8,0.3/0.7, 0.6/1.2	7	46

LICENSED LANDSCAPE ARCHITECT

8-17-09
PLANS APPROVAL DATE

LICENSED LANDSCAPE ARCHITECT
CONNIE M. YIP No. 5011
Signature
02-29-10
Renewal Date
06-26-09
Date
STATE OF CALIFORNIA

THE STATE OF CALIFORNIA OR ITS OFFICERS OR AGENTS SHALL NOT BE RESPONSIBLE FOR THE ACCURACY OR COMPLETENESS OF SCANNED COPIES OF THIS PLAN SHEET.

NOTE:

FOR COMPLETE RIGHT OF WAY AND ACCURATE ACCESS DATA, SEE RIGHT OF WAY RECORD MAPS AT DISTRICT OFFICE.

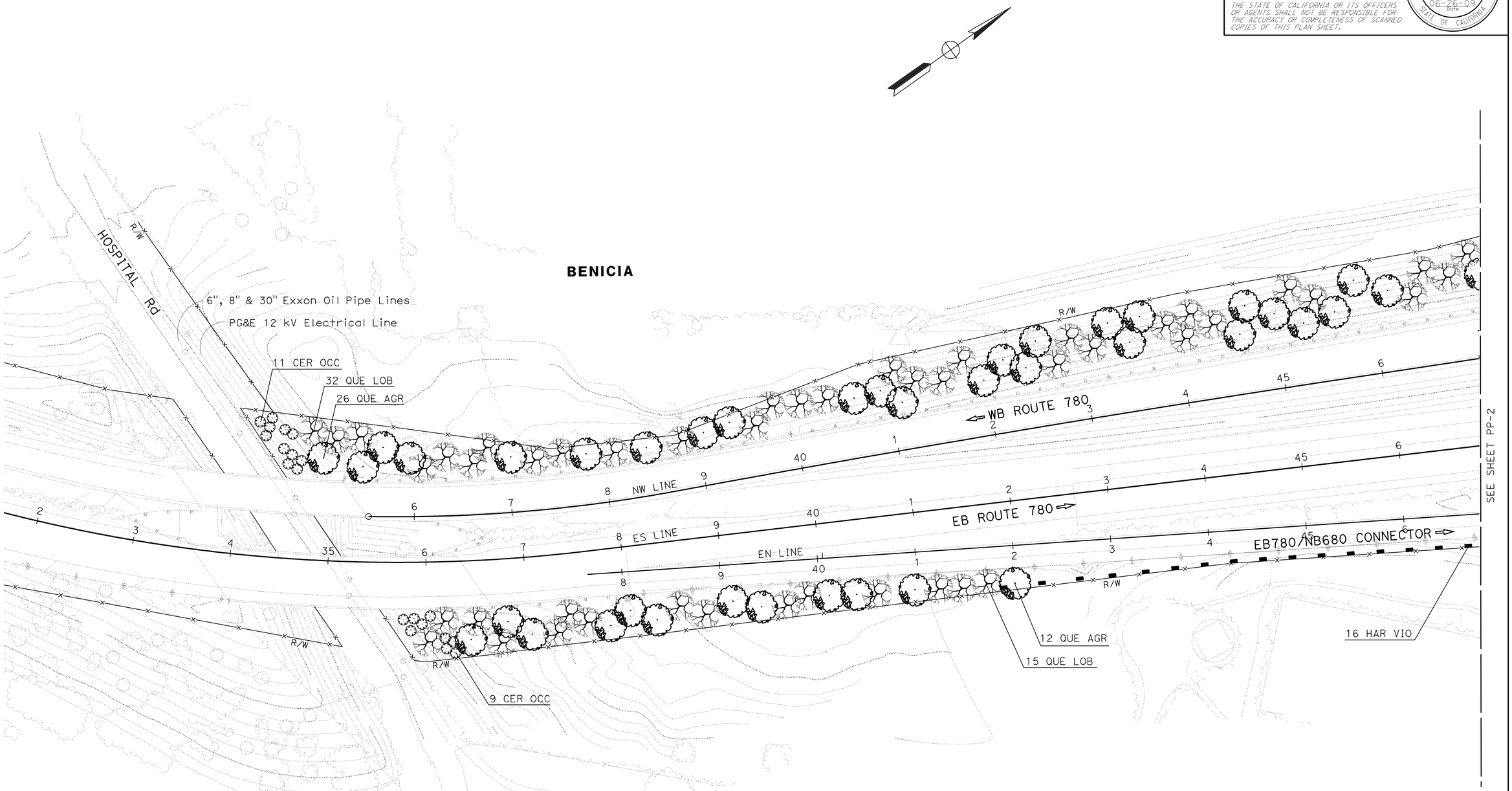

PLANTING PLAN

SCALE: 1"=50'

PP-1

THIS PLAN ACCURATE FOR PLANTING WORK ONLY.

STATE OF CALIFORNIA - DEPARTMENT OF TRANSPORTATION
Caltrans® LANDSCAPE ARCHITECTURE

SENIOR LANDSCAPE ARCHITECT: JEANNE GORHAM

CALCULATED-DESIGNED BY: CONNIE YIP
CHECKED BY: JEANNE GORHAM

REVISED BY
DATE REVISED

LAST REVISION 00-00-00
DATE PLOTTED => 24-AUG-2009
TIME PLOTTED => 13:04

Dist	COUNTY	ROUTE	POST MILES TOTAL PROJECT	SHEET No.	TOTAL SHEETS
04	CC,Sol	680,780	24.2/24.8,0.3/0.7, 0.6/1.2	8	46

LICENSED LANDSCAPE ARCHITECT

8-17-09
PLANS APPROVAL DATE

THE STATE OF CALIFORNIA OR ITS OFFICERS OR AGENTS SHALL NOT BE RESPONSIBLE FOR THE ACCURACY OR COMPLETENESS OF SCANNED COPIES OF THIS PLAN SHEET.

LICENSED LANDSCAPE ARCHITECT
CONNIE M. YIP No. 4071
Signature
02-29-10
Renewal Date
06-26-09
Date
STATE OF CALIFORNIA

NOTE:

FOR COMPLETE RIGHT OF WAY AND ACCURATE ACCESS DATA, SEE RIGHT OF WAY RECORD MAPS AT DISTRICT OFFICE.

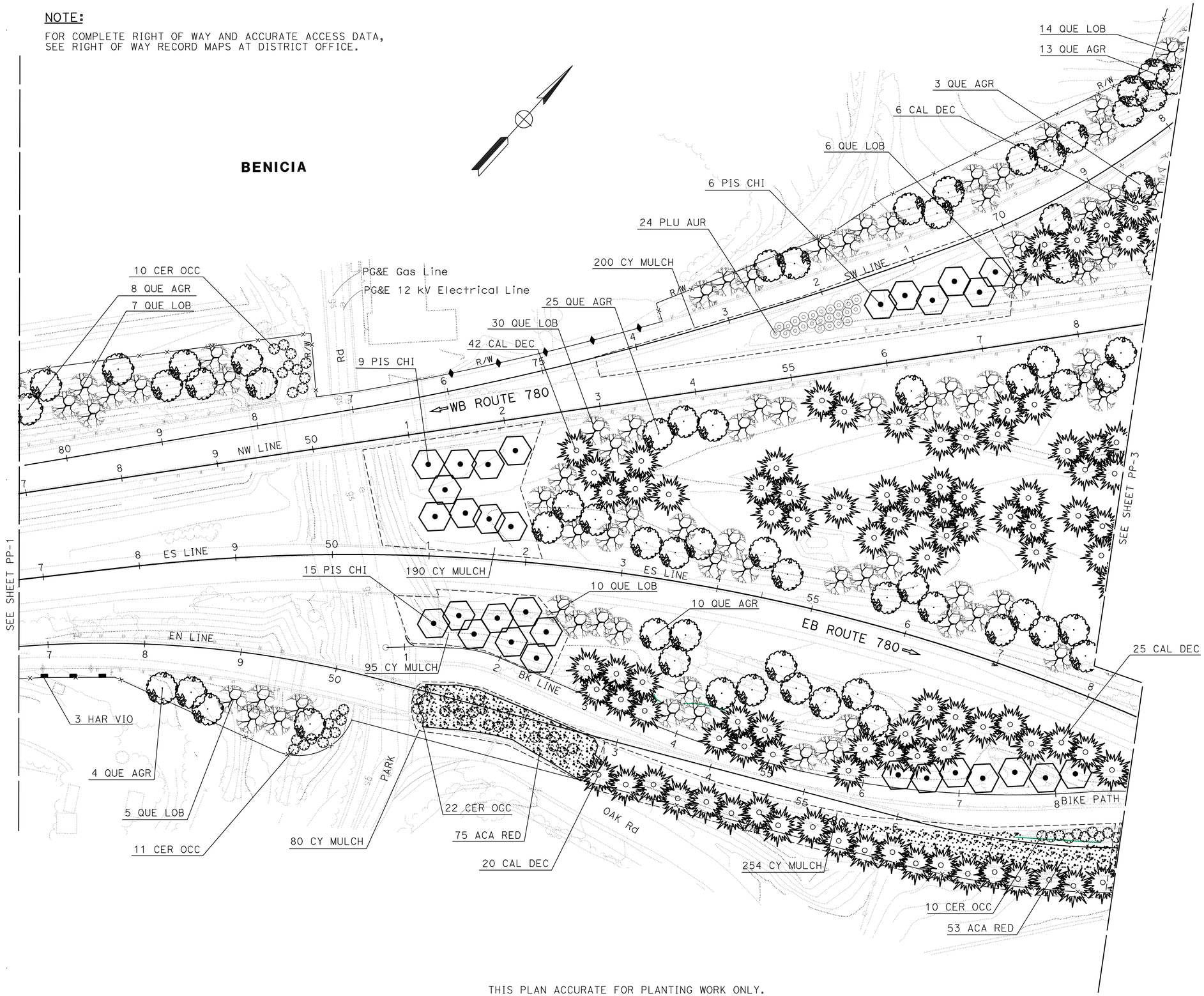

THIS PLAN ACCURATE FOR PLANTING WORK ONLY.

PLANTING PLAN

SCALE: 1"=50'

PP-2

STATE OF CALIFORNIA - DEPARTMENT OF TRANSPORTATION
Caltrans® LANDSCAPE ARCHITECTURE

SENIOR LANDSCAPE ARCHITECT: JEANNE GORHAM

CALCULATED-DESIGNED BY: CONNIE YIP
CHECKED BY: JEANNE GORHAM

REVISED BY
DATE REVISED

LAST REVISION 00-00-00
DATE PLOTTED => 24-AUG-2009
TIME PLOTTED => 13:05

Dist	COUNTY	ROUTE	POST MILES TOTAL PROJECT	SHEET No.	TOTAL SHEETS
04	CC,Sol	680,780	24.2/24.8,0.3/0.7, 0.6/1.2	9	46

LICENSED LANDSCAPE ARCHITECT

8-17-09
PLANS APPROVAL DATE

LICENSED LANDSCAPE ARCHITECT
CONNIE M. YIP No. 4071
Signature
02-29-10
Renewal Date
06-26-09
Date
STATE OF CALIFORNIA

THE STATE OF CALIFORNIA OR ITS OFFICERS OR AGENTS SHALL NOT BE RESPONSIBLE FOR THE ACCURACY OR COMPLETENESS OF SCANNED COPIES OF THIS PLAN SHEET.

NOTE:

FOR COMPLETE RIGHT OF WAY AND ACCURATE ACCESS DATA, SEE RIGHT OF WAY RECORD MAPS AT DISTRICT OFFICE.

THIS PLAN ACCURATE FOR PLANTING WORK ONLY.

PLANTING PLAN

SCALE: 1"=50'

PP-3

REVISED BY	
DATE REVISED	
CONNIE YIP	CALCULATED-DESIGNED BY
JEANNE GORHAM	CHECKED BY
SENIOR LANDSCAPE ARCHITECT	
JEANNE GORHAM	

STATE OF CALIFORNIA - DEPARTMENT OF TRANSPORTATION
Caltrans® LANDSCAPE ARCHITECTURE

LAST REVISION 00-00-00
DATE PLOTTED => 24-AUG-2009
TIME PLOTTED => 13:25

Dist	COUNTY	ROUTE	POST MILES TOTAL PROJECT	SHEET No.	TOTAL SHEETS
04	CC,Sol	680,780	24.2/24.8,0.3/0.7, 0.6/1.2	10	46

LICENSED LANDSCAPE ARCHITECT

8-17-09
PLANS APPROVAL DATE

LICENSED LANDSCAPE ARCHITECT
CONNIE M. YIP No. 4071
Signature
02-29-10
Renewal Date
06-26-09
Date
STATE OF CALIFORNIA

THE STATE OF CALIFORNIA OR ITS OFFICERS OR AGENTS SHALL NOT BE RESPONSIBLE FOR THE ACCURACY OR COMPLETENESS OF SCANNED COPIES OF THIS PLAN SHEET.

NOTE:

FOR COMPLETE RIGHT OF WAY AND ACCURATE ACCESS DATA, SEE RIGHT OF WAY RECORD MAPS AT DISTRICT OFFICE.

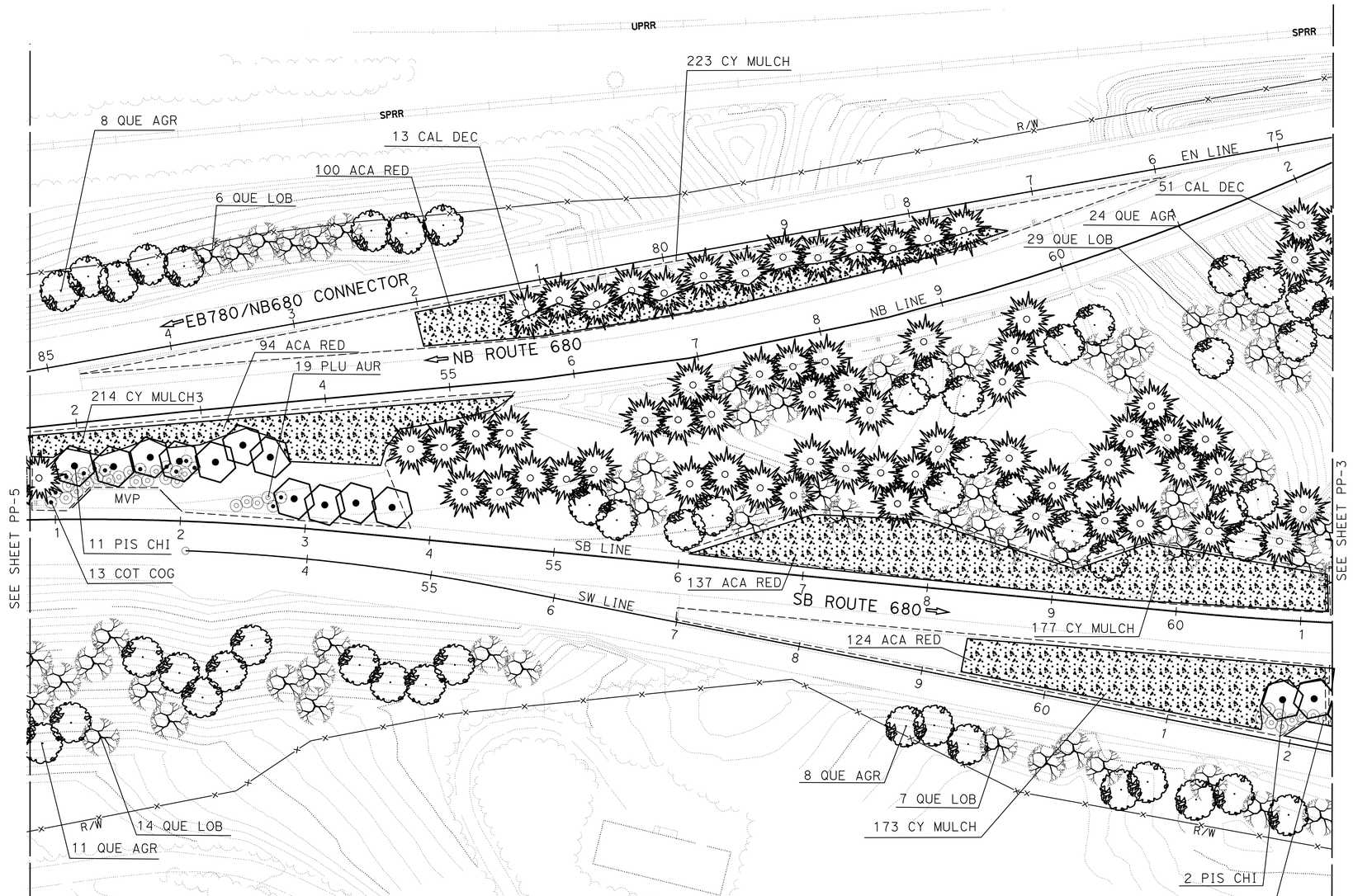

THIS PLAN ACCURATE FOR PLANTING WORK ONLY.

PLANTING PLAN

SCALE: 1"=50'

PP-4

STATE OF CALIFORNIA - DEPARTMENT OF TRANSPORTATION
Caltrans® LANDSCAPE ARCHITECTURE

SENIOR LANDSCAPE ARCHITECT: JEANNE GORHAM

CALCULATED-DESIGNED BY: CONNIE YIP
CHECKED BY: JEANNE GORHAM

REVISED BY
DATE REVISED

LAST REVISION 00-00-00
DATE PLOTTED => 24-AUG-2009
TIME PLOTTED => 13:06

Dist	COUNTY	ROUTE	POST MILES TOTAL PROJECT	SHEET No.	TOTAL SHEETS
04	CC,Sol	680,780	24.2/24.8,0.3/0.7, 0.6/1.2	11	46

LICENSED LANDSCAPE ARCHITECT

8-17-09
PLANS APPROVAL DATE

LICENSED LANDSCAPE ARCHITECT
CONNIE M. YIP No. 4071
Signature
02-29-10
Renewal Date
06-26-09
Date
STATE OF CALIFORNIA

THE STATE OF CALIFORNIA OR ITS OFFICERS OR AGENTS SHALL NOT BE RESPONSIBLE FOR THE ACCURACY OR COMPLETENESS OF SCANNED COPIES OF THIS PLAN SHEET.

NOTE:

FOR COMPLETE RIGHT OF WAY AND ACCURATE ACCESS DATA, SEE RIGHT OF WAY RECORD MAPS AT DISTRICT OFFICE.

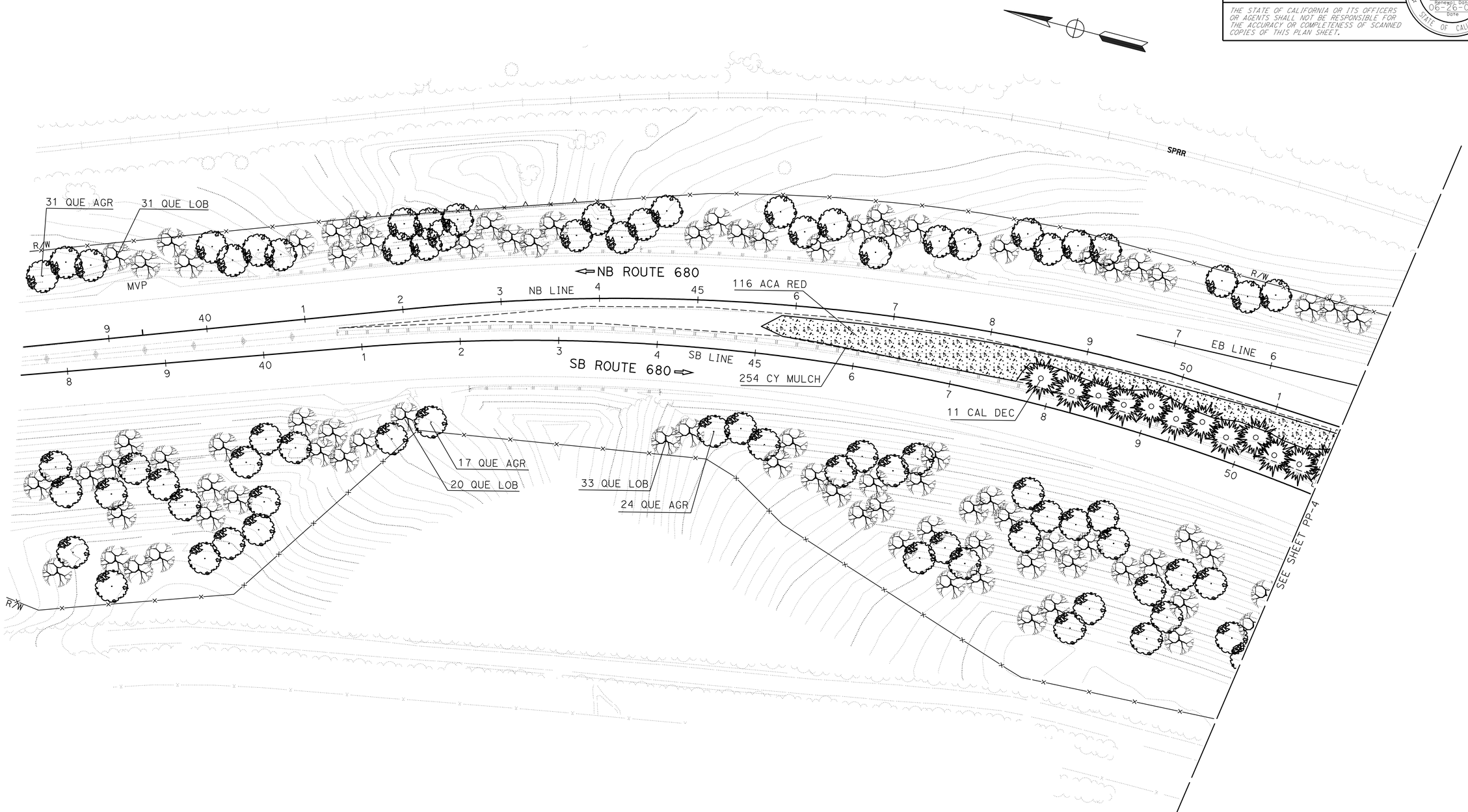

PLANTING PLAN

SCALE: 1"=50'

PP-5

THIS PLAN ACCURATE FOR PLANTING WORK ONLY.

STATE OF CALIFORNIA - DEPARTMENT OF TRANSPORTATION
Caltrans LANDSCAPE ARCHITECTURE

SENIOR LANDSCAPE ARCHITECT: JEANNE GORHAM

CALCULATED-DESIGNED BY: CONNIE YIP
CHECKED BY: JEANNE GORHAM

REVISED BY
DATE REVISED

LAST REVISION 00-00-00
DATE PLOTTED => 24-AUG-2009
TIME PLOTTED => 13:06

Dist	COUNTY	ROUTE	POST MILES TOTAL PROJECT	SHEET No.	TOTAL SHEETS
04	CC,Sol	680,780	24.2/24.8,0.3/0.7, 0.6/1.2	12	46

LICENSED LANDSCAPE ARCHITECT

8-17-09
PLANS APPROVAL DATE

LICENSED LANDSCAPE ARCHITECT
CONNIE M. YIP No. 4011
Signature
02-29-10
Renewal Date
06-26-09
Date
STATE OF CALIFORNIA

THE STATE OF CALIFORNIA OR ITS OFFICERS OR AGENTS SHALL NOT BE RESPONSIBLE FOR THE ACCURACY OR COMPLETENESS OF SCANNED COPIES OF THIS PLAN SHEET.

NOTE:

FOR COMPLETE RIGHT OF WAY AND ACCURATE ACCESS DATA, SEE RIGHT OF WAY RECORD MAPS AT DISTRICT OFFICE.

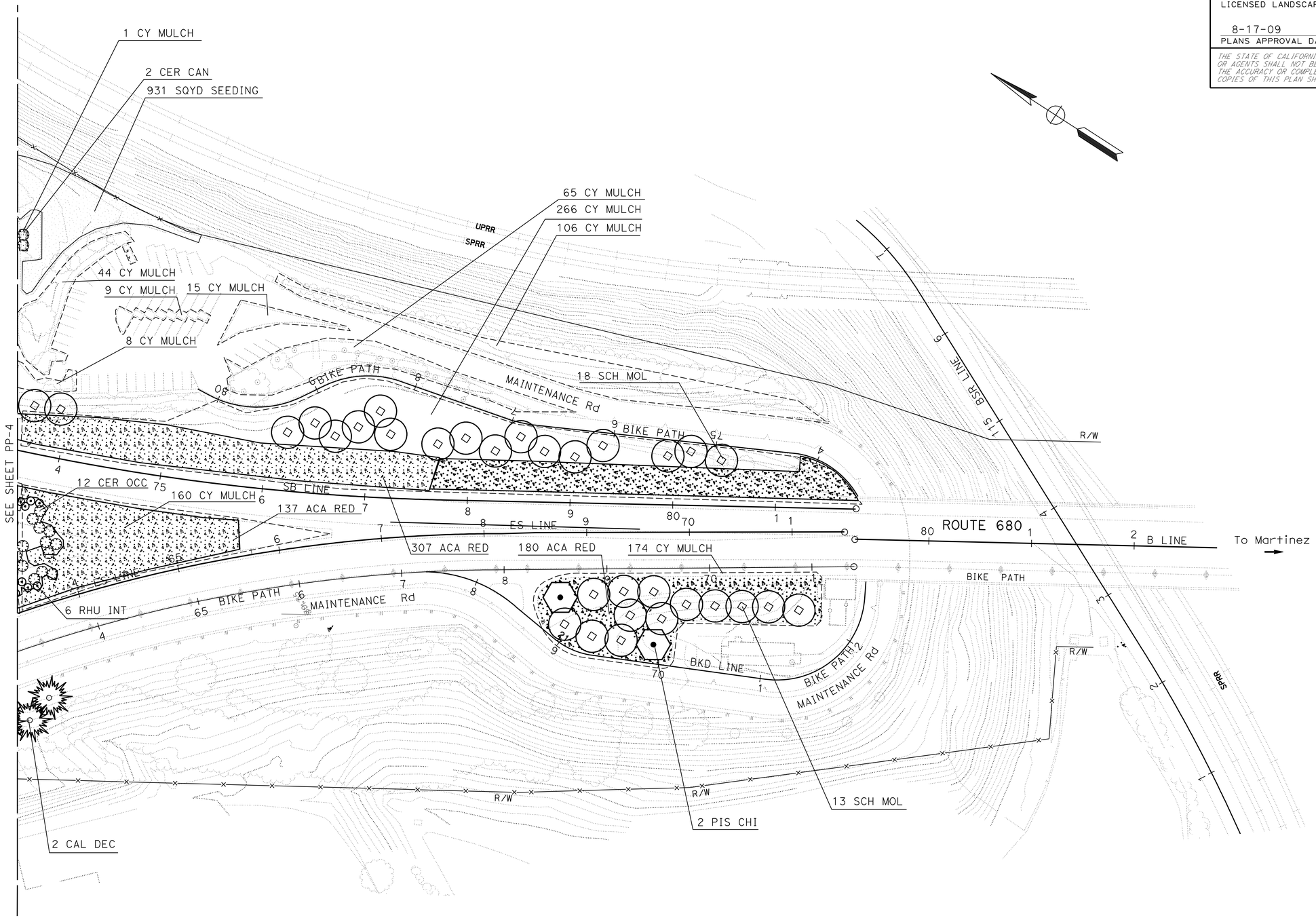

PLANTING PLAN

SCALE: 1"=50'

PP-6

THIS PLAN ACCURATE FOR PLANTING WORK ONLY.

STATE OF CALIFORNIA - DEPARTMENT OF TRANSPORTATION
LANDSCAPE ARCHITECTURE

SENIOR LANDSCAPE ARCHITECT: JEANNE GORHAM

CALCULATED-DESIGNED BY: CONNIE YIP
CHECKED BY: JEANNE GORHAM

REVISED BY
DATE REVISED

LAST REVISION 00-00-00
DATE PLOTTED => 24-AUG-2009
TIME PLOTTED => 13:26

Dist	COUNTY	ROUTE	POST MILES TOTAL PROJECT	SHEET No.	TOTAL SHEETS
04	CC,Sol	680,780	24.2/24.8,0.3/0.7, 0.6/1.2	13	46

LICENSED LANDSCAPE ARCHITECT

8-17-09
PLANS APPROVAL DATE

LICENSED LANDSCAPE ARCHITECT
CONNIE M. YIP No. 4371
Signature
02-29-10
Renewal Date
06-26-09
Date
STATE OF CALIFORNIA

THE STATE OF CALIFORNIA OR ITS OFFICERS OR AGENTS SHALL NOT BE RESPONSIBLE FOR THE ACCURACY OR COMPLETENESS OF SCANNED COPIES OF THIS PLAN SHEET.

NOTE:

FOR COMPLETE RIGHT OF WAY AND ACCURATE ACCESS DATA, SEE RIGHT OF WAY RECORD MAPS AT DISTRICT OFFICE.

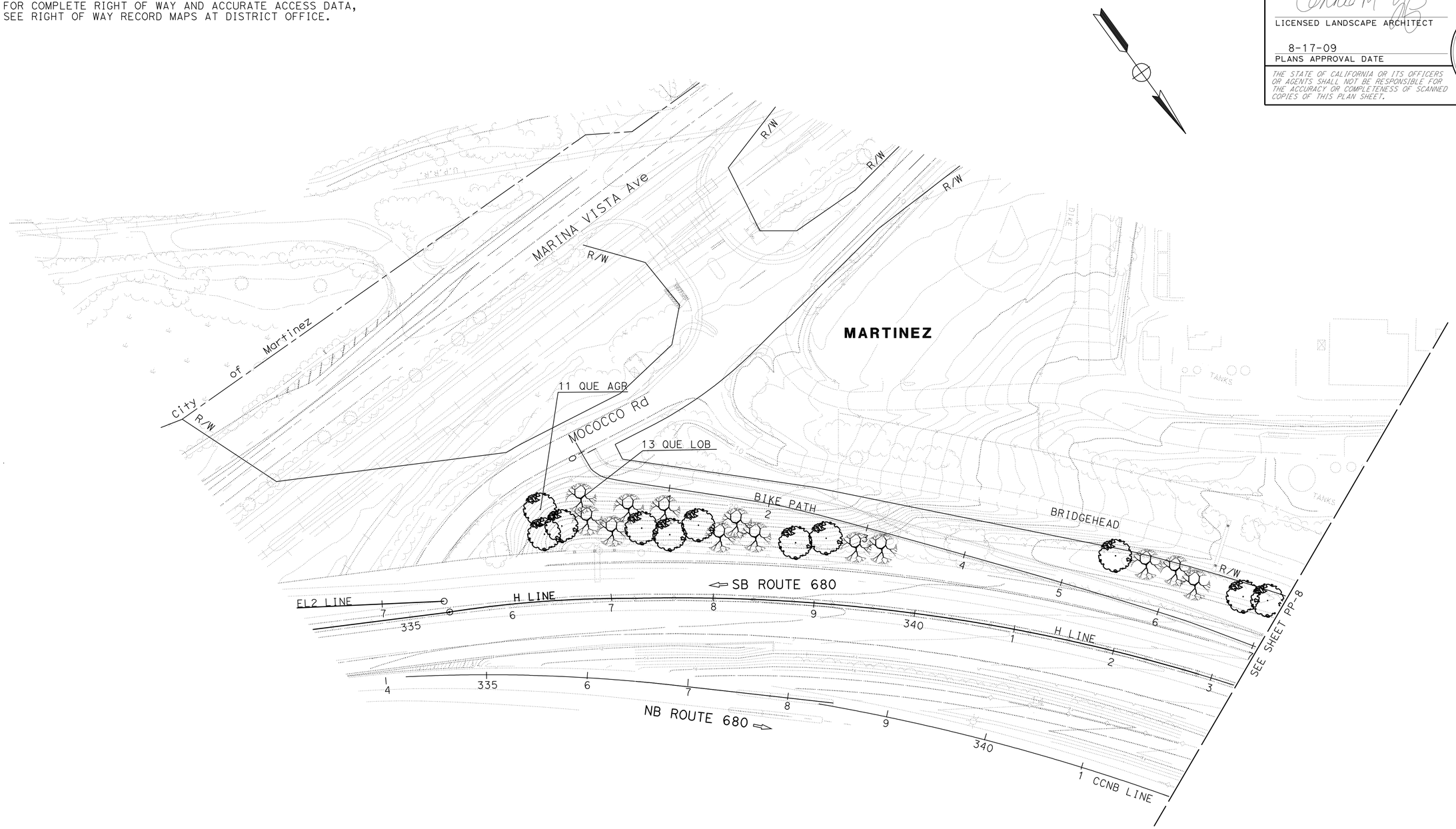

THIS PLAN ACCURATE FOR PLANTING WORK ONLY.

PLANTING PLAN

SCALE: 1"=50'

PP-7

STATE OF CALIFORNIA - DEPARTMENT OF TRANSPORTATION
Caltrans®
LANDSCAPE ARCHITECTURE

SENIOR LANDSCAPE ARCHITECT: JEANNE GORHAM

CALCULATED-DESIGNED BY: OWEN WILLIAMS
CHECKED BY: JEANNE GORHAM

REVISED BY: OLW
DATE REVISED:

LAST REVISION 00-00-00
DATE PLOTTED => 24-AUG-2009
TIME PLOTTED => 13:07

Dist	COUNTY	ROUTE	POST MILES TOTAL PROJECT	SHEET No.	TOTAL SHEETS
04	CC,Sol	680,780	24.2/24.8,0.3/0.7, 0.6/1.2	14	46

LICENSED LANDSCAPE ARCHITECT

8-17-09
PLANS APPROVAL DATE

LICENSED LANDSCAPE ARCHITECT
CONNIE M. YIP No. 4577
Signature 02-29-10
Renewal Date 06-26-09
Date
STATE OF CALIFORNIA

THE STATE OF CALIFORNIA OR ITS OFFICERS OR AGENTS SHALL NOT BE RESPONSIBLE FOR THE ACCURACY OR COMPLETENESS OF SCANNED COPIES OF THIS PLAN SHEET.

NOTE:

FOR COMPLETE RIGHT OF WAY AND ACCURATE ACCESS DATA, SEE RIGHT OF WAY RECORD MAPS AT DISTRICT OFFICE.

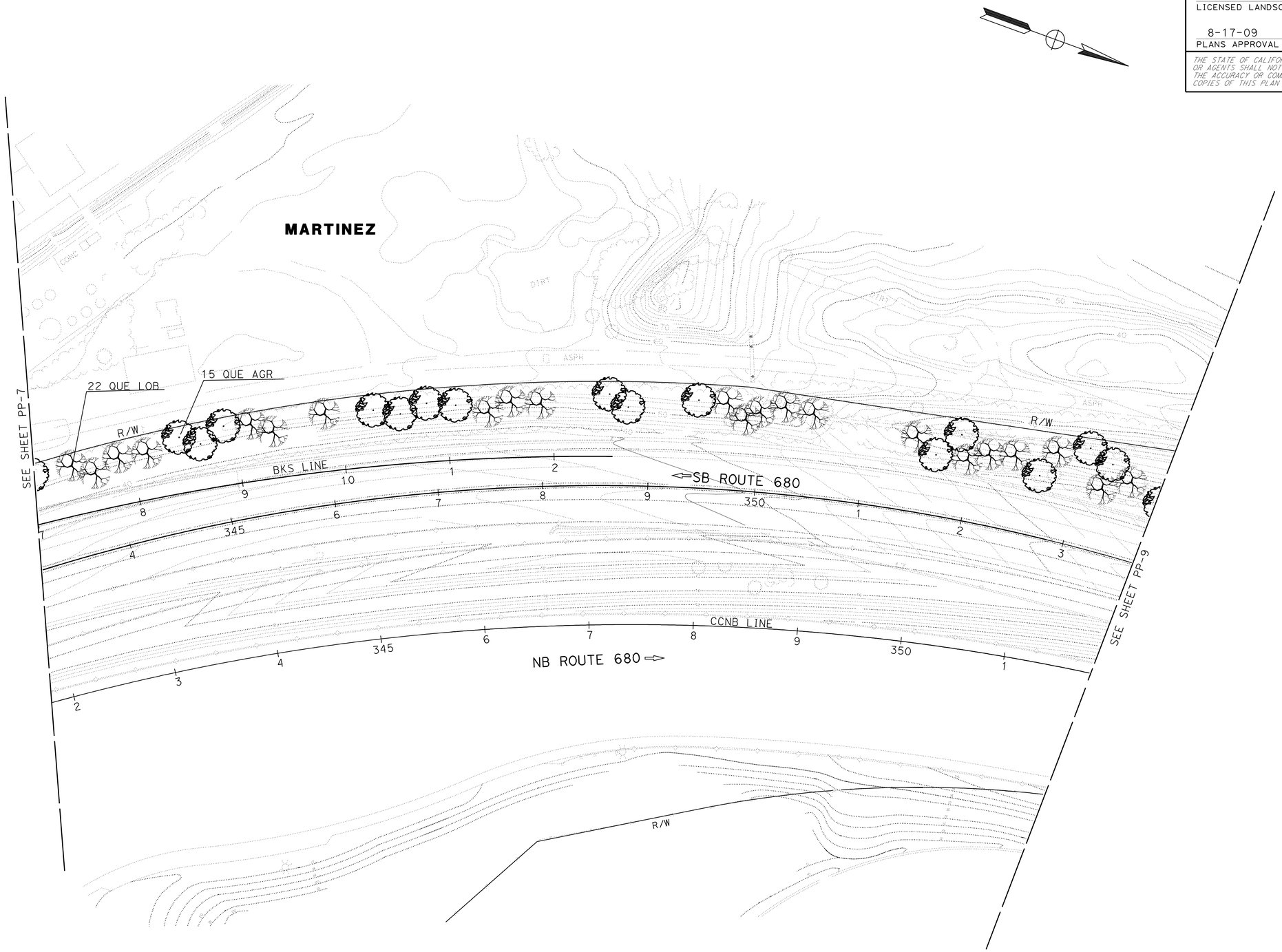

THIS PLAN ACCURATE FOR PLANTING WORK ONLY.

PLANTING PLAN

SCALE: 1"=50'

PP-8

STATE OF CALIFORNIA - DEPARTMENT OF TRANSPORTATION
LANDSCAPE ARCHITECTURE

SENIOR LANDSCAPE ARCHITECT: JEANNE GORHAM

CALCULATED-DESIGNED BY: OWEN WILLIAMS
CHECKED BY: JEANNE GORHAM

REVISED BY: OLW
DATE REVISED:

LAST REVISION 00-00-00
DATE PLOTTED => 24-AUG-2009
TIME PLOTTED => 13:07

Dist	COUNTY	ROUTE	POST MILES TOTAL PROJECT	SHEET No.	TOTAL SHEETS
04	CC,Sol	680,780	24.2/24.8,0.3/0.7, 0.6/1.2	15	46

LICENSED LANDSCAPE ARCHITECT

8-17-09
PLANS APPROVAL DATE

LICENSED LANDSCAPE ARCHITECT
CONNIE M. TIP No. 433
Signature
02-29-10
Renewal Date
06-26-09
Date
STATE OF CALIFORNIA

THE STATE OF CALIFORNIA OR ITS OFFICERS OR AGENTS SHALL NOT BE RESPONSIBLE FOR THE ACCURACY OR COMPLETENESS OF SCANNED COPIES OF THIS PLAN SHEET.

NOTE:

FOR COMPLETE RIGHT OF WAY AND ACCURATE ACCESS DATA, SEE RIGHT OF WAY RECORD MAPS AT DISTRICT OFFICE.

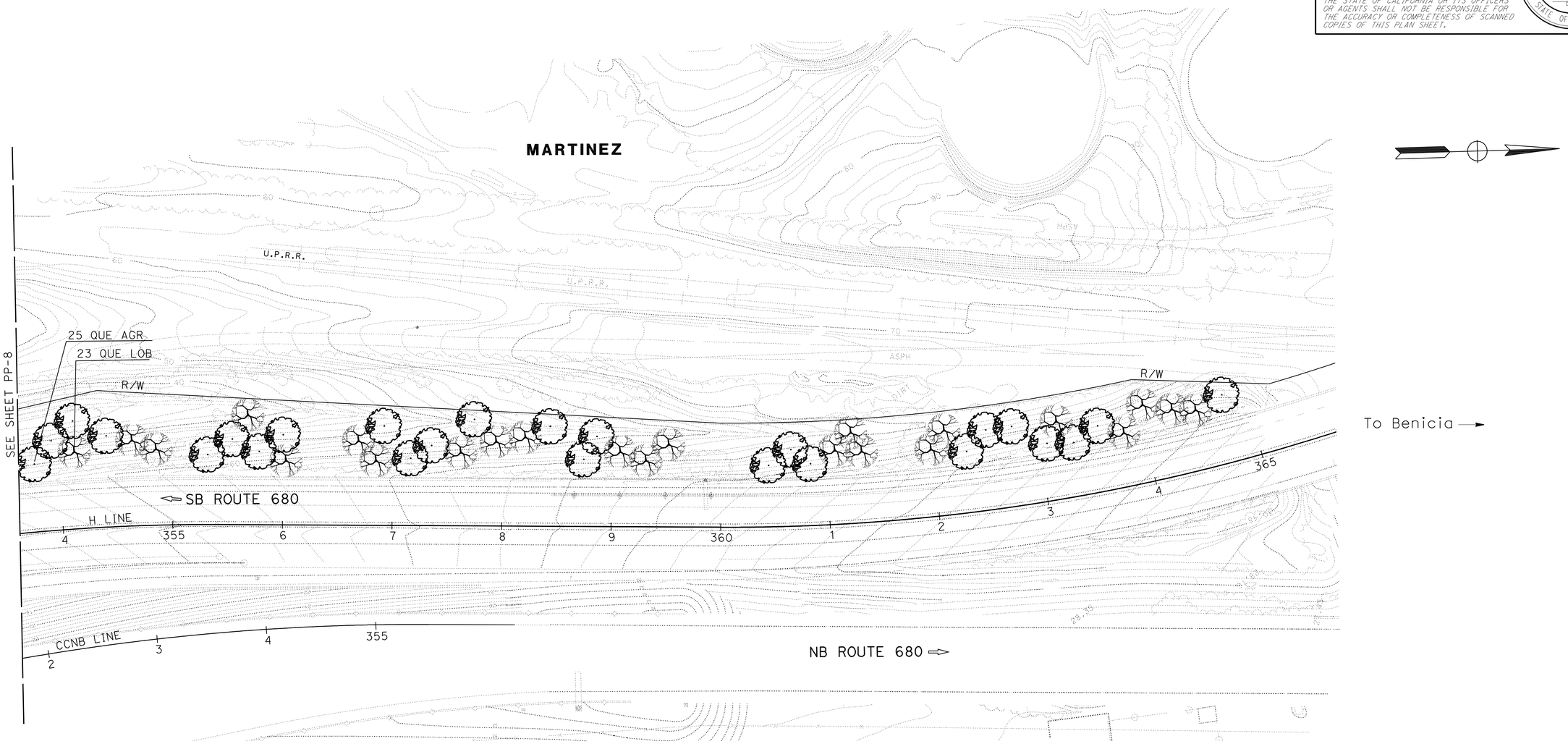

THIS PLAN ACCURATE FOR PLANTING WORK ONLY.

PLANTING PLAN

SCALE: 1"=50'

PP-9

OLW	
REVISED BY	DATE REVISED
OWEN WILLIAMS	JEANNE GORHAM
CALCULATED-DESIGNED BY	CHECKED BY
SENIOR LANDSCAPE ARCHITECT	JEANNE GORHAM

STATE OF CALIFORNIA - DEPARTMENT OF TRANSPORTATION
Caltrans
LANDSCAPE ARCHITECTURE

LAST REVISION 00-00-00
DATE PLOTTED => 24-AUG-2009
TIME PLOTTED => 13:07

Dist	COUNTY	ROUTE	POST MILES TOTAL PROJECT	SHEET No.	TOTAL SHEETS
04	CC,Sol	680,780	24.2/24.8,0.3/0.7, 0.6/1.2	16	46

LICENSED LANDSCAPE ARCHITECT

8-17-09
PLANS APPROVAL DATE

LICENSED LANDSCAPE ARCHITECT
CONNIE M. YIP No. 4011
Signature 02-29-10
Renewal Date 06-26-09
Date
STATE OF CALIFORNIA

THE STATE OF CALIFORNIA OR ITS OFFICERS OR AGENTS SHALL NOT BE RESPONSIBLE FOR THE ACCURACY OR COMPLETENESS OF SCANNED COPIES OF THIS PLAN SHEET.

NOTES:

1. FOR COMPLETE RIGHT OF WAY AND ACCURATE ACCESS DATA, SEE RIGHT OF WAY RECORD MAPS AT DISTRICT OFFICE.
2. AFTER REMOVAL AND SALVAGE, CONTRACTOR SHALL FILL DEPRESSIONS AND GRADE TO CONFORM WITH SURROUNDING AREA.

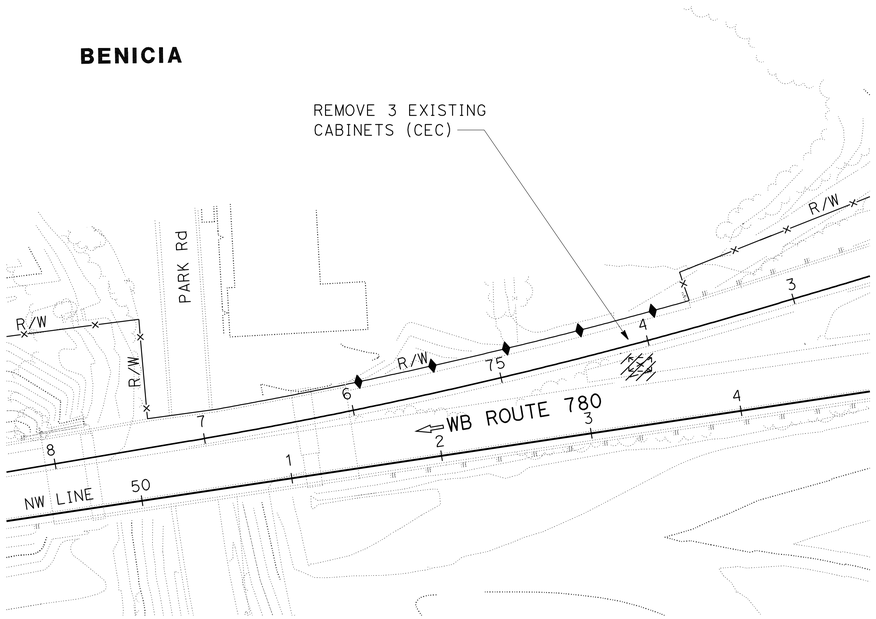

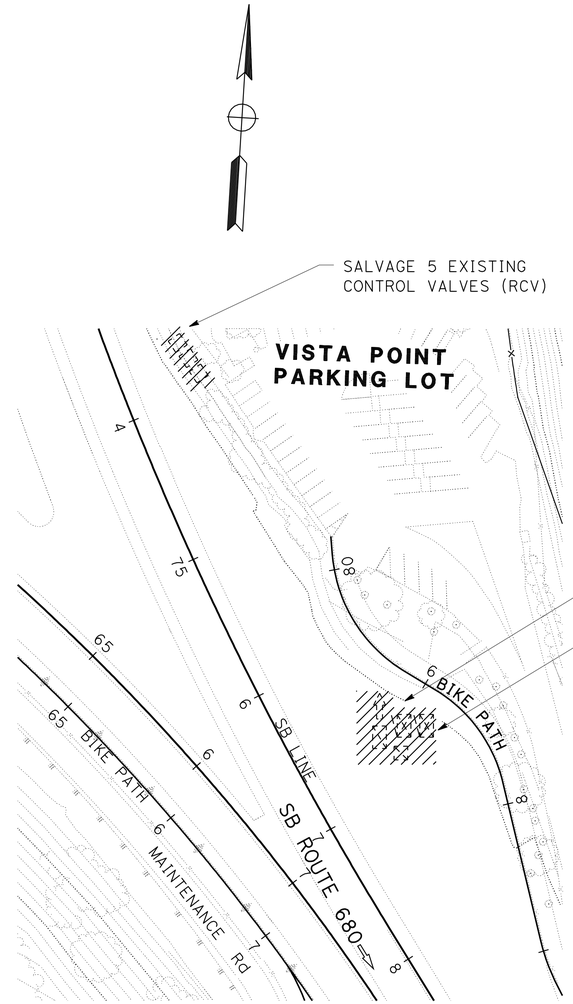

IRRIGATION REMOVAL PLAN

SCALE: 1"=50'

IR-1

THIS PLAN ACCURATE FOR IRRIGATION REMOVAL WORK ONLY.

STATE OF CALIFORNIA - DEPARTMENT OF TRANSPORTATION
Caltrans LANDSCAPE ARCHITECTURE

SENIOR LANDSCAPE ARCHITECT: JEANNE GORHAM
CALCULATED-DESIGNED BY: CONNIE YIP
CHECKED BY: JEANNE GORHAM
REVISED BY
DATE REVISED

LAST REVISION 00-00-00
DATE PLOTTED => 24-AUG-2009
TIME PLOTTED => 13:07

Dist	COUNTY	ROUTE	POST MILES TOTAL PROJECT	SHEET No.	TOTAL SHEETS
04	CC,Sol	680,780	24.2/24.8,0.3/0.7, 0.6/1.2	17	46

LICENSED LANDSCAPE ARCHITECT

8-17-09
PLANS APPROVAL DATE

LICENSED LANDSCAPE ARCHITECT
CONNIE M. YIP No. 4071
Signature 02-29-10
Renewal Date 06-26-09
date
STATE OF CALIFORNIA

THE STATE OF CALIFORNIA OR ITS OFFICERS OR AGENTS SHALL NOT BE RESPONSIBLE FOR THE ACCURACY OR COMPLETENESS OF SCANNED COPIES OF THIS PLAN SHEET.

NOTE:

FOR COMPLETE RIGHT OF WAY AND ACCURATE ACCESS DATA, SEE RIGHT OF WAY RECORD MAPS AT DISTRICT OFFICE.

IRRIGATION NOTES:

1. PLASTIC PIPE (SUPPLY LINE) (MAIN) SHALL BE 3" PVC (PR 315), UNLESS OTHERWISE NOTED.
2. PLASTIC PIPE (SUPPLY LINE) (LATERAL) SHALL BE SIZED IN ACCORDANCE WITH THE PIPE SIZING CHART FOR BUBBLERS, UNLESS OTHERWISE SHOWN ONTHE PLANS.
3. QUICK COUPLING VALVES (QCV) SHALL BE ¾" INSTALLED ON A SWING JOINT (TYPE I) WITH A SPRINKLER PROTECTOR (TYPE I), UNLESS OTHERWISE NOTED.
4. GATE VALVES (GV) SHALL BE THE SAME SIZE AS THE PIPE (SUPPLY LINE) (MAIN) CONNECTED ON THE UPSTREAM SIDE OF THE VALVE.
5. SPRINKLER (TYPE C-2), WHEN LOCATED ON SLOPES, SHALL BE INSTALLED ON THE UPHILL SIDE OF THE PLANT BASIN.
6. SPRINKLERS (TYPE C-2) FOR SHRUBS AND GROUNDCOVER MAY NOT BE SHOWN FOR GRAPHIC CLARITY. QUANTITIES OF BUBBLERS FOR THESE AREAS ARE IDENTIFIED IN VALVE CODE CALLOUTS.
7. WYE STRAINERS (WS) SHALL BE THE SAME SIZE AS THE LARGEST VALVE THEY SERVE.
8. LOCATE ALL IRRIGATION ON FREEWAY SIDE OF WALLS AND R/W FENCES.
9. TRENCHING SHALL BE OUTSIDE OF DRIPLINE OF EXISTING VEGETATION.
10. 6" IRRIGATION SLEEVES SHALL BE INSTALLED FOR ALL PIPING RUNNING UNDER CONCRETE AT THE VISTA POINT. SEE SHEET IR-6.

PIPE SIZING FOR BUBBLERS

PIPE SIZE	NUMBER OF BUBBLERS	GPM
¾ "	1-16	0.5-8
1"	17-32	8.5-16
1¼"	33-50	16.5-25
1½"	51+	25.5+

LEGEND & ABBREVIATIONS:

P — REMOTE CONTROL VALVE W/ PRESSURE REGULATOR

(E) — EXISTING

—SCC— — INSTALL PLASTIC PIPE (SUPPLY LINE) AND SPRINKLER CONTROL CONDUIT (SCC) IN EXISTING CONDUIT

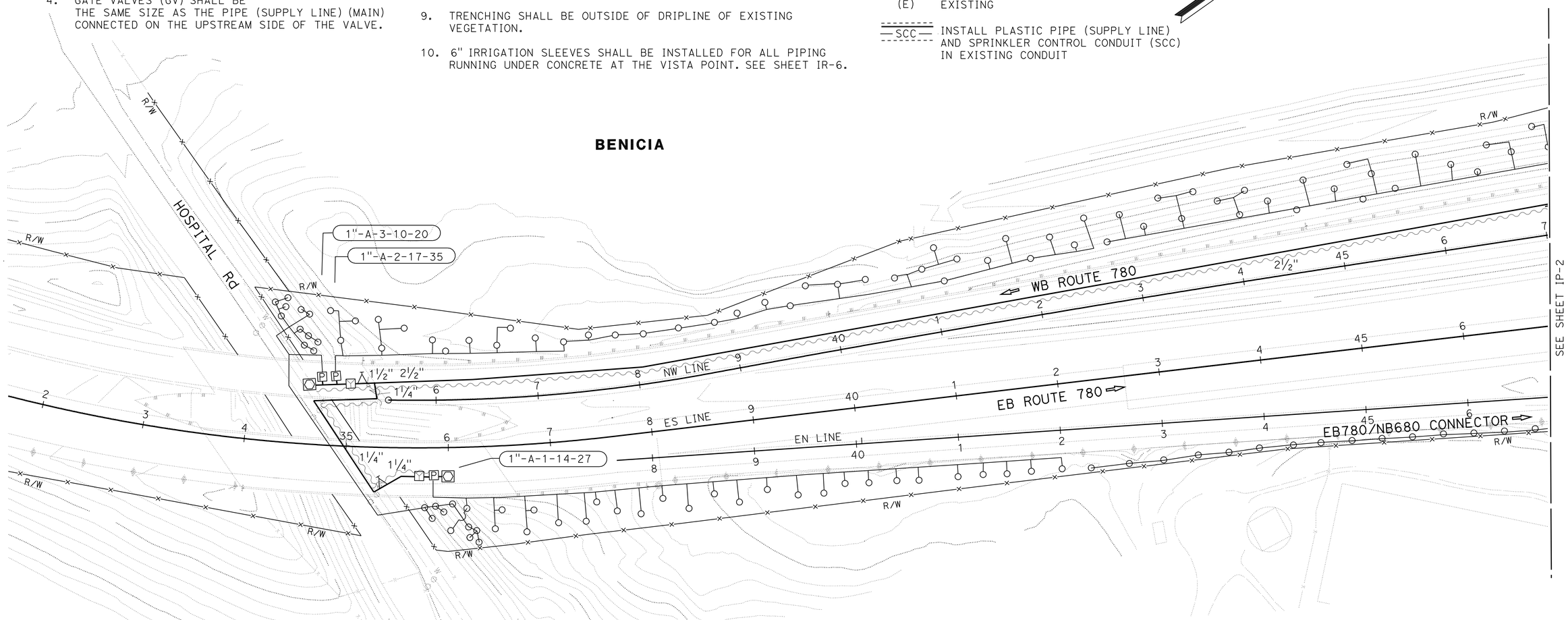

THIS PLAN ACCURATE FOR IRRIGATION WORK ONLY.

IRRIGATION PLAN

SCALE: 1"=50'

IP-1

STATE OF CALIFORNIA - DEPARTMENT OF TRANSPORTATION
Caltrans® LANDSCAPE ARCHITECTURE

SENIOR LANDSCAPE ARCHITECT: JEANNE GORHAM

CALCULATED-DESIGNED BY: CONNIE YIP
CHECKED BY: JEANNE GORHAM

REVISED BY
DATE REVISED

LAST REVISION 00-00-00
DATE PLOTTED => 24-AUG-2009
TIME PLOTTED => 13:08

Dist	COUNTY	ROUTE	POST MILES TOTAL PROJECT	SHEET No.	TOTAL SHEETS
04	CC,Sol	680,780	24.2/24.8,0.3/0.7, 0.6/1.2	18	46

LICENSED LANDSCAPE ARCHITECT

8-17-09
PLANS APPROVAL DATE

LICENSED LANDSCAPE ARCHITECT
CONNIE M. YIP No. 4011
Signature
02-29-10
Renewal Date
06-26-09
Date
STATE OF CALIFORNIA

THE STATE OF CALIFORNIA OR ITS OFFICERS OR AGENTS SHALL NOT BE RESPONSIBLE FOR THE ACCURACY OR COMPLETENESS OF SCANNED COPIES OF THIS PLAN SHEET.

NOTE:

FOR COMPLETE RIGHT OF WAY AND ACCURATE ACCESS DATA, SEE RIGHT OF WAY RECORD MAPS AT DISTRICT OFFICE.

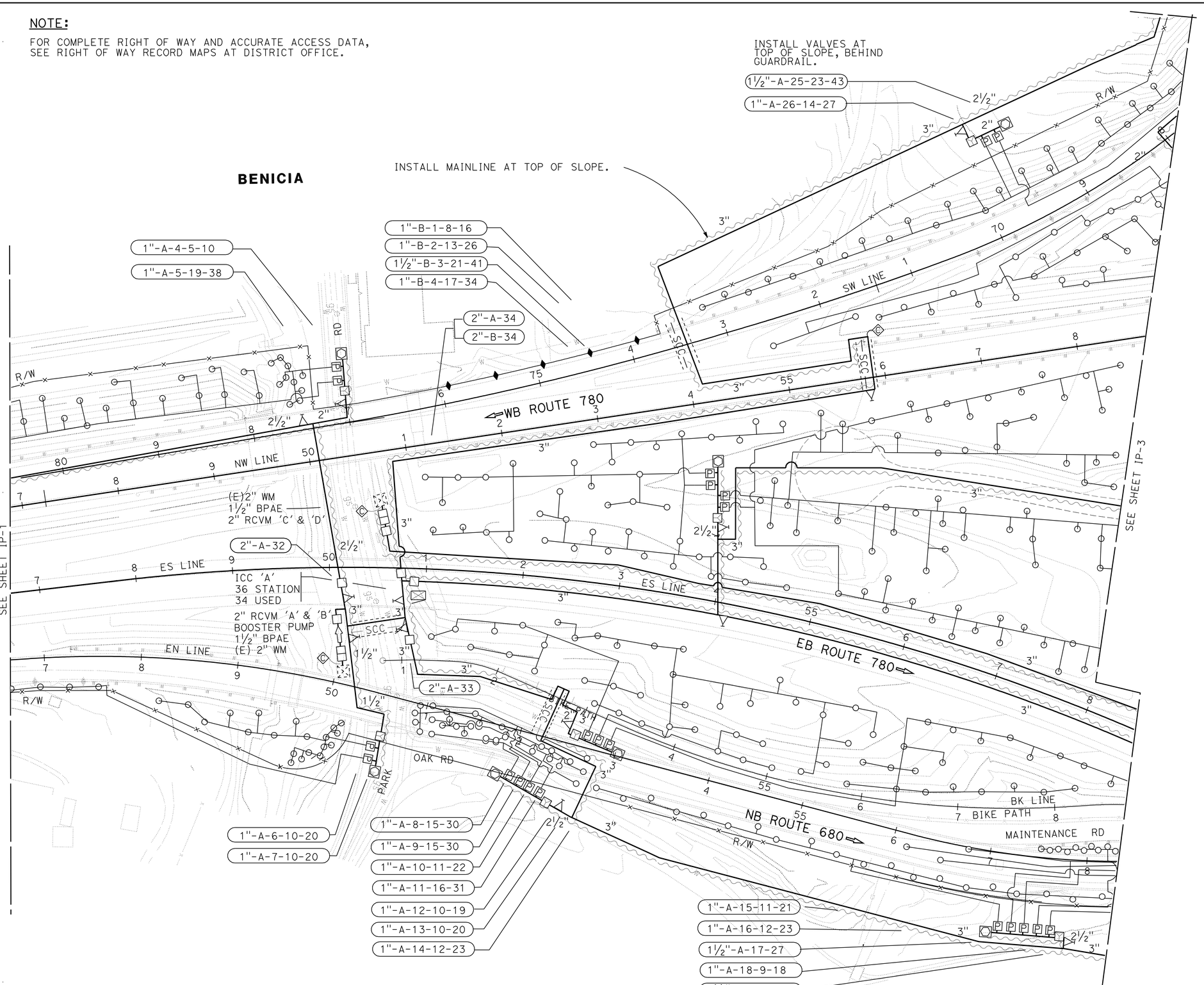

THIS PLAN ACCURATE FOR IRRIGATION WORK ONLY.

IRRIGATION PLAN

SCALE: 1"=50'

IP-2

STATE OF CALIFORNIA - DEPARTMENT OF TRANSPORTATION
Caltrans® LANDSCAPE ARCHITECTURE

SENIOR LANDSCAPE ARCHITECT: JEANNE GORHAM

CALCULATED-DESIGNED BY: CONNIE YIP
CHECKED BY: JEANNE GORHAM

REVISED BY
DATE REVISED

LAST REVISION 00-00-00
DATE PLOTTED => 24-AUG-2009
TIME PLOTTED => 13:08

Dist	COUNTY	ROUTE	POST MILES TOTAL PROJECT	SHEET No.	TOTAL SHEETS
04	CC,Sol	680,780	24.2/24.8,0.3/0.7, 0.6/1.2	19	46

LICENSED LANDSCAPE ARCHITECT

8-17-09
PLANS APPROVAL DATE

LICENSED LANDSCAPE ARCHITECT
CONNIE M. YIP No. 4011
Signature
02-29-10
Renewal Date
06-26-09
Date
STATE OF CALIFORNIA

THE STATE OF CALIFORNIA OR ITS OFFICERS OR AGENTS SHALL NOT BE RESPONSIBLE FOR THE ACCURACY OR COMPLETENESS OF SCANNED COPIES OF THIS PLAN SHEET.

NOTE:

FOR COMPLETE RIGHT OF WAY AND ACCURATE ACCESS DATA, SEE RIGHT OF WAY RECORD MAPS AT DISTRICT OFFICE.

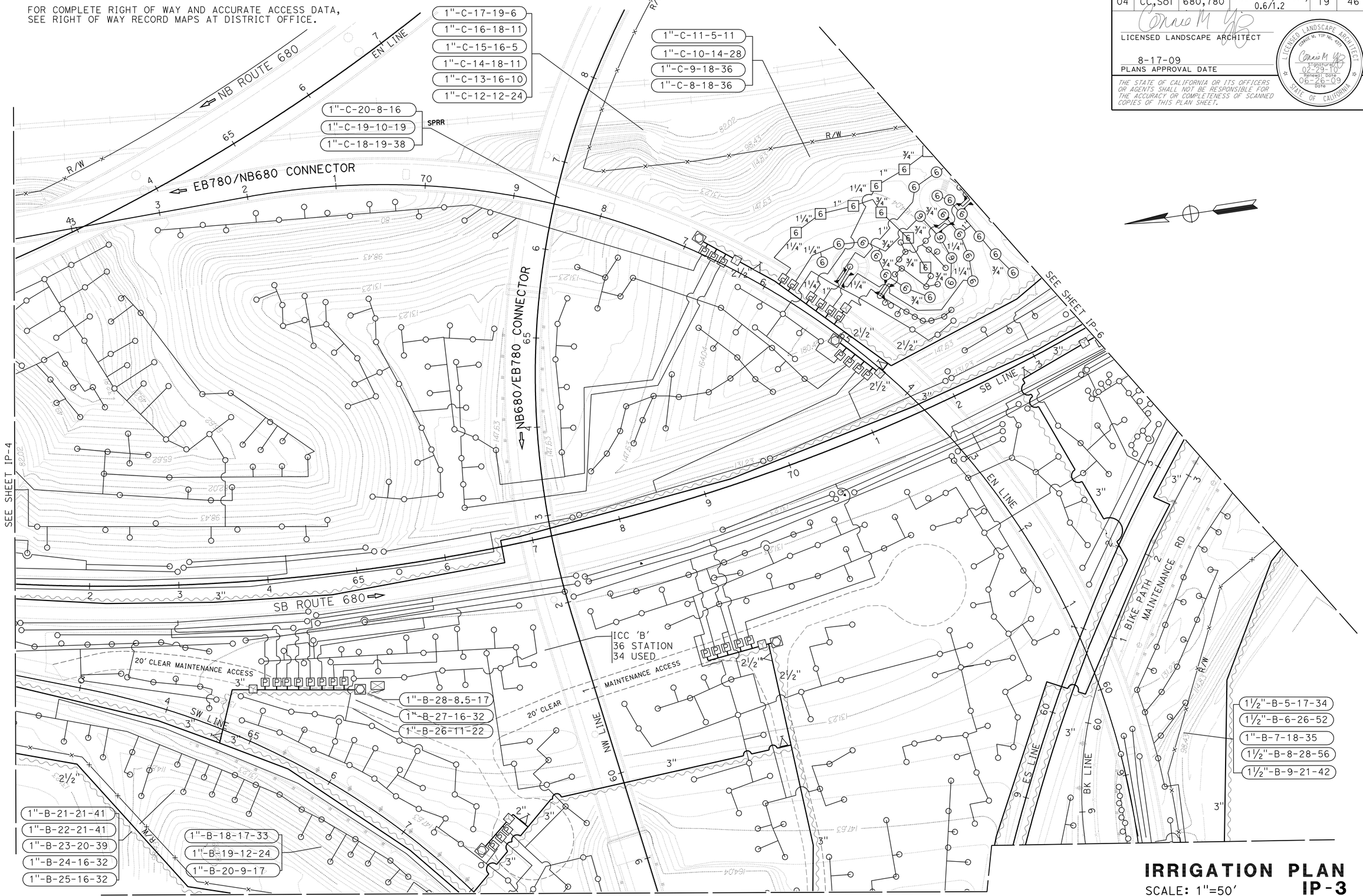

THIS PLAN ACCURATE FOR IRRIGATION WORK ONLY.

IRRIGATION PLAN
SCALE: 1"=50'

IP-3

STATE OF CALIFORNIA - DEPARTMENT OF TRANSPORTATION
Caltrans® LANDSCAPE ARCHITECTURE

SENIOR LANDSCAPE ARCHITECT: JEANNE GORHAM

CALCULATED-DESIGNED BY: CONNIE YIP
CHECKED BY: JEANNE GORHAM

REVISED BY
DATE REVISED

LAST REVISION 00-00-00
DATE PLOTTED => 24-AUG-2009
TIME PLOTTED => 13:08

Dist	COUNTY	ROUTE	POST MILES TOTAL PROJECT	SHEET No.	TOTAL SHEETS
04	CC,Sol	680,780	24.2/24.8,0.3/0.7, 0.6/1.2	20	46

LICENSED LANDSCAPE ARCHITECT

8-17-09
PLANS APPROVAL DATE

LICENSED LANDSCAPE ARCHITECT — CONNIE M. YIP No. 4011 — Signature — 02-29-10 Renewal Date — 06-26-09 Date — STATE OF CALIFORNIA

THE STATE OF CALIFORNIA OR ITS OFFICERS OR AGENTS SHALL NOT BE RESPONSIBLE FOR THE ACCURACY OR COMPLETENESS OF SCANNED COPIES OF THIS PLAN SHEET.

NOTE:

FOR COMPLETE RIGHT OF WAY AND ACCURATE ACCESS DATA, SEE RIGHT OF WAY RECORD MAPS AT DISTRICT OFFICE.

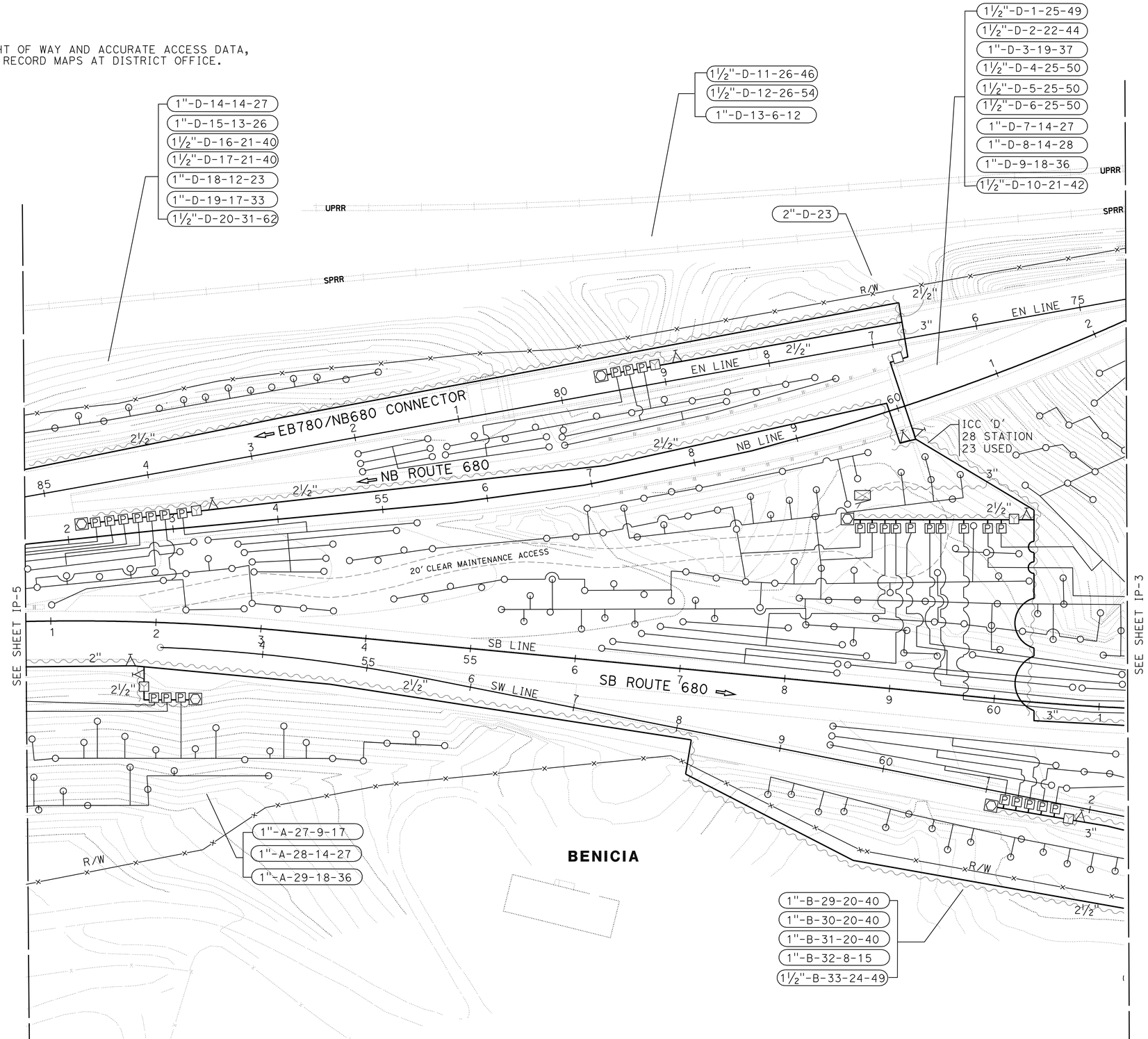

THIS PLAN ACCURATE FOR IRRIGATION WORK ONLY.

IRRIGATION PLAN

SCALE: 1"=50'

IP-4

STATE OF CALIFORNIA - DEPARTMENT OF TRANSPORTATION
Caltrans® LANDSCAPE ARCHITECTURE

SENIOR LANDSCAPE ARCHITECT: JEANNE GORHAM

CALCULATED-DESIGNED BY: CONNIE YIP
CHECKED BY: JEANNE GORHAM

REVISED BY | DATE REVISED

LAST REVISION 00-00-00 | DATE PLOTTED => 24-AUG-2009 | TIME PLOTTED => 13:08

Dist	COUNTY	ROUTE	POST MILES TOTAL PROJECT	SHEET No.	TOTAL SHEETS
04	CC,Sol	680,780	24.2/24.8,0.3/0.7, 0.6/1.2	21	46

LICENSED LANDSCAPE ARCHITECT

8-17-09
PLANS APPROVAL DATE

LICENSED LANDSCAPE ARCHITECT
CONNIE M. YIP No. 4071
Signature
02-29-10
Renewal Date
06-26-09
Date
STATE OF CALIFORNIA

THE STATE OF CALIFORNIA OR ITS OFFICERS OR AGENTS SHALL NOT BE RESPONSIBLE FOR THE ACCURACY OR COMPLETENESS OF SCANNED COPIES OF THIS PLAN SHEET.

NOTE:

FOR COMPLETE RIGHT OF WAY AND ACCURATE ACCESS DATA, SEE RIGHT OF WAY RECORD MAPS AT DISTRICT OFFICE.

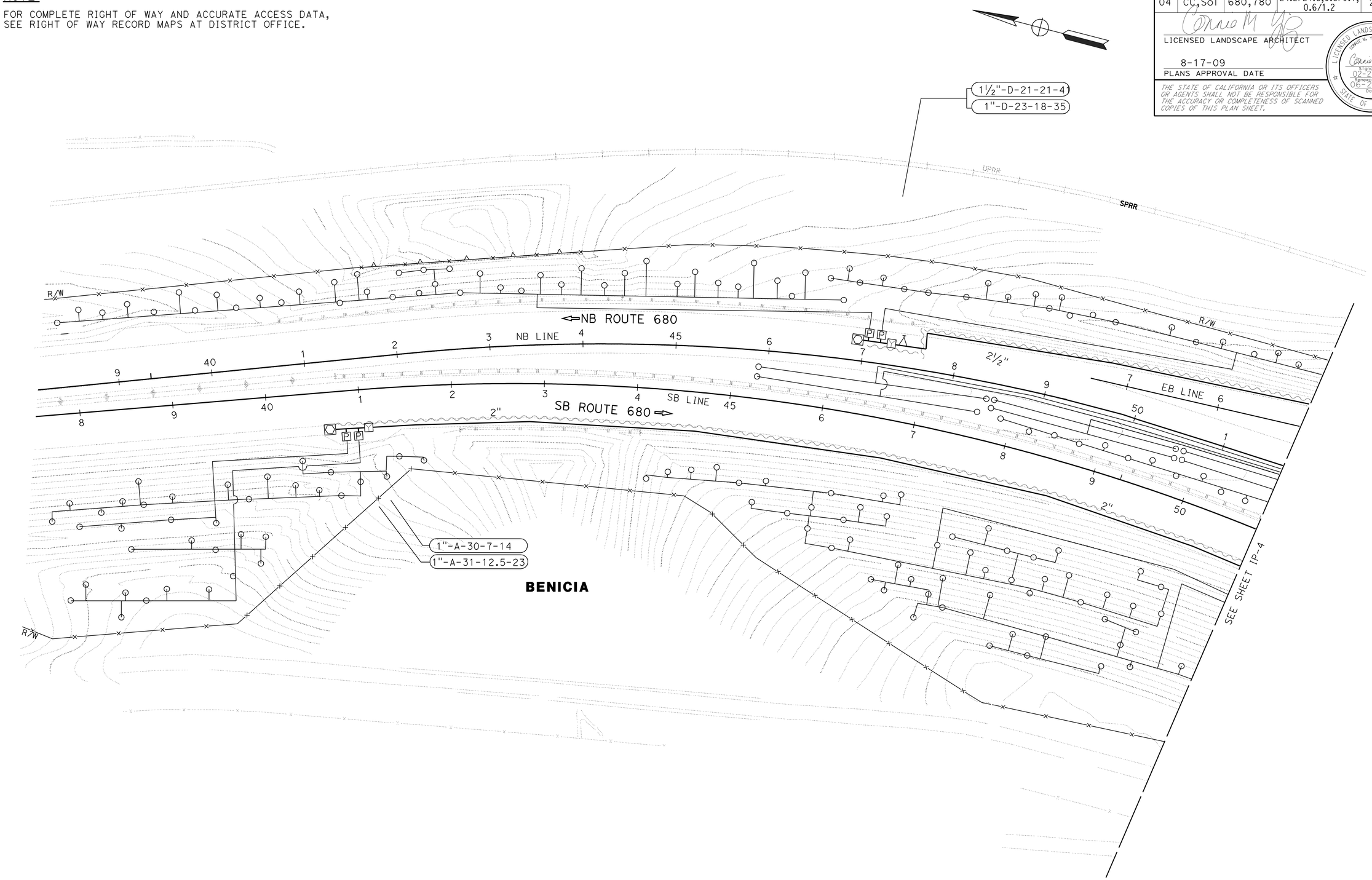

THIS PLAN ACCURATE FOR IRRIGATION WORK ONLY.

IRRIGATION PLAN

SCALE: 1"=50'

IP-5

STATE OF CALIFORNIA - DEPARTMENT OF TRANSPORTATION
Caltrans® LANDSCAPE ARCHITECTURE

SENIOR LANDSCAPE ARCHITECT: JEANNE GORHAM

CALCULATED-DESIGNED BY: CONNIE YIP
CHECKED BY: JEANNE GORHAM

REVISED BY
DATE REVISED

LAST REVISION 00-00-00
DATE PLOTTED => 24-AUG-2009
TIME PLOTTED => 13:08

Dist	COUNTY	ROUTE	POST MILES TOTAL PROJECT	SHEET No.	TOTAL SHEETS
04	CC,Sol	680,780	24.2/24.8,0.3/0.7, 0.6/1.2	22	46

LICENSED LANDSCAPE ARCHITECT

8-17-09
PLANS APPROVAL DATE

LICENSED LANDSCAPE ARCHITECT
CONNIE M. YIP No. 4011
Signature
02-29-10
Renewal Date
06-26-09
Date
STATE OF CALIFORNIA

THE STATE OF CALIFORNIA OR ITS OFFICERS OR AGENTS SHALL NOT BE RESPONSIBLE FOR THE ACCURACY OR COMPLETENESS OF SCANNED COPIES OF THIS PLAN SHEET.

NOTE:

FOR COMPLETE RIGHT OF WAY AND ACCURATE ACCESS DATA, SEE RIGHT OF WAY RECORD MAPS AT DISTRICT OFFICE.

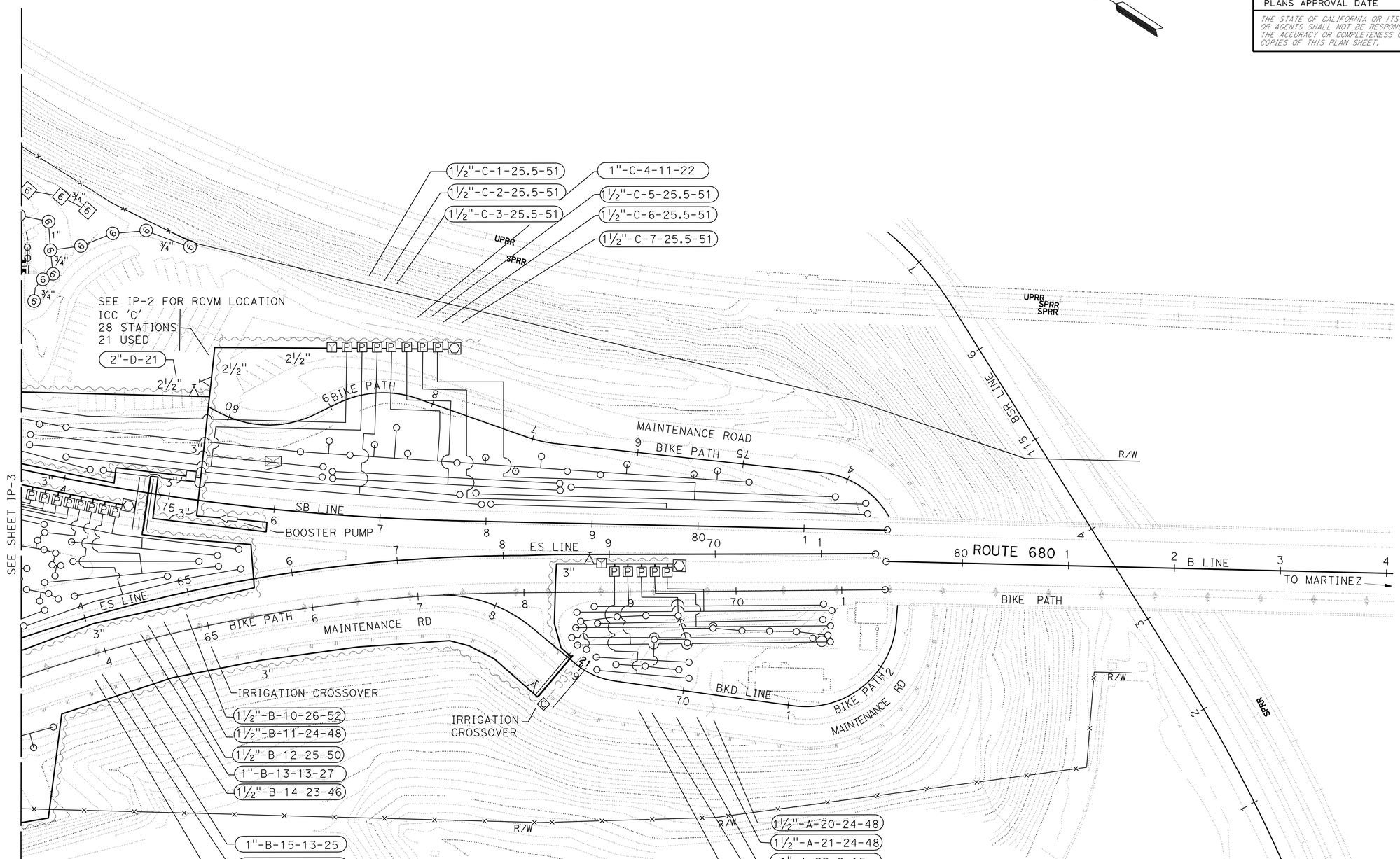

IRRIGATION PLAN

SCALE: 1"=50'

IP-6

THIS PLAN ACCURATE FOR IRRIGATION WORK ONLY.

STATE OF CALIFORNIA - DEPARTMENT OF TRANSPORTATION
Caltrans® LANDSCAPE ARCHITECTURE

SENIOR LANDSCAPE ARCHITECT: JEANNE GORHAM

CALCULATED-DESIGNED BY: CONNIE YIP
CHECKED BY: JEANNE GORHAM

REVISED BY
DATE REVISED

LAST REVISION 00-00-00
DATE PLOTTED => 24-AUG-2009
TIME PLOTTED => 13:08

Dist	COUNTY	ROUTE	POST MILES TOTAL PROJECT	SHEET No.	TOTAL SHEETS
04	CC,Sol	680,780	24.2/24.8,0.3/0.7, 0.6/1.2	23	46

LICENSED LANDSCAPE ARCHITECT

8-17-09
PLANS APPROVAL DATE

THE STATE OF CALIFORNIA OR ITS OFFICERS OR AGENTS SHALL NOT BE RESPONSIBLE FOR THE ACCURACY OR COMPLETENESS OF SCANNED COPIES OF THIS PLAN SHEET.

LICENSED LANDSCAPE ARCHITECT
CONNIE M. YIP No. 4511
Signature
02-29-10
Renewal Date
06-26-09
Date
STATE OF CALIFORNIA

NOTE:

FOR COMPLETE RIGHT OF WAY AND ACCURATE ACCESS DATA, SEE RIGHT OF WAY RECORD MAPS AT DISTRICT OFFICE.

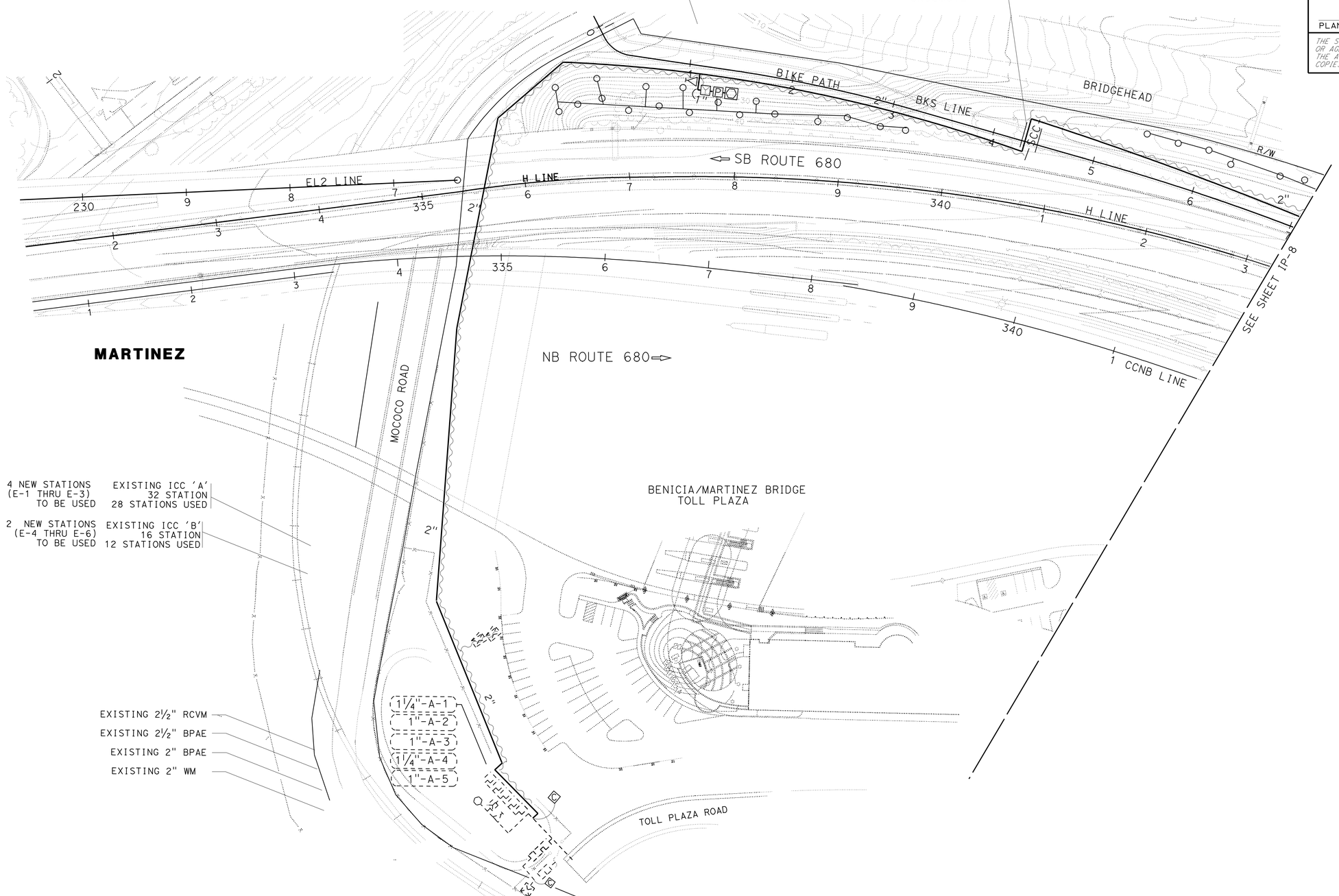

THIS PLAN ACCURATE FOR IRRIGATION WORK ONLY.

IRRIGATION PLAN

SCALE: 1"=50'

IP-7

STATE OF CALIFORNIA - DEPARTMENT OF TRANSPORTATION
Caltrans®
LANDSCAPE ARCHITECTURE

SENIOR LANDSCAPE ARCHITECT: JEANNE GORHAM

CALCULATED-DESIGNED BY: OWEN WILLIAMS
CHECKED BY: JEANNE GORHAM

REVISED BY: OLW
DATE REVISED:

LAST REVISION 00-00-00
DATE PLOTTED => 24-AUG-2009
TIME PLOTTED => 13:08

Dist	COUNTY	ROUTE	POST MILES TOTAL PROJECT	SHEET No.	TOTAL SHEETS
04	CC,Sol	680,780	24.2/24.8,0.3/0.7, 0.6/1.2	24	46

LICENSED LANDSCAPE ARCHITECT

8-17-09
PLANS APPROVAL DATE

LICENSED LANDSCAPE ARCHITECT
CONNIE M. YIP No. 4357
Signature
02-29-10
Renewal Date
06-26-09
Date
STATE OF CALIFORNIA

THE STATE OF CALIFORNIA OR ITS OFFICERS OR AGENTS SHALL NOT BE RESPONSIBLE FOR THE ACCURACY OR COMPLETENESS OF SCANNED COPIES OF THIS PLAN SHEET.

NOTE:

FOR COMPLETE RIGHT OF WAY AND ACCURATE ACCESS DATA, SEE RIGHT OF WAY RECORD MAPS AT DISTRICT OFFICE.

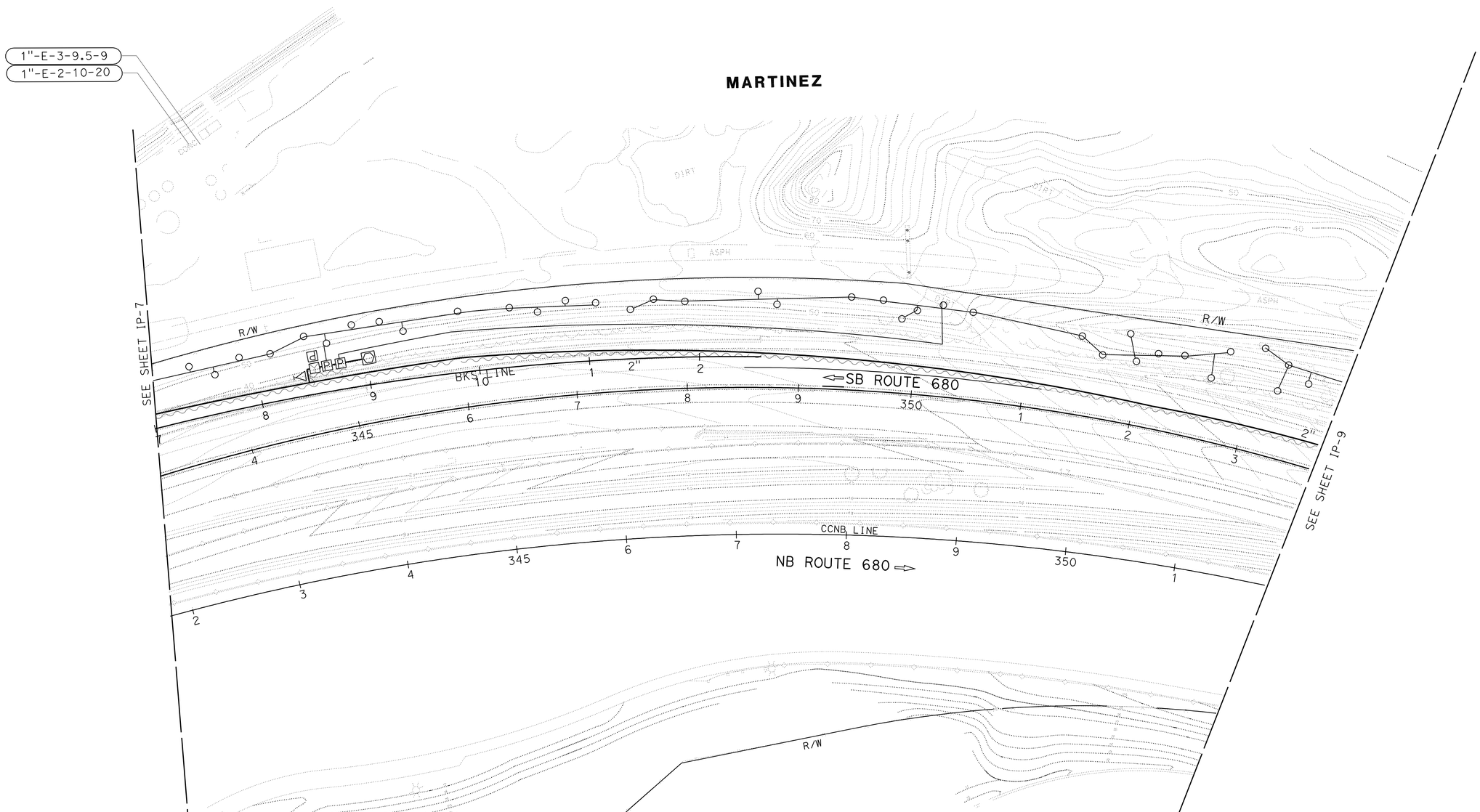

THIS PLAN ACCURATE FOR IRRIGATION WORK ONLY.

IRRIGATION PLAN

SCALE: 1"=50'

IP-8

STATE OF CALIFORNIA - DEPARTMENT OF TRANSPORTATION
Caltrans®
LANDSCAPE ARCHITECTURE

SENIOR LANDSCAPE ARCHITECT: JEANNE GORHAM

CALCULATED-DESIGNED BY: OWEN WILLIAMS
CHECKED BY: JEANNE GORHAM

REVISED BY: OLW
DATE REVISED:

LAST REVISION 00-00-00
DATE PLOTTED => 24-AUG-2009
TIME PLOTTED => 13:09

Dist	COUNTY	ROUTE	POST MILES TOTAL PROJECT	SHEET No.	TOTAL SHEETS
04	CC,Sol	680,780	24.2/24.8,0.3/0.7, 0.6/1.2	25	46

LICENSED LANDSCAPE ARCHITECT

8-17-09
PLANS APPROVAL DATE

LICENSED LANDSCAPE ARCHITECT
JANIE M. TIP No. 455
Signature
02-29-10
Renewal Date
06-26-09
Date
STATE OF CALIFORNIA

THE STATE OF CALIFORNIA OR ITS OFFICERS OR AGENTS SHALL NOT BE RESPONSIBLE FOR THE ACCURACY OR COMPLETENESS OF SCANNED COPIES OF THIS PLAN SHEET.

NOTE:

FOR COMPLETE RIGHT OF WAY AND ACCURATE ACCESS DATA, SEE RIGHT OF WAY RECORD MAPS AT DISTRICT OFFICE.

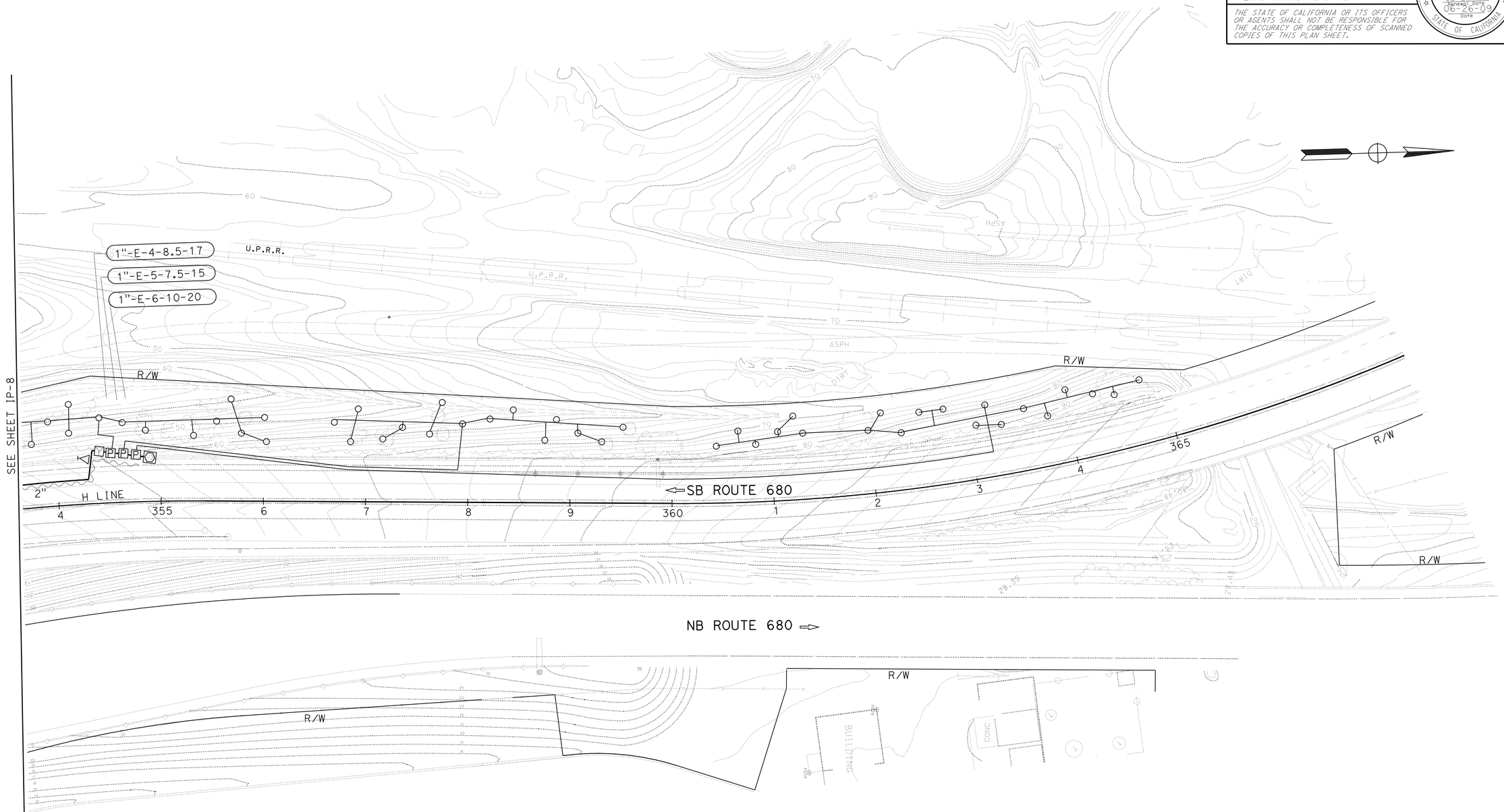

THIS PLAN ACCURATE FOR IRRIGATION WORK ONLY.

IRRIGATION PLAN

SCALE: 1"=50'

IP-9

STATE OF CALIFORNIA - DEPARTMENT OF TRANSPORTATION
LANDSCAPE ARCHITECTURE

SENIOR LANDSCAPE ARCHITECT: JEANNE GORHAM

CALCULATED-DESIGNED BY: OWEN WILLIAMS
CHECKED BY: JEANNE GORHAM

REVISED BY
DATE REVISED

LAST REVISION 00-00-00
DATE PLOTTED => 24-AUG-2009
TIME PLOTTED => 13:09

Dist	COUNTY	ROUTE	POST MILES TOTAL PROJECT	SHEET No.	TOTAL SHEETS
04	CC,Sol	680,780	24.2/24.8,0.3/0.7, 0.6/1.2	26	46

LICENSED LANDSCAPE ARCHITECT

8-17-09
PLANS APPROVAL DATE

LICENSED LANDSCAPE ARCHITECT
CONNIE M. YIP No. 4071
Signature 02-29-10
Renewal Date 06-26-09
date
STATE OF CALIFORNIA

THE STATE OF CALIFORNIA OR ITS OFFICERS OR AGENTS SHALL NOT BE RESPONSIBLE FOR THE ACCURACY OR COMPLETENESS OF SCANNED COPIES OF THIS PLAN SHEET.

SPRINKLER SCHEDULE

SYMBOL	TYPE	DESCRIPTION	SPRAY PATTERN	OPERATING PRESSURE (PSI)	PRESSURE COMPENSATING	PLUS/MINUS 5% ② DISCHARGE: GALLONS PER MINUTE (GPM)	GALLONS PER HOUR (GPH)	RADIUS (Ft)	WIDTH x LENGTH (Ft)	MATERIAL	NOZZLE SIZE (INCH)	INLET CONNECTION (NPT INCH)	POSITIVE-LOCKING ADJ ARC STOP	BACKSPLASH PREVENTER	DIFFUSER PIN	DISTANCE CONTROL FLAP	ADJ DISCHARGE	RISER: TYPE	MATERIAL: PLASTIC	MATERIAL: GALVANIZED	SIZE (IPS INCH)	HEIGHT (INCH)	FLOW SHUTOFF DEVICE	⑤ SWING JOINT (TYPE)	RISER SUPPORT	SPRINKLER PROTECTOR (TYPE)	REMARKS
[6]	A-6	GEAR DRIVEN	F	30	X	3.2	-	37	-	PL	¾"	-	-	-	-	-	X	-	X	-	¾"	-	X	1	-	-	12" POP-UP ROTOR
⑥	A-6	GEAR DRIVEN	P	30	X	1.6	-	32	-	PL	¾"	-	-	-	-	-	X	-	X	-	¾"	-	X	1	-	-	12" POP-UP ROTOR
○	C-2	BUBBLER	-	20	X	0.5	-	-	-	PL	½"	-	-	-	-	-	-	V	X	-	½"	-	-	-	-	-	

X IN BOX DENOTES REQUIREMENT

APPLICABLE WHEN CIRCLED BELOW:

1 - See Special Provisions.
② - If a pressure compensating device is specified, the discharge and radii shown reflect its use.
③ - Arc Stop shall be fitted with a nut and bolt.
4 - Vinyl-coated cast iron housing.
⑤ - Swing Joints required adjacent to shoulders, curbs, sidewalks, and dikes.
6 - Unless otherwise shown on plans.

ABBREVIATIONS

F	full circle	Ft	feet/foot
P	part circle	GPM	gallons per minute
F/P	full/part circle	GPH	gallons per hour
Q	quarter circle	Adj	adjustable
T	third circle	PL	plastic
H	half circle	B/B	brass/bronze
TT	two third circle	B/PL	brass/plastic
TQ	three quarter circle	B/B/PL	brass/bronze/plastic
CST	center strip	NPT	national pipe thread
SST	side strip	IPS	iron pipe size
EST	end strip	PSI	pounds per square inch

IRRIGATION CROSSOVERS

LOCATION: LINE	LOCATION: STATION	SIDE: R†	SIDE: L†	CONDUIT TYPE ④ SIZE (INCH) LENGTH (LF)	CONDUIT TYPE -- SIZE (INCH) LENGTH (LF)	(N) WATER LINE CROSSOVER SIZE (INCH)	(N) SPRINKLER CONTROL CROSSOVER SIZE (INCH)
SB	74+80	X	X	52	--	3	2
ES	68+90	X	X	50	--	3	2
BKS	4+32	X	X	30	--	2	1
TOTAL				102			

(N) - NOT A SEPARATE PAY ITEM FOR INFORMATION ONLY
X - DENOTES REQUIREMENT

CONDUIT TYPE
(Applicable when circled below and shown under the 'CONDUIT TYPE' column heading)

1 BITUMINOUS COATED CORRUGATED STEEL PIPE (0.064 INCH THICK)
2 CORRUGATED STEEL PIPE (0.064 INCH THICK)
3 CORRUGATED HIGH DENSITY POLYETHYLENE PIPE
④ WELDED STEEL PIPE

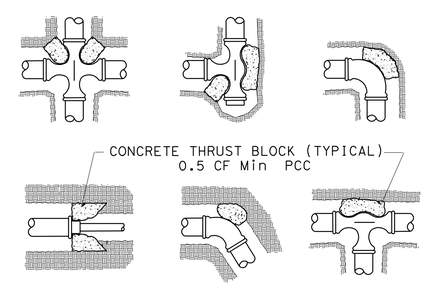

THRUST BLOCKS

LANDSCAPE DETAILS

NO SCALE

LD-1

REVISED BY	DATE REVISED
CONNIE YIP	JEANNE GORHAM
CALCULATED-DESIGNED BY	CHECKED BY
SENIOR LANDSCAPE ARCHITECT	JEANNE GORHAM

STATE OF CALIFORNIA - DEPARTMENT OF TRANSPORTATION
Caltrans® LANDSCAPE ARCHITECTURE

LAST REVISION 00-00-00 | DATE PLOTTED => 24-AUG-2009 | TIME PLOTTED => 13:09

Dist	COUNTY	ROUTE	POST MILES TOTAL PROJECT	SHEET No.	TOTAL SHEETS
04	CC,Sol	680,780	24.2/24.8,0.3/0.7, 0.6/1.2	27	46

LICENSED LANDSCAPE ARCHITECT

8-17-09
PLANS APPROVAL DATE

LICENSED LANDSCAPE ARCHITECT
CONNIE M. YIP NO. 4337
Signature
02-29-10
Renewal Date
06-26-09
Date
STATE OF CALIFORNIA

THE STATE OF CALIFORNIA OR ITS OFFICERS OR AGENTS SHALL NOT BE RESPONSIBLE FOR THE ACCURACY OR COMPLETENESS OF ELECTRONIC COPIES OF THIS PLAN SHEET.

ABBREVIATIONS

EA — each
DIP — ductile iron pipe
GSP — galvanized steel pipe
Ft — foot/feet
PR — pressure rated

SUBTOTALS PER VALVE ON LATERAL SUPPLY SIDE OF CONTROL VALVE

DESCRIPTION			UNIT	VALVE OR ASSEMBLY NUMBER																													SUBTOTALS	UNIT	DESCRIPTION		
				A-1	A-2	A-3	A-4	A-5	A-6	A-7	A-8	A-9	A-10	A-11	A-12	A-13	A-14	A-15	A-16	A-17	A-18	A-19	A-20	A-21	A-22	A-23	A-24	A-25	A-26	A-27	A-28	A-29	A-30	A-31					
PLASTIC PIPE SUPPLY LINE	PR 200		¾"	LF	800	775	530	165	970	370	450	220	230	355	170	580	560	730	580	340	260	150	440	240	240	485	240	170	1210	785	620	1035	825	460	765	15750	LF	¾"	PR 200	PLASTIC PIPE SUPPLY LINE
			1"	LF	250	450	55	-	520	40	415	-	-	-	-	30	165	320	160	120	100	160	240	65	85	-	60	-	995	60	50	325	240	-	210	5105	LF	1"		
			1-¼"	LF	-	-	-	-	-	-	-	-	-	-	-	-	-	-	-	-	-	-	-	-	-	-	-	-	-	-	-	-	505	-	-	505	LF	1-¼"		
	PR 315																																					PR 315	
GSP																																							GSP
DIP																																							DIP
SPRINKLER TYPE		A-6		EA	-	-	-	-	-	-	-	-	-	-	-	-	-	-	-	-	-	-	-	-	-	-	-	-	-	-	-	-	-	-	-	-	EA	A-6	SPRINKLER TYPE	
		C-2		EA	27	35	20	10	38	20	19	15	15	22	16	19	20	23	21	23	27	17	27	24	24	15	24	16	43	27	17	27	36	14	23	704	EA	C-2		

DESCRIPTION			UNIT	VALVE OR ASSEMBLY NUMBER																															SUBTOTALS	UNIT	DESCRIPTION		
				B-1	B-2	B-3	B-4	B-5	B-6	B-7	B-8	B-9	B-10	B-11	B-12	B-13	B-14	B-15	B-16	B-17	B-18	B-19	B-20	B-21	B-22	B-23	B-24	B-25	B-26	B-27	B-28	B-29	B-30	B-31	B-32	B-33				
PLASTIC PIPE SUPPLY LINE	PR 200		¾"	LF	605	785	1437	515	260	190	650	260	1495	390	275	380	270	115	575	535	160	924	90	679	220	255	240	240	275	215	715	717	175	172	223	488	325	14850	LF	¾"	PR 200	PLASTIC PIPE SUPPLY LINE
			1"	LF	-	85	160	275	-	105	30	40	360	30	90	35	95	40	378	230	140	180	520	35	75	55	70	280	220	215	140	65	40	45	45	-	35	4113	LF	1"		
			1-1/4"	LF	-	-	60	25	280	115	20	50	20	-	-	100	-	210	-	-	-	33	-	-	160	165	190	-	-	-	-	-	95	120	120	-	155	1918	LF	1-1/4"		
			1-1/2"	LF	-	-	-	-	-	120	-	100	-	15	-	-	-	-	-	210	-	-	-	-	-	-	-	-	-	-	-	-	-	-	-	-	-	445	LF	1-1/2"		
	PR 315																																							PR 315	
GSP																																								GSP
DIP																																								DIP
SPRINKLER TYPE		A-6		EA	-	-	-	-	-	-	-	-	-	-	-	-	-	-	-	-	-	-	-	-	-	-	-	-	-	-	-	-	-	-	-	-	-	EA	A-6	SPRINKLER TYPE	
		C-2		EA	15	25	42	34	34	52	35	56	42	52	48	50	27	46	25	17	60	33	24	17	41	41	39	32	32	32	22	17	40	40	40	15	49	1174	EA	C-2		

IRRIGATION QUANTITIES
IQ-1

STATE OF CALIFORNIA - DEPARTMENT OF TRANSPORTATION
Caltrans LANDSCAPE ARCHITECTURE

SENIOR LANDSCAPE ARCHITECT: JEANNE GORHAM
CALCULATED-DESIGNED BY: OWEN WILLIAMS
CHECKED BY: JEANNE GORHAM
REVISED BY: OLW
DATE REVISED:

LAST REVISION 00-00-00
DATE PLOTTED => 24-AUG-2009
TIME PLOTTED => 13:09

Dist	COUNTY	ROUTE	POST MILES TOTAL PROJECT	SHEET No.	TOTAL SHEETS
04	CC,Sol	680,780	24.2/24.8,0.3/0.7, 0.6/1.2	28	46

LICENSED LANDSCAPE ARCHITECT

8-17-09
PLANS APPROVAL DATE

LICENSED LANDSCAPE ARCHITECT — CONNIE M. YIP No. 4317 — Signature — 02-29-10 Renewal Date — 06-26-09 Date — STATE OF CALIFORNIA

THE STATE OF CALIFORNIA OR ITS OFFICERS OR AGENTS SHALL NOT BE RESPONSIBLE FOR THE ACCURACY OR COMPLETENESS OF ELECTRONIC COPIES OF THIS PLAN SHEET.

ABBREVIATIONS

EA — each
DIP — ductile iron pipe
GSP — galvanized steel pipe
Ft — foot/feet
PR — pressure rated

SUBTOTALS PER VALVE ON LATERAL SUPPLY SIDE OF CONTROL VALVE

DESCRIPTION			UNIT	VALVE OR ASSEMBLY NUMBER																				SUBTOTALS	UNIT	DESCRIPTION		
				C-1	C-2	C-3	C-4	C-5	C-6	C-7	C-8	C-9	C-10	C-11	C-12	C-13	C-14	C-15	C-16	C-17	C-18	C-19	C-20					
PLASTIC PIPE SUPPLY LINE	PR 200	¾"	LF	87	160	160	938	160	160	160	195	195	815	475	388	150	197	100	257	122	856	731	751	7057	LF	¾"	PR 200	PLASTIC PIPE SUPPLY LINE
		1"	LF	58	80	60	140	80	60	80	20	20	166	80	105	15	253	38	-	38	158	338	-	1789	LF	1"		
		1-1/4"	LF	-	-	-	-	-	-	-	80	285	-	-	-	275	11	140	120	100	628	-	-	1639	LF	1-1/4"		
		1-1/2"	LF	459	249	135	-	161	321	366	-	-	-	-	-	-	-	-	-	-	-	-	-	1691	LF	1-1/2"		
	PR 315																											
GSP																											GSP	
DIP																											DIP	
SPRINKLER TYPE		A-6	EA	-	-	-	-	-	-	-	-	-	-	-	-	10	11	5	11	6	-	-	-	43	EA	A-6	SPRINKLER TYPE	
		C-2	EA	51	51	51	22	51	51	51	36	36	28	11	24	-	-	-	-	-	37	19	11	530	EA	C-2		

DESCRIPTION			UNIT	VALVE OR ASSEMBLY NUMBER																					SUBTOTALS	UNIT	DESCRIPTION		
				D-1	D-2	D-3	D-4	D-5	D-6	D-7	D-8	D-9	D-10	D-11	D-12	D-13	D-14	D-15	D-16	D-17	D-18	D-19	D-20	D-21	D-22					
PLASTIC PIPE SUPPLY LINE	PR 200	¾"	LF	1530	1270	270	405	370	400	190	200	670	1440	270	425	350	240	230	190	460	680	190	536	1230	920	12466	LF	¾"	PR 200	PLASTIC PIPE SUPPLY LINE
		1"	LF	80	60	40	10	40	40	500	710	530	310	90	30	40	570	580	50	20	170	30	40	160	180	4280	LF	1"		
		1-1/4"	LF	140	90	210	250	170	410	150	160	400	140	10	10	-	560	-	-	90	-	60	50	400	425	3725	LF	1-1/4"		
		1-1/2"	LF	-	-	-	-	-	-	-	-	-	-	200	90	-	-	-	-	-	-	-	170	-	-	460	LF	1-1/2"		
	PR 315																													
GSP																													GSP	
DIP																													DIP	
SPRINKLER TYPE		A-6		-	-	-	-	-	-	-	-	-	-	-	-	-	-	-	-	-	-	-	-	-	-	-	EA	A-6	SPRINKLER TYPE	
		C-2		49	44	37	50	50	50	27	28	36	42	54	54	12	27	26	40	40	23	33	62	41	35	860	EA	C-2		

IRRIGATION QUANTITIES
IQ-2

STATE OF CALIFORNIA - DEPARTMENT OF TRANSPORTATION
Caltrans LANDSCAPE ARCHITECTURE

SENIOR LANDSCAPE ARCHITECT: JEANNE GORHAM
CALCULATED-DESIGNED BY: OWEN WILLIAMS
CHECKED BY: JEANNE GORHAM
REVISED BY: OLW
DATE REVISED:

LAST REVISION 00-00-00
DATE PLOTTED => 24-AUG-2009
TIME PLOTTED => 13:09

Dist	COUNTY	ROUTE	POST MILES TOTAL PROJECT	SHEET No.	TOTAL SHEETS
04	CC,Sol	680,780	24.2/24.8,0.3/0.7, 0.6/1.2	29	46

LICENSED LANDSCAPE ARCHITECT

8-17-09
PLANS APPROVAL DATE

LICENSED LANDSCAPE ARCHITECT
CONNIE M. YIP No. 4317
Signature
02-29-10
Renewal Date
06-26-09
Date
STATE OF CALIFORNIA

THE STATE OF CALIFORNIA OR ITS OFFICERS OR AGENTS SHALL NOT BE RESPONSIBLE FOR THE ACCURACY OR COMPLETENESS OF ELECTRONIC COPIES OF THIS PLAN SHEET.

ABBREVIATIONS

EA — each
DIP — ductile iron pipe
GSP — galvanized steel pipe
Ft — foot/feet
PR — pressure rated

SUBTOTALS PER VALVE ON LATERAL SUPPLY SIDE OF CONTROL VALVE

DESCRIPTION			UNIT	VALVE OR ASSEMBLY NUMBER E-1	E-2	E-3	E-4	E-5	E-6	SUBTOTALS	UNIT	DESCRIPTION		
PLASTIC PIPE SUPPLY LINE	PR 200	¾"	LF	445	580	580	470	810	545	3430	LF	¾"	PR 200	PLASTIC PIPE SUPPLY LINE
		1"	LF	15	25	585	45	-	-	670	LF	1"		
	PR 315												PR 315	
GSP														GSP
DIP														DIP
SPRINKLER TYPE		C-2	EA	18	20	19	17	15	20	109	EA	C-2		SPRINKLER TYPE

IRRIGATION QUANTITIES
IQ-3

STATE OF CALIFORNIA - DEPARTMENT OF TRANSPORTATION
Caltrans LANDSCAPE ARCHITECTURE

SENIOR LANDSCAPE ARCHITECT: JEANNE GORHAM
CALCULATED-DESIGNED BY: OWEN WILLIAMS
CHECKED BY: JEANNE GORHAM
REVISED BY: OLW
DATE REVISED:

Dist	COUNTY	ROUTE	POST MILES TOTAL PROJECT	SHEET No.	TOTAL SHEETS
04	CC,Sol	680,780	24.2/24.8,0.3/0.7, 0.6/1.2	30	46

LICENSED LANDSCAPE ARCHITECT

8-17-09
PLANS APPROVAL DATE

THE STATE OF CALIFORNIA OR ITS OFFICERS OR AGENTS SHALL NOT BE RESPONSIBLE FOR THE ACCURACY OR COMPLETENESS OF ELECTRONIC COPIES OF THIS PLAN SHEET.

LICENSED LANDSCAPE ARCHITECT — CONNIE M. YIP No. 4577 — Signature — 02-29-10 Renewal Date — 06-26-09 Date — STATE OF CALIFORNIA

SUBTOTALS PER PLAN SHEET ON MAIN SUPPLY SIDE OF CONTROL VALVE

DESCRIPTION			UNIT	IP-1	IP-2	IP-3	IP-4	IP-5	IP-6	IP-7	IP-8	IP-9	SUBTOTALS
BPA		1-1/2"	EA	-	2	-	-	-	-	-	-	-	2
BPA		2"	EA	-	-	-	-	-	-	-	-	-	-
BPA		ENCLOSURE	EA	-	2	-	-	-	-	-	-	-	2
BOOSTER PUMP				-	1	-	-	-	1	-	-	-	2
IRRIGATION CONTROLLER		28 STATION	EA	-	-	-	1	-	1	-	-	-	2
IRRIGATION CONTROLLER		36 STATION	EA	-	1	1	-	-	-	-	-	-	2
IRRIGATION CONTROLLER	CEC	SINGLE	EA	-	1	1	1	-	1	-	-	-	4
IRRIGATION CONTROLLER	CEC	DOUBLE											
VALVES AND ASSEMBLIES	RCV(M)	1"	EA	3	15	23	11	3	9	1	2	3	70
VALVES AND ASSEMBLIES	RCV(M)	1-1/2"	EA	-	7	5	18	1	13	-	-	-	42
VALVES AND ASSEMBLIES	RCV(M)	2"	EA	-	6	-	1	-	1	-	-	-	8
VALVES AND ASSEMBLIES	GV	1"	EA	-	-	-	-	-	-	-	-	-	-
VALVES AND ASSEMBLIES	GV	1-1/4"	EA	1	-	-	-	-	-	-	-	-	1
VALVES AND ASSEMBLIES	GV	1-1/2"	EA	1	-	-	-	-	-	-	-	-	1
VALVES AND ASSEMBLIES	GV	2"	EA	-	4	1	-	-	-	1	1	1	8
VALVES AND ASSEMBLIES	GV	2-1/2"	EA	1	4	3	3	1	2	-	-	-	14
VALVES AND ASSEMBLIES	GV	3"	EA	-	5	3	4	-	2	-	-	-	14
VALVES AND ASSEMBLIES	QCV	¾"	EA	2	7	5	5	2	3	1	1	1	27
VALVES AND ASSEMBLIES	WS	1"	EA	2	2	4	1	1	-	1	1	1	13
VALVES AND ASSEMBLIES	WS	1-1/2"	EA	-	4	3	4	1	2	-	-	-	14
CONDUIT	CSP												
CONDUIT	WSP												
PLASTIC PIPE SUPPLY LINE	PR 200	¾"	LF	-	-	-	-	-	-	-	-	-	-
PLASTIC PIPE SUPPLY LINE	PR 200	1"	LF	-	-	-	-	-	-	-	-	-	-
PLASTIC PIPE SUPPLY LINE	PR 200	1-1/4"	LF	320	-	-	-	-	-	-	-	-	320
PLASTIC PIPE SUPPLY LINE	PR 200	1-1/2"	LF	80	190	-	-	-	-	-	-	-	270
PLASTIC PIPE SUPPLY LINE	PR 200	2"	LF	-	240	290	110	1020	-	1580	1120	190	4550
PLASTIC PIPE SUPPLY LINE	PR 200	2-1/2"	LF	1230	920	610	3390	520	450	-	-	-	7120
PLASTIC PIPE SUPPLY LINE	PR 315	3"	LF	-	3890	3760	650	-	2040	-	-	-	10340
GSP													
DIP													

TOTAL QUANTITIES

TOTALS	UNIT	DESCRIPTION		
2	EA	1-1/2"		BPA
-	EA	2"		BPA
2	EA	ENCLOSURE		BPA
2	EA	BOOSTER PUMP		
2	EA	STATION 28		IRRIGATION CONTROLLER
2	EA	STATION 36		IRRIGATION CONTROLLER
4	EA	SINGLE	CEC	IRRIGATION CONTROLLER
		DOUBLE	CEC	IRRIGATION CONTROLLER
70	EA	1"	RCV(M)	VALVES AND ASSEMBLIES
42	EA	1-1/2"	RCV(M)	VALVES AND ASSEMBLIES
8	EA	2"	RCV(M)	VALVES AND ASSEMBLIES
-	EA	1"	GV	VALVES AND ASSEMBLIES
1	EA	1-1/4"	GV	VALVES AND ASSEMBLIES
1	EA	1-1/2"	GV	VALVES AND ASSEMBLIES
8	EA	2"	GV	VALVES AND ASSEMBLIES
14	EA	2-1/2"	GV	VALVES AND ASSEMBLIES
14	EA	3"	GV	VALVES AND ASSEMBLIES
27	EA	¾"	QCV	VALVES AND ASSEMBLIES
13	EA	1"	WS	VALVES AND ASSEMBLIES
14	EA	1-1/2"	WS	VALVES AND ASSEMBLIES
			CSP	CONDUIT
			WSP	CONDUIT
53550	LF	¾"	PR 200	PLASTIC PIPE SUPPLY LINE
16000	LF	1"	PR 200	PLASTIC PIPE SUPPLY LINE
8110	LF	1-1/4"	PR 200	PLASTIC PIPE SUPPLY LINE
2650	LF	1-1/2"	PR 200	PLASTIC PIPE SUPPLY LINE
4550	LF	2"	PR 200	PLASTIC PIPE SUPPLY LINE
7120	LF	2-1/2"	PR 200	PLASTIC PIPE SUPPLY LINE
10340	LF	3"	PR 315	PLASTIC PIPE SUPPLY LINE
			GSP	
			DIP	
43	EA	A-6		SPRINKLER TYPE
3377	EA	C-2		SPRINKLER TYPE

ABBREVIATIONS

BPA — backflow preventer assembly
BV — ball valve
CV — check valve
CEC — controller enclosure cabinet
CSP — corrugated steel pipe
DIP — ductile iron pipe
EA — each
FAU — filter assembly unit
FCV — flow control valve
FS — flow sensor
FV — flush valve
GSP — galvanized steel pipe
GV — gate valve
MCV — manual control valve
Ft — foot/feet
PR — pressure rated
PRV — pressure reducing valve
PRLV — pressure relief valve
QCV — quick coupling valve
RCV — remote control valve
RCV(M) — remote control valve & RCV (master)
VAU — valve assembly unit
WSP — welded steel pipe
WS — wye strainer

IRRIGATION QUANTITIES
IQ-4

STATE OF CALIFORNIA - DEPARTMENT OF TRANSPORTATION
Caltrans LANDSCAPE ARCHITECTURE
SENIOR LANDSCAPE ARCHITECT: JEANNE GORHAM
CALCULATED-DESIGNED BY: OWEN WILLIAMS
CHECKED BY: JEANNE GORHAM
REVISED BY: OLW
DATE REVISED:

LAST REVISION 00-00-00
DATE PLOTTED => 24-AUG-2009
TIME PLOTTED => 13:09

Dist	COUNTY	ROUTE	POST MILES TOTAL PROJECT	SHEET No.	TOTAL SHEETS
04	CC,Sol	680,780	24.2/24.8,0.3/0.7, 0.6/1.2	31	46

M Noii 3/26/09
REGISTERED ELECTRICAL ENGINEER DATE

8-17-09
PLANS APPROVAL DATE

REGISTERED PROFESSIONAL ENGINEER
M. Noii
No. 13717
Exp. 6-30-11
ELECT
STATE OF CALIFORNIA

THE STATE OF CALIFORNIA OR ITS OFFICERS OR AGENTS SHALL NOT BE RESPONSIBLE FOR THE ACCURACY OR COMPLETENESS OF SCANNED COPIES OF THIS PLAN SHEET.

NOTES:

1. CONNECT TO EXISTING (480/120 V) STEP DOWN SUBMERSIBLE TYPE TRANSFORMER IN PULL BOX.
2. INSTALL ICC (SEE ES-3H FOR DETAILS)
3. INSTALL 1.25 kVA SINGLE PHASE (480/240 V) STEPDOWN SUBMERSIBLE TYPE TRANSFORMER IN PULL BOX. INSTALL TWO 1 A, 480 V IN LINE FUSES ON THE PRIMARY SIDE OF THE TRANSFORMER. CONNECT PRIMARY SIDE TO EXISTING 480 V TOS FEEDER 3.
4. INSTALL 1½''C, 2#8 (480 V, EEE),
   1#8 (NUETRAL),
   1#8 (GROUND),
   2#12 (LOW VOLTAGE CONTROL TO IRRIGATION CONTROLLER).
5. INSTALL 1''C, 2#8,
   1#8 (GROUND)
6. INSTALL 1½''C, 2#10 (120 V, IRRIGATION),
   2#12 (LOW VOLTAGE CONTROL TO IRRIGATION CONTROLLER),
   1#8 (GROUND).
7. EXISTING 2"C,
   3#6 (480 V TOS FEEDER 3).
   ADD 2#12 (LOW VOLTAGE CONTROL TO IRRIGATION CONTROLLER),
   1#8 (GROUND).
8. EXISTING 2"C,
   3#6 (480 V NL FEEDER 1),
   3#6 (480 V NL FEEDER 2),
   3#6 (480 V TOS FEEDER 3)
9. EXISTING 2"C,
   3#6 (480 V NL FEEDER 1),
   2#6 (480 V TOS FEEDER 3)
10. 1½'' CONDUIT SHOULD BE INSTALLED BY JACKING OR DRILLING METHODS

ABBREVIATIONS:

DC	DISTRIBUTION CABINET
EEE	ELECTICAL EQUIPMENT ENCLOSURE
NL	NORTH APPROACH LIGHTING

SYMBOL:

EXISTING	PROPOSED	
		TRANSFORMER
		EEE

THIS PLAN IS ACCURATE FOR ELECTRICAL WORK ONLY.

ELECTRICAL SERVICE
(IRRIGATION)
SCALE: 1"=50'

E-1

STATE OF CALIFORNIA - DEPARTMENT OF TRANSPORTATION
Caltrans
ELECTRICAL

FUNCTIONAL SUPERVISOR: MAHMOOD NOII
CALCULATED-DESIGNED BY: ALBERTO SOJUACO Jr
CHECKED BY: DAVID TRUONG
REVISED BY: A
DATE REVISED: A

LAST REVISION 05-29-09
DATE PLOTTED => 24-AUG-2009
TIME PLOTTED => 13:09

Dist	COUNTY	ROUTE	POST MILES TOTAL PROJECT	SHEET No.	TOTAL SHEETS
04	CC,Sol	680,780	24.2/24.8,0.3/0.7, 0.6/1.2	32	46

REGISTERED ELECTRICAL ENGINEER — DATE 3/26/09

8-17-09
PLANS APPROVAL DATE

REGISTERED PROFESSIONAL ENGINEER — M. Noii — No. 13717 — Exp 6-30-11 — ELECT — STATE OF CALIFORNIA

THE STATE OF CALIFORNIA OR ITS OFFICERS OR AGENTS SHALL NOT BE RESPONSIBLE FOR THE ACCURACY OR COMPLETENESS OF SCANNED COPIES OF THIS PLAN SHEET.

NOTE:

FOR COMPLETE RIGHT OF WAY AND ACCURATE ACCESS DATA, SEE RIGHT OF WAY RECORD MAPS AT DISTRICT OFFICE.

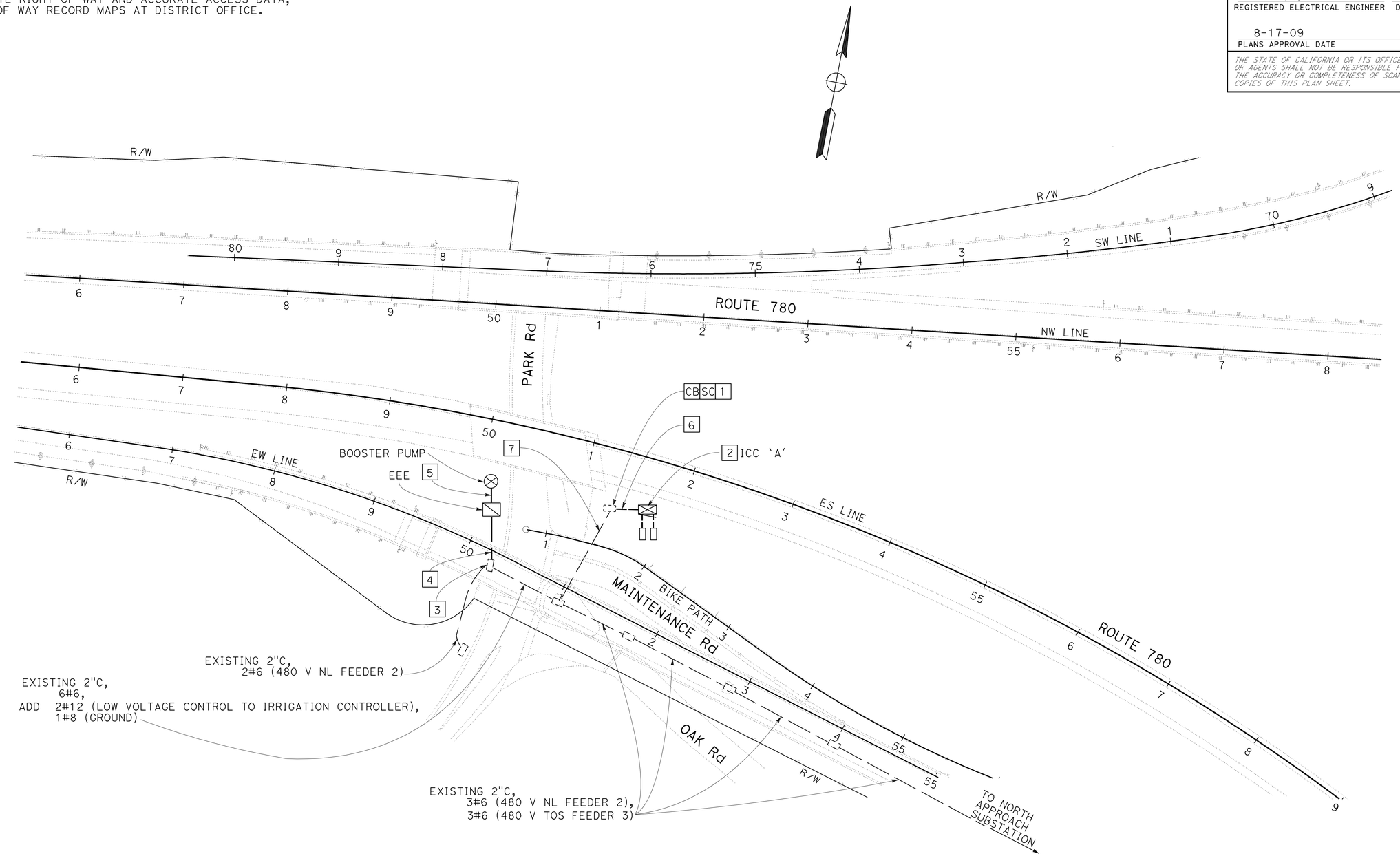

THIS PLAN IS ACCURATE FOR ELECTRICAL WORK ONLY.

FOR NOTES, ABBREVIATIONS AND LEGEND, SEE SHEET E-1

ELECTRICAL SERVICE
(IRRIGATION)
SCALE: 1"=50'

E-2

REVISED BY | DATE REVISED
ALBERTO SOJUACO Jr | DAVID TRUONG
CALCULATED-DESIGNED BY | CHECKED BY
FUNCTIONAL SUPERVISOR: MAHMOOD NOII

STATE OF CALIFORNIA - DEPARTMENT OF TRANSPORTATION
Caltrans
ELECTRICAL

LAST REVISION 05-29-09 | DATE PLOTTED => 24-AUG-2009 | TIME PLOTTED => 13:10

Dist	COUNTY	ROUTE	POST MILES TOTAL PROJECT	SHEET No.	TOTAL SHEETS
04	CC,Sol	680,780	24.2/24.8,0.3/0.7, 0.6/1.2	33	46

REGISTERED ELECTRICAL ENGINEER — DATE 3/26/09

8-17-09
PLANS APPROVAL DATE

REGISTERED PROFESSIONAL ENGINEER — M. Noii No. 13717 Exp 6-30-11 ELECT — STATE OF CALIFORNIA

THE STATE OF CALIFORNIA OR ITS OFFICERS OR AGENTS SHALL NOT BE RESPONSIBLE FOR THE ACCURACY OR COMPLETENESS OF SCANNED COPIES OF THIS PLAN SHEET.

NOTE:

FOR COMPLETE RIGHT OF WAY AND ACCURATE ACCESS DATA, SEE RIGHT OF WAY RECORD MAPS AT DISTRICT OFFICE.

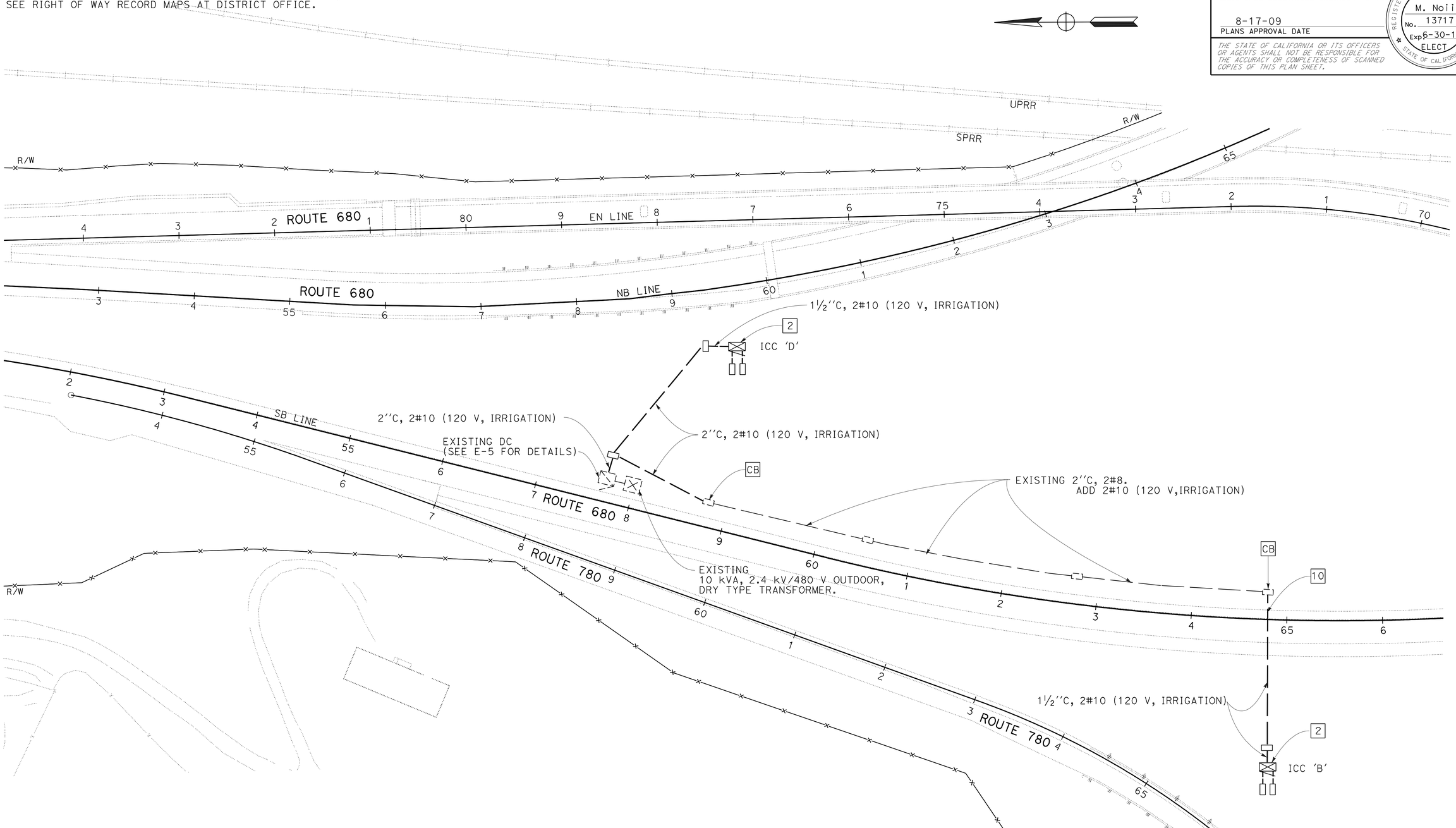

THIS PLAN IS ACCURATE FOR ELECTRICAL WORK ONLY.

FOR NOTES, ABBREVIATIONS AND LEGEND, SEE SHEET E-1

ELECTRICAL SERVICE
(IRRIGATION)
SCALE: 1"=50'

E-3

STATE OF CALIFORNIA - DEPARTMENT OF TRANSPORTATION
Caltrans
ELECTRICAL

FUNCTIONAL SUPERVISOR: MAHMOOD NOII
CALCULATED-DESIGNED BY: ALBERTO SOJUACO JR
CHECKED BY: DAVID TRUONG
REVISED BY
DATE REVISED

LAST REVISION 05-29-09 | DATE PLOTTED => 24-AUG-2009 | TIME PLOTTED => 13:10

BORDER LAST REVISED 4/11/2008 | RELATIVE BORDER SCALE IS IN INCHES 0 1 2 3 | USERNAME => trlenard | DGN FILE => 40060Ctt004.dgn | CU 04609 | EA 0060C1

Dist	COUNTY	ROUTE	POST MILES TOTAL PROJECT	SHEET No.	TOTAL SHEETS
04	CC,Sol	680,780	24.2/24.8,0.3/0.7, 0.6/1.2	34	46

REGISTERED ELECTRICAL ENGINEER — DATE 3/26/09

8-17-09
PLANS APPROVAL DATE

REGISTERED PROFESSIONAL ENGINEER — M. Noii — No. 13717 — Exp. 6-30-11 — ELECT — STATE OF CALIFORNIA

THE STATE OF CALIFORNIA OR ITS OFFICERS OR AGENTS SHALL NOT BE RESPONSIBLE FOR THE ACCURACY OR COMPLETENESS OF SCANNED COPIES OF THIS PLAN SHEET.

NOTE:

FOR COMPLETE RIGHT OF WAY AND ACCURATE ACCESS DATA, SEE RIGHT OF WAY RECORD MAPS AT DISTRICT OFFICE.

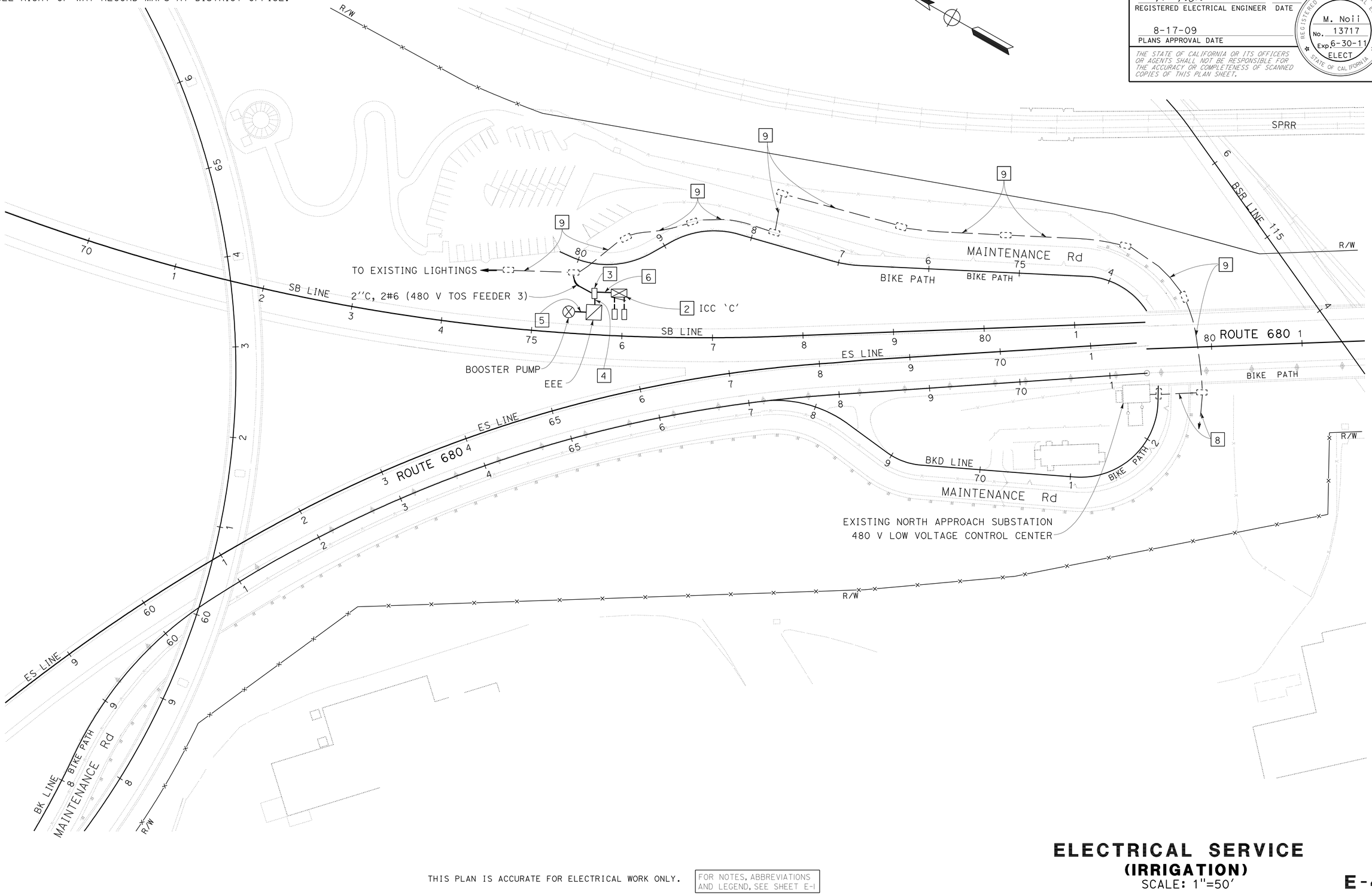

THIS PLAN IS ACCURATE FOR ELECTRICAL WORK ONLY.

FOR NOTES, ABBREVIATIONS AND LEGEND, SEE SHEET E-1

ELECTRICAL SERVICE
(IRRIGATION)
SCALE: 1"=50'

E-4

STATE OF CALIFORNIA - DEPARTMENT OF TRANSPORTATION
Caltrans
ELECTRICAL

FUNCTIONAL SUPERVISOR: MAHMOOD NOII
CALCULATED-DESIGNED BY: ALBERTO SOJUACO JR
CHECKED BY: DAVID TRUONG
REVISED BY / DATE REVISED

LAST REVISION 05-29-09
DATE PLOTTED => 24-AUG-2009
TIME PLOTTED => 13:10

Dist	COUNTY	ROUTE	POST MILES TOTAL PROJECT	SHEET No.	TOTAL SHEETS
04	CC,Sol	680,780	24.2/24.8,0.3/0.7, 0.6/1.2	35	46

REGISTERED ELECTRICAL ENGINEER — DATE 3/26/09

8-17-09
PLANS APPROVAL DATE

REGISTERED PROFESSIONAL ENGINEER — M. Noii — No. 13717 — Exp. 6-30-11 — ELECT — STATE OF CALIFORNIA

THE STATE OF CALIFORNIA OR ITS OFFICERS OR AGENTS SHALL NOT BE RESPONSIBLE FOR THE ACCURACY OR COMPLETENESS OF SCANNED COPIES OF THIS PLAN SHEET.

480 V(ac) PANEL (E2) LEGEND

ITEM	COMPOMENT	NAMEPLATE	NOTES
①	20 A, 480 V, 2P CB	RAMP METERING XFMR	
②	20 A, 480 V, 2P CB	LIGHTING	
③	20 A, 480 V, 2P CB	SIGN ILLUMINATION	
④	20 A, 480 V, 2P CB	TRANSFORMER	
⑤	20 A, 480 V, 2P CB	SPARE	
⑥	20 A, 480 V, 2P CB	TMS XFMR	
⑦	150 A, 480 V, 2P CB	MAIN	

240/120 V(ac) PANEL (E4) LEGEND

ITEM	COMPOMENT	NAMEPLATE	NOTES
①	60 A, 240 V, 2P CB	MAIN	
②	20 A, 120 V, 1P CB	ICC	
③	20 A, 120 V, 1P CB	SPARE	
④	30 A, 120 V, 1P CB	EMS	
⑤	20 A, 120 V, 1P CB	PEU	
⑥	20 A, 120 V, 1P CB	SPARE	
⑦	20 A, 120 V, 1P CB	MVDS	

EQUIPMENT LEGEND

ITEM	NAMEPLATE
E1	10 kVA, 2.4 kV/480 V, 1Ø TRANSFORMER
E2	150 A, 480 V(ac),1Ø PANEL
E3	1 kVA, 480 V-240/120 V(ac), 1Ø TRANSFORMER
E4	60 A, 240/120 V(ac), 1Ø, 3 W PANEL
E5	LIGHTING CONTACTOR AND TEST STATION
E6	TEST AUTO
E7	DISTRIBUTION CABINET

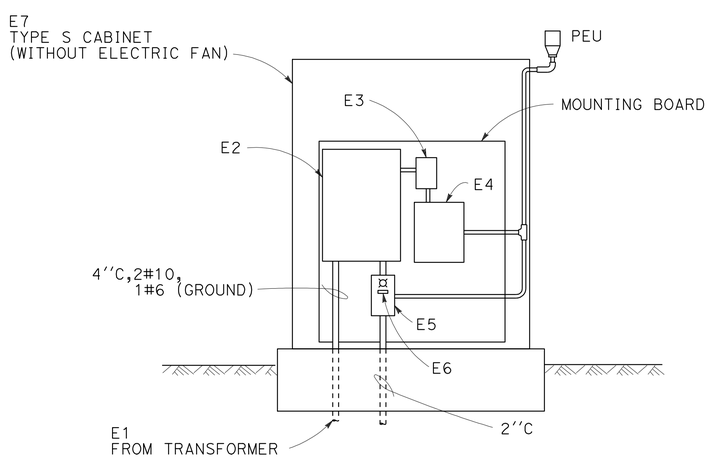

LAYOUT

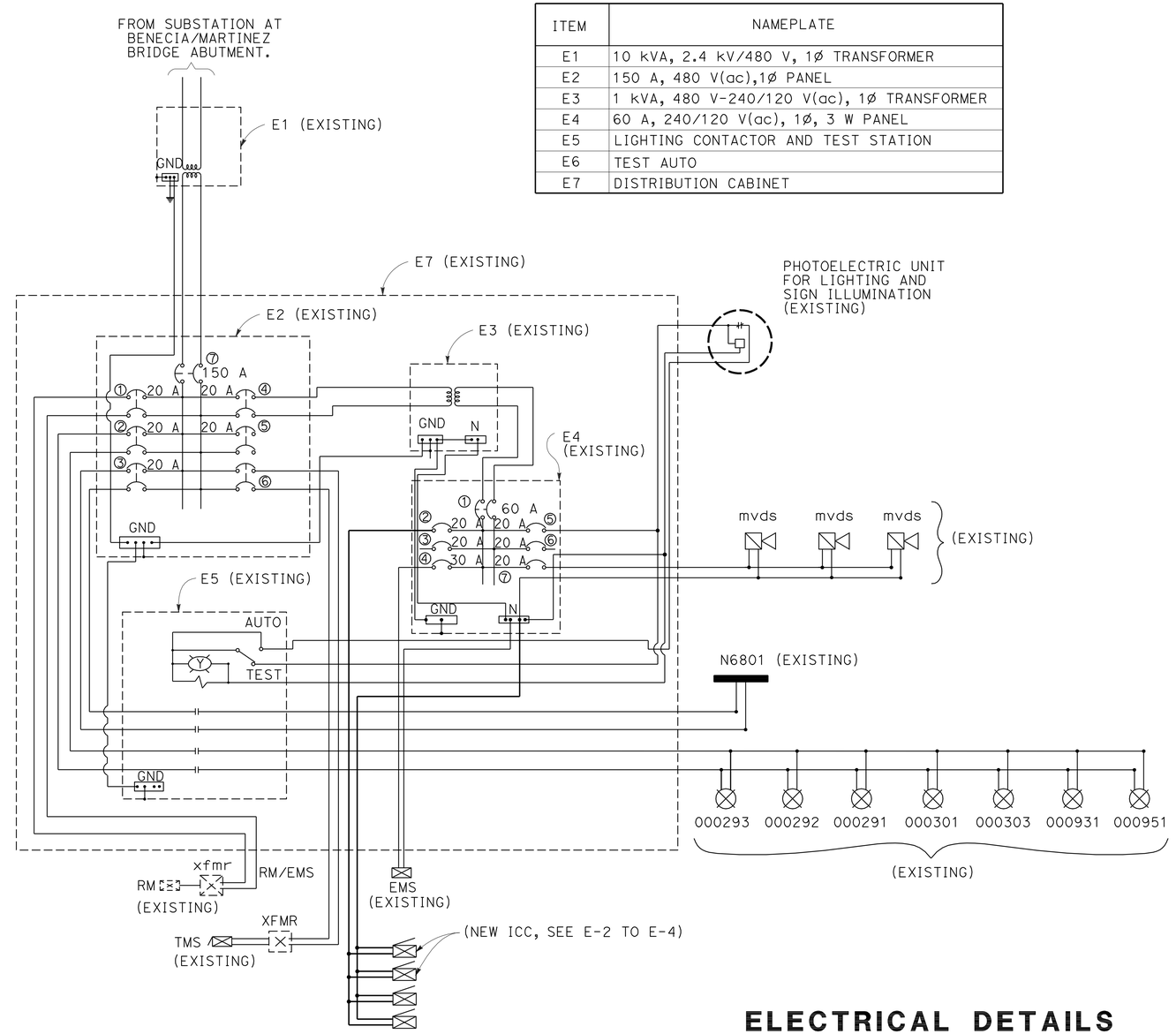

WIRING DIAGRAM

THIS PLAN IS ACCURATE FOR ELECTRICAL WORK ONLY.

FOR NOTES, ABBREVIATIONS AND LEGEND, SEE SHEET E-1

ELECTRICAL DETAILS
(EXISTING DISTRUBUTION CABINET)

NO SCALE

E-5

STATE OF CALIFORNIA - DEPARTMENT OF TRANSPORTATION
ELECTRICAL
FUNCTIONAL SUPERVISOR: MAHMOOD NOII
CALCULATED-DESIGNED BY: ALBERTO SOJUACO Jr
CHECKED BY: DAVID TRUONG
REVISED BY
DATE REVISED

LAST REVISION 05-29-09 | DATE PLOTTED => 24-AUG-2009 | TIME PLOTTED => 13:10

DIST	COUNTY	ROUTE	POST MILES TOTAL PROJECT	SHEET NO.	TOTAL SHEETS
04	CC,Sol	680,780	24.2/24.8,0.3/0.7, 0.6/1.2	36	46

Gregory A. Balzer
LICENSED LANDSCAPE ARCHITECT

June 5, 2009
PLANS APPROVAL DATE

The State of California or its officers or agents shall not be responsible for the accuracy or completeness of electronic copies of this plan sheet.

LICENSED LANDSCAPE ARCHITECT Gregory A. Balzer 2576 STATE OF CALIFORNIA
10 (previous) 2-28-11 (renewal) date
5-14-09 date

To accompany plans dated 8-17-09

2006 REVISED STANDARD PLAN RSP H1

A

AB	aggregate base
ABS	acrylonitrile-butadiene-styrene
AC	asphalt concrete
Adj	adjacent/adjustable
AIC	auxiliary irrigation controller
Alt	alternative
AMEND	amendment
ARV	air release valve
AUTO	automatic
AUX	auxiliary
AVB	atmospheric vacuum breaker

B

B&B	balled and burlapped
B/B	brass/bronze
B/B/PL	brass/bronze/plastic
B/PL	brass/plastic
BFM	bonded fiber matrix
Bit Ctd	bituminous coated
BP	booster pump
BPA	backflow preventer assembly
BPAE	backflow preventer assembly in enclosure
BPE	backflow preventer enclosure
BV	ball valve

C

CAP	corrugated aluminum pipe
CARV	combination air release valve
CCA	cam coupler assembly
CEC	controller enclosure cabinet
CHDPE	corrugated high density polyethylene
CL	chain link
CNC	control and neutral conductors
Conc	concrete
Cond	conduit
CSP	corrugated steel pipe
CST	center strip
CV	check valve

D

Dia	diameter
DIP	ductile iron pipe
DN	diameter nominal

E

EA	each
Elect	electric/electrical
Elev	elevation
ENCL	enclosure
EP	edge of pavement
ES	edge of shoulder
EST	end strip
ESTB	establishment
ETW	edge of traveled way

F

F	full circle
F/P	full/part circle
FAU	filter assembly unit
FCV	flow control valve
FERT	fertilizer
FG	finished grade
FIPT	female iron pipe thread
FIS	fertilizer injector system
FL	flow line
FM	flow monitor
FS	flow sensor
Ft	foot/feet
FV	flush valve

G

GAL	Gallon(s)
Galv	galvanized
GARV	garden valve
GPH	gallons per hour
GPM	gallons per minute
GSP	galvanized steel pipe
GV	gate valve

H

H	half circle
HB	hose bib
HDPE	high density polyethylene
HP	horsepower/hinge point
HPL	high pressure line
Hwy	highway

I

IC	irrigation controller
ICC	irrigation controller(s) in controller enclosure cabinet
ID	inside diameter
In	inches
IFS	irrigation filtration system
IPS	iron pipe size
IPT	iron pipe thread
Irr	irrigation

L

L	length
LF	linear foot

M

Max	maximum
MBGR	metal beam guard railing
MCV	manual control valve
MIC	master irrigation controller
Min	minimum
MIPT	male iron pipe thread
Misc	miscellaneous
Mtl	material
MVP	maintenance vehicle pullout

N

NCN	no common name
NL	nozzle line
No.	number
NPT	national pipe thread

O

O/C	on center
OD	outside diameter
Oz	ounce

P

P	part circle
PB	pull box
PCC	portland cement concrete
PE	polyethylene
Pkt	packet
PL	plastic
PLT	plant/planting
PLT ESTB	plant establishment
PM	post mile
PR	pressure rated
PRLV	pressure relief valve
PSFM	polymer stabilized fiber matrix
PSI	pounds per square inch
PRV	pressure reducing valve
PVC	polyvinyl chloride
Pvmt	pavement

Q

Q	quarter circle
QCV	quick coupling valve

R

R	radius
RCP	reinforced concrete pipe
RCV	remote control valve
RCVM	remote control valve (master)
RCVMF	remote control valve (master) w/ flow meter
RCW	recycled/reclaimed water
RECP	rolled erosion control product
REQ	required
R/W	right of way

S

S	slip
SCC	sprinkler control conduit
SCH	schedule
SF	state-furnished
Shld	shoulder
SQFT	square foot/feet
SQYD	square yard(s)
SST	side strip
Sta	station
Std	standard
SW	sidewalk/sound wall

T

T	third circle/thread
TLS	truck loading standpipe
TQ	three quarter circle
TRM	turf reinforcement mat
TRVD	traveled
TT	two third circle
Typ	typical

U

UG	underground

V

VAU	valve assembly unit

W

W	width
W/	with
WM	water meter
WS	wye strainer
WSP	welded steel pipe
WWM	welded wire mesh

NOTE:

FOR ADDITIONAL ABBREVIATIONS, SEE STANDARD PLANS A10A AND A10B.

STATE OF CALIFORNIA
DEPARTMENT OF TRANSPORTATION

PLANTING AND IRRIGATION ABBREVIATIONS

NO SCALE

RSP H1 DATED JUNE 5, 2009 SUPERSEDES STANDARD PLAN H1
DATED MAY 1, 2006 - PAGE 201 OF THE STANDARD PLANS BOOK DATED MAY 2006.

REVISED STANDARD PLAN RSP H1

5-28-09

DIST	COUNTY	ROUTE	POST MILES TOTAL PROJECT	SHEET NO.	TOTAL SHEETS
04	CC,Sol	680,780	24.2/24.8,0.3/0.7, 0.6/1.2	37	46

LICENSED LANDSCAPE ARCHITECT

June 5, 2009
PLANS APPROVAL DATE

The State of California or its officers or agents shall not be responsible for the accuracy or completeness of electronic copies of this plan sheet.

LICENSED LANDSCAPE ARCHITECT — Gregory A. Balzer — 2576 — STATE OF CALIFORNIA
10 expiration date
2-28-11 (renewal) date
5-14-09 date

To accompany plans dated 8-17-09

EXISTING	PROPOSED	ITEM DESCRIPTION
		WATER METER (WM)
		BACKFLOW PREVENTER ASSEMBLY (BPA)
		BACKFLOW PREVENTER ASSEMBLY IN ENCLOSURE (BPAE)
		BACKFLOW PREVENTER ENCLOSURE (BPE)
		BOOSTER PUMP (BP)
		TRUCK LOADING STANDPIPE (TLS)
FS	FS	FLOW SENSOR (FS)
X	X	MASTER IRRIGATION CONTROLLER (MIC)
		AUXILIARY IRRIGATION CONTROLLER (AIC)
		IRRIGATION CONTROLLER (IC)/ IRRIGATION CONTROLLER (IC) (BATTERY) IRRIGATION CONTROLLER (IC) (SOLAR)
		IRRIGATION CONTROLLER(S) IN CONTROLLER ENCLOSURE CABINET (ICC)
		CONTROL AND NEUTRAL CONDUCTORS (CNC)
SCC	SCC	SPRINKLER CONTROL CONDUIT (SCC)
		IRRIGATION CROSSOVER
		EXTEND IRRIGATION CROSSOVER
		IRRIGATION SLEEVE
dip	DIP	DUCTILE IRON PIPE (SUPPLY LINE) (MAIN) (DIP)
		GALVANIZED STEEL PIPE (SUPPLY LINE) (MAIN) (GSP)
		GALVANIZED STEEL PIPE (SUPPLY LINE) (LATERAL) (GSP)
		PLASTIC PIPE (PR 200) (SUPPLY LINE) (MAIN)
		PLASTIC PIPE (PR 200) (SUPPLY LINE) (LATERAL)
		PLASTIC PIPE (IRRIGATION LINE)
		REMOTE CONTROL VALVE (RCV) REMOTE CONTROL VALVE (MASTER) (RCVM) REMOTE CONTROL VALVE (MASTER) W/FLOW METER (RCVMF)
		MANUAL CONTROL VALVE (MCV)
		VALVE ASSEMBLY UNIT (VAU)
		WYE STRAINER (WS)
		FILTER ASSEMBLY UNIT (FAU)
		GATE VALVE (GV)
		BALL VALVE (BV)

EXISTING	PROPOSED	ITEM DESCRIPTION
		QUICK COUPLING VALVE (QCV)
		CAM COUPLER ASSEMBLY (CCA)
		PRESSURE REDUCING VALVE (PRV)
		PRESSURE RELIEF VALVE (PRLV)
		FLOW CONTROL VALVE (FCV)
		COMBINATION AIR RELEASE VALVE (CARV)
		CHECK VALVE (CV)
		FLUSH VALVE (FV)
		NOZZLE LINE W/TURNING UNION
		IRRIGATION SYSTEM
		IRRIGATION SYSTEM TO BE REMOVED
		CHAIN LINK GATE
		QUICK COUPLING VALVE W/SPRINKLER PROTECTOR
3	3	SPRINKLER W/SPRINKLER PROTECTOR
	C	CONNECT TO EXISTING SYSTEM
		CAP
		CAP EXISTING

VALVE CODE

RCV SIZE
IRRIGATION CONTROLLER
CONTROLLER STATION
VALVE IN PARALLEL (IF APPLICABLE)
GPM
QUANTITY OF SPRINKLERS (WHEN SHOWN)

* 2½"-A-2b-40 -60

MCV SIZE
VALVE NUMBER
GPM
QUANTITY OF TYPE SPRINKLERS (WHEN SHOWN)

* 2"-3-30 -50

* VALVE CODES FOR EXISTING VALVES ARE SHOWN IN A DASHED ENCLOSURE.

STATE OF CALIFORNIA
DEPARTMENT OF TRANSPORTATION

PLANTING AND IRRIGATION SYMBOLS

NO SCALE

RSP H2 DATED JUNE 5, 2009 SUPERSEDES RSP H2 DATED MARCH 7, 2008 AND STANDARD PLAN H2 DATED MAY 1, 2006 - PAGE 202 OF THE STANDARD PLANS BOOK DATED MAY 2006.

REVISED STANDARD PLAN RSP H2

2006 REVISED STANDARD PLAN RSP H2

5-11-09

DIST	COUNTY	ROUTE	POST MILES TOTAL PROJECT	SHEET NO.	TOTAL SHEETS
04	CC,Sol	680,780	24.2/24.8,0.3/0.7, 0.6/1.2	38	46

Gregory A. Balzer
LICENSED LANDSCAPE ARCHITECT

June 5, 2009
PLANS APPROVAL DATE

LICENSED LANDSCAPE ARCHITECT Gregory A. Balzer 2576 STATE OF CALIFORNIA
10 (renewal) 2-28-11 (renewal) date 5-14-09 date

The State of California or its officers or agents shall not be responsible for the accuracy or completeness of electronic copies of this plan sheet.

To accompany plans dated 8-17-09

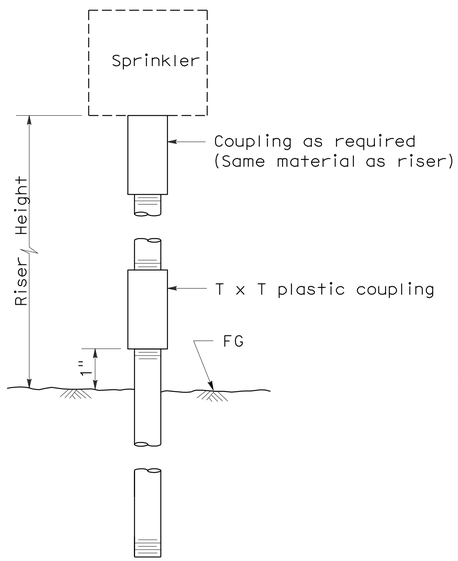

ELEVATION
RISER TYPE I

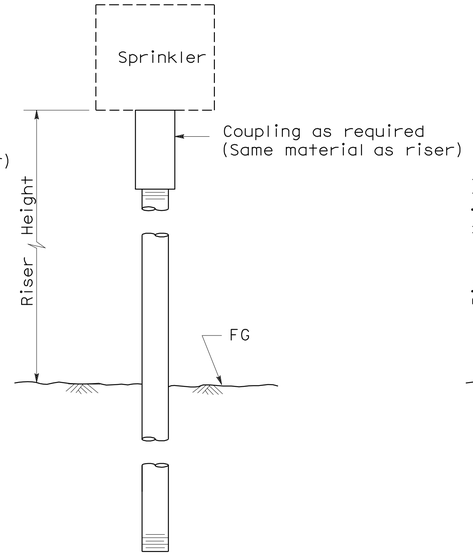

ELEVATION
RISER TYPE II

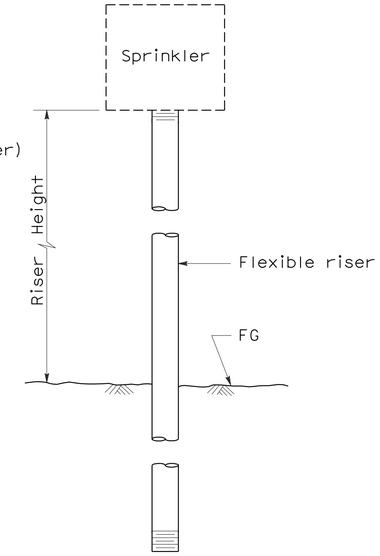

ELEVATION
RISER TYPE III

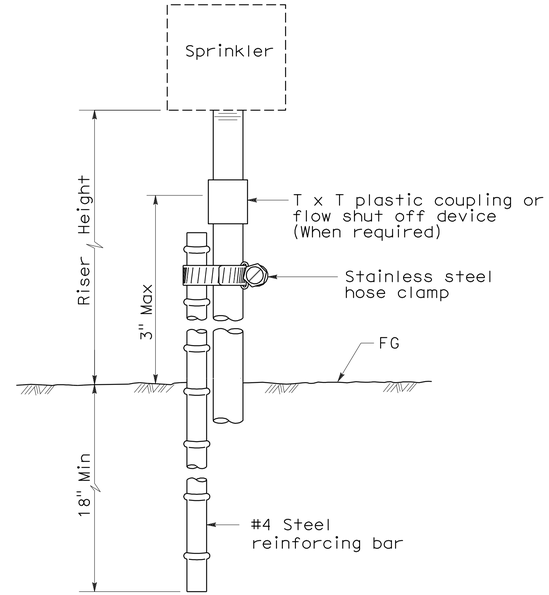

ELEVATION
RISER TYPE IV

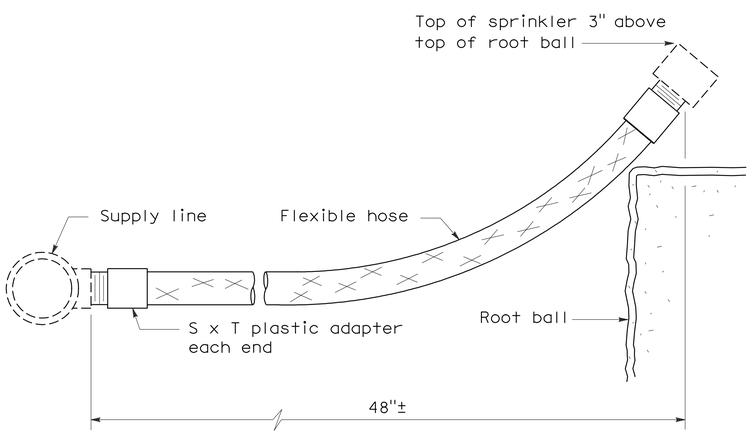

ELEVATION
RISER TYPE V

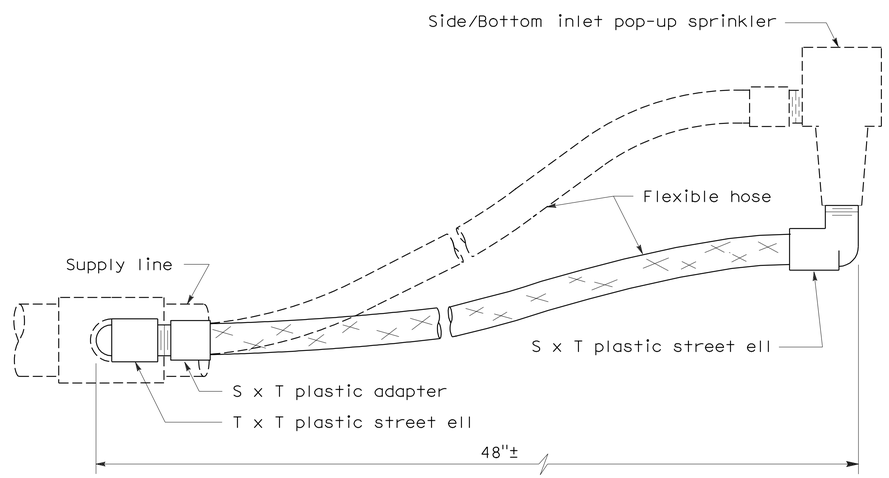

ELEVATION
RISER TYPE VI

STATE OF CALIFORNIA
DEPARTMENT OF TRANSPORTATION

PLANTING AND IRRIGATION DETAILS

NO SCALE

RSP H5 DATED JUNE 5, 2009 SUPERSEDES STANDARD PLAN H5
DATED MAY 1, 2006 - PAGE 205 OF THE STANDARD PLANS BOOK DATED MAY 2006.

REVISED STANDARD PLAN RSP H5

2006 REVISED STANDARD PLAN RSP H5

5-28-09

DIST	COUNTY	ROUTE	POST MILES TOTAL PROJECT	SHEET NO.	TOTAL SHEETS
04	CC,Sol	680,780	24.2/24.8,0.3/0.7, 0.6/1.2	39	46

LICENSED LANDSCAPE ARCHITECT

June 5, 2009
PLANS APPROVAL DATE

Gregory A. Baker 2576 LICENSED LANDSCAPE ARCHITECT STATE OF CALIFORNIA
10 expiration date
2-28-11 renewal date
5-14-09 date

The State of California or its officers or agents shall not be responsible for the accuracy or completeness of electronic copies of this plan sheet.

To accompany plans dated 8-17-09

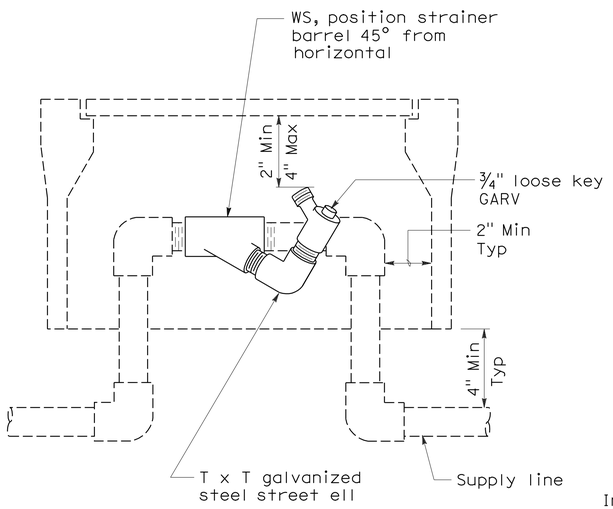

ELEVATION
WYE STRAINER

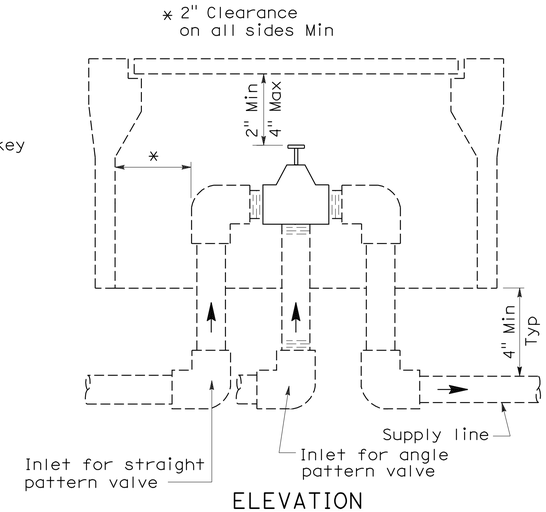

ELEVATION
VALVE

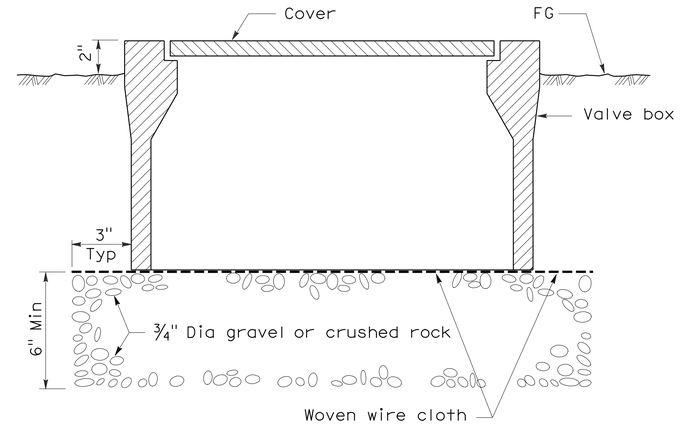

SECTION
VALVE BOX

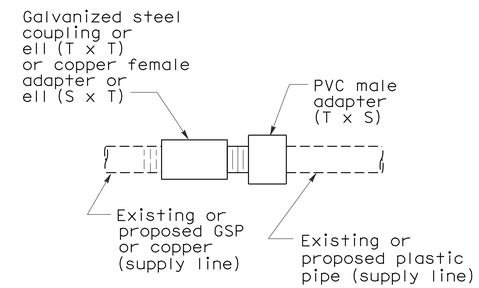

PLAN
GALVANIZED OR COPPER PIPE CONNECTION TO PLASTIC PIPE

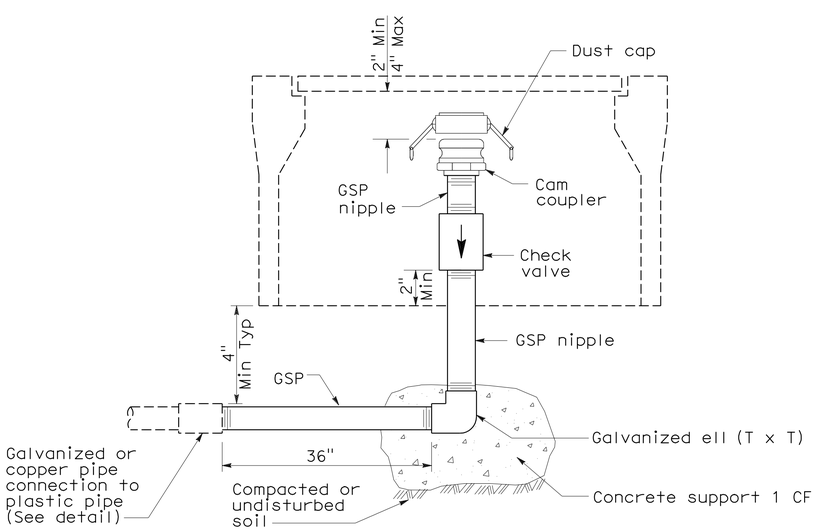

ELEVATION
CAM COUPLER ASSEMBLY

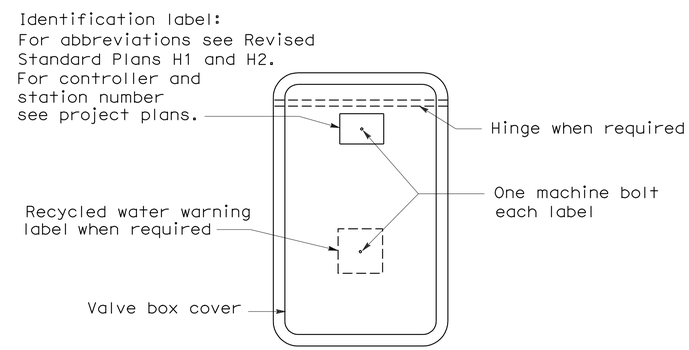

PLAN

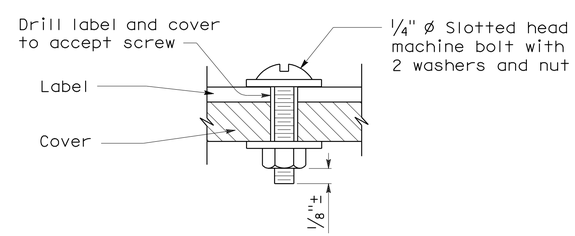

SECTION
VALVE BOX IDENTIFICATION

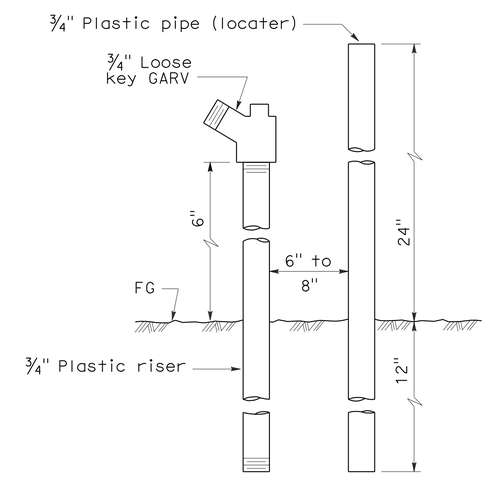

ELEVATION
FLUSH VALVE

STATE OF CALIFORNIA
DEPARTMENT OF TRANSPORTATION

PLANTING AND IRRIGATION DETAILS

NO SCALE

RSP H7 DATED JUNE 5, 2009 SUPERSEDES STANDARD PLAN H7
DATED MAY 1, 2006 - PAGE 207 OF THE STANDARD PLANS BOOK DATED MAY 2006.

REVISED STANDARD PLAN RSP H7

2006 REVISED STANDARD PLAN RSP H7

5-28-09

DIST	COUNTY	ROUTE	POST MILES TOTAL PROJECT	SHEET NO.	TOTAL SHEETS
04	CC,Sol	680,780	24.2/24.8,0.3/0.7, 0.6/1.2	40	46

Gregory A. Balzer
LICENSED LANDSCAPE ARCHITECT

June 5, 2009
PLANS APPROVAL DATE

LICENSED LANDSCAPE ARCHITECT Gregory A. Balzer 2576 STATE OF CALIFORNIA
10-31-10 expiration date
2-28-11 (renewal) date
5-14-09 date

The State of California or its officers or agents shall not be responsible for the accuracy or completeness of electronic copies of this plan sheet.

To accompany plans dated 8-17-09

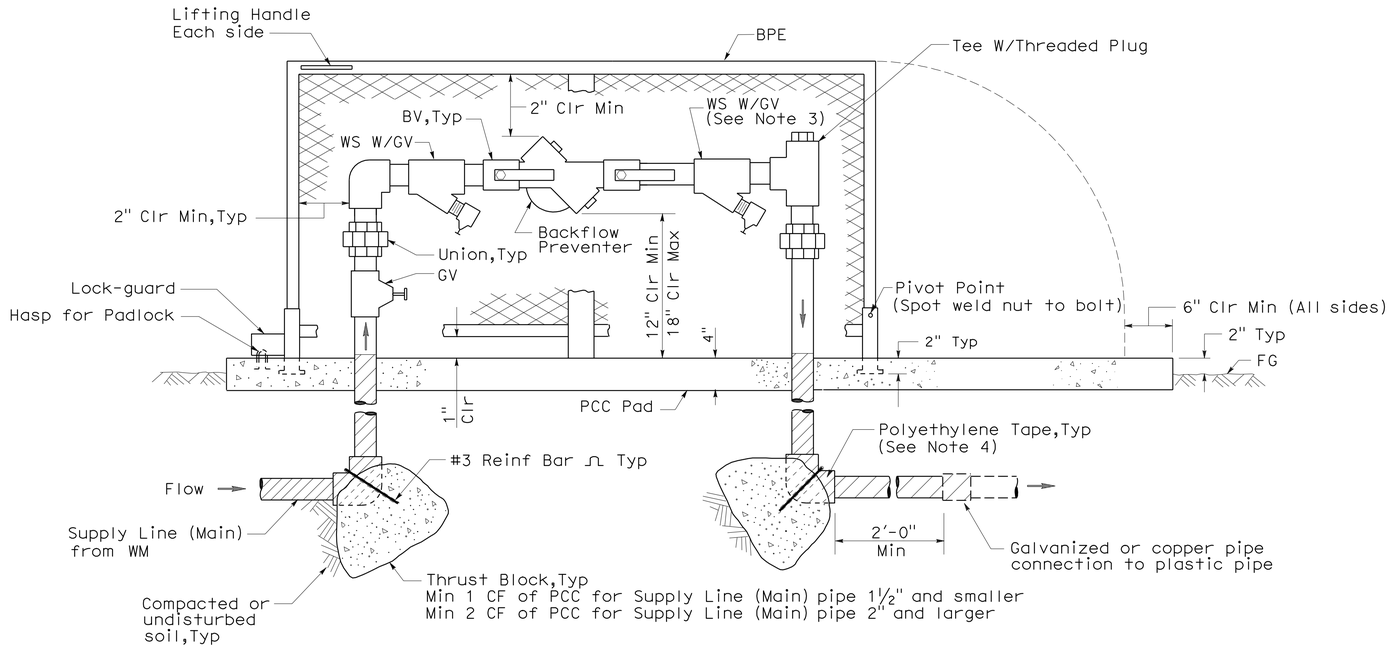

ELEVATION

BACKFLOW PREVENTER ASSEMBLY IN ENCLOSURE (ONE PIECE)

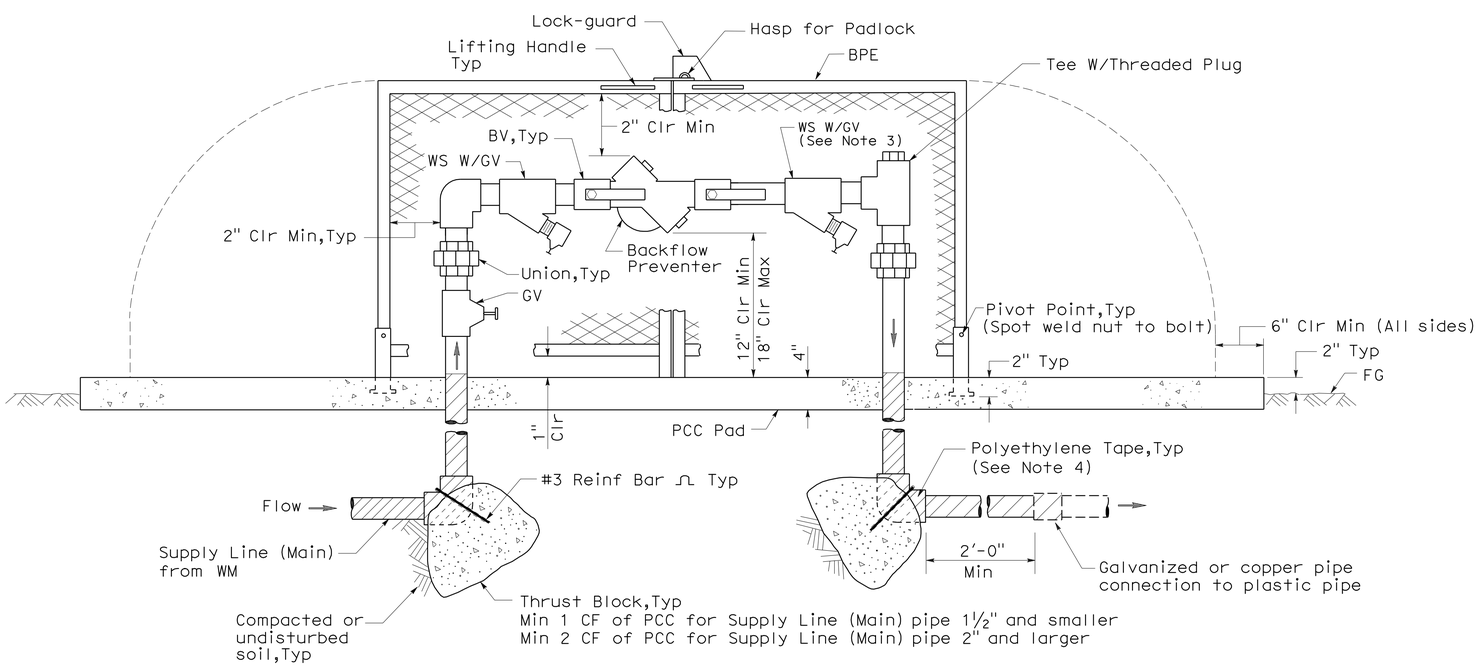

ELEVATION

BACKFLOW PREVENTER ASSEMBLY IN ENCLOSURE (TWO PIECE)

NOTES:

1. Wye strainer and fittings must be the same size as the backflow preventer shown on the plans.
2. Backflow preventer assembly manifold pipe must be the same pipe as the supply line (main) pipe to be installed from the water meter to the backflow preventer assembly.
3. Wye strainer location shown downstream of the backflow preventer is for District 11 projects only.
4. All metal in contact with soil and Portland Cement Concrete must be polyethylene wrapped using 2" wide plastic backed adhesive tape 20 mil thick with ½" overlap.

STATE OF CALIFORNIA
DEPARTMENT OF TRANSPORTATION

PLANTING AND IRRIGATION DETAILS

NO SCALE

RSP H8 DATED JUNE 5, 2009 SUPERSEDES STANDARD PLAN H8
DATED MAY 1, 2006 - PAGE 208 OF THE STANDARD PLANS BOOK DATED MAY 2006.

REVISED STANDARD PLAN RSP H8

2006 REVISED STANDARD PLAN RSP H8

5-28-09

DIST	COUNTY	ROUTE	POST MILES TOTAL PROJECT	SHEET NO.	TOTAL SHEETS
04	CC,Sol	680,780	24.2/24.8,0.3/0.7, 0.6/1.2	41	46

Randell D. Hiatt
REGISTERED CIVIL ENGINEER

June 6, 2008
PLANS APPROVAL DATE

REGISTERED PROFESSIONAL ENGINEER
Randell D. Hiatt
No. C50200
Exp. 6-30-09
CIVIL
STATE OF CALIFORNIA

The State of California or its officers or agents shall not be responsible for the accuracy or completeness of electronic copies of this plan sheet.

To accompany plans dated 8-17-09

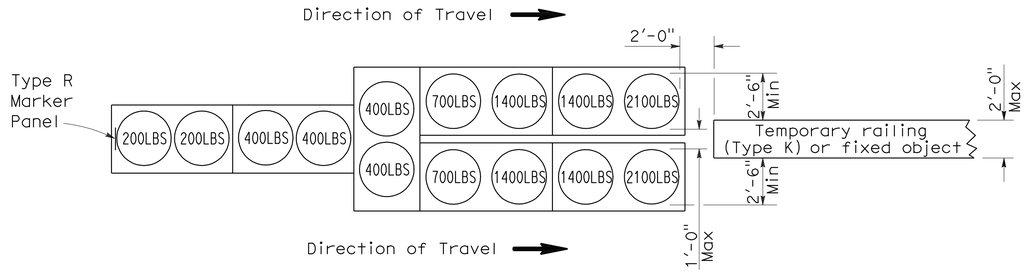

ARRAY 'TU14'

Approach speed 45 mph or more

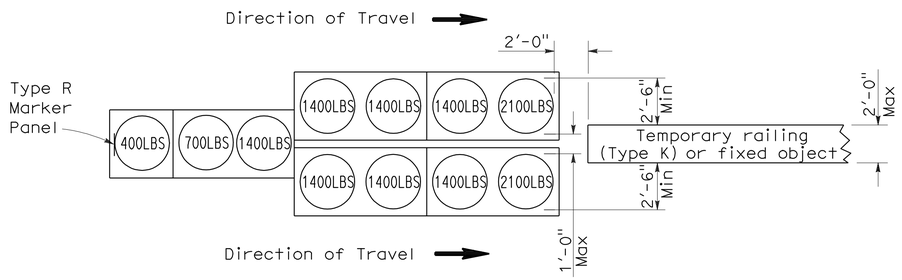

ARRAY 'TU11'

Approach speed less than 45 mph

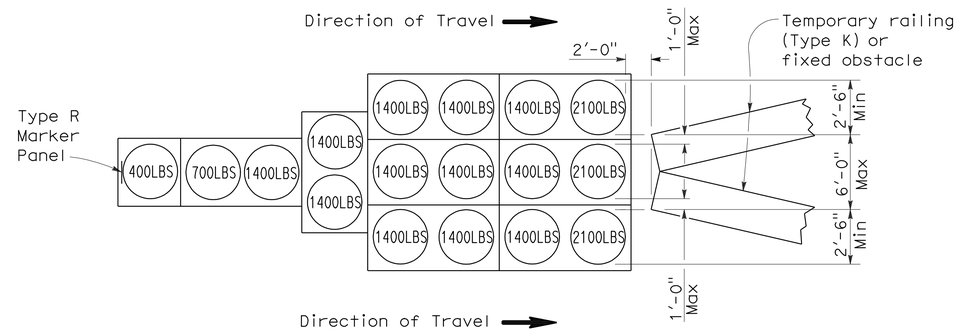

ARRAY 'TU17'

Approach speed less than 45 mph

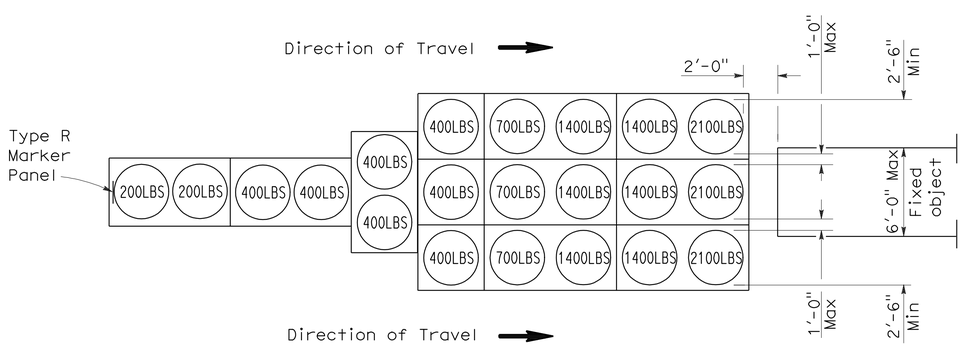

ARRAY 'TU21'

Approach speed 45 mph or more

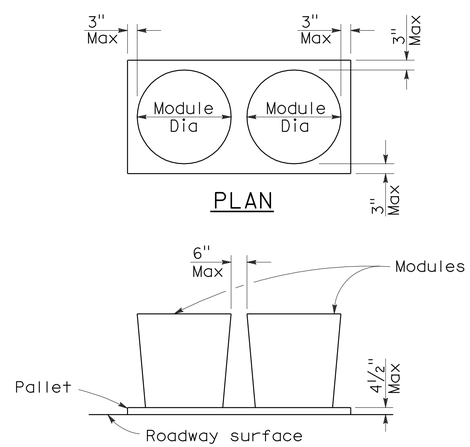

CRASH CUSHION PALLET DETAIL

See Note 7

NOTES:

1. (XXX) Indicates sand filled module location and weight of sand in pounds for each module. Module spacing is based on the greater diameter of the module.
2. All sand weights are nominal.
3. Temporary crash cushion arrays shall not encroach on the traveled way.
4. Place the top of Type R marker panel 1" below the module lid.
5. Refer to Standard Plan A73B for marker details.
6. Approach speeds indicated conform to NCHRP 350 Report criteria.
7. Use of pallets is optional.

STATE OF CALIFORNIA
DEPARTMENT OF TRANSPORTATION

TEMPORARY CRASH CUSHION, SAND FILLED (UNIDIRECTIONAL)

NO SCALE

RSP T1A DATED JUNE 6, 2008 SUPERSEDES STANDARD PLAN T1A
DATED MAY 1, 2006 - PAGE 211 OF THE STANDARD PLANS BOOK DATED MAY 2006.

REVISED STANDARD PLAN RSP T1A

2006 REVISED STANDARD PLAN RSP T1A

5-15-08

DIST	COUNTY	ROUTE	POST MILES TOTAL PROJECT	SHEET NO.	TOTAL SHEETS
04	CC,Sol	680,780	24.2/24.8,0.3/0.7, 0.6/1.2	42	46

Randell D. Hiatt
REGISTERED CIVIL ENGINEER

June 6, 2008
PLANS APPROVAL DATE

REGISTERED PROFESSIONAL ENGINEER
Randell D. Hiatt
No. C50200
Exp. 6-30-09
CIVIL
STATE OF CALIFORNIA

The State of California or its officers or agents shall not be responsible for the accuracy or completeness of electronic copies of this plan sheet.

To accompany plans dated 8-17-09

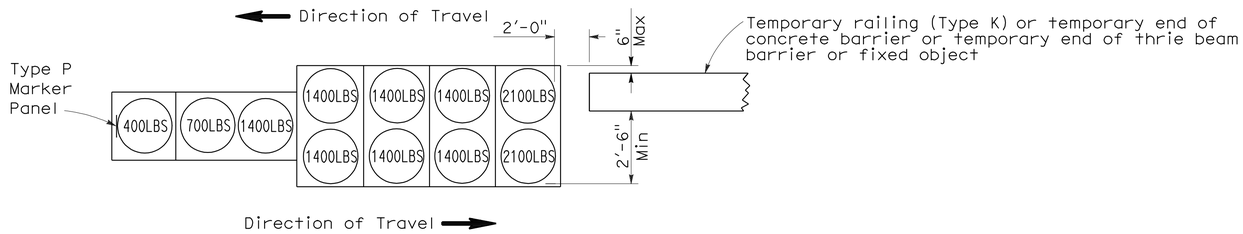

ARRAY 'TB11'

Approach speed less than 45 mph

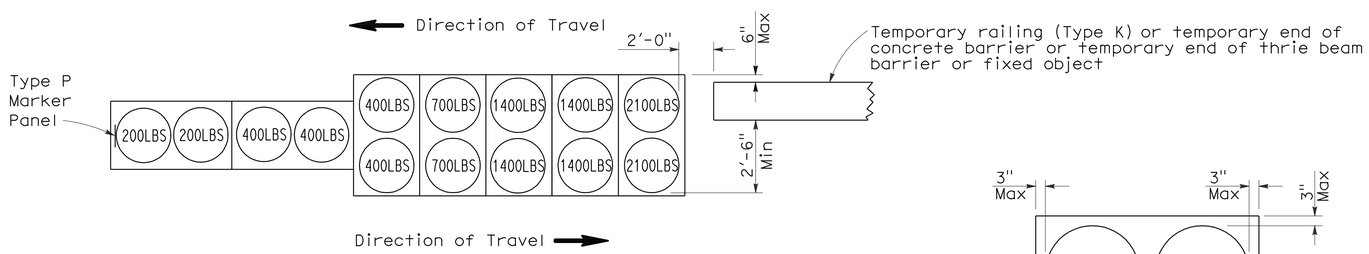

ARRAY 'TB14'

Approach speed 45 mph or more

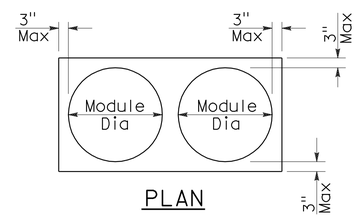

PLAN

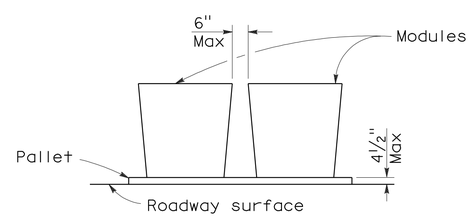

ELEVATION

CRASH CUSHION PALLET DETAIL

See Note 7

NOTES:

1. (XXX) Indicates sand filled module location and weight of sand in pounds for each module. Module spacing is based on the greater diameter of the module.
2. All sand weights are nominal.
3. Temporary crash cushion arrays shall not encroach on the traveled way.
4. Place the Type P marker panel so that the bottom of the panel rests upon the pallet.
5. Refer to Standard Plan A73B for marker details.
6. Approach speeds indicated conform to NCHRP 350 Report criteria.
7. Use of pallets is optional.

STATE OF CALIFORNIA
DEPARTMENT OF TRANSPORTATION

TEMPORARY CRASH CUSHION, SAND FILLED (BIDIRECTIONAL)

NO SCALE

RSP T1B DATED JUNE 6, 2008 SUPERSEDES STANDARD PLAN T1B
DATED MAY 1, 2006 - PAGE 212 OF THE STANDARD PLANS BOOK DATED MAY 2006.

REVISED STANDARD PLAN RSP T1B

2006 REVISED STANDARD PLAN RSP T1B

5-15-08

DIST	COUNTY	ROUTE	POST MILES TOTAL PROJECT	SHEET NO.	TOTAL SHEETS
04	CC,Sol	680,780	24.2/24.8,0.3/0.7, 0.6/1.2	43	46

Randell D. Hiatt
REGISTERED CIVIL ENGINEER

June 6, 2008
PLANS APPROVAL DATE

REGISTERED PROFESSIONAL ENGINEER
Randell D. Hiatt
No. C50200
Exp. 6-30-09
CIVIL
STATE OF CALIFORNIA

The State of California or its officers or agents shall not be responsible for the accuracy or completeness of electronic copies of this plan sheet.

To accompany plans dated 8-17-09

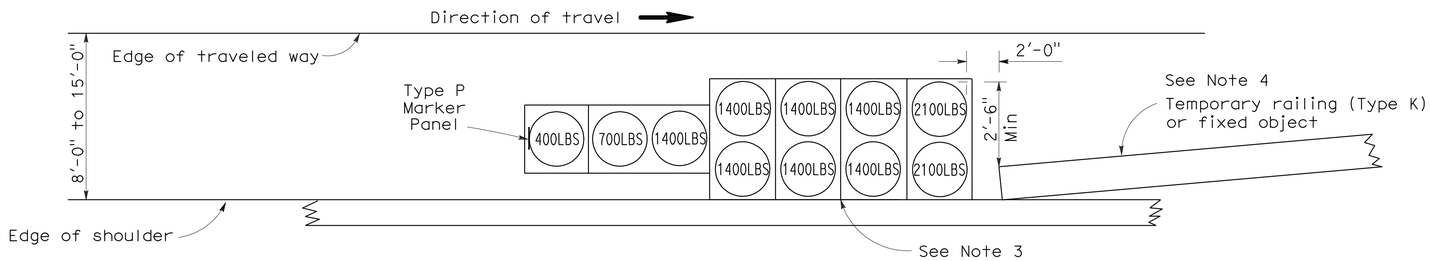

ARRAY 'TS11'

Approach speed less than 45 mph
See Note 9

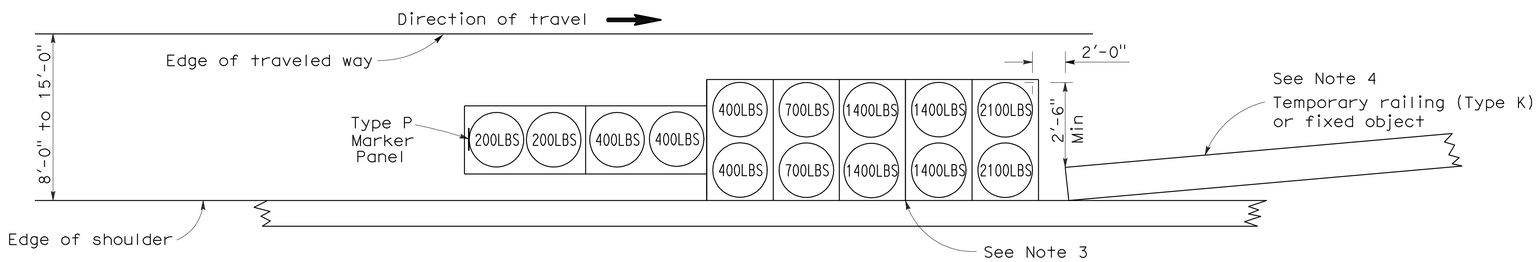

ARRAY 'TS14'

Approach speed 45 mph or more
See Note 9

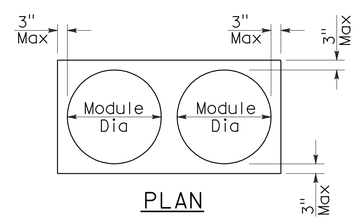

PLAN

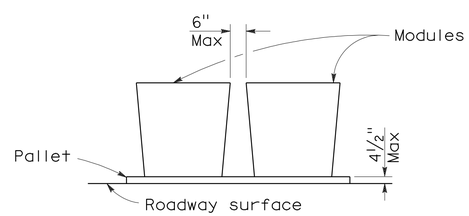

ELEVATION

CRASH CUSHION PALLET DETAIL

See Note 11

NOTES:

1. (XXX) Indicates sand filled module location and weight of sand in pounds for each module. Module spacing is based on the greater diameter of the module.
2. All sand weights are nominal.
3. The temporary crash cushion arrays shown on this plan shall be used only in locations where there will be traffic on one side of the temporary crash cushion array.
4. If the fixed object or approach end of the temporary railing is less than 15'-0" from the edge of traveled way, a temporary crash cushion is required in a construction or work zone.
5. Temporary crash cushion arrays shall not encroach on the traveled way.
6. Arrays for median shoulders shall conform to details shown on this plan for outside shoulders.
7. Place the Type P marker panel so that the bottom of the panel rests upon the pallet and faces traffic.
8. Refer to Standard Plan A73B for marker details.
9. For shoulder widths less than 8'-0", appropriate approved crash cushion protection, other than sand filled modules, shall be provided at fixed objects and at approach ends of temporary railing. The specific type of crash cushion shall be as shown on the project plans or as specified in the Special Provisions, or if not shown on the project plans or specified in the Special Provisions, shall be as approved by the Engineer.
10. Approach speeds indicated conform to NCHRP 350 Report criteria.
11. Use of pallets is optional.

STATE OF CALIFORNIA
DEPARTMENT OF TRANSPORTATION

TEMPORARY CRASH CUSHION, SAND FILLED (SHOULDER INSTALLATIONS)

NO SCALE

RSP T2 DATED JUNE 6, 2008 SUPERSEDES STANDARD PLAN T2
DATED MAY 1, 2006 - PAGE 213 OF THE STANDARD PLANS BOOK DATED MAY 2006.

REVISED STANDARD PLAN RSP T2

2006 REVISED STANDARD PLAN RSP T2

5-15-08

DIST	COUNTY	ROUTE	POST MILES TOTAL PROJECT	SHEET NO.	TOTAL SHEETS
04	CC,Sol	680,780	24.2/24.8,0.3/0.7, 0.6/1.2	44	46

REGISTERED ELECTRICAL ENGINEER

October 5, 2007
PLANS APPROVAL DATE

REGISTERED PROFESSIONAL ENGINEER Jeffery G. McRae No. E14512 Exp. 6-30-08 ELECTRICAL STATE OF CALIFORNIA

The State of California or its officers or agents shall not be responsible for the accuracy or completeness of electronic copies of this plan sheet.

To accompany plans dated 8-17-09

2006 REVISED STANDARD PLAN RSP ES-1A

ELECTROLIERS

STANDARD TYPES
15, 15D
15 STRUCTURE
21, 21D STRUCTURE
30
31
32
35
36-20A

High mast light pole

Double Arm lighting standard

Existing electrolier

Electrolier foundation (Future installation)

NOTES:

1. Luminaires shall be 310 W HPS when installed on Type 21, 21D, 30, 31, 32, 35 and 36-20A Standards, unless otherwise specified. Luminaires shall be 200 W HPS when installed on other type standards or poles, unless otherwise specified.
2. Luminaires shall be the cutoff type, ANSI Type Ⅲ medium cutoff lighting distribution, unless otherwise specified.
3. Variations noted adjacent to symbol on project plans.

Electrolier (see project notes or project plans)

Luminaire on wood pole

STANDARD NOTES:

- AB — Abandon. If applied to conduit, remove conductors.
- BC — Install pull box in existing conduit run.
- BP — Pedestrian barricade, type as indicated on plan.
- CB — Install conduit into existing pull box.
- CC — Connect new and existing conduit. Remove existing conductors and install conductors as indicated.
- CF — Conduit to remain for future use. Remove conductors. Install pull wire or rope.
- DH — Detector handhole.
- FA — Foundation to be abandoned.
- IS — Install sign on signal mast arm.
- NS — No slip base on standard.
- PEC — Photoelectric control.
- PEU — Photoelectric unit.
- RC — Equipment or material to be removed and become the property of the Contractor.
- RE — Remove electrolier, fuses and ballast. Tape ends of conductors.
- RL — Relocate equipment.
- RR — Remove and reuse equipment.
- RS — Remove and salvage equipment.
- SC — Splice new to existing conductors.
- SD — Service disconnect.
- SF — Standard to remain for future use. Remove luminaire, pole conductors, fuses and ballast.
- TSP — Telephone service point.

ABBREVIATIONS AND EQUIPMENT DESIGNATIONS

PROPOSED	EXISTING	
BBS	bbs	Battery backup system
BC	bc	Bolt circle
C	C	Conduit
CCTV	cctv	Closed circuit television
CKT	ckt	Circuit
CMS	cms	Changeable message sign
DLC	dlc	Loop detector lead-in cable
EMS	ems	Extinguishable message sign
EVC	evc	Emergency vehicle cable
EVD	evd	Emergency vehicle detector
FB	fb	Flashing beacon
FBCA	fbca	Flashing beacon control assembly
FBS	fbs	Flashing beacon with slip base
FO	fo	Fiber optic
G	G	Ground (Equipment Grounding Conductor)
GFCI	GFCI	Ground fault circuit interrupt
HAR	har	Highway advisory radio
HEX	hex	Hexagonal
HPS	hps	High pressure sodium
IISNS	iisns	Internally illuminated street name sign
ISL	isl	Induction sign lighting
LED	led	Light emitting diode
LMA	lma	Luminaire mast arm
LPS	lps	Low pressure sodium
LTG	ltg	Lighting
LUM	lum	Luminaire
MAT	mat	Mast arm mounting vehicle signal faces, top attachment
MAS	mas	Mast arm mounting vehicle signal faces, side attachment
MAS-4A	mas-4A	Mast arm mounting vehicle signal faces, side attachment - 4 signal section
MAS-4B	mas-4B	
MAS-4C	mas-4C	
MAS-5A	mas-5A	Mast arm mounting vehicle signal faces, side attachment - 5 signal section
MAS-5B	mas-5B	
MC	mc	Mercury contactor
M/M	m/m	Multiple to multiple transformer
MT	mt	Conduit with pull wire or rope only
MTG	mtg	Mounting
	mv	Mercury vapor lighting fixture
N	N	Neutral (Grounded Conductor)
NC	NC	Normally closed
NO	NO	Normally open
PB	pb	Pull box
PEC	pec	Photoelectric control (Type Ⅰ, Ⅱ, Ⅲ, Ⅳ or Ⅴ as shown)
PED	ped	Pedestrian
PEU	peu	Photoelectric unit
PPB	ppb	Pedestrian push button
RL		Relocated equipment
RM	rm	Ramp metering
SB	sb	Slip base
SIC	sic	Signal interconnect cable
SIG	sig	Signal
SMA	sma	Signal mast arm
SNS	sns	Street name sign
SP	sp	Service point
TDC	tdc	Telephone demarcation cabinet
TMS	tms	Traffic monitoring station
TOS	tos	Traffic Operations System
VEH	veh	Vehicle
XFMR	xfmr	Transformer
COMM	comm	Communication
RWIS	rwis	Roadway weather information system

SOFFIT AND WALL MOUNTED LUMINAIRES

Pendant, 70 W HPS unless otherwise specified.

Flush, 70 W HPS unless otherwise specified.

Wall surface, 70 W HPS unless otherwise specified.

Existing soffit or wall luminaire to remain unmodified.

Existing soffit or wall luminaire to be modified as specified.

NOTE:

Arrow indicates "street side" of luminaire.

STATE OF CALIFORNIA
DEPARTMENT OF TRANSPORTATION

ELECTRICAL SYSTEMS (SYMBOLS AND ABBREVIATIONS)

NO SCALE

RSP ES-1A DATED OCTOBER 5, 2007 SUPERSEDES STANDARD PLAN ES-1A DATED MAY 1, 2006 - PAGE 400 OF THE STANDARD PLANS BOOK DATED MAY 2006.

REVISED STANDARD PLAN RSP ES-1A

DIST	COUNTY	ROUTE	POST MILES TOTAL PROJECT	SHEET NO.	TOTAL SHEETS
04	CC,Sol	680,780	24.2/24.8,0.3/0.7, 0.6/1.2	45	46

REGISTERED ELECTRICAL ENGINEER

October 5, 2007
PLANS APPROVAL DATE

REGISTERED PROFESSIONAL ENGINEER Jeffery G. McRae No. E14512 Exp. 6-30-08 ELECTRICAL STATE OF CALIFORNIA

The State of California or its officers or agents shall not be responsible for the accuracy or completeness of electronic copies of this plan sheet.

To accompany plans dated 8-17-09

CONDUIT

PROPOSED	EXISTING	
		Lighting Conduit, unless otherwise indicated or noted
		Traffic signal conduit
C	c	Communication conduit
T	t	Telephone conduit
F	f	Fire alarm conduit
FO	fo	Fiber optic conduit
		Conduit termination (RSP ES-9A C)
R	r	Conduit riser in/on structure or service pole

SERVICE EQUIPMENT

PROPOSED	EXISTING	
OH	oh	Overhead lines
U	U	Wood pole "U" indicates utility owned
		Pole guy with anchor
		Utility transformer - ground mounted
III		Service equipment enclosure type
		Service equipment enclosure door indicates front of enclosure
T	t	Telephone demarcation cabinet

POLE-MOUNTED SERVICE DESIGNATION

Type of installation

TYPE H SERVICE - 28'-10" ← Pole height above grade

ILLUMINATED OVERHEAD SIGN

PROPOSED	EXISTING	
		Overhead sign - Single post
		Overhead sign - Two post
		Overhead sign - Mounted on structure
		Overhead sign with electrolier

SIGNAL EQUIPMENT

PROPOSED	EXISTING	
		Pedestrian signal face
		Pedestrian push button post
		Pedestrian barricade
		Vehicle signal face (with backplate, 3-Section: red, yellow and green)
		Vehicle signal face with angle visors
PV	PV	Modifications of basic symbols: "L" indicates all non-arrow sections louvered "LG" indicates louvered green section only "PV" indicates 12" programmed visibility sections "8" indicates all 8" sections (only when specified)
		Type 15TS and Vehicle signal face
		Vehicle signal face with red, yellow and green left arrow sections
		Vehicle signal face with red and yellow sections and up green arrow
		Vehicle signal face (5 Section) with red, yellow and green sections and yellow and green right arrows
		Type 1 Standard and attached vehicle signal faces
		Standard with signal mast arm only and attached vehicle signal faces and internally illuminated street name sign
		Type 33 Standard, Left-turn vehicle signal face and sign
		Standard with luminaire and signal mast arms and attached vehicle signal faces
		Cantilever flashing beacon Type 9 Frame, with a sign unless otherwise specified or indicated
		Type 15-FBS Standard with two vehicle signal face sections with lens, backplate and visor with a sign
R	Y	Flashing beacon. One vehicle signal face section with lens, backplate and visor. "R" indicates red indication, "Y" indicates yellow indication
		Controller assembly. Door indicates front of cabinet

SIGNAL EQUIPMENT Cont

PROPOSED	EXISTING	
		Guard post
		Type 1 Standard with "Meter On" sign
		Emergency Vehicle detector

NOTES:

1. All signal sections shall be 12" unless shown otherwise.
2. Signal heads shall be provided with backplates unless shown otherwise.
3. Signal indication shall be LED.

STATE OF CALIFORNIA
DEPARTMENT OF TRANSPORTATION

ELECTRICAL SYSTEMS (SYMBOLS AND ABBREVIATIONS)

NO SCALE

RSP ES-1B DATED OCTOBER 5, 2007 SUPERCEDES STANDARD PLAN ES-1B DATED MAY 1, 2006 - PAGE 401 OF THE STANDARD PLANS BOOK DATED MAY 2006.

REVISED STANDARD PLAN RSP ES-1B

2006 REVISED STANDARD PLAN RSP ES-1B

7-10-07

DIST	COUNTY	ROUTE	POST MILES TOTAL PROJECT	SHEET NO.	TOTAL SHEETS
04	CC,Sol	680,780	24.2/24.8,0.3/0.7, 0.6/1.2	46	46

REGISTERED ELECTRICAL ENGINEER

October 5, 2007
PLANS APPROVAL DATE

REGISTERED PROFESSIONAL ENGINEER Jeffery G. McRae No. E14512 Exp. 6-30-08 ELECTRICAL STATE OF CALIFORNIA

The State of California or its officers or agents shall not be responsible for the accuracy or completeness of electronic copies of this plan sheet.

To accompany plans dated 8-17-09

EQUIPMENT IDENTIFICATION

ILLUMINATED SIGN IDENTIFICATION NUMBER:

Sign No. 12345

10 ISL SCI 1.0

- Sign number - Place on post or structure
- Transformer rating (kVA)
- Lighting control type
- Number and type of fixtures

Do NOT place on standard or structure

ELECTROLIER OR EQUIPMENT IDENTIFICATION NUMBER:

12345 - 15'-0"

- Mast arm length, if shown. Do not place on standard or structure.
- Equipment number - Place on standard or structure. Existing equipment numbers are shown in parenthesis

CONDUIT AND CONDUCTOR IDENTIFICATION:

1½"C, 2#10, 15#14, 2 DLC

- Number and size of conductors and cables
- Size of conduit in inches

Ø1, Ø2, Ø2P, etc.	Traffic phase identification for signal faces, detectors and phase diagrams
1 2 3	Project note numbers
A B C	Equipment description, installation or item numbers
1 2 3	Conduit run numbers

SIGNAL AND LIGHTING STANDARD (TYPICAL DESIGNATION):

19A - 3 - 100

- Wind velocity = 100 mph
- Case 3 arm loading
- Standard type
- Standard Plan sheet number
- Detail number or letter

MISCELLANEOUS EQUIPMENT

PROPOSED	EXISTING	
CMS	cms	Changeable message sign
		Closed circuit television camera
		Highway advisory radio pole and antenna
EMS	ems	Extinguishable message sign
M V	m v	Detection device M = Microwave sensor V = Video image sensor

WIRING DIAGRAM LEGEND

P	Pole
CB	Circuit breaker
A	Ampere
V	Volt
M	Metered
UM	Unmetered
NB	Neutral bus
GB	Ground bus
G	Equipment grounding conductor
N	Grounded conductor (Neutral)

- External conductor
- Conductor or bus
- Tie point
- Contactor coil
- Contactor, Contact NO
- Terminal blocks
- Contactor, Contact NC
- Enclosure bond
- Grounding electrode
- Circuit breaker
- Receptacle

PULL BOXES

PROPOSED EXISTING

Pull box-No. 5 unless otherwise indicated or noted.

3 9A(21)

Pull box-Additional designations or descriptions

3	= No. 3½ pull box
5	= No. 5 pull box
6	= No. 6 pull box
7	= No. 7 (Ceiling pull box)
8	= No. 8 (Pendant soffit pull box)
9	= No. 9 pull box
9A	= No. 9A pull box

(C) = Communications pull box
(E) = Pull box with extension
(S) = Sprinkler control pull box
(21) = Anchor bolts and conduit for future installation of Type 21 Standard
(T) = Traffic pull box

VEHICLE DETECTORS

5 J 9 U

- Vehicle detector designation
- U = Upper
- L = Lower
- Slot number in input file
- Input file (I or J)
- Phase

PROPOSED EXISTING

	Type A detector loop. Outline of sawcut shown.
	Type B detector loop. Outline of sawcut shown.
	Type C detector loop. Outline of sawcut shown.
	Type D detector loop. Outline of sawcut shown.
	Type E detector loop. Outline of sawcut shown.
	Type Q detector loop. Outline of sawcut shown.
	Magnetic detector
DH dh	Detector handhole
	Microwave or video detection zone

STATE OF CALIFORNIA
DEPARTMENT OF TRANSPORTATION

ELECTRICAL SYSTEMS (SYMBOLS AND ABBREVIATIONS)

NO SCALE

RSP ES-1C DATED OCTOBER 5, 2007 SUPERCEDES STANDARD PLAN ES-1C DATED MAY 1, 2006 - PAGE 402 OF THE STANDARD PLANS BOOK DATED MAY 2006.

REVISED STANDARD PLAN RSP ES-1C

2006 REVISED STANDARD PLAN RSP ES-1C

7-10-07