DIST.	COUNTY	ROUTE	POST MILES TOTAL PROJECT	SHEET NO.	TOTAL SHEETS
04	CC	580	6.1/6.3	101	216

LICENSED ARCHITECT — 4/27/2012 DATE

LICENSED ARCHITECT FRANK THOMAS No. C-31406 Exp. 4-30-13 STATE OF CALIFORNIA

7-30-12
PLANS APPROVAL DATE

The State of California or its officers or agents shall not be responsible for the accuracy or completeness of scanned copies of this plan sheet.

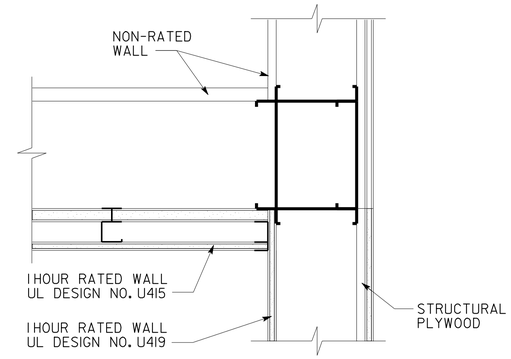

3 ONE HOUR FIRE BARRIER
SCALE 3" = 1'-0"

ACCESSIBILITY DESIGN APPROVAL STAMP DOT / DES / OTA
PROJECT ID 0400000002
Reviewed by: Y. A. WANG
Date: 05-04-12

CALIFORNIA STATE FIRE MARSHAL APPROVED
Approval of this plan does not authorize or approve any omission or deviation from applicable regulations. Final approval is subject to field inspection. One set of approved plans shall be available on the project site at all times.
Reviewed by: INGRID P. ICASIANO, DSFM III
Approval date: July 17, 2012

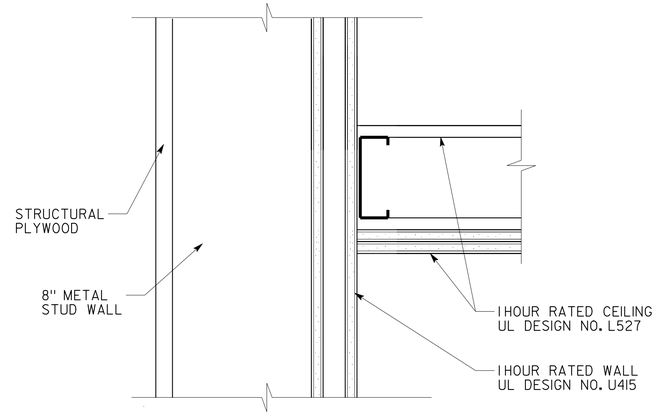

4 ONE HOUR FIRE BARRIER
SCALE 3" = 1'-0"

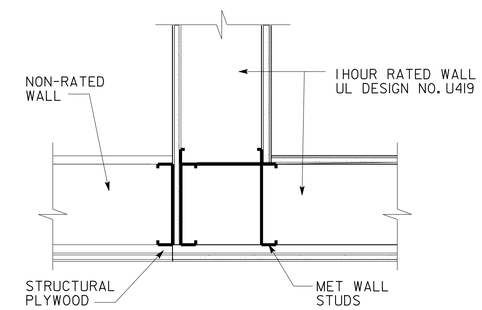

1 ONE HOUR FIRE BARRIER
SCALE 3" = 1'-0"

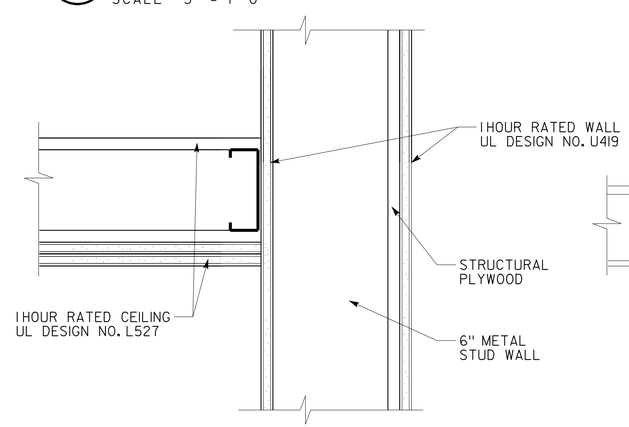

5 ONE HOUR FIRE BARRIER
SCALE 3" = 1'-0"

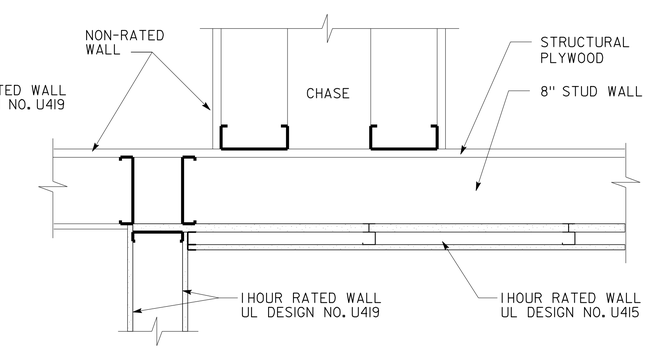

2 ONE HOUR FIRE BARRIER
NO SCALE

	BY	CHECKED
DESIGN	F. THOMAS	C. FAUST,
DETAILS	D. IGNACIO, S. YEH	F. THOMAS
QUANTITIES		

STATE OF CALIFORNIA DEPARTMENT OF TRANSPORTATION

DIVISION OF ENGINEERING SERVICES ARCHITECTURAL AND STRUCTURAL DESIGN

BRIDGE NO. 28T5783
POST MILE 6.3

RICHMOND - SAN RAFAEL BRIDGE MAINTENANCE STATION
ONE-HOUR RATED DETAILS

SHEET A1-30.2

a1_30_2 1hr notes.dgn
TAEMWW Imperial Rev. 7/10 02-AUG-2012 15:42

ORIGINAL SCALE IN INCHES FOR REDUCED PLANS 0 1 2 3

UNIT 3598
PROJECT NUMBER & PHASE 04000000021
EA 003941

DISREGARD PRINTS BEARING EARLIER REVISION DATES → 06-02-11 12-02-11 03-16-12 04-5-12 04-26-12

REVISION DATES (PRELIMINARY STAGE ONLY) SHEET X OF X

02-AUG-2012 15:42
a1_30_2 1hr notes.dgn

DIST.	COUNTY	ROUTE	POST MILES TOTAL PROJECT	SHEET NO.	TOTAL SHEETS
04	CC	580	6.1/6.3	102	216

LICENSED ARCHITECT — 4/27/2012 DATE

LICENSED ARCHITECT FRANK THOMAS No. C-31406 Exp. 4-30-13 STATE OF CALIFORNIA

7-30-12
PLANS APPROVAL DATE

The State of California or its officers or agents shall not be responsible for the accuracy or completeness of scanned copies of this plan sheet.

ACCESSIBILITY DESIGN APPROVAL STAMP DOT / DES / OTA
PROJECT ID **0400000002**
Reviewed by: Y. A. WANG
Date: 05-04-12

CALIFORNIA STATE FIRE MARSHAL APPROVED
Approval of this plan does not authorize or approve any omission or deviation from applicable regulations. Final approval is subject to field inspection. One set of approved plans shall be available on the project site at all times.
Reviewed by: INGRID P. ICASIANO, DSFM III
Approval date: July 17, 2012

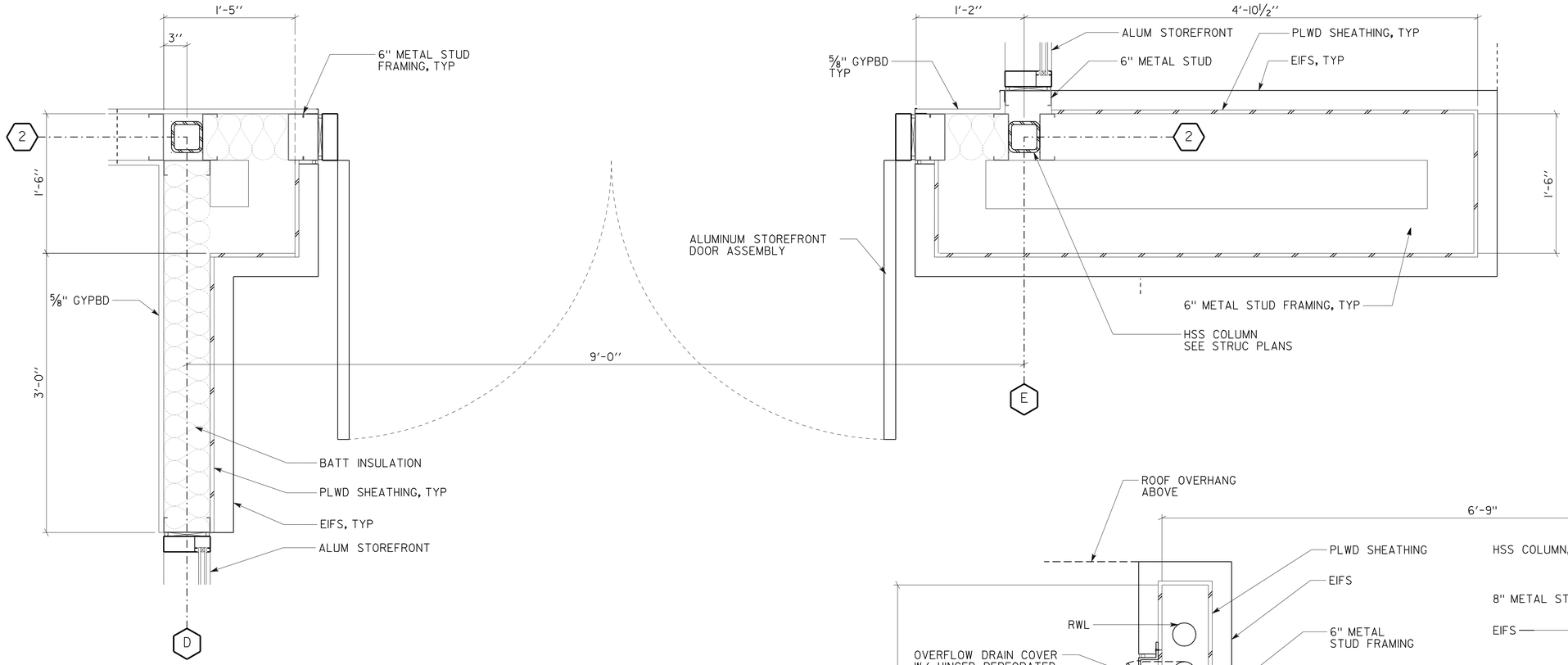

2 DETAIL
1 1/2" = 1'-0"

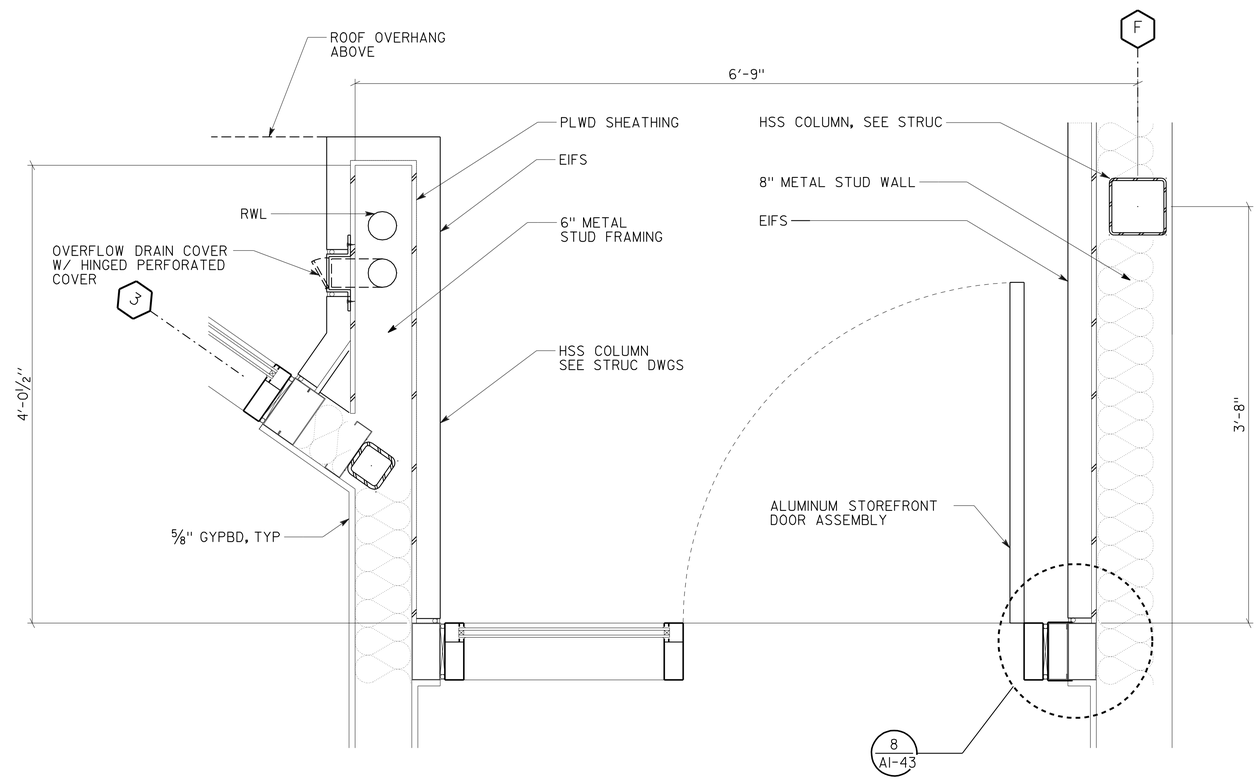

1 DETAIL
1 1/2" = 1'-0"

	BY	CHECKED
DESIGN	F. THOMAS	C. FAUST,
DETAILS	D. IGNACIO, S. YEH	F. THOMAS
QUANTITIES		

STATE OF CALIFORNIA
DEPARTMENT OF TRANSPORTATION

DIVISION OF ENGINEERING SERVICES
ARCHITECTURAL AND STRUCTURAL DESIGN

BRIDGE NO. 28T5783
POST MILE 6.3

RICHMOND - SAN RAFAEL BRIDGE MAINTENANCE STATION
BUILDING DETAILS

SHEET **A1-31**

a1_31_bldg_details.dgn
TAEMWW Imperial Rev. 7/10 02-AUG-2012 15:42

ORIGINAL SCALE IN INCHES FOR REDUCED PLANS 0 1 2 3

UNIT 3598
PROJECT NUMBER & PHASE 04000000021
EA 003941

DISREGARD PRINTS BEARING EARLIER REVISION DATES
REVISION DATES (PRELIMINARY STAGE ONLY) 06-02-11 12-02-11 03-16-12 04-5-12 04-26-12
SHEET X OF X

02-AUG-2012 15:42
a1_31_bldg_details.dgn

DIST.	COUNTY	ROUTE	POST MILES TOTAL PROJECT	SHEET NO.	TOTAL SHEETS
04	CC	580	6.1/6.3	103	216

LICENSED ARCHITECT — DATE 4/27/2012

LICENSED ARCHITECT FRANK THOMAS No. C-31406 Exp. 4-30-13 STATE OF CALIFORNIA

7-30-12
PLANS APPROVAL DATE

The State of California or its officers or agents shall not be responsible for the accuracy or completeness of scanned copies of this plan sheet.

ACCESSIBILITY DESIGN APPROVAL STAMP DOT / DES / OTA
PROJECT ID **0400000002**
Reviewed by: Y. A. WANG
Date: 05-04-12

CALIFORNIA STATE FIRE MARSHAL APPROVED
Approval of this plan does not authorize or approve any omission or deviation from applicable regulations. Final approval is subject to field inspection. One set of approved plans shall be available on the project site at all times.
Reviewed by: INGRID P. ICASIANO, DSFM III
Approval date: July 17, 2012

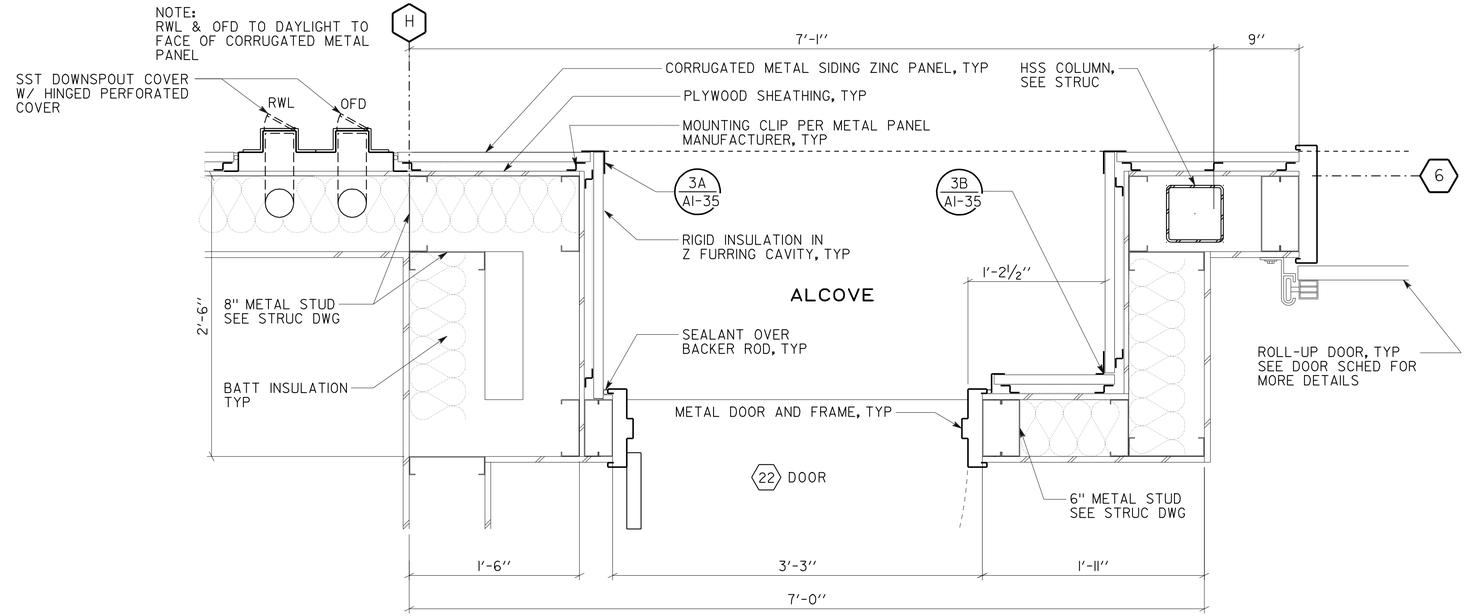

2 DETAIL
1½" = 1'-0"

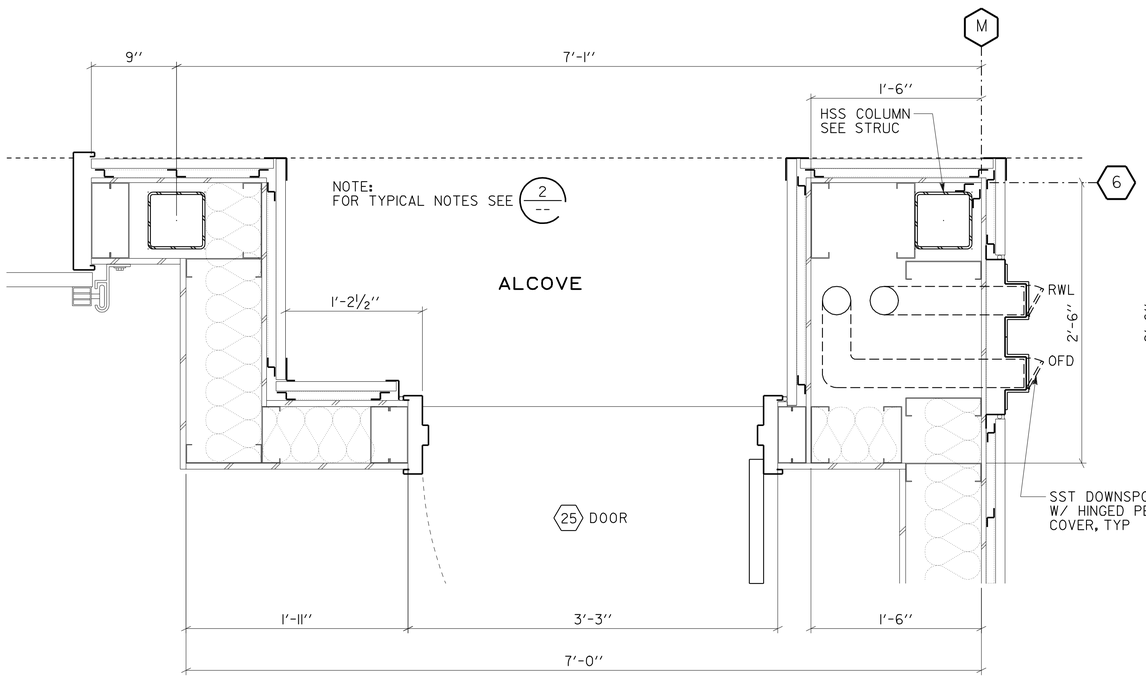

3 DETAIL
1½" = 1'-0"

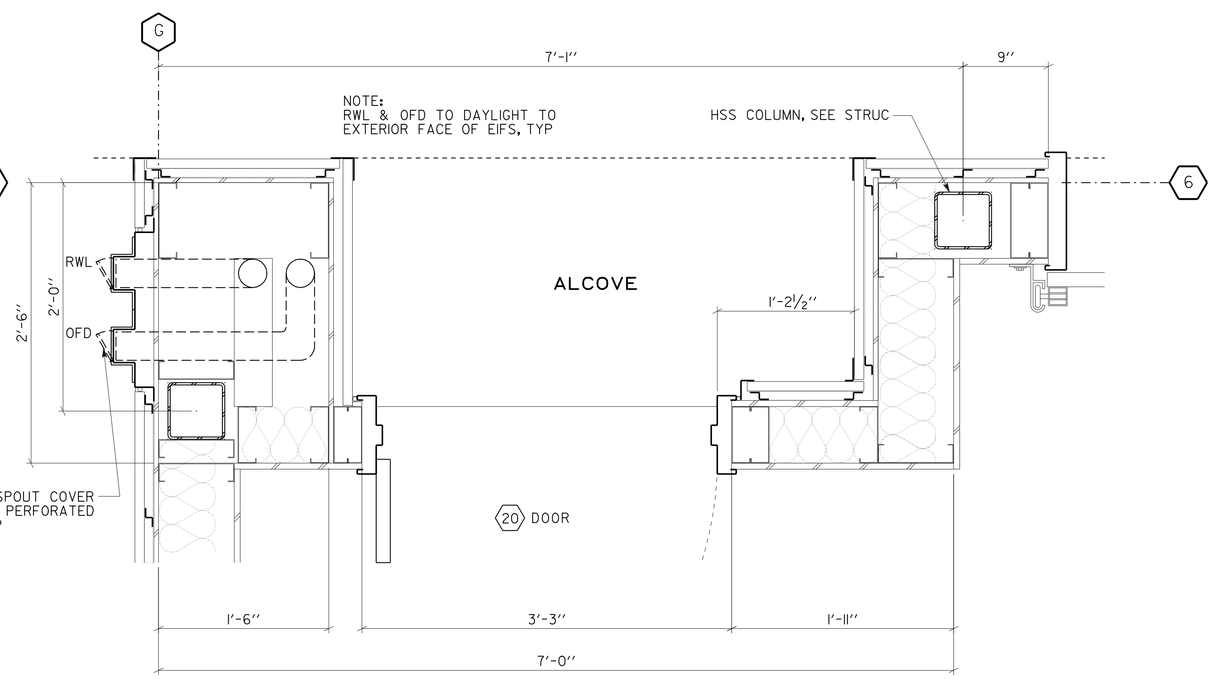

1 DETAIL
1½" = 1'-0"

	BY	CHECKED
DESIGN	F. THOMAS	C. FAUST,
DETAILS	D. IGNACIO, S. YEH	F. THOMAS
QUANTITIES		

STATE OF CALIFORNIA
DEPARTMENT OF TRANSPORTATION

DIVISION OF ENGINEERING SERVICES
ARCHITECTURAL AND STRUCTURAL DESIGN

BRIDGE NO. 28T5783
POST MILE 6.3

RICHMOND - SAN RAFAEL BRIDGE MAINTENANCE STATION
BUILDING DETAILS

SHEET **A1-32**

a1_32_bldg_details.dgn
TAEMWW Imperial Rev. 7/10 02-AUG-2012 15:42

ORIGINAL SCALE IN INCHES FOR REDUCED PLANS 0 1 2 3

UNIT 3598
PROJECT NUMBER & PHASE 04000000021
EA 003941

DISREGARD PRINTS BEARING EARLIER REVISION DATES → 06-02-11 12-02-11 03-16-12 04-5-12 04-26-12

REVISION DATES (PRELIMINARY STAGE ONLY) SHEET X OF X

02-AUG-2012 15:42
a1_32_bldg_details.dgn

DIST.	COUNTY	ROUTE	POST MILES TOTAL PROJECT	SHEET NO.	TOTAL SHEETS
04	CC	580	6.1/6.3	104	216

LICENSED ARCHITECT — 4/27/2012 DATE

LICENSED ARCHITECT FRANK THOMAS No. C-31406 Exp. 4-30-13 STATE OF CALIFORNIA

7-30-12
PLANS APPROVAL DATE

The State of California or its officers or agents shall not be responsible for the accuracy or completeness of scanned copies of this plan sheet.

ACCESSIBILITY DESIGN APPROVAL STAMP DOT / DES / OTA
PROJECT ID 0400000002
Reviewed by: Y. A. WANG
Date: 05-04-12

CALIFORNIA STATE FIRE MARSHAL APPROVED
Approval of this plan does not authorize or approve any omission or deviation from applicable regulations. Final approval is subject to field inspection. One set of approved plans shall be available on the project site at all times.
Reviewed by: INGRID P. ICASIANO, DSFM III
Approval date: July 17, 2012

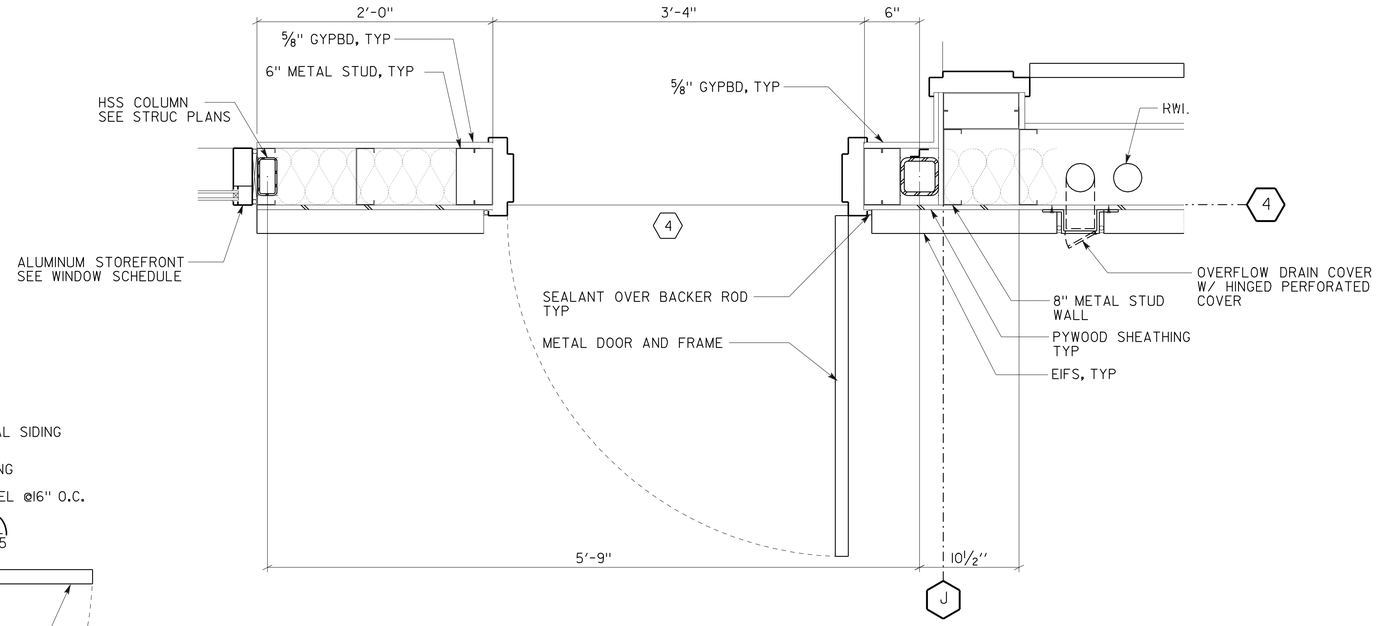

2 DETAIL
1 1/2" = 1'-0"

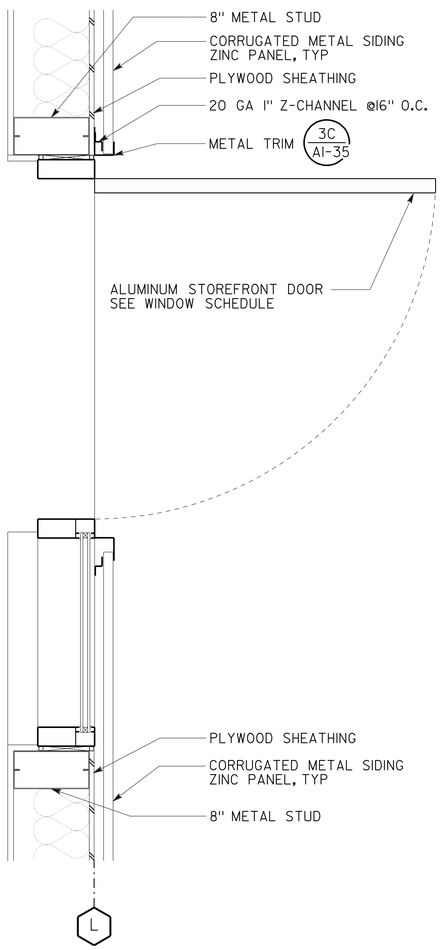

3 DETAIL
1 1/2" = 1'-0"

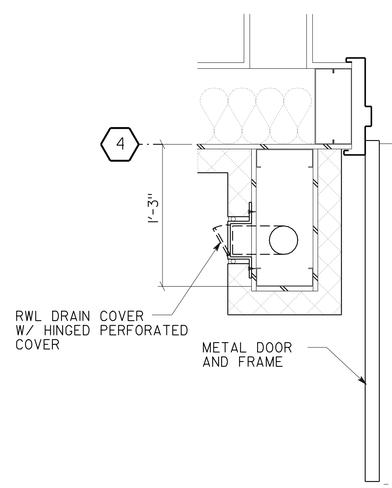

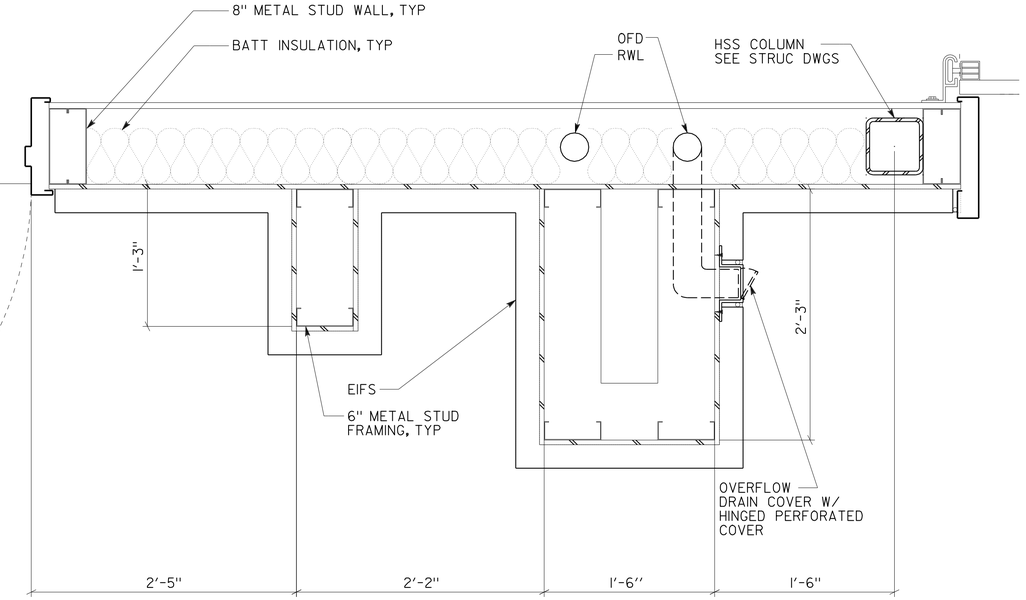

1 DETAIL
1 1/2" = 1'-0"

	BY	CHECKED
DESIGN	F. THOMAS	C. FAUST,
DETAILS	D. IGNACIO, S. YEH	F. THOMAS
QUANTITIES		

STATE OF CALIFORNIA DEPARTMENT OF TRANSPORTATION

DIVISION OF ENGINEERING SERVICES ARCHITECTURAL AND STRUCTURAL DESIGN

BRIDGE NO. 28T5783
POST MILE 6.3

RICHMOND - SAN RAFAEL BRIDGE MAINTENANCE STATION
BUILDING DETAILS

SHEET **A1-33**

a1_33_bldg_details.dgn
TAEMWW Imperial Rev. 7/10 02-AUG-2012 15:42

ORIGINAL SCALE IN INCHES FOR REDUCED PLANS 0 1 2 3

UNIT 3598
PROJECT NUMBER & PHASE 04000000021
EA 003941

DISREGARD PRINTS BEARING EARLIER REVISION DATES → 06-02-11 12-02-11 03-16-12 04-5-12 04-26-12

REVISION DATES (PRELIMINARY STAGE ONLY) SHEET X OF X

02-AUG-2012 15:42
a1_33_bldg_details.dgn

DIST.	COUNTY	ROUTE	POST MILES TOTAL PROJECT	SHEET NO.	TOTAL SHEETS
04	CC	580	6.1/6.3	105	216

LICENSED ARCHITECT — DATE 4/27/2012

LICENSED ARCHITECT FRANK THOMAS No. C-31406 Exp. 4-30-13 STATE OF CALIFORNIA

7-30-12
PLANS APPROVAL DATE

The State of California or its officers or agents shall not be responsible for the accuracy or completeness of scanned copies of this plan sheet.

ACCESSIBILITY DESIGN APPROVAL STAMP DOT / DES / OTA
PROJECT ID 0400000002
Reviewed by: Y. A. WANG
Date: 05-04-12

CALIFORNIA STATE FIRE MARSHAL APPROVED
Approval of this plan does not authorize or approve any omission or deviation from applicable regulations. Final approval is subject to field inspection. One set of approved plans shall be available on the project site at all times.
Reviewed by: INGRID P. ICASIANO, DSFM III
Approval date: July 17, 2012

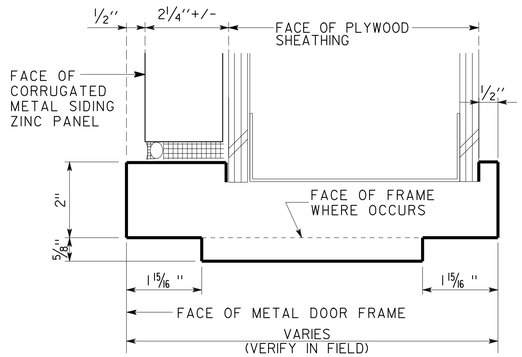

10 EXT PRESSED METAL FRAME (20)(22)(25) DOOR
6" = 1'-0"

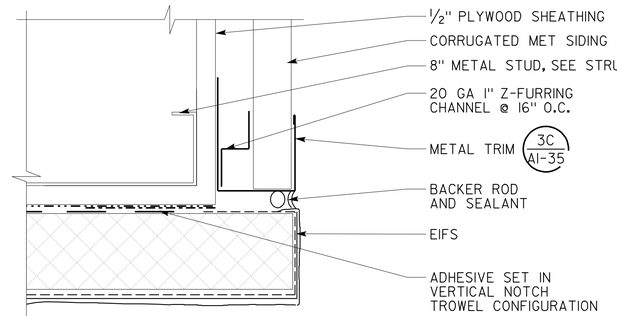

8 OUTSIDE CORNER EIFS AND CORRUGATED METAL PANEL
6" = 1'-0"

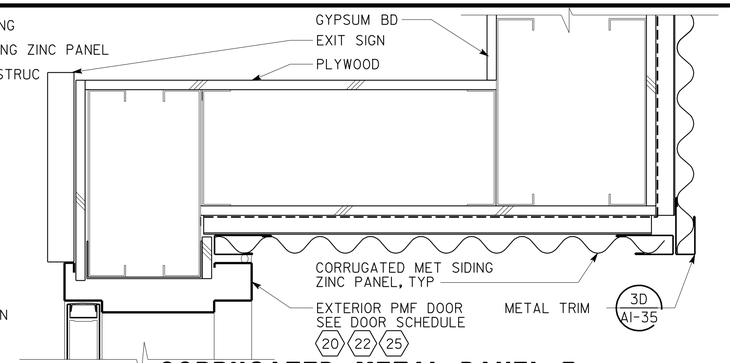

5 CORRUGATED METAL PANEL @ EXTERIOR DOOR HEAD
3" = 1'-0"

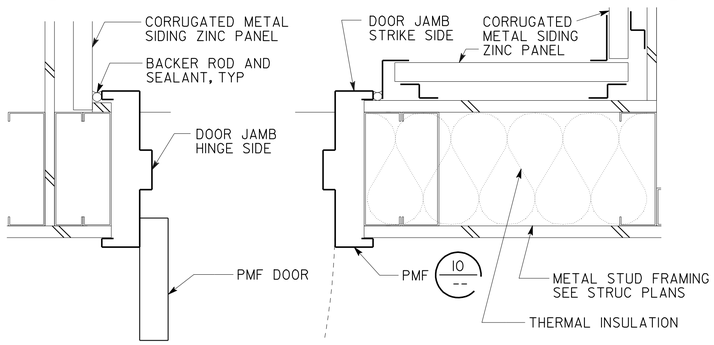

9 EXT DOOR JAMB @ ALCOVE ENTRANCE
3" = 1'-0"

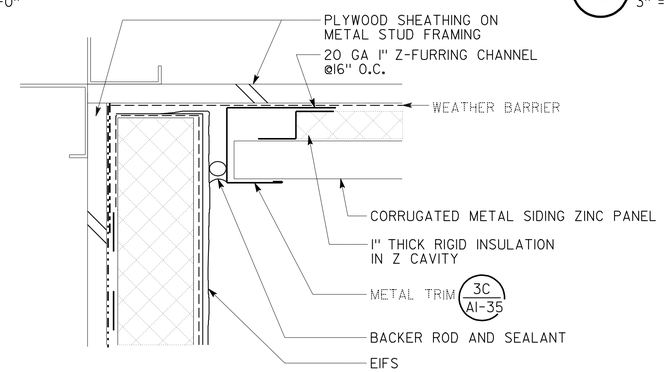

7 INSIDE CORNER EIFS AND CORRUGATED METAL PANEL
6" = 1'-0"

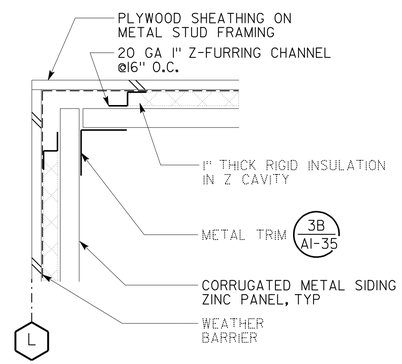

4 INSIDE CORNER FLASHING
3" = 1'-0"

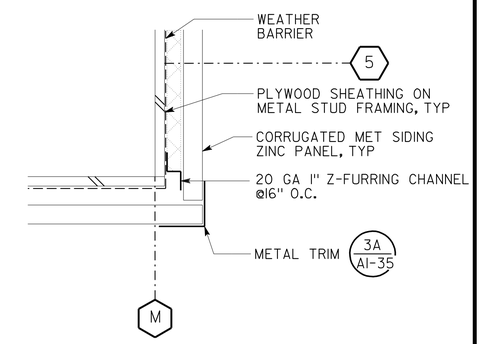

2 OUTSIDE CORNER FLASHING
3" = 1'-0"

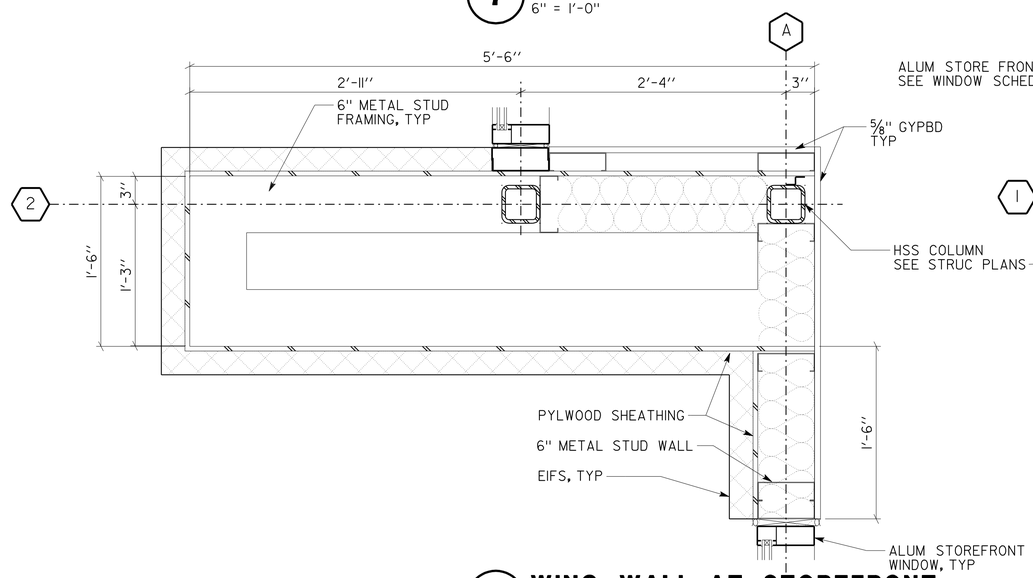

6 WING WALL AT STOREFRONT
1 1/2" = 1'-0"

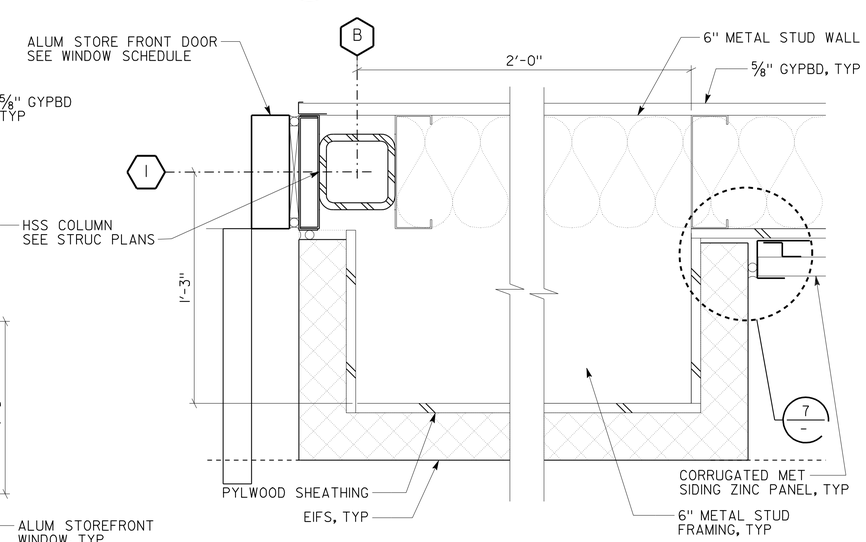

3 EIFS AT DOOR
3" = 1'-0"

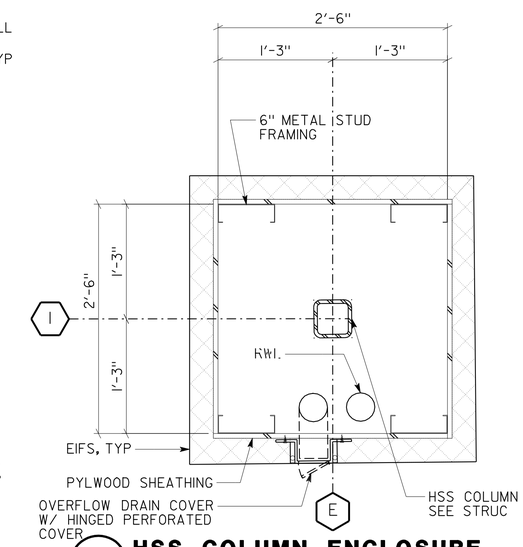

1 HSS COLUMN ENCLOSURE
1 1/2" = 1'-0"

DESIGN	BY F. THOMAS	CHECKED C. FAUST,	
DETAILS	BY D. IGNACIO, S. YEH	CHECKED F. THOMAS	
QUANTITIES	BY	CHECKED	

STATE OF CALIFORNIA
DEPARTMENT OF TRANSPORTATION

DIVISION OF ENGINEERING SERVICES
ARCHITECTURAL AND STRUCTURAL DESIGN

BRIDGE NO. 28T5783
POST MILE 6.3

RICHMOND - SAN RAFAEL BRIDGE MAINTENANCE STATION
BUILDING DETAILS

SHEET **A1-34**

a1_34_bldg_details.dgn
TAEMWW Imperial Rev. 7/10 02-AUG-2012 15:41

ORIGINAL SCALE IN INCHES FOR REDUCED PLANS 0 1 2 3

UNIT 3598
PROJECT NUMBER & PHASE 04000000021
EA 003941

DISREGARD PRINTS BEARING EARLIER REVISION DATES
REVISION DATES (PRELIMINARY STAGE ONLY): 06-02-11 12-02-11 03-16-12 04-5-12 04-26-12
SHEET X OF X

02-AUG-2012 15:41
a1_34_bldg_details.dgn

DIST.	COUNTY	ROUTE	POST MILES TOTAL PROJECT	SHEET NO.	TOTAL SHEETS
04	CC	580	6.1/6.3	106	216

CALIFORNIA STATE FIRE MARSHAL APPROVED
Approval of this plan does not authorize or approve any omission or deviation from applicable regulations. Final approval is subject to field inspection. One set of approved plans shall be available on the project site at all times.
Reviewed by: INGRID P. ICASIANO, DSFM III
Approval date: July 17, 2012

ACCESSIBILITY DESIGN APPROVAL STAMP DOT / DES / OTA
PROJECT ID 0400000002
Reviewed by: Y. A. WANG
Date: 05-04-12

4/27/2012
LICENSED ARCHITECT — DATE

LICENSED ARCHITECT FRANK THOMAS No. C-31406 Exp. 4-30-13 STATE OF CALIFORNIA

7-30-12
PLANS APPROVAL DATE

The State of California or its officers or agents shall not be responsible for the accuracy or completeness of scanned copies of this plan sheet.

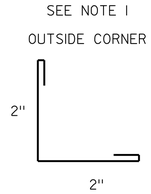

20 GA METAL
TRIM
A

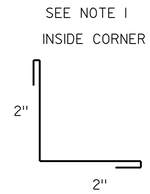

20 GA METAL
TRIM
B

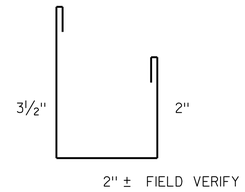

SEE NOTE 1
20 GA METAL
END CLOSURE
C

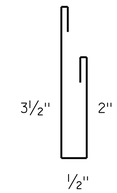

SEE NOTE 1
20 GA METAL
END CLOSURE
D

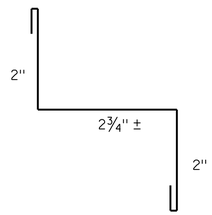

SEE NOTE 2
16 GA METAL
FLASHING
E

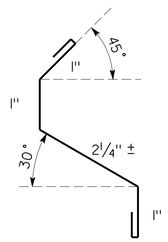

SEE NOTE 2
24 GA METAL
FLASHING
F

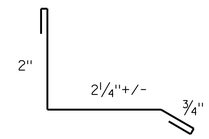

SEE NOTE 2
24 GA METAL
FLASHING
G

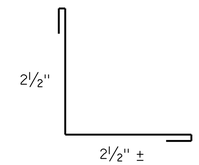

SEE NOTES 1 & 3
16 GA METAL
FLASHING
H

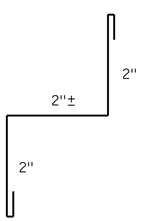

SEE NOTE 1
20 GA METAL
TRIM
J

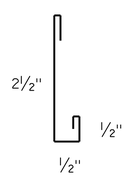

24 GA METAL
TRIM
K

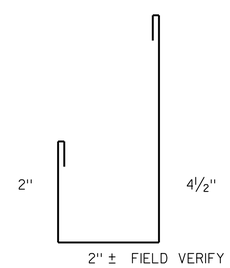

SEE NOTE 1
20 GA METAL
END CLOSURE
L

3 MISCELLANEOUS FLASHINGS, TRIM AND CLOSURES PROFILES

SCALE 6" = 1'-0"

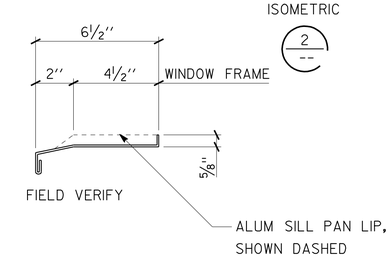

1 WINDOW SILL PAN

SCALE 3" = 1'-0"

NOTES:

1. MATERIAL, COLOR AND FINISH TO MATCH CORRUGATED METAL SIDING ZINC PANEL
2. VERIFY IN FIELD THE THICKNESS OF EIFS
3. FLASHING AT BOTTOM OF CORRUGATED PANEL

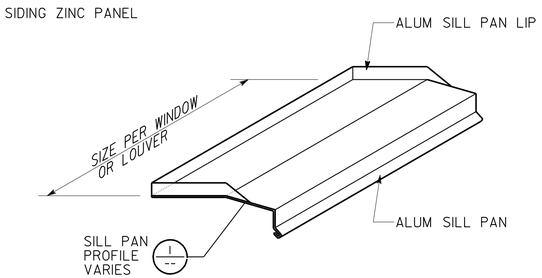

2 SILL PAN ISOMETRIC

NO SCALE

DESIGN	BY F. THOMAS	CHECKED C. FAUST,	
DETAILS	BY D. IGNACIO, S. YEH	CHECKED F. THOMAS	
QUANTITIES	BY	CHECKED	

STATE OF CALIFORNIA
DEPARTMENT OF TRANSPORTATION

DIVISION OF ENGINEERING SERVICES
ARCHITECTURAL AND STRUCTURAL DESIGN

BRIDGE NO. 28T5783
POST MILE 6.3

RICHMOND - SAN RAFAEL BRIDGE MAINTENANCE STATION
MISCELLANEOUS FLASHING, TRIMS AND CLOSURES PROFILES

SHEET **A1-35**

a1_35_flashing_details.dgn
TAEMWW Imperial Rev. 7/10 02-AUG-2012 15:41

ORIGINAL SCALE IN INCHES FOR REDUCED PLANS 0 1 2 3

UNIT 3598
PROJECT NUMBER & PHASE 04000000021
EA 003941

DISREGARD PRINTS BEARING EARLIER REVISION DATES →
REVISION DATES (PRELIMINARY STAGE ONLY): 06-02-11, 12-02-11, 03-16-12, 04-5-12, 04-26-12
SHEET X OF X

02-AUG-2012 15:41
a1_35_flashing_details.dgn

DIST.	COUNTY	ROUTE	POST MILES TOTAL PROJECT	SHEET NO.	TOTAL SHEETS
04	CC	580	6.1/6.3	107	216

LICENSED ARCHITECT — DATE 4/27/2012

LICENSED ARCHITECT FRANK THOMAS No. C-31406 Exp. 4-30-13 STATE OF CALIFORNIA

7-30-12
PLANS APPROVAL DATE

The State of California or its officers or agents shall not be responsible for the accuracy or completeness of scanned copies of this plan sheet.

ACCESSIBILITY DESIGN APPROVAL STAMP DOT / DES / OTA
PROJECT ID 0400000002
Reviewed by: Y. A. WANG
Date: 05-04-12

CALIFORNIA STATE FIRE MARSHAL APPROVED
Approval of this plan does not authorize or approve any omission or deviation from applicable regulations. Final approval is subject to field inspection. One set of approved plans shall be available on the project site at all times.
Reviewed by: INGRID P. ICASIANO, DSFM III
Approval date: July 17, 2012

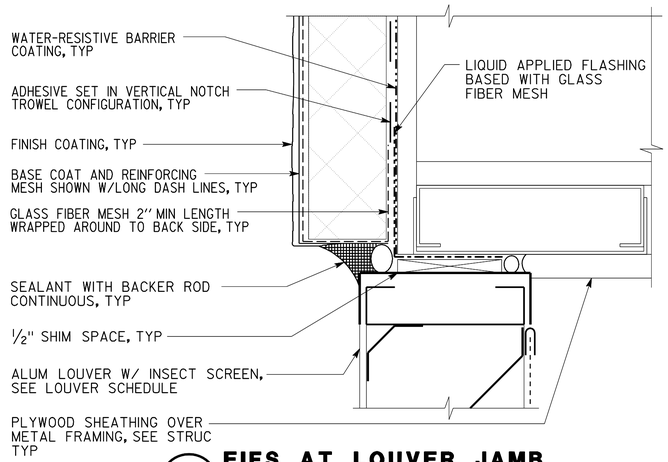

5 EIFS AT LOUVER JAMB

SCALE 6" = 1'-0"

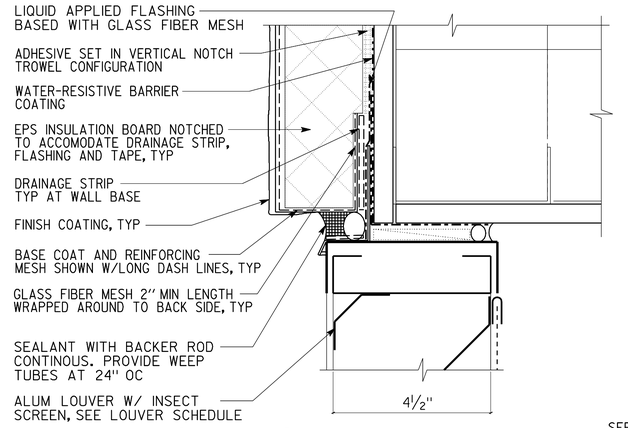

3 EIFS AT LOUVER HEADER

SCALE 6" = 1'-0"

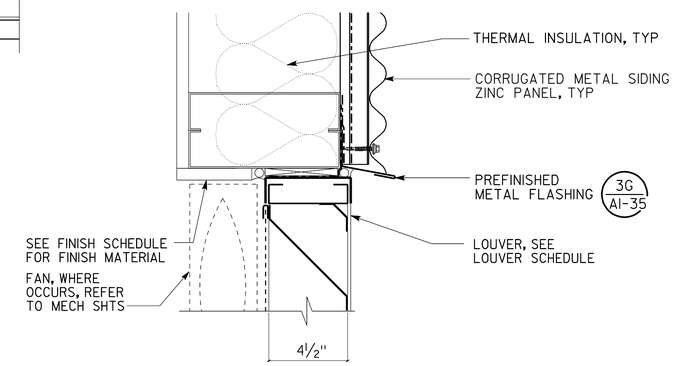

1 CORRUGATED METAL PANEL @ LOUVER HEADER

SCALE 3" = 1'-0"

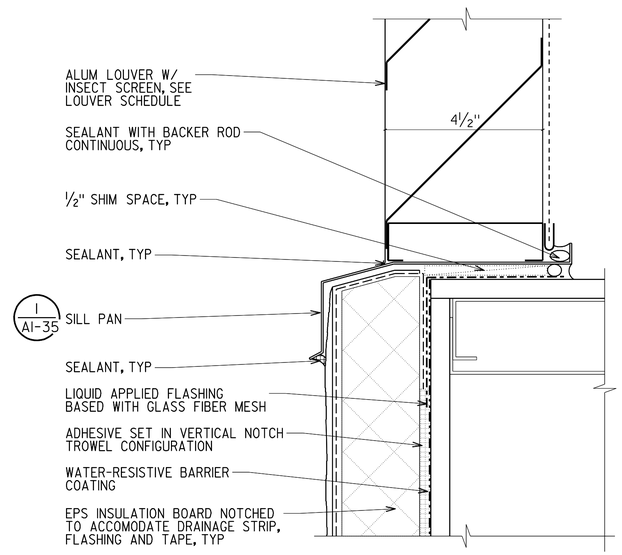

4 EIFS AT LOUVER SILL

SCALE 6" = 1'-0"

NOTE:
PROVIDE ISOLATING PADS AS NEEDED

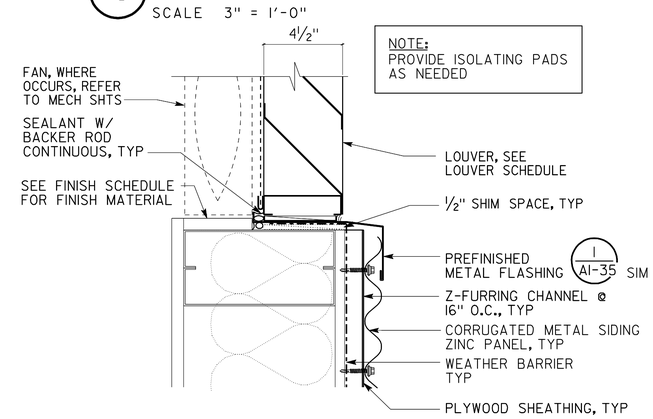

2 CORRUGATED METAL PANEL @ LOUVER SILL

SCALE 3" = 1'-0"

DESIGN	BY F. THOMAS	CHECKED C. FAUST,	
DETAILS	BY D. IGNACIO, S. YEH	CHECKED F. THOMAS	
QUANTITIES	BY	CHECKED	

STATE OF CALIFORNIA
DEPARTMENT OF TRANSPORTATION

DIVISION OF ENGINEERING SERVICES
ARCHITECTURAL AND STRUCTURAL DESIGN

BRIDGE NO. 28T5783
POST MILE 6.3

RICHMOND - SAN RAFAEL BRIDGE MAINTENANCE STATION
LOUVERS AND MISCELLANEOUS DETAILS

SHEET **A1-36**

a1_36_det_louv.dgn
TAEMWW Imperial Rev. 7/10 03-AUG-2012 06:43

ORIGINAL SCALE IN INCHES FOR REDUCED PLANS 0 1 2 3

UNIT 3598
PROJECT NUMBER & PHASE 04000000021
EA 003941

DISREGARD PRINTS BEARING EARLIER REVISION DATES
REVISION DATES (PRELIMINARY STAGE ONLY) 06-02-11 12-02-11 03-16-12 04-5-12 04-26-12
SHEET OF

03-AUG-2012 06:43
a1_36_det_louv.dgn

DIST.	COUNTY	ROUTE	POST MILES TOTAL PROJECT	SHEET NO.	TOTAL SHEETS
04	CC	580	6.1/6.3	108	216

LICENSED ARCHITECT — DATE 4/27/2012

LICENSED ARCHITECT FRANK THOMAS No. C-31406 Exp. 4-30-13 STATE OF CALIFORNIA

7-30-12
PLANS APPROVAL DATE

The State of California or its officers or agents shall not be responsible for the accuracy or completeness of scanned copies of this plan sheet.

ACCESSIBILITY DESIGN APPROVAL STAMP DOT / DES / OTA
PROJECT ID 0400000002
Reviewed by: Y. A. WANG
Date: 05-04-12

CALIFORNIA STATE FIRE MARSHAL APPROVED
Approval of this plan does not authorize or approve any omission or deviation from applicable regulations. Final approval is subject to field inspection. One set of approved plans shall be available on the project site at all times.
Reviewed by: INGRID P. ICASIANO, DSFM III
Approval date: July 17, 2012

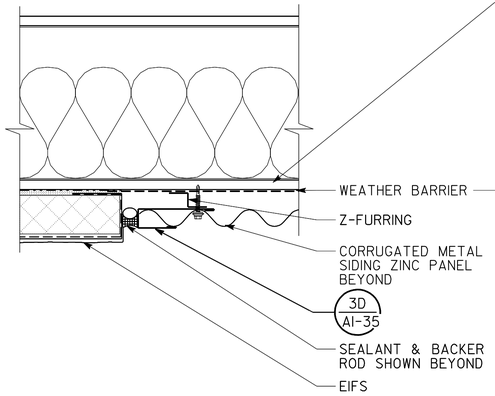

9 EIFS @ CORRUGATED PANEL
SCALE 3" = 1'-0"

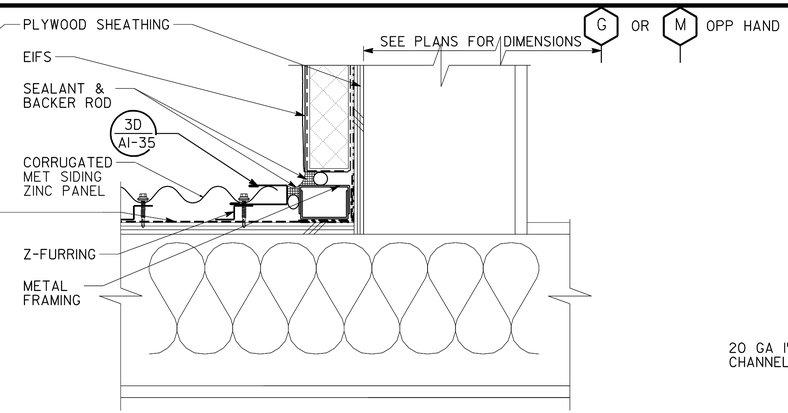

6 EIFS @ CORRUGATED PANEL - PLAN
SCALE 3" = 1'-0"

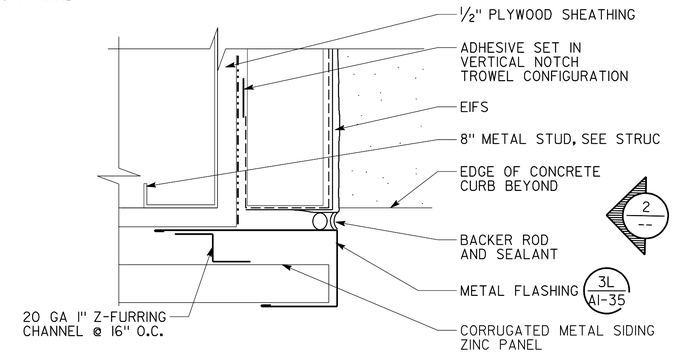

3 OUTSIDE CORNER EIFS AND CORRUGATED METAL PANEL
SCALE 6" = 1'-0"

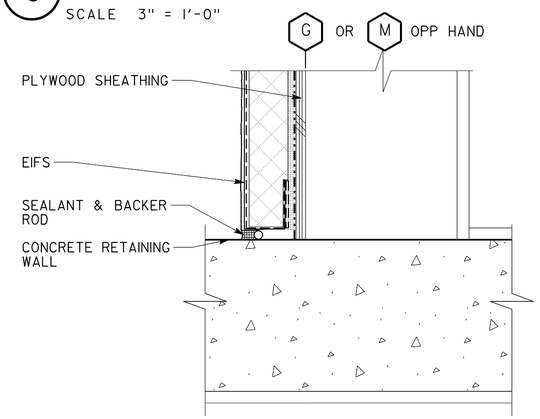

7 EIFS @ CONCRETE WALL - PLAN
SCALE 3" = 1'-0"

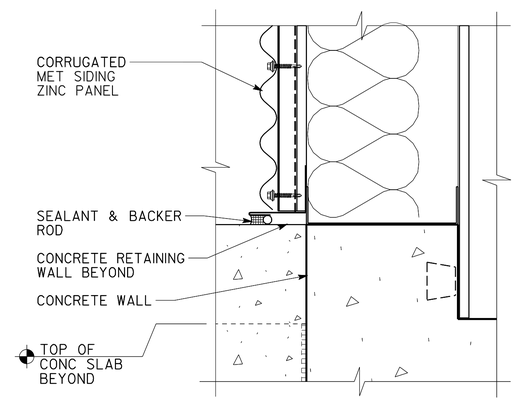

4 CORRUGATED PANEL @ CONCRETE CURB
SCALE 3" = 1'-0"

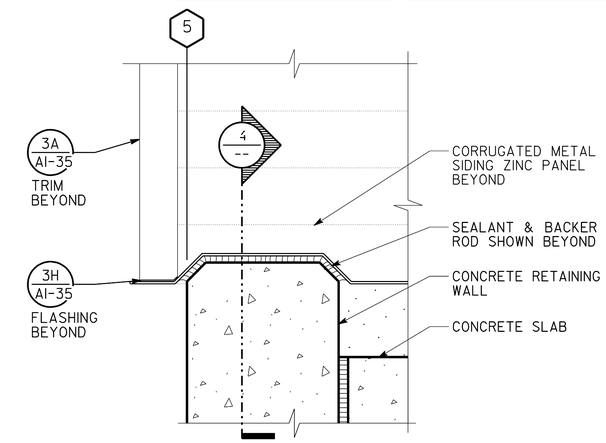

1 CORRUGATED PANEL @ CONCRETE CURB
SCALE 3" = 1'-0"

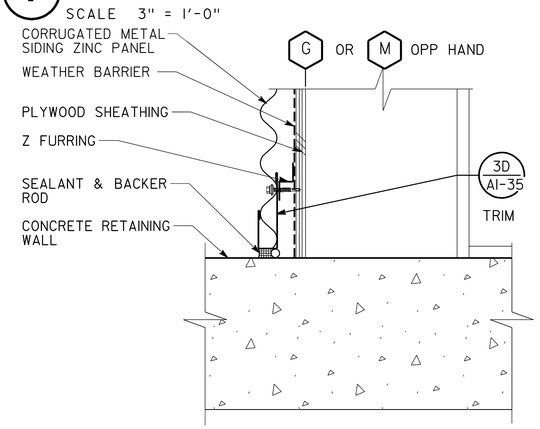

8 CORRUGATED PANEL @ CONCRETE WALL - PLAN
SCALE 3" = 1'-0"

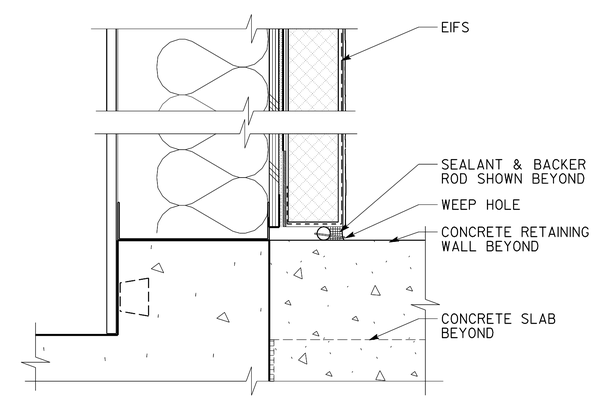

5 EIFS @ CONCRETE CURB
SCALE 3" = 1'-0"

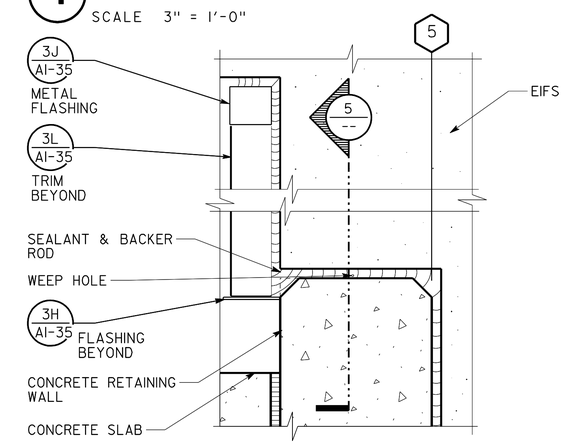

2 EIFS @ CONCRETE CURB
SCALE 3" = 1'-0"

	BY	CHECKED
DESIGN	F. THOMAS	C. FAUST,
DETAILS	D. IGNACIO, S. YEH	F. THOMAS
QUANTITIES		

STATE OF CALIFORNIA
DEPARTMENT OF TRANSPORTATION

DIVISION OF ENGINEERING SERVICES
ARCHITECTURAL AND STRUCTURAL DESIGN

BRIDGE NO. 28T5783
POST MILE 6.3

RICHMOND - SAN RAFAEL BRIDGE MAINTENANCE STATION
EIFS DETAILS

SHEET **A1-37**

a1_37_details.dgn
TAEMWW Imperial Rev. 7/10 02-AUG-2012 15:40

ORIGINAL SCALE IN INCHES FOR REDUCED PLANS 0 1 2 3

UNIT 3598
PROJECT NUMBER & PHASE 04000000021
EA 003941

DISREGARD PRINTS BEARING EARLIER REVISION DATES
REVISION DATES (PRELIMINARY STAGE ONLY) 06-08-11 12-02-11 03-16-12 04-5-12 04-26-12
SHEET X OF X

02-AUG-2012 15:40
a1_37_details.dgn

DIST.	COUNTY	ROUTE	POST MILES TOTAL PROJECT	SHEET NO.	TOTAL SHEETS
04	CC	580	6.1/6.3	109	216

LICENSED ARCHITECT — DATE 4/27/2012

LICENSED ARCHITECT FRANK THOMAS No. C-31406 Exp. 4-30-13 STATE OF CALIFORNIA

7-30-12
PLANS APPROVAL DATE

The State of California or its officers or agents shall not be responsible for the accuracy or completeness of scanned copies of this plan sheet.

ACCESSIBILITY DESIGN APPROVAL STAMP DOT / DES / OTA
PROJECT ID 0400000002
Reviewed by: Y. A. WANG
Date: 05-04-12

CALIFORNIA STATE FIRE MARSHAL APPROVED
Approval of this plan does not authorize or approve any omission or deviation from applicable regulations. Final approval is subject to field inspection. One set of approved plans shall be available on the project site at all times.
Reviewed by: INGRID P. ICASIANO, DSFM III
Approval date: July 17, 2012

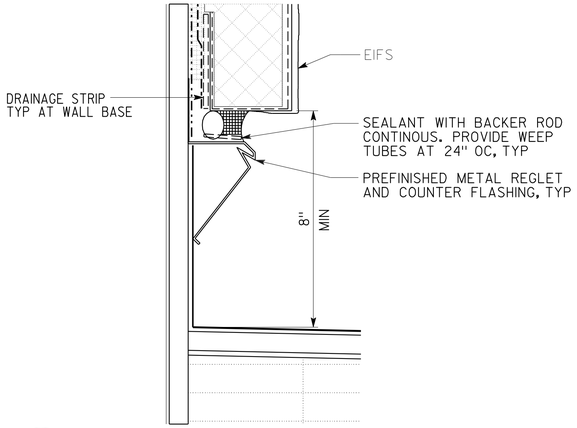

11 TERMINATION @ UPPER ROOF BASE
6" = 1'-0"

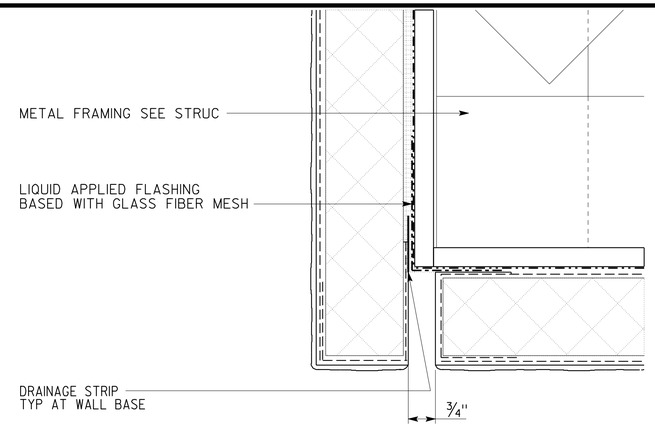

8 TERMINATION AT SOFFIT
6" = 1'-0"

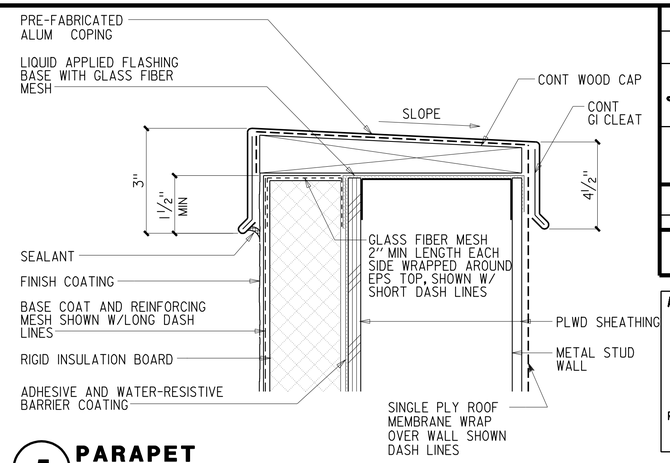

5 PARAPET
NO SCALE

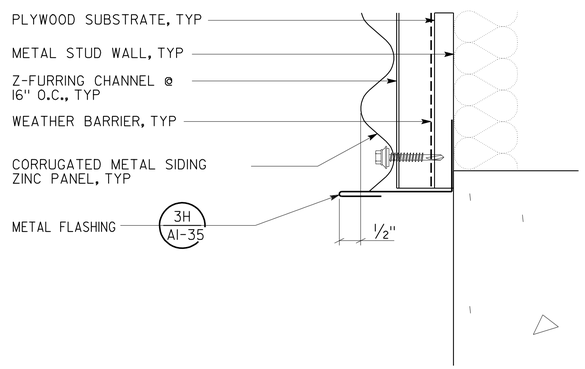

10 CORRUGATED METAL PANEL @ CONCRETE CURB
6" = 1'-0"

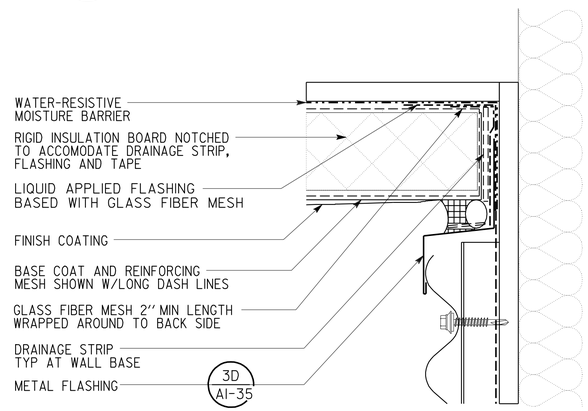

7 INSIDE CORNER/ FLASHING @ CORRUGATED METAL PANEL
6" = 1'-0"

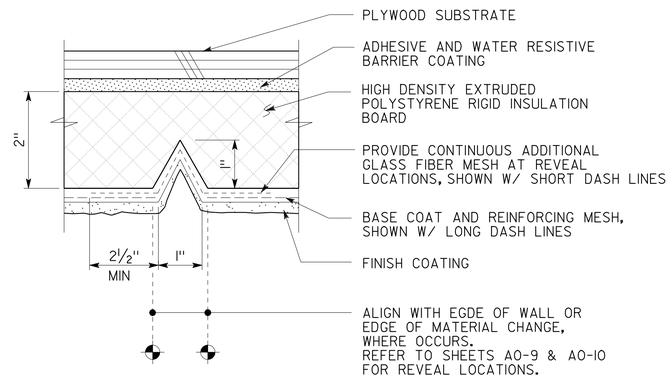

4 EIFS VERTICAL REVEAL
4" = 1'-0"

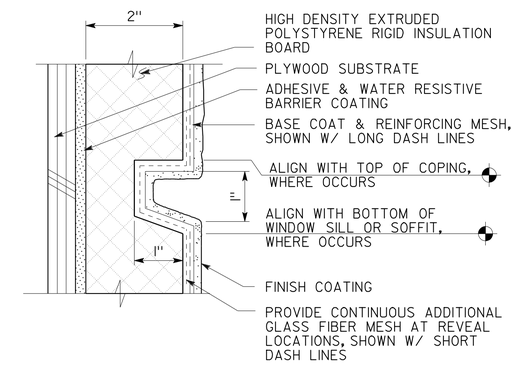

2 EIFS HORIZONTAL REVEAL
NO SCALE

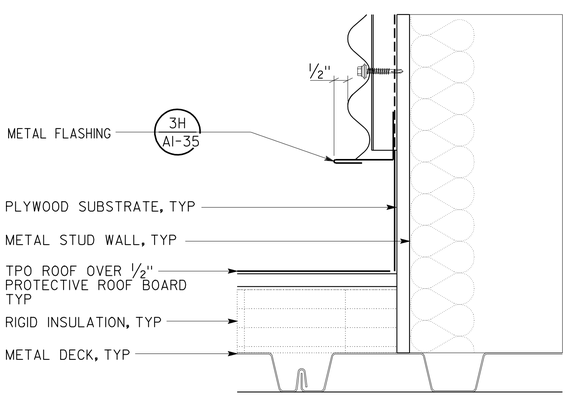

9 CORRUGATED METAL PANEL @ SINGLE PLY ROOFING
4" = 1'-0"

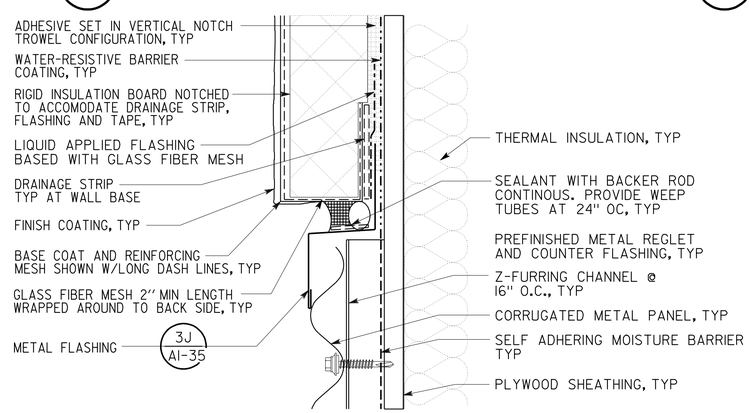

6 HORIZONTAL JOINT @ CORRUGATED METAL PANEL
6" = 1'-0"

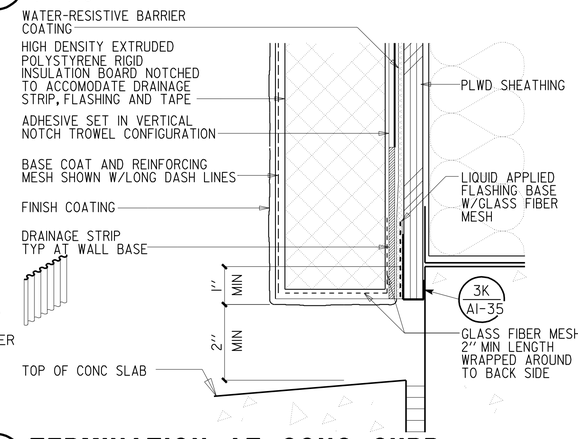

3 TERMINATION AT CONC CURB
NO SCALE

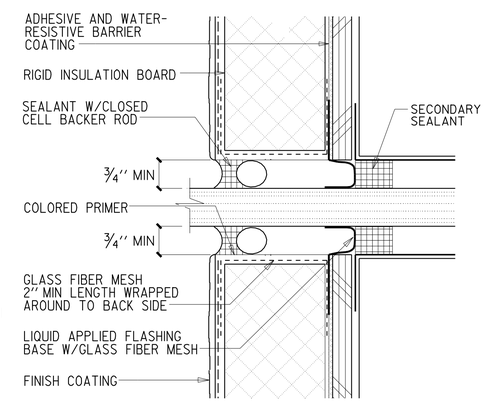

1 PENETRATION
NO SCALE

	BY	CHECKED
DESIGN	F. THOMAS	C. FAUST,
DETAILS	D. IGNACIO, S. YEH	F. THOMAS
QUANTITIES		

STATE OF CALIFORNIA
DEPARTMENT OF TRANSPORTATION

DIVISION OF ENGINEERING SERVICES
ARCHITECTURAL AND STRUCTURAL DESIGN

BRIDGE NO. 28T5783
POST MILE 6.3

RICHMOND - SAN RAFAEL BRIDGE MAINTENANCE STATION
EIFS DETAILS

SHEET **A1-41**

a1_41_details.dgn
TAEMWW Imperial Rev. 7/10 02-AUG-2012 15:39

ORIGINAL SCALE IN INCHES FOR REDUCED PLANS 0 1 2 3

UNIT 3598
PROJECT NUMBER & PHASE 04000000021
EA 003941

DISREGARD PRINTS BEARING EARLIER REVISION DATES
REVISION DATES (PRELIMINARY STAGE ONLY) 06-02-11 12-02-11 03-16-12 04-5-12 04-26-12
SHEET X OF X

02-AUG-2012 15:39
a1_41_details.dgn

DIST.	COUNTY	ROUTE	POST MILES TOTAL PROJECT	SHEET NO.	TOTAL SHEETS
04	CC	580	6.1/6.3	110	216

LICENSED ARCHITECT — DATE 4/27/2012

LICENSED ARCHITECT FRANK THOMAS No. C-31406 Exp. 4-30-13 STATE OF CALIFORNIA

7-30-12
PLANS APPROVAL DATE

The State of California or its officers or agents shall not be responsible for the accuracy or completeness of scanned copies of this plan sheet.

ACCESSIBILITY DESIGN APPROVAL STAMP DOT / DES / OTA
PROJECT ID 0400000002
Reviewed by: Y. A. WANG
Date: 05-04-12

CALIFORNIA STATE FIRE MARSHAL APPROVED
Approval of this plan does not authorize or approve any omission or deviation from applicable regulations. Final approval is subject to field inspection. One set of approved plans shall be available on the project site at all times.
Reviewed by: INGRID P. ICASIANO, DSFM III
Approval date: July 17, 2012

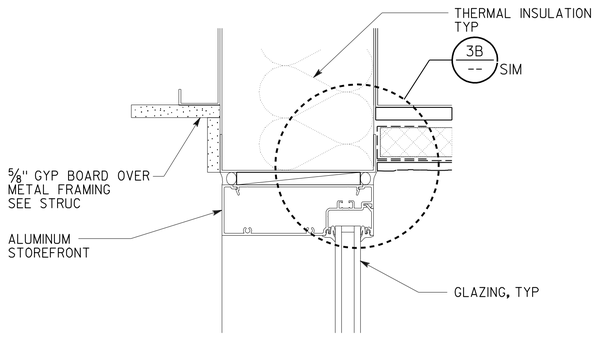

9 ALUMINUM STROREFRONT HEADER DETAIL

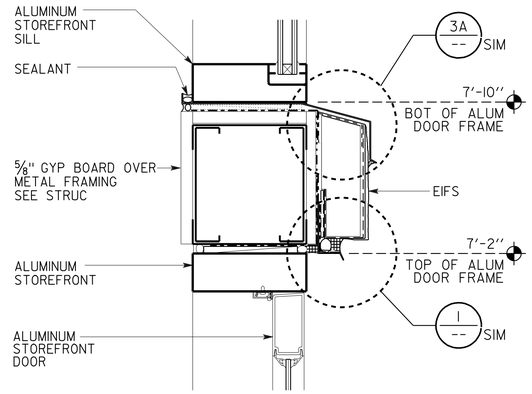

6 EIFS @ ALUM WINDOW HEADER & SILL DETAIL

3" = 1'-0"

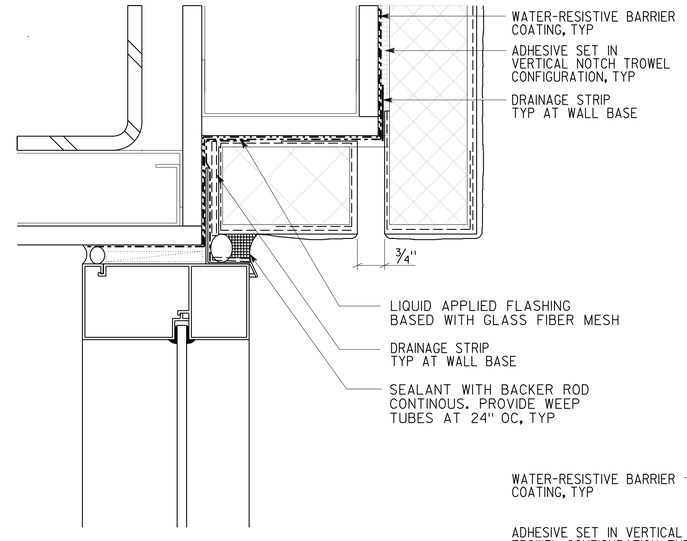

3B EIFS @ ALUM WINDOW HEADER

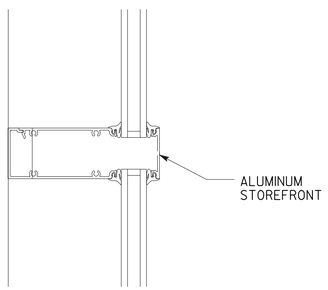

8 ALUMINUM STOREFRONT TRANSOM / SPLIT MULLION DETAIL

6" = 1'-0"

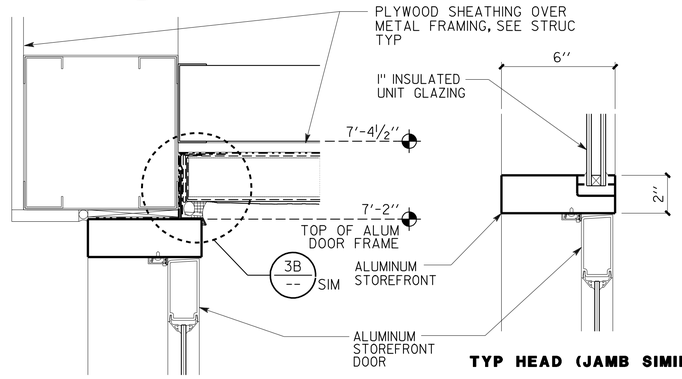

TYP HEAD (JAMB SIMILAR)

5B 5A

5 ALUMINUM STOREFRONT DOOR HEAD DETAIL

3" = 1'-0"

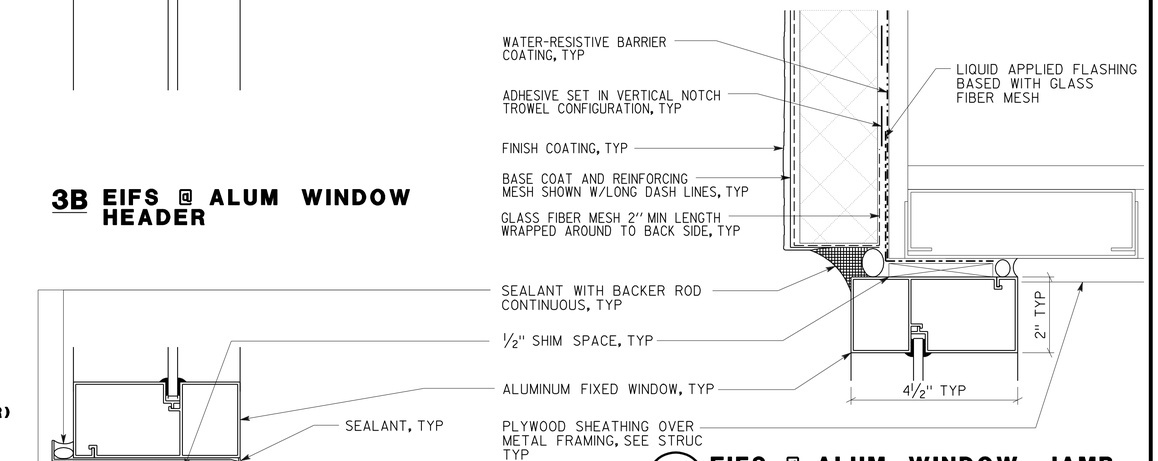

2 EIFS @ ALUM WINDOW JAMB

6" = 1'-0"

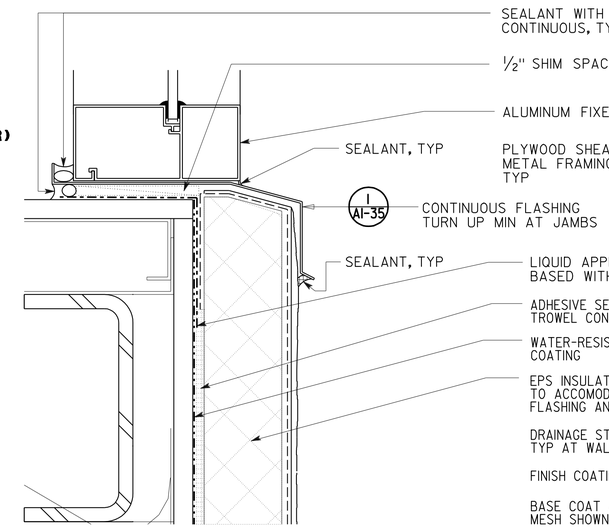

3A EIFS @ ALUM WINDOW SILL

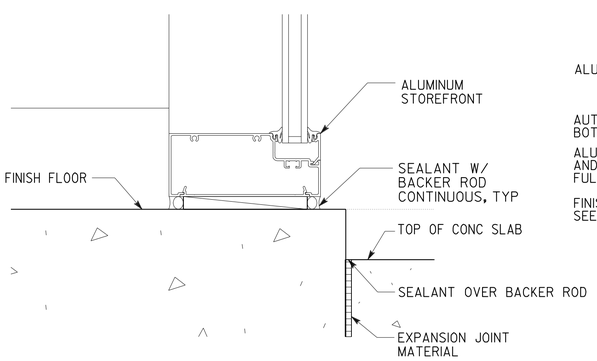

7 ALUMINUM STOREFRONT WINDOW SILL @CONC CURB

6" = 1'-0"

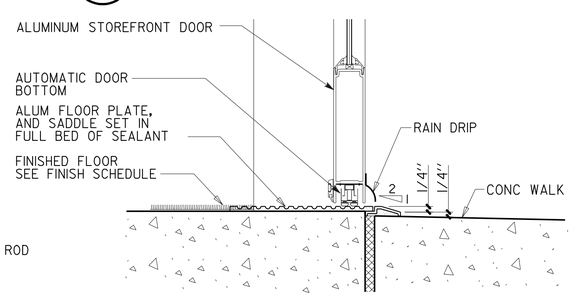

4 ALUMINUM STORE FRONT DOOR @ THRESHOLD

3" = 1'-0"

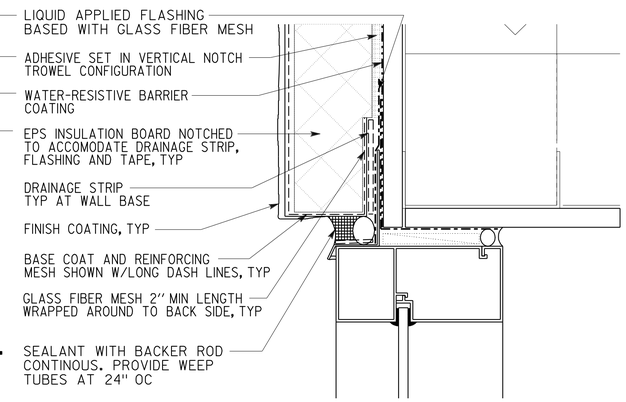

3 EIFS @ ALUM WINDOW

6" = 1'-0"

1 EIFS @ ALUM WINDOW HEADER

6" = 1'-0"

	BY	CHECKED
DESIGN	F. THOMAS	C. FAUST,
DETAILS	D. IGNACIO, S. YEH	F. THOMAS
QUANTITIES		

STATE OF CALIFORNIA
DEPARTMENT OF TRANSPORTATION

DIVISION OF ENGINEERING SERVICES
ARCHITECTURAL AND STRUCTURAL DESIGN

BRIDGE NO. 28T5783
POST MILE 6.3

RICHMOND - SAN RAFAEL BRIDGE MAINTENANCE STATION
DOOR AND WINDOW DETAILS

SHEET A1-42

a1_42_details.dgn
TAEMWW Imperial Rev. 7/10 02-AUG-2012 15:39

ORIGINAL SCALE IN INCHES FOR REDUCED PLANS 0 1 2 3

UNIT 3598
PROJECT NUMBER & PHASE 04000000021
EA 003941

DISREGARD PRINTS BEARING EARLIER REVISION DATES
REVISION DATES (PRELIMINARY STAGE ONLY) 06-02-11 12-02-11 03-16-12 04-5-12 04-26-12
SHEET X OF X

02-AUG-2012 15:39
a1_42_details.dgn

DIST.	COUNTY	ROUTE	POST MILES TOTAL PROJECT	SHEET NO.	TOTAL SHEETS
04	CC	580	6.1/6.3	111	216

CALIFORNIA STATE FIRE MARSHAL APPROVED
Approval of this plan does not authorize or approve any omission or deviation from applicable regulations. Final approval is subject to field inspection. One set of approved plans shall be available on the project site at all times.
Reviewed by: INGRID P. ICASIANO, DSFM III
Approval date: July 17, 2012

ACCESSIBILITY DESIGN APPROVAL STAMP DOT / DES / OTA
PROJECT ID 0400000002
Reviewed by: Y. A. WANG
Date: 05-04-12

LICENSED ARCHITECT — 4/27/2012 DATE
LICENSED ARCHITECT FRANK THOMAS No. C-31406 Exp. 4-30-13 STATE OF CALIFORNIA
7-30-12
PLANS APPROVAL DATE

The State of California or its officers or agents shall not be responsible for the accuracy or completeness of scanned copies of this plan sheet.

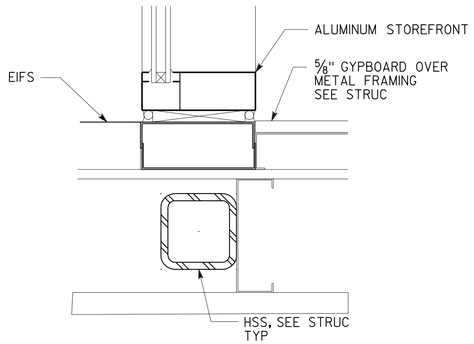

11 ALUMINUM STOREFRONT DETAIL
SCALE X" = 1'-0"

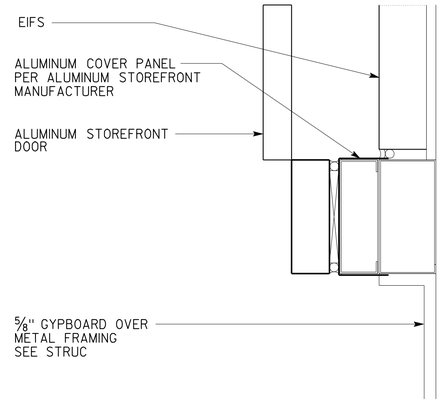

8 ALUMINUM STOREFRONT DETAIL
SCALE 3" = 1'-0"

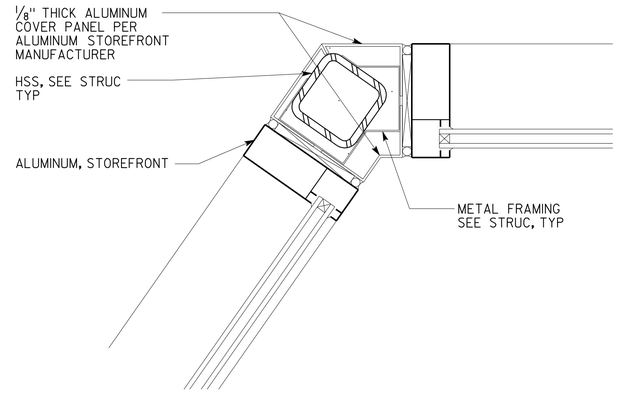

5 ALUMINUM STOREFRONT DETAIL
SCALE 3" = 1'-0"

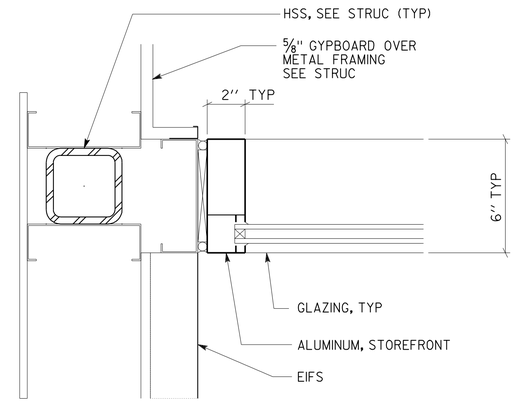

2 EIFS @ ALUMINUM STOREFRONT DETAIL
SCALE 3" = 1'-0"

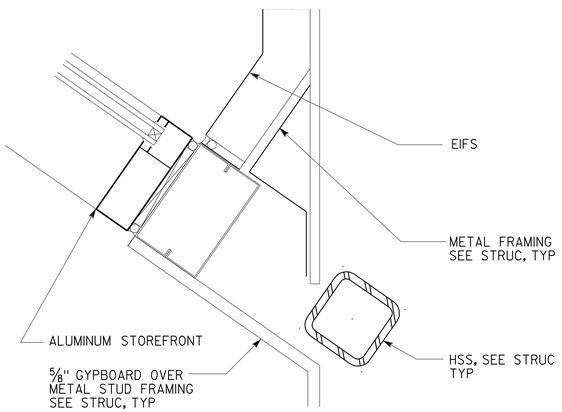

10 ALUMINUM STOREFRONT DETAIL
SCALE X" = 1'-0"

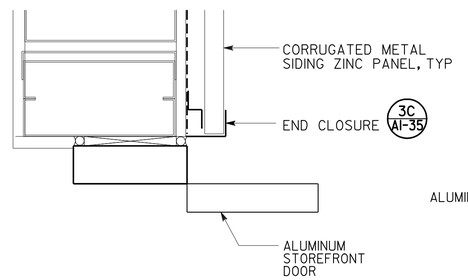

7 ALUMINUM STOREFRONT DETAIL
SCALE 3" = 1'-0"

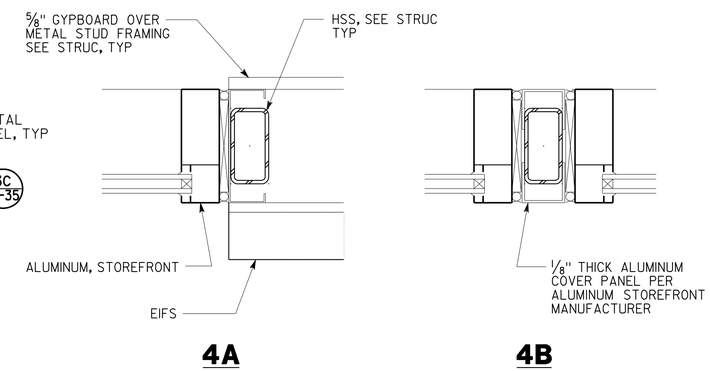

4 ALUMINUM STOREFRONT DETAIL
SCALE 3" = 1'-0"

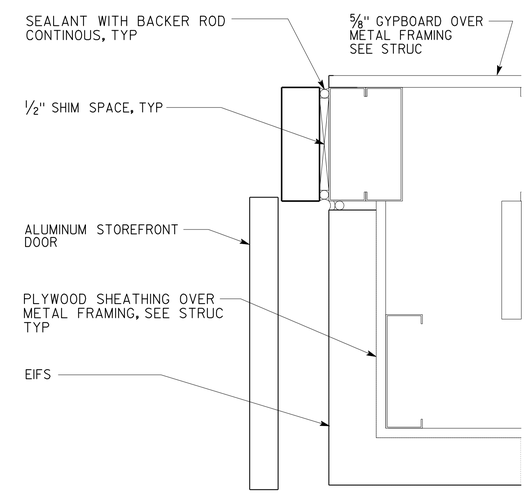

1 EIFS @ ALUMINUM STOREFRONT DOOR JAMB
SCALE 3" = 1'-0"

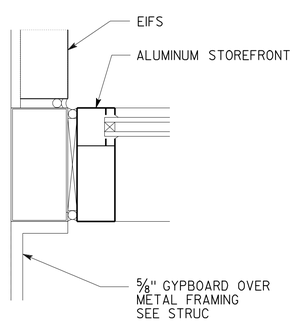

9 ALUMINUM STOREFRONT DETAIL
SCALE X" = 1'-0"

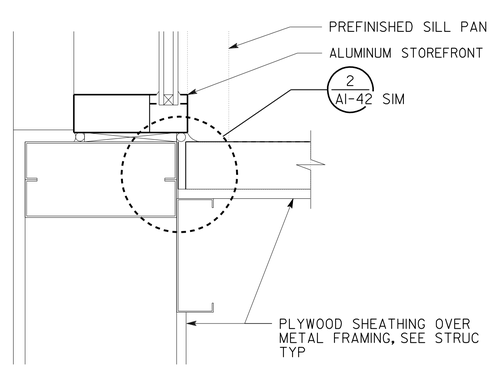

6 ALUMINUM STOREFRONT DETAIL
SCALE 3" = 1'-0"

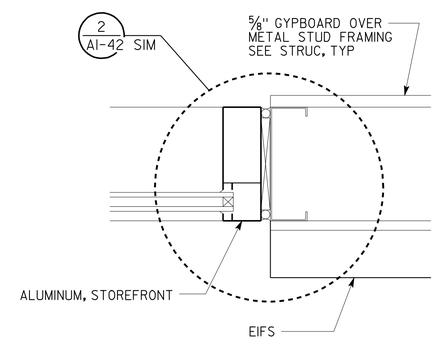

3 EIFS @ ALUMINUM STOREFRONT JAMB
SCALE 3" = 1'-0"

DESIGN	BY F. THOMAS	CHECKED C. FAUST,	
DETAILS	BY D. IGNACIO, S. YEH	CHECKED F. THOMAS	
QUANTITIES	BY	CHECKED	

STATE OF CALIFORNIA DEPARTMENT OF TRANSPORTATION

DIVISION OF ENGINEERING SERVICES ARCHITECTURAL AND STRUCTURAL DESIGN

BRIDGE NO. 28T5783
POST MILE 6.3

RICHMOND - SAN RAFAEL BRIDGE MAINTENANCE STATION
WINDOW DETAILS

SHEET A1-43

a1_43_details.dgn
TAEMWW Imperial Rev. 7/10 02-AUG-2012 15:38

ORIGINAL SCALE IN INCHES FOR REDUCED PLANS 0 1 2 3

UNIT 3598
PROJECT NUMBER & PHASE 04000000021
EA 003941

DISREGARD PRINTS BEARING EARLIER REVISION DATES → 06-02-11 12-02-11 03-16-12 04-5-12 04-26-12

REVISION DATES (PRELIMINARY STAGE ONLY) SHEET X OF X

02-AUG-2012 15:38
a1_43_details.dgn

DIST.	COUNTY	ROUTE	POST MILES TOTAL PROJECT	SHEET NO.	TOTAL SHEETS
04	CC	580	6.1/6.3	112	216

CALIFORNIA STATE FIRE MARSHAL APPROVED
Approval of this plan does not authorize or approve any omission or deviation from applicable regulations. Final approval is subject to field inspection. One set of approved plans shall be available on the project site at all times.
Reviewed by: INGRID P. ICASIANO, DSFM III
Approval date: July 17, 2012

ACCESSIBILITY DESIGN APPROVAL STAMP DOT / DES / OTA
PROJECT ID 0400000002
Reviewed by: Y. A. WANG
Date: 05-04-12

4/27/2012
LICENSED ARCHITECT — DATE

LICENSED ARCHITECT FRANK THOMAS No. C-31406 Exp. 4-30-13 STATE OF CALIFORNIA

7-30-12
PLANS APPROVAL DATE

The State of California or its officers or agents shall not be responsible for the accuracy or completeness of scanned copies of this plan sheet.

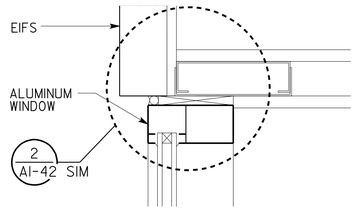

11 ALUM FIXED WINDOW JAMB
SCALE 3" = 1'-0"

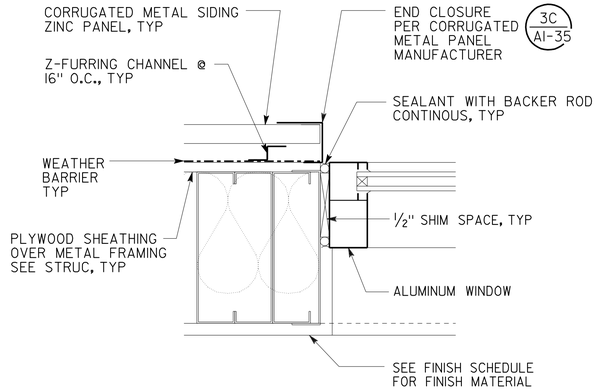

8 CORRUGATED MET SIDING ZINC PANEL @ ALUM FIXED WINDOW JAMB
SCALE 3" = 1'-0"

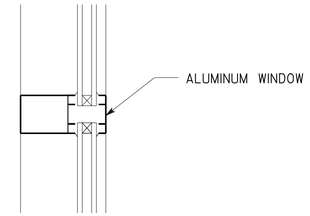

5 ALUM FIXED WINDOW DETAIL
SCALE 3" = 1'-0"

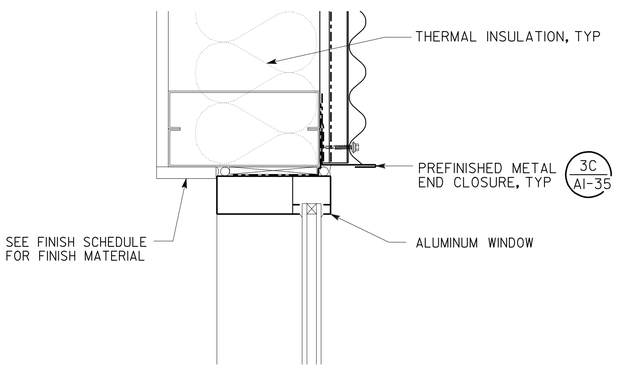

10 CORRUGATED MET SIDING ZINC PANEL @ ALUM FIXED WINDOW HEAD
SCALE 3" = 1'-0"

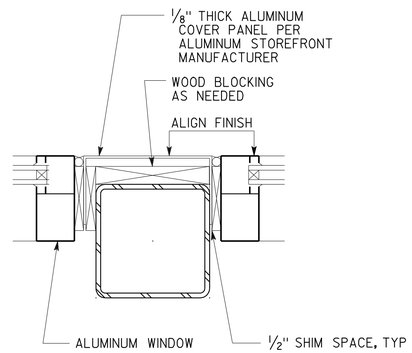

7 ALUM FIXED WINDOW JAMB
SCALE 3" = 1'-0"

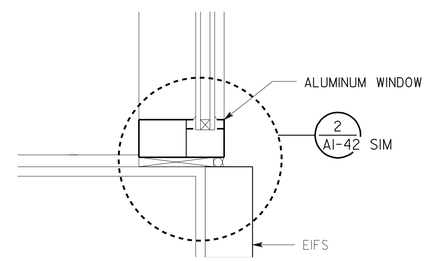

4 EIFS @ ALUM FIXED WINDOW JAMB
SCALE 3" = 1'-0"

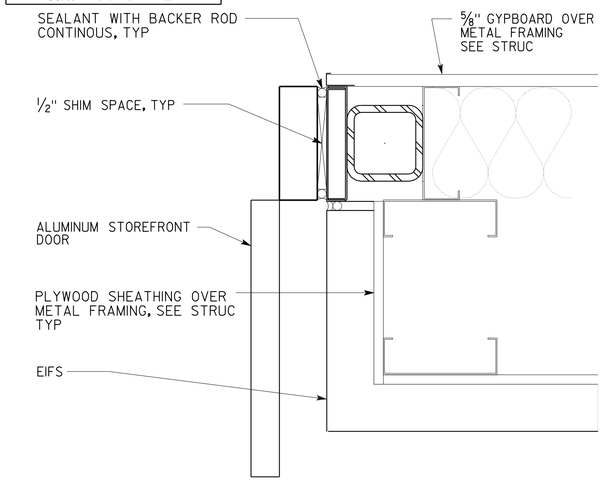

2 ALUMINUM STOREFRONT DETAIL
SCALE 3" = 1'-0"

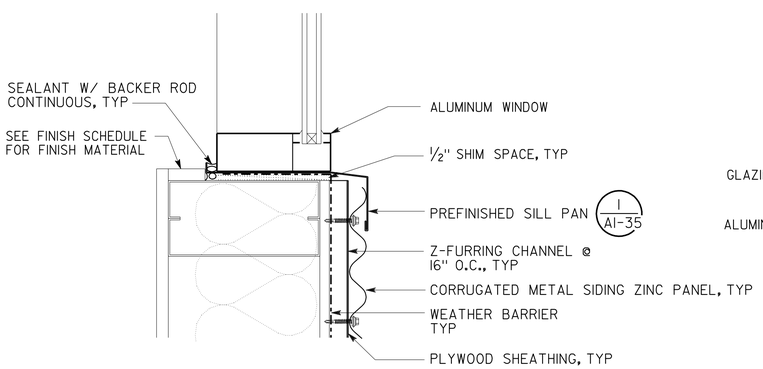

9 CORRUGATED MET SIDING ZINC PANEL @ ALUM FIXED WINDOW SILL
SCALE 3" = 1'-0"

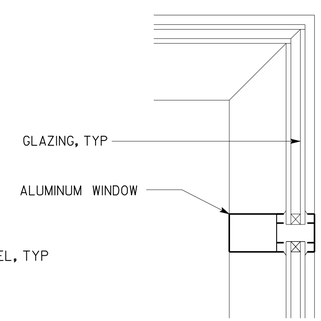

6 MITERED GLAZING @ OUTSIDE CORNER
SCALE 3" = 1'-0"

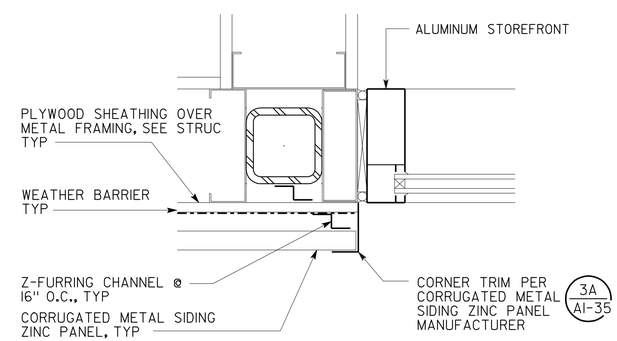

3 CORRUGATED METAL SIDING ZINC PANEL @ ALUM STOREFRONT JAMB
SCALE 3" = 1'-0"

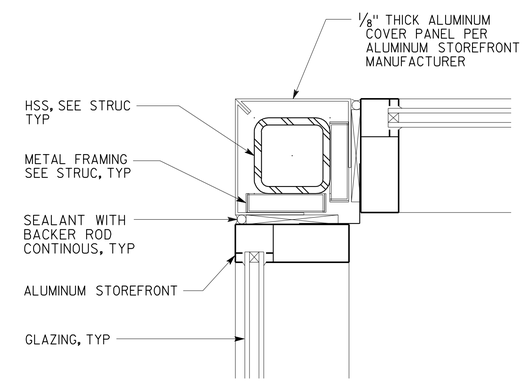

1 ALUMINUM STOREFRONT DETAIL
SCALE 3" = 1'-0"

	BY	CHECKED
DESIGN	F. THOMAS	C. FAUST,
DETAILS	D. IGNACIO, S. YEH	F. THOMAS
QUANTITIES		

STATE OF CALIFORNIA
DEPARTMENT OF TRANSPORTATION

DIVISION OF ENGINEERING SERVICES
ARCHITECTURAL AND STRUCTURAL DESIGN

BRIDGE NO. 28T5783
POST MILE 6.3

RICHMOND - SAN RAFAEL BRIDGE MAINTENANCE STATION
WINDOW DETAILS

SHEET A1-44

a1_44_details.dgn
TAEMWW Imperial Rev. 7/10 02-AUG-2012 15:38

ORIGINAL SCALE IN INCHES FOR REDUCED PLANS 0 1 2 3

UNIT 3598
PROJECT NUMBER & PHASE 04000000021
EA 003941

DISREGARD PRINTS BEARING EARLIER REVISION DATES
REVISION DATES (PRELIMINARY STAGE ONLY): 06-02-11 12-02-11 03-16-12 04-5-12 04-26-12
SHEET X OF X

02-AUG-2012 15:38
a1_44_details.dgn

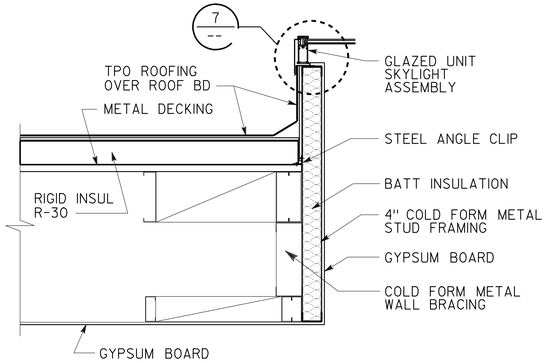

11 SLOPED GLAZING DETAIL END RAFTER WALL CONDITION

SCALE 3/4" = 1'-0"

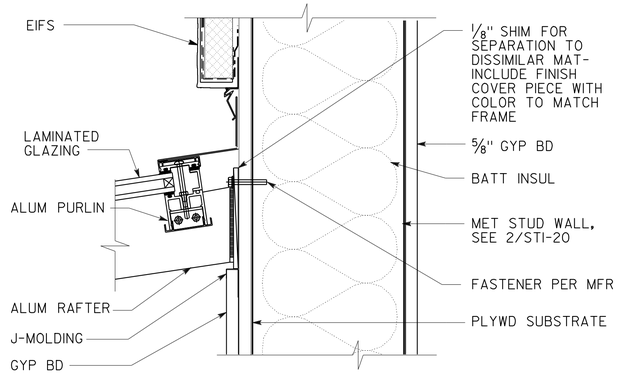

8 HEAD CONNECTION

SCALE 3" = 1'-0"

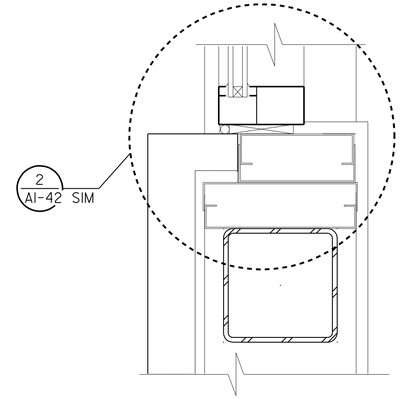

5 ALUMINUM FIXED WINDOW JAMB

SCALE 3" = 1'-0"

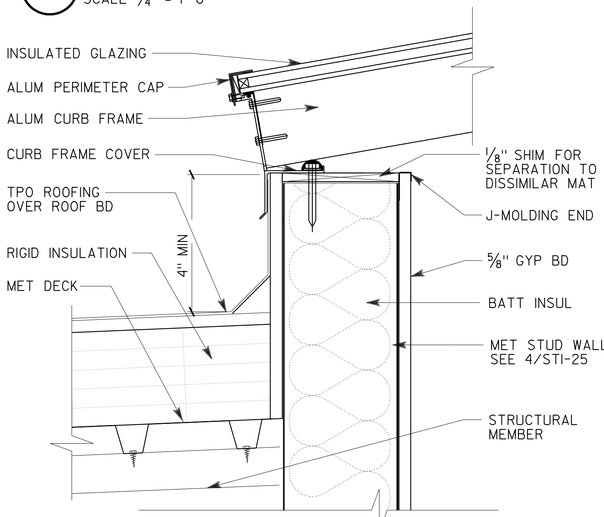

10 SLOPED GLAZING DETAIL SILL CONNECTION

SCALE 3" = 1'-0"

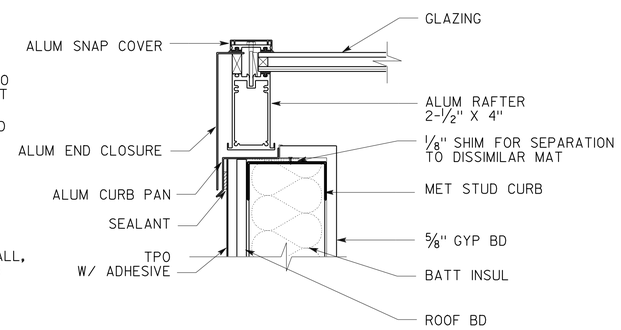

7 END RAFTER AT CURB

SCALE 3" = 1'-0"

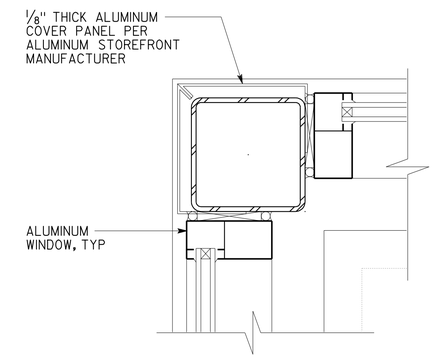

4 ALUMINUM FIXED WINDOW JAMB

SCALE 3" = 1'-0"

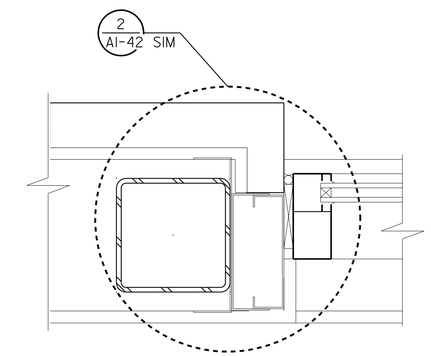

2 ALUMINUM FIXED WINDOW JAMB

SCALE 3" = 1'-0"

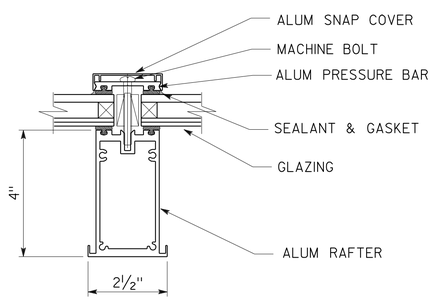

9 SLOPED GLAZING DETAIL TYPICAL RAFTER

SCALE 5" = 1'-0"

6 NOT USED

SCALE X" = X'-X"

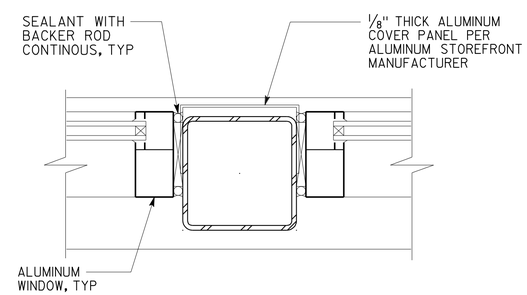

3 ALUMINUM FIXED WINDOW JAMB

SCALE 3" = 1'-0"

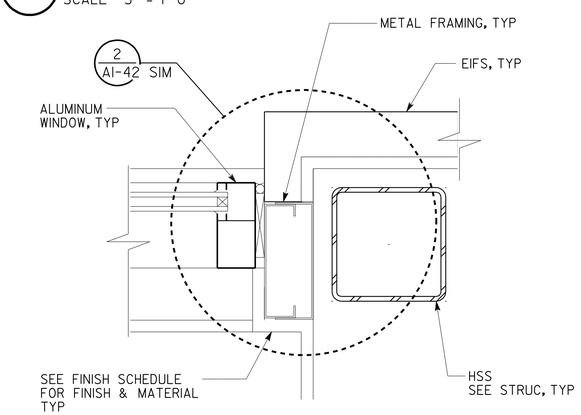

1 ALUMINUM FIXED WINDOW JAMB

SCALE 3" = 1'-0"

CALIFORNIA STATE FIRE MARSHAL APPROVED

Approval of this plan does not authorize or approve any omission or deviation from applicable regulations. Final approval is subject to field inspection. One set of approved plans shall be available on the project site at all times.

Reviewed by: INGRID P. ICASIANO, DSFM III

Approval date: July 17, 2012

ACCESSIBILITY DESIGN APPROVAL STAMP DOT / DES / OTA

PROJECT ID 0400000002

Reviewed by: Y. A. WANG

Date: 05-04-12

DIST.	COUNTY	ROUTE	POST MILES TOTAL PROJECT	SHEET NO.	TOTAL SHEETS
04	CC	580	6.1/6.3	113	216

LICENSED ARCHITECT 4/27/2012 DATE

LICENSED ARCHITECT FRANK THOMAS No. C-31406 Exp. 4-30-13 STATE OF CALIFORNIA

7-30-12 PLANS APPROVAL DATE

The State of California or its officers or agents shall not be responsible for the accuracy or completeness of scanned copies of this plan sheet.

	BY	CHECKED
DESIGN	F. THOMAS	C. FAUST,
DETAILS	D. IGNACIO, S. YEH	F. THOMAS
QUANTITIES		

STATE OF CALIFORNIA DEPARTMENT OF TRANSPORTATION

DIVISION OF ENGINEERING SERVICES ARCHITECTURAL AND STRUCTURAL DESIGN

BRIDGE NO. 28T5783 POST MILE 6.3

RICHMOND - SAN RAFAEL BRIDGE MAINTENANCE STATION

WINDOW DETAILS

SHEET A1-45

a1_45_details.dgn

TAEMWW Imperial Rev. 7/10 02-AUG-2012 15:38

ORIGINAL SCALE IN INCHES FOR REDUCED PLANS 0 1 2 3

UNIT 3598

PROJECT NUMBER & PHASE 04000000021

EA 003941

DISREGARD PRINTS BEARING EARLIER REVISION DATES → 06-02-11 12-02-11 03-16-12 04-5-12 04-26-12

SHEET	OF
X	X

02-AUG-2012 15:38

a1_45_details.dgn

DIST.	COUNTY	ROUTE	POST MILES TOTAL PROJECT	SHEET NO.	TOTAL SHEETS
04	CC	580	6.1/6.3	114	216

LICENSED ARCHITECT — 4/27/2012 DATE

LICENSED ARCHITECT FRANK THOMAS No. C-31406 Exp. 4-30-13 STATE OF CALIFORNIA

7-30-12
PLANS APPROVAL DATE

The State of California or its officers or agents shall not be responsible for the accuracy or completeness of scanned copies of this plan sheet.

ACCESSIBILITY DESIGN APPROVAL STAMP DOT / DES / OTA
PROJECT ID **0400000002**
Reviewed by: Y. A. WANG
Date: 05-04-12

CALIFORNIA STATE FIRE MARSHAL APPROVED
Approval of this plan does not authorize or approve any omission or deviation from applicable regulations. Final approval is subject to field inspection. One set of approved plans shall be available on the project site at all times.
Reviewed by: INGRID P. ICASIANO, DSFM III
Approval date: July 17, 2012

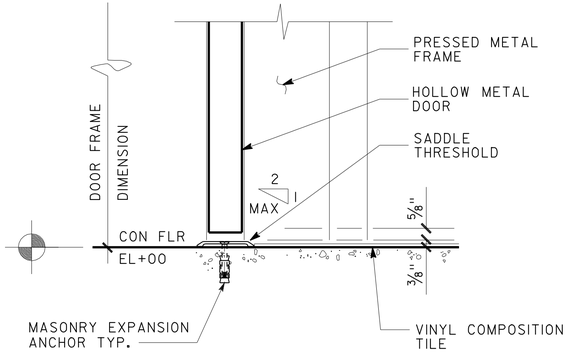

9 INTERIOR DOOR THRESHOLD
SCALE 3" = 1'-0"

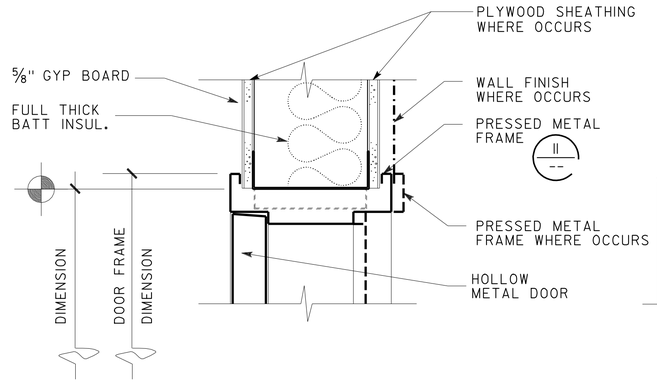

6 INTERIOR DOOR JAMB/HEAD SIM.
SCALE 3" = 1'-0"

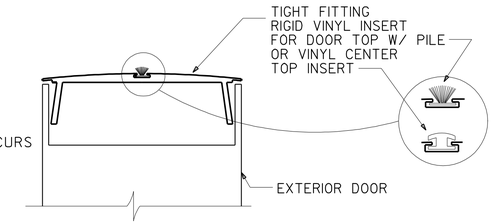

3 EXTERIOR DOOR TOPPER
NO SCALE

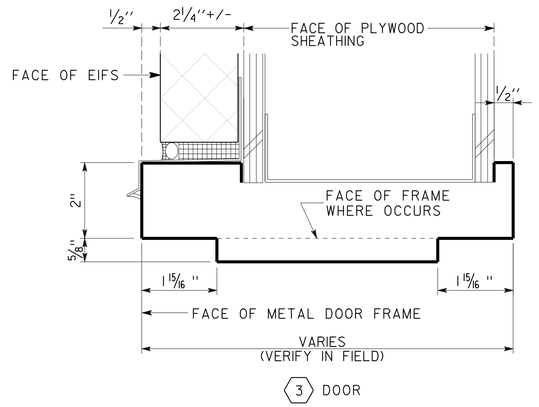

10 EXT PRESSED METAL FRAME
SCALE 6" = 1'-0"

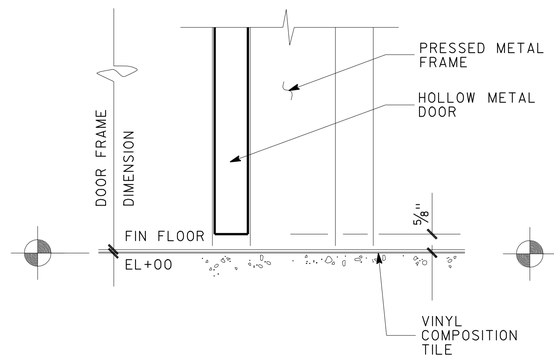

7 INTERIOR DOOR THRESHOLD
SCALE 3" = 1'-0"

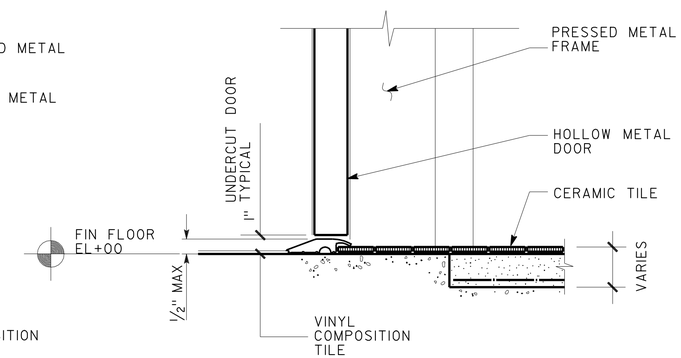

4 INTERIOR DOOR THRESHOLD
SCALE 3" = 1'-0"

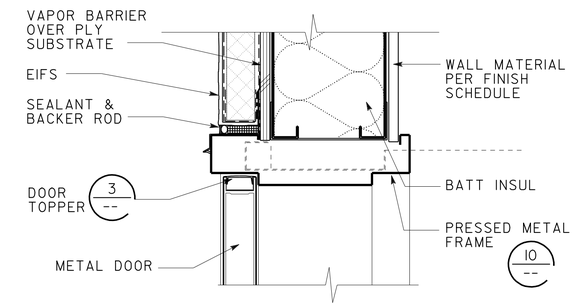

1 EXTERIOR DOOR HEAD
SCALE 3" = 1'-0"

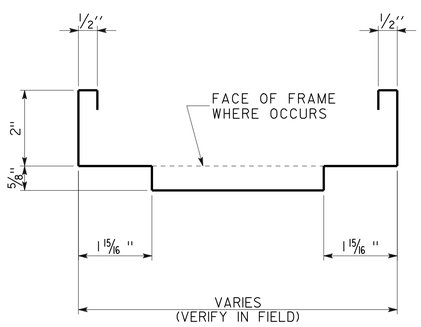

11 PRESSED METAL FRAME
SCALE 6" = 1'-0"

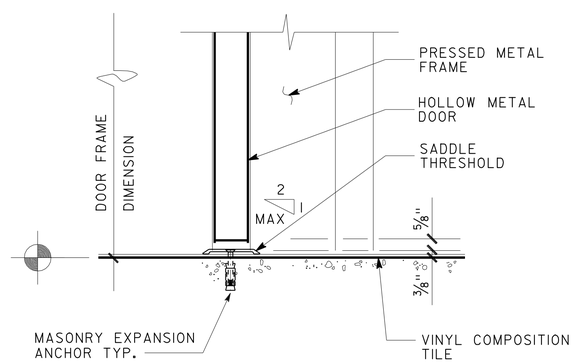

8 INTERIOR DOOR THRESHOLD
SCALE 3" = 1'-0"

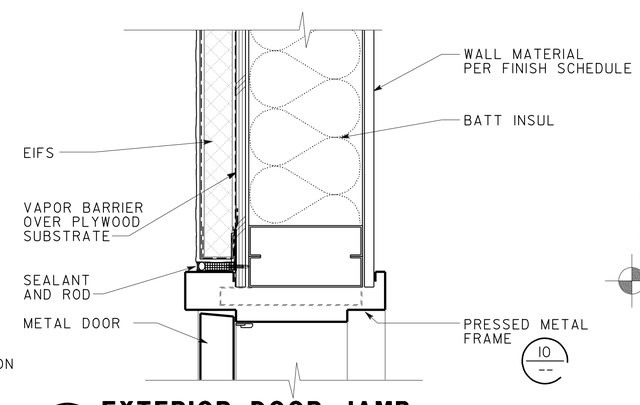

5 EXTERIOR DOOR JAMB
SCALE 3" = 1'-0"

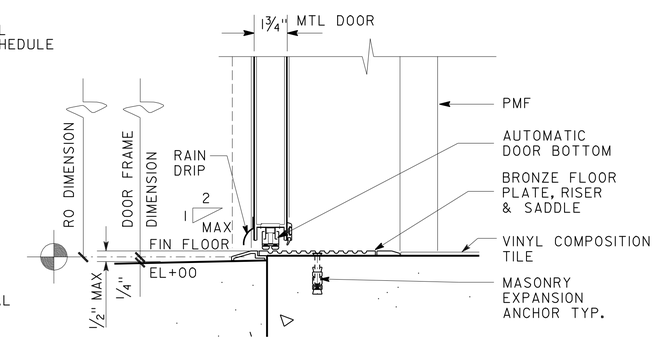

2 EXTERIOR DOOR THRESHOLD
SCALE 3" = 1'-0"

	BY	CHECKED
DESIGN	F. THOMAS	C. FAUST,
DETAILS	D. IGNACIO, S. YEH	F. THOMAS
QUANTITIES	BY	CHECKED

STATE OF CALIFORNIA
DEPARTMENT OF TRANSPORTATION

DIVISION OF ENGINEERING SERVICES
ARCHITECTURAL AND STRUCTURAL DESIGN

BRIDGE NO. 28T5783
POST MILE 6.3

RICHMOND - SAN RAFAEL BRIDGE MAINTENANCE STATION
DOOR DETAILS

SHEET **A1-46**

a1_46_det_door.dgn
TAEMWW Imperial Rev. 7/10 02-AUG-2012 15:37

ORIGINAL SCALE IN INCHES FOR REDUCED PLANS 0 1 2 3

UNIT 3598
PROJECT NUMBER & PHASE 04000000021
EA 003941

DISREGARD PRINTS BEARING EARLIER REVISION DATES
REVISION DATES (PRELIMINARY STAGE ONLY) 06-02-11 12-02-11 03-16-12 04-5-12 04-26-12
SHEET OF

02-AUG-2012 15:37
a1_46_det_door.dgn

DIST.	COUNTY	ROUTE	POST MILES TOTAL PROJECT	SHEET NO.	TOTAL SHEETS
04	CC	580	6.1/6.3	115	216

LICENSED ARCHITECT — DATE 4/27/2012

LICENSED ARCHITECT FRANK THOMAS No. C-31406 Exp. 4-30-13 STATE OF CALIFORNIA

7-30-12
PLANS APPROVAL DATE

The State of California or its officers or agents shall not be responsible for the accuracy or completeness of scanned copies of this plan sheet.

ACCESSIBILITY DESIGN APPROVAL STAMP DOT / DES / OTA
PROJECT ID 0400000002
Reviewed by: Y. A. WANG
Date: 05-04-12

CALIFORNIA STATE FIRE MARSHAL APPROVED
Approval of this plan does not authorize or approve any omission or deviation from applicable regulations. Final approval is subject to field inspection. One set of approved plans shall be available on the project site at all times.
Reviewed by: INGRID P. ICASIANO, DSFM III
Approval date: July 17, 2012

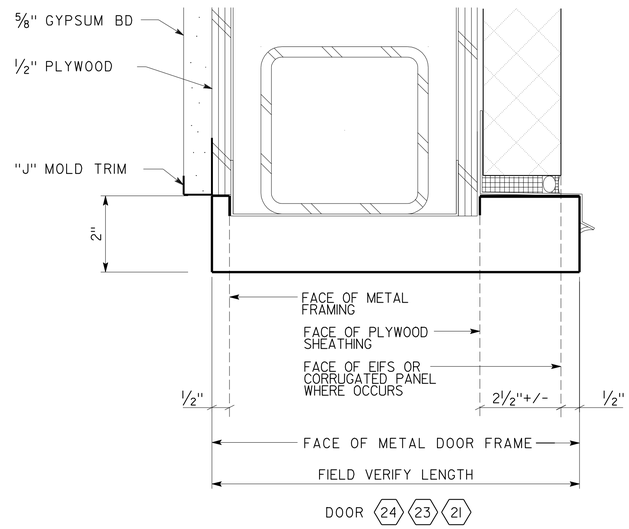

7 EXT PRESSED METAL FRAME @ ROLL-UP SECTIONAL DOOR

SCALE 6" = 1'-0"

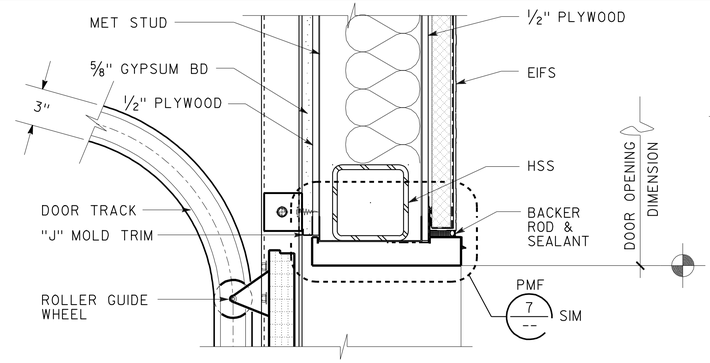

4B EIFS @ SECTIONAL OH DOOR HEAD

SCALE 2" = 1'-0"

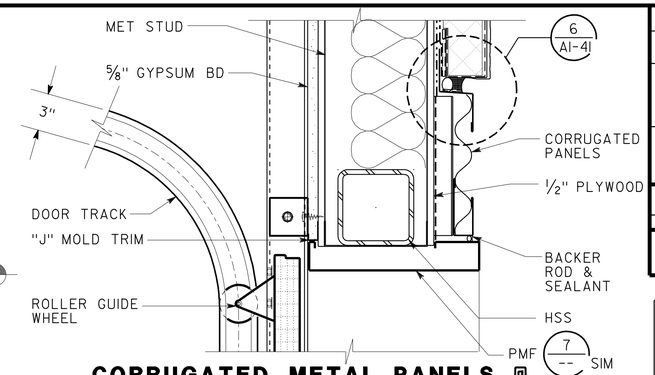

4A CORRUGATED METAL PANELS @ SECTIONAL OH DOOR HEAD

SCALE 2" = 1'-0"

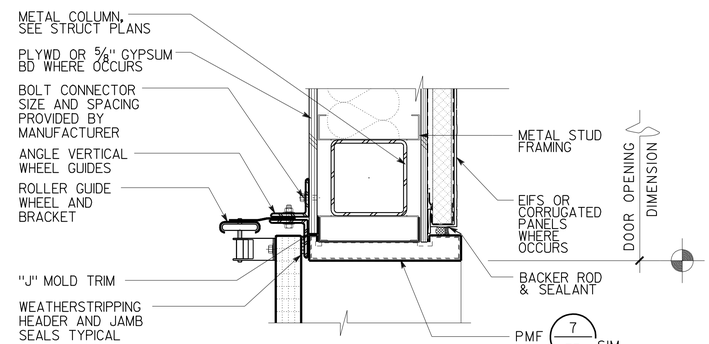

5 SECTIONAL OH JAMB

SCALE 2" = 1'-0"

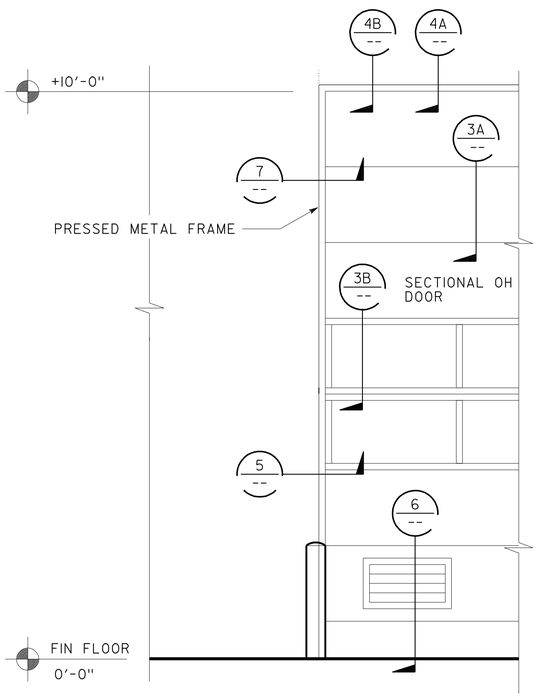

8 EXTERIOR WALL FACE- PORTION

SCALE 1/2" = 1'-0"

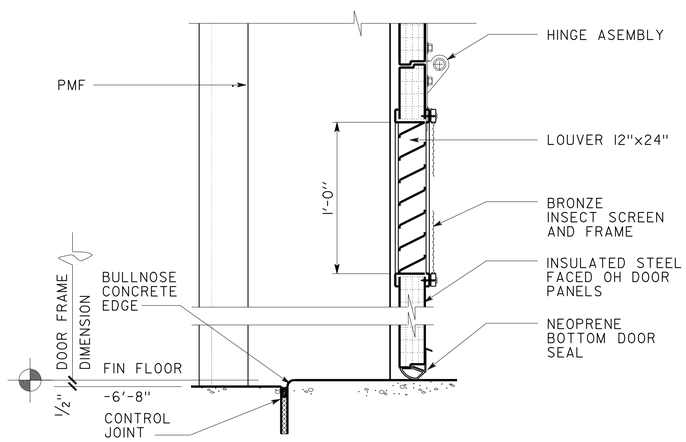

6 SECTIONAL OH SILL

SCALE 2" = 1'-0"

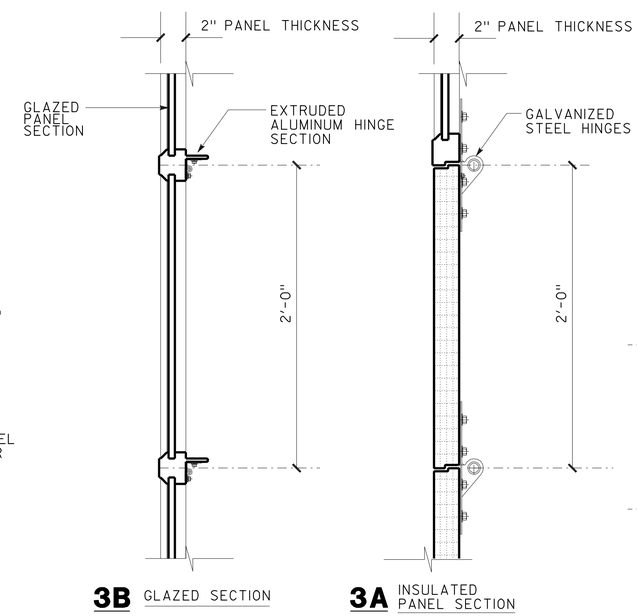

3 SECTIONAL OH DOOR PANELS

SCALE 2" = 1'-0"

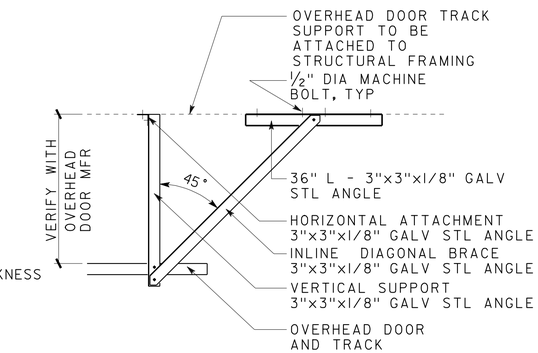

2 OVERHEAD DOOR TRACK AND SUPPORT

SCALE 3/4" = 1'-0"

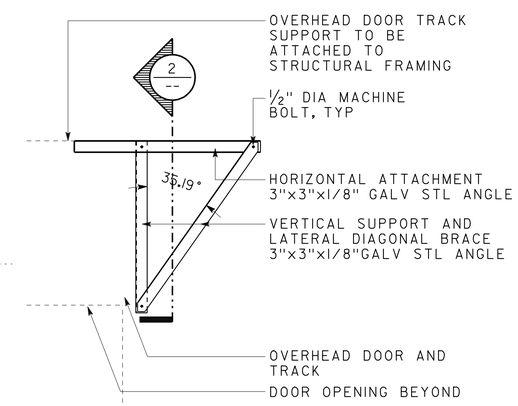

1 OVERHEAD DOOR TRACK SUPPORT

SCALE 3/4" = 1'-0"

	BY	CHECKED
DESIGN	F. THOMAS	C. FAUST,
DETAILS	D. IGNACIO, S. YEH	F. THOMAS
QUANTITIES		

STATE OF CALIFORNIA DEPARTMENT OF TRANSPORTATION

DIVISION OF ENGINEERING SERVICES ARCHITECTURAL AND STRUCTURAL DESIGN

BRIDGE NO. 28T5783
POST MILE 6.3

RICHMOND - SAN RAFAEL BRIDGE MAINTENANCE STATION

DOOR DETAILS (OVERHEAD)

SHEET **A1-47**

a1_47_det_ohdoor.dgn
TAEMWW Imperial Rev. 7/10 02-AUG-2012 15:37

ORIGINAL SCALE IN INCHES FOR REDUCED PLANS 0 1 2 3

UNIT 3598
PROJECT NUMBER & PHASE 04000000021
EA 003941

DISREGARD PRINTS BEARING EARLIER REVISION DATES → 06-02-11 12-02-11 03-16-12 04-5-12 04-26-12

REVISION DATES (PRELIMINARY STAGE ONLY) SHEET OF

02-AUG-2012 15:37
a1_47_det_ohdoor.dgn

DIST.	COUNTY	ROUTE	POST MILES TOTAL PROJECT	SHEET NO.	TOTAL SHEETS
04	CC	580	6.1/6.3	116	216

LICENSED ARCHITECT — DATE 4/27/2012

LICENSED ARCHITECT FRANK THOMAS No. C-31406 Exp. 4-30-13 STATE OF CALIFORNIA

7-30-12
PLANS APPROVAL DATE

The State of California or its officers or agents shall not be responsible for the accuracy or completeness of scanned copies of this plan sheet.

ACCESSIBILITY DESIGN APPROVAL STAMP DOT / DES / OTA
PROJECT ID 0400000002
Reviewed by: Y. A. WANG
Date: 05-04-12

CALIFORNIA STATE FIRE MARSHAL APPROVED
Approval of this plan does not authorize or approve any omission or deviation from applicable regulations. Final approval is subject to field inspection. One set of approved plans shall be available on the project site at all times.
Reviewed by: INGRID P. ICASIANO, DSFM III
Approval date: July 17, 2012

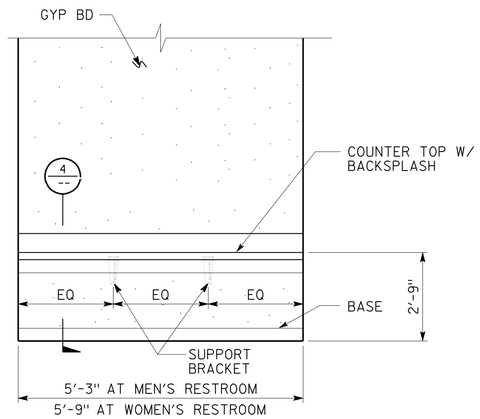

C RESTROOM COUNTER
SCALE 1/2" = 1'-0"

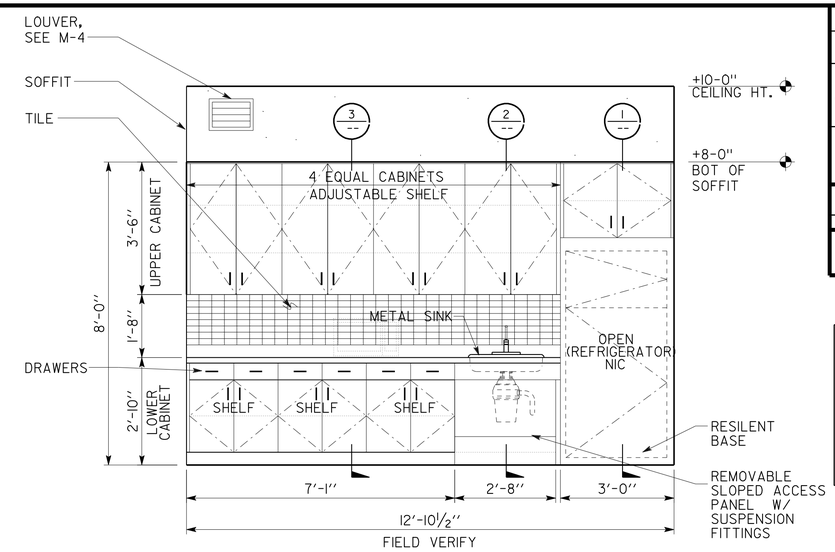

A CREW ROOM CABINET
SCALE 1/2" = 1'-0"

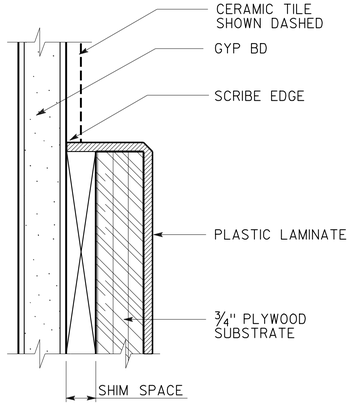

5 BACKSPLASH DETAIL
NO SCALE

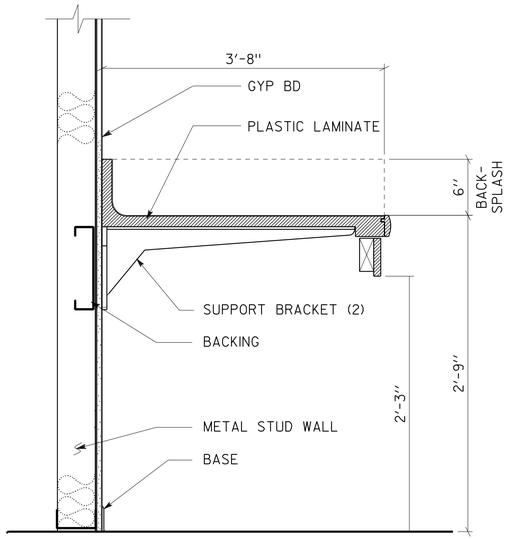

4 COUNTER SECTION
SCALE: 1 1/2" = 1'-0"

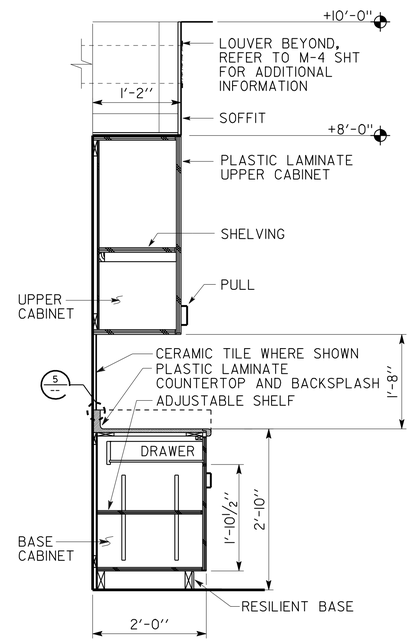

3 CABINET SECTION
SCALE 3/4" = 1'-0"

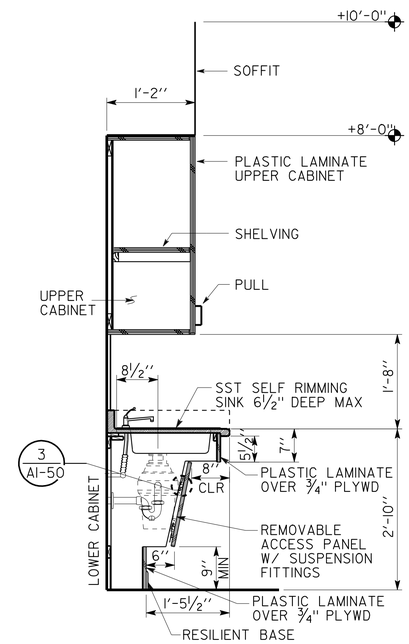

2 ACCESSIBLE COUNTER AT SINK
SCALE 3/4" = 1'-0"

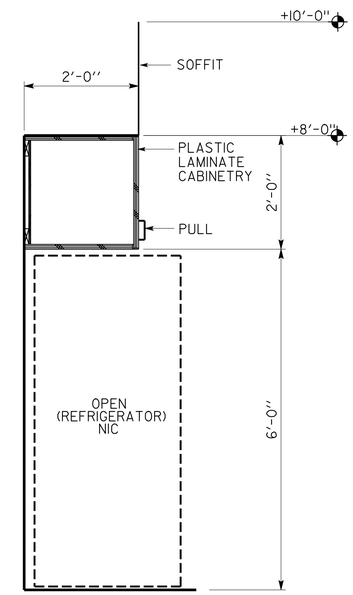

1 CABINET SECTION AT REFRIGERATOR
SCALE 3/4" = 1'-0"

	BY	CHECKED
DESIGN	F. THOMAS	C. FAUST,
DETAILS	D. IGNACIO, S. YEH	F. THOMAS
QUANTITIES		

STATE OF CALIFORNIA
DEPARTMENT OF TRANSPORTATION

DIVISION OF ENGINEERING SERVICES
ARCHITECTURAL AND STRUCTURAL DESIGN

BRIDGE NO. 28T5783
POST MILE 6.3

RICHMOND - SAN RAFAEL BRIDGE MAINTENANCE STATION
CASEWORK DETAILS I

SHEET A1-49

a1_49_det_cab.dgn
TAEMWW Imperial Rev. 7/10 03-AUG-2012 09:22

ORIGINAL SCALE IN INCHES FOR REDUCED PLANS 0 1 2 3

UNIT 3598
PROJECT NUMBER & PHASE 04000000021
EA 003941

DISREGARD PRINTS BEARING EARLIER REVISION DATES
REVISION DATES (PRELIMINARY STAGE ONLY) 06-02-11 12-02-11 03-16-12 04-5-12 04-26-12
SHEET OF

03-AUG-2012 09:22
a1_49_det_cab.dgn

DIST.	COUNTY	ROUTE	POST MILES TOTAL PROJECT	SHEET NO.	TOTAL SHEETS
04	CC	580	6.1/6.3	117	216

LICENSED ARCHITECT — 4/27/2012 DATE

LICENSED ARCHITECT FRANK THOMAS No. C-31406 Exp. 4-30-13 STATE OF CALIFORNIA

7-30-12
PLANS APPROVAL DATE

The State of California or its officers or agents shall not be responsible for the accuracy or completeness of scanned copies of this plan sheet.

ACCESSIBILITY DESIGN APPROVAL STAMP DOT / DES / OTA

PROJECT ID **0400000002**

Reviewed by: Y. A. WANG
Date: 05-04-12

CALIFORNIA STATE FIRE MARSHAL APPROVED

Approval of this plan does not authorize or approve any omission or deviation from applicable regulations. Final approval is subject to field inspection. One set of approved plans shall be available on the project site at all times.

Reviewed by: INGRID P. ICASIANO, DSFM III
Approval date: July 17, 2012

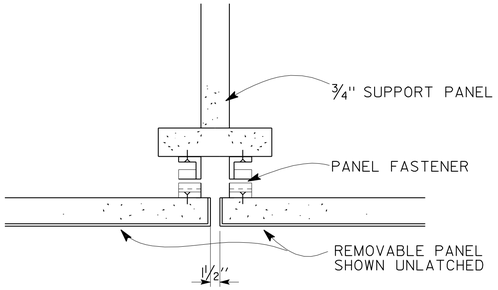

5 PANEL DETAIL

SCALE 1" = 1'-0"

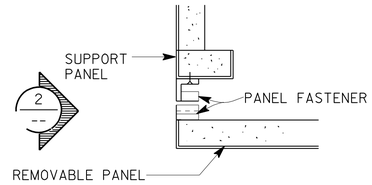

4 CORNER SECTION PANEL UNLATCHED

SCALE 6" = 1'-0"

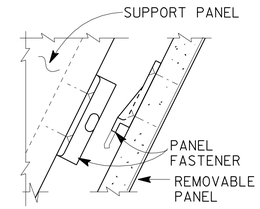

3 PANEL FASTENER

SCALE 6" = 1'-0"

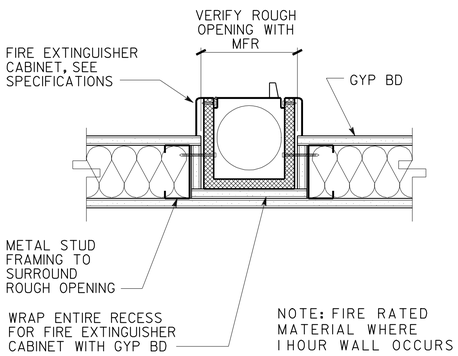

6 FIRE EXTINGUISHER CABINET AT STUD WALL

SCALE 3" = 1'-0"

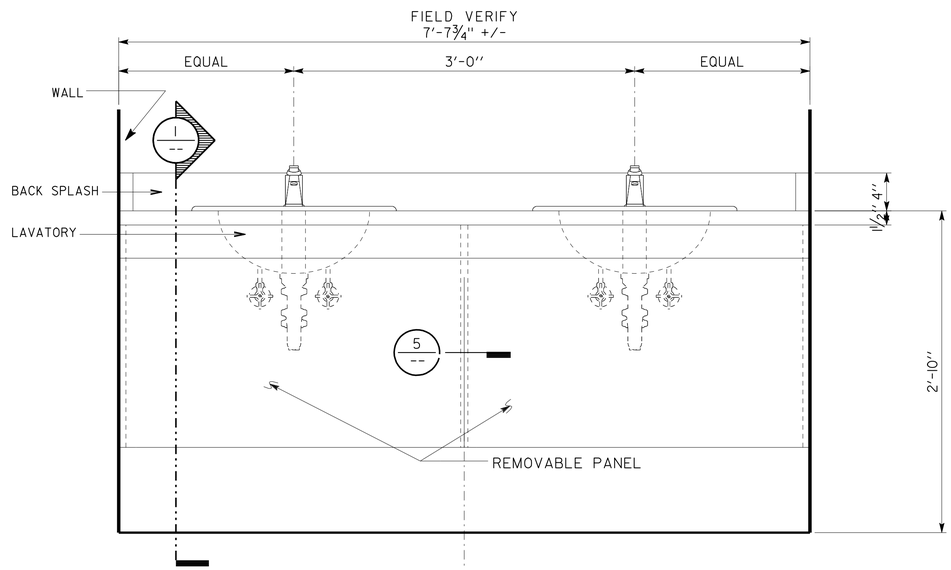

2 ELEVATION

SCALE 1 1/2" = 1'-0"

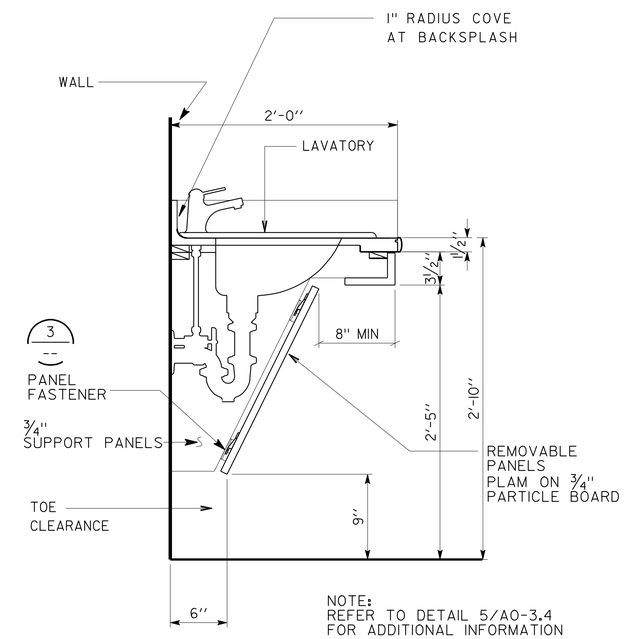

1 SECTION

SCALE 1 1/2" = 1'-0"

	BY	CHECKED
DESIGN	F. THOMAS	C. FAUST,
DETAILS	D. IGNACIO, S. YEH	F. THOMAS
QUANTITIES		

STATE OF CALIFORNIA
DEPARTMENT OF TRANSPORTATION

DIVISION OF ENGINEERING SERVICES
ARCHITECTURAL AND STRUCTURAL DESIGN

BRIDGE NO. 28T5783
POST MILE 6.3

RICHMOND - SAN RAFAEL BRIDGE MAINTENANCE STATION

CASEWORK DETAILS 2

SHEET **A1-50**

a1_50_det_cab2.dgn
TAEMWW Imperial Rev. 7/10 02-AUG-2012 15:36

ORIGINAL SCALE IN INCHES FOR REDUCED PLANS 0 1 2 3

UNIT 3598
PROJECT NUMBER & PHASE 04000000021
EA 003941

DISREGARD PRINTS BEARING EARLIER REVISION DATES → 06-02-11 12-02-11 03-16-12 04-5-12 04-26-12

REVISION DATES (PRELIMINARY STAGE ONLY) SHEET OF

02-AUG-2012 15:36
a1_50_det_cab2.dgn

DIST.	COUNTY	ROUTE	POST MILES TOTAL PROJECT	SHEET NO.	TOTAL SHEETS
04	CC	580	6.1/6.3	118	216

LICENSED ARCHITECT — 4/27/2012 DATE

LICENSED ARCHITECT FRANK THOMAS No. C-31406 Exp. 4-30-13 STATE OF CALIFORNIA

7-30-12
PLANS APPROVAL DATE

The State of California or its officers or agents shall not be responsible for the accuracy or completeness of scanned copies of this plan sheet.

ACCESSIBILITY DESIGN APPROVAL STAMP DOT / DES / OTA
PROJECT ID 0400000002
Reviewed by: Y. A. WANG
Date: 05-04-12

CALIFORNIA STATE FIRE MARSHAL APPROVED
Approval of this plan does not authorize or approve any omission or deviation from applicable regulations. Final approval is subject to field inspection. One set of approved plans shall be available on the project site at all times.
Reviewed by: INGRID P. ICASIANO, DSFM III
Approval date: July 17, 2012

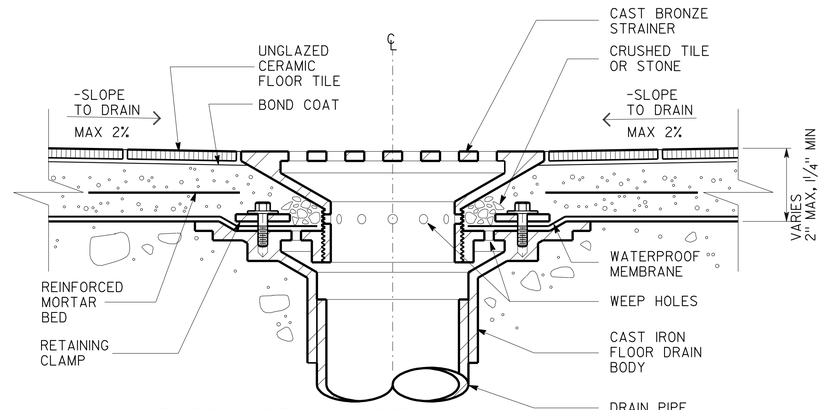

3 FLOOR DRAIN DETAIL
F121
SCALE 6" = 1'-0"

6 NOT USED
SCALE X" = 1'-0"

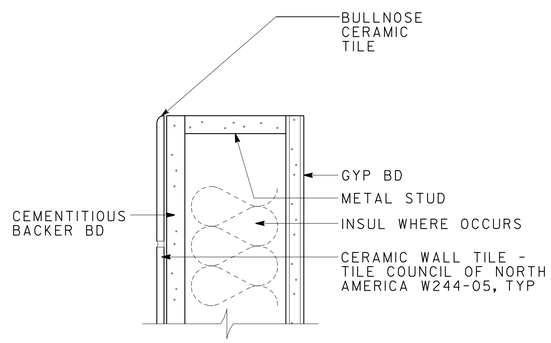

NOTE: TILE CAN BE ON OPPOSITE HAND OF WALL
REFER TO INTERIOR ELEVATIONS

7 TILE/ GYP BD AT WING WALL
SCALE 4" = 1'-0"

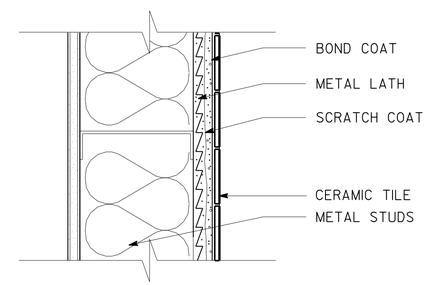

4 WALL TILE INSTALLATION
SCALE 3" = 1'-0"

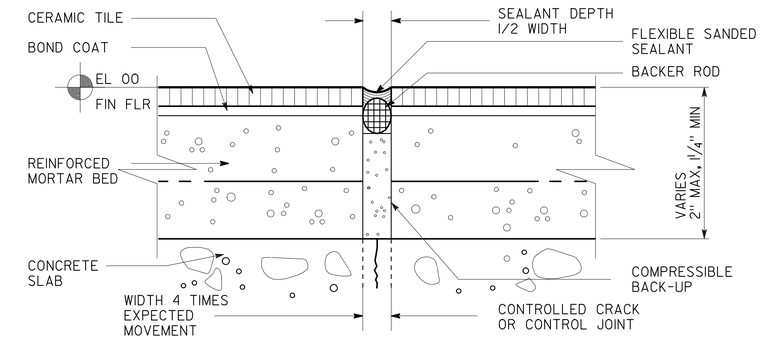

1 CONTROL JOINT
SCALE 1" = 1'-0"

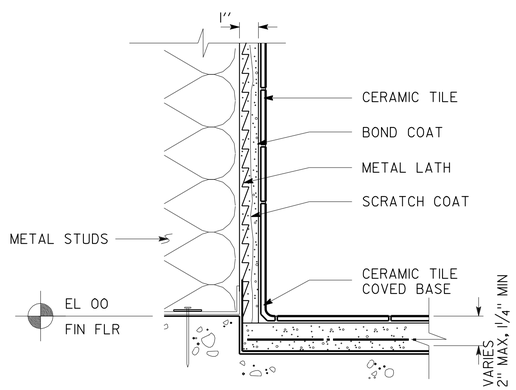

8 FULL MORTAR BED
W241
F121
SCALE 3" = 1'-0"

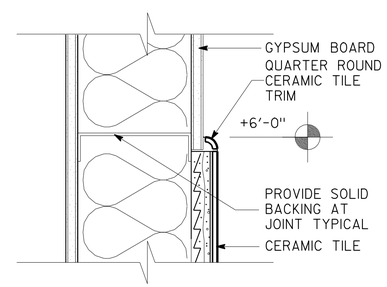

5 WALL TILE
SCALE 3" = 1'-0"

2 NOT USED
SCALE X" = 1'-0"

	BY	CHECKED
DESIGN	F. THOMAS	C. FAUST,
DETAILS	D. IGNACIO, S. YEH	F. THOMAS
QUANTITIES		

STATE OF CALIFORNIA DEPARTMENT OF TRANSPORTATION

DIVISION OF ENGINEERING SERVICES ARCHITECTURAL AND STRUCTURAL DESIGN

BRIDGE NO. 28T5783
POST MILE 6.3

RICHMOND - SAN RAFAEL BRIDGE MAINTENANCE STATION
INTERIOR FINISH DETAILS 1

SHEET A1-51

a1_51_det_tile.dgn
TAEMWW Imperial Rev. 7/10 02-AUG-2012 15:36

ORIGINAL SCALE IN INCHES FOR REDUCED PLANS 0 1 2 3

UNIT 3598
PROJECT NUMBER & PHASE 04000000021
EA 003941

DISREGARD PRINTS BEARING EARLIER REVISION DATES
REVISION DATES (PRELIMINARY STAGE ONLY) 06-02-11 12-02-11 03-16-12 04-5-12 04-26-12
SHEET OF

02-AUG-2012 15:36
a1_51_det_tile.dgn

DIST.	COUNTY	ROUTE	POST MILES TOTAL PROJECT	SHEET NO.	TOTAL SHEETS
04	CC	580	6.1/6.3	119	216

LICENSED ARCHITECT — DATE 4/27/2012

LICENSED ARCHITECT FRANK THOMAS No. C-31406 Exp. 4-30-13 STATE OF CALIFORNIA

7-30-12
PLANS APPROVAL DATE

The State of California or its officers or agents shall not be responsible for the accuracy or completeness of scanned copies of this plan sheet.

ACCESSIBILITY DESIGN APPROVAL STAMP DOT / DES / OTA
PROJECT ID 0400000002
Reviewed by: Y. A. WANG
Date: 05-04-12

CALIFORNIA STATE FIRE MARSHAL APPROVED
Approval of this plan does not authorize or approve any omission or deviation from applicable regulations. Final approval is subject to field inspection. One set of approved plans shall be available on the project site at all times.
Reviewed by: INGRID P. ICASIANO, DSFM III
Approval date: July 17, 2012

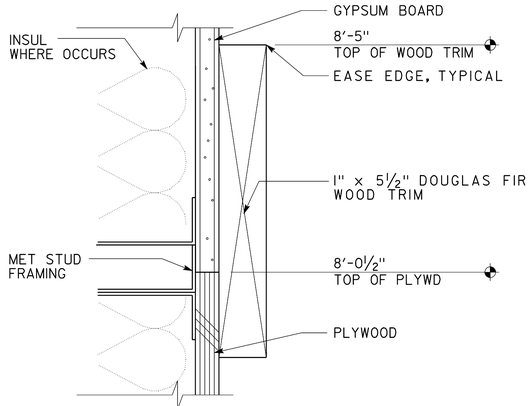

9 TRIM DETAIL
NO SCALE

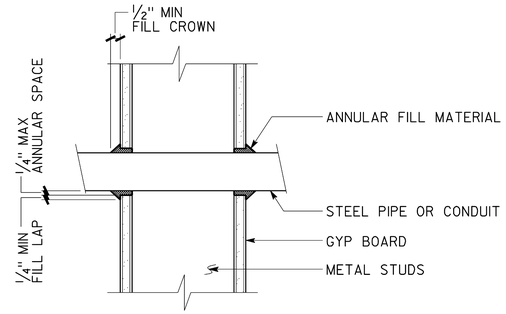

6 PIPE/CONDUIT THRU STUD WALL
NO SCALE

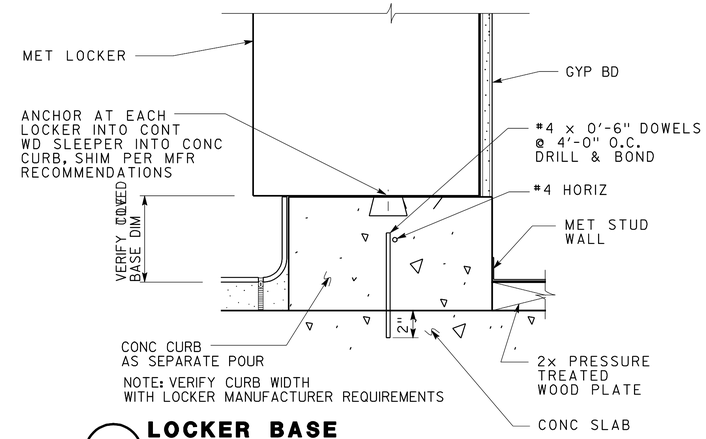

3 LOCKER BASE
SCALE 3" = 1'-0"

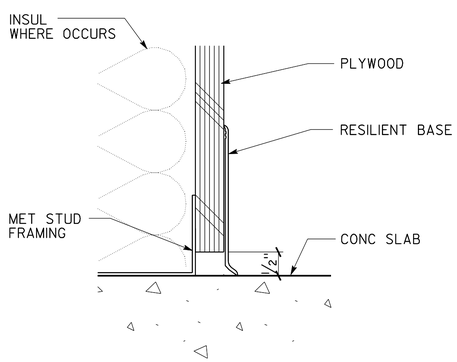

10 RESILIENT BASE
NO SCALE

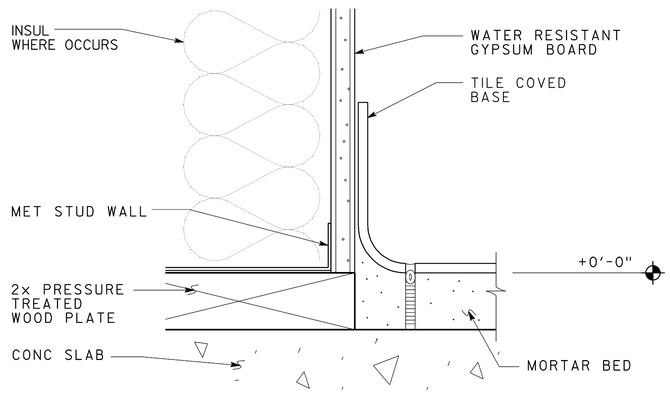

7 TILE COVED BASE
NO SCALE

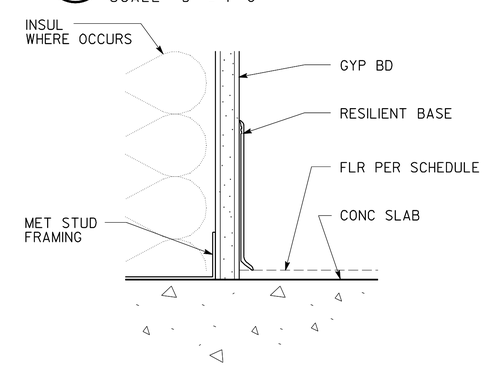

4 RESILIENT BASE
NO SCALE

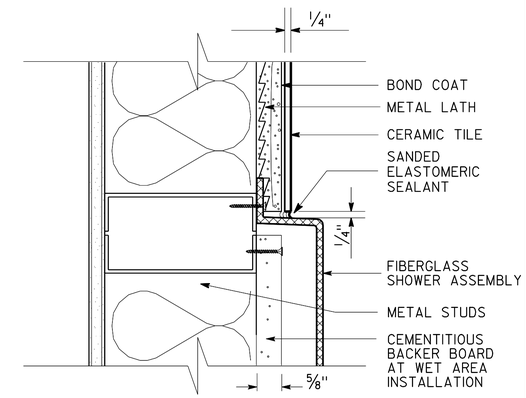

1 SHOWER INSTALLATION
NO SCALE

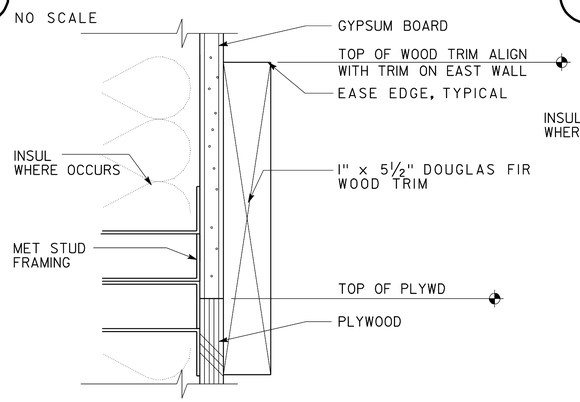

11 WOOD TRIM DETAIL
NO SCALE

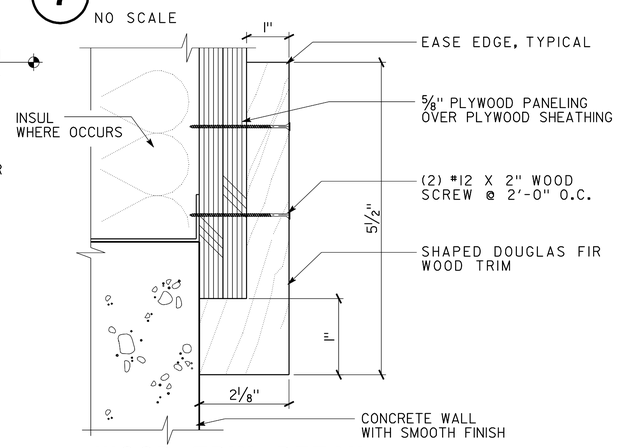

8 WOOD TRIM DETAIL AT EAST WALL
NO SCALE

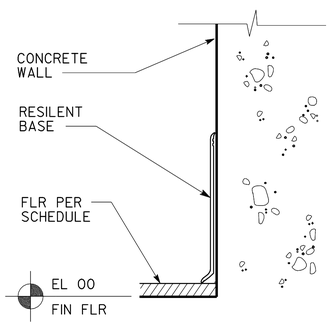

5 RESILIENT BASE
NO SCALE

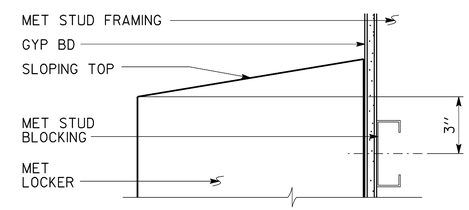

2 LOCKER TOP
SCALE 3" = 1'-0"

	BY	CHECKED
DESIGN	F. THOMAS	C. FAUST,
DETAILS	D. IGNACIO, S. YEH	F. THOMAS
QUANTITIES		

STATE OF CALIFORNIA DEPARTMENT OF TRANSPORTATION

DIVISION OF ENGINEERING SERVICES ARCHITECTURAL AND STRUCTURAL DESIGN

BRIDGE NO. 28T5783
POST MILE 6.3

RICHMOND - SAN RAFAEL BRIDGE MAINTENANCE STATION

INTERIOR FINISH DETAILS 2

SHEET A1-52

a1_52_det_fin.dgn
TAEMWW Imperial Rev. 7/10 02-AUG-2012 15:36

ORIGINAL SCALE IN INCHES FOR REDUCED PLANS 0 1 2 3

UNIT 3598
PROJECT NUMBER & PHASE 04000000021
EA 003941

DISREGARD PRINTS BEARING EARLIER REVISION DATES → REVISION DATES (PRELIMINARY STAGE ONLY) 06-02-11 12-02-11 03-16-12 04-5-12 04-26-12 SHEET OF

02-AUG-2012 15:36
a1_52_det_fin.dgn

DIST.	COUNTY	ROUTE	POST MILES TOTAL PROJECT	SHEET NO.	TOTAL SHEETS
04	CC	580	6.1/6.3	120	216

LICENSED ARCHITECT — 4/27/2012 DATE

LICENSED ARCHITECT FRANK THOMAS No. C-31406 Exp. 4-30-13 STATE OF CALIFORNIA

7-30-12
PLANS APPROVAL DATE

The State of California or its officers or agents shall not be responsible for the accuracy or completeness of scanned copies of this plan sheet.

ACCESSIBILITY DESIGN APPROVAL STAMP DOT / DES / OTA
PROJECT ID 0400000002
Reviewed by: Y. A. WANG
Date: 05-04-12

CALIFORNIA STATE FIRE MARSHAL APPROVED
Approval of this plan does not authorize or approve any omission or deviation from applicable regulations. Final approval is subject to field inspection. One set of approved plans shall be available on the project site at all times.
Reviewed by: INGRID P. ICASIANO, DSFM III
Approval date: July 17, 2012

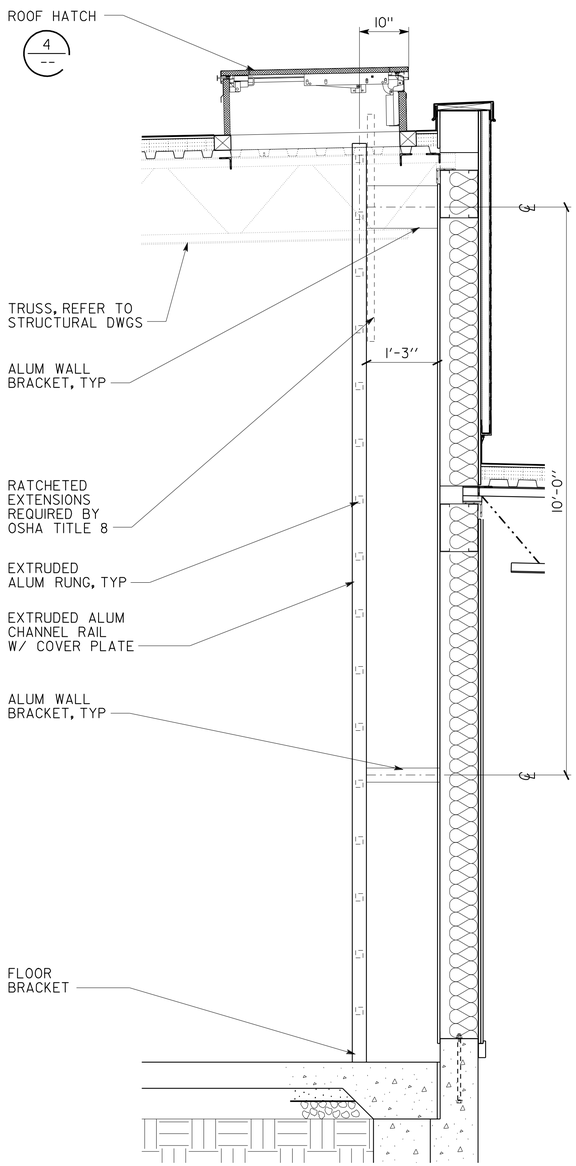

5 FIXED INTERIOR METAL WALL LADDER TO THE ROOF

SCALE 3/4" = 1'-0"

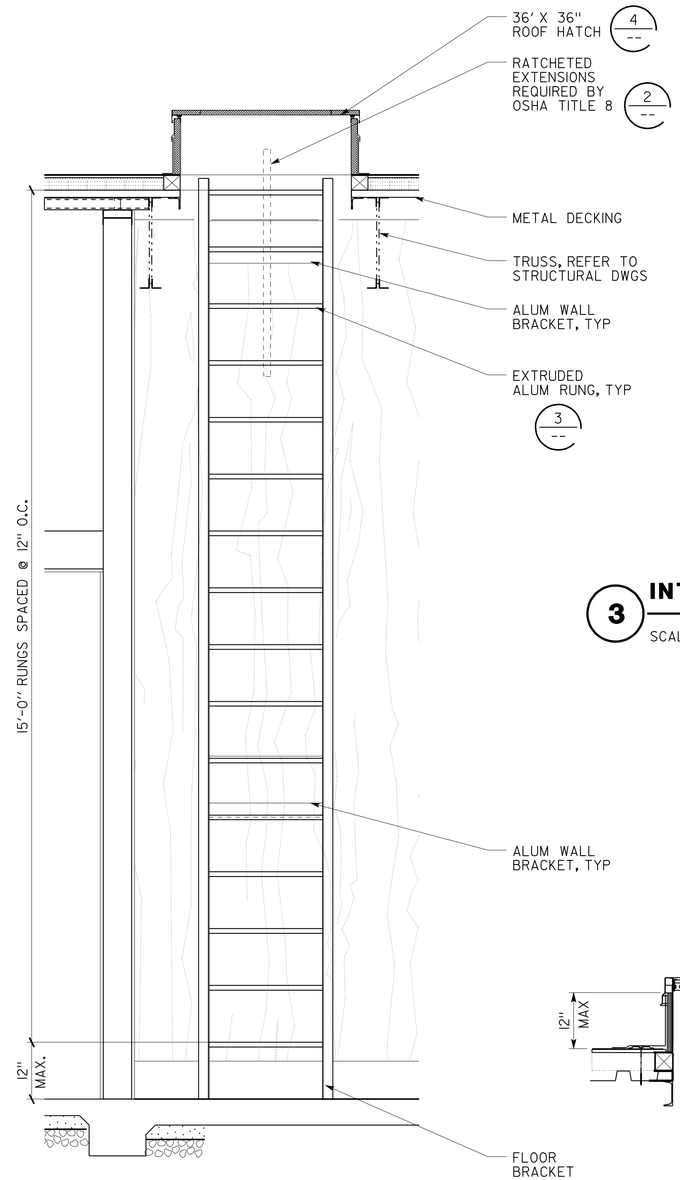

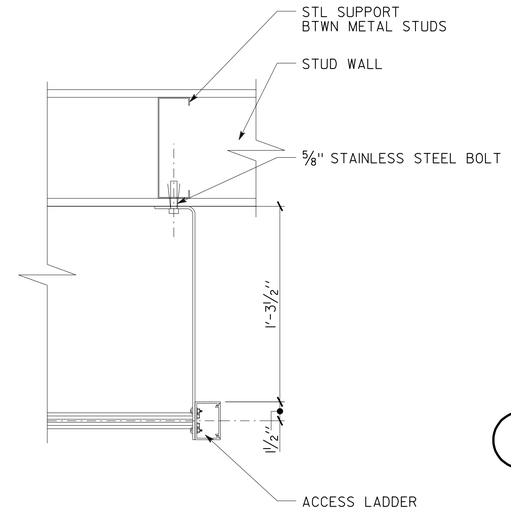

3 INTERIOR RUNG & WALL BRACKET

SCALE 2" = 1'-0"

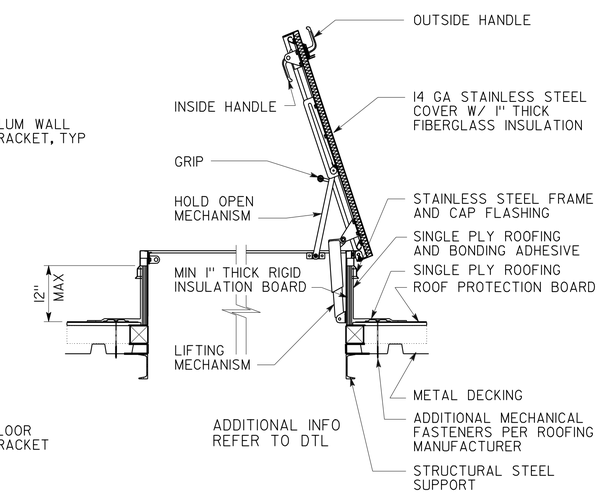

4 SECTION- ROOF ACCESS

SCALE 3/4" = 1'-0"

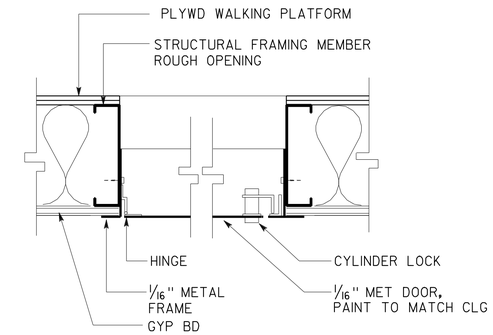

1 ATTIC ACCESS

SCALE 3/4" = 1'-0"

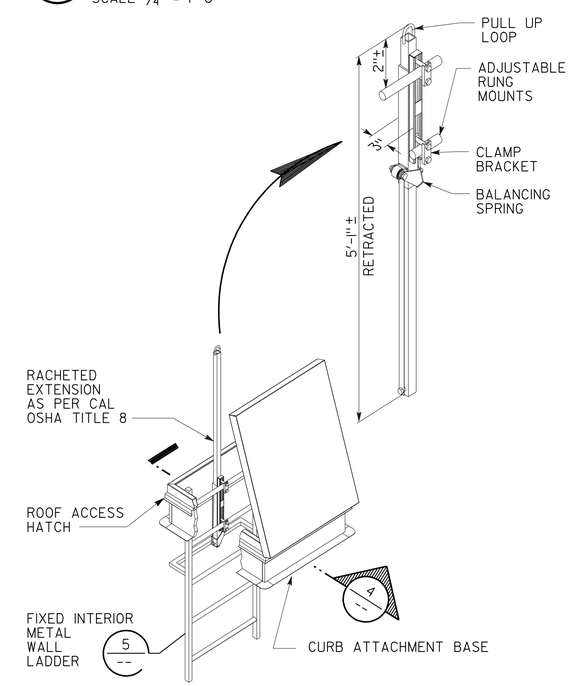

2 ACCESS HATCH ISOMETRIC

NO SCALE

	BY	CHECKED
DESIGN	F. THOMAS	C. FAUST,
DETAILS	D. IGNACIO, S. YEH	F. THOMAS
QUANTITIES		

STATE OF CALIFORNIA DEPARTMENT OF TRANSPORTATION

DIVISION OF ENGINEERING SERVICES ARCHITECTURAL AND STRUCTURAL DESIGN

BRIDGE NO. 28T5783
POST MILE 6.3

RICHMOND - SAN RAFAEL BRIDGE MAINTENANCE STATION

ROOF ACCESS DETAILS

SHEET A1-53.1

a1_53_1det_roof_acc1.dgn
TAEMWW Imperial Rev. 7/10 02-AUG-2012 15:35

ORIGINAL SCALE IN INCHES FOR REDUCED PLANS 0 1 2 3

UNIT 3598
PROJECT NUMBER & PHASE 04000000021
EA 003941

DISREGARD PRINTS BEARING EARLIER REVISION DATES
REVISION DATES (PRELIMINARY STAGE ONLY) 06-02-11 12-02-11 03-16-12 04-5-12 04-26-12
SHEET OF

02-AUG-2012 15:35
a1_53_1det_roof_acc1.dgn

DIST.	COUNTY	ROUTE	POST MILES TOTAL PROJECT	SHEET NO.	TOTAL SHEETS
04	CC	580	6.1/6.3	121	216

LICENSED ARCHITECT — DATE 4/27/2012

LICENSED ARCHITECT FRANK THOMAS No. C-31406 Exp. 4-30-13 STATE OF CALIFORNIA

PLANS APPROVAL DATE 7-30-12

The State of California or its officers or agents shall not be responsible for the accuracy or completeness of scanned copies of this plan sheet.

ACCESSIBILITY DESIGN APPROVAL STAMP DOT / DES / OTA

PROJECT ID 0400000002

Reviewed by: Y. A. WANG Date: 05-04-12

CALIFORNIA STATE FIRE MARSHAL APPROVED

Approval of this plan does not authorize or approve any omission or deviation from applicable regulations. Final approval is subject to field inspection. One set of approved plans shall be available on the project site at all times.

Reviewed by: INGRID P. ICASIANO, DSFM III

Approval date: July 17, 2012

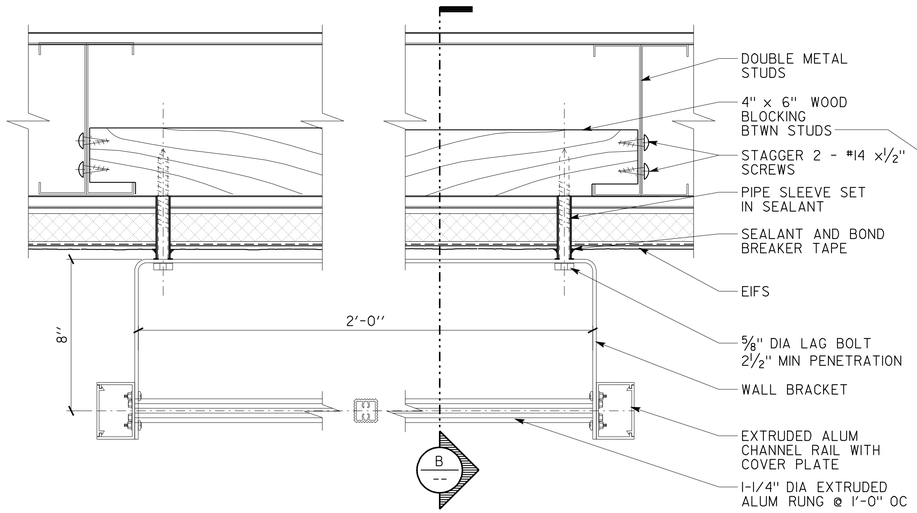

A EXTERIOR ALUM WALL LADDER ATTACHMENT

SCALE 3" = 1'-0"

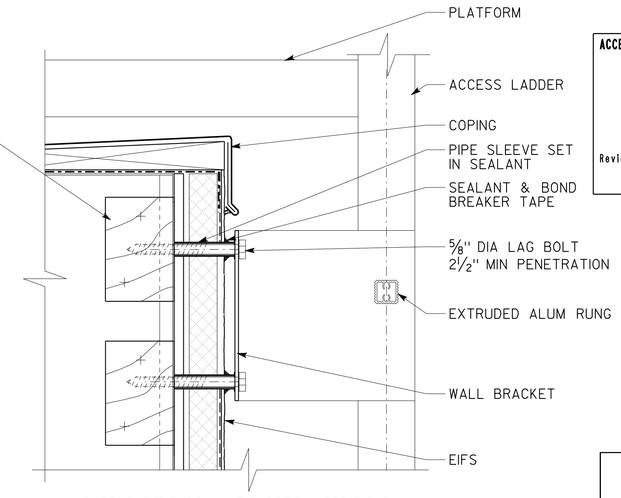

B EXTERIOR ALUM WALL LADDER ATTACHMENT

SCALE 3" = 1'-0"

NOTE

1. LOCATE EXTERIOR ALUM WALL LADDER BETWEEN TRUSS JOIST LOCATIONS TO ALLOW FOR PLACEMENT OF WOOD BLOCKING BETWEEN STUDS.

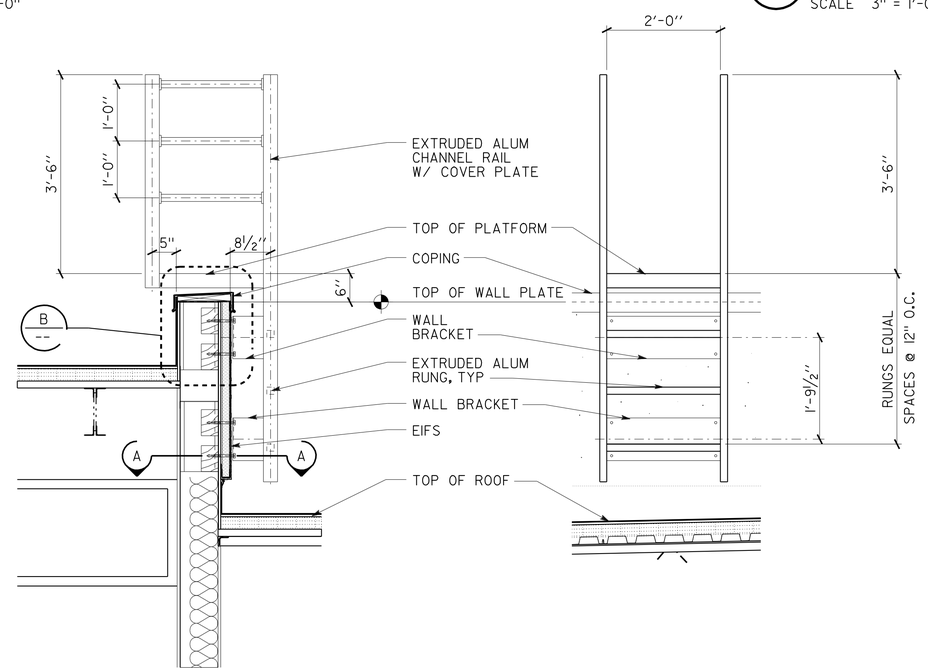

2 EXTERIOR ALUM WALL LADDER #2

SCALE 3/4" = 1'-0"

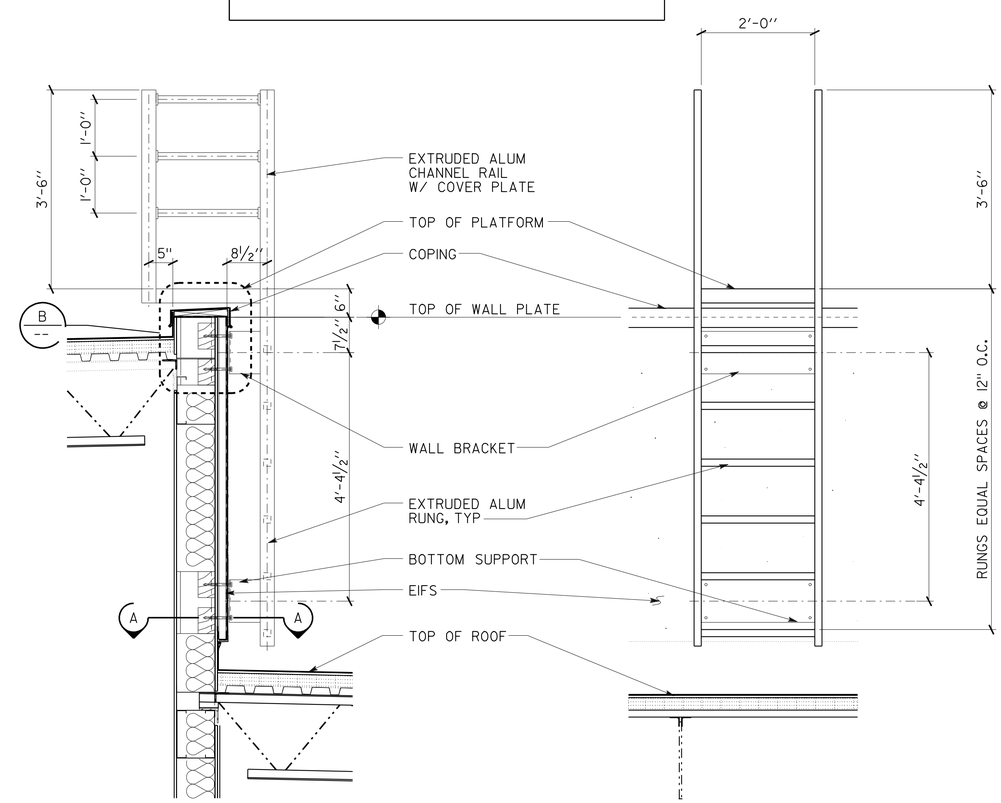

1 EXTERIOR ALUM WALL LADDER #1

SCALE 3/4" = 1'-0"

	BY	CHECKED
DESIGN	F. THOMAS	C. FAUST,
DETAILS	D. IGNACIO, S. YEH	F. THOMAS
QUANTITIES		

STATE OF CALIFORNIA DEPARTMENT OF TRANSPORTATION

DIVISION OF ENGINEERING SERVICES ARCHITECTURAL AND STRUCTURAL DESIGN

BRIDGE NO. 28T5783 — POST MILE 6.3

RICHMOND - SAN RAFAEL BRIDGE MAINTENANCE STATION

ROOF ACCESS DETAILS

SHEET A1-53.2

a1_53_2det_roof_acc2.dgn
TAEMWW Imperial Rev. 7/10 02-AUG-2012 15:35

ORIGINAL SCALE IN INCHES FOR REDUCED PLANS 0 1 2 3

UNIT 3598
PROJECT NUMBER & PHASE 04000000021
EA 003941

DISREGARD PRINTS BEARING EARLIER REVISION DATES → REVISION DATES (PRELIMINARY STAGE ONLY) 06-02-11 12-02-11 03-16-12 04-5-12 04-26-12 SHEET OF

02-AUG-2012 15:35
a1_53_2det_roof_acc2.dgn

DIST.	COUNTY	ROUTE	POST MILES TOTAL PROJECT	SHEET NO.	TOTAL SHEETS
04	CC	580	6.1/6.3	122	216

ACCESSIBILITY DESIGN APPROVAL STAMP DOT / DES / OTA
PROJECT ID 0400000002
Reviewed by: Y. A. WANG
Date: 05-04-12

CALIFORNIA STATE FIRE MARSHAL APPROVED
Approval of this plan does not authorize or approve any omission or deviation from applicable regulations. Final approval is subject to field inspection. One set of approved plans shall be available on the project site at all times.
Reviewed by: INGRID P. ICASIANO, DSFM III
Approval date: July 17, 2012

LICENSED ARCHITECT — FRANK THOMAS No. C-31406 Exp. 4-30-13 — STATE OF CALIFORNIA
LICENSED ARCHITECT 4/27/2012 DATE

7-30-12
PLANS APPROVAL DATE

The State of California or its officers or agents shall not be responsible for the accuracy or completeness of scanned copies of this plan sheet.

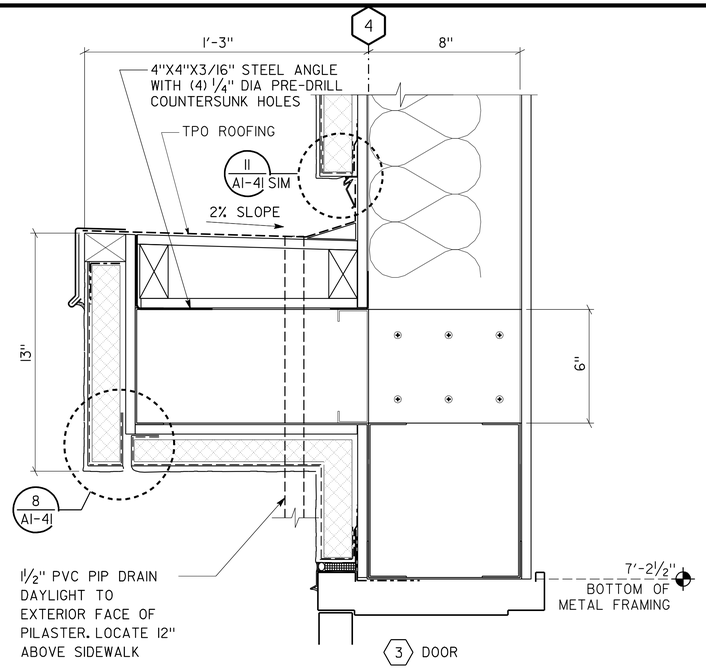

7 OVERHANG DOOR COVER
SCALE 3" = 1'-0"

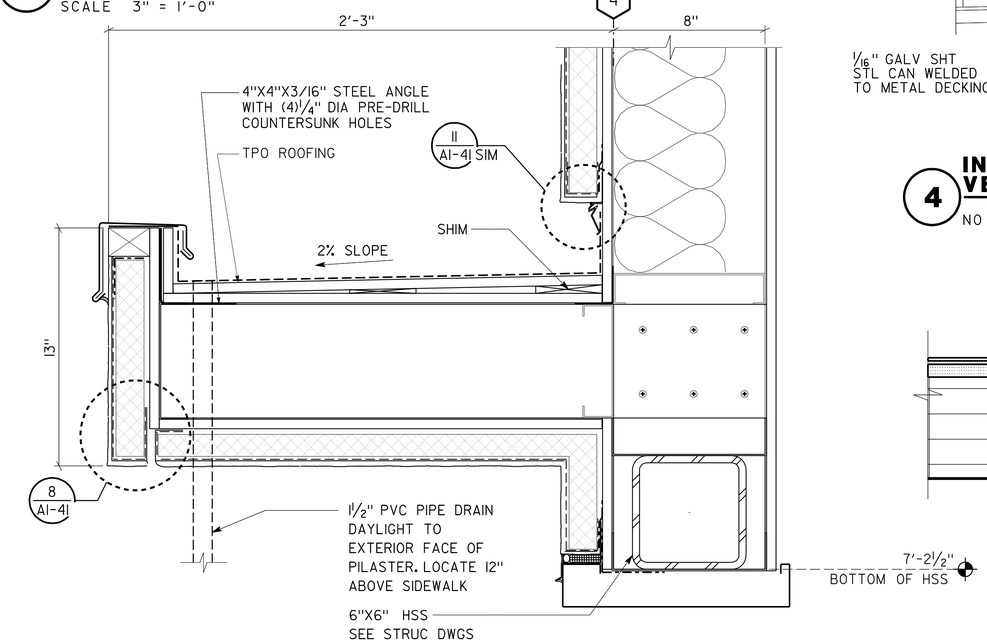

6 OVERHANG DOOR COVER
SCALE 3" = 1'-0"

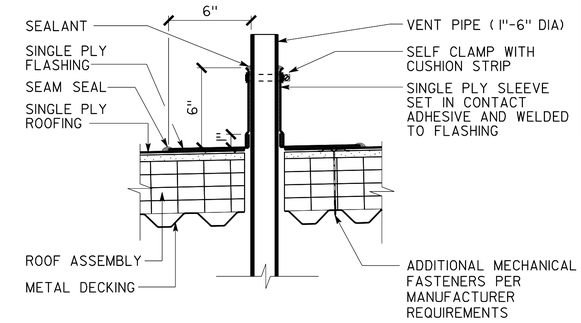

3 PLUMBING VENT THRU ROOF
NO SCALE

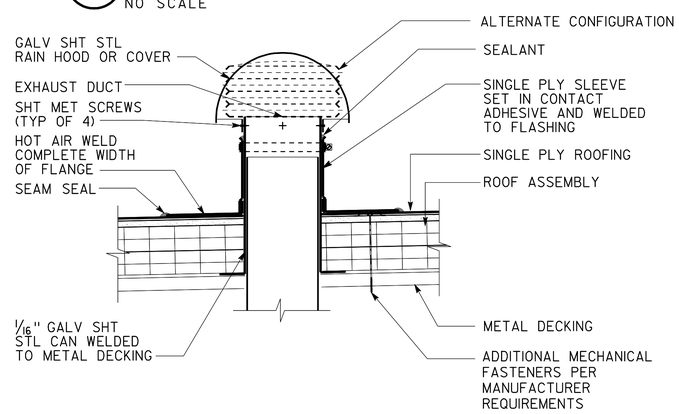

4 INTAKE OR EXHAUST VENT THRU ROOF
NO SCALE

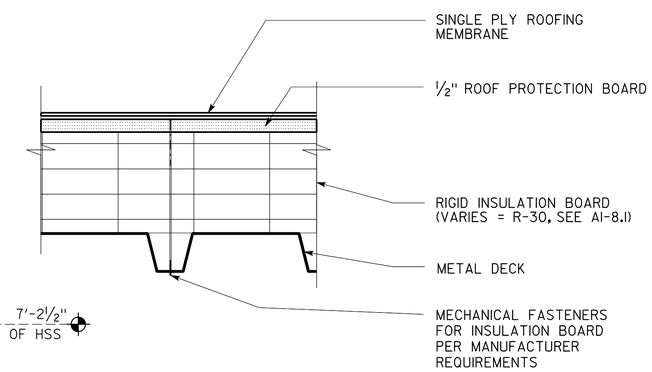

5 INSULATED DECK ASSEMBLY
SCALE 3" = 1'-0"

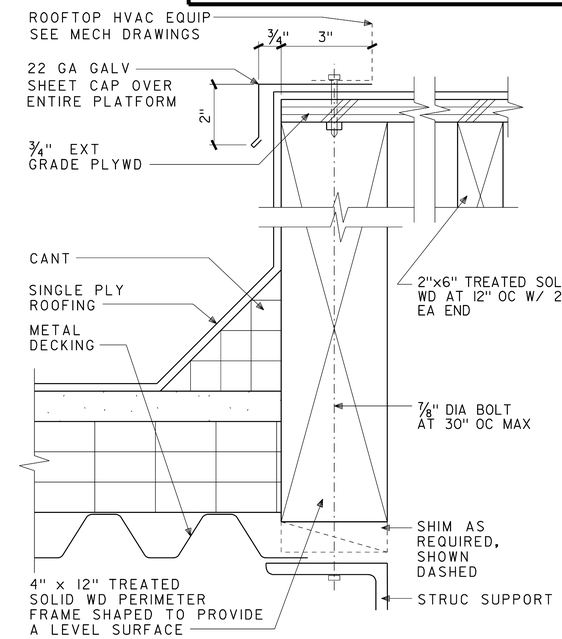

1 EQUIPMENT PLATFORM
SCALE 3" = 1'-0"

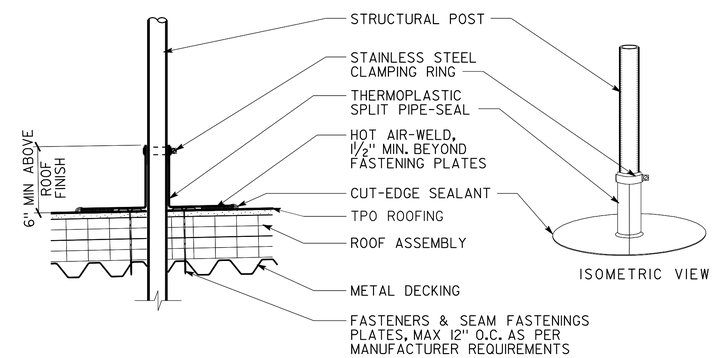

2 ROOFING AT PHOTOVOLTAIC POSTS
SCALE 1 1/2" = 1'-0"

DESIGN	BY F. THOMAS	CHECKED C. FAUST,	
DETAILS	BY D. IGNACIO, S. YEH	CHECKED F. THOMAS	
QUANTITIES	BY	CHECKED	

STATE OF CALIFORNIA DEPARTMENT OF TRANSPORTATION

DIVISION OF ENGINEERING SERVICES ARCHITECTURAL AND STRUCTURAL DESIGN

BRIDGE NO. 28T5783
POST MILE 6.3

RICHMOND - SAN RAFAEL BRIDGE MAINTENANCE STATION
ROOF AND FLASHING DETAILS

SHEET A1-54

a1_54_det_roof1.dgn
TAEMWW Imperial Rev. 7/10 02-AUG-2012 15:35

ORIGINAL SCALE IN INCHES FOR REDUCED PLANS 0 1 2 3

UNIT 3598
PROJECT NUMBER & PHASE 04000000021
EA 003941

DISREGARD PRINTS BEARING EARLIER REVISION DATES
REVISION DATES (PRELIMINARY STAGE ONLY) 06-02-11 12-02-11 03-16-12 04-5-12 04-26-12 06-11-12
SHEET OF

02-AUG-2012 15:35
a1_54_det_roof1.dgn

DIST.	COUNTY	ROUTE	POST MILES TOTAL PROJECT	SHEET NO.	TOTAL SHEETS
04	CC	580	6.1/6.3	123	216

ACCESSIBILITY DESIGN APPROVAL STAMP
DOT / DES / OTA
PROJECT ID 0400000002
Reviewed by: Y. A. WANG
Date: 05-04-12

CALIFORNIA STATE FIRE MARSHAL APPROVED
Approval of this plan does not authorize or approve any omission or deviation from applicable regulations. Final approval is subject to field inspection. One set of approved plans shall be available on the project site at all times.
Reviewed by: INGRID P. ICASIANO, DSFM III
Approval date: July 17, 2012

LICENSED ARCHITECT — FRANK THOMAS No. C-31406 Exp. 4-30-13 — STATE OF CALIFORNIA
LICENSED ARCHITECT 4/27/2012 DATE

7-30-12
PLANS APPROVAL DATE

The State of California or its officers or agents shall not be responsible for the accuracy or completeness of scanned copies of this plan sheet.

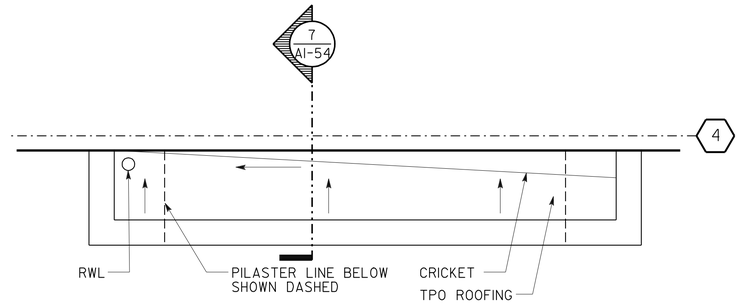

3 OVERHANG DOOR COVER PLAN

1" = 1'-0"

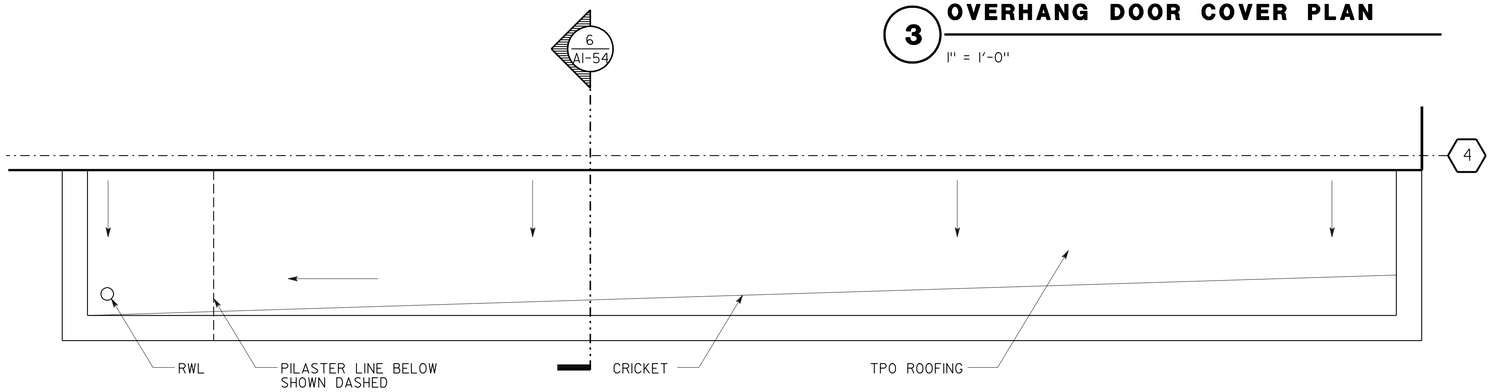

1 OVERHANG DOOR COVER PLAN

1" = 1'-0"

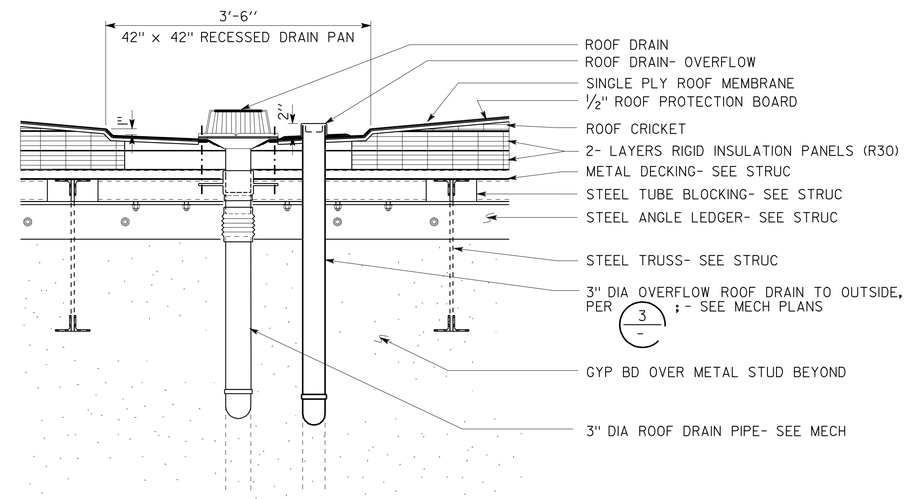

6 ROOF DRAIN (PROFILE)

SCALE 1" = 1'-0"

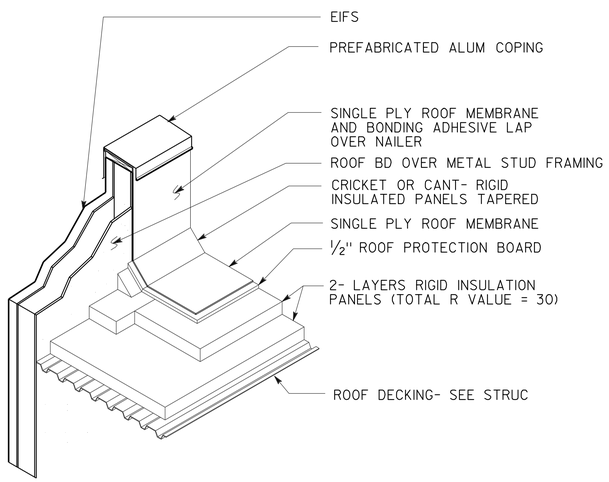

2 ROOFING SYSTEM ISOMETRIC

NO SCALE

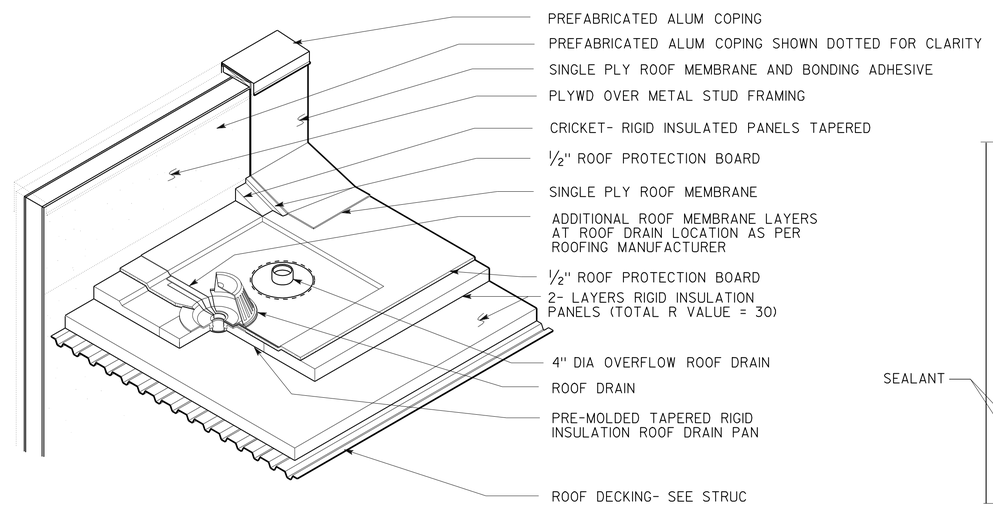

5 ROOF DRAIN ISOMETRIC

NO SCALE

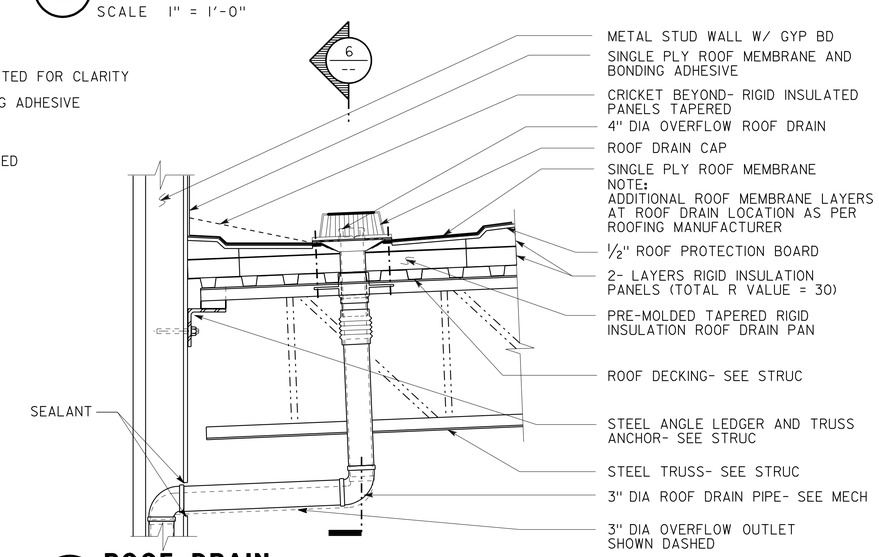

7 ROOF DRAIN

SCALE 1" = 1'-0"

	BY	CHECKED
DESIGN	F. THOMAS	C. FAUST,
DETAILS	D. IGNACIO, S. YEH	F. THOMAS
QUANTITIES		

STATE OF CALIFORNIA
DEPARTMENT OF TRANSPORTATION

DIVISION OF ENGINEERING SERVICES
ARCHITECTURAL AND STRUCTURAL DESIGN

BRIDGE NO. 28T5783
POST MILE 6.3

RICHMOND - SAN RAFAEL BRIDGE MAINTENANCE STATION

ROOF DETAILS (SINGLE PLY)

SHEET **A1-55**

a1_55_det_roof_2.dgn
TAEMWW Imperial Rev. 7/10 02-AUG-2012 15:35

ORIGINAL SCALE IN INCHES FOR REDUCED PLANS 0 1 2 3

UNIT 3598
PROJECT NUMBER & PHASE 04000000021
EA 003941

DISREGARD PRINTS BEARING EARLIER REVISION DATES
REVISION DATES (PRELIMINARY STAGE ONLY) 06-02-11 12-02-11 03-16-12 04-5-12 04-26-12
SHEET OF

02-AUG-2012 15:35
a1_55_det_roof_2.dgn

DIST.	COUNTY	ROUTE	POST MILES TOTAL PROJECT	SHEET NO.	TOTAL SHEETS
04	CC	580	6.1/6.3	124	216

LICENSED ARCHITECT — DATE 4/27/2012

LICENSED ARCHITECT FRANK THOMAS No. C-31406 Exp. 4-30-13 STATE OF CALIFORNIA

7-30-12
PLANS APPROVAL DATE

The State of California or its officers or agents shall not be responsible for the accuracy or completeness of scanned copies of this plan sheet.

ACCESSIBILITY DESIGN APPROVAL STAMP DOT / DES / OTA

PROJECT ID **0400000002**

Reviewed by: Y. A. WANG
Date: 05-04-12

CALIFORNIA STATE FIRE MARSHAL APPROVED

Approval of this plan does not authorize or approve any omission or deviation from applicable regulations. Final approval is subject to field inspection. One set of approved plans shall be available on the project site at all times.

Reviewed by: INGRID P. ICASIANO, DSFM III
Approval date: July 17, 2012

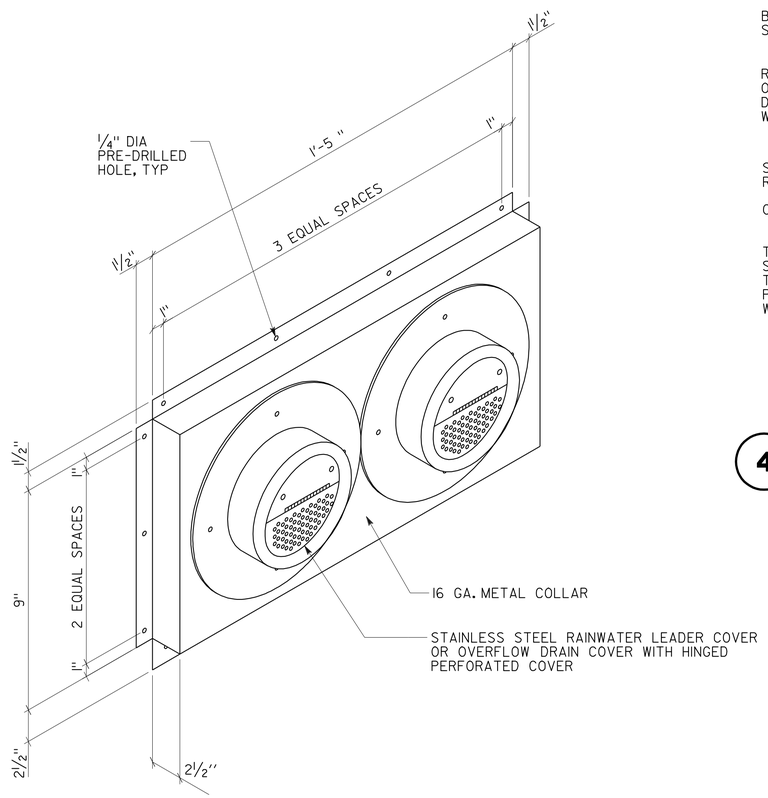

5 RWL & OFD METAL COLLAR ISOMETRIC DETAIL
NOT TO SCALE

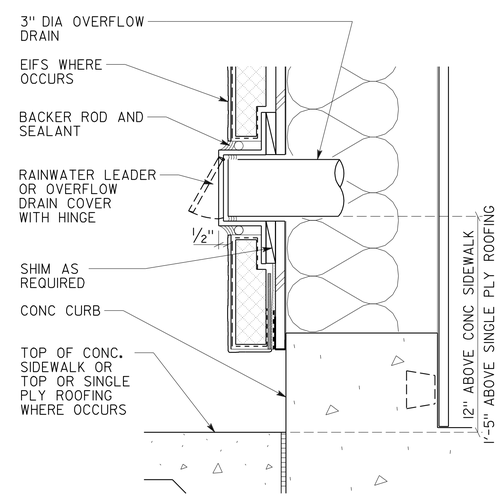

4 DRAIN COVER FOR OFD @ EIFS SECTION - DETAIL
3" = 1'-0"

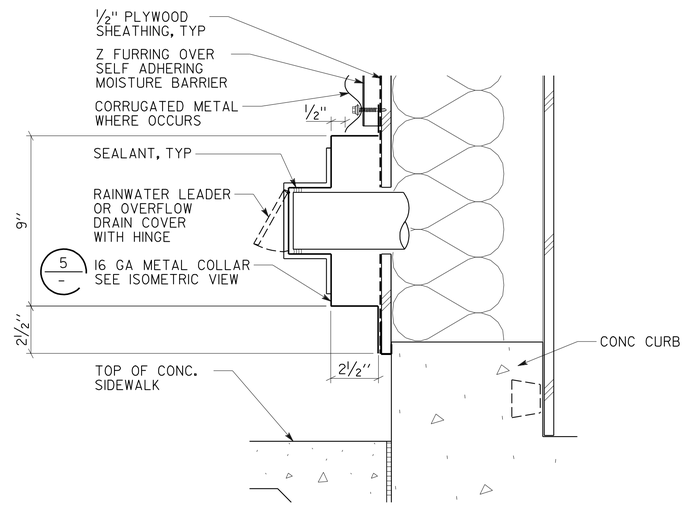

2 METAL COLLAR @ CORR. PANEL SECTION - DETAIL
3" = 1'-0"

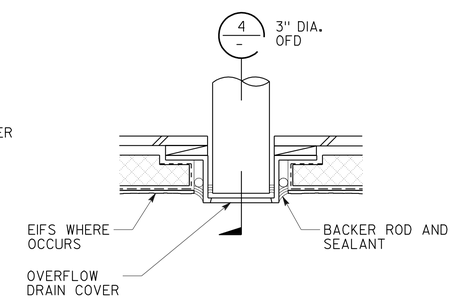

3 METAL COLLAR @ EIFS PLAN-DETAIL
3" = 1'-0"

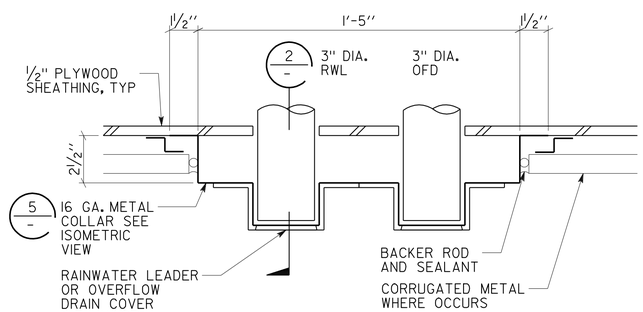

1 METAL COLLAR @ CORR. PANEL PLAN-DETAIL
3" = 1'-0"

	BY	CHECKED
DESIGN	F. THOMAS	C. FAUST,
DETAILS	D. IGNACIO, S. YEH	F. THOMAS
QUANTITIES		

STATE OF CALIFORNIA
DEPARTMENT OF TRANSPORTATION

DIVISION OF ENGINEERING SERVICES
ARCHITECTURAL AND STRUCTURAL DESIGN

BRIDGE NO. 28T5783
POST MILE 6.3

RICHMOND - SAN RAFAEL BRIDGE MAINTENANCE STATION

MISCELLANEOUS DETAILS

SHEET **A1-56**

a1_56_det_roof_3.dgn
TAEMWW Imperial Rev. 7/10 02-AUG-2012 15:34

ORIGINAL SCALE IN INCHES FOR REDUCED PLANS 0 1 2 3

UNIT 3598
PROJECT NUMBER & PHASE 04000000021
EA 003941

DISREGARD PRINTS BEARING EARLIER REVISION DATES

REVISION DATES (PRELIMINARY STAGE ONLY): 06-02-11 12-02-11 03-16-12 04-5-12 04-26-12

SHEET X OF X

02-AUG-2012 15:34
a1_56_det_roof_3.dgn

DIST.	COUNTY	ROUTE	POST MILES TOTAL PROJECT	SHEET NO.	TOTAL SHEETS
04	CC	580	6.1/6.3	125	216

REGISTERED CIVIL ENGINEER — DATE 04-27-2012

REGISTERED PROFESSIONAL ENGINEER — Edgardo A. Isidro — No. 058507 — Exp. 12-31-12 — CIVIL — STATE OF CALIFORNIA

7-30-12
PLANS APPROVAL DATE

The State of California or its officers or agents shall not be responsible for the accuracy or completeness of scanned copies of this plan sheet.

CALIFORNIA STATE FIRE MARSHAL APPROVED
Approval of this plan does not authorize or approve any omission or deviation from applicable regulations. Final approval is subject to field inspection. One set of approved plans shall be available on the project site at all times.
Reviewed by: INGRID P. ICASIANO, DSFM III
Approval date: July 17, 2012

ABBREVIATIONS

AAD	Adhesive Anchorage Device
AB	Anchor Bolt
AC	Asphalt Concrete
Alt	Alternate
APA	American Plywood Association
APC	Alternative Pipe Culvert
Bldg	Building
Blkg	Blocking
BN	Boundary Nailing
Btm	Bottom
CB	Carriage Bolt
CIDH	Cast In Drilled Hole
CJ	Control Joint
Clr	Clear
CMU	Concrete Masonry Unit
Conc	Concrete
Const	Construction
Cont	Continuous
CP	Complete Penetration Weld
Dbl	Double
DF	Douglas Fir
Dia	Diameter
DIP	Ductile Iron Pipe
DN	Diameter Nominal
do	Ditto
(E)	Existing
Ea	Each
EF	Each Face
EL	Elevation
Elec	Electrical
Embed	Embedment
EN	Edge Nail
Eq	Equal
Exp	Expansion
FDGM	Free Draining Granular Material
FG	Finish Grade
FL	Flow Line
Flr	Floor
FN	Face (Field) Nail
FOC	Face of Concrete
FOM	Face of Masonry
FOS	Face of Stud
Ftg	Footing
Ga	Gage
Galv	Galvanized
GLM	Glue Laminated Member
Gyp Bd	Gypsum Board
HD	Holdown
Hex	Hexagon
Horiz	Horizontal
HSB	High Strength Bolt
HSS	Hollow Structural Section
Jt	Joint
LOL	Layout Line
LVL	Laminated Veneer Lumber
m	Meter
Max	Maximum
MEA	Mechanical Expansion Anchor
Mech	Mechanical
Mfr	Manufacturer
mm	Millimeter
Min	Minimum
MIW	Malleable Iron Washer
OC	On Center
OG	Original Grade
OH	Opposite Hand
Opt	Optional
P	Pitch
PDF	Powder Driven Fastener
Plwd	Plywood
PT	Pressure Treated
PW	Puddle Weld
PWB	Prefabricated Wood I Beam
RCP	Reinforced Concrete Pipe
Reinf	Reinforced, Reinforcing
Req'd	Required
SDSTS	Self Drill, Self Tap Screw
Sim	Similar
SPS	Structural Plywood Sheathing
Sq	Square
Stagg	Staggered
Std	Standard
SW	Stud Weld
Sym	Symmetrical
T&G	Tongue-and-Groove
TN	Toe Nail
TS	Tube Steel
Typ	Typical
UON	Unless Otherwise Noted
Vert	Vertical

SYMBOLS

- Blocking In Section or Elevation
- Continuous Member In Section
- End of Member
- Bearing Wall
- Shear Wall
- Length / Shearwall Schedule Symbol (X XXXX) / Reference
- Glue Laminated Member Section
- North Arrow
- Partial Section Cut (X STX-X)
- Full Section Cut (X STX-X)
- Revision Callout (X)
- Grid Line Indicator (A)
- Center Line
- Station Line
- Steel Plate
- Diameter
- Square
- Dropped Slab on Plan Views
- Reinforced Concrete
- Sand
- Structure Excavation and Structure Backfill
- Original Ground
- Limits of Structural Excavation (shown on plan view)
- Free Draining Granular Material
- Bottom of Footing (X)
- Elevation or Working Point
- Existing Features
- Holdown, Typ — Simpson / USP / Equal (Manufacturers are those noted in the order shown.)
- Frame Connector — Simpson / USP / Equal (Manufacturers are those noted in the order shown.)
- 3 / ST-1 — 5b: Detail Number or Note Number; Additional Reference (if required); Sheet Number

NOTE: SPECIFIC DETAILS OR NOTES ON OTHER SHEETS SHALL PREVAIL OVER STANDARD DETAILS AND NOTES ON THIS SHEET

STANDARD DRAWING

FILE NO. XS-25-0	DESIGN BY Sean Samuel	CHECKED Eric Gustafson	APPROVED R.E. Travis
DRAWING DATE 1-04	DETAILS BY George E. Rowe	CHECKED Scott Wolfe	DESIGN SUPERVISOR
	SUBMITTED BY Sean Samuel, DESIGN ENGINEER		

STATE OF CALIFORNIA DEPARTMENT OF TRANSPORTATION

DIVISION OF ENGINEERING SERVICES ARCHITECTURAL AND STRUCTURAL DESIGN

BRIDGE NO. 28T5783 — POST MILE 6.3

RICHMOND-SAN RAFAEL BRIDGE MAINTENANCE STATION

LEGEND

SHEET ST-1

TAEMWW Imperial Rev. 7/10

ORIGINAL SCALE IN INCHES FOR REDUCED PLANS 0 1 2 3

UNIT 3581
PROJECT NUMBER & PHASE 04000000021
EA 000000

DISREGARD PRINTS BEARING EARLIER REVISION DATES → 1-16-04

REVISION DATES (PRELIMINARY STAGE ONLY) — SHEET — OF

21-AUG-2012 05:46

st0_01.dgn

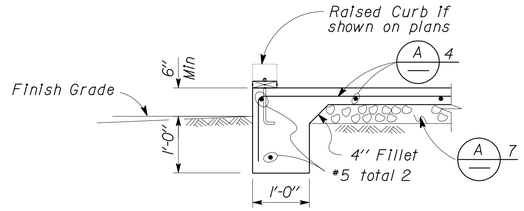

1 EXTERIOR FOOTING
No Scale

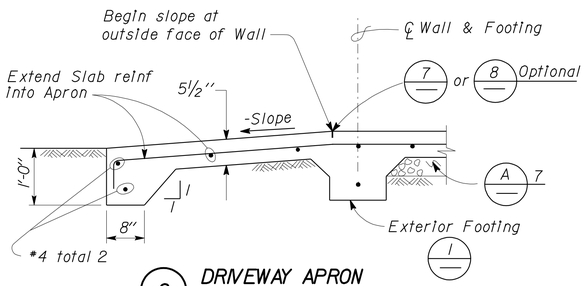

2 DRIVEWAY APRON
No Scale

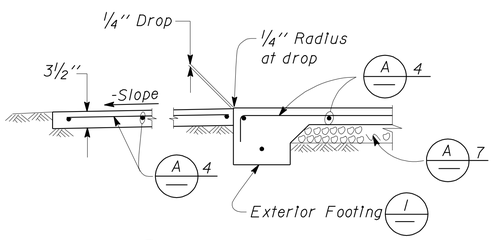

3 WALKWAY APRON
No Scale

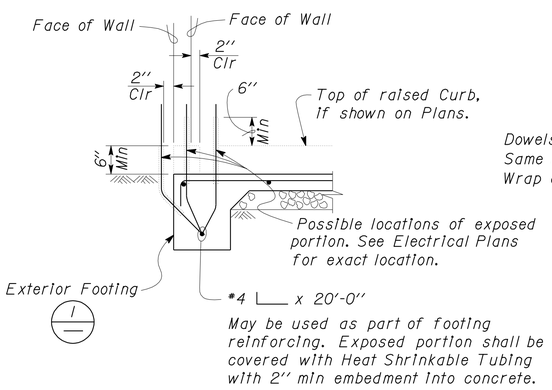

4 GROUND BAR DETAIL
No Scale

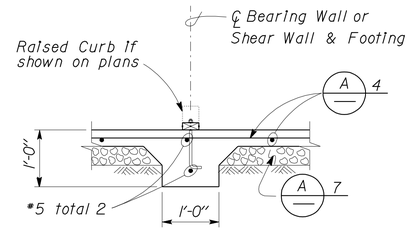

5 INTERIOR FOOTING
No Scale

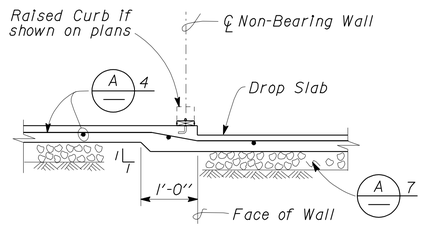

6 DROP SLAB AT NON-BEARING WALL
No Scale

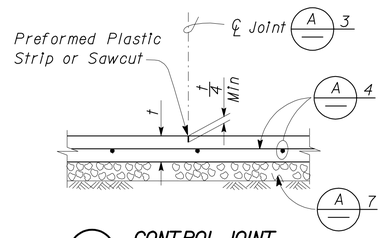

7 CONTROL JOINT
No Scale

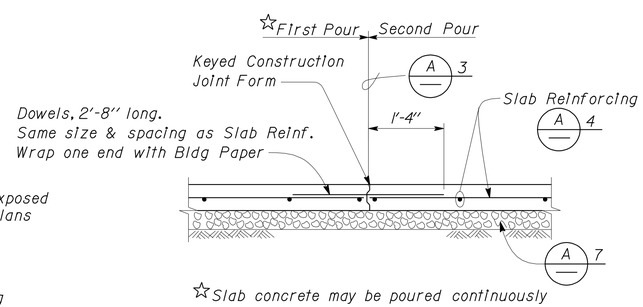

☆Slab concrete may be poured continuously across the Control Joint, to cover as large an area as practical.

8 CONTRACTION JOINT
No Scale

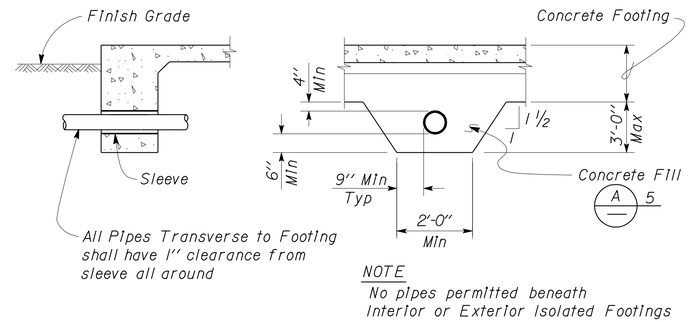

NOTE
No pipes permitted beneath Interior or Exterior Isolated Footings

9 PIPE DETAILS THROUGH FOOTING
No Scale

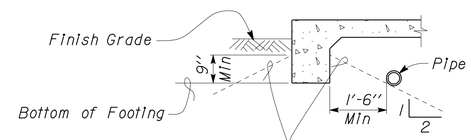

NOTE
For Pipe Cover, see Specifications: Earthwork for Building Work

No digging for Pipe Trench parallel to Footing below these lines.

Exterior Footing shown, Interior or Exterior Isolated Footings are similar.

10 PIPE DETAILS PARALLEL TO FOOTING
No Scale

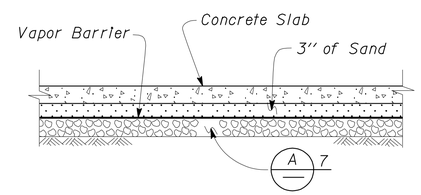

11 MOISTURE BARRIER
No Scale

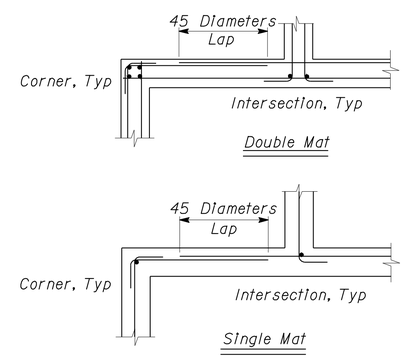

12 CORNER/INTERSECTION REINF SPLICE, TYPICAL
No Scale

CALIFORNIA STATE FIRE MARSHAL APPROVED
Approval of this plan does not authorize or approve any omission or deviation from applicable regulations. Final approval is subject to field inspection. One set of approved plans shall be available on the project site at all times.
Reviewed by: Ingrid P. Icasiano
INGRID P. ICASIANO, OSFM III
Approval date: July 17, 2012

DIST.	COUNTY	ROUTE	POST MILES TOTAL PROJECT	SHEET NO.	TOTAL SHEETS
04	CC	580	6.1/6.3	126	216

REGISTERED CIVIL ENGINEER — DATE: 04-27-2012
REGISTERED PROFESSIONAL ENGINEER — Edgardo A. Isidro — No. 058507 — Exp. 12-31-12 — CIVIL — STATE OF CALIFORNIA

7-30-12
PLANS APPROVAL DATE

The State of California or its officers or agents shall not be responsible for the accuracy or completeness of scanned copies of this plan sheet.

A CONCRETE NOTES

1. The following minimum concrete cover shall be provided for reinforcement.

	Minimum Cover
a. Concrete cast against and permanently exposed to earth	3"
b. Concrete exposed to earth or weather but cast in forms :	
#6 thru #18 bars	2"
#5 bar and smaller, W31 or D31 Wire, and smaller	1½"
c. Concrete not exposed to weather or in contact with ground : Slabs, Walls and Joists :	
#14 and #18 Bar	1½"
#11 Bar and smaller	¾"
Beams and Columns : Primary Reinforcement, Ties, Stirrups and Spirals	1½"

2. Splices in continuous reinforcement as in Walls, Wall Footings, etc. #8 or smaller shall have a lap of 45 diameters and the splices in adjacent bars shall not be less than 5'-0" apart.

   Continuous Bars in spandrels, Wall Beams, etc. shall lap Top Bars at center of span and Bottom Bars at supports.

3. Contraction Joints and Control Joints shall divide slab into areas not exceeding 25 square yards without reentrant corners and with length to width ratios not exceeding 1.5 to 1. Joint spacing shall not exceed 15'-0".

4.

Slab Thickness (t)	Reinforcement	
3½"	#3 @ 18	Each way, place in center of Slab
5½"	#4 @ 18	Each way, place in center of Slab

5. Concrete fill is to be placed before Footing is poured. Make the same width as the Footing and the full width of the Pipe trench. Concrete fill not required for pipes less than 2" diameter for pipes more than 3'-0" below bottom of footing.
6. See Mechanical and Architectural Plans for size and locations of pipe, vents, ducts and other similar openings. See Electrical Plans for conduits and outlet boxes in floors, walls, etc.
7. Place 4" of free draining granular material under slabs.

NOTE: SPECIFIC DETAILS OR NOTES ON OTHER SHEETS SHALL PREVAIL OVER STANDARD DETAILS AND NOTES ON THIS SHEET

STANDARD DRAWING
FILE NO. XS-25-1 — DRAWING DATE 1-04
DESIGN — BY Sean Samad — CHECKED Lee Galindo
DETAILS — BY Peter F. von Saurma, II — CHECKED Lee Galindo
SUBMITTED BY Sean Samad, DESIGN ENGINEER
APPROVED R.E. Travis, DESIGN SUPERVISOR

STATE OF CALIFORNIA DEPARTMENT OF TRANSPORTATION
DIVISION OF ENGINEERING SERVICES ARCHITECTURAL AND STRUCTURAL DESIGN
BRIDGE NO. 28T5783 — POST MILE 6.3
RICHMOND-SAN RAFAEL BRIDGE MAINTENANCE STATION
CONCRETE STANDARD
SHEET ST-2

DOES SD Imperial Rev. 9/02
ORIGINAL SCALE IN INCHES FOR REDUCED PLANS 0 1 2 3
CU EA
DISREGARD PRINTS BEARING EARLIER REVISION DATES → 1-16-04 11-14-05
REVISION DATES (PRELIMINARY STAGE ONLY) — SHEET — OF
02-AUG-2012 14:56
st0_02.dgn

DIST.	COUNTY	ROUTE	POST MILES TOTAL PROJECT	SHEET NO.	TOTAL SHEETS
04	CC	580	6.1/6.3	127	216

REGISTERED CIVIL ENGINEER — DATE 04-27-2012

REGISTERED PROFESSIONAL ENGINEER — Edgardo A. Isidro — No. 058507 — Exp. 12-31-12 — CIVIL — STATE OF CALIFORNIA

7-30-12
PLANS APPROVAL DATE

The State of California or its officers or agents shall not be responsible for the accuracy or completeness of scanned copies of this plan sheet.

CALIFORNIA STATE FIRE MARSHAL APPROVED
Approval of this plan does not authorize or approve any omission or deviation from applicable regulations. Final approval is subject to field inspection. One set of approved plans shall be available on the project site at all times.
Reviewed by: Ingrid P. Icasiano
INGRID P. ICASIANO, DSFM III
Approval date: July 17, 2012

Cold-Formed Steel Shape Designation

600 S 162 -54

- Depth of Member
- Type of Member
- Flange Width
- Minimum Metal Thickness (mils)

Example designation is for:
6.00" x 1.62" x 54 mils thick "C" member

Web Depth — Depth of member in inches, to two (2) decimal places
Member Type — Only four types are used.
S = "C" member
T = Track member
F = Furring member
U = Channel member
Flange Width — Width of member in inches, to two (2) decimal places
Metal Thickness — Minimum uncoated thickness in mils (0.001 in).

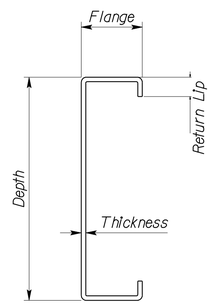

'C' (Stud) MEMBER
Member Type

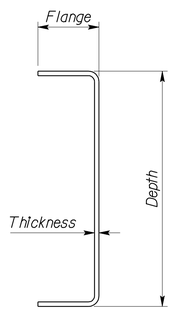

'T' (Track) MEMBER
Member Type

Design Thickness

Mils	Gauge
27	22
33	20
43	18
54	16
68	14
97	12

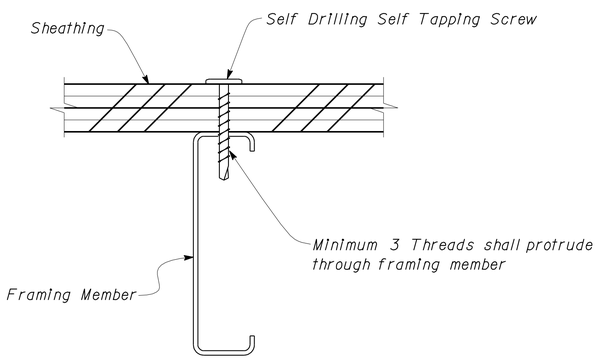

1 SCREW DETAIL
No Scale

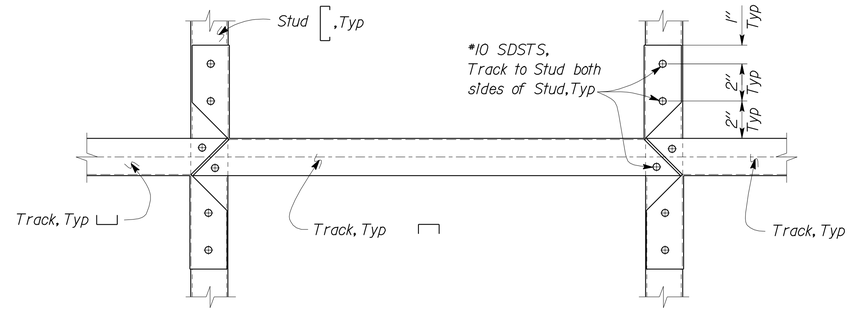

Note
Track used for Blocking shall match Studs, in Width and Gauge thickness.

2 STUD BLOCKING DETAIL
No Scale

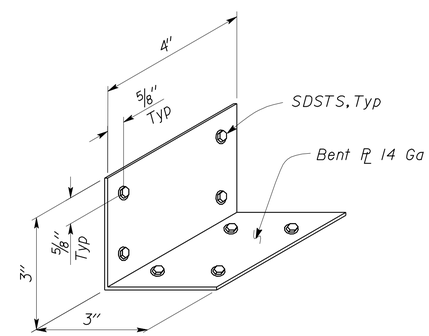

CLIP TYPE B

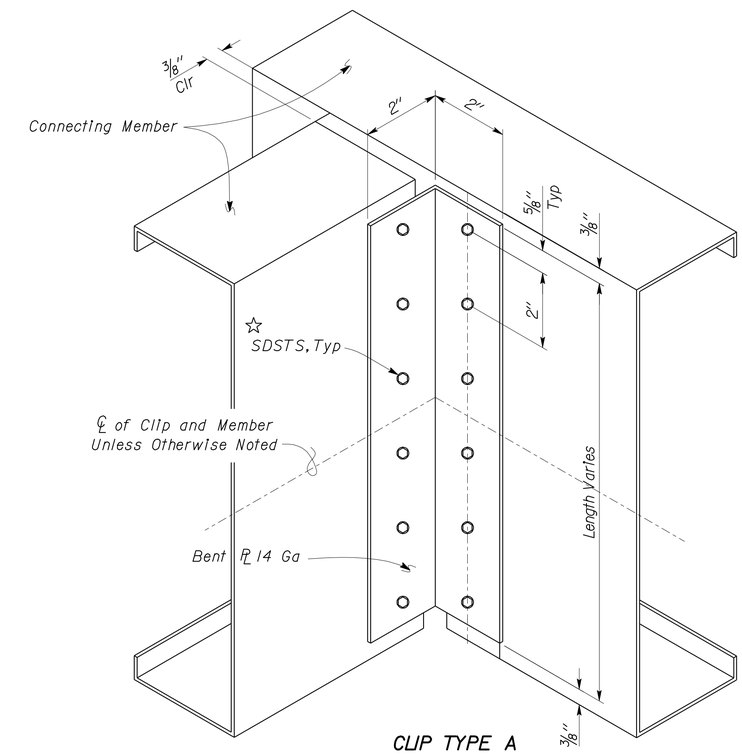

CLIP TYPE A

Notes
1. All Clips shall be 14 ga hot dipped galvanized Steel.
2. All Clips shall use *10 SDSTS as fasteners.
☆ 3. Screws shall be centered in flanges, 5/8" minimum from ends, equally spaced, three SDSTS per flange minimum, unless otherwise shown.

1 CLIP TYPES
No Scale

DESIGN	BY Edgardo Isidro	CHECKED Gang Hong	
DETAILS	BY Aleksey Serin	CHECKED Edgardo Isidro	
QUANTITIES	BY	CHECKED	

STATE OF CALIFORNIA
DEPARTMENT OF TRANSPORTATION

DIVISION OF ENGINEERING SERVICES
ARCHITECTURAL AND STRUCTURAL DESIGN

BRIDGE NO. 28T5783
POST MILE 6.3

RICHMOND-SAN RAFAEL BRIDGE MAINTENANCE STATION
USEFUL INFORMATION AND DETAILS

SHEET **ST-3**

TAEMWW Imperial Rev. 7/10

ORIGINAL SCALE IN INCHES FOR REDUCED PLANS 0 1 2 3

UNIT 3581
PROJECT NUMBER & PHASE 04000000021
EA 000000

DISREGARD PRINTS BEARING EARLIER REVISION DATES → 02-10-12 03-21-12
REVISION DATES (PRELIMINARY STAGE ONLY) SHEET OF

02-AUG-2012 14:56
P:\dist_04\0400000002_richmond_san_rafael_mb\expedite\20120718_resubmit\st0_03.dgn

DIST.	COUNTY	ROUTE	POST MILES TOTAL PROJECT	SHEET NO.	TOTAL SHEETS
04	CC	580	6.1/6.3	128	216

REGISTERED CIVIL ENGINEER — DATE 04-27-2012

REGISTERED PROFESSIONAL ENGINEER — Edgardo A. Isidro — No. 058507 — Exp. 12-31-12 — CIVIL — STATE OF CALIFORNIA

7-30-12
PLANS APPROVAL DATE

The State of California or its officers or agents shall not be responsible for the accuracy or completeness of scanned copies of this plan sheet.

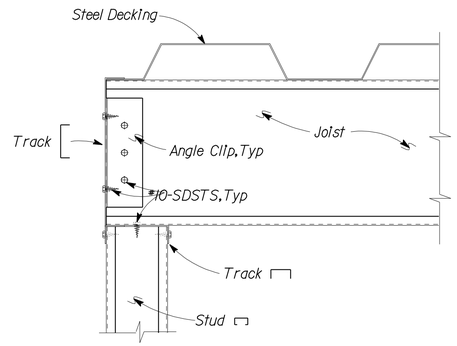

1 JOIST AT STUD CONNECTION
No Scale

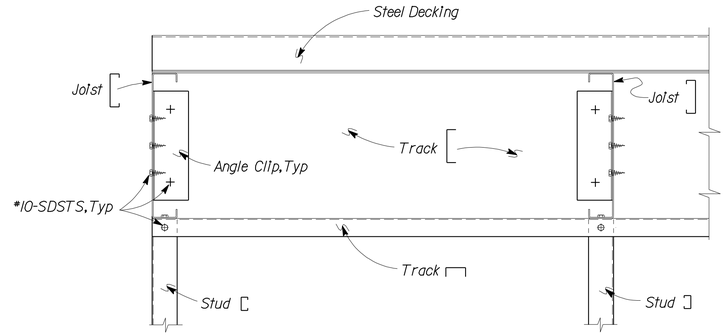

4 JOIST TRANSVERSE SECTION
No Scale

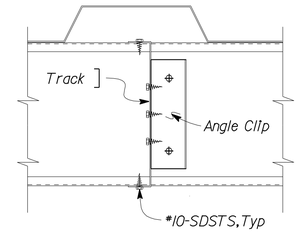

7 JOIST BLOCKING PLAN
No Scale

A METAL FRAMING NOTES

1. Splices in studs shall not be permitted.
2. Prefabricated panels shall have components attached in a manner as to prevent racking and to minimize distortion while lifting.

CALIFORNIA STATE FIRE MARSHAL APPROVED
Approval of this plan does not authorize or approve any omission or deviation from applicable regulations. Final approval is subject to field inspection. One set of approved plans shall be available on the project site at all times.
Reviewed by: INGRID P. ICASIANO, DSFM III
Approval date: July 17, 2012

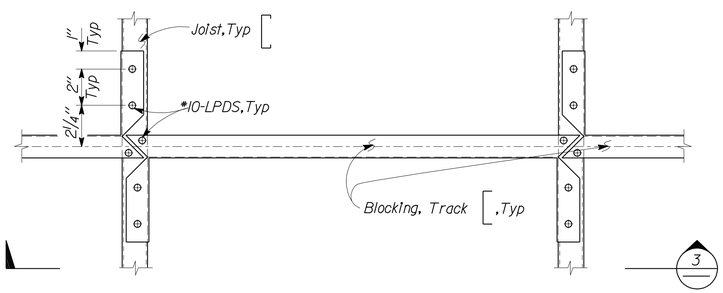

2 JOIST BLOCKING PLAN
No Scale

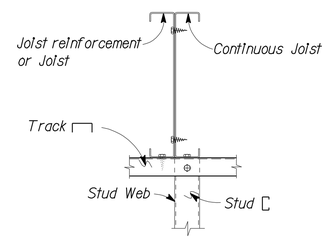

5 JOIST REINFORCEMENT SECTION
No Scale

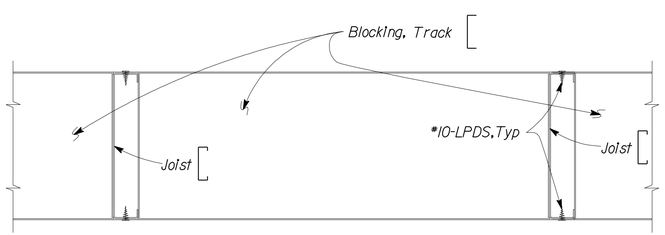

3 JOIST BLOCKING ELEVATION
No Scale

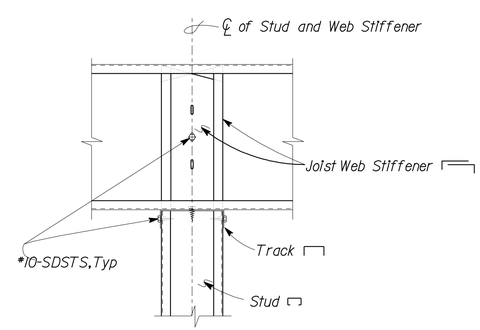

6 JOIST WEB STIFFENER DETAIL
No Scale

DESIGN	BY Edgardo Isidro	CHECKED Gang Hong	
DETAILS	BY Aleksey Serin	CHECKED Edgardo Isidro	
QUANTITIES	BY	CHECKED	

STATE OF CALIFORNIA
DEPARTMENT OF TRANSPORTATION

DIVISION OF ENGINEERING SERVICES
ARCHITECTURAL AND STRUCTURAL DESIGN

BRIDGE NO. 28T5783
POST MILE 6.3

RICHMOND-SAN RAFAEL BRIDGE MAINTENANCE STATION
WALL AND CEILING FRAMING

SHEET **ST-4**

TAEMWW Imperial Rev. 7/10

ORIGINAL SCALE IN INCHES FOR REDUCED PLANS 0 1 2 3

UNIT 3581
PROJECT NUMBER & PHASE 04000000021
EA 000000

DISREGARD PRINTS BEARING EARLIER REVISION DATES → 02-10-12
REVISION DATES (PRELIMINARY STAGE ONLY) SHEET OF

P:\dist_04\0400000002_richmond_san_rafael_mb\expedite\20120718_resubmit\st0_04.dgn
02-AUG-2012 14:56

DIST.	COUNTY	ROUTE	POST MILES TOTAL PROJECT	SHEET NO.	TOTAL SHEETS
04	CC	580	6.1/6.3	129	216

REGISTERED CIVIL ENGINEER — 04-27-2012 DATE

REGISTERED PROFESSIONAL ENGINEER — Edgardo A. Isidro — No. 058507 — Exp. 12-31-12 — CIVIL — STATE OF CALIFORNIA

7-30-12
PLANS APPROVAL DATE

The State of California or its officers or agents shall not be responsible for the accuracy or completeness of scanned copies of this plan sheet.

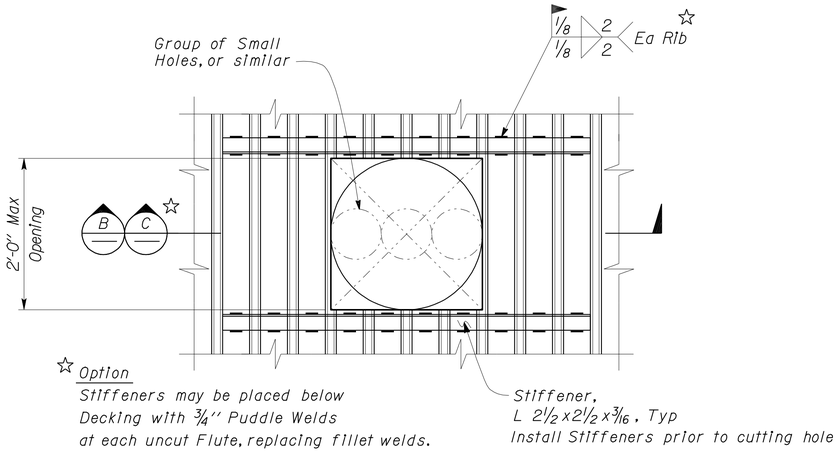

A ROUND OR SQUARE STEEL DECK OPENING PLAN

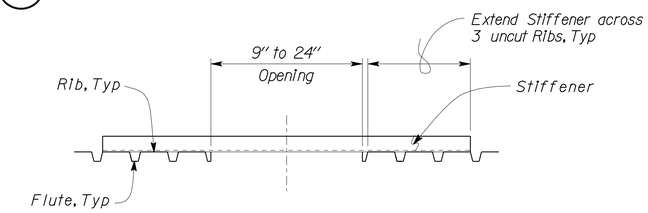

B STEEL DECK OPENING SECTION

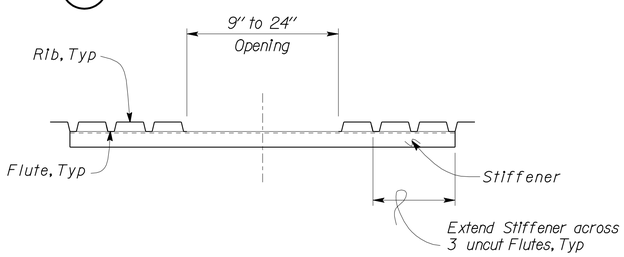

C ALTERNATE STEEL DECK OPENING SECTION

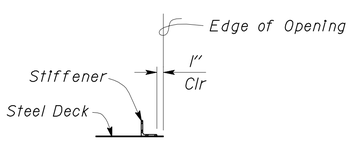

Note
Rib connection shown, Flute connection similar.

D STEEL DECK OPENING DETAIL

I STEEL DECK OPENING DETAIL
No Scale

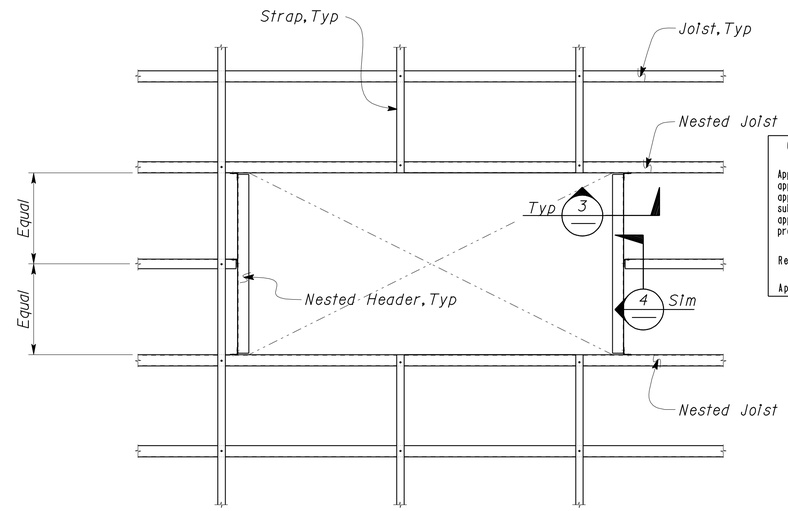

Note
Roof SPS not shown

2 EQUIPMENT BAY ROOF OPENING
No Scale

CALIFORNIA STATE FIRE MARSHAL APPROVED
Approval of this plan does not authorize or approve any omission or deviation from applicable regulations. Final approval is subject to field inspection. One set of approved plans shall be available on the project site at all times.
Reviewed by: Ingrid P. Casiano
INGRID P. ICASIANO, DSFM III
Approval date: July 17, 2012

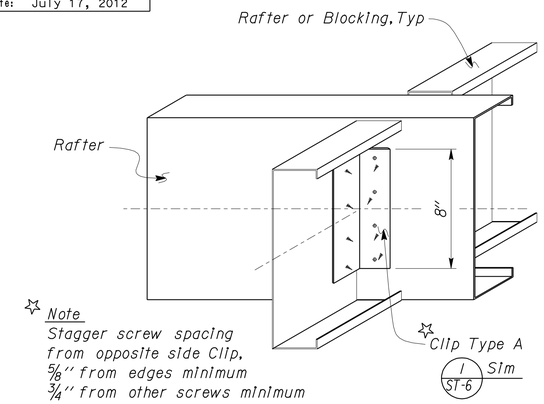

Note
Stagger screw spacing from opposite side Clip, 5/8" from edges minimum 3/4" from other screws minimum

4 ROOF CONNECTION DETAIL
No Scale

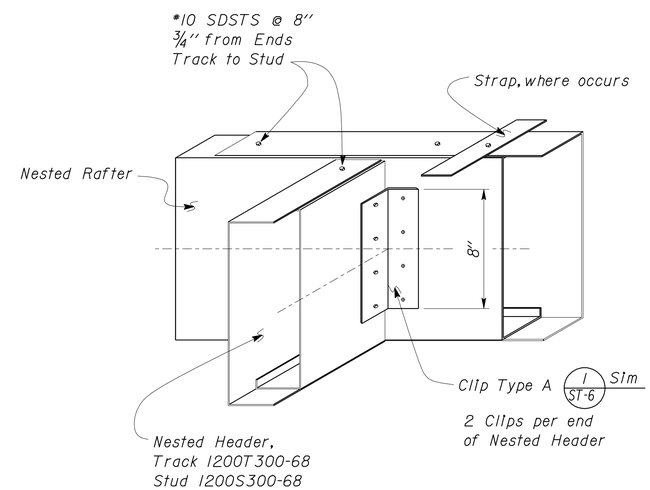

3 ROOF CONNECTION DETAIL
No Scale

DESIGN	BY Edgardo Isidro	CHECKED Gang Hong	
DETAILS	BY Aleksey Serin	CHECKED Edgardo Isidro	
QUANTITIES	BY	CHECKED	

STATE OF CALIFORNIA
DEPARTMENT OF TRANSPORTATION

DIVISION OF ENGINEERING SERVICES
ARCHITECTURAL AND STRUCTURAL DESIGN

BRIDGE NO. 28T5783
POST MILE 6.3

RICHMOND-SAN RAFAEL BRIDGE MAINTENANCE STATION
ROOF/STEEL DECK OPENING DETAILS

SHEET ST-5

TAEMWW Imperial Rev. 7/10

ORIGINAL SCALE IN INCHES FOR REDUCED PLANS 0 1 2 3

UNIT 3581
PROJECT NUMBER & PHASE 04000000021
EA 000000

DISREGARD PRINTS BEARING EARLIER REVISION DATES → 02-18-12 03-19-12

REVISION DATES (PRELIMINARY STAGE ONLY) SHEET OF

P:\dist_04\0400000002_richmond_san_rafael_mb\expedite\20120718_resubmit\st0_05.dgn

02-AUG-2012 14:56

DIST.	COUNTY	ROUTE	POST MILES TOTAL PROJECT	SHEET NO.	TOTAL SHEETS
04	CC	580	6.1/6.3	130	216

REGISTERED CIVIL ENGINEER — 04-27-2012 DATE

REGISTERED PROFESSIONAL ENGINEER — Edgardo A. Isidro — No. 058507 — Exp. 12-31-12 — CIVIL — STATE OF CALIFORNIA

7-30-12
PLANS APPROVAL DATE

The State of California or its officers or agents shall not be responsible for the accuracy or completeness of scanned copies of this plan sheet.

CALIFORNIA STATE FIRE MARSHAL APPROVED

Approval of this plan does not authorize or approve any omission or deviation from applicable regulations. Final approval is subject to field inspection. One set of approved plans shall be available on the project site at all times.

Reviewed by: Ingrid P. Casiano
INGRID P. ICASIANO, DSFM III

Approval date: July 17, 2012

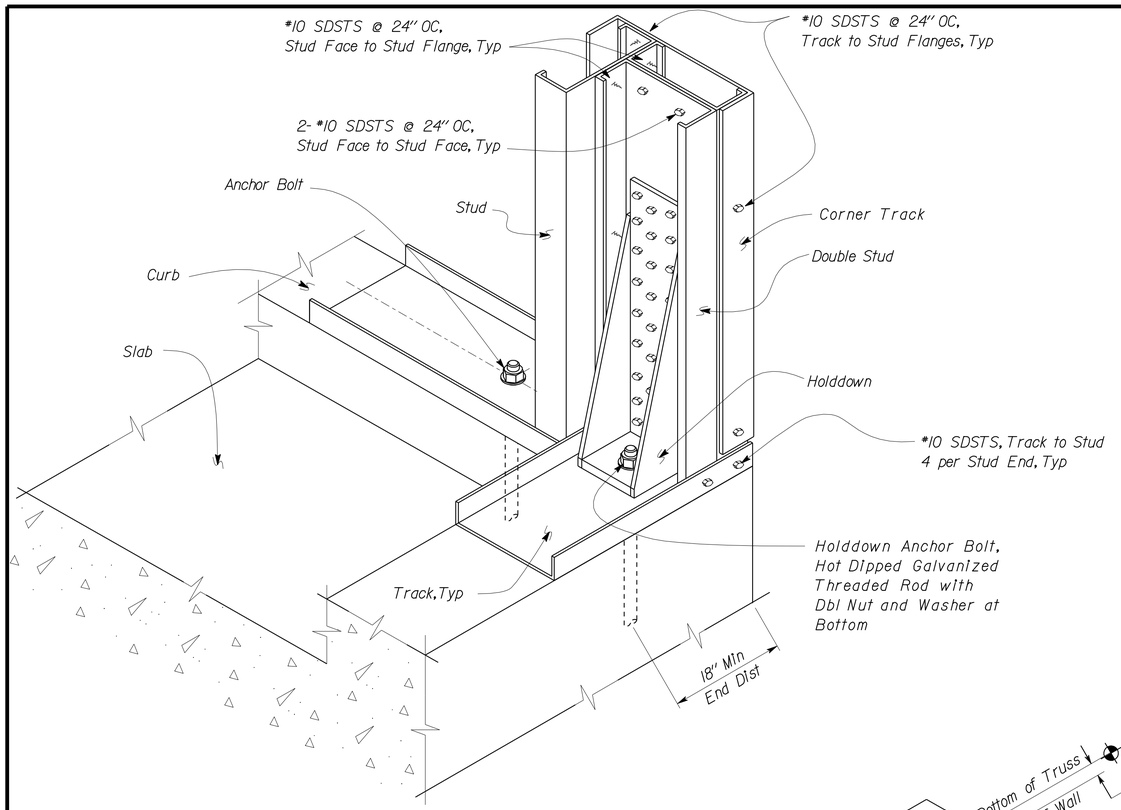

1 HOLDOWN DETAIL
No Scale

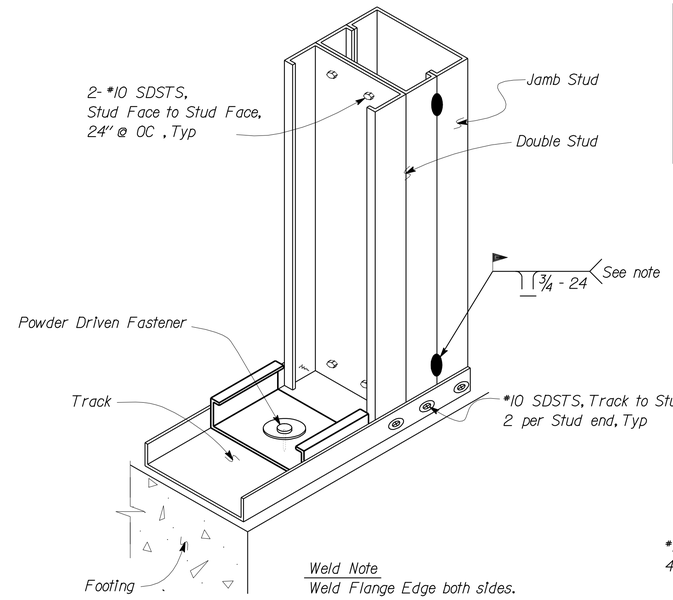

Weld Note
Weld Flange Edge both sides.

2 DOUBLE STUD WITH JAMB STUD DETAIL
No Scale

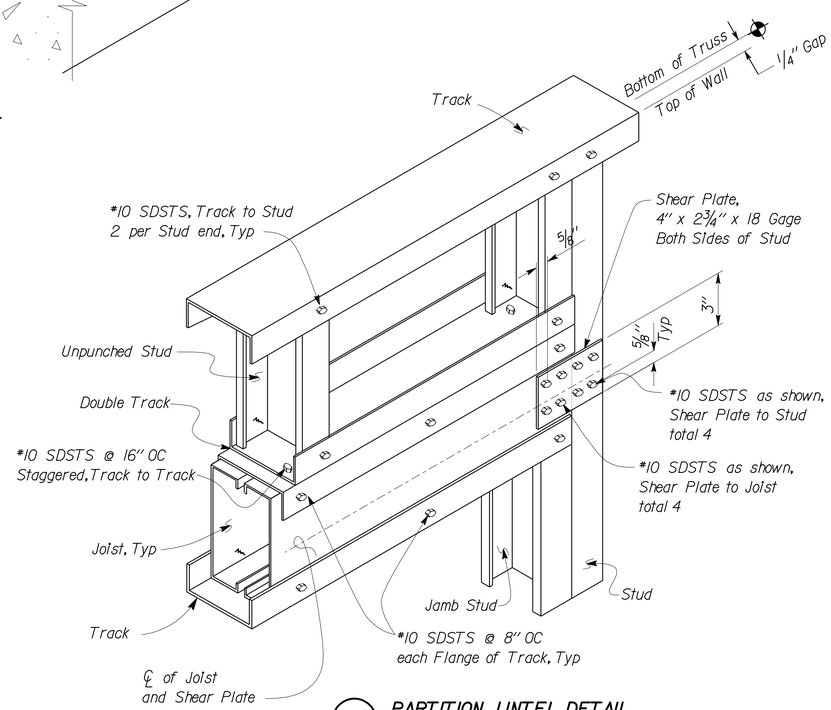

3 PARTITION LINTEL DETAIL
No Scale

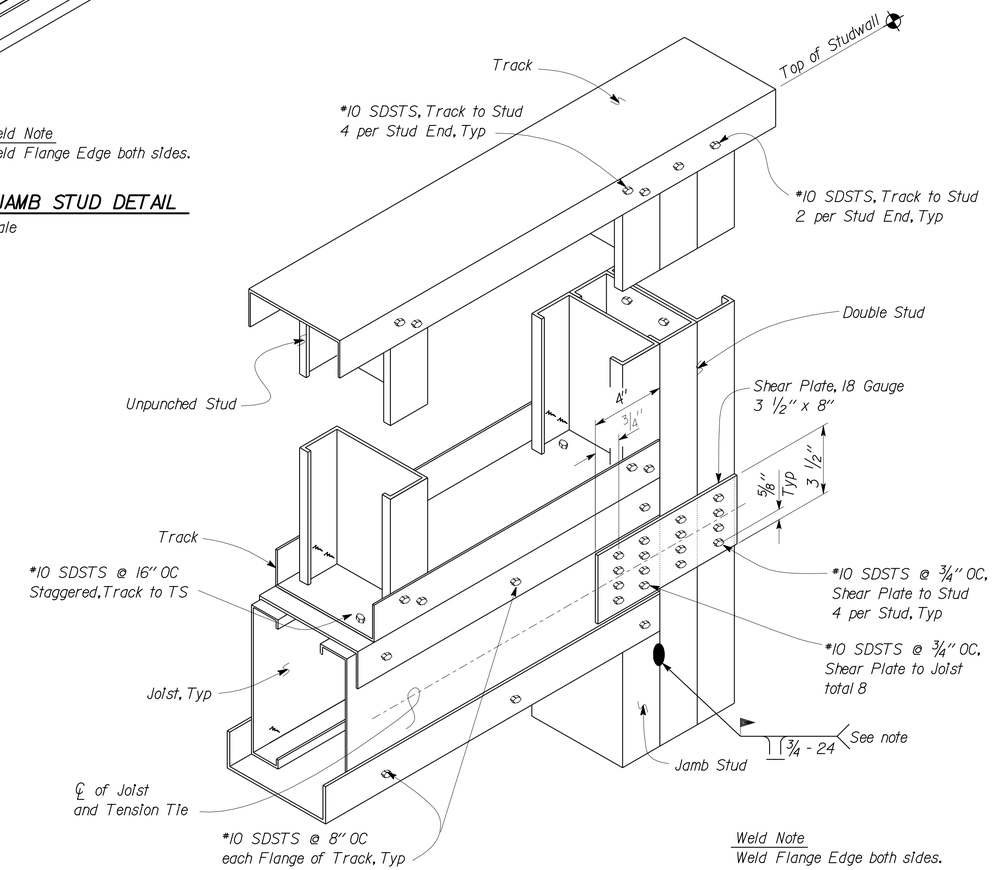

Weld Note
Weld Flange Edge both sides.

4 BEARING/SHEAR WALL LINTEL DETAIL
No Scale

	BY	CHECKED
DESIGN	Edgardo Isidro	Gang Hong
DETAILS	Aleksey Serin	Edgardo Isidro
QUANTITIES		

STATE OF CALIFORNIA
DEPARTMENT OF TRANSPORTATION

DIVISION OF ENGINEERING SERVICES
ARCHITECTURAL AND STRUCTURAL DESIGN

BRIDGE NO. 28T5783
POST MILE 6.3

RICHMOND-SAN RAFAEL BRIDGE MAINTENANCE STATION

STUD WALL DETAILS

SHEET **ST-6**

TAEMWW Imperial Rev. 7/10

ORIGINAL SCALE IN INCHES FOR REDUCED PLANS 0 1 2 3

UNIT 3581
PROJECT NUMBER & PHASE 04000000021
EA 000000

DISREGARD PRINTS BEARING EARLIER REVISION DATES 02-10-12

REVISION DATES (PRELIMINARY STAGE ONLY) SHEET OF

P:\dist_04\0400000002_richmond_san_rafael_mb\expedite\20120718_resubmit\st0_06.dgn

02-AUG-2012 14:56

DIST.	COUNTY	ROUTE	POST MILES TOTAL PROJECT	SHEET NO.	TOTAL SHEETS
04	CC	580	6.1/6.3	131	216

REGISTERED CIVIL ENGINEER — DATE 04-27-2012

REGISTERED PROFESSIONAL ENGINEER — Edgardo A. Isidro — No. 058507 — Exp. 12-31-12 — CIVIL — STATE OF CALIFORNIA

7-30-12
PLANS APPROVAL DATE

The State of California or its officers or agents shall not be responsible for the accuracy or completeness of scanned copies of this plan sheet.

CALIFORNIA STATE FIRE MARSHAL APPROVED
Approval of this plan does not authorize or approve any omission or deviation from applicable regulations. Final approval is subject to field inspection. One set of approved plans shall be available on the project site at all times.
Reviewed by: Ingrid P. Casiano
INGRID P. ICASIANO, DSFM III
Approval date: July 17, 2012

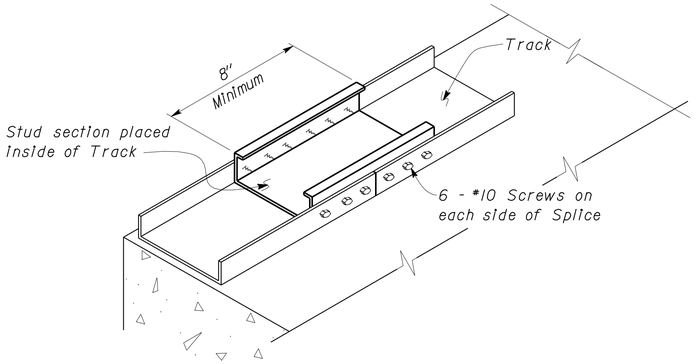

1 FLOOR TRACK SPLICE
No Scale

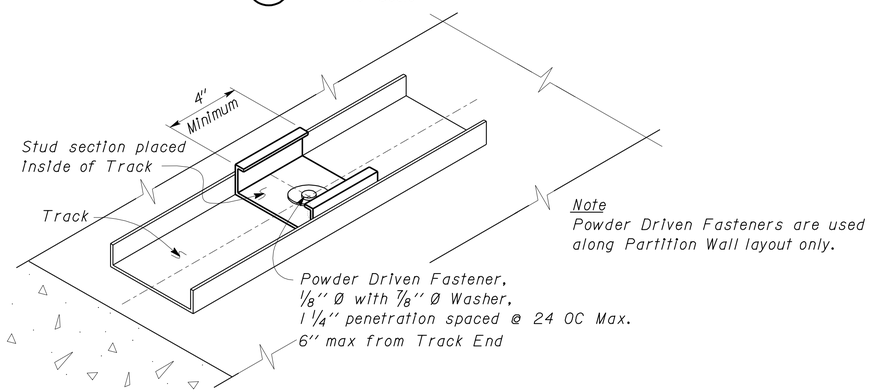

Note
Powder Driven Fasteners are used along Partition Wall layout only.

2 PARTITION WALL ANCHORAGE
No Scale

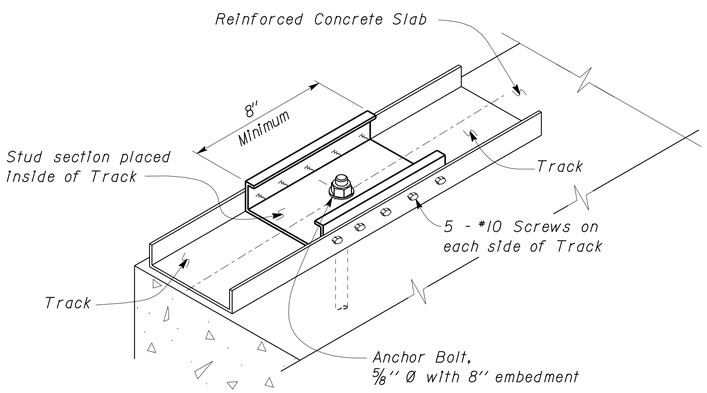

4 EXTERIOR WALL TRACK ANCHORAGE
No Scale

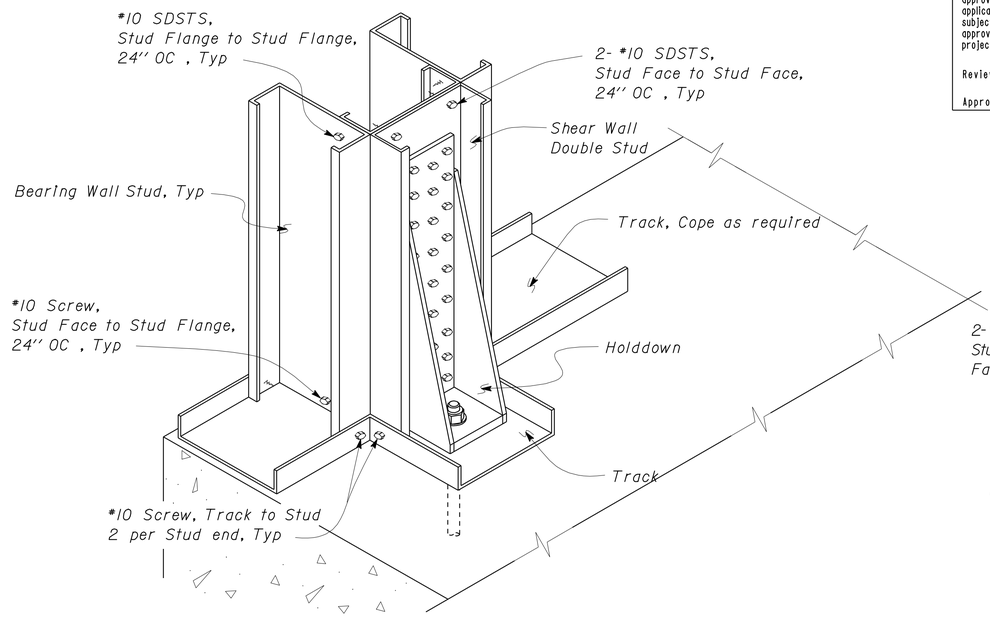

4 BEARING WALL HOLDDOWN DETAIL
No Scale

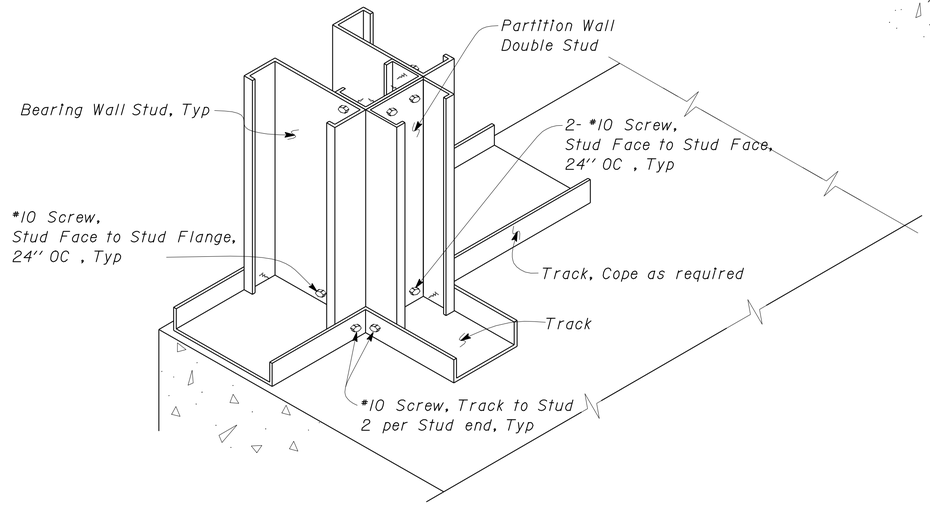

5 WALL INTERSECTION DETAIL
No Scale

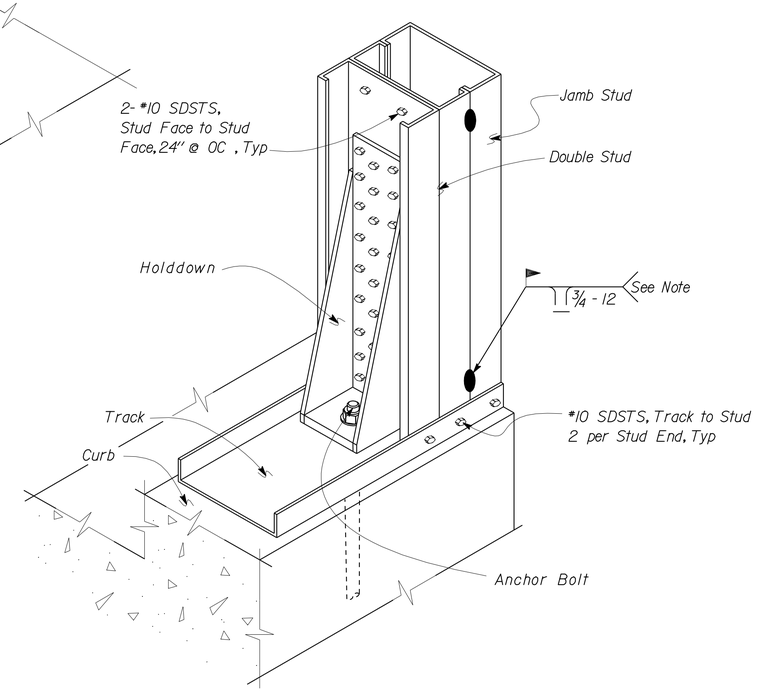

6 HOLDOWN DETAIL
No Scale

	BY	CHECKED
DESIGN	Edgardo Isidro	Gang Hong
DETAILS	Aleksey Serin	Edgardo Isidro
QUANTITIES		

STATE OF CALIFORNIA
DEPARTMENT OF TRANSPORTATION

DIVISION OF ENGINEERING SERVICES
ARCHITECTURAL AND STRUCTURAL DESIGN

BRIDGE NO. 28T5783
POST MILE 6.3

RICHMOND-SAN RAFAEL BRIDGE MAINTENANCE STATION
STUD WALL DETAILS

SHEET **ST-7**

TAEMWW Imperial Rev. 7/10

ORIGINAL SCALE IN INCHES FOR REDUCED PLANS 0 1 2 3

UNIT 3581
PROJECT NUMBER & PHASE 04000000021
EA 000000

DISREGARD PRINTS BEARING EARLIER REVISION DATES → 02-10-12
REVISION DATES (PRELIMINARY STAGE ONLY) SHEET OF

P:\dist_04\0400000002_richmond_san_rafael_mb\expedite\20120718_resubmit\st0_07.dgn

03-AUG-2012 08:20

DIST	COUNTY	ROUTE	POST MILES TOTAL PROJECT	SHEET No	TOTAL SHEETS
04	CC	580	6.1/6.3	132	216

REGISTERED CIVIL ENGINEER 07-29=10 DATE

7-30-12
PLANS APPROVAL DATE

REGISTERED PROFESSIONAL ENGINEER Samuel Awad No. 64589 Exp. 6-30-11 CIVIL STATE OF CALIFORNIA

The State of California or its officers or agents shall not be responsible for the accuracy or completeness of electronic copies of this plan sheet.

CALIFORNIA STATE FIRE MARSHAL APPROVED
Approval of this plan does not authorize or approve any omission or deviation from applicable regulations. Final approval is subject to field inspection. One set of approved plans shall be available on the project site at all times.
Reviewed by: Ingrid P. Icasiano
INGRID P. ICASIANO, DSFM III
Approval date: July 17, 2012

NOTE: This LOTB sheet was prepared in accordance with the Caltrans Soil & Rock Logging, Classification, and Presentation Manual (April 2010).

*NR=Not Recorded.

BENCH MARK

503	2 167 693.233 N	6 012 872.739 E	46.55′ Elev.
505	2 167 663.608 N	6 012 818.495 E	47.06′ Elev.

BORING	EASTING	NORTHING
R-10-001	6 012 827	2 167 778
R-10-002	6 012 716	2 167 756
R-10-003	6 012 702	2 167 731
R-10-004	6 012 732	2 167 806
R-10-005	6 012 790	2 167 794
R-10-006	6 012 758	2 167 729
R-10-007	6 012 743	2 167 665

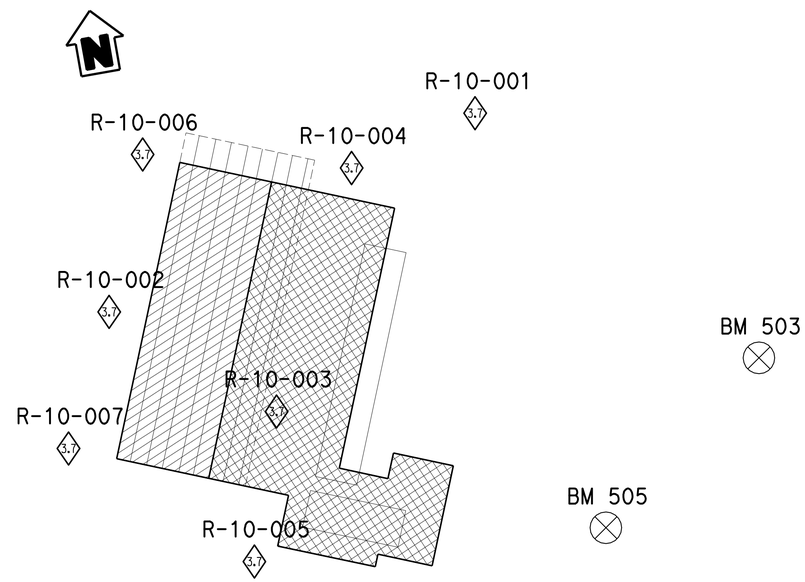

PLAN
Not to Scale

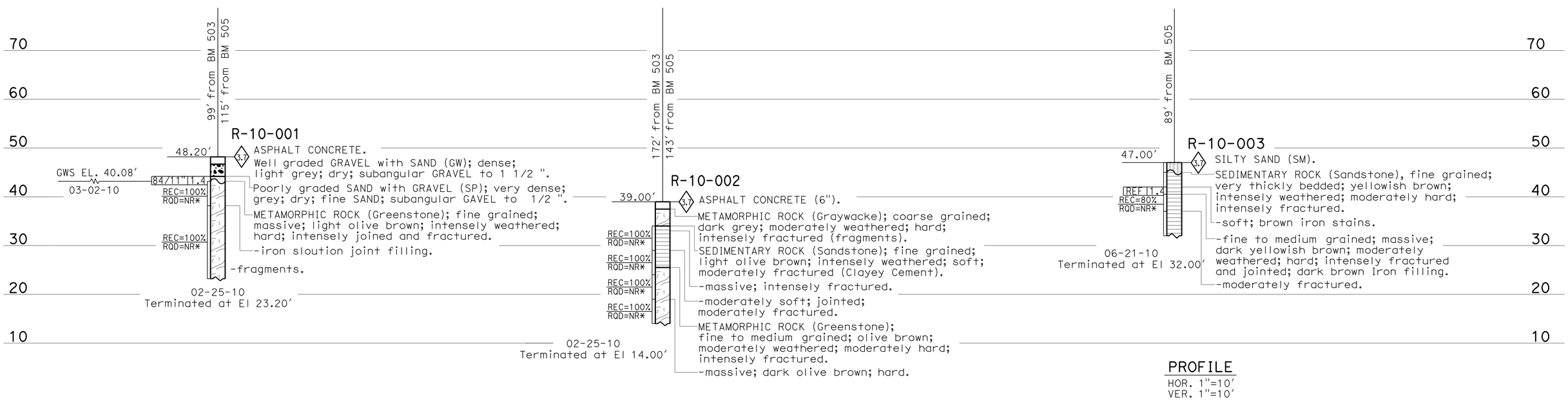

PROFILE
HOR. 1"=10′
VER. 1"=10′

ENGINEERING SERVICES	GEOTECHNICAL SERVICES	STATE OF CALIFORNIA DEPARTMENT OF TRANSPORTATION	DIVISION OF ENGINEERING SERVICES OFFICE OF GEOTECHNICAL DESIGN BRANCH	BRIDGE NO. / POST MILES	RICHMOND-SAN RAFAEL MAINTENANCE BLDG. LOG OF TEST BORINGS 1 of 6
FUNCTIONAL SUPERVISOR NAME: H. Nikoui	DRAWN BY: M. Reynolds 04/10 CHECKED BY: R. Nashed	FIELD INVESTIGATION BY: S. Awad			

OGS CIVIL LOG OF TEST BORINGS SHEET

ORIGINAL SCALE IN INCHES FOR REDUCED PLANS 0 1 2 3

CU 04
EA 003941

DISREGARD PRINTS BEARING EARLIER REVISION DATES → 03-19-12

REVISION DATES | SHEET | OF

FILE => st0_Log01_of_06.dgn

USERNAME => s109858 DATE PLOTTED => 02-AUG-2012 TIME PLOTTED => 14:57

DIST	COUNTY	ROUTE	POST MILES TOTAL PROJECT	SHEET No	TOTAL SHEETS
04	CC	580	6.1/6.3	133	216

REGISTERED CIVIL ENGINEER 07-29-10 DATE

7-30-12
PLANS APPROVAL DATE

REGISTERED PROFESSIONAL ENGINEER Samuel Awad No. 64589 Exp. 6-30-11 CIVIL STATE OF CALIFORNIA

The State of California or its officers or agents shall not be responsible for the accuracy or completeness of electronic copies of this plan sheet.

CALIFORNIA STATE FIRE MARSHAL APPROVED
Approval of this plan does not authorize or approve any omission or deviation from applicable regulations. Final approval is subject to field inspection. One set of approved plans shall be available on the project site at all times.
Reviewed by: INGRID P. ICASIANO, DSFM III
Approval date: July 17, 2012

NOTE: This LOTB sheet was prepared in accordance with the Caltrans Soil & Rock Logging, Classification, and Presentation Manual (April 2010).

*NR=Not Recorded.

(For Boring Location See Plan, LOTB Sheet 1 of 6)

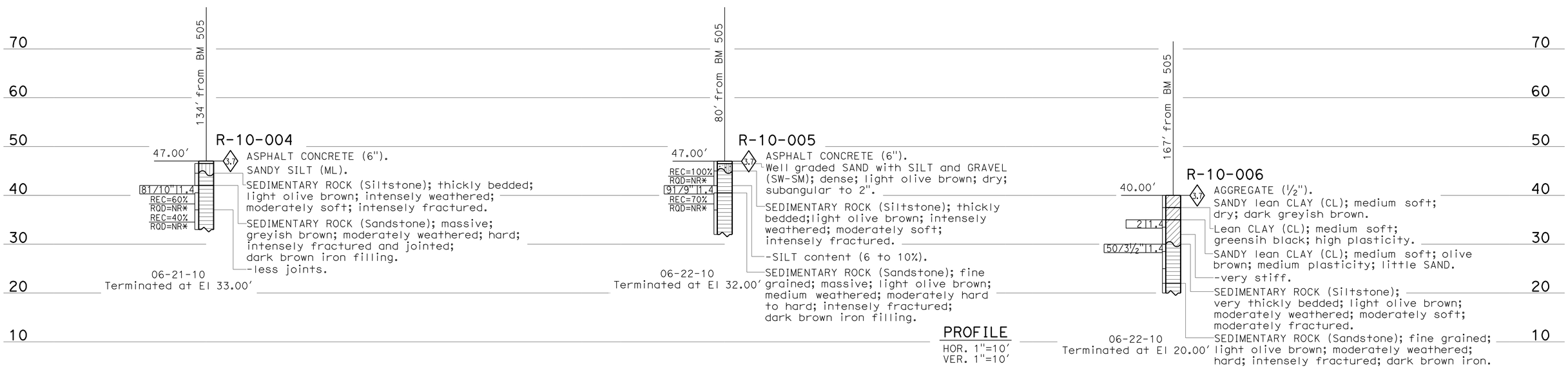

ENGINEERING SERVICES	GEOTECHNICAL SERVICES	STATE OF CALIFORNIA DEPARTMENT OF TRANSPORTATION	DIVISION OF ENGINEERING SERVICES OFFICE OF GEOTECHNICAL DESIGN BRANCH	BRIDGE NO. / POST MILES	RICHMOND-SAN RAFAEL MAINTENANCE BLDG.
FUNCTIONAL SUPERVISOR	DRAWN BY: M. Reynolds 04/10	FIELD INVESTIGATION BY:			LOG OF TEST BORINGS 2 OF 6
NAME: H. Nikoui	CHECKED BY: R. Nashed	S. Awad			

OGS CIVIL LOG OF TEST BORINGS SHEET

ORIGINAL SCALE IN INCHES FOR REDUCED PLANS 0 1 2 3

CU 04
EA 003941

DISREGARD PRINTS BEARING EARLIER REVISION DATES

REVISION DATES | SHEET | OF

FILE => st0_Log02_of_06.dgn

USERNAME => s109858 DATE PLOTTED => 02-AUG-2012 TIME PLOTTED => 14:57

DIST	COUNTY	ROUTE	POST MILES TOTAL PROJECT	SHEET No	TOTAL SHEETS
04	CC	580	6.1/6.3	134	216

CALIFORNIA STATE FIRE MARSHAL APPROVED

Approval of this plan does not authorize or approve any omission or deviation from applicable regulations. Final approval is subject to field inspection. One set of approved plans shall be available on the project site at all times.

Reviewed by: Ingrid P. Casiano
INGRID P. ICASIANO, DSFM III

Approval date: July 17, 2012

07-29-10
REGISTERED CIVIL ENGINEER DATE

7-30-12
PLANS APPROVAL DATE

REGISTERED PROFESSIONAL ENGINEER
Samuel Awad
No. 64589
Exp. 6-30-11
CIVIL
STATE OF CALIFORNIA

The State of California or its officers or agents shall not be responsible for the accuracy or completeness of electronic copies of this plan sheet.

NOTE: This LOTB sheet was prepared in accordance with the Caltrans Soil & Rock Logging, Classification, and Presentation Manual (April 2010).

(For Boring Location See Plan, LOTB Sheet 1 of 6)

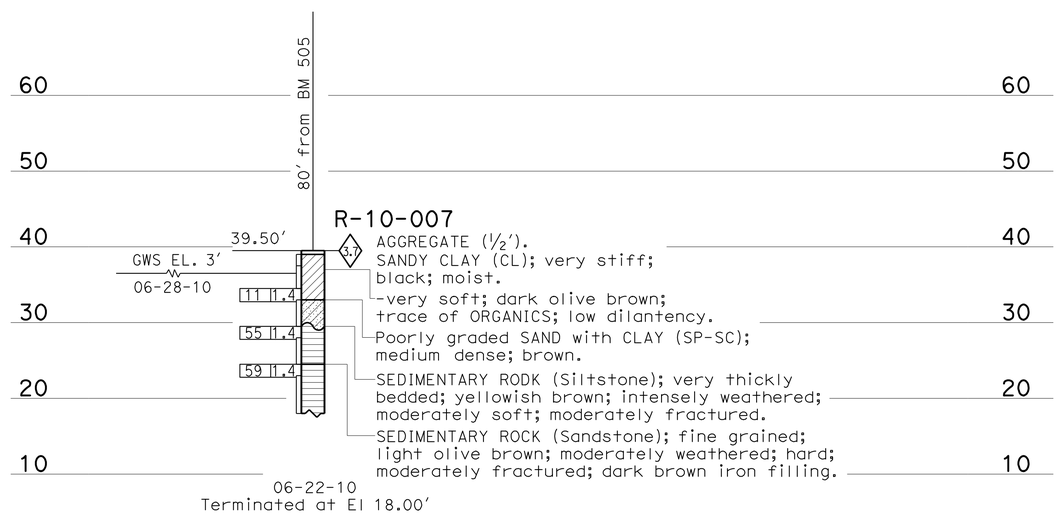

PROFILE
HOR. 1"=10'
VER. 1"=10'

ENGINEERING SERVICES	GEOTECHNICAL SERVICES	STATE OF CALIFORNIA DEPARTMENT OF TRANSPORTATION	DIVISION OF ENGINEERING SERVICES OFFICE OF GEOTECHNICAL DESIGN BRANCH	BRIDGE NO. / POST MILES	RICHMOND-SAN RAFAEL MAINTENANCE BLDG.
FUNCTIONAL SUPERVISOR	DRAWN BY: M. Reynolds 04/10	FIELD INVESTIGATION BY: S. Awad			LOG OF TEST BORINGS 3 OF 6
NAME: H. Nikoui	CHECKED BY: R. Nashed				

OGS CIVIL LOG OF TEST BORINGS SHEET

ORIGINAL SCALE IN INCHES FOR REDUCED PLANS 0 1 2 3

CU 04
EA 003941

DISREGARD PRINTS BEARING EARLIER REVISION DATES

REVISION DATES | SHEET | OF

FILE => st0_Log03_of_06.dgn

USERNAME => s109858 DATE PLOTTED => 02-AUG-2012 TIME PLOTTED => 14:57

DIST	COUNTY	ROUTE	POST MILES TOTAL PROJECT	SHEET No	TOTAL SHEETS
04	CC	580	6.1/6.3	135	216

REGISTERED CIVIL ENGINEER 07-29-10 DATE

7-30-12
PLANS APPROVAL DATE

REGISTERED PROFESSIONAL ENGINEER Samuel Awad No. 64589 Exp. 6-30-11 CIVIL STATE OF CALIFORNIA

The State of California or its officers or agents shall not be responsible for the accuracy or completeness of electronic copies of this plan sheet.

REFERENCE: CALTRANS SOIL & ROCK LOGGING, CLASSIFICATION, AND PRESENTATION MANUAL (JUNE 2007)

CEMENTATION

Description	Criteria
Weak	Crumbles or breaks with handling or little finger pressure.
Moderate	Crumbles or breaks with considerable finger pressure.
Strong	Will not crumble or break with finger pressure.

CONSISTENCY OF COHESIVE SOILS

Description	Unconfined Compressive Strength (tsf)	Pocket Penetrometer Measurement (tsf)	Torvane Measurement (tsf)	Field Approximation
Very Soft	< 0.25	< 0.25	< 0.12	Easily penetrated several inches by fist
Soft	0.25 to 0.50	0.25 to 0.50	0.12 to 0.25	Easily penetrated several inches by thumb
Medium Stiff	0.50 to 1.0	0.50 to 1.0	0.25 to 0.50	Penetrated several inches by thumb with moderate effort
Stiff	1 to 2	1 to 2	0.50 to 1.0	Readily indented by thumb but penetrated only with great effort
Very Stiff	2 to 4	2 to 4	1.0 to 2.0	Readily indented by thumbnail
Hard	> 4.0	> 4.0	> 2.0	Indented by thumbnail with difficulty

CALIFORNIA STATE FIRE MARSHAL APPROVED

Approval of this plan does not authorize or approve any omission or deviation from applicable regulations. Final approval is subject to field inspection. One set of approved plans shall be available on the project site at all times.

Reviewed by: Ingrid P. Icasiano
INGRID P. ICASIANO, DSFM III
Approval date: July 17, 2012

BOREHOLE IDENTIFICATION

Symbol	Hole Type	Description
Size	A	Auger Boring
Size	R P	Rotary drilled boring Rotary percussion boring (air)
Size	R	Rotary drilled diamond core
Size	HD HA	Hand driven (1-inch soil tube) Hand Auger
	D	Dynamic Cone Penetration Boring
	CPT	Cone Penetration Test (ASTM D 5778-95)
	O	Other

Note: Size in inches.

PLASTICITY OF FINE-GRAINED SOILS

Description	Criteria
Nonplastic	A 1/8-inch thread cannot be rolled at any water content.
Low	The thread can barely be rolled and the lump cannot be formed when drier than the plastic limit.
Medium	The thread is easy to roll and not much time is required to reach the plastic limit. The thread cannot be rerolled after reaching the plastic limit. The lump crumbles when drier than the plastic limit.
High	It takes considerable time rolling and kneading to reach the plastic limit. The thread can be rerolled several times after reaching the plastic limit. The lump can be formed without crumbling when drier than the plastic limit.

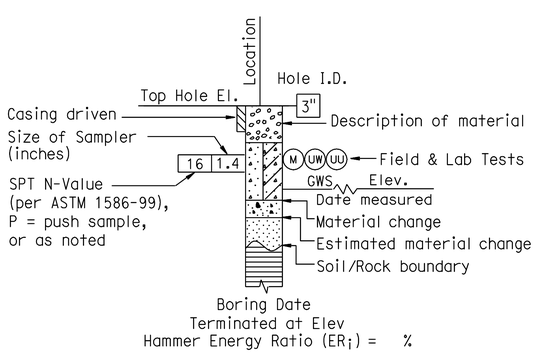

ROTARY BORING

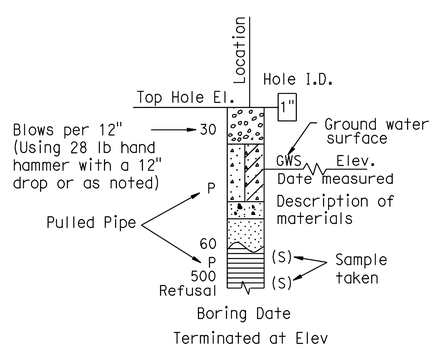

HAND BORING

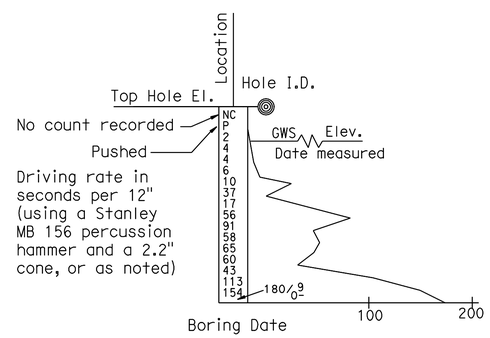

DYNAMIC CONE PENETRATION BORING

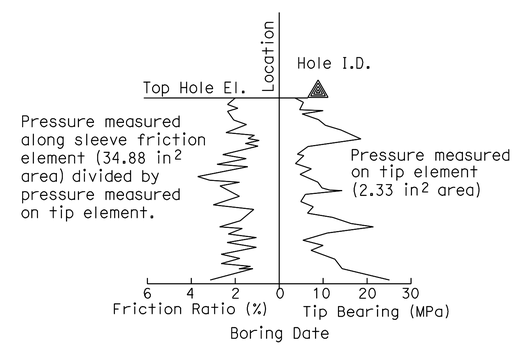

CONE PENETRATION TEST (CPT) SOUNDING

ENGINEERING SERVICES			GEOTECHNICAL SERVICES	STATE OF CALIFORNIA DEPARTMENT OF TRANSPORTATION	DIVISION OF ENGINEERING SERVICES OFFICE OF GEOTECHNICAL DESIGN BRANCH	BRIDGE NO. / POST MILE	SOIL LEGEND LOG OF TEST BORINGS 4 of 6
FUNCTIONAL SUPERVISOR	PREPARED BY M. Reynolds	04/10					
NAME: H. Nikoui	CHECKED BY R. Nashed		S. Awad				
GS LOTB SOIL LEGEND			ORIGINAL SCALE IN INCHES FOR REDUCED PLANS 0 1 2 3		CU 04 EA 003941	DISREGARD PRINTS BEARING EARLIER REVISION DATES	REVISION DATES / SHEET / OF

FILE => st0_Log04_of_06.dgn

USERNAME => s109858 DATE PLOTTED => 02-AUG-2012 TIME PLOTTED => 14:57

REFERENCE: CALTRANS SOIL & ROCK LOGGING, CLASSIFICATION, AND PRESENTATION MANUAL (JUNE 2007)

DIST	COUNTY	ROUTE	POST MILES TOTAL PROJECT	SHEET No	TOTAL SHEETS
04	CC	580	6.1/6.3	136	216

REGISTERED CIVIL ENGINEER 07-29-10 DATE

7-30-12
PLANS APPROVAL DATE

REGISTERED PROFESSIONAL ENGINEER Samuel Awad No. 64589 Exp. 6-30-11 CIVIL STATE OF CALIFORNIA

The State of California or its officers or agents shall not be responsible for the accuracy or completeness of electronic copies of this plan sheet.

CALIFORNIA STATE FIRE MARSHAL
APPROVED
Approval of this plan does not authorize or approve any omission or deviation from applicable regulations. Final approval is subject to field inspection. One set of approved plans shall be available on the project site at all times.
Reviewed by: Ingrid P. Casiano
INGRID P. CASIANO, DSFM III
Approval date: July 17, 2012

GROUP SYMBOLS AND NAMES

Graphic/Symbol	Group Names	Graphic/Symbol	Group Names
GW	Well-graded GRAVEL Well-graded GRAVEL with SAND	CL	Lean CLAY Lean CLAY with SAND Lean CLAY with GRAVEL SANDY lean CLAY SANDY lean CLAY with GRAVEL GRAVELLY lean CLAY GRAVELLY lean CLAY with SAND
GP	Poorly graded GRAVEL Poorly graded GRAVEL with SAND		
GW-GM	Well-graded GRAVEL with SILT Well-graded GRAVEL with SILT and SAND	CL-ML	SILTY CLAY SILTY CLAY with SAND SILTY CLAY with GRAVEL SANDY SILTY CLAY SANDY SILTY CLAY with GRAVEL GRAVELLY SILTY CLAY GRAVELLY SILTY CLAY with SAND
GW-GC	Well-graded GRAVEL with CLAY (or SILTY CLAY) Well-graded GRAVEL with CLAY and SAND (or SILTY CLAY and SAND)		
GP-GM	Poorly graded GRAVEL with SILT Poorly graded GRAVEL with SILT and SAND	ML	SILT SILT with SAND SILT with GRAVEL SANDY SILT SANDY SILT with GRAVEL GRAVELLY SILT GRAVELLY SILT with SAND
GP-GC	Poorly graded GRAVEL with CLAY (or SILTY CLAY) Poorly graded GRAVEL with CLAY and SAND (or SILTY CLAY and SAND)		
GM	SILTY GRAVEL SILTY GRAVEL with SAND	OL	ORGANIC lean CLAY ORGANIC lean CLAY with SAND ORGANIC lean CLAY with GRAVEL SANDY ORGANIC lean CLAY SANDY ORGANIC lean CLAY with GRAVEL GRAVELLY ORGANIC lean CLAY GRAVELLY ORGANIC lean CLAY with SAND
GC	CLAYEY GRAVEL CLAYEY GRAVEL with SAND		
GC-GM	SILTY, CLAYEY GRAVEL SILTY, CLAYEY GRAVEL with SAND	OL	ORGANIC SILT ORGANIC SILT with SAND ORGANIC SILT with GRAVEL SANDY ORGANIC SILT SANDY ORGANIC SILT with GRAVEL GRAVELLY ORGANIC SILT GRAVELLY ORGANIC SILT with SAND
SW	Well-graded SAND Well-graded SAND with GRAVEL		
SP	Poorly graded SAND Poorly graded SAND with GRAVEL	CH	Fat CLAY Fat CLAY with SAND Fat CLAY with GRAVEL SANDY fat CLAY SANDY fat CLAY with GRAVEL GRAVELLY fat CLAY GRAVELLY fat CLAY with SAND
SW-SM	Well-graded SAND with SILT Well-graded SAND with SILT and GRAVEL		
SW-SC	Well-graded SAND with CLAY (or SILTY CLAY) Well-graded SAND with CLAY and GRAVEL (or SILTY CLAY and GRAVEL)	MH	Elastic SILT Elastic SILT with SAND Elastic SILT with GRAVEL SANDY elastic SILT SANDY elastic SILT with GRAVEL GRAVELLY elastic SILT GRAVELLY elastic SILT with SAND
SP-SM	Poorly graded SAND with SILT Poorly graded SAND with SILT and GRAVEL		
SP-SC	Poorly graded SAND with CLAY (or SILTY CLAY) Poorly graded SAND with CLAY and GRAVEL (or SILTY CLAY and GRAVEL)	OH	ORGANIC fat CLAY ORGANIC fat CLAY with SAND ORGANIC fat CLAY with GRAVEL SANDY ORGANIC fat CLAY SANDY ORGANIC fat CLAY with GRAVEL GRAVELLY ORGANIC fat CLAY GRAVELLY ORGANIC fat CLAY with SAND
SM	SILTY SAND SILTY SAND with GRAVEL		
SC	CLAYEY SAND CLAYEY SAND with GRAVEL	OH	ORGANIC elastic SILT ORGANIC elastic SILT with SAND ORGANIC elastic SILT with GRAVEL SANDY ORGANIC elastic SILT SANDY ORGANIC elastic SILT with GRAVEL GRAVELLY ORGANIC elastic SILT GRAVELLY ORGANIC elastic SILT with SAND
SC-SM	SILTY, CLAYEY SAND SILTY, CLAYEY SAND with GRAVEL		
PT	PEAT	OL/OH	ORGANIC SOIL ORGANIC SOIL with SAND ORGANIC SOIL with GRAVEL SANDY ORGANIC SOIL SANDY ORGANIC SOIL with GRAVEL GRAVELLY ORGANIC SOIL GRAVELLY ORGANIC SOIL with SAND
	COBBLES COBBLES and BOULDERS BOULDERS		

FIELD AND LABORATORY TESTING

- (C) Consolidation (ASTM D 2435)
- (CL) Collapse Potential (ASTM D 5333)
- (CP) Compaction Curve (CTM 216)
- (CR) Corrosivity Testing (CTM 643, CTM 422, CTM 417)
- (CU) Consolidated Undrained Triaxial (ASTM D 4767)
- (DS) Direct Shear (ASTM D 3080)
- (EI) Expansion Index (ASTM D 4829)
- (M) Moisture Content (ASTM D 2216)
- (OC) Organic Content-% (ASTM D 2974)
- (P) Permeability (CTM 220)
- (PA) Particle Size Analysis (ASTM D 422)
- (PI) Plasticity Index (AASHTO T 90) Liquid Limit (AASHTO T 89)
- (PL) Point Load Index (ASTM D 5731)
- (PM) Pressure Meter
- (PP) Pocket Penetrometer
- (R) R-Value (CTM 301)
- (SE) Sand Equivalent (CTM 217)
- (SG) Specific Gravity (AASHTO T 100)
- (SL) Shrinkage Limit (ASTM D 427)
- (SW) Swell Potential (ASTM D 4546)
- (TV) Pocket Torvane
- (UC) Unconfined Compression-Soil (ASTM D 2166) Unconfined Compression-Rock (ASTM D 2938)
- (UU) Unconsolidated Undrained Triaxial (ASTM D 2850)
- (UW) Unit Weight (ASTM D 4767)
- (VS) Vane Shear (AASHTO T 223)

APPARENT DENSITY OF COHESIONLESS SOILS

Description	SPT N_{60} (Blows / 12 inches)
Very loose	0 - 4
Loose	5 - 10
Medium Dense	11 - 30
Dense	31 - 50
Very Dense	> 50

MOISTURE

Description	Criteria
Dry	Absence of moisture, dusty, dry to the touch
Moist	Damp but no visible water
Wet	Visible free water, usually soil is below water table

PERCENT OR PROPORTION OF SOILS

Description	Criteria
Trace	Particles are present but estimated to be less than 5%
Few	5 to 10%
Little	15 to 25%
Some	30 to 45%
Mostly	50 to 100%

PARTICLE SIZE

Description		Size
Boulder		> 12"
Cobble		3" to 12"
Gravel	Coarse	3/4" to 3"
	Fine	No. 4 to 3/4"
Sand	Coarse	No. 10 to No. 4
	Medium	No. 40 to No. 10
	Fine	No. 200 to No. 40

ENGINEERING SERVICES				GEOTECHNICAL SERVICES
FUNCTIONAL SUPERVISOR	PREPARED BY	M. Reynolds	04/10	
NAME: H.Nikoui	CHECKED BY	R. Nashed		S. Awad

STATE OF CALIFORNIA
DEPARTMENT OF TRANSPORTATION

DIVISION OF ENGINEERING SERVICES
OFFICE OF GEOTECHNICAL
DESIGN BRANCH

CU 04
EA 003941

BRIDGE NO.
POST MILE

SOIL LEGEND
LOG OF TEST BORINGS 5 of 6

GS LOTB SOIL LEGEND

ORIGINAL SCALE IN INCHES FOR REDUCED PLANS 0 1 2 3

DISREGARD PRINTS BEARING EARLIER REVISION DATES

REVISION DATES SHEET OF

FILE => st0_Log05_of_06.dgn

USERNAME => s109858 DATE PLOTTED => 02-AUG-2012 TIME PLOTTED => 14:58

REFERENCE: CALTRANS SOIL & ROCK LOGGING, CLASSIFICATION, AND PRESENTATION MANUAL (JUNE 2007)

DIST	COUNTY	ROUTE	POST MILES TOTAL PROJECT	SHEET No	TOTAL SHEETS
04	CC	580	6.1/6.3	137	216

REGISTERED CIVIL ENGINEER 07-29-10 DATE

7-30-12
PLANS APPROVAL DATE

REGISTERED PROFESSIONAL ENGINEER Samuel Awad No. 64589 Exp. 6-30-11 CIVIL STATE OF CALIFORNIA

The State of California or its officers or agents shall not be responsible for the accuracy or completeness of electronic copies of this plan sheet.

PERCENT CORE RECOVERY (REC) & ROCK QUALITY DESIGNATION (RQD)

$$REC = \frac{\sum \text{Length of the recovered core pieces (inches)}}{\text{Total length of core run (inches)}} \times 100\%$$

$$RQD = \frac{\sum \text{Length of intact core pieces} \geq 4''}{\text{Total length of core run (inches)}} \times 100\%$$

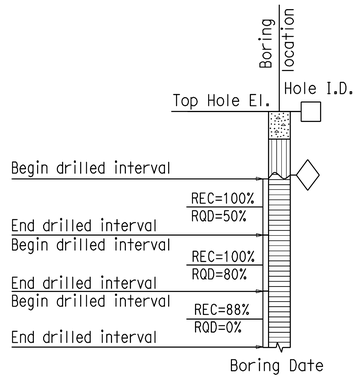

RELATIVE STRENGTH OF INTACT ROCK

Term	Uniaxial Compressive Strength (PSI)
Extremely Strong	> 30,000
Very Strong	14,500 - 30,000
Strong	7,000 - 14,500
Medium Strong	3,500 - 7,000
Weak	700 - 3,500
Very Weak	150 - 700
Extremely Weak	< 150

BEDDING SPACING

Description	Thickness / Spacing
Massive	Greater than 10 ft
Very thickly bedded	3 to 10 ft
Thickly bedded	1 to 3 ft
Moderately bedded	3-5/8" to 1 ft
Thinly bedded	1-1/4" to 3-5/8"
Very thinly bedded	3/8" to 1-1/4"
Laminated	Less than 3/8"

LEGEND OF ROCK MATERIALS

- IGNEOUS ROCK
- SEDIMENTARY ROCK
- METAMORPHIC ROCK

CALIFORNIA STATE FIRE MARSHAL APPROVED

Approval of this plan does not authorize or approve any omission or deviation from applicable regulations. Final approval is subject to field inspection. One set of approved plans shall be available on the project site at all times.

Reviewed by: Ingrid P. Icasiano
INGRID P. ICASIANO, OSFM III
Approval date: July 17, 2012

ROCK HARDNESS

Description	Criteria
Extremely Hard	Specimen cannot be scratched with a pocket knife or sharp pick; can only be chipped with repeated heavy hammer blows.
Very Hard	Specimen cannot be scratched with a pocket knife or sharp pick. Breaks with repeated heavy hammer blows.
Hard	Specimen can be scratched with a pocket knife or sharp pick with difficulty (heavy pressure). Heavy hammer blows required to break specimen.
Moderately Hard	Specimen can be scratched with pocket knife or sharp pick with light or moderate pressure. Core breaks with moderate hammer pressure.
Moderately Soft	Specimen can be grooved 1/6" deep with a pocket knife or sharp pick with moderate or heavy pressure. Breaks with light hammer blow or heavy manual pressure.
Soft	Specimen can be grooved or gouged easily by a pocket knife or sharp pick with light pressure, can be scratched with fingernail. Breaks with light to moderate manual pressure.
Very Soft	Specimen can be readily indented, grooved or gouged with fingernail, or carved with a pocket knife. Breaks with light manual pressure.

FRACTURE DENSITY

Description	Observed Fracture Density
Unfractured	No fractures.
Very slightly fractured	Lengths greater than 3 feet.
Slightly fractured	Lengths from 1 to 3 feet with few lengths less than 1 foot or greater than 3 feet.
Moderately fractured	Lengths mostly in 4" to 1 foot range with most lengths about 8"
Intensely fractured	Lengths average from 1 to 4" with scattered fragmented intervals with lengths less than 4"
Very intensely fractured	Mostly chips and fragments with a few scattered short core lengths.

Combination descriptors (such as "Very intensely to intensely fractured") are used where equal distribution of both fracture density characteristics is present over a significant interval or exposure, or where characteristics are "in between" the descriptor definitions. Only two adjacent descriptors may be combined.

WEATHERING DESCRIPTORS FOR INTACT ROCK

Description	Diagnostic features					General Characteristics
	Chemical Weathering-Discoloration and/or oxidation		Mechanical Weathering-Grain boundary conditions (disaggregation) primarily for granitics and some coarse-grained sediments	Texture and Solutioning		
	Body of Rock	Fracture Surfaces		Texture	Solutioning	
Fresh	No discoloration, not oxidized.	No discoloration or oxidation.	No separation, intact (tight).	No change.	No solutioning.	Hammer rings when crystalline rocks are struck.
Slightly Weathered	Discoloration or oxidation is limited to surface of, or short distance from, fractures; some feldspar crystals are dull.	Minor to complete discoloration or oxidation of most surfaces.	No visible separation, intact (tight).	Preserved.	Minor leaching of some soluble minerals may be noted.	Hammer rings when crystalline rocks are struck. Body of rock not weakened.
Moderately Weathered	Discoloration or oxidation extends from fractures usually throughout; Fe-Mg minerals are "rusty," feldspar crystals are "cloudy."	All fracture surfaces are discolored or oxidized.	Partial separation of boundaries visible.	Generally preserved.	Soluble minerals may be mostly leached.	Hammer does not ring when rock is struck. Body of rock is slightly weakened.
Intensely Weathered	Discoloration or oxidation throughout; all feldspars and Fe-Mg minerals are altered to clay to some extent; or chemical alteration produces in-situ disaggregation, see grain boundary conditions.	All fracture surfaces are discolored or oxidized, surfaces friable.	Partial separation, rock is friable; in semiarid conditions granitics are disaggregated.	Texture altered by chemical disintegration (hydration, argillation).	Leaching of soluble minerals may be complete.	Dull sound when struck with hammer, usually can be broken with moderate to heavy manual pressure or by light hammer blow without reference to planes of weakness such as incipient or hairline fractures, or veinlets. Rock is significantly weakened.
Decomposed	Discolored or oxidized throughout, but resistant minerals such as quartz may be unaltered; all feldspars and Fe-Mg minerals are completely altered to clay.		Complete separation of grain boundaries (disaggregated).	Resembles a soil, partial or complete remnant rock structure may be preserved; leaching of soluble minerals usually complete.		Can be granulated by hand. Resistant minerals such as quartz may be present as "stringers" or "dikes."

Combination descriptors (such as "slightly weathered to fresh") are permissible where equal distribution of both weathering characteristics is present over significant intervals or where characteristics present are "in between" the diagnostic feature. However, combination descriptors should not be used where significant, identifiable zones can be delineated. Only two adjacent descriptors may be combined. "Very intensely weathered" is the combination descriptor for "intensely weathered to decomposed."

ENGINEERING SERVICES			GEOTECHNICAL SERVICES	STATE OF CALIFORNIA DEPARTMENT OF TRANSPORTATION	DIVISION OF ENGINEERING SERVICES OFFICE OF GEOTECHNICAL DESIGN BRANCH	BRIDGE NO. / POST MILE	ROCK LEGEND
FUNCTIONAL SUPERVISOR	PREPARED BY	M. Reynolds 04/10	FIELD INVESTIGATION BY:				LOG OF TEST BORINGS 6 of 6
NAME: H. Nikoui	CHECKED BY	R. Nashed	S. Awad				
GS LOTB ROCK LEGEND	ORIGINAL SCALE IN INCHES FOR REDUCED PLANS 0 1 2 3				CU 04 EA 003941	DISREGARD PRINTS BEARING EARLIER REVISION DATES	REVISION DATES / SHEET / OF

FILE => st0_Log06_of_06.dgn

USERNAME => s109858 DATE PLOTTED => 02-AUG-2012 TIME PLOTTED => 14:58

PROJECT DESIGN CRITERIA

The building work on this project has been designed to conform to the 2010 California Building Code (2009 IBC).

LOADS

SEISMIC: Risk Category = I

Importance Factor I_e = 1.0

Site Soil Class = C

S_S = 1.5 S_{DS} = 1.0

S_1 = 0.6 S_{D1} = 0.52

Seismic Design Category = D

Seismic Force-Resisting System:

Steel Ordinary Moment Frame

R = 3.5 C_S = 0.286

Bearing / Shear Wall

R = 6.5 C_S = 0.154

WIND: Basic Wind Speed = 85 mph I = 1.0

λ = 1.29 P_S30 = ± 12.7

K_{zt} = 1.0

Wind Pressure on Components and Cladding = 20 psf

Parapet: Windward Parapet GC_{pi} = 1.5

Leeward Parapet GC_{pn} = 1.0

LIVE LOAD: Roof = 20 psf

MATERIALS

REINFORCED CONCRETE: (Ultimate Strength Design):

f'c = 3,000 psi

f_y = 60,000 psi

STRUCTURAL STEEL: (Allowable Strength Design):

Wide Flange F_y = 50 ksi

Channels, Angles & Misc. Shapes F_y = 36 ksi

Plates F_y = 36 ksi

Hollow Structural Section (HSS) F_y = 46 ksi

COLD FORMED STEEL: shall be F_y = 33 ksi

FOUNDATION:

Soils report dated : July 19, 2010

Allowable Soil Pressure (DL + LL) : = 2,500 psf

Retaining Wall (Equivalent Fluid Pressure)

Active = 75 pcf

Passive = 360 pcf

For Soil Classification, see Log of Test Boring Sheets.

DETAIL NOTES

1. For Concrete see: "Concrete Standard"
2. All bolts shall be hex head machine bolts, with hex head nuts; unless otherwise noted.
3. All lock washers shall be helical spring lock washers.

DESIGN NOTES

1. Metal stud wall framing:
   a) 6" wall - 600S162-43 @ 16" OC
      600T150-54 top and bottom track.
   b) 8" wall - 800S162-54 @ 16" OC
      800T150-54 top and bottom track.
2. Exterior built out wall:
   4" wall - 400S162-43 @ 24" OC
   400T150-43 top and bottom track.
3. Ceiling framing:
   a) 4" Joist - 400S37-33 @ 24" OC
      Provide strap and blocking at compression flange at mid-span or at 7'-0" OC Max for spans greater then 12'-0". Provide vertical support to roof rafters with 4-#8 SDSTS at mid-span
   b) 6" Joist - 600S162-43 @ 24" OC
4. Built-up header, see (4/ST-7)
5. Structural plywood sheathing (SPS):
   a) 15/32 structural I sheathing (4-ply) with exterior glue applied horizontally and vertically. #8 flat-head self drilling, self-tapping screws (SDSTS) with minimum head diameter of 0.285 inches.
   b) All edges with #8 edge fastener (EF) at 4" OC provide blocking where required, field fastener at 12" OC.

PRE-ENGINEERED OPEN WEB STEEL JOIST (OWSJ) REQUIREMENTS

LOADS:	Dead Load	Live Load
Top Chord (Roof):	11 psf	20 psf
Bottom Chord (Ceiling)	5 psf	10 psf
Wind Uplift @ Eave:	16 psf	

1. Deflection:
   Live Load ---------- L/360
   Total Load ---------- L/240
2. Camber Shall be 1.5 Times Dead Load Deflection
3. Top chord axial force shall be 0.5 kips and is due to lateral loads which do not include net uplift wind force.
4. Joist seat angle thickness shall be 1/2" minimum, UON.
5. The joist system provided shall be a complete framing system including joists, joist girders, bracing, cross bridging, stabilizer plates, and all connections. The contractor shall install all required bracing specified by manufacturer for stability during erection.
6. The design and fabrication of steel joist shall conform to the requirements of CBC 2010 edition.
7. Joist shop drawing, erection drawings and calculations shall be submitted to Architect/Engineer for review prior to fabrication. All required bracing, cross bridging and bearing connections shall be on the shop drawings. Calculations and drawings shall be signed by a civil or structural engineer registered in the State of California.
8. Connections shown are for representation only.
9. See Architectural and Mechanical drawings for locations and weights of additional loads. Examples include, but not limited to: Fire Sprinkler, Supply Water lines, Draft Stops, Mechanical Units etc. Contractor shall provide seismic bracing for water line. Top and bottom chord shall be capable of carrying a Min of 250 lbs of point load between panel points (non-concurrent with design loads.

DIST.	COUNTY	ROUTE	POST MILES TOTAL PROJECT	SHEET NO.	TOTAL SHEETS
04	CC	580	6.1/6.3	138	216

REGISTERED CIVIL ENGINEER — DATE 04-27-2012

REGISTERED PROFESSIONAL ENGINEER Edgardo A. Isidro No. 058507 Exp. 12-31-12 CIVIL STATE OF CALIFORNIA

7-30-12
PLANS APPROVAL DATE

The State of California or its officers or agents shall not be responsible for the accuracy or completeness of scanned copies of this plan sheet.

CALIFORNIA STATE FIRE MARSHAL APPROVED

Approval of this plan does not authorize or approve any omission or deviation from applicable regulations. Final approval is subject to field inspection. One set of approved plans shall be available on the project site at all times.

Reviewed by: Ingrid P. Casiano
INGRID P. ICASIANO, DSFM III

Approval date: July 17, 2012

STEEL DECK MINIMUM SECTION PROPERTIES

Deck Type	Depth & Gage	Moment of Inertia	Positive Section Modulus	Negative Section Modulus	Minimum Yield Strength
Steel Decking	1.5" x 18 Ga	0.292 in^4/ft	0.318 in^3/ft	0.327 in^3/ft	33 Ksi

Note
Minimum 3 Span Condition

WELDING SCHEDULE and STEEL DECK PROFILE

Steel Deck Profile	5/8" Diameter Puddle Weld			Diaphragm Shear Capacity
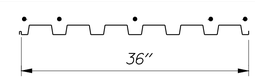	Perpendicular Supports and Panel Ends	Parallel Supports	Side Laps	
	5 - Puddle Welds Per Support	12" OC	12" OC	958 lb/ft

(A) STEEL DECK NOTES

	BY	CHECKED
DESIGN	Edgardo Isidro	Gang Hong
DETAILS	Aleksey Serin	Edgardo Isidro
QUANTITIES		

STATE OF CALIFORNIA DEPARTMENT OF TRANSPORTATION

DIVISION OF ENGINEERING SERVICES ARCHITECTURAL AND STRUCTURAL DESIGN

BRIDGE NO. 28T5783 POST MILE 6.3

RICHMOND-SAN RAFAEL BRIDGE MAINTENANCE STATION

MAIN BUILDING DESIGN CRITERIA AND DETAIL NOTES

SHEET ST1-0

TAEMWW Imperial Rev. 7/10

ORIGINAL SCALE IN INCHES FOR REDUCED PLANS 0 1 2 3

UNIT 3581
PROJECT NUMBER & PHASE 04000000021
EA 000000

DISREGARD PRINTS BEARING EARLIER REVISION DATES → 06-10-09 11-29-11

REVISION DATES (PRELIMINARY STAGE ONLY) SHEET OF

P:\dist_04\0400000002_richmond_san_rafael_mb\expedite\20120718_resubmit\st1_00.dgn

02-AUG-2012 14:59

DIST.	COUNTY	ROUTE	POST MILES TOTAL PROJECT	SHEET NO.	TOTAL SHEETS
04	CC	580	6.1/6.3	139	216

REGISTERED CIVIL ENGINEER — 04-27-2012 DATE

REGISTERED PROFESSIONAL ENGINEER — Edgardo A. Isidro — No. 058507 — Exp. 12-31-12 — CIVIL — STATE OF CALIFORNIA

7-30-12
PLANS APPROVAL DATE

The State of California or its officers or agents shall not be responsible for the accuracy or completeness of scanned copies of this plan sheet.

CALIFORNIA STATE FIRE MARSHAL APPROVED

Approval of this plan does not authorize or approve any omission or deviation from applicable regulations. Final approval is subject to field inspection. One set of approved plans shall be available on the project site at all times.

Reviewed by: Ingrid P. Icasiano
INGRID P. ICASIANO, DSFM III

Approval date: July 17, 2012

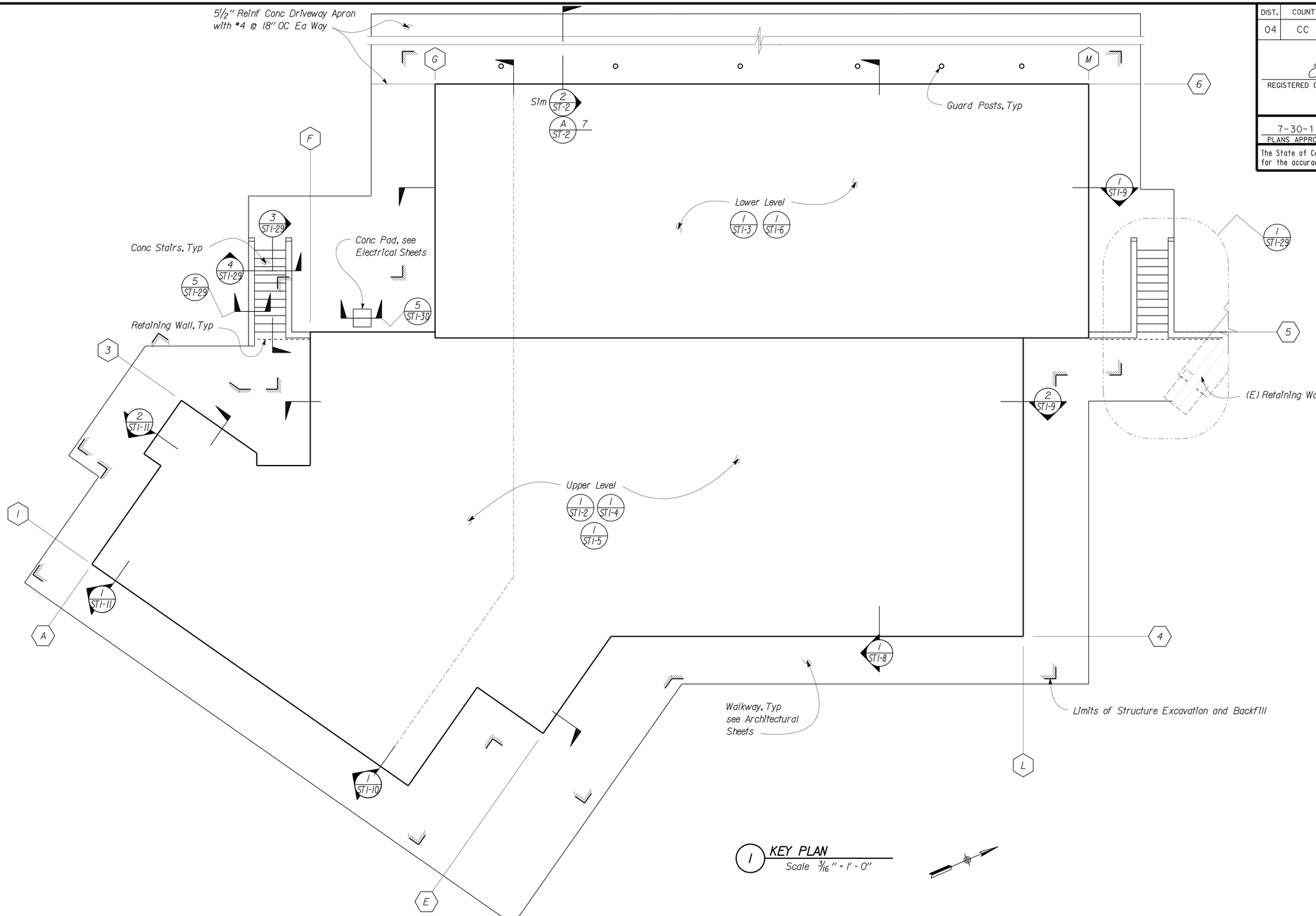

1 KEY PLAN
Scale 3/16" = 1'-0"

DESIGN	BY Edgardo Isidro	CHECKED Gang Hong	
DETAILS	BY Aleksey Serin	CHECKED Edgardo Isidro	
QUANTITIES	BY	CHECKED	

DESIGN ENGINEER

STATE OF CALIFORNIA
DEPARTMENT OF TRANSPORTATION

DIVISION OF ENGINEERING SERVICES
ARCHITECTURAL AND STRUCTURAL DESIGN

BRIDGE NO. 28T5783
POST MILE 6.3

RICHMOND-SAN RAFAEL BRIDGE MAINTENANCE STATION

MAIN BUILDING — KEY PLAN

SHEET **ST1-1**

TAEMWW Imperial Rev. 7/10

ORIGINAL SCALE IN INCHES FOR REDUCED PLANS 0 1 2 3

UNIT 3581
PROJECT NUMBER & PHASE 04000000021
EA 000000

DISREGARD PRINTS BEARING EARLIER REVISION DATES → 10-13-11 11-29-11 01-26-12 04-09-12 06-07-12

REVISION DATES (PRELIMINARY STAGE ONLY) SHEET OF

P:\dist_04\0400000002_richmond_san_rafael_mb\expedite\20120718_resubmit\st1_01.dgn

20-AUG-2012 10:50

DIST.	COUNTY	ROUTE	POST MILES TOTAL PROJECT	SHEET NO.	TOTAL SHEETS
04	CC	580	6.1/6.3	140	216

REGISTERED CIVIL ENGINEER — DATE 04-27-2012

REGISTERED PROFESSIONAL ENGINEER — Edgardo A. Isidro — No. 058507 — Exp. 12-31-12 — CIVIL — STATE OF CALIFORNIA

7-30-12
PLANS APPROVAL DATE

The State of California or its officers or agents shall not be responsible for the accuracy or completeness of scanned copies of this plan sheet.

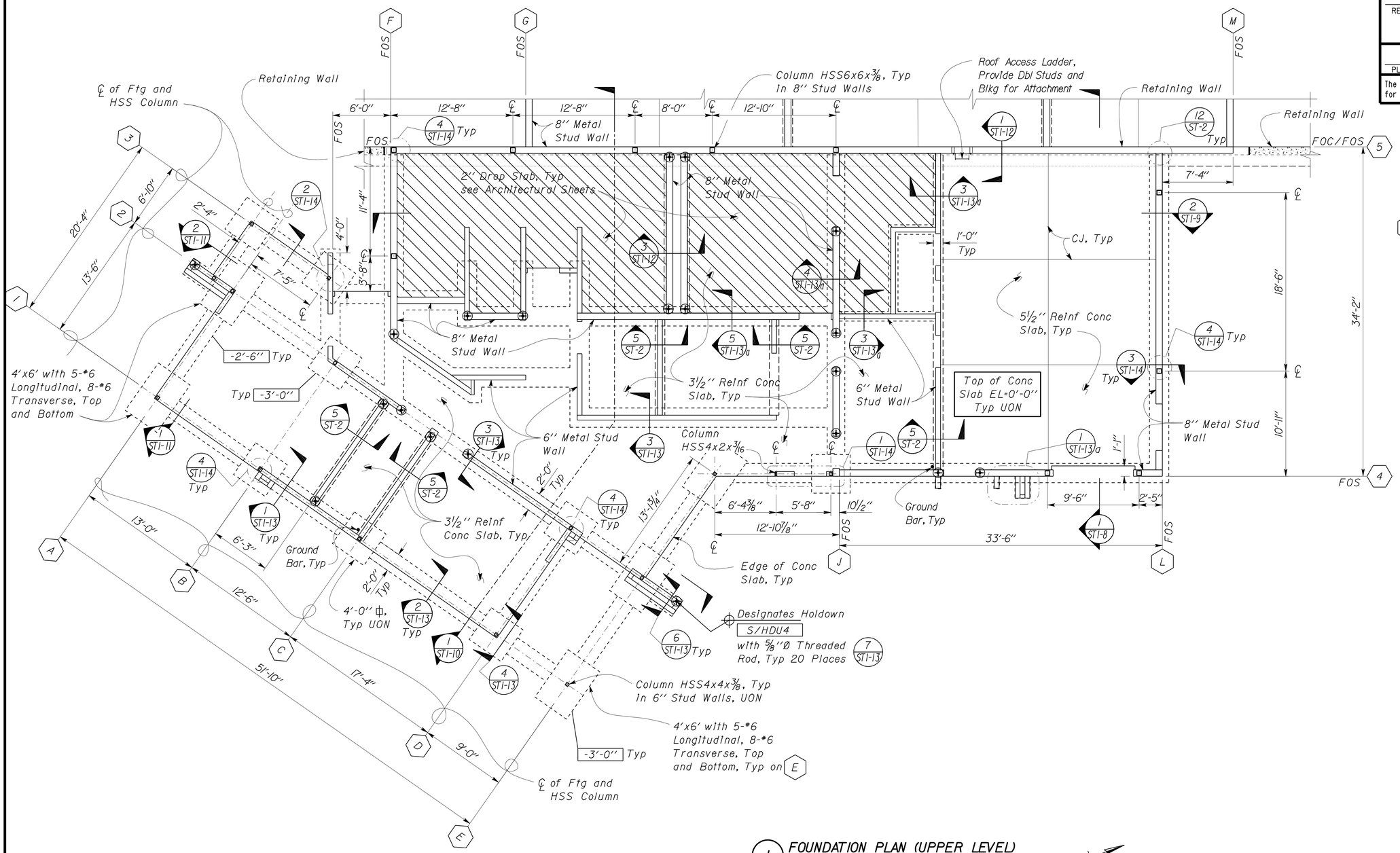

1 FOUNDATION PLAN (UPPER LEVEL)
Scale 3/16'' = 1'-0''

Elevation 48.00 = Datum 0'-0''
See Civil Sheets

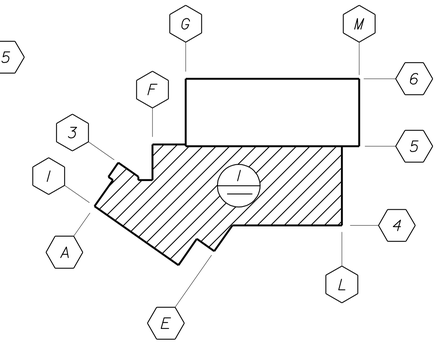

A KEY PLAN
Scale 1/32'' = 1'-0''

B SYMBOL
⊕ Holdown

C NOTES

1. All Walls Shown Requires Structural Plywood Sheathing, see Design Notes on ST1-0.
2. See Architectural Sheets for Rain Leader and Overflow Outlet Locations.

CALIFORNIA STATE FIRE MARSHAL
APPROVED
Approval of this plan does not authorize or approve any omission or deviation from applicable regulations. Final approval is subject to field inspection. One set of approved plans shall be available on the project site at all times.
Reviewed by: Ingrid P. Icasiano
INGRID P. ICASIANO, DSFM III
Approval date: July 17, 2012

	BY	CHECKED
DESIGN	Edgardo Isidro	Gang Hong
DETAILS	Aleksey Serin	Edgardo Isidro
QUANTITIES		

STATE OF CALIFORNIA
DEPARTMENT OF TRANSPORTATION

DIVISION OF ENGINEERING SERVICES
ARCHITECTURAL AND STRUCTURAL DESIGN

BRIDGE NO. 28T5783
POST MILE 6.3

RICHMOND-SAN RAFAEL BRIDGE MAINTENANCE STATION
MAIN BUILDING — FOUNDATION PLAN - UPPER LEVEL

SHEET ST1-2

TAEMWW Imperial Rev. 7/10

ORIGINAL SCALE IN INCHES FOR REDUCED PLANS 0 1 2 3

UNIT 3581
PROJECT NUMBER & PHASE 04000000021
EA 000000

DISREGARD PRINTS BEARING EARLIER REVISION DATES → REVISION DATES (PRELIMINARY STAGE ONLY) 10-17-11 11-16-11 01-11-12 01-19-12 01-26-12 03-12-12 04-09-12 04-17-12

SHEET OF

P:\dist_04\0400000002_richmond_san_rafael_mb\expedite\20120718_resubmit\st1_02.dgn

02-AUG-2012 14:59

DIST.	COUNTY	ROUTE	POST MILES TOTAL PROJECT	SHEET NO.	TOTAL SHEETS
04	CC	580	6.1/6.3	141	216

REGISTERED CIVIL ENGINEER — DATE 04-27-2012

REGISTERED PROFESSIONAL ENGINEER — Edgardo A. Isidro — No. 058507 — Exp. 12-31-12 — CIVIL — STATE OF CALIFORNIA

7-30-12
PLANS APPROVAL DATE

The State of California or its officers or agents shall not be responsible for the accuracy or completeness of scanned copies of this plan sheet.

CALIFORNIA STATE FIRE MARSHAL APPROVED

Approval of this plan does not authorize or approve any omission or deviation from applicable regulations. Final approval is subject to field inspection. One set of approved plans shall be available on the project site at all times.

Reviewed by: Ingrid P. Casiano
INGRID P. [CASIANO], DSFM III

Approval date: July 17, 2012

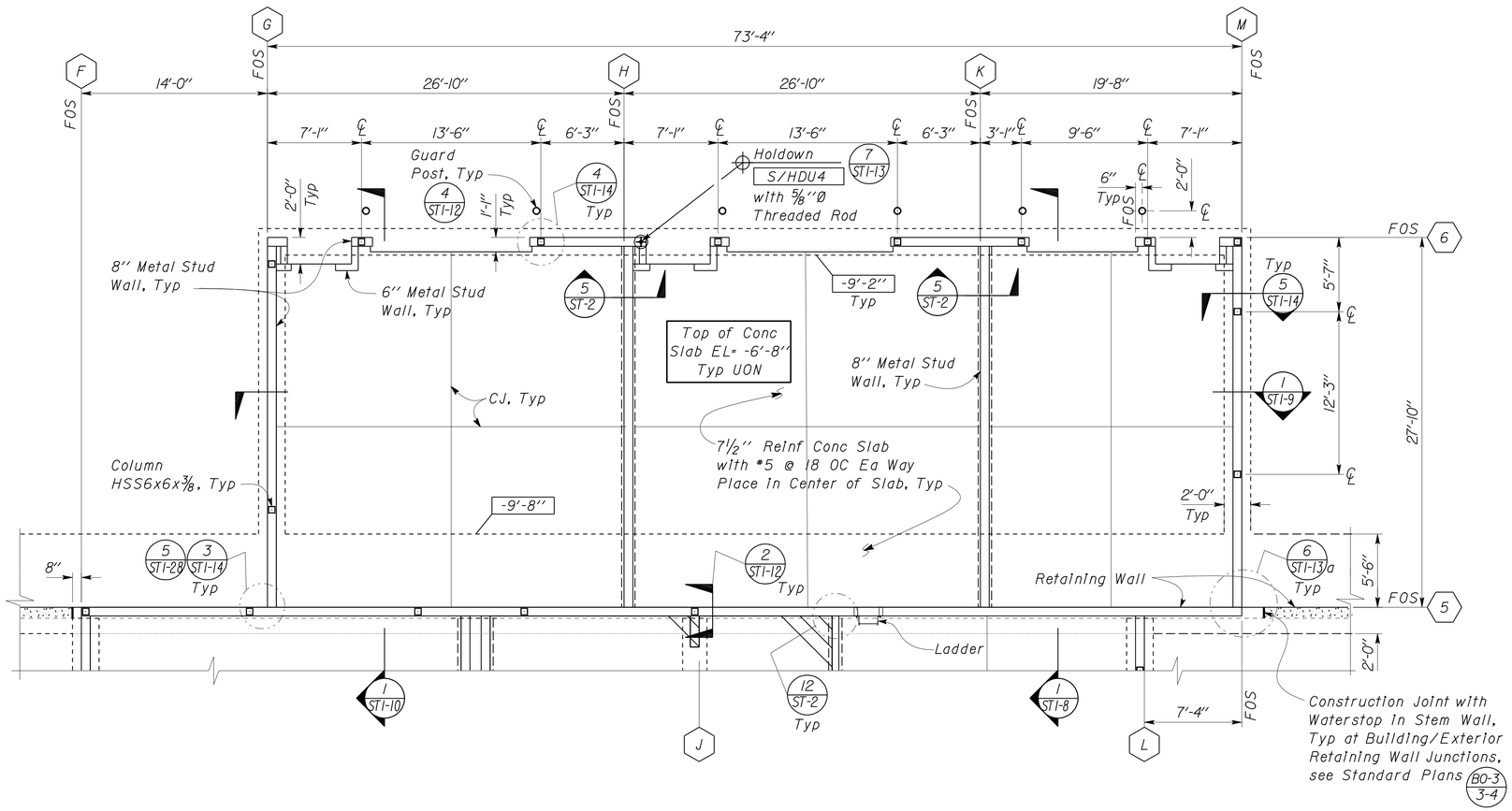

1 FOUNDATION PLAN (LOWER LEVEL)
Scale 3/16" = 1'-0"

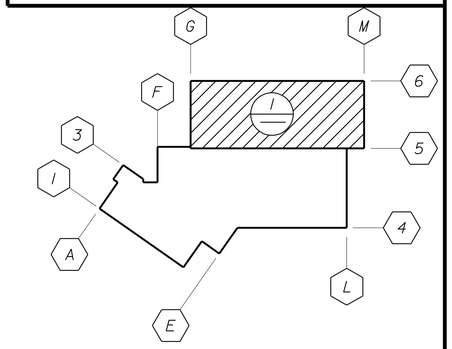

A KEY PLAN
Scale 1/32" = 1'-0"

B NOTE:

See Architectural Sheets for Rain Leader and Overflow Outlet Locations.

	BY	CHECKED
DESIGN	Edgardo Isidro	Gang Hong
DETAILS	Aleksey Serin	Edgardo Isidro
QUANTITIES		

STATE OF CALIFORNIA
DEPARTMENT OF TRANSPORTATION

DIVISION OF ENGINEERING SERVICES
ARCHITECTURAL AND STRUCTURAL DESIGN

BRIDGE NO. 28T5783
POST MILE 6.3

RICHMOND-SAN RAFAEL BRIDGE MAINTENANCE STATION
MAIN BUILDING — FOUNDATION PLAN

SHEET ST1-3

TAEMWW Imperial Rev. 7/10

ORIGINAL SCALE IN INCHES FOR REDUCED PLANS 0 1 2 3

UNIT 3581
PROJECT NUMBER & PHASE 04000000021
EA 000000

DISREGARD PRINTS BEARING EARLIER REVISION DATES → 10-17-11 11-16-11 12-28-11 01-26-12 03-12-12
REVISION DATES (PRELIMINARY STAGE ONLY) SHEET OF

P:\dist_04\0400000002_richmond_san_rafael_mb\expedite\20120718_resubmit\st1_03.dgn

02-AUG-2012 14:59

DIST.	COUNTY	ROUTE	POST MILES TOTAL PROJECT	SHEET NO.	TOTAL SHEETS
04	CC	580	6.1/6.3	142	216

REGISTERED CIVIL ENGINEER — DATE 04-27-2012

REGISTERED PROFESSIONAL ENGINEER — Edgardo A. Isidro — No. 058507 — Exp. 12-31-12 — CIVIL — STATE OF CALIFORNIA

7-30-12
PLANS APPROVAL DATE

The State of California or its officers or agents shall not be responsible for the accuracy or completeness of scanned copies of this plan sheet.

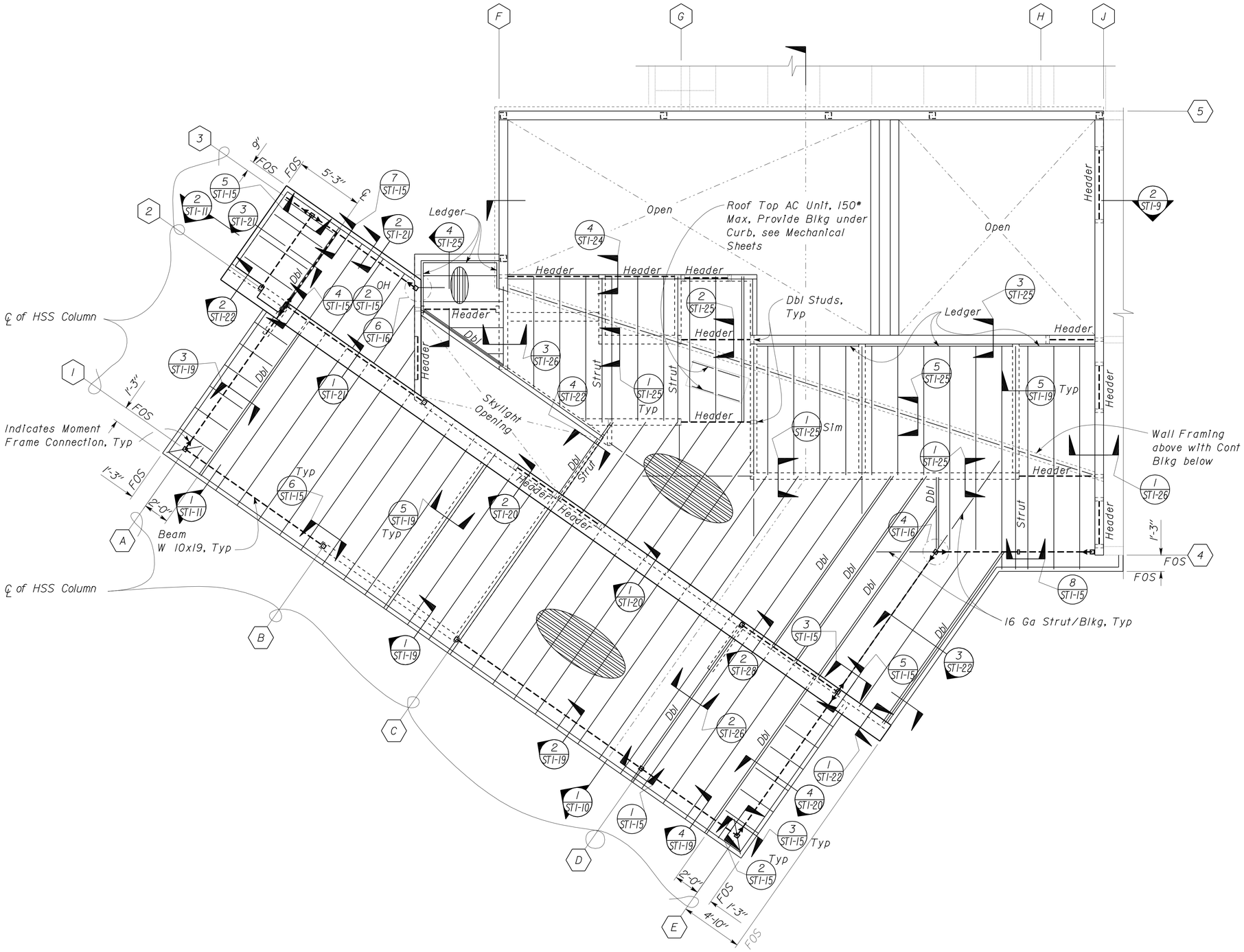

1 PARTIAL ROOF FRAMING PLAN
Scale 1/4" = 1'-0"

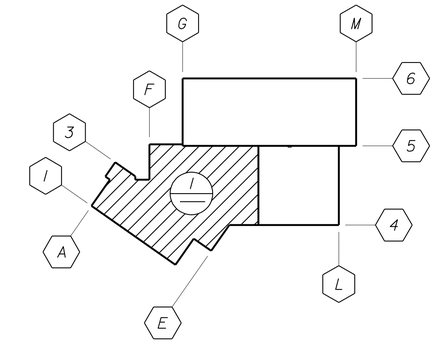

A KEY PLAN
Scale 1/32" = 1'-0"

B DESIGN NOTES

1. Typical roof framing: 800S200-54 @ 24" OC
2. Add framing on top of shearwalls and weld metal deck @ 6" OC
3. Weld metal deck to struts and strut/blocking @ 6" OC
4. Weld metal deck to all roof framing @ 24" OC Min, UON

CALIFORNIA STATE FIRE MARSHAL APPROVED
Approval of this plan does not authorize or approve any omission or deviation from applicable regulations. Final approval is subject to field inspection. One set of approved plans shall be available on the project site at all times.
Reviewed by: Ingrid P. Icasiano
INGRID P. ICASIANO, DSFM III
Approval date: July 17, 2012

	BY	CHECKED
DESIGN	Edgardo Isidro	Gang Hong
DETAILS	Aleksey Serin	Edgardo Isidro
QUANTITIES		

STATE OF CALIFORNIA
DEPARTMENT OF TRANSPORTATION

DIVISION OF ENGINEERING SERVICES
ARCHITECTURAL AND STRUCTURAL DESIGN

BRIDGE NO. 28T5783
POST MILE 6.3

RICHMOND-SAN RAFAEL BRIDGE MAINTENANCE STATION
MAIN BUILDING — PARTIAL ROOF FRAMING PLAN

SHEET ST1-4

ORIGINAL SCALE IN INCHES FOR REDUCED PLANS 0 1 2 3

UNIT 3581
PROJECT NUMBER & PHASE 04000000021
EA 000000

DISREGARD PRINTS BEARING EARLIER REVISION DATES → 10-18-11 11-28-11 12-28-11 01-13-12 01-26-12 02-13-12 03-13-12 03-20-12 04-09-12

REVISION DATES (PRELIMINARY STAGE ONLY) — SHEET — OF

TAEMWW Imperial Rev. 7/10

P:\dist_04\0400000002_richmond_san_rafael_mb\expedite\20120718_resubmit\st1_04.dgn

02-AUG-2012 14:59

DIST.	COUNTY	ROUTE	POST MILES TOTAL PROJECT	SHEET NO.	TOTAL SHEETS
04	CC	580	6.1/6.3	143	216

REGISTERED CIVIL ENGINEER — DATE: 04-27-2012

REGISTERED PROFESSIONAL ENGINEER — Edgardo A. Isidro — No. 058507 — Exp. 12-31-12 — CIVIL — STATE OF CALIFORNIA

7-30-12
PLANS APPROVAL DATE

The State of California or its officers or agents shall not be responsible for the accuracy or completeness of scanned copies of this plan sheet.

CALIFORNIA STATE FIRE MARSHAL APPROVED

Approval of this plan does not authorize or approve any omission or deviation from applicable regulations. Final approval is subject to field inspection. One set of approved plans shall be available on the project site at all times.

Reviewed by: INGRID P. ICASIANO, DSFM III

Approval date: July 17, 2012

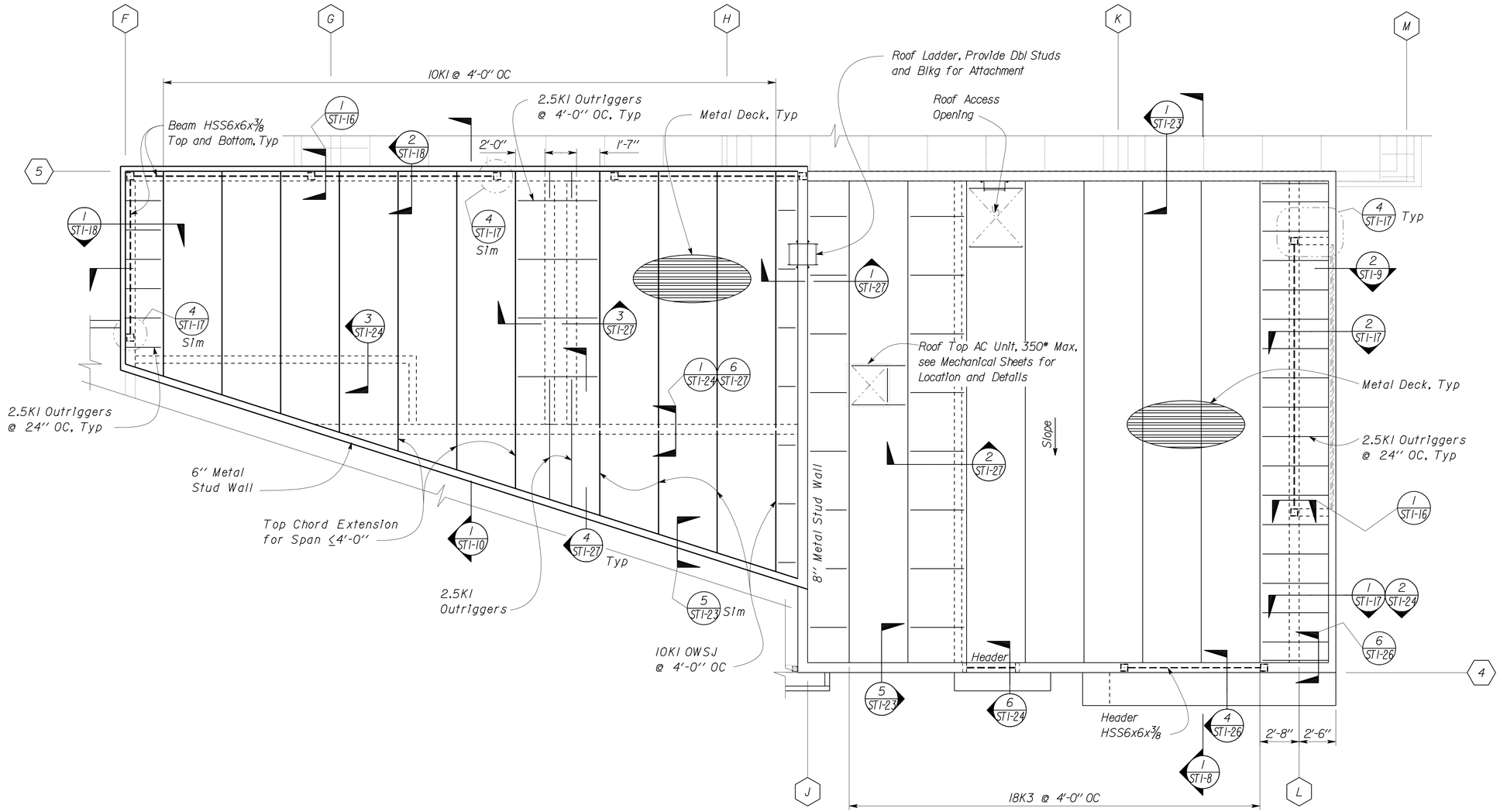

1 ROOF FRAMING PLAN (UPPER LEVEL)
Scale 1/4" = 1'-0"

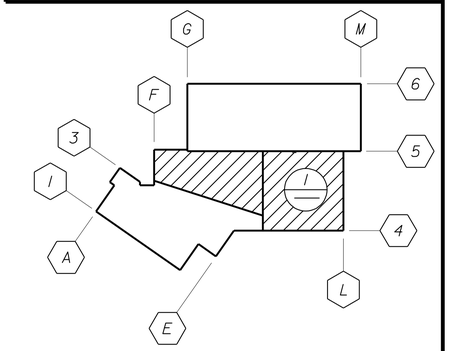

A KEY PLAN
Scale 1/32" = 1'-0"

B SYMBOL

Window, see Architectural Sheets

C NOTES:

1. See Electrical sheets for Roof areas available for Photovoltaic Modules.
2. See Building Section sheets ST1-8 and ST1-9 for support framing for Photovoltaic Modules. Max uplift load equal to 216# per post.

	BY	CHECKED
DESIGN	Edgardo Isidro	Gang Hong
DETAILS	Aleksey Serin	Edgardo Isidro
QUANTITIES		

STATE OF CALIFORNIA
DEPARTMENT OF TRANSPORTATION

DIVISION OF ENGINEERING SERVICES
ARCHITECTURAL AND STRUCTURAL DESIGN

BRIDGE NO. 28T5783
POST MILE 6.3

RICHMOND-SAN RAFAEL BRIDGE MAINTENANCE STATION
MAIN BUILDING — ROOF FRAMING PLAN

SHEET ST1-5

TAEMWW Imperial Rev. 7/10

ORIGINAL SCALE IN INCHES FOR REDUCED PLANS 0 1 2 3

UNIT 3581
PROJECT NUMBER & PHASE 04000000021
EA 000000

DISREGARD PRINTS BEARING EARLIER REVISION DATES → 09-09-11 11-28-11 01-23-12 02-07-12 03-13-12 04-09-12

REVISION DATES (PRELIMINARY STAGE ONLY) SHEET OF

P:\dist_04\0400000002_richmond_san_rafael_mb\expedite\20120718_resubmit\st1_05.dgn

02-AUG-2012 14:59

DIST.	COUNTY	ROUTE	POST MILES TOTAL PROJECT	SHEET NO.	TOTAL SHEETS
04	CC	580	6.1/6.3	144	216

REGISTERED CIVIL ENGINEER — DATE: 04-27-2012

REGISTERED PROFESSIONAL ENGINEER — Edgardo A. Isidro — No. 058507 — Exp. 12-31-12 — CIVIL — STATE OF CALIFORNIA

7-30-12
PLANS APPROVAL DATE

The State of California or its officers or agents shall not be responsible for the accuracy or completeness of scanned copies of this plan sheet.

CALIFORNIA STATE FIRE MARSHAL APPROVED

Approval of this plan does not authorize or approve any omission or deviation from applicable regulations. Final approval is subject to field inspection. One set of approved plans shall be available on the project site at all times.

Reviewed by: INGRID P. ICASIANO, DSFM III

Approval date: July 17, 2012

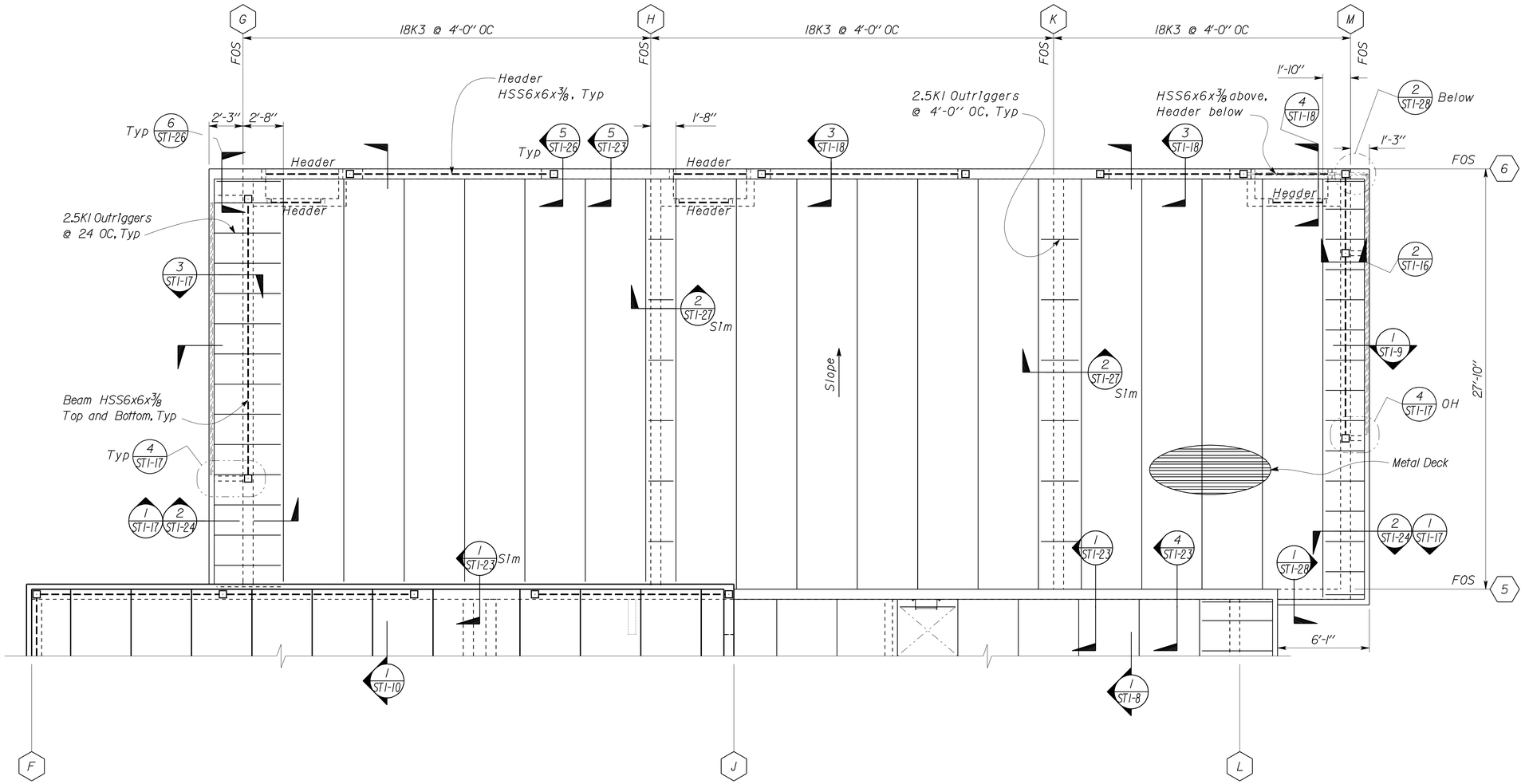

1 ROOF FRAMING PLAN (LOWER LEVEL)

Scale 1/4" = 1' - 0"

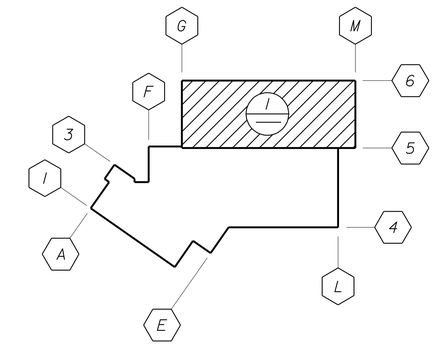

A KEY PLAN

Scale 1/32" = 1' - 0"

B SYMBOL

Window, see Architectural Sheets

C NOTES:

1. See Electrical sheets for Roof areas available for Photovoltaic Modules.
2. See Building Section sheets ST1-8 and ST1-9 for support framing for Photovoltaic Modules. Max uplift load equal to 216# per post.

	BY	CHECKED
DESIGN	Edgardo Isidro	Gang Hong
DETAILS	Aleksey Serin	Edgardo Isidro
QUANTITIES		

STATE OF CALIFORNIA
DEPARTMENT OF TRANSPORTATION

DIVISION OF ENGINEERING SERVICES
ARCHITECTURAL AND STRUCTURAL DESIGN

BRIDGE NO. 28T5783
POST MILE 6.3

RICHMOND-SAN RAFAEL BRIDGE MAINTENANCE STATION

MAIN BUILDING — ROOF FRAMING PLAN

SHEET ST1-6

TAEMWW Imperial Rev. 7/10

ORIGINAL SCALE IN INCHES FOR REDUCED PLANS 0 1 2 3

UNIT 3581
PROJECT NUMBER & PHASE 04000000021
EA 000000

DISREGARD PRINTS BEARING EARLIER REVISION DATES → REVISION DATES (PRELIMINARY STAGE ONLY) 10-18-11 02-06-12 03-13-12 03-19-12

SHEET OF

P:\dist_04\0400000002_richmond_san_rafael_mb\expedite\20120718_resubmit\st1_06.dgn

02-AUG-2012 14:59

DIST.	COUNTY	ROUTE	POST MILES TOTAL PROJECT	SHEET NO.	TOTAL SHEETS
04	CC	580	6.1/6.3	145	216

REGISTERED CIVIL ENGINEER — 04-27-2012 DATE

REGISTERED PROFESSIONAL ENGINEER — Edgardo A. Isidro — No. 058507 — Exp. 12-31-12 — CIVIL — STATE OF CALIFORNIA

7-30-12
PLANS APPROVAL DATE

The State of California or its officers or agents shall not be responsible for the accuracy or completeness of scanned copies of this plan sheet.

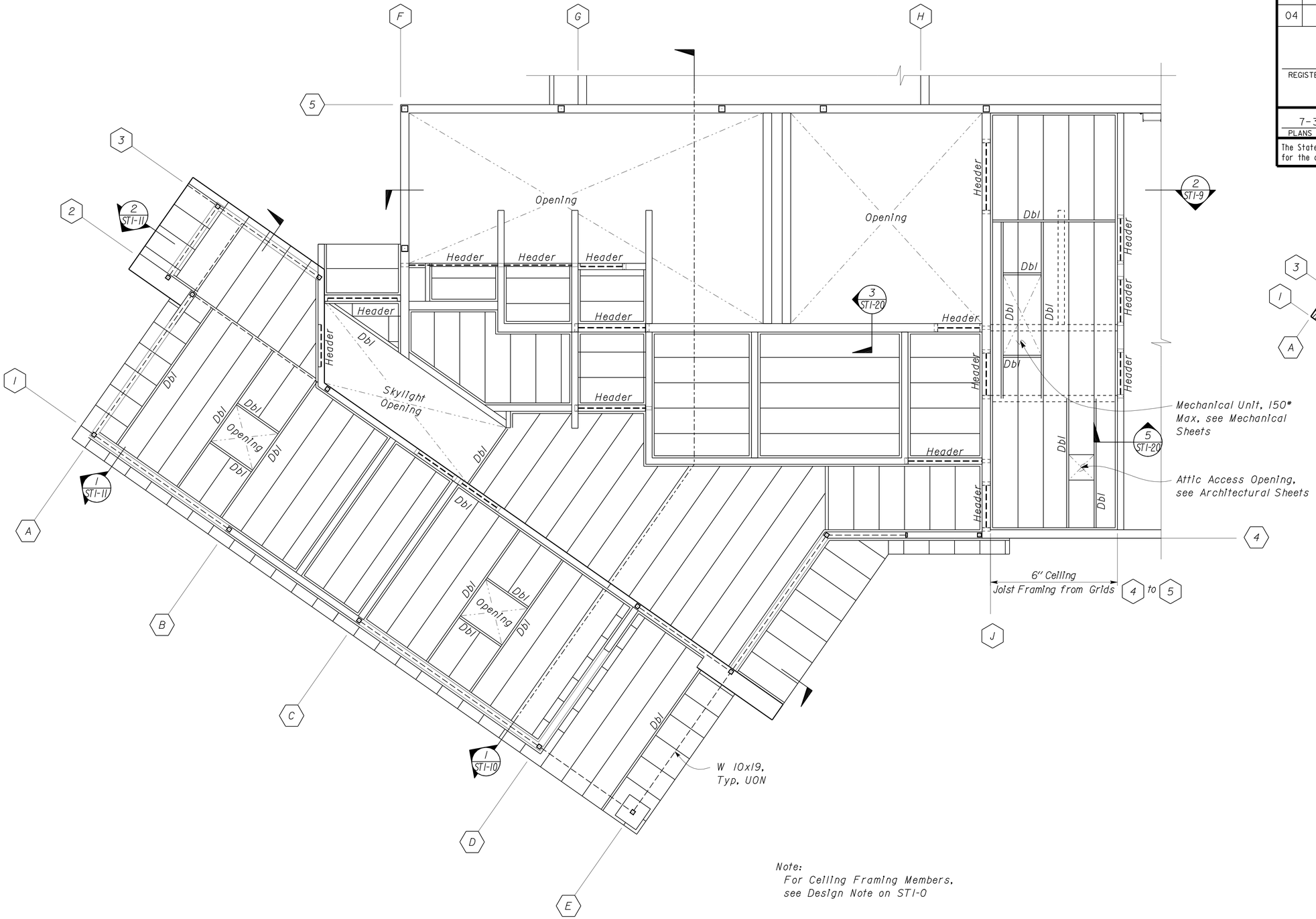

Note:
For Ceiling Framing Members, see Design Note on ST1-0

1 REFLECTED CEILING FRAMING PLAN
Scale 1/4" = 1'-0"

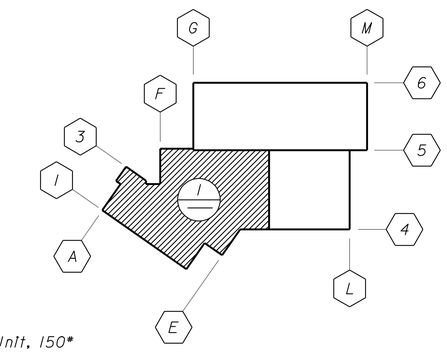

A KEY PLAN
Scale 1/32" = 1'-0"

CALIFORNIA STATE FIRE MARSHAL APPROVED
Approval of this plan does not authorize or approve any omission or deviation from applicable regulations. Final approval is subject to field inspection. One set of approved plans shall be available on the project site at all times.
Reviewed by: Ingrid P. Icasiano
INGRID P. ICASIANO, DSFM III
Approval date: July 17, 2012

	BY	CHECKED
DESIGN	Edgardo Isidro	Gang Hong
DETAILS	Aleksey Serin	Edgardo Isidro
QUANTITIES		

STATE OF CALIFORNIA
DEPARTMENT OF TRANSPORTATION

DIVISION OF ENGINEERING SERVICES
ARCHITECTURAL AND STRUCTURAL DESIGN

BRIDGE NO. 28T5783
POST MILE 6.3

RICHMOND-SAN RAFAEL BRIDGE MAINTENANCE STATION
MAIN BUILDING — CEILING FRAMING PLAN

SHEET ST1-7

TAEMWW Imperial Rev. 7/10

ORIGINAL SCALE IN INCHES FOR REDUCED PLANS 0 1 2 3

UNIT 3581
PROJECT NUMBER & PHASE 04000000021
EA 000000

DISREGARD PRINTS BEARING EARLIER REVISION DATES → REVISION DATES (PRELIMINARY STAGE ONLY) 10-26-11 03-23-12 04-09-12 — SHEET — OF

P:\dist_04\0400000002_richmond_san_rafael_mb\expedite\20120718_resubmit\st1_07.dgn

02-AUG-2012 14:59

DIST.	COUNTY	ROUTE	POST MILES TOTAL PROJECT	SHEET NO.	TOTAL SHEETS
04	CC	580	6.1/6.3	146	216

REGISTERED CIVIL ENGINEER — DATE 04-27-2012

REGISTERED PROFESSIONAL ENGINEER — Edgardo A. Isidro — No. 058507 — Exp. 12-31-12 — CIVIL — STATE OF CALIFORNIA

7-30-12
PLANS APPROVAL DATE

The State of California or its officers or agents shall not be responsible for the accuracy or completeness of scanned copies of this plan sheet.

CALIFORNIA STATE FIRE MARSHAL APPROVED
Approval of this plan does not authorize or approve any omission or deviation from applicable regulations. Final approval is subject to field inspection. One set of approved plans shall be available on the project site at all times.
Reviewed by: Ingrid P. Icastano
INGRID P. ICASTANO, DSFM III
Approval date: July 17, 2012

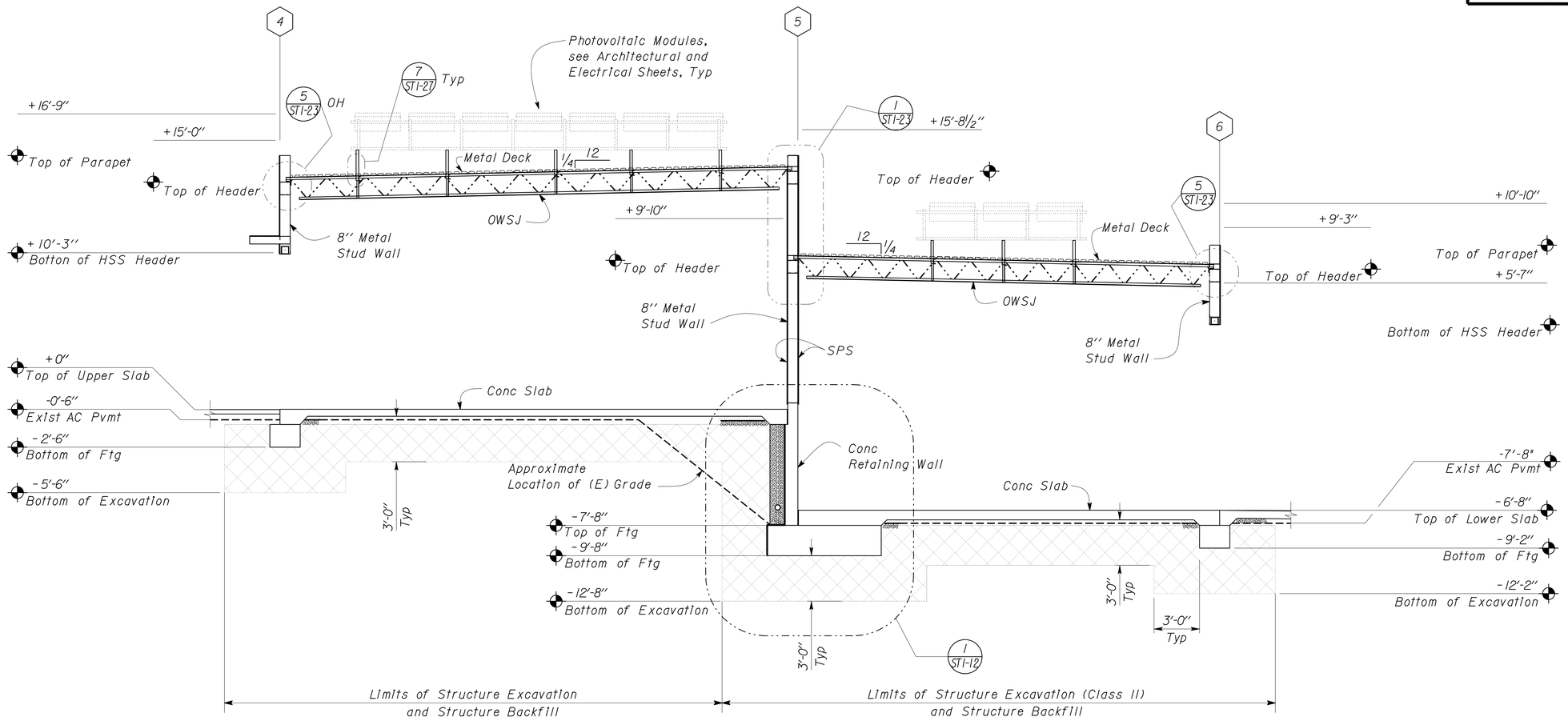

1 CROSS SECTION
Scale 1/4" = 1'-0"

	BY	CHECKED
DESIGN	Edgardo Isidro	Gang Hong
DETAILS	Aleksey Serin	Edgardo Isidro
QUANTITIES		

STATE OF CALIFORNIA
DEPARTMENT OF TRANSPORTATION

DIVISION OF ENGINEERING SERVICES
ARCHITECTURAL AND STRUCTURAL DESIGN

BRIDGE NO. 28T5783
POST MILE 6.3

RICHMOND-SAN RAFAEL BRIDGE MAINTENANCE STATION
MAIN BUILDING — CROSS SECTION

SHEET **ST1-8**

TAEMWW Imperial Rev. 7/10

ORIGINAL SCALE IN INCHES FOR REDUCED PLANS 0 1 2 3

UNIT 3581
PROJECT NUMBER & PHASE 04000000021
EA 000000

DISREGARD PRINTS BEARING EARLIER REVISION DATES → REVISION DATES (PRELIMINARY STAGE ONLY) 08-10-11 10-28-11 12-15-11 04-18-12 — SHEET OF

P:\dist_04\0400000002_richmond_san_rafael_mb\expedite\20120718_resubmit\st1_08.dgn

21-AUG-2012 09:37

DIST.	COUNTY	ROUTE	POST MILES TOTAL PROJECT	SHEET NO.	TOTAL SHEETS
04	CC	580	6.1/6.3	147	216

REGISTERED CIVIL ENGINEER — DATE 04-27-2012

REGISTERED PROFESSIONAL ENGINEER — Edgardo A. Isidro — No. 058507 — Exp. 12-31-12 — CIVIL — STATE OF CALIFORNIA

7-30-12
PLANS APPROVAL DATE

The State of California or its officers or agents shall not be responsible for the accuracy or completeness of scanned copies of this plan sheet.

CALIFORNIA STATE FIRE MARSHAL APPROVED

Approval of this plan does not authorize or approve any omission or deviation from applicable regulations. Final approval is subject to field inspection. One set of approved plans shall be available on the project site at all times.

Reviewed by: Ingrid P. Icasiano
INGRID P. ICASIANO, DSFM III
Approval date: July 17, 2012

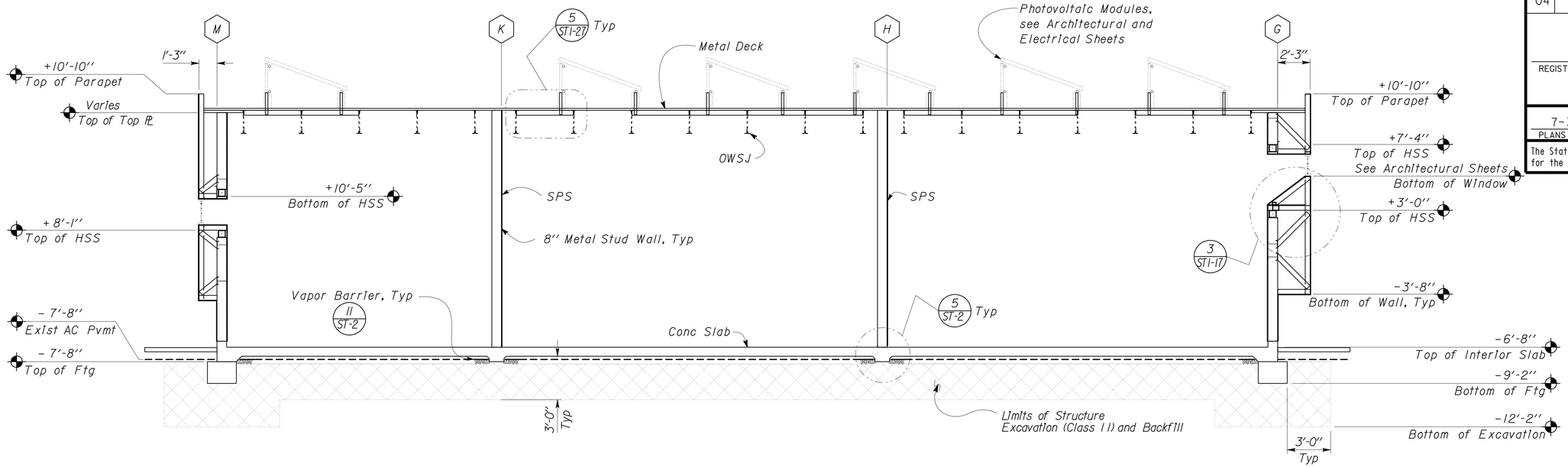

1 LOWER LEVEL SECTION
Scale 1/4" = 1'-0"

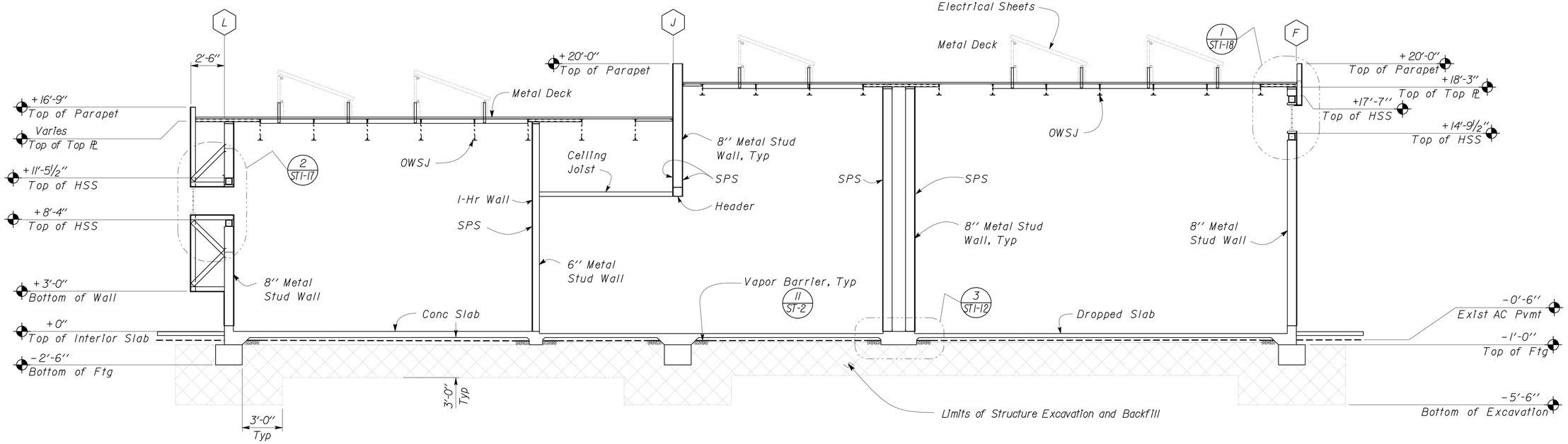

2 UPPER LEVEL SECTION
Scale 1/4" = 1'-0"

	BY	CHECKED
DESIGN	Edgardo Isidro	Gang Hong
DETAILS	Aleksey Serin	Edgardo Isidro
QUANTITIES		

STATE OF CALIFORNIA
DEPARTMENT OF TRANSPORTATION

DIVISION OF ENGINEERING SERVICES
ARCHITECTURAL AND STRUCTURAL DESIGN

BRIDGE NO. 28T5783
POST MILE 6.3

RICHMOND-SAN RAFAEL BRIDGE MAINTENANCE STATION
MAIN BUILDING — SECTIONS

SHEET ST1-9

TAEMWW Imperial Rev. 7/10

ORIGINAL SCALE IN INCHES FOR REDUCED PLANS 0 1 2 3

UNIT 3581
PROJECT NUMBER & PHASE 04000000021
EA 000000

DISREGARD PRINTS BEARING EARLIER REVISION DATES → 08-10-11 10-28-11 11-29-11 12-15-11 03-13-12 04-09-12

REVISION DATES (PRELIMINARY STAGE ONLY) — SHEET — OF

P:\dist_04\0400000002_richmond_san_rafael_mb\expedite\20120718_resubmit\st1_09.dgn

21-AUG-2012 09:37

CALIFORNIA STATE FIRE MARSHAL APPROVED
Approval of this plan does not authorize or approve any omission or deviation from applicable regulations. Final approval is subject to field inspection. One set of approved plans shall be available on the project site at all times.
Reviewed by: INGRID P. ICASIANO, DSFM III
Approval date: July 17, 2012

DIST.	COUNTY	ROUTE	POST MILES TOTAL PROJECT	SHEET NO.	TOTAL SHEETS
04	CC	580	6.1/6.3	148	216

REGISTERED CIVIL ENGINEER — DATE 04-27-2012
REGISTERED PROFESSIONAL ENGINEER — Edgardo A. Isidro — No. 058507 — Exp. 12-31-12 — CIVIL — STATE OF CALIFORNIA
7-30-12
PLANS APPROVAL DATE

The State of California or its officers or agents shall not be responsible for the accuracy or completeness of scanned copies of this plan sheet.

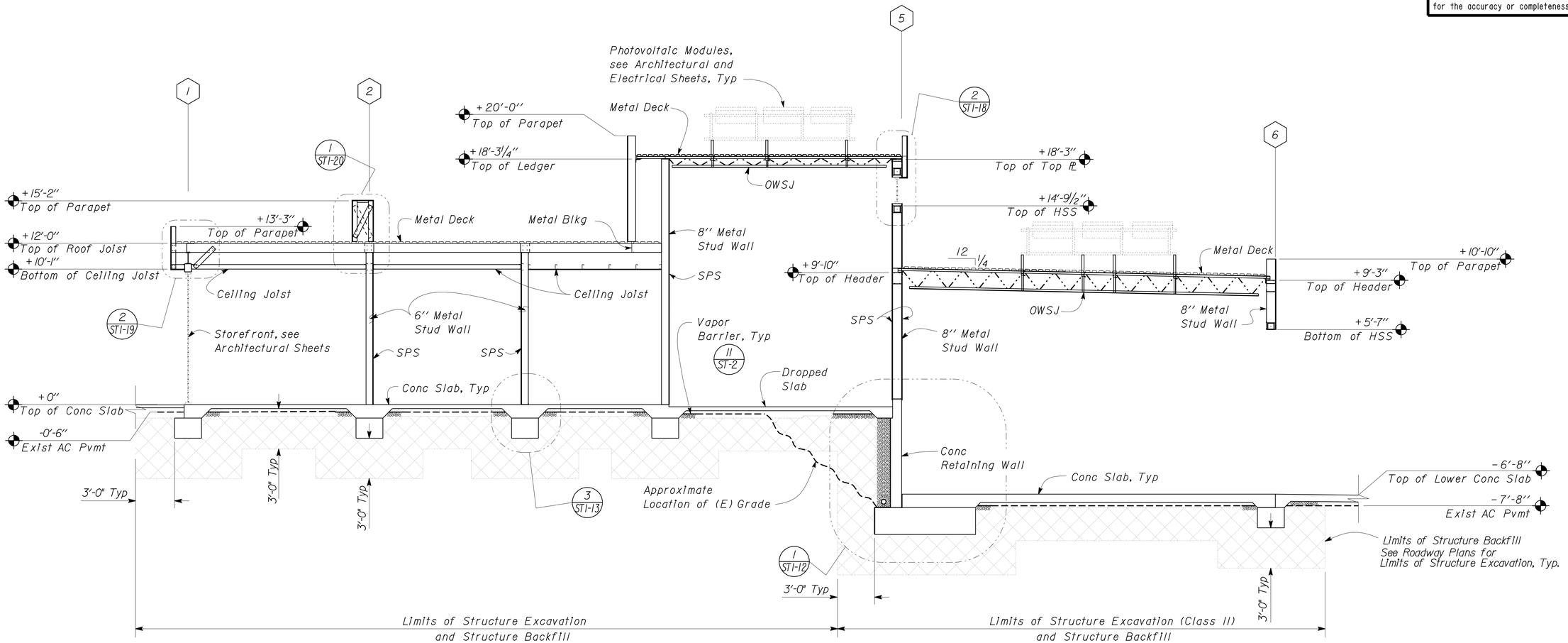

1 CROSS SECTION
Scale 1/4" = 1'-0"

DESIGN	BY Edgardo Isidro	CHECKED Gang Hong	
DETAILS	BY Aleksey Serin	CHECKED Edgardo Isidro	
QUANTITIES	BY	CHECKED	

STATE OF CALIFORNIA
DEPARTMENT OF TRANSPORTATION

DIVISION OF ENGINEERING SERVICES
ARCHITECTURAL AND STRUCTURAL DESIGN

BRIDGE NO. 28T5783
POST MILE 6.3

RICHMOND-SAN RAFAEL BRIDGE MAINTENANCE STATION
MAIN BUILDING — SECTIONS

SHEET ST1-10

TAEMWW Imperial Rev. 7/10

ORIGINAL SCALE IN INCHES FOR REDUCED PLANS 0 1 2 3

UNIT 3581
PROJECT NUMBER & PHASE 04000000021
EA 000000

DISREGARD PRINTS BEARING EARLIER REVISION DATES
REVISION DATES (PRELIMINARY STAGE ONLY) 09-13-11 09-13-11 11-21-11 12-15-11 03-13-12
SHEET OF

P:\dist_04\0400000002_richmond_san_rafael_mb\expedite\20120718_resubmit\st1_10.dgn
21-AUG-2012 09:37

DIST.	COUNTY	ROUTE	POST MILES TOTAL PROJECT	SHEET NO.	TOTAL SHEETS
04	CC	580	6.1/6.3	149	216

REGISTERED CIVIL ENGINEER — DATE: 04-27-2012

REGISTERED PROFESSIONAL ENGINEER — Edgardo A. Isidro — No. 058507 — Exp. 12-31-12 — CIVIL — STATE OF CALIFORNIA

7-30-12
PLANS APPROVAL DATE

The State of California or its officers or agents shall not be responsible for the accuracy or completeness of scanned copies of this plan sheet.

CALIFORNIA STATE FIRE MARSHAL APPROVED

Approval of this plan does not authorize or approve any omission or deviation from applicable regulations. Final approval is subject to field inspection. One set of approved plans shall be available on the project site at all times.

Reviewed by: Ingrid P. Icasiano
INGRID P. ICASIANO, DSFM III

Approval date: July 17, 2012

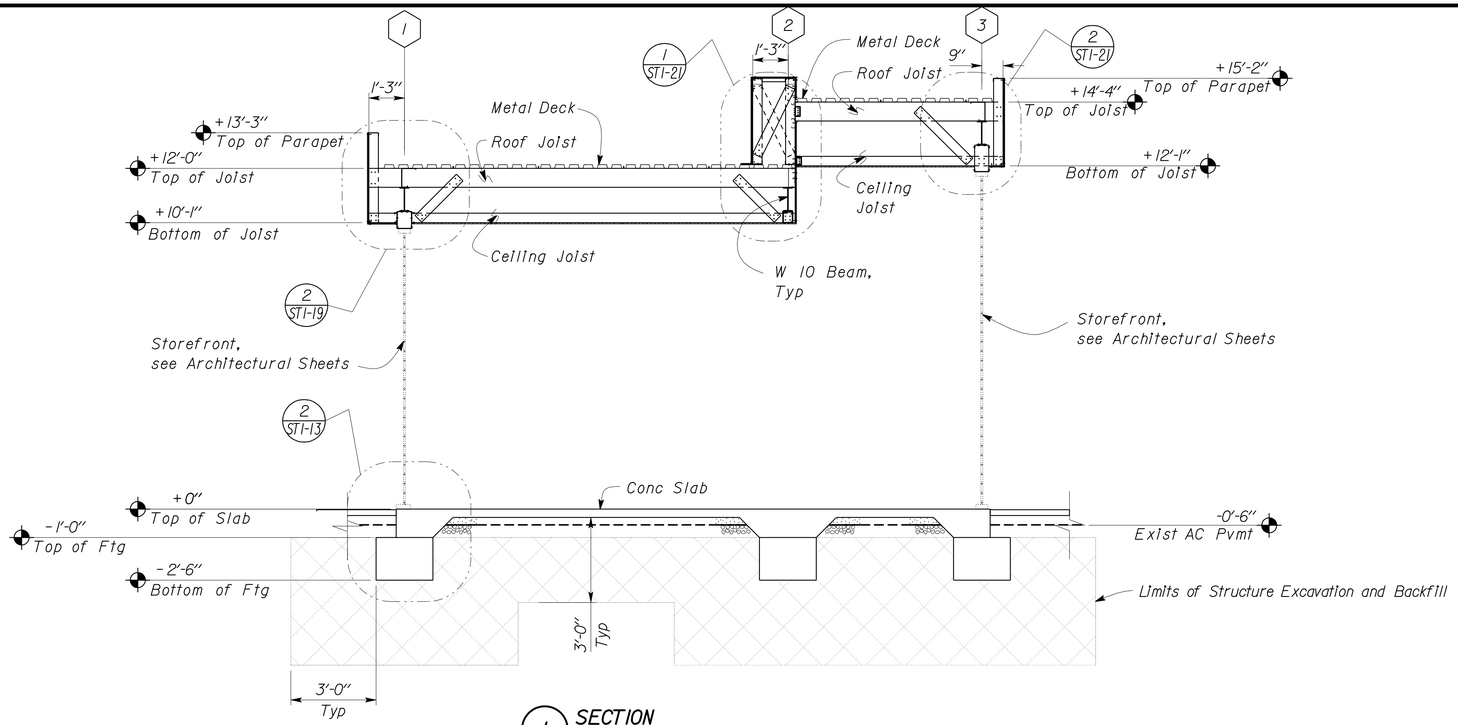

1 SECTION
Scale 3/8" = 1'-0"

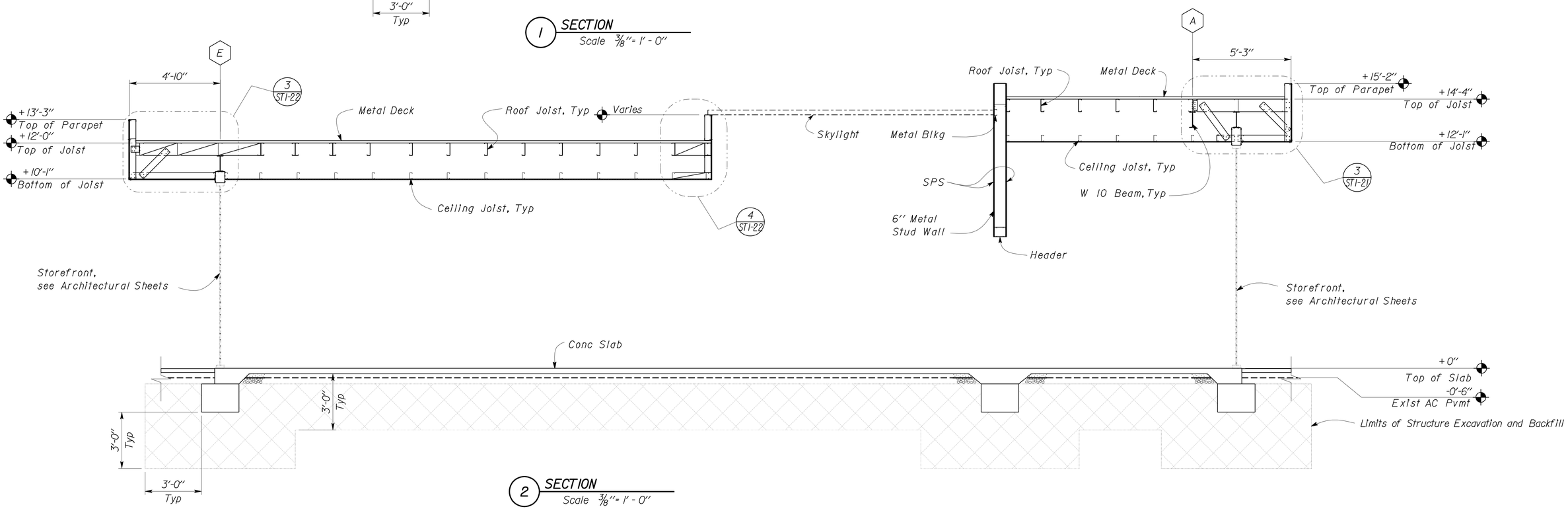

2 SECTION
Scale 3/8" = 1'-0"

	BY	CHECKED
DESIGN	Edgardo Isidro	Gang Hong
DETAILS	Aleksey Serin	Edgardo Isidro
QUANTITIES		

STATE OF CALIFORNIA
DEPARTMENT OF TRANSPORTATION

DIVISION OF ENGINEERING SERVICES
ARCHITECTURAL AND STRUCTURAL DESIGN

BRIDGE NO. 28T5783
POST MILE 6.3

RICHMOND-SAN RAFAEL BRIDGE MAINTENANCE STATION

MAIN BUILDING — SECTIONS

SHEET **ST1-11**

TAEMWW Imperial Rev. 7/10

ORIGINAL SCALE IN INCHES FOR REDUCED PLANS 0 1 2 3

UNIT 3581
PROJECT NUMBER & PHASE 04000000021
EA 000000

DISREGARD PRINTS BEARING EARLIER REVISION DATES → 09-14-11 11-24-11 12-15-11 03-13-12

REVISION DATES (PRELIMINARY STAGE ONLY) SHEET OF

P:\dist_04\0400000002_richmond_san_rafael_mb\expedite\20120718_resubmit\st1_11.dgn

20-AUG-2012 10:50

DIST.	COUNTY	ROUTE	POST MILES TOTAL PROJECT	SHEET NO.	TOTAL SHEETS
04	CC	580	6.1/6.3	150	216

REGISTERED CIVIL ENGINEER — DATE 04-27-2012

REGISTERED PROFESSIONAL ENGINEER — Edgardo A. Isidro — No. 058507 — Exp. 12-31-12 — CIVIL — STATE OF CALIFORNIA

7-30-12
PLANS APPROVAL DATE

The State of California or its officers or agents shall not be responsible for the accuracy or completeness of scanned copies of this plan sheet.

CALIFORNIA STATE FIRE MARSHAL APPROVED

Approval of this plan does not authorize or approve any omission or deviation from applicable regulations. Final approval is subject to field inspection. One set of approved plans shall be available on the project site at all times.

Reviewed by: Ingrid P. Casiano
INGRID P. ICASIANO, DSFM III

Approval date: July 17, 2012

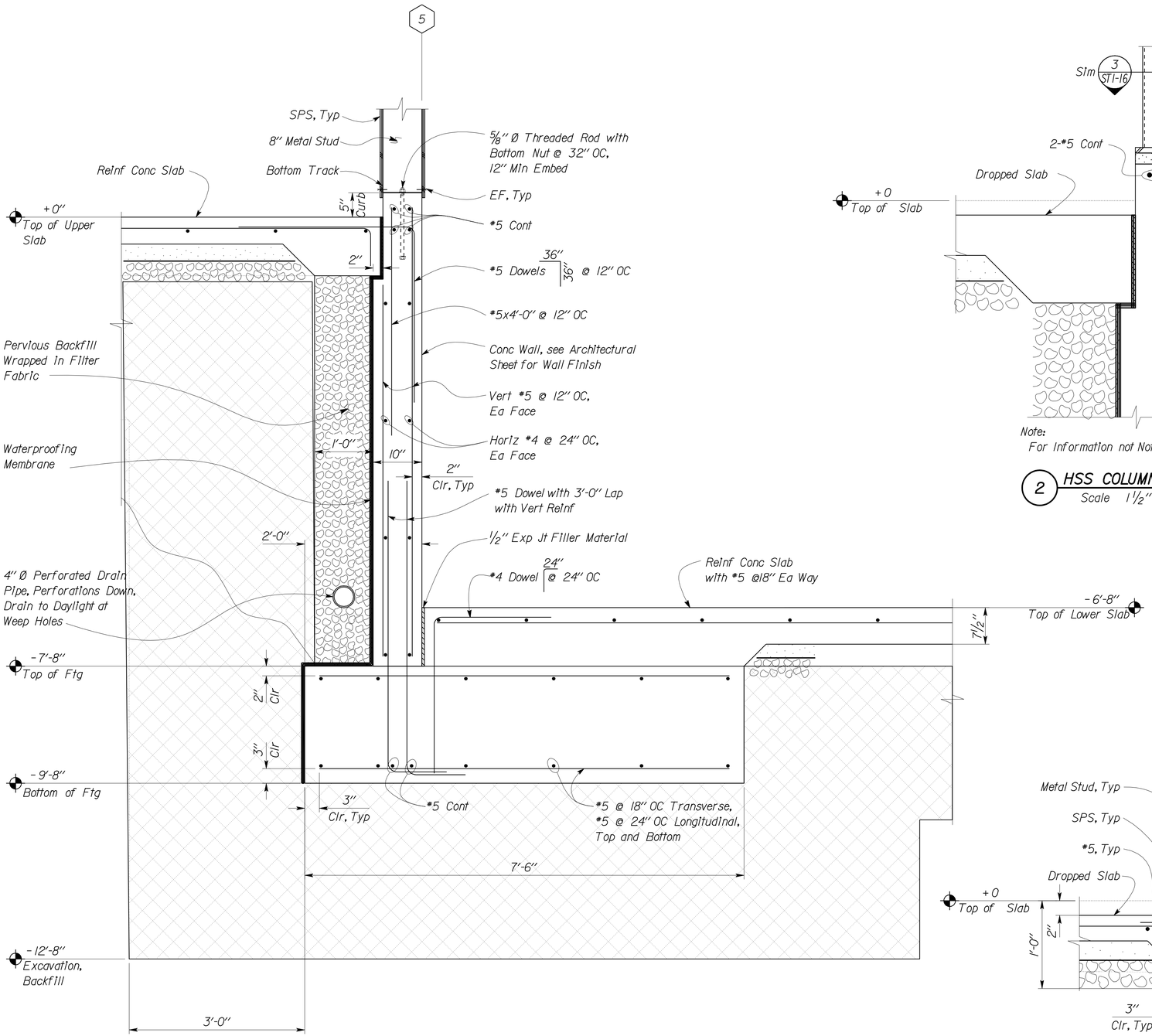

1 CONCRETE RETAINING WALL DETAIL
Scale 1" = 1'-0"

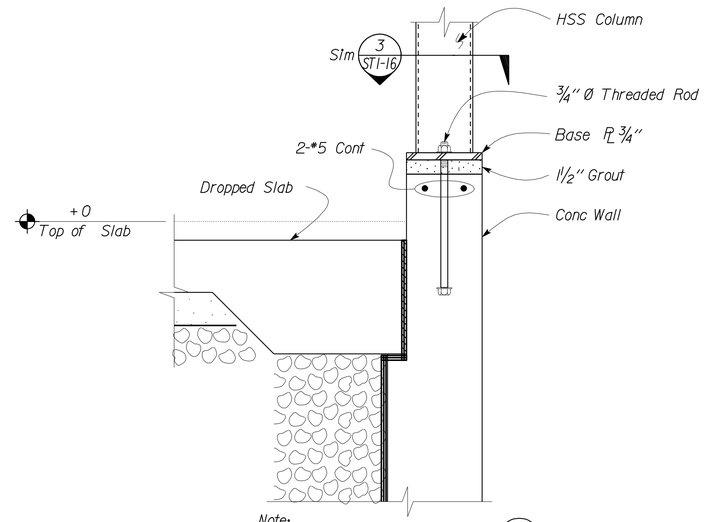

2 HSS COLUMN DETAIL
Scale 1 1/2" = 1'-0"

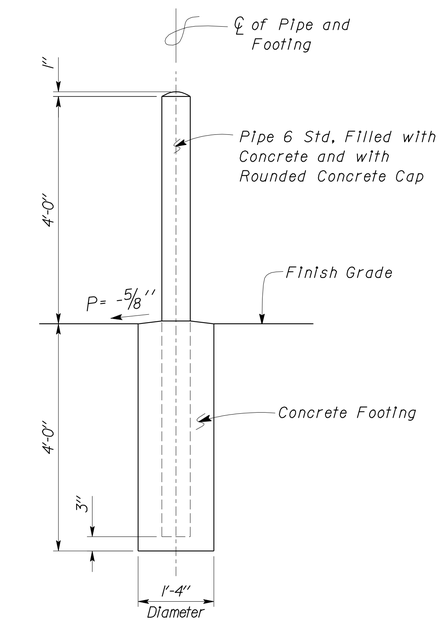

4 PIPE GUARD POST DETAIL
Scale 3/4" = 1'-0"

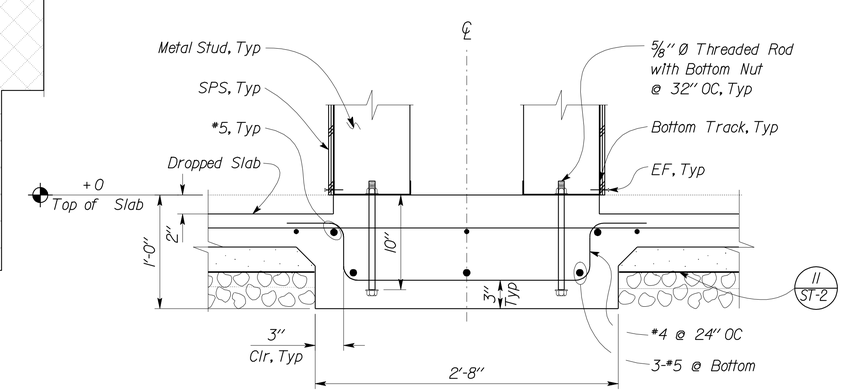

3 FOUNDATION DETAIL
Scale 1 1/2" = 1'-0"

DESIGN	BY Edgardo Isidro	CHECKED Gang Hong	
DETAILS	BY Aleksey Serin	CHECKED Edgardo Isidro	
QUANTITIES	BY	CHECKED	

STATE OF CALIFORNIA DEPARTMENT OF TRANSPORTATION

DIVISION OF ENGINEERING SERVICES
ARCHITECTURAL AND STRUCTURAL DESIGN

BRIDGE NO. 28T5783
POST MILE 6.3

RICHMOND-SAN RAFAEL BRIDGE MAINTENANCE STATION

MAIN BUILDING — FOUNDATION DETAILS

SHEET **ST1-12**

TAEMWW Imperial Rev. 7/10

ORIGINAL SCALE IN INCHES FOR REDUCED PLANS 0 1 2 3

UNIT 3581
PROJECT NUMBER & PHASE 04000000021
EA 000000

DISREGARD PRINTS BEARING EARLIER REVISION DATES

REVISION DATES (PRELIMINARY STAGE ONLY) 09-27-11 11-17-11 12-15-11 02-09-12 02-10-12 03-13-12 04-18-12 — SHEET — OF

P:\dist_04\0400000002_richmond_san_rafael_mb\expedite\20120718_resubmit\st1_12.dgn

20-AUG-2012 13:54

DIST.	COUNTY	ROUTE	POST MILES TOTAL PROJECT	SHEET NO.	TOTAL SHEETS
04	CC	580	6.0/6.3	151	216

REGISTERED CIVIL ENGINEER — DATE 04-27-2012

REGISTERED PROFESSIONAL ENGINEER — Edgardo A. Isidro — No. 058507 — Exp. 12-31-12 — CIVIL — STATE OF CALIFORNIA

7-30-12
PLANS APPROVAL DATE

The State of California or its officers or agents shall not be responsible for the accuracy or completeness of scanned copies of this plan sheet.

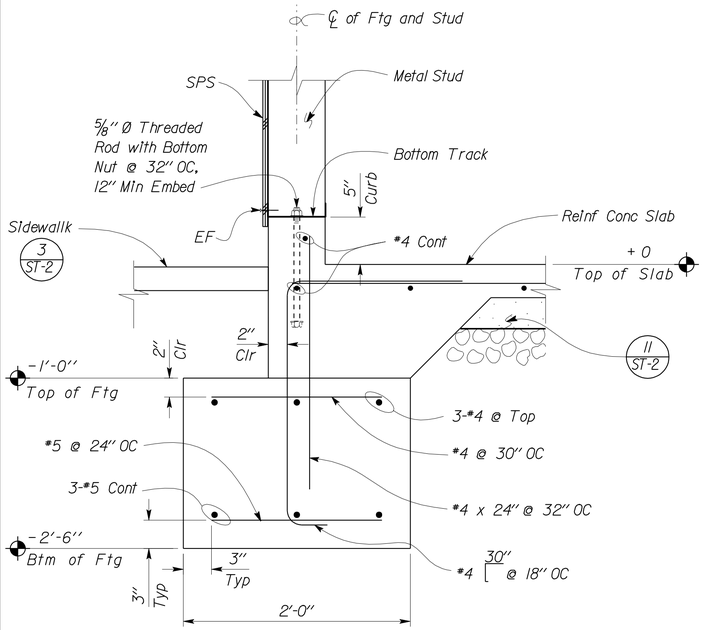

1 EXTERIOR WALL FOOTING DETAIL
Scale 1 1/2" = 1'-0"

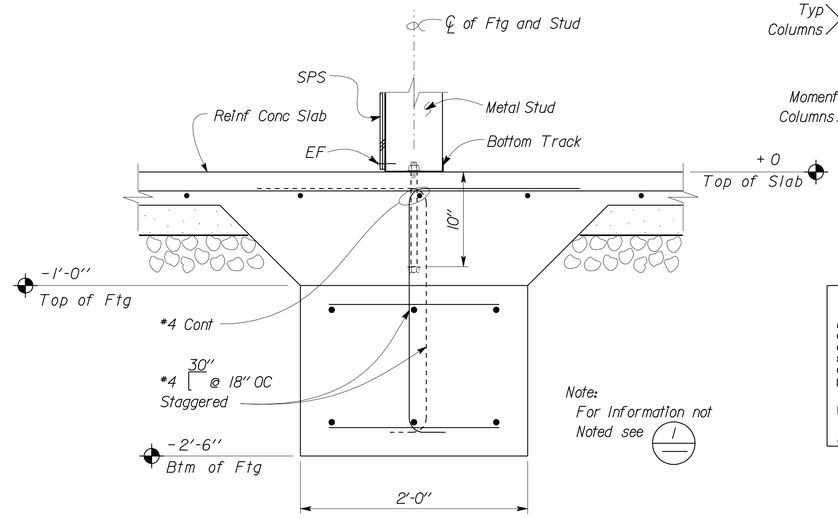

3 INTERIOR WALL FOOTING DETAIL
Scale 1 1/2" = 1'-0"

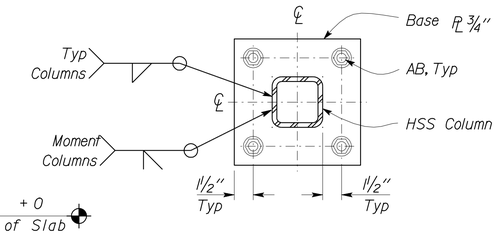

5 BASE PLATE
Scale 2" = 1'-0"

CALIFORNIA STATE FIRE MARSHAL APPROVED
Approval of this plan does not authorize or approve any omission or deviation from applicable regulations. Final approval is subject to field inspection. One set of approved plans shall be available on the project site at all times.
Reviewed by: Ingrid P. Icasiano
INGRID P. ICASIANO, DSFM III
Approval date: July 17, 2012

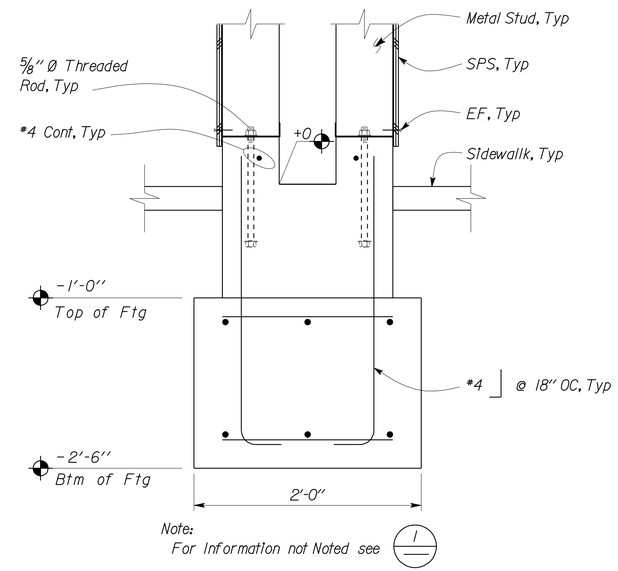

6 FOOTING DETAIL
Scale 1 1/2" = 1'-0"

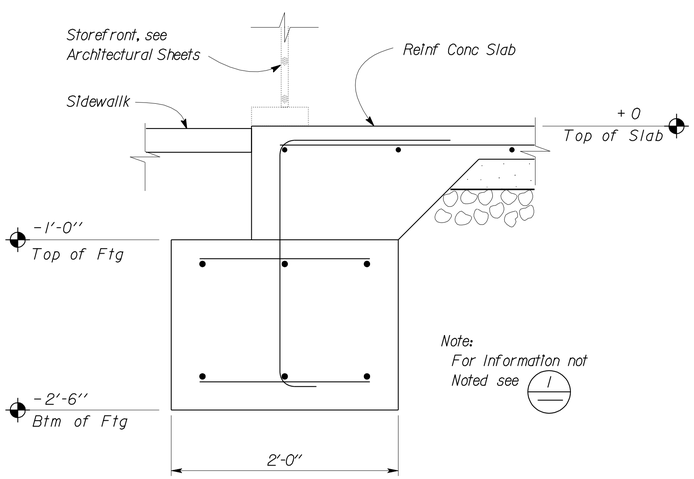

2 EXTERIOR FOOTING DETAIL
Scale 1 1/2" = 1'-0"

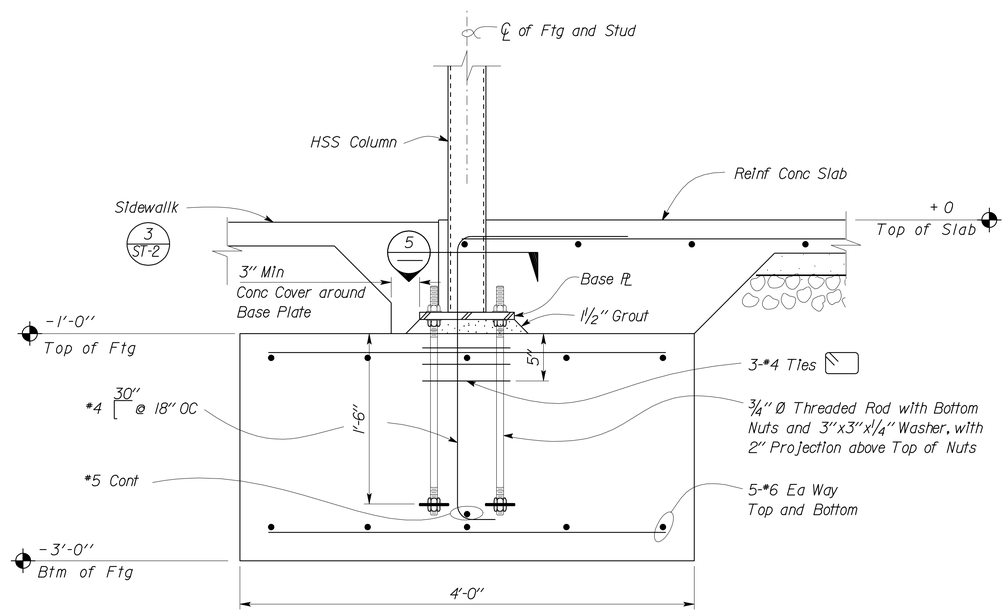

4 COLUMN FOOTING DETAIL
Scale 1 1/2" = 1'-0"

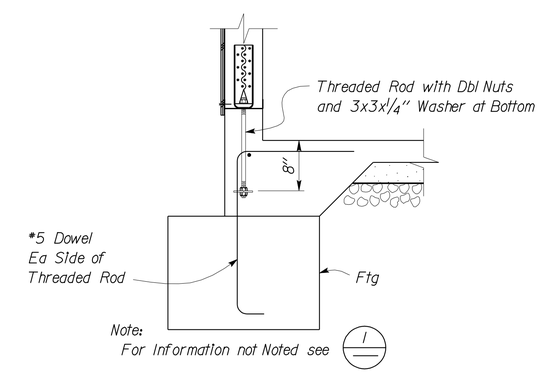

7 HOLDOWN ANCHOR BOLT
Scale 1" = 1'-0"

DESIGN	BY Edgardo Isidro	CHECKED Gang Hong	
DETAILS	BY Aleksey Serin	CHECKED Edgardo Isidro	
QUANTITIES	BY	CHECKED	

STATE OF CALIFORNIA
DEPARTMENT OF TRANSPORTATION

DIVISION OF ENGINEERING SERVICES
ARCHITECTURAL AND STRUCTURAL DESIGN

BRIDGE NO. 28T5783
POST MILE 6.3

RICHMOND-SAN RAFAEL BRIDGE MAINTENANCE STATION
MAIN BUILDING — FOUNDATION DETAILS

SHEET ST1-13

TAEMWW Imperial Rev. 7/10

ORIGINAL SCALE IN INCHES FOR REDUCED PLANS 0 1 2 3

UNIT 3581
PROJECT NUMBER & PHASE 04000000021
EA 000000

DISREGARD PRINTS BEARING EARLIER REVISION DATES
REVISION DATES (PRELIMINARY STAGE ONLY) 09-27-11 10-26-11 11-21-11 12-15-11 12-28-11 02-07-12 02-13-12 03-13-12 — SHEET — OF

P:\dist_04\0400000002_richmond_san_rafael_mb\expedite\20120718_resubmit\st1_13.dgn

02-AUG-2012 13:47

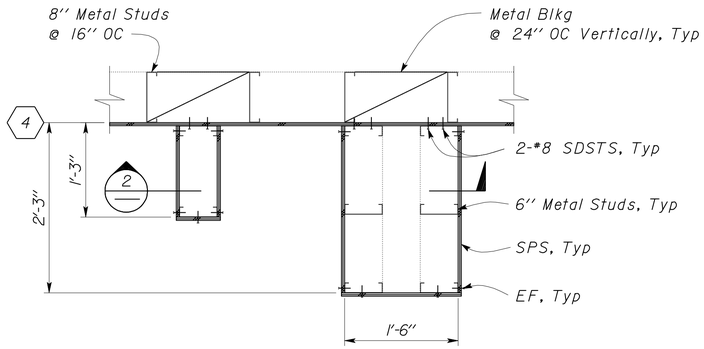

1 WALL PLAN DETAIL
Scale 1'' = 1' - 0''

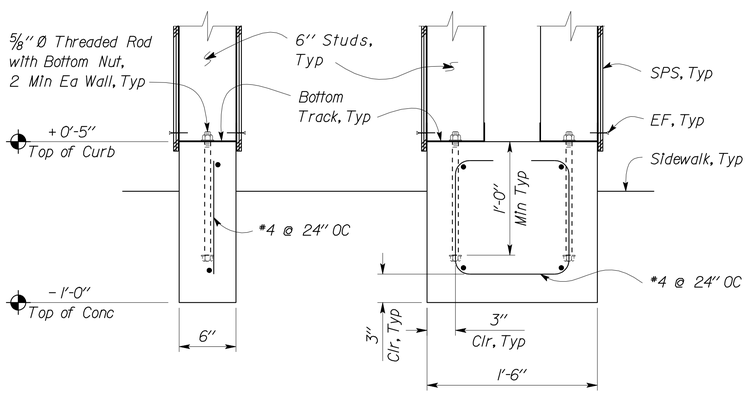

2 WALLS SECTION
Scale 1 1/2'' = 1' - 0''

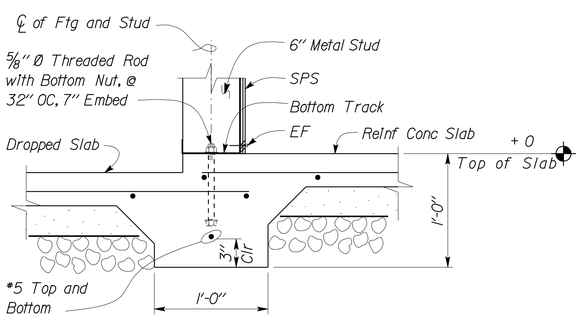

3 INTERIOR WALLS FOOTING DETAIL
Scale 1 1/2'' = 1' - 0''

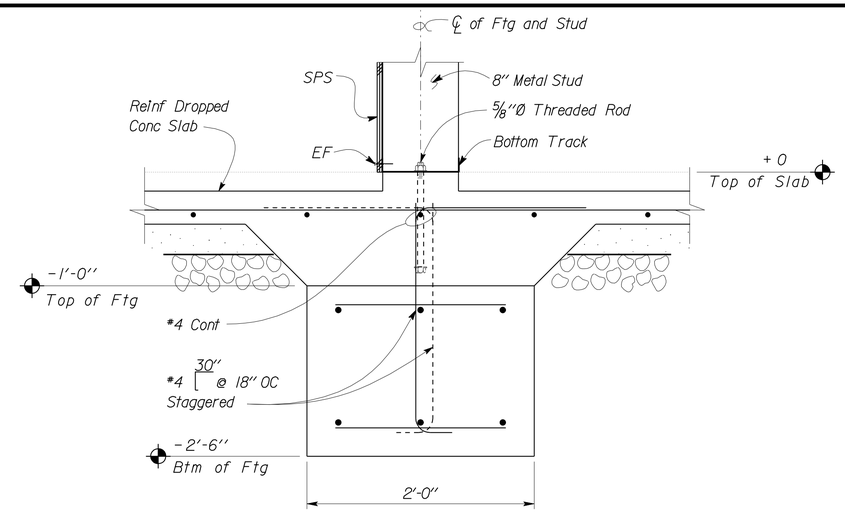

Note:
For Information not Noted see 1/ST1-13

4 INTERIOR WALLS FOOTING DETAIL
Scale 1 1/2'' = 1' - 0''

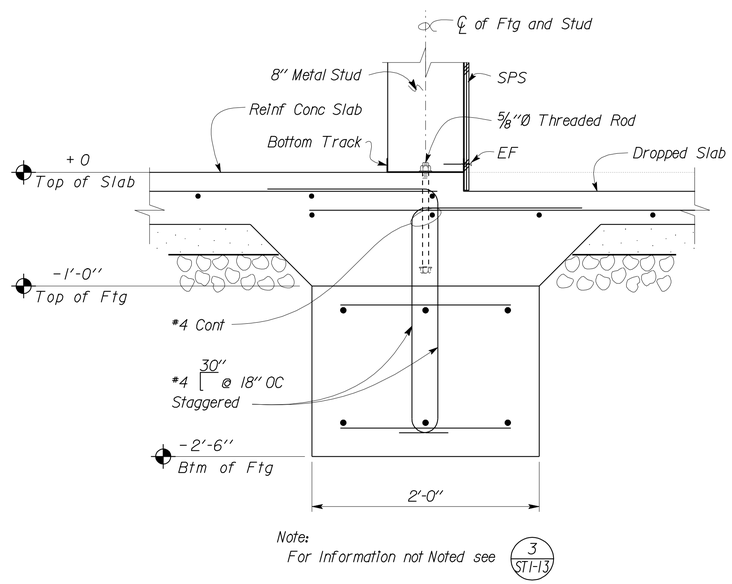

Note:
For Information not Noted see 3/ST1-13

5 INTERIOR WALLS FOOTING DETAIL
Scale 1 1/2'' = 1' - 0''

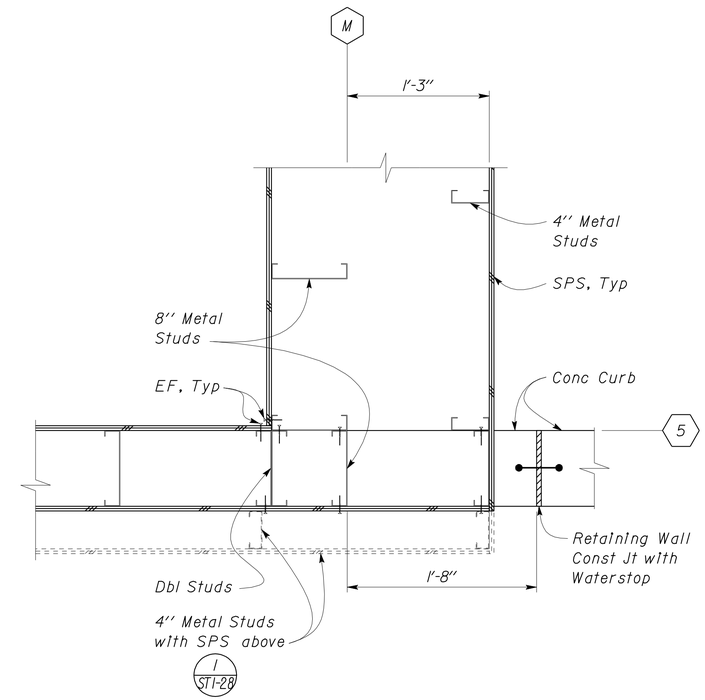

6 WALL CONNECTION (PLAN)
Scale 1 1/2'' = 1' - 0''

CALIFORNIA STATE FIRE MARSHAL APPROVED
Approval of this plan does not authorize or approve any omission or deviation from applicable regulations. Final approval is subject to field inspection. One set of approved plans shall be available on the project site at all times.
Reviewed by: Ingrid P. Icasiano
INGRID P. ICASIANO, DSFM III
Approval date: July 17, 2012

DIST.	COUNTY	ROUTE	POST MILES TOTAL PROJECT	SHEET NO.	TOTAL SHEETS
04	CC	580	6.0/6.3	152	216

REGISTERED CIVIL ENGINEER — DATE 04-27-2012
REGISTERED PROFESSIONAL ENGINEER — Edgardo A. Isidro No. 058507 Exp. 12-31-12 CIVIL STATE OF CALIFORNIA

7-30-12
PLANS APPROVAL DATE

The State of California or its officers or agents shall not be responsible for the accuracy or completeness of scanned copies of this plan sheet.

	BY	CHECKED
DESIGN	Edgardo Isidro	Gang Hong
DETAILS	Aleksey Serin	Edgardo Isidro
QUANTITIES		

STATE OF CALIFORNIA
DEPARTMENT OF TRANSPORTATION

DIVISION OF ENGINEERING SERVICES
ARCHITECTURAL AND STRUCTURAL DESIGN

BRIDGE NO. 28T5783
POST MILE 6.3

RICHMOND-SAN RAFAEL BRIDGE MAINTENANCE STATION
MAIN BUILDING — FOUNDATION/WALLS DETAILS

SHEET ST1-13a

TAEMWW Imperial Rev. 7/10

ORIGINAL SCALE IN INCHES FOR REDUCED PLANS 0 1 2 3

UNIT 3581
PROJECT NUMBER & PHASE 04000000021
EA 000000

DISREGARD PRINTS BEARING EARLIER REVISION DATES 03-14-12
REVISION DATES (PRELIMINARY STAGE ONLY) SHEET OF

P:\dist_04\0400000002_richmond_san_rafael_mb\expedite\20120718_resubmit\st1_13a.dgn

02-AUG-2012 13:47

DIST.	COUNTY	ROUTE	POST MILES TOTAL PROJECT	SHEET NO.	TOTAL SHEETS
04	CC	580	6.0/6.3	153	216

REGISTERED CIVIL ENGINEER — DATE: 04-27-2012

REGISTERED PROFESSIONAL ENGINEER — Edgardo A. Isidro — No. 058507 — Exp. 12-31-12 — CIVIL — STATE OF CALIFORNIA

7-30-12
PLANS APPROVAL DATE

The State of California or its officers or agents shall not be responsible for the accuracy or completeness of scanned copies of this plan sheet.

CALIFORNIA STATE FIRE MARSHAL APPROVED
Approval of this plan does not authorize or approve any omission or deviation from applicable regulations. Final approval is subject to field inspection. One set of approved plans shall be available on the project site at all times.
Reviewed by: INGRID P. ICASIANO, DSFM III
Approval date: July 17, 2012

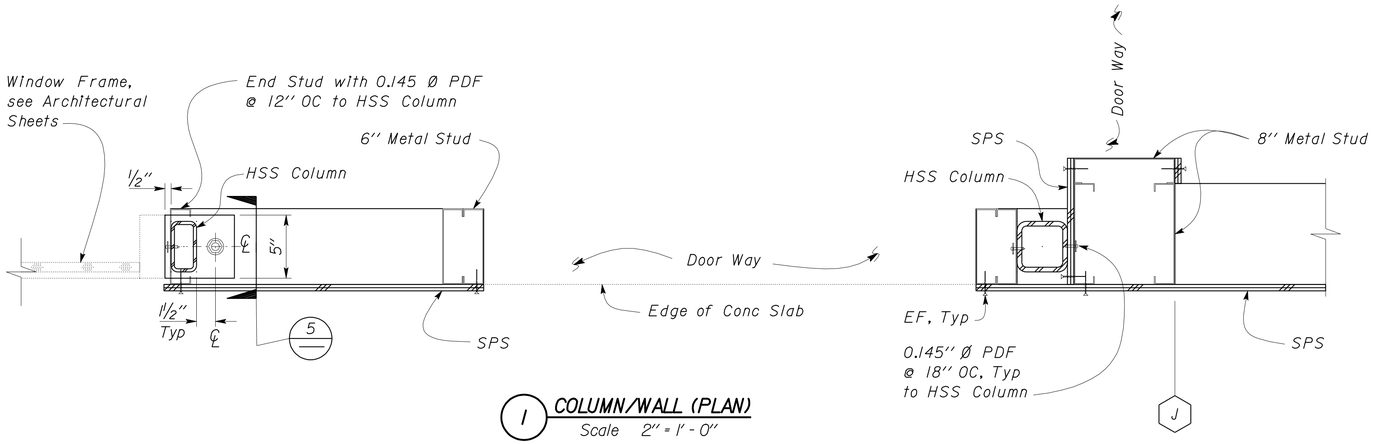

1 COLUMN/WALL (PLAN)
Scale 2" = 1'-0"

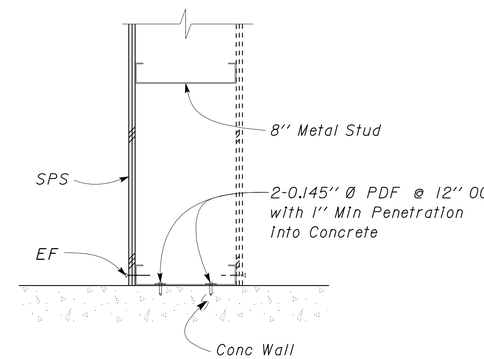

3 CONNECTION DETAIL (PLAN)
Scale 2" = 1'-0"

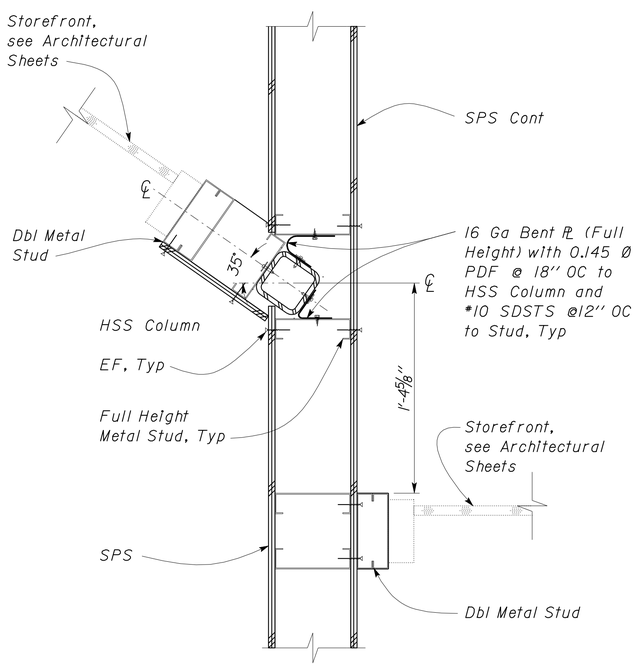

2 COLUMN/WALL (PLAN)
Scale 2" = 1'-0"

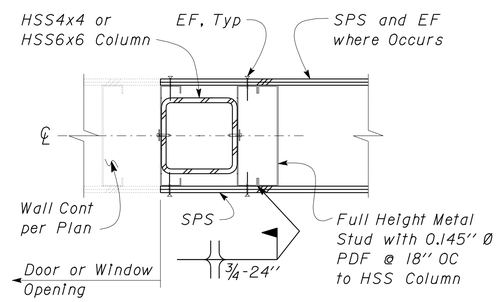

A TYPICAL COLUMN/STUD CONNECTION

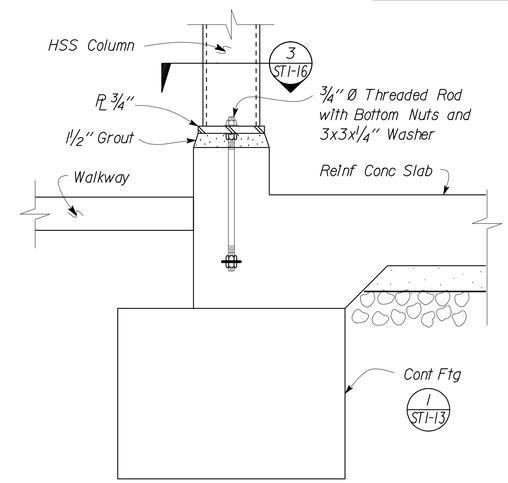

5 FOOTING SECTION
Scale 1 1/2" = 1'-0"

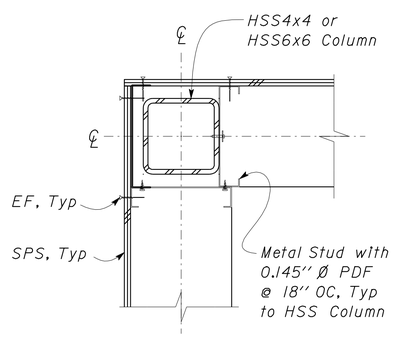

B HSS AT CORNER

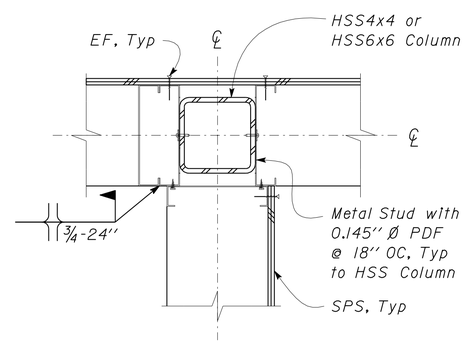

C HSS AT INTERSECTION

4 COLUMN/STUD CONNECTION
Scale 2" = 1'-0"

	BY	CHECKED
DESIGN	Edgardo Isidro	Gang Hong
DETAILS	Aleksey Serin	Edgardo Isidro
QUANTITIES		

STATE OF CALIFORNIA
DEPARTMENT OF TRANSPORTATION

DIVISION OF ENGINEERING SERVICES
ARCHITECTURAL AND STRUCTURAL DESIGN

BRIDGE NO. 28T5783
POST MILE 6.3

RICHMOND-SAN RAFAEL BRIDGE MAINTENANCE STATION
MAIN BUILDING — FOUNDATION DETAILS

SHEET **ST1-14**

TAEMWW Imperial Rev. 7/10

ORIGINAL SCALE IN INCHES FOR REDUCED PLANS 0 1 2 3

UNIT 3581
PROJECT NUMBER & PHASE 04000000021

DISREGARD PRINTS BEARING EARLIER REVISION DATES
REVISION DATES (PRELIMINARY STAGE ONLY) 11-17-11 12-19-11 01-11-12 01-27-12 02-07-12 02-10-12 03-14-12
SHEET OF

EA 000000

P:\dist_04\0400000002_richmond_san_rafael_mb\expedite\20120718_resubmit\st1_14.dgn

02-AUG-2012 13:47

DIST.	COUNTY	ROUTE	POST MILES TOTAL PROJECT	SHEET NO.	TOTAL SHEETS
04	CC	580	6.0/6.3	154	216

REGISTERED CIVIL ENGINEER — 04-27-2012 DATE

REGISTERED PROFESSIONAL ENGINEER — Edgardo A. Isidro — No. 058507 — Exp. 12-31-12 — CIVIL — STATE OF CALIFORNIA

7-30-12
PLANS APPROVAL DATE

The State of California or its officers or agents shall not be responsible for the accuracy or completeness of scanned copies of this plan sheet.

CALIFORNIA STATE FIRE MARSHAL APPROVED

Approval of this plan does not authorize or approve any omission or deviation from applicable regulations. Final approval is subject to field inspection. One set of approved plans shall be available on the project site at all times.

Reviewed by: Ingrid P. Casiano
INGRID P. ICASIANO, DSFM III

Approval date: July 17, 2012

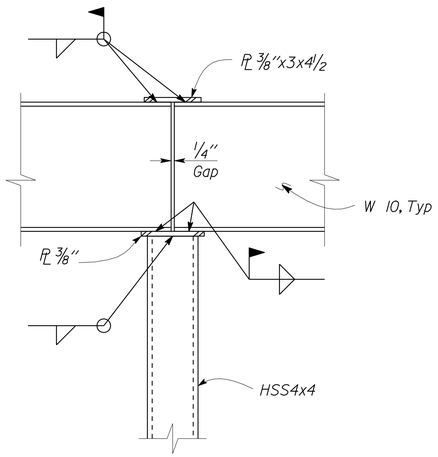

1 BEAM CONNECTION
Scale 2" = 1' - 0"

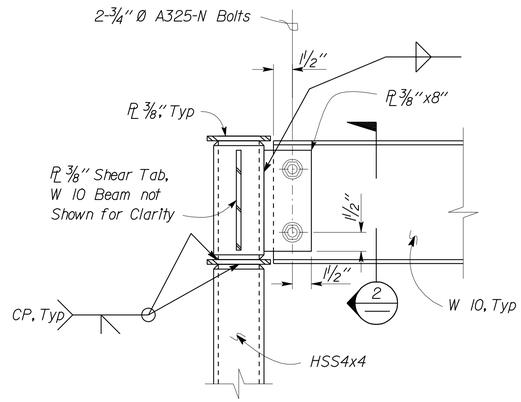

3 BEAM CONNECTION
Scale 2" = 1' - 0"

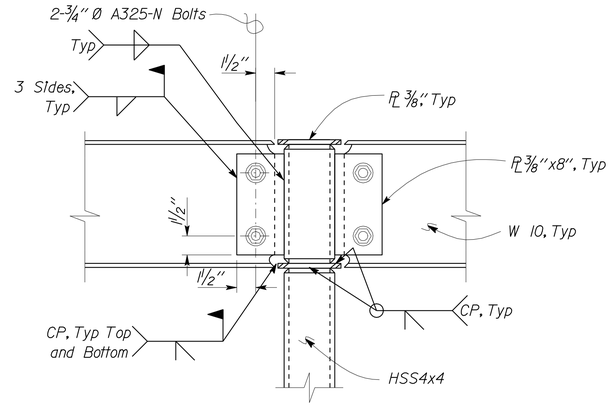

5 MOMENT CONNECTION
Scale 2" = 1' - 0"

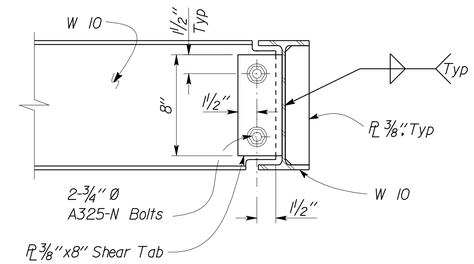

7 BEAM TO BEAM CONNECTION
Scale 2" = 1' - 0"

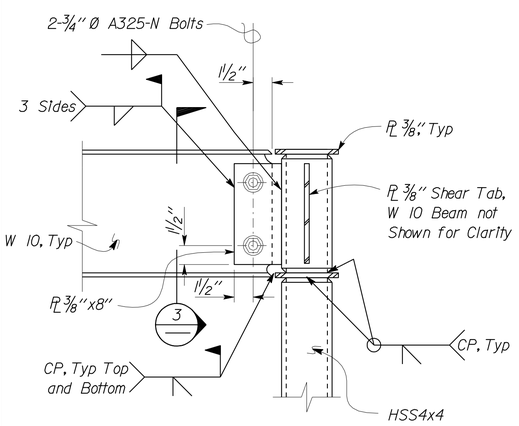

2 MOMENT CONNECTION
Scale 2" = 1' - 0"

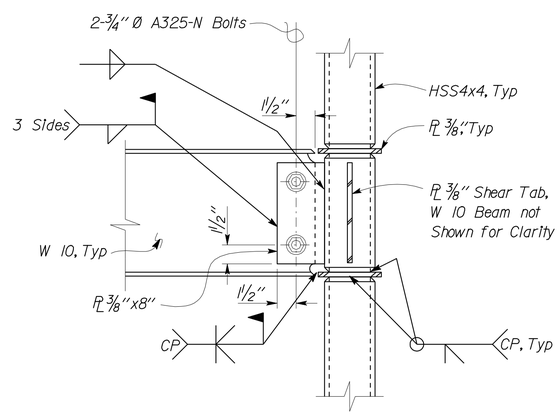

4 MOMENT CONNECTION
Scale 2" = 1' - 0"

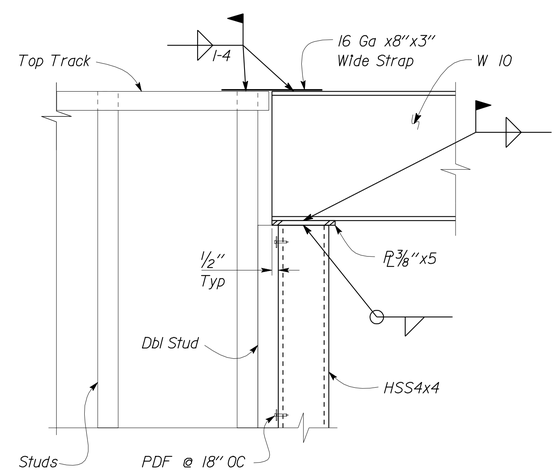

6 TYPICAL COLUMN/STUD WALL CONNECTION
Scale 2" = 1' - 0"

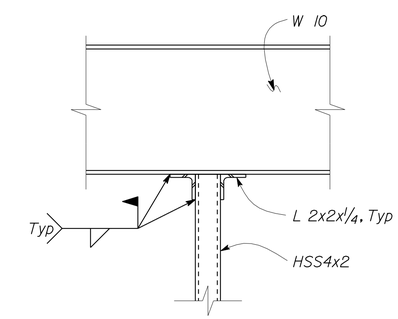

8 HSS/ W BEAM CONNECTION
Scale 2" = 1' - 0"

	BY	CHECKED
DESIGN	Edgardo Isidro	Gang Hong
DETAILS	Aleksey Serin	Edgardo Isidro
QUANTITIES		

STATE OF CALIFORNIA DEPARTMENT OF TRANSPORTATION

DIVISION OF ENGINEERING SERVICES
ARCHITECTURAL AND STRUCTURAL DESIGN

BRIDGE NO. 28T5783
POST MILE 6.3

RICHMOND-SAN RAFAEL BRIDGE MAINTENANCE STATION
MAIN BUILDING — WALL FRAMING DETAILS

SHEET ST1-15

TAEMWW Imperial Rev. 7/10

ORIGINAL SCALE IN INCHES FOR REDUCED PLANS 0 1 2 3

UNIT 3581
PROJECT NUMBER & PHASE 04000000021
EA 000000

DISREGARD PRINTS BEARING EARLIER REVISION DATES
REVISION DATES (PRELIMINARY STAGE ONLY) 12-02-11 02-02-12 02-07-12 03-14-12 04-10-12 SHEET OF

02-AUG-2012 13:47

P:\dist_04\0400000002_richmond_san_rafael_mb\expedite\20120718_resubmit\st1_15.dgn

DIST.	COUNTY	ROUTE	POST MILES TOTAL PROJECT	SHEET NO.	TOTAL SHEETS
04	CC	580	6.1/6.3	155	216

REGISTERED CIVIL ENGINEER — DATE: 04-27-2012

REGISTERED PROFESSIONAL ENGINEER — Edgardo A. Isidro — No. 058507 — Exp. 12-31-12 — CIVIL — STATE OF CALIFORNIA

7-30-12
PLANS APPROVAL DATE

The State of California or its officers or agents shall not be responsible for the accuracy or completeness of scanned copies of this plan sheet.

CALIFORNIA STATE FIRE MARSHAL APPROVED
Approval of this plan does not authorize or approve any omission or deviation from applicable regulations. Final approval is subject to field inspection. One set of approved plans shall be available on the project site at all times.
Reviewed by: Ingrid P. Icasiano — INGRID P. ICASIANO, DSFM III
Approval date: July 17, 2012

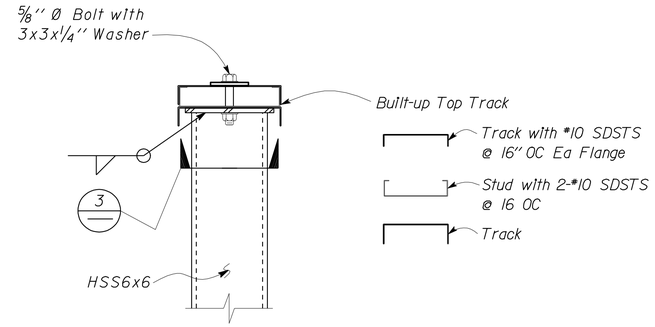

1 TOP COLUMN DETAIL
Scale 2" = 1'-0"

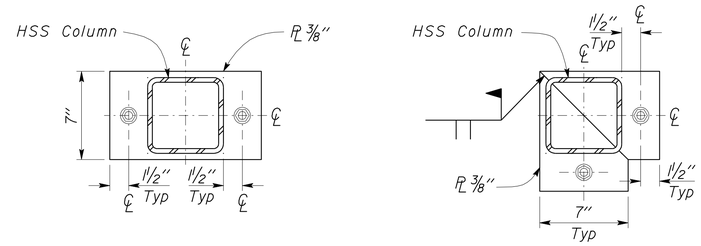

3 BASE/TOP PLATE DETAIL
Scale 2" = 1'-0"

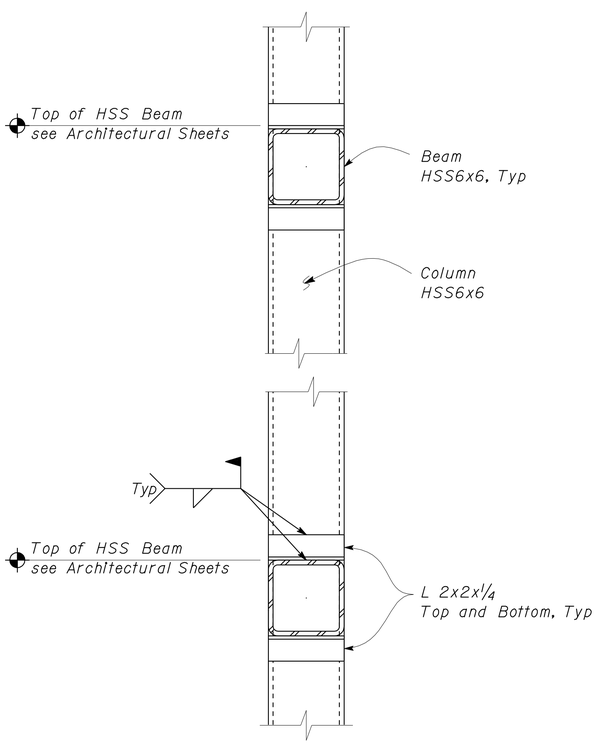

2 WINDOW COLUMN DETAIL
Scale 2" = 1'-0"

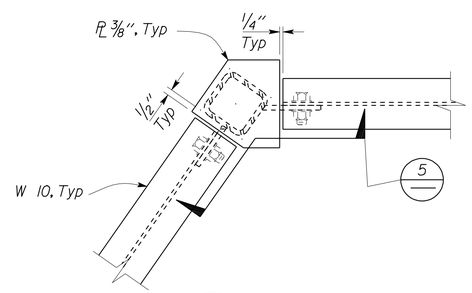

4 PLAN VIEW
Scale 2" = 1'-0"

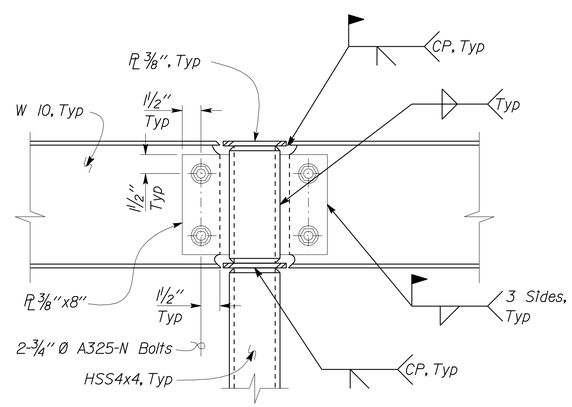

5 MOMENT CONNECTION
Scale 2" = 1'-0"

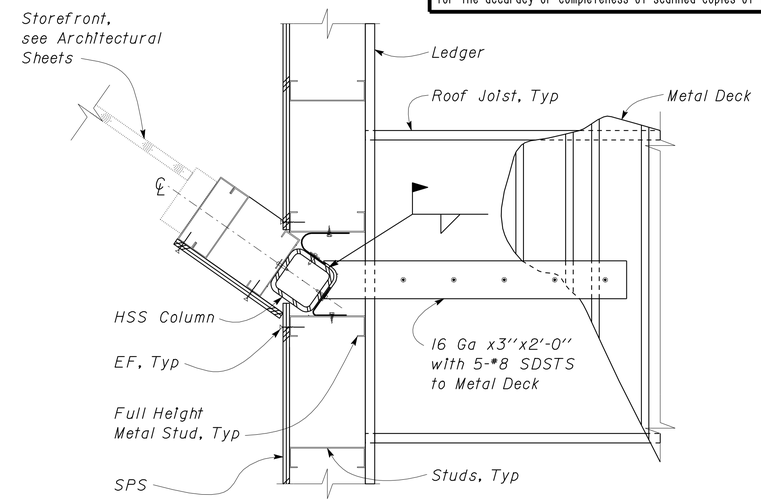

6 COLUMN/WALL (PLAN) AT DECK LEVEL
Scale 2" = 1'-0"

	BY	CHECKED
DESIGN	Edgardo Isidro	Gang Hong
DETAILS	Aleksey Serin	Edgardo Isidro
QUANTITIES		

STATE OF CALIFORNIA
DEPARTMENT OF TRANSPORTATION

DIVISION OF ENGINEERING SERVICES
ARCHITECTURAL AND STRUCTURAL DESIGN

BRIDGE NO. 28T5783
POST MILE 6.3

RICHMOND-SAN RAFAEL BRIDGE MAINTENANCE STATION
MAIN BUILDING — WALL FRAMING DETAILS

SHEET **ST1-16**

TAEMWW Imperial Rev. 7/10

ORIGINAL SCALE IN INCHES FOR REDUCED PLANS 0 1 2 3

UNIT 3581
PROJECT NUMBER & PHASE 04000000021
EA 000000

DISREGARD PRINTS BEARING EARLIER REVISION DATES → 12-06-11 01-25-12 02-06-12 03-14-12

REVISION DATES (PRELIMINARY STAGE ONLY) SHEET OF

P:\dist_04\0400000002_richmond_san_rafael_mb\expedite\20120718_resubmit\st1_16.dgn

02-AUG-2012 15:07

DIST.	COUNTY	ROUTE	POST MILES TOTAL PROJECT	SHEET NO.	TOTAL SHEETS
04	CC	580	6.1/6.3	156	216

REGISTERED CIVIL ENGINEER — DATE 04-27-2012

REGISTERED PROFESSIONAL ENGINEER — Edgardo A. Isidro — No. 058507 — Exp. 12-31-12 — CIVIL — STATE OF CALIFORNIA

7-30-12
PLANS APPROVAL DATE

The State of California or its officers or agents shall not be responsible for the accuracy or completeness of scanned copies of this plan sheet.

CALIFORNIA STATE FIRE MARSHAL APPROVED
Approval of this plan does not authorize or approve any omission or deviation from applicable regulations. Final approval is subject to field inspection. One set of approved plans shall be available on the project site at all times.
Reviewed by: Ingrid P. Icasiano
INGRID P. ICASIANO, DSFM III
Approval date: July 17, 2012

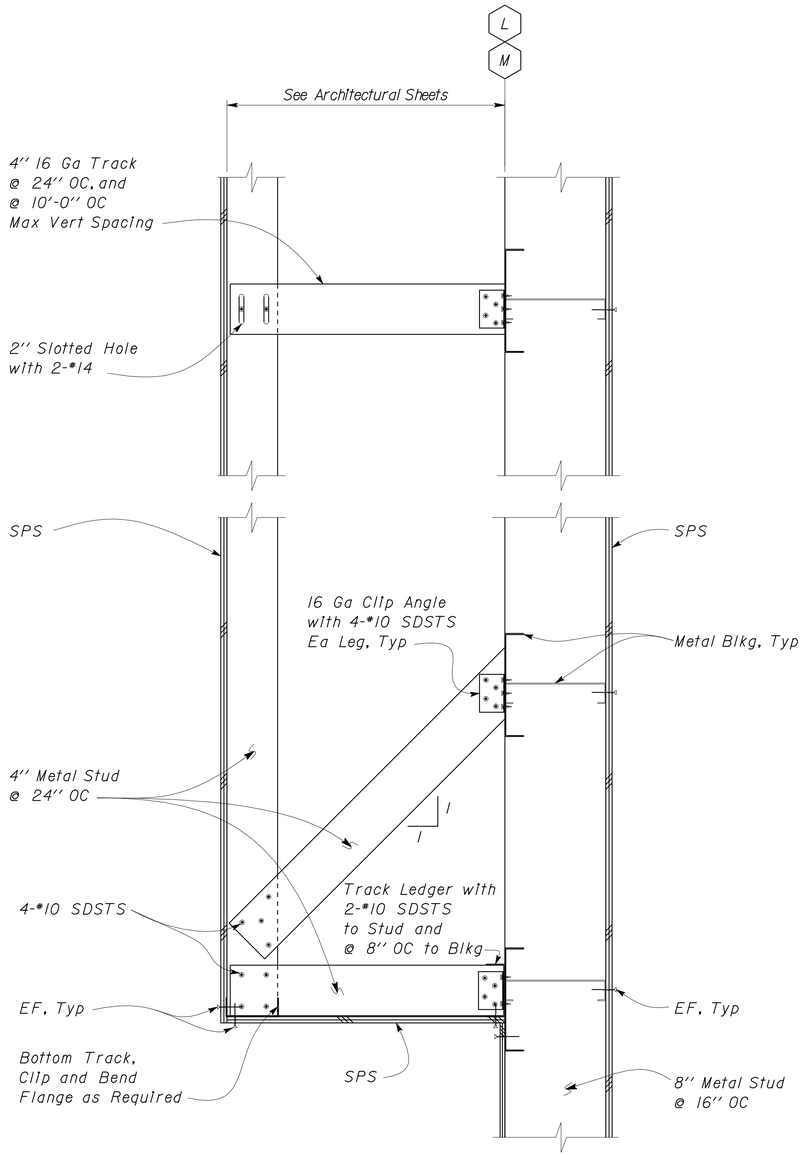

1 WALL CONNECTION DETAIL
Scale 2" = 1'-0"

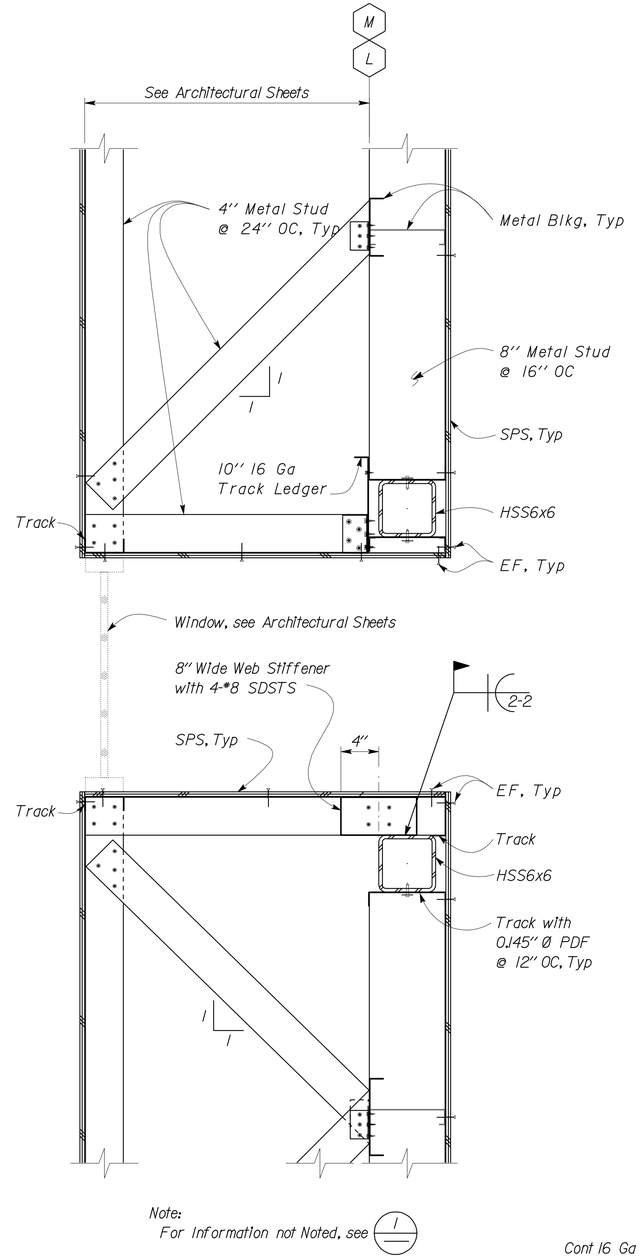

2 WINDOW FRAMING DETAIL
Scale 1 1/2" = 1'-0"

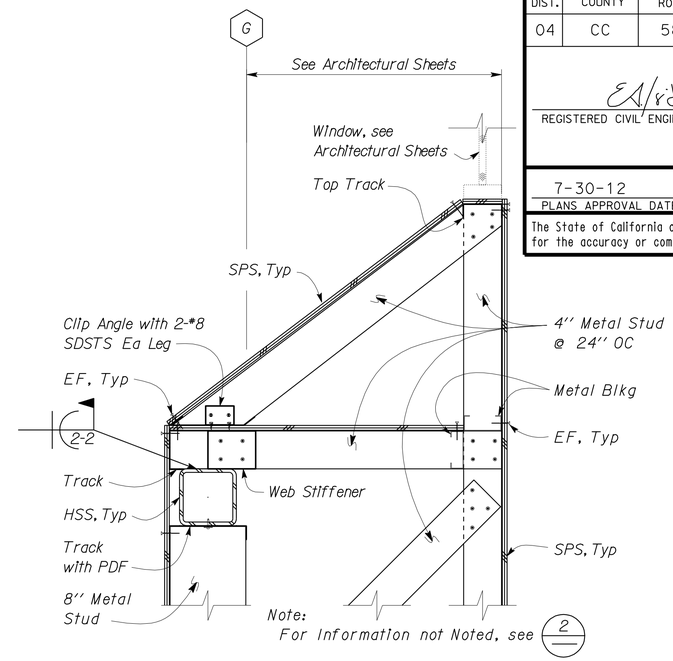

3 WINDOW FRAMING DETAIL
Scale 1 1/2" = 1'-0"

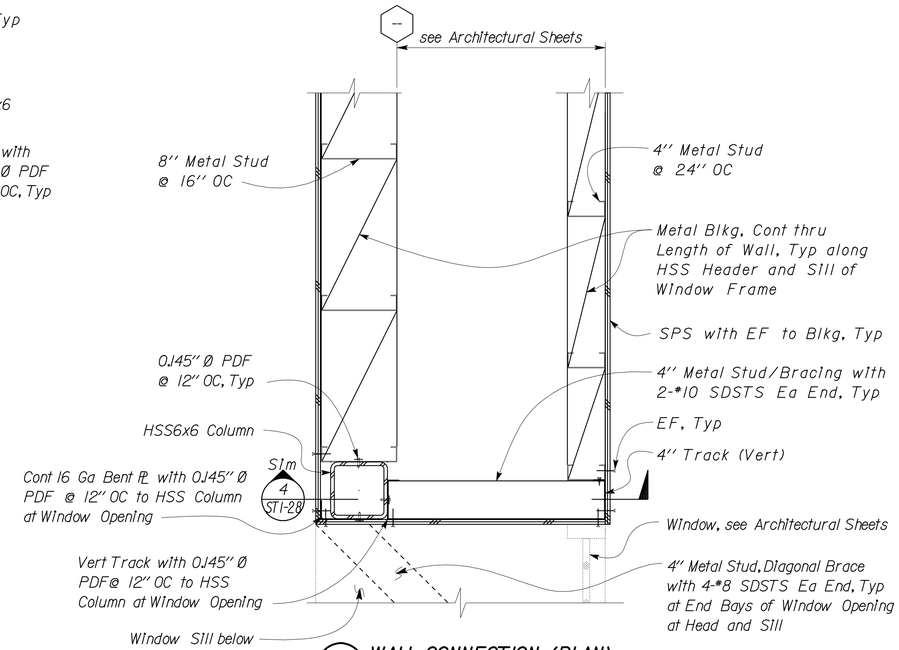

4 WALL CONNECTION (PLAN)
Scale 1 1/2" = 1'-0"

	BY	CHECKED
DESIGN	Edgardo Isidro	Gang Hong
DETAILS	Aleksey Serin	Edgardo Isidro
QUANTITIES		

STATE OF CALIFORNIA
DEPARTMENT OF TRANSPORTATION

DIVISION OF ENGINEERING SERVICES
ARCHITECTURAL AND STRUCTURAL DESIGN

BRIDGE NO. 28T5783
POST MILE 6.3

RICHMOND-SAN RAFAEL BRIDGE MAINTENANCE STATION
MAIN BUILDING — WALL FRAMING DETAILS

SHEET ST1-17

TAEMWW Imperial Rev. 7/10

ORIGINAL SCALE IN INCHES FOR REDUCED PLANS 0 1 2 3

UNIT 3581
PROJECT NUMBER & PHASE 04000000021
EA 000000

DISREGARD PRINTS BEARING EARLIER REVISION DATES → 11-30-11 01-25-12 02-09-12 03-14-12 03-28-12 04-26-12

REVISION DATES (PRELIMINARY STAGE ONLY) SHEET OF

P:\dist_04\0400000002_richmond_san_rafael_mb\expedite\20120718_resubmit\st1_17.dgn

02-AUG-2012 15:07

DIST.	COUNTY	ROUTE	POST MILES TOTAL PROJECT	SHEET NO.	TOTAL SHEETS
04	CC	580	6.1/6.3	157	216

REGISTERED CIVIL ENGINEER — 04-27-2012 DATE

REGISTERED PROFESSIONAL ENGINEER — Edgardo A. Isidro — No. 058507 — Exp. 12-31-12 — CIVIL — STATE OF CALIFORNIA

7-30-12
PLANS APPROVAL DATE

The State of California or its officers or agents shall not be responsible for the accuracy or completeness of scanned copies of this plan sheet.

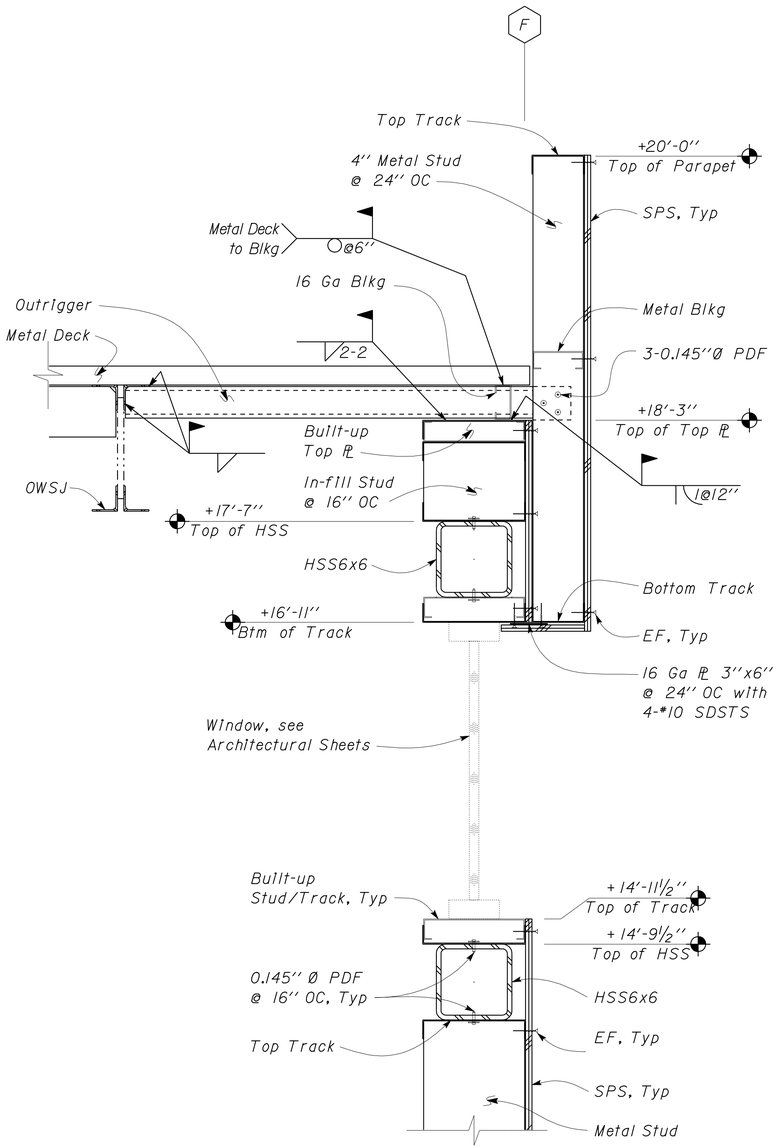

1 CONNECTION DETAIL
Scale 2" = 1'-0"

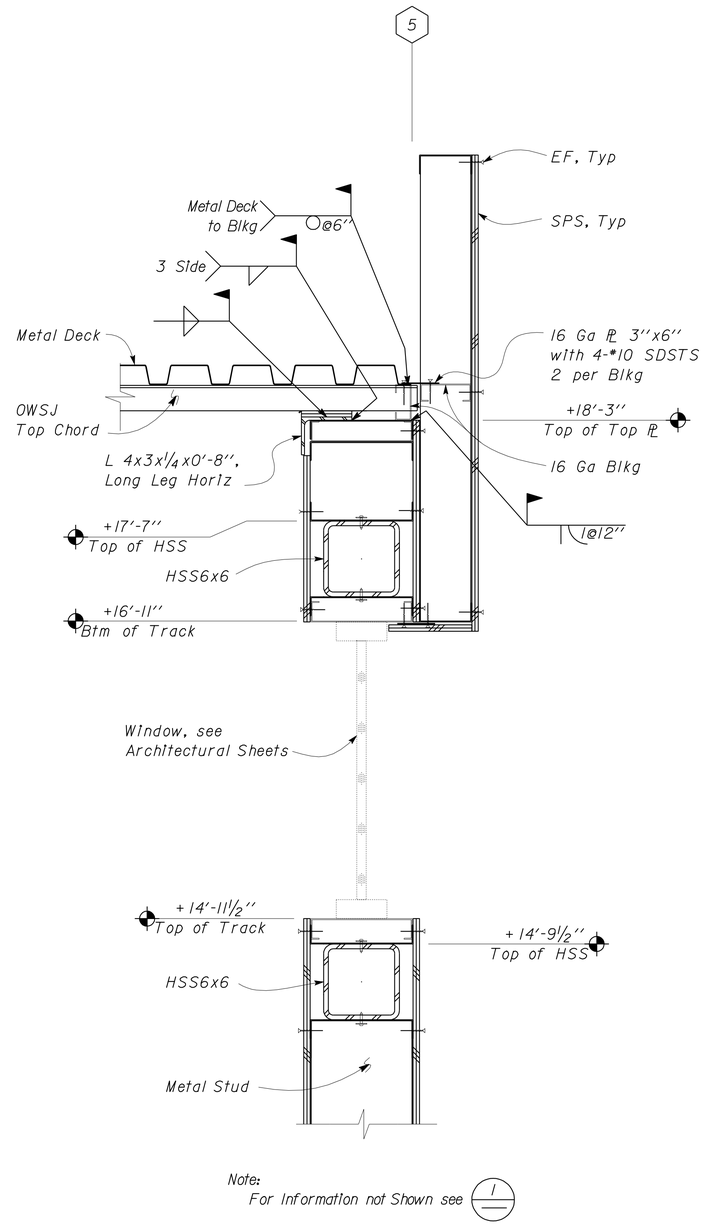

2 CONNECTION DETAIL
Scale 2" = 1'-0"

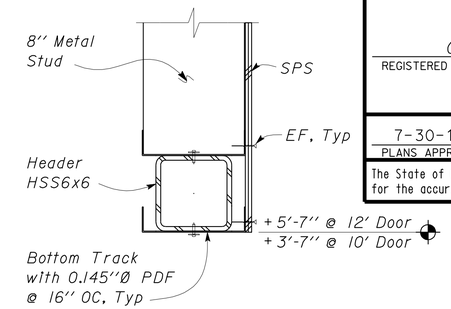

3 SECTION DETAIL
Scale 2" = 1'-0"

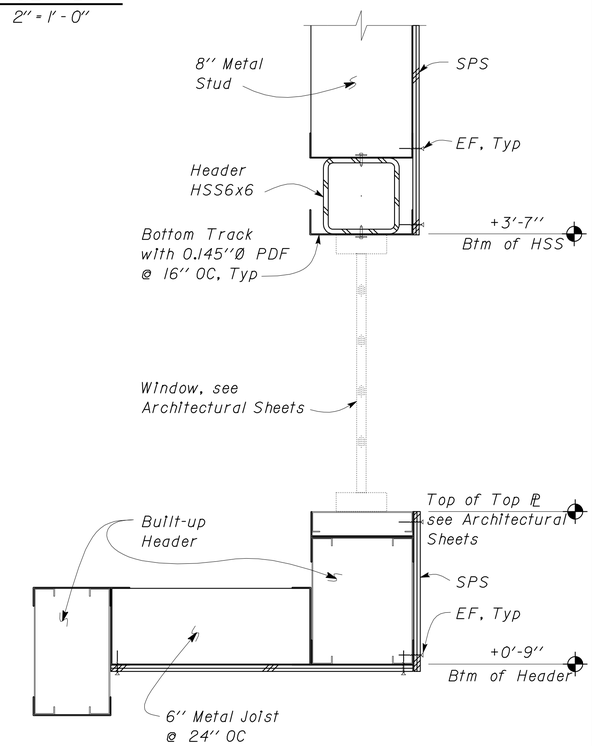

4 SECTION DETAIL
Scale 2" = 1'-0"

CALIFORNIA STATE FIRE MARSHAL APPROVED
Approval of this plan does not authorize or approve any omission or deviation from applicable regulations. Final approval is subject to field inspection. One set of approved plans shall be available on the project site at all times.
Reviewed by: Ingrid P. Icasiano
INGRID P. ICASIANO, DSFM III
Approval date: July 17, 2012

DESIGN	BY Edgardo Isidro	CHECKED Gang Hong	
DETAILS	BY Aleksey Serin	CHECKED Edgardo Isidro	
QUANTITIES	BY	CHECKED	

STATE OF CALIFORNIA
DEPARTMENT OF TRANSPORTATION

DIVISION OF ENGINEERING SERVICES
ARCHITECTURAL AND STRUCTURAL DESIGN

BRIDGE NO. 28T5783
POST MILE 6.3

RICHMOND-SAN RAFAEL BRIDGE MAINTENANCE STATION
MAIN BUILDING — WALL FRAMING DETAILS

SHEET ST1-18

TAEMWW Imperial Rev. 7/10

ORIGINAL SCALE IN INCHES FOR REDUCED PLANS 0 1 2 3

UNIT 3581
PROJECT NUMBER & PHASE 04000000021
EA 000000

DISREGARD PRINTS BEARING EARLIER REVISION DATES → 12-13-11 12-16-11 01-25-12 02-06-12 02-13-12 03-15-12 04-18-12

REVISION DATES (PRELIMINARY STAGE ONLY) SHEET OF

P:\dist_04\0400000002_richmond_san_rafael_mb\expedite\20120718_resubmit\st1_18.dgn

02-AUG-2012 15:07

DIST.	COUNTY	ROUTE	POST MILES TOTAL PROJECT	SHEET NO.	TOTAL SHEETS
04	CC	580	6.1/6.3	158	216

CALIFORNIA STATE FIRE MARSHAL APPROVED

Approval of this plan does not authorize or approve any omission or deviation from applicable regulations. Final approval is subject to field inspection. One set of approved plans shall be available on the project site at all times.

Reviewed by: Ingrid P. Icasiano
INGRID P. ICASIANO, OSFM III
Approval date: July 17, 2012

REGISTERED CIVIL ENGINEER — DATE 04-27-2012

REGISTERED PROFESSIONAL ENGINEER — Edgardo A. Isidro, No. 058507, Exp. 12-31-12, CIVIL, STATE OF CALIFORNIA

7-30-12
PLANS APPROVAL DATE

The State of California or its officers or agents shall not be responsible for the accuracy or completeness of scanned copies of this plan sheet.

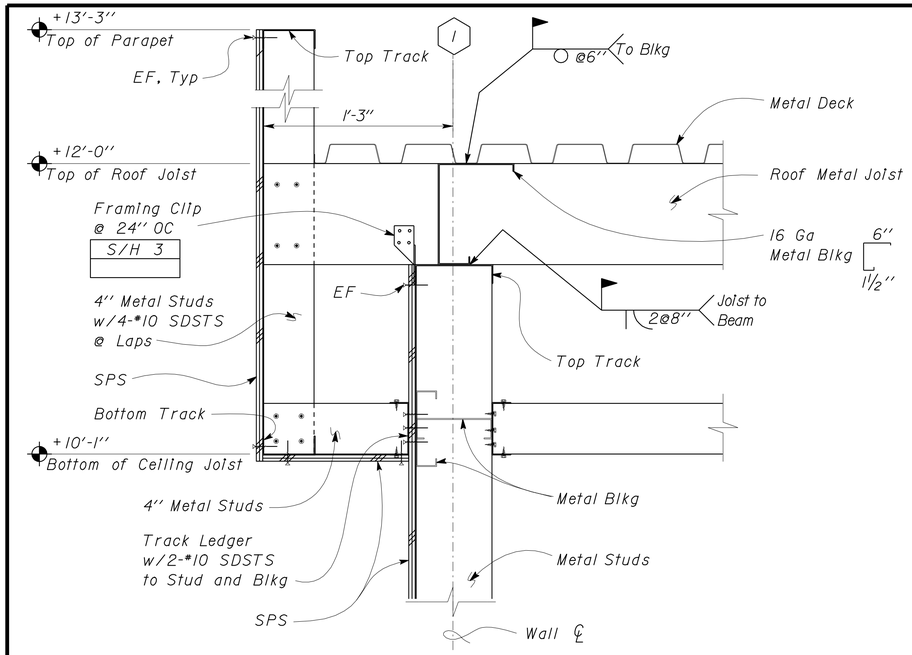

1 CONNECTION DETAIL
Scale 2" = 1'-0"

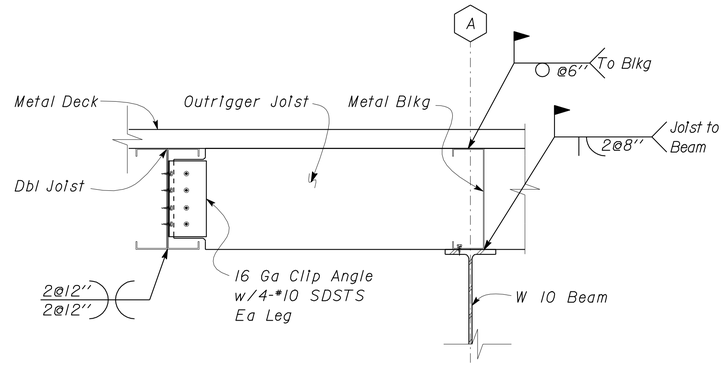

3 CONNECTION DETAIL
Scale 2" = 1'-0"

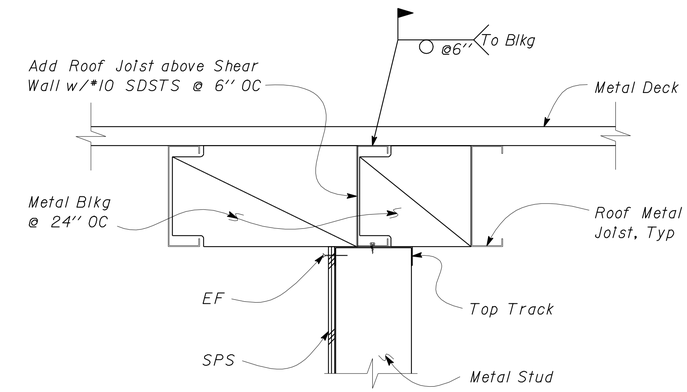

5 INTERIOR SHEAR WALL
Scale 2" = 1'-0"

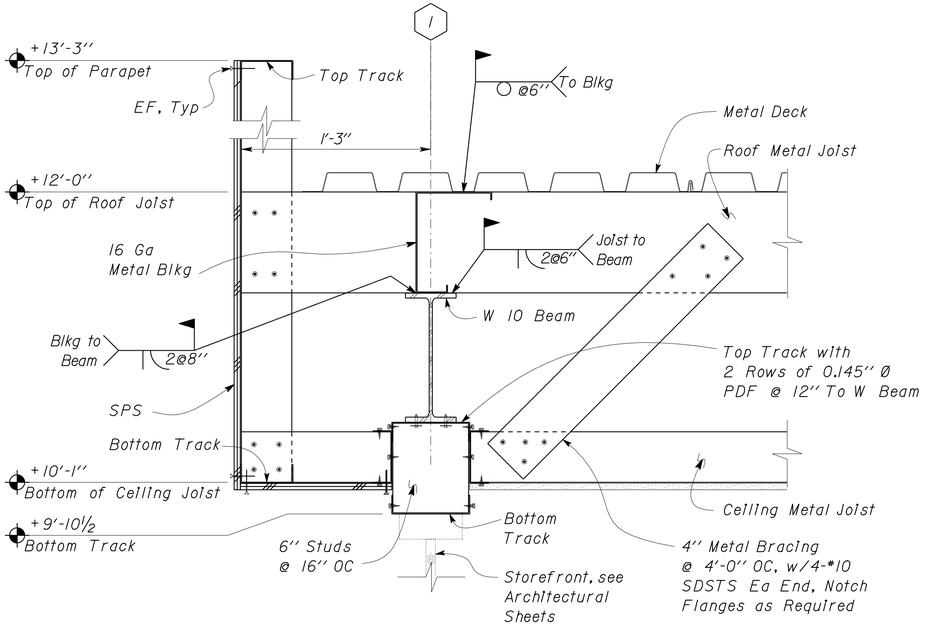

Note:
For Information not Noted, see 1

2 CONNECTION DETAIL
Scale 2" = 1'-0"

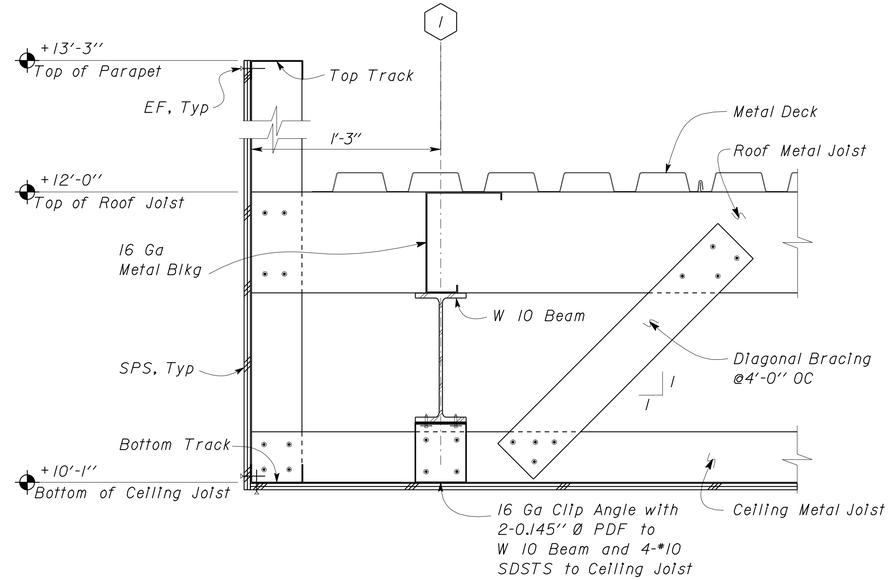

Note:
For Information not Noted, see 2

4 CONNECTION DETAIL
Scale 2" = 1'-0"

	BY	CHECKED
DESIGN	Edgardo Isidro	Gang Hong
DETAILS	Aleksey Serin	Edgardo Isidro
QUANTITIES		

STATE OF CALIFORNIA
DEPARTMENT OF TRANSPORTATION

DIVISION OF ENGINEERING SERVICES
ARCHITECTURAL AND STRUCTURAL DESIGN

BRIDGE NO. 28T5783
POST MILE 6.3

RICHMOND-SAN RAFAEL BRIDGE MAINTENANCE STATION
MAIN BUILDING — ROOF FRAMING DETAILS

SHEET ST1-19

TAEMWW Imperial Rev. 7/10

ORIGINAL SCALE IN INCHES FOR REDUCED PLANS 0 1 2 3

UNIT 3581
PROJECT NUMBER & PHASE 04000000021
EA 000000

DISREGARD PRINTS BEARING EARLIER REVISION DATES
REVISION DATES (PRELIMINARY STAGE ONLY) 08-31-11 12-16-11 02-03-12 03-19-12
SHEET OF

P:\dist_04\0400000002_richmond_san_rafael_mb\expedite\20120718_resubmit\st1_19.dgn
02-AUG-2012 15:08

DIST.	COUNTY	ROUTE	POST MILES TOTAL PROJECT	SHEET NO.	TOTAL SHEETS
04	CC	580	6.1/6.3	159	216

REGISTERED CIVIL ENGINEER — DATE 04-27-2012

REGISTERED PROFESSIONAL ENGINEER — Edgardo A. Isidro — No. 058507 — Exp. 12-31-12 — CIVIL — STATE OF CALIFORNIA

7-30-12
PLANS APPROVAL DATE

The State of California or its officers or agents shall not be responsible for the accuracy or completeness of scanned copies of this plan sheet.

CALIFORNIA STATE FIRE MARSHAL APPROVED
Approval of this plan does not authorize or approve any omission or deviation from applicable regulations. Final approval is subject to field inspection. One set of approved plans shall be available on the project site at all times.
Reviewed by: INGRID P. ICASIANO, DSFM III
Approval date: July 17, 2012

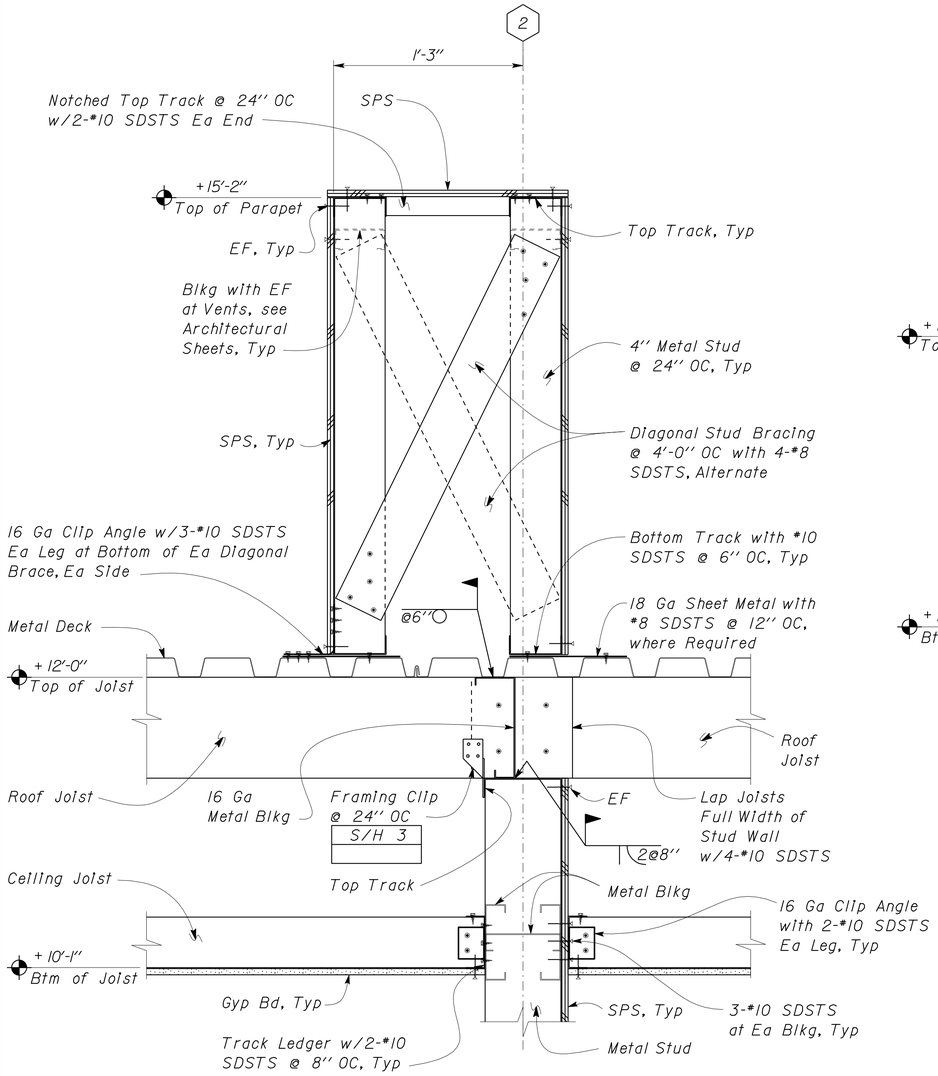

1 CONNECTION DETAIL
Scale 2" = 1'-0"

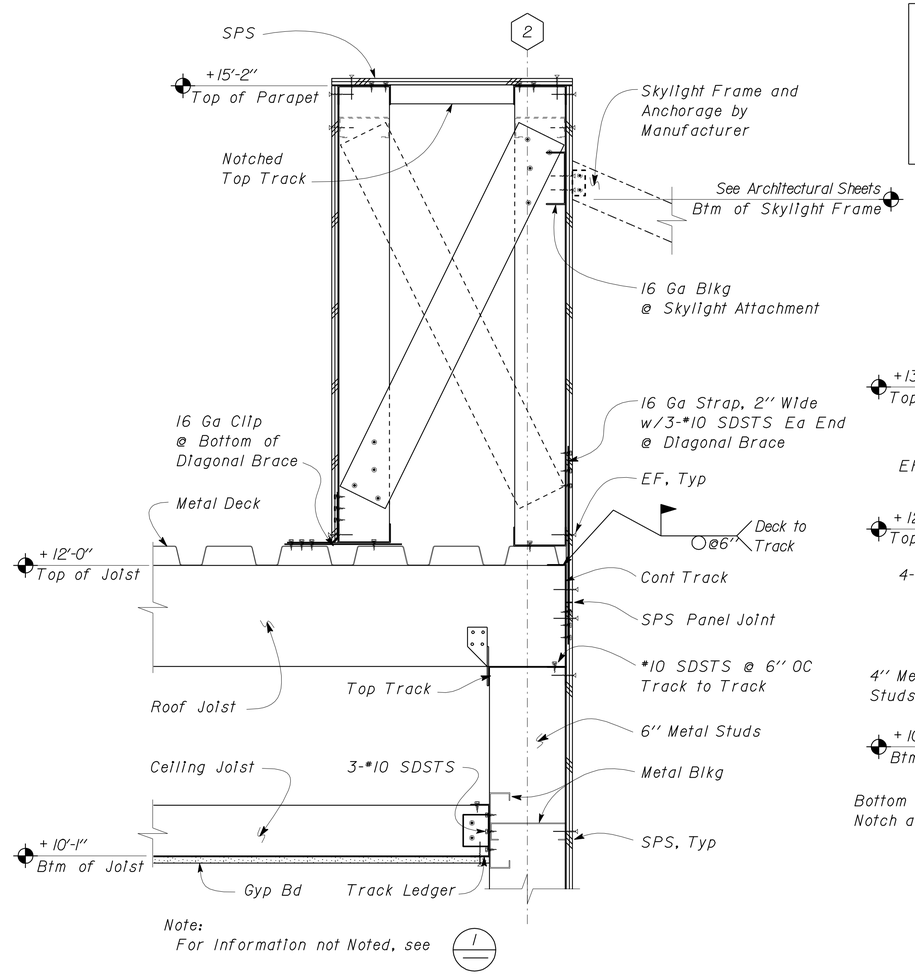

Note:
For Information not Noted, see 1

2 CONNECTION DETAIL
Scale 2" = 1'-0"

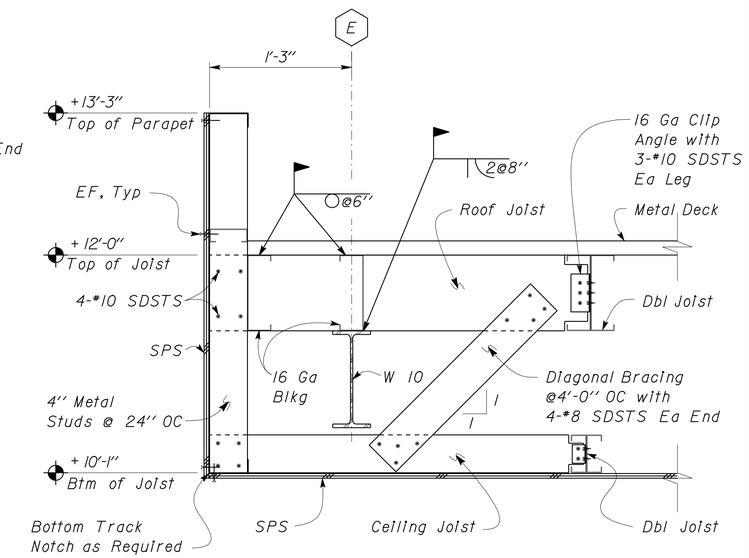

4 CONNECTION DETAIL
Scale 1 1/2" = 1'-0"

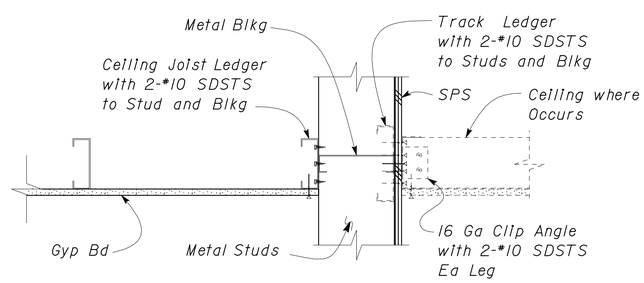

3 CONNECTION DETAIL
Scale 2" = 1'-0"

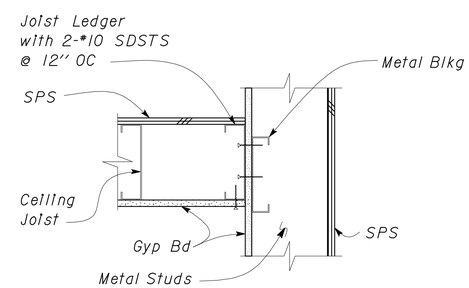

5 CONNECTION DETAIL
Scale 2" = 1'-0"

	BY	CHECKED
DESIGN	Edgardo Isidro	Gang Hong
DETAILS	Aleksey Serin	Edgardo Isidro
QUANTITIES		

STATE OF CALIFORNIA
DEPARTMENT OF TRANSPORTATION

DIVISION OF ENGINEERING SERVICES
ARCHITECTURAL AND STRUCTURAL DESIGN

BRIDGE NO. 28T5783
POST MILE 6.3

RICHMOND-SAN RAFAEL BRIDGE MAINTENANCE STATION
MAIN BUILDING — ROOF FRAMING DETAILS

SHEET **ST1-20**

TAEMWW Imperial Rev. 7/10

ORIGINAL SCALE IN INCHES FOR REDUCED PLANS 0 1 2 3

UNIT 3581
PROJECT NUMBER & PHASE 04000000021
EA 000000

DISREGARD PRINTS BEARING EARLIER REVISION DATES → 08-31-11 12-16-11 03-15-12 03-21-12 03-23-12 03-28-12 04-10-12

REVISION DATES (PRELIMINARY STAGE ONLY) SHEET OF

P:\dist_04\0400000002_richmond_san_rafael_mb\expedite\20120718_resubmit\st1_20.dgn

02-AUG-2012 15:08

DIST.	COUNTY	ROUTE	POST MILES TOTAL PROJECT	SHEET NO.	TOTAL SHEETS
04	CC	580	6.1/6.3	160	216

REGISTERED CIVIL ENGINEER — DATE 04-27-2012

REGISTERED PROFESSIONAL ENGINEER — Edgardo A. Isidro — No. 058507 — Exp. 12-31-12 — CIVIL — STATE OF CALIFORNIA

7-30-12
PLANS APPROVAL DATE

The State of California or its officers or agents shall not be responsible for the accuracy or completeness of scanned copies of this plan sheet.

CALIFORNIA STATE FIRE MARSHAL APPROVED

Approval of this plan does not authorize or approve any omission or deviation from applicable regulations. Final approval is subject to field inspection. One set of approved plans shall be available on the project site at all times.

Reviewed by: Ingrid P. Icasiano — INGRID P. ICASIANO, DSFM III

Approval date: July 17, 2012

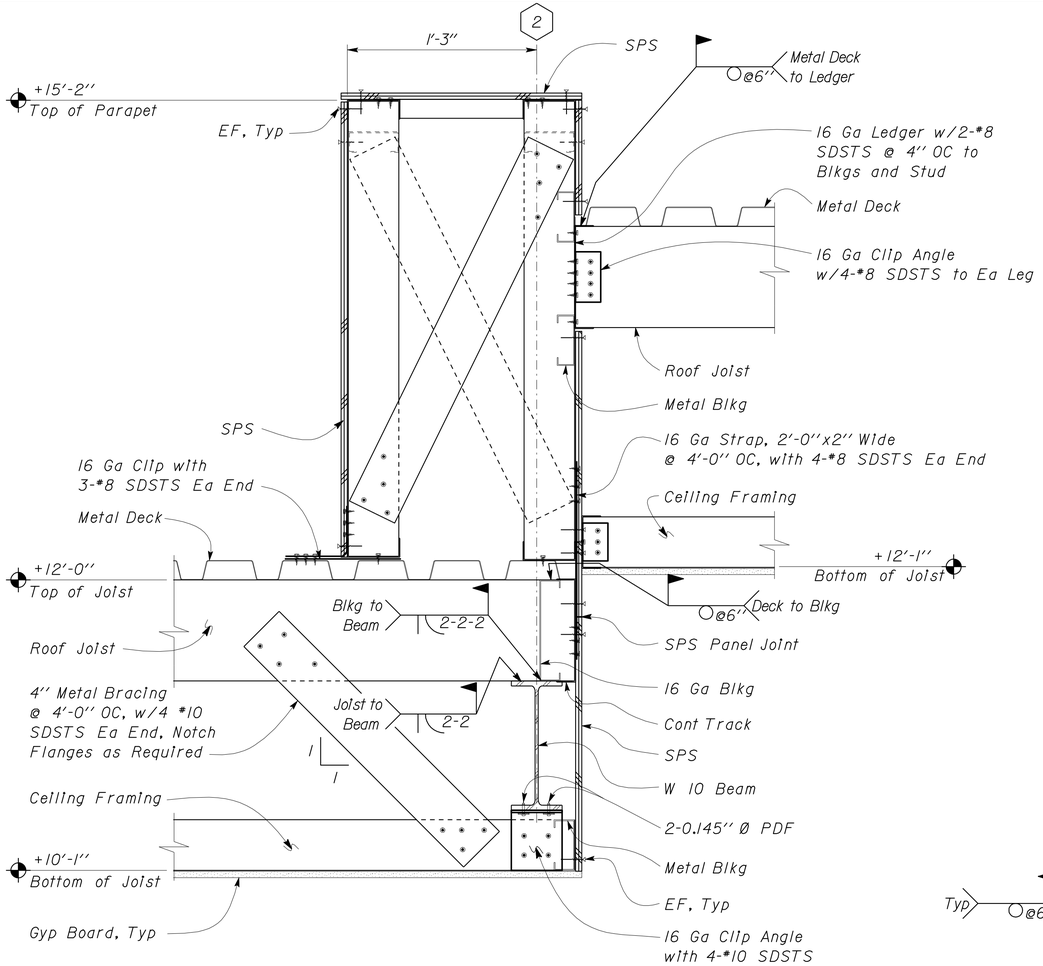

Note:
For Information not Noted, see 1/ST1-20

1 CONNECTION DETAIL
Scale 2" = 1'-0"

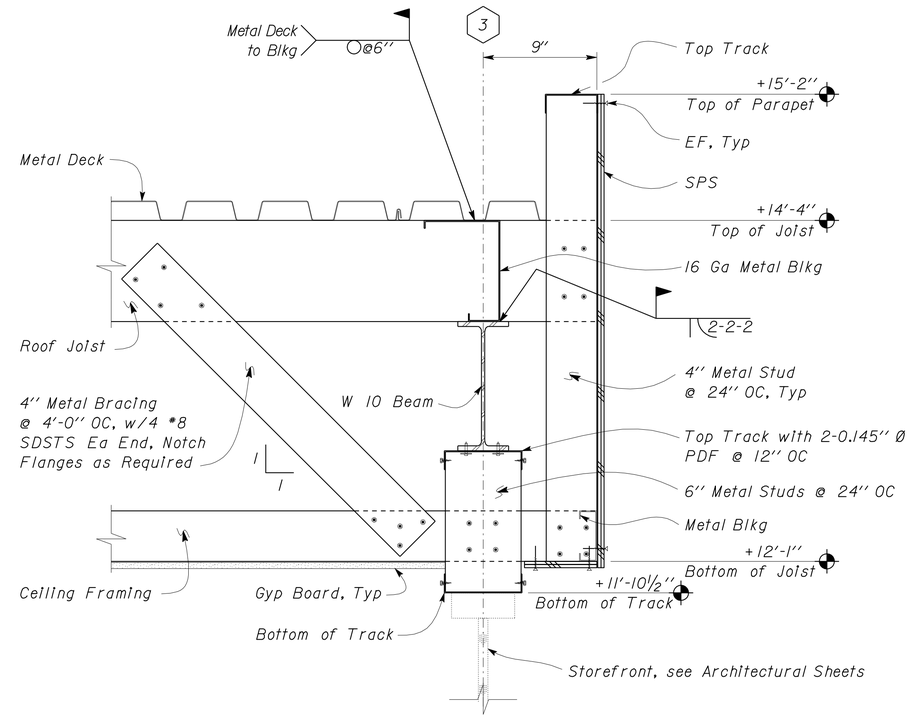

2 CONNECTION DETAIL
Scale 2" = 1'-0"

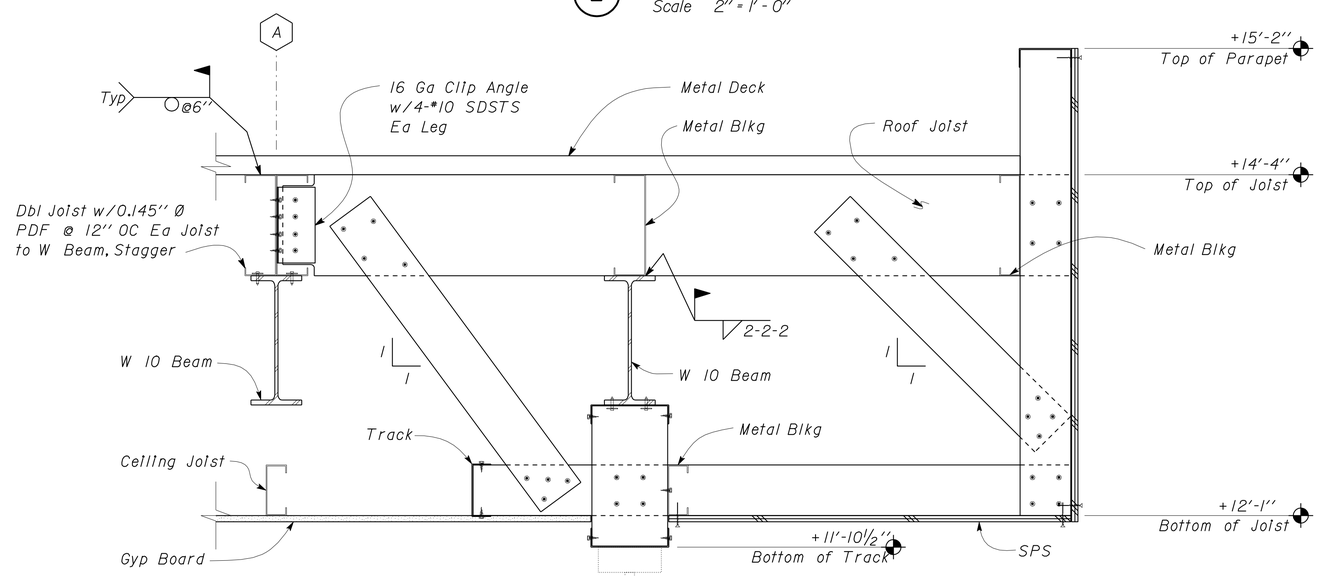

Note:
For Information not Noted, see 2

3 CONNECTION DETAIL
Scale 2" = 1'-0"

DESIGN	BY Edgardo Isidro	CHECKED Gang Hong	
DETAILS	BY Aleksey Serin	CHECKED Edgardo Isidro	
QUANTITIES	BY	CHECKED	

STATE OF CALIFORNIA
DEPARTMENT OF TRANSPORTATION

DIVISION OF ENGINEERING SERVICES
ARCHITECTURAL AND STRUCTURAL DESIGN

BRIDGE NO. 28T5783
POST MILE 6.3

RICHMOND-SAN RAFAEL BRIDGE MAINTENANCE STATION

MAIN BUILDING — ROOF FRAMING DETAILS

SHEET **ST1-21**

TAEMWW Imperial Rev. 7/10

ORIGINAL SCALE IN INCHES FOR REDUCED PLANS 0 1 2 3

UNIT 3581
PROJECT NUMBER & PHASE 04000000021
EA 000000

DISREGARD PRINTS BEARING EARLIER REVISION DATES → 10-27-11 11-21-11 12-16-11 02-03-12 02-08-12

REVISION DATES (PRELIMINARY STAGE ONLY) — SHEET — OF

P:\dist_04\0400000002_richmond_san_rafael_mb\expedite\20120718_resubmit\st1_21.dgn

02-AUG-2012 15:08

DIST.	COUNTY	ROUTE	POST MILES TOTAL PROJECT	SHEET NO.	TOTAL SHEETS
04	CC	580	6.1/6.3	161	216

REGISTERED CIVIL ENGINEER — DATE 04-27-2012

REGISTERED PROFESSIONAL ENGINEER — Edgardo A. Isidro — No. 058507 — Exp. 12-31-12 — CIVIL — STATE OF CALIFORNIA

7-30-12
PLANS APPROVAL DATE

The State of California or its officers or agents shall not be responsible for the accuracy or completeness of scanned copies of this plan sheet.

CALIFORNIA STATE FIRE MARSHAL APPROVED
Approval of this plan does not authorize or approve any omission or deviation from applicable regulations. Final approval is subject to field inspection. One set of approved plans shall be available on the project site at all times.
Reviewed by: INGRID P. ICASIANO, DSFM III
Approval date: July 17, 2012

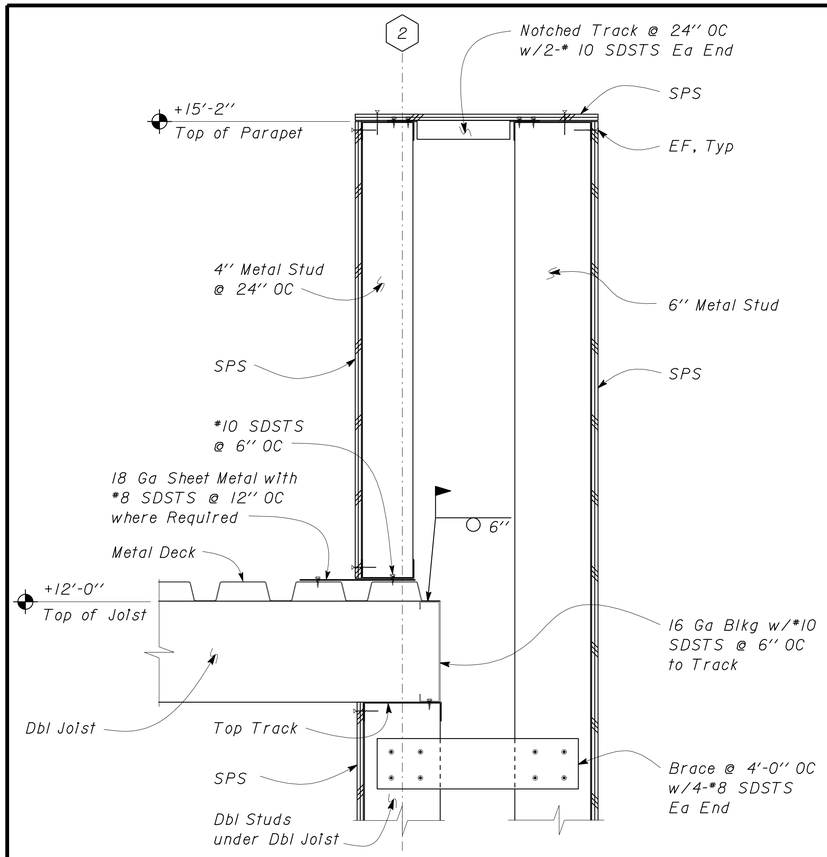

1 CONNECTION DETAIL
Scale 2" = 1'-0"

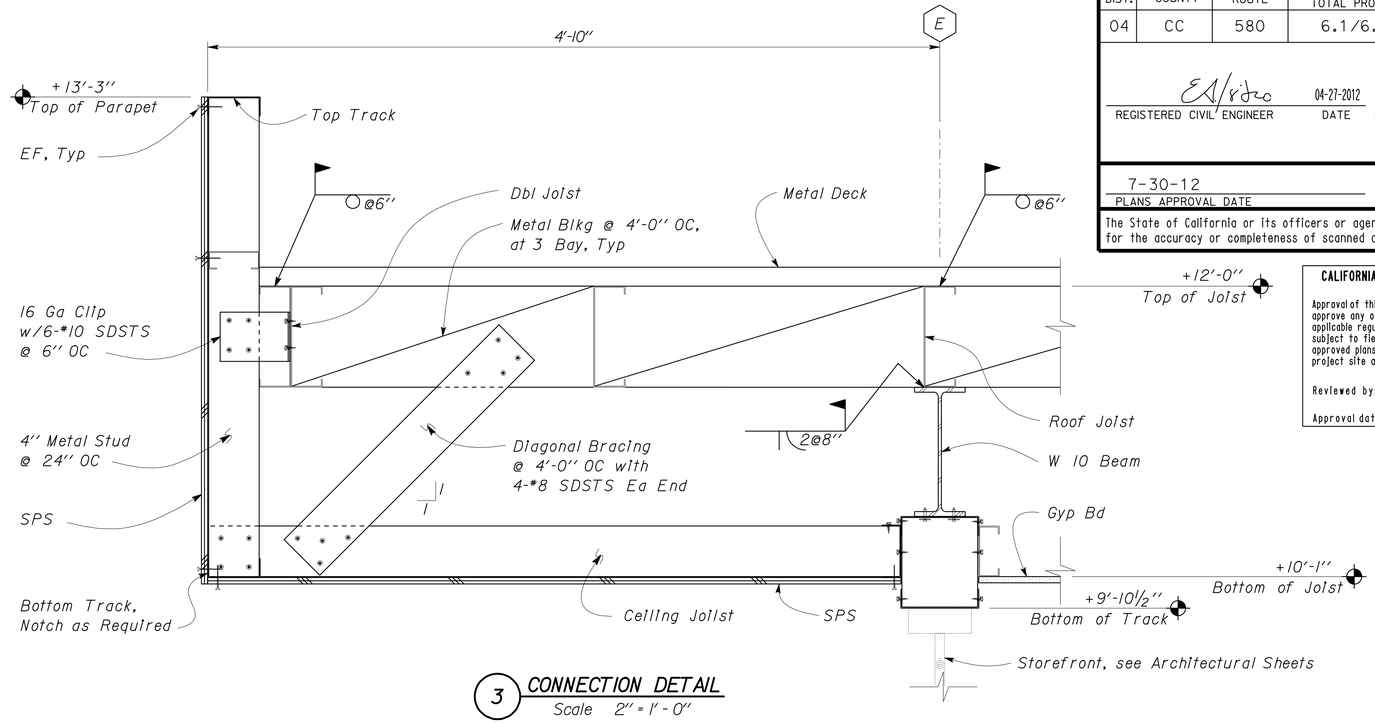

3 CONNECTION DETAIL
Scale 2" = 1'-0"

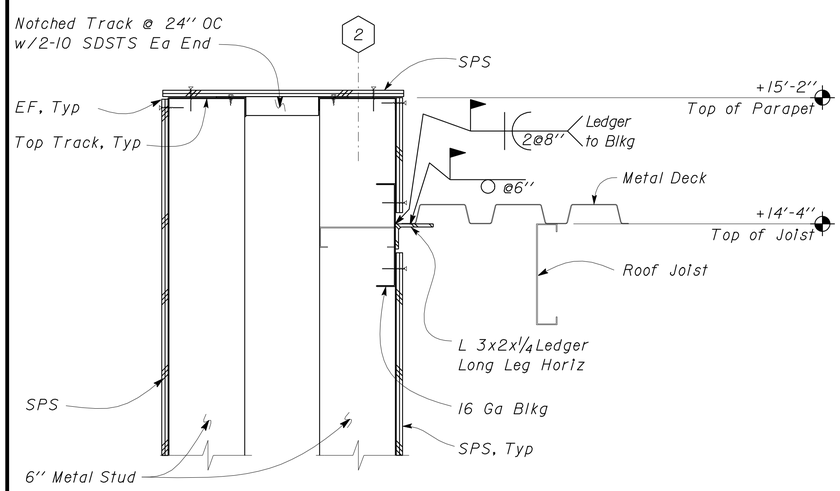

2 CONNECTION DETAIL
Scale 2" = 1'-0"

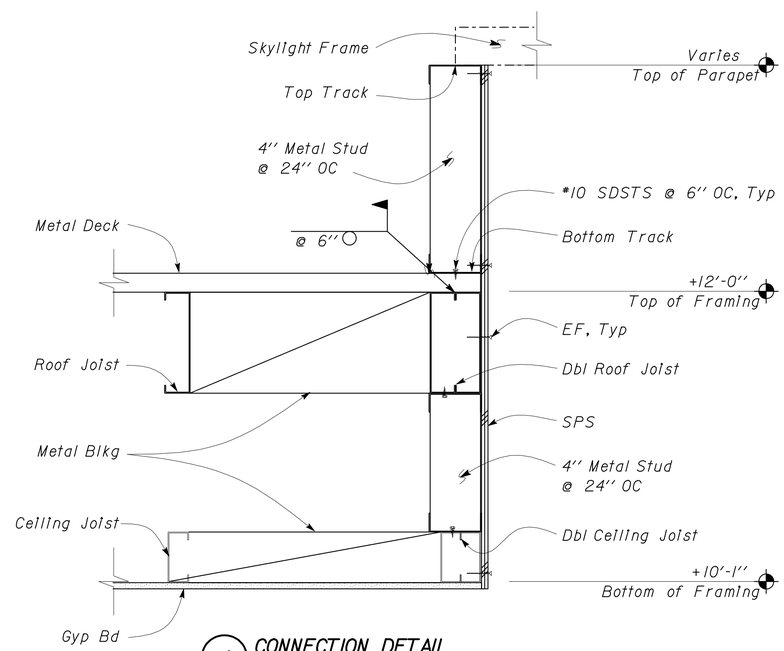

4 CONNECTION DETAIL
Scale 2" = 1'-0"

	BY	CHECKED
DESIGN	Edgardo Isidro	Gang Hong
DETAILS	Aleksey Serin	Edgardo Isidro
QUANTITIES		

STATE OF CALIFORNIA
DEPARTMENT OF TRANSPORTATION

DIVISION OF ENGINEERING SERVICES
ARCHITECTURAL AND STRUCTURAL DESIGN

BRIDGE NO. 28T5783
POST MILE 6.3

RICHMOND-SAN RAFAEL BRIDGE MAINTENANCE STATION
MAIN BUILDING — ROOF FRAMING DETAILS

SHEET ST1-22

TAEMWW Imperial Rev. 7/10

ORIGINAL SCALE IN INCHES FOR REDUCED PLANS 0 1 2 3

UNIT 3581
PROJECT NUMBER & PHASE 04000000021

DISREGARD PRINTS BEARING EARLIER REVISION DATES
REVISION DATES (PRELIMINARY STAGE ONLY) 10-27-11 12-16-11 02-08-12 03-15-12
SHEET OF

EA 000000

P:\dist_04\0400000002_richmond_san_rafael_mb\expedite\20120718_resubmit\st1_22.dgn

02-AUG-2012 15:08

DIST.	COUNTY	ROUTE	POST MILES TOTAL PROJECT	SHEET NO.	TOTAL SHEETS
04	CC	580	6.1/6.3	162	216

REGISTERED CIVIL ENGINEER — 04-27-2012 DATE

REGISTERED PROFESSIONAL ENGINEER — Edgardo A. Isidro — No. 058507 — Exp. 12-31-12 — CIVIL — STATE OF CALIFORNIA

7-30-12
PLANS APPROVAL DATE

The State of California or its officers or agents shall not be responsible for the accuracy or completeness of scanned copies of this plan sheet.

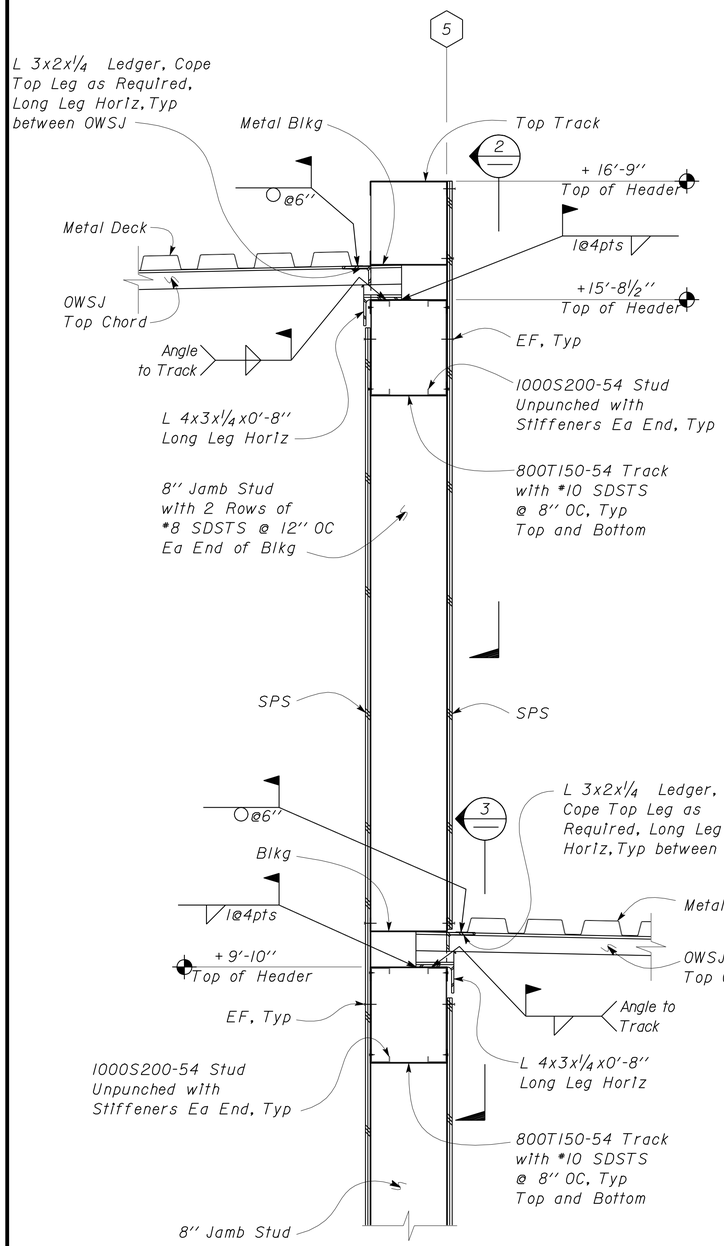

1 OWSJ BLOCKING SECTION
Scale 1 1/2" = 1'-0"

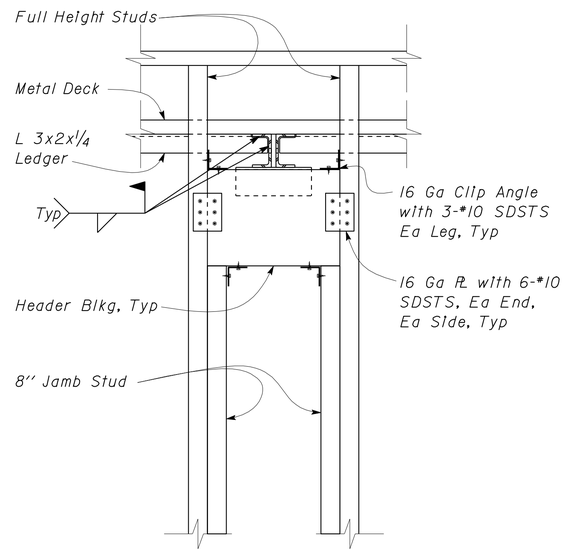

2 OWSJ BLOCKING ELEVATION
Scale 1 1/2" = 1'-0"

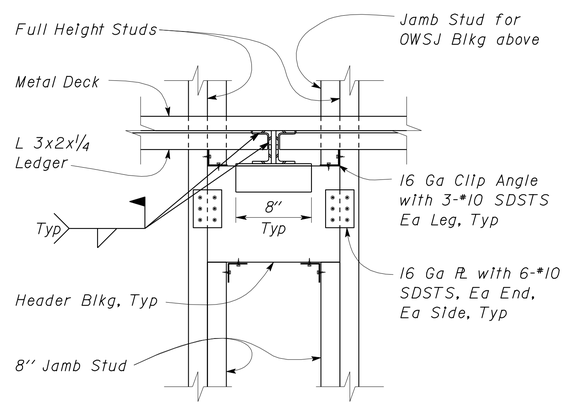

3 OWSJ BLOCKING ELEVATION
Scale 1 1/2" = 1'-0"

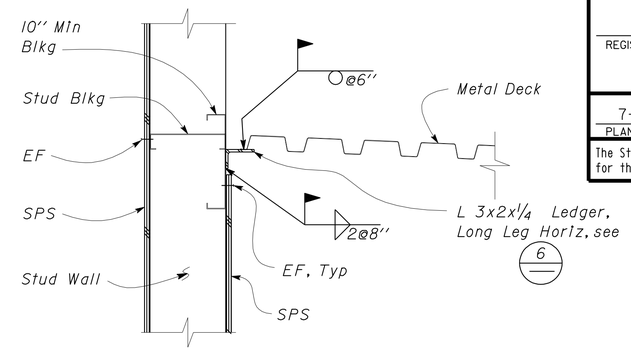

4 CONNECTION DETAIL
Scale 1 1/2" = 1'-0"

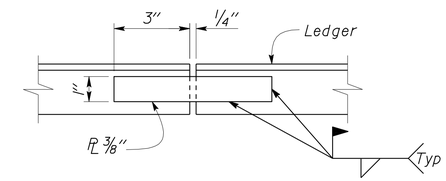

6 TYPICAL LEDGER SPLICE DETAIL
Scale 4" = 1'-0"

CALIFORNIA STATE FIRE MARSHAL APPROVED
Approval of this plan does not authorize or approve any omission or deviation from applicable regulations. Final approval is subject to field inspection. One set of approved plans shall be available on the project site at all times.
Reviewed by: Ingrid P. Casiano — INGRID P. ICASIANO, DSFM III
Approval date: July 17, 2012

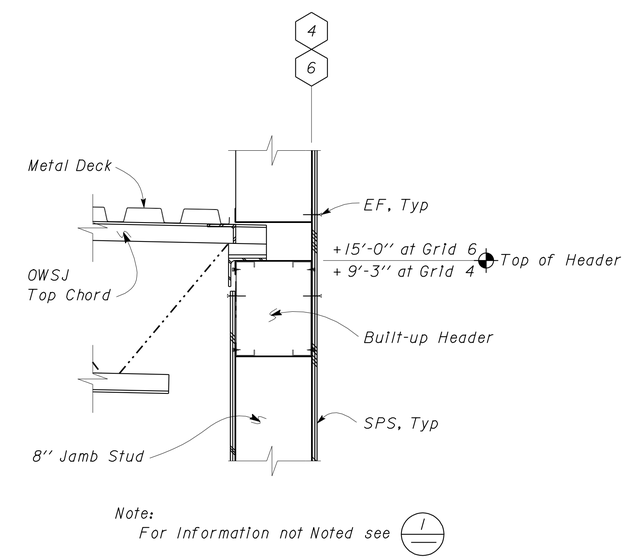

5 OWSJ CONNECTION SECTION
Scale 1 1/2" = 1'-0"

	BY	CHECKED
DESIGN	Edgardo Isidro	Gang Hong
DETAILS	Aleksey Serin	Edgardo Isidro
QUANTITIES		

STATE OF CALIFORNIA DEPARTMENT OF TRANSPORTATION

DIVISION OF ENGINEERING SERVICES ARCHITECTURAL AND STRUCTURAL DESIGN

BRIDGE NO. 28T5783 — POST MILE 6.3

RICHMOND-SAN RAFAEL BRIDGE MAINTENANCE STATION
MAIN BUILDING — ROOF FRAMING DETAILS

SHEET ST1-23

TAEMWW Imperial Rev. 7/10

ORIGINAL SCALE IN INCHES FOR REDUCED PLANS 0 1 2 3

UNIT 3581
PROJECT NUMBER & PHASE 04000000021
EA 000000

DISREGARD PRINTS BEARING EARLIER REVISION DATES → 11-22-11 12-20-11 02-03-12 02-10-12

REVISION DATES (PRELIMINARY STAGE ONLY) — SHEET — OF

P:\dist_04\0400000002_richmond_san_rafael_mb\expedite\20120718_resubmit\st1_23.dgn

02-AUG-2012 15:08

DIST.	COUNTY	ROUTE	POST MILES TOTAL PROJECT	SHEET NO.	TOTAL SHEETS
04	CC	580	6.1/6.3	163	216

REGISTERED CIVIL ENGINEER — DATE 04-27-2012

REGISTERED PROFESSIONAL ENGINEER — Edgardo A. Isidro — No. 058507 — Exp. 12-31-12 — CIVIL — STATE OF CALIFORNIA

7-30-12
PLANS APPROVAL DATE

The State of California or its officers or agents shall not be responsible for the accuracy or completeness of scanned copies of this plan sheet.

CALIFORNIA STATE FIRE MARSHAL APPROVED

Approval of this plan does not authorize or approve any omission or deviation from applicable regulations. Final approval is subject to field inspection. One set of approved plans shall be available on the project site at all times.

Reviewed by: Ingrid P. Casiano
INGRID P. ICASIANO, DSFM III

Approval date: July 17, 2012

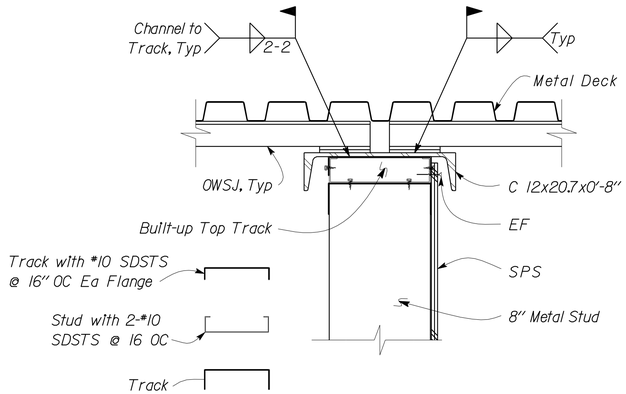

1 OWSJ AT WALL DETAIL
Scale 2" = 1' - 0"

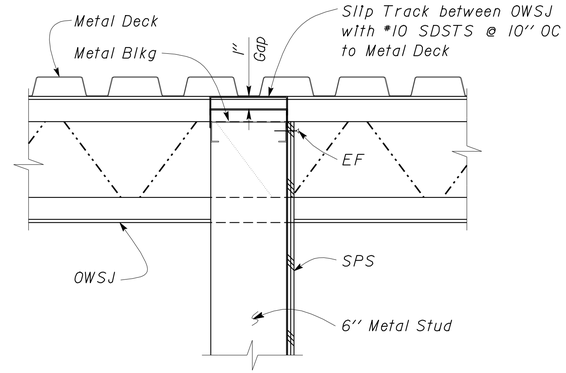

3 CONNECTION DETAIL
Scale 2" = 1' - 0"

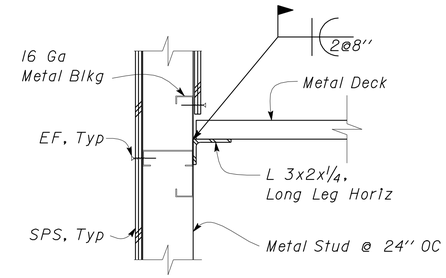

5 CONNECTION DETAIL
Scale 2" = 1' - 0"

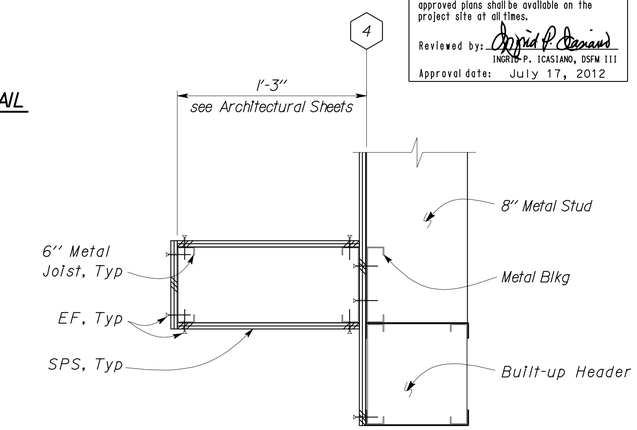

6 OVERHANG DETAIL
Scale 2" = 1' - 0"

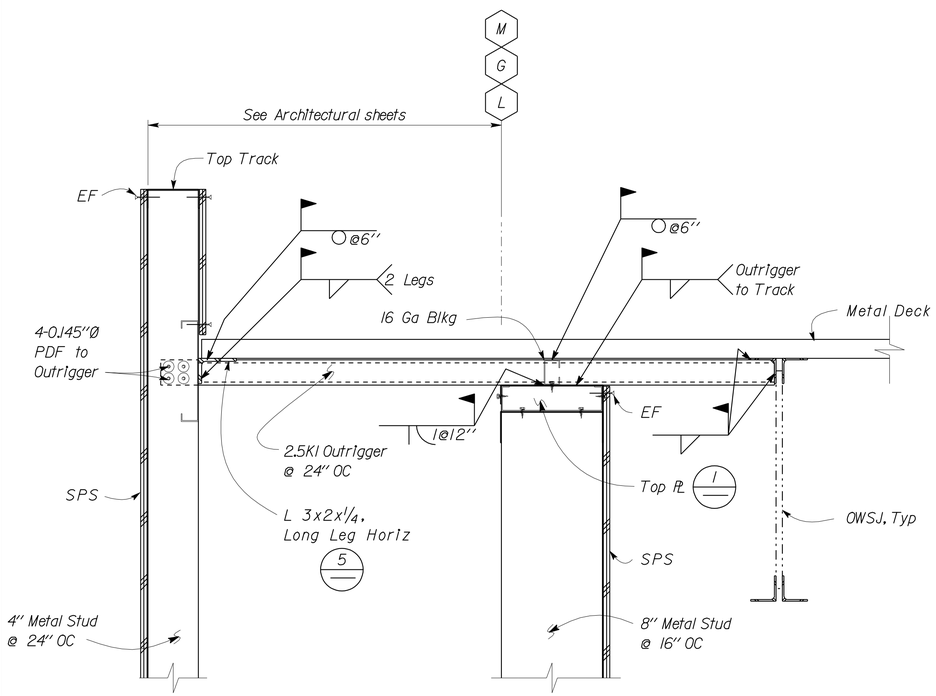

2 OUTRIGGER DETAIL
Scale 2" = 1' - 0"

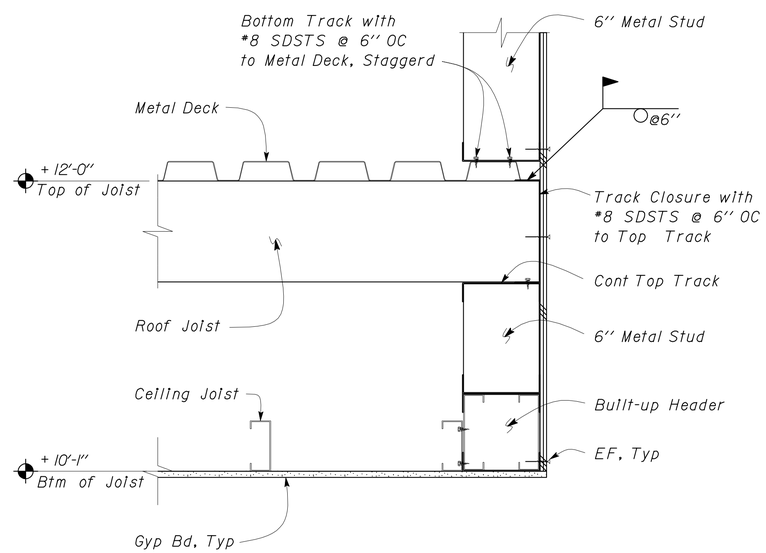

4 CONNECTION DETAIL
Scale 2" = 1' - 0"

	BY	CHECKED
DESIGN	Edgardo Isidro	Gang Hong
DETAILS	Aleksey Serin	Edgardo Isidro
QUANTITIES		

STATE OF CALIFORNIA
DEPARTMENT OF TRANSPORTATION

DIVISION OF ENGINEERING SERVICES
ARCHITECTURAL AND STRUCTURAL DESIGN

BRIDGE NO. 28T5783
POST MILE 6.3

RICHMOND-SAN RAFAEL BRIDGE MAINTENANCE STATION
MAIN BUILDING — ROOF FRAMING DETAILS

SHEET **ST1-24**

TAEMWW Imperial Rev. 7/10

ORIGINAL SCALE IN INCHES FOR REDUCED PLANS 0 1 2 3

UNIT 3581
PROJECT NUMBER & PHASE 04000000021
EA 000000

DISREGARD PRINTS BEARING EARLIER REVISION DATES
REVISION DATES (PRELIMINARY STAGE ONLY) 11-29-11 01-11-12 03-16-12
SHEET OF

P:\dist_04\0400000002_richmond_san_rafael_mb\expedite\20120718_resubmit\st1_24.dgn
02-AUG-2012 15:08

DIST.	COUNTY	ROUTE	POST MILES TOTAL PROJECT	SHEET NO.	TOTAL SHEETS
04	CC	580	6.1/6.3	164	216

REGISTERED CIVIL ENGINEER — DATE 04-27-2012

REGISTERED PROFESSIONAL ENGINEER — Edgardo A. Isidro — No. 058507 — Exp. 12-31-12 — CIVIL — STATE OF CALIFORNIA

7-30-12
PLANS APPROVAL DATE

The State of California or its officers or agents shall not be responsible for the accuracy or completeness of scanned copies of this plan sheet.

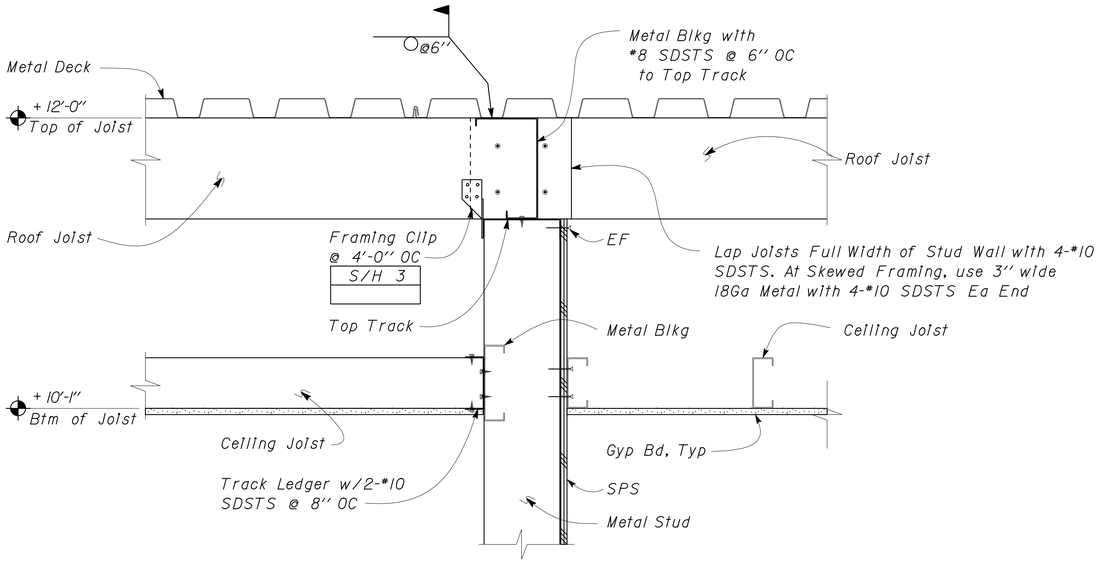

1 CONNECTION DETAIL
Scale 2" = 1' - 0"

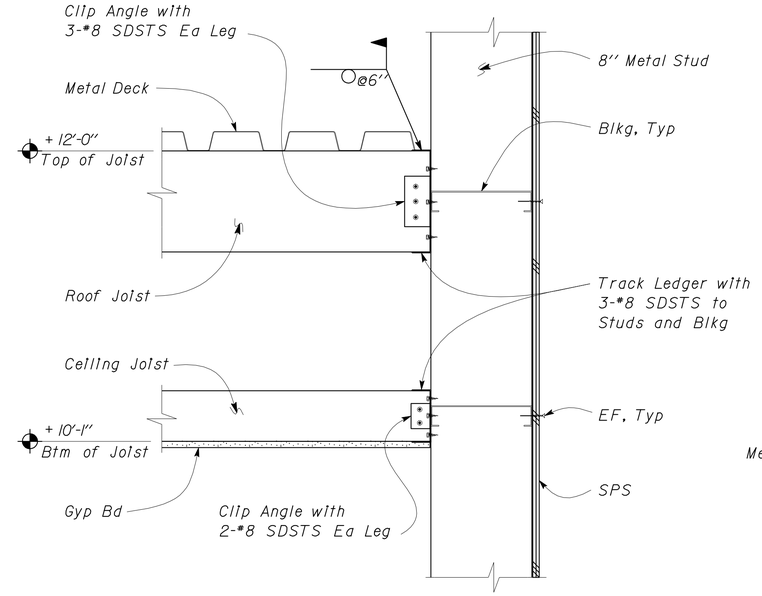

3 CONNECTION DETAIL
Scale 2" = 1' - 0"

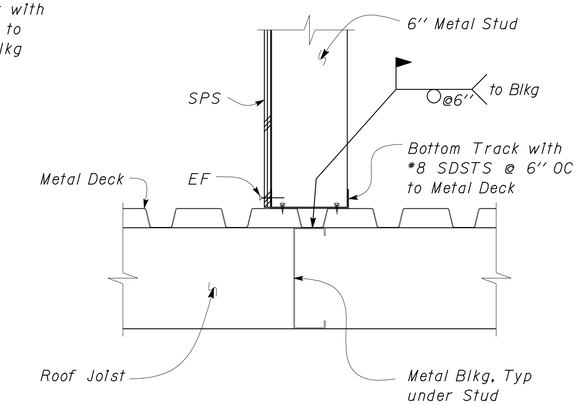

5 CONNECTION DETAIL
Scale 2" = 1' - 0"

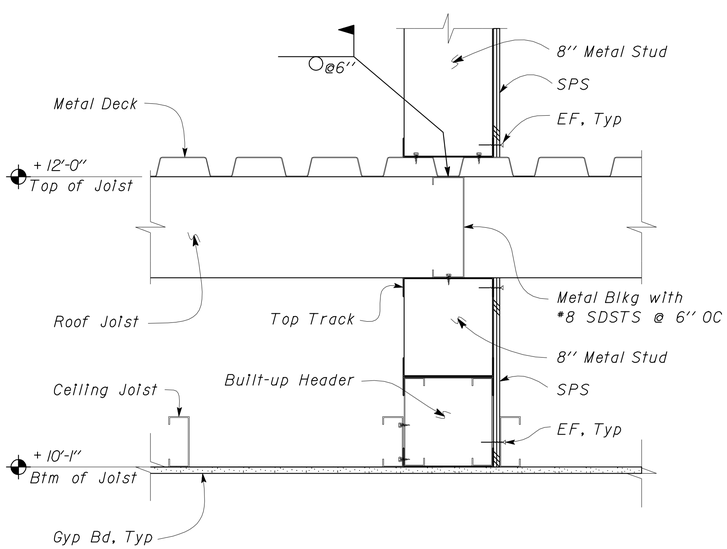

2 CONNECTION DETAIL
Scale 2" = 1' - 0"

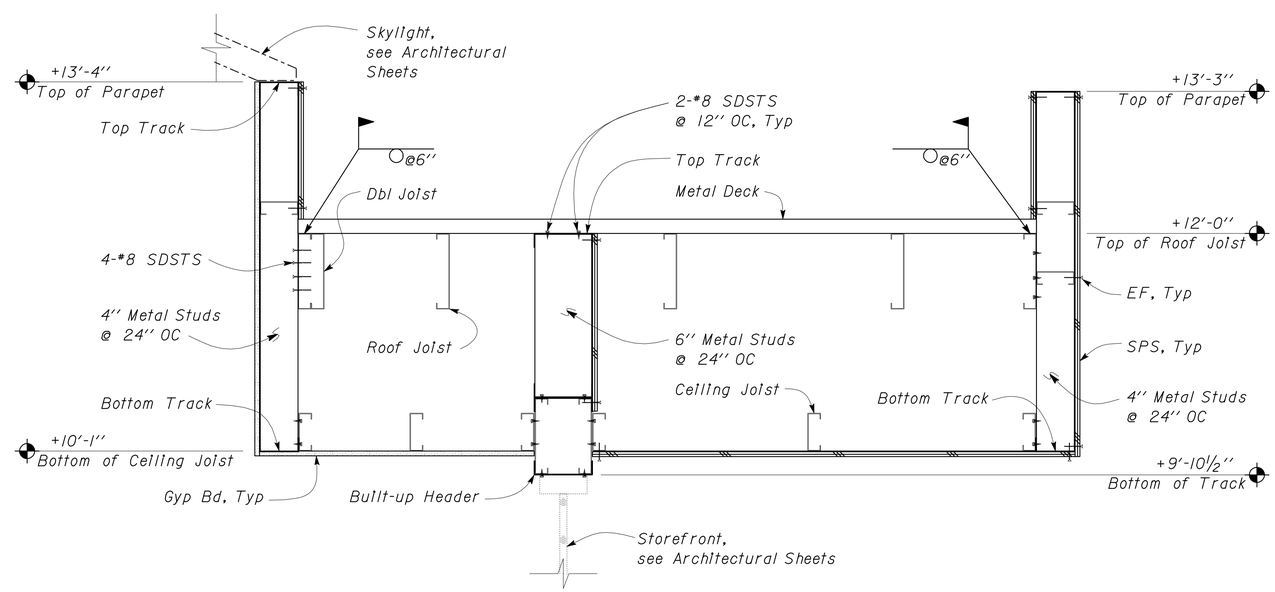

4 CONNECTION DETAIL
Scale 1½" = 1' - 0"

CALIFORNIA STATE FIRE MARSHAL APPROVED

Approval of this plan does not authorize or approve any omission or deviation from applicable regulations. Final approval is subject to field inspection. One set of approved plans shall be available on the project site at all times.

Reviewed by: INGRID P. ICASIANO, DSFM III

Approval date: July 17, 2012

DESIGN	BY Edgardo Isidro	CHECKED Gang Hong	
DETAILS	BY Aleksey Serin	CHECKED Edgardo Isidro	
QUANTITIES	BY	CHECKED	

STATE OF CALIFORNIA
DEPARTMENT OF TRANSPORTATION

DIVISION OF ENGINEERING SERVICES
ARCHITECTURAL AND STRUCTURAL DESIGN

BRIDGE NO. 28T5783
POST MILE 6.3

RICHMOND-SAN RAFAEL BRIDGE MAINTENANCE STATION

MAIN BUILDING — ROOF/CEILING FRAMING DETAILS

SHEET **ST1-25**

TAEMWW Imperial Rev. 7/10

ORIGINAL SCALE IN INCHES FOR REDUCED PLANS 0 1 2 3

UNIT 3581
PROJECT NUMBER & PHASE 04000000021
EA 000000

DISREGARD PRINTS BEARING EARLIER REVISION DATES → 01-12-12 03-16-12

REVISION DATES (PRELIMINARY STAGE ONLY) — SHEET — OF

P:\dist_04\0400000002_richmond_san_rafael_mb\expedite\20120718_resubmit\st1_25.dgn

02-AUG-2012 15:08

DIST.	COUNTY	ROUTE	POST MILES TOTAL PROJECT	SHEET NO.	TOTAL SHEETS
04	CC	580	6.1/6.3	165	216

REGISTERED CIVIL ENGINEER — 04-27-2012 DATE

REGISTERED PROFESSIONAL ENGINEER — Edgardo A. Isidro — No. 058507 — Exp. 12-31-12 — CIVIL — STATE OF CALIFORNIA

7-30-12
PLANS APPROVAL DATE

The State of California or its officers or agents shall not be responsible for the accuracy or completeness of scanned copies of this plan sheet.

CALIFORNIA STATE FIRE MARSHAL APPROVED

Approval of this plan does not authorize or approve any omission or deviation from applicable regulations. Final approval is subject to field inspection. One set of approved plans shall be available on the project site at all times.

Reviewed by: Ingrid P. Icasiano
INGRID P. ICASIANO, DSFM III

Approval date: July 17, 2012

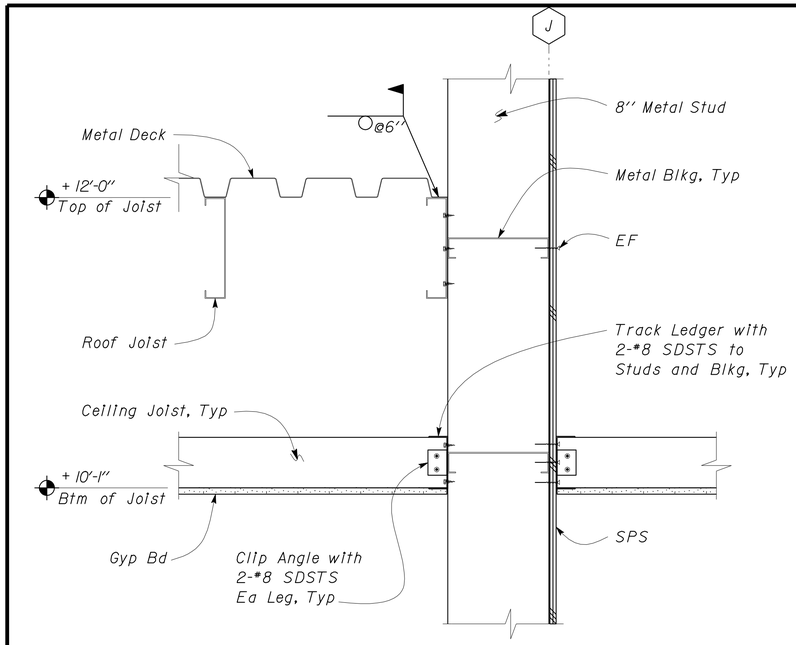

1 CONNECTION DETAIL
Scale 2" = 1' - 0"

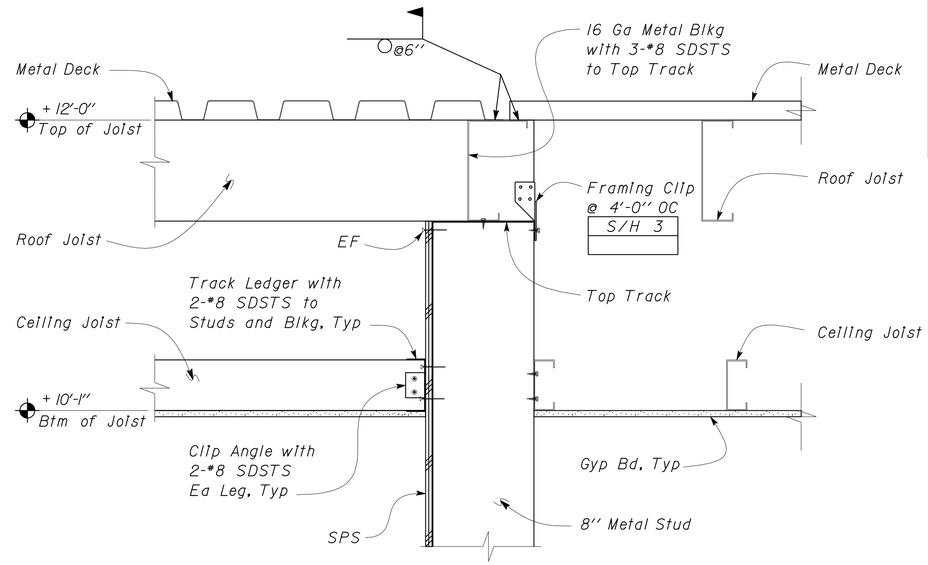

3 CONNECTION DETAIL
Scale 2" = 1' - 0"

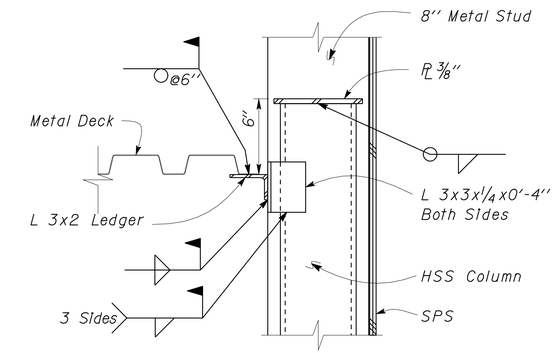

5 LEDGER CONNECTION DETAIL
Scale 2" = 1' - 0"

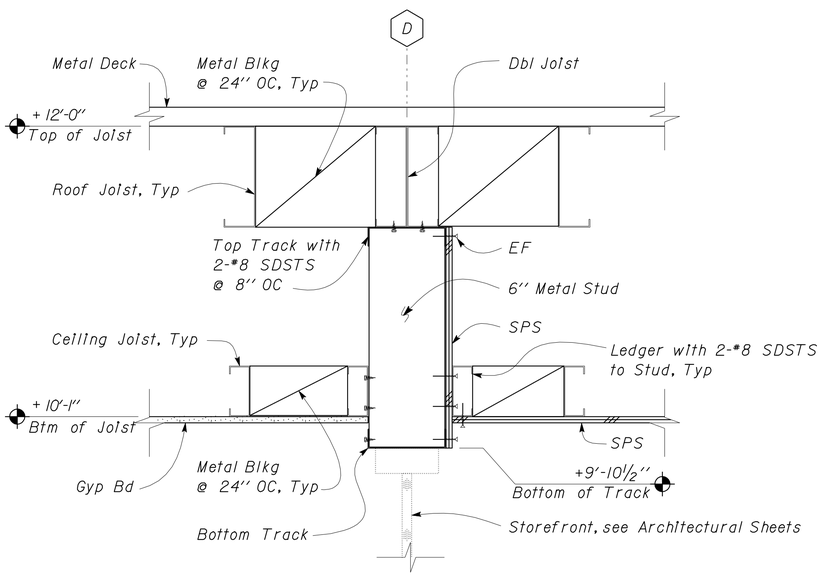

2 CONNECTION DETAIL
Scale 2" = 1' - 0"

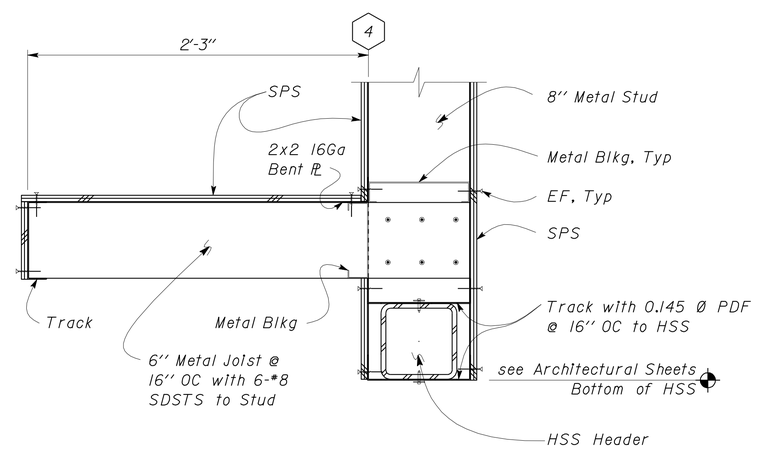

4 CONNECTION DETAIL
Scale 2" = 1' - 0"

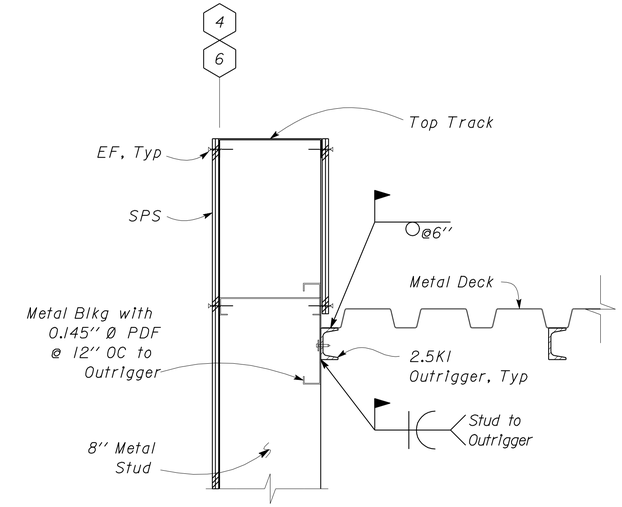

6 CONNECTION DETAIL
Scale 2" = 1' - 0"

	BY	CHECKED
DESIGN	Edgardo Isidro	Gang Hong
DETAILS	Aleksey Serin	Edgardo Isidro
QUANTITIES		

STATE OF CALIFORNIA
DEPARTMENT OF TRANSPORTATION

DIVISION OF ENGINEERING SERVICES
ARCHITECTURAL AND STRUCTURAL DESIGN

BRIDGE NO. 28T5783
POST MILE 6.3

RICHMOND-SAN RAFAEL BRIDGE MAINTENANCE STATION
MAIN BUILDING — ROOF/CEILING FRAMING DETAILS

SHEET **ST1-26**

TAEMWW Imperial Rev. 7/10

ORIGINAL SCALE IN INCHES FOR REDUCED PLANS 0 1 2 3

UNIT 3581
PROJECT NUMBER & PHASE 04000000021
EA 000000

DISREGARD PRINTS BEARING EARLIER REVISION DATES → 01-13-12 02-08-12 02-15-12 03-16-12 03-19-12

REVISION DATES (PRELIMINARY STAGE ONLY) SHEET OF

P:\dist_04\0400000002_richmond_san_rafael_mb\expedite\20120718_resubmit\st1_26.dgn

02-AUG-2012 15:08

DIST.	COUNTY	ROUTE	POST MILES TOTAL PROJECT	SHEET NO.	TOTAL SHEETS
04	CC	580	6.1/6.3	166	216

REGISTERED CIVIL ENGINEER — DATE 04-27-2012

REGISTERED PROFESSIONAL ENGINEER — Edgardo A. Isidro — No. 058507 — Exp. 12-31-12 — CIVIL — STATE OF CALIFORNIA

7-30-12
PLANS APPROVAL DATE

The State of California or its officers or agents shall not be responsible for the accuracy or completeness of scanned copies of this plan sheet.

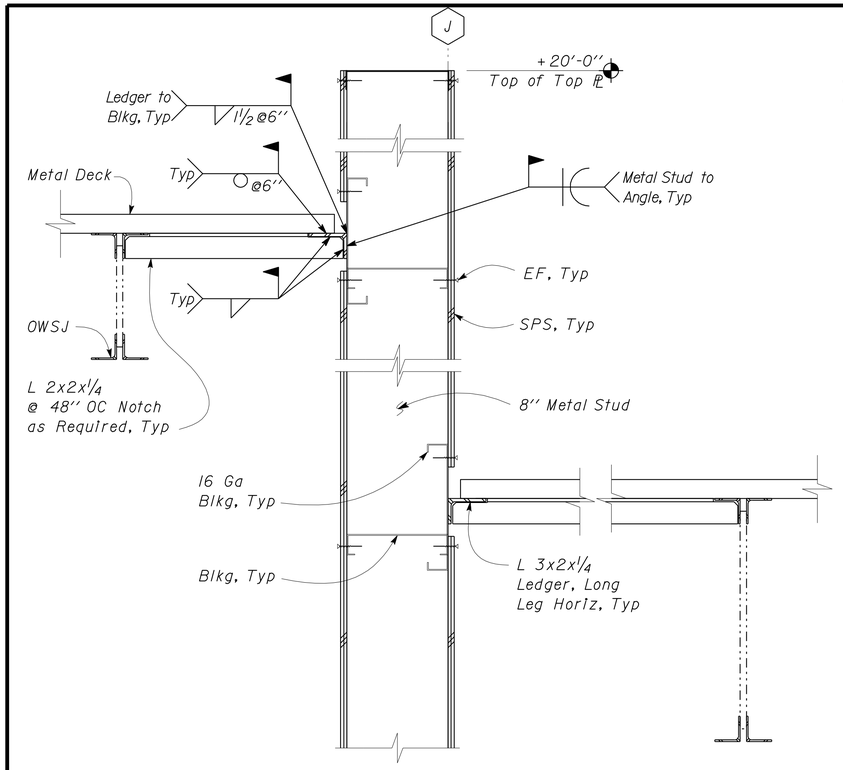

1 CONNECTION DETAIL
Scale 2" = 1'-0"

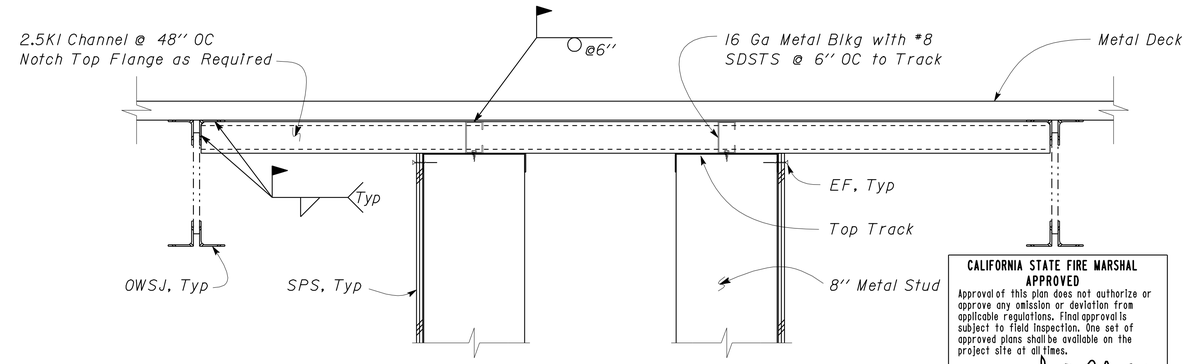

3 CONNECTION DETAIL
Scale 2" = 1'-0"

CALIFORNIA STATE FIRE MARSHAL APPROVED
Approval of this plan does not authorize or approve any omission or deviation from applicable regulations. Final approval is subject to field inspection. One set of approved plans shall be available on the project site at all times.
Reviewed by: Ingrid P. Icasiano — INGRID P. ICASIANO, DSFM III
Approval date: July 17, 2012

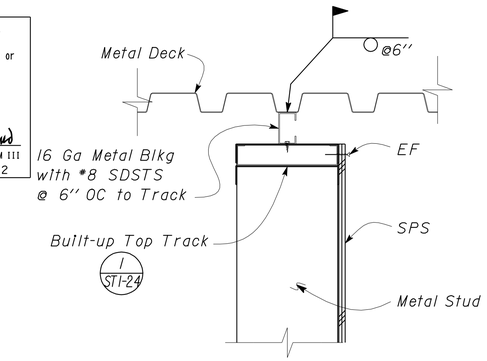

6 CONNECTION DETAIL
Scale 2" = 1'-0"

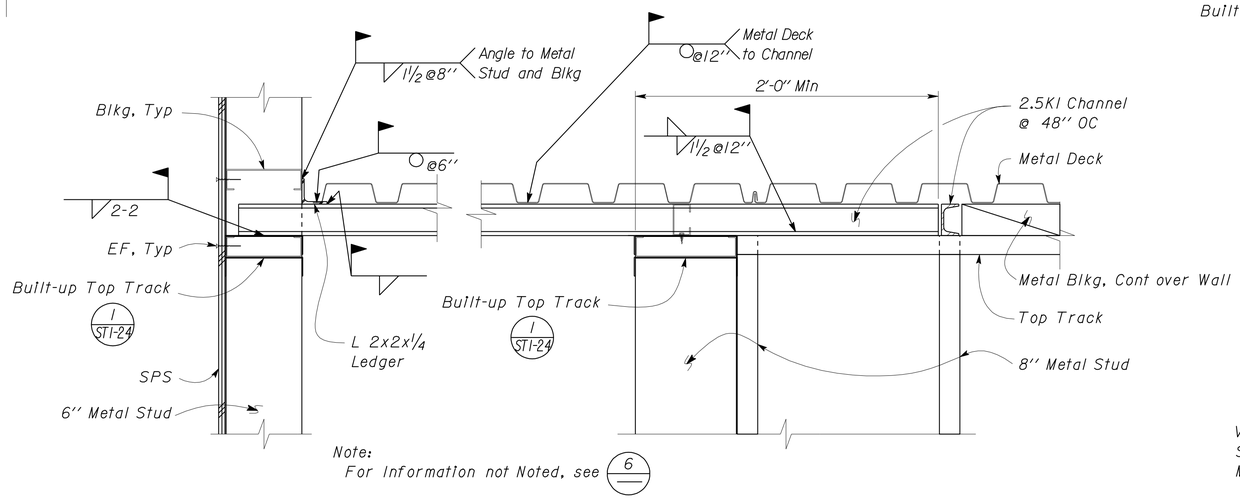

Note:
For Information not Noted, see 6

4 CONNECTION DETAIL
Scale 2" = 1'-0"

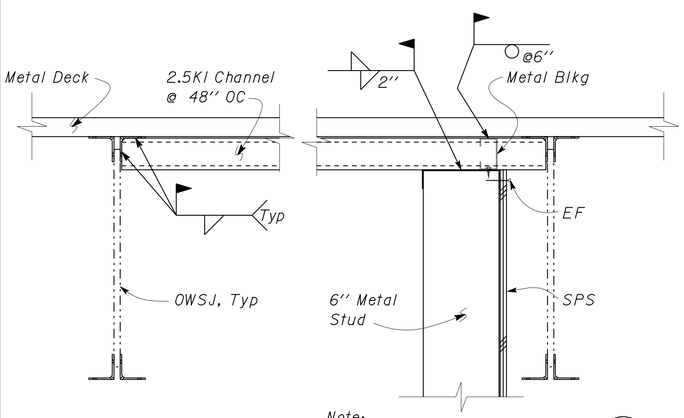

Note:
For Information not Shown see 3

2 CONNECTION DETAIL
Scale 2" = 1'-0"

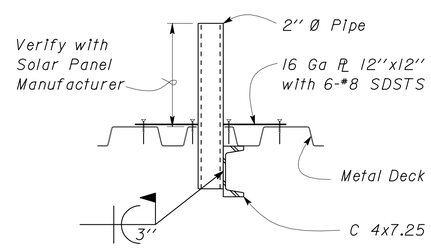

7 SECTION
Scale 2" = 1'-0"

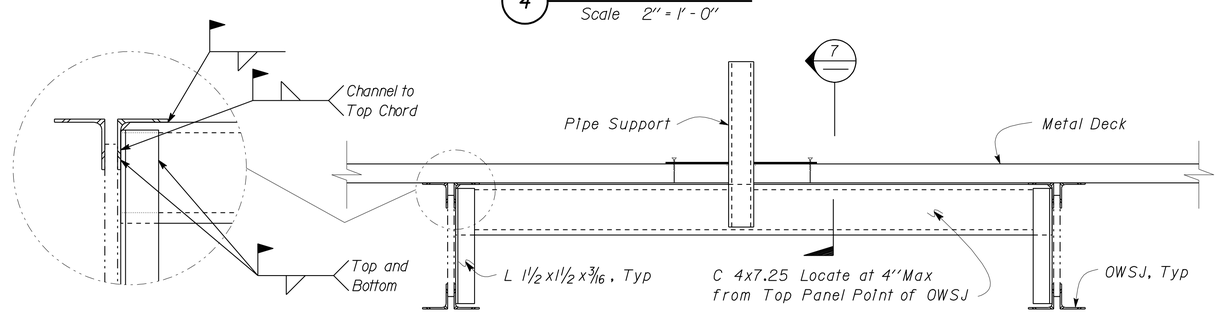

Note:
Pipe Supports @ 6'-0" OC Max Spacing

5 PIPE SUPPORT CONNECTION DETAIL
Scale 2" = 1'-0"

	BY	CHECKED
DESIGN	Edgardo Isidro	Gang Hong
DETAILS	Aleksey Serin	Edgardo Isidro
QUANTITIES		

STATE OF CALIFORNIA
DEPARTMENT OF TRANSPORTATION

DIVISION OF ENGINEERING SERVICES
ARCHITECTURAL AND STRUCTURAL DESIGN

BRIDGE NO. 28T5783
POST MILE 6.3

RICHMOND-SAN RAFAEL BRIDGE MAINTENANCE STATION
MAIN BUILDING — ROOF FRAMING DETAILS

SHEET ST1-27

TAEMWW Imperial Rev. 7/10

ORIGINAL SCALE IN INCHES FOR REDUCED PLANS 0 1 2 3

UNIT 3581
PROJECT NUMBER & PHASE 04000000021
EA 000000

DISREGARD PRINTS BEARING EARLIER REVISION DATES → 01-23-12 03-16-12 03-23-12 04-10-12

REVISION DATES (PRELIMINARY STAGE ONLY) SHEET OF

P:\dist_04\0400000002_richmond_san_rafael_mb\expedite\20120718_resubmit\st1_27.dgn 02-AUG-2012 15:09

DIST.	COUNTY	ROUTE	POST MILES TOTAL PROJECT	SHEET NO.	TOTAL SHEETS
04	CC	580	6.1/6.3	167	216

REGISTERED CIVIL ENGINEER — DATE 04-27-2012

REGISTERED PROFESSIONAL ENGINEER — Edgardo A. Isidro — No. 058507 — Exp. 12-31-12 — CIVIL — STATE OF CALIFORNIA

7-30-12
PLANS APPROVAL DATE

The State of California or its officers or agents shall not be responsible for the accuracy or completeness of scanned copies of this plan sheet.

CALIFORNIA STATE FIRE MARSHAL APPROVED
Approval of this plan does not authorize or approve any omission or deviation from applicable regulations. Final approval is subject to field inspection. One set of approved plans shall be available on the project site at all times.
Reviewed by: Ingrid P. Casiano
INGRID P. ICASIANO, DSFM III
Approval date: July 17, 2012

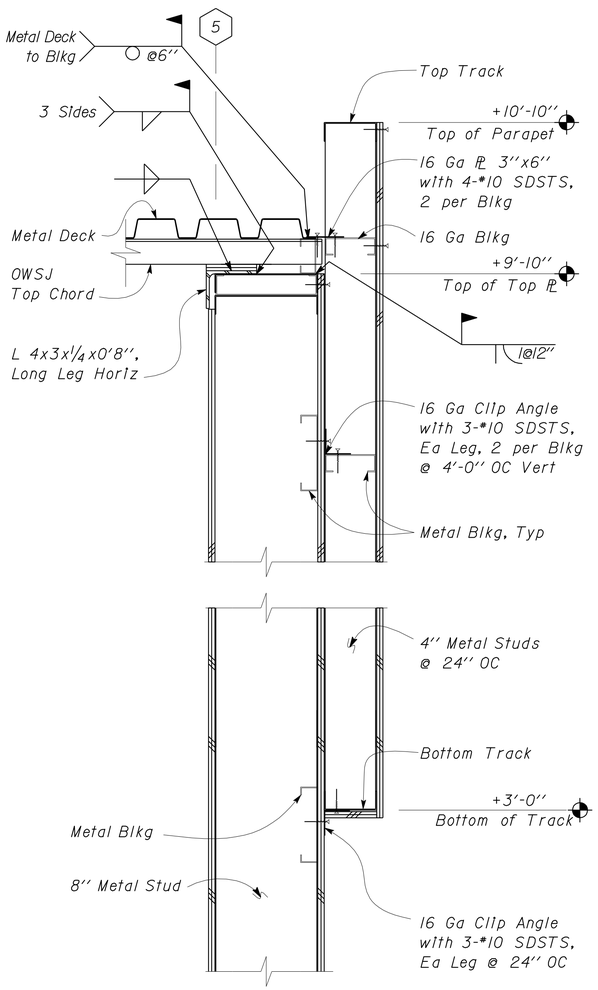

1 CONNECTION DETAIL
Scale 2'' = 1'-0''

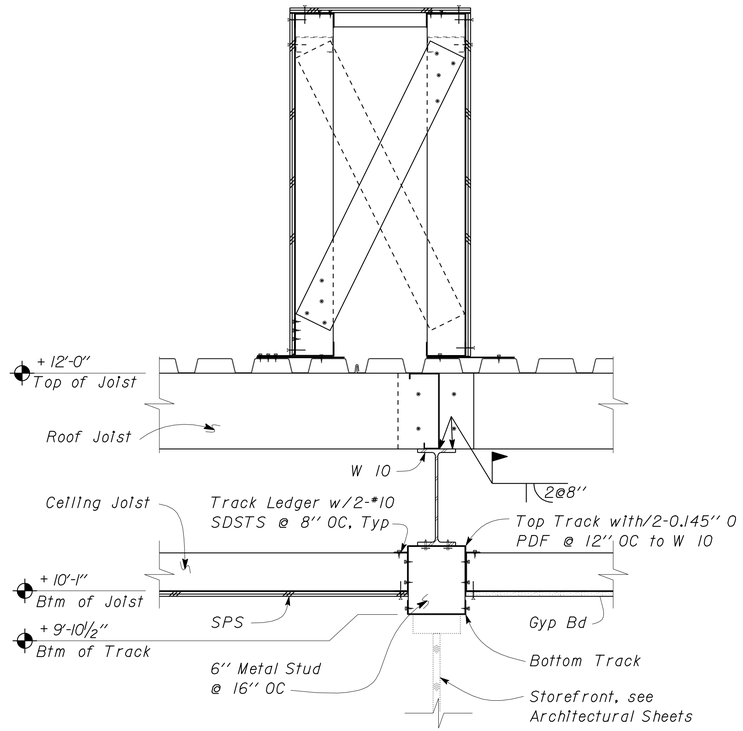

Note:
For Information not Noted, see 1/ST1-20

2 CONNECTION DETAIL
Scale 1 1/2'' = 1'-0''

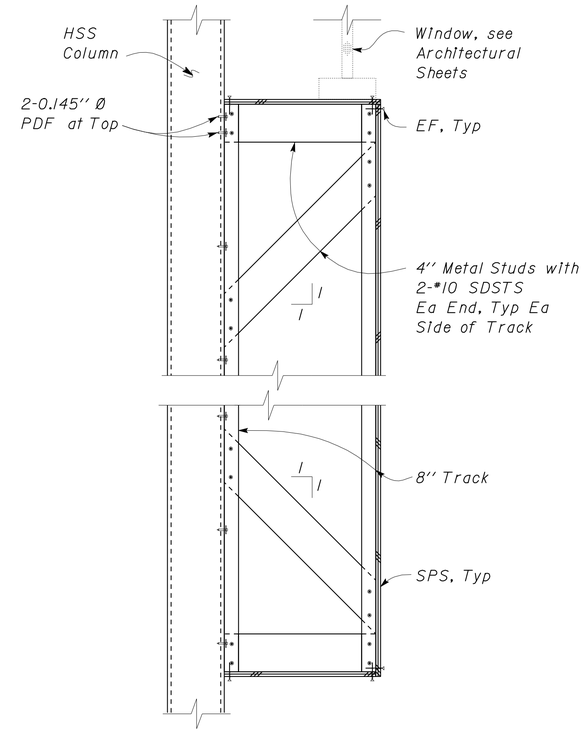

Note:
Typical Connection to HSS Column at Windows

4 CONNECTION DETAIL (SECTION)
Scale 1 1/2'' = 1'-0''

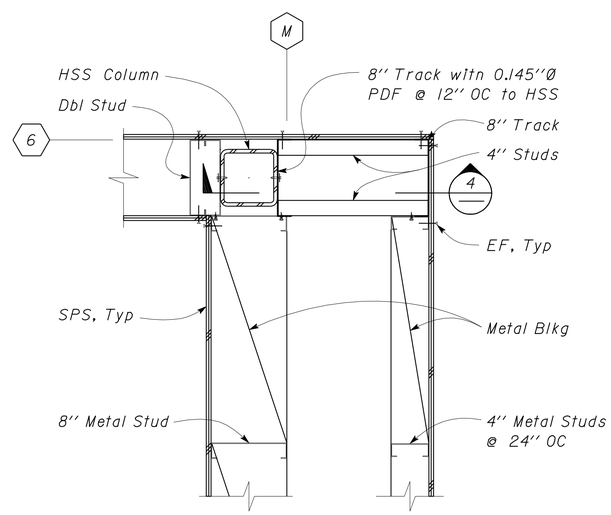

3 CONNECTION DETAIL (PLAN)
Scale 1 1/2'' = 1'-0''

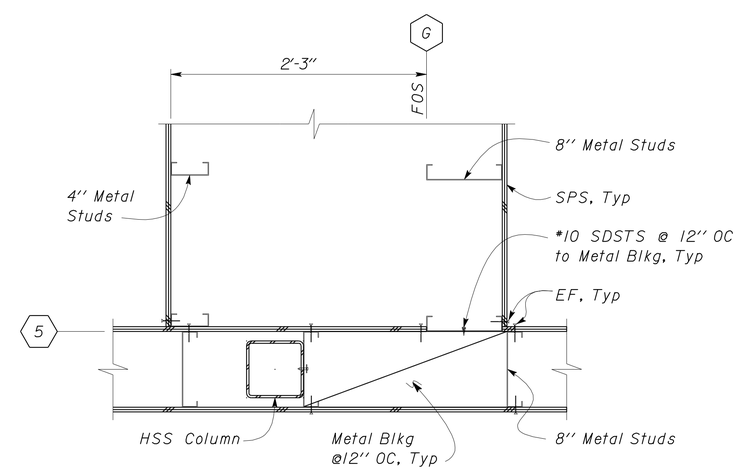

5 WALL CONNECTION (PLAN)
Scale 1 1/2'' = 1'-0''

	BY	CHECKED
DESIGN	Edgardo Isidro	Gang Hong
DETAILS	Aleksey Serin	Edgardo Isidro
QUANTITIES		

STATE OF CALIFORNIA
DEPARTMENT OF TRANSPORTATION

DIVISION OF ENGINEERING SERVICES
ARCHITECTURAL AND STRUCTURAL DESIGN

BRIDGE NO. 28T5783
POST MILE 6.3

RICHMOND-SAN RAFAEL BRIDGE MAINTENANCE STATION
MAIN BUILDING — WALL FRAMING DETAILS

SHEET **ST1-28**

TAEMWW Imperial Rev. 7/10

ORIGINAL SCALE IN INCHES FOR REDUCED PLANS 0 1 2 3

UNIT 3581
PROJECT NUMBER & PHASE 04000000021
EA 000000

DISREGARD PRINTS BEARING EARLIER REVISION DATES → 03-21-12 04-18-12
REVISION DATES (PRELIMINARY STAGE ONLY) SHEET OF

P:\dist_04\0400000002_richmond_san_rafael_mb\expedite\20120718_resubmit\st1_28.dgn

02-AUG-2012 15:09

DIST.	COUNTY	ROUTE	POST MILES TOTAL PROJECT	SHEET NO.	TOTAL SHEETS
04	CC	580	6.1/6.3	168	216

REGISTERED CIVIL ENGINEER — DATE 04-27-2012

REGISTERED PROFESSIONAL ENGINEER — Edgardo A. Isidro — No. 058507 — Exp. 12-31-12 — CIVIL — STATE OF CALIFORNIA

7-30-12
PLANS APPROVAL DATE

The State of California or its officers or agents shall not be responsible for the accuracy or completeness of scanned copies of this plan sheet.

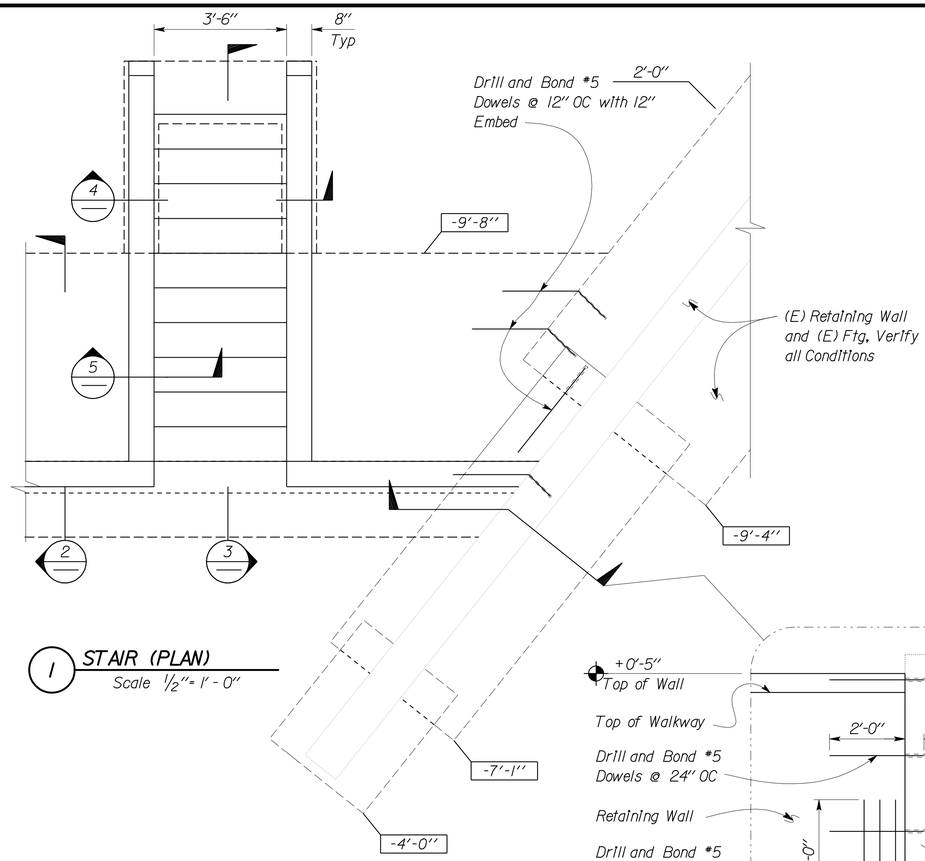

1 STAIR (PLAN)
Scale 1/2" = 1'-0"

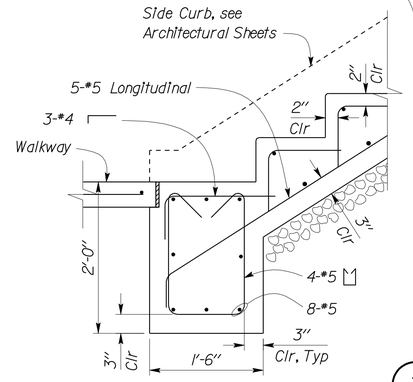

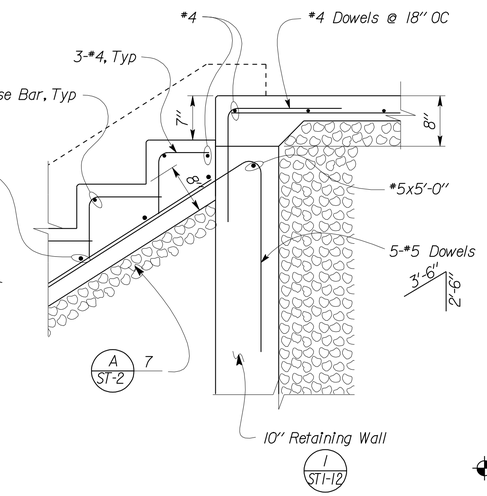

3 STAIR SECTION
Scale 1" = 1'-0"

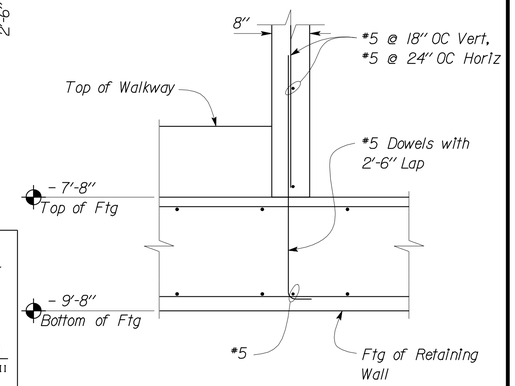

5 WALL SECTION
Scale 3/4" = 1'-0"

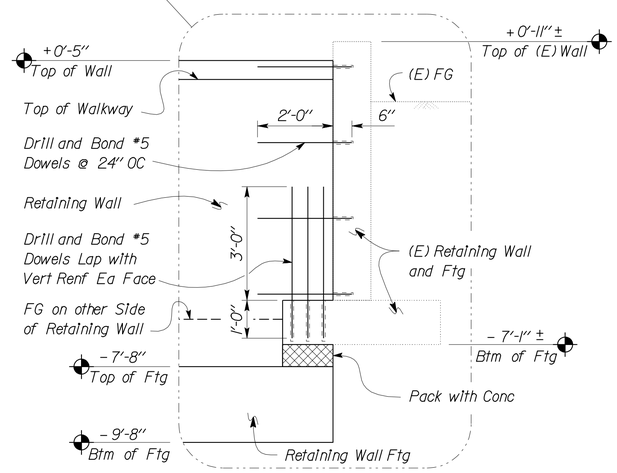

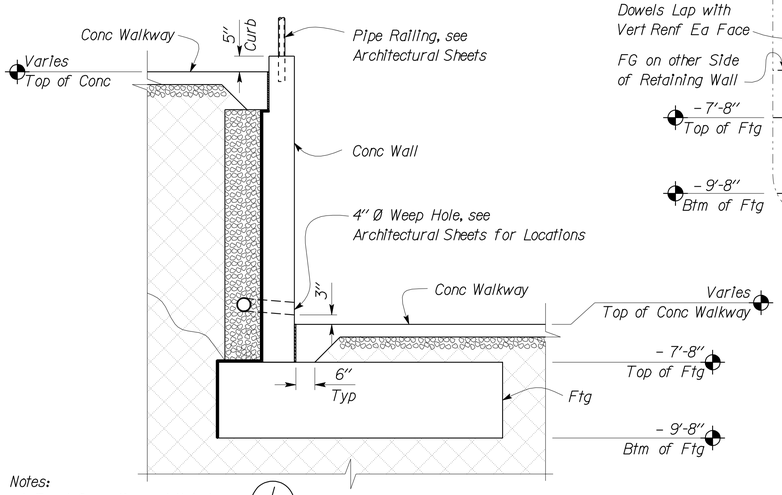

Notes:
1. For Information not Noted see 1/ST1-12
2. For Walkway Elevation, see Architectural Sheets

2 EXTERIOR RETAINING WALL SECTION
Scale 1/2" = 1'-0"

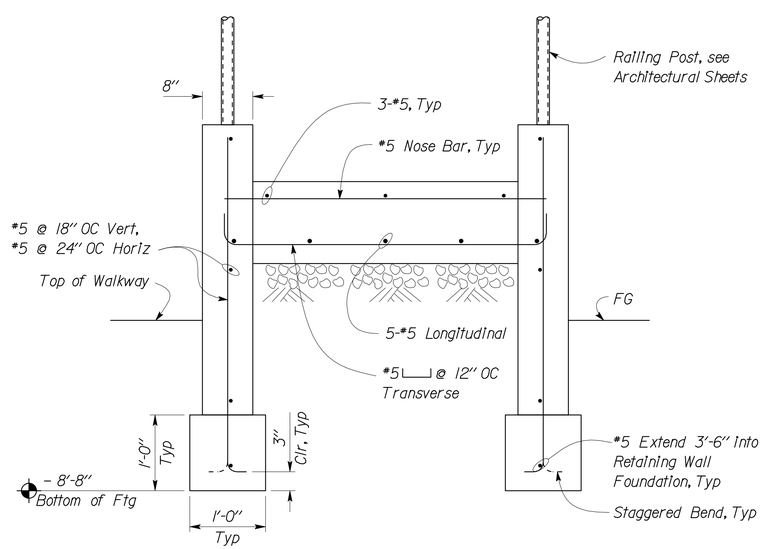

4 STAIR SECTION
Scale 1" = 1'-0"

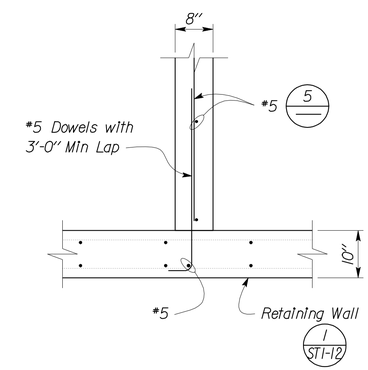

6 WALLS CONNECTION (PLAN)
Scale 3/4" = 1'-0"

CALIFORNIA STATE FIRE MARSHAL APPROVED
Approval of this plan does not authorize or approve any omission or deviation from applicable regulations. Final approval is subject to field inspection. One set of approved plans shall be available on the project site at all times.
Reviewed by: Ingrid P. Icasiano
INGRID P. ICASIANO, DSFM III
Approval date: July 17, 2012

	BY	CHECKED
DESIGN	Edgardo Isidro	Gang Hong
DETAILS	Aleksey Serin	Edgardo Isidro
QUANTITIES		

STATE OF CALIFORNIA
DEPARTMENT OF TRANSPORTATION

DIVISION OF ENGINEERING SERVICES
ARCHITECTURAL AND STRUCTURAL DESIGN

BRIDGE NO. 28T5783
POST MILE 6.3

RICHMOND-SAN RAFAEL BRIDGE MAINTENANCE STATION
MAIN BUILDING — STAIR/RETAINING WALL DETAILS

SHEET ST1-29

TAEMWW Imperial Rev. 7/10

ORIGINAL SCALE IN INCHES FOR REDUCED PLANS 0 1 2 3

UNIT 3581
PROJECT NUMBER & PHASE 04000000021
EA 000000

DISREGARD PRINTS BEARING EARLIER REVISION DATES → 03-30-12 04-10-12 04-18-12
REVISION DATES (PRELIMINARY STAGE ONLY) SHEET OF

P:\dist_04\0400000002_richmond_san_rafael_mb\expedite\20120718_resubmit\st1_29.dgn
20-AUG-2012 13:54

DIST.	COUNTY	ROUTE	POST MILES TOTAL PROJECT	SHEET NO.	TOTAL SHEETS
04	CC	580	6.1/6.3	169	216

REGISTERED CIVIL ENGINEER — DATE 04-27-2012

REGISTERED PROFESSIONAL ENGINEER — Edgardo A. Isidro — No. 058507 — Exp. 12-31-12 — CIVIL — STATE OF CALIFORNIA

7-30-12
PLANS APPROVAL DATE

The State of California or its officers or agents shall not be responsible for the accuracy or completeness of scanned copies of this plan sheet.

CALIFORNIA STATE FIRE MARSHAL APPROVED

Approval of this plan does not authorize or approve any omission or deviation from applicable regulations. Final approval is subject to field inspection. One set of approved plans shall be available on the project site at all times.

Reviewed by: INGRID P. ICASIANO, DSFM III

Approval date: July 17, 2012

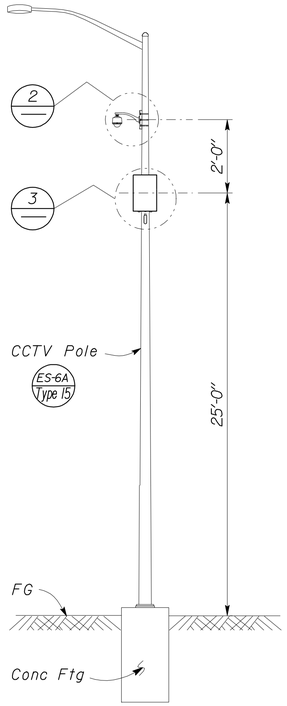

1 LUMINAIRE WITH CCTV CAMERA DETAIL
No Scale

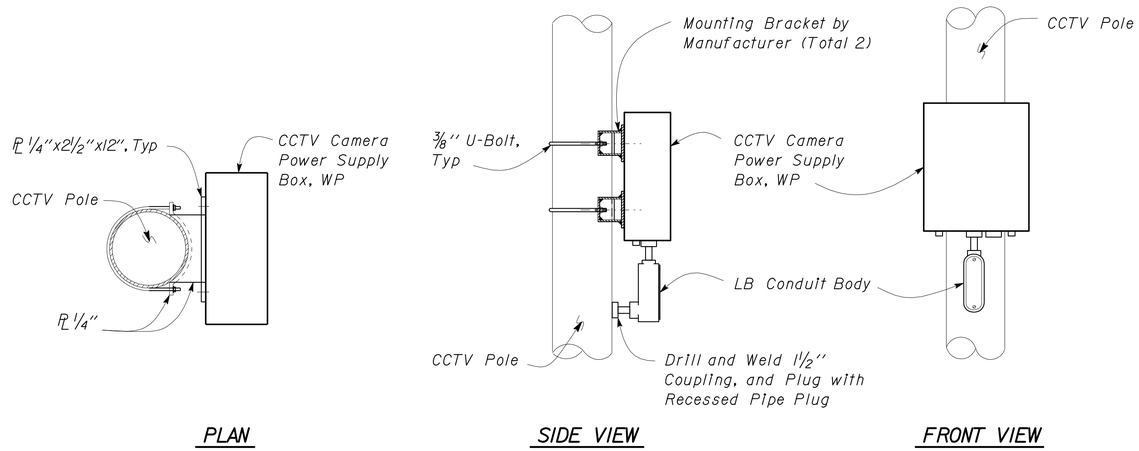

3 CCTV CAMERA POWER SUPPLY BOX MOUNTING DETAILS
No Scale

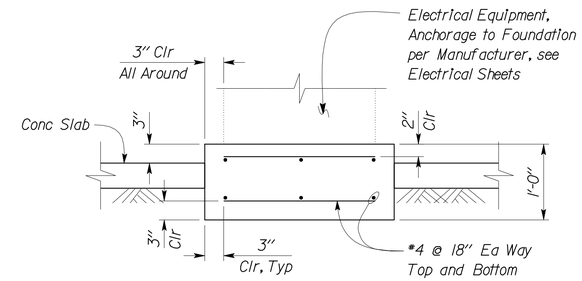

5 FOUNDATION SECTION
Scale 1" = 1' - 0"

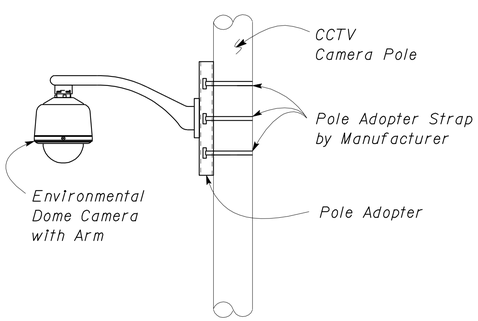

2 CCTV CAMERA MOUNTING DETAIL
No Scale

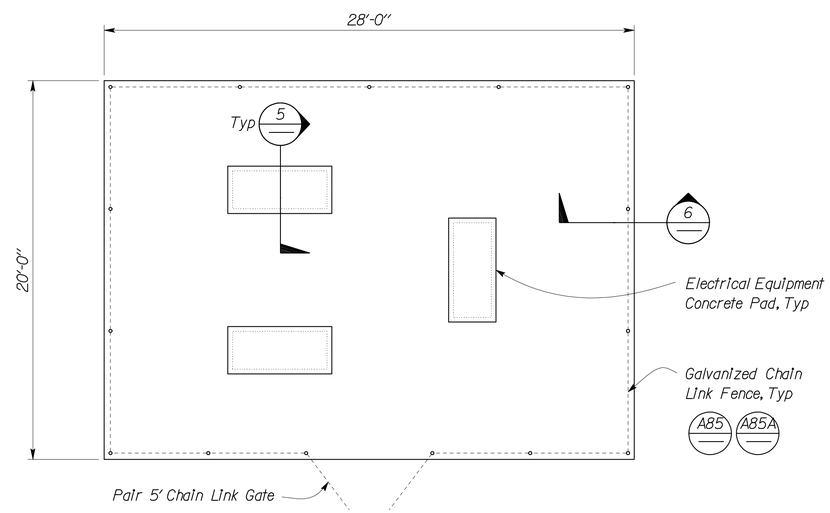

Note:
See Electrical Sheet for Clearances and Location

4 CONCRETE SLAB FOR SERVICE EQUIPMENT
Scale 1/4" = 1' - 0"

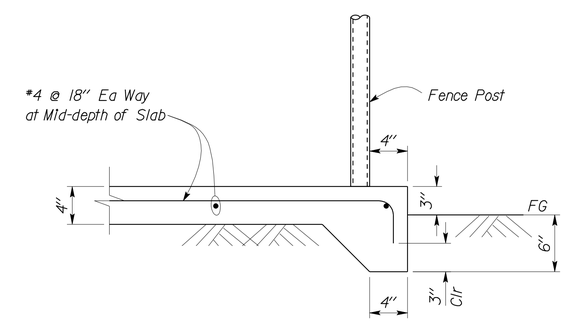

6 SLAB SECTION
Scale 1 1/2" = 1' - 0"

DESIGN	BY Edgardo Isidro	CHECKED Gang Hong	
DETAILS	BY Aleksey Serin	CHECKED Edgardo Isidro	
QUANTITIES	BY	CHECKED	

STATE OF CALIFORNIA
DEPARTMENT OF TRANSPORTATION

DIVISION OF ENGINEERING SERVICES
ARCHITECTURAL AND STRUCTURAL DESIGN

BRIDGE NO. 28T5783
POST MILE 6.3

RICHMOND-SAN RAFAEL BRIDGE MAINTENANCE STATION

MAIN BUILDING — MISCELLANEOUS DETAILS

SHEET **ST1-30**

TAEMWW Imperial Rev. 7/10

ORIGINAL SCALE IN INCHES FOR REDUCED PLANS 0 1 2 3

UNIT 3581
PROJECT NUMBER & PHASE 04000000021
EA 000000

DISREGARD PRINTS BEARING EARLIER REVISION DATES → 03-27-12

REVISION DATES (PRELIMINARY STAGE ONLY) — SHEET — OF

02-AUG-2012 15:09

P:\dist_04\0400000002_richmond_san_rafael_mb\expedite\20120718_resubmit\st1_30.dgn

DIST.	COUNTY	ROUTE	POST MILES TOTAL PROJECT	SHEET NO.	TOTAL SHEETS
04	CC	580	6.1/6.3	170	216

REGISTERED ENGINEER-MECHANICAL 04-27-12

REGISTERED PROFESSIONAL ENGINEER Jack Wheeler No. 21648 Exp. 6-30-13 MECH STATE OF CALIFORNIA

7-30-12
PLANS APPROVAL DATE

The State of California or its officers or agents shall not be responsible for the accuracy or completeness of scanned copies of this plan sheet.

CALIFORNIA STATE FIRE MARSHAL APPROVED
Approval of this plan does not authorize or approve any omission or deviation from applicable regulations. Final approval is subject to field inspection. One set of approved plans shall be available on the project site at all times.
Reviewed by: INGRID P. ICASIANO, DSFM III
Approval date: July 17, 2012

PLUMBING

- Cold Water
- A — Compressed Air
- LPG — Liquefied Petroleum Gas
- D — Equipment Drain
- RD — Roof Drain
- OD — Overflow Drain
- RW — Non Potable Water
- FW — Fire Water
- Hot Water
- Hot Water Return
- R — Relief Valve Discharge Pipe
- S — Sewer Line
- Sanitary Sewer (above grade)
- Sanitary Sewer (below grade)
- Sanitary Sewer Vent

PIPE FITTINGS AND VALVES

- Cap, Threaded
- Elbow, Turned Down
- Elbow, Turned Up
- Reducer, Concentric
- Pressure Gauge (with gage cock and Snubber)
- Strainer
- Union
- Union, Insulating
- Valve, Ball
- Valve, Check
- Valve, Gas
- Valve, Gate
- Valve, Safety Relief
- Valve, Faucet Assembly
- Valve, Pressure/Temperature Relief
- Water Hammer Arrestor

HEATING, VENTILATING AND AIR CONDITIONING

- Balance Damper
- Flexible Duct
- EA — Exhaust Air
- RA — Return Air
- SA — Supply Air
- cfm — Exhaust Register
- or cfm — Return Register
- or cfm SIZE — Supply Diffuser
- T — Thermostat
- TS — Time Switch
- Anode Test Station
- Three Wire Test Station
- F — Exhaust Fan
- FE — Fire Extinguisher

MISCELLANEOUS

- L — Angle
- ℄ — Centerline
- Ø — Diameter
- RE — (E) Duct to be Removed
- Section / Elevation Letter
- Sheet Number
- Detail Number
- Sheet Number
- 12x12 " — NECK SIZE
- 190 cfm — FLOW RATE

MECHANICAL ABBREVIATIONS:

A/C	Air Conditioning
ABS	Acrylonitrile Butadiene Styrene
AC	Asphalt Concrete
AD	Air Drop
AP	Alternative Pipe
ATF	Automatic Transmission Fluid
AWG	American Wire Gauge
BFP	Backflow Preventer
BLDG	Building
BTU	British Thermal Unit
BTUH	British Thermal Unit Per Hour
BV	Balancing Valve
C	Conduit
CD	Ceiling Diffuser
CFM	Cubic Feet Per Minute
CHLF	Combination Heat Light Fan
CI	Cast-Iron
CO	Cleanout
COTF	Cleanout Through Floor
COTG	Cleanout Through Grade
COTW	Cleanout To Wall
CW	Cold Water
D	Depth
DB	Dry Bulb
DH	Duct Heater
DIA	Diameter
(E)	Existing
EA	Exhaust Air
EF	Exhaust Fan
EL	Elevation
ESEW	Emergency Shower and Eyewash
EWC	Electric Water Cooler
FC	Flexible Connection
FD	Floor Drain
FDC	Fire Department Connection
FE	Fire Extinguisher
FEC	Fire Extinguisher In Cabinet
FG	Finish Grade
FH	Fire Hydrant
FL	Flow Line
FS	Flow Switch
GA	Gauge
GALV	Galvanized
GLV	Globe Valve
GPM	Gallons Per Minute
GSP	Galvanized Steel Pipe
GV	Gate Valve
GWH	Gas Water Heater
GYP	Gypsum
H	Height
HB	Hydrant Box
H/C	Hot Water, High Pressure Cleaner
HF	Hose Faucet
HVAC	Heating, Ventilating And Air Conditioning
HW	Hot Water
HZ	Hertz
ID	Inside Diameter
IE	Invert Elevation
IF	Inline Fan
IN	Inch
IPS	International Pipe Standard
KS	Kitchen Sink
LAV	Lavatory
LPG	Liquified Petroleum Gas
MAX	Maximum
MAN	Manhole
MIN	Minimum
NIC	Not In Contract
NO	Number
NPT	National Pipe Thread
NST	National Standard Thread
OA	Outside Air
OC	On Center
OD	Outside Diameter
OG	Original Ground
PH	Phase
PRV	Pressure Reducing Valve
PSI	Pounds Per Square Inch
PVC	Polyvinyl Chloride
R	Radius
REG	Register
RA	Return Air
RCP	Reinforced Concrete Pipe
REQ	Required
RH	Radiant Heater
RV	Relief Valve
S/S	Service Sink
SA	Supply Air
SCH	Schedule
SDS	Sanitary Dump Station
SF	Supply Fan
SHR	Shower
SP	Static Pressure
SS	Sanitary Sewer
STA	Station
STD	Standard
TCV	Temperature Control Valve
TOT	Total
TS	Time Switch
TYP	Typical
UH	Unit Heater
URI	Urinal
V	Vent
VAC	Voltage, Alternating Current
VR	Vent Riser
VTR	Vent Thru Roof
W	Width
W/	With
W/O	Without
WB	Wet Bulb
WC	Water Closet
W.C.	Water Column
WEF	Wall Exhaust Fan
WFC	Welding fume Collector
WH	Water Heater
WHA	Water Hammer Arrestor
WLS	Water Level Switch
WP	Weatherproof
WS	Wash Sink

The Contractor shall verify all controlling field dimensions before ordering or fabricating any material.

THIS DRAWING ACCURATE FOR MECHANICAL WORK ONLY

	BY	CHECKED
DESIGN	Alvin Kwan	Severiano Gutierrez
DETAILS	Alvin Kwan	Severiano Gutierrez
QUANTITIES	Alvin Kwan	Severiano Gutierrez

STATE OF CALIFORNIA DEPARTMENT OF TRANSPORTATION

DIVISION OF ENGINEERING SERVICES
ELECTRICAL-MECHANICAL-WATER AND WASTEWATER DESIGN

BRIDGE NO. 28T5783
POST MILE 6.3

RICHMOND - SAN RAFAEL BRIDGE MAINTENANCE STATION
LEGEND

SHEET M-00

TAEMWW Imperial Rev. 7/10
FILE => m0_00.dgn
DATE PLOTTED => 02-AUG-2012 TIME PLOTTED => 15:28

ORIGINAL SCALE IN INCHES FOR REDUCED PLANS 0 1 2 3

UNIT 3615
PROJECT NUMBER & PHASE 04000000021
EA 003941

DISREGARD PRINTS BEARING EARLIER REVISION DATES 04/27/12

REVISION DATES (PRELIMINARY STAGE ONLY) SHEET OF

USERNAME => s128843 DATE PLOTTED => 02-AUG-2012 TIME PLOTTED => 15:28

V|=|

DIST.	COUNTY	ROUTE	POST MILES TOTAL PROJECT	SHEET NO.	TOTAL SHEETS
04	CC	580	6.1/6.3	171	216

CALIFORNIA STATE FIRE MARSHAL APPROVED
Approval of this plan does not authorize or approve any omission or deviation from applicable regulations. Final approval is subject to field inspection. One set of approved plans shall be available on the project site at all times.
Reviewed by: Ingrid P. Icasiano
INGRID P. ICASIANO, OSFM III
Approval date: July 17, 2012

Jack W Wheeler 04-27-12
REGISTERED ENGINEER-MECHANICAL

REGISTERED PROFESSIONAL ENGINEER
Jack Wheeler
No. 21648
Exp. 6-30-13
MECH
STATE OF CALIFORNIA

7-30-12
PLANS APPROVAL DATE

The State of California or its officers or agents shall not be responsible for the accuracy or completeness of scanned copies of this plan sheet.

PERFORMANCE CERTIFICATE OF COMPLIANCE (Part 1 of 3) PERF-1C

Project Name	Date
Richmond-San Rafael Maintenance Station	4/25/2012

Project Address	Climate Zone	Total Cond. Floor Area	Addition Floor Area
San Rafael	CA Climate Zone 02	3,418	n/a

GENERAL INFORMATION

Building Type: ☑ Nonresidential ☐ High-Rise Residential ☐ Hotel/Motel Guest Room ☐ Relocatable - indicate ☐ specific climate zone ☐ all climates

Phase of Construction: ☑ New Construction ☐ Addition ☐ Alteration

STATEMENT OF COMPLIANCE

This certificate of compliance lists the building features and specifications needed to comply with Title 24, Parts 1 and 6 of the California Code of Regulations. This certificate applies only to a Building using the performance compliance approach.

The documentation author hereby certifies that the documentation is accurate and complete.

Documentation Author

Name	Severiano Gutierrez	Signature	Severiano Gutierrez
Company	Department of Transportation - TAMEWW Branch	Date	4/25/2012
Address		Phone	
City/State/Zip	,		

The Principal Designer hereby certifies that the proposed building design represented in this set of construction documents is consistent with the other compliance forms and worksheets, with the specifications, and with any other calculations submitted with this permit application. The proposed building has been designed to meet the energy efficiency requirements contained in sections 110, 116 through 118, and 140 through 149 of Title 24, Part 6. Please check one:

ENV.	LTG.	MECH.	
☐	☐	☐	I hereby affirm that I am eligible under the provisions of Division 3 of the Business and Professions Code to sign this document as the person responsible for its preparation; and that I am licensed in the State of California as a civil engineer, mechanical engineer, electrical engineer, or I am a licensed architect.
☐	☐	☐	I affirm that I am eligible under the provisions of Division 3 of the Business and Professions Code by section 5537.2 or 6737.3 to sign this document as the person responsible for its preparation; and that I am a licensed contractor performing this work.
☐	☐	☐	I affirm that I am eligible under Division 3 of the Business and Professions Code to sign this document because it pertains to a structure or type of work described as exempt pursuant to Business and Professions Code Sections 5537, 5538 and 6737.1.

Principal Envelope Designer

Name	Frank Thomas	Signature	Frank Thomas
Company	CALTRANS	Date	April 25, 2012
Address	1801 30th Street	License #	C-31406
City/State/Zip	Sacramento, CA 95816	Phone	916-227-6833

Principal Mechanical Designer

Name	Jack Wheeler	Signature	Jack W Wheeler
Company	CALTRANS	Date	April 25, 2012
Address	1801 30th Street	License #	M21648
City/State/Zip	Sacramento, CA 95816	Phone	916-227-8537

Principal Lighting Designer

Name	Beatris Bindu	Signature	Beatris
Company	CALTRANS	Date	April 25, 2012
Address	1801 30th Street	License #	E 17240
City/State/Zip	Sacramento, Ca 95816	Phone	916-227-8764

INSTRUCTIONS TO APPLICANT COMPLIANCE & WORKSHEETS (check box if worksheets are included)

☑	ENV-1C	Certificate of Compliance. Required on plans.	☑	MECH-1C	Certificate of Compliance. Required on plans.
☑	LTG-1C	Certificate of Compliance. Required on plans.	☑	MECH-2C	Air/Water Side/Service Hot Water & Pool Requirements.
☑	LTG-2C	Lighting Controls Credit Worksheet.	☑	MECH-3C	Mechanical Ventilation and Reheat.
☑	LTG-3C	Indoor Lighting Power Allowance.	☑	MECH-5C	Mechanical Equipment Details.

PERFORMANCE CERTIFICATE OF COMPLIANCE (Part 2 of 3) PERF-1C

Project Name	Date
Richmond-San Rafael Maintenance Station	4/25/2012

ANNUAL TDV ENERGY USE SUMMARY (kBtu/sqft-yr)

Energy Component	Standard Design	Proposed Design	Compliance Margin
Space Heating	24.88	19.51	5.37
Space Cooling	70.15	39.83	30.33
Indoor Fans	34.16	27.53	6.63
Heat Rejection	0.00	0.00	0.00
Pumps & Misc.	0.00	0.00	0.00
Domestic Hot Water	6.72	4.96	1.76
Lighting	68.85	46.19	22.66
Receptacle	34.86	34.86	0.00
Process	19.06	19.06	0.00
Process Lighting	6.01	6.01	0.00
TOTALS	264.69	197.95	66.75
Percent better than Standard		25.2 %	(27.9 % excluding process)

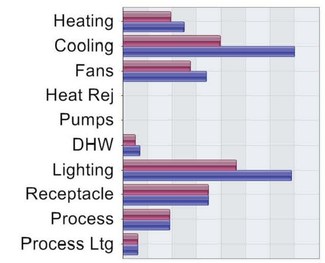

BUILDING COMPLIES

GENERAL INFORMATION

Building Orientation	(SE) 135 deg	Conditioned Floor Area	3,418	sqft.
Number of Stories	1	Unconditioned Floor Area	2,173	sqft.
Number of Systems	3	Conditioned Footprint Area	3,418	sqft.
Number of Zones	5	Natural Gas Available On Site	No	

	Orientation	Gross Area		Glazing Area		Glazing Ratio
Front Elevation	(SE)	862	sqft.	330	sqft.	38.3 %
Left Elevation	(SW)	768	sqft.	60	sqft.	7.8 %
Rear Elevation	(NW)	1,195	sqft.	114	sqft.	9.5 %
Right Elevation	(NE)	533	sqft.	286	sqft.	53.7 %
Total		3,358	sqft.	790	sqft.	23.5 %
Roof		3,418	sqft.	74	sqft.	2.2 %

	Standard		Proposed		
Prescriptive Lighting Power Density	1.100	W/sqft.	0.738	W/sqft.	Prescriptive Values for Comparison only. See LTG-1C for allowed LPD.
Prescriptive Envelope TDV Energy	179,666		111,634		

Remarks:

The Contractor shall verify all controlling field dimensions before ordering or fabricating any material.

THIS DRAWING ACCURATE FOR MECHANICAL WORK ONLY

	BY	CHECKED
DESIGN	Alvin Kwan	Severiano Gutierrez
DETAILS	Alvin Kwan	Severiano Gutierrez
QUANTITIES	Alvin Kwan	Severiano Gutierrez

STATE OF CALIFORNIA
DEPARTMENT OF TRANSPORTATION

DIVISION OF ENGINEERING SERVICES
ELECTRICAL-MECHANICAL-WATER AND WASTEWATER DESIGN

BRIDGE NO. 28T5783
POST MILE 6.3

RICHMOND - SAN RAFAEL BRIDGE MAINTENANCE STATION
TITLE 24 ENVELOPE AND MECHANICAL DESIGN ENERGY COMPLIANCE FORMS

SHEET M-01

TAEMWW Imperial Rev. 7/10
FILE => m0_01.dgn
DATE PLOTTED => 02-AUG-2012 TIME PLOTTED => 15:28
ORIGINAL SCALE IN INCHES FOR REDUCED PLANS 0 1 2 3
UNIT 3615
PROJECT NUMBER & PHASE 04000000021
EA 003941
DISREGARD PRINTS BEARING EARLIER REVISION DATES
REVISION DATES (PRELIMINARY STAGE ONLY) 04/12/12 04/27/12
SHEET OF

USERNAME => s128843 DATE PLOTTED => 02-AUG-2012 TIME PLOTTED => 15:28
V|=|

DIST.	COUNTY	ROUTE	POST MILES TOTAL PROJECT	SHEET NO.	TOTAL SHEETS
04	CC	580	6.1/6.3	172	216

CALIFORNIA STATE FIRE MARSHAL APPROVED
Approval of this plan does not authorize or approve any omission or deviation from applicable regulations. Final approval is subject to field inspection. One set of approved plans shall be available on the project site at all times.
Reviewed by: Ingrid P. Icasiano
INGRID P. ICASIANO, DSFM III
Approval date: July 17, 2012

04-27-12
REGISTERED ENGINEER-MECHANICAL

REGISTERED PROFESSIONAL ENGINEER
Jack Wheeler
No. 21648
Exp. 6-30-13
MECH
STATE OF CALIFORNIA

7-30-12
PLANS APPROVAL DATE

The State of California or its officers or agents shall not be responsible for the accuracy or completeness of scanned copies of this plan sheet.

CERTIFICATE OF COMPLIANCE AND FIELD INSPECTION ENERGY CHECKLIST (Part 1 of 3) ENV-1C

Project Name	Climate Zone	Total Cond. Floor Area	Addition Floor Area	Date
Richmond-San Rafael Maintenance Station				4/25/2012
Project Address: San Rafael	2	3,418	n/a	

GENERAL INFORMATION

Building Type: ☑ Nonresidential ☐ High-Rise Residential ☐ Hotel/Motel Guest Room
☐ Schools (Public School) ☐ Relocatable Public School Bldg. ☑ Conditioned Spaces ☐ Unconditioned Spaces
☐ Skylight Area for Large Enclosed Space ≥ 8000 ft^2 (If checked include the ENV-4C with submittal)
Phase of Construction: ☑ New Construction ☐ Addition ☐ Alteration
Approach of Compliance: ☐ Component ☑ Overall Envelope ☐ Unconditioned (file affidavit)
Front Orientation: N, E, S, W or in Degrees: 135 deg

FIELD INSPECTION ENERGY CHECKLIST

OPAQUE SURFACE DETAILS / INSULATION

Tag/ID	Assembly Type	Area (ft^2)	Orientation N, E, S, W	U-Factor	Cavity R-Value	Exterior R-Value	Exterior Furring[3]	Interior R-Value	Interior Furring[3]	Joint Appendix 4	Condition Status	Pass	Fail[2]
1	Wall	160	(SE)	0.052	R-25	13.0	None			4.3.3-A9	New	☐	☐
2	Wall	27	(NW)	0.052	R-25	13.0	None			4.3.3-A9	New	☐	☐
3	Wall	250	(SW)	0.052	R-25	13.0	None			4.3.3-A9	New	☐	☐
4	Roof	365	(E)	0.030	None			30.0	None	4.2.6-A1	New	☐	☐
5	Slab	365	(N)	0.730	None					4.4.7-A1	New	☐	☐
6	Demising	96	(N)	0.183	R-19					4.3.3-A5	New	☐	☐
7	Demising	168	(N)	0.183	R-19					4.3.3-A5	New	☐	☐
8	Demising	121	(N)	0.183	R-19					4.3.3-A5	New	☐	☐
9	Wall	59	(SE)	0.052	R-25	13.0	None			4.3.3-A9	New	☐	☐
10	Wall	96	(NE)	0.052	R-25	13.0	None			4.3.3-A9	New	☐	☐

1. See Instructions in the Nonresidential Compliance Manual, page 3-96.
2. If Fail, then describe on Page 2 of the Inspection Checklist Form and take appropriate action to correct. A fail does not meet compliance.

FENESTRATION SURFACE DETAILS

Tag/ID	Fenestration Type	Area (ft^2)	Orientation N, E, S, W	Max U-Factor	U-Factor Source	Max (R)SHGC	SHGC Source	Overhang	Conditions Status	Pass	Fail[2]
1	Window	330	(SE)	0.270	NFRC	0.240	NFRC	☐	New	☐	☐
2	Window	90	(NW)	0.270	NFRC	0.240	NFRC	☐	New	☐	☐
3	Window	232	(NE)	0.270	NFRC	0.240	NFRC	☐	New	☐	☐
4	Window	54	(E)	0.270	NFRC	0.240	NFRC	☐	New	☐	☐
5	Window	60	(W)	0.270	NFRC	0.240	NFRC	☐	New	☐	☐
6	Skylight	74	(N)	0.510	NFRC	0.260	NFRC	☐	New	☐	☐
7	Window	24	(N)	1.190	Default	0.830	Default	☐	New	☐	☐
								☐		☐	☐
								☐		☐	☐
								☐		☐	☐

1. See Instructions in the Nonresidential Compliance Manual, page 3-96.
2. If Fail then describe on Page 2 of the Inspection Checklist Form and take appropriate action to correct. Verify building plans if necessary.

EnergyPro 5.1 by EnergySoft User Number: 3478 **RunCode: 2012-04-25T16:01:32** *ID: 04000000021 Page 6 of 41*

CERTIFICATE OF COMPLIANCE AND FIELD INSPECTION ENERGY CHECKLIST (Part 1 of 3) ENV-1C

Project Name	Climate Zone	Total Cond. Floor Area	Addition Floor Area	Date
Richmond-San Rafael Maintenance Station				4/25/2012
Project Address: San Rafael	2	3,418	n/a	

GENERAL INFORMATION

Building Type: ☑ Nonresidential ☐ High-Rise Residential ☐ Hotel/Motel Guest Room
☐ Schools (Public School) ☐ Relocatable Public School Bldg. ☑ Conditioned Spaces ☐ Unconditioned Spaces
☐ Skylight Area for Large Enclosed Space ≥ 8000 ft^2 (If checked include the ENV-4C with submittal)
Phase of Construction: ☑ New Construction ☐ Addition ☐ Alteration
Approach of Compliance: ☐ Component ☑ Overall Envelope ☐ Unconditioned (file affidavit)
Front Orientation: N, E, S, W or in Degrees: 135 deg

FIELD INSPECTION ENERGY CHECKLIST

OPAQUE SURFACE DETAILS / INSULATION

Tag/ID	Assembly Type	Area (ft^2)	Orientation N, E, S, W	U-Factor	Cavity R-Value	Exterior R-Value	Exterior Furring[3]	Interior R-Value	Interior Furring[3]	Joint Appendix 4	Condition Status	Pass	Fail[2]
11	Demising	216	(N)	0.183	R-19					4.3.3-A5	New	☐	☐
12	Demising	168	(N)	0.183	R-19					4.3.3-A5	New	☐	☐
13	Roof	243	(N)	0.030	None			30.0	None	4.2.6-A1	New	☐	☐
14	Slab	243	(N)	0.730	None					4.4.7-A1	New	☐	☐
15	Wall	20	(SE)	0.062	R-19	10.0	None			4.3.3-A7	New	☐	☐
16	Wall	52	(NE)	0.062	R-19	10.0	None			4.3.3-A7	New	☐	☐
17	Wall	78	(E)	0.062	R-19	10.0	None			4.3.3-A7	New	☐	☐
18	Door	21	(E)	0.500	Insul					4.5.1-A3	New	☐	☐
19	Demising	572	(N)	0.183	R-19					4.3.3-A5	New	☐	☐
20	Demising	378	(N)	0.158	R-25					4.3.3-A9	New	☐	☐

1. See Instructions in the Nonresidential Compliance Manual, page 3-96.
2. If Fail, then describe on Page 2 of the Inspection Checklist Form and take appropriate action to correct. A fail does not meet compliance.

FENESTRATION SURFACE DETAILS

Tag/ID	Fenestration Type	Area (ft^2)	Orientation N, E, S, W	Max U-Factor	U-Factor Source	Max (R)SHGC	SHGC Source	Overhang	Conditions Status	Pass	Fail[2]
								☐		☐	☐
								☐		☐	☐
								☐		☐	☐
								☐		☐	☐
								☐		☐	☐
								☐		☐	☐
								☐		☐	☐
								☐		☐	☐
								☐		☐	☐
								☐		☐	☐

1. See Instructions in the Nonresidential Compliance Manual, page 3-96.
2. If Fail then describe on Page 2 of the Inspection Checklist Form and take appropriate action to correct. Verify building plans if necessary.

EnergyPro 5.1 by EnergySoft User Number: 3478 **RunCode: 2012-04-25T16:01:32** *ID: 04000000021 Page 7 of 41*

The Contractor shall verify all controlling field dimensions before ordering or fabricating any material.

THIS DRAWING ACCURATE FOR MECHANICAL WORK ONLY

	BY	CHECKED
DESIGN	Alvin Kwan	Severiano Gutierrez
DETAILS	Alvin Kwan	Severiano Gutierrez
QUANTITIES	Alvin Kwan	Severiano Gutierrez

STATE OF CALIFORNIA
DEPARTMENT OF TRANSPORTATION

DIVISION OF ENGINEERING SERVICES
ELECTRICAL-MECHANICAL-WATER AND WASTEWATER DESIGN

UNIT 3615
PROJECT NUMBER & PHASE 04000000021
EA 003941

BRIDGE NO. 28T5783
POST MILE 6.3

RICHMOND - SAN RAFAEL BRIDGE MAINTENANCE STATION
TITLE 24 ENVELOPE AND MECHANICAL DESIGN ENERGY COMPLIANCE FORMS

SHEET M-02

TAEMWW Imperial Rev. 7/10
FILE => m0_02.dgn
DATE PLOTTED => 02-AUG-2012 TIME PLOTTED => 15:28
ORIGINAL SCALE IN INCHES FOR REDUCED PLANS 0 1 2 3
DISREGARD PRINTS BEARING EARLIER REVISION DATES
REVISION DATES (PRELIMINARY STAGE ONLY) 04/17/12 04/27/12
SHEET OF

USERNAME => s128843 DATE PLOTTED => 02-AUG-2012 TIME PLOTTED => 15:28

DIST.	COUNTY	ROUTE	POST MILES TOTAL PROJECT	SHEET NO.	TOTAL SHEETS
04	CC	580	6.1/6.3	173	216

CALIFORNIA STATE FIRE MARSHAL APPROVED
Approval of this plan does not authorize or approve any omission or deviation from applicable regulations. Final approval is subject to field inspection. One set of approved plans shall be available on the project site at all times.
Reviewed by: Ingrid P. Casiano
INGRID P. ICASIANO, DSFM III
Approval date: July 17, 2012

Jack W Wheeler 04-27-12
REGISTERED ENGINEER-MECHANICAL

REGISTERED PROFESSIONAL ENGINEER
Jack Wheeler
No. 21648
Exp. 6-30-13
MECH
STATE OF CALIFORNIA

7-30-12
PLANS APPROVAL DATE

The State of California or its officers or agents shall not be responsible for the accuracy or c mpleteness of scanned copies of this plan sheet.

CERTIFICATE OF COMPLIANCE AND FIELD INSPECTION ENERGY CHECKLIST (Part 1 of 3) ENV-1C

Project Name	Climate Zone	Total Cond. Floor Area	Addition Floor Area	Date
Richmond-San Rafael Maintenance Station				4/25/2012
Project Address: San Rafael	2	3,418	n/a	

GENERAL INFORMATION

Building Type: ☑ Nonresidential ☐ High-Rise Residential ☐ Hotel/Motel Guest Room
☐ Schools (Public School) ☐ Relocatable Public School Bldg. ☑ Conditioned Spaces ☐ Unconditioned Spaces
☐ Skylight Area for Large Enclosed Space ≥ 8000 ft² (If checked include the ENV-4C with submittal)
Phase of Construction: ☑ New Construction ☐ Addition ☐ Alteration
Approach of Compliance: ☐ Component ☑ Overall Envelope ☐ Unconditioned (file affidavit)
Front Orientation: N, E, S, W or in Degrees: 135 deg

FIELD INSPECTION ENERGY CHECKLIST

OPAQUE SURFACE DETAILS / INSULATION

Tag/ID	Assembly Type	Area (ft²)	Orientation N, E, S, W	U-Factor	Cavity R-Value	Exterior R-Value	Exterior Furring³	Interior R-Value	Interior Furring³	Joint Appendix 4	Condition Status	Pass	Fail²
21	Wall	458	(W)	0.052	R-25	13.0	None			4.3.3-A9	New	☐	☐
22	Wall	294	(S)	0.052	R-25	13.0	None			4.3.3-A9	New	☐	☐
23	Demising	84	(N)	0.183	R-19					4.3.3-A5	New	☐	☐
24	Demising	84	(N)	0.183	R-19					4.3.3-A5	New	☐	☐
25	Demising	72	(N)	0.183	R-19					4.3.3-A5	New	☐	☐
26	Demising	216	(N)	0.183	R-19					4.3.3-A5	New	☐	☐
27	Roof	1,966	(N)	0.031	None	30.0	None			4.2.6-A5	New	☐	☐
28	Slab	2,040	(N)	0.730	None					4.4.7-A1	New	☐	☐
29	Wall	551	(N)	0.052	R-25	13.0	None			4.3.3-A9	New	☐	☐
30	Door	21	(N)	0.500	Insul					4.5.1-A3	New	☐	☐

1. See Instructions in the Nonresidential Compliance Manual, page 3-96.
2. If Fail, then describe on Page 2 of the Inspection Checklist Form and take appropriate action to correct. A fail does not meet compliance.

FENESTRATION SURFACE DETAILS

Tag/ID	Fenestration Type	Area (ft²)	Orientation N, E, S, W	Max U-Factor	U-Factor Source	Max (R)SHGC	SHGC Source	Overhang	Conditions Status	Pass	Fail²
								☐		☐	☐
								☐		☐	☐
								☐		☐	☐
								☐		☐	☐
								☐		☐	☐
								☐		☐	☐
								☐		☐	☐
								☐		☐	☐
								☐		☐	☐
								☐		☐	☐

1. See Instructions in the Nonresidential Compliance Manual, page 3-96.
2. If Fail then describe on Page 2 of the Inspection Checklist Form and take appropriate action to correct. Verify building plans if necessary.

EnergyPro 5.1 by EnergySoft User Number: 3478 **RunCode: 2012-04-25T16:01:32** *ID: 04000000021 Page 8 of 41*

CERTIFICATE OF COMPLIANCE AND FIELD INSPECTION ENERGY CHECKLIST (Part 1 of 3) ENV-1C

Project Name	Climate Zone	Total Cond. Floor Area	Addition Floor Area	Date
Richmond-San Rafael Maintenance Station				4/25/2012
Project Address: San Rafael	2	3,418	n/a	

GENERAL INFORMATION

Building Type: ☑ Nonresidential ☐ High-Rise Residential ☐ Hotel/Motel Guest Room
☐ Schools (Public School) ☐ Relocatable Public School Bldg. ☑ Conditioned Spaces ☐ Unconditioned Spaces
☐ Skylight Area for Large Enclosed Space ≥ 8000 ft² (If checked include the ENV-4C with submittal)
Phase of Construction: ☑ New Construction ☐ Addition ☐ Alteration
Approach of Compliance: ☐ Component ☑ Overall Envelope ☐ Unconditioned (file affidavit)
Front Orientation: N, E, S, W or in Degrees: 135 deg

FIELD INSPECTION ENERGY CHECKLIST

OPAQUE SURFACE DETAILS / INSULATION

Tag/ID	Assembly Type	Area (ft²)	Orientation N, E, S, W	U-Factor	Cavity R-Value	Exterior R-Value	Exterior Furring³	Interior R-Value	Interior Furring³	Joint Appendix 4	Condition Status	Pass	Fail²
31	Wall	161	(N)	0.052	R-25	13.0	None			4.3.3-A9	New	☐	☐
32	Wall	220	(N)	0.052	R-25	13.0	None			4.3.3-A9	New	☐	☐
33	Door	21	(N)	0.500	Insul					4.5.1-A3	New	☐	☐
34	Door	80	(N)	0.179	Insul					4.5.1-A7	New	☐	☐
35	Demising	200	(N)	0.158	R-25					4.3.3-A9	New	☐	☐
36	Demising	484	(N)	0.158	R-25					4.3.3-A9	New	☐	☐
37	Roof	770	(N)	0.031	None	30.0	None			4.2.6-A5	New	☐	☐
38	Slab	770	(N)	0.730	None					4.4.7-A1	New	☐	☐
												☐	☐
												☐	☐

1. See Instructions in the Nonresidential Compliance Manual, page 3-96.
2. If Fail, then describe on Page 2 of the Inspection Checklist Form and take appropriate action to correct. A fail does not meet compliance.

FENESTRATION SURFACE DETAILS

Tag/ID	Fenestration Type	Area (ft²)	Orientation N, E, S, W	Max U-Factor	U-Factor Source	Max (R)SHGC	SHGC Source	Overhang	Conditions Status	Pass	Fail²
								☐		☐	☐
								☐		☐	☐
								☐		☐	☐
								☐		☐	☐
								☐		☐	☐
								☐		☐	☐
								☐		☐	☐
								☐		☐	☐
								☐		☐	☐
								☐		☐	☐

1. See Instructions in the Nonresidential Compliance Manual, page 3-96.
2. If Fail then describe on Page 2 of the Inspection Checklist Form and take appropriate action to correct. Verify building plans if necessary.

EnergyPro 5.1 by EnergySoft User Number: 3478 **RunCode: 2012-04-25T16:01:32** *ID: 04000000021 Page 9 of 41*

The Contractor shall verify all controlling field dimensions before ordering or fabricating any material.

THIS DRAWING ACCURATE FOR MECHANICAL WORK ONLY

	BY	CHECKED
DESIGN	Alvin Kwan	Severiano Gutierrez
DETAILS	Alvin Kwan	Severiano Gutierrez
QUANTITIES	Alvin Kwan	Severiano Gutierrez

STATE OF CALIFORNIA
DEPARTMENT OF TRANSPORTATION

DIVISION OF ENGINEERING SERVICES
ELECTRICAL-MECHANICAL-WATER AND WASTEWATER DESIGN

BRIDGE NO. 28T5783
POST MILE 6.3

RICHMOND - SAN RAFAEL BRIDGE MAINTENANCE STATION
TITLE 24 ENVELOPE AND MECHANICAL DESIGN ENERGY COMPLIANCE FORMS

SHEET M-03

TAEMWW Imperial Rev. 7/10
FILE => m0_03.dgn
DATE PLOTTED => 02-AUG-2012 TIME PLOTTED => 15:10
ORIGINAL SCALE IN INCHES FOR REDUCED PLANS 0 1 2 3
UNIT 3615
PROJECT NUMBER & PHASE 04000000021
EA 003941
DISREGARD PRINTS BEARING EARLIER REVISION DATES
REVISION DATES (PRELIMINARY STAGE ONLY) 04/17/12 04/27/12
SHEET OF

USERNAME => s128643 DATE PLOTTED => 02-AUG-2012 TIME PLOTTED => 15:10

VI=I

DIST.	COUNTY	ROUTE	POST MILES TOTAL PROJECT	SHEET NO.	TOTAL SHEETS
04	CC	580	6.1/6.3	174	216

CALIFORNIA STATE FIRE MARSHAL APPROVED
Approval of this plan does not authorize or approve any omission or deviation from applicable regulations. Final approval is subject to field inspection. One set of approved plans shall be available on the project site at all times.
Reviewed by: INGRID P. ICASIANO, DSFM III
Approval date: July 17, 2012

04-27-12
REGISTERED ENGINEER-MECHANICAL

REGISTERED PROFESSIONAL ENGINEER Jack Wheeler No. 21648 Exp. 6-30-13 MECH STATE OF CALIFORNIA

7-30-12
PLANS APPROVAL DATE

The State of California or its officers or agents shall not be responsible for the accuracy or completeness of scanned copies of this plan sheet.

CERTIFICATE OF COMPLIANCE AND FIELD INSPECTION ENERGY CHECKLIST (Part 2 of 3) ENV-1C

Project Name: *Richmond-San Rafael Maintenance Station* | Date: *4/25/2012*

ROOFING PRODUCT (COOL ROOFS)

(Note if the roofing product is not CRRC certified, this compliance approach cannot be used). Go to Overall Envelope Approach or Performance Approach.

CHECK APPLICABLE BOX BELOW IF EXEMPT FROM THE ROOFING PRODUCT "COOL ROOF" REQUIREMENTS:	Pass	Fail[1]	N/A
☐ Roofing compliance not required in Climate Zones 1 and16 with a Low-Sloped. 2:12 pitch or less.	☐	☐	☐
☐ Roofing compliance not required in Climate Zone 1 with a Steep-Sloped with less than 5 lb/ft². Greater than 2:12 pitch.	☐	☐	☐
☐ Low-sloped Wood framed roofs in Climate Zones 3 and 5 are exempted, solar reflectance and thermal emittance or SRI that have a U-factor of 0.039 or lower. See Opaque Surface Details roof assembly, Column H of ENV-2C.	☐	☐	☐
☐ Low-sloped Metal building roofs in Climate Zone 3 and 5 are exempted, solar relectance and thermal emittance or SRI that have a U-factor of 0.048 or lower. See Opaque Surface Details roof assembly below, Column H of ENV-2C.	☐	☐	☐
☐ The roof area covered by building integrated photovoltaic panels and building integrated solar thermal panels are exempted. Solar reflectance and thermal emittance or SRI, see spreadsheet calculator at www.energy.ca.gov/title24/	☐	☐	☐
☐ Roof constructions that have thermal mass over the roof membrane with a weight of at least 25 lb/ft² are exempt from the Cool Roof criteria below.	☐	☐	☐
☐ High-rise residential buildings and hotels and motels with low-sloped roofs in Climate Zones 1 through 9, 12 and 16 are exempted from the low-sloped roofing criteria.	☐	☐	☐

1. If Fail then describe on this page of the Inspection Checklist Form and take appropriate action to correct. Verify building plans if necessary.

CRRC Product ID Number[1]	Roof Slope ≤ 2:12	Roof Slope > 2:12	Product Weight < 5lb/ft²	Product Weight ≥ 5lb/ft²	Product Type[2]	Aged Solar Reflectance[3]		Thermal Emmitance	SRI[5]	Pass	Fail[6]
R-30 Span Deck Roo	☑	☐	☑	☐		☐ [4]	*0.30*	*0.75*		☐	☐
R-30 Span Deck Roo	☑	☐	☑	☐		☐ [4]	*0.30*	*0.75*		☐	☐
	☐	☐	☐	☐		☐ [4]				☐	☐
	☐	☐	☐	☐		☐ [4]				☐	☐
	☐	☐	☐	☐		☐ [4]				☐	☐
	☐	☐	☐	☐		☐ [4]				☐	☐

1. The CRRC Product ID Number can be obtained from the Cool Roof Rating Council's Rated Product Directory at www.coolroofs.org/products/search.php
2. Indicate the type of product is being used for the roof top, i.e. single-ply roof, asphalt roof, metal roof, etc.
3. If the Aged Reflectance is not available in the Cool Roof Rating Council's Rated Product Directory then use the Initial Reflectance value from the same directory and use the equation $(0.2+0.7(\rho_{initial} - 0.2)$ to obtain a calculated aged value. Where ρ is the Initial Solar Reflectance from the Cool Roof Rating Council's Rated Product Directory.
4. Check box if the Aged Reflectance is a calculated value using the equation above.
5. The SRI value needs to be calculated from a spreadsheet calculator at http://www.energy.ca.gov/title24/
6. If Fail then describe on this page of the Inspection Checklist Form and take appropriate action to correct. Verify building plans if necessary.

To apply **Liquid Field Applied Coatings**, the coating must be applied across the entire roof surface and meet the dry mil thickness or coverage recommended by the coatings manufacturer and meet minimum performance requirements listed in §118(i)4. Select the applicable coating:

☐ Aluminum-Pigmented Asphalt Roof Coating ☐ Cement-Based Roof Coating ☐ Other _____

Discrepancies:

CERTIFICATE OF COMPLIANCE AND FIELD INSPECTION ENERGY CHECKLIST (Part 3 of 3) ENV-1C

Project Name: *Richmond-San Rafael Maintenance Station* | Date: *4/25/2012*

Required Acceptance Tests

Designer:

This form is to be used by the designer and attached to the plans. Listed below is the acceptance test for Envelope Fenestrations system. The designer is required to check the acceptance tests and list all the fenestration products that require an acceptance test. If all the site-built fenestration of a certain type requires a test, list the different fenestration products and the number of systems. The NA7 Section in the Appendix of the Nonresidential Reference Appendices Manual describes the test. Since this form will be part of the plans, completion of this section will allow the responsible party to budget for the scope of work appropriately.

Enforcement Agency:

Systems Acceptance. Before Occupancy Permit is granted for a newly constructed building or space or whenever new fenestration is installed in the building or space shall be certified as meeting the Acceptance Requirements.
The ENV-2A form is not considered a complete form and is not to be accepted by the enforcement agency unless the boxes are checked and/or filled and signed. In addition, a Certificate of Acceptance forms shall be submitted to the enforcement agency that certifies plans, specifications, installation certificates, and operating and maintenance information meet the requirements of §10-103(b) of Title 24 Part 6. The field inspector must receive the properly filled out and signed forms before the building can receive final occupancy. A copy of the ENV-2A for each different fenestration product line must be provided to the owner of the building for their records.

Test Description: Fenestration Products Name or ID Requiring Testing or Verification	Area of like Products	ENV-2A Building Envelope Acceptance Test	Test Performed By:
Solarban Solargray	*766*	☑	
Velux America Skylight White	*74*	☑	
Single Metal Clear	*24*	☑	
		☐	
		☐	
		☐	
		☐	
		☐	
		☐	
		☐	
		☐	
		☐	
		☐	
		☐	
		☐	
		☐	
		☐	
		☐	
		☐	
		☐	
		☐	
		☐	
		☐	
		☐	
		☐	
		☐	

The Contractor shall verify all controlling field dimensions before ordering or fabricating any material.

THIS DRAWING ACCURATE FOR MECHANICAL WORK ONLY

	BY	CHECKED
DESIGN	Alvin Kwan	Severiano Gutierrez
DETAILS	Alvin Kwan	Severiano Gutierrez
QUANTITIES	Alvin Kwan	Severiano Gutierrez

STATE OF CALIFORNIA DEPARTMENT OF TRANSPORTATION

DIVISION OF ENGINEERING SERVICES ELECTRICAL-MECHANICAL-WATER AND WASTEWATER DESIGN

BRIDGE NO. 28T5783 | POST MILE 6.3

RICHMOND - SAN RAFAEL BRIDGE MAINTENANCE STATION
TITLE 24 ENVELOPE AND MECHANICAL DESIGN ENERGY COMPLIANCE FORMS

SHEET M-04

TAEMWW Imperial Rev. 7/10 FILE => m0_04.dgn DATE PLOTTED => 02-AUG-2012 TIME PLOTTED => 15:10

ORIGINAL SCALE IN INCHES FOR REDUCED PLANS 0 1 2 3

UNIT 3615 PROJECT NUMBER & PHASE 04000000021 EA 003941

DISREGARD PRINTS BEARING EARLIER REVISION DATES → 04/12/12 04/27/12

REVISION DATES (PRELIMINARY STAGE ONLY) SHEET OF

USERNAME => s128843 DATE PLOTTED => 02-AUG-2012 TIME PLOTTED => 15:10

V|=|

DIST.	COUNTY	ROUTE	POST MILES TOTAL PROJECT	SHEET NO.	TOTAL SHEETS
04	CC	580	6.1/6.3	175	216

CALIFORNIA STATE FIRE MARSHAL APPROVED
Approval of this plan does not authorize or approve any omission or deviation from applicable regulations. Final approval is subject to field inspection. One set of approved plans shall be available on the project site at all times.
Reviewed by: Ingrid P. Casiano
INGRID P. ICASIANO, DSFM III
Approval date: July 17, 2012

Jack W Wheeler 04-27-12
REGISTERED ENGINEER-MECHANICAL

REGISTERED PROFESSIONAL ENGINEER
Jack Wheeler
No. 21648
Exp. 6-30-13
MECH
STATE OF CALIFORNIA

7-30-12
PLANS APPROVAL DATE

The State of California or its officers or agents shall not be responsible for the accuracy or completeness of scanned copies of this plan sheet.

CERTIFICATE OF COMPLIANCE and FIELD INSPECTION ENERGY CHECKLIST (Part 1 of 4) MECH-1C

Project Name	Climate Zone	Total Cond. Floor Area	Addition Floor Area	Date
Richmond-San Rafael Maintenance Station	2	3,418	n/a	4/25/2012
Project Address: San Rafael				

GENERAL INFORMATION

Building Type: ☑ Nonresidential ☐ High-Rise Residential ☐ Hotel/Motel Guest Room
☐ Schools (Public School) ☐ Relocatable Public School Bldg. ☑ Conditioned Spaces ☐ Unconditioned Spaces (affidavit)
Phase of Construction: ☑ New Construction ☐ Addition ☐ Alteration
Approach of Compliance: ☐ Component ☐ Overall Envelope TDV Energy ☐ Unconditioned (file affidavit)
Front Orientation: N, E, S, W or in Degrees: 135 deg

HVAC SYSTEM DETAILS

Equipment[2]	Inspection Criteria	FIELD INSPECTION ENERGY CHECKLIST Meets Criteria or Requirements: Pass	Fail – Describe Reason[2]
Item or System Tags (i.e. AC-1, RTU-1, HP-1)	DHW Heater	☐	☐
Equipment Type[3]:	Gas Fired DHW Boiler	☐	☐
Number of Systems	1	☐	☐
Max Allowed Heating Capacity[1]	185,000 Btu/hr	☐	☐
Minimum Heating Efficiency[1]	0.84 EF	☐	☐
Max Allowed Cooling Capacity[1]	n/a	☐	☐
Cooling Efficiency[1]	n/a	☐	☐
Duct Location/ R-Value	n/a	☐	☐
When duct testing is required, submit **MECH-4A** & **MECH-4-HERS**	n/a	☐	☐
Economizer	n/a	☐	☐
Thermostat	n/a	☐	☐
Fan Control	n/a	☐	☐

Equipment[2]	Inspection Criteria	FIELD INSPECTION ENERGY CHECKLIST Pass	Fail – Describe Reason[2]
Item or System Tags (i.e. AC-1, RTU-1, HP-1)	System #1 For Break and Supervisor room	☐	☐
Equipment Type[3]:	Split DX	☐	☐
Number of Systems	1	☐	☐
Max Allowed Heating Capacity[1]	36,000 Btu/hr	☐	☐
Minimum Heating Efficiency[1]	9.00 HSPF	☐	☐
Max Allowed Cooling Capacity[1]	36,000 Btu/hr	☐	☐
Cooling Efficiency[1]	13.0 SEER / 11.4 EER	☐	☐
Duct Location/ R-Value	n/a	☐	☐
When duct testing is required, submit **MECH-4A** & **MECH-4-HERS**	No	☐	☐
Economizer	No Economizer	☐	☐
Thermostat	Setback Required	☐	☐
Fan Control	Constant Volume	☐	☐

1. If the Actual installed equipment performance efficiency and capacity is less than the Proposed (from the energy compliance submittal or from the building plans) the responsible party shall resubmit energy compliance to include the new changes.
2. For additional detailed discrepancy use Page 2 of the Inspection Checklist Form. Compliance fails if a Fail box is checked.
3. Indicate Equipment Type: Gas (Pkg or, Split), VAV, HP (Pkg or split), Hydronic, PTAC, or other.

EnergyPro 5.1 by EnergySoft User Number: 3478 ***RunCode: 2012-04-25T16:01:32*** *ID: 04000000021* *Page 16 of 41*

CERTIFICATE OF COMPLIANCE and FIELD INSPECTION ENERGY CHECKLIST (Part 1 of 4) MECH-1C

Project Name	Climate Zone	Total Cond. Floor Area	Addition Floor Area	Date
Richmond-San Rafael Maintenance Station	2	3,418	n/a	4/25/2012
Project Address: San Rafael				

GENERAL INFORMATION

Building Type: ☑ Nonresidential ☐ High-Rise Residential ☐ Hotel/Motel Guest Room
☐ Schools (Public School) ☐ Relocatable Public School Bldg. ☑ Conditioned Spaces ☐ Unconditioned Spaces (affidavit)
Phase of Construction: ☑ New Construction ☐ Addition ☐ Alteration
Approach of Compliance: ☐ Component ☐ Overall Envelope TDV Energy ☐ Unconditioned (file affidavit)
Front Orientation: N, E, S, W or in Degrees: 135 deg

HVAC SYSTEM DETAILS

Equipment[2]	Inspection Criteria	FIELD INSPECTION ENERGY CHECKLIST Meets Criteria or Requirements: Pass	Fail – Describe Reason[2]
Item or System Tags (i.e. AC-1, RTU-1, HP-1)	System #2-Entry/Locker/Bathrooms Syste	☐	☐
Equipment Type[3]:	Split DX	☐	☐
Number of Systems	1	☐	☐
Max Allowed Heating Capacity[1]	50,000 Btu/hr	☐	☐
Minimum Heating Efficiency[1]	95% AFUE	☐	☐
Max Allowed Cooling Capacity[1]	36,000 Btu/hr	☐	☐
Cooling Efficiency[1]	17.0 SEER / 12.0 EER	☐	☐
Duct Location/ R-Value	Attic, Ceiling Ins, vented / 8.0	☐	☐
When duct testing is required, submit **MECH-4A** & **MECH-4-HERS**	No	☐	☐
Economizer	Fixed Temp (Integrated)	☐	☐
Thermostat	Setback Required	☐	☐
Fan Control	Constant Volume	☐	☐

Equipment[2]	Inspection Criteria	FIELD INSPECTION ENERGY CHECKLIST Pass	Fail – Describe Reason[2]
Item or System Tags (i.e. AC-1, RTU-1, HP-1)	System #3 Welding Room and Storage S	☐	☐
Equipment Type[3]:	Packaged DX	☐	☐
Number of Systems	1	☐	☐
Max Allowed Heating Capacity[1]	30,000 Btu/hr	☐	☐
Minimum Heating Efficiency[1]	80% AFUE	☐	☐
Max Allowed Cooling Capacity[1]	0 Btu/hr	☐	☐
Cooling Efficiency[1]	n/a	☐	☐
Duct Location/ R-Value	n/a	☐	☐
When duct testing is required, submit **MECH-4A** & **MECH-4-HERS**	No	☐	☐
Economizer	No Economizer	☐	☐
Thermostat	No Setback Required	☐	☐
Fan Control	Constant Volume	☐	☐

1. If the Actual installed equipment performance efficiency and capacity is less than the Proposed (from the energy compliance submittal or from the building plans) the responsible party shall resubmit energy compliance to include the new changes.
2. For additional detailed discrepancy use Page 2 of the Inspection Checklist Form. Compliance fails if a Fail box is checked.
3. Indicate Equipment Type: Gas (Pkg or, Split), VAV, HP (Pkg or split), Hydronic, PTAC, or other.

EnergyPro 5.1 by EnergySoft User Number: 3478 ***RunCode: 2012-04-25T16:01:32*** *ID: 04000000021* *Page 17 of 41*

The Contractor shall verify all controlling field dimensions before ordering or fabricating any material.

THIS DRAWING ACCURATE FOR MECHANICAL WORK ONLY

	BY	CHECKED
DESIGN	Alvin Kwan	Severiano Gutierrez
DETAILS	Alvin Kwan	Severiano Gutierrez
QUANTITIES	Alvin Kwan	Severiano Gutierrez

STATE OF CALIFORNIA DEPARTMENT OF TRANSPORTATION

DIVISION OF ENGINEERING SERVICES
ELECTRICAL-MECHANICAL-WATER AND WASTEWATER DESIGN

BRIDGE NO. 28T5783
POST MILE 6.3

RICHMOND - SAN RAFAEL BRIDGE MAINTENANCE STATION
TITLE 24 ENVELOPE AND MECHANICAL DESIGN ENERGY COMPLIANCE FORMS

SHEET M-05

TAEMWW Imperial Rev. 7/10
FILE => m0_05.dgn
DATE PLOTTED => 02-AUG-2012 TIME PLOTTED => 14:43
ORIGINAL SCALE IN INCHES FOR REDUCED PLANS 0 1 2 3
UNIT 3615
PROJECT NUMBER & PHASE 04000000021
EA 003941
DISREGARD PRINTS BEARING EARLIER REVISION DATES
REVISION DATES (PRELIMINARY STAGE ONLY) 04/17/12 04/27/12
SHEET OF

USERNAME => s119571 DATE PLOTTED => 02-AUG-2012 TIME PLOTTED => 14:43
VI=1

DIST.	COUNTY	ROUTE	POST MILES TOTAL PROJECT	SHEET NO.	TOTAL SHEETS
04	CC	580	6.1/6.3	176	216

CALIFORNIA STATE FIRE MARSHAL APPROVED
Approval of this plan does not authorize or approve any omission or deviation from applicable regulations. Final approval is subject to field inspection. One set of approved plans shall be available on the project site at all times.
Reviewed by: Ingrid P. Casiano
INGRID P. TCASIANO, DSFM III
Approval date: July 17, 2012

04-27-12
REGISTERED ENGINEER-MECHANICAL

REGISTERED PROFESSIONAL ENGINEER
Jack Wheeler
No. 21648
Exp. 6-30-13
MECH
STATE OF CALIFORNIA

7-30-12
PLANS APPROVAL DATE

The State of California or its officers or agents shall not be responsible for the accuracy or completeness of scanned copies of this plan sheet.

CERTIFICATE OF COMPLIANCE and FIELD INSPECTION ENERGY CHECKLIST (Part 2 of 4) MECH-1C

Project Name: *Richmond-San Rafael Maintenance Station*
Date: *4/25/2012*

Discrepancies:

EnergyPro 5.1 by EnergySoft *User Number: 3478* ***RunCode: 2012-04-25T16:01:32*** *ID: 04000000021* *Page 18 of 41*

THIS DRAWING ACCURATE FOR MECHANICAL WORK ONLY

The Contractor shall verify all controlling field dimensions before ordering or fabricating any material.

	BY	CHECKED
DESIGN	Alvin Kwan	Severiano Gutierrez
DETAILS	Alvin Kwan	Severiano Gutierrez
QUANTITIES	Alvin Kwan	Severiano Gutierrez

STATE OF CALIFORNIA
DEPARTMENT OF TRANSPORTATION

DIVISION OF ENGINEERING SERVICES
ELECTRICAL-MECHANICAL-WATER AND WASTEWATER DESIGN

BRIDGE NO. 28T5783
POST MILE 6.3

RICHMOND - SAN RAFAEL BRIDGE MAINTENANCE STATION
TITLE 24 ENVELOPE AND MECHANICAL DESIGN ENERGY COMPLIANCE FORMS

SHEET **M-06**

TAEMWW Imperial Rev. 7/10
FILE => m0_06.dgn
DATE PLOTTED => 02-AUG-2012 TIME PLOTTED => 14:43
ORIGINAL SCALE IN INCHES FOR REDUCED PLANS 0 1 2 3
UNIT 3615
PROJECT NUMBER & PHASE 04000000021
EA 003941
DISREGARD PRINTS BEARING EARLIER REVISION DATES
REVISION DATES (PRELIMINARY STAGE ONLY) 04/12/12 04/27/12
SHEET OF

USERNAME => s119571 DATE PLOTTED => 02-AUG-2012 TIME PLOTTED => 14:43

DIST.	COUNTY	ROUTE	POST MILES TOTAL PROJECT	SHEET NO.	TOTAL SHEETS
04	CC	580	6.1/6.3	177	216

CALIFORNIA STATE FIRE MARSHAL APPROVED
Approval of this plan does not authorize or approve any omission or deviation from applicable regulations. Final approval is subject to field inspection. One set of approved plans shall be available on the project site at all times.
Reviewed by: Ingrid P. Casiano
INGRID P. ICASIANO, DSFM III
Approval date: July 17, 2012

04-27-12
REGISTERED ENGINEER-MECHANICAL

REGISTERED PROFESSIONAL ENGINEER
Jack Wheeler
No. 21648
Exp. 6-30-13
MECH
STATE OF CALIFORNIA

7-30-12
PLANS APPROVAL DATE

The State of California or its officers or agents shall not be responsible for the accuracy or completeness of scanned copies of this plan sheet.

CERTIFICATE OF COMPLIANCE and FIELD INSPECTION ENERGY CHECKLIST (Part 3 of 4) MECH-1C

Project Name: *Richmond-San Rafael Maintenance Station*
Date: *4/25/2012*

Required Acceptance Tests

Designer:

This form is to be used by the designer and attached to the plans. Listed below are all the acceptance tests for mechanical systems. The designer is required to check the applicable boxes by all acceptance tests that apply and listed all equipment that requires an acceptance test. If all equipment of a certain type requires a test, list the equipment description and the number of systems. The NA number designates the Section in the Appendix of the Nonresidential Reference Appendices Manual that describes the test. Since this form will be part of the plans, completion of this section will allow the responsible party to budget for the scope of work appropriately.

Building Departments:

Systems Acceptance: Before occupancy permit is granted for a newly constructed building or space, or a new space-conditioning system serving a building or space is operated for normal use, all control devices serving the building or space shall be certified as meeting the Acceptance Requirements for Code Compliance.
Systems Acceptance: Before occupancy permit is granted. All newly installed HVAC equipment must be tested using the Acceptance Requirements.

The MECH-1C form is not considered a completed form and is not to be accepted by the building department unless the correct boxes are checked. The equipment requiring testing, person performing the test (Example: HVAC installer, TAB contractor, controls contractor, PE in charge of project) and what Acceptance test must be conducted. The following checked-off forms are required for **ALL** newly installed equipment. In addition a Certificate of Acceptance forms shall be submitted to the building department that certifies plans, specifications, installation, certificates, and operating and maintenance information meet the requirements of §10-103(b) and Title-24 Part 6. The building inspector must receive the properly filled out and signed forms before the building can receive final occupancy.

TEST DESCRIPTION		MECH-2A	MECH-3A	MECH-4A	MECH-5A	MECH-6A	MECH-7A	MECH-8A	MECH-9A	MECH-10A	MECH-11A
Equipment Requiring Testing or Verification	Qty.	Outdoor Ventilation For VAV & CAV	Constant Volume & Single-Zone Unitary	Air Distribution Ducts	Economizer Controls	Demand Control Ventilation DCV	Supply Fan VAV	Valve Leakage Test	Supply Water Temp. Reset	Hydronic System Variable Flow Control	Automatic Demand Shed Control
Mitsubishi Pumy-P38NHMU	*1*	☑	☑	☐	☐	☐	☐	☐	☐	☐	☐
Carrier58HDV ,24 ACB7	*1*	☑	☑	☐	☑	☐	☐	☐	☐	☐	☐
Radiant Heater	*1*	☐	☑	☐	☐	☐	☐	☐	☐	☐	☐
		☐	☐	☐	☐	☐	☐	☐	☐	☐	☐
		☐	☐	☐	☐	☐	☐	☐	☐	☐	☐
		☐	☐	☐	☐	☐	☐	☐	☐	☐	☐
		☐	☐	☐	☐	☐	☐	☐	☐	☐	☐
		☐	☐	☐	☐	☐	☐	☐	☐	☐	☐
		☐	☐	☐	☐	☐	☐	☐	☐	☐	☐
		☐	☐	☐	☐	☐	☐	☐	☐	☐	☐
		☐	☐	☐	☐	☐	☐	☐	☐	☐	☐
		☐	☐	☐	☐	☐	☐	☐	☐	☐	☐
		☐	☐	☐	☐	☐	☐	☐	☐	☐	☐

CERTIFICATE OF COMPLIANCE and FIELD INSPECTION ENERGY CHECKLIST (Part 4 of 4) MECH-1C

Project Name: *Richmond-San Rafael Maintenance Station*
Date: *4/25/2012*

TEST DESCRIPTION		MECH-12A	MECH-13A	MECH-14A	MECH-15A	
Equipment Requiring Testing	Qty.	Fault Detection & Diagnostics for DX Units	Automatic Fault Detection & Diagnostics for Air & Zone	Distributed Energy Storage DX AC Systems	Thermal Energy Storage (TES) Systems	Test Performed By:
Mitsubishi Pumy-P38NHMU	*1*	☐	☐	☐	☐	
Carrier58HDV ,24 ACB7	*1*	☐	☐	☐	☐	
Radiant Heater	*1*	☐	☐	☐	☐	
		☐	☐	☐	☐	
		☐	☐	☐	☐	
		☐	☐	☐	☐	
		☐	☐	☐	☐	
		☐	☐	☐	☐	
		☐	☐	☐	☐	
		☐	☐	☐	☐	
		☐	☐	☐	☐	
		☐	☐	☐	☐	
		☐	☐	☐	☐	
		☐	☐	☐	☐	
		☐	☐	☐	☐	
		☐	☐	☐	☐	
		☐	☐	☐	☐	
		☐	☐	☐	☐	
		☐	☐	☐	☐	
		☐	☐	☐	☐	
		☐	☐	☐	☐	
		☐	☐	☐	☐	
		☐	☐	☐	☐	
		☐	☐	☐	☐	
		☐	☐	☐	☐	

The Contractor shall verify all controlling field dimensions before ordering or fabricating any material.

THIS DRAWING ACCURATE FOR MECHANICAL WORK ONLY

	BY	CHECKED
DESIGN	Alvin Kwan	Severiano Gutierrez
DETAILS	Alvin Kwan	Severiano Gutierrez
QUANTITIES	Alvin Kwan	Severiano Gutierrez

STATE OF CALIFORNIA
DEPARTMENT OF TRANSPORTATION

DIVISION OF ENGINEERING SERVICES
ELECTRICAL-MECHANICAL-WATER AND WASTEWATER DESIGN

BRIDGE NO. 28T5783
POST MILE 6.3

RICHMOND - SAN RAFAEL BRIDGE MAINTENANCE STATION
TITLE 24 ENVELOPE AND MECHANICAL DESIGN ENERGY COMPLIANCE FORMS

SHEET **M-07**

TAEMWW Imperial Rev. 7/10
FILE => m0_07.dgn
DATE PLOTTED => 02-AUG-2012 TIME PLOTTED => 14:43

ORIGINAL SCALE IN INCHES FOR REDUCED PLANS 0 1 2 3

UNIT 3615
PROJECT NUMBER & PHASE 04000000021
EA 003941

DISREGARD PRINTS BEARING EARLIER REVISION DATES
REVISION DATES (PRELIMINARY STAGE ONLY) 04/12/12 04/27/12
SHEET OF

USERNAME => s113571 DATE PLOTTED => 02-AUG-2012 TIME PLOTTED => 14:43

V|=|

DIST.	COUNTY	ROUTE	POST MILES TOTAL PROJECT	SHEET NO.	TOTAL SHEETS
04	CC	580	6.1/6.3	178	216

CALIFORNIA STATE FIRE MARSHAL APPROVED

Approval of this plan does not authorize or approve any omission or deviation from applicable regulations. Final approval is subject to field inspection. One set of approved plans shall be available on the project site at all times.

Reviewed by: Ingrid P. Casiano
INGRID P. ICASIANO, DSFM III

Approval date: July 17, 2012

REGISTERED ENGINEER-MECHANICAL 04-27-12

REGISTERED PROFESSIONAL ENGINEER Jack Wheeler No. 21648 Exp. 6-30-13 MECH STATE OF CALIFORNIA

7-30-12
PLANS APPROVAL DATE

The State of California or its officers or agents shall not be responsible for the accuracy or completeness of scanned copies of this plan sheet.

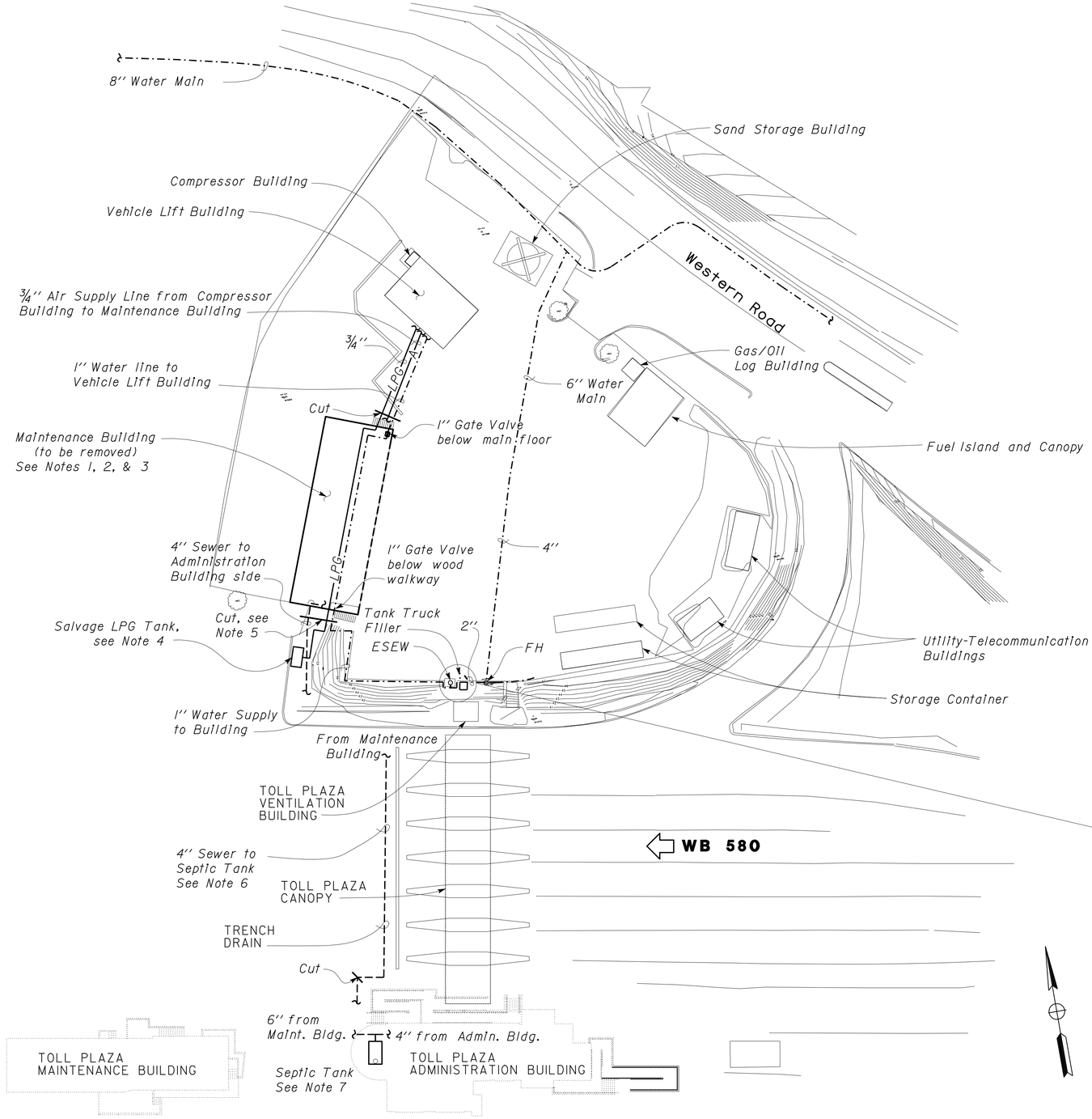

SITE PLAN

SCALE 1" = 30'-0"

Notes:

1. *Remove all plumbing fixtures, associated accessories, and piping in the Maintenance Building. See AI-1.1 (Note 5 and Note 9)*
2. *Remove all mechanical equipment, associated accessories, and piping in the Maintenance Building. See AI-1.1 (Note 5 and Note 9)*
3. *Cut and remove LPG piping, air piping, water piping, sewer piping, and all associated valves under the main floor of the Maintenance Building. See AI-1.0 (General Note)*
4. *Relocate 500 Gallon LPG tank to near Vehicle Lift Building. See M-1 (Note 1)*
5. *Remove 10 feet of LPG and Sewer piping beyond the building.*
6. *Abandon the 4'' sewer pipe across Toll Plaza.*
7. *Sewer Inlet at Septic tank is 6'' CI, IE=23.85*
8. *Remove Gate Valve and Hose Connection. Install new valve in box. See M-1 (Note 3)*

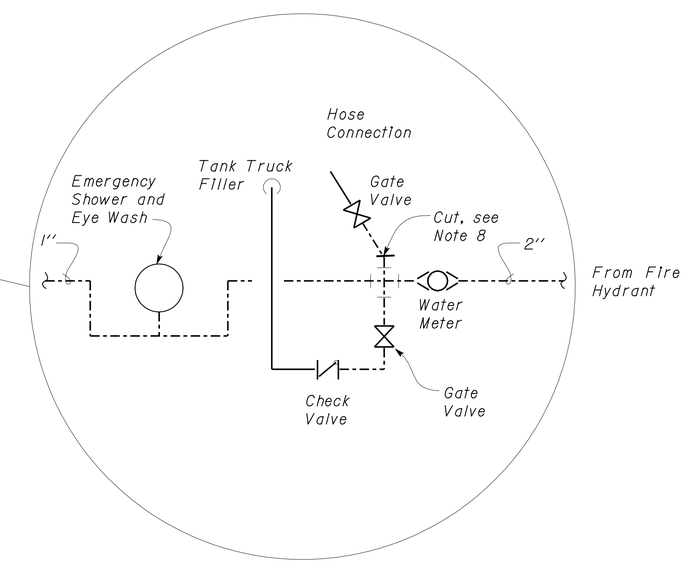

The Contractor shall verify all controlling field dimensions before ordering or fabricating any material.

THIS DRAWING ACCURATE FOR MECHANICAL WORK ONLY

DESIGN SUPERVISOR	DESIGN	BY Alvin Kwan	CHECKED Severiano Gutierrez
DESIGN ENGINEER	DETAILS	BY Alvin Kwan / J. R. Stangl	CHECKED Severiano Gutierrez
	QUANTITIES	BY Alvin Kwan	CHECKED Severiano Gutierrez

STATE OF CALIFORNIA
DEPARTMENT OF TRANSPORTATION

DIVISION OF ENGINEERING SERVICES
ELECTRICAL-MECHANICAL-WATER AND WASTEWATER DESIGN

BRIDGE NO. 28T5783
POST MILE 6.3

RICHMOND - SAN RAFAEL BRIDGE MAINTENANCE STATION

EXISTING SITE PLAN

SHEET M-0

TAEMWW Imperial Rev. 7/10

FILE => m_00.dgn
DATE PLOTTED => 02-AUG-2012 TIME PLOTTED => 14:43

ORIGINAL SCALE IN INCHES FOR REDUCED PLANS 0 1 2 3

UNIT 3615
PROJECT NUMBER & PHASE 04000000021
EA 003941

DISREGARD PRINTS BEARING EARLIER REVISION DATES

REVISION DATES (PRELIMINARY STAGE ONLY) 01-06-12 01-19-12 02-22-12 03-02-12 03-16-12 04-27-12 SHEET OF

USERNAME => s119571 DATE PLOTTED => 02-AUG-2012 TIME PLOTTED => 14:43

VI=1

DIST.	COUNTY	ROUTE	POST MILES TOTAL PROJECT	SHEET NO.	TOTAL SHEETS
04	CC	580	6.0/6.3	179	216

CALIFORNIA STATE FIRE MARSHAL APPROVED
Approval of this plan does not authorize or approve any omission or deviation from applicable regulations. Final approval is subject to field inspection. One set of approved plans shall be available on the project site at all times.
Reviewed by: Ingrid P. Icasiano
INGRID P. ICASIANO, DSFM III
Approval date: July 17, 2012

Jack W Wheeler 04-27-12
REGISTERED ENGINEER-MECHANICAL

REGISTERED PROFESSIONAL ENGINEER
Jack Wheeler
No. 21648
Exp. 6-30-13
MECH
STATE OF CALIFORNIA

7-30-12
PLANS APPROVAL DATE

The State of California or its officers or agents shall not be responsible for the accuracy or completeness of scanned copies of this plan sheet.

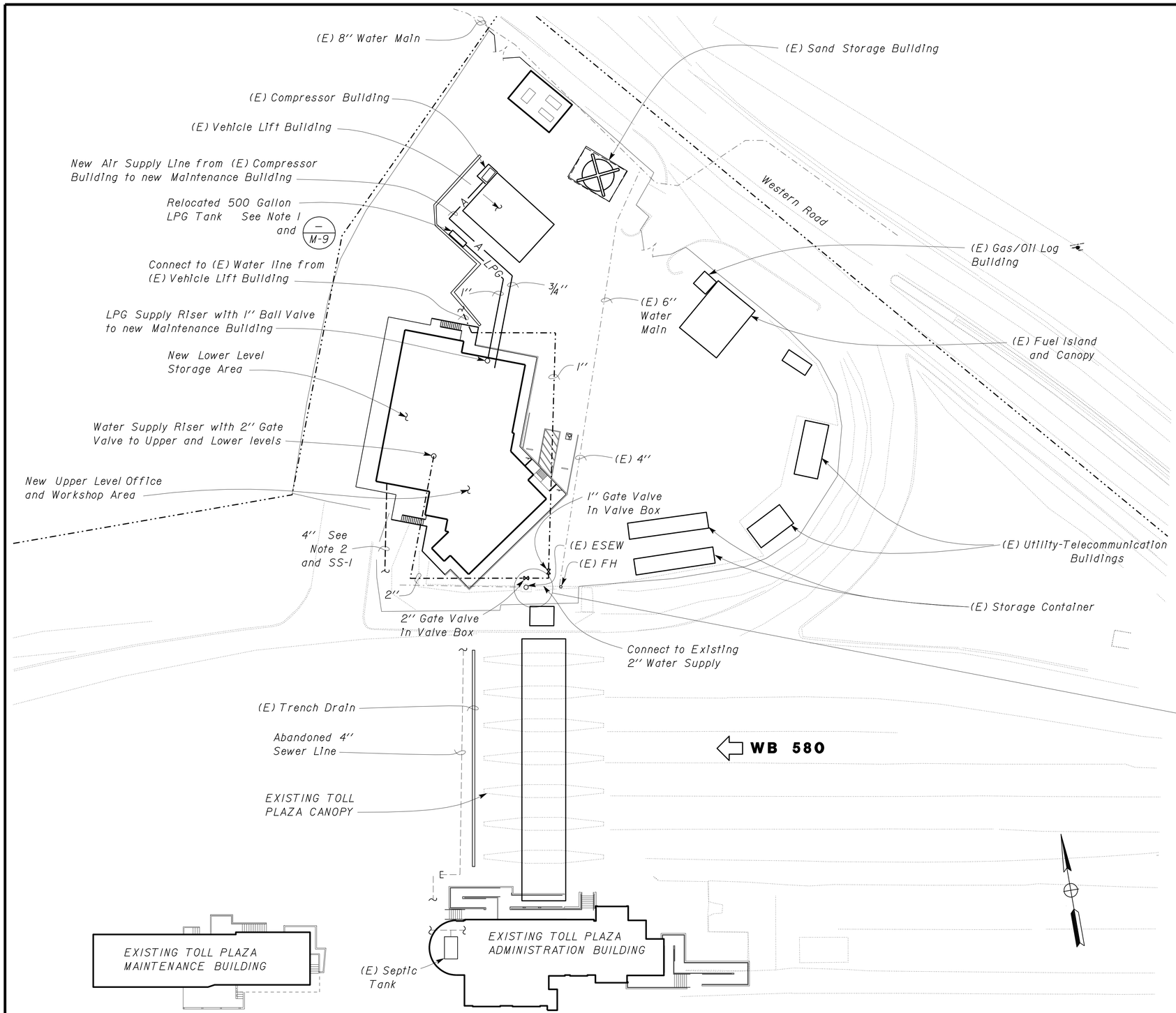

Notes:

1. Install relocated 500 gallon LPG tank with new 1st stage regulator. Connect to LPG piping for (E) Vehicle Lift Building and new Maintenance Building. Maintain 10 feet of clearance from building.
2. Connect new Maintenance Building sewer piping to new 4" sewer crossing Toll Plaza.
3. Connect new 2" water supply to buildings. Split off for both buildings.

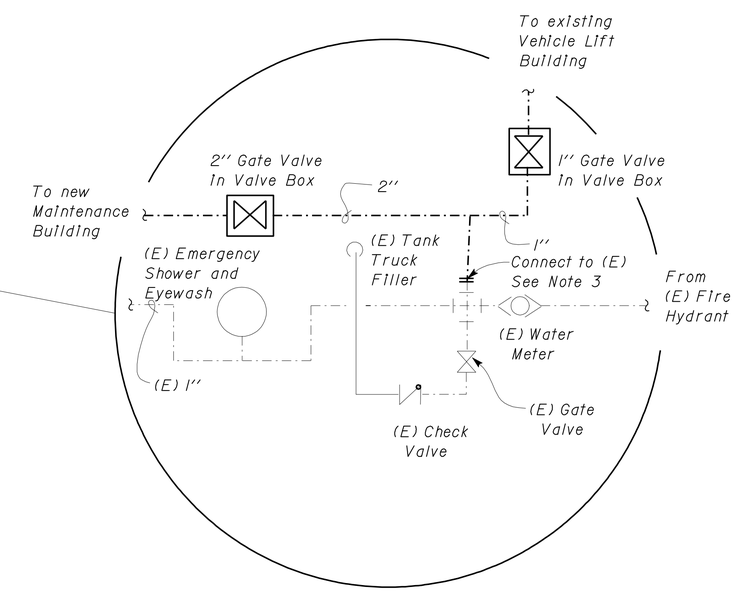

The Contractor shall verify all controlling field dimensions before ordering or fabricating any material.

THIS DRAWING ACCURATE FOR MECHANICAL WORK ONLY

	BY	CHECKED
DESIGN	Alvin Kwan	Severiano Gutierrez
DETAILS	Alvin Kwan	Severiano Gutierrez
QUANTITIES	Alvin Kwan	Severiano Gutierrez

STATE OF CALIFORNIA
DEPARTMENT OF TRANSPORTATION

DIVISION OF ENGINEERING SERVICES
ELECTRICAL-MECHANICAL-WATER AND WASTEWATER DESIGN

BRIDGE NO. 28T5783
POST MILE 6.3

RICHMOND - SAN RAFAEL BRIDGE MAINTENANCE STATION
MODIFIED SITE PLAN

SHEET **M-1**

TAEMWW Imperial Rev. 7/10
FILE => m_01.dgn
DATE PLOTTED => 02-AUG-2012 TIME PLOTTED => 14:54
ORIGINAL SCALE IN INCHES FOR REDUCED PLANS 0 1 2 3
UNIT 3615
PROJECT NUMBER & PHASE 04000000021
EA 003941
DISREGARD PRINTS BEARING EARLIER REVISION DATES
REVISION DATES (PRELIMINARY STAGE ONLY) 08/09/11 10/25/11 12/08/11 01/19/12 02/23/12 03/02/12 03/16/12 04/27/12
SHEET OF

USERNAME => s114926 DATE PLOTTED => 02-AUG-2012 TIME PLOTTED => 14:54

DIST.	COUNTY	ROUTE	POST MILES TOTAL PROJECT	SHEET NO.	TOTAL SHEETS
04	CC	580	6.0/6.3	180	216

REGISTERED ENGINEER-MECHANICAL 04-27-12

REGISTERED PROFESSIONAL ENGINEER Jack Wheeler No. 21648 Exp. 6-30-13 MECH STATE OF CALIFORNIA

7-30-12
PLANS APPROVAL DATE

The State of California or its officers or agents shall not be responsible for the accuracy or completeness of scanned copies of this plan sheet.

CALIFORNIA STATE FIRE MARSHAL APPROVED
Approval of this plan does not authorize or approve any omission or deviation from applicable regulations. Final approval is subject to field inspection. One set of approved plans shall be available on the project site at all times.
Reviewed by: INGRID P. ICASIANO, DSFM III
Approval date: July 17, 2012
CSFM#: 18-07-11-0001

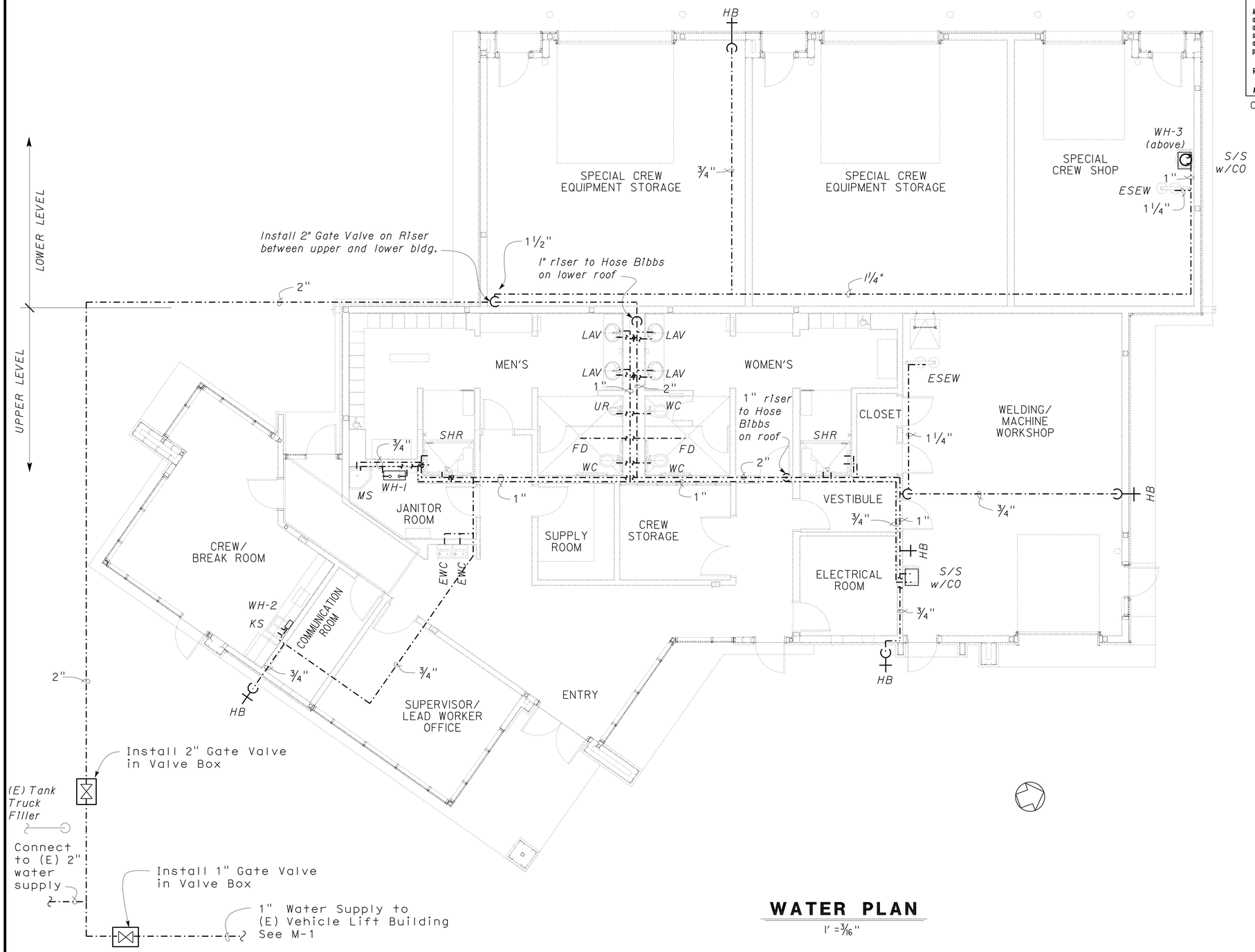

WATER PLAN

1' = 3/16"

The Contractor shall verify all controlling field dimensions before ordering or fabricating any material.

THIS DRAWING ACCURATE FOR MECHANICAL WORK ONLY

	BY	CHECKED
DESIGN	Alvin Kwan	Severiano Gutierrez
DETAILS	Alvin Kwan	Severiano Gutierrez
QUANTITIES	Alvin Kwan	Severiano Gutierrez

STATE OF CALIFORNIA DEPARTMENT OF TRANSPORTATION

DIVISION OF ENGINEERING SERVICES
ELECTRICAL-MECHANICAL-WATER AND WASTEWATER DESIGN

BRIDGE NO. 28T5783
POST MILE 6.3

RICHMOND - SAN RAFAEL BRIDGE MAINTENANCE STATION
MAINTENANCE BUILDING WATER PLAN

SHEET **M-2**

TAEMWW Imperial Rev. 7/10
FILE => m_02.dgn
DATE PLOTTED => 02-AUG-2012 TIME PLOTTED => 14:54
ORIGINAL SCALE IN INCHES FOR REDUCED PLANS 0 1 2 3
UNIT 3615
PROJECT NUMBER & PHASE 04000000021
EA 003941
DISREGARD PRINTS BEARING EARLIER REVISION DATES
REVISION DATES (PRELIMINARY STAGE ONLY) 12-02-11 01-20-12 03-02-12 04-27-12
SHEET OF

USERNAME => s114926 DATE PLOTTED => 02-AUG-2012 TIME PLOTTED => 14:54

DIST.	COUNTY	ROUTE	POST MILES TOTAL PROJECT	SHEET NO.	TOTAL SHEETS
04	CC	580	6.0/6.3	181	216

CALIFORNIA STATE FIRE MARSHAL APPROVED

Approval of this plan does not authorize or approve any omission or deviation from applicable regulations. Final approval is subject to field inspection. One set of approved plans shall be available on the project site at all times.

Reviewed by: Ingrid P. Ciasiano
INGRID P. ICASIANO, DSFM III

Approval date: July 17, 2012

Jack W Wheeler 04-27-12
REGISTERED ENGINEER-MECHANICAL

REGISTERED PROFESSIONAL ENGINEER
Jack Wheeler
No. 21648
Exp. 6-30-13
MECH
STATE OF CALIFORNIA

7-30-12
PLANS APPROVAL DATE

The State of California or its officers or agents shall not be responsible for the accuracy or completeness of scanned copies of this plan sheet.

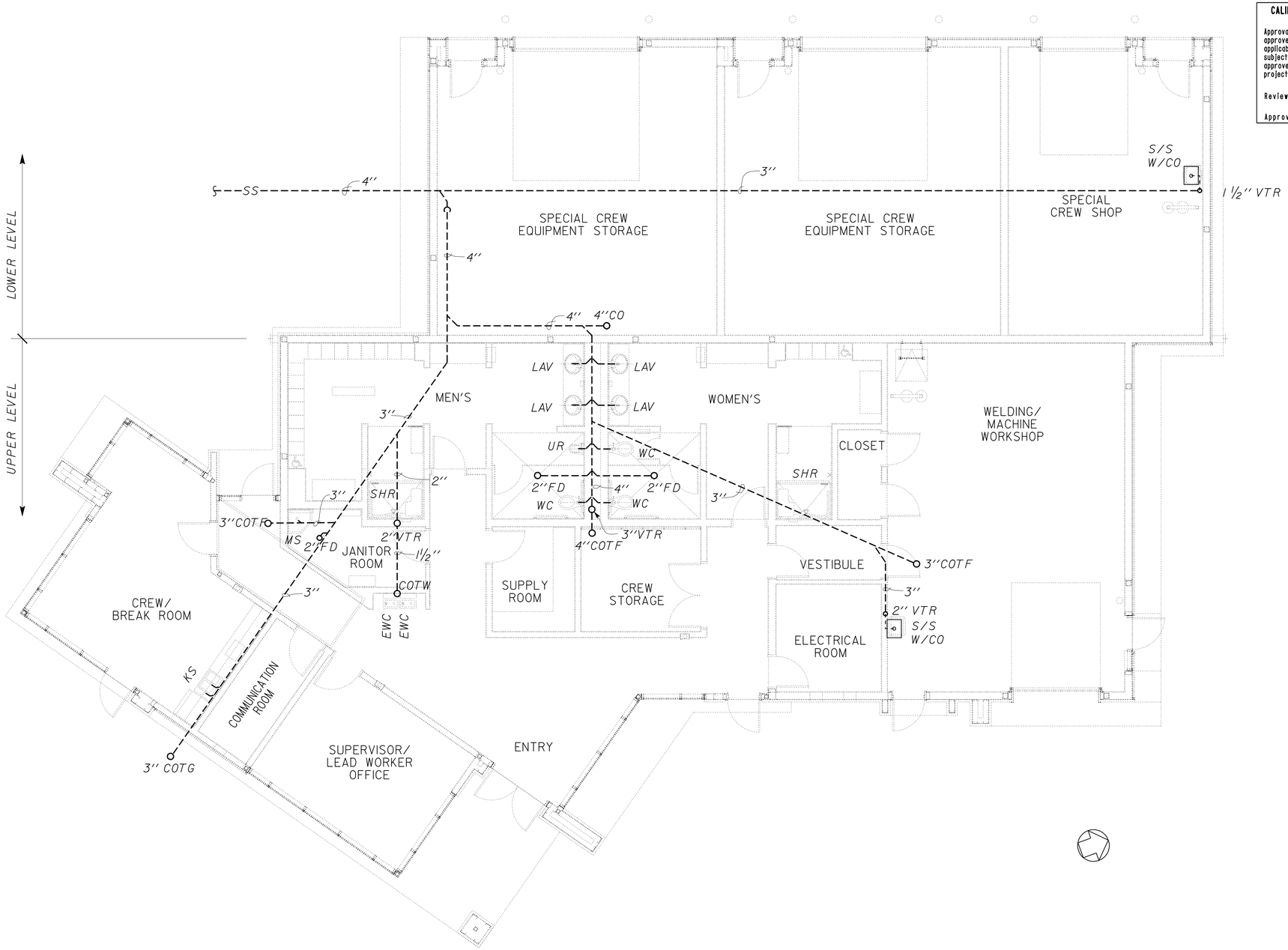

SEWER PLAN

1" = 3/16"

The Contractor shall verify all controlling field dimensions before ordering or fabricating any material.

THIS DRAWING ACCURATE FOR MECHANICAL WORK ONLY

	BY	CHECKED
DESIGN	Alvin Kwan	Severiano Gutierrez
DETAILS	Alvin Kwan	Severiano Gutierrez
QUANTITIES	Alvin Kwan	Severiano Gutierrez

STATE OF CALIFORNIA
DEPARTMENT OF TRANSPORTATION

DIVISION OF ENGINEERING SERVICES
ELECTRICAL-MECHANICAL-WATER AND WASTEWATER DESIGN

BRIDGE NO. 28T5783
POST MILE 6.3

RICHMOND - SAN RAFAEL BRIDGE MAINTENANCE STATION

MAINTENANCE BUILDING SEWER PLAN

SHEET **M-3**

TAEMWW Imperial Rev. 7/10

FILE => m_03.dgn
DATE PLOTTED => 02-AUG-2012 TIME PLOTTED => 16:11

ORIGINAL SCALE IN INCHES FOR REDUCED PLANS 0 1 2 3

UNIT 3615
PROJECT NUMBER & PHASE 04000000021
EA 003941

DISREGARD PRINTS BEARING EARLIER REVISION DATES

REVISION DATES (PRELIMINARY STAGE ONLY) 08-03-11 03-02-12 04-27-12

SHEET OF

USERNAME => s114937 DATE PLOTTED => 02-AUG-2012 TIME PLOTTED => 16:11

V|=|

DIST.	COUNTY	ROUTE	POST MILES TOTAL PROJECT	SHEET NO.	TOTAL SHEETS
04	CC	580	6.0/6.3	182	216

REGISTERED ENGINEER-MECHANICAL 04-27-12

REGISTERED PROFESSIONAL ENGINEER Jack Wheeler No. 21648 Exp. 6-30-13 MECH STATE OF CALIFORNIA

7-30-12
PLANS APPROVAL DATE

The State of California or its officers or agents shall not be responsible for the accuracy or completeness of scanned copies of this plan sheet.

CALIFORNIA STATE FIRE MARSHAL APPROVED
Approval of this plan does not authorize or approve any omission or deviation from applicable regulations. Final approval is subject to field inspection. One set of approved plans shall be available on the project site at all times.
Reviewed by: INGRID P. ICASIANO, DSFM III
Approval date: July 17, 2012

Notes:

1. HP-1 is surface mounted on wall and to be installed at 9 feet above finished floor. HP-2 and HP-3 are ceiling cassette type.
2. WEF is through-the-wall type and mounted at 8 feet above finished floor.
3. EF-2 for both Mens and Womens restrooms are mounted in wall at 9 feet above finished floor. Manifold outlets and terminate through exhaust vent.
4. EF-1 and both CHLFs are ceiling mounted. Duct up and terminate through exhaust vent.

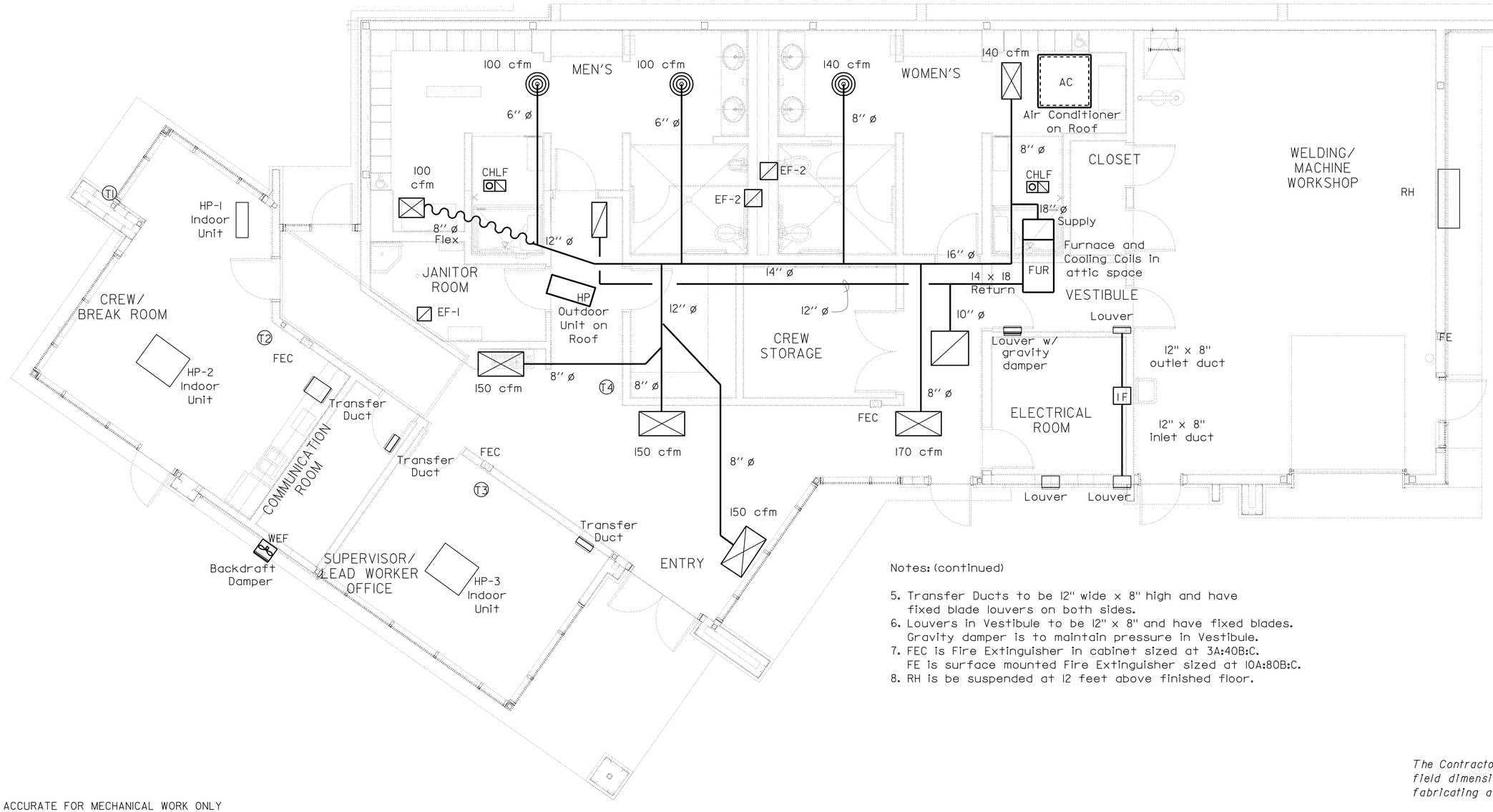

Notes: (continued)

5. Transfer Ducts to be 12" wide x 8" high and have fixed blade louvers on both sides.
6. Louvers in Vestibule to be 12" x 8" and have fixed blades. Gravity damper is to maintain pressure in Vestibule.
7. FEC is Fire Extinguisher in cabinet sized at 3A:40B:C. FE is surface mounted Fire Extinguisher sized at 10A:80B:C.
8. RH is be suspended at 12 feet above finished floor.

The Contractor shall verify all controlling field dimensions before ordering or fabricating any material.

THIS DRAWING ACCURATE FOR MECHANICAL WORK ONLY

	BY	CHECKED
DESIGN	Alvin Kwan	Severiano Gutierrez
DETAILS	Alvin Kwan	Severiano Gutierrez
QUANTITIES	Alvin Kwan	Severiano Gutierrez

STATE OF CALIFORNIA
DEPARTMENT OF TRANSPORTATION

DIVISION OF ENGINEERING SERVICES
ELECTRICAL-MECHANICAL-WATER AND WASTEWATER DESIGN

BRIDGE NO. 28T5783
POST MILE 6.3

RICHMOND - SAN RAFAEL BRIDGE MAINTENANCE STATION

MAINTENANCE BUILDING HVAC PLAN

SHEET **M-4**

TAEMWW Imperial Rev. 7/10
FILE => m_04.dgn
DATE PLOTTED => 02-AUG-2012 TIME PLOTTED => 16:12
ORIGINAL SCALE IN INCHES FOR REDUCED PLANS 0 1 2 3
UNIT 3615
PROJECT NUMBER & PHASE 04000000021
EA 003941
DISREGARD PRINTS BEARING EARLIER REVISION DATES
REVISION DATES (PRELIMINARY STAGE ONLY) 12-04-11 01-20-12 03-02-12 03-16-12 04-27-12
SHEET OF

USERNAME => s114337 DATE PLOTTED => 02-AUG-2012 TIME PLOTTED => 16:12

V1=1

DIST.	COUNTY	ROUTE	POST MILES TOTAL PROJECT	SHEET NO.	TOTAL SHEETS
04	CC	580	6.0/6.3	183	216

CALIFORNIA STATE FIRE MARSHAL APPROVED
Approval of this plan does not authorize or approve any omission or deviation from applicable regulations. Final approval is subject to field inspection. One set of approved plans shall be available on the project site at all times.
Reviewed by: Ingrid P. Icasiano
INGRID P. ICASIANO, DSFM III
Approval date: July 17, 2012

04-27-12
REGISTERED ENGINEER-MECHANICAL

REGISTERED PROFESSIONAL ENGINEER
Jack Wheeler
No. 21648
Exp. 6-30-13
MECH
STATE OF CALIFORNIA

7-30-12
PLANS APPROVAL DATE

The State of California or its officers or agents shall not be responsible for the accuracy or completeness of scanned copies of this plan sheet.

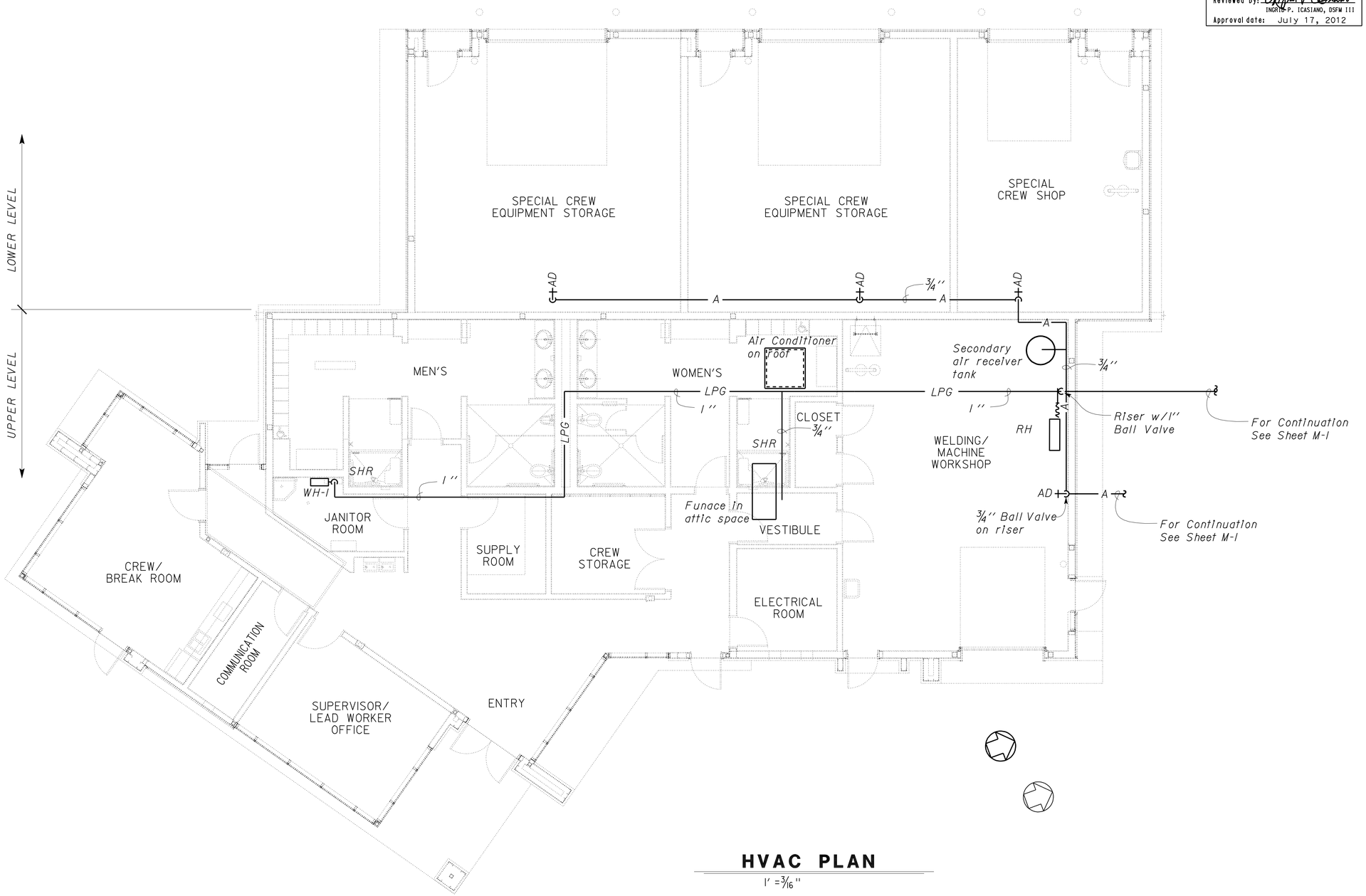

HVAC PLAN

1' = 3/16''

The Contractor shall verify all controlling field dimensions before ordering or fabricating any material.

THIS DRAWING ACCURATE FOR MECHANICAL WORK ONLY

DESIGN	BY Alvin Kwan	CHECKED Severiano Gutierrez	
DETAILS	BY Alvin Kwan	CHECKED Severiano Gutierrez	
QUANTITIES	BY Alvin Kwan	CHECKED Severiano Gutierrez	

STATE OF CALIFORNIA
DEPARTMENT OF TRANSPORTATION

DIVISION OF ENGINEERING SERVICES
ELECTRICAL-MECHANICAL-WATER AND WASTEWATER DESIGN

BRIDGE NO. 28T5783
POST MILE 6.3

RICHMOND - SAN RAFAEL BRIDGE MAINTENANCE STATION
MAINTENANCE BUILDING LPG AND COMPRESSED AIR PLAN

SHEET **M-5**

TAEMWW Imperial Rev. 7/10
FILE => m_05.dgn
DATE PLOTTED => 03-AUG-2012 TIME PLOTTED => 07:19

ORIGINAL SCALE IN INCHES FOR REDUCED PLANS 0 1 2 3

UNIT 3615
PROJECT NUMBER & PHASE 04000000021
EA 003941

DISREGARD PRINTS BEARING EARLIER REVISION DATES
REVISION DATES (PRELIMINARY STAGE ONLY) 01-23-12 03-02-12 03-16-12 04-27-12
SHEET OF

USERNAME => s121614 DATE PLOTTED => 03-AUG-2012 TIME PLOTTED => 07:19

V|=|

CALIFORNIA STATE FIRE MARSHAL APPROVED
Approval of this plan does not authorize or approve any omission or deviation from applicable regulations. Final approval is subject to field inspection. One set of approved plans shall be available on the project site at all times.
Reviewed by: Ingris P. Icastano
INGRIS P. ICASTANO, DSFM III
Approval date: July 17, 2012

DIST.	COUNTY	ROUTE	POST MILES TOTAL PROJECT	SHEET NO.	TOTAL SHEETS
04	CC	580	6.0/6.3	184	216

Jack W Wheeler 04-27-12
REGISTERED ENGINEER-MECHANICAL

REGISTERED PROFESSIONAL ENGINEER
Jack Wheeler
No. 21648
Exp. 6-30-13
MECH
STATE OF CALIFORNIA

7-30-12
PLANS APPROVAL DATE

The State of California or its officers or agents shall not be responsible for the accuracy or completeness of scanned copies of this plan sheet.

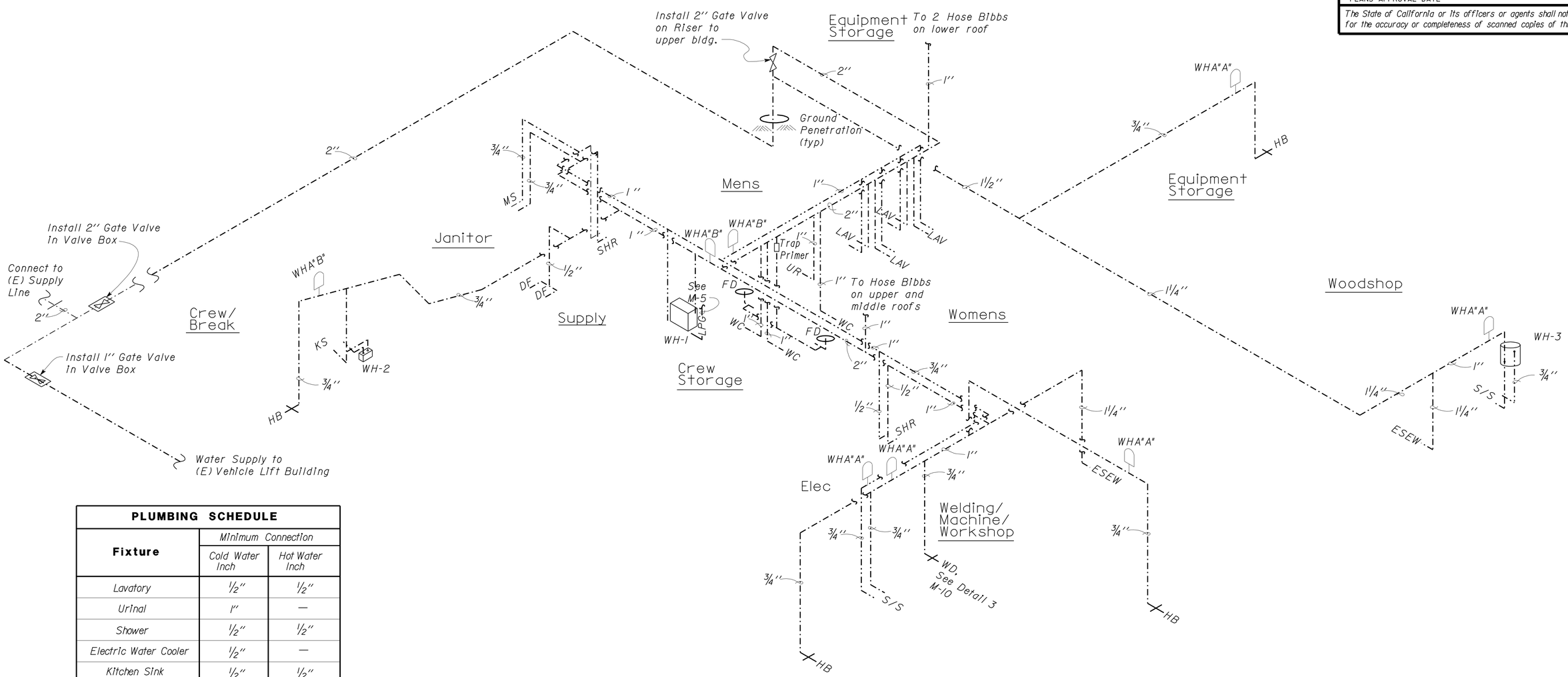

ISOMETRIC PLAN

1' = 3/16''

PLUMBING SCHEDULE		
Fixture	Minimum Connection	
	Cold Water Inch	Hot Water Inch
Lavatory	1/2''	1/2''
Urinal	1''	—
Shower	1/2''	1/2''
Electric Water Cooler	1/2''	—
Kitchen Sink	1/2''	1/2''
Water Closet	1''	—
Mop Sink	3/4''	3/4''
Service Sink	3/4''	3/4''
Refrigerator/Ice maker	1/2''	—
Emergency Eye Wash	1 1/4''	—
Hose Bibb	3/4''	—

The Contractor shall verify all controlling field dimensions before ordering or fabricating any material.

THIS DRAWING ACCURATE FOR MECHANICAL WORK ONLY

	BY	CHECKED
DESIGN	Alvin Kwan	Severiano Gutierrez
DETAILS	Alvin Kwan / J.H. Stung/	Severiano Gutierrez
QUANTITIES	Alvin Kwan	Severiano Gutierrez

STATE OF CALIFORNIA
DEPARTMENT OF TRANSPORTATION

DIVISION OF ENGINEERING SERVICES
ELECTRICAL-MECHANICAL-WATER AND WASTEWATER DESIGN

BRIDGE NO. 28T5783
POST MILE 6.3

RICHMOND - SAN RAFAEL BRIDGE MAINTENANCE STATION
MAINT. BLDG. WATER ISOMETRIC PLAN

SHEET M-6

TAEMWW Imperial Rev. 7/10
FILE => m_06.dgn
DATE PLOTTED => 02-AUG-2012 TIME PLOTTED => 16:12
ORIGINAL SCALE IN INCHES FOR REDUCED PLANS 0 1 2 3
UNIT 3615
PROJECT NUMBER & PHASE 04000000021
EA 003941
DISREGARD PRINTS BEARING EARLIER REVISION DATES
REVISION DATES (PRELIMINARY STAGE ONLY) 12-02-11 01-20-12 03-02-12 04-27-12
SHEET OF

USERNAME => s114937 DATE PLOTTED => 02-AUG-2012 TIME PLOTTED => 16:12

DIST.	COUNTY	ROUTE	POST MILES TOTAL PROJECT	SHEET NO.	TOTAL SHEETS
04	CC	580	6.1/6.3	185	216

REGISTERED ENGINEER-MECHANICAL 04-27-12

REGISTERED PROFESSIONAL ENGINEER Jack Wheeler No. 21648 Exp. 6-30-13 MECH STATE OF CALIFORNIA

7-30-12
PLANS APPROVAL DATE

The State of California or its officers or agents shall not be responsible for the accuracy or completeness of scanned copies of this plan sheet.

CALIFORNIA STATE FIRE MARSHAL APPROVED

Approval of this plan does not authorize or approve any omission or deviation from applicable regulations. Final approval is subject to field inspection. One set of approved plans shall be available on the project site at all times.

Reviewed by: INGRID P. ICASIANO, DSFM III

Approval date: July 17, 2012

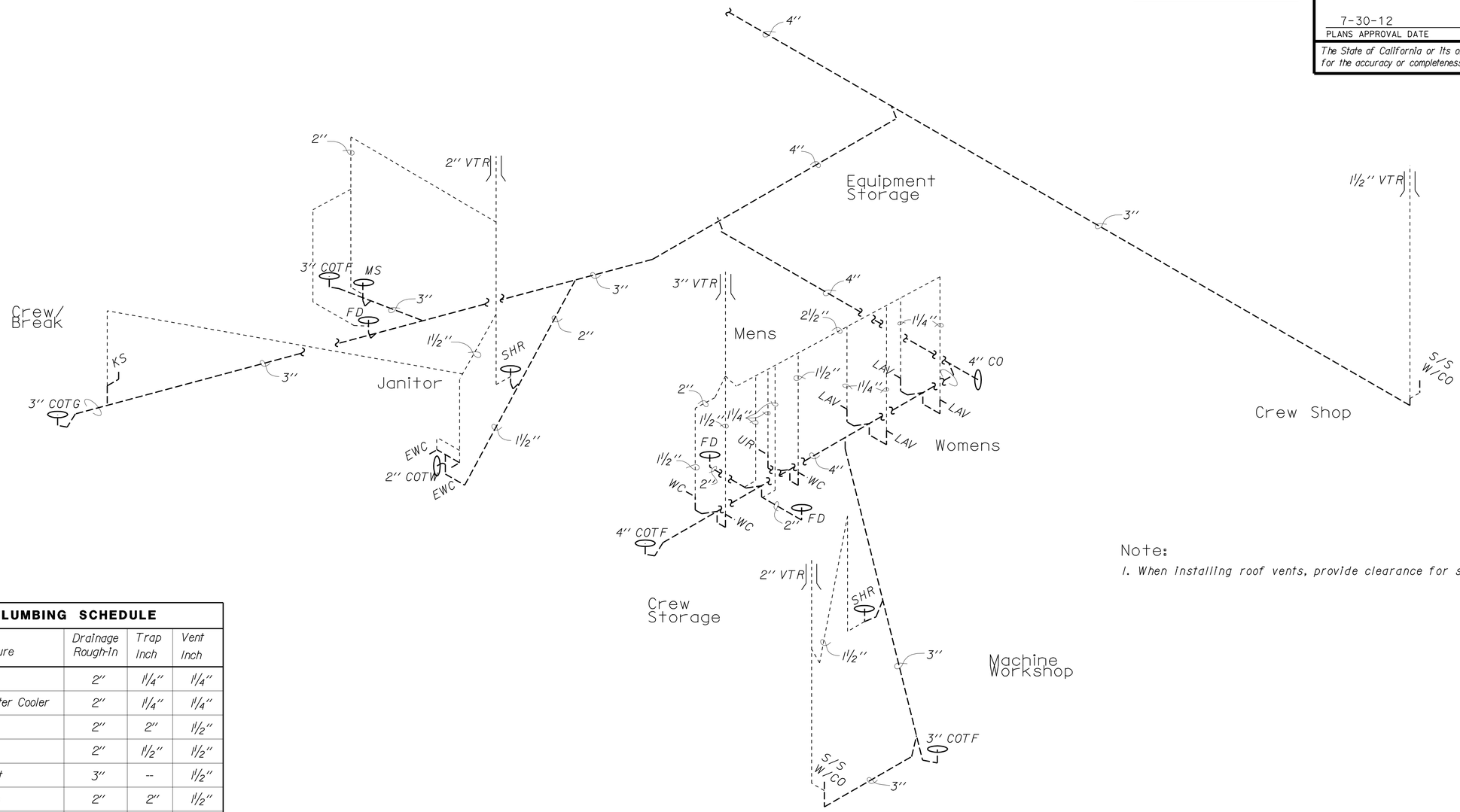

Note:

1. When installing roof vents, provide clearance for solar panels.

PLUMBING SCHEDULE

Fixture	Drainage Rough-In	Trap Inch	Vent Inch
Lavatory	2''	1¼''	1¼''
Electric Water Cooler	2''	1¼''	1¼''
Shower	2''	2''	1½''
Urinal	2''	1½''	1½''
Water Closet	3''	--	1½''
Floor Drain	2''	2''	1½''
Mop Sink	3''	3''	1½''
Service Sink	3''	3''	1½''
Kitchen Sink	2''	1½''	1¼''

ISOMETRIC PLAN

No Scale

The Contractor shall verify all controlling field dimensions before ordering or fabricating any material.

THIS DRAWING ACCURATE FOR MECHANICAL WORK ONLY

	BY	CHECKED
DESIGN	Alvin Kwan	Severiano Gutierrez
DETAILS	Alvin Kwan	Severiano Gutierrez
QUANTITIES	Alvin Kwan	Severiano Gutierrez

STATE OF CALIFORNIA DEPARTMENT OF TRANSPORTATION

DIVISION OF ENGINEERING SERVICES ELECTRICAL-MECHANICAL-WATER AND WASTEWATER DESIGN

BRIDGE NO. 28T5783
POST MILE 6.3

RICHMOND - SAN RAFAEL BRIDGE MAINTENANCE STATION

MAINTENANCE BUILDING ISOMETRIC SEWER PLAN

SHEET **M-7**

TAEMWW Imperial Rev. 7/10

FILE => m_07.dgn
DATE PLOTTED => 02-AUG-2012 TIME PLOTTED => 16:44

ORIGINAL SCALE IN INCHES FOR REDUCED PLANS 0 1 2 3

UNIT 3615
PROJECT NUMBER & PHASE 04000000021
EA 003941

DISREGARD PRINTS BEARING EARLIER REVISION DATES

REVISION DATES (PRELIMINARY STAGE ONLY) 08-04-11 01-20-12 04-27-12

SHEET OF

USERNAME => s109858 DATE PLOTTED => 02-AUG-2012 TIME PLOTTED => 16:44

VI=I

DIST.	COUNTY	ROUTE	POST MILES TOTAL PROJECT	SHEET NO.	TOTAL SHEETS
04	CC	580	6.1/6.3	186	216

CALIFORNIA STATE FIRE MARSHAL APPROVED
Approval of this plan does not authorize or approve any omission or deviation from applicable regulations. Final approval is subject to field inspection. One set of approved plans shall be available on the project site at all times.
Reviewed by: Ingrid P. Casiano
INGRID P. ICASIANO, DSFM III
Approval date: July 17, 2012

04-27-12
REGISTERED ENGINEER-MECHANICAL

REGISTERED PROFESSIONAL ENGINEER
Jack Wheeler
No. 21648
Exp. 6-30-13
MECH
STATE OF CALIFORNIA

7-30-12
PLANS APPROVAL DATE

The State of California or its officers or agents shall not be responsible for the accuracy or completeness of scanned copies of this plan sheet.

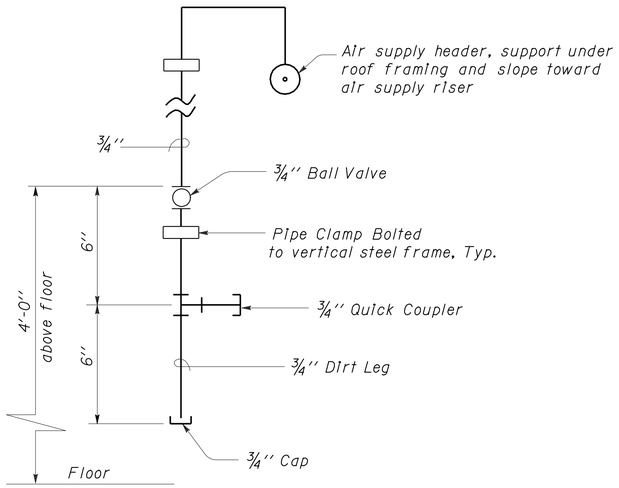

2 AIR DROP
No Scale

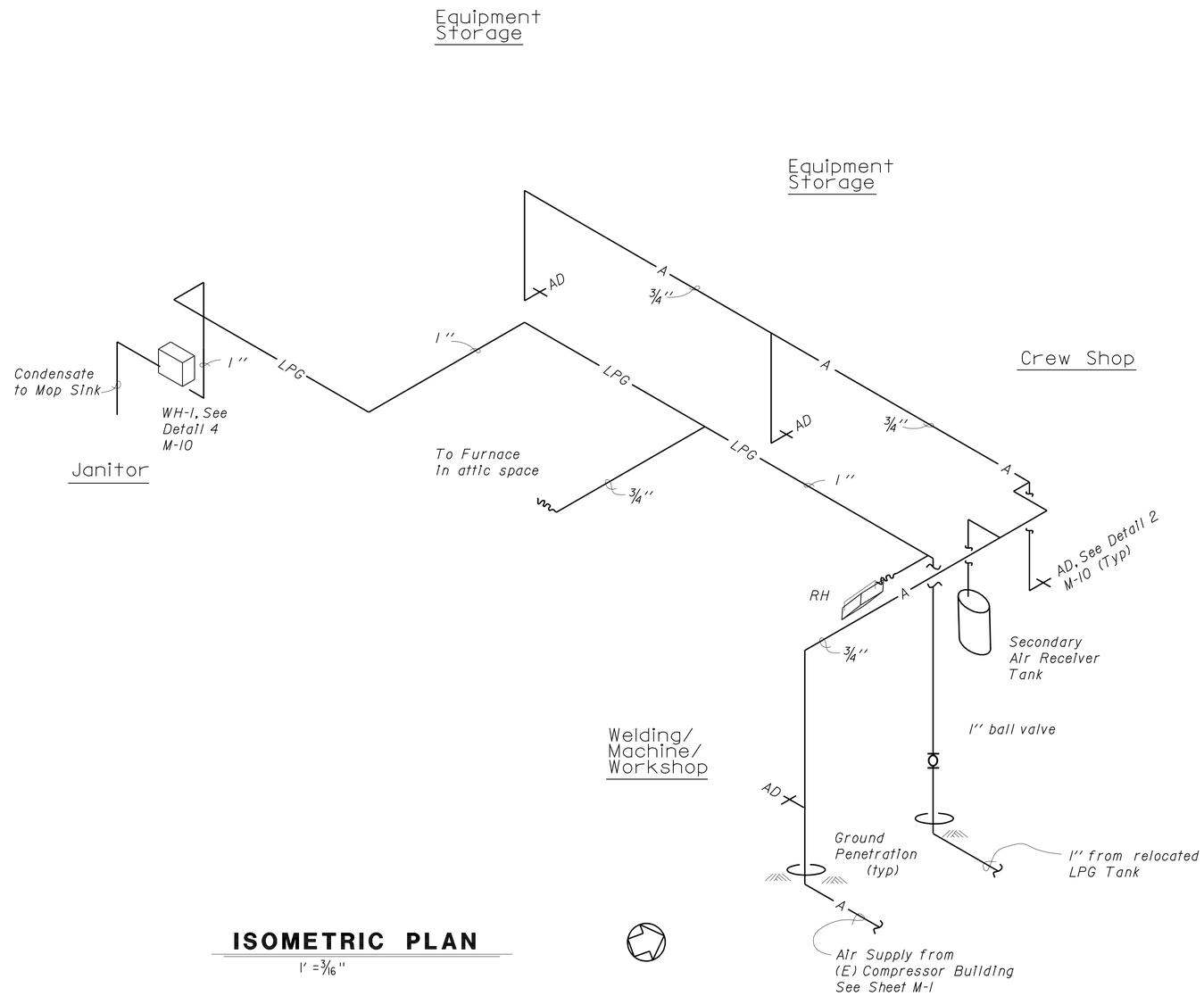

ISOMETRIC PLAN
1' = 3/16"

The Contractor shall verify all controlling field dimensions before ordering or fabricating any material.

THIS DRAWING ACCURATE FOR MECHANICAL WORK ONLY

DESIGN	BY Alvin Kwan	CHECKED Severiano Gutierrez	
DETAILS	BY Alvin Kwan	CHECKED Severiano Gutierrez	
QUANTITIES	BY Alvin Kwan	CHECKED Severiano Gutierrez	

STATE OF CALIFORNIA
DEPARTMENT OF TRANSPORTATION

DIVISION OF ENGINEERING SERVICES
ELECTRICAL-MECHANICAL-WATER AND WASTEWATER DESIGN

BRIDGE NO. 28T5783
POST MILE 6.3

RICHMOND - SAN RAFAEL BRIDGE MAINTENANCE STATION
MAINT. BLDG. LPG AND AIR ISOMETRIC PLAN

SHEET **M-8**

TAEMWW Imperial Rev. 7/10
FILE => m_08.dgn
DATE PLOTTED => 03-AUG-2012 TIME PLOTTED => 07:25
ORIGINAL SCALE IN INCHES FOR REDUCED PLANS 0 1 2 3
UNIT 3615
PROJECT NUMBER & PHASE 04000000021
EA 003941
DISREGARD PRINTS BEARING EARLIER REVISION DATES
REVISION DATES (PRELIMINARY STAGE ONLY) 01-23-12 03-05-12 04-27-12
SHEET OF

USERNAME => s121614 DATE PLOTTED => 03-AUG-2012 TIME PLOTTED => 07:25

DIST.	COUNTY	ROUTE	POST MILES TOTAL PROJECT	SHEET NO.	TOTAL SHEETS
04	CC	580	6.1/6.3	187	216

REGISTERED ENGINEER-MECHANICAL 04-27-12

REGISTERED PROFESSIONAL ENGINEER Jack Wheeler No. 21648 Exp. 6-30-13 MECH STATE OF CALIFORNIA

7-30-12
PLANS APPROVAL DATE

The State of California or its officers or agents shall not be responsible for the accuracy or completeness of scanned copies of this plan sheet.

CALIFORNIA STATE FIRE MARSHAL APPROVED
Approval of this plan does not authorize or approve any omission or deviation from applicable regulations. Final approval is subject to field inspection. One set of approved plans shall be available on the project site at all times.
Reviewed by: Ingrid P. Casiano
INGRID P. ICASIANO, DSFM III
Approval date: July 17, 2012

Notes:

1. *Mount Warning Signs for LPG Tank on 2" Standard Galvanized Steel Pipe at the height of 50" and clamp to the back of guard post with two Stainless Steel Brackets at location as shown.*
2. *Approximate LPG Tank Slab dimensions shall be 1 foot beyond drip line of tank. Contractor shall verify tank dimensions before pouring slab.*
3. *All pipe below grade to be coated black steel.*
4. *Warning shall be lettered in red letters, 1 1/2" high, on a white background and shall state the following:*

NO SMOKING, OPEN FLAMES OR OTHER SOURCE OF IGNITION PERMITTED WITHIN 50 FEET

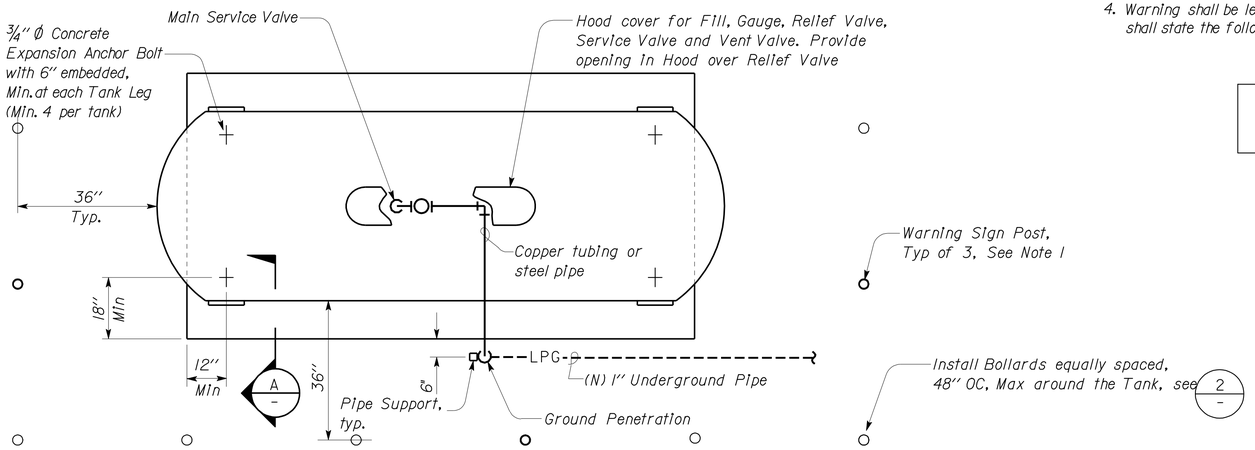

PLAN
NO SCALE

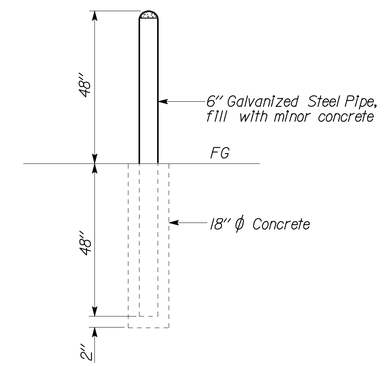

2 GUARD POST
NO SCALE

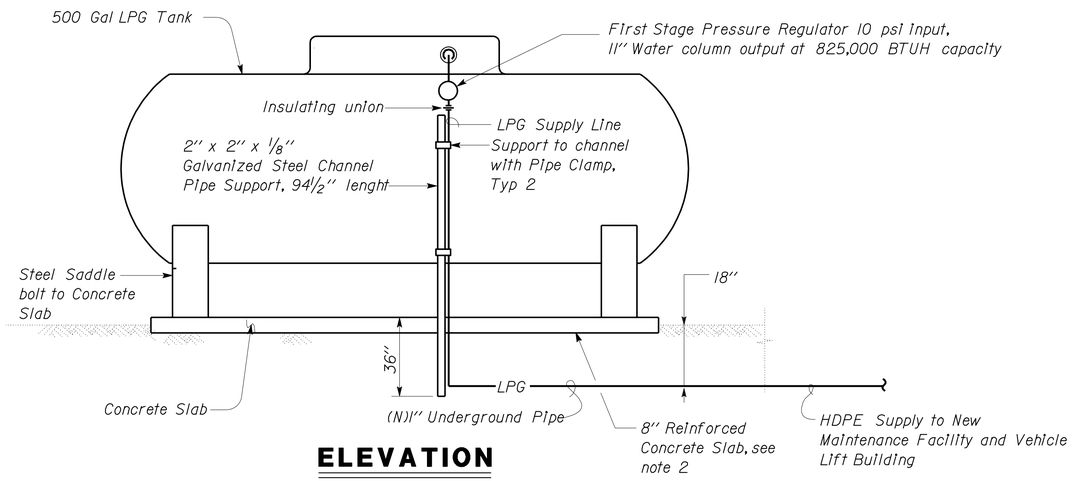

ELEVATION

1 LPG TANK
NO SCALE

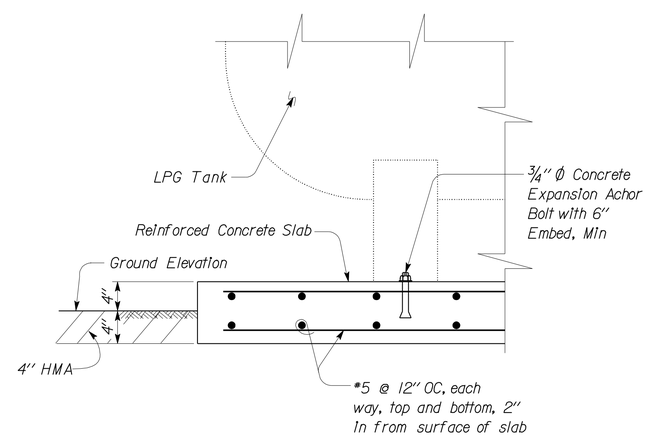

A LPG TANK SLAB-SECTION

The Contractor shall verify all controlling field dimensions before ordering or fabricating any material.

THIS DRAWING ACCURATE FOR MECHANICAL WORK ONLY

	BY	CHECKED
DESIGN	Alvin Kwan	Severiano Gutierrez
DETAILS	Alvin Kwan	Severiano Gutierrez
QUANTITIES	Alvin Kwan	Severiano Gutierrez

STATE OF CALIFORNIA
DEPARTMENT OF TRANSPORTATION

DIVISION OF ENGINEERING SERVICES
ELECTRICAL-MECHANICAL-WATER AND WASTEWATER DESIGN

BRIDGE NO. 28T5783
POST MILE 6.3

RICHMOND - SAN RAFAEL BRIDGE MAINTENANCE STATION
MAINTENANCE BUILDING DETAILS

SHEET **M-9**

TAEMWW Imperial Rev. 7/10
FILE => m_09.dgn
DATE PLOTTED => 03-AUG-2012 TIME PLOTTED => 07:25
ORIGINAL SCALE IN INCHES FOR REDUCED PLANS 0 1 2 3
UNIT 3615
PROJECT NUMBER & PHASE 04000000021
EA 003941
DISREGARD PRINTS BEARING EARLIER REVISION DATES 04-27-12
REVISION DATES (PRELIMINARY STAGE ONLY) SHEET OF

USERNAME => s121614 DATE PLOTTED => 03-AUG-2012 TIME PLOTTED => 07:25

DIST.	COUNTY	ROUTE	POST MILES TOTAL PROJECT	SHEET NO.	TOTAL SHEETS
04	CC	580	6.1/6.3	188	216

REGISTERED ENGINEER-MECHANICAL 04-27-12

REGISTERED PROFESSIONAL ENGINEER Jack Wheeler No. 21648 Exp. 6-30-13 MECH STATE OF CALIFORNIA

7-30-12
PLANS APPROVAL DATE

The State of California or its officers or agents shall not be responsible for the accuracy or completeness of scanned copies of this plan sheet.

CALIFORNIA STATE FIRE MARSHAL APPROVED
Approval of this plan does not authorize or approve any omission or deviation from applicable regulations. Final approval is subject to field inspection. One set of approved plans shall be available on the project site at all times.
Reviewed by: INGRID P. ICASIANO, DSFM III
Approval date: July 17, 2012

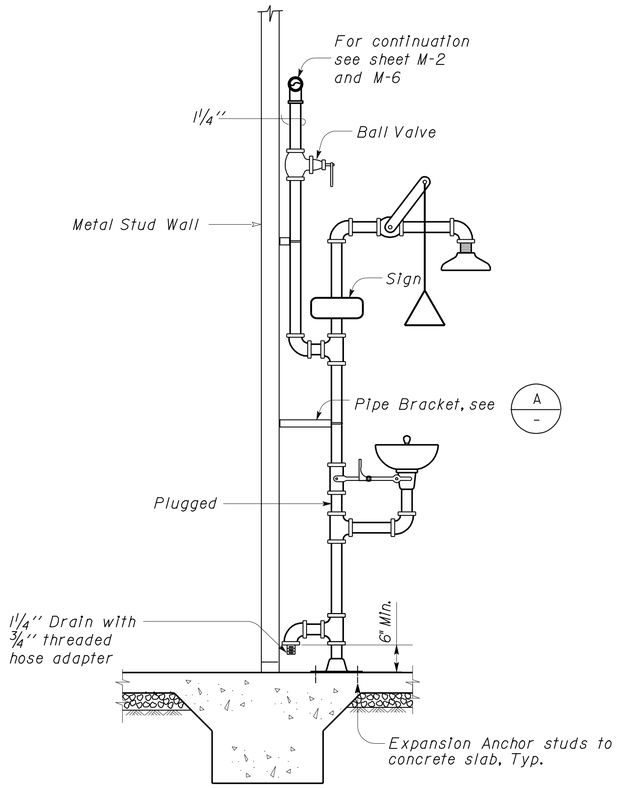

1 EMERGENCY SHOWER AND EYEWASH DETAIL

No Scale

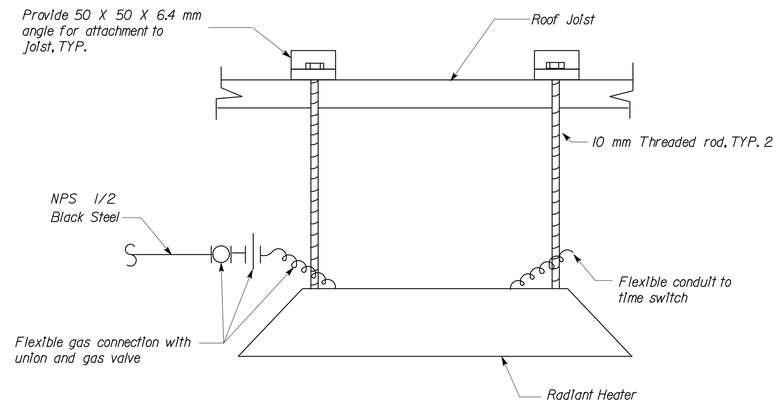

2 RADIANT HEATER

No Scale

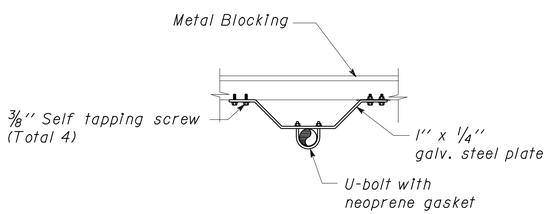

A EMERGENCY SHOWER AND EYEWASH BRACKET

No Scale

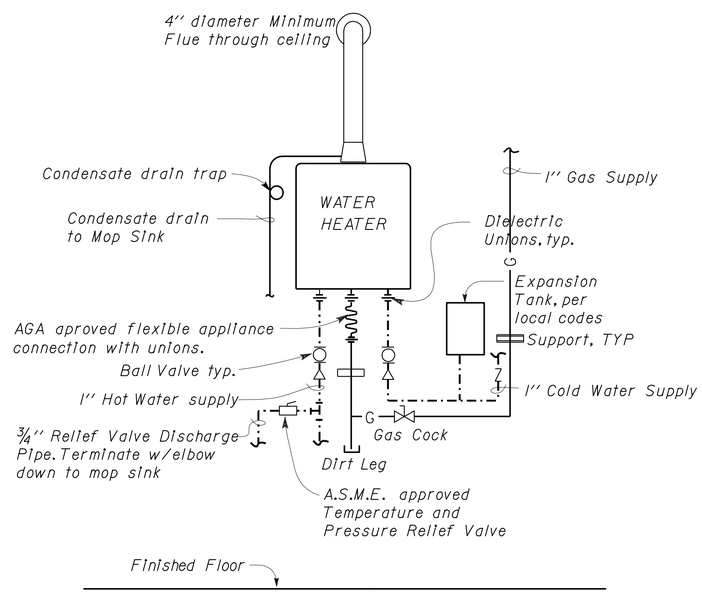

3 TANKLESS GAS WATER HEATER

No Scale

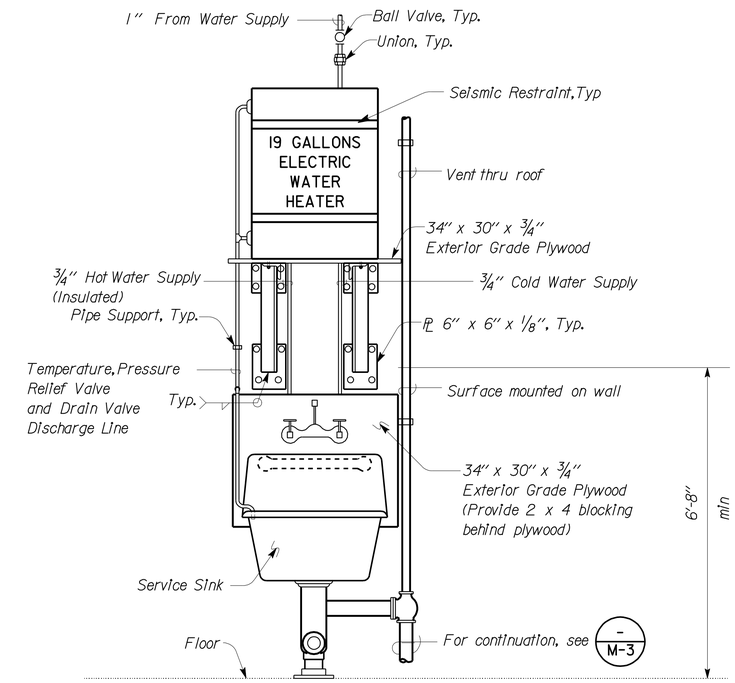

FRONT VIEW

4 SERVICE SINK ROUGH-IN DETAIL

No Scale

Note:
Exterior Grade Plywood shall be painted as specified under Paint (for wood mounting panels) in Section 16.04 of the Special Provisions.

The Contractor shall verify all controlling field dimensions before ordering or fabricating any material.

THIS DRAWING ACCURATE FOR MECHANICAL WORK ONLY

	BY	CHECKED
DESIGN	Alvin Kwan	Severiano Gutierrez
DETAILS	Alvin Kwan	Severiano Gutierrez
QUANTITIES	Alvin Kwan	Severiano Gutierrez

STATE OF CALIFORNIA
DEPARTMENT OF TRANSPORTATION

DIVISION OF ENGINEERING SERVICES
ELECTRICAL-MECHANICAL-WATER AND WASTEWATER DESIGN

BRIDGE NO. 28T5783
POST MILE 6.3

RICHMOND - SAN RAFAEL BRIDGE MAINTENANCE STATION
MAINTENANCE BUILDING DETAILS

SHEET M-10

TAEMWW Imperial Rev. 7/10
FILE => m_10.dgn
DATE PLOTTED => 03-AUG-2012 TIME PLOTTED => 07:25
ORIGINAL SCALE IN INCHES FOR REDUCED PLANS 0 1 2 3
UNIT 3615
PROJECT NUMBER & PHASE 04000000021
EA 003941
DISREGARD PRINTS BEARING EARLIER REVISION DATES
REVISION DATES (PRELIMINARY STAGE ONLY) 04-27-12
SHEET OF

USERNAME => s121614 DATE PLOTTED => 03-AUG-2012 TIME PLOTTED => 07:25

DIST.	COUNTY	ROUTE	POST MILES TOTAL PROJECT	SHEET NO.	TOTAL SHEETS
04	CC	580	6.1/6.3	189	216

REGISTERED ENGINEER-MECHANICAL 04-27-12

REGISTERED PROFESSIONAL ENGINEER Jack Wheeler No. 21648 Exp. 6-30-13 MECH STATE OF CALIFORNIA

7-30-12
PLANS APPROVAL DATE

The State of California or its officers or agents shall not be responsible for the accuracy or completeness of scanned copies of this plan sheet.

CALIFORNIA STATE FIRE MARSHAL APPROVED
Approval of this plan does not authorize or approve any omission or deviation from applicable regulations. Final approval is subject to field inspection. One set of approved plans shall be available on the project site at all times.
Reviewed by: INGRID P. ICASIANO, DSFM III
Approval date: July 17, 2012

SYMBOL	DESCRIPTION	SYMBOL	DESCRIPTION
HP-1 HP-2 HP-3 Crew/Break Supervisor	SPLIT SYSTEM HEAT PUMP (Ductless): Cooling Capacity : 12,000 Btuh nominal,@ 95F Ambient temperature and 80F DB/67F WB Indoor temperature Heating Capacity : 13,600 Btuh nominal,@ 18F Ambient temperature and 70F DB/60F WB Indoor temperature Evap.Blower : 250 cfm @ 0 inch E.S.P. SEER: 22 Unit Electrical : 230 V-1 Ph - 60Hz HSPF: 10 Route condensate drain pipe to outdoor above grade.	FUR Attic AC Rooftop	SPLIT SYSTEM HVAC: Cooling Capacity : 36,000 Btuh nominal, @ 95F Ambient temperature and 80F DB/67F WB Indoor temperature Heating Capacity : 42,600 Btuh nominal, @ 18F Ambient temperature and 70F DB/60F WB Indoor temperature Indoor Unit: 1200 cfm @ 0.80 inch w.g.E.S.P., 95% AFUE, Variable speed blower, 115 V-1 Ph - 60 HZ Evap.Blower : 250 cfm @ 0 inch E.S.P. SEER: 17 Unit Electrical : 230 V-1 Ph - 60Hz HSPF: 8.5 Route condensate drain pipe to outdoor above grade.
RH Welding/ Machine/ Workshop	RADIANT HEATER: Input Capacity : 36,000 Buth burner, propane gas Unit Electrical : 115 V-1 Ph - 60Hz Radiant heater shall be controlled by wall mounted thermostat and time switch (4 hrs dial)	CHLF Shower Quantity = 2	COMBINATION HEAT/ LIGHT/ CEILING EXHAUST FAN: Air : 100 cfm @ 0.125 inch w.g.E.S.P., 2 sones max. Unit Electrical : 14 Amps, 115 V -1 Ph - 60Hz Route 6 inch dia.duct as shown. Fan shall be complete with backdraft damper and vent hood with birdscreen. Provide 1/27 watt fluorescent bulb and 1500 watts heater.
EF-1 Janitor	EXHAUST FAN (ceiling mounted): Flow Capacity : 150 cfm @ 0.25 inch w.g.E.S.P., 21 sones max. Unit Electrical : 80 Watts, 115 V-1 Ph - 60Hz Provide local disconnect at exhaust fan. Fan shall be controlled by light switch.	EWC Hallway Quantity = 2	ELECTRIC WATER COOLER: Capacity : 8 Gallon per hour cooling capacity Unit Electrical: 460 watts, 115 V- 3Ph - 60HZ
EF-2 Mens Womens Quantity = 2	EXHAUST FAN (wall mounted): Flow Capacity : 227 cfm @ 0.25 inch w.g.E.S.P., 21 sones max. Unit Electrical : 83 Watts, 115 V 1 Ph - 60Hz Provide local disconnect at exhaust fan. Fan shall be controlled by occupancy sensor.	WH-1 Janitor	WATER HEATER (tankless LPG): Unit type : Heat-on-demand Capacity : 200,000 Btuh min., 9.4 nominal GPM Unit Electrical: 115 V-1 Ph - 60HZ
IF Electrical	INLINE FAN (centrifugal): Flow Capacity : 200 cfm @ 0.5 inch w.g. E.S.P. 10 sones max. Unit Electrical : 0.25 HP, 115 V-1 Ph - 60Hz Provide local disconnect at fan Fan shall be controlled by ceiling mounted switch in Vestibule.	WH-2 Crew/Break	WATER HEATER (tankless electric): Unit type : Heat-on-demand Capacity : 7,200 Watts Unit Electrical: 208 V-1 Ph - 60HZ
WEF Commun- ications	WALL EXHAUST FAN (propeller): Flow Capacity : 270 cfm @ 0.25 inch w.g. E.S.P. 15 sones max. Unit Electrical : 0.125 HP, 115 V-1 Ph - 60Hz Provide local disconnect at fan Fan shall be controlled by wall mounted switch.	WH-3 Woodshop	WATER HEATER (electric): Unit type : Compact Tank Capacity : 19 Gallon, 2,000 Watts max. Unit Electrical: 120 V-1 Ph - 60HZ
WFC Machine Workshop	WELDING FUME COLLECTOR: Flow Capacity : 1100 cfm Unit Electrical : 1.5 HP, 115 V-1 Ph - 60Hz Portable type, with removable media cartridge and 10' extraction arm	Tank Welding/ Machine/ Workshop	Secondary Air Reciever Tank Capacity : 80 gallon vertical tank

The Contractor shall verify all controlling field dimensions before ordering or fabricating any material.

THIS DRAWING ACCURATE FOR MECHANICAL WORK ONLY

	BY	CHECKED
DESIGN	Alvin Kwan	Severiano Gutierrez
DETAILS	Alvin Kwan	Severiano Gutierrez
QUANTITIES	Alvin Kwan	Severiano Gutierrez

STATE OF CALIFORNIA DEPARTMENT OF TRANSPORTATION

DIVISION OF ENGINEERING SERVICES
ELECTRICAL-MECHANICAL-WATER AND WASTEWATER DESIGN

BRIDGE NO. 28T5783
POST MILE 6.3

RICHMOND - SAN RAFAEL BRIDGE MAINTENANCE STATION
MAINTENANCE BUILDING EQUIPMENT SCHEDULE

SHEET **M-11**

TAEMWW Imperial Rev. 7/10
FILE => m_11.dgn
DATE PLOTTED => 03-AUG-2012 TIME PLOTTED => 07:25

ORIGINAL SCALE IN INCHES FOR REDUCED PLANS 0 1 2 3

UNIT 3615
PROJECT NUMBER & PHASE 04000000021
EA 003941

DISREGARD PRINTS BEARING EARLIER REVISION DATES → 02-21-12 02-27-12 04-27-12

REVISION DATES (PRELIMINARY STAGE ONLY) SHEET OF

USERNAME => s121614 DATE PLOTTED => 03-AUG-2012 TIME PLOTTED => 07:25

V|=|

DIST.	COUNTY	ROUTE	POST MILES TOTAL PROJECT	SHEET NO.	TOTAL SHEETS
04	CC	580	6.1/6.3	190	216

REGISTERED ELECTRICAL ENGINEER — 4-25-12 DATE

REGISTERED PROFESSIONAL ENGINEER — BEATRICE BINDU — No. E 17240 — Exp. 6-30-12 — ELEC — STATE OF CALIFORNIA

7-30-12
PLANS APPROVAL DATE

The State of California or its officers or agents shall not be responsible for the accuracy or completeness of scanned copies of this plan sheet.

GRAPHIC SYMBOLS FOR ELECTRICAL WIRING AND LAYOUT DIAGRAMS

SYMBOL	DESCRIPTION
	POLE-TOP ELECTROLIER
	POLE-ARM ELECTROLIER
CEILING WALL	
(S) -(S)	SURFACE FLUORESCENT, METAL HALIDE OR SODIUM VAPOR FIXTURE
(R) -(R)	RECESSED FLUORESCENT, METAL HALIDE, OR SODIUM VAPOR FIXTURE
(X) -(X)	EXIT LIGHT
	SURFACE OR PENDANT INDIVIDUAL FLUORESCENT FIXTURE
(R)	RECESSED INDIVIDUAL FLUORESCENT FIXTURE
	SURFACE OR PENDANT CONTINUOUS ROW FLUORESCENT FIXTURES

NOTE: A LOWER CASE LETTER NEAR GRAPHIC LIGHTING FIXTURE SYMBOL DENOTES THAT FIXTURE IS CONTROLLED BY A SIMILARLY MARKED SWITCH, AN ALPHA-NUMERIC SYMBOL NEAR GRAPHIC LIGHTING FIXTURE SYMBOL DENOTES FIXTURE TYPE, (I=INCANDESCENT, F=FLUORESCENT, MH=METAL HALIDE, H=HIGH PRESSURE SODIUM VAPOR), DESIGN TYPE, NUMBER OF LAMPS AND WATTAGE.

EXAMPLE : (4) F 2 - 2 x 32
- 32 WATT LAMPS
- 2 LAMPS
- DESIGN TYPE
- FLUORESCENT
- NUMBER OF FIXTURES

SYMBOL	DESCRIPTION
(B) -(B)	BLANK OUTLET
(J) -(J)	JUNCTION BOX
(D)	DROP CORD
	SINGLE RECEPTACLE OUTLET
	DUPLEX RECEPTACLE OUTLET
(GFCI)	DUPLEX RECEPTACLE OUTLET (WITH GFCI)
(GFCI) WP	DUPLEX RECEPTACLE OUTLET, WEATHERPROOF (WITH GFCI)
	SINGLE, SPECIAL PURPOSE RECEPTACLE OUTLET
	DUPLEX, SPECIAL PURPOSE RECEPTACLE OUTLET
R	RANGE OUTLET
(C)	CLOCK HANGER RECEPTACLE
(F)	FAN HANGER RECEPTACLE
	FLOOR SINGLE RECEPTACLE OUTLET
	FLOOR DUPLEX RECEPTACLE OUTLET
	FLOOR SPECIAL PURPOSE OUTLET
	FLOOR RADIO OUTLET
	FLOOR TELEPHONE OUTLET
	MULTI-FLOOR OUTLET, 2 OR MORE GANG
	MULTI-OUTLET ASSEMBLY
S	SINGLE POLE SWITCH
S_2	DOUBLE POLE SWITCH
S_3	THREE WAY SWITCH
S_4	FOUR WAY SWITCH
S_D	AUTOMATIC DOOR
S_K	KEY OPERATED SWITCH
S_P	SWITCH AND PILOT LIGHT
S_{MC}	MOMENTARY CONTACT SWITCH
S_{RC}	REMOTE CONTROL SWITCH
S_{WP}	WEATHERPROOF SWITCH
S_F	FAN SWITCH
S_L	LIGHT SWITCH
S_H	HEATER SWITCH
S_{VS}	VARIABLE SPEED MOTOR CONTROL SWITCH
S_{CHLF}	TWO TIMER SWITCHES, ONE SWITCH FOR LIGHT AND FAN AND ONE SWITCH FOR HEAT LAMP
C_a	LONG RANGE OCCUPANCY SENSOR

SYMBOL	DESCRIPTION
S^{O}_{1}	OCCUPANCY SENSOR WALL SWITCH, SINGLE LEVEL
S^{O}_{2}	OCCUPANCY SENSOR WALL SWITCH, BILEVEL
S_M	MOTION SENSOR SWITCH
S_T	MANUAL MOTOR STARTING SWITCH, THERMAL OVERLOAD TYPE
S_{HP}	MANUAL MOTOR STARTING SWITCH, WITHOUT OVERLOAD ELEMENT
TS	TIMER SWITCH
$_S$	SWITCH AND SINGLE RECEPTACLE
$_S$	SWITCH AND DUPLEX RECEPTACLE
C	HAND DRYER NOZZLE
H	HAND DRYER
	RADIO OUTLET
	COMMUNICATION OUTLET
	SOUND SYSTEM LOUD SPEAKER OUTLET
	PUSHBUTTON
$_L$	PUSHBUTTON STATION, NC, WITH LOCKING DEVICE FOR OPEN
	PUSHBUTTON STATION MOTOR CONTROL
	BUZZER
	BELL
	COMBINATION BELL-BUZZER
(T)	THERMOSTAT
(PS)	PRESSURE SWITCH
(R)	CONTROL RELAY
(FS)	FLOW SWITCH
PEC	PHOTOELECTRIC CELL
R	RADIO OUTLET
TV	TELEVISION OUTLET
M	MICROPHONE OUTLET
	FLUSH-MOUNTED PANELBOARD AND CABINET
	SURFACE-MOUNTED PANELBOARD AND CABINET
	LIGHTING PANEL
	POWER PANEL
	COMBINATION LIGHTING AND POWER
MC	MOTOR CONTROLLER
	DISCONNECT SWITCH
	CONDUIT CONCEALED IN CEILING OR WALL
	CONDUIT CONCEALED IN FLOOR
	CONDUIT EXPOSED
	CROSS-LINES INDICATE NUMBER OF #12 AWG CONDUCTORS. LONGER CROSS-LINE INDICATES 1#12 AWG (G) FOR EQUIPMENT GROUNDING CONDUCTOR. NO CROSS-LINE INDICATES 2#12 WITH 1#12 (G) UNLESS OTHERWISE NOTED. ALL CONDUIT ½" UNLESS OTHERWISE NOTED.
A1, 2	HOMERUN TO PANELBOARD, ARROWS INDICATE NUMBER OF CIRCUITS, LETTER DENOTES PANEL-BOARD, NUMERAL DENOTES CIRCUIT.
—SM—	SURFACE METAL RACEWAY

(2) ½"C, PVC, 2#12
- CONDUCTOR INFO (PER CONDUIT)
- CONDUIT TYPE
- CONDUIT SIZE
- NUMBER OF CONDUITS (NO NUMBER INDICATES ONE CONDUIT)

SYMBOL	DESCRIPTION
—MC—	CONDUIT, RIGID STEEL, UNDERGROUND
—PVC—	CONDUIT, POLYVINYL CHLORIDE, UNDERGROUND
	CONDUIT, FLEXIBLE
	CONDUIT, TURN UP
	CONDUIT, TURN DOWN
	CONDUIT SEAL, EXPLOSION-PROOF
	CONDUIT, EXPANSION JOINT
	ADAPTER, ONE TYPE CONDUIT TO ANOTHER
	POLE

SYMBOL	DESCRIPTION
(OC)	OCCUPANCY SENSOR
(P)	OCCUPANCY SENSOR POWER PACK
(H)	HEAT DETECTOR
(S)	SMOKE DETECTOR
P	MANUAL PULL STATION
AV	AUDIO/VISUAL ALARM DEVICE
(G)	GLASS BREAK DISCRIMINATOR
(C)	MAGNETIC CONTACT SWITCH-PEDESTRIAN DOOR
(C)	MAGNETIC CONTACT SWITCH-VEHICLE DOOR
K	KEYPAD FOR ALARM SYSTEM
(W)	COMBINATION DETECTOR (MICROWAVE/PASSIVE INFRARED)
	PULL BOX-LETTER INDICATES TYPE OF PULL BOX (E-ELECTRICAL, T-TELEPHONE, R-RADIO)
(T)	PULL BOX (TRAFFIC RATED)-LETTER INDICATES TYPE OF PULL BOX (E-ELECTRICAL, T-TELEPHONE, R-RADIO)
CHLF	COMBINATION HEAT, LIGHT AND FAN UNIT
A / EE-2	SECTION/ELEVATION LETTER / SHEET NUMBER
1 / EE-2	DETAIL NUMBER / SHEET NUMBER

REMODEL WORK

SYMBOL	DESCRIPTION
	EXISTING FLUORESCENT FIXTURE-TO REMAIN
	EXISTING FLUORESCENT FIXTURE-REMOVE
	EXISTING INCANDESCENT FIXTURE-TO REMAIN
	EXISTING INCANDESCENT FIXTURE-REMOVE
	EXISTING OUTLET-TO REMAIN
	EXISTING RECEPTACLE OUTLET-TO REMAIN
	EXISTING RECEPTACLE OUTLET-REMOVE
—E—E—	EXISTING CONDUIT AND CONDUCTORS-TO REMAIN UNLESS OTHERWISE NOTED
—✱✱—	EXISTING CONDUIT AND CONDUCTORS-REMOVE
S	EXISTING SWITCH-TO REMAIN
	EXISTING SWITCH-REMOVE
(J)	EXISTING JUNCTION BOX-TO REMAIN
	EXISTING JUNCTION BOX-REMOVE

STANDARD NOTES

AB	ABANDON, IF APPLIED TO CONDUIT, REMOVE CONDUCTORS.
BC	INSTALL PULL BOX IN EXISTING CONDUIT RUN.
CB	INSTALL CONDUIT INTO EXISTING PULL BOX.
CC	CONNECT NEW AND EXISTING CONDUIT. REMOVE EXISTING CONDUCTORS AND INSTALL CONDUCTORS AS INDICATED.
CF	CONDUIT TO REMAIN FOR FUTURE USE. REMOVE CONDUCTORS, INSTALL PULL ROPE AND PLUG.
FA	REMOVE FOUNDATION ABOVE GRADE AND ABANDON FOUNDATION BELOW GRADE.
RL	RELOCATE EQUIPMENT.
RLD	RELOCATED EQUIPMENT.
SC	SPLICE NEW TO EXISTING CONDUCTORS.

STANDARD PLANS

DATED MAY, 2006

- RSP ES-6A
- NSP ES-8A
- NSP ES-8B

GRAPHIC SYMBOLS FOR ELECTRICAL DIAGRAMS

SYMBOL	DESCRIPTION
	CIRCUIT BREAKER, SINGLE POLE
	CIRCUIT BREAKER, DOUBLE POLE
	CIRCUIT BREAKER, THREE POLE
GFCI	CIRCUIT BREAKER, WITH GROUND FAULT CIRCUIT INTERRUPTER
	CIRCUIT BREAKER, SINGLE POLE, SWITCHED NEUTRAL
	CONTACT, NORMALLY OPEN
	CONTACT, NORMALLY CLOSED
	CONTACT, NORMALLY CLOSED, TIME DELAY CLOSING ON DE-ENERGIZING
	CONTACT, NORMALLY OPEN, TIME DELAY OPENING ON DE-ENERGIZING
	CONTACT, NORMALLY OPEN, TIME DELAY CLOSING ON ENERGIZING
	CONTACT, NORMALLY CLOSED, TIME DELAY OPENING ON ENERGIZING
	CONTACT, SINGLE POLE DOUBLE-THROW
	OPERATING COIL
	LIQUID LEVEL ACTUATED SWITCH, NORMALLY CLOSED
	LIQUID LEVEL ACTUATED SWITCH, NORMALLY OPEN
	PRESSURE ACTUATED SWITCH, NORMALLY CLOSED
	PRESSURE ACTUATED SWITCH, NORMALLY OPEN
	FLOW ACTUATED SWITCH, NORMALLY CLOSED
	FLOW ACTUATED SWITCH, NORMALLY OPEN
	TEMPERATURE ACTUATED SWITCH, NORMALLY CLOSED
	TEMPERATURE ACTUATED SWITCH, NORMALLY OPEN
	LIMIT SWITCH, NORMALLY CLOSED
	LIMIT SWITCH, NORMALLY OPEN
	PUSHBUTTON SWITCH, NORMALLY CLOSED
	PUSHBUTTON SWITCH, NORMALLY OPEN
	SWITCH, SINGLE-POLE
	SWITCH, SINGLE-POLE, DOUBLE-THROW
	SWITCH, DOUBLE-POLE
	SWITCH, DOUBLE-POLE, DOUBLE-THROW
	SWITCH, SINGLE-POLE, 3-POSITION
	THERMAL OVERLOAD
	FUSE
	RESISTOR
	VARIABLE RESISTOR
	TRANSFORMER WINDING
	GROUNDING ELECTRODE
	ENCLOSURE BOND
(A)	PILOT LIGHT (A=AMBER, G=GREEN, R=RED)
(G)	GENERATOR
(M)	MOTOR
(F)	FAN MOTOR

PROJECT NOTES

A. SEPARATE GROUNDED (NEUTRAL) CONDUCTOR SHALL BE USED FOR EACH 120-VOLT CIRCUIT.

B. HOMERUNS TO PANELBOARDS SHALL BE INSTALLED AS SHOWN ON THE PLANS. HOMERUNS SHALL NOT BE COMBINED.

C. A SINGLE INSULATED EQUIPMENT GROUNDING CONDUCTOR (SIZED AS REQUIRED) SHALL BE INSTALLED IN EACH CONDUIT RUN.

D. FOR FIRE-RATED WALL PENETRATION DETAILS, SEE ARCHITECTURAL SHEETS.

CALIFORNIA STATE FIRE MARSHAL APPROVED

Approval of this plan does not authorize or approve any omission or deviation from applicable regulations. Final approval is subject to field inspection. One set of approved plans shall be available on the project site at all times.

Reviewed by: INGRID P. ICASIANO, DSFM III

Approval date: July 17, 2012

ABBREVIATIONS

A	AMPERES
A/C	AIR CONDITIONING UNIT
ACP	ACCESS CONTROL PANEL
ACS	AIR COMPRESSOR STARTER
ADAAG	AMERICANS WITH DISABILITIES ACT ACCESSIBILITY GUIDELINES
AL	ALARM LIGHT
ATS	AUTOMATIC TRANSFER SWITCH
BD	BUILDING DISCONNECT
BRK	BREAKER
C	CONDUIT
CB	CIRCUIT BREAKER
CBC	CALIFORNIA BUILDING CODE
CEC	CALIFORNIA ELECTRICAL CODE
CFC	CALIFORNIA FIRE CODE
CKT	CIRCUIT
CR	CONTROL RELAY
DP	DUPLEX PLUG RECEPTACLE
DS	DOOR SWITCH
(E)	EXISTING
EF	EXHAUST FAN
EWC	ELECTRIC WATER COOLER
F	FUSE
FACP	FIRE ALARM CONTROL PANEL
FLA	FLASHER
FLEX	FLEXIBLE CONDUIT
FLS	FLOW SWITCH
FR	FAILURE RESET
G	GROUND
GFCI	GROUND FAULT CIRCUIT INTERRUPTER
GRS	GALVANIZED RIGID STEEL
HP	HEAT PUMP
IF	INLINE FAN
IDF	INTERMEDIATE DISTRIBUTION FRAME
JB	JUNCTION BOX
L	LIGHT
LC	LIGHTING CONTACTOR
LCP	LIGHTING CONTROL PANEL
LD	LIGHT DISCONNECT
LL	LIQUID LEVEL RELAY
LLC	LIQUID LEVEL CONTROLLER
LP	LIGHT PANEL
LS	LIGHT SWITCH
LT	LIGHT TRANSFORMER
LTO	LIGHT TRANSFORMER OVERLOAD
MB	MAIN BREAKER
MC	METALLIC CONDUIT
MCP	MOTOR CIRCUIT PROTECTOR
MCC	MOTOR CONTROL CENTER
MSB	MAIN SWITCHBOARD
MT	EMPTY CONDUIT
(N)	NEW
NC	NORMALLY CLOSED
NO	NORMALLY OPEN
NFPA	NATIONAL FIRE PROTECTION ASSOCIATION
NSW	NEUTRAL SWITCHING BREAKER
OL	OVERLOAD
P	POLE
PB	PULL BOX
PB	PUSHBUTTON
PEC	PHOTOELECTRIC CELL
PFR	PHASE FAILURE RELAY
PL	PILOT LIGHT
PP	PATCH PANEL
PPE	PERSONAL PROTECTION EQUIPMENT
PTS	POWER TRANSFER SWITCH
PV	PHOTOVOLTAIC
PVC	POLYVINYL CHLORIDE
RES	RESISTOR
RTB	RADIO TERMINAL BOARD
S	STARTER COIL
SD	SERVICE DISCONNECT
SFR	SEAL FAILURE RELAY
SL	SUMP LIGHT
SPR	STANDBY POWER RECEPTACLE
SS	SELECTOR SWITCH
ST	STARTER
SV	SOLENOID VALVE
T	TRANSFORMER
TB	TERMINAL BLOCK
TDR	TIME DELAY RELAY
TM	TIME METER
TOT	TOTAL
TS	TIMER SWITCH
TSW	TEST SWITCH
TTB	TELEPHONE TERMINAL BOARD
TYP	TYPICAL
WH	WATT HOUR METER
WP	WEATHERPROOF

	BY	CHECKED
DESIGN	Beatrice Bindu	Mark Cheap
DETAILS	Kathi Andreasen	Beatrice Bindu
QUANTITIES	Beatrice Bindu	Mark Cheap

STATE OF CALIFORNIA
DEPARTMENT OF TRANSPORTATION

DIVISION OF ENGINEERING SERVICES
ELECTRICAL-MECHANICAL-WATER AND WASTEWATER DESIGN

BRIDGE NO. 28T5783
POST MILE 6.3

RICHMOND-SAN RAFAEL BRIDGE MAINTENANCE STATION

LEGEND

SHEET EE0-0

TAEMWW Imperial Rev. 7/10

ORIGINAL SCALE IN INCHES FOR REDUCED PLANS 0 1 2 3

UNIT 3597
PROJECT NUMBER & PHASE 04000000021
EA 003941

DISREGARD PRINTS BEARING EARLIER REVISION DATES → 8/31/11 3/16/12 4/25/12

REVISION DATES (PRELIMINARY STAGE ONLY) SHEET OF

02-AUG-2012 16:45

ee0_00.dgn

DIST.	COUNTY	ROUTE	POST MILES TOTAL PROJECT	SHEET NO.	TOTAL SHEETS
04	CC	580	6.1/6.3	191	216

REGISTERED ELECTRICAL ENGINEER — 4-25-12 DATE

REGISTERED PROFESSIONAL ENGINEER — BEATRICE BINDU — No. E 17240 — Exp. 6-30-12 — ELEC — STATE OF CALIFORNIA

7-30-12
PLANS APPROVAL DATE

The State of California or its officers or agents shall not be responsible for the accuracy or completeness of scanned copies of this plan sheet.

CALIFORNIA STATE FIRE MARSHAL APPROVED
Approval of this plan does not authorize or approve any omission or deviation from applicable regulations. Final approval is subject to field inspection. One set of approved plans shall be available on the project site at all times.
Reviewed by: INGRID P. ICASIANO, OSFM III
Approval date: July 17, 2012

CERTIFICATE OF COMPLIANCE (Page 1 of 4) LTG-1C

Project Name: RICHMOND-SAN RAFAEL BRIDGE MAINTENANCE STATION			Date: 03/7/12
Project Address: 295 WESTERN DRIVE, RICHMOND, CA 94801	Climate Zone: 3	Building CFA: 5,493	Unconditioned Floor Area: 2,785

General Information

Building Type:	☑ Nonresidential	☐ High-Rise Residential	☐ Hotel/Motel
☐ Schools	☐ Relocatable Public Schools	☑ Conditioned Spaces	☑ Unconditioned Spaces
Phase of Construction:	☑ New Construction	☐ Addition	☐ Alteration
Method of Compliance:	☐ Complete Building	☑ Area Category	☐ Tailored

Documentation Author's Declaration Statement

- I Certify that this Certificate of Compliance documentation is accurate and complete.

Name: BEATRICE BINDU		Signature: Beatrice Bindu	
Company: CALIFORNIA DEPARTMENT OF TRANSPORTATION			Date: 3/7/12
Address: 1801 30TH STREET, MS-9, 3/11H			If applicable: CEA # CEPE #
City/State/Zip: SACRAMENTO, CA 95816			Phone: (916) 227-8764

Principal Lighting Designer's Declaration Statement

- I am eligible under Division 3 of the California Business and Professions Code to accept responsibility for the lighting design.
- This Certificate of Compliance identifies the lighting features and performance specifications required for compliance with Title 24, Pages 1 and 6 of the California Code of Regulations.
- The design features represented on this Certificate of Compliance are consistent with the information provided to document this design on the other applicable compliance forms, worksheets, calculations, plans and specifications submitted to the enforcement agency for approval with this building permit application.

Name: BEATRICE BINDU		Signature: Beatrice Bindu	
Company: CALIFORNIA DEPARTMENT OF TRANSPORTATION			Phone: (916) 227-8764
Address: 1801 30TH STREET, MS-9, 3/11H			License # E 17240
City/State/Zip: SACRAMENTO, CA 95816			Date: 3/7/12

Lighting Mandatory Measures
Indicate location on building plans of Mandatory Measures Note Block: EE1-3

LIGHTING COMPLIANCE FORMS & WORKSHEETS (Check box if worksheet is included)

For detailed instructions on the use of this and all Energy Efficiency Standards compliance forms, please refer to the Nonresidential Manual published by the California Energy Commission.

☑	LTG-1C Pages 1 through 4	Certificate of Compliance. All pages required on plans for all submittals.
☑	LTG-2C	Lighting Controls Credit Worksheet
☑	LTG-3C	Indoor Lighting Power Allowance
☐	LTG-4C Pages 1 through 4	Tailored Method Worksheet
☐	LTG-5C Pages 1 and 2	Line Voltage Track Lighting Worksheet

CERTIFICATE OF COMPLIANCE (Page 2 of 4) LTG-1C

INDOOR LIGHTING SCHEDULE and FIELD INSPECTION ENERGY CHECKLIST

Project Name: RICHMOND-SAN RAFAEL BRIDGE MAINTENANCE STATION		Date: 03/7/12
Installation Certificate, LTG-1-INST (Retain a copy and verify form is completed and signed.)		Field Inspector ☐
Certificate of Acceptance, LTG-2A and LTG-3A (Retain a copy and verify form is completed and signed.)		Field Inspector ☐

A separate Lighting Schedule Must Be Filled Out for Conditioned and Unconditioned Spaces Installed Lighting Power listed on this Lighting Schedule is only for: ☑ CONDITIONED SPACE ☑ UNCONDITIONED SPACE

☑ The actual indoor lighting power listed below includes all installed permanent and portable lighting system in accordance with S 146 (a)

☐ Only for offices: Up to the first 0.2 watts per square foot of portable lighting shall not be required to be included in the calculation of actual indoor lighting power density in accordance with Exception to S 146 (a). All portable lighting in excess of 0.2 watts per square foot is totaled below.

	Luminaire Schedule (Type, Lamps, Ballasts)		Installed Watts						
A	B	C	D	E		F	G	H	
				How wattage was determined				Field 2 Inspector	
Name or Item Tag	Complete Luminaire Description (i.e, 3 lamp fluorescent troffer, F32T8, one dimmable electronic ballast)		Watts per Luminaire 1	CEC Default from NA8	According to S 130 (d or e)	Number of Luminaires	Installed Watts (D x F)	Pass	Fail
F1	F32T8, 2-LAMP, SURFACE		54	☐	☐	25	1350	☐	☐
F2	F2x13, RECESSED		29	☐	☐	2	58	☐	☐
F3	F2x32, 2-LAMP, BRACKET		54	☐	☐	1	54	☐	☐
F4	F2x32, 2-LAMP, SURFACE		54	☐	☐	16	864	☐	☐
F5	F2x32, 2-LAMP, PENDANT		54	☐	☐	16	864	☐	☐
F6	F4x32, 4-LAMP, PENDANT		101	☐	☐	12	1212	☐	☐
CHLF	HEAT/LIGHT/FAN UNIT		27	☐	☐	2	54	☐	☐
				☐	☐			☐	☐
				☐	☐			☐	☐
				☐	☐			☐	☐
				☐	☐			☐	☐
				☐	☐			☐	☐
				☐	☐			☐	☐
				☐	☐			☐	☐
				☐	☐			☐	☐
				☐	☐			☐	☐
				☐	☐			☐	☐
			INSTALLED WATTS PAGE TOTAL:				4,456		

Building total number of pages		Installed Watts Building Total (Sum of all pages)	4,456

Enter into LTG-1C Page 4 of 4

1. Wattage shall be determined according to Section 130 (d and e). Wattage shall be rating of light fixture, not rating of bulb.
2. If Fail then describe on Page 2 of the Inspection Checklist Form and take appropriate action to correct. Verify building plans if necessary.

DESIGN	BY Beatrice Bindu	CHECKED Mark Cheap	
DETAILS	BY Kathi Andreasen	CHECKED Beatrice Bindu	
QUANTITIES	BY Beatrice Bindu	CHECKED Mark Cheap	

STATE OF CALIFORNIA DEPARTMENT OF TRANSPORTATION

DIVISION OF ENGINEERING SERVICES
ELECTRICAL-MECHANICAL-WATER AND WASTEWATER DESIGN

BRIDGE NO. 28T5783
POST MILE 6.3

RICHMOND-SAN RAFAEL BRIDGE MAINTENANCE STATION
TITLE 24 COMPLIANCE NO. 1

SHEET **EE0-1**

TAEMWW Imperial Rev. 7/10

ORIGINAL SCALE IN INCHES FOR REDUCED PLANS 0 1 2 3

UNIT 3597
PROJECT NUMBER & PHASE 04000000021
EA 003941

DISREGARD PRINTS BEARING EARLIER REVISION DATES → 8/31/11 3/16/12 4/25/12
REVISION DATES (PRELIMINARY STAGE ONLY) SHEET OF

02-AUG-2012 16:45
ee0_01.dgn

DIST.	COUNTY	ROUTE	POST MILES TOTAL PROJECT	SHEET NO.	TOTAL SHEETS
04	CC	580	6.1/6.3	192	216

REGISTERED ELECTRICAL ENGINEER — 4-25-12 DATE

REGISTERED PROFESSIONAL ENGINEER — BEATRICE BINDU No. E 17240 Exp. 6-30-12 ELEC — STATE OF CALIFORNIA

7-30-12
PLANS APPROVAL DATE

The State of California or its officers or agents shall not be responsible for the accuracy or completeness of scanned copies of this plan sheet.

CALIFORNIA STATE FIRE MARSHAL APPROVED
Approval of this plan does not authorize or approve any omission or deviation from applicable regulations. Final approval is subject to field inspection. One set of approved plans shall be available on the project site at all times.
Reviewed by: INGRID P. ICASIANO, DSFM III
Approval date: July 17, 2012

CERTIFICATE OF COMPLIANCE (Page 3 of 4) LTG-1C

Project Name: RICHMOND-SAN RAFAEL BRIDGE MAINTENANCE STATION — Date: 3/7/12

INDOOR LIGHTING SCHEDULE and FIELD ENERGY CHECKLIST

Fill in controls for all spaces: a) area controls, b) multi-level controls, c) manual daylighting controls for daylit areas> 250 sq ft, automatic daylighting controls for daylit areas> 2,500 sq ft, d) shut-off controls, e) display lighting controls, f) tailored lighting controls-general lighting controlled separately from display, ornamental and display case lighting and g) demand responsive automatic controls for retail stores> 50,000 sq ft, in accordance with Section 131.

MANDATORY LIGHTING CONTROLS - FIELD INSPECTION ENERGY CHECKLIST				Field Inspector	
Type/Description	Number of Units	Location in Building		Pass	Fail
WALL OCCUPANCY SENSOR, TYPE 1	4	VESTIBULE, SUPPLY, JANITOR, CLOSET		☐	☐
WALL OCCUPANCY SENSOR, TYPE 2	3	BREAK RM, OFFICE, CREW STORAGE		☐	☐
WALL LONG RANGE OCCUPANCY SENSOR	1	CORRIDOR		☐	☐
CEILING OCCUPANCY SENSOR	14	SHOP, STORAGE, CORRIDOR, LOCKER		☐	☐
				☐	☐
				☐	☐
				☐	☐
				☐	☐
				☐	☐
				☐	☐
				☐	☐
				☐	☐
				☐	☐

Field Inspectors's Notes or Discrepancies:

2008 Nonresidential Compliance Forms — *July 2010*

CERTIFICATE OF COMPLIANCE (Page 4 of 4) LTG-1C

Project Name: RICHMOND-SAN RAFAEL BRIDGE MAINTENANCE STATION — Date: 3/7/12

Conditioned and Unconditioned space Lighting must not be combined for compliance

Indoor Lighting Power for Conditioned Spaces		Watts	Indoor Lighting Power for Unconditioned Spaces		Watts
Installed Lighting (from Conditioned LTG-1C Page 2		2,326	Installed Lighting (from Unconditioned LTG-1C Page 2		2,130
Lighting Control Credit Conditioned Spaces (from LTG-2C)	-	197	Lighting Control Credit Unconditioned Spaces (from LTG-2C)	-	--
Adjusted Installed Lighting Power	=	2,129	Adjusted Installed Lighting Power	=	2,130
Complies if Installed ≤ Allowed			Complies if Installed ≤ Allowed		
Allowed Lighting Power Conditioned Spaces (from LTG-3C)		2,142	Allowed Lighting Power Unconditioned Spaces (from LTG-3C)		2,559

Required Acceptance Tests

Designer:
This form is to be used by the designer and attached to the plans. Listed below is the acceptance test for the Lighting system, LTG-2A and LTG-3A. The designer is required to check the acceptance tests and list all control devices serving the building or space shall be certified as meeting the Acceptance Requirements for Code Compliance. If all the lighting system or control of a certain type requires a test, list the different lighting and the number of systems. The NA7 Section in the Appendix of the Nonresidential Reference Appendices Manual describes the test. Since this form will be part of the plans, completion of this section will allow the responsible party to budget for the scope of work appropriately. Forms can be grouped by type of Luminaire controlled.

Enforcement Agency:
System Acceptance. Before Occupancy Permit is granted for a newly constructed building or space or when ever new lighting system with controls is installed in the building or space shall be certified as meeting the Acceptance Requirements.
The LTG-2A and LTG-3A forms are not considered a complete form and is not to be accepted by the enforcement agency unless the boxes are checked and/or filled and signed. In addition, a Certificate of Acceptance forms shall be submitted to the enforcement agency that certifies plans, specifications, installation certificates, and operating and maintenance information meet the requirements of S 10-103 (b) of Title 24 Part 6. The field inspector must receive the properly filled out and signed forms before the building can receive final occupancy. A copy of the LTG-2A and LTG-3A for each different lighting luminaire control(s) must be provided to the owner of the building for their records.

Luminaires Controlled				LTG-2A and LTG-3A
Equipment Requiring Testing	Description	Number of like Controls	Location	Controls and Sensors and Automatic Daylighting Controls Acceptance
WALL LONG RANGE OCCUPANCY SENSOR	OCCUPANCY SENSOR ONE (1) PHOTOCELL		CORRIDOR	☑
WALL OCCUPANCY SENSOR, TYPE 1			SUPPLY RM, JANITOR, CLOSET, VESTIBULE	☑
WALL OCCUPANCY SENSOR, TYPE 2			BREAK RM, OFFICE, CREW STORAGE	☑
CEILING OCCUPANCY SENSOR			VARIOUS	☑
				☐
				☐
				☐
				☐
				☐
				☐

2008 Nonresidential Compliance Forms — *July 2010*

DIST.	COUNTY	ROUTE	POST MILES TOTAL PROJECT	SHEET NO.	TOTAL SHEETS
04	CC	580	6.1/6.3	193	216

REGISTERED ELECTRICAL ENGINEER — 4-25-12 DATE

REGISTERED PROFESSIONAL ENGINEER — BEATRICE BINDU — No. E 17240 — Exp. 6-30-12 — ELEC — STATE OF CALIFORNIA

7-30-12
PLANS APPROVAL DATE

The State of California or its officers or agents shall not be responsible for the accuracy or completeness of scanned copies of this plan sheet.

CERTIFICATE OF COMPLIANCE (Page 1 of 4) OLTG-1C

Project Name: RICHMOND-SAN RAFAEL BRIDGE MAINTENANCE STATION	Date: 3/12/12
Project Address: 295 WESTERN DRIVE, RICHMOND, CA 94801	Total Hardscape Illuminated Area: 225,000 SF

General Information

Phase of Construction: ☑ New Construction ☐ Addition ☐ Alteration

Documentation Author's Declaration Statement

- I Certify that this Certificate of Compliance documentation is accurate and complete.

Name: BEATRICE BINDU	Signature: Beatrice Bindu
Company: CALIFORNIA DEPARTMENT OF TRANSPORTATION	Date: 3/12/12
Address: 1801 30TH STREET, MS-9, 3/11H	If applicable: CEA # CEPE #
City/State/Zip: SACRAMENTO, CA 95816	Phone: (916) 227-8764

Principal Lighting Designer's Declaration Statement

- I am eligible under Division 3 of the California Business and Professions Code to accept responsibility for the lighting design.
- This Certificate of Compliance identifies the lighting features and performance specification required for compliance with Title 24, Pages 1 and 6 of the California Code of Regulations.
- The design features represented on this Certificate of Compliance are consistent with the information provided to document this design on the other applicable compliance forms, worksheets, calculations, plans and specifications submitted to the enforcement agency for approval with this building permit application.

Name: BEATRICE BINDU	Signature: Beatrice Bindu
Company: CALIFORNIA DEPARTMENT OF TRANSPORTATION	Phone: (916) 227-8764
Address: 1801 30TH STREET, MS-9, 3/11H	License # E 17240
City/State/Zip: SACRAMENTO, CA 95816	Date: 3/12/12

Principal Lighting Designer's Declaration

☑ I Certify that this Certificate of Compliance documentation is accurate and complete, and accounts for all outdoor lighting power, including building mounted, pole mounted, as well as all other outdoor lighting designed for the site, and that Additional Lighting Power Allowances for Specific Applications or Additional Lighting Power Allowances for Ordinance Requirements have not been counted more than one time for the same area, in Accordance with Section 147 of the Standards.

Outdoor Lighting Mandatory Measures

Indicate location on building plans of Mandatory Measures Note Block: _____

LIGHTING COMPLIANCE FORMS & WORKSHEETS (check box if worksheet is included)

For detailed instructions on the use of this and all Energy Efficiency Standards compliance forms, please refer to the Nonresidential Manual published by the California Energy Commission.

☑	OLTG-1C	Certificate of Compliance. All 4 pages required on plans for all submittal.
☑	OLTG-2C	(Page 1 of 3) Lighting Wattage Allowances for General Hardscape, Sales Frontage, or Ornamental Lighting. Optional on plans.
☑	OLTG-2C	(Page 2 of 3) Lighting Wattage Allowances for Per Application or Per Area. Optional on plans.
☐	OLTG-2C	(Page 3 of 3) Additional Lighting Power Allowance for Ordinance Requirements. Optional on plans.

CERTIFICATE OF COMPLIANCE (Page 2 of 4) OLTG-1C

COMPLIANCE FIXTURE/LIGHTING CONTROL SCHEDULE and FIELD INSPECTION CHECKLIST

Project Name: RICHMOND-SAN RAFAEL BRIDGE MAINTENANCE STATION	Date: 3/12/12

INSTALLATION CERTIFICATE, OLTG-1-INST (Retain a copy and verify form is completed and signed.) — Field Inspection ☐

CERTIFICATE OF ACCEPTANCE, OLTG-2A (Retain a copy and verify form is completed and signed.) — Field Inspection ☐

Luminaire Schedule			Installed Watts							
A	B	C	D	E	F		G	H	I	
					How wattage was determined				Field Inspector [2]	
Name Or Item Tag	Luminaire Description See footnote below (i.e, lamp pole-top shoe-box 400 watt metal halide)	Cutoff Designation	Watts per Luminaire [1]	Special Features	Default from NA-8	According to S 130 (d or e)	Number of Luminaires	Installed Watts (D x G)	Pass	Fail
LED1	WALL MOUNT, FULL CUT OFF, ELECTRONIC DRIVER	FC	70	☐	☐	☑	18	1260	☐	☐
LED2	RECESSED DOWNLIGHT, ELECTRONIC DRIVER		26	☐	☐	☑	9	234	☐	☐
LED3	POLE MOUNT, FULL CUT OFF, ELECTRONIC DRIVER	FC	150	☐	☐	☑	9	1,350	☐	☐
				☐	☐	☐			☐	☐
				☐	☐	☐			☐	☐
				☐	☐	☐			☐	☐
				☐	☐	☐			☐	☐
	Enter total into OLTG-1C; Page 4 of 4; Row H; Total Installed Watts:							2,844		

1. Type of luminaire (i.e.: post top, wall pack, surface, shoe box); for non-incandescent luminaires, indicate nominal lamp wattage and lamp type (i.e.: fluorescent incandescent, HID); ballast type (i.e.: electronic or magnetic); number of lamps and number of ballast per luminaire. For incandescent luminaires the luminaire wattage listed in column D shall be the maximum relamping rated wattage on a permanent factory-installed label on the luminaire. NOT the wattage of the lamp (bulb) used, in accordance with Section 130 (d or e).
2. If Fail then describe on Page 2 of the Inspection Checklist Form and take appropriate action to correct. Verify building plans if necessary.

EXEMPT LUMINAIRES — Field Inspection ☐

Name or Symbol	Description of exempt luminaires in accordance with S 147

MANDATORY CONTROLS — Field Inspection ☐

#	Description	Location	#	Description	Location

SPECIAL FEATURES INSPECTION CHECKLIST (See Page 2 of 4 of OLTG-1C)

The local enforcement agency should pay special attention to the items specified in this checklist. These Items require special written justification and documentation, and special verification. The local enforcement agency determines the adequacy of the justification, and may reject a building or design that otherwise complies base on the adequacy of the special justification and documentation submitted.

Field Inspector Notes or Discrepancies:

General Note:

Form OLTG-1-C, Parts 1 of 4 and 2 of 4, are shown on this sheet.
Form OLTG-1-C, Parts 3 of 4 and 4 of 4, are shown on sheet EE0-4.
Other checked forms are available upon request.

CALIFORNIA STATE FIRE MARSHAL APPROVED
Approval of this plan does not authorize or approve any omission or deviation from applicable regulations. Final approval is subject to field inspection. One set of approved plans shall be available on the project site at all times.
Reviewed by: Ingrid P. Castano — INGRID P. ICASIANO, DSFM III
Approval date: July 17, 2012

DESIGN	BY Beatrice Bindu	CHECKED Mark Cheap	
DETAILS	BY Kathi Andreasen	CHECKED Beatrice Bindu	
QUANTITIES	BY Beatrice Bindu	CHECKED Mark Cheap	

STATE OF CALIFORNIA DEPARTMENT OF TRANSPORTATION

DIVISION OF ENGINEERING SERVICES ELECTRICAL-MECHANICAL-WATER AND WASTEWATER DESIGN

BRIDGE NO. 28T5783 — POST MILE 6.3

RICHMOND-SAN RAFAEL BRIDGE MAINTENANCE STATION

TITLE 24 COMPLIANCE NO. 3

SHEET EE0-3

TAEMWW Imperial Rev. 7/10

ORIGINAL SCALE IN INCHES FOR REDUCED PLANS 0 1 2 3

UNIT 3597
PROJECT NUMBER & PHASE 04000000021
EA 003941

DISREGARD PRINTS BEARING EARLIER REVISION DATES → 8/31/11 3/16/12 4/25/12

REVISION DATES (PRELIMINARY STAGE ONLY) SHEET OF

02-AUG-2012 16:45
ee0_03.dgn

DIST.	COUNTY	ROUTE	POST MILES TOTAL PROJECT	SHEET NO.	TOTAL SHEETS
04	CC	580	6.1/6.3	194	216

REGISTERED ELECTRICAL ENGINEER — 4-25-12 DATE

REGISTERED PROFESSIONAL ENGINEER BEATRICE BINDU No. E 17240 Exp. 6-30-12 ELEC STATE OF CALIFORNIA

7-30-12
PLANS APPROVAL DATE

The State of California or its officers or agents shall not be responsible for the accuracy or completeness of scanned copies of this plan sheet.

CALIFORNIA STATE FIRE MARSHAL APPROVED
Approval of this plan does not authorize or approve any omission or deviation from applicable regulations. Final approval is subject to field inspection. One set of approved plans shall be available on the project site at all times.
Reviewed by: INGRID P. ICASIANO, DSFM III
Approval date: July 17, 2012

CERTIFICATE OF COMPLIANCE (Page 3 of 4) OLTG-1C

Project Name: RICHMOND-SAN RAFAEL BRIDGE MAINTENANCE STATION — Date: 3/12/12

A. OUTDOOR LIGHTING ZONE

OUTDOOR LIGHTING ZONE: ☐ OLZ 1 ☐ OLZ 2 ☑ OLZ 3 ☐ OLZ 4

Is the Outdoor Lighting Zone: ☐ Default in accordance with S 10-114, or ☐ Amended by JHA

Complete the information below if the default Outdoor Lighting Zone has been amended by the local jurisdiction having authority (JHA):

☐ The site is a government designated park, recreation area, wildlife preserve, or portion thereof, and has been designated as LZ2 or LZ3, in accordance with Table 10-114-A, because the site is contained within such a zone.
☐ The local jurisdiction having authority has officially adopted a change to the State Default Lighting Zone and has notified the Energy Commission by providing the materials required in S 10-114(d) to the Executive Director.
☐ The adopted change is posted on the Energy Commission website.

B. ADDITIONAL LIGHTING POWER ALLOWANCE FOR ORDINANCE REQUIREMENTS

Are additional lighting power allowances for ordinance in Table 147-C used? Yes ☐ No ☐

Complete the information below if the additional lighting power allowances for ordinance requirements are used:

☐ The local jurisdiction having authority has officially adopted specific outdoor light levels, which are expressed as average or minimum footcandle levels, by following a public process that allowed for formal public notification, review, and comment about the proposed changed.
☐ The local jurisdiction having authority which adopted specific outdoor light levels and has notified the Commission by providing the following materials required S 10-114(f) to the Executive Director.

C. ACCEPTANCE FORMS

Required Acceptance Tests

Designer:
This form is to be used by the designer and attached to the plans. Listed below is the acceptance tests for the Lighting system,
OLTG-2A. The designer is required to check the acceptance tests and list all control devices serving the building or space shall be certified as meeting the Acceptance Requirements for Code Compliance. If all the lighting system or control of a certain type requires a tests, list the different lighting and the number of systems. The NA7 Section in the Appendix of the Nonresidential Reference Appendices Manual describes the test. Since this form will be a part of the plans, completion of this section will allow the responsible party to budget for the scope of work appropriately. Forms can be grouped by type of Luminaire controlled.

Enforcement Agency:
Systems Acceptance. Before Occupancy Permit is granted for a newly constructed building or space or when ever new lighting system with controls is installed in the building or space shall be certified as meeting the Acceptance Requirements.
The OLTG-2A form is not considered a complete form and is not to be accepted by the enforcement agency unless the boxes are checked and/or filled and signed. In addition, a Certificate of Acceptance forms shall be submitted to the enforcement agency that certifies plans, specifications, installation certificates, and operating and maintenance information meet the requirements of S 10-103(b) of Title 24 Part 6. The field inspector must receive the properly filled out and signed forms before the building can receive final occupancy. A copy of the OLTG-2A for each different lighting luminaire control(s) must be provided to the owner of the building for their records.

	Luminaires Controlled			Certificate of Acceptance OLTG-2A [1]
Equipment Requiring Testing	Description	Number of like Controls	Location	Outdoor Lighting Acceptance Tests
OLCS	TIMECLOCK, PHOTOCELL		SPECIAL CREW SHOP, ELECTRICAL RM	✓
TS	TIMESWITCH		ELECTRICAL RM	✓

1. Insert: **OMS** for Outdoor Motion Sensor; **OLSC** for Outdoor Lighting Shutoff Controls; **OP** for Outdoor Photocontrol; **ATS** for Astronomical Time Switch; and, **STS** for Standard (non-astronomical) Time Switch acceptance.

CERTIFICATE OF COMPLIANCE (Page 4 of 4) OLTG-1C

COMPLIANCE FIXTURE/LIGHTING CONTROL SCHEDULE and FIELD INSPECTION CHECKLIST

Project Name: RICHMOND-SAN RAFAEL BRIDGE MAINTENANCE STATION — Date: 3/12/12

ALLOWED AND INSTALLED OUTDOOR LIGHTING POWER

		Lighting Wattage Power Allowance
A	Lighting power allowance for general hardscape (from OLTG-2C Page 1 of 3)	18,630
B	Specific application lighting wattage allowance per unit length (from OLTG-2C Page 1 of 3)	0
C	Specific application wattage allowance for ornamental lighting (from OLTG-2C Page 1 of 3)	0
D	Specific application wattage allowance per application (from OLTG-2C Page 2 of 3)	240
E	Specific application lighting wattage allowance per area (from OLTG-2C Page 2 of 3)	
F	Additional lighting power allowance for ordinance requirements (from OLTG-2C Page 3 of 3)	
G	Total Allowed Wattage = Sum of rows A through F:	18,870
H	Total installed Watts (from Luminaire Schedule, (from OLTG-1C (Page 2 of 4)	2,844

Provided that the lighting wattage power allowance listed in rows A through F are identical to the lighting wattage power allowance taken from OLTG-2C pages 1 through 3, complies if installed Wattage in row H is less than or equal to the Total Installed Wattage in row G — ☑ Yes ☐ No

NOTES:

	BY	CHECKED
DESIGN	Beatrice Bindu	Mark Cheap
DETAILS	Kathi Andreasen	Beatrice Bindu
QUANTITIES	Beatrice Bindu	Mark Cheap

STATE OF CALIFORNIA DEPARTMENT OF TRANSPORTATION

DIVISION OF ENGINEERING SERVICES ELECTRICAL-MECHANICAL-WATER AND WASTEWATER DESIGN

BRIDGE NO. 28T5783 — POST MILE 6.3

RICHMOND-SAN RAFAEL BRIDGE MAINTENANCE STATION
TITLE 24 COMPLIANCE NO. 4

SHEET EE0-4

TAEMWW Imperial Rev. 7/10

ORIGINAL SCALE IN INCHES FOR REDUCED PLANS 0 1 2 3

UNIT 3597
PROJECT NUMBER & PHASE 04000000021
EA 003941

DISREGARD PRINTS BEARING EARLIER REVISION DATES → 8/31/11 3/16/12 4/25/12

REVISION DATES (PRELIMINARY STAGE ONLY) SHEET OF

03-AUG-2012 07:29
ee0_04.dgn

DIST.	COUNTY	ROUTE	POST MILES TOTAL PROJECT	SHEET NO.	TOTAL SHEETS
04	CC	580	6.1/6.3	195	216

REGISTERED ELECTRICAL ENGINEER — 4-25-12 DATE

REGISTERED PROFESSIONAL ENGINEER — BEATRICE BINDU — No. E 17240 — Exp. 6-30-12 — ELEC — STATE OF CALIFORNIA

7-30-12
PLANS APPROVAL DATE

The State of California or its officers or agents shall not be responsible for the accuracy or completeness of scanned copies of this plan sheet.

CALIFORNIA STATE FIRE MARSHAL APPROVED
Approval of this plan does not authorize or approve any omission or deviation from applicable regulations. Final approval is subject to field inspection. One set of approved plans shall be available on the project site at all times.
Reviewed by: Ingrid P. Casiano
INGRID P. ICASIANO, DSFM III
Approval date: July 17, 2012

Notes:

1. *Remove conductors and exposed part of conduit. Abandon underground conduit.*
2. *To Panel B. Disconnect conductors from both ends. Tape and tag them as "SPARE".*
3. *For demolition plan see Architectural sheets.*

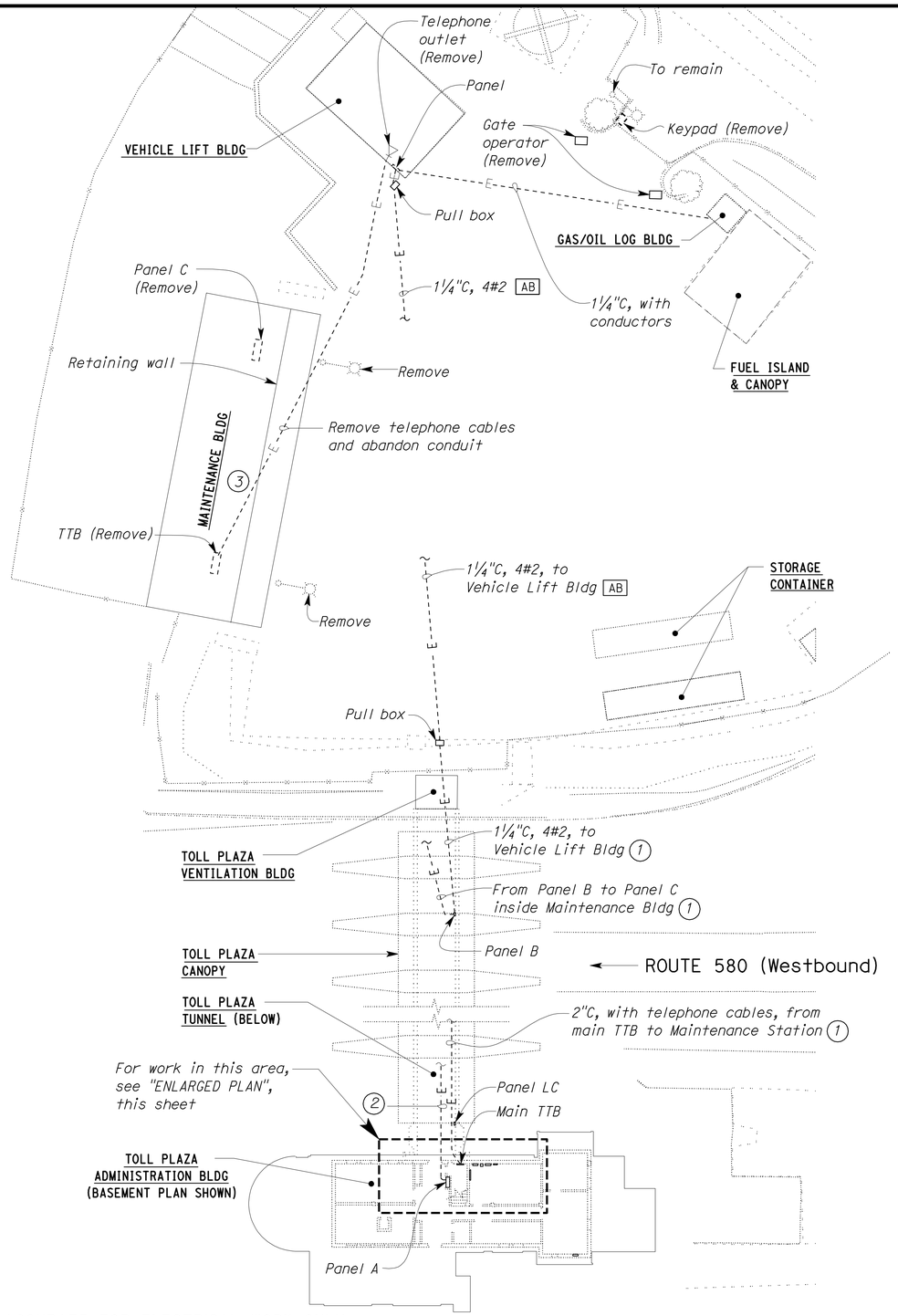

PARTIAL PLAN
SCALE 1" = 20'-0"

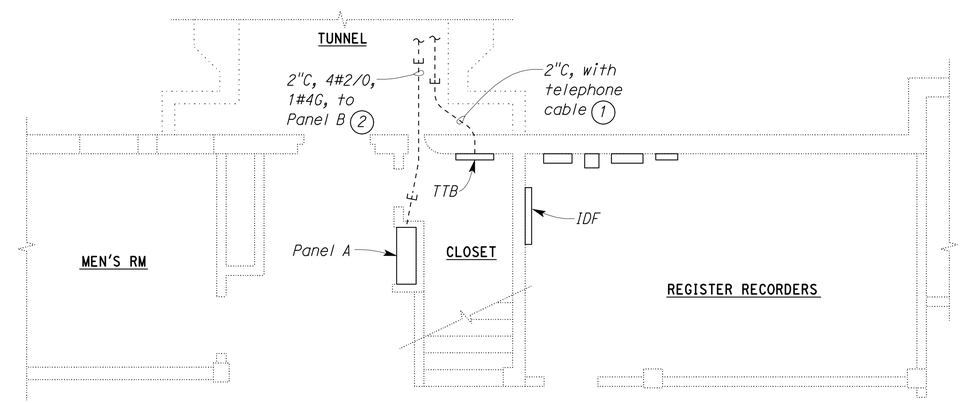

ENLARGED PLAN
SCALE ¼" = 1'-0"

THIS DRAWING ACCURATE FOR ELECTRICAL WORK ONLY.

DESIGN	BY Beatrice Bindu	CHECKED Mark Cheap	
DETAILS	BY Kathi Andreasen	CHECKED Beatrice Bindu	
QUANTITIES	BY Beatrice Bindu	CHECKED Mark Cheap	

DESIGN SUPERVISOR — DESIGN ENGINEER

STATE OF CALIFORNIA
DEPARTMENT OF TRANSPORTATION

DIVISION OF ENGINEERING SERVICES
ELECTRICAL-MECHANICAL-WATER AND WASTEWATER DESIGN

BRIDGE NO. 28T5783
POST MILE 6.3

RICHMOND-SAN RAFAEL BRIDGE MAINTENANCE STATION
EXISTING POWER AND COMMUNICATION PARTIAL SITE PLAN

SHEET **EE0-5**

TAEMWW Imperial Rev. 7/10

ORIGINAL SCALE IN INCHES FOR REDUCED PLANS 0 1 2 3

UNIT 3597
PROJECT NUMBER & PHASE 04000000021
EA 003941

DISREGARD PRINTS BEARING EARLIER REVISION DATES
REVISION DATES (PRELIMINARY STAGE ONLY) 12/12/11 12/28/11 1/20/12 1/30/12 3/16/12 4/25/12
SHEET OF

03-AUG-2012 07:30
ee0_05.dgn

DIST.	COUNTY	ROUTE	POST MILES TOTAL PROJECT	SHEET NO.	TOTAL SHEETS
04	CC	580	6.1/6.3	196	216

REGISTERED ELECTRICAL ENGINEER — 4-25-12 DATE

REGISTERED PROFESSIONAL ENGINEER — BEATRICE BINDU — No. E 17240 — Exp. 6-30-12 — ELEC — STATE OF CALIFORNIA

7-30-12
PLANS APPROVAL DATE

The State of California or its officers or agents shall not be responsible for the accuracy or completeness of scanned copies of this plan sheet.

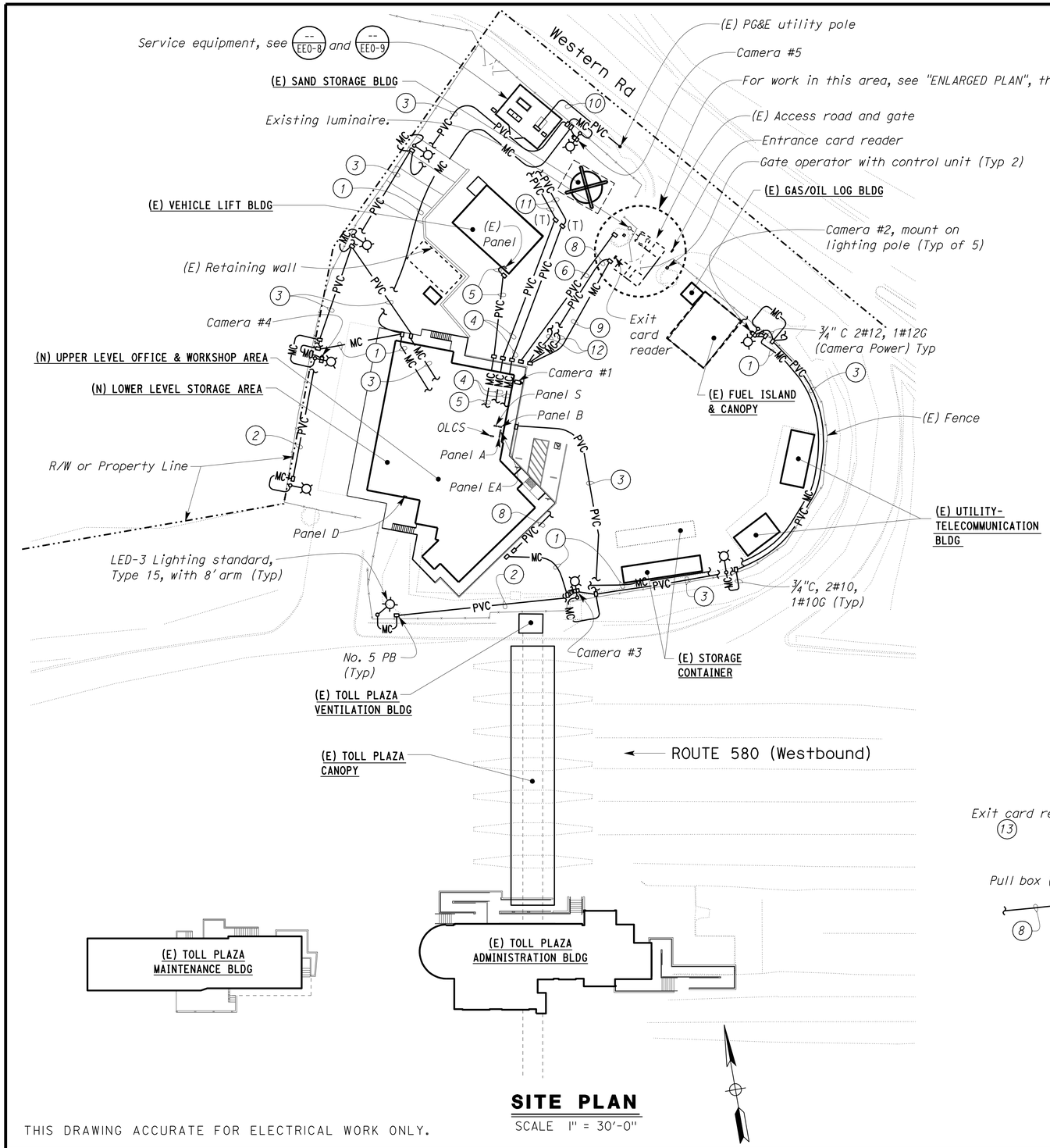

SITE PLAN

SCALE 1" = 30'-0"

THIS DRAWING ACCURATE FOR ELECTRICAL WORK ONLY.

General Notes:

A. For details of electrical conduit run, and connection of pad mounted transformer, generator, and main switchboard, see "Power Distribution Diagram", sheet EE0-8.

B. For CCTV interconnection diagram, see sheet EE1-11.

C. For additional work on Site Plan, see sheet EE0-7.

D. Remote gate operator and camera controls are located inside Supervisor's Office.

E. For CCTV mounting details, see 1/ST1-30.

F. Location of gate operators, loop detectors, and gate digital card readers are arbitrary only. Locations shall be per equipment and device manufacturer recommendations and shall be verified in the field.

G. Gate operator shall be 1 horsepower, 208 Volts, 1-phase, continuous duty type motor, that can operate a gate weighing a maximum of 3,000 lbs.

H. Provide concrete pad and unit stand for access gate operators. Concrete pad and pedestal mounting stand installation shall be per gate operator manufacturer recommendations.

I. Provide and install safety opening device for Fire Department. The type of device shall be as required by the State Fire Marshal. Install device at a location as directed by the State Fire Marshal and the Engineer. Provide tamper switch integral to safety opening device and connect to building intrusion alarm for monitoring.

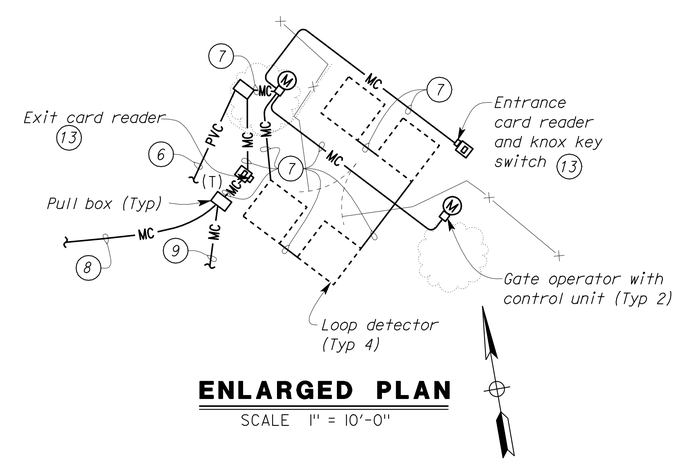

ENLARGED PLAN

SCALE 1" = 10'-0"

Notes:

1. 1½"C, video and control cable.
2. 1"C, 2#8, 1#8G.
3. (1) 1½"C, 2#8, 1#8G (Area light), to OLCS, and (1) 1½"C, 2#8, 1#8G (Camera power), to Panel EA.
4. To Panels A and EA. For sizes of conduit and cables connected to service equipment, see "SINGLE LINE POWER DISTRIBUTION DIAGRAM", sheet EE0-8.
5. 2"C, 4#2, 1#6G, to Panel EB.
6. 1½"C, 3#10, 1#12G (Ckt EA10-12), power conductors for gate motors.
7. 1"C, conductors as required by manufacturer of the unit.
8. 1½"C, conductors as required, to remote gate operator.
9. 2"C, conductors as required, to Access Control Panel, inside Electrical Room.
10. 4"C, conductors per Utility Company requirements.
11. From service panel. For sizes of conduit and cables connected to service equipment, see "SINGLE LINE POWER DISTRIBUTION DIAGRAM", sheet EE0-8.
12. 1½"C, conductors as required, to existing Vehicle Lift Building.
13. Gate card reader unit stand. The exact location as directed by the Engineer. For details see 2/EE1-13.

CALIFORNIA STATE FIRE MARSHAL APPROVED

Approval of this plan does not authorize or approve any omission or deviation from applicable regulations. Final approval is subject to field inspection. One set of approved plans shall be available on the project site at all times.

Reviewed by: Ingrid P. Icasiano
INGRID P. ICASIANO, DSFM III

Approval date: July 17, 2012

DESIGN	BY Beatrice Bindu	CHECKED Mark Cheap	
DETAILS	BY Kathi Andreasen	CHECKED Beatrice Bindu	
QUANTITIES	BY Beatrice Bindu	CHECKED Mark Cheap	

STATE OF CALIFORNIA DEPARTMENT OF TRANSPORTATION

DIVISION OF ENGINEERING SERVICES
ELECTRICAL-MECHANICAL-WATER AND WASTEWATER DESIGN

BRIDGE NO. 28T5783
POST MILE 6.3

RICHMOND-SAN RAFAEL BRIDGE MAINTENANCE STATION

MODIFIED ELECTRICAL SITE PLAN

SHEET EE0-6

TAEMWW Imperial Rev. 7/10

ORIGINAL SCALE IN INCHES FOR REDUCED PLANS 0 1 2 3

UNIT 3597
PROJECT NUMBER & PHASE 04000000021
EA 003941

DISREGARD PRINTS BEARING EARLIER REVISION DATES

REVISION DATES (PRELIMINARY STAGE ONLY) 8/31/11 10/31/11 11/18/11 11/21/11 1/18/12 1/20/12 1/23/12 1/30/12 3/16/12 4/25/12

SHEET OF

03-AUG-2012 07:30

ee0_06.dgn

DIST.	COUNTY	ROUTE	POST MILES TOTAL PROJECT	SHEET NO.	TOTAL SHEETS
04	CC	580	6.1/6.3	197	216

REGISTERED ELECTRICAL ENGINEER — 4-25-12 DATE

REGISTERED PROFESSIONAL ENGINEER — BEATRICE BINDU — No. E 17240 — Exp. 6-30-12 — ELEC — STATE OF CALIFORNIA

7-30-12
PLANS APPROVAL DATE

The State of California or its officers or agents shall not be responsible for the accuracy or completeness of scanned copies of this plan sheet.

CALIFORNIA STATE FIRE MARSHAL APPROVED
Approval of this plan does not authorize or approve any omission or deviation from applicable regulations. Final approval is subject to field inspection. One set of approved plans shall be available on the project site at all times.
Reviewed by: INGRID P. ICASIANO, DSFM III
Approval date: July 17, 2012

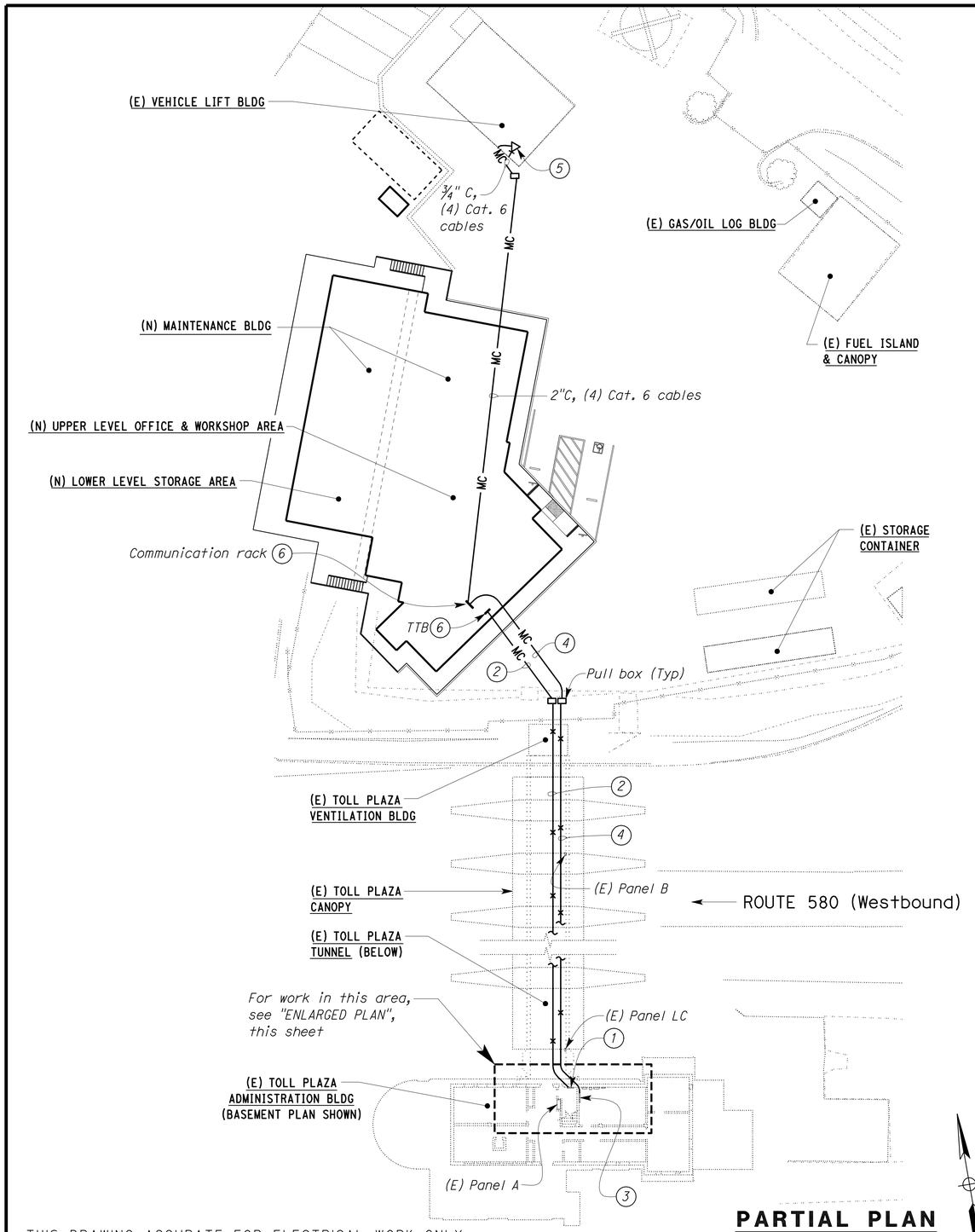

PARTIAL PLAN
SCALE 1" = 20'-0"

THIS DRAWING ACCURATE FOR ELECTRICAL WORK ONLY.

Notes:

1. *Existing main telephone terminal board located inside Communication Closet near the Utility Tunnel entrance. Install 50-pair telephone cable for the new Maintenance Building.*
2. *2"C, MC, with 50-pair telephone cable, to 66 block inside new Maintenance Building Communication Room.*
3. *Existing Intermediate Distribution Frame located inside Register Recorders Room, near the Utility Tunnel entrance. Install 12-pair fiber optic cable for the new Maintenance Building.*
4. *2"C, MC, with 12-pair, multi-mode (62.5/125um 850nm) fiber optic cable to communication rack inside new Maintenance Building Communication Room.*
5. *Install four new RJ45 jacks, with quad faceplate.*
6. *See sheet EE1-5 for details.*

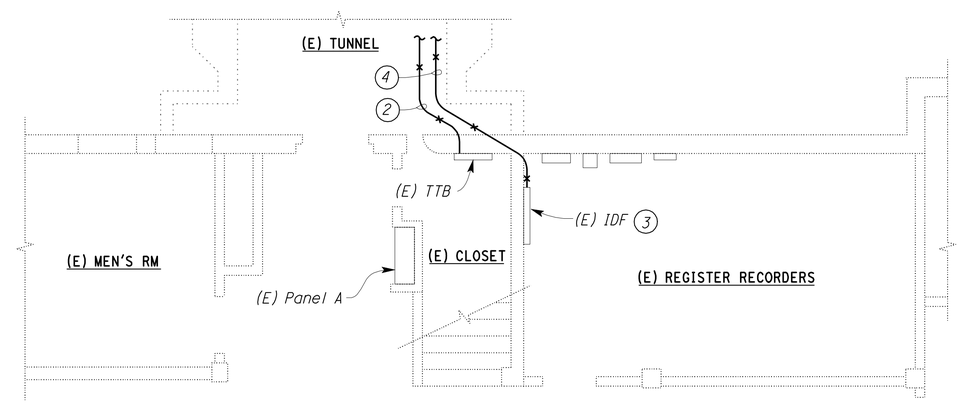

ENLARGED PLAN
SCALE ¼" = 1'-0"

	BY	CHECKED
DESIGN	Beatrice Bindu	Mark Cheap
DETAILS	Kathi Andreasen	Beatrice Bindu
QUANTITIES	Beatrice Bindu	Mark Cheap

STATE OF CALIFORNIA DEPARTMENT OF TRANSPORTATION

DIVISION OF ENGINEERING SERVICES
ELECTRICAL-MECHANICAL-WATER AND WASTEWATER DESIGN

BRIDGE NO. 28T5783
POST MILE 6.3

RICHMOND-SAN RAFAEL BRIDGE MAINTENANCE STATION
MODIFIED COMMUNICATION SITE PLAN

SHEET **EE0-7**

TAEMWW Imperial Rev. 7/10

ORIGINAL SCALE IN INCHES FOR REDUCED PLANS 0 1 2 3

UNIT 3597
PROJECT NUMBER & PHASE 04000000021
EA 003941

DISREGARD PRINTS BEARING EARLIER REVISION DATES
REVISION DATES (PRELIMINARY STAGE ONLY) 12/12/11 12/28/11 1/20/12 1/26/12 1/30/12 3/16/12 4/25/12 SHEET OF

03-AUG-2012 07:30
ee0_07.dgn

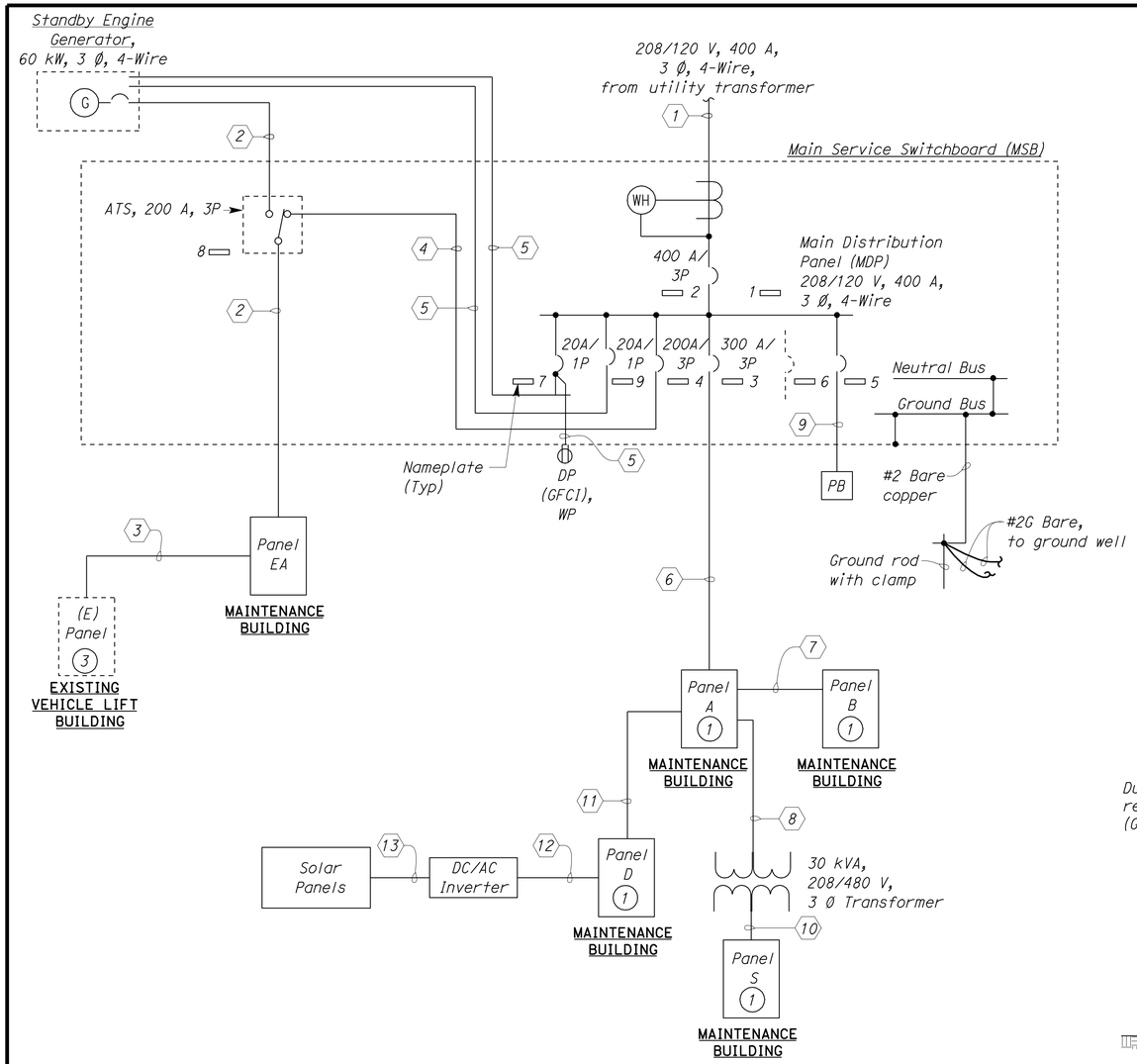

SINGLE-LINE POWER DISTRIBUTION DIAGRAM

General Note:

Installation of main service switchboard shall be per PG&E (Pacific Gas & Electric Co.) standards. PG&E will supply and install metering transformers and meter.

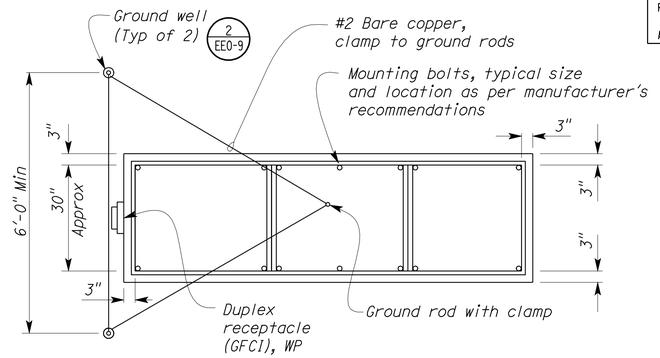

PLAN

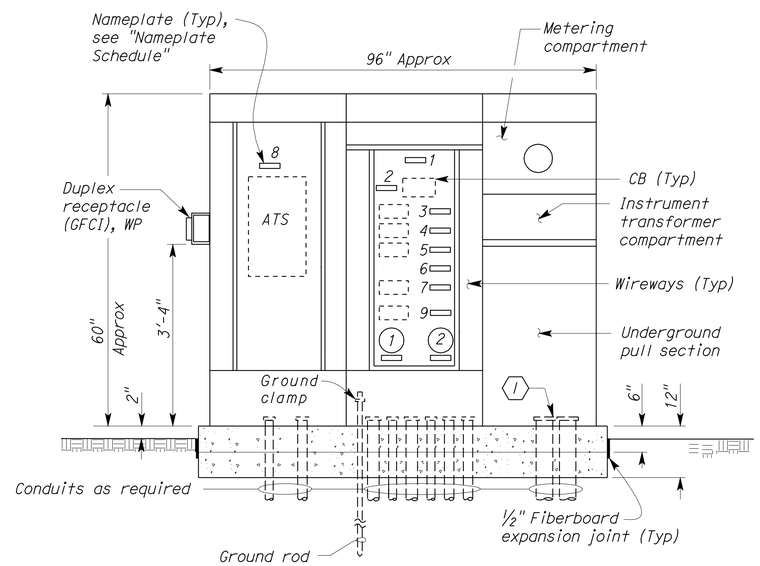

ELEVATION

(A) MAIN SERVICE SWITCHBOARD

NO SCALE

Note:

Dimensions of switchboard are approximate only. Service switchboard elevation shown without weatherproof enclosure. For number and size of conduits and conductors, see "SINGLE-LINE POWER DISTRIBUTION DIAGRAM", this sheet.

CALIFORNIA STATE FIRE MARSHAL APPROVED

Approval of this plan does not authorize or approve any omission or deviation from applicable regulations. Final approval is subject to field inspection. One set of approved plans shall be available on the project site at all times.

Reviewed by: Ingrid P. Casiano
INGRID P. ICASIANO, DSFM III
Approval date: July 17, 2012

DIST.	COUNTY	ROUTE	POST MILES TOTAL PROJECT	SHEET NO.	TOTAL SHEETS
04	CC	580	6.1/6.3	198	216

REGISTERED ELECTRICAL ENGINEER — 4-25-12 DATE

REGISTERED PROFESSIONAL ENGINEER — BEATRICE BINDU — No. E 17240 — Exp. 6-30-12 — ELEC — STATE OF CALIFORNIA

7-30-12
PLANS APPROVAL DATE

The State of California or its officers or agents shall not be responsible for the accuracy or completeness of scanned copies of this plan sheet.

FEEDER SCHEDULE
(This sheet only)

NO.	DESCRIPTION
1	4"C, conductors per utility requirements
2	3"C, 4 #4/0, 1#2G. Connect neutral to neutral bus.
3	2"C, 4#2, 1#6G
4	3#4/0, 1#4G
5	¾"C, 2#10, 1#12G
6	4"C, 4-400 kcmil, 1#2G
7	2"C, 4#2/0, 1#6G
8	2"C, 4#1/0, 1#6G
9	2"C, MT
10	2"C, 4#4, 1#6G
11	2"C, 4#1, 1#6G
12	2"C, 4#4, 1#6G
13	(2) 2"C, DC conductors as required

NAMEPLATE SCHEDULE

ITEM NO.	INSCRIPTION	LETTER HEIGHT
1	Main Distribution Panel	¼"
2	Service Disconnect	¼"
3	Panel A (Maintenance Bldg)	¼"
4	Standby Power Loads	¼"
5	PB (Spare 50 A/3P)	¼"
6	Space	¼"
7	Receptacle & Battery Charger	¼"
8	Automatic Transfer Switch	¼"
9	Heater	¼"

Nameplate Notes:

1. Warning plate. Warning plate shall read: "THIS PANEL FED FROM MULTIPLE SOURCES, UTILITY AND SOLAR".
2. Warning plate. Warning plate shall read: "ARC FLASH AND SHOCK HAZARD. APPROPRIATE PPE REQUIRED. FAILURE TO COMPLY MAY RESULT IN INJURY OR DEATH. REFER TO NFPA 70E FOR MINIMUM PPE REQUIREMENT".
3. Install nameplate on the existing Panel with inscription: "PANEL EB".

	BY	CHECKED
DESIGN	Beatrice Bindu	Mark Cheap
DETAILS	Kathi Andreasen	Beatrice Bindu
QUANTITIES	Beatrice Bindu	Mark Cheap

STATE OF CALIFORNIA DEPARTMENT OF TRANSPORTATION

DIVISION OF ENGINEERING SERVICES
ELECTRICAL-MECHANICAL-WATER AND WASTEWATER DESIGN

BRIDGE NO. 28T5783
POST MILE 6.3

RICHMOND-SAN RAFAEL BRIDGE MAINTENANCE STATION

SINGLE LINE POWER DIAGRAM AND DETAILS

SHEET EE0-8

TAEMWW Imperial Rev. 7/10

ORIGINAL SCALE IN INCHES FOR REDUCED PLANS 0 1 2 3

UNIT 3597
PROJECT NUMBER & PHASE 04000000021
EA 003941

DISREGARD PRINTS BEARING EARLIER REVISION DATES → 10/5/11 1/26/12 1/30/12 3/16/12 4/25/12

REVISION DATES (PRELIMINARY STAGE ONLY) SHEET OF

02-AUG-2012 16:46

ee0_08.dgn

DIST.	COUNTY	ROUTE	POST MILES TOTAL PROJECT	SHEET NO.	TOTAL SHEETS
04	CC	580	6.1/6.3	199	216

REGISTERED ELECTRICAL ENGINEER — 4-25-12 DATE

REGISTERED PROFESSIONAL ENGINEER — BEATRICE BINDU — No. E 17240 — Exp. 6-30-12 — ELEC — STATE OF CALIFORNIA

7-30-12
PLANS APPROVAL DATE

The State of California or its officers or agents shall not be responsible for the accuracy or completeness of scanned copies of this plan sheet.

CALIFORNIA STATE FIRE MARSHAL APPROVED

Approval of this plan does not authorize or approve any omission or deviation from applicable regulations. Final approval is subject to field inspection. One set of approved plans shall be available on the project site at all times.

Reviewed by: INGRID P. ICASIANO, DSFM III

Approval date: July 17, 2012

General Notes:

A. *For size of conduits and number of conductors, to and from main service switchboard, engine generator, and PG&E transformer, see "SINGLE-LINE POWER DISTRIBUTION DIAGRAM", sheet EE0-8.*

B. *For details of concrete pad, see* (4 / ST1-30).

C. *For details of chain link fence, see* (1 / A1-2.2).

Notes:

(1) *Provide transformer pad per PG&E requirements, including size, thickness, reinforcement, anchorage, duct openings, and grounding.*

(2) *Install engine generator and concrete pad with foundation, as recommended by engine generator's manufacturer. Stub-up conduits at locations to suit engine generator furnished.*

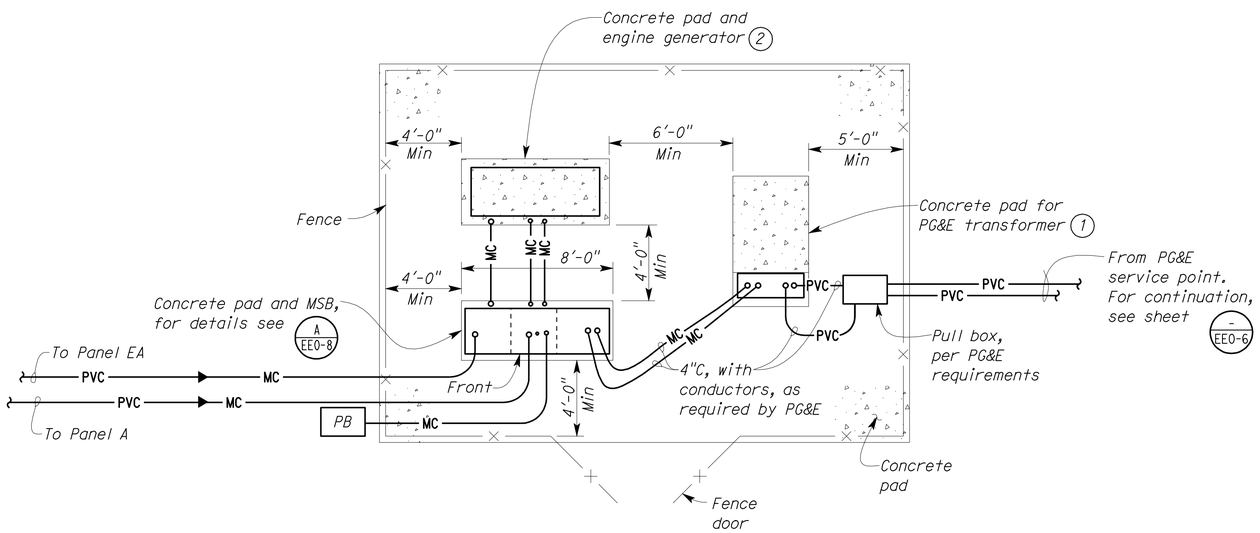

(1) SERVICE EQUIPMENT LAYOUT

SCALE 1/4" = 1'-0"

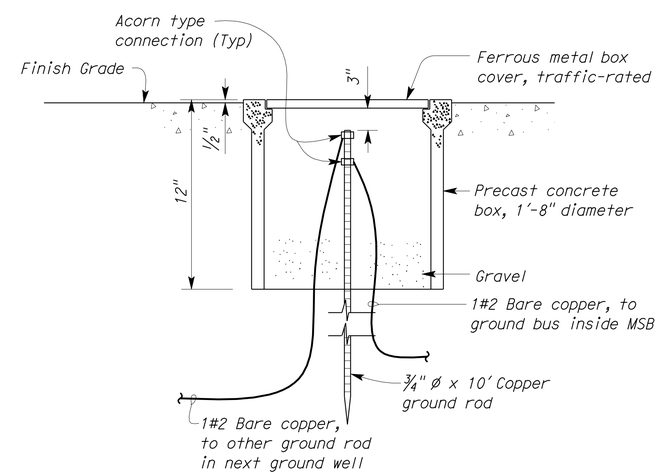

(2) GROUND WELL DETAIL

NO SCALE

THIS DRAWING ACCURATE FOR ELECTRICAL WORK ONLY.

	BY	CHECKED
DESIGN	Beatrice Bindu	Mark Cheap
DETAILS	Kathi Andreasen	Beatrice Bindu
QUANTITIES	Beatrice Bindu	Mark Cheap

STATE OF CALIFORNIA DEPARTMENT OF TRANSPORTATION

DIVISION OF ENGINEERING SERVICES
ELECTRICAL-MECHANICAL-WATER AND WASTEWATER DESIGN

BRIDGE NO. 28T5783
POST MILE 6.3

RICHMOND-SAN RAFAEL BRIDGE MAINTENANCE STATION

SERVICE EQUIPMENT LAYOUT

SHEET **EE0-9**

TAEMWW Imperial Rev. 7/10

ORIGINAL SCALE IN INCHES FOR REDUCED PLANS 0 1 2 3

UNIT 3597
PROJECT NUMBER & PHASE 04000000021
EA 003941

DISREGARD PRINTS BEARING EARLIER REVISION DATES → 11/18/11 1/20/12 1/30/12 3/18/12 4/10/12 4/25/12

REVISION DATES (PRELIMINARY STAGE ONLY) SHEET OF

03-AUG-2012 07:32

ee0_09.dgn

DIST.	COUNTY	ROUTE	POST MILES TOTAL PROJECT	SHEET NO.	TOTAL SHEETS
04	CC	580	6.1/6.3	200	216

REGISTERED ELECTRICAL ENGINEER — 4-25-12 DATE

REGISTERED PROFESSIONAL ENGINEER — BEATRICE BINDU — No. E 17240 — Exp. 6-30-12 — ELEC — STATE OF CALIFORNIA

7-30-12
PLANS APPROVAL DATE

The State of California or its officers or agents shall not be responsible for the accuracy or completeness of scanned copies of this plan sheet.

CALIFORNIA STATE FIRE MARSHAL APPROVED
Approval of this plan does not authorize or approve any omission or deviation from applicable regulations. Final approval is subject to field inspection. One set of approved plans shall be available on the project site at all times.
Reviewed by: INGRID P. ICASIANO, DSFM III
Approval date: July 17, 2012

General Notes:

A. For exact location and additional details of all mechanical items, see Mechanical plans.

B. The location of overhead door operators is shown arbitrarily only. Exact location depends on unit furnished. Contractor shall provide any additional conduits and wires not shown, but necessary for the automatic operation of the door, including conduits and conductors from overhead door operator to reversing edge limit switch.

C. For photovoltaic system single line diagram, see sheet EE1-10.

D. For PV system Roof Plan, see sheet EE1-9.

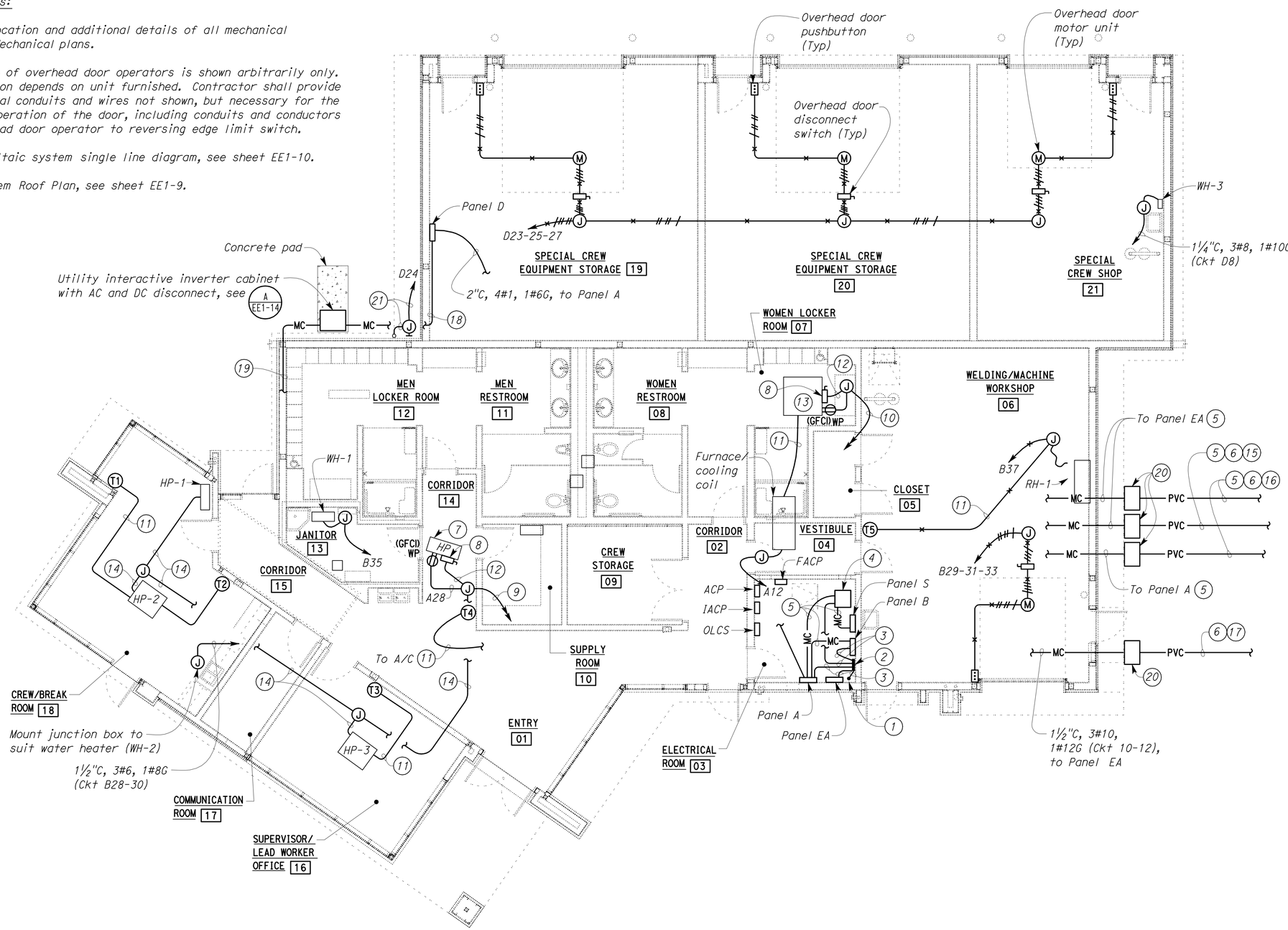

PLAN
SCALE 3/16" = 1'-0"

Notes:

1. Ground bar. For details, see 4/ST-2.
2. Ground plate. For detail, see 1/EE1-12.
3. 1"C, 1#2G.
4. 120-208/480 Volts, 30 kVA, 3-phase transformer.
5. For size of conduit and number of conductors see "SINGLE-LINE POWER DISTRIBUTION DIAGRAM", sheet EE0-8.
6. For continuation, see sheet EE0-6.
7. Outdoor unit for HP-1, HP-2, and HP-3.
8. Disconnect switch, WP.
9. 1½"C, 3#6, 2#12, 1#6G (Ckt A22-24-26, 28).
10. 1½"C, 3#6, 2#12, 1#6G (Ckt A14, 16-18-20).
11. ¾"C, conductors as required.
12. 1½"C, 3#6, 1#6G.
13. Air conditioner (A/C) rooftop unit.
14. (2) 1"C, conductors as required.
15. To existing Panel inside Vehicle Lift Building.
16. To service equipment.
17. 1½"C, 3#10, 1#12G, power conductor for gate motor.
18. 2"C, MC, 4#4, 1#6G, to Panel D.
19. (2) 2"C, MC, with DC conductors and equipment grounding conductor, from PV Array Circuit Combiner Boxes #1 and #2, to Fused Sub-Array Combiner inside Utility Interactive Inverter Cabinet. For location of PV Array Circuit Combiner Boxes #1 and #2, see sheet EE1-9.
20. This pull box is also shown on sheet EE0-6.
21. Power to Irrigation Controller.

THIS DRAWING ACCURATE FOR ELECTRICAL WORK ONLY.

	BY	CHECKED
DESIGN	Beatrice Bindu	Mark Cheap
DETAILS	Kathi Andreasen	Beatrice Bindu
QUANTITIES	Beatrice Bindu	Mark Cheap

STATE OF CALIFORNIA
DEPARTMENT OF TRANSPORTATION

DIVISION OF ENGINEERING SERVICES
ELECTRICAL-MECHANICAL-WATER AND WASTEWATER DESIGN

BRIDGE NO. 28T5783
POST MILE 6.3

RICHMOND-SAN RAFAEL BRIDGE MAINTENANCE STATION
POWER PLAN NO. 1

SHEET EE1-1

TAEMWW Imperial Rev. 7/10

ORIGINAL SCALE IN INCHES FOR REDUCED PLANS 0 1 2 3

UNIT 3597
PROJECT NUMBER & PHASE 04000000021
EA 003941

DISREGARD PRINTS BEARING EARLIER REVISION DATES
REVISION DATES (PRELIMINARY STAGE ONLY): 8/31/11 10/18/11 11/14/11 11/16/11 1/20/12 1/24/12 1/26/12 1/30/12 3/16/12 4/25/12
SHEET OF

02-AUG-2012 16:46
ee1_01.dgn

DIST.	COUNTY	ROUTE	POST MILES TOTAL PROJECT	SHEET NO.	TOTAL SHEETS
04	CC	580	6.1/6.3	201	216

REGISTERED ELECTRICAL ENGINEER — 4-25-12 DATE

REGISTERED PROFESSIONAL ENGINEER — BEATRICE BINDU — No. E 17240 — Exp. 6-30-12 — ELEC — STATE OF CALIFORNIA

7-30-12
PLANS APPROVAL DATE

The State of California or its officers or agents shall not be responsible for the accuracy or completeness of scanned copies of this plan sheet.

CALIFORNIA STATE FIRE MARSHAL APPROVED
Approval of this plan does not authorize or approve any omission or deviation from applicable regulations. Final approval is subject to field inspection. One set of approved plans shall be available on the project site at all times.
Reviewed by: INGRID P. ICASIANO, DSFM III
Approval date: July 17, 2012

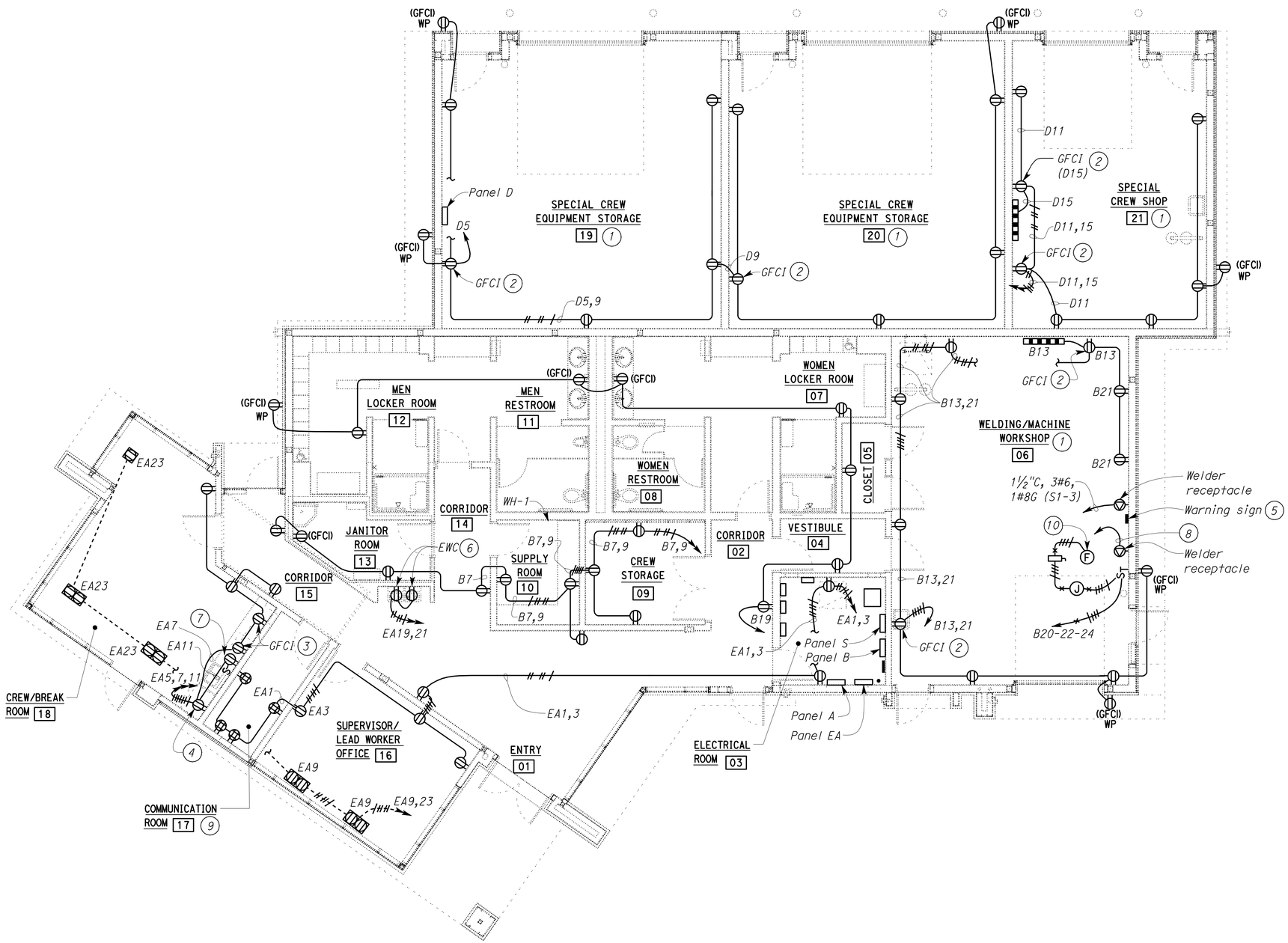

PLAN

SCALE 3/16" = 1'-0"

Notes:

1. Convenience outlets in this room shall be installed at 3'-4" above finish floor, unless otherwise noted.
2. GFCI receptacle, feed through type.
3. Mount 6" above the countertop.
4. Receptacle for refrigerator. Mount to suit the unit.
5. Warning sign shall read "WELDER - 480 V Only".
6. Mount to suit the unit.
7. Receptacle for garbage disposal (Ckt EA11). Mount to suit the unit.
8. 1¼"C, 3#6, 1#8G (B23-25).
9. Convenience outlets inside this room shall be mounted on the plywood backing board as directed by the Engineer.
10. Fume exhaust fan.

THIS DRAWING ACCURATE FOR ELECTRICAL WORK ONLY.

	BY	CHECKED
DESIGN	Beatrice Bindu	Mark Cheap
DETAILS	Kathi Andreasen	Beatrice Bindu
QUANTITIES	Beatrice Bindu	Mark Cheap

STATE OF CALIFORNIA
DEPARTMENT OF TRANSPORTATION

DIVISION OF ENGINEERING SERVICES
ELECTRICAL-MECHANICAL-WATER AND WASTEWATER DESIGN

BRIDGE NO. 28T5783
POST MILE 6.3

RICHMOND-SAN RAFAEL BRIDGE MAINTENANCE STATION
POWER PLAN NO. 2

SHEET EE1-2

TAEMWW Imperial Rev. 7/10

ORIGINAL SCALE IN INCHES FOR REDUCED PLANS 0 1 2 3

UNIT 3597
PROJECT NUMBER & PHASE 04000000021
EA 003941

DISREGARD PRINTS BEARING EARLIER REVISION DATES
REVISION DATES (PRELIMINARY STAGE ONLY) 8/31/11 11/28/11 1/25/12 1/30/12 3/16/12 4/25/12
SHEET OF

02-AUG-2012 16:33
ee1_02.dgn

DIST.	COUNTY	ROUTE	POST MILES TOTAL PROJECT	SHEET NO.	TOTAL SHEETS
04	CC	580	6.1/6.3	202	216

REGISTERED ELECTRICAL ENGINEER — 4-25-12 DATE

REGISTERED PROFESSIONAL ENGINEER BEATRICE BINDU No. E 17240 Exp. 6-30-12 ELEC STATE OF CALIFORNIA

7-30-12
PLANS APPROVAL DATE

The State of California or its officers or agents shall not be responsible for the accuracy or completeness of scanned copies of this plan sheet.

CALIFORNIA STATE FIRE MARSHAL APPROVED
Approval of this plan does not authorize or approve any omission or deviation from applicable regulations. Final approval is subject to field inspection. One set of approved plans shall be available on the project site at all times.
Reviewed by: INGRID P. ICASIANO, DSFM III
Approval date: July 17, 2012

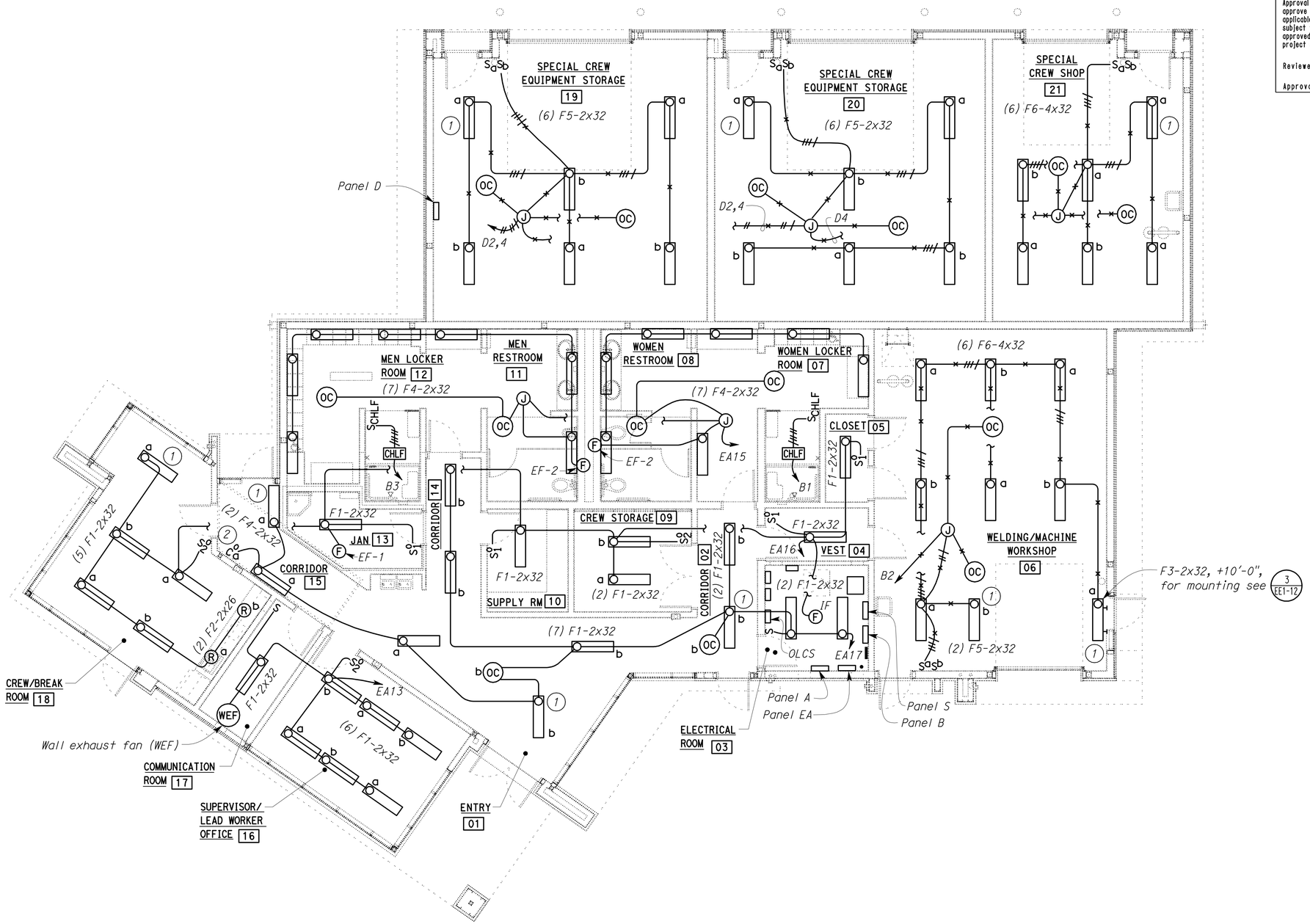

General Notes:

A. *For exact location of lighting fixtures, see Architectural plans.*

B. *For exact location and details of exhaust fans and other mechanical items, see Mechanical plans.*

C. *For occupancy sensor wiring diagrams, see sheet EE1-12.*

Notes:

(1) *This light fixture is equipped with emergency battery pack.*

(2) *Occupancy sensor, mount 7'-0" above the floor.*

THIS DRAWING ACCURATE FOR ELECTRICAL WORK ONLY.

	BY	CHECKED
DESIGN	Beatrice Bindu	Mark Cheap
DETAILS	Kathi Andreasen	Beatrice Bindu
QUANTITIES	Beatrice Bindu	Mark Cheap

STATE OF CALIFORNIA DEPARTMENT OF TRANSPORTATION

DIVISION OF ENGINEERING SERVICES
ELECTRICAL-MECHANICAL-WATER AND WASTEWATER DESIGN

BRIDGE NO. 28T5783
POST MILE 6.3

RICHMOND-SAN RAFAEL BRIDGE MAINTENANCE STATION

LIGHTING PLAN NO. 1

SHEET EE1-3

TAEMWW Imperial Rev. 7/10

ORIGINAL SCALE IN INCHES FOR REDUCED PLANS 0 1 2 3

UNIT 3597
PROJECT NUMBER & PHASE 04000000021
EA 003941

DISREGARD PRINTS BEARING EARLIER REVISION DATES → 8/31/11 10/18/11 11/18/11 1/20/12 3/16/12 4/25/12

REVISION DATES (PRELIMINARY STAGE ONLY) SHEET OF

02-AUG-2012 16:33
ee1_03.dgn

DIST.	COUNTY	ROUTE	POST MILES TOTAL PROJECT	SHEET NO.	TOTAL SHEETS
04	CC	580	6.1/6.3	203	216

REGISTERED ELECTRICAL ENGINEER — 4-25-12 DATE

REGISTERED PROFESSIONAL ENGINEER — BEATRICE BINDU — No. E 17240 — Exp. 6-30-12 — ELEC — STATE OF CALIFORNIA

7-30-12
PLANS APPROVAL DATE

The State of California or its officers or agents shall not be responsible for the accuracy or completeness of scanned copies of this plan sheet.

CALIFORNIA STATE FIRE MARSHAL APPROVED

Approval of this plan does not authorize or approve any omission or deviation from applicable regulations. Final approval is subject to field inspection. One set of approved plans shall be available on the project site at all times.

Reviewed by: INGRID P. ICASIANO, DSFM III

Approval date: July 17, 2012

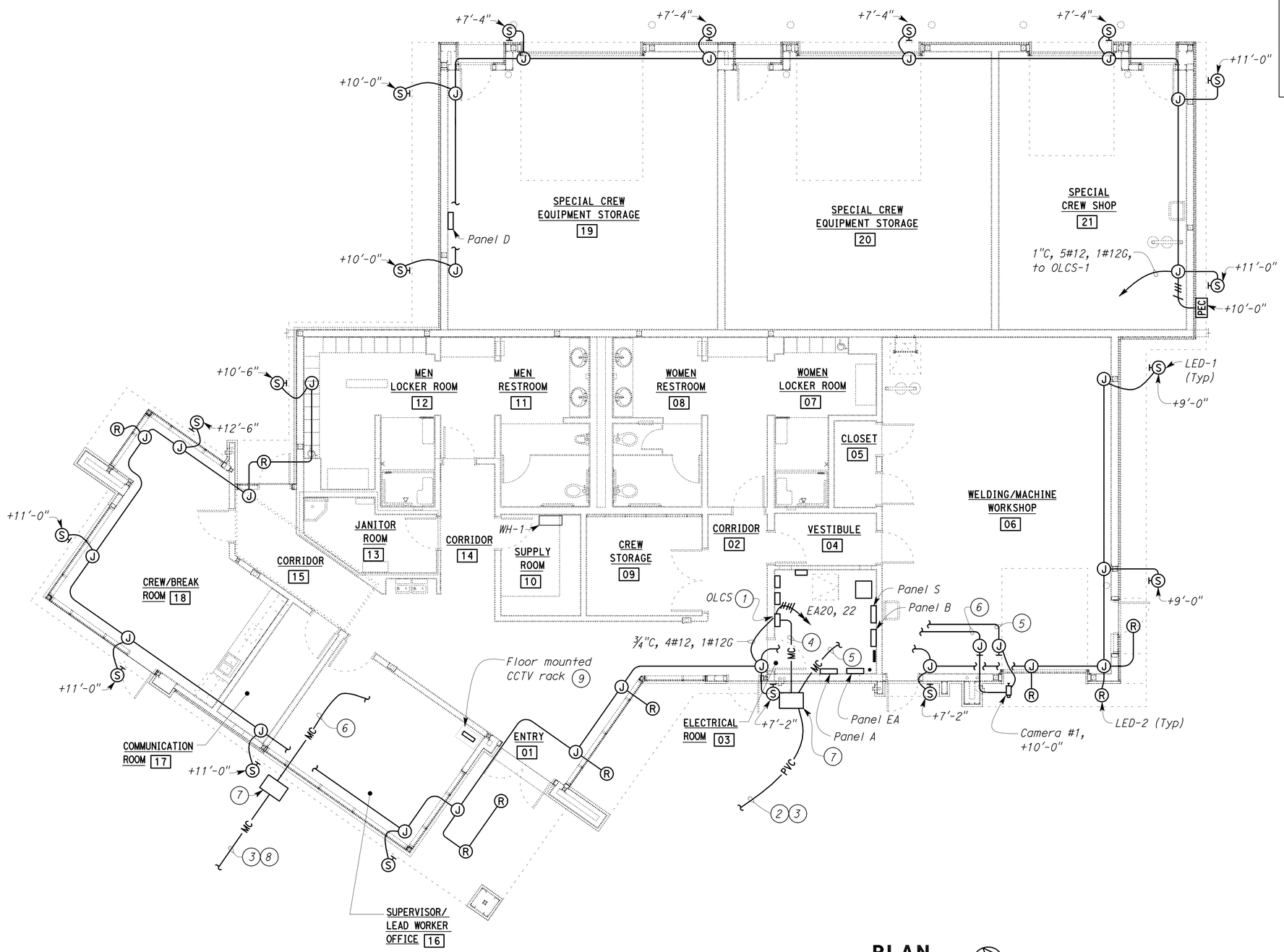

PLAN

SCALE 3/16" = 1'-0"

General Note:

For exact location and mounting height of all light fixtures, see Architectural plans.

Notes:

1. *For wiring diagram, see (2/EE1-13).*
2. *(1) 1½"C, 2#8, 1#8, 1#8G (Area light), and (1) 1½"C, 2#8, 1#8G (Camera power).*
3. *For continuation, see (-/EE0-6).*
4. *1½"C, 2#8, 1#8G, to OLCS.*
5. *1½"C, 2#10, 1#12G, (Camera power) to Panel EA.*
6. *1½"C, video and control cable, to CCTV controls*
7. *This pull box is also shown on sheet EE0-6.*
8. *1½"C, video and control cable, to camera.*
9. *For details, see sheet EE1-11.*

THIS DRAWING ACCURATE FOR ELECTRICAL WORK ONLY.

	BY	CHECKED
DESIGN	Beatrice Bindu	Mark Cheap
DETAILS	Kathi Andreasen /KG	Beatrice Bindu
QUANTITIES	Beatrice Bindu	Mark Cheap

STATE OF CALIFORNIA DEPARTMENT OF TRANSPORTATION

DIVISION OF ENGINEERING SERVICES
ELECTRICAL-MECHANICAL-WATER AND WASTEWATER DESIGN

BRIDGE NO. 28T5783
POST MILE 6.3

RICHMOND-SAN RAFAEL BRIDGE MAINTENANCE STATION

LIGHTING PLAN NO. 2

SHEET **EE1-4**

TAEMWW Imperial Rev. 7/10

ORIGINAL SCALE IN INCHES FOR REDUCED PLANS 0 1 2 3

UNIT 3597
PROJECT NUMBER & PHASE 04000000021
EA 003941

DISREGARD PRINTS BEARING EARLIER REVISION DATES →

REVISION DATES (PRELIMINARY STAGE ONLY) 8/31/11 10/18/11 12/16/11 1/23/12 1/26/12 3/16/12 4/25/12 SHEET OF

02-AUG-2012 16:33

ee1_04.dgn

DIST.	COUNTY	ROUTE	POST MILES TOTAL PROJECT	SHEET NO.	TOTAL SHEETS
04	CC	580	6.1/6.3	204	216

REGISTERED ELECTRICAL ENGINEER — 4-25-12 DATE

REGISTERED PROFESSIONAL ENGINEER — BEATRICE BINDU — No. E 17240 — Exp. 6-30-12 — ELEC — STATE OF CALIFORNIA

7-30-12
PLANS APPROVAL DATE

The State of California or its officers or agents shall not be responsible for the accuracy or completeness of scanned copies of this plan sheet.

CALIFORNIA STATE FIRE MARSHAL APPROVED
Approval of this plan does not authorize or approve any omission or deviation from applicable regulations. Final approval is subject to field inspection. One set of approved plans shall be available on the project site at all times.
Reviewed by: INGRID P. ICASIANO, DSFM III
Approval date: July 17, 2012

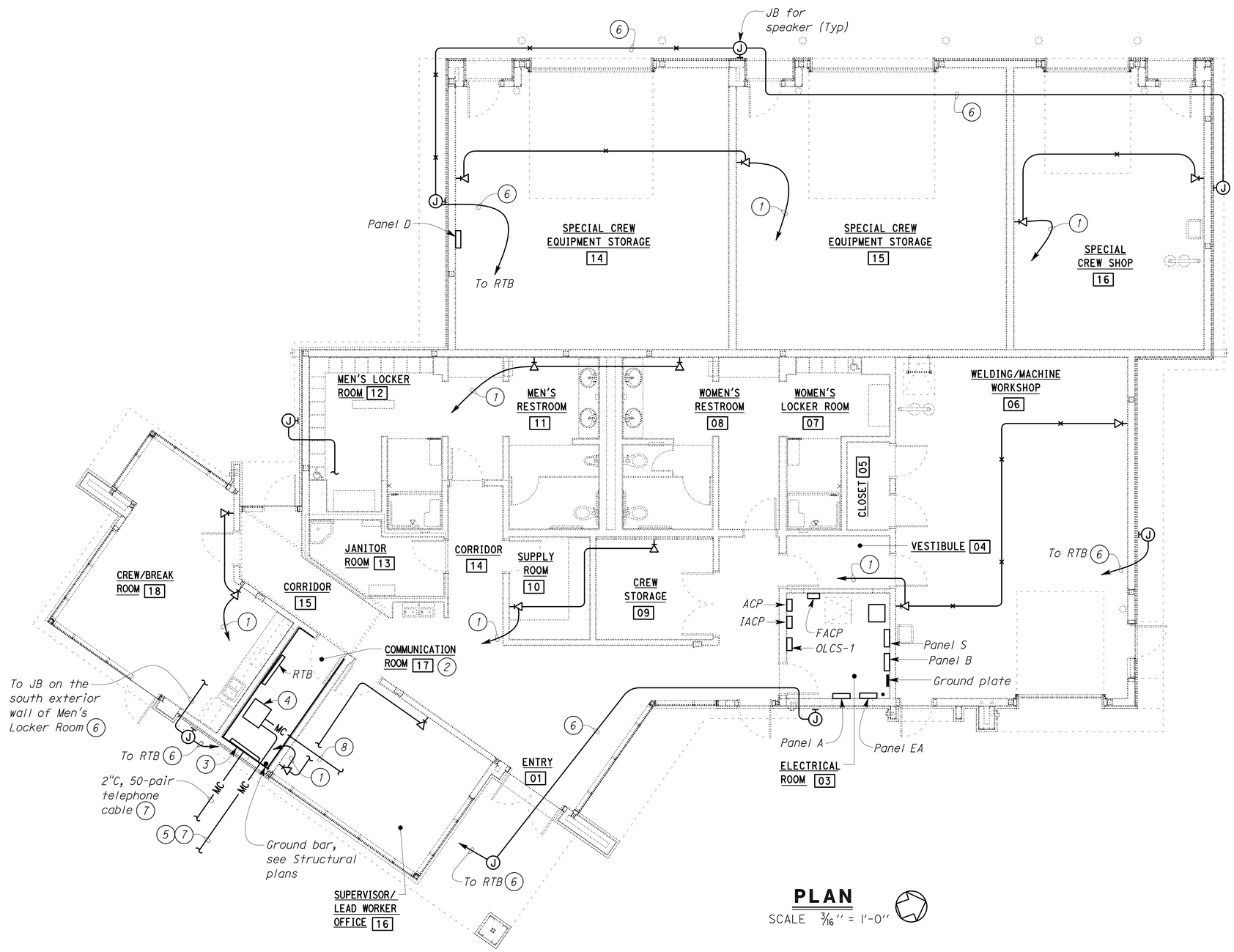

PLAN
SCALE 3/16" = 1'-0"

General Notes:

A. Coordinate with Resident Engineer before laying out equipment inside Communication Room.

B. All conduits for data and telephone outlets shall be 1"C, with 4 Cat. 6 cables, unless otherwise noted.

C. Each communication outlet shall have four RJ45 jacks with quad faceplate. Two RJ45 jacks on the top shall be for voice, and two RJ45 jacks on the bottom shall be for data.

D. Each Cat. 6 cable shall be terminated on the patch panels. Voice cables shall be terminated on the voice patch panels, and data cables shall be terminated on the data patch panels.

E. Unless otherwise shown, stub up underground conduit in a manner so that the conduits are approximately 2-inches above the bottom of the mounting plywood.

F. Unless otherwise shown, terminate conduits from ceiling in a manner so that conduits are approximately 2-inches below the top of the mounting plywood.

G. All data and telephone cables shall be run continuous and unspliced, from the communication outlets up to the termination point.

H. All risers for PVC conduits on this plan shall be PVC coated RSC. Wrap joints in touch with soil with two layers of wrapping tape.

I. See sheet EE1-11 for the details of communication outlets, TTB and Communication Rack.

Notes:

1. 1½"C, 8 Cat. 6 cables, to patch panels inside Communication Room.
2. For plywood lining on the walls, see Architectural plans.
3. Telephone Terminal board. Terminate each end of the 50-pair telephone cable on the 66 block punchdown block. 66 block shall be cross connected to voice patch panel.
4. Floor mounted 19" open Communication Rack to mount voice and data patch panels. Voice patch panels shall be mounted on the top, and data patch panels shall be mounted on the bottom.
5. 2"C, MC, with 12-pair, multi-mode (62. 5/125um 850nm) fiber optic cable. Terminate each end of the 12-pair fiber optic cable on data patch panels.
6. 1½"C, MT.
7. For continuation, see sheet EE0-7.
8. 2"C, 4 Cat. 6 cables, to existing Vehicle Lift Building.

THIS DRAWING ACCURATE FOR ELECTRICAL WORK ONLY.

	BY	CHECKED
DESIGN	Beatrice Bindu	Mark Cheap
DETAILS	Kerry Geoffroy	Beatrice Bindu
QUANTITIES	Beatrice Bindu	Mark Cheap

STATE OF CALIFORNIA
DEPARTMENT OF TRANSPORTATION

DIVISION OF ENGINEERING SERVICES
ELECTRICAL-MECHANICAL-WATER AND WASTEWATER DESIGN

BRIDGE NO. 28T5783
POST MILE 6.3

RICHMOND-SAN RAFAEL BRIDGE MAINTENANCE STATION
COMMUNICATION PLAN

SHEET **EE1-5**

TAEMWW Imperial Rev. 7/10

ORIGINAL SCALE IN INCHES FOR REDUCED PLANS 0 1 2 3

UNIT 3597
PROJECT NUMBER & PHASE 04000000021
EA 003941

DISREGARD PRINTS BEARING EARLIER REVISION DATES →
REVISION DATES (PRELIMINARY STAGE ONLY): 8/31/11 10/26/11 11/16/11 1/26/12 1/30/12 3/16/12 4/25/12

SHEET OF

02-AUG-2012 16:34
ee1_05.dgn

DIST.	COUNTY	ROUTE	POST MILES TOTAL PROJECT	SHEET NO.	TOTAL SHEETS
04	CC	580	6.1/6.3	205	216

REGISTERED ELECTRICAL ENGINEER — 4-25-12 DATE

REGISTERED PROFESSIONAL ENGINEER — BEATRICE BINDU — No. E 17240 — Exp. 6-30-12 — ELEC — STATE OF CALIFORNIA

7-30-12
PLANS APPROVAL DATE

The State of California or its officers or agents shall not be responsible for the accuracy or completeness of scanned copies of this plan sheet.

General Notes:

A. Conduit system for intrusion alarm system is not shown. See Special Provisions for requirements.

B. For Intrusion/Access system zoning schedules, see sheet EE1-7.

C. Unless otherwise noted, card reader shall be mounted on the adjacent wall, at a convenient location near the door, as directed by the Engineer, and as recommended by the manufacturer.

D. All risers for PVC conduits on this plan shall be PVC coated RSC. Wrap joints in touch with soil with two layers of wrapping tape.

E. Power supply supplied by door hardware supplier, size to suit doors supplied.

F. See sheet EE2-1, "Intrusion Alarm Plan-2", for the existing Vehicle Lift Building.

Notes:

1. (2) 1½"C, conductors as required, to Vehicle Lift Building.
2. For continuation, see sheet EE2-1.
3. This pull box also shown on sheet EE0-6.

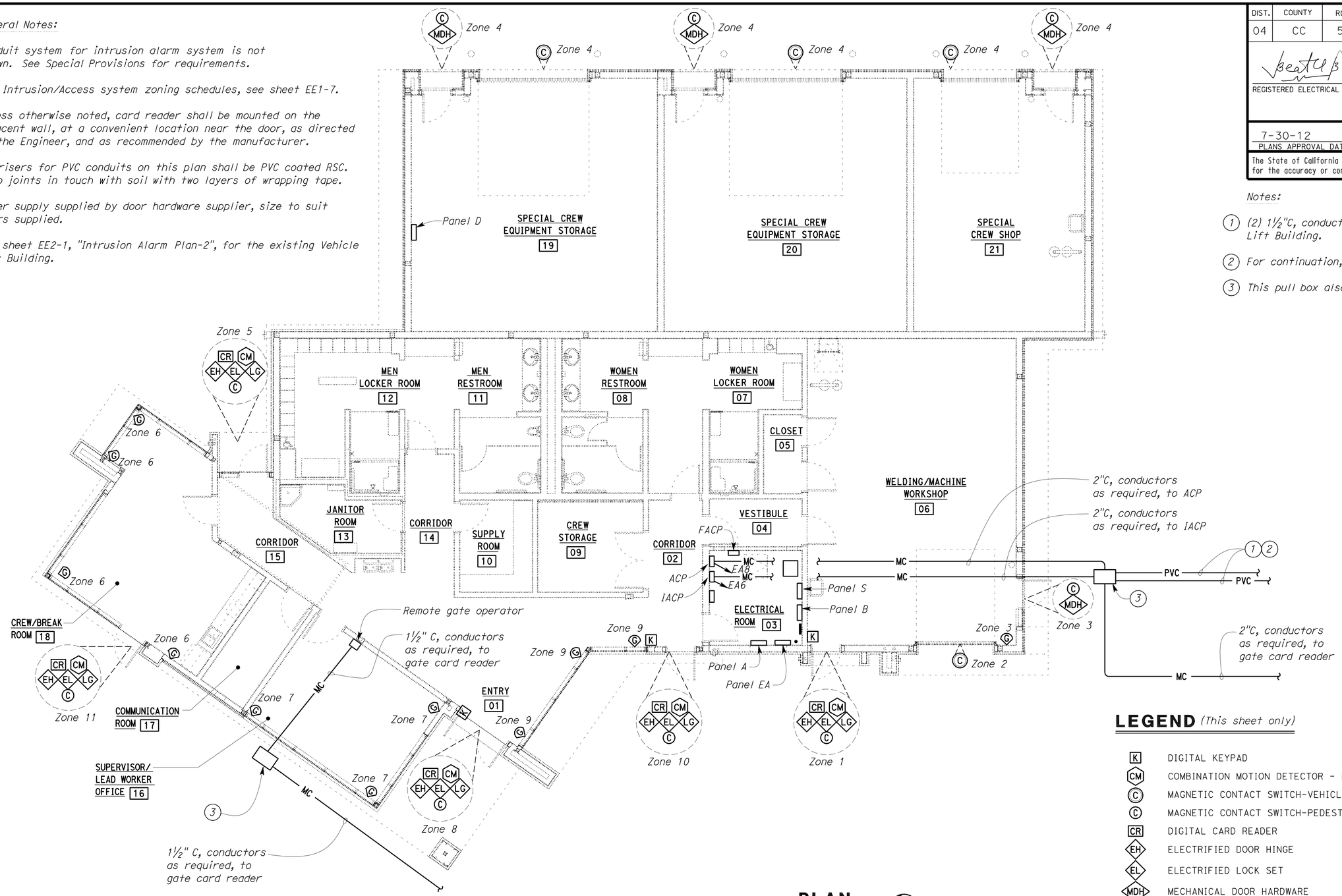

PLAN

SCALE 3/16" = 1'-0"

CALIFORNIA STATE FIRE MARSHAL APPROVED

Approval of this plan does not authorize or approve any omission or deviation from applicable regulations. Final approval is subject to field inspection. One set of approved plans shall be available on the project site at all times.

Reviewed by: INGRID P. ICASIANO, DSFM III

Approval date: July 17, 2012

LEGEND (This sheet only)

K	DIGITAL KEYPAD
CM	COMBINATION MOTION DETECTOR - MICROWAVE/PASSIVE INFRARED
C	MAGNETIC CONTACT SWITCH-VEHICLE
C	MAGNETIC CONTACT SWITCH-PEDESTRIAN
CR	DIGITAL CARD READER
EH	ELECTRIFIED DOOR HINGE
EL	ELECTRIFIED LOCK SET
MDH	MECHANICAL DOOR HARDWARE
LG	LOCK GUARD
MS	MOTION DETECTOR
G	GLASS BREAK DETECTOR

	BY	CHECKED
DESIGN	Beatrice Bindu	Mark Cheap
DETAILS	Kathi Andreasen	Beatrice Bindu
QUANTITIES	Beatrice Bindu	Mark Cheap

STATE OF CALIFORNIA DEPARTMENT OF TRANSPORTATION

DIVISION OF ENGINEERING SERVICES
ELECTRICAL-MECHANICAL-WATER AND WASTEWATER DESIGN

BRIDGE NO. 28T5783
POST MILE 6.3

RICHMOND-SAN RAFAEL BRIDGE MAINTENANCE STATION

INTRUSION ALARM PLAN

SHEET EE1-6

TAEMWW Imperial Rev. 7/10

ORIGINAL SCALE IN INCHES FOR REDUCED PLANS 0 1 2 3

UNIT 3597
PROJECT NUMBER & PHASE 04000000021
EA 003941

DISREGARD PRINTS BEARING EARLIER REVISION DATES →

REVISION DATES (PRELIMINARY STAGE ONLY): 8/31/11 11/29/11 1/25/12 1/26/12 1/30/12 3/16/12 4/25/12

SHEET OF

02-AUG-2012 16:34

ee1_06.dgn

DIST.	COUNTY	ROUTE	POST MILES TOTAL PROJECT	SHEET NO.	TOTAL SHEETS
04	CC	580	6.1/6.3	206	216

REGISTERED ELECTRICAL ENGINEER — 4-25-12 DATE

REGISTERED PROFESSIONAL ENGINEER BEATRICE BINDU No. E 17240 Exp. 6-30-12 ELEC STATE OF CALIFORNIA

7-30-12
PLANS APPROVAL DATE

The State of California or its officers or agents shall not be responsible for the accuracy or completeness of scanned copies of this plan sheet.

INTRUSION ALARM ZONING SCHEDULE

ZONE	LOCATION	QNTY	DEVICE DESCRIPTION
1	SINGLE PEDESTRIAN ACCESS DOOR - ROOM 06 (WELDING/MACHINE WORKSHOP) (NORTHEAST END)	1	DIGITAL CARD READER
		1	MAGNETIC CONTACT SWITCH - PEDESTRIAN
		1	ELECTRIFIED DOOR HINGE
		1	ELECTRIFIED LOCK SET
		1	COMBINATION MOTION DETECTOR
		1	LOCK GUARD
		1	DIGITAL KEYPAD DEACTIVATES ZONES 1, 2, 3, & 4
2	VEHICLE ACCESS ROLL-UP DOOR - ROOM 06 (WELDING/MACHINE WORKSHOP)	1	MAGNETIC CONTACT SWITCH - VEHICLE
3	SINGLE PEDESTRIAN ACCESS DOOR - ROOM 06 (WELDING/MACHINE WORKSHOP NORTH ENTRANCE) GLASS BREAK DETECTOR - ROOM 06	1	MAGNETIC CONTACT SWITCH - PEDESTRIAN
		1	MECHANICAL DOOR HARDWARE
		1	GLASS BREAK DETECTOR
4	SINGLE PEDESTRIAN ACCESS DOOR - ROOM 21 (SPECIAL CREW SHOP)	1	MAGNETIC CONTACT SWITCH - PEDESTRIAN
		1	MECHANICAL DOOR HARDWARE
	VEHICLE ACCESS ROLL-UP DOOR - ROOM 21 (SPECIAL CREW SHOP)	1	MAGNETIC CONTACT SWITCH - VEHICLE
	SINGLE PEDESTRIAN ACCESS DOOR - ROOM 20 (SPECIAL CREW EQUIPMENT STORAGE)	1	MAGNETIC CONTACT SWITCH - PEDESTRIAN
		1	MECHANICAL DOOR HARDWARE
	VEHICLE ACCESS ROLL-UP DOOR - ROOM 20 (SPECIAL CREW EQUIPMENT STORAGE)	1	MAGNETIC CONTACT SWITCH - VEHICLE
	SINGLE PEDESTRIAN ACCESS DOOR - ROOM 19 (SPECIAL CREW EQUIPMENT STORAGE)	1	MAGNETIC CONTACT SWITCH - PEDESTRIAN
		1	MECHANICAL DOOR HARDWARE
	VEHICLE ACCESS ROLL-UP DOOR - ROOM 19 (SPECIAL CREW EQUIPMENT STORAGE)	1	MAGNETIC CONTACT SWITCH - VEHICLE
5	SINGLE PEDESTRIAN ACCESS DOOR - ROOM 15 (CORRIDOR WEST END)	1	DIGITAL CARD READER
		1	MAGNETIC CONTACT SWITCH - PEDESTRIAN
		1	ELECTRIFIED DOOR HINGE
		1	ELECTRIFIED LOCK SET
		1	COMBINATION MOTION DETECTOR
		1	LOCK GUARD
		1	DIGITAL KEYPAD DEACTIVATES ZONES 4, 5, 6, 7, & 11
6	GLASS BREAK DETECTOR - ROOM 18 (CREW/BREAK ROOM)	4	GLASS BREAK DETECTOR
7	GLASS BREAK DETECTOR - ROOM 16 (SUPERVISOR/LEAD WORKER OFFICE)	3	GLASS BREAK DETECTOR
8	DOUBLE PEDESTRIAN ACCESS DOOR - ROOM 01 (ENTRY SOUTH END)	1	DIGITAL CARD READER
		1	MAGNETIC CONTACT SWITCH - PEDESTRIAN
		1	ELECTRIFIED DOOR HINGE
		1	ELECTRIFIED LOCK SET
		1	COMBINATION MOTION DETECTOR
		1	LOCK GUARD
		1	DIGITAL KEYPAD DEACTIVATES ZONES 6, 7, 8, 9, & 11
9	GLASS BREAK DETECTOR - ROOM 01 & 02 (CORRIDOR EAST END)	3	GLASS BREAK DETECTOR
10	SINGLE PEDESTRIAN ACCESS DOOR - ROOM 02 (CORRIDOR ENTRY SOUTHEAST END)	1	DIGITAL CARD READER
		1	MAGNETIC CONTACT SWITCH - PEDESTRIAN
		1	ELECTRIFIED DOOR HINGE
		1	ELECTRIFIED LOCK SET
		1	COMBINATION MOTION DETECTOR
		1	LOCK GUARD
		1	DIGITAL KEYPAD DEACTIVATES ZONES 6, 7, 8, 9, 10, & 11

General Notes:

A. See sheet EE1-6 for the locations of control panels and Intrusion alarm plan for the new maintenance building.

B. See sheet EE2-1 for Intrusion alarm plan for the existing vehicle lift building.

CALIFORNIA STATE FIRE MARSHAL APPROVED
Approval of this plan does not authorize or approve any omission or deviation from applicable regulations. Final approval is subject to field inspection. One set of approved plans shall be available on the project site at all times.
Reviewed by: Ingrid P. Casiano
INGRID P. ICASIANO, DSFM III
Approval date: July 17, 2012

INTRUSION ALARM ZONING SCHEDULE (CONTINUED)

ZONE	LOCATION	QNTY	DEVICE DESCRIPTION
11	SINGLE PEDESTRIAN ACCESS DOOR - ROOM 18 (SOUTH END)	1	DIGITAL CARD READER
		1	MAGNETIC CONTACT SWITCH - PEDESTRIAN
		1	ELECTRIFIED DOOR HINGE
		1	ELECTRIFIED LOCK SET
		1	COMBINATION MOTION DETECTOR
		1	LOCK GUARD
		1	DIGITAL KEYPAD DEACTIVATES ZONES 6, 7, 8, 9, 10, & 11
12	SINGLE PEDESTRIAN ACCESS DOOR - EXISTING VEHICLE LIFT BUILDING (ENTRY SOUTHEAST END)	1	DIGITAL CARD READER
		1	MAGNETIC CONTACT SWITCH - PEDESTRIAN
		1	ELECTRIFIED DOOR HINGE
		1	ELECTRIFIED LOCK SET
		1	COMBINATION MOTION DETECTOR
		1	LOCK GUARD
		1	DIGITAL KEYPAD DEACTIVATES ZONES 11, 12 & 13
13	VEHICLE ACCESS ROLL-UP DOOR - EXISTING VEHICLE LIFT BUILDING (ENTRY NORTHEAST END)	1	MAGNETIC CONTACT SWITCH - VEHICLE
	GLASS BREAK DETECTOR - EXISTING VEHICLE LIFT BUILDING (NORTH EAST SIDE)	2	GLASS BREAK DETECTOR
14	SINGLE PEDESTRIAN ACCESS DOOR - EXISTING VEHICLE LIFT BUILDING (SOUTH WEST END)	1	MAGNETIC CONTACT SWITCH - PEDESTRIAN
		1	MECHANICAL DOOR HARDWARE
	GLASS BREAK DETECTOR - EXISTING VEHICLE LIFT BUILDING (SOUTH WEST SIDE)	2	GLASS BREAK DETECTOR

	BY	CHECKED
DESIGN	Beatrice Bindu	Mark Cheap
DETAILS	Kathi Andreasen	Beatrice Bindu
QUANTITIES	Beatrice Bindu	Mark Cheap

STATE OF CALIFORNIA DEPARTMENT OF TRANSPORTATION

DIVISION OF ENGINEERING SERVICES
ELECTRICAL-MECHANICAL-WATER AND WASTEWATER DESIGN

BRIDGE NO. 28T5783
POST MILE 6.3

RICHMOND-SAN RAFAEL BRIDGE MAINTENANCE STATION

INTRUSION ALARM ZONING SCHEDULE

SHEET EE1-7

TAEMWW Imperial Rev. 7/10

ORIGINAL SCALE IN INCHES FOR REDUCED PLANS 0 1 2 3

UNIT 3597
PROJECT NUMBER & PHASE 04000000021
EA 003941

DISREGARD PRINTS BEARING EARLIER REVISION DATES → 11/28/11 1/27/12 3/16/12 4/25/12

REVISION DATES (PRELIMINARY STAGE ONLY) SHEET OF

02-AUG-2012 16:34

ee1_07.dgn

DIST.	COUNTY	ROUTE	POST MILES TOTAL PROJECT	SHEET NO.	TOTAL SHEETS
04	CC	580	6.1/6.3	207	216

REGISTERED ELECTRICAL ENGINEER — 4-25-12 DATE

REGISTERED PROFESSIONAL ENGINEER — BEATRICE BINDU — No. E 17240 — Exp. 6-30-12 — ELEC — STATE OF CALIFORNIA

7-30-12
PLANS APPROVAL DATE

The State of California or its officers or agents shall not be responsible for the accuracy or completeness of scanned copies of this plan sheet.

CALIFORNIA STATE FIRE MARSHAL APPROVED
Approval of this plan does not authorize or approve any omission or deviation from applicable regulations. Final approval is subject to field inspection. One set of approved plans shall be available on the project site at all times.
Reviewed by: INGRID P. ICASIANO, DSFM III
Approval date: July 17, 2012

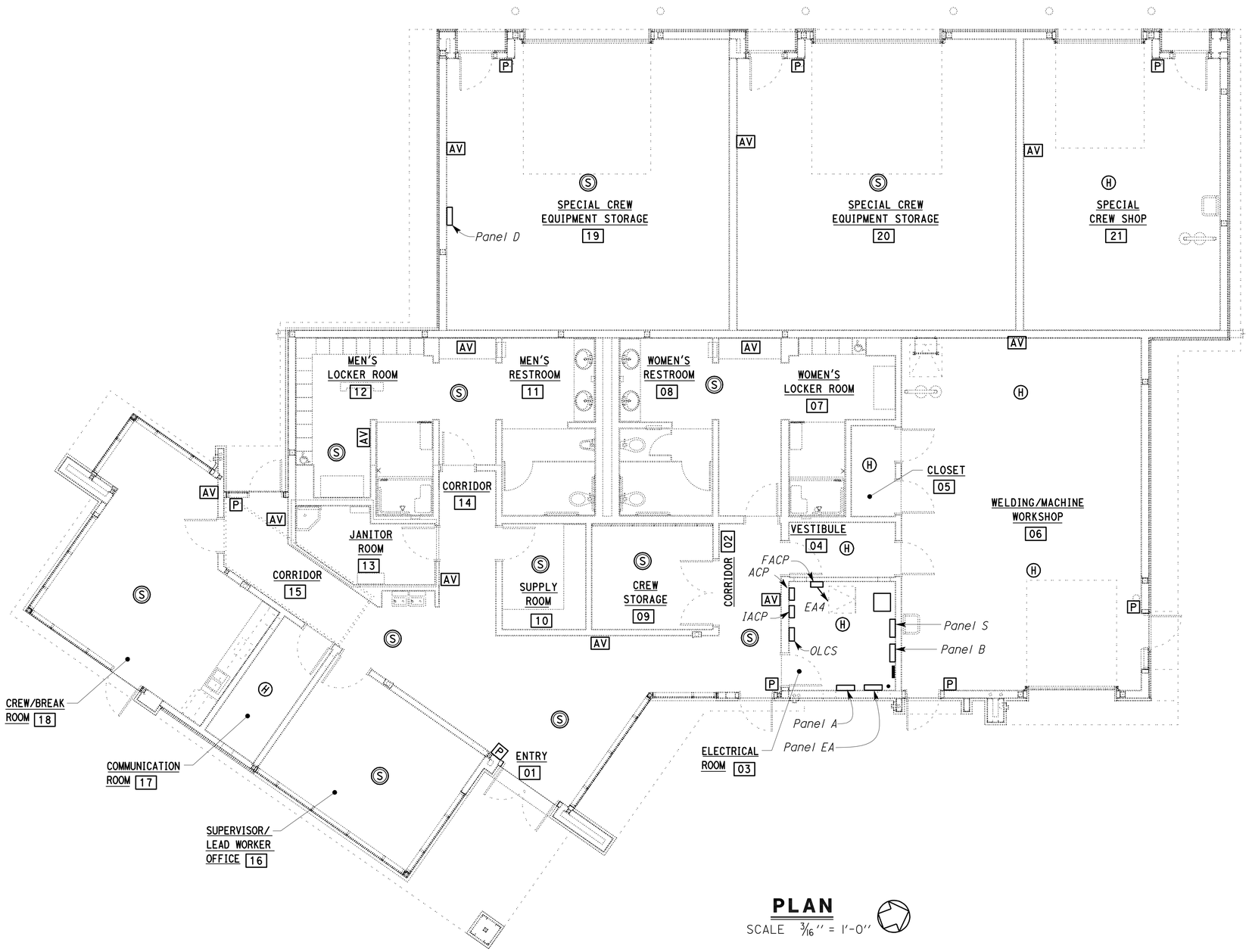

PLAN
SCALE 3/16" = 1'-0"

General Notes:

A. *Conduit and conductor system for fire alarm system is not shown. See Special Provisions for requirements.*

B. *Fire alarm shall comply with NFPA 72 - 2010 National Fire Alarm Code, 2004 ADAAG 702, 2010 CBC Sections 907.5.2.1 & 907.5.2.3, 2010 CFC Sections 907.6.2.1 & 907.6.2.3, and 2010 CEC Article 760.*

C. *Installation of the fire alarm system shall not start up until detailed plans and specifications, including California Fire Marshal listing numbers for each component of the sytem, have been approved by the California State Fire Marshal.*

D. *Before requesting final approval of the installation, the installing contractor shall furnish a written statement to the State Fire Marshal to the effect that the system has been installed and completely tested in accordance with NFPA 72 - 2010 National Fire Alarm Code, 2004 ADAAG 702, 2010 CBC Sections 907.5.2.1 & 907.5.2.3, 2010 CFC Sections 907.6.2.1 & 907.6.2.3, and 2010 CEC Article 760.*

E. *Upon completion of the installation of the fire alarm system, a satisfactory test of the system shall be made in the presence of the State Fire Marshal.*

F *For Fire Alarm Zones, see Specifications.*

G. *Before requesting final approval of the installation the installing contractor shall furnish a written statement to the state Fire Marshal to the effect that the system has been installed and completely tested in accordance with 2010 Edition of NFPA 72 Sections 10.18.1.3 and 14.4.1.2.*

	BY	CHECKED
DESIGN	Beatrice Bindu	Mark Cheap
DETAILS	Kathi Andreasen	Beatrice Bindu
QUANTITIES	Beatrice Bindu	Mark Cheap

STATE OF CALIFORNIA
DEPARTMENT OF TRANSPORTATION

DIVISION OF ENGINEERING SERVICES
ELECTRICAL-MECHANICAL-WATER AND WASTEWATER DESIGN

BRIDGE NO. 28T5783
POST MILE 6.3

RICHMOND-SAN RAFAEL BRIDGE MAINTENANCE STATION
FIRE ALARM PLAN

SHEET **EE1-8**

TAEMWW Imperial Rev. 7/10

ORIGINAL SCALE IN INCHES FOR REDUCED PLANS 0 1 2 3

UNIT 3597
PROJECT NUMBER & PHASE 04000000021
EA 003941

DISREGARD PRINTS BEARING EARLIER REVISION DATES
REVISION DATES (PRELIMINARY STAGE ONLY): 8/31/11 10/14/11 1/27/12 1/30/12 3/16/12 4/25/12

SHEET OF

02-AUG-2012 16:34
ee1_08.dgn

DIST.	COUNTY	ROUTE	POST MILES TOTAL PROJECT	SHEET NO.	TOTAL SHEETS
04	CC	580	6.1/6.3	208	216

REGISTERED ELECTRICAL ENGINEER — 4-25-12 DATE

REGISTERED PROFESSIONAL ENGINEER — BEATRICE BINDU — No. E 17240 — Exp. 6-30-12 — ELEC — STATE OF CALIFORNIA

7-30-12
PLANS APPROVAL DATE

The State of California or its officers or agents shall not be responsible for the accuracy or completeness of scanned copies of this plan sheet.

CALIFORNIA STATE FIRE MARSHAL APPROVED
Approval of this plan does not authorize or approve any omission or deviation from applicable regulations. Final approval is subject to field inspection. One set of approved plans shall be available on the project site at all times.
Reviewed by: INGRID P. ICASIANO, DSFM III
Approval date: July 17, 2012

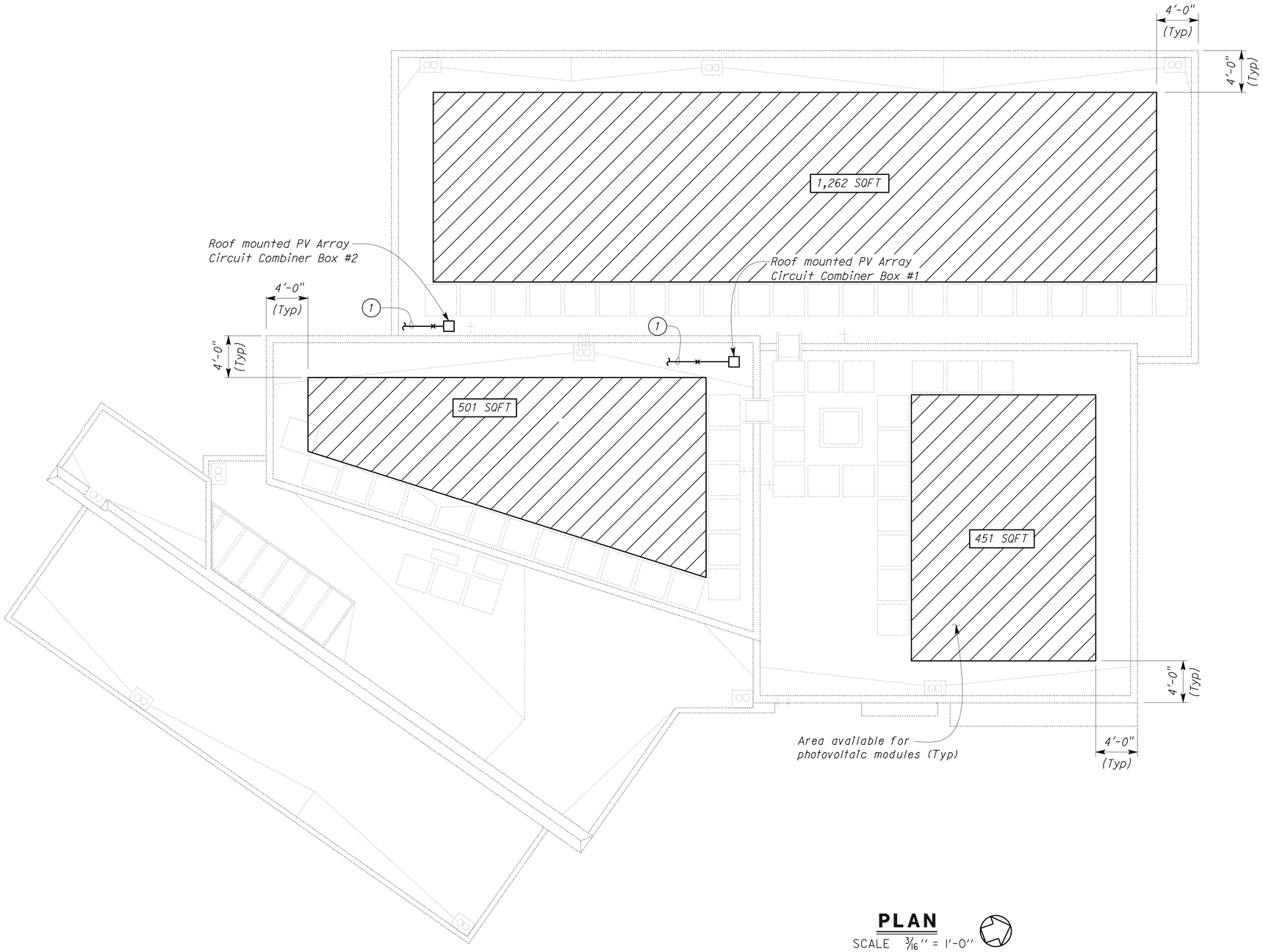

PLAN
SCALE 3/16" = 1'-0"

General Notes:

A. *Provide and install approved conduit support on top of the roof to support conduit system and junction boxes. Conduit support shall be one-piece and non-metallic type. For conduit support details, see Detail 1 on sheet EE1-14.*

B. *All exposed conduits shall be galvanized rigid steel, with minimum size 3/4".*

C. *No DC wiring, except at the module connector, shall be exposed.*

D. *Use type CGB connectors at conduit terminations to exposed conductors.*

E. *DC conduit/conductors between PV modules and PV Array Circuit Combiner Boxes are not shown.*

F. *For the exact location of all rooftop items, see Mechanical, Structural and Architectural plans.*

G. *For the details of roof penetration for photovoltaic posts, see 2/A1-54.*

Note:

(1) *2"C, MC, with DC conductors and equipment grounding conductor, to Utility Interactive Inverter Cabinet. For continuation, see sheet EE1-1.*

THIS DRAWING ACCURATE FOR ELECTRICAL WORK ONLY.

	BY	CHECKED
DESIGN	Beatrice Bindu	Mark Cheap
DETAILS	Kathi Andreasen	Beatrice Bindu
QUANTITIES	Beatrice Bindu	Mark Cheap

STATE OF CALIFORNIA
DEPARTMENT OF TRANSPORTATION

DIVISION OF ENGINEERING SERVICES
ELECTRICAL-MECHANICAL-WATER AND WASTEWATER DESIGN

BRIDGE NO. 28T5783
POST MILE 6.3

RICHMOND-SAN RAFAEL BRIDGE MAINTENANCE STATION
PHOTOVOLTAIC MODULES

SHEET **EE1-9**

TAEMWW Imperial Rev. 7/10

ORIGINAL SCALE IN INCHES FOR REDUCED PLANS 0 1 2 3

UNIT 3597
PROJECT NUMBER & PHASE 04000000021
EA 003941

DISREGARD PRINTS BEARING EARLIER REVISION DATES
REVISION DATES (PRELIMINARY STAGE ONLY) 11/28/11 1/30/12 3/16/12 4/25/12
SHEET OF

02-AUG-2012 16:34
ee1_09.dgn

DIST.	COUNTY	ROUTE	POST MILES TOTAL PROJECT	SHEET NO.	TOTAL SHEETS
04	CC	580	6.1/6.3	209	216

REGISTERED ELECTRICAL ENGINEER — 4-25-12 DATE

REGISTERED PROFESSIONAL ENGINEER — BEATRICE BINDU No. E 17240 Exp. 6-30-12 ELEC — STATE OF CALIFORNIA

7-30-12
PLANS APPROVAL DATE

The State of California or its officers or agents shall not be responsible for the accuracy or completeness of scanned copies of this plan sheet.

CALIFORNIA STATE FIRE MARSHAL APPROVED

Approval of this plan does not authorize or approve any omission or deviation from applicable regulations. Final approval is subject to field inspection. One set of approved plans shall be available on the project site at all times.

Reviewed by: INGRID P. ICASIANO, DSFM III

Approval date: July 17, 2012

Photovoltaic Module

PV modules shall be polycrystalline silicon cell type module, with interconnection connectors rated for 90°C. PV modules shall be UL 1703 listed, with a maximum system voltage of 600 VDC. PV module manufacturer shall be one of those manufacturers listed as an eligible California Solar Initiative (CSI) PV module manufacturer.

Photovoltaic Array Circuit Combiner Box

PV array circuit combiner box shall be factory assembled, 600 VDC rated combiner box, with fused input circuits, two isolated DC bus bars, ground bus bar, all enclosed inside NEMA 3R lockable hinged cover enclosure. The combiner box shall be UL 1741 listed.

PV array circuit combiner box shall have the following components:
- DIN rail mounted touch safe fuse holders with fuse.
- Positive DC bus bar, negative DC bus bar and ground bus bar.
- DIN rail mounted Grid-Tie surge arrestor: The surge arrestor shall be rated to withstand 20 kA (8/20 micro second) induced transient surge type, and compatible to use with grounded PV arrays.

Utility Interactive Inverter System

Utility interactive inverter cabinet shall be outdoor type, factory assembled cabinet consisting of the following equipment:
- DC/AC Inverter:
  DC/AC inverter rated at maximum continuous output power of 10 kW, 208/120 VAC. 3-phase, 4-wire, at a power factor of 0. 99 or greater, efficiency 95. 5%, with input operating voltage range between 305 to 600 VDC.
  Inverter shall be capable of operating at ambient temperature range (Full power) of -4°F to +122°F. DC/AC inverter manufacturer shall be one of those manufacturers listed as an eligible California Solar Initiative (CSI) DC/AC inverter manufacturer.
- Fused sub-array combiner, with minimum of 4 array inputs each for positive DC, negative DC, and DC ground bus bars. Positive array input fuse shall be sized to match loading.
- Built-in DC and AC disconnect switches, size to match loading.
- Integrated 15 kVA, 208/120 V, 3-phase, 4-wire, output Isolation type transformer.
- Ground fault protection.
- Integrated AC and DC surge protections.
- Integrated AC and DC contactors.
- Pre-charge circuit.
- Human Machine Interface (HMI):
  AC/DC inverter's HMI shall be equipped with LCD and keypad displaying main menu. HMI main menu shall display system monitoring, status and faults, and operation. Monitoring menu shall display system status, metering, daily, weekly and monthly energy production. Status and faults menu shall display status messages, system output, and number of faults. Operation menu shall display control and settings.
- Local and remote monitoring system capabilities.
- AC ground bus bars.
- NEMA 3R enclosure:
  Enclosure shall be NEMA 3R, 14-gauge, and powder-coated standard factory finish steel enclosure. All screws, latches, hinge pins and similar hardware shall be stainless steel. HMI, AC and DC disconnect switches and equipment rating labels shall be mounted on the exterior door. Exterior door shall have interlock switch and be lockable with a padlock. The cabinet shall have MEV13 rated filtered, top entry forced air cooling system with one fan, sloped roof, and shall be suitable for Seismic Design Category D compliance.

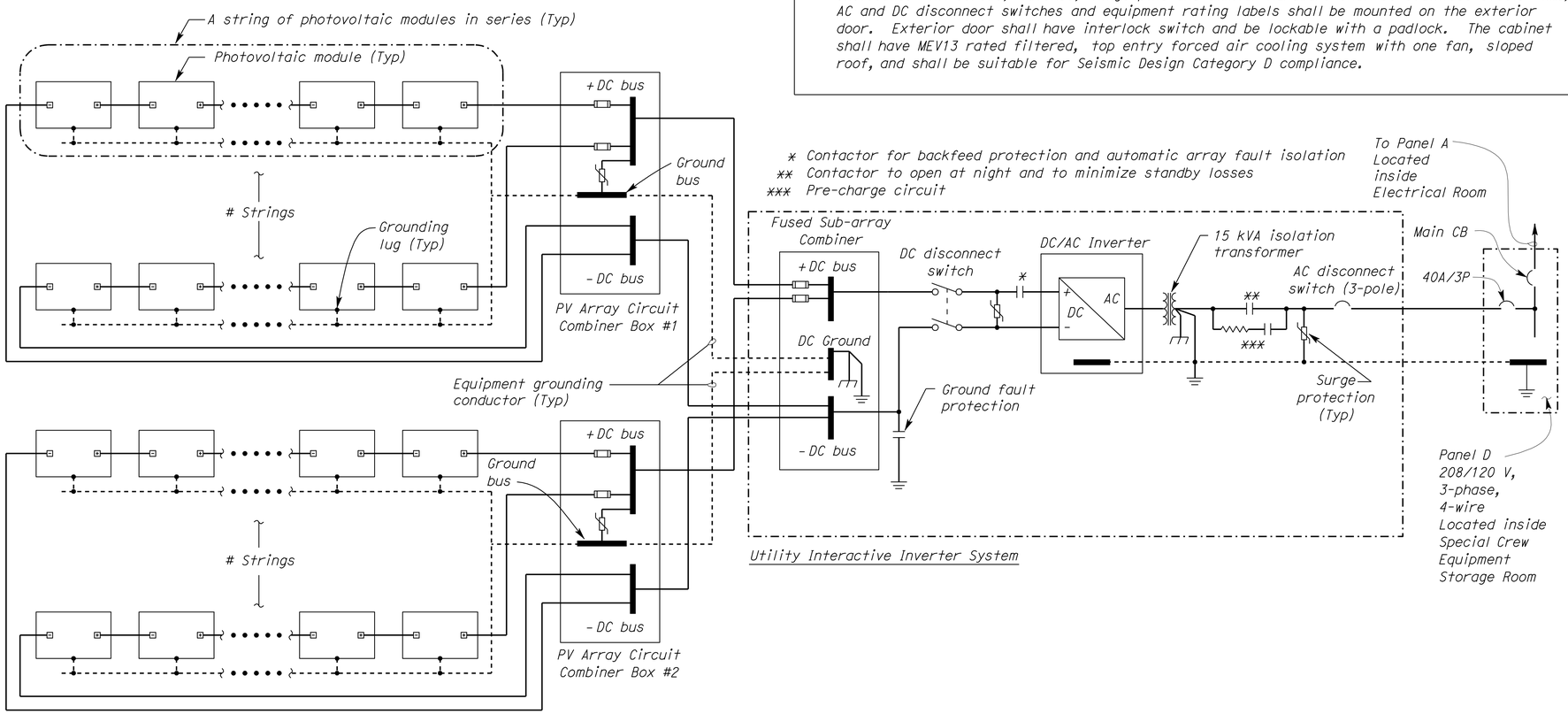

General Notes:

A. Provide and install all necessary warning labels/markings, per Article 690 of California Electrical Code (CEC), and the State Fire Marshal's guideline for solar PV installation. Materials used for marking shall be weather resistant (UL marking and labeling system 969 recommended).

B. Solar PV installation shall comply with the latest guideline from California Department of Forestry & Fire Protection, Office of the State Fire Marshal and latest Program Handbook from California Solar Initiative (CSI).

C. See sheet EE0-8 for the single line power distribution diagram for the building

Photovoltaic System Requirements

Photovoltaic system complete design and installation details, inclusive of all Engineering calculations signed by an Professional Engineer of the respective field (both Electrical and Civil Engineering) in the State of California, shall be submitted for approval by the Contractor. The PV design shall meet or exceed the following requirements:

1) Total designed capacity of photovoltaic system shall have CEC-AC rating of 10 kW. Number of PV modules per string shall be arranged in a manner to meet or exceed the following:
   - Maximum system voltage based on lowest expected ambient temperature at the site (Voc maximum on coldest day) shall be no less than 1% of the inverter's maximum input DC voltage range.
   - Maximum system voltage, based on highest continuous ambient temperature at the site (Vmp on warmest day), shall be 20% greater than the inverter's minimum input DC voltage range.

2) Photovoltaic system module row spacing shall be designed to prevent shading from adjacent module.

3) All wiring, except at module interconnection, shall be concealed inside conduit system.

4) Photovoltaic system modules structural support system shall be designed to withstand wind forces of 85-mile per hour.

5) Photovoltaic system wiring and protective devices shall meet or exceed the requirements of all applicable codes.

6) PV Array Circuit Combiner Boxes locations as shown are arbitrary only. Contractor shall install the combiner boxes at locations that best suit the photovoltaic system strings layout.

	BY	CHECKED
DESIGN	Beatrice Bindu	Mark Cheap
DETAILS	Kerry Geoffroy	Beatrice Bindu
QUANTITIES	Beatrice Bindu	Mark Cheap

STATE OF CALIFORNIA DEPARTMENT OF TRANSPORTATION

DIVISION OF ENGINEERING SERVICES
ELECTRICAL-MECHANICAL-WATER AND WASTEWATER DESIGN

BRIDGE NO. 28T5783
POST MILE 6.3

RICHMOND-SAN RAFAEL BRIDGE MAINTENANCE STATION
SINGLE LINE DIAGRAM
GRID-TIED PV SYSTEM

SHEET **EE1-10**

TAEMWW Imperial Rev. 7/10

ORIGINAL SCALE IN INCHES FOR REDUCED PLANS 0 1 2 3

UNIT 3597
PROJECT NUMBER & PHASE 04000000021
EA 003941

DISREGARD PRINTS BEARING EARLIER REVISION DATES → 1/28/12 1/30/12 3/16/12 4/25/12

REVISION DATES (PRELIMINARY STAGE ONLY) SHEET OF

02-AUG-2012 16:34

ee1_10.dgn

DIST.	COUNTY	ROUTE	POST MILES TOTAL PROJECT	SHEET NO.	TOTAL SHEETS
04	CC	580	6.1/6.3	210	216

REGISTERED ELECTRICAL ENGINEER — 4-25-12 DATE

REGISTERED PROFESSIONAL ENGINEER — BEATRICE BINDU — No. E 17240 — Exp. 6-30-12 — ELEC — STATE OF CALIFORNIA

7-30-12
PLANS APPROVAL DATE

The State of California or its officers or agents shall not be responsible for the accuracy or completeness of scanned copies of this plan sheet.

CALIFORNIA STATE FIRE MARSHAL APPROVED

Approval of this plan does not authorize or approve any omission or deviation from applicable regulations. Final approval is subject to field inspection. One set of approved plans shall be available on the project site at all times.

Reviewed by: Ingrid P. Casiano
INGRID P. ICASIANO, DSFM III

Approval date: July 17, 2012

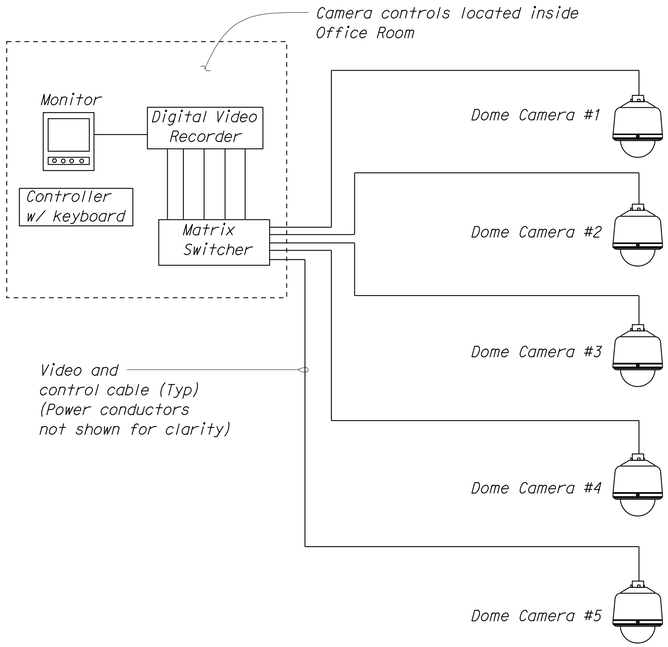

1 CCTV SYSTEM DIAGRAM

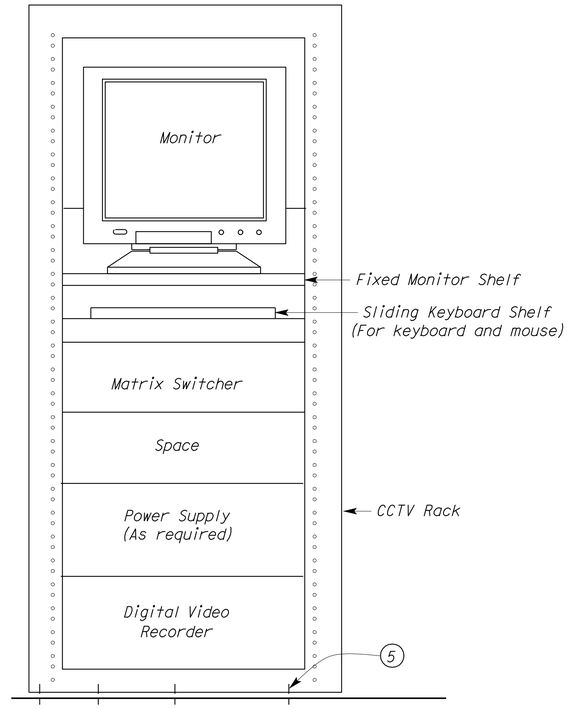

2 CCTV RACK DETAIL

NO SCALE

Notes:

1. 66 block punch down block.
2. 1½"C, 1#4/0, to ground plate inside Electrical Room.
3. Conduit system as required, see plans.
4. Patch panel as required.
5. Anchor brackets and bolts to comply with CBC Seismic requirement.
6. Ground rebar, see Structural plans.

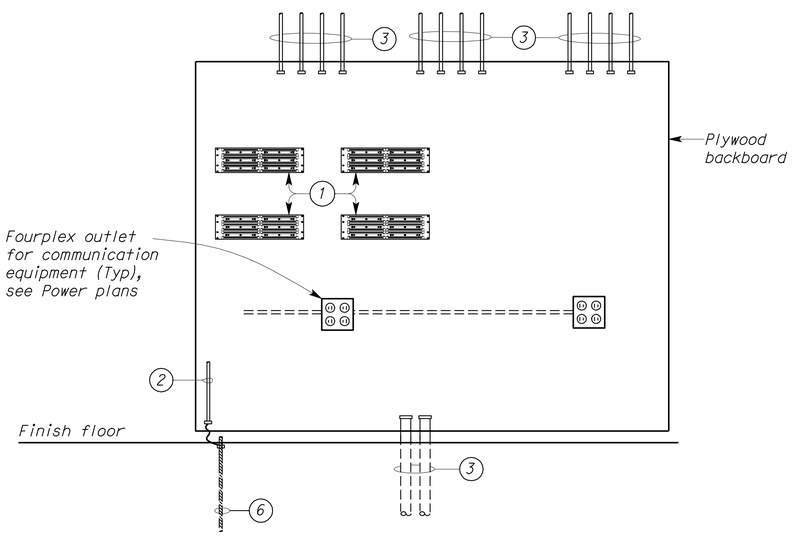

3 TELEPHONE TERMINAL BLOCK DETAIL

NO SCALE

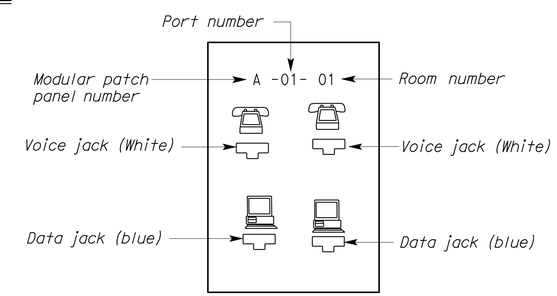

4 COMMUNICATION OUTLET FACE PLATE DETAIL

NO SCALE

(Where a communication outlets equipped with PAX, one of the voice jack shall be designated as PAX and shall be red)

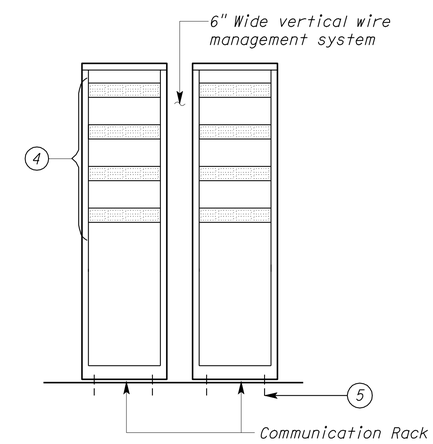

5 COMMUNICATION ROOM COMMUNICATION RACK DETAIL

NO SCALE

DESIGN	BY Beatrice Bindu	CHECKED Mark Cheap	
DETAILS	BY Kathi Andreasen	CHECKED Beatrice Bindu	
QUANTITIES	BY Beatrice Bindu	CHECKED Mark Cheap	

STATE OF CALIFORNIA
DEPARTMENT OF TRANSPORTATION

DIVISION OF ENGINEERING SERVICES
ELECTRICAL-MECHANICAL-WATER AND WASTEWATER DESIGN

BRIDGE NO. 28T5783
POST MILE 6.3

RICHMOND-SAN RAFAEL BRIDGE MAINTENANCE STATION
CCTV CAMERA AND COMMUNICATION ROOM DETAILS

SHEET **EE1-11**

TAEMWW Imperial Rev. 7/10

ORIGINAL SCALE IN INCHES FOR REDUCED PLANS 0 1 2 3

UNIT 3597
PROJECT NUMBER & PHASE 04000000021
EA 003941

DISREGARD PRINTS BEARING EARLIER REVISION DATES
REVISION DATES (PRELIMINARY STAGE ONLY) 11/18/11 1/28/12 3/16/12 4/25/12
SHEET OF

02-AUG-2012 16:34
ee1_11.dgn

DIST.	COUNTY	ROUTE	POST MILES TOTAL PROJECT	SHEET NO.	TOTAL SHEETS
04	CC	580	6.1/6.3	211	216

REGISTERED ELECTRICAL ENGINEER — 4-25-12 DATE

REGISTERED PROFESSIONAL ENGINEER — BEATRICE BINDU No. E 17240 Exp. 6-30-12 ELEC — STATE OF CALIFORNIA

7-30-12
PLANS APPROVAL DATE

The State of California or its officers or agents shall not be responsible for the accuracy or completeness of scanned copies of this plan sheet.

CALIFORNIA STATE FIRE MARSHAL APPROVED
Approval of this plan does not authorize or approve any omission or deviation from applicable regulations. Final approval is subject to field inspection. One set of approved plans shall be available on the project site at all times.
Reviewed by: INGRID P. ICASIANO, DSFM III
Approval date: July 17, 2012

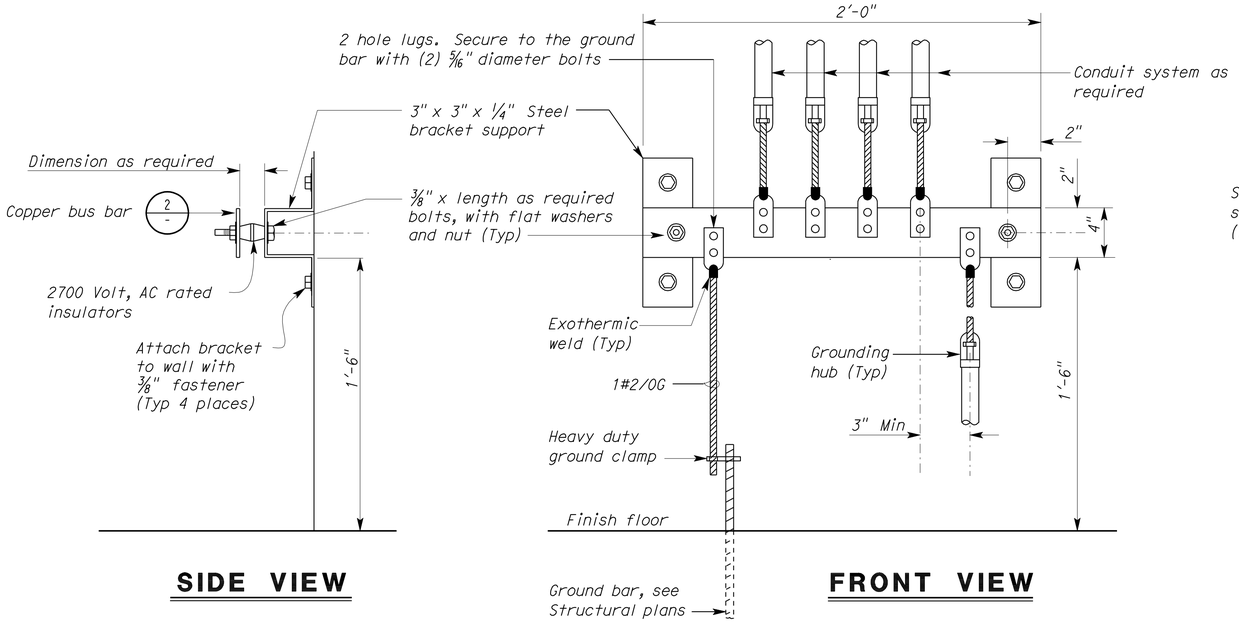

1 GROUNDING PLATE DETAIL
NO SCALE

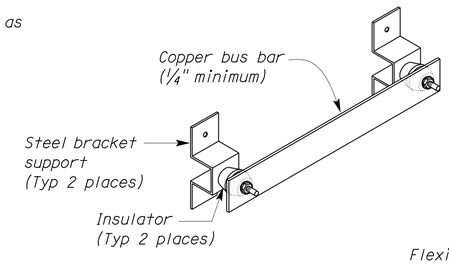

2 DETAIL
NO SCALE

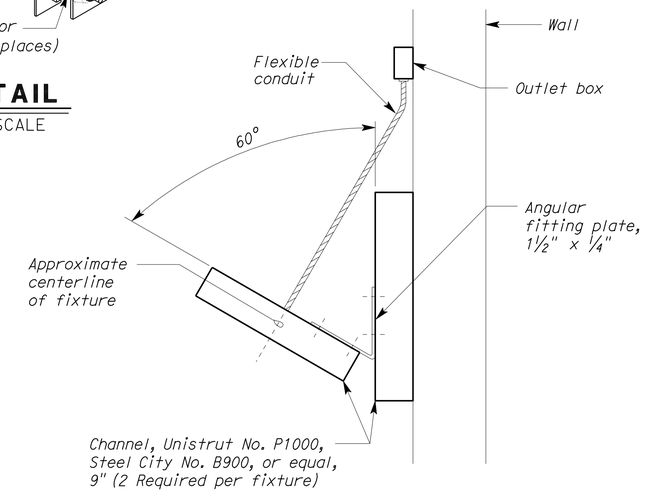

3 FIXTURE MOUNTING DETAIL
NO SCALE

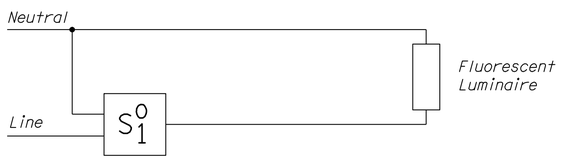

4 WALL SWITCH OCCUPANCY SENSOR (SINGLE-LEVEL)

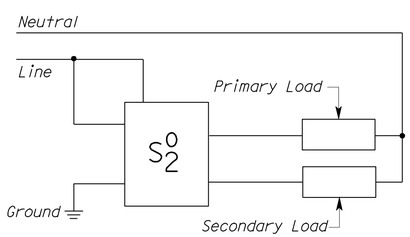

5 WALL SWITCH OCCUPANCY SENSOR (BI-LEVEL)

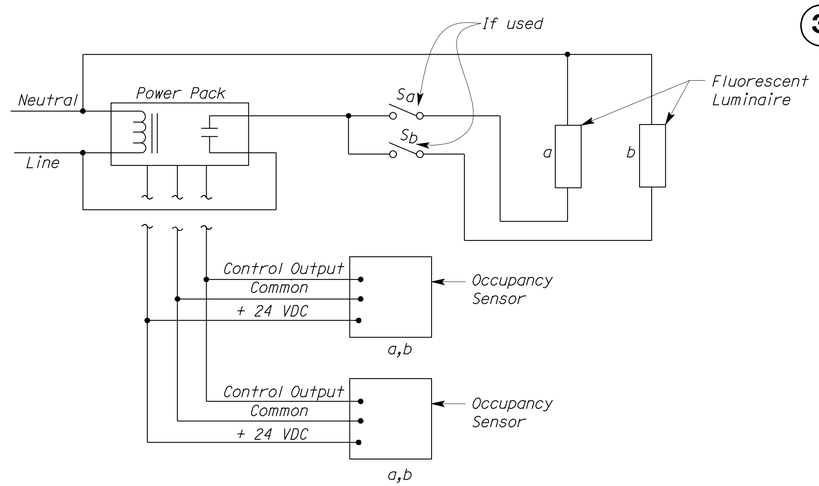

6 MULTIPLE OCCUPANCY SENSOR USING ONE POWER PACK

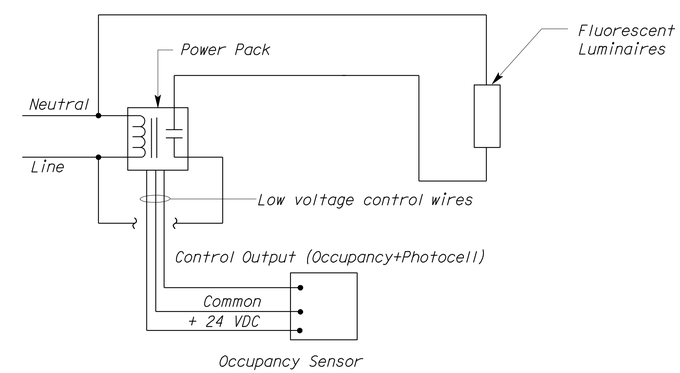

7 CEILING/WALL MOUNTED LONG-RANGE OCCUPANCY SENSOR WIRING DIAGRAM

THIS DRAWING ACCURATE FOR ELECTRICAL WORK ONLY.

	BY	CHECKED
DESIGN	Beatrice Bindu	Mark Cheap
DETAILS	Kathi Andreasen	Beatrice Bindu
QUANTITIES	Beatrice Bindu	Mark Cheap

STATE OF CALIFORNIA DEPARTMENT OF TRANSPORTATION

DIVISION OF ENGINEERING SERVICES
ELECTRICAL-MECHANICAL-WATER AND WASTEWATER DESIGN

BRIDGE NO. 28T5783
POST MILE 6.3

RICHMOND-SAN RAFAEL BRIDGE MAINTENANCE STATION
ELECTRICAL DETAILS

SHEET EE1-12

TAEMWW Imperial Rev. 7/10

ORIGINAL SCALE IN INCHES FOR REDUCED PLANS 0 1 2 3

UNIT 3597
PROJECT NUMBER & PHASE 04000000021
EA 003941

DISREGARD PRINTS BEARING EARLIER REVISION DATES
REVISION DATES (PRELIMINARY STAGE ONLY) 11/16/11 3/16/12 4/25/12
SHEET OF

02-AUG-2012 16:35
ee1_12.dgn

DIST.	COUNTY	ROUTE	POST MILES TOTAL PROJECT	SHEET NO.	TOTAL SHEETS
04	CC	580	6.1/6.3	212	216

REGISTERED ELECTRICAL ENGINEER — 4-25-12 DATE

REGISTERED PROFESSIONAL ENGINEER — BEATRICE BINDU — No. E 17240 — Exp. 6-30-12 — ELEC — STATE OF CALIFORNIA

7-30-12
PLANS APPROVAL DATE

The State of California or its officers or agents shall not be responsible for the accuracy or completeness of scanned copies of this plan sheet.

CALIFORNIA STATE FIRE MARSHAL APPROVED

Approval of this plan does not authorize or approve any omission or deviation from applicable regulations. Final approval is subject to field inspection. One set of approved plans shall be available on the project site at all times.

Reviewed by: INGRID P. ICASIANO, DSFM III

Approval date: July 17, 2012

Note:

(1) *Knox key switch box. Enclosure box shall be UL listed, 1/4" thick stainless steel case, 100% welded with maximum width of 4".*

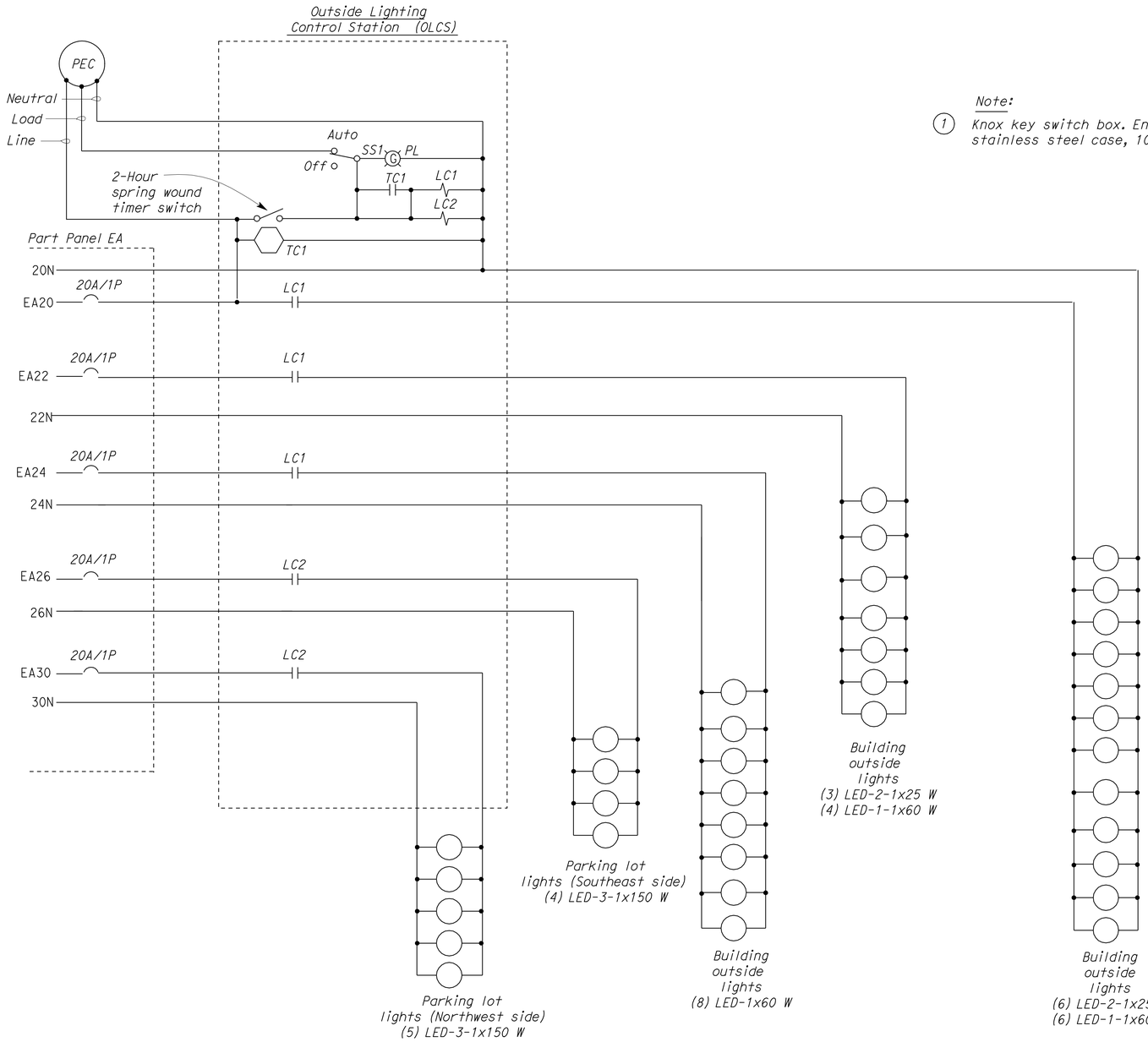

1 OUTSIDE LIGHTING CONTROL STATION (OLCS) SCHEMATIC DIAGRAM

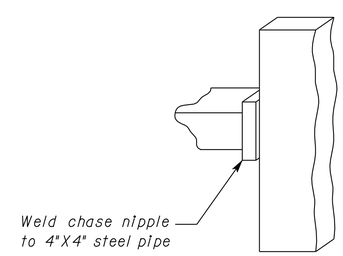

3 DETAIL

NO SCALE

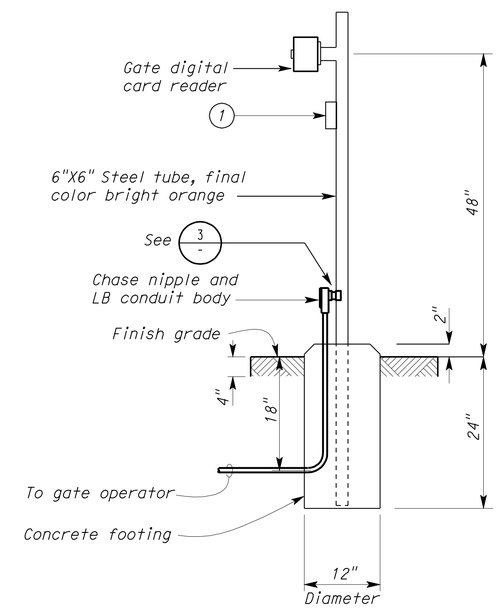

2 GATE DIGITAL CARD READER UNIT STAND

NO SCALE

DESIGN	BY Beatrice Bindu	CHECKED Mark Cheap	
DETAILS	BY Kathi Andreasen	CHECKED Beatrice Bindu	
QUANTITIES	BY Beatrice Bindu	CHECKED Mark Cheap	

STATE OF CALIFORNIA DEPARTMENT OF TRANSPORTATION

DIVISION OF ENGINEERING SERVICES
ELECTRICAL-MECHANICAL-WATER AND WASTEWATER DESIGN

BRIDGE NO. 28T5783
POST MILE 6.3

RICHMOND-SAN RAFAEL BRIDGE MAINTENANCE STATION

OLCS SCHEMATIC DIAGRAM

SHEET EE1-13

TAEMWW Imperial Rev. 7/10

ORIGINAL SCALE IN INCHES FOR REDUCED PLANS 0 1 2 3

UNIT 3597
PROJECT NUMBER & PHASE 04000000021
EA 003941

DISREGARD PRINTS BEARING EARLIER REVISION DATES → 1/31/12 3/16/12 4/25/12

REVISION DATES (PRELIMINARY STAGE ONLY) SHEET OF

02-AUG-2012 16:35

ee1_13.dgn

DIST.	COUNTY	ROUTE	POST MILES TOTAL PROJECT	SHEET NO.	TOTAL SHEETS
04	CC	580	6.1/6.3	213	216

REGISTERED ELECTRICAL ENGINEER — 4-25-12 DATE

REGISTERED PROFESSIONAL ENGINEER — BEATRICE BINDU — No. E 17240 — Exp. 6-30-12 — ELEC — STATE OF CALIFORNIA

7-30-12
PLANS APPROVAL DATE

The State of California or its officers or agents shall not be responsible for the accuracy or completeness of scanned copies of this plan sheet.

General Note:

For the details of concrete pad, see (5 / ST1-30) and (6 / ST1-30).

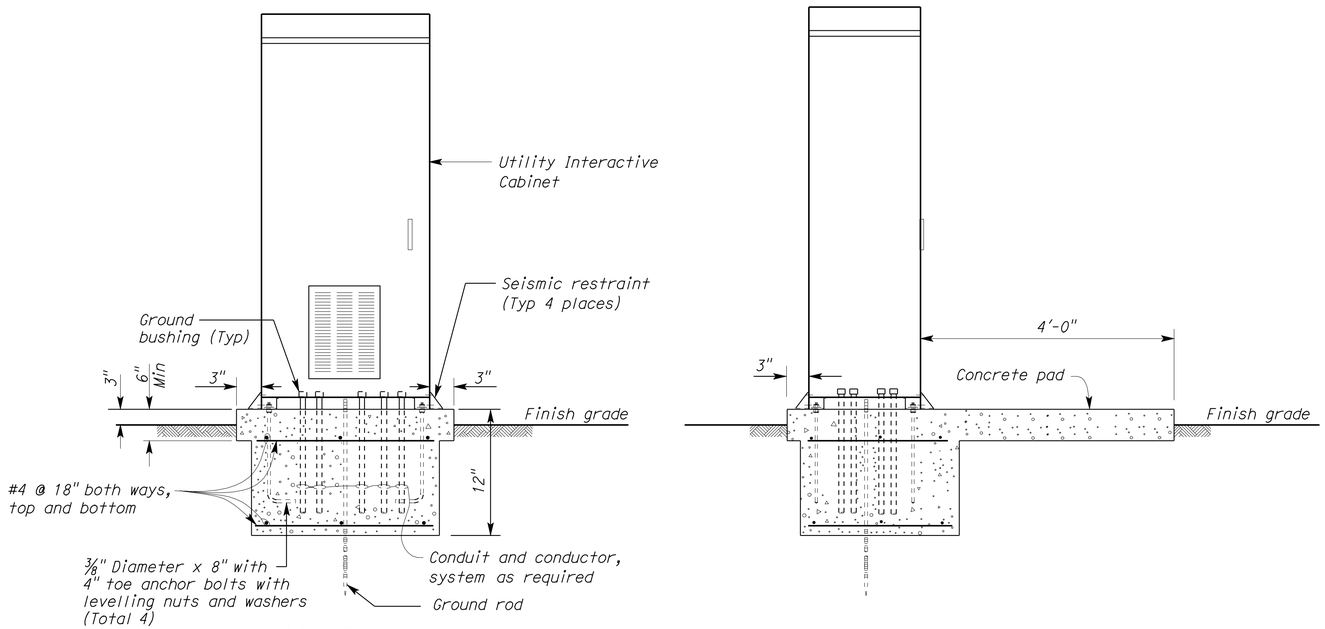

FRONT VIEW **SIDE VIEW**

(A) ELEVATION
NO SCALE

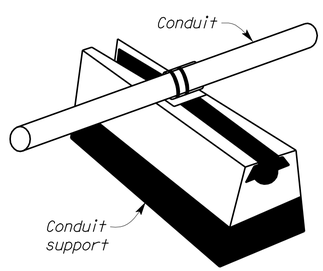

(1) ROOF EXPOSED CONDUIT SUPPORT
NO SCALE

CALIFORNIA STATE FIRE MARSHAL APPROVED
Approval of this plan does not authorize or approve any omission or deviation from applicable regulations. Final approval is subject to field inspection. One set of approved plans shall be available on the project site at all times.
Reviewed by: Ingrid P. Icasiano
INGRID P. ICASIANO, DSFM III
Approval date: July 17, 2012

DESIGN	BY Beatrice Bindu	CHECKED Mark Cheap	
DETAILS	BY Kathi Andreasen	CHECKED Beatrice Bindu	
QUANTITIES	BY Beatrice Bindu	CHECKED Mark Cheap	

STATE OF CALIFORNIA
DEPARTMENT OF TRANSPORTATION

DIVISION OF ENGINEERING SERVICES
ELECTRICAL-MECHANICAL-WATER AND WASTEWATER DESIGN

BRIDGE NO. 28T5783
POST MILE 6.3

RICHMOND-SAN RAFAEL BRIDGE MAINTENANCE STATION
PHOTOVOLTAIC SYSTEM DETAILS

SHEET **EE1-14**

TAEMWW Imperial Rev. 7/10

ORIGINAL SCALE IN INCHES FOR REDUCED PLANS 0 1 2 3

UNIT 3597
PROJECT NUMBER & PHASE 04000000021
EA 003941

DISREGARD PRINTS BEARING EARLIER REVISION DATES → 3/16/12 4/25/12
REVISION DATES (PRELIMINARY STAGE ONLY) SHEET OF

02-AUG-2012 16:35
ee1_14.dgn

DIST.	COUNTY	ROUTE	POST MILES TOTAL PROJECT	SHEET NO.	TOTAL SHEETS
04	CC	580	6.1/6.3	214	216

REGISTERED ELECTRICAL ENGINEER — 4-25-12 DATE

REGISTERED PROFESSIONAL ENGINEER BEATRICE BINDU No. E 17240 Exp. 6-30-12 ELEC STATE OF CALIFORNIA

7-30-12
PLANS APPROVAL DATE

The State of California or its officers or agents shall not be responsible for the accuracy or completeness of scanned copies of this plan sheet.

CALIFORNIA STATE FIRE MARSHAL APPROVED
Approval of this plan does not authorize or approve any omission or deviation from applicable regulations. Final approval is subject to field inspection. One set of approved plans shall be available on the project site at all times.
Reviewed by: INGRID P. ICASIANO, DSFM III
Approval date: July 17, 2012

MAIN: 300 A/3P CIRCUIT BREAKER
VOLTS: 208/120 V, 3-PHASE, 4-WIRE

PANEL A

FEEDER SIZE: 4#400 kcmil
LOCATION: ELECTRICAL ROOM

DESCRIPTION	AMPERES A	AMPERES B	AMPERES C	BRK	CKT	A B C	CKT	BRK	AMPERES A	AMPERES B	AMPERES C	DESCRIPTION
PANEL B	78			150/3	1		2	100/3	61			PANEL D
		70			3		4			59		
			73		5		6				58	
PANEL S VIA TRANSFORMER	30			100/3	7		8	---	---			SPACE
		30			9		10	---		---		SPACE
			0		11		12	20/1			5	FURNACE/COOLING COIL
SPARE	---			20/1	13		14	20/1	2			GFCI- WP
SPARE		---		20/1	15		16	**/3		25		AC ROOFTOP UNIT
SPARE			---	20/1	17		18				25	
SPACE	---			---	19		20		25			
SPACE		---		---	21		22	**/3		25		HP
SPACE			---	---	23		24				25	
SPACE	---			---	25		26		25			
SPACE		---		---	27		28	20/1		2		GFCI- WP
SPACE			---	---	29		30	---			---	SPACE
SPACE	---			---	31		32	---	---			SPACE

*Note: **/3 denotes 3-pole circuit breaker with trip rating as recommended by unit manufacturer.*

A	B	C	
221	211	186	TOTAL CONNECTED LOAD (AMPERES PER PHASE)

MAIN: 150 A/3P CIRCUIT BREAKER
VOLTS: 208/120 V, 3-PHASE, 4-WIRE

PANEL B

FEEDER SIZE: 4#2/0
LOCATION: ELECTRICAL ROOM

DESCRIPTION	AMPERES A	AMPERES B	AMPERES C	BRK	CKT	A B C	CKT	BRK	AMPERES A	AMPERES B	AMPERES C	DESCRIPTION
CHLF - WOMEN'S ROOM	5			20/1	1		2	20/1	8			LIGHTS - WELDING MACHINE WORKSHOP
CHLF - MEN'S ROOM		5		20/1	3		4	20/1		---		SPARE
SPARE			---	20/1	5		6	20/1			---	SPARE
RECEPT -JANITOR, CORRIDOR	7			20/1	7		8	20/1	---			SPARE
RECEPT -SUPPLY, CREW STORAGE, CORR		7		20/1	9		10	20/1		---		SPARE
SPARE			---	20/1	11		12	20/2			---	SPARE
MULTIOUTLET - WELDING WORKSHOP	9			20/1	13		14		---			
SPARE		---		20/2	15		16	20/1		---		SPARE
			---		17		18	20/1			---	SPARE
RECEPT - VESTIBULE, CORRIDOR, CLOSET, LOCKER ROOMS	11			20/1	19		20	20/3	5			FUME EXHAUST FAN
RECEPT - WELDING WORKSHOP		12		20/1	21		22			5		
RECEPTACLE - WELDER			25	50/2	23		24				5	
	25				25		26	20/1	---			SPARE
SPARE		---		20/1	27		28	50/2		35		WATER HEATER - CREW /BREAK ROOM (WH-2)
OVERHEAD DOORS			6	20/3	29		30				35	
	6				31		32	---	---			SPACE
		6			33		34	---		---		SPACE
WATER HEATER-1-JANITOR RM (WH-1)			2	20/1	35		36	---			---	SPACE
RADIANT HEATER -1	2			20/1	37		38	---	---			SPACE
SPARE				20/1	39		40	---		---		SPACE
SPACE			---	---	41		42	---			---	SPACE

A	B	C	
78	70	73	TOTAL CONNECTED LOAD (AMPERES PER PHASE)

MAIN: 50 A/3P CIRCUIT BREAKER
VOLTS: 480/277 V, 3-PHASE, 4-WIRE

PANEL S

FEEDER SIZE: 3#4
LOCATION: ELECTRICAL ROOM

DESCRIPTION	AMPERES A	AMPERES B	AMPERES C	BRK	CKT	A B C	CKT	BRK	AMPERES A	AMPERES B	AMPERES C	DESCRIPTION
RECEPTACLE - WELDER	30			50/2	1		2	---	---			SPACE
		30			3		4	---		---		SPACE
SPACE			---	---	5		6	---			---	SPACE
SPACE	---			---	7		8	---	---			SPACE
SPACE		---		---	9		10	---		---		SPACE
SPACE			---	---	11		12	---			---	SPACE

A	B	C	
30	30	0	TOTAL CONNECTED LOAD (AMPERES PER PHASE)

DESIGN	BY Beatrice Bindu	CHECKED Mark Cheap	
DETAILS	BY Kathi Andreasen	CHECKED Beatrice Bindu	
QUANTITIES	BY Beatrice Bindu	CHECKED Mark Cheap	

STATE OF CALIFORNIA
DEPARTMENT OF TRANSPORTATION

DIVISION OF ENGINEERING SERVICES
ELECTRICAL-MECHANICAL-WATER AND WASTEWATER DESIGN

BRIDGE NO. 28T5783
POST MILE 6.3

RICHMOND-SAN RAFAEL BRIDGE MAINTENANCE STATION

PANEL SCHEDULES NO.1

SHEET EE1-15

TAEMWW Imperial Rev. 7/10

ORIGINAL SCALE IN INCHES FOR REDUCED PLANS 0 1 2 3

UNIT 3597
PROJECT NUMBER & PHASE 04000000021
EA 003941

DISREGARD PRINTS BEARING EARLIER REVISION DATES → 11/18/11 1/30/12 3/16/12 4/25/12

REVISION DATES (PRELIMINARY STAGE ONLY) SHEET OF

02-AUG-2012 16:35

ee1_15.dgn

DIST.	COUNTY	ROUTE	POST MILES TOTAL PROJECT	SHEET NO.	TOTAL SHEETS
04	CC	580	6.1/6.3	215	216

REGISTERED ELECTRICAL ENGINEER — 4-25-12 DATE

REGISTERED PROFESSIONAL ENGINEER — BEATRICE BINDU — No. E 17240 — Exp. 6-30-12 — ELEC — STATE OF CALIFORNIA

7-30-12
PLANS APPROVAL DATE

The State of California or its officers or agents shall not be responsible for the accuracy or completeness of scanned copies of this plan sheet.

CALIFORNIA STATE FIRE MARSHAL APPROVED
Approval of this plan does not authorize or approve any omission or deviation from applicable regulations. Final approval is subject to field inspection. One set of approved plans shall be available on the project site at all times.
Reviewed by: INGRID P. ICASIANO, DSFM III
Approval date: July 17, 2012

MAIN: 150 A/3P CIRCUIT BREAKER
VOLTS: 208/120 V, 3-PHASE, 4-WIRE

PANEL EA

FEEDER SIZE: 4#4/0
LOCATION: ELECTRICAL ROOM

DESCRIPTION	AMPERES A	AMPERES B	AMPERES C	BRK	CKT	A B C	CKT	BRK	AMPERES A	AMPERES B	AMPERES C	DESCRIPTION
RECEPT - COMMUNICATION RM	10			20/1	1		2	20/1	2			CCTV POWER
RECEPT - CORRIDOR, SUP. OFF, ELEC RM		10		20/1	3		4	20/1		2		FIRE ALARM PANEL
RECEPT - REFRIGERATOR			5	20/1	5		6	20/1			2	INTRUSION ALARM PANEL
RECEPT - BREAK RM, CORRIDOR	9			20/1	7		8	20/1	2			ACCESS CONTROL PANEL
FLOOR RECEPT - SUP. OFFICE		7		20/1	9		10	20/2		5		GATE MOTORS
RECEPT - GARBAGE DISPOSAL			5	20/1	11		12				5	
LIGHTS - OFFICE, COMMUNICATION RM	6			20/1	13		14	20/1	---			SPARE
LIGHTS - LOCKER ROOMS		8		20/1	15		16	20/1		7		LIGHTS-JANITOR, CORRIDOR, VESTIBULE, SUPPLY, CREW STORAGE, CLOSET
LIGHTS - CORRIDOR, ELEC RM			6	20/1	17		18	20/1			---	SPARE
EWC	5			20/1	19		20	20/1	5			BUILDING OUTSIDE LIGHTS
EWC		5		20/1	21		22	20/1		2		BUILDING OUTSIDE LIGHTS
FLOOR RECEPT - SUP. OFFICE			7	---	23		24	20/1			4	BUILDING OUTSIDE LIGHTS (NORTH)
EXISTING PANEL AT VEHICLE LIFT BLDG	50			70/3	25		26	20/1	5			PARKING LOT LIGHTS - SOUTHEAST SIDE
		50			27		28	20/1		---		SPACE
			50		29		30	20/1			6	PARKING LOT LIGHTS- NORTHWEST SIDE
SPACE	---			---	31		32	---	---			SPACE

A	B	C	
94	96	90	TOTAL CONNECTED LOAD (AMPERES PER PHASE)

MAIN: 100 A/3P CIRCUIT BREAKER
VOLTS: 208/120 V, 3-PHASE, 4-WIRE

PANEL D

FEEDER SIZE: 4#1
LOCATION: SPECIAL CREW EQUIPMENT STORAGE ROOM

DESCRIPTION	AMPERES A	AMPERES B	AMPERES C	BRK	CKT	A B C	CKT	BRK	AMPERES A	AMPERES B	AMPERES C	DESCRIPTION
SPARE	---			20/1	1		2	20/1	8			LIGHTS - SPECIAL CREW EQUIPMENT STORAGE ROOMS
SPARE		---		20/1	3		4	20/1		8		LIGHTS - SPECIAL CREW SHOP
RECEPT- SPECIAL CREW EQ.STORAGE			11	20/1	5		6	20/1			---	SPARE
SPARE	---			20/1	7		8	30/1	17			WATER HEATER - SPECIAL CREW SHOP (WH-3)
RECEPT- SPECIAL CREW EQUIP. STORAGE		9		20/1	9		10	20/1		---		SPARE
RECEPT- SPECIAL CREW SHOP			9	20/1	11		12	---			---	SPACE
SPARE	---			20/1	13		14	20/1	---			SPARE
MULTIOUTLET- SPECIAL CREW SHOP		6		20/1	15		16	---		---		SPACE
SPARE			---	20/1	17		18	---			---	SPACE
SPARE	---			20/1	19		20	---	---			SPACE
SPARE		---		20/1	21		22	---		---		SPACE
OVERHEAD DOORS- SPECIAL EQUIPMENT CREW STORAGE, SPECIAL CREW SHOP			6	15/3	23		24	20/1			2	IRRIGATION CONTROLLER
	6				25		26	40/3	30			PHOTOVOLTAIC BREAKER
		6			27		28			30		
SPARE			---	20/1	29		30				30	
SPACE	---			---	31		32	---	---			SPACE

A	B	C	
61	59	58	TOTAL CONNECTED LOAD (AMPERES PER PHASE)

THIS DRAWING ACCURATE FOR ELECTRICAL WORK ONLY.

DESIGN	BY Beatrice Bindu	CHECKED Mark Cheap	
DETAILS	BY Kathi Andreasen	CHECKED Beatrice Bindu	
QUANTITIES	BY Beatrice Bindu	CHECKED Mark Cheap	

STATE OF CALIFORNIA
DEPARTMENT OF TRANSPORTATION

DIVISION OF ENGINEERING SERVICES
ELECTRICAL-MECHANICAL-WATER AND WASTEWATER DESIGN

BRIDGE NO. 28T5783
POST MILE 6.3

RICHMOND-SAN RAFAEL BRIDGE MAINTENANCE STATION
PANEL SCHEDULES NO.2

SHEET **EE1-16**

TAEMWW Imperial Rev. 7/10

ORIGINAL SCALE IN INCHES FOR REDUCED PLANS 0 1 2 3

UNIT 3597
PROJECT NUMBER & PHASE 04000000021
EA 003941

DISREGARD PRINTS BEARING EARLIER REVISION DATES →
REVISION DATES (PRELIMINARY STAGE ONLY) 11/18/11 1/26/12 3/16/12 4/25/12
SHEET OF

02-AUG-2012 16:35
ee1_16.dgn

DIST.	COUNTY	ROUTE	POST MILES TOTAL PROJECT	SHEET NO.	TOTAL SHEETS
04	CC	580	6.1/6.3	216	216

REGISTERED ELECTRICAL ENGINEER — 4-25-12 DATE

REGISTERED PROFESSIONAL ENGINEER — BEATRICE BINDU — No. E 17240 — Exp. 6-30-12 — ELEC — STATE OF CALIFORNIA

7-30-12
PLANS APPROVAL DATE

The State of California or its officers or agents shall not be responsible for the accuracy or completeness of scanned copies of this plan sheet.

CALIFORNIA STATE FIRE MARSHAL APPROVED

Approval of this plan does not authorize or approve any omission or deviation from applicable regulations. Final approval is subject to field inspection. One set of approved plans shall be available on the project site at all times.

Reviewed by: INGRID P. ICASIANO, DSFM III

Approval date: July 17, 2012

LEGEND *(This sheet only)*

- K — DIGITAL KEYPAD
- CM — COMBINATION MOTION DETECTOR - MICROWAVE/PASSIVE INFRARED
- C — MAGNETIC CONTACT SWITCH-VEHICLE
- C — MAGNETIC CONTACT SWITCH-PEDESTRIAN
- CR — DIGITAL CARD READER
- EH — ELECTRIFIED DOOR HINGE
- EL — ELECTRIFIED LOCK SET
- MDH — MECHANICAL DOOR HARDWARE
- LG — LOCK GUARD
- MS — MOTION DETECTOR
- G — GLASS BREAK DETECTOR

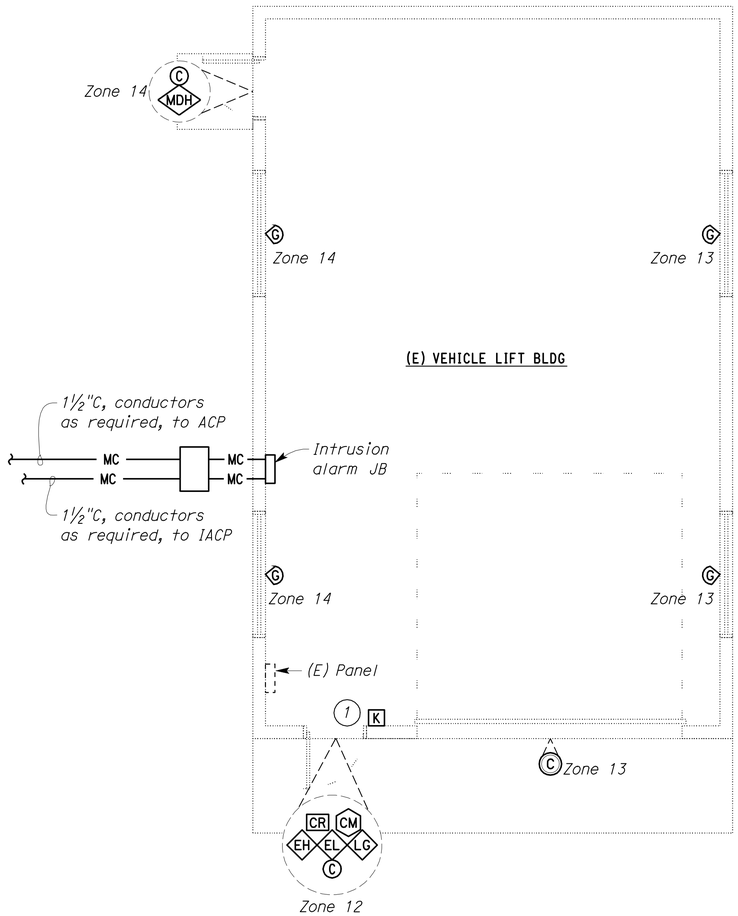

PLAN

SCALE 1/4" = 1'-0"

General Notes:

A. *Conduit system for intrusion alarm system is not shown. See Special Provisions for requirements.*

B. *For Intrusion/Access system zoning schedules, see sheet EE1-7.*

C. *Unless otherwise noted, card reader shall be mounted on the adjacent wall, at a convenient location near the door, as directed by the Engineer, and as recommended by the manufacturers.*

D. *All risers for PVC conduits on this plan shall be PVC coated RSC. Wrap joints in touch with soil with two layers of wrapping tape.*

E. *Power supply for the door hardware must suit the existing doors.*

F. *See sheet EE1-6 for the locations of Intrusion Alarm Control Panel and Access Control Panel.*

Note:

1. *Keypad controls Zones 11, 12, and 13.*

THIS DRAWING ACCURATE FOR ELECTRICAL WORK ONLY.

	BY	CHECKED
DESIGN	Beatrice Bindu	Mark Cheap
DETAILS	Kathi Andreasen	Beatrice Bindu
QUANTITIES	Beatrice Bindu	Mark Cheap

STATE OF CALIFORNIA DEPARTMENT OF TRANSPORTATION

DIVISION OF ENGINEERING SERVICES
ELECTRICAL-MECHANICAL-WATER AND WASTEWATER DESIGN

BRIDGE NO. 28T5783
POST MILE 6.3

(E) VEHICLE LIFT BLDG

RICHMOND-SAN RAFAEL BRIDGE MAINTENANCE STATION

INTRUSION ALARM PLAN - 2

SHEET **EE2-1**

TAEMWW Imperial Rev. 7/10

ORIGINAL SCALE IN INCHES FOR REDUCED PLANS 0 1 2 3

UNIT 3597
PROJECT NUMBER & PHASE 04000000021
EA 003941

DISREGARD PRINTS BEARING EARLIER REVISION DATES →

REVISION DATES (PRELIMINARY STAGE ONLY) 11/23/11 1/23/12 1/24/12 1/30/12 3/16/12 4/25/12

SHEET OF

02-AUG-2012 16:35

ee2_01.dgn