Dist	COUNTY	ROUTE	POST MILES TOTAL PROJECT	SHEET No.	TOTAL SHEETS
03	Pla	80	44.8/49.2	1	12

INDEX OF PLANS

SHEET No.	DESCRIPTION
1	TITLE AND LOCATION MAP
2	TYPICAL CROSS SECTIONS
3-5	CONSTRUCTION DETAILS
6	CONSTRUCTION AREA SIGNS
7	PAVEMENT DELINEATION QUANTITIES
8	SUMMARY OF QUANTITIES
9-12	REVISED AND NEW STANDARD PLANS

THE STANDARD PLANS LIST APPLICABLE TO THIS CONTRACT IS INCLUDED IN THE NOTICE TO BIDDERS AND SPECIAL PROVISIONS BOOK.

STATE OF CALIFORNIA

DEPARTMENT OF TRANSPORTATION

PROJECT PLANS FOR CONSTRUCTION ON

STATE HIGHWAY

IN PLACER COUNTY AT AND NEAR BAXTER FROM ALTA ROAD UNDERCROSSING TO 0.2 MILE EAST OF DRUM FOREBAY OVERCROSSING

TO BE SUPPLEMENTED BY STANDARD PLANS DATED MAY 2006

LOCATION MAP

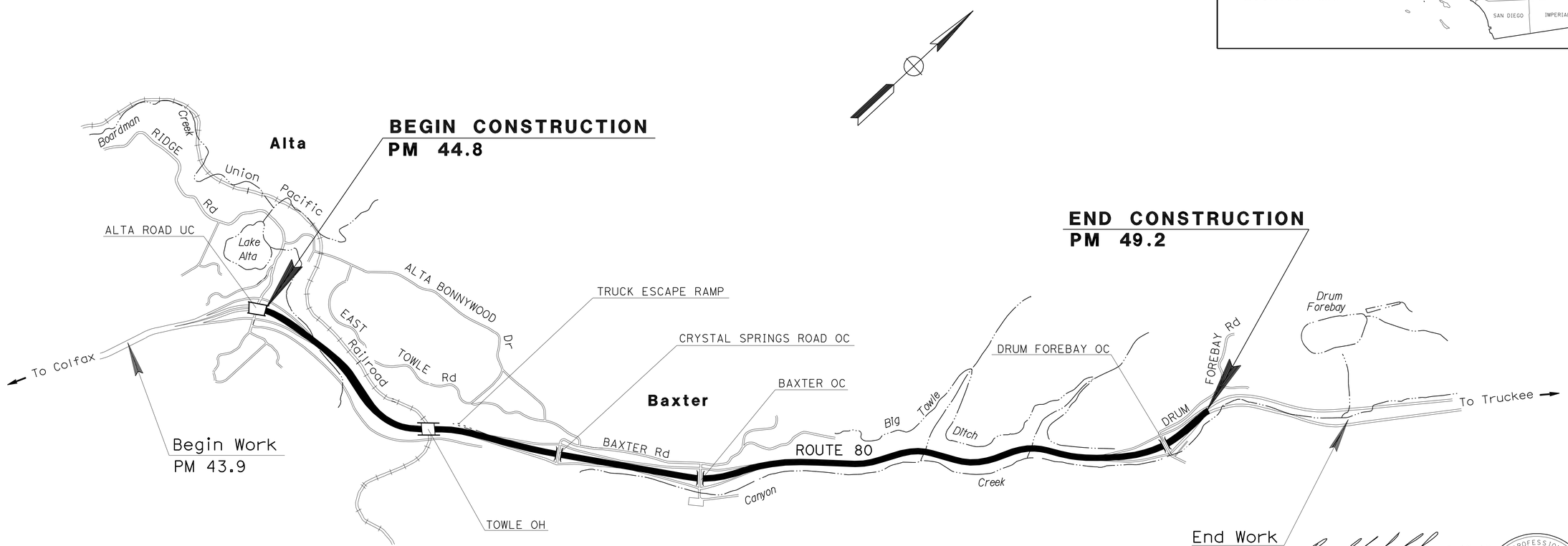

NO SCALE

Ronald S. Sykes 3-16-12
PROJECT ENGINEER DATE
REGISTERED CIVIL ENGINEER

March 26, 2012
PLANS APPROVAL DATE

REGISTERED PROFESSIONAL ENGINEER
RONALD S. SYKES
No. C35526
Exp. 9-30-13
CIVIL
STATE OF CALIFORNIA

THE STATE OF CALIFORNIA OR ITS OFFICERS OR AGENTS SHALL NOT BE RESPONSIBLE FOR THE ACCURACY OR COMPLETENESS OF SCANNED COPIES OF THIS PLAN SHEET.

THE CONTRACTOR SHALL POSSESS THE CLASS (OR CLASSES) OF LICENSE AS SPECIFIED IN THE "NOTICE TO BIDDERS."

PROJECT MANAGER RONALD S. SYKES

DESIGN ENGINEER RONALD S. SYKES

CONTRACT No.	03-4M6004
PROJECT ID	03120001371

LAST REVISION 03-08-12

DATE PLOTTED => 28-MAR-2012
TIME PLOTTED => 14:47

Dist	COUNTY	ROUTE	POST MILES TOTAL PROJECT	SHEET No.	TOTAL SHEETS
03	Pla	80	44.8/49.2	2	12

REGISTERED CIVIL ENGINEER 3-16-12 DATE

3-26-12
PLANS APPROVAL DATE

REGISTERED PROFESSIONAL ENGINEER RONALD S. SYKES No. C35526 Exp. 9-30-13 CIVIL STATE OF CALIFORNIA

THE STATE OF CALIFORNIA OR ITS OFFICERS OR AGENTS SHALL NOT BE RESPONSIBLE FOR THE ACCURACY OR COMPLETENESS OF SCANNED COPIES OF THIS PLAN SHEET.

NOTES:

1. EXISTING UTILITY FACILITIES HAVE NOT BEEN PLOTTED ON THESE PLANS.
2. FOR SHOULDER RUMBLE STRIP SEE CONSTRUCTION DETAILS SHEET C-3 AND SUMMARY OF QUANTITIES SHEET.

ABBREVIATIONS:

FSC - ASPHALTIC EMULSION (FOG SEAL COAT)
ISM - IMPORTED SUBBASE MATERIAL
UB - UNTREATED BASE
CTS - CEMENT TREATED SUBGRADE

LEGEND:

COLD PLANE AC Pvmt (0.08' Max)

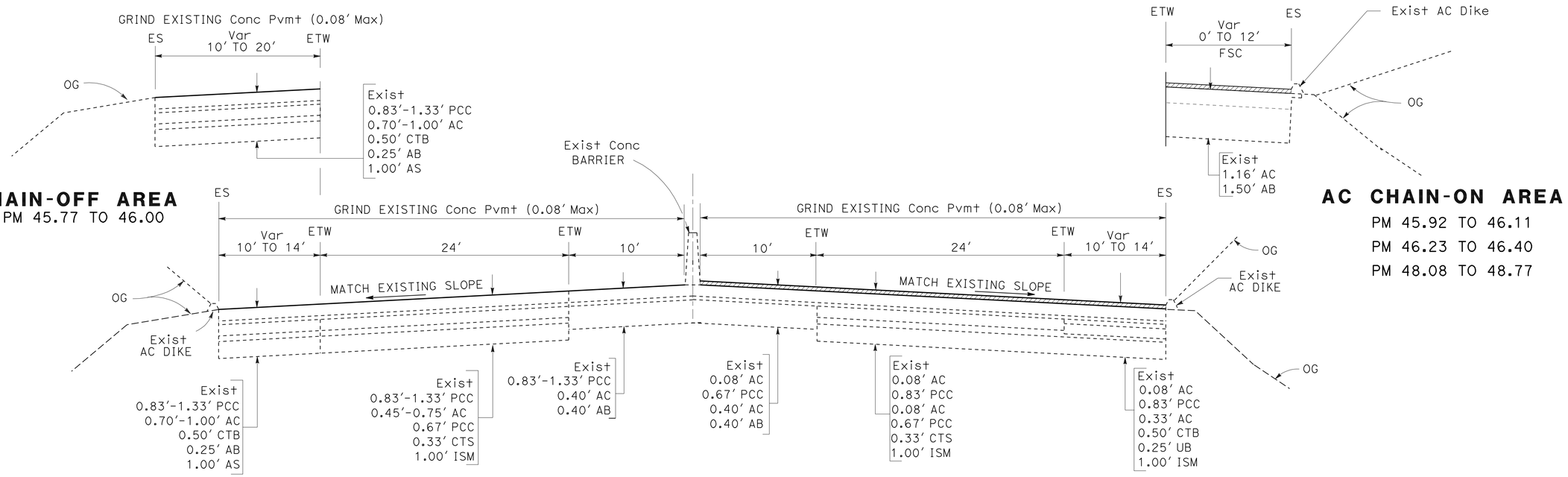

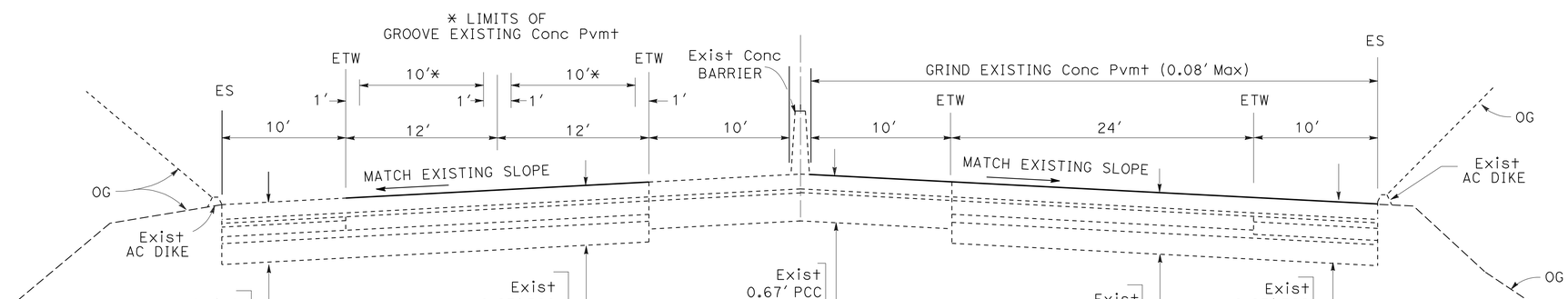

ROUTE 80

TYPICAL CROSS SECTIONS

NO SCALE

X-1

STATE OF CALIFORNIA - DEPARTMENT OF TRANSPORTATION
MAINTENANCE DESIGN
Caltrans

FUNCTIONAL SUPERVISOR: RONALD S. SYKES
CALCULATED-DESIGNED BY: JOSEPH SAAVEDRA
CHECKED BY: REX HERVEY
REVISED BY
DATE REVISED

LAST REVISION 03-16-12 | DATE PLOTTED => 28-MAR-2012 | TIME PLOTTED => 14:47

Dist	COUNTY	ROUTE	POST MILES TOTAL PROJECT	SHEET No.	TOTAL SHEETS
03	Pla	80	44.8/49.2	3	12

REGISTERED CIVIL ENGINEER 3-16-12 DATE

3-26-12
PLANS APPROVAL DATE

REGISTERED PROFESSIONAL ENGINEER RONALD S. SYKES No. C35526 Exp. 9-30-13 CIVIL STATE OF CALIFORNIA

THE STATE OF CALIFORNIA OR ITS OFFICERS OR AGENTS SHALL NOT BE RESPONSIBLE FOR THE ACCURACY OR COMPLETENESS OF SCANNED COPIES OF THIS PLAN SHEET.

NOTES:

1. EXISTING UTILITY FACILITIES HAVE NOT BEEN PLOTTED ON THESE PLANS.
2. NO WORK ON STRUCTURES AND APPROACH SLABS.

LEGEND:

- LIMITS OF GRIND EXISTING Conc Pvmt (0.08' Max)
- LIMITS OF PAVEMENT TRANSITION TAPER
- LIMITS OF COLD PLANE AC Pvmt (0.08' Max)
- LIMITS OF GROOVE EXISTING Conc Pvmt
- (X) RAMP No.

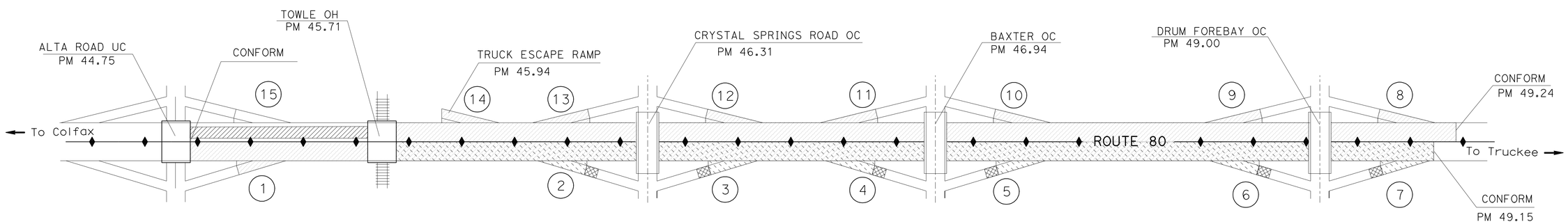

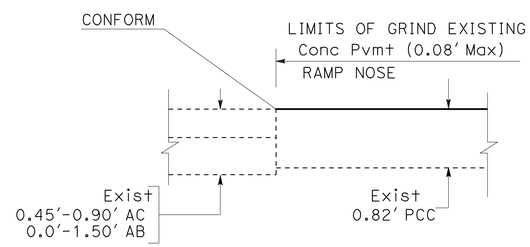

SECTION A-A

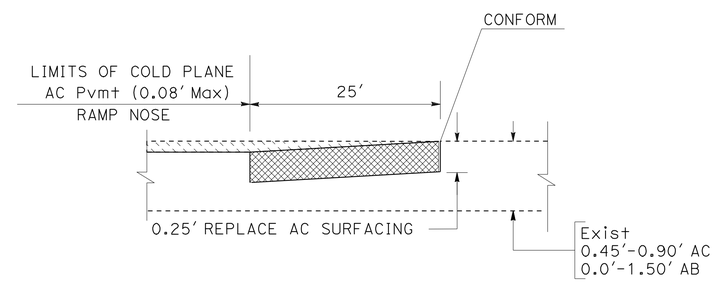

SECTION B-B

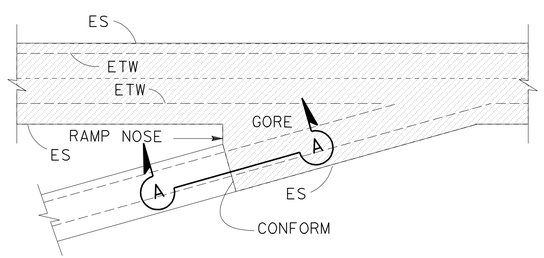

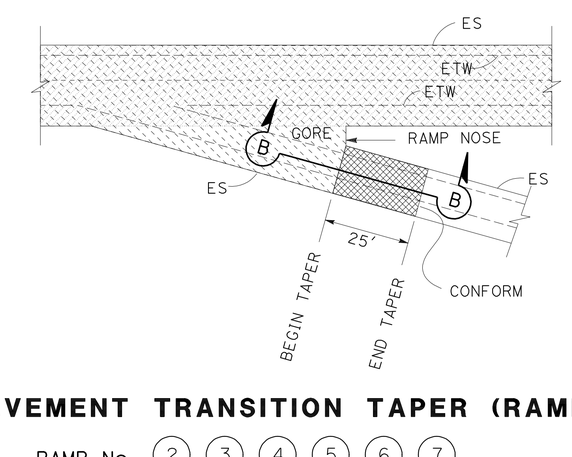

PAVEMENT TRANSITION TAPER (RAMPS)

RAMP No. (1) (8) (9) (10) (11) (12) (13) (14)

PAVEMENT TRANSITION TAPER (RAMPS)

RAMP No. (2) (3) (4) (5) (6) (7)

CONSTRUCTION DETAILS

NO SCALE

C-1

STATE OF CALIFORNIA - DEPARTMENT OF TRANSPORTATION
MAINTENANCE DESIGN
Caltrans

FUNCTIONAL SUPERVISOR: RONALD S. SYKES
CALCULATED-DESIGNED BY: JOSEPH SAAVEDRA
CHECKED BY: REX HERVEY
REVISED BY
DATE REVISED

LAST REVISION 03-16-12
DATE PLOTTED => 28-MAR-2012
TIME PLOTTED => 14:47

Dist	COUNTY	ROUTE	POST MILES TOTAL PROJECT	SHEET No.	TOTAL SHEETS
03	Pla	80	44.8/49.2	4	12

REGISTERED CIVIL ENGINEER 3-16-12 DATE

3-26-12
PLANS APPROVAL DATE

REGISTERED PROFESSIONAL ENGINEER RONALD S. SYKES No. C35526 Exp. 9-30-13 CIVIL STATE OF CALIFORNIA

THE STATE OF CALIFORNIA OR ITS OFFICERS OR AGENTS SHALL NOT BE RESPONSIBLE FOR THE ACCURACY OR COMPLETENESS OF SCANNED COPIES OF THIS PLAN SHEET.

ABBREVIATION:

FSC - ASPHALTIC EMULSION (FOG SEAL COAT)

LEGEND:

LIMITS OF GRIND EXISTING Conc Pvmt (0.08'Max)

LIMITS OF COLD PLANE AC Pvmt (0.08' Max)

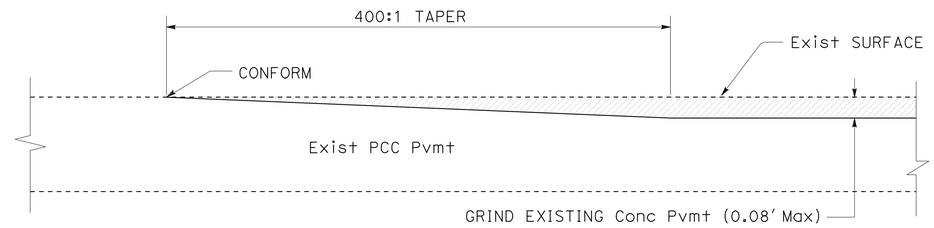

MAINLINE CONFORM TAPERS
BEGIN AND END OF CONSTRUCTION

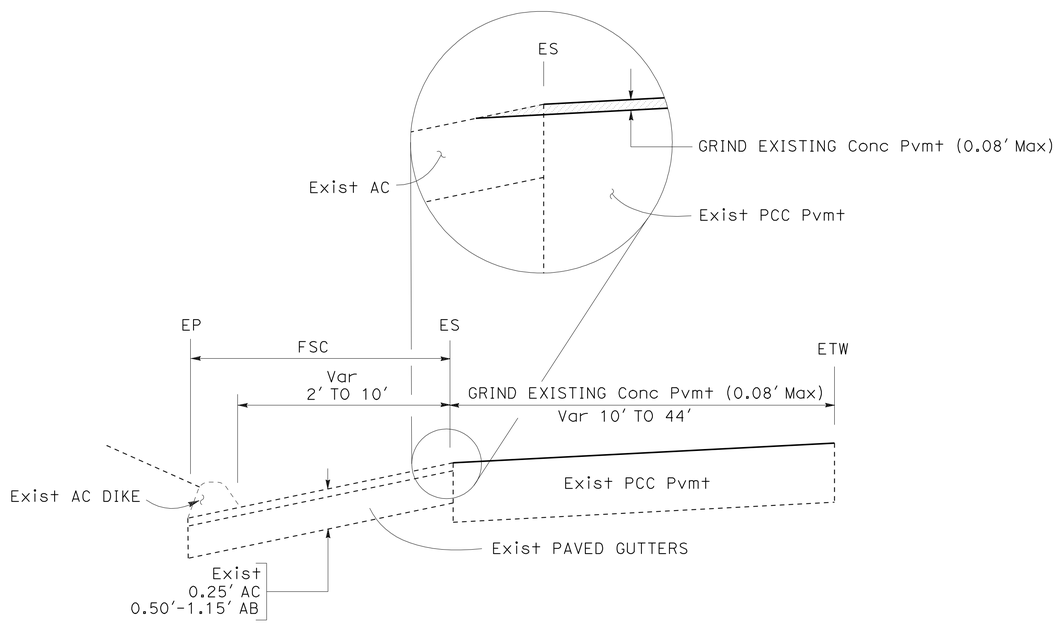

CONFORM GRINDS AT PAVED GUTTERS

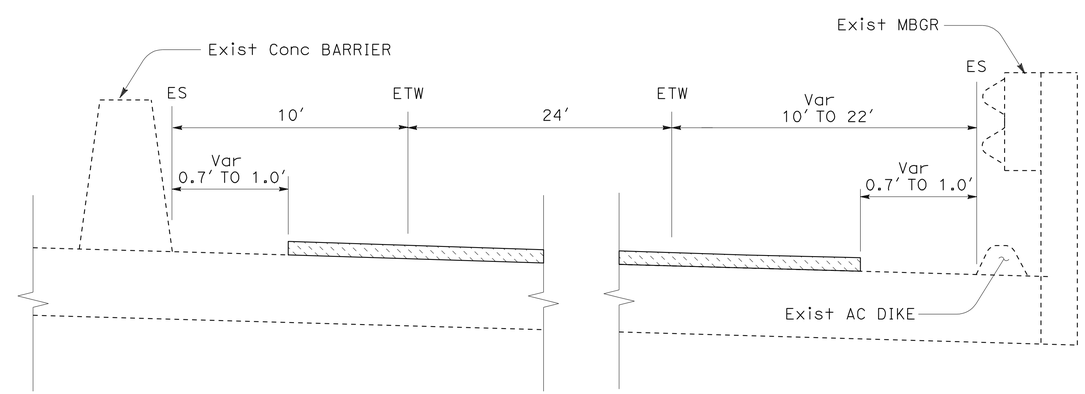

COLD PLANE AC Pvmt (0.08' Max) AT MBGR, DIKE, AND MEDIAN BARRIER

CONSTRUCTION DETAILS
NO SCALE

C-2

STATE OF CALIFORNIA - DEPARTMENT OF TRANSPORTATION
MAINTENANCE DESIGN
Caltrans

FUNCTIONAL SUPERVISOR: RONALD S. SYKES
CALCULATED-DESIGNED BY: JOSEPH SAAVEDRA
CHECKED BY: REX HERVEY
REVISED BY
DATE REVISED

LAST REVISION 03-16-12
DATE PLOTTED => 28-MAR-2012
TIME PLOTTED => 14:47

Dist	COUNTY	ROUTE	POST MILES TOTAL PROJECT	SHEET No.	TOTAL SHEETS
03	Pla	80	44.8/49.2	5	12

REGISTERED CIVIL ENGINEER 3-16-12 DATE

3-26-12
PLANS APPROVAL DATE

REGISTERED PROFESSIONAL ENGINEER RONALD S. SYKES No. C35526 Exp. 9-30-13 CIVIL STATE OF CALIFORNIA

THE STATE OF CALIFORNIA OR ITS OFFICERS OR AGENTS SHALL NOT BE RESPONSIBLE FOR THE ACCURACY OR COMPLETENESS OF SCANNED COPIES OF THIS PLAN SHEET.

NOTE:

1. EXISTING UTILITY FACILITIES HAVE NOT BEEN PLOTTED ON THESE PLANS.

LEGEND:

⇨ DIRECTION OF TRAFFIC

SHOULDER RUMBLE STRIP (CONCRETE PAVEMENT, GROUND-IN INDENTATIONS)

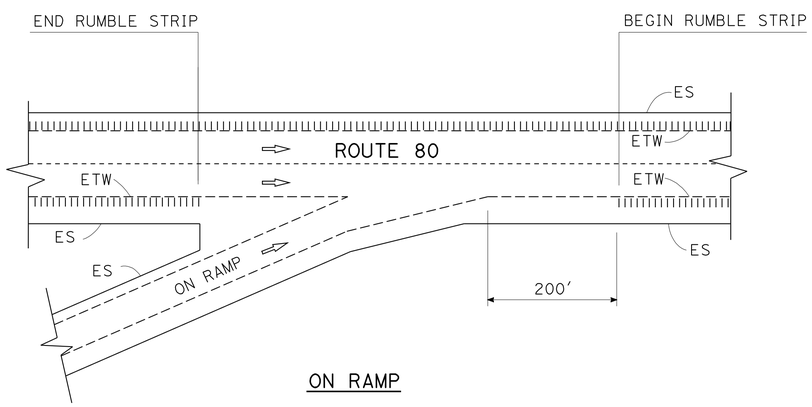

ON RAMP

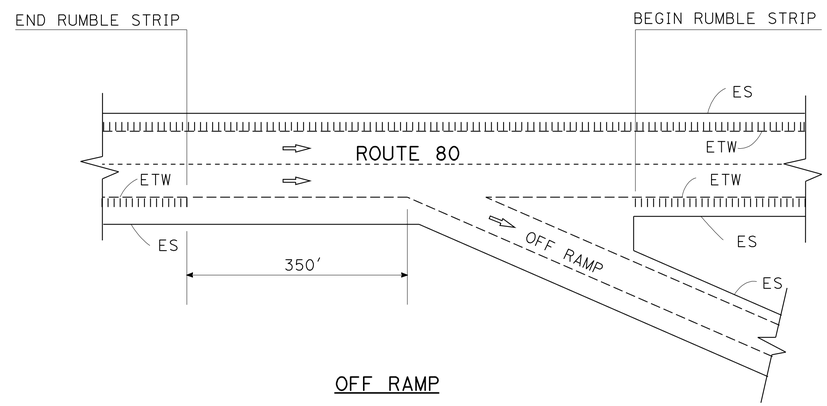

OFF RAMP

RUMBLE STRIP DETAIL AT RAMPS

CONSTRUCTION DETAILS

NO SCALE

C-3

STATE OF CALIFORNIA - DEPARTMENT OF TRANSPORTATION
Caltrans
MAINTENANCE DESIGN

FUNCTIONAL SUPERVISOR: RONALD S. SYKES
CALCULATED-DESIGNED BY: JOSEPH SAAVEDRA
CHECKED BY: REX HERVEY
REVISED BY
DATE REVISED

LAST REVISION 03-16-12 | DATE PLOTTED => 28-MAR-2012 | TIME PLOTTED => 14:47

Dist	COUNTY	ROUTE	POST MILES TOTAL PROJECT	SHEET No.	TOTAL SHEETS
03	Pla	80	44.8/49.2	6	12

REGISTERED CIVIL ENGINEER 3-16-12 DATE

3-26-12
PLANS APPROVAL DATE

REGISTERED PROFESSIONAL ENGINEER RONALD S. SYKES No. C35526 Exp. 9-30-13 CIVIL STATE OF CALIFORNIA

THE STATE OF CALIFORNIA OR ITS OFFICERS OR AGENTS SHALL NOT BE RESPONSIBLE FOR THE ACCURACY OR COMPLETENESS OF SCANNED COPIES OF THIS PLAN SHEET.

STATIONARY MOUNTED CONSTRUCTION AREA SIGNS

SIGN LETTER	SIGN CODE FEDERAL	SIGN CODE CALIFORNIA	PANEL SIZE	SIGN MESSAGE	NUMBER OF POST AND SIZE	NUMBER OF SIGNS
A	G20-1[Spec](5)		84" x 42"	ROAD WORK NEXT 5 MILES	2 - 4" x 6"	3
B		C40(Mod)	96" x 60"	TRAFFIC FINES DOUBLED IN WORK ZONES	2 - 6" x 6"	2
C	G20-2	C14	48" x 24"	END ROAD WORK	1 - 4" x 6"	2
D	W20-1	C23	48" x 48"	ROAD WORK AHEAD	1 - 6" x 6"	7
E	G20-2	C14	36" x 18"	END ROAD WORK	1 - 4" x 4"	7

SIGN DETAILS

(A) G20-1[Spec](5)

ROAD WORK
NEXT 5 MILES

8" C SERIES LETTERS

84"x42"

RETROREFLECTIVE ORANGE BACKGROUND WITH BLACK LEGEND AND BORDER.

(B) C40(Mod)<CA>

TRAFFIC FINES
DOUBLED IN
WORK ZONES

8" D SERIES LETTERS

96"x60"

RETROREFLECTIVE WHITE BACKGROUND WITH BLACK LEGEND AND BORDER.

NOTES:

1. POST DIMENSIONS ARE NOMINAL.
2. EXACT SIGN LOCATIONS TO BE DETERMINED BY THE ENGINEER.
3. EXISTING UTILITY FACILITIES HAVE NOT BEEN PLOTTED ON THESE PLANS.

LEGEND

SIGN - SINGLE POST

SIGN - DOUBLE POST

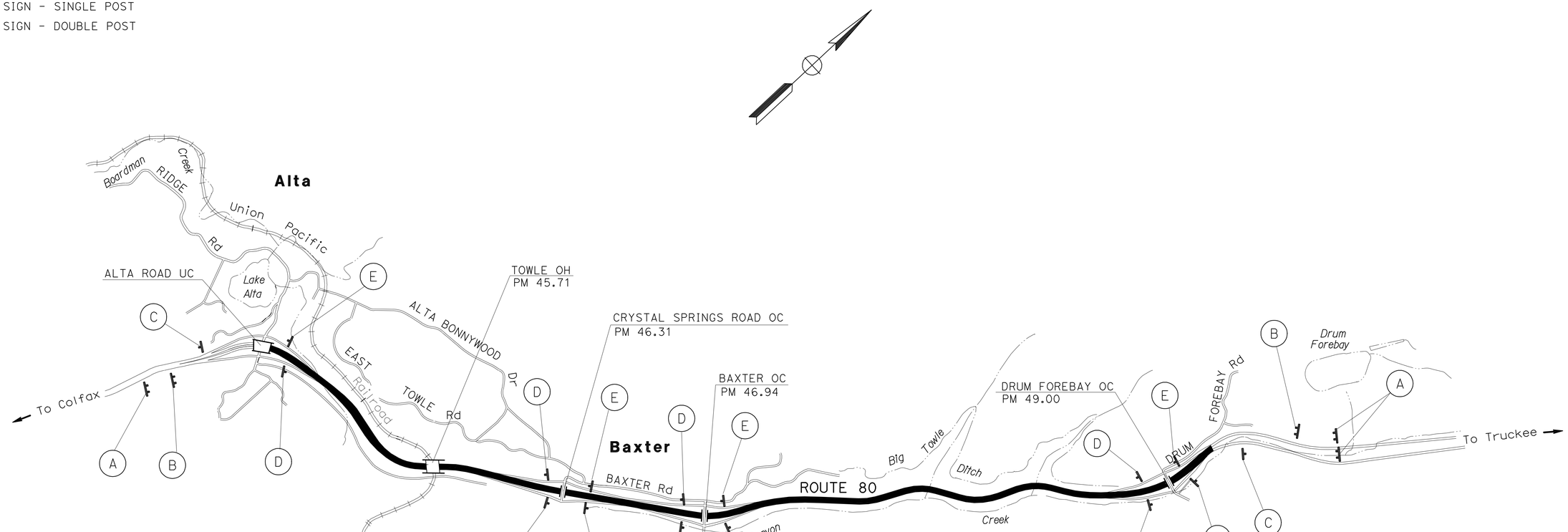

CONSTRUCTION AREA SIGNS

NO SCALE

CS-1

STATE OF CALIFORNIA - DEPARTMENT OF TRANSPORTATION
MAINTENANCE DESIGN
Caltrans

FUNCTIONAL SUPERVISOR: RONALD S. SYKES
CALCULATED-DESIGNED BY: JOSEPH SAAVEDRA
CHECKED BY: REX HERVEY
REVISED BY
DATE REVISED

LAST REVISION 03-16-12
DATE PLOTTED => 28-MAR-2012
TIME PLOTTED => 14:47

Dist	COUNTY	ROUTE	POST MILES TOTAL PROJECT	SHEET No.	TOTAL SHEETS
03	Pla	80	44.8/49.2	7	12

REGISTERED CIVIL ENGINEER 3-16-12 DATE

3-26-12
PLANS APPROVAL DATE

REGISTERED PROFESSIONAL ENGINEER RONALD S. SYKES No. C35526 Exp. 9-30-13 CIVIL STATE OF CALIFORNIA

THE STATE OF CALIFORNIA OR ITS OFFICERS OR AGENTS SHALL NOT BE RESPONSIBLE FOR THE ACCURACY OR COMPLETENESS OF SCANNED COPIES OF THIS PLAN SHEET.

NOTES:

1. DETAIL 36 AND 36A SHALL BE PLACED WITHOUT THE RETROREFLECTIVE PAVEMENT MARKERS.
2. NO RECESS WORK ON STRUCTURES AND APPROACH SLABS.

4" TWO-COMPONENT PAINT TRAFFIC STRIPE (RECESSED)

DETAIL NUMBER	LF
24	47,384
27B	49,170
TOTAL	96,554

8" TWO-COMPONENT PAINT TRAFFIC STRIPE (RECESSED)

DETAIL NUMBER	LF
36	5,344
36A	1,836
TOTAL	7,180

4" TWO-COMPONENT PAINT TRAFFIC STRIPE (RECESSED) (BROKEN 17-7)

DETAIL NUMBER	LF
8	787
TOTAL	787

4" TWO-COMPONENT PAINT TRAFFIC STRIPE (RECESSED) (BROKEN 36-12)

DETAIL NUMBER	LF
11	46,684
TOTAL	46,684

TWO-COMPONENT PAINT PAVEMENT MARKING

LOCATION/DESCRIPTION	"ONLY"	"VEHICLES"	"RUNAWAY"
	SQFT		
PM 45.94 TRUCK ESCAPE RAMP	22	42	43
TOTAL	107		

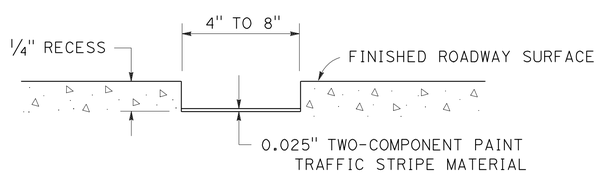

DETAIL FOR RECESSED TWO-COMPONENT PAINT TRAFFIC STRIPE

NO SCALE

PAVEMENT DELINEATION QUANTITIES

PDQ-1

STATE OF CALIFORNIA - DEPARTMENT OF TRANSPORTATION
MAINTENANCE DESIGN
Caltrans

FUNCTIONAL SUPERVISOR: RONALD S. SYKES
CALCULATED-DESIGNED BY: JOSEPH SAAVEDRA
CHECKED BY: REX HERVEY
REVISED BY
DATE REVISED

LAST REVISION 03-16-12
DATE PLOTTED => 28-MAR-2012
TIME PLOTTED => 14:47

Dist	COUNTY	ROUTE	POST MILES TOTAL PROJECT	SHEET No.	TOTAL SHEETS
03	Pla	80	44.8/49.2	8	12

REGISTERED CIVIL ENGINEER 3-16-12 DATE

3-26-12
PLANS APPROVAL DATE

REGISTERED PROFESSIONAL ENGINEER RONALD S. SYKES No. C35526 Exp. 9-30-13 CIVIL STATE OF CALIFORNIA

THE STATE OF CALIFORNIA OR ITS OFFICERS OR AGENTS SHALL NOT BE RESPONSIBLE FOR THE ACCURACY OR COMPLETENESS OF SCANNED COPIES OF THIS PLAN SHEET.

ROADWAY QUANTITITES

Co	ROUTE	PM	DESCRIPTION	COLD PLANE ASPHALT CONCRETE PAVEMENT	GRIND EXISTING CONCRETE PAVEMENT	REPLACE ASPHALT CONCRETE SURFACING	GROOVE EXISTING CONCRETE PAVEMENT	(N) HMA	SHOULDER RUMBLE STRIP (CONCRETE PAVEMENT, GROUND-IN INDENTATIONS)	ASPHALTIC EMULSION (FOG SEAL COAT)
				SQYD	SQYD	CY	SQYD	TON	STA	TON
Pla	80	44.75 TO 45.71	EASTBOUND		24,673				95	0.1
Pla	80	45.71 TO 49.15	EASTBOUND	98,387	98,387	30.6		61.2	368	0.2
Pla	80	44.75 TO 45.71	WESTBOUND				10,860			0.7
Pla	80	45.71 TO 49.24	WESTBOUND		95,864				337	1.7
			TOTAL	98,387	218,924	30.6	10,860	61.2	800	2.7

(N) - NOT A SEPARATE PAY ITEM, FOR INFORMATION ONLY.

REVISED BY | DATE REVISED

JOSEPH SAAVEDRA | REX HERVEY

CALCULATED-DESIGNED BY | CHECKED BY

FUNCTIONAL SUPERVISOR: RONALD S. SYKES

STATE OF CALIFORNIA - DEPARTMENT OF TRANSPORTATION

Caltrans

MAINTENANCE DESIGN

SUMMARY OF QUANTITIES

Q-1

LAST REVISION 03-16-12 | DATE PLOTTED => 28-MAR-2012 | TIME PLOTTED => 14:47

DIST	COUNTY	ROUTE	POST MILES TOTAL PROJECT	SHEET NO.	TOTAL SHEETS
03	Pla	80	44.8/49.2	9	12

Randell D. Hiatt
REGISTERED CIVIL ENGINEER

June 6, 2008
PLANS APPROVAL DATE

REGISTERED PROFESSIONAL ENGINEER
Randell D. Hiatt
No. C50200
Exp. 6-30-09
CIVIL
STATE OF CALIFORNIA

The State of California or its officers or agents shall not be responsible for the accuracy or completeness of electronic copies of this plan sheet.

To accompany plans dated 3-26-12

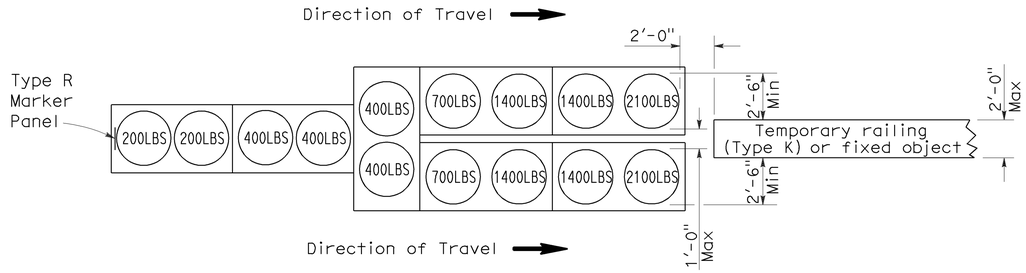

ARRAY 'TU14'

Approach speed 45 mph or more

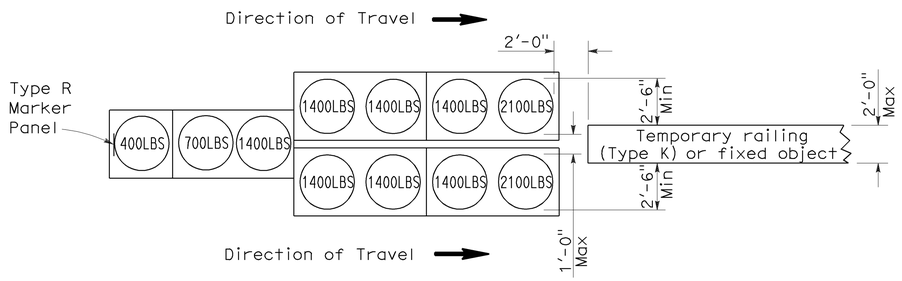

ARRAY 'TU11'

Approach speed less than 45 mph

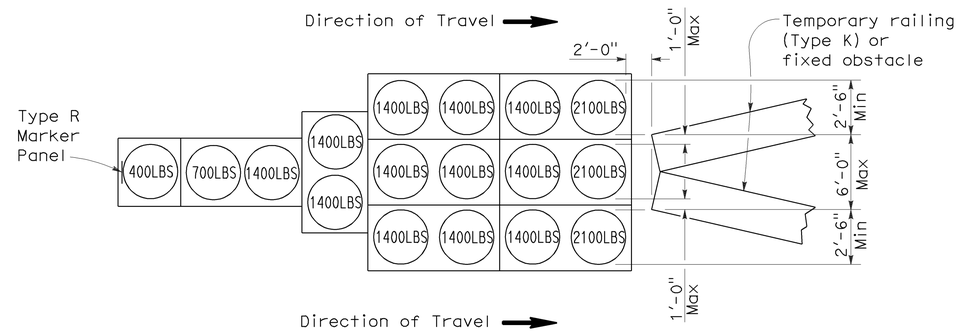

ARRAY 'TU17'

Approach speed less than 45 mph

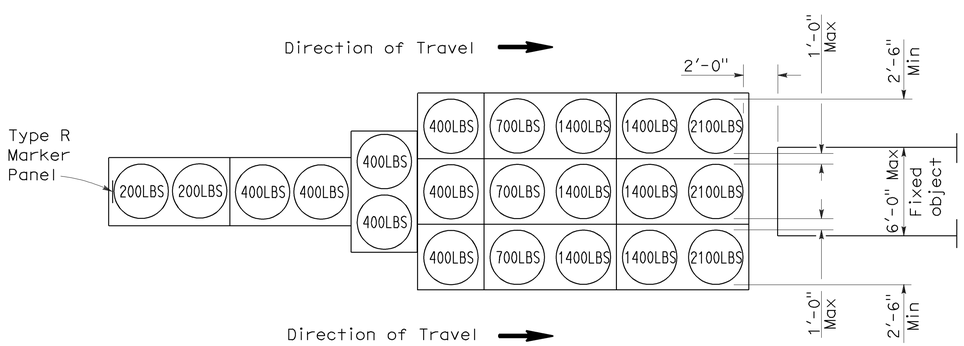

ARRAY 'TU21'

Approach speed 45 mph or more

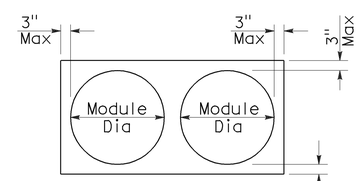

PLAN

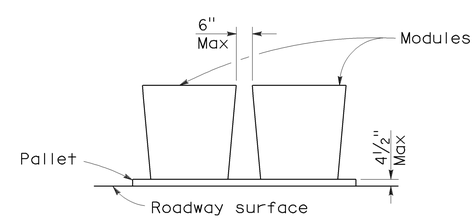

ELEVATION

CRASH CUSHION PALLET DETAIL

See Note 7

NOTES:

1. (XXX) Indicates sand filled module location and weight of sand in pounds for each module. Module spacing is based on the greater diameter of the module.
2. All sand weights are nominal.
3. Temporary crash cushion arrays shall not encroach on the traveled way.
4. Place the top of Type R marker panel 1" below the module lid.
5. Refer to Standard Plan A73B for marker details.
6. Approach speeds indicated conform to NCHRP 350 Report criteria.
7. Use of pallets is optional.

STATE OF CALIFORNIA
DEPARTMENT OF TRANSPORTATION

TEMPORARY CRASH CUSHION, SAND FILLED (UNIDIRECTIONAL)

NO SCALE

RSP T1A DATED JUNE 6, 2008 SUPERSEDES STANDARD PLAN T1A
DATED MAY 1, 2006 - PAGE 211 OF THE STANDARD PLANS BOOK DATED MAY 2006.

REVISED STANDARD PLAN RSP T1A

2006 REVISED STANDARD PLAN RSP T1A

DIST	COUNTY	ROUTE	POST MILES TOTAL PROJECT	SHEET NO.	TOTAL SHEETS
03	Pla	80	44.8/49.2	10	12

Randell D. Hiatt
REGISTERED CIVIL ENGINEER

June 6, 2008
PLANS APPROVAL DATE

REGISTERED PROFESSIONAL ENGINEER
Randell D. Hiatt
No. C50200
Exp. 6-30-09
CIVIL
STATE OF CALIFORNIA

The State of California or its officers or agents shall not be responsible for the accuracy or completeness of electronic copies of this plan sheet.

To accompany plans dated 3-26-12

2006 REVISED STANDARD PLAN RSP T1B

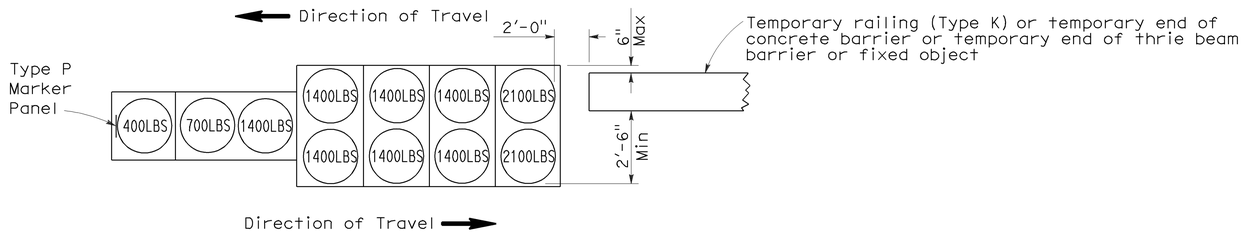

ARRAY 'TB11'

Approach speed less than 45 mph

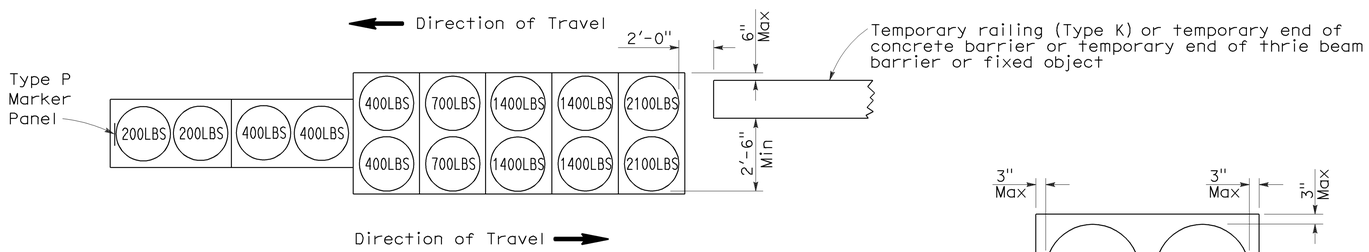

ARRAY 'TB14'

Approach speed 45 mph or more

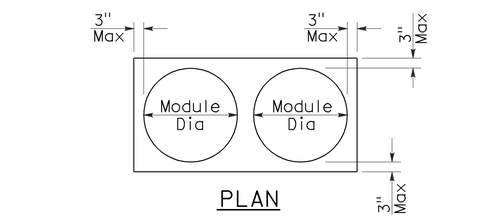

PLAN

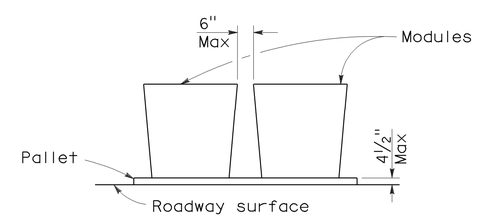

ELEVATION

CRASH CUSHION PALLET DETAIL

See Note 7

NOTES:

1. (XXX) Indicates sand filled module location and weight of sand in pounds for each module. Module spacing is based on the greater diameter of the module.
2. All sand weights are nominal.
3. Temporary crash cushion arrays shall not encroach on the traveled way.
4. Place the Type P marker panel so that the bottom of the panel rests upon the pallet.
5. Refer to Standard Plan A73B for marker details.
6. Approach speeds indicated conform to NCHRP 350 Report criteria.
7. Use of pallets is optional.

STATE OF CALIFORNIA
DEPARTMENT OF TRANSPORTATION

TEMPORARY CRASH CUSHION, SAND FILLED (BIDIRECTIONAL)

NO SCALE

RSP T1B DATED JUNE 6, 2008 SUPERSEDES STANDARD PLAN T1B
DATED MAY 1, 2006 - PAGE 212 OF THE STANDARD PLANS BOOK DATED MAY 2006.

REVISED STANDARD PLAN RSP T1B

DIST	COUNTY	ROUTE	POST MILES TOTAL PROJECT	SHEET NO.	TOTAL SHEETS
03	Pla	80	44.8/49.2	11	12

Randell D. Hiatt
REGISTERED CIVIL ENGINEER

June 6, 2008
PLANS APPROVAL DATE

REGISTERED PROFESSIONAL ENGINEER
Randell D. Hiatt
No. C50200
Exp. 6-30-09
CIVIL
STATE OF CALIFORNIA

The State of California or its officers or agents shall not be responsible for the accuracy or completeness of electronic copies of this plan sheet.

To accompany plans dated 3-26-12

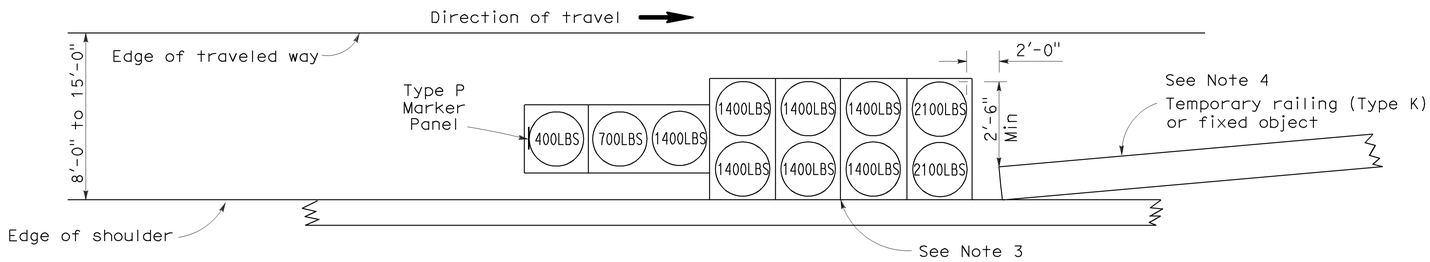

ARRAY 'TS11'

Approach speed less than 45 mph
See Note 9

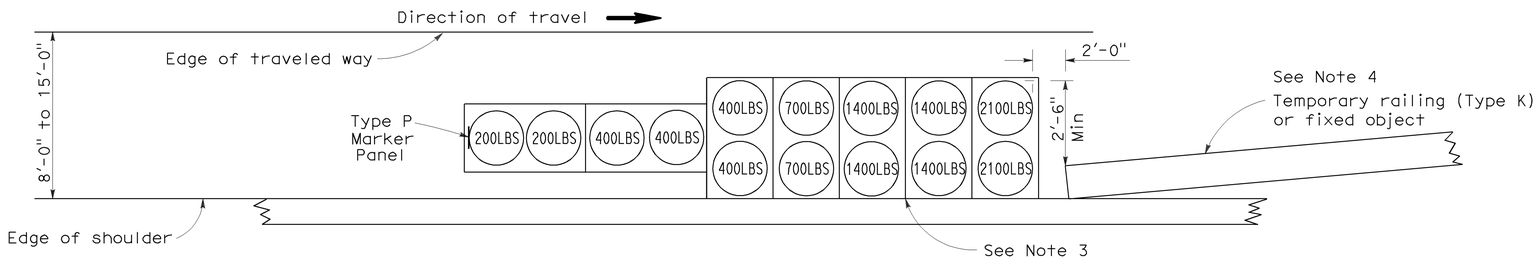

ARRAY 'TS14'

Approach speed 45 mph or more
See Note 9

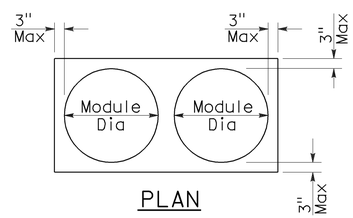

PLAN

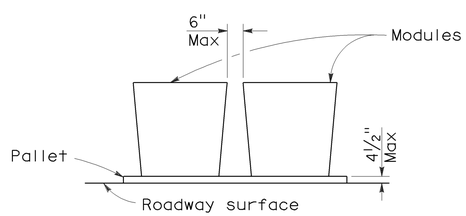

ELEVATION

CRASH CUSHION PALLET DETAIL

See Note 11

NOTES:

1. (XXX) Indicates sand filled module location and weight of sand in pounds for each module. Module spacing is based on the greater diameter of the module.
2. All sand weights are nominal.
3. The temporary crash cushion arrays shown on this plan shall be used only in locations where there will be traffic on one side of the temporary crash cushion array.
4. If the fixed object or approach end of the temporary railing is less than 15'-0" from the edge of traveled way, a temporary crash cushion is required in a construction or work zone.
5. Temporary crash cushion arrays shall not encroach on the traveled way.
6. Arrays for median shoulders shall conform to details shown on this plan for outside shoulders.
7. Place the Type P marker panel so that the bottom of the panel rests upon the pallet and faces traffic.
8. Refer to Standard Plan A73B for marker details.
9. For shoulder widths less than 8'-0", appropriate approved crash cushion protection, other than sand filled modules, shall be provided at fixed objects and at approach ends of temporary railing. The specific type of crash cushion shall be as shown on the project plans or as specified in the Special Provisions, or if not shown on the project plans or specified in the Special Provisions, shall be as approved by the Engineer.
10. Approach speeds indicated conform to NCHRP 350 Report criteria.
11. Use of pallets is optional.

STATE OF CALIFORNIA
DEPARTMENT OF TRANSPORTATION

TEMPORARY CRASH CUSHION, SAND FILLED (SHOULDER INSTALLATIONS)

NO SCALE

RSP T2 DATED JUNE 6, 2008 SUPERSEDES STANDARD PLAN T2
DATED MAY 1, 2006 - PAGE 213 OF THE STANDARD PLANS BOOK DATED MAY 2006.

REVISED STANDARD PLAN RSP T2

2006 REVISED STANDARD PLAN RSP T2

5-15-08

Dist	COUNTY	ROUTE	POST MILES TOTAL PROJECT	SHEET No.	TOTAL SHEETS
03	Pla	80	44.8/49.2	12	12

Randell D. Hiatt
REGISTERED CIVIL ENGINEER

May 20, 2011
PLANS APPROVAL DATE

REGISTERED PROFESSIONAL ENGINEER
Randell D. Hiatt
No. C50200
Exp. 6-30-11
CIVIL
STATE OF CALIFORNIA

The State of California or its officers or agents shall not be responsible for the accuracy or completeness of electronic copies of this plan sheet.

To accompany plans dated 3-26-12

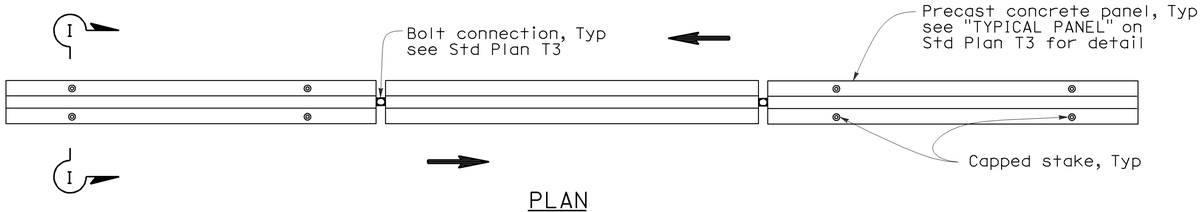

PLAN

RAILING STAKING CONFIGURATION FOR TWO-WAY TRAFFIC

See Note 1

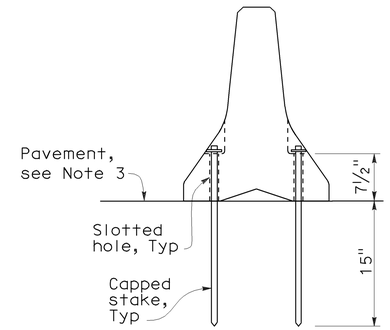

SECTION I-I

NOTES:

1. Where Type K Temporary Railing is placed as a temporary or long term barrier in two-way traffic on highways with less than 24" from the edge of traveled way, use four capped stakes per every other panel with end panels staked.
2. Where Type K Temporary Railing is placed 3" to 24" from the edge of an excavation on highways, use two capped stakes per panel along the traffic side.
3. Staked Type K Temporary Railing must be supported by at least 4" thick concrete, hot mix asphalt or existing asphalt concrete pavement.
4. The minimum yield strength for the washer must be 60,000 psi.
5. Direction of adjacent traffic indicated by ⟹.

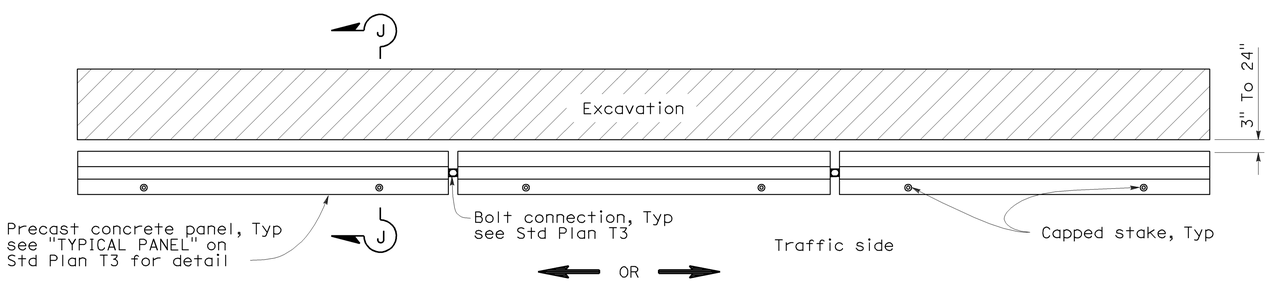

PLAN

RAILING STAKING CONFIGURATION ADJACENT TO AN EXCAVATION

See Note 2

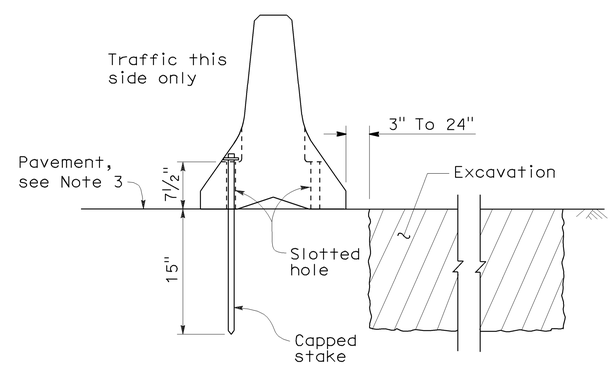

SECTION J-J

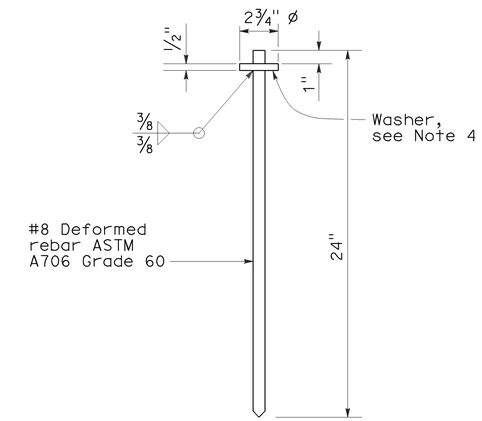

CAPPED STAKE DETAIL

STATE OF CALIFORNIA
DEPARTMENT OF TRANSPORTATION

TEMPORARY RAILING (TYPE K)

NO SCALE

NSP T3A DATED MAY 20, 2011 SUPPLEMENTS
THE STANDARD PLANS BOOK DATED MAY 2006.

NEW STANDARD PLAN NSP T3A

2006 NEW STANDARD PLAN NSP T3A