Dist	COUNTY	ROUTE	POST MILES TOTAL PROJECT	SHEET No.	TOTAL SHEETS
03	Gle	162	37.7/51.0	1	18

INDEX OF PLANS

SHEET No.	DESCRIPTION
1	TITLE AND LOCATION MAP
2-10	DRAINAGE PLANS AND PROFILES
11-13	DRAINAGE DETAILS
14-15	DRAINAGE QUANTITIES
16-18	REVISED STANDARD PLANS

THE STANDARD PLANS LIST APPLICABLE TO THIS CONTRACT IS INCLUDED IN THE NOTICE TO BIDDERS AND SPECIAL PROVISIONS BOOK.

STATE OF CALIFORNIA

DEPARTMENT OF TRANSPORTATION

PROJECT PLANS FOR CONSTRUCTION ON

STATE HIGHWAY

IN GLENN COUNTY AT VARIOUS LOCATIONS FROM 0.1 MILE EAST OF COUNTY ROAD 307 TO COUNTY ROAD 303

TO BE SUPPLEMENTED BY STANDARD PLANS DATED 2010

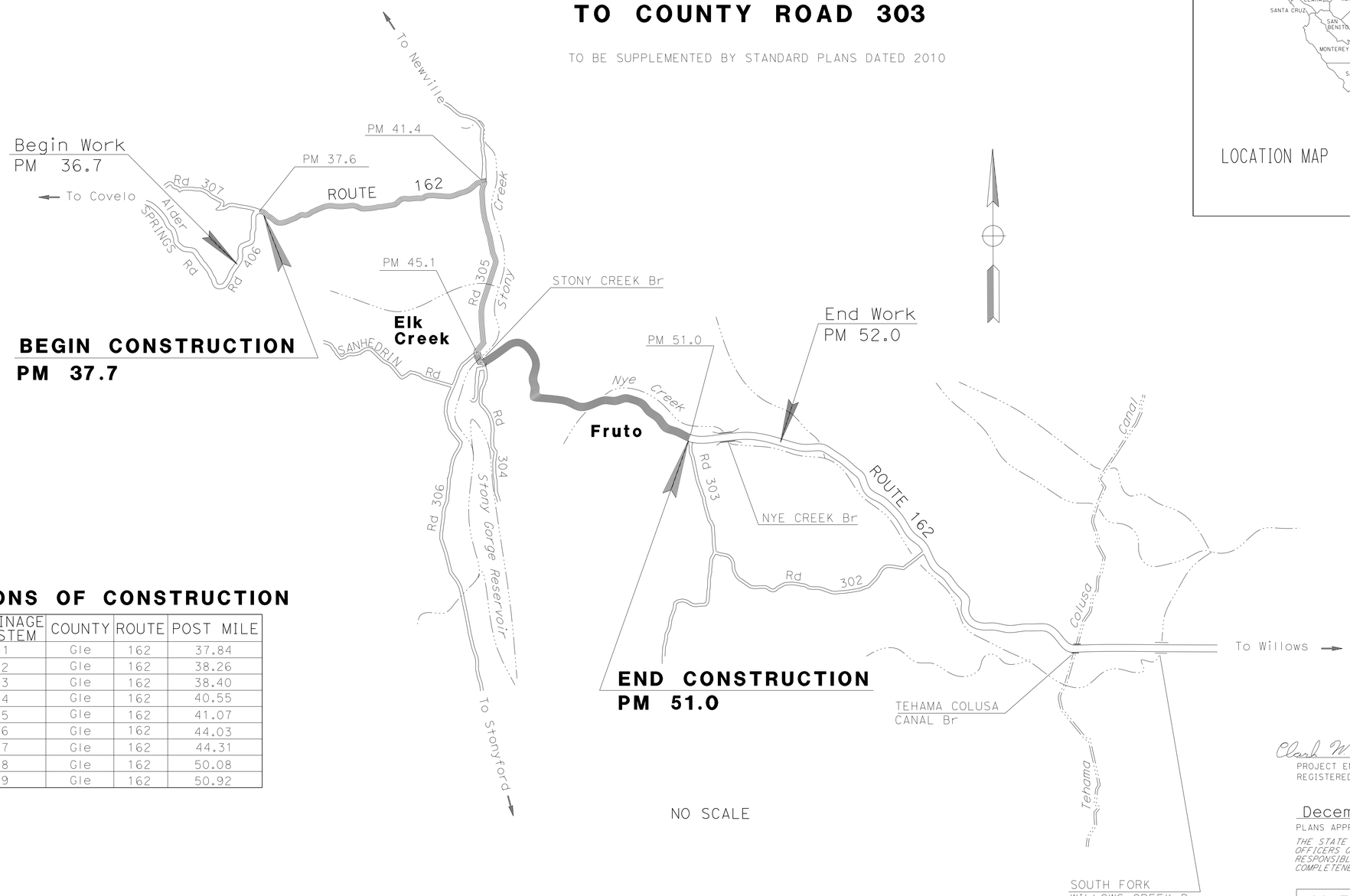

LOCATIONS OF CONSTRUCTION

Loc	DRAINAGE SYSTEM	COUNTY	ROUTE	POST MILE
1	1	Gle	162	37.84
2	2	Gle	162	38.26
3	3	Gle	162	38.40
4	4	Gle	162	40.55
5	5	Gle	162	41.07
6	6	Gle	162	44.03
7	7	Gle	162	44.31
8	8	Gle	162	50.08
9	9	Gle	162	50.92

PROJECT MANAGER RONALD S. SYKES

DESIGN ENGINEER DENNIS R. JAGODA

THE CONTRACTOR SHALL POSSESS THE CLASS (OR CLASSES) OF LICENSE AS SPECIFIED IN THE "NOTICE TO BIDDERS."

Clark W. Townsend 12-2-13
PROJECT ENGINEER DATE
REGISTERED CIVIL ENGINEER

December 2, 2013
PLANS APPROVAL DATE

REGISTERED PROFESSIONAL ENGINEER CLARK W. TOWNSEND No. 47921 Exp. 12-31-15 CIVIL STATE OF CALIFORNIA

THE STATE OF CALIFORNIA OR ITS OFFICERS OR AGENTS SHALL NOT BE RESPONSIBLE FOR THE ACCURACY OR COMPLETENESS OF SCANNED COPIES OF THIS PLAN SHEET.

CONTRACT No.	03-4M1804
PROJECT ID	0300020043

LAST REVISION 11-14-13 DATE PLOTTED => 19-DEC-2013 TIME PLOTTED => 11:43

Dist	COUNTY	ROUTE	POST MILES TOTAL PROJECT	SHEET No.	TOTAL SHEETS
03	Gle	162	37.7/51.0	2	18

Clark W. Townsend 12-2-13
REGISTERED CIVIL ENGINEER DATE

12-2-13
PLANS APPROVAL DATE

REGISTERED PROFESSIONAL ENGINEER CLARK W. TOWNSEND No. 47921 Exp. 12-31-15 CIVIL STATE OF CALIFORNIA

THE STATE OF CALIFORNIA OR ITS OFFICERS OR AGENTS SHALL NOT BE RESPONSIBLE FOR THE ACCURACY OR COMPLETENESS OF SCANNED COPIES OF THIS PLAN SHEET.

NOTES:

1. FOR ACCURATE RIGHT OF WAY DATA, CONTACT RIGHT OF WAY ENGINEERING AT THE DISTRICT OFFICE.
2. VERTICAL DATUM = ASSUMED.
3. UTILITY LOCATIONS WHERE SHOWN ARE APPROXIMATE ONLY. CONTRACTOR TO VERIFY ALL POTENTIAL CONFLICTS PRIOR TO CONSTRUCTION.
4. TCE BOUNDARIES ARE APPROXIMATE AND MAY BE ADJUSTED BY THE ENGINEER, HOWEVER, THE TCE AREA MAY NOT BE INCREASED.

ABBREVIATIONS:

BRCB	BOTTOMLESS RCB
CIPPL	CURED-IN-PLACE PIPELINER
CSSPPA	CORRUGATED STRUCTURAL STEEL PLATE PIPE ARCH
CSSPVE	CORRUGATED STRUCTURAL STEEL PLATE VERTICAL ELLIPSE
M-C	MARKER (CULVERT)
SC	SACKED CONCRETE

LEGEND

- PLACE HOT MIX ASPHALT (Misc AREA)
- MINOR CONCRETE (FOOTING)
- CONCRETE BACKFILL (PIPE TRENCH)
- FL

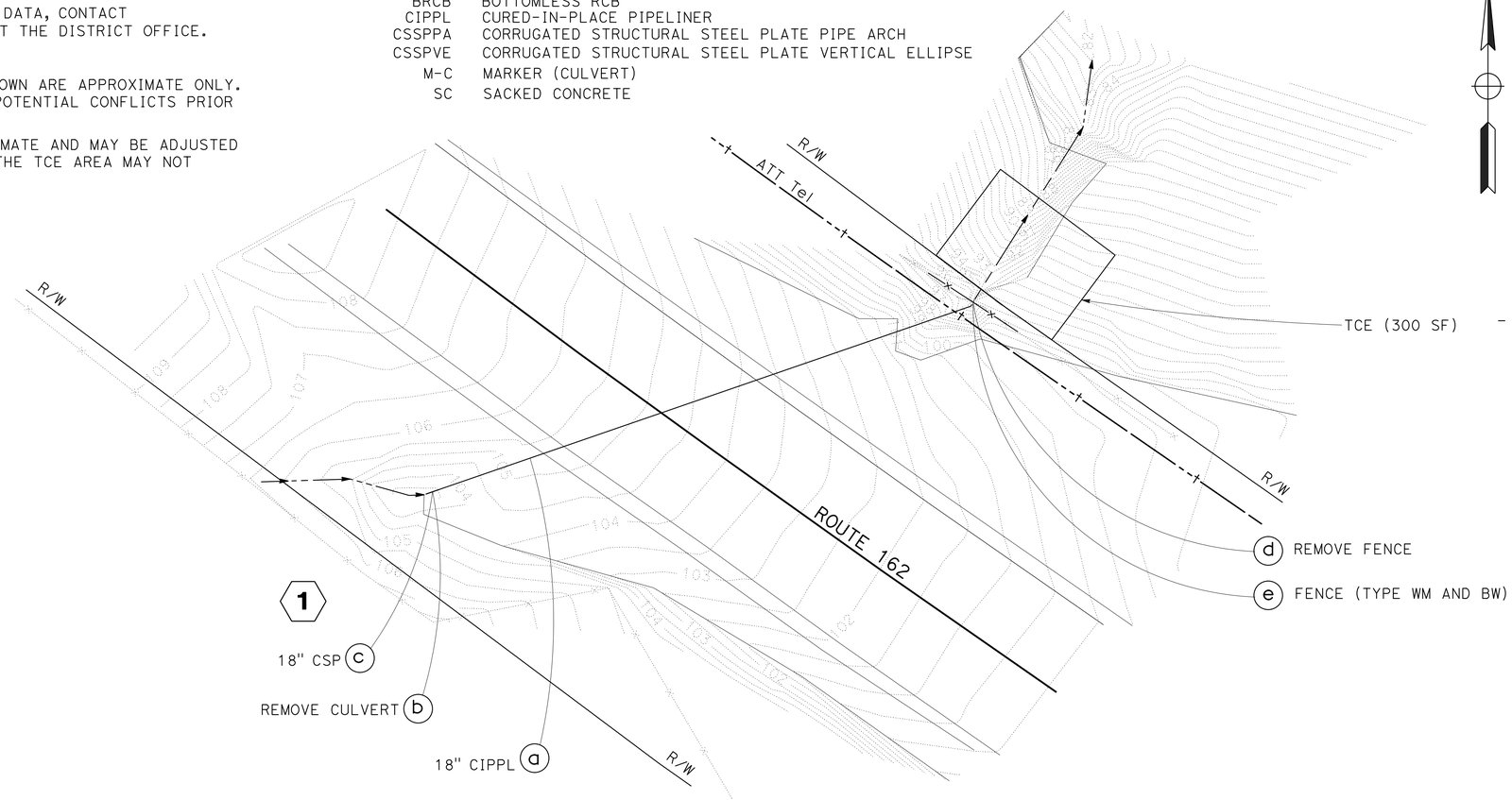

SCALE: 1" = 10'

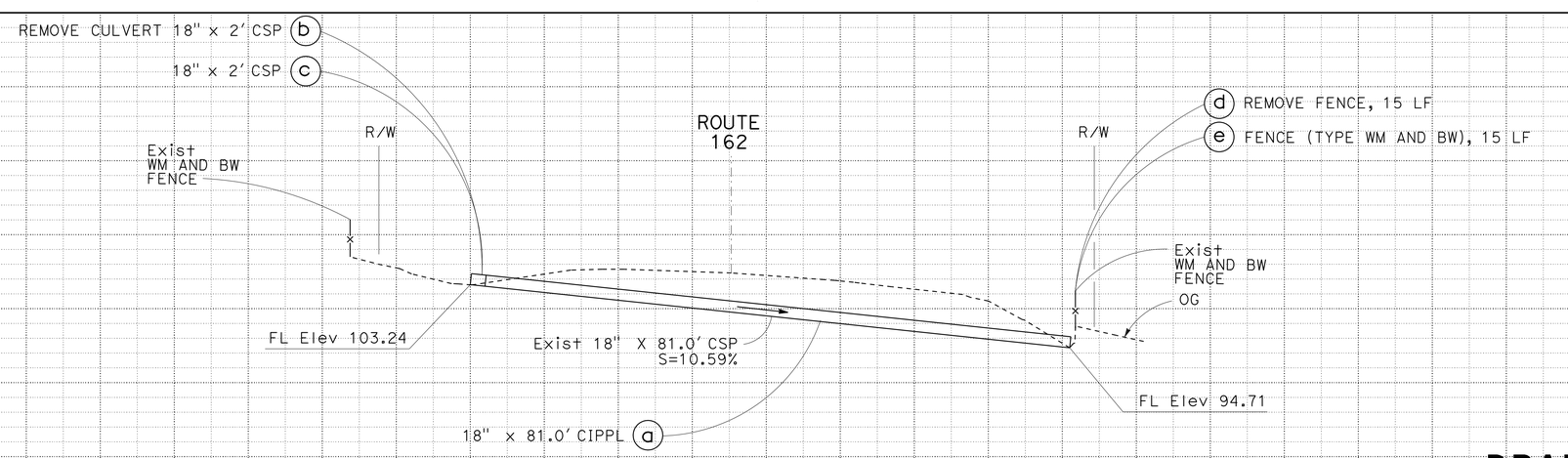

DRAINAGE SYSTEM No. 1

PM 37.84 (Loc 1)

APPROVED FOR DRAINAGE WORK ONLY

DRAINAGE PLAN AND PROFILES

SCALE: Horiz 1" = 10'
Vert 1" = 10'

D-1

STATION		TOTAL
CY	Exc	
	Emb	

STATE OF CALIFORNIA - DEPARTMENT OF TRANSPORTATION
Caltrans
DIVISION OF ENGINEERING HYDRAULICS

FUNCTIONAL SUPERVISOR: DENNIS R. JAGODA
CALCULATED-DESIGNED BY: CLARK W. TOWNSEND
CHECKED BY: DENNIS R. JAGODA
REVISED BY
DATE REVISED

LAST REVISION 11-15-13
DATE PLOTTED => 19-DEC-2013
TIME PLOTTED => 11:36

Dist	COUNTY	ROUTE	POST MILES TOTAL PROJECT	SHEET No.	TOTAL SHEETS
03	Gle	162	37.7/51.0	3	18

Clark W. Townsend 12-2-13
REGISTERED CIVIL ENGINEER DATE

12-2-13
PLANS APPROVAL DATE

REGISTERED PROFESSIONAL ENGINEER
CLARK W. TOWNSEND
No. 47921
Exp. 12-31-15
CIVIL
STATE OF CALIFORNIA

THE STATE OF CALIFORNIA OR ITS OFFICERS OR AGENTS SHALL NOT BE RESPONSIBLE FOR THE ACCURACY OR COMPLETENESS OF SCANNED COPIES OF THIS PLAN SHEET.

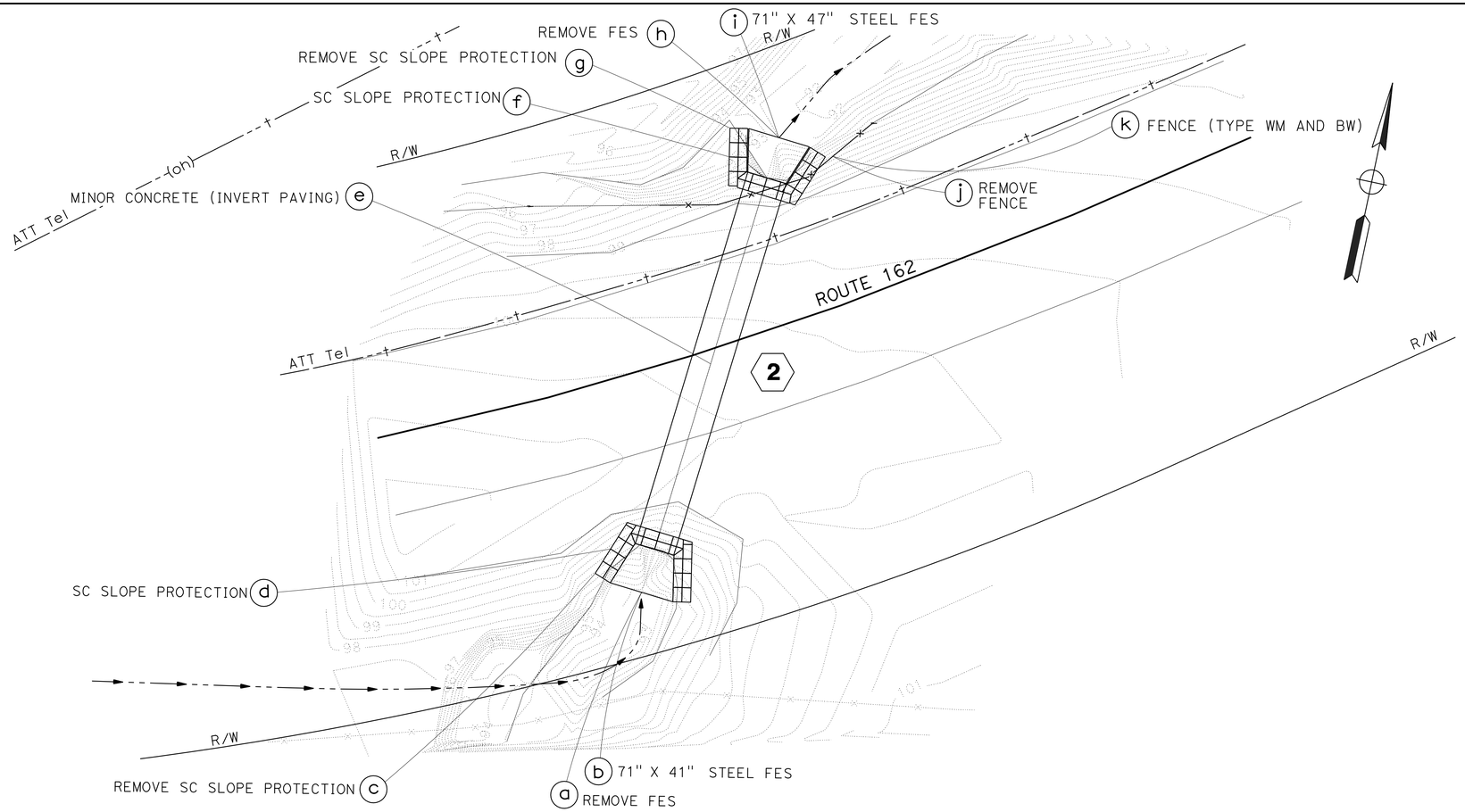

SCALE: 1" = 10'

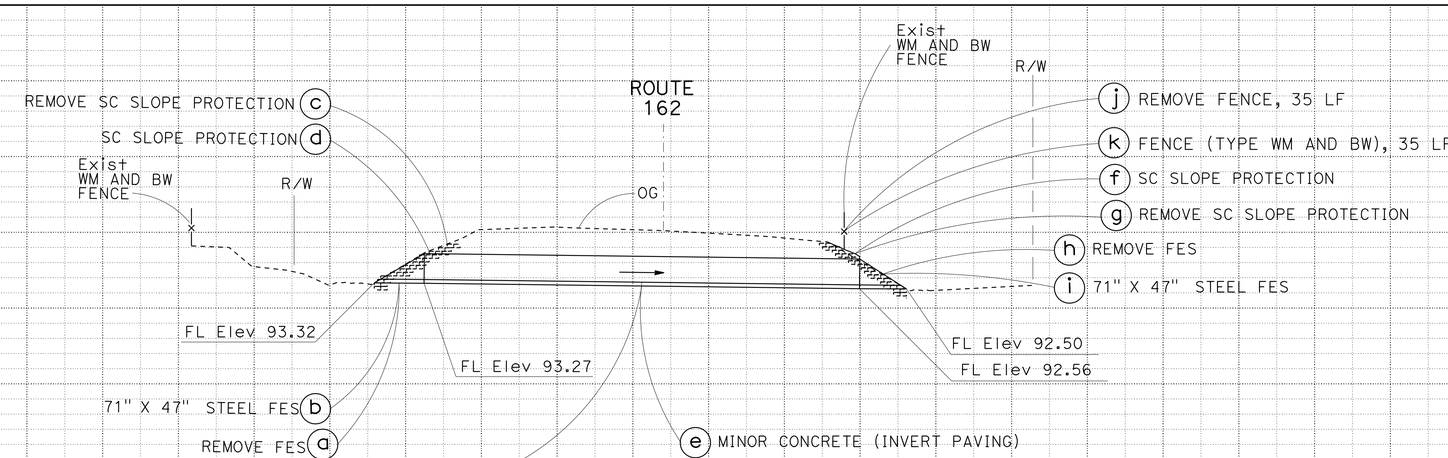

DRAINAGE SYSTEM No. 2

PM 38.26 (Loc 2)

APPROVED FOR DRAINAGE WORK ONLY

DRAINAGE PLAN AND PROFILES

SCALE: Horiz 1" = 10'
Vert 1" = 10'

D-2

STATION		TOTAL
CY	Exc	
	Emb	

STATE OF CALIFORNIA - DEPARTMENT OF TRANSPORTATION
DIVISION OF ENGINEERING HYDRAULICS
Caltrans

FUNCTIONAL SUPERVISOR: DENNIS R. JAGODA
CALCULATED-DESIGNED BY: CLARK W. TOWNSEND
CHECKED BY: DENNIS R. JAGODA
REVISED BY
DATE REVISED

LAST REVISION 11-15-13
DATE PLOTTED => 19-DEC-2013
TIME PLOTTED => 11:36

Dist	COUNTY	ROUTE	POST MILES TOTAL PROJECT	SHEET No.	TOTAL SHEETS
03	Gle	162	37.7/51.0	4	18

Clark W. Townsend 12-2-13
REGISTERED CIVIL ENGINEER DATE

12-2-13
PLANS APPROVAL DATE

REGISTERED PROFESSIONAL ENGINEER
CLARK W. TOWNSEND
No. 47921
Exp. 12-31-15
CIVIL
STATE OF CALIFORNIA

THE STATE OF CALIFORNIA OR ITS OFFICERS OR AGENTS SHALL NOT BE RESPONSIBLE FOR THE ACCURACY OR COMPLETENESS OF SCANNED COPIES OF THIS PLAN SHEET.

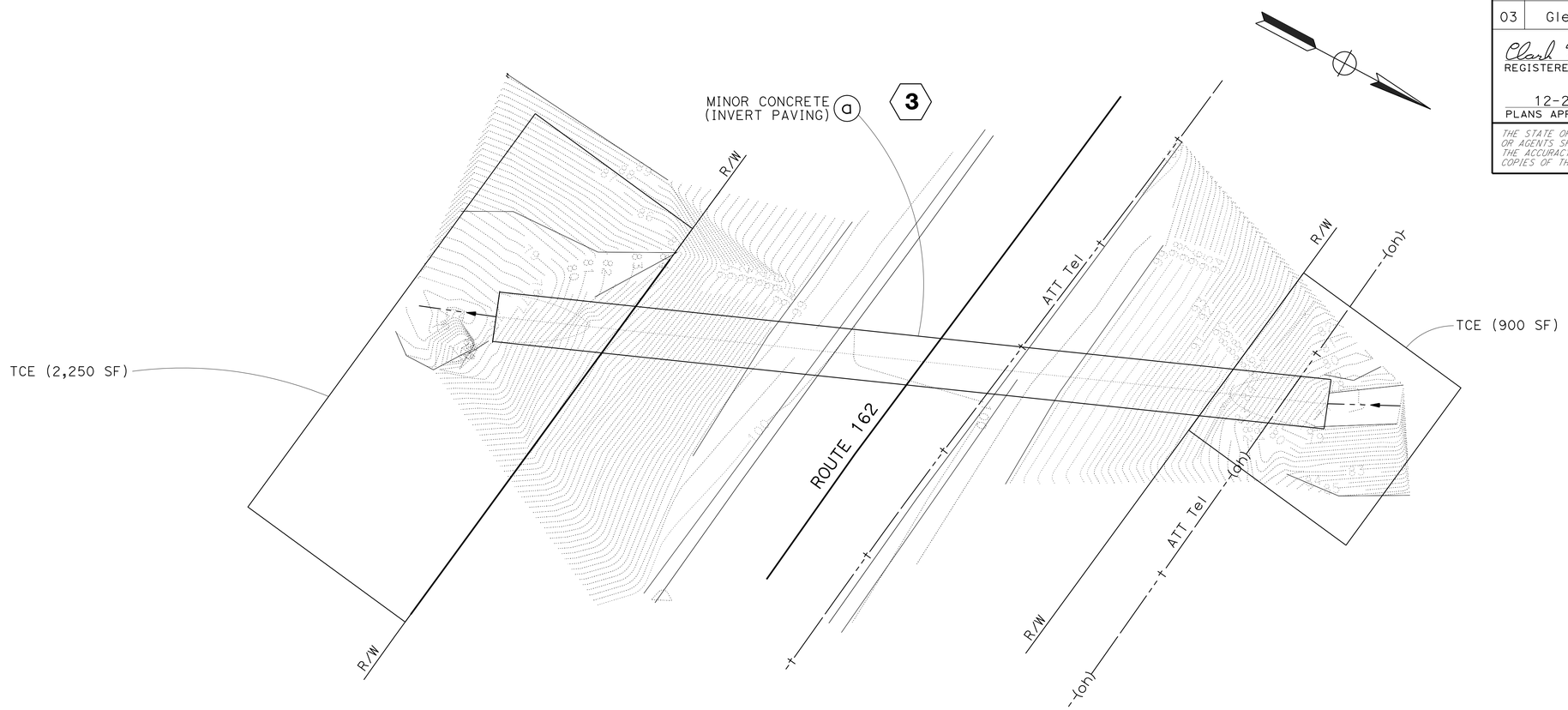

SCALE: 1" = 10'

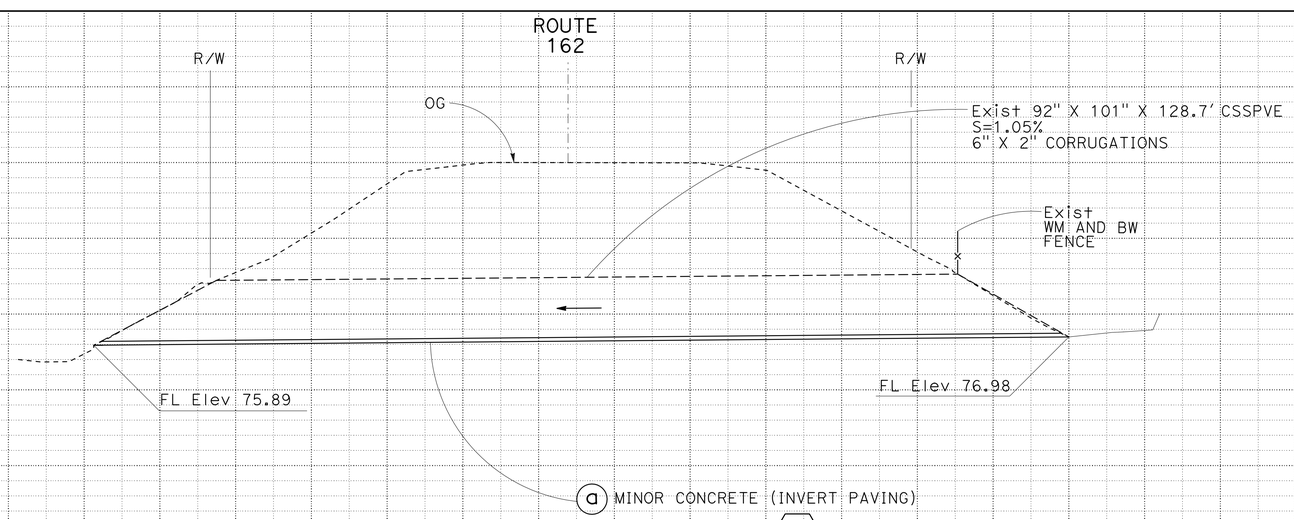

DRAINAGE SYSTEM No. 3

PM 38.40 (Loc 3)

APPROVED FOR DRAINAGE WORK ONLY

DRAINAGE PLAN AND PROFILES

SCALE: Horiz 1" = 10'
Vert 1" = 10'

D-3

STATION		TOTAL
CY	Exc	
	Emb	

STATE OF CALIFORNIA - DEPARTMENT OF TRANSPORTATION
Caltrans
DIVISION OF ENGINEERING HYDRAULICS

FUNCTIONAL SUPERVISOR: DENNIS R. JAGODA
CALCULATED-DESIGNED BY: CLARK W. TOWNSEND
CHECKED BY: DENNIS R. JAGODA
REVISED BY
DATE REVISED

LAST REVISION 11-15-13
DATE PLOTTED => 19-DEC-2013
TIME PLOTTED => 11:36

Dist	COUNTY	ROUTE	POST MILES TOTAL PROJECT	SHEET No.	TOTAL SHEETS
03	Gle	162	37.7/51.0	5	18

Clark W. Townsend 12-2-13
REGISTERED CIVIL ENGINEER DATE

12-2-13
PLANS APPROVAL DATE

REGISTERED PROFESSIONAL ENGINEER
CLARK W. TOWNSEND
No. 47921
Exp. 12-31-15
CIVIL
STATE OF CALIFORNIA

THE STATE OF CALIFORNIA OR ITS OFFICERS OR AGENTS SHALL NOT BE RESPONSIBLE FOR THE ACCURACY OR COMPLETENESS OF SCANNED COPIES OF THIS PLAN SHEET.

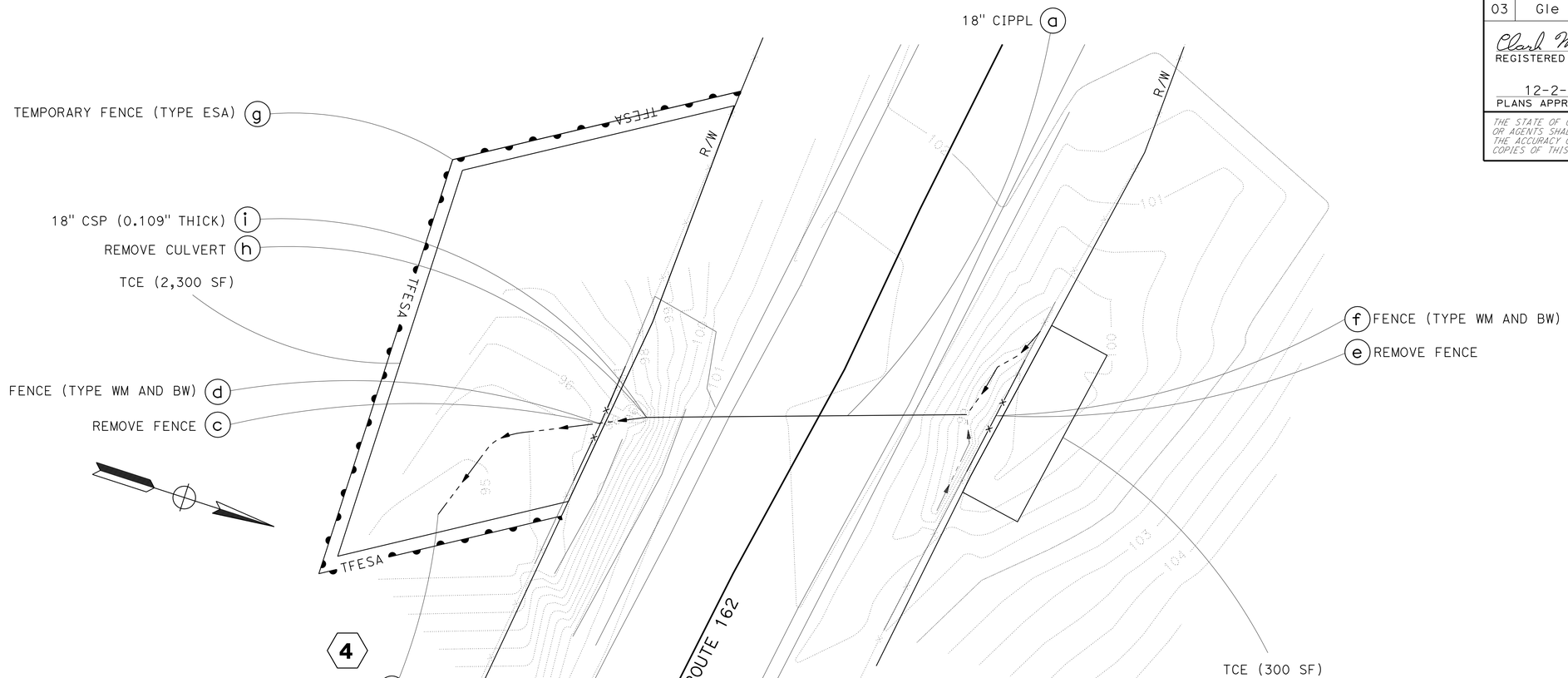

SCALE: 1" = 10'

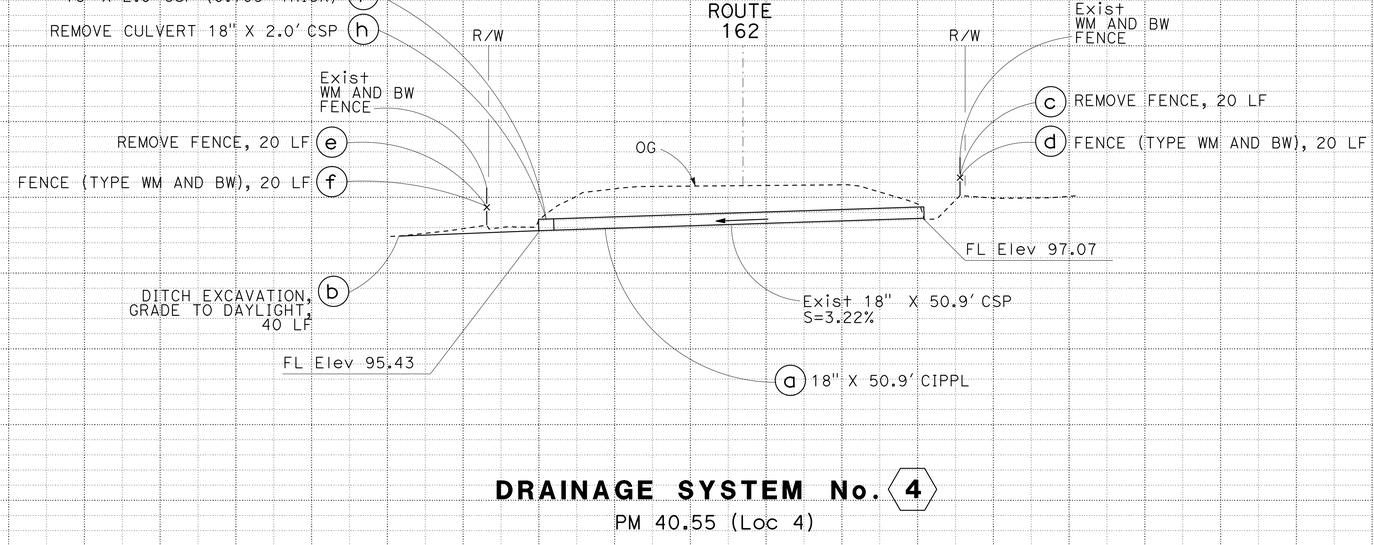

DRAINAGE SYSTEM No. 4

PM 40.55 (Loc 4)

APPROVED FOR DRAINAGE WORK ONLY

DRAINAGE PLAN AND PROFILES

SCALE: Horiz 1" = 10'
Vert 1" = 10'

D-4

STATION		TOTAL
CY	Exc	
	Emb	

STATE OF CALIFORNIA - DEPARTMENT OF TRANSPORTATION
Caltrans
DIVISION OF ENGINEERING HYDRAULICS

FUNCTIONAL SUPERVISOR: DENNIS R. JAGODA
CALCULATED-DESIGNED BY: CLARK W. TOWNSEND
CHECKED BY: DENNIS R. JAGODA
REVISED BY
DATE REVISED

LAST REVISION 11-15-13
DATE PLOTTED => 19-DEC-2013
TIME PLOTTED => 11:36

Dist	COUNTY	ROUTE	POST MILES TOTAL PROJECT	SHEET No.	TOTAL SHEETS
03	Gle	162	37.7/51.0	6	18

Clark W. Townsend 12-2-13
REGISTERED CIVIL ENGINEER DATE

12-2-13
PLANS APPROVAL DATE

REGISTERED PROFESSIONAL ENGINEER
CLARK W. TOWNSEND
No. 47921
Exp. 12-31-15
CIVIL
STATE OF CALIFORNIA

THE STATE OF CALIFORNIA OR ITS OFFICERS OR AGENTS SHALL NOT BE RESPONSIBLE FOR THE ACCURACY OR COMPLETENESS OF SCANNED COPIES OF THIS PLAN SHEET.

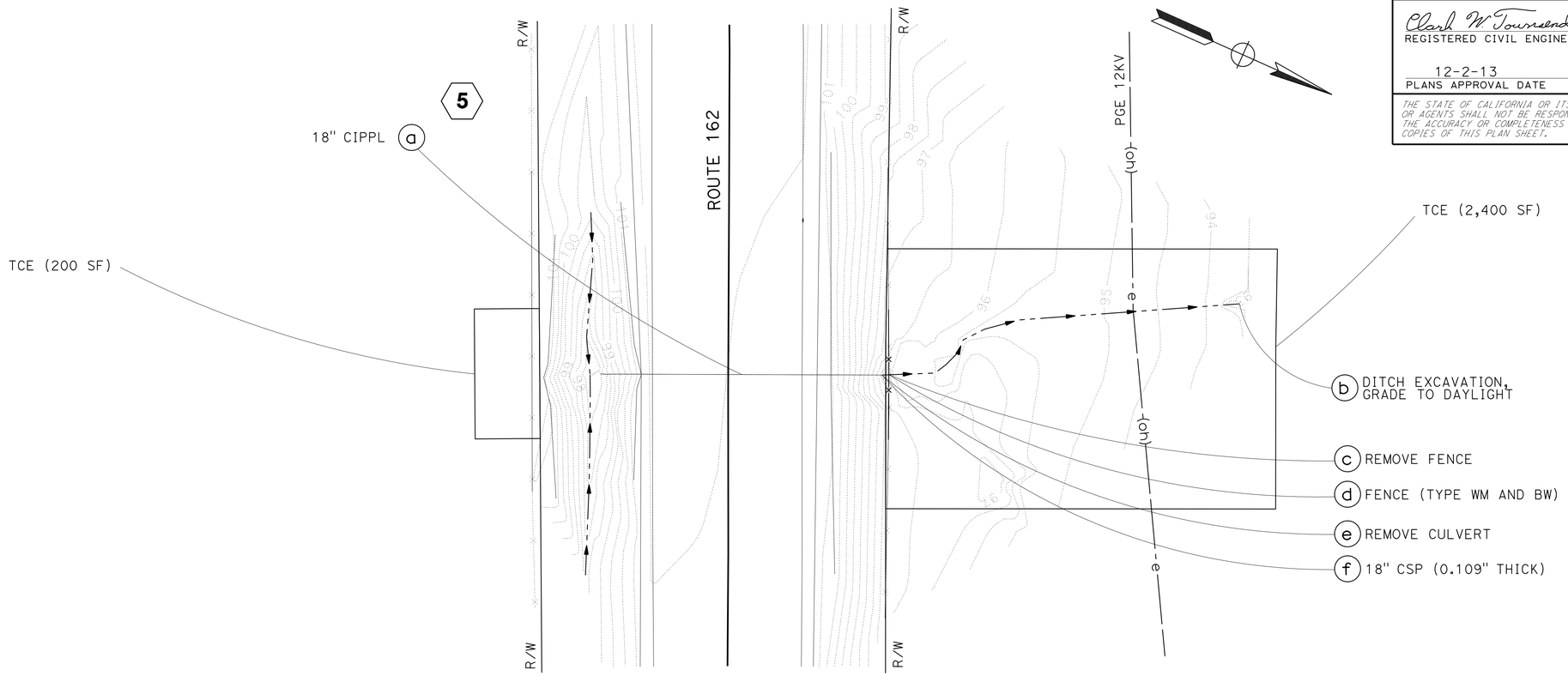

SCALE: 1" = 10'

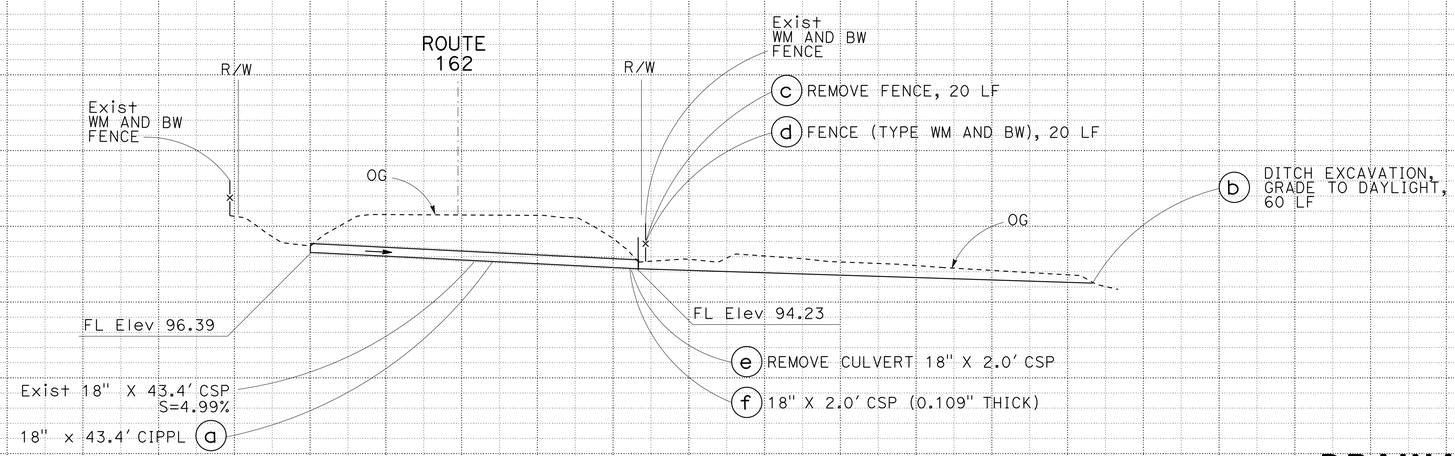

DRAINAGE SYSTEM No. 5

PM 41.07 (Loc 5)

APPROVED FOR DRAINAGE WORK ONLY

DRAINAGE PLAN AND PROFILES

SCALE: Horiz 1" = 10'
Vert 1" = 10'

D-5

STATION		TOTAL
CY	Exc	
	Emb	

STATE OF CALIFORNIA - DEPARTMENT OF TRANSPORTATION
Caltrans
DIVISION OF ENGINEERING HYDRAULICS

FUNCTIONAL SUPERVISOR: DENNIS R. JAGODA
CALCULATED-DESIGNED BY: CLARK W. TOWNSEND
CHECKED BY: DENNIS R. JAGODA
REVISED BY
DATE REVISED

LAST REVISION 11-15-13
DATE PLOTTED => 19-DEC-2013
TIME PLOTTED => 11:36

Dist	COUNTY	ROUTE	POST MILES TOTAL PROJECT	SHEET No.	TOTAL SHEETS
03	Gle	162	37.7/51.0	7	18

Clark W. Townsend 12-2-13
REGISTERED CIVIL ENGINEER DATE

12-2-13
PLANS APPROVAL DATE

REGISTERED PROFESSIONAL ENGINEER
CLARK W. TOWNSEND
No. 47921
Exp. 12-31-15
CIVIL
STATE OF CALIFORNIA

THE STATE OF CALIFORNIA OR ITS OFFICERS OR AGENTS SHALL NOT BE RESPONSIBLE FOR THE ACCURACY OR COMPLETENESS OF SCANNED COPIES OF THIS PLAN SHEET.

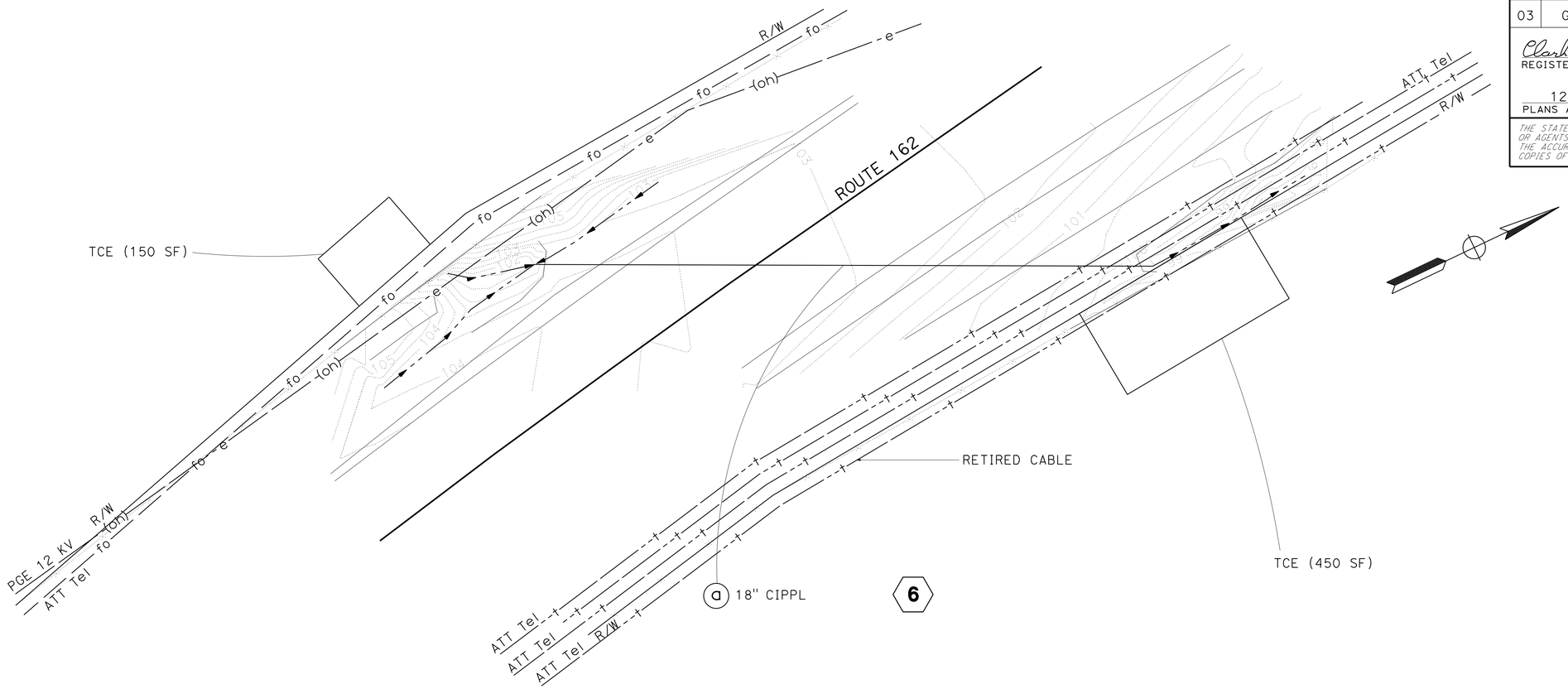

SCALE: 1" = 10'

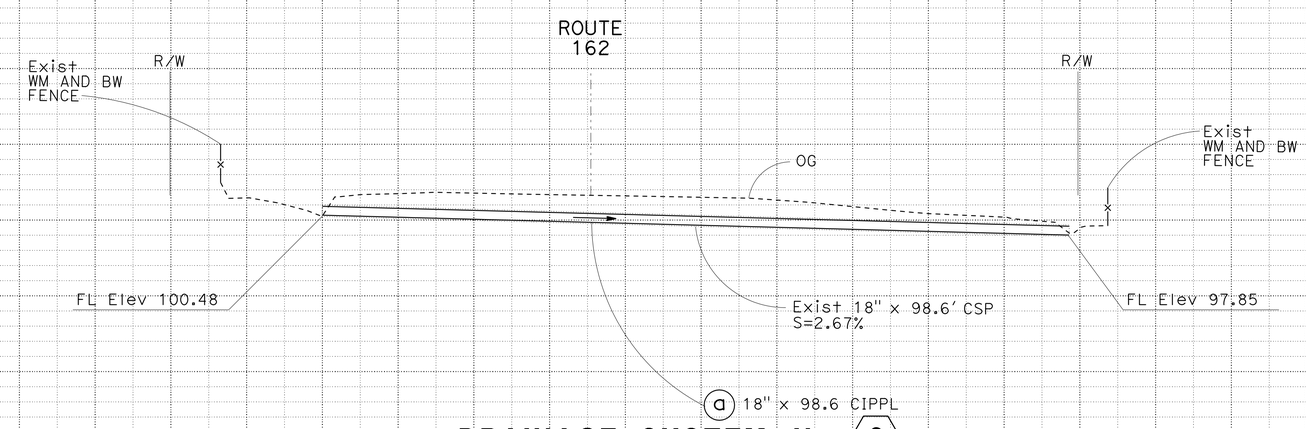

DRAINAGE SYSTEM No. 6

PM 44.03 (Loc 6)

APPROVED FOR DRAINAGE WORK ONLY

DRAINAGE PLAN AND PROFILES

SCALE: Horiz 1" = 10'
Vert 1" = 10'

D-6

STATION		TOTAL
CY	Exc	
	Emb	

STATE OF CALIFORNIA - DEPARTMENT OF TRANSPORTATION
Caltrans
DIVISION OF ENGINEERING HYDRAULICS

FUNCTIONAL SUPERVISOR: DENNIS R. JAGODA
CALCULATED-DESIGNED BY: CLARK W. TOWNSEND
CHECKED BY: DENNIS R. JAGODA
REVISED BY
DATE REVISED

LAST REVISION 11-15-13 | DATE PLOTTED => 19-DEC-2013 | TIME PLOTTED => 11:36

Dist	COUNTY	ROUTE	POST MILES TOTAL PROJECT	SHEET No.	TOTAL SHEETS
03	Gle	162	37.7/51.0	8	18

Clark W. Townsend 12-2-13
REGISTERED CIVIL ENGINEER DATE

12-2-13
PLANS APPROVAL DATE

REGISTERED PROFESSIONAL ENGINEER
CLARK W. TOWNSEND
No. 47921
Exp. 12-31-15
CIVIL
STATE OF CALIFORNIA

THE STATE OF CALIFORNIA OR ITS OFFICERS OR AGENTS SHALL NOT BE RESPONSIBLE FOR THE ACCURACY OR COMPLETENESS OF SCANNED COPIES OF THIS PLAN SHEET.

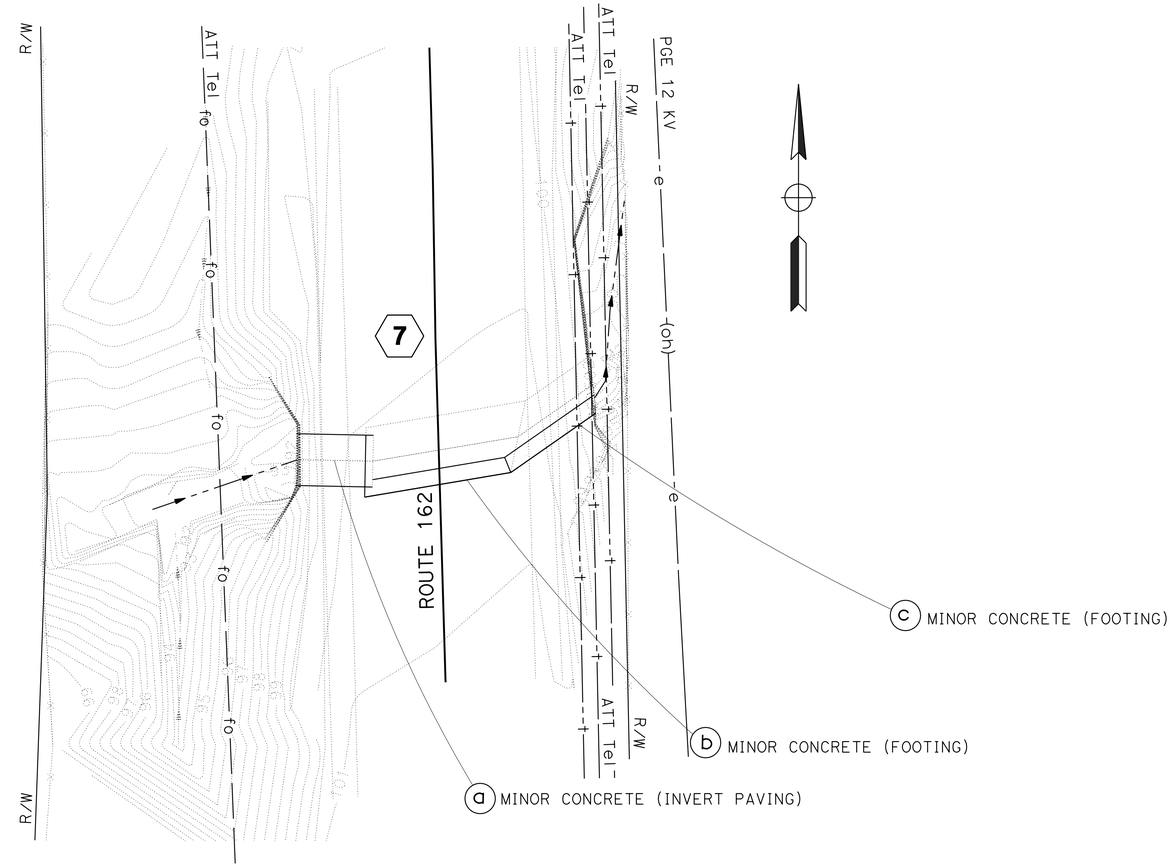

SCALE: 1" = 10'

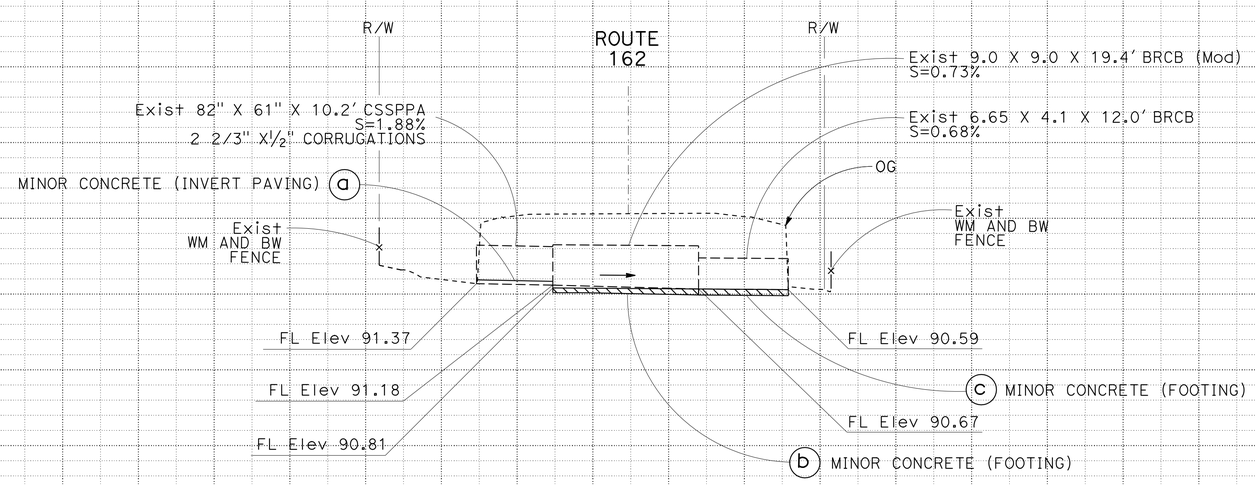

DRAINAGE SYSTEM No. 7

PM 44.31 (Loc 7)

APPROVED FOR DRAINAGE WORK ONLY

DRAINAGE PLAN AND PROFILES

SCALE: Horiz 1" = 10'
Vert 1" = 10'

D-7

STATION		TOTAL
CY	Exc	
	Emb	

STATE OF CALIFORNIA - DEPARTMENT OF TRANSPORTATION
Caltrans
DIVISION OF ENGINEERING HYDRAULICS

FUNCTIONAL SUPERVISOR: DENNIS R. JAGODA
CALCULATED-DESIGNED BY: CLARK W. TOWNSEND
CHECKED BY: DENNIS R. JAGODA
REVISED BY
DATE REVISED

LAST REVISION 11-15-13
DATE PLOTTED => 19-DEC-2013
TIME PLOTTED => 11:36

Dist	COUNTY	ROUTE	POST MILES TOTAL PROJECT	SHEET No.	TOTAL SHEETS
03	Gle	162	37.7/51.0	9	18

Clark W. Townsend 12-2-13
REGISTERED CIVIL ENGINEER DATE

12-2-13
PLANS APPROVAL DATE

REGISTERED PROFESSIONAL ENGINEER
CLARK W. TOWNSEND
No. 47921
Exp. 12-31-15
CIVIL
STATE OF CALIFORNIA

THE STATE OF CALIFORNIA OR ITS OFFICERS OR AGENTS SHALL NOT BE RESPONSIBLE FOR THE ACCURACY OR COMPLETENESS OF SCANNED COPIES OF THIS PLAN SHEET.

SCALE: 1" = 10'

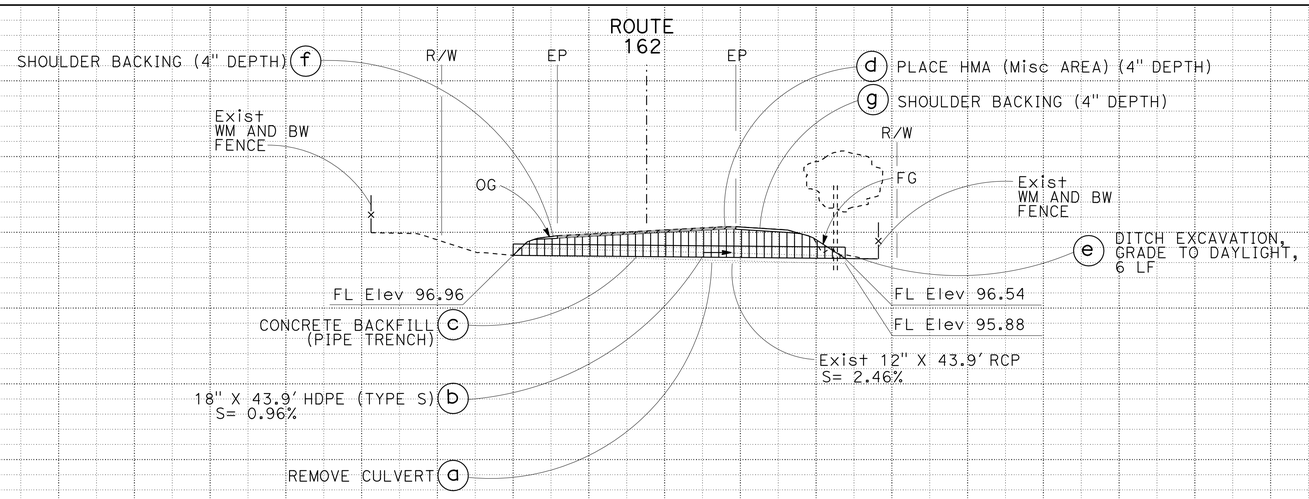

DRAINAGE SYSTEM No. 8

PM 50.08 (Loc 8)

APPROVED FOR DRAINAGE WORK ONLY

DRAINAGE PLAN AND PROFILES

SCALE: Horiz 1" = 10'
Vert 1" = 10'

D-8

STATION		TOTAL
CY	Exc	
	Emb	

STATE OF CALIFORNIA - DEPARTMENT OF TRANSPORTATION
DIVISION OF ENGINEERING HYDRAULICS
Caltrans

FUNCTIONAL SUPERVISOR: DENNIS R. JAGODA
CALCULATED-DESIGNED BY: CLARK W. TOWNSEND
CHECKED BY: DENNIS R. JAGODA
REVISED BY
DATE REVISED

LAST REVISION 11-15-13
DATE PLOTTED => 19-DEC-2013
TIME PLOTTED => 11:36

Dist	COUNTY	ROUTE	POST MILES TOTAL PROJECT	SHEET No.	TOTAL SHEETS
03	Gle	162	37.7/51.0	10	18

Clark W. Townsend 12-2-13
REGISTERED CIVIL ENGINEER DATE

12-2-13
PLANS APPROVAL DATE

REGISTERED PROFESSIONAL ENGINEER CLARK W. TOWNSEND No. 47921 Exp. 12-31-15 CIVIL STATE OF CALIFORNIA

THE STATE OF CALIFORNIA OR ITS OFFICERS OR AGENTS SHALL NOT BE RESPONSIBLE FOR THE ACCURACY OR COMPLETENESS OF SCANNED COPIES OF THIS PLAN SHEET.

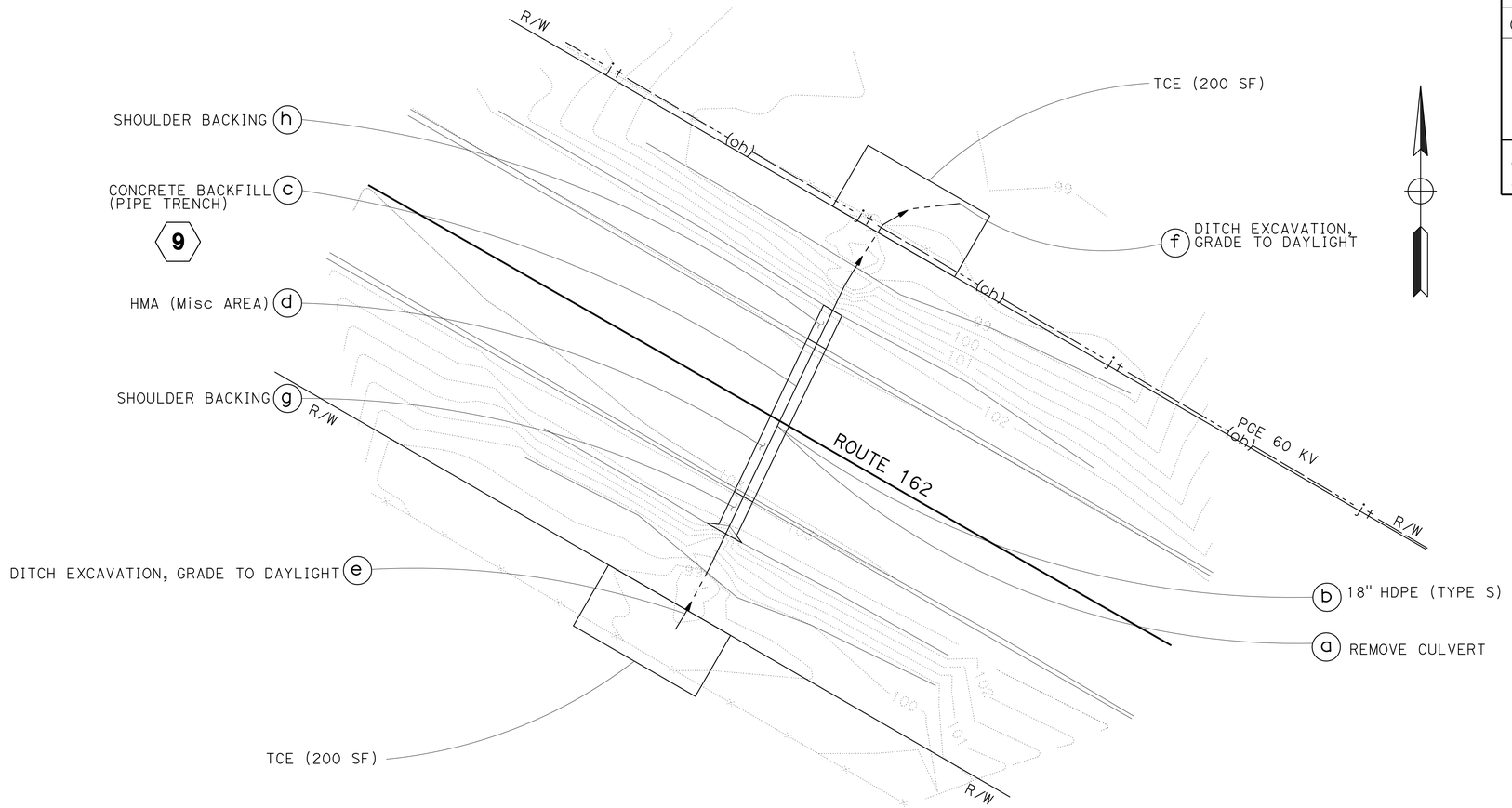

SCALE: 1" = 10'

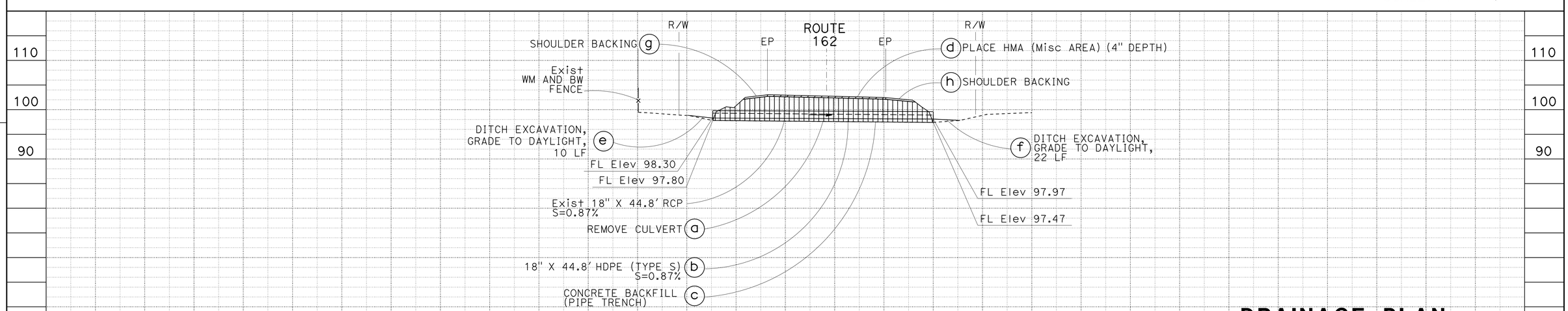

DRAINAGE SYSTEM No. 9

PM 50.92 (Loc 9)

APPROVED FOR DRAINAGE WORK ONLY

DRAINAGE PLAN AND PROFILES

SCALE: Horiz 1" = 10'
Vert 1" = 10'

D-9

STATION		TOTAL
CY	Exc	
	Emb	

STATE OF CALIFORNIA - DEPARTMENT OF TRANSPORTATION
Caltrans
DIVISION OF ENGINEERING HYDRAULICS

FUNCTIONAL SUPERVISOR: DENNIS R. JAGODA
CALCULATED-DESIGNED BY: CLARK W. TOWNSEND
CHECKED BY: DENNIS R. JAGODA
REVISED BY
DATE REVISED

LAST REVISION 11-15-13
DATE PLOTTED => 19-DEC-2013
TIME PLOTTED => 11:36

Dist	COUNTY	ROUTE	POST MILES TOTAL PROJECT	SHEET No.	TOTAL SHEETS
03	Gle	162	37.7/51.0	11	18

Clark W. Townsend 12-2-13
REGISTERED CIVIL ENGINEER DATE

12-2-13
PLANS APPROVAL DATE

REGISTERED PROFESSIONAL ENGINEER
CLARK W. TOWNSEND
No. 47921
Exp. 12-31-15
CIVIL
STATE OF CALIFORNIA

THE STATE OF CALIFORNIA OR ITS OFFICERS OR AGENTS SHALL NOT BE RESPONSIBLE FOR THE ACCURACY OR COMPLETENESS OF SCANNED COPIES OF THIS PLAN SHEET.

REMOVE MARKER (CULVERT)

Loc	SIDE Lt/Rt	QUANTITY EA	STENCIL PM
1	Lt & Rt	2	37.84
2	Lt & Rt	2	38.26
3	Lt & Rt	2	38.40
4	Lt & Rt	2	40.55
5	Lt & Rt	2	41.07
6	Lt & Rt	2	44.03
7	Lt & Rt	2	44.31
8	Lt & Rt	2	50.08
9	Lt & Rt	2	50.92
TOTAL		18	

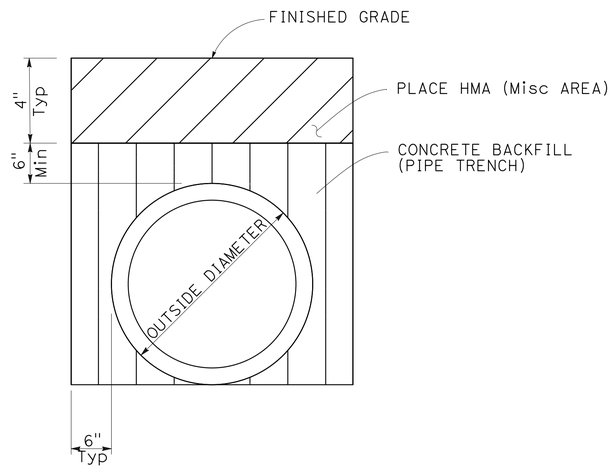

NOTES:

1. USE AT ALL LOCATIONS WHERE CONCRETE BACKFILL (PIPE TRENCH) IS INDICATED ON DRAINAGE PROFILE SHEETS.
2. PLACE HMA (Misc AREA), ONLY APPLIES WITHIN PAVED ROADWAY

CONCRETE BACKFILL (PIPE TRENCH) DETAIL

8 C 9 C

MARKER (CULVERT)

Loc	SIDE Lt/Rt	QUANTITY EA	STENCIL PM
1	Lt & Rt	2	37.84
2	Lt & Rt	2	38.26
3	Lt & Rt	2	38.40
4	Lt & Rt	2	40.55
5	Lt & Rt	2	41.07
6	Lt & Rt	2	44.03
7	Lt & Rt	2	44.31
8	Lt & Rt	2	50.08
9	Lt & Rt	2	50.92
TOTAL		18	

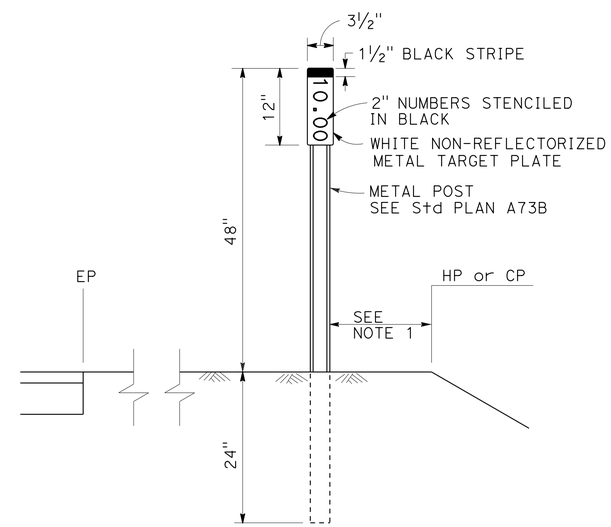

NOTES:

1. PLACE CULVERT MARKERS 1′ FROM EDGE OF HP, CP, OR AS DIRECTED BY THE ENGINEER.

MARKER (CULVERT)

DRAINAGE DETAILS

NO SCALE

DD-1

STATE OF CALIFORNIA - DEPARTMENT OF TRANSPORTATION
DIVISION OF ENGINEERING HYDRAULICS
Caltrans

FUNCTIONAL SUPERVISOR: DENNIS JAGODA
CALCULATED-DESIGNED BY: CLARK W. TOWNSEND
CHECKED BY: GURDEEP BHATTAL
REVISED BY
DATE REVISED

LAST REVISION 11-15-13
DATE PLOTTED => 19-DEC-2013
TIME PLOTTED => 11:36

Dist	COUNTY	ROUTE	POST MILES TOTAL PROJECT	SHEET No.	TOTAL SHEETS
03	Gle	162	37.7/51.0	12	18

Clark W. Townsend 12-2-13
REGISTERED CIVIL ENGINEER DATE

12-2-13
PLANS APPROVAL DATE

REGISTERED PROFESSIONAL ENGINEER CLARK W. TOWNSEND No. 47921 Exp. 12-31-15 CIVIL STATE OF CALIFORNIA

THE STATE OF CALIFORNIA OR ITS OFFICERS OR AGENTS SHALL NOT BE RESPONSIBLE FOR THE ACCURACY OR COMPLETENESS OF SCANNED COPIES OF THIS PLAN SHEET.

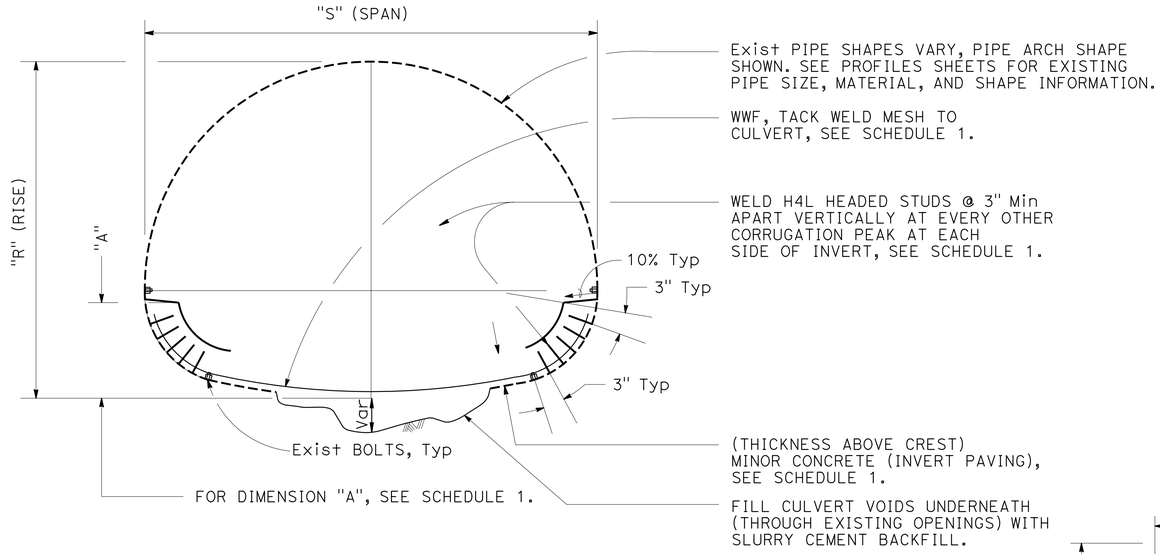

"S" X "R" CSSPPA INVERT PAVING DETAIL

2 e 7 a

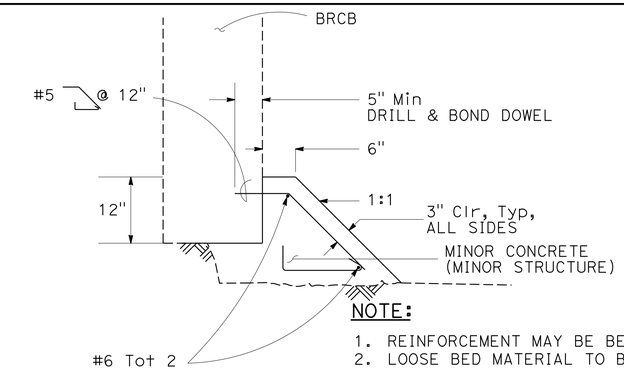

NOTE:

1. REINFORCEMENT MAY BE BENT/CUT AS NECESSARY TO CLEAR BEDROCK.
2. LOOSE BED MATERIAL TO BE REMOVED AS DITCH EXCAVATION.

MINOR CONCRETE (FOOTING) DETAIL

7 b c

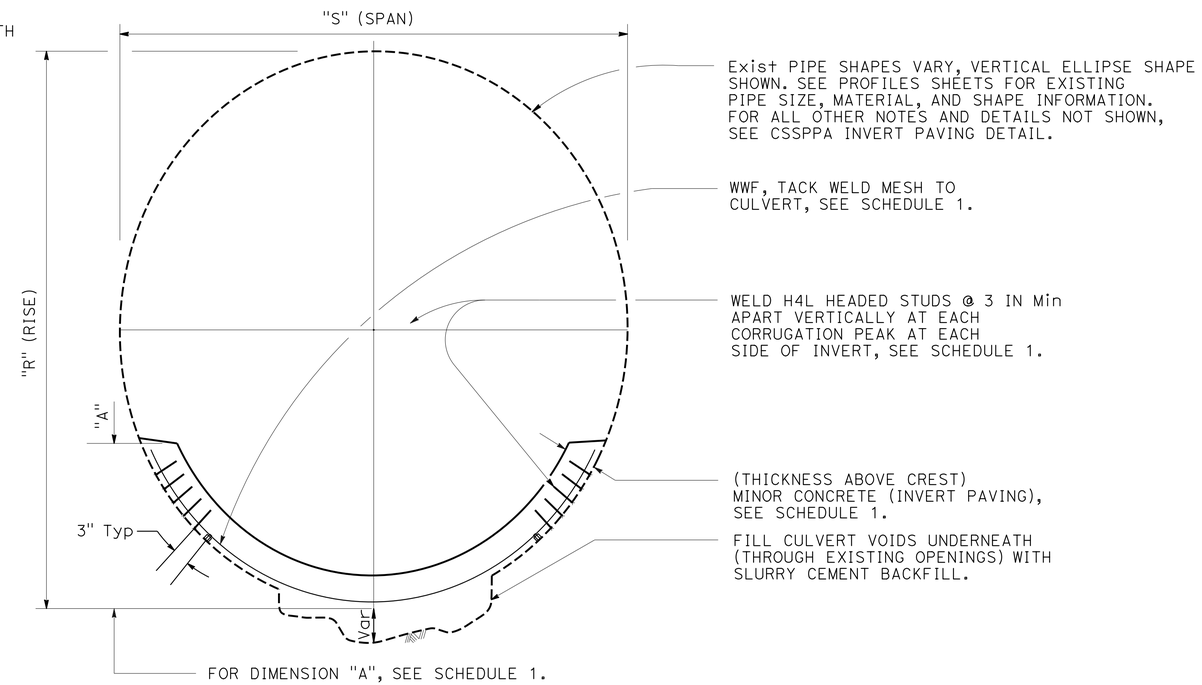

"S" X "R" CSSPVE INVERT PAVING DETAIL

3 a

CONSTRUCTION NOTES:

1. ANY WATER DIVERSION SCHEDULED AND CONDUCTED BY THE CONTRACTOR PRIOR TO AND DURING THE REPLACEMENT OF PAVEMENT SHALL BE TO THE SATISFACTION OF THE ENGINEER.
2. THE CONTRACTOR SHALL CLEAN THE ENTIRE INTERIOR SURFACE TO BE REPAIRED WITH HIGH-PRESSURE WATER JET AND/OR WET SANDBLASTING, AND THE SURFACE SHALL BE FREE OF RUST FLAKES TO THE SATISFACTION OF THE ENGINEER.
3. WELDED WIRE FABRIC (WWF) SHALL BE TIED TO STUDS OR TACK WELDED TO CULVERT
4. THE STUDS SHALL BE PLACED 3 INCHES ON CENTER TRANSVERSLY (CIRCUMFERENTIALLY)
5. THE PAVEMENT SHALL BE FINISHED TO A SMOOTH SURFACE ACCEPTABLE TO THE ENGINEER.
6. THE CONCRETE SHALL BE CURED IN CONFORMANCE WITH THE PROVISIONS IN SECTION 90-1.03 OF THE STANDARD SPECIFICATIONS.
7. THE CONCRETE SHALL BE CURED FOR A MINIMUM PERIOD OF 48 HOURS BEFORE ANY WATER IS PERMITTED TO FLOW IN THE INVERT.
8. THE CONCRETE SHALL BE ROUNDED WITH 3 INCH RADIUS ON A 1:1 BEVEL AT THE INLET & OUTLET ENDS OF THE PIPE
9. THE STUD DIAMETER, LENGTH, AND No./SIDE; WWF SIZE, TYPE, AND TACK SPACING; CORRUGATION CREST LENGTH; AND CONCRETE THICKNESS SHALL BE IN ACCORDANCE WITH SCHEDULE 1.
10. THE UNIT WEIGHT OF No. 5 REBAR IS 1.043 LBS/FT. THE UNIT WEIGHT OF No. 6 REBAR IS 1.502 LBS/FT. THE UNIT WEIGHT OF 1/2" DIAMETER HEADED STUDS IS 222.4 LBS/1000 STUDS. THE WWF SHALL BE INCLUDED IN THE COST OF MINOR CONCRETE (INVERT PAVING).
11. FOR DIMENSIONS "S" (SPAN) AND "R" (RISE), SEE DRAINAGE PLAN SHEETS.

SCHEDULE 1

			STUD			WWF			CONCRETE		
DS	DU	PM	DIAMETER	LENGTH	No. / SIDE	SIZE	TYPE	TACK SPACING	THICKNESS	"A"	Vol
			in	In	EA			C-C EACH WAY	in	Ft	CY/LF
2	e	38.26	1/2	4-1/8	5	4" X 4"	W4 x W4	12"	6	3.22	0.1193
3	a	38.40	1/2	4-1/8	5	4" X 4"	W4 x W4	12"	6	4.20	0.1556
7	a	44.31	1/2	4-1/8	5	4" X 4"	W4 x W4	12"	6	3.70	0.1372

ABBREVIATIONS:

BRCB	BOTTOMLESS RCB
CSSPPA	CORRUCATED STRUCTURAL STEEL PLATE PIPE ARCH
CSSPUE	CIRRYCATED STRYCTURAL STEEK PLATE UERTICAL ELLIPSE
DS	DRAINAGE SUSTEM No.
DU	DRAINAGE UNIT
WWF	WELDED WIRE FABRIC

DRAINAGE DETAILS

NO SCALE

DD-2

STATE OF CALIFORNIA - DEPARTMENT OF TRANSPORTATION
Caltrans
DIVISION OF ENGINEERING HYDRAULICS

FUNCTIONAL SUPERVISOR: DENNIS JAGODA
CALCULATED-DESIGNED BY: CLARK W. TOWNSEND
CHECKED BY: GURDEEP BHATTAL
REVISED BY
DATE REVISED

LAST REVISION 11-15-13
DATE PLOTTED => 19-DEC-2013
TIME PLOTTED => 11:36

Dist	COUNTY	ROUTE	POST MILES TOTAL PROJECT	SHEET No.	TOTAL SHEETS
03	Gle	162	37.7/51.0	13	18

Clark W. Townsend 12-2-13
REGISTERED CIVIL ENGINEER DATE

12-2-13
PLANS APPROVAL DATE

REGISTERED PROFESSIONAL ENGINEER
CLARK W. TOWNSEND
No. 47921
Exp. 12-31-15
CIVIL
STATE OF CALIFORNIA

THE STATE OF CALIFORNIA OR ITS OFFICERS OR AGENTS SHALL NOT BE RESPONSIBLE FOR THE ACCURACY OR COMPLETENESS OF SCANNED COPIES OF THIS PLAN SHEET.

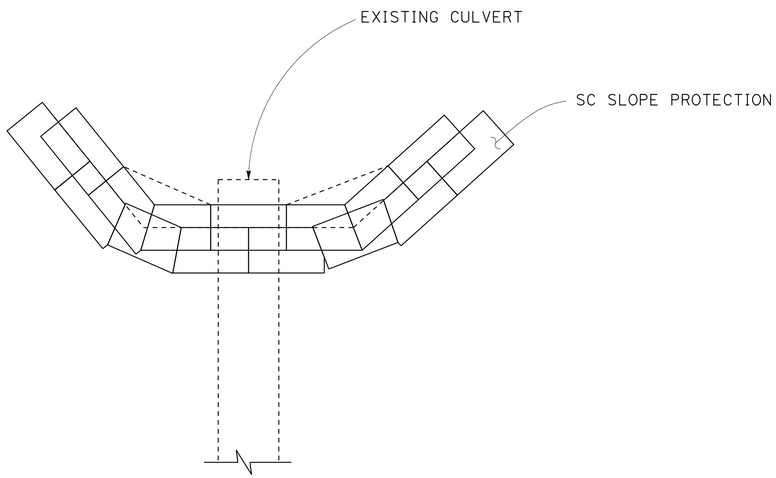

PLAN

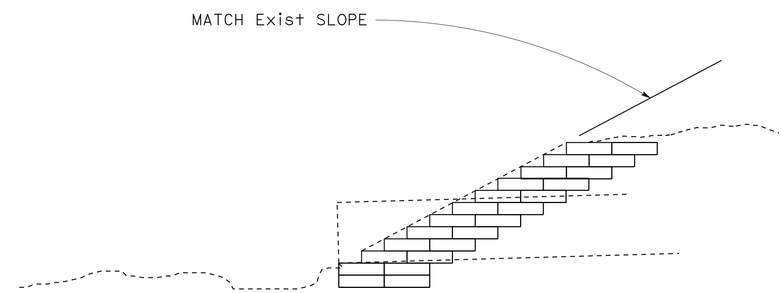

PROFILE

SC SLOPE PROTECTION AT CULVERT

2 d f

NOTES:

1. BASE OF SC SLOPE PROTECTION SHALL BE TWO BAGS DEEP.
2. SUCESSIVE ROWS OF SC BAGS SHALL BE STAGGERED.
3. EACH LEVEL OF SC BAGS MUST HAVE A MINIMUM OF TWO SC BAGS.
4. LIMITS OF SC SLOPE PROTECTION SHALL BE AS DIRECTED BY THE ENGINEER.
5. PLACEMENT OF NEW SC SLOPE PROTECTION SHALL NOT EXCEED THE LIMITS OF EXISTING SC SLOPE PROTECTION.

ABBREVIATIONS:

SC SACKED CONCRETE

APPROVED FOR DRAINAGE WORK ONLY

DRAINAGE DETAILS

NO SCALE **DD-3**

STATE OF CALIFORNIA - DEPARTMENT OF TRANSPORTATION
Caltrans
DIVISION OF ENGINEERING HYDRAULICS

FUNCTIONAL SUPERVISOR: DENNIS JAGODA
CALCULATED-DESIGNED BY: CLARK W. TOWNSEND
CHECKED BY: DENNIS JAGODA
REVISED BY
DATE REVISED

LAST REVISION 11-15-13
DATE PLOTTED => 19-DEC-2013
TIME PLOTTED => 11:36

Dist	COUNTY	ROUTE	POST MILES TOTAL PROJECT	SHEET No.	TOTAL SHEETS
03	Gle	162	37.7/51.0	14	18

Clark W. Townsend 12-2-13
REGISTERED CIVIL ENGINEER DATE

12-2-13
PLANS APPROVAL DATE

REGISTERED PROFESSIONAL ENGINEER CLARK W. TOWNSEND No. C47921 Exp. 12-31-15 CIVIL STATE OF CALIFORNIA

THE STATE OF CALIFORNIA OR ITS OFFICERS OR AGENTS SHALL NOT BE RESPONSIBLE FOR THE ACCURACY OR COMPLETENESS OF SCANNED COPIES OF THIS PLAN SHEET.

ABBREVIATIONS:

CIPPL CURED-IN-PLACE PIPELINER
SC SACKED CONCRETE
S STANDARD JOINT
P POSITIVE JOINT

DRAINAGE QUANTITIES

DRAINAGE SHEET No.	DRAINAGE SYSTEM No. ⬡	DRAINAGE UNIT ○	REMOVE FENCE	FENCE (TYPE WM AND BW)	TEMPORARY FENCE (TYPE ESA)	REMOVE CULVERT	REMOVE FES	(N) GRADE TO DAYLIGHT	DITCH EXCAVATION	REMOVE SC SLOPE PROTECTION	SC SLOPE PROTECTION	(N) MINOR CONCRETE (FOOTING)	MINOR CONCRETE (MINOR STRUCTURE)	MINOR CONCRETE (INVERT PAVING)	CONCRETE BACKFILL (PIPE TRENCH)	MISCELLANEOUS IRON & STEEL	SHOULDER BACKING	PLACE HMA (MISCELLANEOUS AREA)	HMA (TYPE A)	(N) MAXIMUM COVER	18" CSP (0.109" THICK)	18" CIPPL	18" HDPE (TYPE S)	71" x 47" STEEL FES	CLEANING, INSPECTING, AND REPAIRING CULVERTS	(N) JOINT CLASSIFICATION	DESCRIPTION	LOCATION	DRAINAGE SYSTEM No. ⬡	DRAINAGE UNIT ○
			LF	LF	LF	LF	LF	LF	CY	CY	CY	LF	CY	CY	CY	LB	CY	SQYD	TON	FT	LF	LF	LF	EA	LF	S/P				
DP-1	1	a																				81.0			81.0		18" CIPPL	PM 37.84 (Loc 1)	1	a
		b				2.0																					REMOVE CULVERT (18" CSP)			b
		c																		4.0	2.0					S	18" CSP (0.109" THICK)			c
		d	15																								REMOVE FENCE			d
		e		15																							FENCE (TYPE WM AND BW)			e
DP-2	2	a					1																				REMOVE FES	PM 38.26 (Loc 2)	2	a
		b																						1			71" x 41" STEEL FES			b
		c								4.6																	REMOVE SC SLOPE PROTECTION			c
		d									4.6																SC SLOPE PROTECTION			d
		e												6.9		286.9				3.7					55.7		MINOR CONCRETE (INVERT PAVING)			e
		f									4.5																SC SLOPE PROTECTION			f
		g								4.5																	REMOVE SC SLOPE PROTECTION			g
		h					1																				REMOVE FES			h
		i																						1			71" x 41" STEEL FES			i
		j	35																								REMOVE FENCE			j
		k		35																							FENCE (TYPE WM AND BW)			k
DP-3	3	a												20.0		642.7				15.3					128.7		MINOR CONCRETE (INVERT PAVING)	PM 38.40 (Loc 3)	3	a
DP-4	4	a																		3.9		50.9			50.9		18" CIPPL	PM 40.55 (Loc 4)	4	a
		b						40	3.7																		GRADE TO DAYLIGHT			b
		c	20																								REMOVE FENCE			c
		d		20																							FENCE (TYPE WM AND BW)			d
		e	20																								REMOVE FENCE			e
		f		20																							FENCE (TYPE WM AND BW)			f
		g			166																						GRADE TO DAYLIGHT			g
		h				2.0																					REMOVE CULVERT (18" CSP)			h
		i																		0.0	2.0					S	18" CSP (0.109" THICK)			i
DP-5	5	a																		5.0		43.4			43.4		18" CIPPL	PM 41.07 (Loc 5)	5	a
		b						60	0.9																		GRADE TO DAYLIGHT			b
		c	20																								REMOVE FENCE			c
		d		20																							FENCE (TYPE WM AND BW)			d
		e				2.0																					REMOVE CULVERT (18" CSP)			e
		f																		0.0	2.0					S	18" CSP (0.109" THICK)			f
DP-6	6	a																		2.4		98.6			98.6		18" CIPPL	PM 44.03 (Loc 6)	6	a
DP-7	7	a												1.4		44.5				4.3					10.2		MINOR CONCRETE (INVERT PAVING)	PM 44.31 (Loc 7)	7	a
		b							0.5			19.4	1.9							4.3							MINOR CONCRETE (FOOTING)			b
		c							0.5			12.0	1.2							5.9							MINOR CONCRETE (FOOTING)			c
SHEET TOTAL			110	110	166	6.0	2		5.6	9.1	9.1		3.1	28.3		974.1					6.0	273.9		2	468.5					

(N) NOT A SEPARATE PAY ITEM, FOR INFORMATION ONLY

DRAINAGE QUANTITIES
DQ-1

STATE OF CALIFORNIA - DEPARTMENT OF TRANSPORTATION
Caltrans
DIVISION OF ENGINEERING HYDRAULICS

CALCULATED-DESIGNED BY: CLARK W. TOWNSEND
CHECKED BY: DENNIS JAGODA
FUNCTIONAL SUPERVISOR: DENNIS JAGODA
REVISED BY / DATE REVISED

LAST REVISION 11-15-13 | DATE PLOTTED => 07-JAN-2014 | TIME PLOTTED => 11:13

Dist	COUNTY	ROUTE	POST MILES TOTAL PROJECT	SHEET No.	TOTAL SHEETS
03	Gle	162	37.7/51.0	15	18

Clark W. Townsend 12-2-13
REGISTERED CIVIL ENGINEER DATE

12-2-13
PLANS APPROVAL DATE

REGISTERED PROFESSIONAL ENGINEER
CLARK W. TOWNSEND
No. C47921
Exp. 12-31-15
CIVIL
STATE OF CALIFORNIA

THE STATE OF CALIFORNIA OR ITS OFFICERS OR AGENTS SHALL NOT BE RESPONSIBLE FOR THE ACCURACY OR COMPLETENESS OF SCANNED COPIES OF THIS PLAN SHEET.

ABBREVIATIONS:

CIPPL CURED-IN-PLACE PIPELINER
SC SACKED CONCRETE
S STANDARD JOINT
P POSITIVE JOINT

DRAINAGE QUANTITIES

DRAINAGE SHEET No.	DRAINAGE SYSTEM No. ⬡	DRAINAGE UNIT ○	REMOVE FENCE LF	FENCE (TYPE WM AND BW) LF	TEMPORARY FENCE (TYPE ESA) LF	REMOVE CULVERT LF	REMOVE FES EA	(N) GRADE TO DAYLIGHT LF	DITCH EXCAVATION CY	REMOVE SC SLOPE PROTECTION CY	SC SLOPE PROTECTION CY	(N) MINOR CONCRETE (FOOTING) LF	MINOR CONCRETE (MINOR STRUCTURE) CY	MINOR CONCRETE (INVERT PAVING) CY	CONCRETE BACKFILL (PIPE TRENCH) CY	MISCELLANEOUS IRON & STEEL LB	SHOULDER BACKING CY	PLACE HMA (MISCELLANEOUS AREA) SQYD	HMA (TYPE A) Ton	(N) MAXIMUM COVER FT	18" CSP (0.109" THICK) LF	18" CIPPL LF	18" HDPE (TYPE S) LF	71" x 47" STEEL FES EA	CLEANING, INSPECTING, AND REPAIRING CULVERTS LF	(N) JOINT CLASSIFICATION S/P/DD	DESCRIPTION	STATION	DRAINAGE SYSTEM No. ⬡	DRAINAGE UNIT ○
DP-8	8	a				43.9																					REMOVE CULVERT (18" RCP)	PM 50.08 (Loc 8)	8	a
		b																		3.0			43.9			S	18" HDPE (Type S)			b
		c													4.4												CONCRETE BACKFILL (PIPE TRENCH)			c
		d																7.2	1.6								PLACE HMA (Misc AREA) (4" DEPTH)			d
		e						6	0.1																		GRADE TO DAYLIGHT			e
		f															0.2										SHOULDER BACKING (4" DEPTH)			f
		g															0.3										SHOULDER BACKING (4" DEPTH)			g
DP-9	9	a				44.8																					REMOVE CULVERT (18" RCP)	PM 50.92 (Loc 9)	9	a
		b																		3.5			44.8			S	18" HDPE (Type S)			b
		c													11.4												CONCRETE BACKFILL (PIPE TRENCH)			c
		d																7.2	1.6								PLACE HMA (Misc AREA) (4" DEPTH)			d
		e						10	0.2																		GRADE TO DAYLIGHT			e
		f						22	2.7																		GRADE TO DAYLIGHT			f
		g															0.2										SHOULDER BACKING (4" DEPTH)			g
		h															0.3										SHOULDER BACKING (4" DEPTH)			h
SHEET TOTAL						88.7			3.0						15.8		1.0	14.4	3.2				88.7							
SUBTOTAL SHEET DQ-1			110	110	166	6.0	2		5.6	9.1	9.1		3.1	28.3		974.1					6.0	273.9		2	468.5					
SUBTOTAL SHEET DQ-2						88.7			3.0						15.8		1.0	14.4	3.2				88.7							
TOTAL			110	110	166	94.7	2		8.6	9.1	9.1		3.1	28.3	15.8	974.1	1.0	14.4	3.2		6.0	273.9	88.7	2	468.5					

(N) NOT A SEPARATE PAY ITEM, FOR INFORMATION ONLY

CLARK W. TOWNSEND — REVISED BY
DENNIS JAGODA — DATE REVISED
CALCULATED-DESIGNED BY
CHECKED BY
FUNCTIONAL SUPERVISOR
DENNIS JAGODA

STATE OF CALIFORNIA - DEPARTMENT OF TRANSPORTATION
Caltrans
DIVISION OF ENGINEERING
HYDRAULICS

DRAINAGE QUANTITIES
DQ-2

APPROVED FOR DRAINAGE WORK ONLY

LAST REVISION 11-15-13 | DATE PLOTTED => 07-JAN-2014 | TIME PLOTTED => 11:13

M

Maint	MAINTENANCE
Max	MAXIMUM
MB	METAL BEAM
MBB	METAL BEAM BARRIER
MBGR	METAL BEAM GUARD RAILING
Med	MEDIAN
MGS	MIDWEST GUARDRAIL SYSTEM
MH	MANHOLE
Min	MINIMUM
Misc	MISCELLANEOUS
Misc I & S	MISCELLANEOUS IRON AND STEEL
Mkr	MARKER
Mod	MODIFIED, MODIFY
Mon	MONUMENT
MP	METAL PLATE
MPGR	METAL PLATE GUARD RAILING
MR	MOVEMENT RATING
MSE	MECHANICALLY STABILIZED EMBANKMENT
Mt	MOUNTAIN, MOUNT
Mtl	MATERIAL
MVP	MAINTENANCE VEHICLE PULLOUT

N

N	NORTH
NB	NORTHBOUND
No.	NUMBER (MUST HAVE PERIOD)
Nos.	NUMBERS (MUST HAVE PERIOD)
NPS	NOMINAL PIPE SIZE
NS	NEAR SIDE
NSP	NEW STANDARD PLAN
NTS	NOT TO SCALE

O

Oblr	OBLITERATE
OC	OVERCROSSING
OD	OUTSIDE DIAMETER
OF	OUTSIDE FACE
OG	ORIGINAL GROUND
OGAC	OPEN GRADED ASPHALT CONCRETE
OGFC	OPEN GRADED FRICTION COURSE
OH	OVERHEAD
OHWM	ORDINARY HIGH WATER MARK
O-O	OUT TO OUT
Opp	OPPOSITE
OSD	OVERSIDE DRAIN

P

p	PAGE
PAP	PERFORATED ALUMINUM PIPE
PB	PULL BOX
PC	POINT OF CURVATURE, PRECAST
PCC	POINT OF COMPOUND CURVE, PORTLAND CEMENT CONCRETE
PCMS	PORTABLE CHANGEABLE MESSAGE SIGN
PCP	PERFORATED CONCRETE PIPE, PRESTRESSED CONCRETE PIPE
PCVC	POINT OF COMPOUND VERTICAL CURVE
PEC	PERMIT TO ENTER AND CONSTRUCT
Ped	PEDESTRIAN
Ped OC	PEDESTRIAN OVERCROSSING
Ped UC	PEDESTRIAN UNDERCROSSING
Perm Mtl	PERMEABLE MATERIAL

P continued

PG	PROFILE GRADE
PI	POINT OF INTERSECTION
PJP	PARTIAL JOINT PENETRATION
Pkwy	PARKWAY
ℙ,PL	PLATE
P/L	PROPERTY LINE
PM	POST MILE, TIME FROM NOON TO MIDNIGHT
PN	PAVING NOTCH
POC	POINT OF HORIZONTAL CURVE
POT	POINT OF TANGENT
POVC	POINT OF VERTICAL CURVE
PP	PIPE PILE, PLASTIC PIPE, POWER POLE
PPL	PREFORMED PERMEABLE LINER
PPP	PERFORATED PLASTIC PIPE
PRC	POINT OF REVERSE CURVE
PRF	PAVEMENT REINFORCING FABRIC
PRVC	POINT OF REVERSE VERTICAL CURVE
PS&E	PLANS, SPECIFICATIONS AND ESTIMATES
PS, P/S	PRESTRESSED
PSP	PERFORATED STEEL PIPE
PT	POINT OF TANGENCY
PVC	POLYVINYL CHLORIDE
Pvmt	PAVEMENT

Q

Qty	QUANTITY

R

R	RADIUS
R & D	REMOVE AND DISPOSE
R & S	REMOVE AND SALVAGE
R/C	RATE OF CHANGE
RCA	REINFORCED CONCRETE ARCH
RCB	REINFORCED CONCRETE BOX
RCP	REINFORCED CONCRETE PIPE
RCPA	REINFORCED CONCRETE PIPE ARCH
Rd	ROAD
Reinf	REINFORCED, REINFORCEMENT, REINFORCING
Rel	RELOCATE
Repl	REPLACEMENT
Ret	RETAINING
Rev	REVISED, REVISION
Rdwy	ROADWAY
RHMA	RUBBERIZED HOT MIX ASPHALT
Riv	RIVER
RM	ROAD-MIXED
RP	RADIUS POINT, REFERENCE POINT
RR	RAILROAD
RSP	ROCK SLOPE PROTECTION, REVISED STANDARD PLAN
Rt	RIGHT
Rte	ROUTE
RW	REDWOOD, RETAINING WALL
R/W	RIGHT OF WAY
Rwy	RAILWAY

S

S	SOUTH, SUPPLEMENT
SAE	STRUCTURE APPROACH EMBANKMENT
Salv	SALVAGE
SAPP	STRUCTURAL ALUMINUM PLATE PIPE
SB	SOUTHBOUND
SC	SAND CUSHION
SCSP	SLOTTED CORRUGATED STEEL PIPE
SD	STORM DRAIN
Sec	SECOND, SECTION
Sep	SEPARATION
SG	SUBGRADE
Shld	SHOULDER
Sht	SHEET
Sim	SIMILAR
℄	STATION LINE
SM	SELECTED MATERIAL
Spec	SPECIAL, SPECIFICATIONS
SPP	SLOTTED PLASTIC PIPE
SS	SLOPE STAKE
SSBM	STRAP AND SADDLE BRACKET METHOD
SSD	STRUCTURAL SECTION DRAIN
SSPA	STRUCTURAL STEEL PLATE ARCH
SSPP	STRUCTURAL STEEL PLATE PIPE
SSPPA	STRUCTURAL STEEL PLATE PIPE ARCH
SSRP	STEEL SPIRAL RIB PIPE
St	STREET
Sta	STATION
STBB	SINGLE THRIE BEAM BARRIER
Std	STANDARD
Str	STRUCTURE
Surf	SURFACING
SW	SIDEWALK, SOUND WALL
Swr	SEWER
Sym	SYMMETRICAL
S4S	SURFACE 4 SIDES

T

T	SEMI-TANGENT
Tan	TANGENT
TBB	THRIE BEAM BARRIER
Tbr	TIMBER
TC	TOP OF CURB
TCB	TRAFFIC CONTROL BOX
TCE	TEMPORARY CONSTRUCTION EASEMENT
Tel	TELEPHONE
Temp	TEMPORARY
TG	TOP OF GRADE
Tot	TOTAL
TP	TELEPHONE POLE
TPB	TREATED PERMEABLE BASE
TPM	TREATED PERMEABLE MATERIAL
Trans	TRANSITION

T continued

TS	TRANSVERSE, TRAFFIC SIGNAL, TUBULAR STEEL
Typ	TYPICAL

U

UC	UNDERCROSSING
UD	UNDERDRAIN
UG	UNDERGROUND
UON	UNLESS OTHERWISE NOTED
UP	UNDERPASS

V

V	VALVE, DESIGN SPEED
Var	VARIABLE, VARIES
VC	VERTICAL CURVE
VCP	VITRIFIED CLAY PIPE
Vert	VERTICAL
Via	VIADUCT
Vol	VOLUME

W

W	WEST, WIDTH
WB	WESTBOUND
WH	WEEP HOLE
WM	WIRE MESH
WS	WATER SURFACE
WSP	WELDED STEEL PIPE
Wt	WEIGHT
WV	WATER VALVE
WW	WINGWALL
WWLOL	WINGWALL LAYOUT LINE

X

X Sec	CROSS SECTION
Xing	CROSSING

Y

Yr	YEAR
Yrs	YEARS

Dist	COUNTY	ROUTE	POST MILES TOTAL PROJECT	SHEET No.	TOTAL SHEETS
03	Gle	162	37.7/51.0	16	18

Grace M. Tsushima
REGISTERED CIVIL ENGINEER

July 19, 2013
PLANS APPROVAL DATE

REGISTERED PROFESSIONAL ENGINEER Grace M. Tsushima No. C49814 Exp. 9-30-14 CIVIL STATE OF CALIFORNIA

THE STATE OF CALIFORNIA OR ITS OFFICERS OR AGENTS SHALL NOT BE RESPONSIBLE FOR THE ACCURACY OR COMPLETENESS OF SCANNED COPIES OF THIS PLAN SHEET.

TO ACCOMPANY PLANS DATED 12-2-13

UNIT OF MEASUREMENT SYMBOLS:

Some of the symbols used in the project plan quantity tables and in the Bid Item List are:

TABLE A

SYMBOL USED	DEFINITIONS
ACRE	ACRE
CF	CUBIC FOOT
CY	CUBIC YARD
EA	EACH
GAL	GALLON
LB	POUND
LF	LINEAR FOOT
SQFT	SQUARE FOOT
SQYD	SQUARE YARD
STA	100 FEET
TAB	TABLET
TON	2,000 POUNDS

Some of the symbols used in the plans other than in the project plan quantity tables are:

TABLE B

SYMBOL USED	DEFINITIONS
ksi	KIPS PER SQUARE INCH
ksf	KIPS PER SQUARE FOOT
psi	POUNDS PER SQUARE INCH
psf	POUNDS PER SQUARE FOOT
lb/ft^3, pcf	POUNDS PER CUBIC FOOT
tsf	TONS PER SQUARE FOOT
mph, MPH *	MILES PER HOUR
ø	NOMINAL DIAMETER
oz	OUNCE
lb	POUND
kip	1,000 POUNDS
cal	CALORIE
ft	FOOT OR FEET
gal	GALLON

* For use on a sign panel only

STATE OF CALIFORNIA
DEPARTMENT OF TRANSPORTATION

ABBREVIATIONS (SHEET 2 OF 2)

NO SCALE

RSP A10B DATED JULY 19, 2013 SUPERSEDES STANDARD PLAN A10B DATED MAY 20, 2011 - PAGE 2 OF THE STANDARD PLANS BOOK DATED 2010.

REVISED STANDARD PLAN RSP A10B

2010 REVISED STANDARD PLAN RSP A10B

6-7-13

Dist	COUNTY	ROUTE	POST MILES TOTAL PROJECT	SHEET No.	TOTAL SHEETS
03	Gle	162	37.7/51.0	17	18

Raymond Don Tsztoo
REGISTERED CIVIL ENGINEER

October 19, 2012
PLANS APPROVAL DATE

REGISTERED PROFESSIONAL ENGINEER
Raymond Don Tsztoo
No. C37332
Exp. 6-30-14
CIVIL
STATE OF CALIFORNIA

THE STATE OF CALIFORNIA OR ITS OFFICERS OR AGENTS SHALL NOT BE RESPONSIBLE FOR THE ACCURACY OR COMPLETENESS OF SCANNED COPIES OF THIS PLAN SHEET.

TO ACCOMPANY PLANS DATED 12-2-13

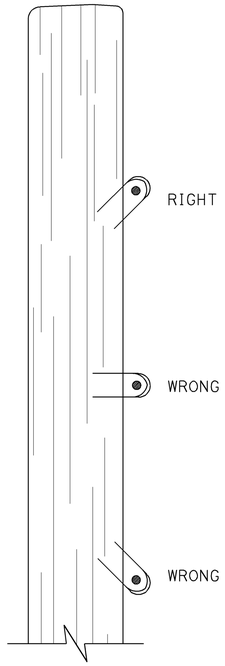

DRIVE STAPLES AT ANGLE

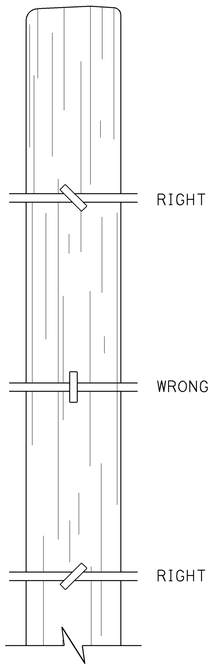

DO NOT DRIVE STAPLES PARALLEL TO SIDE OF POST

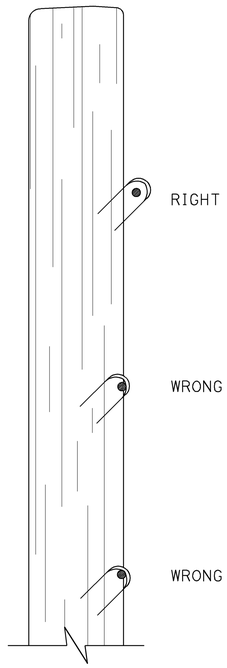

LEAVE WIRE LOOSE IN STAPLE

LINE POST STAPLING DETAILS

(Apply to rectangular/square and round posts)
Do not staple vertical wire in wire mesh.

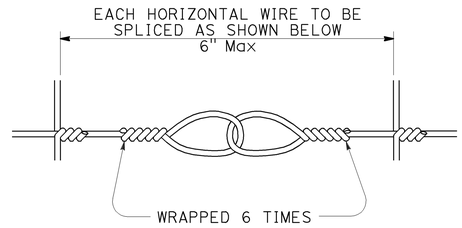

SPLICE DETAIL FOR BARBED WIRE/WIRE MESH FENCE

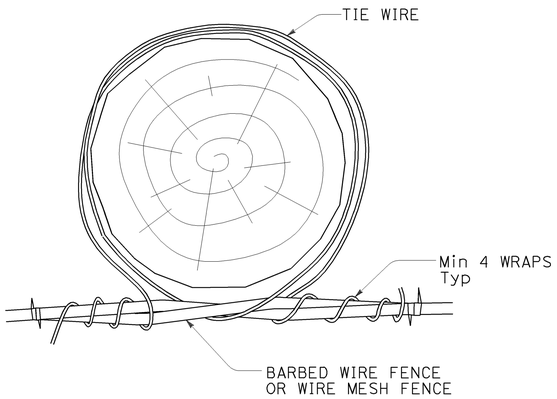

OPTION A

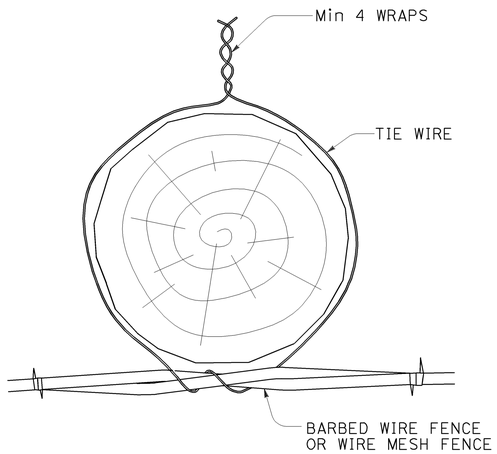

OPTION B

LINE POST WIRE TIE OPTION DETAILS

(Option details also apply to rectangular/square posts)

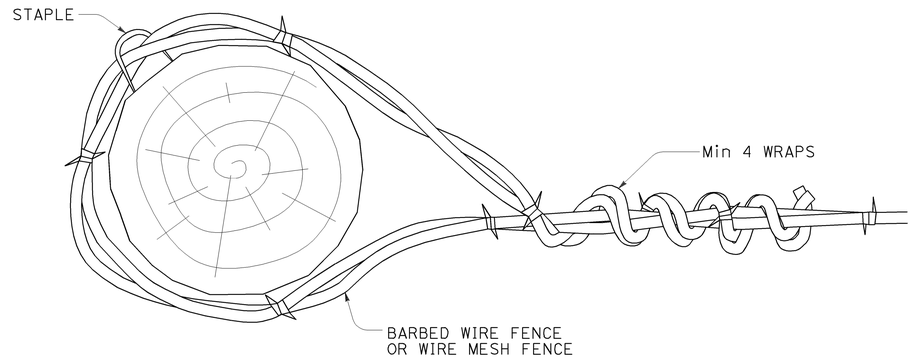

END, LATCH, PULL, AND CORNER POST DETAIL

(Also applies to rectangular/square posts)

STATE OF CALIFORNIA
DEPARTMENT OF TRANSPORTATION

BARBED WIRE AND WIRE MESH FENCE - MISCELLANEOUS DETAILS

NO SCALE

RSP A86D DATED OCTOBER 19, 2012 SUPPLEMENTS THE STANDARD PLANS BOOK DATED 2010.

REVISED STANDARD PLAN RSP A86D

2010 REVISED STANDARD PLAN RSP A86D

10-9-12

Dist	COUNTY	ROUTE	POST MILES TOTAL PROJECT	SHEET No.	TOTAL SHEETS
03	Gle	162	37.7/51.0	18	18

REGISTERED CIVIL ENGINEER

April 19, 2013
PLANS APPROVAL DATE

REGISTERED PROFESSIONAL ENGINEER Gurinderpal Bhullar No. C48815 Exp. 9-30-14 CIVIL STATE OF CALIFORNIA

THE STATE OF CALIFORNIA OR ITS OFFICERS OR AGENTS SHALL NOT BE RESPONSIBLE FOR THE ACCURACY OR COMPLETENESS OF SCANNED COPIES OF THIS PLAN SHEET.

TO ACCOMPANY PLANS DATED 12-2-13

NOTES:

See Revised Standard Plan RSP T9 for tables.

Use cone spacing X for taper segment, Y for tangent segment or Z for conflict situations, as approriate, per Table 1, unless X, Y, or Z cone spacing is shown on this sheet.

Unless otherwise specified in the special provisions, all temporary warning signs shall have black legend on fluorescent orange background.

California codes are designated by (CA). Otherwise, Federal (MUTCD) codes are shown.

TYPICAL LANE CLOSURE WITH REVERSIBLE CONTROL

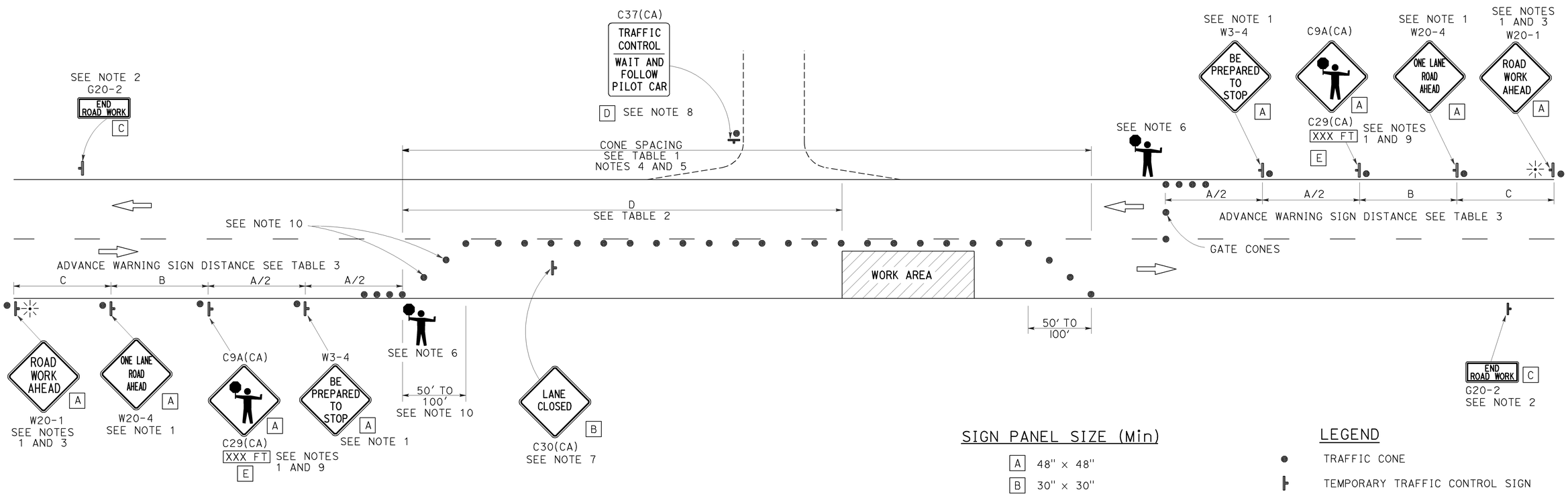

SIGN PANEL SIZE (Min)

A	48" × 48"
B	30" × 30"
C	36" × 18"
D	36" × 42"
E	20" × 7"

LEGEND

- TRAFFIC CONE
- TEMPORARY TRAFFIC CONTROL SIGN
- PORTABLE FLASHING BEACON
- FLAGGER

NOTES:

1. Each advance warning sign in each direction of travel shall be equipped with at least two flags for daytime closure. Each flag shall be at least 16" x 16" in size and shall be orange or fluorescent red-orange in color. Flashing beacons shall be placed at the locations indicated for lane closure during hours of darkness.
2. A G20-2 "END ROAD WORK" sign, as appropriate, shall be placed at the end of the lane control unless the end of work area is obvious, or ends within a larger project's limits.
3. If the W20-1 sign would follow within 2000' of a stationary W20-1 or G20-1 "ROAD WORK NEXT _____ MILES", use a W20-4 sign for the first advance warning sign.
4. All cones used for lane closures during the hours of darkness shall be fitted with retroreflective bands (or sleeves) as specified in the specifications.
5. Portable delineators, placed at one-half the spacing indicated for traffic cones, may be used instead of cones for daytime closures only.
6. Additional advance flaggers may be required. Flagger should stand in a conspicuous place, be visible to approaching traffic as well as approaching vehicles after the first vehicle has stopped. During the hours of darkness, the flagging-station and flagger shall be illuminated and clearly visible to approaching traffic. The illumination footprint of the lighting on the ground shall be at least 20' in diameter. Place a minimum of four cones at 50' intervals in advance of flagger station as shown.
7. Place C30(CA) "LANE CLOSED" sign at 500' to 1000' intervals throughout extended work areas. They are optional if the work area is visible from the flagger station.
8. When a pilot car is used, place a C37(CA) "TRAFFIC CONTROL-WAIT AND FOLLOW PILOT CAR" sign with black legend on white background at all intersections, driveways and alleys without a flagger within traffic control area. Signs shall be clean and visible at all times. Where traffic can not be effectively self-regulated, at least one flagger shall be used at each intersection within traffic control area.
9. An optional C29(CA) sign may be placed below the C9A(CA) sign.
10. Either traffic cones or barricades shall be placed on the taper. Barricades shall be Type I, II, or III.

STATE OF CALIFORNIA
DEPARTMENT OF TRANSPORTATION

TRAFFIC CONTROL SYSTEM FOR LANE CLOSURE ON TWO LANE CONVENTIONAL HIGHWAYS

NO SCALE

RSP T13 DATED APRIL 19, 2013 SUPERSEDES STANDARD PLAN T13 DATED MAY 20, 2011 - PAGE 241 OF THE STANDARD PLANS BOOK DATED 2010.

REVISED STANDARD PLAN RSP T13

2010 REVISED STANDARD PLAN RSP T13

4-2-13