Dist	COUNTY	ROUTE	POST MILES TOTAL PROJECT	SHEET No.	TOTAL SHEETS
03	ED	193	0.2/R6.0	2	17

REGISTERED CIVIL ENGINEER 3-14-11 DATE

1-21-11
PLANS APPROVAL DATE

REGISTERED PROFESSIONAL ENGINEER REX P. HERVEY No. C53302 Exp. 06-30-11 CIVIL STATE OF CALIFORNIA

THE STATE OF CALIFORNIA OR ITS OFFICERS OR AGENTS SHALL NOT BE RESPONSIBLE FOR THE ACCURACY OR COMPLETENESS OF SCANNED COPIES OF THIS PLAN SHEET.

1

NOTES:

1. FOR COMPLETE RIGHT OF WAY DATA, SEE RIGHT OF WAY RECORD MAPS AT DISTRICT OFFICE.
2. DIMENSIONS OF THE STRUCTURAL SECTION ARE SUBJECT TO THE TOLERANCES SPECIFIED IN THE STANDARD SPECIFICATIONS.
3. SUPERELEVATIONS AS SHOWN OR AS DIRECTED BY THE ENGINEER.
4. NO SURFACE TREATMENT ON EXISTING STRUCTURES.
5. EXISTING UTILITIES ARE NOT SHOWN ON THESE PLANS.
6. PLACE SAFETY EDGE LEFT AND RIGHT EDGE, SEE SHEET C-1 FOR DETAILS.
7. SEE SUMMARY OF QUANTITIES FOR ITEMS, LOCATIONS AND DIMENSIONS.

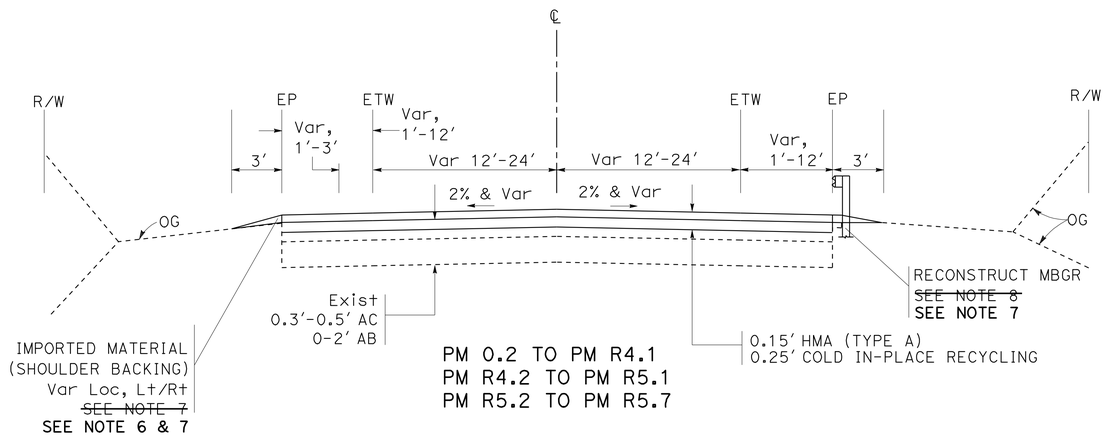

PM 0.2 TO PM R4.1
PM R4.2 TO PM R5.1
PM R5.2 TO PM R5.7

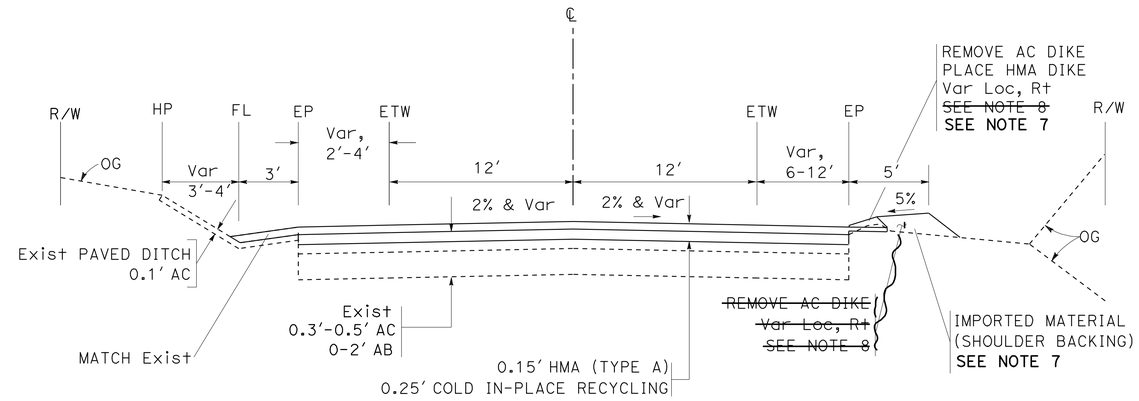

PM R4.1 TO PM R4.2

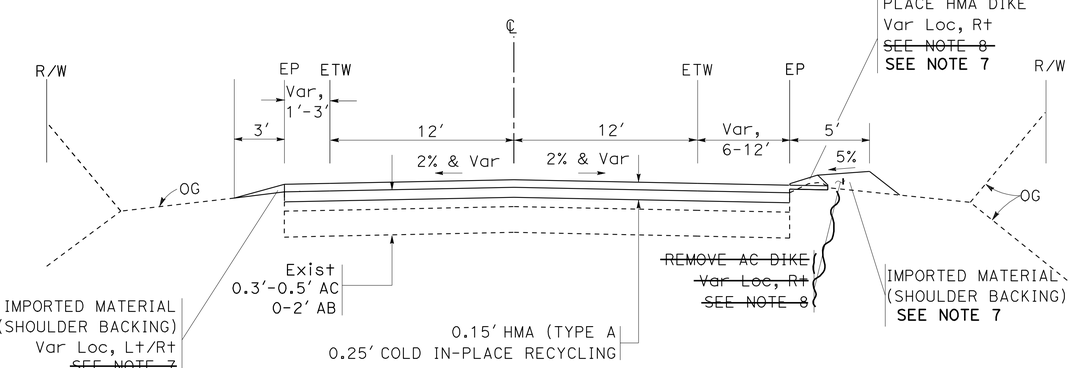

PM R5.1 TO PM R5.2

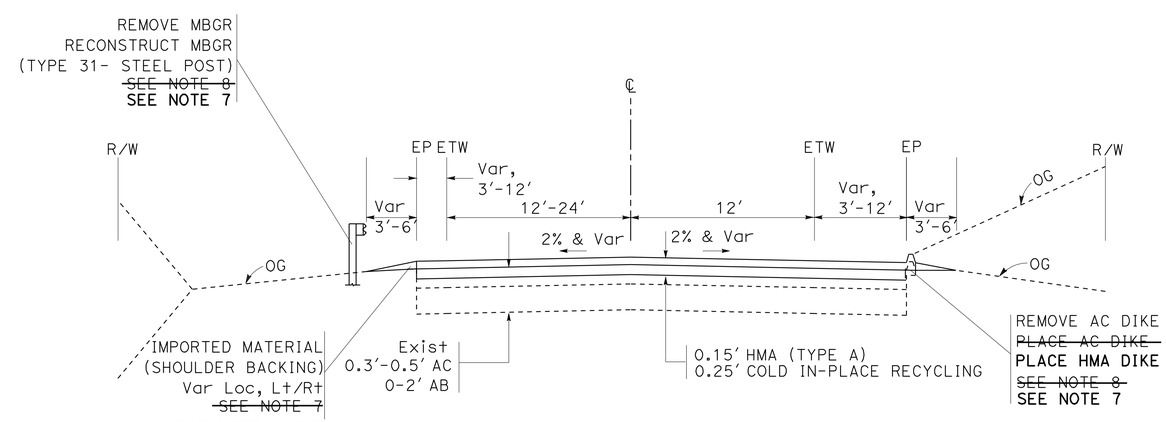

PM R5.7 TO PM R6.0

1 **REVISED PER ADDENDUM No. 1 DATED MARCH 16, 2011**

TYPICAL CROSS SECTIONS

NO SCALE

X-1

STATE OF CALIFORNIA - DEPARTMENT OF TRANSPORTATION
MAINTENANCE ENGINEERING
Caltrans

FUNCTIONAL SUPERVISOR: PAT KELLEY
CALCULATED-DESIGNED BY: D'ARCY MCLEOD
CHECKED BY: REX HERVEY
REVISED BY
DATE REVISED

LAST REVISION 01-06-11
DATE PLOTTED => 16-MAR-2011
TIME PLOTTED => 13:28

Dist	COUNTY	ROUTE	POST MILES TOTAL PROJECT	SHEET No.	TOTAL SHEETS
03	ED	193	0.2/R6.0	5	17

REGISTERED CIVIL ENGINEER 3-14-11 DATE

1-21-11
PLANS APPROVAL DATE

REGISTERED PROFESSIONAL ENGINEER REX P. HERVEY No. C53302 Exp. 06-30-11 CIVIL STATE OF CALIFORNIA

THE STATE OF CALIFORNIA OR ITS OFFICERS OR AGENTS SHALL NOT BE RESPONSIBLE FOR THE ACCURACY OR COMPLETENESS OF SCANNED COPIES OF THIS PLAN SHEET.

NOTES:

1. POST MILE SHOWN ARE APPROXIMATE. EXACT LIMITS OF HMA DIKE AND METAL BEAM GUARD RAILING WORK TO BE DETERMINED BY THE ENGINEER.
2. (N) - NOT A SEPARATE PAY ITEM, FOR INFORMATION ONLY.

METAL BEAM GUARD RAILING

LOCATION	REMOVE MBGR	(N) REMOVE END CAP	(N) REMOVE TERMINAL SECTION	(N) REMOVE BURIED POST END ANCHOR	(N) REMOVE CONCRETE ANCHOR	(N) REMOVE CABLE ANCHOR ASSEMBLY	RECONSTRUCT MBGR (TYPE 31 - STEEL POST)	RECONSTRUCT END ANCHOR ASSEMBLY (TYPE SFT)	RECONSTRUCT TERMINAL SYSTEM (TYPE SRT)	ALTERNATIVE FLARED TERMINAL SYSTEM	OBJECT MARKER (TYPE L-1)
PM	LF	EA					LF	EA			
R+ 0.43							202	1	1		1
L+ R5.84	76	2	2	2	2	2	585			2	1
TOTAL	76	2	2	2	2	2	787	1	1	2	2

ROADWAY QUANTITIES

LOCATION	COLD-IN-PLACE RECYCLING	(N) COLD-IN-PLACE RECYCLING ADDITIVE	EMULSIFIED RECYCLING AGENT	HMA (TYPE A)	ASPHALTIC EMULSION (FOG SEAL COAT)	SAND COVER	IMPORTED MATERIAL (SHOULDER BACKING)	RESET ROADSIDE SIGN (WOOD POST)	COLD PLANE AC PAVEMENT
	SQYD	TON						EA	SQYD
PM 0.2 TO R6.0	98971	165	660	10021	44	75	558		124
R+ PM R5.17				53				1 (W2-1)	
R+ PM R5.73				7				1 (R1-1)	
TOTAL	98971	165	660	10081	44	75	558	2	124

DIKE

LOCATION/ DESCRIPTION	REMOVE ASPHALT CONCRETE DIKE	PLACE HMA DIKE (TYPE A)	PLACE HMA DIKE (TYPE D)	HMA (TYPE A)
	LF			TON
PM R4.19 R+	680			
PM R5.17 R+	640		640	53
PM R5.73 R+	270	270		7
TOTAL	1590	270	640	60 *

* SEE ROADWAY QUANTITY TABLE FOR GRAND TOTAL.

INTERSECTIONS & DRIVEWAYS ** 1

LOCATION	ROADWAY WIDTH	ROAD /DRIVEWAY WIDTH	LENGTH
	LF	LF	LF
CHERRY ACRES Rd	28	12	18
AMERICAN RIVER Trl	48	30	18
LIGAYA LN	24	12	10
CRAMER Rd	28	12	10
SWEETWATER Trl	30	12	10
BLACK ROCK Ln	28	12	10
UPPER BLACK ROCK Rd	28	12	10
BLACK ROCK Ln	28	12	10
SCOTTY DOG Ln	24	12	10
PRIVATE DRIVEWAY	16	12	10
TEGRA Rd	28	12	10
PENOBSCOT Rd	40	12	10
PRIVATE DRIVEWAY	28	12	3
LOU ALLEN Ln	16	12	10
CIRCLE Dr	14	12	10
CIRCLE Dr	14	12	10
SWEETWATER Trl	48	12	10
PILGRIM C+	26	12	10

** TONNAGE INCLUDED IN ROADWAY QUANTITIES TABLE

1 REVISED PER ADDENDUM No. 1 DATED MARCH 16, 2011

SUMMARY OF QUANTITIES

Q-1

STATE OF CALIFORNIA - DEPARTMENT OF TRANSPORTATION
MAINTENANCE ENGINEERING
Caltrans

FUNCTIONAL SUPERVISOR: PAT KELLEY
CALCULATED-DESIGNED BY: D'ARCY MCLEOD
CHECKED BY: REX HERVEY
REVISED BY
DATE REVISED

LAST REVISION 01-06-11
DATE PLOTTED => 16-MAR-2011
TIME PLOTTED => 13:29