INDEX OF PLANS

SHEET No.	DESCRIPTION
1	TITLE AND LOCATION MAP
2-4	TYPICAL CROSS SECTIONS
5	LAYOUTS
6-18	CONSTRUCTION DETAILS
19	CONSTRUCTION AREA SIGNS
20-21	STAGE CONSTRUCTION PLANS
22	PAVEMENT DELINEATION AND SIGN PLAN
23	PAVEMENT DELINEATION QUANTITIES
24-28	SIGN DETAILS AND QUANTITIES
29	SUMMARY OF QUANTITIES
30-31	EROSION CONTROL PLAN AND QUANTITIES
32-34	ELECTRICAL PLANS
35-63	REVISED STANDARD PLANS

STRUCTURE PLANS

64-68	ILLINOISTOWN OC, Br No. 19-0085

THE STANDARD PLANS LIST APPLICABLE TO THIS CONTRACT IS INCLUDED IN THE NOTICE TO BIDDERS AND SPECIAL PROVISIONS BOOK.

STATE OF CALIFORNIA
DEPARTMENT OF TRANSPORTATION

PROJECT PLANS FOR CONSTRUCTION ON
STATE HIGHWAY

IN PLACER COUNTY
NEAR COLFAX
AT ILLINOISTOWN OVERCROSSING

TO BE SUPPLEMENTED BY STANDARD PLANS DATED 2010

Dist	COUNTY	ROUTE	POST MILES TOTAL PROJECT	SHEET No.	TOTAL SHEETS
03	Pla	80	31.8	1	68

LOCATION MAP

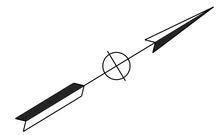

PM 31.8
LOCATION OF CONSTRUCTION

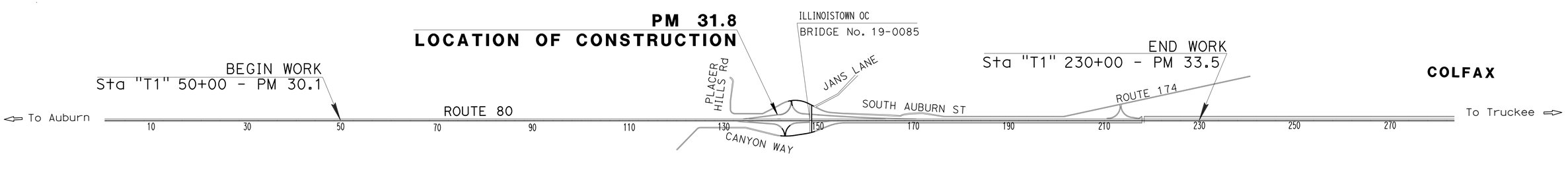

NO SCALE

PROJECT MANAGER: NADARAJAH SUTHAHAR
DESIGN MANAGER: STEPHEN WRIGHT

1-5-15
PROJECT ENGINEER DATE
REGISTERED CIVIL ENGINEER

January 5, 2015
PLANS APPROVAL DATE

REGISTERED PROFESSIONAL ENGINEER
ERIC NORMAN SOUZA
No. 75706
Exp. 6/30/16
CIVIL
STATE OF CALIFORNIA

THE STATE OF CALIFORNIA OR ITS OFFICERS OR AGENTS SHALL NOT BE RESPONSIBLE FOR THE ACCURACY OR COMPLETENESS OF SCANNED COPIES OF THIS PLAN SHEET.

THE CONTRACTOR SHALL POSSESS THE CLASS (OR CLASSES) OF LICENSE AS SPECIFIED IN THE "NOTICE TO BIDDERS."

CONTRACT No.	03-4F7004
PROJECT ID	0314000243

LAST REVISION 04-18-14
DATE PLOTTED => 09-JAN-2015
TIME PLOTTED => 08:45

Dist	COUNTY	ROUTE	POST MILES TOTAL PROJECT	SHEET No.	TOTAL SHEETS
03	PLA	80	31.8	2	68

REGISTERED CIVIL ENGINEER — 1-5-15 DATE

1-5-15
PLANS APPROVAL DATE

REGISTERED PROFESSIONAL ENGINEER
ERIC NORMAN SOUZA
No. 75706
Exp. 06/30/16
CIVIL
STATE OF CALIFORNIA

THE STATE OF CALIFORNIA OR ITS OFFICERS OR AGENTS SHALL NOT BE RESPONSIBLE FOR THE ACCURACY OR COMPLETENESS OF SCANNED COPIES OF THIS PLAN SHEET.

NOTES:

1. DIMENSIONS OF THE STRUCTURES (STRUCTURAL SECTIONS) ARE SUBJECT TO TOLERANCES SPECIFIED IN THE STANDARD SPECIFICATIONS.
2. SEE CONSTRUCTION DETAIL SHEETS FOR WIDENING AND HMA DIKE (TYPE E) LIMITS.
3. SEE LAYOUT FOR COLD PLANE PAVEMENT DEPTHS AND HMA (TYPE A) LIMITS.

PAVEMENT CLIMATE REGION

LOW MOUNTAIN

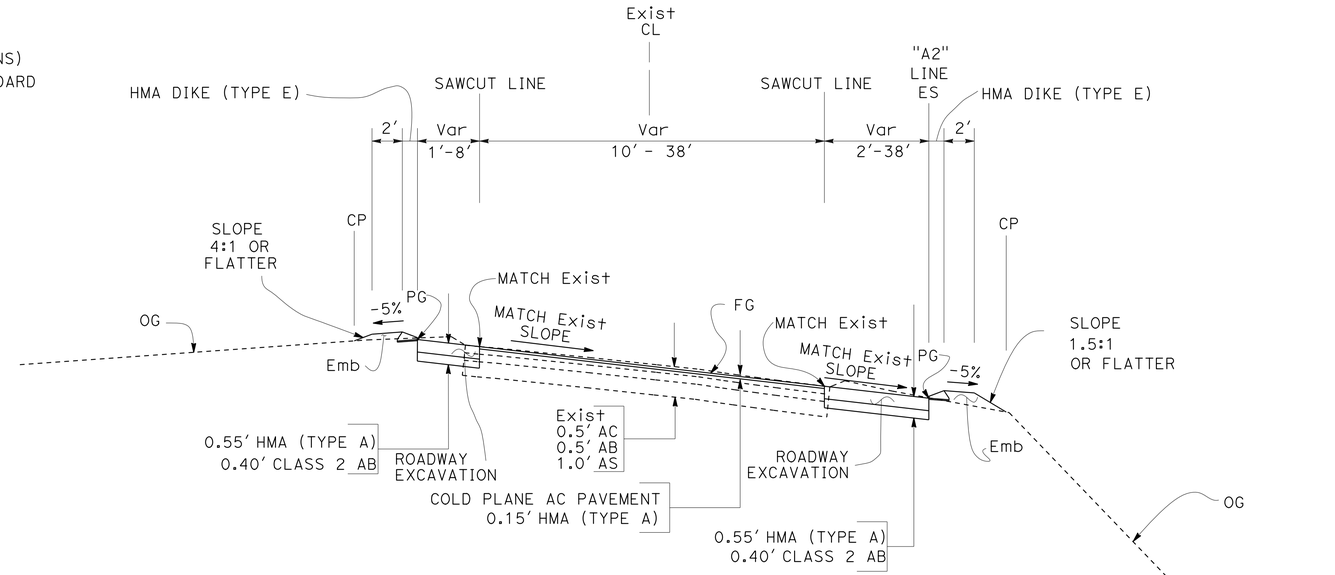

LT Exist CL
"A2" 24+46.00 TO "A2" 25+95.00

RT Exist CL
"A2" 20+00.00 TO "A2" 25+40.00

LOCATION 2

"A2" 20+00.00 TO "A2" 26+05.46

EB ROUTE 80 ON RAMP AND CANYON WAY

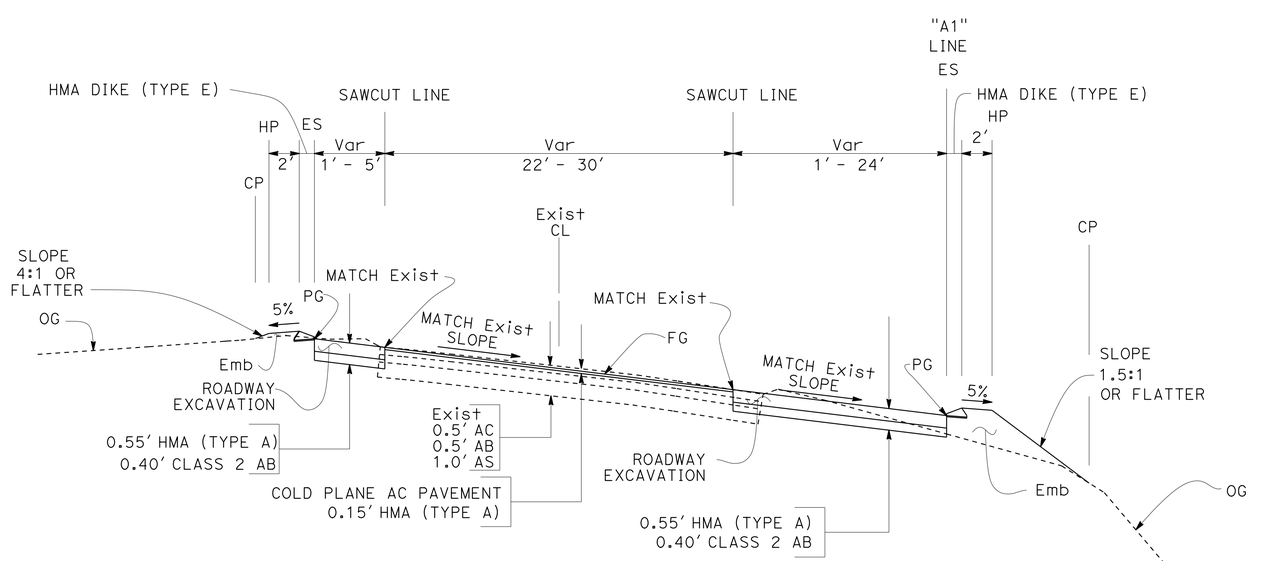

LT Exist CL
"A1" 10+62.50 TO "A1" 12+58.50

RT EXIST CL
"A1" 11+69.91 TO "A1" 14+86.82

LOCATION 1

"A1" 10+00.00 TO "A1" 15+06.00

EB ROUTE 80 OFF RAMP

TYPICAL CROSS SECTIONS

NO SCALE

X-1

REVISED BY | DATE REVISED
A. G. CHIN | CAROL MESMAN
CALCULATED-DESIGNED BY | CHECKED BY
FUNCTIONAL SUPERVISOR: STEPHEN WRIGHT

STATE OF CALIFORNIA - DEPARTMENT OF TRANSPORTATION
Caltrans®
TRAFFIC

LAST REVISION 10-15-14 | DATE PLOTTED => 08-JAN-2015 | TIME PLOTTED => 19:10

BORDER LAST REVISED 7/2/2010 | USERNAME => s119538 | DGN FILE => 0314000243ca001.dgn | RELATIVE BORDER SCALE IS IN INCHES 0 1 2 3 | UNIT 0399 | PROJECT NUMBER & PHASE 03140002431

Dist	COUNTY	ROUTE	POST MILES TOTAL PROJECT	SHEET No.	TOTAL SHEETS
03	PLA	80	31.8	3	68

REGISTERED CIVIL ENGINEER — 1-5-15 DATE

1-5-15 PLANS APPROVAL DATE

REGISTERED PROFESSIONAL ENGINEER — ERIC NORMAN SOUZA — No. 75706 — Exp. 06/30/16 — CIVIL — STATE OF CALIFORNIA

THE STATE OF CALIFORNIA OR ITS OFFICERS OR AGENTS SHALL NOT BE RESPONSIBLE FOR THE ACCURACY OR COMPLETENESS OF SCANNED COPIES OF THIS PLAN SHEET.

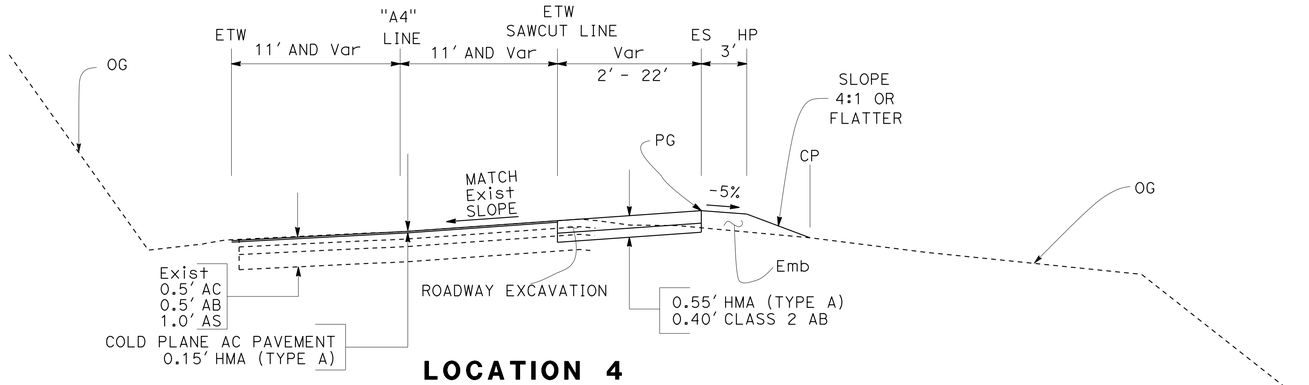

LOCATION 4

"A4" 42+52.79 TO "A4" 44+74.00

SOUTH AUBURN STREET

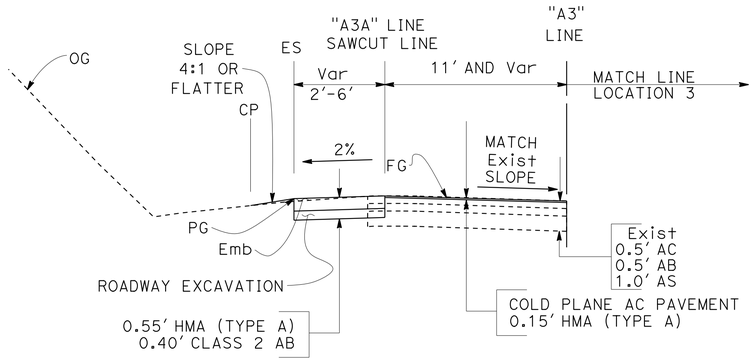

LOCATION 3A

"A3A" 30+00.00 TO "A3A" 31+96.71

CANYON WAY

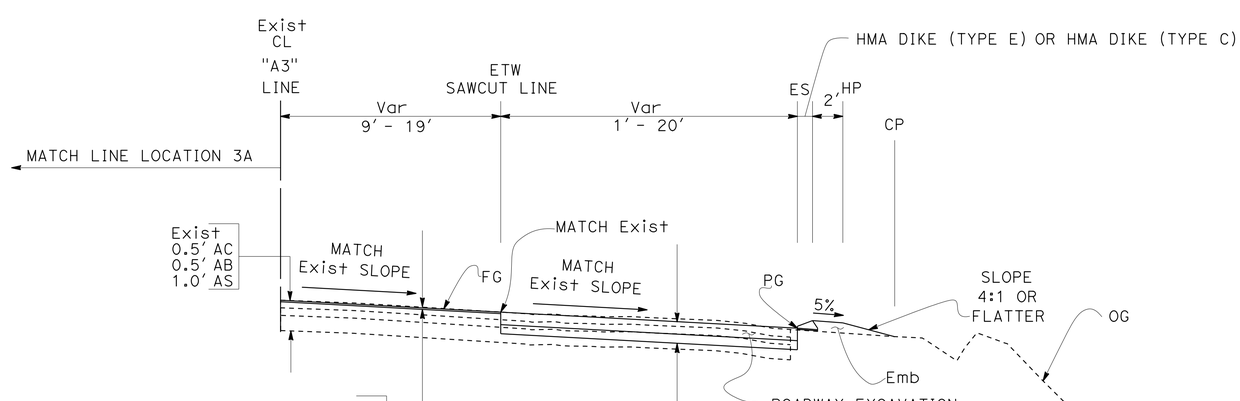

RT "A3" LINE

"A3" 31+05.00 TO "A1" 33+02.00

LOCATION 3

"A3" 29+70.00 TO "A3" 33+02.00

CANYON WAY

TYPICAL CROSS SECTIONS

NO SCALE

X-2

LAST REVISION | DATE PLOTTED => 08-JAN-2015
10-16-14 | TIME PLOTTED => 19:10

STATE OF CALIFORNIA - DEPARTMENT OF TRANSPORTATION
Caltrans®
TRAFFIC

FUNCTIONAL SUPERVISOR: STEPHEN WRIGHT
CALCULATED-DESIGNED BY: A. G. CHIN
CHECKED BY: CAROL MESMAN
REVISED BY | DATE REVISED

BORDER LAST REVISED 7/2/2010

USERNAME => s119538
DGN FILE => 0314000243ca002.dgn

RELATIVE BORDER SCALE IS IN INCHES 0 1 2 3

UNIT 0399

PROJECT NUMBER & PHASE 03140002431

Dist	COUNTY	ROUTE	POST MILES TOTAL PROJECT	SHEET No.	TOTAL SHEETS
03	PLA	80	31.8	4	68

REGISTERED CIVIL ENGINEER — 1-5-15 DATE

1-5-15
PLANS APPROVAL DATE

REGISTERED PROFESSIONAL ENGINEER
ERIC NORMAN SOUZA
No. 75706
Exp. 06/30/16
CIVIL
STATE OF CALIFORNIA

THE STATE OF CALIFORNIA OR ITS OFFICERS OR AGENTS SHALL NOT BE RESPONSIBLE FOR THE ACCURACY OR COMPLETENESS OF SCANNED COPIES OF THIS PLAN SHEET.

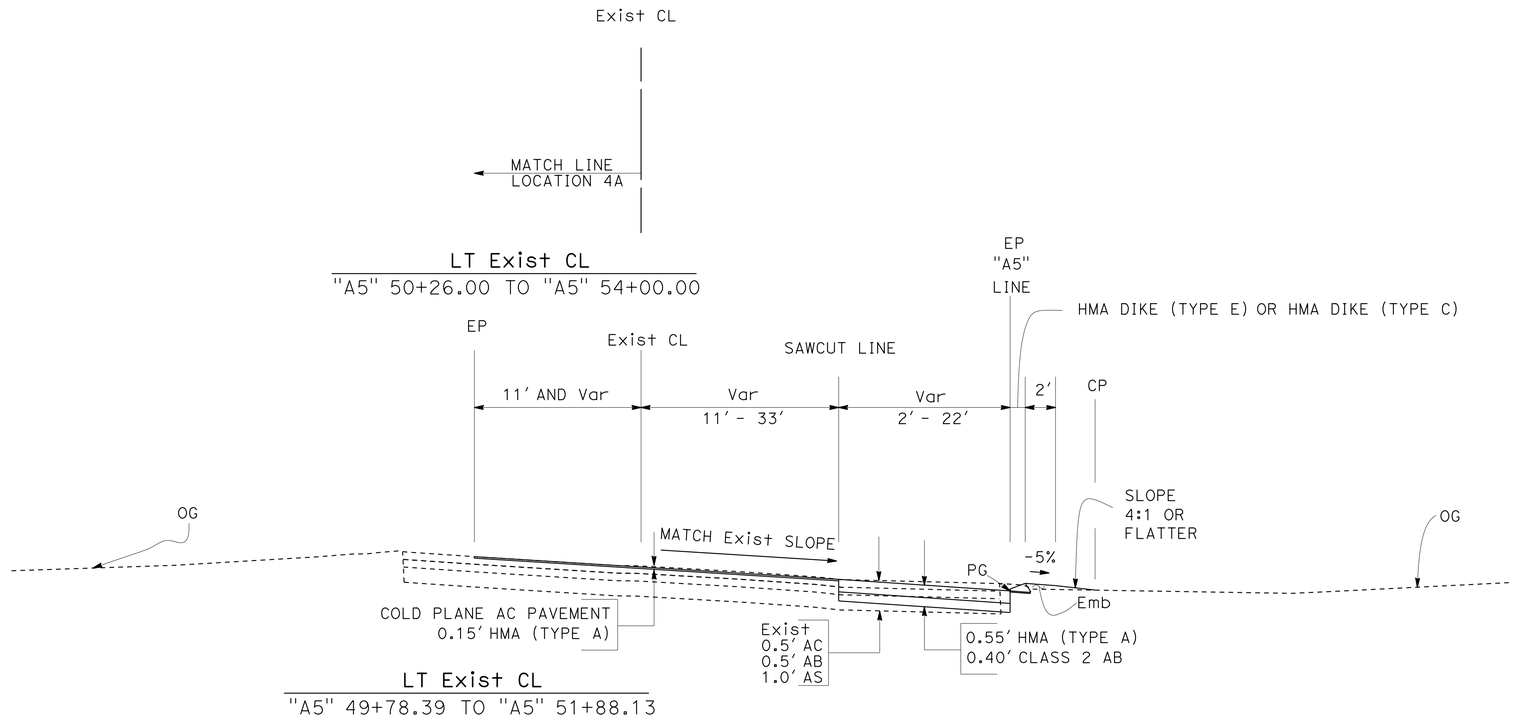

LOCATION 5

"A5" 49+78.39 TO "A5" 54+16.79

PLACER HILLS ROAD AND WB ROUTE 80 OFF RAMP

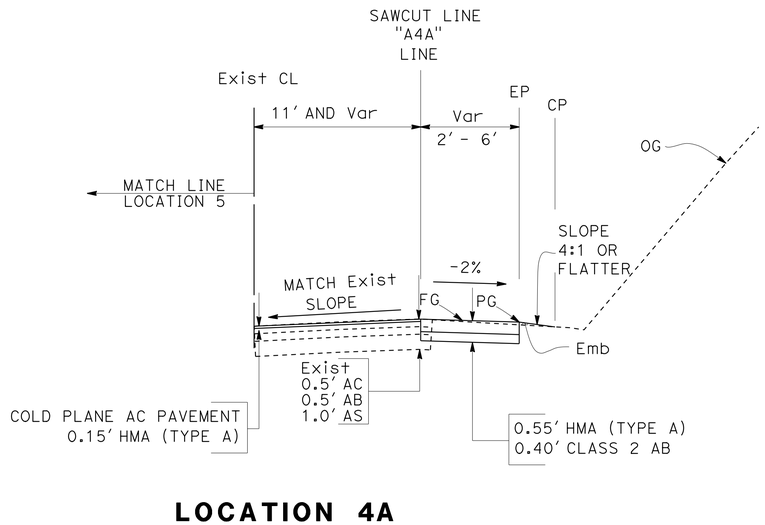

LOCATION 4A

"A4A" 40+00.00 TO "A4A" 42+06.55

PLACER HILLS ROAD

TYPICAL CROSS SECTIONS

NO SCALE

X-3

REVISED BY | DATE REVISED
A. G. CHIN | CAROL MESMAN
CALCULATED-DESIGNED BY | CHECKED BY
FUNCTIONAL SUPERVISOR: STEPHEN WRIGHT
STATE OF CALIFORNIA - DEPARTMENT OF TRANSPORTATION
Caltrans® TRAFFIC

LAST REVISION | DATE PLOTTED => 08-JAN-2015
10-15-14 | TIME PLOTTED => 19:10

BORDER LAST REVISED 7/2/2010 | USERNAME => s119538 | DGN FILE => 0314000243ca003.dgn | RELATIVE BORDER SCALE IS IN INCHES 0 1 2 3 | UNIT 0399 | PROJECT NUMBER & PHASE 03140002431

Dist	COUNTY	ROUTE	POST MILES TOTAL PROJECT	SHEET No.	TOTAL SHEETS
03	PLA	80	31.8	5	68

REGISTERED CIVIL ENGINEER — 1-5-15 DATE

1-5-15
PLANS APPROVAL DATE

REGISTERED PROFESSIONAL ENGINEER
ERIC NORMAN SOUZA
No. 75706
Exp. 06/30/16
CIVIL
STATE OF CALIFORNIA

THE STATE OF CALIFORNIA OR ITS OFFICERS OR AGENTS SHALL NOT BE RESPONSIBLE FOR THE ACCURACY OR COMPLETENESS OF SCANNED COPIES OF THIS PLAN SHEET.

LEGEND

COLD PLANE AC PAVEMENT (0.25' MAX)
0.15' HMA OVERLAY LIMITS

COLD PLANE AC PAVEMENT (0.15' MAX)
0.15' HMA OVERLAY LIMITS

CLEARING AND GRUBBING LIMITS

NOTE:
1. FOR COMPLETE RIGHT OF WAY AND ACCURATE ACCESS DATA, SEE RIGHT OF WAY RECORD MAPS AT DISTRICT OFFICE.
2. AT LOCATIONS WITH Exist OPEN GRADE AC, COLD PLANE AC PAVEMENT 0.25' MAX. ALL OTHER LOCATIONS COLD PLANE AC PAVEMENT 0.15' MAX.
3. FOR ALIGNMENT DATA, SEE CONSTRUCTION DETAILS.
4. NOT ALL UTILITIES OUTSIDE OF THE STATE RIGHT OF WAY ARE SHOWN.
5. UTILITY OWNERSHIP:
   SEWER - COUNTY OF PLACER (COPLAC)
   WATER - PLACER COUNTY WATER AGENCY (PCWA)
   ELECTRIC - PACIFIC GAS AND ELECTRIC CO. (PG&E)
   TELEPHONE OVERHEAD AND UNDERGROUND - VERIZON
   UNDERGROUND FIBER OPTICS - AMERICAN TELEPHONE AND TELEGRAPH (AT&T)
6. THIS PLAN ACCURATE FOR COLD PLANE ASPHALT CONCRETE, HMA OVERLAY AND CLEARING AND GRUBBING ONLY. FOR ALL OTHER ROADWAY WORK, SEE OTHER PLANS.

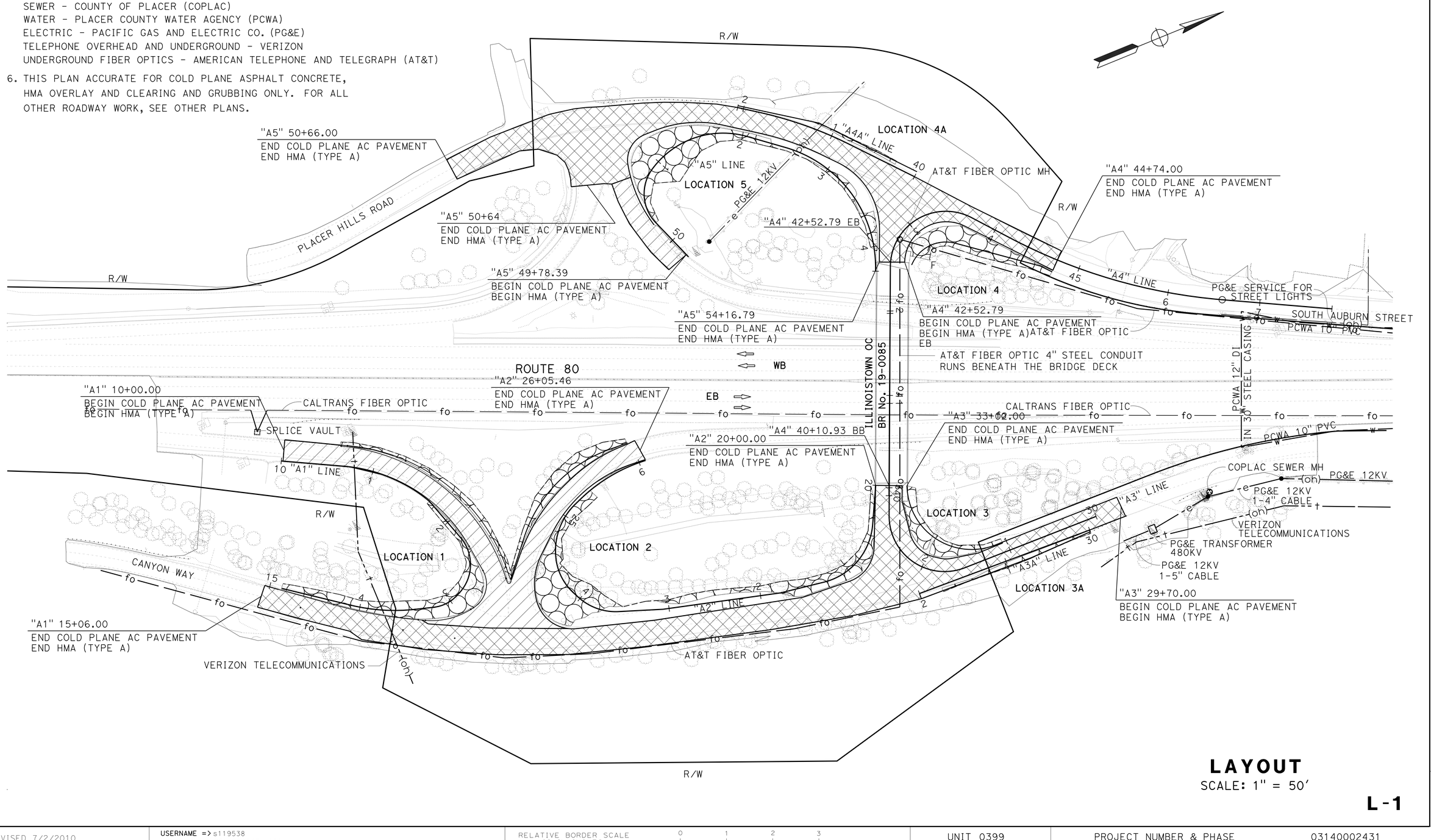

LAYOUT

SCALE: 1" = 50'

L-1

STATE OF CALIFORNIA - DEPARTMENT OF TRANSPORTATION
Caltrans
TRAFFIC
FUNCTIONAL SUPERVISOR: STEPHEN WRIGHT
CALCULATED-DESIGNED BY: A. G. CHIN
CHECKED BY: ERIC SOUZA
REVISED BY | DATE REVISED

LAST REVISION | DATE PLOTTED => 08-JAN-2015
10-15-14 | TIME PLOTTED => 19:10

BORDER LAST REVISED 7/2/2010
USERNAME => s119538
DGN FILE => 0314000243ea001.dgn
RELATIVE BORDER SCALE IS IN INCHES 0 1 2 3
UNIT 0399
PROJECT NUMBER & PHASE 03140002431

NOTE: SEE LAYOUT FOR COLD PLANE PAVEMENT AND HMA (TYPE A) OVERLAY LIMITS

LEGEND

0.55′ HMA (TYPE A)
0.40′ CLASS 2 AB

ABBREVIATIONS

SWC = SAWCUT

Dist	COUNTY	ROUTE	POST MILES TOTAL PROJECT	SHEET No.	TOTAL SHEETS
03	PLA	80	31.8	6	68

REGISTERED CIVIL ENGINEER — 1-5-15 DATE

1-5-15
PLANS APPROVAL DATE

REGISTERED PROFESSIONAL ENGINEER
ERIC NORMAN SOUZA
No.75706
Exp.06/30/16
CIVIL
STATE OF CALIFORNIA

THE STATE OF CALIFORNIA OR ITS OFFICERS OR AGENTS SHALL NOT BE RESPONSIBLE FOR THE ACCURACY OR COMPLETENESS OF SCANNED COPIES OF THIS PLAN SHEET.

EB ROUTE 80

L+ "A1" 10+62.50
BEGIN ROADWAY EXCAVATION
BEGIN HMA (TYPE A)
BEGIN CLASS 2 AB
BEGIN HMA DIKE (TYPE E)

EB ROUTE 80 OFF RAMP

"A1" LINE

L+ "A1" 12+58.50
END ROADWAY EXCAVATION
END HMA (TYPE A)
END CLASS 2 AB
END HMA DIKE (TYPE E)

L+ "A2" 25+95
END ROADWAY EXCAVATION
END HMA (TYPE A)
END CLASS 2 AB
END HMA DIKE (TYPE E)
MATCH Exist AC DIKE

EB ROUTE 80 ON RAMP

R+/ L+ "A2" 25+40
END ROADWAY EXCAVATION
END HMA (TYPE A)
END CLASS 2 AB
END HMA DIKE (TYPE E)

R+/ L+ "A2" 25+40
HMA DIKE TRANSITION
SEE DETAILS SHEET C-9

R+ "A2" 24+84
HMA ENTRANCE TAPER
PIPE ENTRANCE TAPER
SEE DETAILS SHEET C-9

R+ "A1" 14+86.82
END ROADWAY EXCAVATION
END HMA (TYPE A)
END CLASS 2 AB
END HMA DIKE (TYPE E)

R+ "A1" 11+69.91
BEGIN ROADWAY EXCAVATION
BEGIN HMA (TYPE A)
BEGIN CLASS 2 AB
BEGIN HMA DIKE (TYPE E)

R+ "A1" 11+90
HMA OVERSIDE DRAIN
SEE DETAILS SHEET C-7

R+ "A2" 24+00
HMA OVERSIDE DRAIN
SEE DETAILS SHEET C-8

R/W

LOCATION 1

LOCATION 2

R+/L+ "A1" 14+86.82
HMA GUTTER AND
DIKE TRANSITON
SEE DETAILS SHEET C-7

HMA DIKE (TYPE E) RETURN
SEE DETAIL THIS SHEET

L+ "A2" 24+46
BEGIN ROADWAY EXCAVATION
BEGIN HMA (TYPE A)
BEGIN CLASS 2 AB
BEGIN HMA DIKE (TYPE E)

"A2" LINE

CANYON WAY

MATCH LINE C-2

HMA DIKE (TYPE E)

"A1" STA 12+63.09

"A2" STA 24+41.67

R=2′

HMA DIKE RETURN DETAIL
NO SCALE

CONSTRUCTION DETAILS

SCALE: 1" = 20′

C-1

REVISED BY | DATE REVISED
A. G. CHIN | ERIC SOUZA
CALCULATED-DESIGNED BY | CHECKED BY
FUNCTIONAL SUPERVISOR: STEPHEN WRIGHT

STATE OF CALIFORNIA - DEPARTMENT OF TRANSPORTATION
TRAFFIC

LAST REVISION | DATE PLOTTED => 08-JAN-2015
10-16-14 | TIME PLOTTED => 19:11

BORDER LAST REVISED 7/2/2010 | USERNAME => s119538 | DGN FILE => 03140002431ga001.dgn | RELATIVE BORDER SCALE IS IN INCHES 0 1 2 3 | UNIT 0399 | PROJECT NUMBER & PHASE 03140002431

Dist	COUNTY	ROUTE	POST MILES TOTAL PROJECT	SHEET No.	TOTAL SHEETS
03	PLA	80	31.8	7	68

REGISTERED CIVIL ENGINEER 1-5-15 DATE

1-5-15
PLANS APPROVAL DATE

REGISTERED PROFESSIONAL ENGINEER
ERIC NORMAN SOUZA
No. 75706
Exp. 06/30/16
CIVIL
STATE OF CALIFORNIA

THE STATE OF CALIFORNIA OR ITS OFFICERS OR AGENTS SHALL NOT BE RESPONSIBLE FOR THE ACCURACY OR COMPLETENESS OF SCANNED COPIES OF THIS PLAN SHEET.

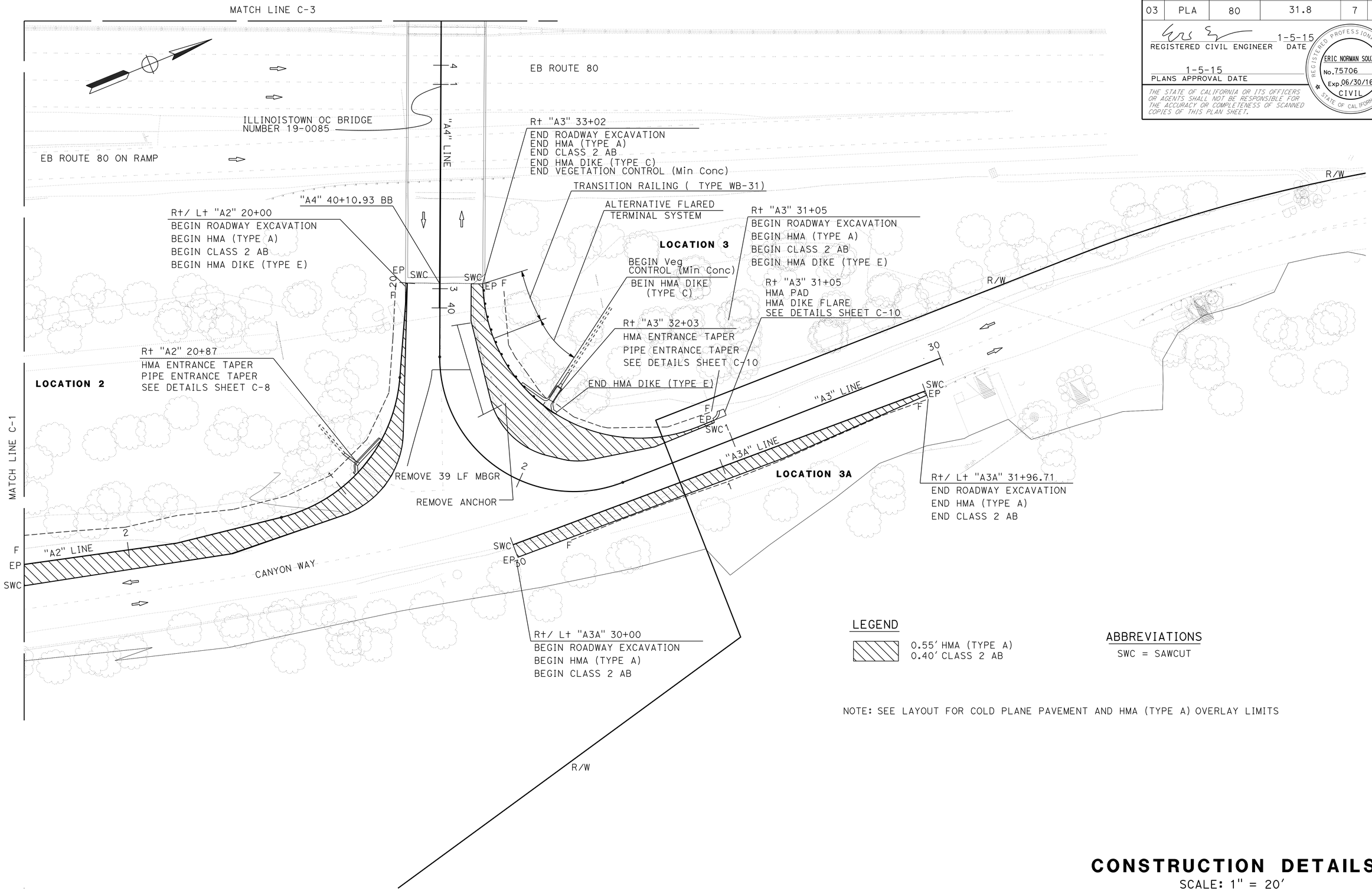

LEGEND

0.55' HMA (TYPE A)
0.40' CLASS 2 AB

ABBREVIATIONS

SWC = SAWCUT

NOTE: SEE LAYOUT FOR COLD PLANE PAVEMENT AND HMA (TYPE A) OVERLAY LIMITS

CONSTRUCTION DETAILS

SCALE: 1" = 20'

C-2

STATE OF CALIFORNIA - DEPARTMENT OF TRANSPORTATION
Caltrans
TRAFFIC

FUNCTIONAL SUPERVISOR: STEPHEN WRIGHT
CALCULATED-DESIGNED BY: A. G. CHIN
CHECKED BY: ERIC SOUZA
REVISED BY
DATE REVISED

LAST REVISION 10-15-14
DATE PLOTTED => 08-JAN-2015
TIME PLOTTED => 19:11

Dist	COUNTY	ROUTE	POST MILES TOTAL PROJECT	SHEET No.	TOTAL SHEETS
03	PLA	80	31.8	8	68

REGISTERED CIVIL ENGINEER — DATE 1-5-15

PLANS APPROVAL DATE 1-5-15

REGISTERED PROFESSIONAL ENGINEER — ERIC NORMAN SOUZA No.75706 Exp.06/30/16 CIVIL — STATE OF CALIFORNIA

THE STATE OF CALIFORNIA OR ITS OFFICERS OR AGENTS SHALL NOT BE RESPONSIBLE FOR THE ACCURACY OR COMPLETENESS OF SCANNED COPIES OF THIS PLAN SHEET.

NOTE: SEE LAYOUT FOR COLD PLANE PAVEMENT AND HMA (TYPE A) OVERLAY LIMITS

LEGEND

0.55' HMA (TYPE A)
0.40' CLASS 2 AB

ABBREVIATIONS

SWC = SAWCUT

R/W

AILTS | MGS 37.5 LF | AILTS

REMOVE 138.5 LF MBGR

END VEGETATION CONTROL (MINOR CONCRETE)
REMOVE ANCHOR

REMOVE ANCHOR
BEGIN VEGETATION CONTROL (MINOR CONCRETE)

R/ L "A4A" 42+06.55
END ROADWAY EXCAVATION
END HMA (TYPE A)
END CLASS 2 AB

EP SWC

PLACER HILLS ROAD

LOCATION 4A

R/ L "A4A" 40+00
BEGIN ROADWAY EXCAVATION
BEGIN HMA (TYPE A)
BEGIN CLASS 2 AB

"A5" LINE

"A4A" LINE

R "A5" 52+00
HMA OVERSIDE DRAIN
SEE DETAILS SHEET C-11

LOCATION 5

R "A5" 50+50
HMA OVERSIDE DRAIN
SEE DETAILS SHEET C-11

R/ L "A5" 50+26
BEGIN ROADWAY EXCAVATION
BEGIN HMA (TYPE A)
BEGIN CLASS 2 AB
BEGIN HMA DIKE (TYPE E)

SWC EP

BEGIN VEGETATION CONTROL (MINOR CONCRETE)
END HMA DIKE (TYPE E)
BEGIN HMA DIKE (TYPE C)
SEE HMA DIKE TRANSITION DETAIL SHEET C-11

REMOVE ANCHOR

REMOVE 39 LF MBGR

AFTS

TRANSITION RAILING (TYPE WB-31)

CONCRETE END BLOCK
SEE DETAILS SHEET C-6

R/ L "A5" 54+00
END ROADWAY EXCAVATION
END HMA (TYPE A)
END CLASS 2 AB
END HMA DIKE (TYPE C)
END VEGETATION CONTROL (MINOR CONCRETE)

"A4" 42+52.79 EB

R "A4" 43+05
END HMA DIKE (TYPE E)
HMA PAD SEE DETAILS SHEET C-10

"A4" LINE

R/W

SOUTH AUBURN STREET

R "A4" 42+52.79
BEGIN ROADWAY EXCAVATION
BEGIN HMA (TYPE A)
BEGIN CLASS 2 AB
BEGIN HMA DIKE (TYPE E)

LOCATION 4

R "A4" 44+74
END ROADWAY EXCAVATION
END HMA (TYPE A)
END CLASS 2 AB

WB ROUTE 80 ON RAMP

WB ROUTE 80 OFF RAMP

ILLINOISTOWN OC
BRIDGE NUMBER 19-0085

WB ROUTE 80

MATCH LINE C-2

CONSTRUCTION DETAILS

SCALE: 1" = 20'

C-3

STATE OF CALIFORNIA - DEPARTMENT OF TRANSPORTATION
TRAFFIC
Caltrans

FUNCTIONAL SUPERVISOR: STEPHEN WRIGHT
CALCULATED-DESIGNED BY: A. G. CHIN
CHECKED BY: ERIC SOUZA
REVISED BY
DATE REVISED

LAST REVISION | DATE PLOTTED => 08-JAN-2015
10-15-14 | TIME PLOTTED => 19:11

BORDER LAST REVISED 7/2/2010

USERNAME => s119538
DGN FILE => 03140002431ga003.dgn

RELATIVE BORDER SCALE IS IN INCHES 0 1 2 3

UNIT 0399

PROJECT NUMBER & PHASE 03140002431

Dist	COUNTY	ROUTE	POST MILES TOTAL PROJECT	SHEET No.	TOTAL SHEETS
03	PLA	80	31.8	9	68

REGISTERED CIVIL ENGINEER — 1-5-15 DATE

1-5-15
PLANS APPROVAL DATE

REGISTERED PROFESSIONAL ENGINEER
ERIC NORMAN SOUZA
No. 75706
Exp. 06/30/16
CIVIL
STATE OF CALIFORNIA

THE STATE OF CALIFORNIA OR ITS OFFICERS OR AGENTS SHALL NOT BE RESPONSIBLE FOR THE ACCURACY OR COMPLETENESS OF SCANNED COPIES OF THIS PLAN SHEET.

ALIGNMENT DATA

LOCATION	ALIGNMENT	STATION	BEARING	DISTANCE	R	Δ	T	L
1	A1	10+00.00						
			N26°57′45.77"E	68.45′				
		10+68.45 BC						
					165.00′	34°55′51"	51.91′	100.59′
		11+69.04 EC						
			N61°53′36.29"E	0.57′				
		11+69.61						
			N71°31′42.06"E	51.71′				
		12+21.32 BC						
					45.00′	83°25′53"	40.12′	65.53′
		12+86.85 EC						
			S25°02′25.36"E	4.23′				
		12+91.08 BC						
					40.00′	40°52′01"	14.90′	28.53′
		13+19.61 EC						
			S15°49′35.37"W	20.29′				
		13+39.90 BC						
					200.00′	20°01′08"	35.30′	69.88′
		14+09.78 EC						
			S35°50′42.92"W	77.05′				
		14+86.82						
2	A2	20+00.00						
			S63°23′20.83"W	42.42′				
		20+42.42 BC						
					70.00′	71°40′17"	50.55′	87.56′
		21+29.89 EC						
			S08°16′56.60"W	48.12′				
		21+78.10						
			S14°14′11.82"W	128.44′				
		23+06.54						
			S19°10′02.17"W	48.25′				
		23+54.79 BC						
					60.00′	45°06′01"	24.91′	47.23′
		24+02.02 EC						
			S64°16′02.76"W	6.81′				
		24+08.83 BC						
					60.00′	44°17′06"	24.42′	46.38′
		24+55.21 EC						
			N71°26′51.11"W	0.76′				
		24+55.97 BC						
					70.00′	49°34′33"	32.33′	60.57′
		25+16.54 EC						
			N21°52′18.27"W	8.65′				
		25+25.19 BC						
					175.00′	25°32′09"	39.66′	77.99′
		26+03.18 EC						
			N03°39′50.90"E	4.14′				
		26+07.33						
3	A3	30+00.00						
			S00°48′57.21"W	152.63′				
		31+52.63 BC						
					60.00′	111°37′13"	88.32′	116.89′
		32+69.52 EC						
			N67°33′50.27"W	219.26′				
		34+88.78						
3A	A3A	30+00.00						
			N01°43′07.52"E	196.71′				
		31+96.71						

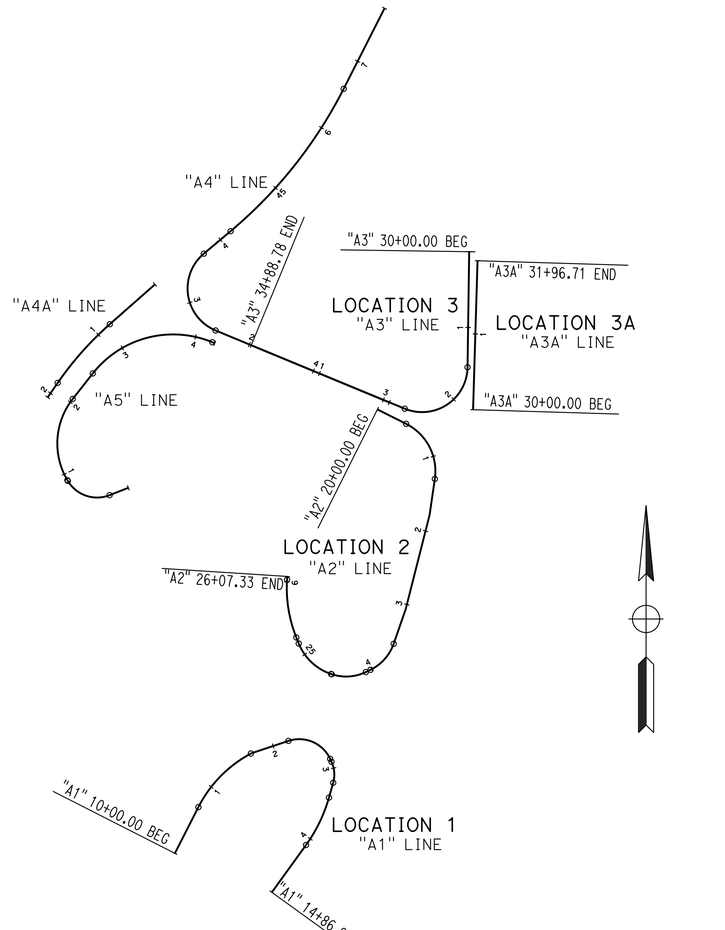

NOTE : ALIGNMENT DATA FOR LOCATIONS 4, 4A, AND 5, SEE SHEET C-5.

CONSTRUCTION DETAILS
ALIGNMENT DATA

NO SCALE

C-4

A. G. CHIN — CALCULATED-DESIGNED BY
ERIC SOUZA — CHECKED BY
REVISED BY — DATE REVISED
FUNCTIONAL SUPERVISOR — STEPHEN WRIGHT

STATE OF CALIFORNIA - DEPARTMENT OF TRANSPORTATION
TRAFFIC

LAST REVISION | DATE PLOTTED => 08-JAN-2015
10-16-14 | TIME PLOTTED => 19:11

BORDER LAST REVISED 7/2/2010 | USERNAME => s119538 | DGN FILE => 0314000243ga004.dgn | RELATIVE BORDER SCALE IS IN INCHES 0 1 2 3 | UNIT 0399 | PROJECT NUMBER & PHASE 03140002431

Dist	COUNTY	ROUTE	POST MILES TOTAL PROJECT	SHEET No.	TOTAL SHEETS
03	PLA	80	31.8	10	68

REGISTERED CIVIL ENGINEER — 1-5-15 DATE

1-5-15
PLANS APPROVAL DATE

REGISTERED PROFESSIONAL ENGINEER
ERIC NORMAN SOUZA
No. 75706
Exp. 06/30/16
CIVIL
STATE OF CALIFORNIA

THE STATE OF CALIFORNIA OR ITS OFFICERS OR AGENTS SHALL NOT BE RESPONSIBLE FOR THE ACCURACY OR COMPLETENESS OF SCANNED COPIES OF THIS PLAN SHEET.

ALIGNMENT DATA

LOCATION	ALIGNMENT	STATION	BEARING	DISTANCE	R	Δ	T	L
4	A4	40+00.00						
			N68°28′55.70"E	248.31′				
		42+48.31 BC						
					60.00′	117°28′29"	98.83′	123.02′
		43+71.33 EC						
			N49°59′33.25"E	46.22′				
		44+17.54 BC						
					600.00′	23°04′22"	122.47′	241.62′
		46+59.16 EC						
			N26°55′11.47"E	119.25′				
		47+78.41						
4A	A4A	40+00.00						
			S48°36′58.45"W	79.51				
		40+79.51 BC						
					425.00′	13°59′43"	52.17′	103.81′
		41+83.32 EC						
			S34°37′15.60"W	23.24′				
		42+06.55						
5	A5	50+00.00						
			S68°26′16.92"W	26.54′				
		50+26.54 BC						
					45.00′	80°51′03"	38.33′	63.50′
		50+90.04 EC						
			N30°42′39.60"W	1.06′				
		50+91.10 BC						
					95.00′	68°54′52"	65.19′	114.26′
		52+05.36 EC						
			N38°12′12.21"E	42.81′				
		52+48.17 BC						
					135.00′	74°18′52"	102.31′	175.10′
		54+23.27 EC						
			S67°28′55.67"E	3.51′				
		54+26.78						

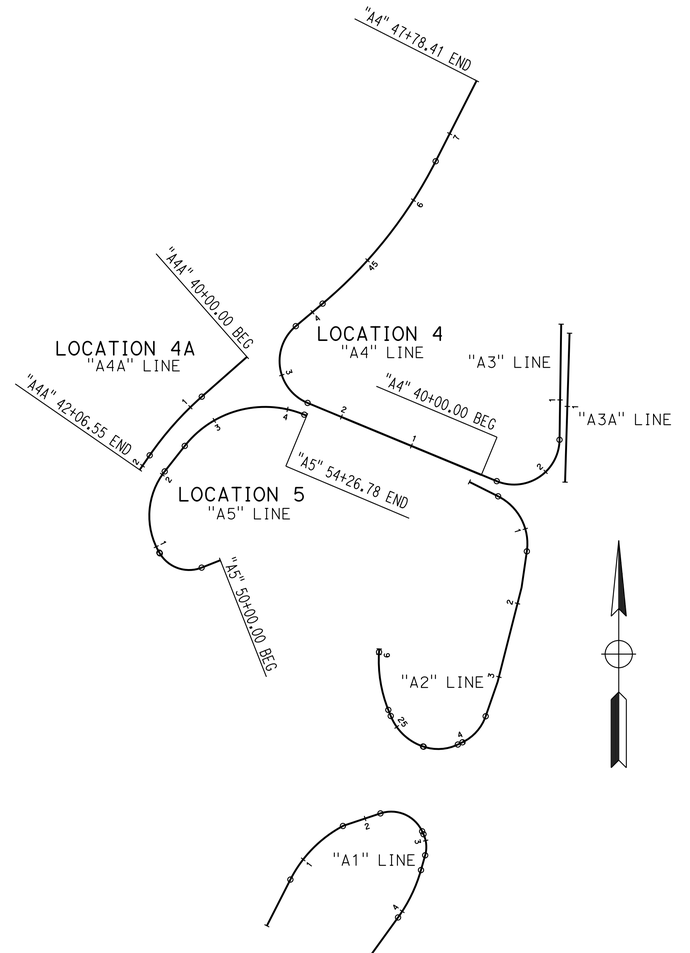

NOTE : ALIGNMENT DATA FOR LOCATIONS 1, 2, 3, AND 3A, SEE SHEET C-4.

CONSTRUCTION DETAILS
ALIGNMENT DATA

NO SCALE

C-5

REVISED BY | DATE REVISED
A. G. CHIN | ERIC SOUZA
CALCULATED-DESIGNED BY | CHECKED BY
FUNCTIONAL SUPERVISOR: STEPHEN WRIGHT

STATE OF CALIFORNIA - DEPARTMENT OF TRANSPORTATION
Caltrans®
TRAFFIC

LAST REVISION: 10-16-14
DATE PLOTTED => 08-JAN-2015
TIME PLOTTED => 19:11

BORDER LAST REVISED 7/2/2010
USERNAME => s119538
DGN FILE => 0314000243ga005.dgn
RELATIVE BORDER SCALE IS IN INCHES 0 1 2 3
UNIT 0399
PROJECT NUMBER & PHASE 03140002431

Dist	COUNTY	ROUTE	POST MILES TOTAL PROJECT	SHEET No.	TOTAL SHEETS
03	Pla	80	31.8	11	68

REGISTERED CIVIL ENGINEER — 1-5-15 DATE

1-5-15 PLANS APPROVAL DATE

REGISTERED PROFESSIONAL ENGINEER — ERIC NORMAN SOUZA No. 75706 Exp. 06/30/16 CIVIL — STATE OF CALIFORNIA

THE STATE OF CALIFORNIA OR ITS OFFICERS OR AGENTS SHALL NOT BE RESPONSIBLE FOR THE ACCURACY OR COMPLETENESS OF SCANNED COPIES OF THIS PLAN SHEET.

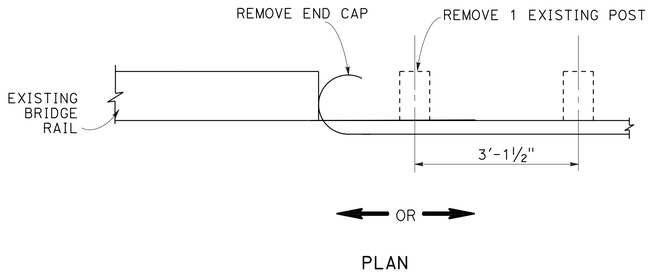

PLAN

STAGE 1

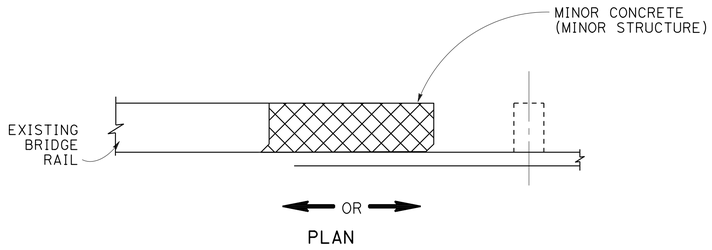

PLAN

STAGE 2

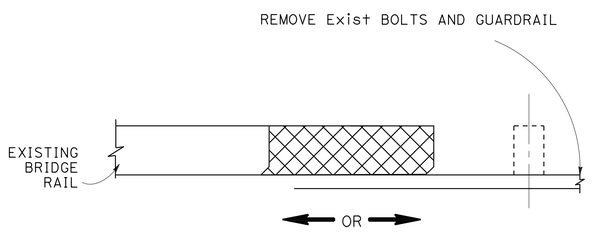

PLAN

STAGE 3

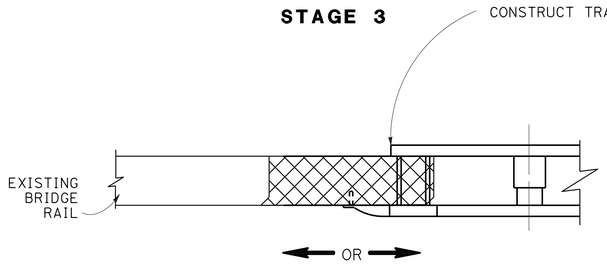

PLAN

STAGE 4

MGS STAGING SEQUENCE FOR CONCRETE END BLOCK LOCATION 5

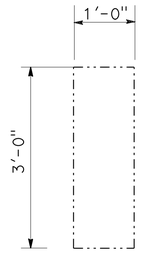

SECTION B-B

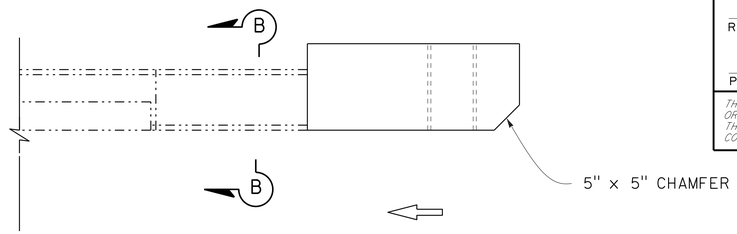

PLAN

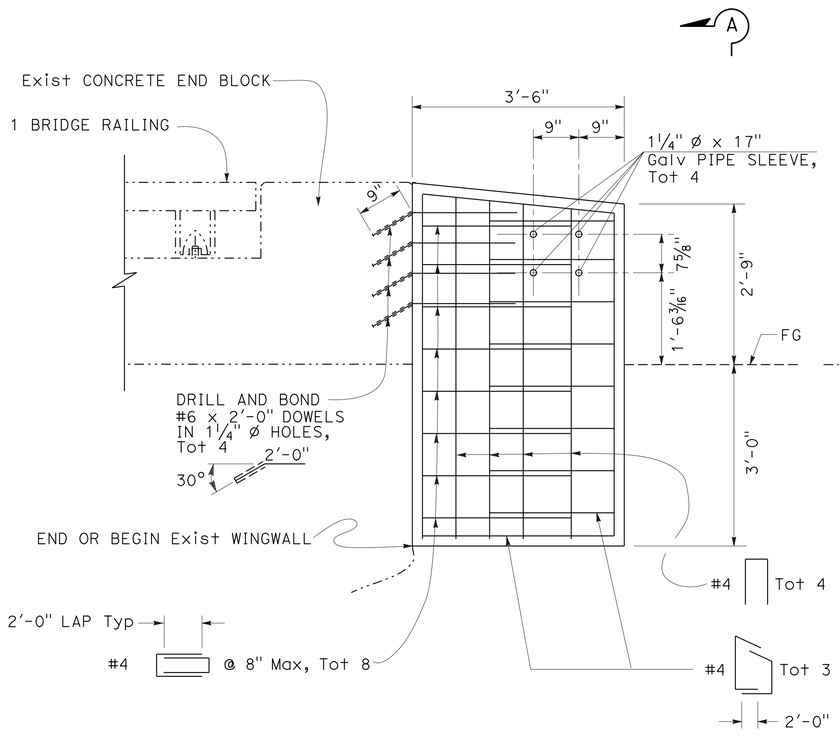

ELEVATION

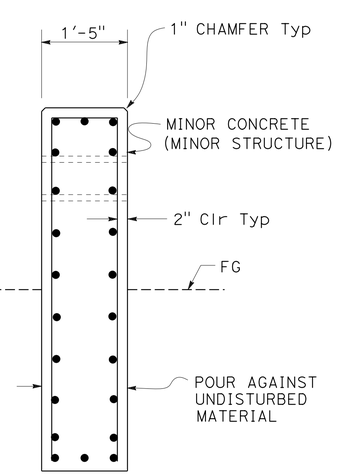

VIEW A-A

CONCRETE END BLOCK DETAIL

ILLINOISTOWN OC

STA "A5" 54+00 Rt

CONSTRUCTION DETAILS

NO SCALE

C-6

CALCULATED-DESIGNED BY	CHECKED BY	REVISED BY	DATE REVISED
A. G. CHIN	ERIC SOUZA		

FUNCTIONAL SUPERVISOR: STEPHEN WRIGHT

STATE OF CALIFORNIA - DEPARTMENT OF TRANSPORTATION

Caltrans® **TRAFFIC**

LAST REVISION: DATE PLOTTED => 08-JAN-2015 TIME PLOTTED => 19:11

10-16-14

Dist	COUNTY	ROUTE	POST MILES TOTAL PROJECT	SHEET No.	TOTAL SHEETS
03	PLA	80	31.8	12	68

REGISTERED CIVIL ENGINEER — 1-5-15 DATE

1-5-15 PLANS APPROVAL DATE

REGISTERED PROFESSIONAL ENGINEER — ERIC NORMAN SOUZA No. 75706 Exp.06/30/16 CIVIL — STATE OF CALIFORNIA

THE STATE OF CALIFORNIA OR ITS OFFICERS OR AGENTS SHALL NOT BE RESPONSIBLE FOR THE ACCURACY OR COMPLETENESS OF SCANNED COPIES OF THIS PLAN SHEET.

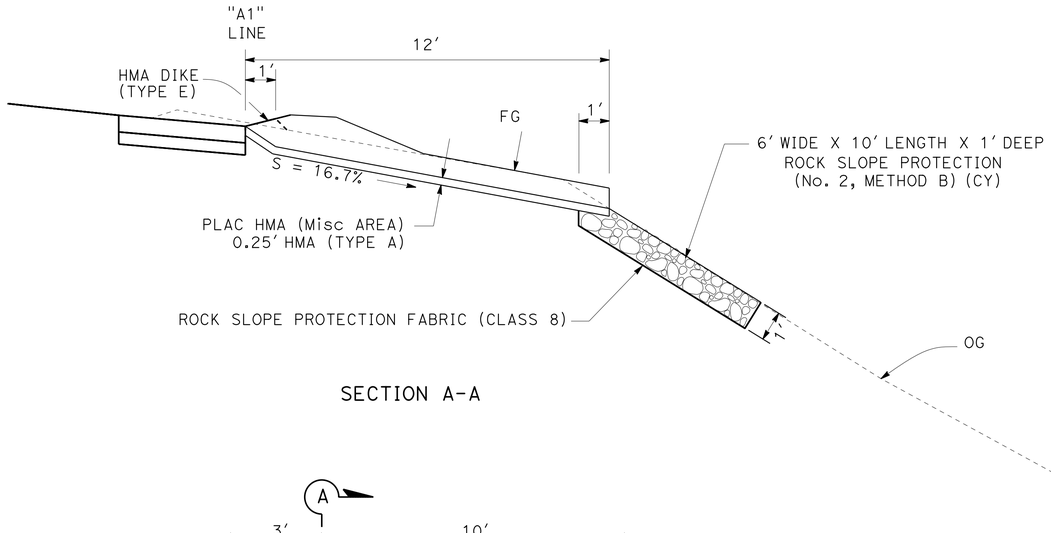

SECTION A-A

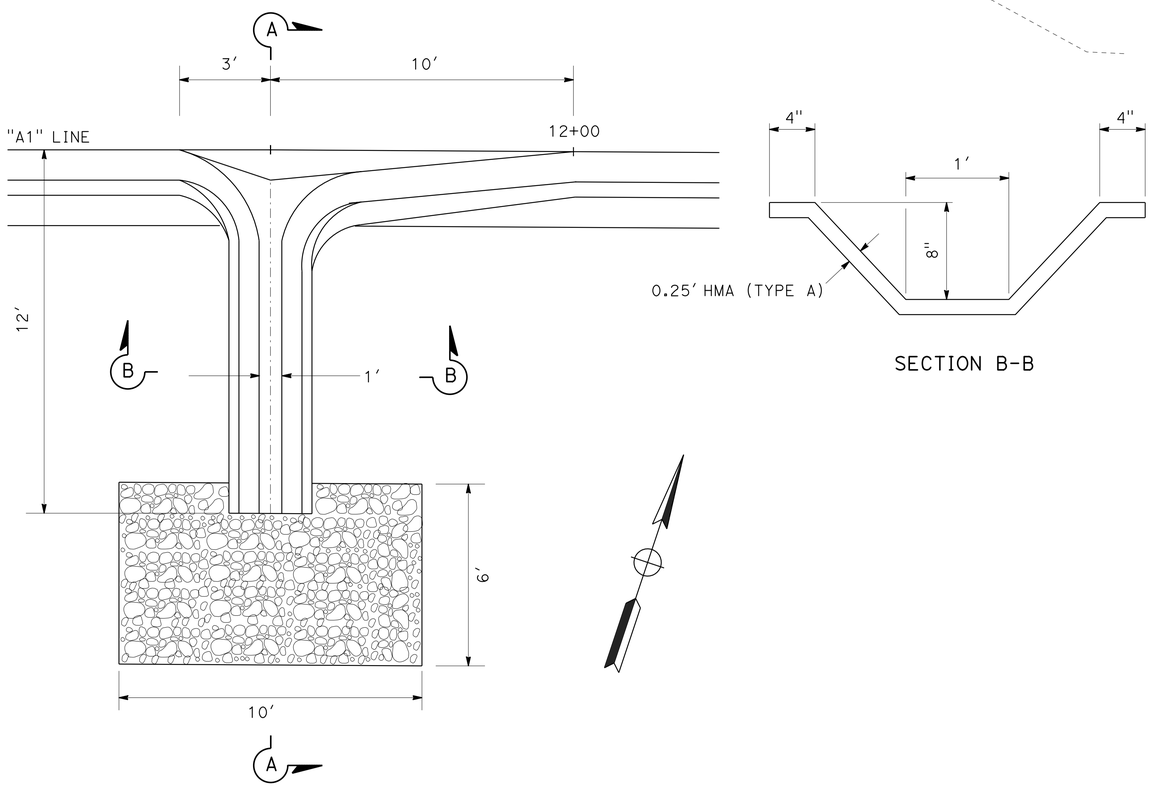

SECTION B-B

NOTE: FOR DETAILS NOT SHOWN SEE STANDARD PLAN D87D.

PLAN

HMA OVERSIDE DRAIN DETAILS

LOCATION 1
Rt "A1" 11+90

LEGEND

REMOVE Exist AC DIKE AND PAVED AREA AS SHOWN TO DEPTH OF 0.5' BELOW GRADE
CONSTRUCT GUTTER WITH 0.5' HMA (TYPE A), MATCH EXISTING FLOWLINE

CONSTRUCT HMA DIKE TRANSITION FROM HMA DIKE (TYPE E) TO MATCH Exist AC DIKE

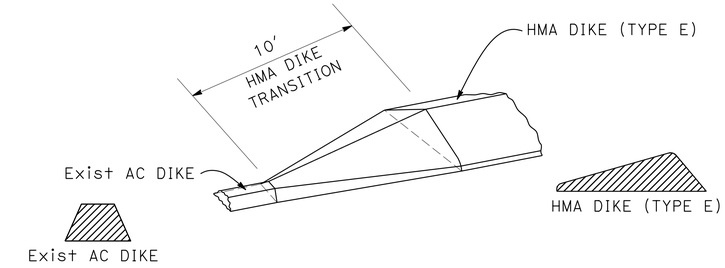

HMA DIKE (TYPE E) TO Exist AC DIKE

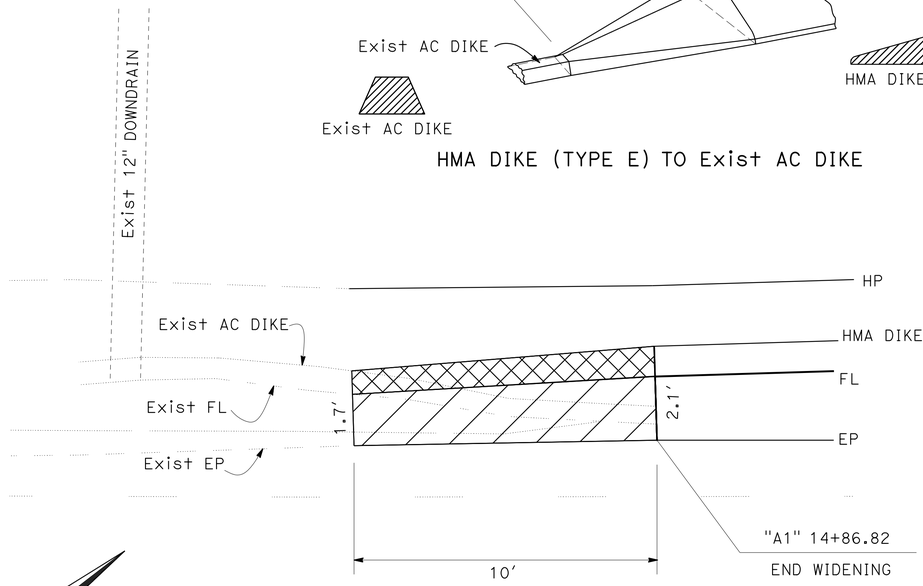

HMA GUTTER AND DIKE TRANSITION DETAILS

LOCATION 1
"A1" 14+86.82

CONSTRUCTION DETAILS LOCATION 1

NO SCALE

C-7

STATE OF CALIFORNIA - DEPARTMENT OF TRANSPORTATION — TRAFFIC
FUNCTIONAL SUPERVISOR: STEPHEN WRIGHT
CALCULATED-DESIGNED BY: A. G. CHIN
CHECKED BY: ERIC SOUZA
REVISED BY | DATE REVISED

LAST REVISION: DATE PLOTTED => 08-JAN-2015
TIME PLOTTED => 10-16-14 19:11

BORDER LAST REVISED 7/2/2010 | USERNAME => s119538 | DGN FILE => 0314000243ga007.dgn | RELATIVE BORDER SCALE IS IN INCHES 0 1 2 3 | UNIT 0399 | PROJECT NUMBER & PHASE 03140002431

NOTES : FOR DETAILS NOT SHOWN SEE STANDARD PLANS D87A AND D87D.

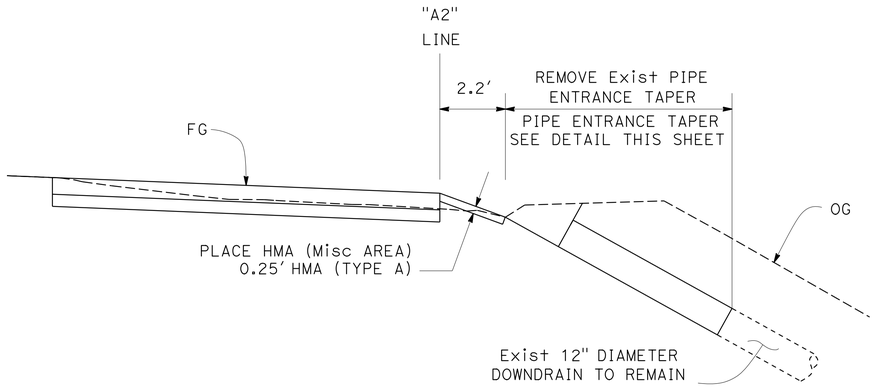

SECTION A-A

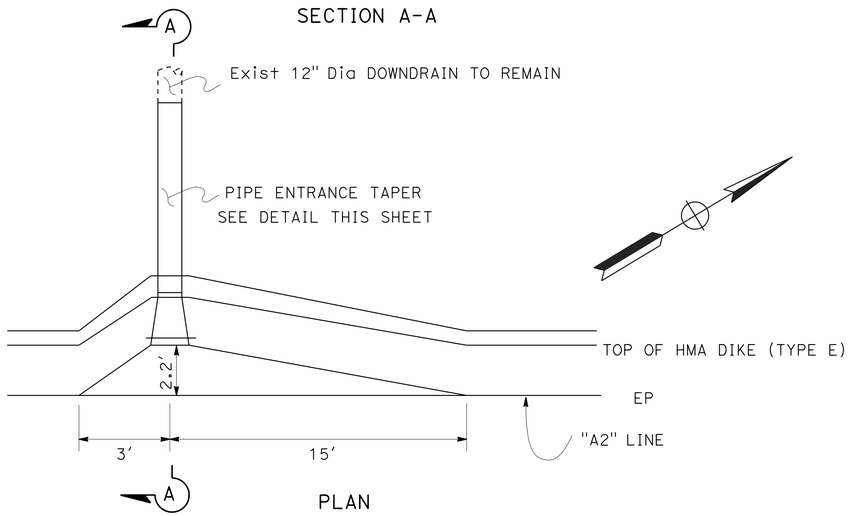

PLAN

HMA ENTRANCE TAPER DETAILS

LOCATION 2

Rt "A2" 20+87

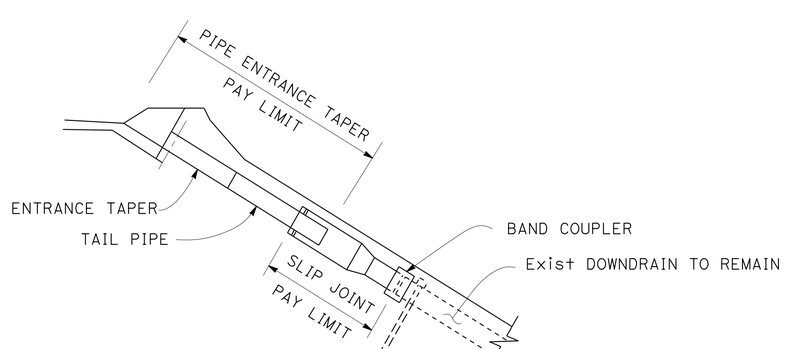

PIPE ENTRANCE TAPER DETAILS

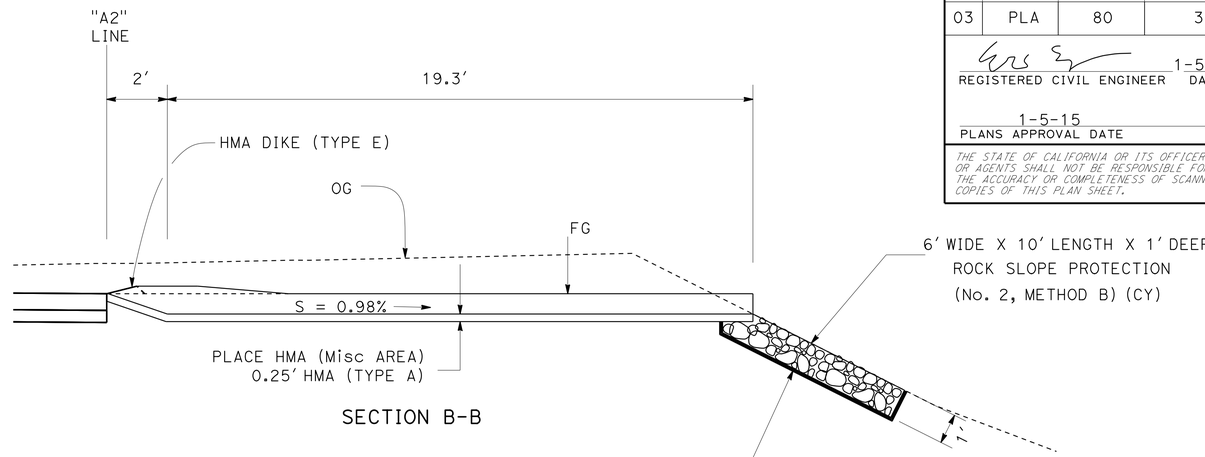

SECTION B-B

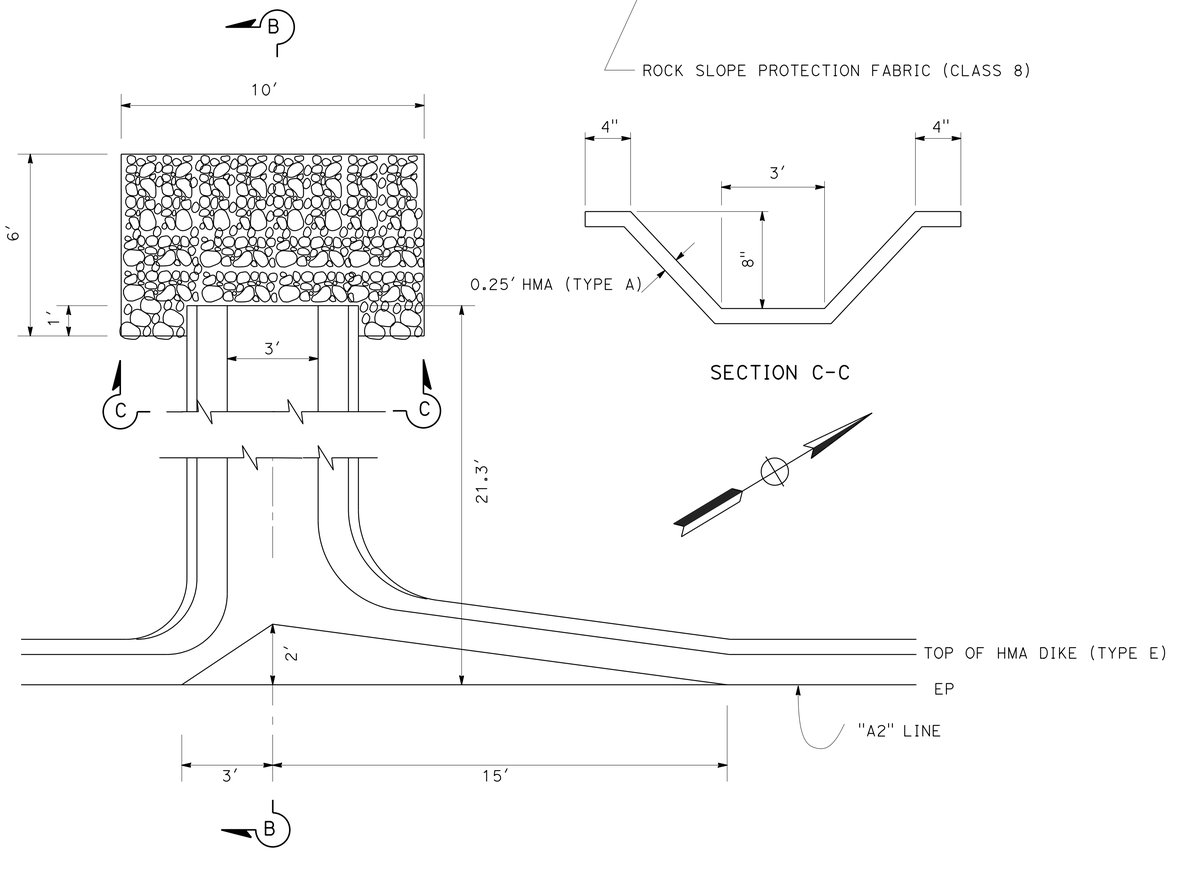

PLAN

SECTION C-C

HMA OVERSIDE DRAIN DETAILS

LOCATION 2

Rt "A2" 24+00

CONSTRUCTION DETAILS LOCATION 2

NO SCALE

C-8

Dist	COUNTY	ROUTE	POST MILES TOTAL PROJECT	SHEET No.	TOTAL SHEETS
03	PLA	80	31.8	13	68

REGISTERED CIVIL ENGINEER — 1-5-15 DATE

1-5-15 PLANS APPROVAL DATE

REGISTERED PROFESSIONAL ENGINEER — ERIC NORMAN SOUZA No. 75706 Exp.06/30/16 CIVIL — STATE OF CALIFORNIA

THE STATE OF CALIFORNIA OR ITS OFFICERS OR AGENTS SHALL NOT BE RESPONSIBLE FOR THE ACCURACY OR COMPLETENESS OF SCANNED COPIES OF THIS PLAN SHEET.

REVISED BY | DATE REVISED

CALCULATED-DESIGNED BY: A. G. CHIN

CHECKED BY: ERIC SOUZA

FUNCTIONAL SUPERVISOR: STEPHEN WRIGHT

STATE OF CALIFORNIA - DEPARTMENT OF TRANSPORTATION

Caltrans®

TRAFFIC

LAST REVISION: DATE PLOTTED => 08-JAN-2015 10-15-14 TIME PLOTTED => 19:11

BORDER LAST REVISED 7/2/2010 | USERNAME => s119538 DGN FILE => 03140002431ga008.dgn | RELATIVE BORDER SCALE IS IN INCHES 0 1 2 3 | UNIT 0399 | PROJECT NUMBER & PHASE 03140002431

Dist	COUNTY	ROUTE	POST MILES TOTAL PROJECT	SHEET No.	TOTAL SHEETS
03	PLA	80	31.8	14	68

REGISTERED CIVIL ENGINEER — 1-5-15 DATE

1-5-15 PLANS APPROVAL DATE

REGISTERED PROFESSIONAL ENGINEER — ERIC NORMAN SOUZA — No. 75706 — Exp.06/30/16 — CIVIL — STATE OF CALIFORNIA

THE STATE OF CALIFORNIA OR ITS OFFICERS OR AGENTS SHALL NOT BE RESPONSIBLE FOR THE ACCURACY OR COMPLETENESS OF SCANNED COPIES OF THIS PLAN SHEET.

NOTES:

1. FOR DETAILS NOT SHOWN SEE STANDARD PLAN D87A.
2. REMOVE Exist AC GUTTER AND PIPE ENTRANCE TAPER.
3. CONSTRUCT HMA AND PIPE ENTRANCE TAPER PER DETAILS.

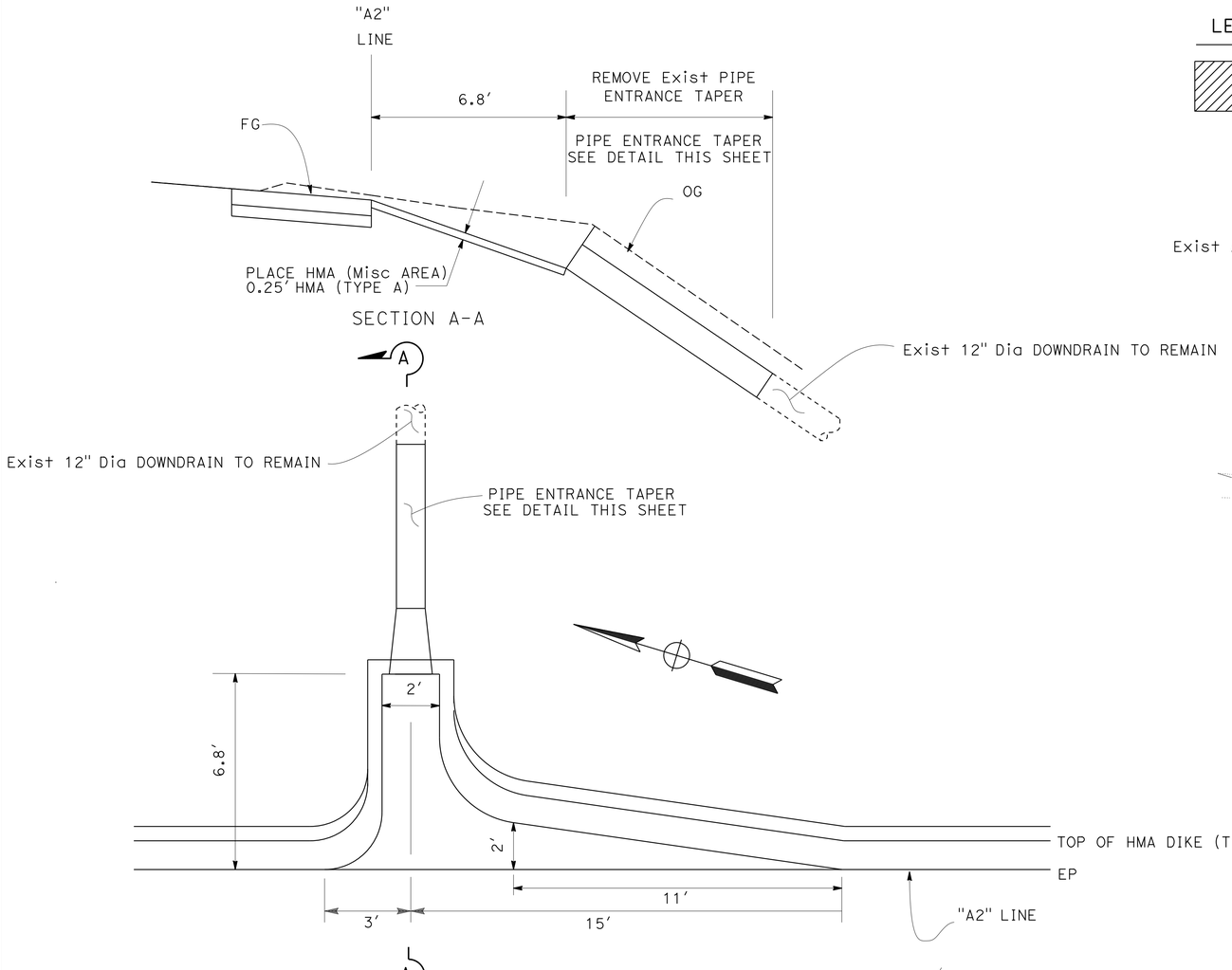

PLAN

HMA ENTRANCE TAPER DETAILS

LOCATION 2

Rt "A2" 24+84

LEGEND

REMOVE AC DIKE, EXCAVATE 0.55' BELOW GRADE
0.55' HMA (TYPE A), MATCH Exist ELEVATIONS

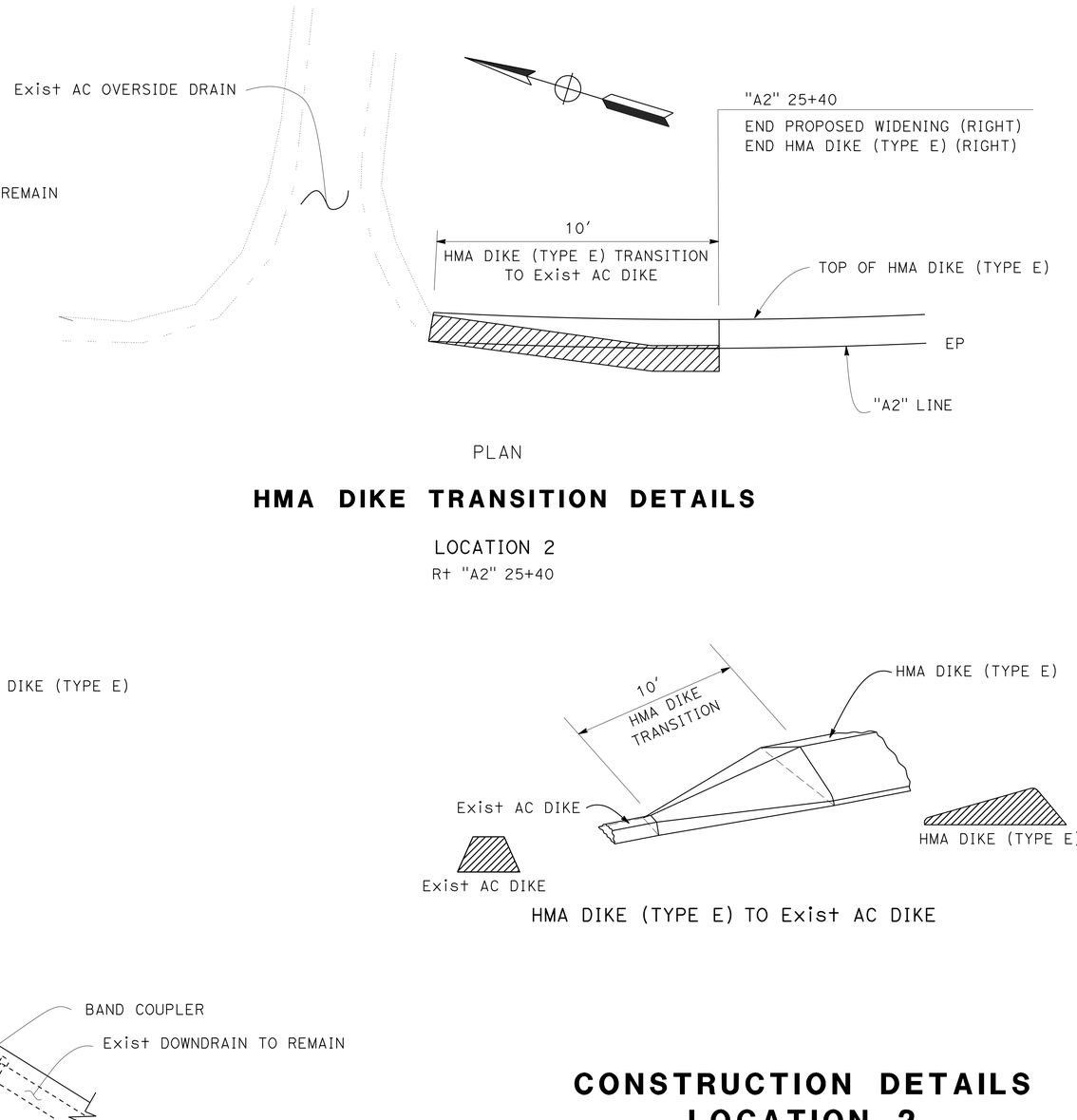

PLAN

HMA DIKE TRANSITION DETAILS

LOCATION 2

Rt "A2" 25+40

HMA DIKE (TYPE E) TO Exist AC DIKE

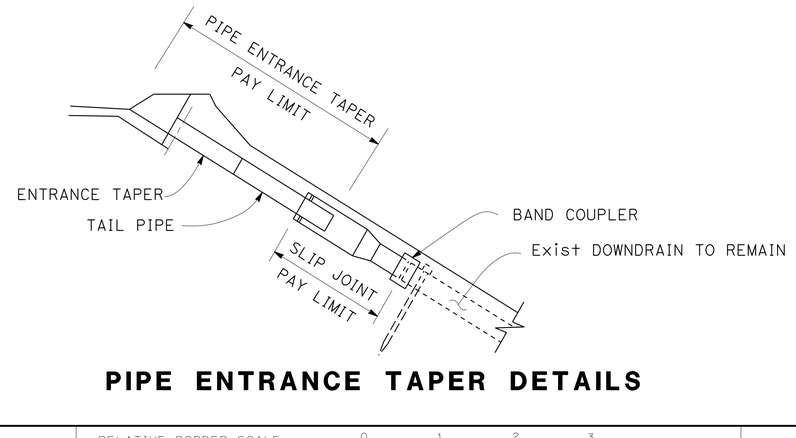

PIPE ENTRANCE TAPER DETAILS

CONSTRUCTION DETAILS LOCATION 2

NO SCALE

C-9

REVISED BY	DATE REVISED

CALCULATED-DESIGNED BY: A. G. CHIN
CHECKED BY: ERIC SOUZA
FUNCTIONAL SUPERVISOR: STEPHEN WRIGHT

STATE OF CALIFORNIA - DEPARTMENT OF TRANSPORTATION
TRAFFIC
Caltrans

LAST REVISION: DATE PLOTTED => 08-JAN-2015
10-16-14 TIME PLOTTED => 19:11

BORDER LAST REVISED 7/2/2010 | USERNAME => s119538 | DGN FILE => 0314000243ga009.dgn | RELATIVE BORDER SCALE IS IN INCHES 0 1 2 3 | UNIT 0399 | PROJECT NUMBER & PHASE 03140002431

NOTES:

1. SEE TYPICAL SECTIONS FOR STRUCTURAL SECTION INFORMATION

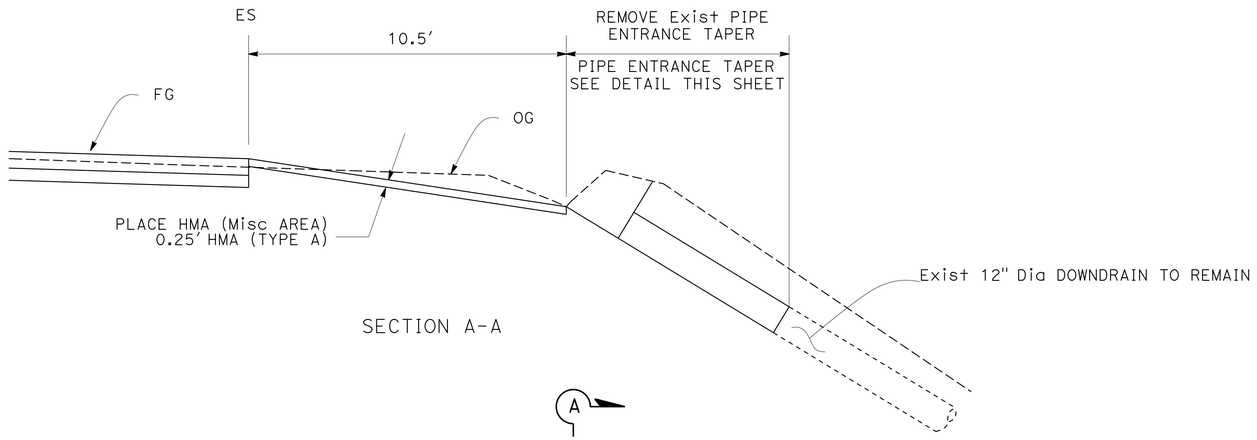

SECTION A-A

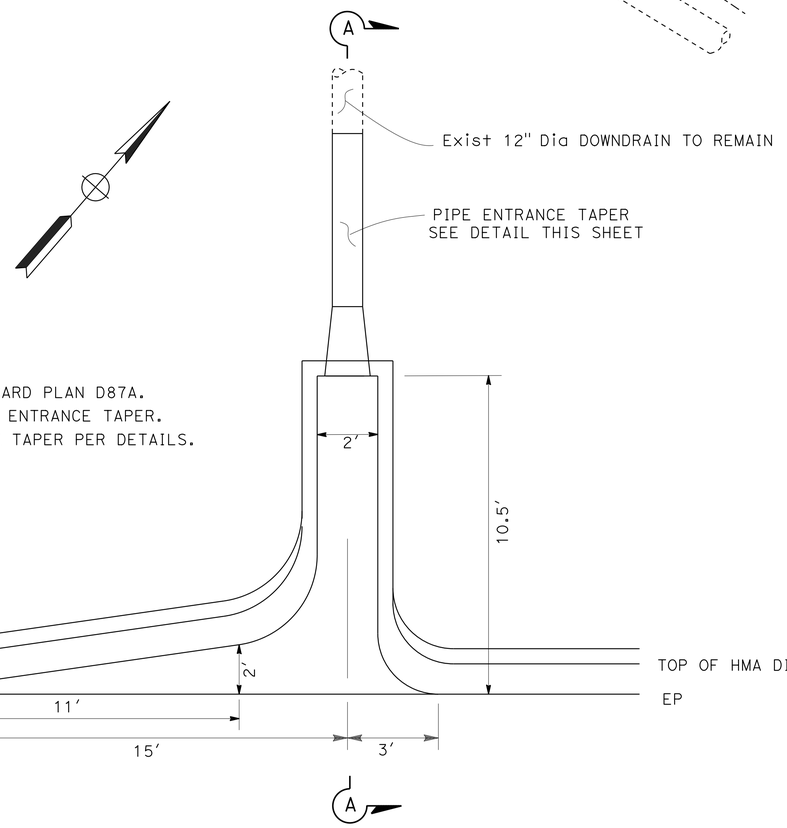

PLAN

HMA ENTRANCE TAPER DETAILS

LOCATION 3
Rt "A3" 32+03

NOTES:

1. FOR DETAILS NOT SHOWN SEE STANDARD PLAN D87A.
2. REMOVE Exist AC GUTTER AND PIPE ENTRANCE TAPER.
3. CONSTRUCT HMA AND PIPE ENTRANCE TAPER PER DETAILS.

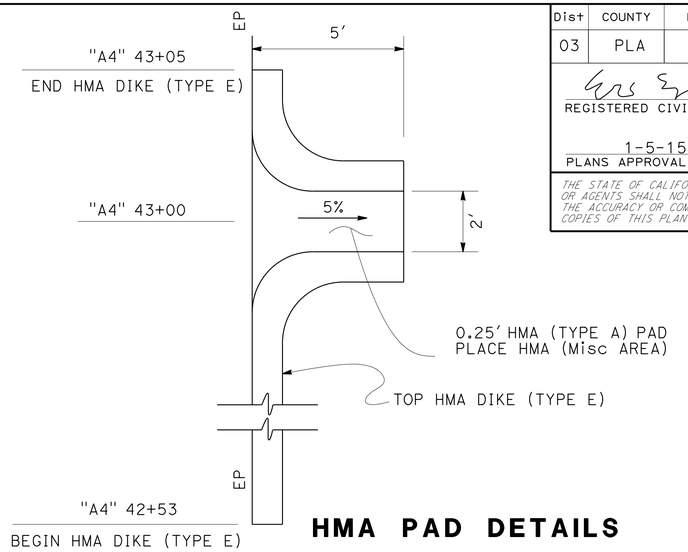

HMA PAD DETAILS

LOCATION 4
Rt "A4" 43+00

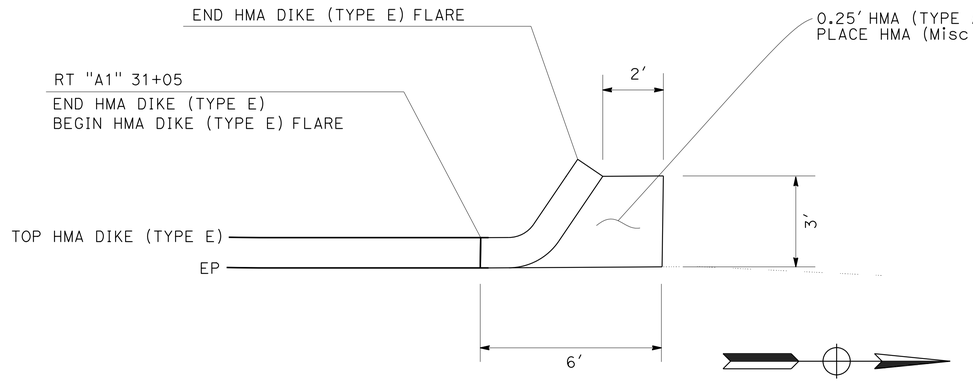

HMA PAD DETAILS

LOCATION 3
Rt "A3" 31+05

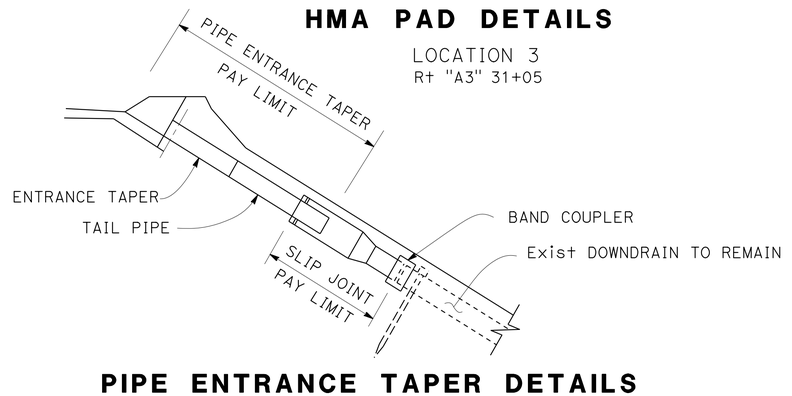

PIPE ENTRANCE TAPER DETAILS

CONSTRUCTION DETAILS LOCATION 3 AND 4

NO SCALE

C-10

Dist	COUNTY	ROUTE	POST MILES TOTAL PROJECT	SHEET No.	TOTAL SHEETS
03	PLA	80	31.8	15	68

REGISTERED CIVIL ENGINEER — 1-5-15 DATE

1-5-15 PLANS APPROVAL DATE

REGISTERED PROFESSIONAL ENGINEER — ERIC NORMAN SOUZA No. 75706 Exp.06/30/16 CIVIL — STATE OF CALIFORNIA

THE STATE OF CALIFORNIA OR ITS OFFICERS OR AGENTS SHALL NOT BE RESPONSIBLE FOR THE ACCURACY OR COMPLETENESS OF SCANNED COPIES OF THIS PLAN SHEET.

CALCULATED-DESIGNED BY: A. G. CHIN
CHECKED BY: ERIC SOUZA
FUNCTIONAL SUPERVISOR: STEPHEN WRIGHT
REVISED BY / DATE REVISED

STATE OF CALIFORNIA - DEPARTMENT OF TRANSPORTATION
TRAFFIC
Caltrans®

LAST REVISION | DATE PLOTTED => 08-JAN-2015
10-16-14 | TIME PLOTTED => 19:11

BORDER LAST REVISED 7/2/2010 | USERNAME => s119538 | DGN FILE => 0314000243ga010.dgn | RELATIVE BORDER SCALE IS IN INCHES 0 1 2 3 | UNIT 0399 | PROJECT NUMBER & PHASE 03140002431

NOTES : FOR DETAILS NOT SHOWN SEE STANDARD PLANS D87D.

Dist	COUNTY	ROUTE	POST MILES TOTAL PROJECT	SHEET No.	TOTAL SHEETS
03	PLA	80	31.8	16	68

REGISTERED CIVIL ENGINEER — 1-5-15 DATE

1-5-15 PLANS APPROVAL DATE

REGISTERED PROFESSIONAL ENGINEER — ERIC NORMAN SOUZA No. 75706 Exp.06/30/16 CIVIL — STATE OF CALIFORNIA

THE STATE OF CALIFORNIA OR ITS OFFICERS OR AGENTS SHALL NOT BE RESPONSIBLE FOR THE ACCURACY OR COMPLETENESS OF SCANNED COPIES OF THIS PLAN SHEET.

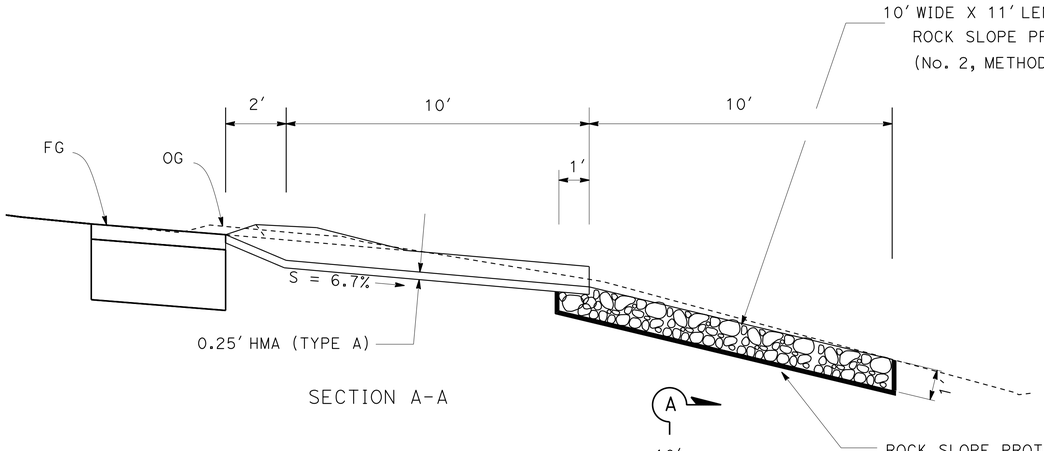

SECTION A-A

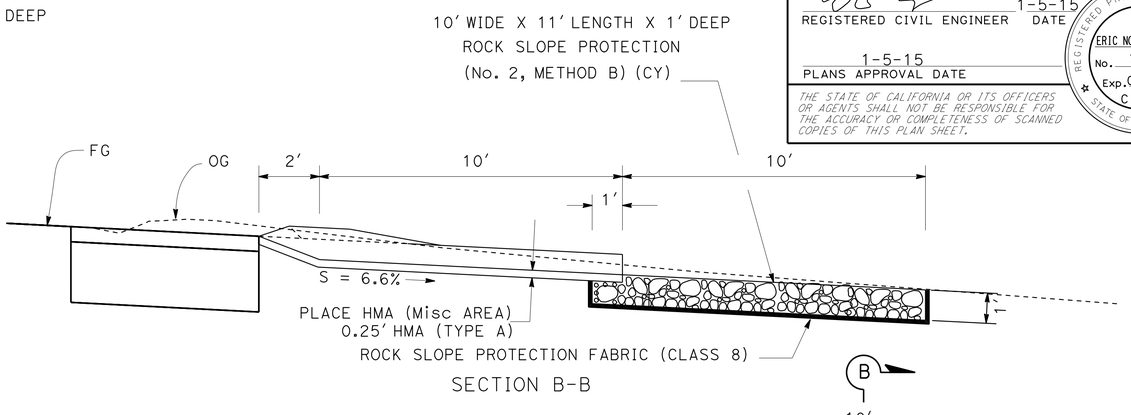

SECTION B-B

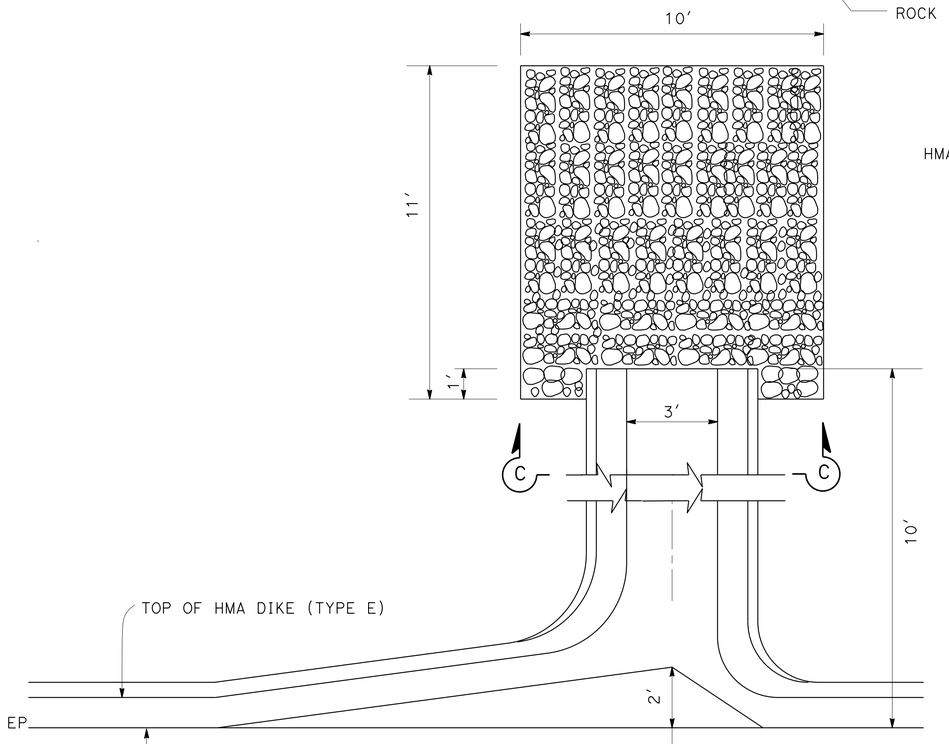

PLAN

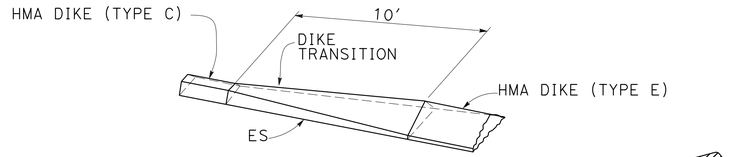

TYPE E

TYPE C

HMA DIKE (TYPE C) TO HMA DIKE (TYPE E)

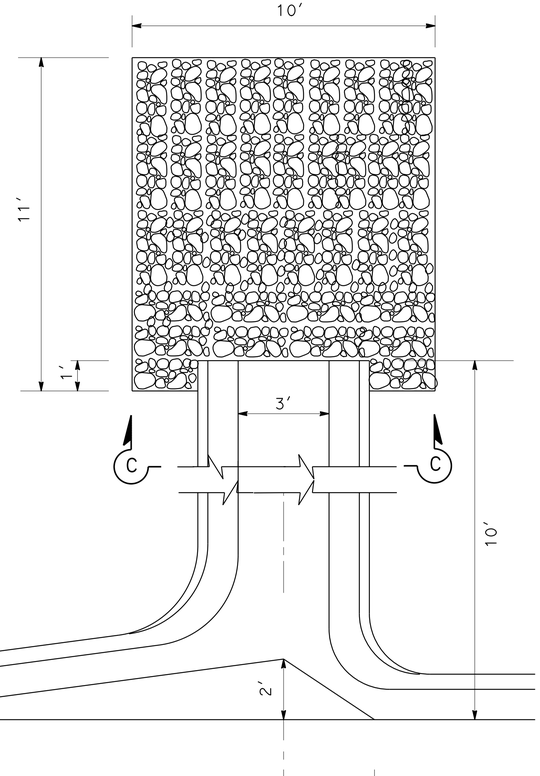

PLAN

SECTION C-C

HMA OVERSIDE DRAIN DETAILS

LOCATION 5
R+ "A5" 50+50

HMA OVERSIDE DRAIN DETAILS

LOCATION 5
R+ "A5" 52+00

CONSTRUCTION DETAILS LOCATION 5

NO SCALE

C-11

STATE OF CALIFORNIA - DEPARTMENT OF TRANSPORTATION
Caltrans®
TRAFFIC

FUNCTIONAL SUPERVISOR: STEPHEN WRIGHT
CALCULATED-DESIGNED BY: A. G. CHIN
CHECKED BY: ERIC SOUZA
REVISED BY
DATE REVISED

LAST REVISION: DATE PLOTTED => 08-JAN-2015 10-03-14 TIME PLOTTED => 19:11

BORDER LAST REVISED 7/2/2010 | USERNAME => s119538 DGN FILE => 0314000243ga011.dgn | RELATIVE BORDER SCALE IS IN INCHES 0 1 2 3 | UNIT 0399 | PROJECT NUMBER & PHASE 03140002431

Dist	COUNTY	ROUTE	POST MILES TOTAL PROJECT	SHEET No.	TOTAL SHEETS
03	Pla	80	31.8	17	68

REGISTERED CIVIL ENGINEER — 1-5-15 DATE

1-5-15
PLANS APPROVAL DATE

REGISTERED PROFESSIONAL ENGINEER
ERIC NORMAN SOUZA
No. 75706
Exp. 06/30/16
CIVIL
STATE OF CALIFORNIA

THE STATE OF CALIFORNIA OR ITS OFFICERS OR AGENTS SHALL NOT BE RESPONSIBLE FOR THE ACCURACY OR COMPLETENESS OF SCANNED COPIES OF THIS PLAN SHEET.

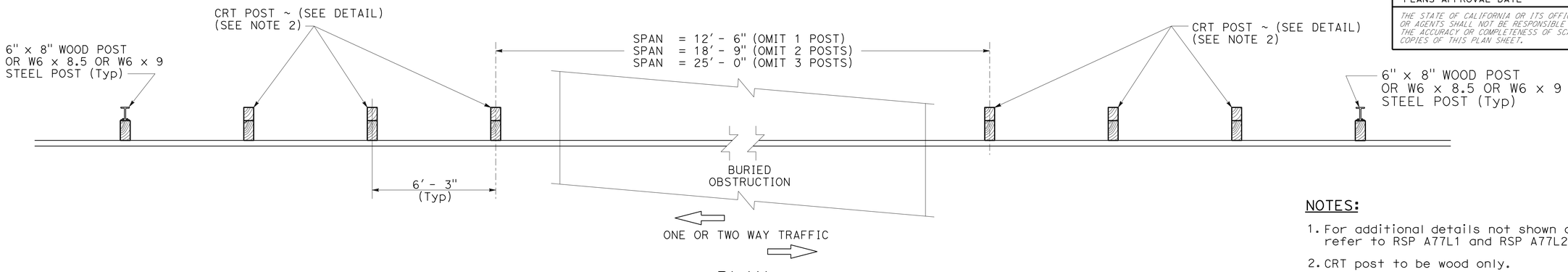

PLAN

NOTES:

1. For additional details not shown on this plan, refer to RSP A77L1 and RSP A77L2.
2. CRT post to be wood only.

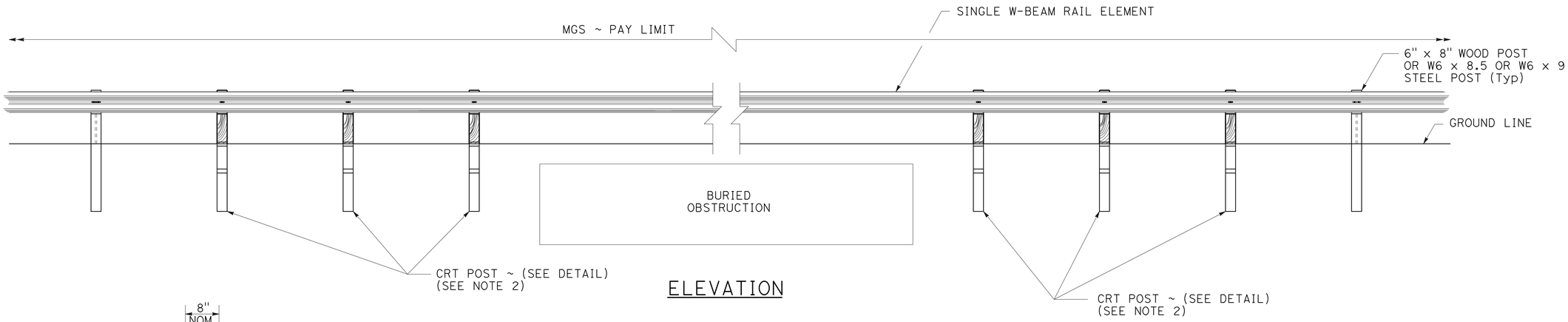

ELEVATION

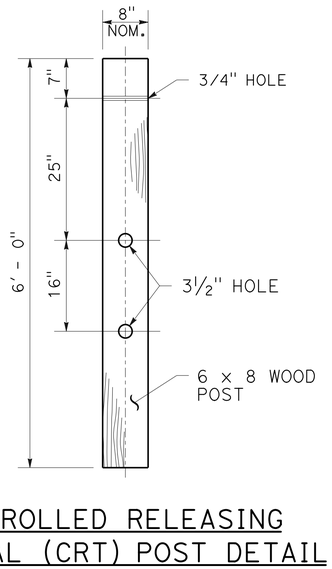

CONTROLLED RELEASING
TERMINAL (CRT) POST DETAIL

MIDWEST GUARDRAIL SYSTEM DETAILS

CONSTRUCTION DETAILS

NO SCALE

C-12

STATE OF CALIFORNIA - DEPARTMENT OF TRANSPORTATION
Caltrans® TRAFFIC

FUNCTIONAL SUPERVISOR: STEPHEN WRIGHT
CALCULATED-DESIGNED BY:
CHECKED BY:
REVISED BY:
DATE REVISED:
A. G. CHIN
ERIC SOUZA

LAST REVISION DATE PLOTTED => 08-JAN-2015
00-00-00 TIME PLOTTED => 19:11

BORDER LAST REVISED 7/2/2010
USERNAME => s119538
DGN FILE => 03140002431ga012.dgn
RELATIVE BORDER SCALE IS IN INCHES 0 1 2 3
UNIT 0399
PROJECT NUMBER & PHASE 03140002431

Dist	COUNTY	ROUTE	POST MILES TOTAL PROJECT	SHEET No.	TOTAL SHEETS
03	Pla	80	31.8	18	68

REGISTERED CIVIL ENGINEER — 1-5-15 DATE

1-5-15
PLANS APPROVAL DATE

REGISTERED PROFESSIONAL ENGINEER
ERIC NORMAN SOUZA
No. 75706
Exp. 06/30/16
CIVIL
STATE OF CALIFORNIA

THE STATE OF CALIFORNIA OR ITS OFFICERS OR AGENTS SHALL NOT BE RESPONSIBLE FOR THE ACCURACY OR COMPLETENESS OF SCANNED COPIES OF THIS PLAN SHEET.

NOTE:
1. USE 15'-7½" LENGTH RAIL.

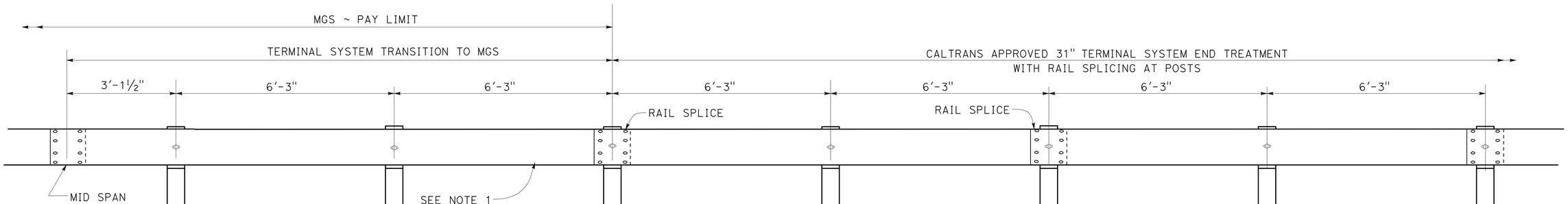

TRANSITION DETAIL FOR 31" TERMINAL SYSTEM END TREATMENT WITH RAIL SPLICING AT POSTS TO MIDWEST GUARDRAIL SYSTEM

CONSTRUCTION DETAILS

NO SCALE

C-13

STATE OF CALIFORNIA - DEPARTMENT OF TRANSPORTATION
Caltrans®
TRAFFIC

FUNCTIONAL SUPERVISOR: STEPHEN WRIGHT

CALCULATED-DESIGNED BY: A. G. CHIN
CHECKED BY: ERIC SOUZA

REVISED BY
DATE REVISED

LAST REVISION
DATE PLOTTED => 08-JAN-2015
TIME PLOTTED => 13:11
00-00-00

BORDER LAST REVISED 7/2/2010

USERNAME => s119538
DGN FILE => 0314000243ga013.dgn

RELATIVE BORDER SCALE IS IN INCHES 0 1 2 3

UNIT 0399

PROJECT NUMBER & PHASE 03140002431

Dist	COUNTY	ROUTE	POST MILES TOTAL PROJECT	SHEET No.	TOTAL SHEETS
03	Pla	80	31.8	19	68

Kris M. Albers 1-5-15
REGISTERED CIVIL ENGINEER DATE

1-5-15
PLANS APPROVAL DATE

REGISTERED PROFESSIONAL ENGINEER
KRIS M. ALBERS
No. 49986
Exp. 6-30-15
CIVIL
STATE OF CALIFORNIA

THE STATE OF CALIFORNIA OR ITS OFFICERS OR AGENTS SHALL NOT BE RESPONSIBLE FOR THE ACCURACY OR COMPLETENESS OF SCANNED COPIES OF THIS PLAN SHEET.

STATIONARY MOUNTED CONSTRUCTION AREA SIGNS

SIGN LETTER	SIGN CODE	PANEL SIZE	SIGN MESSAGE	NUMBER OF POST AND SIZE	NUMBER OF SIGNS
A	W20-1	48" x 48"	ROAD WORK AHEAD	1 - 6" x 6"	6
B	G20-2	36" x 18"	END ROAD WORK	1 - 4" x 4"	6

NOTES:

1. EXACT SIGN LOCATION TO BE DETERMINED BY THE ENGINEER.
2. ALL SIGN CODES SHOWN ARE FEDERAL SIGN CODES UNLESS OTHERWISE DESIGNATED AS A CALIFORNIA SIGN CODE.
3. <CA> = CALIFORNIA SIGN CODE.

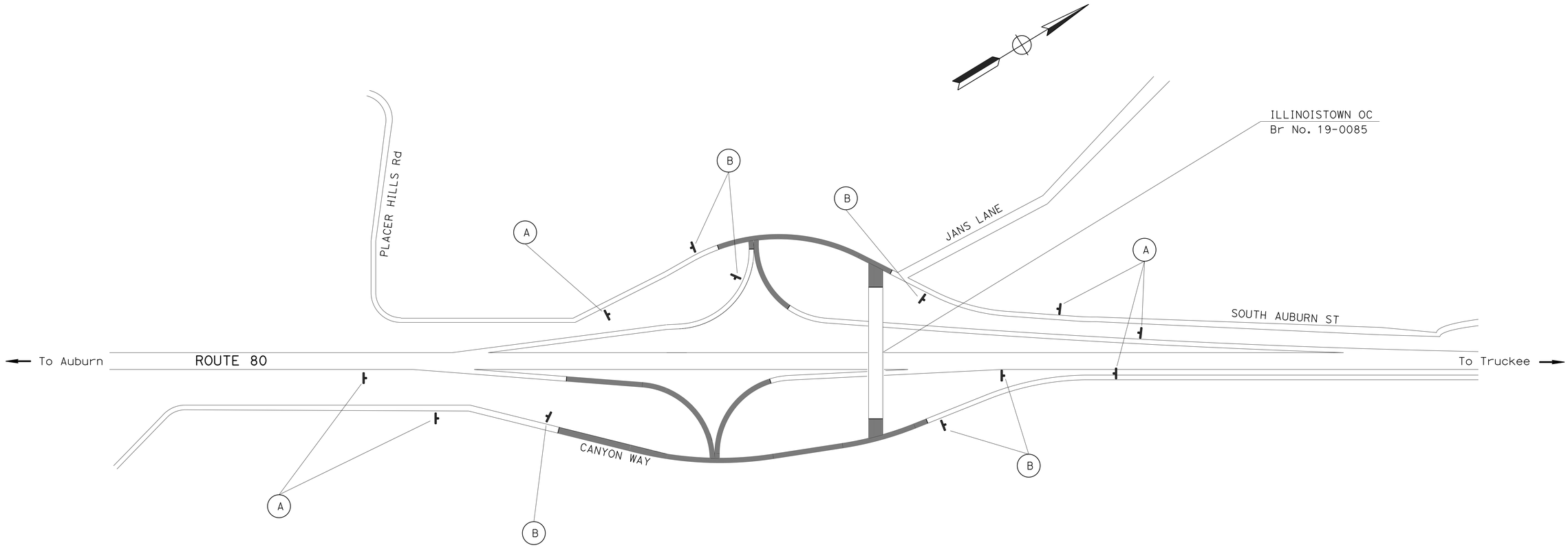

APPROVED FOR CONSTRUCTION AREA SIGN WORK ONLY

CONSTRUCTION AREA SIGNS

NO SCALE

CS-1

REVISED BY | DATE REVISED
CALCULATED-DESIGNED BY: CHUCK COOK
CHECKED BY: KRIS ALBERS
FUNCTIONAL SUPERVISOR: SERGIO ACEVES
STATE OF CALIFORNIA - DEPARTMENT OF TRANSPORTATION
Caltrans
TRAFFIC

LAST REVISION | DATE PLOTTED => 08-JAN-2015
11-24-14 | TIME PLOTTED => 19:11

BORDER LAST REVISED 7/2/2010
USERNAME => s119538
DGN FILE => 03140002431a001.dgn
RELATIVE BORDER SCALE IS IN INCHES 0 1 2 3
UNIT 0390
PROJECT NUMBER & PHASE 03140002431

Dist	COUNTY	ROUTE	POST MILES TOTAL PROJECT	SHEET No.	TOTAL SHEETS
03	PLA	80	31.8	20	68

REGISTERED CIVIL ENGINEER — DATE 1-5-15

PLANS APPROVAL DATE 1-5-15

REGISTERED PROFESSIONAL ENGINEER — ERIC NORMAN SOUZA No.75706 Exp.06/30/16 CIVIL — STATE OF CALIFORNIA

THE STATE OF CALIFORNIA OR ITS OFFICERS OR AGENTS SHALL NOT BE RESPONSIBLE FOR THE ACCURACY OR COMPLETENESS OF SCANNED COPIES OF THIS PLAN SHEET.

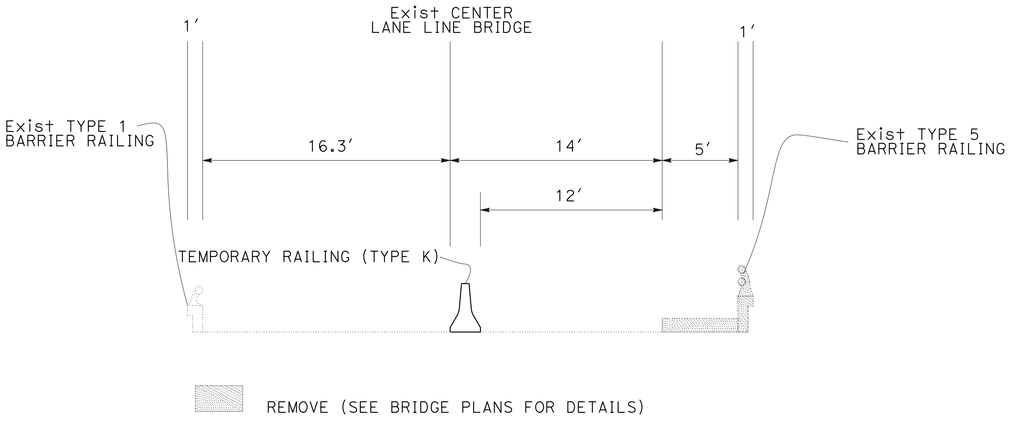

TYPCIAL SECTION (ILLINOISTOWN OVERCROSSING)

STAGE 1

1. INSTALL ADEQUATE PROTECTIVE COVER PRIOR TO ANY TYPE OF BARRIER REMOVAL
2. INSTALL TEMPORARY RAILING (TYPE K) AS SHOWN ON THIS PLAN.
3. TEMPORARY RAILING (TYPE K) MUST BE INSTALLED IMMEDIATELY AFTER REMOVAL OF ANY OF THE SIDEWALK ADJACENT TO THE TYPE 5 BRIDGE RAILING.
4. REMOVE EXISTING TYPE 5 BRIDGE RAILING UNDER AN APPROPRIATE TRAFFIC CONTROL SYSTEM. WHILE REMOVING BRIDGE RAILING, AN APPROPRIATE TRAFFIC CONTROL SYSTEM SHALL BE IMPLEMENTED 24 HOURS A DAY UNTIL THE WORK IS COMPLETED.

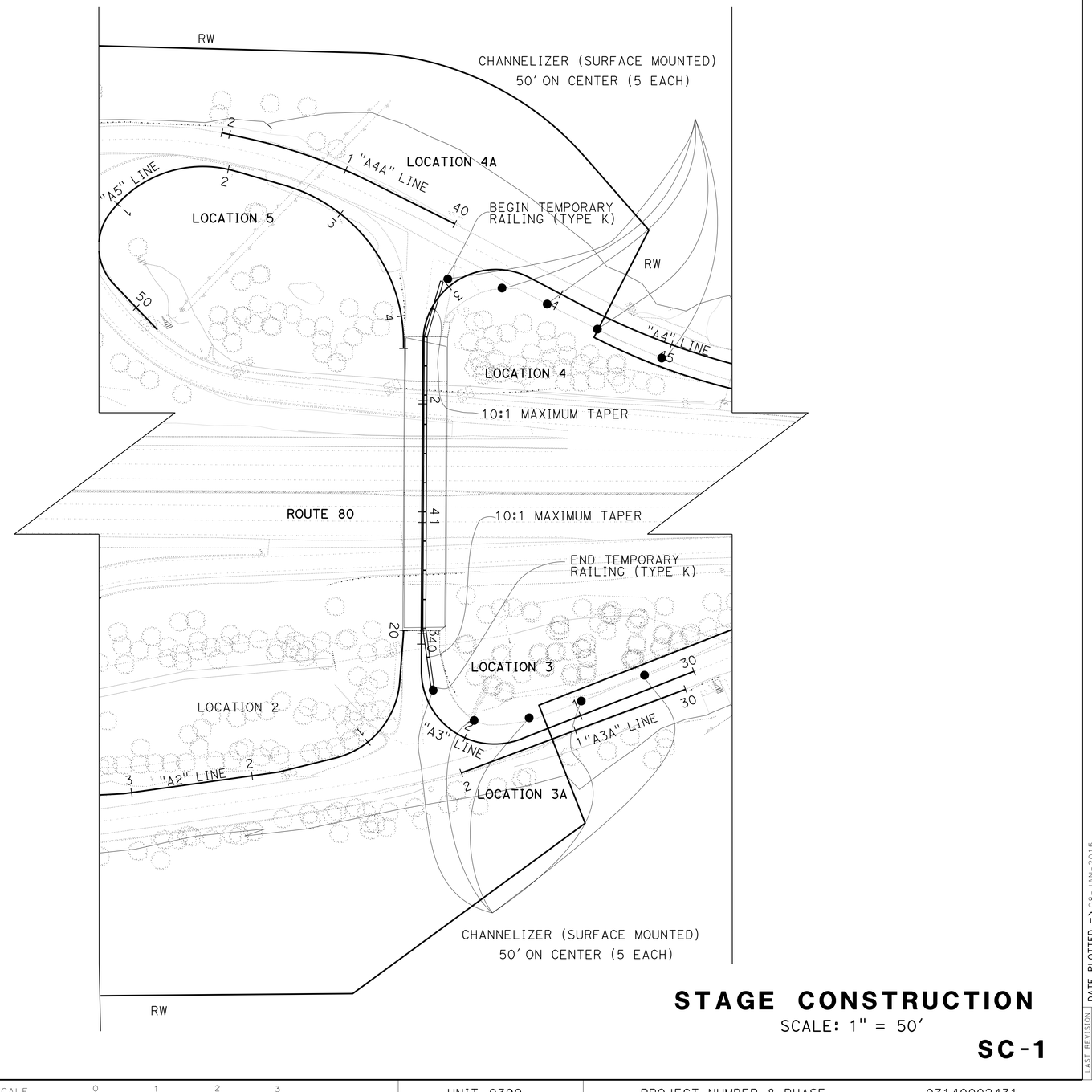

STAGE CONSTRUCTION

SCALE: 1" = 50′

SC-1

STATE OF CALIFORNIA - DEPARTMENT OF TRANSPORTATION — TRAFFIC

FUNCTIONAL SUPERVISOR: STEPHEN WRIGHT

CALCULATED-DESIGNED BY: A. G. CHIN

CHECKED BY: ERIC SOUZA

REVISED BY | DATE REVISED

LAST REVISION 07-15-14 | DATE PLOTTED => 08-JAN-2015 | TIME PLOTTED => 19:11

Dist	COUNTY	ROUTE	POST MILES TOTAL PROJECT	SHEET No.	TOTAL SHEETS
03	PLA	80	31.8	21	68

REGISTERED CIVIL ENGINEER — DATE 1-5-15

PLANS APPROVAL DATE 1-5-15

REGISTERED PROFESSIONAL ENGINEER — ERIC NORMAN SOUZA — No. 75706 — Exp. 06/30/16 — CIVIL — STATE OF CALIFORNIA

THE STATE OF CALIFORNIA OR ITS OFFICERS OR AGENTS SHALL NOT BE RESPONSIBLE FOR THE ACCURACY OR COMPLETENESS OF SCANNED COPIES OF THIS PLAN SHEET.

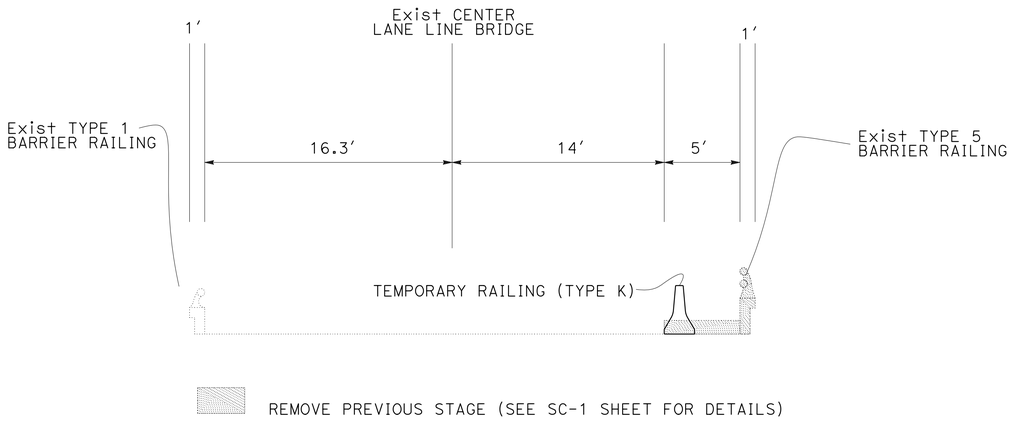

TYPCIAL SECTION (ILLINOISTOWN OVERCROSSING)

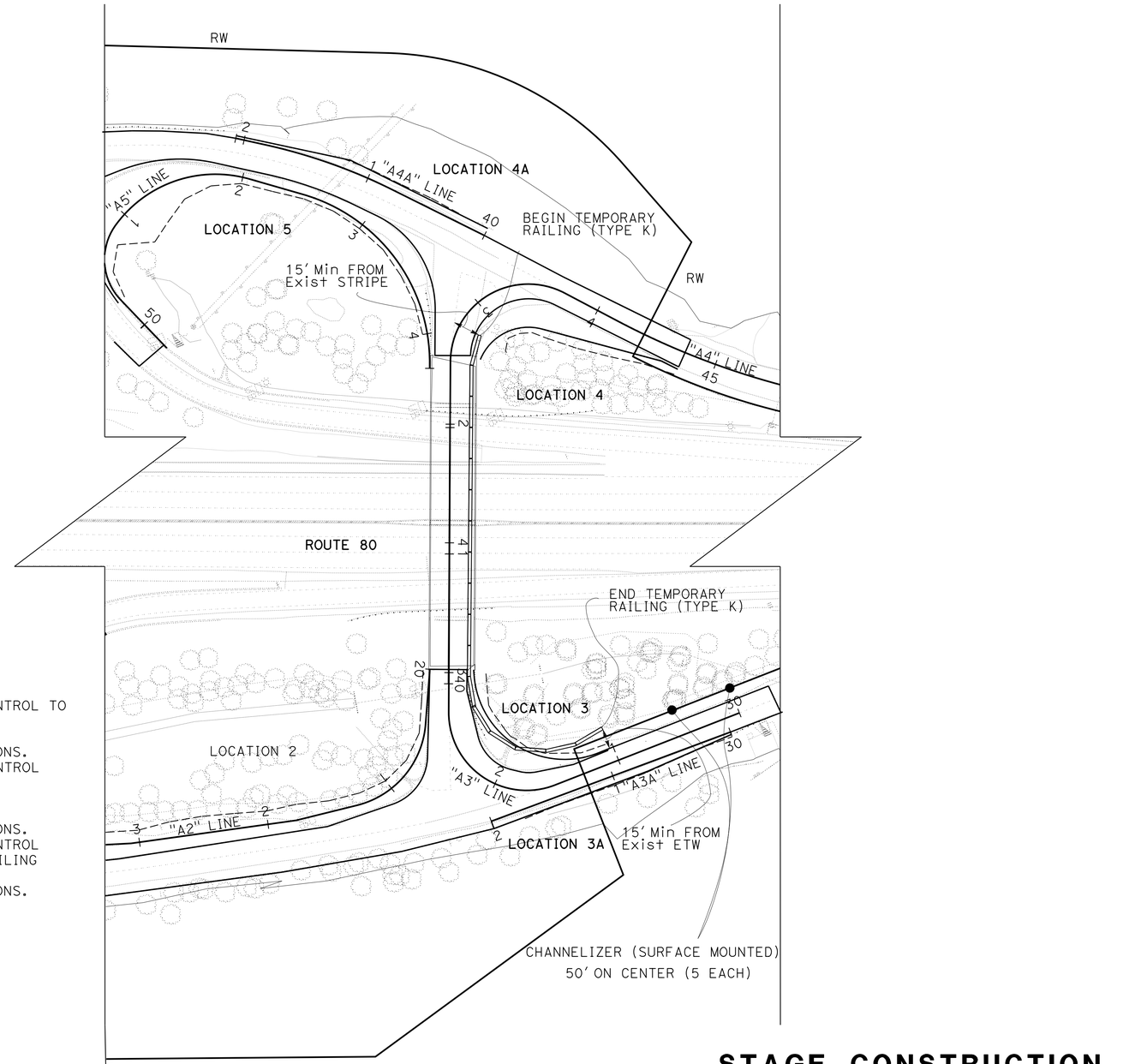

STAGE 2

1. MOVE TEMPORARY RAILING (TYPE K) TO STAGE 2 CONFIGURATION. SEE THIS PLAN AND SPECIAL PROVISIONS FOR PLACEMENT AND THE PAYMENT OF TEMPORARY RAILING (TYPE K) IN STAGE 2.
2. CONSTRUCT THE CONCRETE BARRIER TYPE 732 (MOD) AS SHOWN ON THE STRUCTURE PLANS.
3. COMPLETE LOCATIONS 1, 2, 3A, 4A AND 5 WORK AS SHOWN ON OTHER PLANS.
4. MOVE ENOUGH OF THE TEMPORARY RAILING (TYPE K) WHERE NECESSARY UNDER APPROPRIATE TRAFFIC CONTROL TO COMPLETE CLEARING AND GRUBBING, ROADWAY EXCAVATION AND CLASS 2 AB WORK AT LOCATION 3. WHEN COMPLETE, REINSTALL TEMPORARY RAILING (TYPE K) BACK TO ORIGINAL STAGE 2 CONFIGURATION. SEE SECTION 7 "PUBLIC SAFETY" OF THE STANDARD SPECIFICATIONS FOR REQUIREMENTS AND RESTRICTIONS.
5. MOVE ENOUGH OF THE TEMPORARY RAILING (TYPE K) WHERE NECESSARY UNDER APPROPRIATE TRAFFIC CONTROL TO CONSTRUCT HMA (TYPE A), CONCRETE END BLOCK, TRANSITION RAILING (TYPE WB-31), MGS AND ALTERNATIVE FLARED TERMINAL SYSTEM AT LOCATION 3. WHEN COMPLETE, REINSTALL TEMPORARY RAILING (TYPE K) BACK TO ORIGINAL STAGE 2 CONFIGURATION. SEE SECTION 7 "PUBLIC SAFETY" OF THE STANDARD SPECIFICATIONS FOR REQUIREMENTS AND RESTRICTIONS.
6. MOVE ENOUGH OF THE TEMPORARY RAILING (TYPE K) WHERE NECESSARY UNDER APPROPRIATE TRAFFIC CONTROL TO CONSTRUCT LOCTION 4 WORK AS SHOWN ON OTHER PLANS. WHEN COMPLETE, REINSTALL TEMPORARY RAILING (TYPE K) BACK TO ORIGINAL STAGE 2 CONFIGURATION. SEE SECTION 7 "PUBLIC SAFETY" OF THE STANDARD SPECIFICATIONS FOR REQUIREMENTS AND RESTRICTIONS.
7. REMOVE TEMPORARY RAILING (TYPE K) WHEN CONCRETE BARRIER TYPE 732 (MOD) MEETS STRENGTH REQUIREMENTS AS APPROVED BY THE ENGINEER.
8. UNDER APPROPRIATE TRAFFIC CONTROL COMPLETE THE REMAINING ITEMS OF WORK INCLUDING: REMOVE CONCRETE DECK SURFACE, PREPARE CONCRETE BRIDGE DECK SURFACE, AND PLACE POLYESTER CONCRETE OVERLAY.

STAGE CONSTRUCTION

SCALE: 1" = 50′

SC-2

REVISED BY | DATE REVISED
A. G. CHIN | ERIC SOUZA
CALCULATED-DESIGNED BY | CHECKED BY
FUNCTIONAL SUPERVISOR: STEPHEN WRIGHT

STATE OF CALIFORNIA - DEPARTMENT OF TRANSPORTATION
TRAFFIC

LAST REVISION 07-15-14 | DATE PLOTTED => 08-JAN-2015 | TIME PLOTTED => 19:11

BORDER LAST REVISED 7/2/2010 | USERNAME => s119538 | DGN FILE => 0314000243ma002.dgn | RELATIVE BORDER SCALE IS IN INCHES 0 1 2 3 | UNIT 0399 | PROJECT NUMBER & PHASE 03140002431

Dist	COUNTY	ROUTE	POST MILES TOTAL PROJECT	SHEET No.	TOTAL SHEETS
03	Pla	80	31.8	22	68

Kris M. Albers 1-5-15
REGISTERED CIVIL ENGINEER DATE

1-5-15
PLANS APPROVAL DATE

REGISTERED PROFESSIONAL ENGINEER
KRIS M. ALBERS
No. 49986
Exp. 6-30-15
CIVIL
STATE OF CALIFORNIA

THE STATE OF CALIFORNIA OR ITS OFFICERS OR AGENTS SHALL NOT BE RESPONSIBLE FOR THE ACCURACY OR COMPLETENESS OF SCANNED COPIES OF THIS PLAN SHEET.

LEGEND

- (No.) PAVEMENT DELINEATION DETAIL NUMBER
- (LL) LIMIT LINE
- DELINEATOR
- s= DELINEATOR SPACING
- TYPE 1(24′) ARROW
- TYPE V ARROW
- S "STOP" PAVEMENT MARKING
- (Sht-No.) ROADSIDE SIGN NUMBER
- <CA> CALIFORNIA SIGN CODE

NOTES:

1. ALL LANES SHALL BE 12′ WIDE UNLESS OTHERWISE SHOWN.
2. ALL DELINEATORS SHALL BE TYPE G (CLASS 2).
3. ALL SIGN CODES SHOWN ARE FEDERAL SIGN CODES UNLESS OTHERWISE DESIGNATED AS CALIFORNIA SIGN CODES.

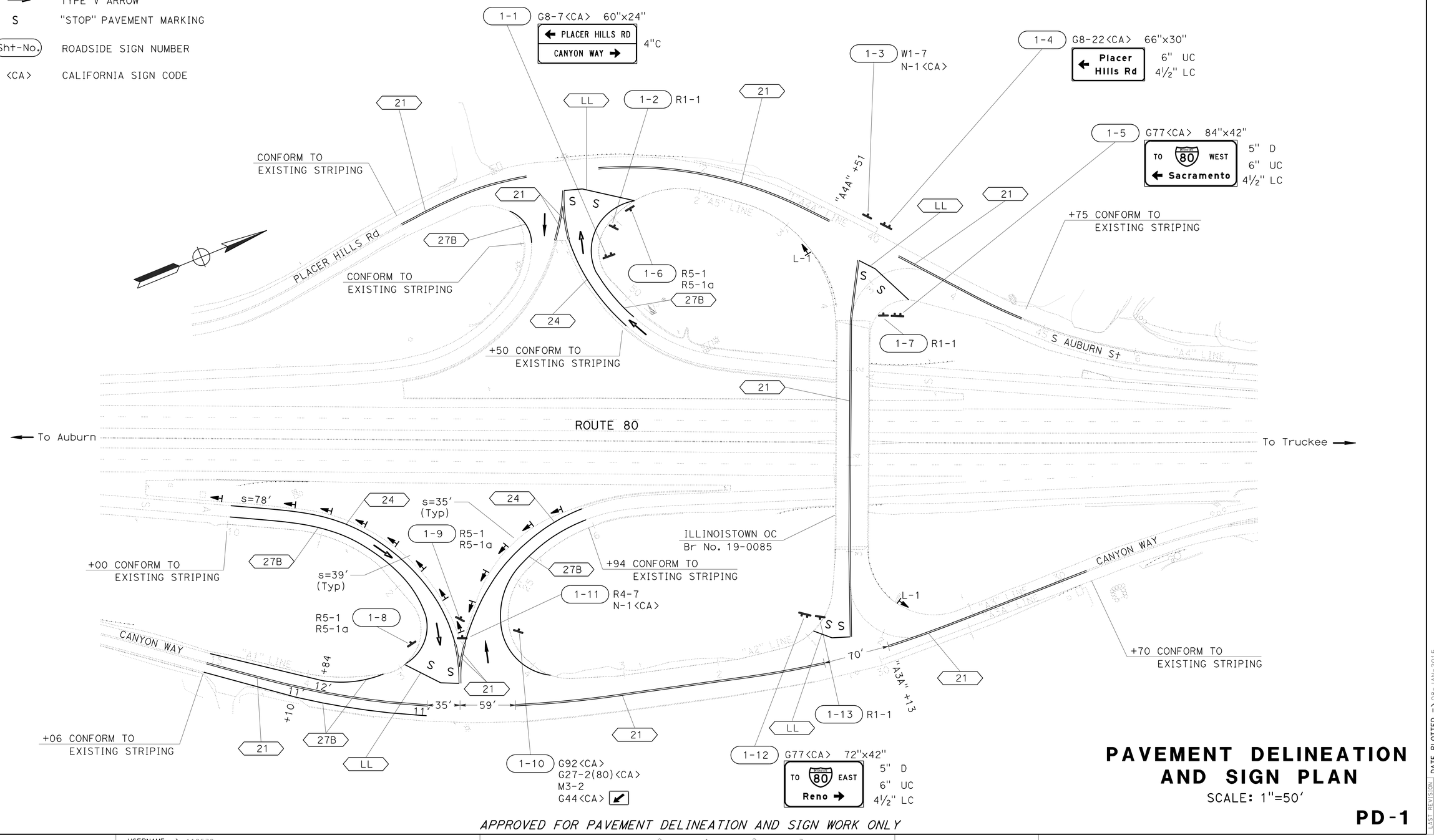

PAVEMENT DELINEATION AND SIGN PLAN

SCALE: 1"=50′

PD-1

APPROVED FOR PAVEMENT DELINEATION AND SIGN WORK ONLY

CHUCK COOK — CALCULATED-DESIGNED BY
KRIS ALBERS — CHECKED BY
SERGIO ACEVES — FUNCTIONAL SUPERVISOR
STATE OF CALIFORNIA - DEPARTMENT OF TRANSPORTATION
TRAFFIC
Caltrans

REVISED BY | DATE REVISED

LAST REVISION | DATE PLOTTED => 08-JAN-2015
11-24-14 | TIME PLOTTED => 19:11

BORDER LAST REVISED 7/2/2010
USERNAME => s119538
DGN FILE => 0314000243na001.dgn
RELATIVE BORDER SCALE IS IN INCHES 0 1 2 3
UNIT 0390
PROJECT NUMBER & PHASE 03140002431

Dist	COUNTY	ROUTE	POST MILES TOTAL PROJECT	SHEET No.	TOTAL SHEETS
03	Pla	80	31.8	23	68

Kris M. Albers 1-5-15
REGISTERED CIVIL ENGINEER DATE

1-5-15
PLANS APPROVAL DATE

REGISTERED PROFESSIONAL ENGINEER
KRIS M. ALBERS
No. 49986
Exp. 6-30-15
CIVIL
STATE OF CALIFORNIA

THE STATE OF CALIFORNIA OR ITS OFFICERS OR AGENTS SHALL NOT BE RESPONSIBLE FOR THE ACCURACY OR COMPLETENESS OF SCANNED COPIES OF THIS PLAN SHEET.

THERMOPLASTIC PAVEMENT MARKING

DESCRIPTION	SQUARE FEET
TYPE I(24') ARROW	62
TYPE V ARROW	132
"STOP"	176
LIMIT LINE	246
TOTAL	616

DELINEATOR- OBJECT MARKER

SHEET NUMBER	DELINEATOR (CLASS 2)	OBJECT MARKER
	TYPE G-2 (EACH)	TYPE L-1 (EACH)
PD-1	13	2
TOTAL	13	2

4" THERMOPLASTIC TRAFFIC STRIPE

DETAIL NUMBER	LF
21	3852
24	611
27B	1180
TOTAL	5643

PAVEMENT DELINEATION QUANTITIES

PDQ-1

REVISED BY	DATE REVISED
CHUCK COOK	KRIS ALBERS
CALCULATED-DESIGNED BY	CHECKED BY
FUNCTIONAL SUPERVISOR	SERGIO ACEVES

STATE OF CALIFORNIA - DEPARTMENT OF TRANSPORTATION
TRAFFIC

LAST REVISION 11-24-14
DATE PLOTTED => 08-JAN-2015
TIME PLOTTED => 19:11

BORDER LAST REVISED 7/2/2010
USERNAME => s119538
DGN FILE => 0314000243nc001.dgn
RELATIVE BORDER SCALE IS IN INCHES 0 1 2 3
UNIT 0390
PROJECT NUMBER & PHASE 03140002431

Dist	COUNTY	ROUTE	POST MILES TOTAL PROJECT	SHEET No.	TOTAL SHEETS
03	Pla	80	31.8	24	68

Kris M. Albers 1-5-15
REGISTERED CIVIL ENGINEER DATE

1-5-15
PLANS APPROVAL DATE

REGISTERED PROFESSIONAL ENGINEER
KRIS M. ALBERS
No. 49986
Exp. 6-30-15
CIVIL
STATE OF CALIFORNIA

THE STATE OF CALIFORNIA OR ITS OFFICERS OR AGENTS SHALL NOT BE RESPONSIBLE FOR THE ACCURACY OR COMPLETENESS OF SCANNED COPIES OF THIS PLAN SHEET.

LEGEND

(Sht-No.)	ROADSIDE SIGN NUMBER
<CA>	CALIFORNIA SIGN CODE
■	REMOVE ROADSIDE SIGN
▲	RESET ROADSIDE SIGN

NOTES:

1. ALL EXISTING SIGNS NOT SHOWN FOR REMOVAL OR RESETTING SHALL REMAIN IN PLACE.
2. ALL SIGN CODES SHOWN ARE FEDERAL SIGN CODES UNLESS OTHERWISE DESIGNATED AS CALIFORNIA SIGN CODES.

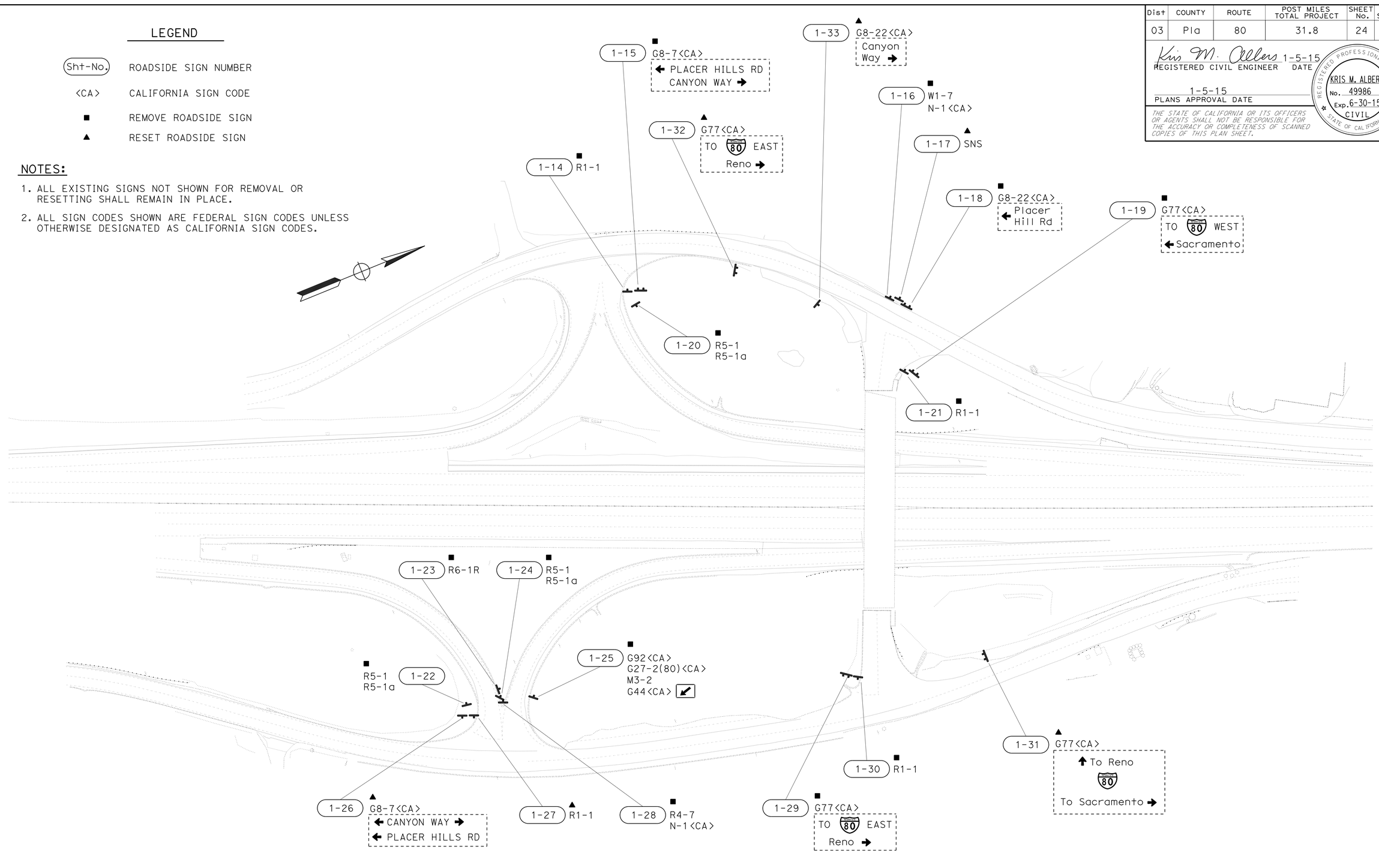

SIGN DETAILS

EXISTING SIGNS

SCALE: 1"=50'

SD-1

APPROVED FOR SIGN WORK ONLY

STATE OF CALIFORNIA - DEPARTMENT OF TRANSPORTATION
TRAFFIC

CALCULATED-DESIGNED BY	CHECKED BY	FUNCTIONAL SUPERVISOR	REVISED BY	DATE REVISED
CHUCK COOK	KRIS ALBERS	SERGIO ACEVES		

LAST REVISION DATE PLOTTED => 08-JAN-2015
01-07-15 TIME PLOTTED => 19:11

Dist	COUNTY	ROUTE	POST MILES TOTAL PROJECT	SHEET No.	TOTAL SHEETS
03	Pla	80	31.8	25	68

Kris M. Albers 1-5-15
REGISTERED CIVIL ENGINEER DATE

1-5-15
PLANS APPROVAL DATE

REGISTERED PROFESSIONAL ENGINEER
KRIS M. ALBERS
No. 49986
Exp. 6-30-15
CIVIL
STATE OF CALIFORNIA

THE STATE OF CALIFORNIA OR ITS OFFICERS OR AGENTS SHALL NOT BE RESPONSIBLE FOR THE ACCURACY OR COMPLETENESS OF SCANNED COPIES OF THIS PLAN SHEET.

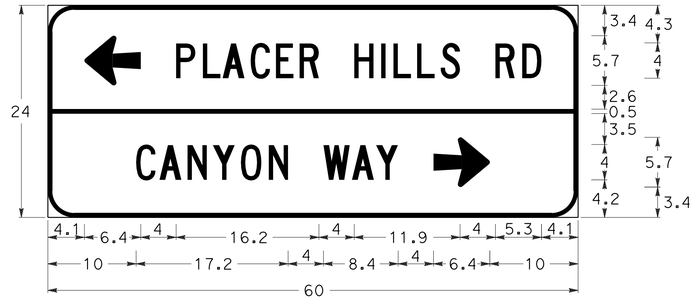

0.5" BORDER WITH 3" RADIUS
ARROW - 4"UC-1 LINE 6.4" 180°
"PLACER HILLS RD" C
"CANYON WAY" C
ARROW - 4"UC-1 LINE 6.4" 0°

G8-7<CA>
1-1

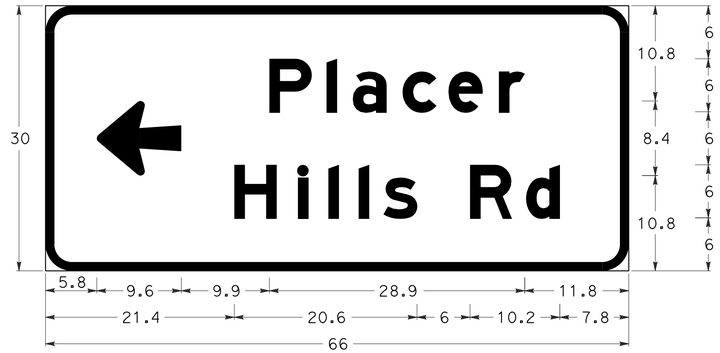

1" BORDER WITH 3" RADIUS
ARROW - 6"UC-1 LINE 9.6" 180°
"PLACER" E Mod
"Hills Rd" E Mod

G8-22<CA>
1-4

1" BORDER WITH 6" RADIUS
"TO" D
"WEST" D
ARROW - 6"UC-1 LINE 9.6" 180°
"Sacramento" E Mod

G77<CA>
1-5

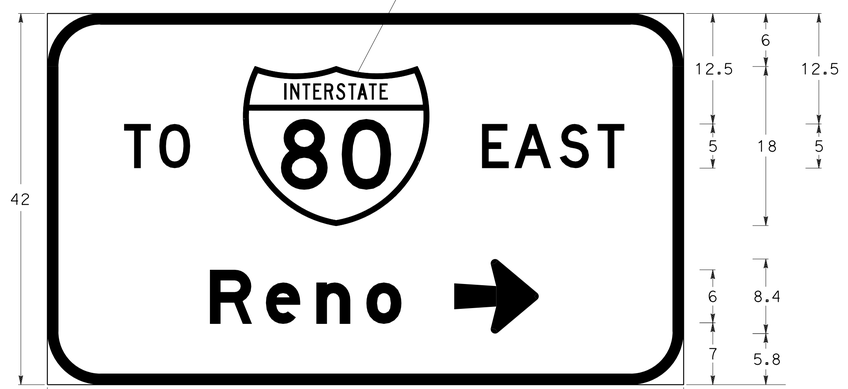

1" BORDER WITH 6" RADIUS
"TO" D
"EAST" D
"Reno" E Mod
ARROW - 6"UC-1 LINE 9.6" 0°

G77<CA>
1-12

SIGN DETAILS
NO SCALE

SD-2

APPROVED FOR SIGN WORK ONLY

STATE OF CALIFORNIA - DEPARTMENT OF TRANSPORTATION
TRAFFIC
Caltrans
FUNCTIONAL SUPERVISOR: SERGIO ACEVES
CALCULATED-DESIGNED BY: CHUCK COOK
CHECKED BY: KRIS ALBERS
REVISED BY
DATE REVISED

LAST REVISION 10-13-14
DATE PLOTTED => 08-JAN-2015
TIME PLOTTED => 19:11

BORDER LAST REVISED 7/2/2010
USERNAME => s119538
DGN FILE => 0314000243ob002.dgn
RELATIVE BORDER SCALE IS IN INCHES 0 1 2 3
UNIT 0390
PROJECT NUMBER & PHASE 03140002431

Dist	COUNTY	ROUTE	POST MILES TOTAL PROJECT	SHEET No.	TOTAL SHEETS
03	Pla	80	31.8	26	68

Kris M. Albers 1-5-15
REGISTERED CIVIL ENGINEER DATE

1-5-15
PLANS APPROVAL DATE

REGISTERED PROFESSIONAL ENGINEER
KRIS M. ALBERS
No. 49986
Exp. 6-30-15
CIVIL
STATE OF CALIFORNIA

THE STATE OF CALIFORNIA OR ITS OFFICERS OR AGENTS SHALL NOT BE RESPONSIBLE FOR THE ACCURACY OR COMPLETENESS OF SCANNED COPIES OF THIS PLAN SHEET.

NOTES:

1. THE SIGN POST SHALL HAVE 7/16" DIAMETER PERFORATIONS 1" ON CENTER ON ALL FOUR SIDES FOR THE FULL LENGTH.
2. USE TWO DRIVE RIVETS TO FASTEN ASSEMBLED SIGN AND SIGN POST INTO ANCHOR SLEEVE. INSTALL DRIVE RIVETS INTO THE SIDES FACING TRAFFIC.
3. ALL METAL SIGN POSTS AND ANCHOR SLEEVES SHALL BE GALVANIZED.
4. ALL ANCHOR SLEEVES SHALL BE EMBEDDED IN PCC.
5. BALANCED SINGLE POST INSTALLATIONS OF SINGLE SHEET ALUMINUM PANEL SIGNS REQUIRE BACK BRACES WHEN 2'-10" OR MORE IN LENGTH.
6. WOOD BLOCK SPACERS ARE NOT REQUIRED FOR SIGNS MOUNTED ON METAL POSTS.
7. ATTACH RECTANGULAR SIGN PANEL TO SIGN POST WITH BOLTS AT TOP AND BOTTOM. CENTER MAY BE ATTACHED WITH EITHER BOLT OR 3/8" DRIVE RIVET.
8. ATTACH DIAMOND SIGN PANEL TO SIGN POST WITH BOLT AT CENTER. TOP AND BOTTOM MAY BE ATTACHED WITH EITHER BOLTS OR 3/8" DRIVE RIVETS.
9. FOR DETAILS NOT SHOWN, SEE STANDARD PLANS RS1 AND RS2.

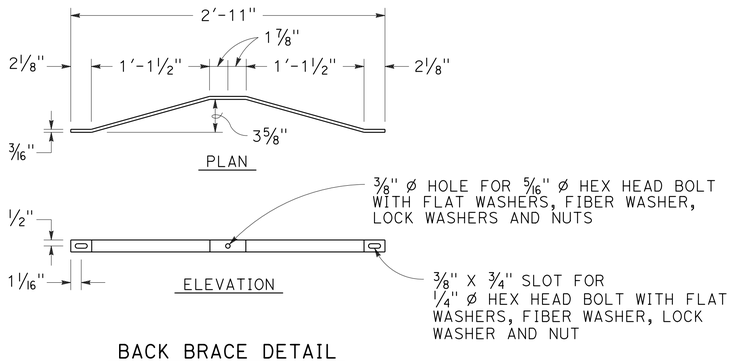

BACK BRACE DETAIL
SEE NOTE 5

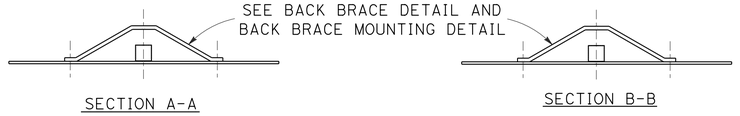

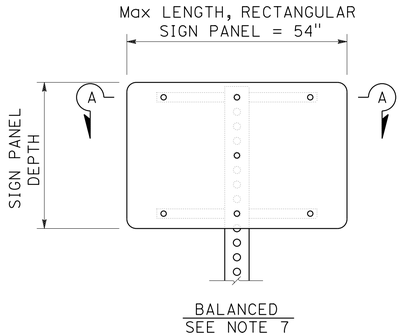

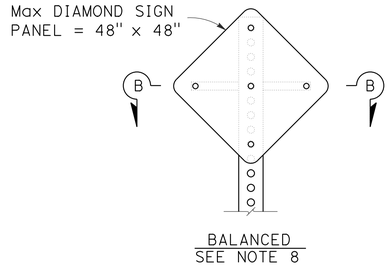

SINGLE POST INSTALLATION

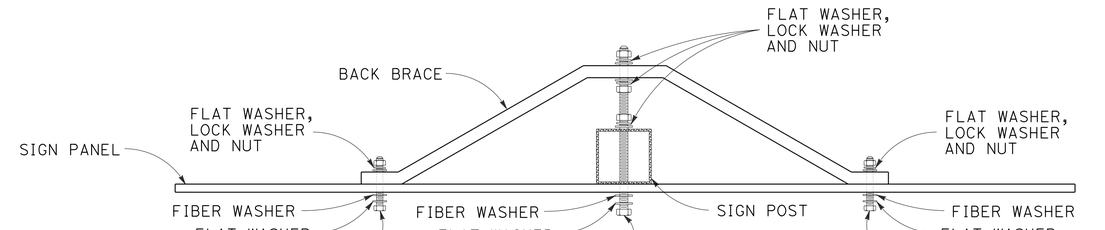

BACK BRACE MOUNTING DETAIL
SEE NOTES 6, 7 AND 8

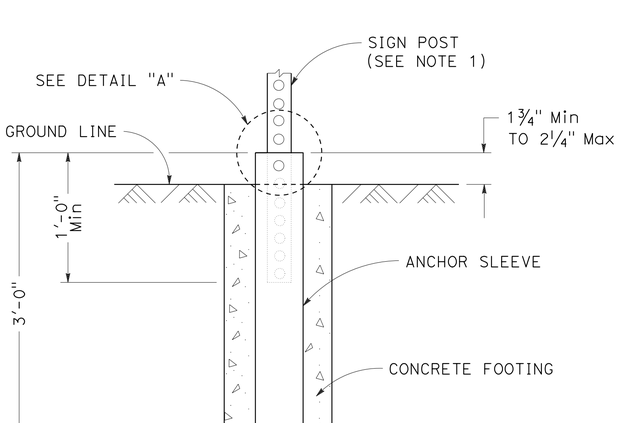

ANCHOR SLEEVE DETAIL

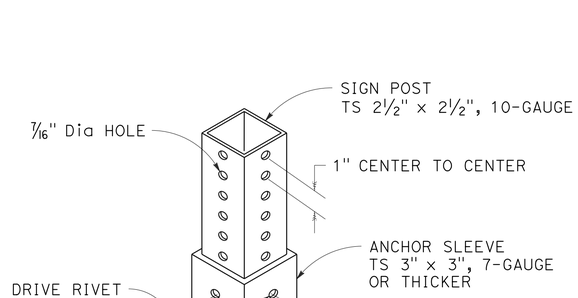

DETAIL "A"

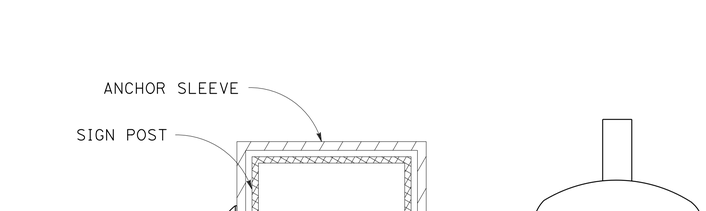

FASTENER DETAIL

APPROVED FOR SIGN WORK ONLY

SIGN DETAILS

NO SCALE

SD-3

STATE OF CALIFORNIA - DEPARTMENT OF TRANSPORTATION
TRAFFIC
FUNCTIONAL SUPERVISOR: SERGIO ACEVES
CALCULATED-DESIGNED BY: KRIS ALBERS
CHECKED BY: CHUCK COOK
REVISED BY / DATE REVISED

LAST REVISION 10-13-14
DATE PLOTTED => 08-JAN-2015
TIME PLOTTED => 19:11

BORDER LAST REVISED 7/2/2010
USERNAME => s119538
DGN FILE => 0314000243ob003.dgn
RELATIVE BORDER SCALE IS IN INCHES 0 1 2 3
UNIT 0390
PROJECT NUMBER & PHASE 03140002431

Dist	COUNTY	ROUTE	POST MILES TOTAL PROJECT	SHEET No.	TOTAL SHEETS
03	Pla	80	31.8	27	68

Kris M. Albers 1-5-15
REGISTERED CIVIL ENGINEER DATE

1-5-15
PLANS APPROVAL DATE

REGISTERED PROFESSIONAL ENGINEER
KRIS M. ALBERS
No. 49986
Exp. 6-30-15
CIVIL
STATE OF CALIFORNIA

THE STATE OF CALIFORNIA OR ITS OFFICERS OR AGENTS SHALL NOT BE RESPONSIBLE FOR THE ACCURACY OR COMPLETENESS OF SCANNED COPIES OF THIS PLAN SHEET.

ROADSIDE SIGN QUANTITIES

SIGN NUMBER (SHT-NO.)	SIGN CODE	PANEL SIZE INCHES	"C" DIM IN FEET	POST SIZE AND LENGTH 4"x4"	4"x6"	METAL POST 2½"X2½"	ROADSIDE SIGN ONE POST EA	ROADSIDE SIGN TWO POST EA	REMOVE ROADSIDE SIGN EA	RESET ROADSIDE SIGN EA
1-1	G8-7<CA>	60 x 24	5	12′				1		
1-2	R1-1	30	5			10′	1			
1-3	W1-7 N-1<CA>	48 x 24 18 x 18	4			10′	1			
1-4	G8-22<CA>	66 x 30	5	12′				1		
1-5	G77<CA>	84 x 42	5		14′			1		
1-6	R5-1 R5-1a	36 x 36 36 x 24	2			10′	1			
1-7	R1-1	30	5			10′	1			
1-8	R5-1 R5-1a	36 x 36 36 x 24	2			10′	1			
1-9	R5-1 R5-1a	36 x 36 36 x 24	2			10′	1			
1-10	G92<CA> G27-2(80)<CA> M3-2 G44<CA>	48 x 30 24 x 24 24 x 12 21 x 15	2			10′	1			
1-11	R4-7 N-1<CA>	24 x 30 18 x 18	4			10′	1			
1-12	G77<CA>	72 x 42	5		14′			1		
1-13	R1-1	30	5			10′	1			
1-14	R1-1								1	
1-15	G8-7<CA>								1	
1-16	W1-7 N-1<CA>								1	
1-17	SNS									1
1-18	G8-22<CA>								1	
1-19	G77<CA>								1	
1-20	R5-1 R5-1a								1	
1-21	R1-1								1	
1-22	R5-1 R5-1a								1	
1-23	R6-1R								1	
1-24	R5-1 R5-1a								1	
1-25	G92<CA> G27-2(80)<CA> M3-2 G44<CA>								1	
1-26	G8-7<CA>									1
1-27	R1-1									1
1-28	R4-7 N-1<CA>								1	
1-29	G77<CA>								1	
1-30	R1-1								1	
1-31	G77<CA>									1
1-32	G77<CA>									1
1-33	G8-22<CA>									1
TOTAL							9	4	14	6

NOTES:

1. EXACT LOCATION AND POSITION OF ROADSIDE SIGNS TO BE DETERMINED BY THE ENGINEER.
2. POST LENGTHS GIVEN ARE APPROXIMATE.
3. "C" DIM = VERTICAL CLEARANCE EP TO BOTTOM OF SIGN PANEL.
4. ALL SIGN CODES SHOWN ARE FEDERAL SIGN CODES UNLESS OTHERWISE DESIGNATED AS A CALIFORNIA SIGN CODE.
5. <CA> = CALIFORNIA SIGN CODE.

ABBREVIATION

SNS = LOCAL STREET NAME SIGN

SIGN QUANTITIES

SQ-1

REVISED BY | DATE REVISED
CHUCK COOK | KRIS ALBERS
CALCULATED-DESIGNED BY | CHECKED BY
FUNCTIONAL SUPERVISOR: SERGIO ACEVES
STATE OF CALIFORNIA - DEPARTMENT OF TRANSPORTATION
TRAFFIC
Caltrans

LAST REVISION 01-06-15 | DATE PLOTTED => 08-JAN-2015 | TIME PLOTTED => 19:11

BORDER LAST REVISED 7/2/2010 | USERNAME => s119538 | DGN FILE => 0314000243od001.dgn | RELATIVE BORDER SCALE IS IN INCHES 0 1 2 3 | UNIT 0390 | PROJECT NUMBER & PHASE 03140002431

Dist	COUNTY	ROUTE	POST MILES TOTAL PROJECT	SHEET No.	TOTAL SHEETS
03	Pla	80	31.8	28	68

Kris M. Albers 1-5-15
REGISTERED CIVIL ENGINEER DATE

1-5-15
PLANS APPROVAL DATE

REGISTERED PROFESSIONAL ENGINEER
KRIS M. ALBERS
No. 49986
Exp. 6-30-15
CIVIL
STATE OF CALIFORNIA

THE STATE OF CALIFORNIA OR ITS OFFICERS OR AGENTS SHALL NOT BE RESPONSIBLE FOR THE ACCURACY OR COMPLETENESS OF SCANNED COPIES OF THIS PLAN SHEET.

ROADSIDE SIGN PANEL QUANTITIES

SIGN CODE	SIGN MESSAGE/DESCRIPTION	PANEL SIZE L x D	PANEL AREA	NUMBER OF PANELS	BACKGROUND		LEGEND		PROTECTIVE-OVERLAY FILM (PREMIUM)	FURNISH SINGLE SHEET ALUMINUM SIGN	RETROREFLECTIVE SHEETING (TYPE XI)	FURNISH SINGLE SHEET ALUMINUM SIGN FOR RETROREFLECTIVE SHEETING (TYPE XI)			
					SHEETING COLOR	RETROREFLECTIVE ASTM TYPE	SHEETING COLOR	RETROREFLECTIVE ASTM TYPE		UNFRAMED		UNFRAMED		FRAMED	
										0.063"		0.063"	0.080"	0.063"	0.080"
		INCHES	SQFT							SQFT	SQFT	SQFT	SQFT	SQFT	SQFT
R1-1	STOP	30	5.18	3	RED	XI	WHITE	XI	X		15.54	15.54			
R5-1	DO NOT ENTER	36 x 36	9.00	3	RED	XI	WHITE	XI			27.00	27.00			
R5-1a	WRONG WAY	36 x 24	6.00	3	RED	XI	WHITE	XI	X		18.00	18.00			
R4-7	KEEP RIGHT (SYMBOL)	24 x 30	5.00	1	WHITE	VIII	BLACK		X	5.00					
W1-7	TWO-DIRECTIONAL ARROW (SYMBOL)	48 x 24	8.00	1	FY	XI	BLACK				8.00		8.00		
N-1<CA>	YELLOW OBJECT MARKER	18 x 18	2.25	2	FY	XI					4.50	4.50			
G8-7<CA>	SIGN 1-1, SEE SHEET SD-2	60 x 24	10.00	1	GREEN	XI	WHITE	XI			10.00			10.00	
G8-22<CA>	SIGN 1-4, SEE SHEET SD-2	66 x 30	13.75	1	GREEN	XI	WHITE	XI			13.75			13.75	
G77<CA>	SIGN 1-5, SEE SHEET SD-2	84 x 42	24.50	1	GREEN	XI	WHITE	XI			24.50				24.50
G77<CA>	SIGN 1-12, SEE SHEET SD-2	72 x 42	21.00	1	GREEN	XI	WHITE	XI			21.00			21.00	
G27-2(80)<CA>	INTERSTATE 80 (ROUTE MARKER)	24 x 24	4.00	1	RED,BLUE	XI	WHITE	XI			4.00	4.00			
G44<CA>	DIRECTION ARROW	21 x 15	2.19	1	BLUE	XI	WHITE	XI			2.19	2.19			
G92<CA>	FREEWAY ENTRANCE	48 x 30	10.00	1	GREEN	XI	WHITE	XI			10.00		10.00		
M3-2	EAST	24 x 12	2.00	1	BLUE	XI	WHITE	XI			2.00	2.00			
TOTAL										5.00	160.48	73.23	18.00	44.75	24.50

NOTES:

1. ALL SIGN CODES SHOWN ARE FEDERAL SIGN CODES UNLESS OTHERWISE DESIGNATED AS A CALIFORNIA SIGN CODE.
2. <CA> = CALIFORNIA SIGN CODE.
3. FY = FLOURESCENT YELLOW.

L = LENGTH OF PANEL
D = DEPTH OF PANEL

SIGN QUANTITIES

SQ-2

REVISED BY | DATE REVISED
CHUCK COOK | KRIS ALBERS
CALCULATED-DESIGNED BY | CHECKED BY
FUNCTIONAL SUPERVISOR: SERGIO ACEVES
STATE OF CALIFORNIA - DEPARTMENT OF TRANSPORTATION
TRAFFIC

LAST REVISION 01-05-15 | DATE PLOTTED => 08-JAN-2015 | TIME PLOTTED => 19:11

BORDER LAST REVISED 7/2/2010 | USERNAME => s119538 | DGN FILE => 0314000243od002.dgn | RELATIVE BORDER SCALE IS IN INCHES 0 1 2 3 | UNIT 0390 | PROJECT NUMBER & PHASE 03140002431

Dist	COUNTY	ROUTE	POST MILES TOTAL PROJECT	SHEET No.	TOTAL SHEETS
03	Pla	80	31.8	29	68

REGISTERED CIVIL ENGINEER — DATE 1-5-15

PLANS APPROVAL DATE 1-5-15

REGISTERED PROFESSIONAL ENGINEER — ERIC NORMAN SOUZA — No. 75706 — Exp. 06/30/16 — CIVIL — STATE OF CALIFORNIA

THE STATE OF CALIFORNIA OR ITS OFFICERS OR AGENTS SHALL NOT BE RESPONSIBLE FOR THE ACCURACY OR COMPLETENESS OF SCANNED COPIES OF THIS PLAN SHEET.

STORM WATER QUANTITIES

	Temp DRAINAGE INLET PROTECTION	Temp SILT FENCE	TREATED WOOD WASTE
	EA	LF	LB
TOTAL	4	2,500	2,080

STAGING QUANTITIES

	CHANNILIZER (SURFACE MOUNTED)	TEMPORARY RAILING (TYPE K)
	EA	LF
STAGE 1	10	340*
STAGE 2	5	80
TOTAL	15	420

*SEE NOTE 1 SHEET SC-2 FOR TEMPORARY RAILING (TYPE K) PAYMENT

ROADWAY QUANTITIES

LOCATION	STATION	EARTHWORK		HMA (TYPE A)							CLASS 2 AB	COLD PLANE AC PAVEMENT		PLACE HMA (MISCELLANEOUS AREA)				PLACE HMA DIKE (TYPE E)	PLACE HMA DIKE (TYPE C)	12" ENTRANCE TAPER	12" DOWNDRAIN SLIP JOINT	ROCK SLOPE PROTECTION (No. 2, METHOD B)	ROCK SLOPE PROTECTION FABRIC (CLASS 8)	MINOR CONCRETE (MINOR STRUCTURE)	(N) CONCRETE END BLOCK	TRANSITION RAILING (TYPE WB-31)	ALTERNATIVE FLARED TERMINAL SYSTEM	ALTERNATIVE IN-LINE TERMINAL SYSTEM	MIDWEST GUARDRAIL SYSTEM	REMOVE GUARDRAIL	(N) REMOVE ANCHOR	VEGETATION CONTROL (MINOR CONCRETE)
		ROADWAY EXCAVATION	(N) EMBANKMENT	WIDENING	COLD PLANE AC PAVEMENT	HMA DIKE	OVERSIDE DRAIN TAPER	DOWN DRAIN TAPER	TRANSITION	PAD		0.25'	0.15'	OVERSIDE DRAIN TAPER	DOWN DRAIN TAPER	TRANSITION	PAD															
		CY		TON							CY	SQYD		SQYD				LF	LF	EA	EA	CY	SQYD	CY	EA	EA	EA	EA	LF	LF	EA	SQYD
1	"A1" 10+62.50 TO "A1" 14+86.82	140	120	180		18			1		60					3		576														
	"A1" 10+00.00 TO "A1" 15+06.00				220							930	850																			
	R+ "A1" 12+00.00						1.3							6								2.3	10.6									
2	"A2" 20+00.00 TO "A2" 25+95.00	410	90	390		23			1		130					1.7		761														
	"A2" 20+00.00 TO "A2" 26+05.46				270							720	1,580																			
	R+ "A2" 20+87.00							1							4.3					1	1											
	R+ "A2" 24+00.00						2.9							16								2.3	10.6									
	R+ "A2" 24+84.00							1							7.7					1	1											
3	"A3" 31+05.00 TO "A3" 33+02.00	67	7	80		6				1	25						2	135	65							1	1			39	1	15
	"A3" 29+70.00 TO "A3" 33+02.00				70								630																			
	R+ "A3" 32+03.00							2							9					1	1											
3A	"A3A" 30+00.00 TO "A3" 31+96.71	37	1	50							17																					
	"A3A" 29+70.00 TO "A3" 31+96.71				40								340																			
4	"A4" 42+72.00 TO "A4" 44+74.00	64	19	120		1.7				0.3	40						2	56														
	"A4" 42+72.00 TO "A4" 44+74.00				80								680																			
4A	"A4A" 40+00.00 TO "A4A" 42+06.55	38	1	50							17																					
	"A4A" 40+00.00 TO "A4A" 45+33.00				90								770																	2	37.5	138.5	2	63
5	"A5" 50+26.00 TO "A5" 54+00.00	191	81	270		12					90							305	70					0.5	1	1	1			39	1	16
	"A5" 49+78.39 TO "A5" 54+17.46				190							260	1,310																			
	R+ "A5" 50+50.00						1.9							12								4.2	16.9									
	R+ "A5" 52+00.00						1.9							12								4.2	16.9									
SUB TOTAL		947	319	1,140	960	60.7	8	4	2	1.3	379	1,910	6,160	46	21	4.7	4	1,833	135	3	3	13	55	0.5	1	2	2	2	37.5	216.5	4	94
TOTAL		947		2,176							379	8,070		75.7				1,833	135	3	3	13	55	0.5		2	2	2	37.5	216.5		94

(N) - NOT A SEPARATE PAY ITEM, FOR INFORMATION ONLY.

SUMMARY OF QUANTITIES

NO SCALE

Q-1

STATE OF CALIFORNIA - DEPARTMENT OF TRANSPORTATION — TRAFFIC

FUNCTIONAL SUPERVISOR: STEPHEN WRIGHT

CALCULATED-DESIGNED BY: A.G. CHIN

CHECKED BY: ERIC SOUZA

REVISED BY | DATE REVISED

LAST REVISION | DATE PLOTTED => 08-JAN-2015 | TIME PLOTTED => 19:11 | 12-03-14

BORDER LAST REVISED 7/2/2010

USERNAME => s119538
DGN FILE => 0314000243pa001.dgn

RELATIVE BORDER SCALE IS IN INCHES 0 1 2 3

UNIT 0399

PROJECT NUMBER & PHASE 03140002431

Dist	COUNTY	ROUTE	POST MILES TOTAL PROJECT	SHEET No.	TOTAL SHEETS
03	PLA	80	31.8	30	68

LICENSED LANDSCAPE ARCHITECT

1-5-15
PLANS APPROVAL DATE

LICENSED LANDSCAPE ARCHITECT
LESLEY E. MORGAN NO. 5066
Renewal Date 03/28/16
Renewal Date 12/05/14
Date
STATE OF CALIFORNIA

THE STATE OF CALIFORNIA OR ITS OFFICERS OR AGENTS SHALL NOT BE RESPONSIBLE FOR THE ACCURACY OR COMPLETENESS OF SCANNED COPIES OF THIS PLAN SHEET.

NOTE:
1. FOR COMPLETE RIGHT OF WAY AND ACCURATE ACCESS DATA, SEE RIGHT OF WAY RECORD MAPS AT DISTRICT OFFICE.

LEGEND

EROSION CONTROL TYPE 1- SEQUENCE- ROLLED EROSION CONTROL PRODUCT (NETTING), FIBER ROLLS, BONDED FIBER MATRIX

EROSION CONTROL TYPE 2- SEQUENCE- FIBER ROLLS, BONDED FIBER MATIRX

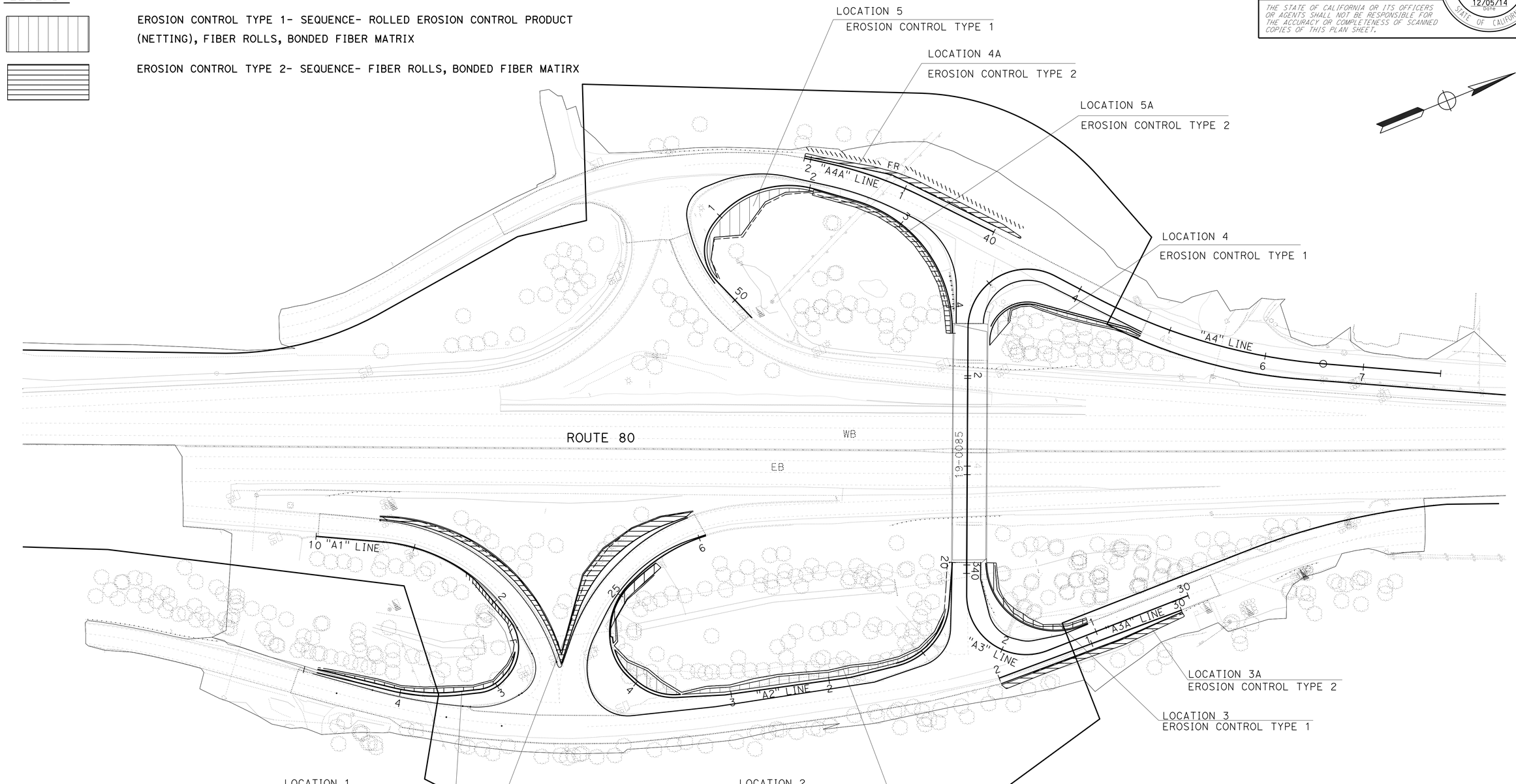

EROSION CONTROL PLAN

SCALE: 1" = 50'

EC-1

APPROVED FOR EROSION CONTROL WORK ONLY

REVISED BY | DATE REVISED
LESLEY E. MORGAN | T. CHRIS JOHNSON
CALCULATED-DESIGNED BY | CHECKED BY
SENIOR LANDSCAPE ARCHITECT | T. CHRIS JOHNSON
STATE OF CALIFORNIA - DEPARTMENT OF TRANSPORTATION
LANDSCAPE ARCHITECTURE

LAST REVISION 07-13-14
DATE PLOTTED => 08-JAN-2015
TIME PLOTTED => 19:11

BORDER LAST REVISED 7/2/2010
USERNAME => s119538
DGN FILE => 0314000243te001.dgn
RELATIVE BORDER SCALE IS IN INCHES 0 1 2 3
UNIT 0381
PROJECT NUMBER & PHASE 03140002431

Dist	COUNTY	ROUTE	POST MILES TOTAL PROJECT	SHEET No.	TOTAL SHEETS
03	PLA	80	31.8	31	68

Lesley Morgan
LICENSED LANDSCAPE ARCHITECT

1-5-15
PLANS APPROVAL DATE

LICENSED LANDSCAPE ARCHITECT LESLEY E. MORGAN NO. 5068 STATE OF CALIFORNIA
Lesley Morgan 3/30/16
Renewal Date
12/5/14
Date

THE STATE OF CALIFORNIA OR ITS OFFICERS OR AGENTS SHALL NOT BE RESPONSIBLE FOR THE ACCURACY OR COMPLETENESS OF SCANNED COPIES OF THIS PLAN SHEET.

EROSION CONTROL (TYPE 1)

SEQUENCE	ITEM	MATERIAL		APPLICATION RATE	REMARKS
		DESCRIPTION	TYPE		
STEP 1	ROLLED EROSION CONTROL PRODUCT (NETTING)	NETTING	B	———	———
STEP 2	FIBER ROLLS	FIBER ROLL	TYPE B 8" TO 10" Dia	———	Type 2 installation
STEP 3	BONDED FIBER MATRIX	SEED	MIX 1	36 LB/ACRE	———

EROSION CONTROL (TYPE 2)

SEQUENCE	ITEM	MATERIAL		APPLICATION RATE	REMARKS
		DESCRIPTION	TYPE		
STEP 1	FIBER ROLLS	FIBER ROLL	TYPE B 8" TO 10" Dia	———	Type 2 installation
STEP 2	BONDED FIBER MATRIX	SEED	MIX 1	36 LB/ACRE	———

SEED MIX 1

BOTANICAL NAME (COMMON NAME)	PERCENT GERMINATION (MINIMUM)	POUNDS PURE LIVE SEED PER ACRE (SLOPE MEASUREMENT)
ACHILLEA MILLIFOLIUM (WHITE YARROW)	56	7.0
BROMUS CARINATUS (CALIFORNIA BROME)	53	9.0
ELYMUS GLAUCUS (BLUE WILDRYE)	56	8.0
LUPINUS BICOLOR (MINIATURE LUPINE)	56	9.0
POA SECUNDA (PINE BLUEGRASS)	46	2.0
NASSELLA PULCHRA (PURPLE NEEDLE GRASS)	53	1.0
TOTAL		TOTAL 36 LBS

EROSION CONTROL QUANTITIES

LOCATION	EROSION CONTROL (TYPE)	STATION	EROSION CONTROL (BFM)	ROLLED EROSION CONTROL PRODUCT (NETTING)	FIBER ROLLS
			SQFT	SQFT	LF
1	1	"A1" 11+69.91. to "A1" 14+86.82	2,184	2,184	530
1A	2	"A2" 10+62.50. to "A2" 25+95	2,518	———	458
2	1	"A2" 20+00. to "A2" 25+40	7,789	7,789	483
3	1	"A3" 31+05 to "A3" 33+02	701	701	143
3A	2	"A3A" 30+00. to "A3A" 31+96.71	574	———	195
4	1	"A4" 42+72. to "A4" 44+74	918	918	177
4A	2	"A4A" 40+00. to "A4A" 42+06.55	1,084	———	236
5	1	"A5" 50+26. to "A5" 52+00	2,300	2,300	151
5A	2	"A5" 52+00. to "A5" 54+00	1,173	———	212
TOTAL			19,241	13,892	2,585

EROSION CONTROL QUANTITIES
ECQ-1

REVISED BY | DATE REVISED
LESLEY MORGAN | T. CHIRS JOHNSON
CALCULATED-DESIGNED BY | CHECKED
SENIOR LANDSCAPE ARCHITECT | T. CHRIS JOHNSON
STATE OF CALIFORNIA - DEPARTMENT OF TRANSPORTATION
Caltrans ®LANDSCAPE ARCHITECTURE

LAST REVISION | DATE PLOTTED => 08-JAN-2015
00-00-00 | TIME PLOTTED => 13:11

BORDER LAST REVISED 7/2/2010 | USERNAME => s119538 | DGN FILE => 0314000243tg001.dgn | RELATIVE BORDER SCALE IS IN INCHES 0 1 2 3 | UNIT 03810000 | PROJECT NUMBER & PHASE 03140002431

Dist	COUNTY	ROUTE	POST MILES TOTAL PROJECT	SHEET No.	TOTAL SHEETS
03	Pla	80	31.8	32	68

Normanye 1-5-15
REGISTERED ELECTRICAL ENGINEER DATE

1-5-15
PLANS APPROVAL DATE

REGISTERED PROFESSIONAL ENGINEER — NORMAN YE No. E16913 Exp.06-30-15 ELECTRICAL — STATE OF CALIFORNIA

THE STATE OF CALIFORNIA OR ITS OFFICERS OR AGENTS SHALL NOT BE RESPONSIBLE FOR THE ACCURACY OR COMPLETENESS OF SCANNED COPIES OF THIS PLAN SHEET.

NOTE:
FOR ACCURATE RIGHT OF WAY DATA, CONTACT
RIGHT OF WAY ENGINEERING AT THE DISTRICT OFFICE.

PROJECT NOTE (SHEET E-1, E2):

RC ALL UNUSED PULLBOXES.

LEGEND (THIS SHEET ONLY):

1 Exist TYPE III-AF SERVICE EQUIPMENT ENCLOSURE Ctid No. 03190800031800.

2 2"C, 2#8 (LIGHTING), 2#8 (EMS/HAR CABINET).

3 2-2"C, PT, IN BARRIER FOR FUTURE USE, SEE STRUCTURE PLANS.

ABBREVIATION:

PG&E PACIFIC GAS AND ELECTRIC COMPANY

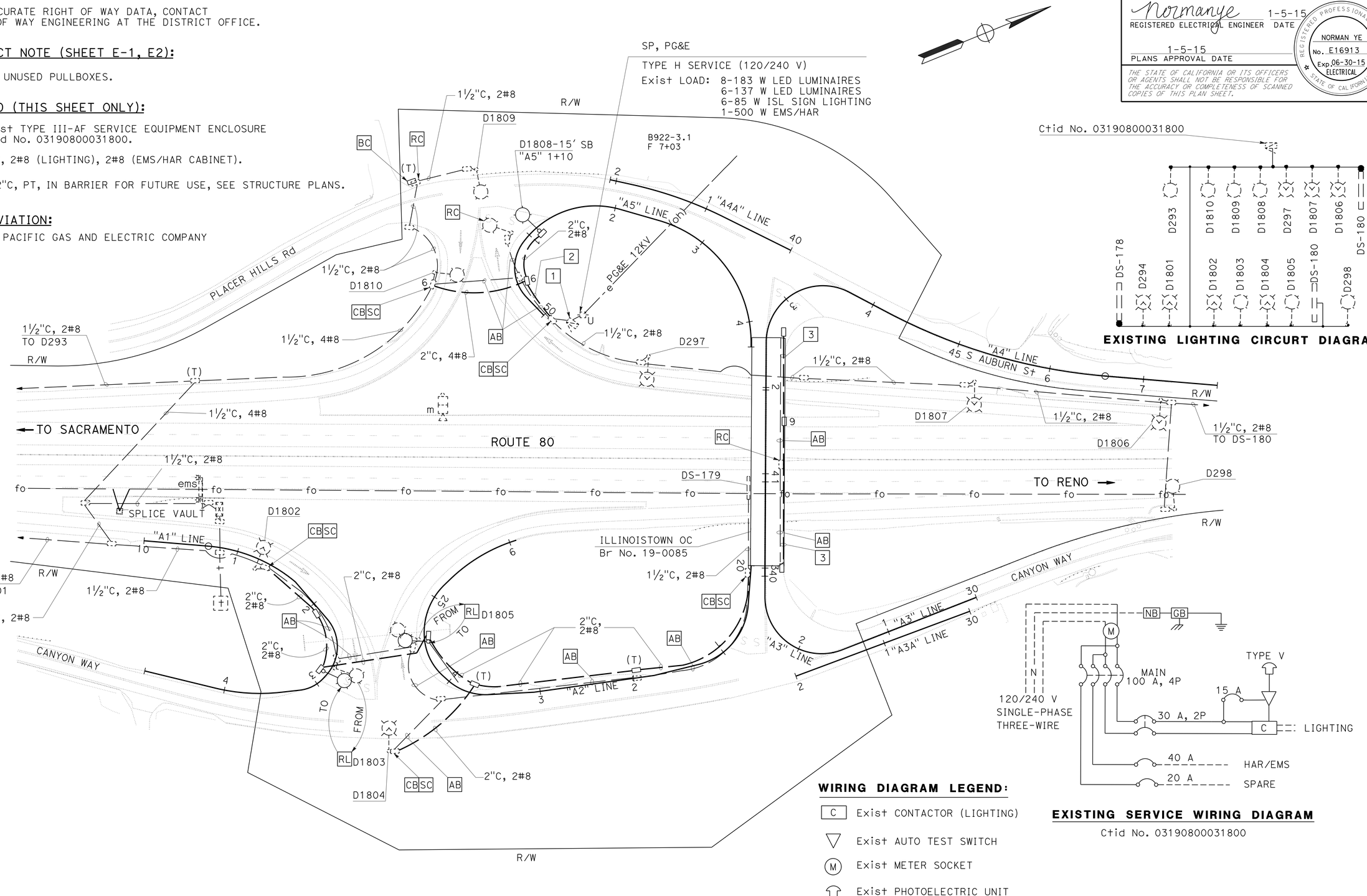

EXISTING LIGHTING CIRCURT DIAGRAM

WIRING DIAGRAM LEGEND:

C Exist CONTACTOR (LIGHTING)

Exist AUTO TEST SWITCH

M Exist METER SOCKET

Exist PHOTOELECTRIC UNIT

EXISTING SERVICE WIRING DIAGRAM

Ctid No. 03190800031800

MODIFY LIGHTING

SCALE: 1"=50'

E-1

APPROVED FOR ELECTRICAL WORK ONLY

STATE OF CALIFORNIA - DEPARTMENT OF TRANSPORTATION
ELECTRICAL DESIGN
FUNCTIONAL SUPERVISOR: NELSON LEE
CALCULATED-DESIGNED BY: JAMIE KOJAK
CHECKED BY: NORMAN YE
REVISED BY | DATE REVISED

LAST REVISION DATE PLOTTED => 08-JAN-2015
TIME PLOTTED => 19:11
11-20-14

BORDER LAST REVISED 7/2/2010
USERNAME => s119538
DGN FILE => 0314000243ua001.dgn
RELATIVE BORDER SCALE IS IN INCHES 0 1 2 3
UNIT 0403
PROJECT NUMBER & PHASE 03140002431

Dist	COUNTY	ROUTE	POST MILES TOTAL PROJECT	SHEET No.	TOTAL SHEETS
03	Pla	80	31.8	33	68

Normanye 1-5-15
REGISTERED ELECTRICAL ENGINEER DATE

1-5-15
PLANS APPROVAL DATE

REGISTERED PROFESSIONAL ENGINEER
NORMAN YE
No. E16913
Exp.06-30-15
ELECTRICAL
STATE OF CALIFORNIA

THE STATE OF CALIFORNIA OR ITS OFFICERS OR AGENTS SHALL NOT BE RESPONSIBLE FOR THE ACCURACY OR COMPLETENESS OF SCANNED COPIES OF THIS PLAN SHEET.

NOTE:
FOR ACCURATE RIGHT OF WAY DATA, CONTACT
RIGHT OF WAY ENGINEERING AT THE DISTRICT OFFICE.

LEGEND (THIS SHEET ONLY):

[1] Exist TYPE III-AF SERVICE EQUIPMENT ENCLOSURE Ctid No. 03190800031800.

[2] 2"C, 2#8 (LIGHTING), 2#8 (EMS/HAR CABINET).

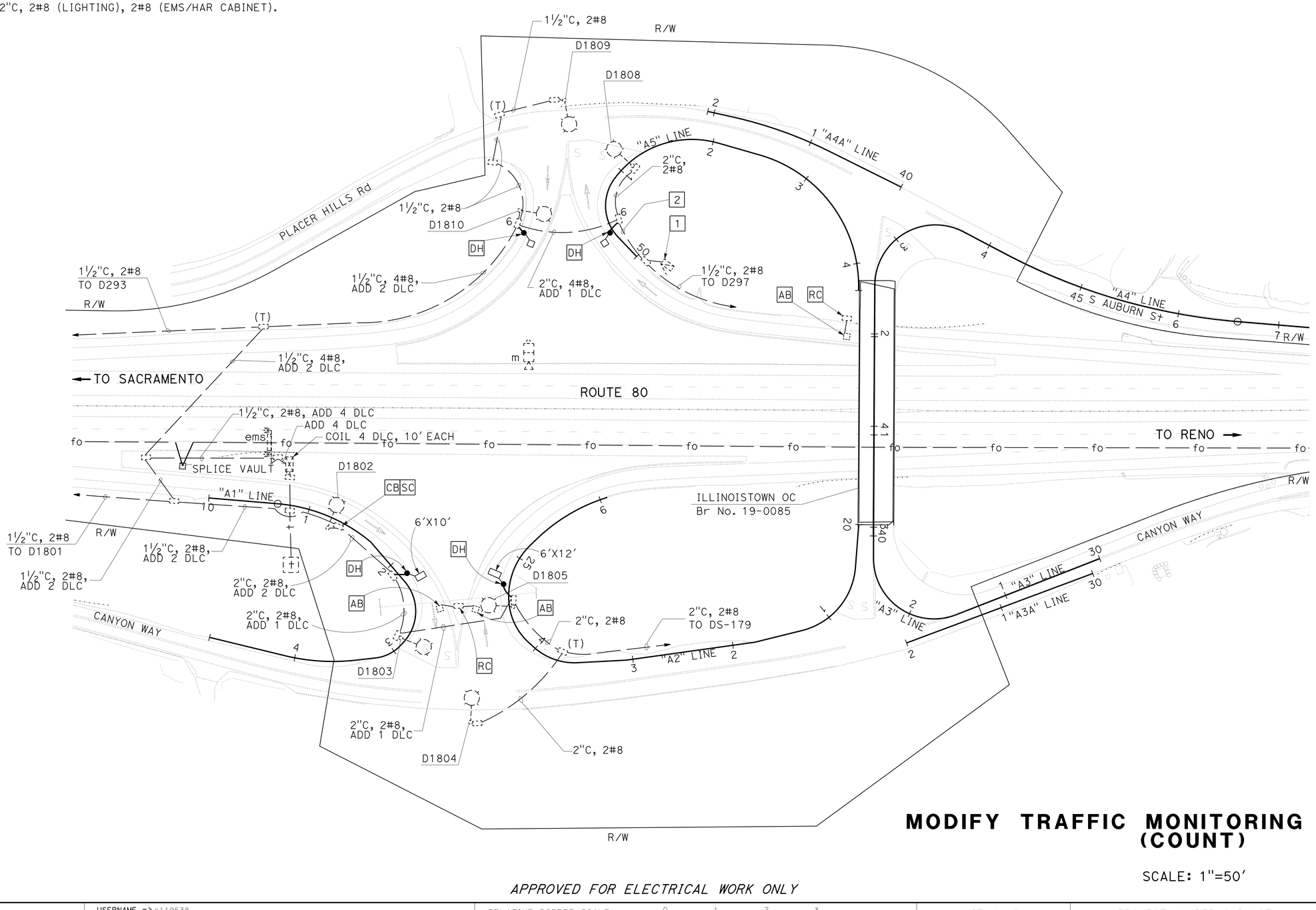

MODIFY TRAFFIC MONITORING STATION (COUNT)

SCALE: 1"=50'

E-2

APPROVED FOR ELECTRICAL WORK ONLY

STATE OF CALIFORNIA - DEPARTMENT OF TRANSPORTATION
Caltrans® **ELECTRICAL DESIGN**

FUNCTIONAL SUPERVISOR	CALCULATED-DESIGNED BY	CHECKED BY	REVISED BY	DATE REVISED
NELSON LEE	JAMIE KOJAK	NORMAN YE		

LAST REVISION DATE PLOTTED => 08-JAN-2015
11-20-14 TIME PLOTTED => 19:11

BORDER LAST REVISED 7/2/2010 | USERNAME => s119538 | DGN FILE => 0314000243ua002.dgn | RELATIVE BORDER SCALE IS IN INCHES 0 1 2 3 | UNIT 0403 | PROJECT NUMBER & PHASE 03140002431

Dist	COUNTY	ROUTE	POST MILES TOTAL PROJECT	SHEET No.	TOTAL SHEETS
03	Pla	80	31.8	34	68

Normanye 1-5-15
REGISTERED ELECTRICAL ENGINEER DATE

1-5-15
PLANS APPROVAL DATE

REGISTERED PROFESSIONAL ENGINEER
NORMAN YE
No. E16913
Exp.06-30-15
ELECTRICAL
STATE OF CALIFORNIA

THE STATE OF CALIFORNIA OR ITS OFFICERS OR AGENTS SHALL NOT BE RESPONSIBLE FOR THE ACCURACY OR COMPLETENESS OF SCANNED COPIES OF THIS PLAN SHEET.

NOTE:

(N)- ITEMS SHOWN IN THE TABLES ARE NOT A SEPARATE PAY ITEM, FOR INFORMATION ONLY.

MODIFY LIGHTING

SHEET No.	(N) PULL BOX No. 5	(N) PULL BOX No. 5 (T)	(N) PULL BOX No. 9	(N) CONDUCTOR #8	(N) 2" CONDUIT TYPE 3	(N) 2" CONDUIT TYPE 3 (IN BARRIER)	(N) STANDARD TYPE 15 (SLIP BASE)
	EA	EA	EA	LF	LF	LF	EA
E-1	6	3	1	2200	1000	600	1

MODIFY TRAFFIC MONITORING STATION (COUNT)

SHEET No.	(N) HAND HOLE	(N) TYPE A LOOP 6'X10'	(N) TYPE A LOOP 6'X12'	(N) TYPE A LOOP 6'X6'	(N) TYPE B DLC
	EA	EA	EA	EA	LF
E-2	4	1	1	2	2500

ELECTRICAL QUANTITIES

E-3

REVISED BY | DATE REVISED
JAMIE KOJAK | NORMAN YE
CALCULATED-DESIGNED BY | CHECKED BY
FUNCTIONAL SUPERVISOR: NELSON LEE
STATE OF CALIFORNIA - DEPARTMENT OF TRANSPORTATION
Caltrans® ELECTRICAL DESIGN

LAST REVISION: DATE PLOTTED => 08-JAN-2015
11-20-14 TIME PLOTTED => 19:11

BORDER LAST REVISED 7/2/2010 | USERNAME => s119538 | DGN FILE => 0314000243ua003.dgn | RELATIVE BORDER SCALE IS IN INCHES 0 1 2 3 | UNIT 0403 | PROJECT NUMBER & PHASE 03140002431

M

Maint	MAINTENANCE
Max	MAXIMUM
MB	METAL BEAM
MBB	METAL BEAM BARRIER
MBGR	METAL BEAM GUARD RAILING
Med	MEDIAN
MGS	MIDWEST GUARDRAIL SYSTEM
MH	MANHOLE
Min	MINIMUM
Misc	MISCELLANEOUS
Misc I & S	MISCELLANEOUS IRON AND STEEL
Mkr	MARKER
Mod	MODIFIED, MODIFY
Mon	MONUMENT
MP	METAL PLATE
MPGR	METAL PLATE GUARD RAILING
MR	MOVEMENT RATING
MSE	MECHANICALLY STABILIZED EMBANKMENT
Mt	MOUNTAIN, MOUNT
Mtl	MATERIAL
MVP	MAINTENANCE VEHICLE PULLOUT

N

N	NORTH
NB	NORTHBOUND
No.	NUMBER (MUST HAVE PERIOD)
Nos.	NUMBERS (MUST HAVE PERIOD)
NPS	NOMINAL PIPE SIZE
NS	NEAR SIDE
NSP	NEW STANDARD PLAN
NTS	NOT TO SCALE

O

Oblr	OBLITERATE
OC	OVERCROSSING
OD	OUTSIDE DIAMETER
OF	OUTSIDE FACE
OG	ORIGINAL GROUND
OGAC	OPEN GRADED ASPHALT CONCRETE
OGFC	OPEN GRADED FRICTION COURSE
OH	OVERHEAD
OHWM	ORDINARY HIGH WATER MARK
O-O	OUT TO OUT
Opp	OPPOSITE
OSD	OVERSIDE DRAIN

P

p	PAGE
PAP	PERFORATED ALUMINUM PIPE
PB	PULL BOX
PC	POINT OF CURVATURE, PRECAST
PCC	POINT OF COMPOUND CURVE, PORTLAND CEMENT CONCRETE
PCMS	PORTABLE CHANGEABLE MESSAGE SIGN
PCP	PERFORATED CONCRETE PIPE, PRESTRESSED CONCRETE PIPE
PCVC	POINT OF COMPOUND VERTICAL CURVE
PEC	PERMIT TO ENTER AND CONSTRUCT
Ped	PEDESTRIAN
Ped OC	PEDESTRIAN OVERCROSSING
Ped UC	PEDESTRIAN UNDERCROSSING
Perm Mtl	PERMEABLE MATERIAL

P continued

PG	PROFILE GRADE
PI	POINT OF INTERSECTION
PJP	PARTIAL JOINT PENETRATION
Pkwy	PARKWAY
℄,PL	PLATE
P/L	PROPERTY LINE
PM	POST MILE, TIME FROM NOON TO MIDNIGHT
PN	PAVING NOTCH
POC	POINT OF HORIZONTAL CURVE
POT	POINT OF TANGENT
POVC	POINT OF VERTICAL CURVE
PP	PIPE PILE, PLASTIC PIPE, POWER POLE
PPL	PREFORMED PERMEABLE LINER
PPP	PERFORATED PLASTIC PIPE
PRC	POINT OF REVERSE CURVE
PRF	PAVEMENT REINFORCING FABRIC
PRVC	POINT OF REVERSE VERTICAL CURVE
PS&E	PLANS, SPECIFICATIONS AND ESTIMATES
PS, P/S	PRESTRESSED
PSP	PERFORATED STEEL PIPE
PT	POINT OF TANGENCY
PVC	POLYVINYL CHLORIDE
Pvmt	PAVEMENT

Q

Qty	QUANTITY

R

R	RADIUS
R & D	REMOVE AND DISPOSE
R & S	REMOVE AND SALVAGE
R/C	RATE OF CHANGE
RCA	REINFORCED CONCRETE ARCH
RCB	REINFORCED CONCRETE BOX
RCP	REINFORCED CONCRETE PIPE
RCPA	REINFORCED CONCRETE PIPE ARCH
Rd	ROAD
Reinf	REINFORCED, REINFORCEMENT, REINFORCING
Rel	RELOCATE
Repl	REPLACEMENT
Ret	RETAINING
Rev	REVISED, REVISION
Rdwy	ROADWAY
RHMA	RUBBERIZED HOT MIX ASPHALT
Riv	RIVER
RM	ROAD-MIXED
RP	RADIUS POINT, REFERENCE POINT
RR	RAILROAD
RSP	ROCK SLOPE PROTECTION, REVISED STANDARD PLAN
Rt	RIGHT
Rte	ROUTE
RW	REDWOOD, RETAINING WALL
R/W	RIGHT OF WAY
Rwy	RAILWAY

S

S	SOUTH, SUPPLEMENT
SAE	STRUCTURE APPROACH EMBANKMENT
Salv	SALVAGE
SAPP	STRUCTURAL ALUMINUM PLATE PIPE
SB	SOUTHBOUND
SC	SAND CUSHION
SCSP	SLOTTED CORRUGATED STEEL PIPE
SD	STORM DRAIN
Sec	SECOND, SECTION
Sep	SEPARATION
SG	SUBGRADE
Shld	SHOULDER
Sht	SHEET
Sim	SIMILAR
℄	STATION LINE
SM	SELECTED MATERIAL
Spec	SPECIAL, SPECIFICATIONS
SPP	SLOTTED PLASTIC PIPE
SS	SLOPE STAKE
SSBM	STRAP AND SADDLE BRACKET METHOD
SSD	STRUCTURAL SECTION DRAIN
SSPA	STRUCTURAL STEEL PLATE ARCH
SSPP	STRUCTURAL STEEL PLATE PIPE
SSPPA	STRUCTURAL STEEL PLATE PIPE ARCH
SSRP	STEEL SPIRAL RIB PIPE
St	STREET
Sta	STATION
STBB	SINGLE THRIE BEAM BARRIER
Std	STANDARD
Str	STRUCTURE
Surf	SURFACING
SW	SIDEWALK, SOUND WALL
Swr	SEWER
Sym	SYMMETRICAL
S4S	SURFACE 4 SIDES

T

T	SEMI-TANGENT
Tan	TANGENT
TBB	THRIE BEAM BARRIER
Tbr	TIMBER
TC	TOP OF CURB
TCB	TRAFFIC CONTROL BOX
TCE	TEMPORARY CONSTRUCTION EASEMENT
Tel	TELEPHONE
Temp	TEMPORARY
TG	TOP OF GRADE
Tot	TOTAL
TP	TELEPHONE POLE
TPB	TREATED PERMEABLE BASE
TPM	TREATED PERMEABLE MATERIAL
Trans	TRANSITION

T continued

TS	TRANSVERSE, TRAFFIC SIGNAL, TUBULAR STEEL
Typ	TYPICAL

U

UC	UNDERCROSSING
UD	UNDERDRAIN
UG	UNDERGROUND
UON	UNLESS OTHERWISE NOTED
UP	UNDERPASS

V

V	VALVE, DESIGN SPEED
Var	VARIABLE, VARIES
VC	VERTICAL CURVE
VCP	VITRIFIED CLAY PIPE
Vert	VERTICAL
Via	VIADUCT
Vol	VOLUME

W

W	WEST, WIDTH
WB	WESTBOUND
WH	WEEP HOLE
WM	WIRE MESH
WS	WATER SURFACE
WSP	WELDED STEEL PIPE
Wt	WEIGHT
WV	WATER VALVE
WW	WINGWALL
WWLOL	WINGWALL LAYOUT LINE

X

X Sec	CROSS SECTION
Xing	CROSSING

Y

Yr	YEAR
Yrs	YEARS

Dist	COUNTY	ROUTE	POST MILES TOTAL PROJECT	SHEET No.	TOTAL SHEETS
03	Pla	80	31.8	35	68

Grace M. Tsushima
REGISTERED CIVIL ENGINEER

July 19, 2013
PLANS APPROVAL DATE

REGISTERED PROFESSIONAL ENGINEER — Grace M. Tsushima — No. C49814 — Exp. 9-30-14 — CIVIL — STATE OF CALIFORNIA

THE STATE OF CALIFORNIA OR ITS OFFICERS OR AGENTS SHALL NOT BE RESPONSIBLE FOR THE ACCURACY OR COMPLETENESS OF SCANNED COPIES OF THIS PLAN SHEET.

TO ACCOMPANY PLANS DATED 1-5-15

UNIT OF MEASUREMENT SYMBOLS:

Some of the symbols used in the project plan quantity tables and in the Bid Item List are:

TABLE A

SYMBOL USED	DEFINITIONS
ACRE	ACRE
CF	CUBIC FOOT
CY	CUBIC YARD
EA	EACH
GAL	GALLON
LB	POUND
LF	LINEAR FOOT
SQFT	SQUARE FOOT
SQYD	SQUARE YARD
STA	100 FEET
TAB	TABLET
TON	2,000 POUNDS

Some of the symbols used in the plans other than in the project plan quantity tables are:

TABLE B

SYMBOL USED	DEFINITIONS
ksi	KIPS PER SQUARE INCH
ksf	KIPS PER SQUARE FOOT
psi	POUNDS PER SQUARE INCH
psf	POUNDS PER SQUARE FOOT
lb/ft^3, pcf	POUNDS PER CUBIC FOOT
tsf	TONS PER SQUARE FOOT
mph, MPH *	MILES PER HOUR
ø	NOMINAL DIAMETER
oz	OUNCE
lb	POUND
kip	1,000 POUNDS
cal	CALORIE
ft	FOOT OR FEET
gal	GALLON

* For use on a sign panel only

STATE OF CALIFORNIA
DEPARTMENT OF TRANSPORTATION

ABBREVIATIONS (SHEET 2 OF 2)

NO SCALE

RSP A10B DATED JULY 19, 2013 SUPERSEDES STANDARD PLAN A10B DATED MAY 20, 2011 - PAGE 2 OF THE STANDARD PLANS BOOK DATED 2010.

REVISED STANDARD PLAN RSP A10B

2010 REVISED STANDARD PLAN RSP A10B

6-7-13

Dist	COUNTY	ROUTE	POST MILES TOTAL PROJECT	SHEET No.	TOTAL SHEETS
03	Pla	80	31.8	36	68

Roberta L. McLaughlin
REGISTERED CIVIL ENGINEER

April 20, 2012
PLANS APPROVAL DATE

REGISTERED PROFESSIONAL ENGINEER
Roberta L. McLaughlin
No. C40375
Exp. 3-31-13
CIVIL
STATE OF CALIFORNIA

THE STATE OF CALIFORNIA OR ITS OFFICERS OR AGENTS SHALL NOT BE RESPONSIBLE FOR THE ACCURACY OR COMPLETENESS OF SCANNED COPIES OF THIS PLAN SHEET.

TO ACCOMPANY PLANS DATED 1-5-15

2010 REVISED STANDARD PLAN RSP A24A

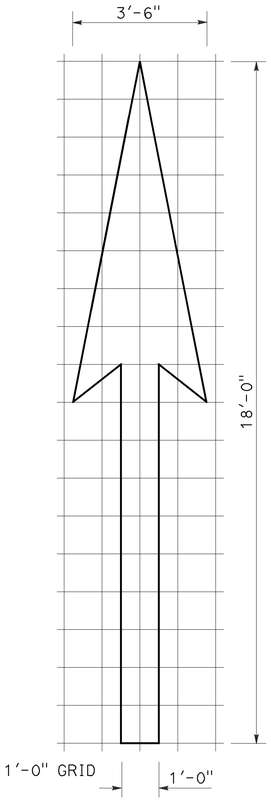

A=25 ft²

TYPE I 18'-0" ARROW

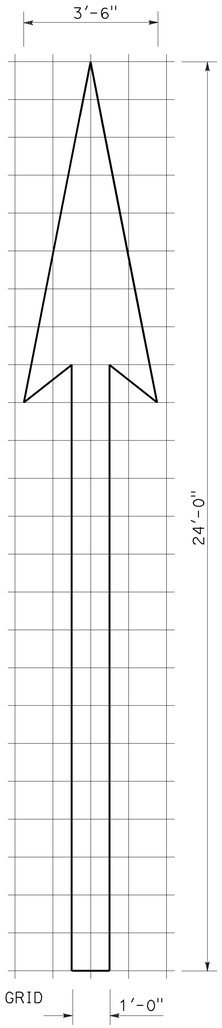

A=31 ft²

TYPE I 24'-0" ARROW

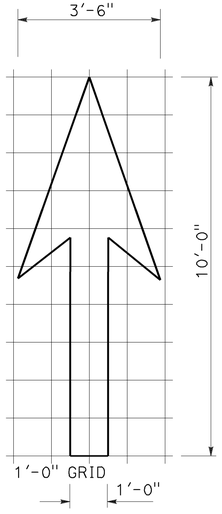

A=14 ft²

TYPE I 10'-0" ARROW

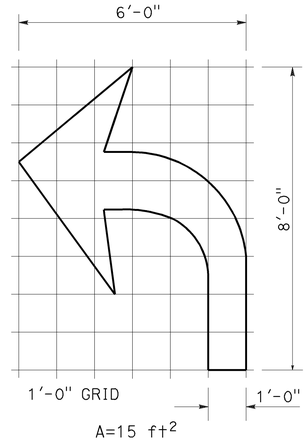

A=15 ft²

TYPE IV (L) ARROW

(For Type IV (R) arrow, use mirror image)

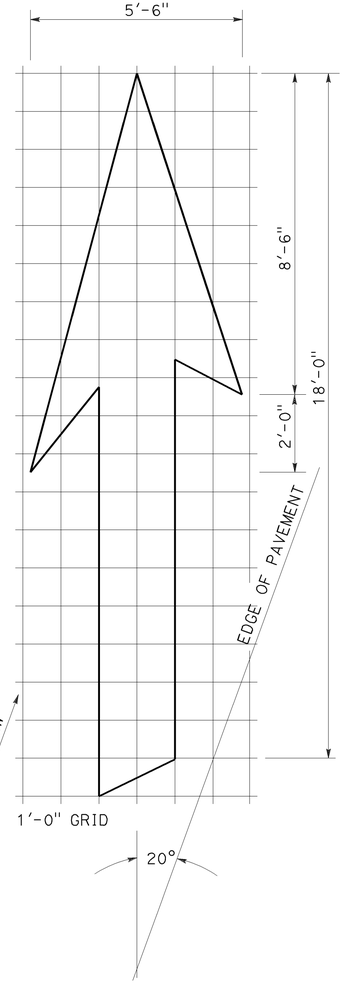

A=42 ft²

TYPE VI ARROW

Right lane drop arrow (For left lane, use mirror image)

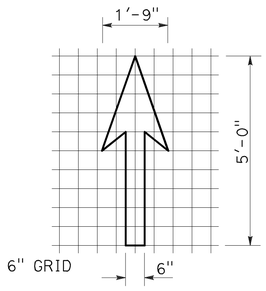

A=3.5 ft²

BIKE LANE ARROW

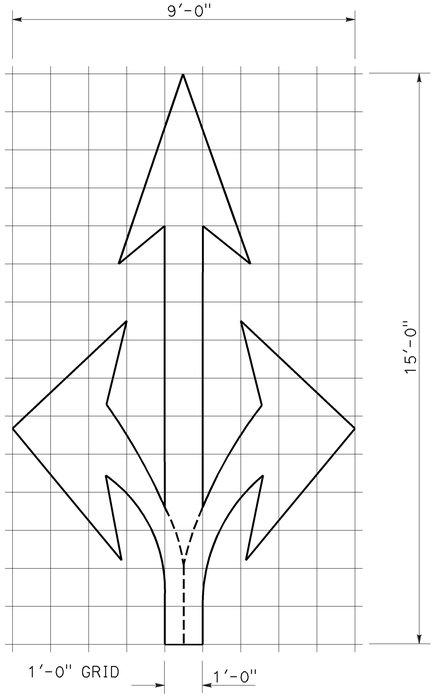

A=36 ft²

TYPE VIII ARROW

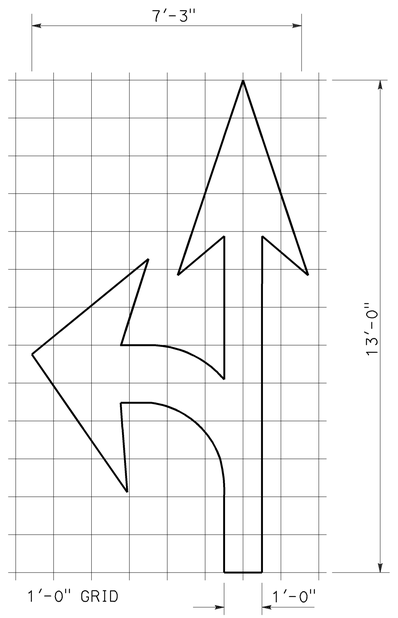

A=27 ft²

TYPE VII (L) ARROW

(For Type VII (R) arrow, use mirror image)

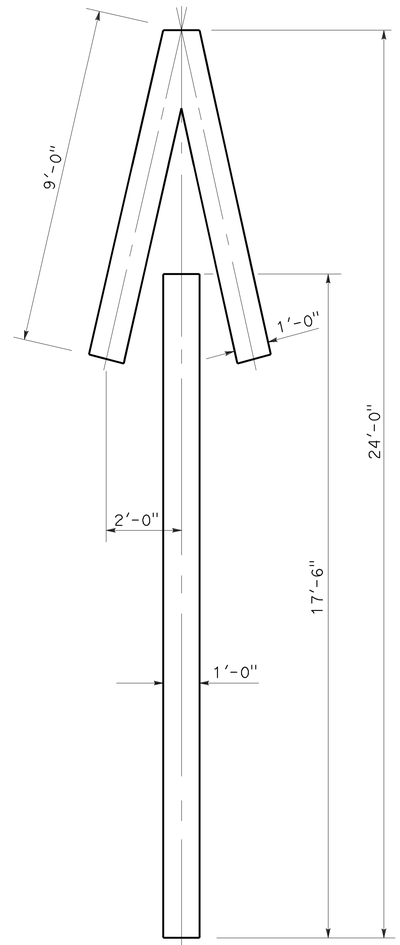

A=33 ft²

TYPE V ARROW

NOTE:
Minor variations in dimensions may be accepted by the Engineer.

STATE OF CALIFORNIA
DEPARTMENT OF TRANSPORTATION

PAVEMENT MARKINGS ARROWS

NO SCALE

RSP A24A DATED APRIL 20, 2012 SUPERSEDES STANDARD PLAN A24A DATED MAY 20, 2011 - PAGE 13 OF THE STANDARD PLANS BOOK DATED 2010.

REVISED STANDARD PLAN RSP A24A

3-14-12

Dist	COUNTY	ROUTE	POST MILES TOTAL PROJECT	SHEET No.	TOTAL SHEETS
03	Pla	80	31.8	37	68

Roberta L. McLaughlin
REGISTERED CIVIL ENGINEER

July 20, 2012
PLANS APPROVAL DATE

REGISTERED PROFESSIONAL ENGINEER
Roberta L. McLaughlin
No. C40375
Exp. 3-31-13
CIVIL
STATE OF CALIFORNIA

THE STATE OF CALIFORNIA OR ITS OFFICERS OR AGENTS SHALL NOT BE RESPONSIBLE FOR THE ACCURACY OR COMPLETENESS OF SCANNED COPIES OF THIS PLAN SHEET.

TO ACCOMPANY PLANS DATED 1-5-15

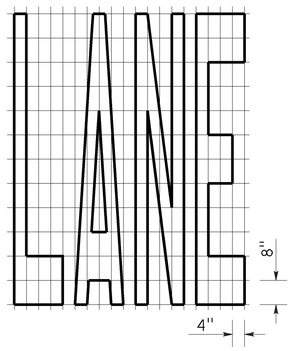

A=24 ft²

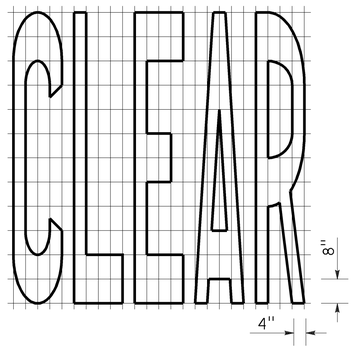

A=27 ft²

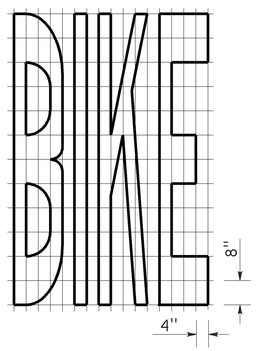

A=21 ft²

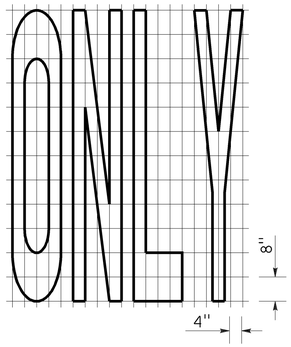

A=22 ft²

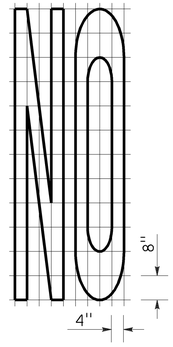

A=14 ft²

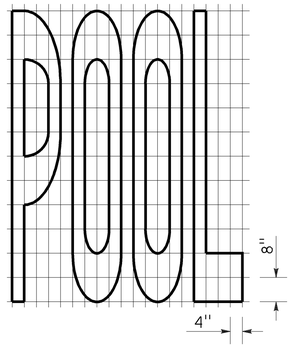

A=23 ft²

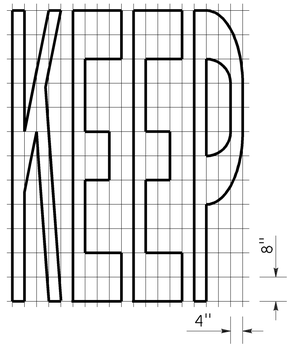

A=24 ft²

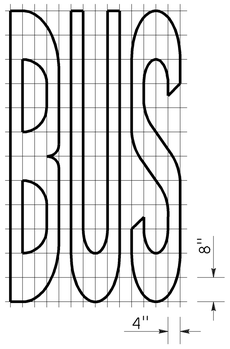

A=20 ft²

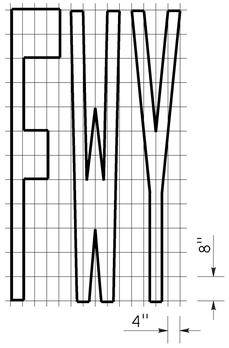

A=16 ft²

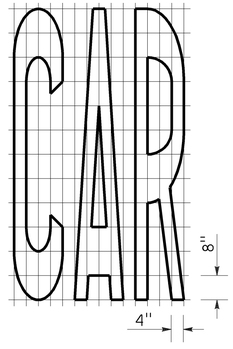

A=17 ft²

WORD MARKINGS			
ITEM	ft²	ITEM	ft²
LANE	24	NO	14
POOL	23	BIKE	21
CAR	17	BUS	20
CLEAR	27	ONLY	22
KEEP	24	FWY	16

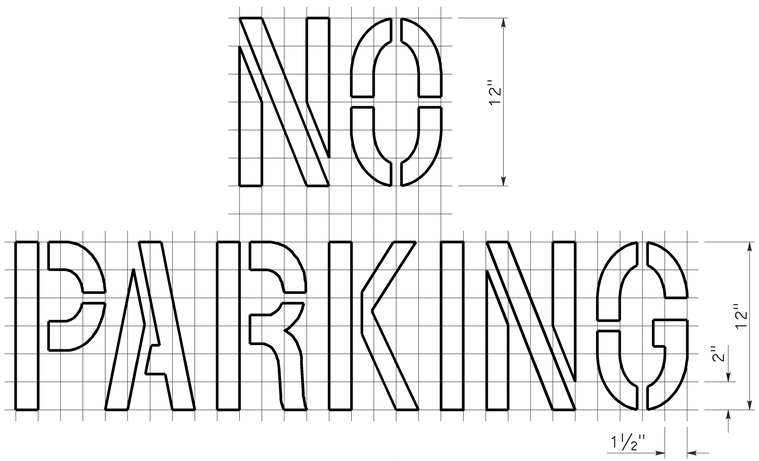

A=2 ft²
See Notes 6 and 7

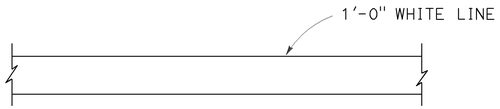

LIMIT LINE (STOP LINE)

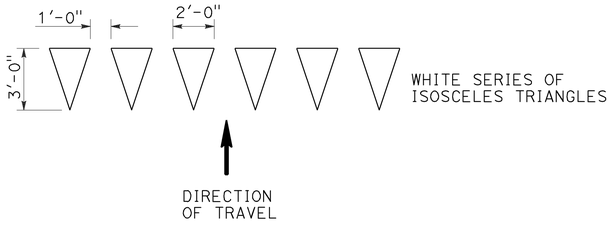

YIELD LINE

NOTES:

1. If a message consists of more than one word, it should read "UP", i.e., the first word should be nearest the driver.
2. The space between words should be at least four times the height of the characters for low speed roads, but not more than ten times the height of the characters. The space may be reduced appropriately where there is limited space because of local conditions.
3. Minor variations in dimensions may be accepted by the Engineer.
4. Portions of a letter, number or symbol may be separated by connecting segments not to exceed 2" in width.
5. The words "NO PARKING" pavement marking is to be used for parking facilities. For typical locations of markings, see Standard Plans A90A and A90B.
6. The words "NO PARKING", shall be painted in white letters no less than 1'-0" high on a contrasting background and located so that it is visible to traffic enforcement officials.

STATE OF CALIFORNIA
DEPARTMENT OF TRANSPORTATION

PAVEMENT MARKINGS
WORDS, LIMIT AND YIELD LINES

NO SCALE

RSP A24E DATED JULY 20, 2012 SUPERSEDES STANDARD PLAN A24E
DATED MAY 20, 2011 - PAGE 17 OF THE STANDARD PLANS BOOK DATED 2010.

REVISED STANDARD PLAN RSP A24E

2010 REVISED STANDARD PLAN RSP A24E

6-12-12

Dist	COUNTY	ROUTE	POST MILES TOTAL PROJECT	SHEET No.	TOTAL SHEETS
03	Pla	80	31.8	38	68

Randell D. Hiatt
REGISTERED CIVIL ENGINEER

July 19, 2013
PLANS APPROVAL DATE

REGISTERED PROFESSIONAL ENGINEER — Randell D. Hiatt — No. C50200 — Exp. 6-30-15 — CIVIL — STATE OF CALIFORNIA

THE STATE OF CALIFORNIA OR ITS OFFICERS OR AGENTS SHALL NOT BE RESPONSIBLE FOR THE ACCURACY OR COMPLETENESS OF SCANNED COPIES OF THIS PLAN SHEET.

TO ACCOMPANY PLANS DATED 1-5-15

2010 REVISED STANDARD PLAN RSP A77L1

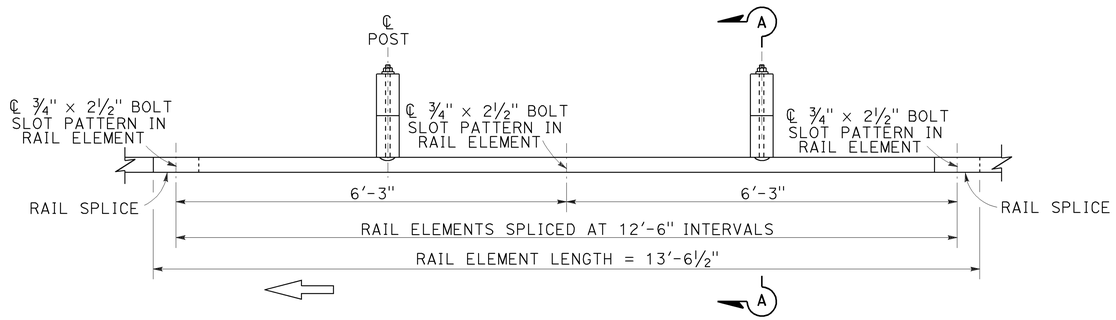

PLAN

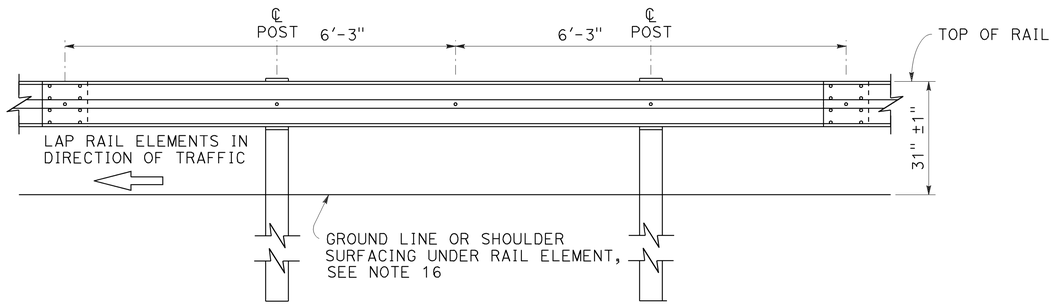

ELEVATION

MIDWEST GUARDRAIL SYSTEM WITH WOOD POST AND BLOCKS

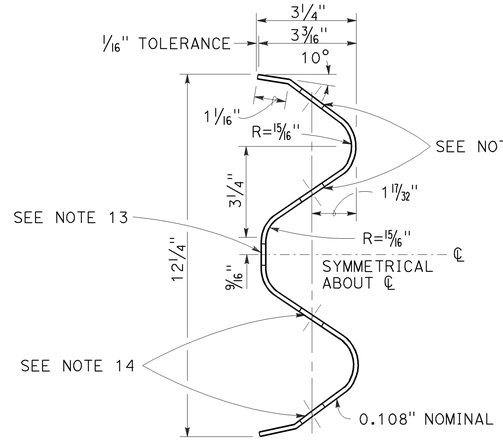

SECTION THRU RAIL ELEMENT

NOTES:

1. For details of steel post installations, see Revised Standard Plan RSP A77L2.
2. For details of standard hardware used to construct MGS, see Revised Standard Plan RSP A77M1.
3. For details of wood posts and wood blocks used to construct MGS, see Revised Standard Plan RSP A77N1.
4. For additional installation details, see Revised Standard Plan RSP A77N3.
5. MGS post spacing to be 6'-3" center to center, except as otherwise noted.
6. For MGS typical layouts, see the A77P, A77Q and A77R Series of Standard Plans.
7. If railing is connected to terminal system end treatment, use 31" height terminal system end treatment.
8. For MGS end anchor details, see Revised Standard Plans RSP A77S1 and RSP A77T2.
9. For details of MGS transition to bridge railing, see Revised Standard Plan RSP A77U4.
10. For additional details of MSG connection to bridge railing, see Revised Standard Plans RSP A77U1, RSP A77U2 and RSP A77V1.
11. For MGS connection details to abutments and walls, see Revised Standard Plan RSP A77U3.
12. For typical MGS delineation and dike positioning details, see Revised Standard Plan RSP A77N4.
13. Slotted hole for bolted connection of rail element to block and post. See "Section Thru Rail Element".
14. Slotted holes for splice bolts to overlap ends of rail element. See "Section Thru Rail Element".
15. Additional hole in uppermost portion of line post is for potential future adjustments of railing height. See Revised Standard Plan RSP A77N1.
16. Install posts in soil.

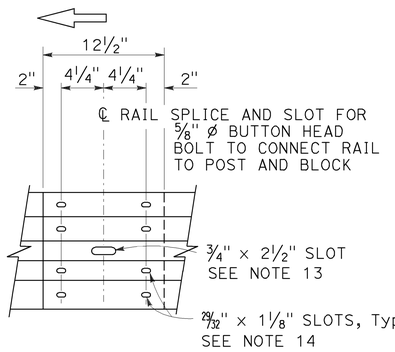

ELEVATION

RAIL ELEMENT SPLICE DETAIL

a) Connect the over lapped end of the rail elements with ⅝" ø × 1⅜" button head oval shoulder splice bolts inserted into the 29/32" × 1⅛" slots and bolted together with ⅝" ø recessed hex nuts. Recess of hex nut points toward rail element. A total of 8 bolts and nuts are to be used at each rail splice connection.

b) The ends of the rail elements are to be overlapped in the direction of traffic (see details).

c) Where end cap is to be attached to the end of a rail element, a total of 4 of the above described splice bolts and nuts are to be used.

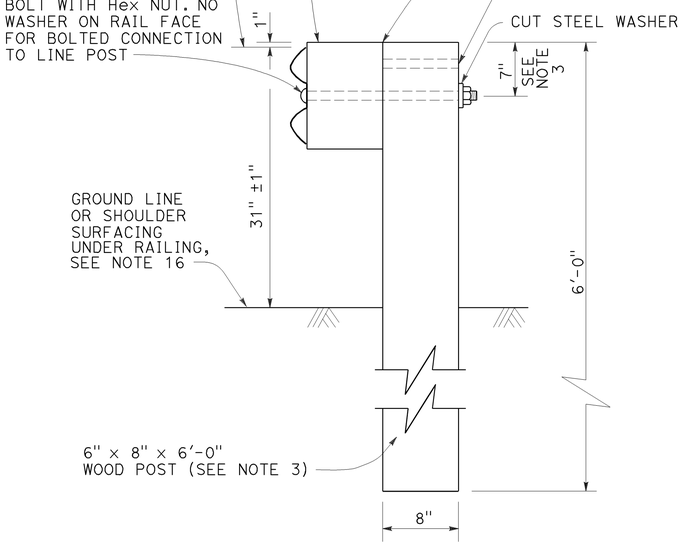

SECTION A-A

TYPICAL WOOD LINE POST INSTALLATION

See Note 4

STATE OF CALIFORNIA
DEPARTMENT OF TRANSPORTATION

MIDWEST GUARDRAIL SYSTEM STANDARD RAILING SECTION (WOOD POST WITH WOOD BLOCK)

NO SCALE

RSP A77L1 DATED JULY 19, 2013 SUPPLEMENTS STANDARD PLANS BOOK DATED 2010.

REVISED STANDARD PLAN RSP A77L1

7-3-13

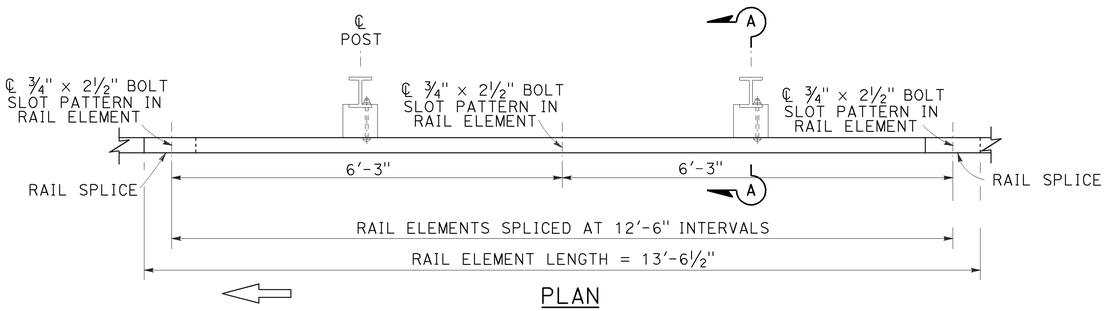

PLAN

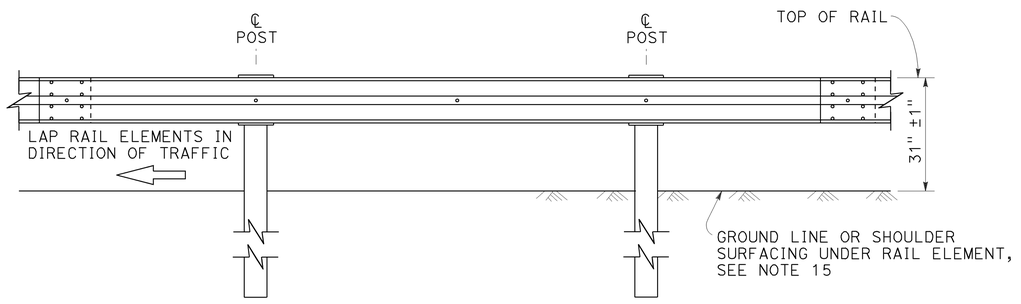

ELEVATION

MIDWEST GUARDRAIL SYSTEM WITH STEEL POSTS AND NOTCHED WOOD OR NOTCHED RECYCLED PLASTIC BLOCKS

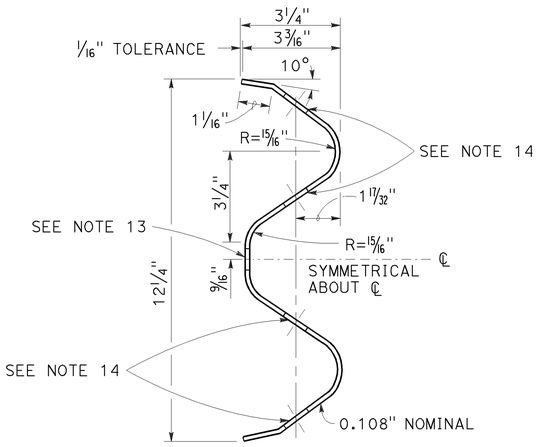

SECTION THRU RAIL ELEMENT

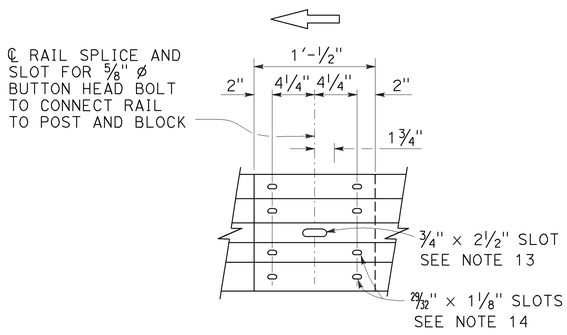

ELEVATION

RAIL ELEMENT SPLICE DETAIL

a) Connect the over lapped end of the rail elements with ⅝" ø × 1⅜" button head oval shoulder splice bolts inserted into the 29/32" × 1⅛" slots and bolted together with ⅝" ø recessed hex nuts. Recess of hex nut points toward rail element. A total of 8 bolts and nuts are to be used at each rail splice connection.

b) The ends of the rail elements are to be overlapped in the direction of traffic (see details).

c) Where end cap is to be attached to the end of a rail element, a total of 4 of the above described splice bolts and nuts are to be used.

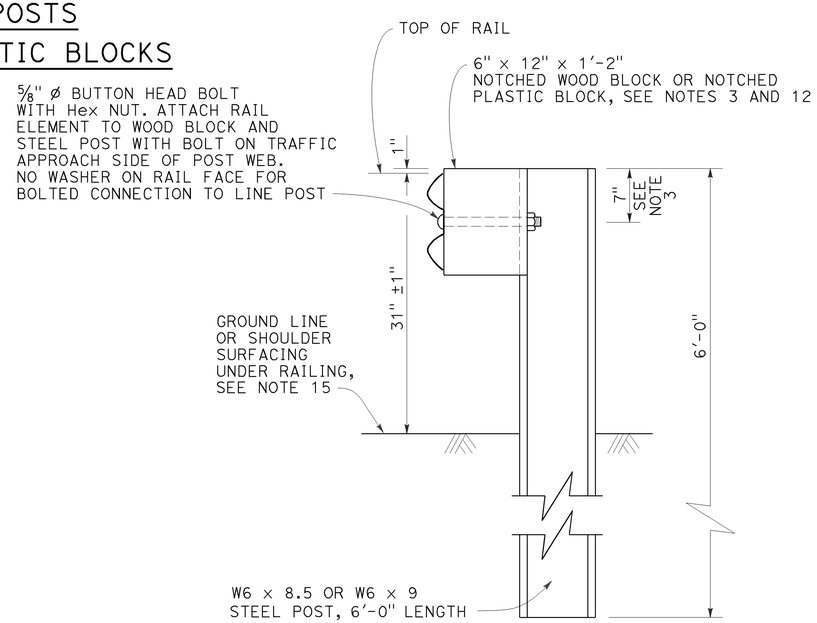

SECTION A-A

TYPICAL STEEL LINE POST INSTALLATION

See Note 4

Dist	COUNTY	ROUTE	POST MILES TOTAL PROJECT	SHEET No.	TOTAL SHEETS
03	Pla	80	31.8	39	68

Randell D. Hiatt
REGISTERED CIVIL ENGINEER

July 19, 2013
PLANS APPROVAL DATE

REGISTERED PROFESSIONAL ENGINEER — Randell D. Hiatt — No. C50200 — Exp. 6-30-15 — CIVIL — STATE OF CALIFORNIA

THE STATE OF CALIFORNIA OR ITS OFFICERS OR AGENTS SHALL NOT BE RESPONSIBLE FOR THE ACCURACY OR COMPLETENESS OF SCANNED COPIES OF THIS PLAN SHEET.

TO ACCOMPANY PLANS DATED 1-5-15

NOTES:

1. For details of wood post installations, see Revised Standard Plan RSP A77L1.
2. For details of standard hardware used to construct MGS, see Revised Standard Plan RSP A77M1.
3. For details of steel posts and notched wood blocks used to construct MGS, see Revised Standard Plan RSP A77N2.
4. For additional installation details, see Revised Standard Plan RSP A77N3.
5. MGS post spacing to be 6'-3" center to center, except as otherwise noted.
6. For MGS typical layouts, see the A77P, A77Q and A77R Series of Standard Plans.
7. If railing is connected to terminal system end treatment, use 31" height terminal system end treatment.
8. For MGS end anchor details, see Revised Standard Plans RSP A77S1 and RSP A77T2.
9. For details of MGS transition to bridge railing, see Revised Standard Plan RSP A77U4.
10. For additional details of MGS connection to bridge railings, see Revised Standard Plans RSP A77U1, RSP A77U2 and RSP A77V1.
11. For dike positioning and MGS delineation details, see Revised Standard Plan RSP A77N4.
12. Notched face of block faces steel post.
13. Slotted hole for bolted connection of rail element to block and post. See "Section Thru Rail Element".
14. Slotted holes for splice bolts to overlap ends of rail element. See "Section Thru Rail Element".
15. Install posts in soil.

STATE OF CALIFORNIA
DEPARTMENT OF TRANSPORTATION

MIDWEST GUARDRAIL SYSTEM STANDARD RAILING SECTION (STEEL POST WITH NOTCHED WOOD OR NOTCHED RECYCLED PLASTIC BLOCK)

NO SCALE

RSP A77L2 DATED JULY 19, 2013 SUPPLEMENTS THE STANDARD PLANS BOOK DATED 2010.

REVISED STANDARD PLAN RSP A77L2

2010 REVISED STANDARD PLAN RSP A77L2

7-3-13

Dist	COUNTY	ROUTE	POST MILES TOTAL PROJECT	SHEET No.	TOTAL SHEETS
03	Pla	80	31.8	40	68

Randell D. Hiatt
REGISTERED CIVIL ENGINEER

July 19, 2013
PLANS APPROVAL DATE

REGISTERED PROFESSIONAL ENGINEER
Randell D. Hiatt
No. C50200
Exp. 6-30-15
CIVIL
STATE OF CALIFORNIA

THE STATE OF CALIFORNIA OR ITS OFFICERS OR AGENTS SHALL NOT BE RESPONSIBLE FOR THE ACCURACY OR COMPLETENESS OF SCANNED COPIES OF THIS PLAN SHEET.

TO ACCOMPANY PLANS DATED 1-5-15

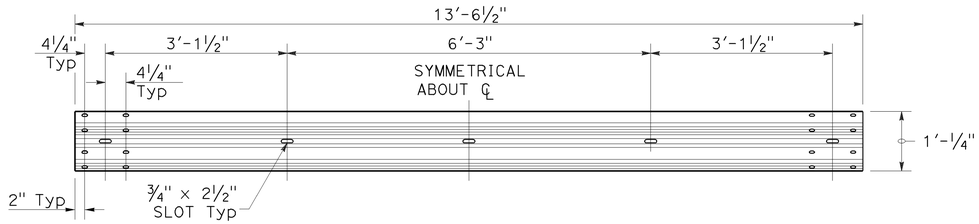

TYPICAL RAIL ELEMENT

NOTE:

1. Slotted holes for splice bolts to overlap ends of rail element.

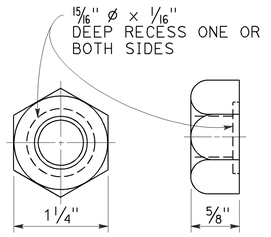

⅝" ø RECESS NUT

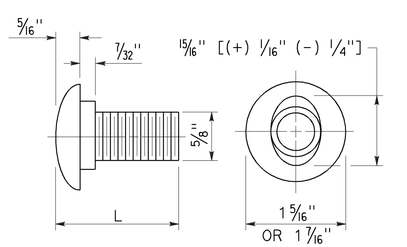

⅝" ø BUTTON HEAD BOLT

BUTTON HEAD BOLT

L	THREAD LENGTH
1⅜"	FULL THREAD LENGTH
2"	FULL THREAD LENGTH
10"	4" Min THREAD LENGTH
18"	4" Min THREAD LENGTH
20"	4" Min THREAD LENGTH
22"	4" Min THREAD LENGTH
26"	4" Min THREAD LENGTH
36"	4" Min THREAD LENGTH
** 2¾"	2" Min THREAD LENGTH
** 19"	4" Min THREAD LENGTH

** For nested rail applications.

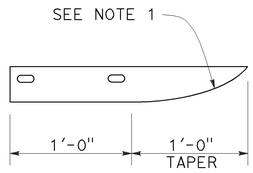

PLAN

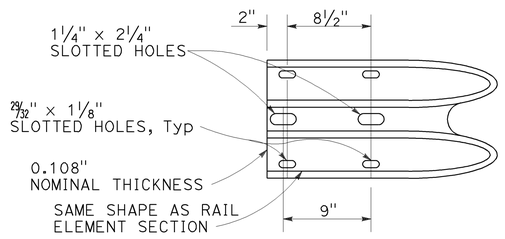

ELEVATION

END CAP (TYPE A)

STATE OF CALIFORNIA
DEPARTMENT OF TRANSPORTATION

MIDWEST GUARDRAIL SYSTEM STANDARD HARDWARE

NO SCALE

RSP A77M1 DATED JULY 19, 2013 SUPPLEMENTS THE STANDARD PLANS BOOK DATED 2010.

REVISED STANDARD PLAN RSP A77M1

2010 REVISED STANDARD PLAN RSP A77M1

7-3-13

Dist	COUNTY	ROUTE	POST MILES TOTAL PROJECT	SHEET No.	TOTAL SHEETS
03	Pla	80	31.8	41	68

Randell D. Hiatt
REGISTERED CIVIL ENGINEER

July 19, 2013
PLANS APPROVAL DATE

REGISTERED PROFESSIONAL ENGINEER
Randell D. Hiatt
No. C50200
Exp. 6-30-15
CIVIL
STATE OF CALIFORNIA

THE STATE OF CALIFORNIA OR ITS OFFICERS OR AGENTS SHALL NOT BE RESPONSIBLE FOR THE ACCURACY OR COMPLETENESS OF SCANNED COPIES OF THIS PLAN SHEET.

TO ACCOMPANY PLANS DATED 1-5-15

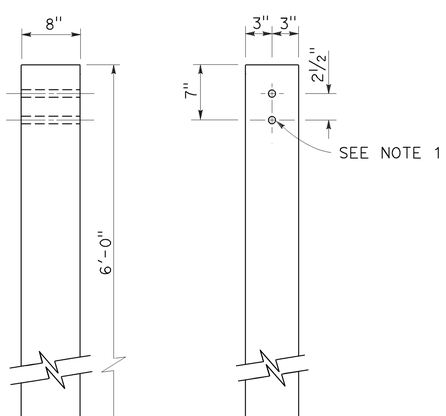

SIDE FRONT

6" x 8" WOOD POST
See Note 3

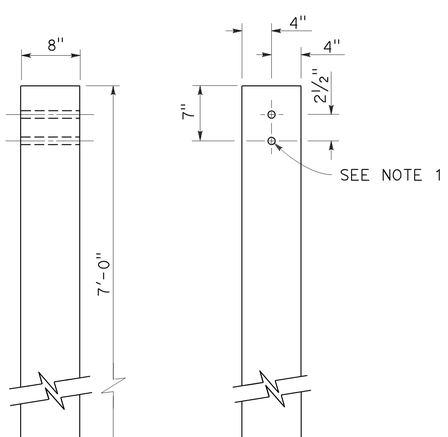

SIDE FRONT

8" x 8" WOOD POST
See Note 4

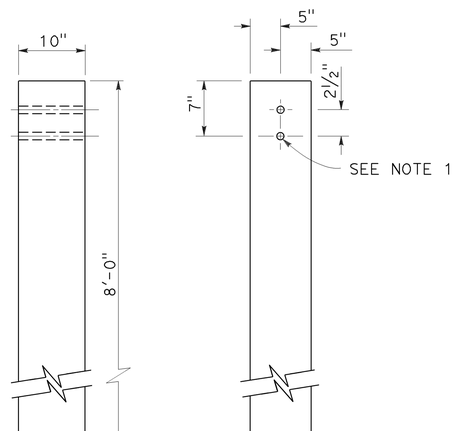

SIDE FRONT

10" x 10" WOOD POST
See Note 5

NOTES:

1. All holes in wood posts and blocks shall be ¾" Dia ± 1/16".
2. Dimensions shown for wood post are nominal.
3. This post and block combination used for standard line post sections of MGS.
4. This post and 8" x 12" block combination used for line post sections of MGS on narrow roadways.
5. This post and 8" x 12" block combination is typically used where strengthened line post sections of MGS are warranted to shield fixed objects.
6. See Revised Standard Plan RSP A77L3 for use of 6" x 8" and 8" x 8" wood blocks.

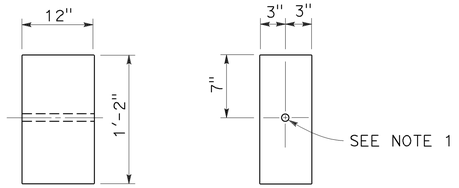

SIDE FRONT

6" x 12" WOOD BLOCK
See Note 3

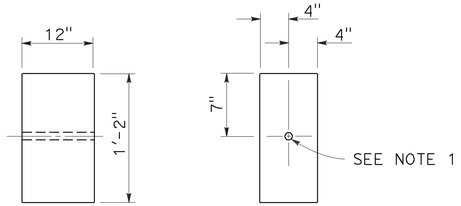

SIDE FRONT

8" x 12" WOOD BLOCK

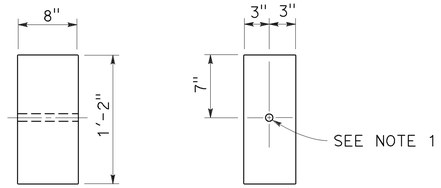

SIDE FRONT

6" x 8" WOOD BLOCK
Only for use with metal beam guard rail see Note 6

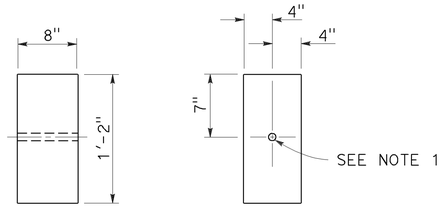

SIDE FRONT

8" x 8" WOOD BLOCK
Only for use with metal beam guard rail see Note 6

STATE OF CALIFORNIA
DEPARTMENT OF TRANSPORTATION

MIDWEST GUARDRAIL SYSTEM WOOD POST AND WOOD BLOCK DETAILS

NO SCALE

RSP A77N1 DATED JULY 19, 2013 SUPPLEMENTS THE STANDARD PLANS BOOK DATED 2010.

REVISED STANDARD PLAN RSP A77N1

2010 REVISED STANDARD PLAN RSP A77N1

7-3-13

Dist	COUNTY	ROUTE	POST MILES TOTAL PROJECT	SHEET No.	TOTAL SHEETS
03	Pla	80	31.8	42	68

Randell D. Hiatt
REGISTERED CIVIL ENGINEER

November 15, 2013
PLANS APPROVAL DATE

REGISTERED PROFESSIONAL ENGINEER
Randell D. Hiatt
No. C50200
Exp. 6-30-15
CIVIL
STATE OF CALIFORNIA

THE STATE OF CALIFORNIA OR ITS OFFICERS OR AGENTS SHALL NOT BE RESPONSIBLE FOR THE ACCURACY OR COMPLETENESS OF SCANNED COPIES OF THIS PLAN SHEET.

TO ACCOMPANY PLANS DATED 1-5-15

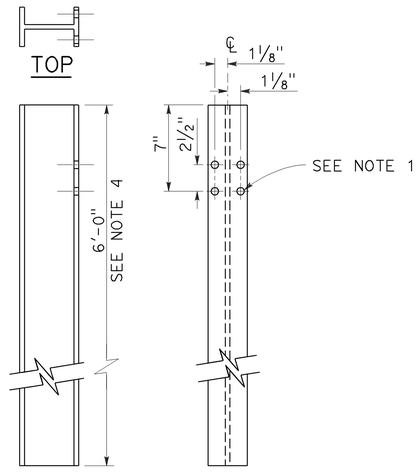

W6 x 9 OR W6 x 8.5
STEEL POST
See Note 4

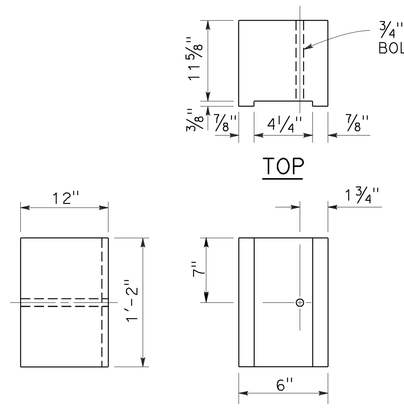

6" x 12"
NOTCHED WOOD BLOCK
See Notes 2 and 3

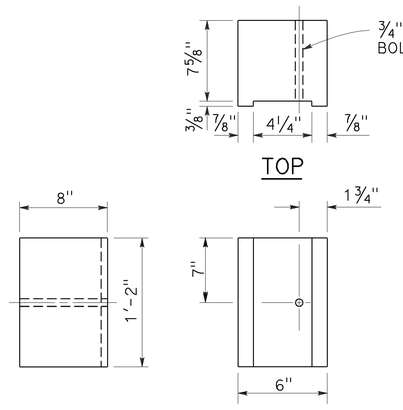

6" x 8"
NOTCHED WOOD BLOCK
Only for use with metal beam guard railing. See Note 5

NOTES:

1. All holes in steel post shall be 13/16" Dia maximum.
2. Dimensions shown for wood block are nominal.
3. Notched face of block faces steel post.
4. 6'-0" length posts to be used for typical roadway installation. See Revised Standard Plan RSP A77N3.
5. See Revised Standard Plan RSP A77L3 for use of 6" x 8" and 8" x 8" notched wood blocks.
6. This post and 8" x 12" block combination to be used for line post sections of MGS on narrow roadways and where strengthened line post sections of MGS are warranted to shield fixed objects.

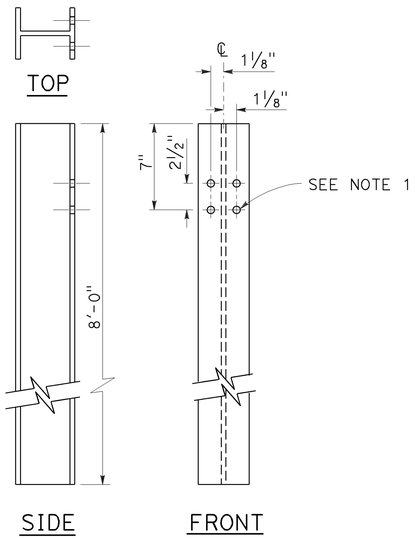

W6 x 15
STEEL POST
See Note 6

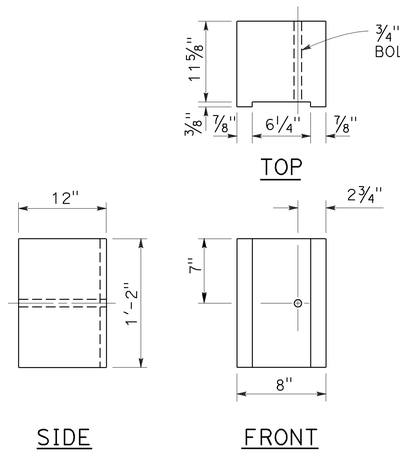

8" x 12"
NOTCHED WOOD BLOCK
See Notes 2 and 3

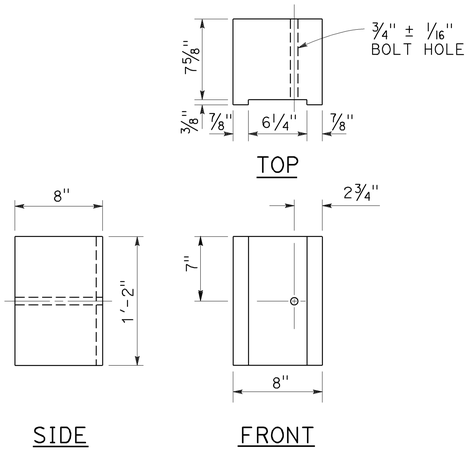

8" x 8"
NOTCHED WOOD BLOCK
Only for use with metal beam guard railing. See Note 5

STATE OF CALIFORNIA
DEPARTMENT OF TRANSPORTATION

MIDWEST GUARDRAIL SYSTEM STEEL POST AND NOTCHED WOOD BLOCK DETAILS

NO SCALE

RSP A77N2 DATED NOVEMBER 15, 2013 SUPERSEDES RSP A77N2
DATED JULY 19, 2013 THAT SUPPLEMENTS THE STANDARD PLANS BOOK DATED 2010.

REVISED STANDARD PLAN RSP A77N2

2010 REVISED STANDARD PLAN RSP A77N2

10-29-13

Dist	COUNTY	ROUTE	POST MILES TOTAL PROJECT	SHEET No.	TOTAL SHEETS
03	Pla	80	31.8	43	68

Randell D. Hiatt
REGISTERED CIVIL ENGINEER

November 15, 2013
PLANS APPROVAL DATE

REGISTERED PROFESSIONAL ENGINEER
Randell D. Hiatt
No. C50200
Exp. 6-30-15
CIVIL
STATE OF CALIFORNIA

THE STATE OF CALIFORNIA OR ITS OFFICERS OR AGENTS SHALL NOT BE RESPONSIBLE FOR THE ACCURACY OR COMPLETENESS OF SCANNED COPIES OF THIS PLAN SHEET.

TO ACCOMPANY PLANS DATED 1-5-15

2010 REVISED STANDARD PLAN RSP A77N3

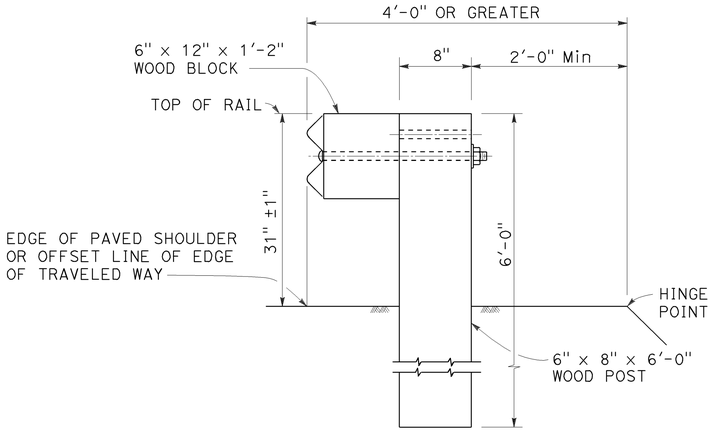

DETAIL A

TYPICAL ROADWAY INSTALLATION

See Note 1

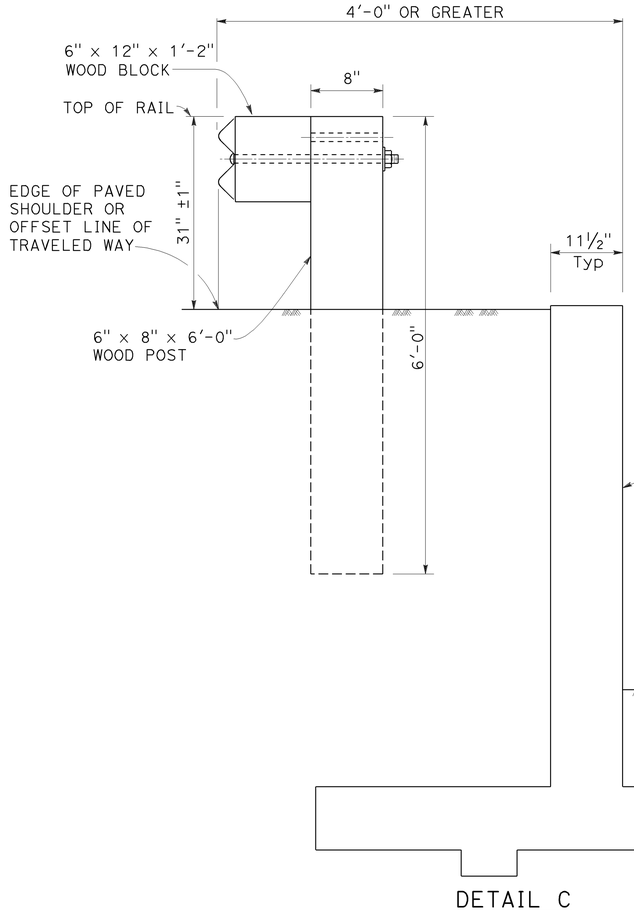

DETAIL C

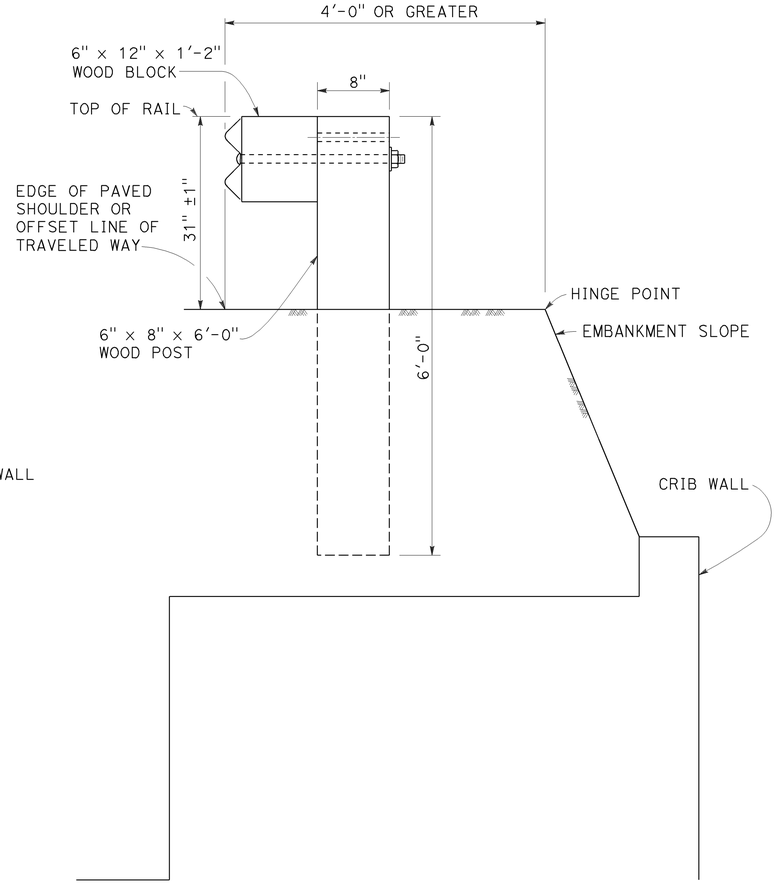

DETAIL D

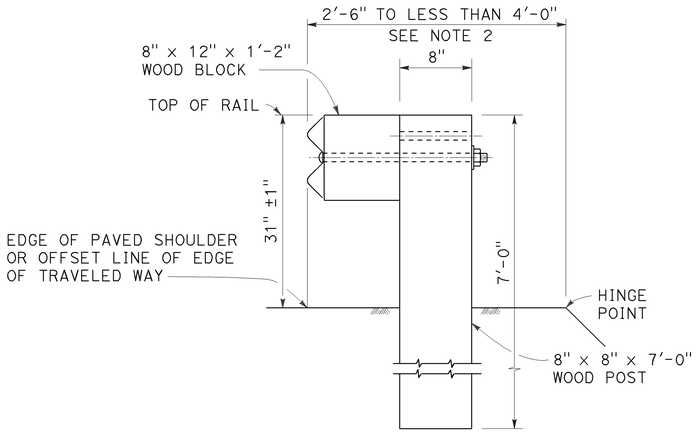

DETAIL B

NARROW ROADWAY INSTALLATION

See Note 1

POST EMBEDMENT

INSTALLATION AT EARTH RETAINING WALLS

NOTES:

1. These installation details also applicable to steel line post installations. For Detail A, C, and D, where steel line post installations are constructed, W6 x 8.5 or W6 x 9 steel post, 6'-0" in length, with 6" x 12" x 1'-2" notched wood blocks or notched recycled plastic blocks are to be used in place of the size of wood post and wood block shown. For Detail B, where steel line post installations are constructed, W6 x 15 steel post, 8'-0" in length, with 8" x 12" x 1'-2" notched wood blocks or notched recycled plastic blocks are to be used in place of the size of wood post and wood block shown. For additional installation details, see Revised Standard Plan RSP A77L1 and RSP A77L2.
2. Where the distance between the face of the rail and the hinge point is less than 2'-6", see the Project Plans for special details.
3. For dike positioning with MGS installations, see Revised Standard Plan RSP A77N4.

STATE OF CALIFORNIA
DEPARTMENT OF TRANSPORTATION

MIDWEST GUARDRAIL SYSTEM TYPICAL LINE POST EMBEDMENT AND HINGE POINT OFFSET DETAILS

NO SCALE

RSP A77N3 DATED NOVEMBER 15, 2013 SUPERSEDES RSP A77N3 DATED JULY 19, 2013 THAT SUPPLEMENTS THE STANDARD PLANS BOOK DATED 2010.

REVISED STANDARD PLAN RSP A77N3

10-29-13

Dist	COUNTY	ROUTE	POST MILES TOTAL PROJECT	SHEET No.	TOTAL SHEETS
03	Pla	80	31.8	44	68

Randell D. Hiatt
REGISTERED CIVIL ENGINEER

July 19, 2013
PLANS APPROVAL DATE

REGISTERED PROFESSIONAL ENGINEER
Randell D. Hiatt
No. C50200
Exp. 6-30-15
CIVIL
STATE OF CALIFORNIA

THE STATE OF CALIFORNIA OR ITS OFFICERS OR AGENTS SHALL NOT BE RESPONSIBLE FOR THE ACCURACY OR COMPLETENESS OF SCANNED COPIES OF THIS PLAN SHEET.

TO ACCOMPANY PLANS DATED 1-5-15

NOTES:

1. When necessary to place dike more than 7" in front of face of MGS, only Type C dike may be used. For dike details, see Revised Standard Plan RSP A87B.
2. For standard railing post embedment, see Revised Standard Plan RSP A77N3.
3. MGS delineation to be used where shown on the Project Plans.
4. When dike or curb is placed under MGS, the maximum height of the dike or curb shall be 6". Mountable dike should not be used. For dike and curb details, see Revised Standard Plans RSP A87A and RSP A87B.
5. For details of typical distance between the face of rail and hinge point, see Revised Standard Plan RSP A77N3.
6. For steel line posts, use 1/4 - 20 self-tapping screws in 0.22" diameter holes or 1/4" bolts in 9/32" diameter holes.

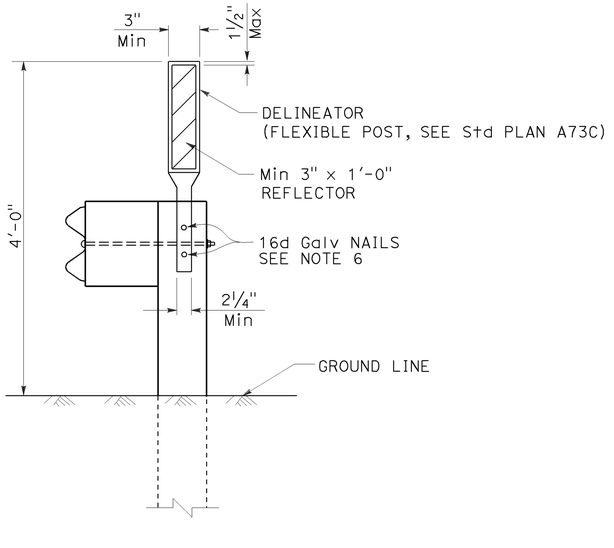

MGS DELINEATION
See Note 3

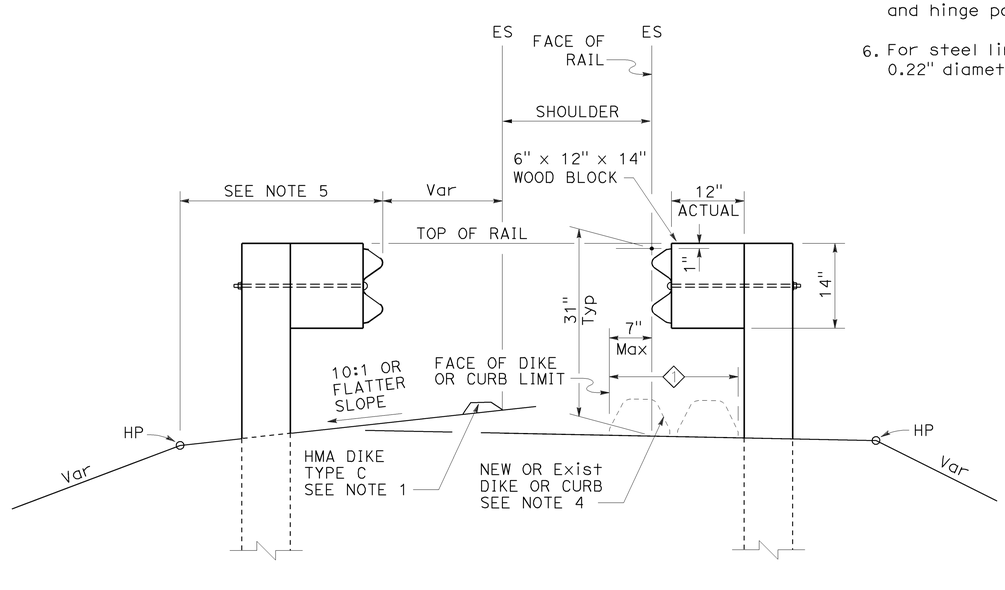

DIKE POSITIONING
See Note 1

◇1 PERMISSIBLE DIKE OR CURB PLACEMENT AREA

STATE OF CALIFORNIA
DEPARTMENT OF TRANSPORTATION

MIDWEST GUARDRAIL SYSTEM TYPICAL RAILING DELINEATION AND DIKE POSITIONING DETAILS

NO SCALE

RSP A77N4 DATED JULY 19, 2013 SUPPLEMENTS THE STANDARD PLANS BOOK DATED 2010.

REVISED STANDARD PLAN RSP A77N4

2010 REVISED STANDARD PLAN RSP A77N4

7-10-13

Dist	COUNTY	ROUTE	POST MILES TOTAL PROJECT	SHEET No.	TOTAL SHEETS
03	Pla	80	31.8	45	68

Randell D. Hiatt
REGISTERED CIVIL ENGINEER

July 19, 2013
PLANS APPROVAL DATE

REGISTERED PROFESSIONAL ENGINEER
Randell D. Hiatt
No. C50200
Exp. 6-30-15
CIVIL
STATE OF CALIFORNIA

THE STATE OF CALIFORNIA OR ITS OFFICERS OR AGENTS SHALL NOT BE RESPONSIBLE FOR THE ACCURACY OR COMPLETENESS OF SCANNED COPIES OF THIS PLAN SHEET.

TO ACCOMPANY PLANS DATED 1-5-15

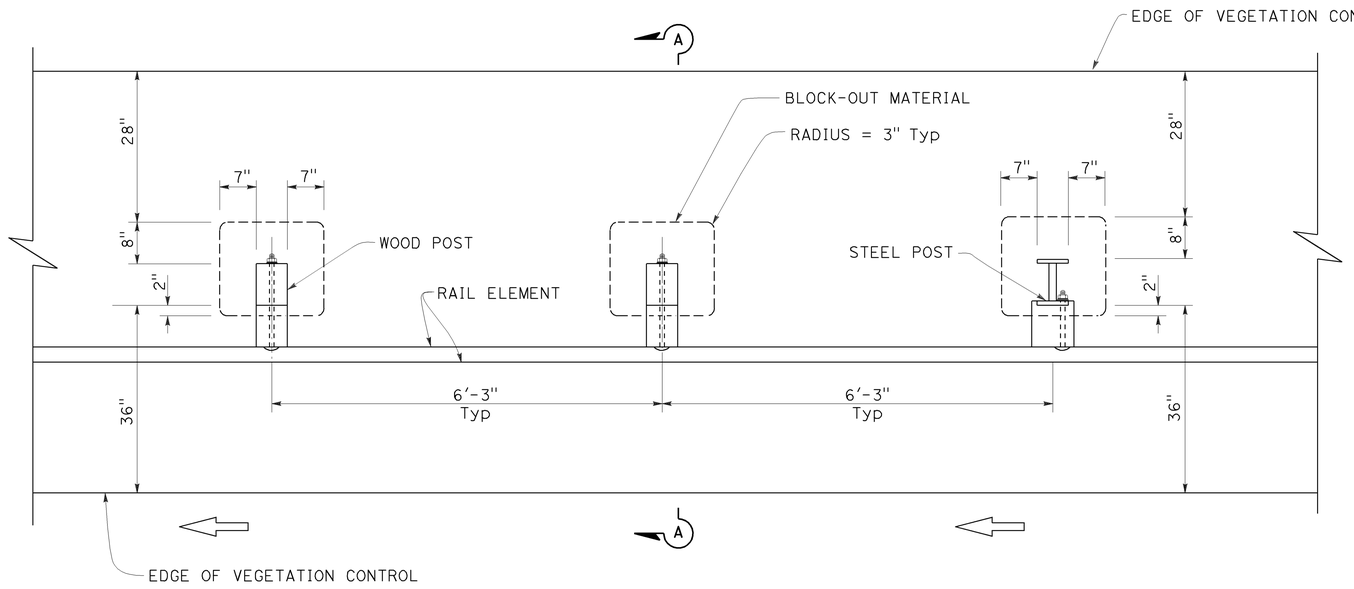

PLAN

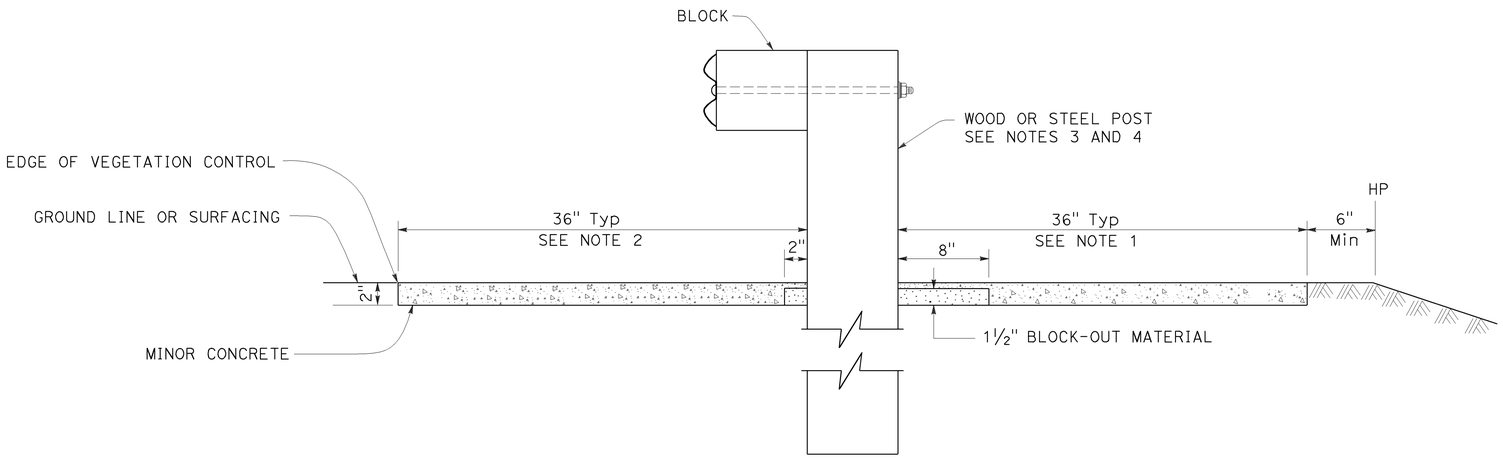

SECTION A-A

NOTES:

1. Where the distance between back of post and hinge point is less than 42", construct vegetation control to 6" from hinge point while maintaining the 8" block-out at back of post. If the 8" block-out at back of post can not be maintained, construct vegetation control flush with the back edge of post.
2. Where dike is constructed under railing, construct vegetation control to back edge of dike. Where paved shoulder is constructed within 36" in front of the post, construct vegetation control to the edge of paved shoulder.
3. For wood post sizes, see Revised Standard Plan RSP A77N1.
4. For steel post sizes, see Revised Standard Plan RSP A77N2.
5. For details not shown, see Revised Standard Plans RSP A77L1 and RSP A77L2.

STATE OF CALIFORNIA
DEPARTMENT OF TRANSPORTATION

MIDWEST GUARDRAIL SYSTEM
TYPICAL VEGETATION CONTROL
STANDARD RAILING SECTION

NO SCALE

RSP A77N5 DATED JULY 19, 2013 SUPPLEMENTS THE STANDARD PLANS BOOK DATED 2010.

REVISED STANDARD PLAN RSP A77N5

2010 REVISED STANDARD PLAN RSP A77N5

7-3-13

Dist	COUNTY	ROUTE	POST MILES TOTAL PROJECT	SHEET No.	TOTAL SHEETS
03	Pla	80	31.8	46	68

Randell D. Hiatt
REGISTERED CIVIL ENGINEER

July 19, 2013
PLANS APPROVAL DATE

REGISTERED PROFESSIONAL ENGINEER
Randell D. Hiatt
No. C50200
Exp. 6-30-15
CIVIL
STATE OF CALIFORNIA

THE STATE OF CALIFORNIA OR ITS OFFICERS OR AGENTS SHALL NOT BE RESPONSIBLE FOR THE ACCURACY OR COMPLETENESS OF SCANNED COPIES OF THIS PLAN SHEET.

TO ACCOMPANY PLANS DATED 1-5-15

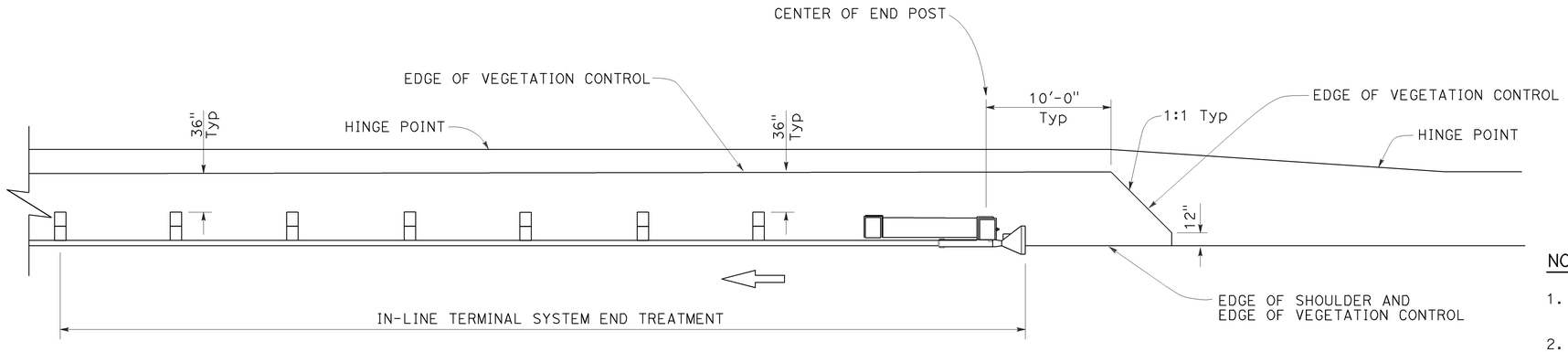

PLAN

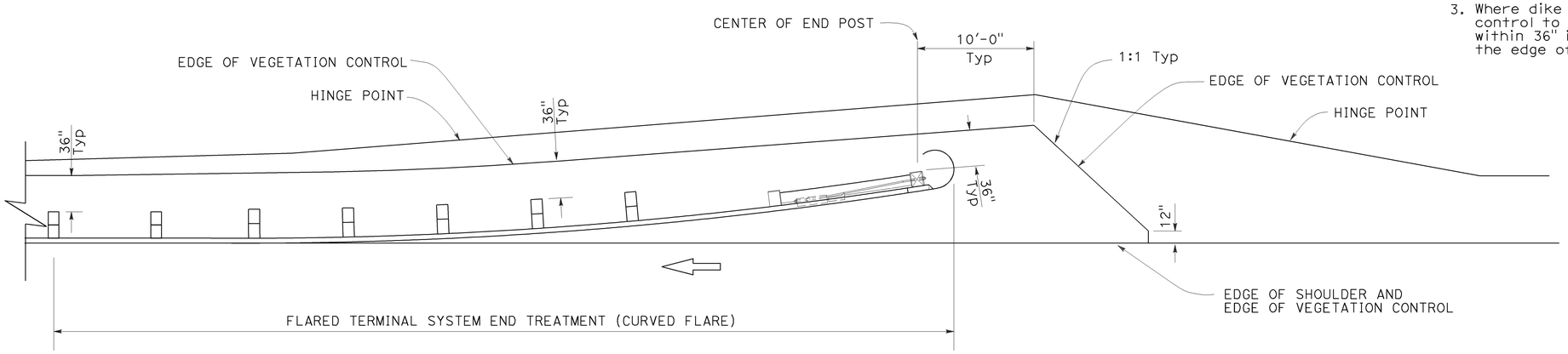

PLAN

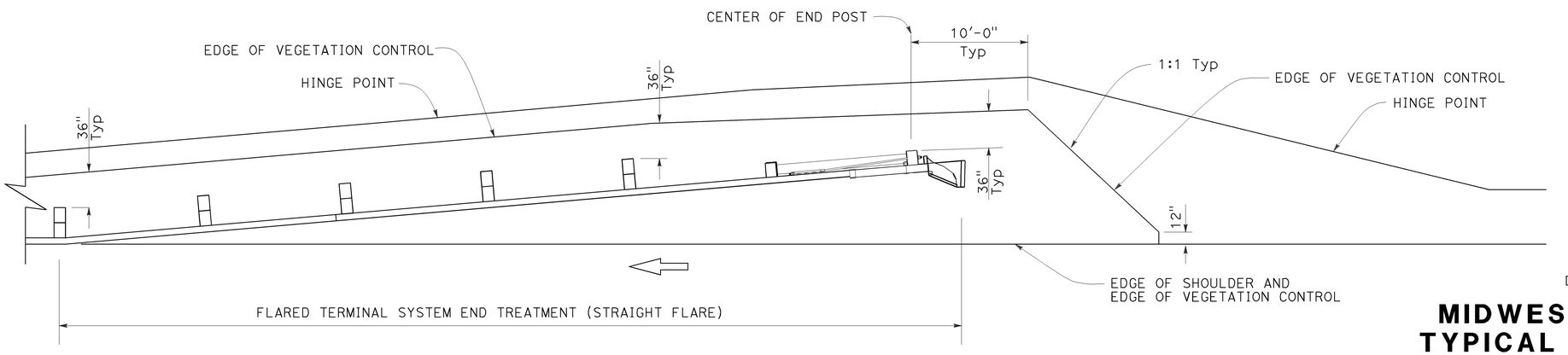

PLAN

NOTES:

1. See Revised Standard Plan RSP A77N5 for additional vegetation control details.
2. Where the distance between back of post and hinge point is less than 42", construct vegetation control to 6" from hinge point while maintaining the 8" block-out at back of post. If the 8" block-out at back of post can not be maintained, construct vegetation control flush with the back edge of post.
3. Where dike is constructed under railing, construct vegetation control to back edge of dike. Where paved shoulder is constructed within 36" in front of the post, construct vegetation control to the edge of paved shoulder.

STATE OF CALIFORNIA
DEPARTMENT OF TRANSPORTATION

MIDWEST GUARDRAIL SYSTEM TYPICAL VEGETATION CONTROL FOR TERMINAL SYSTEM END TREATMENTS

NO SCALE

RSP A77N6 DATED JULY 19, 2013 SUPPLEMENTS THE STANDARD PLANS BOOK DATED 2010.

REVISED STANDARD PLAN RSP A77N6

2010 REVISED STANDARD PLAN RSP A77N6

6-12-13

Dist	COUNTY	ROUTE	POST MILES TOTAL PROJECT	SHEET No.	TOTAL SHEETS
03	Pla	80	31.8	47	68

Randell D. Hiatt
REGISTERED CIVIL ENGINEER

July 19, 2013
PLANS APPROVAL DATE

REGISTERED PROFESSIONAL ENGINEER — Randell D. Hiatt — No. C50200 — Exp. 6-30-15 — CIVIL — STATE OF CALIFORNIA

THE STATE OF CALIFORNIA OR ITS OFFICERS OR AGENTS SHALL NOT BE RESPONSIBLE FOR THE ACCURACY OR COMPLETENESS OF SCANNED COPIES OF THIS PLAN SHEET.

TO ACCOMPANY PLANS DATED 1-5-15

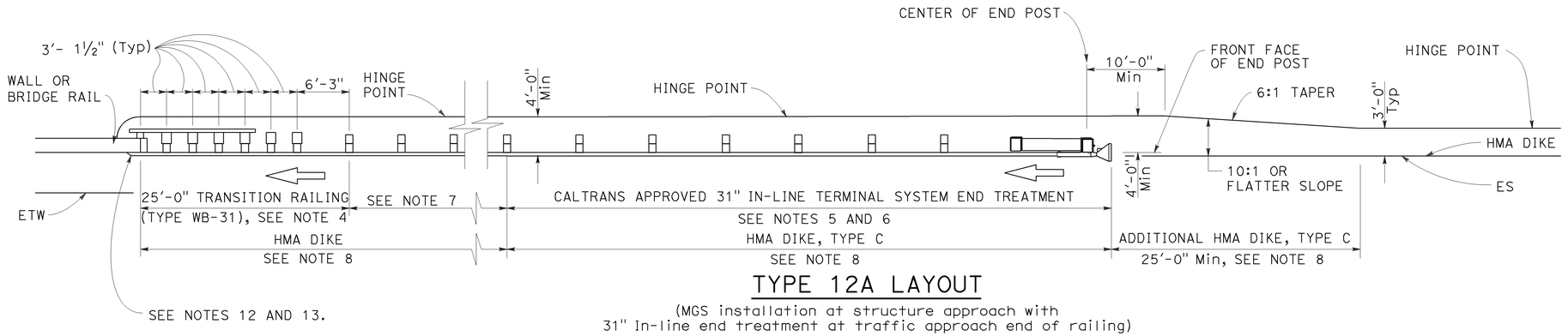

TYPE 12A LAYOUT

(MGS installation at structure approach with
31" In-line end treatment at traffic approach end of railing)
See Notes 9

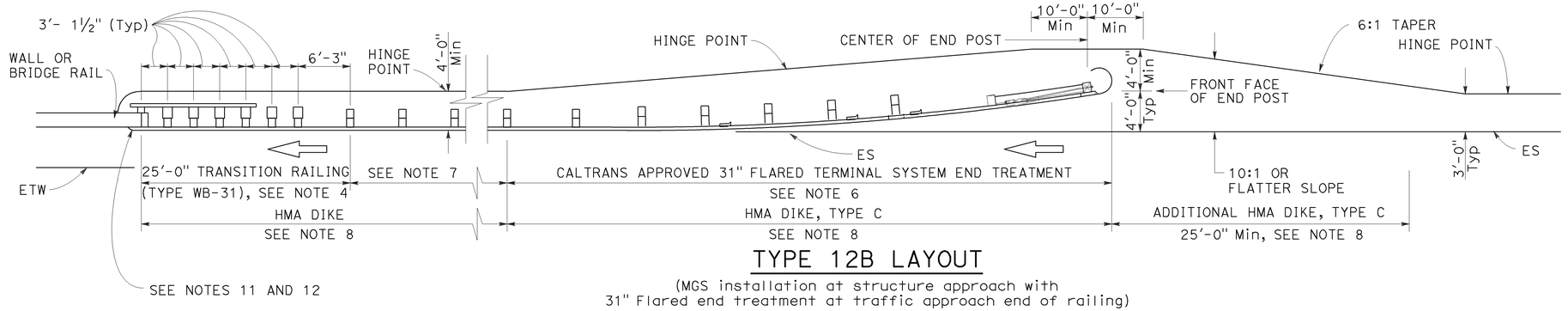

TYPE 12B LAYOUT

(MGS installation at structure approach with
31" Flared end treatment at traffic approach end of railing)
See Notes 9

NOTES:

1. Line post, blocks and hardware to be used are shown on Revised Standard Plans RSP A77L1, RSP A77L2, RSP A77M1, RSP A77N1 and RSP A77N2.
2. MGS post spacing to be 6'-3" center to center, except as otherwise noted.
3. Except as noted, line posts are 6" x 8" x 6'-0" wood with 6" x 12" x 1'-2" wood blocks. W6 x 8.5 or W6 x 9 steel posts, 6'-0" in length, with 6" x 12" x 1'-2" notched wood blocks or plastic blocks may be used for 6" x 8" x 6'-0" wood posts with 6" x 12" x 1'-2" wood blocks where applicable and when specified.
4. For Transition Railing (Type WB-31) details for Types 12A and 12B Layouts, see Revised Standard Plan RSP A77U4.
5. 31" in-line terminal system end treatments are used where site conditions will not accommodate a 31" flared end treatment.
6. The type 31" of terminal system end treatment to be used will be shown on the Project Plans.
7. Dependent on site conditions (embankment height, side slopes, or other fixed objects), it may be advisable to construct additional guard railing (a length equal to multiples of 12'-6" with 6'-3" post spacing) between the transition railing and end treatment. A 12.5 degree angle of departure can be drawn on the Project Plans from the edge of traveled way through the outer most point of the fixed object to determine the additional length of railing needed.
8. Where placement of dike is required with guard railing installations, see Revised Standard Plan RSP A77N4 for dike positioning details.
9. Type 12A or Type 12B Layouts are typically used:
   a. To the right of approaching traffic, at the end of a structure, on two-lane conventional highway where the roadbed width across the structure is less than 40 feet.
   b. To the left of approaching traffic, at the end of a structure, on two-lane conventional highway where the roadbed width across the structure is less than 40 feet.
   c. To the right of approaching traffic at the end of each structure on multilane freeways or expressways with separate adjacent or parallel bridges.
   d. To the right of approaching traffic at the end of the structure on multilane freeways or expressways with decked median on the bridge.
10. See Revised Standard Plan RSP A77Q3 for typical layout used left of approaching traffic at the ends of each structure on multilane freeways or expressways with separate adjacent or parallel bridges.
11. For additional details of typical connections to bridge rail, see Connection Detail AA on Revised Standard Plans RSP A77U1 and RSP A77U2 and Connection Detail FF on Revised Standard Plans RSP A77V1 and RSP A77V2.
12. For additional details of a typical connection to walls or abutments, see Revised Standard Plan RSP A77U3.

STATE OF CALIFORNIA
DEPARTMENT OF TRANSPORTATION

MIDWEST GUARDRAIL SYSTEM TYPICAL LAYOUTS FOR STRUCTURE APPROACH

NO SCALE

RSP A77Q1 DATED JULY 19, 2013 SUPPLEMENTS THE STANDARD PLANS BOOK DATED 2010.

REVISED STANDARD PLAN RSP A77Q1

2010 REVISED STANDARD PLAN RSP A77Q1

6-19-13

Dist	COUNTY	ROUTE	POST MILES TOTAL PROJECT	SHEET No.	TOTAL SHEETS
03	Pla	80	31.8	48	68

Randell D. Hiatt
REGISTERED CIVIL ENGINEER

November 15, 2013
PLANS APPROVAL DATE

REGISTERED PROFESSIONAL ENGINEER — Randell D. Hiatt — No. C50200 — Exp. 6-30-15 — CIVIL — STATE OF CALIFORNIA

THE STATE OF CALIFORNIA OR ITS OFFICERS OR AGENTS SHALL NOT BE RESPONSIBLE FOR THE ACCURACY OR COMPLETENESS OF SCANNED COPIES OF THIS PLAN SHEET.

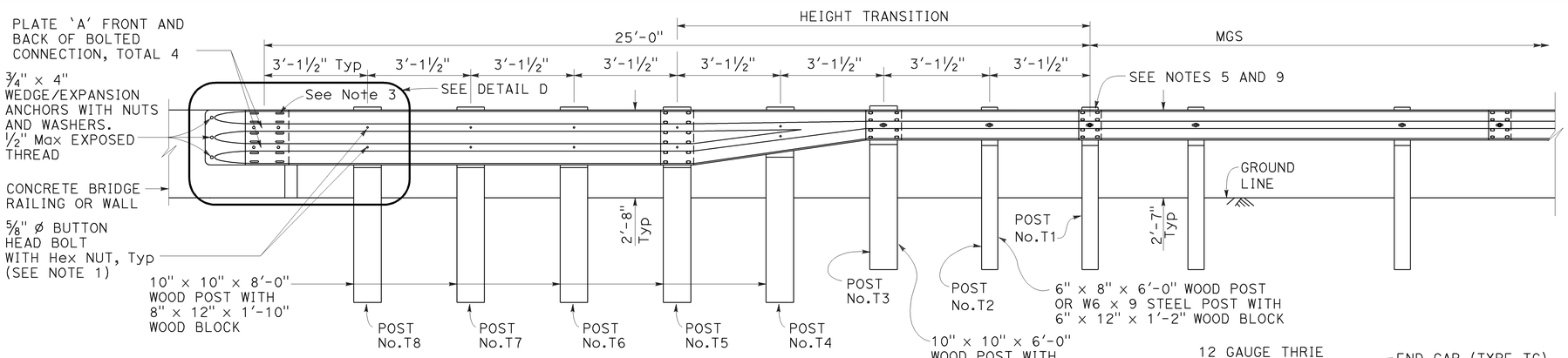

ELEVATION

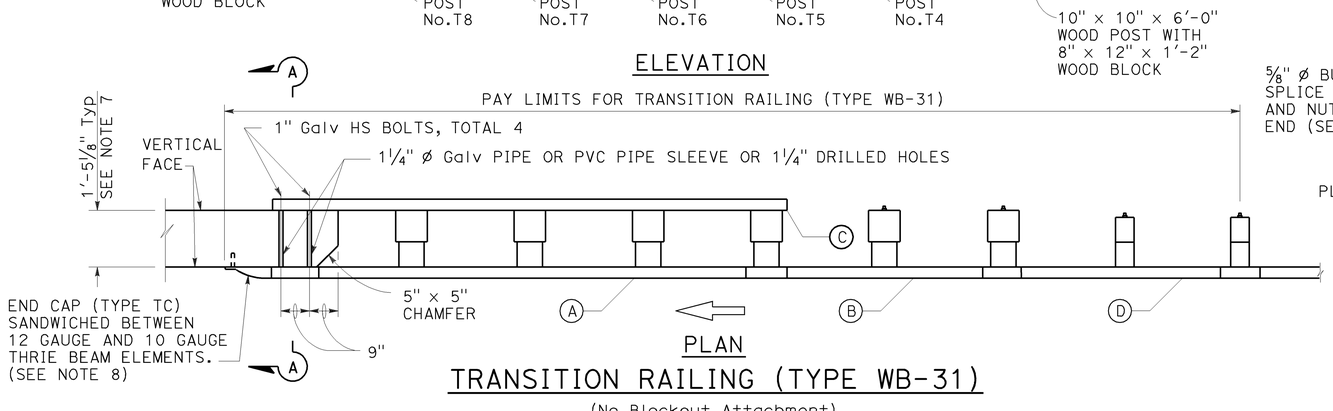

PLAN

TRANSITION RAILING (TYPE WB-31)

(No Blockout Attachment)

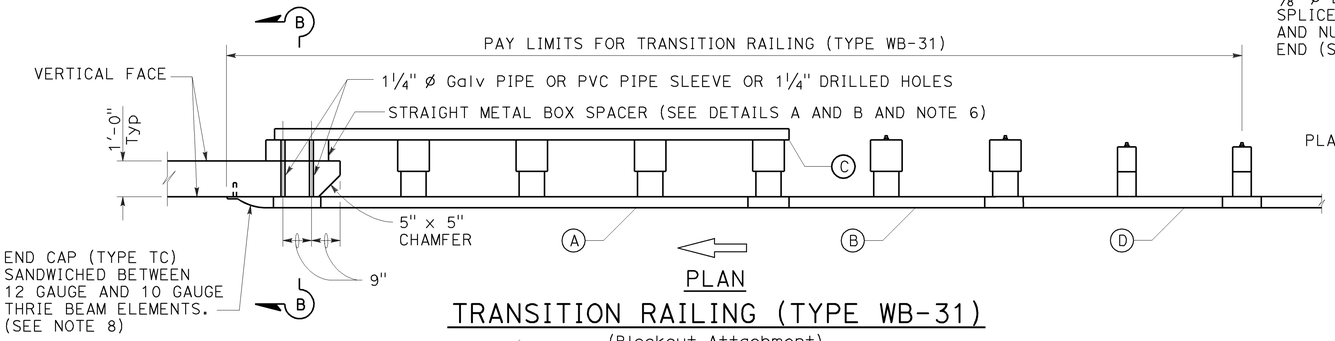

PLAN

TRANSITION RAILING (TYPE WB-31)

(Blockout Attachment)

LEGEND:

- (A) NESTED THRIE BEAM ELEMENTS (ONE 12 GAUGE ELEMENT NESTED OVER ONE 10 GAUGE ELEMENT).
- (B) ONE ASYMMETRICAL 10 GAUGE "W" BEAM TO THRIE BEAM ELEMENT.
- (C) ONE 12 GAUGE THRIE BEAM ELEMENT.
- (D) ONE 10 GAUGE "W" BEAM RAIL ELEMENT (7'-3 1/2"LENGTH)

10 GAUGE = 0.138" THICK
12 GAUGE = 0.108" THICK

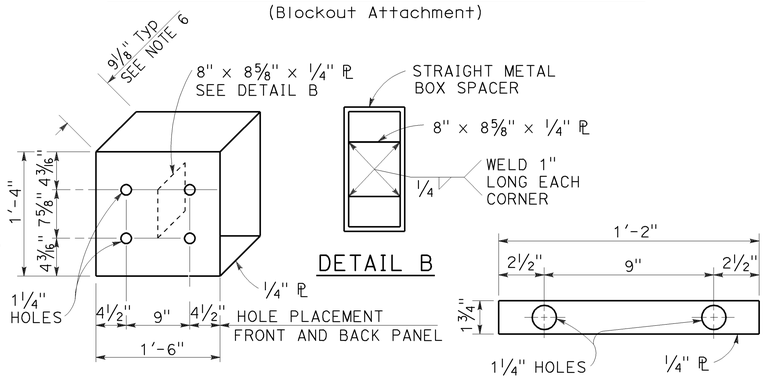

DETAIL A

DETAIL B

DETAIL C

STRAIGHT METAL BOX SPACER — PLATE 'A'

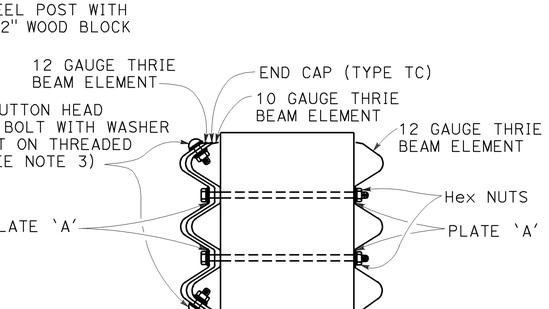

SECTION A-A

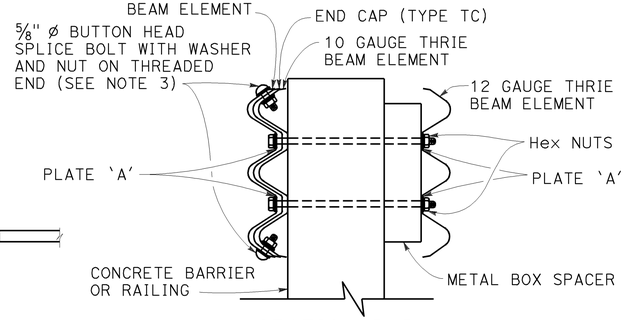

SECTION B-B

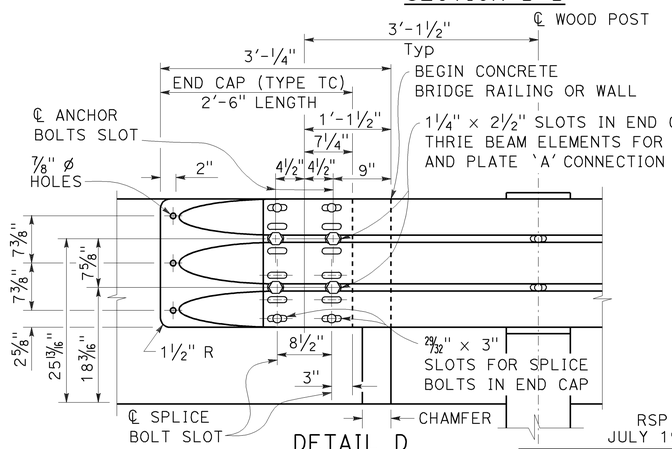

DETAIL D

NOTES: TO ACCOMPANY PLANS DATED 1-5-15

1. Use 5/8" Ø Button head bolts and hex nuts for connections to posts. No washer on rail face for bolted connections to post.
2. The nested rail elements, end cap, and 'W' beam to thrie beam element may be spliced together prior to bolting the elements to the wood post and concrete barrier or railing.
3. Exterior splice bolt holes for rail element splices at Post No. T5 and the connection to the concrete barrier or railing shall be the standard 29/32" x 1 1/8" slot size. Interior splice bolt holes at these locations may be increased up to 1 1/4" Ø. Only the top 4 and the bottom 4 splice bolts with washers and nuts are required for rail splices at Post No. T5 and the connection to the concrete barrier or railing.
4. The top elevation of Posts No. T2 through No. T7 shall not project more than 1" above the top elevation of the rail element.
5. Typically, the railing connected to Transition Railing (Type WB-31) will be either standard railing section of MGS with height transition ratio of 150:1 or a Caltrans approved 31" end treatment attached to Post No. T1.
6. The depth of the metal box spacer varies from the 9 1/8" to 1 1/2" and is dependent on the width of the concrete railing or wall. The combined dimension for the depth of the metal box spacer plus the width of railing or wall is typically 21 1/8". Where the space between the backside of the concrete railing or wall and the rear thrie beam element is less than 1 1/2", metal plates similar to Plate 'A' are to be used as spacers.
7. Where the width of the concrete railing or wall is greater than 17 1/8", wood blocks are to be used to fill the space created between the backside of Posts No. T5 through No. T8 and the rear thrie beam element. These wood blocks shall be 8" in width and 1'-2" in length. The dimension between the front thrie beam element and the rear thrie beam element is to match the width of the concrete railing or wall.
8. End cap may be installed over 12 gauge and 10 gauge thrie beam elements where transition railing is installed on the departure end of bridge railing.
9. Conform standard railing section height to 31" at Post No. T1 using height transition ratio of 150:1.

STATE OF CALIFORNIA
DEPARTMENT OF TRANSPORTATION

MIDWEST GUARDRAIL SYSTEM TRANSITION RAILING (TYPE WB-31)

NO SCALE

RSP A77U4 DATED NOVEMBER 15, 2013 SUPERSEDES RSP A77U4 DATED JULY 19, 2013 THAT SUPPLEMENTS THE STANDARD PLANS BOOK DATED 2010.

REVISED STANDARD PLAN RSP A77U4

2010 REVISED STANDARD PLAN RSP A77U4

10-4-13

Dist	COUNTY	ROUTE	POST MILES TOTAL PROJECT	SHEET No.	TOTAL SHEETS
03	Pla	80	31.8	49	68

REGISTERED CIVIL ENGINEER

July 19, 2013
PLANS APPROVAL DATE

REGISTERED PROFESSIONAL ENGINEER
Michael Janzen
No. 44788
Exp. 03-31-14
CIVIL
STATE OF CALIFORNIA

THE STATE OF CALIFORNIA OR ITS OFFICERS OR AGENTS SHALL NOT BE RESPONSIBLE FOR THE ACCURACY OR COMPLETENESS OF SCANNED COPIES OF THIS PLAN SHEET.

TO ACCOMPANY PLANS DATED 1-5-15

2010 REVISED STANDARD PLAN RSP A87B

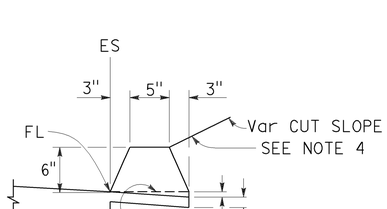

TYPE A
See Note 3

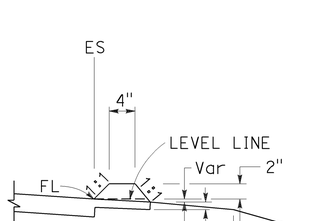

TYPE C

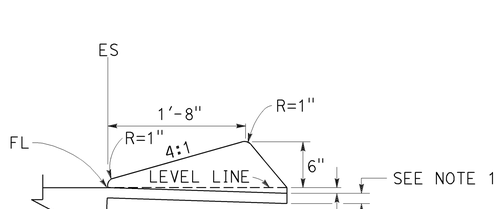

TYPE D

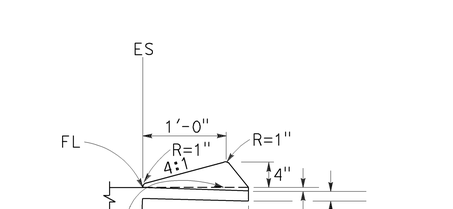

TYPE E

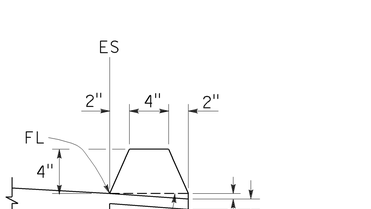

TYPE F
See Note 5

DIKES

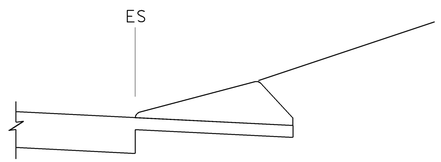

CASE C-1
Cut Slope

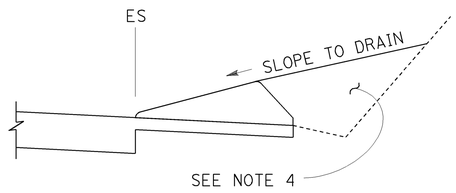

CASE C-2
Cut Slope

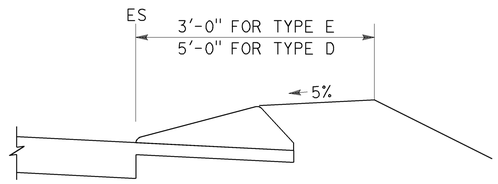

CASE F

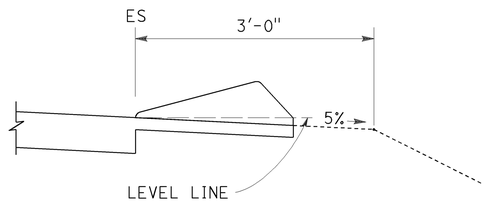

CASE R
See Note 2

TYPE D AND E BACKFILL DETAILS

NOTES:

1. For HMA shoulders only, extend top layer of HMA placed on the shoulder under dike with no joint at the ES. For projects with OGFC shoulders, do not extend OGFC under dike. See project plans for modified dike detail.
2. Case R applies to retrofit only projects where restrictive conditions do not provide enough width for Case F backfill.
3. Type A dike only to be used where restrictive slope conditions do not provide enough width to use Type D or Type E dike.
4. Fill and compact with excavated material to top of dike.
5. Use Type F dike, where dike is required with guard railing installations. See Revised Standard Plan RSP A77N4 for dike positioning details.

DIKE QUANTITIES

TYPE	CUBIC YARDS PER LINEAR FOOT
A	0.0135
C	0.0038
D	0.0293
E	0.0130
F	0.0066

Quantities based on 5% cross slope.

STATE OF CALIFORNIA
DEPARTMENT OF TRANSPORTATION

HOT MIX ASPHALT DIKES

NO SCALE

RSP A87B DATED JULY 19, 2013 SUPERSEDES STANDARD PLAN A87B
DATED MAY 20, 2011 - PAGE 120 OF THE STANDARD PLANS BOOK DATED 2010.

REVISED STANDARD PLAN RSP A87B

6-27-13

Dist	COUNTY	ROUTE	POST MILES TOTAL PROJECT	SHEET No.	TOTAL SHEETS
03	Pla	80	31.8	50	68

REGISTERED CIVIL ENGINEER

July 19, 2013
PLANS APPROVAL DATE

REGISTERED PROFESSIONAL ENGINEER
Gurinderpal Bhullar
No. C48815
Exp. 9-30-14
CIVIL
STATE OF CALIFORNIA

THE STATE OF CALIFORNIA OR ITS OFFICERS OR AGENTS SHALL NOT BE RESPONSIBLE FOR THE ACCURACY OR COMPLETENESS OF SCANNED COPIES OF THIS PLAN SHEET.

TO ACCOMPANY PLANS DATED 1-5-15

TABLE 1

TAPER LENGTH CRITERIA AND CHANNELIZING DEVICE SPACING

SPEED (S)	MINIMUM TAPER LENGTH * FOR WIDTH OF OFFSET 12 FEET (W)				MAXIMUM CHANNELIZING DEVICE SPACING		
					X	Y	Z **
	TANGENT 2L	MERGING L	SHIFTING L/2	SHOULDER L/3	TAPER	TANGENT	CONFLICT
mph	ft	ft	ft	ft	ft	ft	ft
20	160	80	40	27	20	40	10
25	250	125	63	42	25	50	12
30	360	180	90	60	30	60	15
35	490	245	123	82	35	70	17
40	640	320	160	107	40	80	20
45	1080	540	270	180	45	90	22
50	1200	600	300	200	50	100	25
55	1320	660	330	220	55	110	27
60	1440	720	360	240	60	120	30
65	1560	780	390	260	65	130	32
70	1680	840	420	280	70	140	35

* - For other offsets, use the following merging taper length formula for L:
For speed of 40 mph or less, $L = WS^2/60$
For speed of 45 mph or more, $L = WS$

Where: L = Taper length in feet
W = Width of offset in feet
S = Posted speed limit, off-peak 85th-percentile speed prior to work starting, or the anticipated operating speed in mph

** - Use for taper and tangent sections where there are no pavement markings or where there is a conflict between existing pavement markings and channelizers (CA).

TABLE 2

LONGITUDINAL BUFFER SPACE AND FLAGGER STATION SPACING

SPEED *	Min D **	DOWNGRADE Min D ***		
		-3%	-6%	-9%
mph	ft	ft	ft	ft
20	115	116	120	126
25	155	158	165	173
30	200	205	215	227
35	250	257	271	287
40	305	315	333	354
45	360	378	400	427
50	425	446	474	507
55	495	520	553	593
60	570	598	638	686
65	645	682	728	785
70	730	771	825	891

* - Speed is posted speed limit, off-peak 85th-percentile speed prior to work starting, or the anticipated operating speed in mph

** - Longitudinal buffer space or flagger station spacing

*** - Use on sustained downgrade steeper than -3 percent and longer than 1 mile.

TABLE 3

ADVANCE WARNING SIGN SPACING

ROAD TYPE	DISTANCE BETWEEN SIGNS *		
	A	B	C
	ft	ft	ft
URBAN - 25 mph OR LESS	100	100	100
URBAN - MORE THAN 25 mph TO 40 mph	250	250	250
URBAN - MORE THAN 40 mph	350	350	350
RURAL	500	500	500
EXPRESSWAY / FREEWAY	1000	1500	2640

* - The distances are approximate, are intended for guidance purposes only, and should be applied with engineering judgment. These distances should be adjusted by the Engineer for field conditions, if necessary, by increasing or decreasing the recommmended distances.

2010 REVISED STANDARD PLAN RSP T9

STATE OF CALIFORNIA
DEPARTMENT OF TRANSPORTATION

TRAFFIC CONTROL SYSTEM TABLES FOR LANE AND RAMP CLOSURES

NO SCALE

RSP T9 DATED JULY 19, 2013 SUPERSEDES RSP T9 DATED APRIL 19, 2013 THAT SUPPLEMENTS THE STANDARD PLANS BOOK DATED 2010.

REVISED STANDARD PLAN RSP T9

4-30-13

Dist	COUNTY	ROUTE	POST MILES TOTAL PROJECT	SHEET No.	TOTAL SHEETS
03	Pla	80	31.8	51	68

REGISTERED CIVIL ENGINEER

April 19, 2013
PLANS APPROVAL DATE

REGISTERED PROFESSIONAL ENGINEER
Gurinderpal Bhullar
No. C48815
Exp. 9-30-14
CIVIL
STATE OF CALIFORNIA

THE STATE OF CALIFORNIA OR ITS OFFICERS OR AGENTS SHALL NOT BE RESPONSIBLE FOR THE ACCURACY OR COMPLETENESS OF SCANNED COPIES OF THIS PLAN SHEET.

TO ACCOMPANY PLANS DATED 1-5-15

NOTES:

See Revised Standard Plan RSP T9 for tables.

Use cone spacing X for taper segment, Y for tangent segment or Z for conflict situations, as approriate, per Table 1, unless X, Y, or Z cone spacing is shown on this sheet.

Unless otherwise specified in the special provisions, all temporary warning signs shall have black legend on fluorescent orange background.

California codes are designated by (CA). Otherwise, Federal (MUTCD) codes are shown.

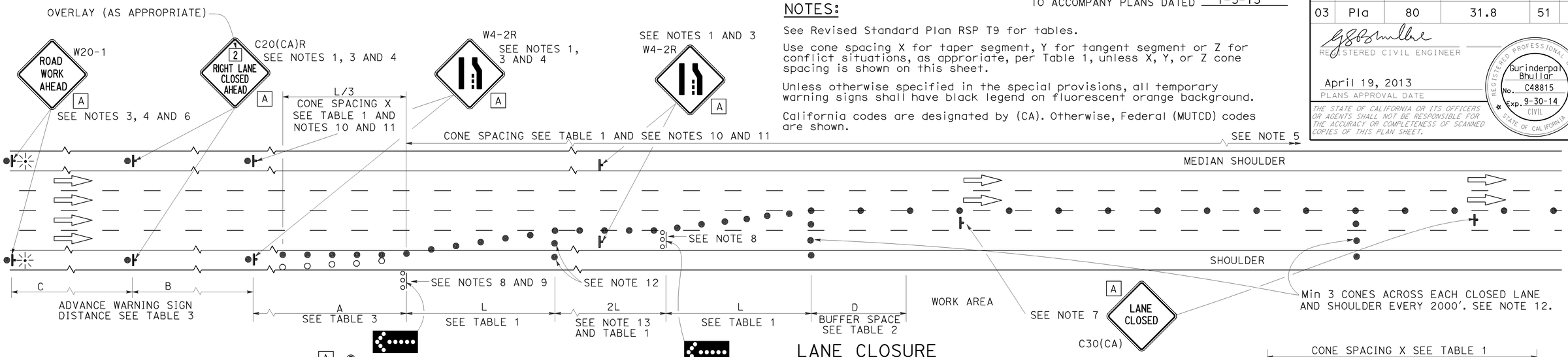

LANE CLOSURE

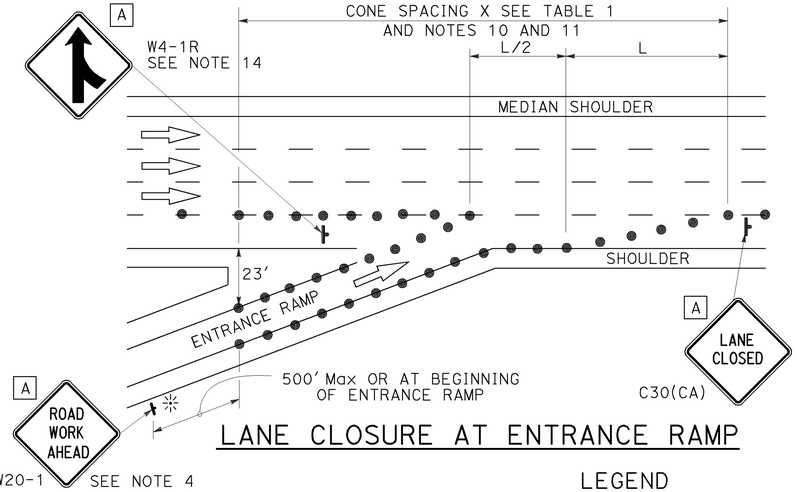

LANE CLOSURE AT ENTRANCE RAMP

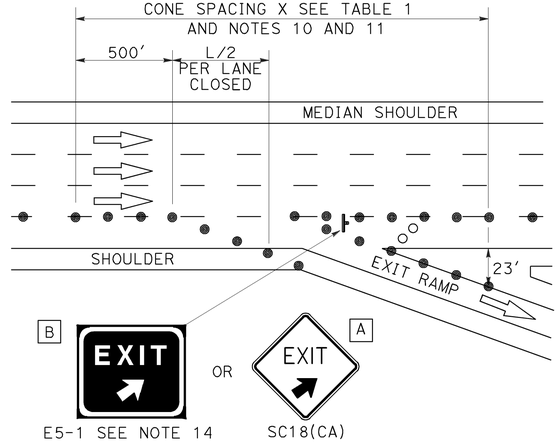

LANE CLOSURE AT EXIT RAMP

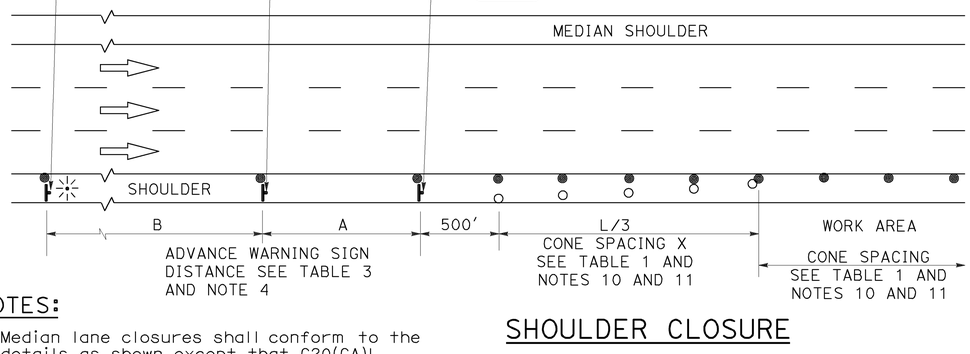

SHOULDER CLOSURE

NOTES:

1. Median lane closures shall conform to the details as shown except that C20(CA)L and W4-2L signs shall be used.
2. At least one person shall be assigned to provide full time maintenance of traffic control devices for lane closures.
3. Duplicate sign installations are not required:
   a) On opposite shoulder if at least one-half of the available lanes remain open to traffic.
   b) In the median if the width of the median shoulder is less than 8' and the outside lanes are to be closed.
4. Each advance warning sign on each side of the roadway shall be equipped with at least two flags for daytime closure. Each flag shall be at least 16" x 16" in size and shall be orange or fluorescent red-orange in color. Flashing beacons shall be placed at the locations indicated for lane closure during hours of darkness.
5. A G20-2 "END ROAD WORK" sign, with minimum size of 48" x 24" as appropriate, shall be placed at the end of the lane closure unless the end of work area is obvious or ends within a larger project's limits.
6. If the W20-1 sign would follow within 2000' of a stationary W20-1 or G20-1 "ROAD WORK NEXT _____ MILES", use a C20(CA) sign for the first advance warning sign.
7. Place a C30(CA) sign every 2000' throughout length of lane closure.
8. One flashing arrow sign for each lane closed. The flashing arrow signs shall be Type I.
9. A minimum 1500' of sight distance shall be provided where possible for vehicles approaching the first flashing arrow sign. Lane closures shall not begin at top of crest vertical curve or on a horizontal curve.
10. All cones used for lane closures during the hours of darkness shall be fitted with retroreflective bands (or sleeves) as specified in the specifications.
11. Portable delineators, placed at one-half the spacing indicated for traffic cones may be used instead of cones for daytime closures only.
12. Unless otherwise specified in the special provisions, a minimum of 3 cones shall be placed transversely across each closed lane and shoulder at each location where a taper across a traffic lane ends and every 2000' as shown on the "Lane Closure" detail. Two Type II barricades may be used instead of the 3 cones. The transverse alignment of the cones or barricades on the closed shoulder may be shifted from the transverse alignment to provide access to the work.
13. Unless otherwise specified in the special provisions, the 2L tangent shown along lane lines shall be used between the L tapers required for each closed traffic lane.
14. Unless otherwise specified in the special provisions, the E5-1 or SC18(CA) and W4-1 signs shall be used as shown.
15. A W7-3aP "NEXT____MILES" plaque must be used if theshoulder closure extends beyond the distance that can be perceived by road users.

LEGEND

- TRAFFIC CONE
- TRAFFIC CONE (OPTIONAL TAPER)
- TEMPORARY TRAFFIC CONTROL SIGN
- FLASHING ARROW SIGN (FAS)
- FAS SUPPORT OR TRAILER
- PORTABLE FLASHING BEACON

SIGN PANEL SIZE (Min)

A	48" x 48"
B	72" x 60"
C	36" x 30"

STATE OF CALIFORNIA
DEPARTMENT OF TRANSPORTATION

TRAFFIC CONTROL SYSTEM FOR LANE CLOSURE ON FREEWAYS AND EXPRESSWAYS

NO SCALE

RSP T10 DATED APRIL 19, 2013 SUPERSEDES STANDARD PLAN T10 DATED MAY 20, 2011 - PAGE 237 OF THE STANDARD PLANS BOOK DATED 2010.

REVISED STANDARD PLAN RSP T10

2010 REVISED STANDARD PLAN RSP T10

12-18-12

Dist	COUNTY	ROUTE	POST MILES TOTAL PROJECT	SHEET No.	TOTAL SHEETS
03	Pla	80	31.8	52	68

Devinder Singh
REGISTERED CIVIL ENGINEER

October 17, 2014
PLANS APPROVAL DATE

REGISTERED PROFESSIONAL ENGINEER — Devinder Singh — No. C50470 — Exp. 6-30-15 — CIVIL — STATE OF CALIFORNIA

THE STATE OF CALIFORNIA OR ITS OFFICERS OR AGENTS SHALL NOT BE RESPONSIBLE FOR THE ACCURACY OR COMPLETENESS OF SCANNED COPIES OF THIS PLAN SHEET.

TO ACCOMPANY PLANS DATED 1-5-15

NOTES:

See Revised Standard Plan RSP T9 for tables.

Use cone spacing X for taper segment, Y for tangent segment or Z for conflict situations, as approriate, per Table 1, unless X, Y, or Z cone spacing is shown on this sheet.

Unless otherwise specified in the special provisions, all temporary warning signs shall have black legend on fluorescent orange background.

California codes are designated by (CA). Otherwise, Federal (MUTCD) codes are shown.

TYPICAL LANE CLOSURE WITH REVERSIBLE CONTROL

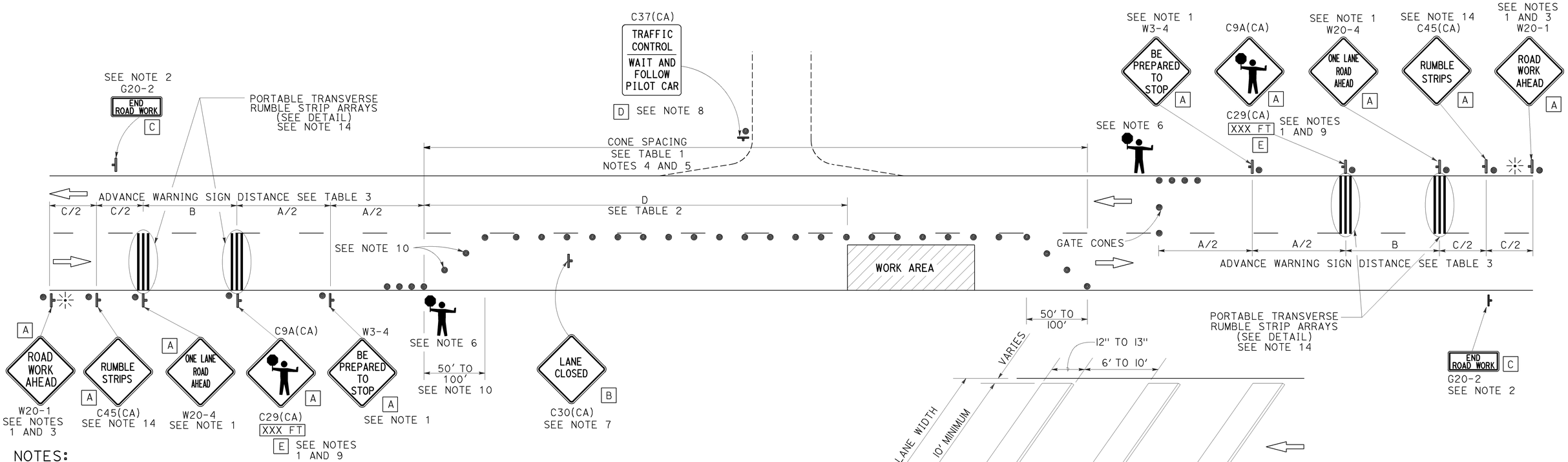

NOTES:

1. Each advance warning sign in each direction of travel shall be equipped with at least two flags for daytime closure. Each flag shall be at least 16" x 16" in size and shall be orange or fluorescent red-orange in color. Flashing beacons shall be placed at the locations indicated for lane closure during hours of darkness.
2. A G20-2 "END ROAD WORK" sign, as appropriate, shall be placed at the end of the lane control unless the end of work area is obvious, or ends within a larger project's limits.
3. If the W20-1 sign would follow within 2000' of a stationary W20-1 or G20-1 "ROAD WORK NEXT _____ MILES", use a W20-4 sign for the first advance warning sign.
4. All cones used for lane closures during the hours of darkness shall be fitted with retroreflective bands (or sleeves) as specified in the specifications.
5. Portable delineators, placed at one-half the spacing indicated for traffic cones, may be used instead of cones for daytime closures only.
6. Additional advance flaggers may be required. Flagger should stand in a conspicuous place, be visible to approaching traffic as well as approaching vehicles after the first vehicle has stopped. During the hours of darkness, the flagging-station and flagger shall be illuminated and clearly visible to approaching traffic. The illumination footprint of the lighting on the ground shall be at least 20' in diameter. Place a minimum of four cones at 50' intervals in advance of flagger station as shown.
7. Place C30(CA) "LANE CLOSED" sign at 500' to 1000' intervals throughout extended work areas. They are optional if the work area is visible from the flagger station.
8. When a pilot car is used, place a C37(CA) "TRAFFIC CONTROL-WAIT AND FOLLOW PILOT CAR" sign with black legend on white background at all intersections, driveways and alleys without a flagger within traffic control area. Signs shall be clean and visible at all times. Where traffic can not be effectively self-regulated, at least one flagger shall be used at each intersection within traffic control area.
9. An optional C29(CA) sign may be placed below the C9A(CA) sign.
10. Either traffic cones or barricades shall be placed on the taper. Barricades shall be Type I, II, or III.
11. The color of the portable transverse rumble strips shall be black or orange. Use 2 arrays, each array shall consist of 3 rumble strips.
12. Portable transverse rumble strips shall not be placed on sharp horizontal or vertical curves nor shall they be placed through pedestrian crossings.
13. If the portable transverse rumble strips become out of alignment (skewed) by more than 6 inches, measured from one end to the other, they shall be readjusted to bring the placement back to the original location.
14. Portable transverse rumble strips are not required if any one of the following conditions is satisfied:
    A. Work duration occupies a location for four hours or less
    B. Posted speed limit is below 45 MPH
    C. Work is of emergency nature
    D. Work zone is in snow or icy weather conditions

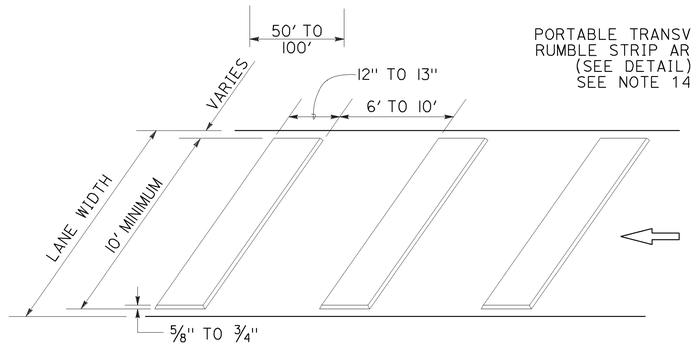

PORTABLE TRANSVERSE RUMBLE STRIP ARRAY DETAIL

LEGEND

- TRAFFIC CONE
- TEMPORARY TRAFFIC CONTROL SIGN
- PORTABLE FLASHING BEACON
- FLAGGER

SIGN PANEL SIZE (Min)

A	48" x 48"
B	30" x 30"
C	36" x 18"
D	36" x 42"
E	20" x 7"

STATE OF CALIFORNIA
DEPARTMENT OF TRANSPORTATION

TRAFFIC CONTROL SYSTEM FOR LANE CLOSURE ON TWO LANE CONVENTIONAL HIGHWAYS

NO SCALE

RSP T13 DATED OCTOBER 17, 2014 SUPERSEDES RSP T13 DATED JULY 18, 2014 AND RSP T13 DATED APRIL 19, 2013 AND STANDARD PLAN T13 DATED MAY 20, 2011 - PAGE 241 OF THE STANDARD PLANS BOOK DATED 2010.

REVISED STANDARD PLAN RSP T13

2010 REVISED STANDARD PLAN RSP T13

9-26-14

TYPICAL RAMP CLOSURES

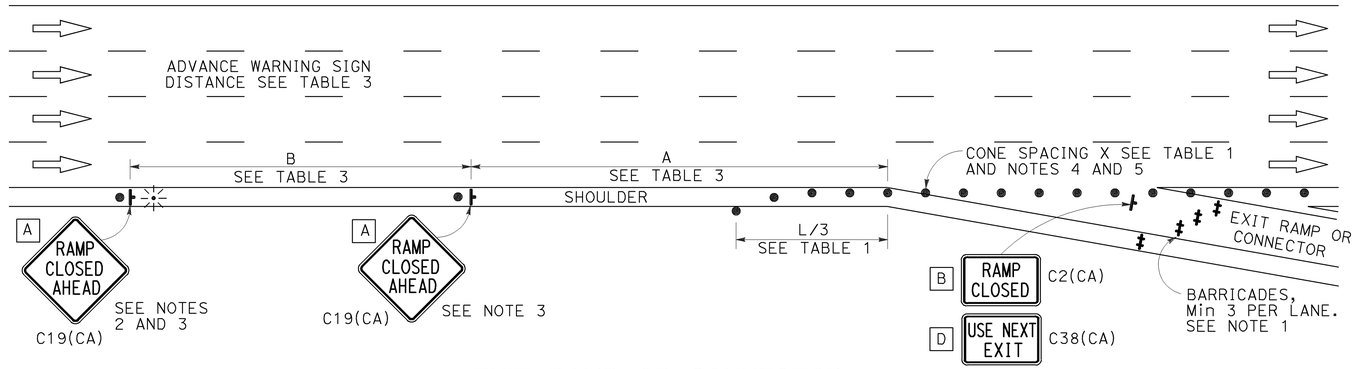

EXIT RAMP OR CONNECTOR

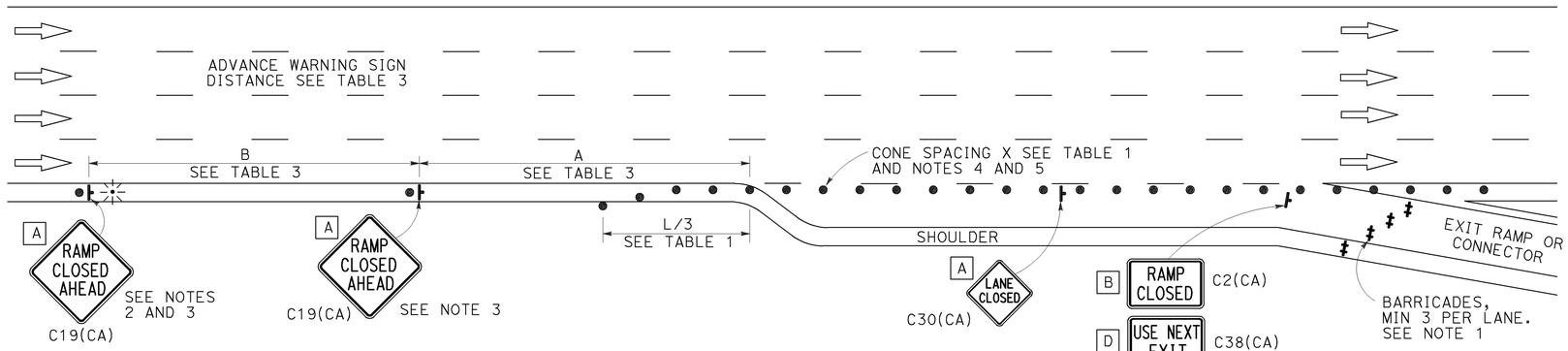

EXIT RAMP OR CONNECTOR WITH ADDITIONAL LANE

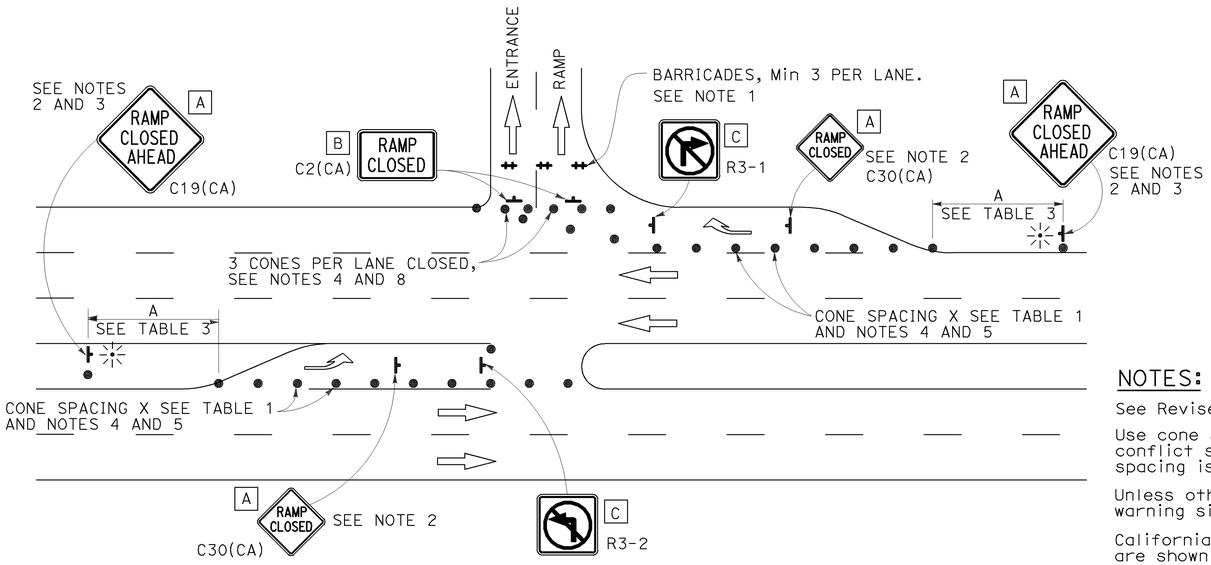

ENTRANCE RAMP WITH TURNING POCKETS

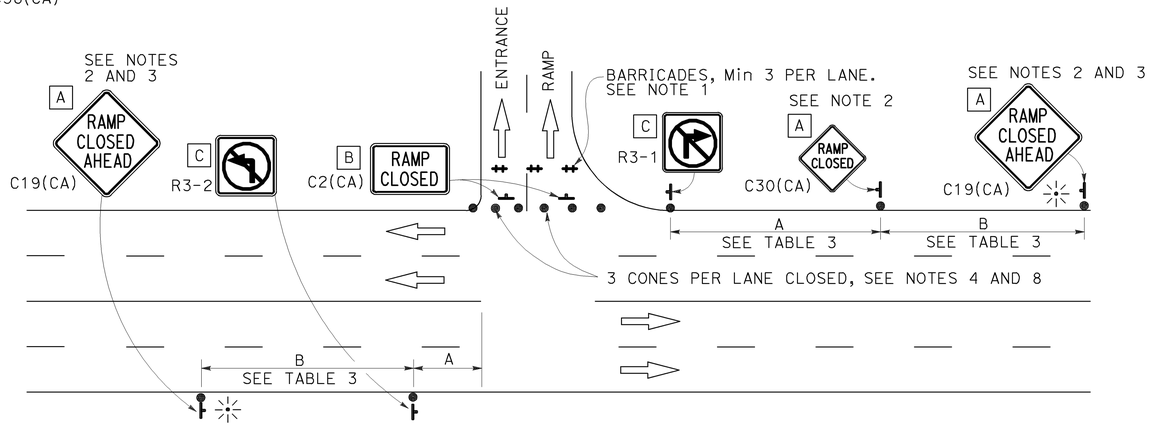

ENTRANCE RAMP WITHOUT TURNING POCKETS

SIGN PANEL SIZE (Min)

- A 48" × 48"
- B 48" × 30"
- C 36" × 36"
- D 48" × 36"

LEGEND

- ● TRAFFIC CONE
- ⊢ TEMPORARY TRAFFIC CONTROL SIGN
- ‡ BARRICADES
- ⁘ PORTABLE FLASHING BEACON

Dist	COUNTY	ROUTE	POST MILES TOTAL PROJECT	SHEET No.	TOTAL SHEETS
03	Pla	80	31.8	53	68

REGISTERED CIVIL ENGINEER

April 19, 2013
PLANS APPROVAL DATE

REGISTERED PROFESSIONAL ENGINEER
Gurinderpal Bhullar
No. C48815
Exp. 9-30-14
CIVIL
STATE OF CALIFORNIA

THE STATE OF CALIFORNIA OR ITS OFFICERS OR AGENTS SHALL NOT BE RESPONSIBLE FOR THE ACCURACY OR COMPLETENESS OF SCANNED COPIES OF THIS PLAN SHEET.

TO ACCOMPANY PLANS DATED 1-5-15

NOTES:

1. Barricades shall be Type I, II, or III for closures lasting one week or less and Type III for closures lasting longer than one week.
2. In addition to placing the C19(CA) "RAMP CLOSED AHEAD" and C30(CA) "RAMP CLOSED" signs, black on orange overlay plates with the word "CLOSED" may be mounted, as directed by the Engineer, on all guide signs that refer to the closed ramp. The letter size on the overlay shall be the same as the guide sign.
3. Each advance C19(CA) "RAMP CLOSED AHEAD" sign shall be equipped with at least two flags for daytime closure. Each flag shall be at least 16" × 16" in size and shall be orange or fluorescent red-orange in color. A flashing beacon shall be placed on top of the first C19(CA) sign during hours of darkness.
4. All cones used for ramp closures during the hours of darkness shall be fitted with retroreflective bands (or sleeves) as specified in the specifications.
5. Portable delineators, placed at one-half the spacing indicated for traffic cones, may be used instead of cones for daytime ramp closures only.
6. At least one person shall be assigned to provide full time maintenance of traffic control devices, unless otherwise directed by the Engineer.
7. The existing "EXIT" signs shall be covered during ramp closures.
8. A minimum of 3 cones shall be placed transversely across each closed lane and shoulder.

NOTES:

See Revised Standard Plan RSP T9 for tables.

Use cone spacing X for taper segment, Y for tangent segment or Z for conflict situations, as approriate, per Table 1, unless X, Y, or Z cone spacing is shown on this sheet.

Unless otherwise specified in the special provisions, all temporary warning signs shall have black legend on fluorescent orange background.

California codes are designated by (CA). Otherwise, Federal (MUTCD) codes are shown.

STATE OF CALIFORNIA
DEPARTMENT OF TRANSPORTATION

TRAFFIC CONTROL SYSTEM FOR RAMP CLOSURE

NO SCALE

RSP T14 DATED APRIL 19, 2013 SUPERSEDES STANDARD PLAN T14
DATED MAY 20, 2011 - PAGE 242 OF THE STANDARD PLANS BOOK DATED 2010.

REVISED STANDARD PLAN RSP T14

2010 REVISED STANDARD PLAN RSP T14

12-18-12

Dist	COUNTY	ROUTE	POST MILES TOTAL PROJECT	SHEET No.	TOTAL SHEETS
03	Pla	80	31.8	54	68

REGISTERED CIVIL ENGINEER

April 19, 2013
PLANS APPROVAL DATE

REGISTERED PROFESSIONAL ENGINEER
Gurinderpal Bhullar
No. C48815
Exp. 9-30-14
CIVIL
STATE OF CALIFORNIA

THE STATE OF CALIFORNIA OR ITS OFFICERS OR AGENTS SHALL NOT BE RESPONSIBLE FOR THE ACCURACY OR COMPLETENESS OF SCANNED COPIES OF THIS PLAN SHEET.

TO ACCOMPANY PLANS DATED 1-5-15

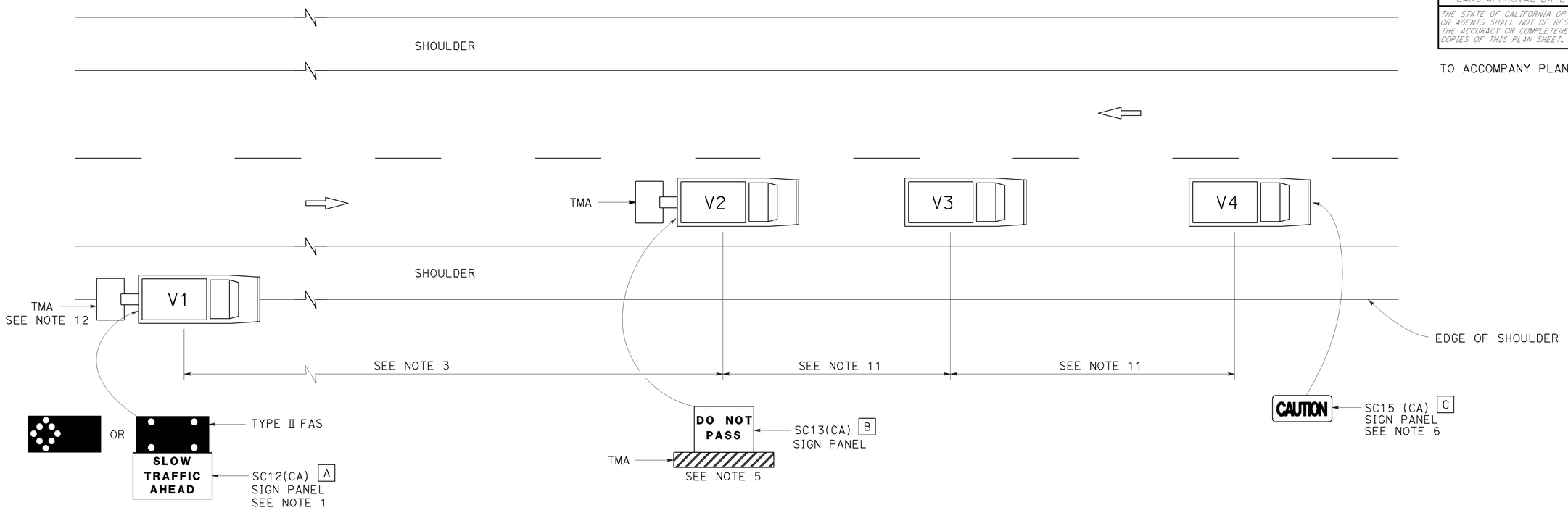

NOTES:

1. Either a changeable message sign or a SC12(CA) "SLOW TRAFFIC AHEAD" sign shall be mounted on the rear of sign vehicle V1. The changeable message sign shall be sequenced to show the "CAUTION" message first, follow by the "SLOW TRAFFIC AHEAD" message. A Type II flashing arrow sign may be used with the SC12(CA) sign panel.
2. Sign vehicle V1 should be positioned where highly visible when shoulders are not available.
3. If traffic queues develop, sign vehicle V1 should be positioned upstream from the end of queue.
4. Vehicle-mounted sign panels shall have Type III or above retroreflective sheeting, black on white, or black on fluorescent orange, with 6" minimum series D letters per Caltrans sign specifications.
5. Shadow vehicle shall be equipped with a truck-mounted attenuator. The sign panel shown shall be mounted on the rear of shadow vehicle V2. The message "LANE CLOSED" may be used in place of the "DO NOT PASS" message.
6. The sign panel shown shall be mounted on the front of sign vehicle V4, facing opposing traffic.
7. All vehicles shall be equipped with flashing or rotating amber lights.
8. Sign vehicle V4 will not be required when the work and vehicles V2 and V3 are 2' or more from the centerline of the highway during the work or application operations.
9. All vehicles used for lane closures shall be equipped with two-way radios and the vehicle operators shall maintain communication during the work or application operation.
10. This plan shall not be used where workers would be on foot in the work area. Use a stationary type lane closure (Revised Standard Plan T13) for this condition.
11. Minimize spacing between vehicles V2 and V3 and vehicles V3 and V4 to deter road users from driving in between them.
12. If sign vehicle V1 encroaches into the traffic lane due to insufficient shoulder width, sign vehicle V1 shall be equipped with a truck-mounted attenuator. Sign vehicle V1 shall stay as close to the edge of shoulder as practicable.

LEGEND

V1	SIGN VEHICLE
V2	SHADOW VEHICLE
V3	WORK/APPLICATION VEHICLE
V4	SIGN VEHICLE
TMA	TRUCK-MOUNTED ATTENUATOR
	FLASHING ARROW SIGN (FAS) IN FLASHING CAUTION MODE
	FLASHING ARROW SIGN (FAS) IN ALTERNATING DIAMOND CAUTION

SIGN PANEL SIZE (Min)

A	72" x 42"
B	54" x 42"
C	54" x 24"

STATE OF CALIFORNIA
DEPARTMENT OF TRANSPORTATION

TRAFFIC CONTROL SYSTEM FOR MOVING LANE CLOSURE ON TWO LANE HIGHWAYS

NO SCALE

RSP T17 DATED APRIL 19, 2013 SUPERSEDES STANDARD PLAN T17
DATED MAY 20, 2011 - PAGE 245 OF THE STANDARD PLANS BOOK DATED 2010.

REVISED STANDARD PLAN RSP T17

2010 REVISED STANDARD PLAN RSP T17

12-18-12

Dist	COUNTY	ROUTE	POST MILES TOTAL PROJECT	SHEET No.	TOTAL SHEETS
03	Pla	80	31.8	55	68

REGISTERED CIVIL ENGINEER

November 15, 2013
PLANS APPROVAL DATE

REGISTERED PROFESSIONAL ENGINEER — Tillat Satter — No. C42892 — Exp. 3-31-14 — CIVIL — STATE OF CALIFORNIA

THE STATE OF CALIFORNIA OR ITS OFFICERS OR AGENTS SHALL NOT BE RESPONSIBLE FOR THE ACCURACY OR COMPLETENESS OF SCANNED COPIES OF THIS PLAN SHEET.

TO ACCOMPANY PLANS DATED 1-5-15

2010 REVISED STANDARD PLAN RSP B11-55

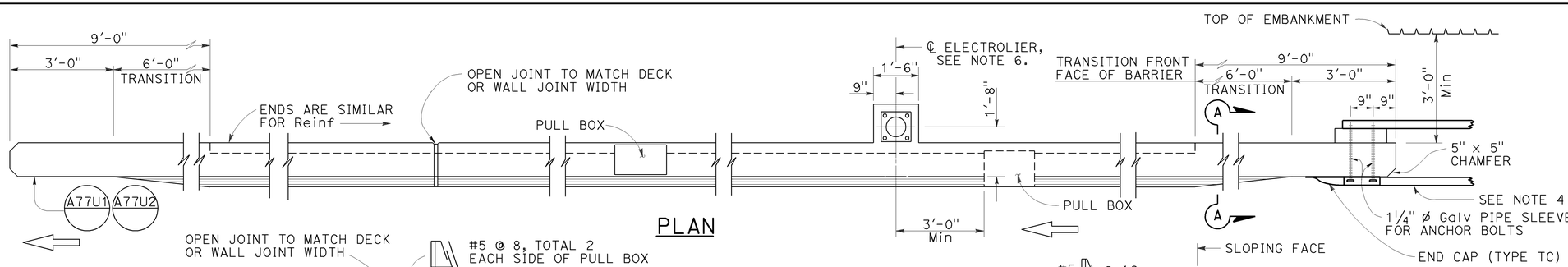

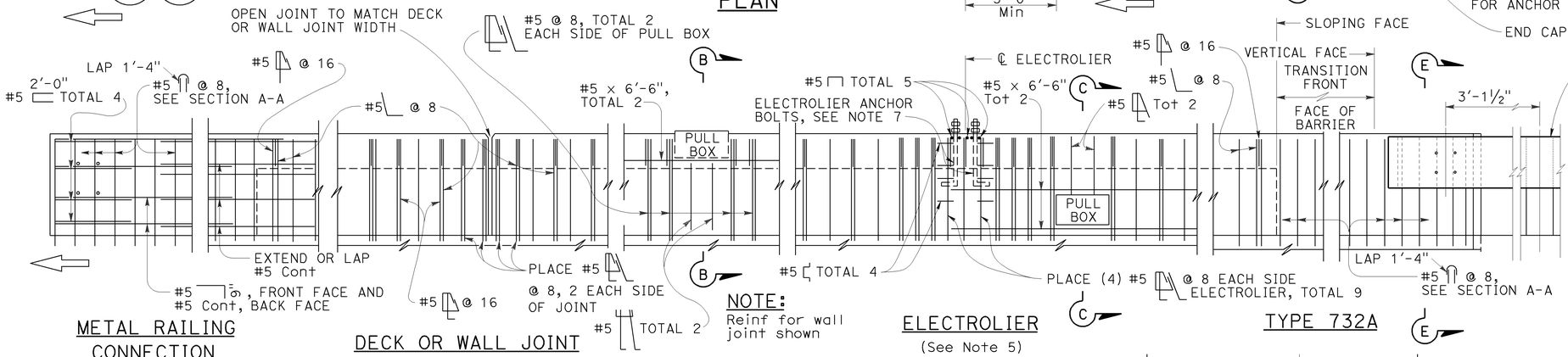

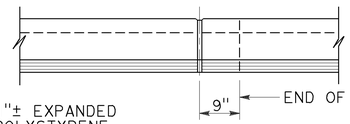

NOTES:

1. Walls are to be backfilled before barrier is placed.
2. Clearance to reinforcing steel in barrier to be 1", except as noted. Longitudinal reinforcement to stop at all expansion joints.
3. Dimensions may vary with roadway cross slope and with certain thickness of surfacing. See Project Plans.
4. For typical metal railing connection details not shown, see Revised Standard Plans RSP A77U1 and RSP A77U2.
5. See Standard Plans ES-9A, ES-9B, ES-9C, ES-9D and ES-9E for electrical details. The maximum number of conduits in the barrier is limited to two 2" conduits along with one 3" conduit. When a 3" conduit is used, it is restricted to the base of the barrier.
6. For electrolier mounting details, See Standard Plans ES-6A and ES-6B.
7. Minimum concrete edge distance, to the reinforcing shown, shall be maintained. Edge distance may be adjusted to accommodate increase in concrete cover for architectual treatment.

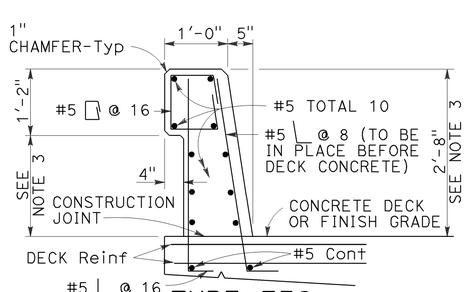

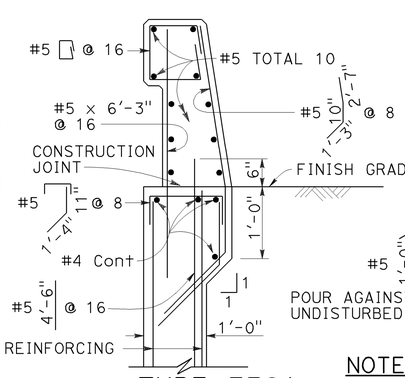

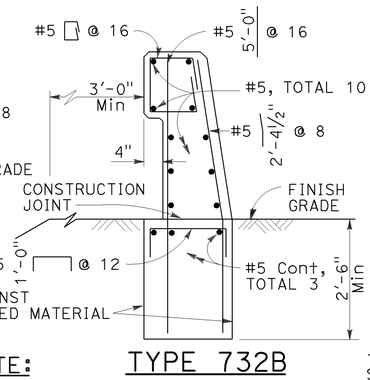

NOTE: Types 732A and 732B are similar to Type 732 except as noted.

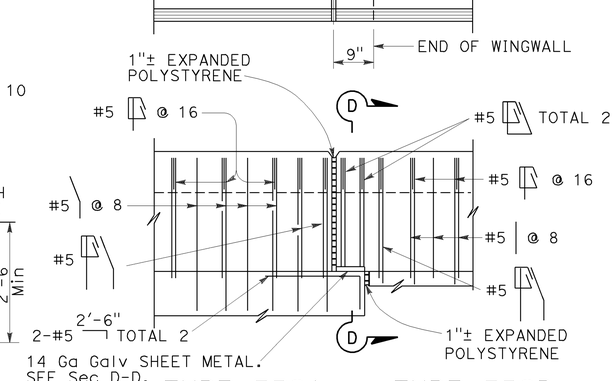

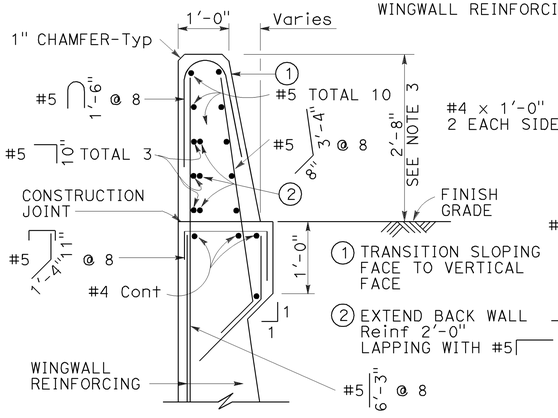

Details shown for barrier anchorage to Type 732A. Anchorage for barrier Types 732 and 732A are similar to their respective details.

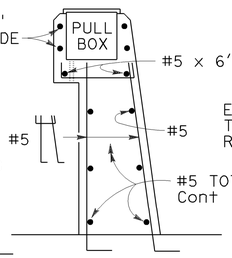

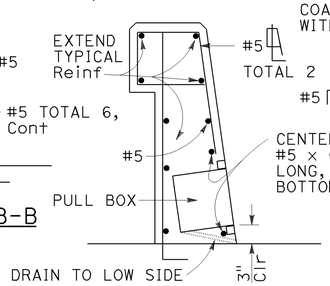

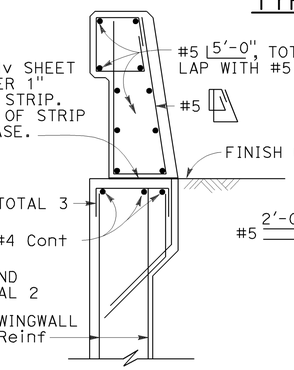

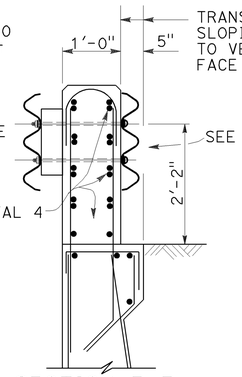

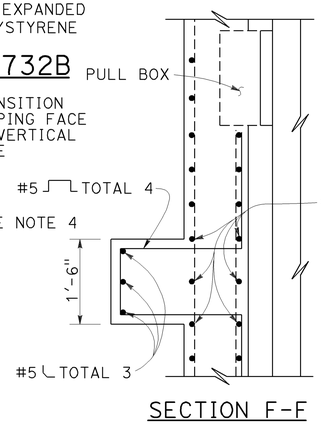

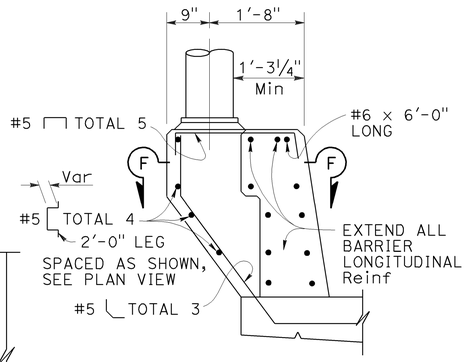

STATE OF CALIFORNIA
DEPARTMENT OF TRANSPORTATION

CONCRETE BARRIER TYPE 732

NO SCALE

RSP B11-55 DATED NOVEMBER 15, 2013 SUPERSEDES
RSP B11-55 DATED JULY 19, 2013 AND STANDARD PLAN B11-55
DATED MAY 20, 2011 - PAGE 297 OF THE STANDARD PLANS BOOK DATED 2010.

REVISED STANDARD PLAN RSP B11-55

10-4-13

LEGEND:

AB	ABANDON. IF APPLIED TO CONDUIT, REMOVE CONDUCTORS
BC	INSTALL PULL BOX IN EXISTING CONDUIT RUN
BP	PEDESTRIAN BARRICADE, TYPE AS INDICATED ON PLAN
CB	INSTALL CONDUIT INTO EXISTING PULL BOX
CC	CONNECT NEW AND EXISTING CONDUIT. REMOVE EXISTING CONDUCTORS AND INSTALL CONDUCTORS AS INDICATED
CF	CONDUIT TO REMAIN FOR FUTURE USE. REMOVE CONDUCTORS. INSTALL PULL TAPE
DH	DETECTOR HANDHOLE
FA	FOUNDATION TO BE ABANDONED
IS	INSTALL SIGN ON SIGNAL MAST ARM
NS	NO SLIP BASE ON STANDARD
PEC	PHOTOELECTRIC CONTROL
PEU	PHOTOELECTRIC UNIT
RC	EQUIPMENT OR MATERIAL TO BE REMOVED AND BECOME THE PROPERTY OF THE CONTRACTOR
RE	REMOVE ELECTROLIER, FUSES AND BALLAST. TAPE ENDS OF CONDUCTORS
RL	RELOCATE EQUIPMENT
RR	REMOVE AND REUSE EQUIPMENT
RS	REMOVE AND SALVAGE EQUIPMENT
SC	SPLICE NEW TO EXISTING CONDUCTORS
SD	SERVICE DISCONNECT
TSP	TELEPHONE SERVICE POINT

ABBREVIATIONS

APS	ACCESSIBLE PEDESTRIAN SIGNAL
BBS	BATTERY BACKUP SYSTEM
BC	BOLT CIRCLE
BPB	BICYCLE PUSH BUTTON
C	CONDUIT
CB	CIRCUIT BREAKER
CCTV	CLOSED CIRCUIT TELEVISION
Ckt	CIRCUIT
CMS	CHANGEABLE MESSAGE SIGN
Ctid	CALTRANS IDENTIFICATION
Comm	COMMUNICATION
DLC	LOOP DETECTOR LEAD-IN CABLE
EMS	EXTINGUISHABLE MESSAGE SIGN
EVUC	EMERGENCY VEHICLE UNIT CABLE
EVUD	EMERGENCY VEHICLE UNIT DETECTOR
FB	FLASHING BEACON
FBCA	FLASHING BEACON CONTROL ASSEMBLY
FBS	FLASHING BEACON WITH SLIP BASE
FO	FIBER OPTIC
G	EQUIPMENT GROUNDING CONDUCTOR
GB	GROUND BUS
GFCI	GROUND FAULT CIRCUIT INTERRUPTER
HAR	HIGHWAY ADVISORY RADIO
Hex	HEXAGONAL
HPS	HIGH PRESSURE SODIUM
IISNS	INTERNALLY ILLUMINATED STREET NAME SIGN
ISL	INDUCTION SIGN LIGHTING
LED	LIGHT EMITTING DIODE
LMA	LUMINAIRE MAST ARM
LPS	LOW PRESSURE SODIUM
Ltg	LIGHTING
Lum	LUMINAIRE
M	METERED
MAT	MAST ARM MOUNTING TOP ATTACHMENT
MAS	MAST ARM MOUNTING SIDE ATTACHMENT
M/M	MULTIPLE TO MULTIPLE TRANSFORMER
Mtg	MOUNTING
MV	MERCURY VAPOR LIGHTING FIXTURE
MVDS	MICROWAVE VEHICLE DETECTION SYSTEM
N	NEUTRAL (GROUNDED CONDUCTOR)
NB	NEUTRAL BUS
NC	NORMALLY CLOSE
NO	NORMALLY OPEN
P	CIRCUIT BREAKER'S POLE
PB	PULL BOX
PBA	PUSH BUTTON ASSEMBLY
PEC	PHOTOELECTRIC CONTROL
Ped	PEDESTRIAN
PEU	PHOTOELECTRIC UNIT
PT	CONDUIT WITH PULL TAPE
RE	RELOCATED EQUIPMENT
RM	RAMP METERING
RWIS	ROADSIDE WEATHER INFORMATION SYSTEM
SB	SLIP BASE
SIC	SIGNAL INTERCONNECT CABLE
Sig	SIGNAL
SMA	SIGNAL MAST ARM
SNS	STREET NAME SIGN
SP	SERVICE POINT
TDC	TELEPHONE DEMARCATION CABINET
TMS	TRAFFIC MONITORING STATION
TOS	TRAFFIC OPERATIONS SYSTEM
Veh	VEHICLE
VIVDS	VIDEO IMAGE VEHICLE DETECTION SYSTEM
WIM	WEIGH-IN-MOTION
Xfmr	TRANSFORMER

Dist	COUNTY	ROUTE	POST MILES TOTAL PROJECT	SHEET No.	TOTAL SHEETS
03	Pla	80	31.8	56	68

Theresa Gabriel
REGISTERED ELECTRICAL ENGINEER

Theresa Aziz Gabriel No. E15129 Exp. 6-30-14 ELECTRICAL — REGISTERED PROFESSIONAL ENGINEER — STATE OF CALIFORNIA

July 19, 2013
PLANS APPROVAL DATE

THE STATE OF CALIFORNIA OR ITS OFFICERS OR AGENTS SHALL NOT BE RESPONSIBLE FOR THE ACCURACY OR COMPLETENESS OF SCANNED COPIES OF THIS PLAN SHEET.

TO ACCOMPANY PLANS DATED 1-5-15

SOFFIT AND WALL MOUNTED LUMINAIRES

- PENDANT, 70 W HPS UNLESS OTHERWISE SPECIFIED
- FLUSH, 70 W HPS UNLESS OTHERWISE SPECIFIED
- WALL SURFACE, 70 W HPS UNLESS OTHERWISE SPECIFIED
- EXISTING SOFFIT OR WALL LUMINAIRE TO REMAIN UNMODIFIED
- (M) EXISTING SOFFIT OR WALL LUMINAIRE TO BE MODIFIED AS SPECIFIED

NOTE:
Arrow indicates "street side" of luminaire.

COMMONLY USED SYMBOLS FOR UNITED STATES CUSTOMARY UNITS OF MEASUREMENT:

SYMBOL USED	DEFINITIONS
Ω	OHMS
min	MINUTE
s	SECOND
bps	BITS PER SECOND
Bps	BYTES PER SECOND
A	AMPERE
V	VOLT
$V_{(dc)}$	VOLT (DIRECT CURRENT)
$V_{(ac)}$	VOLT (ALTERNATING CURRENT)
FC	FOOT - CANDLE
W	WATTS
VA	VOLT-AMPERE
M	MEGA
k	KILO
m	MILLI
μ	MICRO
P	PICO
Hz	HERTZ

MISCELLANEOUS ELECTROLIERS

NEW	EXISTING	
		LUMINAIRE ON WOOD POLE
		NON-STANDARD ELECTROLIER (SEE PROJECT NOTES OR PROJECT PLANS)
		CITY ELECTROLIER
		ELECTROLIER FOUNDATION (FUTURE INSTALLATION)

STANDARD ELECTROLIER

NEW	EXISTING	STANDARD TYPE
		15
		15D
		15 STRUCTURE
		15D STRUCTURE
		21
		21D
		21 STRUCTURE
		21D STRUCTURE
		30
		31
		32

NOTES:

1. HPS luminaires shall be 310 W HPS when installed on Type 21, 21D, 30, 31 and 32 Standards, unless otherwise specified. HPS luminaires shall be 200 W when installed on other type standards or poles, unless otherwise specified.
2. LED luminaires shall be 235 W when installed on Type 21, 21D, 30, 31 and 32 Standards, unless otherwise specified. LED luminaires shall be 165 W when installed on other type standards or poles, unless otherwise specified.
3. Luminaires shall be the cutoff type, ANSI Type III medium cutoff lighting distribution, unless otherwise specified.

STATE OF CALIFORNIA
DEPARTMENT OF TRANSPORTATION

ELECTRICAL SYSTEMS (LEGEND AND ABBREVIATIONS)

NO SCALE

RSP ES-1A DATED JULY 19, 2013 SUPERSEDES STANDARD PLAN ES-1A DATED MAY 20, 2011 - PAGE 425 OF THE STANDARD PLANS BOOK DATED 2010.

REVISED STANDARD PLAN RSP ES-1A

2010 REVISED STANDARD PLAN RSP ES-1A

7-15-13

CONDUIT

NEW	EXISTING	
		LIGHTING CONDUIT, UNLESS OTHERWISE INDICATED OR NOTED
		TRAFFIC SIGNAL CONDUIT
C	c	COMMUNICATION CONDUIT
T	t	TELEPHONE CONDUIT
F	f	FIRE ALARM CONDUIT
FO	fo	FIBER OPTIC CONDUIT
		CONDUIT TERMINATION
R	r	CONDUIT RISER ATTACHED TO THE STRUCTURE OR SERVICE POLE

SERVICE EQUIPMENT

NEW	EXISTING	
OH	oh	OVERHEAD LINES
U	U	WOOD POLE, "U" INDICATES UTILITY OWNED
		POLE GUY WITH ANCHOR
		UTILITY TRANSFORMER - GROUND MOUNTED
III	III	SERVICE EQUIPMENT ENCLOSURE TYPE. DOOR INDICATES FRONT OF ENCLOSURE
T	T	TELEPHONE DEMARCATION CABINET

POLE-MOUNTED SERVICE DESIGNATION

TYPE H SERVICE, 28'-10" — TYPE OF INSTALLATION AND POLE HEIGHT ABOVE GRADE

FLASHING BEACON

NEW	EXISTING	
R	R	FLASHING BEACON (ONE VEHICLE SIGNAL HEAD WITH BACKPLATE AND VISOR) "R" INDICATES RED INDICATION, "Y" INDICATES YELLOW INDICATION
Y Y	Y Y	FLASHING BEACON WITH TYPE 15-FBS STANDARD AND A SIGN.
R R	R R	FLASHING BEACON WITH TYPES 9, 9A OR 9B SIGN UNLESS OTHERWISE SPECIFIED OR INDICATED

SIGNAL EQUIPMENT

NEW	EXISTING	
C	C	PEDESTRIAN SIGNAL HEAD "C" INDICATES COUNTDOWN PEDESTRIAN HEAD
		PUSH BUTTON ASSEMBLY POST
		PEDESTRIAN BARRICADE
		VEHICLE SIGNAL HEAD (WITH BACKPLATE AND 3-SECTIONS: RED, YELLOW AND GREEN)
		VEHICLE SIGNAL HEAD WITH ANGLE VISOR
PV	PV	MODIFICATIONS OF BASIC SYMBOL: "L" INDICATES ALL NON-ARROW SECTIONS LOUVERED "LG" INDICATES LOUVERED GREEN SECTION ONLY "PV" INDICATES ALL 12" SECTIONS PROGRAMMED VISIBILITY "8" INDICATES ALL 8" SECTIONS (ONLY WHEN SPECIFIED)
		VEHICLE SIGNAL HEAD CONSISTING OF RED, YELLOW AND GREEN LEFT ARROW SECTIONS
		VEHICLE SIGNAL HEAD CONSISTING OF RED AND YELLOW SECTIONS WITH AN UP GREEN ARROW SECTION
		VEHICLE SIGNAL HEAD (5 SECTION) CONSISTING OF RED, YELLOW AND GREEN SECTIONS WITH YELLOW AND GREEN RIGHT ARROW SECTIONS
		TYPE 15TS STANDARD WITH VEHICLE SIGNAL HEAD AND LUMINAIRE
		TYPE 21TS STANDARD WITH VEHICLE SIGNAL HEAD AND LUMINAIRE
		STANDARD WITH LUMINAIRE AND SIGNAL MAST ARMS AND ATTACHED VEHICLE SIGNAL HEADS
		TYPE 1 STANDARD WITH ATTACHED VEHICLE SIGNAL HEADS
		STANDARD WITH A SIGNAL MAST ARM, ATTACHED VEHICLE SIGNAL HEADS AND INTERNALLY ILLUMINATED STREET NAME SIGN
		CONTROLLER ASSEMBLY. DOOR INDICATES FRONT OF CABINET

Dist	COUNTY	ROUTE	POST MILES TOTAL PROJECT	SHEET No.	TOTAL SHEETS
03	Pla	80	31.8	57	68

Theresa Gabriel
REGISTERED ELECTRICAL ENGINEER

Theresa Aziz Gabriel No. E15129 Exp. 6-30-14 ELECTRICAL — REGISTERED PROFESSIONAL ENGINEER — STATE OF CALIFORNIA

July 19, 2013
PLANS APPROVAL DATE

THE STATE OF CALIFORNIA OR ITS OFFICERS OR AGENTS SHALL NOT BE RESPONSIBLE FOR THE ACCURACY OR COMPLETENESS OF SCANNED COPIES OF THIS PLAN SHEET.

TO ACCOMPANY PLANS DATED 1-5-15

SIGNAL EQUIPMENT Cont

NEW	EXISTING	
		GUARD POST
		TYPE 1 STANDARD WITH RAMP METERING SIGN
		OPTICAL DETECTOR FOR THE EMERGENCY VEHICLE DETECTION SYSTEM

NOTES:

1. All signal sections shall be 12" unless shown otherwise.
2. Signal heads shall be provided with backplates unless shown otherwise.

ILLUMINATED OVERHEAD SIGN

NEW	EXISTING	
		SINGLE POST, SINGLE ILLUMINATED SIGN, BALANCED BUTTERFLY
		SINGLE POST, DOUBLE ILLUMINATED SIGN, BALANCED BUTTERFLY
		SINGLE POST, SINGLE ILLUMINATED SIGN, FULL CANTILEVER
		DOUBLE POST, SINGLE ILLUMINATED SIGN
		SINGLE ILLUMINATED SIGN MOUNTED ON STRUCTURE
		DOUBLE POST, SINGLE ILLUMINATED SIGN WITH ELECTROLIER

STATE OF CALIFORNIA
DEPARTMENT OF TRANSPORTATION

ELECTRICAL SYSTEMS (LEGEND AND ABBREVIATIONS)

NO SCALE

RSP ES-1B DATED JULY 19, 2013 SUPERSEDES STANDARD PLAN ES-1B DATED MAY 20, 2011 - PAGE 426 OF THE STANDARD PLANS BOOK DATED 2010.

REVISED STANDARD PLAN RSP ES-1B

2010 REVISED STANDARD PLAN RSP ES-1B

7-15-13

Dist	COUNTY	ROUTE	POST MILES TOTAL PROJECT	SHEET No.	TOTAL SHEETS
03	Pla	80	31.8	58	68

Theresa Gabriel
REGISTERED ELECTRICAL ENGINEER

July 19, 2013
PLANS APPROVAL DATE

REGISTERED PROFESSIONAL ENGINEER — Theresa Aziz Gabriel — No. E15129 — Exp. 6-30-14 — ELECTRICAL — STATE OF CALIFORNIA

THE STATE OF CALIFORNIA OR ITS OFFICERS OR AGENTS SHALL NOT BE RESPONSIBLE FOR THE ACCURACY OR COMPLETENESS OF SCANNED COPIES OF THIS PLAN SHEET.

TO ACCOMPANY PLANS DATED 1-5-15

EQUIPMENT IDENTIFICATION

ILLUMINATED SIGN IDENTIFICATION NUMBER:

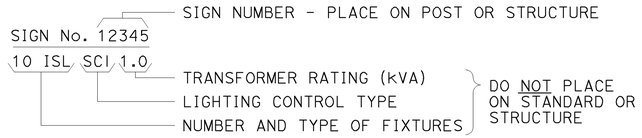

ELECTROLIER OR EQUIPMENT IDENTIFICATION NUMBER:

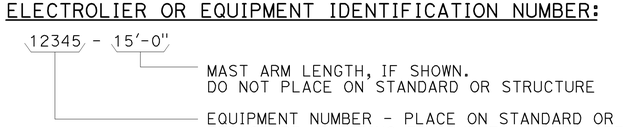

CONDUIT AND CONDUCTOR IDENTIFICATION:

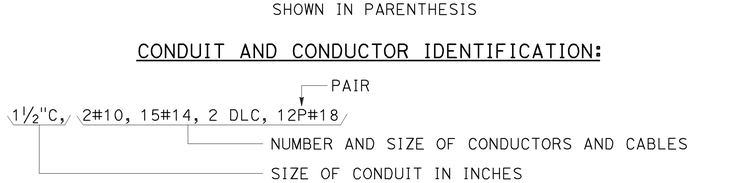

SIGNAL AND LIGHTING STANDARD (TYPICAL DESIGNATION):

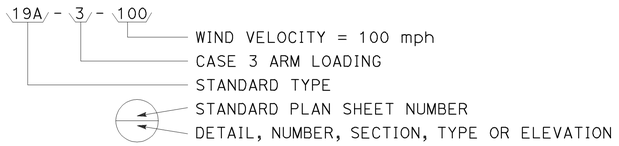

MISCELLANEOUS EQUIPMENT

NEW	EXISTING	
CMS	cms	CHANGEABLE MESSAGE SIGN
		CLOSED CIRCUIT TELEVISION CAMERA
		HIGHWAY ADVISORY RADIO POLE AND ANTENNA
EMS	ems	EXTINGUISHABLE MESSAGE SIGN
M V	m v	DETECTION DEVICE M = MICROWAVE SENSOR V = VIDEO IMAGE SENSOR

WIRING DIAGRAM LEGEND

	EXTERNAL CONDUCTOR
	CONDUCTOR OR BUS
	TIE POINT
	CONTACTOR COIL
	CONTACTOR, NO CONTACT
	TERMINAL BLOCKS
	CONTACTOR, NC CONTACT
	ENCLOSURE BOND
	GROUNDING ELECTRODE
	CIRCUIT BREAKER
	RECEPTACLE

PULL BOXES

NEW	EXISTING	
		PULL BOX, No. 5 UNLESS OTHERWISE INDICATED OR NOTED
3	9A(21)	PULL BOX, ADDITIONAL DESIGNATIONS OR DESCRIPTIONS

3 No. 3½ PULL BOX
5 No. 5 PULL BOX
6 No. 6 PULL BOX
7 No. 7 (CEILING PULL BOX)
8 No. 8 (PENDANT SOFFIT PULL BOX)
9 No. 9 PULL BOX
9A No. 9A PULL BOX

(C) COMMUNICATIONS PULL BOX
(E) PULL BOX WITH EXTENSION
(S) SPRINKLER CONTROL PULL BOX
(21) ANCHOR BOLTS AND CONDUIT FOR FUTURE INSTALLATION OF TYPE 21 STANDARD
(T) TRAFFIC PULL BOX

VEHICLE DETECTORS

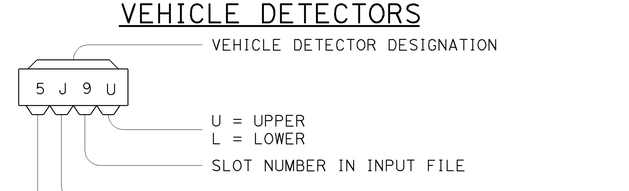

NEW	EXISTING	
		TYPE A DETECTOR LOOP. OUTLINE OF SAWCUT SHOWN
		TYPE B DETECTOR LOOP. OUTLINE OF SAWCUT SHOWN
		TYPE C DETECTOR LOOP. OUTLINE OF SAWCUT SHOWN
		TYPE D DETECTOR LOOP. OUTLINE OF SAWCUT SHOWN
		TYPE E DETECTOR LOOP. OUTLINE OF SAWCUT SHOWN
		TYPE Q DETECTOR LOOP. OUTLINE OF SAWCUT SHOWN
		MAGNETIC DETECTOR
DH	dh	DETECTOR HANDHOLE
		MICROWAVE OR VIDEO DETECTION ZONE

STATE OF CALIFORNIA
DEPARTMENT OF TRANSPORTATION

ELECTRICAL SYSTEMS (LEGEND AND ABBREVIATIONS)

NO SCALE

RSP ES-1C DATED JULY 19, 2013 SUPERSEDES STANDARD PLAN ES-1C DATED MAY 20, 2011 - PAGE 427 OF THE STANDARD PLANS BOOK DATED 2010.

REVISED STANDARD PLAN RSP ES-1C

2010 REVISED STANDARD PLAN RSP ES-1C

7-11-13

Dist	COUNTY	ROUTE	POST MILES TOTAL PROJECT	SHEET No.	TOTAL SHEETS
03	Pla	80	31.8	59	68

Theresa Gabriel
REGISTERED ELECTRICAL ENGINEER

July 19, 2013
PLANS APPROVAL DATE

Theresa Aziz Gabriel No. E15129 Exp. 6-30-14 ELECTRICAL — REGISTERED PROFESSIONAL ENGINEER — STATE OF CALIFORNIA

THE STATE OF CALIFORNIA OR ITS OFFICERS OR AGENTS SHALL NOT BE RESPONSIBLE FOR THE ACCURACY OR COMPLETENESS OF SCANNED COPIES OF THIS PLAN SHEET.

TO ACCOMPANY PLANS DATED 1-5-15

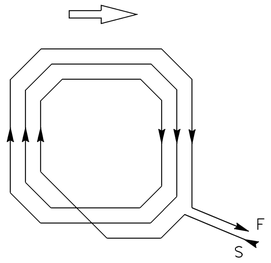

WINDING DETAIL

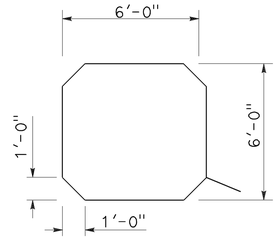

SAWCUT DETAIL

TYPE A LOOP DETECTOR CONFIGURATION

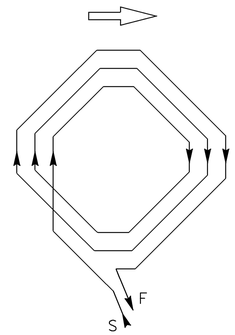

WINDING DETAIL

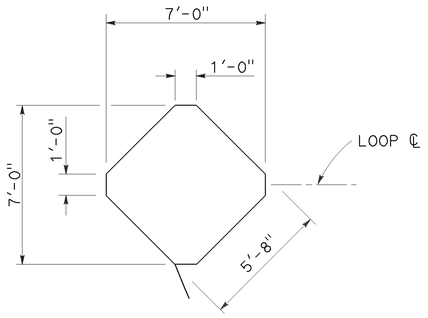

SAWCUT DETAIL

TYPE B LOOP DETECTOR CONFIGURATION

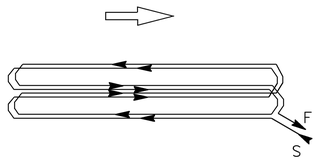

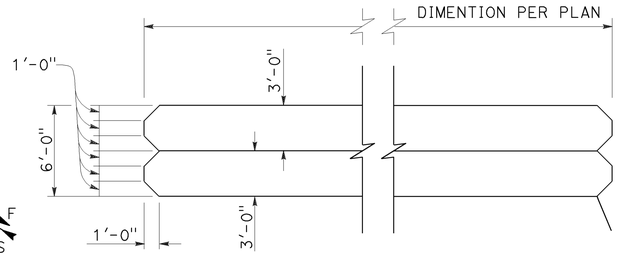

WINDING DETAIL SAWCUT DETAIL

TYPE C LOOP DETECTOR CONFIGURATION

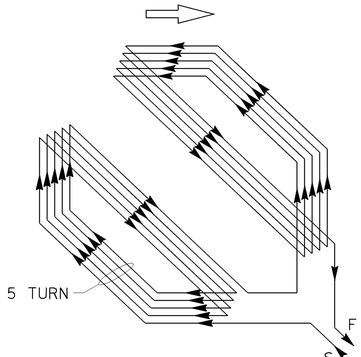

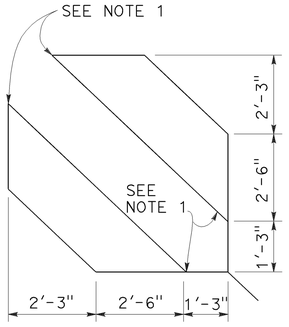

WINDING DETAIL SAWCUT DETAIL

TYPE D LOOP DETECTOR CONFIGURATION

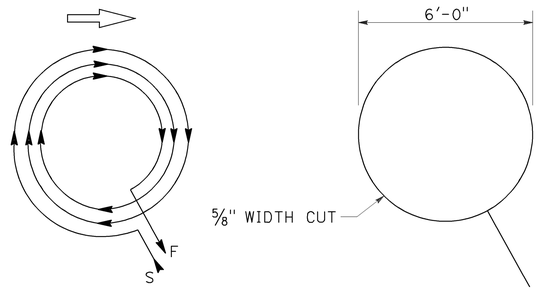

WINDING DETAIL SAWCUT DETAIL

TYPE E LOOP DETECTOR CONFIGURATION

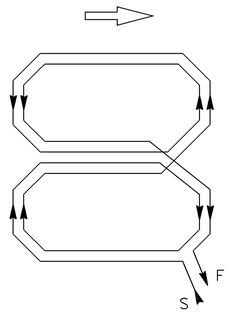

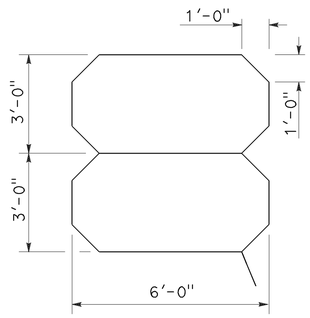

WINDING DETAIL SAWCUT DETAIL

TYPE Q LOOP DETECTOR CONFIGURATION

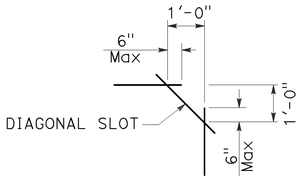

PLAN VIEW OF DIAGONAL SLOT AT CORNERS

NOTES:

1. Round corners of acute angle sawcuts to prevent damage to conductors.
2. Typical distance separating loops from edge to edge is 10' for Type A, B, D and E installation in single lane.

STATE OF CALIFORNIA
DEPARTMENT OF TRANSPORTATION

ELECTRICAL SYSTEMS (DETECTORS)

NO SCALE

RSP ES-5B DATED JULY 19, 2013 SUPERSEDES STANDARD PLAN ES-5B DATED MAY 20, 2011 - PAGE 449 OF THE STANDARD PLANS BOOK DATED 2010.

REVISED STANDARD PLAN RSP ES-5B

2010 REVISED STANDARD PLAN RSP ES-5B

7-9-13

Dist	COUNTY	ROUTE	POST MILES TOTAL PROJECT	SHEET No.	TOTAL SHEETS
03	Pla	80	31.8	60	68

Theresa Gabriel
REGISTERED ELECTRICAL ENGINEER

Theresa Aziz Gabriel
No. E15129
Exp. 6-30-14
ELECTRICAL
REGISTERED PROFESSIONAL ENGINEER
STATE OF CALIFORNIA

July 19, 2013
PLANS APPROVAL DATE

THE STATE OF CALIFORNIA OR ITS OFFICERS OR AGENTS SHALL NOT BE RESPONSIBLE FOR THE ACCURACY OR COMPLETENESS OF SCANNED COPIES OF THIS PLAN SHEET.

TO ACCOMPANY PLANS DATED 1-5-15

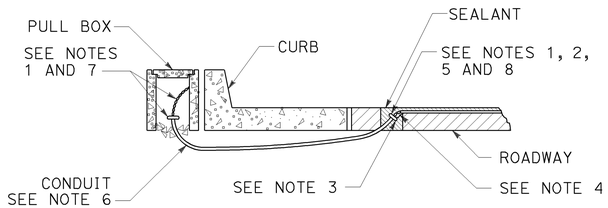

TYPE A
CURB TERMINATION DETAIL

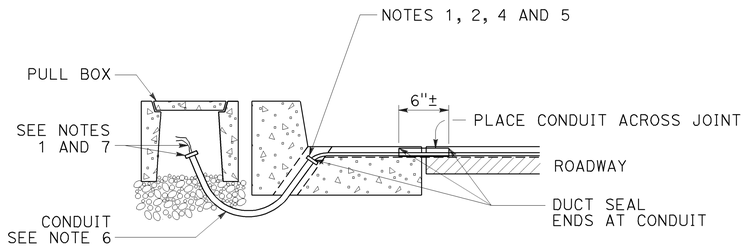

CROSS SECTION

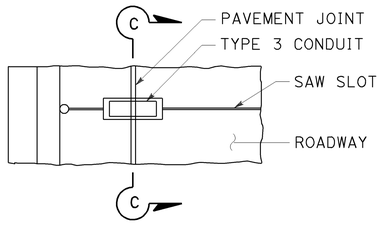

PLAN VIEW

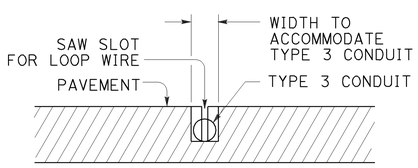

SECTION C-C

TYPE B
CURB TERMINATION DETAIL

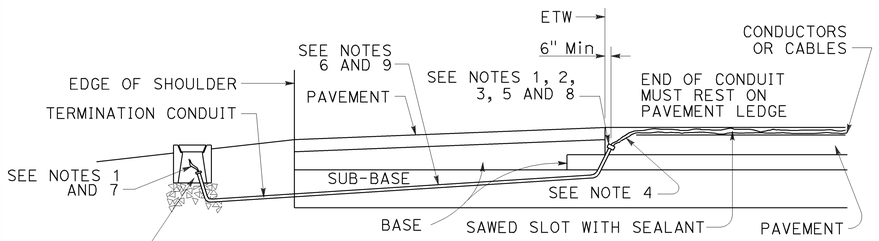

CROSS SECTION

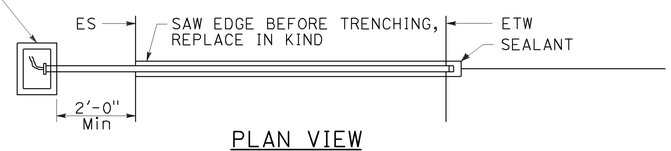

PLAN VIEW

SHOULDER TERMINATION DETAILS

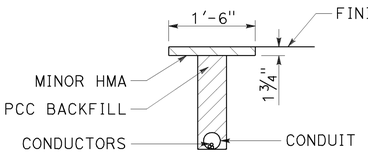

"T" TRENCH DETAIL T

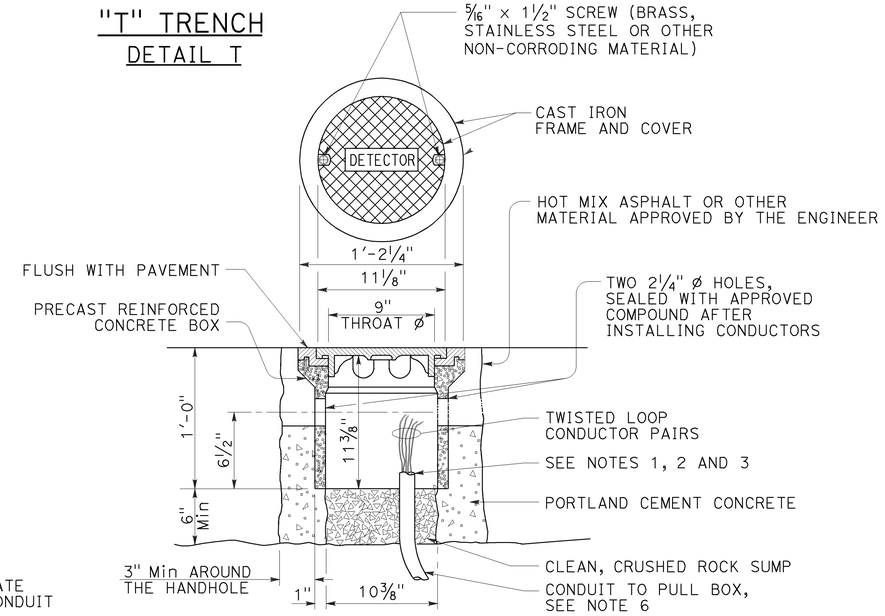

DETECTOR HANDHOLE DETAIL

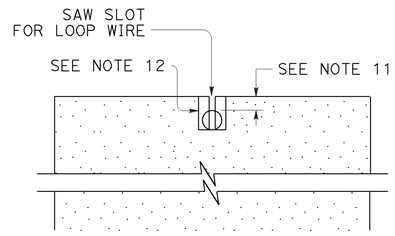

SECTION A-A

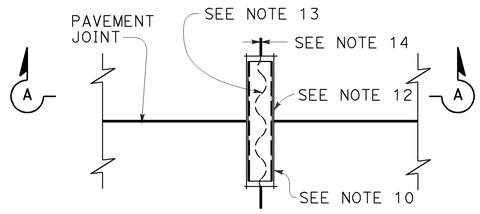

PLAN VIEW

TYPICAL LOOP LEAD-IN DETAIL AT PAVEMENT JOINT

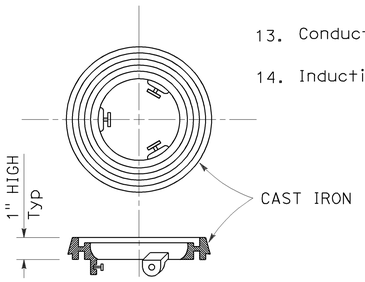

LOCKING GRADE RING

NOTES:

1. Bushing shall be used at end of conduit.
2. Tape detector conductors or cables 3" each side of bushings.
3. Install duct seal compound to each end of termination conduit before installing sealant.
4. Round all sharp edges where detector conductors or cables have to pass.
5. End of conduit shall be 3⅛" below roadway surface.
6.

Conduit size	Loop conductors
1"C minimum	1 to 2 pairs
1½"C minimum	3 to 4 pairs
2"C minimum	5 or more pairs

7. Splice detector conductors or cables to detector lead-in-cable.
8. Location of detector handhole when shown on plans.
9. When the shoulder and traveled way are paved with the same material and there is no joint between them, the conduit shall extend only 2'-0" into the shoulder pavement.
10. ¾"C, Type 3 conduit 6" long minimum, plug both ends with duct compound to keep out sealant.
11. ½" Minimum between top of conduit and pavement surface.
12. Sawcut shall not exceed 1" in width and ⅛" longer than conduit to be installed.
13. Conductors with ½" minimum slack inside conduit.
14. Inductive loop detector saw slot.

STATE OF CALIFORNIA
DEPARTMENT OF TRANSPORTATION

ELECTRICAL SYSTEMS (CURB TERMINATION AND HANDHOLE)

NO SCALE

RSP ES-5D DATED JULY 19, 2013 SUPERSEDES STANDARD PLAN ES-5D DATED MAY 20, 2011 - PAGE 451 OF THE STANDARD PLANS BOOK DATED 2010.

REVISED STANDARD PLAN RSP ES-5D

2010 REVISED STANDARD PLAN RSP ES-5D

7-9-13

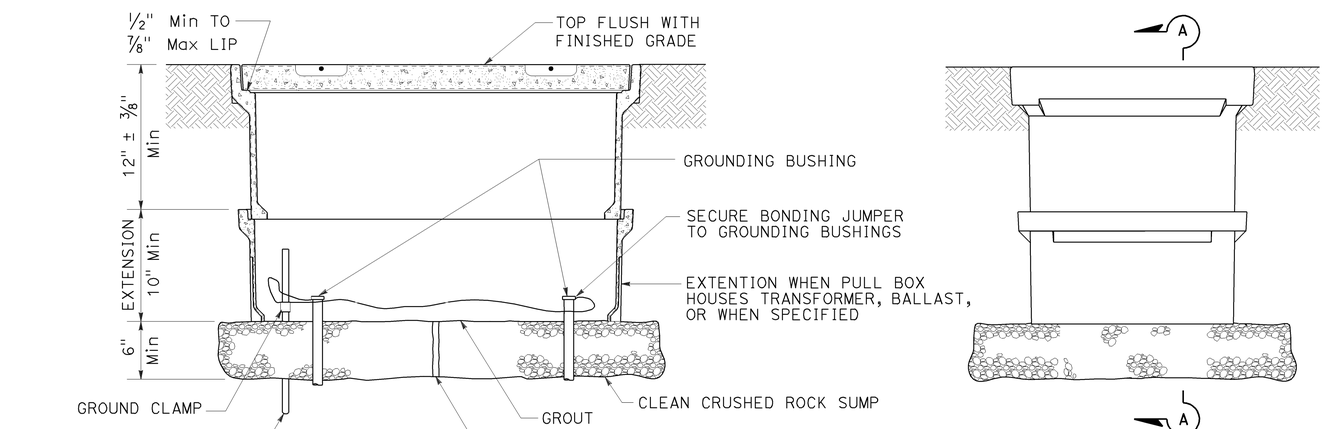

SECTION A-A

SIDE VIEW

INSTALLATION DETAILS

DETAIL A

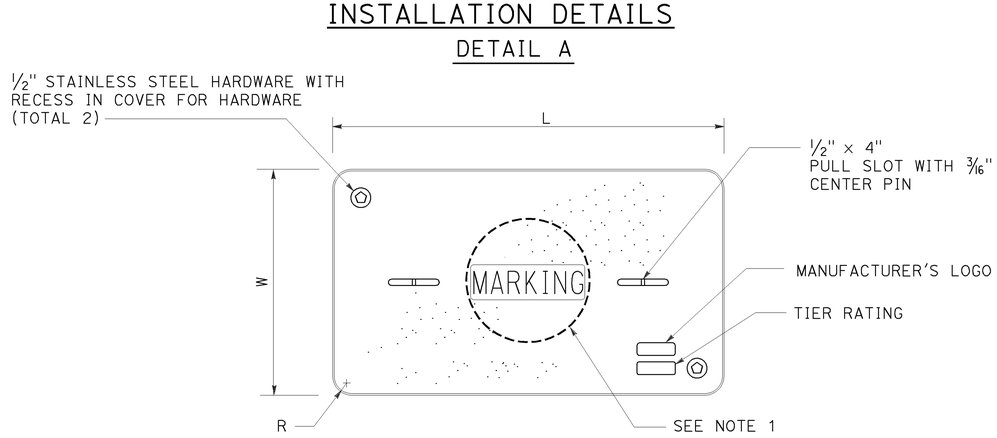

COVER TOP VIEW

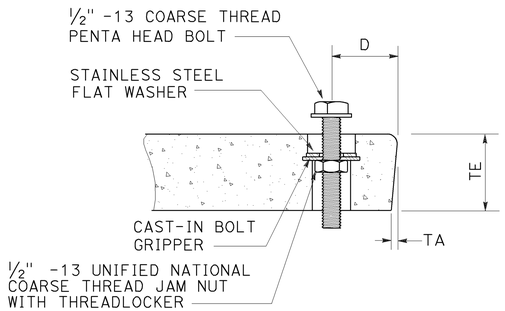

TYPICAL COVER CAPTIVE BOLT
OR SIMILAR

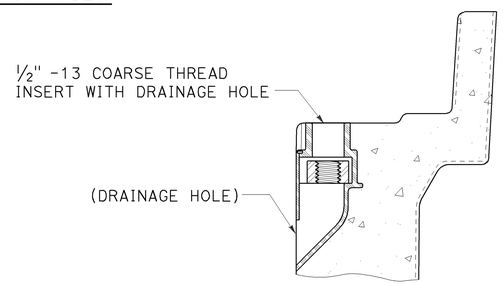

TYPICAL THREADED INSERT
OR SIMILAR

DIMENSION TABLE										
PULL BOX	PULL BOX			COVER						
	MINIMUM DEPTH BOX	MINIMUM DEPTH EXTENSION	MAXIMUM WEIGHT	L	W	R	TE	TA	D	MAXIMUM WEIGHT
No. 3½	12"	N/A	40 lb	1′ - 3⅜"	10⅛"	1⅜"	2"	⅛"	1¾"	30 lb
No. 5	12"	10"	55 lb	1′ - 11¼"	1′ - 1¾"	1⅜"	2"	⅛"	1¾"	60 lb
No. 6	12"	10"	70 lb	2′ - 6½"	1′ - 5½"	1⅜"	2"	⅛"	2"	85 lb

DIST	COUNTY	ROUTE	POST MILES TOTAL PROJECT	SHEET NO.	TOTAL SHEETS
03	Pla	80	31.8	61	68

Theresa Gabriel
REGISTERED ELECTRICAL ENGINEER

REGISTERED PROFESSIONAL ENGINEER
Theresa Aziz Gabriel
No. E15129
Exp. 6-30-14
ELECTRICAL
STATE OF CALIFORNIA

July 19, 2013
PLANS APPROVAL DATE

THE STATE OF CALIFORNIA OR ITS OFFICERS OR AGENTS SHALL NOT BE RESPONSIBLE FOR THE ACCURACY OR COMPLETENESS OF SCANNED COPIES OF THIS PLAN SHEET.

TO ACCOMPANY PLANS DATED 1-5-15

NOTES:

1. Pull box covers shall be marked as follows: "SERVICE" Service circuits between service point and service disconnect; "SPRINKLER-CONTROL" sprinkler control circuits, 50 V or less; "CALTRANS" on all pull boxes, except pull boxes marked "SPRINKLER-CONTROL"; and "TELEPHONE" Telephone service;
   - A) No. 3½ pull box.
     - 1) "SIGNAL" - Traffic signal circuits with or without lighting or sign lighting circuits.
     - 2) "LIGHTING" - Lighting or sign lighting circuits where voltage is under 600 V.
   - B) No. 5, 6, 9 or 9A pull box.
     - 1) "TRAFFIC SIGNAL" - Traffic signal circuits with or without lighting or sign lighting circuits.
     - 2) "LIGHTING" - Lighting or sign lighting circuits where voltage is under 600 V.
     - 3) "LIGHTING-HIGH VOLTAGE" - Lighting or sign lighting circuits where voltage is above 600 V.
     - 4) "IRRIGATION" - Circuits to irrigation controller 120 V or more.
     - 5) "RAMP METER" - Ramp meter circuits.
     - 6) "COUNT STATION" - Count or speed monitor circuits.
     - 7) "COMMUNICATIONS" - Communication circuits.
     - 8) "TOS COMMUNICATIONS" - TOS communication line.
     - 9) "TOS POWER" - TOS power.
     - 10) "TDC POWER" - Telephone demarcation cabinet power.
     - 11) "CCTV" - Closed circuit television circuits.
     - 12) "TMS" - Traffic monitoring station circuits.
     - 13) "CMS" - Changeable message sign circuits.
     - 14) "HAR" - Highway advisory radio circuits.
     - 15) "BOOSTER PUMP" - Booster pump circuit.
2. The nominal dimensions of the opening in which the cover sets shall be the same as the cover dimensions except the length and width dimensions shall be ⅛" greater.
3. Covers and boxes shall be interchangeable with California standard male and female gages. When interchanged with a standard male or female gage, the top surfaces shall be flush within ⅛". Top outside radius of covers and pull boxes shall have a ⅛" radius.
4. Pull box extension may be another pull box as long as the bottom edge of the pull box can fit into the cover opening.
5. All dimensions for the cover for non-traffic pull box are nominal values.

STATE OF CALIFORNIA
DEPARTMENT OF TRANSPORTATION

ELECTRICAL SYSTEMS (NON-TRAFFIC PULL BOX)

NO SCALE

RSP ES-8A DATED JULY 19, 2013 SUPERSEDES RSP ES-8A DATED JANUARY 20, 2012 THAT SUPPLEMENTS THE STANDARD PLANS BOOK DATED 2010.

REVISED STANDARD PLAN RSP ES-8A

2010 REVISED STANDARD PLAN RSP ES-8A

7-15-13

DIST	COUNTY	ROUTE	POST MILES TOTAL PROJECT	SHEET NO.	TOTAL SHEETS
03	Pla	80	31.8	62	68

Theresa Gabriel
REGISTERED ELECTRICAL ENGINEER

Theresa Aziz Gabriel
No. E15129
Exp. 6-30-14
ELECTRICAL
REGISTERED PROFESSIONAL ENGINEER
STATE OF CALIFORNIA

July 19, 2013
PLANS APPROVAL DATE

THE STATE OF CALIFORNIA OR ITS OFFICERS OR AGENTS SHALL NOT BE RESPONSIBLE FOR THE ACCURACY OR COMPLETENESS OF SCANNED COPIES OF THIS PLAN SHEET.

TO ACCOMPANY PLANS DATED 1-5-15

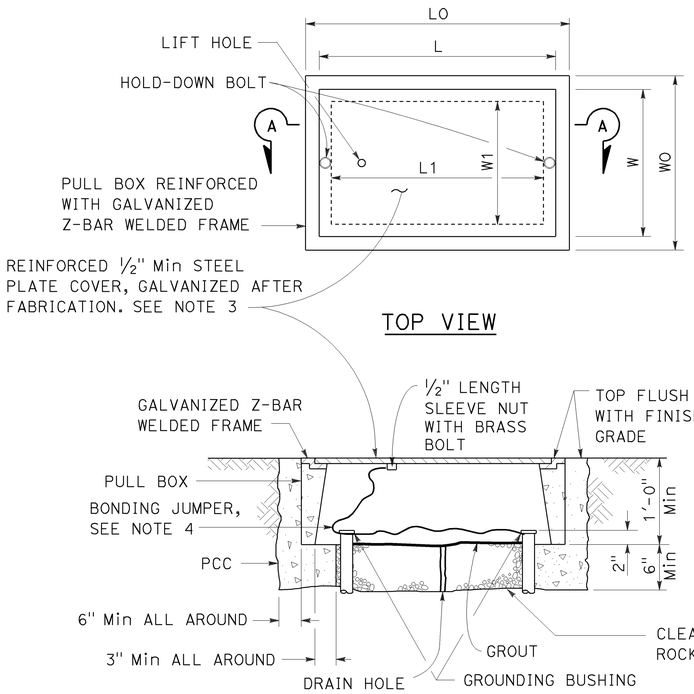

SECTION A-A

No. 3½(T), No. 5(T) AND No. 6(T) TRAFFIC PULL BOX

NOTES:

1. Traffic pull box shall be provided with steel cover and special concrete footing. Steel cover shall have embossed non-skid pattern.
2. Steel reinforcing shall be as regularly used in the standard products of the respective manufacturer.
3. Pull box covers shall be marked as follows: "SERVICE" Service circuits between service point and service disconnect; "SPRINKLER-CONTROL" Sprinkler control circuits, 50 V or less; "CALTRANS" On all pull boxes, except pull boxes marked "SPRINKLER-CONTROL"; and "TELEPHONE" Telephone service.
   A) No. 3½(T) pull box.
      1) "SIGNAL" - Traffic signal circuits with or without lighting or sign lighting circuits.
      2) "LIGHTING" - Lighting or sign lighting circuits where voltage is under 600 V.
   B) No. 5(T) or 6(T) pull box.
      1) "TRAFFIC SIGNAL" - Traffic signal circuits with or without lighting or sign lighting circuits.
      2) "LIGHTING" - Lighting or sign lighting circuits where voltage is under 600 V.
      3) "LIGHTING-HIGH VOLTAGE" - Lighting or sign lighting circuits where voltage is above 600 V.
      4) "IRRIGATION" - Circuits to irrigation controller 120 V or more.
      5) "RAMP METER" - Ramp meter circuits.
      6) "COUNT STATION" - Count or speed monitor circuits.
      7) "COMMUNICATION" - Communication circuits.
      8) "TOS COMMUNICATIONS" - TOS communications line.
      9) "TOS POWER" - TOS power.
      10) "TDC POWER" - Telephone demarcation cabinet power.
      11) "CCTV" - Closed circuit television circuits.
      12) "TMS" - Traffic monitoring station circuits.
      13) "CMS" - Changeable message sign circuits.
      14) "HAR" - Highway advisory radio circuits.
      15) "BOOSTER PUMP" - Booster pump circuit.
4. Bonding jumper for metal covers shall be 3' long, minimum.
5. The nominal dimensions of the opening in which the cover sets shall be the same as the cover dimensions except the length and width dimensions shall be ⅛" greater.
6. Covers and boxes shall be interchangeable with California standard male and female gages. When interchanged with a standard male or female gage, the top surfaces shall be flush within ⅛".

DIMENSION TABLE

PULL BOX	PULL BOX						COVER				
	MINIMUM * THICKNESS	MINIMUM DEPTH BOX AND EXTENSION	WO	LO	L1	W1	L **	W **	R	EDGE THICKNESS	EDGE TAPER
No. 3½(T)	1½"	1'-0"	1'-5"± 1"	1'-8⅞"±	1'-2½"±	10⅝"± 1"	1'-8"±	1'-1¾"±	0"	½"	NONE
No. 5(T)	1¾"	1'-0"	1'-11½"± 1"	2'-5½"±	1'-7"±	1'-1"± 1"	2'-3"±	1'-4"±	0"	½"	NONE
No. 6(T)	2"	1'-0"	2'-6"± 1"	2'-11½"±	1'-11½"±	1'-5"± 1"	2'-9"±	1'-8"±	0"	½"	NONE

* EXCLUDING CONDUIT WEB ** TOP DIMENSION

STATE OF CALIFORNIA
DEPARTMENT OF TRANSPORTATION

ELECTRICAL SYSTEMS (TRAFFIC PULL BOX)

NO SCALE

RSP ES-8B DATED JULY 19, 2013 SUPERSEDES RSP ES-8B DATED JANUARY 20, 2012 THAT SUPPLEMENTS THE STANDARD PLANS BOOK DATED 2010.

REVISED STANDARD PLAN RSP ES-8B

2010 REVISED STANDARD PLAN RSP ES-8B

7-15-13

Dist	COUNTY	ROUTE	POST MILES TOTAL PROJECT	SHEET No.	TOTAL SHEETS
03	Pla	80	31.8	63	68

REGISTERED CIVIL ENGINEER

July 19, 2013
PLANS APPROVAL DATE

REGISTERED PROFESSIONAL ENGINEER
Stanley P. Johnson
No. C57793
Exp. 3-31-14
CIVIL
STATE OF CALIFORNIA

THE STATE OF CALIFORNIA OR ITS OFFICERS OR AGENTS SHALL NOT BE RESPONSIBLE FOR THE ACCURACY OR COMPLETENESS OF SCANNED COPIES OF THIS PLAN SHEET.

TO ACCOMPANY PLANS DATED 1-5-15

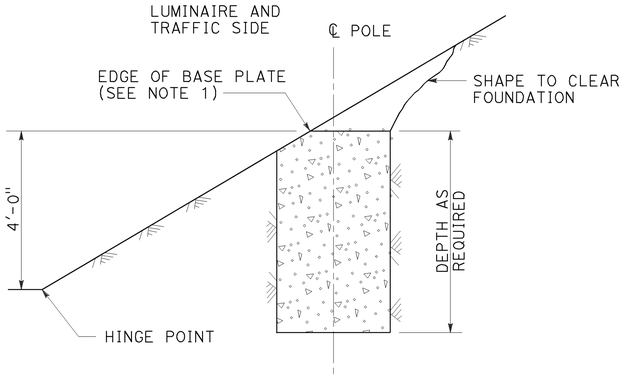

CUT SLOPES
STEEPER THAN 4:1,
LESS THAN 2:1
DETAIL A-1
See Note 2 and 3

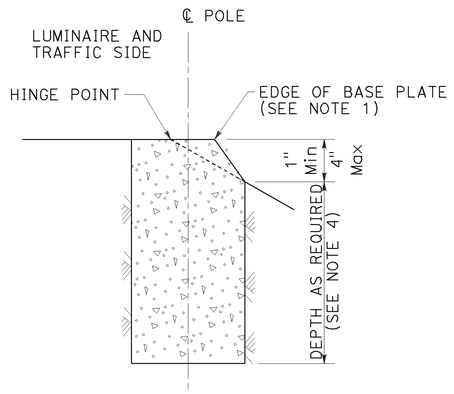

FILL SLOPES
STEEPER THAN 4:1,
LESS THAN 2:1
DETAIL A-2
See Note 2 and 3

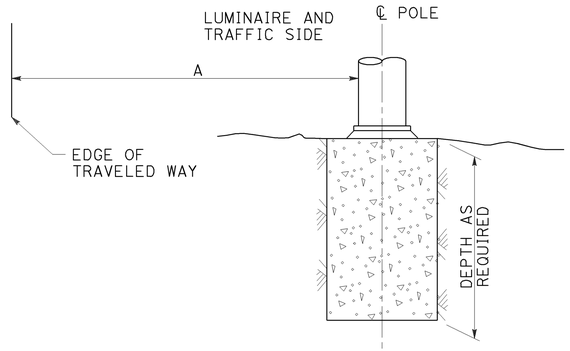

FLAT SECTIONS, CUT OR FILL SLOPES
4:1 OR FLATTER
DETAIL A-3
See Note 2

STANDARD TYPE	SETBACK (DIMENSION A)
32	30'-0" (Min)
31	20'-0" (Min)
15, 15D, 15-SB, 21, 21D, 30	ARM LENGTH (Min)

FOUNDATIONS ADJACENT TO ALL ROADWAYS EXCEPT IN SIDEWALK, MEDIAN AND ISLAND AREAS
DETAIL A

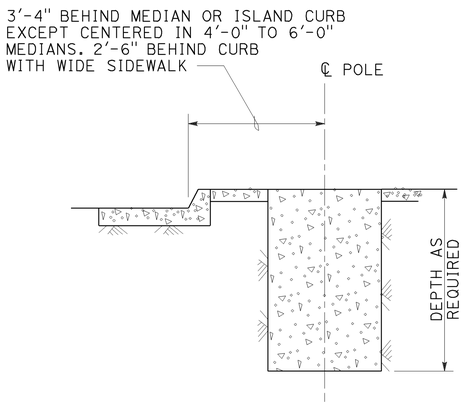

MEDIAN, ISLAND
OR WIDE SIDEWALK
DETAIL B-1
7' Wide and wider

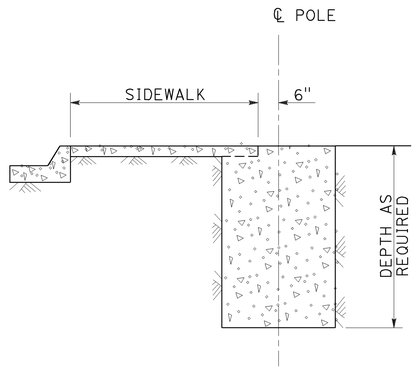

NARROW SIDEWALK
DETAIL B-2
Less than 7' wide

FOUNDATIONS IN SIDEWALK, MEDIAN AND ISLAND AREAS
DETAIL B

NOTES:

1. Where a portion of the foundation is above grade, the top edges shall have a 1" chamfer.
2. Slopes shall be horizontal to vertical ratio (Horizontal : Vertical).
3. Horizontal setbacks on cut and fill slopes steeper than 4:1 shall not exceed the distance shown for flat sections.
4. CIDH embedment depth shall be increased beyond standard depths by the diameter of the CIDH.

STATE OF CALIFORNIA
DEPARTMENT OF TRANSPORTATION

ELECTRICAL SYSTEMS (FOUNDATION INSTALLATIONS)

NO SCALE

RSP ES-11 DATED JULY 19, 2013 SUPERSEDES STANDARD PLAN ES-11
DATED MAY 20, 2011 - PAGE 488 OF THE STANDARD PLANS BOOK DATED 2010.

REVISED STANDARD PLAN RSP ES-11

2010 REVISED STANDARD PLAN RSP ES-11

7-9-13

DIST	COUNTY	ROUTE	POST MILES TOTAL PROJECT	SHEET No.	TOTAL SHEETS
03	Pla	80	31.8	64	68

REGISTERED CIVIL ENGINEER — 11/24/14 DATE

1-5-15
PLANS APPROVAL DATE

REGISTERED PROFESSIONAL ENGINEER — JOEL MAGAÑA — No. C61500 — EXP. 6/30/15 — CIVIL — STATE OF CALIFORNIA

The State of California or its officers or agents shall not be responsible for the accuracy or completeness of scanned copies of this plan sheet.

INDEX TO PLANS

SHEET No.	TITLE
1.	GENERAL PLAN
2.	CONCRETE REMOVAL
3.	BRIDGE DECK AND WINGWALL DETAILS
4.	TUBULAR BICYCLE RAILING DETAILS
5.	EXCAVATION AND BACKFILL

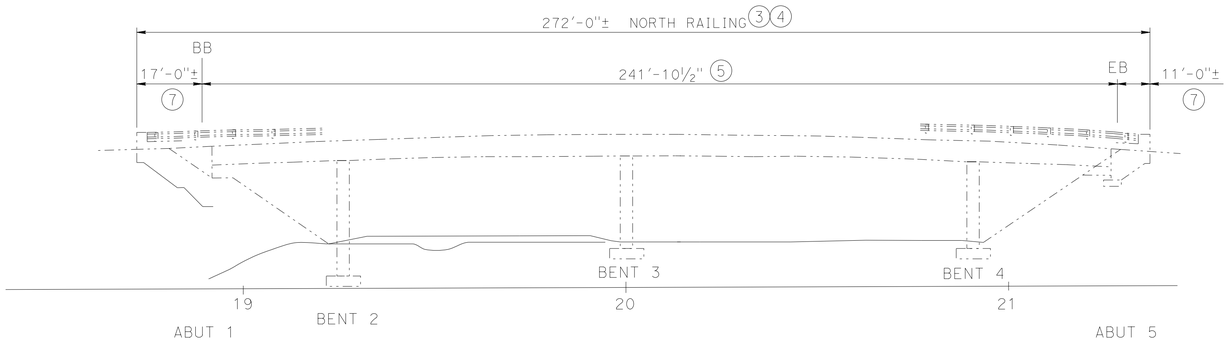

ELEVATION
1" = 20'

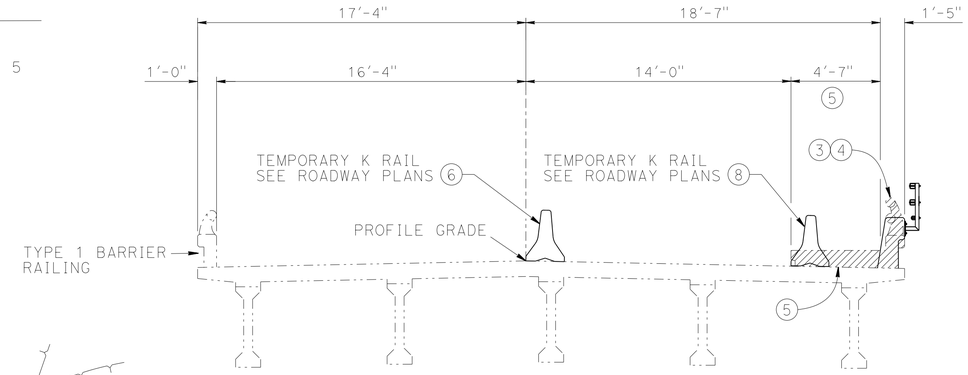

TYPICAL SECTION
¼" = 1'-0"

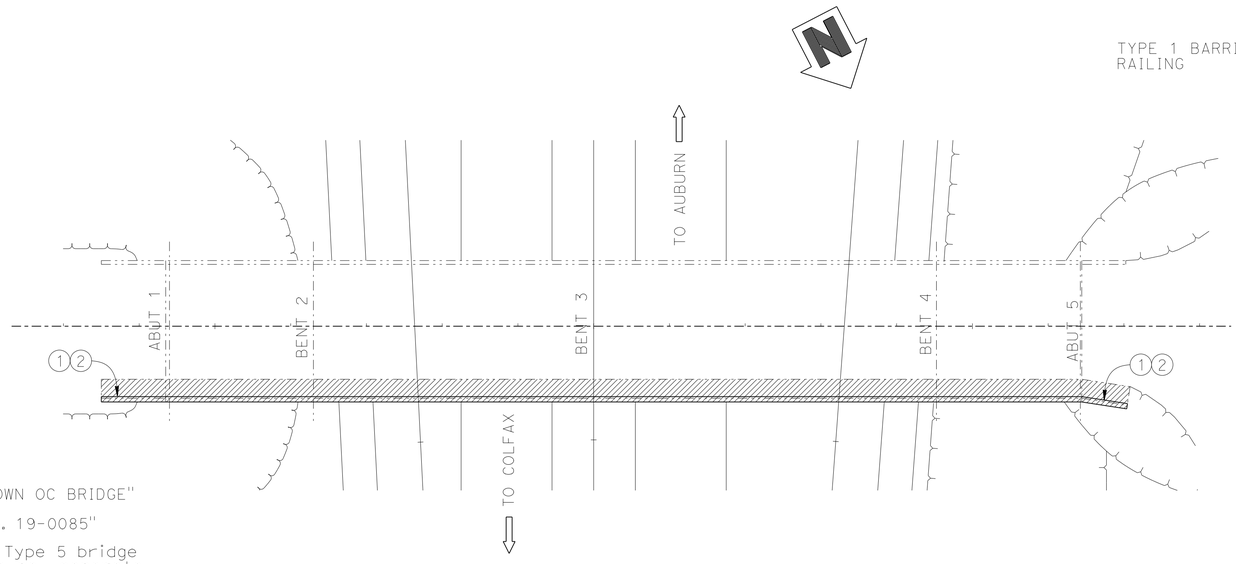

PLAN
1" = 20'

NOTES:

① Paint "ILLINOISTOWN OC BRIDGE"

② Paint "BRIDGE No. 19-0085"

③ Remove existing Type 5 bridge railing and place new concrete barrier Type 732 (Modified) and tubular bicycle railing.

④ Salvage metal bridge railing.

⑤ Remove ¾" concrete deck surface, prepare concrete bridge deck surface, furnish and place ¾" depth polyester concrete overlay.

⑥ Refer to stage 1 construction notes, see "Roadway Plans".

⑦ Placement of HMA under existing sidewalk prior to stage 2 construction Temporary K-Rail installation, see "Roadway Plans".

⑧ Refer to stage 2 construction notes, see "Roadway Plans".

LEGEND:

Indicates existing structure

Indicates bridge removal (portion)

STANDARD PLANS DATED 2010

A10A	ABBREVATIONS (SHEET 1 OF 2)
RSP A10B	ABBREVATIONS (SHEET 2 OF 2)
RSP B11-55	CONCRETE BARRIER TYPE 732
B14-3	COMMUNICATION AND SPRINKLER CONTROL (CONDUITS, LESS THAN 4")

QUANTITIES

REMOVE CONCRETE DECK SURFACE	1,108 SQFT
SALVAGE METAL BRIDGE RAILING	272 LF
PREPARE CONCRETE BRIDGE DECK SURFACE	1,108 SQFT
FURNISH POLYESTER CONCRETE OVERLAY	83 CF
PLACE POLYESTER CONCRETE OVERLAY	1,108 SQFT
BRIDGE REMOVAL (PORTION)	LUMP SUM
STRUCTURE EXCAVATION (BRIDGE)	4 CY
STRUCTURE BACKFILL (BRIDGE)	3.5 CY
STRUCTURAL CONCRETE, (BRIDGE)	2.6 CY
BAR REINFORCING STEEL (BRIDGE)	324 LB
TUBULAR BICYCLE RAILING	272 LF
CONCRETE BARRIER (TYPE 732 MODIFIED)	272 LF

DAVID A. NEUMANN
BRANCH CHIEF

	BY	CHECKED	LOAD & RESISTANCE FACTOR DESIGN	LIVE LOADING: HL93 W/"LOW-BOY"; PERMIT DESIGN VEHICLE
DESIGN	J MAGANA	V LOPEZ		
DETAILS	H NGUYEN/B HUDDLESTON/ B EDWARDS / M TOMAS	J MAGANA	LAYOUT: J MAGANA	V LOPEZ
QUANTITIES	J MAGANA	V LOPEZ	SPECIFICATIONS: TINA CHEN	PLANS AND SPECS COMPARED: TINA CHEN

ORIGINAL SCALE IN INCHES FOR REDUCED PLANS 0 1 2 3

STATE OF CALIFORNIA
DEPARTMENT OF TRANSPORTATION

DIVISION OF ENGINEERING SERVICES
STRUCTURE DESIGN
DESIGN BRANCH B

BRIDGE NO. 19-0085
POST MILE 31.79

UNIT: 3619
PROJECT NUMBER & PHASE: 0314000243-1 CONTRACT NO.: 03-4F7001

ILLINOISTOWN OC
GENERAL PLAN

DISREGARD PRINTS BEARING EARLIER REVISION DATES →

REVISION DATES				SHEET	OF
10-21-14	11-24-14	12-4-14	11-13-14	1	5

STRUCTURES DESIGN GENERAL PLAN SHEET (ENGLISH) (REV.09-01-10)

FILE => 034F7001-a-gp01.dgn

USERNAME => s119538 DATE PLOTTED => 08-JAN-2015 TIME PLOTTED => 19:33

DIST	COUNTY	ROUTE	POST MILES TOTAL PROJECT	SHEET No.	TOTAL SHEETS
03	Pla	80	31.8	65	68

REGISTERED CIVIL ENGINEER — 11/24/14 DATE

1-5-15
PLANS APPROVAL DATE

The State of California or its officers or agents shall not be responsible for the accuracy or completeness of scanned copies of this plan sheet.

REGISTERED PROFESSIONAL ENGINEER
JOEL MAGANA
No. C61500
Exp. 6/30/15
CIVIL
STATE OF CALIFORNIA

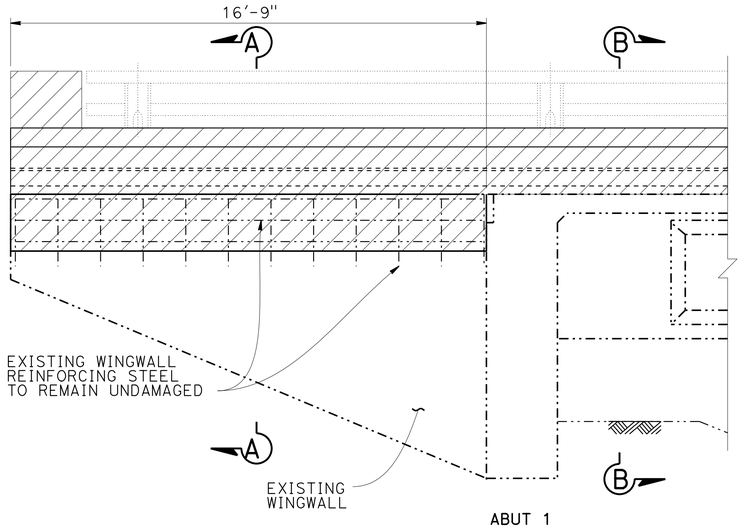

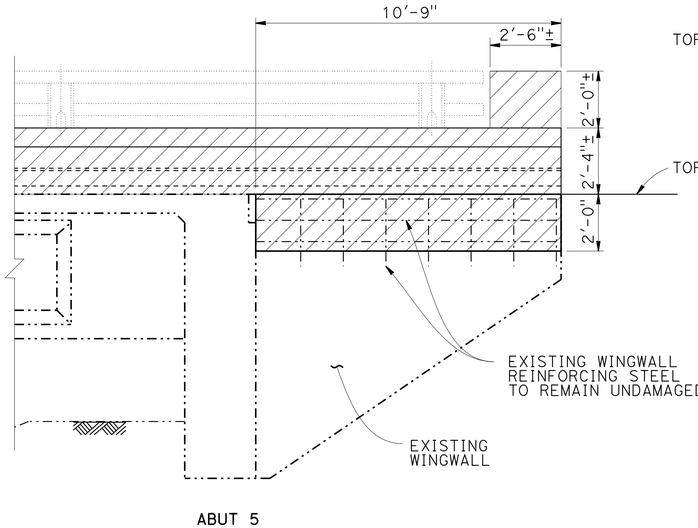

ELEVATION
NO SCALE

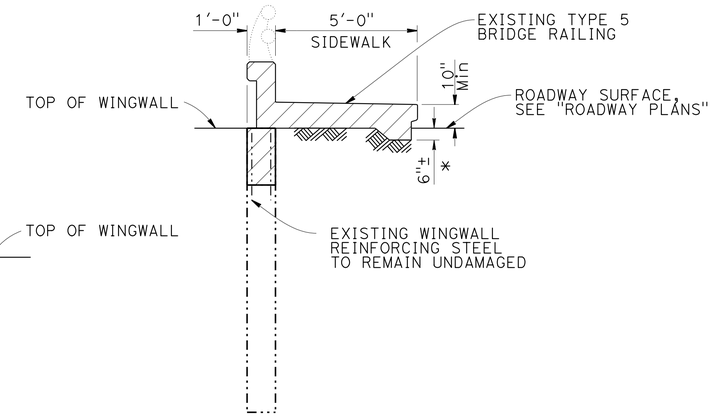

SECTION A-A
NO SCALE

* Placement of HMA under existing sidewalk prior to stage 2 construction Temporary K-Rail installation, see "Roadway Plans".

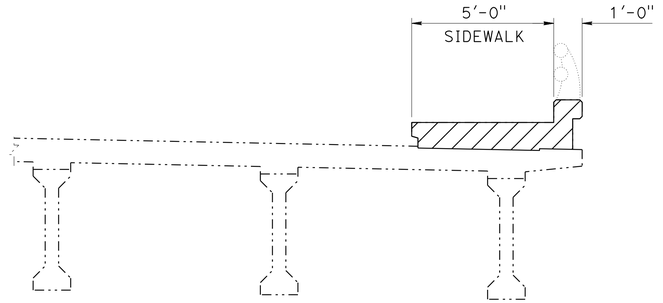

SECTION B-B
NO SCALE

LEGEND:

- Indicates existing structure
- Indicates new construction
- Bridge removal (portion)

NOTE:
THE CONTRACTOR MUST VERIFY ALL CONTROLLING FIELD DIMENSIONS BEFORE ORDERING OR FABRICATING ANY MATERIAL.

BRANCH CHIEF DAVID NEUMANN

	BY	CHECKED
DESIGN	J MAGANA	V LOPEZ
DETAILS	B EDWARDS / M TOMAS	J MAGANA
QUANTITIES	J MAGANA	V LOPEZ

STATE OF **CALIFORNIA**
DEPARTMENT OF TRANSPORTATION

DIVISION OF ENGINEERING SERVICES
DESIGN AND TECHNICAL SERVICES
SPECIAL DESIGNS BRANCH **B**

BRIDGE NO. 19-0085
POST MILE 31.79

ILLINOISTOWN OC
CONCRETE BARRIER TYPE 732 (MOD)
CONCRETE REMOVAL

(ENGLISH) SPECIAL DESIGNS BRANCH BORDER SHEET (REV. 7-1-09)

ORIGINAL SCALE IN INCHES FOR REDUCED PLANS 0 1 2 3

UNIT: 3619
PROJECT NUMBER & PHASE: 0314000243-1 CONTRACT NO.: 03-4F7001

DISREGARD PRINTS BEARING EARLIER REVISION DATES →

REVISION DATES				SHEET	OF
10-21-14	11-24-14	12-04-14	11-25-14	2	5

FILE => 034F7001-u-misc-dt01.dgn

USERNAME => s119538 DATE PLOTTED => 08-JAN-2015 TIME PLOTTED => 19:33

DIST	COUNTY	ROUTE	POST MILES TOTAL PROJECT	SHEET No.	TOTAL SHEETS
03	Pla	80	31.8	66	68

REGISTERED CIVIL ENGINEER — DATE 11/24/14

1-5-15
PLANS APPROVAL DATE

REGISTERED PROFESSIONAL ENGINEER — JOEL MAGANA — No. C61500 — Exp. 6/30/15 — CIVIL — STATE OF CALIFORNIA

The State of California or its officers or agents shall not be responsible for the accuracy or completeness of scanned copies of this plan sheet.

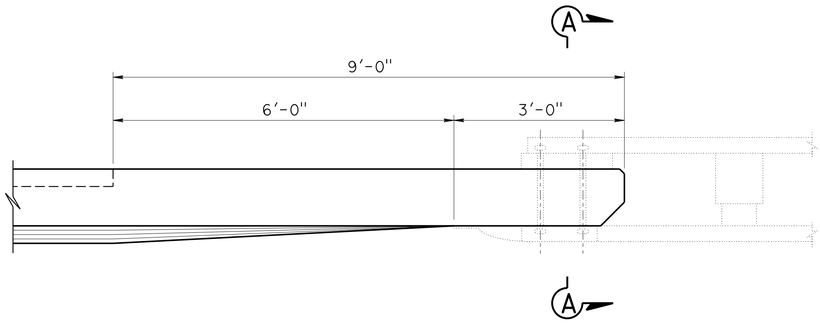

PLAN
NO SCALE

NOTES:

1. Avoid existing reinforcement when drilling.
2. Dimensions may vary with roadway cross slope and with certain thickness of surfacing.
3. Clearance to reinforcing steel in barrier to be 1", except as noted. Longitudinal reinforcement to stop at all expansion joints.
4. Roughen existing bridge deck surface before casting new concrete against existing concrete.
5. For typical metal railing connection details not shown, see "ROADWAY PLANS".
6. All reinforcement within new barrier shall be epoxy coated.
7. Place 2-2" conduits in barrier for future use, see "ELECTRICAL PLANS" and Standard Plan B14-3.

GENERAL NOTES:

DESIGN: AASHTO LRFD Bridge Design Specifications, 6th Edition with California Amendments

CT: 54 kip maximum traffic impact loading evenly distributed over 10 feet at top of the barrier and 1:1 distribution down and outward

Reinforced Concrete:

New	Existing
f'c = 3.6 Ksi	f'c = 3.6 Ksi
fy = 60 Ksi	fy = 60 Ksi

Load Combinations and Limit States. For barrier attachments to existing bridge and check of existing bridge deck overhang only.

Service I Q=1.00DC+1.00 (LL+IM)

Strength I Q=αDC+1.75 (LL+IM)

Extreme II Q=1.00DC+1.00CT

Where:
Q: Force Effects
α: 1.25 or 0.90, Whichever Controls Design
DC: Dead Load of Structure Components
CT: Vehicular Collision Force
LL: Live Load
IM: Live Load Impact

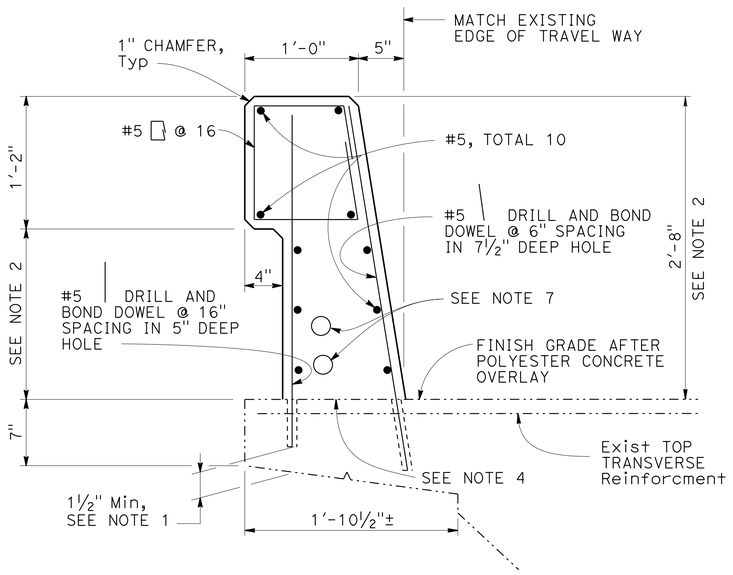

TYPICAL SECTION AT OVERHANG
NO SCALE

RSP B11-55

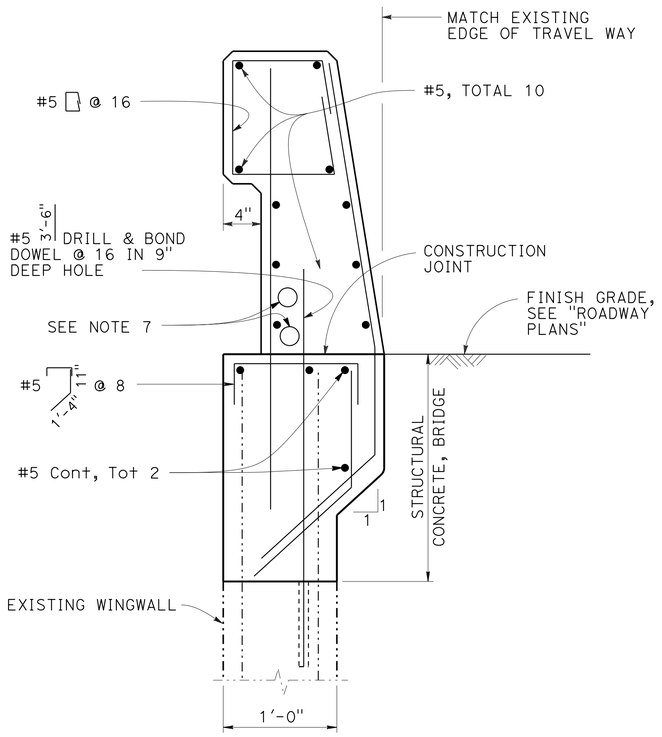

TYPE 732A (Mod)
NO SCALE

RSP B11-55

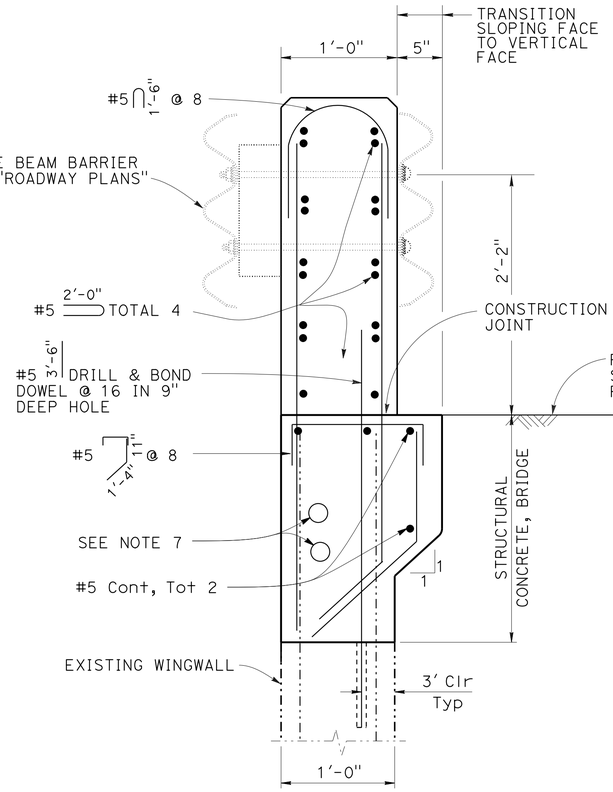

SECTION A-A
NO SCALE

RSP B11-55

BRANCH CHIEF DAVID NEUMANN

	BY	CHECKED
DESIGN	J MAGANA	V LOPEZ
DETAILS	B EDWARDS, M TOMAS	J MAGANA
QUANTITIES	J MAGANA	V LOPEZ

STATE OF CALIFORNIA
DEPARTMENT OF TRANSPORTATION

DIVISION OF ENGINEERING SERVICES
DESIGN AND TECHNICAL SERVICES
SPECIAL DESIGNS BRANCH B

BRIDGE NO. 19-0085
POST MILE 31.79

ILLINOISTOWN OC
CONCRETE BARRIER TYPE 732 (MOD)
BRIDGE DECK AND WINGWALL DETAILS

(ENGLISH) SPECIAL DESIGNS BRANCH BORDER SHEET (REV. 7-1-09)

ORIGINAL SCALE IN INCHES FOR REDUCED PLANS 0 1 2 3

UNIT: 3619
PROJECT NUMBER & PHASE: 0314000243-1
CONTRACT NO.: 03-4F7001

DISREGARD PRINTS BEARING EARLIER REVISION DATES →

REVISION DATES				SHEET	OF
10-21-14	11-24-14	11-05-14	11-13-14	3	5

FILE => 034F7001-u-misc-dt02.dgn

USERNAME => s119538 DATE PLOTTED => 08-JAN-2015 TIME PLOTTED => 19:34

DIST	COUNTY	ROUTE	POST MILES TOTAL PROJECT	SHEET No.	TOTAL SHEETS
03	Pla	80	31.8	67	68

REGISTERED CIVIL ENGINEER — DATE 11/24/14

1-5-15
PLANS APPROVAL DATE

REGISTERED PROFESSIONAL ENGINEER — JOEL MAGANA — No. C61500 — Exp. 6/30/15 — CIVIL — STATE OF CALIFORNIA

The State of California or its officers or agents shall not be responsible for the accuracy or completeness of scanned copies of this plan sheet.

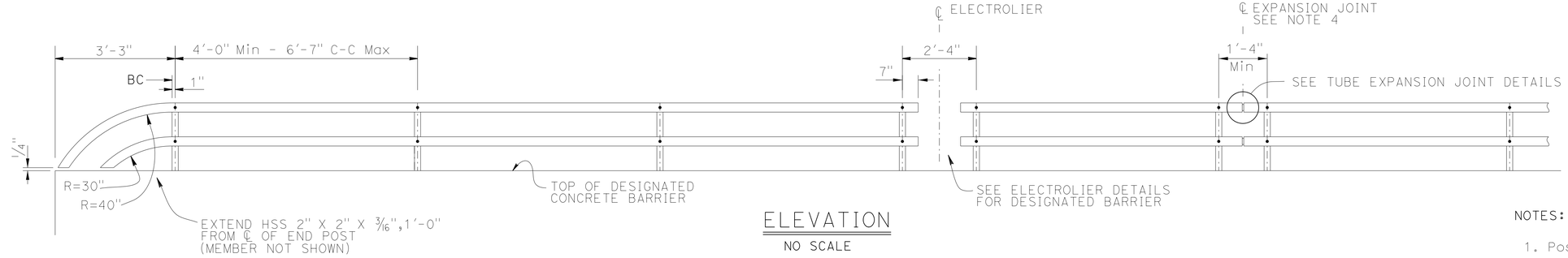

ELEVATION
NO SCALE

NOTES:

1. Post shall be normal to railing.
2. Rail tubes shall be shop bent or fabricated to fit horizontal curve when radius is less than 950'.
3. Tube expansion joints shall be located in the tubes spanning deck or wall joints. Increase joint width in tubes to match expansion joint width and increase sleeve length correspondingly.
4. Top rail tube shall be continuous over not less than two posts except a short post spacing is permitted near deck or wall joints, electroliers, or other rail discontinuities as noted.
5. See General Plan for limits of tubular hand railing.

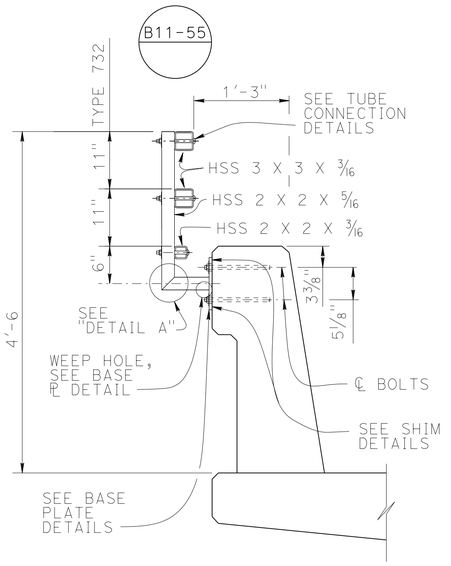

TYPE 732 MOD
1" = 1'-0"

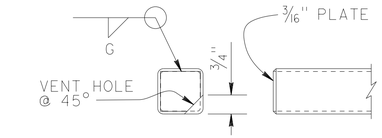

POST AND RAIL CAP DETAIL
NO SCALE

NOTE:

Top of posts must be fully capped.

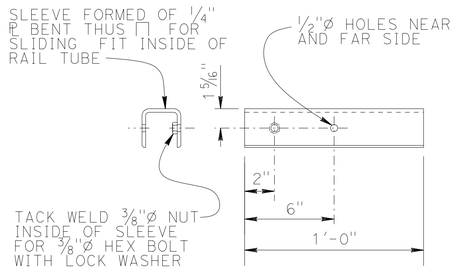

SLEEVE DETAIL
NO SCALE

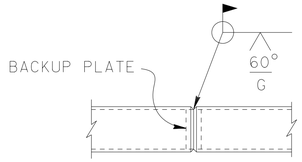

WELDED SPLICE DETAIL
NO SCALE

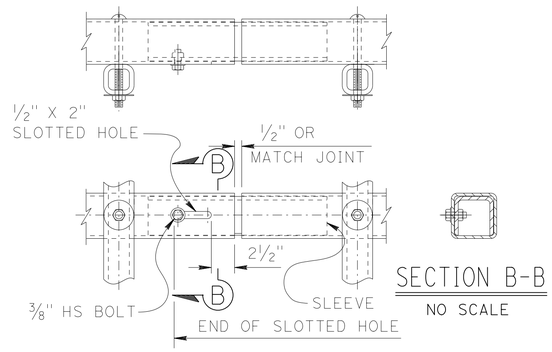

SECTION B-B
NO SCALE

TUBE EXPANSION JOINT DETAILS
NO SCALE

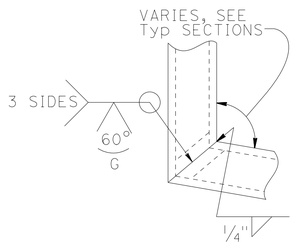

ROUND HEAD SCREW DETAIL
NO SCALE

DETAIL A
NO SCALE

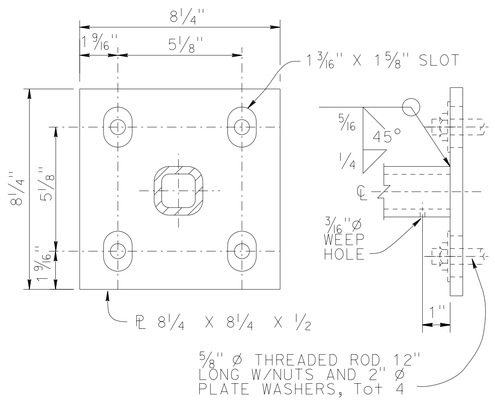

BASE PLATE DETAIL
NO SCALE

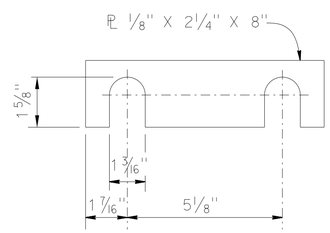

SHIM DETAILS
NO SCALE

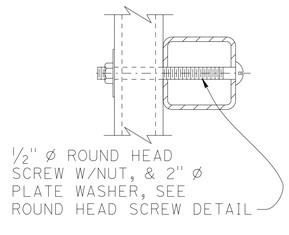

TUBE CONNECTION DETAIL
NO SCALE

DESIGN	BY J MAGANA	CHECKED V LOPEZ	
DETAILS	BY B EDWARDS / M TOMAS	CHECKED J MAGANA	
QUANTITIES	BY J MAGANA	CHECKED V LOPEZ	

BRANCH CHIEF DAVID NEUMANN

STATE OF CALIFORNIA
DEPARTMENT OF TRANSPORTATION

DIVISION OF ENGINEERING SERVICES
DESIGN AND TECHNICAL SERVICES
SPECIAL DESIGNS BRANCH B

BRIDGE NO.	POST MILE
19-0085	31.79

ILLINOISTOWN OC
CONCRETE BARRIER TYPE 732 (MOD)
TUBULAR BICYCLE RAILING DETAILS

(ENGLISH) SPECIAL DESIGNS BRANCH BORDER SHEET (REV. 7-1-09)

ORIGINAL SCALE IN INCHES FOR REDUCED PLANS 0 1 2 3

UNIT: 3619
PROJECT NUMBER & PHASE: 0314000243-1
CONTRACT NO.: 03-4F7001

DISREGARD PRINTS BEARING EARLIER REVISION DATES →

REVISION DATES				SHEET	OF
10-24-14	11-05-14	11-24-14		4	5

FILE => 034F7001-u-misc-dt03.dgn

USERNAME => s119538 DATE PLOTTED => 08-JAN-2015 TIME PLOTTED => 19:34

DIST	COUNTY	ROUTE	POST MILES TOTAL PROJECT	SHEET No.	TOTAL SHEETS
03	Pla	80	31.8	68	68

REGISTERED CIVIL ENGINEER — 11/24/14 DATE

1-5-15
PLANS APPROVAL DATE

REGISTERED PROFESSIONAL ENGINEER — JOEL MAGANA — No. C61500 — Exp. 6/30/15 — CIVIL — STATE OF CALIFORNIA

The State of California or its officers or agents shall not be responsible for the accuracy or completeness of scanned copies of this plan sheet.

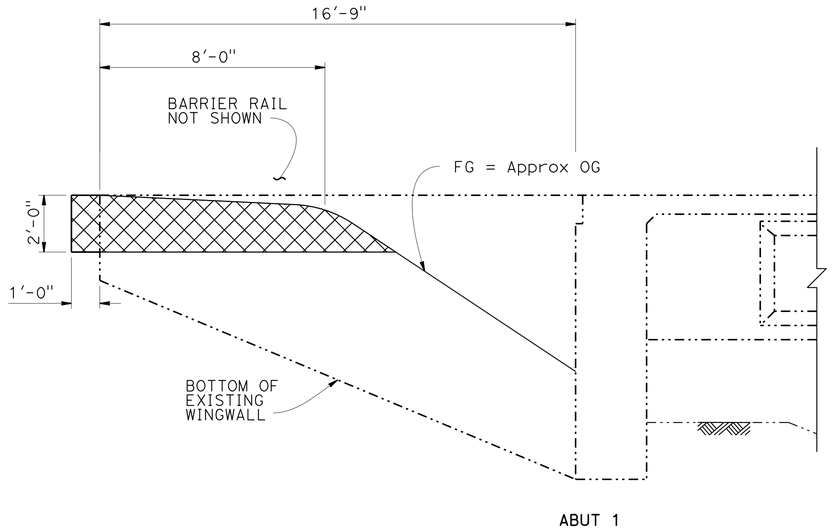

ABUT 1

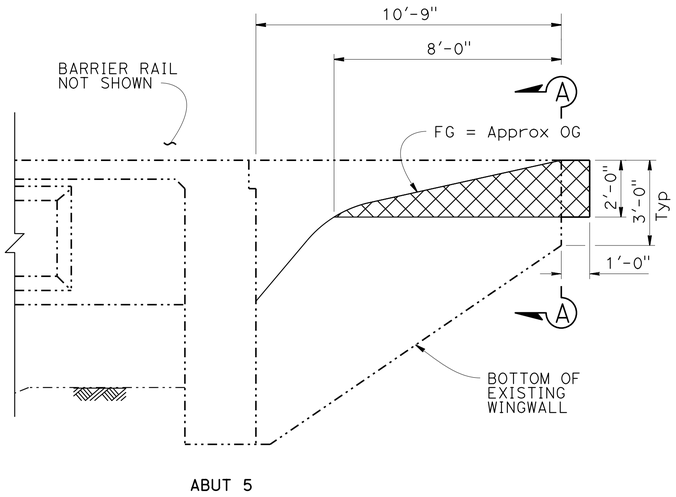

ABUT 5

ELEVATION

NO SCALE

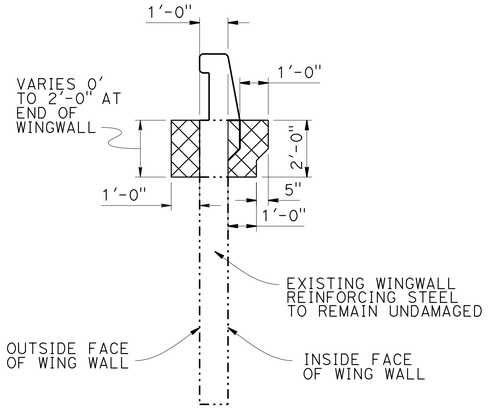

SECTION A-A

NO SCALE

ABUTMENT 5 SHOWN
ABUTMENT 1 SIMILAR

LEGEND:

- Indicates existing structure
- Indicates new construction
- Structure excavation
- Structure backfill

BRANCH CHIEF DAVID NEUMANN

	BY	CHECKED
DESIGN	J MAGANA	V LOPEZ
DETAILS	B EDWARDS / M TOMAS	J MAGANA
QUANTITIES	J MAGANA	V LOPEZ

STATE OF CALIFORNIA
DEPARTMENT OF TRANSPORTATION

DIVISION OF ENGINEERING SERVICES
DESIGN AND TECHNICAL SERVICES
SPECIAL DESIGNS BRANCH B

BRIDGE NO. 19-0085
POST MILE 31.79

ILLINOISTOWN OC
CONCRETE BARRIER TYPE 732 (MOD)
EXCAVATION AND BACKFILL

(ENGLISH) SPECIAL DESIGNS BRANCH BORDER SHEET (REV. 7-1-09)

ORIGINAL SCALE IN INCHES FOR REDUCED PLANS 0 1 2 3

UNIT: 3619
PROJECT NUMBER & PHASE: 0314000243-1
CONTRACT NO.: 03-4F700

DISREGARD PRINTS BEARING EARLIER REVISION DATES →

REVISION DATES: 10-21-14 | 11-05-14 | 11-24-14

SHEET 5 OF 5

FILE => 034F7001-u-misc-dt04.dgn

USERNAME => s119538 DATE PLOTTED => 08-JAN-2015 TIME PLOTTED => 19:34