ACNHI-0057(098)

Dist	COUNTY	ROUTE	POST MILES TOTAL PROJECT	SHEET No.	TOTAL SHEETS
03	Gle	5	R0.0/R20.0	1	77

STATE OF CALIFORNIA

DEPARTMENT OF TRANSPORTATION

PROJECT PLANS FOR CONSTRUCTION ON

STATE HIGHWAY

IN GLENN COUNTY
IN AND NEAR WILLOWS
FROM COLUSA COUNTY LINE TO
0.2 MILE NORTH OF COUNTY ROAD 28

TO BE SUPPLEMENTED BY STANDARD PLANS DATED 2010

INDEX OF PLANS

SHEET No.	DESCRIPTION
1	TITLE AND LOCATION MAP
2	TYPICAL CROSS SECTIONS
3-20	CONSTRUCTION DETAILS
21-22	CONSTRUCTION AREA SIGNS
23-26	PAVEMENT DELINEATION DETAILS AND QUANTITIES
27-31	SUMMARY OF QUANTITIES
32-35	ELECTRICAL PLANS
36-77	REVISED STANDARD PLANS

THE STANDARD PLANS LIST APPLICABLE TO THIS CONTRACT IS INCLUDED IN THE NOTICE TO BIDDERS AND SPECIAL PROVISIONS BOOK.

LOCATION MAP

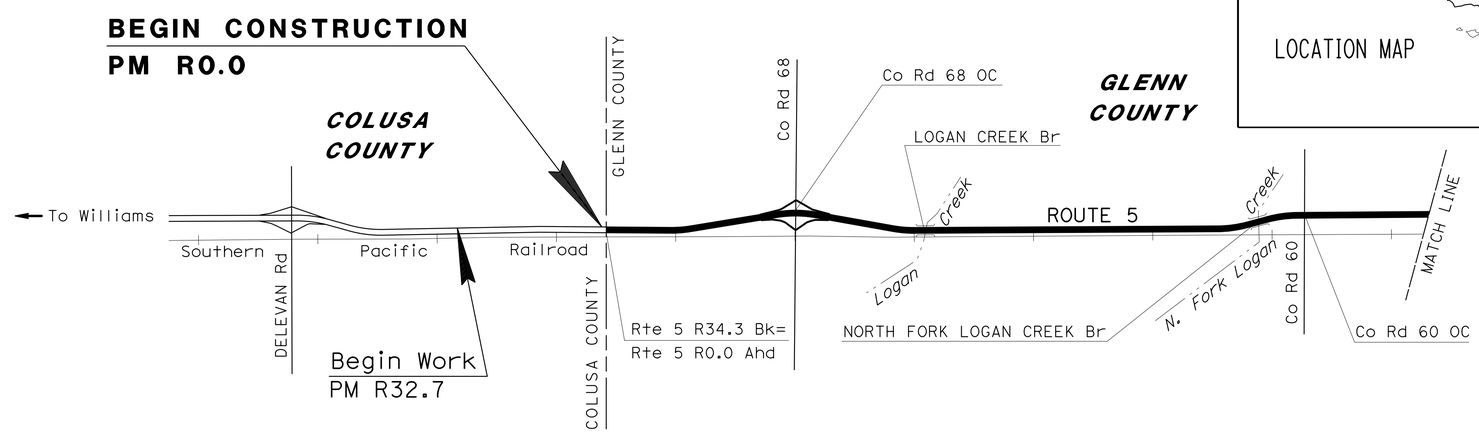

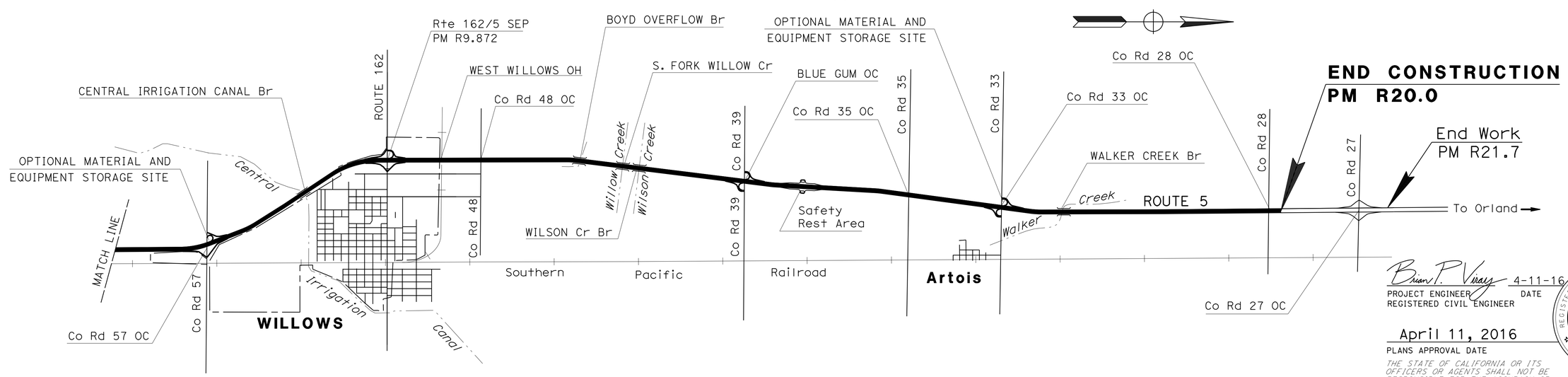

NO SCALE

THE CONTRACTOR SHALL POSSESS THE CLASS (OR CLASSES) OF LICENSE AS SPECIFIED IN THE "NOTICE TO BIDDERS."

PROJECT MANAGER WINDER BAJWA

DESIGN MANAGER FERMIN BARRIGA

Brian P. Viray 4-11-16
PROJECT ENGINEER DATE
REGISTERED CIVIL ENGINEER

April 11, 2016
PLANS APPROVAL DATE

REGISTERED PROFESSIONAL ENGINEER Brian P Viray No. C70023 Exp. 09-30-16 CIVIL STATE OF CALIFORNIA

THE STATE OF CALIFORNIA OR ITS OFFICERS OR AGENTS SHALL NOT BE RESPONSIBLE FOR THE ACCURACY OR COMPLETENESS OF SCANNED COPIES OF THIS PLAN SHEET.

CONTRACT No.	03-4F0604
PROJECT ID	0314000019

LAST REVISION 04-5-16

DATE PLOTTED => 02-MAY-2016
TIME PLOTTED => 15:23

Dist	COUNTY	ROUTE	POST MILES TOTAL PROJECT	SHEET No.	TOTAL SHEETS
03	Gle	5	R0.0/R20.0	2	77

Brian P. Viray 4-11-16
REGISTERED CIVIL ENGINEER DATE

4-11-16
PLANS APPROVAL DATE

REGISTERED PROFESSIONAL ENGINEER BRIAN P VIRAY No. C70023 Exp. 09/30/16 CIVIL STATE OF CALIFORNIA

THE STATE OF CALIFORNIA OR ITS OFFICERS OR AGENTS SHALL NOT BE RESPONSIBLE FOR THE ACCURACY OR COMPLETENESS OF SCANNED COPIES OF THIS PLAN SHEET.

NOTES:

1. DIMENSIONS OF THE PAVEMENT STRUCTURES (STRUCTURAL SECTIONS) ARE SUBJECT TO TOLERANCES SPECIFIED IN THE STANDARD SPECIFICATIONS.
2. SEE CONSTRUCTION DETAILS FOR LOCATIONS OF SRS.
3. SEE CONSTRUCTION DETAILS TO MAINTAIN EXISTING VERTICAL CLEARANCE AT ALL OVERCROSSINGS LOCATIONS.
4. DO NOT COLD PLANE PAVEMENT ON BRIDGE DECK SURFACES AND DO NOT PAVE BRIDGE DECK SURFACES.
5. SEE QUANTITY SHEETS FOR LOCATION AND TYPE OF DIKES.

ABBREVIATIONS

RAC-O - RUBBERIZED ASPHALT CONCRETE (TYPE O)
CPACP - COLD PLANE ASPHALT CONCRETE PAVEMENT
SRS - SHOULDER RUMBLE STRIP (HMA, GROUND-IN INDENTATIONS)

PAVEMENT CLIMATE REGION

INLAND VALLEY

STRUCTURAL SECTION NOTES:

1 Exist
0.10′ RAC-O
Var 0.25′-0.35′ AC
0.65′ AB
1.00′ AS

2 Exist
0.10′ RAC-O
0.35′ AC
0.70′ PCC* OR 0.70′ AC
Var 0.33′-0.45′ AB
Var 0.50′-1.00′ AS
*EXTENDS 1′ EACH SIDE OF ETW

3 Exist
Var 0.55′-0.70′ AC
Var 0.35′-0.95′ AB
Var 0.50′-1.00′ AS

4 0.10′ RHMA-OPEN GRADED (OGFC)
0.20′ RHMA (GAP GRADED)

5 0.10′ RHMA-OPEN GRADED (OGFC)

6 Exist
0.25′ AC
Var 0.67′-0.92′ AB
0.67′ AS

7 0.25′ REPLACE AC SURFACING

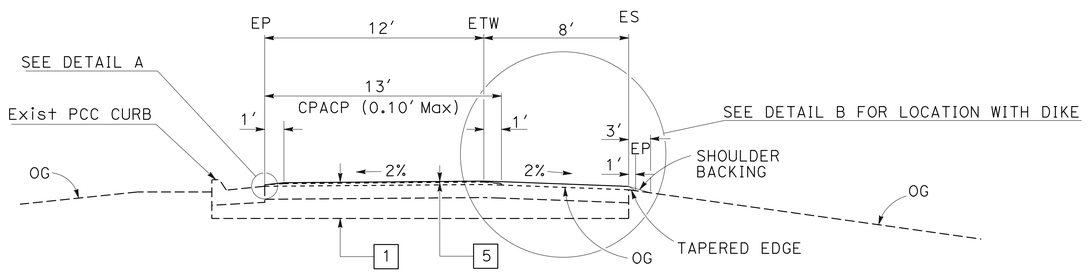

RAMPS

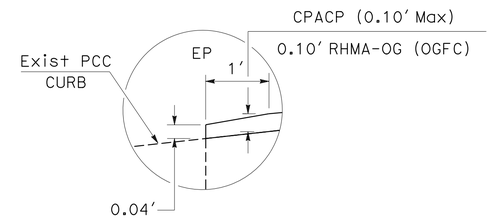

DETAIL A

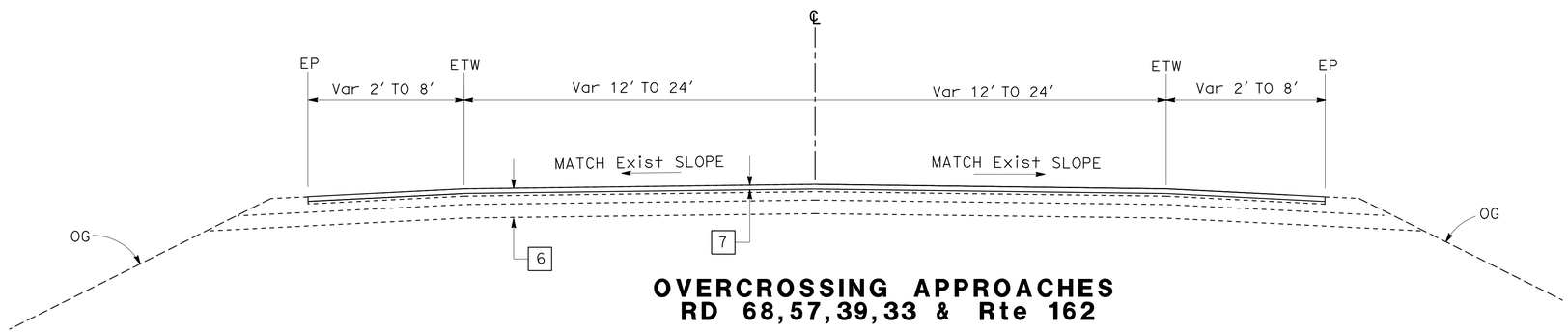

OVERCROSSING APPROACHES
RD 68,57,39,33 & Rte 162

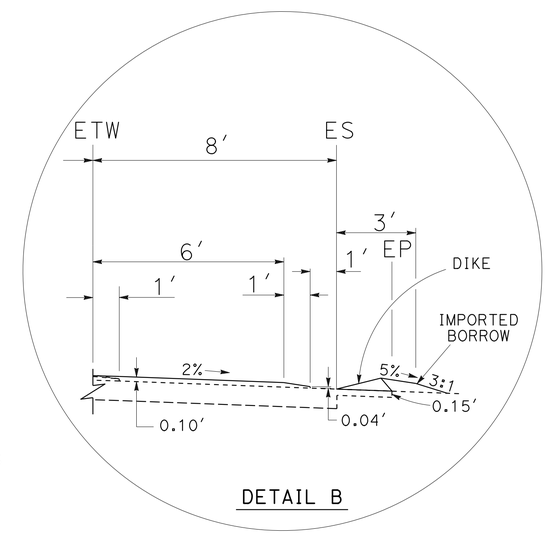

DETAIL B

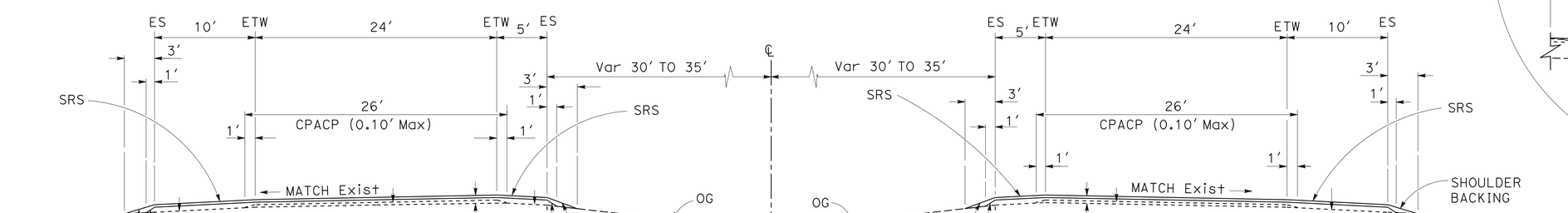

SOUTHBOUND

ROUTE 5
MAINLINE
PM R0.0 TO R20.0

NORTHBOUND

TYPICAL CROSS SECTIONS

NO SCALE

X-1

STATE OF CALIFORNIA - DEPARTMENT OF TRANSPORTATION
Caltrans®
DESIGN
FUNCTIONAL SUPERVISOR: FERMIN BARRIGA
CALCULATED-DESIGNED BY: MAHBOOBEH DEILAMI
CHECKED BY: BRIAN P. VIRAY
REVISED BY
DATE REVISED

LAST REVISION 02-19-16
DATE PLOTTED => 02-MAY-2016
TIME PLOTTED => 13:30

Dist	COUNTY	ROUTE	POST MILES TOTAL PROJECT	SHEET No.	TOTAL SHEETS
03	Gle	5	R0.0/R20.0	3	77

REGISTERED CIVIL ENGINEER 4-11-16 DATE

4-11-16
PLANS APPROVAL DATE

REGISTERED PROFESSIONAL ENGINEER BRIAN P VIRAY No. C70023 Exp. 09/30/16 CIVIL STATE OF CALIFORNIA

THE STATE OF CALIFORNIA OR ITS OFFICERS OR AGENTS SHALL NOT BE RESPONSIBLE FOR THE ACCURACY OR COMPLETENESS OF SCANNED COPIES OF THIS PLAN SHEET.

NOTES:

1. CONFORM AT Beg Const, End Const, BB, EB, Beg WIM, END WIM, REST AREA Rd CONNECTIONS, 65' AT BOTH SIDES OF OC AS SHOWN, AND 80' BEYOND PAVED GORE AREAS.

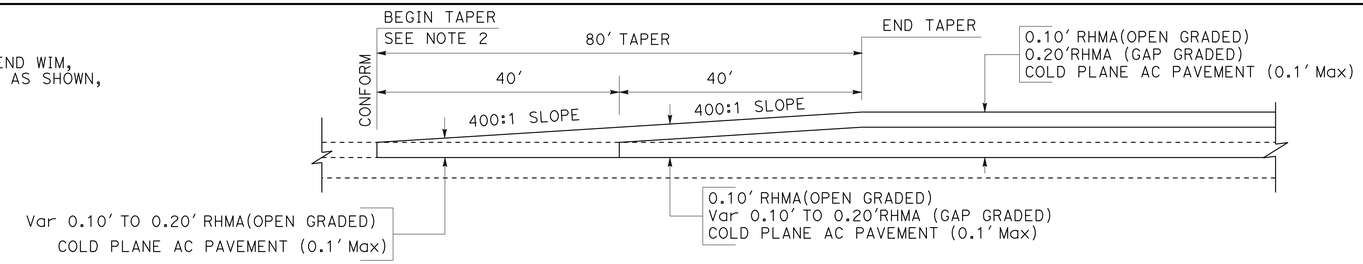

LEGEND

OVERLAY TAPER LIMITS

INDICATES EXISTING STRUCTURE

ABBREVIATIONS

WIM - WEIGHT-IN-MOTION STATION

CONFORM: MAINLINE, BRIDGES, REST AREA Rd CONNECTIONS, RAMPS AND WEIGH-IN-MOTION STATIONS (NB PM R10.891 TO PM R10.847; SB PM R10.825 TO PMR10.10.852)

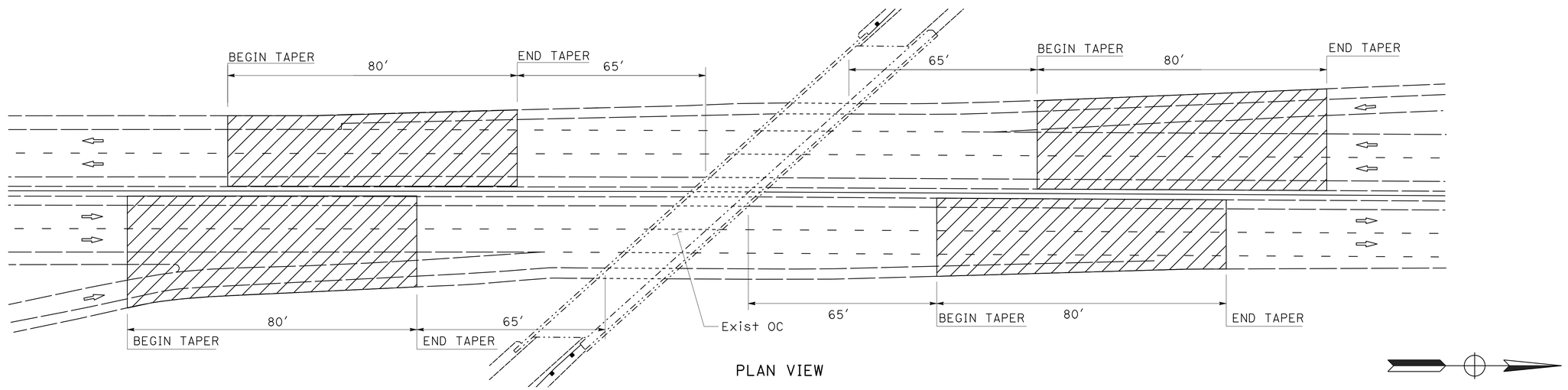

PLAN VIEW

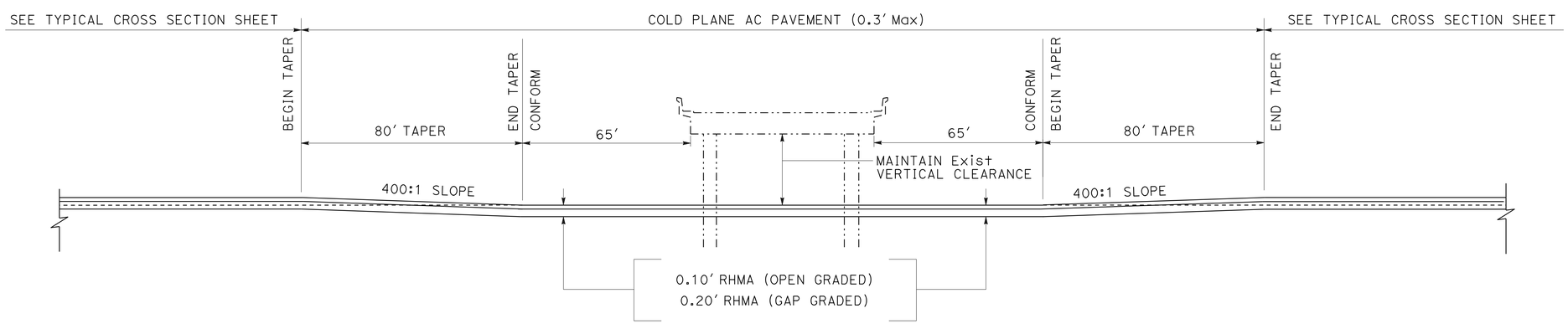

ELEVATION VIEW

OVERCROSSING PAVEMENT OVERLAY TAPER

Co Rd 68 OC	Co Rd 48 OC	Co Rd 33 OC
Co Rd 60 OC	Co Rd 39 OC	Co Rd 35 OC
Co Rd 57 OC	Rte 162/5 Sep	Co Rd 28 OC

CONSTRUCTION DETAILS

NO SCALE

C-1

STATE OF CALIFORNIA - DEPARTMENT OF TRANSPORTATION
Caltrans DESIGN

FUNCTIONAL SUPERVISOR: FERMIN BARRIGA
CALCULATED-DESIGNED BY: FERMIN BARRIGA
CHECKED BY: BRIAN P. VIRAY
REVISED BY
DATE REVISED

LAST REVISION 02-19-16
DATE PLOTTED => 02-MAY-2016
TIME PLOTTED => 13:30

Dist	COUNTY	ROUTE	POST MILES TOTAL PROJECT	SHEET No.	TOTAL SHEETS
03	Gle	5	R0.0/R20.0	4	77

REGISTERED CIVIL ENGINEER 4-11-16 DATE

4-11-16
PLANS APPROVAL DATE

REGISTERED PROFESSIONAL ENGINEER BRIAN P VIRAY No. C70023 Exp. 09/30/16 CIVIL STATE OF CALIFORNIA

THE STATE OF CALIFORNIA OR ITS OFFICERS OR AGENTS SHALL NOT BE RESPONSIBLE FOR THE ACCURACY OR COMPLETENESS OF SCANNED COPIES OF THIS PLAN SHEET.

NOTES:

1. COLD PLANE EXISTING SURFACES TO ACCOMODATE A MINIMUM TAPER THICKNESS OF 0.10′ WHEN EITHER:
   A. HMA MATERIAL SUCH AS RUBBERIZED, POLYMER MODIFIED OR OPEN GRADED IS UNSUITABLE FOR RAKING TO A MAXIMUM 0.02′ THICKNESS AT THE CONFORM.
   B. TEMPORARY TAPER WILL BE IN PLACE FOR MORE THAN 14 DAYS.
2. PERMANENT SURFACE MAY BE EXISTING OR NEW PAVEMENT.
3. ROADWAY SURFACE IS THE TOP OF EXISTING SURFACE OR THE TOP OF THE PLANED SURFACE.
4. FOR TEMPORARY TAPERS ON BRIDGE DECKS AND APPROACH SLABS, CONSTRUCT TEMPORARY TAPERS WITH POLYESTER CONCRETE.
5. IF AUTHORIZED, YOU MAY USE ALTERNATIVE MATERIALS OR METHODS TO PRODUCE THE REQUIRED TAPER.

LEGEND:

- HMA MATERIAL (TEMPORARY TAPER) (SEE NOTE 4)
- IF NECESSARY, COLD PLANE ASPHALT CONCRETE PAVEMENT AND PLACE HMA MATERIAL (SEE NOTE 1)
- REPLACE ASPHALT CONCRETE SURFACING

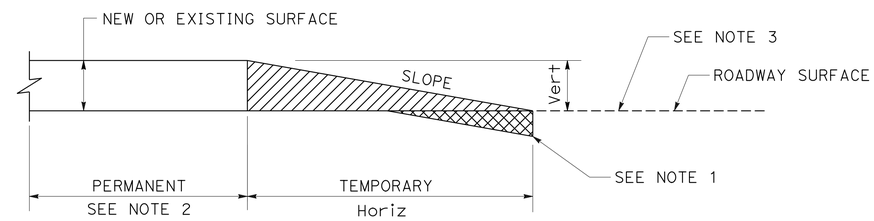

SLOPE RATIO

Vert	Horiz/Vert
0-0.10′	70:1
GREATER THAN 0.10′	160:1

TYPICAL PAVING CONFORM FOR TEMPORARY CONSTRUCTION TAPERS

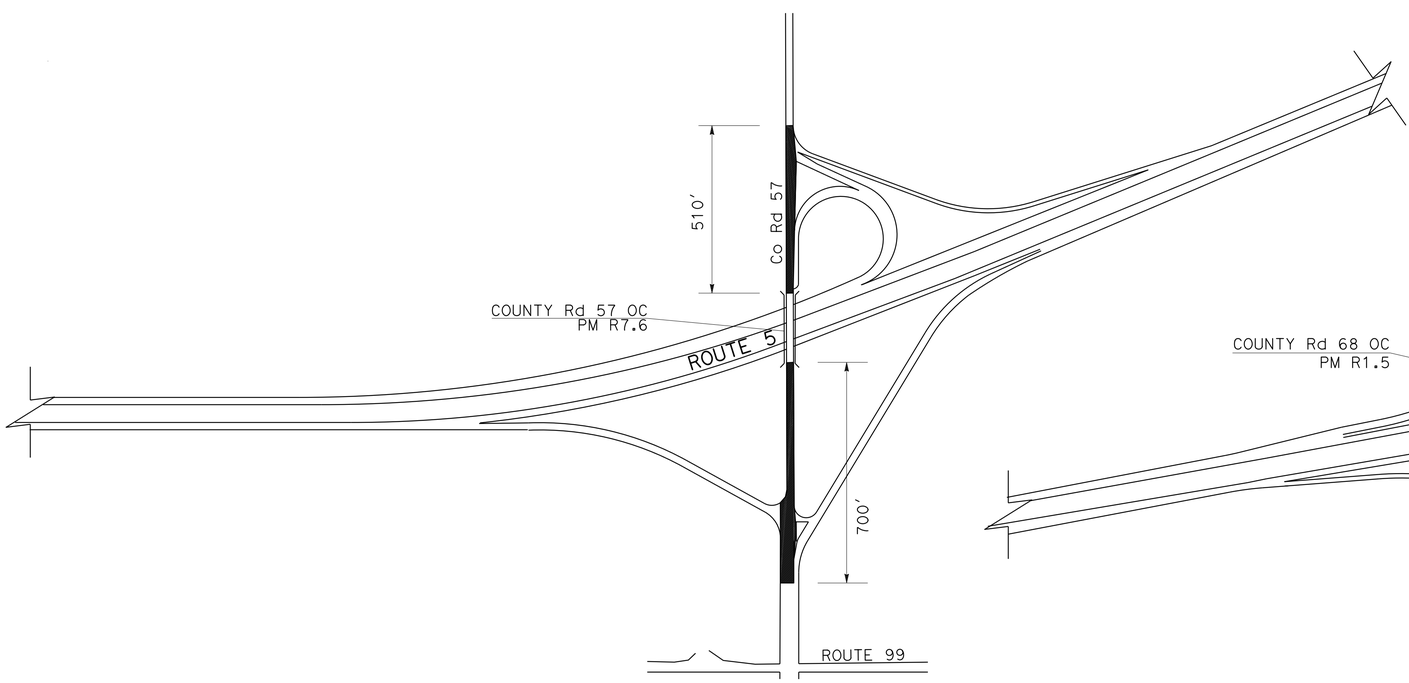

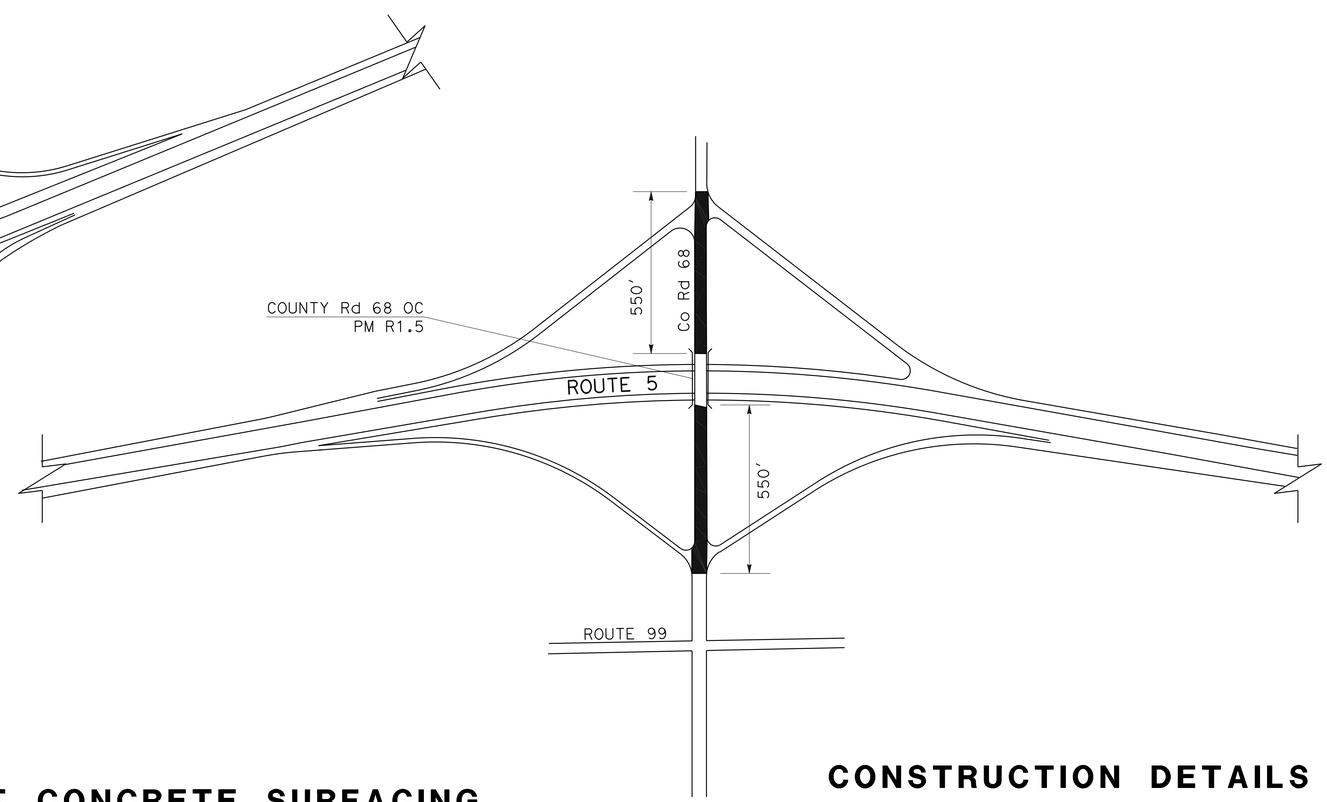

REPLACE ASPHALT CONCRETE SURFACING

CONSTRUCTION DETAILS

NO SCALE

C-2

STATE OF CALIFORNIA - DEPARTMENT OF TRANSPORTATION
Caltrans
DESIGN

FUNCTIONAL SUPERVISOR: FERMIN BARRIGA
CALCULATED-DESIGNED BY: FERMIN BARRIGA
CHECKED BY: BRIAN P. VIRAY
REVISED BY
DATE REVISED

LAST REVISION 02-19-16
DATE PLOTTED => 02-MAY-2016
TIME PLOTTED => 13:30

Dist	COUNTY	ROUTE	POST MILES TOTAL PROJECT	SHEET No.	TOTAL SHEETS
03	Gle	5	R0.0/R20.0	5	77

Brian P. Viray 4-11-16
REGISTERED CIVIL ENGINEER DATE

4-11-16
PLANS APPROVAL DATE

REGISTERED PROFESSIONAL ENGINEER
BRIAN P VIRAY
No. C70023
Exp. 09/30/16
CIVIL
STATE OF CALIFORNIA

THE STATE OF CALIFORNIA OR ITS OFFICERS OR AGENTS SHALL NOT BE RESPONSIBLE FOR THE ACCURACY OR COMPLETENESS OF SCANNED COPIES OF THIS PLAN SHEET.

LEGEND:

REPLACE ASPHALT CONCRETE SURFACING

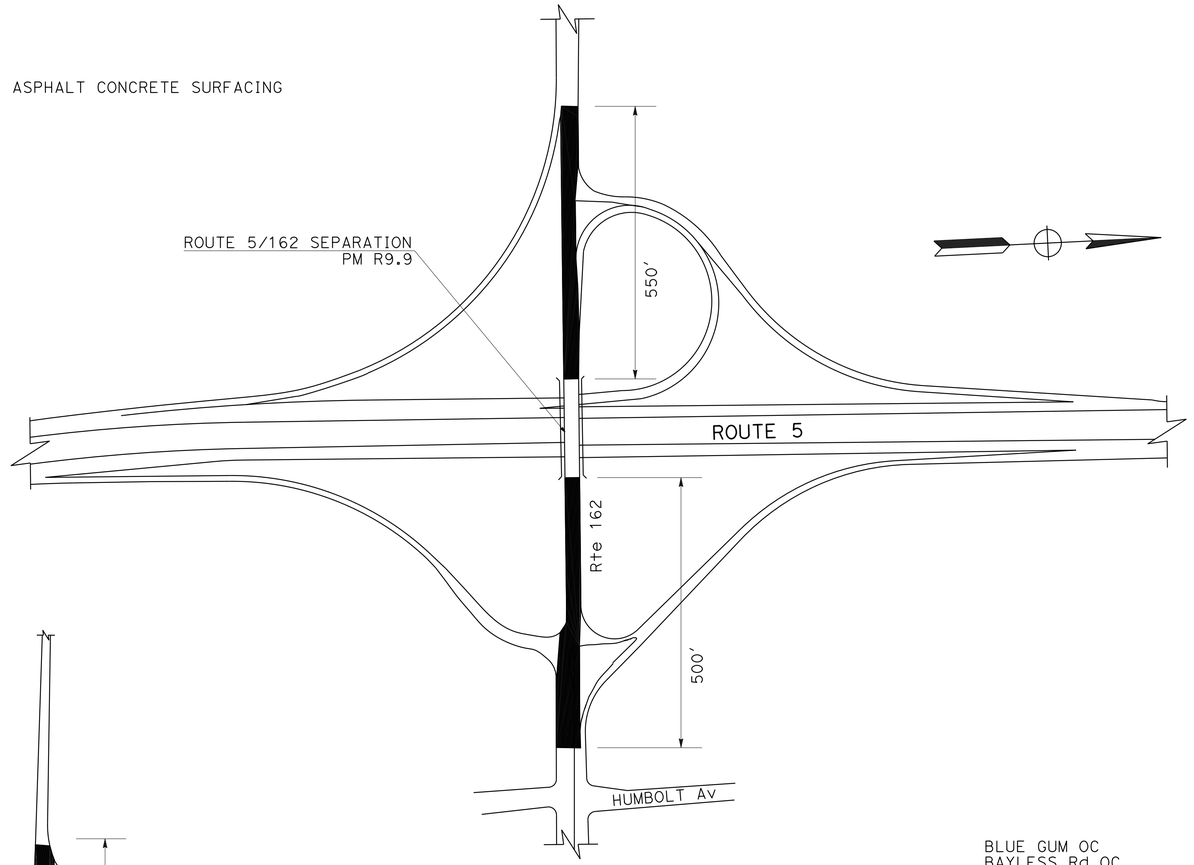

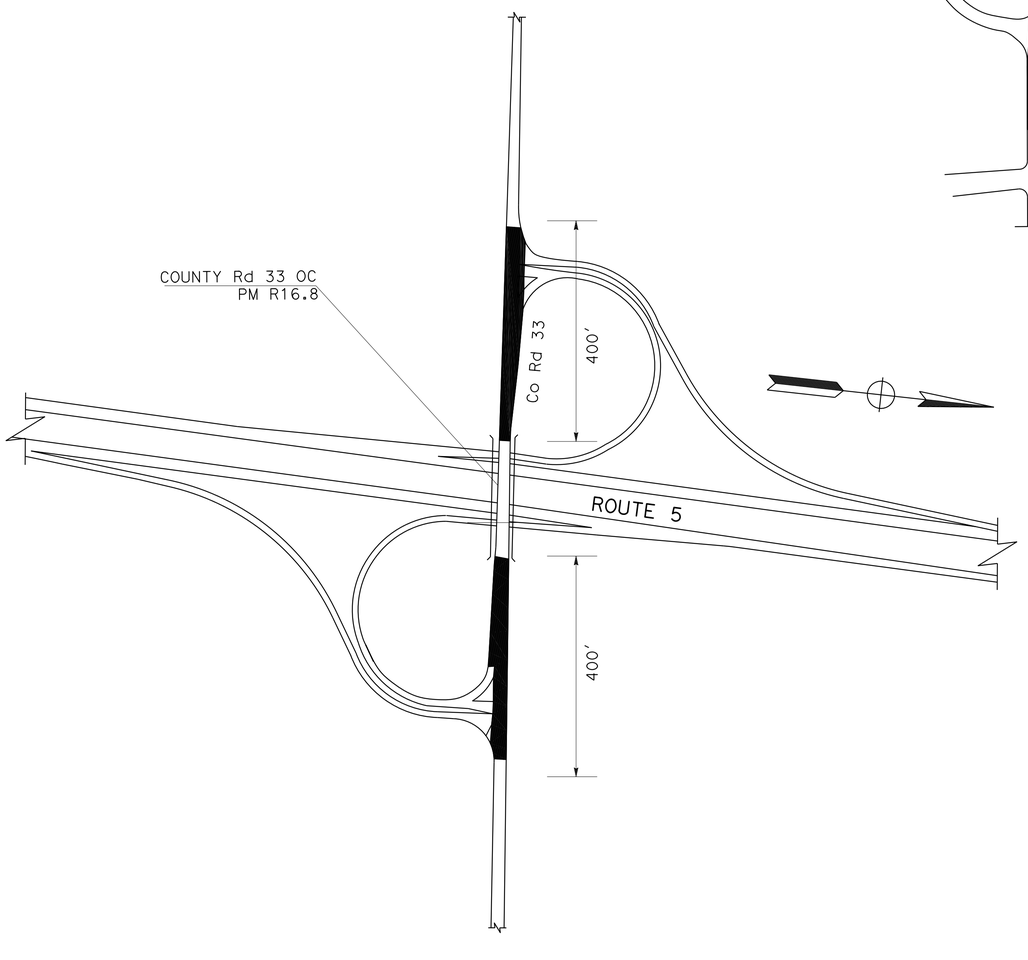

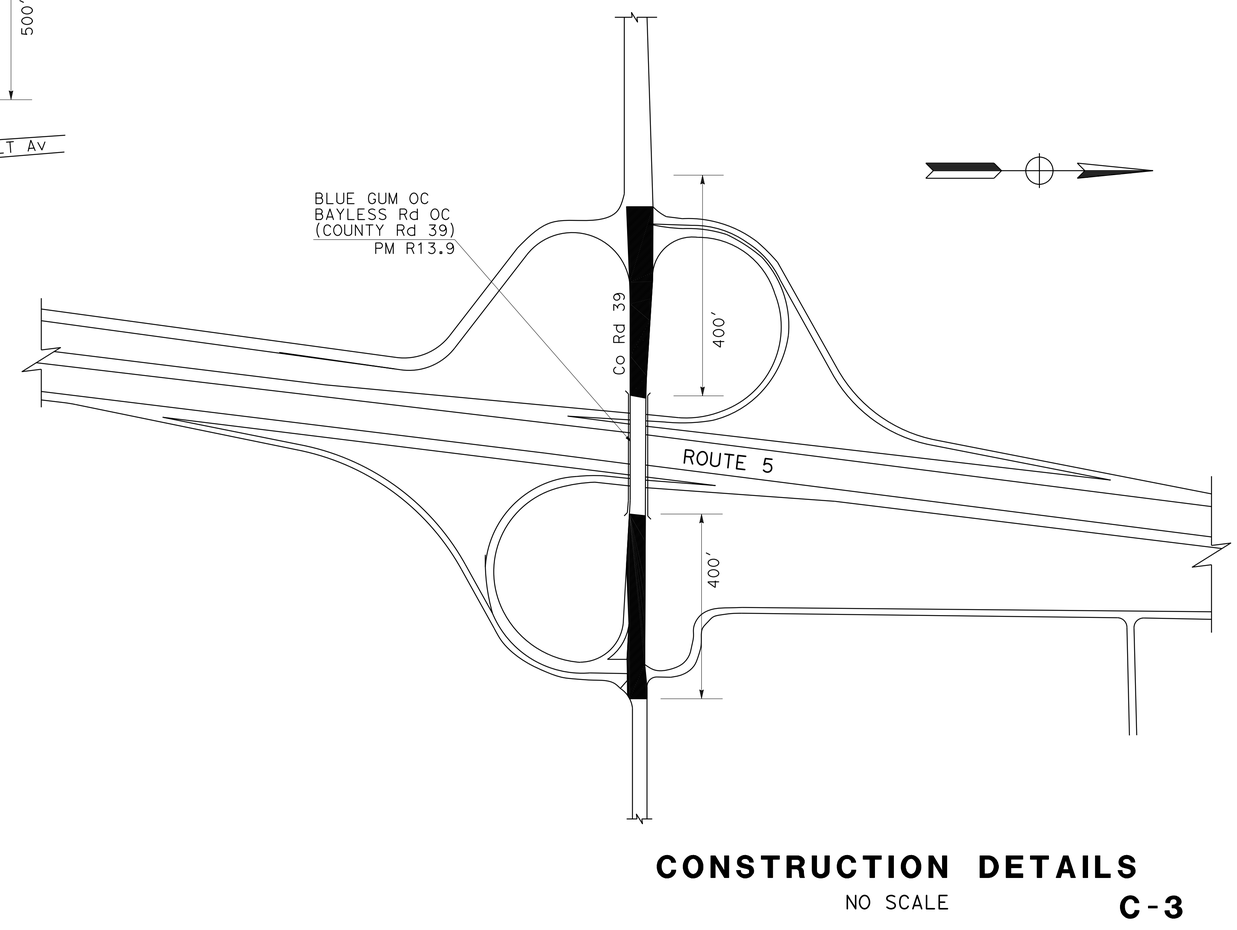

CONSTRUCTION DETAILS

NO SCALE

C-3

STATE OF CALIFORNIA - DEPARTMENT OF TRANSPORTATION
Caltrans
DESIGN

FUNCTIONAL SUPERVISOR: FERMIN BARRIGA

CALCULATED-DESIGNED BY: FERMIN BARRIGA
CHECKED BY: BRIAN P. VIRAY

REVISED BY
DATE REVISED

LAST REVISION 02-19-16
DATE PLOTTED => 02-MAY-2016
TIME PLOTTED => 13:30

Dist	COUNTY	ROUTE	POST MILES TOTAL PROJECT	SHEET No.	TOTAL SHEETS
03	Gle	5	R0.0/R20.0	6	77

Brian P. Viray 4-11-16
REGISTERED CIVIL ENGINEER DATE

4-11-16
PLANS APPROVAL DATE

REGISTERED PROFESSIONAL ENGINEER BRIAN P VIRAY No. C70023 Exp. 09/30/16 CIVIL STATE OF CALIFORNIA

THE STATE OF CALIFORNIA OR ITS OFFICERS OR AGENTS SHALL NOT BE RESPONSIBLE FOR THE ACCURACY OR COMPLETENESS OF SCANNED COPIES OF THIS PLAN SHEET.

NOTE:

1. THE CONTRACTOR MUST VERIFY ALL CONTROLLING FIELD DIMENSIONS BEFORE ORDERING OR FABRICATING ANY MATERIAL.
2. UTILITIES ARE NOT SHOWN. UTILITY INVESTIGATIONS HAVE BEEN COMPLETED AND NO UTILITIES WERE FOUND WITHIN 50 FEET OF THE OUTER LIMITS OF WORK FOR EACH LOCATION OF CONCRETE BLOCK AND CONCRETE BARRIER. OTHER LOCATIONS OF WORK ARE FLEXABLE AND MAYBE ADJUSTED TO MITIGATE ANY CONFLICTS WITH EXISTING UTILITY FACILITIES.

LEGEND:

INDICATES EXISTING STRUCTURE
INDICATES NEW STRUCTURE

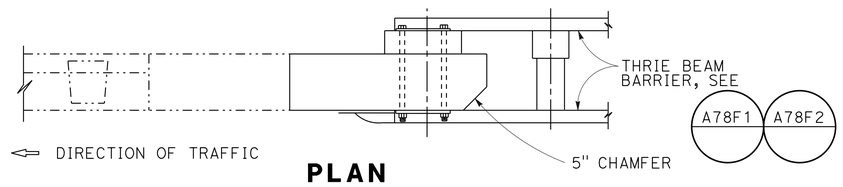

PLAN

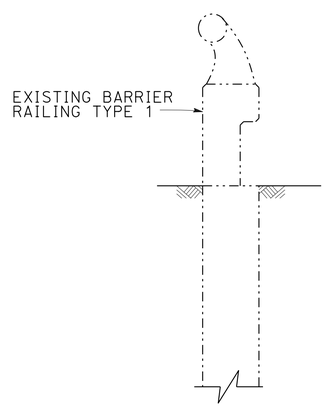

SECTION A-A

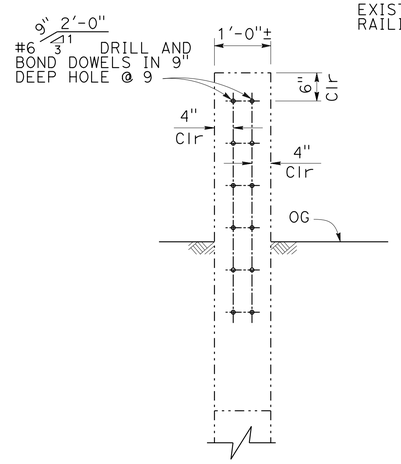

SECTION B-B

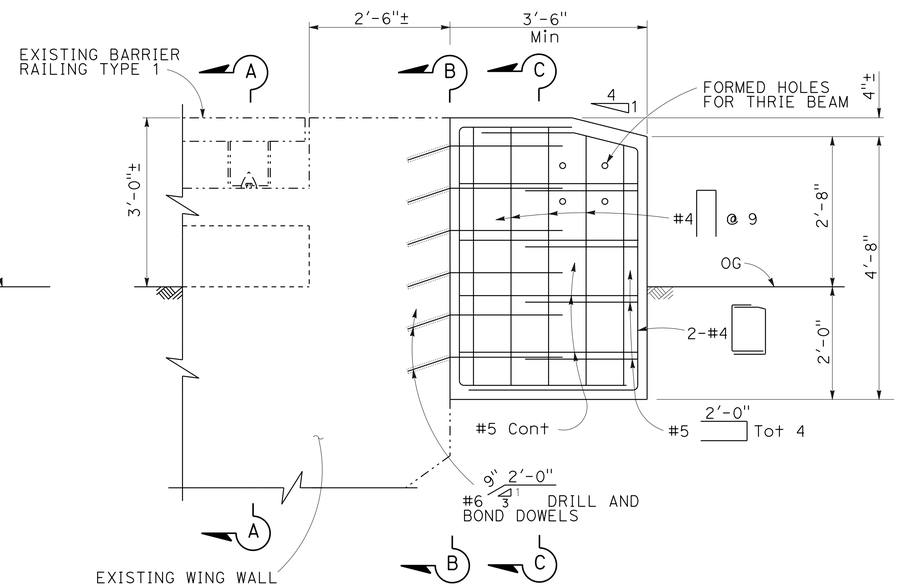

ELEVATION

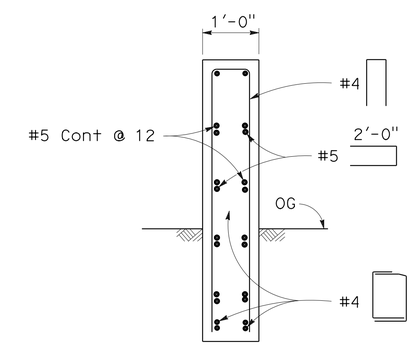

NOTE:

DRILL AND BOND DOWELS NOT SHOWN

SECTION C-C

TYPE 1 CONCRETE TRANSITION LOCATIONS

POST MILE	BRIDGE NAME	BRIDGE No.	DIRECTION	DESCRIPTION
R13.90	COUNTY Rd 39	11-54	SOUTHWEST QUADRANT	
R16.80	COUNTY Rd 33	11-64	SOUTHWEST QUADRANT	

TYPE 1 TRANSITION DETAIL
MINOR CONCRETE (MINOR STRUCTURE)

CONSTRUCTION DETAILS

NO SCALE

C-4

STATE OF CALIFORNIA - DEPARTMENT OF TRANSPORTATION
Caltrans
DESIGN

FUNCTIONAL SUPERVISOR: FERMIN BARRIGA
CALCULATED-DESIGNED BY: TILLAT SATTER
CHECKED BY: FERMIN BARRIGA
REVISED BY
DATE REVISED

LAST REVISION 02-19-16
DATE PLOTTED => 02-MAY-2016
TIME PLOTTED => 13:30

Dist	COUNTY	ROUTE	POST MILES TOTAL PROJECT	SHEET No.	TOTAL SHEETS
03	Gle	5	R0.0/R20.0	7	77

REGISTERED CIVIL ENGINEER 4-11-16 DATE

4-11-16
PLANS APPROVAL DATE

REGISTERED PROFESSIONAL ENGINEER BRIAN P VIRAY No. C70023 Exp. 09/30/16 CIVIL STATE OF CALIFORNIA

THE STATE OF CALIFORNIA OR ITS OFFICERS OR AGENTS SHALL NOT BE RESPONSIBLE FOR THE ACCURACY OR COMPLETENESS OF SCANNED COPIES OF THIS PLAN SHEET.

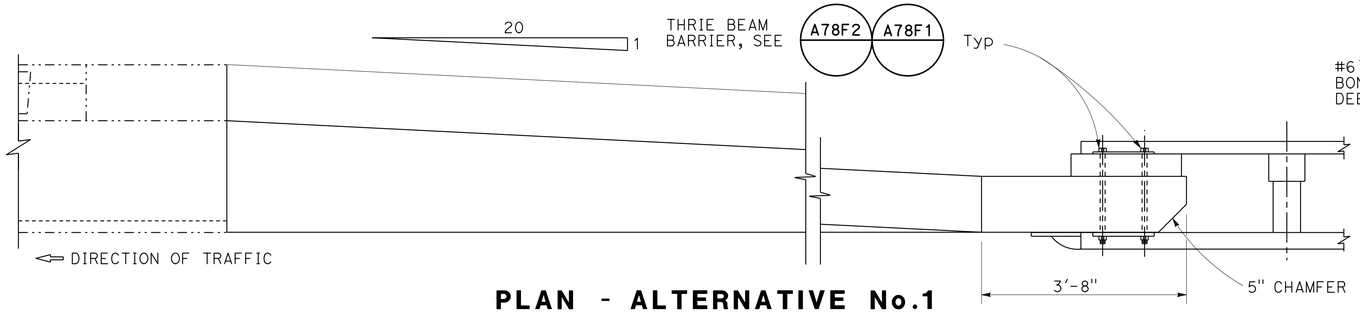

PLAN - ALTERNATIVE No.1

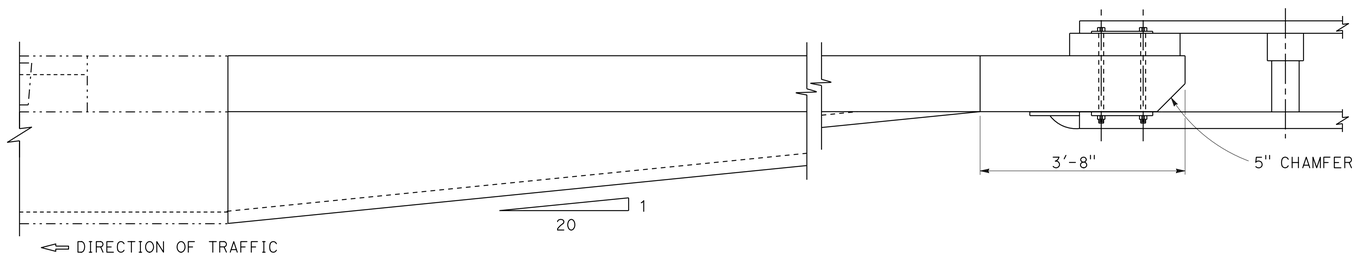

PLAN - ALTERNATIVE No.2

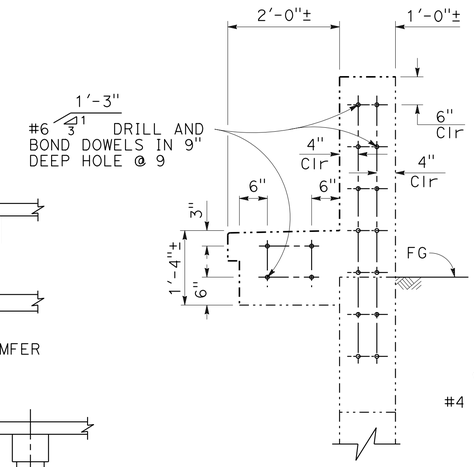

SECTION C-C

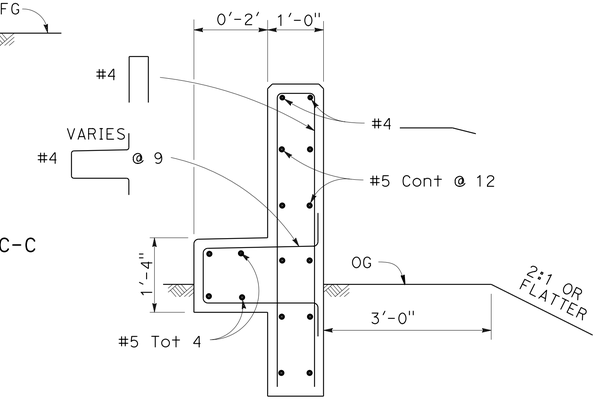

SECTION D-D

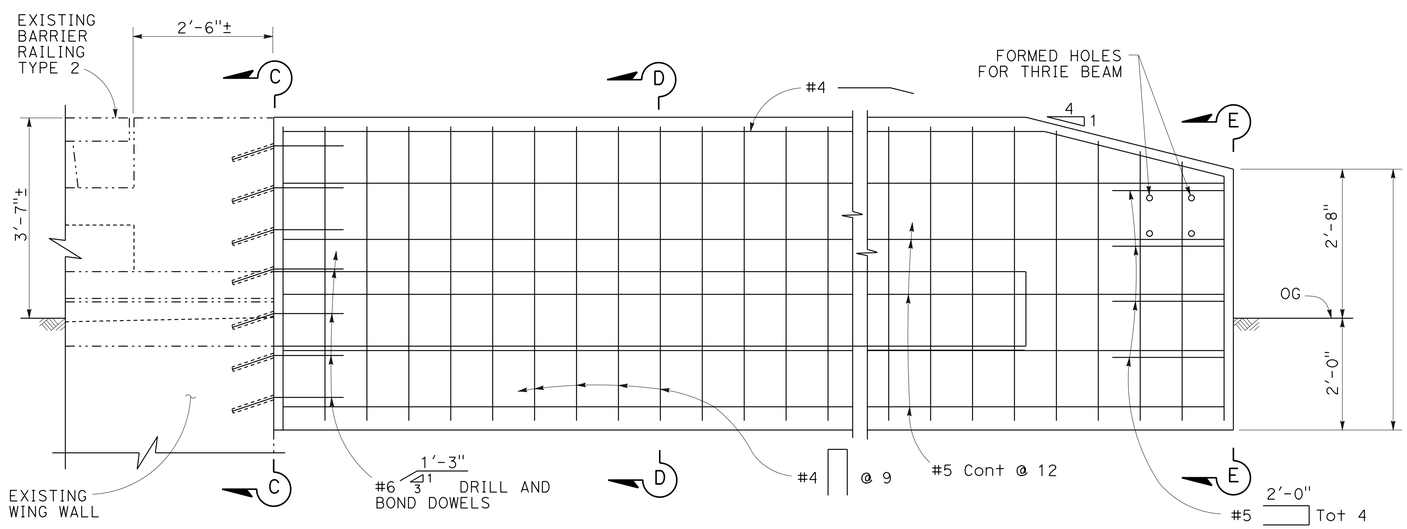

ELEVATION

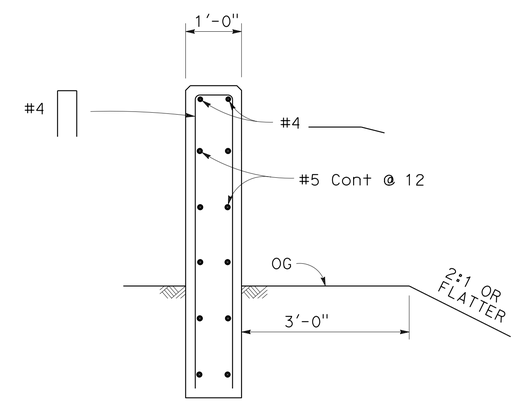

SECTION E-E

TYPE 2 CONCRETE TRANSITION LOCATION

POST MILE	BRIDGE NAME	BRIDGE No.	DIRECTION	DESCRIPTION
R7.61	COUNTY Rd 57	11-80	SW AND NE QUADRANTS	ALTERNATIVE No. 2

NOTE:

1. THE CONTRACTOR MUST VERIFY ALL CONTROLLING FIELD DIMENSIONS BEFORE ORDERING OR FABRICATING ANY MATERIAL.
2. UTILITIES ARE NOT SHOWN. UTILITY INVESTIGATIONS HAVE BEEN COMPLETED AND NO UTILITIES WERE FOUND WITHIN 50 FEET OF THE OUTER LIMITS OF WORK FOR EACH LOCATION OF CONCRETE BLOCK AND CONCRETE BARRIER. OTHER LOCATIONS OF WORK ARE FLEXABLE AND MAYBE ADJUSTED TO MITIGATE ANY CONFLICTS WITH EXISTING UTILITY FACILITIES.

TYPE 2 TRANSITION DETAIL
MINOR CONCRETE (MINOR STRUCTURE)

CONSTRUCTION DETAILS

NO SCALE

C-5

REVISED BY	DATE REVISED
TILLAT SATTER	FERMIN BARRIGA
CALCULATED-DESIGNED BY	CHECKED BY
FUNCTIONAL SUPERVISOR	FERMIN BARRIGA

STATE OF CALIFORNIA - DEPARTMENT OF TRANSPORTATION
DESIGN
Caltrans®

LAST REVISION 02-19-16
DATE PLOTTED => 02-MAY-2016
TIME PLOTTED => 13:30

Dist	COUNTY	ROUTE	POST MILES TOTAL PROJECT	SHEET No.	TOTAL SHEETS
03	Gle	5	R0.0/R20.0	8	77

REGISTERED CIVIL ENGINEER DATE 4-11-16

PLANS APPROVAL DATE 4-11-16

REGISTERED PROFESSIONAL ENGINEER BRIAN P VIRAY No. C70023 Exp. 09/30/16 CIVIL STATE OF CALIFORNIA

THE STATE OF CALIFORNIA OR ITS OFFICERS OR AGENTS SHALL NOT BE RESPONSIBLE FOR THE ACCURACY OR COMPLETENESS OF SCANNED COPIES OF THIS PLAN SHEET.

NOTES:

1. HOLES USED FOR FASTENING EXISTING MBGR MUST BE MORTAR FILLED, UNLESS HOLES WERE CAST USING PIPE SLEEVES.
2. EXISTING BARRIER HEIGHTS VARY. WHERE EXIST BARRIER HEIGHT IS MORE THAN 2'-8" TRANSITION BARRIER HEIGHT TO 2'-8" @ 4:1 SLOPE.
3. THE CONTRACTOR MUST VERIFY ALL CONTROLLING FIELD DIMENSIONS BEFORE ORDERING OR FABRICATING ANY MATERIAL.
4. UTILITIES ARE NOT SHOWN. UTILITY INVESTIGATIONS HAVE BEEN COMPLETED AND NO UTILITIES WERE FOUND WITHIN 50 FEET OF THE OUTER LIMITS OF WORK FOR EACH LOCATION OF CONCRETE BLOCK AND CONCRETE BARRIER. OTHER LOCATIONS OF WORK ARE FLEXABLE AND MAYBE ADJUSTED TO MITIGATE ANY CONFLICTS WITH EXISTING UTILITY FACILITIES.

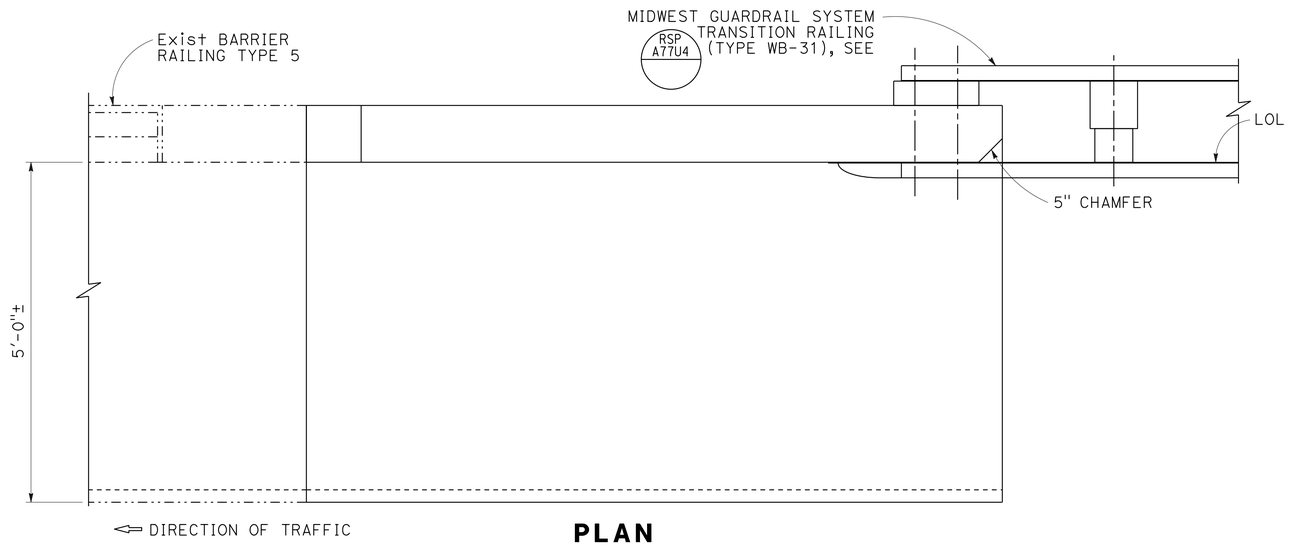

PLAN

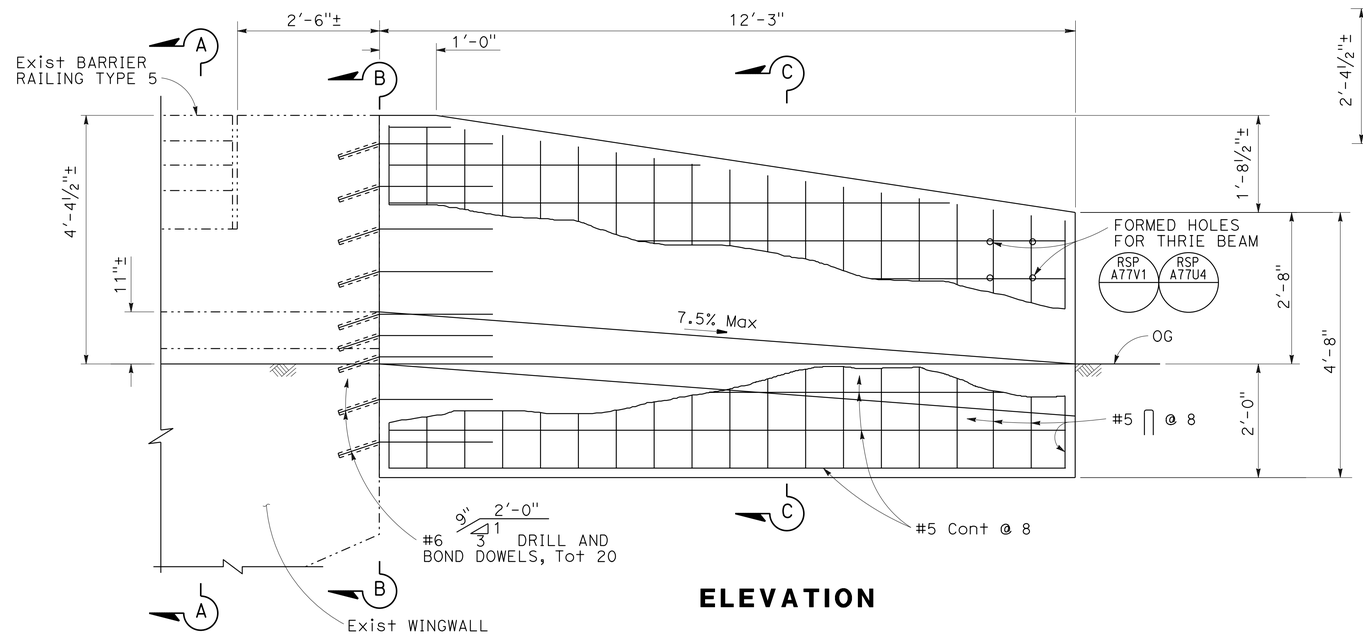

ELEVATION

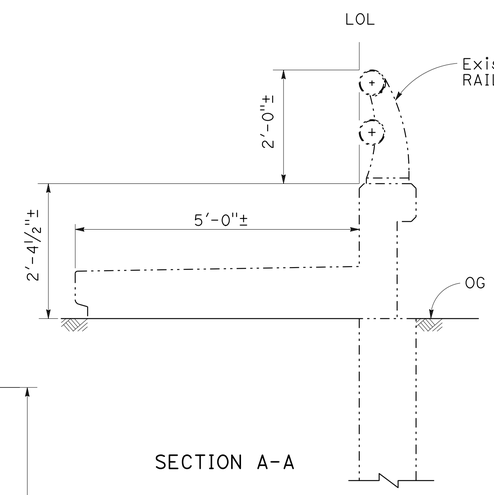

SECTION A-A

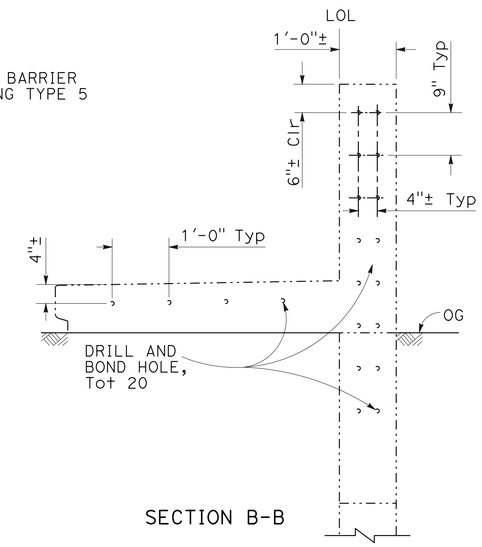

SECTION B-B

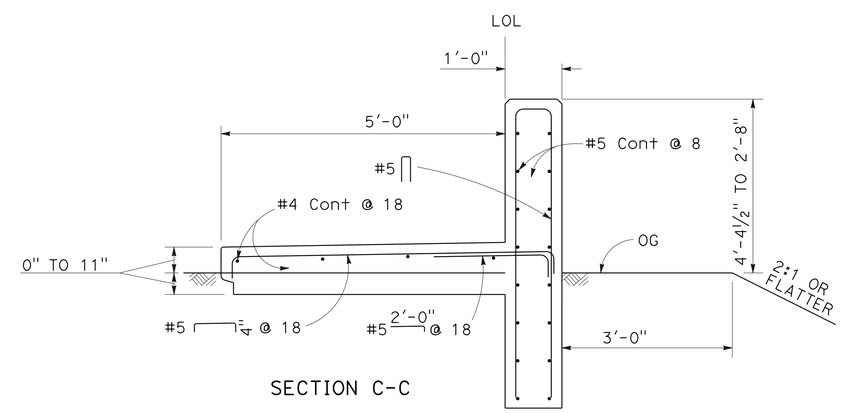

SECTION C-C

TYPE 5 CONCRETE TRANSITION LOCATIONS

POST MILE	BRIDGE NAME	BRIDGE No.	DIRECTION	LENGTH
R13.895	COUNTY ROAD 39 OC	11-0054	WB RIGHT	12'-3"
R16.803	COUNTY ROAD 33 OC	11-0064	WB RIGHT	12'-3"

TYPE 5 TRANSITION DETAIL
MINOR CONCRETE (MINOR STRUCTURE)

CONSTRUCTION DETAILS
NO SCALE

C-6

STATE OF CALIFORNIA - DEPARTMENT OF TRANSPORTATION
DESIGN
Caltrans

FUNCTIONAL SUPERVISOR: FERMIN BARRIGA
CALCULATED-DESIGNED BY: YU SONG
CHECKED BY: FERMIN BARRIGA
REVISED BY
DATE REVISED

LAST REVISION 02-19-16
DATE PLOTTED => 02-MAY-2016
TIME PLOTTED => 13:30

Dist	COUNTY	ROUTE	POST MILES TOTAL PROJECT	SHEET No.	TOTAL SHEETS
03	Gle	5	R0.0/R20.0	9	77

REGISTERED CIVIL ENGINEER 4-11-16 DATE

4-11-16
PLANS APPROVAL DATE

REGISTERED PROFESSIONAL ENGINEER BRIAN P VIRAY No. C70023 Exp. 09/30/16 CIVIL STATE OF CALIFORNIA

THE STATE OF CALIFORNIA OR ITS OFFICERS OR AGENTS SHALL NOT BE RESPONSIBLE FOR THE ACCURACY OR COMPLETENESS OF SCANNED COPIES OF THIS PLAN SHEET.

NOTES:

1. HOLES USED FOR FASTENING EXISTING GUARD RAILING MUST BE MORTAR FILLED, UNLESS HOLES WERE CAST USING PIPE SLEEVES.
2. EXISTING BARRIER HEIGHTS VARY. WHERE EXIST BARRIER HEIGHT IS MORE THAN 2'-8", TRANSITION BARRIER HEIGHT TO 2'-8" @ 4:1 SLOPE.
3. THE CONTRACTOR MUST VERIFY ALL CONTROLLING FIELD DIMENSIONS BEFORE ORDERING OR FABRICATING ANY MATERIAL.
4. UTILITIES ARE NOT SHOWN. UTILITY INVESTIGATIONS HAVE BEEN COMPLETED AND NO UTILITIES WERE FOUND WITHIN 50 FEET OF THE OUTER LIMITS OF WORK FOR EACH LOCATION OF CONCRETE BLOCK AND CONCRETE BARRIER. OTHER LOCATIONS OF WORK ARE FLEXABLE AND MAYBE ADJUSTED TO MITIGATE ANY CONFLICTS WITH EXISTING UTILITY FACILITIES.

LEGEND:

REMOVE EXISTING TYPE 11 BARRIER RAILING

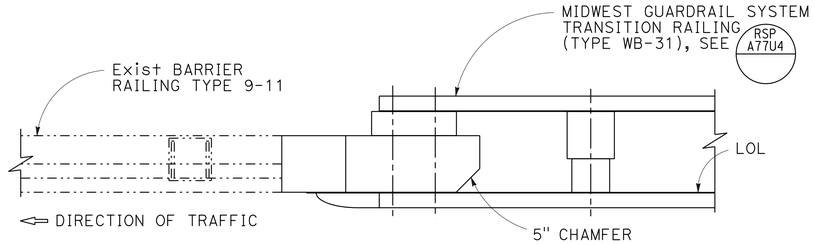

PLAN

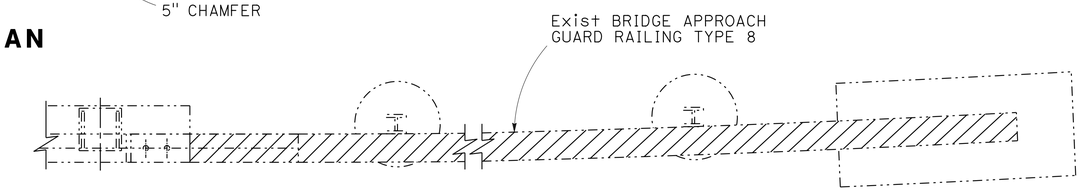

PLAN

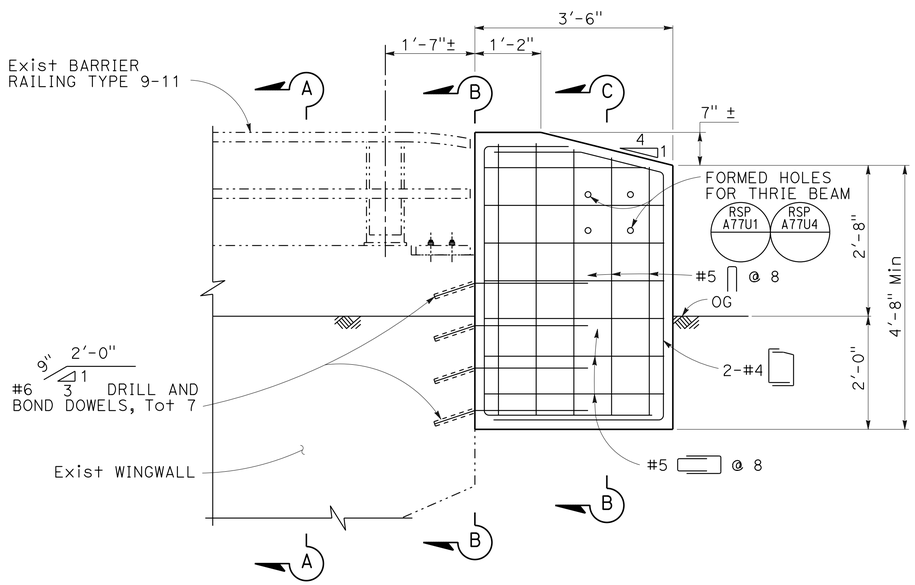

ELEVATION

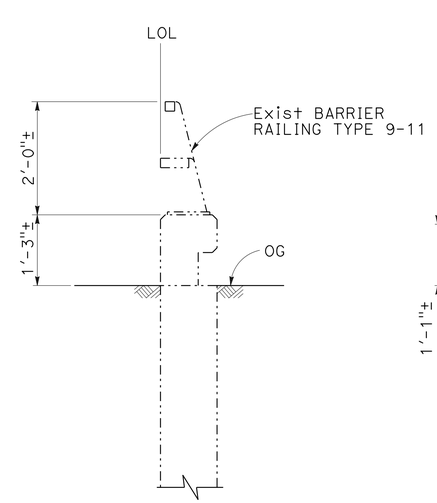

SECTION A-A

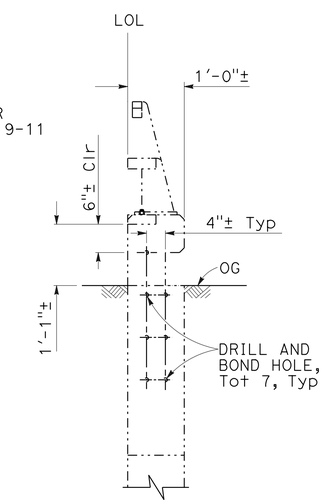

SECTION B-B

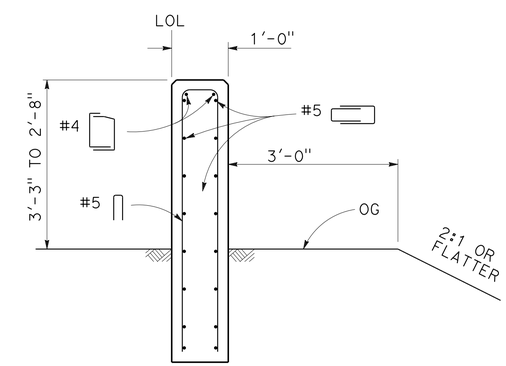

SECTION C-C

TYPE 9-11 CONCRETE TRANSITION LOCATION

POST MILE	BRIDGE NAME	BRIDGE No.	DIRECTION	LENGTH
R1.52	COUNTY Rd 68 OC	11-0083	EB RIGHT	3'-6"

TYPE 9-11 TRANSITION DETAIL
MINOR CONCRETE (MINOR STRUCTURE)

CONSTRUCTION DETAILS

NO SCALE

C-7

STATE OF CALIFORNIA - DEPARTMENT OF TRANSPORTATION
Caltrans®
DESIGN
FUNCTIONAL SUPERVISOR: FERMIN BARRIGA
CALCULATED-DESIGNED BY: YU SONG
CHECKED BY: FERMIN BARRIGA
REVISED BY
DATE REVISED

LAST REVISION 02-19-16
DATE PLOTTED => 02-MAY-2016
TIME PLOTTED => 13:30

Dist	COUNTY	ROUTE	POST MILES TOTAL PROJECT	SHEET No.	TOTAL SHEETS
03	Gle	5	R0.0/R20.0	10	77

REGISTERED CIVIL ENGINEER 4-11-16 DATE

4-11-16
PLANS APPROVAL DATE

REGISTERED PROFESSIONAL ENGINEER BRIAN P VIRAY No. C70023 Exp. 09/30/16 CIVIL STATE OF CALIFORNIA

THE STATE OF CALIFORNIA OR ITS OFFICERS OR AGENTS SHALL NOT BE RESPONSIBLE FOR THE ACCURACY OR COMPLETENESS OF SCANNED COPIES OF THIS PLAN SHEET.

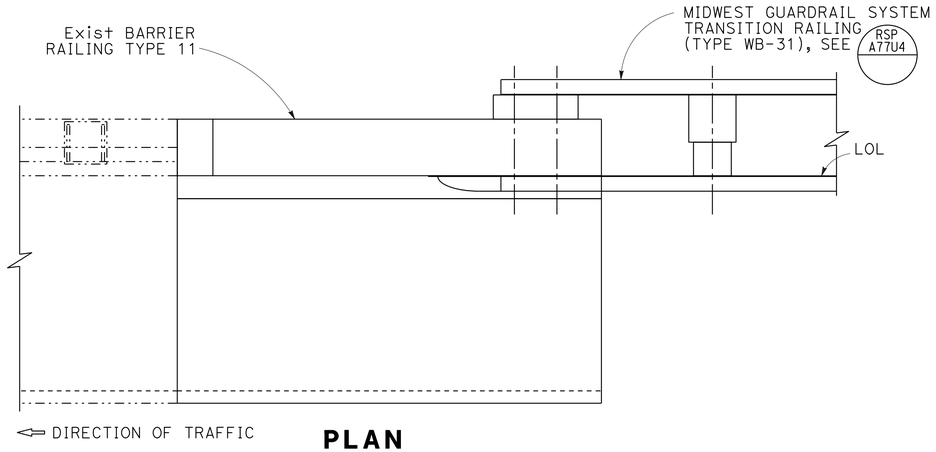

PLAN

NOTES:

1. HOLES USED FOR FASTENING EXISTING GUARD RAILING MUST BE MORTAR FILLED, UNLESS HOLES WERE CAST USING PIPE SLEEVES.

   EXISTING BARRIER HEIGHTS VARY.
2. WHERE EXISTING BARRIER HEIGHT IS MORE THAN 2'-8", TRANSITION BARRIER HEIGHT TO 2'-8" @ 4:1 SLOPE.
3. THE CONTRACTOR MUST VERIFY ALL CONTROLLING FIELD DIMENSIONS BEFORE ORDERING OR FABRICATING ANY MATERIAL.
4. UTILITIES ARE NOT SHOWN. UTILITY INVESTIGATIONS HAVE BEEN COMPLETED AND NO UTILITIES WERE FOUND WITHIN 50 FEET OF THE OUTER LIMITS OF WORK FOR EACH LOCATION OF CONCRETE BLOCK AND CONCRETE BARRIER. OTHER LOCATIONS OF WORK ARE FLEXABLE AND MAYBE ADJUSTED TO MITIGATE ANY CONFLICTS WITH EXISTING UTILITY FACILITIES.

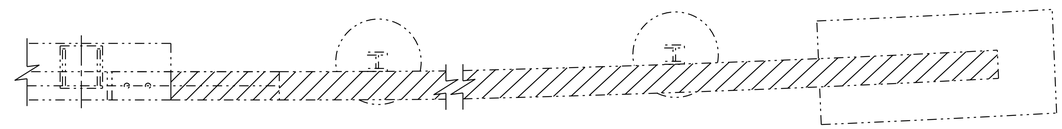

PLAN

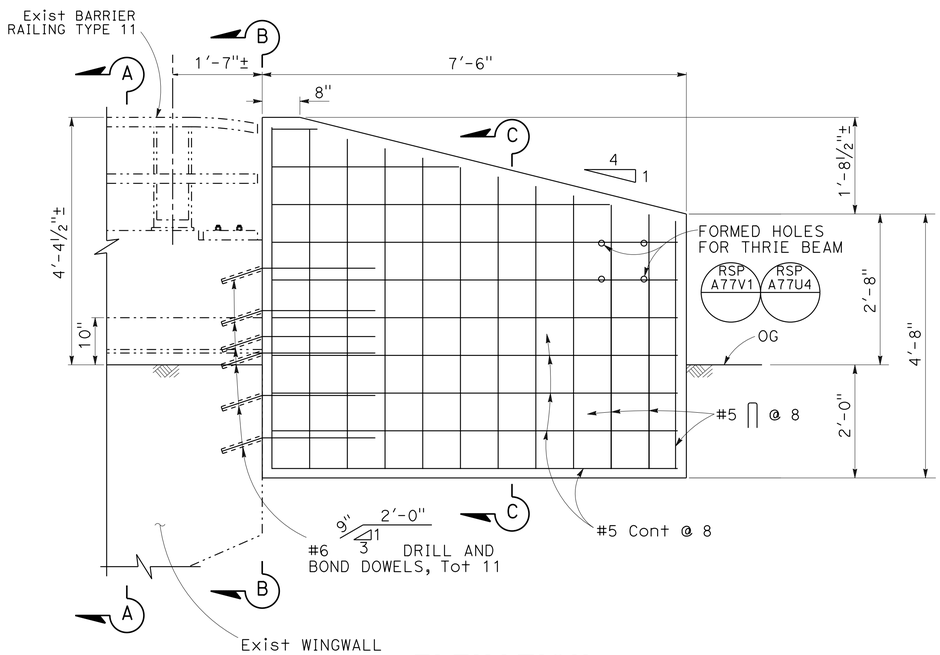

ELEVATION

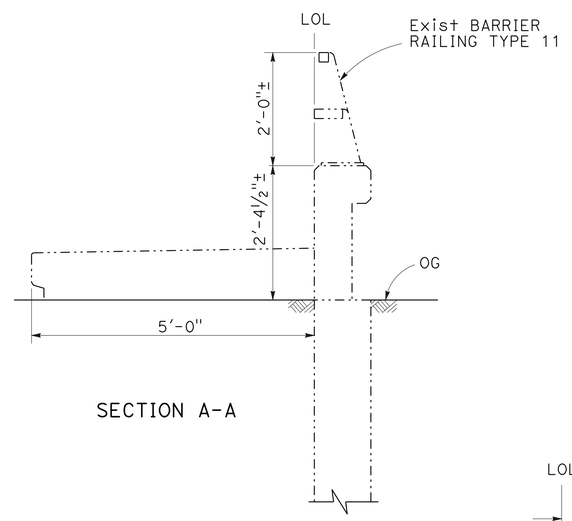

SECTION A-A

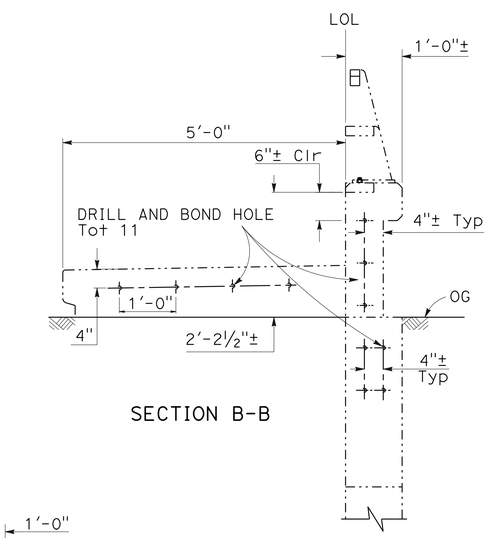

SECTION B-B

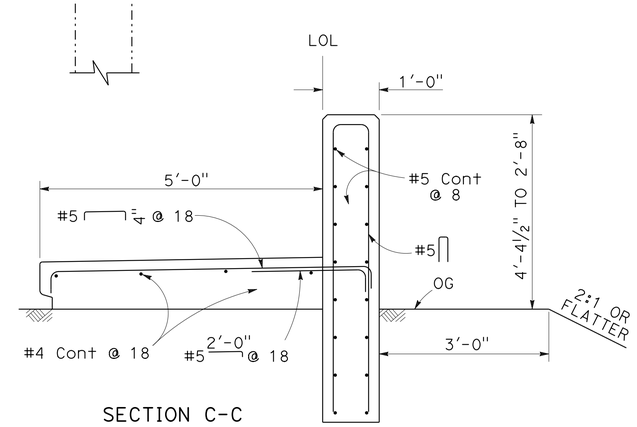

SECTION C-C

TYPE 11 CONCRETE TRANSITION LOCATION

POST MILE	BRIDGE NAME	BRIDGE No.	DIRECTION	LENGTH
R1.52	COUNTY Rd 68 OC	11-0083	WB RIGHT	7'-6"

TYPE 11 TRANSITION DETAIL
MINOR CONCRETE (MINOR STRUCTURE)

CONSTRUCTION DETAILS

NO SCALE

C-8

STATE OF CALIFORNIA - DEPARTMENT OF TRANSPORTATION
Caltrans® DESIGN

FUNCTIONAL SUPERVISOR: FERMIN BARRIGA
CALCULATED-DESIGNED BY: YU SONG
CHECKED BY: FERMIN BARRIGA
REVISED BY
DATE REVISED

LAST REVISION 02-19-16
DATE PLOTTED => 02-MAY-2016
TIME PLOTTED => 13:30

Dist	COUNTY	ROUTE	POST MILES TOTAL PROJECT	SHEET No.	TOTAL SHEETS
03	Gle	5	R0.0/R20.0	11	77

Brian P. Viray 4-11-16
REGISTERED CIVIL ENGINEER DATE

4-11-16
PLANS APPROVAL DATE

REGISTERED PROFESSIONAL ENGINEER
BRIAN P VIRAY
No. C70023
Exp. 09/30/16
CIVIL
STATE OF CALIFORNIA

THE STATE OF CALIFORNIA OR ITS OFFICERS OR AGENTS SHALL NOT BE RESPONSIBLE FOR THE ACCURACY OR COMPLETENESS OF SCANNED COPIES OF THIS PLAN SHEET.

NOTES:

1. BRIDGE ANCHOR BLOCKS SHALL BE SHIELDED FROM TRAFFIC UNTIL ANCHOR BLOCK CONCRETE CURES AND PERMANENT MGS CONNECTION IS PLACED.
2. THIS SHIELD DETAIL IS A SUGGESTED DETAIL FOR WHEN THE ANCHOR BLOCKS CANNOT BE BUILT BEHIND THE EXISTING RAILING. THE WORK FOR THIS DETAIL OR AN ALTERNATE DETAIL THAT MAY BE APPROVED BY THE ENGINEER IS NOT A SEPARATE PAY ITEM.
3. FOR END ANCHOR BLOCK CONSTRUCTION DETAILS, SEE SHEETS C-4 THROUGH C-8.
4. REMOVE GUARD RAILING POST(S), EXCAVATE FOR ANCHOR BLOCK, FORM AND POUR ANCHOR BLOCK, AND PLACE NESTED RAIL, AS SHOWN BELOW, UNTIL BLOCK CONCRETE CURES.
5. EXISTING POST SPACING MAY BE 3'-1½" OR EVEN VARIABLE DEPENDING ON FIELD CONDITIONS.
6. MGS WORK IS TO BE DONE USING THE APPROPRIATE TRAFFIC CONTROL Std PLAN T10, T11, T13, AND T14.
7. UTILITIES ARE NOT SHOWN. UTILITY INVESTIGATIONS HAVE BEEN COMPLETED AND NO UTILITIES WERE FOUND WITHIN 50 FEET OF THE OUTER LIMITS OF WORK FOR EACH LOCATION OF CONCRETE BLOCK AND CONCRETE BARRIER. OTHER LOCATIONS OF WORK ARE FLEXABLE AND MAYBE ADJUSTED TO MITIGATE ANY CONFLICTS WITH EXISTING UTILITY FACILITIES.

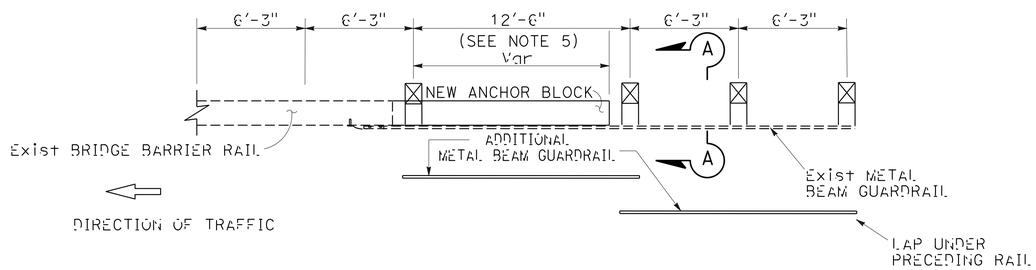

BRIDGE ANCHOR BLOCK SHIELD DETAIL
(SEE NOTE 2)

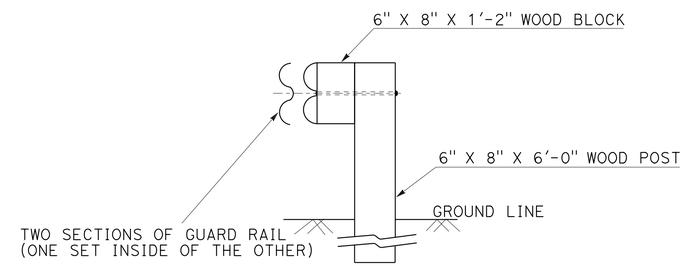

SECTION A-A

CONSTRUCTION DETAILS

NO SCALE

C-9

STATE OF CALIFORNIA - DEPARTMENT OF TRANSPORTATION
Caltrans® DESIGN

FUNCTIONAL SUPERVISOR: FERMIN BARRIGA
CALCULATED-DESIGNED BY: S. WOODBECK
CHECKED BY: F. BARRIGA
REVISED BY
DATE REVISED

LAST REVISION 02-19-16
DATE PLOTTED => 02-MAY-2016
TIME PLOTTED => 13:30

Dist	COUNTY	ROUTE	POST MILES TOTAL PROJECT	SHEET No.	TOTAL SHEETS
03	Gle	5	R0.0/R20.0	12	77

REGISTERED CIVIL ENGINEER 4-11-16 DATE

4-11-16
PLANS APPROVAL DATE

REGISTERED PROFESSIONAL ENGINEER BRIAN P VIRAY No. C70023 Exp. 09/30/16 CIVIL STATE OF CALIFORNIA

THE STATE OF CALIFORNIA OR ITS OFFICERS OR AGENTS SHALL NOT BE RESPONSIBLE FOR THE ACCURACY OR COMPLETENESS OF SCANNED COPIES OF THIS PLAN SHEET.

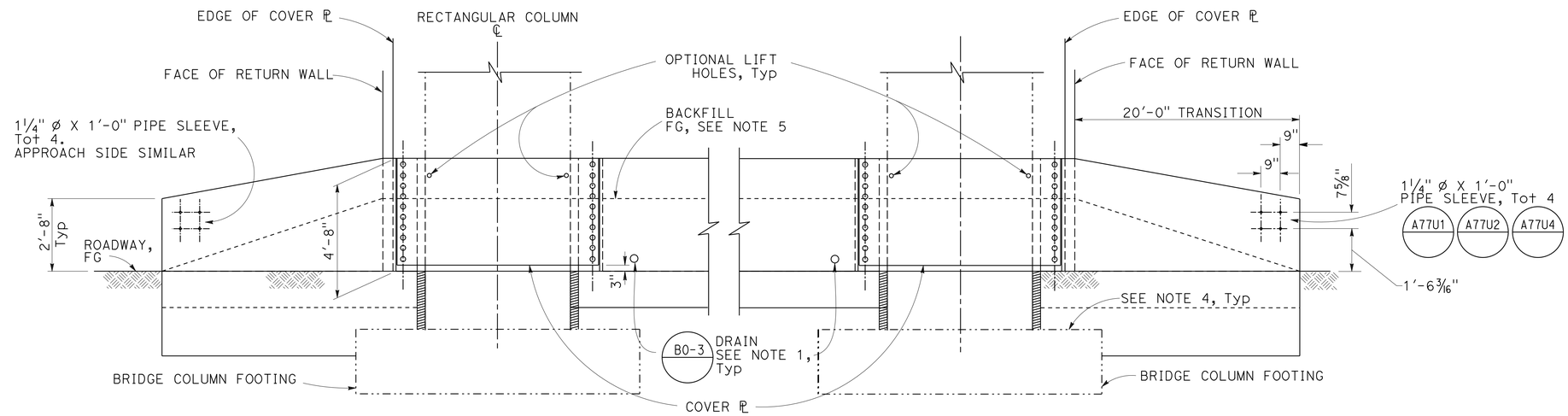

ELEVATION

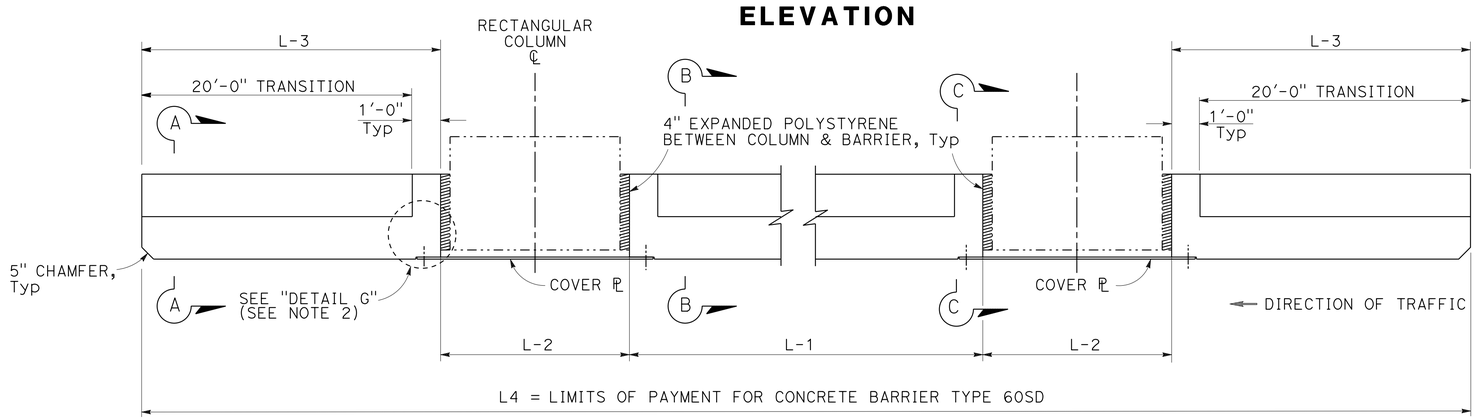

PLAN

CONCRETE BARRIER TYPE 60SD LOCATIONS*

LOCATIONS		DIR	BRIDGE NUMBER	L1 (LF)	L2 (LF)	L3 (LF)	L4 (LF)	(N) VOLUME (CY)
PM	COUNTY ROAD							
R9.87	Rte 162/5	NB	11-56	16.83	4.17	21.0	67.16	29.05
R9.87	Rte 162/5	SB	11-56	16.83	4.17	21.0	67.16	29.05
R10.88	Co Rd 48	NB	11-55	16.83	4.17	21.0	67.16	29.05
R10.88	Co Rd 48	SB	11-55	16.83	4.17	21.0	67.16	29.05
R13.90	Co Rd 39	NB	11-54	16.83	4.17	21.0	67.16	29.05
R13.90	Co Rd 39	SB	11-54	16.83	4.17	21.0	67.16	29.05
R15.91	Co Rd 35	NB	11-62	15.33	4.17	21.0	65.66	28.40
R15.91	Co Rd 35	SB	11-62	15.33	4.17	21.0	65.66	28.40
R16.80	Co Rd 33	NB	11-64	16.83	4.17	21.0	67.16	29.05
R16.80	Co Rd 33	SB	11-64	16.83	4.17	21.0	67.16	29.05
R19.81	Co Rd 28	NB	11-76	15.83	4.17	21.0	66.16	28.62
R19.81	Co Rd 28	SB	11-76	15.83	4.17	21.0	66.16	28.62
						TOTAL	800.92	346.44

*TO BE USED ON Rt SIDE OF NB AND SB Shld OF Rte 5
(N)-NOT A SEPARATE PAY ITEM. FOR INFORMATION ONLY.

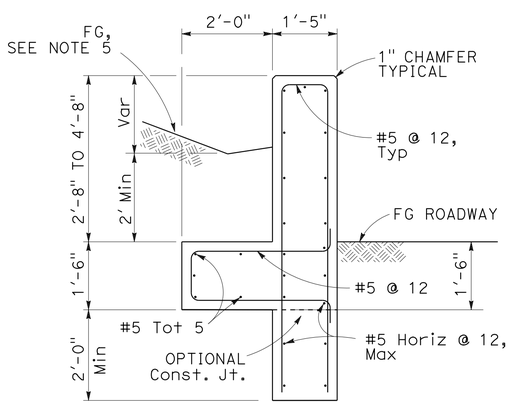

SECTION A-A

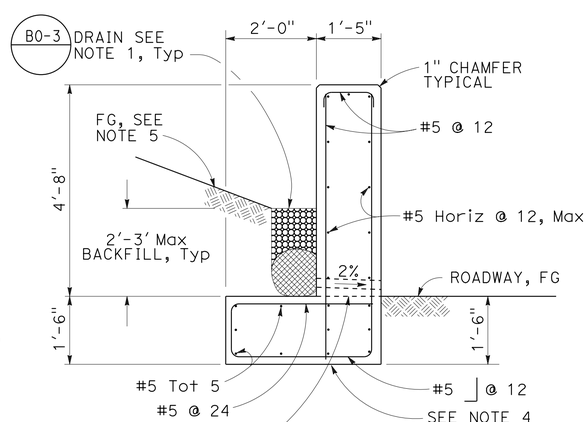

SECTION B-B

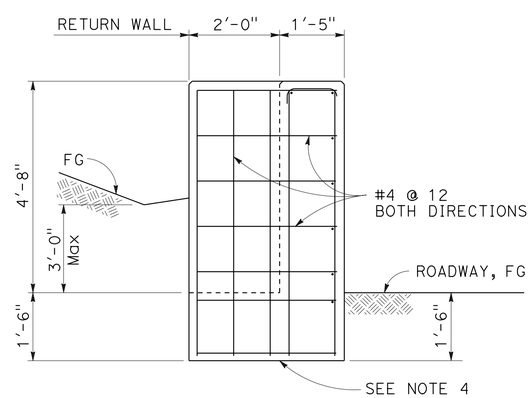

SECTION C-C

NOTES:

1. 4" ø DRAINS AT 9'-0" CENTER TO CENTER, SEE C-11 FOR PROPER DRAINAGE AND GUTTER DETAILS.
2. FOR "DETAIL G", "TABLE 1", "ALTERNATIVE ANCHORAGE" AND "BACKFILL DETAILS", SEE C-11.
3. MAINTAIN 4" (Min) GAP TO EXISTING STRUCTURE.
4. WHERE EXISTING BRIDGE FOOTING IS ENCOUNTERED, APPLY BOND BREAKER BETWEEN BRIDGE FOOTING AND NEW STRUCTURE.
5. SLOPE BACKFILL TO DRAIN ANY SURFACE WATER.
6. ALL PLATES & CONNECTIONS MUST BE GALVANIZED.
7. FIELD CHECK DIMENSIONS BEFORE FABRICATING STEEL PLATE COVER
8. UTILITIES ARE NOT SHOWN. UTILITY INVESTIGATIONS HAVE BEEN COMPLETED AND NO UTILITIES WERE FOUND WITHIN 50 FEET OF THE OUTER LIMITS OF WORK FOR EACH LOCATION OF CONCRETE BLOCK AND CONCRETE BARRIER. OTHER LOCATIONS OF WORK ARE FLEXABLE AND MAYBE ADJUSTED TO MITIGATE ANY CONFLICTS WITH EXISTING UTILITY FACILITIES.

CONSTRUCTION DETAILS

NO SCALE

C-10

CONCRETE BARRIER TYPE 60SD

STATE OF CALIFORNIA - DEPARTMENT OF TRANSPORTATION
Caltrans® DESIGN

FUNCTIONAL SUPERVISOR: FERMIN BARRIGA
CALCULATED-DESIGNED BY: TILLAT SATTER
CHECKED BY: FERMIN BARRIGA
REVISED BY / DATE REVISED

LAST REVISION 02-19-16
DATE PLOTTED => 02-MAY-2016
TIME PLOTTED => 13:30

Dist	COUNTY	ROUTE	POST MILES TOTAL PROJECT	SHEET No.	TOTAL SHEETS
03	Gle	5	R0.0/R20.0	13	77

REGISTERED CIVIL ENGINEER 4-11-16 DATE

4-11-16
PLANS APPROVAL DATE

REGISTERED PROFESSIONAL ENGINEER BRIAN P VIRAY No. C70023 Exp. 09/30/16 CIVIL STATE OF CALIFORNIA

THE STATE OF CALIFORNIA OR ITS OFFICERS OR AGENTS SHALL NOT BE RESPONSIBLE FOR THE ACCURACY OR COMPLETENESS OF SCANNED COPIES OF THIS PLAN SHEET.

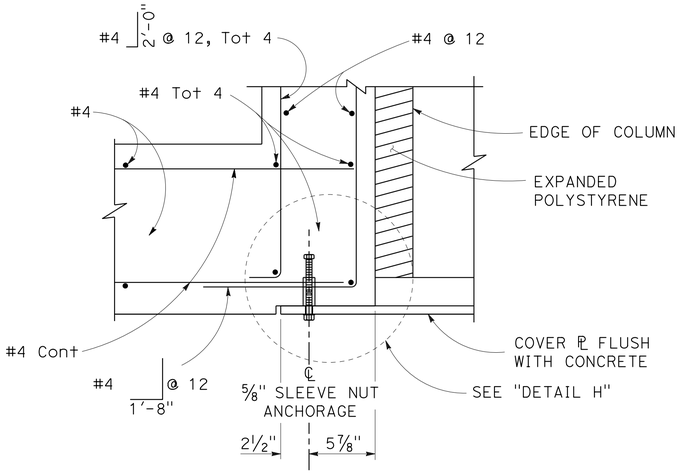

DETAIL G
1 1/2" = 1'-0"

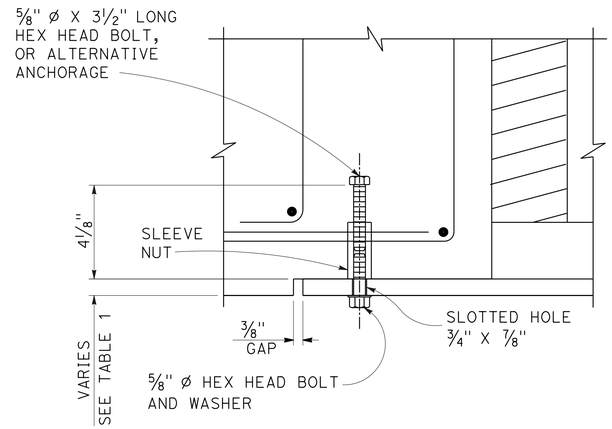

DETAIL H
3" = 1'-0"

TABLE 1

LENGTH	PLATE THICKNESS	# BOLTS
Ft	In	TOTAL
8'-6" Max	7/8	10
6'-6" Max	11/16	7
4'-6" Max	7/16	5

NOTE:

STRUCTURAL STEEL, F= 50,000 psi UNLESS OTHERWISE NOTED.

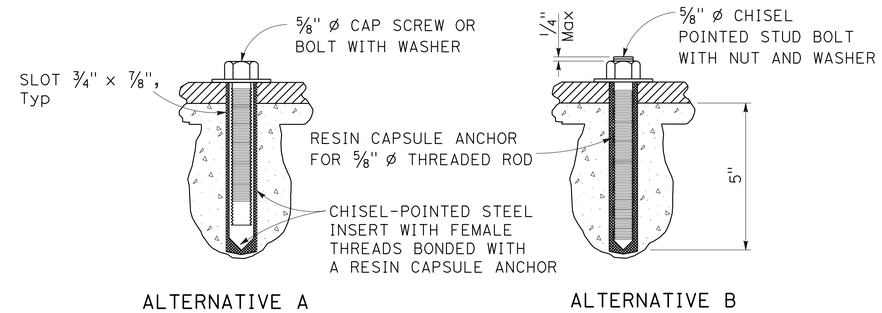

ALTERNATIVE ANCHORAGE

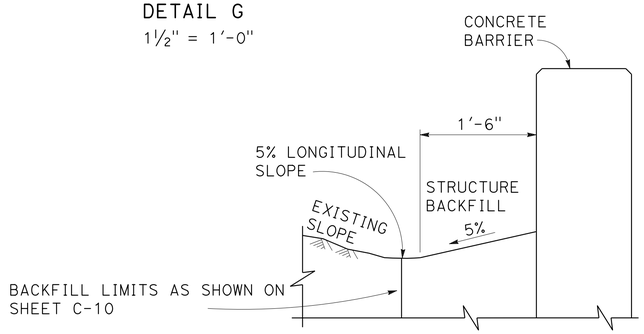

BACKFILL DETAIL

CONCRETE BARRIER (TYPE 60SD) DETAILS

NOTES:

1. SEE SHEET C-10 FOR LOCATIONS OF CONCRETE BARRIER (TYPE 60SD).
2. UTILITIES ARE NOT SHOWN. UTILITY INVESTIGATIONS HAVE BEEN COMPLETED AND NO UTILITIES WERE FOUND WITHIN 50 FEET OF THE OUTER LIMITS OF WORK FOR EACH LOCATION OF CONCRETE BLOCK AND CONCRETE BARRIER. OTHER LOCATIONS OF WORK ARE FLEXABLE AND MAYBE ADJUSTED TO MITIGATE ANY CONFLICTS WITH EXISTING UTILITY FACILITIES.

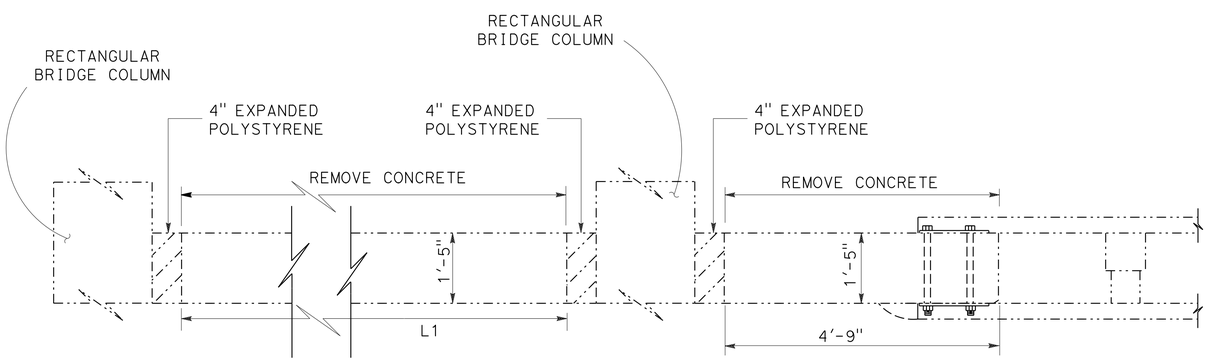

NOTE: LOCATIONS OF REMOVE CONCRETE ARE THE SAME AS THE LOCATIONS FOR CONCRETE BARRIER (TYPE 60SD). SEE SHEET C-10 FOR LOCATIONS OF REMOVE CONCRETE AND DISTANCE BETWEEN COLUMNS.

PLAN VIEW

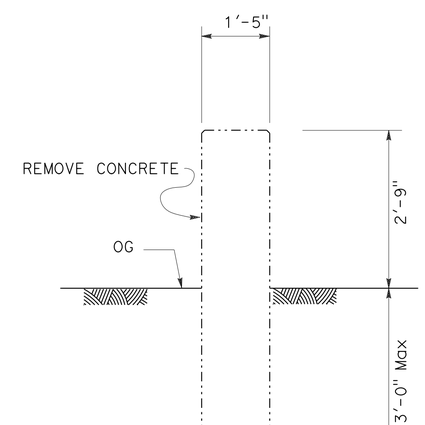

SECTION VIEW

REMOVE CONCRETE

CONSTRUCTION DETAILS

NO SCALE

C-11

STATE OF CALIFORNIA - DEPARTMENT OF TRANSPORTATION
Caltrans®
DESIGN

FUNCTIONAL SUPERVISOR: FERMIN BARRIGA
CALCULATED-DESIGNED BY: TILLAT SATTER
CHECKED BY: FERMIN BARRIGA
REVISED BY
DATE REVISED

LAST REVISION 02-19-16
DATE PLOTTED => 02-MAY-2016
TIME PLOTTED => 13:30

Dist	COUNTY	ROUTE	POST MILES TOTAL PROJECT	SHEET No.	TOTAL SHEETS
03	Gle	5	R0.0/R20.0	14	77

REGISTERED CIVIL ENGINEER 4-11-16 DATE

4-11-16
PLANS APPROVAL DATE

REGISTERED PROFESSIONAL ENGINEER BRIAN P VIRAY No. C70023 Exp. 09/30/16 CIVIL STATE OF CALIFORNIA

THE STATE OF CALIFORNIA OR ITS OFFICERS OR AGENTS SHALL NOT BE RESPONSIBLE FOR THE ACCURACY OR COMPLETENESS OF SCANNED COPIES OF THIS PLAN SHEET.

NOTE:

1. SEE STANDARD PLANS FOR DETAILS NOT SHOWN.
2. DO NOT APPLY SRS ON BRIDGE DECKS OR APPROACH SLABS.

ABBR:

SRS = SHOULDER RUMBLE STRIP (HMA, GROUND-IN INDENTATIONS).

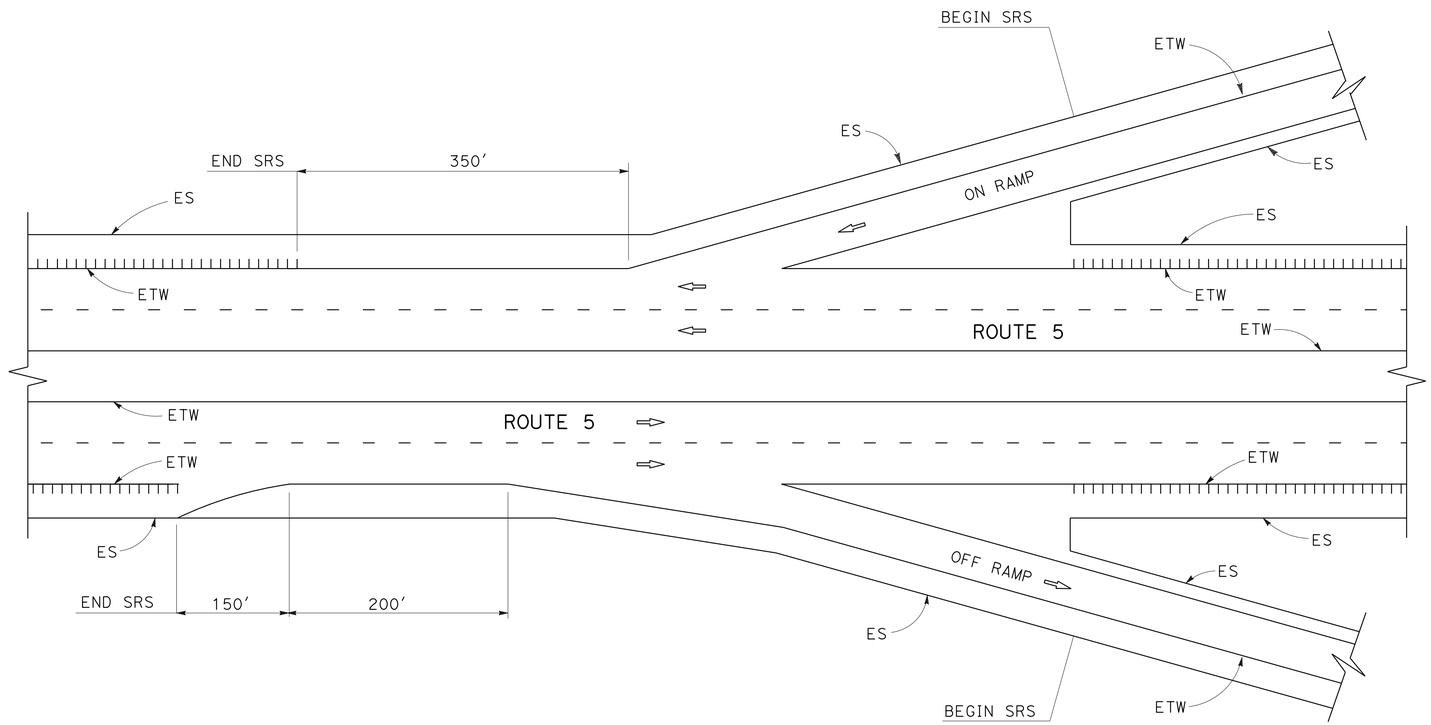

PLAN

TYPICAL RUMBLE STRIP DETAIL AT RAMP LOCATIONS

CONSTRUCTION DETAILS
NO SCALE

C-12

STATE OF CALIFORNIA - DEPARTMENT OF TRANSPORTATION
Caltrans® DESIGN

FUNCTIONAL SUPERVISOR: FERMIN BARRIGA
CALCULATED-DESIGNED BY: FERMIN BARRIGA
CHECKED BY: BRIAN P. VIRAY
REVISED BY: M.DEILAMI
DATE REVISED:

LAST REVISION 02-19-16
DATE PLOTTED => 02-MAY-2016
TIME PLOTTED => 13:30

Dist	COUNTY	ROUTE	POST MILES TOTAL PROJECT	SHEET No.	TOTAL SHEETS
03	Gle	5	R0.0/R20.0	15	77

REGISTERED CIVIL ENGINEER 4-11-16 DATE

4-11-16
PLANS APPROVAL DATE

REGISTERED PROFESSIONAL ENGINEER BRIAN P VIRAY No. 70023 Exp. 09/30/16 CIVIL STATE OF CALIFORNIA

THE STATE OF CALIFORNIA OR ITS OFFICERS OR AGENTS SHALL NOT BE RESPONSIBLE FOR THE ACCURACY OR COMPLETENESS OF SCANNED COPIES OF THIS PLAN SHEET.

NOTES:

1. FOR ACCURATE RIGHT OF WAY, CONTACT RIGHT OF WAY ENGINEERING AT THE DISTRICT OFFICE.
2. REFER TO STANDARD PLAN SHEETS FOR DETAILS NOT SHOWN.
3. MAINTAIN EXISTING FLOW LINE ELEVATIONS.
4. FOR ELECTRICAL WORK SEE ELECTRICAL PLANS.

ABBREVIATIONS:

ppb - EXISTING PEDESTRIAN PUSH BUTTON

LEGEND

REMOVE CONCRETE SIDEWALK AND CURB

DIRECTION OF SIDEWALK OR CURB RAMP SLOPE

CURB RAMP DETECTABLE WARNING SURFACE SEE STD RSP A88A

—— tc ——— AT&T TELECOM FIBER CABLE

—— g ——— Exist 4" STEEL GAS PG&E, LOW PRESSURE

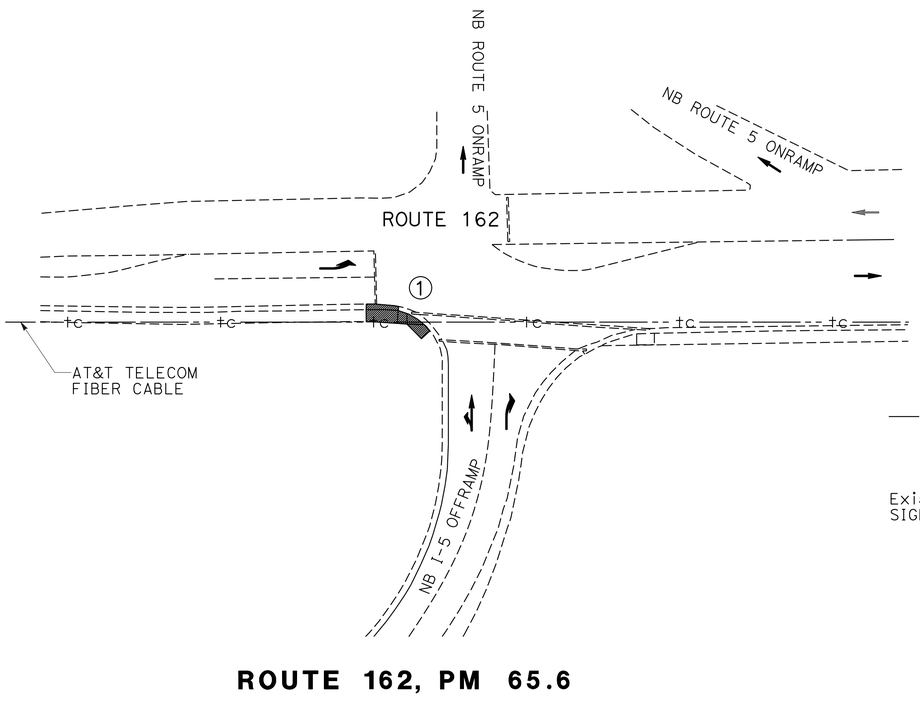

ROUTE 162, PM 65.6

NB ROUTE 5 OFFRAMP, SW CORNER

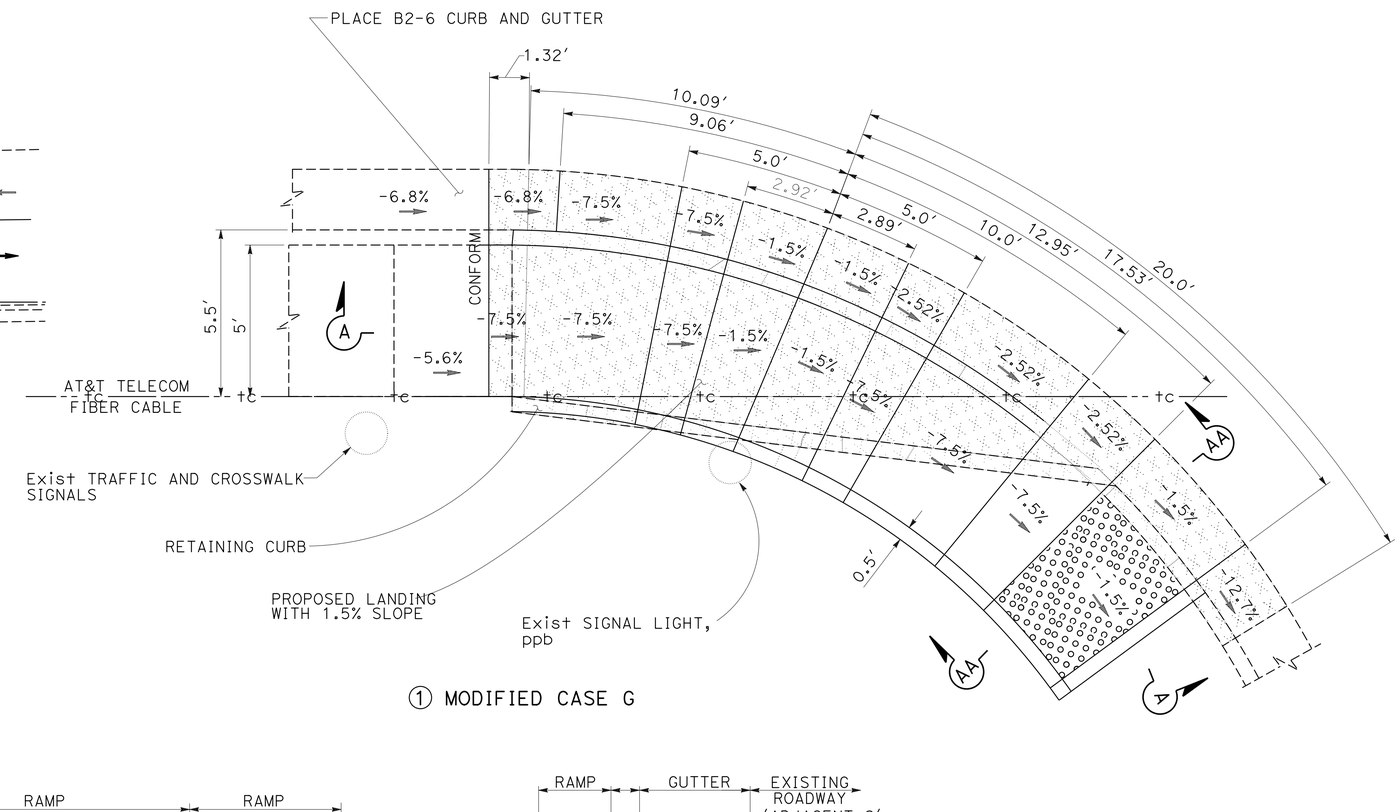

1 MODIFIED CASE G

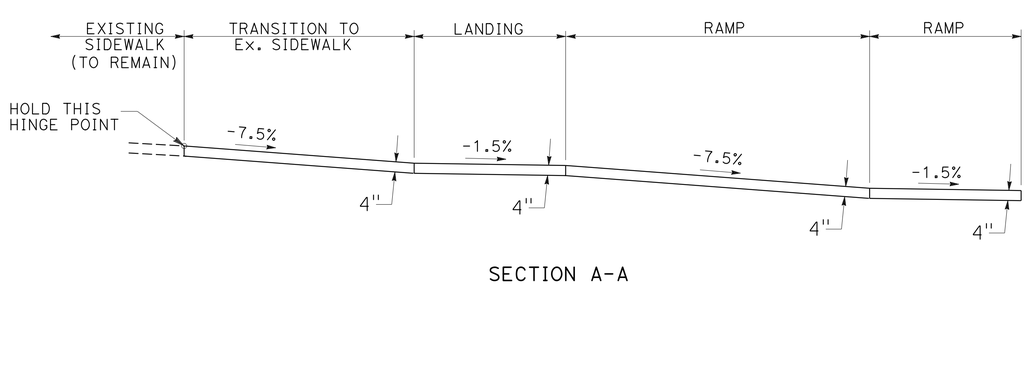

SECTION A-A

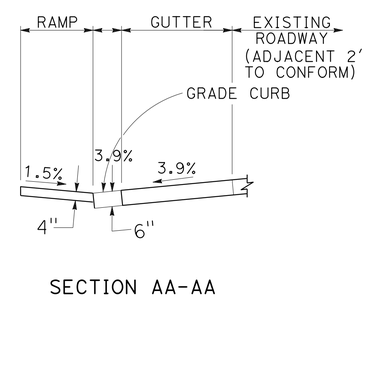

SECTION AA-AA

CONSTRUCTION DETAILS

NO SCALE

C-13

STATE OF CALIFORNIA - DEPARTMENT OF TRANSPORTATION

Caltrans® DESIGN

FUNCTIONAL SUPERVISOR: FERMIN BARRIGA

CALCULATED-DESIGNED BY: BRIAN P. VIRAY

CHECKED BY: FERMIN BARRIGA

REVISED BY

DATE REVISED

LAST REVISION 02-19-16

DATE PLOTTED => 02-MAY-2016
TIME PLOTTED => 13:31

Dist	COUNTY	ROUTE	POST MILES TOTAL PROJECT	SHEET No.	TOTAL SHEETS
03	Gle	5	R0.0/R20.0	16	77

Brian P. Viray 4-11-16
REGISTERED CIVIL ENGINEER DATE

4-11-16
PLANS APPROVAL DATE

REGISTERED PROFESSIONAL ENGINEER BRIAN P VIRAY No. C70023 Exp. 09/30/16 CIVIL STATE OF CALIFORNIA

THE STATE OF CALIFORNIA OR ITS OFFICERS OR AGENTS SHALL NOT BE RESPONSIBLE FOR THE ACCURACY OR COMPLETENESS OF SCANNED COPIES OF THIS PLAN SHEET.

NOTES:

1. FOR ACCURATE RIGHT OF WAY DATA, CONTACT RIGHT OF WAY ENGINEERING AT THE DISTRICT OFFICE.

ABBREVIATIONS:

ppb - EXISTING PEDESTRIAN PUSH BUTTON

LEGEND

REMOVE CONCRETE SIDEWALK AND CURB

CURB RAMP DETECTABLE WARNING SURFACE SEE STD RSP A88A

DIRECTION OF SIDEWALK OR CURB RAMP SLOPE

—— tc ——— AT&T TELECOM FIBER CABLE

——— g ——— Exist 4" STEEL GAS PG&E, LOW PRESSURE

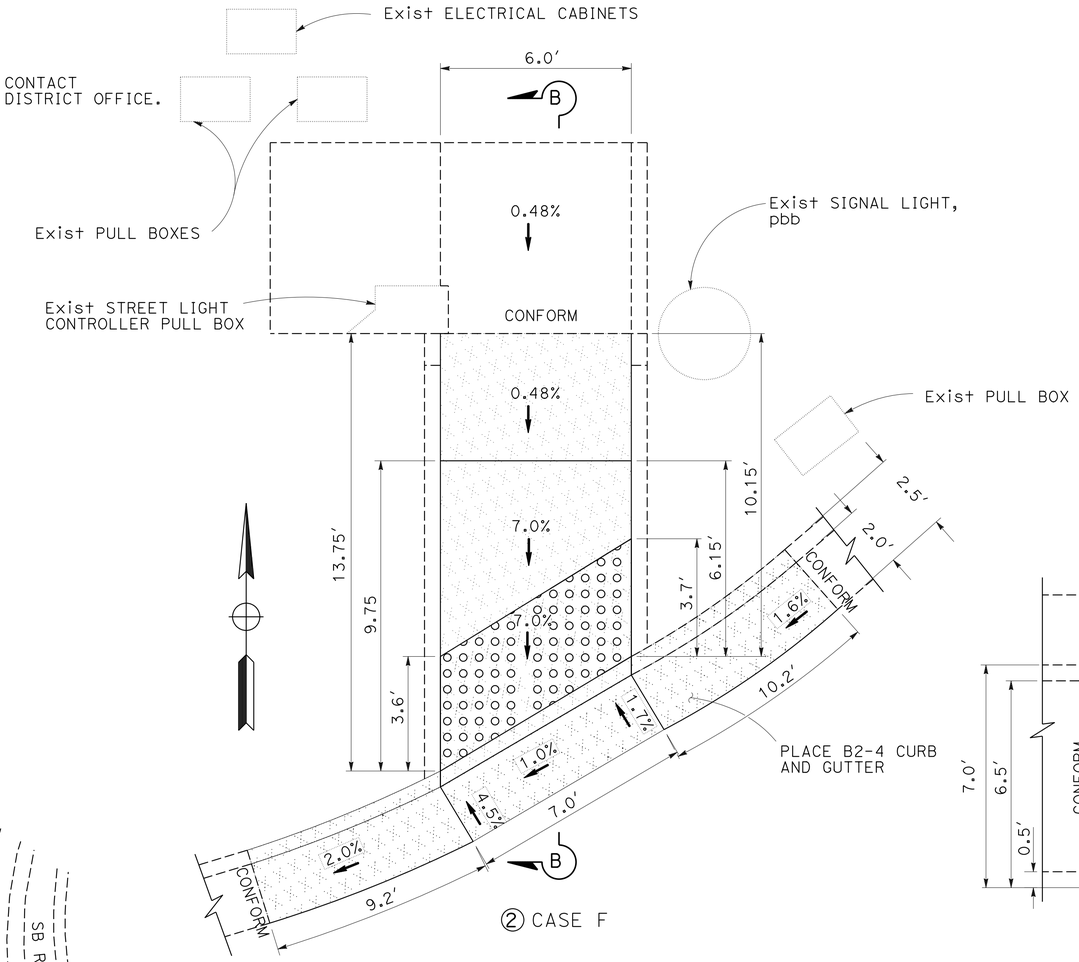

② CASE F

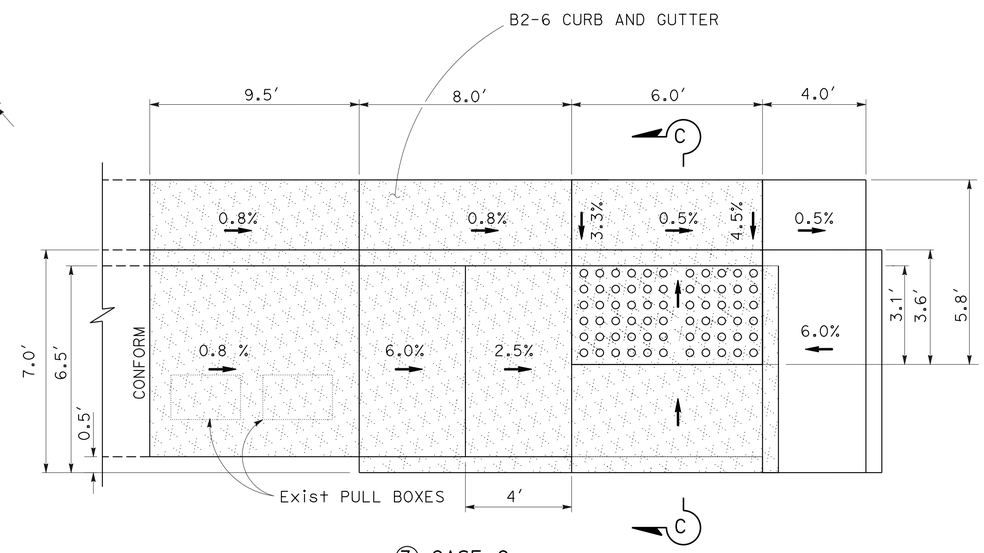

③ CASE C

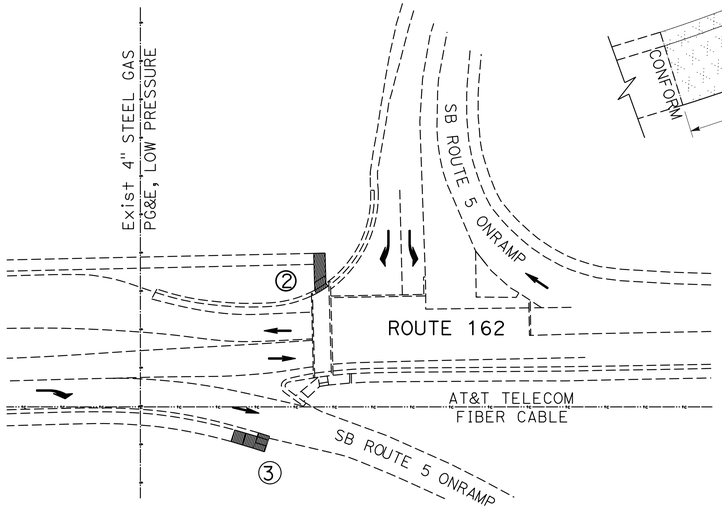

ROUTE 162, PM 65.4

WESTERN SIDE OF ROUTE 162 OC (OVER ROUTE 5)

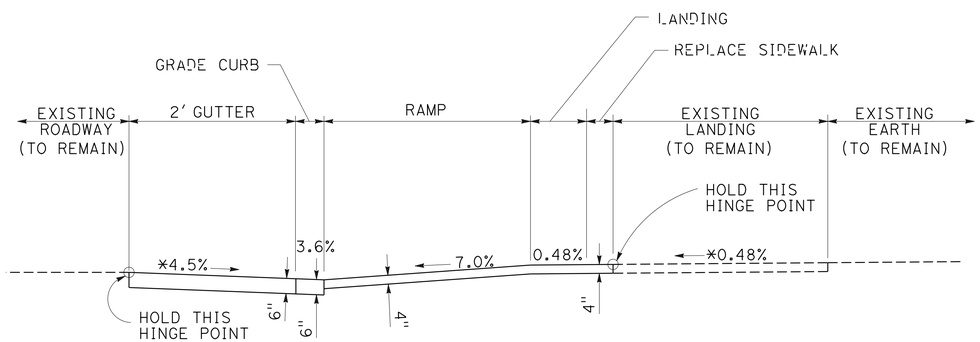

SECTION B-B

*NOTE: PERPENDICULAR SLOPE NOT PROFILE SLOPE

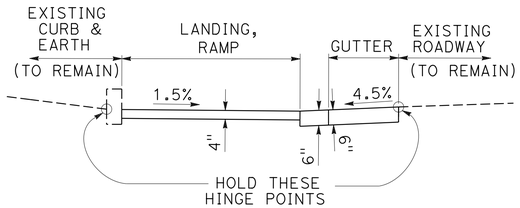

SECTION C-C

CONSTRUCTION DETAILS

NO SCALE

C-14

STATE OF CALIFORNIA - DEPARTMENT OF TRANSPORTATION

Caltrans®

DESIGN

FUNCTIONAL SUPERVISOR: FERMIN BARRIGA

CALCULATED-DESIGNED BY: BRIAN P. VIRAY

CHECKED BY: FERMIN BARRIGA

REVISED BY

DATE REVISED

LAST REVISION 02-19-16

DATE PLOTTED => 02-MAY-2016

TIME PLOTTED => 13:31

Dist	COUNTY	ROUTE	POST MILES TOTAL PROJECT	SHEET No.	TOTAL SHEETS
03	Gle	5	R0.0/R20.0	17	77

REGISTERED CIVIL ENGINEER 4-11-16 DATE

4-11-16
PLANS APPROVAL DATE

REGISTERED PROFESSIONAL ENGINEER BRIAN P VIRAY No. C70023 Exp. 09/30/16 CIVIL STATE OF CALIFORNIA

THE STATE OF CALIFORNIA OR ITS OFFICERS OR AGENTS SHALL NOT BE RESPONSIBLE FOR THE ACCURACY OR COMPLETENESS OF SCANNED COPIES OF THIS PLAN SHEET.

NOTES:

1. ALL SIGN CODES SHOWN ARE FEDERAL SIGN CODES UNLESS OTHERWISE DESIGNATED AS CALIFORNIA SIGN CODES.
2. EXACT SIGN LOCATIONS TO BE DETERMINED BY THE ENGINEEER.
3. SEE SHEETS CS-1 AND CS-2 FOR ADDITIONAL COSTRUCTION AREA SIGNS.

LEGEND

(X) CONSTRUCTION AREA SIGN LETTER
<CA> CALIFORNIA SIGN CODE
SIGN - SINGLE POST
DIRECTION OF TRAVEL

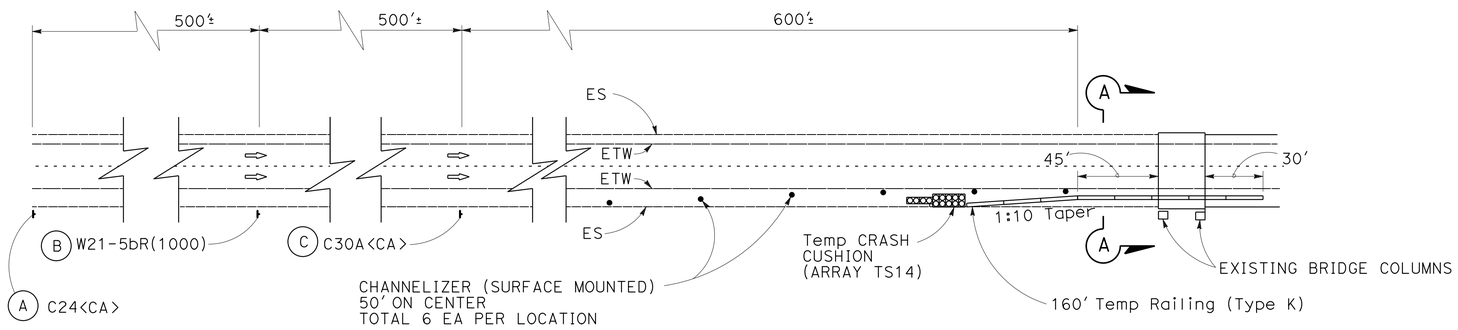

TYPICAL TEMPORARY RAILING (TYPE K) LAYOUT

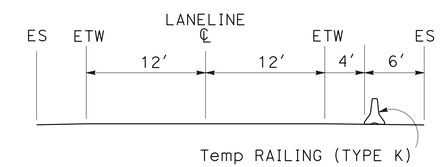

SECTION A-A

TEMPORARY RAILING (TYPE K) LOCATIONS

No.	LOCATION	
1	PM R9.87, Br No.11-56, Rte 162/5 Sep, NB Shld	
2	PM R9.87, Br No.11-56, Rte 162/5 Sep, SB Shld	
3	PM R10.88, Br No.11-55, Co Rd 48, NB Shld	
4	PM R10.88, Br No.11-55, Co Rd 48, SB Shld	
5	PM R13.90, Br No.11-54, Co Rd 39, NB Shld	
6	PM R15.91, Br No.11-62, Co Rd 35, SB Shld	
7	PM R15.91, Br No.11-62, Co Rd 35, NB Shld	
8	PM R15.91, Br No.11-62, Co Rd 35, SB Shld	
9	PM R16.80, Br No.11-64, Co Rd 33, NB Shld	
10	PM R16.80, Br No.11-64, Co Rd 33, SB Shld	
11	PM R19.81, Br No.11-76, Co Rd 28, NB Shld	
12	PM R19.81, Br No.11-76, Co Rd 28, SB Shld	

ADDITIONAL STATIONARY MOUNTED CONSTRUCTION AREA SIGNS AND LOCATIONS

SIGN LETTER	SIGN CODE		SIGN MESSAGE	PANEL SIZE	NUMBER AND SIZE OF POST	NUMBER OF SIGNS
	FEDERAL	CALIFORNIA				
A		C24	SHOULDER WORK AHEAD	48" x 48"	1- 6" x 6"	12
B	W21-5bR		RIGHT SHOULDER CLOSED 1000 FT	48" x 48"	1- 6" x 6"	12
C		C30A	SHOULDER CLOSED	48" x 48"	1- 6" x 6"	12

CONSTRUCTION DETAILS

NO SCALE

C-15

STATE OF CALIFORNIA - DEPARTMENT OF TRANSPORTATION
Caltrans
DESIGN
FUNCTIONAL SUPERVISOR: FERMIN BARRIGA
CALCULATED-DESIGNED BY: FERMIN BARRIGA
CHECKED BY: BRIAN P. VIRAY
REVISED BY
DATE REVISED

LAST REVISION 02-19-16
DATE PLOTTED => 02-MAY-2016
TIME PLOTTED => 13:31

Dist	COUNTY	ROUTE	POST MILES TOTAL PROJECT	SHEET No.	TOTAL SHEETS
03	Gle	5	R0.0/R20.0	18	77

Brian P. Viray 4-11-16
REGISTERED CIVIL ENGINEER DATE

4-11-16
PLANS APPROVAL DATE

REGISTERED PROFESSIONAL ENGINEER
BRIAN P VIRAY
No. C70023
Exp. 09/30/16
CIVIL
STATE OF CALIFORNIA

THE STATE OF CALIFORNIA OR ITS OFFICERS OR AGENTS SHALL NOT BE RESPONSIBLE FOR THE ACCURACY OR COMPLETENESS OF SCANNED COPIES OF THIS PLAN SHEET.

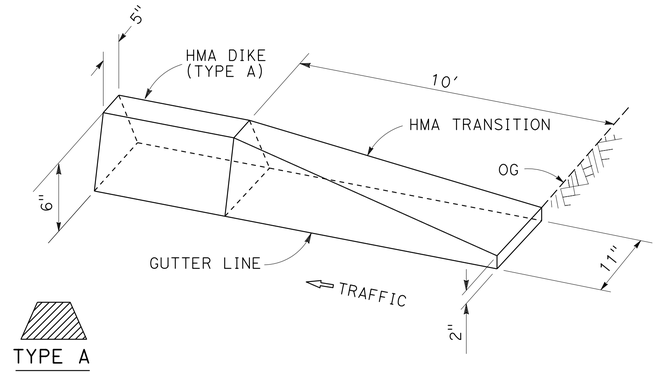

HMA DIKE (TYPE A) APPROACH TRANSITION

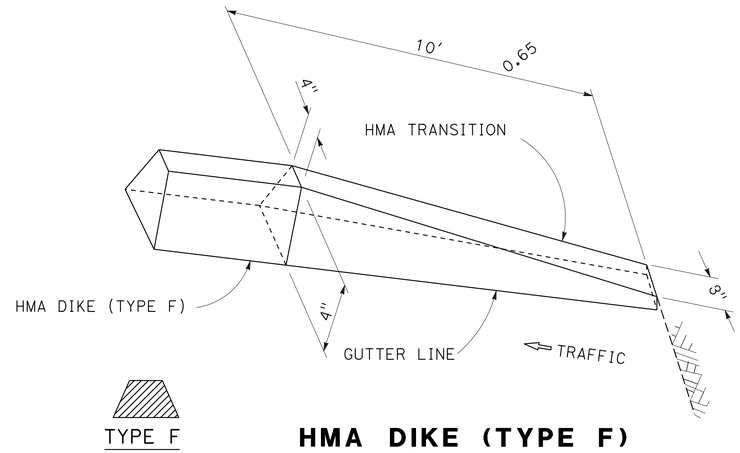

HMA DIKE (TYPE F) APPROACH TRANSITION

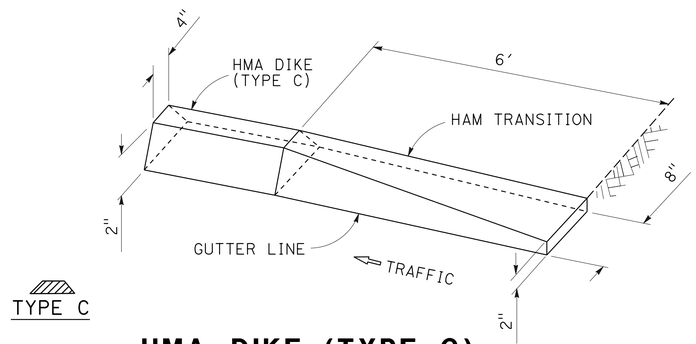

HMA DIKE (TYPE C) APPROACH TRANSITION

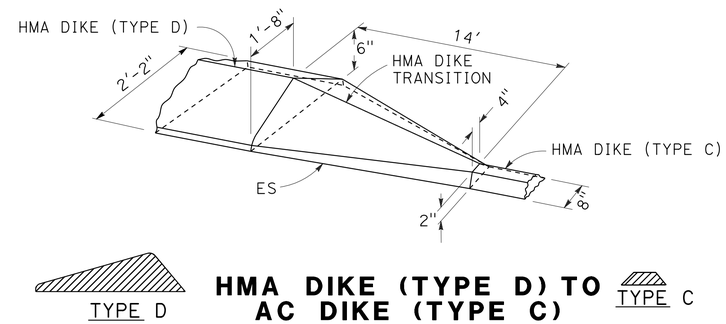

HMA DIKE (TYPE D) TO AC DIKE (TYPE C)

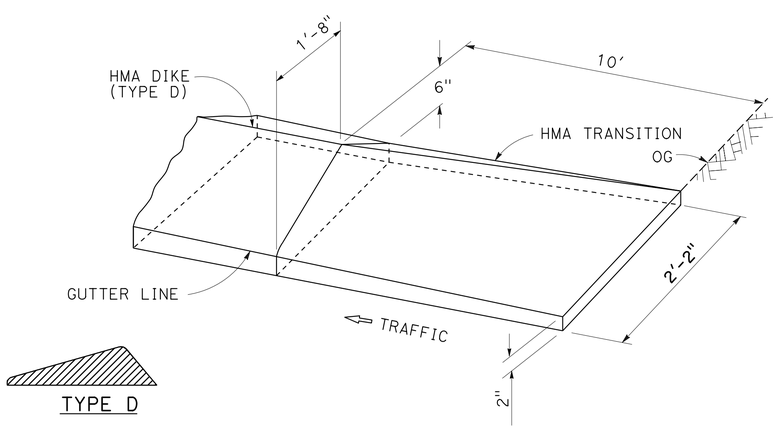

HMA DIKE (TYPE D) APPROACH TRANSITION

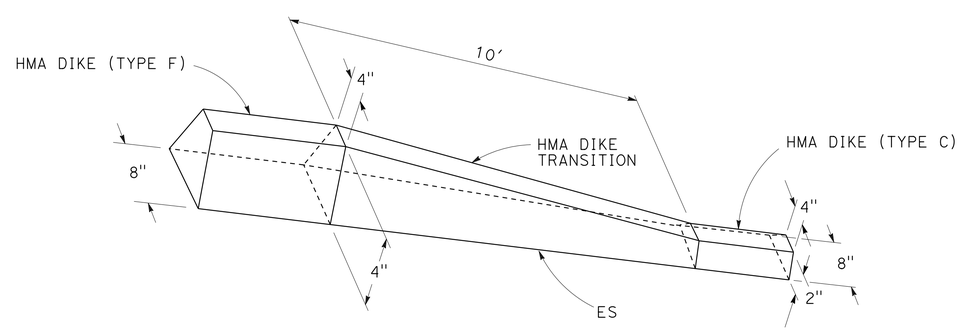

HMA DIKE TRANSITION TYPE C TO TYPE F

CONSTRUCTION DETAILS

NO SCALE

C-16

STATE OF CALIFORNIA - DEPARTMENT OF TRANSPORTATION
DESIGN
Caltrans®

FUNCTIONAL SUPERVISOR: FERMIN BARRIGA
CALCULATED-DESIGNED BY: SANA DEHGHANI
CHECKED BY: FERMIN BARRIGA
REVISED BY
DATE REVISED

LAST REVISION 02-19-16
DATE PLOTTED => 02-MAY-2016
TIME PLOTTED => 13:31

Dist	COUNTY	ROUTE	POST MILES TOTAL PROJECT	SHEET No.	TOTAL SHEETS
03	Gle	5	R0.0/R20.0	19	77

Brian P. Viray 4-11-16
REGISTERED CIVIL ENGINEER DATE

4-11-16
PLANS APPROVAL DATE

REGISTERED PROFESSIONAL ENGINEER
BRIAN P VIRAY
No. C70023
Exp. 09/30/16
CIVIL
STATE OF CALIFORNIA

THE STATE OF CALIFORNIA OR ITS OFFICERS OR AGENTS SHALL NOT BE RESPONSIBLE FOR THE ACCURACY OR COMPLETENESS OF SCANNED COPIES OF THIS PLAN SHEET.

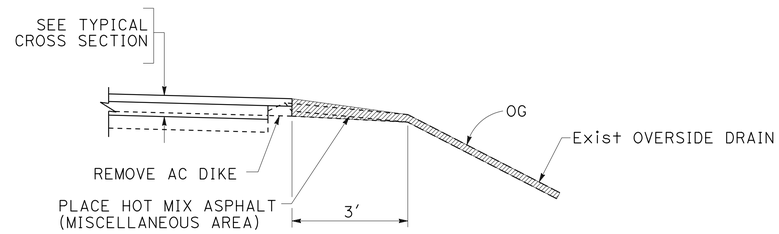

SECTION A-A

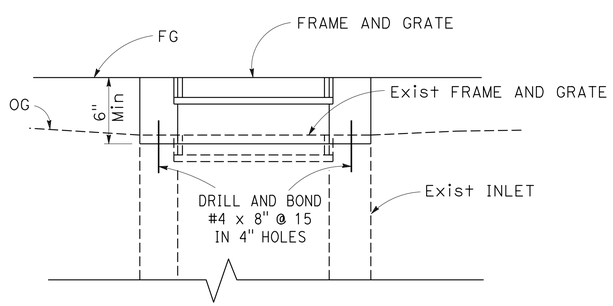

ADJUST FRAME AND GRATE TO GRADE

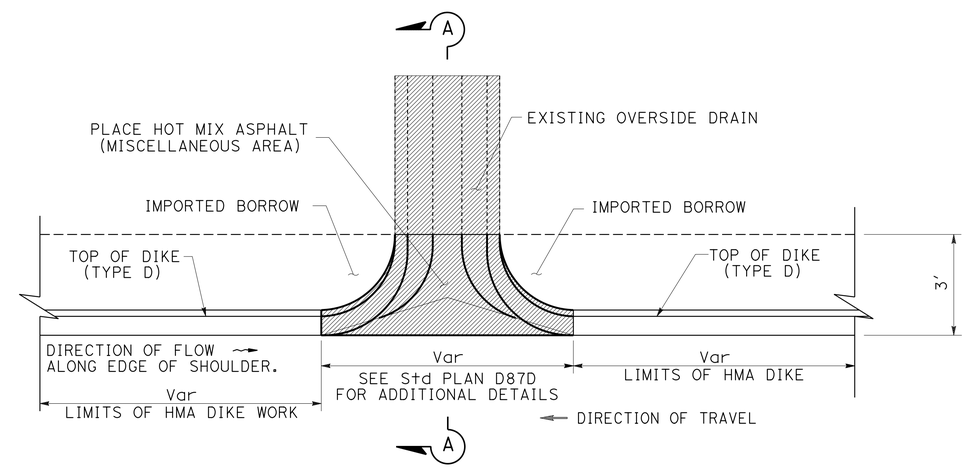

PLAN

OVERSIDE DRAIN

MAIN LINE OVERLAY NOT SHOWN FOR CLARITY

CONSTRUCTION DETAILS

NO SCALE

C-17

REVISED BY	DATE REVISED

CALCULATED-DESIGNED BY: FERMIN BARRIGA
CHECKED BY: BRIAN P. VIRAY

FUNCTIONAL SUPERVISOR: FERMIN BARRIGA

STATE OF CALIFORNIA - DEPARTMENT OF TRANSPORTATION
Caltrans
DESIGN

LAST REVISION 02-19-16
DATE PLOTTED => 02-MAY-2016
TIME PLOTTED => 13:31

Dist	COUNTY	ROUTE	POST MILES TOTAL PROJECT	SHEET No.	TOTAL SHEETS
03	Gle	5	R0.0/R20.0	20	77

Brian P. Viray 4-11-16
REGISTERED CIVIL ENGINEER DATE

4-11-16
PLANS APPROVAL DATE

REGISTERED PROFESSIONAL ENGINEER BRIAN P VIRAY No. C70023 Exp. 09/30/16 CIVIL STATE OF CALIFORNIA

THE STATE OF CALIFORNIA OR ITS OFFICERS OR AGENTS SHALL NOT BE RESPONSIBLE FOR THE ACCURACY OR COMPLETENESS OF SCANNED COPIES OF THIS PLAN SHEET.

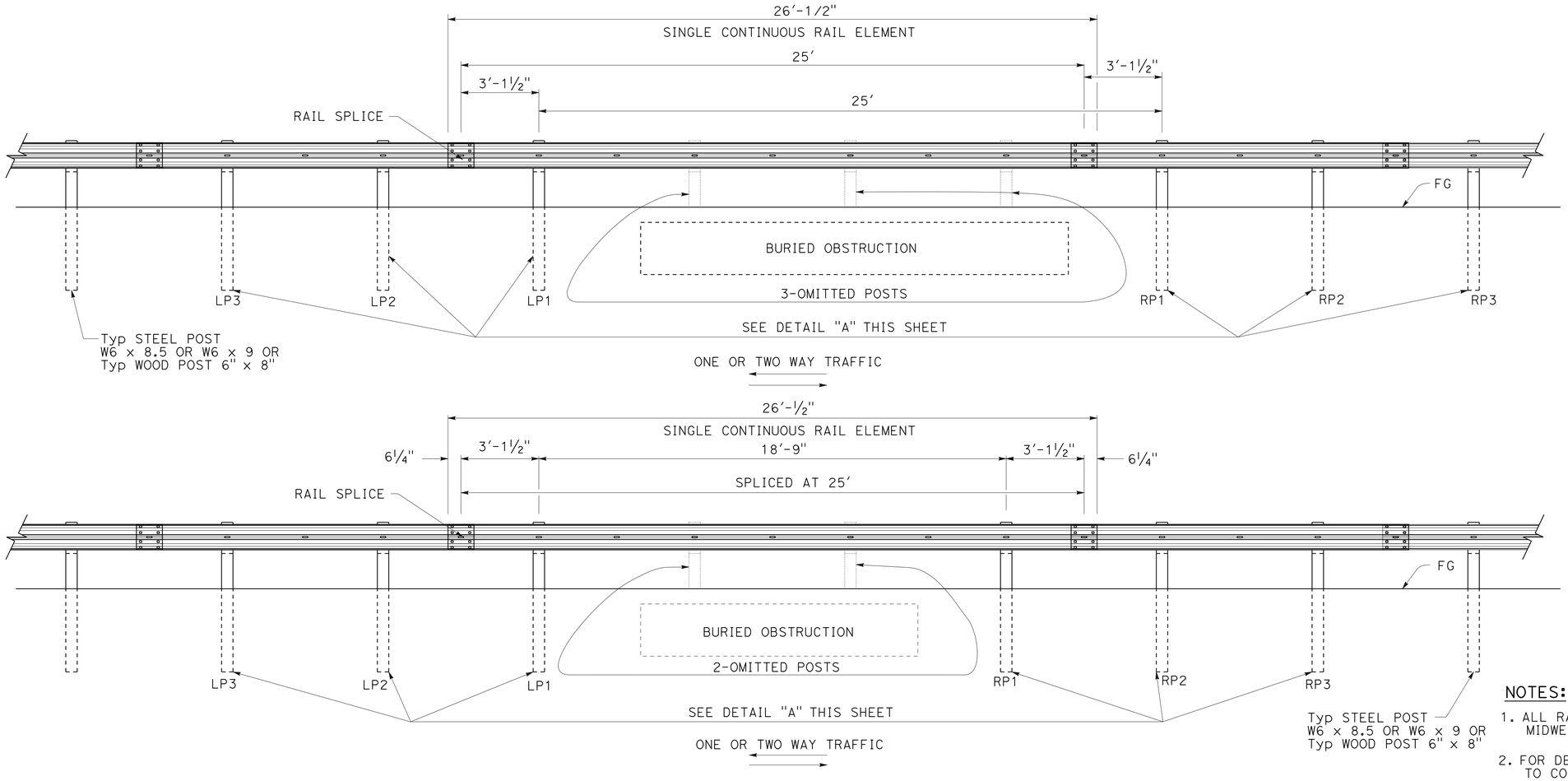

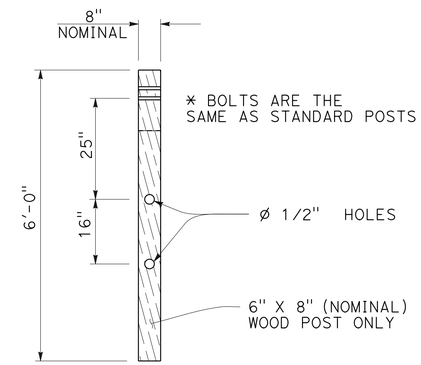

DETAIL "A" (LP/RP)

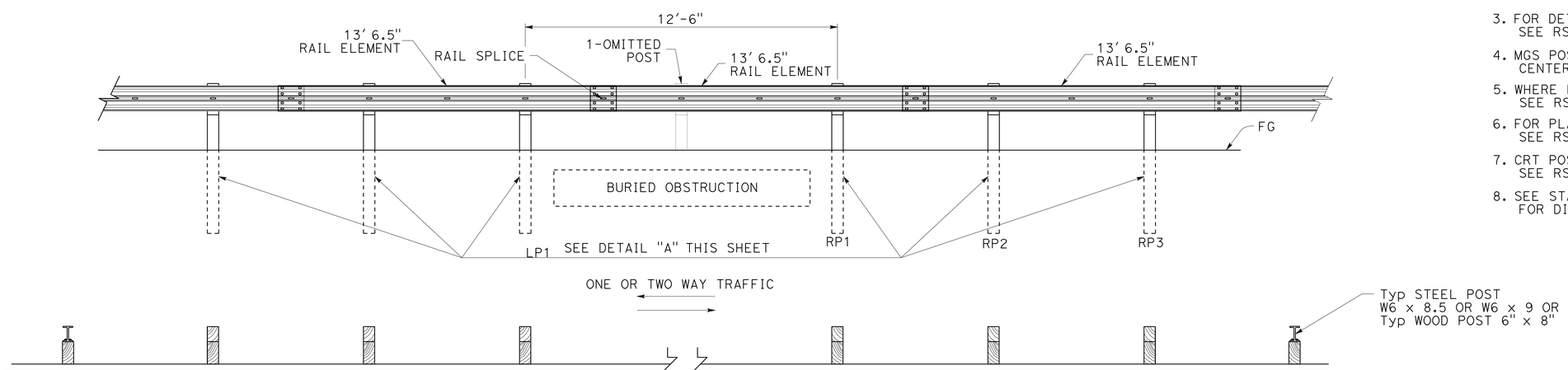

PLAN

NOTES:

1. ALL RAIL ELEMENTS ARE MIDWEST GUARADRAIL SYSTEM
2. FOR DETAILS OF STANDARD HARDWARE USED TO CONSTRUCT MGS, SEE REVISED STANDARD PLAN A77M1
3. FOR DETAILS OF RAIL ELEMENT SPLICE SEE RSP A77L1
4. MGS POST SPACINGS TO BE 6'-3" CENTER TO CENTER, EXCEPT OTHERWISE NOTED
5. WHERE PLACEMENT OF DIKE IS REQUIRED, SEE RSP A77N4
6. FOR PLACEMENT OF VEGETATION CONTROL SEE RSP A77N5
7. CRT POST TO BE WOOD ONLY SEE RSP A77N5
8. SEE STANDRAD PLAN RSP A77N5 AND RSP A87B FOR DIKE TYPE AND PLACEMENT LOCATION

CONSTRUCTION DETAILS

NO SCALE

C-18

STATE OF CALIFORNIA - DEPARTMENT OF TRANSPORTATION
Caltrans® DESIGN

FUNCTIONAL SUPERVISOR: FERMIN BARRIGA
CALCULATED-DESIGNED BY: FERMIN BARRIGA
CHECKED BY: BRIAN P. VIRAY
REVISED BY
DATE REVISED

LAST REVISION 02-19-16
DATE PLOTTED => 02-MAY-2016
TIME PLOTTED => 13:31

Dist	COUNTY	ROUTE	POST MILES TOTAL PROJECT	SHEET No.	TOTAL SHEETS
03	Gle	5	R0.0/R20.0	21	77

REGISTERED CIVIL ENGINEER 4-11-16 DATE

4-11-16
PLANS APPROVAL DATE

REGISTERED PROFESSIONAL ENGINEER BRIAN P VIRAY No. C70023 Exp. 09/30/16 CIVIL STATE OF CALIFORNIA

THE STATE OF CALIFORNIA OR ITS OFFICERS OR AGENTS SHALL NOT BE RESPONSIBLE FOR THE ACCURACY OR COMPLETENESS OF SCANNED COPIES OF THIS PLAN SHEET.

STATIONARY MOUNTED CONSTRUCTION AREA SIGNS

SIGN LETTER	SIGN CODE	PANEL SIZE	SIGN MESSAGE	NUMBER OF POST AND SIZE	NUMBER OF SIGNS
A	W20-1	48" x 48"	ROAD WORK AHEAD	1 - 6" x 6"	10
B	C40(Mod)<CA>	96" x 60"	TRAFFIC FINES DOUBLED IN WORK ZONES	2 - 6" x 6"	2
C	G20-2	36" x 18"	END ROAD WORK	1 - 4" x 4"	10
D	G20-1[Spec](21)	84" x 42"	ROAD WORK NEXT 21 MILES	2 - 4" x 6"	4
E	C14<CA>	48" x 24"	END ROAD WORK	1 - 4" x 6"	2

NOTES:

1. EXACT SIGN LOCATION TO BE DETERMINED BY THE ENGINEER.
2. ALL SIGN CODES SHOWN ARE FEDERAL SIGN CODES UNLESS OTHERWISE DESIGNATED AS A CALIFORNIA SIGN CODE.
3. <CA> = CALIFORNIA SIGN CODE.
4. SEE SHEET C-15 FOR ADDITIONAL CONSTRUCTION AREA SIGNS.

B C40(Mod)<CA>

TRAFFIC FINES DOUBLED IN WORK ZONES

8" D SERIES LETTERS

96"x60"

RETROREFLECTIVE WHITE BACKGROUND WITH BLACK LEGEND AND BORDERS.

D G20-1[Spec](21)

ROAD WORK NEXT 21 MILES

6" C SERIES LETTERS

84"x42"

RETROREFLECTIVE ORANGE BACKGROUND WITH BLACK LEGEND AND BORDERS.

SIGN DETAILS

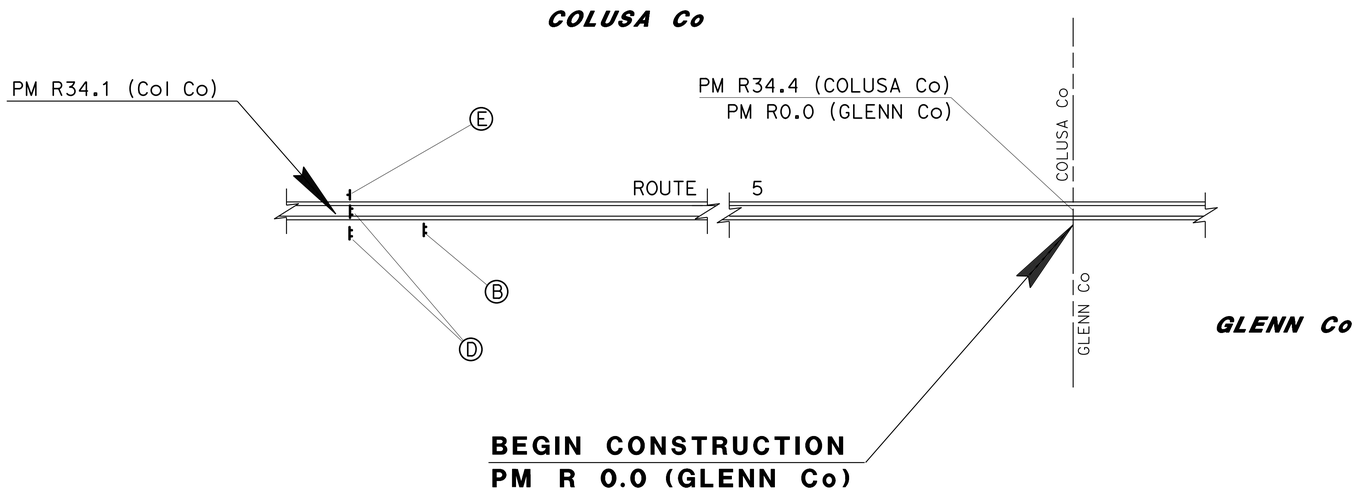

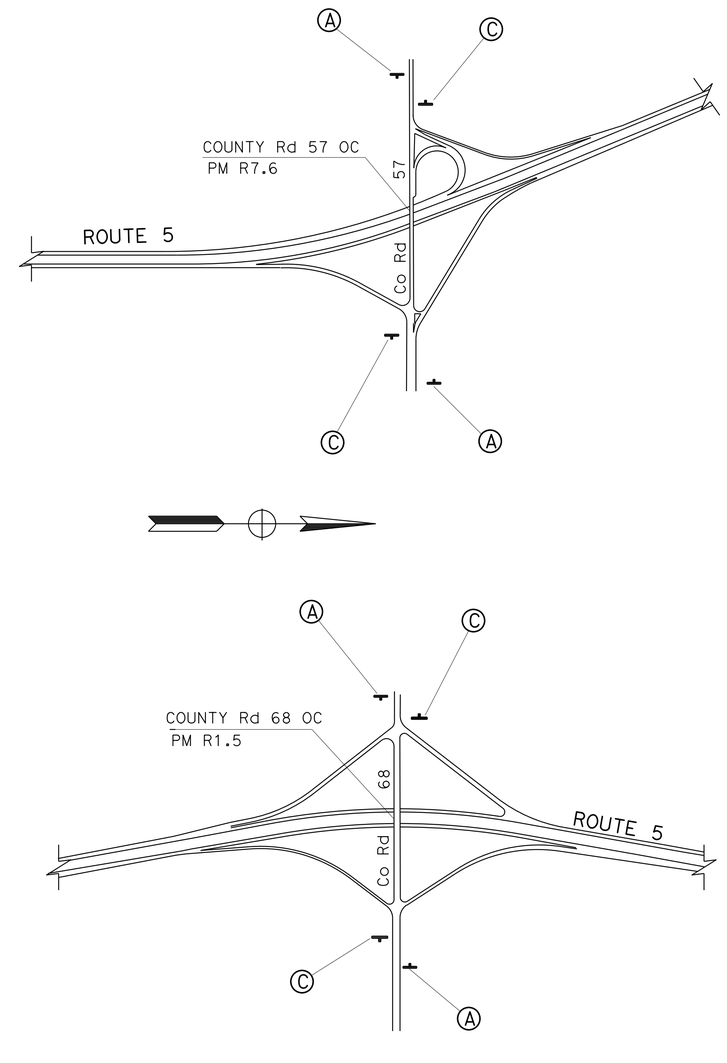

ROUTE 5

EXISTING UTILITY FACILITIES HAVE NOT BEEN PLOTTED ON THESE PLANS.

APPROVED FOR SIGN WORK ONLY

CONSTRUCTION AREA SIGNS

NO SCALE

CS-1

STATE OF CALIFORNIA - DEPARTMENT OF TRANSPORTATION

Caltrans DESIGN

FUNCTIONAL SUPERVISOR: FERMIN BARRIGA

CALCULATED-DESIGNED BY: FERMIN BARRIGA

CHECKED BY: BRIAN P. VIRAY

REVISED BY

DATE REVISED

LAST REVISION 02-19-16

DATE PLOTTED => 02-MAY-2016

TIME PLOTTED => 13:31

Dist	COUNTY	ROUTE	POST MILES TOTAL PROJECT	SHEET No.	TOTAL SHEETS
03	Gle	5	R0.0/R20.0	22	77

Brian P. Viray 4-11-16
REGISTERED CIVIL ENGINEER DATE

4-11-16
PLANS APPROVAL DATE

REGISTERED PROFESSIONAL ENGINEER
BRIAN P VIRAY
No. C70023
Exp. 09/30/16
CIVIL
STATE OF CALIFORNIA

THE STATE OF CALIFORNIA OR ITS OFFICERS OR AGENTS SHALL NOT BE RESPONSIBLE FOR THE ACCURACY OR COMPLETENESS OF SCANNED COPIES OF THIS PLAN SHEET.

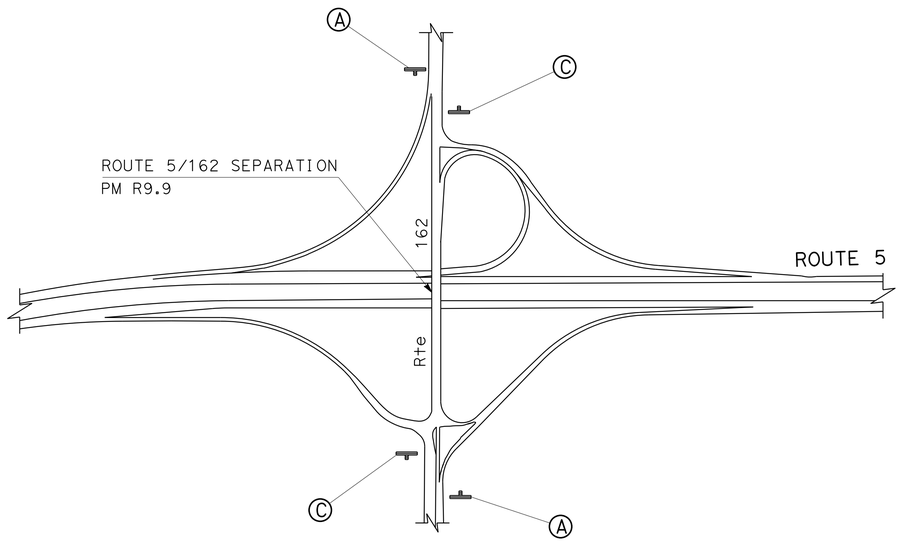

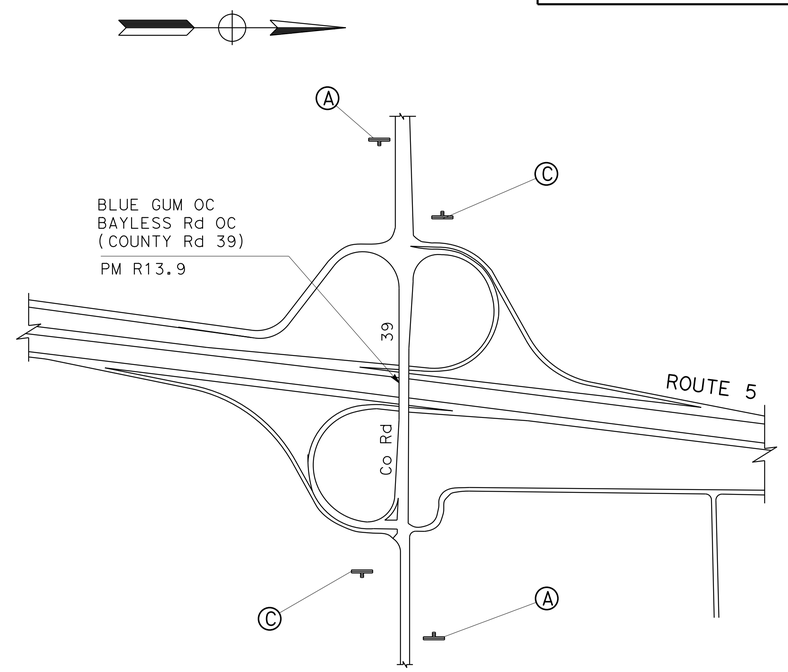

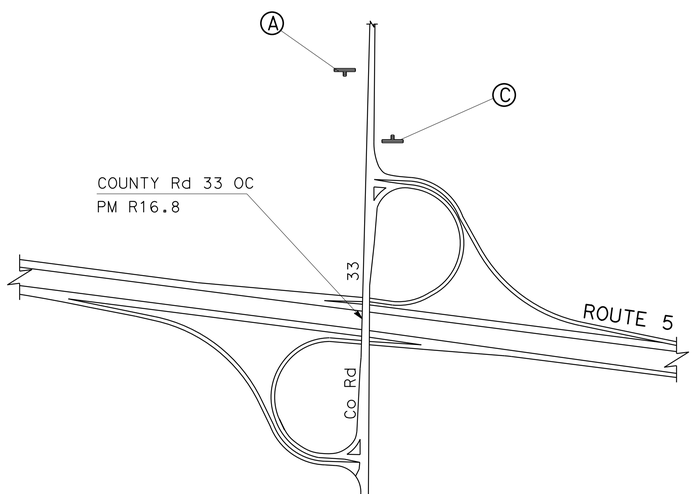

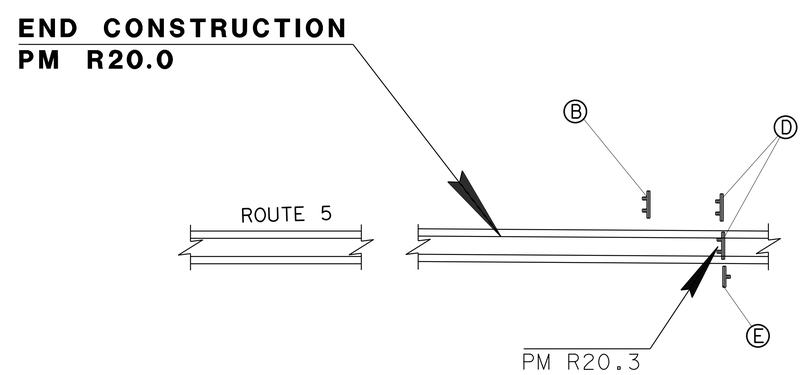

ROUTE 5

EXISTING UTILITY FACILITIES HAVE NOT BEEN PLOTTED ON THESE PLANS.
APPROVED FOR SIGN WORK ONLY

CONSTRUCTION AREA SIGNS

NO SCALE

CS-2

STATE OF CALIFORNIA - DEPARTMENT OF TRANSPORTATION
Caltrans
DESIGN

FUNCTIONAL SUPERVISOR: FERMIN BARRIGA
CALCULATED-DESIGNED BY: FERMIN BARRIGA
CHECKED BY: BRIAN P. VIRAY
REVISED BY
DATE REVISED

LAST REVISION 02-19-16
DATE PLOTTED => 02-MAY-2016
TIME PLOTTED => 13:31

Dist	COUNTY	ROUTE	POST MILES TOTAL PROJECT	SHEET No.	TOTAL SHEETS
03	Gle	5	R0.0/R20.0	23	77

Brian P. Viray 4-11-16
REGISTERED CIVIL ENGINEER DATE

4-11-16
PLANS APPROVAL DATE

REGISTERED PROFESSIONAL ENGINEER BRIAN P VIRAY No. C70023 Exp. 09/30/16 CIVIL STATE OF CALIFORNIA

THE STATE OF CALIFORNIA OR ITS OFFICERS OR AGENTS SHALL NOT BE RESPONSIBLE FOR THE ACCURACY OR COMPLETENESS OF SCANNED COPIES OF THIS PLAN SHEET.

NOTE:

1. ALL DELINEATORS SHALL BE CLASS 1.
2. USE TYPE F DELINEATORS ADJACENT TO OUSIDE SHOULDERS AND USE TYPE G DELINEATORS ADJACENT TO INSIDE SHOULDERS.

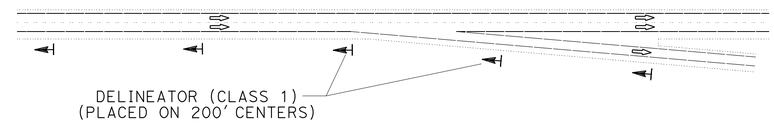

TYPICAL EXIT RAMP DELINEATOR PLACEMENT

LEGEND

DELINEATOR (CLASS 1)

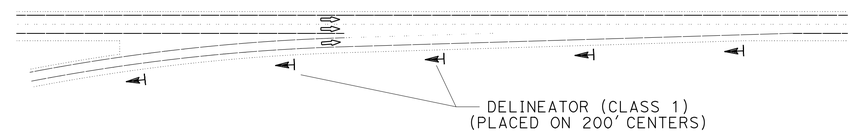

TYPICAL ENTRANCE RAMP DELINEATOR PLACEMENT

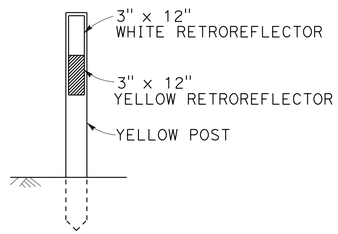

CLASS 1, TYPE P
FLEXIBLE POST

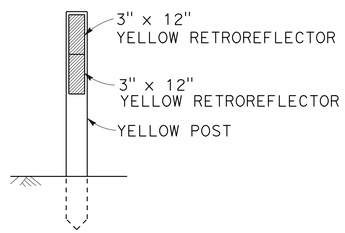

CLASS 1, TYPE H
FLEXIBLE POST

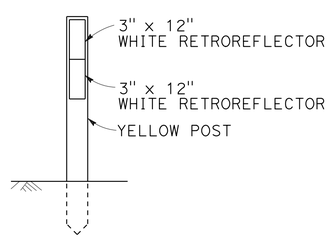

CLASS 1, TYPE C
FLEXIBLE POST

MEDIAN CROSSOVER DELINEATOR DETAILS

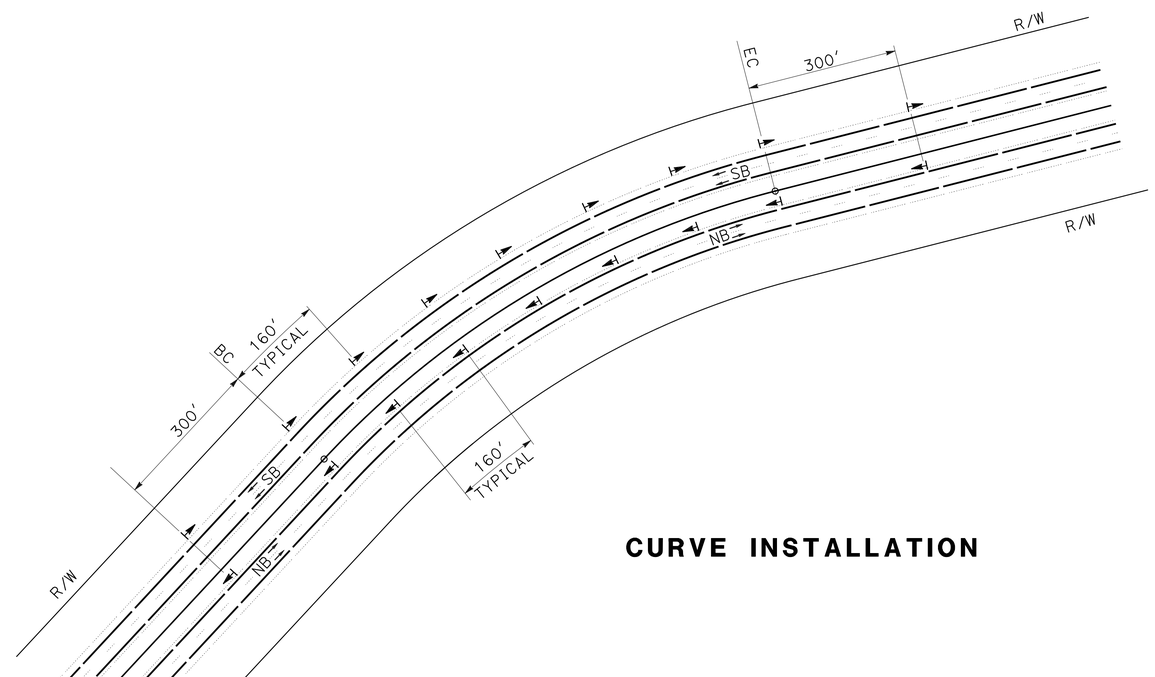

CURVE INSTALLATION

APPROVED FOR PAVEMENT DELINEATION WORK ONLY

PAVEMENT DELINEATION DETAILS

NO SCALE

PDD-1

STATE OF CALIFORNIA - DEPARTMENT OF TRANSPORTATION
Caltrans
DESIGN

FUNCTIONAL SUPERVISOR: FERMIN BARRIGA
CALCULATED-DESIGNED BY: FERMIN BARRIGA
CHECKED BY: BRIAN P. VIRAY
REVISED BY
DATE REVISED

LAST REVISION 02-19-16
DATE PLOTTED => 02-MAY-2016
TIME PLOTTED => 13:31

Dist	COUNTY	ROUTE	POST MILES TOTAL PROJECT	SHEET No.	TOTAL SHEETS
03	Gle	5	R0.0/R20.0	24	77

Brian P. Viray 4-11-16
REGISTERED CIVIL ENGINEER DATE

4-11-16
PLANS APPROVAL DATE

REGISTERED PROFESSIONAL ENGINEER BRIAN P VIRAY No. C70023 Exp. 09/30/16 CIVIL STATE OF CALIFORNIA

THE STATE OF CALIFORNIA OR ITS OFFICERS OR AGENTS SHALL NOT BE RESPONSIBLE FOR THE ACCURACY OR COMPLETENESS OF SCANNED COPIES OF THIS PLAN SHEET.

PAVEMENT MARKER AND THERMOPLASTIC TRAFFIC STRIPE

LOCATION	4" THERMOPLASTIC TRAFFIC STRIPE (ENHANCED WET NIGHT VISIBILITY) (BROKEN 17-7)	4" THERMOPLASTIC TRAFFIC STRIPE (ENHANCED WET NIGHT VISIBILITY) (BROKEN 36-12)		4" THERMOPLASTIC TRAFFIC STRIPE (ENHANCED WET NIGHT VISIBILITY)					THERMOPLASTIC TRAFFIC STRIPE (ENHANCED WET NIGHT VISIBILITY) 8"			THERMOPLASTIC TRAFFIC STRIPE (ENHANCED WET NIGHT VISIBILITY) 6"	PAVEMENT MARKER (RETROREFLECTIVE)				PAVEMENT MARKER (NONREFLECTIVE)
	DETAIL NUMBER																
	9	12	14A	21/23	22	25	25A	27B	36	36A	38	39	TYPE C	TYPE D	TYPE G	TYPE H	TYPE AY
	(LF)	(LF)	(LF)	(LF)	(LF)	(LF)	(LF)	(LF)	(LF)	(LF)	(LF)	(LF)	(EA)	(EA)	(EA)	(EA)	(EA)
NB 5 MAIN LINE		103,008	2,592			105,600		105,600					72		2,146	2,200	
SB 5 MAIN LINE		103,008	2,592			105,600		105,600					72		2,146	2,200	
NB Exit RAMP TO Co Rd 68							1,121	1,119	522						24	48	
NB ENTRANCE RAMP FROM Co Rd 68	300						1,033	1,292		241					18	44	
SB Exit RAMP TO Co Rd 68							1,067	1,073	517						24	45	
SB ENTRANCE RAMP FROM Co Rd 68	300						1,001	1,300		264					19	43	
NB Exit RAMP TO Co Rd 57							983	1,032	572						26	42	
NB ENTRANCE RAMP FROM Co Rd 57	300						1,097	1,325	121	227					17	47	
SB Exit RAMP TO Co Rd 57				150			880	947	537					8	24	34	34
SB ENTRANCE RAMP FROM Co Rd 57	300			150			795	1,201	96	245				8	18	34	34
NB Exit RAMP TO 162							890	879	568		235				37	38	
NB ENTRANCE RAMP FROM 162	300						866	1,295	165	265				8	19	37	
SB Exit RAMP TO 162				134			776	859	615		55			8	28	29	30
SB ENTRANCE RAMP FROM 162 W	300			92			693	906		235					18	30	22
SB ENTRANCE RAMP FROM 162 E	300						942	1,240	142	260					19	40	
NB Exit RAMP TO Co Rd 39				134			800	861	622					8	28	30	30
NB ENTRANCE RAMP FROM Co Rd 39	300			134			720	911	41	221				8	17	31	30
SB Exit RAMP TO Co Rd 39				132			802	869	608					8	27	30	30
SB ENTRANCE RAMP FROM Co Rd 39	300			132			999	714	38	310				8	21	43	30
NB Exit RAMP TO REST AREA							270	271	573						26	12	
NB ENTRANCE RAMP FROM REST AREA	300						116	325		235					18	6	
SB Exit RAMP TO REST AREA							223	500	550						25	10	
SB ENTRANCE RAMP FROM REST AREA	300						109	416		343					22	6	
NB Exit RAMP TO Co Rd 33				140			872	867	619					8	28	37	32
NB ENTRANCE RAMP FROM Co Rd 33	300			140			725	964	47	262				8	19	31	32
SB Exit RAMP TO Co Rd 33				142			798	870	590					8	27	30	32
SB ENTRANCE RAMP FROM Co Rd 33	300			142			724	911	33	218				8	17	31	32
Co Rd 68, EAST OF OC					936			906						42			
Co Rd 68, WEST OF OC					880			880						40			
Co Rd 57, EAST OF OC					1,144			1,050						44			
Co Rd 57, WEST OF OC					868			870						38			
Rte 162, EAST OF Sep					1400			700			65			60	6		
Rte 162, WEST OF Sep					640			660				135		30			
Co Rd 39, EAST OF OC					970			980						42			
Co Rd 39, WEST OF OC					740			500						34			
Co Rd 33, EAST OF OC					720			670						32			
Co Rd 33, WEST OF OC					720			670						32			
SUBTOTAL	3,900	206,016	5,184	1,622	9,018	211,200	19,302	242,033	7,576	3,326	355	135	144	490	4,864	5,208	368
TOTAL	3,900	211,200		483,175					11,257			135	10,706				368

PAVEMENT DELINEATION QUANTITIES

PDQ-1

STATE OF CALIFORNIA - DEPARTMENT OF TRANSPORTATION
Caltrans DESIGN

FUNCTIONAL SUPERVISOR: FERMIN BARRIGA
CALCULATED-DESIGNED BY: MAHBOOBEH DEILAMI
CHECKED BY: BRIAN P. VIRAY
REVISED BY
DATE REVISED

LAST REVISION 02-19-16
DATE PLOTTED => 02-MAY-2016
TIME PLOTTED => 13:31

Dist	COUNTY	ROUTE	POST MILES TOTAL PROJECT	SHEET No.	TOTAL SHEETS
03	Gle	5	R0.0/R20.0	25	77

Brian P. Viray 4-11-16
REGISTERED CIVIL ENGINEER DATE

4-11-16
PLANS APPROVAL DATE

REGISTERED PROFESSIONAL ENGINEER BRIAN P VIRAY No. C70023 Exp. 09/30/16 CIVIL STATE OF CALIFORNIA

THE STATE OF CALIFORNIA OR ITS OFFICERS OR AGENTS SHALL NOT BE RESPONSIBLE FOR THE ACCURACY OR COMPLETENESS OF SCANNED COPIES OF THIS PLAN SHEET.

THERMOPLASTIC PAVEMENT MARKING

LOCATION	THERMOPLASTIC PAVEMENT MARKING (ENHANCED WET NIGHT VISIBILITY)												
	TYPE I (24) ARROW	TYPE II (LEFT) ARROW	TYPE III (RIGHT) ARROW	TYPE V ARROW	"STOP"	"SIGNAL"	"AHEAD"	CROSS WALK	LIMIT LINE WHITE	12" DIAGONAL YELLOW	BIKE LANE		
											BIKE	LANE	ARROW
	SQFT	SQFT	SQFT	SQFT	SQFT		SQFT	SQFT	SQFT	SQFT	SQFT	SQFT	SQFT
NB Exit RAMP TO Co Rd 68				66	66		31		50				
NB ENTRANCE RAMP FROM Co Rd 68	31												
SB Exit RAMP TO Co Rd 68				66	66		31		60				
SB ENTRANCE RAMP FROM Co Rd 68	31												
NB Exit RAMP TO Co Rd 57				99	44		31		39				
NB ENTRANCE RAMP FROM Co Rd 57	62												
SB Exit RAMP TO Co Rd 57				66	44		31		35				
SB ENTRANCE RAMP FROM Co Rd 57	62									32			
NB Exit RAMP TO 162		90	84	33	66		31	87					
NB ENTRANCE RAMP FROM 162	62												
SB Exit RAMP TO 162				66	66		31		44				
SB ENTRANCE RAMP FROM 162 W	31												
SB ENTRANCE RAMP FROM 162 E	31									114			
NB Exit RAMP TO Co Rd 39				66	44		31		39				
NB ENTRANCE RAMP FROM Co Rd 39	62												
SB Exit RAMP TO Co Rd 39				66	44		31		38				
SB ENTRANCE RAMP FROM Co Rd 39	62												
NB Exit RAMP TO Rest Area				33									
NB ENTRANCE RAMP FROM Rest Area				33									
SB Exit RAMP TO Rest Area													
SB ENTRANCE RAMP FROM Rest Area				33									
NB Exit RAMP TO Co Rd 33				66	66		31		49				
NB ENTRANCE RAMP FROM Co Rd 33	62												
SB Exit RAMP TO Co Rd 33				66	44		31		42				
SB ENTRANCE RAMP FROM Co Rd 33	62												
Co Rd 68, EAST OF OC													
Co Rd 68, WEST OF OC					22		31						
Co Rd 57, EAST OF OC													
Co Rd 57, WEST OF OC					22		31						
Rte 162, EAST OF Sep			42						47				
Rte 162, WEST OF Sep	62					32	31	186			5	7	3.5
Co Rd 39, EAST OF OC													
Co Rd 39, WEST OF OC													
Co Rd 33, EAST OF OC													
Co Rd 33, WEST OF OC													
SUBTOTAL	620	90	126	759	594	32	403	273	443	146	5	7	3.5
TOTAL	3,501.5												

PAVEMENT DELINEATION QUANTITIES

PDQ-2

STATE OF CALIFORNIA - DEPARTMENT OF TRANSPORTATION
Caltrans
DESIGN
FUNCTIONAL SUPERVISOR: FERMIN BARRIGA
CALCULATED-DESIGNED BY: MAHBOOBEH DEILAMI
CHECKED BY: BRIAN P. VIRAY
REVISED BY
DATE REVISED

LAST REVISION 02-19-16
DATE PLOTTED => 02-MAY-2016
TIME PLOTTED => 13:31

Dist	COUNTY	ROUTE	POST MILES TOTAL PROJECT	SHEET No.	TOTAL SHEETS
03	Gle	5	R0.0/R20.0	26	77

Brian P. Viray 4-11-16
REGISTERED CIVIL ENGINEER DATE

4-11-16
PLANS APPROVAL DATE

REGISTERED PROFESSIONAL ENGINEER
BRIAN P VIRAY
No. C70023
Exp. 09/30/16
CIVIL
STATE OF CALIFORNIA

THE STATE OF CALIFORNIA OR ITS OFFICERS OR AGENTS SHALL NOT BE RESPONSIBLE FOR THE ACCURACY OR COMPLETENESS OF SCANNED COPIES OF THIS PLAN SHEET.

HIGHWAY POST MARKERS

PM LOCATION	DESCRIPTION	HIGHWAY POST MARKER FNBT (EACH)	HIGHWAY POST MARKER FSBT (EACH)
R0.00	Col PM R34.37 = Gle PM R0.00	2	2
R1.00		1	1
R1.52	COUNTY ROAD 68 OC	1	1
R2.00		1	1
R2.74	LOGAN CREEK BRIDGE	1	1
R3.00		1	1
R4.00		1	1
R5.00		1	1
R5.08	N FORK LOGAN CREEK Br	1	1
R5.58	COUNTY ROAD 60 OC	1	1
R6.00		1	1
R7.00		1	1
R7.60	COUNTY ROAD 57 OC	1	1
R8.00		1	1
R8.82	CANAL BRIDGE	1	1
R9.00		1	1
R9.87	ROUTE 162/5 Sep	1	1
R10.00		1	1
R10.36	WEST WILLOWS OH	1	1
R10.88	COUNTY ROAD 48 OC	1	1
R11.00		1	1
R11.98	BOYD OVERFLOW	1	1
R12.00		1	1
R12.39	SOUTH FORK WILLOW CREEK	1	1
R12.58	WILSON CREEK	1	1
R13.00		1	1
R13.90	COUNTY ROAD 39 OC	1	1
R14.00		1	1
R15.00		1	1
R15.91	COUNTY ROAD 35 OC	1	1
R16.00		1	1
R16.80	COUNTY ROAD 33 OC	1	1
R17.00		1	1
R17.49	WALKER CREEK	1	1
R18.00		1	1
R19.00		1	1
R19.81	COUNTY ROAD 28 OC	1	1
R20.00		1	1
	SUBTOTAL	39	39
	TOTAL	78	

CROSSOVER DELINEATORS (RAMP AND MEDIAN)

LOCATION	DELINEATOR (CLASS 1) TYPE C EA	TYPE F EA	TYPE H EA	TYPE P EA
NB EXIT RAMP TO Co Rd 68		5		
NB ENTRANCE RAMP FROM Co Rd 68		6		
SB EXIT RAMP TO Co Rd 68		5		
SB ENTRANCE RAMP FROM Co Rd 68		6		
NB EXIT RAMP TO Co Rd 57		5		
NB ENTRANCE RAMP FROM Co Rd 57		6		
SB EXIT RAMP TO Co Rd 57		5		
SB ENTRANCE RAMP FROM Co Rd 57		7		
NB EXIT RAMP TO Rte 162		5		
NB ENTRANCE RAMP FROM Rte 162		7		
SB EXIT RAMP TO Rte 162		5		
SB ENTRANCE RAMP FROM FROM EB Rte 162		6		
NB EXIT RAMP TO Co Rd 39		5		
NB ENTRANCE RAMP FROM Co Rd 39		6		
SB EXIT RAMP TO Co Rd 39		5		
SB ENTRANCE RAMP FROM Co Rd 39		6		
NB EXIT RAMP TO WILLOWS REST AREA		5		
NB ENTRANCE RAMP FROM WILLOWS REST AREA		6		
SB EXIT RAMP TO WILLOWS REST AREA		6		
SB ENTRANCE RAMP FROM WILLOWS REST AREA		7		
SB EXIT RAMP TO ARTOIS		5		
SB ENTRANCE RAMP FROM ARTOIS		5		
MEDIAN CROSSOVER PM R0.00 FSBT/FNBT	1		1	1
MEDIAN CROSSOVER PM R5.34 FSBT/FNBT	1		1	1
MEDIAN CROSSOVER PM R12.09 FSBT/FNBT	1		1	1
MEDIAN CROSSOVER PM R18.72 FSBT/FNBT	1		1	1
TABLE SUBTOTAL	4	124	4	4
TABLE TOTAL	136			

MAINLINE DELINEATORS

CURVE DIRECTION	CURVE LIMITS		DELINEATOR (CLASS 1) (EA) SB TYPE F OUTSIDE	SB TYPE G INSIDE	NB TYPE G INSIDE	NB TYPE F OUTSIDE
L+/R+	BEGIN PM	END PM				
L+	R0.55	R0.72				9
R+	R1.35	R1.68	11			
L+	R2.30	R2.47		9		9
R+	R4.88	R5.15		12		12
L+	R5.28	R5.55	12		12	
L+	R7.30	R7.66				6
L+	R8.04	R8.22		9		9
R+	R9.22	R9.77	22			
R+	R11.89	R12.01	8			
L+	R14.11	R14.23		7		7
R+	R15.33	R15.46	8		8	
L+	R17.18	R17.31				8
MAINLINE SUBTOTAL			61	37	20	60
MAINLINE TOTAL			178			
CROSSOVER/RAMP TOTAL			136			
GRAND TOTAL			314			

PAVEMENT DELINEATION QUANTITIES

PDQ-3

STATE OF CALIFORNIA - DEPARTMENT OF TRANSPORTATION
Caltrans® DESIGN
FUNCTIONAL SUPERVISOR: FERMIN BARRIGA
CALCULATED-DESIGNED BY: MAHBOOBEH DEILAMI
CHECKED BY: BRIAN P. VIRAY
REVISED BY
DATE REVISED

LAST REVISION 02-19-16
DATE PLOTTED => 02-MAY-2016
TIME PLOTTED => 13:31

Dist	COUNTY	ROUTE	POST MILES TOTAL PROJECT	SHEET No.	TOTAL SHEETS
03	Gle	5	R0.0/R20.0	27	77

REGISTERED CIVIL ENGINEER 4-11-16 DATE

4-11-16
PLANS APPROVAL DATE

REGISTERED PROFESSIONAL ENGINEER BRIAN P VIRAY No. C70023 Exp. 09/30/16 CIVIL STATE OF CALIFORNIA

THE STATE OF CALIFORNIA OR ITS OFFICERS OR AGENTS SHALL NOT BE RESPONSIBLE FOR THE ACCURACY OR COMPLETENESS OF SCANNED COPIES OF THIS PLAN SHEET.

ROADWAY QUANTITIES

LOCATION	COLD PLANE ASPHALT CONCRETE PAVEMENT	RUBBERIZED HOT MIX ASPHALT - OPEN GRADED (OPEN GRADED FRICTION COURSE)	RUBBERIZED HOT MIX ASPHALT (GAP GRADED)
	SQYD	TONS	TONS
NB ROUTE 5 MAIN LINE	301,780	23,832.30	59,886.30
SB ROUTE 5 MAIN LINE	301,780	23,832.30	59,886.30
SB+ NB ROUTE 5 MAIN LINE SAFETY EDGE			3,094.71
NB EXIT RAMP TO Co Rd 68	2,562	180.78	114.66
NB ENTRANCE RAMP FROM Co Rd 68	2,780	188.66	109.66
SB EXIT RAMP TO Co Rd 68	2,700	185.87	129.64
SB ENTRANCE RAMP FROM Co Rd 68	3,216	210.31	141.68
NB EXIT RAMP TO Co Rd 57	2,702	182.51	104.58
NB ENTRANCE RAMP FROM Co Rd 57	3,188	209.92	119.29
SB EXIT RAMP TO Co Rd 57	2,299	160.13	127.16
SB ENTRANCE RAMP FROM Co Rd 57	2,805	172.00	124.13
NB EXIT RAMP TO ROUTE 162	2,885	188.32	127.83
NB ENTRANCE RAMP FROM ROUTE 162	2,966	184.60	117.91
SB EXIT RAMP TO ROUTE 162	2,390	160.35	124.57
SB ENTRANCE RAMP FROM ROUTE 162 W	2,386	153.99	91.33
SB ENTRANCE RAMP FROM ROUTE 162 E	2,667	178.97	117.31
NB EXIT RAMP TO Co Rd 39	2,335	158.44	115.54
NB ENTRANCE RAMP FROM Co Rd 39	2,175	142.52	123.48
SB EXIT RAMP TO Co Rd 39	2,313	157.31	132.30
SB ENTRANCE RAMP FROM Co Rd 39	2,553	174.13	133.48
NB EXIT RAMP TO REST AREA	1,421	85.86	215.75
NB ENTRANCE RAMP FROM REST AREA	1,708	94.69	237.93
SB EXIT RAMP TO REST AREA	1,129	68.58	172.33
SB ENTRANCE RAMP FROM REST AREA	1,321	74.00	185.96
NB EXIT RAMP TO Co Rd 33	2,373	160.66	124.66
NB ENTRANCE RAMP FROM Co Rd 33	2,270	147.41	108.63
SB EXIT RAMP TO Co Rd 33	2,434	151.46	132.11
SB ENTRANCE RAMP FROM Co Rd 33	2,639	168.60	117.60
TOTAL	663,776	51,604.70	126,216.81

REPLACE ASPHALT CONCRETE SURFACING

LOCATION	CY
CR 68 EAST SIDE OF THE BRIDGE	134.09
CR 68 WEST SIDE OF THE BRIDGE	131.44
CR 57 EAST SIDE OF THE BRIDGE	173.09
CR 57 WEST SIDE OF THE BRIDGE	132.41
ROUTE 162 EAST SIDE OF THE BRIDGE	243.31
ROUTE 162 WEST SIDE OF THE BRIDGE	233.56
CR 39 EAST SIDE OF THE BRIDGE	98.70
CR 39 WEST SIDE OF THE BRIDGE	108.33
CR 33 EAST SIDE OF THE BRIDGE	104.96
CR 33 WEST SIDE OF THE BRIDGE	102.80
TOTAL	1,462.71

TACK COAT

LOCATION	# OF LIFTS	APPLICATION RATE (GAL/SQYD)	TONS
ROUTE 5(SB)	2	0.05	188.61
ROUTE 5(NB)	2	0.05	188.61
RAMPS 0.3' OVERLAY	2	0.05	9.67
RAMPS 0.1' OVERLAY	1	0.07	15.06
OVERCROSSINGS, REPLACE AC SURFACING	1	0.07	5.12
		TOTAL	407.06

SHOULDER BACKING

LOCATION	LENGTH, MILE	TONS
ROUTE 5(SB+NB)	78.01	13,437
RAMPS	3.49	601
	TOTAL	14,038

IMPORTED BORROW

LOCATION	LENGTH, MILE	CY
ROUTE 5(SB+NB)	1.13	99.42
RAMPS	0.71	62.62
OVERCROSSINGS	0.79	79.90
	TOTAL	231.93

SUMMARY OF QUANTITIES

Q-1

REVISED BY | DATE REVISED
M. DEILAMI | BRIAN P. VIRAY
CALCULATED-DESIGNED BY | CHECKED BY
FUNCTIONAL SUPERVISOR: FERMIN BARRIGA
STATE OF CALIFORNIA - DEPARTMENT OF TRANSPORTATION
Caltrans DESIGN

LAST REVISION 02-19-16 | DATE PLOTTED => 02-MAY-2016 | TIME PLOTTED => 13:31

Dist	COUNTY	ROUTE	POST MILES TOTAL PROJECT	SHEET No.	TOTAL SHEETS
03	Gle	5	R0.0/R20.0	28	77

REGISTERED CIVIL ENGINEER 4-11-16 DATE

4-11-16
PLANS APPROVAL DATE

REGISTERED PROFESSIONAL ENGINEER BRIAN P VIRAY No. C70023 Exp. 09/30/16 CIVIL STATE OF CALIFORNIA

THE STATE OF CALIFORNIA OR ITS OFFICERS OR AGENTS SHALL NOT BE RESPONSIBLE FOR THE ACCURACY OR COMPLETENESS OF SCANNED COPIES OF THIS PLAN SHEET.

REMOVE ASPHALT CONCRETE DIKE & PLACE HOT MIX ASPHALT DIKE

ROUTE	L†/R†	LOCATION	REMOVE ASPHALT CONCRETE DIKE	PLACE HOT MIX ASPHALT DIKE												* MINOR HMA
				TYPE A			TYPE C			TYPE F			TYPE D			
		MAINLINE	LF	LF	CY	TON	LF	CY	TON	LF	CY	TON	LF	CY	TON	TON
CR 68	R†	NB5, EXIT	434.50										434.50	12.73	26.73	26.73
	L†	NB5,EXIT	489.8										489.80	14.35	30.14	30.14
	R†	NB5, ENTER	539.34										539.34	15.80	33.19	33.19
	R†	SB5, ENTER	508.48										508.48	14.90	31.29	31.29
	LT	SB5, EXIT	219.1										219.10	6.42	13.48	13.48
	RT	68, SW TO BRIDGE	335.68				53.00	0.20	0.42	25.00	0.17	0.35	257.68	7.55	15.86	16.63
CR 57	R†	NB5, EXIT	424.16										424.16	12.43	26.10	26.10
	R†	NB5, ENTER	300.58										300.58	8.81	18.49	18.49
	RT	57, NE TO BRIDGE	497				53.00	0.20	0.42	25.00	0.17	0.35	444.00	13.01	27.32	28.09
	LT	57, SE TO BRIDGE	354										354.00	10.37	21.78	21.78
	LT	57, NW TO BRIDGE	436.06										436.06	12.78	26.83	26.83
	RT	57, SW TO BRIDGE	635.07				53.00	0.20	0.42	25.00	0.17	0.35	557.07	16.32	34.28	35.05
	RT	SB5, EXIT	645.56										645.56	18.91	39.72	39.72
	RT	39, NE TO BRIDGE	308				53.00	0.20	0.42	25.00	0.17	0.35	230.00	6.74	14.15	14.92
CR 39	LT	39, SE TO BRIDGE	290										290.00	8.50	17.84	17.84
	RT	39, SW TO BRIDGE	282				53.00	0.20	0.42	25.00	0.17	0.35	204.00	5.98	12.55	13.32
	RT	SB5, ENTER	75										75.00	2.20	4.61	4.61
CR 33	RT	33, NE TO BRIDGE	334				53.00	0.20	0.42	25.00	0.17	0.35	256.00	7.50	15.75	16.52
	LT	33, SE TO BRIDGE	307										307.00	9.00	18.89	18.89
	R†	SB5, ENTER	120										120.00	3.52	7.38	7.38
	RT	39, SW TO BRIDGE	390				53.00	0.20	0.42	25.00	0.17	0.35	312.00	9.14	19.20	19.97
		LOCAL ROADS SUBTOTAL	7925.33				371.00	1.40	2.94	175.00	1.19	2.45	7404.33	216.96	455.58	460.97

ROUTE 5		L†/R†	LOCATION	REMOVE ASPHALT CONCRETE DIKE	PLACE HOT MIX ASPHALT DIKE												
					TYPE A			TYPE C			TYPE F			TYPE D			
BEGIN PM	END PM		MAINLINE	LF	LF	CY	TON	LF	CY	TON	LF	CY	TON	LF	CY	TON	
R8.66	R8.82	SB R†	ENDS AT END BR 11-57	836.00										836.00	24.49	51.44	51.44
R8.87	R9.01	NB R†	BEGINS AT END BR 11-57	757.00										757.00	22.18	46.58	46.58
R10.07	R10.37	SB R†	ENDS AT WEST WILLOWS OH 11-60	1605.00				37.50	0.15	0.30	50.50	0.33	0.70	1517.00	44.45	93.34	93.34
R10.38	R10.71	NB R†	BEGINS AT ENDS WEST WILLOWS OH 11-60	1733.00										1733.00	50.78	106.63	106.63
R12.59	R13.6	SB R†	BEGIN AT END OF BR 11-53	5322.00	5,322.00	71.85	150.88										150.88
R16.99	R17.01	NB R†	BEFORE GR AND WALKER CR BRIDGE	122.00										122.00	3.57	7.51	7.51
R17.39	R17.49	SB R†	ENDS AT WALKER CR BRIDGE	550.00										550.00	16.12	33.84	33.84
R17.53	R17.60	NB R†	BEGINS AT END OF WALKER CR BRIDGE	362.00										362.00	10.61	22.27	22.27
			R†e 5 SUBTOTAL	11,287.00	5,322.00	71.85	150.88	37.50	0.15	0.30	50.50	0.33	0.70	5,877.00	172.20	361.61	512.49
			FROM LOCAL ROADS SUBTOTAL	7925.33				371.00	1.40	2.94	175.00	1.19	2.45	7404.33	216.96	455.58	460.97
			TOTAL	19212.3	5,322.00	71.85	150.88	408.50	1.55	3.24	225.50	1.52	3.15	13281.33	389.16	817.19	973.46

* SEE MINOR HOT MIX ASPHALT FOR FINAL QUANTITY

SUMMARY OF QUANTITIES

Q-2

REVISED BY | DATE REVISED
MAHBOOBHEH DEILAMI | BRIAN P. VIRAY
CALCULATED-DESIGNED BY | CHECKED BY
FUNCTIONAL SUPERVISOR: FERMIN BARRIGA
STATE OF CALIFORNIA - DEPARTMENT OF TRANSPORTATION
Caltrans
DESIGN

LAST REVISION 02-19-16 | DATE PLOTTED => 02-MAY-2016 | TIME PLOTTED => 13:31

Dist	COUNTY	ROUTE	POST MILES TOTAL PROJECT	SHEET No.	TOTAL SHEETS
03	Gle	5	R0.0/R20.0	29	77

Brian P. Viray 4-11-16
REGISTERED CIVIL ENGINEER DATE

4-11-16
PLANS APPROVAL DATE

REGISTERED PROFESSIONAL ENGINEER BRIAN P VIRAY No. C70023 Exp. 09/30/16 CIVIL STATE OF CALIFORNIA

THE STATE OF CALIFORNIA OR ITS OFFICERS OR AGENTS SHALL NOT BE RESPONSIBLE FOR THE ACCURACY OR COMPLETENESS OF SCANNED COPIES OF THIS PLAN SHEET.

SUMMARY OF QUANTITIES

	POSTMILE	DESCRIPTION	DIRECTION	REMOVE GUARDRAIL	REMOVE CONCRETE (CY)	(N) MGS TYPICAL LAYOUT	MIDWEST GUARDRAIL SYSTEM (WOOD POST)	ALTERNATIVE IN-LINE TERMINAL SYSTEM	ALTERNATIVE FLARED TERMINAL SYSTEM	CRASH CUSHION (TYPE CAT)	CRASH CUSHION (TYPE CAT) BACKUP	* PLACE HOT MIX ASPHALT DIKE (TYPE C)	* PLACE HOT MIX ASPHALT DIKE (TYPE F)	TRANSITION RAILING (TYPE WB-31)	MINOR CONCRETE (MINOR STRUCTURE)	(N) CONCRETE BLOCK DETAIL No.	OBJECT MARKER (TYPE L-1)	TEMPORARY RAILING (TYPE K)	ALTERNATIVE CRASH CUSHION	TEMPORARY CRASH CUSHION MODULE	CHANNELIZER (SURFACE MOUNTED)	DOUBLE MIDWEST GUARDRAIL SYSTEM (WOOD POST)	CONCRETE BARRIER (TYPE 60SD)	RAIL TENSIONING ASSEMBLY	END ANCHOR ASSEMBLY (TYPE SFT)
				LF	CY	TYPE	LF	EA	EA	EA	EA	LF	LF	EA	CY		EA	LF	EA	EA	EA	LF	LF	EA	EA
* *	R1.52	ATTACH TO WB Br No. 11-0083 (Co Rd 68 OC), R+	WB	37.5		12A		1						1	2.71	11									
* *	R1.52	ATTACH TO EB Br No. 11-0083 (Co Rd 68 OC), R+	EB	37.5		12A		1				53.0	25.0	1	0.66	9-11									
	R5.06	MGS SHIELDING NORTH FORK LOGAN CREEK	NB	115.0		11B	87.5		1								1								1
	R7.61	ATTACH TO SW Br No. 11-80 (Co Rd 57 OC)	WB	37.5		12A		1				53.0	25.0	1	10.94	2									
	R7.61	ATTACH TO NE Br No. 11-80 (Co Rd 57 OC)	EB	37.5		12A		1				53.0	25.0	1	10.94	2									
	R7.86	MGS SHIELDING A CANAL	NB	162.5		11B	125.0		1								1								1
	R7.86	MGS SHIELDING A CANAL	SB	162.5		11B	125.0		1								1								1
	R8.64	CENTRAL IRRIGATION CANAL, R+ SIDE	NB	1,012.5		12B	950.0		1					1			1								
	R8.64	CENTRAL IRRIGATION CANAL, L+ SIDE	NB	268.75		12E	25.0		1	1	1			1			1					175.0		1	
	R9.02	CENTRAL IRRIGATION CANAL, R+ SIDE	SB	787.5		12B	725.0		1					1			1								
	R8.92	CENTRAL IRRIGATION CANAL, L+ SIDE	SB	268.75		12E	25.0		1	1	1			1			1					175.0		1	
	R9.25	MGS SHIELDING A CANAL	NB	300.0		11B	262.5		1								1								1
	R9.36	MGS SHIELDING A CANAL	SB	287.5		11B	250.0		1								1								1
	R9.62	MGS SHIELDING A SIGN STRUCTURE POST	NB	75.0		16B	50.0		1								1								1
	R9.85	AT COLUMNS TO Br No. 11-56 (R+e 162/5 Sep)	NB	75.0	6.5											60SD		160	1	14	6		67.2		
	R9.88	AT COLUMNS TO Br No. 11-56 (R+e 162/5 Sep)	SB	62.5	6.5	12B			1					1		60SD	1	160		14	6		67.2		
	R10.06	ATTACH TO Br No. 11-60R (WEST WILLOWS OH), R+	NB	1,587.5		12B	1,525.0		1					1			1								
	R10.1	MGS SHIELDING SIGN STRUCTURE	SB	87.5		16B	62.5		1			37.5	50.5				1								1
	R10.31	ATTACH TO Br No. 11-60R (WEST WILLOWs OH), L+	NB	268.75		12E	25.0		1	1	1			1			1					175.0		1	
	R10.45	ATTACH TO Br No. 11-60R (WEST WILLOWs OH), L+	SB	268.75		12E	25.0		1	1	1			1			1					175.0		1	
	R10.72	ATTACH TO Br No. 11-60R (WEST WILLOWs OH), R+	SB	1,683.0		12B	1,625.0		1					1			1								
	R10.86	AT COLUMNS TO Br No. 11-55 (Co Rd 48 OC), R+	NB	75.0	6.5											60SD		160	1	14	6		67.2		
	R10.91	AT COLUMNS TO Br No. 11-55 (Co Rd 48 OC), L+	SB	62.5	6.5	12B			1					1		60SD	1	160		14	6		67.2		
	R11.93	ATTACH TO Br No. 11-63R (BOYD OVERFLOW), R+	NB	262.5		12B	200.0		1					1			1								
	R11.93	ATTACH TO Br No. 11-63R (BOYD OVERFLOW), L+	NB	268.75		12E	25.0		1	1	1			1			1					175.0		1	
	R12.05	ATTACH TO Br No. 11-63L (BOYD OVERFLOW), R+	SB	87.5		12B	25.0		1					1			1								
	R12.02	ATTACH TO Br No. 11-63L (BOYD OVERFLOW), L+	SB	268.75		12E	25.0		1	1	1			1			1					175.0		1	
	R12.34	ATTACH TO Br No. 11-58R (S FORK WILLOW CREEK), L+	NB	268.75		12E	25.0		1	1	1			1			1					175.0		1	
	R12.34	ATTACH TO Br No. 11-58R (S FORK WILLOW CREEK), R+	NB	262.5		12B	200.0		1					1			1								
	R12.48	ATTACH TO Br No. 11-58L (S FORK WILLOW CREEK), L+	SB	268.75		12E	25.0		1	1	1			1			1					175.0		1	
	R12.48	ATTACH TO Br No. 11-58L (S FORK WILLOW CREEK), R+	SB	262.5		12B	200.0		1					1			1								
	R12.52	ATTACH TO Br No. 11-53R (WILSON CREEK), L+	NB	268.75		12E	25.0		1	1	1			1			1					175.0		1	
	R12.52	ATTACH TO Br No. 11-53R (WILSON CREEK), R+	NB	260.0		12B	200.0		1					1			1								
	R12.64	ATTACH TO Br No. 11-53R (WILSON CREEK), L+	SB	268.75		12E	25.0		1	1	1			1			1					175.0		1	
	R12.61	ATTACH TO Br No. 11-53R (WILSON CREEK), R+	SB	100.0		12B	37.5		1					1			1								
	R13.88	AT COLUMNS TO Br No. 11-54 (Co Rd 39 OC)	NB	62.5	6.5	12B			1					1		60SD	1	160		14	6		67.2		
* * *	R13.92	AT COLUMNS TO Br No. 11-54 (Co Rd 39 OC)	SB	137.5	6.5	12B	75.0		1					1		60SD	1	160		14	6		67.2		
	R13.8	ATTACH TO NE Br No. 11-54 (Co Rd 39 OC)	WB	37.5		12A		1				53.0	25.0	1	4.59	5									
	R13.8	ATTACH TO SW Br No. 11-54 (Co Rd 39 OC)	EB	37.5		12A		1				53.0	25.0	1	0.64	1									
	R14.45	MGS SHIELDING REST AREA	NB	1,000.0		11B	962.5		1								1								1
		SUBTOTAL		11,883.0	39.0		7937.50	6	32	10	10	302.5	175.5	30	30.48		32	960	2	84	36	1,750.0	403.2	10	8

(N) - NOT A SEPARATE PAY ITEM, FOR INFORMATION ONLY

* - ONLY "LF" FOR PLACE HMA DIKE NEXT TO MGS IS SHOWN. SEE HMA DIKE TABLE FOR COMPLETE HMA DIKE PLACEMENT LIST.

* * - RAILING TO BE REMOVED AS GR.

* * * - SKIP ONE POST OVER DOUBLE 30" RCP AT Approx 95' FROM THE OC COLUMN. SEE SHEET C-18.

SUMMARY OF QUANTITIES

Q-3

STATE OF CALIFORNIA - DEPARTMENT OF TRANSPORTATION
Caltrans® DESIGN
FUNCTIONAL SUPERVISOR: FERMIN BARRIGA
CALCULATED-DESIGNED BY: MAHBOOBEH DEILAMI
CHECKED BY: FERMIN BARRIGA
REVISED BY
DATE REVISED

LAST REVISION 02-19-16
DATE PLOTTED => 02-MAY-2016
TIME PLOTTED => 13:31

Dist	COUNTY	ROUTE	POST MILES TOTAL PROJECT	SHEET No.	TOTAL SHEETS
03	Gle	5	R0.0/R20.0	30	77

Brian P. Viray 4-11-16
REGISTERED CIVIL ENGINEER DATE

4-11-16
PLANS APPROVAL DATE

REGISTERED PROFESSIONAL ENGINEER BRIAN P VIRAY No. C70023 Exp. 09/30/16 CIVIL STATE OF CALIFORNIA

THE STATE OF CALIFORNIA OR ITS OFFICERS OR AGENTS SHALL NOT BE RESPONSIBLE FOR THE ACCURACY OR COMPLETENESS OF SCANNED COPIES OF THIS PLAN SHEET.

SUMMARY OF QUANTITIES

	POSTMILE	DESCRIPTION	DIRECTION	REMOVE GUARDRAIL	REMOVE CONCRETE (CY)	(N) MGS TYPICAL LAYOUT	MIDWEST GUARDRAIL SYSTEM (WOOD POST)	ALTERNATIVE IN-LINE TERMINAL SYSTEM	ALTERNATIVE FLARED TERMINAL SYSTEM	CRASH CUSHION (TYPE CAT)	CRASH CUSHION (TYPE CAT) BACKUP	* PLACE HOT MIX ASPHALT DIKE (TYPE C)	* PLACE HOT MIX ASPHALT DIKE (TYPE F)	TRANSITION RAILING (TYPE WB-31)	MINOR CONCRETE (MINOR STRUCTURE)	(N) CONCRETE BLOCK DETAIL No.	OBJECT MARKER (TYPE L-1)	TEMPORARY RAILING (TYPE K)	ALTERNATIVE CRASH CUSHION	TEMPORARY CRASH CUSHION MODULE	CHANNELIZER (SURFACE MOUNTED)	DOUBLE MIDWEST GUARDRAIL SYSTEM (WOOD POST)	CONCRETE BARRIER (TYPE 60SD)	RAIL TENSIONING ASSEMBLY	END ANCHOR ASSEMBLY (TYPE SFT)
				LF	CY	TYPE	LF	EA	EA	EA	EA	LF	LF	EA	CY		EA	LF	EA	EA	EA	LF	LF	EA	EA
	R14.48	MBGR SHIELDING A CANAL	NB	88.0		11B	62.5		1								1								1
	R14.59	MBGR SHIELDING A CANAL	NB	187.5		11B	150.0		1								1								1
	R14.7	MGS SHIELDING REST AREA	SB	800.0		11B	762.5		1								1								1
	R14.91	MBGR SHIELDING A CANAL, R†	SB	100.0		11B	62.5		1								1								1
	R15.61	AT COLUMNS TO Br No. 11-62 (Co Rd 35 OC)	NB	62.5	6.1									1		60SD		160	1	14	6		65.7		
	R15.64	AT COLUMNS TO Br No. 11-62 (Co Rd 35 OC)	SB	62.5	6.1											60SD		160	1	14	6		65.7		
	R16.51	AT COLUMNS TO Br No. 11-64 (Co Rd 33 OC)	NB	62.5	6.5	12B			1					1		60SD	1	160		14	6		67.2		
* *	R16.55	AT COLUMNS TO Br No. 11-64 (Co Rd 33 OC)	SB	150.0	6.5	12B	87.5		1					1		60SD	1	160		14	6		67.2		
	R16.8	ATTACH TO NE Br No. 11-64 (Co Rd 33 OC)	WB	37.5		12A		1				53.0	25.0	1	4.59	5									
	R16.8	ATTACH TO SW Br No. 11-64 (Co Rd 33 OC)	EB	37.5		12A		1				53.0	25.0	1	0.64	1									
	R17.16	ATTACH TO Br No. 11-65R (WALKER CREEK), L†	NB	268.8		12E	25.0			1	1			1			1					175.0		1	
	R17.15	ATTACH TO Br No. 11-65R (WALKER CREEK), R†	NB	275.0		12A	200.0	1						1											
	R17.31	ATTACH TO Br No. 11-65R (WALKER CREEK), L†	SB	268.8		12E	25.0			1	1			1			1					175.0		1	
	R17.31	ATTACH TO Br No. 11-65R (WALKER CREEK), R†	SB	262.5		12B	200.0		1					1			1								
	R19.01	MGS SHEILDING A CANAL	NB	150.0		11B	112.5		1								1								1
	R19.05	MGS SHEILDING A CANAL	SB	125.0		11B	87.5		1								1								1
	R19.52	AT COLUMNS TO Br No. 11-76 (Co Rd 28 OC)	NB	62.5	6.2	12B			1					1		60SD	1	160		14	6		66.2		
	R19.53	AT COLUMNS TO Br No. 11-76 (Co Rd 28 OC)	SB	62.5	6.2	12B			1					1		60SD	1	160		14	6		66.2		
		SUBTOTAL-Q4		3,063.1	37.6		1,775.0	3	11	2	2	106.0	50.0	11	5.23		13	960	2	84	36	350.0	398.2	2	6
		SUBTOTAL-Q3		11,883.0	39.0		7,937.5	6	32	10	10	302.5	175.5	30	30.48		32	960	2	84	36	1,750.0	403.2	10	8
		TOTAL		14,946.1	76.6		9,712.5	9	43	12	12	408.5	225.5	41	35.71		45	1920	4	168	72	2,100.0	801.4	12	14

(N) - NOT A SEPARATE PAY ITEM, FOR INFORMATION ONLY

* - ONLY "LF" FOR PLACE HMA DIKE NEXT TO MGS IS SHOWN. SEE HMA DIKE TABLE FOR COMPLETE DIKE PLACEMENT LIST.

* * - SKIP TWO MGS POSTS OVER THE 3'x6' RCB FROM Approx 100' TO 113' FROM THE OC COLUMN. SEE SHEET C-18.

SUMMARY OF QUANTITIES

Q-4

STATE OF CALIFORNIA - DEPARTMENT OF TRANSPORTATION
Caltrans
DESIGN

FUNCTIONAL SUPERVISOR: FERMIN BARRIGA
CALCULATED-DESIGNED BY: MAHBOOBEH DEILAMI
CHECKED BY: BRIAN P. VIRAY
REVISED BY
DATE REVISED

LAST REVISION 02-19-16
DATE PLOTTED => 02-MAY-2016
TIME PLOTTED => 13:31

Dist	COUNTY	ROUTE	POST MILES TOTAL PROJECT	SHEET No.	TOTAL SHEETS
03	Gle	5	R0.0/R20.0	31	77

Brian P. Viray 4-11-16
REGISTERED CIVIL ENGINEER DATE

4-11-16
PLANS APPROVAL DATE

REGISTERED PROFESSIONAL ENGINEER BRIAN P VIRAY No. C70023 Exp. 09/30/16 CIVIL STATE OF CALIFORNIA

THE STATE OF CALIFORNIA OR ITS OFFICERS OR AGENTS SHALL NOT BE RESPONSIBLE FOR THE ACCURACY OR COMPLETENESS OF SCANNED COPIES OF THIS PLAN SHEET.

OVERSIDE DRAIN
PLACE HMA (MISCELLANIOUS AREA)

PM	DIRECTION		LOCATION	LENGTH	AREA	* MINOR HMA
				FT	SQYD	TON
R1.51	NB	RT	COUNTY ROAD 68 OVERCROSSING	12.5	8.41	1.47
R1.52	SB	RT	COUNTY ROAD 68 OVERCROSSING	8.0	6.66	1.16
R1.52	SB	RT	COUNTY ROAD 68 OVERCROSSING	3.0	4.71	0.82
R1.52	SB	RT	COUNTY ROAD 68 OVERCROSSING	9.5	7.24	1.27
R1.52	SB	LT	COUNTY ROAD 68 OVERCROSSING	6.5	6.07	1.06
R7.54	NB	RT	RAMP ROUTE 5/COUNTY ROAD 57 OVERCROSSING	21.0	11.71	2.05
R7.54	NB	RT	COUNTY ROAD 57 OVERCROSSING	21.0	11.71	2.05
R7.57	NB	RT	COUNTY ROAD 57 OVERCROSSING	14.0	8.99	1.57
R7.57	NB	RT	COUNTY ROAD 57 OVERCROSSING	12.5	8.41	1.47
R7.57	NB	RT	COUNTY ROAD 57 OVERCROSSING	20.0	11.32	1.98
R7.61	NB	RT	RAMP ROUTE 5/COUNTY ROAD 57 OVERCROSSING	12.0	8.21	1.44
R7.68	SB	RT	RAMP ROUTE 5/COUNTY ROAD 57 OVERCROSSING	20.5	11.52	2.02
R7.68	SB	RT	RAMP ROUTE 5/COUNTY ROAD 57 OVERCROSSING	20.5	11.52	2.02
R7.68	SB	RT	STATE ROUTE 57 OVERCROSSING	15.0	9.38	1.64
R7.69	SB	LT	STATE ROUTE 57 OVERCROSSING	15.0	9.38	1.64
R7.72	SB	RT	RAMP ROUTE 5/COUNTY ROAD 57 OVERCROSSING	20.0	11.32	1.98
R7.72	SB	RT	RAMP ROUTE 5/COUNTY ROAD 57 OVERCROSSING	20.0	11.32	1.98
R8.64	NB	RT	ROUTE 5	12.0	8.21	1.44
R8.64	SB	RT	ROUTE 5	14.5	9.18	1.61
R9.01	NB	RT	ROUTE 5	11.0	7.82	1.37
R9.01	SB	RT	ROUTE 5	20.5	11.52	2.02
R8.87	SB	RT	SB LOOP ONRAMP	17.0	10.16	1.78
R10.06	SB	RT	ROUTE 5	8.5	6.85	1.20
R10.07	NB	RT	ROUTE 5	10.0	7.43	1.30
R12.43	NB	RT	ROUTE 5	5.5	5.68	0.99
R13.88	SB	RT	COUNTY ROAD 39 OVERCROSSING	23.0	12.49	2.19
R13.90	NB	RT	RAMP ROUTE 5/COUNTY ROAD 39 OVERCROSSING	6.0	5.88	1.03
R13.90	SB	RT	RAMP ROUTE 5/COUNTY ROAD 39 OVERCROSSING	15.0	7.43	1.64
R13.91	SB	RT	COUNTY ROAD 39 OVERCROSSING	25.0	5.68	2.32
R13.92	NB	RT	COUNTY ROAD 33 OVERCROSSING	17.0	10.16	1.78
R16.78	SB	RT	COUNTY ROAD 33 OVERCROSSING	8.0	6.66	1.16
R16.80	NB	RT	RAMP ROUTE 5/COUNTY ROAD 33 OVERCROSSING	23.0	12.49	2.19
R16.82	SB	RT	RAMP ROUTE 5/COUNTY ROAD 33 OVERCROSSING	15.0	9.38	1.64
R17.40	NB	RT	ROUTE 5	12.0	8.21	1.44
R17.53	NB	RT	ROUTE 5	15.0	9.38	1.64
			TOTAL	509.0	321.87	56.35

* SEE MINOR HOT MIX ASPHALT TABLE FOR FINAL QUANTITY.

PRE/POST CONSTRUCTION SURVEYS

LOCATION	EA
NB ROUTE 5 AT ROUTE 162 EXIT RAMP, SE CORNER, LOCATION 1	1
SB ROUTE 5 AT ROUTE 162 EXIT RAMP, NW CORNER, LOCATION 2	1
SB ROUTE 5 AT ROUTE 162 ENTRANCE RAMP, SW CORNER, LOCATION 3	1
TOTAL	3

CURB RAMP QUANTITIES

POSTMILE	DIRECTION	LOCATION	MINOR CONCRETE (MISCELLANEOUS CONSTRUCTION)	REMOVE CONCRETE (MISCELLANEOUS)	DETECTABLE WARNING SURFACE
			CY	CY	SF
65.6	EB	ROUTE 162	3.52	2.65	19.2
65.4	EB	ROUTE 162	2.86	2.86	18.6
65.4	WB	ROUTE 162	1.91	1.91	21.9
		TOTAL	8.29	7.42	59.7

TREATED WOOD WASTE

REMOVE GUARDRAIL	TREATED WOOD WASTE
	LB
	229,333
TOTAL	229,333

MINOR HOT MIX ASPHALT

LOCATION	TON
OVERSIDE DRAIN	56.35
ROUTE 5	460.97
LOCAL ROADS	512.49
TOTAL	1029.81

SHOULDER RUMBLE STRIP (HMA, GROUND-IN INDENTATIONS)

Route 5 BEGIN PM	Route 5 END PM	LOCATION			STA
R0.00	R1.25	NB	RT	AT EXIT TO CR 68	66.00
R1.39	R1.70	NB	RT	AT ENTER FROM CR 68	16.37
R1.81	R2.74	NB	RT	Beg Logan Cr 11-90	49.10
R2.75	R5.08	NB	RT	Beg N Fk Logan Cr 11-93	123.02
R5.085	R7.35	NB	RT	AT EXIT TO CR 57	119.59
R7.51	R7.74	NB	RT	AT ENTER FROM CR 57	12.14
R7.85	R8.82	NB	RT	Beg Central Irr Cannal 11-57	51.22
R8.861	R9.65	NB	RT	AT EXIT TO SR 162	41.66
R9.80	R10.00	NB	RT	AT ENTER FROM SR 162	10.56
R10.15	R10.36	NB	RT	W Willows UC 11-60	11.09
R10.382	R11.98	NB	RT	Boyd Overflow Br 11-63	84.37
R11.998	R12.39	NB	RT	S Fork Willow Cr 11-58	20.70
R12.431	R12.58	NB	RT	AT EXIT TO CR 39	7.87
R12.599	R13.69	NB	RT	Wilson Cr Br 11-53	57.60
R13.85	R13.89	NB	RT	AT ENTER FROM CR 39	2.11
R14.04	R14.36	NB	RT	AT EXIT TO REST AREA	16.90
R14.51	R14.62	NB	RT	AT ENTER FROM REST AREA	5.81
R14.77	R16.60	NB	RT	AT EXIT TO CR 33	96.62
R16.76	R16.79	NB	RT	AT ENTER FROM CR 33	1.58
R16.93	R17.49	NB	RT	Beg Walker Cr Br 11-65	29.57
R17.533	R20.00	NB	RT	END Walker Cr Br to the END	130.26
R0.00	R20.00	NB	LT	*NB LEFT SIDE MINUS BRIDGES (1013.76 ft)	1045.86
R0.00	R1.29	SB	RT	AT ENTER FROM CR 68	68.11
R1.45	R1.69	SB	RT	AT EXIT TO CR 68	12.67
R1.83	R2.74	SB	RT	Beg Logan Cr 11-90	48.05
R2.75	R5.08	SB	RT	Beg N Fk Logan Cr 11-93	123.02
R5.085	R7.55	SB	RT	AT ENTER FROM CR 57	130.15
R7.71	R7.81	SB	RT	AT EXIT TO CR 57	5.28
R7.95	R8.82	SB	RT	Beg Central Irr Cannal 11-57	45.94
R8.861	R9.65	SB	RT	AT ENTER FROM SR 162	41.66
R9.96	R10.01	SB	RT	AT EXIT TO SR 162	2.64
R10.17	R10.36	SB	RT	W Willows UC 11-60	10.03
R10.382	R11.98	SB	RT	Boyd Overflow Br 11-63	84.37
R11.998	R12.39	SB	RT	S Fork Willow Cr 11-58	20.70
R12.431	R12.58	SB	RT	AT ENTER FROM CR 39	7.87
R12.599	R13.69	SB	RT	Wilson Cr Br 11-53	57.60
R13.85	R14.03	SB	RT	AT EXIT TO CR 39	9.50
R14.18	R14.45	SB	RT	AT ENTER FROM REST AREA	14.26
R14.62	R14.70	SB	RT	AT EXIT TO REST AREA	4.22
R14.85	R16.75	SB	RT	AT ENTER FROM CR 33	100.32
R16.90	R16.94	SB	RT	AT EXIT TO CR 33	2.11
R17.10	R17.49	SB	RT	Beg Walker Cr Br 11-65	20.59
R17.533	R20.00	SB	RT	END Walker Cr Br to the END	130.26
R0.00	R20.00	SB	LT	*SB LEFT SIDE MINUS BRIDGES (1013.76 ft)	1045.86
				TOTAL	3985.24

ADJUST FRAME AND GRATE TO GRADE AND TEMPORARY DRAINAGE INLET PROTCTION

POSTMILE	DIRECTION		LOCATION	ADJUST FRAME AND GRATE TO GRADE (EA)	TEMPORARY DRAINAGE INLET PROTECTION (EA)
R12.88	SB	RT	ROUTE 5	1	1
R13.26	SB	RT	ROUTE 5	1	1
R13.36	SB	RT	ROUTE 5	1	1
65.59**	NB	LT	STATE ROUTE 162 OVERCROSSING	1	1
65.59**	NB	LT	RAMP ROUTE 5/STATE ROUTE 162 OVERCROSSING	1	1
65.44**	SB	RT	RAMP ROUTE 5/STATE ROUTE 162 OVERCROSSING	1	1
65.44**	SB	RT	RAMP ROUTE 5/STATE ROUTE 162 OVERCROSSING	1	1
			TOTAL	7	7

** - STATE ROUTE 162 POSTMILE

SUMMARY OF QUANTITIES

Q-5

STATE OF CALIFORNIA - DEPARTMENT OF TRANSPORTATION
Caltrans® DESIGN

FUNCTIONAL SUPERVISOR: FERMIN BARRIGA
CALCULATED-DESIGNED BY: MAHBOOBEH DEILAMI
CHECKED BY: BRIAN P. VIRAY
REVISED BY / DATE REVISED

LAST REVISION 02-19-16 | DATE PLOTTED => 02-MAY-2016 | TIME PLOTTED => 13:31

Dist	COUNTY	ROUTE	POST MILES TOTAL PROJECT	SHEET No.	TOTAL SHEETS
03	Gle	5	R0.0/R20.0	32	77

Jaskaran Singh Boparai 4-11-16
REGISTERED ELECTRICAL ENGINEER DATE

4-11-16
PLANS APPROVAL DATE

REGISTERED PROFESSIONAL ENGINEER
JASKARAN S. BOPARAI
No. E15056
Exp. 12-31-17
ELECTRICAL
STATE OF CALIFORNIA

THE STATE OF CALIFORNIA OR ITS OFFICERS OR AGENTS SHALL NOT BE RESPONSIBLE FOR THE ACCURACY OR COMPLETENESS OF SCANNED COPIES OF THIS PLAN SHEET.

NOTE:

FOR ACCURATE RIGHT OF WAY DATA,
CONTACT RIGHT OF WAY ENGINEERING AT THE DISTRICT OFFICE.

LEGEND: (THIS SHEET ONLY)

1. RC dh INSTALL DH ON EXISTING CONDUIT.
2. THE CONTRACTOR SHALL VERIFY LOCATION OF EXISTING HANDHOLES AT EACH LOCATION.
3. RC EXISTING LOOP CONDUCTORS AND INSTALL NEW LOOP CONDUCTORS. TERMINATE ON TERMINAL BLOCK INSIDE EXISTING TYPE H COUNT CABINET.

ABBREVIATION:

CS - COUNT STATION

DETECTOR INDENTIFICATION

FREEWAY MAINLINE DETECTOR DESIGNATION

S-1 2
N-1 2

S = SOUTHBOUND LANES
N = NORTHBOUND LANES

NUMBER OF LOOP IN SAME LANE

1 = FIRST LOOP
2 = SECOND LOOP

NUMBER OF LANE FROM LEFT WITH RESPECT DIRECTION OF TRAFFIC

1 = FIRST LANE FROM LEFT
2 = SECOND LANE FROM LEFT

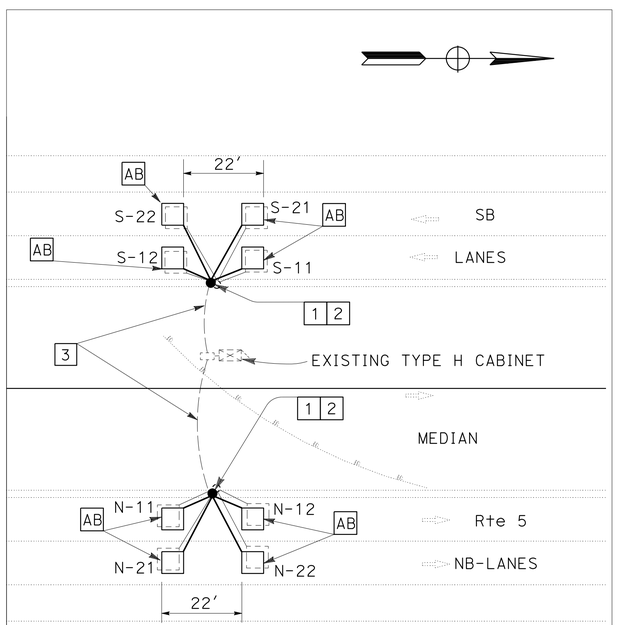

PM R8.86
CS No. 345

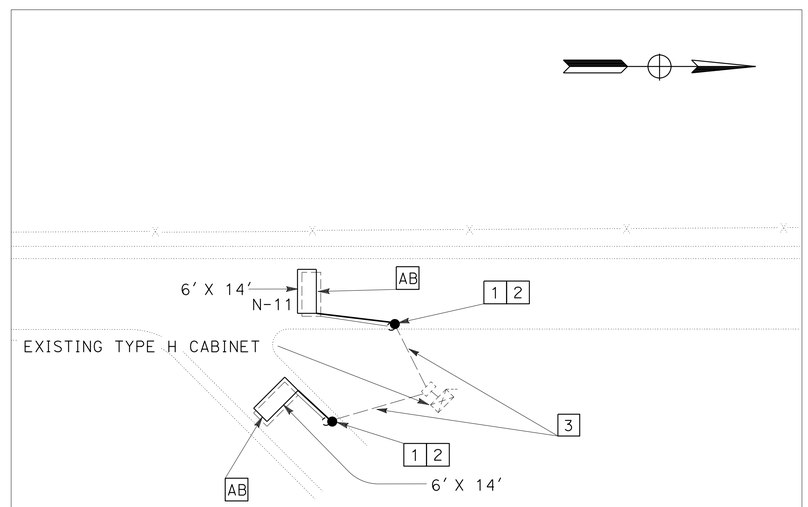

PM R14.57-NB
WILLOWS REST AREA

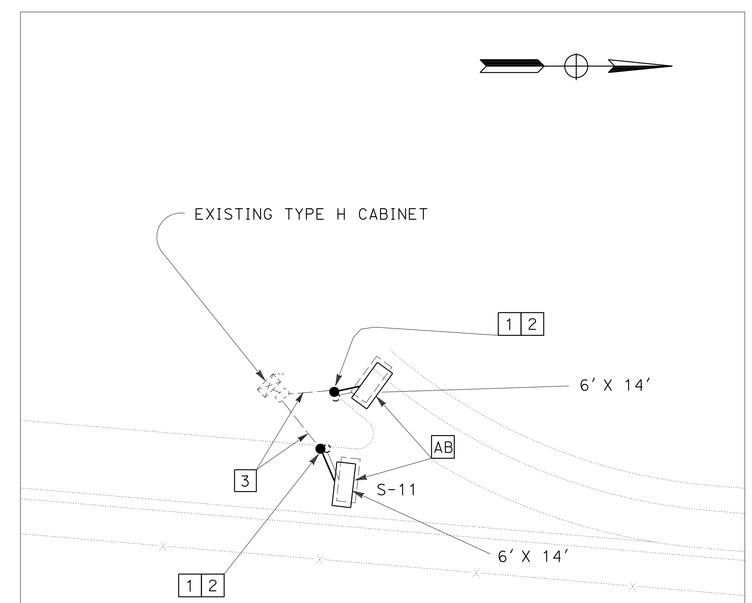

PM R14.57 SB
WILLOWS REST AREA

MODIFY TRAFFIC MONITORING STATION (COUNT)

MODIFYING EXISTING ELECTRICAL SYSTEM

NO SCALE

APPROVED FOR ELECTRICAL WORK ONLY

E-1

STATE OF CALIFORNIA - DEPARTMENT OF TRANSPORTATION
Caltrans
ELECTRICAL DESIGN

FUNCTIONAL SUPERVISOR: MARY ANN HUDSPETH
CALCULATED-DESIGNED BY: YOUNG TON
CHECKED BY: JASKARAN S. BOPARAI
REVISED BY
DATE REVISED

LAST REVISION 04-29-16
DATE PLOTTED => 02-MAY-2016
TIME PLOTTED => 13:31

Dist	COUNTY	ROUTE	POST MILES TOTAL PROJECT	SHEET No.	TOTAL SHEETS
03	Gle	5	R0.0/R20.0	33	77

Jaskaran Singh Boparai 4-11-16
REGISTERED ELECTRICAL ENGINEER DATE

4-11-16
PLANS APPROVAL DATE

REGISTERED PROFESSIONAL ENGINEER JASKARAN S. BOPARAI No. E15056 Exp. 12-31-17 ELECTRICAL STATE OF CALIFORNIA

THE STATE OF CALIFORNIA OR ITS OFFICERS OR AGENTS SHALL NOT BE RESPONSIBLE FOR THE ACCURACY OR COMPLETENESS OF SCANNED COPIES OF THIS PLAN SHEET.

NOTE:

AB Exist INDUCTIVE LOOPS

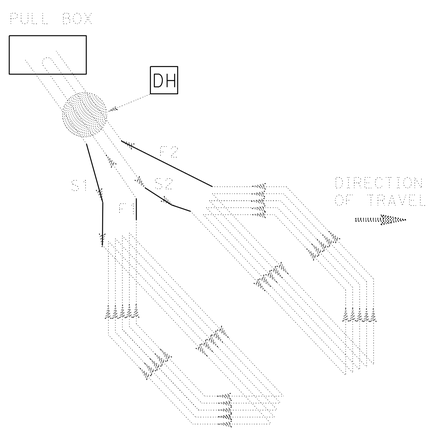

MODIFIED WINDING DETAIL
TYPE D LOOP DETECTOR CONFIGURATION
SEE STANDARD PLAN RSP ES-5B FOR NOTES AND DETAILS

TYPICAL 1D + 3A LOOP CONNECTION

DETAIL A

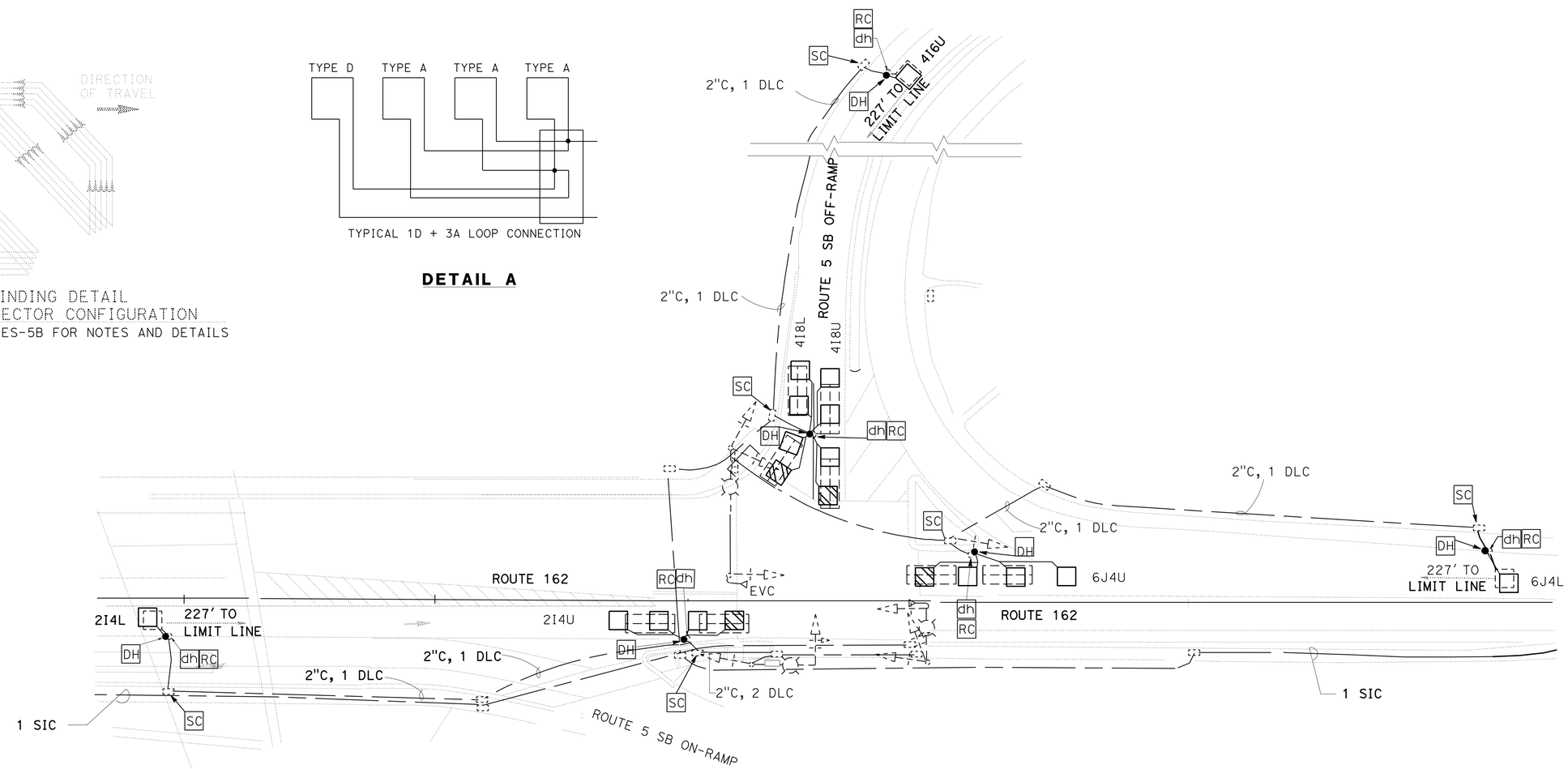

INDUCTIVE LOOP DETECTOR

NO SCALE

APPROVED FOR ELECTRICAL WORK ONLY

E-2

STATE OF CALIFORNIA - DEPARTMENT OF TRANSPORTATION
Caltrans®
ELECTRICAL DESIGN

FUNCTIONAL SUPERVISOR: MARY ANN HUDSPETH
CALCULATED-DESIGNED BY: JASKARAN S. BOPARAI
CHECKED BY
REVISED BY
DATE REVISED

LAST REVISION 04-29-16 | DATE PLOTTED => 02-MAY-2016 | TIME PLOTTED => 13:31

Dist	COUNTY	ROUTE	POST MILES TOTAL PROJECT	SHEET No.	TOTAL SHEETS
03	Gle	5	R0.0/R20.0	34	77

Jaskaran Singh Boparai 4-11-16
REGISTERED ELECTRICAL ENGINEER DATE

4-11-16
PLANS APPROVAL DATE

REGISTERED PROFESSIONAL ENGINEER
JASKARAN S. BOPARAI
No. E15056
Exp. 12-31-17
ELECTRICAL
STATE OF CALIFORNIA

THE STATE OF CALIFORNIA OR ITS OFFICERS OR AGENTS SHALL NOT BE RESPONSIBLE FOR THE ACCURACY OR COMPLETENESS OF SCANNED COPIES OF THIS PLAN SHEET.

NOTE:

AB Exist INDUCTIVE LOOPS

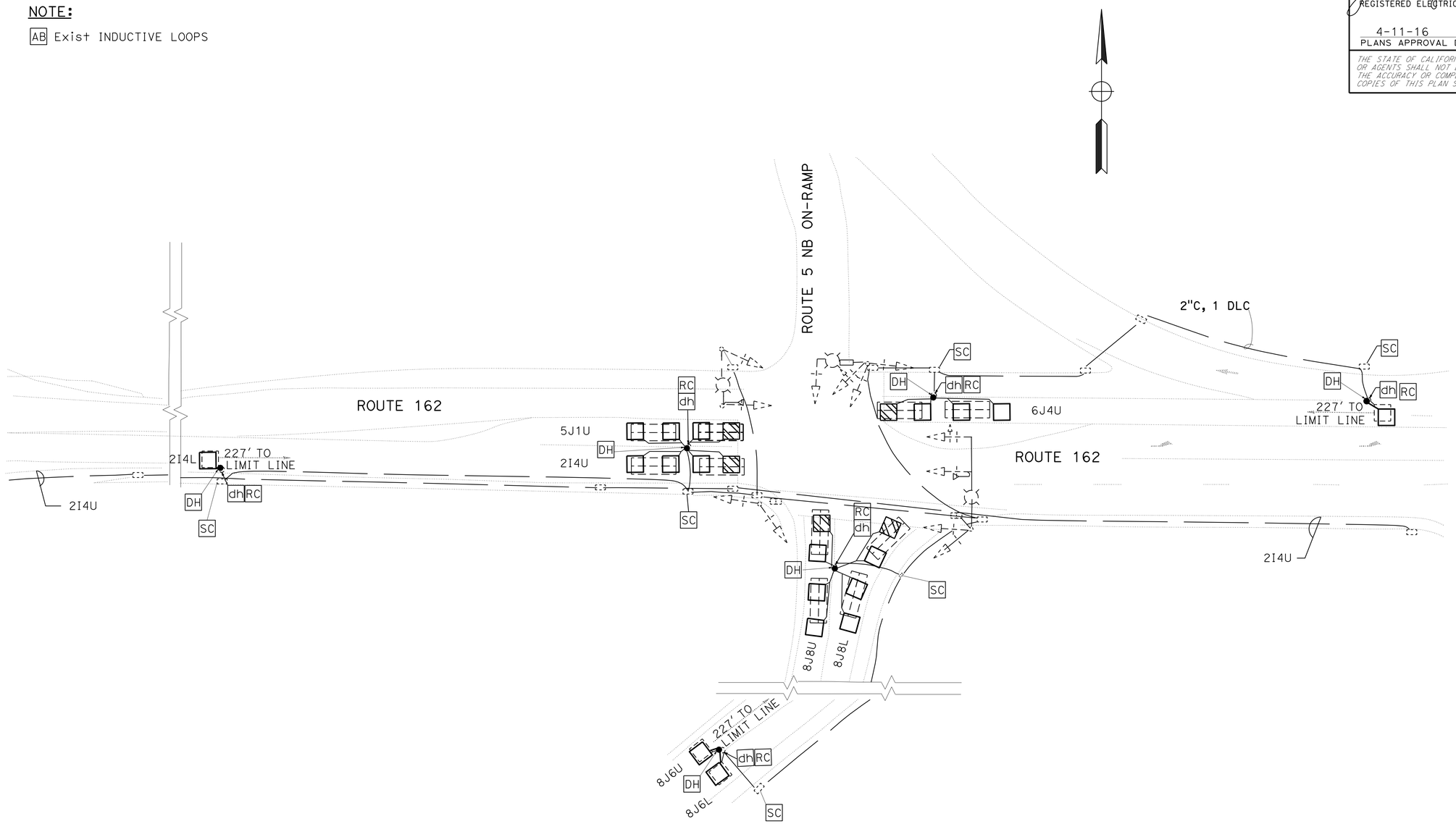

INDUCTIVE LOOP DETECTOR

NO SCALE

APPROVED FOR ELECTRICAL WORK ONLY

E-3

STATE OF CALIFORNIA - DEPARTMENT OF TRANSPORTATION
Caltrans®
ELECTRICAL DESIGN

FUNCTIONAL SUPERVISOR: MARY ANN HUDSPETH

CALCULATED-DESIGNED BY: YOUNG TON
CHECKED BY: JASKARAN S. BOPARAI

REVISED BY
DATE REVISED

LAST REVISION 04-29-16
DATE PLOTTED => 02-MAY-2016
TIME PLOTTED => 13:31

Dist	COUNTY	ROUTE	POST MILES TOTAL PROJECT	SHEET No.	TOTAL SHEETS
03	Gle	5	R0.0/R20.0	35	77

Jaskaran Singh Boparai 4-11-16
REGISTERED ELECTRICAL ENGINEER DATE

4-11-16
PLANS APPROVAL DATE

REGISTERED PROFESSIONAL ENGINEER
JASKARAN S. BOPARAI
No. E15056
Exp. 12-31-17
ELECTRICAL
STATE OF CALIFORNIA

THE STATE OF CALIFORNIA OR ITS OFFICERS OR AGENTS SHALL NOT BE RESPONSIBLE FOR THE ACCURACY OR COMPLETENESS OF SCANNED COPIES OF THIS PLAN SHEET.

NOTE: ITEMS SHOWN IN TABLES ARE NOT SEPARATE PAY ITEMS, FOR INFORMATION ONLY

MODIFYING EXISTING ELECTRICAL SYSTEM

SHEET NO.	DESCRIPTION	DETECTOR HANDHOLE	LOOP TYPE(A)
E-1	CS No. 345 BY Irr CANAL AND Br No. 11-57	2	8
E-1	WILLOWS REST AREA (NB OFF RAMP)	2	2
E-1	WILLOWS REST AREA (SB OFF RAMP)	2	2

INDUCTIVE LOOP DETECTOR

SHEET NO.	DETECTOR HANDHOLE	LOOP TYPE(A)	LOOP TYPE(D)
E-2	6	15	4
E-3	6	19	5

ELECTRICAL QUANTITIES

E-4

REVISED BY | DATE REVISED
YOUNG TON | JASKARAN S. BOPARAI
CALCULATED-DESIGNED BY | CHECKED BY
FUNCTIONAL SUPERVISOR | MARY ANN HUDSPETH
STATE OF CALIFORNIA - DEPARTMENT OF TRANSPORTATION
Caltrans® ELECTRICAL DESIGN

LAST REVISION 04-29-16 | DATE PLOTTED => 02-MAY-2016 TIME PLOTTED => 13:31

M

Maint	MAINTENANCE
Max	MAXIMUM
MB	METAL BEAM
MBB	METAL BEAM BARRIER
MBGR	METAL BEAM GUARD RAILING
Med	MEDIAN
MGS	MIDWEST GUARDRAIL SYSTEM
MH	MANHOLE
Min	MINIMUM
Misc	MISCELLANEOUS
Misc I & S	MISCELLANEOUS IRON AND STEEL
Mkr	MARKER
Mod	MODIFIED,
	MODIFY
Mon	MONUMENT
MP	METAL PLATE
MPGR	METAL PLATE GUARD RAILING
MR	MOVEMENT RATING
MSE	MECHANICALLY STABILIZED EMBANKMENT
Mt	MOUNTAIN, MOUNT
Mtl	MATERIAL
MVP	MAINTENANCE VEHICLE PULLOUT

N

N	NORTH
NB	NORTHBOUND
No.	NUMBER (MUST HAVE PERIOD)
Nos.	NUMBERS (MUST HAVE PERIOD)
NPS	NOMINAL PIPE SIZE
NS	NEAR SIDE
NSP	NEW STANDARD PLAN
NTS	NOT TO SCALE

O

Oblr	OBLITERATE
OC	OVERCROSSING
OD	OUTSIDE DIAMETER
OF	OUTSIDE FACE
OG	ORIGINAL GROUND
OGAC	OPEN GRADED ASPHALT CONCRETE
OGFC	OPEN GRADED FRICTION COURSE
OH	OVERHEAD
OHWM	ORDINARY HIGH WATER MARK
O-O	OUT TO OUT
Opp	OPPOSITE
OSD	OVERSIDE DRAIN

P

P	PAGE
PAP	PERFORATED ALUMINUM PIPE
PB	PULL BOX
PC	POINT OF CURVATURE,
	PRECAST
PCC	POINT OF COMPOUND CURVE,
	PORTLAND CEMENT CONCRETE
PCMS	PORTABLE CHANGEABLE MESSAGE SIGN
PCP	PERFORATED CONCRETE PIPE,
	PRESTRESSED CONCRETE PIPE
PCVC	POINT OF COMPOUND VERTICAL CURVE
PEC	PERMIT TO ENTER AND CONSTRUCT
Ped	PEDESTRIAN
Ped OC	PEDESTRIAN OVERCROSSING
Ped UC	PEDESTRIAN UNDERCROSSING
Perm Mtl	PERMEABLE MATERIAL

P continued

PG	PROFILE GRADE
PI	POINT OF INTERSECTION
PJP	PARTIAL JOINT PENETRATION
Pkwy	PARKWAY
ℙ,PL	PLATE
P/L	PROPERTY LINE
PM	POST MILE,
	TIME FROM NOON TO MIDNIGHT
PN	PAVING NOTCH
POC	POINT OF HORIZONTAL CURVE
POT	POINT OF TANGENT
POVC	POINT OF VERTICAL CURVE
PP	PIPE PILE,
	PLASTIC PIPE,
	POWER POLE
PPL	PREFORMED PERMEABLE LINER
PPP	PERFORATED PLASTIC PIPE
PRC	POINT OF REVERSE CURVE
PRF	PAVEMENT REINFORCING FABRIC
PRVC	POINT OF REVERSE VERTICAL CURVE
PS&E	PLANS, SPECIFICATIONS AND ESTIMATES
PS, P/S	PRESTRESSED
PSP	PERFORATED STEEL PIPE
PT	POINT OF TANGENCY
PVC	POLYVINYL CHLORIDE
Pvmt	PAVEMENT

Q

Qty	QUANTITY

R

R	RADIUS
R & D	REMOVE AND DISPOSE
R & S	REMOVE AND SALVAGE
R/C	RATE OF CHANGE
RCA	REINFORCED CONCRETE ARCH
RCB	REINFORCED CONCRETE BOX
RCP	REINFORCED CONCRETE PIPE
RCPA	REINFORCED CONCRETE PIPE ARCH
Rd	ROAD
Reinf	REINFORCED,
	REINFORCEMENT,
	REINFORCING
Rel	RELOCATE
Repl	REPLACEMENT
Ret	RETAINING
Rev	REVISED, REVISION
Rdwy	ROADWAY
RHMA	RUBBERIZED HOT MIX ASPHALT
Riv	RIVER
RM	ROAD-MIXED
RP	RADIUS POINT,
	REFERENCE POINT
RR	RAILROAD
RSP	ROCK SLOPE PROTECTION,
	REVISED STANDARD PLAN
Rt	RIGHT
Rte	ROUTE
RW	REDWOOD,
	RETAINING WALL
R/W	RIGHT OF WAY
Rwy	RAILWAY

S

S	SOUTH,
	SUPPLEMENT
SAE	STRUCTURE APPROACH EMBANKMENT
Salv	SALVAGE
SAPP	STRUCTURAL ALUMINUM PLATE PIPE
SB	SOUTHBOUND
SC	SAND CUSHION
SCSP	SLOTTED CORRUGATED STEEL PIPE
SD	STORM DRAIN
Sec	SECOND,
	SECTION
Sep	SEPARATION
SG	SUBGRADE
Shld	SHOULDER
Sht	SHEET
Sim	SIMILAR
℄	STATION LINE
SM	SELECTED MATERIAL
Spec	SPECIAL,
	SPECIFICATIONS
SPP	SLOTTED PLASTIC PIPE
SS	SLOPE STAKE
SSBM	STRAP AND SADDLE BRACKET METHOD
SSD	STRUCTURAL SECTION DRAIN
SSPA	STRUCTURAL STEEL PLATE ARCH
SSPP	STRUCTURAL STEEL PLATE PIPE
SSPPA	STRUCTURAL STEEL PLATE PIPE ARCH
SSRP	STEEL SPIRAL RIB PIPE
St	STREET
Sta	STATION
STBB	SINGLE THRIE BEAM BARRIER
Std	STANDARD
Str	STRUCTURE
Surf	SURFACING
SW	SIDEWALK,
	SOUND WALL
Swr	SEWER
Sym	SYMMETRICAL
S4S	SURFACE 4 SIDES

T

T	SEMI-TANGENT
Tan	TANGENT
TBB	THRIE BEAM BARRIER
Tbr	TIMBER
TC	TOP OF CURB
TCB	TRAFFIC CONTROL BOX
TCE	TEMPORARY CONSTRUCTION EASEMENT
Tel	TELEPHONE
Temp	TEMPORARY
TG	TOP OF GRADE
Tot	TOTAL
TP	TELEPHONE POLE
TPB	TREATED PERMEABLE BASE
TPM	TREATED PERMEABLE MATERIAL
Trans	TRANSITION

T continued

TS	TRANSVERSE,
	TRAFFIC SIGNAL,
	TUBULAR STEEL
Typ	TYPICAL

U

UC	UNDERCROSSING
UD	UNDERDRAIN
UG	UNDERGROUND
UON	UNLESS OTHERWISE NOTED
UP	UNDERPASS

V

V	VALVE,
	DESIGN SPEED
Var	VARIABLE,
	VARIES
VC	VERTICAL CURVE
VCP	VITRIFIED CLAY PIPE
Vert	VERTICAL
Via	VIADUCT
Vol	VOLUME

W

W	WEST,
	WIDTH
WB	WESTBOUND
WH	WEEP HOLE
WM	WIRE MESH
WS	WATER SURFACE
WSP	WELDED STEEL PIPE
Wt	WEIGHT
WV	WATER VALVE
WW	WINGWALL
WWLOL	WINGWALL LAYOUT LINE

X

X Sec	CROSS SECTION
Xing	CROSSING

Y

Yr	YEAR
Yrs	YEARS

Dist	COUNTY	ROUTE	POST MILES TOTAL PROJECT	SHEET No.	TOTAL SHEETS
03	Gle	5	R0.0/R20.0	36	77

Grace M. Tsushima
REGISTERED CIVIL ENGINEER

July 19, 2013
PLANS APPROVAL DATE

REGISTERED PROFESSIONAL ENGINEER Grace M. Tsushima No. C49814 Exp. 9-30-14 CIVIL STATE OF CALIFORNIA

THE STATE OF CALIFORNIA OR ITS OFFICERS OR AGENTS SHALL NOT BE RESPONSIBLE FOR THE ACCURACY OR COMPLETENESS OF SCANNED COPIES OF THIS PLAN SHEET.

TO ACCOMPANY PLANS DATED 4-11-16

2010 REVISED STANDARD PLAN RSP A10B

UNIT OF MEASUREMENT SYMBOLS:

Some of the symbols used in the project plan quantity tables and in the Bid Item List are:

TABLE A

SYMBOL USED	DEFINITIONS
ACRE	ACRE
CF	CUBIC FOOT
CY	CUBIC YARD
EA	EACH
GAL	GALLON
LB	POUND
LF	LINEAR FOOT
SQFT	SQUARE FOOT
SQYD	SQUARE YARD
STA	100 FEET
TAB	TABLET
TON	2,000 POUNDS

Some of the symbols used in the plans other than in the project plan quantity tables are:

TABLE B

SYMBOL USED	DEFINITIONS
ksi	KIPS PER SQUARE INCH
ksf	KIPS PER SQUARE FOOT
psi	POUNDS PER SQUARE INCH
psf	POUNDS PER SQUARE FOOT
lb/ft^3, pcf	POUNDS PER CUBIC FOOT
tsf	TONS PER SQUARE FOOT
mph, MPH *	MILES PER HOUR
ø	NOMINAL DIAMETER
oz	OUNCE
lb	POUND
kip	1,000 POUNDS
cal	CALORIE
ft	FOOT OR FEET
gal	GALLON

* For use on a sign panel only

STATE OF CALIFORNIA
DEPARTMENT OF TRANSPORTATION

ABBREVIATIONS (SHEET 2 OF 2)

NO SCALE

RSP A10B DATED JULY 19, 2013 SUPERSEDES STANDARD PLAN A10B DATED MAY 20, 2011 - PAGE 2 OF THE STANDARD PLANS BOOK DATED 2010.

REVISED STANDARD PLAN RSP A10B

6-7-13

Dist	COUNTY	ROUTE	POST MILES TOTAL PROJECT	SHEET No.	TOTAL SHEETS
03	Gle	5	R0.0/R20.0	37	77

REGISTERED CIVIL ENGINEER

July 19, 2013
PLANS APPROVAL DATE

REGISTERED PROFESSIONAL ENGINEER Roberta L. McLaughlin No. C40375 Exp. 3-31-15 CIVIL STATE OF CALIFORNIA

THE STATE OF CALIFORNIA OR ITS OFFICERS OR AGENTS SHALL NOT BE RESPONSIBLE FOR THE ACCURACY OR COMPLETENESS OF SCANNED COPIES OF THIS PLAN SHEET.

TO ACCOMPANY PLANS DATED 4-11-16

EXIT RAMP NEUTRAL AREA (GORE) TREATMENT

DETAIL 36

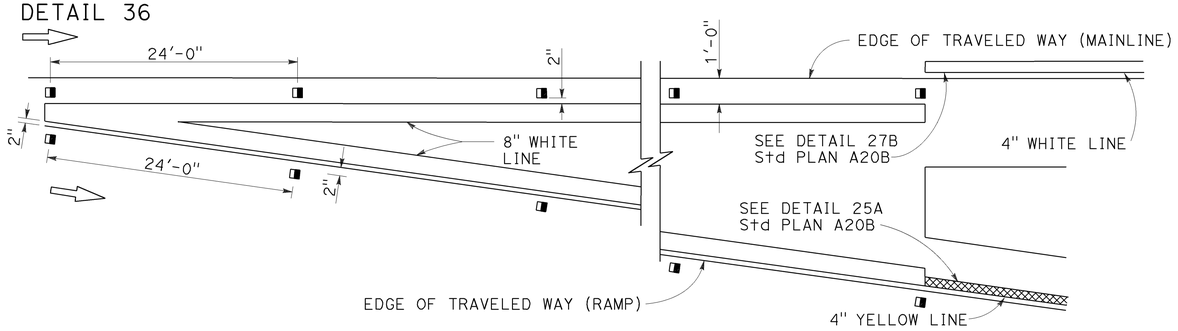

ENTRANCE RAMP NEUTRAL AREA (MERGE) TREATMENT

DETAIL 36A

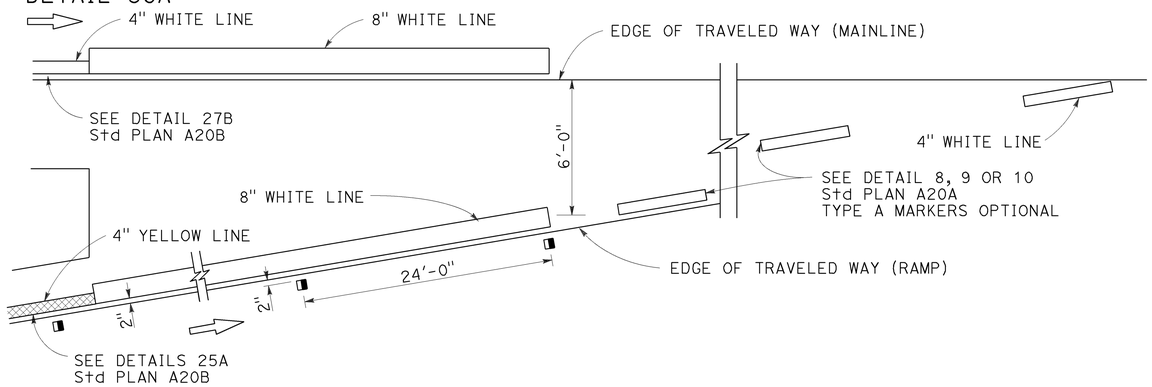

ENTRANCE RAMP NEUTRAL AREA (ACCELERATION LANE) TREATMENT

DETAIL 36B

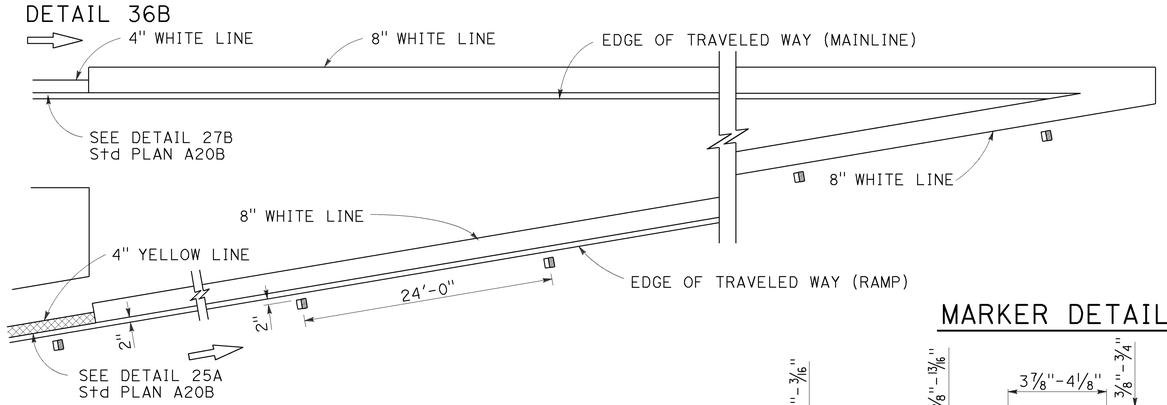

MARKER DETAILS

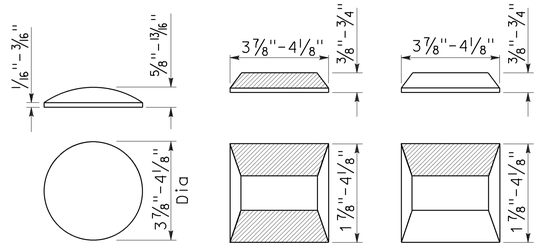

TYPE A TYPE C TYPE G

RETROREFLECTIVE FACE

LEGEND:

MARKERS

- TYPE A WHITE NON-REFLECTIVE
- TYPE C RED-CLEAR RETROREFLECTIVE
- TYPE G ONE-WAY CLEAR RETROREFLECTIVE

LANE DROP AT EXIT RAMPS

DETAIL 37

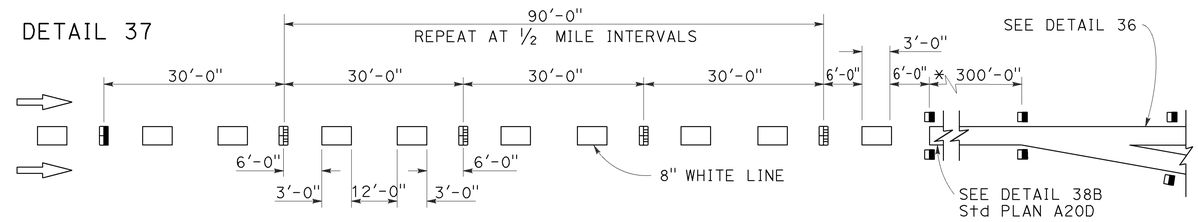

DETAIL 37A

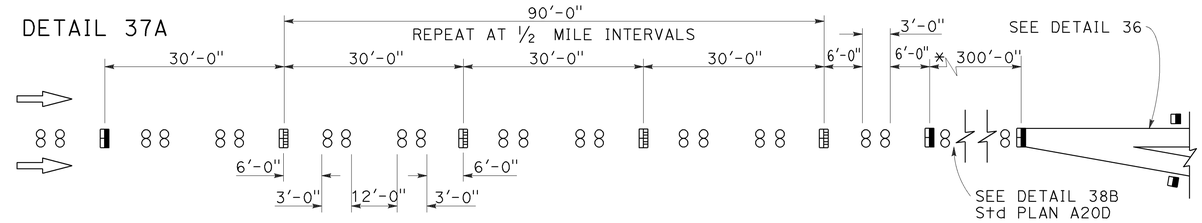

* The solid channelizing line shown may be omitted on short auxiliary lanes where weaving length is critical.

LANE DROP AT INTERSECTIONS

DETAIL 37B

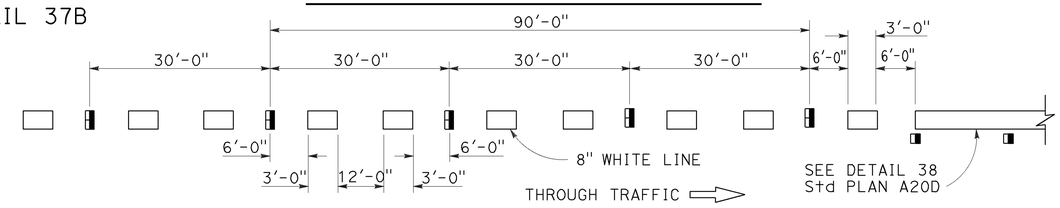

DETAIL 37C

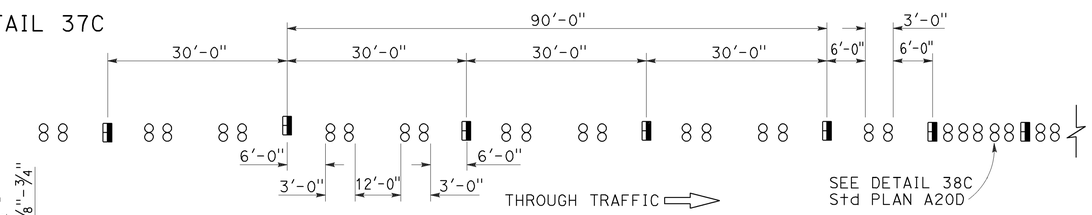

STATE OF CALIFORNIA
DEPARTMENT OF TRANSPORTATION

PAVEMENT MARKERS AND TRAFFIC LINE TYPICAL DETAILS

NO SCALE

RSP A20C DATED JULY 19, 2013 SUPERSEDES STANDARD PLAN A20C DATED MAY 20, 2011 - PAGE 11 OF THE STANDARD PLANS BOOK DATED 2010.

REVISED STANDARD PLAN RSP A20C

2010 REVISED STANDARD PLAN RSP A20C

4-29-13

Dist	COUNTY	ROUTE	POST MILES TOTAL PROJECT	SHEET No.	TOTAL SHEETS
03	Gle	5	R0.0/R20.0	38	77

REGISTERED CIVIL ENGINEER

April 20, 2012
PLANS APPROVAL DATE

REGISTERED PROFESSIONAL ENGINEER
Roberta L. McLaughlin
No. C40375
Exp. 3-31-13
CIVIL
STATE OF CALIFORNIA

THE STATE OF CALIFORNIA OR ITS OFFICERS OR AGENTS SHALL NOT BE RESPONSIBLE FOR THE ACCURACY OR COMPLETENESS OF SCANNED COPIES OF THIS PLAN SHEET.

TO ACCOMPANY PLANS DATED 4-11-16

2010 REVISED STANDARD PLAN RSP A24A

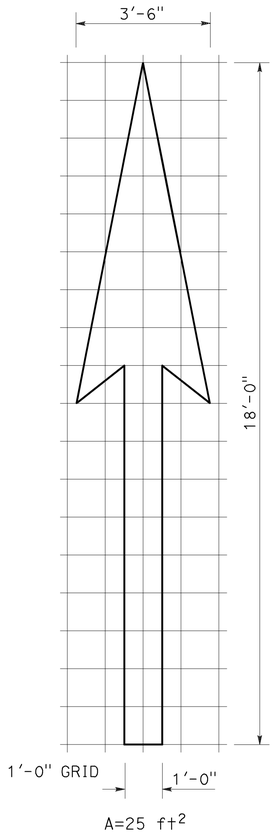

A=25 ft^2

TYPE I 18'-0" ARROW

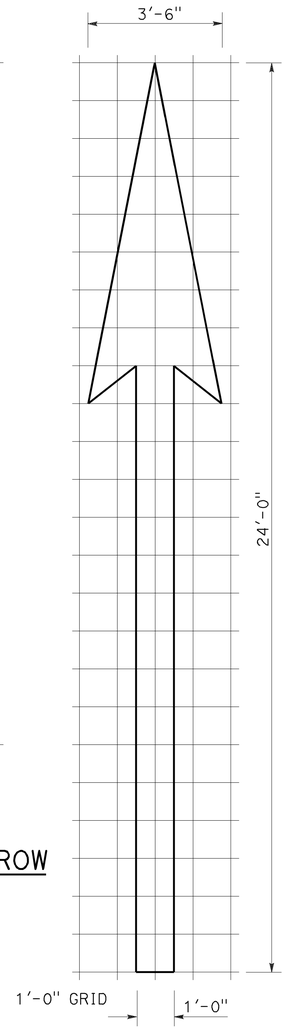

A=31 ft^2

TYPE I 24'-0" ARROW

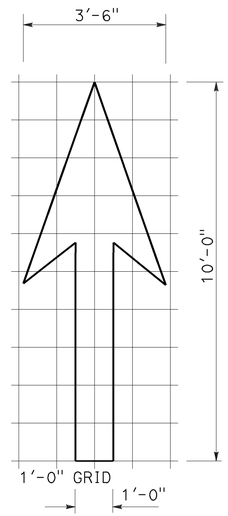

A=14 ft^2

TYPE I 10'-0" ARROW

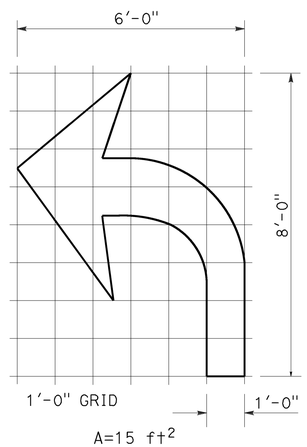

A=15 ft^2

TYPE IV (L) ARROW

(For Type IV (R) arrow, use mirror image)

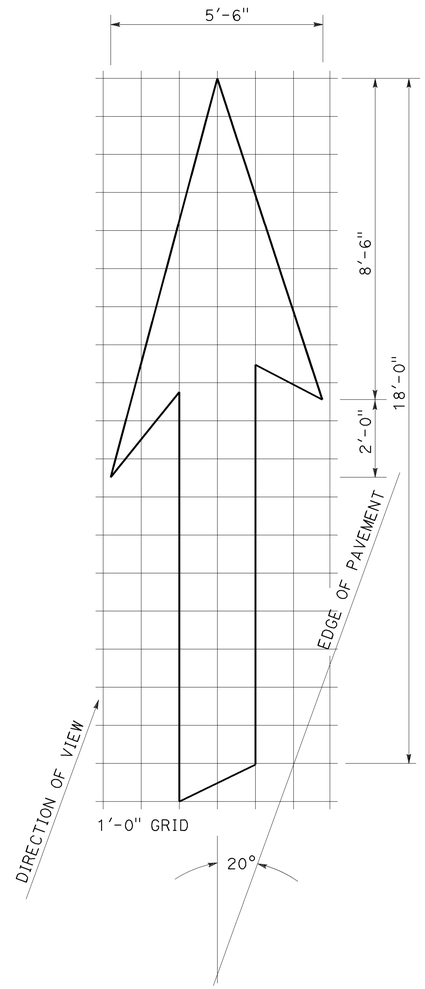

A=42 ft^2

TYPE VI ARROW

Right lane drop arrow
(For left lane, use mirror image)

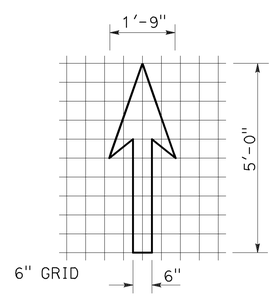

A=3.5 ft^2

BIKE LANE ARROW

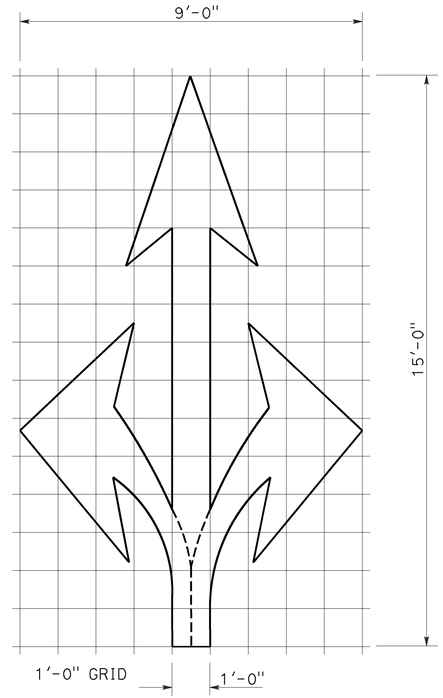

A=36 ft^2

TYPE VIII ARROW

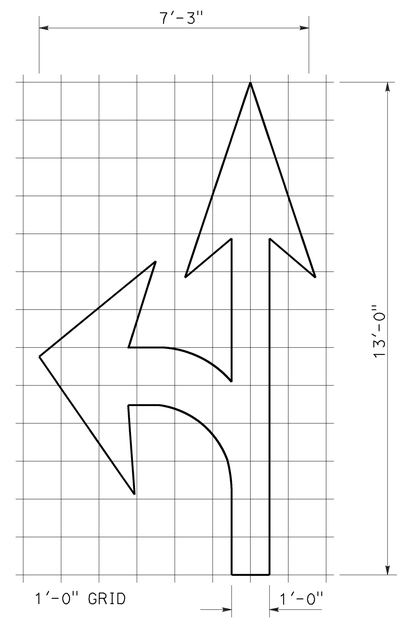

A=27 ft^2

TYPE VII (L) ARROW

(For Type VII (R) arrow, use mirror image)

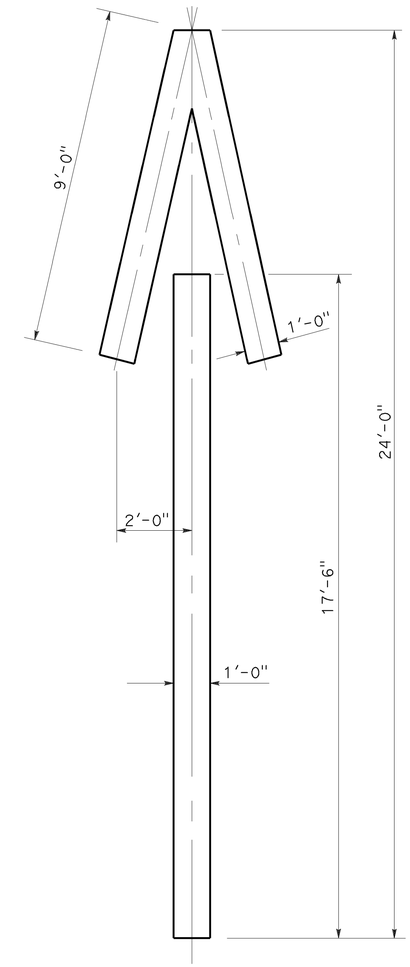

A=33 ft^2

TYPE V ARROW

NOTE:
Minor variations in dimensions may be accepted by the Engineer.

STATE OF CALIFORNIA
DEPARTMENT OF TRANSPORTATION

PAVEMENT MARKINGS ARROWS

NO SCALE

RSP A24A DATED APRIL 20, 2012 SUPERSEDES STANDARD PLAN A24A DATED MAY 20, 2011 - PAGE 13 OF THE STANDARD PLANS BOOK DATED 2010.

REVISED STANDARD PLAN RSP A24A

3-14-12

Dist	COUNTY	ROUTE	POST MILES TOTAL PROJECT	SHEET No.	TOTAL SHEETS
03	Gle	5	R0.0/R20.0	39	77

REGISTERED CIVIL ENGINEER

July 20, 2012
PLANS APPROVAL DATE

REGISTERED PROFESSIONAL ENGINEER
Roberta L. McLaughlin
No. C40375
Exp. 3-31-13
CIVIL
STATE OF CALIFORNIA

THE STATE OF CALIFORNIA OR ITS OFFICERS OR AGENTS SHALL NOT BE RESPONSIBLE FOR THE ACCURACY OR COMPLETENESS OF SCANNED COPIES OF THIS PLAN SHEET.

TO ACCOMPANY PLANS DATED 4-11-16

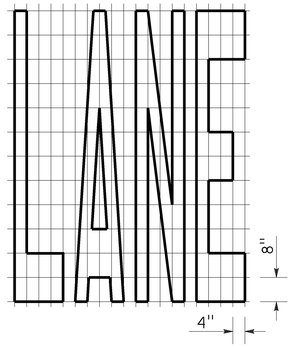

A=24 ft^2

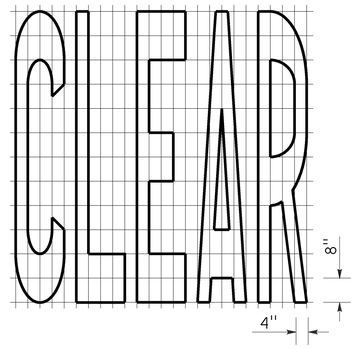

A=27 ft^2

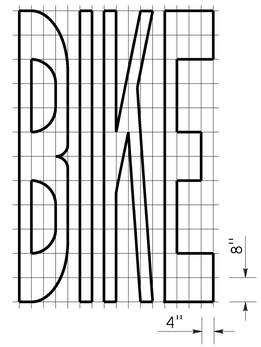

A=21 ft^2

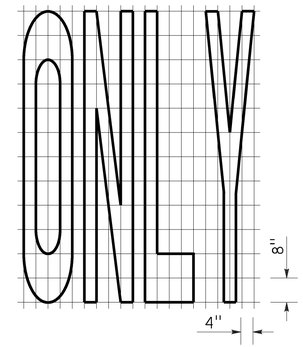

A=22 ft^2

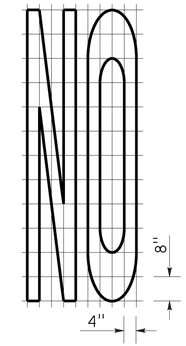

A=14 ft^2

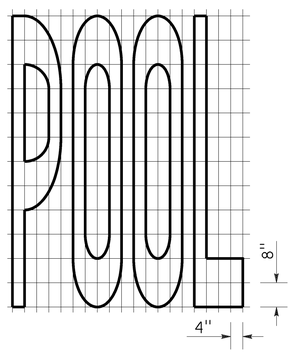

A=23 ft^2

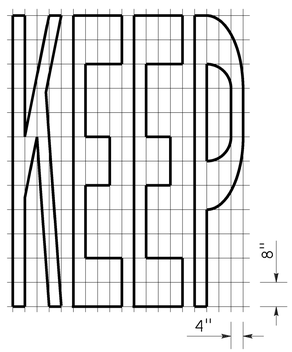

A=24 ft^2

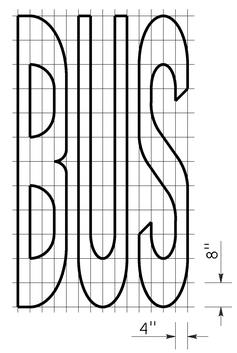

A=20 ft^2

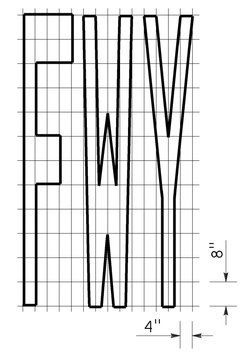

A=16 ft^2

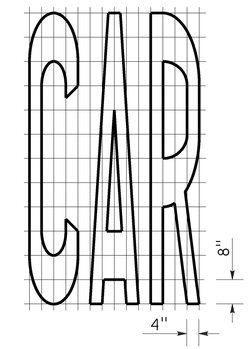

A=17 ft^2

WORD MARKINGS			
ITEM	ft^2	ITEM	ft^2
LANE	24	NO	14
POOL	23	BIKE	21
CAR	17	BUS	20
CLEAR	27	ONLY	22
KEEP	24	FWY	16

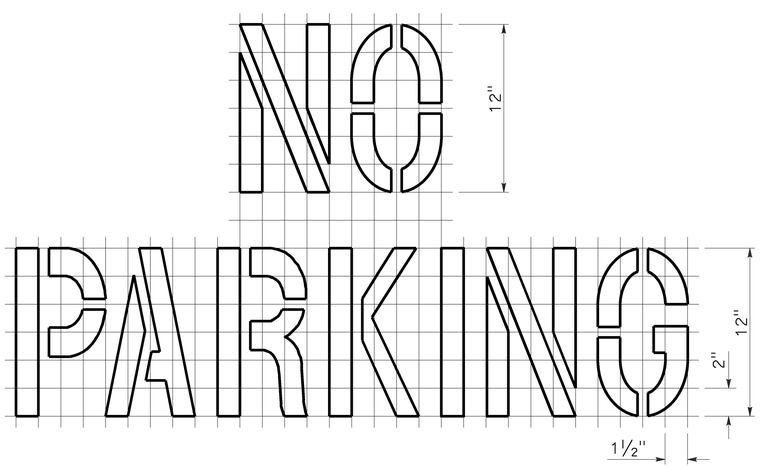

A=2 ft^2
See Notes 6 and 7

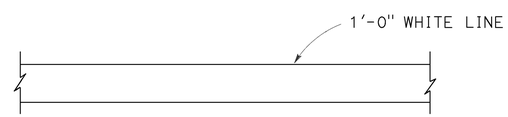

LIMIT LINE (STOP LINE)

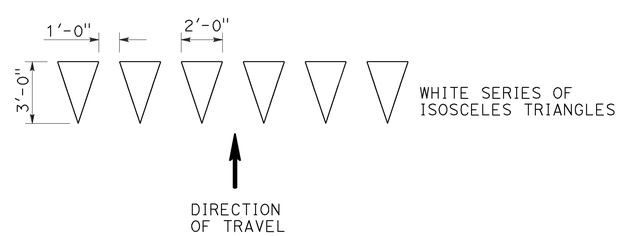

YIELD LINE

NOTES:

1. If a message consists of more than one word, it should read "UP", i.e., the first word should be nearest the driver.
2. The space between words should be at least four times the height of the characters for low speed roads, but not more than ten times the height of the characters. The space may be reduced appropriately where there is limited space because of local conditions.
3. Minor variations in dimensions may be accepted by the Engineer.
4. Portions of a letter, number or symbol may be separated by connecting segments not to exceed 2" in width.
5. The words "NO PARKING" pavement marking is to be used for parking facilities. For typical locations of markings, see Standard Plans A90A and A90B.
6. The words "NO PARKING", shall be painted in white letters no less than 1'-0" high on a contrasting background and located so that it is visible to traffic enforcement officials.

STATE OF CALIFORNIA
DEPARTMENT OF TRANSPORTATION

PAVEMENT MARKINGS WORDS, LIMIT AND YIELD LINES

NO SCALE

RSP A24E DATED JULY 20, 2012 SUPERSEDES STANDARD PLAN A24E
DATED MAY 20, 2011 - PAGE 17 OF THE STANDARD PLANS BOOK DATED 2010.

REVISED STANDARD PLAN RSP A24E

2010 REVISED STANDARD PLAN RSP A24E

6-12-12

Dist	COUNTY	ROUTE	POST MILES TOTAL PROJECT	SHEET No.	TOTAL SHEETS
03	Gle	5	R0.0/R20.0	40	77

Roberta L. McLaughlin
REGISTERED CIVIL ENGINEER

July 20, 2012
PLANS APPROVAL DATE

REGISTERED PROFESSIONAL ENGINEER
Roberta L. McLaughlin
No. C40375
Exp. 3-31-13
CIVIL
STATE OF CALIFORNIA

THE STATE OF CALIFORNIA OR ITS OFFICERS OR AGENTS SHALL NOT BE RESPONSIBLE FOR THE ACCURACY OR COMPLETENESS OF SCANNED COPIES OF THIS PLAN SHEET.

TO ACCOMPANY PLANS DATED 4-11-16

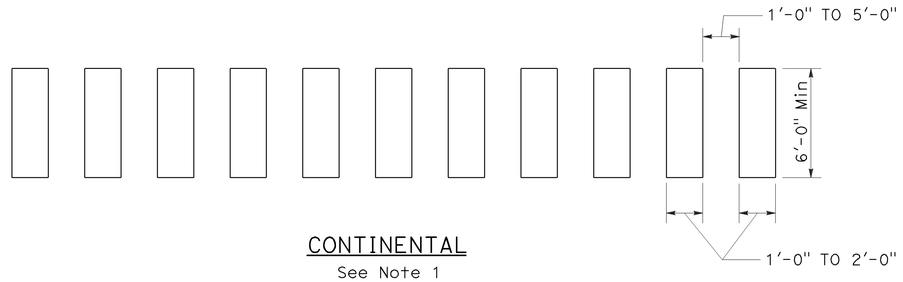

CONTINENTAL
See Note 1

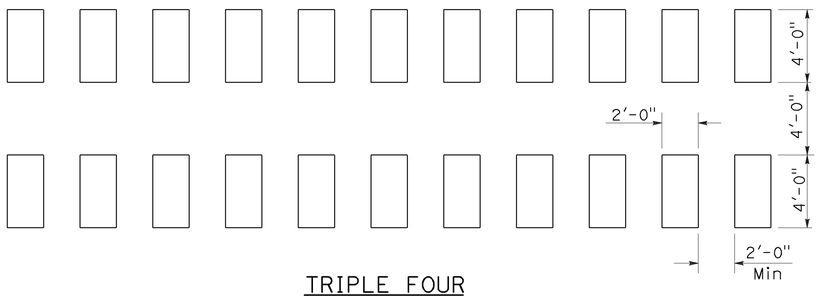

TRIPLE FOUR
See Note 1

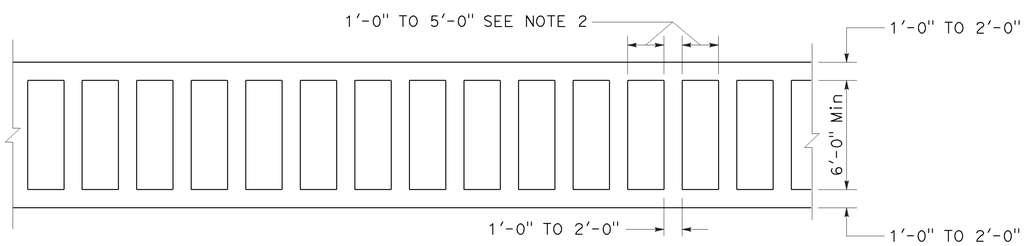

LADDER

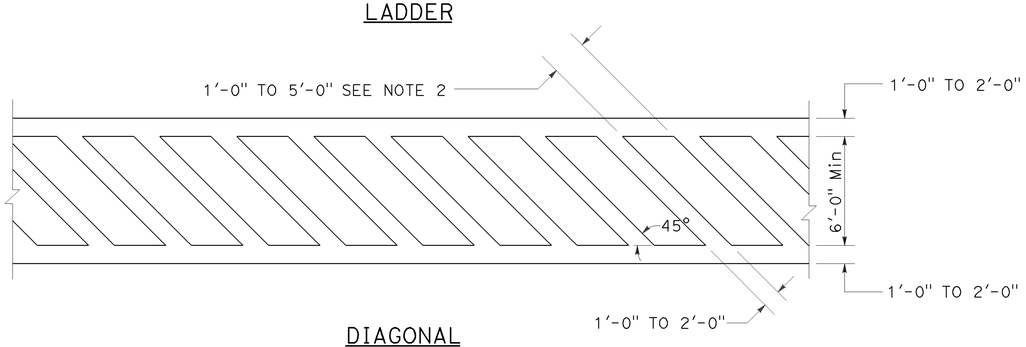

DIAGONAL

HIGHER VISIBILITY CROSSWALKS

NOTES:

1. Spaces between markings should be placed in wheel tracks of each lane.
2. Spacings not to exceed 2.5 times width of longitudinal line.
3. All crosswalk markings must be white except for those near schools must be yellow.

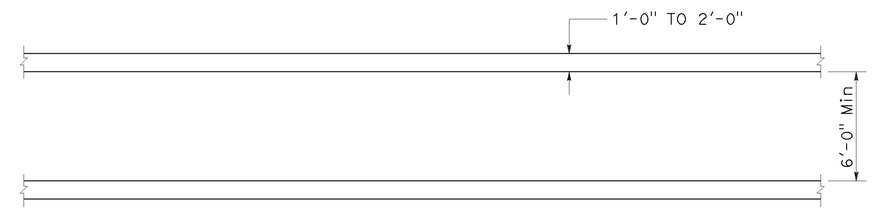

BASIC

STATE OF CALIFORNIA
DEPARTMENT OF TRANSPORTATION

PAVEMENT MARKINGS CROSSWALKS

NO SCALE

RSP A24F DATED JULY 20, 2012 SUPPLEMENTS THE STANDARD PLANS BOOK DATED 2010.

REVISED STANDARD PLAN RSP A24F

2010 REVISED STANDARD PLAN RSP A24F

6-28-12

Dist	COUNTY	ROUTE	POST MILES TOTAL PROJECT	SHEET No.	TOTAL SHEETS
03	Gle	5	R0.0/R20.0	41	77

Randell D. Hiatt
REGISTERED CIVIL ENGINEER

July 19, 2013
PLANS APPROVAL DATE

REGISTERED PROFESSIONAL ENGINEER Randell D. Hiatt No. C50200 Exp. 6-30-15 CIVIL STATE OF CALIFORNIA

THE STATE OF CALIFORNIA OR ITS OFFICERS OR AGENTS SHALL NOT BE RESPONSIBLE FOR THE ACCURACY OR COMPLETENESS OF SCANNED COPIES OF THIS PLAN SHEET.

TO ACCOMPANY PLANS DATED 4-11-16

2010 REVISED STANDARD PLAN RSP A77L1

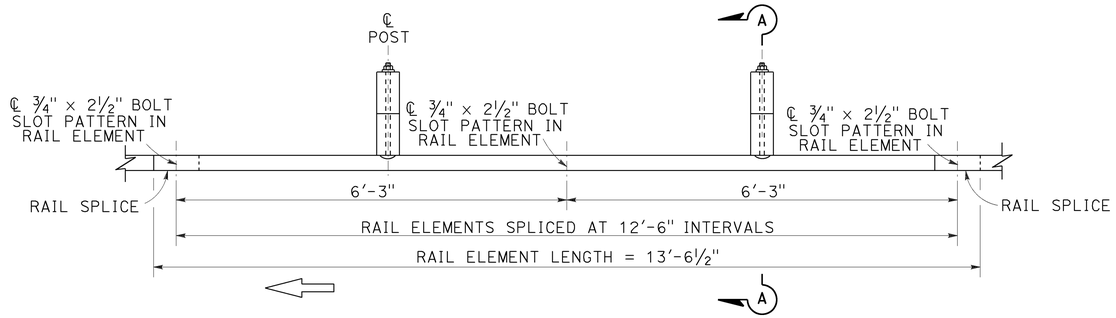

PLAN

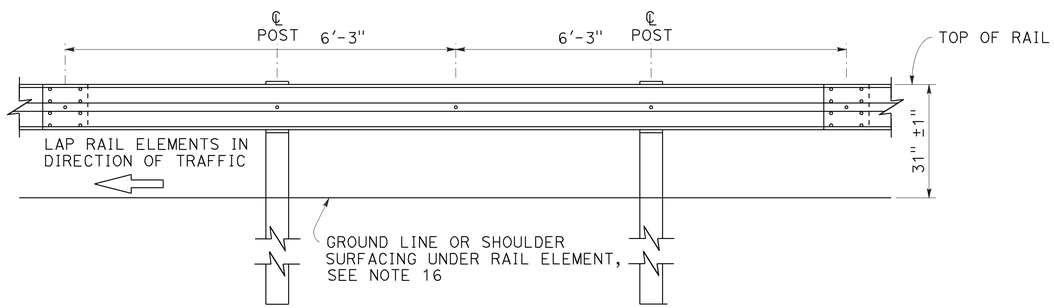

ELEVATION

MIDWEST GUARDRAIL SYSTEM WITH WOOD POST AND BLOCKS

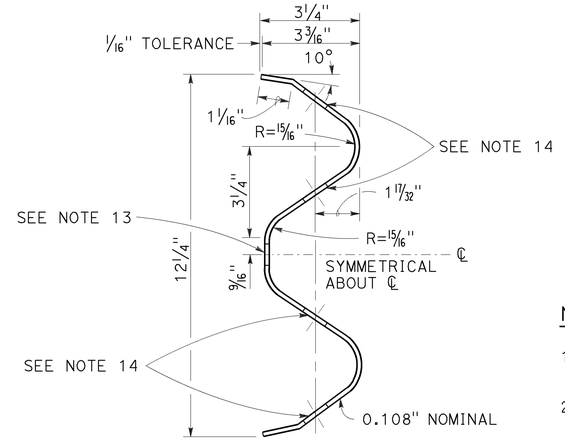

SECTION THRU RAIL ELEMENT

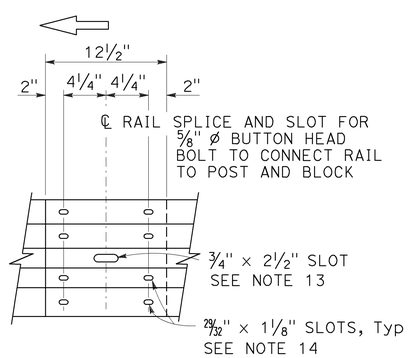

ELEVATION

RAIL ELEMENT SPLICE DETAIL

a) Connect the over lapped end of the rail elements with ⅝" ø × 1⅜" button head oval shoulder splice bolts inserted into the 29⁄32" × 1⅛" slots and bolted together with ⅝" ø recessed hex nuts. Recess of hex nut points toward rail element. A total of 8 bolts and nuts are to be used at each rail splice connection.

b) The ends of the rail elements are to be overlapped in the direction of traffic (see details).

c) Where end cap is to be attached to the end of a rail element, a total of 4 of the above described splice bolts and nuts are to be used.

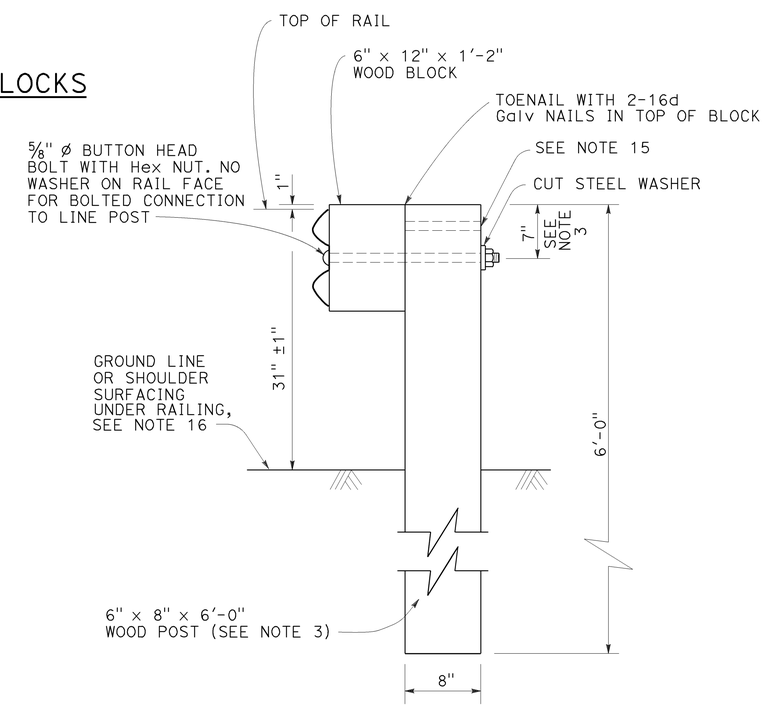

SECTION A-A

TYPICAL WOOD LINE POST INSTALLATION

See Note 4

NOTES:

1. For details of steel post installations, see Revised Standard Plan RSP A77L2.
2. For details of standard hardware used to construct MGS, see Revised Standard Plan RSP A77M1.
3. For details of wood posts and wood blocks used to construct MGS, see Revised Standard Plan RSP A77N1.
4. For additional installation details, see Revised Standard Plan RSP A77N3.
5. MGS post spacing to be 6'-3" center to center, except as otherwise noted.
6. For MGS typical layouts, see the A77P, A77Q and A77R Series of Standard Plans.
7. If railing is connected to terminal system end treatment, use 31" height terminal system end treatment.
8. For MGS end anchor details, see Revised Standard Plans RSP A77S1 and RSP A77T2.
9. For details of MGS transition to bridge railing, see Revised Standard Plan RSP A77U4.
10. For additional details of MSG connection to bridge railing, see Revised Standard Plans RSP A77U1, RSP A77U2 and RSP A77V1.
11. For MGS connection details to abutments and walls, see Revised Standard Plan RSP A77U3.
12. For typical MGS delineation and dike positioning details, see Revised Standard Plan RSP A77N4.
13. Slotted hole for bolted connection of rail element to block and post. See "Section Thru Rail Element".
14. Slotted holes for splice bolts to overlap ends of rail element. See "Section Thru Rail Element".
15. Additional hole in uppermost portion of line post is for potential future adjustments of railing height. See Revised Standard Plan RSP A77N1.
16. Install posts in soil.

STATE OF CALIFORNIA
DEPARTMENT OF TRANSPORTATION

MIDWEST GUARDRAIL SYSTEM STANDARD RAILING SECTION (WOOD POST WITH WOOD BLOCK)

NO SCALE

RSP A77L1 DATED JULY 19, 2013 SUPPLEMENTS STANDARD PLANS BOOK DATED 2010.

REVISED STANDARD PLAN RSP A77L1

Dist	COUNTY	ROUTE	POST MILES TOTAL PROJECT	SHEET No.	TOTAL SHEETS
03	Gle	5	R0.0/R20.0	42	77

Randell D. Hiatt
REGISTERED CIVIL ENGINEER

July 19, 2013
PLANS APPROVAL DATE

REGISTERED PROFESSIONAL ENGINEER
Randell D. Hiatt
No. C50200
Exp. 6-30-15
CIVIL
STATE OF CALIFORNIA

THE STATE OF CALIFORNIA OR ITS OFFICERS OR AGENTS SHALL NOT BE RESPONSIBLE FOR THE ACCURACY OR COMPLETENESS OF SCANNED COPIES OF THIS PLAN SHEET.

TO ACCOMPANY PLANS DATED 4-11-16

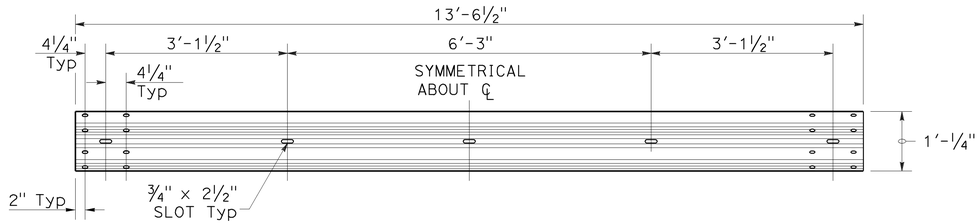

TYPICAL RAIL ELEMENT

NOTE:

1. Slotted holes for splice bolts to overlap ends of rail element.

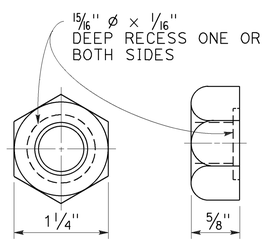

⅝" ø RECESS NUT

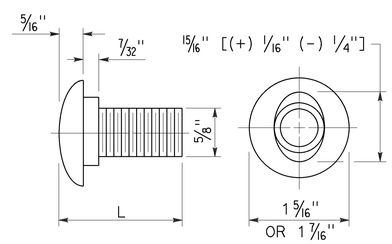

⅝" ø BUTTON HEAD BOLT

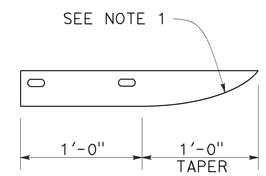

PLAN

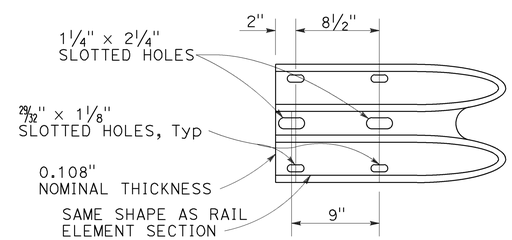

ELEVATION

END CAP
(TYPE A)

BUTTON HEAD BOLT

L	THREAD LENGTH
1⅜"	FULL THREAD LENGTH
2"	FULL THREAD LENGTH
10"	4" Min THREAD LENGTH
18"	4" Min THREAD LENGTH
20"	4" Min THREAD LENGTH
22"	4" Min THREAD LENGTH
26"	4" Min THREAD LENGTH
36"	4" Min THREAD LENGTH
** 2¾"	2" Min THREAD LENGTH
** 19"	4" Min THREAD LENGTH

** For nested rail applications.

STATE OF CALIFORNIA
DEPARTMENT OF TRANSPORTATION

MIDWEST GUARDRAIL SYSTEM STANDARD HARDWARE

NO SCALE

RSP A77M1 DATED JULY 19, 2013 SUPPLEMENTS THE STANDARD PLANS BOOK DATED 2010.

REVISED STANDARD PLAN RSP A77M1

2010 REVISED STANDARD PLAN RSP A77M1

7-3-13

Dist	COUNTY	ROUTE	POST MILES TOTAL PROJECT	SHEET No.	TOTAL SHEETS
03	Gle	5	R0.0/R20.0	43	77

Randell D. Hiatt
REGISTERED CIVIL ENGINEER

July 19, 2013
PLANS APPROVAL DATE

REGISTERED PROFESSIONAL ENGINEER
Randell D. Hiatt
No. C50200
Exp. 6-30-15
CIVIL
STATE OF CALIFORNIA

THE STATE OF CALIFORNIA OR ITS OFFICERS OR AGENTS SHALL NOT BE RESPONSIBLE FOR THE ACCURACY OR COMPLETENESS OF SCANNED COPIES OF THIS PLAN SHEET.

TO ACCOMPANY PLANS DATED 4-11-16

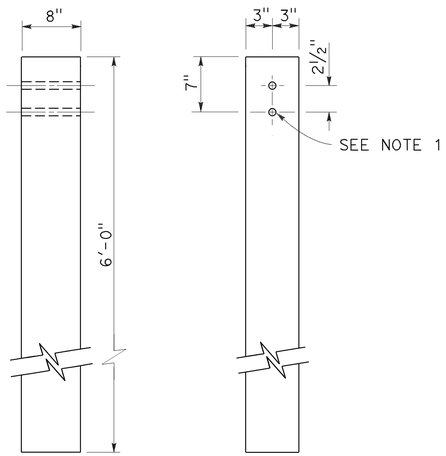

SIDE FRONT

6" x 8" WOOD POST
See Note 3

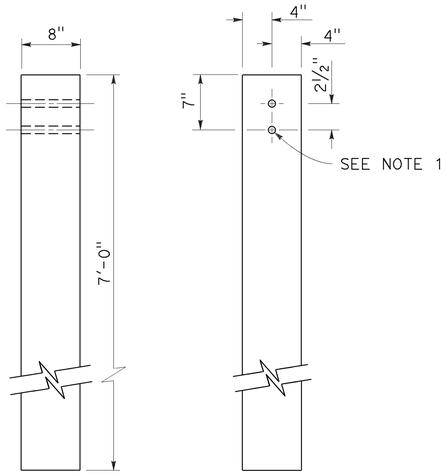

SIDE FRONT

8" x 8" WOOD POST
See Note 4

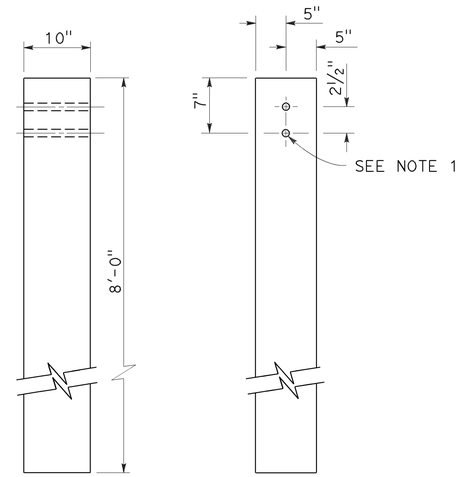

SIDE FRONT

10" x 10" WOOD POST
See Note 5

NOTES:

1. All holes in wood posts and blocks shall be 3/4" Dia ± 1/16".
2. Dimensions shown for wood post are nominal.
3. This post and block combination used for standard line post sections of MGS.
4. This post and 8" x 12" block combination used for line post sections of MGS on narrow roadways.
5. This post and 8" x 12" block combination is typically used where strengthened line post sections of MGS are warranted to shield fixed objects.
6. See Revised Standard Plan RSP A77L3 for use of 6" x 8" and 8" x 8" wood blocks.

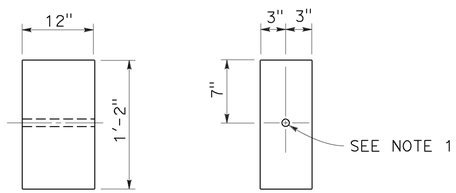

SIDE FRONT

6" x 12" WOOD BLOCK
See Note 3

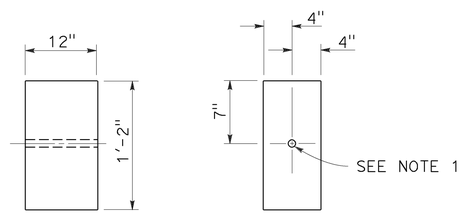

SIDE FRONT

8" x 12" WOOD BLOCK

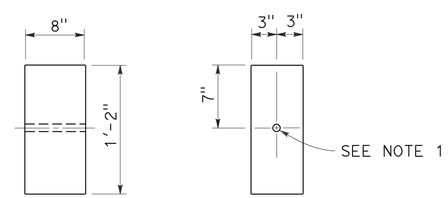

SIDE FRONT

6" x 8" WOOD BLOCK
Only for use with metal beam guard rail see Note 6

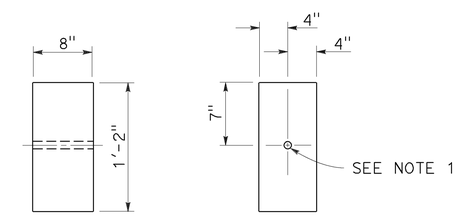

SIDE FRONT

8" x 8" WOOD BLOCK
Only for use with metal beam guard rail see Note 6

STATE OF CALIFORNIA
DEPARTMENT OF TRANSPORTATION

MIDWEST GUARDRAIL SYSTEM WOOD POST AND WOOD BLOCK DETAILS

NO SCALE

RSP A77N1 DATED JULY 19, 2013 SUPPLEMENTS THE STANDARD PLANS BOOK DATED 2010.

REVISED STANDARD PLAN RSP A77N1

2010 REVISED STANDARD PLAN RSP A77N1

7-3-13

Dist	COUNTY	ROUTE	POST MILES TOTAL PROJECT	SHEET No.	TOTAL SHEETS
03	Gle	5	R0.0/R20.0	44	77

Randell D. Hiatt
REGISTERED CIVIL ENGINEER

November 15, 2013
PLANS APPROVAL DATE

REGISTERED PROFESSIONAL ENGINEER
Randell D. Hiatt
No. C50200
Exp. 6-30-15
CIVIL
STATE OF CALIFORNIA

THE STATE OF CALIFORNIA OR ITS OFFICERS OR AGENTS SHALL NOT BE RESPONSIBLE FOR THE ACCURACY OR COMPLETENESS OF SCANNED COPIES OF THIS PLAN SHEET.

TO ACCOMPANY PLANS DATED 4-11-16

2010 REVISED STANDARD PLAN RSP A77N3

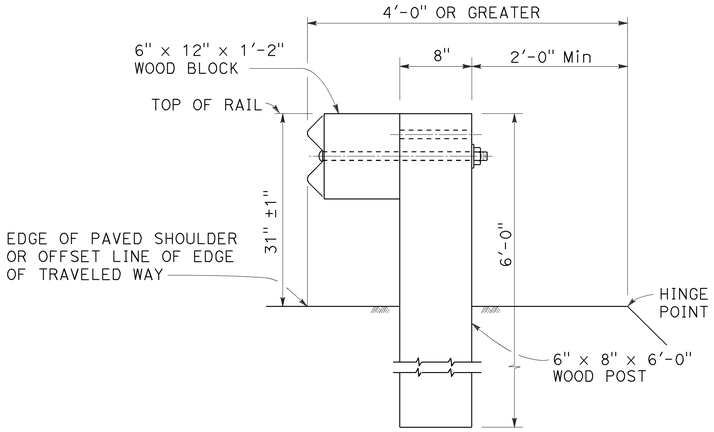

DETAIL A

TYPICAL ROADWAY INSTALLATION

See Note 1

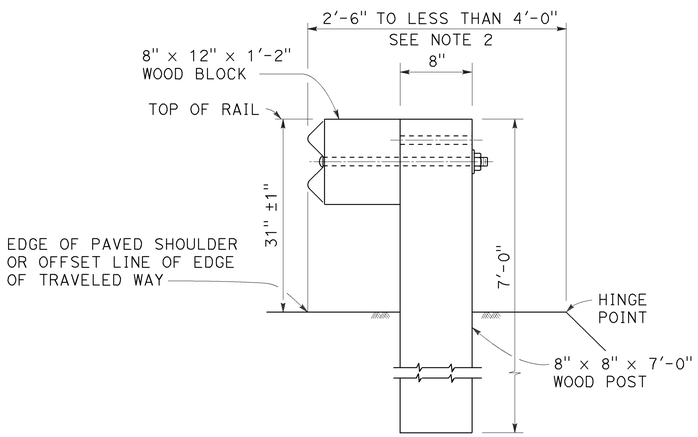

DETAIL B

NARROW ROADWAY INSTALLATION

See Note 1

POST EMBEDMENT

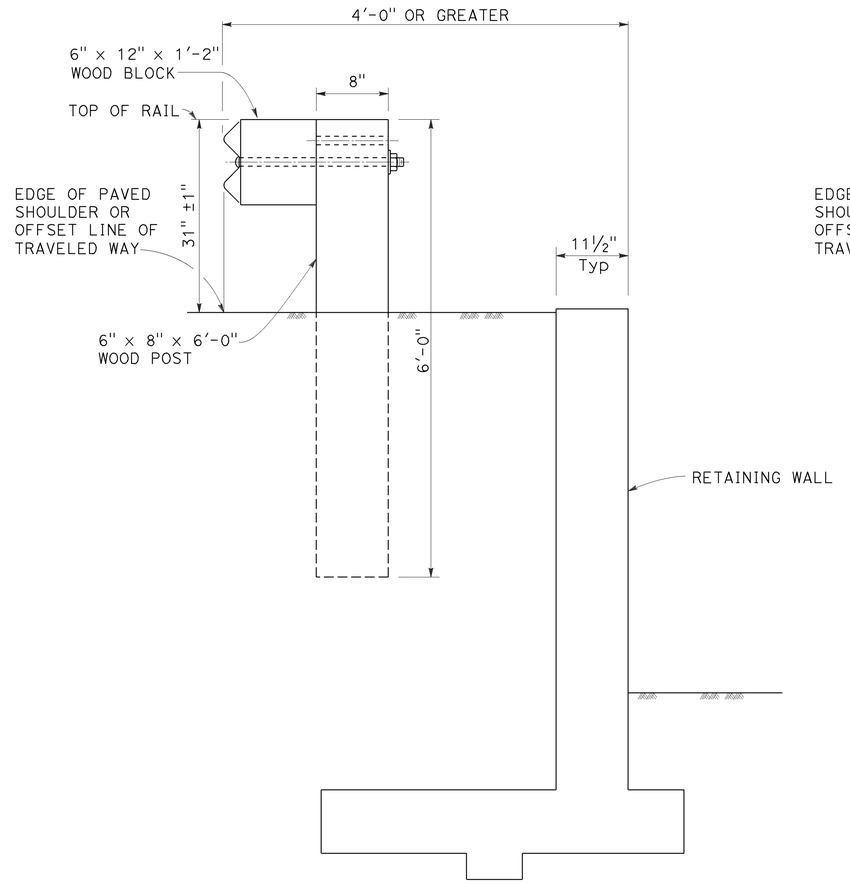

DETAIL C

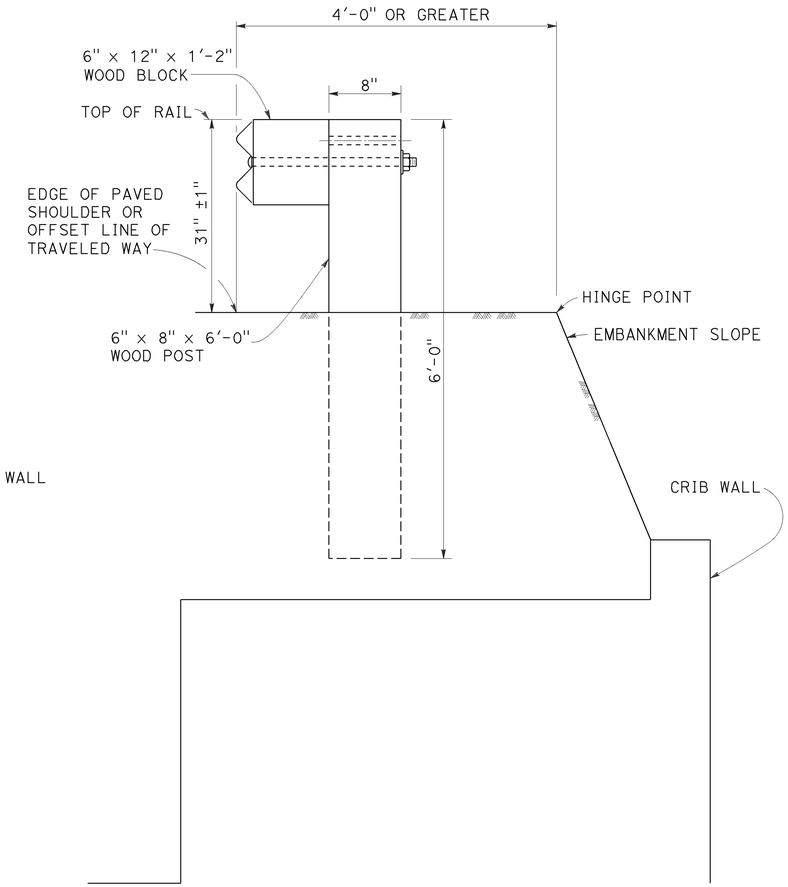

DETAIL D

INSTALLATION AT EARTH RETAINING WALLS

NOTES:

1. These installation details also applicable to steel line post installations. For Detail A, C, and D, where steel line post installations are constructed, W6 x 8.5 or W6 x 9 steel post, 6'-0" in length, with 6" x 12" x 1'-2" notched wood blocks or notched recycled plastic blocks are to be used in place of the size of wood post and wood block shown. For Detail B, where steel line post installations are constructed, W6 x 15 steel post, 8'-0" in length, with 8" x 12" x 1'-2" notched wood blocks or notched recycled plastic blocks are to be used in place of the size of wood post and wood block shown. For additional installation details, see Revised Standard Plan RSP A77L1 and RSP A77L2.
2. Where the distance between the face of the rail and the hinge point is less than 2'-6", see the Project Plans for special details.
3. For dike positioning with MGS installations, see Revised Standard Plan RSP A77N4.

STATE OF CALIFORNIA
DEPARTMENT OF TRANSPORTATION

MIDWEST GUARDRAIL SYSTEM TYPICAL LINE POST EMBEDMENT AND HINGE POINT OFFSET DETAILS

NO SCALE

RSP A77N3 DATED NOVEMBER 15, 2013 SUPERSEDES RSP A77N3
DATED JULY 19, 2013 THAT SUPPLEMENTS THE STANDARD PLANS BOOK DATED 2010.

REVISED STANDARD PLAN RSP A77N3

10-29-13

Dist	COUNTY	ROUTE	POST MILES TOTAL PROJECT	SHEET No.	TOTAL SHEETS
03	Gle	5	R0.0/R20.0	45	77

Randell D. Hiatt
REGISTERED CIVIL ENGINEER

July 19, 2013
PLANS APPROVAL DATE

REGISTERED PROFESSIONAL ENGINEER
Randell D. Hiatt
No. C50200
Exp. 6-30-15
CIVIL
STATE OF CALIFORNIA

THE STATE OF CALIFORNIA OR ITS OFFICERS OR AGENTS SHALL NOT BE RESPONSIBLE FOR THE ACCURACY OR COMPLETENESS OF SCANNED COPIES OF THIS PLAN SHEET.

TO ACCOMPANY PLANS DATED 4-11-16

NOTES:

1. When necessary to place dike more than 7" in front of face of MGS, only Type C dike may be used. For dike details, see Revised Standard Plan RSP A87B.
2. For standard railing post embedment, see Revised Standard Plan RSP A77N3.
3. MGS delineation to be used where shown on the Project Plans.
4. When dike or curb is placed under MGS, the maximum height of the dike or curb shall be 6". Mountable dike should not be used. For dike and curb details, see Revised Standard Plans RSP A87A and RSP A87B.
5. For details of typical distance between the face of rail and hinge point, see Revised Standard Plan RSP A77N3.
6. For steel line posts, use 1/4 - 20 self-tapping screws in 0.22" diameter holes or 1/4" bolts in 9/32" diameter holes.

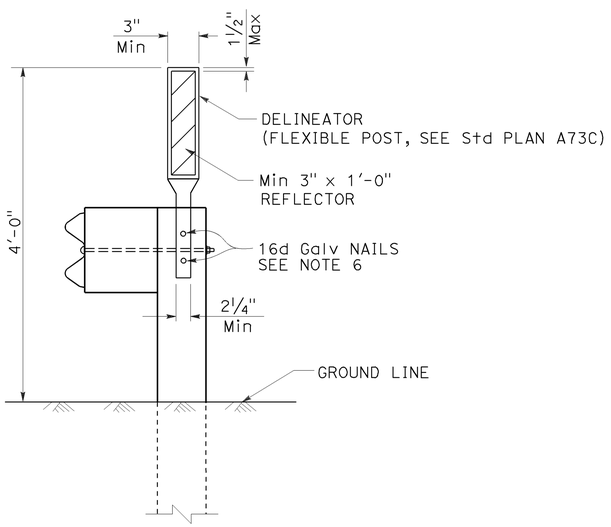

MGS DELINEATION

See Note 3

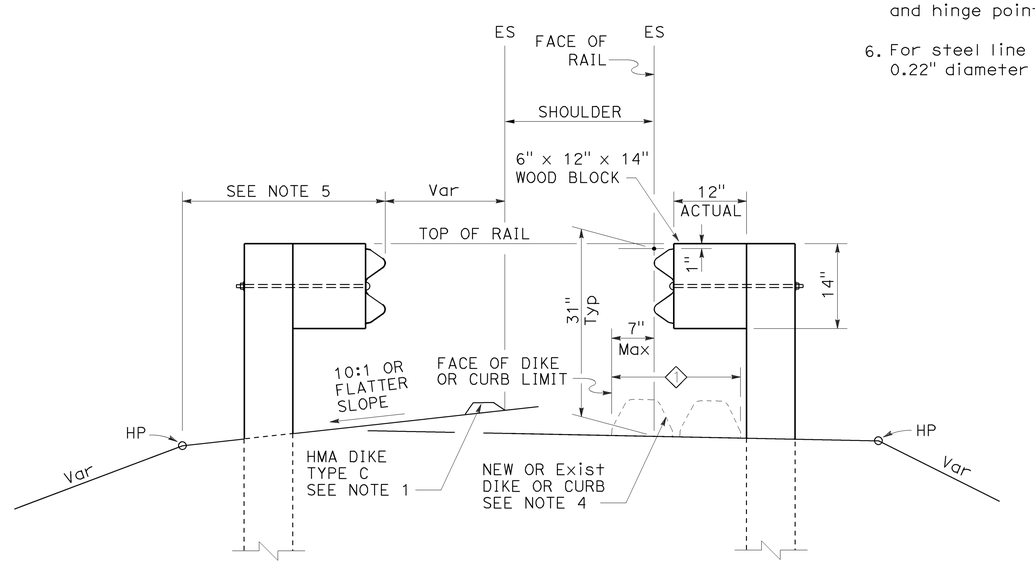

DIKE POSITIONING

See Note 1

1 PERMISSIBLE DIKE OR CURB PLACEMENT AREA

STATE OF CALIFORNIA
DEPARTMENT OF TRANSPORTATION

MIDWEST GUARDRAIL SYSTEM TYPICAL RAILING DELINEATION AND DIKE POSITIONING DETAILS

NO SCALE

RSP A77N4 DATED JULY 19, 2013 SUPPLEMENTS THE STANDARD PLANS BOOK DATED 2010.

REVISED STANDARD PLAN RSP A77N4

2010 REVISED STANDARD PLAN RSP A77N4

7-10-13

Dist	COUNTY	ROUTE	POST MILES TOTAL PROJECT	SHEET No.	TOTAL SHEETS
03	Gle	5	R0.0/R20.0	46	77

Randell D. Hiatt
REGISTERED CIVIL ENGINEER

July 19, 2013
PLANS APPROVAL DATE

REGISTERED PROFESSIONAL ENGINEER
Randell D. Hiatt
No. C50200
Exp. 6-30-15
CIVIL
STATE OF CALIFORNIA

THE STATE OF CALIFORNIA OR ITS OFFICERS OR AGENTS SHALL NOT BE RESPONSIBLE FOR THE ACCURACY OR COMPLETENESS OF SCANNED COPIES OF THIS PLAN SHEET.

TO ACCOMPANY PLANS DATED 4-11-16

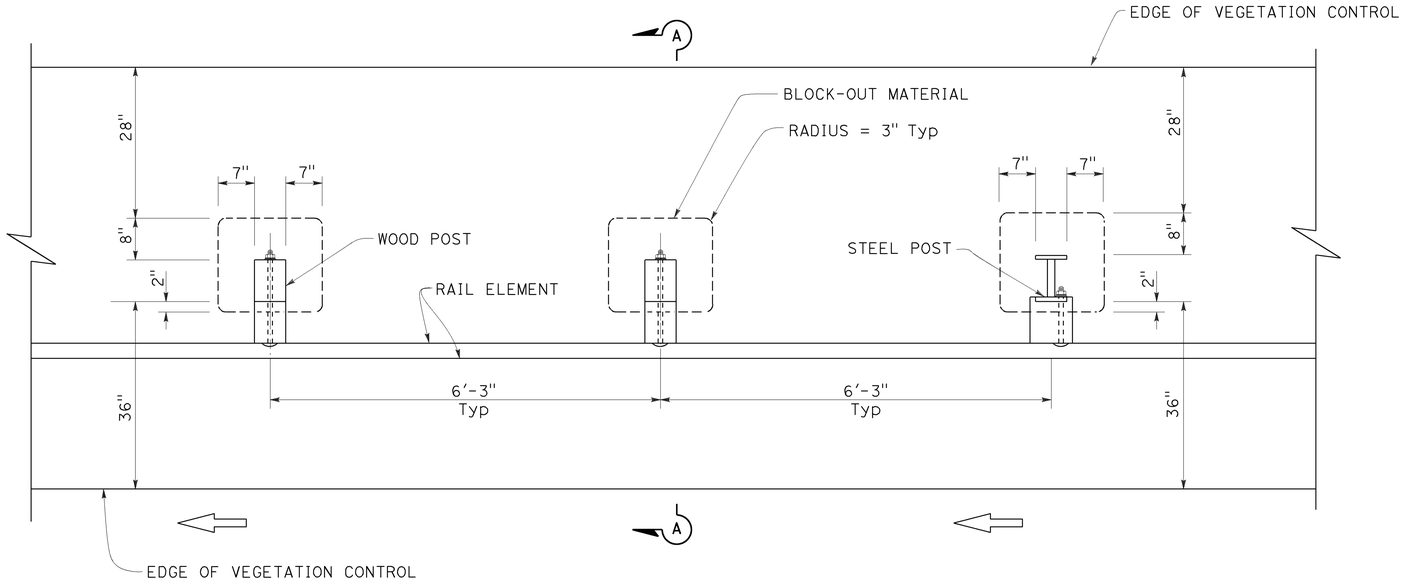

PLAN

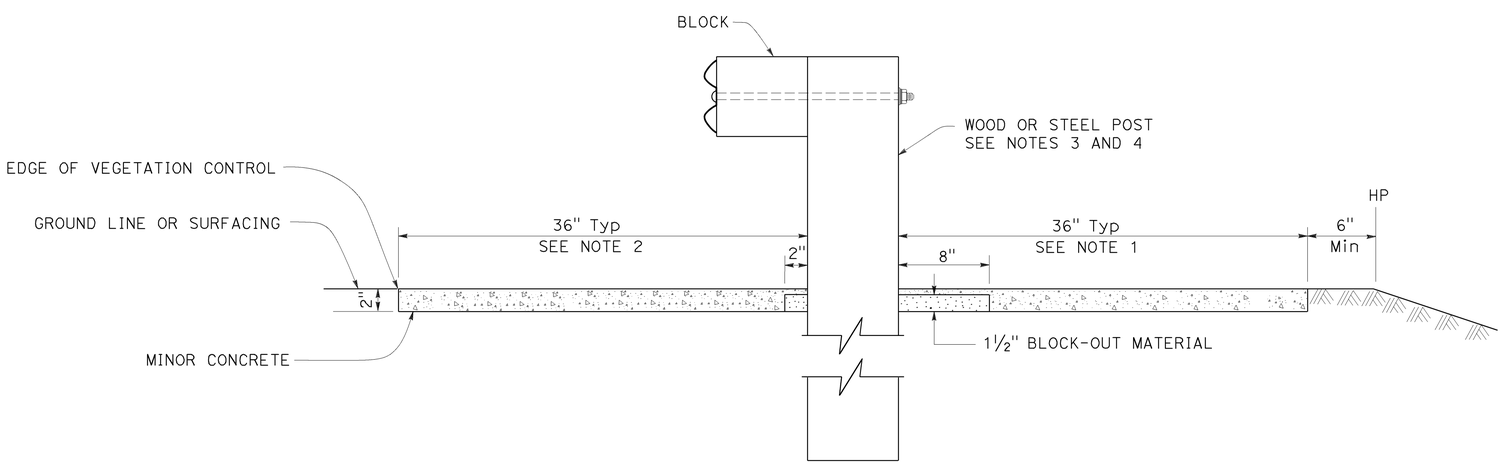

SECTION A-A

NOTES:

1. Where the distance between back of post and hinge point is less than 42", construct vegetation control to 6" from hinge point while maintaining the 8" block-out at back of post. If the 8" block-out at back of post can not be maintained, construct vegetation control flush with the back edge of post.
2. Where dike is constructed under railing, construct vegetation control to back edge of dike. Where paved shoulder is constructed within 36" in front of the post, construct vegetation control to the edge of paved shoulder.
3. For wood post sizes, see Revised Standard Plan RSP A77N1.
4. For steel post sizes, see Revised Standard Plan RSP A77N2.
5. For details not shown, see Revised Standard Plans RSP A77L1 and RSP A77L2.

STATE OF CALIFORNIA
DEPARTMENT OF TRANSPORTATION

MIDWEST GUARDRAIL SYSTEM TYPICAL VEGETATION CONTROL STANDARD RAILING SECTION

NO SCALE

RSP A77N5 DATED JULY 19, 2013 SUPPLEMENTS THE STANDARD PLANS BOOK DATED 2010.

REVISED STANDARD PLAN RSP A77N5

2010 REVISED STANDARD PLAN RSP A77N5

7-3-13

Dist	COUNTY	ROUTE	POST MILES TOTAL PROJECT	SHEET No.	TOTAL SHEETS
03	Gle	5	R0.0/R20.0	47	77

Randell D. Hiatt
REGISTERED CIVIL ENGINEER

July 19, 2013
PLANS APPROVAL DATE

REGISTERED PROFESSIONAL ENGINEER
Randell D. Hiatt
No. C50200
Exp. 6-30-15
CIVIL
STATE OF CALIFORNIA

THE STATE OF CALIFORNIA OR ITS OFFICERS OR AGENTS SHALL NOT BE RESPONSIBLE FOR THE ACCURACY OR COMPLETENESS OF SCANNED COPIES OF THIS PLAN SHEET.

TO ACCOMPANY PLANS DATED 4-11-16

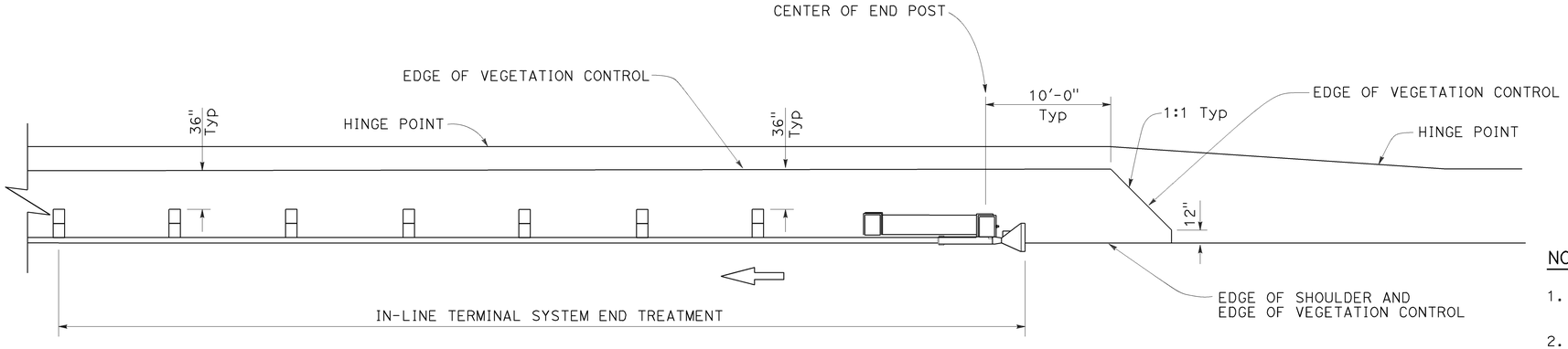

PLAN

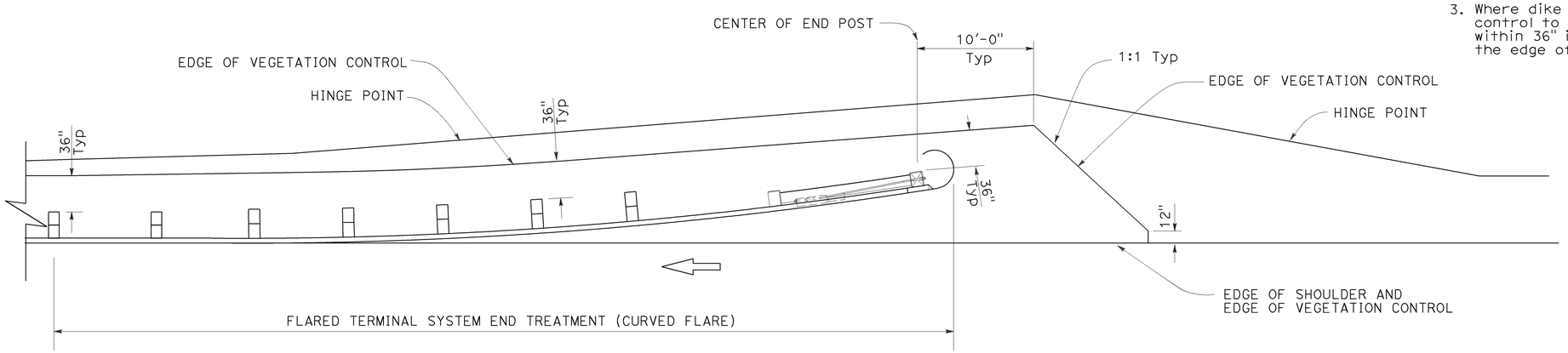

PLAN

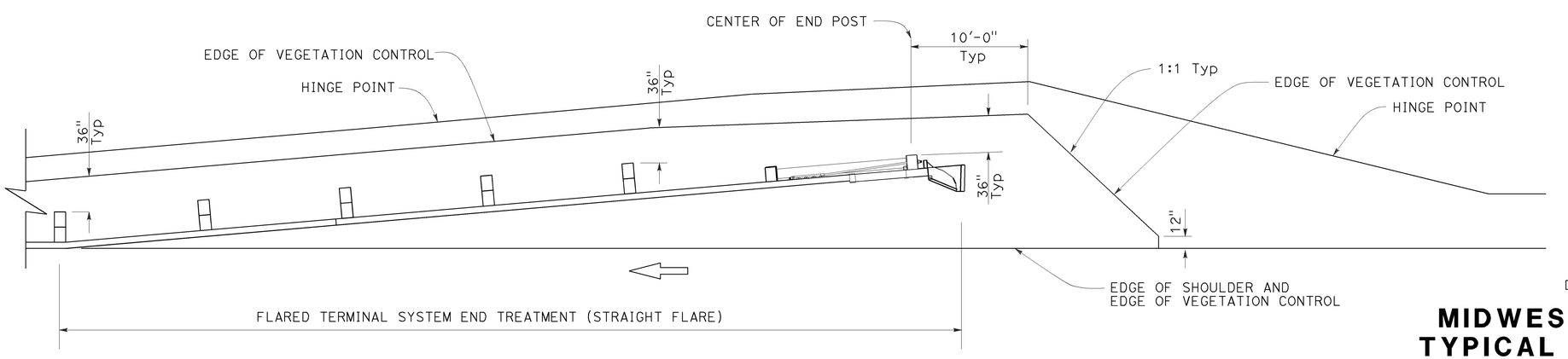

PLAN

NOTES:

1. See Revised Standard Plan RSP A77N5 for additional vegetation control details.
2. Where the distance between back of post and hinge point is less than 42", construct vegetation control to 6" from hinge point while maintaining the 8" block-out at back of post. If the 8" block-out at back of post can not be maintained, construct vegetation control flush with the back edge of post.
3. Where dike is constructed under railing, construct vegetation control to back edge of dike. Where paved shoulder is constructed within 36" in front of the post, construct vegetation control to the edge of paved shoulder.

STATE OF CALIFORNIA
DEPARTMENT OF TRANSPORTATION

MIDWEST GUARDRAIL SYSTEM TYPICAL VEGETATION CONTROL FOR TERMINAL SYSTEM END TREATMENTS

NO SCALE

RSP A77N6 DATED JULY 19, 2013 SUPPLEMENTS THE STANDARD PLANS BOOK DATED 2010.

REVISED STANDARD PLAN RSP A77N6

2010 REVISED STANDARD PLAN RSP A77N6

Dist	COUNTY	ROUTE	POST MILES TOTAL PROJECT	SHEET No.	TOTAL SHEETS
03	Gle	5	R0.0/R20.0	48	77

Randell D. Hiatt
REGISTERED CIVIL ENGINEER

July 19, 2013
PLANS APPROVAL DATE

REGISTERED PROFESSIONAL ENGINEER
Randell D. Hiatt
No. C50200
Exp. 6-30-15
CIVIL
STATE OF CALIFORNIA

THE STATE OF CALIFORNIA OR ITS OFFICERS OR AGENTS SHALL NOT BE RESPONSIBLE FOR THE ACCURACY OR COMPLETENESS OF SCANNED COPIES OF THIS PLAN SHEET.

TO ACCOMPANY PLANS DATED 4-11-16

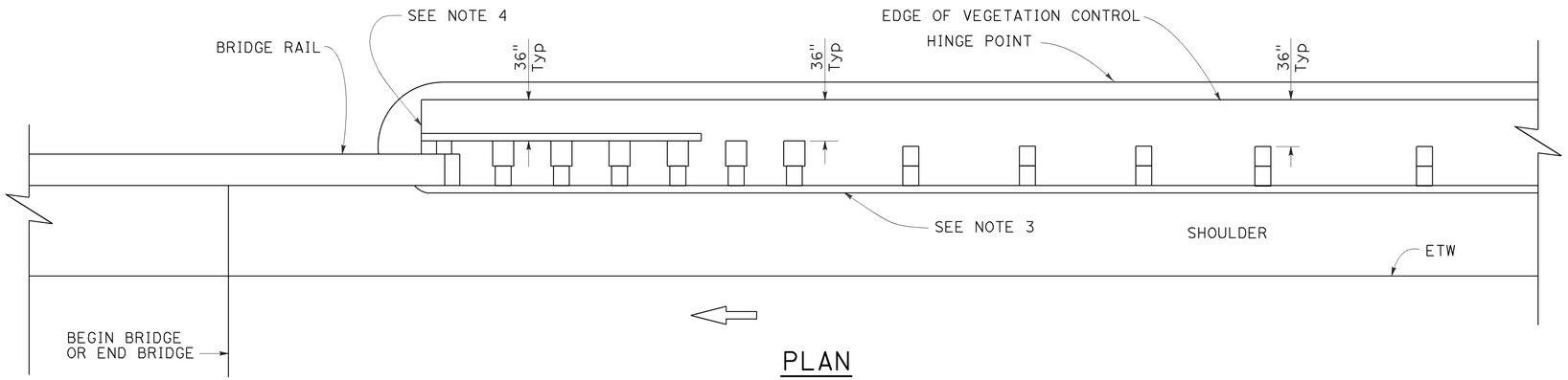

PLAN

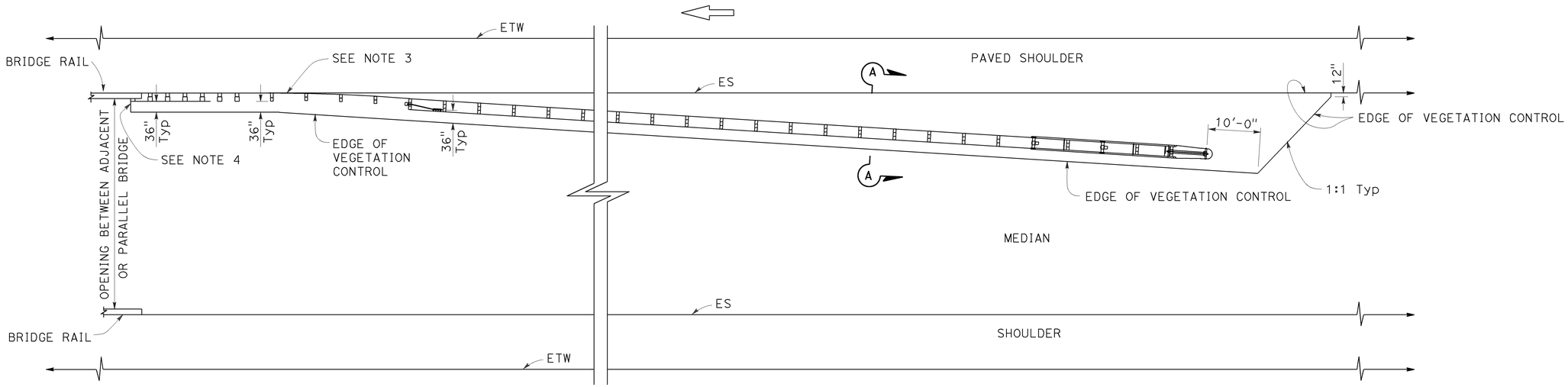

PLAN

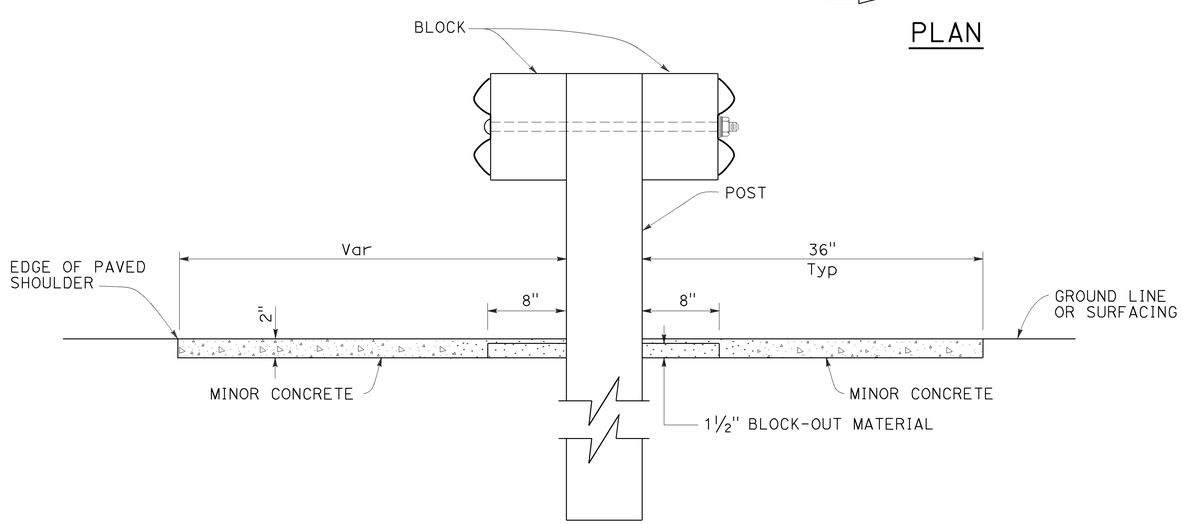

SECTION A-A

NOTES:

1. See Revised Standard Plan RSP A77N5 for additional vegetation control details.
2. Where the distance between back of post and hinge point is less than 42", construct vegetation control to 6" from hinge point while maintaining the 8" block-out at back of post. If the 8" block-out at back of post can not be maintained, construct vegetation control flush with the back edge of post.
3. Where dike is constructed under railing, construct vegetation control to back edge of dike. Where paved shoulder is constructed within 36" in front of the post, construct vegetation control to the edge of paved shoulder.
4. End vegetation control at end of backside rail element.

STATE OF CALIFORNIA
DEPARTMENT OF TRANSPORTATION

MIDWEST GUARDRAIL SYSTEM TYPICAL VEGETATION CONTROL AT STRUCTURE APPROACH

NO SCALE

RSP A77N7 DATED JULY 19, 2013 SUPPLEMENTS THE STANDARD PLANS BOOK DATED 2010.

REVISED STANDARD PLAN RSP A77N7

2010 REVISED STANDARD PLAN RSP A77N7

6-12-13

Dist	COUNTY	ROUTE	POST MILES TOTAL PROJECT	SHEET No.	TOTAL SHEETS
03	Gle	5	R0.0/R20.0	49	77

Randell D. Hiatt
REGISTERED CIVIL ENGINEER

July 19, 2013
PLANS APPROVAL DATE

REGISTERED PROFESSIONAL ENGINEER
Randell D. Hiatt
No. C50200
Exp. 6-30-15
CIVIL
STATE OF CALIFORNIA

THE STATE OF CALIFORNIA OR ITS OFFICERS OR AGENTS SHALL NOT BE RESPONSIBLE FOR THE ACCURACY OR COMPLETENESS OF SCANNED COPIES OF THIS PLAN SHEET.

TO ACCOMPANY PLANS DATED 4-11-16

NOTES:

1. See Revised Standard Plan RSP A77N5 for additional vegetation control details.
2. Where the distance between back of post and hinge point is less than 42", construct vegetation control to 6" from hinge point while maintaining the 8" block-out at back of post. If the 8" block-out at back of post can not be maintained, construct vegetation control flush with the back edge of post.
3. Where dike is constructed under railing, construct vegetation control to back edge of dike. Where paved shoulder is constructed within 36" in front of the post, construct vegetation control to the edge of paved shoulder.

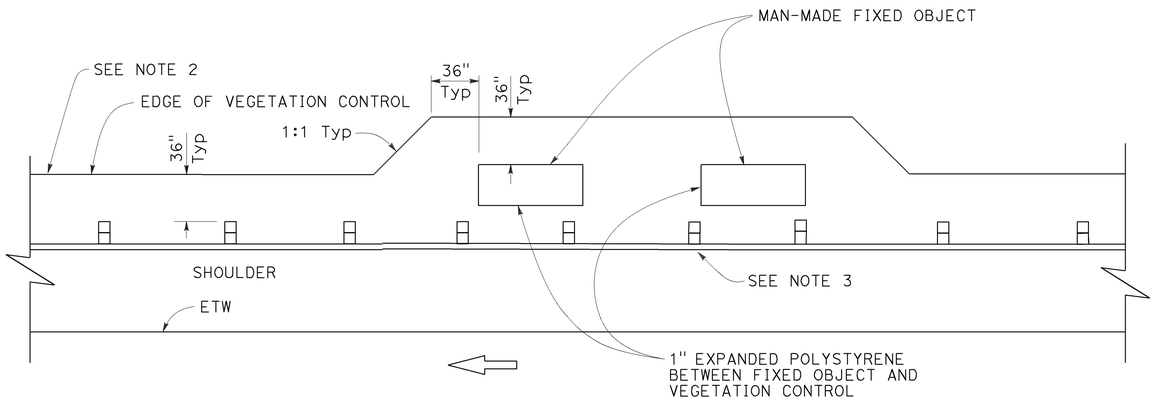

PLAN

Fixed object(s) on shoulder

STATE OF CALIFORNIA
DEPARTMENT OF TRANSPORTATION

MIDWEST GUARDRAIL SYSTEM TYPICAL VEGETATION CONTROL AT FIXED OBJECT

NO SCALE

RSP A77N8 DATED JULY 19, 2013 SUPPLEMENTS THE STANDARD PLANS BOOK DATED 2010.

REVISED STANDARD PLAN RSP A77N8

2010 REVISED STANDARD PLAN RSP A77N8

6-12-13

Dist	COUNTY	ROUTE	POST MILES TOTAL PROJECT	SHEET No.	TOTAL SHEETS
03	Gle	5	R0.0/R20.0	50	77

Randell D. Hiatt
REGISTERED CIVIL ENGINEER

November 15, 2013
PLANS APPROVAL DATE

REGISTERED PROFESSIONAL ENGINEER
Randell D. Hiatt
No. C50200
Exp. 6-30-15
CIVIL
STATE OF CALIFORNIA

THE STATE OF CALIFORNIA OR ITS OFFICERS OR AGENTS SHALL NOT BE RESPONSIBLE FOR THE ACCURACY OR COMPLETENESS OF SCANNED COPIES OF THIS PLAN SHEET.

TO ACCOMPANY PLANS DATED 4-11-16

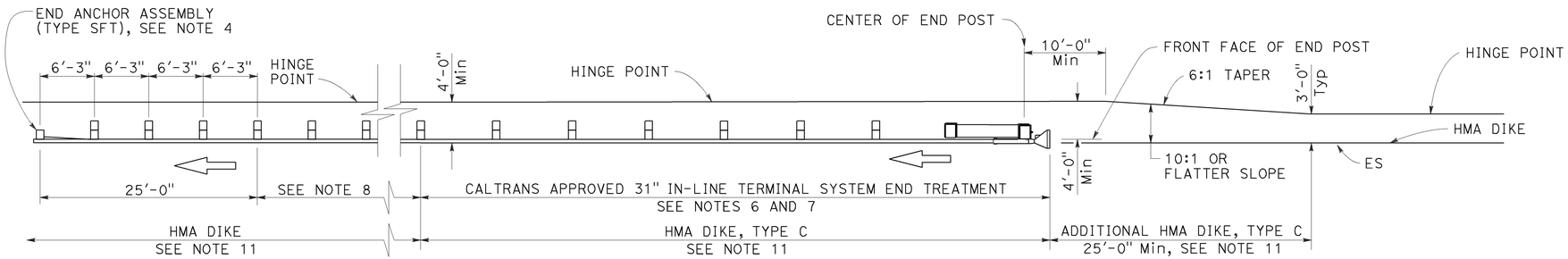

TYPE 11A LAYOUT

(Embankment MGS installation with 31" in-line end treatment at traffic approach end of railing) see Note 5

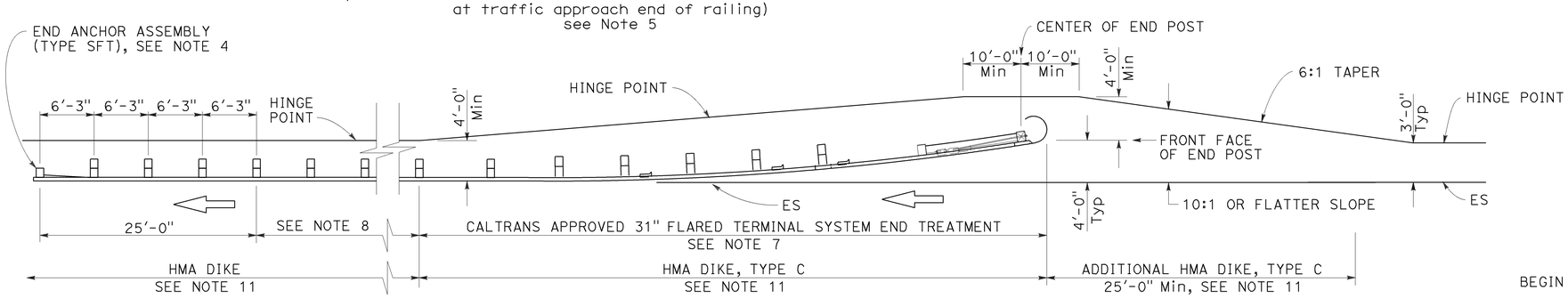

TYPE 11B LAYOUT

(Embankment MGS installation with 31" flared end treatment at traffic approach end of railing) see Note 5

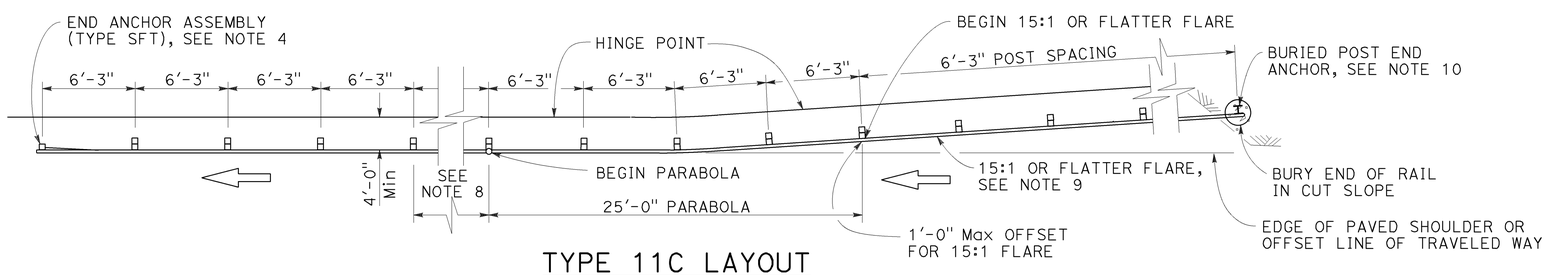

TYPE 11C LAYOUT

(Embankment MGS installation with buried end anchor treatment at traffic approach end of railing) see Notes 5 and 11

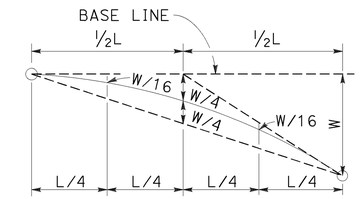

TYPICAL PARABOLIC LAYOUT

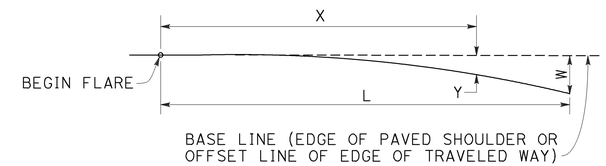

$$Y = \frac{WX^2}{L^2}$$

Y = OFFSET FROM BASE LINE
W = MAXIMUM OFFSET
X = DISTANCE ALONG BASE LINE
L = LENGTH OF FLARE

PARABOLIC FLARE OFFSETS

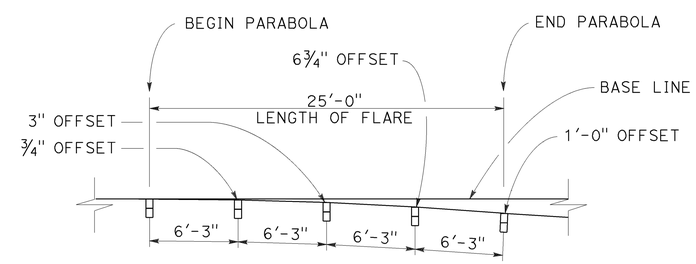

TYPICAL FLARE OFFSETS FOR 1 FOOT Max END OFFSET

NOTES:

1. Line post, blocks and hardware to be used are shown on Revised Standard Plans RSP A77L1, RSP A77L2, RSP A77M1, RSP A77N1 and RSP A77N2.
2. MGS post spacing to be 6'-3" center to center, except as otherwise noted.
3. Except as noted, line posts are 6" x 8" x 6'-0" wood with 6" x 12" x 1'-2" wood blocks. W6 x 8.5 or W6 x 9 steel posts, 6'-0" in length, with 6" x 12" x 1'-2" notched wood blocks or recycled plastic blocks may be used for 6" x 8" x 6'-0" wood post with 6" x 12" x 1'-2" wood blocks where applicable and when specified.
4. For End Anchor Assembly (Type SFT) details, see Revised Standard Plan RSP A77S1.
5. Layout Types 11A, 11B or 11C are typically used where MGS is recommended to shield embankment slopes and a crashworthy end treatment is required for only one direction of traffic.
6. 31" in-line terminal system end treatments are used where site conditions will not accommodate a flared end treatment.
7. The type of 31" terminal system end treatment to be used will be shown on the Project Plans.
8. Dependent on site conditions (embankment height and side slope), construction of additional MGS (length equal to multiples of 12'-6" with 6'-3" post spacing) may be advisable.
9. The 15:1 or flatter flare used with buried end anchors is based on the edge of the paved shoulder or offset line of edge of the traveled way. The length of MGS within the 15:1 or flatter flare is based on site conditions and should be a length equal to multiples of 12'-6".
10. For details of the buried post end anchor used with Type 11C Layout, see Revised Standard Plan RSP A77T2.
11. Where placement of dike is required with MGS installations, see Revised Standard Plan RSP A77N4 for dike positioning details.

STATE OF CALIFORNIA
DEPARTMENT OF TRANSPORTATION

MIDWEST GUARDRAIL SYSTEM TYPICAL LAYOUTS FOR EMBANKMENTS

NO SCALE

RSP A77P1 DATED NOVEMBER 15, 2013 SUPERSEDES RSP A77P1 DATED JULY 19, 2013 THAT SUPPLEMENTS THE STANDARD PLANS BOOK DATED 2010.

REVISED STANDARD PLAN RSP A77P1

2010 REVISED STANDARD PLAN RSP A77P1

10-4-13

Dist	COUNTY	ROUTE	POST MILES TOTAL PROJECT	SHEET No.	TOTAL SHEETS
03	Gle	5	R0.0/R20.0	51	77

Randell D. Hiatt
REGISTERED CIVIL ENGINEER

August 14, 2015
PLANS APPROVAL DATE

REGISTERED PROFESSIONAL ENGINEER
Randell D. Hiatt
No. C50200
Exp. 6-30-17
CIVIL
STATE OF CALIFORNIA

THE STATE OF CALIFORNIA OR ITS OFFICERS OR AGENTS SHALL NOT BE RESPONSIBLE FOR THE ACCURACY OR COMPLETENESS OF SCANNED COPIES OF THIS PLAN SHEET.

TO ACCOMPANY PLANS DATED 4-11-16

2010 REVISED STANDARD PLAN RSP A77Q1

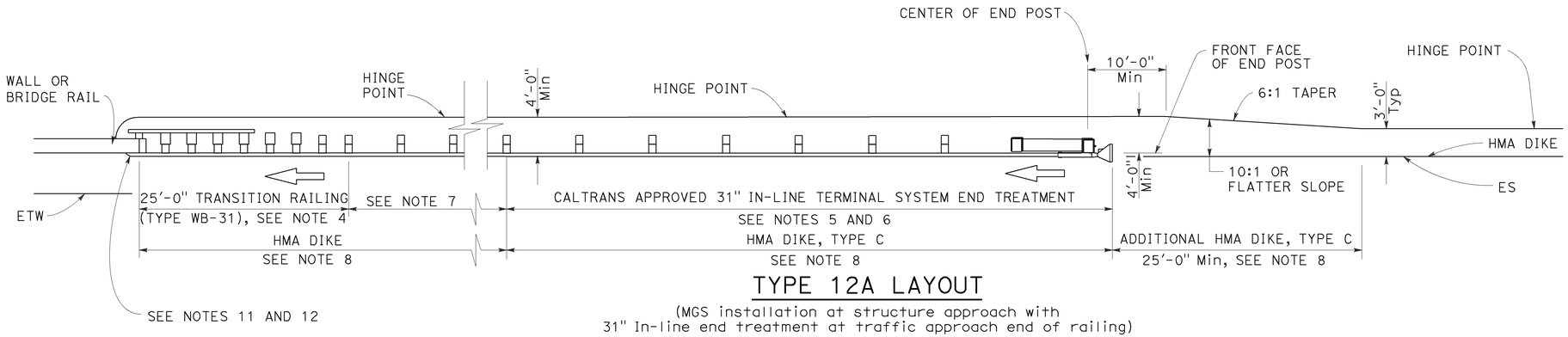

TYPE 12A LAYOUT

(MGS installation at structure approach with
31" In-line end treatment at traffic approach end of railing)
See Note 9

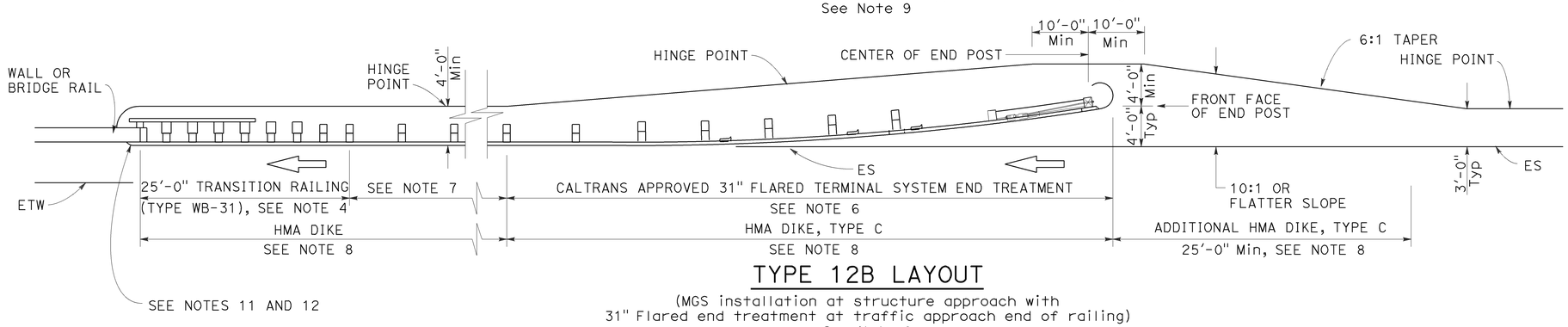

TYPE 12B LAYOUT

(MGS installation at structure approach with
31" Flared end treatment at traffic approach end of railing)
See Note 9

NOTES:

1. Line post, blocks and hardware to be used are shown on Revised Standard Plans RSP A77L1, RSP A77L2, RSP A77M1, RSP A77N1 and RSP A77N2.
2. MGS post spacing to be 6'-3" center to center, except as otherwise noted.
3. Except as noted, line posts are 6" x 8" x 6'-0" wood with 6" x 12" x 1'-2" wood blocks. W6 x 8.5 or W6 x 9 steel posts, 6'-0" in length, with 6" x 12" x 1'-2" notched wood blocks or plastic blocks may be used for 6" x 8" x 6'-0" wood posts with 6" x 12" x 1'-2" wood blocks where applicable and when specified.
4. For Transition Railing (Type WB-31) details for Types 12A and 12B Layouts, see Revised Standard Plan RSP A77U4.
5. 31" in-line terminal system end treatments are used where site conditions will not accommodate a 31" flared end treatment.
6. The type of 31" terminal system end treatment to be used will be shown on the Project Plans.
7. Dependent on site conditions (embankment height, side slopes, or other fixed objects), it may be advisable to construct additional guard railing (a length equal to multiples of 12'-6" with 6'-3" post spacing) between the transition railing and end treatment. A 12.5 degree angle of departure can be drawn on the Project Plans from the edge of traveled way through the outer most point of the fixed object to determine the additional length of railing needed.
8. Where placement of dike is required with guard railing installations, see Revised Standard Plan RSP A77N4 for dike positioning details.
9. Type 12A or Type 12B Layouts are typically used:
   a. To the right of approaching traffic, at the end of a structure, on two-lane conventional highway where the roadbed width across the structure is less than 40 feet.
   b. To the left of approaching traffic, at the end of a structure, on two-lane conventional highway where the roadbed width across the structure is less than 40 feet.
   c. To the right of approaching traffic at the end of each structure on multilane freeways or expressways with separate adjacent or parallel bridges.
   d. To the right of approaching traffic at the end of the structure on multilane freeways or expressways with decked median on the bridge.
10. See Revised Standard Plan RSP A77Q3 for typical layout used left of approaching traffic at the ends of each structure on multilane freeways or expressways with separate adjacent or parallel bridges.
11. For additional details of typical connections to bridge rail, see Connection Detail AA on Revised Standard Plans RSP A77U1 and RSP A77U2 and Connection Detail FF on Revised Standard Plans RSP A77V1 and RSP A77V2.
12. For additional details of a typical connection to walls or abutments, see Revised Standard Plan RSP A77U3.

STATE OF CALIFORNIA
DEPARTMENT OF TRANSPORTATION

MIDWEST GUARDRAIL SYSTEM TYPICAL LAYOUTS FOR STRUCTURE APPROACH

NO SCALE

RSP A77Q1 DATED AUGUST 14, 2015 SUPERSEDES RSP A77Q1 DATED JULY 19, 2013 THAT SUPPLEMENTS THE STANDARD PLANS BOOK DATED 2010.

REVISED STANDARD PLAN RSP A77Q1

Dist	COUNTY	ROUTE	POST MILES TOTAL PROJECT	SHEET No.	TOTAL SHEETS
03	Gle	5	R0.0/R20.0	52	77

Randell D. Hiatt
REGISTERED CIVIL ENGINEER

August 14, 2015
PLANS APPROVAL DATE

REGISTERED PROFESSIONAL ENGINEER
Randell D. Hiatt
No. C50200
Exp. 6-30-17
CIVIL
STATE OF CALIFORNIA

THE STATE OF CALIFORNIA OR ITS OFFICERS OR AGENTS SHALL NOT BE RESPONSIBLE FOR THE ACCURACY OR COMPLETENESS OF SCANNED COPIES OF THIS PLAN SHEET.

TO ACCOMPANY PLANS DATED 4-11-16

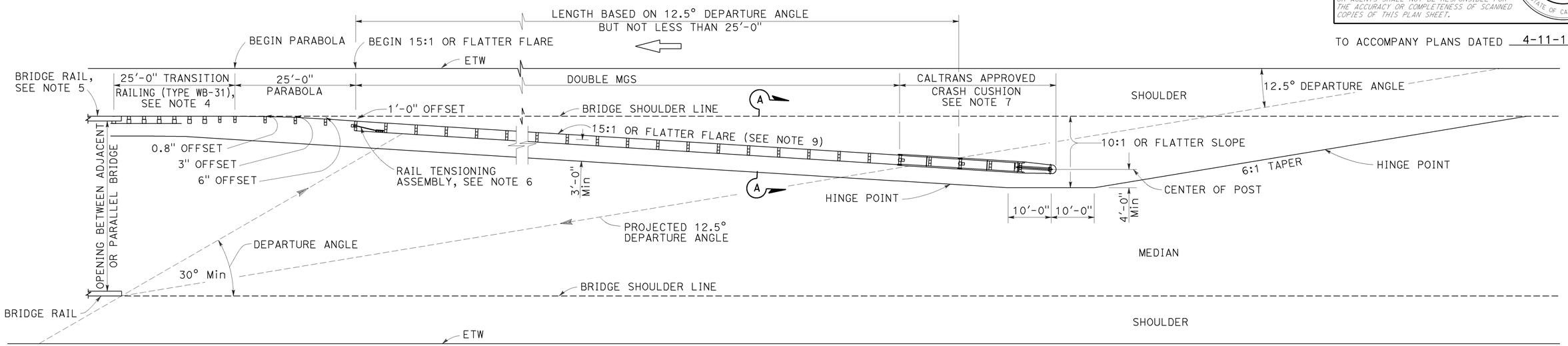

TYPE 12E LAYOUT

See Note 9

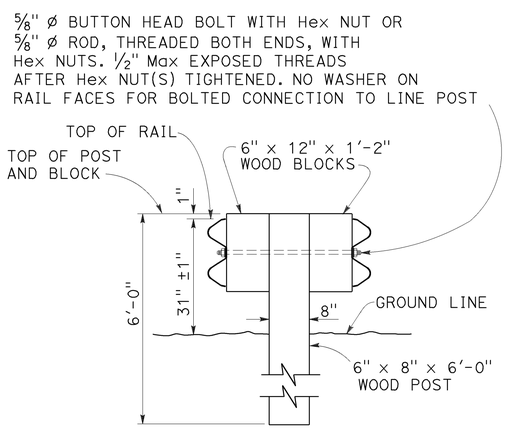

SECTION A-A
TYPICAL DOUBLE MIDWEST GUARDRAIL SYSTEM

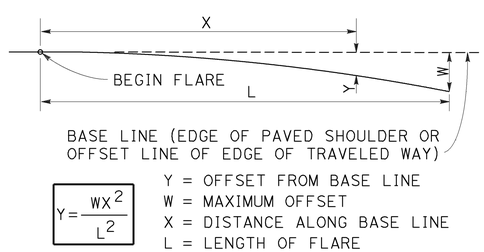

$$Y = \frac{WX^2}{L^2}$$

Y = OFFSET FROM BASE LINE
W = MAXIMUM OFFSET
X = DISTANCE ALONG BASE LINE
L = LENGTH OF FLARE

PARABOLIC FLARE OFFSETS

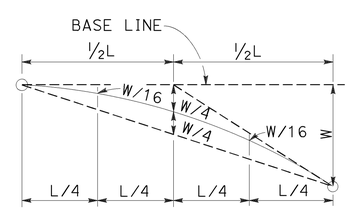

TYPICAL PARABOLIC LAYOUT

NOTES:

1. Line post, blocks and hardware to be used are shown on Revised Standard Plans RSP A77L1, RSP A77L2, RSP A77M1, RSP A77N1 and RSP A77N2.
2. MGS post spacing to be 6'-3" center to center, except as otherwise noted.
3. Except as noted, line posts are 6" x 8" x 6'-0" wood with 6" x 12" x 1'-2" wood blocks. W6 x 8.5 or W6 x 9 steel posts, 6'-0" in length, with 6" x 12" x 1'-2" notched wood blocks or notched recycled plastic blocks may be used for 6" x 8" x 6'-0" wood line posts with 6" x 12" x 1'-2" wood blocks where applicable and when specified.
4. For Transition Railing (Type WB-31) details, see Revised Standard Plan RSP A77U4.
5. For additional details of a typical connection to bridge rail, see Connection Detail AA on Revised Standard Plan RSP A77U1.
6. For Rail Tensioning Assembly details, see Revised Standard Plan RSP A77S2.
7. The type of Crash Cushion to be used will be shown on the Project Plans.
8. Type 12E Layout is typically used left of approaching traffic at the end of each structure on multilane freeways or expressways where a median type barrier is not constructed between separated roadbeds.
9. The 15:1 or flatter flare is measured off of the edge of traveled way.

STATE OF CALIFORNIA
DEPARTMENT OF TRANSPORTATION

MIDWEST GUARDRAIL SYSTEM TYPICAL LAYOUTS FOR STRUCTURE APPROACH

NO SCALE

RSP A77Q3 DATED AUGUST 14, 2015 SUPERSEDES RSP A77Q3 DATED JULY 19, 2013 THAT SUPPLEMENTS THE STANDARD PLANS BOOK DATED 2010.

REVISED STANDARD PLAN RSP A77Q3

2010 REVISED STANDARD PLAN RSP A77Q3

7-8-15

Dist	COUNTY	ROUTE	POST MILES TOTAL PROJECT	SHEET No.	TOTAL SHEETS
03	Gle	5	R0.0/R20.0	53	77

Randell D. Hiatt
REGISTERED CIVIL ENGINEER

August 14, 2015
PLANS APPROVAL DATE

REGISTERED PROFESSIONAL ENGINEER
Randell D. Hiatt
No. C50200
Exp. 6-30-17
CIVIL
STATE OF CALIFORNIA

THE STATE OF CALIFORNIA OR ITS OFFICERS OR AGENTS SHALL NOT BE RESPONSIBLE FOR THE ACCURACY OR COMPLETENESS OF SCANNED COPIES OF THIS PLAN SHEET.

TO ACCOMPANY PLANS DATED 4-11-16

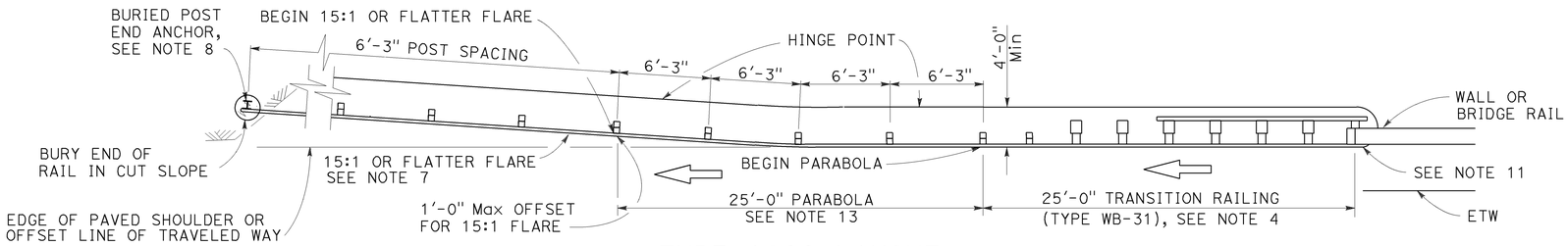

TYPE 12CC LAYOUT

(MGS installation at structure departure with a Buried end anchor treatment at trailing end of railing)
See Notes 9 and 10

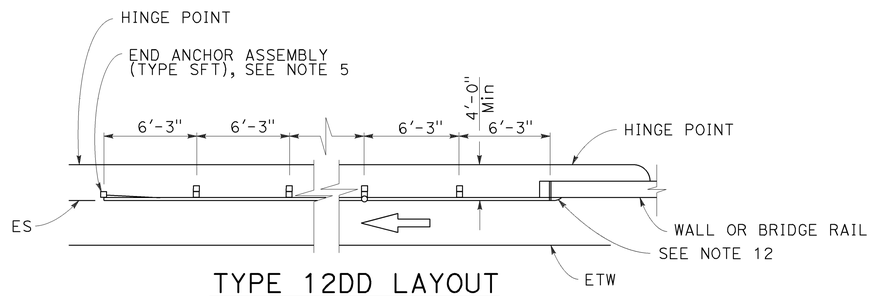

TYPE 12DD LAYOUT

(MGS installation at structure departure With end anchor assembly at trailing end of railing)
See Notes 6 and 9

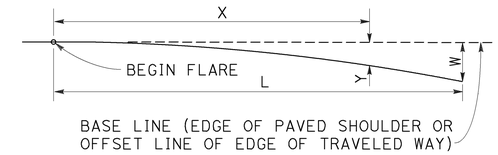

$$Y = \frac{WX^2}{L^2}$$

Y = OFFSET FROM BASE LINE
W = MAXIMUM OFFSET
X = DISTANCE ALONG BASE LINE
L = LENGTH OF FLARE

PARABOLIC FLARE OFFSETS

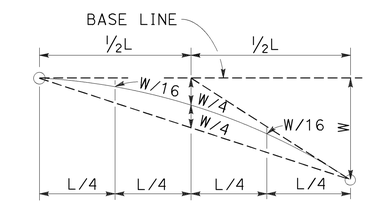

TYPICAL PARABOLIC LAYOUT

NOTES:

1. Line post, blocks and hardware to be used are shown on Revised Standard Plans RSP A77L1, RSP A77L2, RSP A77M1, RSP A77N1 and RSP A77N2.
2. MSG post spacing to be 6'-3" center to center, except as otherwise noted.
3. Except as noted, line posts are 6" x 8" x 6'-0" wood with 6" x 12" x 1'-2" wood blocks. W6 x 8.5 or W6 x 9 steel posts, 6'-0" in length, with 6" x 12" x 1'-2" notched wood blocks or notched recycled plastic blocks may be used for 6" x 8" x 6'-0" wood line posts with 6" x 12" x 1'-2" wood blocks where applicable and when specified.
4. For Transition Railing (Type WB-31) details for Type 12CC Layout, see Revised Standard Plan RSP A77U4.
5. For details of End Anchor Assembly (Type SFT) used with Type 12DD Layout, see Revised Standard Plan RSP A77S1.
6. Type 12DD layout is typically used to the right of traffic departing a structure on two-way conventional highways where the roadbed width across the structure is equal to or greater than 40 feet and MGS is recommended (embankment height, side slopes, other fixed objects). Length of railing to be equal to multiples of 12'-6". For MGS connection details to bridge rail, see Revised Standard Plans RSP A77U1 and RSP A77V1. For MGS connection details to wall, see Revised Standard Plan RSP A77U3.
7. The 15:1 or flatter flare for Type 12CC Layout is based on the edge of the paved shoulder or offset line of edge of the traveled way. The length of MGS within the 15:1 or flatter flare is based on site conditions and should be a length equal to multiples of 12'-6".
8. For details of the buried post end anchor used with Type 12CC Layout, see Revised Standard Plan RSP A77T2.
9. Where placement of dike is required with MGS installations, see Revised Standard Plan RSP A77N4 for dike positioning details.
10. Type 12CC Layout is typically used to the right of traffic departing a structure on two-way conventional highways where the roadbed width across the structure is less than 40 feet.
11. For additional details of a typical connection to bridge rail for Layout Type 12CC, see Connection Detail CC on Revised Standard Plan RSP A77U2 and Connection Detail HH on Revised Standard Plan RSP A77V2.
12. For additional details of a typical connection to bridge rail for Layout Type 12DD, see Connection Detail BB on Revised Standard Plan RSP A77U1 and Connection Detail GG on Revised Standard Plan RSP A77V1.
13. For typical flare offsets for 25'-0" length parabola with maximum offset of 1'-0", see Revised Standard Plan RSP A77P1.

STATE OF CALIFORNIA
DEPARTMENT OF TRANSPORTATION

MIDWEST GUARDRAIL SYSTEM TYPICAL LAYOUTS FOR STRUCTURE DEPARTURE

NO SCALE

RSP A77Q5 DATED AUGUST 14, 2015 SUPERSEDES RSP A77Q5 DATED JULY 19, 2013 THAT SUPPLEMENTS THE STANDARD PLANS BOOK DATED 2010.

REVISED STANDARD PLAN RSP A77Q5

2010 REVISED STANDARD PLAN RSP A77Q5

8-13-15

Dist	COUNTY	ROUTE	POST MILES TOTAL PROJECT	SHEET No.	TOTAL SHEETS
03	Gle	5	R0.0/R20.0	54	77

Randell D. Hiatt
REGISTERED CIVIL ENGINEER

July 19, 2013
PLANS APPROVAL DATE

REGISTERED PROFESSIONAL ENGINEER Randell D. Hiatt No. C50200 Exp. 6-30-15 CIVIL STATE OF CALIFORNIA

THE STATE OF CALIFORNIA OR ITS OFFICERS OR AGENTS SHALL NOT BE RESPONSIBLE FOR THE ACCURACY OR COMPLETENESS OF SCANNED COPIES OF THIS PLAN SHEET.

TO ACCOMPANY PLANS DATED 4-11-16

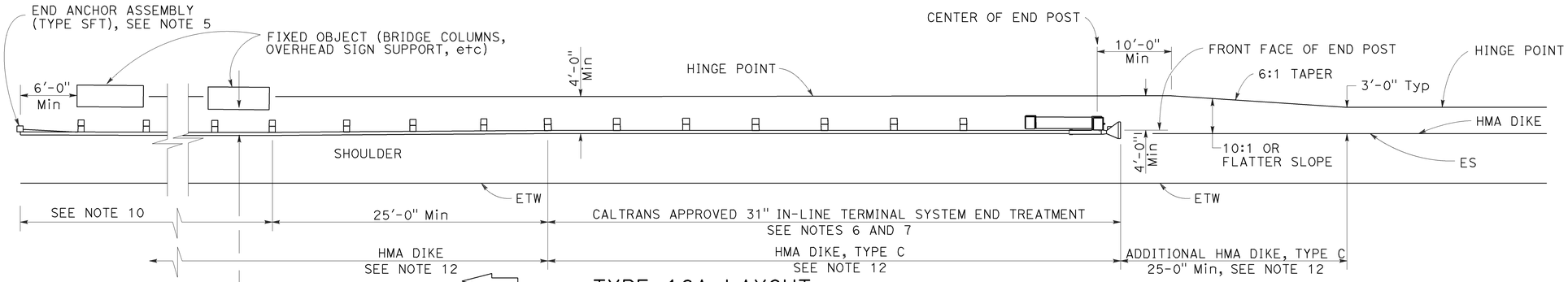

TYPE 16A LAYOUT

(MGS installation at roadside fixed object or objects with 31" in-line end treatment at traffic approach end of railing)
See Notes 11 and 12

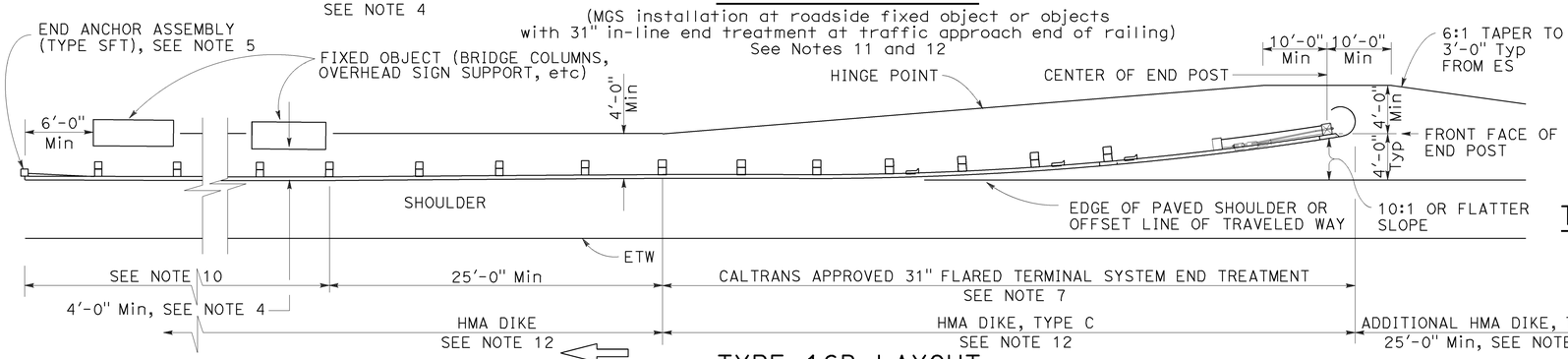

TYPE 16B LAYOUT

(MGS installation at roadside fixed object or objects with 31' flared end treatment at traffic approach end of railing)
See Notes 11 and 12

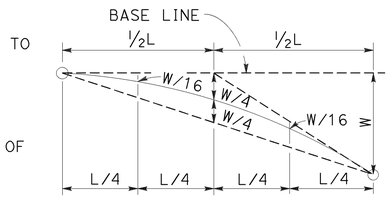

TYPIC AL PARABOLIC LAYOUT

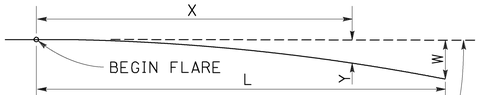

BASE LINE (EDGE OF PAVED SHOULDER OR OFFSET LINE OF EDGE OF TRAVELED WAY)

$$Y = \frac{WX^2}{L^2}$$

Y = OFFSET FROM BASE LINE
W = MAXIMUM OFFSET
X = DISTANCE ALONG BASE LINE
L = LENGTH OF FLARE

PARABOLIC FLARE OFFSETS

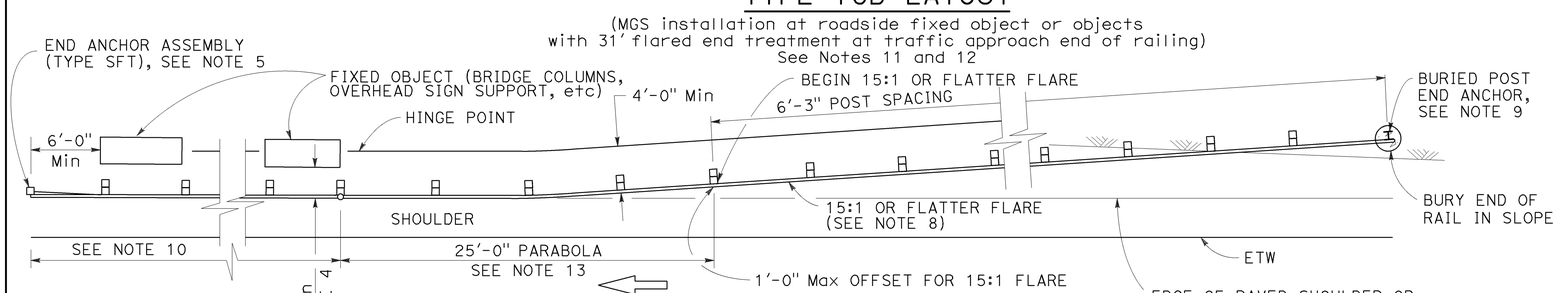

TYPE 16C LAYOUT

(MGS installation at roadside fixed object or objects with a buried end anchor treatment at traffic approach end of railing)
See Notes 11 and 12

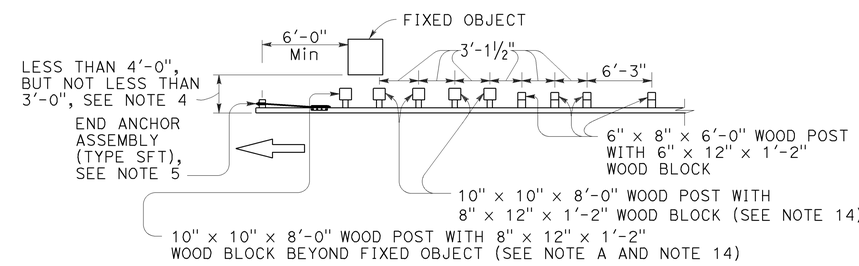

NOTE A: For a series of fixed objects (bridge columns, overhead sign supports, etc.) additional 10" x 10" x 8'-0" wood post with 8" x 12" x 1'-2" wood blocks at 3'-1½" center to center spacing are to be used between fixed objects.

STRENGTHENED MIDWEST GUARDRAIL SYSTEM SECTIONS FOR FIXED OBJECT

Use strengthened MGS sections with Types 16A, 16B or 16C layouts where minimum clearance between the face of the railing and fixed object(s) is less than 4'-0", but not less than 3'-0". See Note 4

NOTES:

1. Line post, blocks and hardware to be used are shown on Revised Standard Plans RSP A77L1, RSP A77L2, RSP A77M1, RSP A77N1 and RSP A77N2.
2. MGS post spacing to be 6'-3" center to center, except as otherwise noted.
3. Except as noted, line posts are 6" x 8" x 6'-0" wood with 6" x 12" x 1'-2" wood blocks. W6 x 8.5 or W6 x 9 steel posts, 6'-0" in length, with 6" x 12" x 1'-2" notched wood blocks or notched recycled plastic blocks may be used for 6" x 8" x 6'-0" wood line posts with 6" x 12" x 1'-2" wood blocks where applicable and when specified.
4. A 4'-0" minimum clearance is required between the face of the railing and the face of a fixed object located directly behind MGS sections with post spacing of 6'-3". Construct MGS as shown in the detail "Strengthened Midwest Guardrail System Sections for Fixed Object" on this plan, where the clearance between the face of the railing and the face of a fixed object is less than 4'-0", but not less than 3'-0". Where the clearance is less than 3'-0", a concrete wall or barrier should be constructed to shield the fixed object(s).
5. For End Anchor Assembly (Type SFT) details, see Revised Standard Plan RSP A77S1.
6. 31" in-line terminal system end treatments are used where site conditions will not accommodate a 31" flared end treatment.
7. The type of 31" terminal system to be used will be shown on the Project Plans.
8. The 15:1 or flatter flare used with Type 16C Layout is based on the edge of the paved shoulder or offset line of edge of the traveled way. The length of MGS within the 15:1 or flatter flare is based on site conditions and should be a length equal to multiples of 12'-6".
9. For details of the Buried Post End Anchor used with Type 16C Layout, see Revised Standard Plan RSP A77T2.
10. As site conditions dictate, construct additional MGS to shield fixed object(s). Additional MGS length equal to multiples of 12'-6". Post spacing at 6'-3" except as specified in Note 4.
11. Layout Types 16A, 16B or 16C are typically used where MGS is recommended to shield roadside fixed object(s) and a crashworthy 31" end treatment is required for only one direction of traffic.
12. Where placement of dike is required with MGS, see Revised Standard Plan RSP A77N4 for dike positioning details.
13. For typical flare offsets for 25'-0" length parabola with maximum offset of 1'-0", see Revised Standard Plan RSP A77P1.
14. W6 x 15 steel post, 8'-0" in length, with 8" x 12" x 1'-2" notched wood block or notched recycled plastic blocks may be used in place of the 10" x 10" x 8'-0" wood post with 8" x 12" x 1'-2" wood block shown in the detail "Strengthened Midwest Guardrail System Sections for Fixed Object".

STATE OF CALIFORNIA
DEPARTMENT OF TRANSPORTATION

MIDWEST GUARDRAIL SYSTEM TYPICAL LAYOUTS FOR ROADSIDE FIXED OBJECTS

NO SCALE

RSP A77R3 DATED JULY 19, 2013 SUPPLEMENTS THE STANDARD PLANS BOOK DATED 2010.

REVISED STANDARD PLAN RSP A77R3

2010 REVISED STANDARD PLAN RSP A77R3

6-20-13

Dist	COUNTY	ROUTE	POST MILES TOTAL PROJECT	SHEET No.	TOTAL SHEETS
03	Gle	5	R0.0/R20.0	55	77

Randell D. Hiatt
REGISTERED CIVIL ENGINEER

November 15, 2013
PLANS APPROVAL DATE

REGISTERED PROFESSIONAL ENGINEER
Randell D. Hiatt
No. C50200
Exp. 6-30-15
CIVIL
STATE OF CALIFORNIA

THE STATE OF CALIFORNIA OR ITS OFFICERS OR AGENTS SHALL NOT BE RESPONSIBLE FOR THE ACCURACY OR COMPLETENESS OF SCANNED COPIES OF THIS PLAN SHEET.

TO ACCOMPANY PLANS DATED 4-11-16

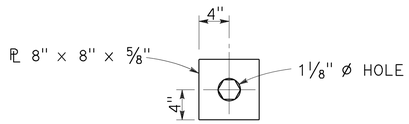

DETAIL "A"
CABLE CONNECTION
END PLATE

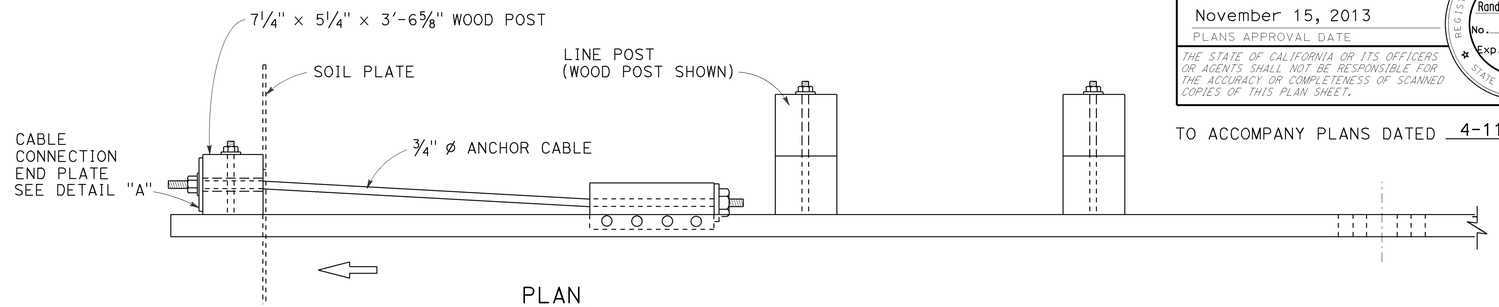

PLAN

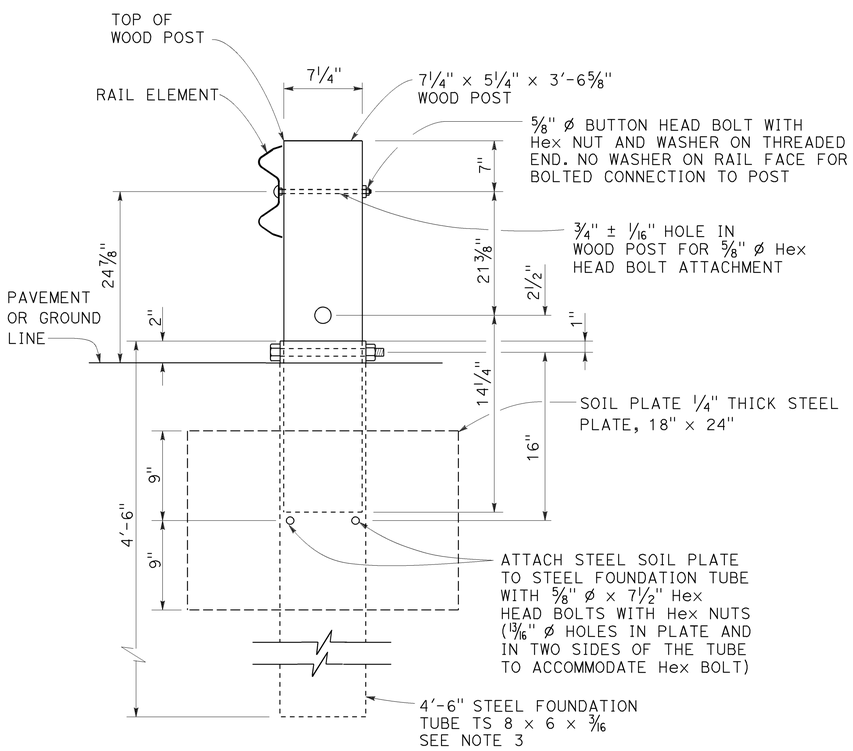

SECTION A-A

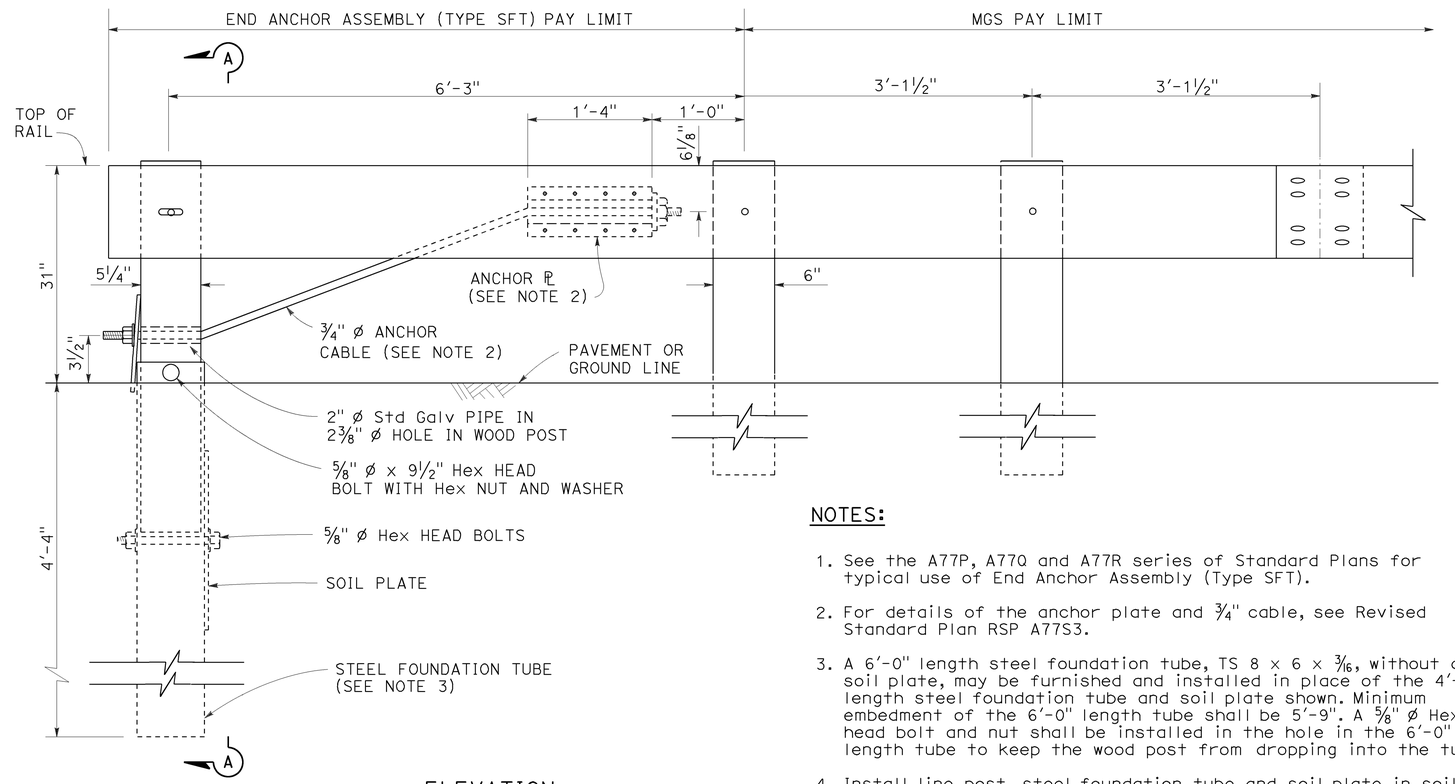

ELEVATION

END ANCHOR
ASSEMBLY (TYPE SFT)
See Note 1

NOTES:

1. See the A77P, A77Q and A77R series of Standard Plans for typical use of End Anchor Assembly (Type SFT).
2. For details of the anchor plate and 3/4" cable, see Revised Standard Plan RSP A77S3.
3. A 6'-0" length steel foundation tube, TS 8 × 6 × 3/16, without a soil plate, may be furnished and installed in place of the 4'-6" length steel foundation tube and soil plate shown. Minimum embedment of the 6'-0" length tube shall be 5'-9". A 5/8" ø Hex head bolt and nut shall be installed in the hole in the 6'-0" length tube to keep the wood post from dropping into the tube.
4. Install line post, steel foundation tube and soil plate in soil.

STATE OF CALIFORNIA
DEPARTMENT OF TRANSPORTATION

MIDWEST GUARDRAIL SYSTEM END ANCHOR ASSEMBLY (TYPE SFT)

NO SCALE

RSP A77S1 DATED NOVEMBER 15, 2013 SUPERSEDES RSP A77S1 DATED JULY 19, 2013 THAT SUPPLEMENTS THE STANDARD PLANS BOOK DATED 2010.

REVISED STANDARD PLAN RSP A77S1

2010 REVISED STANDARD PLAN RSP A77S1

10-4-13

Dist	COUNTY	ROUTE	POST MILES TOTAL PROJECT	SHEET No.	TOTAL SHEETS
03	Gle	5	R0.0/R20.0	56	77

Randell D. Hiatt
REGISTERED CIVIL ENGINEER

July 19, 2013
PLANS APPROVAL DATE

REGISTERED PROFESSIONAL ENGINEER
Randell D. Hiatt
No. C50200
Exp. 6-30-15
CIVIL
STATE OF CALIFORNIA

THE STATE OF CALIFORNIA OR ITS OFFICERS OR AGENTS SHALL NOT BE RESPONSIBLE FOR THE ACCURACY OR COMPLETENESS OF SCANNED COPIES OF THIS PLAN SHEET.

TO ACCOMPANY PLANS DATED 4-11-16

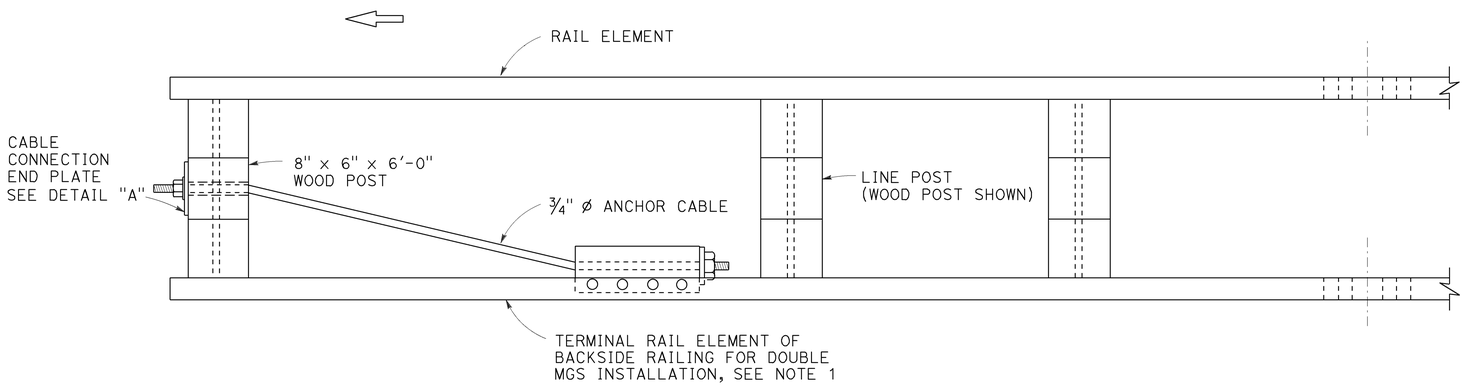

PLAN

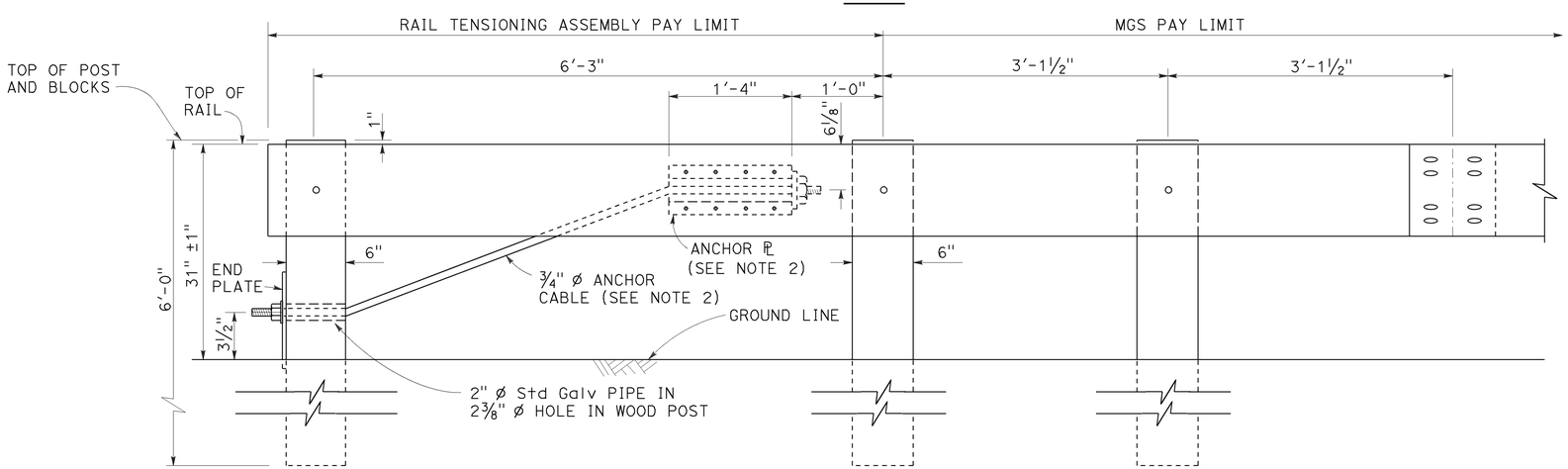

ELEVATION
RAIL TENSIONING ASSEMBLY
See Note 1

NOTES:

1. See Revised Standard Plans RSP A77Q3 and RSP A77R1 for typical use of rail tensioning assembly.
2. For details of the anchor plate and ¾" cable, see Revised Standard Plan RSP A77S3.

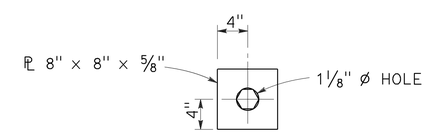

DETAIL "A"
CABLE CONNECTION END PLATE

STATE OF CALIFORNIA
DEPARTMENT OF TRANSPORTATION

MIDWEST GUARDRAIL SYSTEM
RAIL TENSIONING ASSEMBLY

NO SCALE

RSP A77S2 DATED JULY 19, 2013 SUPPLEMENTS THE STANDARD PLANS BOOK DATED 2010.

REVISED STANDARD PLAN RSP A77S2

2010 REVISED STANDARD PLAN RSP A77S2

7-3-13

Dist	COUNTY	ROUTE	POST MILES TOTAL PROJECT	SHEET No.	TOTAL SHEETS
03	Gle	5	R0.0/R20.0	57	77

Randell D. Hiatt
REGISTERED CIVIL ENGINEER

November 15, 2013
PLANS APPROVAL DATE

REGISTERED PROFESSIONAL ENGINEER
Randell D. Hiatt
No. C50200
Exp. 6-30-15
CIVIL
STATE OF CALIFORNIA

THE STATE OF CALIFORNIA OR ITS OFFICERS OR AGENTS SHALL NOT BE RESPONSIBLE FOR THE ACCURACY OR COMPLETENESS OF SCANNED COPIES OF THIS PLAN SHEET.

TO ACCOMPANY PLANS DATED 4-11-16

2010 REVISED STANDARD PLAN RSP A77S3

NOTE:

See Revised Standard Plans RSP A77S1, RSP A77S2 and RSP A77T1 for typical use of anchor cable and anchor plate.

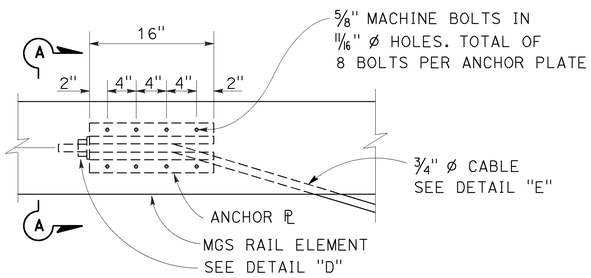

ANCHOR PLATE DETAIL
(MGS shown, TBB similar)

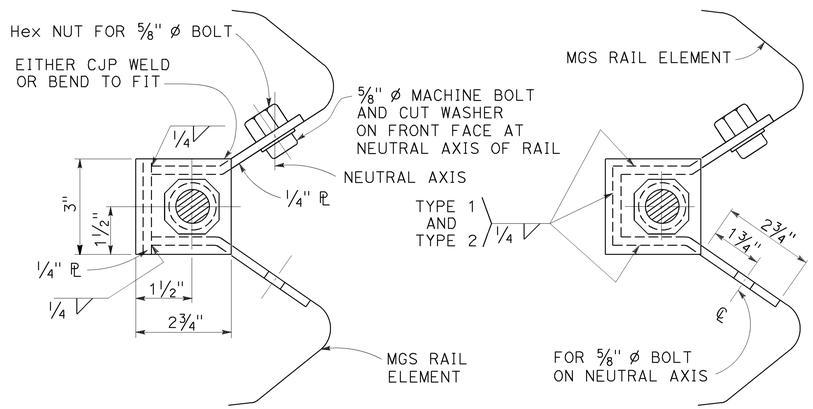

NOTE:
Dimensioning applies to both types.

SECTION A-A
(ALTERNATIVE TYPE 1)

SECTION A-A
(ALTERNATIVE TYPE 2)

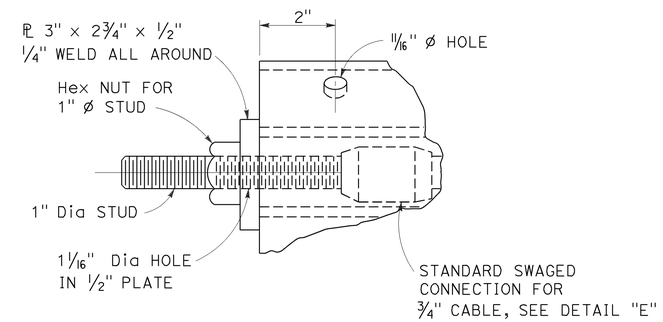

DETAIL "D"

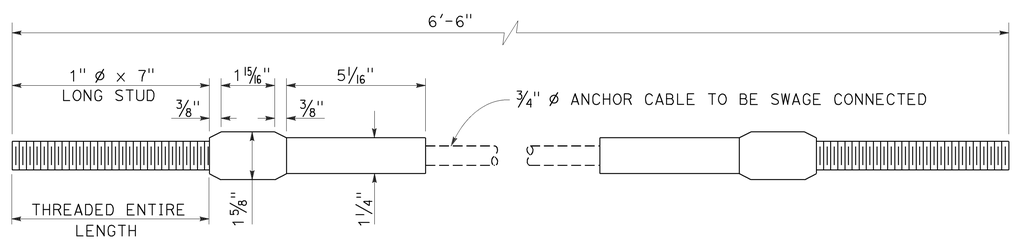

ANCHOR CABLE WITH
SWAGED FITTING AND STUD
DETAIL "E"

STATE OF CALIFORNIA
DEPARTMENT OF TRANSPORTATION

METAL RAILING ANCHOR CABLE AND ANCHOR PLATE DETAILS

NO SCALE

RSP A77S3 DATED NOVEMBER 15, 2013 SUPERSEDES RSP A77S3 DATED JULY 19, 2013 THAT SUPPLEMENTS THE STANDARD PLANS BOOK DATED 2010.

REVISED STANDARD PLAN RSP A77S3

10-4-13

Dist	COUNTY	ROUTE	POST MILES TOTAL PROJECT	SHEET No.	TOTAL SHEETS
03	Gle	5	R0.0/R20.0	58	77

Randell D. Hiatt
REGISTERED CIVIL ENGINEER

July 19, 2013
PLANS APPROVAL DATE

REGISTERED PROFESSIONAL ENGINEER
Randell D. Hiatt
No. C50200
Exp. 6-30-15
CIVIL
STATE OF CALIFORNIA

THE STATE OF CALIFORNIA OR ITS OFFICERS OR AGENTS SHALL NOT BE RESPONSIBLE FOR THE ACCURACY OR COMPLETENESS OF SCANNED COPIES OF THIS PLAN SHEET.

TO ACCOMPANY PLANS DATED 4-11-16

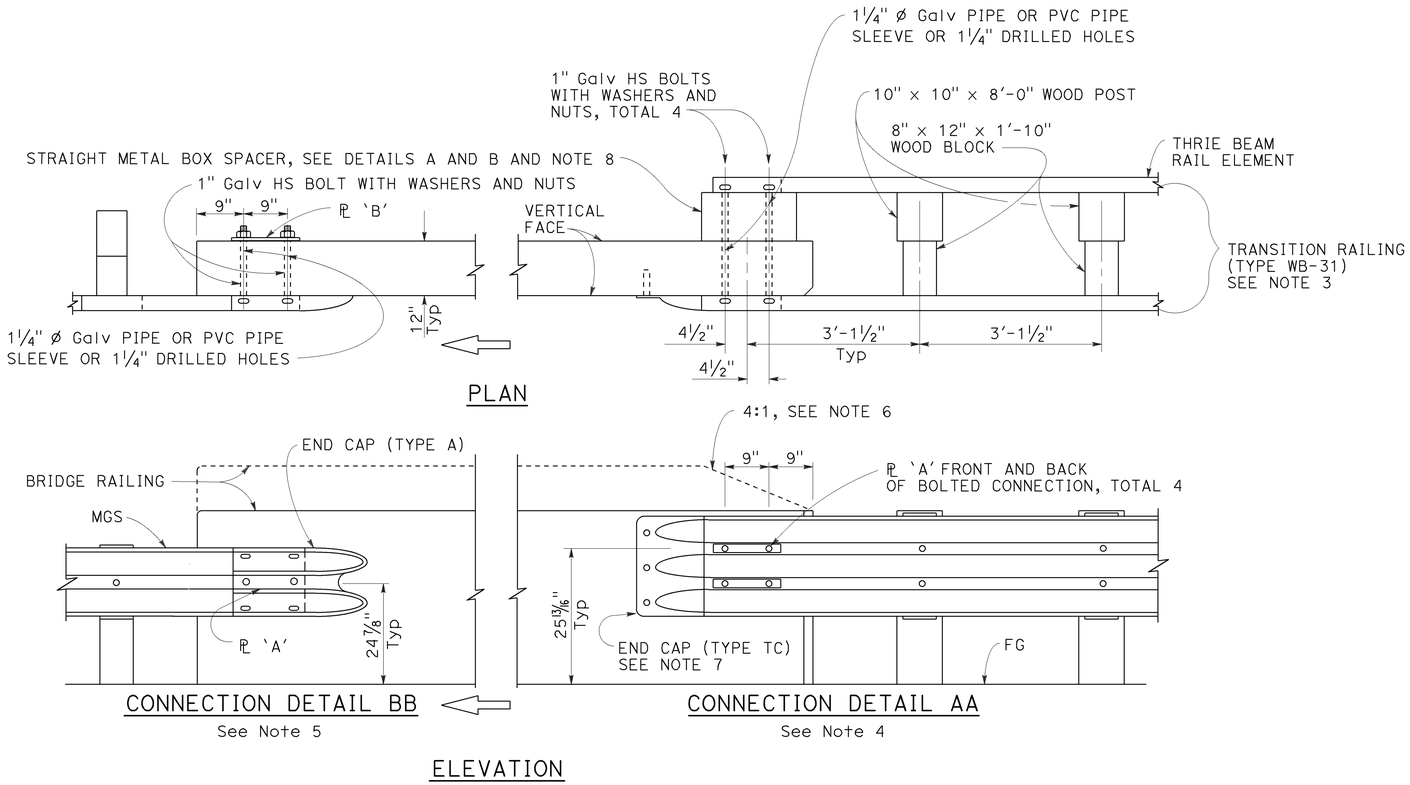

MIDWEST GUARDRAIL SYSTEM CONNECTION TO BRIDGE RAILING WITHOUT SIDEWALK

NOTES:

1. See Revised Standard Plan RSP A77U2 for additional connection details to bridges without sidewalks.
2. Additional details of posts, blocks and hardware are shown on Revised Standard Plans RSP A77M1, RSP A77N1 and RSP A77N2.
3. For additional details of Transition Railing (Type WB-31), see Revised Standard Plan RSP A77U4. Transition Railing (Type WB-31) transitions the 12 gauge MGS railing section to a heavier gage nested thrie beam railing section which is connected to the concrete bridge railing.
4. For typical use of Connection Detail AA, see Layout Types 12A and 12B on Revised Standard Plan RSP A77Q1, Layout Types 12C and 12D on Revised Standard Plan RSP A77Q2, and Layout Type 12E on Revised Standard Plan RSP A77Q3.
5. For typical use of Connection Detail BB, see Layout Type 12D (structure departure railing connection) on Revised Standard Plan RSP A77Q2 and Layout Type 12DD on Revised Standard Plan RSP A77Q5.
6. Where the height of the bridge railing exceeds the height of the thrie beam railing by more than 1" at Connection Detail AA, taper the top of the end of the bridge railing at 4:1 to match the top elevation of the thrie beam rail.
7. For details of End Cap (Type TC), see Revised Standard Plan RSP A77U4.
8. See Revised Standard Plan RSP A77U4 for additional details regarding depth dimension for straight metal box spacer.

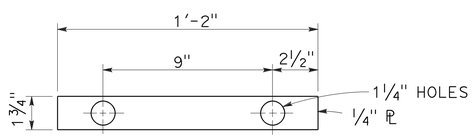

PLATE 'A'

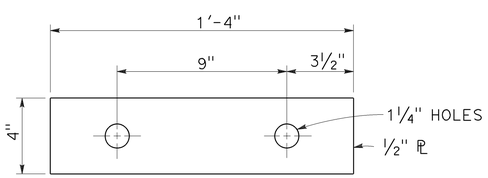

PLATE 'B'
(For backside of connection BB)

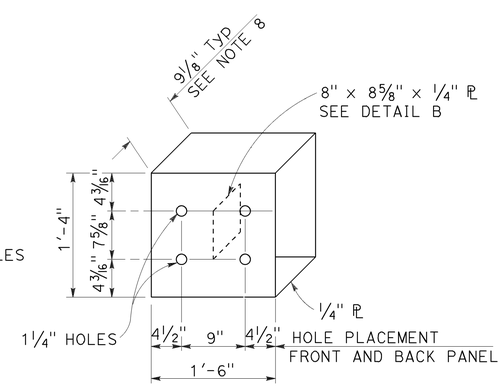

DETAIL A

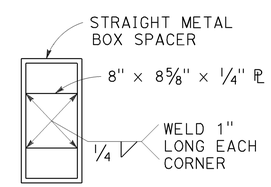

DETAIL B

STRAIGHT METAL BOX SPACER

STATE OF CALIFORNIA
DEPARTMENT OF TRANSPORTATION

MIDWEST GUARDRAIL SYSTEM CONNECTIONS TO BRIDGE RAILINGS WITHOUT SIDEWALKS DETAILS No. 1

NO SCALE

RSP A77U1 DATED JULY 19, 2013 SUPPLEMENTS THE STANDARD PLANS BOOK DATED 2010.

REVISED STANDARD PLAN RSP A77U1

2010 REVISED STANDARD PLAN RSP A77U1

7-8-13

Dist	COUNTY	ROUTE	POST MILES TOTAL PROJECT	SHEET No.	TOTAL SHEETS
03	Gle	5	R0.0/R20.0	59	77

Randell D. Hiatt
REGISTERED CIVIL ENGINEER

July 19, 2013
PLANS APPROVAL DATE

REGISTERED PROFESSIONAL ENGINEER
Randell D. Hiatt
No. C50200
Exp. 6-30-15
CIVIL
STATE OF CALIFORNIA

THE STATE OF CALIFORNIA OR ITS OFFICERS OR AGENTS SHALL NOT BE RESPONSIBLE FOR THE ACCURACY OR COMPLETENESS OF SCANNED COPIES OF THIS PLAN SHEET.

TO ACCOMPANY PLANS DATED 4-11-16

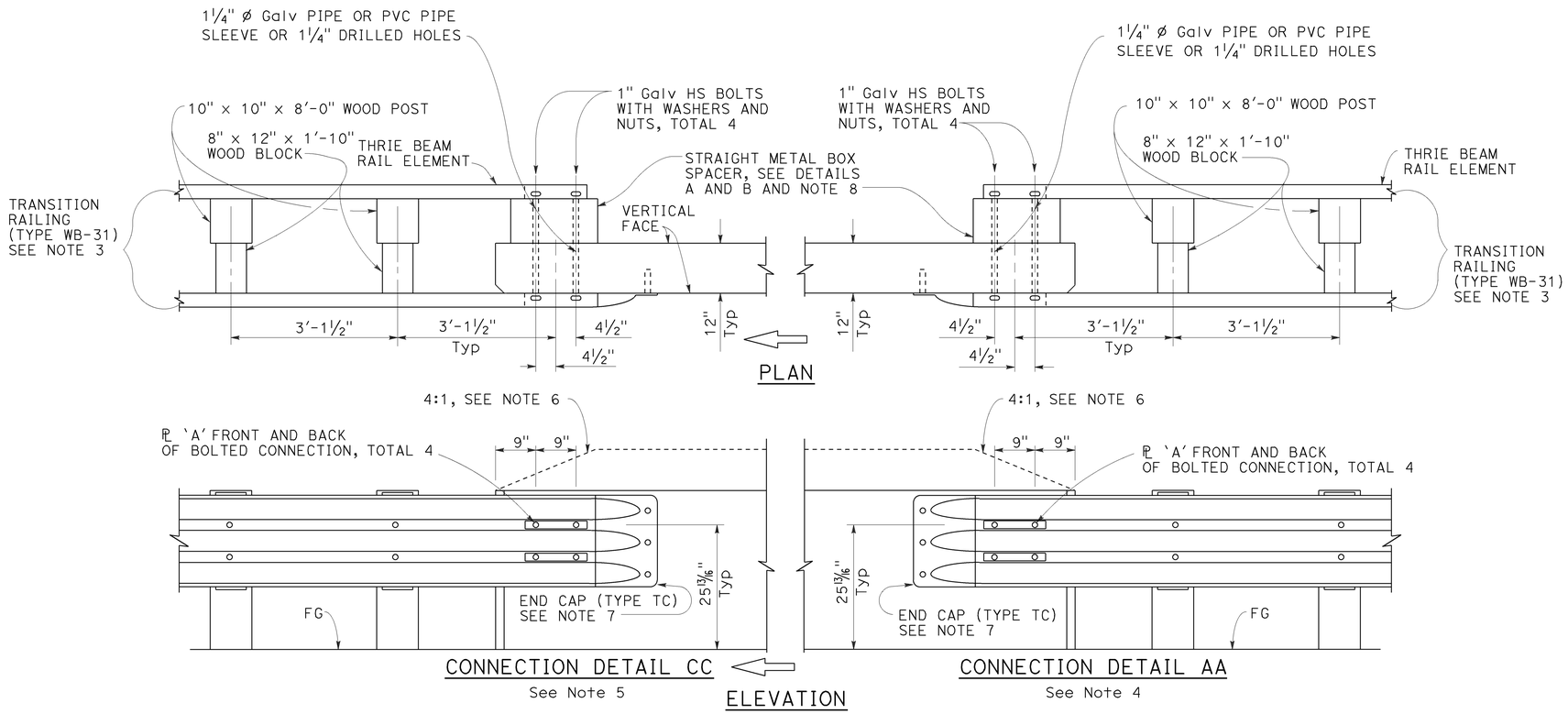

MIDWEST GUARDRAIL SYSTEM CONNECTION TO BRIDGE RAILING WITHOUT SIDEWALK

NOTES:

1. See Revised Standard Plan RSP A77U1 for additional connection details to bridges without sidewalks.
2. Additional details of posts, blocks and hardware are shown on Revised Standard Plans RSP A77M1, RSP A77N1 and RSP A77N2.
3. For additional details of Transition Railing (Type WB-31), see Revised Standard Plan RSP A77U4. Transition Railing (Type WB-31) transitions the 12 gauge MGS railing section to a heavier gage nested thrie beam railing section which is connected to the concrete bridge railing.
4. For typical use of Connection Detail AA, see Layout Types 12A and 12B on Revised Standard Plan RSP A77Q1, Layout Types 12C and 12D on Revised Standard Plan RSP A77Q2, and Layout Type 12E on Revised Standard Plan RSP A77Q3.
5. For typical use of Connection Detail CC, see Layout Types 12AA and 12BB on Revised Standard Plan RSP A77Q4 and Layout Type 12CC on Revised Standard Plan RSP A77Q5.
6. Where the height of the bridge railing exceeds the height of the thrie beam railing by more than 1" at Connection Detail AA and connection Detail CC, taper the top of the end of the bridge railing at 4:1 to match the top elevation of the thrie beam railing.
7. For details of End Cap (Type TC), see Revised Standard Plan RSP A77U4.
8. See Revised Standard Plan RSP A77U4 for additional details regarding depth dimension for straight metal box spacer.

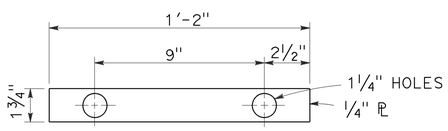

PLATE 'A'

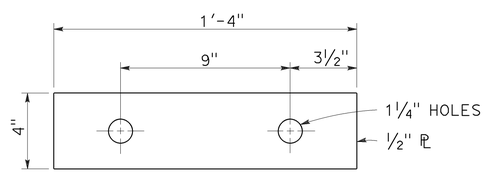

PLATE 'B'
(For backside of connection BB)

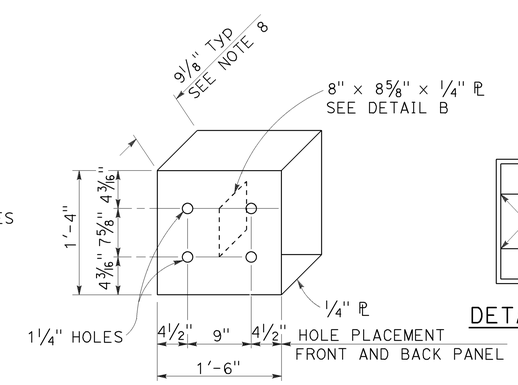

DETAIL A

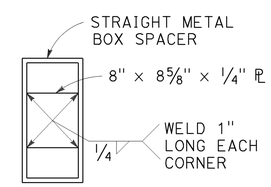

DETAIL B

STRAIGHT METAL BOX SPACER

STATE OF CALIFORNIA
DEPARTMENT OF TRANSPORTATION

MIDWEST GUARDRAIL SYSTEM CONNECTIONS TO BRIDGE RAILINGS WITHOUT SIDEWALKS DETAILS No. 2

NO SCALE

RSP A77U2 DATED JULY 19, 2013 SUPPLEMENTS THE STANDARD PLANS BOOK DATED 2010.

REVISED STANDARD PLAN RSP A77U2

2010 REVISED STANDARD PLAN RSP A77U2

6-20-13

Dist	COUNTY	ROUTE	POST MILES TOTAL PROJECT	SHEET No.	TOTAL SHEETS
03	Gle	5	R0.0/R20.0	60	77

Randell D. Hiatt
REGISTERED CIVIL ENGINEER

January 23, 2015
PLANS APPROVAL DATE

REGISTERED PROFESSIONAL ENGINEER Randell D. Hiatt No. C50200 Exp. 6-30-15 CIVIL STATE OF CALIFORNIA

THE STATE OF CALIFORNIA OR ITS OFFICERS OR AGENTS SHALL NOT BE RESPONSIBLE FOR THE ACCURACY OR COMPLETENESS OF SCANNED COPIES OF THIS PLAN SHEET.

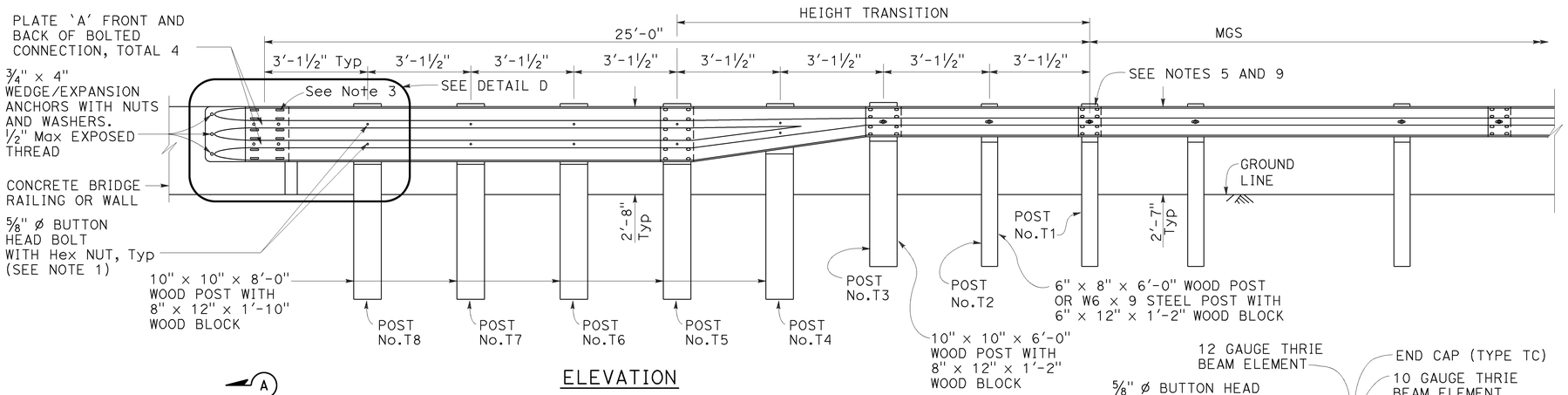

ELEVATION

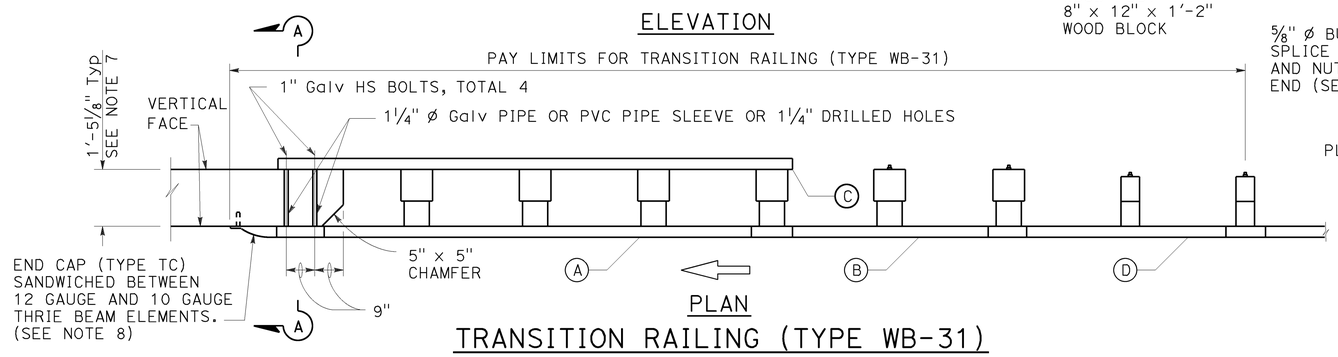

PLAN

TRANSITION RAILING (TYPE WB-31)

(No Blockout Attachment)

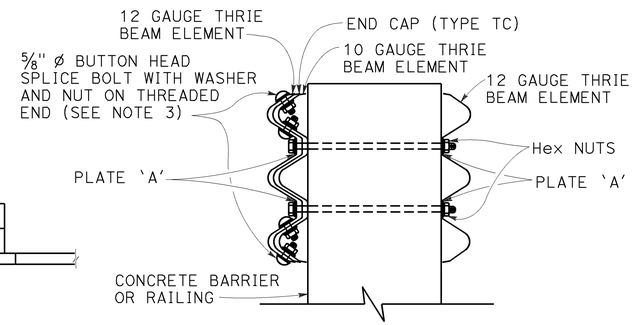

SECTION A-A

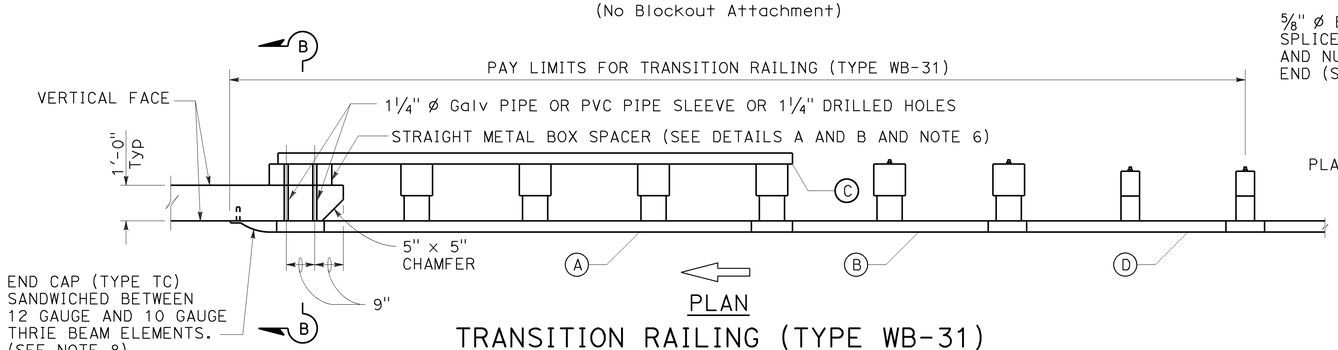

PLAN

TRANSITION RAILING (TYPE WB-31)

(Blockout Attachment)

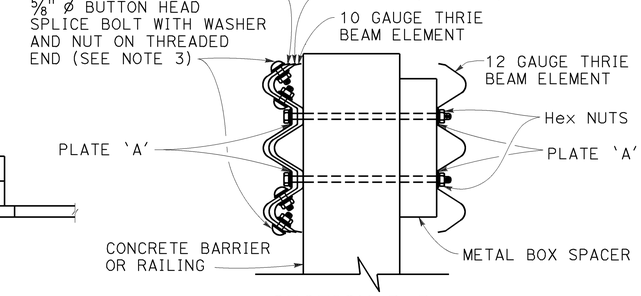

SECTION B-B

LEGEND:

- (A) NESTED THRIE BEAM ELEMENTS (ONE 12 GAUGE ELEMENT NESTED OVER ONE 10 GAUGE ELEMENT).
- (B) ONE ASYMMETRICAL 10 GAUGE "W" BEAM TO THRIE BEAM ELEMENT.
- (C) ONE 12 GAUGE THRIE BEAM ELEMENT.
- (D) ONE 10 GAUGE "W" BEAM RAIL ELEMENT (7'-3 1/2"LENGTH)

10 GAUGE = 0.138" THICK
12 GAUGE = 0.108" THICK

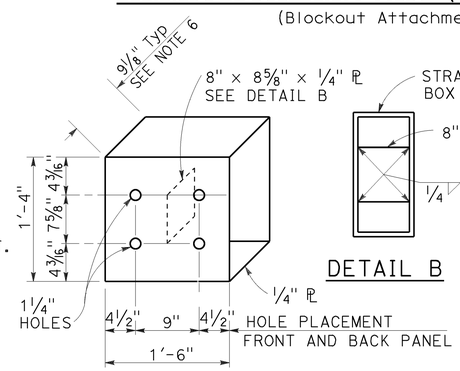

DETAIL A

STRAIGHT METAL BOX SPACER

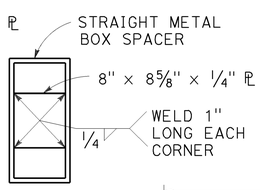

DETAIL B

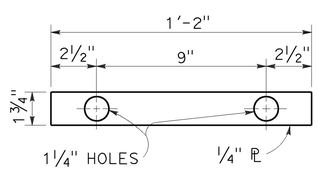

DETAIL C

PLATE 'A'

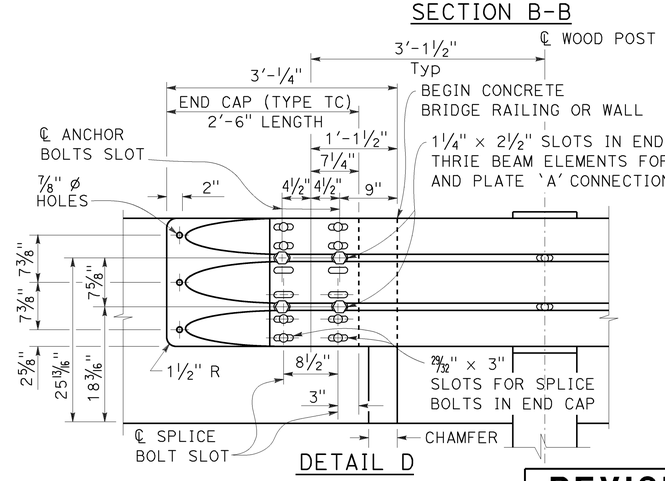

DETAIL D

NOTES:

TO ACCOMPANY PLANS DATED 4-11-16

1. Use 5/8" ø Button head bolts and hex nuts for connections to posts. No washer on rail face for bolted connections to post.
2. The nested rail elements, end cap, and 'W' beam to thrie beam element may be spliced together prior to bolting the elements to the wood post and concrete barrier or railing.
3. Exterior splice bolt holes for rail element splices at Post No. T5 and the connection to the concrete barrier or railing shall be the standard 29/32" x 1 1/8" slot size. Interior splice bolt holes at these locations may be increased up to 1 1/4" ø. Only the top 4 and the bottom 4 splice bolts with washers and nuts are required for rail splices at Post No. T5 and the connection to the concrete barrier or railing.
4. The top elevation of Posts No. T2 through No. T7 shall not project more than 1" above the top elevation of the rail element.
5. Typically, the railing connected to Transition Railing (Type WB-31) will be either standard railing section of MGS with height transition ratio of 150:1 or a Caltrans approved 31" end treatment attached to Post No. T1.
6. The depth of the metal box spacer varies from the 9 1/8" to 1 1/2" and is dependent on the width of the concrete railing or wall. The combined dimension for the depth of the metal box spacer plus the width of railing or wall is typically 21 1/8". Where the space between the backside of the concrete railing or wall and the rear thrie beam element is less than 1 1/2", metal plates similar to Plate 'A' are to be used as spacers.
7. Where the width of the concrete railing or wall is greater than 17 1/8", wood blocks are to be used to fill the space created between the backside of Posts No. T5 through No. T8 and the rear thrie beam element. These wood blocks shall be 8" in width and 1'-2" in length. The dimension between the front thrie beam element and the rear thrie beam element is to match the width of the concrete railing or wall.
8. End cap may be installed over 12 gauge and 10 gauge thrie beam elements where transition railing is installed on the departure end of bridge railing.
9. Conform standard railing section height to 31" at Post No. T1 using height transition ratio of 150:1.

STATE OF CALIFORNIA
DEPARTMENT OF TRANSPORTATION

MIDWEST GUARDRAIL SYSTEM TRANSITION RAILING (TYPE WB-31)

NO SCALE

RSP A77U4 DATED JANUARY 23, 2015 SUPERSEDES RSP A77U4 DATED NOVEMBER 15, 2013 AND RSP A77U4 DATED JULY 19, 2013 THAT SUPPLEMENTS THE STANDARD PLANS BOOK DATED 2010.

REVISED STANDARD PLAN RSP A77U4

2010 REVISED STANDARD PLAN RSP A77U4

1-8-15

Dist	COUNTY	ROUTE	POST MILES TOTAL PROJECT	SHEET No.	TOTAL SHEETS
03	Gle	5	R0.0/R20.0	61	77

Randell D. Hiatt
REGISTERED CIVIL ENGINEER

July 19, 2013
PLANS APPROVAL DATE

REGISTERED PROFESSIONAL ENGINEER
Randell D. Hiatt
No. C50200
Exp. 6-30-15
CIVIL
STATE OF CALIFORNIA

THE STATE OF CALIFORNIA OR ITS OFFICERS OR AGENTS SHALL NOT BE RESPONSIBLE FOR THE ACCURACY OR COMPLETENESS OF SCANNED COPIES OF THIS PLAN SHEET.

TO ACCOMPANY PLANS DATED 4-11-16

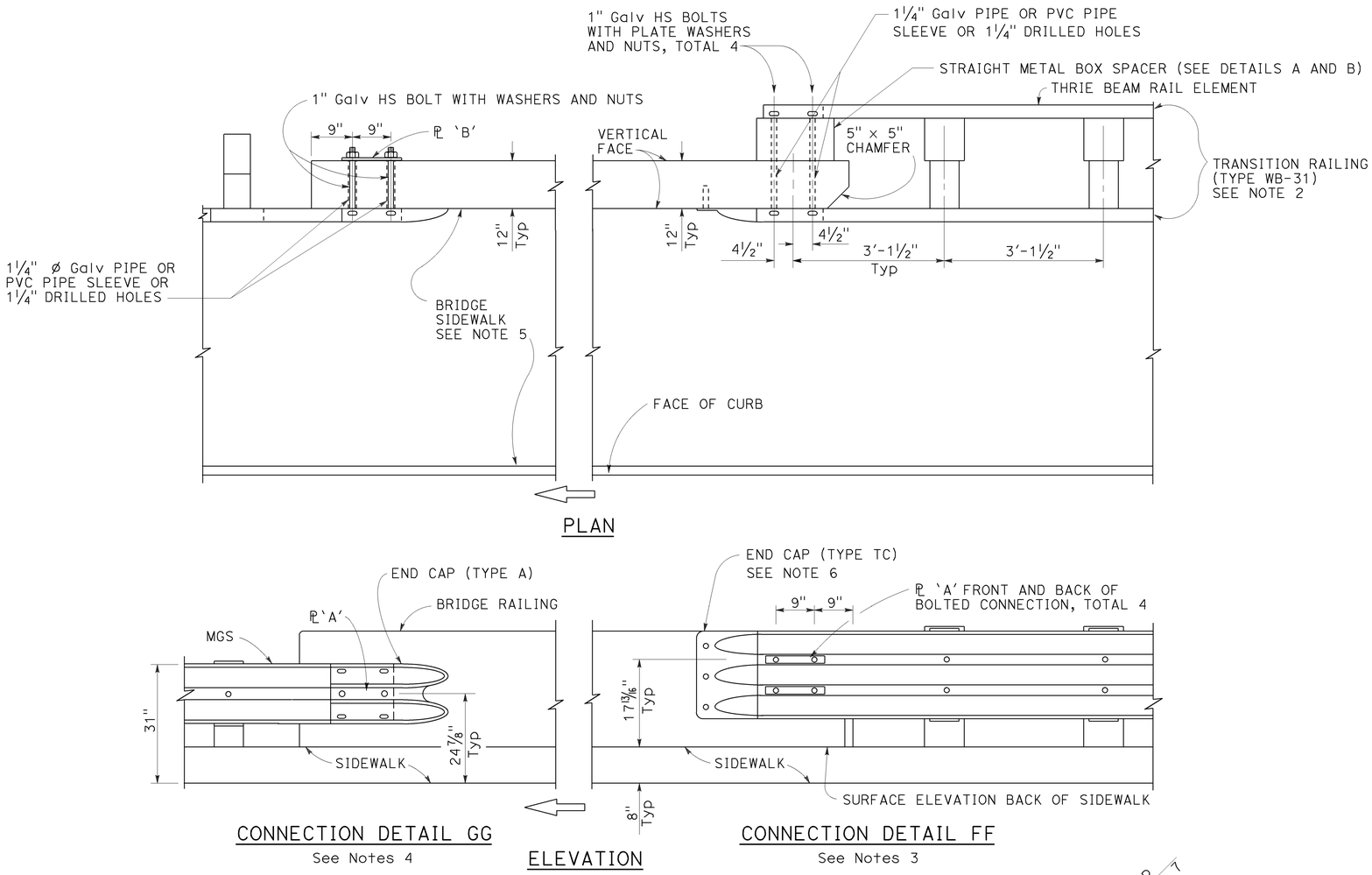

MIDWEST GUARDRAIL SYSTEM CONNECTION TO BRIDGE RAILING WITH SIDEWALKS

NOTES:

1. See Revised Standard Plan RSP A77V2 for additional connection details to bridges with sidewalks.
2. For additional details of Transition Railing (Type WB-31), see Revised Standard Plan RSP A77U4. Transition Railing (Type WB-31) transitions the 12 gauge MGS railing section to a heavier gage nested thrie beam railing section which is connected to the concrete bridge railing.
3. For typical use of Connection Detail FF, see Layout Types 12A and 12B on Revised Standard Plan RSP A77Q1.
4. For typical use of Connection Detail GG, see Layout Type 12D on Revised Standard Plan RSP A77Q2 and Layout Type 12DD on Revised Standard Plan RSP A77Q5.
5. Where the bridge sidewalk is not continued beyond the end of the bridge railing, the portion of the sidewalk beyond each end of the bridge railing shall be transitioned down from the top elevation of the sidewalk, for its entire width, to the finished grade of the adjacent roadbed. The longitudinal slope of each sidewalk elevation transition shall not exceed 8.33 percent.
6. For details of End Cap (Type TC), see Revised Standard Plan RSP A77U4.
7. See Revised Standard Plan RSP A77U4 for additional details regarding depth dimension for straight metal box spacer.

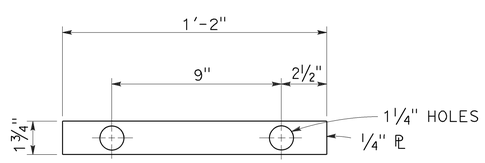

PLATE 'A'

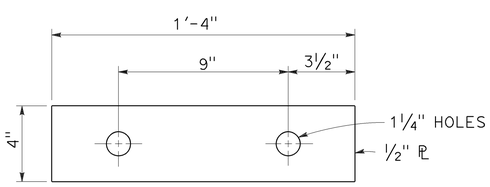

PLATE 'B'
(For backside of connection SB)

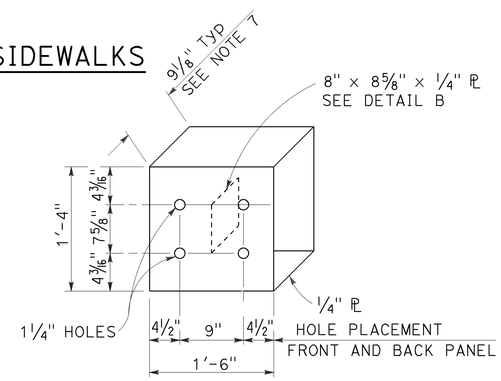

DETAIL A

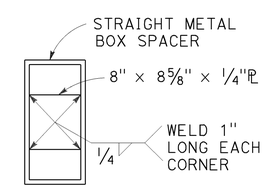

DETAIL B

STRAIGHT METAL BOX SPACER

STATE OF CALIFORNIA
DEPARTMENT OF TRANSPORTATION

MIDWEST GUARDRAIL SYSTEM CONNECTIONS TO BRIDGE RAILINGS WITH SIDEWALKS DETAILS No. 1

NO SCALE

RSP A77V1 DATED JULY 19, 2013 SUPPLEMENTS THE STANDARD PLANS BOOK DATED 2010.

REVISED STANDARD PLAN RSP A77V1

2010 REVISED STANDARD PLAN RSP A77V1

7-8-13

Dist	COUNTY	ROUTE	POST MILES TOTAL PROJECT	SHEET No.	TOTAL SHEETS
03	Gle	5	R0.0/R20.0	62	77

Randell D. Hiatt
REGISTERED CIVIL ENGINEER

July 19, 2013
PLANS APPROVAL DATE

REGISTERED PROFESSIONAL ENGINEER
Randell D. Hiatt
No. C50200
Exp. 6-30-15
CIVIL
STATE OF CALIFORNIA

THE STATE OF CALIFORNIA OR ITS OFFICERS OR AGENTS SHALL NOT BE RESPONSIBLE FOR THE ACCURACY OR COMPLETENESS OF SCANNED COPIES OF THIS PLAN SHEET.

TO ACCOMPANY PLANS DATED 4-11-16

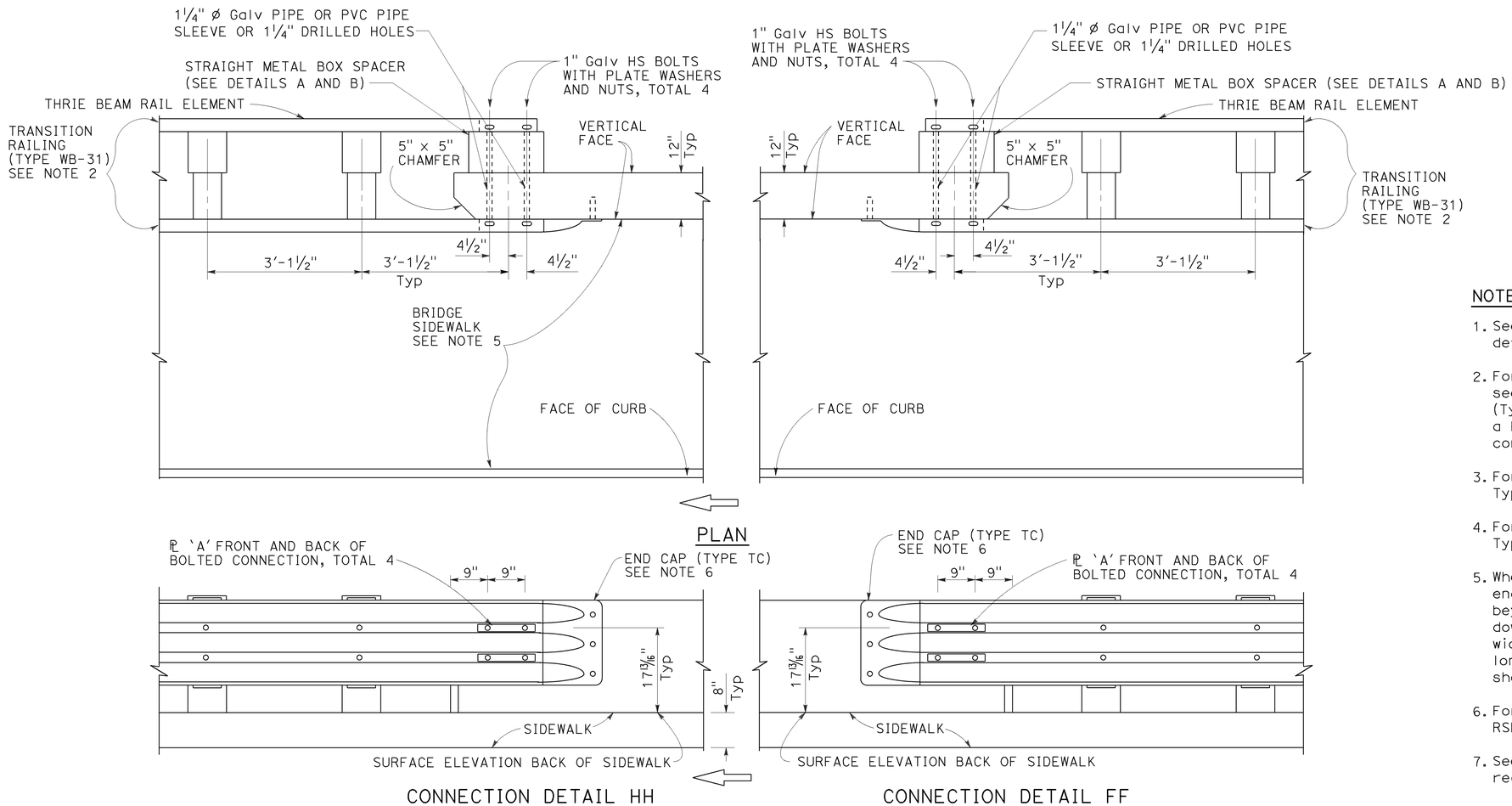

MIDWEST GUARDRAIL SYSTEM CONNECTION TO BRIDGE RAILING WITH SIDEWALKS

NOTES:

1. See Revised Standard Plan RSP A77V1 for additional connection details to bridges with sidewalks.
2. For additional details of Transition Railing (Type WB-31), see Revised Standard Plan RSP A77U4. Transition Railing (Type WB-31) transitions the 12 gauge MGS railing section to a heavier gage nested thrie beam railing section which is connected to the concrete bridge railing.
3. For typical use of Connection Detail FF, see Layout Types 12A and 12B on Revised Standard Plan RSP A77Q1.
4. For typical use of Connection Detail HH, see Layout Types 12AA and 12BB on Revised Standard Plan RSP A77Q4.
5. Where the bridge sidewalk is not continued beyond the end of the bridge railing, the portion of the sidewalk beyond each end of the bridge railing shall be transitioned down from the top elevation of the sidewalk, for its entire width, to the finished grade of the adjacent roadbed. The longitudinal slope of each sidewalk elevation transition shall not exceed 8.33 percent.
6. For details of End Cap (Type TC), see Revised Standard Plan RSP A77U4.
7. See Revised Standard Plan RSP A77U4 for additional details regarding depth dimension for straight metal box spacer.

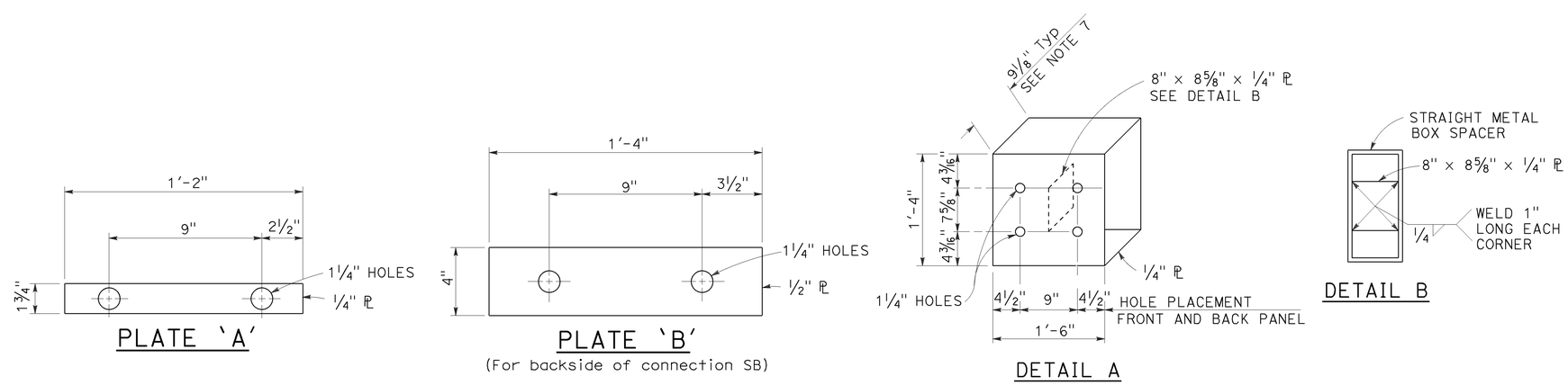

STRAIGHT METAL BOX SPACER

STATE OF CALIFORNIA
DEPARTMENT OF TRANSPORTATION

MIDWEST GUARDRAIL SYSTEM CONNECTIONS TO BRIDGE RAILINGS WITH SIDEWALKS DETAILS No. 2

NO SCALE

RSP A77V2 DATED JULY 19, 2013 SUPPLEMENTS THE STANDARD PLANS BOOK DATED 2010.

REVISED STANDARD PLAN RSP A77V2

2010 REVISED STANDARD PLAN RSP A77V2

6-20-13

Dist	COUNTY	ROUTE	POST MILES TOTAL PROJECT	SHEET No.	TOTAL SHEETS
03	Gle	5	R0.0/R20.0	63	77

REGISTERED CIVIL ENGINEER

July 19, 2013
PLANS APPROVAL DATE

REGISTERED PROFESSIONAL ENGINEER Michael Janzen No. 44788 Exp. 03-31-14 CIVIL STATE OF CALIFORNIA

THE STATE OF CALIFORNIA OR ITS OFFICERS OR AGENTS SHALL NOT BE RESPONSIBLE FOR THE ACCURACY OR COMPLETENESS OF SCANNED COPIES OF THIS PLAN SHEET.

TO ACCOMPANY PLANS DATED 4-11-16

2010 REVISED STANDARD PLAN RSP A87A

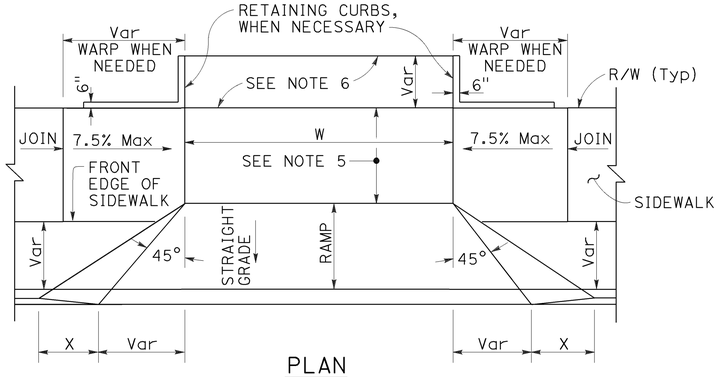

PLAN

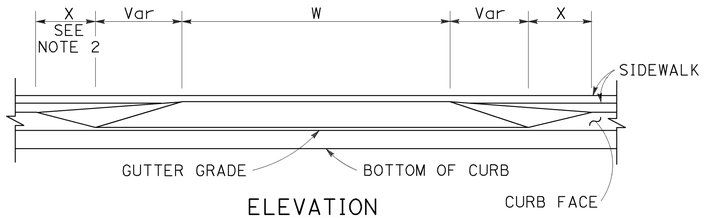

ELEVATION

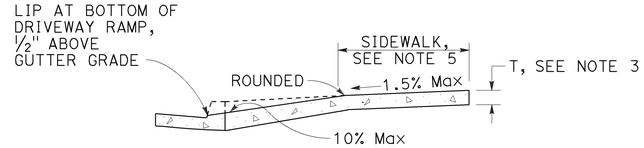

CASE A

Typical driveway, sidewalk not depressed

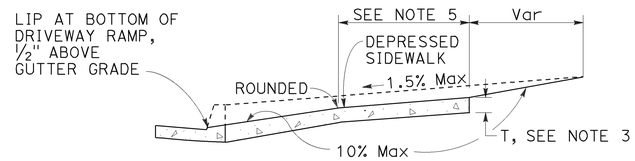

CASE B

Driveway with depressed sidewalk

SECTIONS

DRIVEWAYS

TABLE A

CURB TYPE	DIMENSIONS			
	"H1"	"H2"	"W1"	"W2"
A1-6	1'-2"	6"	7½"	1½"
A1-8	1'-4"	8"	8"	2"
A2-6	1'-0"	6"	2'-7½"	1½"
A2-8	1'-2"	8"	2'-8"	2"
A3-6	6"	5"	7¼"	1¼"
A3-8	8"	7"	7¾"	1¾"
B1-4	1'-0"	4"	7½"	2½"
B1-6	1'-2"	6"	9"	4"
B2-4	10"	4"	2'-7½"	2½"
B2-6	1'-0"	6"	2'-9"	4"
B3-4	4"	3"	7"	2"
B3-6	6"	5"	8½"	3½"
D-4	10"	4"	1'-6"	1'-1"
D-6	1'-0"	6"	2'-2"	1'-9"

CURB QUANTITIES

TYPE	CUBIC YARDS PER LINEAR FOOT
A1-6	0.02585
A1-8	0.03084
A2-6	0.05903
A2-8	0.06379
A3-6	0.01036
A3-8	0.01435
B1-4	0.02185
B1-6	0.02930
B2-4	0.05515
B2-6	0.06171
B3-4	0.00641
B3-6	0.01074
B4	0.05709
D-4	0.04083
D-6	0.06804
E	0.06661

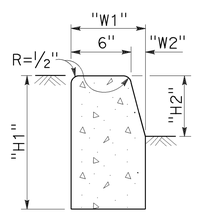

TYPE A1 CURBS

See Table A

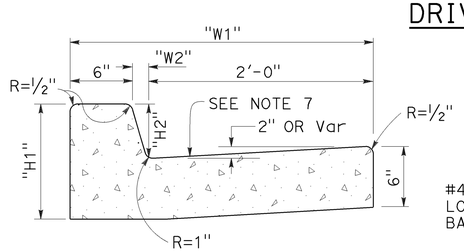

TYPE A2 CURBS

See Table A

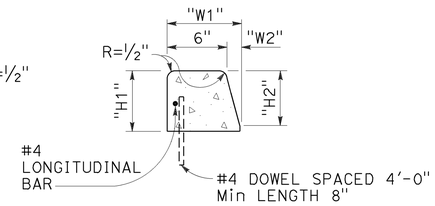

TYPE A3 CURBS

Superimposed on existing pavement
See Table A

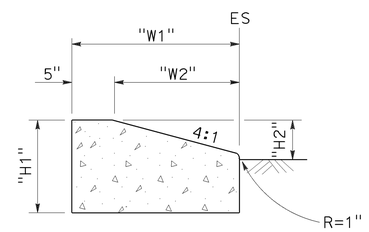

TYPE D CURBS

See Table A

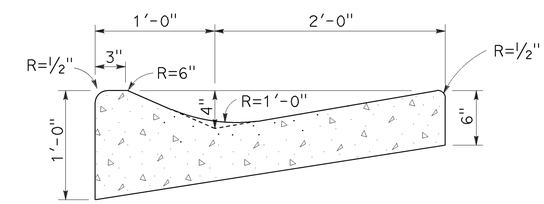

TYPE E CURB

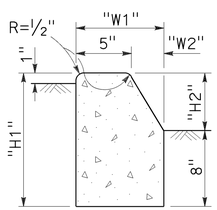

TYPE B1 CURBS

See Table A

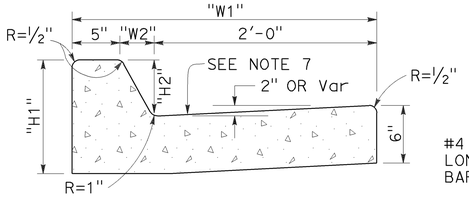

TYPE B2 CURBS

See Table A

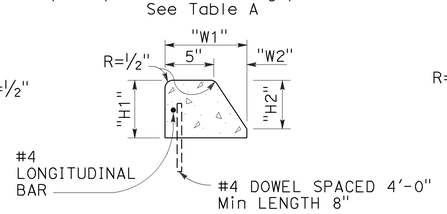

TYPE B3 CURBS

Superimposed on existing pavement
See Table A

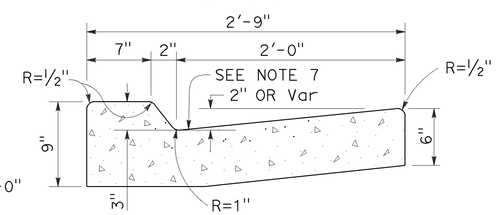

TYPE B4 CURBS

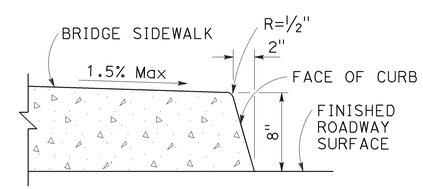

TYPE H CURB

On Bridges

CURBS

NOTES:

1. Case A driveway section typically applies.
2. X=3'-0" except for curb heights over 10" where 4:1 slopes shall be used on curb slope.
3. Sidewalk and ramp thickness "T" at driveway shall be 4" for residental and 6" for commercial.
4. Difference in slope of the driveway ramp and the slope of a line between the gutter and a point on the roadway 5'-0" from gutter line shall not exceed 15%. Reduce driveway ramp slope, not gutter slope, where required.
5. Minimum width of clear passageway for sidewalk shall be 4'-2".
6. Retaining curbs and acquisition of construction easement may be necessary for narrow sidewalks or curb heights in excess of 6".
7. Across the pedestrian route at curb ramp locations, the gutter pan slope shall not exceed 1" of depth for each 2'-0" of width.

STATE OF CALIFORNIA
DEPARTMENT OF TRANSPORTATION

CURBS AND DRIVEWAYS

NO SCALE

RSP A87A DATED JULY 19, 2013 SUPERSEDES STANDARD PLAN A87A
DATED MAY 20, 2011 - PAGE 119 OF THE STANDARD PLANS BOOK DATED 2010.

REVISED STANDARD PLAN RSP A87A

7-8-13

Dist	COUNTY	ROUTE	POST MILES TOTAL PROJECT	SHEET No.	TOTAL SHEETS
03	Gle	5	R0.0/R20.0	64	77

REGISTERED CIVIL ENGINEER

July 3, 2015
PLANS APPROVAL DATE

REGISTERED PROFESSIONAL ENGINEER Hector David Cordova No. C41957 Exp. 3-31-16 CIVIL STATE OF CALIFORNIA

THE STATE OF CALIFORNIA OR ITS OFFICERS OR AGENTS SHALL NOT BE RESPONSIBLE FOR THE ACCURACY OR COMPLETENESS OF SCANNED COPIES OF THIS PLAN SHEET.

TO ACCOMPANY PLANS DATED 4-11-16

2010 REVISED STANDARD PLAN RSP A88A

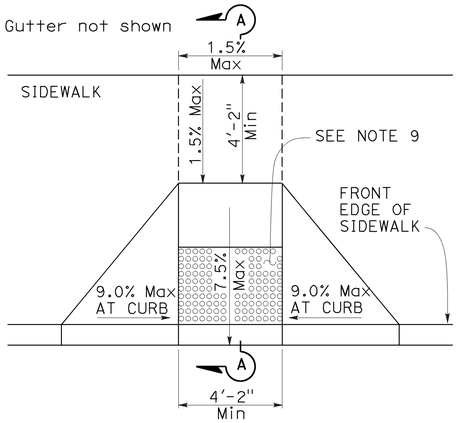

CASE A

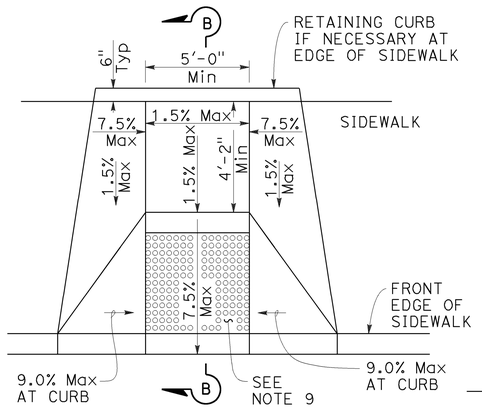

CASE B

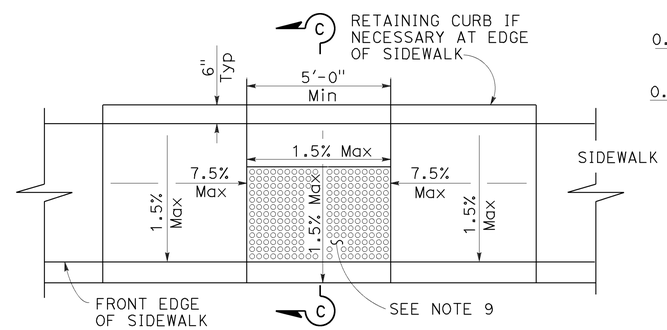

CASE C

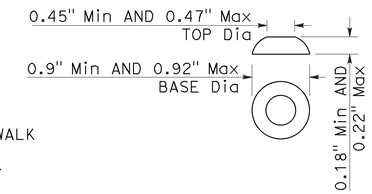

RAISED TRUNCATED DOME

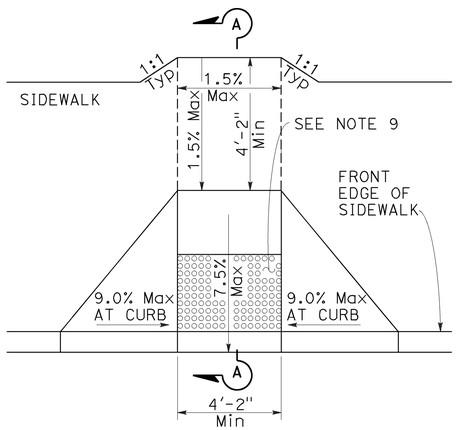

CASE D

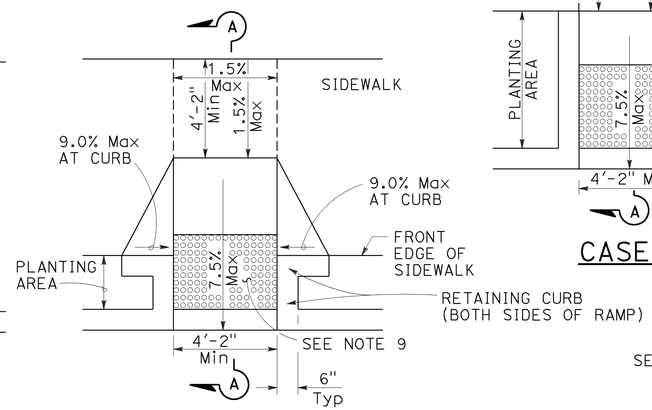

CASE E

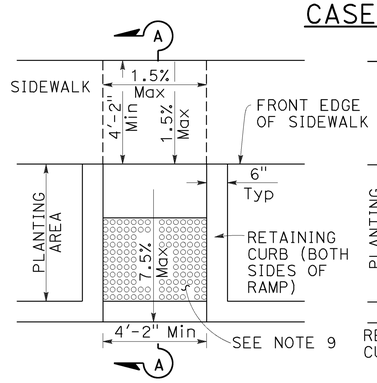

CASE F

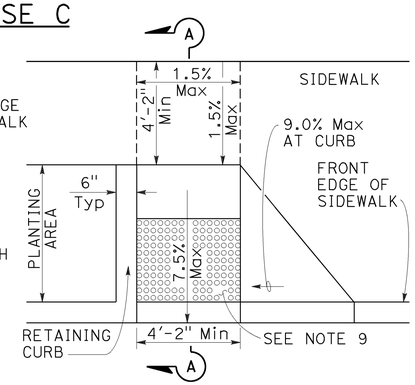

CASE G
See Note 4

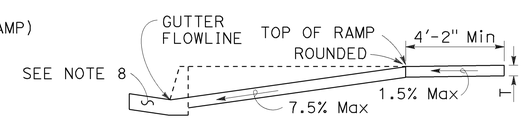

SECTION A-A

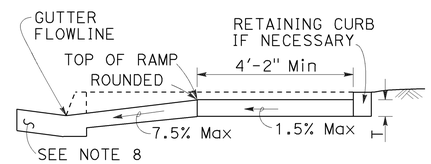

SECTION B-B
Depress entire sidewalk as required

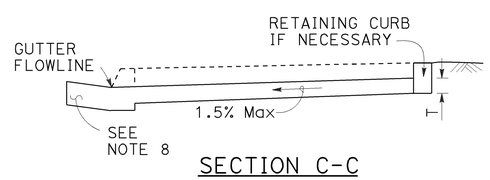

SECTION C-C

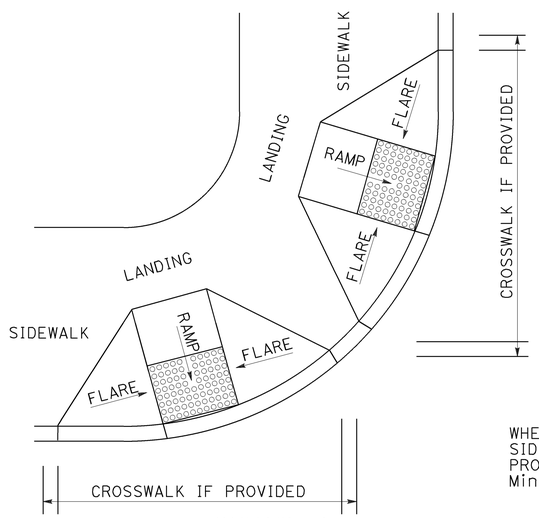

DETAIL A

TYPICAL TWO-RAMP CORNER INSTALLATION

See Note 1

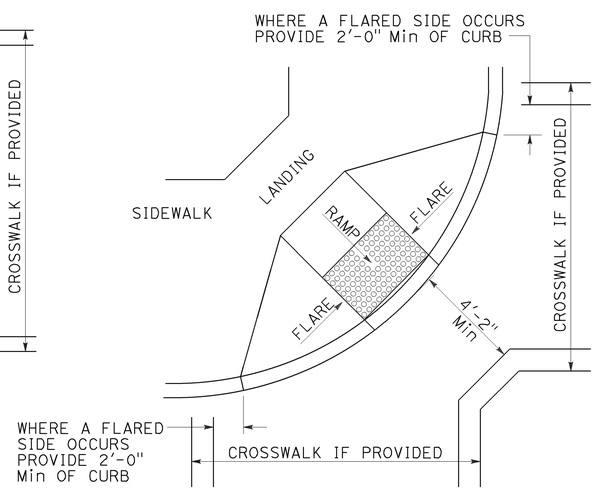

DETAIL B

TYPICAL ONE-RAMP CORNER INSTALLATION

See Notes 1 and 3

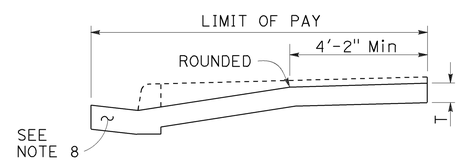

RETROFIT PAY LIMITS

Existing curb and sidewalk

NOTES:

1. As site conditions dictate, Case A through Case G curb ramps may be used for corner installations similar to those shown in Detail A and Detail B. The case of curb ramps used in Detail A do not have to be the same. Case A through Case G curb ramps also may be used at mid block locations, as site conditions dictate.
2. If distance from curb to back of sidewalk is too short to accommodate ramp and 4'-2" platform (landing) as shown in Case A, the sidewalk may be depressed longitudinally as in Case B, or C or may be widened as in Case D.
3. When ramp is located in center of curb return, crosswalk configuration must be similar to that shown for Detail B.
4. As site conditions dictate, the retaining curb side and the flared side of the Case G ramp shall be constructed in reversed position.
5. If located on a curve, the sides of the ramp need not be parallel, but the minimum width of the ramp shall be 4'-2".
6. Side slope of ramp flares vary uniformly from a maximum of 9.0% at curb to conform with longitudinal sidewalk slope adjacent to top of the ramp, except in Case C and Case F.
7. Transitions from ramps and landing to walks, gutters or streets shall be flush (no lip) and free of abrupt changes.
8. Counter slopes of adjoining gutters and road surfaces immediately adjacent to and within 24 inches of the curb ramp shall not be steeper than 1:20 (5.0%). Gutter pan slope shall not exceed 1" of depth for each 2'-0" of width.
9. Curb ramps shall have a detectable warning surface that extends the full width and 3'-0" depth of the ramp. A 4'-0" wide detectable warning surface may be used on a 4'-2" wide curb ramp. Detectable Warning Surfaces shall conform to the requirements in the Standard Specifications.
10. Sidewalk and ramp thickness, "T", shall be 3½" minimum.
11. Utility pull boxes, manholes, vaults and all other utility facilities within the boundaries of the curb ramp will be relocated or adjusted to grade by the owner prior to, or in conjunction with, curb ramp construction.
12. Detectable warning surface may have to be cut to allow removal of utility covers while maintaining full detectable warning width and depth.

RAISED TRUNCATED DOME PATTERN (IN-LINE)

DETECTABLE WARNING SURFACE

See Note 9

STATE OF CALIFORNIA
DEPARTMENT OF TRANSPORTATION

CURB RAMP DETAILS

NO SCALE

RSP A88A DATED JULY 3, 2015 SUPERSEDES RSP A88A DATED MARCH 21, 2014 AND RSP A88A DATED JULY 19, 2013 AND STANDARD PLAN A88A DATED MAY 20, 2011 - PAGE 121 OF THE STANDARD PLANS BOOK DATED 2010.

REVISED STANDARD PLAN RSP A88A

6-30-15

Dist	COUNTY	ROUTE	POST MILES TOTAL PROJECT	SHEET No.	TOTAL SHEETS
03	Gle	5	R0.0/R20.0	65	77

REGISTERED CIVIL ENGINEER

July 19, 2013
PLANS APPROVAL DATE

REGISTERED PROFESSIONAL ENGINEER
Gurinderpal Bhullar
No. C48815
Exp. 9-30-14
CIVIL
STATE OF CALIFORNIA

THE STATE OF CALIFORNIA OR ITS OFFICERS OR AGENTS SHALL NOT BE RESPONSIBLE FOR THE ACCURACY OR COMPLETENESS OF SCANNED COPIES OF THIS PLAN SHEET.

TO ACCOMPANY PLANS DATED 4-11-16

2010 REVISED STANDARD PLAN RSP T9

TABLE 1

TAPER LENGTH CRITERIA AND CHANNELIZING DEVICE SPACING

SPEED (S)	MINIMUM TAPER LENGTH * FOR WIDTH OF OFFSET 12 FEET (W)				MAXIMUM CHANNELIZING DEVICE SPACING		
					X	Y	Z **
	TANGENT 2L	MERGING L	SHIFTING L/2	SHOULDER L/3	TAPER	TANGENT	CONFLICT
mph	ft	ft	ft	ft	ft	ft	ft
20	160	80	40	27	20	40	10
25	250	125	63	42	25	50	12
30	360	180	90	60	30	60	15
35	490	245	123	82	35	70	17
40	640	320	160	107	40	80	20
45	1080	540	270	180	45	90	22
50	1200	600	300	200	50	100	25
55	1320	660	330	220	55	110	27
60	1440	720	360	240	60	120	30
65	1560	780	390	260	65	130	32
70	1680	840	420	280	70	140	35

* - For other offsets, use the following merging taper length formula for L:
For speed of 40 mph or less, $L = WS^2/60$
For speed of 45 mph or more, $L = WS$

Where: L = Taper length in feet
W = Width of offset in feet
S = Posted speed limit, off-peak 85th-percentile speed prior to work starting, or the anticipated operating speed in mph

** - Use for taper and tangent sections where there are no pavement markings or where there is a conflict between existing pavement markings and channelizers (CA).

TABLE 2

LONGITUDINAL BUFFER SPACE AND FLAGGER STATION SPACING

SPEED *	Min D **	DOWNGRADE Min D ***		
		-3%	-6%	-9%
mph	ft	ft	ft	ft
20	115	116	120	126
25	155	158	165	173
30	200	205	215	227
35	250	257	271	287
40	305	315	333	354
45	360	378	400	427
50	425	446	474	507
55	495	520	553	593
60	570	598	638	686
65	645	682	728	785
70	730	771	825	891

* - Speed is posted speed limit, off-peak 85th-percentile speed prior to work starting, or the anticipated operating speed in mph

** - Longitudinal buffer space or flagger station spacing

*** - Use on sustained downgrade steeper than -3 percent and longer than 1 mile.

TABLE 3

ADVANCE WARNING SIGN SPACING

ROAD TYPE	DISTANCE BETWEEN SIGNS *		
	A	B	C
	ft	ft	ft
URBAN - 25 mph OR LESS	100	100	100
URBAN - MORE THAN 25 mph TO 40 mph	250	250	250
URBAN - MORE THAN 40 mph	350	350	350
RURAL	500	500	500
EXPRESSWAY / FREEWAY	1000	1500	2640

* - The distances are approximate, are intended for guidance purposes only, and should be applied with engineering judgment. These distances should be adjusted by the Engineer for field conditions, if necessary, by increasing or decreasing the recommmended distances.

STATE OF CALIFORNIA
DEPARTMENT OF TRANSPORTATION

TRAFFIC CONTROL SYSTEM TABLES FOR LANE AND RAMP CLOSURES

NO SCALE

RSP T9 DATED JULY 19, 2013 SUPERSEDES RSP T9 DATED APRIL 19, 2013 THAT SUPPLEMENTS THE STANDARD PLANS BOOK DATED 2010.

REVISED STANDARD PLAN RSP T9

Dist	COUNTY	ROUTE	POST MILES TOTAL PROJECT	SHEET No.	TOTAL SHEETS
03	Gle	5	R0.0/R20.0	66	77

REGISTERED CIVIL ENGINEER

April 19, 2013
PLANS APPROVAL DATE

REGISTERED PROFESSIONAL ENGINEER Gurinderpal Bhullar No. C48815 Exp. 9-30-14 CIVIL STATE OF CALIFORNIA

THE STATE OF CALIFORNIA OR ITS OFFICERS OR AGENTS SHALL NOT BE RESPONSIBLE FOR THE ACCURACY OR COMPLETENESS OF SCANNED COPIES OF THIS PLAN SHEET.

TO ACCOMPANY PLANS DATED 4-11-16

NOTES:

See Revised Standard Plan RSP T9 for tables.

Use cone spacing X for taper segment, Y for tangent segment or Z for conflict situations, as approriate, per Table 1, unless X, Y, or Z cone spacing is shown on this sheet.

Unless otherwise specified in the special provisions, all temporary warning signs shall have black legend on fluorescent orange background.

California codes are designated by (CA). Otherwise, Federal (MUTCD) codes are shown.

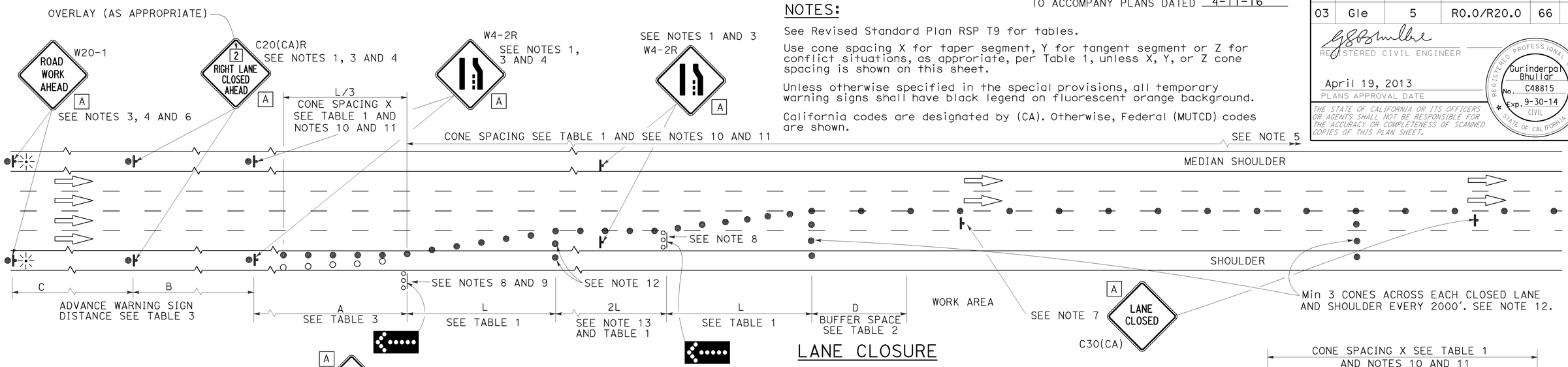

LANE CLOSURE

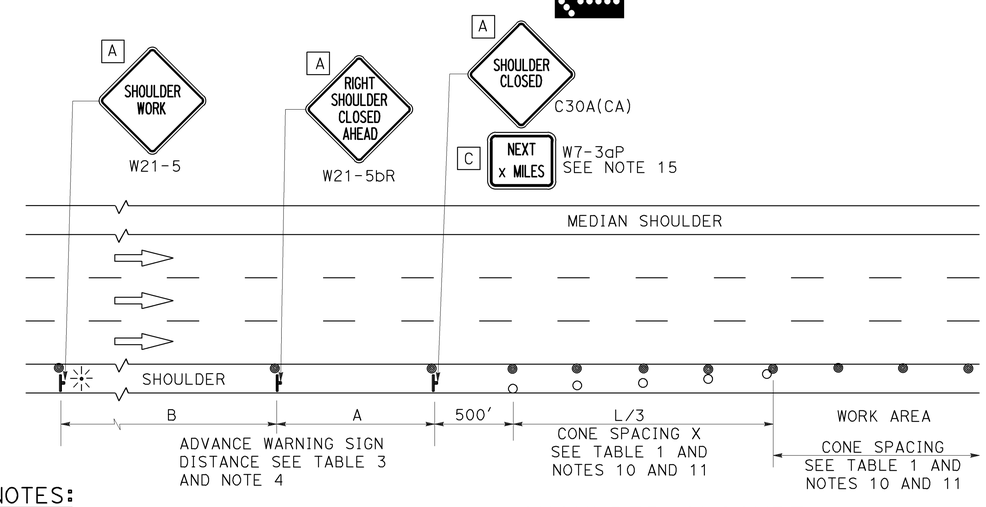

SHOULDER CLOSURE

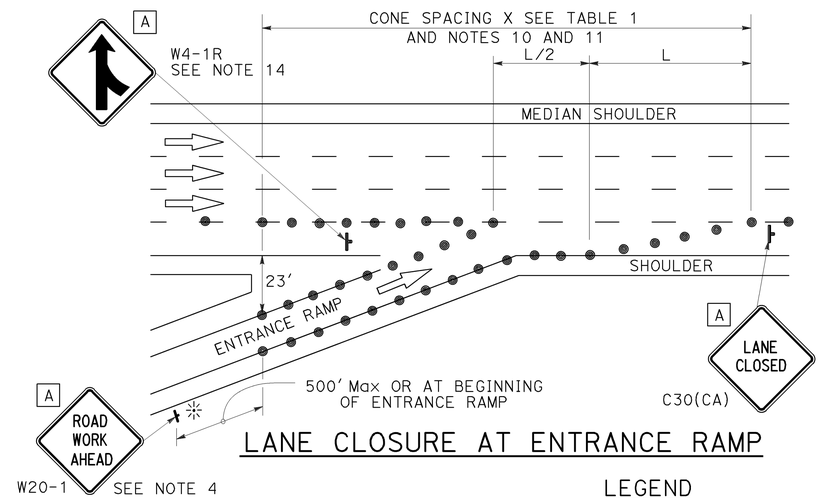

LANE CLOSURE AT ENTRANCE RAMP

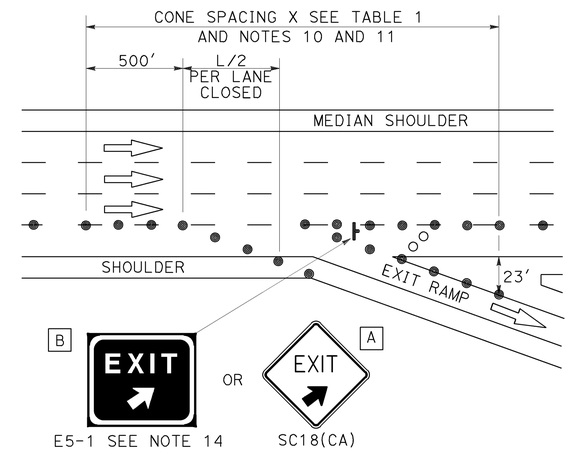

LANE CLOSURE AT EXIT RAMP

NOTES:

1. Median lane closures shall conform to the details as shown except that C20(CA)L and W4-2L signs shall be used.
2. At least one person shall be assigned to provide full time maintenance of traffic control devices for lane closures.
3. Duplicate sign installations are not required:
   a) On opposite shoulder if at least one-half of the available lanes remain open to traffic.
   b) In the median if the width of the median shoulder is less than 8' and the outside lanes are to be closed.
4. Each advance warning sign on each side of the roadway shall be equipped with at least two flags for daytime closure. Each flag shall be at least 16" x 16" in size and shall be orange or fluorescent red-orange in color. Flashing beacons shall be placed at the locations indicated for lane closure during hours of darkness.
5. A G20-2 "END ROAD WORK" sign, with minimum size of 48" x 24" as appropriate, shall be placed at the end of the lane closure unless the end of work area is obvious or ends within a larger project's limits.
6. If the W20-1 sign would follow within 2000' of a stationary W20-1 or G20-1 "ROAD WORK NEXT _____ MILES", use a C20(CA) sign for the first advance warning sign.
7. Place a C30(CA) sign every 2000' throughout length of lane closure.
8. One flashing arrow sign for each lane closed. The flashing arrow signs shall be Type I.
9. A minimum 1500' of sight distance shall be provided where possible for vehicles approaching the first flashing arrow sign. Lane closures shall not begin at top of crest vertical curve or on a horizontal curve.
10. All cones used for lane closures during the hours of darkness shall be fitted with retroreflective bands (or sleeves) as specified in the specifications.
11. Portable delineators, placed at one-half the spacing indicated for traffic cones may be used instead of cones for daytime closures only.
12. Unless otherwise specified in the special provisions, a minimum of 3 cones shall be placed transversely across each closed lane and shoulder at each location where a taper across a traffic lane ends and every 2000' as shown on the "Lane Closure" detail. Two Type II barricades may be used instead of the 3 cones. The transverse alignment of the cones or barricades on the closed shoulder may be shifted from the transverse alignment to provide access to the work.
13. Unless otherwise specified in the special provisions, the 2L tangent shown along lane lines shall be used between the L tapers required for each closed traffic lane.
14. Unless otherwise specified in the special provisions, the E5-1 or SC18(CA) and W4-1 signs shall be used as shown.
15. A W7-3aP "NEXT____ MILES" plaque must be used if theshoulder closure extends beyond the distance that can be perceived by road users.

LEGEND

- TRAFFIC CONE
- TRAFFIC CONE (OPTIONAL TAPER)
- TEMPORARY TRAFFIC CONTROL SIGN
- FLASHING ARROW SIGN (FAS)
- FAS SUPPORT OR TRAILER
- PORTABLE FLASHING BEACON

SIGN PANEL SIZE (Min)

A	48" x 48"
B	72" x 60"
C	36" x 30"

STATE OF CALIFORNIA
DEPARTMENT OF TRANSPORTATION

TRAFFIC CONTROL SYSTEM FOR LANE CLOSURE ON FREEWAYS AND EXPRESSWAYS

NO SCALE

RSP T10 DATED APRIL 19, 2013 SUPERSEDES STANDARD PLAN T10 DATED MAY 20, 2011 - PAGE 237 OF THE STANDARD PLANS BOOK DATED 2010.

REVISED STANDARD PLAN RSP T10

2010 REVISED STANDARD PLAN RSP T10

12-18-12

Dist	COUNTY	ROUTE	POST MILES TOTAL PROJECT	SHEET No.	TOTAL SHEETS
03	Gle	5	R0.0/R20.0	67	77

Devinder Singh
REGISTERED CIVIL ENGINEER

October 30, 2015
PLANS APPROVAL DATE

REGISTERED PROFESSIONAL ENGINEER
Devinder Singh
No. C50470
Exp. 6-30-17
CIVIL
STATE OF CALIFORNIA

THE STATE OF CALIFORNIA OR ITS OFFICERS OR AGENTS SHALL NOT BE RESPONSIBLE FOR THE ACCURACY OR COMPLETENESS OF SCANNED COPIES OF THIS PLAN SHEET.

TO ACCOMPANY PLANS DATED 4-11-16

2010 REVISED STANDARD PLAN RSP T13

NOTES:

See Revised Standard Plan RSP T9 for tables.

Use cone spacing X for taper segment, Y for tangent segment or Z for conflict situations, as approriate, per Table 1, unless X, Y, or Z cone spacing is shown on this sheet.

Unless otherwise specified in the special provisions, all temporary warning signs shall have black legend on fluorescent orange background.

California codes are designated by (CA). Otherwise, Federal (MUTCD) codes are shown.

TYPICAL LANE CLOSURE WITH REVERSIBLE CONTROL

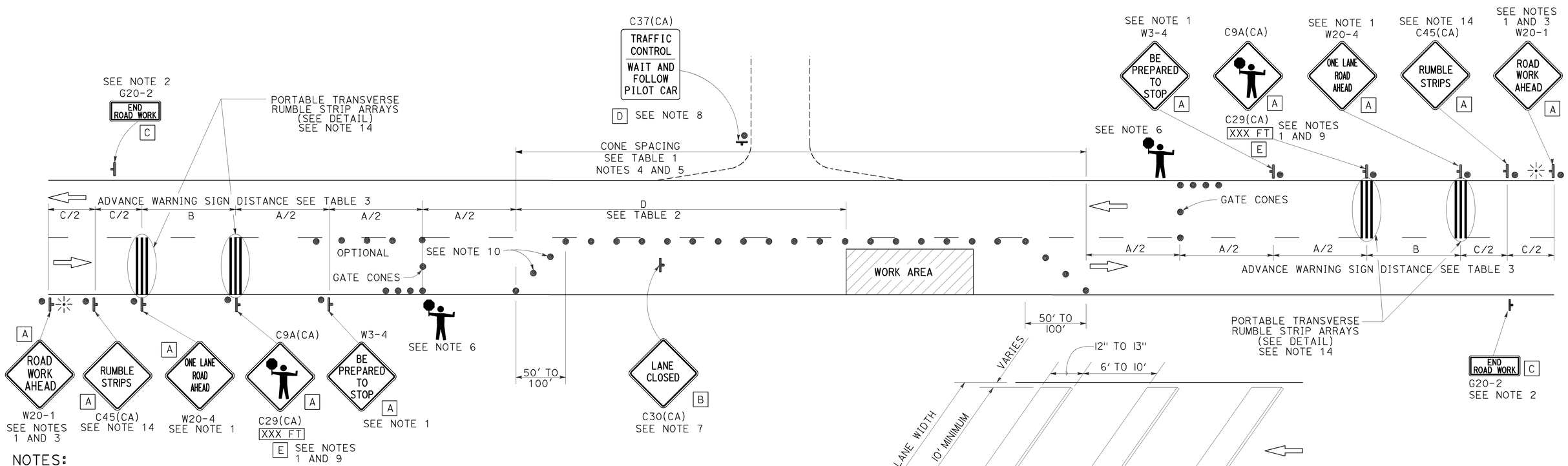

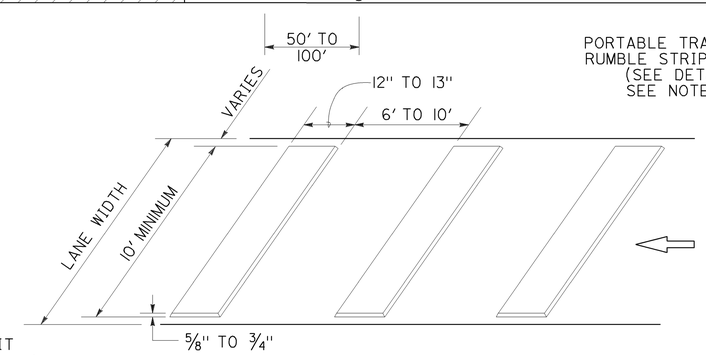

PORTABLE TRANSVERSE RUMBLE STRIP ARRAY DETAIL

NOTES:

1. Each advance warning sign in each direction of travel shall be equipped with at least two flags for daytime closure. Each flag shall be at least 16" x 16" in size and shall be orange or fluorescent red-orange in color. Flashing beacons shall be placed at the locations indicated for lane closure during hours of darkness.
2. A G20-2 "END ROAD WORK" sign, as appropriate, shall be placed at the end of the lane control unless the end of work area is obvious, or ends within a larger project's limits.
3. If the W20-1 sign would follow within 2000' of a stationary W20-1 or G20-1 "ROAD WORK NEXT _____ MILES", use a W20-4 sign for the first advance warning sign.
4. All cones used for lane closures during the hours of darkness shall be fitted with retroreflective bands (or sleeves) as specified in the specifications.
5. Portable delineators, placed at one-half the spacing indicated for traffic cones, may be used instead of cones for daytime closures only.
6. Additional advance flaggers may be required. Flagger should stand in a conspicuous place, be visible to approaching traffic as well as approaching vehicles after the first vehicle has stopped. During the hours of darkness, the flagging-station and flagger shall be illuminated and clearly visible to approaching traffic. The illumination footprint of the lighting on the ground shall be at least 20' in diameter. Place a minimum of four cones at 50' intervals in advance of flagger station as shown.
7. Place C30(CA) "LANE CLOSED" sign at 500' to 1000' intervals throughout extended work areas. They are optional if the work area is visible from the flagger station.
8. When a pilot car is used, place a C37(CA) "TRAFFIC CONTROL-WAIT AND FOLLOW PILOT CAR" sign with black legend on white background at all intersections, driveways and alleys without a flagger within traffic control area. Signs shall be clean and visible at all times. Where traffic can not be effectively self-regulated, at least one flagger shall be used at each intersection within traffic control area.
9. An optional C29(CA) sign may be placed below the C9A(CA) sign.
10. Either traffic cones or barricades shall be placed on the taper. Barricades shall be Type I, II, or III.
11. The color of the portable transverse rumble strips shall be black or orange. Use 2 arrays, each array shall consist of 3 rumble strips.
12. Portable transverse rumble strips shall not be placed on sharp horizontal or vertical curves nor shall they be placed through pedestrian crossings.
13. If the portable transverse rumble strips become out of alignment (skewed) by more than 6 inches, measured from one end to the other, they shall be readjusted to bring the placement back to the original location.
14. Portable transverse rumble strips are not required if any one of the following conditions is satisfied:
    A. Work duration occupies a location for four hours or less
    B. Posted speed limit is below 45 MPH
    C. Work is of emergency nature
    D. Work zone is in snow or icy weather conditions

SIGN PANEL SIZE (Min)

A	48" x 48"
B	30" x 30"
C	36" x 18"
D	36" x 42"
E	20" x 7"

LEGEND

- TRAFFIC CONE
- TEMPORARY TRAFFIC CONTROL SIGN
- PORTABLE FLASHING BEACON
- FLAGGER

STATE OF CALIFORNIA
DEPARTMENT OF TRANSPORTATION

TRAFFIC CONTROL SYSTEM FOR LANE CLOSURE ON TWO LANE CONVENTIONAL HIGHWAYS

NO SCALE

RSP T13 DATED OCTOBER 30, 2015 SUPERSEDES RSP T13 DATED OCTOBER 17, 2014, RSP T13 DATED JULY 18, 2014 AND RSP T13 DATED APRIL 19, 2013 AND STANDARD PLAN T13 DATED MAY 20, 2011 - PAGE 241 OF THE STANDARD PLANS BOOK DATED 2010.

REVISED STANDARD PLAN RSP T13

10-13-15

Dist	COUNTY	ROUTE	POST MILES TOTAL PROJECT	SHEET No.	TOTAL SHEETS
03	Gle	5	R0.0/R20.0	68	77

REGISTERED CIVIL ENGINEER

April 19, 2013
PLANS APPROVAL DATE

REGISTERED PROFESSIONAL ENGINEER Gurinderpal Bhullar No. C48815 Exp. 9-30-14 CIVIL STATE OF CALIFORNIA

THE STATE OF CALIFORNIA OR ITS OFFICERS OR AGENTS SHALL NOT BE RESPONSIBLE FOR THE ACCURACY OR COMPLETENESS OF SCANNED COPIES OF THIS PLAN SHEET.

TO ACCOMPANY PLANS DATED 4-11-16

TYPICAL RAMP CLOSURES

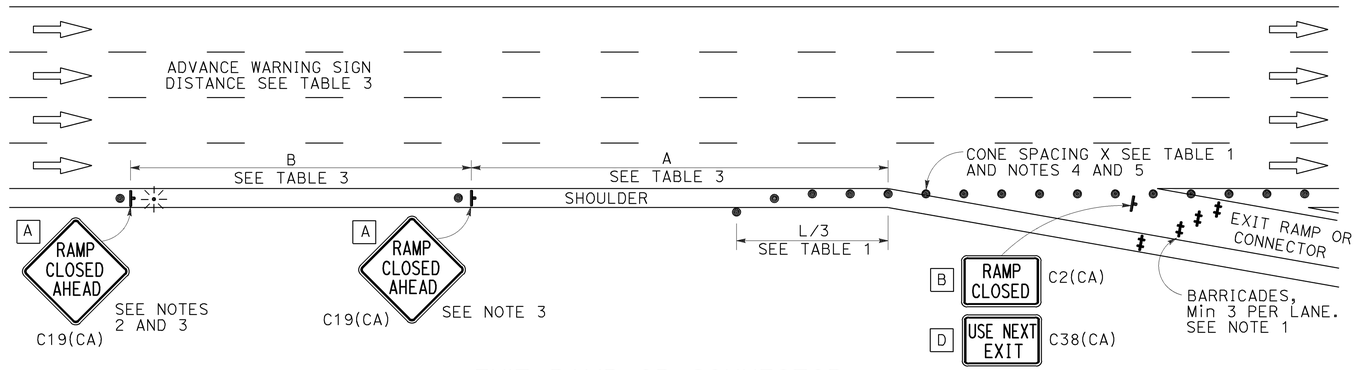

EXIT RAMP OR CONNECTOR

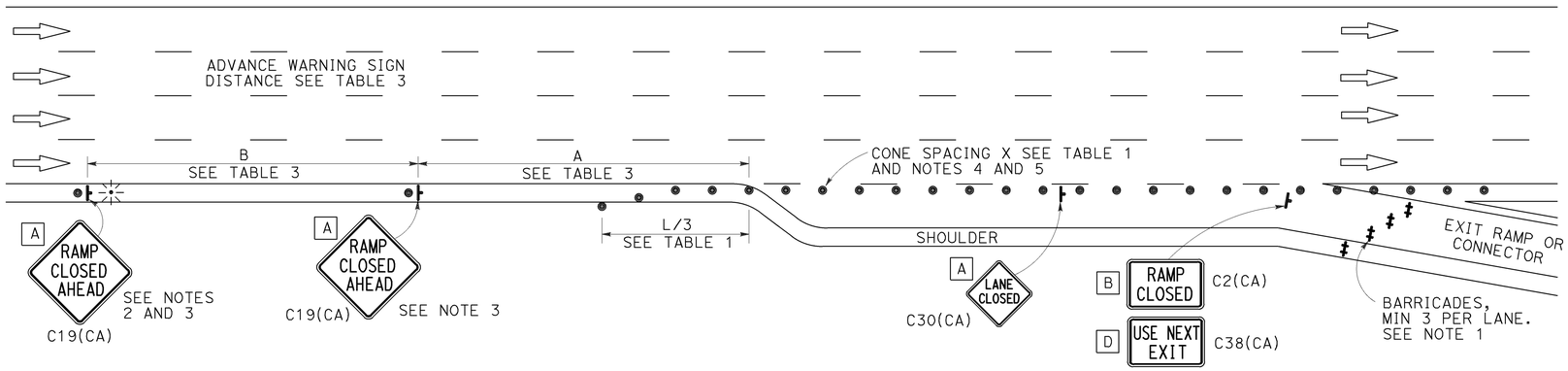

EXIT RAMP OR CONNECTOR WITH ADDITIONAL LANE

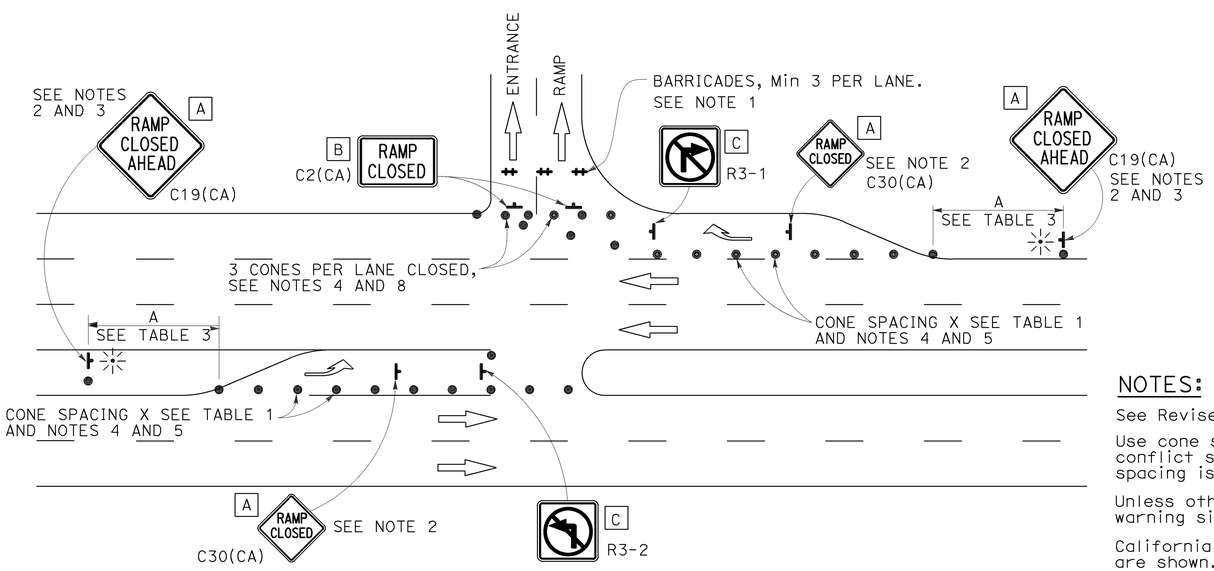

ENTRANCE RAMP WITH TURNING POCKETS

SIGN PANEL SIZE (Min)

- A 48" × 48"
- B 48" × 30"
- C 36" × 36"
- D 48" × 36"

LEGEND

- TRAFFIC CONE
- TEMPORARY TRAFFIC CONTROL SIGN
- BARRICADES
- PORTABLE FLASHING BEACON

NOTES:

1. Barricades shall be Type I, II, or III for closures lasting one week or less and Type III for closures lasting longer than one week.
2. In addition to placing the C19(CA) "RAMP CLOSED AHEAD" and C30(CA) "RAMP CLOSED" signs, black on orange overlay plates with the word "CLOSED" may be mounted, as directed by the Engineer, on all guide signs that refer to the closed ramp. The letter size on the overlay shall be the same as the guide sign.
3. Each advance C19(CA) "RAMP CLOSED AHEAD" sign shall be equipped with at least two flags for daytime closure. Each flag shall be at least 16" × 16" in size and shall be orange or fluorescent red-orange in color. A flashing beacon shall be placed on top of the first C19(CA) sign during hours of darkness.
4. All cones used for ramp closures during the hours of darkness shall be fitted with retroreflective bands (or sleeves) as specified in the specifications.
5. Portable delineators, placed at one-half the spacing indicated for traffic cones, may be used instead of cones for daytime ramp closures only.
6. At least one person shall be assigned to provide full time maintenance of traffic control devices, unless otherwise directed by the Engineer.
7. The existing "EXIT" signs shall be covered during ramp closures.
8. A minimum of 3 cones shall be placed transversely across each closed lane and shoulder.

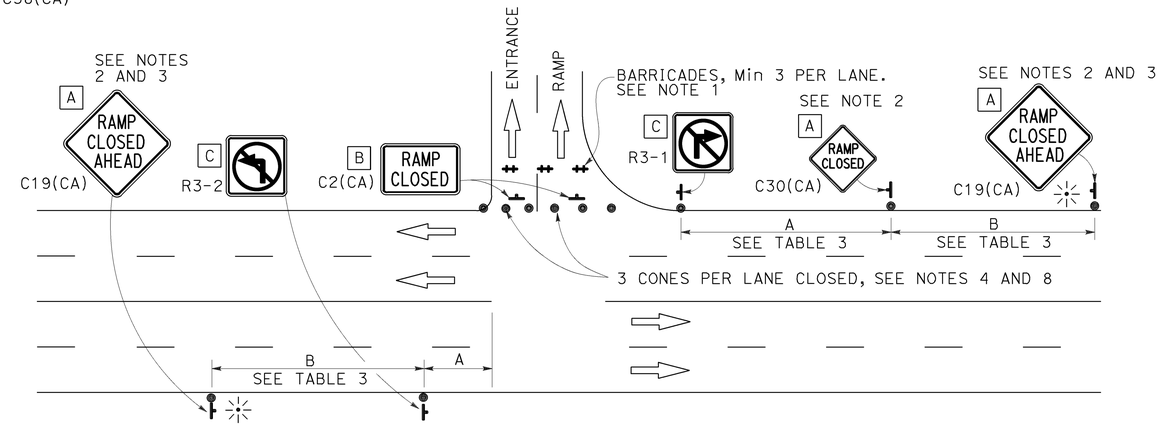

ENTRANCE RAMP WITHOUT TURNING POCKETS

NOTES:

See Revised Standard Plan RSP T9 for tables.

Use cone spacing X for taper segment, Y for tangent segment or Z for conflict situations, as approriate, per Table 1, unless X, Y, or Z cone spacing is shown on this sheet.

Unless otherwise specified in the special provisions, all temporary warning signs shall have black legend on fluorescent orange background.

California codes are designated by (CA). Otherwise, Federal (MUTCD) codes are shown.

STATE OF CALIFORNIA
DEPARTMENT OF TRANSPORTATION

TRAFFIC CONTROL SYSTEM FOR RAMP CLOSURE

NO SCALE

RSP T14 DATED APRIL 19, 2013 SUPERSEDES STANDARD PLAN T14 DATED MAY 20, 2011 - PAGE 242 OF THE STANDARD PLANS BOOK DATED 2010.

REVISED STANDARD PLAN RSP T14

2010 REVISED STANDARD PLAN RSP T14

12-18-12

Dist	COUNTY	ROUTE	POST MILES TOTAL PROJECT	SHEET No.	TOTAL SHEETS
03	Gle	5	R0.0/R20.0	69	77

REGISTERED CIVIL ENGINEER

April 19, 2013
PLANS APPROVAL DATE

REGISTERED PROFESSIONAL ENGINEER Gurinderpal Bhullar No. C48815 Exp. 9-30-14 CIVIL STATE OF CALIFORNIA

THE STATE OF CALIFORNIA OR ITS OFFICERS OR AGENTS SHALL NOT BE RESPONSIBLE FOR THE ACCURACY OR COMPLETENESS OF SCANNED COPIES OF THIS PLAN SHEET.

TO ACCOMPANY PLANS DATED 4-11-16

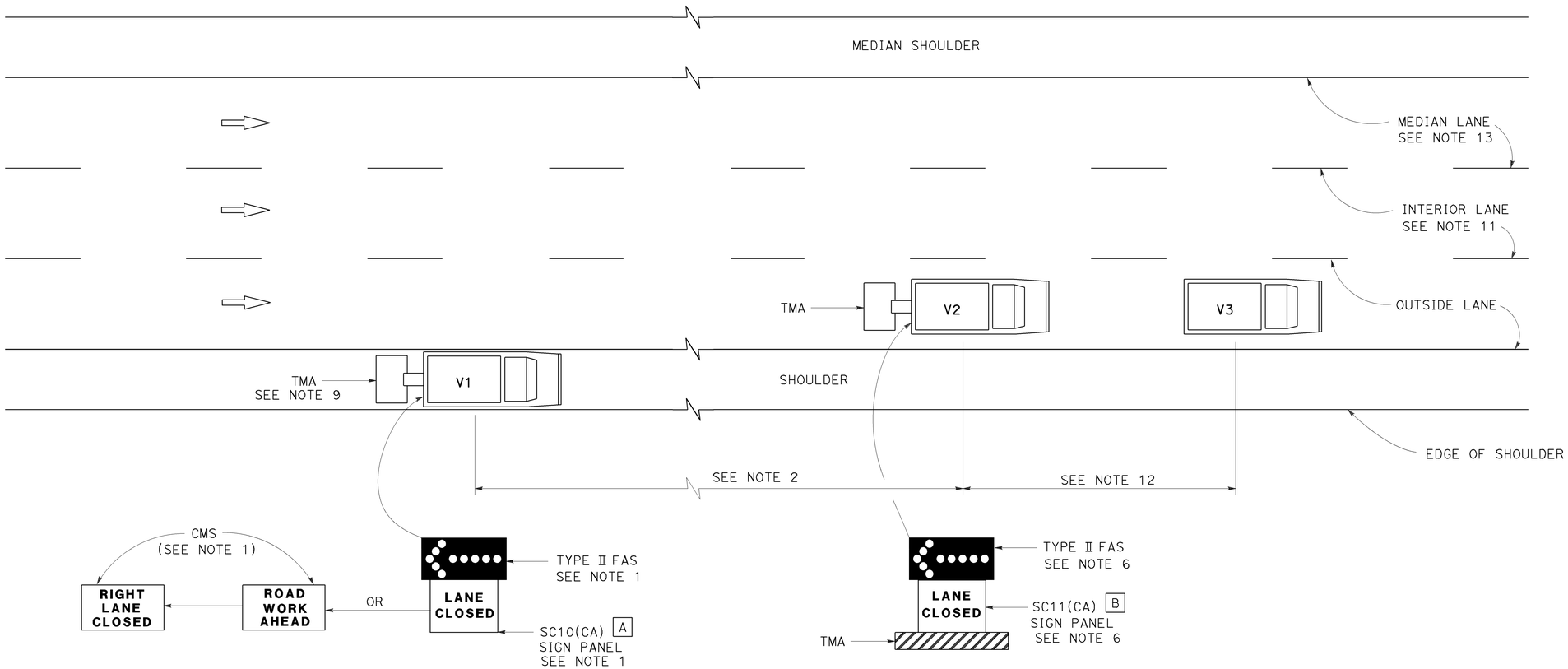

MOVING LANE CLOSURE ON MEDIAN LANE OR OUTSIDE LANE OF MULTILANE HIGHWAYS

SIGN PANEL SIZE (Min)

A 66" x 36"

B 54" x 42"

LEGEND

V1	SIGN VEHICLE
V2	SHADOW VEHICLE
V3	WORK/APPLICATION VEHICLE
	FLASHING ARROW SIGN (FAS)
CMS	CHANGEABLE MESSAGE SIGN
TMA	TRUCK-MOUNTED ATTENUATOR

NOTES:

1. Either a changeable message sign or a SC10(CA) sign panel and a Type II flashing arrow sign shall be mounted on the rear of sign vehicle V1. The changeable message sign shall be sequenced to show the "ROAD WORK AHEAD" message first, followed by the "RIGHT LANE CLOSED" message. For median lane closure, the flashing arrow symbol shall be reversed with the arrowhead on the right and the changeable message sign shall show "LEFT LANE CLOSED".
2. If traffic queues develop, sign vehicle V1 should be positioned upstream from the end of queue. Sign vehicle V1 shall be positioned where highly visible when shoulders are not available.
3. A minimum sight distance of 1500′ should be provided in advance of sign vehicle V1.
4. Sign vehicle V1 should remain at the beginning of horizontal or vertical curves until the other vehicles (V2 and V3) are far enough beyond the curve to resume the minimum sight distance of 1500′.
5. Vehicle-mounted sign panels shall have Type III or above retroreflective sheeting, black on white, or black on fluorescent orange, with 6" minimum series D letters per Caltrans sign specifications.
6. Shadow vehicle V2 shall be equipped with a truck-mounted attenuator. The sign panel shown and a Type II flashing arrow sign shall be mounted on the rear of shadow vehicle V2. For median lane closure the flashing arrow sign symbol shall be displayed with the arrowhead on the right.
7. All vehicles used for lane closures shall be equipped with two-way radios, and the vehicle operators shall maintain communication during the work or application operation.
8. All vehicles shall be equipped with flashing or rotating amber lights.
9. If sign vehicle V1 encroaches into the traffic lane due to insufficient shoulder width, sign vehicle V1 shall be equipped with a truck-mounted attenuator. Sign vehicle V1 shall stay as close to the edge of shoulder as practicable.
10. Where workers would be on foot in the work area, a stationary type lane closure (Revised Standard Plan T10, T11, etc., as applicable) shall be used instead of this plan.
11. For moving lane closure on interior lane of multilane highways, use Revised Standard Plan T16.
12. The spacing between work vehicle(s) and the shadow vehicles, and between each shadow vehicle should be minimized to deter road users from driving in between.
13. When the work/application vehicle V3 occupies the median lane, sign vehicle V1 should drive in the median shoulder and indicate left lane closed ahead.

STATE OF CALIFORNIA
DEPARTMENT OF TRANSPORTATION

TRAFFIC CONTROL SYSTEM FOR MOVING LANE CLOSURE ON MULTILANE HIGHWAYS

NO SCALE

RSP T15 DATED APRIL 19, 2013 SUPERSEDES STANDARD PLAN T15
DATED MAY 20, 2011 - PAGE 243 OF THE STANDARD PLANS BOOK DATED 2010.

REVISED STANDARD PLAN RSP T15

2010 REVISED STANDARD PLAN RSP T15

12-18-12

Dist	COUNTY	ROUTE	POST MILES TOTAL PROJECT	SHEET No.	TOTAL SHEETS
03	Gle	5	R0.0/R20.0	70	77

Theresa Gabriel
REGISTERED ELECTRICAL ENGINEER

October 30, 2015
PLANS APPROVAL DATE

REGISTERED PROFESSIONAL ENGINEER Theresa Aziz Gabriel No. E15129 Exp. 6-30-16 ELECTRICAL STATE OF CALIFORNIA

THE STATE OF CALIFORNIA OR ITS OFFICERS OR AGENTS SHALL NOT BE RESPONSIBLE FOR THE ACCURACY OR COMPLETENESS OF SCANNED COPIES OF THIS PLAN SHEET.

TO ACCOMPANY PLANS DATED 4-11-16

LEGEND:

- AB — ABANDON. IF APPLIED TO CONDUIT, REMOVE CONDUCTORS
- BC — INSTALL PULL BOX IN EXISTING CONDUIT RUN
- BP — PEDESTRIAN BARRICADE, TYPE AS INDICATED ON PLAN
- CB — INSTALL CONDUIT INTO EXISTING PULL BOX
- CC — CONNECT NEW AND EXISTING CONDUIT. REMOVE EXISTING CONDUCTORS AND INSTALL CONDUCTORS AS INDICATED
- CF — CONDUIT TO REMAIN FOR FUTURE USE. REMOVE CONDUCTORS. INSTALL PULL TAPE
- DH — DETECTOR HANDHOLE
- FA — FOUNDATION TO BE ABANDONED
- IS — INSTALL SIGN ON SIGNAL MAST ARM
- NS — NO SLIP BASE ON STANDARD
- PEC — PHOTOELECTRIC CONTROL
- PEU — PHOTOELECTRIC UNIT
- RC — EQUIPMENT OR MATERIAL TO BE REMOVED AND BECOME THE PROPERTY OF THE CONTRACTOR
- RE — REMOVE ELECTROLIER, FUSES AND BALLAST. TAPE ENDS OF CONDUCTORS
- RL — RELOCATE EQUIPMENT
- RR — REMOVE AND REUSE EQUIPMENT
- RS — REMOVE AND SALVAGE EQUIPMENT
- SC — SPLICE NEW TO EXISTING CONDUCTORS
- SD — SERVICE DISCONNECT
- TSP — TELEPHONE SERVICE POINT

ABBREVIATIONS

AC+	UNDERGROUNDED CONDUCTOR
APS	ACCESSIBLE PEDESTRIAN SIGNAL
Batt	BATTERY
BBS	BATTERY BACKUP SYSTEM
BC	BOLT CIRCLE
Blk	BLACK
BP	BYPASS
BPB	BICYCLE PUSH BUTTON
C	CONDUIT
CB	CIRCUIT BREAKER
CCTV	CLOSED CIRCUIT TELEVISION
Ckt	CIRCUIT
CMS	CHANGEABLE MESSAGE SIGN
Ctid	CALTRANS IDENTIFICATION
Comm	COMMUNICATION
Cntl	CONTROL
DF	DEPARTMENT-FURNISHED
DLC	LOOP DETECTOR LEAD-IN CABLE
EMS	EXTINGUISHABLE MESSAGE SIGN
EVUC	EMERGENCY VEHICLE UNIT CABLE
EVUD	EMERGENCY VEHICLE UNIT DETECTOR
FB	FLASHING BEACON
FBCA	FLASHING BEACON CONTROL ASSEMBLY
FBS	FLASHING BEACON WITH SLIP BASE
FO	FIBER OPTIC
G	EQUIPMENT GROUNDING CONDUCTOR
GB	GROUND BUS
GFCI	GROUND FAULT CIRCUIT INTERRUPTER
Grn	GREEN
HAR	HIGHWAY ADVISORY RADIO
Hex	HEXAGONAL
HPS	HIGH PRESSURE SODIUM
IISNS	INTERNALLY ILLUMINATED STREET NAME SIGN
ISL	INDUCTION SIGN LIGHTING
LED	LIGHT EMITTING DIODE
LMA	LUMINAIRE MAST ARM
LPS	LOW PRESSURE SODIUM
Ltg	LIGHTING
Lum	LUMINAIRE
M	METERED
MAT	MAST ARM MOUNTING TOP ATTACHMENT
MAS	MAST ARM MOUNTING SIDE ATTACHMENT
MBPS	MANUAL BYPASS SWITCH
M/M	MULTIPLE TO MULTIPLE TRANSFORMER
Mtg	MOUNTING
MV	MERCURY VAPOR LIGHTING FIXTURE
MVDS	MICROWAVE VEHICLE DETECTION SYSTEM
N	NEUTRAL (GROUNDED CONDUCTOR)
NB	NEUTRAL BUS
NC	NORMALLY CLOSE
NO	NORMALLY OPEN
P	CIRCUIT BREAKER'S POLE
PB	PULL BOX
PBA	PUSH BUTTON ASSEMBLY
PEC	PHOTOELECTRIC CONTROL
Ped	PEDESTRIAN
PEU	PHOTOELECTRIC UNIT
PT	CONDUIT WITH PULL TAPE
PTR	POWER TRANSFER RELAY
RE	RELOCATED EQUIPMENT
RM	RAMP METERING
RWIS	ROADSIDE WEATHER INFORMATION SYSTEM
SB	SLIP BASE
SIC	SIGNAL INTERCONNECT CABLE
Sig	SIGNAL
SMA	SIGNAL MAST ARM
SNS	STREET NAME SIGN
SP	SERVICE POINT
TB	TERMINAL BOARD
TDC	TELEPHONE DEMARCATION CABINET
Temp	TEMPERATURE
TMS	TRAFFIC MONITORING STATION
TOS	TRAFFIC OPERATIONS SYSTEM
UPS	UNINTERRUPTABLE POWER SUPPLY
UPSC	UNINTERRUPTABLE POWER SUPPLY CONTROLLER
Veh	VEHICLE
VIVDS	VIDEO IMAGE VEHICLE DETECTION SYSTEM
Wht	WHITE
WIM	WEIGH-IN-MOTION
Xfmr	TRANSFORMER

SOFFIT AND WALL-MOUNTED LUMINAIRES

- PENDANT SOFFIT LUMINAIRE, 70 W HPS UNLESS OTHERWISE SPECIFIED
- FLUSH-MOUNTED SOFFIT LUMINAIRE, 70 W HPS UNLESS OTHERWISE SPECIFIED
- WALL-MOUNTED LUMINAIRE, 70 W HPS UNLESS OTHERWISE SPECIFIED
- EXISTING SOFFIT OR WALL-MOUNTED LUMINAIRE TO REMAIN UNMODIFIED
- EXISTING SOFFIT OR WALL-MOUNTED LUMINAIRE TO BE MODIFIED AS SPECIFIED

NOTE:
Arrow indicates "street side" of luminaire.

COMMONLY USED SYMBOLS FOR UNITED STATES CUSTOMARY UNITS OF MEASUREMENT:

SYMBOL	DEFINITIONS
Ω	OHMS
min	MINUTE
s	SECOND
bps	BITS PER SECOND
Bps	BYTES PER SECOND
A	AMPERE
V	VOLT
$V_{(dc)}$	VOLT (DIRECT CURRENT)
$V_{(ac)}$	VOLT (ALTERNATING CURRENT)
FC	FOOT - CANDLE
W	WATTS
VA	VOLT-AMPERE
M	MEGA
k	KILO
m	MILLI
μ	MICRO
P	PICO
Hz	HERTZ

MISCELLANEOUS ELECTROLIERS

NEW	EXISTING	
		LUMINAIRE ON WOOD POLE
		NON-STANDARD ELECTROLIER (SEE PROJECT LEGEND)
		CITY ELECTROLIER
		ELECTROLIER FOUNDATION (FUTURE INSTALLATION)

NOTES:

1. LED luminaires shall be 235 W when installed on Type 21, 21D, 30, 31 and 32 Standards, unless otherwise specified. LED luminaires shall be 165 W when installed on other type standards or poles, unless otherwise specified.
2. Luminaires shall be the cutoff type, ANSI Type III medium cutoff lighting distribution, unless otherwise specified.

STANDARD ELECTROLIER

NEW	EXISTING	STANDARD TYPE
		15
		15D
		15 STRUCTURE
		15D STRUCTURE
		21
		21D
		21 STRUCTURE
		21D STRUCTURE
		30
		31
		32

STATE OF CALIFORNIA
DEPARTMENT OF TRANSPORTATION

ELECTRICAL SYSTEMS (LEGEND AND ABBREVIATIONS)

NO SCALE

RSP ES-1A DATED OCTOBER 30, 2015 SUPERSEDES RSP ES-1A DATED JULY 19, 2013 AND STANDARD PLAN ES-1A DATED MAY 20, 2011 - PAGE 425 OF THE STANDARD PLANS BOOK DATED 2010.

REVISED STANDARD PLAN RSP ES-1A

2010 REVISED STANDARD PLAN RSP ES-1A

9-29-15

Dist	COUNTY	ROUTE	POST MILES TOTAL PROJECT	SHEET No.	TOTAL SHEETS
03	Gle	5	R0.0/R20.0	71	77

Theresa Gabriel
REGISTERED ELECTRICAL ENGINEER

October 30, 2015
PLANS APPROVAL DATE

REGISTERED PROFESSIONAL ENGINEER
Theresa Aziz Gabriel
No. E15129
Exp. 6-30-16
ELECTRICAL
STATE OF CALIFORNIA

THE STATE OF CALIFORNIA OR ITS OFFICERS OR AGENTS SHALL NOT BE RESPONSIBLE FOR THE ACCURACY OR COMPLETENESS OF SCANNED COPIES OF THIS PLAN SHEET.

TO ACCOMPANY PLANS DATED 4-11-16

CONDUIT

NEW	EXISTING	
		LIGHTING CONDUIT, UNLESS OTHERWISE INDICATED OR NOTED
		TRAFFIC SIGNAL CONDUIT
C	c	COMMUNICATION CONDUIT
T	t	TELEPHONE CONDUIT
F	f	FIRE ALARM CONDUIT
FO	fo	FIBER OPTIC CONDUIT
		CONDUIT TERMINATION
R	r	CONDUIT RISER ATTACHED TO THE STRUCTURE OR SERVICE POLE

SERVICE EQUIPMENT

NEW	EXISTING	
OH	oh	OVERHEAD LINES
U	U	WOOD POLE, "U" INDICATES UTILITY OWNED
		POLE GUY WITH ANCHOR
		UTILITY TRANSFORMER - GROUND MOUNTED
III	III	SERVICE EQUIPMENT ENCLOSURE TYPE. DOOR INDICATES FRONT OF ENCLOSURE
T	t	TELEPHONE DEMARCATION CABINET

POLE-MOUNTED SERVICE DESIGNATION

TYPE H SERVICE, 28'-10" — TYPE OF INSTALLATION AND POLE HEIGHT ABOVE GRADE

FLASHING BEACON

NEW	EXISTING	
R	R	FLASHING BEACON (ONE VEHICLE SIGNAL HEAD WITH BACKPLATE AND VISOR) "R" INDICATES RED INDICATION, "Y" INDICATES YELLOW INDICATION
Y Y	Y Y	FLASHING BEACON WITH TYPE 15-FBS STANDARD AND A SIGN.
R R	R R	FLASHING BEACON WITH TYPES 9, 9A OR 9B SIGN UNLESS OTHERWISE SPECIFIED OR INDICATED

SIGNAL EQUIPMENT

NEW	EXISTING	
		PEDESTRIAN SIGNAL HEAD
		PUSH BUTTON ASSEMBLY POST
		PEDESTRIAN BARRICADE
		VEHICLE SIGNAL HEAD (WITH BACKPLATE AND 3-SECTIONS: RED, YELLOW AND GREEN)
		VEHICLE SIGNAL HEAD WITH ANGLE VISOR
PV	PV	MODIFICATIONS OF BASIC SYMBOL: "L" INDICATES ALL NON-ARROW SECTIONS LOUVERED "LG" INDICATES LOUVERED GREEN SECTION ONLY "PV" INDICATES ALL 12" SECTIONS PROGRAMMED VISIBILITY "8" INDICATES ALL 8" SECTIONS (ONLY WHEN SPECIFIED)
		VEHICLE SIGNAL HEAD CONSISTING OF RED, YELLOW AND GREEN LEFT ARROW SECTIONS
		VEHICLE SIGNAL HEAD CONSISTING OF RED AND YELLOW SECTIONS WITH AN UP GREEN ARROW SECTION
		VEHICLE SIGNAL HEAD (5 SECTION) CONSISTING OF RED, YELLOW AND GREEN SECTIONS WITH YELLOW AND GREEN RIGHT ARROW SECTIONS
		TYPE 15TS STANDARD WITH VEHICLE SIGNAL HEAD AND LUMINAIRE
		TYPE 21TS STANDARD WITH VEHICLE SIGNAL HEAD AND LUMINAIRE
		STANDARD WITH LUMINAIRE AND SIGNAL MAST ARMS AND ATTACHED VEHICLE SIGNAL HEADS
		TYPE 1 STANDARD WITH ATTACHED VEHICLE SIGNAL HEADS
		STANDARD WITH A SIGNAL MAST ARM, ATTACHED VEHICLE SIGNAL HEADS AND INTERNALLY ILLUMINATED STREET NAME SIGN
		CONTROLLER ASSEMBLY. DOOR INDICATES FRONT OF CABINET

SIGNAL EQUIPMENT Cont

NEW	EXISTING	
		GUARD POST
		TYPE 1 STANDARD WITH RAMP METERING SIGN
		OPTICAL DETECTOR FOR THE EMERGENCY VEHICLE DETECTION

NOTES:

1. All signal sections shall be 12" unless shown otherwise.
2. Signal heads shall be provided with backplates unless shown otherwise.

ILLUMINATED OVERHEAD SIGN

NEW	EXISTING	
		SINGLE POST, SINGLE ILLUMINATED SIGN, BALANCED BUTTERFLY
		SINGLE POST, DOUBLE ILLUMINATED SIGN, BALANCED BUTTERFLY
		SINGLE POST, SINGLE ILLUMINATED SIGN, FULL CANTILEVER
		DOUBLE POST, SINGLE ILLUMINATED SIGN
		SINGLE ILLUMINATED SIGN MOUNTED ON STRUCTURE
		DOUBLE POST, SINGLE ILLUMINATED SIGN WITH ELECTROLIER

STATE OF CALIFORNIA
DEPARTMENT OF TRANSPORTATION

ELECTRICAL SYSTEMS (LEGEND AND ABBREVIATIONS)

NO SCALE

RSP ES-1B DATED OCTOBER 30, 2015 SUPERSEDES RSP ES-1B DATED JULY 19, 2013 AND STANDARD PLAN ES-1B DATED MAY 20, 2011 - PAGE 426 OF THE STANDARD PLANS BOOK DATED 2010.

REVISED STANDARD PLAN RSP ES-1B

2010 REVISED STANDARD PLAN RSP ES-1B

8-19-15

Dist	COUNTY	ROUTE	POST MILES TOTAL PROJECT	SHEET No.	TOTAL SHEETS
03	Gle	5	R0.0/R20.0	72	77

Theresa Gabriel
REGISTERED ELECTRICAL ENGINEER

April 15, 2016
PLANS APPROVAL DATE

REGISTERED PROFESSIONAL ENGINEER
Theresa Aziz Gabriel
No. E15129
Exp. 6-30-16
ELECTRICAL
STATE OF CALIFORNIA

THE STATE OF CALIFORNIA OR ITS OFFICERS OR AGENTS SHALL NOT BE RESPONSIBLE FOR THE ACCURACY OR COMPLETENESS OF SCANNED COPIES OF THIS PLAN SHEET.

TO ACCOMPANY PLANS DATED 4-11-16

EQUIPMENT IDENTIFICATION

ILLUMINATED SIGN IDENTIFICATION:

SIGN No. 12345
10 ISL SCI 1.0

- SIGN EQUIPMENT IDENTIFICATION CHARACTERS - PLACE ON POST OR STRUCTURE
- TRANSFORMER RATING (kVA)
- LIGHTING CONTROL TYPE
- NUMBER AND TYPE OF FIXTURES

} DO NOT PLACE ON STANDARD OR STRUCTURE

ELECTROLIER OR EQUIPMENT IDENTIFICATION:

L2745 - 15'-0"

- MAST ARM LENGTH, IF SHOWN. DO NOT PLACE ON STANDARD OR STRUCTURE
- EQUIPMENT IDENTIFICATION CHARACTERS - PLACE ON STANDARD OR STRUCTURE. EXISTING EQUIPMENT IDENTIFICATION CHARACTERS ARE SHOWN IN PARENTHESIS

CONDUIT AND CONDUCTOR IDENTIFICATION:

1½"C, 2#10, 15#14, 2 DLC, 12P#18 (PAIR)

- NUMBER AND SIZE OF CONDUCTORS AND CABLES
- SIZE OF CONDUIT IN INCHES

ø1, ø2, ø2P, etc.	TRAFFIC PHASE IDENTIFICATION FOR SIGNALS, DETECTORS AND PHASE DIAGRAMS
1 2 3	LEGEND NUMBERS
A B C	EQUIPMENT, SIGNAL POLES, INSTALLATION OR ITEMS
1 2 3	CONDUIT RUN NUMBERS

SIGNAL AND LIGHTING STANDARD (TYPICAL DESIGNATION):

19A - 3 - 100

- WIND VELOCITY = 100 mph
- CASE 3 ARM LOADING
- STANDARD TYPE
- STANDARD PLAN SHEET NUMBER
- DETAIL, NUMBER, SECTION, TYPE OR ELEVATION

MISCELLANEOUS EQUIPMENT

NEW	EXISTING	
CMS	cms	CHANGEABLE MESSAGE SIGN
		CLOSED CIRCUIT TELEVISION CAMERA
		HIGHWAY ADVISORY RADIO POLE AND ANTENNA
EMS	ems	LED EXTINGUISHABLE MESSAGE SIGN
M V	m v	DETECTION DEVICE M = MICROWAVE SENSOR V = VIDEO IMAGE SENSOR

WIRING DIAGRAM LEGEND

- EXTERNAL CONDUCTOR
- CONDUCTOR OR BUS
- TIE POINT
- CONTACTOR COIL
- CONTACTOR, NO CONTACT
- TERMINAL BLOCKS
- CONTACTOR, NC CONTACT
- ENCLOSURE BOND
- GROUNDING ELECTRODE
- CIRCUIT BREAKER
- RECEPTACLE

PULL BOXES

NEW	EXISTING	
		PULL BOX, No. 5 UNLESS OTHERWISE INDICATED OR NOTED
3	9A(21)	PULL BOX, ADDITIONAL DESIGNATIONS OR DESCRIPTIONS

3 No. 3½ PULL BOX
5 No. 5 PULL BOX
6 No. 6 PULL BOX
7 No. 7 PULL BOX (CEILING)
8 No. 8 PULL BOX
9 No. 9 PULL BOX (STRUCTURE)
9A No. 9A PULL BOX (STRUCTURE)

(C) COMMUNICATIONS PULL BOX
(E) PULL BOX WITH EXTENSION
(S) SPRINKLER CONTROL PULL BOX
(21) ANCHOR BOLTS AND CONDUIT FOR FUTURE INSTALLATION OF TYPE 21 STANDARD
(T) TRAFFIC PULL BOX

VEHICLE DETECTORS

5 J 9 U

- VEHICLE DETECTOR DESIGNATION
- U = UPPER
  L = LOWER
- SLOT NUMBER IN INPUT FILE
- INPUT FILE (I OR J)
- PHASE

NEW	EXISTING	
		TYPE A LOOP DETECTOR. OUTLINE OF SAW CUT SHOWN
		TYPE B LOOP DETECTOR. OUTLINE OF SAW CUT SHOWN
		TYPE C LOOP DETECTOR. OUTLINE OF SAW CUT SHOWN
		TYPE D LOOP DETECTOR. OUTLINE OF SAW CUT SHOWN
		TYPE E LOOP DETECTOR. OUTLINE OF SAW CUT SHOWN
		TYPE Q LOOP DETECTOR. OUTLINE OF SAW CUT SHOWN
DH	dh	DETECTOR HANDHOLE
		MICROWAVE OR VIDEO DETECTION ZONE

STATE OF CALIFORNIA
DEPARTMENT OF TRANSPORTATION

ELECTRICAL SYSTEMS (LEGEND AND ABBREVIATIONS)

NO SCALE

RSP ES-1C DATED APRIL 15, 2016 SUPERSEDES RSP ES-1C DATED OCTOBER 30, 2015 AND RSP ES-1C DATED JULY 19, 2013 AND STANDARD PLAN ES-1C DATED MAY 20, 2011 - PAGE 427 OF THE STANDARD PLANS BOOK DATED 2010.

REVISED STANDARD PLAN RSP ES-1C

2010 REVISED STANDARD PLAN RSP ES-1C

1-22-16

Dist	COUNTY	ROUTE	POST MILES TOTAL PROJECT	SHEET No.	TOTAL SHEETS
03	Gle	5	R0.0/R20.0	73	77

Theresa Gabriel
REGISTERED ELECTRICAL ENGINEER

April 15, 2016
PLANS APPROVAL DATE

REGISTERED PROFESSIONAL ENGINEER
Theresa Aziz Gabriel
No. E15129
Exp. 6-30-16
ELECTRICAL
STATE OF CALIFORNIA

THE STATE OF CALIFORNIA OR ITS OFFICERS OR AGENTS SHALL NOT BE RESPONSIBLE FOR THE ACCURACY OR COMPLETENESS OF SCANNED COPIES OF THIS PLAN SHEET.

TO ACCOMPANY PLANS DATED 4-11-16

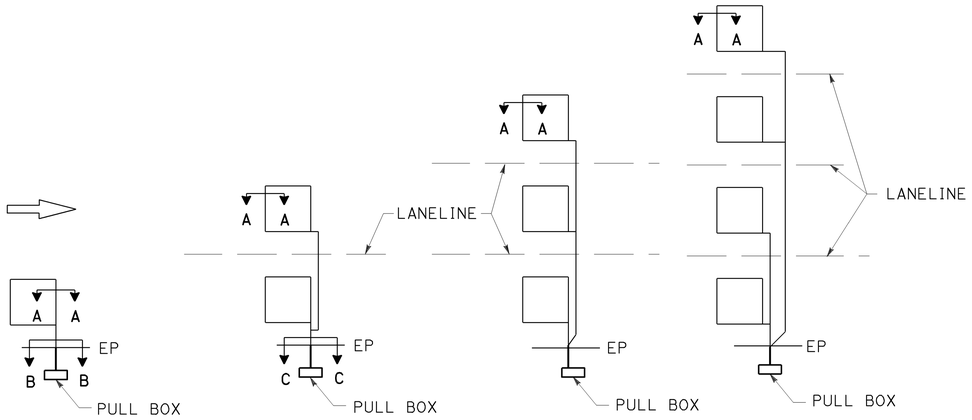

SAW CUT DETAILS

Type A loop detector configurations illustrated

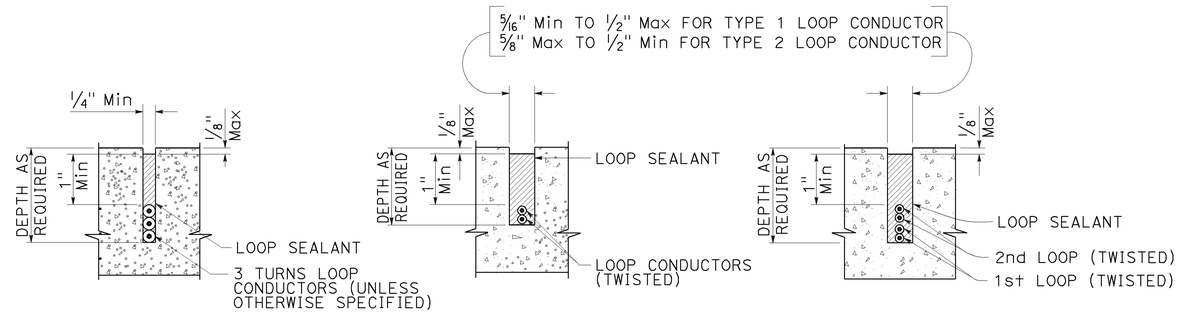

SECTION A-A SECTION B-B SECTION C-C

SLOT DETAILS - TYPE 1 AND TYPE 2 LOOP CONDUCTOR

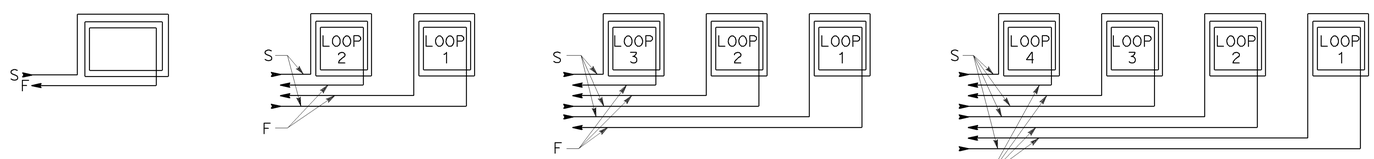

WINDING DETAILS

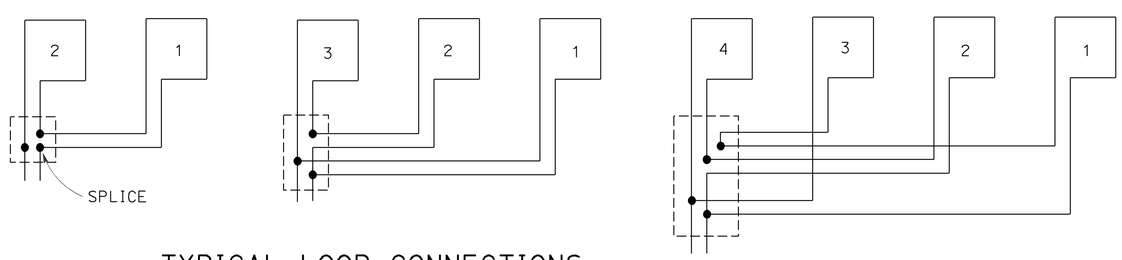

TYPICAL LOOP CONNECTIONS

Dashed lines represent the pull box

ABBREVIATIONS:

S - START
F - FINISH

STATE OF CALIFORNIA
DEPARTMENT OF TRANSPORTATION

ELECTRICAL SYSTEMS (LOOP DETECTORS)

NO SCALE

RSP ES-5A DATED APRIL 15, 2016 SUPERSEDES RSP ES-5A DATED OCTOBER 30, 2015 AND STANDARD PLAN ES-5A DATED MAY 20, 2011 - PAGE 448 OF THE STANDARD PLANS BOOK DATED 2010.

REVISED STANDARD PLAN RSP ES-5A

2010 REVISED STANDARD PLAN RSP ES-5A

1-12-16

Dist	COUNTY	ROUTE	POST MILES TOTAL PROJECT	SHEET No.	TOTAL SHEETS
03	Gle	5	R0.0/R20.0	74	77

Theresa Gabriel
REGISTERED ELECTRICAL ENGINEER

April 15, 2016
PLANS APPROVAL DATE

REGISTERED PROFESSIONAL ENGINEER
Theresa Aziz Gabriel
No. E15129
Exp. 6-30-16
ELECTRICAL
STATE OF CALIFORNIA

THE STATE OF CALIFORNIA OR ITS OFFICERS OR AGENTS SHALL NOT BE RESPONSIBLE FOR THE ACCURACY OR COMPLETENESS OF SCANNED COPIES OF THIS PLAN SHEET.

TO ACCOMPANY PLANS DATED 4-11-16

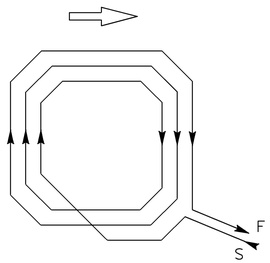

WINDING DETAIL

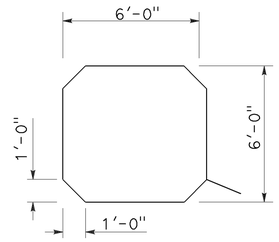

SAW CUT DETAIL

TYPE A LOOP DETECTOR CONFIGURATION

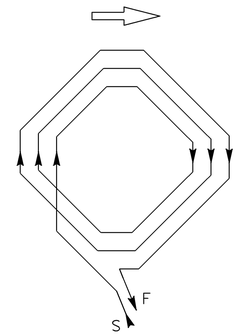

WINDING DETAIL

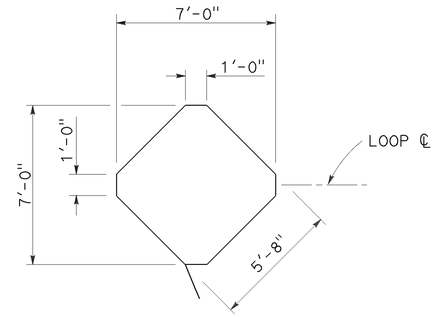

SAW CUT DETAIL

TYPE B LOOP DETECTOR CONFIGURATION

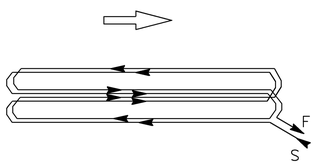

WINDING DETAIL

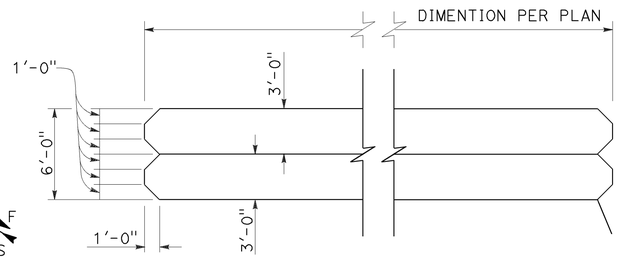

SAW CUT DETAIL

TYPE C LOOP DETECTOR CONFIGURATION

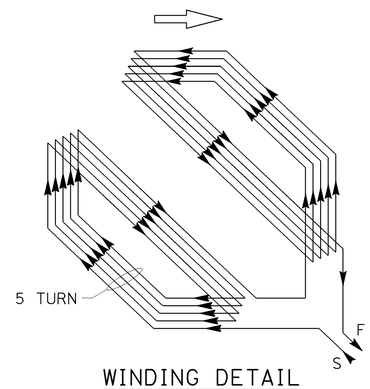

WINDING DETAIL

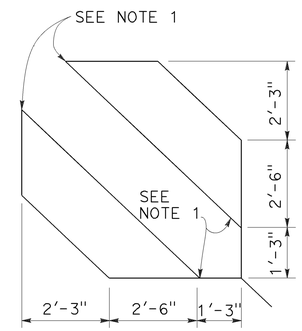

SAW CUT DETAIL

TYPE D LOOP DETECTOR CONFIGURATION

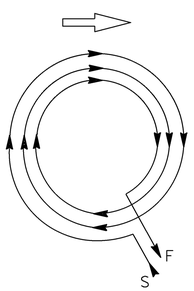

WINDING DETAIL

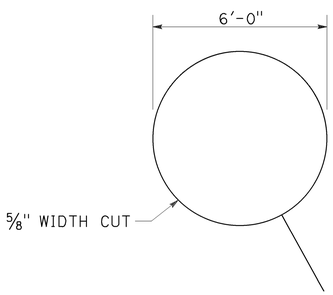

SAW CUT DETAIL

TYPE E LOOP DETECTOR CONFIGURATION

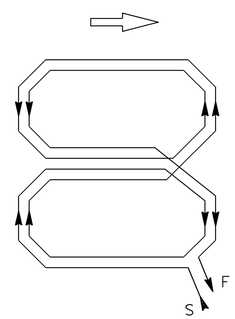

WINDING DETAIL

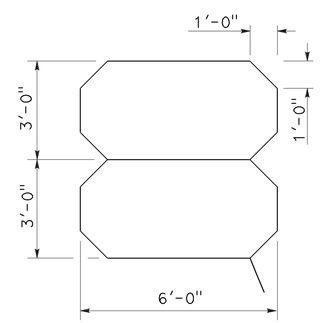

SAW CUT DETAIL

TYPE Q LOOP DETECTOR CONFIGURATION

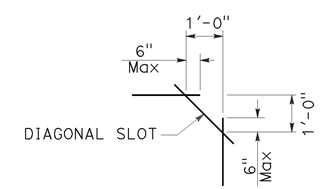

PLAN VIEW OF DIAGONAL SLOT AT CORNERS

NOTES:

1. Round corners of acute angle saw cuts to prevent damage to conductors.
2. Typical distance separating loops from edge to edge is 10' for Type A, B, D and E installation in single lane.
3. Use Type D loops for limit line detection and bicycle lanes.

STATE OF CALIFORNIA
DEPARTMENT OF TRANSPORTATION

ELECTRICAL SYSTEMS (DETECTORS)

NO SCALE

RSP ES-5B DATED APRIL 15, 2016 SUPERSEDES RSP ES-5B DATED OCTOBER 30, 2015 AND RSP ES-5B DATED JULY 19, 2013 AND STANDARD PLAN ES-5B DATED MAY 20, 2011 - PAGE 449 OF THE STANDARD PLANS BOOK DATED 2010.

REVISED STANDARD PLAN RSP ES-5B

2010 REVISED STANDARD PLAN RSP ES-5B

1-22-16

Dist	COUNTY	ROUTE	POST MILES TOTAL PROJECT	SHEET No.	TOTAL SHEETS
03	Gle	5	R0.0/R20.0	75	77

Theresa Gabriel
REGISTERED ELECTRICAL ENGINEER

October 30, 2015
PLANS APPROVAL DATE

REGISTERED PROFESSIONAL ENGINEER Theresa Aziz Gabriel No. E15129 Exp. 6-30-16 ELECTRICAL STATE OF CALIFORNIA

THE STATE OF CALIFORNIA OR ITS OFFICERS OR AGENTS SHALL NOT BE RESPONSIBLE FOR THE ACCURACY OR COMPLETENESS OF SCANNED COPIES OF THIS PLAN SHEET.

TO ACCOMPANY PLANS DATED 4-11-16

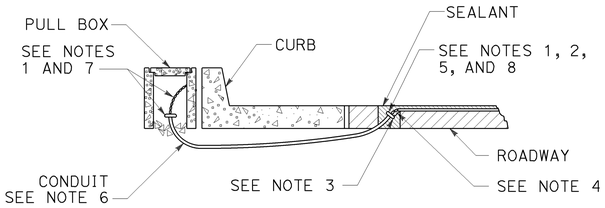

TYPE A
CURB TERMINATION DETAIL

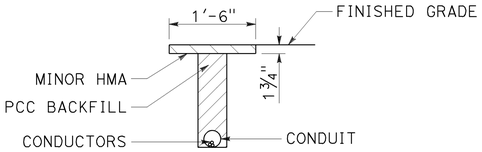

"T" TRENCH DETAIL T

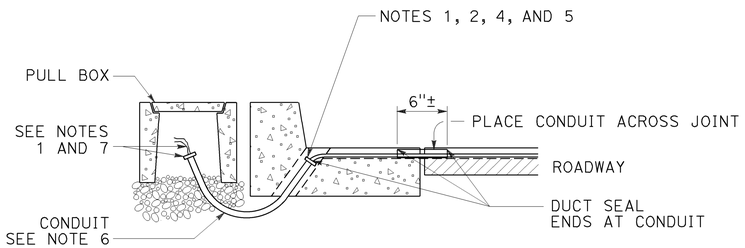

CROSS SECTION

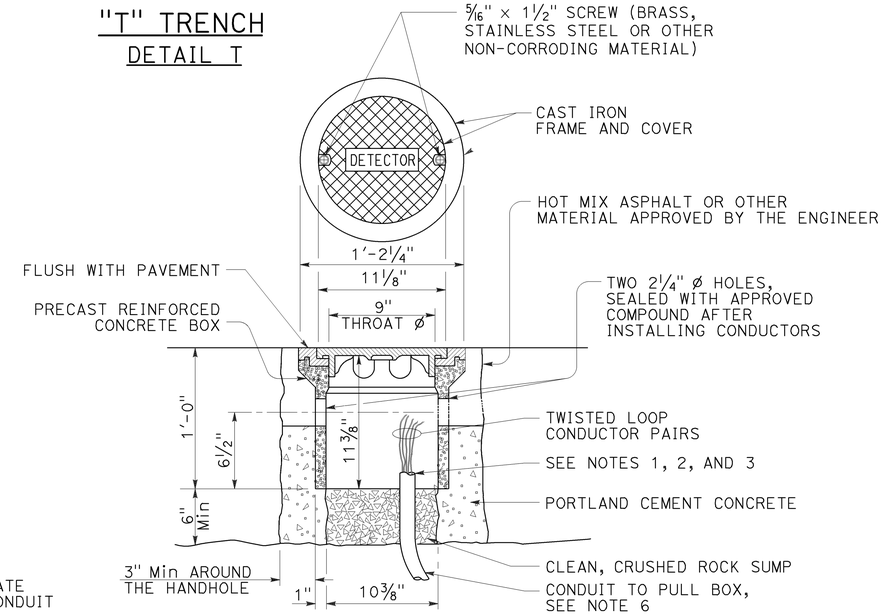

DETECTOR HANDHOLE DETAIL

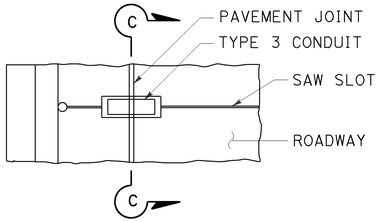

PLAN VIEW

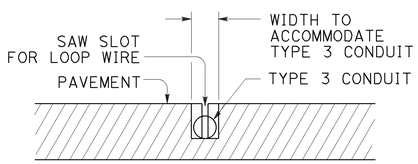

SECTION C-C

TYPE B
CURB TERMINATION DETAIL

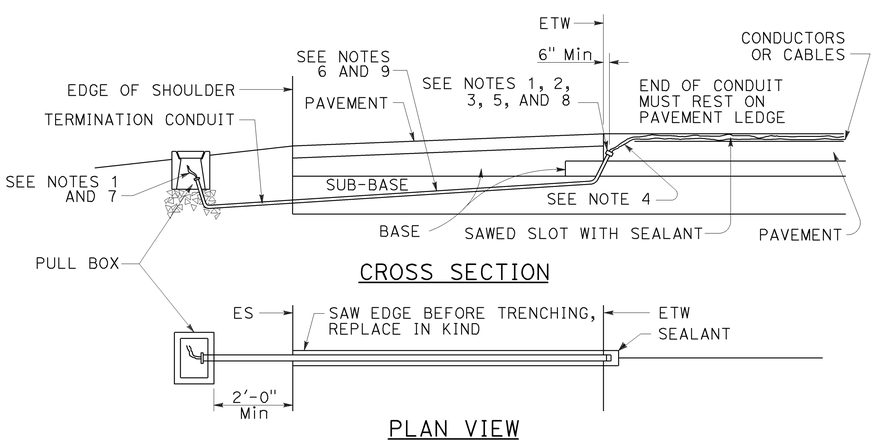

CROSS SECTION

PLAN VIEW

SHOULDER TERMINATION DETAILS

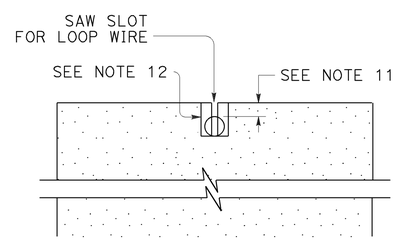

SECTION A-A

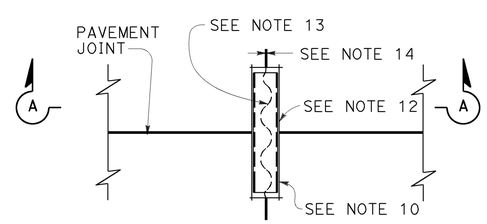

PLAN VIEW

TYPICAL LOOP LEAD-IN DETAIL AT PAVEMENT JOINT

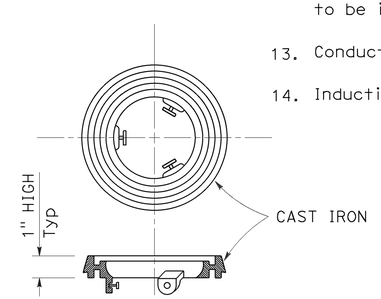

LOCKING GRADE RING

NOTES:

1. Bushing shall be used at end of conduit.
2. Tape detector conductors or cables 3" each side of bushings.
3. Install duct seal compound to each end of termination conduit before installing sealant.
4. Round all sharp edges where detector conductors or cables have to pass.
5. End of conduit shall be 3⅛" below roadway surface.
6.

Conduit size	Loop conductors
1"C minimum	1 to 2 pairs
1½"C minimum	3 to 4 pairs
2"C minimum	5 or more pairs

7. Splice detector conductors or cables to detector lead-in-cable.
8. Location of detector handhole when shown on plans.
9. When the shoulder and traveled way are paved with the same material and there is no joint between them, the conduit shall extend only 2'-0" into the shoulder pavement.
10. ¾"C, Type 3 conduit 6" long minimum, plug both ends with duct compound to keep out sealant.
11. ½" Minimum between top of conduit and pavement surface.
12. Sawcut shall not exceed 1" in width and ⅛" longer than conduit to be installed.
13. Conductors with ½" minimum slack inside conduit.
14. Inductive loop detector saw slot.

STATE OF CALIFORNIA
DEPARTMENT OF TRANSPORTATION

ELECTRICAL SYSTEMS (CURB AND SHOULDER TERMINATION, TRENCH, AND HANDHOLE DETAILS)

NO SCALE

RSP ES-5D DATED OCTOBER 30, 2015 SUPERSEDES RSP ES-5D DATED JULY 19, 2013 AND STANDARD PLAN ES-5D DATED MAY 20, 2011 - PAGE 451 OF THE STANDARD PLANS BOOK DATED 2010.

REVISED STANDARD PLAN RSP ES-5D

2010 REVISED STANDARD PLAN RSP ES-5D

8-19-15

Dist	COUNTY	ROUTE	POST MILES TOTAL PROJECT	SHEET No.	TOTAL SHEETS
03	Gle	5	R0.0/R20.0	76	77

Theresa Gabriel
REGISTERED ELECTRICAL ENGINEER

April 15, 2016
PLANS APPROVAL DATE

REGISTERED PROFESSIONAL ENGINEER
Theresa Aziz Gabriel
No. E15129
Exp. 6-30-16
ELECTRICAL
STATE OF CALIFORNIA

THE STATE OF CALIFORNIA OR ITS OFFICERS OR AGENTS SHALL NOT BE RESPONSIBLE FOR THE ACCURACY OR COMPLETENESS OF SCANNED COPIES OF THIS PLAN SHEET.

TO ACCOMPANY PLANS DATED 4-11-16

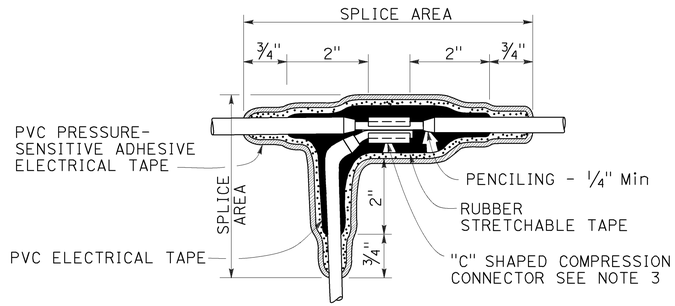

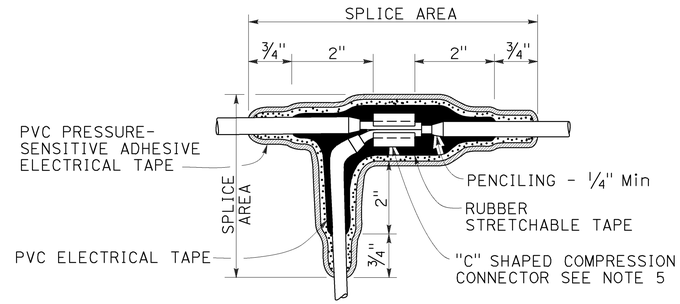

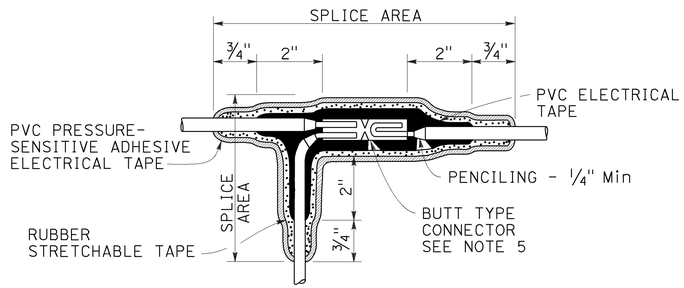

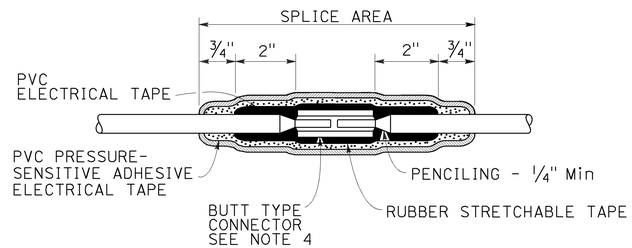

TYPICAL SPLICE INSULATION METHOD B

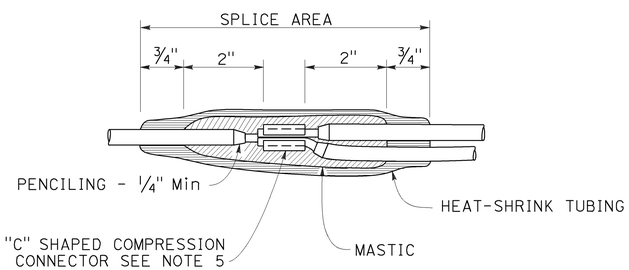

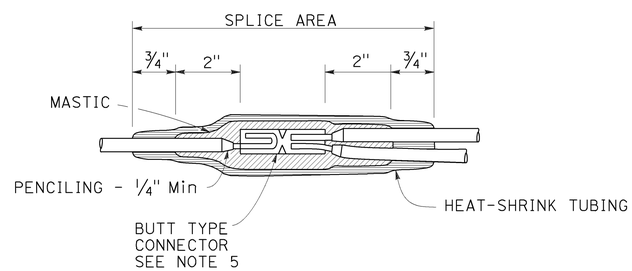

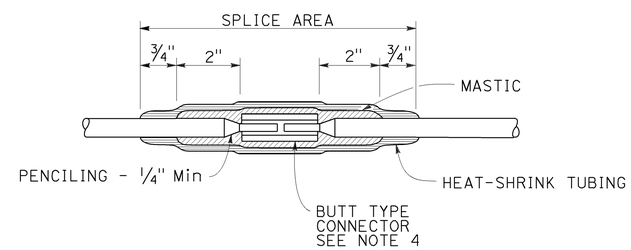

TYPICAL SPLICE INSULATION HEAT-SHRINK TUBING

NOTES:

1. Dimensions are minimum.
2. Rubber tapes shall be rolled after application.
3. Between 1 free-end and 1 through conductor.
4. Between 2 free-end conductors.
5. Between 3 free-end conductors.

STATE OF CALIFORNIA
DEPARTMENT OF TRANSPORTATION

ELECTRICAL SYSTEMS (SPLICE INSULATION METHODS DETAILS)

NO SCALE

RSP ES-13A DATED APRIL 15, 2016 SUPERSEDES RSP ES-13A DATED OCTOBER 30, 2015 AND STANDARD PLAN ES-13A DATED MAY 20, 2011 - PAGE 491 OF THE STANDARD PLANS BOOK DATED 2010.

REVISED STANDARD PLAN RSP ES-13A

2010 REVISED STANDARD PLAN RSP ES-13A

1-22-16

Dist	COUNTY	ROUTE	POST MILES TOTAL PROJECT	SHEET No.	TOTAL SHEETS
03	Gle	5	R0.0/R20.0	77	77

Theresa Gabriel
REGISTERED ELECTRICAL ENGINEER

April 15, 2016
PLANS APPROVAL DATE

REGISTERED PROFESSIONAL ENGINEER
Theresa Aziz Gabriel
No. E15129
Exp. 6-30-16
ELECTRICAL
STATE OF CALIFORNIA

THE STATE OF CALIFORNIA OR ITS OFFICERS OR AGENTS SHALL NOT BE RESPONSIBLE FOR THE ACCURACY OR COMPLETENESS OF SCANNED COPIES OF THIS PLAN SHEET.

TO ACCOMPANY PLANS DATED 4-11-16

CIRCUIT VOLTAGE	FUSE VOLTAGE RATING	FUSE CURRENT RATING						
		HPS LAMP BALLAST		LOW PRESSURE SODIUM BALLAST	INDUCTION SIGN LIGHTING	SINGLE PHASE (TWO WIRE) TRANSFORMERS (PRIMARY SIDE)		
		70 W	100 W	180 W	85 W	1 kVA	2 kVA	3 kVA
120 V	250 V	5 A	5 A	5 A	5 A	10 A	20 A	30 A
240 V	250 V	5 A	5 A	5 A	5 A	6 A	10 A	20 A
480 V	500-600 V	5 A	5 A	3 A	1 A (SEE NOTE 2)	3 A	6 A	10 A

NOTES:

1. Primary lines of multiple ballasts shall be provided with fused connectors. Fuse ratings shall be as noted above.
2. See Revised Standard Plan RSP ES-15D, Type SC3 control.

FUSE RATINGS FOR FUSED CONNECTORS

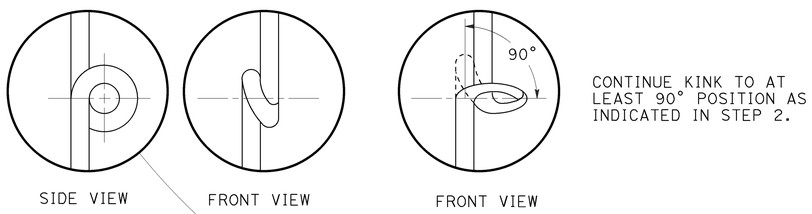

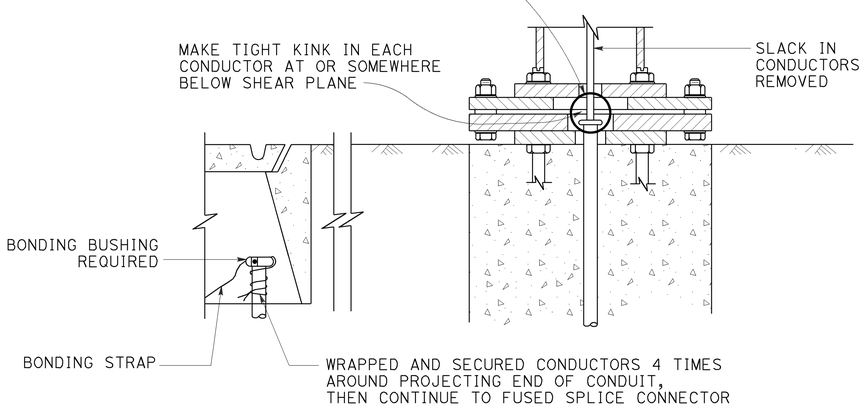

KINKING DETAIL FOR SLIP BASE STANDARDS

DETAIL A

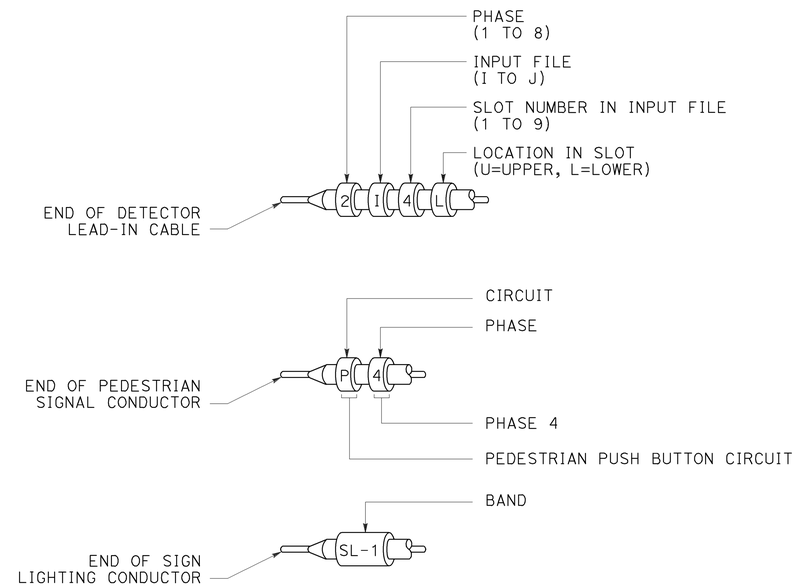

TYPICAL BANDING DETAILS

DETAIL B

STATE OF CALIFORNIA
DEPARTMENT OF TRANSPORTATION

ELECTRICAL SYSTEMS (FUSE RATING, KINKING AND BANDING DETAIL)

NO SCALE

RSP ES-13B DATED APRIL 15, 2016 SUPERSEDES STANDARD PLAN ES-13B DATED MAY 20, 2011 - PAGE 492 OF THE STANDARD PLANS BOOK DATED 2010.

REVISED STANDARD PLAN RSP ES-13B

2010 REVISED STANDARD PLAN RSP ES-13B

1-12-16