HSNH-P070(120)E

Dist	COUNTY	ROUTE	POST MILES TOTAL PROJECT	SHEET No.	TOTAL SHEETS
03	Yub	70	R8.4/13.6	1	29

STATE OF CALIFORNIA
DEPARTMENT OF TRANSPORTATION

PROJECT PLANS FOR CONSTRUCTION ON
STATE HIGHWAY
IN YUBA COUNTY
NEAR MARYSVILLE
FROM 0.1 MILE NORTH OF ROUTE 65 SEPARATION
TO YUBA RIVER BRIDGE AND OVERHEAD

TO BE SUPPLEMENTED BY STANDARD PLANS DATED MAY 2006

INDEX OF PLANS

SHEET No.	DESCRIPTION
1	TITLE AND LOCATION MAP
2-7	LAYOUTS
8-9	CONSTRUCTION DETAILS
10	CONSTRUCTION AREA SIGNS
11	SUMMARY OF QUANTITIES
12-15	PLANTING PLANS
16-19	IRRIGATION PLANS
20	PLANTING AND IRRIGATION PLAN
21-29	REVISED AND NEW STANDARD PLANS

THE STANDARD PLANS LIST APPLICABLE TO THIS CONTRACT IS INCLUDED IN THE NOTICE TO BIDDERS AND SPECIAL PROVISIONS BOOK.

LOCATION MAP

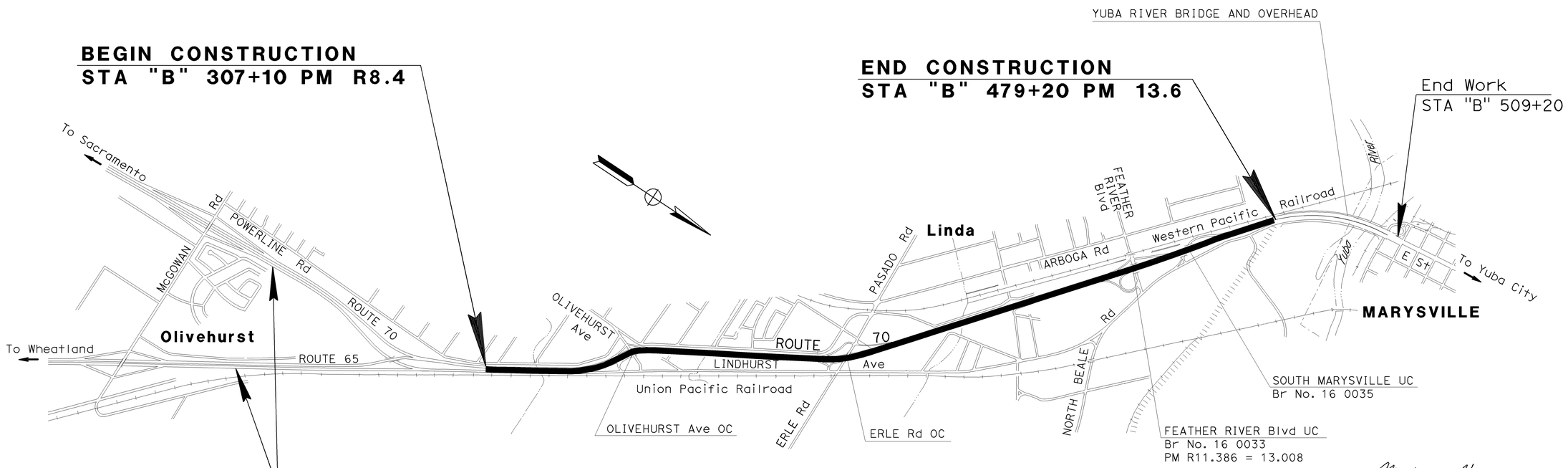

NO SCALE

Michael Hagen 3-24-10
PROJECT ENGINEER DATE
REGISTERED CIVIL ENGINEER

April 19, 2010
PLANS APPROVAL DATE

REGISTERED PROFESSIONAL ENGINEER
MIKE HAGEN
No. 59820
Exp. 12/31/11
CIVIL
STATE OF CALIFORNIA

THE STATE OF CALIFORNIA OR ITS OFFICERS OR AGENTS SHALL NOT BE RESPONSIBLE FOR THE ACCURACY OR COMPLETENESS OF SCANNED COPIES OF THIS PLAN SHEET.

PROJECT MANAGER ROSS FOON
DESIGN ENGINEER ROBERT PETERSON

THE CONTRACTOR SHALL POSSESS THE CLASS (OR CLASSES) OF LICENSE AS SPECIFIED IN THE "NOTICE TO BIDDERS."

CONTRACT No.	03-4E4304
PROJECT ID	0300000705

LAST REVISION 04-19-10
DATE PLOTTED => 26-JUL-2010
TIME PLOTTED => 09:13

FOR COMPLETE RIGHT OF WAY AND ACCURATE ACCESS DATA,
SEE RIGHT OF WAY RECORD MAPS AT DISTRICT OFFICE

Dist	COUNTY	ROUTE	POST MILES TOTAL PROJECT	SHEET No.	TOTAL SHEETS
03	Yub	70	R8.4/13.6	2	29

REGISTERED CIVIL ENGINEER 3-24-10 DATE

4-19-10
PLANS APPROVAL DATE

REGISTERED PROFESSIONAL ENGINEER
MIKE HAGEN
No. 59820
Exp. 12/31/11
CIVIL
STATE OF CALIFORNIA

THE STATE OF CALIFORNIA OR ITS OFFICERS OR AGENTS SHALL NOT BE RESPONSIBLE FOR THE ACCURACY OR COMPLETENESS OF SCANNED COPIES OF THIS PLAN SHEET.

NOTES:

1. TREE REMOVAL LOCATIONS MAY CONTAIN MORE THAN ONE TREE. SEE SHEETS C-4 AND C-5 FOR DETAILS
2. UTILITIES ON THESE SHEETS HAVE NOT BEEN POSITIVELY LOCATED.

LEGEND

TREE TO REMAIN

TREE REMOVAL LOCATION

ROADSIDE CLEARING

HMA - HOT MIX ASPHALT

EAA - END ANCHOR ASSEMBLY

WC (MC) - WEED CONTROL (MINOR CONCRETE)

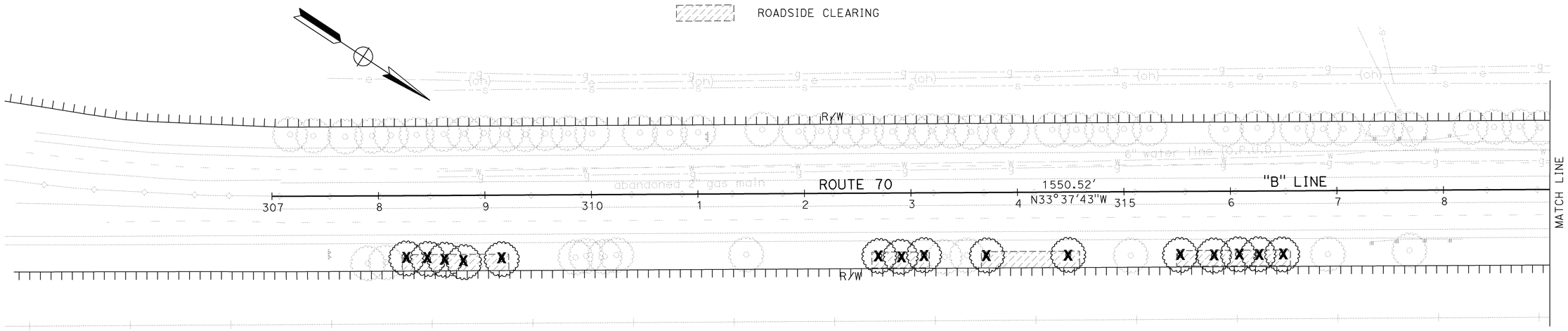

CURVE DATA

No.	R	Δ	T	L
1	2500.00'	18°34'47"	408.94'	810.69'

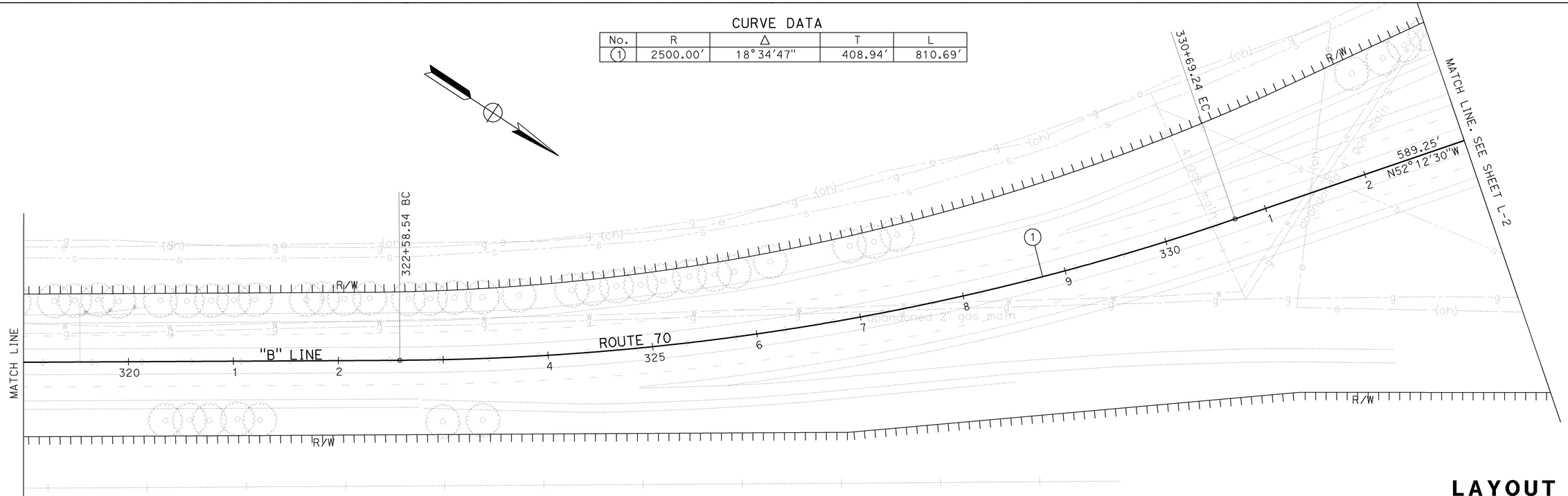

LAYOUT

SCALE: 1":50'

L-1

STATE OF CALIFORNIA - DEPARTMENT OF TRANSPORTATION
Caltrans
TRAFFIC SAFETY

FUNCTIONAL SUPERVISOR: ROBERT PETERSON
CALCULATED-DESIGNED BY: MIKE HAGEN
CHECKED BY: DENNIS CORCORAN
REVISED BY
DATE REVISED

LAST REVISION 04-19-10
DATE PLOTTED => 21-JUL-2010
TIME PLOTTED => 08:05

FOR COMPLETE RIGHT OF WAY AND ACCURATE ACCESS DATA,
SEE RIGHT OF WAY RECORD MAPS AT DISTRICT OFFICE

Dist	COUNTY	ROUTE	POST MILES TOTAL PROJECT	SHEET No.	TOTAL SHEETS
03	Yub	70	R8.4/13.6	3	29

Michael Hagen 3-24-10
REGISTERED CIVIL ENGINEER DATE

4-19-10
PLANS APPROVAL DATE

REGISTERED PROFESSIONAL ENGINEER
MIKE HAGEN
No. 59820
Exp. 12/31/11
CIVIL
STATE OF CALIFORNIA

THE STATE OF CALIFORNIA OR ITS OFFICERS OR AGENTS SHALL NOT BE RESPONSIBLE FOR THE ACCURACY OR COMPLETENESS OF SCANNED COPIES OF THIS PLAN SHEET.

CURVE DATA

No.	R	Δ	T	L
2	2690.28′	21°32′47″	511.90′	1011.70′

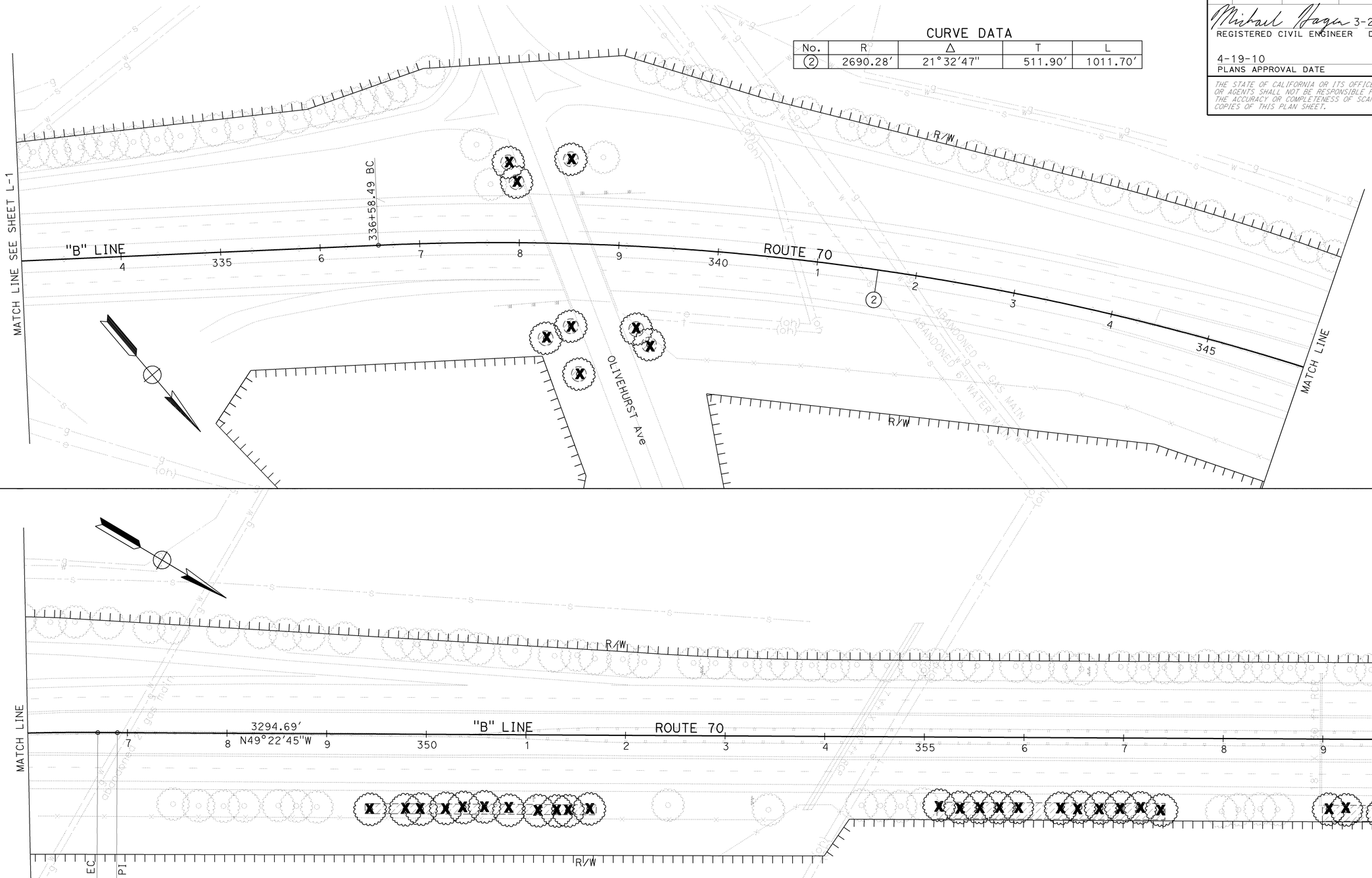

LAYOUT

SCALE: 1":50′

L- 2

REVISED BY | DATE REVISED
MIKE HAGEN | DENNIS CORCORAN
CALCULATED-DESIGNED BY | CHECKED BY
FUNCTIONAL SUPERVISOR
ROBERT PETERSON

STATE OF CALIFORNIA - DEPARTMENT OF TRANSPORTATION
Caltrans
TRAFFIC SAFETY

LAST REVISION 04-19-10 | DATE PLOTTED => 21-JUL-2010 | TIME PLOTTED => 08:05

FOR COMPLETE RIGHT OF WAY AND ACCURATE ACCESS DATA,
SEE RIGHT OF WAY RECORD MAPS AT DISTRICT OFFICE

Dist	COUNTY	ROUTE	POST MILES TOTAL PROJECT	SHEET No.	TOTAL SHEETS
03	Yub	70	R8.4/13.6	4	29

Michael Hagen 3-24-10
REGISTERED CIVIL ENGINEER DATE

4-19-10
PLANS APPROVAL DATE

REGISTERED PROFESSIONAL ENGINEER
MIKE HAGEN
No. 59820
Exp 12/31/11
CIVIL
STATE OF CALIFORNIA

THE STATE OF CALIFORNIA OR ITS OFFICERS OR AGENTS SHALL NOT BE RESPONSIBLE FOR THE ACCURACY OR COMPLETENESS OF SCANNED COPIES OF THIS PLAN SHEET.

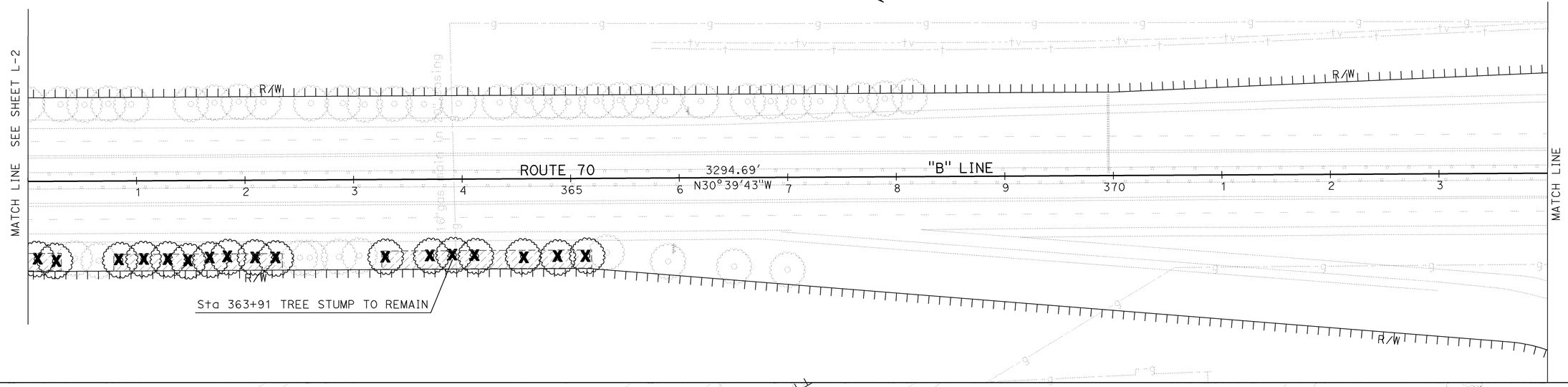

CURVE DATA

No.	R	Δ	T	L
3	3517.70'	21°37'18"	671.73'	1327.47'

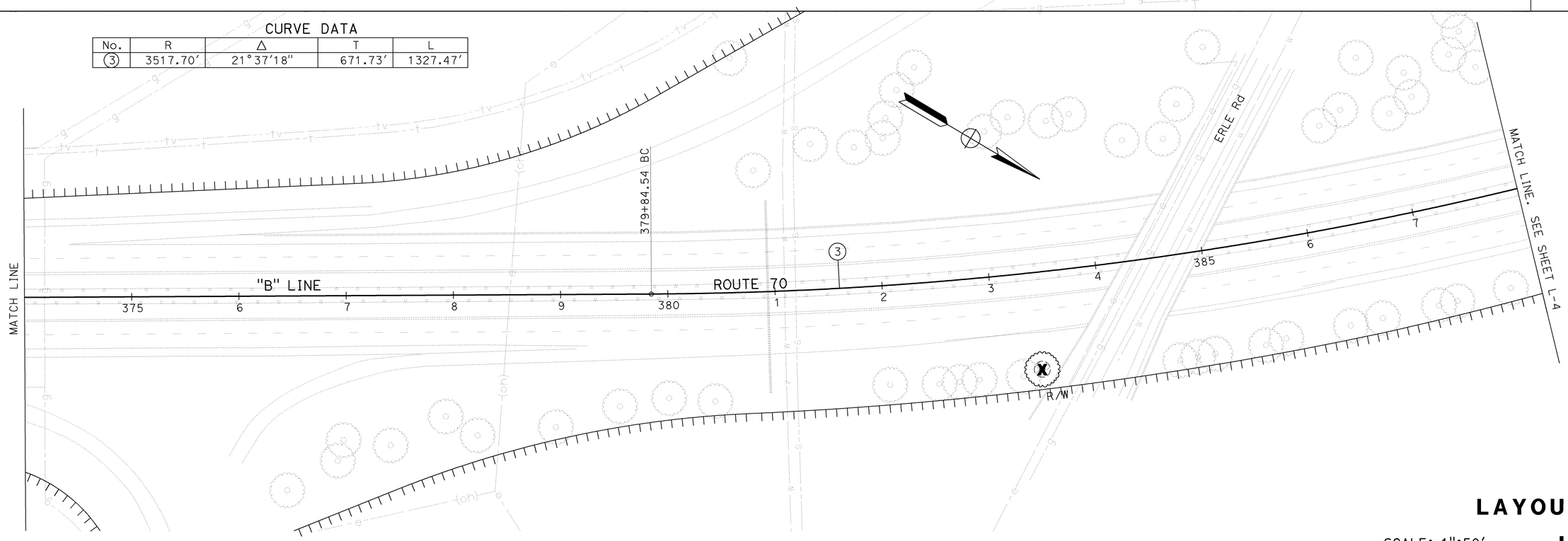

LAYOUT

SCALE: 1":50'

L-3

REVISED BY | DATE REVISED
MIKE HAGEN | DENNIS CORCORAN
CALCULATED-DESIGNED BY | CHECKED BY
FUNCTIONAL SUPERVISOR
ROBERT PETERSON

STATE OF CALIFORNIA - DEPARTMENT OF TRANSPORTATION
Caltrans
TRAFFIC SAFETY

LAST REVISION 04-19-10
DATE PLOTTED => 21-JUL-2010
TIME PLOTTED => 08:05

FOR COMPLETE RIGHT OF WAY AND ACCURATE ACCESS DATA,
SEE RIGHT OF WAY RECORD MAPS AT DISTRICT OFFICE

Dist	COUNTY	ROUTE	POST MILES TOTAL PROJECT	SHEET No.	TOTAL SHEETS
03	Yub	70	R8.4/13.6	5	29

Michael Hagen 3-24-10
REGISTERED CIVIL ENGINEER DATE

4-19-10
PLANS APPROVAL DATE

REGISTERED PROFESSIONAL ENGINEER
MIKE HAGEN
No. 59820
Exp. 12/31/11
CIVIL
STATE OF CALIFORNIA

THE STATE OF CALIFORNIA OR ITS OFFICERS OR AGENTS SHALL NOT BE RESPONSIBLE FOR THE ACCURACY OR COMPLETENESS OF SCANNED COPIES OF THIS PLAN SHEET.

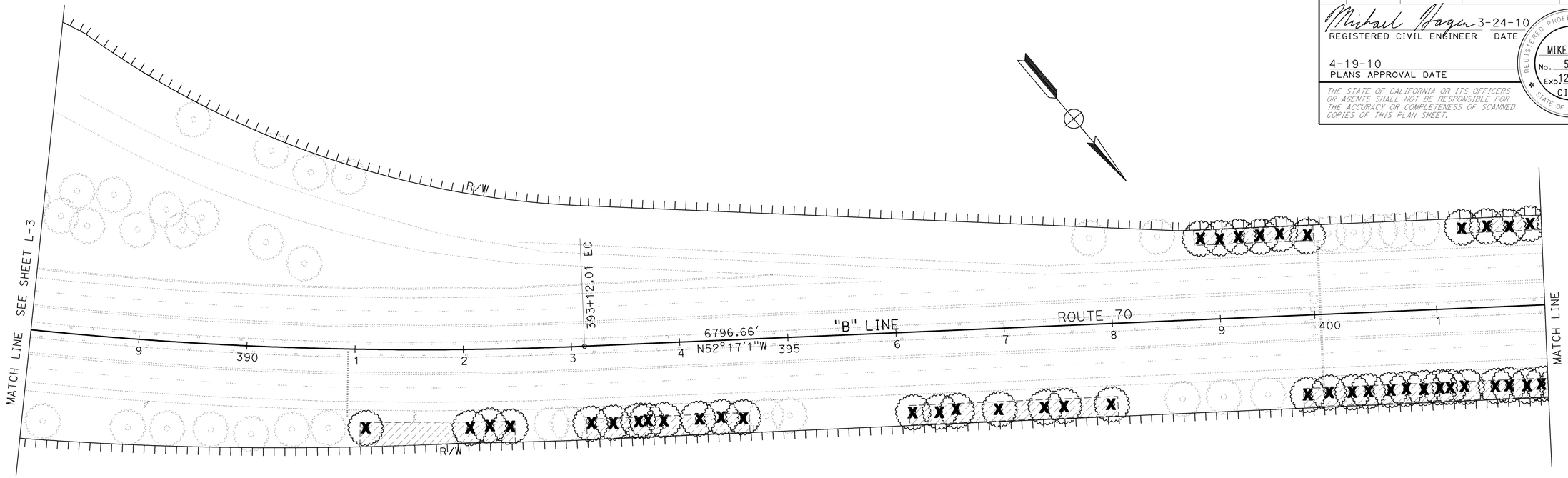

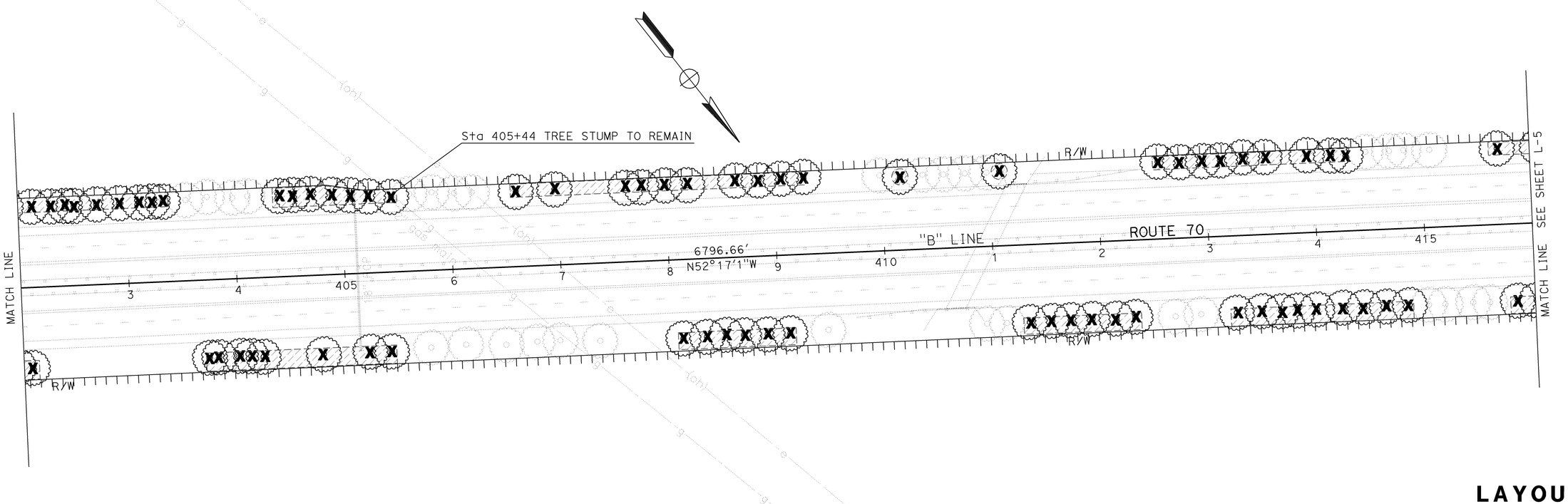

LAYOUT

SCALE: 1":50'

L - 4

REVISED BY	DATE REVISED
MIKE HAGEN	DENNIS CORCORAN
CALCULATED-DESIGNED BY	CHECKED BY
FUNCTIONAL SUPERVISOR	ROBERT PETERSON

STATE OF CALIFORNIA - DEPARTMENT OF TRANSPORTATION
Caltrans
TRAFFIC SAFETY

LAST REVISION 04-19-10 | DATE PLOTTED => 21-JUL-2010 | TIME PLOTTED => 08:05

FOR COMPLETE RIGHT OF WAY AND ACCURATE ACCESS DATA,
SEE RIGHT OF WAY RECORD MAPS AT DISTRICT OFFICE

Dist	COUNTY	ROUTE	POST MILES TOTAL PROJECT	SHEET No.	TOTAL SHEETS
03	Yub	70	R8.4/13.6	6	29

Michael Hagen 3-24-10
REGISTERED CIVIL ENGINEER DATE

4-19-10
PLANS APPROVAL DATE

REGISTERED PROFESSIONAL ENGINEER
MIKE HAGEN
No. 59820
Exp. 12/31/11
CIVIL
STATE OF CALIFORNIA

THE STATE OF CALIFORNIA OR ITS OFFICERS OR AGENTS SHALL NOT BE RESPONSIBLE FOR THE ACCURACY OR COMPLETENESS OF SCANNED COPIES OF THIS PLAN SHEET.

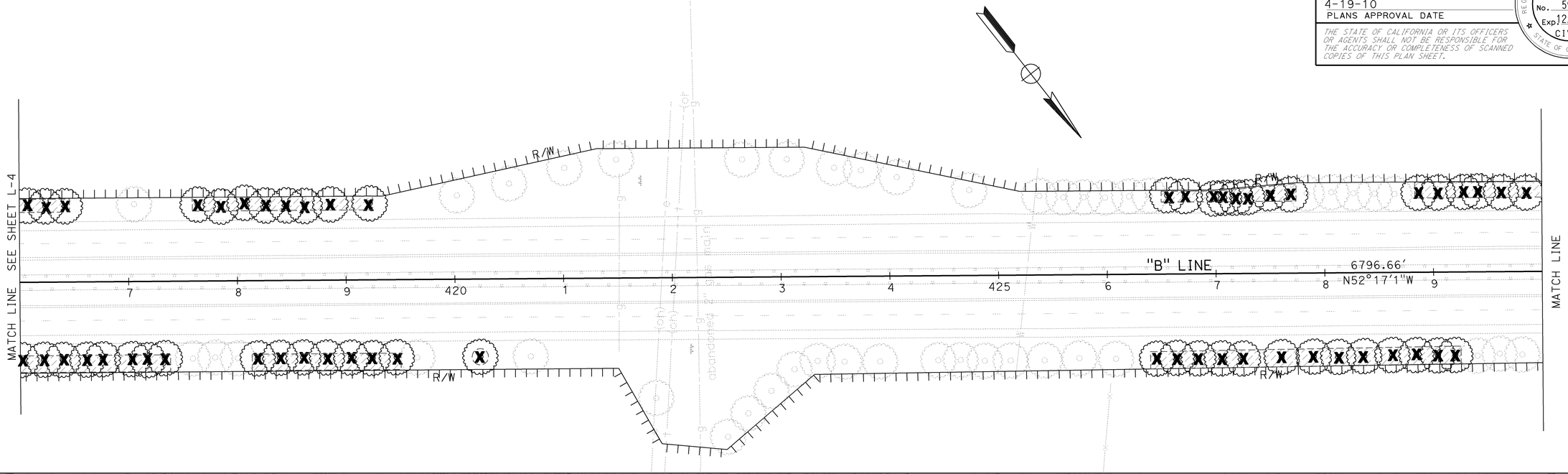

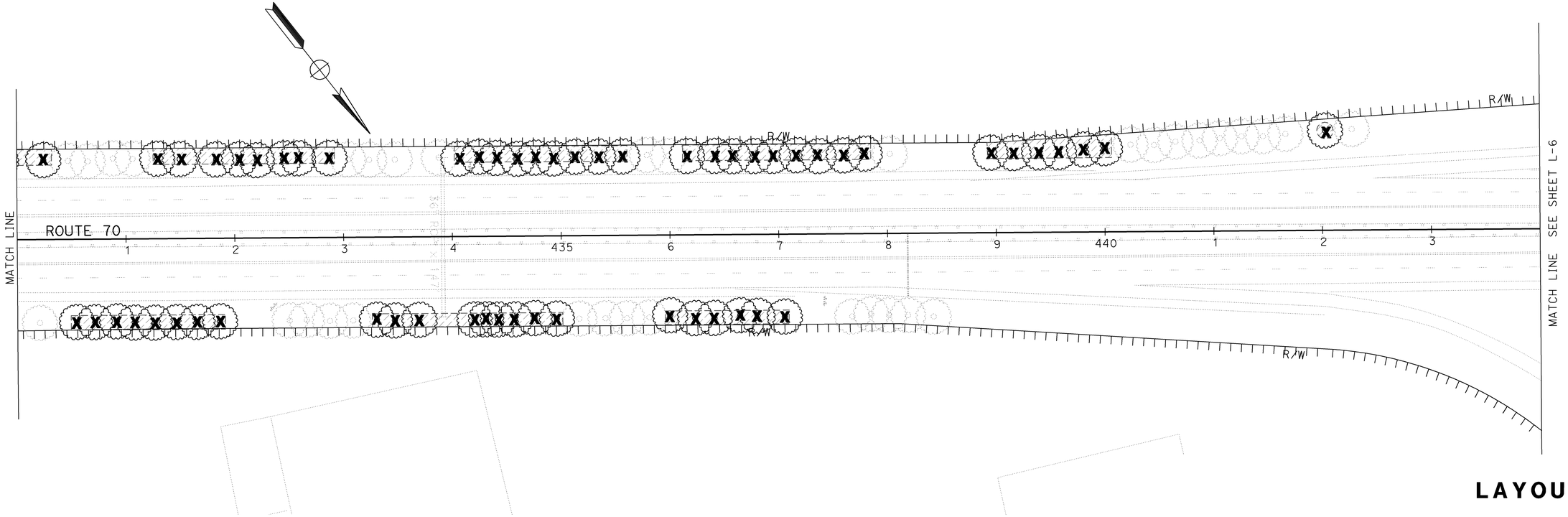

LAYOUT

SCALE: 1":50'

L- 5

STATE OF CALIFORNIA - DEPARTMENT OF TRANSPORTATION
Caltrans
TRAFFIC SAFETY

FUNCTIONAL SUPERVISOR: ROBERT PETERSON
CALCULATED-DESIGNED BY: MIKE HAGEN
CHECKED BY: DENNIS CORCORAN
REVISED BY
DATE REVISED

LAST REVISION 04-19-10
DATE PLOTTED => 21-JUL-2010
TIME PLOTTED => 08:06

FOR COMPLETE RIGHT OF WAY AND ACCURATE ACCESS DATA,
SEE RIGHT OF WAY RECORD MAPS AT DISTRICT OFFICE

Dist	COUNTY	ROUTE	POST MILES TOTAL PROJECT	SHEET No.	TOTAL SHEETS
03	Yub	70	R8.4/13.6	7	29

Michael Hagen 3-24-10
REGISTERED CIVIL ENGINEER DATE

4-19-10
PLANS APPROVAL DATE

REGISTERED PROFESSIONAL ENGINEER
MIKE HAGEN
No. 59820
Exp. 12/31/11
CIVIL
STATE OF CALIFORNIA

THE STATE OF CALIFORNIA OR ITS OFFICERS OR AGENTS SHALL NOT BE RESPONSIBLE FOR THE ACCURACY OR COMPLETENESS OF SCANNED COPIES OF THIS PLAN SHEET.

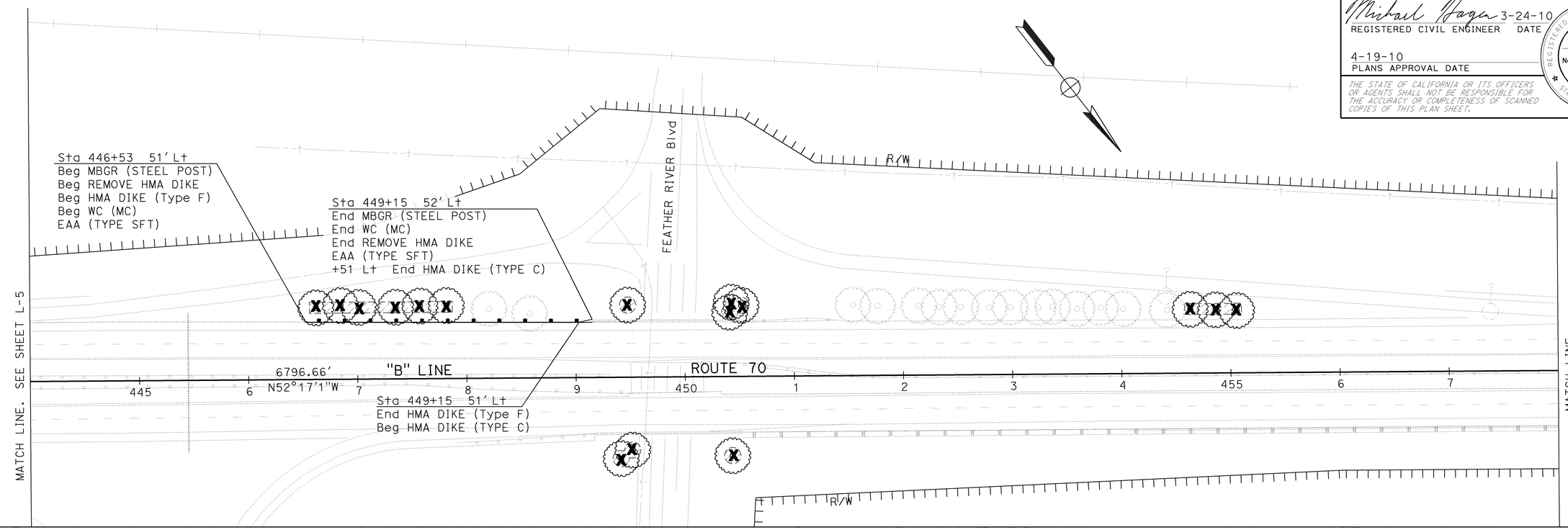

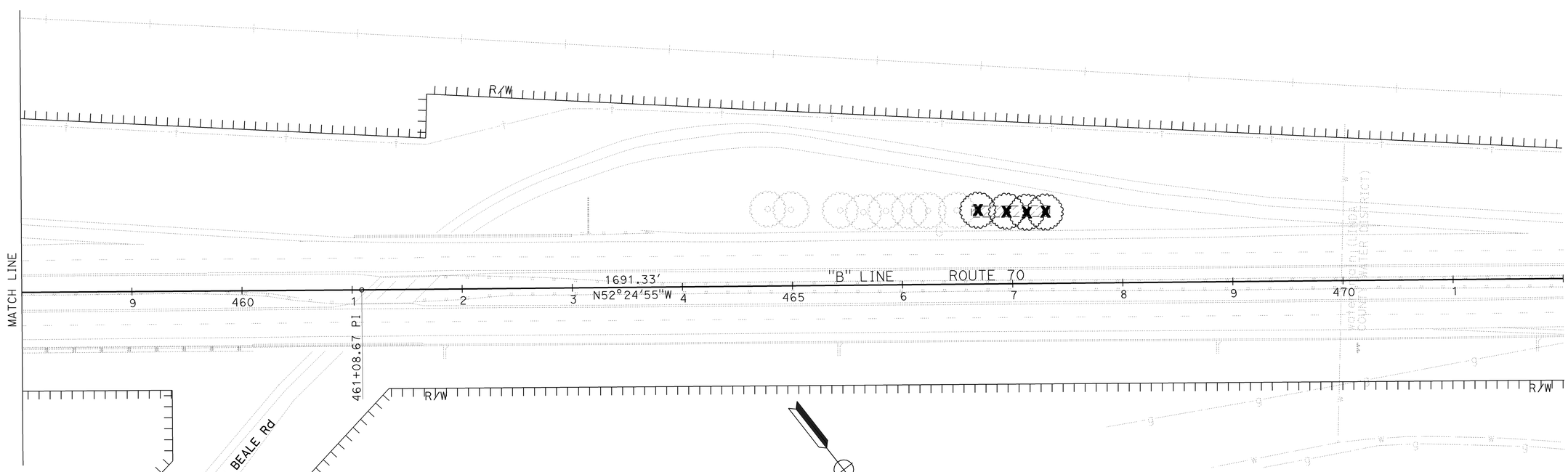

LAYOUT

SCALE: 1":50'

L - 6

STATE OF CALIFORNIA - DEPARTMENT OF TRANSPORTATION
Caltrans
TRAFFIC SAFETY

FUNCTIONAL SUPERVISOR: ROBERT PETERSON
CALCULATED-DESIGNED BY: MIKE HAGEN
CHECKED BY: DENNIS CORCORAN
REVISED BY
DATE REVISED

LAST REVISION DATE PLOTTED => 21-JUL-2010
04-19-10 TIME PLOTTED => 08:06

Dist	COUNTY	ROUTE	POST MILES TOTAL PROJECT	SHEET No.	TOTAL SHEETS
03	Yub	70	R8.4/13.6	8	29

REGISTERED CIVIL ENGINEER 3-24-10 DATE

4-19-10
PLANS APPROVAL DATE

REGISTERED PROFESSIONAL ENGINEER MIKE HAGEN No. 59820 Exp 12/31/11 CIVIL STATE OF CALIFORNIA

THE STATE OF CALIFORNIA OR ITS OFFICERS OR AGENTS SHALL NOT BE RESPONSIBLE FOR THE ACCURACY OR COMPLETENESS OF SCANNED COPIES OF THIS PLAN SHEET.

TREE REMOVAL - NORTHBOUND

SHEET	STATION*	REMOVE TREE No. of Trees	DIAMETER AT BREAST HEIGHT IN	IN	IN	IN	IN
L-1	308+27	1	24.5				
	308+46	4	6.5	9	6	7	
	308+68	2	2	2			
	308+82	2	22	10.5			
	309+17	3	16	14	16		
	312+68	1	22				
	312+92	1	23				
	313+12	2	18	14			
	313+71	1	28				
	314+53	3	14.5	20	20.5		
	315+54	5	16	8	6.5	6.5	6.5
	315+91	2	34	13.5			
	316+10	1	11.5				
	316+26	3	15.5	6	6		
	316+51	3	11.5	15	11		
L-2	338+27	1	22				
	338+55	1	22				
	338+62	1	7.5				
	339+19	2	19	19			
	339+40	3	16	14.5	18		
	349+44	1	18				
	349+80	2	9	13.5			
	349+97	3	12	14	17		
	350+20	3	16	6.5	11.5		
	350+38	2	16.5	19.5			
	350+58	1	7.5				
	350+82	3	11	7	11		
	351+15	5	7	7	5	5	5
	351+30	5	6	3	3	3	3
	351+44	3	15	10	3		
	351+66	3	13	13	16.5		
	355+18	4	11.5	12	3	3	
	355+37	4	8.5	7.5	9	13.5	
	355+55	3	15.5	16.5	19.5		
	355+75	1	7				
	355+94	2	13	15			
	356+37	1	24				
	356+55	2	5	5			
	356+77	2	18	14			
	356+97	5	6	5	5	5	5
	357+17	1	14				
	357+37	2	17	20.5			
	359+05	5	17.5	5.5	7	6	6
	359+22	3	7	20	17.5		
	359+60	4	7.5	10	24.5		
	359+80	1	38				
	360+06	3	3	11.5	11		
L-3	360+26	2	14.5	15.5			

SHEET	STATION*	REMOVE TREE No. of Trees	DIAMETER AT BREAST HEIGHT IN	IN	IN	IN	IN
L-3	360+84	5	7.5	5	10.5	4	2
	361+04	2	17	13			
	361+27	2	9	16			
	361+47	4	12.5	15.5	6.5	15.5	
	361+67	3	19	14.5	14.5		
	361+84	1	28				
	362+08	3	2	2	2		
	362+29	2	17.5	14.5			
	363+31	3	14	8	4		
	363+70	2	14.5	3			
	363+90	2	20	22.5			
	364+11	4	22	16	4	11	
	364+56	2	20.5	2			
	364+87	3	18.5	4	4		
	365+14	1	17.5				
	383+40	1	28.5				
L-4	391+11	1	22.5				
	392+04	6	15	13.5	10	2	2
	392+22	2	17.5	15.0			
	392+41	3	18.5	16.5	4.0		
	393+16	1	18				
	393+37	1	36				
	393+60	2	7	5			
	393+68	2	7	5			
	393+83	2	15.5	7			
	394+15	3	6.5	8.5	12.5		
	394+36	4	10.0	16.5	6.5	9	
	394+57	1	21.5				
	396+14	2	19.5	16.5			
	396+38	1	13.0				
	396+54	3	3	7.5	6		
	396+93	3	17.5	13	17.5		
	397+35	2	18.0	14.5			
	397+54	3	12.5	11.0	23.5		
	397+97	1	28.0				
	399+79	1	20.5				
	399+98	3	20.5	10	11		
	400+20	1	23				
	400+34	1	22.5				
	400+55	2	4	11.5			
	400+69	4	11.5	7	6.5	4	
	400+86	3	5.5	16	17		
	401+08	9	8.5	3	3	21	15
			15.5	11	11.5	7.5	
	401+26	1	14.5				
	401+53	2	2	2			
	401+65	3	13	18	42.5		

SHEET	STATION*	REMOVE TREE No. of Trees	DIAMETER AT BREAST HEIGHT IN	IN	IN	IN	IN
L-4	401+82	5	15.5	7	12.5	11	11.5
	401+96	5	3	3	3	3	3
	402+09	1	20				
	403+74	2	5	5			
	403+82	4	30	6	6	6	
	404+02	3	5.5	4	4		
	404+11	4	7.5	3	3	3	
	404+23	5	16	12.5	15	16.5	15.5
	404+77	2	14	6.5			
	405+21	2	18.5	19.5			
	405+40	3	15	11	11		
	408+11	4	18	14.5	5	11.5	
	408+34	4	12.5	16.5	11.5	6	
	408+52	4	21	30	3	4	
	408+69	5	14.5	11.5	5.5	5.5	6
	408+89	3	4	3	2		
	409+10	1	21				
	411+31	2	14.5	27			
	411+51	1	23				
	411+69	2	17	22			
	411+89	2	21	4			
	412+12	1	23.5				
	412+30	2	11	35			
	413+23	4	23	19.5	24.5	12.5	
	413+46	2	26.5	27.5			
	413+63	1	10.5				
	413+79	5	12.5	10	5	9	13.5
	413+98	4	14.5	17	16	17	
	414+21	3	10	13	3		
	414+40	1	30.5				
	414+61	2	25	7.5			
	414+82	2	13	8			
	415+82	2	21	27			
L-5	416+00	2	18.5	3			
	416+21	2	22	24.5			
	416+38	2	19	13.5			
	416+60	1	30.5				
	416+75	1	17				
	417+02	2	16	17			
	417+17	1	28.5				
	417+33	4	13.5	11.5	17.0	13.5	
	418+18	3	16.5	20.0	19.0		
	418+38	1	10.5				
	418+59	1	26				
	418+81	2	19	17			
	419+05	2	25.5	6			
	419+24	2	14	13.5			
	419+45	1	24				
	420+23	1	32.5				

SHEET	STATION*	REMOVE TREE No. of Trees	DIAMETER AT BREAST HEIGHT IN	IN	IN	IN	IN
L-5	426+45	2	21.0	3.0			
	426+63	3	13.5	25.5	22		
	426+83	2	21.5	25.5			
	427+04	1	29.5				
	427+24	2	15.5	27.0			
	427+59	1	16.5				
	427+90	3	15.5	23.5	17.5		
	428+12	2	26.5	18.5			
	428+36	1	18.5				
	428+62	2	23	16			
	428+84	3	23	17.5	8.5		
	429+03	1	12.5				
	429+20	2	16.5	10.5			
	430+54	2	29	25.5			
	430+71	1	18.5				
	430+91	1	21				
	431+07	1	19				
	431+27	1	27				
	431+47	1	26.5				
	431+64	1	29				
	431+86	2	18	18			
	433+30	1	14				
	433+47	2	23.5	17.5			
	433+69	1	20				
	434+21	1	19.5				
	434+31	1	17				
	434+41	2	7	11			
	434+56	1	14				
	434+75	1	17				
	434+96	1	20.5				
	436+00	1	27				
	436+22	2	13	23			
	436+42	2	28.5	17.5			
	436+63	1	18.5				
	436+80	1	16.5				
	437+04	2	20	21.5			
L-6	449+45	2	24.5	25			
	450+44	1	28.5				
	TOTAL	410					

*EXACT LOCATION WILL BE IDENTIFIED BY THE ENGINEER

CONSTRUCTION DETAILS

NO SCALE

C-1

REVISED BY | DATE REVISED
MIKE HAGEN | DENNIS CORCORAN
CALCULATED-DESIGNED BY | CHECKED BY
FUNCTIONAL SUPERVISOR
ROBERT PETERSON

STATE OF CALIFORNIA - DEPARTMENT OF TRANSPORTATION
Caltrans® TRAFFIC SAFETY

LAST REVISION 04-19-10
DATE PLOTTED => 21-JUL-2010
TIME PLOTTED => 08:06

Dist	COUNTY	ROUTE	POST MILES TOTAL PROJECT	SHEET No.	TOTAL SHEETS
03	Yub	70	R8.4/13.6	9	29

Michael Hagen 3-24-10
REGISTERED CIVIL ENGINEER DATE

4-19-10
PLANS APPROVAL DATE

REGISTERED PROFESSIONAL ENGINEER
MIKE HAGEN
No. 59820
Exp 12/31/11
CIVIL
STATE OF CALIFORNIA

THE STATE OF CALIFORNIA OR ITS OFFICERS OR AGENTS SHALL NOT BE RESPONSIBLE FOR THE ACCURACY OR COMPLETENESS OF SCANNED COPIES OF THIS PLAN SHEET.

TREE REMOVAL - SOUTHBOUND

SHEET	STATION*	TREE REMOVAL					
		No. of Trees	DIAMETER AT BREAST HEIGHT				
			IN	IN	IN	IN	IN
L-6	467+29	1	37.5				
	467+13	1	29.5				
	466+94	1	19.5				
	466+68	3	14.5	17	16.5		
	455+05	1	29				
	454+86	2	7	19.5			
	454+63	1	16				
	450+50	3	35	5	5		
	449+48	2	17	21.5			
	447+82	1	23				
	447+59	1	38				
	447+36	1	31				
	447+01	1	32				
	446+85	1	30.5				
	446+61	1	25.5				
L-5	442+02	1	17.5				
	440+01	1	19				
	439+81	3	6	6	6		
	439+59	1	24				
	439+41	2	28	7			
	439+16	1	11.5				
	438+96	1	35.5				
	437+80	2	18.5	15.5			
	437+61	1	30				
	437+38	1	18.5				
	437+18	1	36.5				
	436+96	1	25.5				
	436+78	1	23.5				
	436+57	1	15				
	436+42	1	26				
	436+17	2	20.5	19			
	435+56	2	17	25			
	435+36	1	26.5				
	435+14	1	20				
	434+94	1	14				
	434+79	1	25				
	434+62	2	22	17			
	434+42	1	14.5				
	434+25	3	22	5.5	4		
	434+07	1	25				
	432+87	2	21.5	24.5			
	432+61	2	19.5	26.5			
	432+47	1	22.5				
	432+23	1	24.5				
	432+06	1	26				
	431+85	1	17				
	431+50	2	20.5	17.5			
	431+30	1	19				
	430+27	2	18	23.5			

SHEET	STATION*	TREE REMOVAL					
		No. of Trees	DIAMETER AT BREAST HEIGHT				
			IN	IN	IN	IN	IN
L-5	429+87	2	21.5	15.5			
	429+62	2	18	17.5			
	429+43	1	12.5				
	429+29	2	24.5	21			
	429+05	1	24				
	428+88	1	34.5				
	427+69	2	24.5	20			
	427+49	2	21.5	11.5			
	427+29	2	24.5	12.5			
	427+18	1	6				
	427+10	2	13.5	10			
	426+96	3	5	5	5		
	426+71	2	17	22.5			
	426+55	2	18	17			
	419+21	1	36.5				
	418+85	3	19	19	19		
	418+63	1	27				
	418+43	1	23.5				
	418+23	2	27	6			
	418+07	1	28.5				
	417+84	1	21.5				
	417+64	1	44.5				
	416+41	1	9.5				
	416+26	3	15	13.5	18.5		
	416+05	1	19	22.5			
	415+67	1	21.5				
L-4	414+28	1	19.5				
	414+14	2	16	10.5			
	413+89	3	17.5	17	17		
	413+53	1	39.7				
	413+32	1	35				
	413+11	1	15				
	412+94	2	15.5	5			
	412+73	2	14.5	18.5			
	412+56	1	17.5				
	411+05	1	5.5				
	410+16	2	14.5	14			
	409+26	1	21				
	409+07	2	14	34			
	408+86	2	11.5	18.5			
	408+69	2	17	10.5			
	408+19	1	17				
	407+99	3	10	17.5	7		
	407+77	1	21				
	407+62	1	23				
	406+97	4	10	16	15.5		
	406+61	1	22				
	405+46	2	14.5	16.5			
	405+24	3	12	14.5	19.5		

SHEET	STATION*	TREE REMOVAL					
		No. of Trees	DIAMETER AT BREAST HEIGHT				
			IN	IN	IN	IN	IN
L-4	405+07	1	34				
	404+91	2	17	20.5			
	404+70	1	15				
	404+55	3	14.5	9.5	5		
	404+41	1	21.5				
	403+34	2	14	31.5			
	403+24	3	7	7			
	403+12	3	15.5	17	19.5		
	402+94	5	11	12	12		
	402+73	3	7	7	7		
	402+52	3	7	9	23.5		
	402+43	2	11	9			
	402+30	1	20				
	402+12	3	15.5	24.5	13.5		
	401+88	1	24.5				
	401+69	2	11	10			
	401+50	1	25				
	401+27	1	21				
	399+84	1	22				
	399+58	1	20				
	399+40	3	22	10.5	7		
	399+20	1	21				
	399+02	3	11	14	9		
	398+84	1	22.5				
L-2	338+51	2	19	21			
	337+96	1	21.5				
	337+88	1	18				
TOTAL		201					

*EXACT LOCATION WILL BE IDENTIFIED BY THE ENGINEER

CONSTRUCTION DETAILS

NO SCALE

C-2

STATE OF CALIFORNIA - DEPARTMENT OF TRANSPORTATION
Caltrans
TRAFFIC SAFETY

FUNCTIONAL SUPERVISOR: ROBERT PETERSON
CALCULATED-DESIGNED BY: MIKE HAGEN
CHECKED BY: DENNIS CORCORAN
REVISED BY
DATE REVISED

LAST REVISION 04-19-10
DATE PLOTTED => 21-JUL-2010
TIME PLOTTED => 08:06

Dist	COUNTY	ROUTE	POST MILES TOTAL PROJECT	SHEET No.	TOTAL SHEETS
03	Yub	70	R8.4/13.6	10	29

REGISTERED CIVIL ENGINEER 3-24-10 DATE

4-19-10
PLANS APPROVAL DATE

REGISTERED PROFESSIONAL ENGINEER
MIKE HAGEN
No. 59820
Exp. 12/31/11
CIVIL
STATE OF CALIFORNIA

THE STATE OF CALIFORNIA OR ITS OFFICERS OR AGENTS SHALL NOT BE RESPONSIBLE FOR THE ACCURACY OR COMPLETENESS OF SCANNED COPIES OF THIS PLAN SHEET.

STATIONARY MOUNTED CONSTRUCTION AREA SIGNS

Type	Sign Code		Panel Size	Sign Message	Number of post and size	Number of Signs
	Federal	California				
A	W20-1	C23	48" x 48"	ROAD WORK AHEAD	1 - 6" x 6"	8
B	G20-2	C14	36" x 18"	END ROAD WORK	1 - 4" x 4"	7
C	W20-1	C23	60" x 60"	ROAD WORK AHEAD	2 - 4" x 6"	4
D	---	C14	48" x 24"	END ROAD WORK	1 - 4" x 6"	2

NOTE: EXACT SIGN LOCATION TO BE DETERMINED BY THE ENGINEER

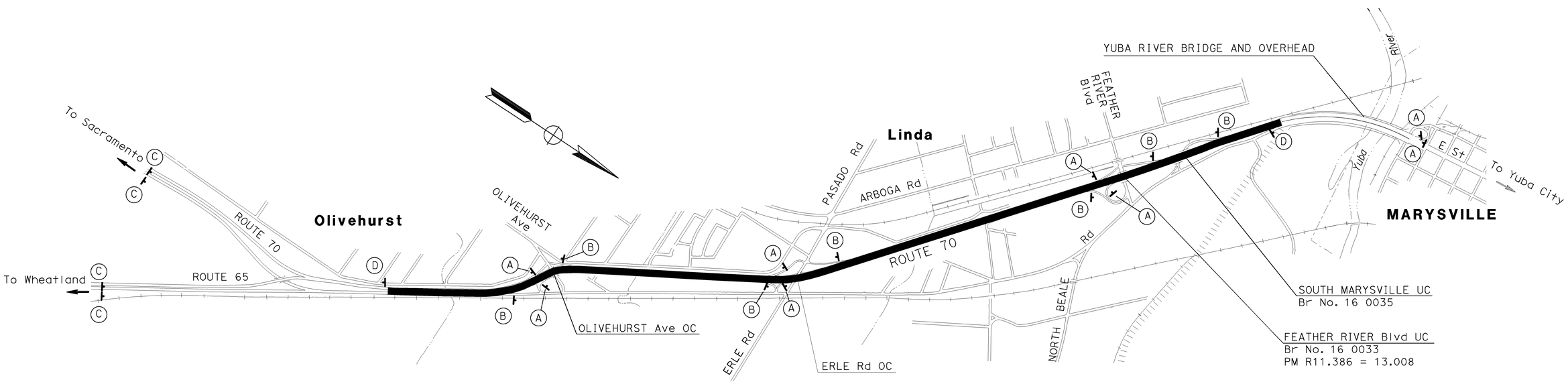

CONSTRUCTION AREA SIGNS

NO SCALE

CS-1

STATE OF CALIFORNIA - DEPARTMENT OF TRANSPORTATION
Caltrans
TRAFFIC SAFETY

FUNCTIONAL SUPERVISOR: ROBERT PETERSON
CALCULATED-DESIGNED BY: MIKE HAGEN
CHECKED BY: DENNIS CORCORAN
REVISED BY
DATE REVISED

LAST REVISION 04-19-10 | DATE PLOTTED => 21-JUL-2010 | TIME PLOTTED => 08:06

Dist	COUNTY	ROUTE	POST MILES TOTAL PROJECT	SHEET No.	TOTAL SHEETS
03	Yub	70	R8.4/13.6	11	29

REGISTERED CIVIL ENGINEER 3-24-10 DATE

4-19-10
PLANS APPROVAL DATE

REGISTERED PROFESSIONAL ENGINEER MIKE HAGEN No. 59820 Exp. 12/31/11 CIVIL STATE OF CALIFORNIA

THE STATE OF CALIFORNIA OR ITS OFFICERS OR AGENTS SHALL NOT BE RESPONSIBLE FOR THE ACCURACY OR COMPLETENESS OF SCANNED COPIES OF THIS PLAN SHEET.

NOTES:

1. REMOVE TREE COSTS INCLUDED ROADSIDE CLEARING LINE ITEM

ROADSIDE CLEARING

STATION	NB/SB	REMOVE TREE (N) EA	ROADSIDE CLEARING (N) ACRE	STATION	NB/SB	REMOVE TREE (N) EA	ROADSIDE CLEARING (N) ACRE
308+22 to 309+22	NB	12	0.035	467+34 to 466+63	SB	6	0.016
312+63 to 313+17	NB	4	0.018	455+10 to 454+58	SB	4	0.012
313+66 to 314+58	NB	4	0.032	450+55 to 450+45	SB	3	0.012
315+49 to 316+56	NB	14	0.036	449+53 to 448+43	SB	2	0.004
338+22 to 338+67	NB	3	0.012	447+87 to 446+56	SB	6	0.030
339+14 to 339+45	NB	5	0.008	442+07 to 441+97	SB	1	0.004
349+39 to 351+71	NB	31	0.053	440+06 to 438+91	SB	9	0.047
355+13 to 357+42	NB	27	0.087	437+85 to 436+12	SB	11	0.057
359+00 to 360+31	NB	18	0.048	435+61 to 434+02	SB	13	0.052
360+79 to 362+34	NB	22	0.054	432+92 to 431+25	SB	11	0.057
363+21 to 365+19	NB	17	0.074	430+32 to 428+83	SB	11	0.049
383+35 to 383+45	NB	1	0.004	427+74 to 426+50	SB	16	0.033
391+06 to 392+46	NB	12	0.068	419+26 to 417+59	SB	11	0.049
393+11 to 394+62	NB	16	0.063	416+46 to 415+62	SB	6	0.023
396+09 to 398+02	NB	15	0.079	414+33 to 412+51	SB	13	0.051
399+74 to 402+14	NB	41	0.095	411+21 to 411+11	SB	1	0.004
403+69 to 405+45	NB	25	0.068	410+10 to 410+00	SB	1	0.004
408+06 to 409+15	NB	21	0.039	409+31 to 406+56	SB	18	0.077
411+26 to 412+35	NB	10	0.039	405+51 to 404+36	SB	13	0.041
413+18 to 414+87	NB	24	0.062	403+39 to 401+22	SB	30	0.066
415+77 to 417+38	NB	17	0.057	399+89 to 398+79	SB	10	0.034
418+13 to 419+50	NB	12	0.047	338+56 to 338+46	SB	2	0.004
420+18 to 420+28	NB	1	0.004	338+01 to 337+83	SB	2	0.008
426+40 to 429+25	NB	25	0.105	SOUTHBOUND SUBTOTAL		201	0.734
430+49 to 431+91	NB	10	0.044	NORTHBOUND SUBTOTAL		410	1.325
433+25 to 435+01	NB	11	0.049	TOTAL		611	2.059
435+95 to 437+09	NB	9	0.033				
449+40 to 449+50	NB	2	0.008				
450+39 to 450+49	NB	1	0.004				
NORTHBOUND SUBTOTAL		410	1.325				

(N) NOT A SEPARATE PAY ITEM. FOR INFORMATION ONLY

HMA DIKE

STATION	NB/SB	REMOVE HMA DIKE LF	HMA DIKE (TYPE C) LF	HMA DIKE (TYPE F) LF	HMA (TYPE A) TON
446+53 to 449+15	SB	262	13	249	3.4
	TOTAL	262	13	249	3.4

METAL BEAM GUARD RAILING

STATION	NB/SB	MBGR (STEEL POST) LF	DELINEATOR (CLASS 1) TYPE F-1 EA	END ANCHOR ASSEMBLY (TYPE SFT) EA	WEED CONTROL (MINOR CONCRETE) SQYD
446+53 to 449+15	SB	263	1	2	100
	TOTAL	263	1	2	100

SUMMARY OF QUANTITIES

Q-1

STATE OF CALIFORNIA - DEPARTMENT OF TRANSPORTATION
Caltrans
TRAFFIC SAFETY

FUNCTIONAL SUPERVISOR: ROBERT PETERSON
CALCULATED-DESIGNED BY: MIKE HAGEN
CHECKED BY: DENNIS CORCORAN
REVISED BY
DATE REVISED

LAST REVISION 04-19-10 | DATE PLOTTED => 21-JUL-2010 | TIME PLOTTED => 08:06

THIS PLAN ACCURATE FOR PLANTING WORK ONLY.

Dist	COUNTY	ROUTE	POST MILES TOTAL PROJECT	SHEET No.	TOTAL SHEETS
03	Yub	70	R8.4/13.6	12	29

LICENSED LANDSCAPE ARCHITECT

4-19-10
PLANS APPROVAL DATE

LICENSED LANDSCAPE ARCHITECT — Lesley E. Phillips — LA# 5066 — Signature — 3-31-12 Renewal Date — 12-03-09 Date — STATE OF CALIFORNIA

THE STATE OF CALIFORNIA OR ITS OFFICERS OR AGENTS SHALL NOT BE RESPONSIBLE FOR THE ACCURACY OR COMPLETENESS OF SCANNED COPIES OF THIS PLAN SHEET.

LEGEND

LIMITS FOR MULCH, ROADSIED CLEARING AND PLANT ESTABLISHMENT WORK

EXISTING TREES TO REMAIN

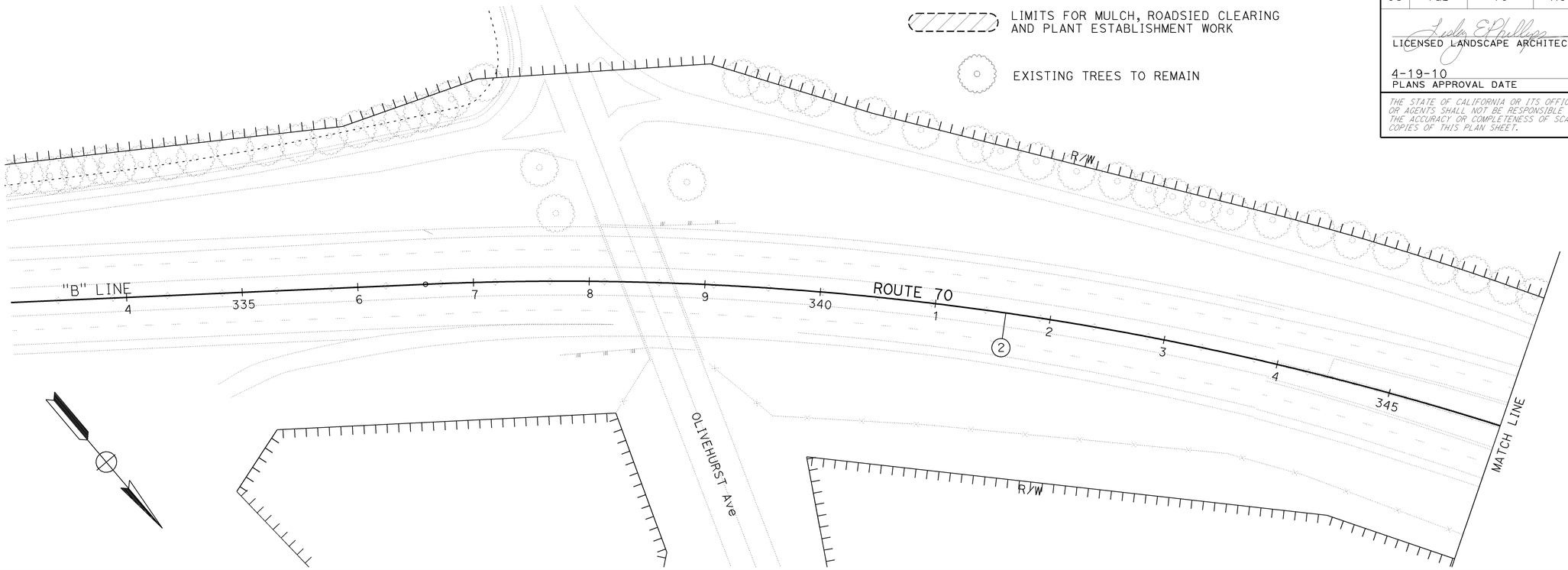

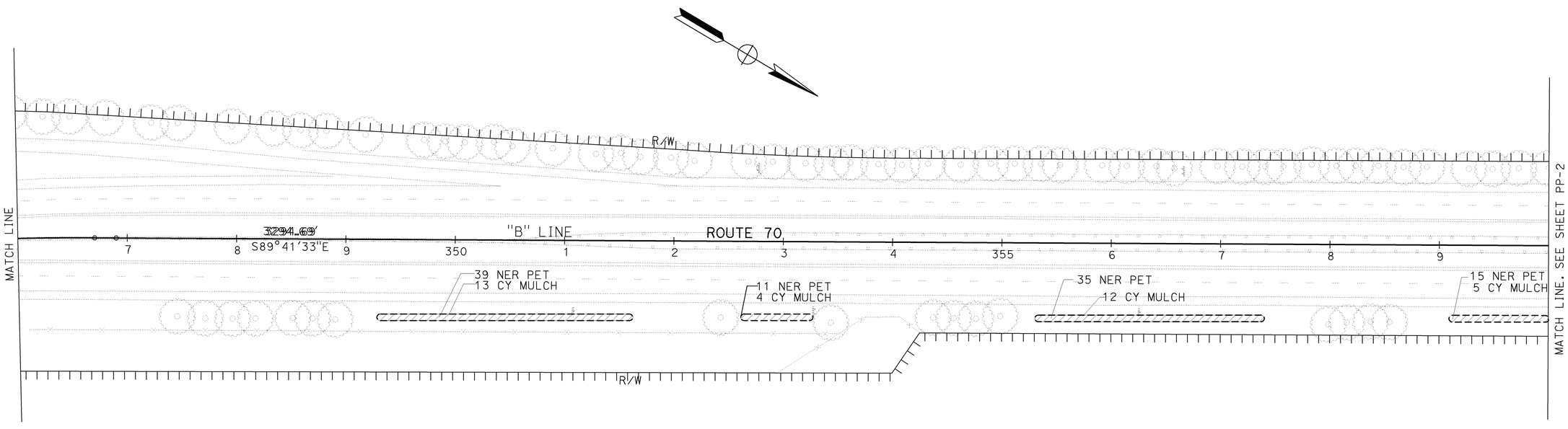

PLANTING PLAN

SCALE: 1":50'

PP-1

REVISED BY	DATE REVISED
LEP	1-26-10

LESLEY PHILLIPS — CALCULATED-DESIGNED BY
T. CHRIS JOHNSON — CHECKED BY
KENNETH MURRAY — SENIOR LANDSCAPE ARCHITECT

STATE OF CALIFORNIA - DEPARTMENT OF TRANSPORTATION
Caltrans

LAST REVISION 04-19-10
DATE PLOTTED => 21-JUL-2010
TIME PLOTTED => 08:06

THIS PLAN ACCURATE FOR PLANTING WORK ONLY.

Dist	COUNTY	ROUTE	POST MILES TOTAL PROJECT	SHEET No.	TOTAL SHEETS
03	Yub	70	R8.4/13.6	13	29

LICENSED LANDSCAPE ARCHITECT

4-19-10
PLANS APPROVAL DATE

THE STATE OF CALIFORNIA OR ITS OFFICERS OR AGENTS SHALL NOT BE RESPONSIBLE FOR THE ACCURACY OR COMPLETENESS OF SCANNED COPIES OF THIS PLAN SHEET.

LICENSED LANDSCAPE ARCHITECT
LESLEY PHILLIPS
LA# 5066
3-31-12
Renewal Date
12-03-09
Date
STATE OF CALIFORNIA

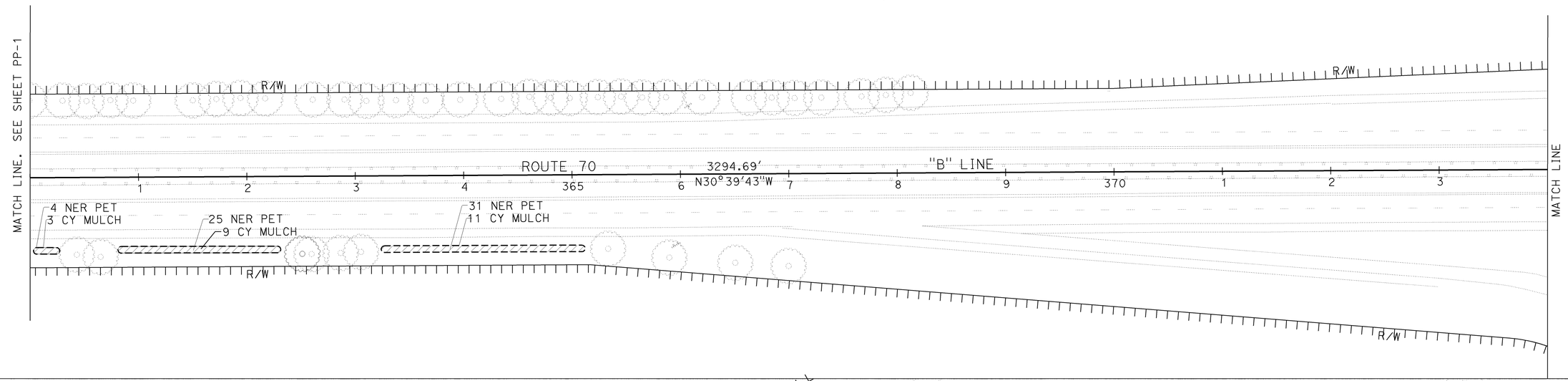

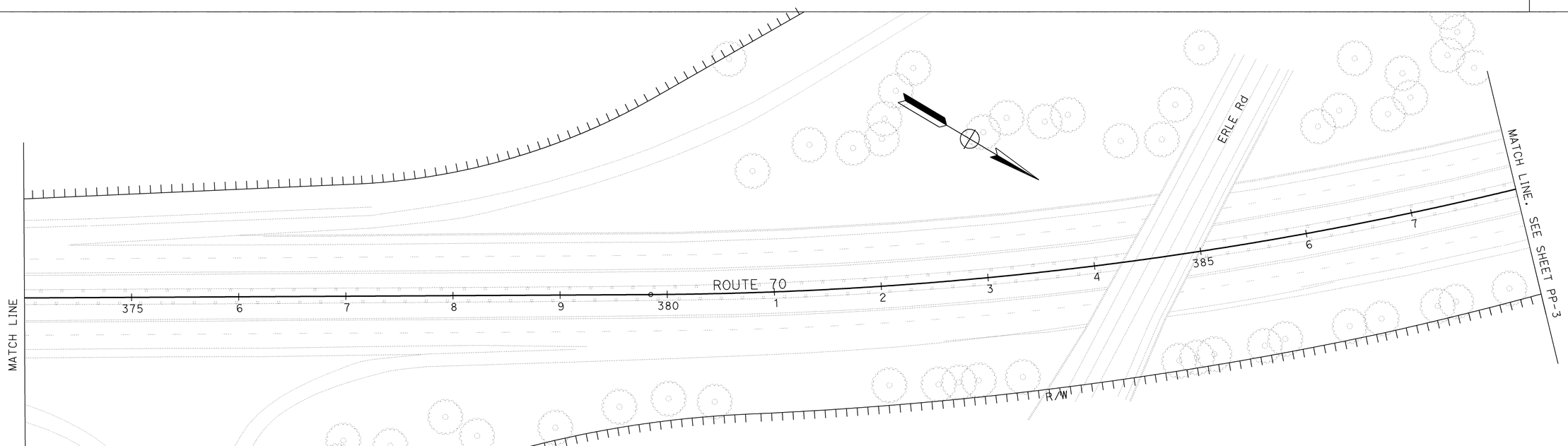

PLANTING PLAN

SCALE: 1":50'

PP-2

STATE OF CALIFORNIA - DEPARTMENT OF TRANSPORTATION

Caltrans

SENIOR LANDSCAPE ARCHITECT: KENNETH MURRAY

CALCULATED-DESIGNED BY: LESLEY PHILLIPS

CHECKED BY: T. CHRIS JOHNSON

REVISED BY: LEP

DATE REVISED: 10-26-10

LAST REVISION 04-19-10

DATE PLOTTED => 21-JUL-2010

TIME PLOTTED => 08:06

BORDER LAST REVISED 4/11/2008

RELATIVE BORDER SCALE IS IN INCHES 0 1 2 3

USERNAME => s128033

DGN FILE => 34e430ti002.dgn

CU 03340

EA 4E4301

THIS PLAN ACCURATE FOR PLANTING WORK ONLY.

Dist	COUNTY	ROUTE	POST MILES TOTAL PROJECT	SHEET No.	TOTAL SHEETS
03	Yub	70	R8.4/13.6	14	29

LICENSED LANDSCAPE ARCHITECT

4-19-10
PLANS APPROVAL DATE

LICENSED LANDSCAPE ARCHITECT
Lesley Phillips
LA # 5066
Signature
3-31-12
Renewal Date
12-03-09
Date
STATE OF CALIFORNIA

THE STATE OF CALIFORNIA OR ITS OFFICERS OR AGENTS SHALL NOT BE RESPONSIBLE FOR THE ACCURACY OR COMPLETENESS OF SCANNED COPIES OF THIS PLAN SHEET.

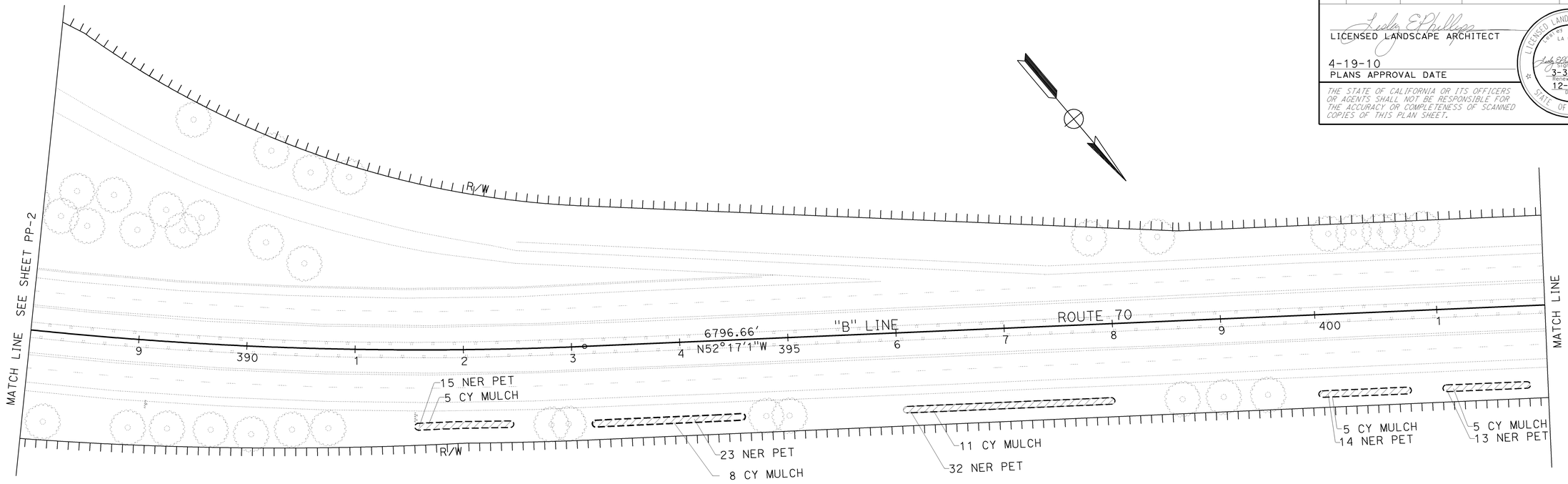

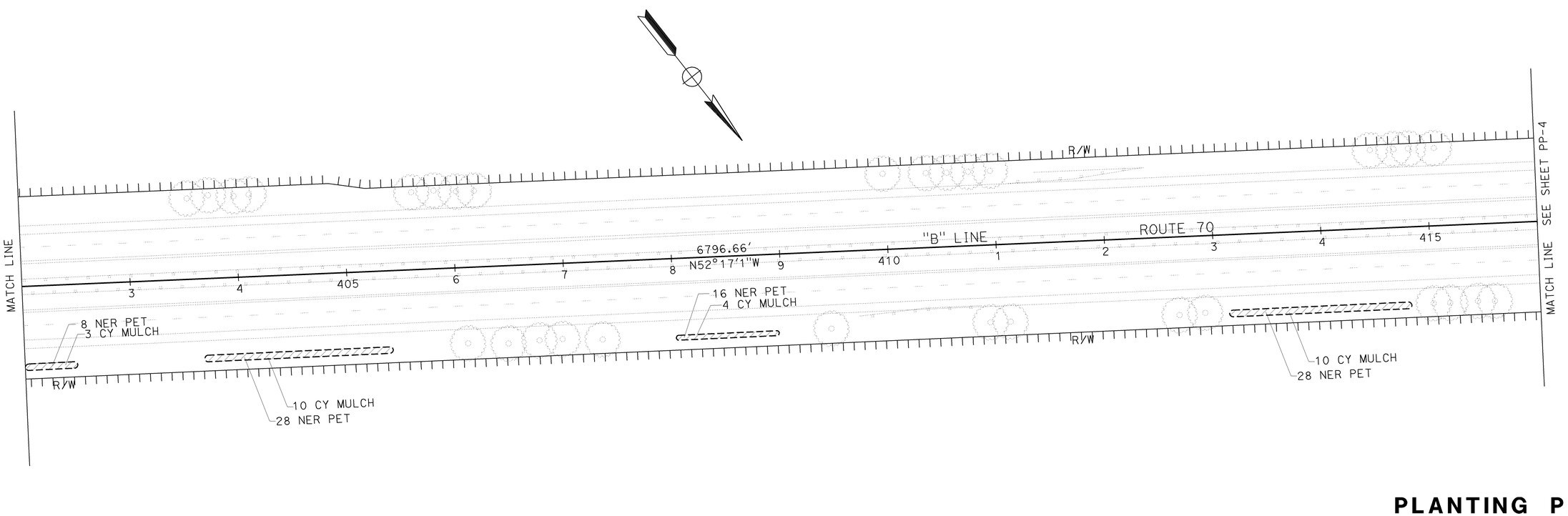

PLANTING PLAN

SCALE: 1":50'

PP-3

STATE OF CALIFORNIA - DEPARTMENT OF TRANSPORTATION

Caltrans

SENIOR LANDSCAPE ARCHITECT: KENNETH MURRAY

CALCULATED-DESIGNED BY: LESLEY PHILLIPS

CHECKED BY: T. CHRIS JOHNSON

REVISED BY: LEP

DATE REVISED: 1-26-10

LAST REVISION 04-19-10

DATE PLOTTED => 21-JUL-2010
TIME PLOTTED => 08:06

THIS PLAN ACCURATE FOR IRRIGATION WORK ONLY.

Dist	COUNTY	ROUTE	POST MILES TOTAL PROJECT	SHEET No.	TOTAL SHEETS
03	Yub	70	R8.4/13.6	15	29

LICENSED LANDSCAPE ARCHITECT

4-19-10
PLANS APPROVAL DATE

LICENSED LANDSCAPE ARCHITECT
Lesley Phillips
LAW 5066
Signature
3-31-12
Renewal Date
12-03-09
Date
STATE OF CALIFORNIA

THE STATE OF CALIFORNIA OR ITS OFFICERS OR AGENTS SHALL NOT BE RESPONSIBLE FOR THE ACCURACY OR COMPLETENESS OF SCANNED COPIES OF THIS PLAN SHEET.

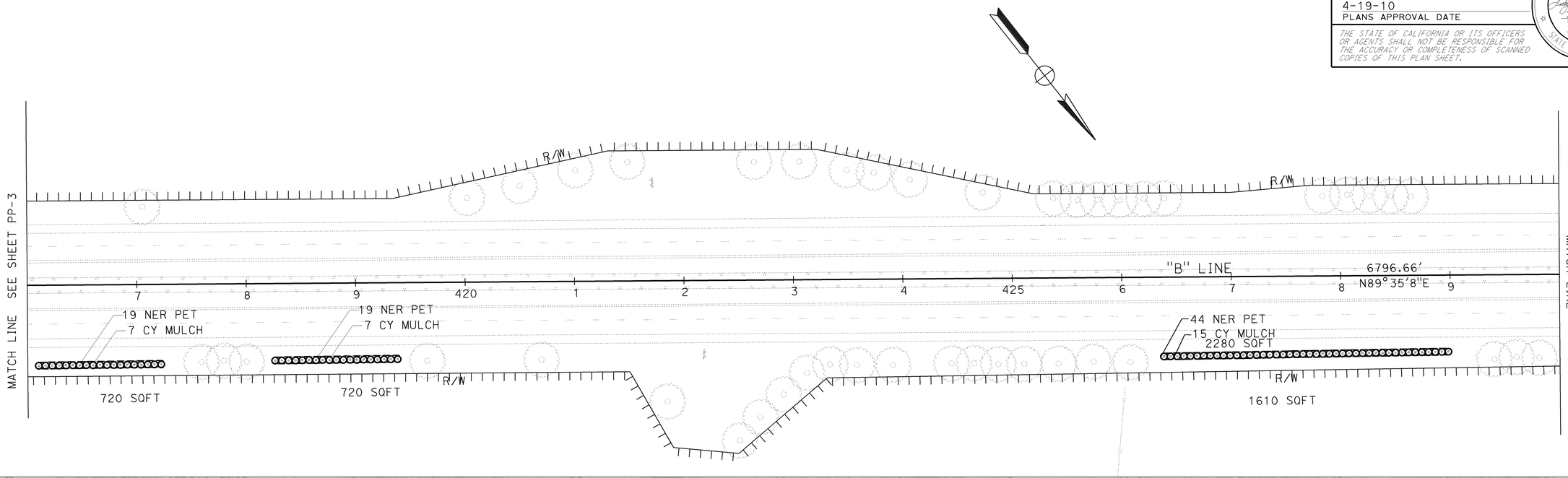

PLANTING PLAN

SCALE: 1":50'

PP-4

REVISED BY	LEP
DATE REVISED	1-26-10
CALCULATED-DESIGNED BY	LESLEY PHILLIPS
CHECKED BY	T. CHRIS JOHNSON
SENIOR LANDSCAPE ARCHITECT	KENNETH MURRAY

STATE OF CALIFORNIA - DEPARTMENT OF TRANSPORTATION

Caltrans

LAST REVISION 04-19-10
DATE PLOTTED => 21-JUL-2010
TIME PLOTTED => 08:06

THIS PLAN ACCURATE FOR IRRIGATION WORK ONLY.

Dist	COUNTY	ROUTE	POST MILES TOTAL PROJECT	SHEET No.	TOTAL SHEETS
03	Yub	70	R8.4/13.6	16	29

LICENSED LANDSCAPE ARCHITECT

4-19-10
PLANS APPROVAL DATE

THE STATE OF CALIFORNIA OR ITS OFFICERS OR AGENTS SHALL NOT BE RESPONSIBLE FOR THE ACCURACY OR COMPLETENESS OF SCANNED COPIES OF THIS PLAN SHEET.

LICENSED LANDSCAPE ARCHITECT
Lesley Phillips
LA# 5066
Signature
3-31-12
Renewal Date
12-03-09
Date
STATE OF CALIFORNIA

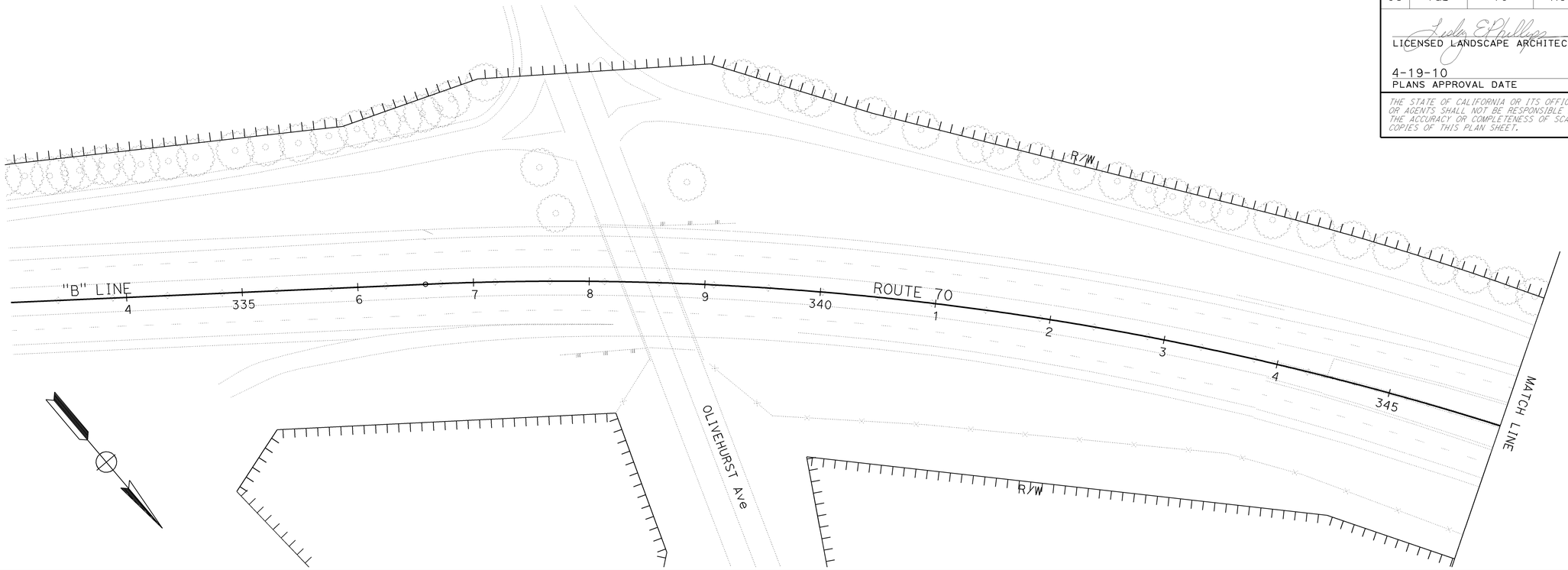

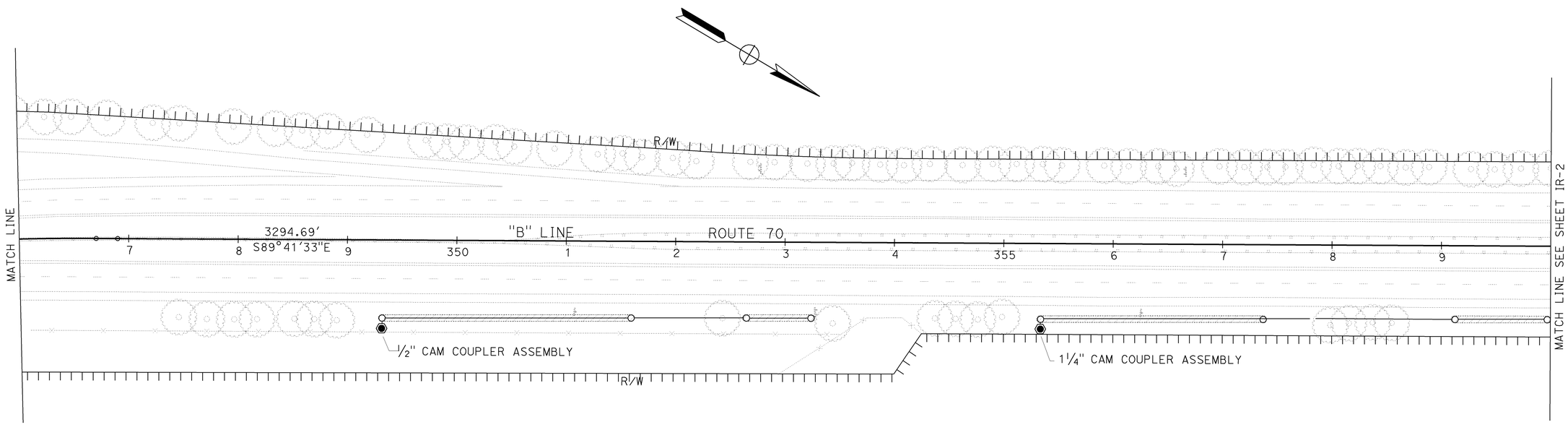

IRRIGATION PLAN

SCALE: 1":50'

IR-1

REVISED BY	DATE REVISED
LEP	1-26-10

LESLEY PHILLIPS
T. CHRIS JOHNSON

CALCULATED-DESIGNED BY
CHECKED BY

SENIOR LANDSCAPE ARCHITECT
KENNETH MURRAY

STATE OF CALIFORNIA - DEPARTMENT OF TRANSPORTATION
Caltrans

LAST REVISION 04-19-10
DATE PLOTTED => 21-JUL-2010
TIME PLOTTED => 08:06

THIS PLAN ACCURATE FOR IRRIGATION WORK ONLY.

Dist	COUNTY	ROUTE	POST MILES TOTAL PROJECT	SHEET No.	TOTAL SHEETS
03	Yub	70	R8.4/13.6	17	29

LICENSED LANDSCAPE ARCHITECT

4-19-10
PLANS APPROVAL DATE

THE STATE OF CALIFORNIA OR ITS OFFICERS OR AGENTS SHALL NOT BE RESPONSIBLE FOR THE ACCURACY OR COMPLETENESS OF SCANNED COPIES OF THIS PLAN SHEET.

LICENSED LANDSCAPE ARCHITECT
LESLEY PHILLIPS
LA # 5066
Expiration
3-31-12
Renewal Date
12-03-09
Date
STATE OF CALIFORNIA

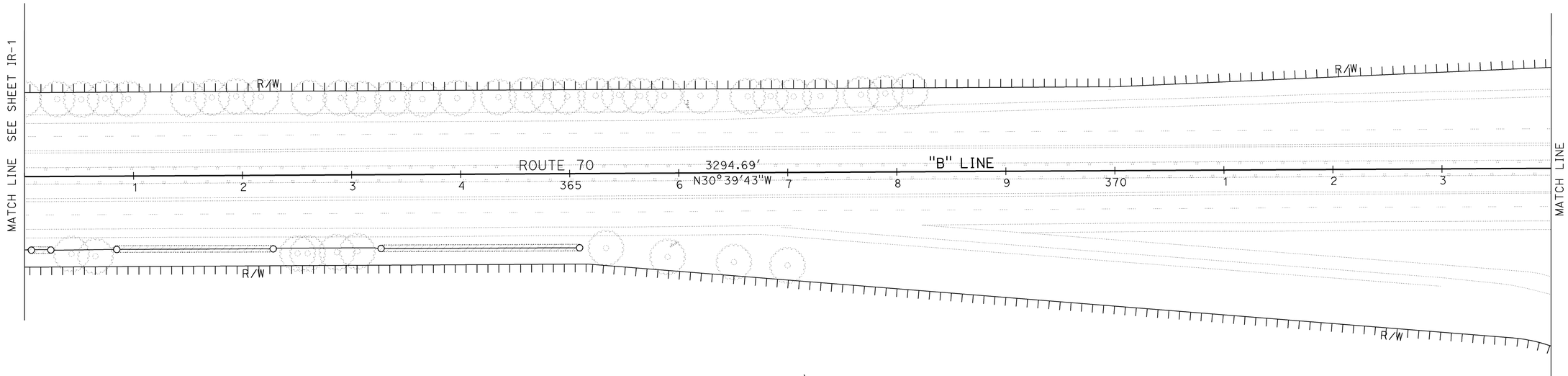

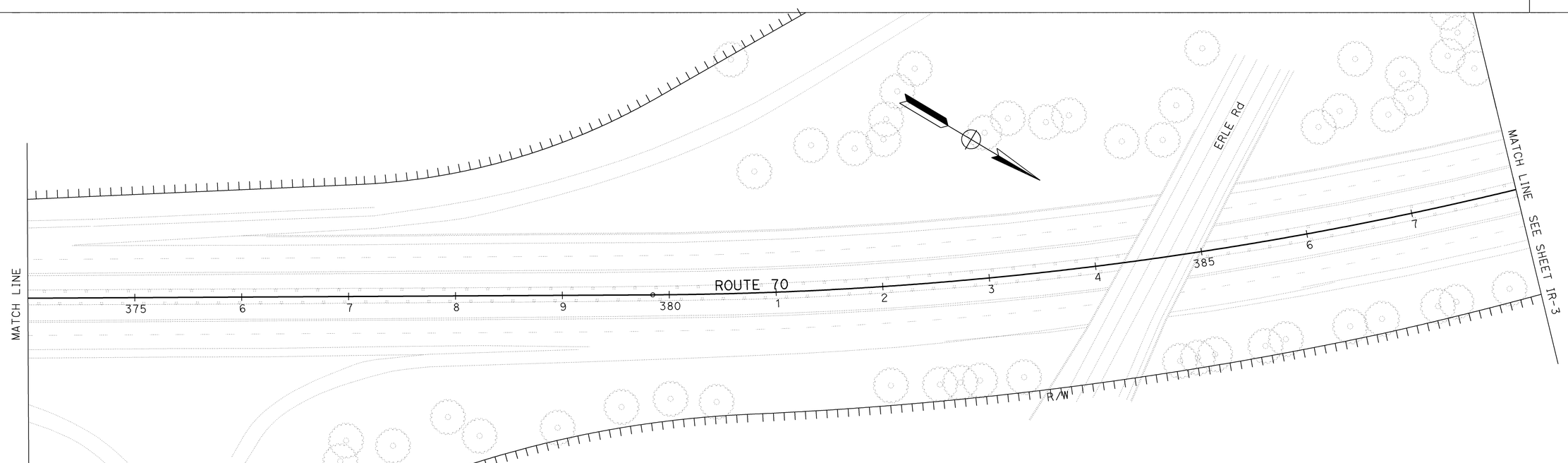

IRRIGATION PLAN

SCALE: 1":50'

IR-2

REVISED BY	DATE REVISED
LEP	1-26-10

LESLEY PHILLIPS
T. CHRIS JOHNSON
CALCULATED-DESIGNED BY
CHECKED BY
SENIOR LANDSCAPE ARCHITECT
KENNETH MURRAY

STATE OF CALIFORNIA - DEPARTMENT OF TRANSPORTATION
Caltrans

LAST REVISION 04-19-10 | DATE PLOTTED => 21-JUL-2010 | TIME PLOTTED => 08:06

THIS PLAN ACCURATE FOR PLANTING WORK ONLY.

Dist	COUNTY	ROUTE	POST MILES TOTAL PROJECT	SHEET No.	TOTAL SHEETS
03	Yub	70	R8.4/13.6	18	29

LICENSED LANDSCAPE ARCHITECT

4-19-10
PLANS APPROVAL DATE

LICENSED LANDSCAPE ARCHITECT
LESLEY PHILLIPS
LA# 5066
Signature
3-31-12
Renewal Date
12-03-09
Date
STATE OF CALIFORNIA

THE STATE OF CALIFORNIA OR ITS OFFICERS OR AGENTS SHALL NOT BE RESPONSIBLE FOR THE ACCURACY OR COMPLETENESS OF SCANNED COPIES OF THIS PLAN SHEET.

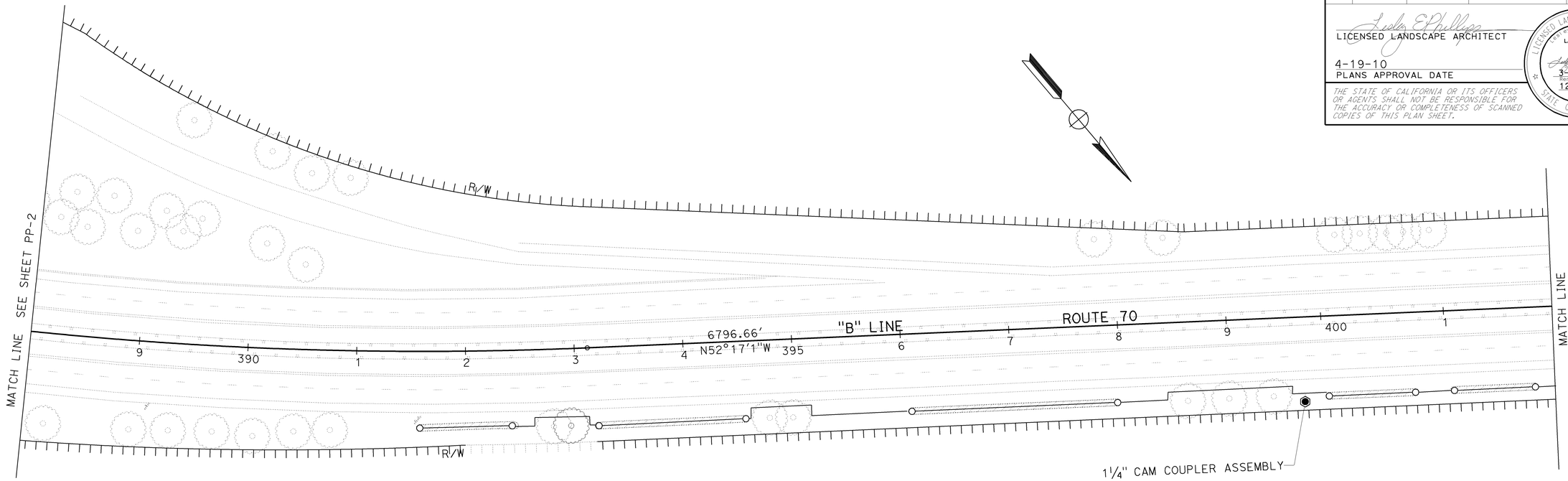

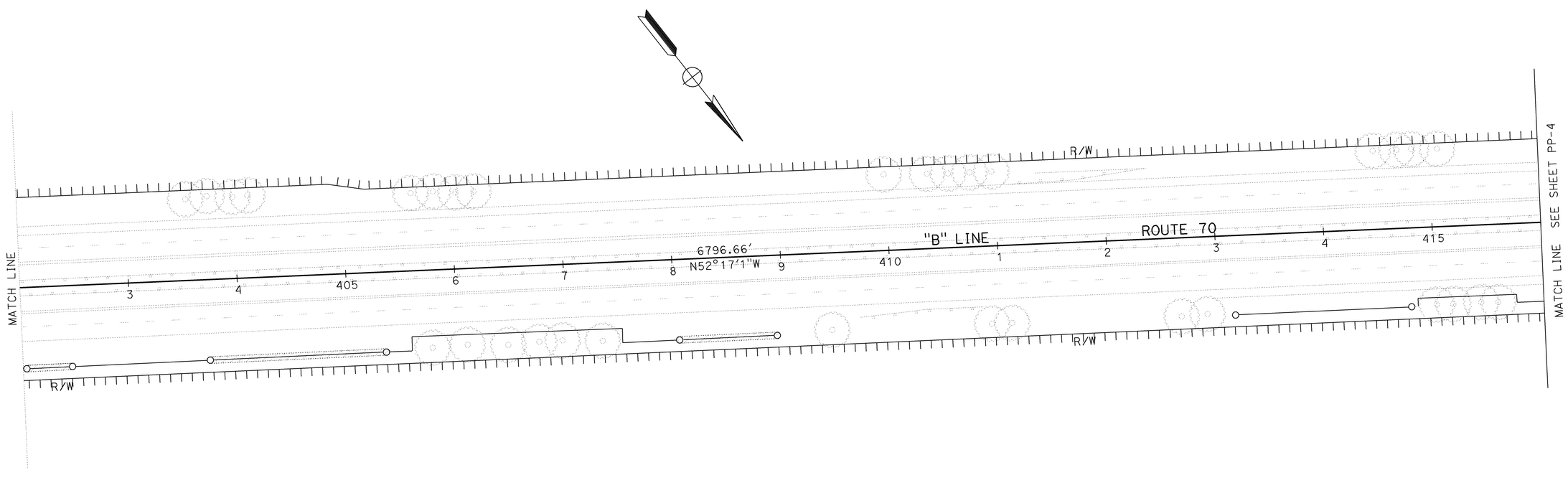

IRRIGATION PLAN

SCALE: 1":50'

IR-3

REVISED BY	DATE REVISED
LEP	1-26-10

CALCULATED-DESIGNED BY: LESLEY PHILLIPS
CHECKED BY: T. CHRIS JOHNSON
SENIOR LANDSCAPE ARCHITECT: KENNETH MURREY

STATE OF CALIFORNIA - DEPARTMENT OF TRANSPORTATION
Caltrans

LAST REVISION 04-19-10
DATE PLOTTED => 21-JUL-2010
TIME PLOTTED => 08:06

THIS PLAN ACCURATE FOR IRRIGATION WORK ONLY.

Dist	COUNTY	ROUTE	POST MILES TOTAL PROJECT	SHEET No.	TOTAL SHEETS
03	Yub	70	R8.4/13.6	19	29

LICENSED LANDSCAPE ARCHITECT

4-19-10
PLANS APPROVAL DATE

THE STATE OF CALIFORNIA OR ITS OFFICERS OR AGENTS SHALL NOT BE RESPONSIBLE FOR THE ACCURACY OR COMPLETENESS OF SCANNED COPIES OF THIS PLAN SHEET.

LICENSED LANDSCAPE ARCHITECT
LESLEY PHILLIPS
LAM 5066
Signature
3-31-12
Renewal Date
12-03-09
Date
STATE OF CALIFORNIA

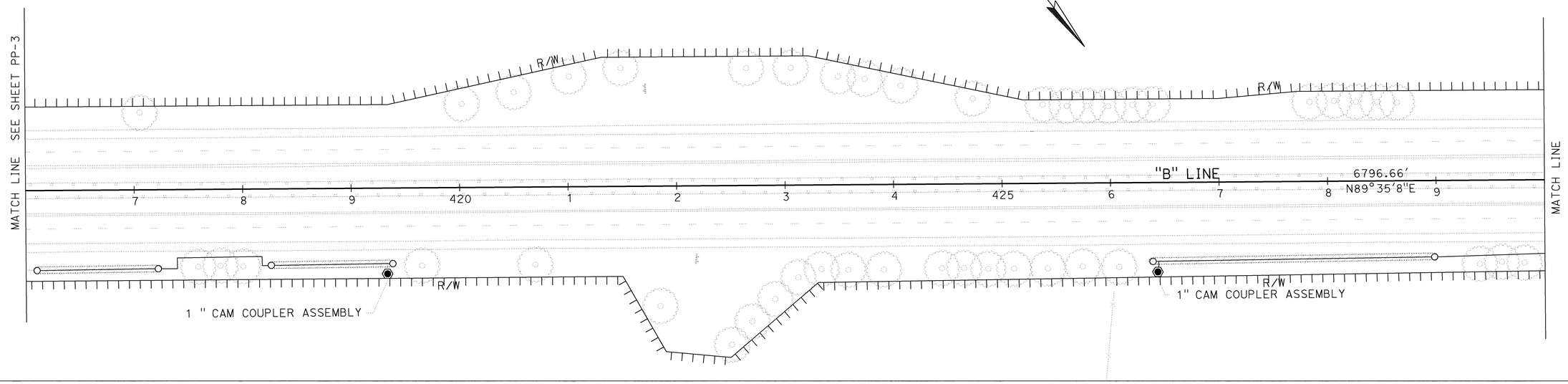

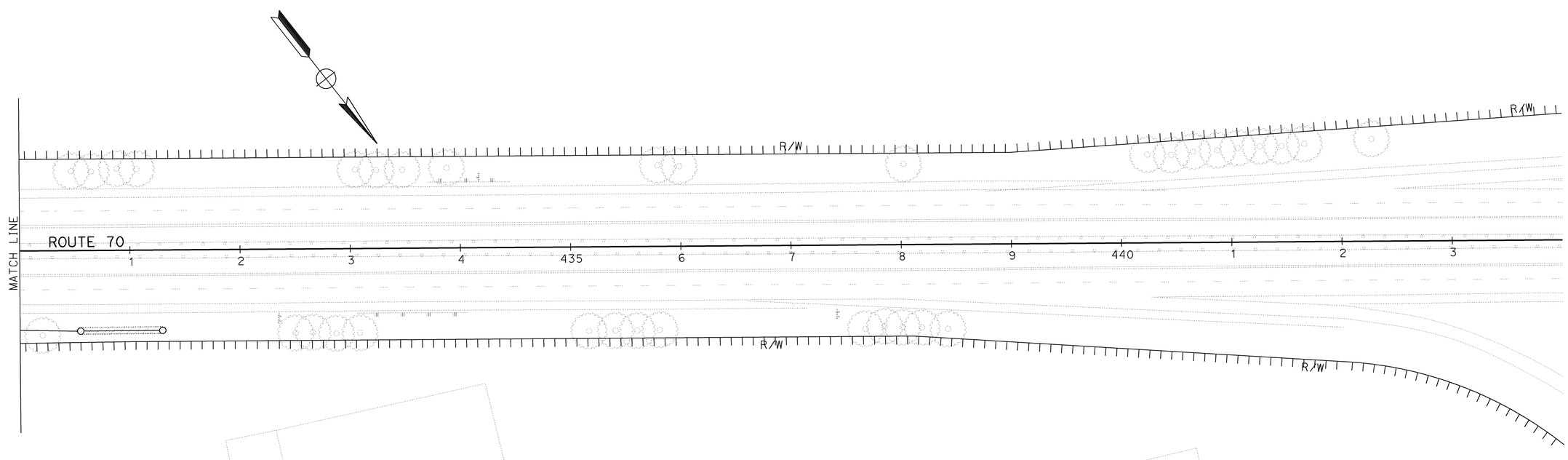

IRRIGATION PLAN

SCALE: 1":50'

IR-4

REVISED BY	DATE REVISED
LEP	1-26-10

CALCULATED-DESIGNED BY: LESLEY PHILLIPS
CHECKED BY: T. CHRIS JOHNSON
SENIOR LANDSCAPE ARCHITECT: KENNETH MURREY

STATE OF CALIFORNIA - DEPARTMENT OF TRANSPORTATION
Caltrans

LAST REVISION 04-19-10
DATE PLOTTED => 21-JUL-2010
TIME PLOTTED => 08:06

Dist	COUNTY	ROUTE	POST MILES TOTAL PROJECT	SHEET No.	TOTAL SHEETS
03	Yub	70	R8.4/13.6	20	29

LICENSED LANDSCAPE ARCHITECT

4-19-10
PLANS APPROVAL DATE

LICENSED LANDSCAPE ARCHITECT — LESLEY E. PHILLIPS — No. LA 5066 — Signature — 3-31-12 Renewal Date — 01-26-10 Date — STATE OF CALIFORNIA

THE STATE OF CALIFORNIA OR ITS OFFICERS OR AGENTS SHALL NOT BE RESPONSIBLE FOR THE ACCURACY OR COMPLETENESS OF SCANNED COPIES OF THIS PLAN SHEET.

ABBREVIATIONS

AMEND — amendment
B & B — balled and burlapped
Dia — diameter
EA — each
LB — pound
Oz — ounce
Ft — foot/feet
SQFT — square feet
SQYD — square yard
CF — cubic feet
Max — maximum
Min — minimum
NCN — no common name
No. — number
Pkt — packet
PLT ESTB — plant establishment
Pvmt — pavement
R/W — right of way
SF — state furnished
TRVD — traveled

NOTE:
Underlined portions of botanical name indicate abbreviations used on Planting Plans.

PLANT LIST AND PLANTING SPECIFICATIONS

PLANT GROUP	PLANT No.	SYMBOL	BOTANICAL NAME	COMMON NAME	SIZE	QUANTITY EACH	HOLE SIZE (INCH) Dia	HOLE SIZE (INCH) DEPTH	BASIN TYPE	IRON SULFATE ①	SOIL AMEND ①	COMMERCIAL FERTILIZER ① PLANTING	COMMERCIAL FERTILIZER ① PLT ESTB	BASIN MULCH	STAKING	PLANTING LIMITS MINIMUM DISTANCE (Ft) FROM TRVD WAY	PVMT	FENCE	WALL	PAVED DITCH	EARTH DITCH	ON CENTER (Ft)	REMARKS
A	1	(dashed)	NERIUM 'PETITE PINK'	DWARF OLEANDER	1GAL	432	2'	2'	I	—	—	1 PKT	—	—	—	6	6	6	—	—	6	6	SHRUB

APPLICABLE WHEN CIRCLED:

① - Quantities shown are "per plant" unless shown as SQFT or SQYD application rates.
2 - Sufficient to receive root ball.
3 - Does not apply to mulch areas.
4 - As shown on plans.
5 - Unless otherwise shown on plans.
6 - See detail.
7 - See Special Provisions.

SPRINKLER SCHEDULE

SYMBOL	TYPE	DESCRIPTION	SPRAY PATTERN	OPERATING PRESSURE (PSI)	PRESSURE COMPENSATING	PLUS/MINUS 5% ② DISCHARGE GALLONS PER MINUTE (GPM)	GALLONS PER HOUR (GPH)	RADIUS (Ft)	WIDTH x LENGTH (Ft)	MATERIAL	INLET CONNECTION (NPT INCH)	POSITIVE-LOCKING ADJ ARC STOP	BACKSPLASH PREVENTER	DIFFUSER PIN	DISTANCE CONTROL FLAP	ADJ DISCHARGE	RISER TYPE	RISER MATERIAL PLASTIC	RISER MATERIAL GALVANIZED	RISER SIZE (IPS INCH)	RISER HEIGHT (INCH)	FLOW SHUTOFF DEVICE	⑤ SWING JOINT (TYPE)	RISER SUPPORT	SPRINKLER PROTECTOR (TYPE)	REMARKS
○	C-2	BUBBLER	—	8	X	—	.10	—	—	PL	½"	—	—	—	—	—	V	—	—	½	—	—	—	—	—	

X IN BOX DENOTES REQUIREMENT

APPLICABLE WHEN CIRCLED BELOW:

① - See Special Provisions.
2 - If a pressure compensating device is specified, the discharge and radii shown reflect its use.
3 - Arc Stop shall be fitted with a nut and bolt.
4 - Vinyl-coated cast iron housing.
5 - Swing Joints required adjacent to shoulders, curbs, sidewalks, and dikes.
6 - Unless otherwise shown on plans.

ABBREVIATIONS

F — full circle
P — part circle
F/P — full/part circle
Q — quarter circle
T — third circle
H — half circle
TT — two third circle
TQ — three quarter circle
CST — center strip
SST — side strip
EST — end strip
Ft — feet/foot
GPM — gallons per minute
GPH — gallons per hour
Adj — adjustable
PL — plastic
B/B — brass/bronze
B/PL — brass/plastic
B/B/PL — brass/bronze/plastic
NPT — national pipe thread
IPS — iron pipe size
PSI — pounds per square inch

IRRIGATION NOTES:

1. ONE SPRINKLER (TYPE C-2) SHALL BE PLACED PER PLANT LOCATION.
2. LATERAL PIPE SHALL BE SIZED ACCORDING TO SIZING CHART.
3. BUBBLERS ARE SHOWN AT THE BEGINING OF TERMINUS OF LATERAL PLASTIC PIPE LATERAL LINE) WITHIN EACH VALVE'S CIRCUIT.

TYPE C-2 PIPE SIZING CHART	
QUANTITY	SIZE OF PIPE
1-38	½"
39-60	¾"
61-98	1"
99-132	1¼"
133-208	1½"
209-302	2"

PLANTING AND IRRIGATION PLAN
PI-1

REVISED BY: LEP — DATE REVISED: 1-26-10
LESLEY PHILLIPS — T. CHRIS JOHNSON
CALCULATED-DESIGNED BY — CHECKED BY
SENIOR LANDSCAPE ARCHITECT: KENNETH MURRAY
STATE OF CALIFORNIA - DEPARTMENT OF TRANSPORTATION — Caltrans

LAST REVISION 04-19-10 | DATE PLOTTED => 21-JUL-2010 | TIME PLOTTED => 08:06

DIST	COUNTY	ROUTE	POST MILES TOTAL PROJECT	SHEET NO.	TOTAL SHEETS
03	Yub	70	R8.4/13.6	21	29

Randell D. Hiatt
REGISTERED CIVIL ENGINEER

October 20, 2006
PLANS APPROVAL DATE

REGISTERED PROFESSIONAL ENGINEER
Randell D. Hiatt
No. C50200
Exp. 6-30-07
CIVIL
STATE OF CALIFORNIA

The State of California or its officers or agents shall not be responsible for the accuracy or completeness of electronic copies of this plan sheet.

To accompany plans dated April 19, 2010

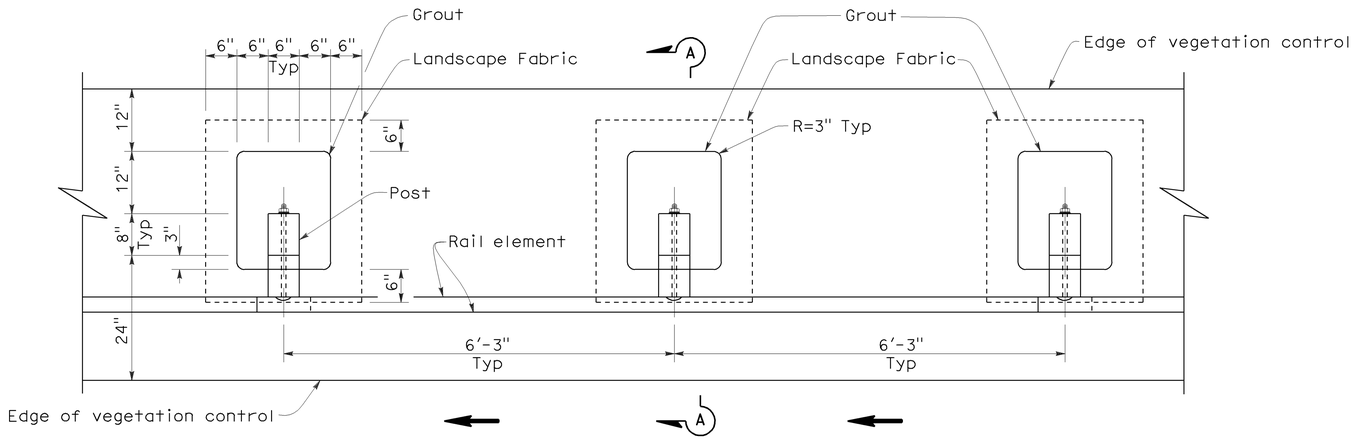

PLAN

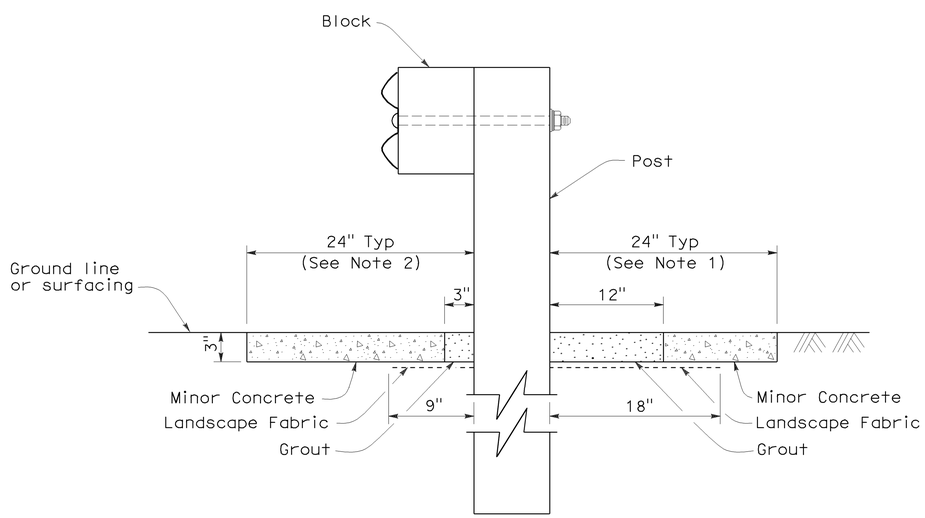

SECTION A-A

NOTES:

1. Where the distance between back of post and hinge point is less than 24", vegetation control to be constructed flush with the back edge of the post.
2. Where dike is constructed under railing, construct vegetation control to back edge of dike. Where paved shoulder is constructed within 24" in front of the post, construct vegetation control to the edge of paved shoulder.
3. Direction of adjacent traffic indicated by ← .

STATE OF CALIFORNIA
DEPARTMENT OF TRANSPORTATION

METAL BEAM GUARD RAILING TYPICAL VEGETATION CONTROL STANDARD RAILING SECTION

NO SCALE

NSP A77C5 DATED OCTOBER 20, 2006 SUPPLEMENTS THE STANDARD PLANS BOOK DATED MAY 2006.

NEW STANDARD PLAN NSP A77C5

2006 NEW STANDARD PLAN NSP A77C5

7-17-06

DIST	COUNTY	ROUTE	POST MILES TOTAL PROJECT	SHEET NO.	TOTAL SHEETS
03	Yub	70	R8.4/13.6	22	29

Randell D. Hiatt
REGISTERED CIVIL ENGINEER

June 6, 2008
PLANS APPROVAL DATE

REGISTERED PROFESSIONAL ENGINEER
Randell D. Hiatt
No. C50200
Exp. 6-30-09
CIVIL
STATE OF CALIFORNIA

The State of California or its officers or agents shall not be responsible for the accuracy or completeness of electronic copies of this plan sheet.

To accompany plans dated April 19, 2010

NOTES:

1. When necessary to place dike in front of face of guard railing, only Type C dike may be used. For dike details, see Standard Plan A87B.
2. For standard railing post embedment, see Standard Plans A77C3.
3. Guard railing delineation to be used where shown on the Project Plans.
4. When dike or curb is placed under guard railing, the maximum height of the dike or curb shall be 4". Mountable dike should not be used. For dike and curb details, see Revised Standard Plans RSP A87A and Standard Plan A87B.
5. For details of typical distance between the face of rail and hinge point, see Standard Plan A77C3.

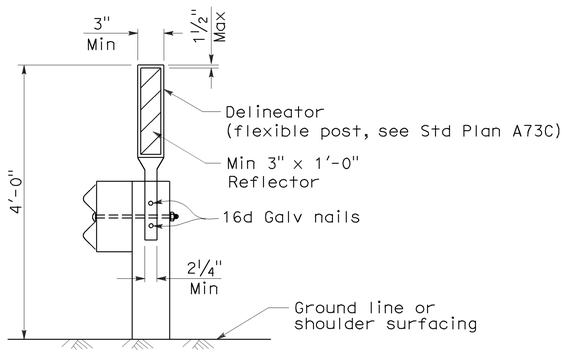

GUARD RAILING DELINEATION

See Note 3

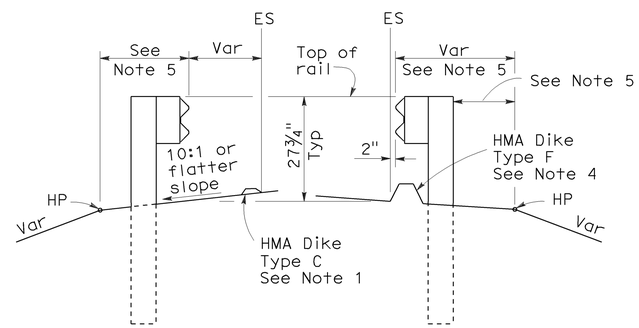

DIKE POSITIONING

See Note 1

STATE OF CALIFORNIA
DEPARTMENT OF TRANSPORTATION

METAL BEAM GUARD RAILING TYPICAL RAILING DELINEATION AND DIKE POSITIONING DETAILS

NO SCALE

RSP A77C4 DATED JUNE 6, 2008 SUPERSEDES STANDARD PLAN A77C4
DATED MAY 1, 2006 - PAGE 47 OF THE STANDARD PLANS BOOK DATED MAY 2006.

REVISED STANDARD PLAN RSP A77C4

2006 REVISED STANDARD PLAN RSP A77C4

12-10-07

DIST	COUNTY	ROUTE	POST MILES TOTAL PROJECT	SHEET NO.	TOTAL SHEETS
03	Yub	70	R8.4/13.6	23	29

Gregory A. Balzer
LICENSED LANDSCAPE ARCHITECT

June 5, 2009
PLANS APPROVAL DATE

LICENSED LANDSCAPE ARCHITECT
Gregory A. Balzer 2576
10-28-09 Expiration Date
2-28-11 Renewal Date
5-14-09 Date
STATE OF CALIFORNIA

The State of California or its officers or agents shall not be responsible for the accuracy or completeness of electronic copies of this plan sheet.

To accompany plans dated April 19, 2010

2006 REVISED STANDARD PLAN RSP H1

A

AB	aggregate base
ABS	acrylonitrile-butadiene-styrene
AC	asphalt concrete
Adj	adjacent/adjustable
AIC	auxiliary irrigation controller
Alt	alternative
AMEND	amendment
ARV	air release valve
AUTO	automatic
AUX	auxiliary
AVB	atmospheric vacuum breaker

B

B&B	balled and burlapped
B/B	brass/bronze
B/B/PL	brass/bronze/plastic
B/PL	brass/plastic
BFM	bonded fiber matrix
Bit Ctd	bituminous coated
BP	booster pump
BPA	backflow preventer assembly
BPAE	backflow preventer assembly in enclosure
BPE	backflow preventer enclosure
BV	ball valve

C

CAP	corrugated aluminum pipe
CARV	combination air release valve
CCA	cam coupler assembly
CEC	controller enclosure cabinet
CHDPE	corrugated high density polyethylene
CL	chain link
CNC	control and neutral conductors
Conc	concrete
Cond	conduit
CSP	corrugated steel pipe
CST	center strip
CV	check valve

D

Dia	diameter
DIP	ductile iron pipe
DN	diameter nominal

E

EA	each
Elect	electric/electrical
Elev	elevation
ENCL	enclosure
EP	edge of pavement
ES	edge of shoulder
EST	end strip
ESTB	establishment
ETW	edge of traveled way

F

F	full circle
F/P	full/part circle
FAU	filter assembly unit
FCV	flow control valve
FERT	fertilizer
FG	finished grade
FIPT	female iron pipe thread
FIS	fertilizer injector system
FL	flow line
FM	flow monitor
FS	flow sensor
Ft	foot/feet
FV	flush valve

G

GAL	Gallon(s)
Galv	galvanized
GARV	garden valve
GPH	gallons per hour
GPM	gallons per minute
GSP	galvanized steel pipe
GV	gate valve

H

H	half circle
HB	hose bib
HDPE	high density polyethylene
HP	horsepower/hinge point
HPL	high pressure line
Hwy	highway

I

IC	irrigation controller
ICC	irrigation controller(s) in controller enclosure cabinet
ID	inside diameter
In	inches
IFS	irrigation filtration system
IPS	iron pipe size
IPT	iron pipe thread
Irr	irrigation

L

L	length
LF	linear foot

M

Max	maximum
MBGR	metal beam guard railing
MCV	manual control valve
MIC	master irrigation controller
Min	minimum
MIPT	male iron pipe thread
Misc	miscellaneous
Mtl	material
MVP	maintenance vehicle pullout

N

NCN	no common name
NL	nozzle line
No.	number
NPT	national pipe thread

O

O/C	on center
OD	outside diameter
Oz	ounce

P

P	part circle
PB	pull box
PCC	portland cement concrete
PE	polyethylene
Pkt	packet
PL	plastic
PLT	plant/planting
PLT ESTB	plant establishment
PM	post mile
PR	pressure rated
PRLV	pressure relief valve
PSFM	polymer stabilized fiber matrix
PSI	pounds per square inch
PRV	pressure reducing valve
PVC	polyvinyl chloride
Pvmt	pavement

Q

Q	quarter circle
QCV	quick coupling valve

R

R	radius
RCP	reinforced concrete pipe
RCV	remote control valve
RCVM	remote control valve (master)
RCVMF	remote control valve (master) w/ flow meter
RCW	recycled/reclaimed water
RECP	rolled erosion control product
REQ	required
R/W	right of way

S

S	slip
SCC	sprinkler control conduit
SCH	schedule
SF	state-furnished
Shld	shoulder
SQFT	square foot/feet
SQYD	square yard(s)
SST	side strip
Sta	station
Std	standard
SW	sidewalk/sound wall

T

T	third circle/thread
TLS	truck loading standpipe
TQ	three quarter circle
TRM	turf reinforcement mat
TRVD	traveled
TT	two third circle
Typ	typical

U

UG	underground

V

VAU	valve assembly unit

W

W	width
W/	with
WM	water meter
WS	wye strainer
WSP	welded steel pipe
WWM	welded wire mesh

NOTE:

FOR ADDITIONAL ABBREVIATIONS, SEE STANDARD PLANS A10A AND A10B.

STATE OF CALIFORNIA
DEPARTMENT OF TRANSPORTATION

PLANTING AND IRRIGATION ABBREVIATIONS

NO SCALE

RSP H1 DATED JUNE 5, 2009 SUPERSEDES STANDARD PLAN H1 DATED MAY 1, 2006 - PAGE 201 OF THE STANDARD PLANS BOOK DATED MAY 2006.

REVISED STANDARD PLAN RSP H1

DIST	COUNTY	ROUTE	POST MILES TOTAL PROJECT	SHEET NO.	TOTAL SHEETS
03	Yub	70	R8.4/13.6	24	29

Gregory A. Balzer
LICENSED LANDSCAPE ARCHITECT

June 5, 2009
PLANS APPROVAL DATE

LICENSED LANDSCAPE ARCHITECT
Gregory A. Balzer 2576
Signature
2-28-11
Renewal Date
5-14-09
Date
STATE OF CALIFORNIA

The State of California or its officers or agents shall not be responsible for the accuracy or completeness of electronic copies of this plan sheet.

To accompany plans dated April 19, 2010

EXISTING	PROPOSED	ITEM DESCRIPTION
		WATER METER (WM)
		BACKFLOW PREVENTER ASSEMBLY (BPA)
		BACKFLOW PREVENTER ASSEMBLY IN ENCLOSURE (BPAE)
		BACKFLOW PREVENTER ENCLOSURE (BPE)
		BOOSTER PUMP (BP)
		TRUCK LOADING STANDPIPE (TLS)
FS	FS	FLOW SENSOR (FS)
		MASTER IRRIGATION CONTROLLER (MIC)
		AUXILIARY IRRIGATION CONTROLLER (AIC)
		IRRIGATION CONTROLLER (IC)/ IRRIGATION CONTROLLER (IC) (BATTERY) IRRIGATION CONTROLLER (IC) (SOLAR)
		IRRIGATION CONTROLLER(S) IN CONTROLLER ENCLOSURE CABINET (ICC)
		CONTROL AND NEUTRAL CONDUCTORS (CNC)
SCC	SCC	SPRINKLER CONTROL CONDUIT (SCC)
		IRRIGATION CROSSOVER
		EXTEND IRRIGATION CROSSOVER
		IRRIGATION SLEEVE
dip	DIP	DUCTILE IRON PIPE (SUPPLY LINE) (MAIN) (DIP)
		GALVANIZED STEEL PIPE (SUPPLY LINE) (MAIN) (GSP)
		GALVANIZED STEEL PIPE (SUPPLY LINE) (LATERAL) (GSP)
		PLASTIC PIPE (PR 200) (SUPPLY LINE) (MAIN)
		PLASTIC PIPE (PR 200) (SUPPLY LINE) (LATERAL)
		PLASTIC PIPE (IRRIGATION LINE)
		REMOTE CONTROL VALVE (RCV) REMOTE CONTROL VALVE (MASTER) (RCVM) REMOTE CONTROL VALVE (MASTER) W/FLOW METER (RCVMF)
		MANUAL CONTROL VALVE (MCV)
		VALVE ASSEMBLY UNIT (VAU)
		WYE STRAINER (WS)
		FILTER ASSEMBLY UNIT (FAU)
		GATE VALVE (GV)
		BALL VALVE (BV)

EXISTING	PROPOSED	ITEM DESCRIPTION
		QUICK COUPLING VALVE (QCV)
		CAM COUPLER ASSEMBLY (CCA)
		PRESSURE REDUCING VALVE (PRV)
		PRESSURE RELIEF VALVE (PRLV)
		FLOW CONTROL VALVE (FCV)
		COMBINATION AIR RELEASE VALVE (CARV)
		CHECK VALVE (CV)
		FLUSH VALVE (FV)
		NOZZLE LINE W/TURNING UNION
		IRRIGATION SYSTEM
		IRRIGATION SYSTEM TO BE REMOVED
		CHAIN LINK GATE
		QUICK COUPLING VALVE W/SPRINKLER PROTECTOR
3	3	SPRINKLER W/SPRINKLER PROTECTOR
		CONNECT TO EXISTING SYSTEM
		CAP
		CAP EXISTING

VALVE CODE

RCV SIZE
IRRIGATION CONTROLLER
CONTROLLER STATION
VALVE IN PARALLEL (IF APPLICABLE)
GPM
QUANTITY OF SPRINKLERS (WHEN SHOWN)

* 2½"-A-2b-40 -60

MCV SIZE
VALVE NUMBER
GPM
QUANTITY OF TYPE SPRINKLERS (WHEN SHOWN)

* 2"-3-30 -50

* VALVE CODES FOR EXISTING VALVES ARE SHOWN IN A DASHED ENCLOSURE.

STATE OF CALIFORNIA
DEPARTMENT OF TRANSPORTATION

PLANTING AND IRRIGATION SYMBOLS

NO SCALE

RSP H2 DATED JUNE 5, 2009 SUPERSEDES RSP H2 DATED MARCH 7, 2008 AND STANDARD PLAN H2 DATED MAY 1, 2006 - PAGE 202 OF THE STANDARD PLANS BOOK DATED MAY 2006.

REVISED STANDARD PLAN RSP H2

2006 REVISED STANDARD PLAN RSP H2

5-11-09

DIST	COUNTY	ROUTE	POST MILES TOTAL PROJECT	SHEET NO.	TOTAL SHEETS
03	Yub	70	R8.4/13.6	25	29

Gregory A. Balzer
LICENSED LANDSCAPE ARCHITECT

June 5, 2009
PLANS APPROVAL DATE

LICENSED LANDSCAPE ARCHITECT
Gregory A. Balzer 2576
Signature
2-28-11
Renewal Date
5-14-09
Date
STATE OF CALIFORNIA

The State of California or its officers or agents shall not be responsible for the accuracy or completeness of electronic copies of this plan sheet.

To accompany plans dated April 19, 2010

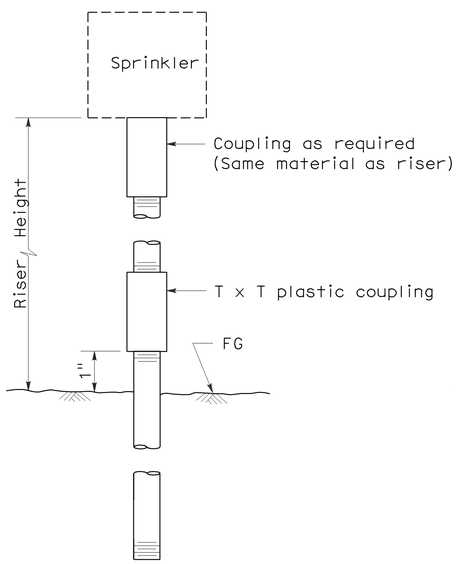

ELEVATION
RISER TYPE I

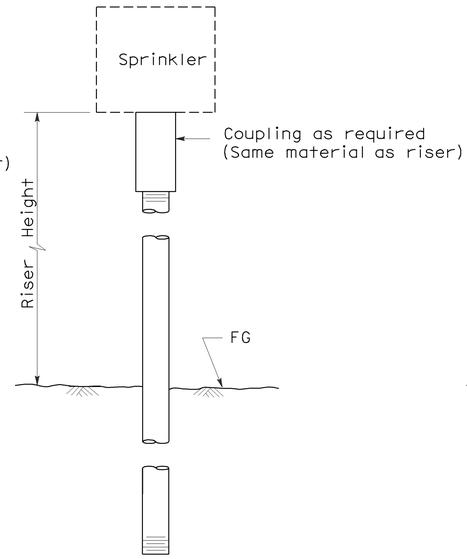

ELEVATION
RISER TYPE II

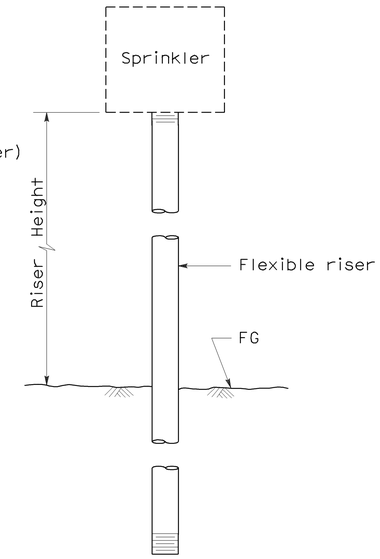

ELEVATION
RISER TYPE III

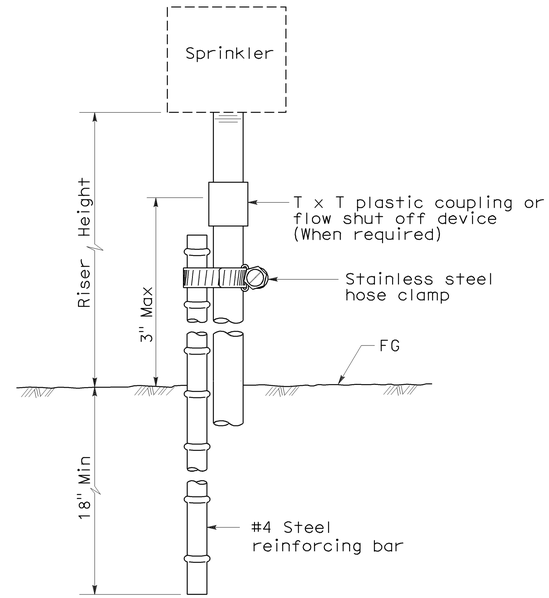

ELEVATION
RISER TYPE IV

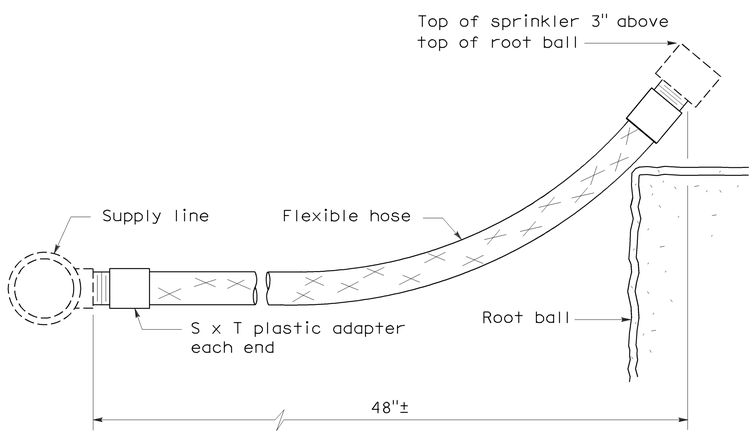

ELEVATION
RISER TYPE V

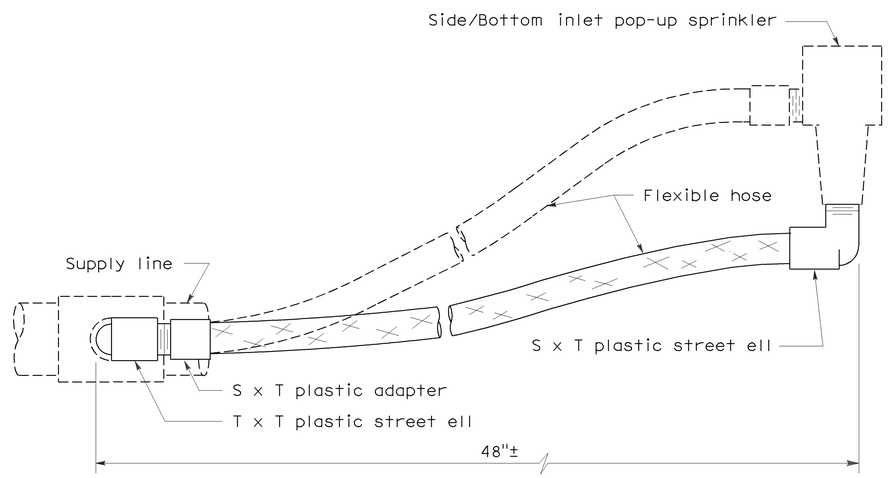

ELEVATION
RISER TYPE VI

STATE OF CALIFORNIA
DEPARTMENT OF TRANSPORTATION

PLANTING AND IRRIGATION DETAILS

NO SCALE

RSP H5 DATED JUNE 5, 2009 SUPERSEDES STANDARD PLAN H5
DATED MAY 1, 2006 - PAGE 205 OF THE STANDARD PLANS BOOK DATED MAY 2006.

REVISED STANDARD PLAN RSP H5

2006 REVISED STANDARD PLAN RSP H5

5-28-09

DIST	COUNTY	ROUTE	POST MILES TOTAL PROJECT	SHEET NO.	TOTAL SHEETS
03	Yub	70	R8.4/13.6	26	29

LICENSED LANDSCAPE ARCHITECT

June 5, 2009
PLANS APPROVAL DATE

Gregory A. Balzer 2576 — 10-31-10 Expiration Date; 2-28-11 Renewal Date; 5-14-09 Date — LICENSED LANDSCAPE ARCHITECT — STATE OF CALIFORNIA

The State of California or its officers or agents shall not be responsible for the accuracy or completeness of electronic copies of this plan sheet.

To accompany plans dated April 19, 2010

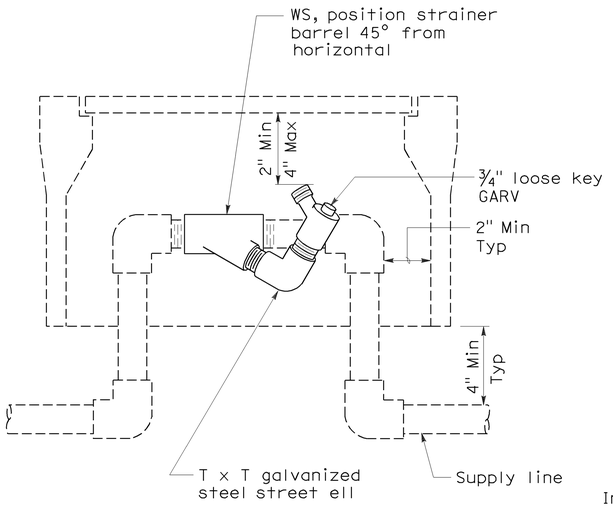

ELEVATION
WYE STRAINER

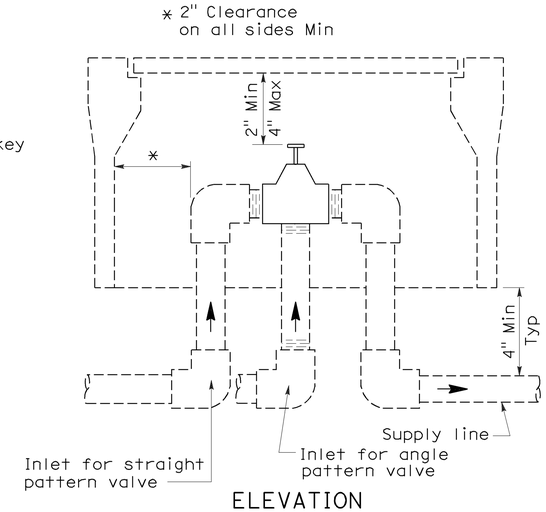

ELEVATION
VALVE

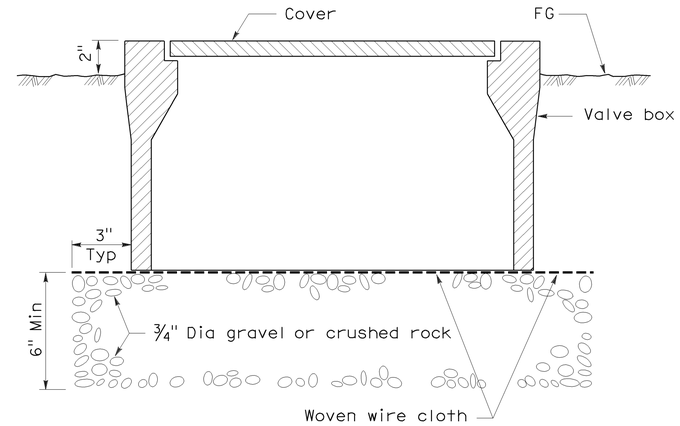

SECTION
VALVE BOX

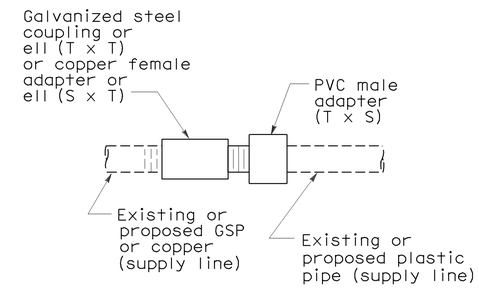

PLAN
GALVANIZED OR COPPER PIPE CONNECTION TO PLASTIC PIPE

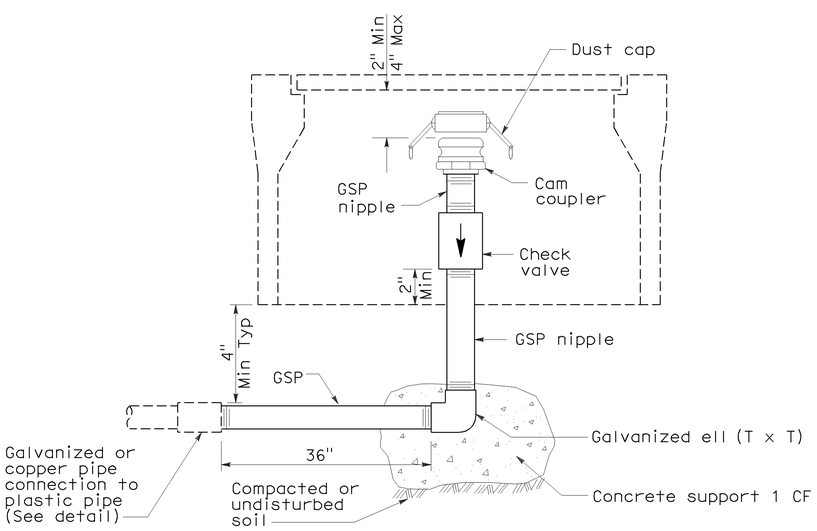

ELEVATION
CAM COUPLER ASSEMBLY

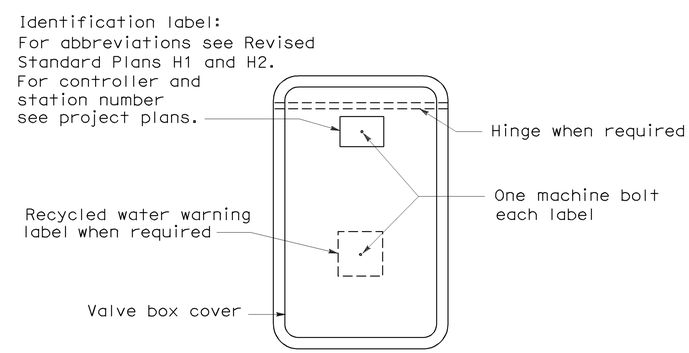

PLAN

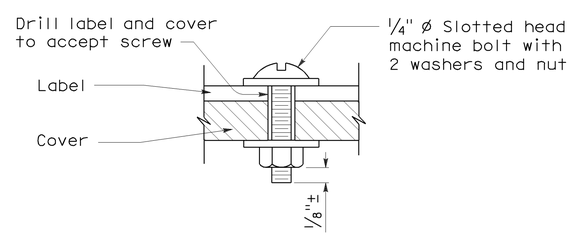

SECTION
VALVE BOX IDENTIFICATION

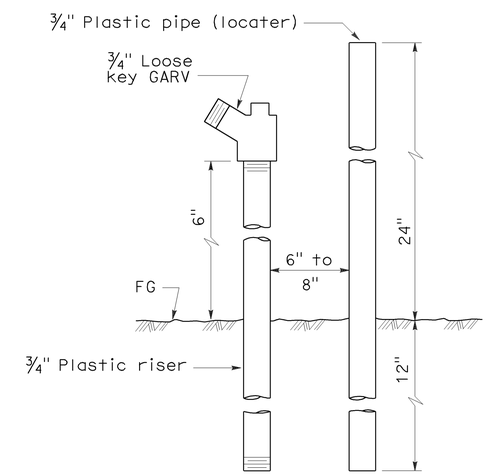

ELEVATION
FLUSH VALVE

STATE OF CALIFORNIA
DEPARTMENT OF TRANSPORTATION

PLANTING AND IRRIGATION DETAILS

NO SCALE

RSP H7 DATED JUNE 5, 2009 SUPERSEDES STANDARD PLAN H7
DATED MAY 1, 2006 - PAGE 207 OF THE STANDARD PLANS BOOK DATED MAY 2006.

REVISED STANDARD PLAN RSP H7

2006 REVISED STANDARD PLAN RSP H7

5-28-09

DIST	COUNTY	ROUTE	POST MILES TOTAL PROJECT	SHEET NO.	TOTAL SHEETS
03	Yub	70	R8.4/13.6	27	29

Randell D. Hiatt
REGISTERED CIVIL ENGINEER

June 6, 2008
PLANS APPROVAL DATE

REGISTERED PROFESSIONAL ENGINEER
Randell D. Hiatt
No. C50200
Exp. 6-30-09
CIVIL
STATE OF CALIFORNIA

The State of California or its officers or agents shall not be responsible for the accuracy or completeness of electronic copies of this plan sheet.

To accompany plans dated April 19, 2010

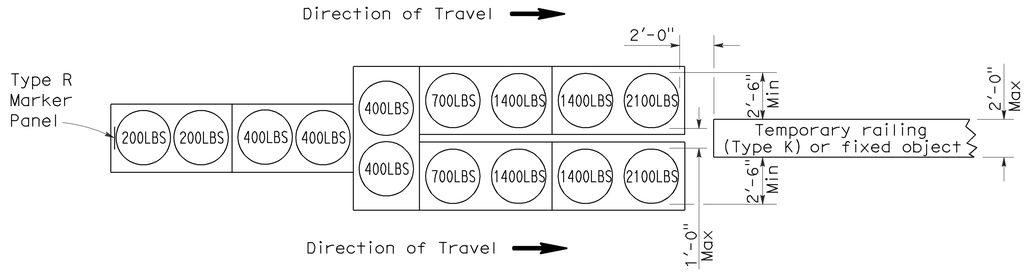

ARRAY 'TU14'

Approach speed 45 mph or more

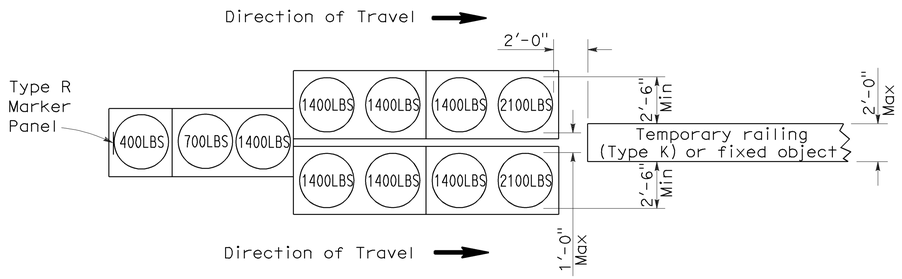

ARRAY 'TU11'

Approach speed less than 45 mph

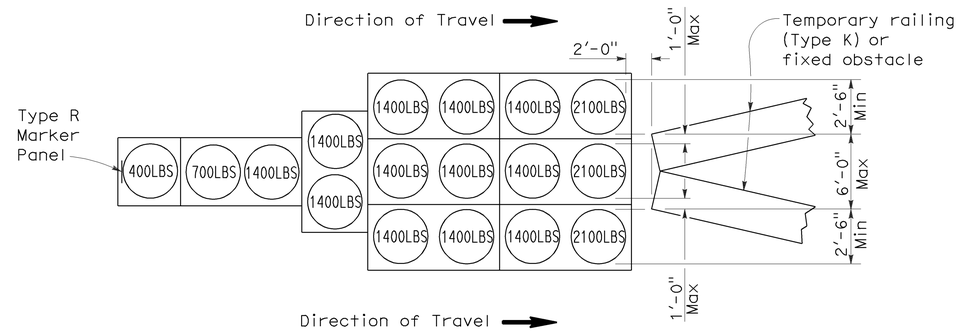

ARRAY 'TU17'

Approach speed less than 45 mph

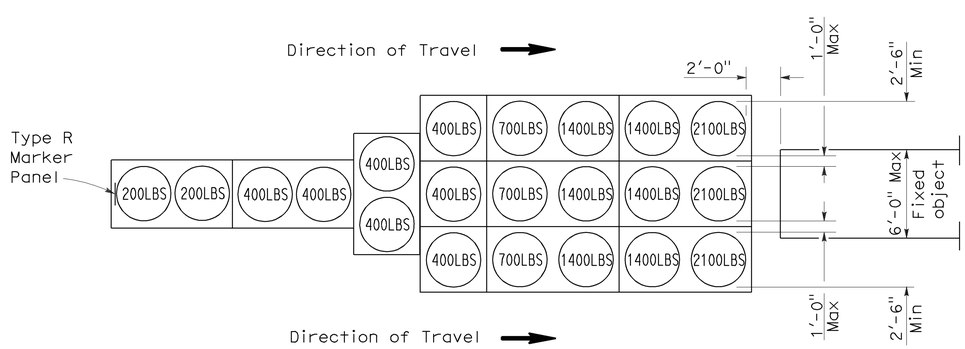

ARRAY 'TU21'

Approach speed 45 mph or more

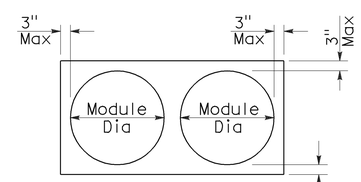

PLAN

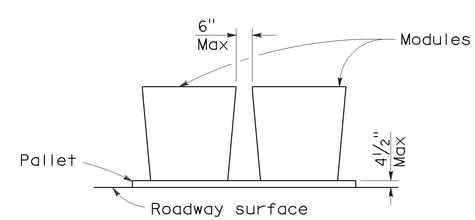

ELEVATION

CRASH CUSHION PALLET DETAIL

See Note 7

NOTES:

1. (XXX) Indicates sand filled module location and weight of sand in pounds for each module. Module spacing is based on the greater diameter of the module.
2. All sand weights are nominal.
3. Temporary crash cushion arrays shall not encroach on the traveled way.
4. Place the top of Type R marker panel 1" below the module lid.
5. Refer to Standard Plan A73B for marker details.
6. Approach speeds indicated conform to NCHRP 350 Report criteria.
7. Use of pallets is optional.

STATE OF CALIFORNIA
DEPARTMENT OF TRANSPORTATION

TEMPORARY CRASH CUSHION, SAND FILLED (UNIDIRECTIONAL)

NO SCALE

RSP T1A DATED JUNE 6, 2008 SUPERSEDES STANDARD PLAN T1A
DATED MAY 1, 2006 - PAGE 211 OF THE STANDARD PLANS BOOK DATED MAY 2006.

REVISED STANDARD PLAN RSP T1A

2006 REVISED STANDARD PLAN RSP T1A

DIST	COUNTY	ROUTE	POST MILES TOTAL PROJECT	SHEET NO.	TOTAL SHEETS
03	Yub	70	R8.4/13.6	28	29

Randell D. Hiatt
REGISTERED CIVIL ENGINEER

June 6, 2008
PLANS APPROVAL DATE

REGISTERED PROFESSIONAL ENGINEER
Randell D. Hiatt
No. C50200
Exp. 6-30-09
CIVIL
STATE OF CALIFORNIA

The State of California or its officers or agents shall not be responsible for the accuracy or completeness of electronic copies of this plan sheet.

To accompany plans dated April 19, 2010

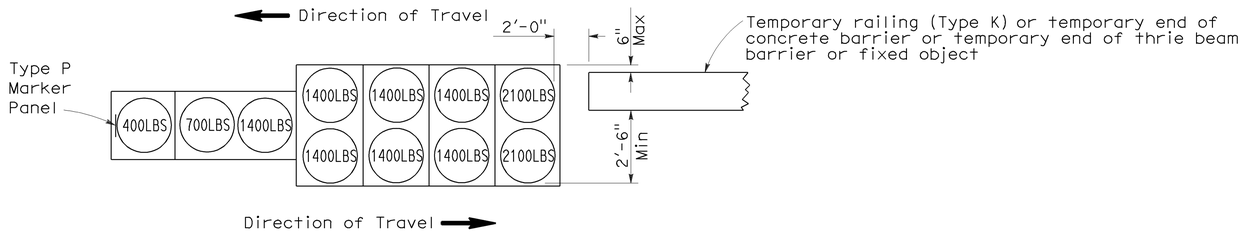

ARRAY 'TB11'

Approach speed less than 45 mph

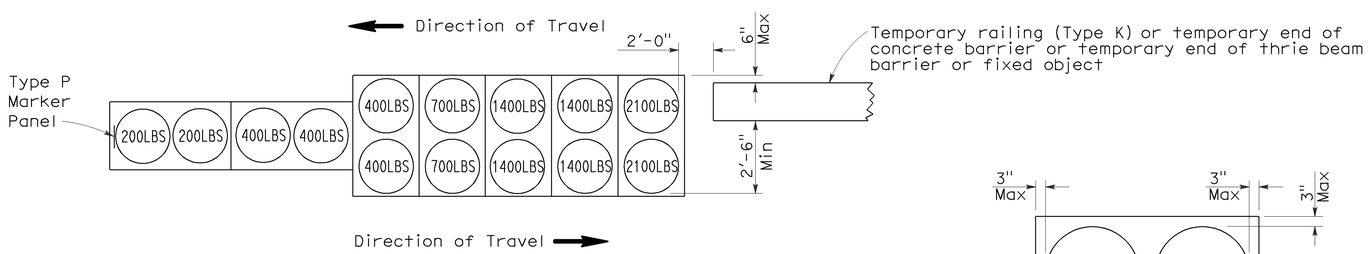

ARRAY 'TB14'

Approach speed 45 mph or more

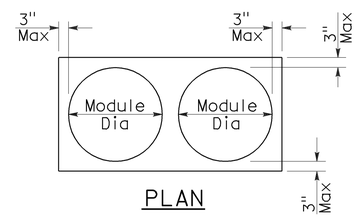

PLAN

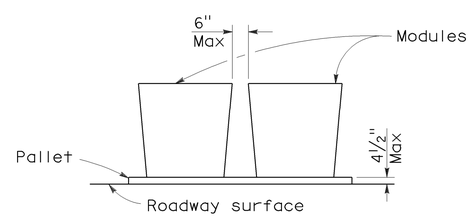

ELEVATION

CRASH CUSHION PALLET DETAIL

See Note 7

NOTES:

1. (XXX) Indicates sand filled module location and weight of sand in pounds for each module. Module spacing is based on the greater diameter of the module.
2. All sand weights are nominal.
3. Temporary crash cushion arrays shall not encroach on the traveled way.
4. Place the Type P marker panel so that the bottom of the panel rests upon the pallet.
5. Refer to Standard Plan A73B for marker details.
6. Approach speeds indicated conform to NCHRP 350 Report criteria.
7. Use of pallets is optional.

STATE OF CALIFORNIA
DEPARTMENT OF TRANSPORTATION

TEMPORARY CRASH CUSHION, SAND FILLED (BIDIRECTIONAL)

NO SCALE

RSP T1B DATED JUNE 6, 2008 SUPERSEDES STANDARD PLAN T1B
DATED MAY 1, 2006 - PAGE 212 OF THE STANDARD PLANS BOOK DATED MAY 2006.

REVISED STANDARD PLAN RSP T1B

2006 REVISED STANDARD PLAN RSP T1B

5-15-08

DIST	COUNTY	ROUTE	POST MILES TOTAL PROJECT	SHEET NO.	TOTAL SHEETS
03	Yub	70	R8.4/13.6	29	29

Randell D. Hiatt
REGISTERED CIVIL ENGINEER

June 6, 2008
PLANS APPROVAL DATE

REGISTERED PROFESSIONAL ENGINEER
Randell D. Hiatt
No. C50200
Exp. 6-30-09
CIVIL
STATE OF CALIFORNIA

The State of California or its officers or agents shall not be responsible for the accuracy or completeness of electronic copies of this plan sheet.

To accompany plans dated April 19, 2010

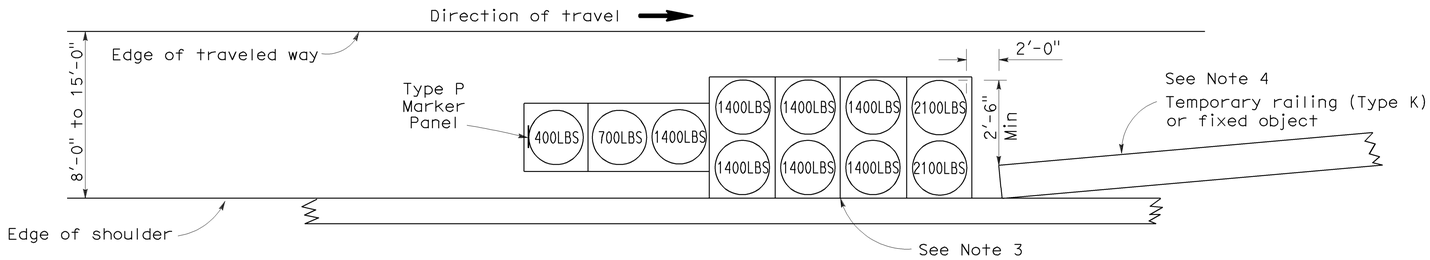

ARRAY 'TS11'

Approach speed less than 45 mph
See Note 9

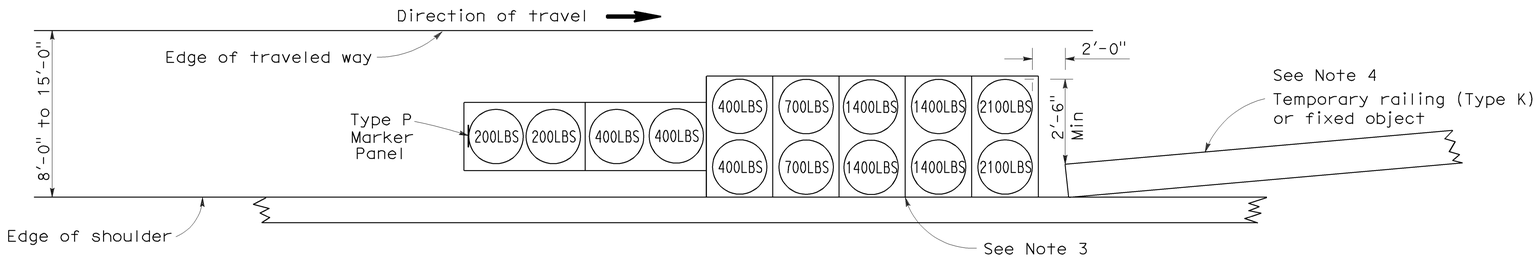

ARRAY 'TS14'

Approach speed 45 mph or more
See Note 9

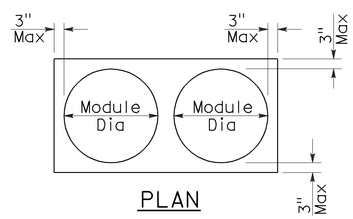

PLAN

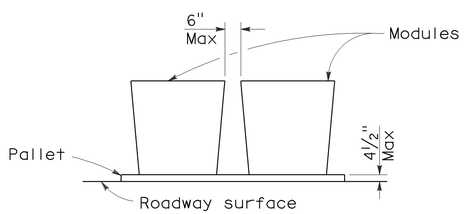

ELEVATION

CRASH CUSHION PALLET DETAIL

See Note 11

NOTES:

1. (XXX) Indicates sand filled module location and weight of sand in pounds for each module. Module spacing is based on the greater diameter of the module.
2. All sand weights are nominal.
3. The temporary crash cushion arrays shown on this plan shall be used only in locations where there will be traffic on one side of the temporary crash cushion array.
4. If the fixed object or approach end of the temporary railing is less than 15'-0" from the edge of traveled way, a temporary crash cushion is required in a construction or work zone.
5. Temporary crash cushion arrays shall not encroach on the traveled way.
6. Arrays for median shoulders shall conform to details shown on this plan for outside shoulders.
7. Place the Type P marker panel so that the bottom of the panel rests upon the pallet and faces traffic.
8. Refer to Standard Plan A73B for marker details.
9. For shoulder widths less than 8'-0", appropriate approved crash cushion protection, other than sand filled modules, shall be provided at fixed objects and at approach ends of temporary railing. The specific type of crash cushion shall be as shown on the project plans or as specified in the Special Provisions, or if not shown on the project plans or specified in the Special Provisions, shall be as approved by the Engineer.
10. Approach speeds indicated conform to NCHRP 350 Report criteria.
11. Use of pallets is optional.

STATE OF CALIFORNIA
DEPARTMENT OF TRANSPORTATION

TEMPORARY CRASH CUSHION, SAND FILLED (SHOULDER INSTALLATIONS)

NO SCALE

RSP T2 DATED JUNE 6, 2008 SUPERSEDES STANDARD PLAN T2
DATED MAY 1, 2006 - PAGE 213 OF THE STANDARD PLANS BOOK DATED MAY 2006.

REVISED STANDARD PLAN RSP T2

2006 REVISED STANDARD PLAN RSP T2

5-15-08