Dist	COUNTY	ROUTE	POST MILES TOTAL PROJECT	SHEET No.	TOTAL SHEETS
03	But	70,162, 191	Var	1	13

INDEX OF PLANS

SHEET No.	DESCRIPTION
1	TITLE AND LOCATION MAP
2	CONSTRUCTION DETAILS
3	CONSTRUCTION AREA SIGNS
4	PAVEMENT DELINEATION QUANTITIES
5-8	REVISED STANDARD PLANS

STRUCTURE PLANS

9-13	ROUTE 70, 162 AND 191 BRIDGES

THE STANDARD PLANS LIST APPLICABLE TO THIS CONTRACT IS INCLUDED IN THE NOTICE TO BIDDERS AND SPECIAL PROVISIONS BOOK.

STATE OF CALIFORNIA

DEPARTMENT OF TRANSPORTATION

PROJECT PLANS FOR CONSTRUCTION ON

STATE HIGHWAY

IN BUTTE COUNTY AT VARIOUS LOCATIONS

TO BE SUPPLEMENTED BY STANDARD PLANS DATED MAY 2006

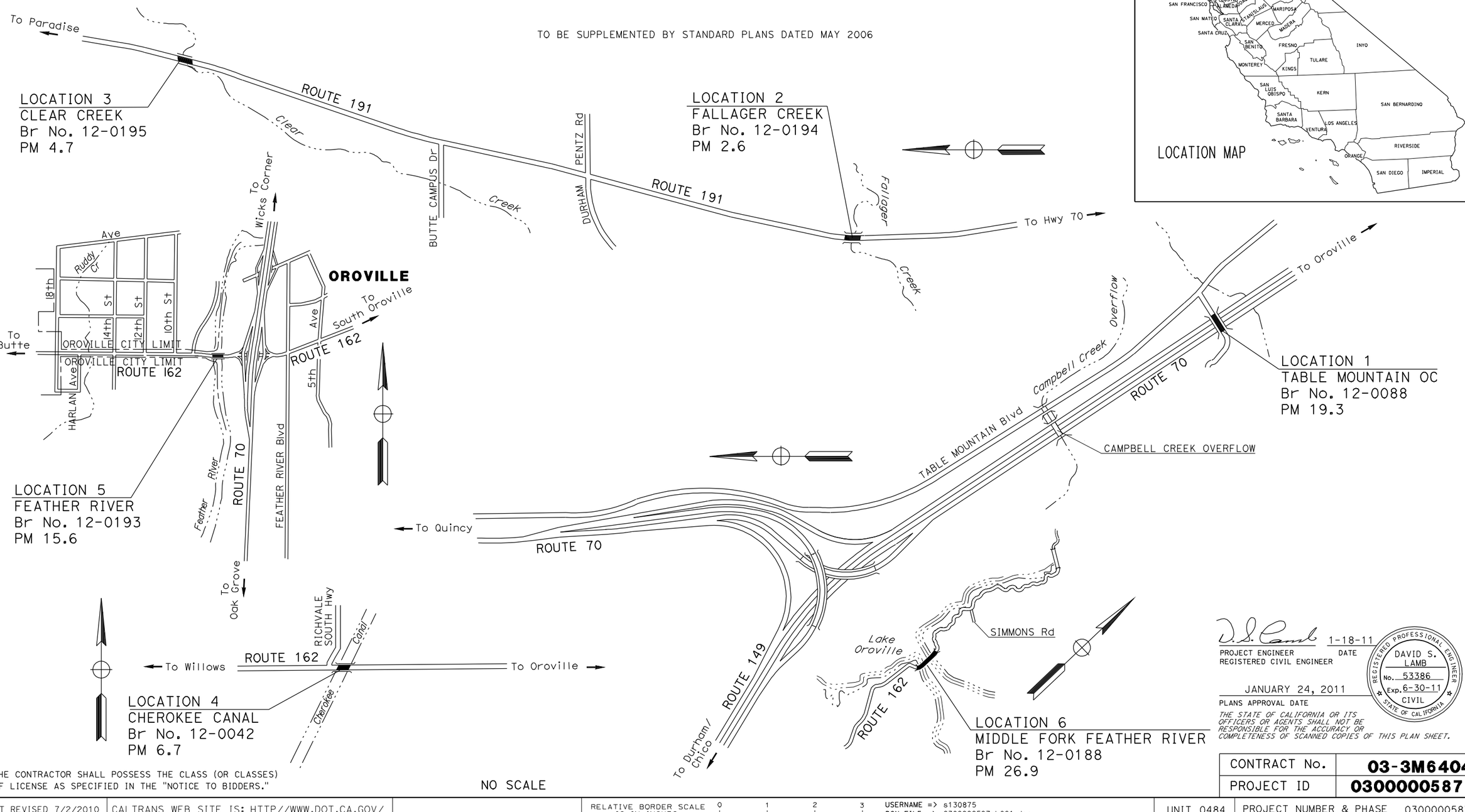

LOCATION 1
TABLE MOUNTAIN OC
Br No. 12-0088
PM 19.3

CAMPBELL CREEK OVERFLOW

LOCATION 2
FALLAGER CREEK
Br No. 12-0194
PM 2.6

LOCATION 3
CLEAR CREEK
Br No. 12-0195
PM 4.7

LOCATION 4
CHEROKEE CANAL
Br No. 12-0042
PM 6.7

LOCATION 5
FEATHER RIVER
Br No. 12-0193
PM 15.6

LOCATION 6
MIDDLE FORK FEATHER RIVER
Br No. 12-0188
PM 26.9

LOCATION MAP

THE CONTRACTOR SHALL POSSESS THE CLASS (OR CLASSES) OF LICENSE AS SPECIFIED IN THE "NOTICE TO BIDDERS."

NO SCALE

PROJECT MANAGER: BRIAN TOEPFER

DESIGN ENGINEER: BRIAN TOEPFER

D. S. Lamb 1-18-11
PROJECT ENGINEER / REGISTERED CIVIL ENGINEER — DATE

REGISTERED PROFESSIONAL ENGINEER — DAVID S. LAMB — No. 53386 — Exp. 6-30-11 — CIVIL — STATE OF CALIFORNIA

JANUARY 24, 2011
PLANS APPROVAL DATE

THE STATE OF CALIFORNIA OR ITS OFFICERS OR AGENTS SHALL NOT BE RESPONSIBLE FOR THE ACCURACY OR COMPLETENESS OF SCANNED COPIES OF THIS PLAN SHEET.

CONTRACT No.	03-3M6404
PROJECT ID	0300000587

LAST REVISION 00-00-00
DATE PLOTTED => 21-JAN-2011
TIME PLOTTED => 15:08

BORDER LAST REVISED 7/2/2010 | CALTRANS WEB SITE IS: HTTP//WWW.DOT.CA.GOV/ | RELATIVE BORDER SCALE IS IN INCHES 0 1 2 3 | USERNAME => s130875 DGN FILE => 0300000587ab001.dgn | UNIT 0484 | PROJECT NUMBER & PHASE 03000005871

Dist	COUNTY	ROUTE	POST MILES TOTAL PROJECT	SHEET No.	TOTAL SHEETS
03	But	70, 162, 191	Var	2	13

REGISTERED CIVIL ENGINEER 1-18-11 DATE

1-24-11
PLANS APPROVAL DATE

REGISTERED PROFESSIONAL ENGINEER DAVID S. LAMB No. 53386 Exp. 6-30-11 CIVIL STATE OF CALIFORNIA

THE STATE OF CALIFORNIA OR ITS OFFICERS OR AGENTS SHALL NOT BE RESPONSIBLE FOR THE ACCURACY OR COMPLETENESS OF SCANNED COPIES OF THIS PLAN SHEET.

LEGEND

COLD PLANE AC PAVEMENT

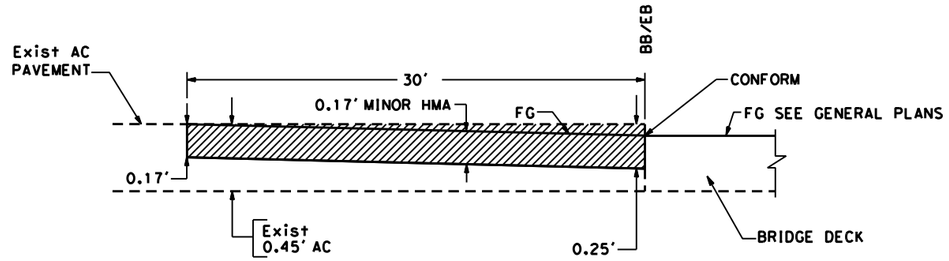

PAVEMENT CONFORM

ROADWAY QUANTITIES

LOCATION No.	COUNTY AND ROUTE	BRIDGE No.	DESCRIPTION	MINOR HOT MIX ASPHALT	COLD PLANE AC PAVEMENT
				TON	SQYD
4	But 162	12-0042	CHEROKEE CANAL	36.1	213.3
6	But 162	12-0188	MIDDLE FORK FEATHER RIVER	31.6	186.7
TOTAL				67.7	400.0

NOTE:
COLD PLANE OF APPROACH AND DEPARTURE IS EP TO EP.

CONSTRUCTION DETAILS
NO SCALE

C-1

STATE OF CALIFORNIA - DEPARTMENT OF TRANSPORTATION
Caltrans MAINTENANCE

FUNCTIONAL SUPERVISOR: BRIAN TOEPFER
CALCULATED-DESIGNED BY: BRIAN K. KORTE
CHECKED BY: DAVID S. LAMB
REVISED BY
DATE REVISED

LAST REVISION 00-00-00
DATE PLOTTED => $DATE
TIME PLOTTED => $TIME

Dist	COUNTY	ROUTE	POST MILES TOTAL PROJECT	SHEET No.	TOTAL SHEETS
03	But	70, 162, 191	Var	3	13

D. S. Lamb 1-18-11
REGISTERED CIVIL ENGINEER DATE

1-24-11
PLANS APPROVAL DATE

REGISTERED PROFESSIONAL ENGINEER — DAVID S. LAMB — No. 53386 — Exp. 6-30-11 — CIVIL — STATE OF CALIFORNIA

THE STATE OF CALIFORNIA OR ITS OFFICERS OR AGENTS SHALL NOT BE RESPONSIBLE FOR THE ACCURACY OR COMPLETENESS OF SCANNED COPIES OF THIS PLAN SHEET.

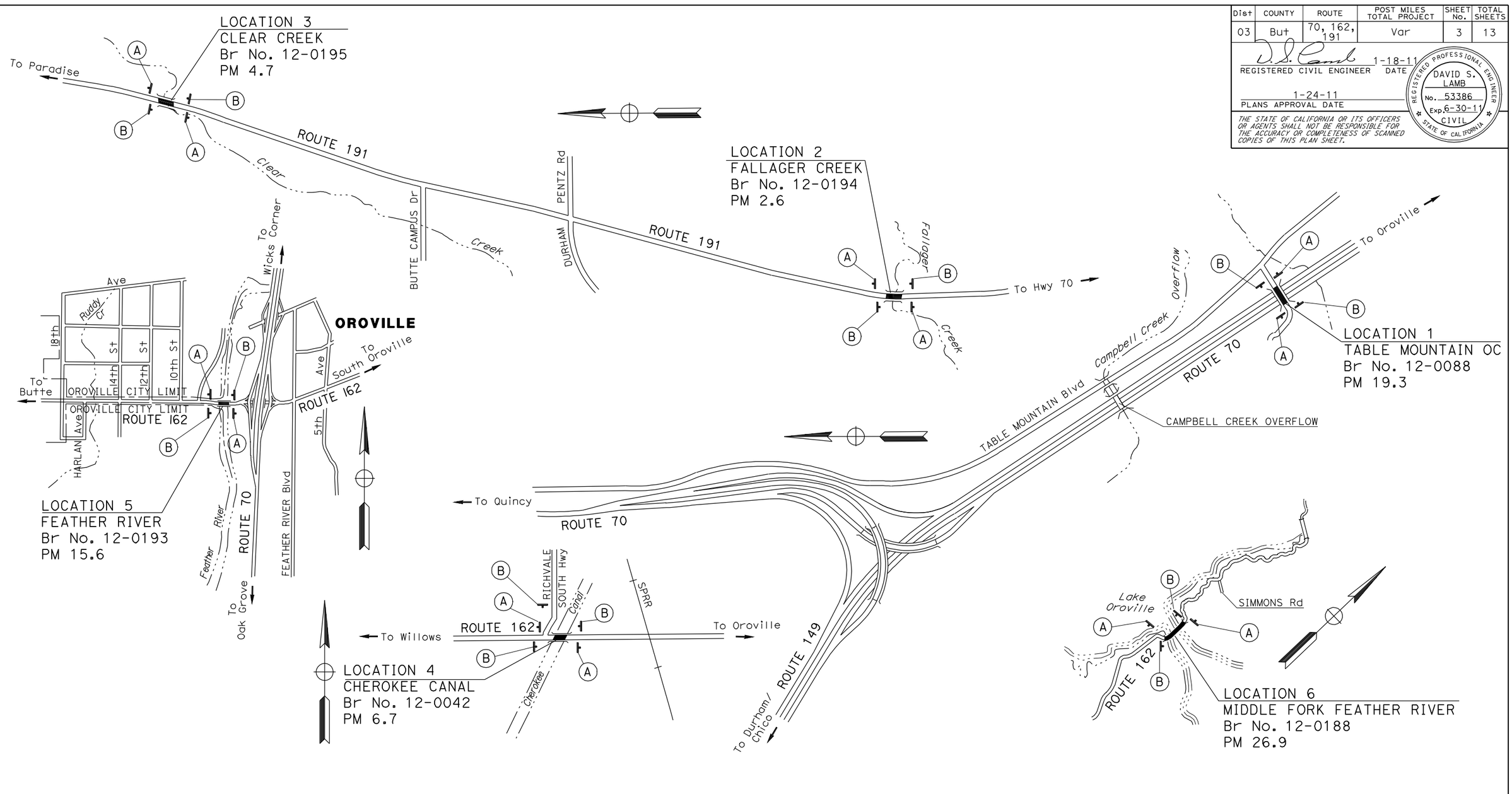

STATIONARY MOUNTED CONSTRUCTION AREA SIGNS

SIGN LETTER	SIGN CODE FEDERAL	SIGN CODE CALIFORNIA	PANEL SIZE	SIGN MESSAGE	NUMBER OF POST AND SIZE	NUMBER OF SIGNS LOCATION 1	LOCATION 2	LOCATION 3	LOCATION 4	LOCATION 5	LOCATION 6
(A)		C14	48" x 24"	END ROAD WORK	1 - 4" x 6"	2	2	2	2	2	2
(B)	W20-1	C23	48" x 48"	ROAD WORK AHEAD	1 - 6" x 6"	2	2	2	3	2	2

NOTE: EXACT SIGN LOCATION TO BE DETERMINED BY THE ENGINEER.

THIS PLAN ACCURATE FOR CONSTRUCTION AREA SIGN WORK ONLY.

CONSTRUCTION AREA SIGNS

NO SCALE **CS-1**

REVISED BY	DATE REVISED
BRIAN K. KORTE	DAVID S. LAMB
CALCULATED-DESIGNED BY	CHECKED BY
FUNCTIONAL SUPERVISOR	
BRIAN TOEPFER	

STATE OF CALIFORNIA - DEPARTMENT OF TRANSPORTATION
Caltrans® MAINTENANCE

LAST REVISION 00-00-00 | DATE PLOTTED => 21-JAN-2011 | TIME PLOTTED => 15:08

BORDER LAST REVISED 7/2/2010 | USERNAME => s130875 | DGN FILE => 03000005871a001.dgn | RELATIVE BORDER SCALE IS IN INCHES 0 1 2 3 | UNIT 0484 | PROJECT NUMBER & PHASE 03000005871

Dist	COUNTY	ROUTE	POST MILES TOTAL PROJECT	SHEET No.	TOTAL SHEETS
03	But	70, 162, 191	Var	4	13

D. S. Lamb 1-18-11
REGISTERED CIVIL ENGINEER DATE

1-24-11
PLANS APPROVAL DATE

REGISTERED PROFESSIONAL ENGINEER
DAVID S. LAMB
No. 53386
Exp. 6-30-11
CIVIL
STATE OF CALIFORNIA

THE STATE OF CALIFORNIA OR ITS OFFICERS OR AGENTS SHALL NOT BE RESPONSIBLE FOR THE ACCURACY OR COMPLETENESS OF SCANNED COPIES OF THIS PLAN SHEET.

REMOVE PAVEMENT DELINEATION QUANTITIES

LOCATION	COUNTY	ROUTE	BRIDGE NUMBER	DESCRIPTION	REMOVE THERMOPLASTIC TRAFFIC STRIPE	REMOVE YELLOW THERMOPLASTIC TRAFFIC STRIPE (HAZARDOUS WASTE)
					LF	LF
2	But	191	12-0194	FALLAGER CREEK	118	12
3	But	191	12-0195	CLEAR CREEK	118	71
5	But	162	12-0193	FEATHER RIVER	1,438	1,438
TOTAL					1,674	1,521

PAVEMENT DELINEATION QUANTITIES

LOCATION	COUNTY	ROUTE	BRIDGE No.	DESCRIPTION	4" THERMOPLASTIC TRAFFIC STRIPE (BROKEN 36 - 12)		4" THERMOPLASTIC TRAFFIC STRIPE			PAVEMENT MARKER (RETROREFLECTIVE)	
					DETAIL 6	DETAIL 19	DETAIL 19	DETAIL 22	DETAIL 27B	TYPE H (EA)	TYPE D (EA)
					LF	LF	LF	LF	LF		
1	But	70	12-0088	TABLE MOUNTAIN OC							
2	But	191	12-0194	FALLAGER CREEK	59				118		2
3	But	191	12-0195	CLEAR CREEK		59	59		118	3	2
4	But	162	12-0042	CHEROKEE CANAL				929	929		42
5	But	162	12-0193	FEATHER RIVER				1,438	1,438		60
6	But	162	12-0188	MIDDLE FORK FEATHER RIVER				3,646	3,646		154
SUBTOTAL					59	59	59	6,013	6,249	3	260
TOTAL					118		12,321			263	

PAVEMENT DELINEATION QUANTITIES

PDQ-1

CALCULATED-DESIGNED BY
CHECKED BY
BRIAN K. KORTE
DAVID S. LAMB
REVISED BY
DATE REVISED
FUNCTIONAL SUPERVISOR
BRIAN TOEPFER
STATE OF CALIFORNIA - DEPARTMENT OF TRANSPORTATION
Caltrans® MAINTENANCE

LAST REVISION 00-00-00
DATE PLOTTED => 21-JAN-2011
TIME PLOTTED => 15:08

BORDER LAST REVISED 7/2/2010
USERNAME => s130875
DGN FILE => 0300000587nc001.dgn
RELATIVE BORDER SCALE IS IN INCHES 0 1 2 3
UNIT 0484
PROJECT NUMBER & PHASE 03000005871

DIST	COUNTY	ROUTE	POST MILES TOTAL PROJECT	SHEET NO.	TOTAL SHEETS
03	But	70,162, 191	Var	5	13

Randell D. Hiatt
REGISTERED CIVIL ENGINEER

June 6, 2008
PLANS APPROVAL DATE

REGISTERED PROFESSIONAL ENGINEER — Randell D. Hiatt — No. C50200 — Exp. 6-30-09 — CIVIL — STATE OF CALIFORNIA

The State of California or its officers or agents shall not be responsible for the accuracy or completeness of electronic copies of this plan sheet.

To accompany plans dated 1-24-11

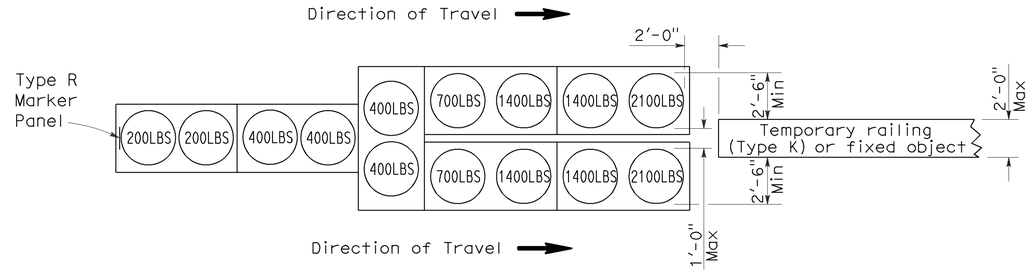

ARRAY 'TU14'

Approach speed 45 mph or more

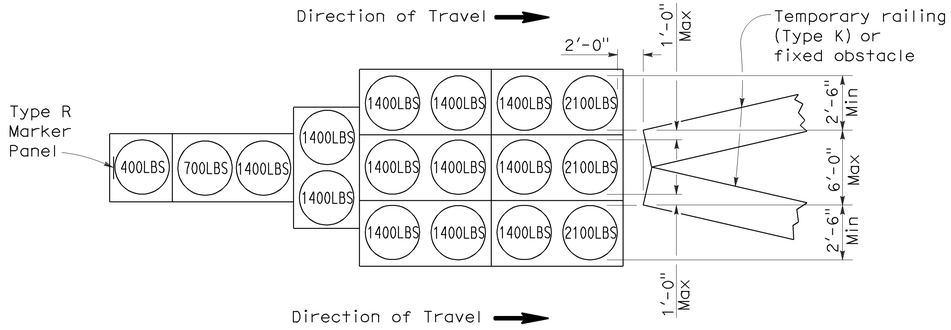

ARRAY 'TU17'

Approach speed less than 45 mph

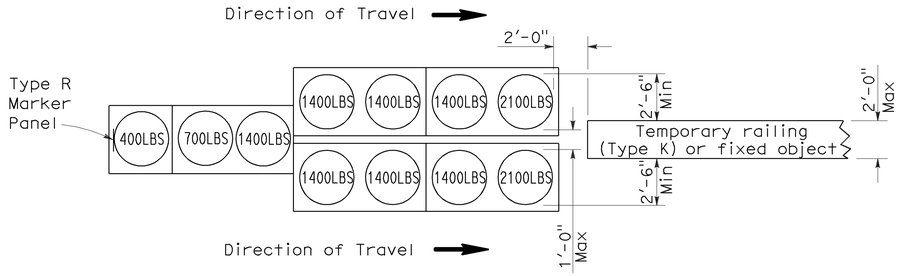

ARRAY 'TU11'

Approach speed less than 45 mph

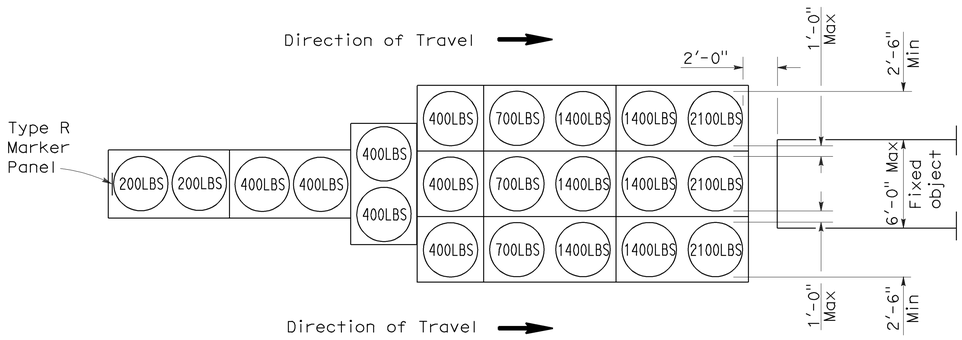

ARRAY 'TU21'

Approach speed 45 mph or more

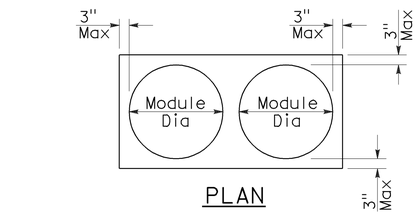

PLAN

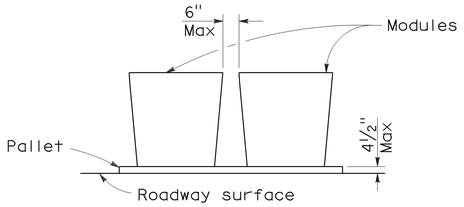

ELEVATION

CRASH CUSHION PALLET DETAIL

See Note 7

NOTES:

1. (XXX) Indicates sand filled module location and weight of sand in pounds for each module. Module spacing is based on the greater diameter of the module.
2. All sand weights are nominal.
3. Temporary crash cushion arrays shall not encroach on the traveled way.
4. Place the top of Type R marker panel 1" below the module lid.
5. Refer to Standard Plan A73B for marker details.
6. Approach speeds indicated conform to NCHRP 350 Report criteria.
7. Use of pallets is optional.

STATE OF CALIFORNIA
DEPARTMENT OF TRANSPORTATION

TEMPORARY CRASH CUSHION, SAND FILLED (UNIDIRECTIONAL)

NO SCALE

RSP T1A DATED JUNE 6, 2008 SUPERSEDES STANDARD PLAN T1A
DATED MAY 1, 2006 - PAGE 211 OF THE STANDARD PLANS BOOK DATED MAY 2006.

REVISED STANDARD PLAN RSP T1A

2006 REVISED STANDARD PLAN RSP T1A

5-15-08

DIST	COUNTY	ROUTE	POST MILES TOTAL PROJECT	SHEET NO.	TOTAL SHEETS
03	But	70,162, 191	Var	6	13

Randell D. Hiatt
REGISTERED CIVIL ENGINEER

June 6, 2008
PLANS APPROVAL DATE

Registered Professional Engineer — Randell D. Hiatt — No. C50200 — Exp. 6-30-09 — CIVIL — State of California

The State of California or its officers or agents shall not be responsible for the accuracy or completeness of electronic copies of this plan sheet.

To accompany plans dated 1-24-11

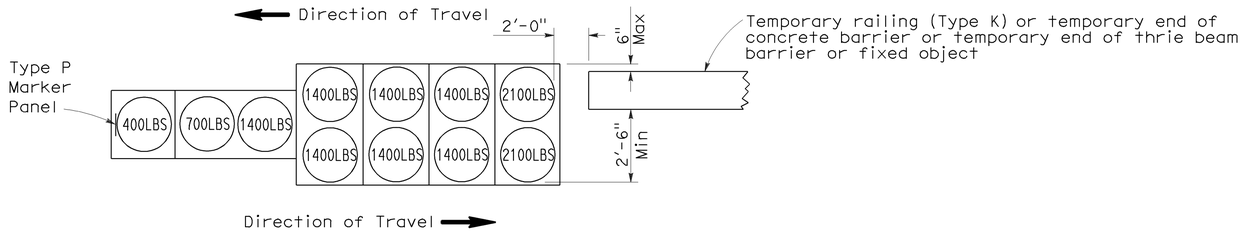

ARRAY 'TB11'

Approach speed less than 45 mph

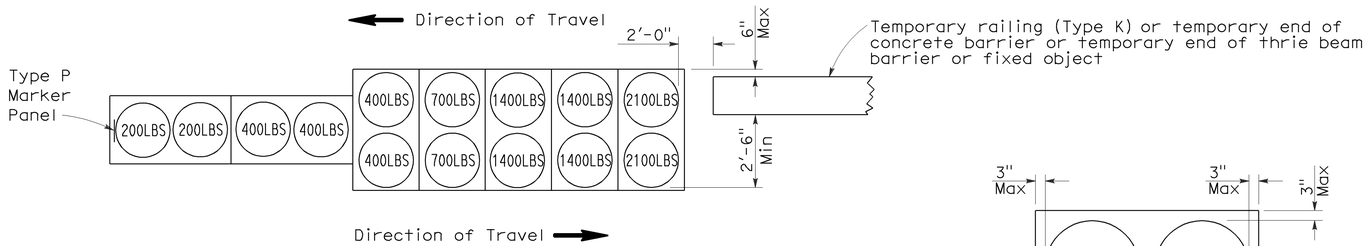

ARRAY 'TB14'

Approach speed 45 mph or more

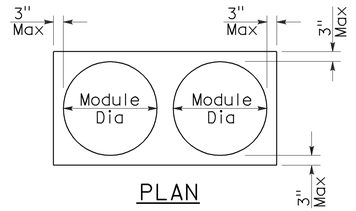

PLAN

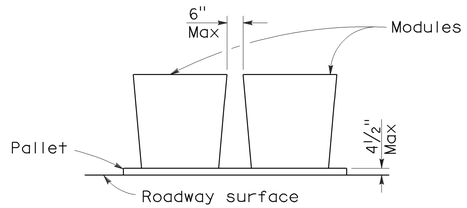

ELEVATION

CRASH CUSHION PALLET DETAIL

See Note 7

NOTES:

1. (XXX) Indicates sand filled module location and weight of sand in pounds for each module. Module spacing is based on the greater diameter of the module.
2. All sand weights are nominal.
3. Temporary crash cushion arrays shall not encroach on the traveled way.
4. Place the Type P marker panel so that the bottom of the panel rests upon the pallet.
5. Refer to Standard Plan A73B for marker details.
6. Approach speeds indicated conform to NCHRP 350 Report criteria.
7. Use of pallets is optional.

STATE OF CALIFORNIA
DEPARTMENT OF TRANSPORTATION

TEMPORARY CRASH CUSHION, SAND FILLED (BIDIRECTIONAL)

NO SCALE

RSP T1B DATED JUNE 6, 2008 SUPERSEDES STANDARD PLAN T1B
DATED MAY 1, 2006 - PAGE 212 OF THE STANDARD PLANS BOOK DATED MAY 2006.

REVISED STANDARD PLAN RSP T1B

2006 REVISED STANDARD PLAN RSP T1B

5-15-08

DIST	COUNTY	ROUTE	POST MILES TOTAL PROJECT	SHEET NO.	TOTAL SHEETS
03	But	70,162, 191	Var	7	13

Randell D. Hiatt
REGISTERED CIVIL ENGINEER

June 6, 2008
PLANS APPROVAL DATE

REGISTERED PROFESSIONAL ENGINEER
Randell D. Hiatt
No. C50200
Exp. 6-30-09
CIVIL
STATE OF CALIFORNIA

The State of California or its officers or agents shall not be responsible for the accuracy or completeness of electronic copies of this plan sheet.

To accompany plans dated 1-24-11

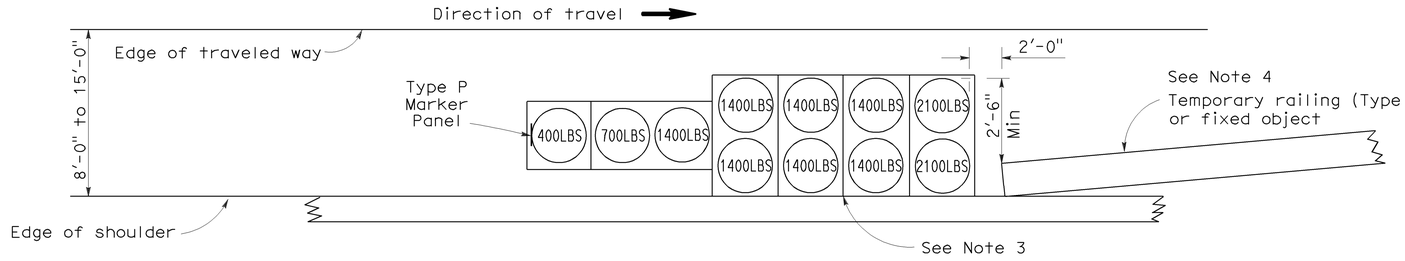

ARRAY 'TS11'

Approach speed less than 45 mph
See Note 9

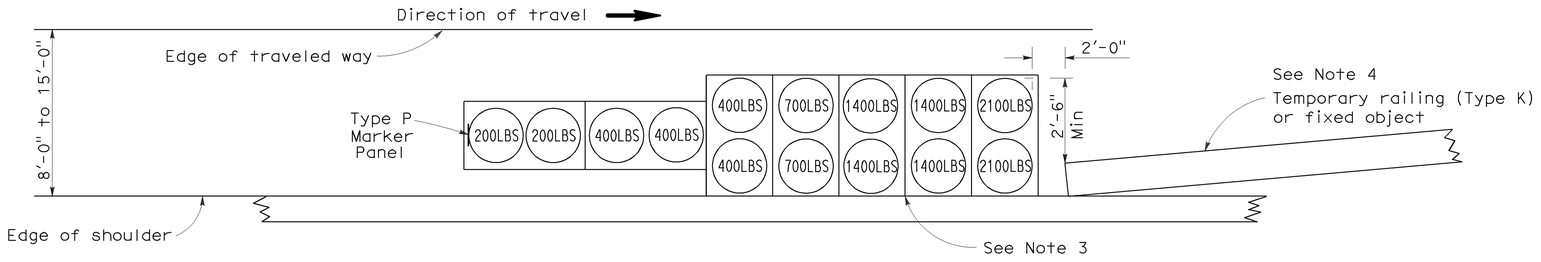

ARRAY 'TS14'

Approach speed 45 mph or more
See Note 9

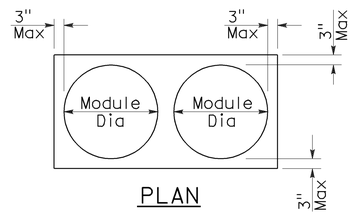

PLAN

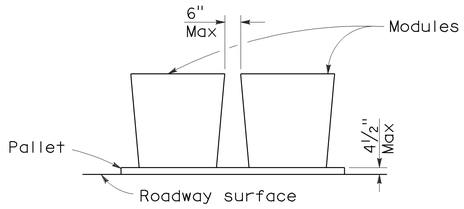

ELEVATION

CRASH CUSHION PALLET DETAIL

See Note 11

NOTES:

1. (XXX) Indicates sand filled module location and weight of sand in pounds for each module. Module spacing is based on the greater diameter of the module.
2. All sand weights are nominal.
3. The temporary crash cushion arrays shown on this plan shall be used only in locations where there will be traffic on one side of the temporary crash cushion array.
4. If the fixed object or approach end of the temporary railing is less than 15'-0" from the edge of traveled way, a temporary crash cushion is required in a construction or work zone.
5. Temporary crash cushion arrays shall not encroach on the traveled way.
6. Arrays for median shoulders shall conform to details shown on this plan for outside shoulders.
7. Place the Type P marker panel so that the bottom of the panel rests upon the pallet and faces traffic.
8. Refer to Standard Plan A73B for marker details.
9. For shoulder widths less than 8'-0", appropriate approved crash cushion protection, other than sand filled modules, shall be provided at fixed objects and at approach ends of temporary railing. The specific type of crash cushion shall be as shown on the project plans or as specified in the Special Provisions, or if not shown on the project plans or specified in the Special Provisions, shall be as approved by the Engineer.
10. Approach speeds indicated conform to NCHRP 350 Report criteria.
11. Use of pallets is optional.

STATE OF CALIFORNIA
DEPARTMENT OF TRANSPORTATION

TEMPORARY CRASH CUSHION, SAND FILLED (SHOULDER INSTALLATIONS)

NO SCALE

RSP T2 DATED JUNE 6, 2008 SUPERSEDES STANDARD PLAN T2
DATED MAY 1, 2006 - PAGE 213 OF THE STANDARD PLANS BOOK DATED MAY 2006.

REVISED STANDARD PLAN RSP T2

2006 REVISED STANDARD PLAN RSP T2

5-15-08

DIST	COUNTY	ROUTE	POST MILES TOTAL PROJECT	SHEET NO.	TOTAL SHEETS
03	But	70,162, 191	Var	8	13

REGISTERED CIVIL ENGINEER

Efthymios Delis
No. C51434
Exp. 6-30-08
CIVIL
REGISTERED PROFESSIONAL ENGINEER
STATE OF CALIFORNIA

October 5, 2007
PLANS APPROVAL DATE

The State of California or its officers or agents shall not be responsible for the accuracy or completeness of electronic copies of this plan sheet.

To accompany plans dated 1-24-11

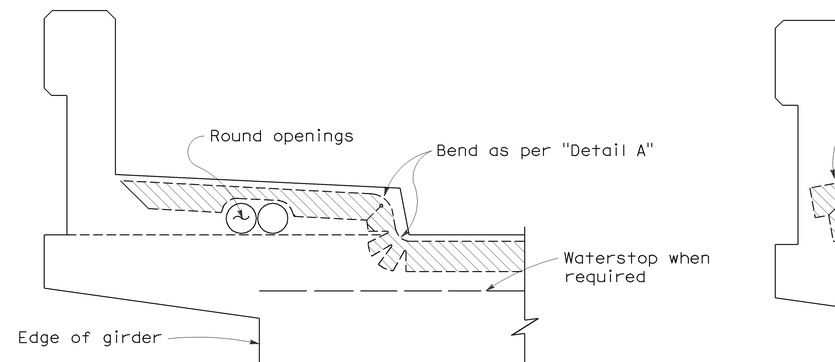

NOTE:

Type "B" seal shown. Type "A" seals to comform to the general path of seal shown, cuts for bending not required. Bend Type "A" seals 3" up into curb or barrier rail on only the low end of the seal.

CONCRETE BARRIER AND SIDEWALK

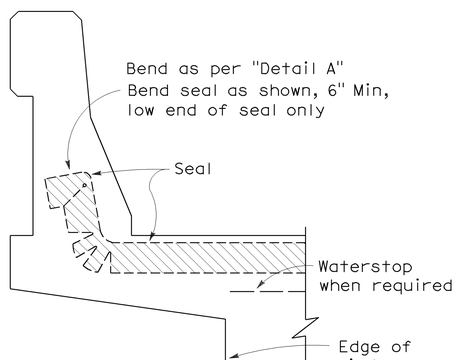

CONCRETE BARRIER

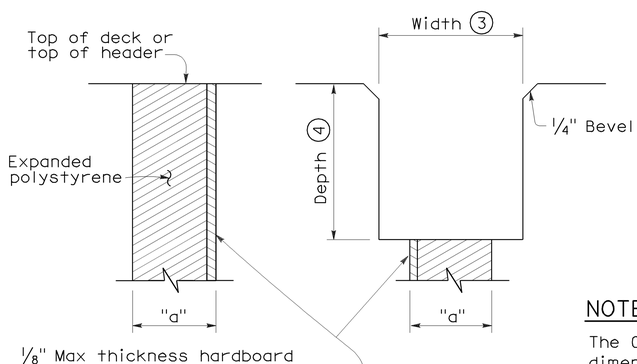

FORMING DETAIL SAWCUT DETAIL

NOTE:

The Contractor shall verify all controlling field dimensions before ordering or fabricatiing any material.

JOINT SEALS DETAILS

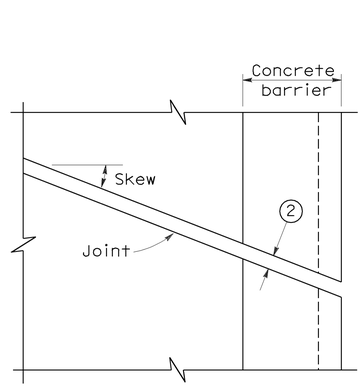

PLAN OF JOINT (SKEW ≤ 20°)

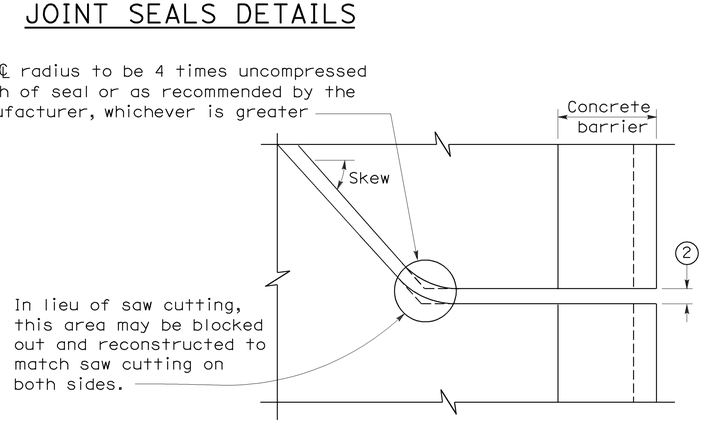

PLAN OF JOINT (SKEW > 20°)

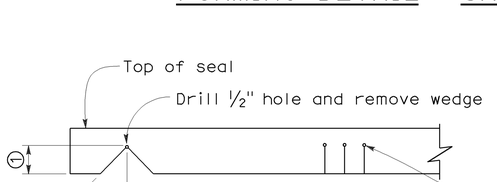

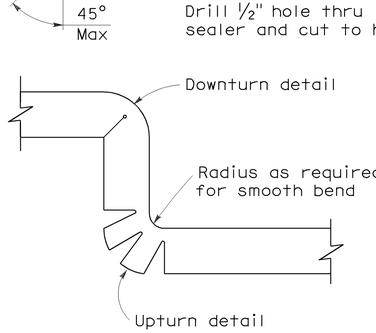

DETAIL A

NOTES:

1. Make smooth cuts from the bottom of seal to 1½" clear of top leaving at least one complete cell between the top of the cut and top of the seal. When necessary cut back of seal to clear conduit and round openings.
2. Opening in barrier to match width of sawn deck joint.
3. Sawcut groove widths shall be as ordered by the Engineer.
4. Depth of sawcut: Type A - Depth to be 2" minimum.
   Type B - Depth to be equal to or greater than the depth of seal measured along the contact surface, when compressed to minimum width position (W_2) plus dimensions shown.
5. MR (movement rating) as shown on other plan sheets.
6. Other depths must be approved by the Engineer.

DIMENSIONS "a" OF JOINT REQUIRED

Movement Rating (MR) (5)	Bridge Type	"a" Dimension Deck Concrete Placed		
		Winter	Fall-Spring	Summer
2"	All except CIP/PS	1½"	1¼"	¾"
	CIP/PS	1¼"	1"	½"
1½"	All except CIP/PS	1¼"	1"	½"
	CIP/PS	1"	¾"	½"
1"	All except CIP/PS	1"	¾"	½"
	CIP/PS	¾"	½"	½"
½"	All except CIP/PS	¾"	¾"	½"
	CIP/PS	½"	½"	½"

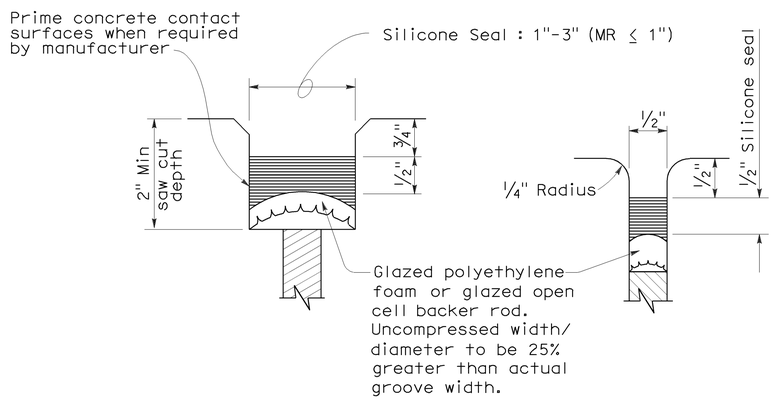

TYPE A SEAL

Movement rating : Silicone = 1" Max

TYPE AL SEAL

Longitudinal joints only

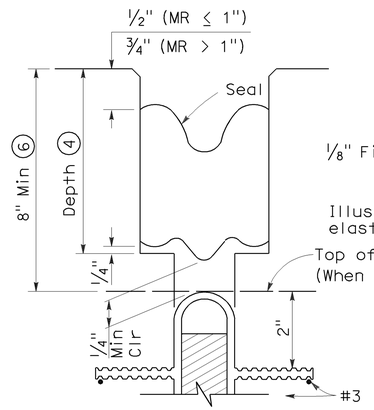

TYPE B JOINT SEAL
IN MINIMUM WIDTH POSITION (W_2)

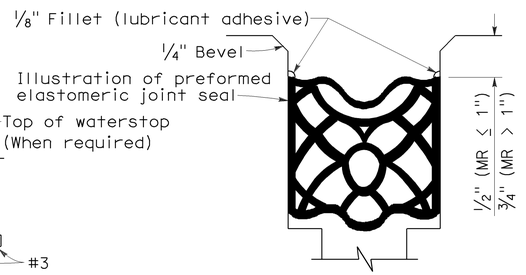

TYPE B SEAL

Movement Rating ≤ 2"

STATE OF CALIFORNIA
DEPARTMENT OF TRANSPORTATION

JOINT SEALS (MAXIMUM MOVEMENT RATING = 2")

NO SCALE

RSP B6-21 DATED OCTOBER 5, 2007 SUPERSEDES STANDARD PLAN B6-21 DATED MAY 1, 2006 - PAGE 258 OF THE STANDARD PLANS BOOK DATED MAY 2006.

REVISED STANDARD PLAN RSP B6-21

2006 REVISED STANDARD PLAN RSP B6-21

5-8-07

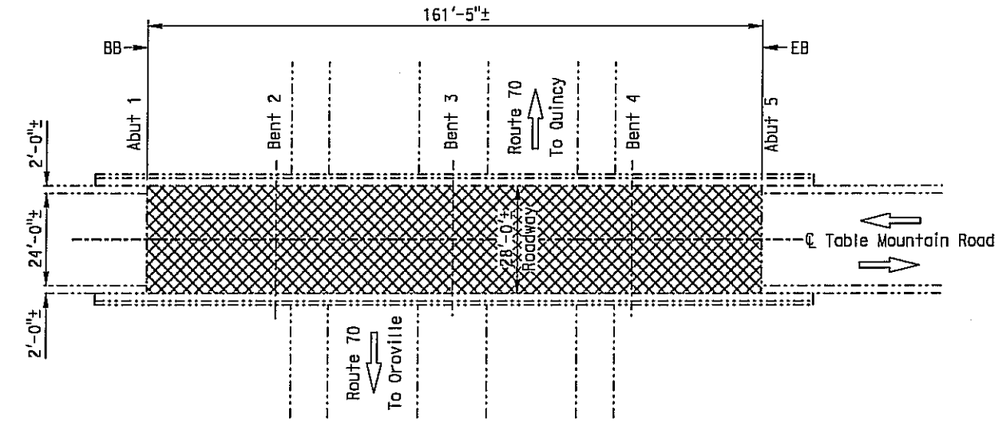

TABLE MOUNTAIN ROAD OVERCROSSING

BR NO. 12-0088, ROUTE 70, PM 19.28
1" = 20'

INDEX TO PLANS

SHEET NO.	TITLE
1	GENERAL PLAN NO. 1
2	GENERAL PLAN NO. 2
3	GENERAL PLAN NO. 3
4	FINGER JOINT COVER PLATE DETAILS
5	MISCELLANEOUS DETAILS

STANDARD PLANS DATED MAY 2006

SHEET NO.	TITLE
A10A	ACRONYMS AND ABBREVIATIONS (SHEET 1 OF 2)
A10B	ACRONYMS AND ABBREVIATIONS (SHEET 2 OF 2)
RSP B6-21	JOINT SEALS (MAXIMUM MOVEMENT RATING = 2")

TABLE MOUNTAIN ROAD OC — BR NO 12-0088

QUANTITIES		
REMOVE UNSOUND CONCRETE	23	CF
CLEAN BRIDGE DECK	4,519	SQFT
RAPID SETTING CONCRETE (PATCH)	23	CF
TREAT BRIDGE DECK	4,519	SQFT
FURNISH BRIDGE DECK TREATMENT MATERIAL	50	GAL

CHEROKEE CANAL — BR NO 12-0042L

QUANTITIES		
REMOVE ASPHALT CONCRETE SURFACING	14,195	SQFT
REMOVE UNSOUND CONCRETE	71	CF
PREPARE CONCRETE BRIDGE DECK SURFACE	14,195	SQFT
CLEAN EXPANSION JOINT	630	LF
RAPID SETTING CONCRETE (PATCH)	71	CF
FURNISH POLYESTER CONCRETE OVERLAY	2,839	CF
PLACE POLYESTER CONCRETE OVERLAY	14,195	SQFT
JOINT SEAL (MR1/2")	627	LF

DIST	COUNTY	ROUTE	POST MILES TOTAL PROJECT	SHEET NO.	TOTAL SHEETS
03	But	70, 162, 191	Varies	9	13

T J Powell — 1-3-11
REGISTERED CIVIL ENGINEER — DATE

1-24-11
PLANS APPROVAL DATE

REGISTERED PROFESSIONAL ENGINEER — TIMOTHY J. POWELL — No. C 61037 — Exp 12-31-12 — CIVIL — STATE OF CALIFORNIA

THE STATE OF CALIFORNIA OR ITS OFFICERS OR AGENTS SHALL NOT BE RESPONSIBLE FOR THE ACCURACY OR COMPLETENESS OF ELECTRONIC COPIES OF THIS PLAN SHEET.

NOTES: (APPLY TO ALL SHEETS)

..... Indicates existing structure.

THE CONTRACTOR SHALL VERIFY ALL CONTROLLING FIELD DIMENSIONS BEFORE ORDERING OR FABRICATING ANY MATERIAL.

STANDARD PLAN SHEET NUMBER
DETAIL NUMBER

NOTES: (APPLY TO THIS SHEET ONLY)

Indicates location of remove existing joint seal and place new joint seal. See MISCELLANEOUS DETAILS sheet.

Indicates limits of clean and treat existing bridge deck with high molecular weight methacrylate. Prior to bridge deck treatment, remove unsound concrete and patch with rapid setting concrete. See MISCELLANEOUS DETAILS sheet.

Indicates limits of remove existing 3"± depth AC overlay and place new 2" min depth polyester concrete overlay. Remove existing unsound concrete and patch with rapid setting concrete prior to placing new concrete. See MISCELLANEOUS DETAILS sheet.

① See Road Plans for overlay conform details.

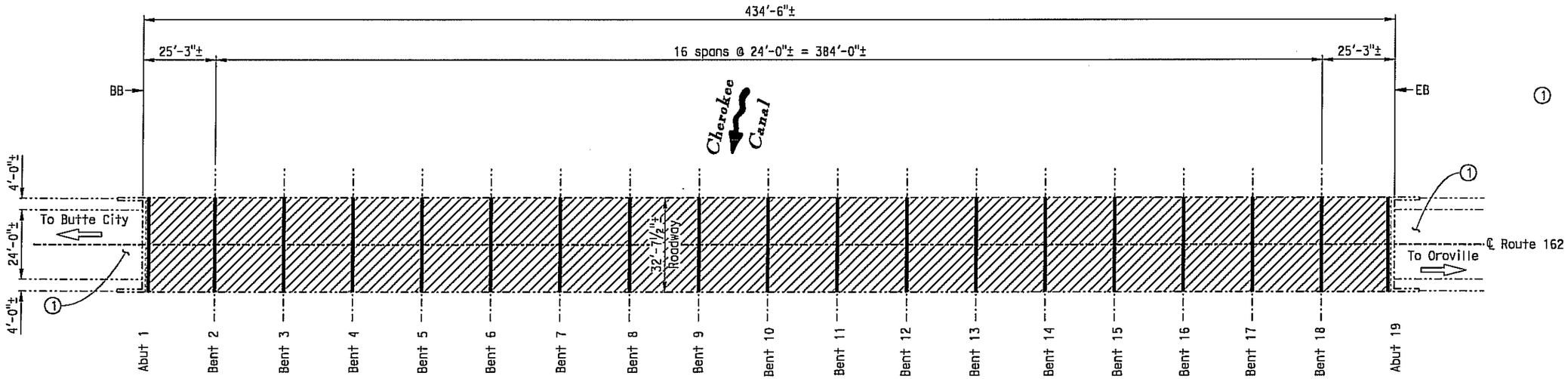

CHEROKEE CANAL

BR NO. 12-0042, But, ROUTE 162, PM 6.67
1" = 20'

Michael J. Lee 1-3-11 DESIGN ENGINEER	DESIGN	BY Hubert Dang	CHECKED Tim Powell	LAYOUT	BY Hubert Dang	CHECKED G.F. Bidwell	STATE OF CALIFORNIA DEPARTMENT OF TRANSPORTATION	DIVISION OF MAINTENANCE STRUCTURE MAINTENANCE DESIGN	BRIDGE NO. VARIOUS
	DETAILS	BY G.F. Bidwell	CHECKED Tim Powell						POST MILE VARIES
	QUANTITIES	BY Hubert Dang	CHECKED Tim Powell	SPECIFICATIONS	BY X	PLANS AND SPECIFICATIONS COMPARED X		CU 03 EA 3M6401	

ROUTE 70, 162 AND 191 BRIDGES
GENERAL PLAN NO. 1

STRUCTURES MAINTENANCE GENERAL PLAN & DETAIL SHEET (ENGLISH) (REV. 10/17/07)

ORIGINAL SCALE IN INCHES FOR REDUCED PLANS 0 1 2 3

DISREGARD PRINTS BEARING EARLIER REVISION DATES

REVISION DATES: ~~9-3-08~~ ~~9-15-09~~ 11-4-10 12-24-10 1-3-11

SHEET 1 OF 5

USERNAME => s137417 DATE PLOTTED => 04-JAN-2011 TIME PLOTTED => 08:07
FILE => 03-3m6401_Gen1.dgn

DIST	COUNTY	ROUTE	POST MILES TOTAL PROJECT	SHEET NO.	TOTAL SHEETS
03	But	70, 162, 191	Varies	10	13

T J Powell 1-3-11
REGISTERED CIVIL ENGINEER DATE

1-24-11
PLANS APPROVAL DATE

REGISTERED PROFESSIONAL ENGINEER TIMOTHY J. POWELL No. C 61037 Exp. 12-31-12 CIVIL STATE OF CALIFORNIA

THE STATE OF CALIFORNIA OR ITS OFFICERS OR AGENTS SHALL NOT BE RESPONSIBLE FOR THE ACCURACY OR COMPLETENESS OF ELECTRONIC COPIES OF THIS PLAN SHEET.

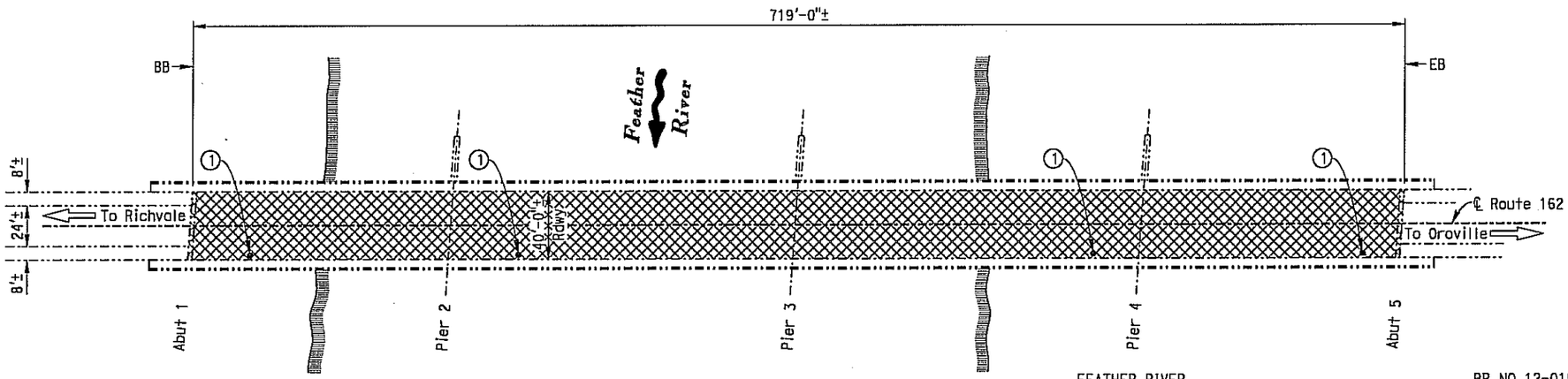

FEATHER RIVER

BR NO. 12-0193, But, ROUTE 162, PM 15.57
1" = 40'

FEATHER RIVER	BR NO 12-0193
QUANTITIES	
CLEAN EXISTING DECK DRAINS	4 EA
REMOVE UNSOUND CONCRETE	360 CF
CLEAN BRIDGE DECK	28,760 SQFT
RAPID SETTING CONCRETE (PATCH)	360 CF
TREAT BRIDGE DECK	28,760 SQFT
FURNISH BRIDGE DECK TREATMENT MATERIAL	320 GAL

MIDDLE FORK FEATHER RIVER	BR NO 12-0188
QUANTITIES	
REMOVE UNSOUND CONCRETE	124 CF
CLEAN BRIDGE DECK	49,723 SQFT
REMOVE CHIP SEAL	49,723 SQFT
BRIDGE REMOVAL (PORTION)	LUMP SUM
CLEAN EXPANSION JOINT	270 LF
RAPID SETTING CONCRETE (PATCH)	124 CF
JOINT SEAL (MR ½")	78 LF
JOINT SEAL (MR 1")	195 LF
TREAT BRIDGE DECK	49,723 SQFT
FURNISH BRIDGE DECK TREATMENT MATERIAL	18 GAL
MISCELLANEOUS METAL (BRIDGE)	1,049 LB

NOTES: (APPLY TO THIS SHEET ONLY)

Indicates location of remove existing joint seal and place new joint seal in roadway and sidewalk. See MISCELLANEOUS DETAILS sheet.

Indicates location of replace existing cover plate at finger joints. For details see FINGER JOINT COVER PLATE DETAILS sheet.

Indicates limits of clean and treat existing bridge deck with high molecular weight methacrylate. Prior to bridge deck treatment, remove unsound concrete and patch with rapid setting concrete. See MISCELLANEOUS DETAILS sheet.

Indicates limits of remove existing asphaltic chip seal and clean and treat existing bridge deck with high molecular weight methacrylate. Prior to bridge deck treatment, remove unsound concrete and patch with rapid setting concrete. See MISCELLANEOUS DETAILS sheet.

① Indicates location of clean existing deck drains (total 4).

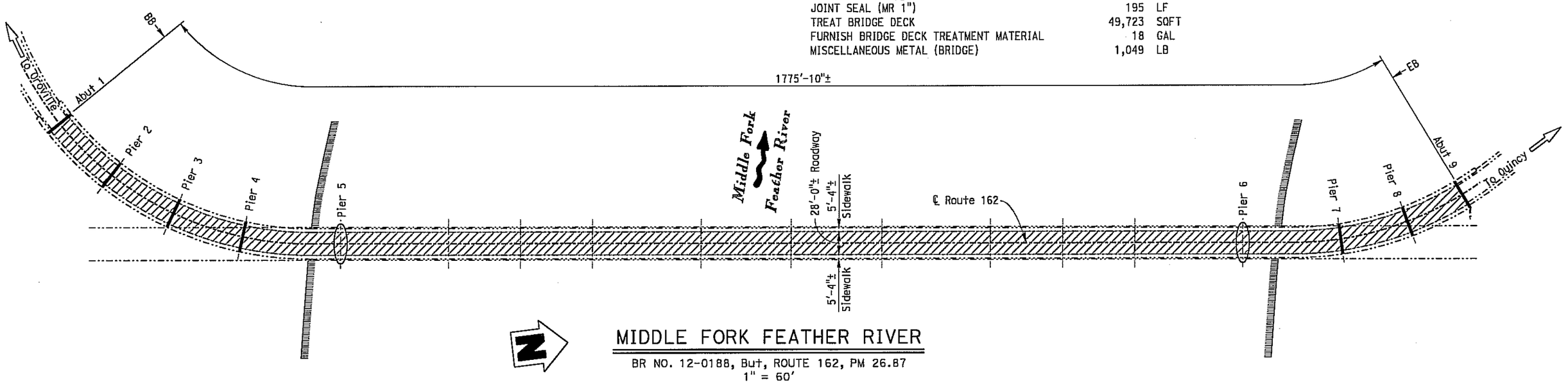

MIDDLE FORK FEATHER RIVER

BR NO. 12-0188, But, ROUTE 162, PM 26.87
1" = 60'

Michael J. Lee 1-3-11
DESIGN ENGINEER

	BY	CHECKED
DESIGN	Hubert Dang	Tim Powell
DETAILS	G.F. Bidwell	Tim Powell
QUANTITIES	Hubert Dang	Tim Powell
LAYOUT	Hubert Dang	G.F. Bidwell
SPECIFICATIONS	X	PLANS AND SPECIFICATIONS COMPARED: X

STRUCTURES MAINTENANCE GENERAL PLAN & DETAIL SHEET (ENGLISH) (REV. 10/17/07)

ORIGINAL SCALE IN INCHES FOR REDUCED PLANS 0 1 2 3

STATE OF CALIFORNIA
DEPARTMENT OF TRANSPORTATION

DIVISION OF MAINTENANCE
STRUCTURE MAINTENANCE DESIGN

CU 03
EA 3M6401

BRIDGE NO. VARIOUS
POST MILE VARIES

ROUTE 70, 162 AND 191 BRIDGES
GENERAL PLAN NO. 2

DISREGARD PRINTS BEARING EARLIER REVISION DATES →
REVISION DATES: 9-3-09 | 5-15-09 | 11-4-10 | 12-21-10 | 1-3-11

SHEET 2 OF 5

FILE => 03-3m6401_02gp2.dgn

USERNAME => s137417 DATE PLOTTED => 04-JAN-2011 TIME PLOTTED => 08:08

DIST	COUNTY	ROUTE	POST MILES TOTAL PROJECT	SHEET NO.	TOTAL SHEETS
03	But	70, 162, 191	Varies	11	13

REGISTERED CIVIL ENGINEER — 1-3-11 DATE

1-24-11
PLANS APPROVAL DATE

REGISTERED PROFESSIONAL ENGINEER — TIMOTHY J. POWELL — No. C 61037 — Exp. 12-31-12 — CIVIL — STATE OF CALIFORNIA

THE STATE OF CALIFORNIA OR ITS OFFICERS OR AGENTS SHALL NOT BE RESPONSIBLE FOR THE ACCURACY OR COMPLETENESS OF ELECTRONIC COPIES OF THIS PLAN SHEET.

NOTES: (APPLY TO THIS SHEET ONLY)

Indicates limits of clean and treat existing bridge deck with high molecular weight methacrylate. Prior to bridge deck treatment, remove unsound concrete and patch with rapid setting concrete. See MISCELLANEOUS DETAILS sheet.

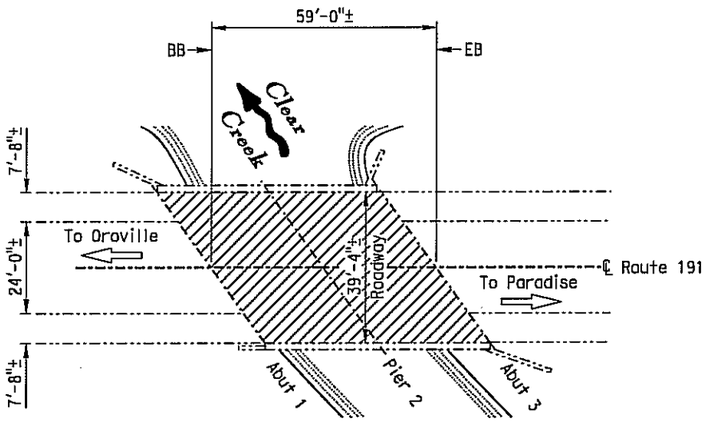

CLEAR CREEK

BR NO. 12-0195, ROUTE 191, PM 4.67
1" = 20'

CLEAR CREEK	BR NO 12-0195
QUANTITIES	
REMOVE UNSOUND CONCRETE	105 CF
CLEAN BRIDGE DECK	2,321 SQFT
RAPID SETTING CONCRETE (PATCH)	105 CF
TREAT BRIDGE DECK	2,321 SQFT
FURNISH BRIDGE DECK TREATMENT MATERIAL	26 GAL

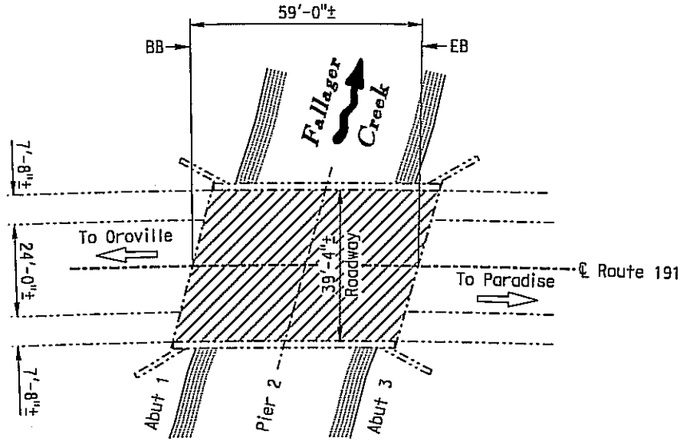

FALLAGER CREEK

BR NO. 12-0194, ROUTE 191, PM 2.61
1" = 20'

FALLAGER CREEK	BR NO 12-0194
QUANTITIES	
REMOVE UNSOUND CONCRETE	6 CF
CLEAN BRIDGE DECK	2,321 SQFT
RAPID SETTING CONCRETE (PATCH)	6 CF
TREAT BRIDGE DECK	2,321 SQFT
FURNISH BRIDGE DECK TREATMENT MATERIAL	26 GAL

Michael J. Lee 1-3-11
DESIGN ENGINEER

DESIGN	BY Hubert Dang	CHECKED Tim Powell	LAYOUT	BY Hubert Dang	CHECKED G.F. Bidwell
DETAILS	BY G.F. Bidwell	CHECKED Tim Powell	SPECIFICATIONS	BY X	PLANS AND SPECIFICATIONS COMPARED X
QUANTITIES	BY Hubert Dang	CHECKED Tim Powell			

STRUCTURES MAINTENANCE GENERAL PLAN & DETAIL SHEET (ENGLISH) (REV. 10/17/07)

ORIGINAL SCALE IN INCHES FOR REDUCED PLANS 0 1 2 3

STATE OF CALIFORNIA
DEPARTMENT OF TRANSPORTATION

DIVISION OF MAINTENANCE
STRUCTURE MAINTENANCE DESIGN

CU 03
EA 3M6401

BRIDGE NO. VARIOUS
POST MILE VARIES

ROUTE 70, 162 AND 191 BRIDGES
GENERAL PLAN NO. 3

DISREGARD PRINTS BEARING EARLIER REVISION DATES →
REVISION DATES: 5-1-09 | 9-15-09 | 11-4-10 | 12-21-10 | 1-3-11

SHEET 3 OF 5

FILE => 03-3m6401_03gp3.dgn

USERNAME => b137417 DATE PLOTTED => 04-JAN-2011 TIME PLOTTED => 08:08

DIST	COUNTY	ROUTE	POST MILES TOTAL PROJECT	SHEET NO.	TOTAL SHEETS
03	But	70, 162, 191	Varies	12	13

REGISTERED CIVIL ENGINEER — 1-3-11 DATE

1-24-11 PLANS APPROVAL DATE

REGISTERED PROFESSIONAL ENGINEER — TIMOTHY J. POWELL — No. C 61037 — Exp 12-31-12 — CIVIL — STATE OF CALIFORNIA

THE STATE OF CALIFORNIA OR ITS OFFICERS OR AGENTS SHALL NOT BE RESPONSIBLE FOR THE ACCURACY OR COMPLETENESS OF ELECTRONIC COPIES OF THIS PLAN SHEET.

NOTES: (APPLY TO THIS SHEET ONLY)

Indicates limits of remove existing steel diamond pattern plate and weldment from existing finger joints, and place new steel diamond pattern plate on finger joints.

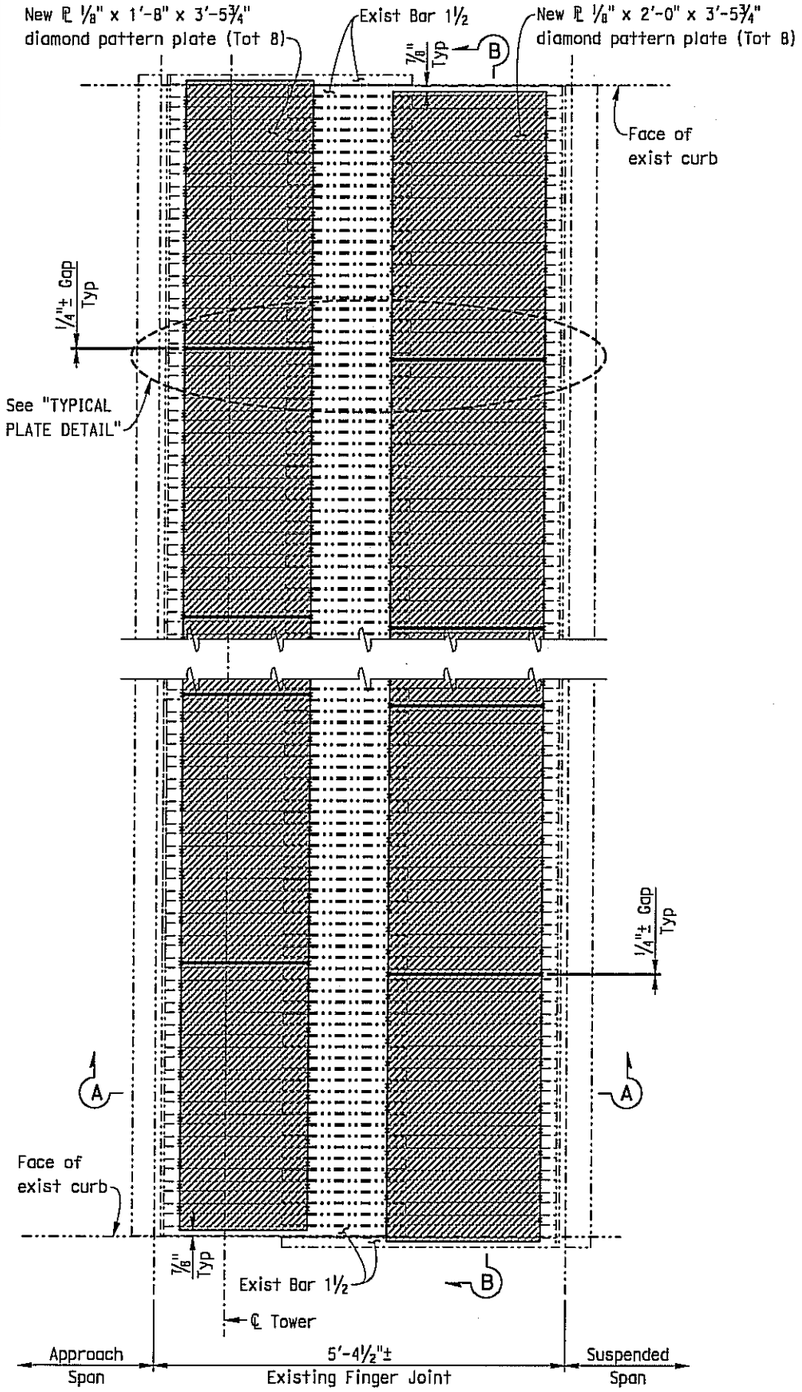

EXISTING FINGER JOINT PLAN

1" = 1'

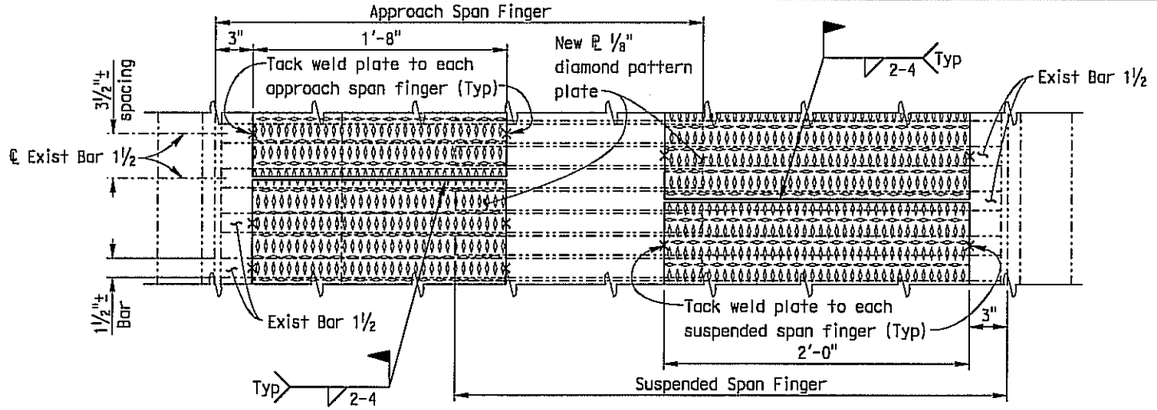

TYPICAL PLATE DETAIL

2" = 1'

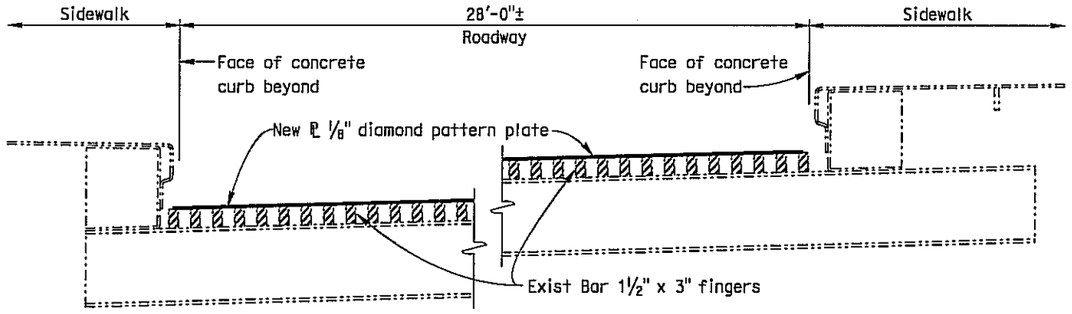

SECTION B-B

1" = 1'

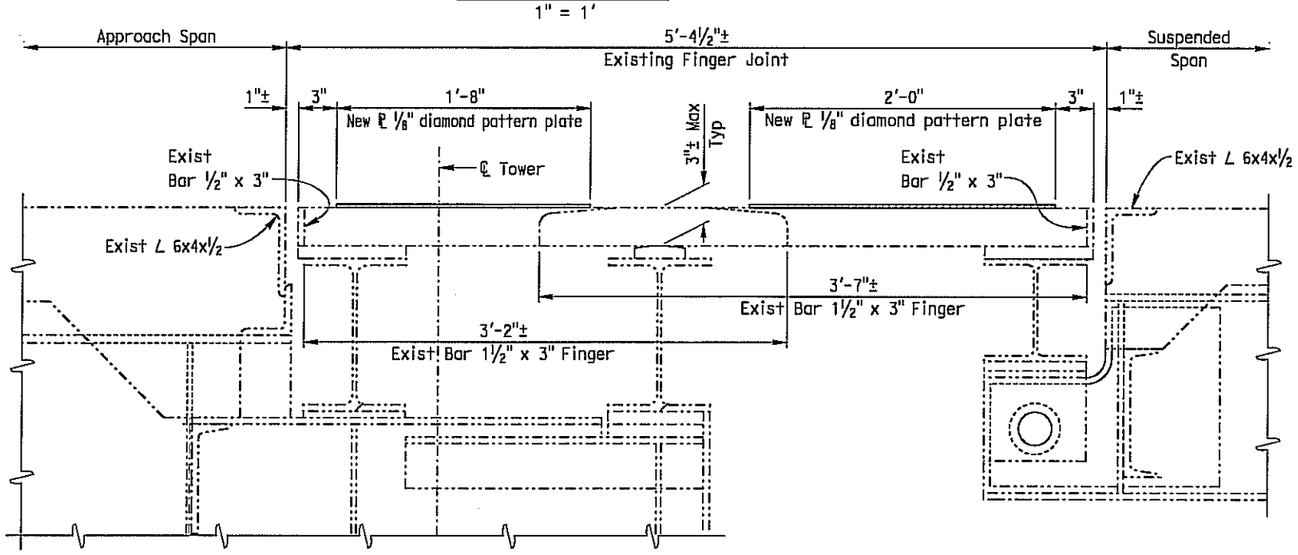

SECTION A-A

2" = 1'

DESIGN	BY Hubert Dang	CHECKED Tim Powell	STATE OF CALIFORNIA DEPARTMENT OF TRANSPORTATION	DIVISION OF MAINTENANCE STRUCTURE MAINTENANCE DESIGN	BRIDGE NO. VARIOUS	ROUTE 70, 162 AND 191 BRIDGES
DETAILS	BY G.F. Bidwell	CHECKED Tim Powell			POST MILE VARIES	FINGER JOINT COVER PLATE DETAILS
QUANTITIES	BY Hubert Dang	CHECKED Tim Powell				

STRUCTURES MAINTENANCE GENERAL PLAN & DETAIL SHEET (ENGLISH) (REV. 10/17/07)

ORIGINAL SCALE IN INCHES FOR REDUCED PLANS 0 1 2 3

CU 03
EA 3M6401

DISREGARD PRINTS BEARING EARLIER REVISION DATES → REVISION DATES: 5-3-08 | 5-15-09 | 11-4-10 | 12-21-10 | 1-3-11

SHEET 4 OF 5

USERNAME => s137417 DATE PLOTTED => 04-JAN-2011 TIME PLOTTED => 08:08

DIST	COUNTY	ROUTE	POST MILES TOTAL PROJECT	SHEET NO.	TOTAL SHEETS
03	But	70, 162, 191	Varies	13	13

T J Powell 1-3-11
REGISTERED CIVIL ENGINEER DATE

1-24-11
PLANS APPROVAL DATE

REGISTERED PROFESSIONAL ENGINEER TIMOTHY J. POWELL No. C 61037 Exp. 12-31-12 CIVIL STATE OF CALIFORNIA

THE STATE OF CALIFORNIA OR ITS OFFICERS OR AGENTS SHALL NOT BE RESPONSIBLE FOR THE ACCURACY OR COMPLETENESS OF ELECTRONIC COPIES OF THIS PLAN SHEET.

JOINT SEAL TABLE

BRIDGE NAME	BRIDGE NUMBER	LOCATION		MINIMUM "MR" (inches)	APPROXIMATE LENGTH (feet)	EXISTING WATERSTOP	APPROX DEPTH TO CLEAN EXPANSION JOINT (inches)	APPROXIMATE DEPTH OF JOINT SPALLS (inches)	APPROXIMATE WIDTH OF JOINT SPALLS (inches)	APPROXIMATE LENGTH OF JOINT SPALLS (FEET)
CHEROKEE CANAL	12-0042	Abut 1	BW	½	33	No	18.0	3.0	6.0	3.0
		Bent 2	B	½	33	No	18.0	3.0	6.0	3.0
		Bent 3	B	½	33	No	18.0	3.0	6.0	3.0
		Bent 4	B	½	33	No	18.0	3.0	6.0	3.0
		Bent 5	B	½	33	No	18.0	3.0	6.0	3.0
		Bent 6	B	½	33	No	18.0	3.0	6.0	3.0
		Bent 7	B	½	33	No	18.0	3.0	6.0	3.0
		Bent 8	B	½	33	No	18.0	3.0	6.0	3.0
		Bent 9	B	½	33	No	18.0	3.0	6.0	3.0
		Bent 10	B	½	33	No	18.0	3.0	6.0	3.0
		Bent 11	B	½	33	No	18.0	3.0	6.0	3.0
		Bent 12	B	½	33	No	18.0	3.0	6.0	3.0
		Bent 13	B	½	33	No	18.0	3.0	6.0	3.0
		Bent 14	B	½	33	No	18.0	3.0	6.0	3.0
		Bent 15	B	½	33	No	18.0	3.0	6.0	3.0
		Bent 16	B	½	33	No	18.0	3.0	6.0	3.0
		Bent 17	B	½	33	No	18.0	3.0	6.0	3.0
		Bent 18	B	½	33	No	18.0	3.0	6.0	3.0
		Abut 19	BW	½	33	No	18.0	3.0	6.0	3.0
MIDDLE FORK FEATHER RIVER	12-0188	Abut 1	BW	½	39	No	14.0	3.0	6.0	3.0
		Pier 2	P	1*	39	No	14.0	3.0	6.0	3.0
		Pier 3	P	1*	39	No	14.0	3.0	6.0	3.0
		Pier 4	P	1*	39	No	14.0	3.0	6.0	3.0
		Pier7	P	1*	39	No	14.0	3.0	6.0	3.0
		Pier 8	P	1*	39	No	14.0	3.0	6.0	3.0
		Abut 9	BW	½	39	No	14.0	3.0	6.0	3.0

LEGEND:
BW = Abutment Backwall
B = Bent
P = Pier
* = Use compression type seal only

The following note applies to JOINT SEAL TYPE A:

Install Type A joint seal 3" up into curb or rail on the low side of the deck where joint matches curb or rail joint. For details not shown see RSP B6-21

The following notes apply to JOINT SEAL TYPE B:

1) Seal must satisfy both minimum Movement Rating (MR) and minimum W1 requirements.

2) Minimum W1 is the calculated maximum width of the joint based on field measurements. After the joints have been cleaned, minimum W1 is to be calculated by the Engineer.

3) W1 shall be the smaller of the values determined as follows:

   A) 0.85 times the manufacturer's designed minimum uncompressed width of the seal.

   B) The width of the seal on the third successive test cycle of the pressure deflection test, when compressed to an average pressure of 3 psi.

4) Bend Type B joint seal 6" up into curb or rail on the low side of the deck where deck joint matches curb or rail joint.

5) For details not shown see RSP B6-21

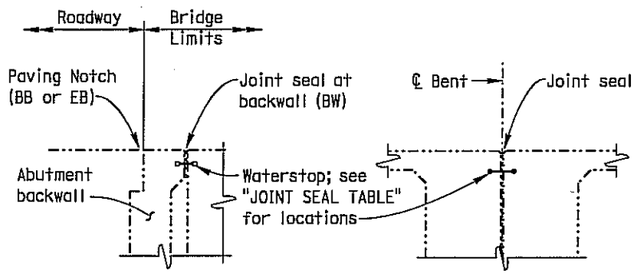

ABUTMENT WITH BACKWALL BENT/PIER

JOINT SEAL LOCATION

NO SCALE

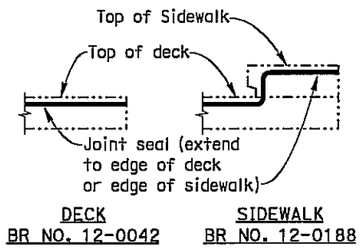

DECK BR NO. 12-0042 SIDEWALK BR NO. 12-0188

JOINT SEAL AT EDGE OF DECK AND SIDEWALK

Details shown for illustration purposes only. For use only where deck joint matches the barrier rail joint.
NO SCALE

DECK & JOINT REPAIR TABLE

REMOVE UNSOUND CONCRETE AND PATCH WITH RAPID SETTING CONCRETE

BRIDGE NAME	BRIDGE NUMBER	APPROXIMATE AREA DAMAGED (PERCENT)	APPROXIMATE DEPTH (INCHES)
TABLE MOUNTAIN ROAD OVERCROSSING	12-0088	2	3
CHEROKEE CANAL	12-0042	2	3
FEATHER RIVER	12-0193	5	3
MIDDLE FORK FEATHER RIVER	12-0188	1	3
CLEAR CREEK	12-0191	1	3
FALLAGER CREEK	12-0194	1	3

Locations to be determined by the Engineer.
For details see "DECK & JOINT REPAIR DETAIL".

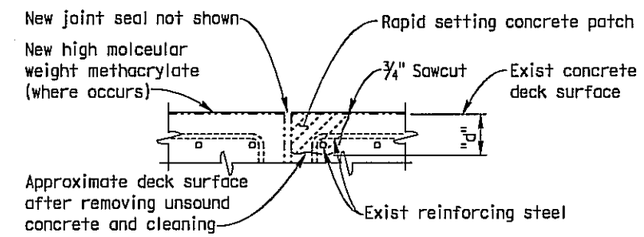

JOINT REPAIR

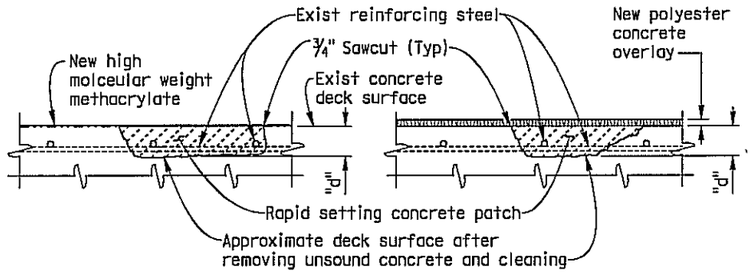

TREAT DECK POLYESTER CONCRETE OVERLAY

DECK REPAIR

DECK & JOINT REPAIR DETAIL

Reinforcement may be encountered during deck concrete removal and is to remain undamaged.
NO SCALE

DESIGN	BY Hubert Dang	CHECKED Tim Powell	
DETAILS	BY G.F. Bidwell	CHECKED Tim Powell	
QUANTITIES	BY Hubert Dang	CHECKED Tim Powell	

STATE OF CALIFORNIA DEPARTMENT OF TRANSPORTATION

DIVISION OF MAINTENANCE STRUCTURE MAINTENANCE DESIGN

CU 03 EA 3M6401

BRIDGE NO. VARIOUS
POST MILE VARIES

ROUTE 70, 162 AND 191 BRIDGES

MISCELLANEOUS DETAILS

STRUCTURES MAINTENANCE GENERAL PLAN & DETAIL SHEET (ENGLISH) (REV. 10/17/07)

ORIGINAL SCALE IN INCHES FOR REDUCED PLANS 0 1 2 3

DISREGARD PRINTS BEARING EARLIER REVISION DATES

REVISION DATES: 8-1-08 | 9-15-09 | 11-4-10 | 12-31-10 | 1-3-11

SHEET 5 OF 5

FILE => 03-3m6401_05miscdets.dgn

USERNAME => s137417 DATE PLOTTED => 04-JAN-2011 TIME PLOTTED => 08:08