Dist	COUNTY	ROUTE	POST MILES TOTAL PROJECT	SHEET No.	TOTAL SHEETS
03	But	99	44.4/46.0	1	14

STATE OF CALIFORNIA
DEPARTMENT OF TRANSPORTATION

PROJECT PLANS FOR CONSTRUCTION ON
STATE HIGHWAY

IN BUTTE COUNTY
NEAR CHICO FROM 0.1 MILE NORTH OF
BROYLES ROAD TO THE TEHAMA COUNTY LINE

TO BE SUPPLEMENTED BY STANDARD PLANS DATED 2010

INDEX OF PLANS

SHEET No.	DESCRIPTION
1	TITLE AND LOCATION MAP
2-3	TYPICAL CROSS SECTIONS
4-5	CONSTRUCTION DETAILS
6	CONSTRUCTION AREA SIGNS
7-8	PAVEMENT DELINEATION DETAILS QUANTITIES
9	SUMMARY OF QUANTITIES
10-11	ELECTRICAL PLANS
12-14	REVISED STANDARD PLANS

THE STANDARD PLANS LIST APPLICABLE TO THIS CONTRACT IS INCLUDED IN THE NOTICE TO BIDDERS AND SPECIAL PROVISIONS BOOK.

LOCATION MAP

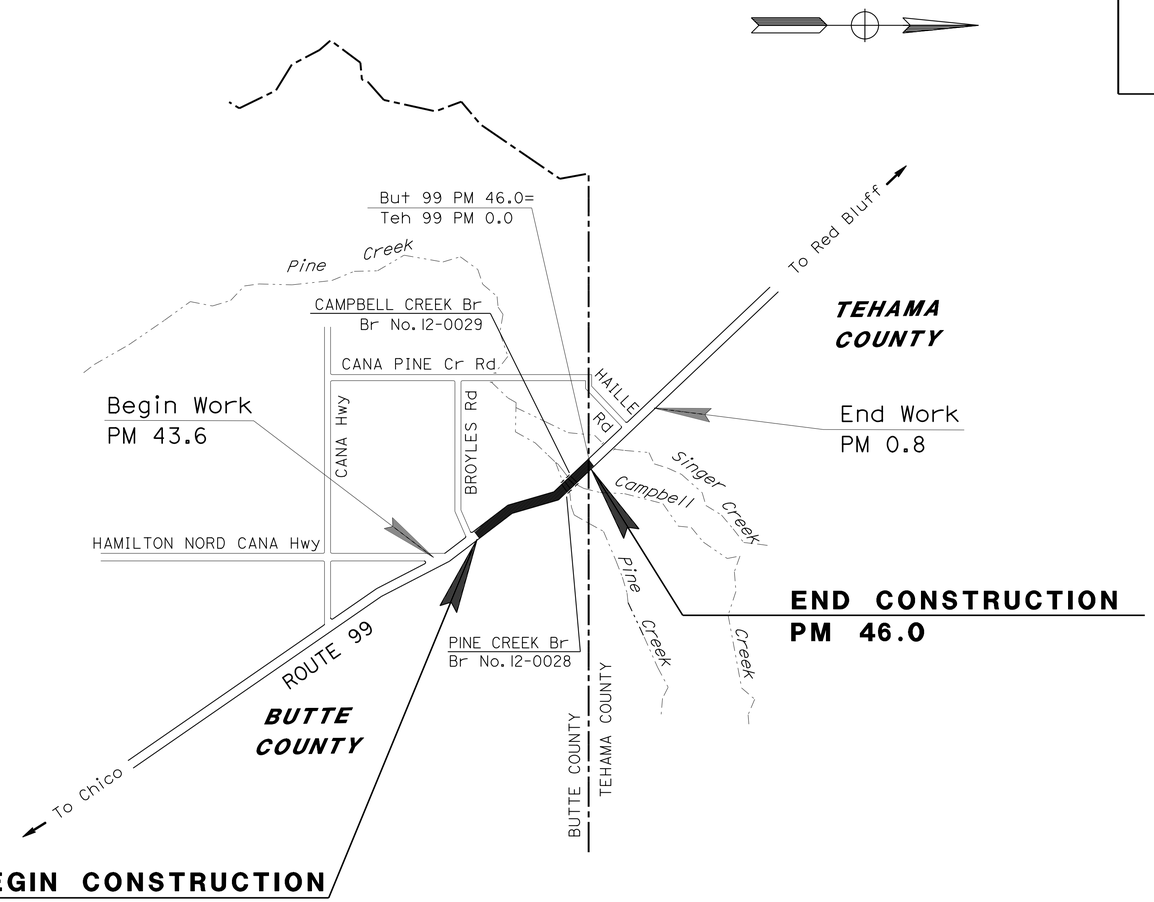

NO SCALE

THE CONTRACTOR SHALL POSSESS THE CLASS (OR CLASSES) OF LICENSE AS SPECIFIED IN THE "NOTICE TO BIDDERS."

PROJECT MANAGER RONALD S. SYKES

DESIGN ENGINEER RONALD S. SYKES

12-03-12
PROJECT ENGINEER DATE
REGISTERED CIVIL ENGINEER

December 3, 2012
PLANS APPROVAL DATE

REGISTERED PROFESSIONAL ENGINEER
RONALD S. SYKES
No. C35526
Exp. 9-30-13
CIVIL
STATE OF CALIFORNIA

THE STATE OF CALIFORNIA OR ITS OFFICERS OR AGENTS SHALL NOT BE RESPONSIBLE FOR THE ACCURACY OR COMPLETENESS OF SCANNED COPIES OF THIS PLAN SHEET.

CONTRACT No.	03-3M5804
PROJECT ID	0312000107

LAST REVISION 00-00-00
DATE PLOTTED => 06-FEB-2013
TIME PLOTTED => 10:01

Dist	COUNTY	ROUTE	POST MILES TOTAL PROJECT	SHEET No.	TOTAL SHEETS
03	But	99	44.4/46.0	2	14

REGISTERED CIVIL ENGINEER 12-3-12 DATE

12-3-12
PLANS APPROVAL DATE

REGISTERED PROFESSIONAL ENGINEER
RONALD S. SYKES
No. C35526
Exp. 9-30-13
CIVIL
STATE OF CALIFORNIA

THE STATE OF CALIFORNIA OR ITS OFFICERS OR AGENTS SHALL NOT BE RESPONSIBLE FOR THE ACCURACY OR COMPLETENESS OF SCANNED COPIES OF THIS PLAN SHEET.

NOTES:

1. FOR DETAILS OF OVERLAY CONFORM AT EDGE OF PAVEMENT SEE CONSTRUCTION DETAILS SHEET.
2. EXACT LOCATION AND WIDTH OF REPLACE AC SURFACING TO BE DETERMINED BY THE ENGINEER.

ABBREVIATION:

RHMA-G - RUBBERIZED HOT MIX ASPHALT (GAP GRADED)

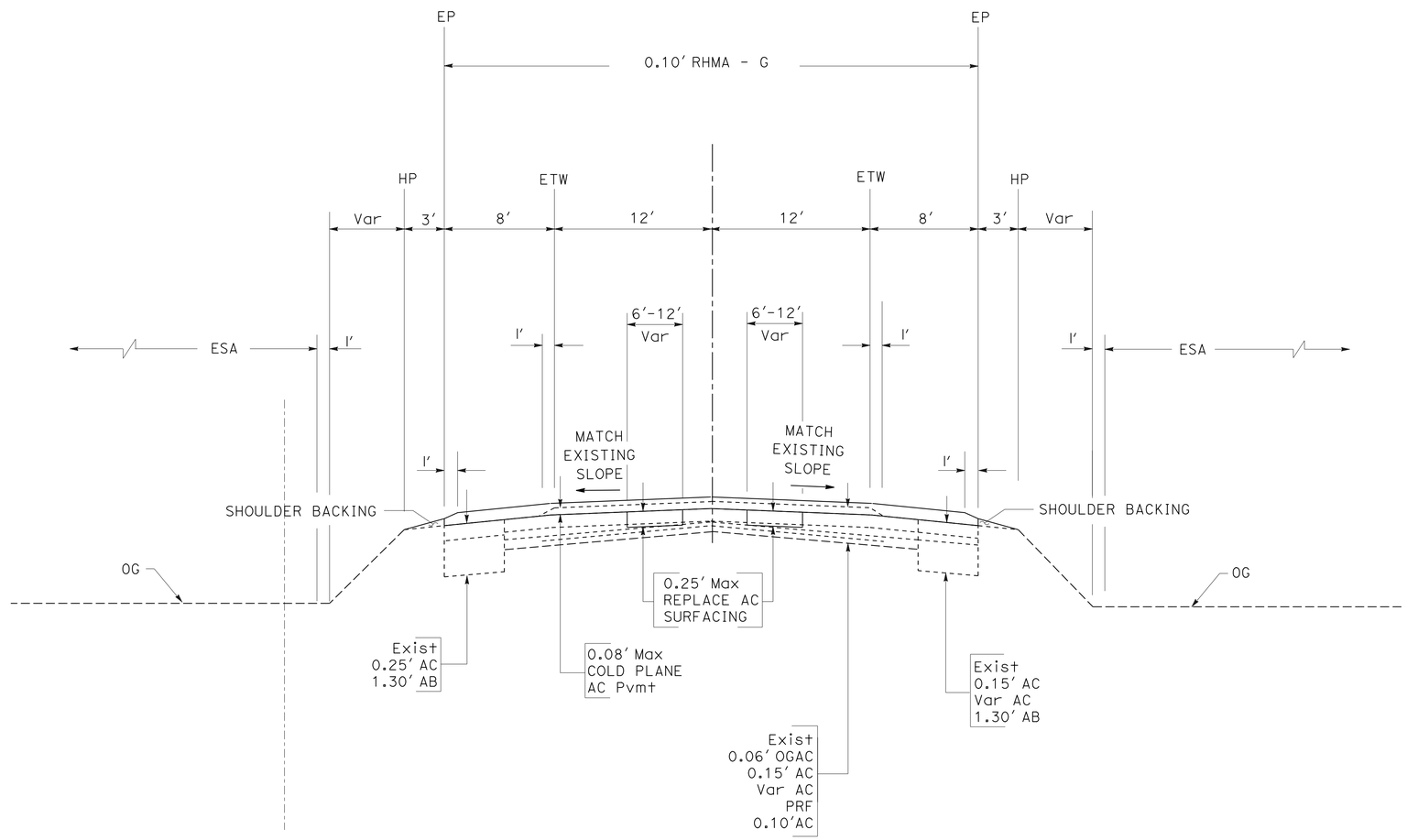

ROUTE 99

PM 44.40 TO PM 44.50

TYPICAL CROSS SECTIONS

NO SCALE

X-1

STATE OF CALIFORNIA - DEPARTMENT OF TRANSPORTATION
Caltrans MAINTENANCE DESIGN

FUNCTIONAL SUPERVISOR: RONALD S. SYKES

CALCULATED-DESIGNED BY: ROBERT M. FLOYD II
CHECKED BY: RONALD S. SYKES

REVISED BY
DATE REVISED

LAST REVISION 00-00-00
DATE PLOTTED => 06-FEB-2013
TIME PLOTTED => 10:01

Dist	COUNTY	ROUTE	POST MILES TOTAL PROJECT	SHEET No.	TOTAL SHEETS
03	But	99	44.4/46.0	3	14

REGISTERED CIVIL ENGINEER 12-3-12 DATE

12-3-12
PLANS APPROVAL DATE

REGISTERED PROFESSIONAL ENGINEER
RONALD S. SYKES
No. C35526
Exp. 9-30-13
CIVIL
STATE OF CALIFORNIA

THE STATE OF CALIFORNIA OR ITS OFFICERS OR AGENTS SHALL NOT BE RESPONSIBLE FOR THE ACCURACY OR COMPLETENESS OF SCANNED COPIES OF THIS PLAN SHEET.

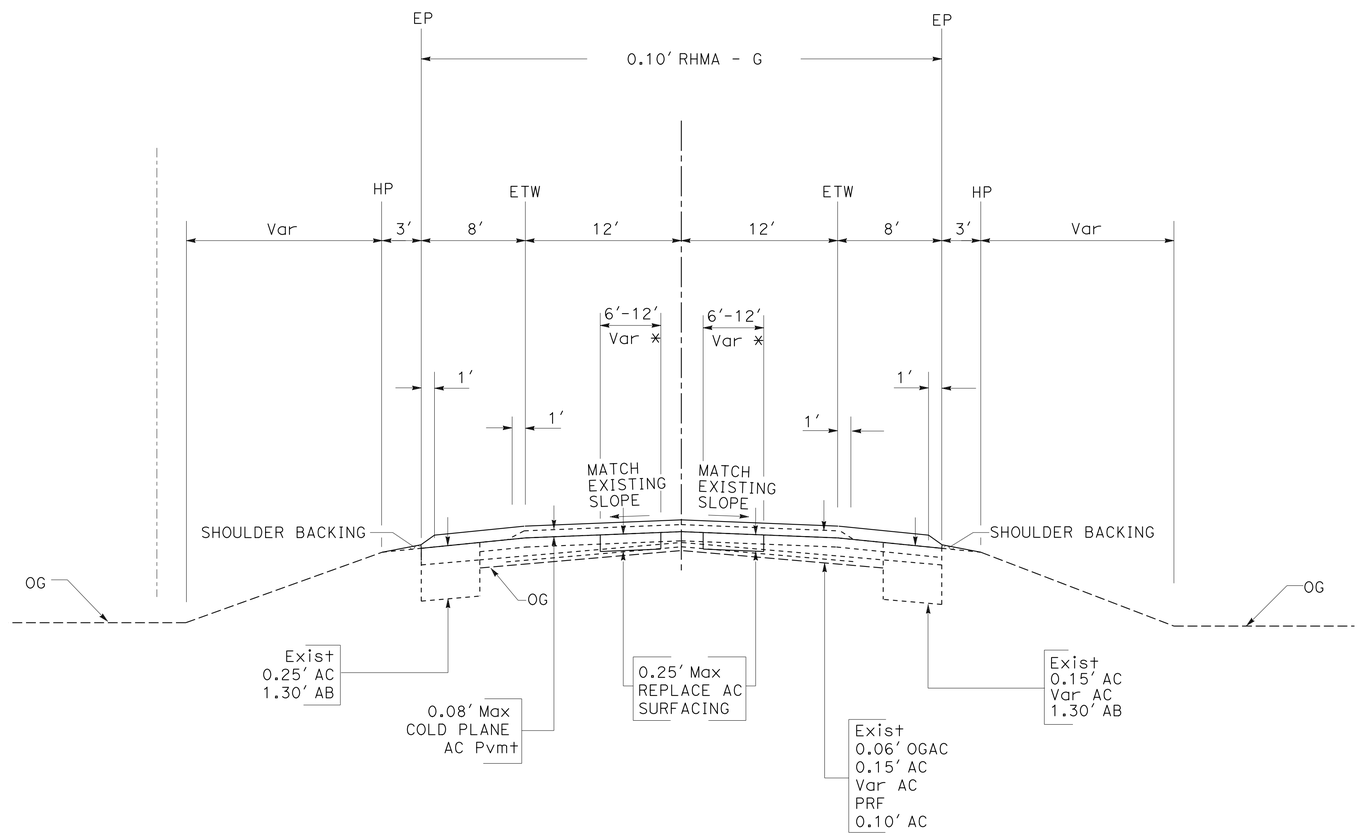

ROUTE 99

PM 44.50 TO PM 45.52
PM 45.56 TO PM 45.70
PM 45.71 TO PM 45.98

* - SEE NOTE 2 ON SHEET X-1

TYPICAL CROSS SECTIONS

NO SCALE

X-2

REVISED BY	DATE REVISED

CALCULATED-DESIGNED BY	ROBERT M. FLOYD II
CHECKED BY	RONALD S. SYKES
FUNCTIONAL SUPERVISOR	RONALD S. SYKES

STATE OF CALIFORNIA - DEPARTMENT OF TRANSPORTATION
Caltrans® MAINTENANCE DESIGN

LAST REVISION 00-00-00 | DATE PLOTTED => 06-FEB-2013 | TIME PLOTTED => 10:01

Dist	COUNTY	ROUTE	POST MILES TOTAL PROJECT	SHEET No.	TOTAL SHEETS
03	But	99	44.4/46.0	4	14

REGISTERED CIVIL ENGINEER 12-3-12 DATE

12-3-12
PLANS APPROVAL DATE

REGISTERED PROFESSIONAL ENGINEER
RONALD S. SYKES
No. C35526
Exp. 9-30-13
CIVIL
STATE OF CALIFORNIA

THE STATE OF CALIFORNIA OR ITS OFFICERS OR AGENTS SHALL NOT BE RESPONSIBLE FOR THE ACCURACY OR COMPLETENESS OF SCANNED COPIES OF THIS PLAN SHEET.

NOTE:

1. EXISTING UTILITY FACILITIES HAVE NOT BEEN PLOTTED ON THESE PLANS.

LEGEND:

- LIMITS OF COLD PLANE AC PAVEMENT (0.08′ Max)
- LIMITS OF COLD PLANE AC PAVEMENT (0.10′ Max)

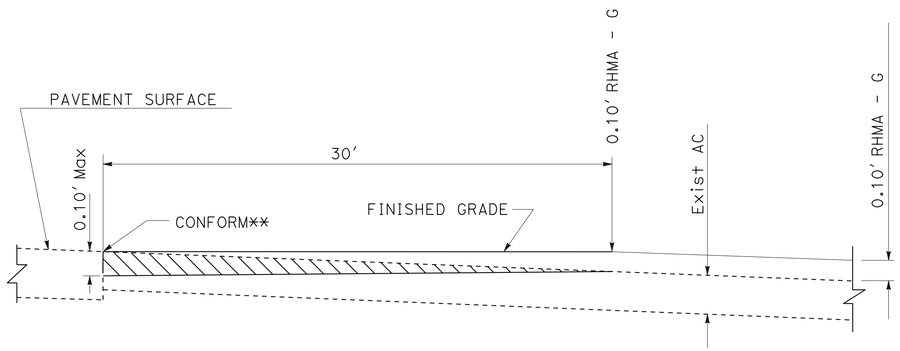

PAVEMENT CONFORM

**BEGIN AND END OF CONSTRUCTION

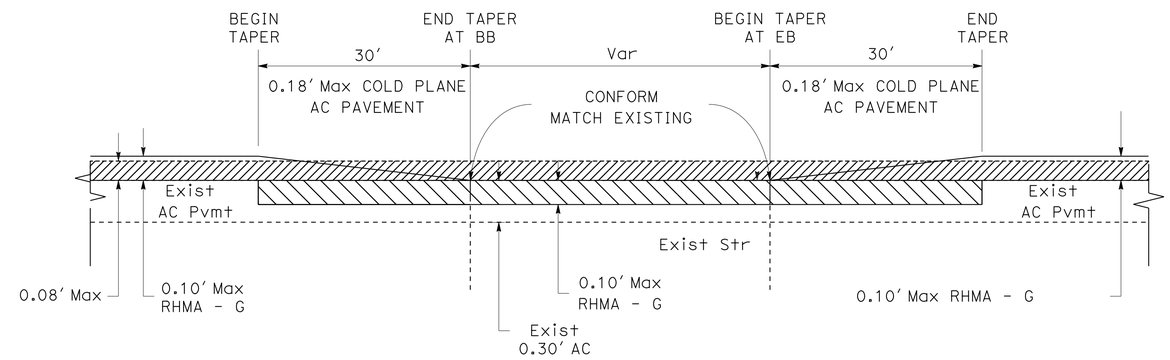

PAVING CONFORM AT BRIDGE STRUCTURES

PINE CREEK BRIDGE (Br No. 12-0028)
CAMPBELL CREEK BRIDGE (Br No. 12-0029)

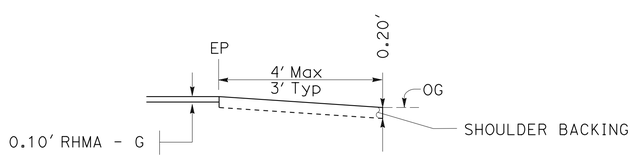

SHOULDER BACKING CONSTRUCTION

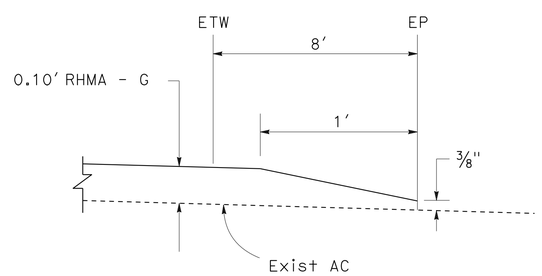

OVERLAY CONFORM DETAIL

CONSTRUCTION DETAILS

NO SCALE

C-1

STATE OF CALIFORNIA - DEPARTMENT OF TRANSPORTATION
Caltrans® MAINTENANCE DESIGN

FUNCTIONAL SUPERVISOR: RONALD S. SYKES
CALCULATED-DESIGNED BY: ROBERT M. FLOYD II
CHECKED BY: RONALD S. SYKES
REVISED BY
DATE REVISED

LAST REVISION 00-00-00
DATE PLOTTED => 06-FEB-2013
TIME PLOTTED => 10:01

Dist	COUNTY	ROUTE	POST MILES TOTAL PROJECT	SHEET No.	TOTAL SHEETS
03	But	99	44.4/46.0	5	14

REGISTERED CIVIL ENGINEER 12-3-12 DATE

12-3-12
PLANS APPROVAL DATE

REGISTERED PROFESSIONAL ENGINEER
RONALD S. SYKES
No. C35526
Exp. 9-30-13
CIVIL
STATE OF CALIFORNIA

THE STATE OF CALIFORNIA OR ITS OFFICERS OR AGENTS SHALL NOT BE RESPONSIBLE FOR THE ACCURACY OR COMPLETENESS OF SCANNED COPIES OF THIS PLAN SHEET.

NOTES:

1. FOR ACCURATE RIGHT OF WAY DATA, CONTACT RIGHT OF WAY ENGINEERING AT THE DISTRICT OFFICE.
2. EXACT LOCATION TO BE DETERMINED BY THE ENVIRONMENTAL CONSTRUCTION LIASON.

LEGEND:
--- ESA

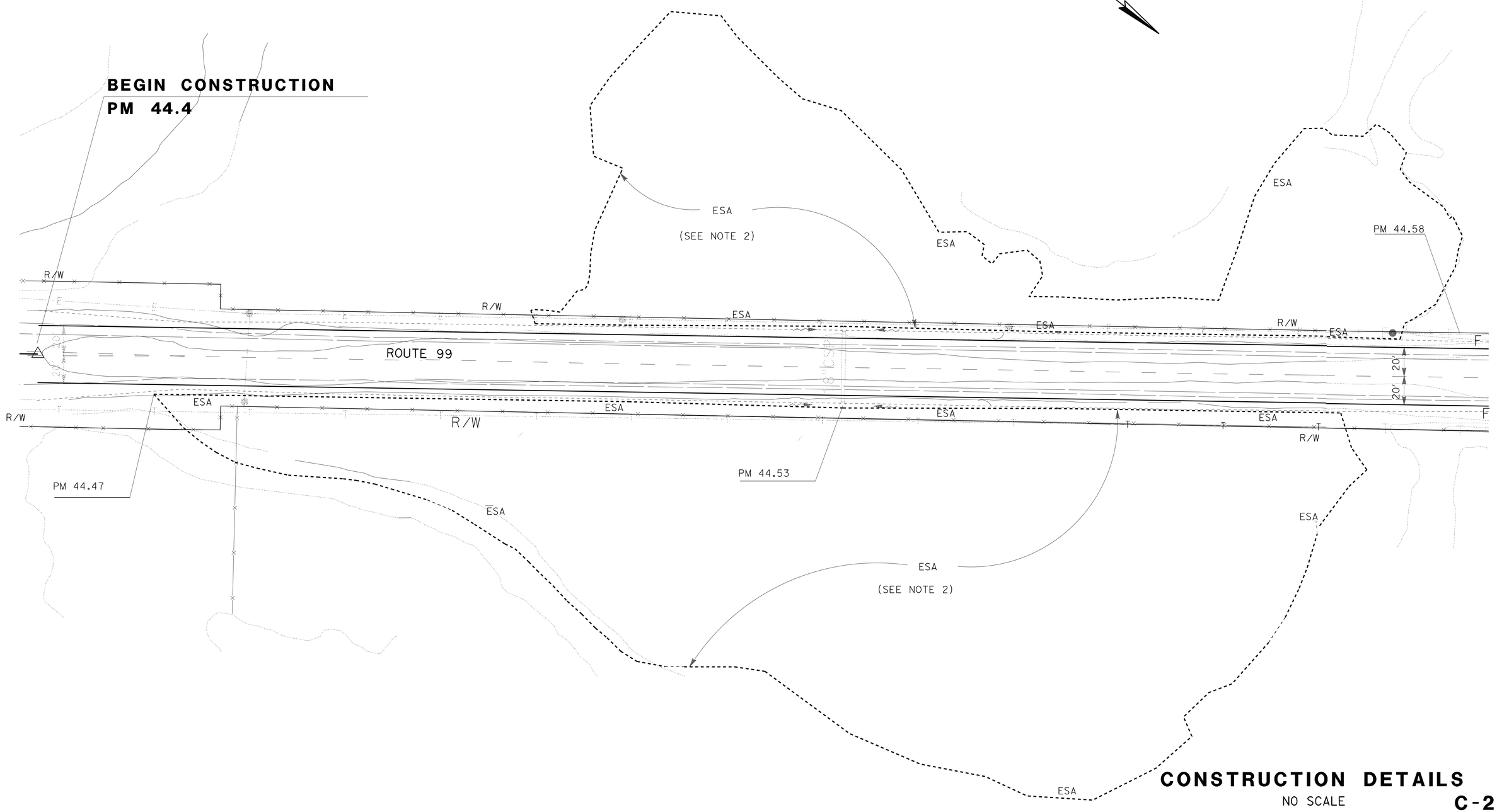

CONSTRUCTION DETAILS

NO SCALE

C-2

REVISED BY	DATE REVISED

CALCULATED-DESIGNED BY: ROBERT M. FLOYD II
CHECKED BY: RONALD S. SYKES
FUNCTIONAL SUPERVISOR: RONALD S. SYKES

STATE OF CALIFORNIA - DEPARTMENT OF TRANSPORTATION
Caltrans® MAINTENANCE DESIGN

LAST REVISION 00-00-00 | DATE PLOTTED => 06-FEB-2013 | TIME PLOTTED => 10:01

Dist	COUNTY	ROUTE	POST MILES TOTAL PROJECT	SHEET No.	TOTAL SHEETS
03	But	99	44.4/46.0	6	14

Joyce K Loftus 12-3-12
REGISTERED CIVIL ENGINEER DATE

12-3-12
PLANS APPROVAL DATE

REGISTERED PROFESSIONAL ENGINEER Joyce K. Loftus No. 38426 Exp. 3-31-13 CIVIL STATE OF CALIFORNIA

THE STATE OF CALIFORNIA OR ITS OFFICERS OR AGENTS SHALL NOT BE RESPONSIBLE FOR THE ACCURACY OR COMPLETENESS OF SCANNED COPIES OF THIS PLAN SHEET.

STATIONARY MOUNTED CONSTRUCTION AREA SIGNS

SIGN LETTER	SIGN CODE FEDERAL	SIGN CODE CALIFORNIA	PANEL SIZE	SIGN MESSAGE	NUMBER OF POST AND SIZE	NUMBER OF SIGNS	HIGHWAY POST LOCATION
A	W20-1	C23	48" x 48"	ROAD WORK AHEAD	1 - 6" x 6"	2	But-44.21 FNBT Teh-0.20 FSBT
B		C40(Mod)	72" x 42"	TRAFFIC FINES DOUBLED IN WORK ZONES	2 - 4" x 6"	2	But-44.31 FNBT Teh-0.10 FSBT
C	G20-2	C14	48" x 24"	END ROAD WORK	1 - 4" x 4"	2	Teh-0.10 FNBT But-44.31 FSBT
D	W20-1		36" x 36"	ROAD WORK AHEAD	1 - 4" x 6"	1	LOCAL ROAD
E	G20-2	C14	36" x 18"	END ROAD WORK	1 - 4" x 4"	1	LOCAL ROAD

NOTE:

1. HIGHWAY POST VALUES GIVEN ARE APPROXIMATE.
   EXACT SIGN LOCATION TO BE DETERMINED BY THE ENGINEER.

SIGN DETAILS

C40(Mod)<CA>

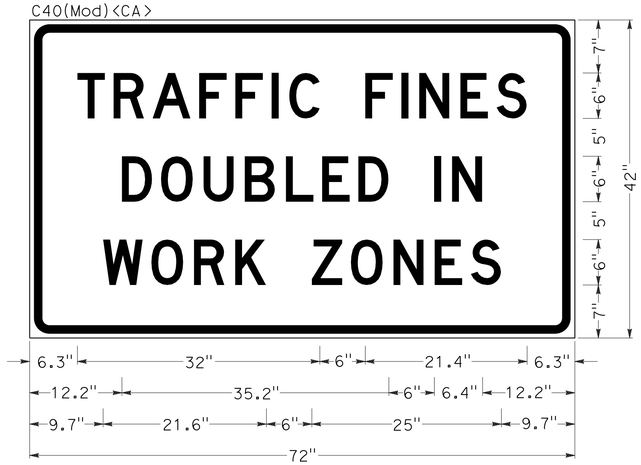

RETROREFLECTIVE WHITE BACKGROUND WITH
6" D BLACK LEGEND AND BLACK BORDERS.
(1" BORDER WITH .625" INDENT AND 2⅝" RADIUS)

CONSTRUCTION AREA SIGN LETTER B

LEGEND:

(X) CONSTRUCTION AREA SIGN LETTER

<CA> CALIFORNIA SIGN CODE

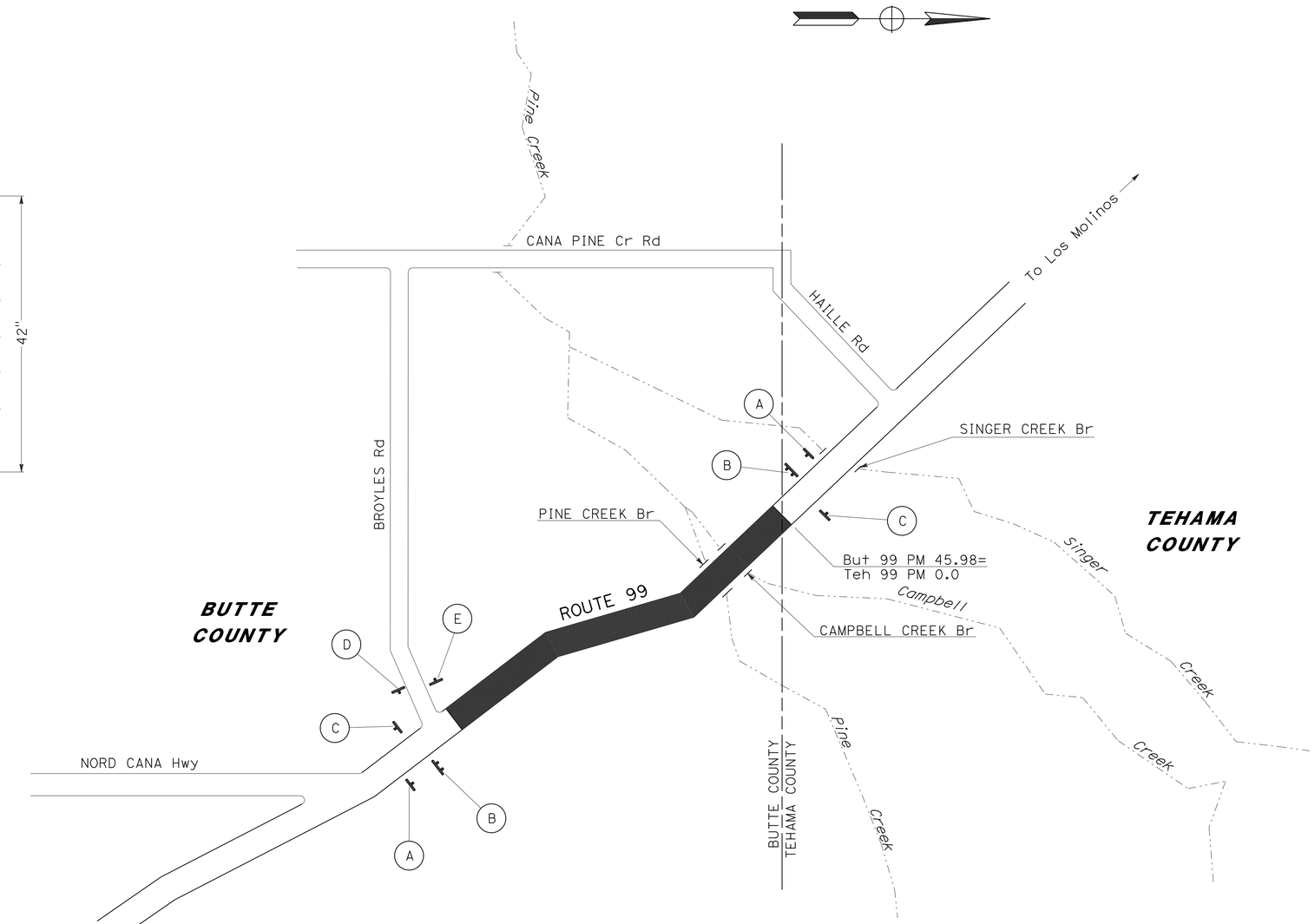

APPROVED FOR CONSTRUCTION AREA SIGN WORK ONLY

CONSTRUCTION AREA SIGNS

NO SCALE

CS-1

STATE OF CALIFORNIA - DEPARTMENT OF TRANSPORTATION
Caltrans
TRAFFIC

FUNCTIONAL SUPERVISOR: ARSHAD IQBAL
CALCULATED-DESIGNED BY: JACK KEMMERLY
CHECKED BY: JOYCE LOFTUS
REVISED BY
DATE REVISED

LAST REVISION 11-5-12
DATE PLOTTED => 06-FEB-2013
TIME PLOTTED => 10:01

Dist	COUNTY	ROUTE	POST MILES TOTAL PROJECT	SHEET No.	TOTAL SHEETS
03	But	99	44.4/46.0	7	14

Joyce K. Loftus 12-3-12
REGISTERED CIVIL ENGINEER DATE

12-3-12
PLANS APPROVAL DATE

REGISTERED PROFESSIONAL ENGINEER Joyce K. Loftus No. 38426 Exp. 3-31-13 CIVIL STATE OF CALIFORNIA

THE STATE OF CALIFORNIA OR ITS OFFICERS OR AGENTS SHALL NOT BE RESPONSIBLE FOR THE ACCURACY OR COMPLETENESS OF SCANNED COPIES OF THIS PLAN SHEET.

NOTES:

1. CENTERLINE RUMBLE STRIP SHALL BE CONSTRUCTED PRIOR TO INSTALLING FINAL TRAFFIC STRIPES.
2. FOR STRIPING DETAIL INFORMATION NOT SHOWN, SEE STANDARD PLANS.
3. THIS PLAN ACCURATE FOR CENTERLINE RUMBLE STRIP AND PAVEMENT DELINEATION DETAILS ONLY.

LEGEND:

TYPE D TWO-WAY YELLOW PAVEMENT MARKER (RETROREFLECTIVE)

TYPE H ONE-WAY YELLOW PAVEMENT MARKER (RETROREFLECTIVE)

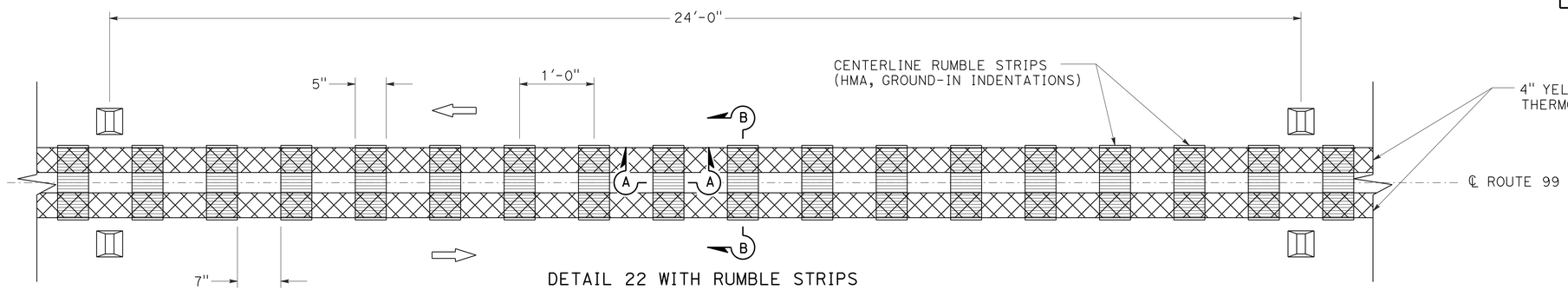

DETAIL 22 WITH RUMBLE STRIPS
(TYPICAL)

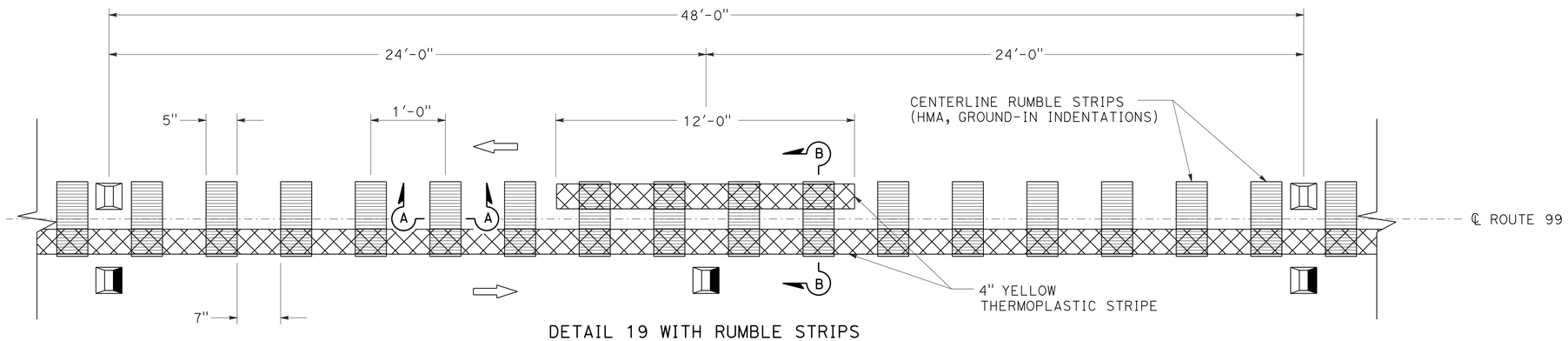

DETAIL 19 WITH RUMBLE STRIPS
(TYPICAL)

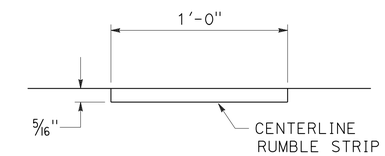

SECTION B-B

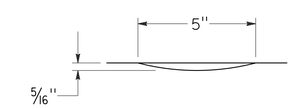

SECTION A-A

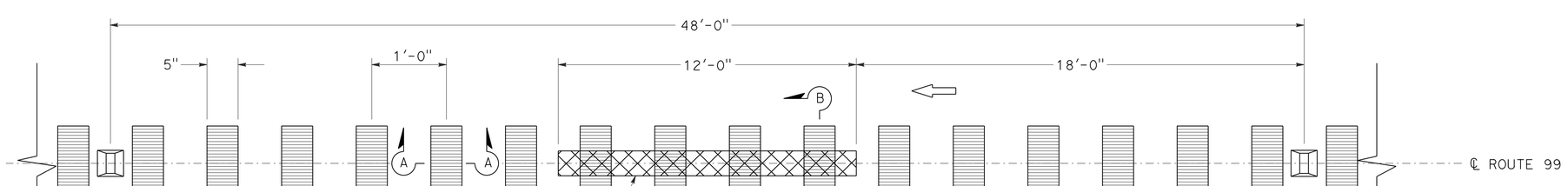

DETAIL 6 WITH RUMBLE STRIPS
(TYPICAL)

PAVEMENT DELINEATION DETAILS

NO SCALE

PDD-1

STATE OF CALIFORNIA - DEPARTMENT OF TRANSPORTATION
Caltrans
TRAFFIC

FUNCTIONAL SUPERVISOR: ARSHAD IQBAL
CALCULATED-DESIGNED BY: JACK KEMMERLY
CHECKED BY: JOYCE LOFTUS
REVISED BY
DATE REVISED

LAST REVISION 11-5-12
DATE PLOTTED => 06-FEB-2013
TIME PLOTTED => 10:01

Dist	COUNTY	ROUTE	POST MILES TOTAL PROJECT	SHEET No.	TOTAL SHEETS
03	But	99	44.4/46.0	8	14

REGISTERED CIVIL ENGINEER 12-3-12 DATE

12-3-12
PLANS APPROVAL DATE

REGISTERED PROFESSIONAL ENGINEER Joyce K. Loftus No. 38426 Exp. 3-31-13 CIVIL STATE OF CALIFORNIA

THE STATE OF CALIFORNIA OR ITS OFFICERS OR AGENTS SHALL NOT BE RESPONSIBLE FOR THE ACCURACY OR COMPLETENESS OF SCANNED COPIES OF THIS PLAN SHEET.

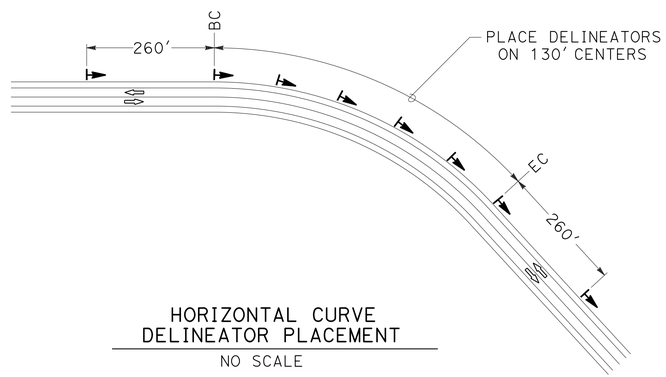

HORIZONTAL CURVE
DELINEATOR PLACEMENT
NO SCALE

LEGEND:

DELINEATOR (CLASS 1)

PAVEMENT DELINEATION QUANTITIES

HIGHWAY POST LIMITS/LOCATION	4" THERMOPLASTIC TRAFFIC STRIPE (EWNV)			4" THERMOPLASTIC TRAFFIC STRIPE (EWNV) (BROKEN 36-12)		PAVEMENT MARKER (RETROREFLECTIVE)		DELINEATOR (CLASS 1)	HIGHWAY POST MARKER
	DETAIL 19	DETAIL 22	DETAIL 27B	DETAIL 6	DETAIL 19	TYPE D	TYPE H	TYPE E	
	LINEAR FEET	LINEAR FEET	LINEAR FEET	LINEAR FEET	LINEAR FEET	EACH	EACH	EACH	EACH
44.40 TO 44.41		212	106			12			
44.41 TO 44.43		212	212			12			
44.43 TO 44.77	1,795		3,590		1,795	38	76		
44.50 (FSBT)									1
44.77 TO 44.90		1,373	1,373			60		3	
44.90 TO 45.10	1,056		2,112		1,056	23	45	5	
45.00 (FNBT)									1
45.10 TO 45.31			2,218	1,109		24			
45.31 TO 45.51	1,056		2,112		1,056	23	45		
45.50 (FSBT)									1
45.51 TO 45.62		1,162	1,162			50			
45.62 TO 45.83	1,109		2,218		1,109	24	47		
45.83 TO 45.98			1,584	792		18			
SUBTOTAL	5,016	2,959	16,687	1,901	5,016	284	213		
TOTAL	24,662			6,917		497		8	3

NOTES:

1. EWNV = ENHANCED WET NIGHT VISIBILITY.
2. EXACT LOCATION OF DELINEATORS AND HIGHWAY POST MARKERS TO BE DETERMINED BY THE ENGINEER.

PAVEMENT DELINEATION QUANTITIES

PDQ-1

REVISED BY | DATE REVISED
JACK KEMMERLY | JOYCE LOFTUS
CALCULATED-DESIGNED BY | CHECKED BY
FUNCTIONAL SUPERVISOR: ARSHAD IQBAL
STATE OF CALIFORNIA - DEPARTMENT OF TRANSPORTATION
Caltrans
TRAFFIC

LAST REVISION 11-5-12
DATE PLOTTED => 06-FEB-2013
TIME PLOTTED => 10:01

Dist	COUNTY	ROUTE	POST MILES TOTAL PROJECT	SHEET No.	TOTAL SHEETS
03	But	99	44.4/46.0	9	14

REGISTERED CIVIL ENGINEER 12-3-12 DATE

12-3-12
PLANS APPROVAL DATE

REGISTERED PROFESSIONAL ENGINEER RONALD S. SYKES No. C35526 Exp. 9-30-13 CIVIL STATE OF CALIFORNIA

THE STATE OF CALIFORNIA OR ITS OFFICERS OR AGENTS SHALL NOT BE RESPONSIBLE FOR THE ACCURACY OR COMPLETENESS OF SCANNED COPIES OF THIS PLAN SHEET.

ROADWAY QUANTITIES

LOCATION				DIRECTION	RUBBERIZED HOT MIX ASPHALT (GAP GRADED)	TACK COAT	COLD PLANE ASPHALT CONCRETE PAVEMENT	REPLACE ASPHALT CONCRETE SURFACING	(N) HOT MIX ASPHALT (TYPE A)
POST MILE LIMITS		DESCRIPTION							
BEGIN	END	BEGIN	END		TON	TON	SQYD	CY	TON
44.41	45.52	BEGIN PROJECT	BB PINE CREEK BRIDGE	NB	1,083.8	2.50	13,587	428.2	870
45.52	45.56	BB PINE CREEK BRIDGE	EB PINE CREEK BRIDGE	NB	31.5	0.07	305		
45.56	45.70	EB PINE CREEK BRIDGE	BB CAMPBELL CREEK BRIDGE	NB	143.0	0.30	1,887	64.3	131
45.70	45.71	BB CAMPBELL CREEK BRIDGE	EB CAMPBELL CREEK BRIDGE	NB	7.2	0.03	76		
45.71	45.98	EB CAMPBELL CREEK BRIDGE	END PROJECT/COUNTY LINE	NB	276.0	0.90	3,525	120.2	244
44.32	45.52	BEGIN PROJECT	BB PINE CREEK BRIDGE	SB	1,083.8	2.50	10,107	134.8	274
45.52	45.56	BB PINE CREEK BRIDGE	EB PINE CREEK BRIDGE	SB	31.5	0.07	305		
45.56	45.70	EB PINE CREEK BRIDGE	BB CAMPBELL CREEK BRIDGE	SB	143	0.30	1,788	56.1	114
45.70	45.71	BB CAMPBELL CREEK BRIDGE	EB CAMPBELL CREEK BRIDGE	SB	7.2	0.03	76		
45.71	45.98	EB CAMPBELL CREEK BRIDGE	END PROJECT/ COUNTY LINE	SB	276.0	0.90	2,809	60.5	123
				SUBTOTAL	3,083.0	7.60	34,505	864.1	1,756
				TOTAL	3,083.0	7.60	34,505	864.1	-

(N) - NOT A SEPARATE PAY ITEM, FOR INFORMATION ONLY

SHOULDER RUMBLE STRIP (HMA, GROUND-IN INDENTATIONS)

COUNTY	ROUTE	POST MILE LIMITS			SHOULDER RUMBLE STRIP (HMA, GROUND-IN INDENTATIONS)
		BEGIN	END	DIRECTION	STA
But	99	44.40	45.52	NB	59.2
		45.56	45.70	NB	7.4
		45.71	45.98	NB	14.3
		44.40	45.52	SB	59.2
		45.56	45.70	SB	7.4
		45.71	45.98	SB	14.3
		TOTAL			161.8

RUMBLE STRIP

COUNTY	ROUTE	POST MILE LIMITS		CENTERLINE RUMBLE STRIP (HMA, GROUND-IN INDENTATIONS)
		BEGIN	END	STA
But	99	44.4	45.5	59.2
		45.6	45.7	7.4
		45.7	46.0	14.3
		TOTAL		80.9

SHOULDER BACKING

POST MILE LIMITS		TON
BEGIN	END	
44.40	45.98	1,001
TOTAL		1,001

TEMPORARY FENCE (TYPE ESA)

POST MILE LIMITS		LF
BEGIN	END	
44.47	44.57	955
TOTAL		955

SUMMARY OF QUANTITIES

Q-1

STATE OF CALIFORNIA - DEPARTMENT OF TRANSPORTATION
Caltrans MAINTENANCE DESIGN

ROBERT M. FLOYD II — CALCULATED-DESIGNED BY
RONALD S. SYKES — CHECKED BY
RONALD S. SYKES — FUNCTIONAL SUPERVISOR
REVISED BY — DATE REVISED

LAST REVISION 00-00-00 DATE PLOTTED => 06-FEB-2013 TIME PLOTTED => 10:01

Dist	COUNTY	ROUTE	POST MILES TOTAL PROJECT	SHEET No.	TOTAL SHEETS
03	But	99	44.4/46.0	10	14

H. Golban 12-3-12
REGISTERED ELECTRICAL ENGINEER DATE

12-3-12
PLANS APPROVAL DATE

REGISTERED PROFESSIONAL ENGINEER
HABIB GOLBAN
No. 17928
Exp 09-30-14
ELECTRICAL
STATE OF CALIFORNIA

THE STATE OF CALIFORNIA OR ITS OFFICERS OR AGENTS SHALL NOT BE RESPONSIBLE FOR THE ACCURACY OR COMPLETENESS OF SCANNED COPIES OF THIS PLAN SHEET.

NOTE:

FOR ACCURATE RIGHT OF WAY DATA, CONTACT
RIGHT OF WAY ENGINEERING AT THE DISTRICT OFFICE.

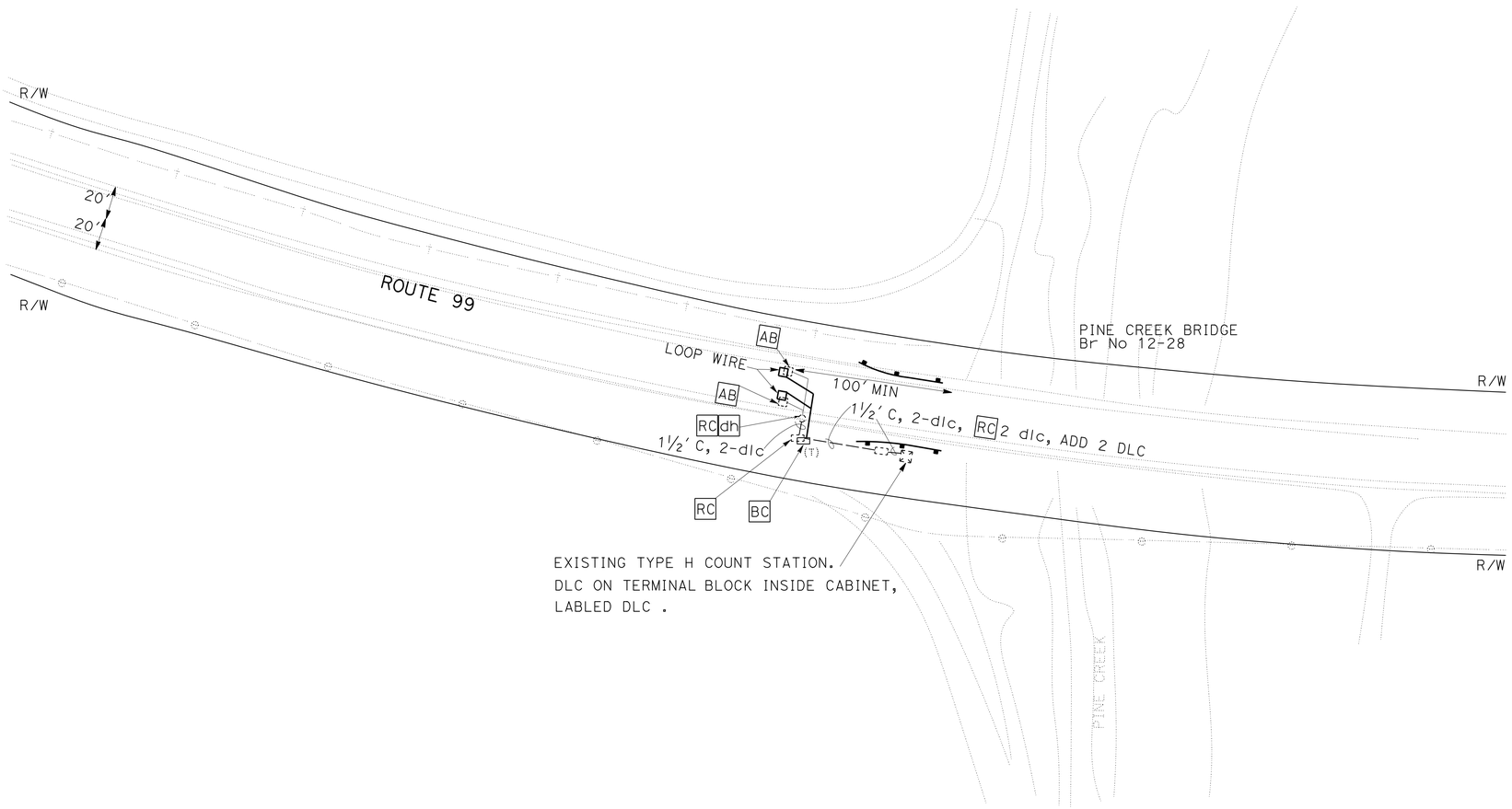

MODIFY TRAFFIC MONITORING STATION (COUNT)

APPROVED FOR ELECTRICAL WORK ONLY

SCALE: 1" = 50'

E-1

STATE OF CALIFORNIA - DEPARTMENT OF TRANSPORTATION
Caltrans
ELECTRICAL DESIGN

FUNCTIONAL SUPERVISOR: NELSON LEE
CALCULATED-DESIGNED BY: HABIB GOLBAN
CHECKED BY: NELSON LEE
REVISED BY
DATE REVISED

LAST REVISION 11-05-12
DATE PLOTTED => 06-FEB-2013
TIME PLOTTED => 10:01

Dist	COUNTY	ROUTE	POST MILES TOTAL PROJECT	SHEET No.	TOTAL SHEETS
03	But	99	44.4/46.0	11	14

H. Golban 12-3-12
REGISTERED ELECTRICAL ENGINEER DATE

12-3-12
PLANS APPROVAL DATE

REGISTERED PROFESSIONAL ENGINEER
HABIB GOLBAN
No. 17928
Exp 09-30-14
ELECTRICAL
STATE OF CALIFORNIA

THE STATE OF CALIFORNIA OR ITS OFFICERS OR AGENTS SHALL NOT BE RESPONSIBLE FOR THE ACCURACY OR COMPLETENESS OF SCANNED COPIES OF THIS PLAN SHEET.

NOTE:
THE QUANTITIES ON THIS SHEET ARE NOT A SEPARATE PAY ITEM AND ARE FOR INFORMATION ONLY

TRAFFIC MONITORING STATION (COUNT)

SHEET No.	No. 5 (T) PB	DLC	TYPE A LOOP
	EA	LF	EA
E-1	1	200	2

APPROVED FOR ELECTRICAL WORK ONLY

ELECTRICAL QUANTITIES

E-2

REVISED BY | DATE REVISED
HABIB GOLBAN | HABIB GOLBAN
CALCULATED-DESIGNED BY | CHECKED BY
FUNCTIONAL SUPERVISOR
NELSON LEE

STATE OF CALIFORNIA - DEPARTMENT OF TRANSPORTATION
Caltrans® ELECTRICAL DESIGN

LAST REVISION 11-05-12 | DATE PLOTTED => 06-FEB-2013 TIME PLOTTED => 10:01

DIST	COUNTY	ROUTE	POST MILES TOTAL PROJECT	SHEET No.	TOTAL SHEETS
03	But	99	44.4/46.0	12	14

REGISTERED CIVIL ENGINEER

January 20, 2012
PLANS APPROVAL DATE

REGISTERED PROFESSIONAL ENGINEER Cornelis M. Hakim No. C55610 Exp. 12-31-12 CIVIL STATE OF CALIFORNIA

THE STATE OF CALIFORNIA OR ITS OFFICERS OR AGENTS SHALL NOT BE RESPONSIBLE FOR THE ACCURACY OR COMPLETENESS OF SCANNED COPIES OF THIS PLAN SHEET.

TO ACCOMPANY PLANS DATED 12-3-12

2010 REVISED STANDARD PLAN RSP P74

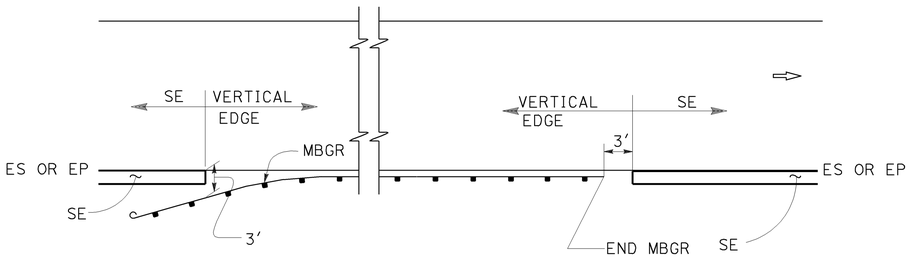

MBGR

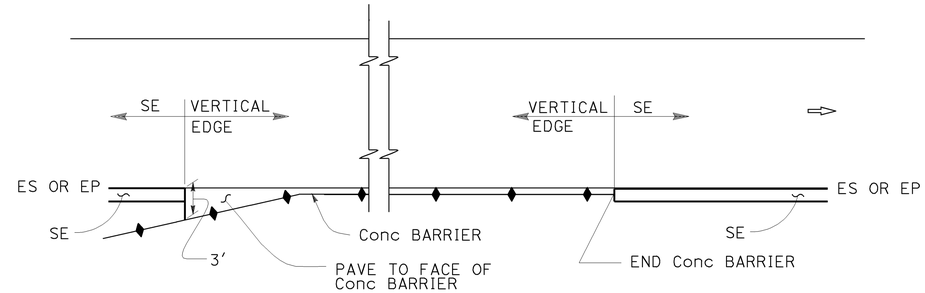

CONCRETE BARRIER

ABBREVIATIONS:

SE SAFETY EDGE

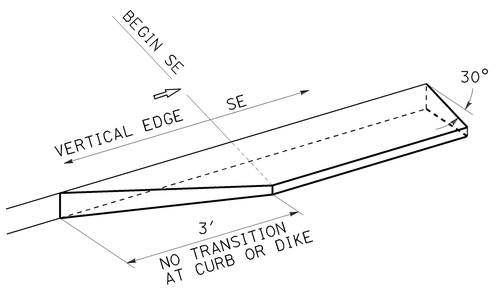

TRANSITION DETAIL FOR CONCRETE ONLY

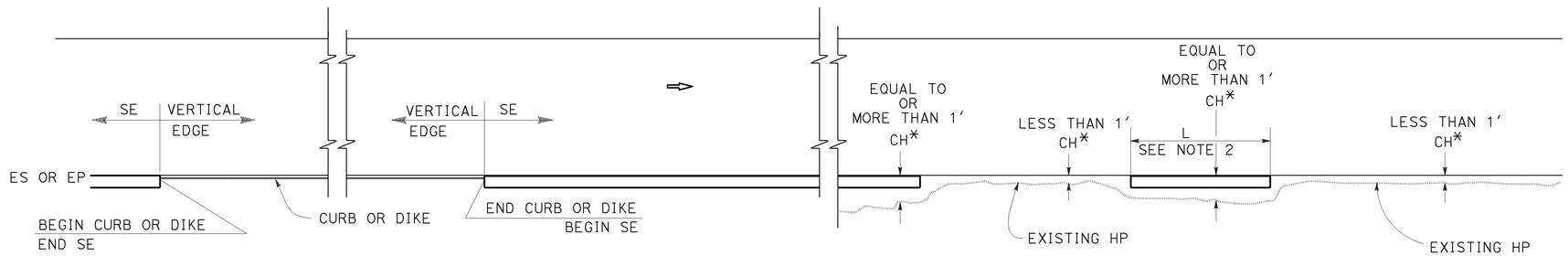

CURB OR DIKE

NARROW SIDE SLOPE

* CH = Distance from ES or EP to existing HP.

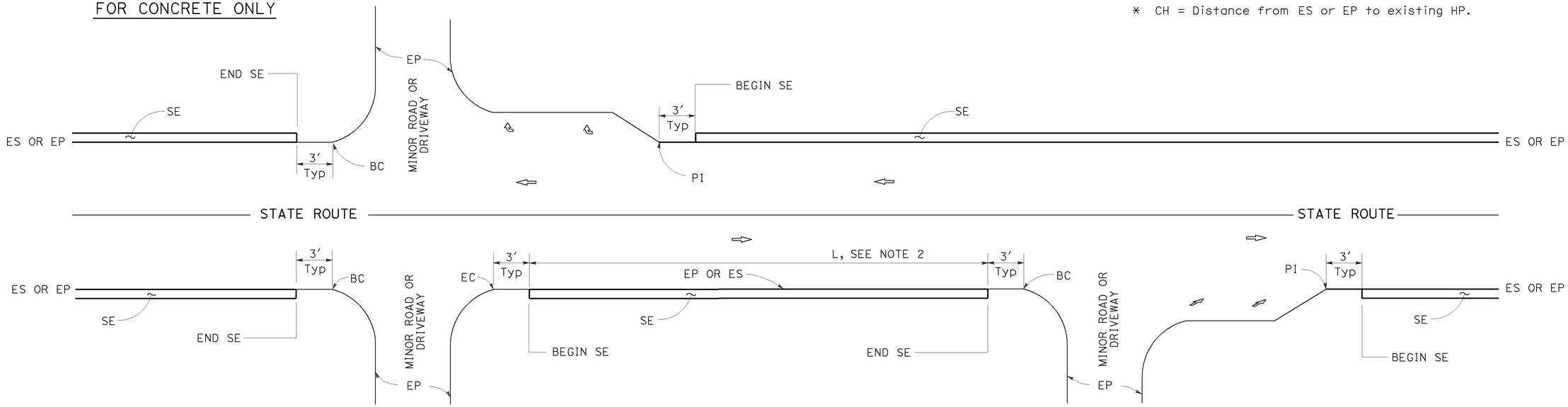

INTERSECTION

MINOR ROADWAY OR DRIVEWAY

DRIVEWAY AND INTERSECTION

NOTES:

1. For details not shown, see Revised Standard Plans RSP P75 and RSP P76.
2. Safety edge is optional when L is less than 30′.

STATE OF CALIFORNIA
DEPARTMENT OF TRANSPORTATION

PAVEMENT EDGE TREATMENTS

NO SCALE

RSP P74 DATED JANUARY 20, 2012 SUPPLEMENTS THE STANDARD PLANS BOOK DATED 2010.

REVISED STANDARD PLAN RSP P74

01-05-12

DIST	COUNTY	ROUTE	POST MILES TOTAL PROJECT	SHEET No.	TOTAL SHEETS
03	But	99	44.4/46.0	13	14

REGISTERED CIVIL ENGINEER

January 20, 2012
PLANS APPROVAL DATE

REGISTERED PROFESSIONAL ENGINEER Cornelis M. Hakim No. C55610 Exp. 12-31-12 CIVIL STATE OF CALIFORNIA

THE STATE OF CALIFORNIA OR ITS OFFICERS OR AGENTS SHALL NOT BE RESPONSIBLE FOR THE ACCURACY OR COMPLETENESS OF SCANNED COPIES OF THIS PLAN SHEET.

TO ACCOMPANY PLANS DATED 12-3-12

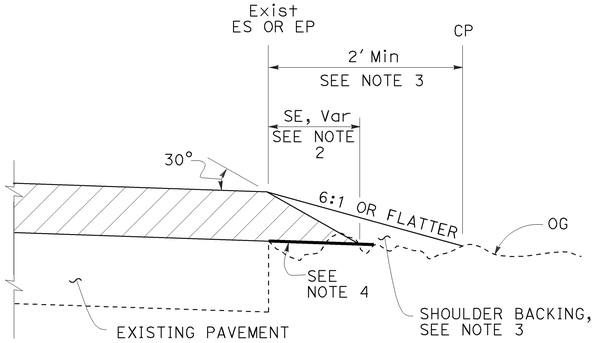

CASE A
Safety Edge

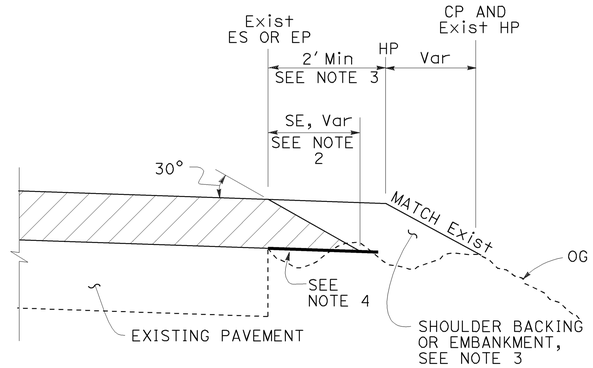

CASE B
Safety Edge

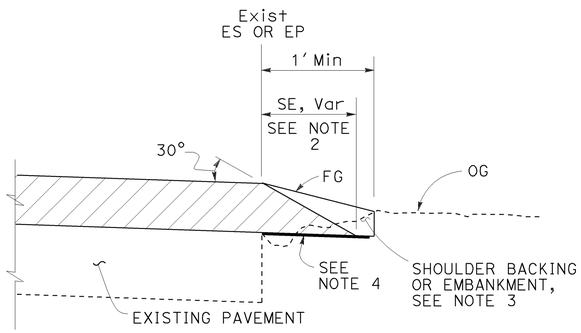

CASE C
Safety Edge

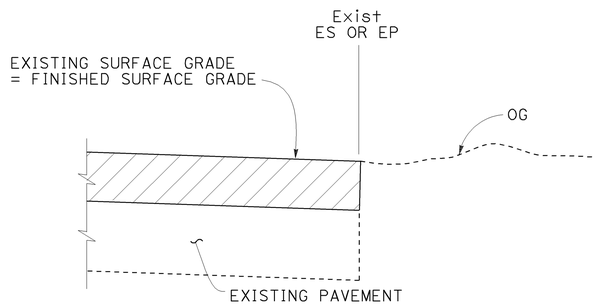

CASE D
Vertical Edge

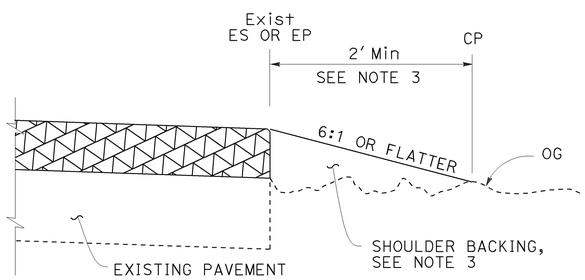

CASE E
Vertical Edge

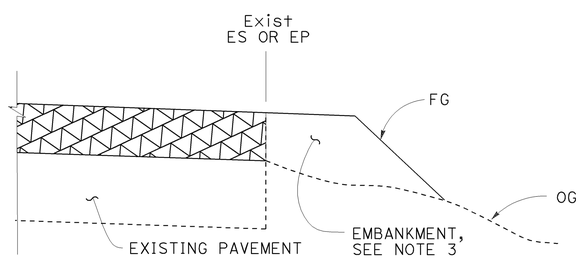

CASE F
Vertical Edge
* See Table A and Revised Std Plan RSP P74

LEGEND:

- HMA OVERLAY
- HMA OR CONCRETE OVERLAY
- CONCRETE OVERLAY

ABBREVIATIONS:

SE SAFETY EDGE
TT TOTAL THICKNESS OF SE

TABLE A
EDGE TREATMENT FOR VARIOUS OVERLAY THICKNESS AND CONDITIONS

	OVERLAY THICKNESS	
FIELD CONDITION	LESS THAN 0.15′	0.15′ OR MORE
Exist SLOPE 6:1 OR FLATTER	CASE E	CASE A
Exist SLOPE 3:1 TO 6:1	CASE E	CASE B
Exist SLOPE STEEPER THAN 3:1	CASE F	CASE F
CUT SECTION (REPLACE, COLD PLANE, MILL PAVEMENT)	CASE D	CASE C

ADDITIONAL HMA OR CONCRETE QUANTITIES FOR SE/SIDE/MILE

TYPICAL CROSS SECTION	TT	TOTAL ADDITIONAL MATERIAL FOR SE/SIDE/MILE		
		HMA (TON)	CONCRETE (CY)*	CONCRETE (CY)**
TT	0.15′	NA	NA	NA
	0.20′	13.7	NA	NA
	0.30′	30.9	NA	NA
	0.40′	54.9	NA	NA
	0.45′	69.4	NA	NA
TT 0.43′	0.50′	84.2	NA	NA
	0.60′	113.9	NA	NA
	0.70′	143.6	70.9	94.2
	0.80′	173.3	85.6	112.2
	0.90′	203.0	100.3	130.2
	1.00′	232.7	114.9	148.2
	1.10′	262.4	129.6	166.2
	1.20′	292.1	144.3	184.2

* For Detail "A"
** For Optional Detail "A"

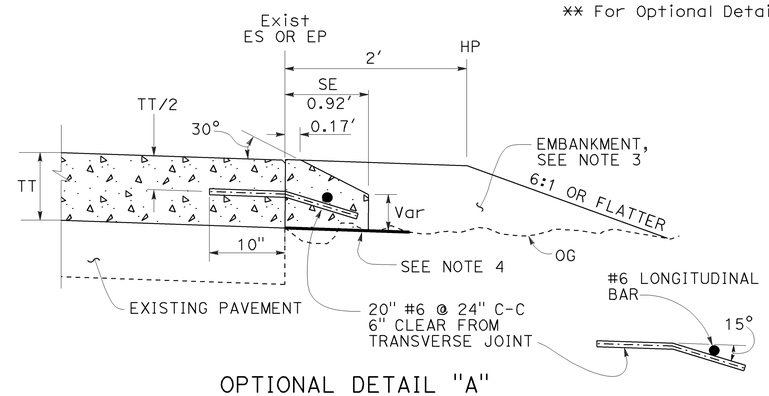

OPTIONAL DETAIL "A"
For concrete overlay
See Note 5

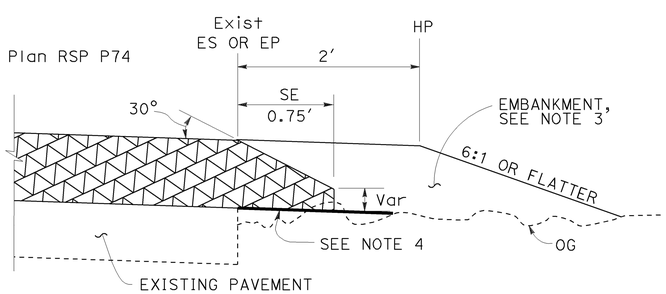

DETAIL "A"
For HMA overlay thickness more than 0.43′ or concrete overlay

NOTES:

1. For limits of safety edge and vertical edge treatments, see Revised Standard Plan RSP P74.
2. Details shown for HMA overlay thickness less than 0.43′. See Detail "A" for HMA overlay thickness more than 0.43′ or concrete overlay.
3. For locations and limits of shoulder backing or embankment see project plans.
4. Grade existing ground to place safety edge. 1′ minimum width
5. Safety edge transverse joint must match overlay transverse joint. End of #6 longitudinal bar must be 2" ±½" clear from transverse joint.
6. Safety edge is not needed in the area of MBGR, barrier, right turn lane and acceleration lane. See Revised Standard Plan RSP P74.

STATE OF CALIFORNIA
DEPARTMENT OF TRANSPORTATION

PAVEMENT EDGE TREATMENTS-OVERLAYS

NO SCALE

RSP P75 DATED JANUARY 20, 2012 SUPPLEMENTS THE STANDARD PLANS BOOK DATED 2010.

REVISED STANDARD PLAN RSP P75

2010 REVISED STANDARD PLAN RSP P75

01-09-12

DIST	COUNTY	ROUTE	POST MILES TOTAL PROJECT	SHEET NO.	TOTAL SHEETS
03	But	99	44.4/46.0	14	14

REGISTERED ELECTRICAL ENGINEER

January 20, 2012
PLANS APPROVAL DATE

REGISTERED PROFESSIONAL ENGINEER
Jeffery G. McRae
No. E14512
Exp. 6-30-12
ELECTRICAL
STATE OF CALIFORNIA

THE STATE OF CALIFORNIA OR ITS OFFICERS OR AGENTS SHALL NOT BE RESPONSIBLE FOR THE ACCURACY OR COMPLETENESS OF SCANNED COPIES OF THIS PLAN SHEET.

TO ACCOMPANY PLANS DATED 12-3-12

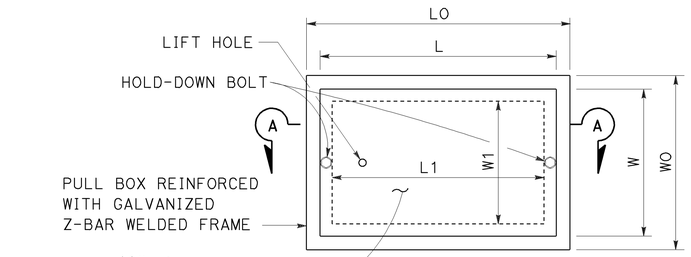

TOP VIEW

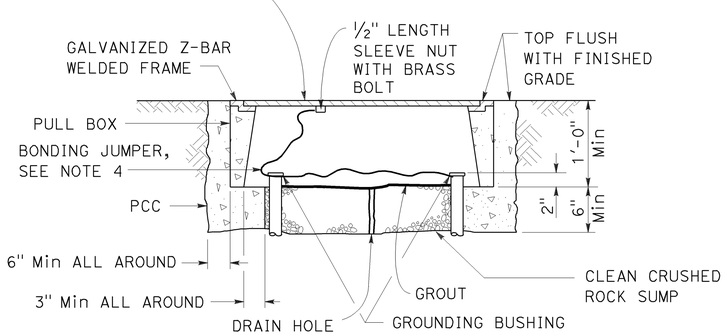

SECTION A-A

No. 3½(T), No. 5(T) AND No. 6(T) TRAFFIC PULL BOX

NOTES ON PULL BOXES:

1. Traffic pull box shall be provided with steel cover and special concrete footing. Steel cover shall have embossed non-skid pattern.
2. Steel reinforcing shall be as regularly used in the standard products of the respective manufacturer.
3. Pull box covers must be marked as follows: "SERVICE" Service circuits between service point and service disconnect; "SPRINKLER-CONTROL" Sprinkler control circuits, 50 V or less; "CALTRANS" On all pull boxes, except pull boxes marked "SPRINKLER-CONTROL"; and "TELEPHONE" Telephone service.
   A) No. 3½(T) pull box.
      1) "SIGNAL" - Traffic signal circuits with or without street or sign lighting circuits.
      2) "ST LIGHTING" - Street or sign lighting circuits where voltage is under 600 V.
   B) No. 5(T) or 6(T) pull box.
      1) "TRAFFIC SIGNAL" - Traffic signal circuits with or without street or sign lighting circuits.
      2) "STREET LIGHTING" - Street or sign lighting circuits where voltage is under 600 V.
      3) "STREET LIGHTING-HIGH VOLTAGE" - Street or sign lighting circuits where voltage is above 600 V.
      4) "IRRIGATION" - Circuits to irrigation controller 120 V or more.
      5) "RAMP METER" - Ramp meter circuits.
      6) "COUNT STATION" - Count or speed monitor circuits.
      7) "COMMUNICATION" - Communication circuits.
      8) "TOS COMMUNICATIONS" - TOS communications line.
      9) "TOS POWER" - TOS power.
      10) "TDC POWER" - Telephone demarcation cabinet power.
      11) "CCTV" - Closed circuit television circuits.
      12) "TMS" - Traffic monitoring station circuits.
      13) "CMS" - Changeable message sign circuits.
      14) "HAR" - Highway advisory radio circuits.
4. Bonding jumper for metal covers shall be 3' long, minimum.
5. The nominal dimensions of the opening in which the cover sets must be the same as the cover dimensions except the length and width dimensions shall be ⅛" greater.
6. Covers and boxes must be interchangeable with California standard male and female gages. When interchanged with a standard male or female gage, the top surfaces must be flush within ⅛".

DIMENSION TABLE

PULL BOX	BOX						COVER				
	MINIMUM * THICKNESS	MINIMUM DEPTH BOX AND EXTENSION	WO	LO	L1	W1	L **	W **	R	EDGE THICKNESS	EDGE TAPER
No. 3½(T)	1½"	1'-0"	1'-5"± 1"	1'-8⅞"±	1'-2½"±	10⅝"± 1"	1'-8"±	1'-1¾"±	0"	½"	NONE
No. 5(T)	1¾"	1'-0"	1'-11½"± 1"	2'-5½"±	1'-7"±	1'-1"± 1"	2'-3"±	1'-4"±	0"	½"	NONE
No. 6(T)	2"	1'-0"	2'-6"± 1"	2'-11½"±	1'-11½"±	1'-5"± 1"	2'-9"±	1'-8"±	0"	½"	NONE

* EXCLUDING CONDUIT WEB ** TOP DIMENSION

STATE OF CALIFORNIA
DEPARTMENT OF TRANSPORTATION

ELECTRICAL SYSTEMS (TRAFFIC RATED PULL BOX)

NO SCALE

RSP ES-8B DATED JANUARY 20, 2012 SUPPLEMENTS THE STANDARD PLANS BOOK DATED 2010.

REVISED STANDARD PLAN RSP ES-8B

2010 REVISED STANDARD PLAN RSP ES-8B