ACSTP-000C(428)

Dist	COUNTY	ROUTE	POST MILES TOTAL PROJECT	SHEET No.	TOTAL SHEETS
03	But,Col,ED, Nev,Pla,*etc.*	5,28,32, 50,51,*etc.*	Var	1	42

STATE OF CALIFORNIA

DEPARTMENT OF TRANSPORTATION

PROJECT PLANS FOR CONSTRUCTION ON

STATE HIGHWAY

IN BUTTE, COLUSA, EL DORADO, NEVADA, PLACER, SACRAMENTO, SUTTER, YOLO AND YUBA COUNTIES AT VARIOUS LOCATIONS

TO BE SUPPLEMENTED BY STANDARD PLANS DATED 2010

INDEX OF PLANS

SHEET No.	DESCRIPTION
1	TITLE AND LOCATION MAP
2	LOCATIONS OF CONSTRUCTION
3	LAYOUT
4	CONSTRUCTION DETAILS
5	SUMMARY OF QUANTITIES
6-23	ELECTRICAL PLANS
24	SPECIAL ELECTRICAL STRUCTURES
25-42	REVISED STANDARD PLANS

THE STANDARD PLANS LIST APPLICABLE TO THIS CONTRACT IS INCLUDED IN THE NOTICE TO BIDDERS AND SPECIAL PROVISIONS BOOK.

LOCATION MAP

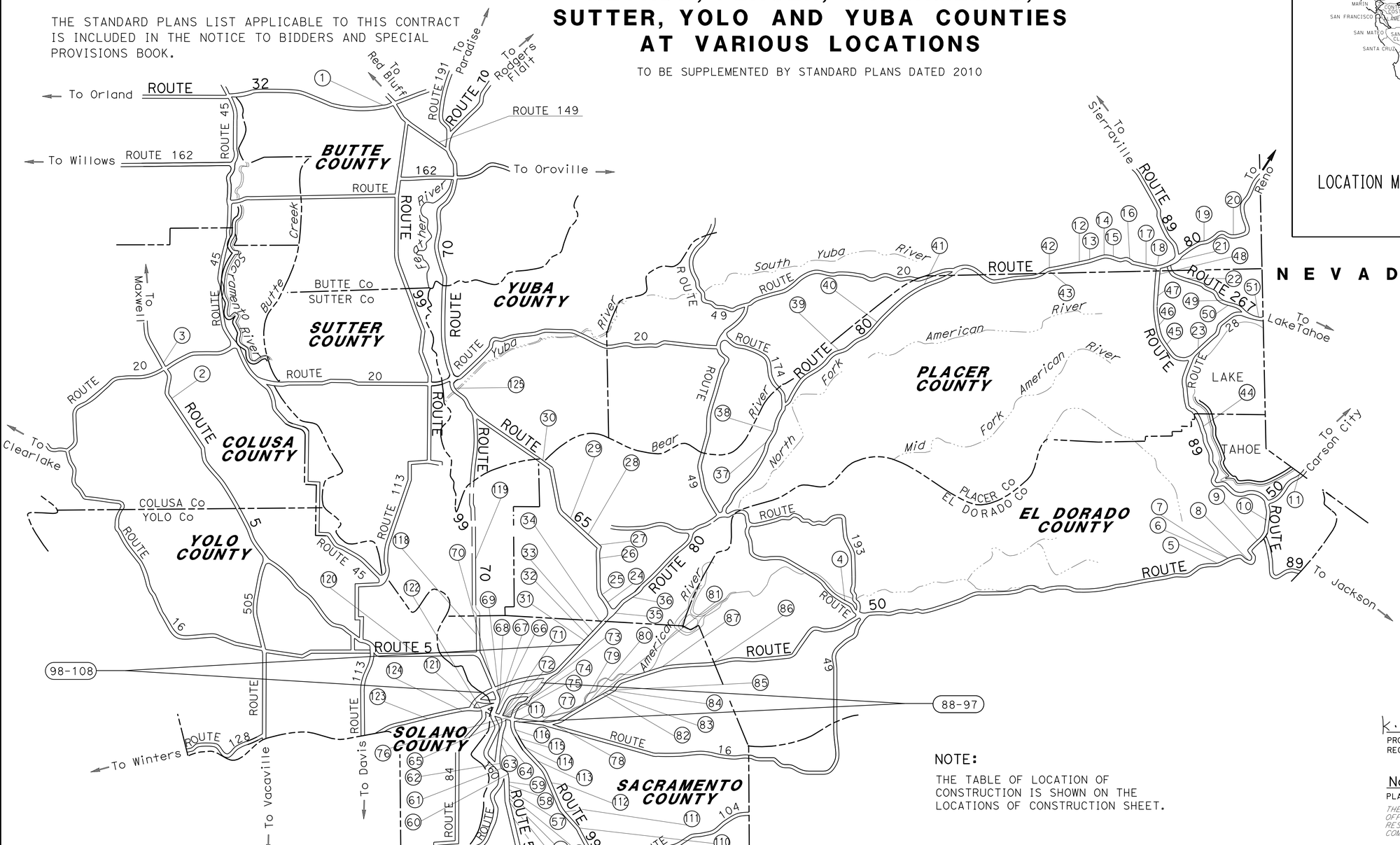

NEVADA

NOTE:

THE TABLE OF LOCATION OF CONSTRUCTION IS SHOWN ON THE LOCATIONS OF CONSTRUCTION SHEET.

THE CONTRACTOR SHALL POSSESS THE CLASS (OR CLASSES) OF LICENSE AS SPECIFIED IN THE "NOTICE TO BIDDERS."

NO SCALE

K. Sudha Mallikarjuna 11-23-15
PROJECT ENGINEER DATE
REGISTERED CIVIL ENGINEER

November 23, 2015
PLANS APPROVAL DATE

REGISTERED PROFESSIONAL ENGINEER SUDHA M. KODALI No. 79722 Exp. 9/30/16 CIVIL STATE OF CALIFORNIA

THE STATE OF CALIFORNIA OR ITS OFFICERS OR AGENTS SHALL NOT BE RESPONSIBLE FOR THE ACCURACY OR COMPLETENESS OF SCANNED COPIES OF THIS PLAN SHEET.

CONTRACT No.	03-3F8304
PROJECT ID	0313000197

PROJECT MANAGER SERGIO ACEVES
DESIGN MANAGER ALI KIANI

LAST REVISION 00-00-00
DATE PLOTTED => 26-JAN-2016
TIME PLOTTED => 08:32

Dist	COUNTY	ROUTE	POST MILES TOTAL PROJECT	SHEET No.	TOTAL SHEETS
03	But,Col,ED, Nev,Pla,etc	5,28,32, 50,51,etc.	Var	2	42

K. Sudha Mallika 11-23-15
REGISTERED CIVIL ENGINEER DATE

11-23-15
PLANS APPROVAL DATE

REGISTERED PROFESSIONAL ENGINEER SUDHA M. KODALI No. 79722 Exp. 9/30/16 CIVIL STATE OF CALIFORNIA

THE STATE OF CALIFORNIA OR ITS OFFICERS OR AGENTS SHALL NOT BE RESPONSIBLE FOR THE ACCURACY OR COMPLETENESS OF SCANNED COPIES OF THIS PLAN SHEET.

LOCATIONS OF CONSTRUCTION

Loc #	Co	ROUTE	PM	DIRECTION	LOCATION
1	But	32	R 9.50		9th AND MAIN (CHICO)
2	Col	5	R17.60	NB	Rte 20, SOUTH OF WILLIAMS
3	Col	5	R19.59	SB	Rte 20, NORTH OF WILLIAMS
4	ED	50	17.64	EB	SPRING St (Rte 49/50 JUNCTION)
5	ED	50	59.50		TWIN BRIDGES
6	ED	50	63.70	EB	SIERRA AT TAHOE Rd
7	ED	50	63.70	WB	SIERRA AT TAHOE Rd
8	ED	50	66.70	EB	ECHO SUMMIT
9	ED	50	70.60	WB	MEYERS/Rte 89 SOUTH OF Jct
10	ED	50	75.45	EB	MAYS Jct @ 89/50
11	ED	50	79.28	EB	SKI RUN Blvd
12	Nev	80	R 2.73	EB	SODA SPRINGS OC
13	Nev	80	R 2.91	WB	SODA SPRINGS OC
14	Nev	80	R 5.10	EB	WEST OF CASTLE PEAK
15	Nev	80	R 5.60	EB	DONNER SUMMIT (RWIS)
16	Nev	80	R 9.10	MEDIAN	DONNER LAKE INTERCHANGE
17	Nev	80	13.61	MEDIAN	TRUCKEE (OLD AGRICULTURAL INSPECTION AREA)
18	Nev	80	14.17	EB	Rte 80/89 SOUTH JUNCTION
19	Nev	80	19.30	WB	TRUCKEE SCALES (RWIS)
20	Nev	80	27.29	EB	FLORISTON (RWIS)
21	Nev	267	0.01	EB	80/267 INTERCHANGE
22	Nev	267	0.42	NB	TRUCKEE BYPASS
23	Pla	28	3.00	WB	DOLLAR POINT (TAHOE CITY, RWIS)
24	Pla	65	R 7.30		PLEASANT GROVE Blvd
25	Pla	65	M 8.20		BLUE OAKS Blvd
26	Pla	65	R12.48	NB	INDUSTRIAL Ave
27	Pla	65	R13.39		FERRARI RANCH Rd (RWIS)
28	Pla	65	R15.27	NB	NELSON Ln
29	Pla	65	R19.19	SB	WEST WISE Rd
30	Pla	65	R22.95	NB	RIOSA Rd
31	Pla	80	0.42	MEDIAN	RIVERSIDE
32	Pla	80	1.11	WB	DARLING WAY
33	Pla	80	1.93	EB	DOUGLAS Blvd
34	Pla	80	3.61		TAYLOR Rd
35	Pla	80	4.10		ROUTE 65/ I-80 Jct
36	Pla	80	5.99		WEST OF ROCKLIN Rd
37	Pla	80	R26.21	EB	APPLEGATE
38	Pla	80	33.13	EB	COLFAX (Rte 80 & 174 SEPARATION)
39	Pla	80	43.17	WB	DUTCH FLAT
40	Pla	80	46.31	MEDIAN	CRYSTAL SPRINGS
41	Pla	80	52.31	WB	WHITEMORE GRADE
42	Pla	80	69.40	EB	KINGVALE OC
43	Pla	80	69.40	WB	KINGVALE UC
44	Pla	89	0.40	NB	JUNCTION Rte 89/Rte 28 (FANNY BRIDGE)
45	Pla	89	10.50	SB	RAMPART (RWIS)
46	Pla	89	12.30		ALPINE MEADOWS Rd
47	Pla	89	13.72	NB	SQUAW VALLEY Rd
48	Pla	89	21.52	SB	WEST RIVER St, SOUTH OF TRUCKEE
49	Pla	267	3.76	NB	NORTHSTAR Dr
50	Pla	267	6.67	SB	BROCKWAY SUMMIT (RWIS)
51	Pla	267	9.90	NB	KINGS BEACH (Jct 28-267)
52	Sac	5	1.50		LOST SLOUGH BRIDGE (COLINE-TWIN CITIES Rd)
53	Sac	5	10.80	NB	ELK GROVE Blvd, OC
54	Sac	5	12.83	NB	LAGUNA Blvd
55	Sac	5	12.90	SB	LAGUNA Blvd
56	Sac	5	16.15	SB	POCKET Rd
57	Sac	5	17.33	MEDIAN	FLORIN Rd
58	Sac	5	18.23	SB	GLORIA Dr
59	Sac	5	18.81	NB	43rd Ave
60	Sac	5	19.27	SB	SEAMAS Ave
61	Sac	5	19.86	SB	25th Ave
62	Sac	5	20.73	MEDIAN	SUTTERVILLE Rd
63	Sac	5	21.37	MEDIAN	6th Ave
64	Sac	5	21.65	MEDIAN	VALLEJO WAY

Loc #	Co	ROUTE	PM	DIRECTION	LOCATION
65	Sac	5	22.40	NB	BROADWAY (NB 5 TO EB 50 CONNECTOR)
66	Sac	5	22.70	NB	JCT Rte 50/ Rte 5
67	Sac	5	22.80	SB	P St
68	Sac	5	24.60		RICHARDS Blvd. (BERCUT TOWER)
69	Sac	5	26.00	SB	WEST EL CAMINO Ave
70	Sac	5	28.55	SB	DEL PASO
71	Sac	50	L 0.52	WB	4th St
72	Sac	50	L 0.89	MEDIAN	9th St
73	Sac	50	R 0.90	WB	39th St
74	Sac	50	L 1.76	MEDIAN	20th St
75	Sac	50	R 1.80	MEDIAN	51st St
76	Sac	50	L 2.39	EB	28th St
77	Sac	50	R 3.00	EB	65th Ave
78	Sac	50	R 3.70	MEDIAN	HOWE Ave
79	Sac	50	R 5.30	MEDIAN	WATT Ave
80	Sac	50	R 6.37	WB	EAST OF MAYHEW OH
81	Sac	50	R 7.75	EB	BRADSHAW Rd
82	Sac	50	R 9.36	EB	MATHER FIELD
83	Sac	50	R 10.92	WB	ZINFANDEL
84	Sac	50	12.80	WB	SUNRISE Blvd
85	Sac	50	15.80	EB	HAZEL Ave
86	ED	50	0.80	WB	ELDORADO HILLS Blvd
87					NOT USED
88	Sac	51	0.20	NB	T St (50/51/99 IC)
89	Sac	51	0.65	MEDIAN	N St
90	Sac	51	1.58	MEDIAN	E St
91	Sac	51	2.43	SB	ELVAS UP
92	Sac	51	3.44	SB	EXPOSITION Blvd
93	Sac	51	4.07		ARDEN
94	Sac	51	4.67	NB	El CAMINO Ave
95	Sac	51	5.64	SB	MARCONI
96	Sac	51	6.80	NB	FULTON Ave
97	Sac	51	8.00	MEDIAN	WATT Ave
98	Sac	80	M 0.17	MEDIAN	BRYTE BEND Br
99	Sac	80	M 2.55	MEDIAN	I-5/I-80 INTERCHANGE (SAN JUAN)
100	Sac	80	M 3.60		TRUXEL Rd
101	Sac	80	M 4.90		NORTHGATE Blvd
102	Sac	80	M 6.10		NORWOOD Ave, OC
103	Sac	80	M 7.60		RALEY Blvd
104	Sac	80	M 10.30	WB	WATT Ave
105	Sac	80	11.90	MEDIAN	SPLIT AT 80/51
106	Sac	80	13.70	MEDIAN	FOOTHILL FARMS POC
107	Sac	80	14.22	MEDIAN	GREENBACK Ln
108	Sac	80	16.72	WB	ANTELOPE Rd
109	Sac	99	2.90		TWIN CITIES, SOUTH OF COUNTY LINE
110	Sac	99	10.10	NB	GRANTLINE Rd
111	Sac	99	15.55		SHELDON Rd, NORTH (JACINTO)
112	Sac	99	17.69	MEDIAN	MACK Rd
113	Sac	99	19.43	MEDIAN	FLORIN Rd
114	Sac	99	20.86	SB	47th Ave
115	Sac	99	21.94	SB	FRUITRIDGE Rd
116	Sac	99	23.12	MEDIAN	12th Ave
117	Sac	99	23.90	MEDIAN	4th Ave
118	Sac	99	33.80	SB	NORTH OF ELKHORN Blvd
119	Sut	70	0.20	SB	70/99 Jct (Hwy70-99)
120	Yol	5	R 0.83	MEDIAN	ELKHORN (RWIS)
121	Yol	50	1.20	MEDIAN	HARBOR Blvd
122	Yol	50	2.50	EB	JEFFERSON Blvd
123	Yol	80	5.83		CHILES Rd
124	Yol	80	9.10	WB	WEST CAPITOL Ave (RWIS)
125	Yub	70	13.94	NB	FEATHER RIVER

LOCATIONS OF CONSTRUCTION

LC-1

REVISED BY | DATE REVISED
WENDYANN CLARKE | SUDHA KODALI
CALCULATED-DESIGNED BY | CHECKED BY
FUNCTIONAL SUPERVISOR
ALI KIANI

STATE OF CALIFORNIA - DEPARTMENT OF TRANSPORTATION
Caltrans
DESIGN

LAST REVISION 00-00-00 | DATE PLOTTED => 09-DEC-2015 | TIME PLOTTED => 09:00

Dist	COUNTY	ROUTE	POST MILES TOTAL PROJECT	SHEET No.	TOTAL SHEETS
03	But,Col,ED, Nev,Pla,etc	5,28,32, 50,51,etc.	Var	3	42

K. Sudha Mallika 11-23-15
REGISTERED CIVIL ENGINEER DATE

11-23-15
PLANS APPROVAL DATE

REGISTERED PROFESSIONAL ENGINEER
SUDHA M. KODALI
No. 79722
Exp. 9/30/16
CIVIL
STATE OF CALIFORNIA

THE STATE OF CALIFORNIA OR ITS OFFICERS OR AGENTS SHALL NOT BE RESPONSIBLE FOR THE ACCURACY OR COMPLETENESS OF SCANNED COPIES OF THIS PLAN SHEET.

NOTES:

1. FOR ACCURATE RIGHT OF WAY DATA CONTACT RIGHT OF WAY ENGINEERING AT THE DISTRICT OFFICE.
2. EXISTING UTILITY FACILITIES HAVE NOT BEEN PLOTTED ON THESE PLANS

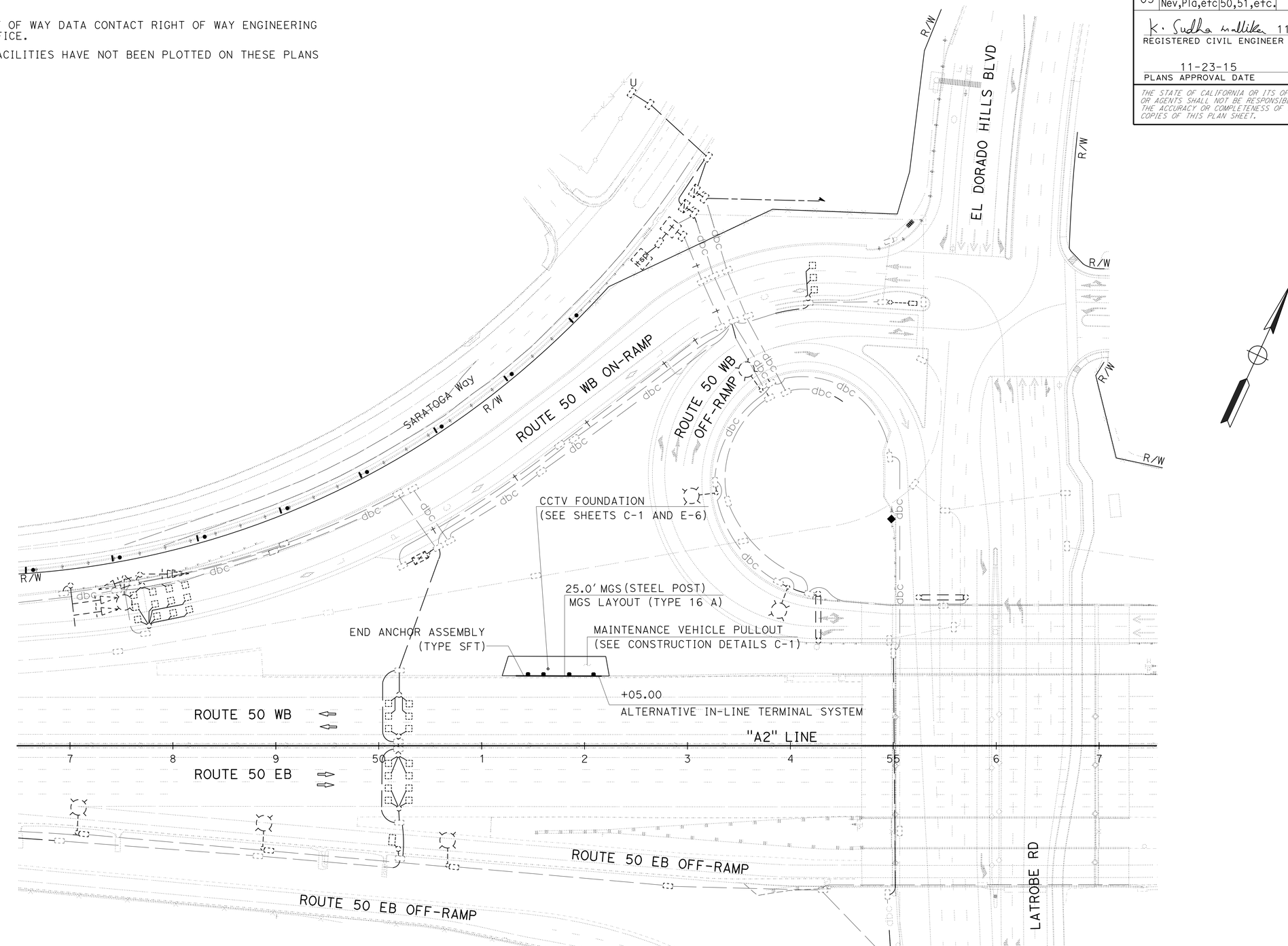

(LOCATION 86)
ED 50, PM 0.80

LAYOUT
SCALE: 1" = 50'

L-1

STATE OF CALIFORNIA - DEPARTMENT OF TRANSPORTATION
Caltrans® **DESIGN**

FUNCTIONAL SUPERVISOR: ALI KIANI
CALCULATED-DESIGNED BY: SUDHA M. KODALI
CHECKED BY: ALI KIANI
REVISED BY
DATE REVISED

LAST REVISION 00-00-00
DATE PLOTTED => 09-DEC-2015
TIME PLOTTED => 09:00

Dist	COUNTY	ROUTE	POST MILES TOTAL PROJECT	SHEET No.	TOTAL SHEETS
03	But,Col,ED, Nev,Pla,etc	5,28,32, 50,51,etc.	Var	4	42

K. Sudha Mallika 11-23-15
REGISTERED CIVIL ENGINEER DATE

11-23-15
PLANS APPROVAL DATE

REGISTERED PROFESSIONAL ENGINEER
SUDHA M. KODALI
No. 79722
Exp. 9/30/16
CIVIL
STATE OF CALIFORNIA

THE STATE OF CALIFORNIA OR ITS OFFICERS OR AGENTS SHALL NOT BE RESPONSIBLE FOR THE ACCURACY OR COMPLETENESS OF SCANNED COPIES OF THIS PLAN SHEET.

LEGEND:

1 Exist
0.10′ OGFC
0.42′ - 0.58′ AC
0.50′ AB
1.00′ AS

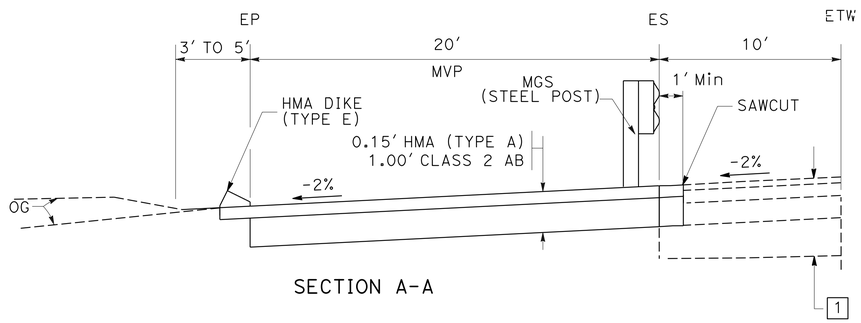

SECTION A-A

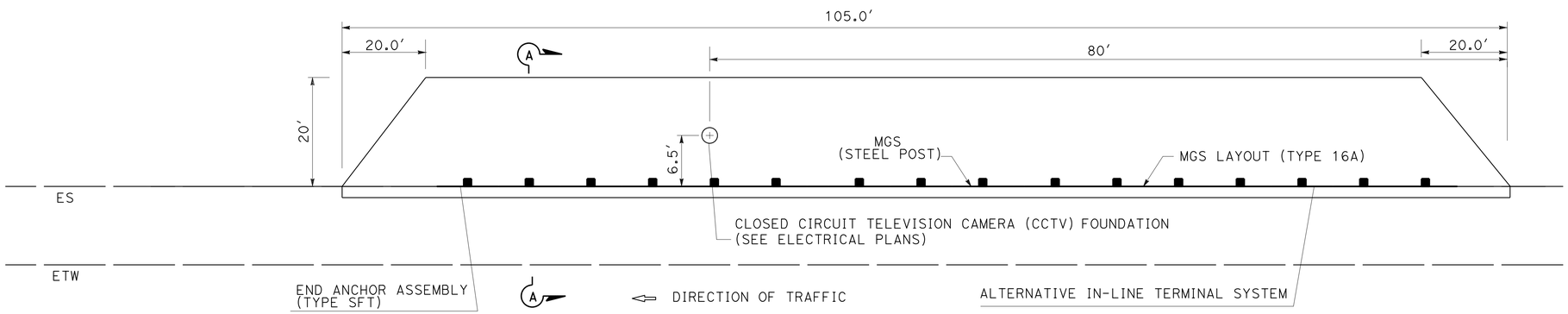

MAINTENANCE VEHICLE PULLOUT (MVP)

LOCATION 86 (ED 50, PM 0.80)

"A2" 51+20 TO "A2" 52+25

CONSTRUCTION DETAILS

NO SCALE

C-1

STATE OF CALIFORNIA - DEPARTMENT OF TRANSPORTATION
Caltrans® DESIGN

FUNCTIONAL SUPERVISOR: ALI KIANI
CALCULATED-DESIGNED BY: SUDHA M. KODALI
CHECKED BY: ALI KIANI
REVISED BY
DATE REVISED

LAST REVISION 06-05-12
DATE PLOTTED => 09-DEC-2015
TIME PLOTTED => 09:00

Dist	COUNTY	ROUTE	POST MILES TOTAL PROJECT	SHEET No.	TOTAL SHEETS
03	But,Col,ED, Nev,Pla,etc	5,28,32, 50,51,etc.	Var	5	42

K. Sudha Mallikarjuna 11-23-15
REGISTERED CIVIL ENGINEER DATE

11-23-15
PLANS APPROVAL DATE

REGISTERED PROFESSIONAL ENGINEER
SUDHA M. KODALI
No. 79722
Exp. 9/30/16
CIVIL
STATE OF CALIFORNIA

THE STATE OF CALIFORNIA OR ITS OFFICERS OR AGENTS SHALL NOT BE RESPONSIBLE FOR THE ACCURACY OR COMPLETENESS OF SCANNED COPIES OF THIS PLAN SHEET.

ROADWAY QUANTITIES

LOCATION	COUNTY	ROUTE	ROADWAY EXCAVATION	(N) EMBANKMENT	HOT MIX ASPHALT (TYPE A)	CLASS 2 AGGREGATE BASE	MIDWEST GUARDRAIL SYSTEM (STEEL POST)	ALTERNATIVE IN-LINE TERMINAL SYSTEM	END ANCHOR ASSEMBLY (TYPE SFT)	PLACE HOT MIX ASPHALT DIKE (TYPE E)	(N) MGS LAYOUT
			CY	CY	TON	CY	LF	EA	EA	LF	TYPE
86	ED	50	94.0	4.0	24.5	81.7	25.0	1	1	130.0	16A
FROM HMA DIKE					3.5						
TOTAL			94.0	4.0	28.0	81.7	25.0	1	1	130.0	

(N) - NOT A SEPARATE PAY ITEM FOR INFORMATION ONLY

TEMPORARY WATER POLLUTION CONTROL

LOCATION	COUNTY	ROUTE	TEMPORARY DI PROTECTION**
			EA
86	ED	50	2
TOTAL			2

** OR LOCATION AS DIRECTED BY THE ENGINEER.

SUMMARY OF QUANTITIES

Q-1

STATE OF CALIFORNIA - DEPARTMENT OF TRANSPORTATION
Caltrans DESIGN

FUNCTIONAL SUPERVISOR: ALI KIANI
CALCULATED-DESIGNED BY: SUDHA KODALI
CHECKED BY: ALI KIANI
REVISED BY
DATE REVISED

LAST REVISION 00-00-00
DATE PLOTTED => 09-DEC-2015
TIME PLOTTED => 09:00

Dist	COUNTY	ROUTE	POST MILES TOTAL PROJECT	SHEET No.	TOTAL SHEETS
03	But, Col, ED, Nev, Pla, etc.	5,28,32, 50,51,etc.	Var	6	42

Jaskaran Singh Boparai 11-23-15
REGISTERED ELECTRICAL ENGINEER DATE

11-23-15
PLANS APPROVAL DATE

REGISTERED PROFESSIONAL ENGINEER JASKARAN S. BOPARAI No. E15056 Exp. 12-31-15 ELECTRICAL STATE OF CALIFORNIA

THE STATE OF CALIFORNIA OR ITS OFFICERS OR AGENTS SHALL NOT BE RESPONSIBLE FOR THE ACCURACY OR COMPLETENESS OF SCANNED COPIES OF THIS PLAN SHEET.

LEGEND:

1 RS Exist CCTV CAMERA AND BRACKET ON Exist TYPE 15 LIGHTING STANDARD POLE. INSTALL NEW CCTV CAMERA, BRACKET AND CCTV CABLE PER DETAIL P ON SHEET E-14.

2 RS Exist CCTV CAMERAS (TWO) AND BRACKETS (TWO) ON Exist TYPE 15 LIGHTING STANDARD POLE. INSTALL NEW CCTV CAMERAS (TWO), BRACKETS (TWO) AND CCTV CABLE PER DETAIL Q ON SHEET E-14.

3 RS Exist CCTV CAMERA CONTROL UNIT, ETHERNET SWITCH, AND MULTIPLE AC OUTLET STRIP.

4 INSTALL ETHERNET SECURITY ROUTER, DSL MODEM, REMOTE ETHERNET POWER CONTROLLER SWITCH, DETAIL D ON E-9

5 RS Exist CCTV CAMERA ON Exist CCTV POLE AND INSTALL NEW CCTV CAMERA. SEE DETAIL A. ON SHEET E-7.

6 RS Exist CCTV CAMERA ON Exist ROADSIDE WEATHER INFORMATION SYSTEM (RWIS) TOWER AND INSTALL NEW CCTV CAMERA. SEE DETAIL E ON SHEET E-8.

7 RS Exist JUNCTION BOX AND INSTALL A COVER PLATE, SEE DETAIL M ON SHEET E-7.

8 RS Exist CCTV CAMERA ON Exist SIGN STRUCTURE AND INSTALL NEW CCTV CAMERA. SEE DETAIL O ON SHEET E-13.

9 RS Exist CCTV CAMERA ON Exist SIGNAL POLE AND INSTALL NEW CCTV CAMERA. SEE DETAIL B ON SHEET E-7.

10 RS Exist CCTV CAMERA AND BRACKET ON Exist TYPE 31 LIGHTING POLE (A2335) AND INSTALL NEW CCTV CAMERA AND BRACKET PER DETAIL B ON REVISED STANDARD PLAN RSP ES-7R. SEE DETAIL Z ON SHEET E-12.

11 RS Exist CCTV CAMERA ON Exist RWIS TOWER AND INSTALL NEW CCTV CAMERA. SEE DETAIL F ON SHEET E-8.

12 RS Exist BOLTS (TWO) ON Exist PULL BOX AND REPLACE WITH TWO SECURITY STUD BOLTS.

13 INSTALL TYPE CCTV 15′ OVERHEAD SIGN MOUNTED POLE PER Std PLAN ES-16A WITH NO CCTV MOUNTING ADAPTER AND NO JUNCTION BOX. NEW CCTV WILL BE MOUNTED ON 2′-6″ MOUNTING BRACKET PER DETAIL R3 SHEET E-14.

14 RS Exist CCTV CAMERA AND BRACKET ON Exist EMS SIGN. INSTALL NEW CCTV CAMERA AND BRACKET PER DETAIL X ON SHEET E-11.

15 RS Exist CCTV CAMERA ON Exist CCTV SIGN MOUNTED POLE AND INSTALL NEW CCTV CAMERA, SEE DETAIL C ON SHEET E-7.

16 SEE DETAIL D ON SHEET E-9 FOR CCTV EQUIPMENT INSTALLATION INSIDE THE CABINET.

17 RC Exist CCTV CABLE AND INSTALL NEW 1 CIC.

18 RC Exist CCTV CABLE AND INSTALL NEW 1 CIC AND ANTENNA CABLE.

19 INSTALL 1 CIC.

20 INSTALL COMMUNICATION EQUIPMENT. SEE DETAIL N ON SHEET E-14.

21 INSTALL OMNI ANTENNA ON Exist RWIS TOWER. CONTRACTOR TO PROVIDE APPROPRIATE STAND OFFS AND BRACKETS.

22 INSTALL 4G (LTE) WIRELESS MODEM ASSEMBLY, 8-PORT ETHERNET SWITCH AND ETHERNET EXTENDER SWITCH COMBINATION UNIT ON DIN RAIL AS SHOWN IN DETAILS I AND H ON SHEET E-9.

23 REMOVE BLANK PLATE.

24 INSTALL 4G (LTE) ANTENNA AND RUN ANTENNA CABLE PER MANUFACTURER RECOMMENDATION, SEE DETAIL K ON SHEET E-10.

25 INSTALL STANDARD HALF SHELF AS SHOWN.

26 INSTALL RJ-11 MODULAR JACKS AS SHOWN.

27 REMOVE EXISTING TERMINAL BLOCK TBO. INSTALL 12 POSITION TERMINAL BLOCKS ON DIN RAIL. LABEL TERMINAL BLOCKS AS SHOWN ON A PERMANENT LABEL.

28 INSTALL REMOTE ETHERNET POWER CONTROLLER SWITCH.

29 INSTALL MULTIPLE AC OUTLET STRIP.

30 INSTALL DATA SURGE SUPPRESSOR AS SHOWN.

31 CONNECT SOLID #10 GROUND WIRE TO EQUIPMENT GROUND.

32 USE 2 PAIR, 22 AWG, STRANDED AND TINNED COPPER WIRES WITH PVC JACKET TYPE INSULATION AS SPECIFIED IN THE SPECIAL PROVISIONS.

33 INSTALL ETHERNET SECURITY ROUTER.

34 NOT USED.

35 INSTALL DSL MODEM.

36 INSTALL UNIVERSAL JUNCTION BOX, SEE DETAIL L ON SHEET E-10.

37 Exist 2"C, 2#12, 1#12G, ADD 1 CIC.

38 Exist 3"C, 9#14 2#10 (METER ON), 1#10, 2 DLC, 23 DLC, ADD 1 CIC

39 Exist 2"C, 2#12, 1#12G, 2 DLC, ADD 1 CIC

40 2"C, 1 CIC, CB

41 FOR DETAILS, SEE SHEET ES-16C FOR POLE TYPE HM CCTV 60.

42 Exist 2-3"C, 12#14, 1#8, 2#6 (120 V RM CONTROLLER), 2#10 (120 V METER ON), 26 DLC, 1#6G, ADD 1 CIC.

43 INSTALL COMMUNICATION EQUIPMENT. SEE DETAIL D ON SHEET E-9.

44 Eixst 3"C,16 DLC, ADD 1 CIC

45 2"C, 1 CIC

46 4′x8′ PAD, SEE L-1 FOR MVP EXACT LOCATION.

47 FOR DETAILS, SEE SHEET RSP ES-16B FOR POLE TYPE CCTV 45.

51 POWDER COAT UNIVERSAL JUNCTION BOX.

52 150′ Exist CONDUIT: REMOVE AND RE-INSTALL SIGNAL CONDUCTORS AND INSTALL NEW CCTV CABLE.

53 INSTALL 12 POSITION TERMINAL BLOCKS ON DIN RAIL. LABEL TERMINAL BLOCKS AS SHOWN ON A PERMANENT LABEL.

54 CCTV CAMERA COLOR: WHITE

55 CCTV CAMERA COLOR: GREEN

56 CCTV CAMERA COLOR: BROWN

57 INSTALL 1 ETHERNET EXTENDER SWITCH COMBINATION UNIT, 1 RJ-11 MODULAR JACK, 1 DATA SURGE SUPPRESSOR, 1 8-PORT ETHERNET SWITCH, 1 4G (LTE) WIRELESS MODEM ASSEMBLY, AND CONNECT CABLE 1 AS SHOWN PER DETAIL H SHEET E-9.

58 INSTALL 2 ETHERNET EXTENDER SWITCH COMBINATION UNIT, 2 RJ-11 MODULAR JACK, 2 DATA SURGE SUPPRESSOR, 1 8-PORT ETHERNET SWITCH, 1 4G (LTE) WIRELESS MODEM ASSEMBLY, AND CONNECT CABLE 1 AND 2 AS SHOWN PER DETAIL H SHEET E-9.

59 INSTALL 3 ETHERNET EXTENDER SWITCH COMBINATION UNIT, 3 RJ-11 MODULAR JACK, 3 DATA SURGE SUPPRESSOR, 1 8-PORT ETHERNET SWITCH, 1 4G (LTE) WIRELESS MODEM ASSEMBLY, AND CONNECT CABLE 1, 2 AND 3 AS SHOWN PER DETAIL H SHEET E-9.

ABBREVIATIONS:

DIR	DIRECTION
CIC	CAMERA INTERCONNECT CABLE
PG&E	PACIFIC GAS AND ELECTRIC
LTE	LONG TERM EVOLUTION
WSEM	WIRELESS SERIAL ETHERNET MODEM
dbc	Exist DIRECT BURIED CABLE
Cat 6	CATEGORY 6
ITS	INTELLIGENT TRANSPORTATION SYSTEM
CBC	CAMERA BREAKOUT CABLE
DSL	DIGITAL SUBSCRIBER LINE

CLOSED CIRCUIT TELEVISION SYSTEM

E-1

STATE OF CALIFORNIA - DEPARTMENT OF TRANSPORTATION
Caltrans® ELECTRICAL DESIGN

FUNCTIONAL SUPERVISOR: MARY ANN HUDSPETH
CALCULATED-DESIGNED BY / CHECKED BY: JASKARAN S. BOPARAI
YOUNG TON
REVISED BY / DATE REVISED

LAST REVISION 10-30-15 | DATE PLOTTED => 09-DEC-2015 | TIME PLOTTED => 09:00

Dist	COUNTY	ROUTE	POST MILES TOTAL PROJECT	SHEET No.	TOTAL SHEETS
03	But, Col, ED, Nev, Pla, etc.	5,28,32, 50,51,etc.	Var	7	42

Jaskaran Singh Boparai 11-23-15
REGISTERED ELECTRICAL ENGINEER DATE

11-23-15
PLANS APPROVAL DATE

REGISTERED PROFESSIONAL ENGINEER
JASKARAN S. BOPARAI
No. E15056
Exp. 12-31-15
ELECTRICAL
STATE OF CALIFORNIA

THE STATE OF CALIFORNIA OR ITS OFFICERS OR AGENTS SHALL NOT BE RESPONSIBLE FOR THE ACCURACY OR COMPLETENESS OF SCANNED COPIES OF THIS PLAN SHEET.

CLOSED CIRCUIT TELEVISION LOCATIONS

LOCATION No.	Co	ROUTE	POST MILES	DIR	LOCATION	CCTV POLE LATITUDE	CCTV POLE LONGITUDE	CABINET LATITUDE	CABINET LONGITUDE	SERVICE ENCLOSURE LATITUDE	SERVICE ENCLOSURE LONGITUDE	Ctid No.	Exist PULL BOX (EA)	LEGEND
1	But	32	R9.5		9th AND MAIN (CHICO)	39.72564	-121.83483	39.72564	-121.83485	39.72567	-121.83450	03120320010187	6	3,9,12,54,57
2	Col	5	R17.6	NB	Rte 20 SOUTH OF WILLIAMS	39.15129	-122.14044	39.15133	-122.14047	39.15134	-122.14048	0315005R017400	1	3,4,5,12,54,57
3	Col	5	R19.59	SB	Rte 20 NORTH OF WILLIAMS	39.17795	-122.15929	39.17792	-122.15927	39.17794	-122.15931	0315005R019500	2	3,4,5,12,54,57
4	ED	50	17.64	EB	SPRING STREET (Rte 49)	38.727997	-120.805058	38.728003	-120.805	38.728003	-120.805036	03250500017670	2	3,9,12,54,57,55
5	ED	50	59.5		NEAR TWIN BRIDGES	38.81118	-120.12439	38.81102	-120.12422	38.81112	-120.12362	03250500065619	3	3,4,5,12,51,57,55
6	ED	50	63.7	EB	SIERRA AT TAHOE Rd	38.81911	-120.07589	38.81911	-120.07589	38.819111	-120.075889	NO SERVICE	1	2,57,55
7	ED	50	63.7	WB	SIERRA AT TAHOE Rd	38.81911	-120.07589	38.81911	-120.07589	38.819111	-120.075889	NO SERVIVE	1	2,55
8	ED	50	66.70	EB	NEAR ECHO SUMMIT	38.81315	-120.02921	38.81313	-120.03003	38.81385	-120.03020	03250500066740	3	3,4,5,51,58,55
9	ED	50	70.60	WB	Rte 89 (MEYERS)	38.85086	-120.02293	38.85094	-120.02280	38.85097	-120.02289	03250500070600	2	3,13,12,58,55
10	ED	50	75.45	EB	Rte 89 (MAYS Jct)	38.91329	-120.00471	38.91356	-120.00496	38.91332	-120.00473	03250500075450	3	3,9,12,57,55
11	ED	50	79.28	EB	SKI RUN Blvd	38.94855	-119.95734	38.94836	-119.95779	38.94826	-119.95782	03250500079280	3	3,9,12,58,55
12	Nev	80	R2.73	EB	SODA SPRINGS OC	39.32719	-120.38787	39.32719	-120.38790	39.32498	-120.39122	0317080R002545	1	3,4,5,12,54,58
13	Nev	80	R2.91	WB	SODA SPRINGS OC	39.32801	-120.38694	39.32802	-120.38698	39.32494	-120.39122	0317080R002950	1	3,4,5,12,54,58
14	Nev	80	R5.1	EB	WEST OF CASTLE PEAK	39.33464	-120.35562	39.33458	-120.35573	39.33455	-120.35575	0317080R005075	1	3,4,8,12,54,58
15	Nev	80	R5.60	EB	DONNER SUMMIT (RWIS)	39.33904	-120.34774	39.33903	-120.34776	39.33852	-120.34917	0317080R005600	1	3,4,11,12,54
16	Nev	80	R9.10	Med	NEAR DONNER LAKE	39.33076	-120.28544	39.33191	-120.28767	39.33190	-120.28766	0317080R009071	5	3,5,12,54,59,4
17	Nev	80	13.61	Med	NEAR TRUCKEE	39.32359	-120.21908	39.32360	-120.21913	39.32362	-120.21913	03170800013610	1	3,4,5,12,54,57
18	Nev	80	14.17	EB	Rte 89	39.32305	-120.20764	39.32272	-120.20739	39.32147	-120.20751	03170800014170	1	3,4,5,12,54,58
19	Nev	80	19.30	WB	TRUCKEE SCALES (RWIS)	39.36220	-120.13009	39.36220	-120.13009	39.36224	-120.13013	03170800019300	1	3,4,11,12,54
20	Nev	80	27.29	EB	FLORISTON (RWIS)	39.39554	-120.02384	39.39556	-120.02382	39.39579	-120.02398	03170800027290	1	3,4,11,12,54,6
21	Nev	267	0.01	EB	Rte 267	39.33800	-120.16830	39.33792	-120.16850	39.33705	-120.16748	03172600000010	1	3,4,5,12,54,57
22	Nev	267	0.42	NB	TRUCKEE BYPASS (RWIS)	39.33431	-120.16324	39.33431	-120.16324	39.33432	-120.16325	03172600000600	2	3,4,11,12,54,6
23	Pla	28	3.00	WB	NEAR DOLLAR POINT (TAHOE CITY, RWIS)	39.19388	-120.10346	39.19388	-120.10346	39.19351	-120.10387	03190280003049	2	3,6,12,54,56
24	Pla	65	R7.30		PLEASANT GROVE Blvd	38.78664	-121.28439	38.78650	-121.28563	38.78470	-121.28503	0319035R006953	2	3,5,12,54,58,4
25	Pla	65	M8.2		BLUE OAKS Blvd	38.79663	-121.29847	38.79771	-121.29927	38.79769	-121.29919	0319065R008063	7	3,4,5,12,54,59
26	Pla	65	R12.48	NB	INDUSTRIAL Ave	38.86387	-121.30140	38.86386	-121.30140	38.86294	-121.30206	0319065R011920	2	3,5,12,54,59,4
27	Pla	65	R13.39		FERRARI RANCH Rd	38.87060	-121.30797	38.87060	-121.30797	38.86916	-121.30899	03190650012650	2	3,5,12,54,57,4
28	Pla	65	R15.27	NB	NELSON Ln	38.88621	-121.34034	38.88620	-121.34053	38.88619	-121.34083	0319065R015502	2	3,4,5,12,54,57
29	Pla	65	R19.19	SB	WEST WISE Rd	38.92623	-121.36877	38.92613	-121.36876	38.92611	-121.36879	0319065R019462	2	3,4,5,12,54,57
30	Pla	65	R22.95	NB	RIOSA Rd	38.97877	-121.38222	38.97861	-121.38217	38.97856	-121.38219	0319065R023192	2	3,4,5,12,54,57
31	Pla	80	0.42	Med	RIVERSIDE Ave	38.72491	-121.29019	38.72576	-121.29022	38.72725	-121.29022	03190800000420	2	3,5,12,54,59,4
32	Pla	80	1.11	WB	DARLING WAY	38.73584	-121.27858	38.73582	-121.27861	38.73583	-121.27862	03190800001110	0	3,4,5,12,54,58
33	Pla	80	1.93	EB	DOUGLAS Blvd	38.74424	-121.27008	38.74425	-121.27005	38.74421	-121.26906	03190800002150	0	3,4,5,12,54,58
34	Pla	80	3.61		TAYLOR Rd	38.76596	-121.25593	38.76576	-121.25646	38.76742	-121.25519	03190800003900	2	3,5,12,54,4
35	Pla	80	4.1		Rte 65	38.77019	-121.24928	38.77024	-121.24935	38.77019	-121.24788	03190800004287	0	3,4,5,12,54
36	Pla	80	5.99		WEST OF ROCKLIN Rd	38.78430	-121.22796	38.78427	-121.22800	38.78419	-121.22803	03190800006010	1	3,5,12,54,58
37	Pla	80	R26.21	EB	AT APPLEGATE	39.00372	-120.99332	39.00336	-120.99331	39.0042	-120.99538	0319080R026196	3	3,4,5,12,54
38	Pla	80	33.13	EB	Rte 174	39.09568	-120.94938	39.09546	-120.94935	39.09553	-120.95066	03190800033132	2	3,4,5,12,54
39	Pla	80	43.17	WB	AT DUTCH FLAT	39.18901	-120.83598	39.18865	-120.83202	39.18860	-120.83198	03190800043170	6	3,4,5,12,54,57
40	Pla	80	46.31	Med	CRYSTAL SPRINGS Rd	39.20923	-120.78633	39.20991	-120.78654	39.20991	-120.78656	03190800043611	5	3,4,5,12,54,58
41	Pla	80	52.31	WB	WHITMORE GRADE	39.26991	-120.71964	39.26993	-120.71964	39.27402	-120.7178	03190800052310	0	3,4,5,12,54,57
42	Pla	80	69.40	EB	KINGVALE OC (EB)	39.31350	-120.44915	39.31350	-120.44911	39.31364	-120.45008	03190800069060	2	3,4,5,12,54,57

CLOSED CIRCUIT TELEVISION SYSTEM

E-2

STATE OF CALIFORNIA - DEPARTMENT OF TRANSPORTATION
Caltrans®
ELECTRICAL DESIGN
FUNCTIONAL SUPERVISOR: MARY ANN HUDSPETH
CALCULATED-DESIGNED BY: JASKARAN S. BOPARAI
CHECKED BY
REVISED BY
DATE REVISED
YOUNG TON

LAST REVISION 09-11-15
DATE PLOTTED => 09-DEC-2015
TIME PLOTTED => 09:00

Dist	COUNTY	ROUTE	POST MILES TOTAL PROJECT	SHEET No.	TOTAL SHEETS
03	But, Col, ED, Nev, Pla, etc.	5,28,32, 50,51,etc.	Var	8	42

Jaskaran Singh Boparai 11-23-15
REGISTERED ELECTRICAL ENGINEER DATE

11-23-15
PLANS APPROVAL DATE

REGISTERED PROFESSIONAL ENGINEER
JASKARAN S. BOPARAI
No. E15056
Exp. 12-31-15
ELECTRICAL
STATE OF CALIFORNIA

THE STATE OF CALIFORNIA OR ITS OFFICERS OR AGENTS SHALL NOT BE RESPONSIBLE FOR THE ACCURACY OR COMPLETENESS OF SCANNED COPIES OF THIS PLAN SHEET.

CLOSED CIRCUIT TELEVISION LOCATIONS

LOCATION No.	Co	ROUTE	POST MILES	DIR	LOCATION	CCTV POLE LATITUDE	CCTV POLE LONGITUDE	CABINET LATITUDE	CABINET LONGITUDE	SERVICE ENCLOSURE LATITUDE	SERVICE ENCLOSURE LONGITUDE	Ctid No.	Exist PULL BOX (EA)	LEGEND
43	Pla	80	69.40	WB	KINGVALE UC	39.31582	-120.43942	39.31590	-120.43918	39.31592	-120.43922	03190800069166	1	3,4,12,13,54,57,5
44	Pla	89	0.40	NB	Rte 28 (FANNNY BRIDGE)	39.16780	-120.14536	39.16769	-120.14549	39.16765	-120.14552	03190280000010	2	3,9,12,52,58,56
45	Pla	89	10.50	SB	RAMPART Dr (RWIS)	39.16529	-120.17755	39.16529	-120.17755	39.16594	-120.17746	03190890010443	0	3,4,6,12,56
46	Pla	89	12.3		ALPINE MEADOWS Rd	39.187207	-120.19489	39.18716	-120.19489	39.18697	-120.19488	03190890012340	2	3,4,5,12,54,57
47	Pla	89	13.72	NB	SQUAW VALLEY Rd	39.20456	-120.19930	39.20494	-120.19915	39.20482	-120.19899	03190890013720	3	3,9,12,52,57,56
48	Pla	89	21.52	SB	W RIVER St (SOUTH OF TRUCKEE)	39.31498	-120.20404	39.31473	-120.20366	39.31475	-120.20371	03190890021500	3	3,9,12,54,57
49	Pla	267	3.76	NB	NORTHSTAR Dr	39.28704	-120.10380	39.28711	-120.10375	39.28695	-120.10419	03192670003790	2	3,9,12,54,57
50	Pla	267	6.67	SB	NEAR BROCKWAY SUMMIT (RWIS)	39.26086	-120.07185	39.26085	-120.07187	39.26084	-120.07183	03170267006700	1	3,4,11,12,56
51	Pla	267	9.9	NB	Rte 28 (KINGS BEACH)	39.23789	-120.03161	39.23814	-120.03163	39.23816	-120.03163	03190280009340	2	3,9,12,52,58,56
52	Sac	5	1.5		LOST SLOUGH BRIDGE (COLINE-TWIN CITIES)	38.27608	-120.45557	38.27613	-121.45577	38.27615	-121.45575	03240050002130	1	3,4,5,12,54,57
53	Sac	5	10.8	NB	ELK GROVE Blvd OC	38.41342	-121.48430	38.41303	-121.48418	38.41248	-121.48398	03240050010826	0	10,54,58
54	Sac	5	12.83	NB	LAGUNA Blvd (NB)	38.43560	-121.48903	38.43564	-121.48904	38.43604	-121.48916	03240050012100	1	3,4,12,54,58,5
55	Sac	5	12.90	SB	LAGUNA Blvd (SB)	38.43860	-121.49025	38.43859	-121.49025	38.43859	-121.4908	03240050013578	2	3,4,12,54,58
56	Sac	5	16.15	SB	POCKET Rd	38.48116	-121.51090	38.48058	-121.50915	38.48134	-121.50921	03240050016150	5	3,5,12,54,59,4
57	Sac	5	17.33	Med	FLORIN Rd	38.49536	-121.51646	38.49468	-121.51547	38.49279	-121.51488	03240050017190	3	3,5,12,54,59,4
58	Sac	5	18.23	SB	GLORIA Dr	38.51000	-121.52241	38.50994	-121.52240	38.50804	-121.52377	03240050018230	1	3,4,5,12,54,57
59	Sac	5	18.81	NB	43rd Ave	38.51647	-121.52175	38.51752	-121.52142	38.51695	-121.52138	03240050018810	4	3,5,12,54,57,4
60	Sac	5	19.27	SB	SEAMAS Ave	38.52546	-121.52167	38.52618	-121.52167	38.52615	-121.52171	03240050019267	1	3,5,12,54,58,4
61	Sac	5	19.86	SB	25th Ave	38.53391	-121.51750	38.53379	-121.51666	38.53375	-121.51663	03240050019857	3	3,5,12,54,58,4
62	Sac	5	20.73	Med	SUTTERVILLE Rd	38.54089	-121.51072	38.54110	-121.50992	38.54108	-121.50995	03240050020730	5	3,5,12,54,57,4
63	Sac	5	21.37	Med	6th AVE	38.55154	-121.51114	38.55160	-121.51080	38.55263	-121.51127	03240050021370	1	3,4,5,12,54,57
64	Sac	5	21.65	Med	VALLEJO WAY	38.56012	-121.51439	38.55934	-121.51371	38.56207	-121.51417	03240050022000	4	3,5,12,54,57,4
65	Sac	5	22.4	NB	BROADWAY (TO SB 50 CONNECTOR)	38.56664	-121.51229	38.56690	-121.51243	38.5676	-121.51303	03240050022400	1	3,4,5,12,54,57
66	Sac	5	22.70	NB	Rte 50	38.56892	-121.50999	38.56870	-121.50904	38.5676	-121.51303	03240050022700	2	3,5,12,54,58,4
67	Sac	5	22.80	SB	P St	38.57796	-121.50760	38.57690	-121.50717	38.57683	-121.50718	03240050021651	6	3,5,12,54,58,4
68	Sac	5	24.60		RICHARDS Blvd	38.59512	-121.50212	38.59539	-121.50207	38.59539	-121.50207	03240050018691		58,54,SEE SHEET E-5
69	Sac	5	26.00	SB	W EL CAMINO Ave	38.61499	-121.51238	38.61541	-121.51353	38.61149	-121.51098	03240050025970	4	3,4,5,12,54,59
70	Sac	5	28.55	SB	DEL PASO Rd	38.64958	-121.52936	38.64962	-121.52939	38.65593	-121.53547	03240050028920	3	3,4,5,12,54,59
71	Sac	50	L0.52	WB	4th St	38.56845	-121.50899	38.56870	-121.50904	38.56835	-121.50791	0324050L000520	2	3,5,7,12,54,58,4,8
72	Sac	50	L0.89	Med	9th St	38.56581	-121.50093	38.56524	-121.50111	38.56541	-121.50113	0324050L000886	3	3,5,7,12,54,58,4
73	Sac	50	R0.90	WB	39th St	38.56100	-121.45876	38.56081	-121.45806	38.56005	-121.45868	0324050R000850	4	3,5,12,54,57,4,8
74	Sac	50	L1.76	Med	20th St	38.56201	-121.48644	38.56142	-121.48672	38.56142	-121.48664	0324050L001932	3	3,5,12,54,58,4
75	Sac	50	R1.80	Med	51st St	38.55675	-121.44451	38.55635	-121.44457	38.55629	-121.44420	0324050R002457	3	3,5,12,54,57,4
76	Sac	50	L2.39	EB	28th St	38.55884	-121.47603	38.55858	-121.47596	38.55856	-121.47598	0324050L002385	2	3,4,5,7,12,54,57,8
77	Sac	50	R3.00	EB	65th Ave	38.55049	-121.42362	38.55015	-121.42343	38.55011	-121.42422	0324050R002874	3	3,4,5,12,54,58
78	Sac	50	R3.70	Med	HOWE Ave	38.55391	-121.40916	38.55411	-121.40901	38.55401	-121.40974	0324050R003730	3	3,4,5,12,54,59
79	Sac	50	R5.3	Med	WATT Ave	38.55920	-121.37998	38.55915	-121.37925	38.55931	-121.37930	0324050R005200	2	3,5,12,54,59,4
80	Sac	50	R6.37	WB	E OF MAYHEW OH	38.56114	-121.36056	38.56108	-121.36028	38.56152	-121.35797	0324050R006371	2	3,4,5,12,54,57
81	Sac	50	R7.75	EB	BRADSHAW Rd	38.56555	-121.33651	38.56481	-121.33708	38.56347	-121.33855	0324050R007745	4	3,5,12,54,59,4
82	Sac	50	R9.36	EB	MATHER FIELD Rd	38.57816	-121.30790	38.57779	-121.30847	38.57872	-121.30641	0324050R009360	2	3,5,12,54,59,4
83	Sac	50	R10.92	WB	ZINFANDEL Dr	38.59107	-121.28756	38.59109	-121.28788	38.59099	-121.28769	0324050R010920	2	3,4,5,12,54,59
84	Sac	50	12.80	WB	SUNRISE Blvd	38.60974	-121.27029	38.60917	-121.27113	38.60927	-121.27123	03240500012600	4	3,5,12,54,59,4

CLOSED CIRCUIT TELEVISION SYSTEM

E-3

REVISED BY | DATE REVISED
YOUNG TON | JASKARAN S. BOPARAI
CALCULATED- DESIGNED BY | CHECKED BY
FUNCTIONAL SUPERVISOR | MARY ANN HUDSPETH

STATE OF CALIFORNIA - DEPARTMENT OF TRANSPORTATION
Caltrans
ELECTRICAL DESIGN

LAST REVISION 09-10-15 | DATE PLOTTED => 09-DEC-2015 | TIME PLOTTED => 09:00

Dist	COUNTY	ROUTE	POST MILES TOTAL PROJECT	SHEET No.	TOTAL SHEETS
03	But, Col, ED, Nev, Pla, etc.	5,28,32, 50,51,etc.	Var	9	42

Jaskaran Singh Boparai 11-23-15
REGISTERED ELECTRICAL ENGINEER DATE

11-23-15
PLANS APPROVAL DATE

REGISTERED PROFESSIONAL ENGINEER
JASKARAN S. BOPARAI
No. E15056
Exp. 12-31-15
ELECTRICAL
STATE OF CALIFORNIA

THE STATE OF CALIFORNIA OR ITS OFFICERS OR AGENTS SHALL NOT BE RESPONSIBLE FOR THE ACCURACY OR COMPLETENESS OF SCANNED COPIES OF THIS PLAN SHEET.

CLOSED CIRCUIT TELEVISION LOCATIONS

LOCATION No.	Co	ROUTE	POST MILES	DIR	LOCATION	CCTV POLE LATITUDE	CCTV POLE LONGITUDE	CABINET LATITUDE	CABINET LONGITUDE	SERVICE ENCLOSURE LATITUDE	SERVICE ENCLOSURE LONGITUDE	Ctid No.	Exist PULL BOX (EA)	LEGEND
85	Sac	50	15.80	EB	HAZEL Ave	38.63065	-121.21641	38.63074	-121.21658	38.62961	-121.21647	03240500015760	3	3,4,5,12,54,59
86	ED	50	0.83		EL DORADO HILLS Blvd	38.64920	-121.09995	38.64924	-121.09940	38.64731	-121.11550	03240500000860		57,54, SEE SHEET E-6
87	Sac	50	22.3		NOT USED									
88	Sac	51	0.20	NB	T St	38.56025	-121.47264	38.56025	-121.47264	38.56266	-121.47097	03240510000201	1	3,4,5,7,12,54,57,8
89	Sac	51	0.65	Med	N St	38.56913	-121.46897	38.56924	-121.47261	38.56919	-121.46944	03240510000752	4	3,5,7,12,54,57,4,8
90	Sac	51	1.58	Med	E St	38.57914	-121.46478	38.57925	-121.46402	38.57839	-121.46408	03240510001579	6	3,5,7,12,54,57,4,8
91	Sac	51	2.43	SB	ELVAS UP	38.58572	-121.45134	38.58562	-121.45132	38.58561	-121.45136	03240510002430	2	3,4,5,12,54,58
92	Sac	51	3.44	SB	EXPOSITION Blvd	38.59714	-121.44386	38.59733	-121.44392	38.59675	-121.44222	03240510003137	1	3,4,5,7,12,54,58
93	Sac	51	4.07		ARDEN WAY	38.60458	-121.43334	38.60425	-121.43283	38.60249	-121.43343	03240510004068	4	3,5,7,12,54,58,4
94	Sac	51	4.67	NB	EL CAMINO Ave	38.61150	-121.42596	38.61163	-121.42570	38.62282	-121.42000	03240510004670	2	3,4,5,7,12,54,59
95	Sac	51	5.64	SB	MARCONI Ave	38.62313	-121.41960	38.62314	-121.41952	38.61304	-121.42534	03240510005640	2	3,4,5,12,54,57
96	Sac	51	6.80	NB	FULTON Ave	38.63069	-121.40126	38.63056	-121.40131	38.63148	-121.40174	03240510006795	4	3,4,5,7,12,54,57
97	Sac	51	8.00	Med	WATT Ave	38.63996	-121.38316	38.63807	-121.38390	38.64026	-121.38433	03240510007971	4	3,5,12,54,58,4
98	Sac	80	M0.17	Med	BRYTE BEND BRIDGE	38.60305	-121.54479	38.60314	-121.54476	38.60301	-121.54484	0324080M000120	1	3,8,12,54,57,4,5
99	Sac	80	M2.55	Med	Rte 5 (SAN JUAN)	38.62511	-121.51714	38.62497	-121.51784	38.62497	-121.51784	0324080M002552	3	3,5,12,54,58,4
100	Sac	80	M3.6		TRUXEL Rd	38.63383	-121.50094	38.93340	-121.50235	38.63717	-121.50260	0324080M003660	7	3,5,12,54,59,4
101	Sac	80	M4.9		NORTHGATE Blvd	38.64065	-121.47793	38.63976	-121.47891	38.63686	-121.47562	0324080M004983	8	3,5,12,54,59,4
102	Sac	80	M6.10		NORWOOD AVE OC	38.64175	-121.45707	38.64197	-121.45837	38.64247	-121.45664	0324080M006100	6	3,4,5,12,54,58
103	Sac	80	M7.6		RALEY Blvd	38.64325	-121.42935	38.64345	-121.42947	38.64326	-121.42954	0324080M007600	2	3,4,5,12,54,59
104	Sac	80	M10.30	WB	WATT Ave	38.64615	-121.38325	38.64580	-121.38383	38.64713	-121.38272	0324080M010361	2	3,5,12,54,58,4
105	Sac	80	11.90	Med	Rte 51	38.65428	-121.36734	38.65407	-121.36710	38.66073	-121.35806	0324080M012100	3	3,4,5,7,12,54,58,8
106	Sac	80	13.70	Med	FOOTHILL FARMS POC	38.67491	-121.34525	38.67462	-121.34486	38.67461	-121.34477	03240800013700	2	3,4,5,12,54,57
107	Sac	80	14.22	Med	GREENBACK Ln	38.68288	-121.33656	38.68181	-121.33636	38.68463	-121.33952	03240800014105	5	3,5,12,54,58,4
108	Sac	80	16.72	WB	ANTELOPE Rd	38.70740	-121.31033	38.70700	-121.31068	38.70711	-121.31294	03240800016720	0	3,4,5,12,54,58
109	Sac	99	2.9		TWIN CITIES Rd, SOUTH OF COUNTY LINE	38.28174	-121.30690	38.28279	-121.30694	38.28291	-121.30691	03240990002900	1	3,4,5,12,54,57
110	Sac	99	10.10	NB	GRANTLINE Rd	38.37641	-121.36192	38.37680	-121.36302	38.37449	-121.36115	03240990009872	5	3,5,12,54,57,4
111	Sac	99	15.55		SHELDON Rd, NORTH OF JACINTO	38.44688	-121.40608	38.44685	-121.40606	38.44653	-121.40633	03240990015518	2	3,4,5,12,54,58
112	Sac	99	17.69	Med	MACK Rd	38.47431	-121.42270	38.47399	-121.42314	38.47388	-121.42356	03240990017690	2	3,4,5,7,12,54,59
113	Sac	99	19.43	Med	FLORIN Rd	38.49629	-121.44604	38.49519	-121.44418	38.49525	-121.44682	03240990020861	5	3,5,7,12,54,58,4
114	Sac	99	20.86	SB	47th Ave	38.51038	-121.46023	38.51004	-121.46023	38.51201	-121.45996	03240990022076	2	3,4,5,7,12,54,58
115	Sac	99	21.94	SB	FRUITRIDGE Rd	38.52495	-121.46762	38.52457	-121.46791	38.52634	-121.46783	03240990023120	1	3,5,7,12,54,58,4
116	Sac	99	23.12	Med	12th Ave	38.54113	-121.47363	38.54137	-121.47426	38.54107	-121.47423	03240990023120	2	3,4,5,7,12,54,58
117	Sac	99	23.90	Med	4th Ave	38.55211	-121.47399	38.55217	-121.47363	38.55254	-121.47273	03240990023896	2	3,4,8,7,12,54,57,5
118	Sac	99	33.8	SB	NORTH OF ELKHORN Blvd	38.69203	-121.54042	38.69196	-121.54043	38.68599	-121.53594	03240990033400	2	3,5 12,54,57,4
119	Sut	70	0.2	SB	Rte 99	38.85058	-121.54415	38.85058	-121.54415	38.84498	-121.54315	03220700001200	0	3,4,1,54,57,5
120	Yol	5	R0.83	Med	ELKHORN Blvd (RWIS)	38.67345	-121.64168	38.67345	-121.64168	38.67616	-121.63708	0322005R000674	0	3,4,11,54
121	Yol	50	1.20	Med	HARBOR Blvd	38.57500	-121.54871	38.57553	-121.64775	38.57654	-121.54914	03220500001205	0	3,5,12,54,59,4
122	Yol	50	2.50	EB	JEFFERSON Blvd	38.57698	-121.52680	38.57685	-121.52687	38.57680	-121.52674	03220500001240	1	3,4,5,12,54,58
123	Yol	80	5.83		CHILES Rd	38.56364	-121.63883	38.56364	-121.63888	38.56505	-121.63971	03220800008967	1	3,4,5,12,54,59
124	Yol	80	9.1	WB	WEST CAPITAL Ave (RWIS)	38.57397	-121.58183	38.57400	-121.58179	38.57450	-121.58222	03220800009250	0	3,4,11,12,54,6
125	Yub	70	13.94	NB	FEATHER RIVER Blvd	39.12165	-121.57214	39.12165	-121.57214	39.12897	-121.58396	03160700013600	0	3,4,14,54,57

CLOSED CIRCUIT TELEVISION SYSTEM

E-4

STATE OF CALIFORNIA - DEPARTMENT OF TRANSPORTATION
Caltrans®
ELECTRICAL DESIGN

FUNCTIONAL SUPERVISOR: MARY ANN HUDSPETH
CALCULATED-DESIGNED BY: YOUNG TON
CHECKED BY: JASKARAN S. BOPARAI
REVISED BY
DATE REVISED

LAST REVISION 10-01-15 | DATE PLOTTED => 09-DEC-2015 | TIME PLOTTED => 09:00

Dist	COUNTY	ROUTE	POST MILES TOTAL PROJECT	SHEET No.	TOTAL SHEETS
03	But, Col, ED, Nev, Pla, etc.	5,28,32, 50,51,etc.	Var	10	42

Rostam Gharaee-Kermani 11-23-15
REGISTERED ELECTRICAL ENGINEER DATE

11-23-15
PLANS APPROVAL DATE

REGISTERED PROFESSIONAL ENGINEER
ROSTAM GHARAEE-KERMANI
No. E16906
Exp. 06-30-17
ELECTRICAL
STATE OF CALIFORNIA

THE STATE OF CALIFORNIA OR ITS OFFICERS OR AGENTS SHALL NOT BE RESPONSIBLE FOR THE ACCURACY OR COMPLETENESS OF SCANNED COPIES OF THIS PLAN SHEET.

NOTE:

FOR ACCURATE RIGHT OF WAY DATA, CONTACT
RIGHT OF WAY ENGINEERING AT THE DISTRICT OFFICE.

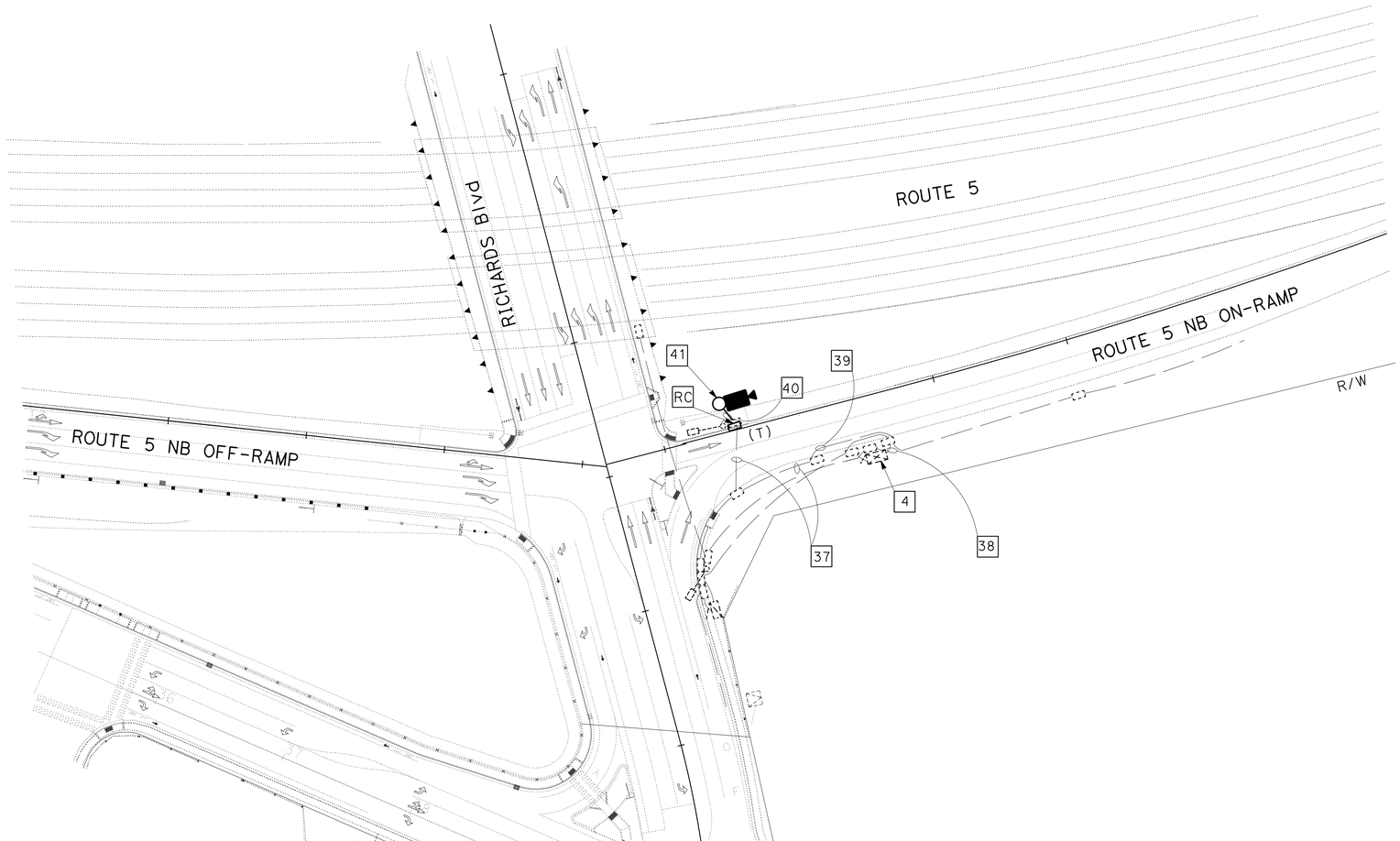

(LOCATION 68)

CLOSED CIRCUIT TELEVISION SYSTEM

APPROVED FOR ELECTRICAL WORK ONLY

SCALE: 1" = 50'

E-5

STATE OF CALIFORNIA - DEPARTMENT OF TRANSPORTATION
Caltrans
ELECTRICAL DESIGN

FUNCTIONAL SUPERVISOR: MARY ANN HUDSPETH
CALCULATED-DESIGNED BY: ROSTAM GHARAEE-KERMANI
CHECKED BY: MARY ANN HUDSPETH
REVISED BY
DATE REVISED

LAST REVISION 11-19-15
DATE PLOTTED => 09-DEC-2015
TIME PLOTTED => 09:00

Dist	COUNTY	ROUTE	POST MILES TOTAL PROJECT	SHEET No.	TOTAL SHEETS
03	But, Col, ED, Nev, Pla, etc.	5,28,32, 50,51,etc.	Var	11	42

Rostam Gharaee-Kermani 11-23-15
REGISTERED ELECTRICAL ENGINEER DATE

11-23-15
PLANS APPROVAL DATE

REGISTERED PROFESSIONAL ENGINEER
ROSTAM GHARAEE-KERMANI
No. E16906
Exp. 06-30-17
ELECTRICAL
STATE OF CALIFORNIA

THE STATE OF CALIFORNIA OR ITS OFFICERS OR AGENTS SHALL NOT BE RESPONSIBLE FOR THE ACCURACY OR COMPLETENESS OF SCANNED COPIES OF THIS PLAN SHEET.

NOTE:

FOR ACCURATE RIGHT OF WAY DATA, CONTACT RIGHT OF WAY ENGINEERING AT THE DISTRICT OFFICE.

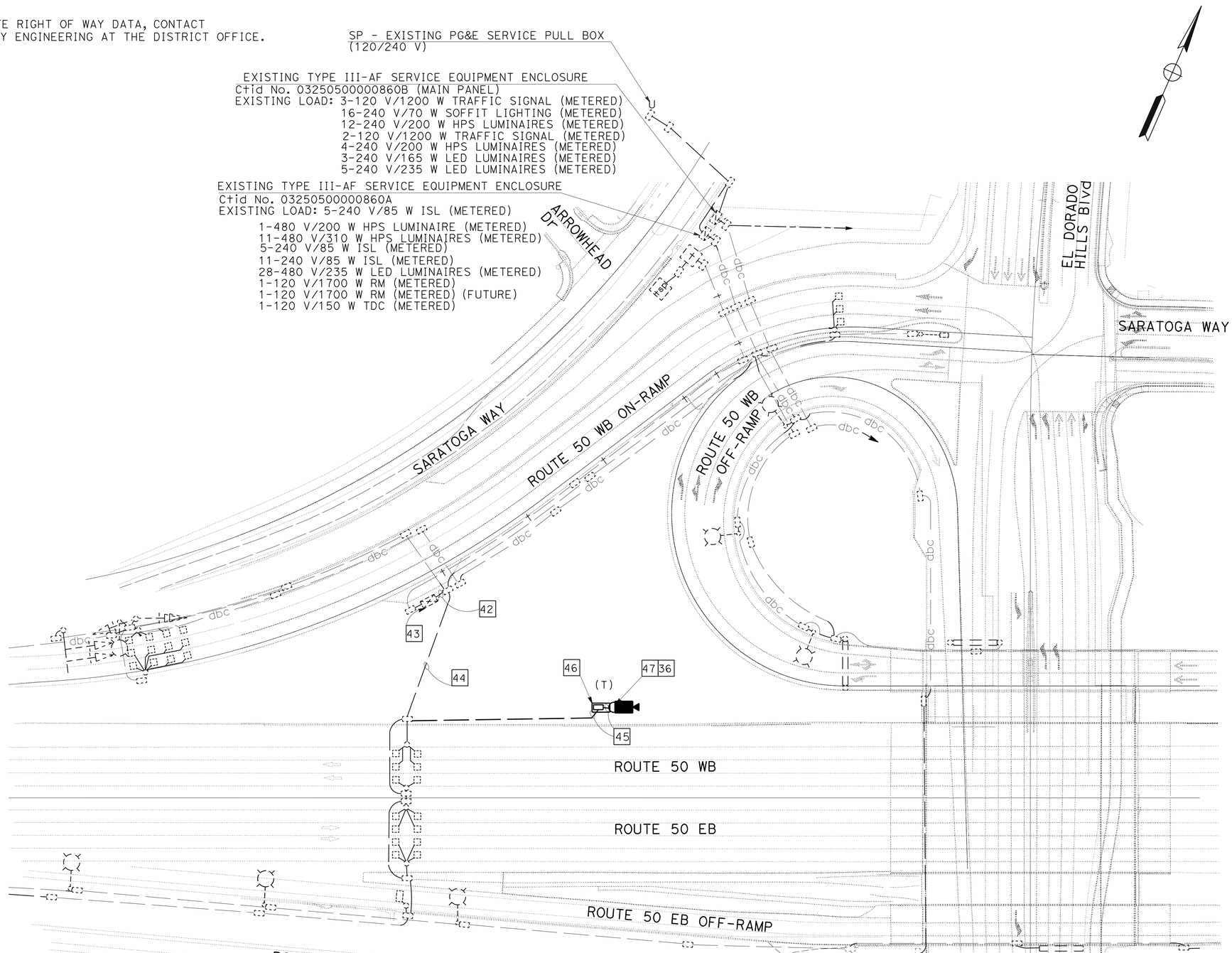

(LOCATION 86)

CLOSED CIRCUIT TELEVISION SYSTEM

SCALE: 1" = 50'

E-6

APPROVED FOR ELECTRICAL WORK ONLY

STATE OF CALIFORNIA - DEPARTMENT OF TRANSPORTATION
Caltrans® ELECTRICAL DESIGN

FUNCTIONAL SUPERVISOR: MARY ANN HUDSPETH
CALCULATED-DESIGNED BY: ROSTAM GHARAEE-KERMANI
CHECKED BY: MARY ANN HUDSPETH
REVISED BY
DATE REVISED

LAST REVISION 11-19-15
DATE PLOTTED => 09-DEC-2015
TIME PLOTTED => 09:00

Dist	COUNTY	ROUTE	POST MILES TOTAL PROJECT	SHEET No.	TOTAL SHEETS
03	But, Col, ED, Nev, Pla, etc.	5,28,32, 50,51,etc.	Var	12	42

Jaskaran Singh Boparai 11-23-15
REGISTERED ELECTRICAL ENGINEER DATE

11-23-15
PLANS APPROVAL DATE

REGISTERED PROFESSIONAL ENGINEER
JASKARAN S. BOPARAI
No. E15056
Exp. 12-31-15
ELECTRICAL
STATE OF CALIFORNIA

THE STATE OF CALIFORNIA OR ITS OFFICERS OR AGENTS SHALL NOT BE RESPONSIBLE FOR THE ACCURACY OR COMPLETENESS OF SCANNED COPIES OF THIS PLAN SHEET.

NOTE (THIS SHEET ONLY):
FOR DETAILS NOT SHOWN, SEE STANDARD PLANS: SHEETS ES-16A, RSP ES-16B, RSP ES-16C, ES-16D AND SHEET SES-1.

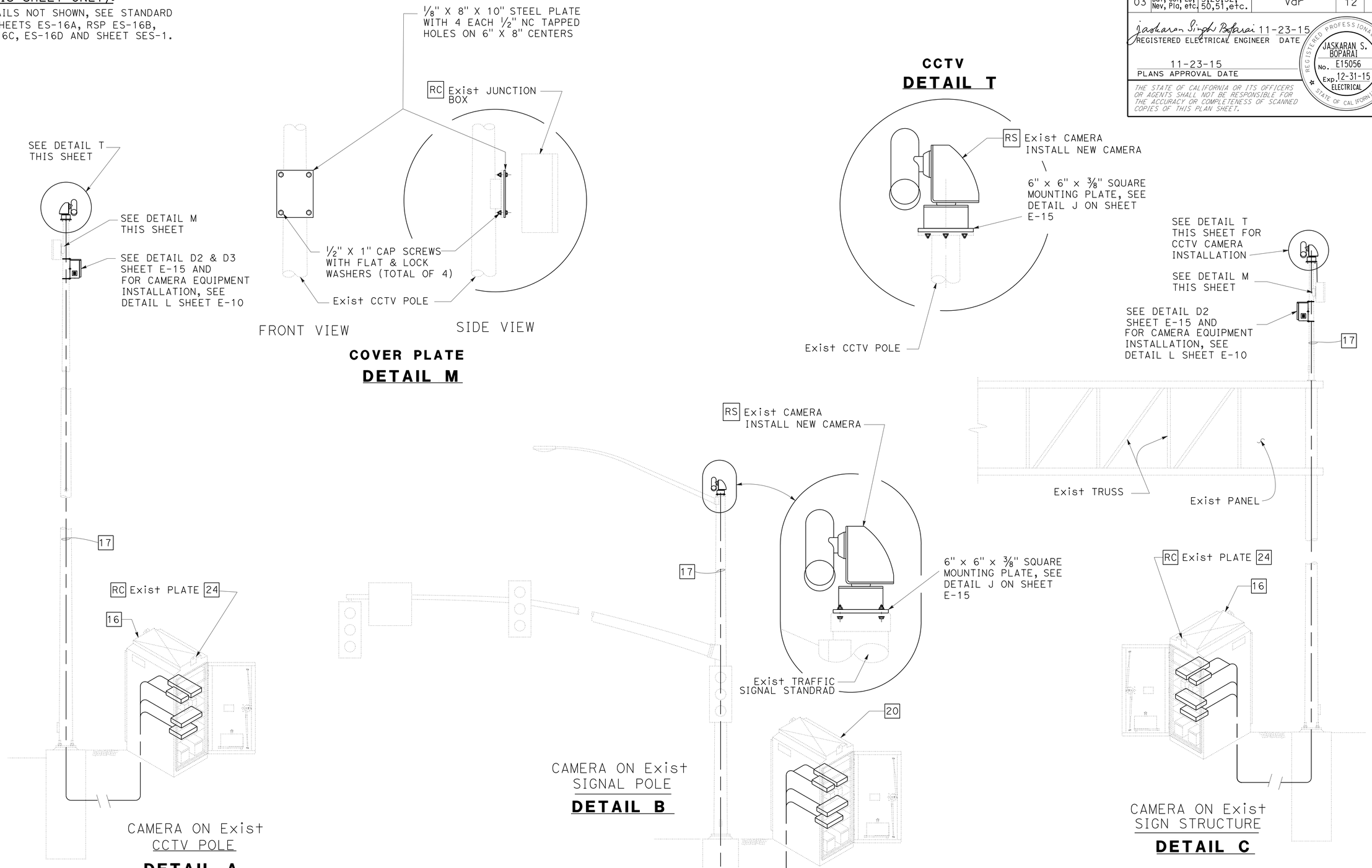

CLOSED CIRCUIT TELEVISION SYSTEM

NO SCALE

E-7

STATE OF CALIFORNIA - DEPARTMENT OF TRANSPORTATION
Caltrans®
ELECTRICAL DESIGN

FUNCTIONAL SUPERVISOR: MARY ANN HUDSPETH
CALCULATED-DESIGNED BY: JASKARAN S. BOPARAI
CHECKED BY: YOUNG TON
REVISED BY
DATE REVISED

LAST REVISION 10-01-15 | DATE PLOTTED => 09-DEC-2015 | TIME PLOTTED => 09:00

Dist	COUNTY	ROUTE	POST MILES TOTAL PROJECT	SHEET No.	TOTAL SHEETS
03	But, Col, ED, Nev, Pla, etc.	5,28,32, 50,51,etc.	Var	13	42

Jaskaran Singh Boparai 11-23-15
REGISTERED ELECTRICAL ENGINEER DATE

11-23-15
PLANS APPROVAL DATE

REGISTERED PROFESSIONAL ENGINEER JASKARAN S. BOPARAI No. E15056 Exp. 12-31-15 ELECTRICAL STATE OF CALIFORNIA

THE STATE OF CALIFORNIA OR ITS OFFICERS OR AGENTS SHALL NOT BE RESPONSIBLE FOR THE ACCURACY OR COMPLETENESS OF SCANNED COPIES OF THIS PLAN SHEET.

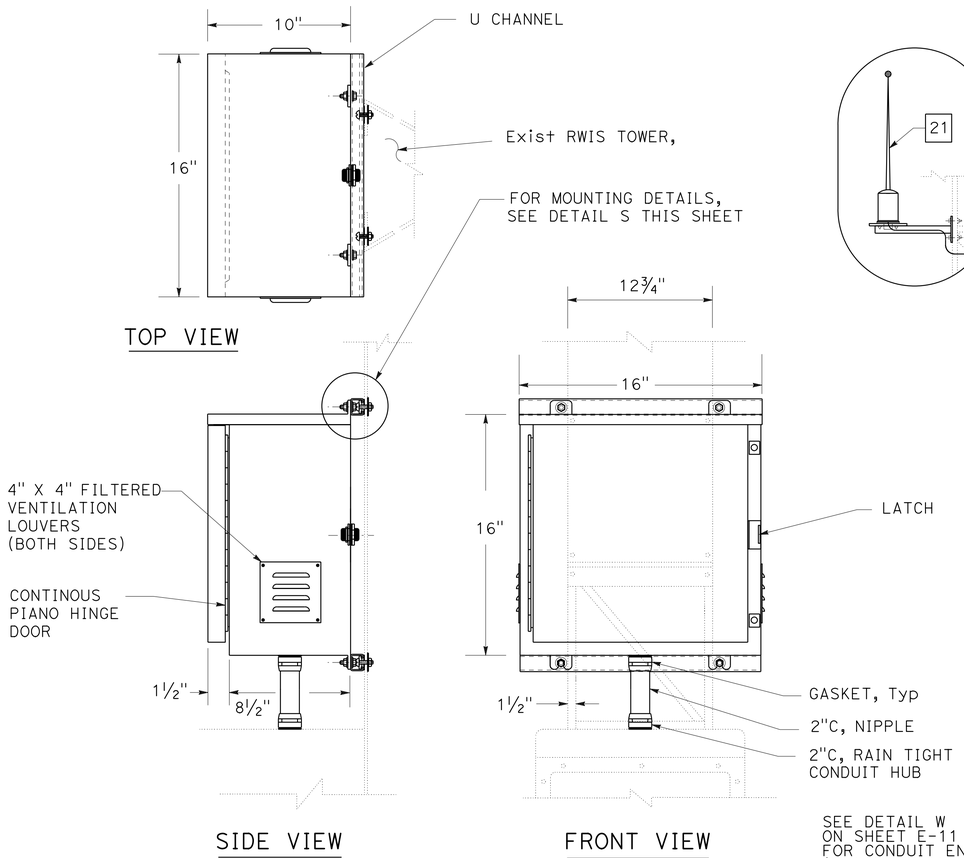

UNIVERSAL JUNCTION BOX MOUNTING

DETAIL G

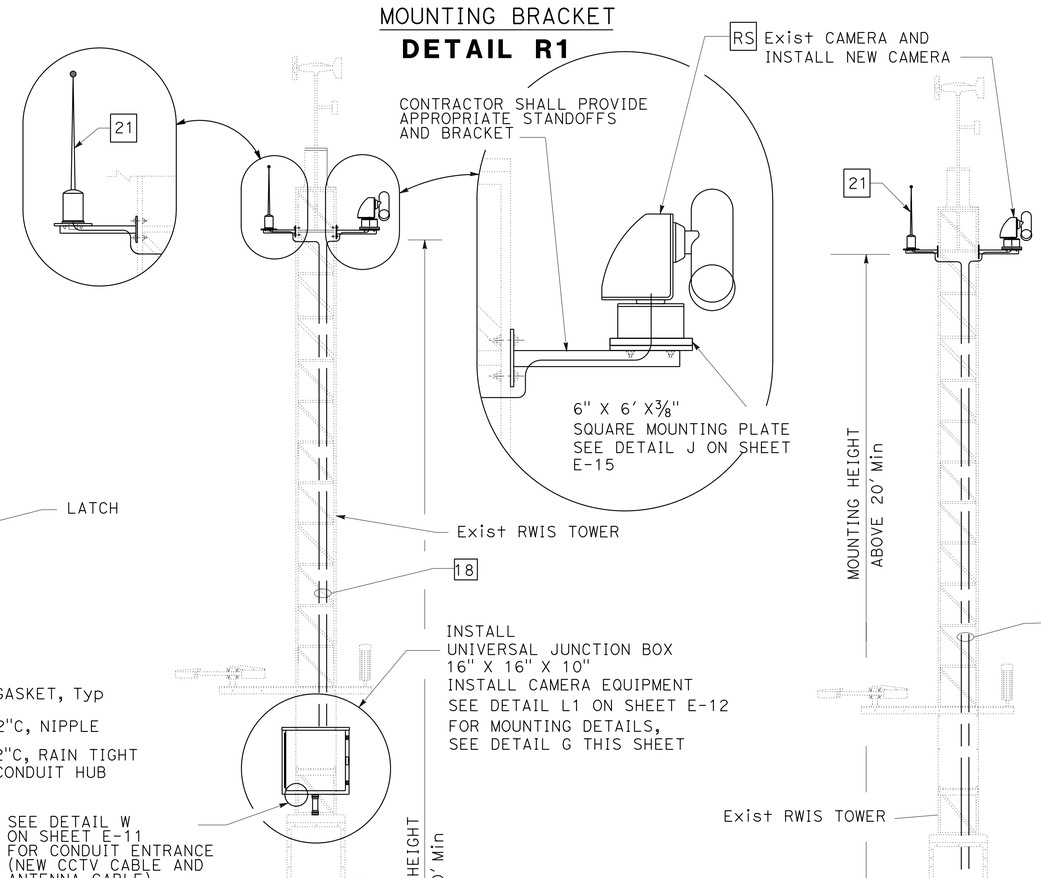

NOTE(THIS SHEET ONLY):

1. FOR DETAILS NOT SHOWN, SEE STANDARD PLANS: SHEETS ES-16A, RSP ES-16B, ES-16C, RSP ES-16D, AND SHEET SES-1.

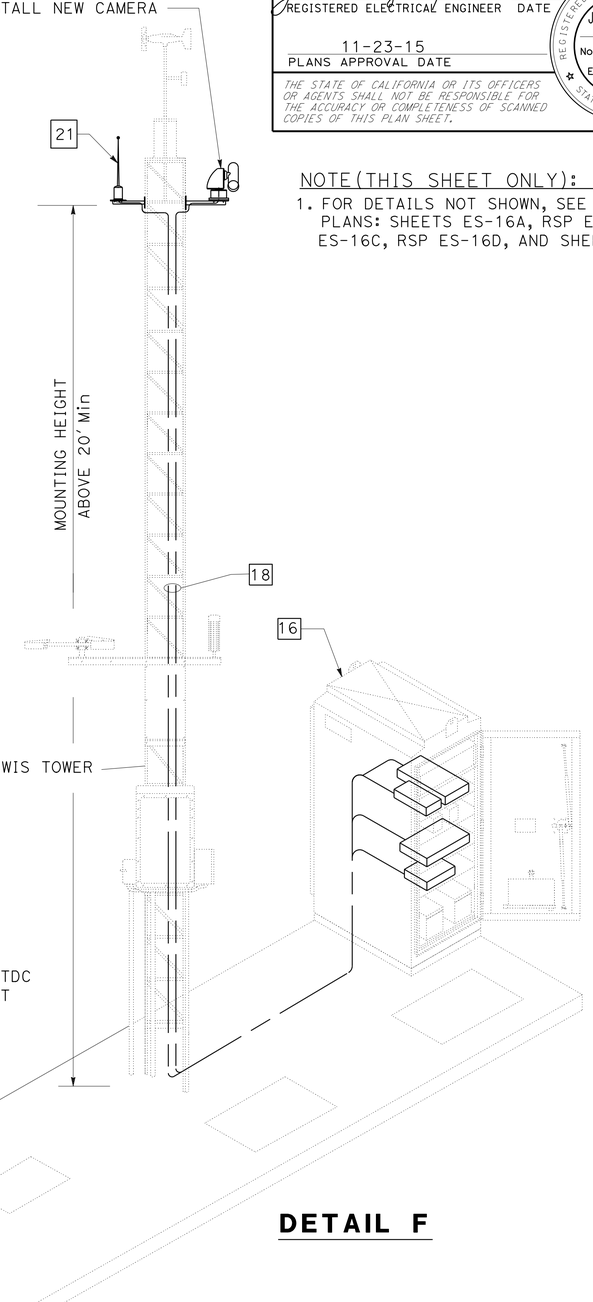

DETAIL E

DETAIL F

CAMERA ON Exist RWIS TOWER

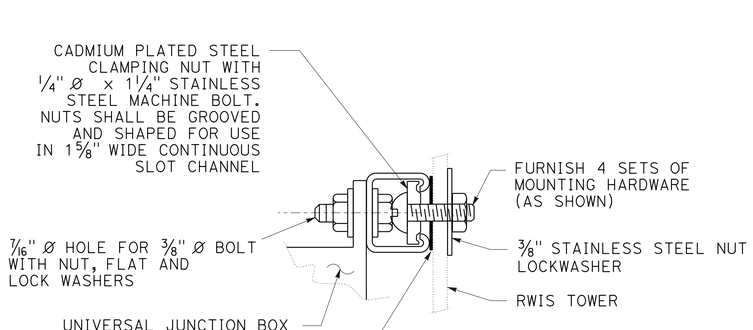

DETAIL S

CLOSED CIRCUIT TELEVISION SYSTEM

NO SCALE

E-8

STATE OF CALIFORNIA - DEPARTMENT OF TRANSPORTATION
Caltrans® ELECTRICAL DESIGN

FUNCTIONAL SUPERVISOR: MARY ANN HUDSPETH
CALCULATED-DESIGNED BY: JASKARAN S. BOPARAI
CHECKED BY
REVISED BY
DATE REVISED

LAST REVISION 10-01-15
DATE PLOTTED => 09-DEC-2015
TIME PLOTTED => 09:00

Dist	COUNTY	ROUTE	POST MILES TOTAL PROJECT	SHEET No.	TOTAL SHEETS
03	But, Col, ED, Nev, Pla, etc.	5,28,32, 50,51,etc.	Var	14	42

Jaskaran Singh Boparai 11-23-15
REGISTERED ELECTRICAL ENGINEER DATE

11-23-15
PLANS APPROVAL DATE

REGISTERED PROFESSIONAL ENGINEER
JASKARAN S. BOPARAI
No. E15056
Exp. 12-31-15
ELECTRICAL
STATE OF CALIFORNIA

THE STATE OF CALIFORNIA OR ITS OFFICERS OR AGENTS SHALL NOT BE RESPONSIBLE FOR THE ACCURACY OR COMPLETENESS OF SCANNED COPIES OF THIS PLAN SHEET.

NOTE (THIS SHEET ONLY):

PROVIDE 6-5' LONG CAT 6 CABLES, AND 2-3' LONG RJ-11 TELEPHONE PATCH CABLES IN EACH CABINET.

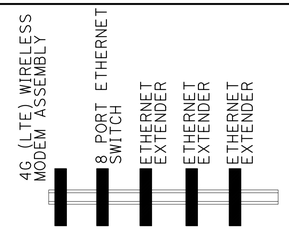

EQUIPMENT INSTALLATION ON DIN RAIL
(TYPICAL)
DETAIL I

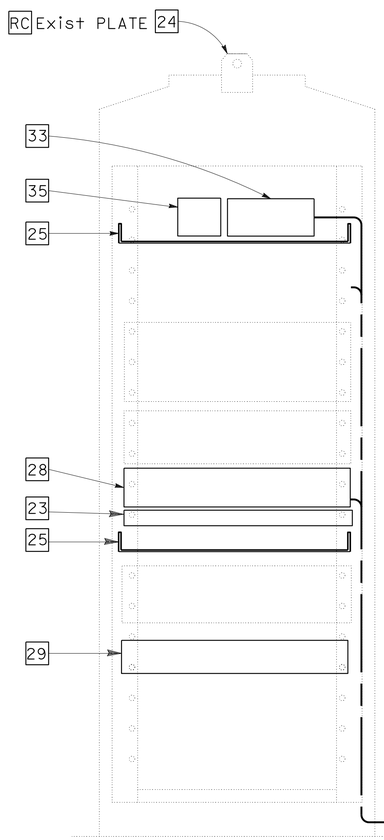

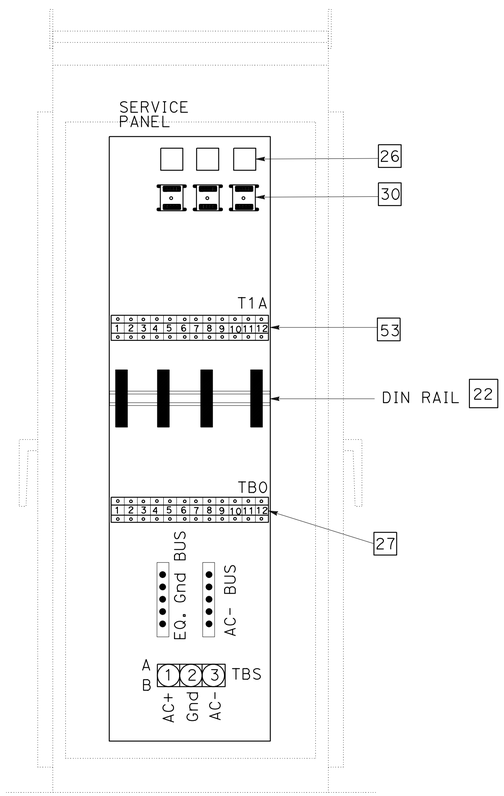

ITS CABINET LAYOUT DETAIL (TYPICAL)
(FRONT VIEW)
334 CONTROLLER CABINET

ITS CABINET ASSEMBLY LAYOUT (TYPICAL)
(SIDE VIEW)
334 CONTROLLER CABINET

DETAIL D

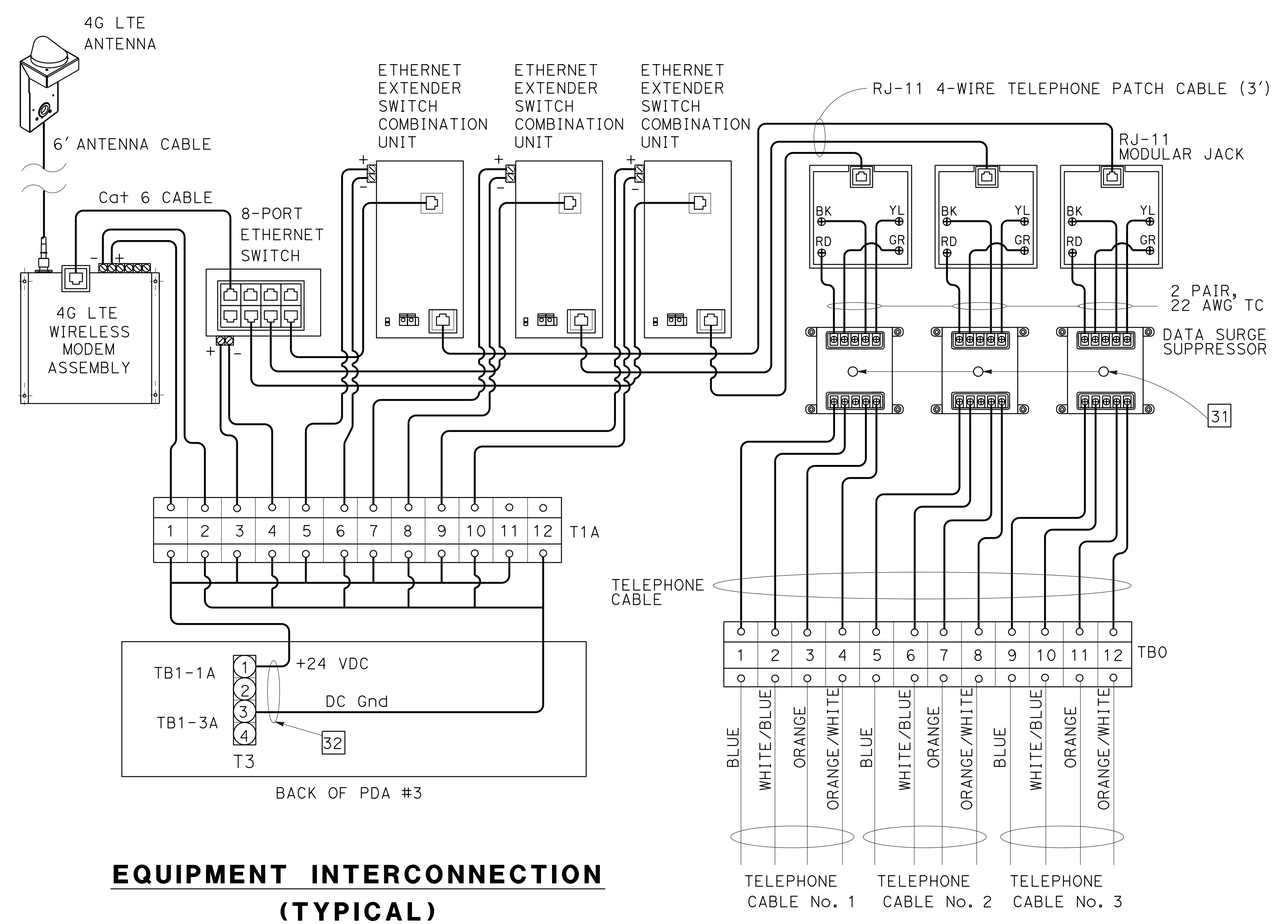

EQUIPMENT INTERCONNECTION
(TYPICAL)

DETAIL H

CLOSED CIRCUIT TELEVISION SYSTEM
NO SCALE

E-9

STATE OF CALIFORNIA - DEPARTMENT OF TRANSPORTATION
Caltrans
ELECTRICAL DESIGN
FUNCTIONAL SUPERVISOR: MARY ANN HUDSPETH
CALCULATED-DESIGNED BY: YOUNG TON
CHECKED BY: JASKARAN S. BOPARAI
REVISED BY
DATE REVISED

LAST REVISION 10-28-15
DATE PLOTTED => 09-DEC-2015
TIME PLOTTED => 09:00

Dist	COUNTY	ROUTE	POST MILES TOTAL PROJECT	SHEET No.	TOTAL SHEETS
03	But, Col, ED, Nev, Pla, etc.	5,28,32, 50,51,etc.	Var	15	42

Jaskaran Singh Boparai 11-23-15
REGISTERED ELECTRICAL ENGINEER DATE

11-23-15
PLANS APPROVAL DATE

REGISTERED PROFESSIONAL ENGINEER JASKARAN S. BOPARAI No. E15056 Exp. 12-31-15 ELECTRICAL STATE OF CALIFORNIA

THE STATE OF CALIFORNIA OR ITS OFFICERS OR AGENTS SHALL NOT BE RESPONSIBLE FOR THE ACCURACY OR COMPLETENESS OF SCANNED COPIES OF THIS PLAN SHEET.

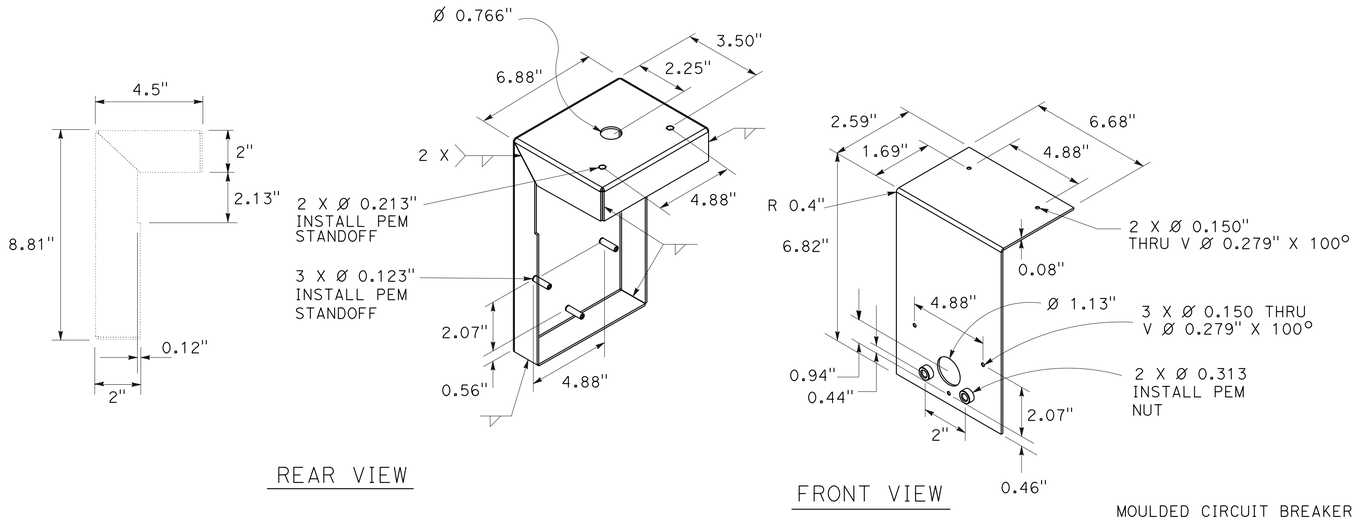

REAR VIEW

FRONT VIEW

BRACKET

* THE CONTRACTOR SHALL SUBMIT A PROTOTYPE OF BRACKET TO THE ENGINEER FOR APPROVAL.

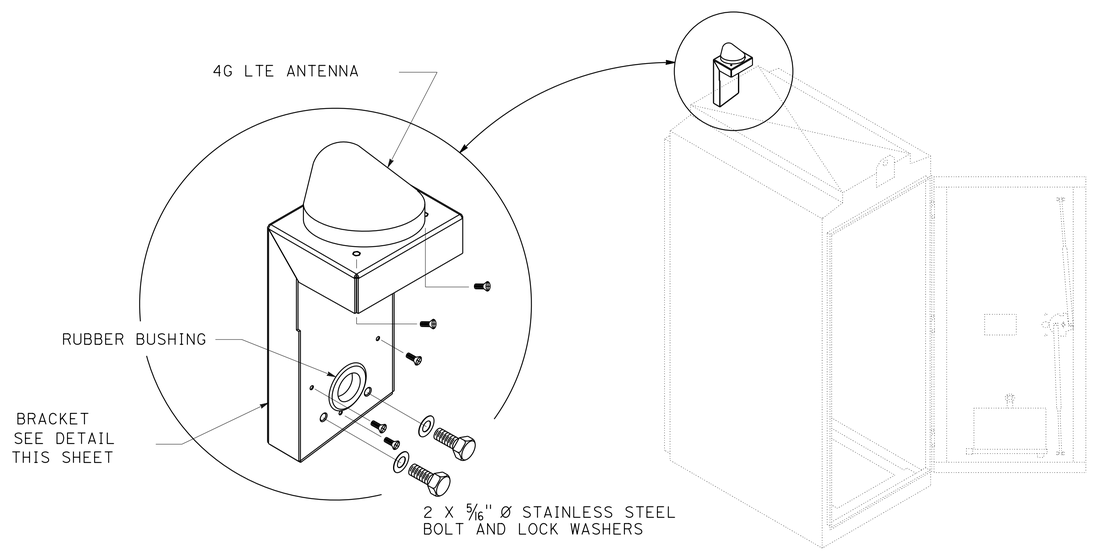

4G (LTE) ANTENNA INSTALLATION ON Exist CABINET

DETAIL K

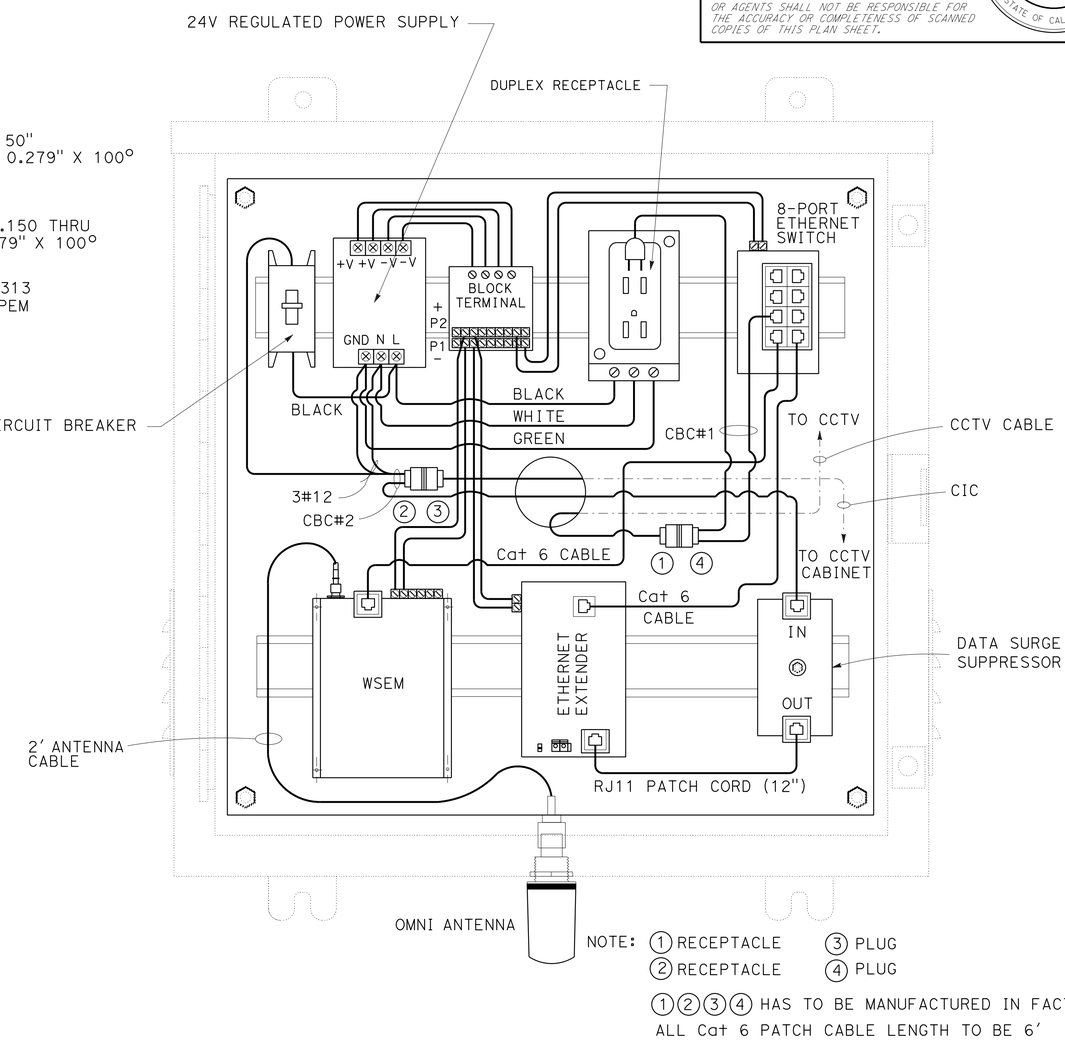

NOTE: ① RECEPTACLE ③ PLUG
② RECEPTACLE ④ PLUG

①②③④ HAS TO BE MANUFACTURED IN FACTORY
ALL Cat 6 PATCH CABLE LENGTH TO BE 6'

CAMERA EQUIPMENT INSTALLATION INSIDE UNIVERSAL JUNCTION BOX

* THE CONTRACTOR SHALL SUBMIT A PROTOTYPE OF THE EQUIPMENT INSTALLATION INSIDE THE UNIVERSAL JUNCTION BOX TO THE ENGINEER FOR APPROVAL.

DETAIL L

CLOSED CIRCUIT TELEVISION SYSTEM

NO SCALE

E-10

REVISED BY	DATE REVISED
YOUNG TON	JASKARAN S. BOPARAI
CALCULATED-DESIGNED BY	CHECKED BY
FUNCTIONAL SUPERVISOR	MARY ANN HUDSPETH

STATE OF CALIFORNIA - DEPARTMENT OF TRANSPORTATION
Caltrans
ELECTRICAL DESIGN

LAST REVISION 10-28-15 | DATE PLOTTED => 09-DEC-2015 | TIME PLOTTED => 09:03

Dist	COUNTY	ROUTE	POST MILES TOTAL PROJECT	SHEET No.	TOTAL SHEETS
03	But, Col, ED, Nev, Pla, etc.	5,28,32, 50,51,etc.	Var	16	42

Jaskaran Singh Boparai 11-23-15
REGISTERED ELECTRICAL ENGINEER DATE

11-23-15
PLANS APPROVAL DATE

REGISTERED PROFESSIONAL ENGINEER
JASKARAN S. BOPARAI
No. E15056
Exp. 12-31-15
ELECTRICAL
STATE OF CALIFORNIA

THE STATE OF CALIFORNIA OR ITS OFFICERS OR AGENTS SHALL NOT BE RESPONSIBLE FOR THE ACCURACY OR COMPLETENESS OF SCANNED COPIES OF THIS PLAN SHEET.

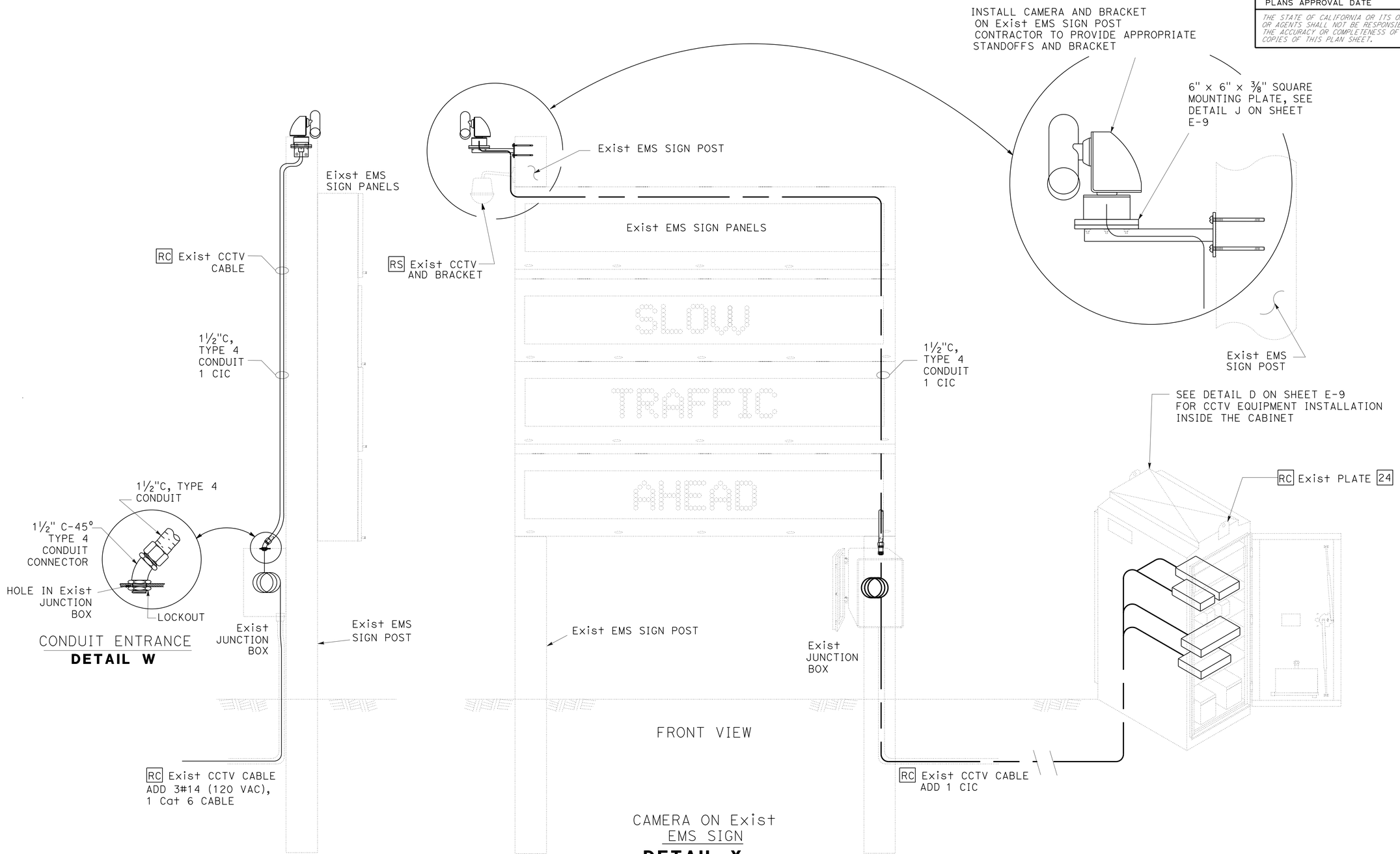

CONDUIT ENTRANCE
DETAIL W

SIDE VIEW

FRONT VIEW

CAMERA ON Exist EMS SIGN
DETAIL X

CLOSED CIRCUIT TELEVISION SYSTEM

NO SCALE

E-11

STATE OF CALIFORNIA - DEPARTMENT OF TRANSPORTATION
Caltrans
ELECTRICAL DESIGN

FUNCTIONAL SUPERVISOR: MARY ANN HUDSPETH
CALCULATED-DESIGNED BY: JASKARAN S. BOPARAI
CHECKED BY: YOUNG TON
REVISED BY
DATE REVISED

LAST REVISION 09-10-15
DATE PLOTTED => 09-DEC-2015
TIME PLOTTED => 09:00

Dist	COUNTY	ROUTE	POST MILES TOTAL PROJECT	SHEET No.	TOTAL SHEETS
03	But, Col, ED, Nev, Pla, etc.	5,28,32, 50,51,etc.	Var	17	42

Jaskaran Singh Boparai 11-23-15
REGISTERED ELECTRICAL ENGINEER DATE

11-23-15
PLANS APPROVAL DATE

REGISTERED PROFESSIONAL ENGINEER
JASKARAN S. BOPARAI
No. E15056
Exp. 12-31-15
ELECTRICAL
STATE OF CALIFORNIA

THE STATE OF CALIFORNIA OR ITS OFFICERS OR AGENTS SHALL NOT BE RESPONSIBLE FOR THE ACCURACY OR COMPLETENESS OF SCANNED COPIES OF THIS PLAN SHEET.

NOTE (THIS SHEET ONLY):

PROVIDE 6-5′ LONG Cat 6 CABLES, AND 2-3′ LONG RJ-11 4-WIRE TELEPHONE PATCH CABLES IN EACH CABINET.

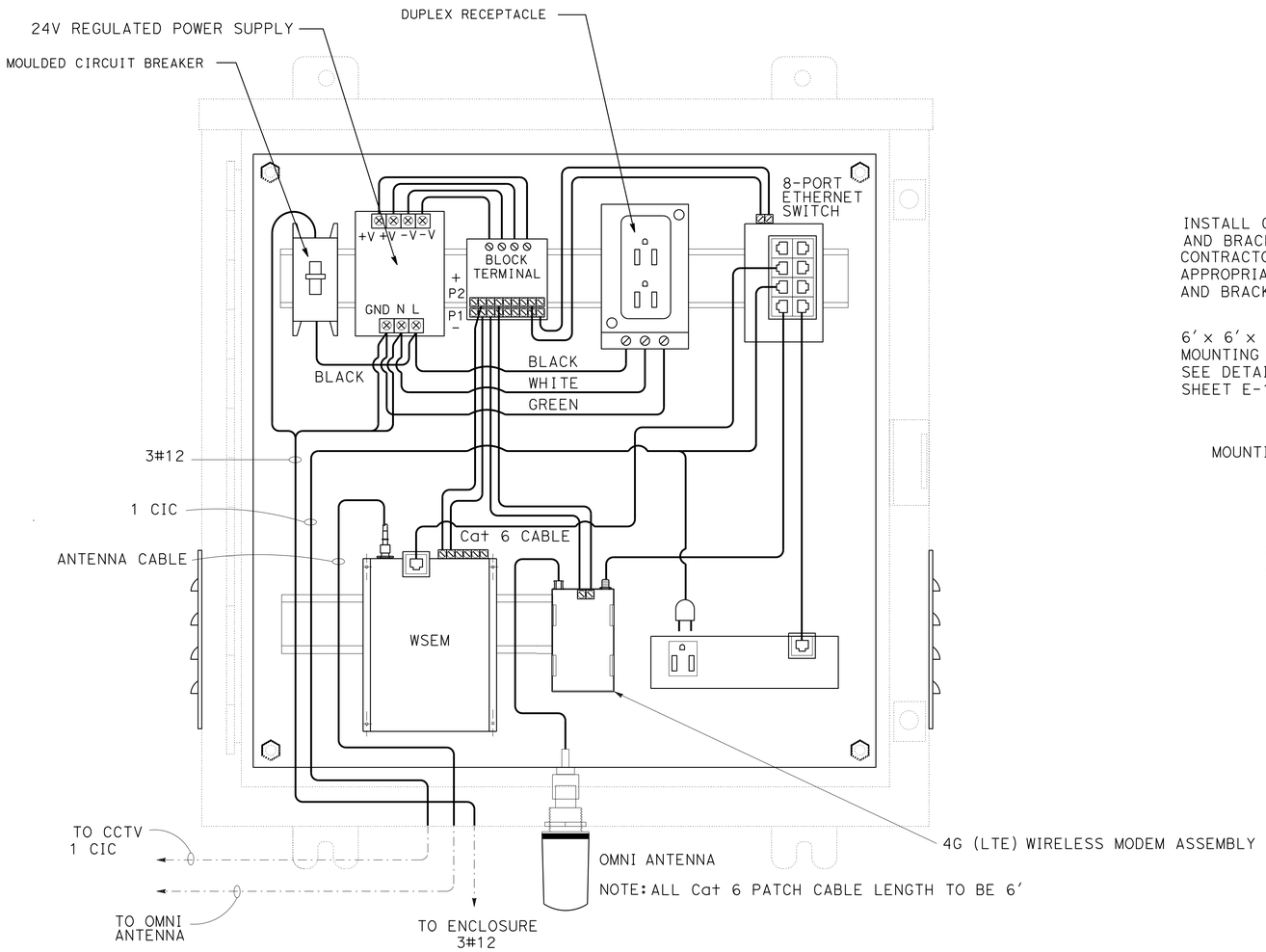

NOTE: ALL Cat 6 PATCH CABLE LENGTH TO BE 6′

CAMERA EQUIPMENT INSTALLATION INSIDE UNIVERSAL JUNCTION BOX @ RWIS TOWER

* THE CONTRACTOR SHALL SUBMIT A PROTOTYPE OF THE EQUIPMENT INSTALLATION INSIDE THE UNIVERSAL JUNCTION BOX TO THE ENGINEER FOR APPROVAL.

DETAIL L1

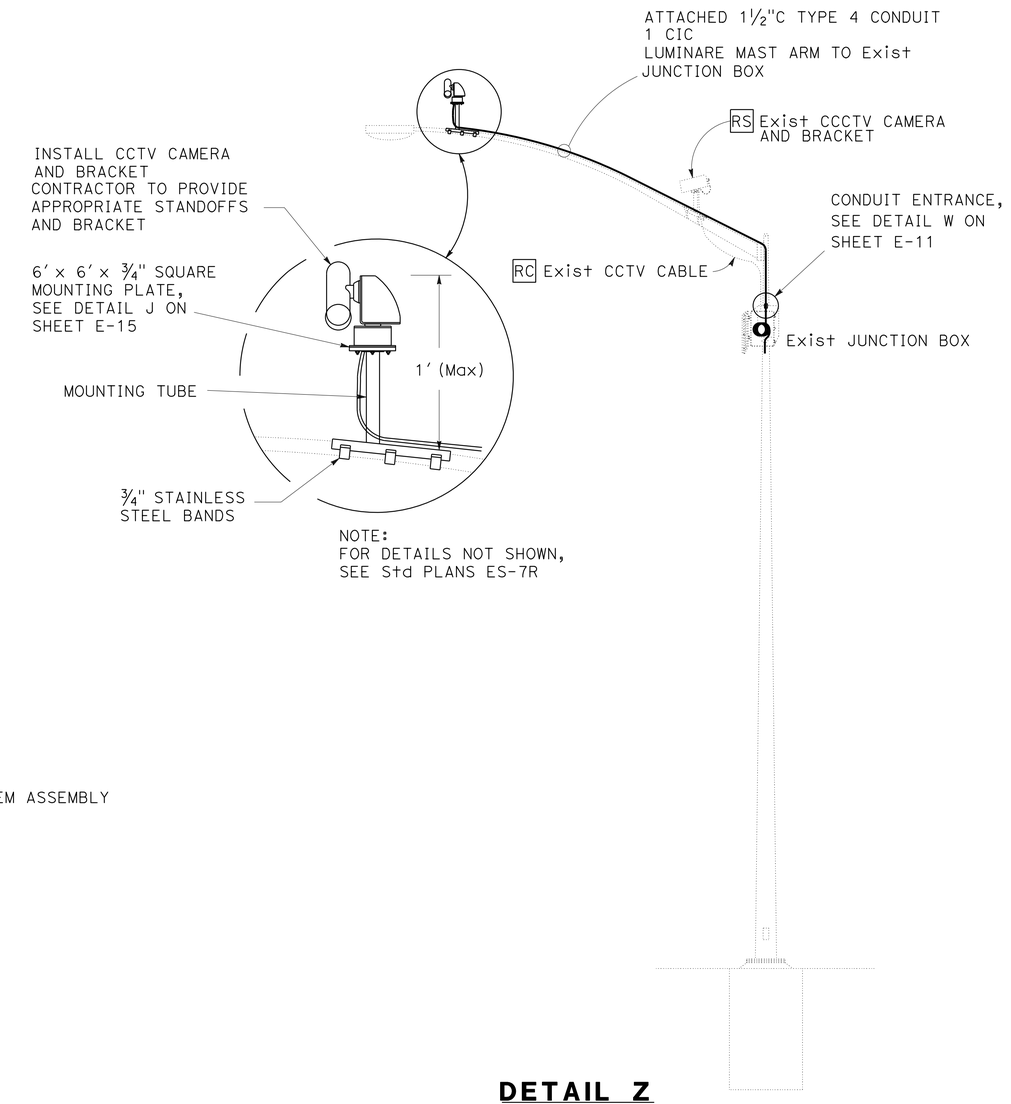

NOTE:
FOR DETAILS NOT SHOWN, SEE Std PLANS ES-7R

DETAIL Z

CLOSED CIRCUIT TELEVISION SYSTEM

NO SCALE

E-12

STATE OF CALIFORNIA - DEPARTMENT OF TRANSPORTATION
Caltrans
ELECTRICAL DESIGN

FUNCTIONAL SUPERVISOR: MARY ANN HUDSPETH
CALCULATED-DESIGNED BY: YOUNG TON
CHECKED BY: JASKARAN S. BOPARAI
REVISED BY
DATE REVISED

LAST REVISION 10-30-15
DATE PLOTTED => 09-DEC-2015
TIME PLOTTED => 09:00

Dist	COUNTY	ROUTE	POST MILES TOTAL PROJECT	SHEET No.	TOTAL SHEETS
03	But, Col, ED, Nev, Pla, etc.	5,28,32, 50,51,etc.	Var	18	42

Jaskaran Singh Boparai 11-23-15
REGISTERED ELECTRICAL ENGINEER DATE

11-23-15
PLANS APPROVAL DATE

REGISTERED PROFESSIONAL ENGINEER
JASKARAN S. BOPARAI
No. E15056
Exp. 12-31-15
ELECTRICAL
STATE OF CALIFORNIA

THE STATE OF CALIFORNIA OR ITS OFFICERS OR AGENTS SHALL NOT BE RESPONSIBLE FOR THE ACCURACY OR COMPLETENESS OF SCANNED COPIES OF THIS PLAN SHEET.

NOTE (THIS SHEET ONLY):

FOR DETAILS NOT SHOWN, SEE STANDARD PLANS: SHEETS ES-16A, RSP ES-16B, RSP ES-16C, ES-16D AND SHEET SES-1.

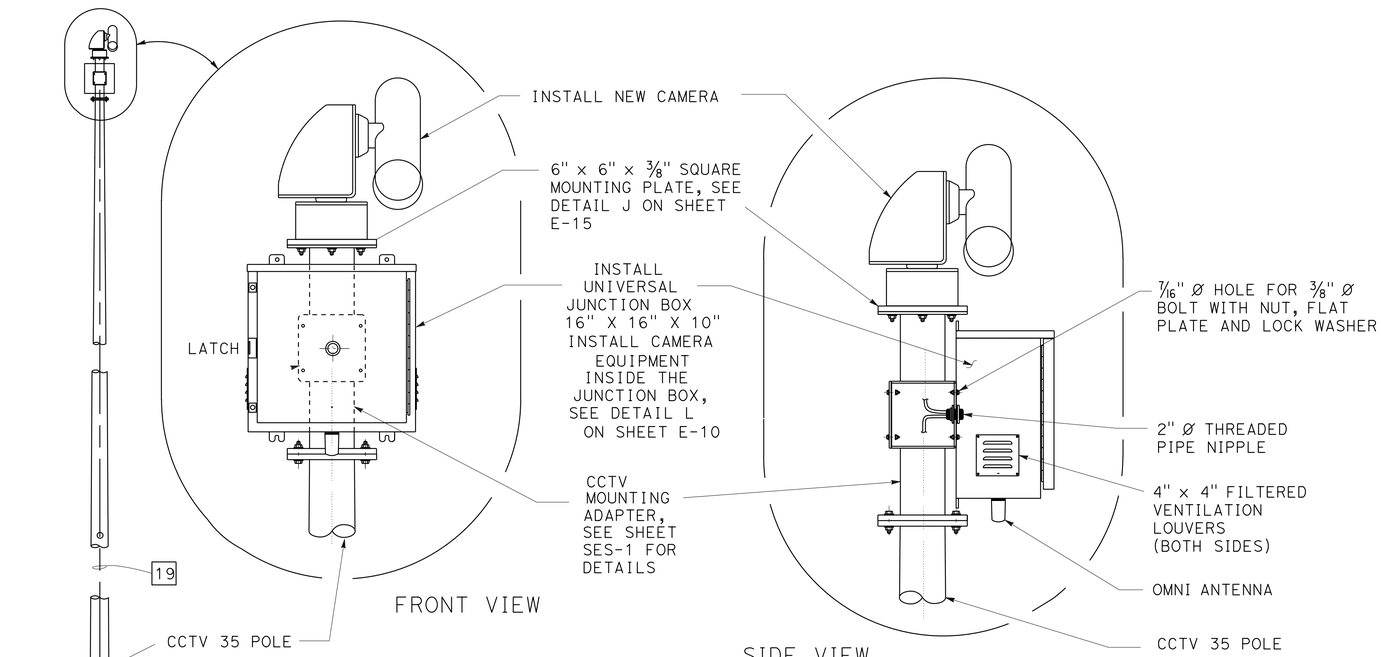

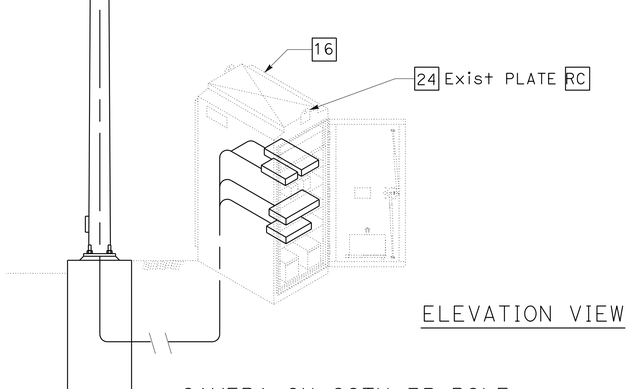

CAMERA ON CCTV 35 POLE

DETAIL Y

DETAIL R2

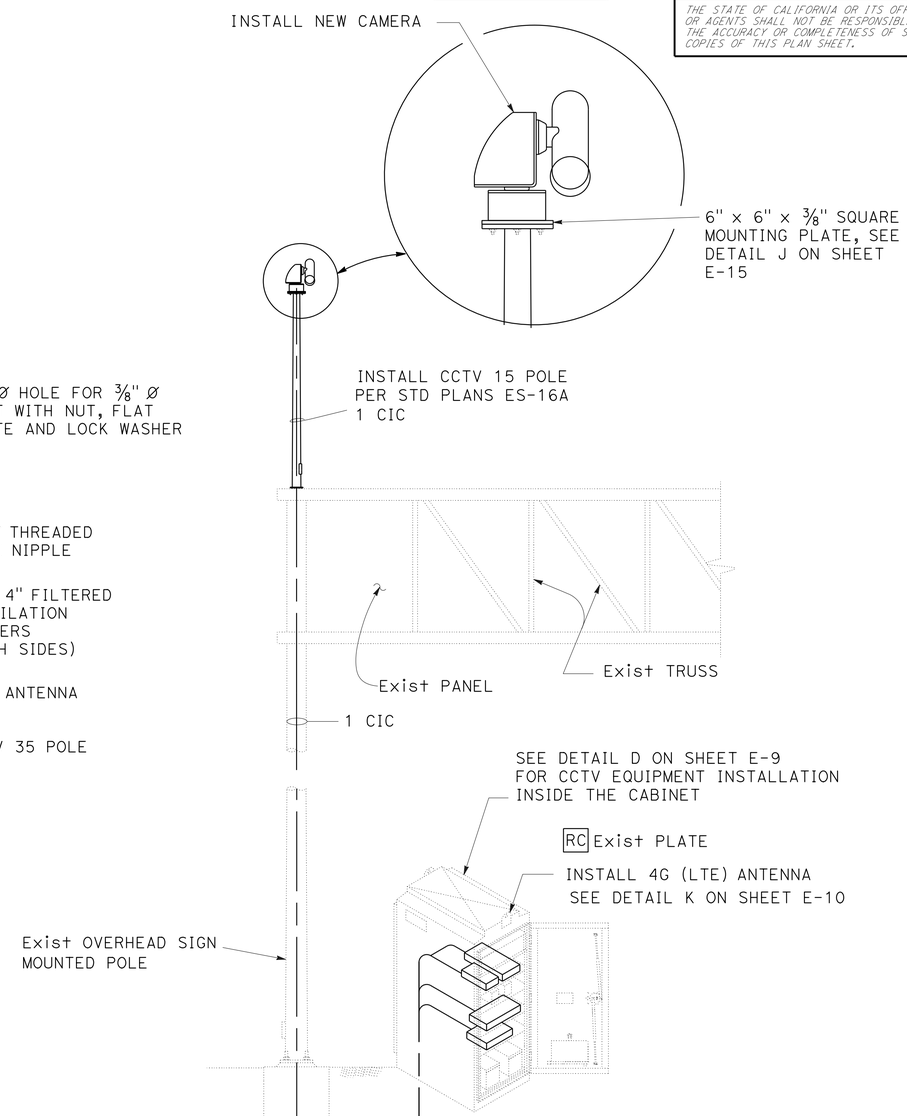

CAMERA ON Exist SIGN STRUCTURE

DETAIL O

CLOSED CIRCUIT TELEVISION SYSTEM

NO SCALE

APPROVED FOR ELECTRICAL WORK ONLY

E-13

STATE OF CALIFORNIA - DEPARTMENT OF TRANSPORTATION
Caltrans
ELECTRICAL DESIGN

FUNCTIONAL SUPERVISOR: MARY ANN HUDSPETH
CALCULATED-DESIGNED BY: JASKARAN S. BOPARAI
CHECKED BY
REVISED BY
DATE REVISED
YOUNG TON

LAST REVISION 09-30-15
DATE PLOTTED => 09-DEC-2015
TIME PLOTTED => 09:00

Dist	COUNTY	ROUTE	POST MILES TOTAL PROJECT	SHEET No.	TOTAL SHEETS
03	But, Col, ED, Nev, Pla, etc.	5,28,32, 50,51,etc.	Var	19	42

Jaskaran Singh Boparai 11-23-15
REGISTERED ELECTRICAL ENGINEER DATE

11-23-15
PLANS APPROVAL DATE

REGISTERED PROFESSIONAL ENGINEER
JASKARAN S. BOPARAI
No. E15056
Exp. 12-31-15
ELECTRICAL
STATE OF CALIFORNIA

THE STATE OF CALIFORNIA OR ITS OFFICERS OR AGENTS SHALL NOT BE RESPONSIBLE FOR THE ACCURACY OR COMPLETENESS OF SCANNED COPIES OF THIS PLAN SHEET.

NOTE (THIS SHEET ONLY):

FOR DETAILS NOT SHOWN, SEE STANDARD PLANS: SHEETS ES-16A, RSP ES-16B, RSP ES-16C, ES-16D AND SHEET SES-1.

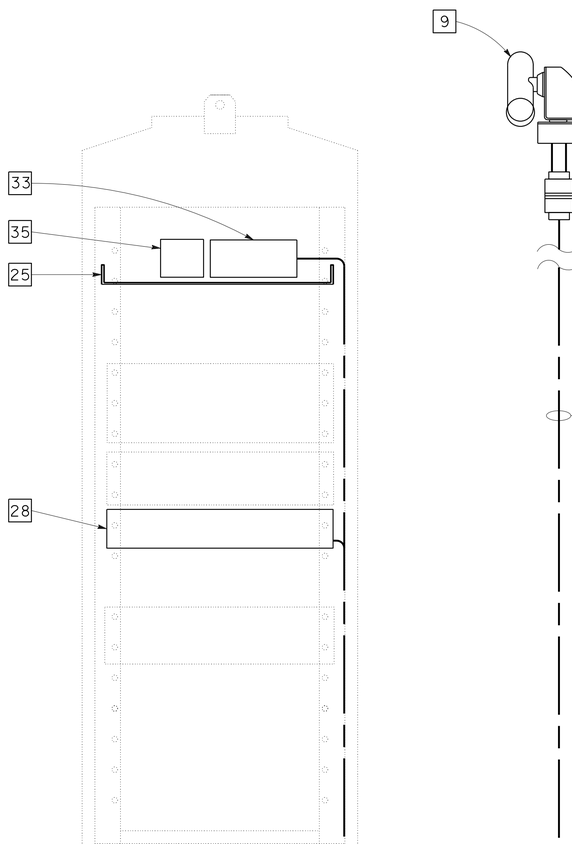

ITS EQUIPMENT ON Exist TRAFFIC SIGNAL CABINET

(FRONT VIEW)
332 CONTROLLER CABINET

DETAIL N

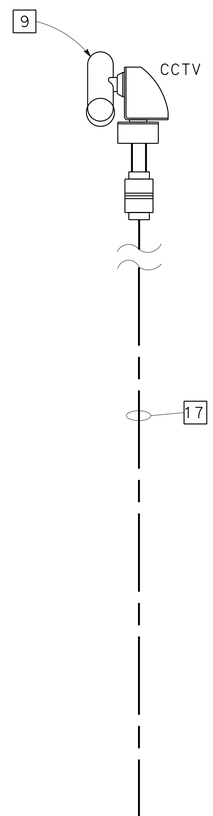

CAMERA MOUNTING BRACKET

DETAIL R3

CONTRACTOR TO PROVIDE APPROPRIATE STANDOFFS AND BRACKET

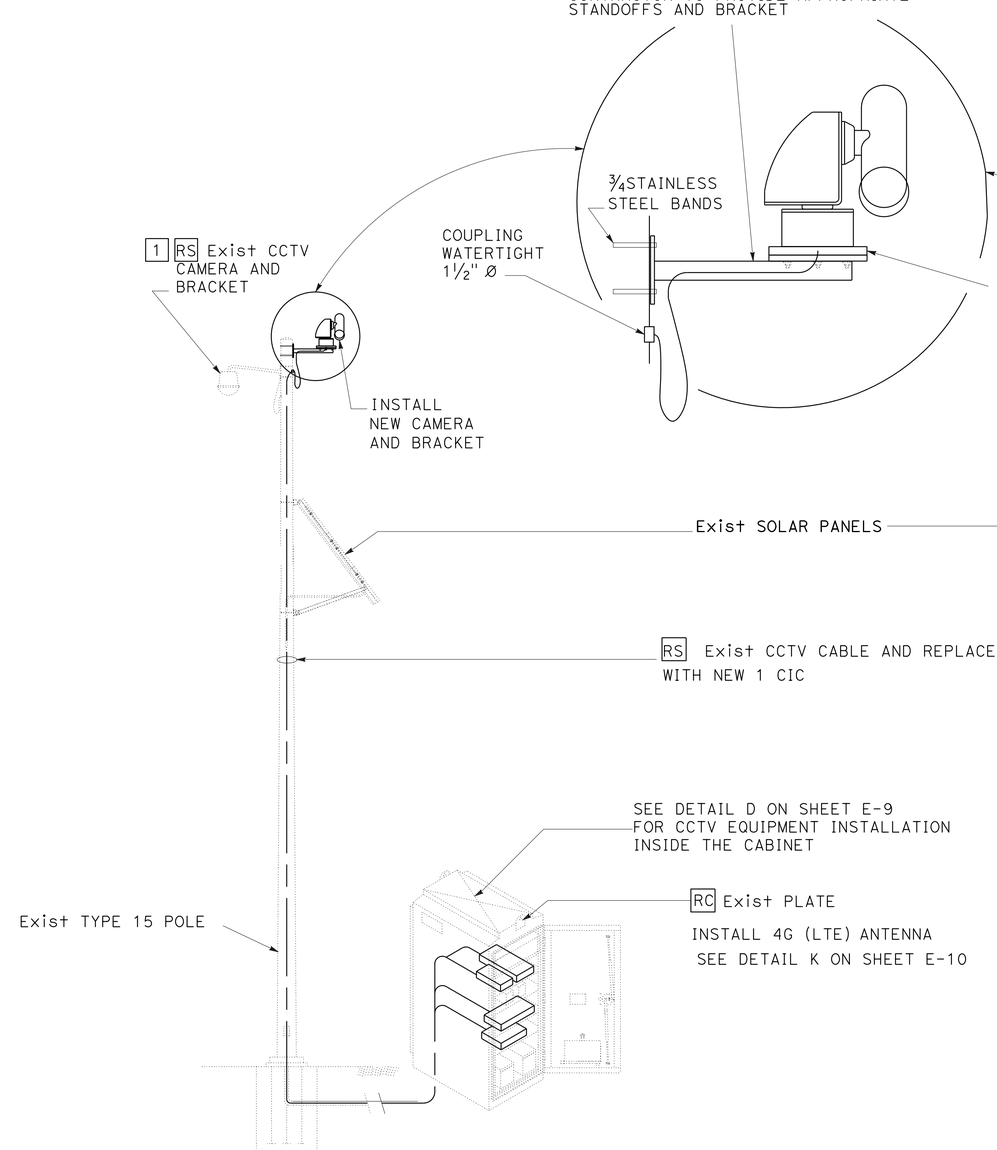

CAMERA ON Exist CCTV POLE

DETAIL P

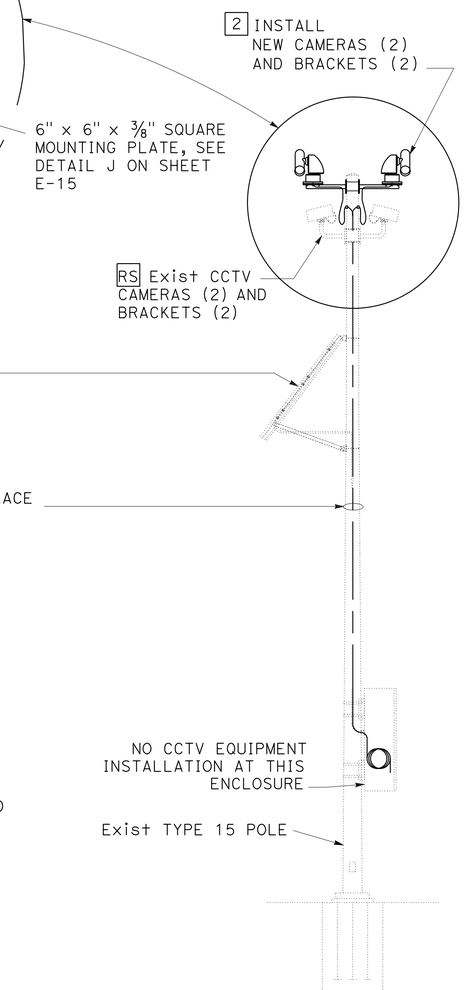

CAMERA ON Exist CCTV POLE

DETAIL Q

CLOSED CIRCUIT TELEVISION SYSTEM

NO SCALE

APPROVED FOR ELECTRICAL WORK ONLY

E-14

STATE OF CALIFORNIA - DEPARTMENT OF TRANSPORTATION
Caltrans
ELECTRICAL DESIGN

FUNCTIONAL SUPERVISOR: MARY ANN HUDSPETH
CALCULATED-DESIGNED BY: JASKARAN S. BOPARAI
CHECKED BY
REVISED BY
DATE REVISED
YOUNG TON

LAST REVISION 09-30-15
DATE PLOTTED => 09-DEC-2015
TIME PLOTTED => 09:00

Dist	COUNTY	ROUTE	POST MILES TOTAL PROJECT	SHEET No.	TOTAL SHEETS
03	But, Col, ED, Nev, Pla, etc	5,28,32, 50,51,etc.	Var	20	42

Stephen Bandiola 11-23-15
REGISTERED CIVIL ENGINEER DATE

11-23-15
PLANS APPROVAL DATE

REGISTERED PROFESSIONAL ENGINEER
Stephen P. Bandirola
No. C48779
Exp. 9-30-17
CIVIL
STATE OF CALIFORNIA

THE STATE OF CALIFORNIA OR ITS OFFICERS OR AGENTS SHALL NOT BE RESPONSIBLE FOR THE ACCURACY OR COMPLETENESS OF SCANNED COPIES OF THIS PLAN SHEET.

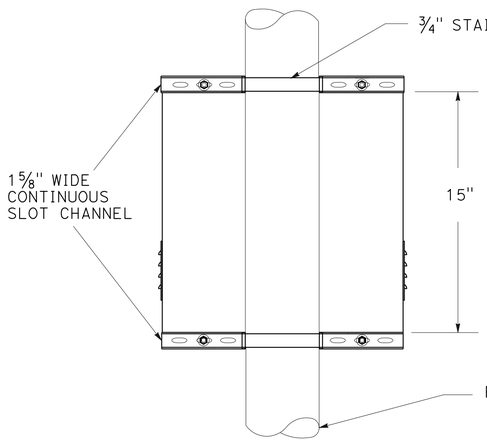

BACK VIEW

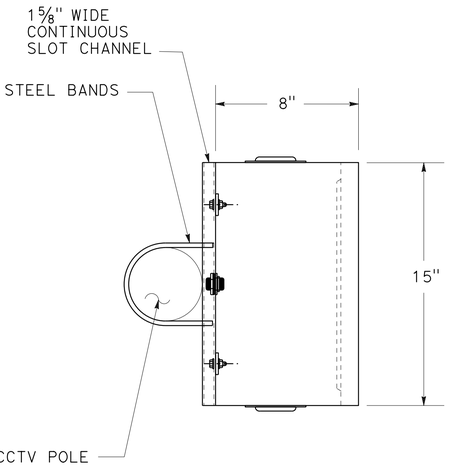

SECTION A-A

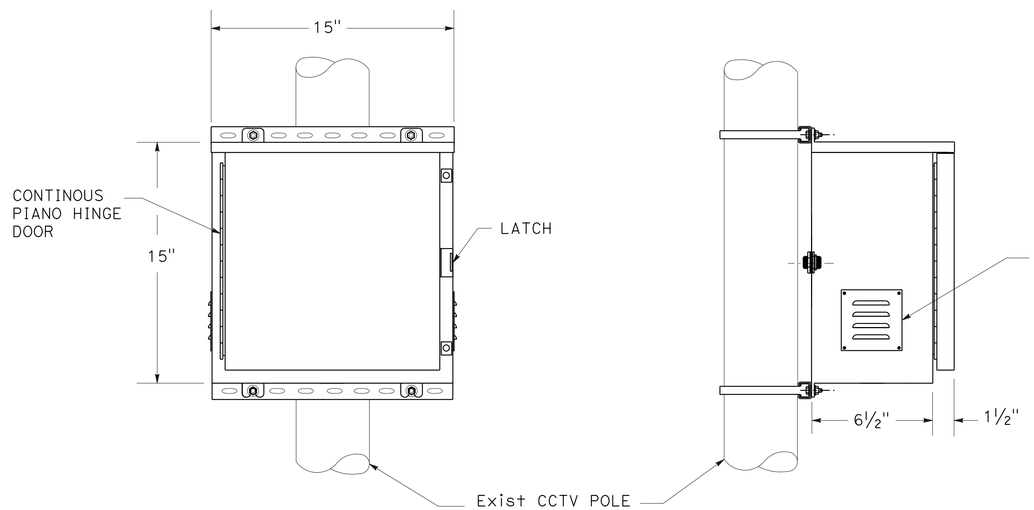

FRONT VIEW SIDE VIEW

UNIVERSAL JUNCTION BOX MOUNTING ON EXISTING CCTV POLE

15" X 15" X 8"

DETAIL D2

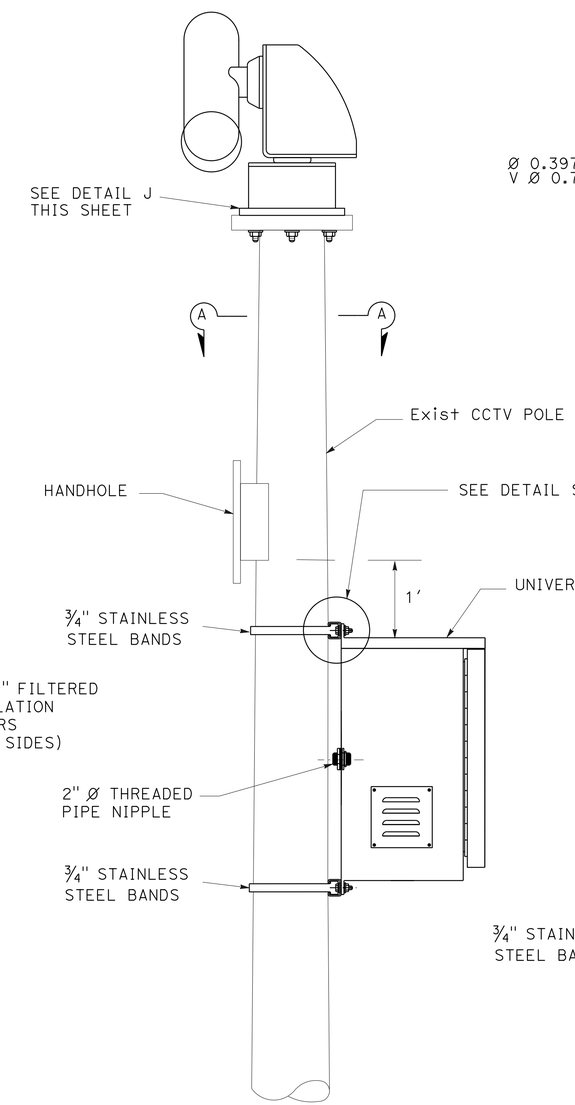

DETAIL D3

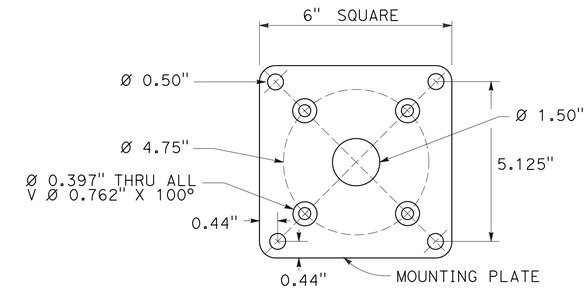

SQUARE MOUNTING PLATE

6" X 6" X 3/8"

DETAIL J

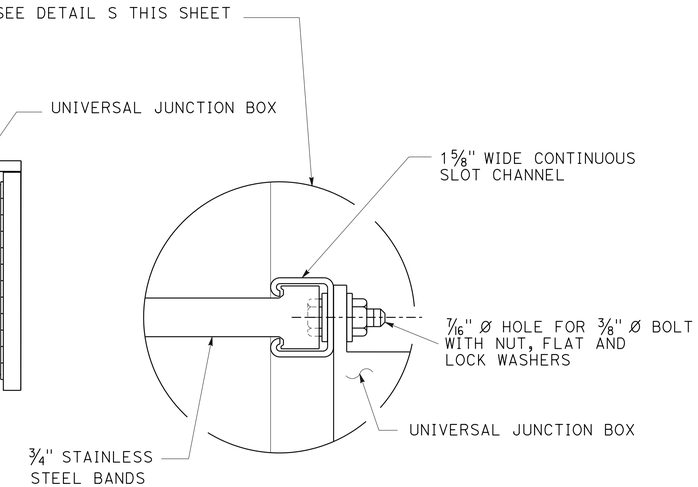

DETAIL S

CLOSED CIRCUIT TELEVISION SYSTEM

NO SCALE

E-15

STATE OF CALIFORNIA - DEPARTMENT OF TRANSPORTATION
Caltrans® ELECTRICAL SYSTEM

FUNCTIONAL SUPERVISOR: DEAN E. CAMPBELL
CALCULATED-DESIGNED BY: YOUNG TON
CHECKED BY: DEAN E. CAMPBELL
REVISED BY
DATE REVISED

LAST REVISION 09-11-15
DATE PLOTTED => 09-DEC-2015
TIME PLOTTED => 09:00

Dist	COUNTY	ROUTE	POST MILES TOTAL PROJECT	SHEET No.	TOTAL SHEETS
03	But, Col, ED, Nev, Pla, etc.	5,28,32, 50,51,etc.	Var	21	42

Rostam Gharaee-Kermani 11-23-15
REGISTERED ELECTRICAL ENGINEER DATE

11-23-15
PLANS APPROVAL DATE

REGISTERED PROFESSIONAL ENGINEER
ROSTAM GHARAEE-KERMANI
No. E16906
Exp. 06-30-17
ELECTRICAL
STATE OF CALIFORNIA

THE STATE OF CALIFORNIA OR ITS OFFICERS OR AGENTS SHALL NOT BE RESPONSIBLE FOR THE ACCURACY OR COMPLETENESS OF SCANNED COPIES OF THIS PLAN SHEET.

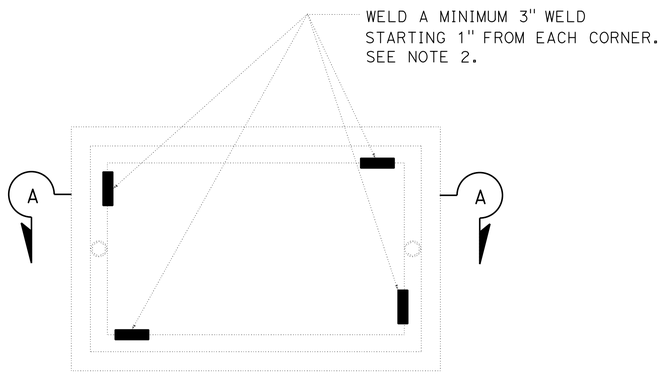

TOP VIEW

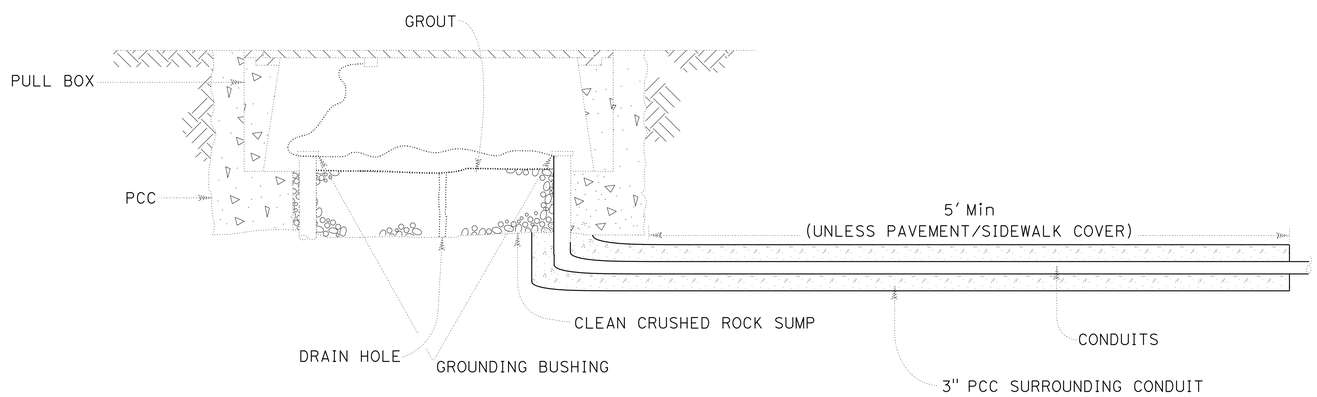

SECTION A-A

TRAFFIC PULL BOX

NOTES ON PULL BOXES:

1. FOR ADDITIONAL DETAILS, SEE REVISED STANDARD PLAN RSP ES-8B.
2. WELDING SHALL COMPLY WITH REQUIREMENTS IN STANDARD SPECIFICATION SECTION 75.
3. A PULL BOX FOR A POST OR A POLE STANDARD MUST BE LOCATED WITHIN 5 FEET OF THE STANDARD.

APPROVED FOR ELECTRICAL WORK ONLY

ELECTRICAL DETAILS

NO SCALE

E-16

REVISED BY | DATE REVISED
ROSTAM GHARAEE-KERMANI
MARY ANN HUDSPETH
CALCULATED-DESIGNED BY
CHECKED BY
FUNCTIONAL SUPERVISOR
MARY ANN HUDSPETH
STATE OF CALIFORNIA - DEPARTMENT OF TRANSPORTATION
Caltrans
ELECTRICAL DESIGN

LAST REVISION 10-13-15
DATE PLOTTED => 09-DEC-2015
TIME PLOTTED => 09:00

Dist	COUNTY	ROUTE	POST MILES TOTAL PROJECT	SHEET No.	TOTAL SHEETS
03	But, Col, ED, Nev, Pla, etc.	5,28,32, 50,51,etc.	Var	22	42

Jaskaran Singh Boparai 11-23-15
REGISTERED ELECTRICAL ENGINEER DATE

11-23-15
PLANS APPROVAL DATE

REGISTERED PROFESSIONAL ENGINEER JASKARAN S. BOPARAI No. E15056 Exp. 12-31-15 ELECTRICAL STATE OF CALIFORNIA

THE STATE OF CALIFORNIA OR ITS OFFICERS OR AGENTS SHALL NOT BE RESPONSIBLE FOR THE ACCURACY OR COMPLETENESS OF SCANNED COPIES OF THIS PLAN SHEET.

NOTE:
ITEMS SHOWN IN THIS TABLE ARE NOT A SEPARATE PAY ITEM, FOR INFORMATION ONLY.

CLOSED CIRCUIT TELEVISION SYSTEM

LOCATION	RC Exist CIC CABLE (FT)	INSTALL CIC CABLE (FT)	JUNCTION BOX (NEW) (EA)	No. 5 (T) PULL BOX (EA)	CCTV CAMERA (EA)	2" TYPE 3 CONDUIT	CCTV 45 POLE	CCTV 60 POLE
1	150	160	0	0	1	0	0	0
2	100	110	1	0	1	0	0	0
3	145	150	1	0	1	0	0	0
4	280	300	0	0	1	0	0	0
5	280	300	1	0	1	0	0	0
6	90	100	0	0	1	0	0	0
7	92	100	0	0	1	0	0	0
8	482	500	1	0	1	0	0	0
9	181	200	0	1	1	0	0	0
10	300	300	0	0	1	0	0	0
11	270	330	0	0	1	0	0	0
12	125	125	0	0	1	0	0	0
13	125	125	0	0	1	0	0	0
14	135	150	0	0	1	0	0	0
15	100	100	0	0	1	0	0	0
16	375	400	1	4	1	0	0	0
17	77	100	1	0	1	0	0	0
18	128	200	1	0	1	0	0	0
19	94	100	0	0	1	0	0	0
20	130	130	0	0	1	0	0	0
21	144	150	1	0	1	0	0	0
22	140	150	0	0	1	0	0	0
23	50	50	0	0	1	0	0	0
24	640	650	1	0	1	0	0	0
25	640	650	1	3	1	0	0	0
26	200	210	1	0	1	0	0	0
27	535	550	1	0	1	0	0	0
28	140	150	1	0	1	0	0	0
29	140	150	1	0	1	0	0	0
30	140	150	1	0	1	0	0	0
31	480	500	1	0	1	0	0	0
32	125	125	1	0	1	0	0	0
33	125	125	1	0	1	0	0	0
34	325	350	1	0	1	0	0	0
35	120	150	1	0	1	0	0	0
36	280	300	1	0	1	0	0	0
37	340	350	1	0	1	0	0	0
38	238	250	1	0	1	0	0	0
39	1102	1100	1	5	1	0	0	0
40	420	450	1	1	1	0	0	0
41	129	150	1	0	1	0	0	0
42	134	150	1	0	1	0	0	0

CLOSED CIRCUIT TELEVISION SYSTEM

LOCATION	RC Exist CIC CABLE (FT)	INSTALL CIC CABLE (FT)	JUNCTION BOX (NEW) (EA)	No. 5 (T) PULL BOX (EA)	CCTV CAMERA (EA)	2" TYPE 3 CONDUIT	CCTV 45 POLE	CCTV 60 POLE
43	160	250	1	0	1	0	0	0
44	205	200	0	0	1	0	0	0
45	56	100	0	0	1	0	0	0
46	280	300	1	0	1	0	0	0
47	205	200	0	0	1	0	0	0
48	280	300	0	0	1	0	0	0
49	75	100	0	0	1	0	0	0
50	90	100	0	0	1	0	0	0
51	325	350	0	0	1	0	0	0
52	90	100	1	0	1	0	0	0
53	20	25	0	0	1	0	0	0
54	90	100	1	0	1	0	0	0
55	140	150	0	0	1	0	0	0
56	720	800	1	2	1	0	0	0
57	435	650	1	1	1	0	0	0
58	95	100	1	0	1	0	0	0
59	360	450	1	1	1	0	0	0
60	188	350	0	0	1	0	0	0
61	340	600	1	0	1	0	0	0
62	406	500	1	0	1	0	0	0
63	165	200	1	0	1	0	0	0
64	486	550	1	0	1	0	0	0
65	280	300	0	0	1	0	0	0
66	360	400	1	0	1	0	0	0
67	590	600	1	0	1	0	0	0
68	0	400	0	1	1	20	0	1
69	503	550	1	0	1	0	0	0
70	90	100	1	0	1	0	0	0
71	342	550	1	0	1	0	0	0
72	378	400	1	0	1	0	0	0
73	343	400	1	0	1	0	0	0
74	380	400	1	0	1	0	0	0
75	389	400	1	0	1	0	0	0
76	269	300	1	0	1	0	0	0
77	181	300	1	0	1	0	0	0
78	302	300	1	0	1	0	0	0
79	430	450	1	0	1	0	0	0
80	187	300	1	0	1	0	0	0
81	543	550	1	0	1	0	0	0
82	506	650	1	0	1	0	0	0
83	271	300	1	0	1	0	0	0
84	489	500	1	2	1	0	0	0

ELECTRICAL QUANTITIES

E-17

REVISED BY | DATE REVISED
YOUNG TON | JASKARAN S. BOPARAI
CALCULATED-DESIGNED BY | CHECKED BY
FUNCTIONAL SUPERVISOR | MARY ANN HUDSPETH
STATE OF CALIFORNIA - DEPARTMENT OF TRANSPORTATION
Caltrans® ELECTRICAL DESIGN

LAST REVISION 10-30-15 | DATE PLOTTED => 09-DEC-2015 | TIME PLOTTED => 09:00

Dist	COUNTY	ROUTE	POST MILES TOTAL PROJECT	SHEET No.	TOTAL SHEETS
03	But, Col, ED, Nev, Pla, etc.	5,28,32, 50,51,etc.	Var	23	42

Jaskaran Singh Boparai 11-23-15
REGISTERED ELECTRICAL ENGINEER DATE

11-23-15
PLANS APPROVAL DATE

REGISTERED PROFESSIONAL ENGINEER JASKARAN S. BOPARAI No. E15056 Exp. 12-31-15 ELECTRICAL STATE OF CALIFORNIA

THE STATE OF CALIFORNIA OR ITS OFFICERS OR AGENTS SHALL NOT BE RESPONSIBLE FOR THE ACCURACY OR COMPLETENESS OF SCANNED COPIES OF THIS PLAN SHEET.

NOTE:
ITEMS SHOWN IN THIS TABLE ARE NOT A SEPARATE PAY ITEM, FOR INFORMATION ONLY.

CLOSED CIRCUIT TELEVISION SYSTEM

LOCATION	RC Exist CIC CABLE (FT)	INSTALL CIC CABLE (FT)	JUNCTION BOX (NEW) (EA)	NO. 5 (T) PULL BOX (EA)	CCTV CAMERA (EA)	2" TYPE 3 CONDUIT	CCTV 45 POLE	CCTV 60 POLE
85	380	400	1	0	1	0	0	0
86	0	600	1	1	1	300	1	0
87	NOT USED					0	0	0
88	91	100	1	0	1	0	0	0
89	468	500	1	0	1	0	0	0
90	531	530	1	0	1	0	0	0
91	100	100	1	0	1	0	0	0
92	90	100	1	0	1	0	0	0
93	400	400	1	4	1	0	0	0
94	270	300	1	0	1	0	0	0
95	133	150	1	0	1	0	0	0
96	141	150	1	0	1	0	0	0
97	1100	1100	1	0	1	0	0	0
98	140	150	1	0	1	0	0	0
99	379	450	1	0	1	0	0	0
100	680	700	1	2	1	0	0	0
101	620	650	1	0	1	0	0	0
102	525	550	1	2	1	0	0	0
103	220	225	1	0	1	0	0	0
104	280	400	1	1	1	0	0	0
105	267	300	1	0	1	0	0	0
106	212	300	1	0	1	0	0	0
107	735	750	1	0	1	0	0	0
108	269	300	1	0	1	0	0	0
109	85	100	1	0	1	0	0	0
110	475	550	1	0	1	0	0	0
111	85	100	1	0	1	0	0	0
112	278	300	1	0	1	0	0	0
113	820	820	1	3	1	0	0	0
114	163	200	1	0	1	0	0	0
115	332	350	1	0	1	0	0	0
116	228	300	1	0	1	0	0	0
117	212	250	1	0	1	0	0	0
118	90	100	1	0	1	0	0	0
119	90	100	0	0	1	0	0	0
120	82	100	0	0	1	0	0	0
121	610	600	1	0	1	0	0	0
122	139	150	1	0	1	0	0	0
123	90	100	0	0	1	0	0	0
124	135	150	0	0	1	0	0	0
125	95	100	0	0	1	0	0	0

ELECTRICAL QUANTITIES

E-18

REVISED BY | DATE REVISED
YOUNG TON | JASKARAN S. BOPARAI
CALCULATED-DESIGNED BY | CHECKED BY
FUNCTIONAL SUPERVISOR | MARY ANN HUDSPETH
STATE OF CALIFORNIA - DEPARTMENT OF TRANSPORTATION
Caltrans ELECTRICAL DESIGN

LAST REVISION 10-30-15 | DATE PLOTTED => 09-DEC-2015 | TIME PLOTTED => 09:00

DIST	COUNTY	ROUTE	POST MILES TOTAL PROJECT	SHEET No	TOTAL SHEETS
03	But,Col,ED, Nev,Pla,etc.	5,28,32, 50,51,etc.	Var	24	42

Eliseo Lopez 8/18/15
REGISTERED CIVIL ENGINEER DATE

11-23-15
PLANS APPROVAL DATE

REGISTERED PROFESSIONAL ENGINEER ELISEO LOPEZ No. C72910 Exp. 12/31/16 CIVIL STATE OF CALIFORNIA

The State of California or its officers or agents shall not be responsible for the accuracy or completeness of electronic copies of this plan sheet.

NOTES:

1. Closed Circuit Television Mounting Adapter details are for CCTV 25 to CCTV 45 Poles ONLY, see 2010 RSP ES-16B.
2. Univeral Junction box to be 16"W x 16"H x 10"D Max and 45 lbs Max.

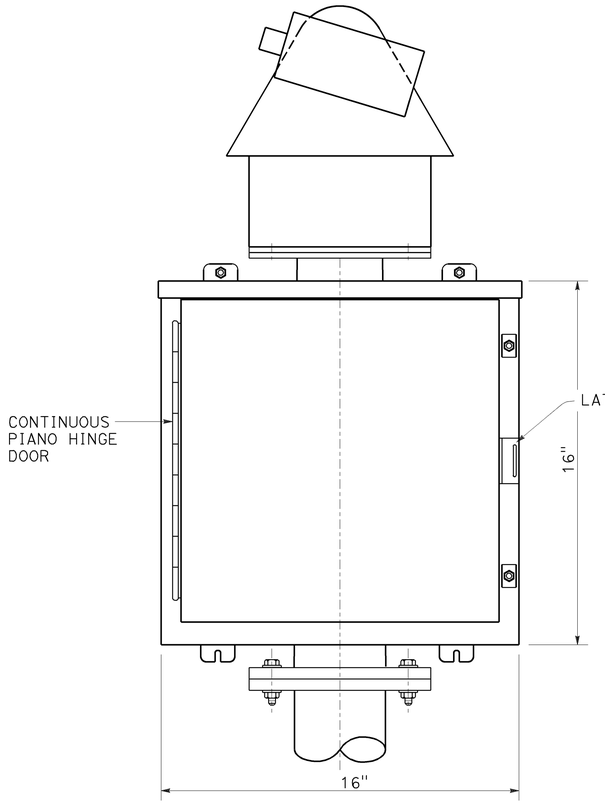

FRONT

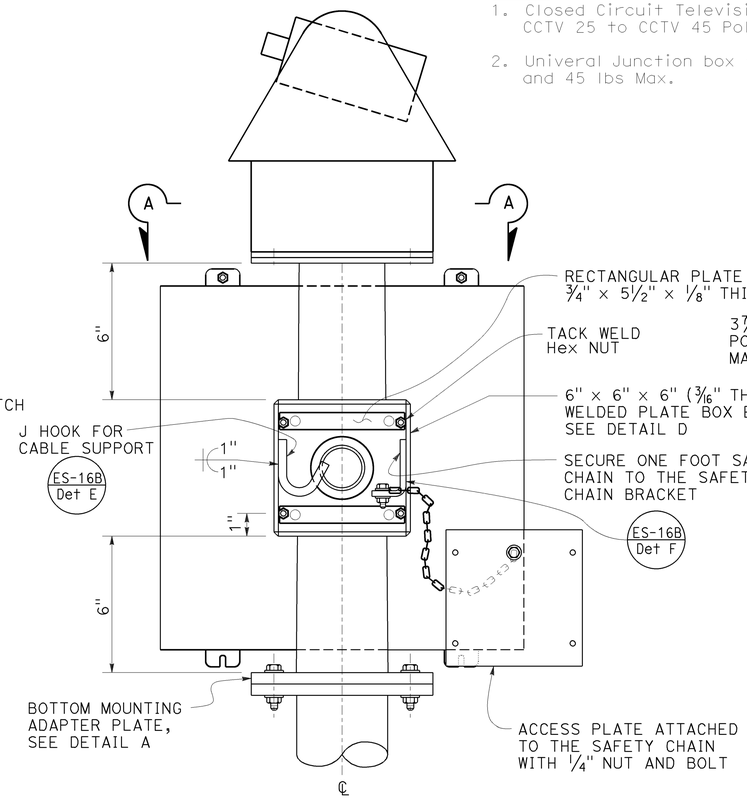

BACK

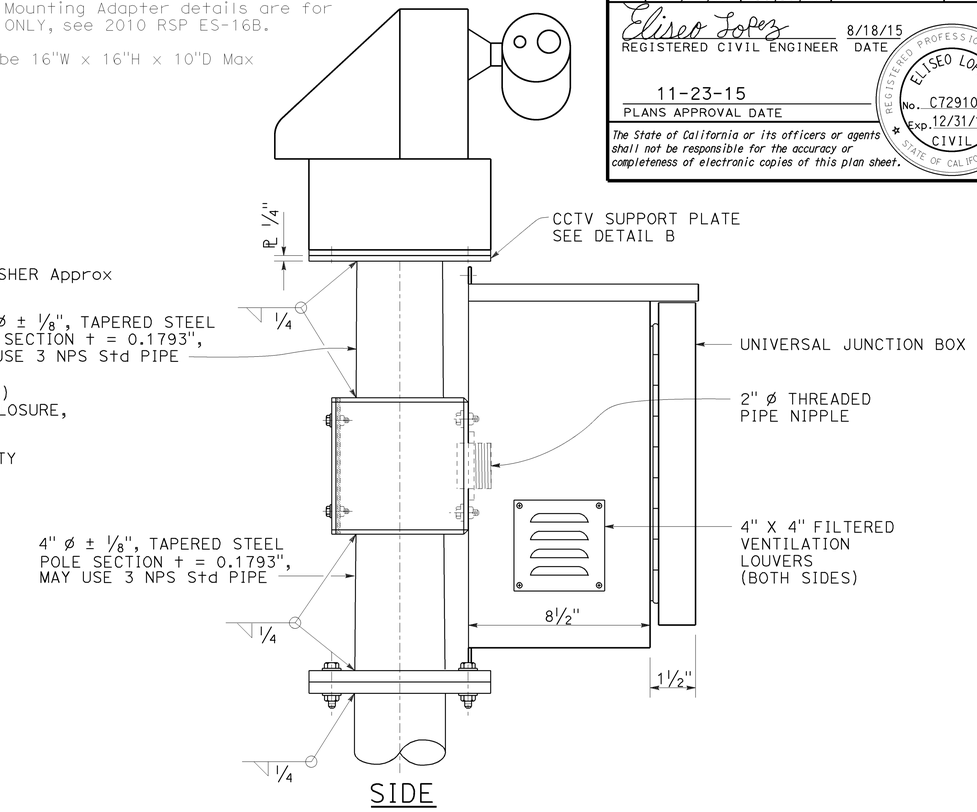

SIDE

CLOSED CIRCUIT TELEVISION MOUNTING ADAPTER

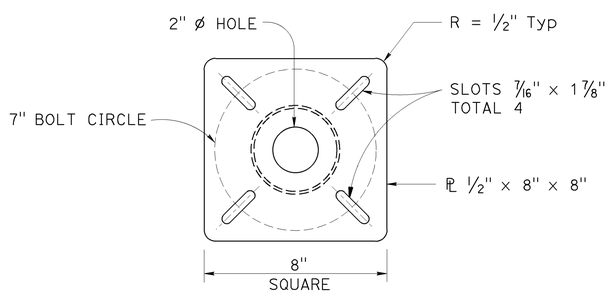

DETAIL A

BOTTOM MOUNTING ADAPTER PLATE

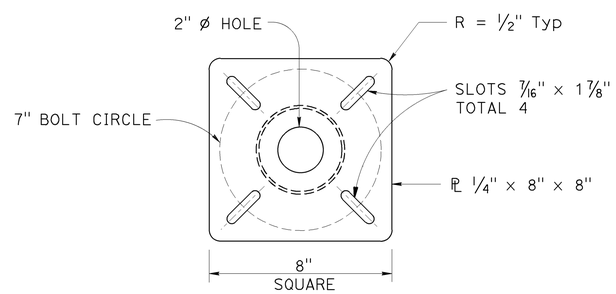

DETAIL B

CCTV SUPPORT PLATE

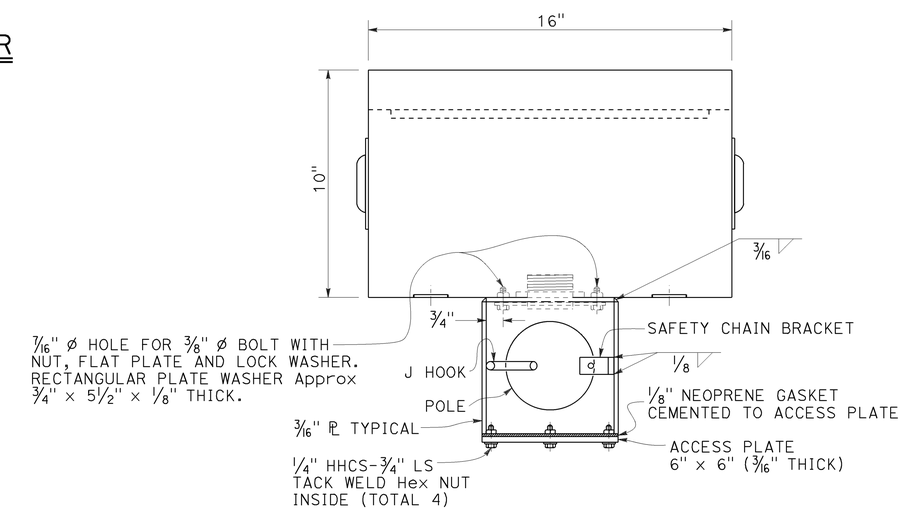

SECTION A-A

NOTE:
THE CONTRACTOR MUST VERIFY ALL CONTROLLING FIELD DIMENSIONS BEFORE ORDERING OR FABRICATING ANY MATERIAL.

STANDARD PLAN SHEET No.
DETAIL No.

NO SCALE

BRANCH CHIEF	JEFF WOODY	DESIGN BY ELISEO LOPEZ	CHECKED ELISEO LOPEZ
		DETAILS BY T.NGUYEN	CHECKED JOHN DATILES
		QUANTITIES BY	CHECKED

STATE OF CALIFORNIA
DEPARTMENT OF TRANSPORTATION

DIVISION OF ENGINEERING SERVICES
DESIGN AND TECHNICAL SERVICES
SPECIAL DESIGNS BRANCH A

BRIDGE NO.
POST MILE Var

CLOSED CIRCUIT TELEVISION MOUNTING ADAPTER

SES-1

(ENGLISH) SPECIAL DESIGNS BRANCH BORDER SHEET (REV. 7-1-09)

ORIGINAL SCALE IN INCHES FOR REDUCED PLANS 0 1 2 3

UNIT: 3619
PROJECT NUMBER & PHASE: 0313000197-1
CONTRACT NO.: 03-3F8301

DISREGARD PRINTS BEARING EARLIER REVISION DATES
REVISION DATES 8/18/15 8/18/15 12/3/15
SHEET OF

FILE => /2015/03-3f8301/03-3f8301_ses-1

USERNAME => s114937 DATE PLOTTED => 03-DEC-2015 TIME PLOTTED => 14:43

M

Maint	MAINTENANCE
Max	MAXIMUM
MB	METAL BEAM
MBB	METAL BEAM BARRIER
MBGR	METAL BEAM GUARD RAILING
Med	MEDIAN
MGS	MIDWEST GUARDRAIL SYSTEM
MH	MANHOLE
Min	MINIMUM
Misc	MISCELLANEOUS
Misc I & S	MISCELLANEOUS IRON AND STEEL
Mkr	MARKER
Mod	MODIFIED,
	MODIFY
Mon	MONUMENT
MP	METAL PLATE
MPGR	METAL PLATE GUARD RAILING
MR	MOVEMENT RATING
MSE	MECHANICALLY STABILIZED EMBANKMENT
Mt	MOUNTAIN, MOUNT
Mtl	MATERIAL
MVP	MAINTENANCE VEHICLE PULLOUT

N

N	NORTH
NB	NORTHBOUND
No.	NUMBER (MUST HAVE PERIOD)
Nos.	NUMBERS (MUST HAVE PERIOD)
NPS	NOMINAL PIPE SIZE
NS	NEAR SIDE
NSP	NEW STANDARD PLAN
NTS	NOT TO SCALE

O

Oblr	OBLITERATE
OC	OVERCROSSING
OD	OUTSIDE DIAMETER
OF	OUTSIDE FACE
OG	ORIGINAL GROUND
OGAC	OPEN GRADED ASPHALT CONCRETE
OGFC	OPEN GRADED FRICTION COURSE
OH	OVERHEAD
OHWM	ORDINARY HIGH WATER MARK
O-O	OUT TO OUT
Opp	OPPOSITE
OSD	OVERSIDE DRAIN

P

P	PAGE
PAP	PERFORATED ALUMINUM PIPE
PB	PULL BOX
PC	POINT OF CURVATURE,
	PRECAST
PCC	POINT OF COMPOUND CURVE,
	PORTLAND CEMENT CONCRETE
PCMS	PORTABLE CHANGEABLE MESSAGE SIGN
PCP	PERFORATED CONCRETE PIPE,
	PRESTRESSED CONCRETE PIPE
PCVC	POINT OF COMPOUND VERTICAL CURVE
PEC	PERMIT TO ENTER AND CONSTRUCT
Ped	PEDESTRIAN
Ped OC	PEDESTRIAN OVERCROSSING
Ped UC	PEDESTRIAN UNDERCROSSING
Perm Mtl	PERMEABLE MATERIAL

P continued

PG	PROFILE GRADE
PI	POINT OF INTERSECTION
PJP	PARTIAL JOINT PENETRATION
Pkwy	PARKWAY
ℙ,PL	PLATE
P/L	PROPERTY LINE
PM	POST MILE,
	TIME FROM NOON TO MIDNIGHT
PN	PAVING NOTCH
POC	POINT OF HORIZONTAL CURVE
POT	POINT OF TANGENT
POVC	POINT OF VERTICAL CURVE
PP	PIPE PILE,
	PLASTIC PIPE,
	POWER POLE
PPL	PREFORMED PERMEABLE LINER
PPP	PERFORATED PLASTIC PIPE
PRC	POINT OF REVERSE CURVE
PRF	PAVEMENT REINFORCING FABRIC
PRVC	POINT OF REVERSE VERTICAL CURVE
PS&E	PLANS, SPECIFICATIONS AND ESTIMATES
PS, P/S	PRESTRESSED
PSP	PERFORATED STEEL PIPE
PT	POINT OF TANGENCY
PVC	POLYVINYL CHLORIDE
Pvmt	PAVEMENT

Q

Qty	QUANTITY

R

R	RADIUS
R & D	REMOVE AND DISPOSE
R & S	REMOVE AND SALVAGE
R/C	RATE OF CHANGE
RCA	REINFORCED CONCRETE ARCH
RCB	REINFORCED CONCRETE BOX
RCP	REINFORCED CONCRETE PIPE
RCPA	REINFORCED CONCRETE PIPE ARCH
Rd	ROAD
Reinf	REINFORCED,
	REINFORCEMENT,
	REINFORCING
Rel	RELOCATE
Repl	REPLACEMENT
Ret	RETAINING
Rev	REVISED, REVISION
Rdwy	ROADWAY
RHMA	RUBBERIZED HOT MIX ASPHALT
Riv	RIVER
RM	ROAD-MIXED
RP	RADIUS POINT,
	REFERENCE POINT
RR	RAILROAD
RSP	ROCK SLOPE PROTECTION,
	REVISED STANDARD PLAN
Rt	RIGHT
Rte	ROUTE
RW	REDWOOD,
	RETAINING WALL
R/W	RIGHT OF WAY
Rwy	RAILWAY

S

S	SOUTH,
	SUPPLEMENT
SAE	STRUCTURE APPROACH EMBANKMENT
Salv	SALVAGE
SAPP	STRUCTURAL ALUMINUM PLATE PIPE
SB	SOUTHBOUND
SC	SAND CUSHION
SCSP	SLOTTED CORRUGATED STEEL PIPE
SD	STORM DRAIN
Sec	SECOND,
	SECTION
Sep	SEPARATION
SG	SUBGRADE
Shld	SHOULDER
Sht	SHEET
Sim	SIMILAR
℄	STATION LINE
SM	SELECTED MATERIAL
Spec	SPECIAL,
	SPECIFICATIONS
SPP	SLOTTED PLASTIC PIPE
SS	SLOPE STAKE
SSBM	STRAP AND SADDLE BRACKET METHOD
SSD	STRUCTURAL SECTION DRAIN
SSPA	STRUCTURAL STEEL PLATE ARCH
SSPP	STRUCTURAL STEEL PLATE PIPE
SSPPA	STRUCTURAL STEEL PLATE PIPE ARCH
SSRP	STEEL SPIRAL RIB PIPE
St	STREET
Sta	STATION
STBB	SINGLE THRIE BEAM BARRIER
Std	STANDARD
Str	STRUCTURE
Surf	SURFACING
SW	SIDEWALK,
	SOUND WALL
Swr	SEWER
Sym	SYMMETRICAL
S4S	SURFACE 4 SIDES

T

T	SEMI-TANGENT
Tan	TANGENT
TBB	THRIE BEAM BARRIER
Tbr	TIMBER
TC	TOP OF CURB
TCB	TRAFFIC CONTROL BOX
TCE	TEMPORARY CONSTRUCTION EASEMENT
Tel	TELEPHONE
Temp	TEMPORARY
TG	TOP OF GRADE
Tot	TOTAL
TP	TELEPHONE POLE
TPB	TREATED PERMEABLE BASE
TPM	TREATED PERMEABLE MATERIAL
Trans	TRANSITION

T continued

TS	TRANSVERSE,
	TRAFFIC SIGNAL,
	TUBULAR STEEL
Typ	TYPICAL

U

UC	UNDERCROSSING
UD	UNDERDRAIN
UG	UNDERGROUND
UON	UNLESS OTHERWISE NOTED
UP	UNDERPASS

V

V	VALVE,
	DESIGN SPEED
Var	VARIABLE,
	VARIES
VC	VERTICAL CURVE
VCP	VITRIFIED CLAY PIPE
Vert	VERTICAL
Via	VIADUCT
Vol	VOLUME

W

W	WEST,
	WIDTH
WB	WESTBOUND
WH	WEEP HOLE
WM	WIRE MESH
WS	WATER SURFACE
WSP	WELDED STEEL PIPE
Wt	WEIGHT
WV	WATER VALVE
WW	WINGWALL
WWLOL	WINGWALL LAYOUT LINE

X

X Sec	CROSS SECTION
Xing	CROSSING

Y

Yr	YEAR
Yrs	YEARS

Dist	COUNTY	ROUTE	POST MILES TOTAL PROJECT	SHEET No.	TOTAL SHEETS
03	But, Col, ED, Nev, Plq, etc.	5,28,32, 50,51,etc.	Var	25	42

Grace M. Tsushima
REGISTERED CIVIL ENGINEER

July 19, 2013
PLANS APPROVAL DATE

REGISTERED PROFESSIONAL ENGINEER
Grace M. Tsushima
No. C49814
Exp. 9-30-14
CIVIL
STATE OF CALIFORNIA

THE STATE OF CALIFORNIA OR ITS OFFICERS OR AGENTS SHALL NOT BE RESPONSIBLE FOR THE ACCURACY OR COMPLETENESS OF SCANNED COPIES OF THIS PLAN SHEET.

TO ACCOMPANY PLANS DATED 11-23-15

2010 REVISED STANDARD PLAN RSP A10B

UNIT OF MEASUREMENT SYMBOLS:

Some of the symbols used in the project plan quantity tables and in the Bid Item List are:

TABLE A

SYMBOL USED	DEFINITIONS
ACRE	ACRE
CF	CUBIC FOOT
CY	CUBIC YARD
EA	EACH
GAL	GALLON
LB	POUND
LF	LINEAR FOOT
SQFT	SQUARE FOOT
SQYD	SQUARE YARD
STA	100 FEET
TAB	TABLET
TON	2,000 POUNDS

Some of the symbols used in the plans other than in the project plan quantity tables are:

TABLE B

SYMBOL USED	DEFINITIONS
ksi	KIPS PER SQUARE INCH
ksf	KIPS PER SQUARE FOOT
psi	POUNDS PER SQUARE INCH
psf	POUNDS PER SQUARE FOOT
lb/ft^3, pcf	POUNDS PER CUBIC FOOT
tsf	TONS PER SQUARE FOOT
mph, MPH *	MILES PER HOUR
ø	NOMINAL DIAMETER
oz	OUNCE
lb	POUND
kip	1,000 POUNDS
cal	CALORIE
ft	FOOT OR FEET
gal	GALLON

* For use on a sign panel only

STATE OF CALIFORNIA
DEPARTMENT OF TRANSPORTATION

ABBREVIATIONS (SHEET 2 OF 2)

NO SCALE

RSP A10B DATED JULY 19, 2013 SUPERSEDES STANDARD PLAN A10B DATED MAY 20, 2011 - PAGE 2 OF THE STANDARD PLANS BOOK DATED 2010.

REVISED STANDARD PLAN RSP A10B

6-7-13

Dist	COUNTY	ROUTE	POST MILES TOTAL PROJECT	SHEET No.	TOTAL SHEETS
03	But, Col, ED, Nev, Plq, etc.	5,28,32, 50,51,etc.	Var	26	42

Randell D. Hiatt
REGISTERED CIVIL ENGINEER

July 19, 2013
PLANS APPROVAL DATE

REGISTERED PROFESSIONAL ENGINEER Randell D. Hiatt No. C50200 Exp. 6-30-15 CIVIL STATE OF CALIFORNIA

THE STATE OF CALIFORNIA OR ITS OFFICERS OR AGENTS SHALL NOT BE RESPONSIBLE FOR THE ACCURACY OR COMPLETENESS OF SCANNED COPIES OF THIS PLAN SHEET.

TO ACCOMPANY PLANS DATED 11-23-15

2010 REVISED STANDARD PLAN RSP A77R3

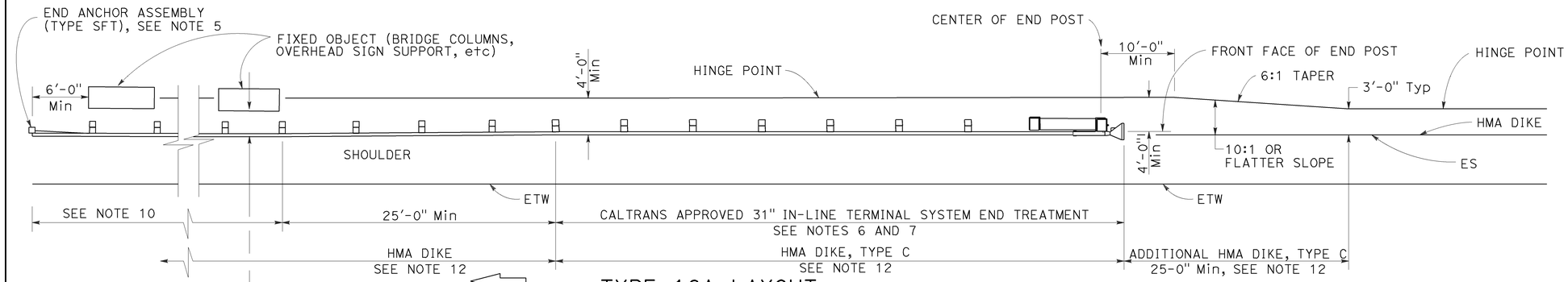

TYPE 16A LAYOUT

(MGS installation at roadside fixed object or objects with 31" in-line end treatment at traffic approach end of railing)
See Notes 11 and 12

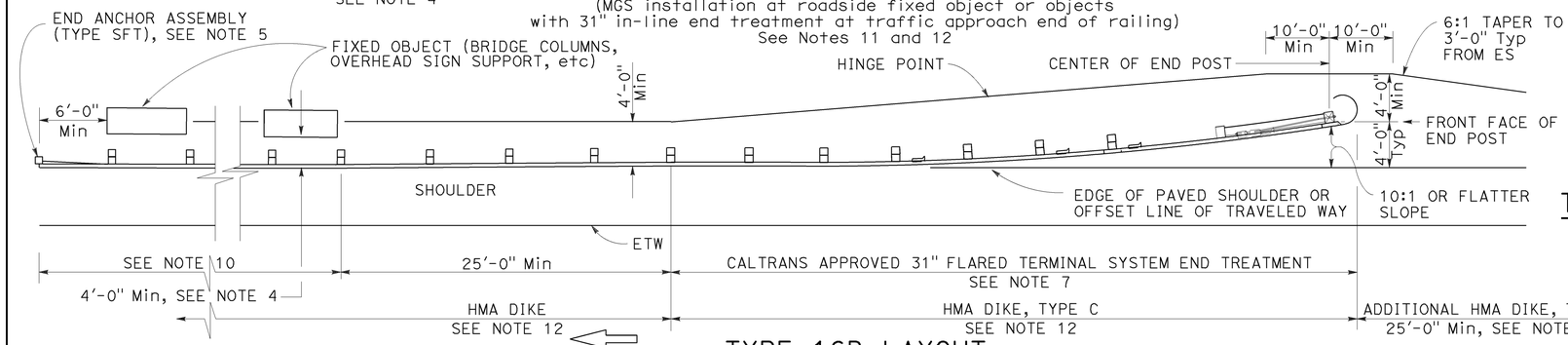

TYPE 16B LAYOUT

(MGS installation at roadside fixed object or objects with 31' flared end treatment at traffic approach end of railing)
See Notes 11 and 12

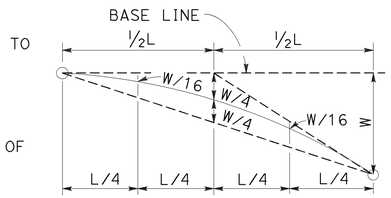

TYPIC AL PARABOLIC LAYOUT

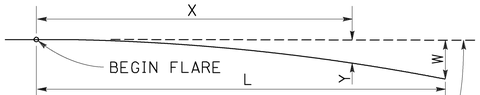

BASE LINE (EDGE OF PAVED SHOULDER OR OFFSET LINE OF EDGE OF TRAVELED WAY)

$$Y = \frac{WX^2}{L^2}$$

Y = OFFSET FROM BASE LINE
W = MAXIMUM OFFSET
X = DISTANCE ALONG BASE LINE
L = LENGTH OF FLARE

PARABOLIC FLARE OFFSETS

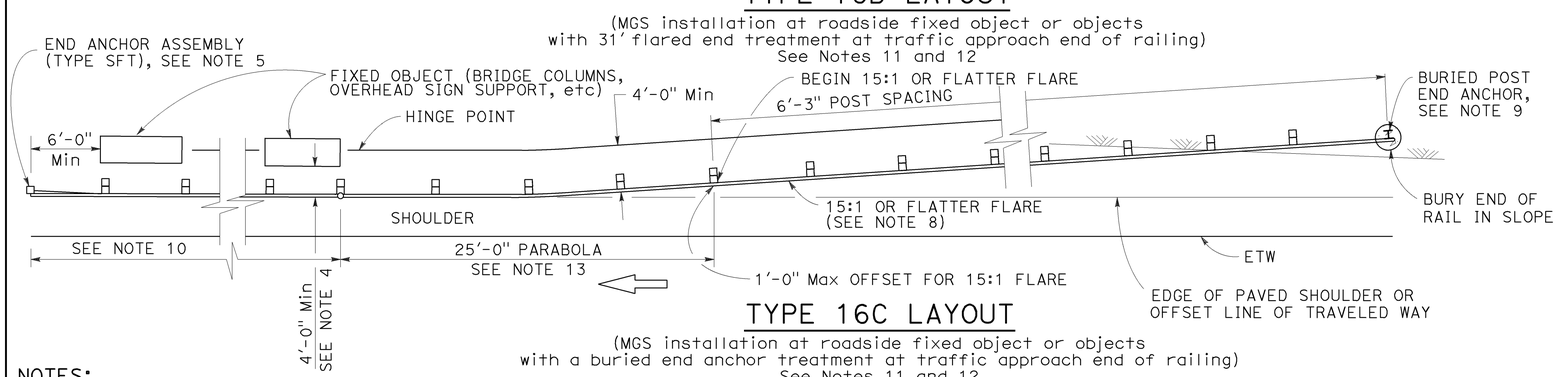

TYPE 16C LAYOUT

(MGS installation at roadside fixed object or objects with a buried end anchor treatment at traffic approach end of railing)
See Notes 11 and 12

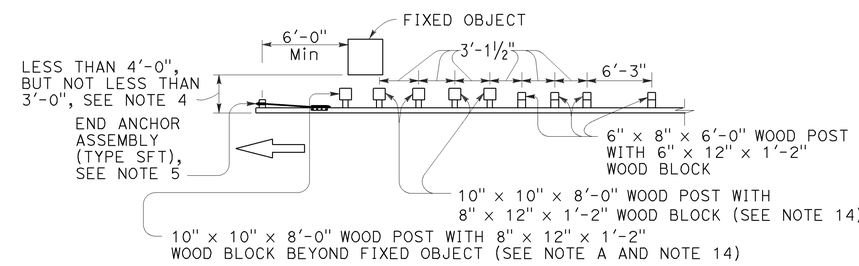

NOTE A: For a series of fixed objects (bridge columns, overhead sign supports, etc.) additional 10" x 10" x 8'-0" wood post with 8" x 12" x 1'-2" wood blocks at 3'-1½" center to center spacing are to be used between fixed objects.

STRENGTHENED MIDWEST GUARDRAIL SYSTEM SECTIONS FOR FIXED OBJECT

Use strengthened MGS sections with Types 16A, 16B or 16C layouts where minimum clearance between the face of the railing and fixed object(s) is less than 4'-0", but not less than 3'-0". See Note 4

NOTES:

1. Line post, blocks and hardware to be used are shown on Revised Standard Plans RSP A77L1, RSP A77L2, RSP A77M1, RSP A77N1 and RSP A77N2.
2. MGS post spacing to be 6'-3" center to center, except as otherwise noted.
3. Except as noted, line posts are 6" x 8" x 6'-0" wood with 6" x 12" x 1'-2" wood blocks. W6 x 8.5 or W6 x 9 steel posts, 6'-0" in length, with 6" x 12" x 1'-2" notched wood blocks or notched recycled plastic blocks may be used for 6" x 8" x 6'-0" wood line posts with 6" x 12" x 1'-2" wood blocks where applicable and when specified.
4. A 4'-0" minimum clearance is required between the face of the railing and the face of a fixed object located directly behind MGS sections with post spacing of 6'-3". Construct MGS as shown in the detail "Strengthened Midwest Guardrail System Sections for Fixed Object" on this plan, where the clearance between the face of the railing and the face of a fixed object is less than 4'-0", but not less than 3'-0". Where the clearance is less than 3'-0", a concrete wall or barrier should be constructed to shield the fixed object(s).
5. For End Anchor Assembly (Type SFT) details, see Revised Standard Plan RSP A77S1.
6. 31" in-line terminal system end treatments are used where site conditions will not accommodate a 31" flared end treatment.
7. The type of 31" terminal system to be used will be shown on the Project Plans.
8. The 15:1 or flatter flare used with Type 16C Layout is based on the edge of the paved shoulder or offset line of edge of the traveled way. The length of MGS within the 15:1 or flatter flare is based on site conditions and should be a length equal to multiples of 12'-6".
9. For details of the Buried Post End Anchor used with Type 16C Layout, see Revised Standard Plan RSP A77T2.
10. As site conditions dictate, construct additional MGS to shield fixed object(s). Additional MGS length equal to multiples of 12'-6". Post spacing at 6'-3" except as specified in Note 4.
11. Layout Types 16A, 16B or 16C are typically used where MGS is recommended to shield roadside fixed object(s) and a crashworthy 31" end treatment is required for only one direction of traffic.
12. Where placement of dike is required with MGS, see Revised Standard Plan RSP A77N4 for dike positioning details.
13. For typical flare offsets for 25'-0" length parabola with maximum offset of 1'-0", see Revised Standard Plan RSP A77P1.
14. W6 x 15 steel post, 8'-0" in length, with 8" x 12" x 1'-2" notched wood block or notched recycled plastic blocks may be used in place of the 10" x 10" x 8'-0" wood post with 8" x 12" x 1'-2" wood block shown in the detail "Strengthened Midwest Guardrail System Sections for Fixed Object".

STATE OF CALIFORNIA
DEPARTMENT OF TRANSPORTATION

MIDWEST GUARDRAIL SYSTEM TYPICAL LAYOUTS FOR ROADSIDE FIXED OBJECTS

NO SCALE

RSP A77R3 DATED JULY 19, 2013 SUPPLEMENTS THE STANDARD PLANS BOOK DATED 2010.

REVISED STANDARD PLAN RSP A77R3

6-20-13

Dist	COUNTY	ROUTE	POST MILES TOTAL PROJECT	SHEET No.	TOTAL SHEETS
03	But, Col, ED, Nev, Pla, etc.	5,28,32, 50,51,etc.	Var	27	42

Randell D. Hiatt
REGISTERED CIVIL ENGINEER

November 15, 2013
PLANS APPROVAL DATE

REGISTERED PROFESSIONAL ENGINEER
Randell D. Hiatt
No. C50200
Exp. 6-30-15
CIVIL
STATE OF CALIFORNIA

THE STATE OF CALIFORNIA OR ITS OFFICERS OR AGENTS SHALL NOT BE RESPONSIBLE FOR THE ACCURACY OR COMPLETENESS OF SCANNED COPIES OF THIS PLAN SHEET.

TO ACCOMPANY PLANS DATED 11-23-15

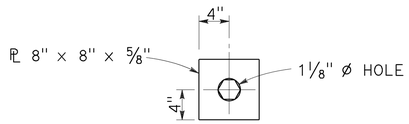

DETAIL "A"
CABLE CONNECTION
END PLATE

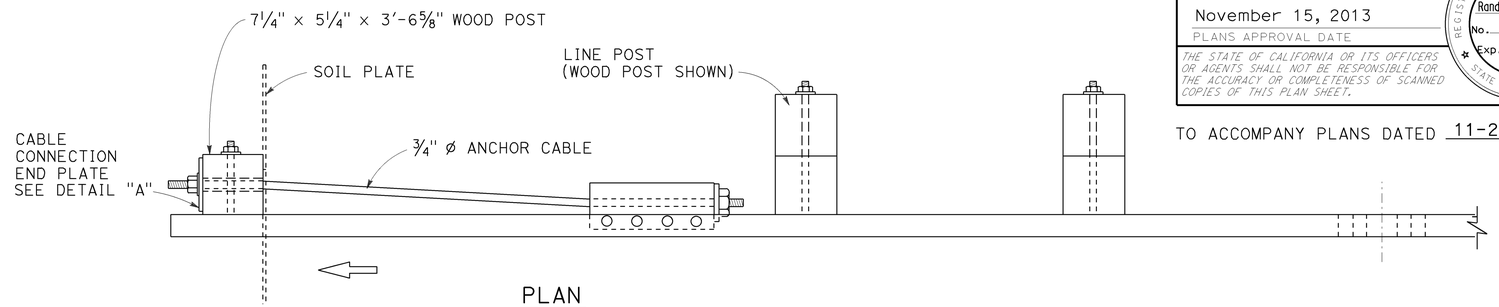

PLAN

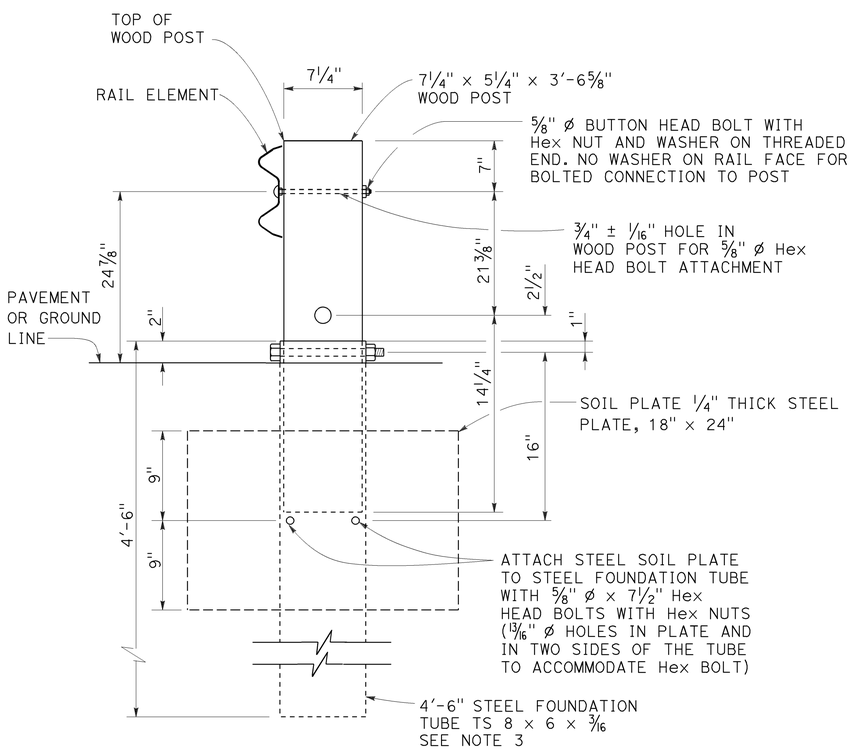

SECTION A-A

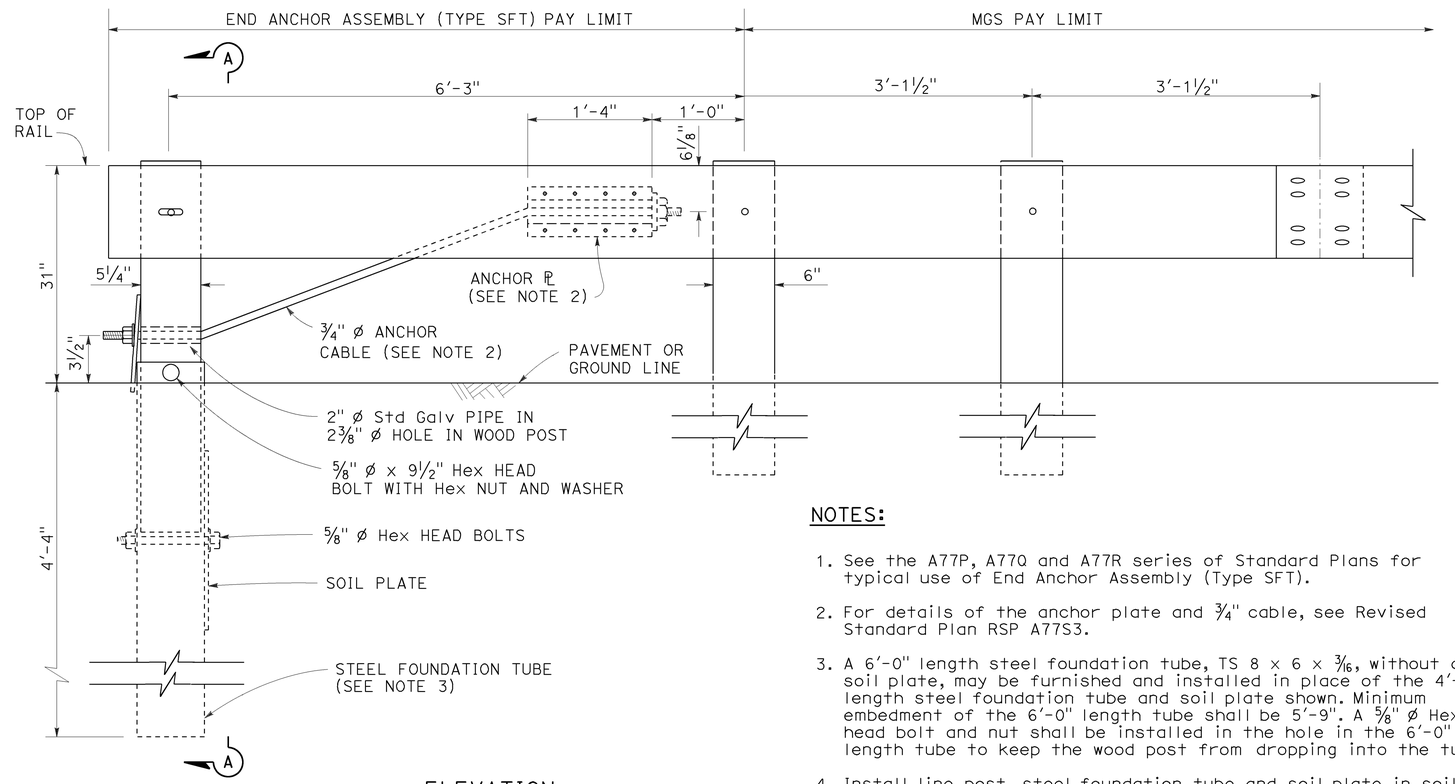

ELEVATION

END ANCHOR
ASSEMBLY (TYPE SFT)
See Note 1

NOTES:

1. See the A77P, A77Q and A77R series of Standard Plans for typical use of End Anchor Assembly (Type SFT).
2. For details of the anchor plate and 3/4" cable, see Revised Standard Plan RSP A77S3.
3. A 6'-0" length steel foundation tube, TS 8 × 6 × 3/16, without a soil plate, may be furnished and installed in place of the 4'-6" length steel foundation tube and soil plate shown. Minimum embedment of the 6'-0" length tube shall be 5'-9". A 5/8" ø Hex head bolt and nut shall be installed in the hole in the 6'-0" length tube to keep the wood post from dropping into the tube.
4. Install line post, steel foundation tube and soil plate in soil.

STATE OF CALIFORNIA
DEPARTMENT OF TRANSPORTATION

MIDWEST GUARDRAIL SYSTEM END ANCHOR ASSEMBLY (TYPE SFT)

NO SCALE

RSP A77S1 DATED NOVEMBER 15, 2013 SUPERSEDES RSP A77S1 DATED JULY 19, 2013 THAT SUPPLEMENTS THE STANDARD PLANS BOOK DATED 2010.

REVISED STANDARD PLAN RSP A77S1

2010 REVISED STANDARD PLAN RSP A77S1

10-4-13

Dist	COUNTY	ROUTE	POST MILES TOTAL PROJECT	SHEET No.	TOTAL SHEETS
03	But, Col, ED, Nev, Plq, etc.	5,28,32, 50,51,etc.	Var	28	42

REGISTERED CIVIL ENGINEER

April 19, 2013
PLANS APPROVAL DATE

REGISTERED PROFESSIONAL ENGINEER Gurinderpal Bhullar No. C48815 Exp. 9-30-14 CIVIL STATE OF CALIFORNIA

THE STATE OF CALIFORNIA OR ITS OFFICERS OR AGENTS SHALL NOT BE RESPONSIBLE FOR THE ACCURACY OR COMPLETENESS OF SCANNED COPIES OF THIS PLAN SHEET.

TO ACCOMPANY PLANS DATED 11-23-15

NOTES:

See Revised Standard Plan RSP T9 for tables.

Use cone spacing X for taper segment, Y for tangent segment or Z for conflict situations, as approriate, per Table 1, unless X, Y, or Z cone spacing is shown on this sheet.

Unless otherwise specified in the special provisions, all temporary warning signs shall have black legend on fluorescent orange background.

California codes are designated by (CA). Otherwise, Federal (MUTCD) codes are shown.

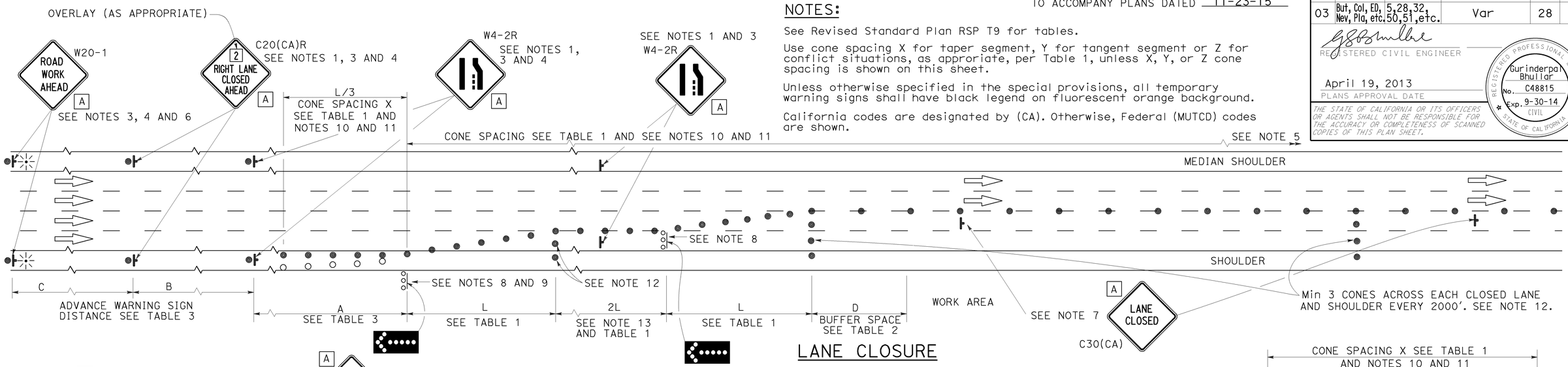

LANE CLOSURE

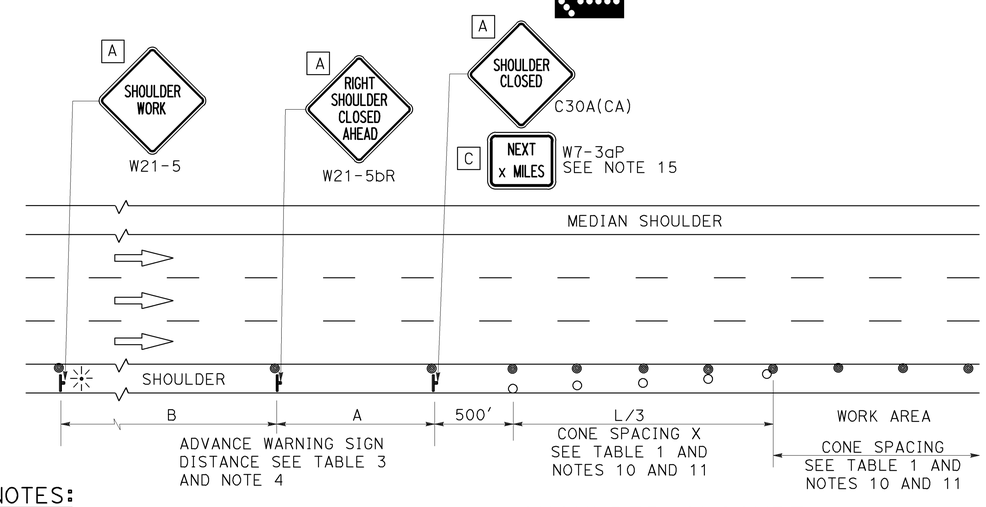

SHOULDER CLOSURE

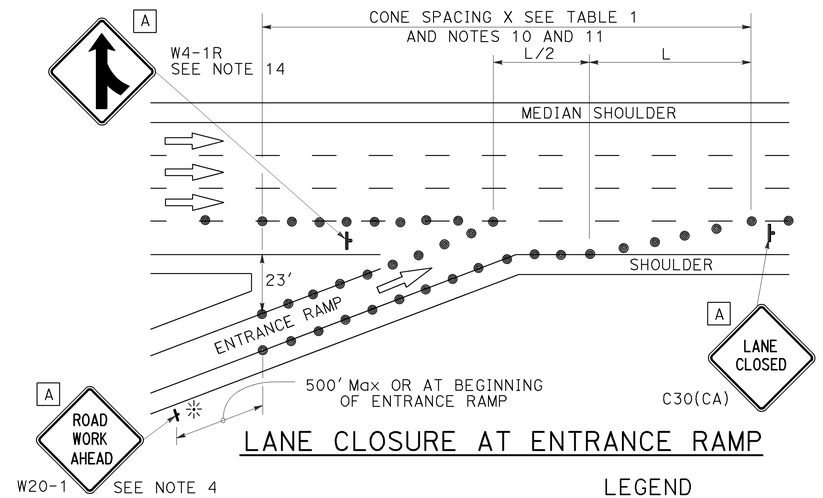

LANE CLOSURE AT ENTRANCE RAMP

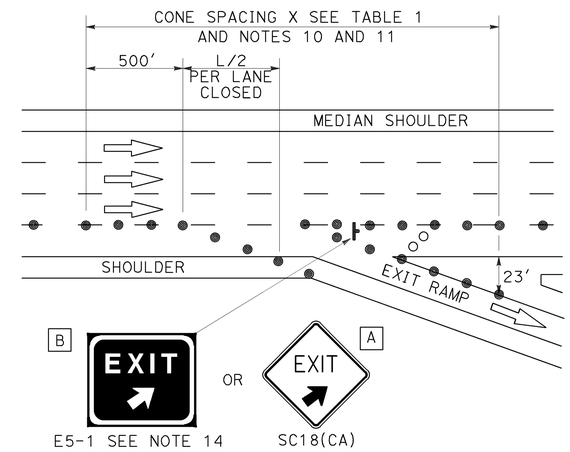

LANE CLOSURE AT EXIT RAMP

NOTES:

1. Median lane closures shall conform to the details as shown except that C20(CA)L and W4-2L signs shall be used.
2. At least one person shall be assigned to provide full time maintenance of traffic control devices for lane closures.
3. Duplicate sign installations are not required:
   a) On opposite shoulder if at least one-half of the available lanes remain open to traffic.
   b) In the median if the width of the median shoulder is less than 8' and the outside lanes are to be closed.
4. Each advance warning sign on each side of the roadway shall be equipped with at least two flags for daytime closure. Each flag shall be at least 16" x 16" in size and shall be orange or fluorescent red-orange in color. Flashing beacons shall be placed at the locations indicated for lane closure during hours of darkness.
5. A G20-2 "END ROAD WORK" sign, with minimum size of 48" x 24" as appropriate, shall be placed at the end of the lane closure unless the end of work area is obvious or ends within a larger project's limits.
6. If the W20-1 sign would follow within 2000' of a stationary W20-1 or G20-1 "ROAD WORK NEXT _____ MILES", use a C20(CA) sign for the first advance warning sign.
7. Place a C30(CA) sign every 2000' throughout length of lane closure.
8. One flashing arrow sign for each lane closed. The flashing arrow signs shall be Type I.
9. A minimum 1500' of sight distance shall be provided where possible for vehicles approaching the first flashing arrow sign. Lane closures shall not begin at top of crest vertical curve or on a horizontal curve.
10. All cones used for lane closures during the hours of darkness shall be fitted with retroreflective bands (or sleeves) as specified in the specifications.
11. Portable delineators, placed at one-half the spacing indicated for traffic cones may be used instead of cones for daytime closures only.
12. Unless otherwise specified in the special provisions, a minimum of 3 cones shall be placed transversely across each closed lane and shoulder at each location where a taper across a traffic lane ends and every 2000' as shown on the "Lane Closure" detail. Two Type II barricades may be used instead of the 3 cones. The transverse alignment of the cones or barricades on the closed shoulder may be shifted from the transverse alignment to provide access to the work.
13. Unless otherwise specified in the special provisions, the 2L tangent shown along lane lines shall be used between the L tapers required for each closed traffic lane.
14. Unless otherwise specified in the special provisions, the E5-1 or SC18(CA) and W4-1 signs shall be used as shown.
15. A W7-3aP "NEXT____ MILES" plaque must be used if theshoulder closure extends beyond the distance that can be perceived by road users.

LEGEND

- TRAFFIC CONE
- TRAFFIC CONE (OPTIONAL TAPER)
- TEMPORARY TRAFFIC CONTROL SIGN
- FLASHING ARROW SIGN (FAS)
- FAS SUPPORT OR TRAILER
- PORTABLE FLASHING BEACON

SIGN PANEL SIZE (Min)

A	48" x 48"
B	72" x 60"
C	36" x 30"

STATE OF CALIFORNIA
DEPARTMENT OF TRANSPORTATION

TRAFFIC CONTROL SYSTEM FOR LANE CLOSURE ON FREEWAYS AND EXPRESSWAYS

NO SCALE

RSP T10 DATED APRIL 19, 2013 SUPERSEDES STANDARD PLAN T10 DATED MAY 20, 2011 - PAGE 237 OF THE STANDARD PLANS BOOK DATED 2010.

REVISED STANDARD PLAN RSP T10

2010 REVISED STANDARD PLAN RSP T10

12-18-12

TO ACCOMPANY PLANS DATED 11-23-15

Dist	COUNTY	ROUTE	POST MILES TOTAL PROJECT	SHEET No.	TOTAL SHEETS
03	But, Col, ED, Nev, Plq, etc.	5,28,32, 50,51,etc.	Var	29	42

REGISTERED CIVIL ENGINEER

April 19, 2013
PLANS APPROVAL DATE

REGISTERED PROFESSIONAL ENGINEER Gurinderpal Bhullar No. C48815 Exp. 9-30-14 CIVIL STATE OF CALIFORNIA

THE STATE OF CALIFORNIA OR ITS OFFICERS OR AGENTS SHALL NOT BE RESPONSIBLE FOR THE ACCURACY OR COMPLETENESS OF SCANNED COPIES OF THIS PLAN SHEET.

NOTES: See Revised Standard Plan RSP T9 for tables.

Use cone spacing X for taper segment, Y for tangent segment or Z for conflict situations, as approriate, per Table 1, unless X, Y, or Z cone spacing is shown on this sheet.

Unless otherwise specified in the special provisions, all temporary warning signs shall have black legend on fluorescent orange background.

California codes are designated by (CA). Otherwise, Federal (MUTCD) codes are shown.

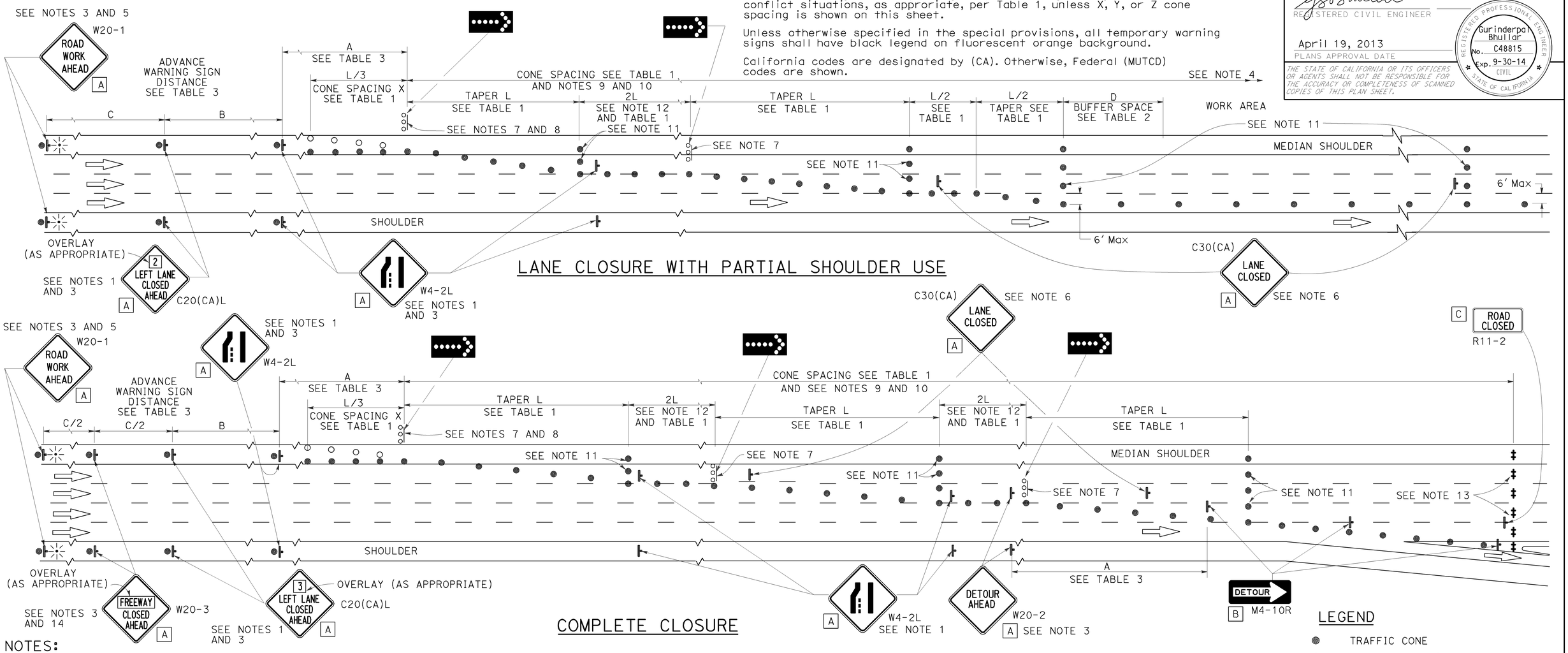

LANE CLOSURE WITH PARTIAL SHOULDER USE

COMPLETE CLOSURE

NOTES:

1. Lane closures on the right side using partial median shoulder as a traffic lane shall conform to the details as shown except that C20(CA)R and W4-2R signs shall be used.
2. At least one person shall be assigned to provide full time maintenance of traffic control devices for lane closures.
3. Each advance warning sign on each side of the roadway shall be equipped with at least two flags for daytime closure. Each flag shall be at least 16" X 16" in size and shall be orange or fluorescent red-orange in color. Flashing beacons shall be placed at the locations indicated for lane closure during hours of darkness.
4. A G20-2 "END ROAD WORK" sign, with minimum size of 48" x 24" as appropriate, shall be placed at the end of the lane closure unless the end of work area is obvious or ends within a larger project's limits.
5. If the W20-1 sign would follow within 2000' of a stationary W20-1 or G20-1 "ROAD WORK NEXT ___ MILES", use a C20(CA) sign for the first advance warning sign.
6. Place a C30(CA) sign every 2000' throughout length of lane closure.
7. One flashing arrow sign for each lane closed. The flashing arrow signs shall be Type I.
8. A minimum 1500' of sight distance shall be provided where possible for vehicles approaching the first flashing arrow sign. Lane closures shall not begin at the top of crest vertical curve or on a horizontal curve.
9. All cones used for lane closures during the hours of darkness shall be fitted with retroreflective bands (or sleeves) as specified in the specifications.
10. Portable delineators, placed at one-half the spacing indicated for traffic cones, may be used instead of cones for daytime closures only.
11. Unless otherwise specified in the special provisions, a minimum of 3 cones shall be placed transversely across each closed lane and shoulder at each location where a taper across a traffic lane ends and every 2000' as shown on the "Lane Closure With Partial Shoulder Use" detail. Two Type II barricades may be used instead of the 3 cones. The transverse alignment of the cones or barricades on the closed shoulder may be shifted from the transverse alignment to provide access to the work.
12. Unless otherwise specified in the special provisions, the 2L tangent shown along lane lines shall be used between the L tapers required for each closed traffic lane.
13. A minimum of Two Type II or III barricades shall be placed across each closed lane and shoulder at the location shown and every 2000' within the complete closure area. Within the complete closure area, the transverse alignment of the barricades on the closed shoulder may be shifted from the transverse alignment to provide access to the work.
14. When specified in the special provisions, a W20-2 "DETOUR AHEAD" sign is to be used in place of the W20-3 "FREEWAY CLOSED AHEAD" sign.

SIGN PANEL SIZE (Min)

A	48" x 48"
B	48" x 18"
C	48" x 30"

LEGEND

- TRAFFIC CONE
- TRAFFIC CONE (OPTIONAL TAPER)
- TEMPORARY TRAFFIC CONTROL SIGN
- FLASHING ARROW SIGN (FAS)
- FAS SUPPORT OR TRAILER
- PORTABLE FLASHING BEACON

STATE OF CALIFORNIA
DEPARTMENT OF TRANSPORTATION

TRAFFIC CONTROL SYSTEM FOR LANE CLOSURES ON FREEWAYS AND EXPRESSWAYS

NO SCALE

RSP T10A DATED APRIL 19, 2013 SUPERSEDES STANDARD PLAN T10A DATED MAY 20, 2011 - PAGE 238 OF THE STANDARD PLANS BOOK DATED 2010.

REVISED STANDARD PLAN RSP T10A

2010 REVISED STANDARD PLAN RSP T10A

12-18-13

Dist	COUNTY	ROUTE	POST MILES TOTAL PROJECT	SHEET No.	TOTAL SHEETS
03	But, Col, ED, Nev, Plq, etc.	5,28,32, 50,51,etc.	Var	30	42

REGISTERED CIVIL ENGINEER

April 19, 2013
PLANS APPROVAL DATE

REGISTERED PROFESSIONAL ENGINEER
Gurinderpal Bhullar
No. C48815
Exp. 9-30-14
CIVIL
STATE OF CALIFORNIA

THE STATE OF CALIFORNIA OR ITS OFFICERS OR AGENTS SHALL NOT BE RESPONSIBLE FOR THE ACCURACY OR COMPLETENESS OF SCANNED COPIES OF THIS PLAN SHEET.

TO ACCOMPANY PLANS DATED 11-23-15

2010 REVISED STANDARD PLAN RSP T11

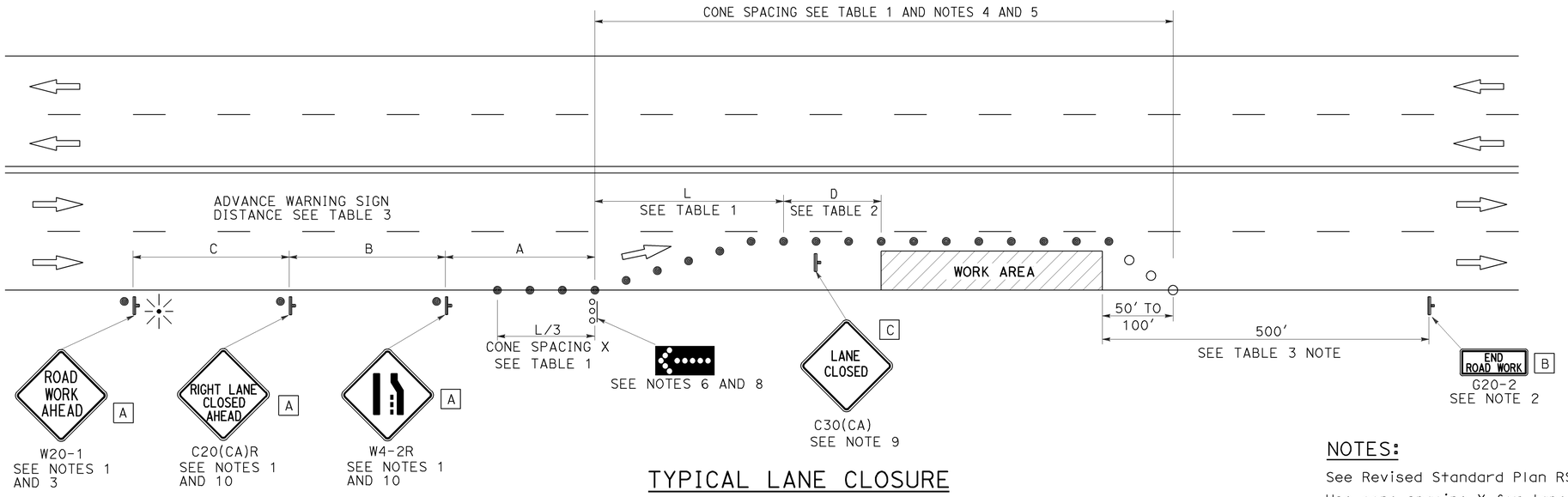

TYPICAL LANE CLOSURE

NOTES:

See Revised Standard Plan RSP T9 for tables.

Use cone spacing X for taper segment, Y for tangent segment or Z for conflict situations, as approriate, per Table 1, unless X, Y, or Z cone spacing is shown on this sheet.

Unless otherwise specified in the special provisions, all temporary warning signs shall have black legend on fluorescent orange background.

California codes are designated by (CA). Otherwise, Federal (MUTCD) codes are shown.

LEGEND

- TRAFFIC CONE
- TRAFFIC CONE (OPTIONAL TAPER)
- TEMPORARY TRAFFIC CONTROL SIGN
- FLASHING ARROW SIGN (FAS)
- FAS SUPPORT OR TRAILER
- PORTABLE FLASHING BEACON

SIGN PANEL SIZE (Min)

A	48" × 48"
B	36" × 18"
C	30" × 30"

NOTES:

1. Each advance warning sign shall be equipped with at least two flags for daytime closure. Each flag shall be at least 16" x 16" in size and shall be orange or fluorescent red-orange in color. Flashing beacons shall be placed at the locations indicated for lane closure during hours of darkness.
2. A G20-2 "END ROAD WORK" sign, as appropriate, shall be placed at the end of the lane closure unless the end of work area is obvious, or ends within a larger project's limits.
3. If the W20-1 sign would follow within 2000' of a stationary W20-1 or G20-1 "ROAD WORK NEXT _____ MILES", use a C20(CA) sign for the first advance warning sign.
4. All cones used for lane closures during the hours of darkness shall be fitted with retroreflective bands (or sleeves) as specified in the specifications.
5. Portable delineators, placed at one-half the spacing indicated for traffic cones, may be used instead of cones for daytime closures only.
6. Flashing arrow sign shall be either Type I or Type II.
7. For approach speeds over 50 mph, use the "Traffic Control System for Lane Closure On Freeways And Expressways" plan for lane closure details and requirements.
8. A minimum 1500' of sight distance shall be provided where possible for vehicles approaching the first flashing arrow sign. Lane closures shall not begin at the top of crest vertical curve or on a horizontal curve.
9. Place a C30(CA) sign every 2000' throughout length of lane closure.
10. Median lane closures shall conform to the details as shown except that C20(CA)L and W4-2L signs shall be used.
11. At least one person shall be assigned to provide full time maintenance of traffic control devices for lane closure unless, otherwise directed by the Engineer.

STATE OF CALIFORNIA
DEPARTMENT OF TRANSPORTATION

TRAFFIC CONTROL SYSTEM FOR LANE CLOSURE ON MULTILANE CONVENTIONAL HIGHWAYS

NO SCALE

RSP T11 DATED APRIL 19, 2013 SUPERSEDES STANDARD PLAN T11 DATED MAY 20, 2011 - PAGE 239 OF THE STANDARD PLANS BOOK DATED 2010.

REVISED STANDARD PLAN RSP T11

Dist	COUNTY	ROUTE	POST MILES TOTAL PROJECT	SHEET No.	TOTAL SHEETS
03	But, Col, ED, Nev, Pla, etc.	5,28,32, 50,51,etc.	Var	31	42

Devinder Singh
REGISTERED CIVIL ENGINEER

October 30, 2015
PLANS APPROVAL DATE

REGISTERED PROFESSIONAL ENGINEER
Devinder Singh
No. C50470
Exp. 6-30-17
CIVIL
STATE OF CALIFORNIA

THE STATE OF CALIFORNIA OR ITS OFFICERS OR AGENTS SHALL NOT BE RESPONSIBLE FOR THE ACCURACY OR COMPLETENESS OF SCANNED COPIES OF THIS PLAN SHEET.

TO ACCOMPANY PLANS DATED 11-23-15

2010 REVISED STANDARD PLAN RSP T13

NOTES:

See Revised Standard Plan RSP T9 for tables.

Use cone spacing X for taper segment, Y for tangent segment or Z for conflict situations, as approriate, per Table 1, unless X, Y, or Z cone spacing is shown on this sheet.

Unless otherwise specified in the special provisions, all temporary warning signs shall have black legend on fluorescent orange background.

California codes are designated by (CA). Otherwise, Federal (MUTCD) codes are shown.

TYPICAL LANE CLOSURE WITH REVERSIBLE CONTROL

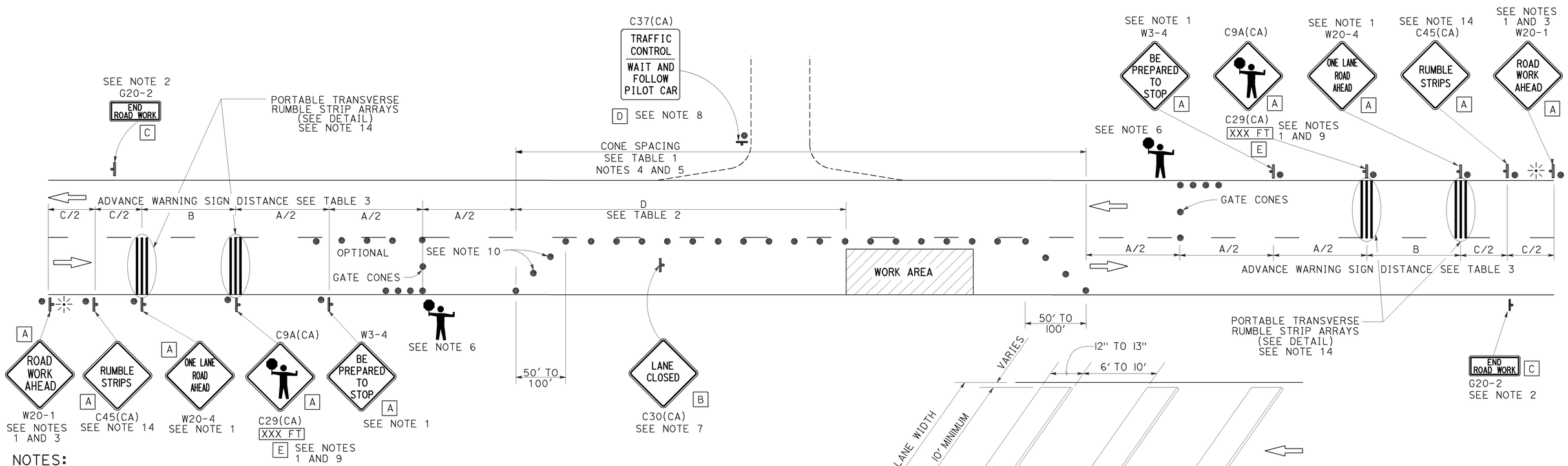

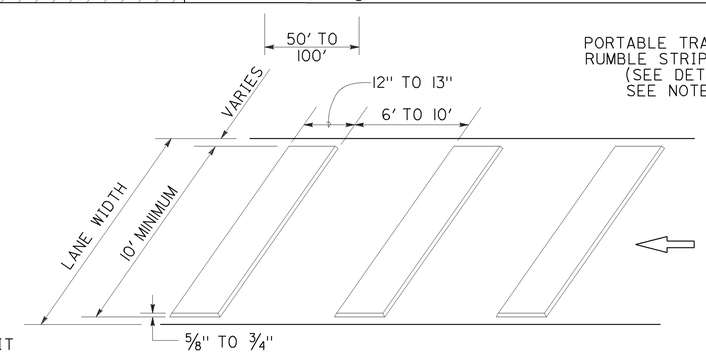

PORTABLE TRANSVERSE RUMBLE STRIP ARRAY DETAIL

NOTES:

1. Each advance warning sign in each direction of travel shall be equipped with at least two flags for daytime closure. Each flag shall be at least 16" x 16" in size and shall be orange or fluorescent red-orange in color. Flashing beacons shall be placed at the locations indicated for lane closure during hours of darkness.
2. A G20-2 "END ROAD WORK" sign, as appropriate, shall be placed at the end of the lane control unless the end of work area is obvious, or ends within a larger project's limits.
3. If the W20-1 sign would follow within 2000' of a stationary W20-1 or G20-1 "ROAD WORK NEXT _____ MILES", use a W20-4 sign for the first advance warning sign.
4. All cones used for lane closures during the hours of darkness shall be fitted with retroreflective bands (or sleeves) as specified in the specifications.
5. Portable delineators, placed at one-half the spacing indicated for traffic cones, may be used instead of cones for daytime closures only.
6. Additional advance flaggers may be required. Flagger should stand in a conspicuous place, be visible to approaching traffic as well as approaching vehicles after the first vehicle has stopped. During the hours of darkness, the flagging-station and flagger shall be illuminated and clearly visible to approaching traffic. The illumination footprint of the lighting on the ground shall be at least 20' in diameter. Place a minimum of four cones at 50' intervals in advance of flagger station as shown.
7. Place C30(CA) "LANE CLOSED" sign at 500' to 1000' intervals throughout extended work areas. They are optional if the work area is visible from the flagger station.
8. When a pilot car is used, place a C37(CA) "TRAFFIC CONTROL-WAIT AND FOLLOW PILOT CAR" sign with black legend on white background at all intersections, driveways and alleys without a flagger within traffic control area. Signs shall be clean and visible at all times. Where traffic can not be effectively self-regulated, at least one flagger shall be used at each intersection within traffic control area.
9. An optional C29(CA) sign may be placed below the C9A(CA) sign.
10. Either traffic cones or barricades shall be placed on the taper. Barricades shall be Type I, II, or III.
11. The color of the portable transverse rumble strips shall be black or orange. Use 2 arrays, each array shall consist of 3 rumble strips.
12. Portable transverse rumble strips shall not be placed on sharp horizontal or vertical curves nor shall they be placed through pedestrian crossings.
13. If the portable transverse rumble strips become out of alignment (skewed) by more than 6 inches, measured from one end to the other, they shall be readjusted to bring the placement back to the original location.
14. Portable transverse rumble strips are not required if any one of the following conditions is satisfied:
    A. Work duration occupies a location for four hours or less
    B. Posted speed limit is below 45 MPH
    C. Work is of emergency nature
    D. Work zone is in snow or icy weather conditions

LEGEND

- TRAFFIC CONE
- TEMPORARY TRAFFIC CONTROL SIGN
- PORTABLE FLASHING BEACON
- FLAGGER

SIGN PANEL SIZE (Min)

A	48" x 48"
B	30" x 30"
C	36" x 18"
D	36" x 42"
E	20" x 7"

STATE OF CALIFORNIA
DEPARTMENT OF TRANSPORTATION

TRAFFIC CONTROL SYSTEM FOR LANE CLOSURE ON TWO LANE CONVENTIONAL HIGHWAYS

NO SCALE

RSP T13 DATED OCTOBER 30, 2015 SUPERSEDES RSP T13 DATED OCTOBER 17, 2014, RSP T13 DATED JULY 18, 2014 AND RSP T13 DATED APRIL 19, 2013 AND STANDARD PLAN T13 DATED MAY 20, 2011 - PAGE 241 OF THE STANDARD PLANS BOOK DATED 2010.

REVISED STANDARD PLAN RSP T13

10-13-15

Dist	COUNTY	ROUTE	POST MILES TOTAL PROJECT	SHEET No.	TOTAL SHEETS
03	But, Col, ED, Nev, Plq, etc.	5,28,32, 50,51,etc.	Var	32	42

REGISTERED CIVIL ENGINEER

April 19, 2013
PLANS APPROVAL DATE

REGISTERED PROFESSIONAL ENGINEER Gurinderpal Bhullar No. C48815 Exp. 9-30-14 CIVIL STATE OF CALIFORNIA

THE STATE OF CALIFORNIA OR ITS OFFICERS OR AGENTS SHALL NOT BE RESPONSIBLE FOR THE ACCURACY OR COMPLETENESS OF SCANNED COPIES OF THIS PLAN SHEET.

TO ACCOMPANY PLANS DATED 11-23-15

TYPICAL RAMP CLOSURES

SIGN PANEL SIZE (Min)

- A 48" x 48"
- B 48" x 30"
- C 36" x 36"
- D 48" x 36"

LEGEND

- TRAFFIC CONE
- TEMPORARY TRAFFIC CONTROL SIGN
- BARRICADES
- PORTABLE FLASHING BEACON

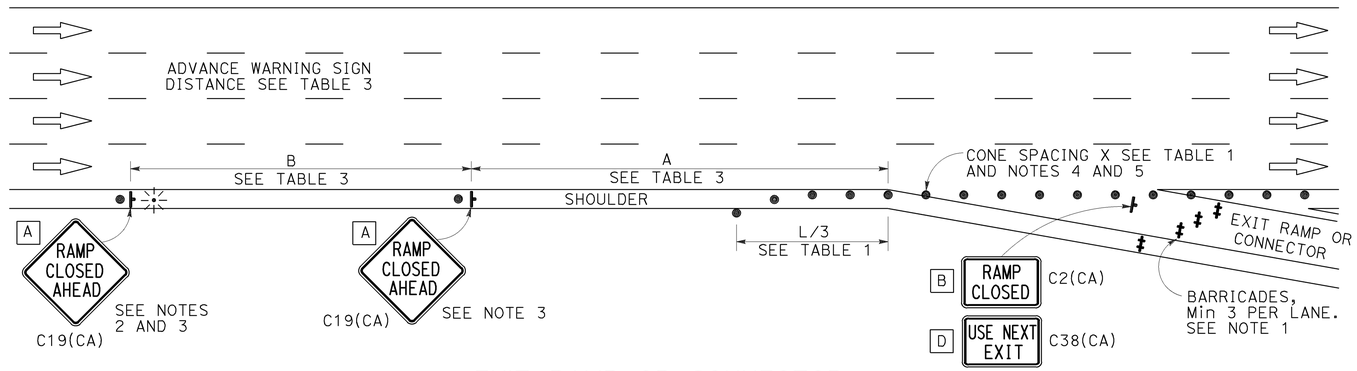

EXIT RAMP OR CONNECTOR

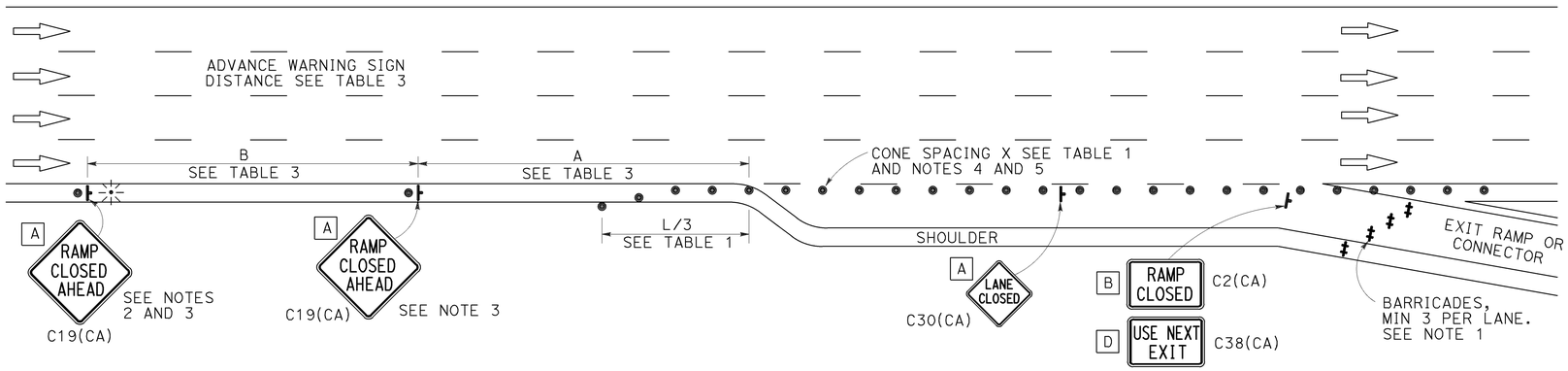

EXIT RAMP OR CONNECTOR WITH ADDITIONAL LANE

NOTES:

1. Barricades shall be Type I, II, or III for closures lasting one week or less and Type III for closures lasting longer than one week.
2. In addition to placing the C19(CA) "RAMP CLOSED AHEAD" and C30(CA) "RAMP CLOSED" signs, black on orange overlay plates with the word "CLOSED" may be mounted, as directed by the Engineer, on all guide signs that refer to the closed ramp. The letter size on the overlay shall be the same as the guide sign.
3. Each advance C19(CA) "RAMP CLOSED AHEAD" sign shall be equipped with at least two flags for daytime closure. Each flag shall be at least 16" x 16" in size and shall be orange or fluorescent red-orange in color. A flashing beacon shall be placed on top of the first C19(CA) sign during hours of darkness.
4. All cones used for ramp closures during the hours of darkness shall be fitted with retroreflective bands (or sleeves) as specified in the specifications.
5. Portable delineators, placed at one-half the spacing indicated for traffic cones, may be used instead of cones for daytime ramp closures only.
6. At least one person shall be assigned to provide full time maintenance of traffic control devices, unless otherwise directed by the Engineer.
7. The existing "EXIT" signs shall be covered during ramp closures.
8. A minimum of 3 cones shall be placed transversely across each closed lane and shoulder.

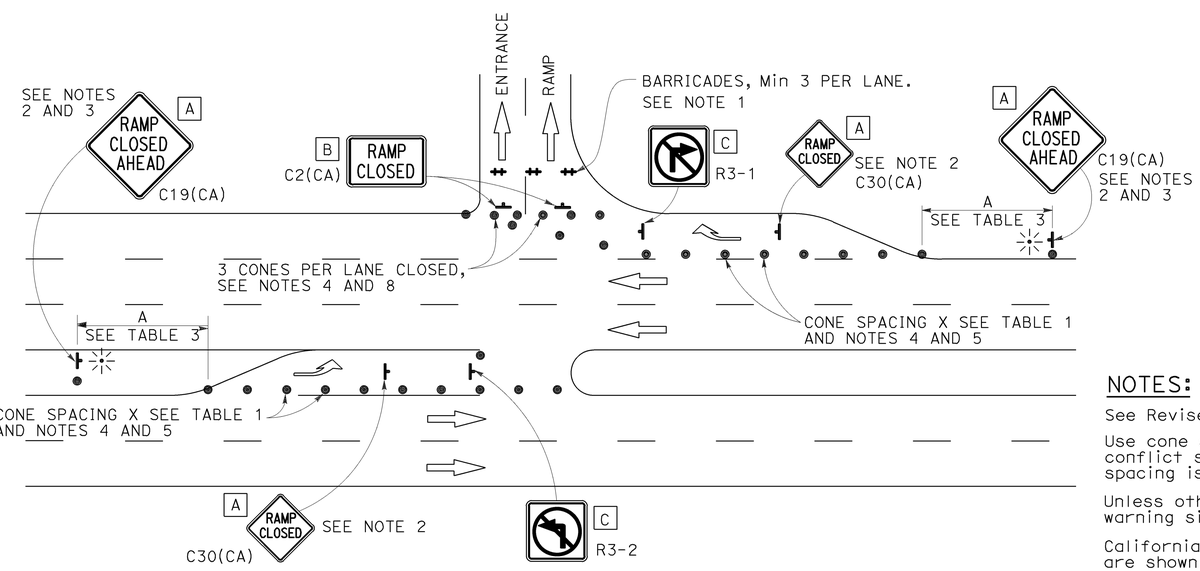

ENTRANCE RAMP WITH TURNING POCKETS

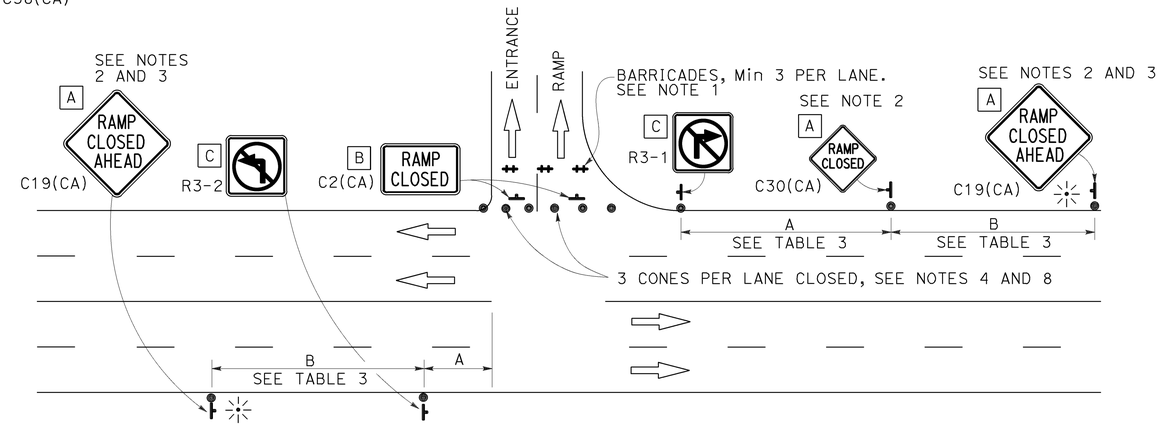

ENTRANCE RAMP WITHOUT TURNING POCKETS

NOTES:

See Revised Standard Plan RSP T9 for tables.

Use cone spacing X for taper segment, Y for tangent segment or Z for conflict situations, as approriate, per Table 1, unless X, Y, or Z cone spacing is shown on this sheet.

Unless otherwise specified in the special provisions, all temporary warning signs shall have black legend on fluorescent orange background.

California codes are designated by (CA). Otherwise, Federal (MUTCD) codes are shown.

STATE OF CALIFORNIA
DEPARTMENT OF TRANSPORTATION

TRAFFIC CONTROL SYSTEM FOR RAMP CLOSURE

NO SCALE

RSP T14 DATED APRIL 19, 2013 SUPERSEDES STANDARD PLAN T14 DATED MAY 20, 2011 - PAGE 242 OF THE STANDARD PLANS BOOK DATED 2010.

REVISED STANDARD PLAN RSP T14

2010 REVISED STANDARD PLAN RSP T14

12-18-12

Dist	COUNTY	ROUTE	POST MILES TOTAL PROJECT	SHEET No.	TOTAL SHEETS
03	But, Col, ED, Nev, Plq, etc.	5,28,32, 50,51,etc.	Var	33	42

Theresa Gabriel
REGISTERED ELECTRICAL ENGINEER

October 30, 2015
PLANS APPROVAL DATE

REGISTERED PROFESSIONAL ENGINEER Theresa Aziz Gabriel No. E15129 Exp. 6-30-16 ELECTRICAL STATE OF CALIFORNIA

THE STATE OF CALIFORNIA OR ITS OFFICERS OR AGENTS SHALL NOT BE RESPONSIBLE FOR THE ACCURACY OR COMPLETENESS OF SCANNED COPIES OF THIS PLAN SHEET.

TO ACCOMPANY PLANS DATED 11-23-15

LEGEND:

AB	ABANDON. IF APPLIED TO CONDUIT, REMOVE CONDUCTORS
BC	INSTALL PULL BOX IN EXISTING CONDUIT RUN
BP	PEDESTRIAN BARRICADE, TYPE AS INDICATED ON PLAN
CB	INSTALL CONDUIT INTO EXISTING PULL BOX
CC	CONNECT NEW AND EXISTING CONDUIT. REMOVE EXISTING CONDUCTORS AND INSTALL CONDUCTORS AS INDICATED
CF	CONDUIT TO REMAIN FOR FUTURE USE. REMOVE CONDUCTORS. INSTALL PULL TAPE
DH	DETECTOR HANDHOLE
FA	FOUNDATION TO BE ABANDONED
IS	INSTALL SIGN ON SIGNAL MAST ARM
NS	NO SLIP BASE ON STANDARD
PEC	PHOTOELECTRIC CONTROL
PEU	PHOTOELECTRIC UNIT
RC	EQUIPMENT OR MATERIAL TO BE REMOVED AND BECOME THE PROPERTY OF THE CONTRACTOR
RE	REMOVE ELECTROLIER, FUSES AND BALLAST. TAPE ENDS OF CONDUCTORS
RL	RELOCATE EQUIPMENT
RR	REMOVE AND REUSE EQUIPMENT
RS	REMOVE AND SALVAGE EQUIPMENT
SC	SPLICE NEW TO EXISTING CONDUCTORS
SD	SERVICE DISCONNECT
TSP	TELEPHONE SERVICE POINT

ABBREVIATIONS

AC+	UNDERGROUNDED CONDUCTOR
APS	ACCESSIBLE PEDESTRIAN SIGNAL
Batt	BATTERY
BBS	BATTERY BACKUP SYSTEM
BC	BOLT CIRCLE
Blk	BLACK
BP	BYPASS
BPB	BICYCLE PUSH BUTTON
C	CONDUIT
CB	CIRCUIT BREAKER
CCTV	CLOSED CIRCUIT TELEVISION
Ckt	CIRCUIT
CMS	CHANGEABLE MESSAGE SIGN
Ctid	CALTRANS IDENTIFICATION
Comm	COMMUNICATION
Cntl	CONTROL
DF	DEPARTMENT-FURNISHED
DLC	LOOP DETECTOR LEAD-IN CABLE
EMS	EXTINGUISHABLE MESSAGE SIGN
EVUC	EMERGENCY VEHICLE UNIT CABLE
EVUD	EMERGENCY VEHICLE UNIT DETECTOR
FB	FLASHING BEACON
FBCA	FLASHING BEACON CONTROL ASSEMBLY
FBS	FLASHING BEACON WITH SLIP BASE
FO	FIBER OPTIC
G	EQUIPMENT GROUNDING CONDUCTOR
GB	GROUND BUS
GFCI	GROUND FAULT CIRCUIT INTERRUPTER
Grn	GREEN
HAR	HIGHWAY ADVISORY RADIO
Hex	HEXAGONAL
HPS	HIGH PRESSURE SODIUM
IISNS	INTERNALLY ILLUMINATED STREET NAME SIGN
ISL	INDUCTION SIGN LIGHTING
LED	LIGHT EMITTING DIODE
LMA	LUMINAIRE MAST ARM
LPS	LOW PRESSURE SODIUM
Ltg	LIGHTING
Lum	LUMINAIRE
M	METERED
MAT	MAST ARM MOUNTING TOP ATTACHMENT
MAS	MAST ARM MOUNTING SIDE ATTACHMENT
MBPS	MANUAL BYPASS SWITCH
M/M	MULTIPLE TO MULTIPLE TRANSFORMER
Mtg	MOUNTING
MV	MERCURY VAPOR LIGHTING FIXTURE
MVDS	MICROWAVE VEHICLE DETECTION SYSTEM
N	NEUTRAL (GROUNDED CONDUCTOR)
NB	NEUTRAL BUS
NC	NORMALLY CLOSE
NO	NORMALLY OPEN
P	CIRCUIT BREAKER'S POLE
PB	PULL BOX
PBA	PUSH BUTTON ASSEMBLY
PEC	PHOTOELECTRIC CONTROL
Ped	PEDESTRIAN
PEU	PHOTOELECTRIC UNIT
PT	CONDUIT WITH PULL TAPE
PTR	POWER TRANSFER RELAY
RE	RELOCATED EQUIPMENT
RM	RAMP METERING
RWIS	ROADSIDE WEATHER INFORMATION SYSTEM
SB	SLIP BASE
SIC	SIGNAL INTERCONNECT CABLE
Sig	SIGNAL
SMA	SIGNAL MAST ARM
SNS	STREET NAME SIGN
SP	SERVICE POINT
TB	TERMINAL BOARD
TDC	TELEPHONE DEMARCATION CABINET
Temp	TEMPERATURE
TMS	TRAFFIC MONITORING STATION
TOS	TRAFFIC OPERATIONS SYSTEM
UPS	UNINTERRUPTABLE POWER SUPPLY
UPSC	UNINTERRUPTABLE POWER SUPPLY CONTROLLER
Veh	VEHICLE
VIVDS	VIDEO IMAGE VEHICLE DETECTION SYSTEM
Wht	WHITE
WIM	WEIGH-IN-MOTION
Xfmr	TRANSFORMER

SOFFIT AND WALL-MOUNTED LUMINAIRES

- PENDANT SOFFIT LUMINAIRE, 70 W HPS UNLESS OTHERWISE SPECIFIED
- FLUSH-MOUNTED SOFFIT LUMINAIRE, 70 W HPS UNLESS OTHERWISE SPECIFIED
- WALL-MOUNTED LUMINAIRE, 70 W HPS UNLESS OTHERWISE SPECIFIED
- EXISTING SOFFIT OR WALL-MOUNTED LUMINAIRE TO REMAIN UNMODIFIED
- (M) EXISTING SOFFIT OR WALL-MOUNTED LUMINAIRE TO BE MODIFIED AS SPECIFIED

NOTE:
Arrow indicates "street side" of luminaire.

COMMONLY USED SYMBOLS FOR UNITED STATES CUSTOMARY UNITS OF MEASUREMENT:

SYMBOL	DEFINITIONS
Ω	OHMS
min	MINUTE
s	SECOND
bps	BITS PER SECOND
Bps	BYTES PER SECOND
A	AMPERE
V	VOLT
V(dc)	VOLT (DIRECT CURRENT)
V(ac)	VOLT (ALTERNATING CURRENT)
FC	FOOT - CANDLE
W	WATTS
VA	VOLT-AMPERE
M	MEGA
k	KILO
m	MILLI
μ	MICRO
P	PICO
Hz	HERTZ

MISCELLANEOUS ELECTROLIERS

NEW	EXISTING	
		LUMINAIRE ON WOOD POLE
		NON-STANDARD ELECTROLIER (SEE PROJECT LEGEND)
		CITY ELECTROLIER
		ELECTROLIER FOUNDATION (FUTURE INSTALLATION)

NOTES:

1. LED luminaires shall be 235 W when installed on Type 21, 21D, 30, 31 and 32 Standards, unless otherwise specified. LED luminaires shall be 165 W when installed on other type standards or poles, unless otherwise specified.
2. Luminaires shall be the cutoff type, ANSI Type III medium cutoff lighting distribution, unless otherwise specified.

STANDARD ELECTROLIER

NEW	EXISTING	STANDARD TYPE
		15
		15D
		15 STRUCTURE
		15D STRUCTURE
		21
		21D
		21 STRUCTURE
		21D STRUCTURE
		30
		31
		32

STATE OF CALIFORNIA
DEPARTMENT OF TRANSPORTATION

ELECTRICAL SYSTEMS (LEGEND AND ABBREVIATIONS)

NO SCALE

RSP ES-1A DATED OCTOBER 30, 2015 SUPERSEDES RSP ES-1A DATED JULY 19, 2013 AND STANDARD PLAN ES-1A DATED MAY 20, 2011 - PAGE 425 OF THE STANDARD PLANS BOOK DATED 2010.

REVISED STANDARD PLAN RSP ES-1A

2010 REVISED STANDARD PLAN RSP ES-1A

Dist	COUNTY	ROUTE	POST MILES TOTAL PROJECT	SHEET No.	TOTAL SHEETS
03	But, Col, ED, Nev, Pla, etc.	5,28,32, 50,51,etc.	Var	34	42

Theresa Gabriel
REGISTERED ELECTRICAL ENGINEER

October 30, 2015
PLANS APPROVAL DATE

REGISTERED PROFESSIONAL ENGINEER
Theresa Aziz Gabriel
No. E15129
Exp. 6-30-16
ELECTRICAL
STATE OF CALIFORNIA

THE STATE OF CALIFORNIA OR ITS OFFICERS OR AGENTS SHALL NOT BE RESPONSIBLE FOR THE ACCURACY OR COMPLETENESS OF SCANNED COPIES OF THIS PLAN SHEET.

TO ACCOMPANY PLANS DATED 11-23-15

CONDUIT

NEW	EXISTING	
		LIGHTING CONDUIT, UNLESS OTHERWISE INDICATED OR NOTED
		TRAFFIC SIGNAL CONDUIT
C	c	COMMUNICATION CONDUIT
T	t	TELEPHONE CONDUIT
F	f	FIRE ALARM CONDUIT
FO	fo	FIBER OPTIC CONDUIT
		CONDUIT TERMINATION
R	r	CONDUIT RISER ATTACHED TO THE STRUCTURE OR SERVICE POLE

SERVICE EQUIPMENT

NEW	EXISTING	
OH	oh	OVERHEAD LINES
U	U	WOOD POLE, "U" INDICATES UTILITY OWNED
		POLE GUY WITH ANCHOR
		UTILITY TRANSFORMER - GROUND MOUNTED
III	III	SERVICE EQUIPMENT ENCLOSURE TYPE. DOOR INDICATES FRONT OF ENCLOSURE
T	t	TELEPHONE DEMARCATION CABINET

POLE-MOUNTED SERVICE DESIGNATION

TYPE H SERVICE, 28'-10" — TYPE OF INSTALLATION AND POLE HEIGHT ABOVE GRADE

FLASHING BEACON

NEW	EXISTING	
R	R	FLASHING BEACON (ONE VEHICLE SIGNAL HEAD WITH BACKPLATE AND VISOR) "R" INDICATES RED INDICATION, "Y" INDICATES YELLOW INDICATION
Y Y	Y Y	FLASHING BEACON WITH TYPE 15-FBS STANDARD AND A SIGN.
R R	R R	FLASHING BEACON WITH TYPES 9, 9A OR 9B SIGN UNLESS OTHERWISE SPECIFIED OR INDICATED

SIGNAL EQUIPMENT

NEW	EXISTING	
		PEDESTRIAN SIGNAL HEAD
		PUSH BUTTON ASSEMBLY POST
		PEDESTRIAN BARRICADE
		VEHICLE SIGNAL HEAD (WITH BACKPLATE AND 3-SECTIONS: RED, YELLOW AND GREEN)
		VEHICLE SIGNAL HEAD WITH ANGLE VISOR
PV	PV	MODIFICATIONS OF BASIC SYMBOL: "L" INDICATES ALL NON-ARROW SECTIONS LOUVERED "LG" INDICATES LOUVERED GREEN SECTION ONLY "PV" INDICATES ALL 12" SECTIONS PROGRAMMED VISIBILITY "8" INDICATES ALL 8" SECTIONS (ONLY WHEN SPECIFIED)
		VEHICLE SIGNAL HEAD CONSISTING OF RED, YELLOW AND GREEN LEFT ARROW SECTIONS
		VEHICLE SIGNAL HEAD CONSISTING OF RED AND YELLOW SECTIONS WITH AN UP GREEN ARROW SECTION
		VEHICLE SIGNAL HEAD (5 SECTION) CONSISTING OF RED, YELLOW AND GREEN SECTIONS WITH YELLOW AND GREEN RIGHT ARROW SECTIONS
		TYPE 15TS STANDARD WITH VEHICLE SIGNAL HEAD AND LUMINAIRE
		TYPE 21TS STANDARD WITH VEHICLE SIGNAL HEAD AND LUMINAIRE
		STANDARD WITH LUMINAIRE AND SIGNAL MAST ARMS AND ATTACHED VEHICLE SIGNAL HEADS
		TYPE 1 STANDARD WITH ATTACHED VEHICLE SIGNAL HEADS
		STANDARD WITH A SIGNAL MAST ARM, ATTACHED VEHICLE SIGNAL HEADS AND INTERNALLY ILLUMINATED STREET NAME SIGN
		CONTROLLER ASSEMBLY. DOOR INDICATES FRONT OF CABINET

SIGNAL EQUIPMENT Cont

NEW	EXISTING	
		GUARD POST
		TYPE 1 STANDARD WITH RAMP METERING SIGN
		OPTICAL DETECTOR FOR THE EMERGENCY VEHICLE DETECTION

NOTES:

1. All signal sections shall be 12" unless shown otherwise.
2. Signal heads shall be provided with backplates unless shown otherwise.

ILLUMINATED OVERHEAD SIGN

NEW	EXISTING	
		SINGLE POST, SINGLE ILLUMINATED SIGN, BALANCED BUTTERFLY
		SINGLE POST, DOUBLE ILLUMINATED SIGN, BALANCED BUTTERFLY
		SINGLE POST, SINGLE ILLUMINATED SIGN, FULL CANTILEVER
		DOUBLE POST, SINGLE ILLUMINATED SIGN
		SINGLE ILLUMINATED SIGN MOUNTED ON STRUCTURE
		DOUBLE POST, SINGLE ILLUMINATED SIGN WITH ELECTROLIER

STATE OF CALIFORNIA
DEPARTMENT OF TRANSPORTATION

ELECTRICAL SYSTEMS (LEGEND AND ABBREVIATIONS)

NO SCALE

RSP ES-1B DATED OCTOBER 30, 2015 SUPERSEDES RSP ES-1B DATED JULY 19, 2013 AND STANDARD PLAN ES-1B DATED MAY 20, 2011 - PAGE 426 OF THE STANDARD PLANS BOOK DATED 2010.

REVISED STANDARD PLAN RSP ES-1B

2010 REVISED STANDARD PLAN RSP ES-1B

8-19-15

Dist	COUNTY	ROUTE	POST MILES TOTAL PROJECT	SHEET No.	TOTAL SHEETS
03	But, Col, ED, Nev, Plq, etc.	5,28,32, 50,51,etc.	Var	35	42

Theresa Gabriel
REGISTERED ELECTRICAL ENGINEER

October 30, 2015
PLANS APPROVAL DATE

REGISTERED PROFESSIONAL ENGINEER
Theresa Aziz Gabriel
No. E15129
Exp. 6-30-16
ELECTRICAL
STATE OF CALIFORNIA

THE STATE OF CALIFORNIA OR ITS OFFICERS OR AGENTS SHALL NOT BE RESPONSIBLE FOR THE ACCURACY OR COMPLETENESS OF SCANNED COPIES OF THIS PLAN SHEET.

TO ACCOMPANY PLANS DATED 11-23-15

2010 REVISED STANDARD PLAN RSP ES-1C

EQUIPMENT IDENTIFICATION

ILLUMINATED SIGN IDENTIFICATION NUMBER:

SIGN No. 12345
10 ISL SCI 1.0

- SIGN NUMBER - PLACE ON POST OR STRUCTURE
- TRANSFORMER RATING (kVA)
- LIGHTING CONTROL TYPE
- NUMBER AND TYPE OF FIXTURES

DO NOT PLACE ON STANDARD OR STRUCTURE

ELECTROLIER OR EQUIPMENT IDENTIFICATION NUMBER:

12345 - 15'-0"

- MAST ARM LENGTH, IF SHOWN. DO NOT PLACE ON STANDARD OR STRUCTURE
- EQUIPMENT NUMBER - PLACE ON STANDARD OR STRUCTURE. EXISTING EQUIPMENT NUMBERS ARE SHOWN IN PARENTHESIS

CONDUIT AND CONDUCTOR IDENTIFICATION:

1½"C, 2#10, 15#14, 2 DLC, 12P#18

- PAIR
- NUMBER AND SIZE OF CONDUCTORS AND CABLES
- SIZE OF CONDUIT IN INCHES

Ø1, Ø2, Ø2P, etc.	TRAFFIC PHASE IDENTIFICATION FOR SIGNALS, DETECTORS AND PHASE DIAGRAMS
1 2 3	LEGEND NUMBERS
A B C	EQUIPMENT, SIGNAL POLES, INSTALLATION OR ITEMS
1 2 3	CONDUIT RUN NUMBERS

SIGNAL AND LIGHTING STANDARD (TYPICAL DESIGNATION):

19A - 3 - 100

- WIND VELOCITY = 100 mph
- CASE 3 ARM LOADING
- STANDARD TYPE
- STANDARD PLAN SHEET NUMBER
- DETAIL, NUMBER, SECTION, TYPE OR ELEVATION

MISCELLANEOUS EQUIPMENT

NEW	EXISTING	
CMS	cms	CHANGEABLE MESSAGE SIGN
		CLOSED CIRCUIT TELEVISION CAMERA
		HIGHWAY ADVISORY RADIO POLE AND ANTENNA
EMS	ems	LED EXTINGUISHABLE MESSAGE SIGN
M V	m v	DETECTION DEVICE M = MICROWAVE SENSOR V = VIDEO IMAGE SENSOR

WIRING DIAGRAM LEGEND

- EXTERNAL CONDUCTOR
- CONDUCTOR OR BUS
- TIE POINT
- CONTACTOR COIL
- CONTACTOR, NO CONTACT
- TERMINAL BLOCKS
- CONTACTOR, NC CONTACT
- ENCLOSURE BOND
- GROUNDING ELECTRODE
- CIRCUIT BREAKER
- RECEPTACLE

PULL BOXES

NEW	EXISTING	
		PULL BOX, No. 5 UNLESS OTHERWISE INDICATED OR NOTED
3	9A(21)	PULL BOX, ADDITIONAL DESIGNATIONS OR DESCRIPTIONS

3 No. 3½ PULL BOX
5 No. 5 PULL BOX
6 No. 6 PULL BOX
7 No. 7 (CEILING PULL BOX)
8 No. 8 (PENDANT SOFFIT PULL BOX)
9 No. 9 PULL BOX
9A No. 9A PULL BOX

(C) COMMUNICATIONS PULL BOX
(E) PULL BOX WITH EXTENSION
(S) SPRINKLER CONTROL PULL BOX
(21) ANCHOR BOLTS AND CONDUIT FOR FUTURE INSTALLATION OF TYPE 21 STANDARD
(T) TRAFFIC PULL BOX

VEHICLE DETECTORS

5 J 9 U

- VEHICLE DETECTOR DESIGNATION
- U = UPPER
  L = LOWER
- SLOT NUMBER IN INPUT FILE
- INPUT FILE (I OR J)
- PHASE

NEW	EXISTING	
		TYPE A LOOP DETECTOR. OUTLINE OF SAWCUT SHOWN
		TYPE B LOOP DETECTOR. OUTLINE OF SAWCUT SHOWN
		TYPE C LOOP DETECTOR. OUTLINE OF SAWCUT SHOWN
		TYPE D LOOP DETECTOR. OUTLINE OF SAWCUT SHOWN
		TYPE E LOOP DETECTOR. OUTLINE OF SAWCUT SHOWN
		TYPE Q LOOP DETECTOR. OUTLINE OF SAWCUT SHOWN
DH	dh	DETECTOR HANDHOLE
		MICROWAVE OR VIDEO DETECTION ZONE

STATE OF CALIFORNIA
DEPARTMENT OF TRANSPORTATION

ELECTRICAL SYSTEMS (LEGEND AND ABBREVIATIONS)

NO SCALE

RSP ES-1C DATED OCTOBER 30, 2015 SUPERSEDES RSP ES-1C DATED JULY 19, 2013 AND STANDARD PLAN ES-1C DATED MAY 20, 2011 - PAGE 427 OF THE STANDARD PLANS BOOK DATED 2010.

REVISED STANDARD PLAN RSP ES-1C

Dist	COUNTY	ROUTE	POST MILES TOTAL PROJECT	SHEET No.	TOTAL SHEETS
03	But, Col, ED, Nev, Pla, etc.	5,28,32, 50,51,etc.	Var	36	42

Theresa Gabriel
REGISTERED ELECTRICAL ENGINEER

October 30, 2015
PLANS APPROVAL DATE

REGISTERED PROFESSIONAL ENGINEER Theresa Aziz Gabriel No. E15129 Exp. 6-30-16 ELECTRICAL STATE OF CALIFORNIA

THE STATE OF CALIFORNIA OR ITS OFFICERS OR AGENTS SHALL NOT BE RESPONSIBLE FOR THE ACCURACY OR COMPLETENESS OF SCANNED COPIES OF THIS PLAN SHEET.

TO ACCOMPANY PLANS DATED _____

NOTES:

1. Cabinet dimensions are nominal.
2. Cabinet fan may be installed at an alternate location near the top of the cabinet when approved by the Engineer.

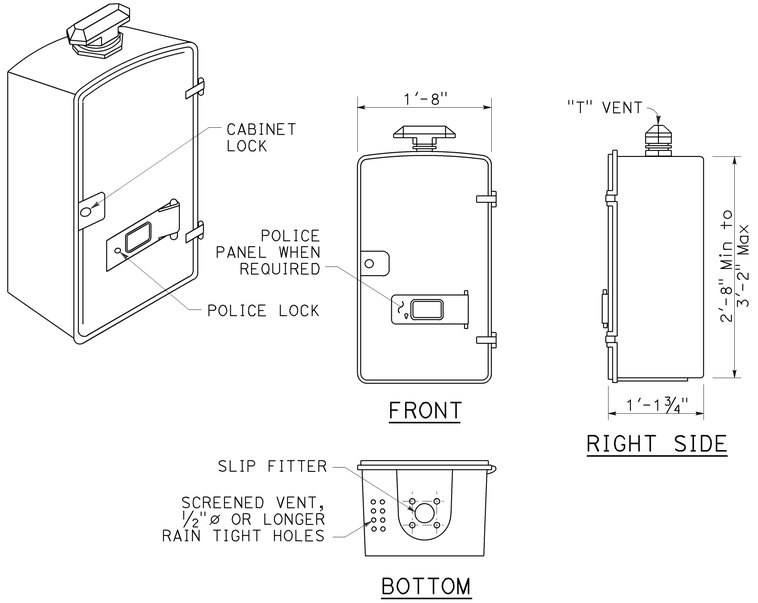

TYPE G CABINET

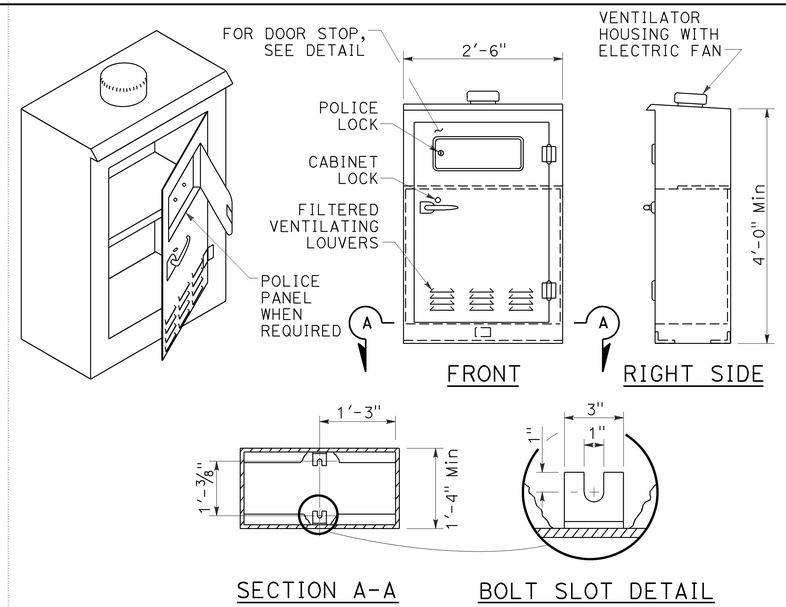

TYPE M CABINET

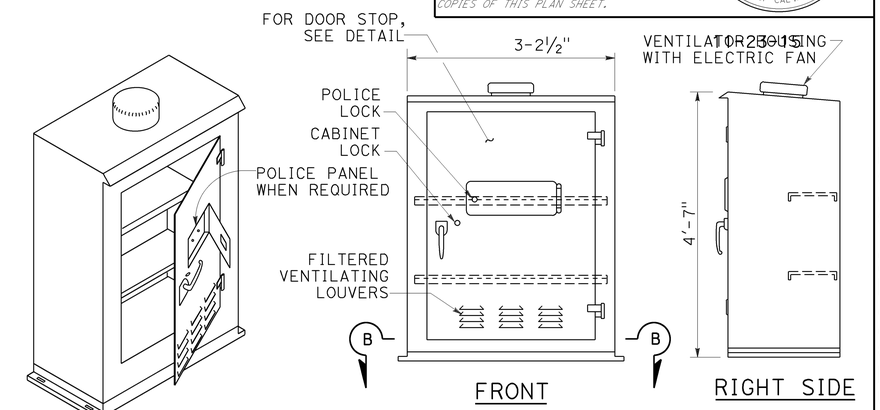

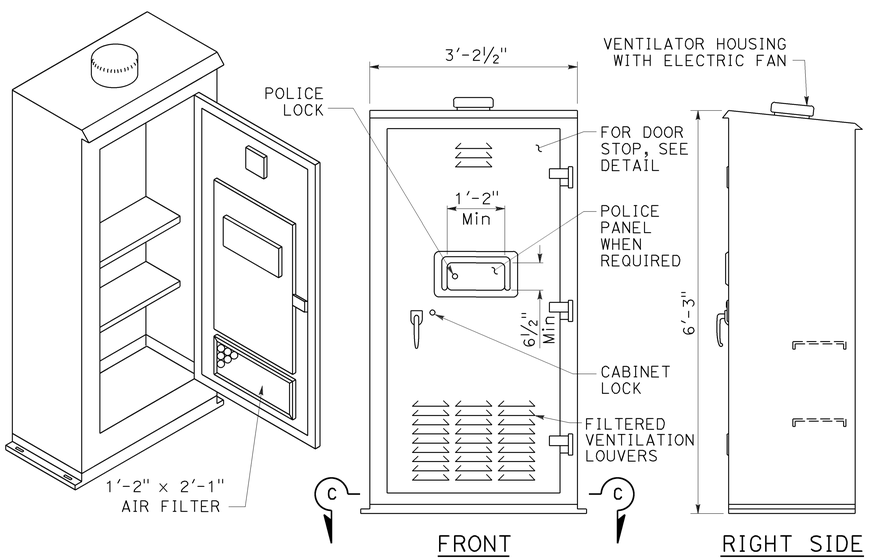

TYPE R CABINET

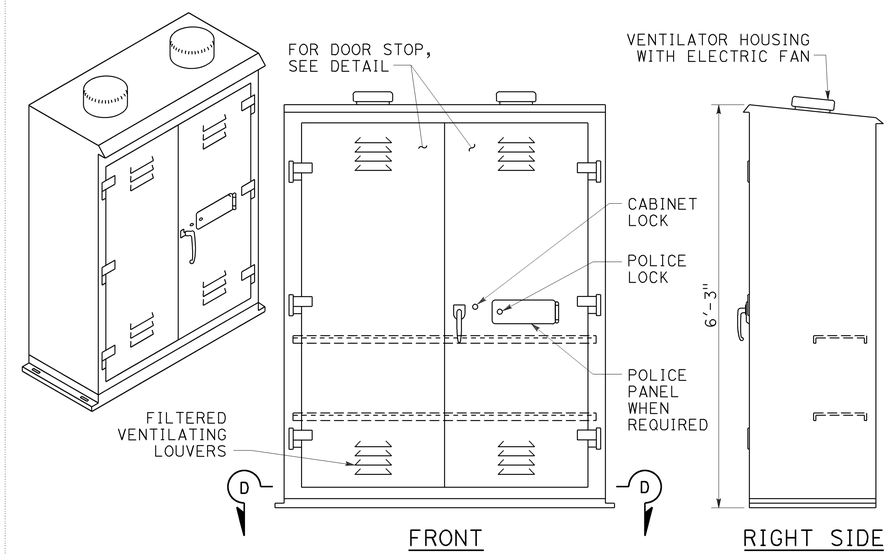

TYPE S CABINET

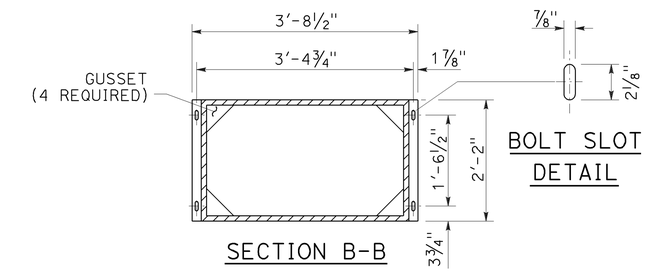

TYPE P CABINET

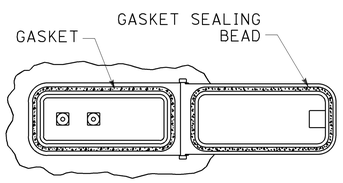

FRONT

POLICE PANEL

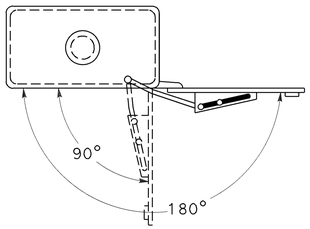

PLAN VIEW
DOOR STOP DETAIL
(2 POSITIONS)

STATE OF CALIFORNIA
DEPARTMENT OF TRANSPORTATION

ELECTRICAL SYSTEMS (CONTROLLER CABINET DETAILS)

NO SCALE

RSP ES-3A DATED OCTOBER 30, 2015 SUPERSEDES STANDARD PLAN ES-3A DATED MAY 20, 2011 - PAGE 435 OF THE STANDARD PLANS BOOK DATED 2010.

REVISED STANDARD PLAN RSP ES-3A

2010 REVISED STANDARD PLAN RSP ES-3A

8-19-15

Dist	COUNTY	ROUTE	POST MILES TOTAL PROJECT	SHEET No.	TOTAL SHEETS
03	But, Col, ED, Nev, Pla, etc.	5,28,32, 50,51,etc.	Var	37	42

REGISTERED CIVIL ENGINEER

October 30, 2015
PLANS APPROVAL DATE

REGISTERED PROFESSIONAL ENGINEER
Stanley P. Johnson
No. C57793
Exp. 3-31-16
CIVIL
STATE OF CALIFORNIA

THE STATE OF CALIFORNIA OR ITS OFFICERS OR AGENTS SHALL NOT BE RESPONSIBLE FOR THE ACCURACY OR COMPLETENESS OF SCANNED COPIES OF THIS PLAN SHEET.

TO ACCOMPANY PLANS DATED 11-23-15

2010 REVISED STANDARD PLAN RSP ES-6C

LUMINAIRE MAST ARM DATA			
M PROJECTED LENGTH	N RISE	Min OD AT POLE	NOMINAL THICKNESS
15'-0"	4'-9"±	4¼"	0.1196"
20'-0"	2'-6"±	5"	0.1793"

POLE DATA				
POLE EXTENSION TYPE	HEIGHT "H"	Min OD		THICKNESS
		BASE	TOP	
5	5'-0"	6½"	5 11/16"	0.1793"
10	10'-0"	7¼"		

NOTES:

1. The Contractor shall verify all controlling field dimensions before ordering or fabricating any material.
2. Bolt hole locations may vary at the discretion of the Engineer.
3. Wind Loading (Fastest Mile): 80 mph AASHTO.
4. See Standard Plan S13.
5. Unit stresses (Structural Steel):
   a. fy = 55,000 psi tapered steel tube (pole)
   b. fy = 50,000 psi unless otherwise noted

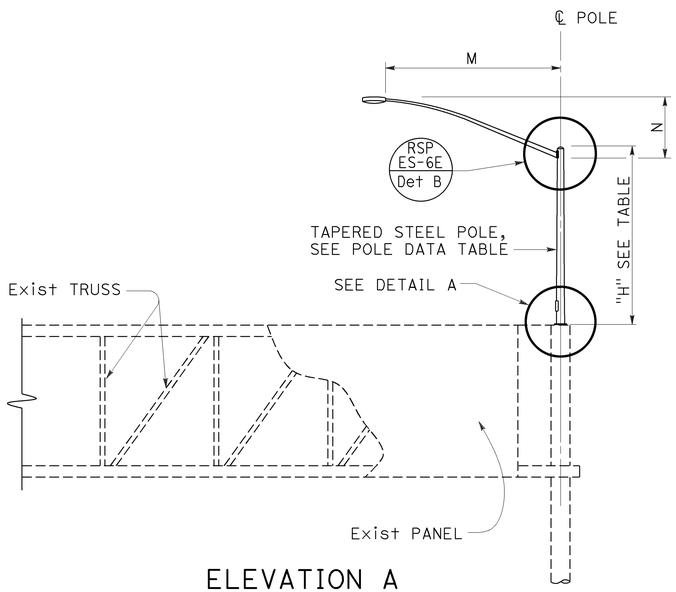

ELEVATION A

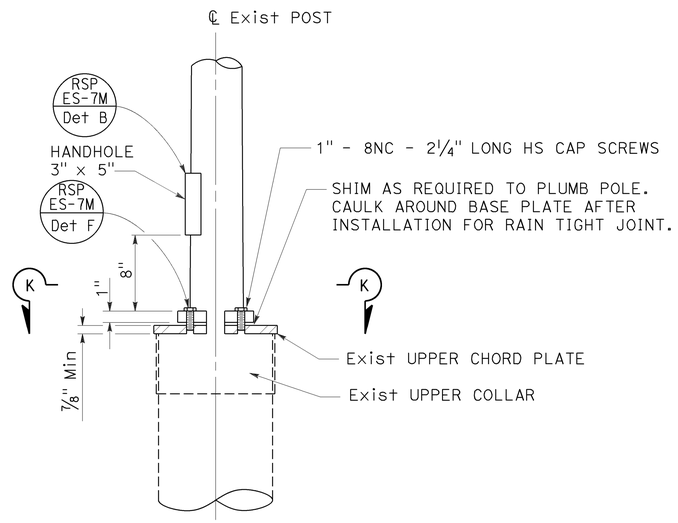

DETAIL A

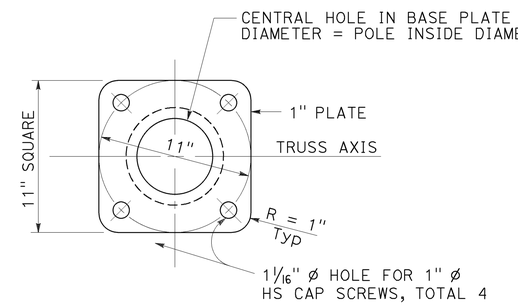

SECTION K-K

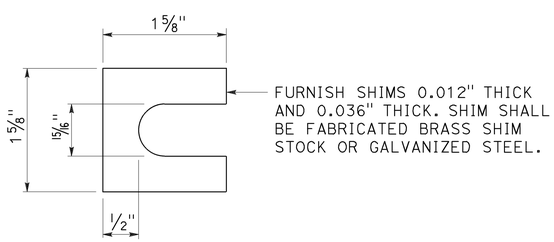

SHIM DETAIL
DETAIL B

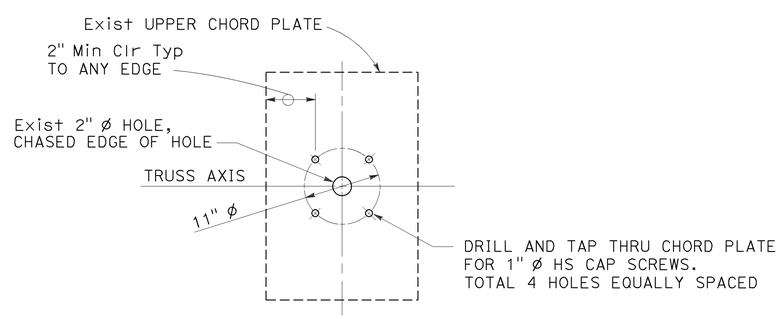

UPPER CHORD PLATE
DETAIL C
See Note 4

STATE OF CALIFORNIA
DEPARTMENT OF TRANSPORTATION

ELECTRICAL SYSTEMS (LIGHTING STANDARD, TYPES 5 AND 10, OVERHEAD SIGN MOUNTED)

NO SCALE

RSP ES-6C DATED OCTOBER 30, 2015 SUPERSEDES STANDARD PLAN ES-6C DATED MAY 20, 2011 - PAGE 454 OF THE STANDARD PLANS BOOK DATED 2010.

REVISED STANDARD PLAN RSP ES-6C

8-20-15

Dist	COUNTY	ROUTE	POST MILES TOTAL PROJECT	SHEET No.	TOTAL SHEETS
03	But, Col, ED, Nev, Plq, etc.	5,28,32, 50,51,etc.	Var	38	42

REGISTERED CIVIL ENGINEER

October 30, 2015

PLANS APPROVAL DATE

REGISTERED PROFESSIONAL ENGINEER Stanley P. Johnson No. C57793 Exp. 3-31-16 CIVIL STATE OF CALIFORNIA

THE STATE OF CALIFORNIA OR ITS OFFICERS OR AGENTS SHALL NOT BE RESPONSIBLE FOR THE ACCURACY OR COMPLETENESS OF SCANNED COPIES OF THIS PLAN SHEET.

NOTE:

Handhole shall be located on the downstream side of traffic.

TO ACCOMPANY PLANS DATED 11-23-15

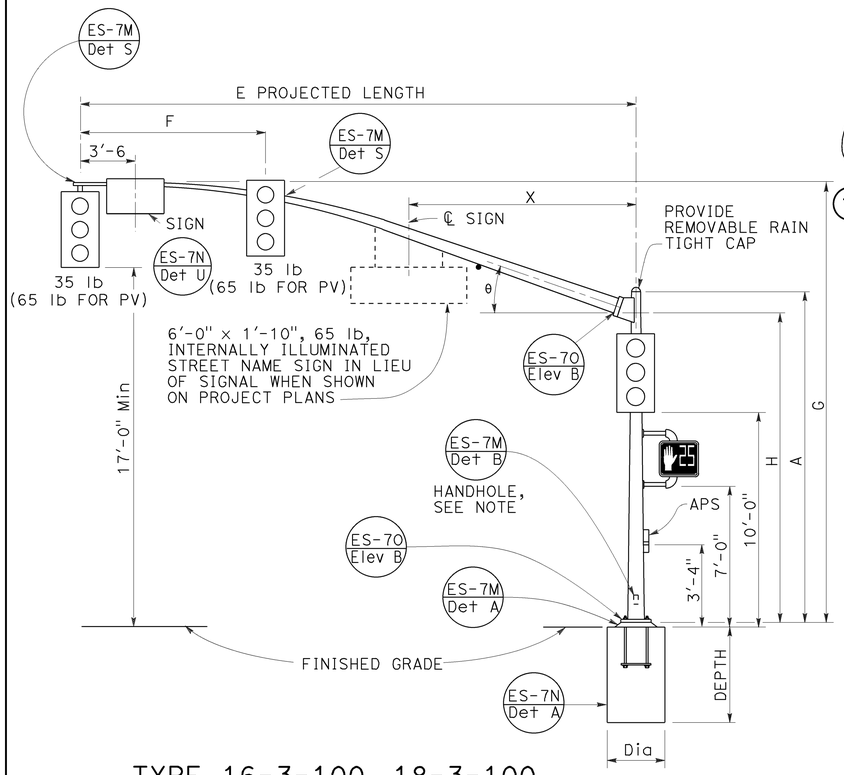

TYPE 16-3-100, 18-3-100, 23-3-100, 27-3-100

ELEVATION A

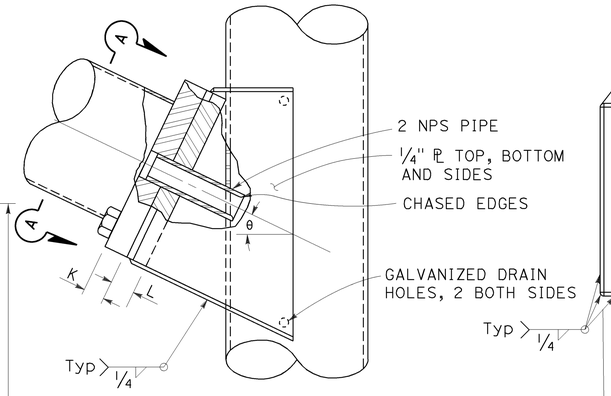

ELEVATION C

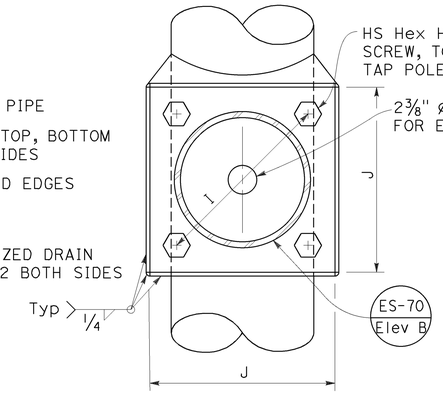

VIEW A-A

SIGNAL MAST ARM CONNECTION

DETAIL A

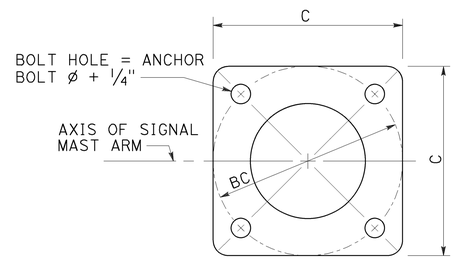

BASE PLATE

DETAIL B

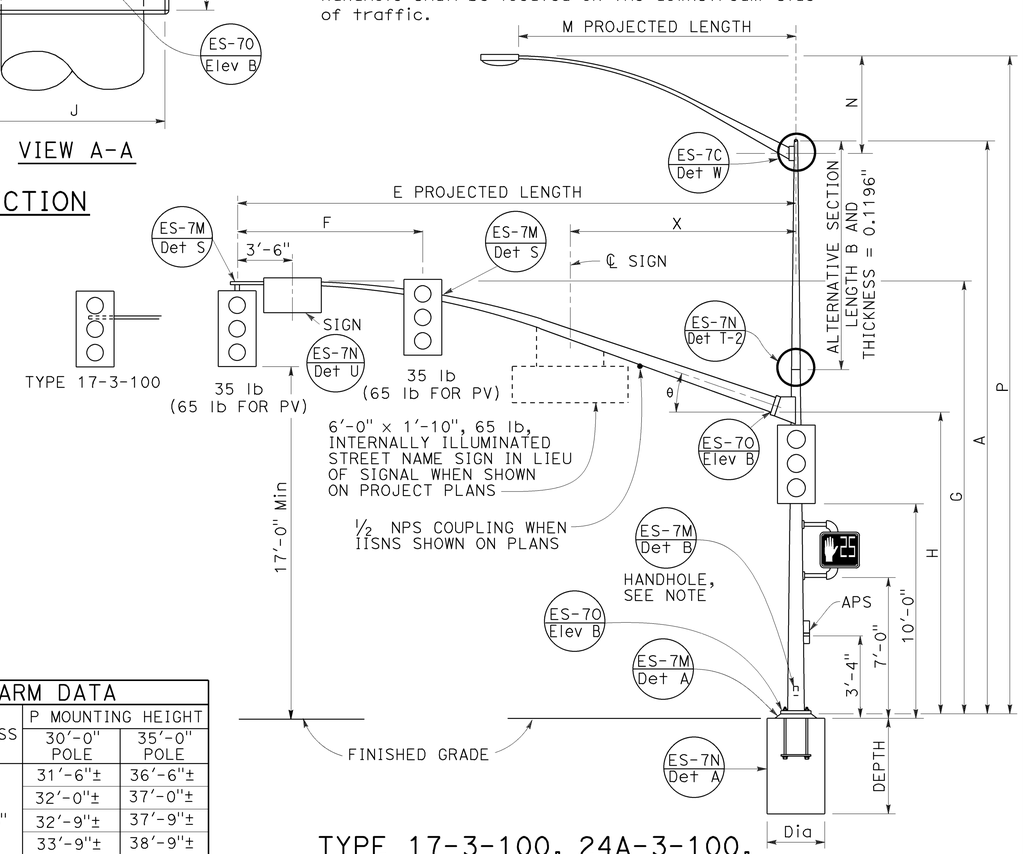

TYPE 17-3-100, 24A-3-100, 19-3-100, 26-3-100, 19A-3-100, 26A-3-100, 24-3-100

ELEVATION B

SIGNAL MAST ARM DATA

E PROJECTED LENGTH	F Min SPACING	G MOUNTING HEIGHT	H	Min OD AT POLE	THICKNESS	I BOLT CIRCLE	HS CAP SCREWS	J PLATE SIZE	K MAST ARM ℙ THICKNESS	L POLE ℙ THICKNESS	θ	X Max
15'-0"	8'-0"	21'-8"±	17'-6"	7 3/8"	0.1793"	12"	1 1/4"-7NC-3"	1'-0"	1 1/4"	1 1/2"	23°	-
20'-0"		21'-8"±		7 3/8"								
25'-0"	12'-0"	22'-8"±	16'-0"	7 3/8"	0.2391"							10'-6"
30'-0"		23'-0"±		8"								
35'-0"	14'-0"			8 3/4"		13"		1'-1"	1 1/2"	1 3/4"	21°	
40'-0"	15'-0"			9 3/8"							15°	13'-0"
45'-0"		23'-8"±		10 1/16"								

LUMINAIRE MAST ARM DATA

M PROJECTED LENGTH	N RISE	Min OD AT POLE	THICKNESS	P MOUNTING HEIGHT 30'-0" POLE	P MOUNTING HEIGHT 35'-0" POLE
6'-0"	2'-0"±	3 1/4"	0.1196"	31'-6"±	36'-6"±
8'-0"	2'-6"±	3 1/2"		32'-0"±	37'-0"±
10'-0"	3'-3"±	3 7/8"		32'-9"±	37'-9"±
12'-0"	4'-3"±			33'-9"±	38'-9"±
15'-0"	4'-9"±	4 1/4"		34'-3"±	39'-3"±

POLE DATA / BASE PLATE DATA / CIDH PILE FOUNDATION

POLE TYPE	LOAD CASE	WIND VELOCITY (mph)	A HEIGHT	Min OD BASE	Min OD TOP	THICKNESS	ALTERNATIVE SECTION B LENGTH	ALTERNATIVE SECTION BOTTOM	ALTERNATIVE SECTION TOP	C	BC = BOLT CIRCLE	THICKNESS	ANCHOR BOLT SIZE	LUMINAIRE MAST ARM	SIGNAL MAST ARM	CIDH PILE FOUNDATION DIAMETER	DEPTH	REINFORCED
16-3-100	3	100	18'-6"	10 3/4"	8 1/16"	0.1793"	NONE			1'-5 1/2"	1'-5 1/2"	3"	1 1/2" ø x 42"	NONE	15'-0", [20'-0"]	3'-0"	8'-6"	YES
17-3-100			30'-0"		6 7/16"		10'-0"	7 7/8"	6 7/16"					6'-15' [12'-0"]				
18-3-100			17'-0"	1'-0"	8 5/16"	0.2391"	NONE			1'-7"			2" ø x 42"	NONE	25'-0", [30'-0"]		9'-6"	
19-3-100			30'-0"		7 11/16"		10'-0"	9 1/8"	7 11/16"					6'-15' [12'-0"]			11'-0"	
19A-3-100			35'-0"		6 15/16"		15'-0"		6 15/16"					6'-15' [15'-0"]				
23-3-100			17'-0"		9 9/16"		NONE							NONE	35'-0"			
24-3-100			30'-0"		7 11/16"		10'-0"	9 1/8"	7 11/16"					6'-15' [12'-0"]				
24A-3-100			35'-0"		6 15/16"		15'-0"		6 15/16"					6'-15' [15'-0"]				
26-3-100			30'-0"	1'-2"	7 13/16"	0.3125"	10'-0"	9 1/4"	7 13/16"	1'-11"	1'-9"		2 1/2" ø x 42"	6'-15' [12'-0"]	40'-0", [45'-0"]	3'-6"	12'-0"	
26A-3-100			35'-0"		7 1/16"		15'-0"		7 1/16"					6'-15' [15'-0"]				
27-3-100			17'-0"		9 11/16"		NONE							NONE				

[ ] INDICATES MAST ARM LENGTH TO BE USED UNLESS OTHERWISE NOTED ON PLANS.

STATE OF CALIFORNIA
DEPARTMENT OF TRANSPORTATION

ELECTRICAL SYSTEMS (SIGNAL AND LIGHTING STANDARD, CASE 3 SIGNAL MAST ARM LOADING, WIND VELOCITY=100 MPH AND SIGNAL MAST ARM LENGTHS 15' TO 45')

NO SCALE

RSP ES-7E DATED OCTOBER 30, 2015 SUPERSEDES RSP ES-7E DATED JULY 19, 2013 AND ES-7E DATED MAY 20, 2011 - PAGE 466 OF THE STANDARD PLANS BOOK DATED 2010.

REVISED STANDARD PLAN RSP ES-7E

2010 REVISED STANDARD PLAN RSP ES-7E

8-24-15

Dist	COUNTY	ROUTE	POST MILES TOTAL PROJECT	SHEET No.	TOTAL SHEETS
03	But, Col, ED, Nev, Pla, etc.	5,28,32, 50,51,etc.	Var	39	42

REGISTERED CIVIL ENGINEER

October 30, 2015
PLANS APPROVAL DATE

REGISTERED PROFESSIONAL ENGINEER
Stanley P. Johnson
No. C57793
Exp. 3-31-16
CIVIL
STATE OF CALIFORNIA

THE STATE OF CALIFORNIA OR ITS OFFICERS OR AGENTS SHALL NOT BE RESPONSIBLE FOR THE ACCURACY OR COMPLETENESS OF SCANNED COPIES OF THIS PLAN SHEET.

TO ACCOMPANY PLANS DATED 11-23-15

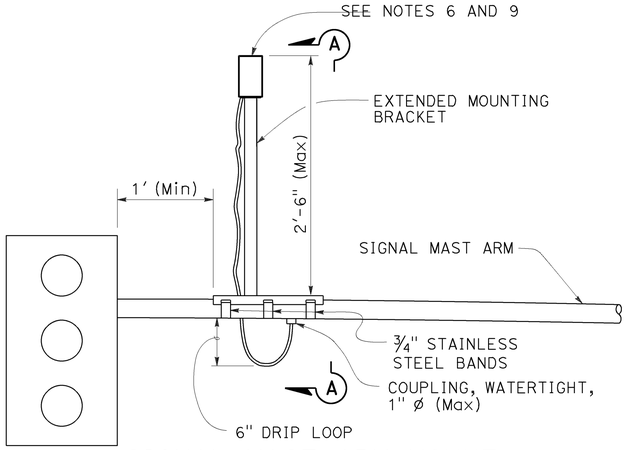

SIGNAL MAST ARM MOUNT

DETAIL A

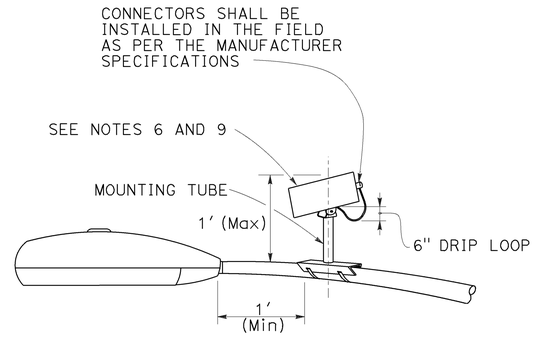

LUMINAIRE MAST ARM MOUNT

DETAIL B

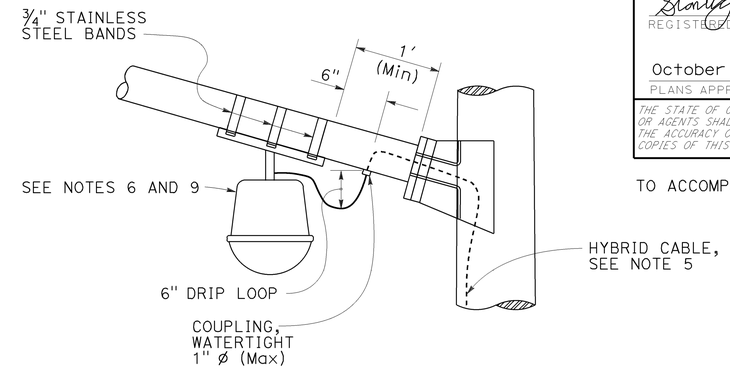

LUMINAIRE MAST ARM MOUNT

DETAIL C

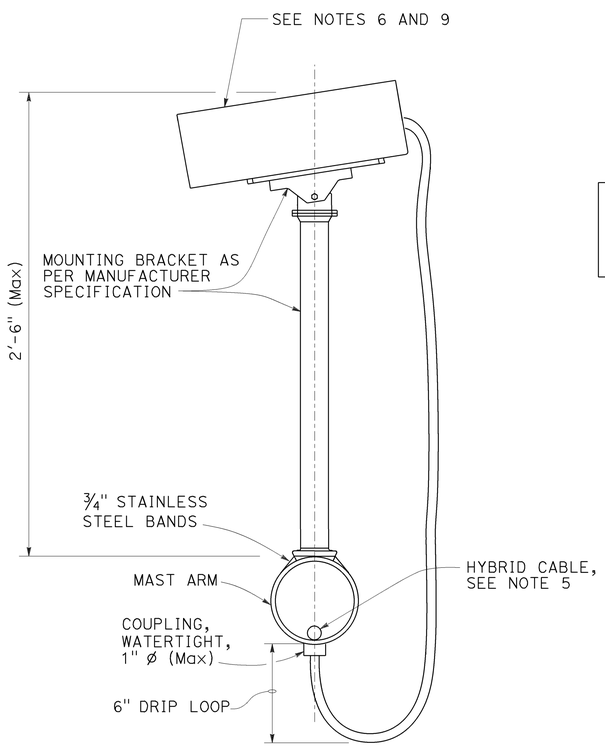

SECTION A-A

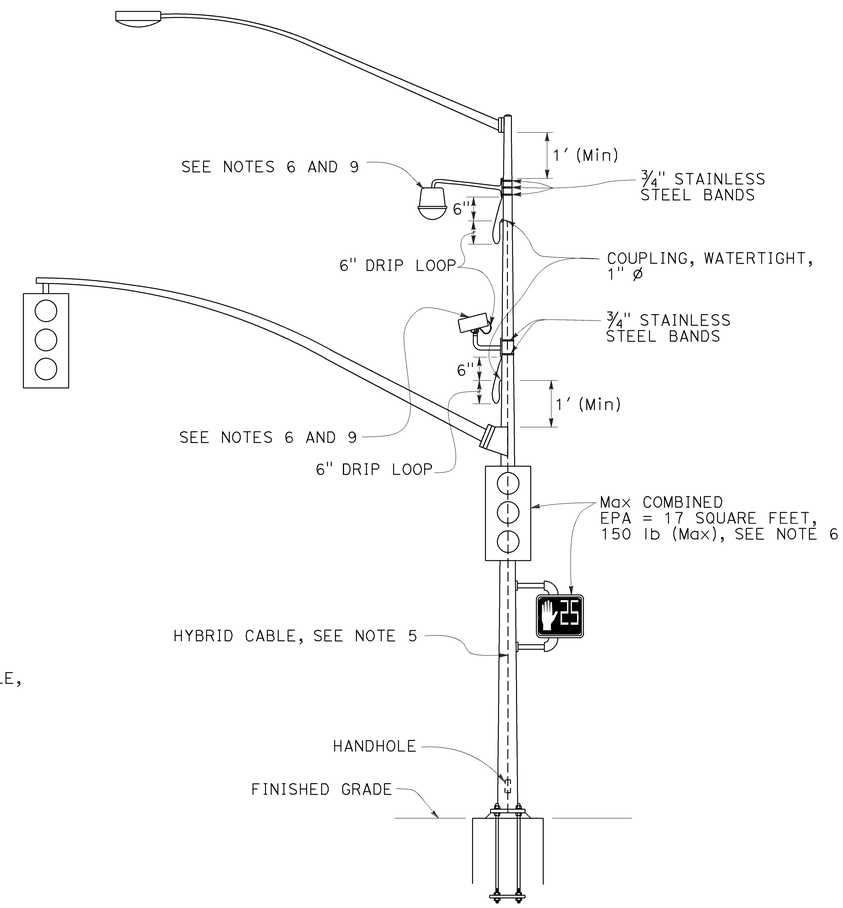

SIGNAL POLE MOUNT

DETAIL D

NOTES:

1. Exact mounting location of miscellaneous attachment and bracket shall be approved by the Engineer per manufacturer's recommendation.
2. Location of cable entrances on signal pole shall be a minimum of 1′ from any flange or base plate.
3. Hybrid cable entrances on signal pole shall be drilled for weathertight coupling as required.
4. Hybrid cable shall have a drip loop at the entrance into signal pole, luminaire mast arm and signal mast arm.
5. A single hybrid cable shall run continuous and shall not be twisted from the miscellaneous attachment to the controller cabinet. No splices shall be allowed.
6. Use the manufacturer's Effective Projected Area (EPA) for miscellaneous attachment. The maximum EPA for each miscellaneous attachment shall be 1.6 square feet with 10 lb Max.
7. Maximum of two miscellaneous attachments per traffic signal standard.
8. Maximum of one miscellaneous attachment per mast arm.
9. Miscellaneous attachment shall be mounted using clamping devices.

STATE OF CALIFORNIA
DEPARTMENT OF TRANSPORTATION

ELECTRICAL SYSTEMS (SIGNAL AND LIGHTING, MISCELLANEOUS ATTACHMENT)

NO SCALE

RSP ES-7R DATED OCTOBER 30, 2015 SUPERSEDES RSP ES-7R DATED JULY 19, 2013 AND STANDARD PLAN ES-7R DATED MAY 20, 2011 - PAGE 479 OF THE STANDARD PLANS BOOK DATED 2010.

REVISED STANDARD PLAN RSP ES-7R

2010 REVISED STANDARD PLAN RSP ES-7R

8-21-15

DIST	COUNTY	ROUTE	POST MILES TOTAL PROJECT	SHEET NO.	TOTAL SHEETS
03	But, Col, ED, Nev, Plq, etc.	5,28,32, 50,51,etc.	Var	40	42

Theresa Gabriel
REGISTERED ELECTRICAL ENGINEER

October 30, 2015
PLANS APPROVAL DATE

REGISTERED PROFESSIONAL ENGINEER Theresa Aziz Gabriel No. E15129 Exp. 6-30-16 ELECTRICAL STATE OF CALIFORNIA

THE STATE OF CALIFORNIA OR ITS OFFICERS OR AGENTS SHALL NOT BE RESPONSIBLE FOR THE ACCURACY OR COMPLETENESS OF SCANNED COPIES OF THIS PLAN SHEET.

TO ACCOMPANY PLANS DATED 11-23-15

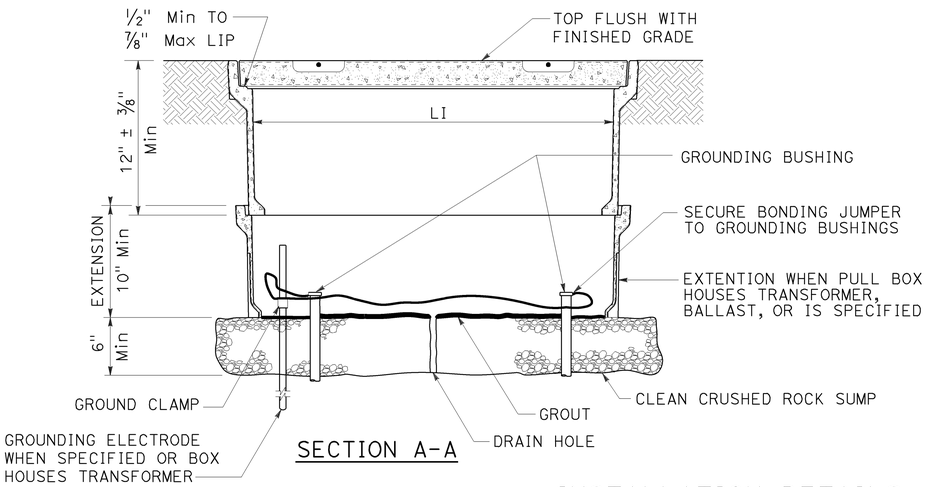

SECTION A-A

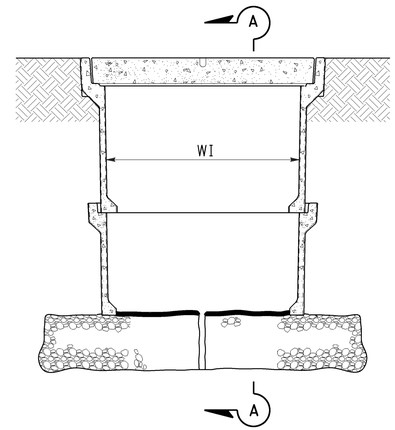

SIDE VIEW

INSTALLATION DETAILS

DETAIL A

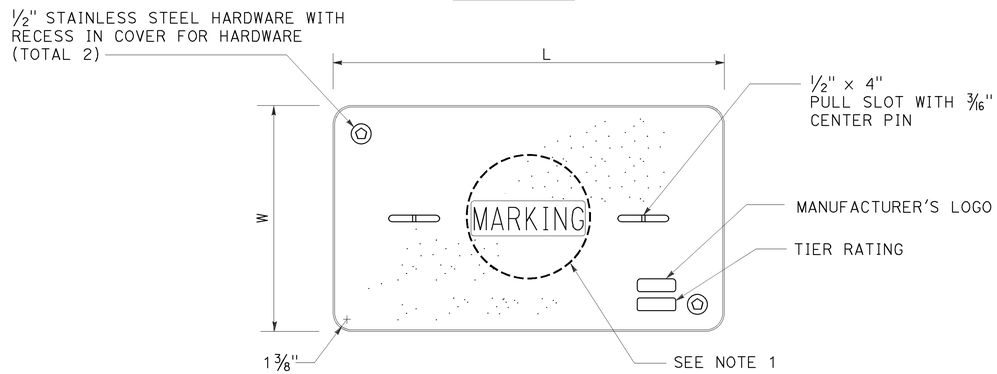

COVER TOP VIEW

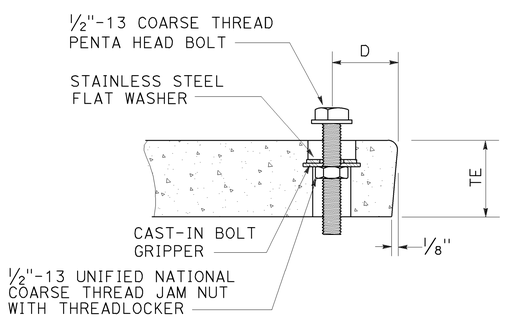

TYPICAL COVER CAPTIVE BOLT

OR SIMILAR

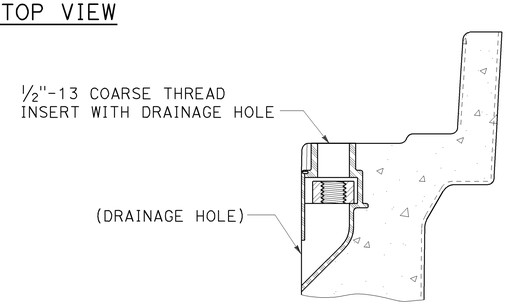

TYPICAL THREADED INSERT

OR SIMILAR

NOTES:

1. Pull box covers shall be marked as follows: "SERVICE" Service circuits between service point and service disconnect; "SPRINKLER-CONTROL" sprinkler control circuits, 50 V or less; "CALTRANS" on all pull boxes, except pull boxes marked "SPRINKLER-CONTROL"; and "TELEPHONE" Telephone service;

   A) No. 3½ pull box.
      1) "SIGNAL" - Traffic signal circuits with or without lighting or sign lighting circuits.
      2) "LIGHTING" - Lighting or sign lighting circuits where voltage is under 600 V.

   B) No. 5, 6, 9 or 9A pull box.
      1) "TRAFFIC SIGNAL" - Traffic signal circuits with or without lighting or sign lighting circuits.
      2) "LIGHTING" - Lighting or sign lighting circuits where voltage is under 600 V.
      3) "LIGHTING-HIGH VOLTAGE" - Lighting or sign lighting circuits where voltage is above 600 V.
      4) "IRRIGATION" - Circuits to irrigation controller 120 V or more.
      5) "RAMP METER" - Ramp meter circuits.
      6) "COUNT STATION" - Count or speed monitor circuits.
      7) "COMMUNICATIONS" - Communication circuits.
      8) "TOS COMMUNICATIONS" - TOS communication line.
      9) "TOS POWER" - TOS power.
      10) "TDC POWER" - Telephone demarcation cabinet power.
      11) "CCTV" - Closed circuit television circuits.
      12) "TMS" - Traffic monitoring station circuits.
      13) "CMS" - Changeable message sign circuits.
      14) "HAR" - Highway advisory radio circuits.
      15) "BOOSTER PUMP" - Booster pump circuit.

2. The nominal dimensions of the opening in which the cover sets shall be the same as the cover dimensions except the length and width dimensions shall be ⅛" greater.

3. Covers and boxes shall be interchangeable with California standard male and female gages. When interchanged with a standard male or female gage, the top surfaces shall be flush within ⅛". Top outside radius of covers and pull boxes shall have a ⅛" radius.

4. Pull box extension may be another pull box as long as the bottom edge of the pull box can fit into the cover opening.

5. Dimensions for the cover for non-traffic pull box are nominal values.

DIMENSION TABLE

PULL BOX	PULL BOX					COVER				
	MINIMUM DEPTH BOX	MINIMUM DEPTH EXTENSION	MINIMUM WEIGHT	LI Min	WI Min	TE	D	L	W	MINIMUM WEIGHT
No. 3½	12"	N/A	40 lb	1' - 3"	9"	1¾"	1¾"	1'-3¼" - 1'-3⅜"	10" - 10⅛"	30 lb
No. 5	12"	10"	55 lb	1' - 8"	11"	2"	1¾"	1'-11¼"	1'-1¾"	60 lb
No. 6	12"	10"	70 lb	2' - 4¼"	1' - 3¼"	2"	2"	2'-6½"	1'-5½"	85 lb

STATE OF CALIFORNIA
DEPARTMENT OF TRANSPORTATION

ELECTRICAL SYSTEMS (NON-TRAFFIC PULL BOX)

NO SCALE

RSP ES-8A DATED OCTOBER 30, 2015 SUPERSEDES RSP ES-8A DATED JULY 19, 2013 AND RSP ES-8A DATED JANUARY 20, 2012 THAT SUPPLEMENTS THE STANDARD PLANS BOOK DATED 2010.

REVISED STANDARD PLAN RSP ES-8A

2010 REVISED STANDARD PLAN RSP ES-8A

8-25-15

DIST	COUNTY	ROUTE	POST MILES TOTAL PROJECT	SHEET NO.	TOTAL SHEETS
03	But, Col, ED, Nev, Plq, etc.	5,28,32, 50,51,etc.	Var	41	42

Theresa Gabriel
REGISTERED ELECTRICAL ENGINEER

October 30, 2015
PLANS APPROVAL DATE

REGISTERED PROFESSIONAL ENGINEER
Theresa Aziz Gabriel
No. E15129
Exp. 6-30-16
ELECTRICAL
STATE OF CALIFORNIA

THE STATE OF CALIFORNIA OR ITS OFFICERS OR AGENTS SHALL NOT BE RESPONSIBLE FOR THE ACCURACY OR COMPLETENESS OF SCANNED COPIES OF THIS PLAN SHEET.

TO ACCOMPANY PLANS DATED 11-23-15

2010 REVISED STANDARD PLAN RSP ES-8B

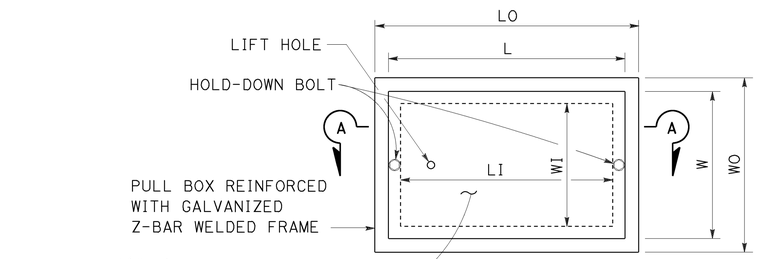

TOP VIEW

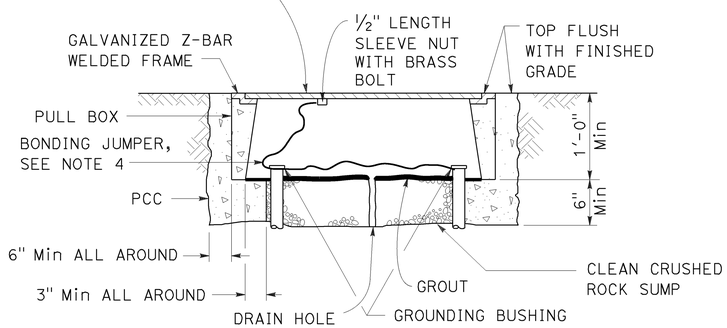

SECTION A-A

No. 3½(T), No. 5(T) AND No. 6(T) TRAFFIC PULL BOX

NOTES:

1. Traffic pull box shall be provided with steel cover and special concrete footing. Steel cover shall have embossed non-skid pattern.
2. Steel reinforcing shall be as regularly used in the standard products of the respective manufacturer.
3. Pull box covers shall be marked as follows: "SERVICE" Service circuits between service point and service disconnect; "SPRINKLER-CONTROL" Sprinkler control circuits, 50 V or less; "CALTRANS" On all pull boxes, except pull boxes marked "SPRINKLER-CONTROL"; and "TELEPHONE" Telephone service.
   A) No. 3½(T) pull box.
      1) "SIGNAL" - Traffic signal circuits with or without lighting or sign lighting circuits.
      2) "LIGHTING" - Lighting or sign lighting circuits where voltage is under 600 V.
   B) No. 5(T) or 6(T) pull box.
      1) "TRAFFIC SIGNAL" - Traffic signal circuits with or without lighting or sign lighting circuits.
      2) "LIGHTING" - Lighting or sign lighting circuits where voltage is under 600 V.
      3) "LIGHTING-HIGH VOLTAGE" - Lighting or sign lighting circuits where voltage is above 600 V.
      4) "IRRIGATION" - Circuits to irrigation controller 120 V or more.
      5) "RAMP METER" - Ramp meter circuits.
      6) "COUNT STATION" - Count or speed monitor circuits.
      7) "COMMUNICATION" - Communication circuits.
      8) "TOS COMMUNICATIONS" - TOS communications line.
      9) "TOS POWER" - TOS power.
      10) "TDC POWER" - Telephone demarcation cabinet power.
      11) "CCTV" - Closed circuit television circuits.
      12) "TMS" - Traffic monitoring station circuits.
      13) "CMS" - Changeable message sign circuits.
      14) "HAR" - Highway advisory radio circuits.
      15) "BOOSTER PUMP" - Booster pump circuit.
4. Bonding jumper for metal covers shall be 3' long, minimum.
5. The nominal dimensions of the opening in which the cover sets shall be the same as the cover dimensions except the length and width dimensions shall be ⅛" greater.
6. Covers and boxes shall be interchangeable with California standard male and female gages. When interchanged with a standard male or female gage, the top surfaces shall be flush within ⅛".

DIMENSION TABLE

PULL BOX	PULL BOX						COVER	
	MINIMUM * THICKNESS	MINIMUM DEPTH BOX AND EXTENSION	LO	LI	WO	WI	L **	W **
No. 3½(T)	1½"	1'-0"	1'-10" - 1'-11"	1'-5" - 1'-6½"	1'-3" - 1'-4"	10" - 1'-0"	1'-8" -1'-8½"	1'-1" - 1'-2"
No. 5(T)	1¾"	1'-0"	2'-5" - 2'-6"	2'-0" - 2'-1"	1'-6" - 1'-7"	1'-1" - 1'-2"	2'-3" - 2'-3½"	1'-4" - 1'-4½"
No. 6(T)	2"	1'-0"	2'-11" - 3'-1"	2'-6" - 2'-7"	1'-10" - 2'-0"	1'-5" - 1'-6"	2'-9" - 2'-9½"	1'-8" - 1'-8½"

* EXCLUDING CONDUIT WEB ** TOP DIMENSION

STATE OF CALIFORNIA
DEPARTMENT OF TRANSPORTATION

ELECTRICAL SYSTEMS (TRAFFIC PULL BOX)

NO SCALE

RSP ES-8B DATED OCTOBER 30, 2015 SUPERSEDES RSP ES-8B DATED JULY 19, 2013 AND RSP ES-8B DATED JANUARY 20, 2012 THAT SUPPLEMENTS THE STANDARD PLANS BOOK DATED 2010.

REVISED STANDARD PLAN RSP ES-8B

Dist	COUNTY	ROUTE	POST MILES TOTAL PROJECT	SHEET No.	TOTAL SHEETS
03	But, Col, ED, Nev, Pla, etc.	5,28,32, 50,51,etc.	Var	42	42

Theresa Gabriel
REGISTERED ELECTRICAL ENGINEER

October 30, 2015
PLANS APPROVAL DATE

REGISTERED PROFESSIONAL ENGINEER
Theresa Aziz Gabriel
No. E15129
Exp. 6-30-16
ELECTRICAL
STATE OF CALIFORNIA

THE STATE OF CALIFORNIA OR ITS OFFICERS OR AGENTS SHALL NOT BE RESPONSIBLE FOR THE ACCURACY OR COMPLETENESS OF SCANNED COPIES OF THIS PLAN SHEET.

TO ACCOMPANY PLANS DATED 11-23-15

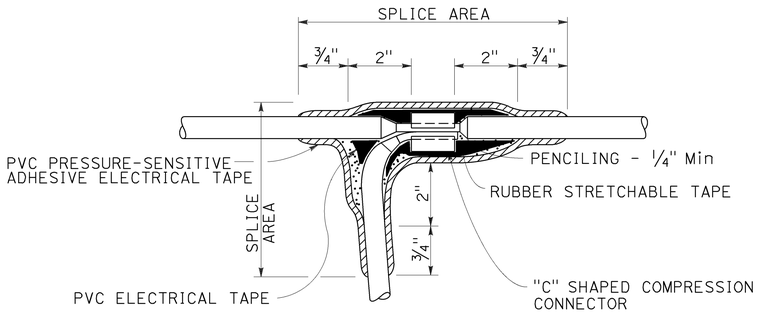

TYPE C SPLICE

See Note 3

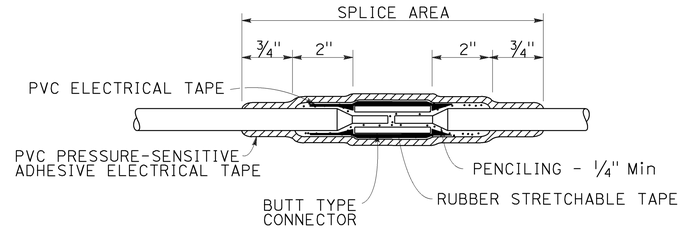

TYPE S SPLICE

See Note 4

NOTES:

1. Dimensions are minimum.
2. Rubber tapes shall be rolled after application.
3. Between 1 free-end and 1 through conductor.
4. Between 2 free-end conductors.
5. Between 3 free-end conductors.

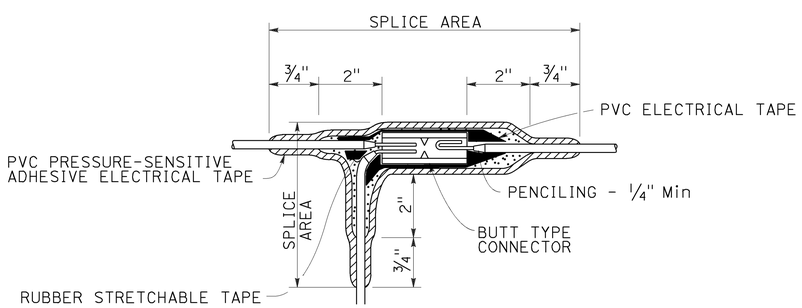

TYPE ST SPLICE

See Note 5

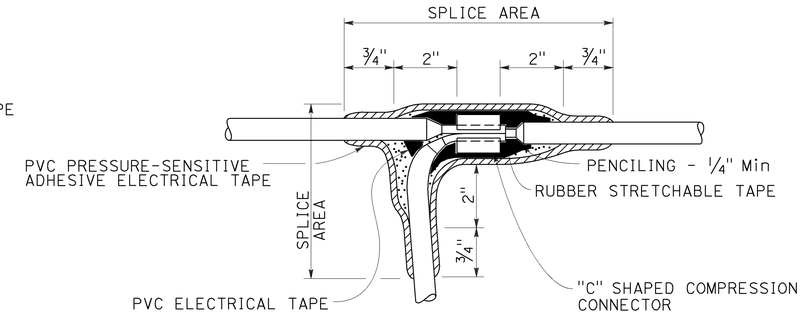

TYPE T SPLICE

See Note 5

STATE OF CALIFORNIA
DEPARTMENT OF TRANSPORTATION

ELECTRICAL SYSTEMS (SPLICING DETAILS)

NO SCALE

RSP ES-13A DATED OCTOBER 30, 2015 SUPERSEDES STANDARD PLAN ES-13A DATED MAY 20, 2011 - PAGE 491 OF THE STANDARD PLANS BOOK DATED 2010.

REVISED STANDARD PLAN RSP ES-13A

2010 REVISED STANDARD PLAN RSP ES-13A

9-28-15