Dist	COUNTY	ROUTE	POST MILES TOTAL PROJECT	SHEET No.	TOTAL SHEETS
03	ED	49	9.6/10.1	1	61

STATE OF CALIFORNIA

DEPARTMENT OF TRANSPORTATION

PROJECT PLANS FOR CONSTRUCTION ON

STATE HIGHWAY

IN EL DORADO COUNTY
IN EL DORADO
FROM MISSOURI STREET
NORTH TO 4.8 MILES SOUTH
OF JUNCTION ROUTE 49/50 SEPARATION

TO BE SUPPLEMENTED BY STANDARD PLANS DATED MAY 2006

INDEX OF PLANS

	DESCRIPTION
1	TITLE SHEET AND MAP
2	TYPICAL CROSS SECTIONS
3-7	LAYOUTS
8	CONSTRUCTION DETAILS
9-15	TEMPORARY WATER POLLUTION AND EROSION CONTROL
16-36	DRAINAGE
37-41	UTILITIES
42	CONSTRUCTION AREA SIGNAGE
43	PAVEMENT DELINEATION PLAN AND QUANTITIES
44-46	SIGN PLAN, DEATAILS AND QUANTITIES
47	SUMMARY OF QUANTITIES
48-61	NEW AND REVISED STANDARD PLANS

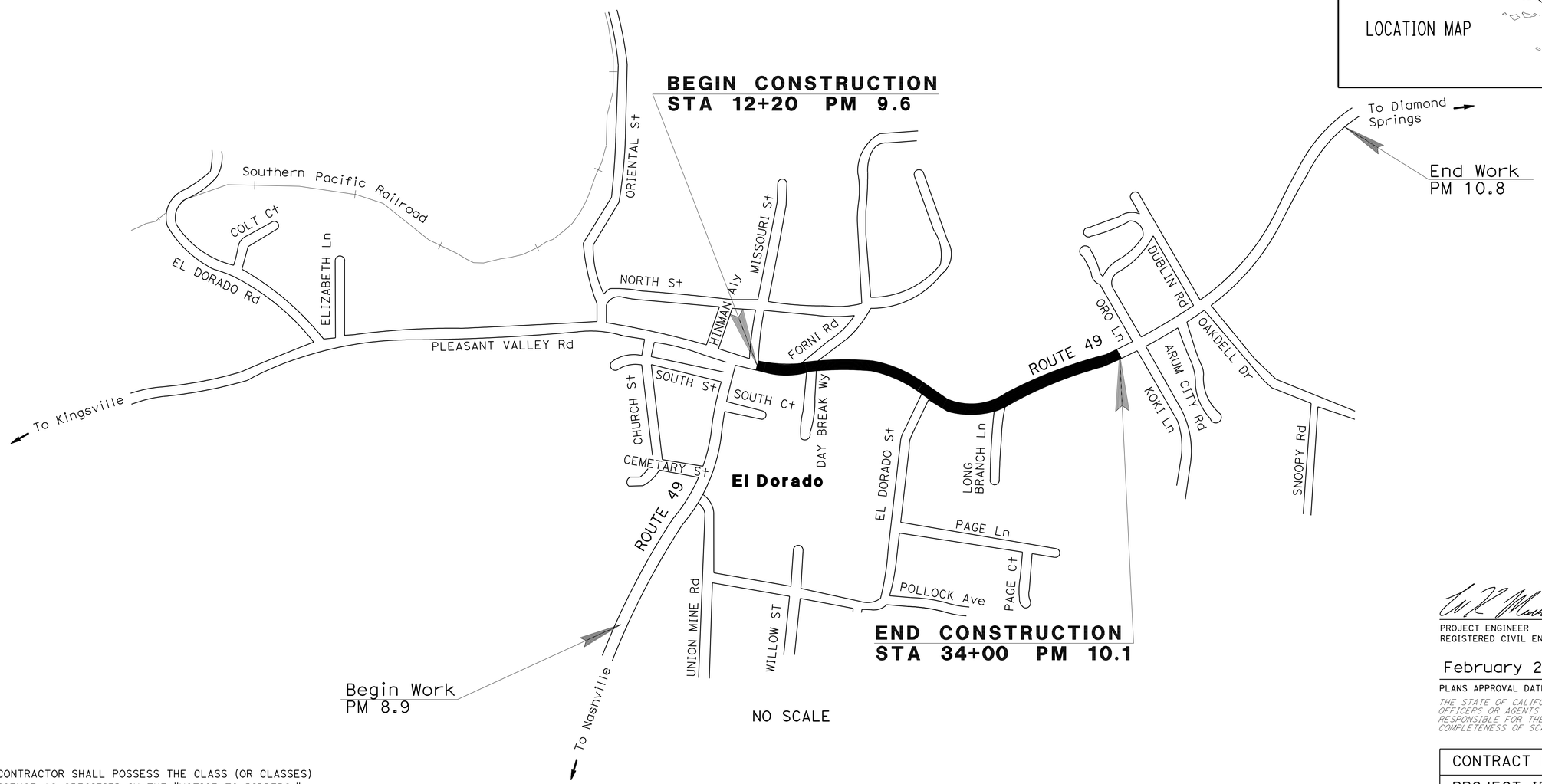

PROJECT MANAGER NAJED DAKAK

DESIGN ENGINEER SCOTT MANN

THE CONTRACTOR SHALL POSSESS THE CLASS (OR CLASSES) OF LICENSE AS SPECIFIED IN THE "NOTICE TO BIDDERS."

3-1-12
PROJECT ENGINEER DATE
REGISTERED CIVIL ENGINEER

February 29, 2012
PLANS APPROVAL DATE

REGISTERED PROFESSIONAL ENGINEER W. KEITH MACK No. 73964 Exp. 6/30/2013 CIVIL STATE OF CALIFORNIA

THE STATE OF CALIFORNIA OR ITS OFFICERS OR AGENTS SHALL NOT BE RESPONSIBLE FOR THE ACCURACY OR COMPLETENESS OF SCANNED COPIES OF THIS PLAN SHEET.

DATE PLOTTED => 09-MAR-2012
TIME PLOTTED => 09:51

CONTRACT No.	03-3E6304
PROJECT ID	0300000510

LAST REVISION 10-31-11

Dist	COUNTY	ROUTE	POST MILES TOTAL PROJECT	SHEET No.	TOTAL SHEETS
03	ED	49	9.6/10.1	2	61

REGISTERED CIVIL ENGINEER 3-1-12 DATE

2-29-12
PLANS APPROVAL DATE

REGISTERED PROFESSIONAL ENGINEER W. KEITH MACK No. 73964 Exp. 6/30/13 CIVIL STATE OF CALIFORNIA

THE STATE OF CALIFORNIA OR ITS OFFICERS OR AGENTS SHALL NOT BE RESPONSIBLE FOR THE ACCURACY OR COMPLETENESS OF SCANNED COPIES OF THIS PLAN SHEET.

DESIGN DESIGNATION:

2009 ANNUAL ADT= 14,600 PEAK HOUR ADT=1,620 D=63%

2029 ANNUAL ADT= 22,200 PEAK HOUR ADT=2,460 T=6% V=35MPH

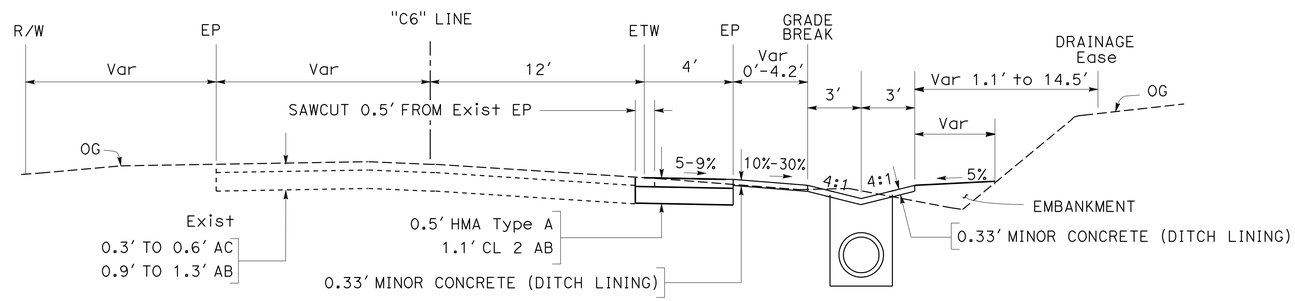

"C6" 20+66.00 TO "C6" 21+61.70

ROUTE 49

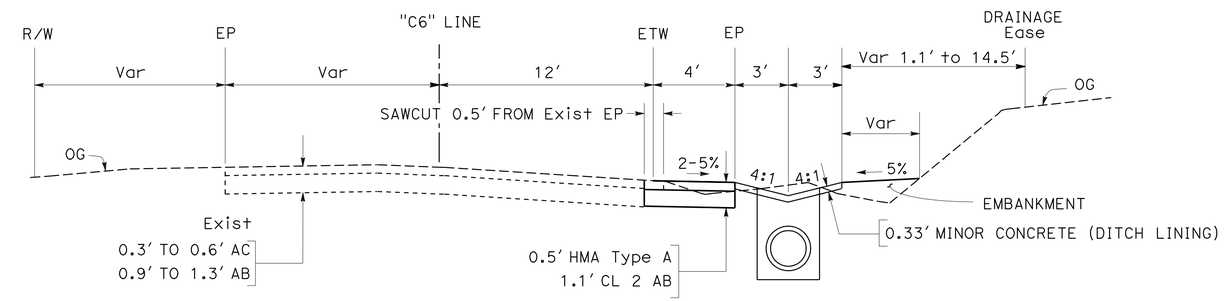

"C6" 16+64.00 TO "C6" 17+75.00
"C6" 18+85.00 TO "C6" 20+21.00
"C6" 27+39.00 TO "C6" 29+20.00

"C6" 29+62.00 TO "C6" 29+95.00
"C6" 30+30.00 TO "C6" 30+98.50

ROUTE 49

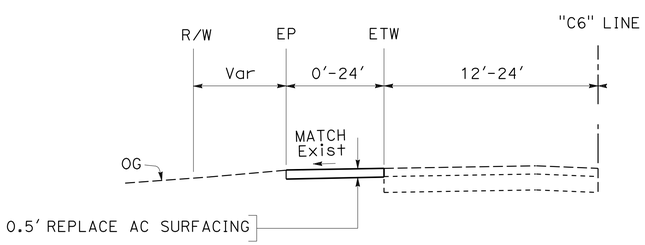

"C6" 12+20.00 TO "C6" 17+60.00

ROUTE 49

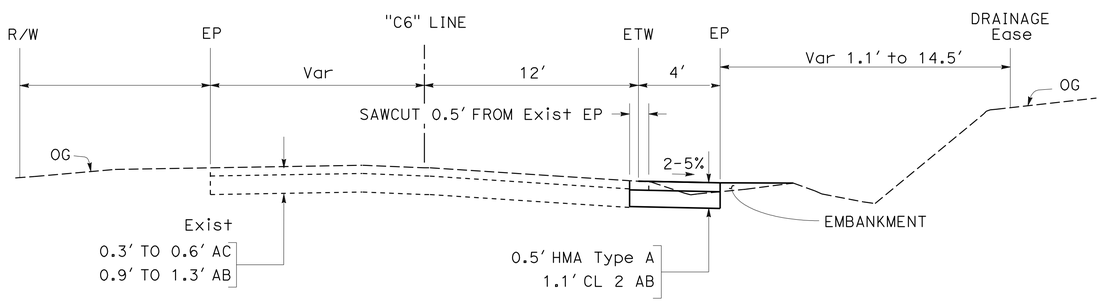

"C6" 15+40.68 TO "C6" 16+64.00
"C6" 17+75.00 TO "C6" 18+85.00
"C6" 20+21.00 TO "C6" 20+66.00
"C6" 22+16.00 TO "C6" 27+39.00

"C6" 29+20.00 TO "C6" 29+62.00
"C6" 29+95.00 TO "C6" 30+30.00
"C6" 30+98.50 TO "C6" 31+00.00

ROUTE 49

TYPICAL CROSS-SECTIONS

NO SCALE

X-1

STATE OF CALIFORNIA - DEPARTMENT OF TRANSPORTATION
Caltrans®
03-DESIGN

FUNCTIONAL SUPERVISOR: SCOTT MANN

W. KEITH MACK

CALCULATED-DESIGNED BY | CHECKED BY

REVISED BY | DATE REVISED

LAST REVISION 10-25-11

DATE PLOTTED => 09-MAR-2012
TIME PLOTTED => 09:51

Dist	COUNTY	ROUTE	POST MILES TOTAL PROJECT	SHEET No.	TOTAL SHEETS
03	ED	49	9.6/10.1	3	61

REGISTERED CIVIL ENGINEER 3-1-12 DATE

2-29-12
PLANS APPROVAL DATE

REGISTERED PROFESSIONAL ENGINEER W. KEITH MACK No. 73964 Exp. 6/30/13 CIVIL STATE OF CALIFORNIA

THE STATE OF CALIFORNIA OR ITS OFFICERS OR AGENTS SHALL NOT BE RESPONSIBLE FOR THE ACCURACY OR COMPLETENESS OF SCANNED COPIES OF THIS PLAN SHEET.

NOTES:

1. FOR ACCURATE RIGHT OF WAY DATA, CONTACT RIGHT OF WAY ENGINEERING AT THE DISTRICT OFFICE.
2. REFER TO SHEETS U-1 AND U-2 FOR UTILITIES INFORMATION.
3. REFER TO DRAINAGE SHEETS FOR DRAINAGE INFORMATION.

NOTES:

1. EXACT LIMITS OF REPLACE AC SURFACING TO BE DETERMINED BY THE ENGINEER.
2. ALL CALLOUTS TO MINOR Conc (DITCH LINING) ARE TO FLOWLINE.
3. EXACT LOCATION OF RELOCATED MAILBOXES TO BE DETERMINED BY ENGINEER.
4. ALL FENCES WITHIN THE PROJECT AREA WILL BE REMOVED BY CONTRACTOR, TO BE REPLACED BY OTHERS.

ABBREVIATIONS

CP	CATCH POINT
DE	DRAINAGE Ease
TCE	Temp Const Ease

LEGEND

REPLACE AC SURFACING
DEPTH 0.5'

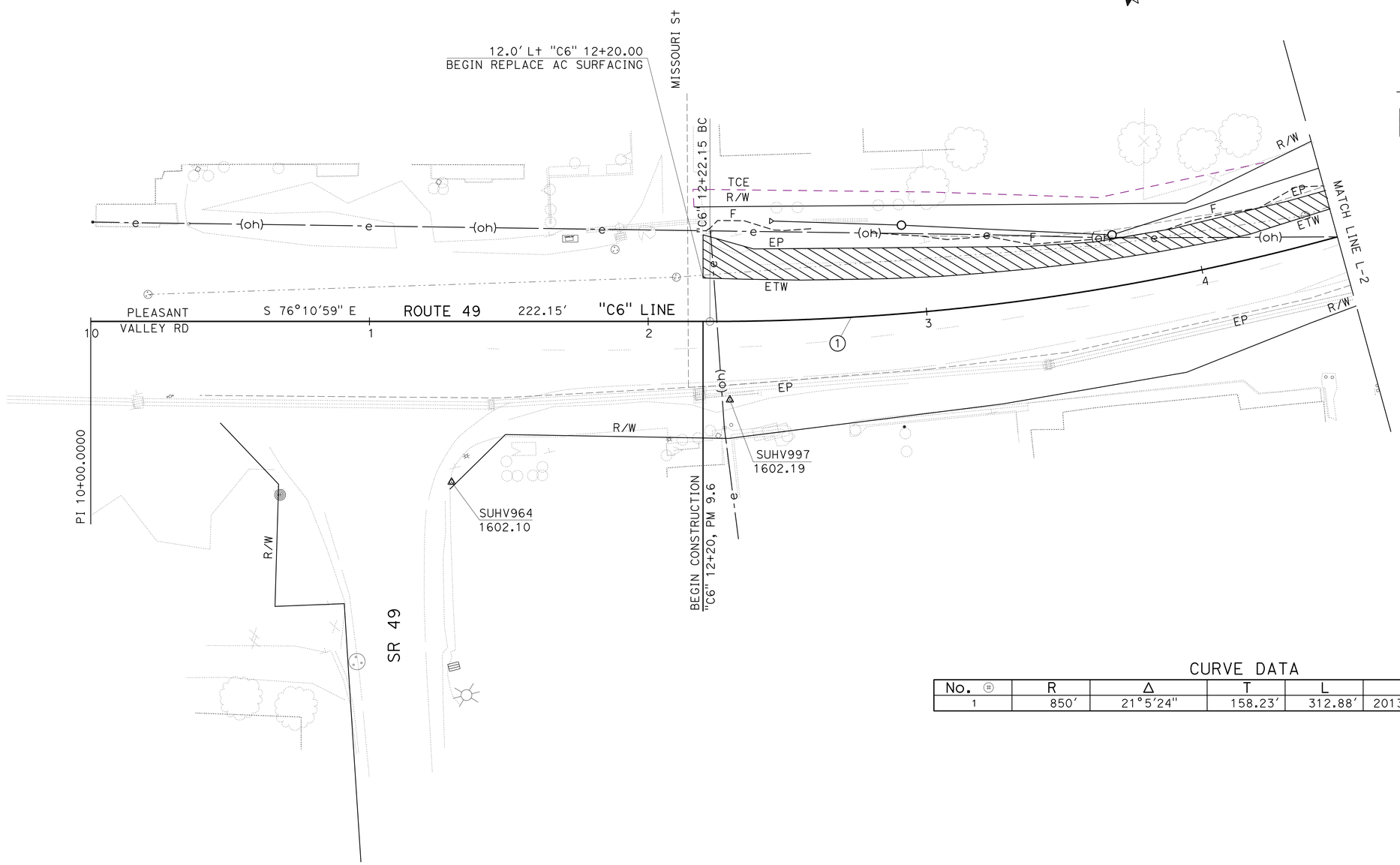

CURVE DATA

No. ⊕	R	Δ	T	L	N	E
1	850'	21°5'24"	158.23'	312.88'	2013160.43	6891101.13

LAYOUT
SCALE: 1" = 20'

L-1

STATE OF CALIFORNIA - DEPARTMENT OF TRANSPORTATION
Caltrans
03-DESIGN

FUNCTIONAL SUPERVISOR: SCOTT MANN
CALCULATED-DESIGNED BY: W. KEITH MACK
CHECKED BY
REVISED BY
DATE REVISED

LAST REVISION 10-25-11
DATE PLOTTED => 09-MAR-2012
TIME PLOTTED => 09:51

Dist	COUNTY	ROUTE	POST MILES TOTAL PROJECT	SHEET No.	TOTAL SHEETS
03	ED	49	9.6/10.1	4	61

REGISTERED CIVIL ENGINEER 3-1-12 DATE

2-29-12
PLANS APPROVAL DATE

REGISTERED PROFESSIONAL ENGINEER W. KEITH MACK No. 73964 Exp. 6/30/13 CIVIL STATE OF CALIFORNIA

THE STATE OF CALIFORNIA OR ITS OFFICERS OR AGENTS SHALL NOT BE RESPONSIBLE FOR THE ACCURACY OR COMPLETENESS OF SCANNED COPIES OF THIS PLAN SHEET.

NOTES:

1. EXACT LIMITS OF REPLACE AC SURFACING TO BE DETERMINED BY THE ENGINEER.
2. ALL CALLOUTS TO MINOR Conc (DITCH LINING) ARE TO FLOWLINE.
3. EXACT LOCATION OF RELOCATED MAILBOXES TO BE DETERMINED BY ENGINEER.
4. FOR COMPLETE RIGHT OF WAY DATA, SEE RIGHT OF WAY RECORD MAPS AT DISTRICT OFFICE.
5. ALL FENCES WITHIN THE PROJECT AREA WILL BE REMOVED BY CONTRACTOR, TO BE REPLACED BY OTHERS.

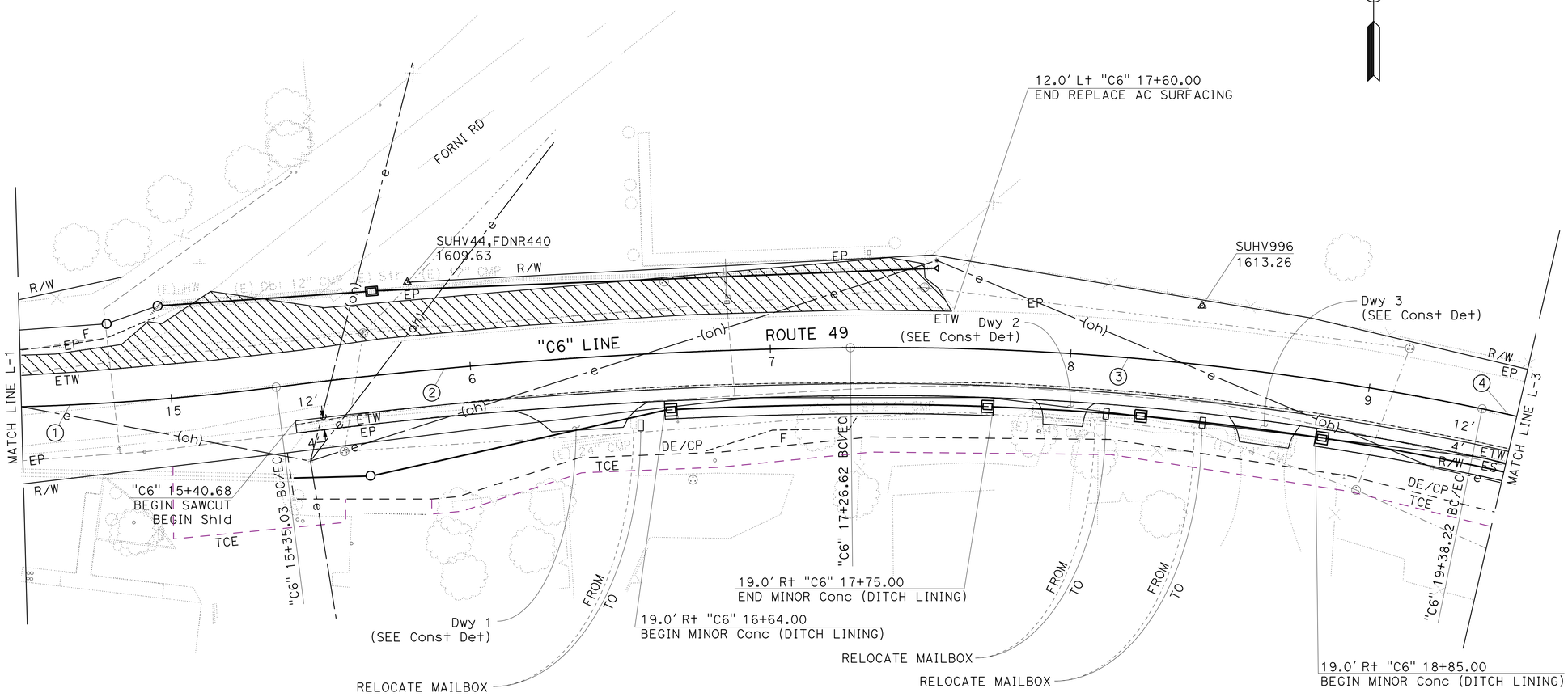

CURVE DATA

No. Ⓗ	R	Δ	T	L	N	E
1	850'	21°5'24"	158.23'	312.88'	2013160.43	6891101.13
2	1642'	6°41'06"	95.90'	191.59'	2010688.41	6891416.63
3	991'	12°14'17"	106.21'	211.61'	2011339.76	6891409.94
4	490'	25°29'05"	110.91'	218.14'	2011829.71	6891510.96

LAYOUT
SCALE: 1" = 20'

L-2

REVISED BY | DATE REVISED
W. KEITH MACK
CALCULATED-DESIGNED BY | CHECKED BY
FUNCTIONAL SUPERVISOR: SCOTT MANN
STATE OF CALIFORNIA - DEPARTMENT OF TRANSPORTATION
Caltrans
03-DESIGN

LAST REVISION 10-25-11 | DATE PLOTTED => 09-MAR-2012 | TIME PLOTTED => 09:51

Dist	COUNTY	ROUTE	POST MILES TOTAL PROJECT	SHEET No.	TOTAL SHEETS
03	ED	49	9.6/10.1		

REGISTERED CIVIL ENGINEER 3-1-12 DATE

2-29-12
PLANS APPROVAL DATE

REGISTERED PROFESSIONAL ENGINEER W. KEITH MACK No. 73964 Exp. 6/30/13 CIVIL STATE OF CALIFORNIA

THE STATE OF CALIFORNIA OR ITS OFFICERS OR AGENTS SHALL NOT BE RESPONSIBLE FOR THE ACCURACY OR COMPLETENESS OF SCANNED COPIES OF THIS PLAN SHEET.

NOTES:

1. ALL CALLOUTS TO MINOR Conc (DITCH LINING) ARE TO FLOWLINE.
2. EXACT LOCATION OF RELOCATED MAILBOXES TO BE DETERMINED BY ENGINEER.
3. FOR COMPLETE RIGHT OF WAY DATA, SEE RIGHT OF WAY RECORD MAPS AT DISTRICT OFFICE.
4. ALL FENCES WITHIN THE PROJECT AREA WILL BE REMOVED BY CONTRACTOR, TO BE REPLACED BY OTHERS.

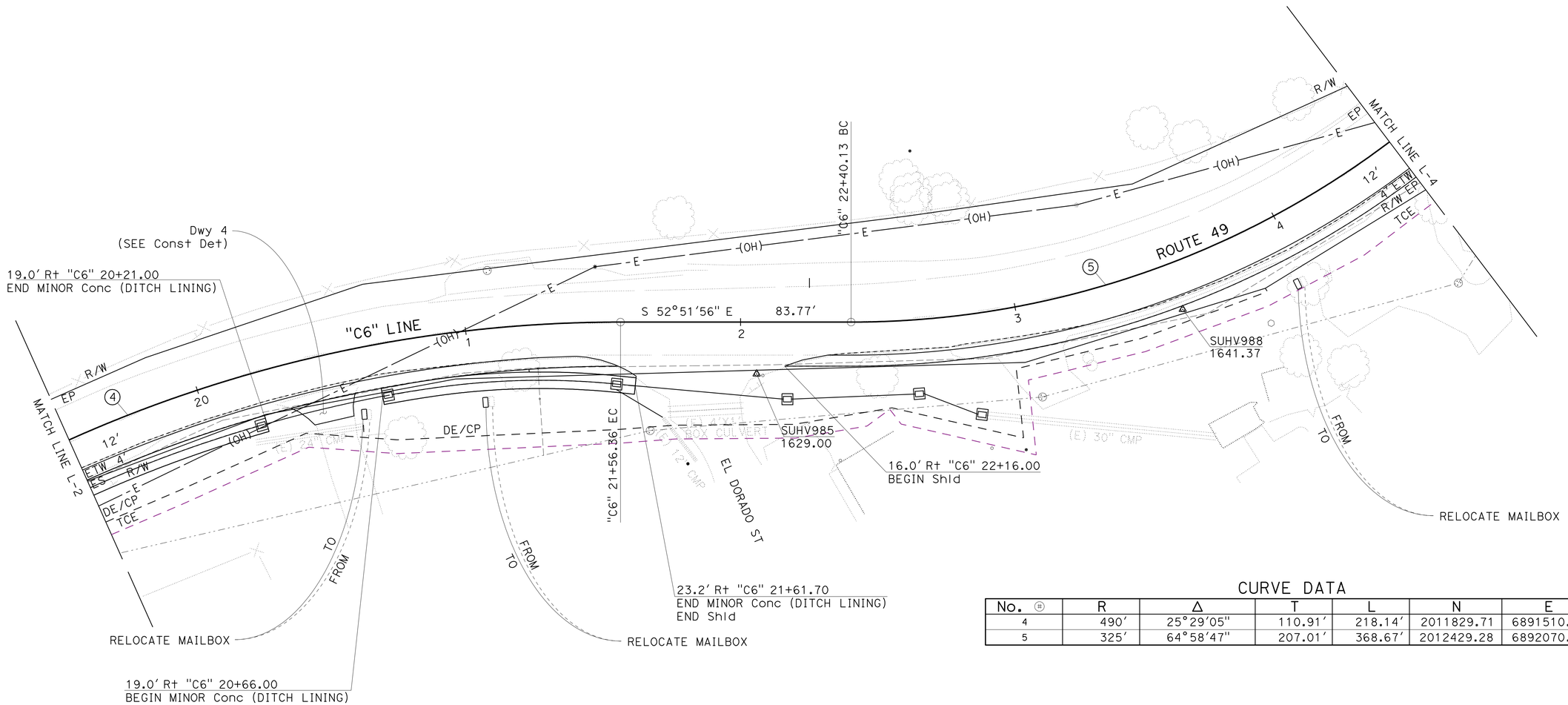

CURVE DATA

No.	R	Δ	T	L	N	E
4	490'	25°29'05"	110.91'	218.14'	2011829.71	6891510.96
5	325'	64°58'47"	207.01'	368.67'	2012429.28	6892070.05

LAYOUT
SCALE: 1" = 20'

L-3

STATE OF CALIFORNIA - DEPARTMENT OF TRANSPORTATION
Caltrans®
03-DESIGN

FUNCTIONAL SUPERVISOR: SCOTT MANN
CALCULATED-DESIGNED BY: W. KEITH MACK
CHECKED BY
REVISED BY
DATE REVISED

LAST REVISION 10-25-11
DATE PLOTTED => 09-MAR-2012
TIME PLOTTED => 09:51

Dist	COUNTY	ROUTE	POST MILES TOTAL PROJECT	SHEET No.	TOTAL SHEETS
03	ED	49	9.6/10.1	6	61

REGISTERED CIVIL ENGINEER 3-1-12 DATE

2-29-12
PLANS APPROVAL DATE

REGISTERED PROFESSIONAL ENGINEER W. KEITH MACK No. 73964 Exp. 6/30/13 CIVIL STATE OF CALIFORNIA

THE STATE OF CALIFORNIA OR ITS OFFICERS OR AGENTS SHALL NOT BE RESPONSIBLE FOR THE ACCURACY OR COMPLETENESS OF SCANNED COPIES OF THIS PLAN SHEET.

NOTES:

1. ALL CALLOUTS TO MINOR Conc (DITCH LINING) ARE TO FLOWLINE.
2. EXACT LOCATION OF RELOCATED MAILBOXES TO BE DETERMINED BY ENGINEER.
3. FOR COMPLETE RIGHT OF WAY DATA, SEE RIGHT OF WAY RECORD MAPS AT DISTRICT OFFICE.
4. ALL FENCES WITHIN THE PROJECT AREA WILL BE REMOVED BY CONTRACTOR, TO BE REPLACED BY OTHERS.

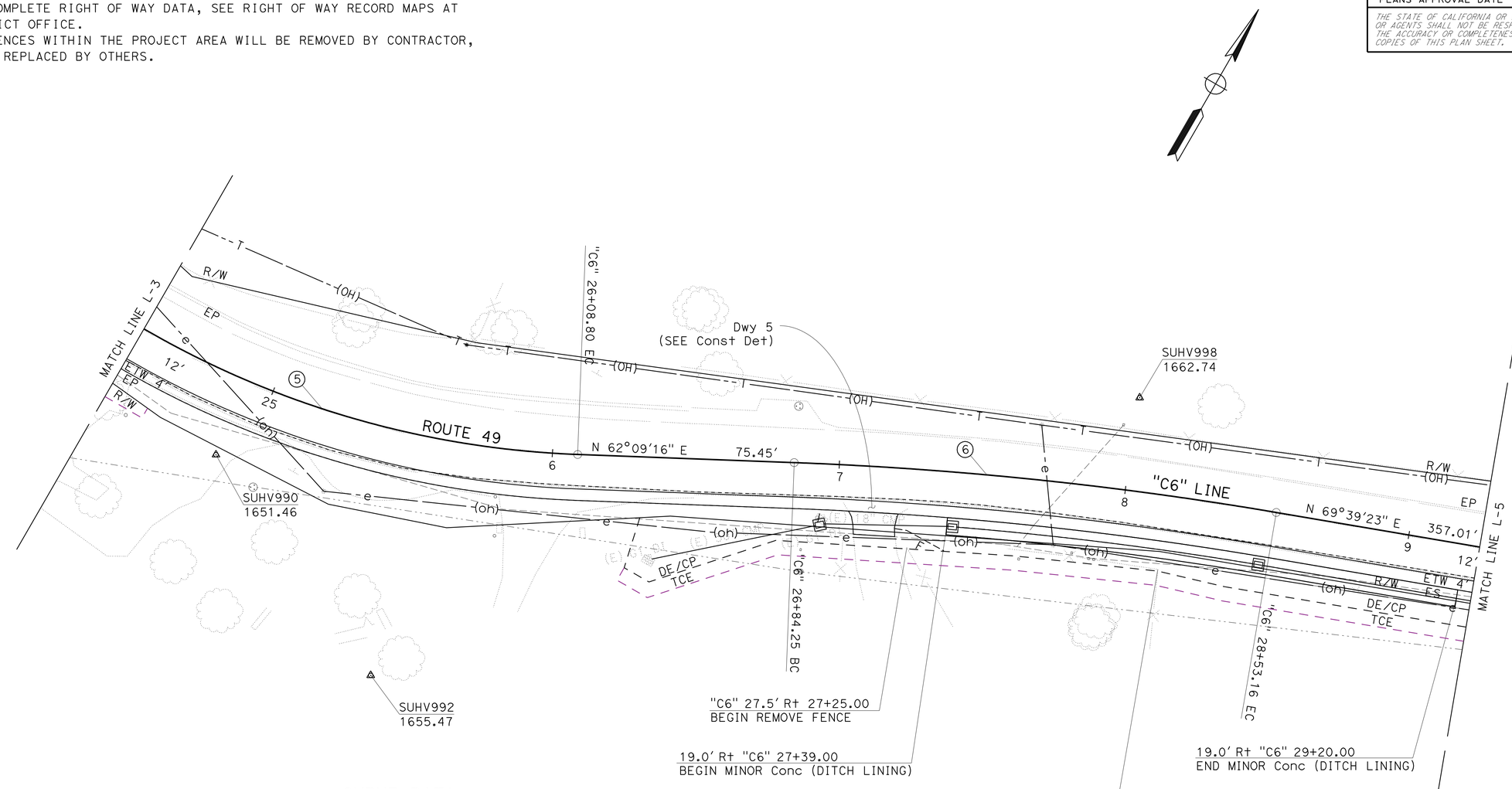

CURVE DATA

No. ⊕	R	Δ	T	L	N	E
5	325'	64°58'47"	207.01'	368.67'	2012429.28	6892070.05
6	1290'	7°30'06"	84.57'	168.91'	2011036.42	6892891.17

LAYOUT
SCALE: 1" = 20'

L-4

REVISED BY | DATE REVISED
W. KEITH MACK
CALCULATED-DESIGNED BY | CHECKED BY
FUNCTIONAL SUPERVISOR: SCOTT MANN
STATE OF CALIFORNIA - DEPARTMENT OF TRANSPORTATION
Caltrans
03-DESIGN

LAST REVISION 10-25-11 | DATE PLOTTED => 09-MAR-2012 | TIME PLOTTED => 09:51

Dist	COUNTY	ROUTE	POST MILES TOTAL PROJECT	SHEET No.	TOTAL SHEETS
03	ED	49	9.6/10.1	7	61

REGISTERED CIVIL ENGINEER 3-1-12 DATE

2-29-12
PLANS APPROVAL DATE

REGISTERED PROFESSIONAL ENGINEER W. KEITH MACK No. 73964 Exp. 6/30/13 CIVIL STATE OF CALIFORNIA

THE STATE OF CALIFORNIA OR ITS OFFICERS OR AGENTS SHALL NOT BE RESPONSIBLE FOR THE ACCURACY OR COMPLETENESS OF SCANNED COPIES OF THIS PLAN SHEET.

NOTES:

1. ALL CALLOUTS TO MINOR Conc (DITCH LINING) ARE TO FLOWLINE.
2. EXACT LOCATION OF RELOCATED MAILBOXES TO BE DETERMINED BY ENGINEER.
3. FOR COMPLETE RIGHT OF WAY DATA, SEE RIGHT OF WAY RECORD MAPS AT DISTRICT OFFICE.
4. ALL FENCES WITHIN THE PROJECT AREA WILL BE REMOVED BY CONTRACTOR, TO BE REPLACED BY OTHERS.

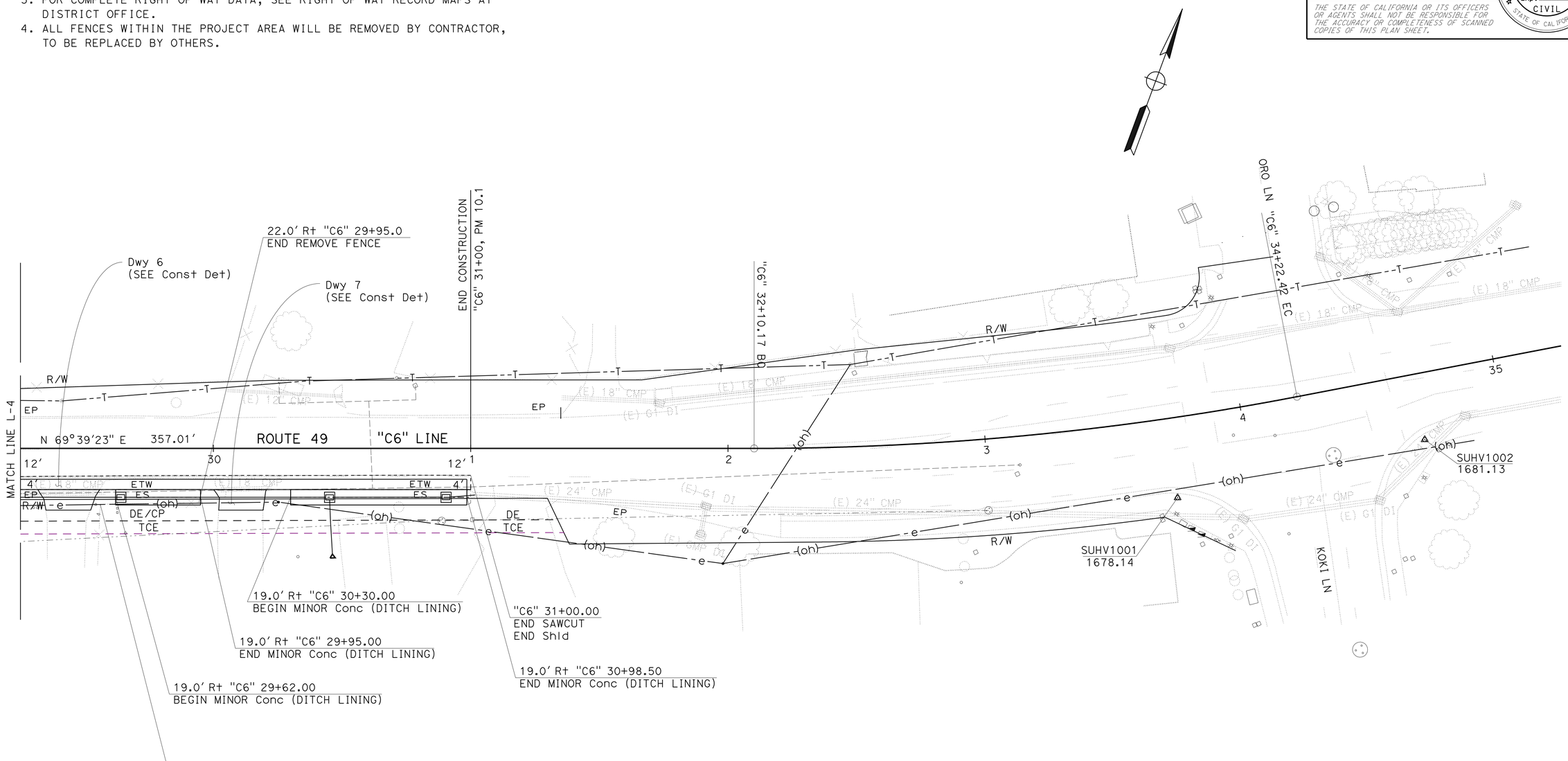

LAYOUT
SCALE: 1" = 20'

L-5

STATE OF CALIFORNIA - DEPARTMENT OF TRANSPORTATION
Caltrans
03-DESIGN

FUNCTIONAL SUPERVISOR: SCOTT MANN
CALCULATED-DESIGNED BY: W. KEITH MACK
CHECKED BY
REVISED BY
DATE REVISED

LAST REVISION 10-25-11
DATE PLOTTED => 09-MAR-2012
TIME PLOTTED => 09:51

Dist	COUNTY	ROUTE	POST MILES TOTAL PROJECT	SHEET No.	TOTAL SHEETS
03	ED	49	9.6/10.1	8	61

REGISTERED CIVIL ENGINEER 3-1-12 DATE

2-29-12
PLANS APPROVAL DATE

REGISTERED PROFESSIONAL ENGINEER
W. KEITH MACK
No. 73964
Exp. 6/30/13
CIVIL
STATE OF CALIFORNIA

THE STATE OF CALIFORNIA OR ITS OFFICERS OR AGENTS SHALL NOT BE RESPONSIBLE FOR THE ACCURACY OR COMPLETENESS OF SCANNED COPIES OF THIS PLAN SHEET.

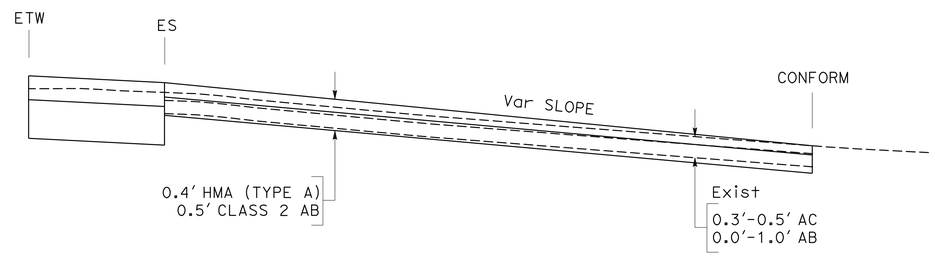

SECTION A-A
NO SCALE

DRIVEWAYS

LOCATION	WIDTH
Dwy 1 - "C6" 16+40.00 Rt	24'
Dwy 2 - "C6" 18+00.00 Rt	14'
Dwy 3 - "C6" 18+65.00 Rt	16'
Dwy 4 - "C6" 20+50.00 Rt	15'
Dwy 5 - "C6" 27+15.00 Rt	15'
Dwy 6 - "C6" 29+45.00 Rt	17'
Dwy 7 - "C6" 30+10.00 Rt	17'

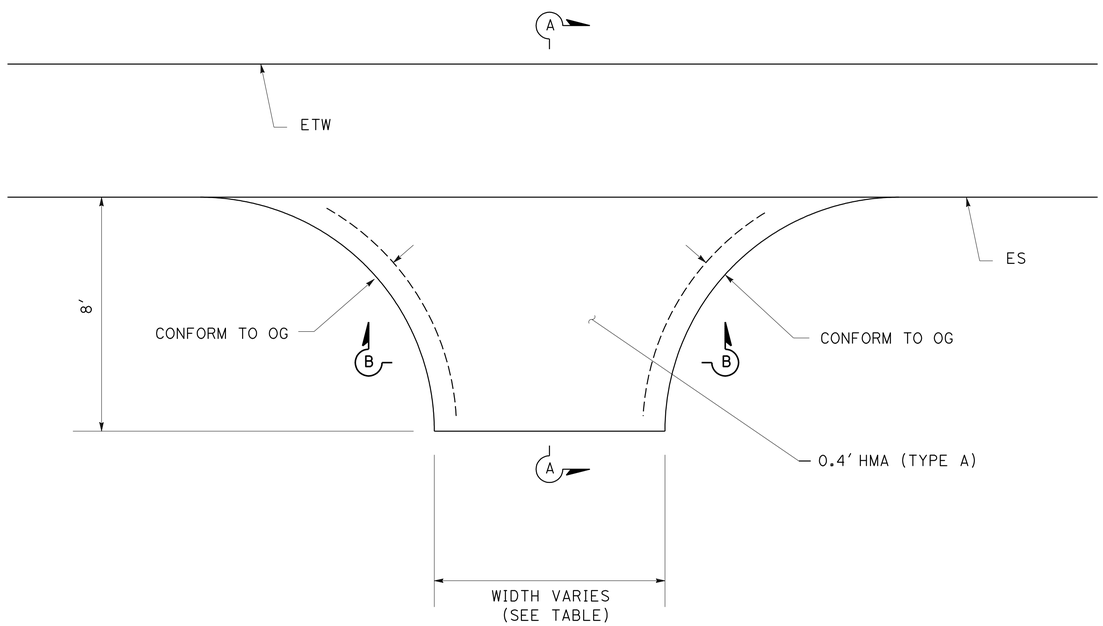

DRIVEWAY DETAIL

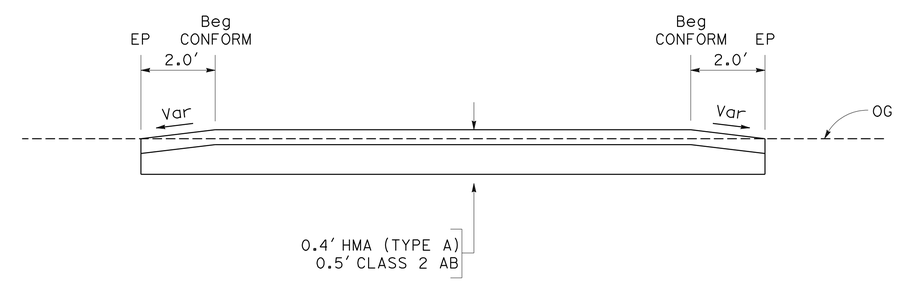

SECTION B-B
NO SCALE

CONSTRUCTION DETAILS
NO SCALE

C-1

STATE OF CALIFORNIA - DEPARTMENT OF TRANSPORTATION
Caltrans
03-DESIGN

FUNCTIONAL SUPERVISOR: SCOTT MANN
CALCULATED-DESIGNED BY: W. KEITH MACK
CHECKED BY
REVISED BY
DATE REVISED

LAST REVISION 10-25-11
DATE PLOTTED => 09-MAR-2012
TIME PLOTTED => 09:51

Dist	COUNTY	ROUTE	POST MILES TOTAL PROJECT	SHEET No.	TOTAL SHEETS
03	ED	49	9.6/10.1	9	61

2-29-12
LICENSED LANDSCAPE ARCHITECT

2-29-12
PLANS APPROVAL DATE

LICENSED LANDSCAPE ARCHITECT JAMES G. WILLIAMSON No. 5415 Signature 02-28-14 Renewal Date 02-23-12 Date STATE OF CALIFORNIA

THE STATE OF CALIFORNIA OR ITS OFFICERS OR AGENTS SHALL NOT BE RESPONSIBLE FOR THE ACCURACY OR COMPLETENESS OF SCANNED COPIES OF THIS PLAN SHEET.

NOTE:

FOR ACCURATE RIGHT OF WAY DATA, CONTACT RIGHT OF WAY ENGINEERING AT THE DISTRICT OFFICE.

LEGEND:

BFM = BONDED FIBER MATRIX

EROSION CONTROL (TYPE 1)
- EROSION CONTROL (BFM)

EROSION CONTROL (TYPE 2)
-RECP (NETTING)
-EROSION CONTROL (BFM)

EROSION CONTROL SHEET
EROSION CONTROL AREA

GRAVEL (MISCELLANEOUS AREAS)

ROADSIDE CLEARING

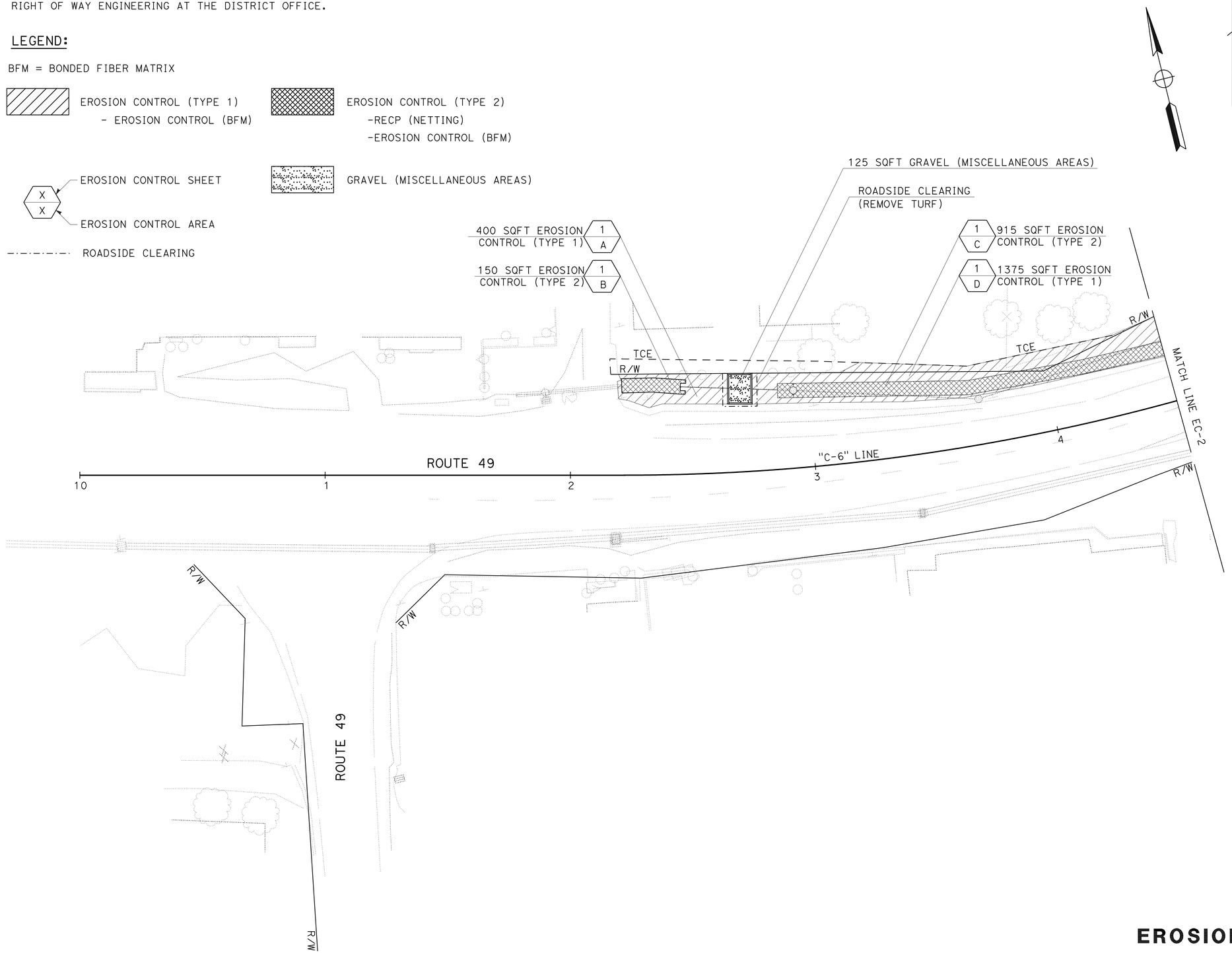

APPROVED FOR EROSION CONTROL WORK ONLY

EROSION CONTROL PLAN

SCALE 1" = 20'

EC-1

STATE OF CALIFORNIA - DEPARTMENT OF TRANSPORTATION
Caltrans® LANDSCAPE ARCHITECTURE

SENIOR LANDSCAPE ARCHITECT: T. CHRIS JOHNSON
CALCULATED-DESIGNED BY: J. KURTH
CHECKED BY: J. WILLIAMSON
REVISED BY / DATE REVISED

LAST REVISION 12-09-11
DATE PLOTTED => 09-MAR-2012
TIME PLOTTED => 09:51

Dist	COUNTY	ROUTE	POST MILES TOTAL PROJECT	SHEET No.	TOTAL SHEETS
03	ED	49	9.6/10.1	10	61

2-29-12
LICENSED LANDSCAPE ARCHITECT

2-29-12
PLANS APPROVAL DATE

LICENSED LANDSCAPE ARCHITECT JAMES G. WILLIAMSON No. 5415 STATE OF CALIFORNIA
Signature
02-28-14
Renewal Date
02-23-12
Date

THE STATE OF CALIFORNIA OR ITS OFFICERS OR AGENTS SHALL NOT BE RESPONSIBLE FOR THE ACCURACY OR COMPLETENESS OF SCANNED COPIES OF THIS PLAN SHEET.

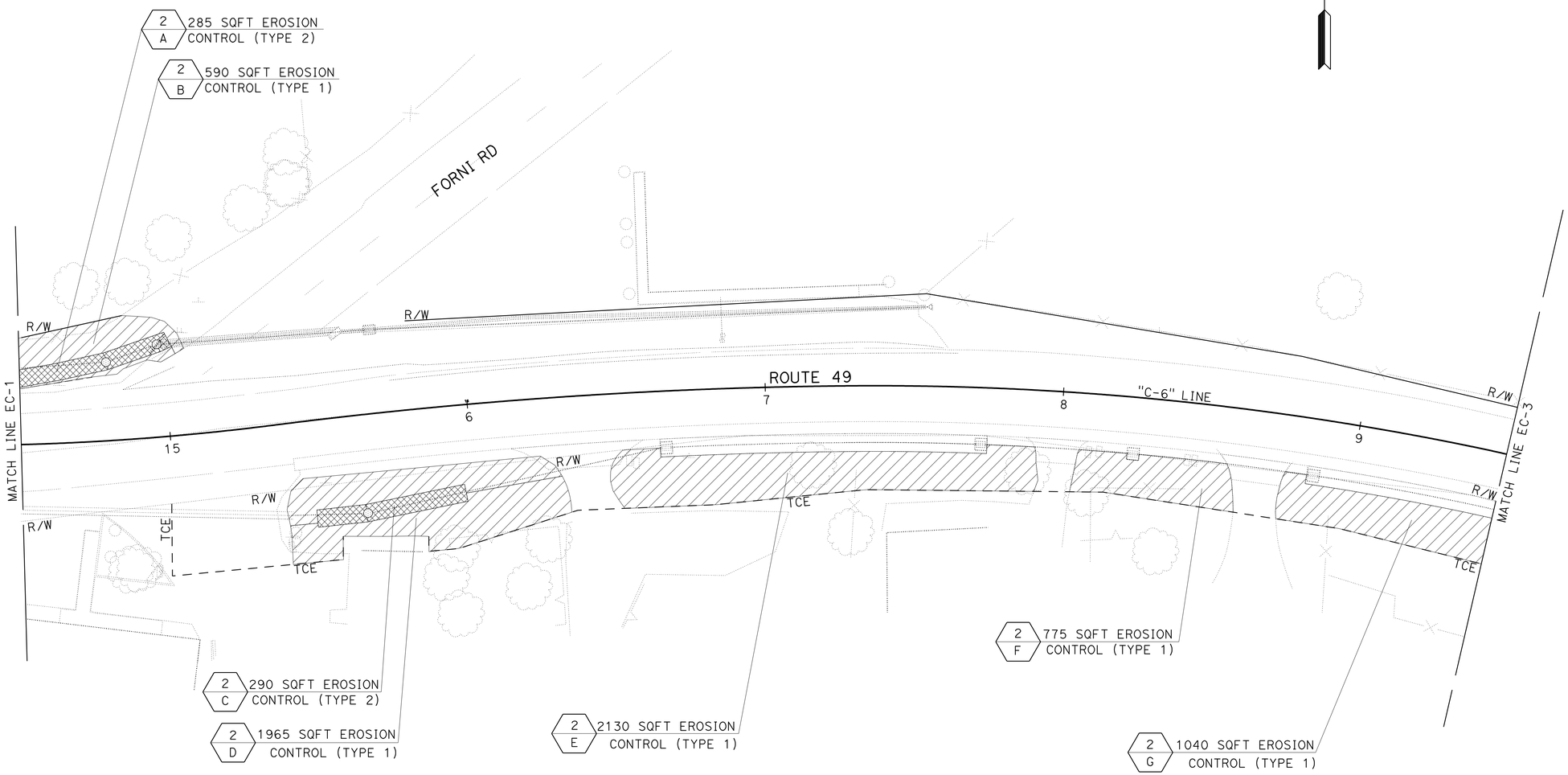

APPROVED FOR EROSION CONTROL WORK ONLY

EROSION CONTROL PLAN

SCALE 1" =20'

EC-2

STATE OF CALIFORNIA - DEPARTMENT OF TRANSPORTATION
Caltrans® LANDSCAPE ARCHITECTURE

SENIOR LANDSCAPE ARCHITECT: T. CHRIS JOHNSON
CALCULATED-DESIGNED BY: J. KURTH
CHECKED BY: J. WILLIAMSON
REVISED BY / DATE REVISED

LAST REVISION 12-09-11
DATE PLOTTED => 09-MAR-2012
TIME PLOTTED => 09:51

Dist	COUNTY	ROUTE	POST MILES TOTAL PROJECT	SHEET No.	TOTAL SHEETS
03	ED	49	9.6/10.1	11	61

2-29-12
LICENSED LANDSCAPE ARCHITECT

2-29-12
PLANS APPROVAL DATE

LICENSED LANDSCAPE ARCHITECT JAMES G. WILLIAMSON No. 5415 Signature 02-28-14 Renewal Date 02-23-12 Date STATE OF CALIFORNIA

THE STATE OF CALIFORNIA OR ITS OFFICERS OR AGENTS SHALL NOT BE RESPONSIBLE FOR THE ACCURACY OR COMPLETENESS OF SCANNED COPIES OF THIS PLAN SHEET.

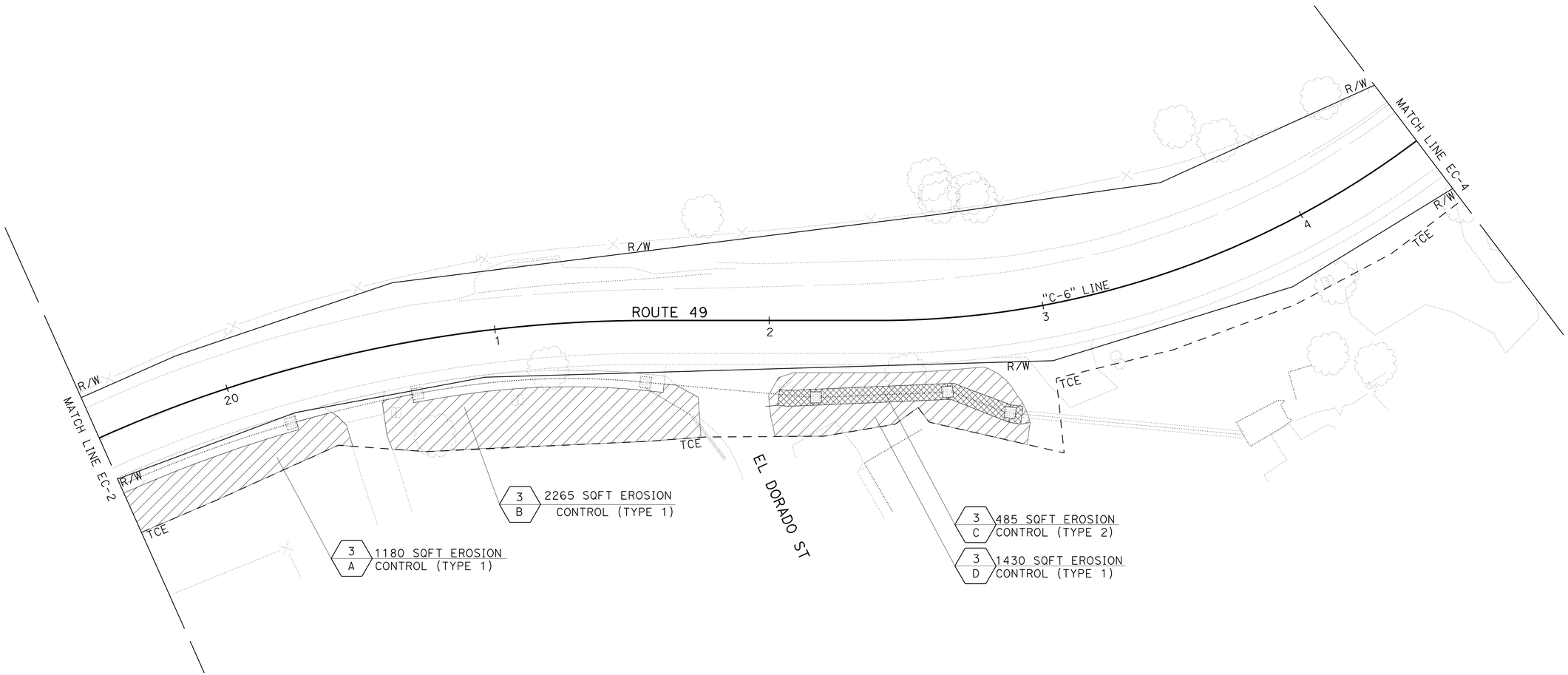

EROSION CONTROL PLAN

SCALE 1" =20'

EC-3

APPROVED FOR EROSION CONTROL WORK ONLY

STATE OF CALIFORNIA - DEPARTMENT OF TRANSPORTATION
Caltrans® LANDSCAPE ARCHITECTURE

SENIOR LANDSCAPE ARCHITECT: T. CHRIS JOHNSON
CALCULATED-DESIGNED BY: J. KURTH
CHECKED BY: J. WILLIAMSON
REVISED BY
DATE REVISED

LAST REVISION 12-09-11
DATE PLOTTED => 09-MAR-2012
TIME PLOTTED => 09:51

Dist	COUNTY	ROUTE	POST MILES TOTAL PROJECT	SHEET No.	TOTAL SHEETS
03	ED	49	9.6/10.1	12	61

2-29-12
LICENSED LANDSCAPE ARCHITECT

2-29-12
PLANS APPROVAL DATE

LICENSED LANDSCAPE ARCHITECT
JAMES G. WILLIAMSON
No. 5415
Signature
02-28-14
Renewal Date
02-23-12
Date
STATE OF CALIFORNIA

THE STATE OF CALIFORNIA OR ITS OFFICERS OR AGENTS SHALL NOT BE RESPONSIBLE FOR THE ACCURACY OR COMPLETENESS OF SCANNED COPIES OF THIS PLAN SHEET.

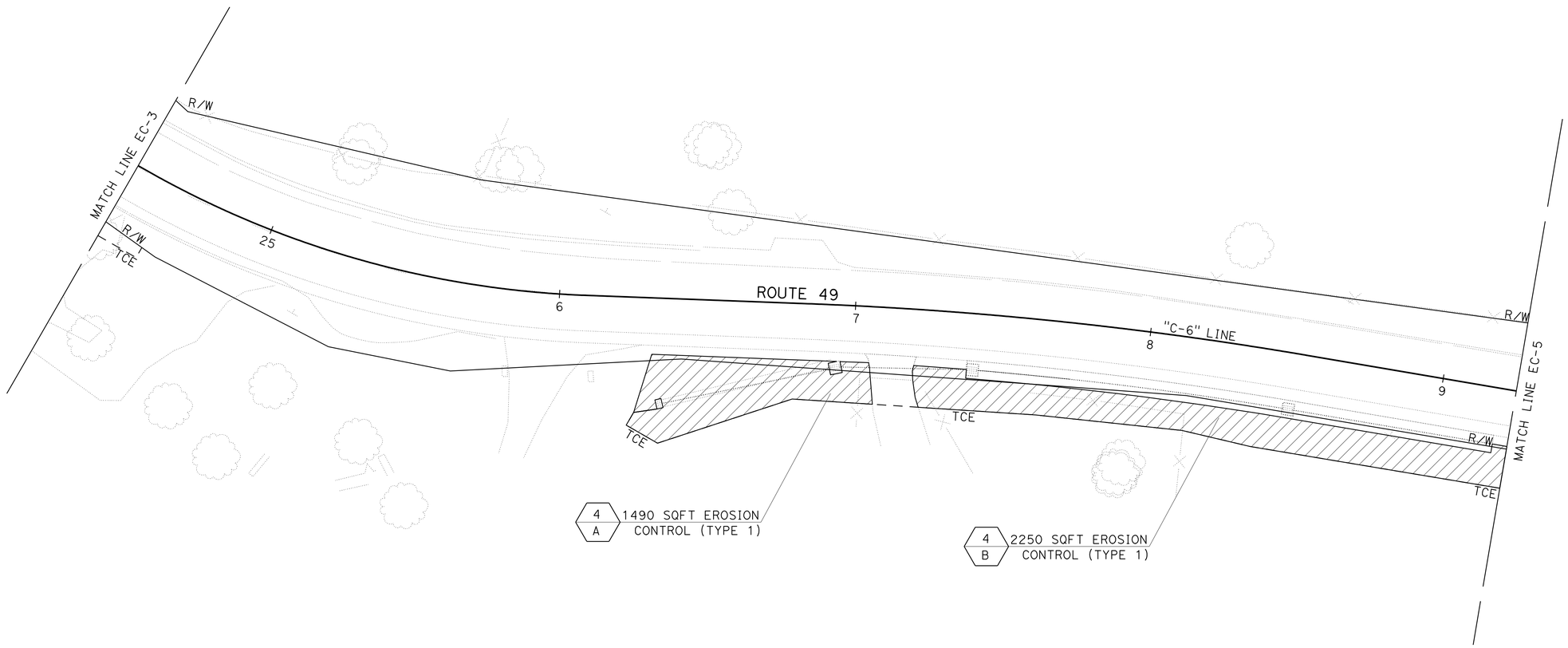

APPROVED FOR EROSION CONTROL WORK ONLY

EROSION CONTROL PLAN

SCALE 1" =20'

EC-4

STATE OF CALIFORNIA - DEPARTMENT OF TRANSPORTATION
Caltrans® LANDSCAPE ARCHITECTURE

SENIOR LANDSCAPE ARCHITECT: T. CHRIS JOHNSON
CALCULATED-DESIGNED BY: J. KURTH
CHECKED BY: J. WILLIAMSON
REVISED BY
DATE REVISED

LAST REVISION 12-09-11
DATE PLOTTED => 09-MAR-2012
TIME PLOTTED => 09:51

Dist	COUNTY	ROUTE	POST MILES TOTAL PROJECT	SHEET No.	TOTAL SHEETS
03	ED	49	9.6/10.1	13	61

2-29-12
LICENSED LANDSCAPE ARCHITECT

2-29-12
PLANS APPROVAL DATE

LICENSED LANDSCAPE ARCHITECT JAMES G. WILLIAMSON No. 5415 STATE OF CALIFORNIA
Signature
02-28-14
Renewal Date
02-23-12
Date

THE STATE OF CALIFORNIA OR ITS OFFICERS OR AGENTS SHALL NOT BE RESPONSIBLE FOR THE ACCURACY OR COMPLETENESS OF SCANNED COPIES OF THIS PLAN SHEET.

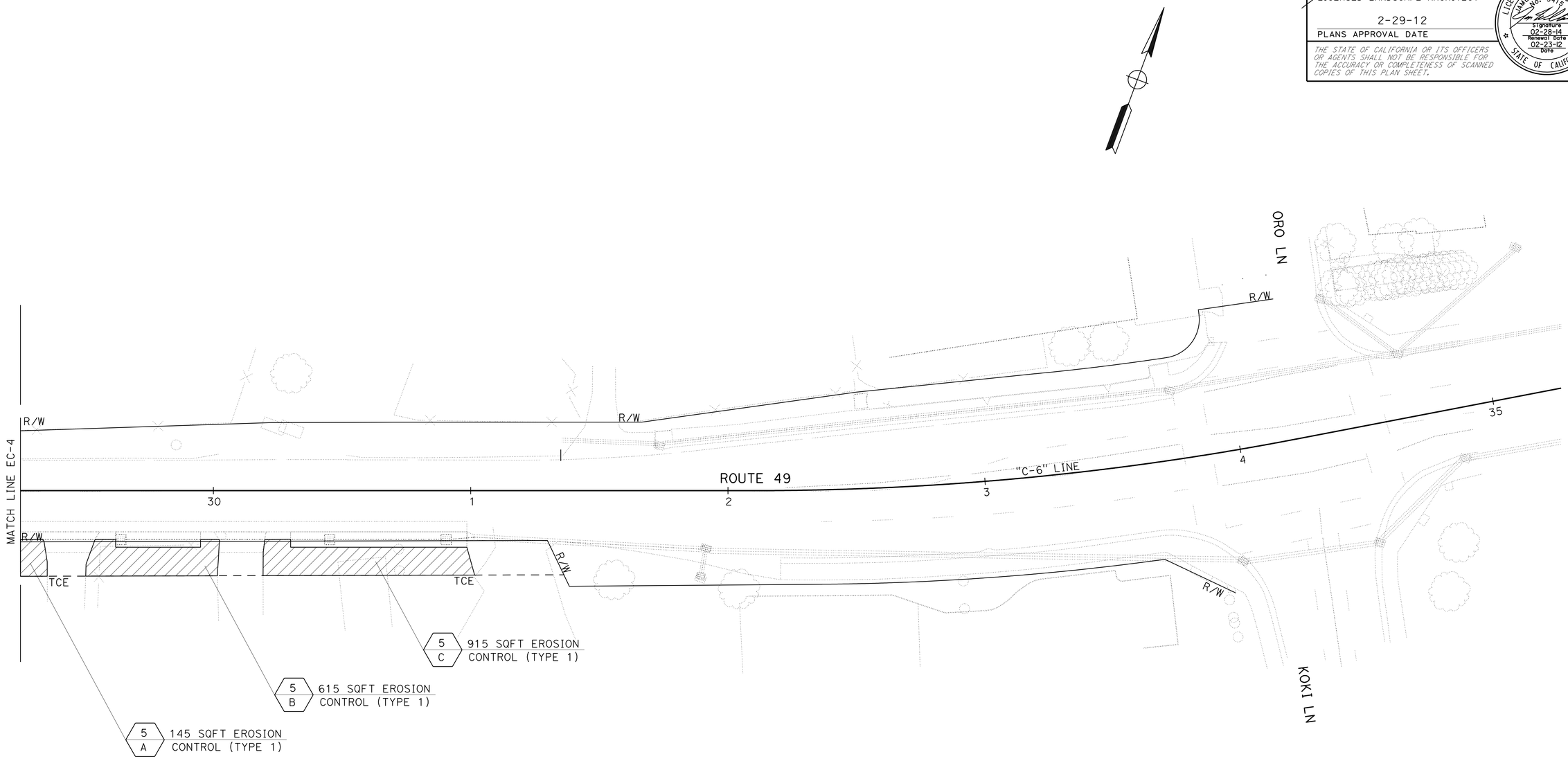

APPROVED FOR EROSION CONTROL WORK ONLY

EROSION CONTROL PLAN

SCALE 1" =20'

EC-5

STATE OF CALIFORNIA - DEPARTMENT OF TRANSPORTATION
Caltrans® LANDSCAPE ARCHITECTURE

SENIOR LANDSCAPE ARCHITECT: T. CHRIS JOHNSON

CALCULATED-DESIGNED BY: J. KURTH
CHECKED BY: J. WILLIAMSON

REVISED BY
DATE REVISED

LAST REVISION 12-09-11
DATE PLOTTED => 09-MAR-2012
TIME PLOTTED => 09:51

Dist	COUNTY	ROUTE	POST MILES TOTAL PROJECT	SHEET No.	TOTAL SHEETS
03	ED	49	9.6/10.1	14	61

2-29-12
LICENSED LANDSCAPE ARCHITECT

2-29-12
PLANS APPROVAL DATE

LICENSED LANDSCAPE ARCHITECT JAMES G. WILLIAMSON No. 5415 Signature 02-28-14 Renewal Date 02-23-12 Date STATE OF CALIFORNIA

THE STATE OF CALIFORNIA OR ITS OFFICERS OR AGENTS SHALL NOT BE RESPONSIBLE FOR THE ACCURACY OR COMPLETENESS OF SCANNED COPIES OF THIS PLAN SHEET.

GRAVEL (MISCELLANEOUS AREAS) QUANTITY

STATION	LOCATION	GRAVEL (MISCELLANEOUS AREAS)	(N) GRAVEL	(N) FILTER FABRIC	(N) EDGING
		SQFT	CF	SQFT	LF
"C6" 12+65 TO 12+75	L+	125	42	125	44

(N) - NOT A SEPARATE PAY ITEM, FOR INFORMATION ONLY

EROSION CONTROL ITEMS

SHEET	AREA	(N) EROSION CONTROL TYPE	ROLLED EROSION CONTROL PRODUCT (NETTING)	EROSION CONTROL (BFM)	BFM APPLICATION (N) 1ST: BONDED FIBER (FIBER AND TACKIFIER)	BFM APPLICATION (N) 2ND: BONDED FIBER (FIBER AND TACKIFIER)	BFM APPLICATION (N) 2ND: ORGANIC FERTILIZER	BFM APPLICATION (N) 2ND: SEED
			SQFT	SQFT	Lbs	Lbs	Lbs	Lbs
EC-1	A	1	--	400	13.8	9.2	4.6	0.3
EC-1	B	2	150	150	5.2	3.4	1.7	0.1
EC-1	C	2	915	915	31.5	21.0	10.5	0.7
EC-1	D	1	--	1375	47.3	31.6	15.8	1.1
EC-2	A	2	285	285	9.8	6.5	3.3	0.2
EC-2	B	1	--	590	20.3	13.5	6.8	0.5
EC-2	C	2	290	290	10.0	6.7	3.3	0.2
EC-2	D	1	--	1965	67.7	45.1	22.6	1.6
EC-2	E	1	--	2130	73.3	48.9	24.4	1.7
EC-2	F	1	--	775	26.7	17.8	8.9	0.6
EC-2	G	1	--	1040	35.8	23.9	11.9	0.8
EC-3	A	1	--	1180	40.6	27.1	13.5	0.9
EC-3	B	1	--	2265	78.0	52.0	26.0	1.8
EC-3	C	2	485	485	16.7	11.1	5.6	0.4
EC-3	D	1	--	1430	49.2	32.8	16.4	1.1
EC-4	A	1	--	1490	51.3	34.2	17.1	1.2
EC-4	B	1	--	2250	77.5	51.7	25.8	1.8
EC-5	A	1	--	145	5.0	3.3	1.7	0.1
EC-5	B	1	--	615	21.2	14.1	7.1	0.5
EC-5	C	1	--	915	31.5	21.0	10.5	0.7
TOTAL			2125	20690	712.5	475.0	237.5	16.6

(N) - NOT A SEPARATE PAY ITEM, FOR INFORMATION ONLY

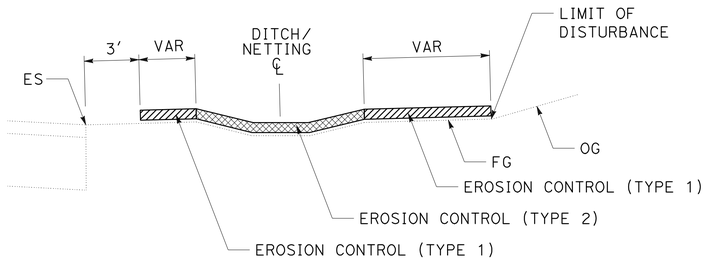

EROSION CONTROL TYPICAL SECTION

SECTION

"C6" 12+19 L+ TO 12+65 L+
"C6" 12+75 L+ TO 14+50 L+
"C6" 14+50 L+ TO 15+07 L+
"C6" 15+35 R+ TO 15+97 R+
"C6" 22+00 R+ TO 22+90 R+

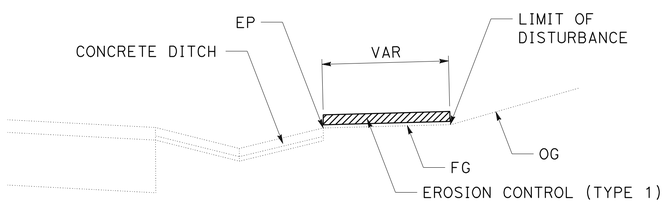

EROSION CONTROL TYPICAL SECTION

SECTION

"C6" 16+47 R+ TO 17+92 R+
"C6" 18+77 R+ TO 19+50 R+
"C6" 19+50 R+ TO 20+39 R+
"C6" 20+54 R+ TO 21+75 R+
"C6" 27+20 R+ TO 29+25 R+
"C6" 29+25 R+ TO 29+35 R+
"C6" 29+50 R+ TO 30+02 R+
"C6" 30+19 R+ TO 31+02 R+

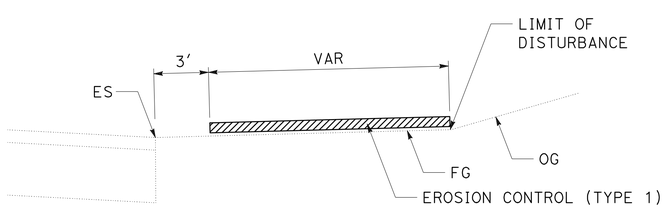

EROSION CONTROL TYPICAL SECTION

SECTION

"C6" 15+97 R+ TO 16+32 R+
"C6" 18+04 R+ TO 18+61 R+
"C6" 26+24 R+ TO 27+08 R+

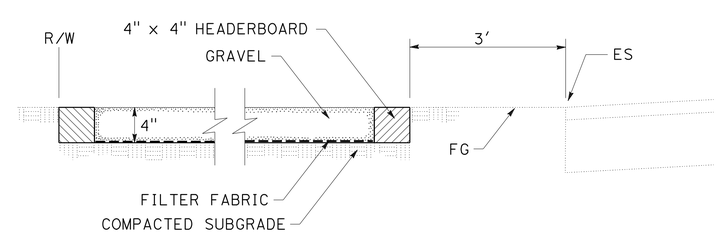

GRAVEL (MISCELLANEOUS AREAS)

SECTION

"C6" 12+65 L+ TO 12+75 L+

EROSION CONTROL DETAILS

NO SCALE

ECD-1

STATE OF CALIFORNIA - DEPARTMENT OF TRANSPORTATION
Caltrans® LANDSCAPE ARCHITECTURE

SENIOR LANDSCAPE ARCHITECT: T. CHRIS JOHNSON
CALCULATED-DESIGNED BY: J. WILLIAMSON
CHECKED BY: J. KURTH
REVISED BY / DATE REVISED

LAST REVISION 12-09-11
DATE PLOTTED => 09-MAR-2012
TIME PLOTTED => 09:51

Dist	COUNTY	ROUTE	POST MILES TOTAL PROJECT	SHEET No.	TOTAL SHEETS
03	ED	49	9.6/10.1	15	61

2-29-12
LICENSED LANDSCAPE ARCHITECT

2-29-12
PLANS APPROVAL DATE

LICENSED LANDSCAPE ARCHITECT JAMES G. WILLIAMSON No. 5415 Signature 02-28-14 Renewal Date 02-23-12 Date STATE OF CALIFORNIA

THE STATE OF CALIFORNIA OR ITS OFFICERS OR AGENTS SHALL NOT BE RESPONSIBLE FOR THE ACCURACY OR COMPLETENESS OF SCANNED COPIES OF THIS PLAN SHEET.

NOTES:

1. FOR CLARITY, PERSPECTIVE VIEW DOES NOT SHOW ALL STAPLES.
2. NOTCH RECP (NETTING) AROUND FLARED END SECTION AND HEADWALL AT SIDE DITCH LOCATIONS.
3. STEEL STAPLES TO BE PLACED 0'-6" ON CENTER ALONG THE LENGTH OF THE KEY TRENCH AND TRANSVERSE JOINTS.
4. KEY TRENCH SHALL BE PLACED AT THE UPSTREAM END OF THE RECP (NETTING) ONLY.

LEGEND:

RECP = ROLLED EROSION CONTROL PRODUCT

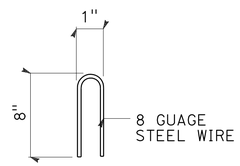

STAPLE DETAIL

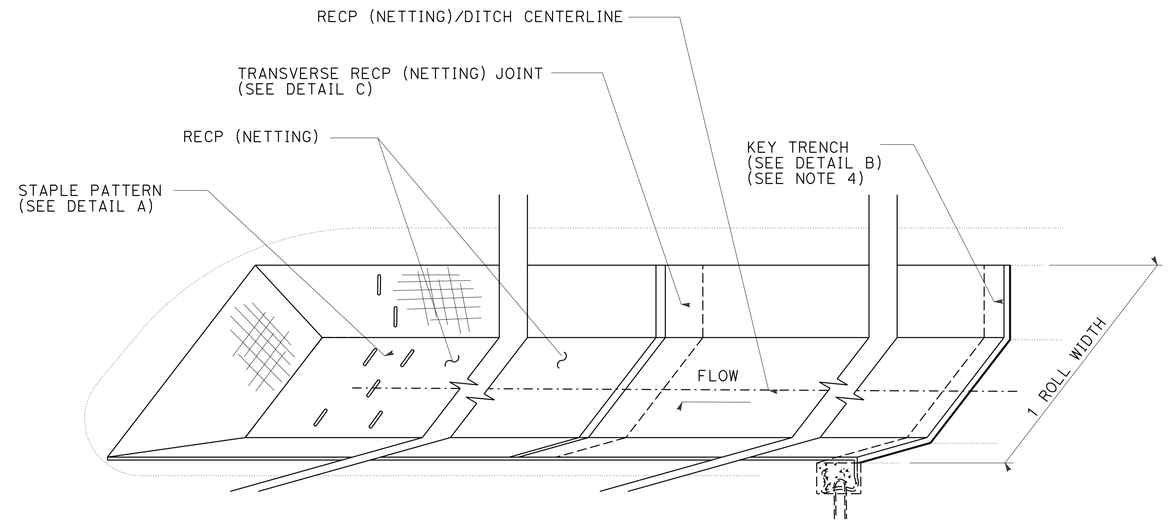

RECP (NETTING) TYPICAL DETAIL AT END OF DITCH LOCATION

PERSPECTIVE

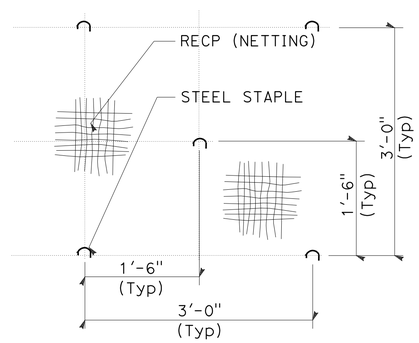

DETAIL A STAPLE PATTERN

PLAN

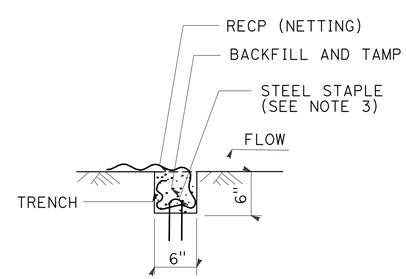

DETAIL B KEY TRENCH

SECTION

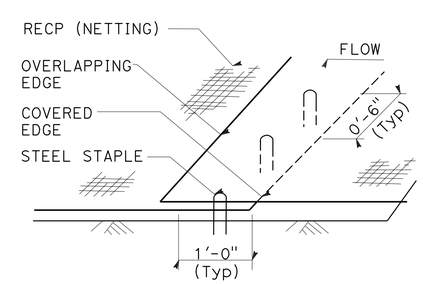

DETAIL C TRANSVERSE RECP (NETTING) JOINT

PERSPECTIVE

EROSION CONTROL DETAILS

NO SCALE

ECD-2

STATE OF CALIFORNIA - DEPARTMENT OF TRANSPORTATION
Caltrans® LANDSCAPE ARCHITECTURE

SENIOR LANDSCAPE ARCHITECT: T. CHRIS JOHNSON
CALCULATED-DESIGNED BY: J. WILLIAMSON
CHECKED BY: J. KURTH
REVISED BY
DATE REVISED

LAST REVISION 12-09-11
DATE PLOTTED => 09-MAR-2012
TIME PLOTTED => 09:51

Dist	COUNTY	ROUTE	POST MILES TOTAL PROJECT	SHEET No.	TOTAL SHEETS
03	ED	49	9.6/10.1	16	61

REGISTERED CIVIL ENGINEER 3-1-12 DATE

2-29-12
PLANS APPROVAL DATE

REGISTERED PROFESSIONAL ENGINEER CHRIS ROCKEY No. C78030 Exp. 09-30-13 CIVIL STATE OF CALIFORNIA

THE STATE OF CALIFORNIA OR ITS OFFICERS OR AGENTS SHALL NOT BE RESPONSIBLE FOR THE ACCURACY OR COMPLETENESS OF SCANNED COPIES OF THIS PLAN SHEET.

NOTES:

1. FOR ACCURATE RIGHT OF WAY DATA, CONTACT RIGHT OF WAY ENGINEERING AT THE DISTRICT OFFICE.
2. UTILITY LOCATIONS ARE APPROXIMATE AND SHALL BE VERITIED BY THE CONTRACTOR PRIOR TO CONSTRUCTION.
3. FINAL CONTOUR GRADING TO BE DETERMINED BY THE ENGINEER.
4. ITEM 1a, 3q AND 3r HAVE BEEN OMITTED
5. STAMPED CONCRETE IMPRINT DI MARKER, DRAINS TO RIVER. SEE NSP D71 FOR DETAILS.

LEGEND:

(#) DRAINAGE SYSTEM NUMBER

(×) DRAINAGE UNIT

DE = DRAINAGE EASMENT
TCE = TEMPORARY CONSTRUCTION EASEMENT

DRAINAGE AND CONTOUR GRADING PLAN

SCALE 1"= 5'

D-1

APPROVED FOR DRAINAGE AND CONTOUR GRADING WORK ONLY

STATE OF CALIFORNIA - DEPARTMENT OF TRANSPORTATION
Caltrans
HYDRAULICS BRANCH

FUNCTIONAL SUPERVISOR: DENNIS JAGODA
CALCULATED-DESIGNED BY: JAMES PHILIPP
CHECKED BY
REVISED BY
DATE REVISED

LAST REVISION 00-00-00
DATE PLOTTED => 09-MAR-2012
TIME PLOTTED => 09:51

Dist	COUNTY	ROUTE	POST MILES TOTAL PROJECT	SHEET No.	TOTAL SHEETS
03	ED	49	9.6/10.1	17	61

REGISTERED CIVIL ENGINEER 3-1-12 DATE

2-29-12
PLANS APPROVAL DATE

REGISTERED PROFESSIONAL ENGINEER
CHRIS ROCKEY
No. C78030
Exp. 09-30-13
CIVIL
STATE OF CALIFORNIA

THE STATE OF CALIFORNIA OR ITS OFFICERS OR AGENTS SHALL NOT BE RESPONSIBLE FOR THE ACCURACY OR COMPLETENESS OF SCANNED COPIES OF THIS PLAN SHEET.

NOTES:

1. FOR ACCURATE RIGHT OF WAY DATA, CONTACT RIGHT OF WAY ENGINEERING AT THE DISTRICT OFFICE.

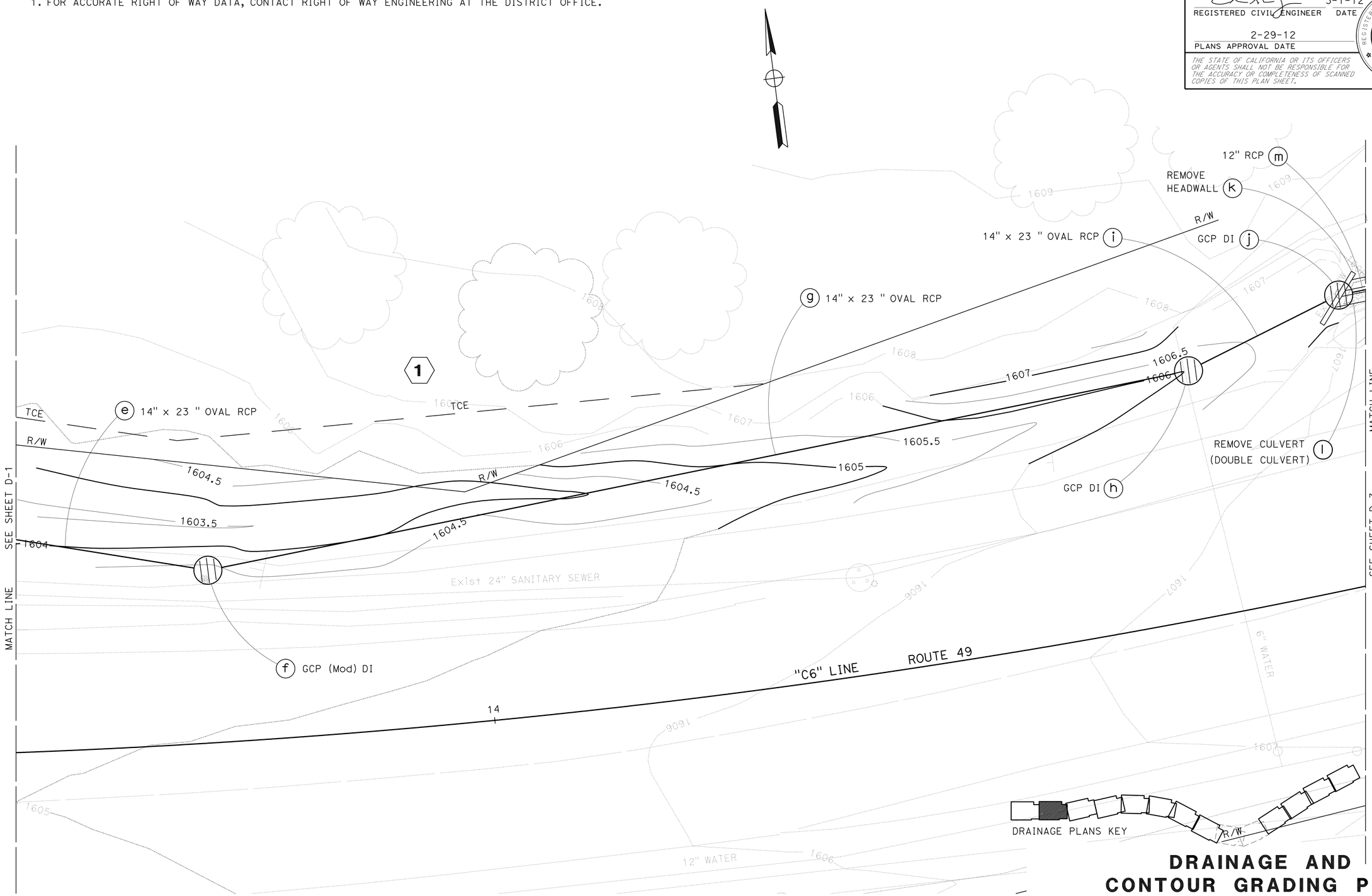

DRAINAGE AND CONTOUR GRADING PLAN

SCALE 1"= 5'

D-2

APPROVED FOR DRAINAGE AND CONTOUR GRADING WORK ONLY

STATE OF CALIFORNIA - DEPARTMENT OF TRANSPORTATION
Caltrans
HYDRAULICS BRANCH

FUNCTIONAL SUPERVISOR: DENNIS JAGODA
CALCULATED-DESIGNED BY: JAMES PHILIPP
CHECKED BY
REVISED BY
DATE REVISED

LAST REVISION 00-00-00
DATE PLOTTED => 09-MAR-2012
TIME PLOTTED => 09:52

Dist	COUNTY	ROUTE	POST MILES TOTAL PROJECT	SHEET No.	TOTAL SHEETS
03	ED	49	9.6/10.1	18	61

REGISTERED CIVIL ENGINEER 3-1-12 DATE

2-29-12
PLANS APPROVAL DATE

REGISTERED PROFESSIONAL ENGINEER
CHRIS ROCKEY
No. C78030
Exp. 09-30-13
CIVIL
STATE OF CALIFORNIA

THE STATE OF CALIFORNIA OR ITS OFFICERS OR AGENTS SHALL NOT BE RESPONSIBLE FOR THE ACCURACY OR COMPLETENESS OF SCANNED COPIES OF THIS PLAN SHEET.

NOTES:

1.FOR ACCURATE RIGHT OF WAY DATA, CONTACT RIGHT OF WAY ENGINEERING AT THE DISTRICT OFFICE.

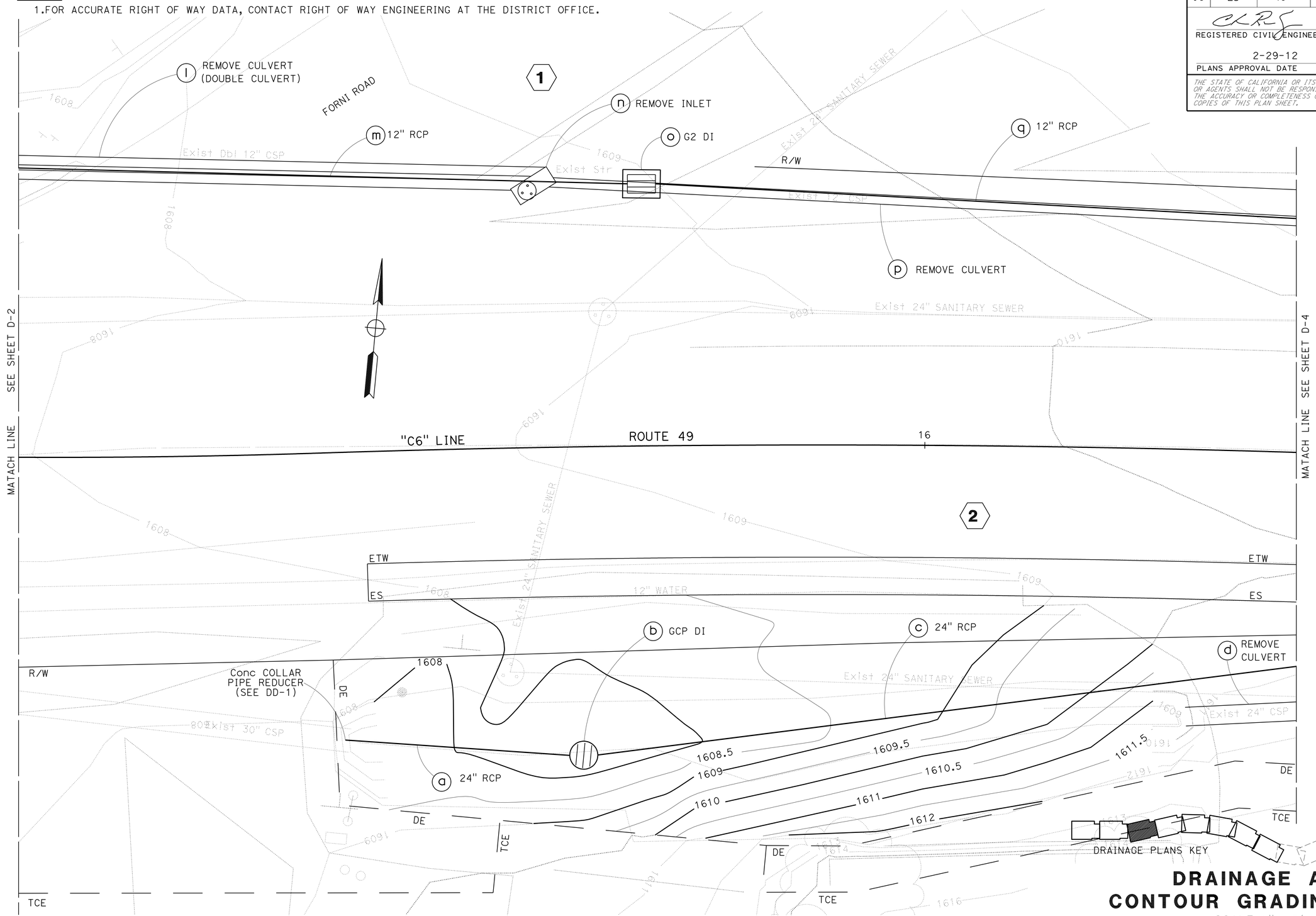

DRAINAGE AND CONTOUR GRADING PLAN

SCALE 1"= 5'

D-3

APPROVED FOR DRAINAGE AND CONTOUR GRADING WORK ONLY

STATE OF CALIFORNIA - DEPARTMENT OF TRANSPORTATION
Caltrans
HYDRAULICS BRANCH

FUNCTIONAL SUPERVISOR: DENNIS JAGODA
CALCULATED-DESIGNED BY: JAMES PHILIPP
CHECKED BY
REVISED BY
DATE REVISED

LAST REVISION 00-00-00
DATE PLOTTED => 09-MAR-2012
TIME PLOTTED => 09:52

Dist	COUNTY	ROUTE	POST MILES TOTAL PROJECT	SHEET No.	TOTAL SHEETS
03	ED	49	9.6/10.1	19	61

REGISTERED CIVIL ENGINEER 3-1-12 DATE

2-29-12
PLANS APPROVAL DATE

REGISTERED PROFESSIONAL ENGINEER CHRIS ROCKEY No. C78030 Exp. 09-30-13 CIVIL STATE OF CALIFORNIA

THE STATE OF CALIFORNIA OR ITS OFFICERS OR AGENTS SHALL NOT BE RESPONSIBLE FOR THE ACCURACY OR COMPLETENESS OF SCANNED COPIES OF THIS PLAN SHEET.

NOTES:

1. FOR ACCURATE RIGHT OF WAY DATA, CONTACT RIGHT OF WAY ENGINEERING AT THE DISTRICT OFFICE.

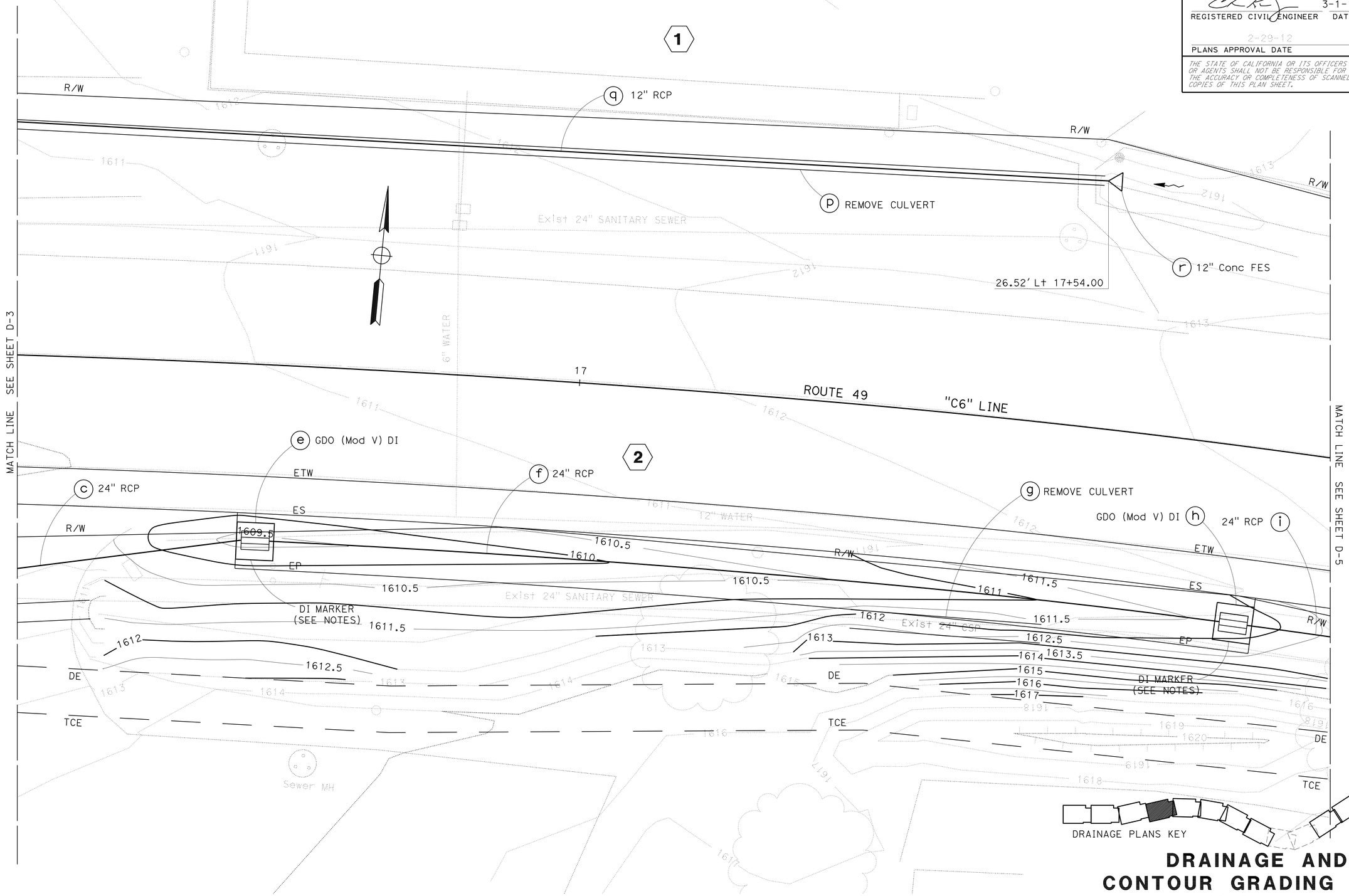

DRAINAGE AND CONTOUR GRADING PLAN

SCALE 1"= 5'

D-4

APPROVED FOR DRAINAGE AND CONTOUR GRADING WORK ONLY

STATE OF CALIFORNIA - DEPARTMENT OF TRANSPORTATION
Caltrans
HYDRAULICS BRANCH

FUNCTIONAL SUPERVISOR: DENNIS JAGODA
CALCULATED-DESIGNED BY: JAMES PHILIPP
CHECKED BY
REVISED BY
DATE REVISED

LAST REVISION 00-00-00
DATE PLOTTED => 09-MAR-2012
TIME PLOTTED => 09:52

Dist	COUNTY	ROUTE	POST MILES TOTAL PROJECT	SHEET No.	TOTAL SHEETS
03	ED	49	9.6/10.1	20	61

REGISTERED CIVIL ENGINEER 3-1-12 DATE

2-29-12
PLANS APPROVAL DATE

REGISTERED PROFESSIONAL ENGINEER
CHRIS ROCKEY
No. C78030
Exp. 09-30-13
CIVIL
STATE OF CALIFORNIA

THE STATE OF CALIFORNIA OR ITS OFFICERS OR AGENTS SHALL NOT BE RESPONSIBLE FOR THE ACCURACY OR COMPLETENESS OF SCANNED COPIES OF THIS PLAN SHEET.

NOTES:

1. FOR ACCURATE RIGHT OF WAY DATA, CONTACT RIGHT OF WAY ENGINEERING AT THE DISTRICT OFFICE.

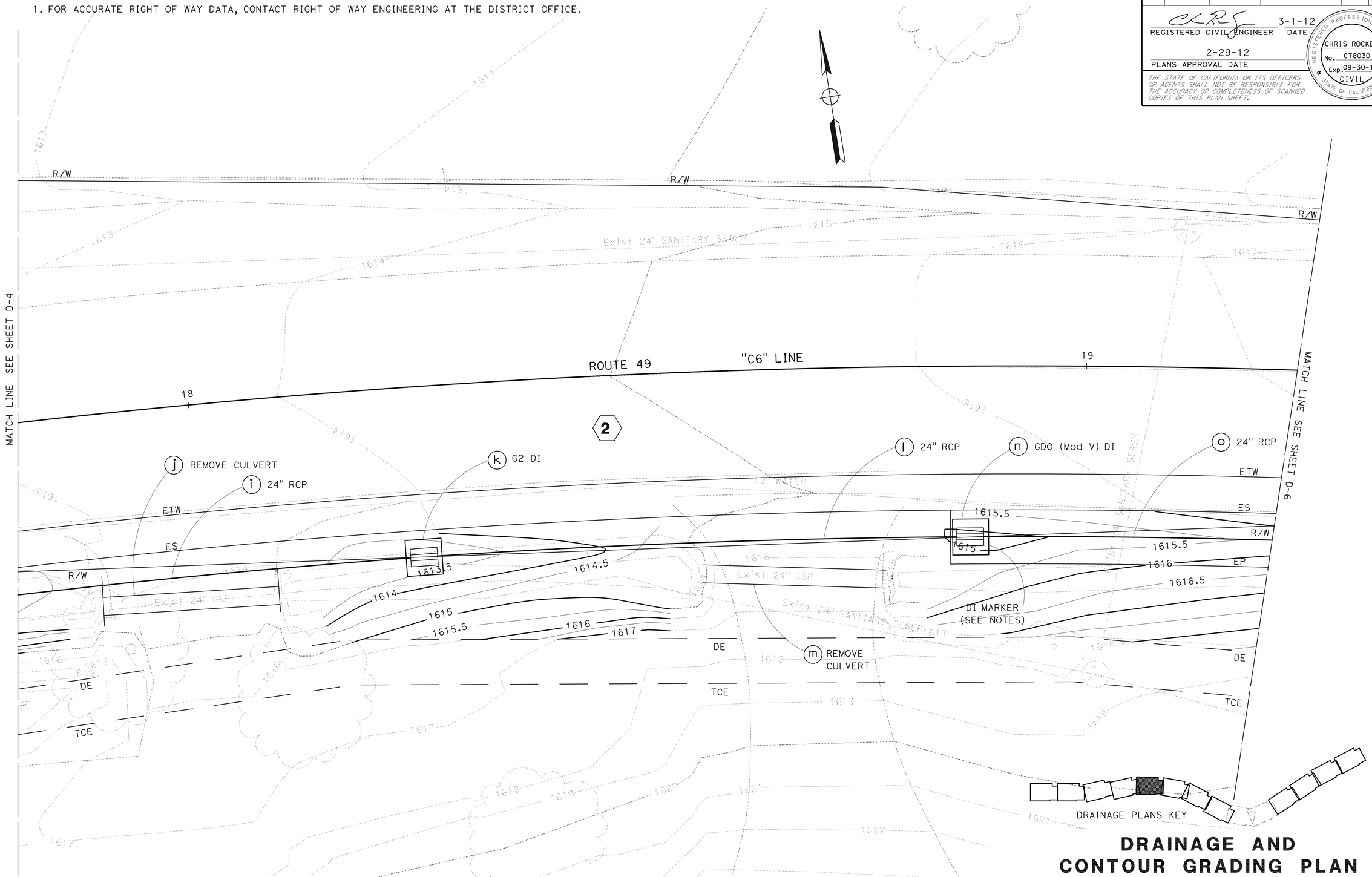

DRAINAGE AND CONTOUR GRADING PLAN

SCALE 1"= 5'

D-5

APPROVED FOR DRAINAGE AND CONTOUR GRADING WORK ONLY

STATE OF CALIFORNIA - DEPARTMENT OF TRANSPORTATION
HYDRAULICS BRANCH

FUNCTIONAL SUPERVISOR: DENNIS JAGODA
CALCULATED-DESIGNED BY: JAMES PHILIPP
CHECKED BY
REVISED BY
DATE REVISED

LAST REVISION 00-00-00
DATE PLOTTED => 09-MAR-2012
TIME PLOTTED => 09:52

Dist	COUNTY	ROUTE	POST MILES TOTAL PROJECT	SHEET No.	TOTAL SHEETS
03	ED	49	9.6/10.1	21	61

REGISTERED CIVIL ENGINEER 3-1-12 DATE

2-29-12
PLANS APPROVAL DATE

REGISTERED PROFESSIONAL ENGINEER
CHRIS ROCKEY
No. C78030
Exp. 09-30-13
CIVIL
STATE OF CALIFORNIA

THE STATE OF CALIFORNIA OR ITS OFFICERS OR AGENTS SHALL NOT BE RESPONSIBLE FOR THE ACCURACY OR COMPLETENESS OF SCANNED COPIES OF THIS PLAN SHEET.

NOTES:

1. FOR ACCURATE RIGHT OF WAY DATA, CONTACT RIGHT OF WAY ENGINEERING AT THE DISTRICT OFFICE.

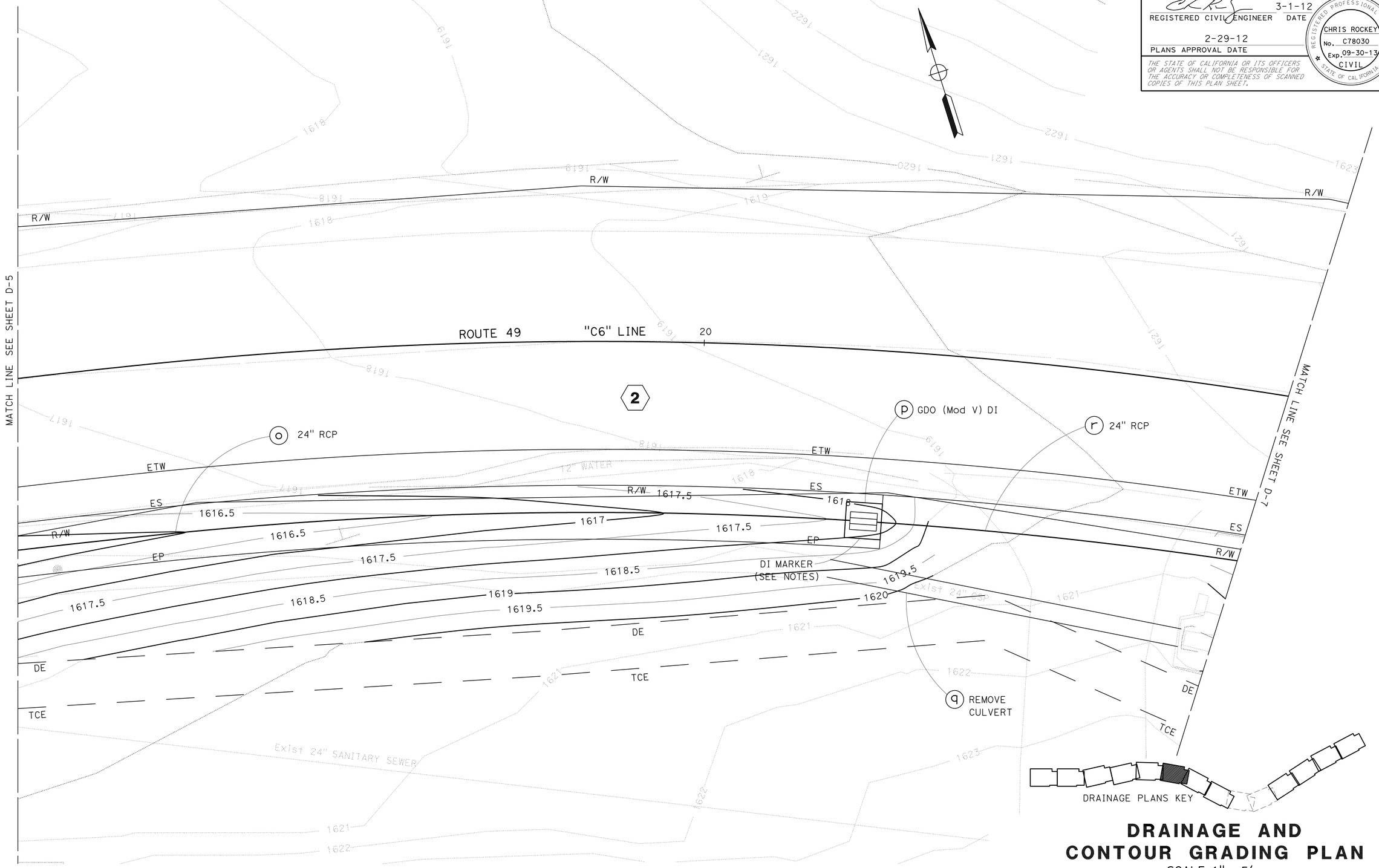

DRAINAGE AND CONTOUR GRADING PLAN

SCALE 1"= 5'

D-6

APPROVED FOR DRAINAGE AND CONTOUR GRADING WORK ONLY

STATE OF CALIFORNIA - DEPARTMENT OF TRANSPORTATION
Caltrans®
HYDRAULICS BRANCH

FUNCTIONAL SUPERVISOR: DENNIS JAGODA
CALCULATED-DESIGNED BY: JAMES PHILIPP
CHECKED BY
REVISED BY
DATE REVISED

LAST REVISION 00-00-00
DATE PLOTTED => 09-MAR-2012
TIME PLOTTED => 09:52

Dist	COUNTY	ROUTE	POST MILES TOTAL PROJECT	SHEET No.	TOTAL SHEETS
03	ED	49	9.6/10.1	22	61

REGISTERED CIVIL ENGINEER 3-1-12 DATE

2-29-12
PLANS APPROVAL DATE

REGISTERED PROFESSIONAL ENGINEER
CHRIS ROCKEY
No. C78030
Exp. 09-30-13
CIVIL
STATE OF CALIFORNIA

THE STATE OF CALIFORNIA OR ITS OFFICERS OR AGENTS SHALL NOT BE RESPONSIBLE FOR THE ACCURACY OR COMPLETENESS OF SCANNED COPIES OF THIS PLAN SHEET.

NOTE:
FOR ACCURATE RIGHT OF WAY DATA, CONTACT RIGHT OF WAY ENGINEERING AT THE DISTRICT OFFICE.

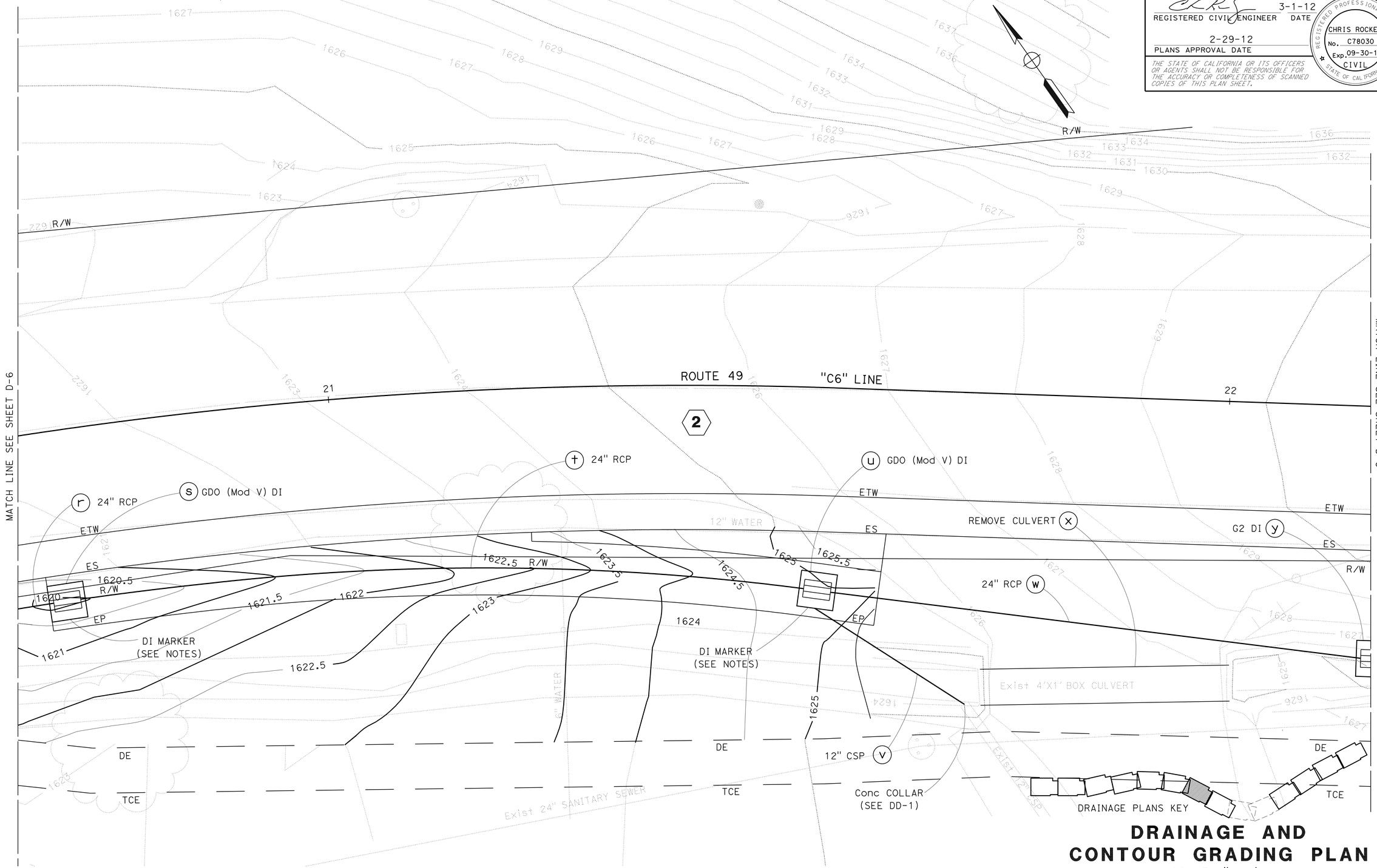

DRAINAGE AND CONTOUR GRADING PLAN

SCALE 1"= 5'

D-7

APPROVED FOR DRAINAGE AND CONTOUR GRADING WORK ONLY

STATE OF CALIFORNIA - DEPARTMENT OF TRANSPORTATION
Caltrans
HYDRAULICS BRANCH

FUNCTIONAL SUPERVISOR: DENNIS JAGODA
CALCULATED-DESIGNED BY: JAMES PHILIPP
CHECKED BY
REVISED BY
DATE REVISED

LAST REVISION 00-00-00
DATE PLOTTED => 09-MAR-2012
TIME PLOTTED => 09:52

Dist	COUNTY	ROUTE	POST MILES TOTAL PROJECT	SHEET No.	TOTAL SHEETS
03	ED	49	9.6/10.1	23	61

REGISTERED CIVIL ENGINEER 3-1-12 DATE

2-29-12
PLANS APPROVAL DATE

REGISTERED PROFESSIONAL ENGINEER
CHRIS ROCKEY
No. C78030
Exp. 09-30-13
CIVIL
STATE OF CALIFORNIA

THE STATE OF CALIFORNIA OR ITS OFFICERS OR AGENTS SHALL NOT BE RESPONSIBLE FOR THE ACCURACY OR COMPLETENESS OF SCANNED COPIES OF THIS PLAN SHEET.

NOTES:

1. FOR ACCURATE RIGHT OF WAY DATA, CONTACT RIGHT OF WAY ENGINEERING AT THE DISTRICT OFFICE.

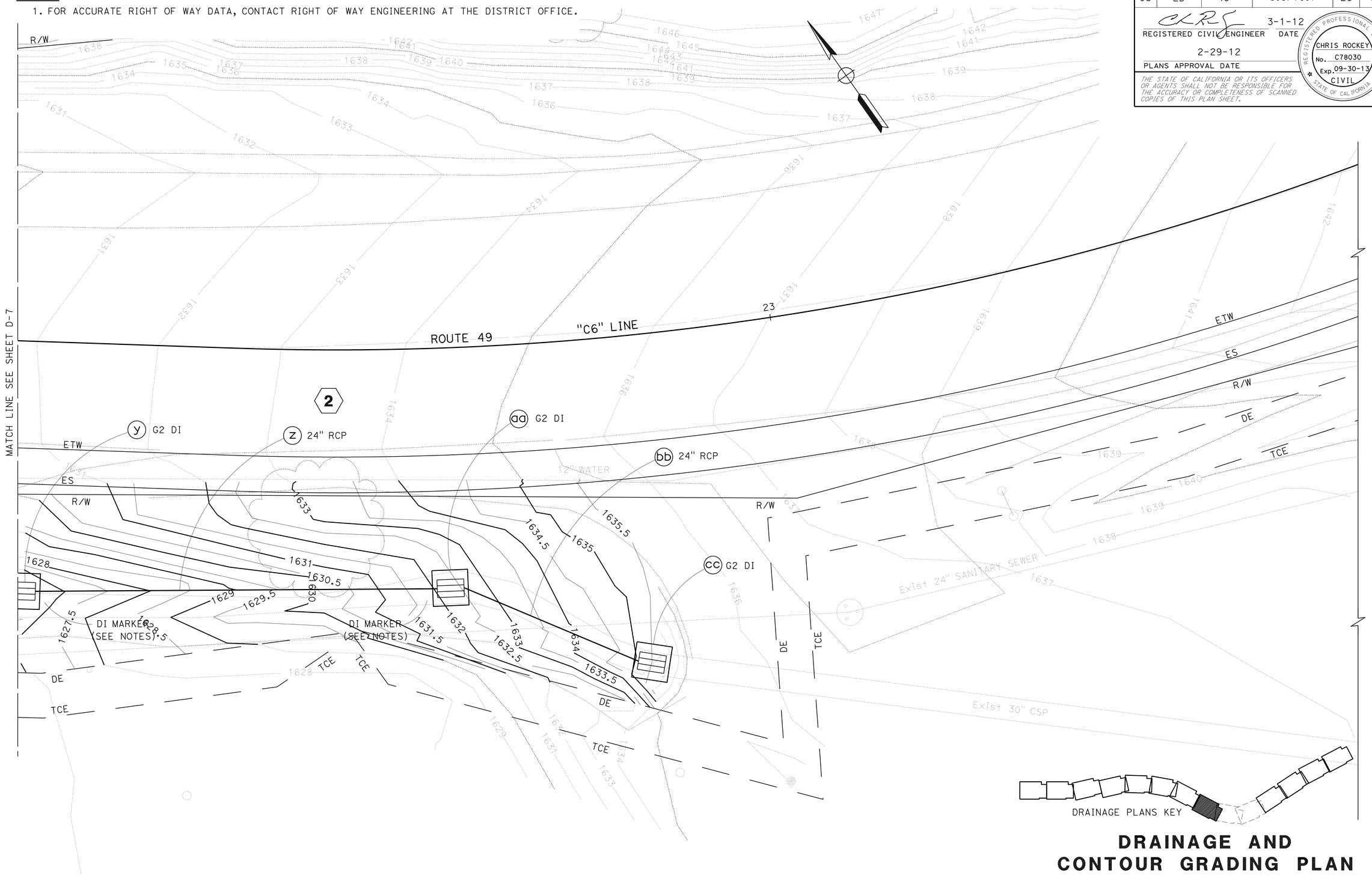

DRAINAGE AND CONTOUR GRADING PLAN

SCALE 1"= 5'

D-8

APPROVED FOR DRAINAGE AND CONTOUR GRADING WORK ONLY

STATE OF CALIFORNIA - DEPARTMENT OF TRANSPORTATION
Caltrans
HYDRAULICS BRANCH

FUNCTIONAL SUPERVISOR: DENNIS JAGODA
CALCULATED-DESIGNED BY: JAMES PHILIPP
CHECKED BY
REVISED BY
DATE REVISED

LAST REVISION 00-00-00
DATE PLOTTED => 09-MAR-2012
TIME PLOTTED => 09:52

Dist	COUNTY	ROUTE	POST MILES TOTAL PROJECT	SHEET No.	TOTAL SHEETS
03	ED	49	9.6/10.1	24	61

REGISTERED CIVIL ENGINEER 3-1-12 DATE

2-29-12
PLANS APPROVAL DATE

REGISTERED PROFESSIONAL ENGINEER
CHRIS ROCKEY
No. C78030
Exp. 09-30-13
CIVIL
STATE OF CALIFORNIA

THE STATE OF CALIFORNIA OR ITS OFFICERS OR AGENTS SHALL NOT BE RESPONSIBLE FOR THE ACCURACY OR COMPLETENESS OF SCANNED COPIES OF THIS PLAN SHEET.

NOTES:

1. FOR ACCURATE RIGHT OF WAY DATA, CONTACT RIGHT OF WAY ENGINEERING AT THE DISTRICT OFFICE.

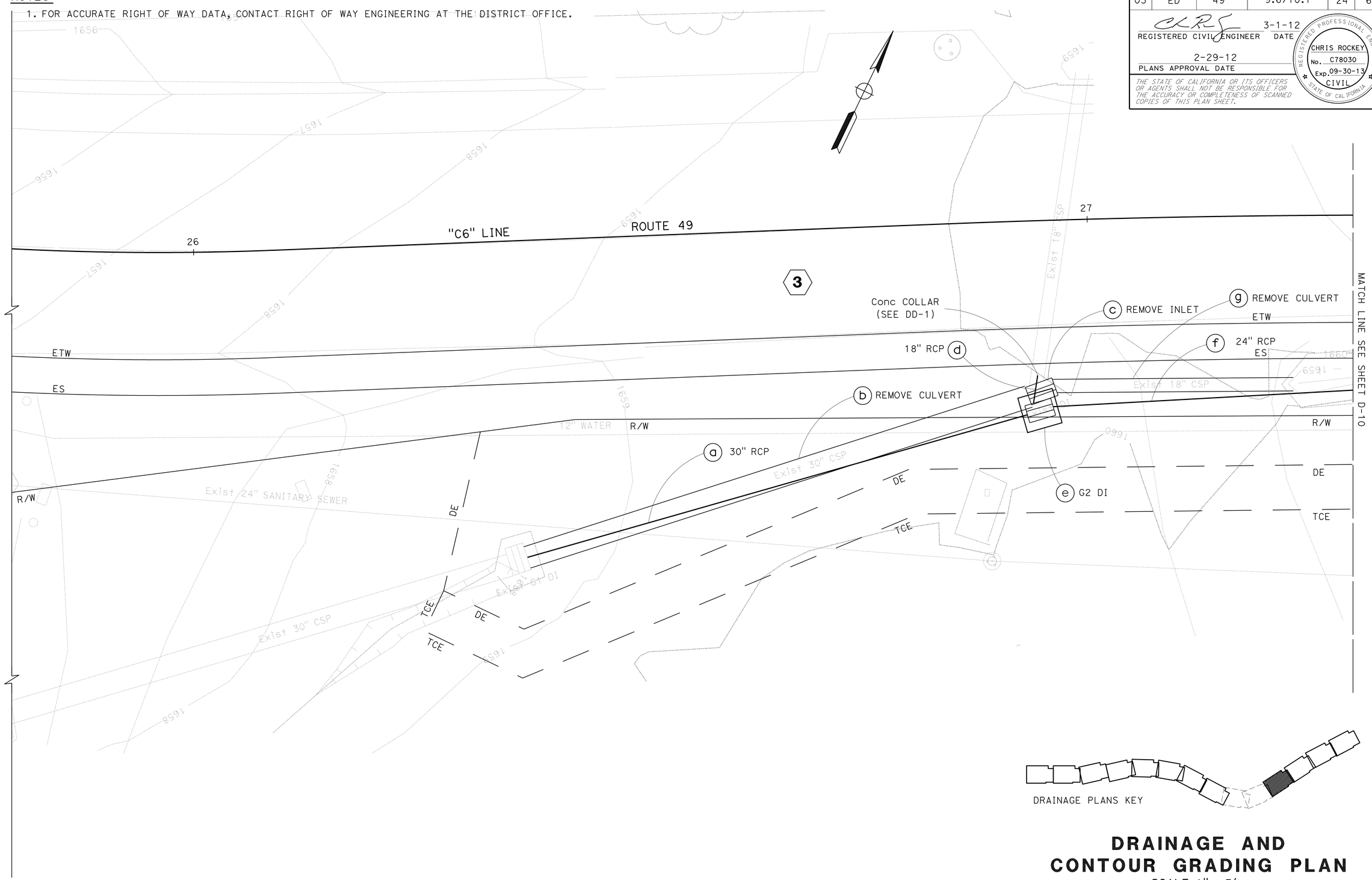

DRAINAGE AND CONTOUR GRADING PLAN

SCALE 1"= 5'

D-9

APPROVED FOR DRAINAGE AND CONTOUR GRADING WORK ONLY

STATE OF CALIFORNIA - DEPARTMENT OF TRANSPORTATION
Caltrans
HYDRAULICS BRANCH

FUNCTIONAL SUPERVISOR: DENNIS JAGODA
CALCULATED-DESIGNED BY: JAMES PHILIPP
CHECKED BY
REVISED BY
DATE REVISED

LAST REVISION 00-00-00
DATE PLOTTED => 09-MAR-2012
TIME PLOTTED => 09:52

Dist	COUNTY	ROUTE	POST MILES TOTAL PROJECT	SHEET No.	TOTAL SHEETS
03	ED	49	9.6/10.1	25	61

REGISTERED CIVIL ENGINEER 3-1-12 DATE

2-29-12
PLANS APPROVAL DATE

REGISTERED PROFESSIONAL ENGINEER
CHRIS ROCKEY
No. C78030
Exp. 09-30-13
CIVIL
STATE OF CALIFORNIA

THE STATE OF CALIFORNIA OR ITS OFFICERS OR AGENTS SHALL NOT BE RESPONSIBLE FOR THE ACCURACY OR COMPLETENESS OF SCANNED COPIES OF THIS PLAN SHEET.

NOTES:

1. FOR ACCURATE RIGHT OF WAY DATA, CONTACT RIGHT OF WAY ENGINEERING AT THE DISTRICT OFFICE.

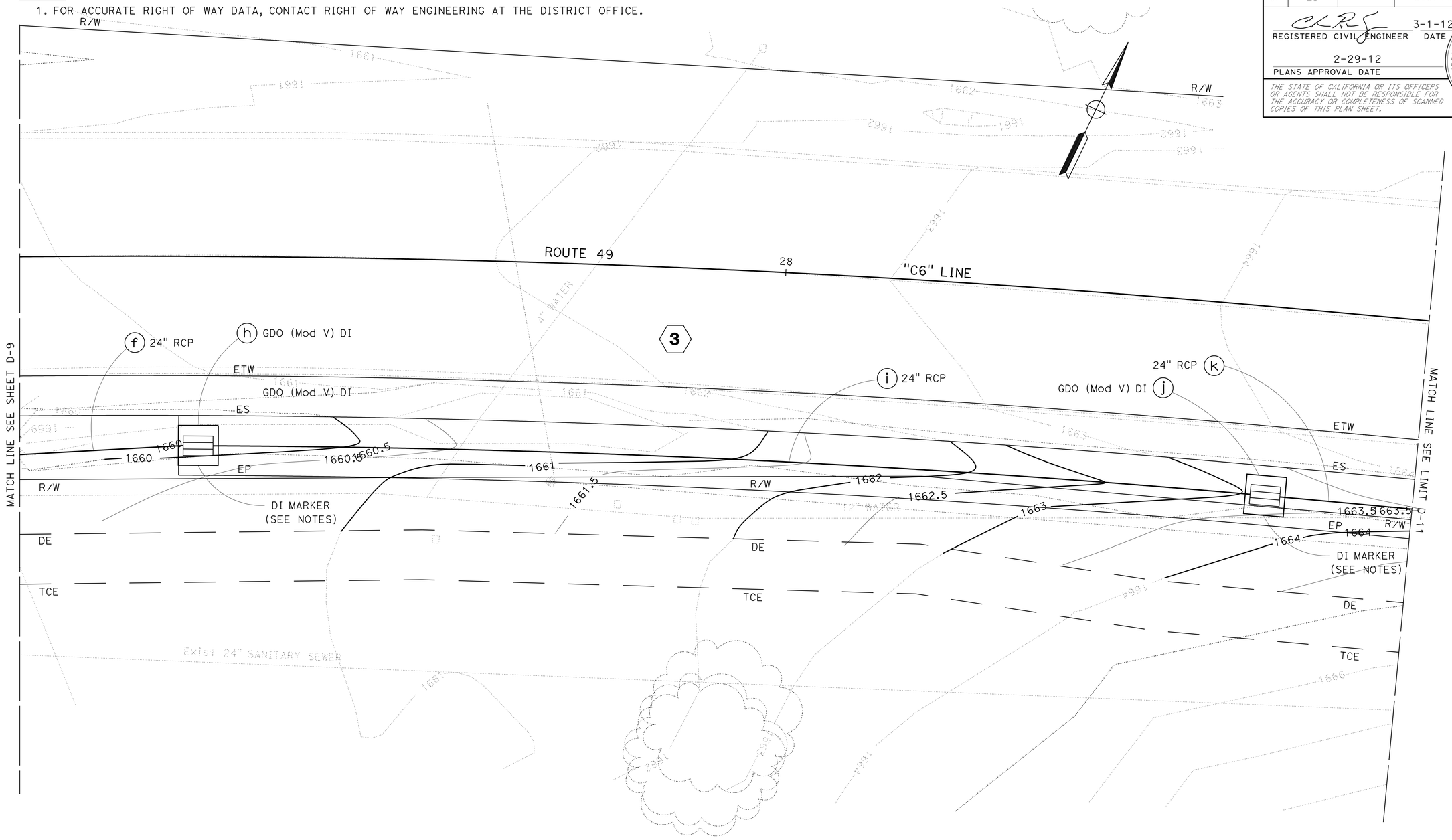

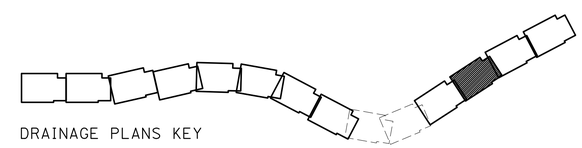

DRAINAGE PLANS KEY

DRAINAGE AND CONTOUR GRADING PLAN

SCALE 1"= 5'

D-10

APPROVED FOR DRAINAGE AND CONTOUR GRADING WORK ONLY

REVISED BY	DATE REVISED

CALCULATED-DESIGNED BY	CHECKED BY
JAMES PHILIPP	

FUNCTIONAL SUPERVISOR
DENNIS JAGODA

STATE OF CALIFORNIA - DEPARTMENT OF TRANSPORTATION
Caltrans
HYDRAULICS BRANCH

LAST REVISION 00-00-00
DATE PLOTTED => 09-MAR-2012
TIME PLOTTED => 09:52

Dist	COUNTY	ROUTE	POST MILES TOTAL PROJECT	SHEET No.	TOTAL SHEETS
03	ED	49	9.6/10.1	26	61

REGISTERED CIVIL ENGINEER 3-1-12 DATE

2-29-12
PLANS APPROVAL DATE

REGISTERED PROFESSIONAL ENGINEER
CHRIS ROCKEY
No. C78030
Exp. 09-30-13
CIVIL
STATE OF CALIFORNIA

THE STATE OF CALIFORNIA OR ITS OFFICERS OR AGENTS SHALL NOT BE RESPONSIBLE FOR THE ACCURACY OR COMPLETENESS OF SCANNED COPIES OF THIS PLAN SHEET.

NOTES:

1 FOR ACCURATE RIGHT OF WAY DATA, CONTACT RIGHT OF WAY ENGINEERING AT THE DISTRICT OFFICE.

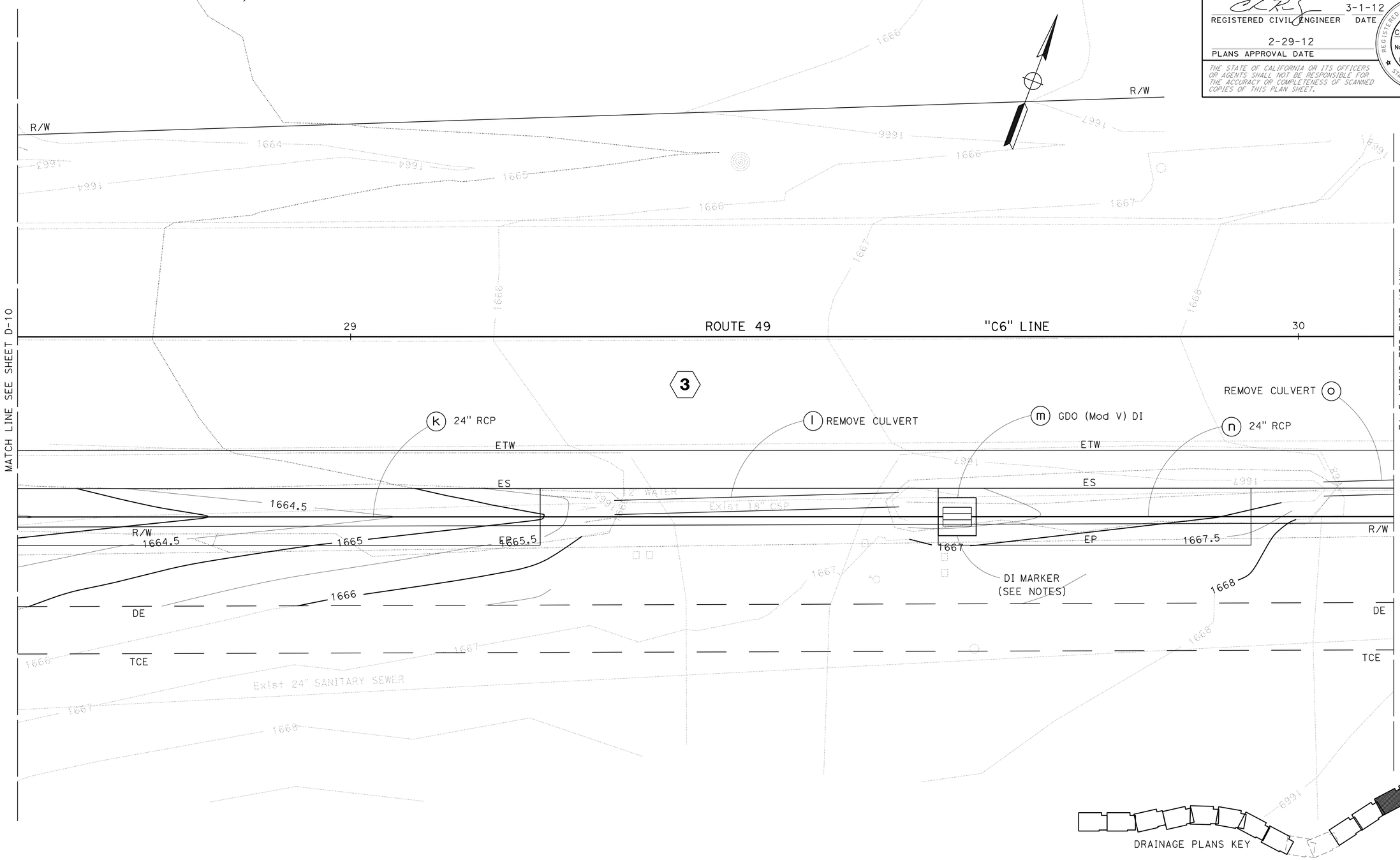

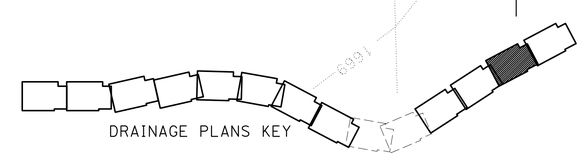

DRAINAGE AND CONTOUR GRADING PLAN

SCALE 1"= 5'

D-11

APPROVED FOR DRAINAGE AND CONTOUR GRADING WORK ONLY

REVISED BY	DATE REVISED

JAMES PHILIPP

CALCULATED-DESIGNED BY

CHECKED BY

FUNCTIONAL SUPERVISOR

DENNIS JAGODA

STATE OF CALIFORNIA - DEPARTMENT OF TRANSPORTATION

Caltrans®

HYDRAULICS BRANCH

LAST REVISION 00-00-00

DATE PLOTTED => 09-MAR-2012

TIME PLOTTED => 09:52

Dist	COUNTY	ROUTE	POST MILES TOTAL PROJECT	SHEET No.	TOTAL SHEETS
03	ED	49	9.6/10.1	27	61

REGISTERED CIVIL ENGINEER 3-1-12 DATE

2-29-12
PLANS APPROVAL DATE

REGISTERED PROFESSIONAL ENGINEER CHRIS ROCKEY No. C78030 Exp. 09-30-13 CIVIL STATE OF CALIFORNIA

THE STATE OF CALIFORNIA OR ITS OFFICERS OR AGENTS SHALL NOT BE RESPONSIBLE FOR THE ACCURACY OR COMPLETENESS OF SCANNED COPIES OF THIS PLAN SHEET.

NOTES:

1. FOR ACCURATE RIGHT OF WAY DATA, CONTACT RIGHT OF WAY ENGINEERING AT THE DISTRICT OFFICE.
2. ITEMS 3q AND 3r HAVE BEEN OMITTED.

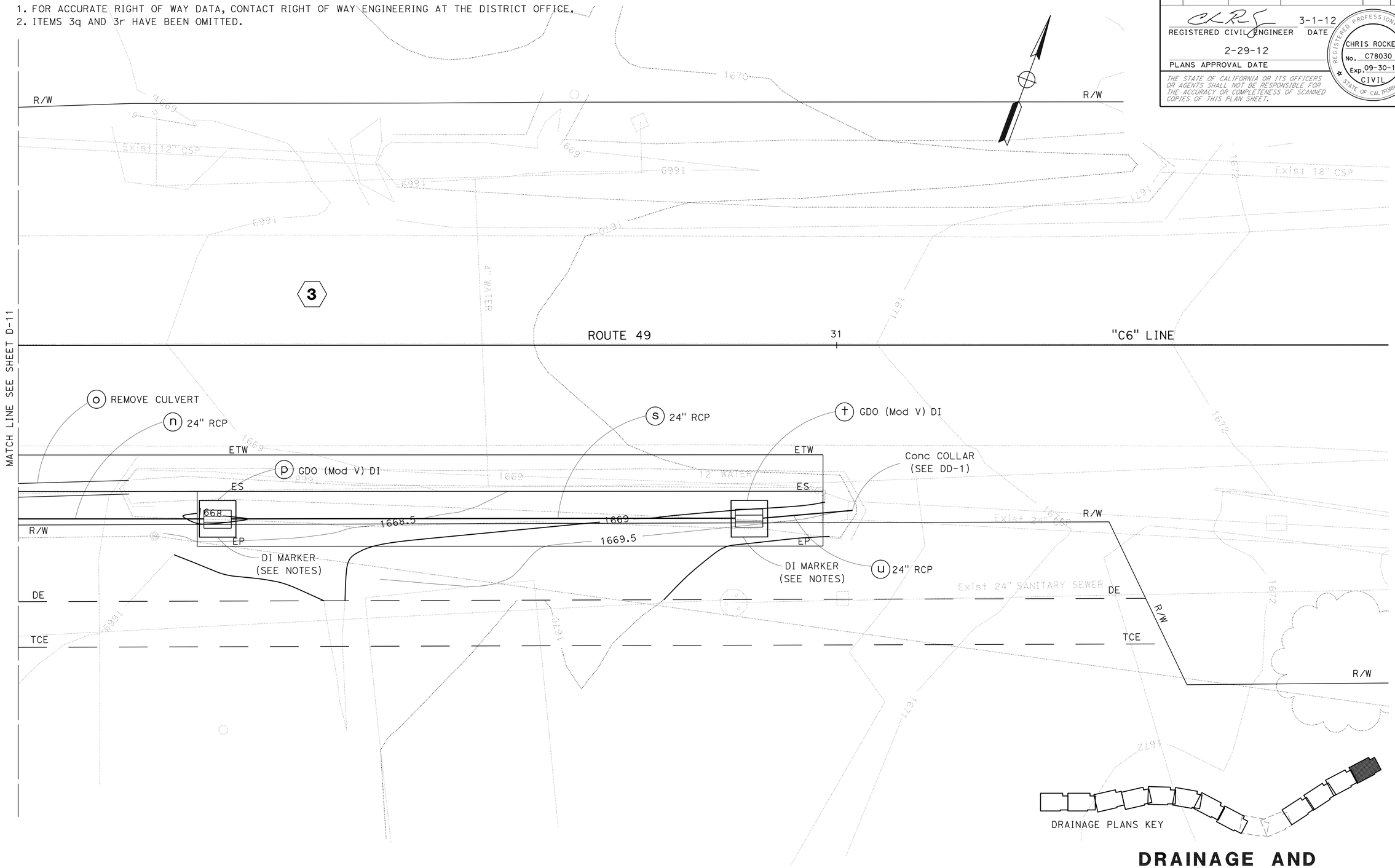

DRAINAGE AND CONTOUR GRADING PLAN

SCALE 1"= 5'

D-12

APPROVED FOR DRAINAGE AND CONTOUR GRADING WORK ONLY

STATE OF CALIFORNIA - DEPARTMENT OF TRANSPORTATION
Caltrans
HYDRAULICS BRANCH

FUNCTIONAL SUPERVISOR: DENNIS JAGODA
CALCULATED-DESIGNED BY: JAMES PHILIPP
CHECKED BY
REVISED BY
DATE REVISED

LAST REVISION 00-00-00
DATE PLOTTED => 09-MAR-2012
TIME PLOTTED => 09:52

Dist	COUNTY	ROUTE	POST MILES TOTAL PROJECT	SHEET No.	TOTAL SHEETS
03	ED	49	9.6/10.1	28	61

REGISTERED CIVIL ENGINEER 3-1-12 DATE

2-29-12
PLANS APPROVAL DATE

REGISTERED PROFESSIONAL ENGINEER CHRIS ROCKEY No. C78030 Exp. 09-30-13 CIVIL STATE OF CALIFORNIA

THE STATE OF CALIFORNIA OR ITS OFFICERS OR AGENTS SHALL NOT BE RESPONSIBLE FOR THE ACCURACY OR COMPLETENESS OF SCANNED COPIES OF THIS PLAN SHEET.

NOTES:
1. THE STATION AND OFFSET IS MEASURED TO THE CENTER OF THE DRAINAGE STRUCTURE.
2. "H" IS MEASURED IN FEET FROM THE TOP CENTER OF THE GRATE TO THE LOWEST FLOWLINE.
3. ALL DRAINAGE INLET GRATES ARE TO BE TYPE 24-12X, UNLESS OTHERWISE NOTED, SEE STANDARD PLANS D77B.
4. FLOWLINE IS LEVEL THROUGH DRAINAGE INLETS.
5. CONTRACTOR SHALL VERIFY ALL EXISTING PIPES PRIOR TO CASTING DRAINAGE INLETS.
6. UTILITY LOCATIONS ARE APPROXIMATE AND SHALL BE VERITIED BY THE CONTRACTOR PRIOR TO CONSTRUCTION.
7. STAMPED CONCRETE IMPRINT DI MARKER, DRAINS TO RIVER, SEE NSP D21 FOR DETAILS.
8. ITEMS 1a, 3q AND 3t HAVE BEEN OMITTED.

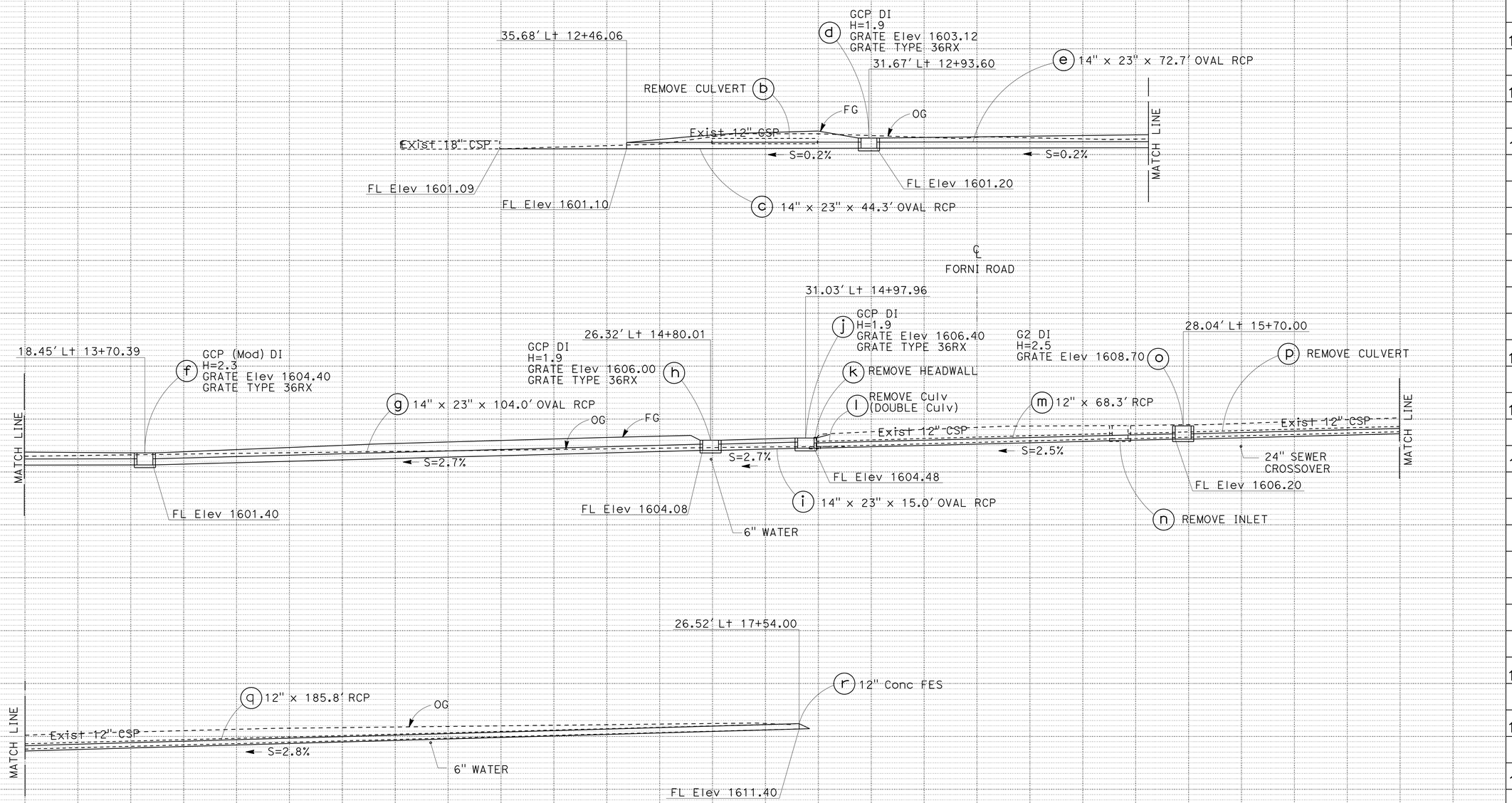

DRAINAGE SYSTEM No. 1
STATION 12+21 Lt TO 17+54 Lt

DRAINAGE PROFILES

SCALE: Horiz 1" = 10'
Vert 1" = 10'

DP-1

REVISED BY | DATE REVISED
JAMES PHILIPP
CALCULATED-DESIGNED BY | CHECKED BY
FUNCTIONAL SUPERVISOR
DENNIS JAGODA
STATE OF CALIFORNIA - DEPARTMENT OF TRANSPORTATION
HYDRAULICS BRANCH
Caltrans

LAST REVISION 00-00-00 | DATE PLOTTED => 09-MAR-2012 | TIME PLOTTED => 09:52

Dist	COUNTY	ROUTE	POST MILES TOTAL PROJECT	SHEET No.	TOTAL SHEETS
03	ED	49	9.6/10.1	29	61

REGISTERED CIVIL ENGINEER 3-1-12 DATE

2-29-12
PLANS APPROVAL DATE

REGISTERED PROFESSIONAL ENGINEER CHRIS ROCKEY No. C78030 Exp. 09-30-13 CIVIL STATE OF CALIFORNIA

THE STATE OF CALIFORNIA OR ITS OFFICERS OR AGENTS SHALL NOT BE RESPONSIBLE FOR THE ACCURACY OR COMPLETENESS OF SCANNED COPIES OF THIS PLAN SHEET.

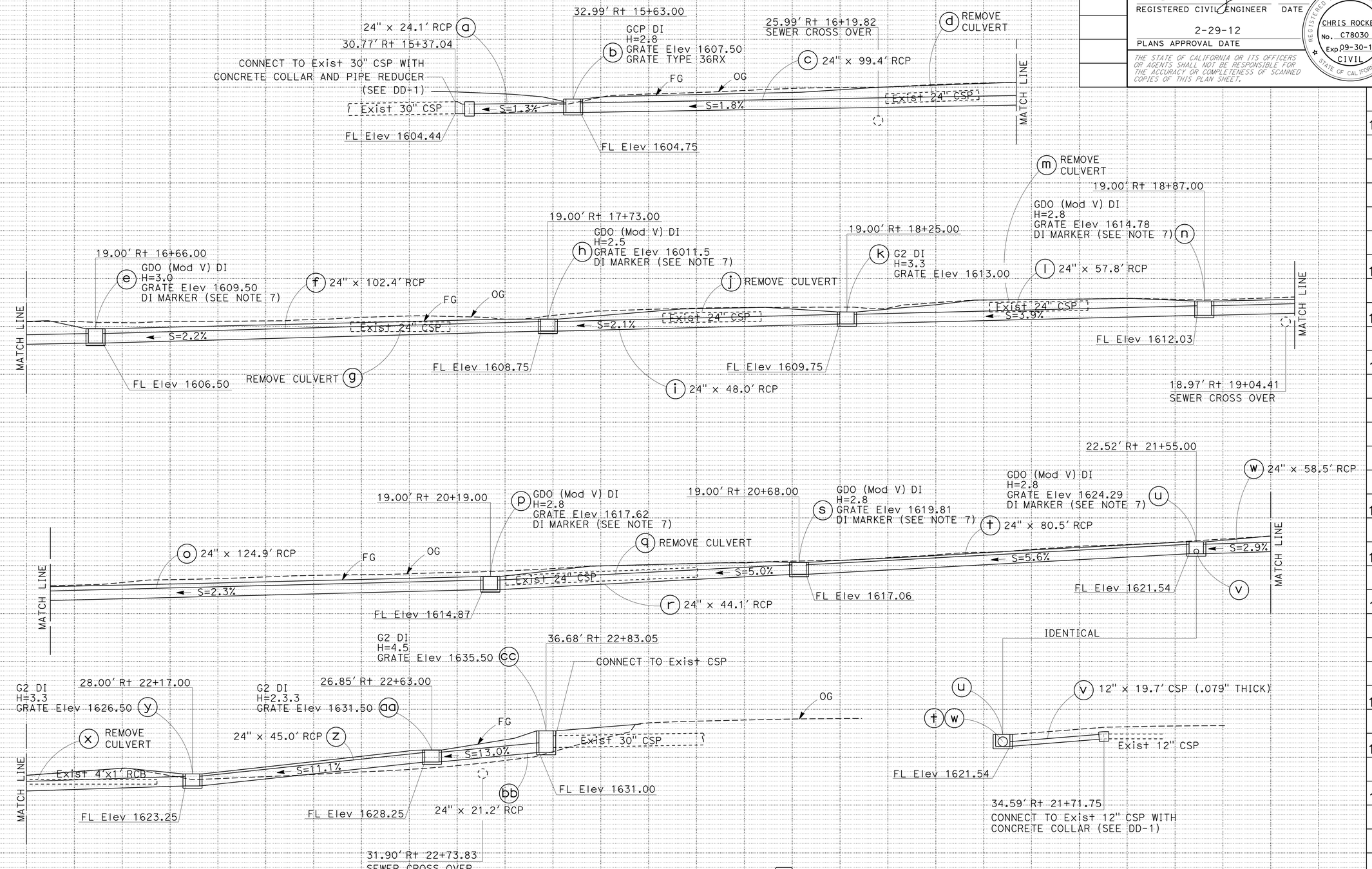

DRAINAGE SYSTEM No. 2

STATION 15+38 Rt TO 22+85 Rt

DRAINAGE PROFILES

SCALE: Horiz 1" = 10'
Vert 1" = 10'

DP-2

REVISED BY | DATE REVISED
JAMES PHILIPP
CALCULATED-DESIGNED BY | CHECKED BY
FUNCTIONAL SUPERVISOR
DENNIS JAGODA

STATE OF CALIFORNIA - DEPARTMENT OF TRANSPORTATION
Caltrans
HYDRAULICS BRANCH

LAST REVISION 00-00-00 | DATE PLOTTED => 09-MAR-2012 | TIME PLOTTED => 09:52

Dist	COUNTY	ROUTE	POST MILES TOTAL PROJECT	SHEET No.	TOTAL SHEETS
03	ED	49	9.6/10.1	30	61

REGISTERED CIVIL ENGINEER 3-1-12 DATE

2-29-12
PLANS APPROVAL DATE

REGISTERED PROFESSIONAL ENGINEER CHRIS ROCKEY No. C78030 Exp. 09-30-13 CIVIL STATE OF CALIFORNIA

THE STATE OF CALIFORNIA OR ITS OFFICERS OR AGENTS SHALL NOT BE RESPONSIBLE FOR THE ACCURACY OR COMPLETENESS OF SCANNED COPIES OF THIS PLAN SHEET.

NOTES:
1. ITEMS 3q AND 3r HAVE BEEN OMITTED.

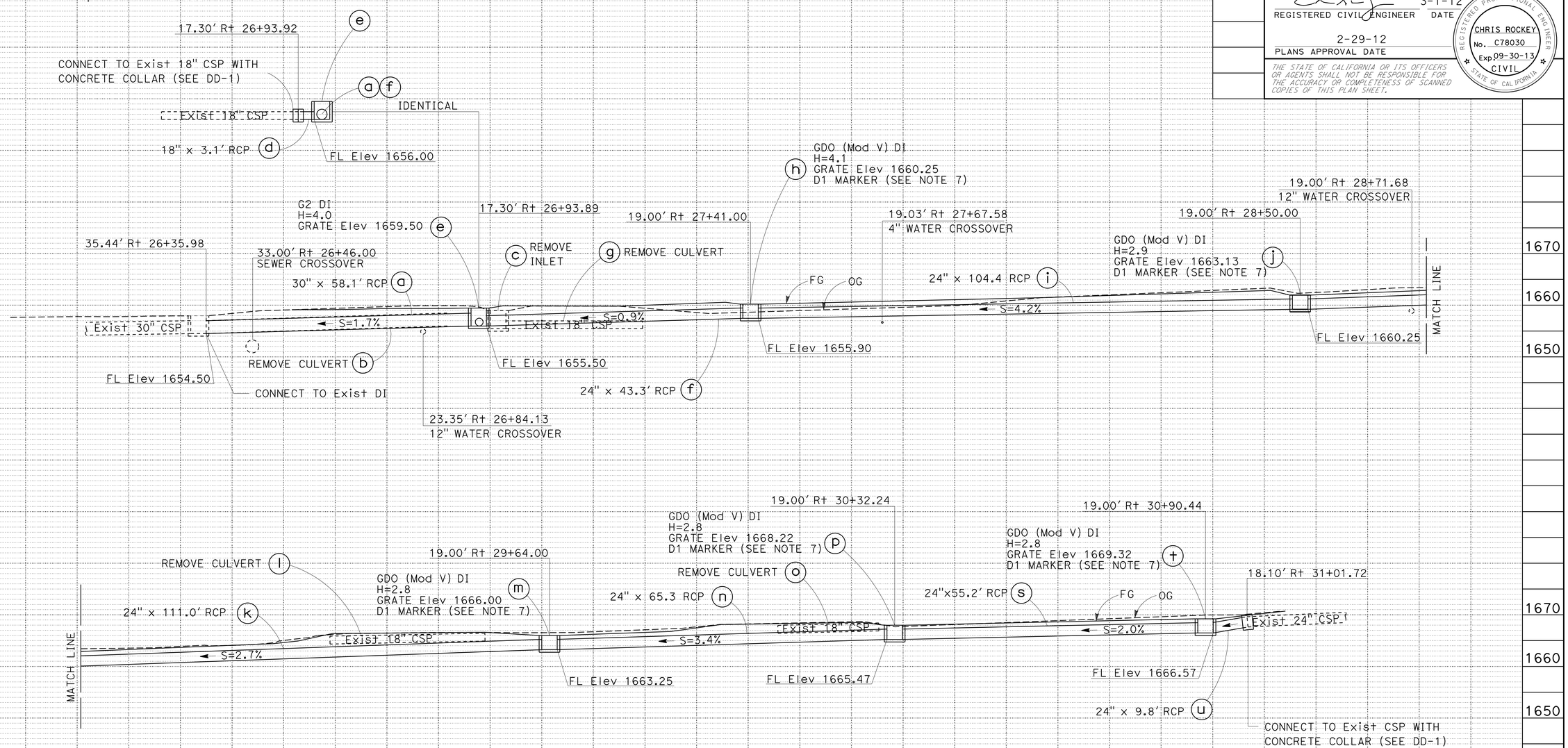

DRAINAGE SYSTEM No. 3

STATION 26+36 Rt TO 31+01 Rt

DRAINAGE PROFILES

SCALE: Horiz 1" = 10'
Vert 1" = 10'

DP-3

REVISED BY | DATE REVISED
JAMES PHILIPP
CALCULATED-DESIGNED BY | CHECKED BY
FUNCTIONAL SUPERVISOR
DENNIS JAGODA

STATE OF CALIFORNIA - DEPARTMENT OF TRANSPORTATION
Caltrans
HYDRAULICS BRANCH

LAST REVISION 00-00-00 | DATE PLOTTED => 09-MAR-2012 | TIME PLOTTED => 09:52

Dist	COUNTY	ROUTE	POST MILES TOTAL PROJECT	SHEET No.	TOTAL SHEETS
03	ED	49	9.6/10.1	31	61

REGISTERED CIVIL ENGINEER 3-1-12 DATE

2-29-12
PLANS APPROVAL DATE

REGISTERED PROFESSIONAL ENGINEER
CHRIS ROCKEY
No. C78030
Exp. 09-30-13
CIVIL
STATE OF CALIFORNIA

THE STATE OF CALIFORNIA OR ITS OFFICERS OR AGENTS SHALL NOT BE RESPONSIBLE FOR THE ACCURACY OR COMPLETENESS OF SCANNED COPIES OF THIS PLAN SHEET.

NOTES:

1. FOR ACCURATE RIGHT OF WAY DATA, CONTACT RIGHT OF WAY ENGINEERING AT THE DISTRICT OFFICE.
2. CONCRETE COLLAR IS TO BE USED TO JOIN PIPES OF THE SAME DIAMETER ONLY.
3. WHERE PIPES OF DIFFERENT DIAMETERS ARE JOINED, USE A PIPE REDUCER TO MATCH DIAMETERS.
4. JOIN PIPES AT INVERTS.

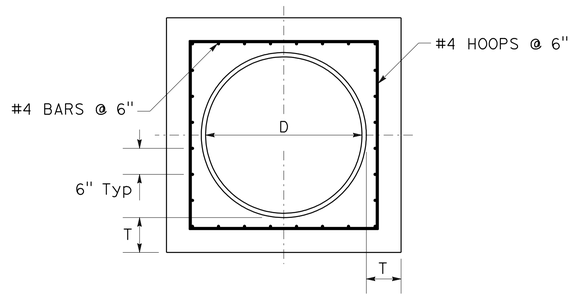

SECTION B-B

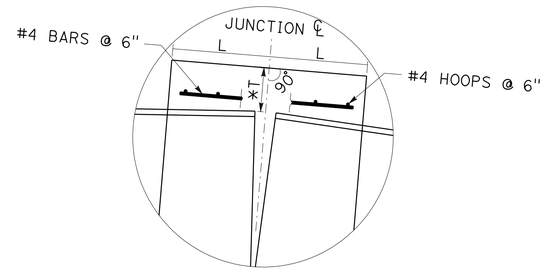

DETAIL C
*MEASURED ALONG JUNCTION ℄

TABLE D

D	L (Min)	T (Min)
1'-6"	1'-0"	6"
2'-0"	1'-0"	6"
3'-0"	1'-6"	8"

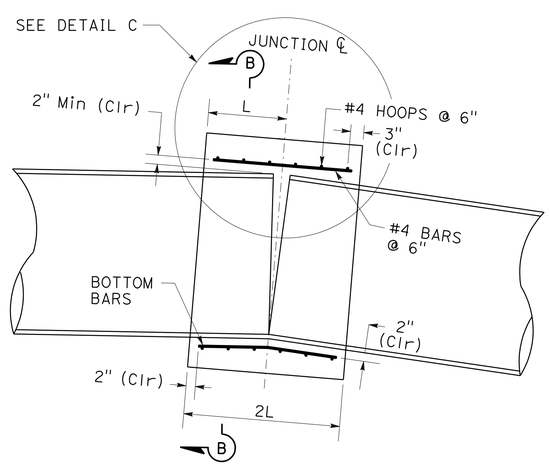

SECTION A-A

NOTE: BEND BOTTOM BARS AS NECESSARY TO MAINTAIN 2" CLEARANCE

CONCRETE COLLAR

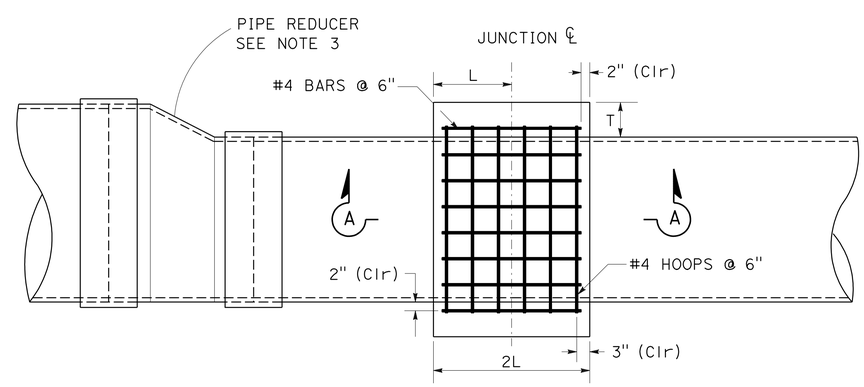

PLAN

2 a v
3 d u

DRAINAGE DETAILS

NO SCALE

DD-1

APPROVED FOR DRAINAGE WORK ONLY

STATE OF CALIFORNIA - DEPARTMENT OF TRANSPORTATION
Caltrans
HYDRAULICS BRANCH
FUNCTIONAL SUPERVISOR DENNIS JAGODA
CALCULATED-DESIGNED BY JAMES PHILIPP
CHECKED BY
REVISED BY
DATE REVISED

LAST REVISION 00-00-00
DATE PLOTTED => 09-MAR-2012
TIME PLOTTED => 09:52

Dist	COUNTY	ROUTE	POST MILES TOTAL PROJECT	SHEET No.	TOTAL SHEETS
03	ED	49	9.6/10.1	32	61

REGISTERED CIVIL ENGINEER 3-1-12 DATE

2-29-12
PLANS APPROVAL DATE

REGISTERED PROFESSIONAL ENGINEER CHRIS ROCKEY No. C78030 Exp. 09-30-13 CIVIL STATE OF CALIFORNIA

THE STATE OF CALIFORNIA OR ITS OFFICERS OR AGENTS SHALL NOT BE RESPONSIBLE FOR THE ACCURACY OR COMPLETENESS OF SCANNED COPIES OF THIS PLAN SHEET.

NOTES:

1. FOR ACCURATE RIGHT OF WAY DATA, CONTACT RIGHT OF WAY ENGINEERING AT THE DISTRICT OFFICE.
2. FOR GDO (Mod) V DETAILS NOT SHOWN SEE STANDARD PLANS RSP D74B, TYPE GDO.
3. CONTRACTOR TO VERIFY SIDESLOPES BEFORE CASTING DRAINAGE INLETS.
4. "H" IS MEASURED FROM THE TOP CENTER OF THE GRATE TO THE LOWEST FLOWLINE.
5. ALL DRAINAGE INLET GRATES ARE TO BE TYPE 24-12X, UNLESS OTHERWISE NOTED, SEE STANDARD PLANS D77B.
4. FLOWLINE IS LEVEL THROUGH DRAINAGE INLETS.
5. CONTRACTOR SHALL VERIFY ALL EXISTING PIPES PRIOR TO CASTING DRAINAGE INLETS.
6. FOR FRAME DETAILS NOT SHOWN SEE STANDARD PLANS RSP D77A, RECTANGULAR FRAME DETAILS.

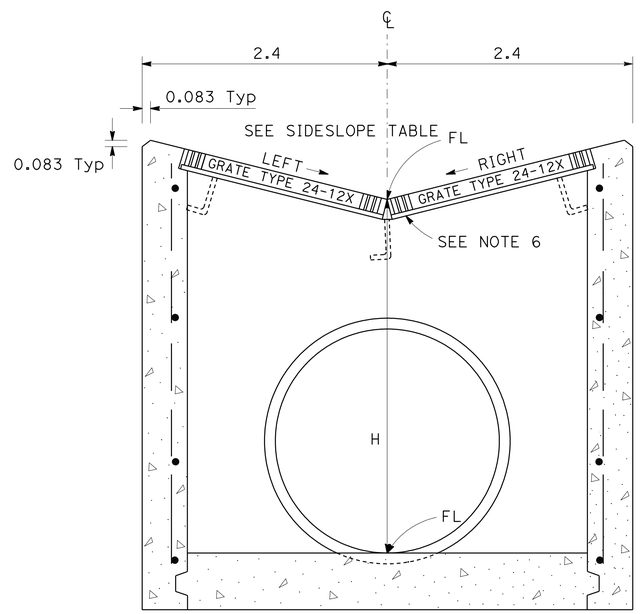

SECTION A-A

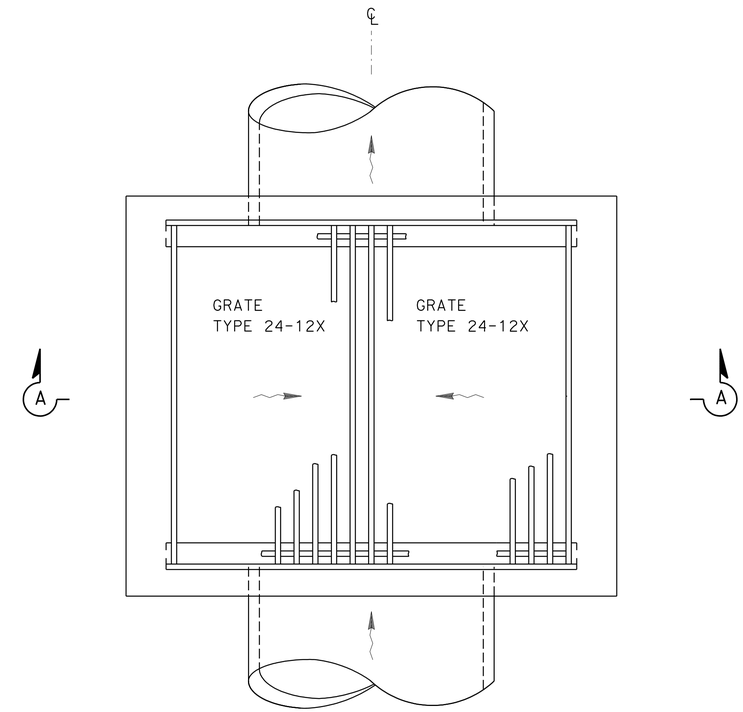

PLAN

SIDESLOPE TABLE

SYSTEM	UNIT	SIDE SLOPE*	
		LEFT	RIGHT
2	e	4:1	4:1
	h	4:1	6:1
	n	4:1	4:1
	p	4:1	4:1
	s	4:1	4:1
	u	4:1	4:1
3	h	4:1	4:1
	j	4:1	4:1
	m	4:1	5.5:1
	p	4:1	4:1
	t	4:1	4:1

*SEE NOTE 3

GDO (Mod V) D1

2 e h n p s u

3 h j m p t

DRAINAGE DETAILS

NO SCALE

DD-2

APPROVED FOR DRAINAGE AND CONTOUR GRADING WORK ONLY

REVISED BY	DATE REVISED

JAMES PHILIPP — CALCULATED-DESIGNED BY / CHECKED BY

FUNCTIONAL SUPERVISOR: DENNIS JAGODA

STATE OF CALIFORNIA - DEPARTMENT OF TRANSPORTATION — Caltrans — HYDRAULICS BRANCH

LAST REVISION 00-00-00 | DATE PLOTTED => 09-MAR-2012 | TIME PLOTTED => 09:52

Dist	COUNTY	ROUTE	POST MILES TOTAL PROJECT	SHEET No.	TOTAL SHEETS
03	ED	49	9.6/10.1	33	61

REGISTERED CIVIL ENGINEER — DATE 11/30/11

2-29-12
PLANS APPROVAL DATE

REGISTERED PROFESSIONAL ENGINEER — JAMES PHILIPP — No. 59614 — Exp. 12/31/11 — CIVIL — STATE OF CALIFORNIA

THE STATE OF CALIFORNIA OR ITS OFFICERS OR AGENTS SHALL NOT BE RESPONSIBLE FOR THE ACCURACY OR COMPLETENESS OF SCANNED COPIES OF THIS PLAN SHEET.

NOTES:

1. BOTTOM OF DITCH SHALL BE REINFORCED WITH 4" x 4" 10G/10G, WELDED WIRE FABRIC (WWF).
2. FOR DETAILS NOT SHOWN ON GCP (Mod) DI, SEE STANDARD PLAN RSP D75B
3. SEE SUMMARY OF QUANTITY SHEETS IN ROADWAY PLANS FOR MINOR CONCRETE QUANTITIES.

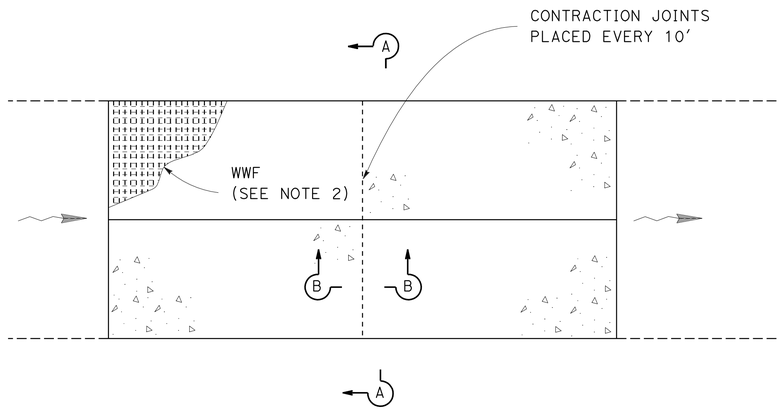

PLAN VIEW

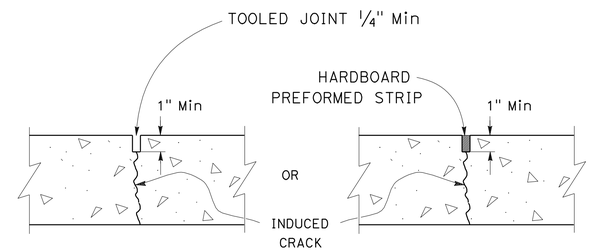

SECTION B-B

CONTRACTION JOINT DETAIL

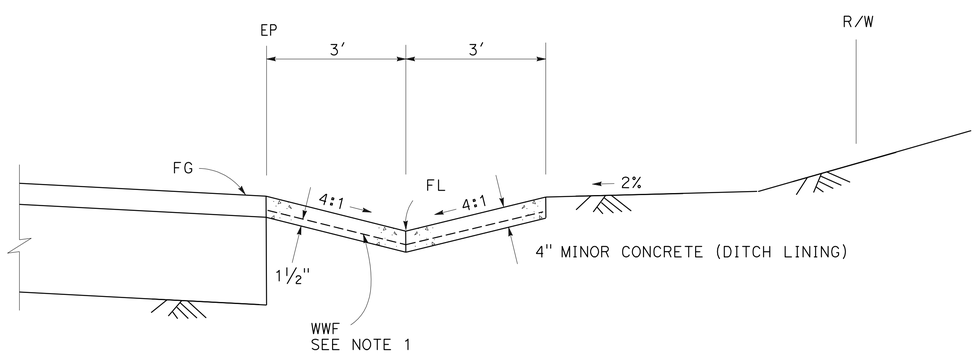

SECTION A-A

TYPICAL SECTION
MINOR CONCRETE DITCH DETAIL

STATIONS: 16+64 R† TO 17+75 R†
18+85 R† TO 20+21 R†
20+66 R† TO 21+62 R†
27+39 R† TO 29+20 R†
29+62 R† TO 29+95 R†
30+30 R† TO 30+99 R†

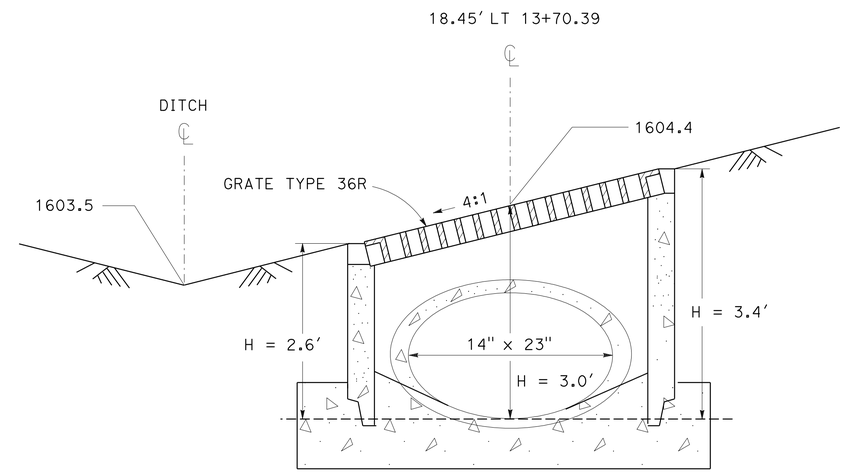

GCP (Mod) DI

1 f

DRAINAGE DETAILS
NO SCALE

DD-3

REVISED BY	DATE REVISED

CALCULATED-DESIGNED BY	CHECKED BY
JAMES M. PHILIPP	GURDEEP BHATTAL

FUNCTIONAL SUPERVISOR
DENNIS R. JAGODA

STATE OF CALIFORNIA - DEPARTMENT OF TRANSPORTATION
Caltrans
DESIGN - HYDRAULICS

LAST REVISION 00-00-00 | DATE PLOTTED => 09-MAR-2012 | TIME PLOTTED => 09:52

Dist	COUNTY	ROUTE	POST MILES TOTAL PROJECT	SHEET No.	TOTAL SHEETS
03	ED	49	9.6/10.1	34	61

REGISTERED CIVIL ENGINEER 3-1-12 DATE

2-29-12
PLANS APPROVAL DATE

REGISTERED PROFESSIONAL ENGINEER
CHRIS ROCKEY
No. C78030
Exp. 09-30-13
CIVIL
STATE OF CALIFORNIA

THE STATE OF CALIFORNIA OR ITS OFFICERS OR AGENTS SHALL NOT BE RESPONSIBLE FOR THE ACCURACY OR COMPLETENESS OF SCANNED COPIES OF THIS PLAN SHEET.

NOTES:

1. FOR ACCURATE RIGHT OF WAY DATA, CONTACT RIGHT OF WAY ENGINEERING AT THE DISTRICT OFFICE.
2. ITEMS 1a, 3q AND 3r HAVE BEEN OMITTED.

DRAINAGE ITEMS

DRAINAGE PLAN SHEET No.	DRAINAGE SYSTEM No. ⬡	DRAINAGE UNIT ◯	REMOVE CULVERT	REMOVE HEADWALL	REMOVE INLET	DRAINAGE INLET (N) INLET TYPE	DRAINAGE INLET (N) FRAME AND GRATE TYPE	DRAINAGE INLET (N) HEIGHT OF INLET "H"	DRAINAGE INLET MINOR CONCRETE (MINOR STRUCTURE)	DRAINAGE INLET MISC IRON & STEEL	DI MARKER	PIPE REDUCER (30" x 24")	REINFORCED CONCRETE PIPE 14"x23" OVAL SHAPED	REINFORCED CONCRETE PIPE 12"	REINFORCED CONCRETE PIPE 18"	REINFORCED CONCRETE PIPE 24"	REINFORCED CONCRETE PIPE 30"	REINFORCED CONCRETE PIPE 36"	12" CSP (.079" THICK)	12" Conc FES	DESCRIPTION	STATION	DRAINAGE PLAN SHEET No.	DRAINAGE SYSTEM No. ⬡	DRAINAGE UNIT ◯
			EA	EA	EA			Ft	CY	Lb	EA	EA	LF	LF	LF	LF	LF	LF	LF	EA					
D-1	1	a																			OMITTED		D-1	1	a
		b	1																		REMOVE CULVERT	Sta 12+60.72 Lt			b
		c											44.3								14" X 23" OVAL RCP				c
		d				GCP	36RX	1.9	0.55	215								2.4			GCP DI	Sta 13+93.60 Lt			d
D-1,2		e											72.7								14" X 23" OVAL RCP		D-1,2		e
D-2		f				GCP	36RX	2.3	0.55	215								2.8			GCP DI	Sta 13+70.39 Lt	D-2		f
		g											104.0								14" X 23" OVAL RCP				g
		h				GCP	36RX	1.9	0.55	215								2.4			GCP DI	Sta 14+80.01 Lt			h
		i											15.0								14" X 23" OVAL RCP				i
		j				GCP	36RX	1.9	0.55	215								2.4			GCP DI	Sta 14+97.96 Lt			j
		k		1																	REMOVE HEADWALL	Sta 14+97.96 Lt			k
D-2,3		l	2																		REMOVE CULVERT (DOUBLE CULVERT)	Sta 14+97.96 Lt	D-2,3		l
D-2,3		m												68.3							12" RCP		D-2,3		m
D-3		n			1																REMOVE DI	Sta 15+58.28 Lt	D-3		n
D-3		o				G2	24-12X	2.5	1.31	239											G2 DI	Sta 15+70.00 Lt	D-3		o
D-3,4		p	1																		REMOVE CULVERT	Sta 15+58.28 Lt	D-3,4		p
		q												185.8							12" RCP				q
		r																		1	12" CONCRETE FES	Sta 17+54.00 Lt			r
SHEET TOTAL			4	1	1				3.51	1099			236.0	254.1				10.0		1					

(N) - NOT A SEPARATE PAY ITEM, FOR INFORMATION ONLY.

APPROVED FOR DRAINAGE WORK ONLY

DRAINAGE QUANTITIES
DQ-1

STATE OF CALIFORNIA - DEPARTMENT OF TRANSPORTATION
Caltrans
HYDRAULICS BRANCH
FUNCTIONAL SUPERVISOR DENNIS JAGODA
CALCULATED-DESIGNED BY JAMES PHILIPP
CHECKED BY
REVISED BY
DATE REVISED

LAST REVISION 00-00-00
DATE PLOTTED => 09-MAR-2012
TIME PLOTTED => 09:52

Dist	COUNTY	ROUTE	POST MILES TOTAL PROJECT	SHEET No.	TOTAL SHEETS
03	ED	49	9.6/10.1	35	61

REGISTERED CIVIL ENGINEER 3-1-12 DATE

2-29-12
PLANS APPROVAL DATE

REGISTERED PROFESSIONAL ENGINEER CHRIS ROCKEY No. C78030 Exp. 09-30-13 CIVIL STATE OF CALIFORNIA

THE STATE OF CALIFORNIA OR ITS OFFICERS OR AGENTS SHALL NOT BE RESPONSIBLE FOR THE ACCURACY OR COMPLETENESS OF SCANNED COPIES OF THIS PLAN SHEET.

NOTE:
FOR ACCURATE RIGHT OF WAY DATA, CONTACT RIGHT OF WAY ENGINEERING AT THE DISTRICT OFFICE.

DRAINAGE ITEMS

DRAINAGE PLAN SHEET No.	DRAINAGE SYSTEM No. ⬡	DRAINAGE UNIT ◯	REMOVE CULVERT	REMOVE HEADWALL	REMOVE INLET	DRAINAGE INLET (N) INLET TYPE	DRAINAGE INLET (N) FRAME AND GRATE TYPE	DRAINAGE INLET (N) HEIGHT OF INLET "H"	MINOR CONCRETE (MINOR STRUCTURE)	MISC IRON & STEEL	DI MARKER	PIPE REDUCER (30" x 24")	REINFORCED CONCRETE PIPE 14"x23" OVAL SHAPED	REINFORCED CONCRETE PIPE 12"	REINFORCED CONCRETE PIPE 18"	REINFORCED CONCRETE PIPE 24"	REINFORCED CONCRETE PIPE 30"	REINFORCED CONCRETE PIPE 36"	12" CSP (.079" THICK)	12" Conc FES	DESCRIPTION	STATION	DRAINAGE PLAN SHEET No.	DRAINAGE SYSTEM No. ⬡	DRAINAGE UNIT ◯
			EA	EA	EA			Ft	CY	Lb	EA	EA	LF	LF	LF	LF	LF	LF	LF	EA					
D-3	2	a							1.40	32		1				24.1					24" RCP & CONCRETE COLLAR AND PIPE REDUCER	Sta 15+37.04 Rt	D-3	2	a
		b				GCP	36RX	2.8	0.55	98								3.3			GCP DI	Sta 15+63.00 Rt			b
		c														99.4					24" RCP				c
		d	1																		REMOVE CULVERT	Sta 16+28.51 Rt			d
D-4		e				GDO	24-12X	3.0	1.62	478	1										GDO (Mod V) DI	Sta 16+66.00 Rt	D-4		e
		f														102.4					24" RCP				f
		g	1																		REMOVE CULVERT	Sta 17+31.15 Rt			g
		h				GDO	24-12X	2.5	1.62	478	1										GDO (Mod V) DI	Sta 17+73.00 Rt			h
D-4,5		i														48.0					24" RCP		D-4,5		i
D-4,5		j	1																		REMOVE CULVERT	Sta 17+88.30 Rt	D-4,5		j
D-5		k				G2	24-12X	3.3	1.39	239											G2 DI	Sta 18+25.00 Rt	D-5		k
		l														57.8					24" RCP				l
		m	1																		REMOVE CULVERT	Sta 18+56.56 Rt			m
		n				GDO	24-12X	2.8	1.62	478	1										GDO (Mod V) DI	Sta 18+87.00 Rt			n
D-5,6		o														124.9					24" RCP		D-5,6		o
D-6		p				GDO	24-12X	2.8	1.62	478	1										GDO (Mod V) DI	Sta 20+19.00 Rt	D-6		p
D-6		q	1																		REMOVE CULVERT	Sta 20+19.00 Rt	D-6		q
D-6,7		r														44.1					24" RCP		D-6,7		r
D-6,7		s				GDO	24-12X	2.8	1.62	478	1										GDO (Mod V) DI	Sta 20+68.00 Rt	D-6,7		s
D-7		t														80.5					24" RCP		D-7		t
		u				GDO	24-12X	2.8	1.62	478	1										GDO (Mod V) DI	Sta 21+55.00 Rt			u
		v							0.93	20									19.7		12" CSP & CONCRETE COLLAR	Sta 21+71.75 Rt			v
		w														58.5					24" RCP				w
		x	1																		REMOVE CULVERT	Sta 21+73.34 Rt			x
D-7,8		y				G2	24-12X	3.3	1.39	239											G2 DI	Sta 22+17.00 Rt	D-7,8		y
D-8		z														45.0					24" RCP		D-8		z
		aa				G2	24-12X	3.3	1.39	239											G2 DI	Sta 22+63.00 Rt			aa
		bb														21.2					24" RCP				bb
		cc				G2	24-12X	4.5	1.69	239											G2 DI	Sta 22+83.05 Rt			cc
SHEET TOTAL			6						18.46	3974	6	1				705.9		3.3	19.7						

(N) - NOT A SEPARATE PAY ITEM, FOR INFORMATION ONLY.

APPROVED FOR DRAINAGE WORK ONLY

DRAINAGE QUANTITIES

DQ-2

STATE OF CALIFORNIA - DEPARTMENT OF TRANSPORTATION
Caltrans®
HYDRAULICS BRANCH

FUNCTIONAL SUPERVISOR: DENNIS JAGODA
CALCULATED-DESIGNED BY: JAMES PHILIPP
CHECKED BY
REVISED BY
DATE REVISED

LAST REVISION 00-00-00
DATE PLOTTED => 09-MAR-2012
TIME PLOTTED => 09:52

Dist	COUNTY	ROUTE	POST MILES TOTAL PROJECT	SHEET No.	TOTAL SHEETS
03	ED	49	9.6/10.1	36	61

REGISTERED CIVIL ENGINEER 3-1-12 DATE

2-29-12
PLANS APPROVAL DATE

REGISTERED PROFESSIONAL ENGINEER CHRIS ROCKEY No. C78030 Exp. 09-30-13 CIVIL STATE OF CALIFORNIA

THE STATE OF CALIFORNIA OR ITS OFFICERS OR AGENTS SHALL NOT BE RESPONSIBLE FOR THE ACCURACY OR COMPLETENESS OF SCANNED COPIES OF THIS PLAN SHEET.

NOTE:
FOR ACCURATE RIGHT OF WAY DATA, CONTACT RIGHT OF WAY ENGINEERING AT THE DISTRICT OFFICE.

DRAINAGE ITEMS

DRAINAGE PLAN SHEET No.	DRAINAGE SYSTEM No. ⬡	DRAINAGE UNIT ◯	REMOVE CULVERT	REMOVE HEADWALL	REMOVE INLET	DRAINAGE INLET: (N) INLET TYPE	DRAINAGE INLET: (N) FRAME AND GRATE TYPE	DRAINAGE INLET: (N) HEIGHT OF INLET "H"	DRAINAGE INLET: MINOR CONCRETE (MINOR STRUCTURE)	DRAINAGE INLET: MISC IRON & STEEL	DI MARKER	PIPE REDUCER (30" x 24")	REINFORCED CONCRETE PIPE: 14"x23" OVAL SHAPED	REINFORCED CONCRETE PIPE: 12"	REINFORCED CONCRETE PIPE: 18"	REINFORCED CONCRETE PIPE: 24"	REINFORCED CONCRETE PIPE: 30"	REINFORCED CONCRETE PIPE: 36"	12" CSP (.079" THICK)	12" Conc FES	DESCRIPTION	STATION	DRAINAGE PLAN SHEET No.	DRAINAGE SYSTEM No. ⬡	DRAINAGE UNIT ◯
			EA	EA	EA			Ft	CY	Lb	EA	EA	LF	LF	LF	LF	LF	LF	LF	EA					
D-9	3	a															58.1				30" RCP		D-9	3	a
		b	1																		REMOVE CULVERT	Sta 26+36.29 Rt			b
		c			1																REMOVE DI	Sta 26+94.01 Rt			c
		d							1.16	26					3.1						18" RCP & CONCRETE COLLAR	Sta 26+93.92 Rt			d
		e				G2	24-12X	4.0	1.72	239											G2 DI	Sta 26+93.89 Rt			e
		f														43.3					24" RCP	Sta 26+94.01 Rt			f
		g	1																		REMOVE CULVERT				g
D-10		h				GDO	24-12X	4.1	1.62	478	1										GDO (Mod V) DI	Sta 27+41.00 Rt	D-10		h
		i														104.4					24" RCP				i
		j				GDO	24-12X	2.9	1.62	478	1										GDO (Mod V) DI	Sta 28+50.00 Rt			j
		k														111.0					24" RCP				k
D-11		l	1																		REMOVE CULVERT	Sta 29+27.81 Rt	D-11		l
		m				GDO	24-12X	2.8	1.62	478	1										GDO (Mod V) DI	Sta 29+64.00 Rt			m
		n														65.3					24" RCP				n
		o	1																		REMOVE CULVERT	Sta 30+00.00 Rt			o
D-12		p				GDO	24-12X	2.8	1.62	478	1										GDO (Mod V) DI	Sta 30+32.24 Rt	D-12		p
		q																			OMITTED				q
		r																			OMITTED				r
		s														55.2					24" RCP				s
		t				GDO	24-12X	2.8	1.62	478	1										GDO (Mod V) DI	Sta 30+90.44 Rt			t
		u							1.40	32						9.8					24" RCP & CONCRETE COLLAR	Sta 31+01.72 Rt			u
SHEET TOTAL			4		1				12.38	2687	5				3.1	389.0	58.1								

SHEET TOTALS

DQ-1	4	1	1				3.51	1099			236.0	254.1				10.0	1	1
DQ-2	6						18.46	3974	6	1				705.9		3.3	19.7	
DQ-3	4		1				12.38	2687	5				3.1	389.0	58.1			
TOTAL	14	1	2				34.35	7760	11	1	236.0	254.1	3.1	1094.9	58.1	13.3	19.7	1

(N) - NOT A SEPARATE PAY ITEM, FOR INFORMATION ONLY.

APPROVED FOR DRAINAGE WORK ONLY

DRAINAGE QUANTITIES
DQ-3

STATE OF CALIFORNIA - DEPARTMENT OF TRANSPORTATION
Caltrans
HYDRAULICS BRANCH
FUNCTIONAL SUPERVISOR DENNIS JAGODA
CALCULATED-DESIGNED BY JAMES PHILIPP
CHECKED BY
REVISED BY
DATE REVISED

LAST REVISION 00-00-00
DATE PLOTTED => 09-MAR-2012
TIME PLOTTED => 09:52

Dist	COUNTY	ROUTE	POST MILES TOTAL PROJECT	SHEET No.	TOTAL SHEETS
03	ED	49	9.6/10.5	37	61

REGISTERED CIVIL ENGINEER 2-29-12 DATE

2-29-12
PLANS APPROVAL DATE

REGISTERED PROFESSIONAL ENGINEER OLAWALE AJAYI No. 78029 Exp 09-30-13 CIVIL STATE OF CALIFORNIA

THE STATE OF CALIFORNIA OR ITS OFFICERS OR AGENTS SHALL NOT BE RESPONSIBLE FOR THE ACCURACY OR COMPLETENESS OF SCANNED COPIES OF THIS PLAN SHEET.

NOTES:

1. FOR ACCURATE RIGHT OF WAY DATA, CONTACT RIGHT OF WAY ENGINEERING AT THE DISTRICT OFFICE.
2. LOCATION OF EXISTING UTILITY FACILITIES SHOWN ON THESE PLANS ARE APPROXIMATE AND SHALL BE VERIFIED BY THE CONTRACTOR PRIOR TO CONSTRUCTION.
3. NOT ALL SERVICE LINES OR FACILITIES OUTSIDE OF THE STATE RIGHT OF WAY ARE SHOWN.
4. CALIFORNIA COORDINATE SYSTEM, ZONE 2, HORIZONTAL DATUM: NAD 83, VERTICAL DATUM: NGVD 29

LEGEND

UTILITY	OWNERSHIP
FIBER OPTIC	AT&T
TELEPHONE	AT&T
ELECTRIC	PG&E
GAS	PG&E
WATER	EL DORADO IRRIGATION DISTRICT (EID)
SANITARY SEWER	EL DORADO IRRIGATION DISTRICT (EID)

POTHOLE LOCATION

ABBREVIATIONS:

PH = POTHOLE

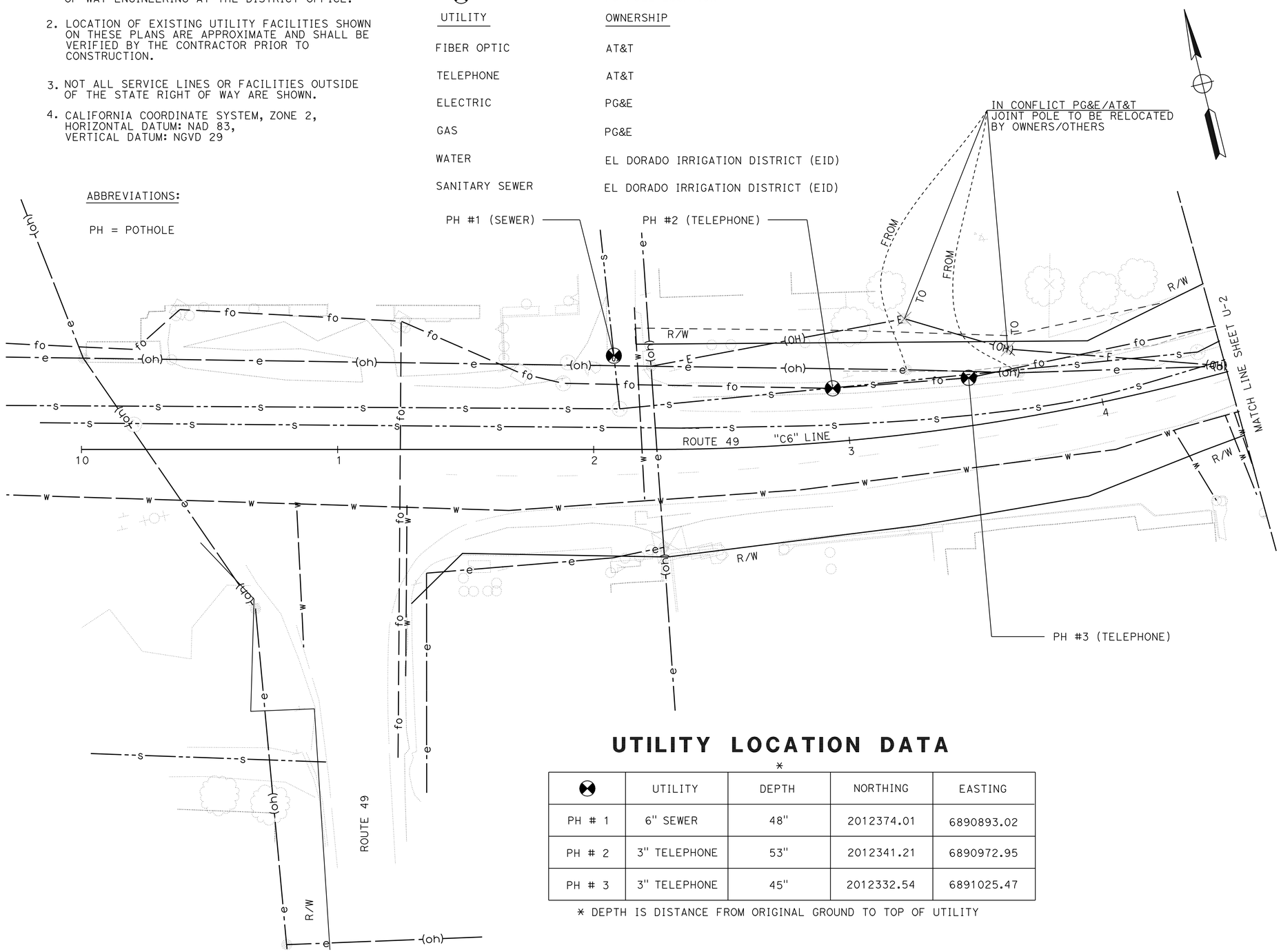

UTILITY LOCATION DATA

⊗	UTILITY	DEPTH *	NORTHING	EASTING
PH # 1	6" SEWER	48"	2012374.01	6890893.02
PH # 2	3" TELEPHONE	53"	2012341.21	6890972.95
PH # 3	3" TELEPHONE	45"	2012332.54	6891025.47

* DEPTH IS DISTANCE FROM ORIGINAL GROUND TO TOP OF UTILITY

THIS PLAN ACCURATE FOR UTILITY INFORMATION ONLY

UTILITY PLAN

SCALE : 1" = 20'

U-1

STATE OF CALIFORNIA - DEPARTMENT OF TRANSPORTATION
Caltrans DIVISION OF ENGINEERING

FUNCTIONAL SUPERVISOR: CHARLES LAUGHLIN
CALCULATED-DESIGNED BY: OLAWALE AJAYI
CHECKED BY: DANIEL RECHS
REVISED BY / DATE REVISED

LAST REVISION 01-31-12
DATE PLOTTED => 09-MAR-2012
TIME PLOTTED => 09:52

Dist	COUNTY	ROUTE	POST MILES TOTAL PROJECT	SHEET No.	TOTAL SHEETS
03	ED	49	9.6/10.5	38	61

REGISTERED CIVIL ENGINEER 2-29-12 DATE

2-29-12
PLANS APPROVAL DATE

REGISTERED PROFESSIONAL ENGINEER OLAWALE AJAYI No. 78029 Exp. 09-30-13 CIVIL STATE OF CALIFORNIA

THE STATE OF CALIFORNIA OR ITS OFFICERS OR AGENTS SHALL NOT BE RESPONSIBLE FOR THE ACCURACY OR COMPLETENESS OF SCANNED COPIES OF THIS PLAN SHEET.

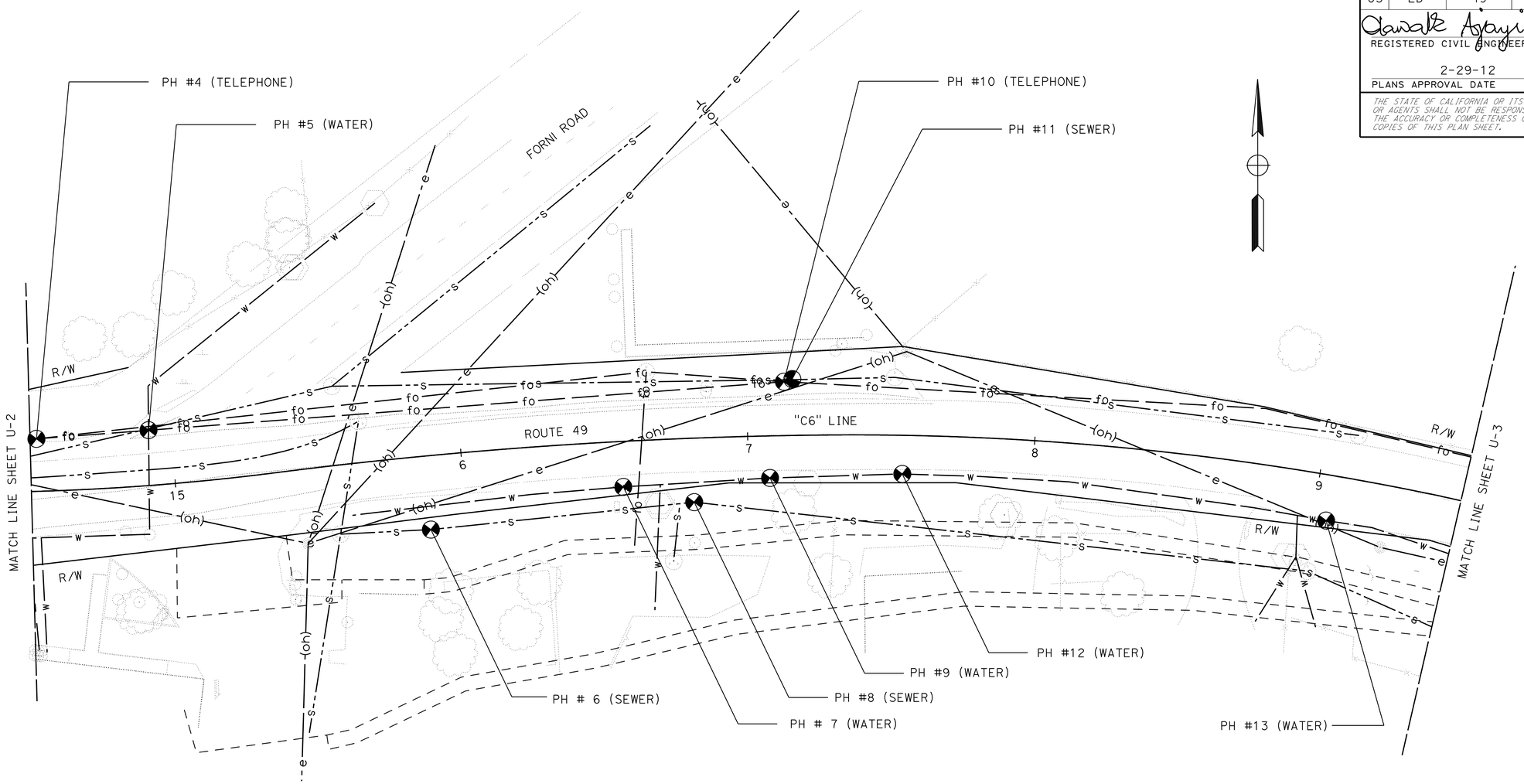

UTILITY LOCATION DATA

⊕	UTILITY	DEPTH *	NORTHING	EASTING
PH # 4	6" TELEPHONE	57"	2012329.07	6891125.55
PH # 5	6" WATER	88"	2012326.86	6891164.63
PH # 6	24" SEWER	79"	2012297.48	6891262.88
PH # 7	12" WATER	42"	2012312.34	6891329.86
PH # 8	24" SEWER	92"	2012307.03	6891354.55

* DEPTH IS DISTANCE FROM ORIGINAL GROUND TO TOP OF UTILITY

UTILITY LOCATION DATA

⊕	UTILITY	DEPTH *	NORTHING	EASTING
PH # 9	12" WATER	36"	2012315.46	6891380.95
PH # 10	6" TELEPHONE	88"	2012348.97	6891385.79
PH # 11	10" SEWER	54"	2012349.64	6891387.86
PH # 12	12" WATER	36"	2012316.85	6891426.99
PH # 13	12" WATER	39"	2012300.62	6891574.53

* DEPTH IS DISTANCE FROM ORIGINAL GROUND TO TOP OF UTILITY

THIS PLAN ACCURATE FOR UTILITY INFORMATION ONLY

UTILITY PLAN

SCALE : 1" = 20'

U-2

STATE OF CALIFORNIA - DEPARTMENT OF TRANSPORTATION
Caltrans® DIVISION OF ENGINEERING

FUNCTIONAL SUPERVISOR: CHARLES LAUGHLIN
CALCULATED-DESIGNED BY: OLAWALE AJAYI
CHECKED BY: DANIEL RECHS
REVISED BY / DATE REVISED

LAST REVISION 01-31-12 | DATE PLOTTED => 09-MAR-2012 | TIME PLOTTED => 09:52

Dist	COUNTY	ROUTE	POST MILES TOTAL PROJECT	SHEET No.	TOTAL SHEETS
03	ED	49	9.6/10.5	39	61

Olawale Ajayi 2-29-12
REGISTERED CIVIL ENGINEER DATE

2-29-12
PLANS APPROVAL DATE

REGISTERED PROFESSIONAL ENGINEER OLAWALE AJAYI No. 78029 Exp. 09-30-13 CIVIL STATE OF CALIFORNIA

THE STATE OF CALIFORNIA OR ITS OFFICERS OR AGENTS SHALL NOT BE RESPONSIBLE FOR THE ACCURACY OR COMPLETENESS OF SCANNED COPIES OF THIS PLAN SHEET.

UTILITY LOCATION DATA

*

⊕	UTILLITY	DEPTH	NORTHING	EASTING
PH # 14	4" TELEPHONE	25"	2012203.11	6891800.07
PH # 15	12" WATER	42"	2012201.21	6891800.74
PH # 16	12" WATER	47"	2012130.68	6891873.94
PH # 17	24" SEWER	48"	2012145.64	6891881.73

* DEPTH IS DISTANCE FROM ORIGINAL GROUND TO TOP OF UTILITY

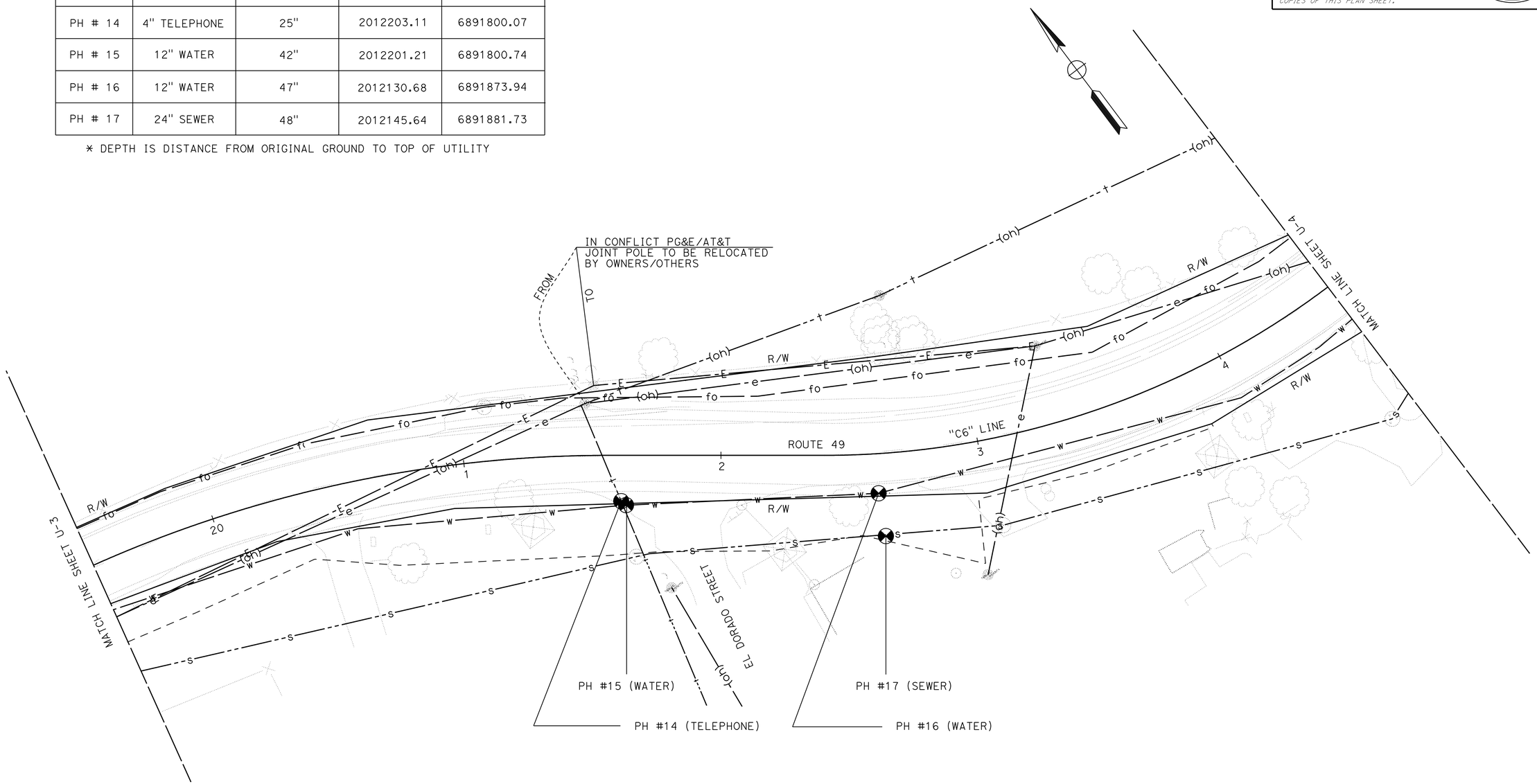

UTILITY PLAN

SCALE : 1" = 20'

THIS PLAN ACCURATE FOR UTILITY INFORMATION ONLY

U-3

STATE OF CALIFORNIA - DEPARTMENT OF TRANSPORTATION
Caltrans DIVISION OF ENGINEERING

FUNCTIONAL SUPERVISOR: CHARLES LAUGHLIN

CALCULATED-DESIGNED BY: OLAWALE AJAYI
CHECKED BY: DANIEL RECHS

REVISED BY / DATE REVISED

LAST REVISION 01-31-12
DATE PLOTTED => 09-MAR-2012
TIME PLOTTED => 09:52

Dist	COUNTY	ROUTE	POST MILES TOTAL PROJECT	SHEET No.	TOTAL SHEETS
03	ED	49	9.6/10.5	40	61

REGISTERED CIVIL ENGINEER DATE 2-29-12

2-29-12
PLANS APPROVAL DATE

REGISTERED PROFESSIONAL ENGINEER OLAWALE AJAYI No. 78029 Exp. 09-30-13 CIVIL STATE OF CALIFORNIA

THE STATE OF CALIFORNIA OR ITS OFFICERS OR AGENTS SHALL NOT BE RESPONSIBLE FOR THE ACCURACY OR COMPLETENESS OF SCANNED COPIES OF THIS PLAN SHEET.

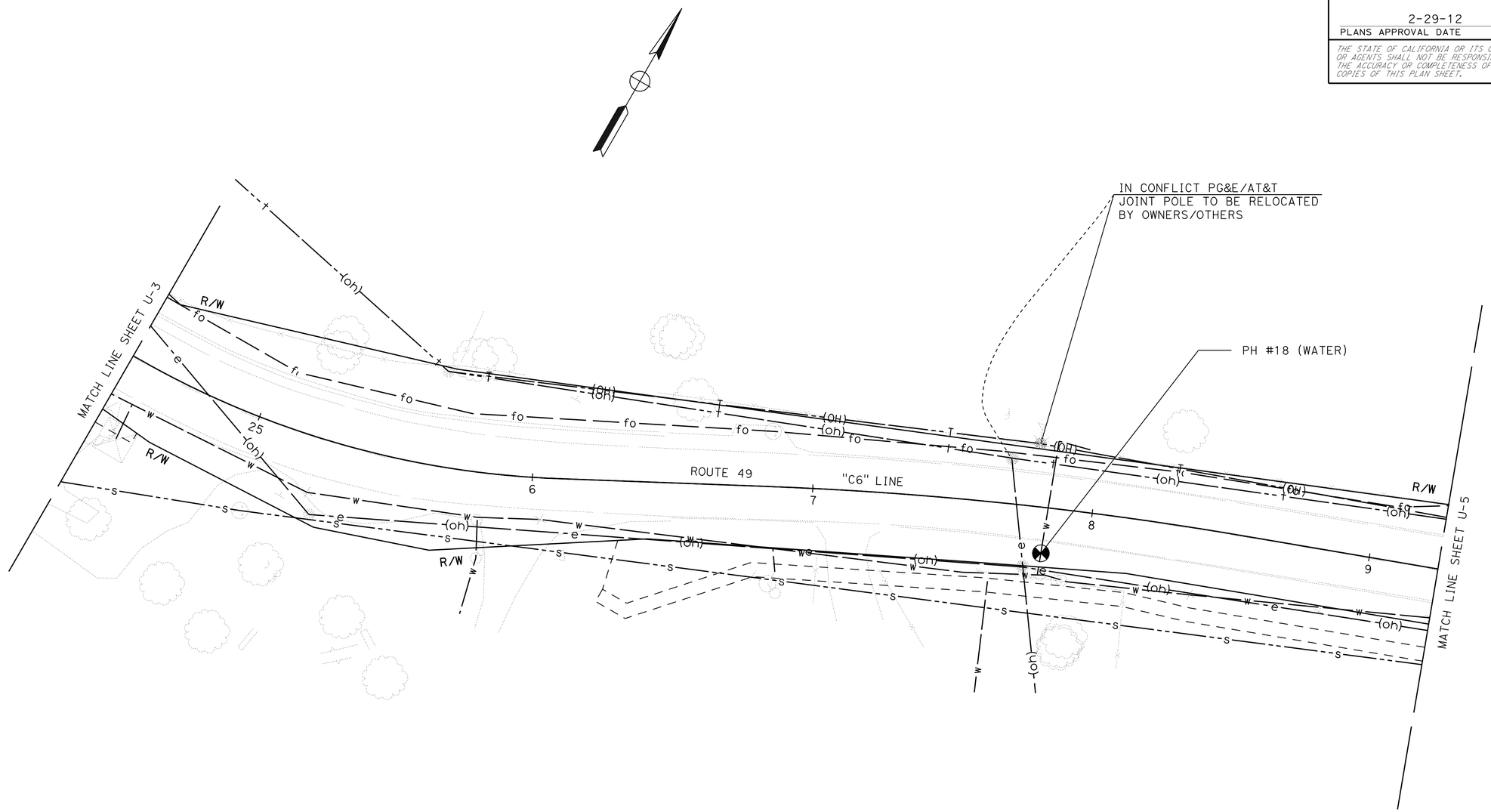

UTILITY LOCATION DATA

⊗	UTILITY	DEPTH *	NORTHING	EASTING
PH # 18	4" WATER	24"	2012205.00	6892384.53

* DEPTH IS DISTANCE FROM ORIGINAL GROUND TO TOP OF UTILITY

THIS PLAN ACCURATE FOR UTILITY INFORMATION ONLY

UTILITY PLAN

SCALE : 1" = 20'

U-4

STATE OF CALIFORNIA - DEPARTMENT OF TRANSPORTATION
Caltrans® DIVISION OF ENGINEERING

FUNCTIONAL SUPERVISOR: CHARLES LAUGHLIN
CALCULATED-DESIGNED BY: OLAWALE AJAYI
CHECKED BY: DANIEL RECHS
REVISED BY
DATE REVISED

LAST REVISION 01-31-12
DATE PLOTTED => 09-MAR-2012
TIME PLOTTED => 09:52

Dist	COUNTY	ROUTE	POST MILES TOTAL PROJECT	SHEET No.	TOTAL SHEETS
03	ED	49	9.6/10.5	41	61

Olawale Ajayi 2-29-12
REGISTERED CIVIL ENGINEER DATE

2-29-12
PLANS APPROVAL DATE

REGISTERED PROFESSIONAL ENGINEER
OLAWALE AJAYI
No. 78029
Exp. 09-30-13
CIVIL
STATE OF CALIFORNIA

THE STATE OF CALIFORNIA OR ITS OFFICERS OR AGENTS SHALL NOT BE RESPONSIBLE FOR THE ACCURACY OR COMPLETENESS OF SCANNED COPIES OF THIS PLAN SHEET.

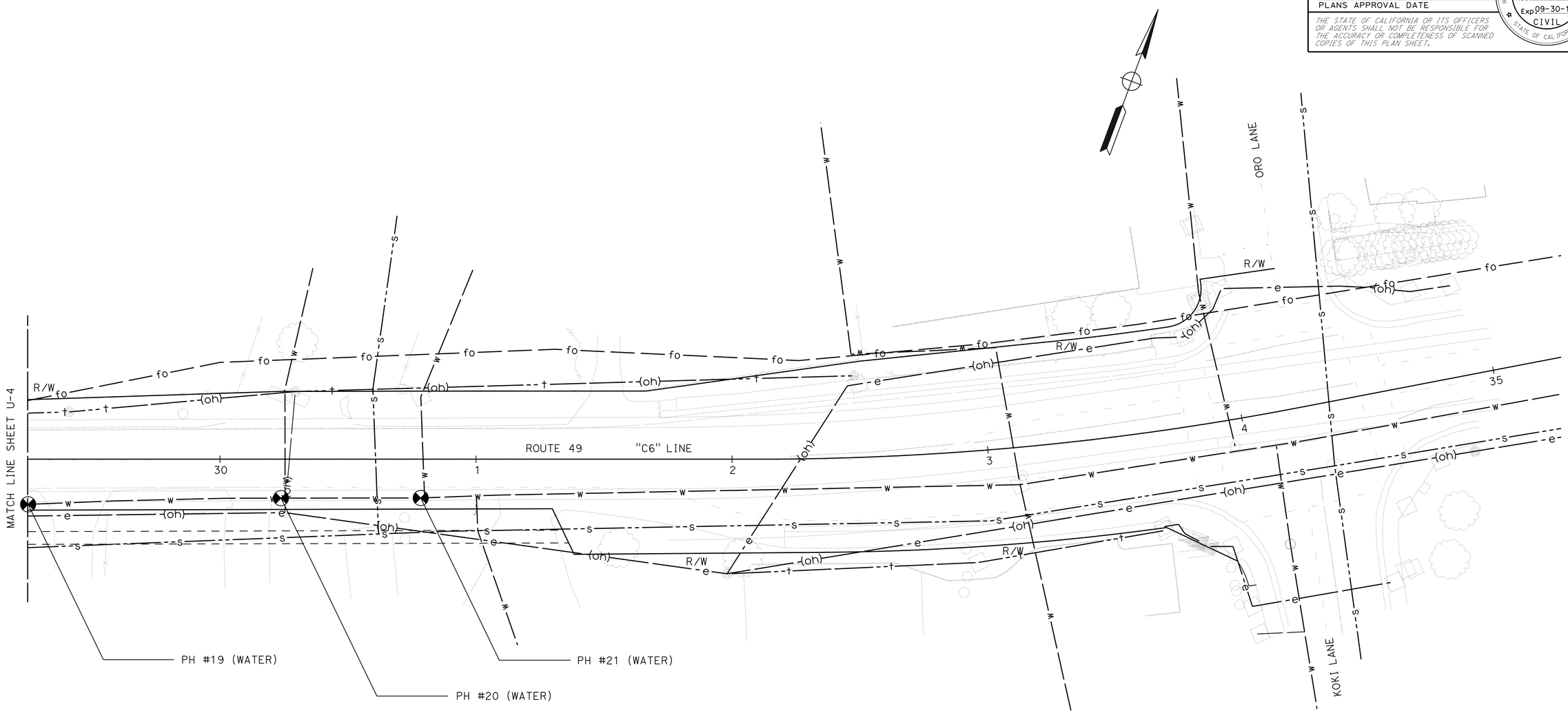

UTILITY LOCATION DATA

	UTILITY	DEPTH*	NORTHING	EASTING
PH # 19	12" WATER	36"	2012254.48	6892516.25
PH # 20	12" WATER	42"	2012291.05	6892608.00
PH # 21	12" WATER	49"	2012310.10	6892659.15

*DEPTH IS DISTANCE FROM ORIGINAL GROUND TO TOP OF UTILITY

THIS PLAN ACCURATE FOR UTILITY INFORMATION ONLY

UTILITY PLAN

SCALE : 1" = 20'

U-5

STATE OF CALIFORNIA - DEPARTMENT OF TRANSPORTATION
Caltrans DIVISION OF ENGINEERING

FUNCTIONAL SUPERVISOR: CHARLES LAUGHLIN

CALCULATED-DESIGNED BY: OLAWALE AJAYI
CHECKED BY: DANIEL RECHS

REVISED BY
DATE REVISED

LAST REVISION 01-31-12
DATE PLOTTED => 09-MAR-2012
TIME PLOTTED => 09:52

Dist	COUNTY	ROUTE	POST MILES TOTAL PROJECT	SHEET No.	TOTAL SHEETS
03	ED	49	9.6/10.1	42	61

REGISTERED CIVIL ENGINEER 2-29-12 DATE

2-29-12
PLANS APPROVAL DATE

REGISTERED PROFESSIONAL ENGINEER W. KEITH MACK No. 73964 Exp. 6/30/13 CIVIL STATE OF CALIFORNIA

THE STATE OF CALIFORNIA OR ITS OFFICERS OR AGENTS SHALL NOT BE RESPONSIBLE FOR THE ACCURACY OR COMPLETENESS OF SCANNED COPIES OF THIS PLAN SHEET.

STATIONARY MOUNTED CONSTRUCTION AREA SIGNS

SIGN LETTER	SIGN CODE		PANEL SIZE	SIGN MESSAGE	NUMBER OF POST AND SIZE	NUMBER OF SIGNS
	FEDERAL	CALIFORNIA				
A	W20-1	C23	48" x 48"	ROAD WORK AHEAD	1 - 6" x 6"	3
B	W20-1	C23	36" x 36"	ROAD WORK AHEAD	1 - 4" x 6"	7
C	G20-2	C14	36" x 18"	END ROAD WORK	1 - 4" x 4"	3
D		C40(Mod)	48" x 36"	TRAFFIC FINES DOUBLED IN WORK ZONES	1 - 4" x 6"	2

NOTE: EXACT SIGN LOCATION TO BE DETERMINED BY THE ENGINEER.

SIGN DETAILS

(D) C40(Mod)<CA>

TRAFFIC FINES
DOUBLED IN
WORK ZONES

4" D SERIES LETTERS

48"X36"

RETROREFLECTIVE WHITE BACKGROUND WITH BLACK LEGEND AND BORDERS.

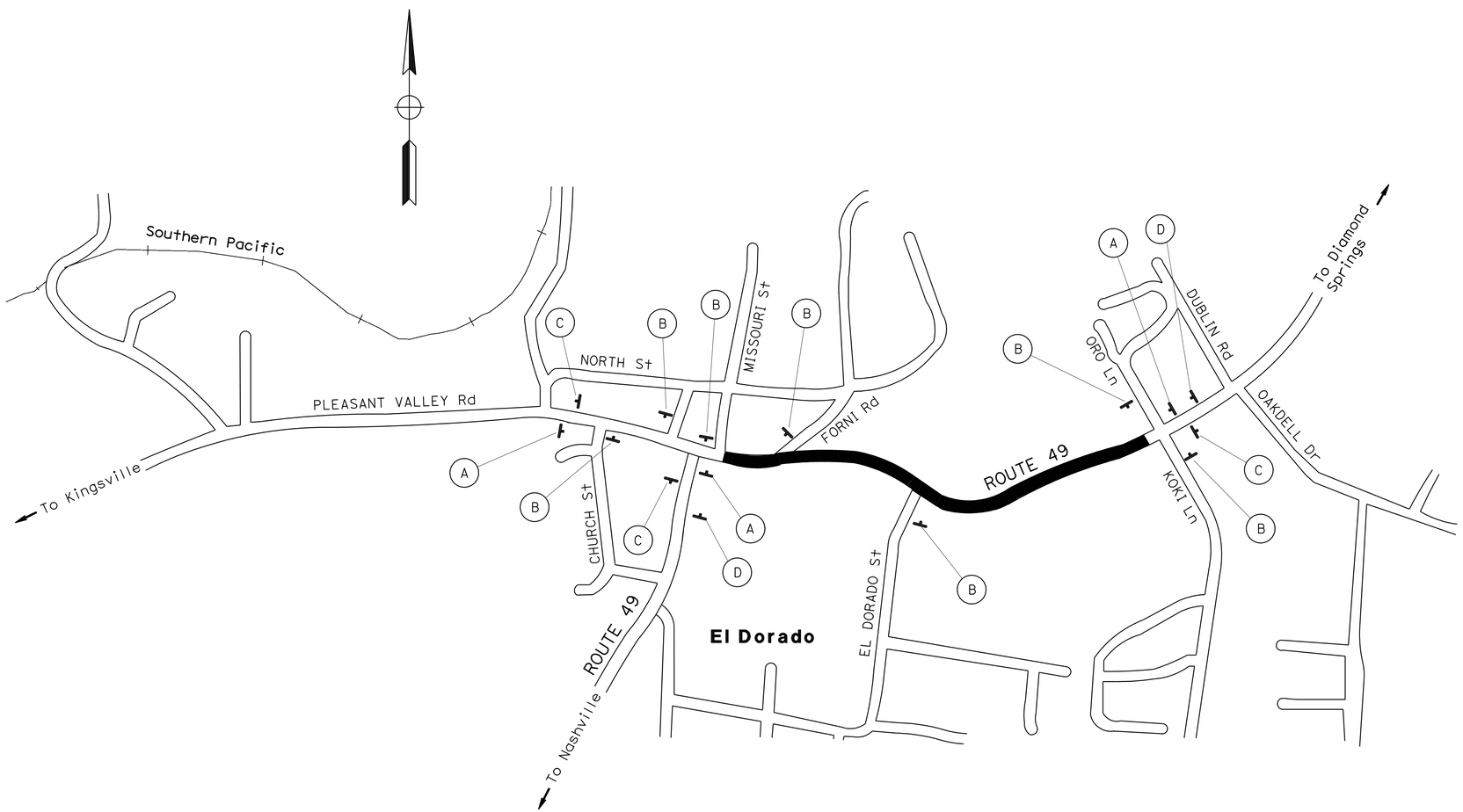

LEGEND

(X) CONSTRUCTION AREA SIGN LETTER

SIGN - SINGLE POST

<CA> CALIFORNIA SIGN CODE

CONSTRUCTION AREA SIGNS

NO SCALE

CS-1

STATE OF CALIFORNIA - DEPARTMENT OF TRANSPORTATION
Caltrans 03-DESIGN

FUNCTIONAL SUPERVISOR: SCOTT MANN

CALCULATED-DESIGNED BY: W. KEITH MACK
CHECKED BY

REVISED BY | DATE REVISED

LAST REVISION 10-25-11 | DATE PLOTTED => 09-MAR-2012 | TIME PLOTTED => 09:52

Dist	COUNTY	ROUTE	POST MILES TOTAL PROJECT	SHEET No.	TOTAL SHEETS
03	ED	49	9.6/10.1	43	61

REGISTERED CIVIL ENGINEER 3-1-12 DATE

2-29-12
PLANS APPROVAL DATE

REGISTERED PROFESSIONAL ENGINEER Jeffrey S. Jewett No. 49233 Exp. 9-30-12 CIVIL STATE OF CALIFORNIA

THE STATE OF CALIFORNIA OR ITS OFFICERS OR AGENTS SHALL NOT BE RESPONSIBLE FOR THE ACCURACY OR COMPLETENESS OF SCANNED COPIES OF THIS PLAN SHEET.

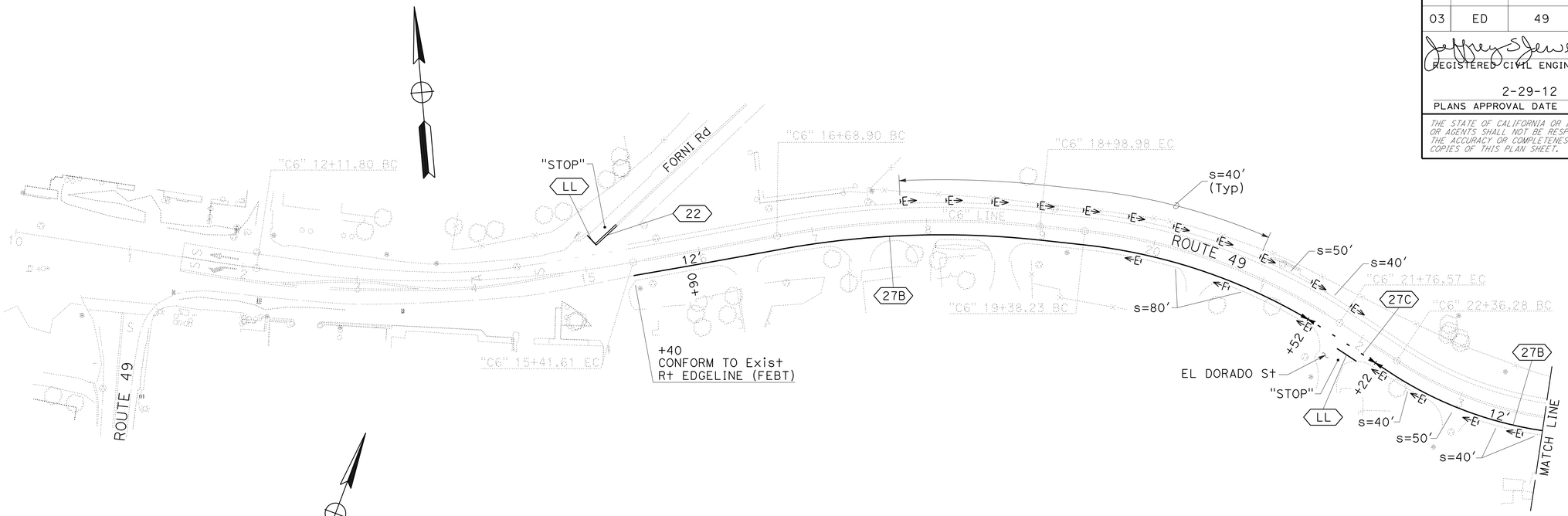

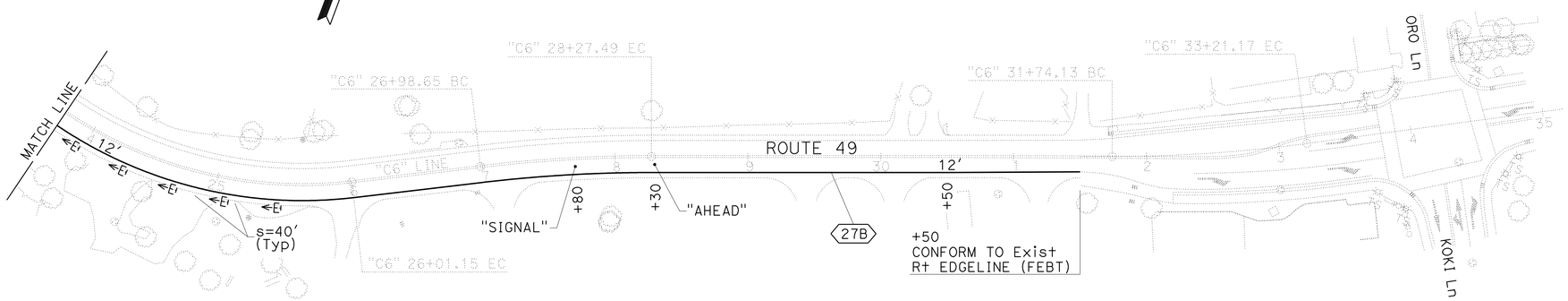

PAVEMENT DELINEATION QUANTITIES

STATION LIMITS	4" THERMOPLASTIC TRAFFIC STRIPE		4" THERMOPLASTIC TRAFFIC STRIPE (BROKEN 12-3)	PAVEMENT MARKER (RETROREFLECTIVE)	THERMOPLASTIC PAVEMENT MARKING				DELINEATOR (CLASS 1)	
	DETAIL 22	DETAIL 27B	DETAIL 27C	TYPE D	STOP	SIGNAL	AHEAD	LIMIT LINE	TYPE E	TYPE F
	LF	LF	LF	EA	SQFT	SQFT	SQFT	SQFT	EA	EA
"C6" 15+40 TO 21+52		612							12	1
"C6" 21+52 TO 22+22			70						1	
"C6" 22+22 TO 31+50		928				32	31		9	
FORNI ROAD	50			6	22			12		
EL DORADO STREET					22			20		
TOTAL	1,590		70	6	139				23	

APPROVED FOR PAVEMENT DELINEATION WORK ONLY

LEGEND

- LIMIT OF STRIPING PATTERN
- CHANGE IN STRIPING PATTERN
- (No.) PAVEMENT DELINEATION DETAIL NUMBER
- (LL) LIMIT LINE
- E DELINEATOR (CLASS 1) (TYPE E)
- s= DELINEATOR SPACING

PAVEMENT DELINEATION PLAN AND QUANTITIES

SCALE: 1"=50′

PD-1

REVISED BY	DATE REVISED

CALCULATED-DESIGNED BY	JACK KEMMERLY
CHECKED BY	JEFF JEWETT
FUNCTIONAL SUPERVISOR	SERGIO ACEVES

STATE OF CALIFORNIA - DEPARTMENT OF TRANSPORTATION
Caltrans
TRAFFIC

LAST REVISION 11-28-11 | DATE PLOTTED => 09-MAR-2012 | TIME PLOTTED => 09:52

Dist	COUNTY	ROUTE	POST MILES TOTAL PROJECT	SHEET No.	TOTAL SHEETS
03	ED	49	9.6/10.1	44	61

REGISTERED CIVIL ENGINEER 3-1-12 DATE

2-29-12
PLANS APPROVAL DATE

REGISTERED PROFESSIONAL ENGINEER Jeffrey S. Jewett No. 49233 Exp. 9-30-12 CIVIL STATE OF CALIFORNIA

THE STATE OF CALIFORNIA OR ITS OFFICERS OR AGENTS SHALL NOT BE RESPONSIBLE FOR THE ACCURACY OR COMPLETENESS OF SCANNED COPIES OF THIS PLAN SHEET.

NOTES:

1. ALL EXISTING SIGNS NOT SHOWN FOR REMOVAL, RELOCATION OR RESETTING SHALL REMAIN IN PLACE.
2. ALL SIGN CODES SHOWN ARE FEDERAL SIGN CODES UNLESS OTHERWISE DESIGNATED AS CALIFORNIA SIGN CODES.
3. FOR PANEL LEGEND LAYOUT INFORMATION, SEE SHEET SQ-2.

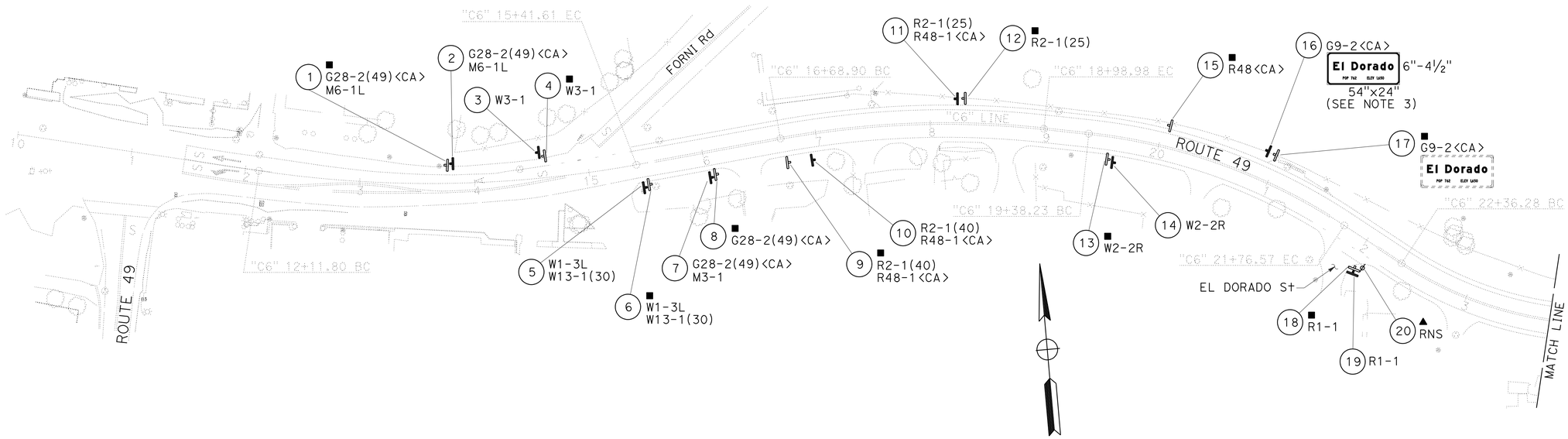

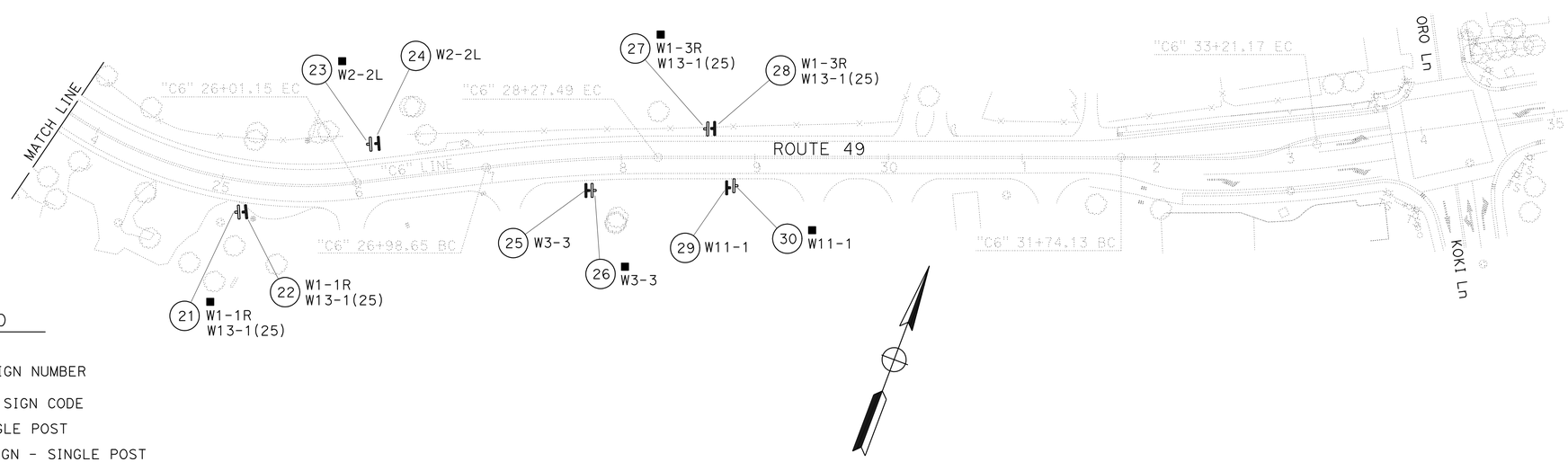

LEGEND

(No.)	ROADSIDE SIGN NUMBER
<CA>	CALIFORNIA SIGN CODE
	SIGN - SINGLE POST
	EXISTING SIGN - SINGLE POST
	COUNTY SIGN
RNS	ROAD NAME SIGN
■	REMOVE ROADSIDE SIGN
▲	RESET ROADSIDE SIGN

SIGN PLAN

SCALE: 1"=50'

S-1

APPROVED FOR SIGN WORK ONLY

STATE OF CALIFORNIA - DEPARTMENT OF TRANSPORTATION
Caltrans
TRAFFIC

FUNCTIONAL SUPERVISOR: SERGIO ACEVES
CALCULATED-DESIGNED BY: JACK KEMMERLY
CHECKED BY: JEFF JEWETT
REVISED BY / DATE REVISED

LAST REVISION 9-21-11
DATE PLOTTED => 09-MAR-2012
TIME PLOTTED => 09:52

Dist	COUNTY	ROUTE	POST MILES TOTAL PROJECT	SHEET No.	TOTAL SHEETS
03	ED	49	9.6/10.1	45	61

REGISTERED CIVIL ENGINEER — DATE 3-1-12

2-29-12
PLANS APPROVAL DATE

REGISTERED PROFESSIONAL ENGINEER — Jeffrey S. Jewett No. 49233 Exp. 9-30-12 CIVIL — STATE OF CALIFORNIA

THE STATE OF CALIFORNIA OR ITS OFFICERS OR AGENTS SHALL NOT BE RESPONSIBLE FOR THE ACCURACY OR COMPLETENESS OF SCANNED COPIES OF THIS PLAN SHEET.

NOTES:

1. THE SIGN POST SHALL HAVE 7/16" DIAMETER PERFORATIONS 1" ON CENTER ON ALL FOUR SIDES FOR THE FULL LENGTH.
2. USE TWO DRIVE RIVETS TO FASTEN ASSEMBLED SIGN AND SIGN POST INTO ANCHOR SLEEVE. INSTALL DRIVE RIVETS INTO THE SIDES FACING TRAFFIC.
3. ALL METAL SIGN POSTS AND ANCHOR SLEEVES SHALL BE GALVANIZED.
4. ALL ANCHOR SLEEVES SHALL BE EMBEDDED IN PCC.
5. BALANCED SINGLE POST INSTALLATIONS OF SINGLE SHEET ALUMINUM PANEL SIGNS REQUIRE BACK BRACES WHEN 2'-10" OR MORE IN LENGTH.
6. WOOD BLOCK SPACERS ARE NOT REQUIRED FOR SIGNS MOUNTED ON METAL POSTS.
7. ATTACH RECTANGULAR SIGN PANEL TO SIGN POST WITH BOLTS AT TOP AND BOTTOM. CENTER MAY BE ATTACHED WITH EITHER BOLT OR 3/8" DRIVE RIVET.
8. ATTACH DIAMOND SIGN PANEL TO SIGN POST WITH BOLT AT CENTER. TOP AND BOTTOM MAY BE ATTACHED WITH EITHER BOLTS OR 3/8" DRIVE RIVETS.
9. FOR DETAILS NOT SHOWN, SEE STANDARD PLANS RS1 AND RS2.

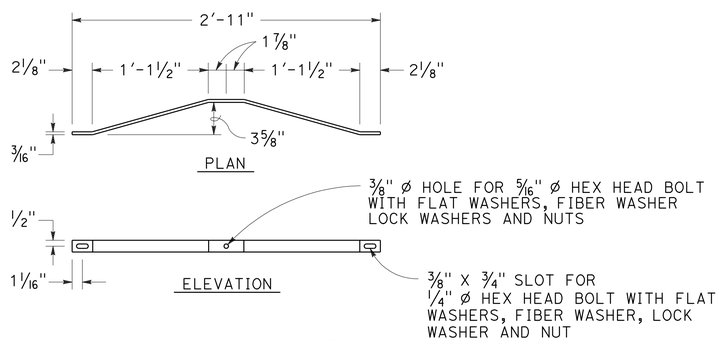

BACK BRACE DETAILS
SEE NOTE 5

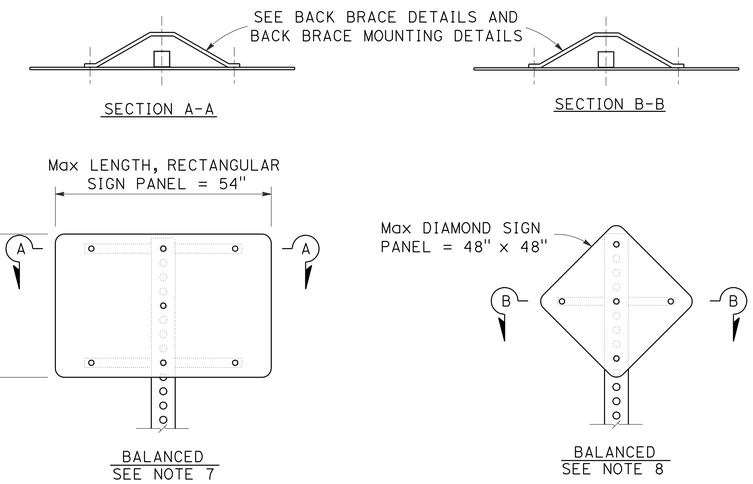

SINGLE POST INSTALLATION

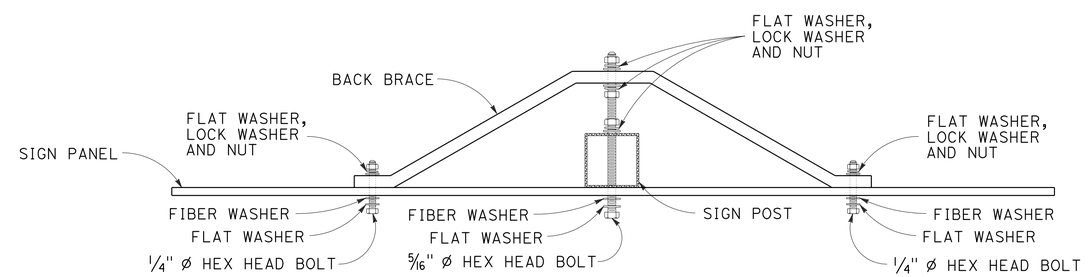

BACK BRACE MOUNTING DETAIL
SEE NOTES 6, 7 AND 8

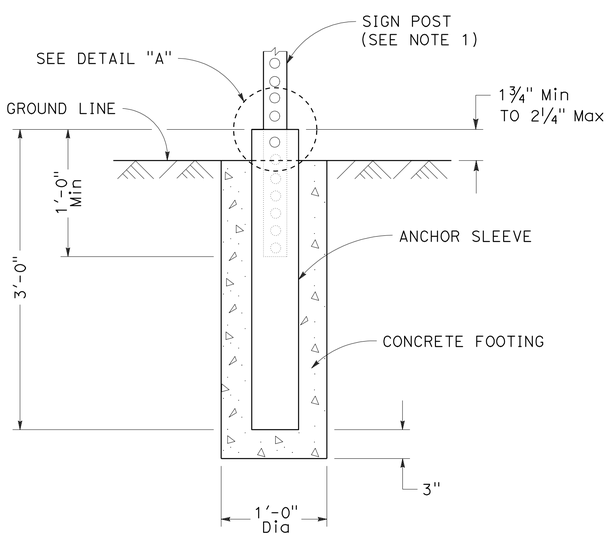

ANCHOR SLEEVE DETAIL

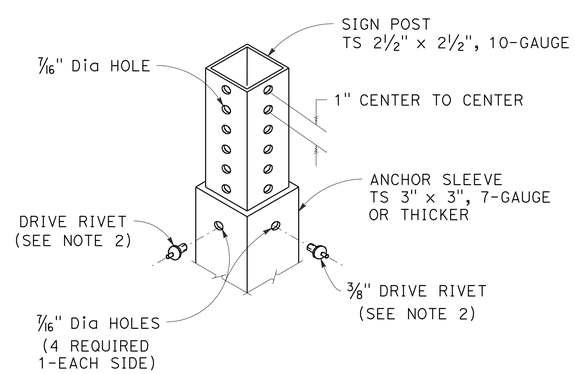

DETAIL "A"

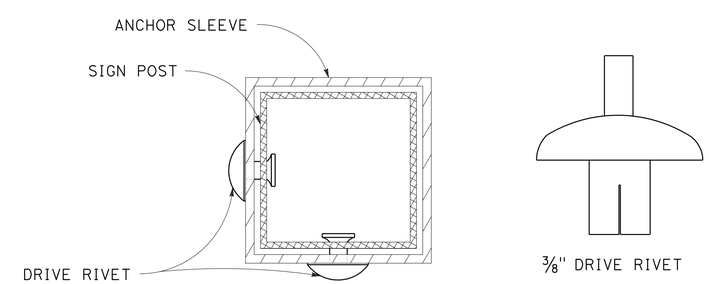

FASTENER DETAILS

SIGN DETAILS

NO SCALE

SD-1

STATE OF CALIFORNIA - DEPARTMENT OF TRANSPORTATION
Caltrans®
TRAFFIC

FUNCTIONAL SUPERVISOR: SERGIO ACEVES
CALCULATED-DESIGNED BY: JACK KEMMERLY
CHECKED BY: JEFF JEWETT
REVISED BY
DATE REVISED

LAST REVISION 1-17-12
DATE PLOTTED => 09-MAR-2012
TIME PLOTTED => 09:52

Dist	COUNTY	ROUTE	POST MILES TOTAL PROJECT	SHEET No.	TOTAL SHEETS
03	ED	49	9.6/10.1	46	61

REGISTERED CIVIL ENGINEER 3-1-12 DATE

2-29-12
PLANS APPROVAL DATE

REGISTERED PROFESSIONAL ENGINEER Jeffrey S. Jewett No. 49233 Exp. 9-30-12 CIVIL STATE OF CALIFORNIA

THE STATE OF CALIFORNIA OR ITS OFFICERS OR AGENTS SHALL NOT BE RESPONSIBLE FOR THE ACCURACY OR COMPLETENESS OF SCANNED COPIES OF THIS PLAN SHEET.

ROADSIDE SIGN QUANTITIES

SIGN NUMBER (No.)	SIGN CODE FEDERAL	SIGN CODE CALIFORNIA	PANEL SIZE INCHES	"C" DIM IN FEET	POST SIZE AND LENGTH 6"x6"	POST SIZE AND LENGTH METAL POST 2½"x2½"	ROADSIDE SIGN ONE POST EA	REMOVE ROADSIDE SIGN EA	RESET ROADSIDE SIGN EA	REMARKS
1	M6-1L	G28-2(49)						1		
2	M6-1L	G28-2(49)	24 x 25 21 x 15	4		10′	1			
3	W3-1		48 x 48	5		12′	1			
4	W3-1							1		
5	W1-3L W13-1(30)		36 x 36 24 x 24	4		12′	1			
6	W1-3L W13-1(30)							1		
7	M3-1	G28-2(49)	24 x 12 24 x 25	4		10′	1			
8		G28-2(49)						1		
9	R2-1(40)	R48-1						1		
10	R2-1(40)	R48-1	36 x 48 36 x 18	4		12′	1			
11	R2-1(25)	R48-1	36 x 48 36 x 18	4		12′	1			
12	R2-1(25)							1		
13	W2-2R							1		
14	W2-2R		36 x 36	5		12′	1			
15		R48						1		
16		G9-2	54 x 24	5		8′	1			SEE NOTE 5
17		G9-2						1		
18	R1-1							1		
19	R1-1		30	5		10′	1			
20		RNS							1	ROAD NAME SIGN
21	W1-1R W13-1(25)							1		
22	W1-1R W13-1(25)		48 x 48 30 x 30	4	18′		1			
23	W2-2L							1		
24	W2-2L		36 x 36	5		12′	1			
25	W3-3		48 x 48	5		12′	1			
26	W3-3							1		
27	W1-3R W13-1(25)							1		
28	W1-3R W13-1(25)		36 x 36 24 x 24	4		12′	1			
29	W11-1		30 x 30	5		10′	1			
30	W11-1							1		
TOTAL							14	15	1	————

NOTES:

1. EXACT LOCATION AND POSITION OF ROADSIDE SIGNS TO BE DETERMINED BY THE ENGINEER.
2. POST LENGTHS GIVEN ARE APPROXIMATE.
3. "C" DIM = VERTICAL CLEARANCE EP TO BOTTOM OF SIGN PANEL.
4. FOR ADDITIONAL METAL POST INSTALLATION INFORMATION, SEE SHEET SD-1.
5. FOR PANEL LEGEND LAYOUT, SEE SHEET SQ-2.
6. RNS = ROAD NAME SIGN.

SIGN QUANTITIES

SQ-1

REVISED BY | DATE REVISED
JACK KEMMERLY | JEFF JEWETT
CALCULATED-DESIGNED BY | CHECKED BY
FUNCTIONAL SUPERVISOR: SERGIO ACEVES
STATE OF CALIFORNIA - DEPARTMENT OF TRANSPORTATION
Caltrans
TRAFFIC

LAST REVISION 11-28-11 | DATE PLOTTED => 09-MAR-2012 | TIME PLOTTED => 09:52

Dist	COUNTY	ROUTE	POST MILES TOTAL PROJECT	SHEET No.	TOTAL SHEETS
03	ED	49	9.6/10.1	47	61

REGISTERED CIVIL ENGINEER 3-1-12 DATE

2-29-12
PLANS APPROVAL DATE

REGISTERED PROFESSIONAL ENGINEER Jeffrey S. Jewett No. 49233 Exp. 9-30-12 CIVIL STATE OF CALIFORNIA

THE STATE OF CALIFORNIA OR ITS OFFICERS OR AGENTS SHALL NOT BE RESPONSIBLE FOR THE ACCURACY OR COMPLETENESS OF SCANNED COPIES OF THIS PLAN SHEET.

ROADSIDE SIGN PANEL QUANTITIES

SIGN CODE FEDERAL	SIGN CODE CALIFORNIA	SIGN MESSAGE/DESCRIPTION	SIGN SIZE L X D INCHES	PANEL AREA SQFT	NUMBER OF PANELS	BACKGROUND SHEETING COLOR	BACKGROUND RETROREFLECTIVE ASTM TYPE	LEGEND SHEETING COLOR	LEGEND RETROREFLECTIVE ASTM TYPE	PROTECTIVE OVERLAY PREMIUM	FURNISH SINGLE SHEET ALUMINUM SIGN UNFRAMED 0.063" SQFT	FURNISH SINGLE SHEET ALUMINUM SIGN UNFRAMED 0.080" SQFT
M3-1		NORTH	24 X 12	2.00	1	GREEN	III	WHITE	III	X	2.00	
M6-1L		LEFT ARROW	21 X 15	2.19	1	GREEN	III	WHITE	III	X	2.19	
R1-1		STOP SIGN	30	5.17	1	RED	IX	WHITE	IX	X	5.17	
R2-1(25)		SPEED LIMIT 25	36 X 48	12.00	1	WHITE	III	BLACK		X	12.00	
R2-1(40)		SPEED LIMIT 40	36 X 48	12.00	1	WHITE	III	BLACK		X	12.00	
W1-1R		TURN - RIGHT (SYMBOL SIGN)	48 X 48	16.00	1	YELLOW	III	BLACK		X		16.00
W1-3L		REVERSE CURVE (SYMBOL SIGN)	36 X 36	9.00	1	YELLOW	III	BLACK		X	9.00	
W1-3R		REVERSE CURVE (SYMBOL SIGN)	36 X 36	9.00	1	YELLOW	III	BLACK		X	9.00	
W2-2L		SIDE ROAD - LEFT (SYMBOL SIGN)	36 X 36	9.00	1	YELLOW	III	BLACK		X	9.00	
W2-2R		SIDE ROAD - RIGHT (SYMBOL SIGN)	36 X 36	9.00	1	YELLOW	III	BLACK		X	9.00	
W3-1		STOP AHEAD (SYMBOL SIGN)	48 X 48	16.00	1	YELLOW	IX	BLACK RED WHITE	 IX IX	X		16.00
W3-3		SIGNAL AHEAD (SYMBOL SIGN)	48 X 48	16.00	1	YELLOW	IX	BLACK GREEN RED	 IX IX	X		16.00
W11-1		BICYCLE TRAFFIC (SYMBOL SIGN)	30 X 30	6.25	1	YELLOW	III	BLACK		X	6.25	
W13-1(25)		25 MPH	24 X 24	4.00	1	YELLOW	III	BLACK		X	4.00	
W13-1(25)		25 MPH	30 X 30	6.25	1	YELLOW	III	BLACK		X	6.25	
W13-1(30)		30 MPH	24 X 24	4.00	1	YELLOW	III	BLACK		X	4.00	
	G28-2(49)	STATE ROUTE MARKER	24 X 25	4.17	2	GREEN	III	WHITE	III	X	8.34	
	G9-2	UNINCORPORATED COMMUNITY SIGN	54 X 24	9.00	1	GREEN	III	WHITE	III	X		9.00
	R48-1	RADAR ENFORCED	36 X 18	4.50	2	WHITE	III	BLACK		X	9.00	
TOTAL											107.20	57.00

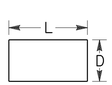

L = LENGTH OF SIGN
D = DEPTH OF SIGN

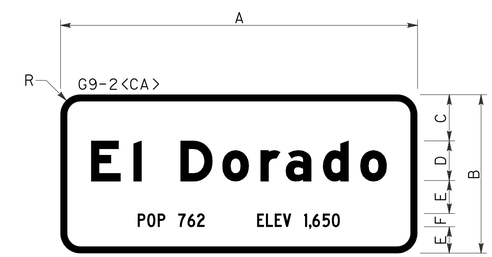

A	B	C	D	E	F	R
54"	24"	7"	6"-4½" E Mod	5"	2"C	3"

1" BORDER

ROADSIDE SIGN NUMBER 16

SIGN QUANTITIES

SQ-2

STATE OF CALIFORNIA - DEPARTMENT OF TRANSPORTATION
Caltrans
TRAFFIC

FUNCTIONAL SUPERVISOR: SERGIO ACEVES
CALCULATED-DESIGNED BY: JACK KEMMERLY
CHECKED BY: JEFF JEWETT
REVISED BY
DATE REVISED

LAST REVISION 1-17-12
DATE PLOTTED => 09-MAR-2012
TIME PLOTTED => 09:52

Dist	COUNTY	ROUTE	POST MILES TOTAL PROJECT	SHEET No.	TOTAL SHEETS
03	ED	49	9.6/10.1	48	61

REGISTERED CIVIL ENGINEER 3-1-12 DATE

2-29-12
PLANS APPROVAL DATE

REGISTERED PROFESSIONAL ENGINEER W. KEITH MACK No. 73964 Exp. 6/30/13 CIVIL STATE OF CALIFORNIA

THE STATE OF CALIFORNIA OR ITS OFFICERS OR AGENTS SHALL NOT BE RESPONSIBLE FOR THE ACCURACY OR COMPLETENESS OF SCANNED COPIES OF THIS PLAN SHEET.

REMOVE FENCE

LOCATION	REMOVE FENCE (LF)
"C6" 27+25 TO 28+15 Rt	90
"C6" 29+55 TO 29+95 Rt	40
TOTAL	130

RELOCATE MAILBOX

LOCATION	RELOCATE MAILBOX (EA)
"C6" 16+50 Rt	1
"C6" 18+10 Rt	1
"C6" 18+40 Rt	1
"C6" 20+50 Rt	1
"C6" 21+05 Rt	1
"C6" 24+00 Rt	1
TOTAL	6

WATER POLLUTION CONTROL

DRAINAGE SYSTEM No.	"C6" STATION	Temp DI PROTECTION (EA)	Temp FIBER ROLL (LF)	Temp CONCRETE WASHOUT FACILITY (LS)
1	15+70.00 Lt	1		
2	15+63.00 Rt	1		
2	16+66.00 Rt	1		
2	17+73.00 Rt	1		
2	18+25.00 Rt	1		
2	18+87.00 Rt	1		
2	20+19.00 Rt	1		
2	20+68.00 Rt	1		
2	21+55.00 Rt	1		
2	22+17.00 Rt	1		
2	22+63.00 Rt	1		
2	22+83.05 Rt	1		
3	26+93.89 Rt	1		
3	27+41.00 Rt	1		
3	28+50.00 Rt	1		
3	29+64.00 Rt	1		
3	30+45.17 Rt	1		
3	30+90.44 Rt	1		
-	Var		500	1
	TOTAL	18	500	1

DRIVEWAY QUANTITIES

LOCATION	PLACE HMA (Misc AREA) (SQYD)	HMA (TYPE A) (TON)	CLASS 2 AB (CY)
Dwy 1 - "C6" 16+40.00 Rt	29	7.9	4.7
Dwy 2 - "C6" 18+00.00 Rt	14	3.7	2.2
Dwy 3 - "C6" 18+65.00 Rt	17	4.8	2.9
Dwy 4 - "C6" 20+50.00 Rt	17	4.6	2.7
Dwy 5 - "C6" 27+15.00 Rt	14	3.8	2.3
Dwy 6 - "C6" 29+45.00 Rt	18	5.0	3.0
Dwy 7 - "C6" 30+10.00 Rt	16	4.5	2.7
SUBTOTAL*		34.3*	20.5*
TOTAL	125		

*SUBTOTAL INCLUDED IN ROADWAY AND EARTHWORK QUANTITY SUMMARY TABLE

ROADWAY AND EARTHWORK QUANTITY SUMMARY

LOCATION	REPLACE ASPHALT CONCRETE SURFACING (CY)	CLASS 2 AGGREGATE BASE (CY)	HOT MIX ASPHALT (TYPE A) (TON)	TACK COAT (TON)	MINOR CONCRETE (DITCH LINING) (CY)	ROADWAY EXCAVATION (CY)	(N) EMBANKMENT (CY)	IMPORTED BORROW (CY)
"C6" 12+20.00 TO 17+60.00	150					4	42	
"C6" 15+40.68 TO 16+64.00		23.3	22.3	0.06		42	67	
"C6" 16+64.00 TO 17+75.00		16.3	15.6	0.05	8.3	38	13	
"C6" 17+75.00 TO 18+85.00		21.9	20.9	0.05		34	30	
"C6" 18+85.00 TO 20+21.00		27.2	25.9	0.06	10.0	62	42	
"C6" 20+21.00 TO 20+66.00		9.0	8.6	0.02		16	3	
"C6" 20+66.00 TO 21+61.70		19.3	18.4	0.04	8.3	53	31	
"C6" 22+16.00 TO 27+39.00		89.5	85.4	0.23		140	125	
"C6" 27+39.00 TO 29+20.00		35.1	33.5	0.08	13.6	46	16	
"C6" 29+20.00 TO 29+62.00		8.8	8.4	0.02		13	1	
"C6" 29+62.00 TO 29+95.00		7.3	6.9	0.01	2.5	12	2	
"C6" 29+95.00 TO 30+30.00		7.8	7.5	0.02		11	1	
"C6" 30+30.00 TO 30+98.50		15.4	14.7	0.03	5.2	21	5	
"C6" 30+98.50 TO 31+00.00		0.3	0.3	0.01		1	1	
DRIVEWAY SUBTOTAL		20.5	34.3					
TOTAL	150	301.7	302.7	0.68	47.9	493	379	114

SUMMARY OF QUANTITIES
Q-1

STATE OF CALIFORNIA - DEPARTMENT OF TRANSPORTATION
Caltrans 03-DESIGN

FUNCTIONAL SUPERVISOR: SCOTT MANN
CALCULATED-DESIGNED BY: W. KEITH MACK
CHECKED BY
REVISED BY
DATE REVISED

LAST REVISION 10-25-11
DATE PLOTTED => 09-MAR-2012
TIME PLOTTED => 09:52

DIST	COUNTY	ROUTE	POST MILES TOTAL PROJECT	SHEET NO.	TOTAL SHEETS
03	EL	49	9.6/10.1	49	61

REGISTERED CIVIL ENGINEER

November 17, 2006
PLANS APPROVAL DATE

REGISTERED PROFESSIONAL ENGINEER Dallas Forester No. C37765 Exp. 12-31-06 CIVIL STATE OF CALIFORNIA

The State of California or its officers or agents shall not be responsible for the accuracy or completeness of electronic copies of this plan sheet.

To accompany plans dated 2-29-12

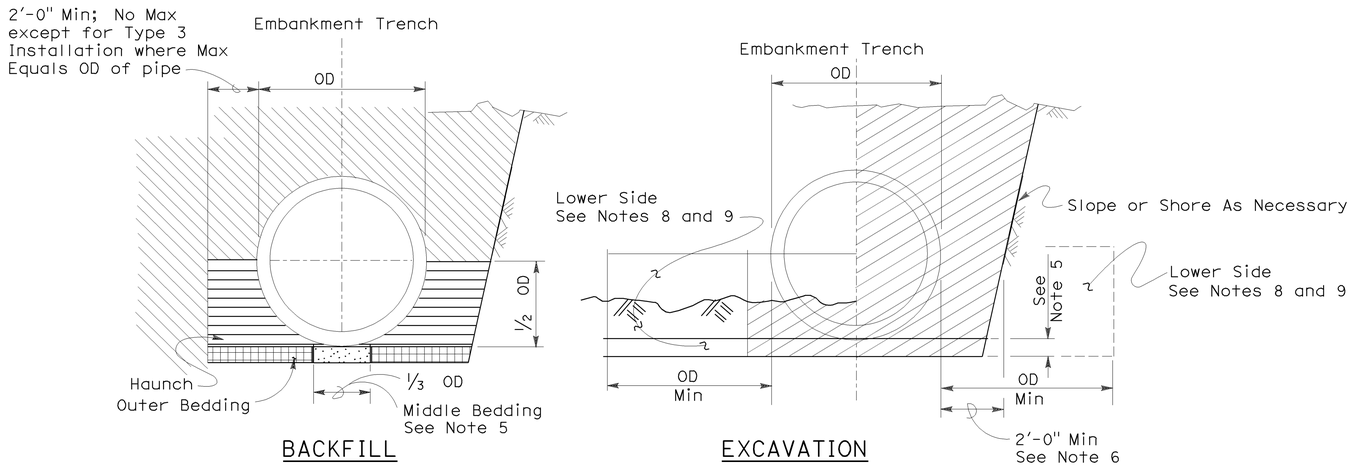

Roadway Embankment

Structure Backfill (Culvert) See Note 6

Structure Backfill (Culvert) See Note 6

Loose Backfill

Excavation Structure (Culvert)

TYPE 1 INSTALLATION:

The haunch and outer bedding shall be compacted to a minimum 90 percent relative compaction. In addition, the minimum sand equivalent in these areas shall be 30 and the maximum percentage passing the 75 μm sieve size shall be 12.

TYPE 2 INSTALLATION:

The haunch and outer bedding shall be compacted to a minimum 90 percent relative compaction. In addition, the minimum sand equivalent in these areas shall be 25.

TYPE 3 INSTALLATION:

The haunch and outer bedding shall be compacted to a minimum 85 percent relative compaction. 90 percent relative compaction will be required where the fill over the pipe is less than 4'-0" or 1/2 OD.

NOTES:

1. Unless otherwise shown on the plans or specified in the special provision, the Contractor shall have the option of selecting the class of RCP and the type of installation to be used, provided the height of cover does not exceed the value shown for the RCP selected.
   Example: 24" RCP culvert with maximum cover of 19'-0" the options are:
   a) Class III or stronger with Installation Type 1.
   b) Class III Special or stronger with Installation Type 2.
   c) Class IV Special or stronger with Installation Type 3.
   Cover is defined as the maximum vertical distance from top of the pipe to finished grade within the length of any given culvert.
2. The class of RCP and Installation Type selected shall be the same throughout the length of any given culvert.
3. The "length of any culvert" is defined as the culvert between:
   a) Successive drainage structure (inlets, junction boxes, headwalls, etc.).
   b) A drainage structure and the inlet or outlet end of the culvert.
   c) The inlet and outlet end of the culvert when there are no intervening drainage structures.
4. Oval and arch shaped RCP shall not be used.
5. 1/25 OD Min, not less than 3".
6. Slurry cement backfill may be substituted for backfill in the outer bedding and haunch areas. If slurry is used the outer and middle beddings shall be omitted. Prior to installation the soil under the middle 1/3 of the outside diameter of the pipe shall be softened by scarifying or other means to a minimum depth of 1/25 OD, but not less than 3". Where slurry cement backfill is used clear distance to trench wall may be reduced as set forth in Section 19-3.062 of the Standard Specifications.
7. Backfill shall be placed full width of excavation except where dimensions are shown for backfill width or thickness. Dimensions shown are minimums.
8. Lower side shall be suitable material as determined by the Engineer. Otherwise it shall be considered unsuitable as set forth in Section 19-2.02 of the Standard Specifications. See Note 9.
9. Where the pipe is placed in a trench, if the trench walls are sloped at 5 vertical to 1 horizontal or steeper for at least 90 percent of the trench height or up to not less than 12" from the grading plane, the firmness of the soil in the lower side need not be considered.
10. Non-reinforced precast concrete pipe sizes 3'-0" or smaller may be placed under installation Types 1, 2 or 3.

INSTALLATION TYPE 1

MINIMUM CLASS AND D-LOAD	COVER	
	108" Dia AND SMALLER	OVER 108" Dia
Class II 1000D	14.9'	12.9'
Class III 1350D	15.0' - 20.9'	13.0' - 18.9'
Class III Special 1700D	21.0' - 26.9'	19.0' - 24.9'
Class IV 2000D	27.0' - 31.9'	25.0' - 29.9'
Class IV Special 2500D	32.0' - 40.9'	30.0' - 38.9'
Class V 3000D	41.0' - 49.9'	39.0' - 46.9'
Class V Special 3600D	50.0' - 59.0'	47.0' - 58.0'

INSTALLATION TYPE 2

MINIMUM CLASS AND D-LOAD	COVER
Class II 1000D	9.9'
Class III 1350D	10.0'- 14.9'
Class III Special 1700D	15.0' - 19.9'
Class IV 2000D	20.0' - 24.9'
Class IV Special 2500D	25.0' - 31.9'
Class V 3000D	32.0' - 38.9'
Class V Special 3600D	39.0' - 47.0'

INSTALLATION TYPE 3

MINIMUM CLASS AND D-LOAD	COVER	
	48" Dia AND SMALLER	OVER 48" Dia
Class II 1000D	7.9'	5.9'
Class III 1350D	8.0' - 10.9'	6.0' - 8.9'
Class III Special 1700D	11.0' - 14.9'	9.0' - 12.9'
Class IV 2000D	15.0' - 17.9'	13.0' - 15.9'
Class IV Special 2500D	18.0' - 21.9'	16.0' - 19.9'
Class V 3000D	22.0' - 26.9'	20.0' - 24.9'
Class V Special 3600D	30.0' - 33.0'	25.0' - 31.0'

STATE OF CALIFORNIA
DEPARTMENT OF TRANSPORTATION

EXCAVATION AND BACKFILL CONCRETE PIPE CULVERTS

NO SCALE

RSP A62DA DATED NOVEMBER 17, 2006 SUPERSEDES STANDARD PLAN A62DA DATED MAY 1, 2006 - PAGE 20 OF THE STANDARD PLANS BOOK DATED MAY 2006.

REVISED STANDARD PLAN RSP A62DA

2006 REVISED STANDARD PLAN RSP A62DA

10-26-06

DIST	COUNTY	ROUTE	POST MILES TOTAL PROJECT	SHEET NO.	TOTAL SHEETS
03	EL	49	9.6/10.1	50	61

LICENSED LANDSCAPE ARCHITECT

April 3, 2009
PLANS APPROVAL DATE

The State of California or its officers or agents shall not be responsible for the accuracy or completeness of electronic copies of this plan sheet.

LICENSED LANDSCAPE ARCHITECT — Robert B. Schott 3635 — Signature — 11-30-10 Renewal Date — 2-25-09 Date — STATE OF CALIFORNIA

To accompany plans dated 2-29-12

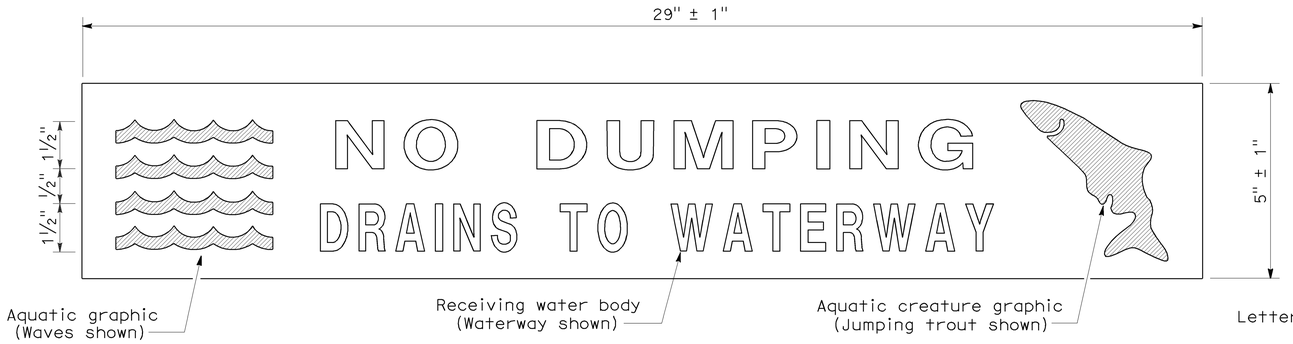

PLAN
DRAINAGE INLET MARKER
(PREFABRICATED THERMOPLASTIC)

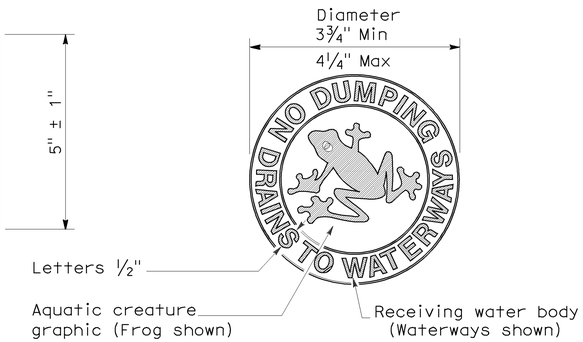

PLAN
DRAINAGE INLET MARKER
(MEDALLION)

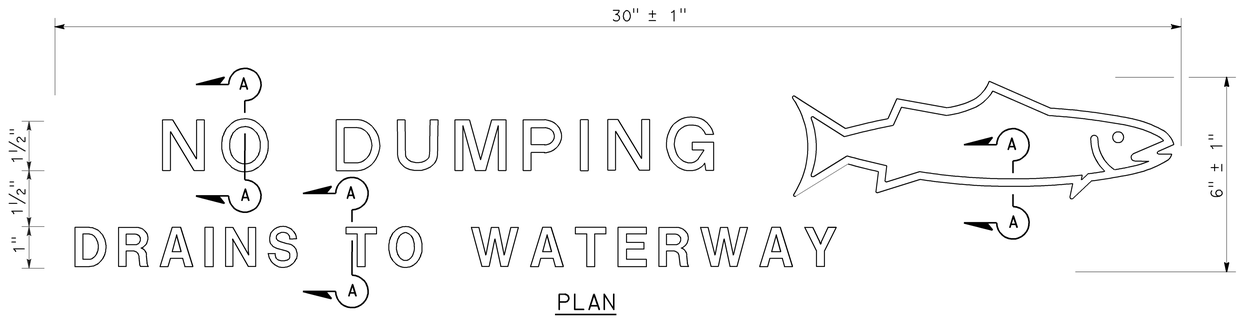

PLAN
DRAINAGE INLET MARKER
(STAMPED CONCRETE IMPRINT)

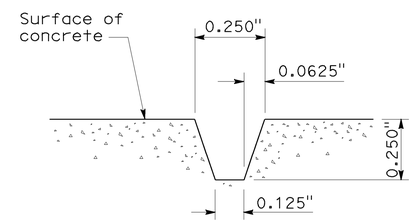

SECTION A-A
STAMPED CONCRETE
IMPRINT DETAIL

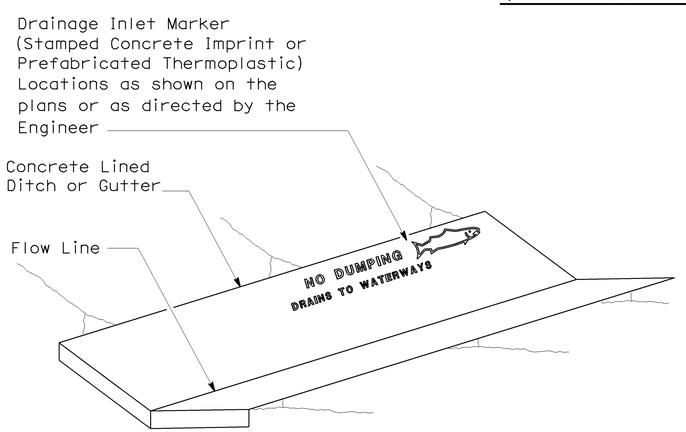

PERSPECTIVE
DRAINAGE INLET MARKER ON
CONCRETE LINED DITCH

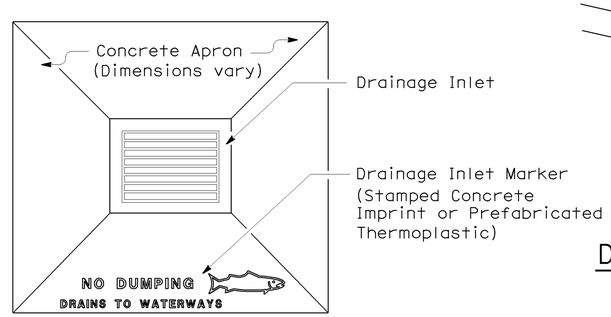

PLAN
DRAINAGE INLET MARKER ON
DRAINAGE INLET APRON

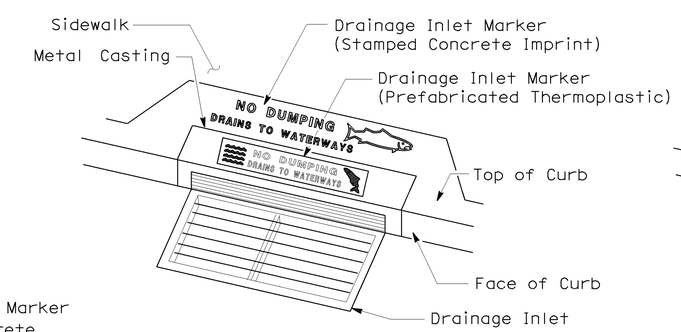

PERSPECTIVE
DRAINAGE INLET MARKER ON
DRAINAGE INLET

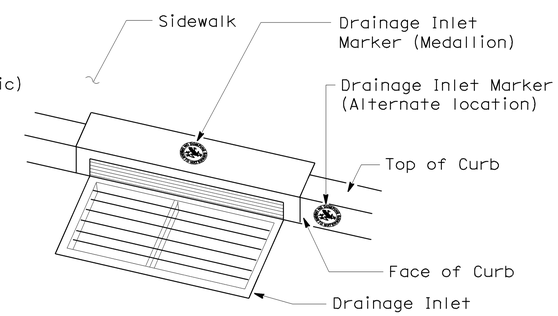

PERSPECTIVE
DRAINAGE INLET MARKER (MEDALLION)
ON DRAINAGE INLET

STATE OF CALIFORNIA
DEPARTMENT OF TRANSPORTATION

DRAINAGE INLET MARKERS

NO SCALE

NSP D71 DATED APRIL 3, 2009 SUPPLEMENTS
THE STANDARD PLANS BOOK DATED MAY 2006.

NEW STANDARD PLAN NSP D71

2006 NEW STANDARD PLAN NSP D71

7-24-09

DIST	COUNTY	ROUTE	POST MILES TOTAL PROJECT	SHEET NO.	TOTAL SHEETS
03	EL	49	9.6/10.1	51	61

LICENSED LANDSCAPE ARCHITECT

April 3, 2009
PLANS APPROVAL DATE

LICENSED LANDSCAPE ARCHITECT
Gregory A. Balzer
02-28-11
Renewal Date
03-04-09
Date
STATE OF CALIFORNIA

The State of California or its officers or agents shall not be responsible for the accuracy or completeness of electronic copies of this plan sheet.

To accompany plans dated 2-29-12

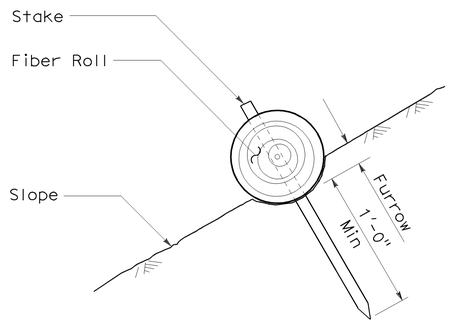

SECTION

FIBER ROLL (TYPE 1)

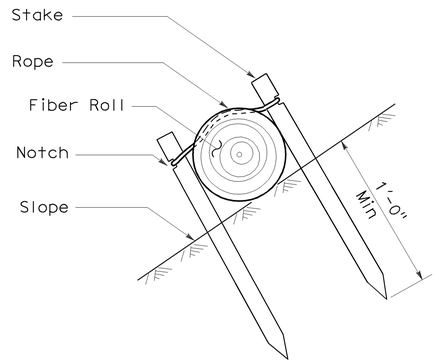

SECTION

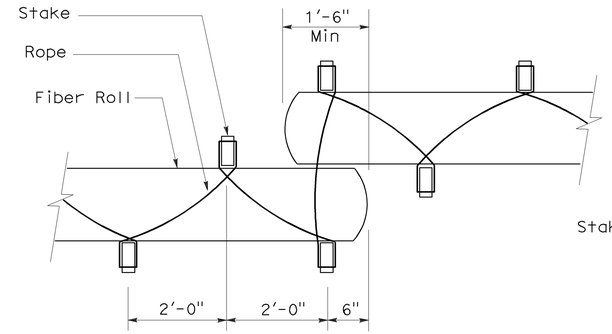

PLAN

FIBER ROLL (TYPE 2)

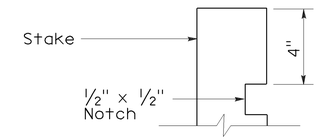

ELEVATION

STAKE NOTCH DETAIL

NOTES:

1. Fiber roll spacing varies depending upon slope inclination.
2. Installations shown in the perspectives are for slope inclination of 10:1 and steeper.

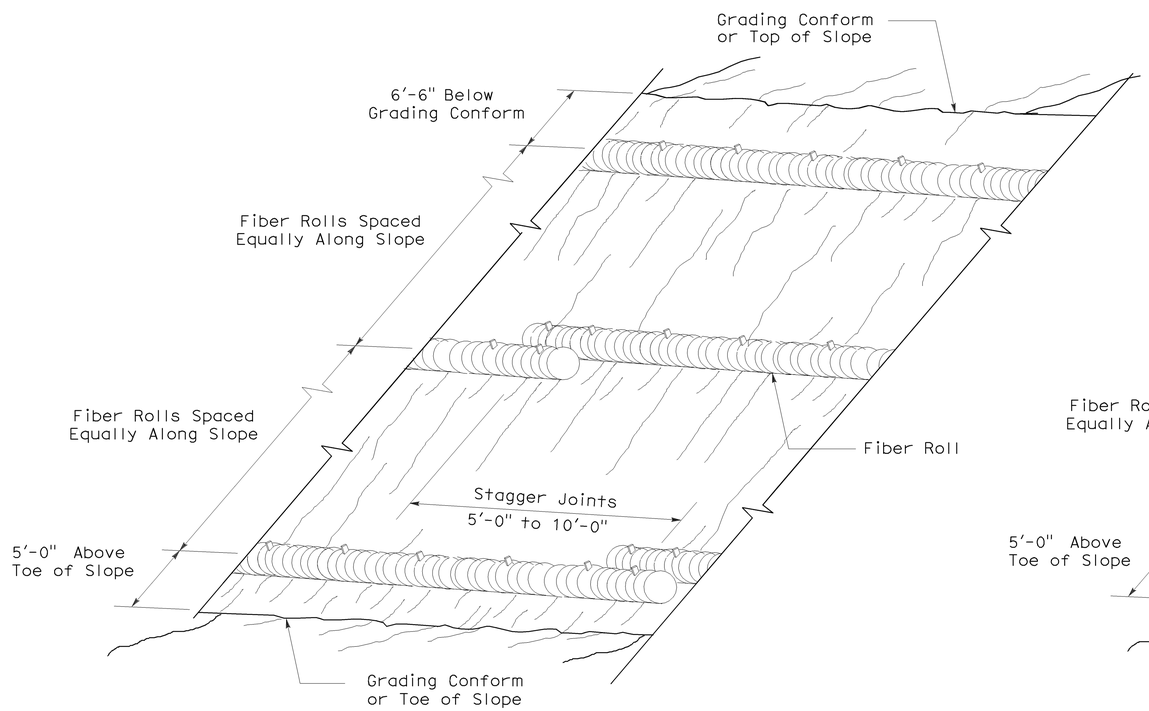

PERSPECTIVE

FIBER ROLL (TYPE 1)

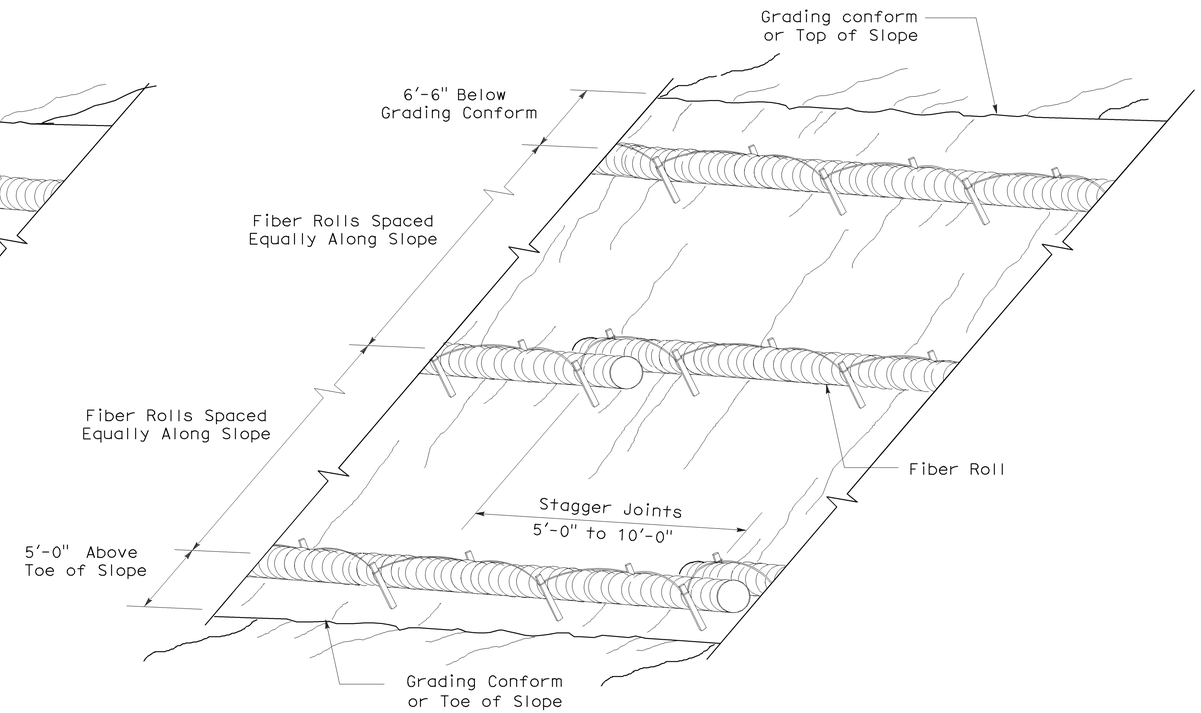

PERSPECTIVE

FIBER ROLL (TYPE 2)

STATE OF CALIFORNIA
DEPARTMENT OF TRANSPORTATION

EROSION CONTROL DETAILS (FIBER ROLL)

NO SCALE

RNSP H51 DATED APRIL 3, 2009 SUPERSEDES NSP H51 DATED DECEMBER 1, 2006 THAT SUPPLEMENTS THE STANDARD PLANS BOOK DATED MAY 2006.

REVISED NEW STANDARD PLAN RNSP H51

2006 REVISED NEW STANDARD PLAN RNSP H51

3-4-09

DIST	COUNTY	ROUTE	POST MILES TOTAL PROJECT	SHEET NO.	TOTAL SHEETS
03	EL	49	9.6/10.1	52	61

LICENSED LANDSCAPE ARCHITECT

June 5, 2009
PLANS APPROVAL DATE

LICENSED LANDSCAPE ARCHITECT — Gregory A. Balzer — STATE OF CALIFORNIA — 2-28-11 (Renewal Date) — 5-14-09 (Date)

The State of California or its officers or agents shall not be responsible for the accuracy or completeness of electronic copies of this plan sheet.

To accompany plans dated 2-29-12

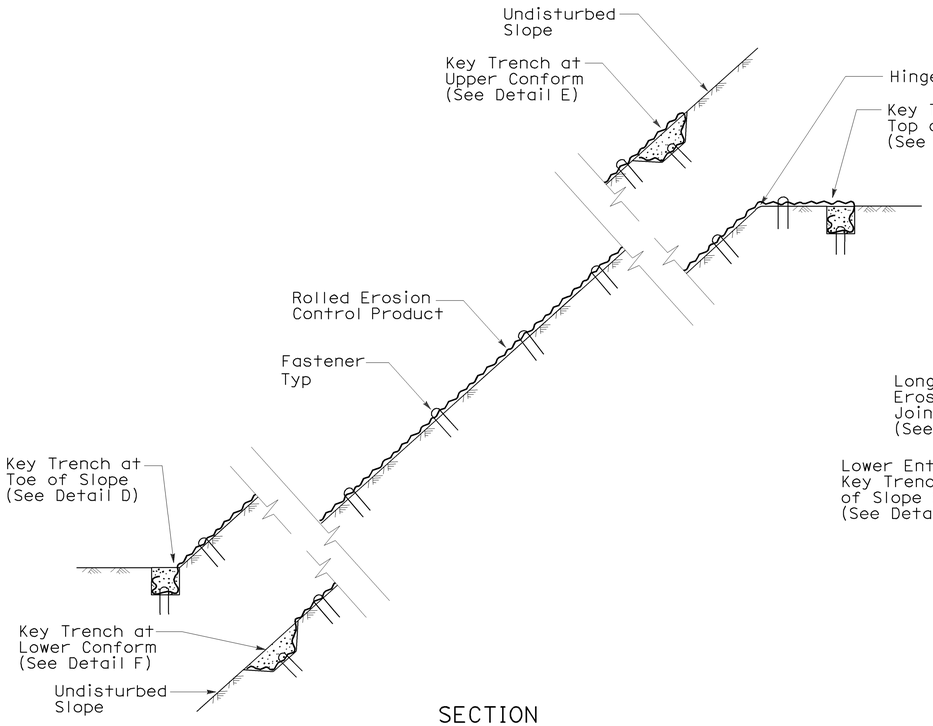

SECTION

ROLLED EROSION CONTROL PRODUCT ON SLOPE WITH VARIOUS KEY ENTRENCHMENTS

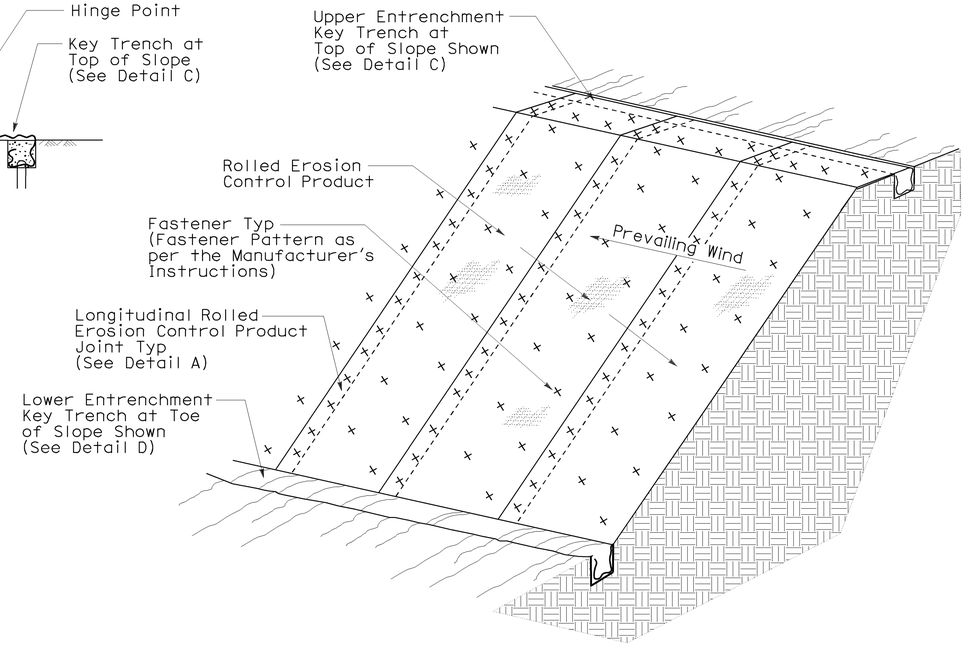

ISOMETRIC

ROLLED EROSION CONTROL PRODUCT ON SLOPE

NOTE:

1. Fiber Roll/Compost Sock shown for reference purposes only.
2. If transverse rolled erosion control product joints are required on slopes, see Detail B.

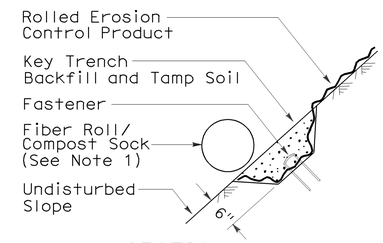

SECTION

DETAIL F
KEY TRENCH AT LOWER CONFORM

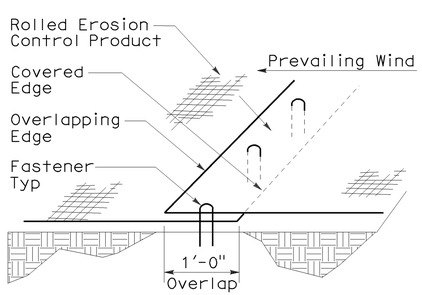

PERSPECTIVE

DETAIL A
LONGITUDINAL ROLLED EROSION CONTROL PRODUCT JOINT

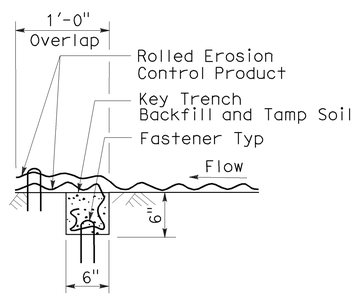

SECTION

DETAIL B
TRANSVERSE ROLLED EROSION CONTROL PRODUCT JOINT

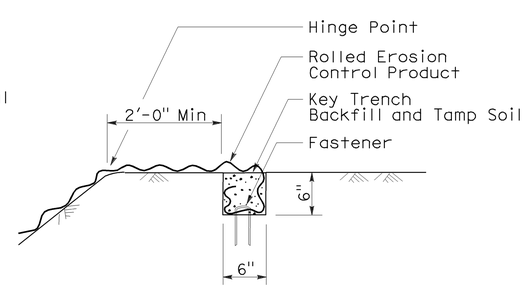

SECTION

DETAIL C
KEY TRENCH AT TOP OF SLOPE

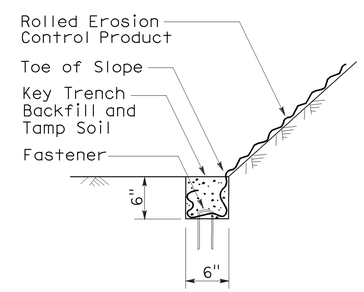

SECTION

DETAIL D
KEY TRENCH AT TOE OF SLOPE

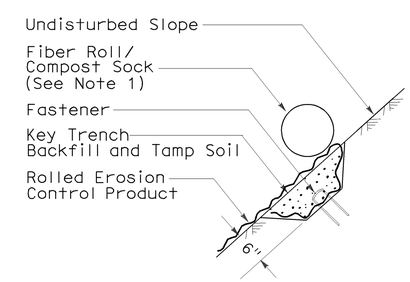

SECTION

DETAIL E
KEY TRENCH AT UPPER CONFORM

STATE OF CALIFORNIA
DEPARTMENT OF TRANSPORTATION

ROLLED EROSION CONTROL PRODUCT

NO SCALE

NSP H53 DATED JUNE 5, 2009 SUPPLEMENTS
THE STANDARD PLANS BOOK DATED MAY 2006.

NEW STANDARD PLAN NSP H53

2006 NEW STANDARD PLAN NSP H53

3-4-09

DIST	COUNTY	ROUTE	POST MILES TOTAL PROJECT	SHEET NO.	TOTAL SHEETS
03	EL	49	9.6/10.1	53	61

Randell D. Hiatt
REGISTERED CIVIL ENGINEER

June 6, 2008
PLANS APPROVAL DATE

REGISTERED PROFESSIONAL ENGINEER
Randell D. Hiatt
No. C50200
Exp. 6-30-09
CIVIL
STATE OF CALIFORNIA

The State of California or its officers or agents shall not be responsible for the accuracy or completeness of electronic copies of this plan sheet.

To accompany plans dated 2-29-12

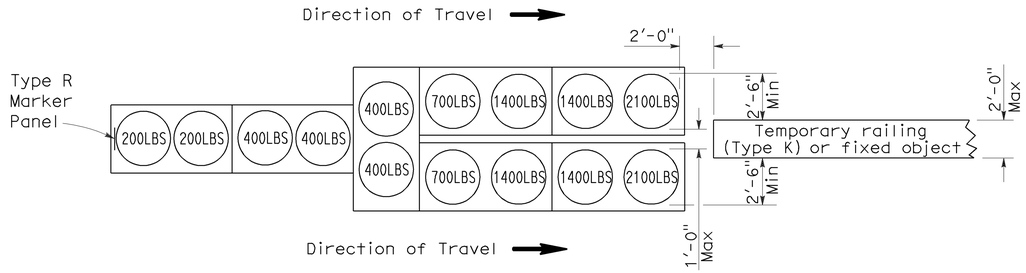

ARRAY 'TU14'

Approach speed 45 mph or more

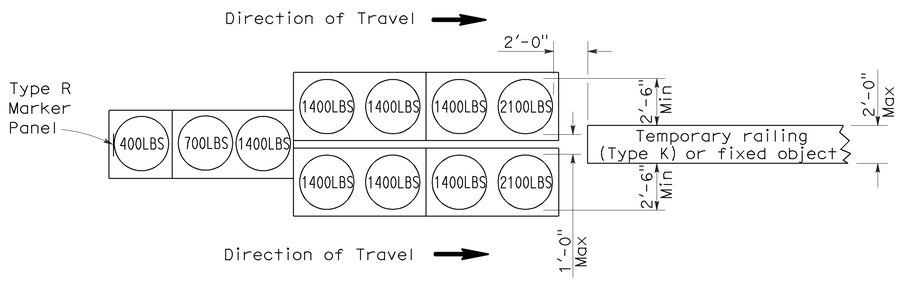

ARRAY 'TU11'

Approach speed less than 45 mph

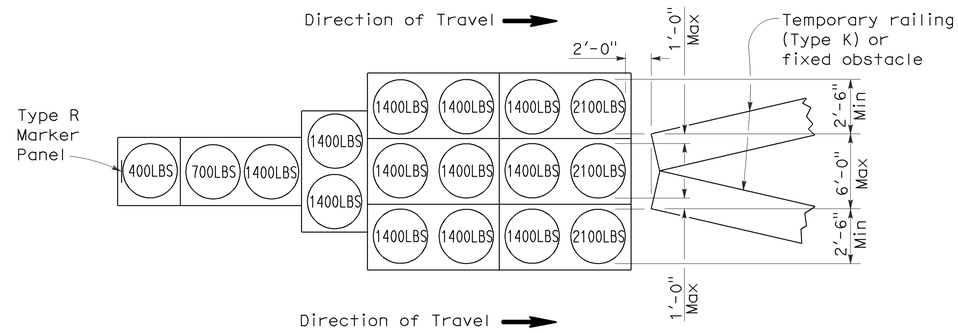

ARRAY 'TU17'

Approach speed less than 45 mph

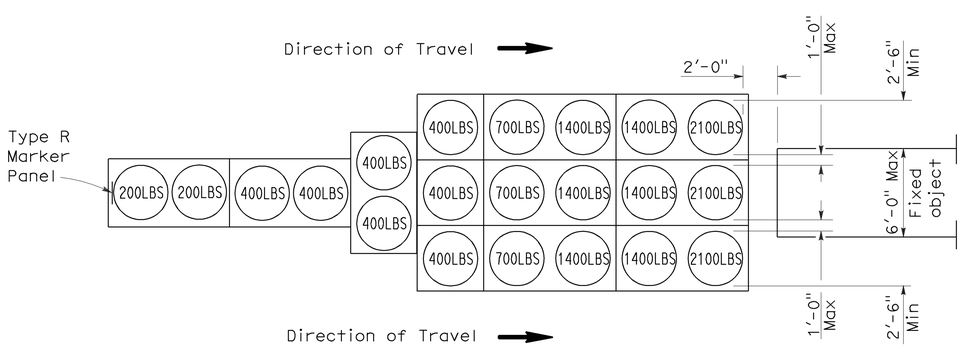

ARRAY 'TU21'

Approach speed 45 mph or more

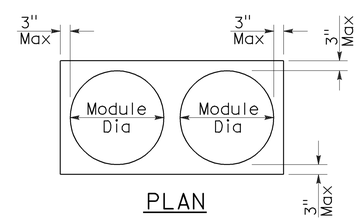

PLAN

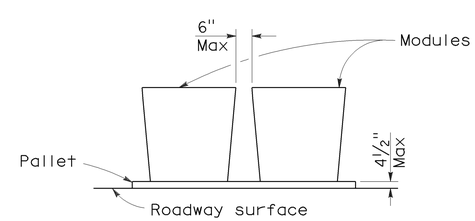

ELEVATION

CRASH CUSHION PALLET DETAIL

See Note 7

NOTES:

1. (XXX) Indicates sand filled module location and weight of sand in pounds for each module. Module spacing is based on the greater diameter of the module.
2. All sand weights are nominal.
3. Temporary crash cushion arrays shall not encroach on the traveled way.
4. Place the top of Type R marker panel 1" below the module lid.
5. Refer to Standard Plan A73B for marker details.
6. Approach speeds indicated conform to NCHRP 350 Report criteria.
7. Use of pallets is optional.

STATE OF CALIFORNIA
DEPARTMENT OF TRANSPORTATION

TEMPORARY CRASH CUSHION, SAND FILLED (UNIDIRECTIONAL)

NO SCALE

RSP T1A DATED JUNE 6, 2008 SUPERSEDES STANDARD PLAN T1A
DATED MAY 1, 2006 - PAGE 211 OF THE STANDARD PLANS BOOK DATED MAY 2006.

REVISED STANDARD PLAN RSP T1A

2006 REVISED STANDARD PLAN RSP T1A

DIST	COUNTY	ROUTE	POST MILES TOTAL PROJECT	SHEET NO.	TOTAL SHEETS
03	EL	49	9.6/10.1	54	61

Randell D. Hiatt
REGISTERED CIVIL ENGINEER

June 6, 2008
PLANS APPROVAL DATE

REGISTERED PROFESSIONAL ENGINEER
Randell D. Hiatt
No. C50200
Exp. 6-30-09
CIVIL
STATE OF CALIFORNIA

The State of California or its officers or agents shall not be responsible for the accuracy or completeness of electronic copies of this plan sheet.

To accompany plans dated 2-29-12

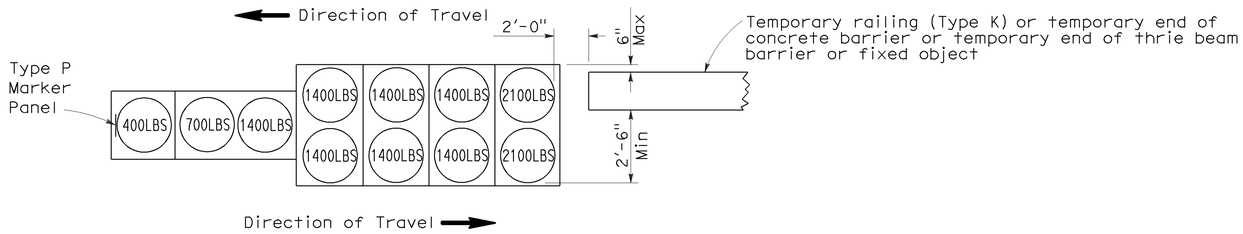

ARRAY 'TB11'

Approach speed less than 45 mph

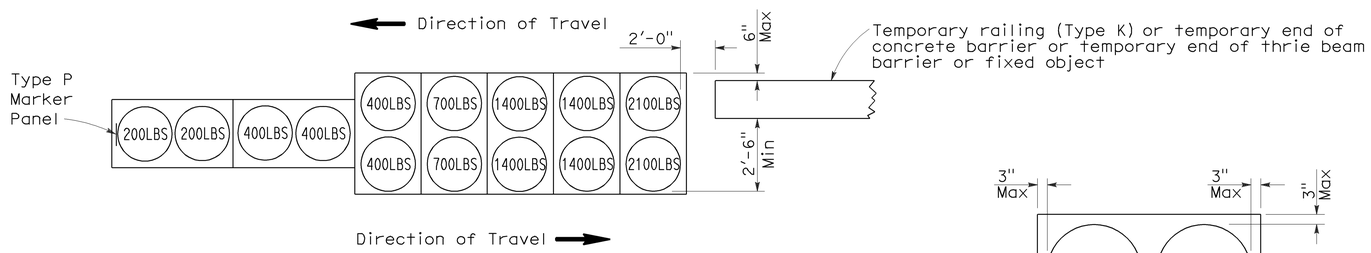

ARRAY 'TB14'

Approach speed 45 mph or more

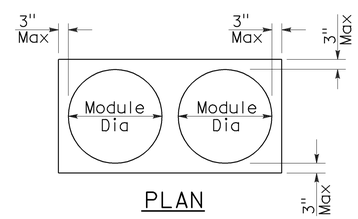

PLAN

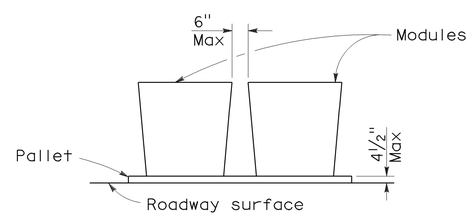

ELEVATION

CRASH CUSHION PALLET DETAIL

See Note 7

NOTES:

1. (XXX) Indicates sand filled module location and weight of sand in pounds for each module. Module spacing is based on the greater diameter of the module.
2. All sand weights are nominal.
3. Temporary crash cushion arrays shall not encroach on the traveled way.
4. Place the Type P marker panel so that the bottom of the panel rests upon the pallet.
5. Refer to Standard Plan A73B for marker details.
6. Approach speeds indicated conform to NCHRP 350 Report criteria.
7. Use of pallets is optional.

STATE OF CALIFORNIA
DEPARTMENT OF TRANSPORTATION

TEMPORARY CRASH CUSHION, SAND FILLED (BIDIRECTIONAL)

NO SCALE

RSP T1B DATED JUNE 6, 2008 SUPERSEDES STANDARD PLAN T1B
DATED MAY 1, 2006 - PAGE 212 OF THE STANDARD PLANS BOOK DATED MAY 2006.

REVISED STANDARD PLAN RSP T1B

2006 REVISED STANDARD PLAN RSP T1B

5-15-08

DIST	COUNTY	ROUTE	POST MILES TOTAL PROJECT	SHEET NO.	TOTAL SHEETS
03	EL	49	9.6/10.1	55	61

Randell D. Hiatt
REGISTERED CIVIL ENGINEER

June 6, 2008
PLANS APPROVAL DATE

REGISTERED PROFESSIONAL ENGINEER
Randell D. Hiatt
No. C50200
Exp. 6-30-09
CIVIL
STATE OF CALIFORNIA

The State of California or its officers or agents shall not be responsible for the accuracy or completeness of electronic copies of this plan sheet.

To accompany plans dated 2-29-12

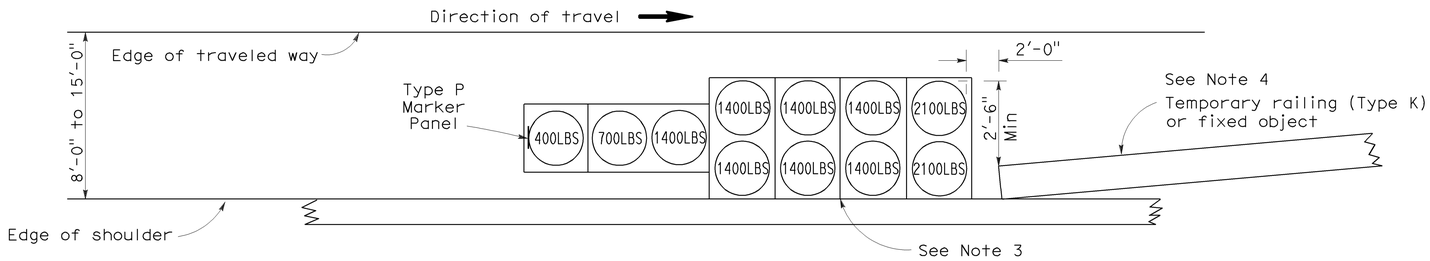

ARRAY 'TS11'

Approach speed less than 45 mph
See Note 9

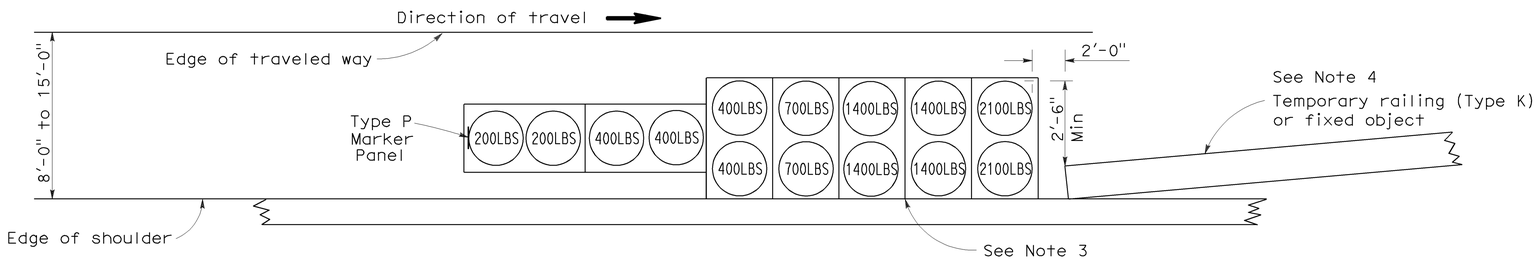

ARRAY 'TS14'

Approach speed 45 mph or more
See Note 9

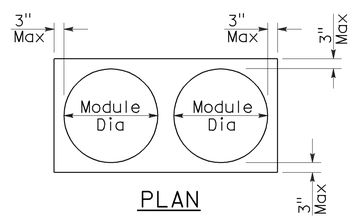

PLAN

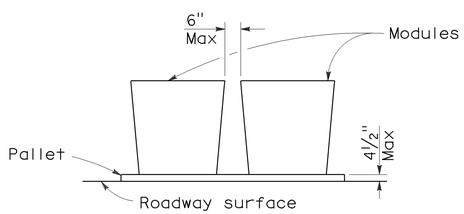

ELEVATION

CRASH CUSHION PALLET DETAIL

See Note 11

NOTES:

1. (XXX) Indicates sand filled module location and weight of sand in pounds for each module. Module spacing is based on the greater diameter of the module.
2. All sand weights are nominal.
3. The temporary crash cushion arrays shown on this plan shall be used only in locations where there will be traffic on one side of the temporary crash cushion array.
4. If the fixed object or approach end of the temporary railing is less than 15'-0" from the edge of traveled way, a temporary crash cushion is required in a construction or work zone.
5. Temporary crash cushion arrays shall not encroach on the traveled way.
6. Arrays for median shoulders shall conform to details shown on this plan for outside shoulders.
7. Place the Type P marker panel so that the bottom of the panel rests upon the pallet and faces traffic.
8. Refer to Standard Plan A73B for marker details.
9. For shoulder widths less than 8'-0", appropriate approved crash cushion protection, other than sand filled modules, shall be provided at fixed objects and at approach ends of temporary railing. The specific type of crash cushion shall be as shown on the project plans or as specified in the Special Provisions, or if not shown on the project plans or specified in the Special Provisions, shall be as approved by the Engineer.
10. Approach speeds indicated conform to NCHRP 350 Report criteria.
11. Use of pallets is optional.

STATE OF CALIFORNIA
DEPARTMENT OF TRANSPORTATION

TEMPORARY CRASH CUSHION, SAND FILLED (SHOULDER INSTALLATIONS)

NO SCALE

RSP T2 DATED JUNE 6, 2008 SUPERSEDES STANDARD PLAN T2
DATED MAY 1, 2006 - PAGE 213 OF THE STANDARD PLANS BOOK DATED MAY 2006.

REVISED STANDARD PLAN RSP T2

2006 REVISED STANDARD PLAN RSP T2

5-15-08

Dist	COUNTY	ROUTE	POST MILES TOTAL PROJECT	SHEET No.	TOTAL SHEETS
03	EL	49	9.6/10.1	56	61

Randell D. Hiatt
REGISTERED CIVIL ENGINEER

May 20, 2011
PLANS APPROVAL DATE

REGISTERED PROFESSIONAL ENGINEER
Randell D. Hiatt
No. C50200
Exp. 6-30-11
CIVIL
STATE OF CALIFORNIA

The State of California or its officers or agents shall not be responsible for the accuracy or completeness of electronic copies of this plan sheet.

To accompany plans dated 2-29-12

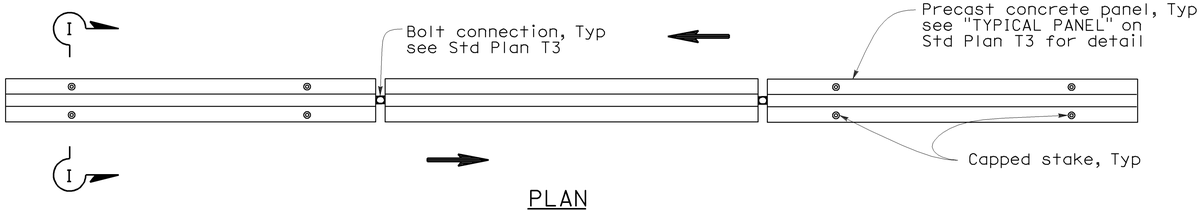

PLAN

RAILING STAKING CONFIGURATION FOR TWO-WAY TRAFFIC

See Note 1

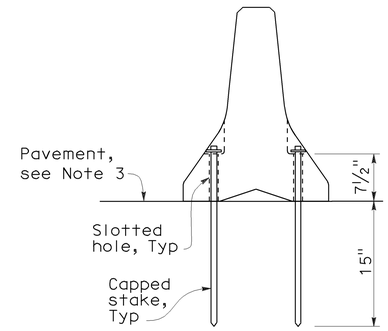

SECTION I-I

NOTES:

1. Where Type K Temporary Railing is placed as a temporary or long term barrier in two-way traffic on highways with less than 24" from the edge of traveled way, use four capped stakes per every other panel with end panels staked.
2. Where Type K Temporary Railing is placed 3" to 24" from the edge of an excavation on highways, use two capped stakes per panel along the traffic side.
3. Staked Type K Temporary Railing must be supported by at least 4" thick concrete, hot mix asphalt or existing asphalt concrete pavement.
4. The minimum yield strength for the washer must be 60,000 psi.
5. Direction of adjacent traffic indicated by ⟹.

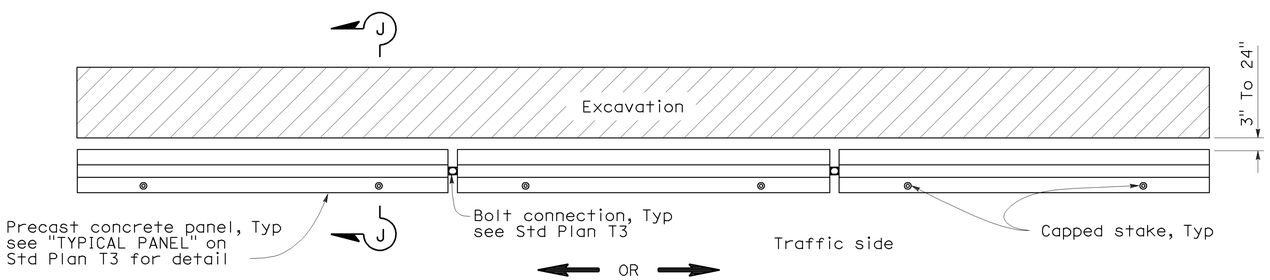

PLAN

RAILING STAKING CONFIGURATION ADJACENT TO AN EXCAVATION

See Note 2

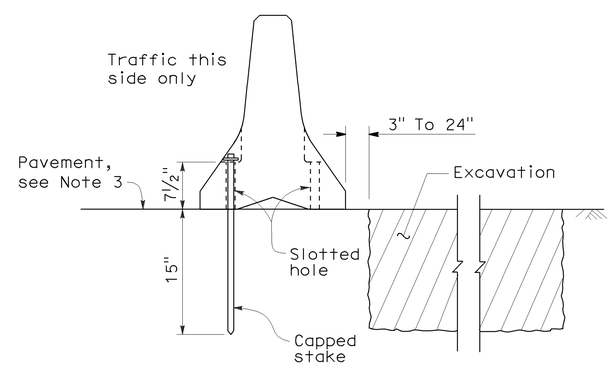

SECTION J-J

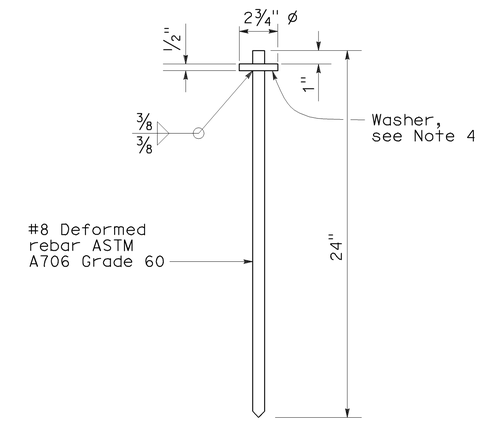

CAPPED STAKE DETAIL

STATE OF CALIFORNIA
DEPARTMENT OF TRANSPORTATION

TEMPORARY RAILING (TYPE K)

NO SCALE

NSP T3A DATED MAY 20, 2011 SUPPLEMENTS
THE STANDARD PLANS BOOK DATED MAY 2006.

NEW STANDARD PLAN NSP T3A

2006 NEW STANDARD PLAN NSP T3A

DIST	COUNTY	ROUTE	POST MILES TOTAL PROJECT	SHEET NO.	TOTAL SHEETS
03	EL	49	9.6/10.1	57	61

LICENSED LANDSCAPE ARCHITECT

April 3, 2009
PLANS APPROVAL DATE

The State of California or its officers or agents shall not be responsible for the accuracy or completeness of electronic copies of this plan sheet.

LICENSED LANDSCAPE ARCHITECT — Robert B. Schott 3635 — 11-30-10 Renewal Date — 2-25-09 Date — STATE OF CALIFORNIA

To accompany plans dated 2-29-12

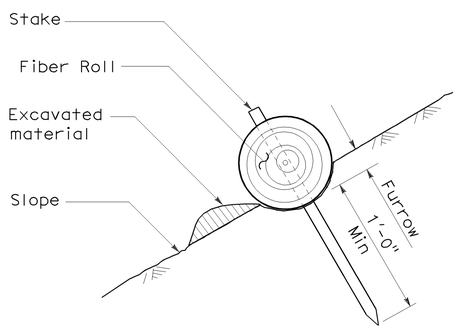

SECTION

TEMPORARY FIBER ROLL (TYPE 1)

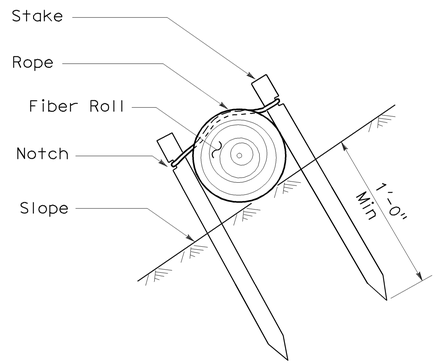

SECTION

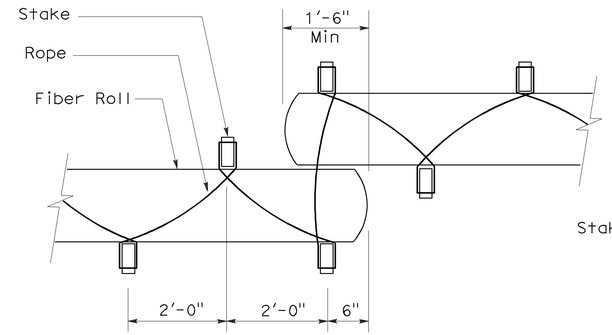

PLAN

TEMPORARY FIBER ROLL (TYPE 2)

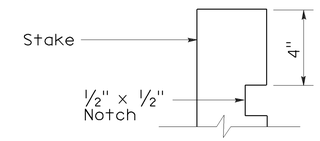

ELEVATION

STAKE NOTCH DETAIL

NOTES:

1. Temporary fiber roll spacing varies depending upon slope inclination.
2. Installations shown in the perspectives are for slope inclination of 10:1 and steeper.

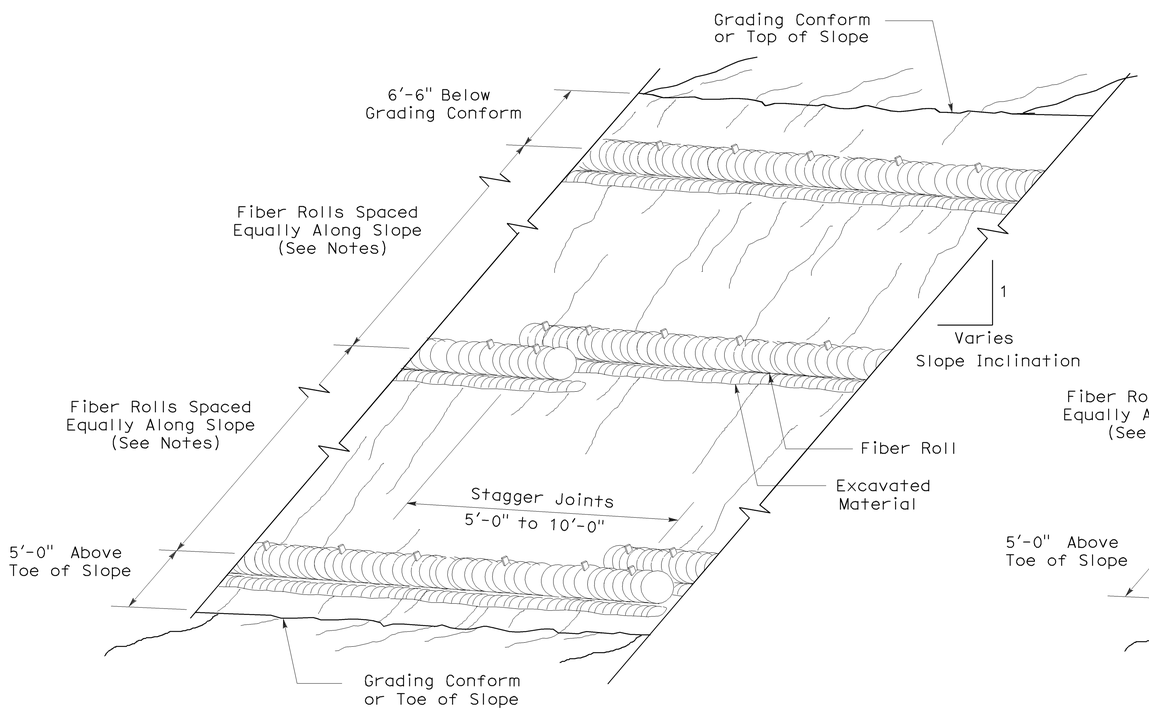

PERSPECTIVE

TEMPORARY FIBER ROLL (TYPE 1)

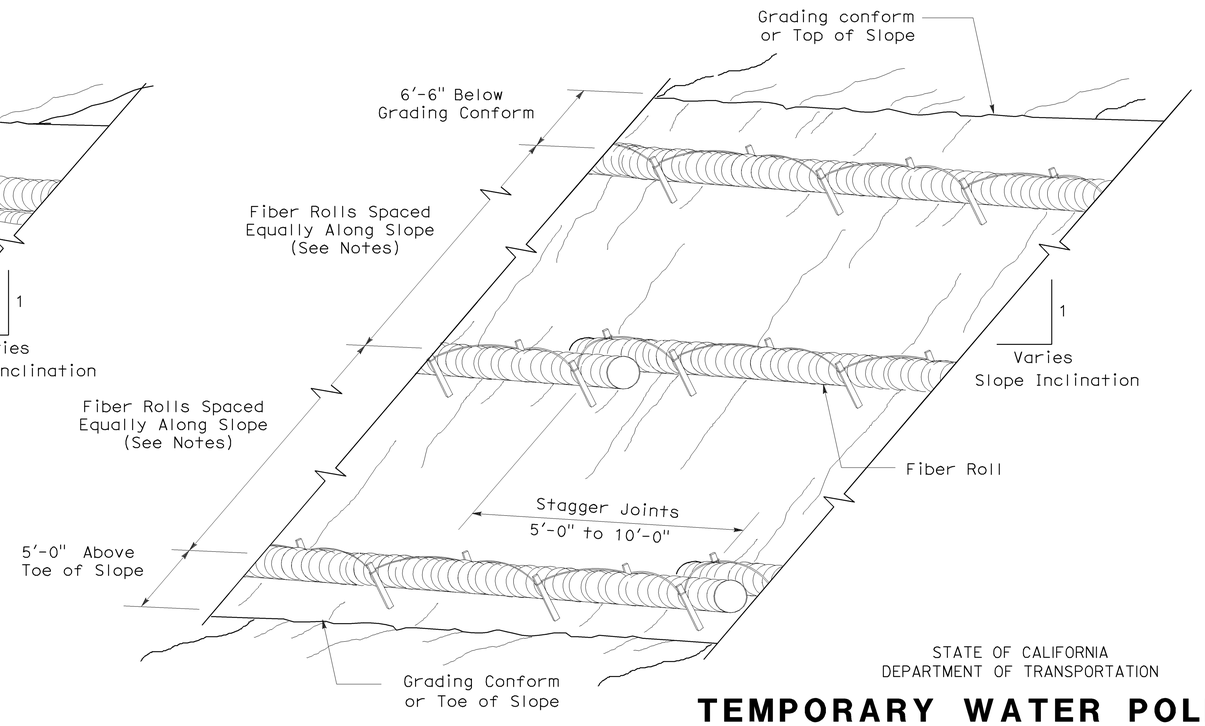

PERSPECTIVE

TEMPORARY FIBER ROLL (TYPE 2)

STATE OF CALIFORNIA
DEPARTMENT OF TRANSPORTATION

TEMPORARY WATER POLLUTION CONTROL DETAILS (TEMPORARY FIBER ROLL)

NO SCALE

RSP T56 DATED APRIL 3, 2009 SUPERSEDES STANDARD PLAN T56
DATED MAY 1, 2006 - PAGE 232 OF THE STANDARD PLANS BOOK DATED MAY 2006.

REVISED STANDARD PLAN RSP T56

2006 REVISED STANDARD PLAN RSP T56

2-23-09

DIST	COUNTY	ROUTE	POST MILES TOTAL PROJECT	SHEET NO.	TOTAL SHEETS
03	EL	49	9.6/10.1	58	61

LICENSED LANDSCAPE ARCHITECT

August 15, 2008
PLANS Approval DATE

The State of California or its officers or agents shall not be responsible for the accuracy or completeness of electronic copies of this plan sheet.

LICENSED LANDSCAPE ARCHITECT Robert B. Schott 3635 Signature 11-04-08 Renewal Date 08-11-08 Date STATE OF CALIFORNIA

To accompany plans dated 2-29-12

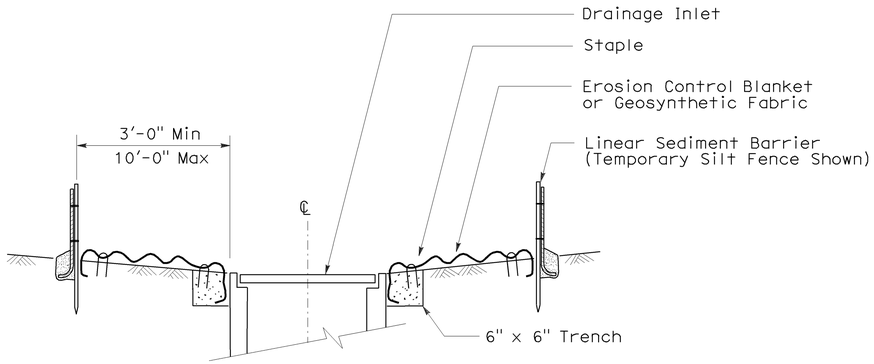

SECTION A-A

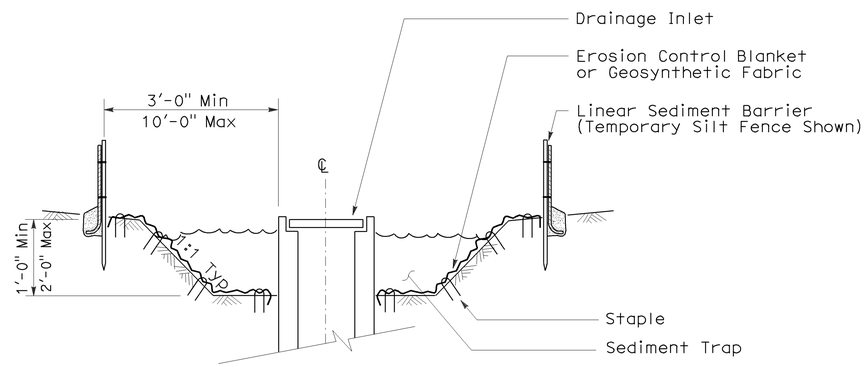

SECTION B-B

NOTES:

1. See Standard Plan T51 for Temporary Silt Fence.
2. Dimensions may vary to fit field conditions.

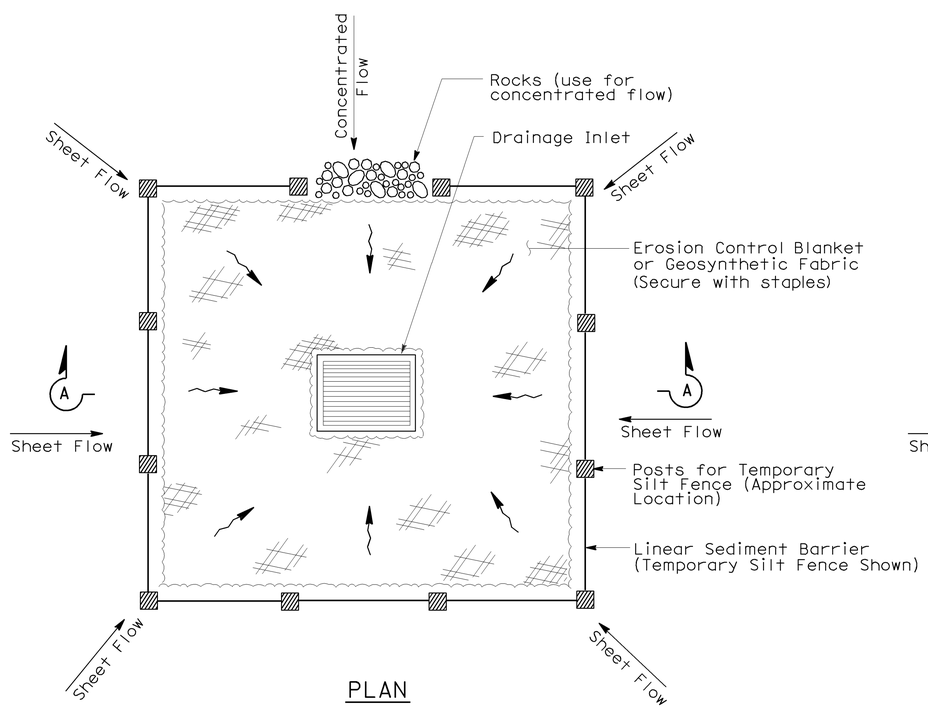

PLAN

TEMPORARY DRAINAGE INLET PROTECTION (TYPE 1)

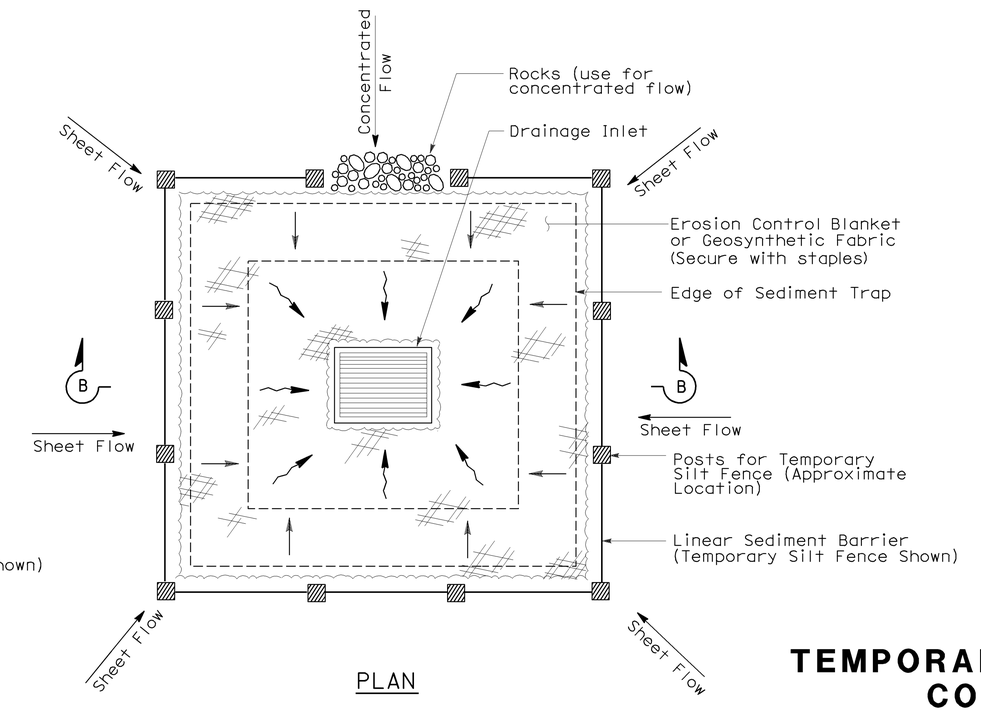

PLAN

TEMPORARY DRAINAGE INLET PROTECTION (TYPE 2) (EXCAVATED SEDIMENT TRAP)

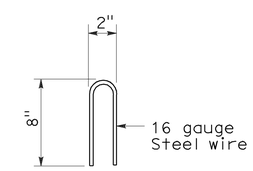

STAPLE DETAIL

STATE OF CALIFORNIA
DEPARTMENT OF TRANSPORTATION

TEMPORARY WATER POLLUTION CONTROL DETAILS (TEMPORARY DRAINAGE INLET PROTECTION)

NO SCALE

Nsp t61 dated august 15, 2008 supplements the standard plans book dated may 2006.

NEW STANDARD PLAN NSP T61

2006 NEW STANDARD PLAN NSP T61

7-11-08

DIST	COUNTY	ROUTE	POST MILES TOTAL PROJECT	SHEET NO.	TOTAL SHEETS
03	EL	49	9.6/10.1	59	61

LICENSED LANDSCAPE ARCHITECT

August 15, 2008
PLANS APPROVAL DATE

The State of California or its officers or agents shall not be responsible for the accuracy or completeness of electronic copies of this plan sheet.

LICENSED LANDSCAPE ARCHITECT — Robert B. Schott 3635 — Signature — 11-04-08 Renewal Date — 08-11-08 Date — STATE OF CALIFORNIA

To accompany plans dated 2-29-12

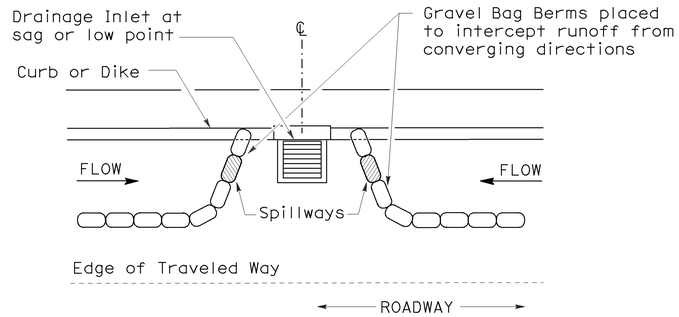

PLAN

CONFIGURATION FOR SAG POINT INLET (GRAVEL BAG BERM)

GRAVEL BAG BERM (TYPE 3A) SPACING TABLE

SLOPE OF ROADWAY (PERCENT)	1 to 3.9	4 to 5.9	6 to 7.9	8 to 10	10+
INTERVAL BETWEEN BERM	100′	75′	50′	25′	12′

For slope of less than 1%, install barriers only if erosion/sediment is prevalent

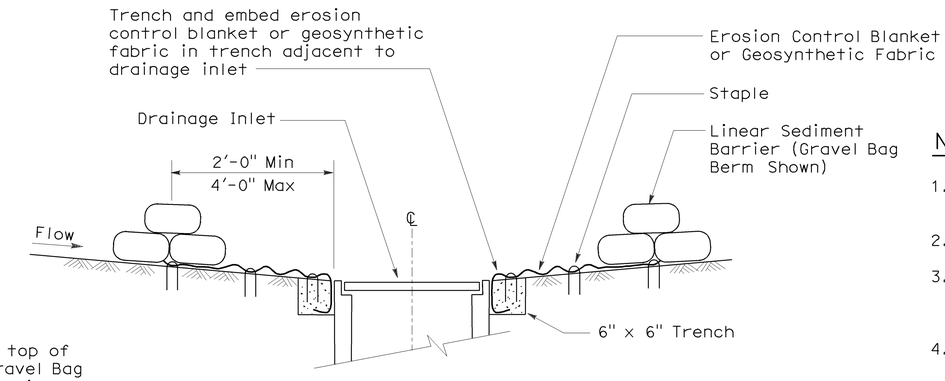

SECTION A-A

NOTES:

1. Place safety cones adjacent to drainage inlet protection.
2. Dimensions may vary to fit field conditions.
3. Install a minimum of 3 gravel bag berms upstream of each drainage inlet to be protected.
4. Position erosion control blanket or geosynthetic fabric at edge of concrete apron and secure in trench.
5. Erosion control blanket or geosynthetic fabric is not required if the area adjacent to the drainage inlet is vegetated or paved.

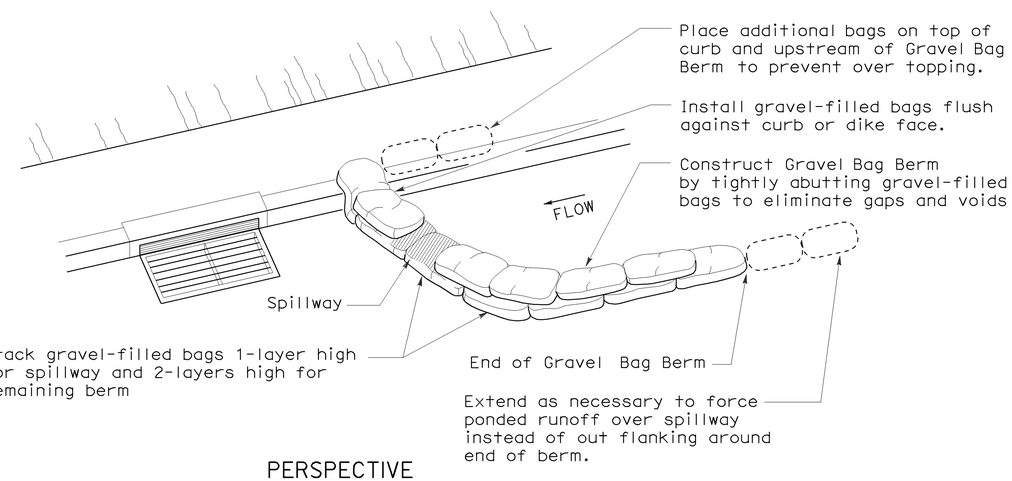

PERSPECTIVE

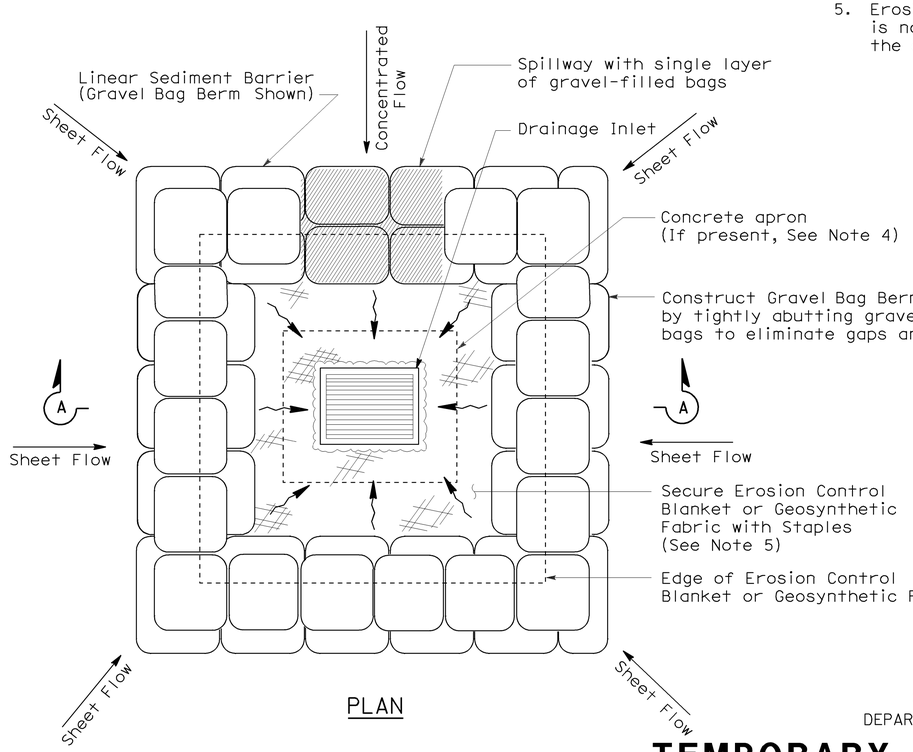

PLAN

TEMPORARY DRAINAGE INLET PROTECTION (TYPE 3B)

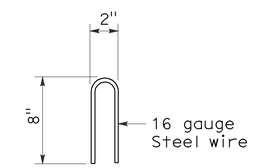

STAPLE DETAIL

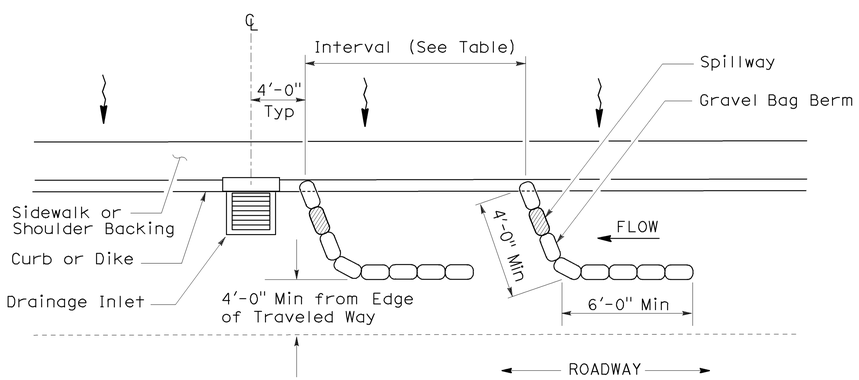

PLAN

TEMPORARY DRAINAGE INLET PROTECTION (TYPE 3A) (GRAVEL BAG BERM)

STATE OF CALIFORNIA
DEPARTMENT OF TRANSPORTATION

TEMPORARY WATER POLLUTION CONTROL DETAILS (TEMPORARY DRAINAGE INLET PROTECTION)

NO SCALE

NSP T62 DATED AUGUST 15, 2008 SUPPLEMENTS THE STANDARD PLANS BOOK DATED MAY 2006.

NEW STANDARD PLAN NSP T62

2006 NEW STANDARD PLAN NSP T62

7-11-08

DIST	COUNTY	ROUTE	POST MILES TOTAL PROJECT	SHEET NO.	TOTAL SHEETS
03	EL	49	9.6/10.1	60	61

Robert B. Schott
LICENSED LANDSCAPE ARCHITECT

August 15, 2008
PLANS APPROVAL DATE

LICENSED LANDSCAPE ARCHITECT Robert B. Schott 3635 Signature 11-04-08 Renewal Date 08-11-08 Date STATE OF CALIFORNIA

The State of California or its officers or agents shall not be responsible for the accuracy or completeness of electronic copies of this plan sheet.

To accompany plans dated 2-29-12

FLEXIBLE SEDIMENT BARRIER SPACING TABLE

SLOPE OF ROADWAY (PERCENT)	0 to 0.9	1 to 1.9	2 to 2.9	3 to 4	5+
INTERVAL BETWEEN BARRIERS	50′	35′	30′	25′	20′
ANGLE FROM FACE OF CURB	70°	70°	70°	45°	45°
SUGGESTED BARRIER LENGTH	6′	6′	6′	6′	6′

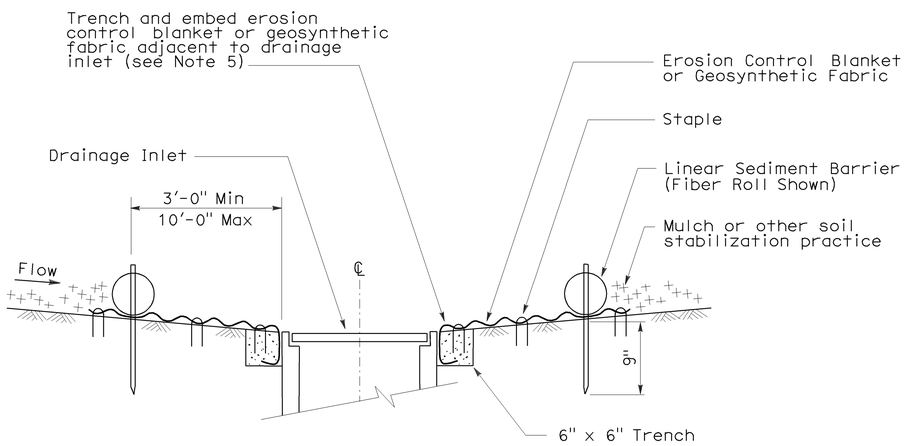

SECTION A-A

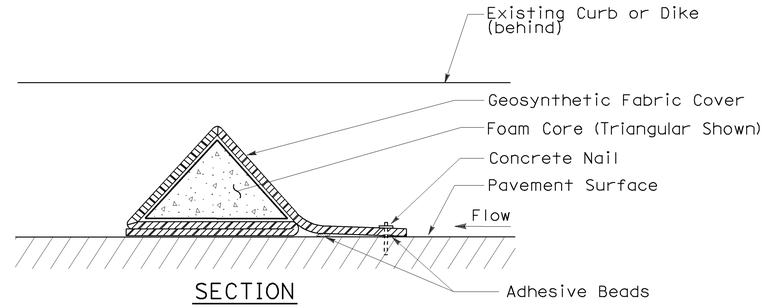

SECTION

FLEXIBLE SEDIMENT BARRIER DETAIL (FOAM BARRIER SHOWN)

NOTES:

1. See Standard Plan T51 for Temporary Silt Fence.
2. Dimensions may vary to fit field conditions.
3. Install a minimum of 3 flexible sediment barriers upstream of each drainage inlet to be protected.
4. Position erosion control blanket or geosynthetic fabric at edge of concrete apron and secure in trench.
5. Erosion control blanket or geosynthetic fabric is not required if the area adjacent to the drainage inlet is vegetated.

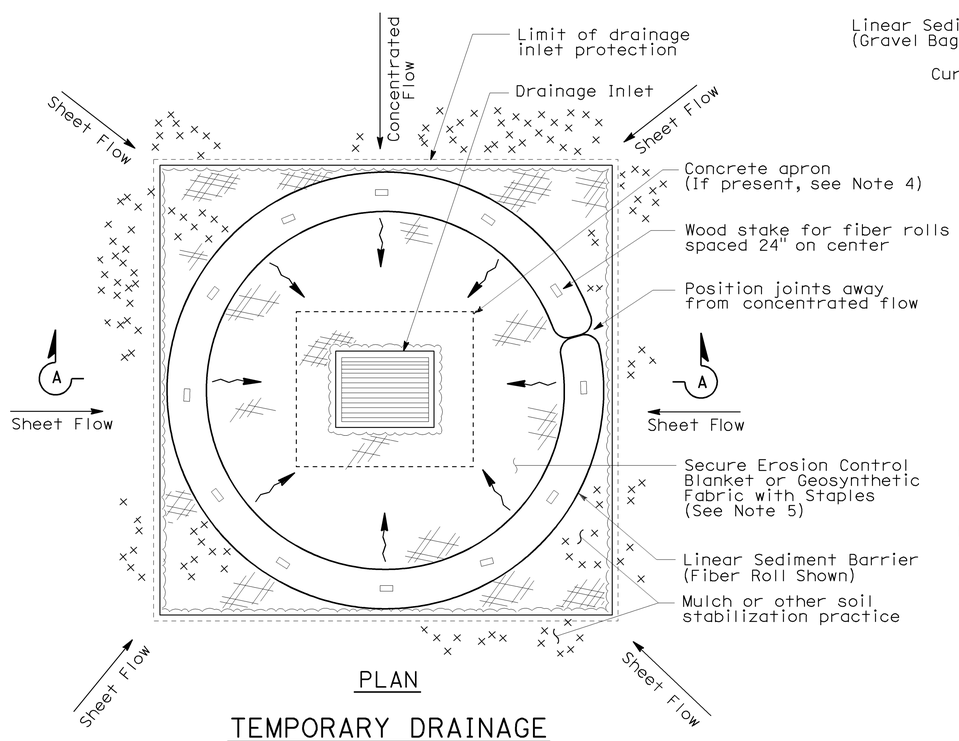

PLAN

TEMPORARY DRAINAGE INLET PROTECTION (TYPE 4A)

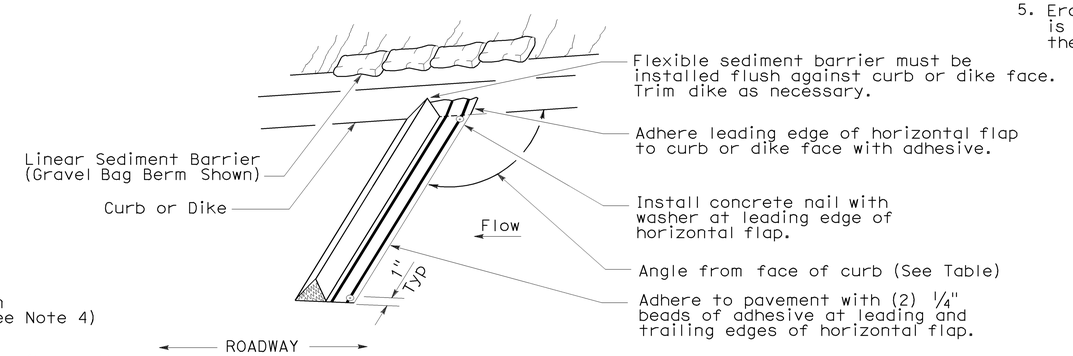

PERSPECTIVE

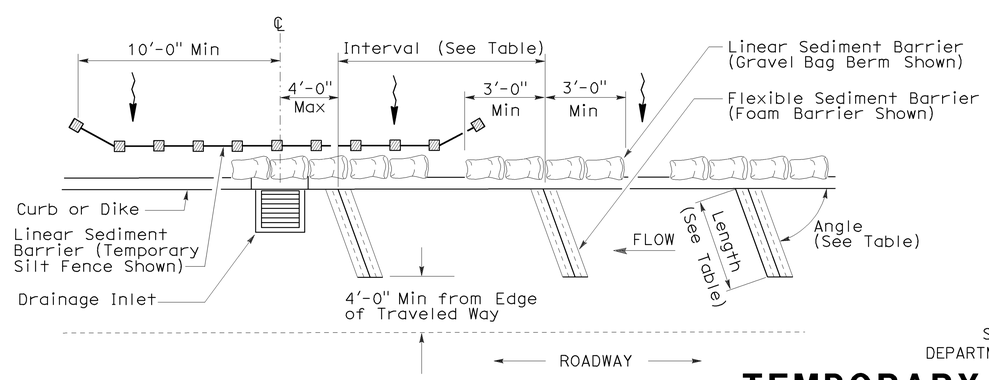

PLAN

TEMPORARY DRAINAGE INLET PROTECTION (TYPE 4B) FLEXIBLE SEDIMENT BARRIER

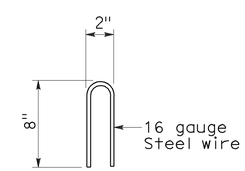

STAPLE DETAIL

STATE OF CALIFORNIA
DEPARTMENT OF TRANSPORTATION

TEMPORARY WATER POLLUTION CONTROL DETAILS (TEMPORARY DRAINAGE INLET PROTECTION)

NO SCALE

NSP T63 DATED AUGUST 15, 2008 SUPPLEMENTS THE STANDARD PLANS BOOK DATED MAY 2006.

NEW STANDARD PLAN NSP T63

2006 NEW STANDARD PLAN NSP T63

7-11-08

DIST	COUNTY	ROUTE	POST MILES TOTAL PROJECT	SHEET NO.	TOTAL SHEETS
03	EL	49	9.6/10.1	61	61

LICENSED LANDSCAPE ARCHITECT

August 15, 2008
PLANS APPROVAL DATE

LICENSED LANDSCAPE ARCHITECT
Robert B. Schott 3635
Signature
11-04-08
Renewal Date
08-11-08
Date
STATE OF CALIFORNIA

The State of California or its officers or agents shall not be responsible for the accuracy or completeness of electronic copies of this plan sheet.

To accompany plans dated 2-29-12

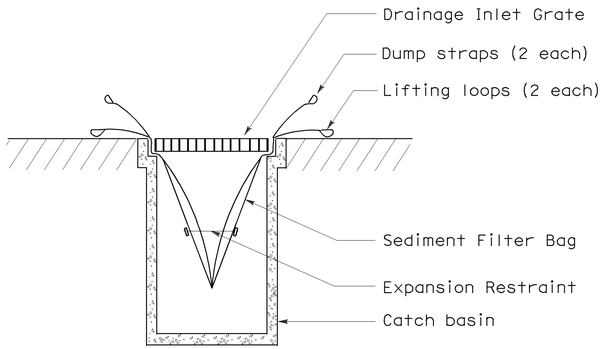

SECTION B-B

SEDIMENT FILTER BAG DETAIL

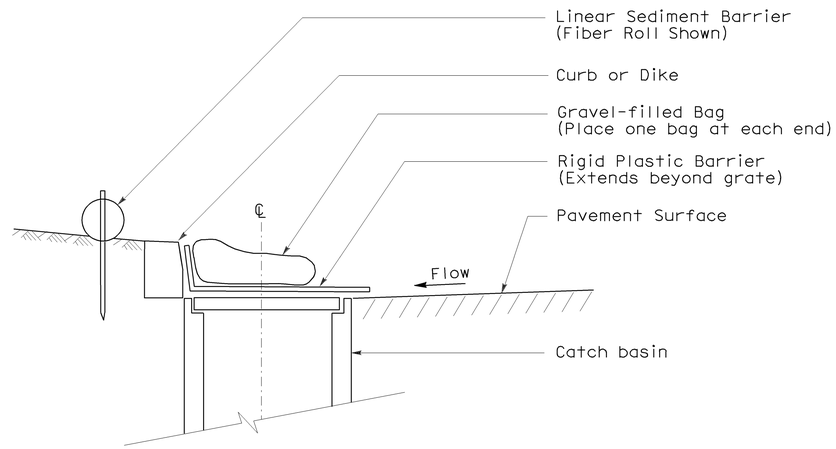

SECTION

TEMPORARY DRAINAGE INLET PROTECTION (TYPE 6A) (CATCH BASIN WITH GRATE)

NOTES:

1. See Standard Plan T51 for Temporary Silt Fence.
2. Dimensions may vary to fit field conditions.

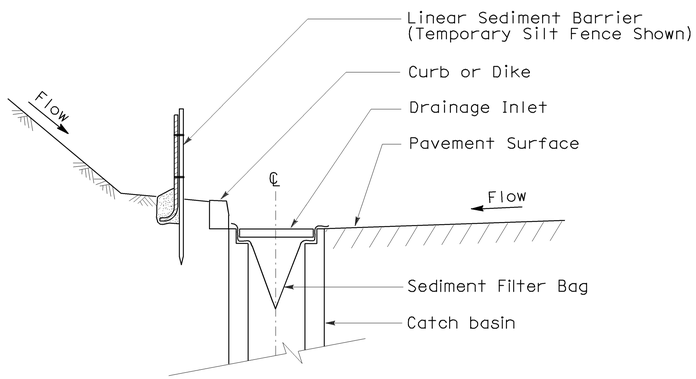

SECTION A-A

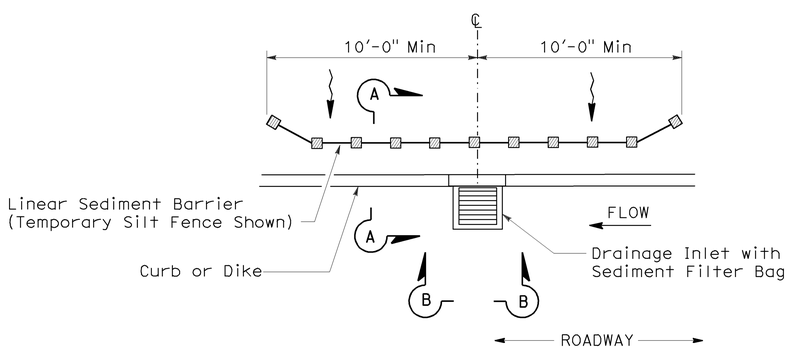

PLAN

TEMPORARY DRAINAGE INLET PROTECTION (TYPE 5) (SEDIMENT FILTER BAG)

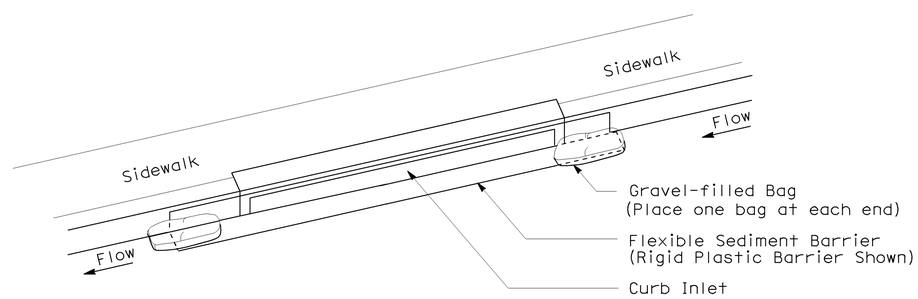

PERSPECTIVE

TEMPORARY DRAINAGE INLET PROTECTION (TYPE 6B) (CURB INLET WITHOUT GRATE)

STATE OF CALIFORNIA
DEPARTMENT OF TRANSPORTATION

TEMPORARY WATER POLLUTION CONTROL DETAILS (TEMPORARY DRAINAGE INLET PROTECTION)

NO SCALE

NSP T64 DATED AUGUST 15, 2008 SUPPLEMENTS
THE STANDARD PLANS BOOK DATED MAY 2006.

NEW STANDARD PLAN NSP T64

2006 NEW STANDARD PLAN NSP T64

7-11-08