Dist	COUNTY	ROUTE	POST MILES TOTAL PROJECT	SHEET No.	TOTAL SHEETS
03	Pla	80	0.3/29.3	1	56

ACBHI-0803(238)E

STATE OF CALIFORNIA
DEPARTMENT OF TRANSPORTATION

PROJECT PLANS FOR CONSTRUCTION ON
STATE HIGHWAY
IN PLACER COUNTY
AT VARIOUS LOCATIONS
FROM SOUTH ROSEVILLE OVERCROSSING
TO WEIMAR CROSS ROAD OVERCROSSING

TO BE SUPPLEMENTED BY STANDARD PLANS DATED MAY 2006

2

INDEX OF PLANS

SHEET No.	DESCRIPTION
1	TITLE AND LOCATION MAP
2-4	TYPICAL CROSS SECTIONS
5-11	CONSTRUCTION DETAILS
12-13	CONSTRUCTION AREA SIGNS
14-18	STAGE CONSTRUCTION
19-25	TRAFFIC HANDLING PLANS AND QUANTITIES
26	PAVEMENT DELINEATION QUANTITIES
27-28	SUMMARY OF QUANTITIES
29-44	REVISED AND NEW STANDARD PLANS

STRUCTURE PLANS

45-56	I-80 REHAB

THE STANDARD PLANS LIST APPLICABLE TO THIS CONTRACT IS INCLUDED IN THE NOTICE TO BIDDERS AND SPECIAL PROVISIONS BOOK.

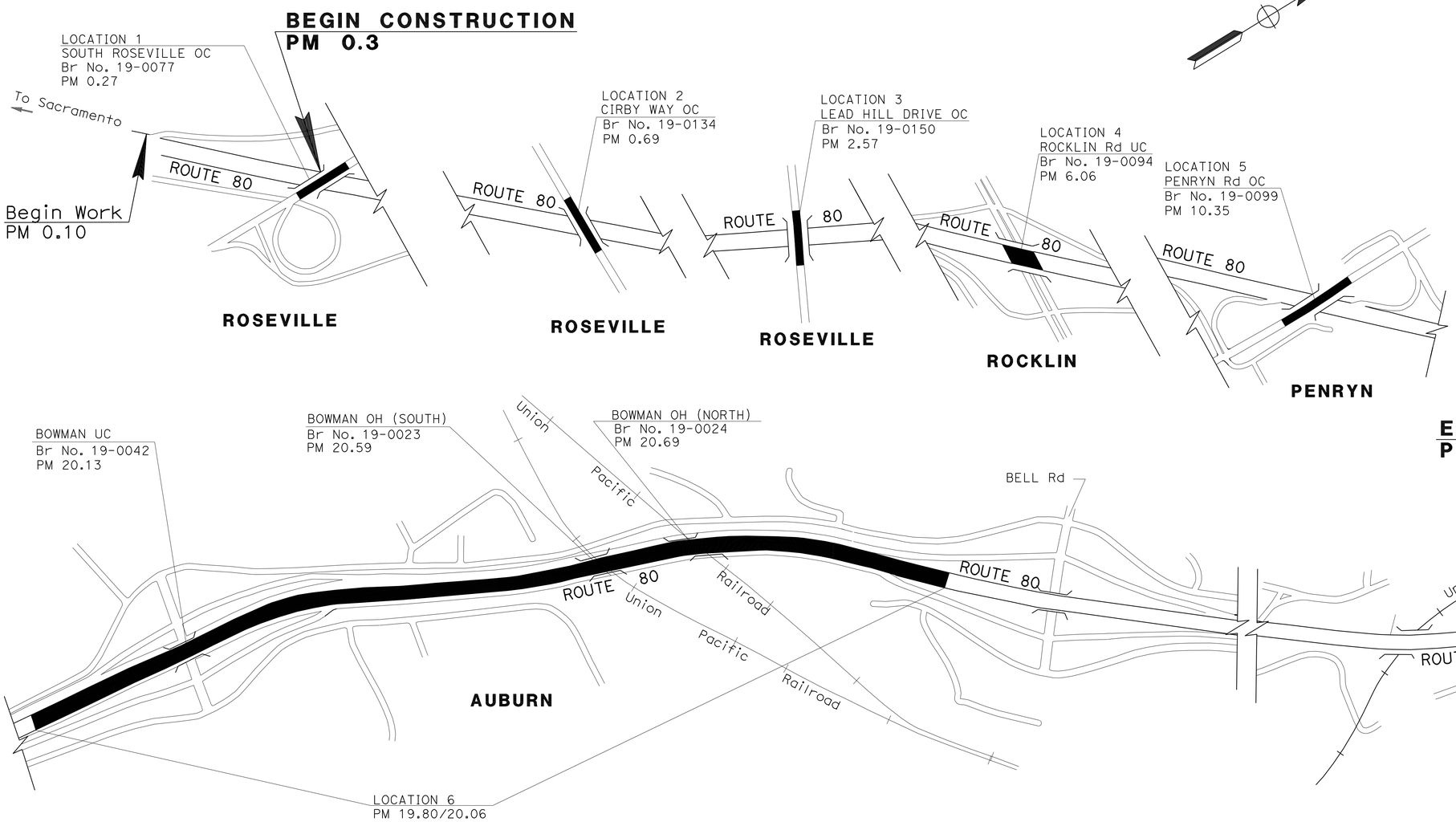

PROJECT MANAGER DOUG LANGE

DESIGN ENGINEER GILBERT OGAZ

Ana Serrano 6-30-10
PROJECT ENGINEER DATE
REGISTERED CIVIL ENGINEER

September 13, 2010
PLANS APPROVAL DATE

REGISTERED PROFESSIONAL ENGINEER
ANA SERRANO
No. 65977
Exp. 6-30-12
CIVIL
STATE OF CALIFORNIA

THE STATE OF CALIFORNIA OR ITS OFFICERS OR AGENTS SHALL NOT BE RESPONSIBLE FOR THE ACCURACY OR COMPLETENESS OF SCANNED COPIES OF THIS PLAN SHEET.

2 REVISED PER ADDENDUM NO. 2 DATED FEBRUARY 25, 2011

NO SCALE

THE CONTRACTOR SHALL POSSESS THE CLASS (OR CLASSES) OF LICENSE AS SPECIFIED IN THE "NOTICE TO BIDDERS."

CONTRACT No.	03-3E0904
PROJECT ID	0300000472

LAST REVISION 00-00-00 DATE PLOTTED => 18-FEB-2011 TIME PLOTTED => 10:55

Dist	COUNTY	ROUTE	POST MILES TOTAL PROJECT	SHEET No.	TOTAL SHEETS
03	Pla	80	0.3/29.3	2	56

REGISTERED CIVIL ENGINEER 6-30-10 DATE

9-13-10
PLANS APPROVAL DATE

REGISTERED PROFESSIONAL ENGINEER ANA SERRANO No. 65977 Exp. 6-30-12 CIVIL STATE OF CALIFORNIA

THE STATE OF CALIFORNIA OR ITS OFFICERS OR AGENTS SHALL NOT BE RESPONSIBLE FOR THE ACCURACY OR COMPLETENESS OF SCANNED COPIES OF THIS PLAN SHEET.

2

NOTES:

1. DIMENSIONS OF THE PAVEMENT STRUCTURES (STRUCTURAL SECTIONS) ARE SUBJECT TO TOLERANCES SPECIFIED IN THE STANDARD SPECIFICATIONS.
2. EXACT LOCATIONS AND TYPES OF HMA DIKE ARE SHOWN ON THE SUMMARY OF QUANTITIES SHEETS.
3. SUPERELEVATION AS SHOWN OR AS DIRECTED BY THE ENGINEER.
4. 0.10′ RHMA (OPEN GRADED) TO BE CARRIED OUT TO ES WHEN ES IS HIGHER THAN ETW.
5. FINAL THICKNESS OF HMA-A IS 0.8′. HOWEVER, A THICKER SECTION OF HMA WILL BE PLACED AND REMOVED DURING STAGE CONSTRUCTION. SEE STAGE CONSTRUCTION PLANS.

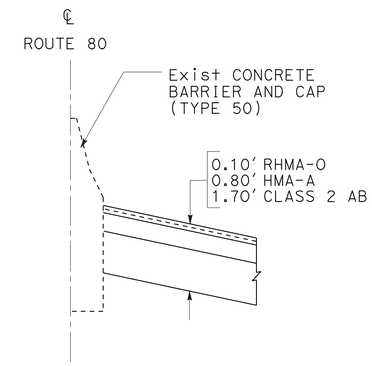

RHMA-O AT SUPERELEVATION
(VARIOUS LOCATIONS)

LEGEND:

RHMA-O	RUBBERIZED HOT MIX ASPHALT (OPEN GRADED)
RAC	RUBBERIZED ASPHALT CONCRETE
HMA-A	HOT MIX ASPHALT (TYPE A)

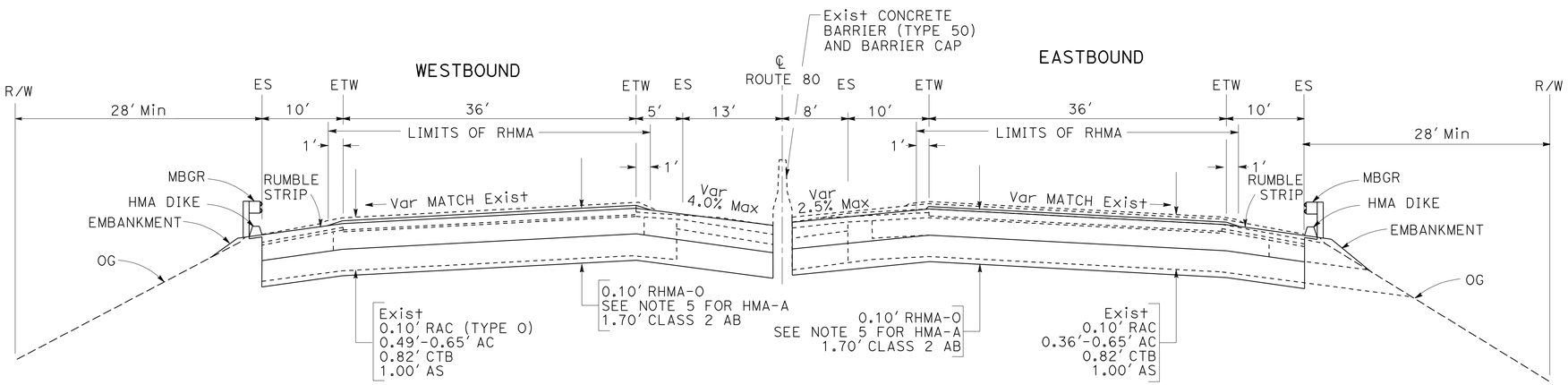

AT BOWMAN UC
PM 20.091 TO 20.185

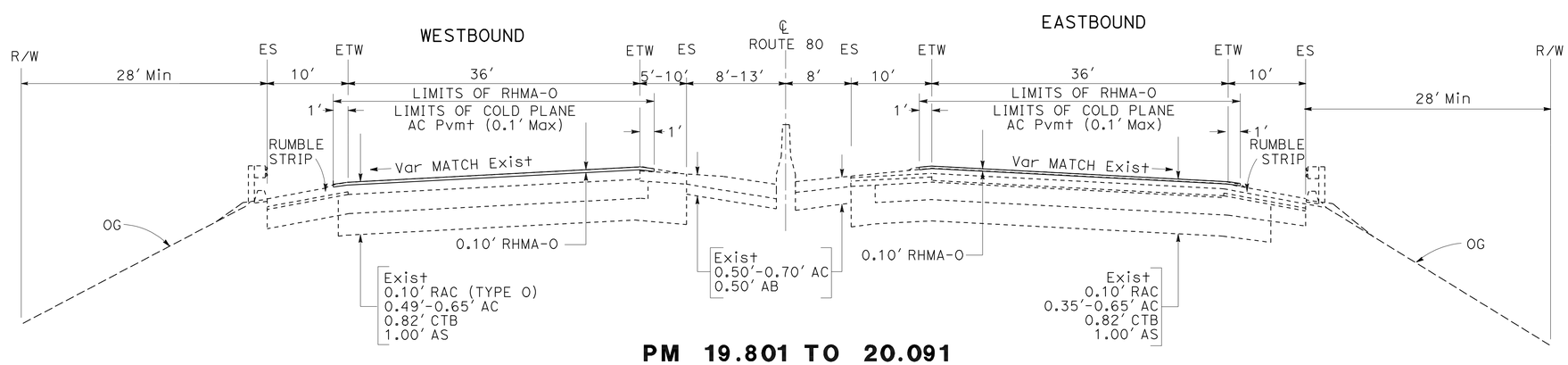

PM 19.801 TO 20.091
PM 20.185 TO 20.551
PM 20.766 TO 21.056

2 **REVISED PER ADDENDUM No. 2 DATED FEBRUARY 25, 2001**

TYPICAL CROSS SECTIONS
NO SCALE

X-1

STATE OF CALIFORNIA - DEPARTMENT OF TRANSPORTATION
Caltrans® NORTH REGION OFFICE OF DESIGN SOUTH DESIGN BRANCH S2

FUNCTIONAL SUPERVISOR: GILBERT OGAZ
CALCULATED-DESIGNED BY: ANA SERRANO
CHECKED BY: ANA SERRANO
REVISED BY / DATE REVISED

LAST REVISION 00-00-00
DATE PLOTTED => 18-FEB-2011
TIME PLOTTED => 11:13

Dist	COUNTY	ROUTE	POST MILES TOTAL PROJECT	SHEET No.	TOTAL SHEETS
03	Pla	80	0.3/29.3	3	56

2

REGISTERED CIVIL ENGINEER 6-30-10 DATE

9-13-10
PLANS APPROVAL DATE

REGISTERED PROFESSIONAL ENGINEER
ANA SERRANO
No. 65977
Exp. 6-30-12
CIVIL
STATE OF CALIFORNIA

THE STATE OF CALIFORNIA OR ITS OFFICERS OR AGENTS SHALL NOT BE RESPONSIBLE FOR THE ACCURACY OR COMPLETENESS OF SCANNED COPIES OF THIS PLAN SHEET.

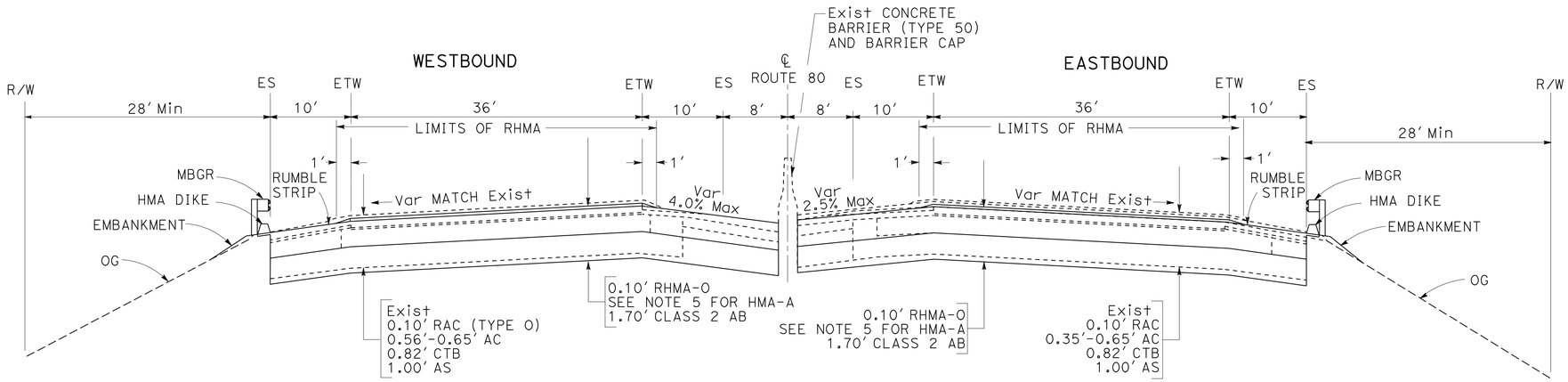

AT BOWMAN OH (SOUTH AND NORTH)
PM 20.551 TO 20.766

2 REVISED PER ADDENDUM No. 2 DATED FEBRUARY 25, 2001

TYPICAL CROSS SECTIONS
NO SCALE

X-2

STATE OF CALIFORNIA - DEPARTMENT OF TRANSPORTATION
Caltrans
NORTH REGION
OFFICE OF DESIGN SOUTH
DESIGN BRANCH S2

FUNCTIONAL SUPERVISOR: GILBERT OGAZ

CALCULATED-DESIGNED BY: ANA SERRANO
CHECKED BY:

REVISED BY
DATE REVISED

LAST REVISION 00-00-00
DATE PLOTTED => 18-FEB-2011
TIME PLOTTED => 11:13

Dist	COUNTY	ROUTE	POST MILES TOTAL PROJECT	SHEET No.	TOTAL SHEETS
03	Pla	80	0.3/29.3	4A	56

REGISTERED CIVIL ENGINEER 2-10-11 DATE

9-13-10
PLANS APPROVAL DATE

REGISTERED PROFESSIONAL ENGINEER JUSTIN A. UNCK No. C65889 Exp. 12-31-11 CIVIL STATE OF CALIFORNIA

THE STATE OF CALIFORNIA OR ITS OFFICERS OR AGENTS SHALL NOT BE RESPONSIBLE FOR THE ACCURACY OR COMPLETENESS OF SCANNED COPIES OF THIS PLAN SHEET.

2

NOTE:

1. FOR INFORMATION ONLY. NO ROADWAY WORK AT THIS LOCATION.
   SEE STRUCTURES PLANS FOR STRUCTURE WORK AT THIS LOCATION.

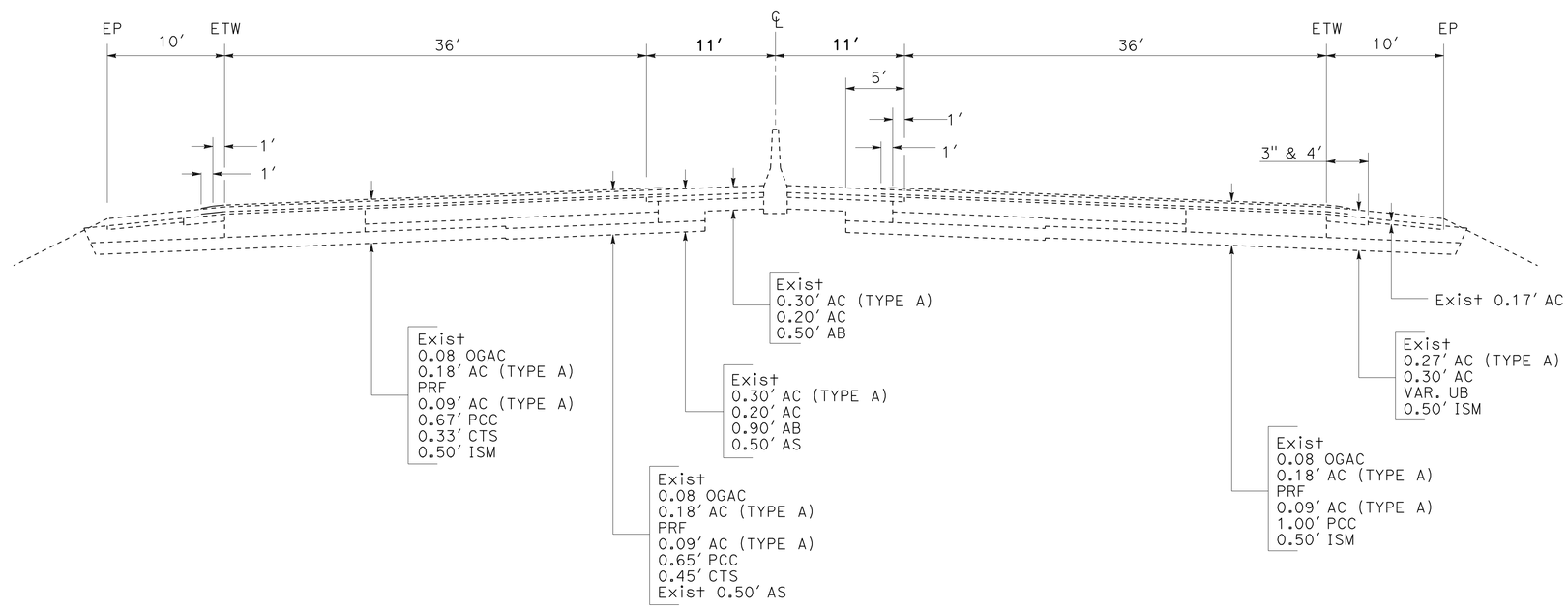

NEAR ROCKLIN UNDERCROSSING
PM 5.73 TO 6.40

2 **ADDED PER ADDENDUM No. 2 DATED FEBRUARY 25, 2011**

TYPICAL CROSS SECTIONS
NO SCALE

X-4

STATE OF CALIFORNIA - DEPARTMENT OF TRANSPORTATION
Caltrans®
NORTH REGION
OFFICE OF DESIGN SOUTH
DESIGN BRANCH S1

FUNCTIONAL SUPERVISOR: M. SADIQ
CALCULATED-DESIGNED BY: J. UNCK
CHECKED BY: J. UNCK
REVISED BY
DATE REVISED

LAST REVISION 00-00-00
DATE PLOTTED => 18-FEB-2011
TIME PLOTTED => 11:18

Dist	COUNTY	ROUTE	POST MILES TOTAL PROJECT	SHEET No.	TOTAL SHEETS
03	Pla	80	0.3/29.3	5	56

REGISTERED CIVIL ENGINEER 2-10-11 DATE

9-13-10
PLANS APPROVAL DATE

REGISTERED PROFESSIONAL ENGINEER JUSTIN A. UNCK No. C65889 Exp. 12-31-11 CIVIL STATE OF CALIFORNIA

THE STATE OF CALIFORNIA OR ITS OFFICERS OR AGENTS SHALL NOT BE RESPONSIBLE FOR THE ACCURACY OR COMPLETENESS OF SCANNED COPIES OF THIS PLAN SHEET.

2

NOTES: 1. FINAL THICKNESS OF HMA (TYPE A) IS 0.8′. HOWEVER, A THICKER SECTION OF HMA WILL BE PLACED AND REMOVED DURING STAGE CONSTRUCTION. SEE STAGE CONSTRUCTION PLANS.
* ALL STRUCTURAL SECTION BETWEEN BOWMAN OH (SOUTH) AND BOWMAN OH (NORTH) WILL BE RECONSTRUCTED.
** CONFORM HMA (TYPE A) TO POLYESTER CONCRETE OVERLAY. SEE DETAIL A FOR LAYOUT AT SKEWED OR STAGGERED APPROACH SLABS.
*** MAINTAIN 20′ BETWEEN RHMA (OPEN GRADED) AND APPROACH SLAB.

LEGEND:

EXCAVATION FOR NEW APPROACH SLAB - SEE STRUCTURE PLANS

REMOVE ASPHALT CONCRETE SURFACING - SEE STRUCTURE PLANS

EXCAVATION FOR NEW STRUCTURAL SECTION

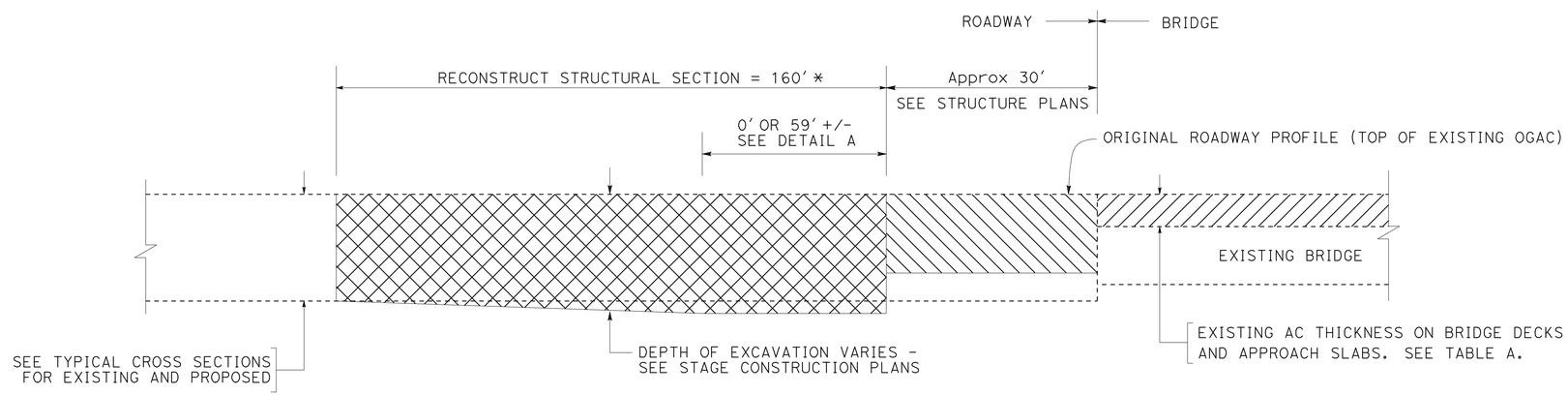

CONFORM AT STRUCTURES - REMOVAL WORK

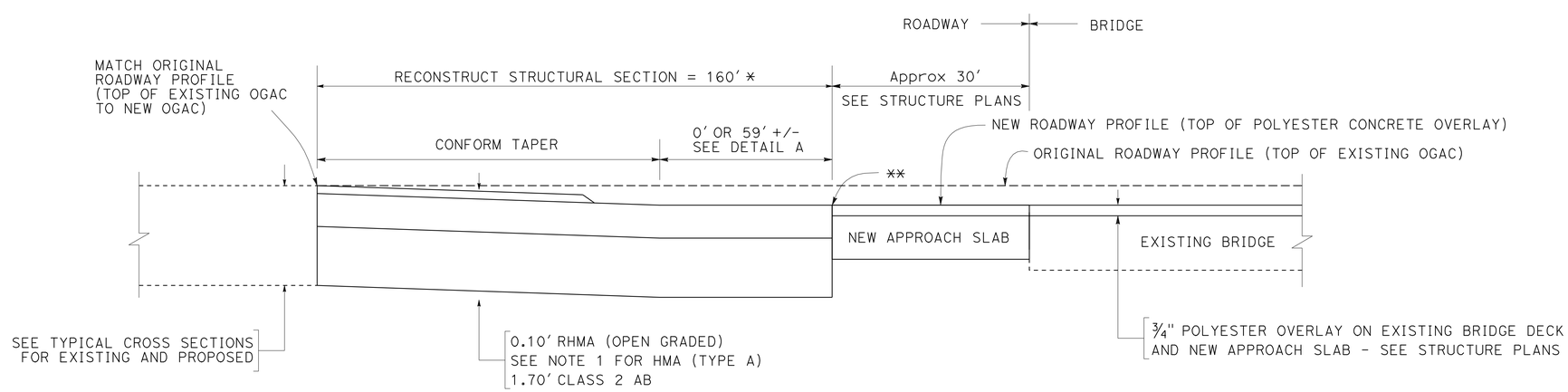

CONFORM AT STRUCTURES - FINAL CONDITION

TABLE A

DIRECTION	BRIDGE	EXISTING AC THICKNESS ***
EASTBOUND	BOWMAN UC	2.00"
	BOWMAN OH (SOUTH)	2.20-2.95"
	BOWMAN OH (NORTH)	2.40-2.75"
WESTBOUND	BOWMAN UC	2.75"
	BOWMAN OH (SOUTH)	2.95-4.00"
	BOWMAN OH (NORTH)	4.00"

*** EXISTING AC THICKNESS BASED ON LIMITED CORE SAMPLES. ACTUAL THICKNESS MAY VARY +/- FROM VALUE OR RANGE GIVEN.

BOWMAN UC BRIDGE No. 19-0042
BOWMAN OH (SOUTH) BRIDGE No. 19-0023
BOWMAN OH (NORTH) BRIDGE No. 19-0024

2 **REVISED PER ADDENDUM No. 2 DATED FEBRUARY 25, 2011**

CONSTRUCTION DETAILS
NO SCALE

C-1

STATE OF CALIFORNIA - DEPARTMENT OF TRANSPORTATION
Caltrans
NORTH REGION
OFFICE OF DESIGN SOUTH
DESIGN BRANCH S1

FUNCTIONAL SUPERVISOR: M. SADIQ
CALCULATED-DESIGNED BY: J. UNCK
CHECKED BY: J. UNCK
REVISED BY
DATE REVISED

LAST REVISION 00-00-00
DATE PLOTTED => 18-FEB-2011
TIME PLOTTED => 11:18

Dist	COUNTY	ROUTE	POST MILES TOTAL PROJECT	SHEET No.	TOTAL SHEETS
03	Pla	80	0.3/29.3	11	56

REGISTERED CIVIL ENGINEER 6-30-10 DATE

9-13-10
PLANS APPROVAL DATE

REGISTERED PROFESSIONAL ENGINEER
ANA SERRANO
No. 65977
Exp. 6-30-12
CIVIL
STATE OF CALIFORNIA

THE STATE OF CALIFORNIA OR ITS OFFICERS OR AGENTS SHALL NOT BE RESPONSIBLE FOR THE ACCURACY OR COMPLETENESS OF SCANNED COPIES OF THIS PLAN SHEET.

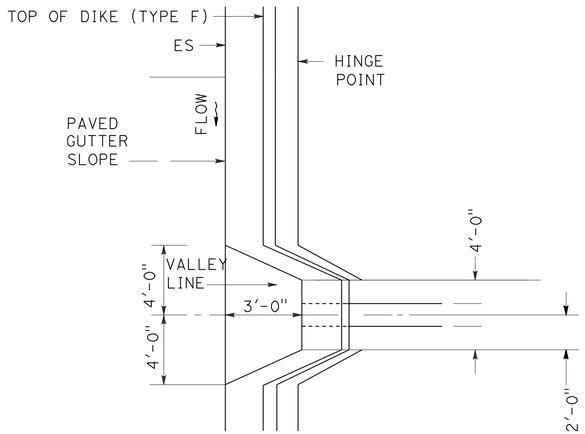

PLACE HMA (Misc AREA) AT BOWMAN UC WB
PM 20.15

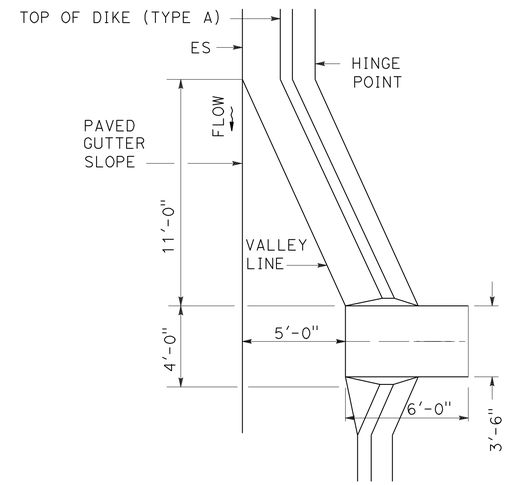

PLACE HMA (Misc AREA) AT BOWMAN OH (NORTH) WB
PM 20.68

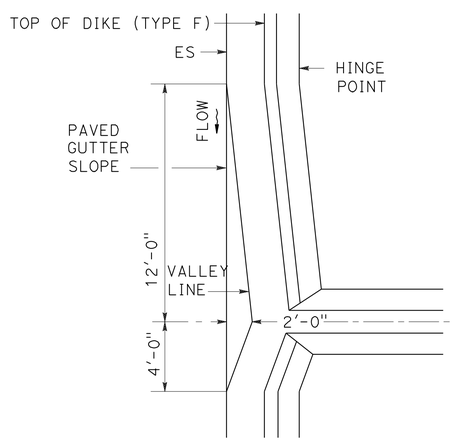

PLACE HMA (Misc AREA) BETWEEN BOWMAN OH (SOUTH & NORTH) EB
PM 20.68

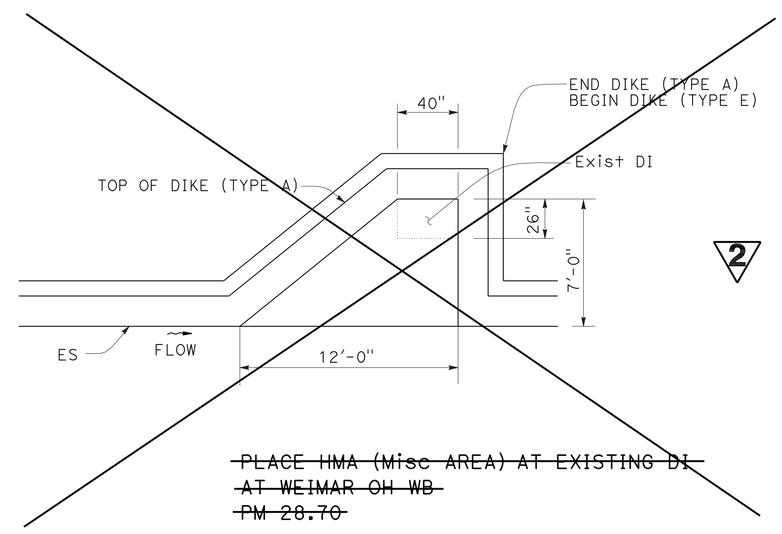

~~PLACE HMA (Misc AREA) AT EXISTING DI AT WEIMAR OH WB PM 28.70~~

2 **REVISED PER ADDENDUM No. 2 DATED FEBRUARY 25, 2011**

CONSTRUCTION DETAILS

NO SCALE

C-7

STATE OF CALIFORNIA - DEPARTMENT OF TRANSPORTATION
Caltrans
NORTH REGION
OFFICE OF DESIGN SOUTH
DESIGN BRANCH S2

FUNCTIONAL SUPERVISOR: GILBERT OGAZ
CALCULATED-DESIGNED BY: ANA SERRANO
CHECKED BY: ANA SERRANO
REVISED BY
DATE REVISED

LAST REVISION 00-00-00
DATE PLOTTED => 18-FEB-2011
TIME PLOTTED => 11:18

Dist	COUNTY	ROUTE	POST MILES TOTAL PROJECT	SHEET No.	TOTAL SHEETS
03	Pla	80	0.3/29.3	11A	56

REGISTERED CIVIL ENGINEER 2-10-11 DATE

9-13-10
PLANS APPROVAL DATE

REGISTERED PROFESSIONAL ENGINEER JUSTIN A. UNCK No. C65889 Exp. 12-31-11 CIVIL STATE OF CALIFORNIA

THE STATE OF CALIFORNIA OR ITS OFFICERS OR AGENTS SHALL NOT BE RESPONSIBLE FOR THE ACCURACY OR COMPLETENESS OF SCANNED COPIES OF THIS PLAN SHEET.

2

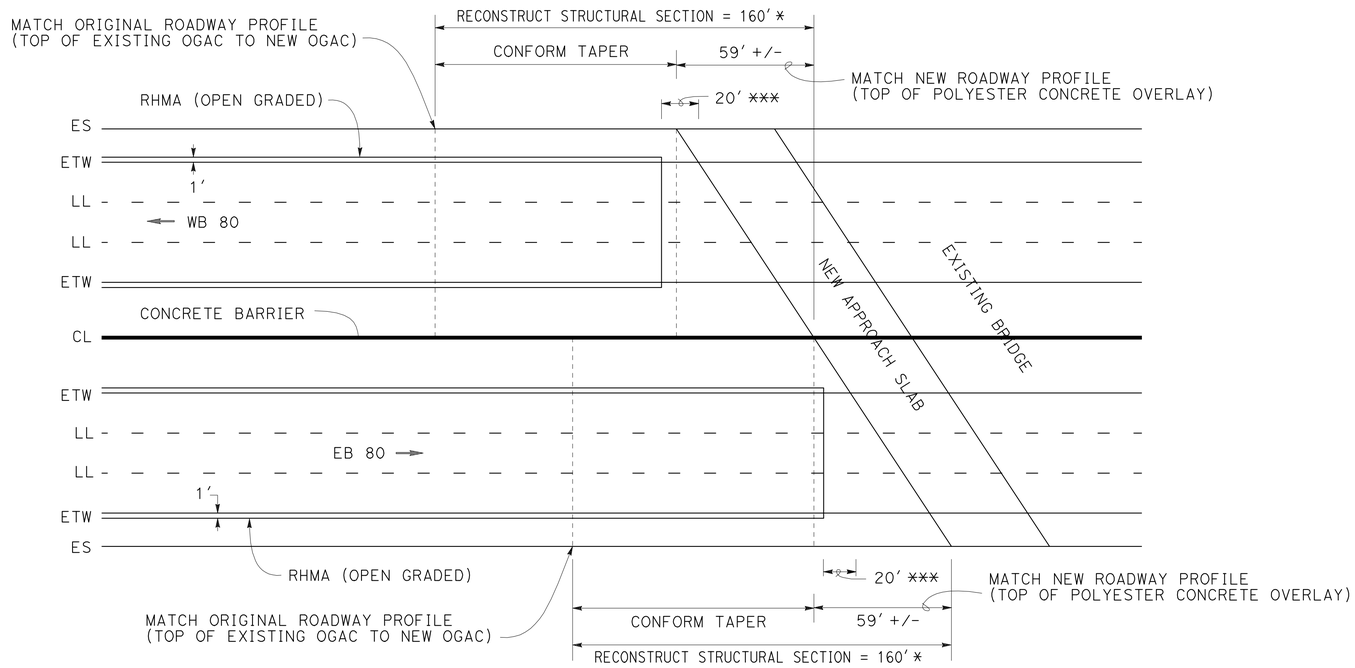

DETAIL A

SKEWED APPROACH SLABS AT BOWMAN OVERHEADS ONLY.
CONFORM HMA (TYPE A) TO POLYESTER CONCRETE OVERLAY.
RHMA (OPEN GRADED) EXTENDS TO ES WHEN ES IS HIGHER THAN ETW.

2 **ADDED PER ADDENDUM No. 2 DATED FEBRUARY 25, 2011**

CONSTRUCTION DETAILS

NO SCALE

C-8

STATE OF CALIFORNIA - DEPARTMENT OF TRANSPORTATION
Caltrans
NORTH REGION
OFFICE OF DESIGN SOUTH
DESIGN BRANCH S1

FUNCTIONAL SUPERVISOR: M. SADIQ
CALCULATED-DESIGNED BY: J. UNCK
CHECKED BY: J. UNCK
REVISED BY
DATE REVISED

LAST REVISION 00-00-00
DATE PLOTTED => 18-FEB-2011
TIME PLOTTED => 11:18

Dist	COUNTY	ROUTE	POST MILES TOTAL PROJECT	SHEET No.	TOTAL SHEETS
03	Pla	80	0.3/29.3	13	56

REGISTERED CIVIL ENGINEER 6-30-10 DATE

9-13-10
PLANS APPROVAL DATE

REGISTERED PROFESSIONAL ENGINEER
ANA SERRANO
No. 65977
Exp. 6-30-12
CIVIL
STATE OF CALIFORNIA

THE STATE OF CALIFORNIA OR ITS OFFICERS OR AGENTS SHALL NOT BE RESPONSIBLE FOR THE ACCURACY OR COMPLETENESS OF SCANNED COPIES OF THIS PLAN SHEET.

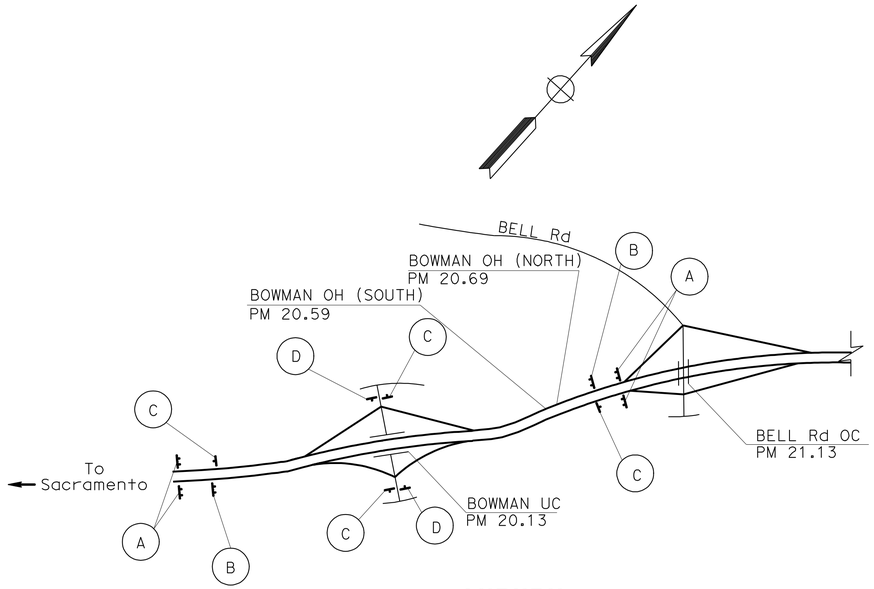

AUBURN

LOCATION 6 ~~& 7~~ 2

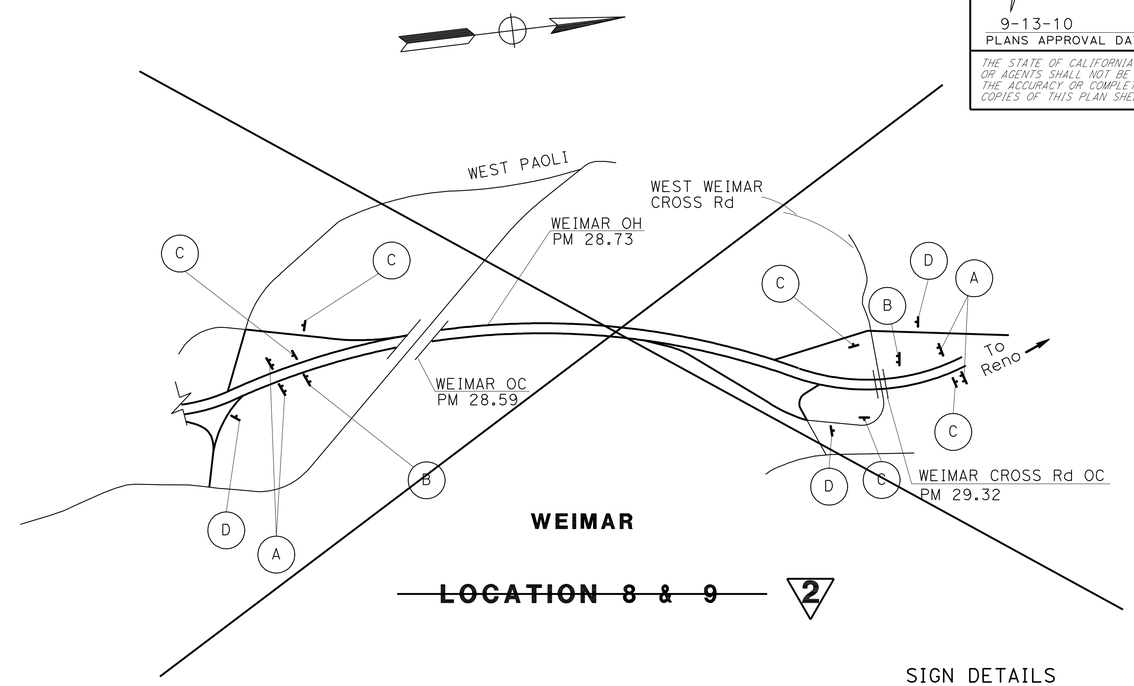

WEIMAR

~~**LOCATION 8 & 9**~~ 2

SIGN DETAILS

(A) C11(Mod)<CA>

ROAD WORK
NEXT 2 MILES

8" D SERIES LETTERS

90"x36"

RETROREFLECTIVE ORANGE BACKGROUND WITH BLACK LEGEND AND BORDER.

(B) C40(Mod)<CA>

TRAFFIC FINES
DOUBLED IN
WORK ZONES

8" D SERIES LETTERS

96"x60"

RETROREFLECTIVE WHITE BACKGROUND WITH BLACK LEGEND AND BORDER.

LOCATIONS 6-9
STATIONARY MOUNTED CONSTRUCTION AREA SIGNS

2

SIGN LETTER	SIGN CODE FEDERAL	SIGN CODE CALIFORNIA	PANEL SIZE	SIGN MESSAGE	NUMBER OF POST AND SIZE	NUMBER OF SIGNS
A		C11 (Mod)	90" x 36"	ROAD WORK NEXT 2 MILES	2 - 4" x 6"	~~8~~ 4
B		C40 (Mod)	96" x 60"	TRAFFIC FINES DOUBLED IN WORK ZONES	2 - 6" x 6"	~~4~~ 2
C	G20-2	C14	48" x 24"	END ROAD WORK	1 - 4" x 6"	~~9~~ 4
D	W20-1	C23	48" x 48"	ROAD WORK AHEAD	1 - 6" x 6"	~~5~~ 2

NOTE: EXACT SIGN LOCATIONS TO BE DETERMINED BY THE ENGINEER.

2 **REVISED PER ADDENDUM No. 2 DATED FEBRUARY 25, 2011**

THIS PLAN ACCURATE FOR CONSTRUCTION AREA SIGN WORK ONLY

CONSTRUCTION AREA SIGNS

NO SCALE

CS-2

STATE OF CALIFORNIA - DEPARTMENT OF TRANSPORTATION
Caltrans
NORTH REGION
OFFICE OF DESIGN SOUTH
DESIGN BRANCH S2

FUNCTIONAL SUPERVISOR: GILBERT OGAZ

CALCULATED-DESIGNED BY: ANA SERRANO
CHECKED BY: ANA SERRANO
REVISED BY
DATE REVISED

LAST REVISION 00-00-00
DATE PLOTTED => 18-FEB-2011
TIME PLOTTED => 13:20

Dist	COUNTY	ROUTE	POST MILES TOTAL PROJECT	SHEET No.	TOTAL SHEETS
03	Pla	80	0.3/29.3	14	56

REGISTERED CIVIL ENGINEER 2-10-11 DATE

9-13-10
PLANS APPROVAL DATE

REGISTERED PROFESSIONAL ENGINEER JUSTIN A. UNCK No. C65889 Exp. 12-31-11 CIVIL STATE OF CALIFORNIA

2

THE STATE OF CALIFORNIA OR ITS OFFICERS OR AGENTS SHALL NOT BE RESPONSIBLE FOR THE ACCURACY OR COMPLETENESS OF SCANNED COPIES OF THIS PLAN SHEET.

NOTES:

1. FOR CONSTRUCTION ON WESTBOUND 80, FOLLOW THE SAME CONSTRUCTION STAGING DEPICTED FOR EASTBOUND.
2. SEE CONSTRUCTION DETAILS AND STRUCTURE PLANS FOR PLANNED WORK.
3. USE TRAFFIC HANDLING PLANS OR STANDARD PLAN TRAFFIC CONTROL SYSTEM T10 OR T10A AS APPROPRIATE, SUBJECT TO RESTRICTIONS AS GIVEN IN SPECIAL PROVISIONS.

STAGE CONSTRUCTION NOTE:

STAGE 1A AND 1B - IN ONE 60 HOUR CLOSURE WINDOW, RECONSTRUCT ROADWAY STRUCTURAL SECTION AT EASTBOUND APPROACH AND DEPARTURE SLABS. STRUCTURAL SECTION WILL BE OVERBUILT TO MATCH EXISTING PAVEMENT TO ALLOW FOR REOPENING TO TRAFFIC AT END OF CLOSURE. SEE DETAILS THIS PAGE.

LEGEND:

CONSTRUCT THIS STAGE

LEGEND:

HMA (TYPE A) TO BE REMOVED IN STAGE 2

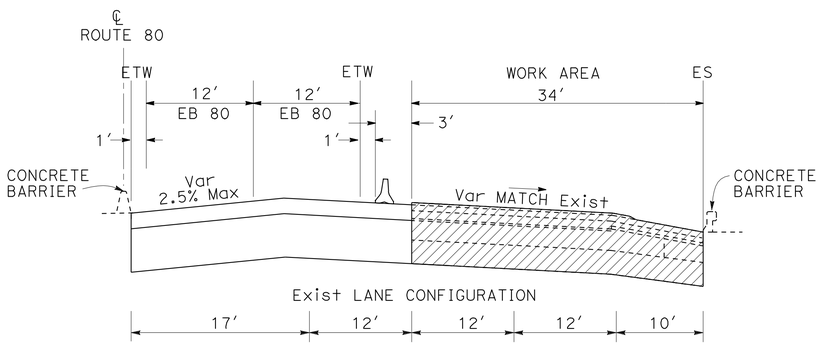

STAGE 1A

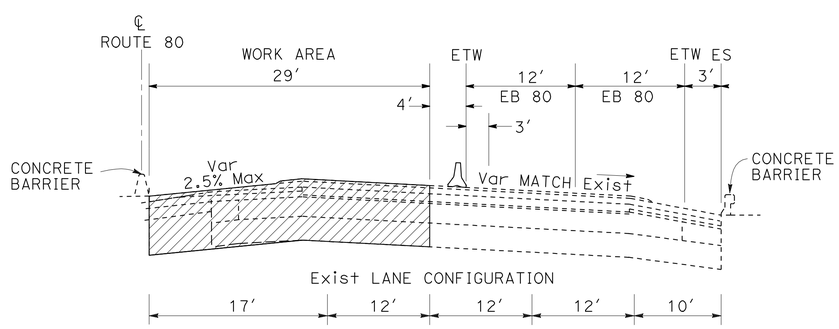

STAGE 1B

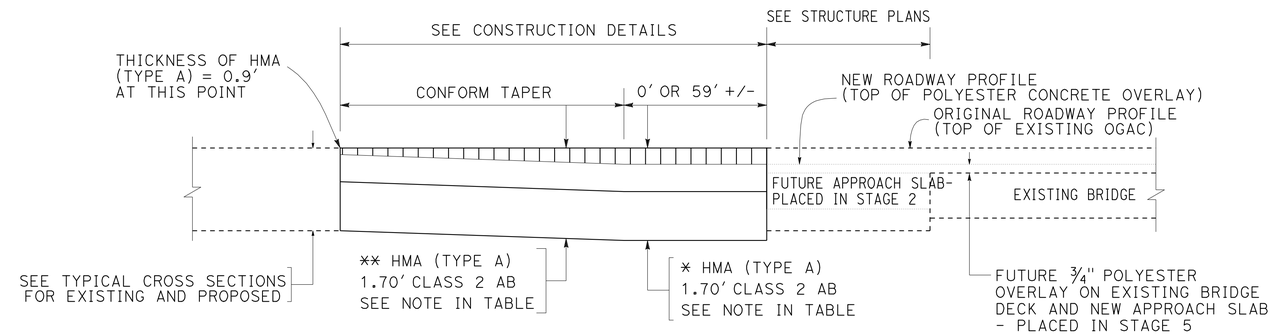

CONFORM AT STRUCTURES - STAGE 1A AND 1B

THICKNESS OF HMA (TYPE A) PLACED IN STAGE 1

DIRECTION	BRIDGE	*	**
EASTBOUND	BOWMAN UC	N/A	0.90-0.95′
	BOWMAN OH (SOUTH)	1.00′	0.90-1.00′
	BOWMAN OH (NORTH)	1.00′	0.90-1.00′
WESTBOUND	BOWMAN UC	N/A	0.90-1.00′
	BOWMAN OH (SOUTH)	1.10′	0.90-1.10′
	BOWMAN OH (NORTH)	1.10′	0.90-1.10′

DEPTH OF EXCAVATION AND THICKNESS OF HMA (TYPE A) PLACED IN STAGE 1 SHALL BE ADJUSTED AS REQUIRED TO PROVIDE 0.8′ HMA (TYPE A) AFTER COLD PLANING OPERATIONS IN STAGE 2, OR AS DIRECTED BY THE ENGINEER.

BOWMAN UC BRIDGE No. 19-0042
BOWMAN OH (SOUTH) BRIDGE No. 19-0023
BOWMAN OH (NORTH) BRIDGE No. 19-0024

2 **REVISED PER ADDENDUM No. 2 DATED FEBRUARY 25, 2011**

THIS PLAN ACCURATE FOR STAGE CONSTRUCTION WORK ONLY

STAGE CONSTRUCTION

NO SCALE

SC-1

STATE OF CALIFORNIA - DEPARTMENT OF TRANSPORTATION
Caltrans®
NORTH REGION
OFFICE OF DESIGN SOUTH
DESIGN BRANCH S1

FUNCTIONAL SUPERVISOR: M. SADIQ
CALCULATED-DESIGNED BY: J. UNCK
CHECKED BY: J. UNCK
REVISED BY / DATE REVISED

LAST REVISION 00-00-00 | DATE PLOTTED => 18-FEB-2011 | TIME PLOTTED => 13:21

Dist	COUNTY	ROUTE	POST MILES TOTAL PROJECT	SHEET No.	TOTAL SHEETS
03	Pla	80	0.3/29.3	18A	56

REGISTERED CIVIL ENGINEER 2-10-11 DATE

9-13-10
PLANS APPROVAL DATE

REGISTERED PROFESSIONAL ENGINEER JUSTIN A. UNCK No. C65889 Exp. 12-31-11 CIVIL STATE OF CALIFORNIA

THE STATE OF CALIFORNIA OR ITS OFFICERS OR AGENTS SHALL NOT BE RESPONSIBLE FOR THE ACCURACY OR COMPLETENESS OF SCANNED COPIES OF THIS PLAN SHEET.

2

NOTE:

USE STANDARD PLAN TRAFFIC CONTROL SYSTEM T10 OR T10A AS APPROPRIATE, SUBJECT TO RESTRICTIONS AS GIVEN IN SPECIAL PROVISIONS.

LEGEND:

CONSTRUCT THIS STAGE

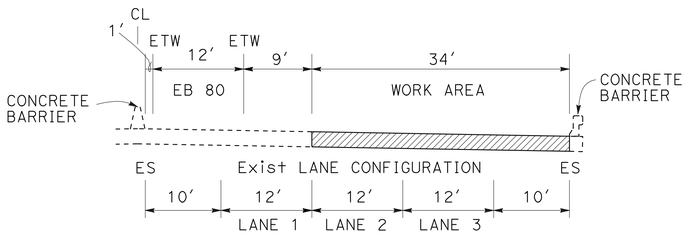

STAGE 1A

REPLACE EASTBOUND APPROACH AND DEPARTURE SLABS UNDER LANES 2 AND 3, AND OUTSIDE SHOULDER.

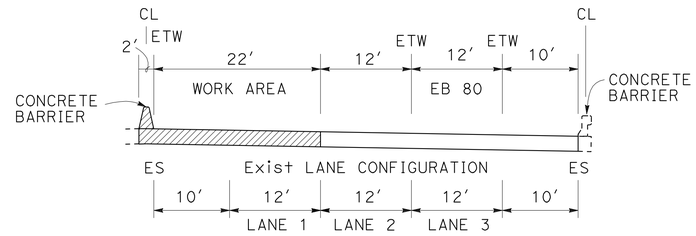

STAGE 1B

REPLACE EASTBOUND APPROACH AND DEPARTURE SLABS UNDER LANE 1 AND INSIDE SHOULDER, INCLUDING PORTION UNDER MEDIAN BARRIER. REPLACE MEDIAN BARRIER REMOVED TO ALLOW FOR SLAB REPLACEMENT. SEE DETAIL A.

STAGE 1C

APPLY POLYESTER CONCRETE OVERLAY TO EASTBOUND LANES.

STAGE 2A

REPLACE WESTBOUND APPROACH AND DEPARTURE SLABS UNDER LANES 2 AND 3, AND OUTSIDE SHOULDER. WESTBOUND TYPICAL IS MIRROR IMAGE OF EASTBOUND TYPICAL SHOWN IN STAGE 1A.

STAGE 2B

REPLACE WESTBOUND APPROACH AND DEPARTURE SLABS UNDER LANE 1 AND INSIDE SHOULDER. WESTBOUND TYPICAL IS MIRROR IMAGE OF EASTBOUND TYPICAL SHOWN IN STAGE 1B.

STAGE 2C

APPLY POLYESTER CONCRETE OVERLAY TO WESTBOUND LANES.

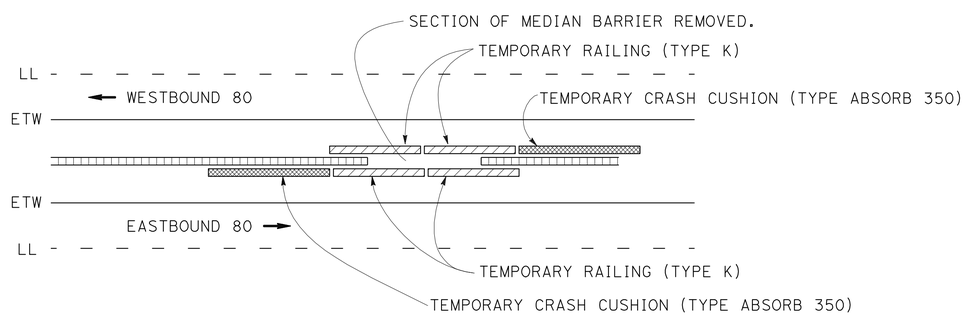

DETAIL A

PROTECT TRAFFIC FROM OPENING IN BARRIER. TEMPORARY RAILING (TYPE K) SHALL REMAIN IN PLACE UNTIL CONCRETE IS CURED OR AS DIRECTED BY THE ENGINEER.

ROCKLIN RD UC BRIDGE No. 19-0094

2 **ADDED PER ADDENDUM No. 2 DATED FEBRUARY 25, 2011**

THIS PLAN ACCURATE FOR STAGE CONSTRUCTION WORK ONLY

STAGE CONSTRUCTION

NO SCALE

SC-6

STATE OF CALIFORNIA - DEPARTMENT OF TRANSPORTATION
Caltrans®
NORTH REGION
OFFICE OF DESIGN SOUTH
DESIGN BRANCH S1

FUNCTIONAL SUPERVISOR: M. SADIQ
CALCULATED-DESIGNED BY: J. UNCK
CHECKED BY: J. UNCK
REVISED BY
DATE REVISED

LAST REVISION 00-00-00
DATE PLOTTED => 18-FEB-2011
TIME PLOTTED => 13:21

Dist	COUNTY	ROUTE	POST MILES TOTAL PROJECT	SHEET No.	TOTAL SHEETS
03	Pla	80	0.3/29.3	18B	56

REGISTERED CIVIL ENGINEER 2-10-11 DATE

9-13-10
PLANS APPROVAL DATE

REGISTERED PROFESSIONAL ENGINEER JUSTIN A. UNCK No. C65889 Exp. 12-31-11 CIVIL STATE OF CALIFORNIA

THE STATE OF CALIFORNIA OR ITS OFFICERS OR AGENTS SHALL NOT BE RESPONSIBLE FOR THE ACCURACY OR COMPLETENESS OF SCANNED COPIES OF THIS PLAN SHEET.

2

LEGEND:

REMOVE ASPHALT CONCRETE SURFACING - SEE STRUCTURE PLANS
COLD PLANE AC Pvmnt

CONSTRUCT THIS STAGE

STAGE CONSTRUCTION NOTES:

STAGE 2A AND 2B - IN ONE 60 HOUR CLOSURE WINDOW, PLACE NEW EASTBOUND APPROACH AND DEPARTURE SLABS, REMOVE AC SURFACING FROM BRIDGE DECK, AND COLD PLANE OVERBUILT STRUCTURAL SECTION AT CONFORM TAPER. SEE DETAIL A AND CONFORM AT STRUCTURES - STAGE 2A AND 2B DETAIL THIS PAGE, AND STRUCTURE PLANS.
STAGE 3 - REPLACE MEDIAN BARRIER REMOVED IN STAGE 2B. REPLACE EASTBOUND CONCRETE BRIDGE BARRIER ON OUTSIDE SHOULDER.
STAGE 4 - COLD PLANE HMA PAVEMENT AND PLACE RHMA (OPEN GRADED) ON EASTBOUND LANES.
STAGE 5 - PLACE POLYESTER CONCRETE OVERLAY ON EASTBOUND LANES.

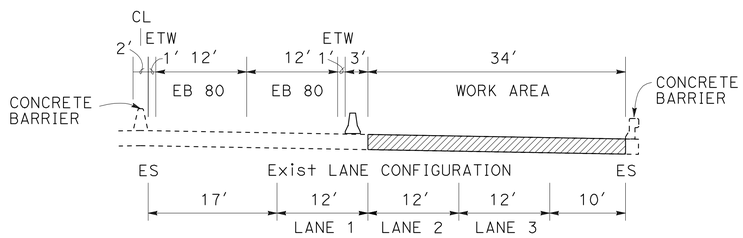

STAGE 2A

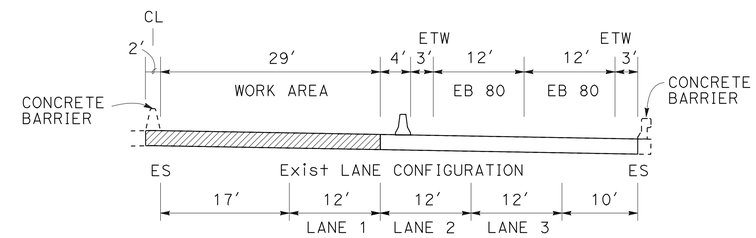

STAGE 2B

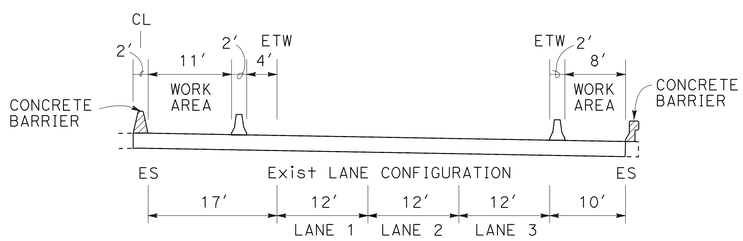

STAGE 3

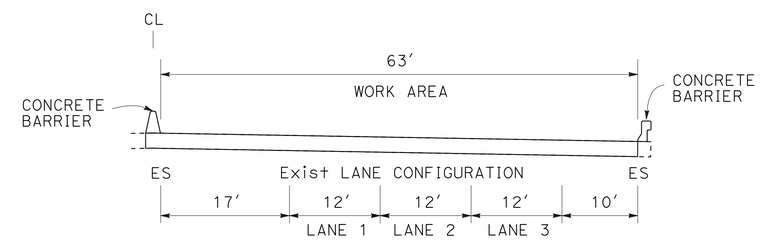

STAGE 4
STAGE 5

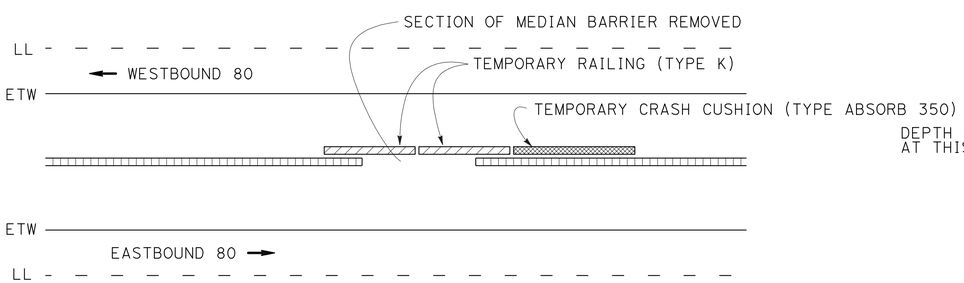

DETAIL A

PROTECT TRAFFIC FROM OPENING IN BARRIER. TEMPORARY RAILING (TYPE K) SHALL REMAIN IN PLACE UNTIL NEW CONCRETE BARRIER IS CURED OR AS DIRECTED BY THE ENGINEER. STAGE 3 TEMPORARY RAILING (TYPE K) WILL PROTECT EASTBOUND TRAFFIC.

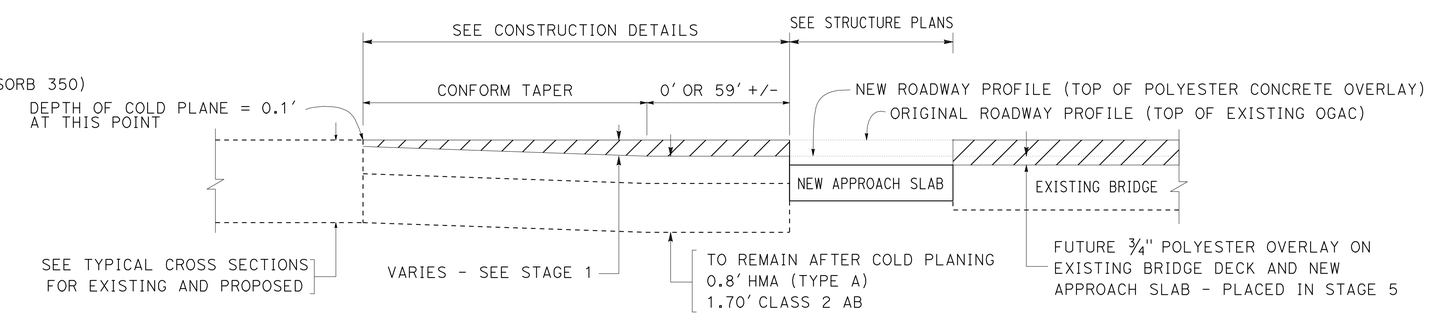

CONFORM AT STRUCTURES - STAGE 2A AND 2B

BOWMAN UC BRIDGE No. 19-0042
BOWMAN OH (SOUTH) BRIDGE No. 19-0023
BOWMAN OH (NORTH) BRIDGE No. 19-0024

2 **ADDED PER ADDENDUM No. 2 DATED FEBRUARY 25, 2011**

THIS PLAN ACCURATE FOR STAGE CONSTRUCTION WORK ONLY

STAGE CONSTRUCTION
NO SCALE
SC-7

STATE OF CALIFORNIA - DEPARTMENT OF TRANSPORTATION
Caltrans
NORTH REGION
OFFICE OF DESIGN SOUTH
DESIGN BRANCH S1

FUNCTIONAL SUPERVISOR: M. SADIQ
CALCULATED-DESIGNED BY: J. UNCK
CHECKED BY: J. UNCK
REVISED BY
DATE REVISED

LAST REVISION 00-00-00
DATE PLOTTED => 18-FEB-2011
TIME PLOTTED => 13:21

Dist	COUNTY	ROUTE	POST MILES TOTAL PROJECT	SHEET No.	TOTAL SHEETS
03	Pla	80	0.3/29.3	19	56

REGISTERED CIVIL ENGINEER 2-10-11 DATE

9-13-10
PLANS APPROVAL DATE

REGISTERED PROFESSIONAL ENGINEER JUSTIN A. UNCK No. C65889 Exp. 12-31-11 CIVIL STATE OF CALIFORNIA

THE STATE OF CALIFORNIA OR ITS OFFICERS OR AGENTS SHALL NOT BE RESPONSIBLE FOR THE ACCURACY OR COMPLETENESS OF SCANNED COPIES OF THIS PLAN SHEET.

2

NOTES:

1. SEE STAGE CONSTRUCTION PLANS FOR DETAILS ON WORK PLANNED EACH STAGE.
2. REMOVE TEMPORARY PAVEMENT DELINEATION AT COMPLETION OF STAGE OR WHEN NO LONGER NEEDED.
3. FOR CONSTRUCTION ON WESTBOUND 80, FOLLOW THE SAME TRFFIC HANDLING DEPICTED FOR EASTBOUND.

LEGEND:

- WORK AREA (SEE STAGE CONSTRUCTION PLANS)
- TRAFFIC PLASTIC DRUM
- ✱ REMOVE PAVEMENT MARKER AND USE BLACK Temp TRAFFIC STRIPE (TAPE) TO OBLITERATE EXISTING TRAFFIC STRIPE

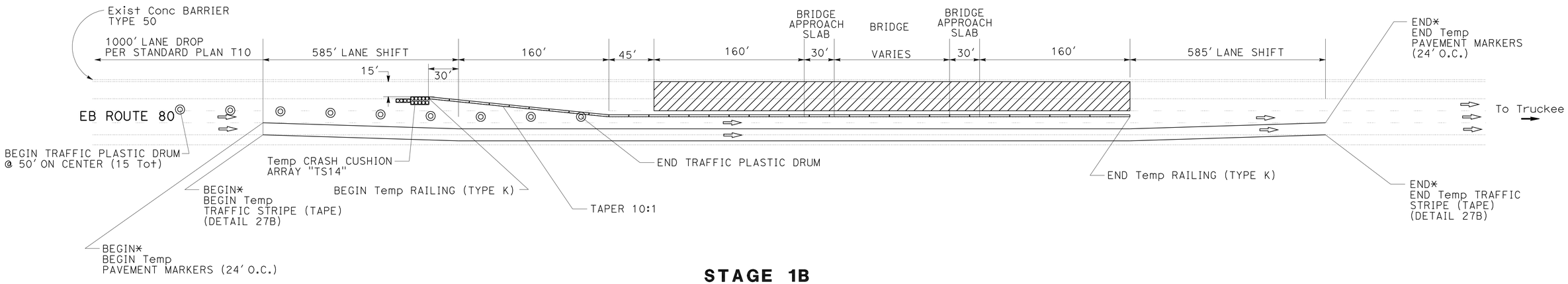

STAGE 1B
STAGE 2B

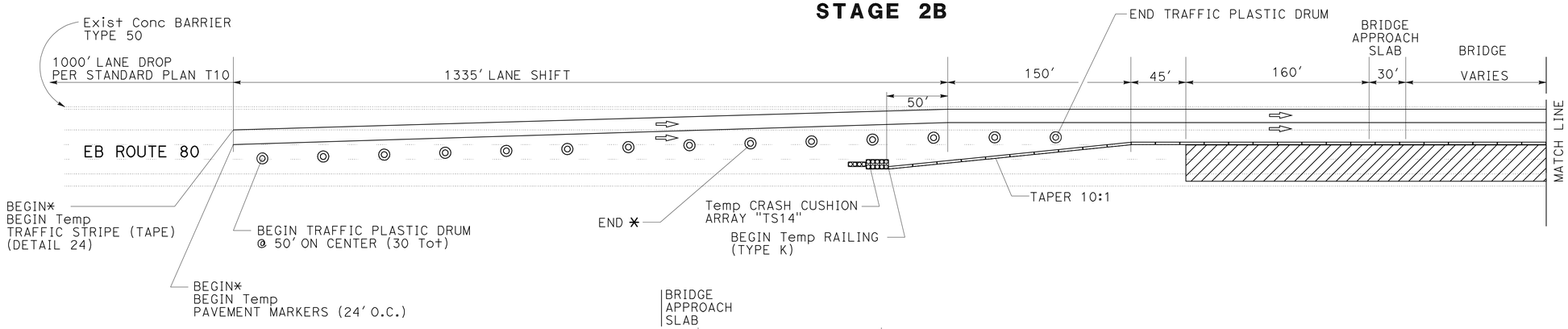

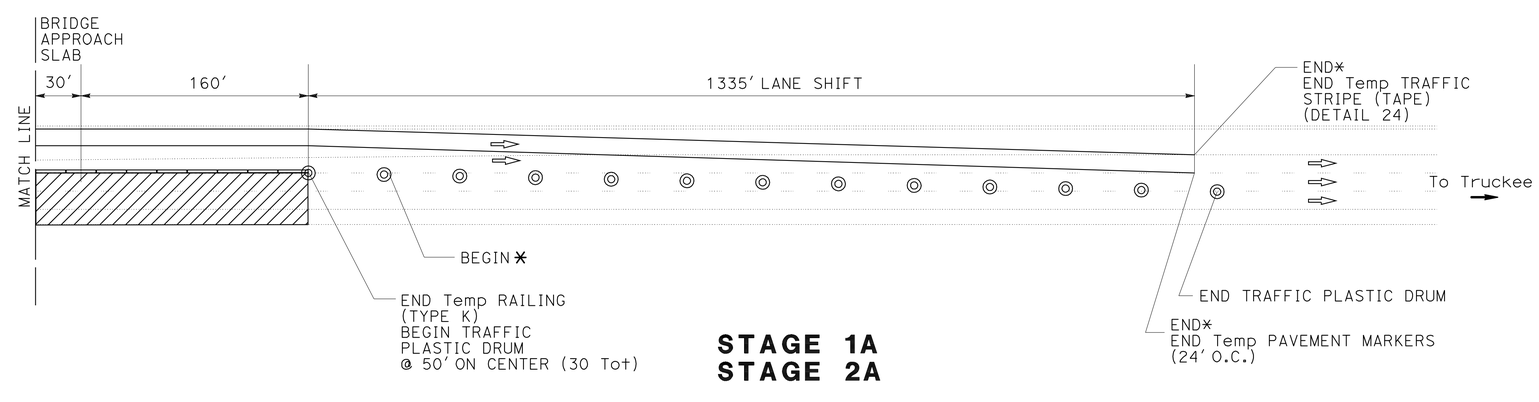

STAGE 1A
STAGE 2A

BOWMAN UC
BOWMAN OH (SOUTH)
BOWMAN OH (NORTH)

2 **REVISED PER ADDENDUM No. 2 DATED FEBRUARY 25, 2011**

THIS PLAN ACCURATE FOR TRAFFIC HANDLING WORK ONLY

TRAFFIC HANDLING PLAN

NO SCALE

TH-1

STATE OF CALIFORNIA - DEPARTMENT OF TRANSPORTATION
NORTH REGION
OFFICE OF DESIGN SOUTH
DESIGN BRANCH S1

FUNCTIONAL SUPERVISOR: M. SADIQ
CALCULATED-DESIGNED BY: J. UNCK
CHECKED BY: J. UNCK
REVISED BY
DATE REVISED

LAST REVISION 00-00-00 | DATE PLOTTED => 18-FEB-2011 | TIME PLOTTED => 13:21

Dist	COUNTY	ROUTE	POST MILES TOTAL PROJECT	SHEET No.	TOTAL SHEETS
03	Pla	80	0.3/29.3	25	56

REGISTERED CIVIL ENGINEER 2-10-11 DATE

9-13-10
PLANS APPROVAL DATE

REGISTERED PROFESSIONAL ENGINEER JUSTIN A. UNCK No. C65889 Exp. 12-31-11 CIVIL STATE OF CALIFORNIA

THE STATE OF CALIFORNIA OR ITS OFFICERS OR AGENTS SHALL NOT BE RESPONSIBLE FOR THE ACCURACY OR COMPLETENESS OF SCANNED COPIES OF THIS PLAN SHEET.

2

TRAFFIC HANDLING ITEMS

DIRECTION	LOCATION	STAGE	Temp TRAFFIC STRIPE (TAPE) WHITE DETAIL 27B LF	YELLOW DETAIL 24 LF	BLACK DETAIL 12 LF	BLACK DETAIL 25 LF	BLACK DETAIL 27B LF	Temp RAILING (TYPE K) LF	Temp CRASH CUSHION MODULE EA	Temp CRASH CUSHION (TYPE ABSORB 350) EA	TRAFFIC PLASTIC DRUMS EA	Temp PAVEMENT MARKER RETRO-REFLECTIVE TYPE G EA	(N) REMOVE PAVEMENT MARKER DETAIL 12 EA	(N) REMOVE PAVEMENT MARKER DETAIL 25 EA	NOTES
EB	ROCKLIN RD UC	1B						40		1					9 ELEMENT ABSORB 350
	BOWMAN UC	1A		3360	2000	3360		740	14		57	140	42	72	
	BOWMAN UC	1B	1860		1860		1860	720	14		15	78	39		
	BOWMAN UC	2A		3360	2000	3360		740	14		57	140	42	72	
	BOWMAN UC	2B	1860		1860		1860	780	14	1	15	78	39		9 ELEMENT ABSORB 350
	BOWMAN UC	3						640		2					9 ELEMENT ABSORB 350
	BOWMAN OH (SOUTH)	1A		3420	2000	3420		800	14		57	143	42	72	
	BOWMAN OH (SOUTH)	1B	1920		1920		1920	780	14		15	80	40		
	BOWMAN OH (SOUTH)	2A		3420	2000	3420		800	14		57	143	42	72	
	BOWMAN OH (SOUTH)	2B	1920		1920		1920	820	14	1	15	80	40		9 ELEMENT ABSORB 350
	BOWMAN OH (SOUTH)	3						760		2					9 ELEMENT ABSORB 350
	BOWMAN OH (NORTH)	1A		3449	2000	3420		840	14		57	144	42	72	
	BOWMAN OH (NORTH)	1B	1949		1949		1949	820	14		15	82	41		
	BOWMAN OH (NORTH)	2A		3449	2000	3420		840	14		57	144	42	72	
	BOWMAN OH (NORTH)	2B	1949		1949		1949	860	14	1	15	82	41		9 ELEMENT ABSORB 350
	BOWMAN OH (NORTH)	3						820		2					9 ELEMENT ABSORB 350
WB	ROCKLIN RD UC	1B						40		1					9 ELEMENT ABSORB 350
	BOWMAN UC	1A		3360	2000	3360		740	14		57	140	42	72	
	BOWMAN UC	1B	1860		1860		1860	720	14		15	78	39		
	BOWMAN UC	2A		3360	2000	3360		740	14		57	140	42	72	
	BOWMAN UC	2B	1860		1860		1860	780	14	1	15	78	39		9 ELEMENT ABSORB 350
	BOWMAN UC	3						640		2					9 ELEMENT ABSORB 350
	BOWMAN OH (SOUTH)	1A		3420	2000	3420		800	14		57	143	42	72	
	BOWMAN OH (SOUTH)	1B	1920		1920		1920	780	14		15	80	40		
	BOWMAN OH (SOUTH)	2A		3420	2000	3420		800	14		57	143	42	72	
	BOWMAN OH (SOUTH)	2B	1920		1920		1920	820	14	1	15	80	40		9 ELEMENT ABSORB 350
	BOWMAN OH (SOUTH)	3						760		2					9 ELEMENT ABSORB 350
	BOWMAN OH (NORTH)	1A		3449	2000	3420		840	14		57	144	42	72	
	BOWMAN OH (NORTH)	1B	1949		1949		1949	820	14		15	82	41		
	BOWMAN OH (NORTH)	2A		3449	2000	3420		840	14		57	144	42	72	
	BOWMAN OH (NORTH)	2B	1949		1949		1949	860	14	1	15	82	41		9 ELEMENT ABSORB 350
	BOWMAN OH (NORTH)	3						820		2					9 ELEMENT ABSORB 350
SUB-TOTAL			22,916	40,916	46,916	40,800	22,916						984	864	
TOTAL			174,464					23,600	336	20	864	2668	1848		

(N) NOT A SEPARATE PAY ITEM, FOR INFORMATION ONLY.

2 REVISED PER ADDENDUM No. 2 DATED FEBRUARY 25, 2011

TRAFFIC HANDLING QUANTITIES

THQ-1

STATE OF CALIFORNIA - DEPARTMENT OF TRANSPORTATION
Caltrans
NORTH REGION
OFFICE OF DESIGN SOUTH
DESIGN BRANCH S1

FUNCTIONAL SUPERVISOR: M. SADIQ
CALCULATED-DESIGNED BY: J. UNCK
CHECKED BY: J. UNCK
REVISED BY
DATE REVISED

LAST REVISION 00-00-00
DATE PLOTTED => 18-FEB-2011
TIME PLOTTED => 13:21

Dist	COUNTY	ROUTE	POST MILES TOTAL PROJECT	SHEET No.	TOTAL SHEETS
03	Pla	80	0.3/29.3	26	56

REGISTERED CIVIL ENGINEER 6-30-10 DATE

9-13-10
PLANS APPROVAL DATE

REGISTERED PROFESSIONAL ENGINEER ANA SERRANO No. 65977 Exp. 6-30-12 CIVIL STATE OF CALIFORNIA

THE STATE OF CALIFORNIA OR ITS OFFICERS OR AGENTS SHALL NOT BE RESPONSIBLE FOR THE ACCURACY OR COMPLETENESS OF SCANNED COPIES OF THIS PLAN SHEET.

2

DELINEATOR & OBJECT MARKER & MILEPOST MARKER

LOCATION	DELINEATOR (CLASS 2) (TYPE F-2)	OBJECT MARKER (TYPE L-1)	MILEPOST MARKER
	EA	EA	EA
ROCKLIN RD UC PM 6.06			2
BOWMAN UC AND OH'S PM R19.80 TO R21.06	9	4	4
TOTAL	9	4	6

PAVEMENT DELINEATION ITEMS (1 OF 2)

LOCATION/POST MILE LIMITS	PAVEMENT MARKER (RETROREFLECTIVE)								PAVEMENT MARKER (RETROREFLECTIVE-RECESSED)			PAVEMENT MARKER (NON-REFLECTIVE)			
	TYPE C	TYPE D		TYPE G				TYPE H	TYPE C	TYPE G	TYPE H	TYPE A		TYPE AY	
	DETAIL 37	DETAIL 23	DETAIL 30	DETAIL 10	DETAIL 25	DETAIL 37	DETAIL 38	DETAIL 25	DETAIL 14A	DETAIL 12	DETAIL 25	DETAIL 10	DETAIL 13	DETAIL 23	DETAIL 30
	EA	EA	EA	EA	EA	EA	EA	EA	EA	EA	EA	EA	EA	EA	EA
SOUTH ROSEVILLE OC PM 0.27	36	30	36	24		4	13					126		134	152
CIRBY WAY PM 0.69			56	16								76			248
LEAD HILL DRIVE OC PM 2.57		20		12			10					54		88	
ROCKLIN ROAD OC PM 6.01 TO 6.13					12			3					32		
PENRYN ROAD OC PM 10.35															
BOWMAN UC AND OH'S PM R19.80 TO R21.06										512	256				
SUB-TOTAL	36	50	92	52	12	4	23	3		512	256	256	32	222	400
TOTAL	272								768			910			

PAVEMENT DELINEATION ITEMS (2 OF 2)

LOCATION/POST MILE LIMITS	THERMOPLASTIC PAVEMENT MARKING	THERMOPLASTIC TRAFFIC STRIPE							REMOVE YELLOW THERMOPLASTIC TRAFFIC STRIPE (HAZARDOUS WASTE)	REMOVE THERMOPLASTIC TRAFFIC STRIPE
		8" SOLID WHITE	6" SOLID WHITE	8" DASHED WHITE (BROKEN 12-3)	4" DASHED WHITE (BROKEN 36-12)	4" SOLID				
						YELLOW		WHITE		
	TYPE III (L)	DETAIL 38	DETAIL 39	DETAIL 37	DETAIL 12	DETAIL 21	DETAIL 25	DETAIL 27B		
	SQFT	LF	LF	LF	LF	LF	LF	LF	LF	LF
SOUTH ROSEVILLE OC PM 0.27	42.00	544.00		999.00						743.80
CIRBY WAY PM 0.69										1,050.00
LEAD HILL DRIVE OC PM 2.57	42.00	420.00	630.00							572.22
ROCKLIN ROAD OC PM 6.01 TO 6.13					381.48		189.94	189.94	190.74	664.20
PENRYN ROAD OC PM 10.35						664.20		664.20	664.20	
BOWMAN UC AND OH'S PM R19.80 TO R21.06					26,527.00		13,263.00	13,263.00		
SUB-TOTAL						664.00	13,453.00	14,117.00		
TOTAL	84.00	964.00	630.00	999.00	26,908.00	28,234.00			854.94	3,030.22

2 REVISED PER ADDENDUM No. 2 DATED FEBRUARY 25, 2011

PAVEMENT DELINEATION QUANTITIES

PDQ-1

REVISED BY | DATE REVISED
ANA SERRANO | ANA SERRANO
CALCULATED-DESIGNED BY | CHECKED BY
FUNCTIONAL SUPERVISOR
GILBERT OGAZ

STATE OF CALIFORNIA - DEPARTMENT OF TRANSPORTATION
Caltrans®
NORTH REGION
OFFICE OF DESIGN SOUTH
DESIGN BRANCH S2

LAST REVISION 00-00-00 | DATE PLOTTED => 22-FEB-2011 | TIME PLOTTED => 09:55

Dist	COUNTY	ROUTE	POST MILES TOTAL PROJECT	SHEET No.	TOTAL SHEETS
03	Pla	80	0.3/29.3	27	56

REGISTERED CIVIL ENGINEER 2-10-11 DATE

9-13-10
PLANS APPROVAL DATE

REGISTERED PROFESSIONAL ENGINEER JUSTIN A. UNCK No. C65889 Exp. 12-31-11 CIVIL STATE OF CALIFORNIA

THE STATE OF CALIFORNIA OR ITS OFFICERS OR AGENTS SHALL NOT BE RESPONSIBLE FOR THE ACCURACY OR COMPLETENESS OF SCANNED COPIES OF THIS PLAN SHEET.

2

METAL BEAM GUARD RAILING

DIRECTION	POST MILE OF STRUCTURE	DESCRIPTION	REMOVE METAL BEAM GUARD RAILING	METAL BEAM GUARD RAILING	TRANSITION RAILING (TYPE WB)	ALTERNATIVE FLARED TERMINAL SYSTEM	END ANCHOR ASSEMBLY (TYPE SFT)	NOTES
			LF	LF	EA	EA	EA	
EB	R20.13	BOWMAN UC APPROACH	200.0	175.0	1			REPLACE 200' STARTING AT CONNECTION TO BARRIER.
	R20.13	BOWMAN UC DEPARTURE	142.5	142.5			1	LAYOUT 12DD
	R20.59	BOWMAN OH (SOUTH) APPROACH	200.0	175.0	1			REPLACE 200' STARTING AT CONNECTION TO BARRIER.
	R20.59/R20.69	BETWEEN BOWMAN OH SOUTH AND NORTH	362.5	337.5	1			LAYOUT 12D
	R20.69	BOWMAN OH (NORTH) DEPARTURE	200.0	200.0				REPLACE 200' STARTING AT CONNECTION TO BARRIER.
WB	R20.13	BOWMAN UC DEPARTURE	50.0	50.0			1	LAYOUT 12DD
	R20.13	BOWMAN UC APPROACH	50.0		1	1		LAYOUT 12B
	R20.59	BOWMAN OH (SOUTH) APPROACH	50.0		1	1		LAYOUT 12B
	R20.69	BOWMAN OH (NORTH) APPROACH	200.0	175.0	1			REPLACE 200' STARTING AT CONNECTION TO BARRIER.
		TOTAL	1455.0	1255.0	6	2	2	

HMA DIKE

DIRECTION	POST MILE OF STRUCTURE	DESCRIPTION	PLACE HMA DIKE (TYPE A)	PLACE HMA DIKE (TYPE C)	PLACE HMA DIKE (TYPE E)	PLACE HMA DIKE (TYPE F)	HMA (TYPE A)
			LF	LF	LF	LF	TON
EB	R20.13	BOWMAN UC APPROACH				170.0	2.2
	R20.13	BOWMAN UC DEPARTURE			16.3	153.7	2.4
	R20.59	BOWMAN OH (SOUTH) APPROACH				65.6	0.8
	R20.59/R20.69	BETWEEN BOWMAN OH (SOUTH AND NORTH)				360.6	4.7
	R20.69	BOWMAN OH (NORTH) DEPARTURE				128.0	1.7
WB	R20.13	BOWMAN UC DEPARTURE	185.0				4.9
	R20.13	BOWMAN UC APPROACH				17.1	0.2
	R20.59	BOWMAN OH (SOUTH) DEPARTURE			126.0		3.2
	R20.59/R20.69	BETWEEN BOWMAN OH (SOUTH AND NORTH)	282.5	62.5		25.0	8.3
		SUB-TOTAL					28.4 *
		TOTAL	467.5	62.5	142.3	920.0	

* SEE ROADWAY QUANTITIES FOR HMA (TYPE A) TOTAL

PLACE HMA (MISCELLANEOUS AREA)

POSTMILE - LOCATION	DIRECTION WB	DIRECTION EB	REMOVE ENTRANCE TAPER	PLACE HMA (Misc AREA)	HMA (TYPE A) *	REMARKS
			EA	SQYD	TON	
PM 20.15 - BOWMAN UC	X		1	2.0	0.3	OSD
PM 20.68 - BOWMAN OH (N)	X		1	7.5	1.2	OSD
PM 20.68 - IN BETWEEN OH		X	1	1.8	0.3	OSD
TOTAL			3	11.3	1.8	

* FOR TOTAL QUANTITY, SEE ROADWAY ITEMS TABLE

STAGE CONSTRUCTION QUANTITIES

DIRECTION	APPROXIMATE POST MILE	DESCRIPTION	STAGE 1 HOT MIX ASPHALT (TYPE A) *	STAGE 2 COLD PLANE ASPHALT CONCRETE PAVEMENT *
			TON	SQYD
EB	R20.09 TO R20.12	BOWMAN UC APPROACH	91.4	1120
	R20.16 TO R20.19	BOWMAN UC DEPARTURE	91.4	1120
	R20.55 TO R20.58	BOWMAN OH (SOUTH) APPROACH	96.2	914
	R20.63 TO R20.66	BOWMAN OH (SOUTH) DEPARTURE	96.2	914
	R20.66 TO R20.69	BOWMAN OH (NORTH) APPROACH	96.2	914
	R20.74 TO R20.77	BOWMAN OH (NORTH) DEPARTURE	96.2	914
WB	R20.09 TO R20.12	BOWMAN UC DEPARTURE	109.6	1120
	R20.16 TO R20.19	BOWMAN UC APPROACH	109.6	1120
	R20.55 TO R20.58	BOWMAN OH (SOUTH) DEPARTURE	132.7	914
	R20.63 TO R20.66	BOWMAN OH (SOUTH) APPROACH	132.7	914
	R20.66 TO R20.69	BOWMAN OH (NORTH) DEPARTURE	132.7	914
	R20.74 TO R20.77	BOWMAN OH (NORTH) APPROACH	132.7	914
		SUB-TOTAL	1317.6	11792

* FOR TOTALS, SEE ROADWAY QUANTITIES.

2 **REVISED PER ADDENDUM No. 2 DATED FEBRUARY 25, 2011**

SUMMARY OF QUANTITIES

Q-1

STATE OF CALIFORNIA - DEPARTMENT OF TRANSPORTATION
Caltrans
NORTH REGION
OFFICE OF DESIGN SOUTH
DESIGN BRANCH S1

FUNCTIONAL SUPERVISOR: M. SADIQ
CALCULATED-DESIGNED BY: J. UNCK
CHECKED BY: J. UNCK
REVISED BY
DATE REVISED

LAST REVISION 00-00-00 | DATE PLOTTED => 18-FEB-2011 | TIME PLOTTED => 13:21

Dist	COUNTY	ROUTE	POST MILES TOTAL PROJECT	SHEET No.	TOTAL SHEETS
03	Pla	80	0.3/29.3	28	56

REGISTERED CIVIL ENGINEER 2-10-11 DATE

9-13-10
PLANS APPROVAL DATE

REGISTERED PROFESSIONAL ENGINEER JUSTIN A. UNCK No. C65889 Exp. 12-31-11 CIVIL STATE OF CALIFORNIA

2 THE STATE OF CALIFORNIA OR ITS OFFICERS OR AGENTS SHALL NOT BE RESPONSIBLE FOR THE ACCURACY OR COMPLETENESS OF SCANNED COPIES OF THIS PLAN SHEET.

ROADWAY QUANTITIES

DIRECTION	APPROXIMATE POST MILE	DESCRIPTION	ROADWAY EXCAVATION (CY)	HOT MIX ASPHALT (TYPE A) (TON)	RUBBERIZED HOT MIX ASPHALT (OPEN GRADED) (TON)	CLASS 2 AGGREGATE BASE (CY)	COLD PLANE ASPHALT CONCRETE PAVEMENT (SQYD)	REMARKS
EB	R19.80 TO R20.09				340.5		6465.0	TO OBLITERATE REMAINS OF TEMPORARY STRIPING/MARKERS.
	R20.09 TO R20.12	BOWMAN UC APPROACH	970.6	584.8	30.5	634.7		RECONSTRUCT STRUCTURAL SECTION TO CONFORM AT APPROACH SLAB.
	R20.16 TO R20.19	BOWMAN UC DEPARTURE	970.6	584.8	30.5	634.7		RECONSTRUCT STRUCTURAL SECTION TO CONFORM AT APPROACH SLAB.
	R20.19 TO R20.55	BETWEEN BOWMAN UC AND BOWMAN OH (SOUTH)			429.7		8159.0	TO OBLITERATE REMAINS OF TEMPORARY STRIPING/MARKERS.
	R20.55 TO R20.58	BOWMAN OH (SOUTH) APPROACH	816.1	477.0	31.7	517.7		RECONSTRUCT STRUCTURAL SECTION TO CONFORM AT APPROACH SLAB.
	R20.63 TO R20.66	BOWMAN OH (SOUTH) DEPARTURE	816.1	477.0	16.4	517.7		RECONSTRUCT STRUCTURAL SECTION TO CONFORM AT APPROACH SLAB.
	R20.66 TO R20.66	BETWEEN BOWMAN OH (SOUTH) AND (NORTH)	318.5	191.9		208.3		
	R20.66 TO R20.69	BOWMAN OH (NORTH) APPROACH	817.7	479.7	30.5	520.6		RECONSTRUCT STRUCTURAL SECTION TO CONFORM AT APPROACH SLAB.
	R20.74 TO R20.77	BOWMAN OH (NORTH) DEPARTURE	817.7	479.7	18.8	520.6		RECONSTRUCT STRUCTURAL SECTION TO CONFORM AT APPROACH SLAB.
	R20.77 TO R21.06				340.5		6465.0	TO OBLITERATE REMAINS OF TEMPORARY STRIPING/MARKERS.
	R20.15 TO R20.35	MEDIAN SHOULDER AT SUPER			98.9		1549.0	
	R20.73 TO R20.87	MEDIAN SHOULDER AT SUPER			69.2		549.0	
	R20.44 TO R20.59	OUTSIDE SHOULDER AT SUPER			41.7		1042.0	
WB	R19.80 TO R20.09				340.5		6465.0	TO OBLITERATE REMAINS OF TEMPORARY STRIPING/MARKERS.
	R20.09 TO R20.12	BOWMAN UC DEPARTURE	996.8	584.8	30.5	634.7		RECONSTRUCT STRUCTURAL SECTION TO CONFORM AT APPROACH SLAB.
	R20.16 TO R20.19	BOWMAN UC APPROACH	996.8	584.8	30.5	634.7		RECONSTRUCT STRUCTURAL SECTION TO CONFORM AT APPROACH SLAB.
	R20.19 TO R20.55	BETWEEN BOWMAN UC AND BOWMAN OH (SOUTH)			429.7		8159.0	TO OBLITERATE REMAINS OF TEMPORARY STRIPING/MARKERS.
	R20.55 TO R20.58	BOWMAN OH (SOUTH) DEPARTURE	843.5	477.0	17.6	517.7		RECONSTRUCT STRUCTURAL SECTION TO CONFORM AT APPROACH SLAB.
	R20.63 TO R20.66	BOWMAN OH (SOUTH) APPROACH	843.5	477.0	30.5	517.7		RECONSTRUCT STRUCTURAL SECTION TO CONFORM AT APPROACH SLAB.
	R20.66 TO R20.66	BETWEEN BOWMAN OH (SOUTH) AND (NORTH)	318.5	191.9		208.3		
	R20.66 TO R20.69	BOWMAN OH (NORTH) DEPARTURE	848.3	479.7	17.6	520.6		RECONSTRUCT STRUCTURAL SECTION TO CONFORM AT APPROACH SLAB.
	R20.74 TO R20.77	BOWMAN OH (NORTH) APPROACH	848.3	479.7	31.7	520.6		RECONSTRUCT STRUCTURAL SECTION TO CONFORM AT APPROACH SLAB.
	R20.77 TO R21.06				340.5		6465.0	TO OBLITERATE REMAINS OF TEMPORARY STRIPING/MARKERS.
	R20.17 TO R20.32	OUTSIDE SHOULDER AT SUPER			41.7		713.0	
	R20.73 TO R20.80	OUTSIDE SHOULDER AT SUPER			19.5		180.0	
		FROM PLACE HMA (MISCELLANEOUS AREA)		1.8				
		FROM HMA DIKE		28.4				
		FROM STAGE CONSTRUCTION QUANTITIES		1317.6			11,792.0	
		TOTAL	11,223.0	7897.6	2809.4	7108.6	58,003.0	

NOTE: EMBANKMENT TO BE USED AS REQUIRED OR DIRECTED BY ENGINEER

EROSION CONTROL (HYDROSEED) (SQFT)

LOCATION	SQFT
PM R20.10 TO R28.78	52,590

ADJUST DRAINAGE INLET

LOCATION	ADJUST INLET (EA)
BOWMAN UC, WESTBOUND	1
BOWMAN UC, EASTBOUND	3
TOTAL	4

RUMBLE STRIPS

DIRECTION	APPROXIMATE POST MILE	RUMBLE STRIP STA MEDIAN	RUMBLE STRIP STA OUTSIDE	NOTES
EB	R19.80 TO R20.12	16.9	16.9	
	R20.16 TO R20.58	22.5	10.5	
	R20.63 TO R20.69	3.1	3.1	
	R20.74 TO R21.06	16.9	9.3	
WB	R19.80 TO R20.12	16.9	8.9	
	R20.16 TO R20.58	22.5	14.9	
	R20.63 TO R20.69	3.1	3.1	
	R20.74 TO R21.06	16.9	4.9	
TOTAL		190.4		

CONSTRUCTION BMPs

	UNIT	QUANTITY
TEMPORARY DRAINAGE INLET PROTECTION	EA	4
TEMPORARY CONCRETE WASHOUT FACILITY	EA	3

TEMPORARY FENCE (TYPE ESA)

LOCATION	LENGTH (LF)	REMARKS
WEIMAR CROSS ROAD OC	600	FENCING TO BE PLACED AT STAGING AREA NEAR PM 29.32

TACK COAT

DIRECTION	APPROXIMATE POST MILE	DESCRIPTION	TACK COAT (TONS)	NOTES
EB/WB	R19.80 TO R21.06	FOR RHMA (OPEN GRADED)	15.4	
	VARIOUS	RECONSTRUCT ROADWAY AT APPROACH SLABS	2.1	
		TOTAL	17.5	

2 REVISED PER ADDENDUM No. 2 DATED FEBRUARY 25, 2011 SUMMARY OF QUANTITIES

Q-2

REVISED BY | DATE REVISED
J. UNCK | J. UNCK
CALCULATED-DESIGNED BY | CHECKED BY
FUNCTIONAL SUPERVISOR
M. SADIQ

STATE OF CALIFORNIA - DEPARTMENT OF TRANSPORTATION
Caltrans
NORTH REGION
OFFICE OF DESIGN SOUTH
DESIGN BRANCH S1

LAST REVISION 00-00-00 | DATE PLOTTED => 18-FEB-2011 | TIME PLOTTED => 13:22

DIST	COUNTY	ROUTE	POST MILES TOTAL PROJECT	SHEET No	TOTAL SHEETS
03	Pla	80	0.3/29.3	45	56

REGISTERED CIVIL ENGINEER 2/4/11 DATE

9-13-10
PLANS APPROVAL DATE

REGISTERED PROFESSIONAL ENGINEER Kelly Holden No. 42268 Exp. 3/31/2012 CIVIL STATE OF CALIFORNIA

The State of California or its officers or agents shall not be responsible for the accuracy or completeness of electronic copies of this plan sheet.

2

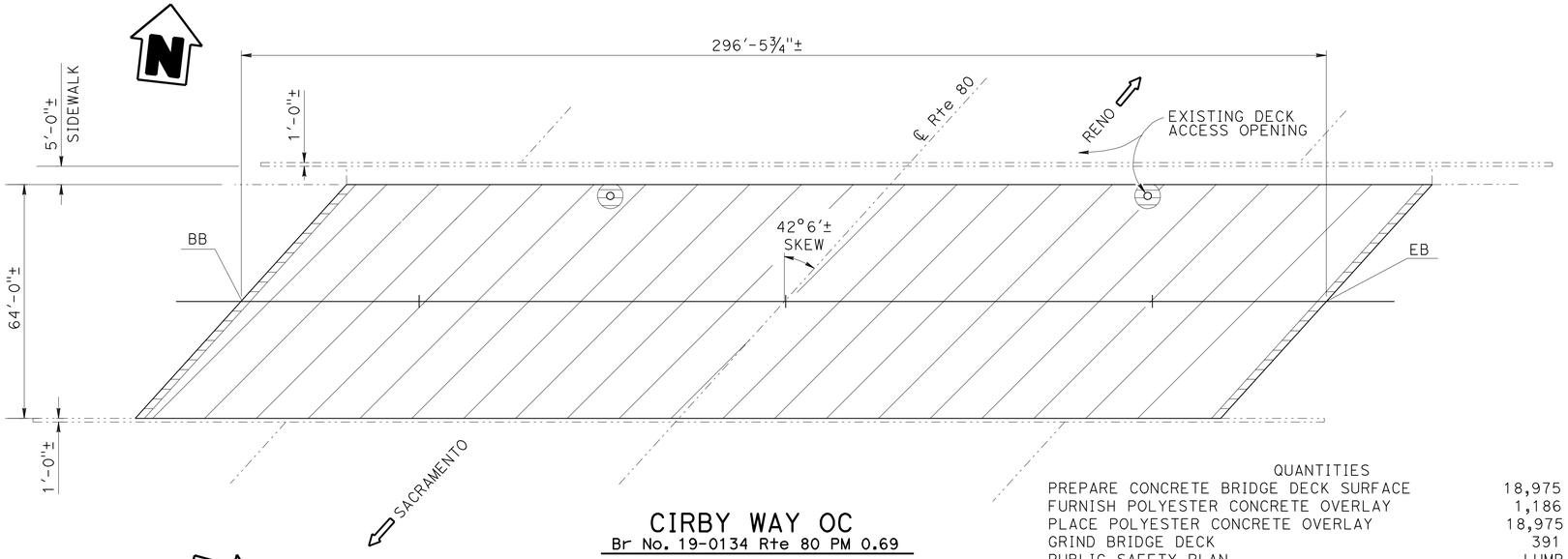

CIRBY WAY OC
Br No. 19-0134 Rte 80 PM 0.69

PLAN
1" = 20'

QUANTITIES

PREPARE CONCRETE BRIDGE DECK SURFACE	18,975	SQFT
FURNISH POLYESTER CONCRETE OVERLAY	1,186	CF
PLACE POLYESTER CONCRETE OVERLAY	18,975	SQFT
GRIND BRIDGE DECK	391	SQFT
PUBLIC SAFETY PLAN	LUMP SUM	

INDEX TO PLANS

SHEET No.	DESCRIPTION
1	GENERAL PLAN No. 1
2	GENERAL PLAN No. 2
3	GENERAL PLAN No. 3
4	GENERAL PLAN No. 4
5	GENERAL PLAN No. 5
6	GENERAL PLAN No. 6
~~7~~	~~GENERAL PLAN No. 7~~
~~8~~	~~GENERAL PLAN No. 8~~
9	GRIND BRIDGE DECK DETAILS
10	STRUCTURE APPROACH TYPE R(30D)
11	JOINT SEAL DETAILS
12	SNOWPLOW DEFLECTOR DETAILS
12A	BARRIER REPLACEMENT DETAILS
12B	CONCRETE SPALL/DECK REPAIR DETAILS

STANDARD PLANS DATED MAY 2006

A10A	ACRONYMS AND ABBREVIATIONS 1 OF 2
A10B	ACRONYMS AND ABBREVIATIONS 2 OF 2
RSP B6-21	JOINT SEALS
B11-55	CONCRETE BARRIER TYPE 732

STANDARD PLAN SHEET No.

DETAIL No.

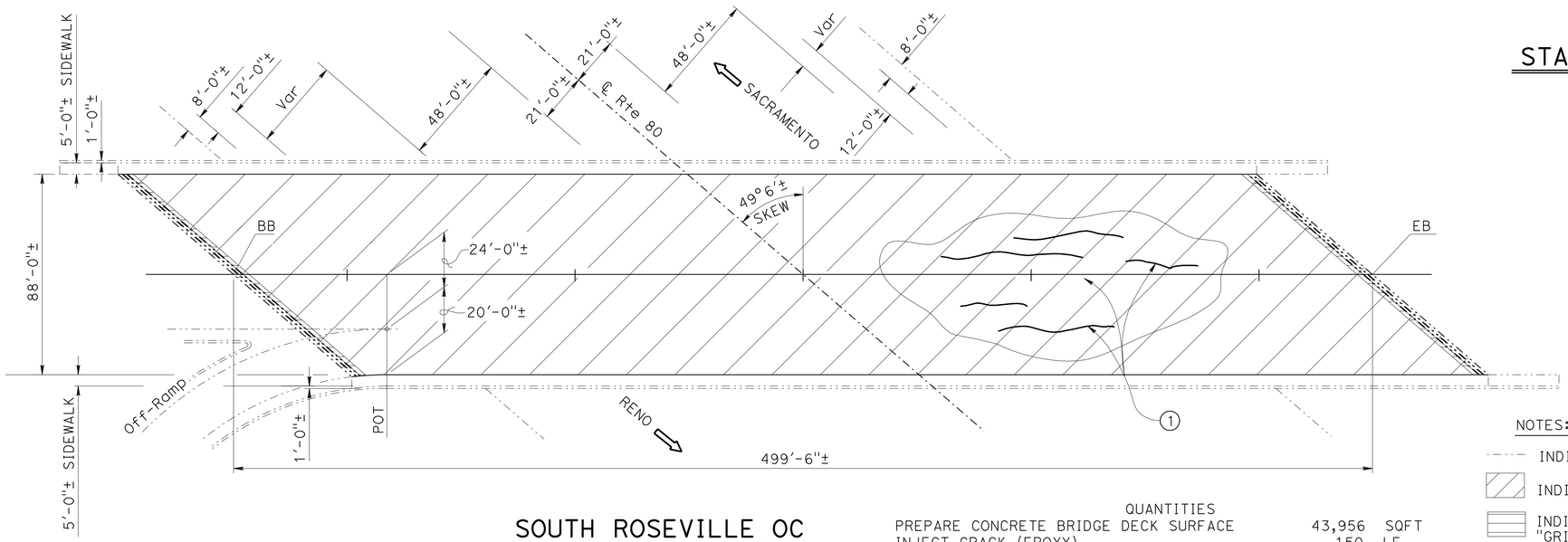

SOUTH ROSEVILLE OC
Br No. 19-0077 Rte 80 PM 0.27

PLAN
1" = 30'

QUANTITIES

PREPARE CONCRETE BRIDGE DECK SURFACE	43,956	SQFT
INJECT CRACK (EPOXY)	150	LF
FURNISH POLYESTER CONCRETE OVERLAY	2,748	CF
PLACE POLYESTER CONCRETE OVERLAY	43,956	SQFT
GRIND BRIDGE DECK	440	SQFT

NOTES:

INDICATES EXISTING STRUCTURE

INDICATES LIMITS OF ¾" POLYESTER CONCRETE OVERLAY

INDICATES LIMITS OF GRIND BRIDGE DECK, SEE "GRIND BRIDGE DECK DETAILS" SHEET.

(1) EPOXY INJECT THE CRACKS ALONG BRIDGE SOFFIT IN SPAN 2, APPROXIMATELY 150 LF, AS DIRECTED BY THE ENGINEER.

NOTE:
THE CONTRACTOR SHALL VERIFY ALL CONTROLLING FIELD DIMENSIONS BEFORE ORDERING OR FABRICATING ANY MATERIAL.

2 **REVISED PER ADDENDUM No. 2 DATED FEBRUARY 25, 2011**

DESIGN ENGINEER

	BY	CHECKED		BY	CHECKED
DESIGN	D. Grenley / K. Holden	D. Desai / D. Soon			
DETAILS	Anthony Valdez	D. Desai / E. Ortega	LAYOUT	David Grenley	Dhwani Desai
QUANTITIES	B. Hansen / B. Jenko	W. Hou / J. Dickerson	SPECIFICATIONS	Sirisha Nelapatla	PLANS AND SPECS COMPARED Sirisha Nelapatla

STATE OF CALIFORNIA
DEPARTMENT OF TRANSPORTATION

DIVISION OF ENGINEERING SERVICES
STRUCTURE DESIGN
DESIGN BRANCH 7

BRIDGE NO. Various
POST MILE Various

I-80 REHAB
GENERAL PLAN No. 1

ORIGINAL SCALE IN INCHES FOR REDUCED PLANS 0 1 2 3

CU 03
EA 3E0901

DISREGARD PRINTS BEARING EARLIER REVISION DATES

REVISION DATES: 3-23-09 6-2-09 9-3-09 10-7-09 10-19-09 2-2-10 2-4-10 4-6-10 4-15-10

SHEET 1 OF 12

STRUCTURES DESIGN GENERAL PLAN SHEET (ENGLISH) (REV.07-24-06)

FILE => 03_3E0901-a-gp-1.add

USERNAME => rtmartin DATE PLOTTED => 18-FEB-2011 TIME PLOTTED => 12:44

DIST	COUNTY	ROUTE	POST MILES TOTAL PROJECT	SHEET No	TOTAL SHEETS
03	Pla	80	0.3/29.3	46	56

REGISTERED CIVIL ENGINEER 2/4/11 DATE

9-13-10
PLANS APPROVAL DATE

The State of California or its officers or agents shall not be responsible for the accuracy or completeness of electronic copies of this plan sheet.

REGISTERED PROFESSIONAL ENGINEER Kelly Holden No. 42268 Exp. 3/31/2012 CIVIL STATE OF CALIFORNIA

2

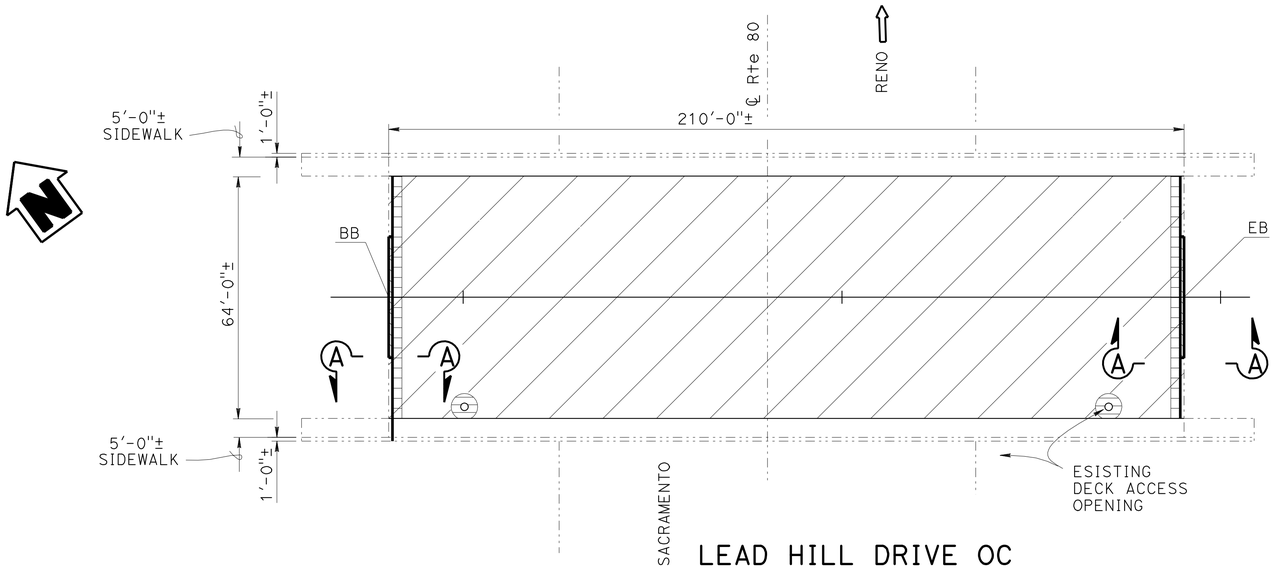

LEAD HILL DRIVE OC
Br No. 19-0150 Rte 80 PM 2.57

PLAN
1" = 20'

QUANTITIES

PREPARE CONCRETE BRIDGE DECK SURFACE	13,440	SQFT
BRIDGE REMOVAL (PORTION) (BACKWALL)	64	CF
STRUCTURAL CONCRETE, BRIDGE	64	CF
CLEAN EXPANSION JOINT	140	LF
FURNISH POLYESTER CONCRETE OVERLAY	840	CF
PLACE POLYESTER CONCRETE OVERLAY	13,440	SQFT
GRIND BRIDGE DECK	390	SQFT
JOINT SEAL (MR 1")	140	LF
BAR REINFORCING STEEL (BRIDGE)	86	LB
PUBLIC SAFETY PLAN	LUMP	SUM

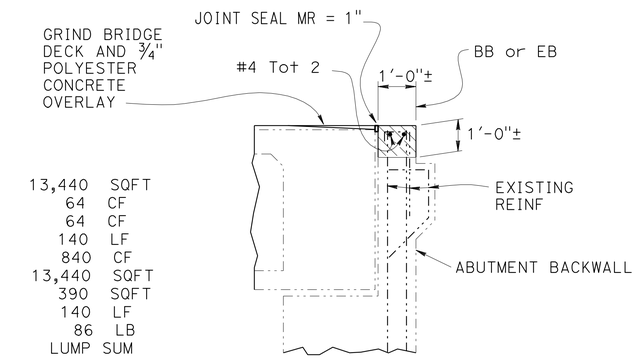

SECTION A-A
NO SCALE

REMOVE AND REPLACE TOP PORTION OF ABUTMENT BACKWALL. VERTICAL REINFORCEMENT TO REMAIN UNDAMAGED. LIMITS OF REPAIR TO BE VERIFIED BY ENGINEER.

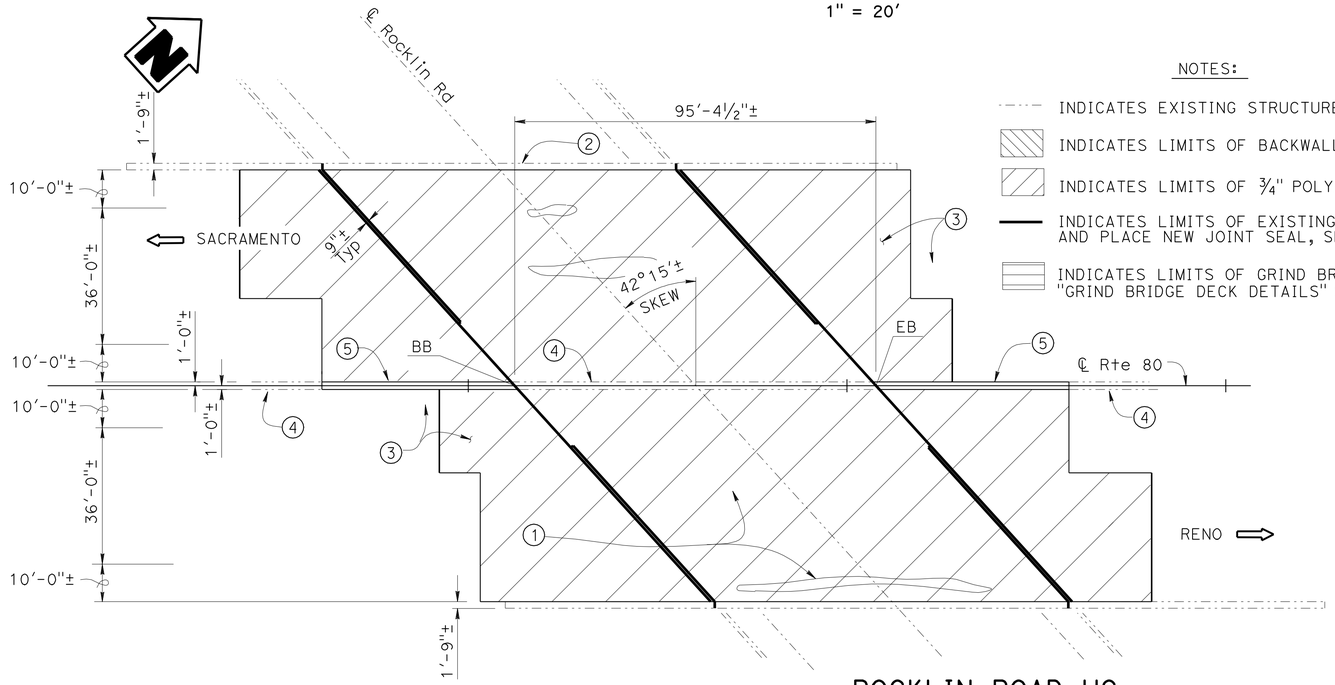

NOTES:

- INDICATES EXISTING STRUCTURE
- INDICATES LIMITS OF BACKWALL REMOVE AND REPLACE CONCRETE STRUCTURE
- INDICATES LIMITS OF ¾" POLYESTER CONCRETE OVERLAY
- INDICATES LIMITS OF EXISTING JOINT SEAL REMOVAL, CLEAN AND PLACE NEW JOINT SEAL, SEE "JOINT SEAL DETAILS" SHEET.
- INDICATES LIMITS OF GRIND BRIDGE DECK, SEE "GRIND BRIDGE DECK DETAILS" SHEET.

1. PATCH SPALLS IN BRIDGE DECK AS DIRECTED BY THE ENGINEER, SEE "DECK REPAIR DETAIL" ON "CONCRETE SPALL/DECK REPAIR DETAILS" SHEET.
2. PATCH SPALL AT EXTERIOR GIRDER EDGE, SEE "EXTERIOR GIRDER REPAIR DETAIL" ON "CONCRETE SPALL/DECK REPAIR DETAILS" SHEET.
3. STRUCTURE APPROACH SLAB TYPE R(30D) WITH ¾" POLYESTER CONCRETE OVERLAY.
4. EXISTING CONCRETE BARRIER TYPE 50 OR 50A.
5. REMOVE AND REPLACE CONCRETE BARRIER TYPE 50A, SEE "BARRIER REPLACEMENT DETAILS" SHEET.

QUANTITIES

REMOVE UNSOUND CONCRETE	25	CF
PREPARE CONCRETE BRIDGE DECK SURFACE	19,800	SQFT
BRIDGE REMOVAL (PORTION), LOCATION D	LUMP	SUM
AGGREGATE BASE (APPROACH SLAB)	34	CY
STRUCTURAL CONCRETE, APPROACH SLAB (TYPE R)	341	CY
PAVING NOTCH EXTENSION	228	CF
RAPID SETTING CONCRETE (PATCH)	25	CF
REPAIR SPALLED SURFACE AREA	3	SQFT
FURNISH POLYESTER CONCRETE OVERLAY	1,240	CF
PLACE POLYESTER CONCRETE OVERLAY	19,800	SQFT
JOINT SEAL (MR½")	227	LF
JOINT SEAL (MR 1")	315	LF
CONCRETE BARRIER (TYPE 50A)	103	LF

ROCKLIN ROAD UC
Br No. 19-0094 Rte 80 PM 6.06

PLAN
1" = 20'

NOTE:
THE CONTRACTOR SHALL VERIFY ALL CONTROLLING FIELD DIMENSIONS BEFORE ORDERING OR FABRICATING ANY MATERIAL.

2 **REVISED PER ADDENDUM No. 2 DATED FEBRUARY 25, 2011**

DESIGN ENGINEER	DESIGN	BY D. Grenley / K. Holden	CHECKED D. Desai / D. Soon		
	DETAILS	BY Anthony Valdez	CHECKED D. Desai / E. Ortega	LAYOUT BY David Grenley	CHECKED Dhvani Desai
	QUANTITIES	BY B. Hansen / B. Jenko	CHECKED W. Hou / J. Dickerson	SPECIFICATIONS BY Sirisha Nelapatla	PLANS AND SPECS COMPARED Sirisha Nelapatla

STATE OF CALIFORNIA DEPARTMENT OF TRANSPORTATION

DIVISION OF ENGINEERING SERVICES STRUCTURE DESIGN DESIGN BRANCH 7

BRIDGE NO. Various
POST MILE Various

I-80 REHAB
GENERAL PLAN No. 2

ORIGINAL SCALE IN INCHES FOR REDUCED PLANS 0 1 2 3

CU 03
EA 3E0901

DISREGARD PRINTS BEARING EARLIER REVISION DATES

REVISION DATES: 1-28-09 6-3-09 7-16-09 7-30-09 9-3-09 9-16-09 10-7-09 2-1-10 3-8-10 4-15-10

SHEET 2 OF 12

STRUCTURES DESIGN GENERAL PLAN SHEET (ENGLISH) (REV.07-24-06)

FILE => 03_3e0901-a-gp-2.dgn

USERNAME => s135318 DATE PLOTTED => 18-FEB-2011 TIME PLOTTED => 09:54

DIST	COUNTY	ROUTE	POST MILES TOTAL PROJECT	SHEET No	TOTAL SHEETS
03	Pla	80	0.3/29.3	47	56

REGISTERED CIVIL ENGINEER 2/4/11 DATE

9-13-10
PLANS APPROVAL DATE

REGISTERED PROFESSIONAL ENGINEER Kelly Holden No. 42268 Exp. 3/31/2012 CIVIL STATE OF CALIFORNIA

The State of California or its officers or agents shall not be responsible for the accuracy or completeness of electronic copies of this plan sheet.

2

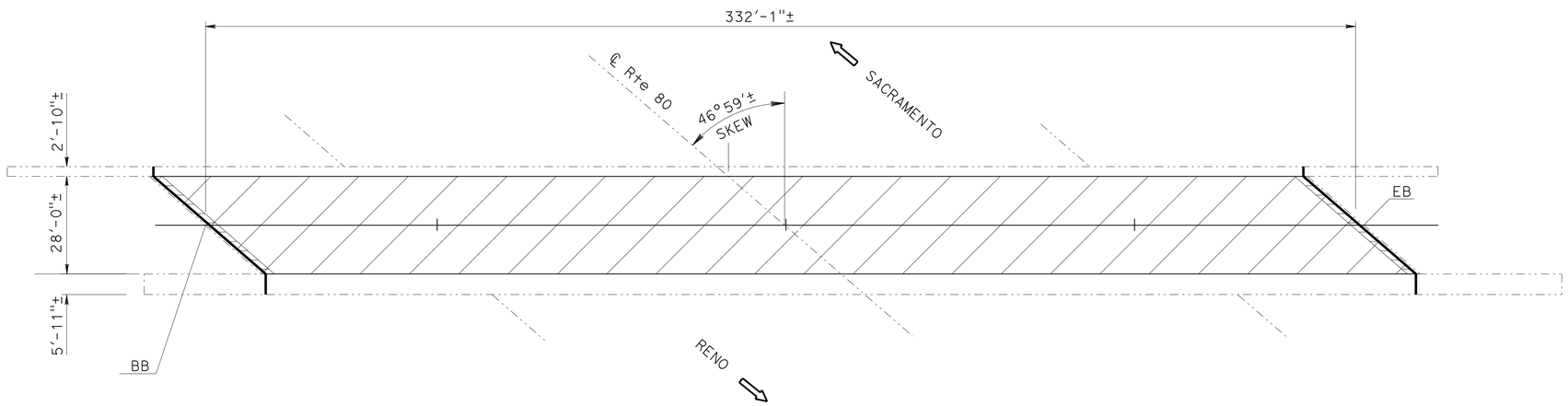

PENRYN ROAD OC
Br No. 19-0099 Rte 80 PM 10.35

PLAN
1" = 20'

NOTES:

- INDICATES EXISTING STRUCTURE
- INDICATES LIMITS OF ¾" POLYESTER CONCRETE OVERLAY
- INDICATES LIMITS OF EXISTING JOINT SEAL REMOVAL, CLEAN AND PLACE NEW JOINT SEAL, SEE "JOINT SEAL DETAILS" SHEET.
- INDICATES LIMITS OF GRIND BRIDGE DECK, SEE "GRIND BRIDGE DECK DETAILS" SHEET.

QUANTITIES

PREPARE CONCRETE BRIDGE DECK SURFACE	9,299	SQFT
CLEAN EXPANSION JOINT	84	LF
FURNISH POLYESTER CONCRETE OVERLAY	582	CF
PLACE POLYESTER CONCRETE OVERLAY	9,299	SQFT
GRIND BRIDGE DECK	140	SQFT
JOINT SEAL (MR 2")	85	LF

NOTE:
THE CONTRACTOR SHALL VERIFY ALL CONTROLLING FIELD DIMENSIONS BEFORE ORDERING OR FABRICATING ANY MATERIAL.

2 **REVISED PER ADDENDUM No. 2 DATED FEBRUARY 25, 2011**

DESIGN ENGINEER

	BY	CHECKED
DESIGN	D. Grenley / K. Holden	D. Desai / D. Soon
DETAILS	A. Valdez / Y. Feng	D. Desai / E. Ortega
QUANTITIES	B. Hansen / B. Jenko	W. Hou / J. Dickerson

	BY	CHECKED
LAYOUT	David Grenley	Dhvani Desai
SPECIFICATIONS	Sirisha Nelapatla	PLANS AND SPECS COMPARED: Sirisha Nelapatla

STATE OF CALIFORNIA
DEPARTMENT OF TRANSPORTATION

DIVISION OF ENGINEERING SERVICES
STRUCTURE DESIGN
DESIGN BRANCH 7

BRIDGE NO. Various
POST MILE Various

I-80 REHAB
GENERAL PLAN No. 3

ORIGINAL SCALE IN INCHES FOR REDUCED PLANS 0 1 2 3

CU 03
EA 3E0901

DISREGARD PRINTS BEARING EARLIER REVISION DATES

REVISION DATES: 3-26-09, 6-16-09, 6-24-09, 9-3-09, 10-2-09, 2-4-10, 4-6-10, 4-15-10

SHEET 3 OF 12

STRUCTURES DESIGN GENERAL PLAN SHEET (ENGLISH) (REV.07-24-06)

FILE => 03_3e0901-a-gp-3.add

USERNAME => s135318 DATE PLOTTED => 18-FEB-2011 TIME PLOTTED => 09:54

DIST	COUNTY	ROUTE	POST MILES TOTAL PROJECT	SHEET No	TOTAL SHEETS
03	Pla	80	0.3/29.3	48	56

REGISTERED CIVIL ENGINEER 2/4/11 DATE

9-13-10
PLANS APPROVAL DATE

REGISTERED PROFESSIONAL ENGINEER Kelly Holden No. 42268 Exp. 3/31/2012 CIVIL STATE OF CALIFORNIA

The State of California or its officers or agents shall not be responsible for the accuracy or completeness of electronic copies of this plan sheet.

2

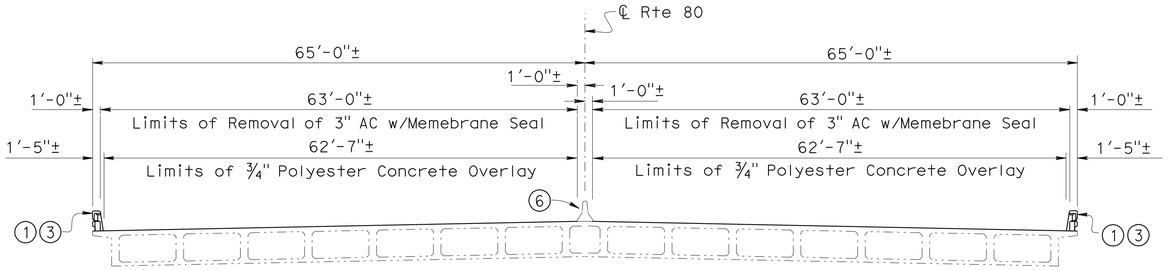

TYPICAL SECTION

1" = 10'

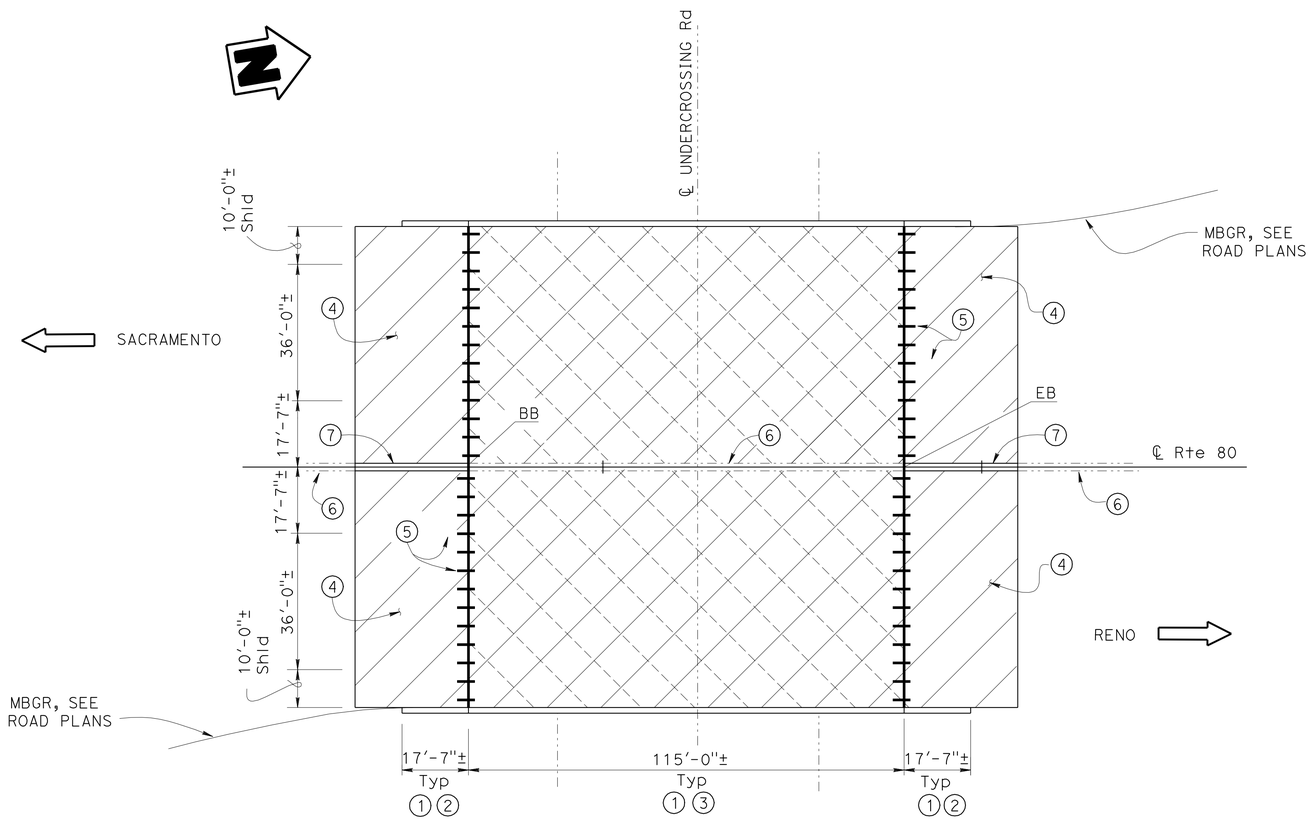

BOWMAN UC

Br No. 19-0042 Rte 80 PM 20.13

PLAN

1" = 20'

NOTES:

INDICATES EXISTING STRUCTURE

INDICATES LIMITS OF REMOVAL OF Approx 3" AC OVERLAY W/ MEMBRANE SEAL

INDICATES LIMITS OF ¾" POLYESTER CONCRETE OVERLAY

INDICATES LIMITS OF EXISTING JOINT SEAL REMOVAL, CLEAN AND PLACE NEW JOINT SEAL, SEE "JOINT SEAL DETAILS" SHEET.

1. REMOVE EXISTING CONCRETE BRIDGE RAIL AND REPLACE WITH CONCRETE BARRIER TYPE 732R. SALVAGE EXISTING METAL RAILING. SEE "BARRIER REPLACEMENT DETAILS" SHEET.
2. REPLACE CONCRETE BARRIER ON WINGWALL
3. REPLACE CONCRETE BARRIER ON BRIDGE
4. STRUCTURE APPROACH SLAB TYPE R(30D) WITH ¾" POLYESTER CONCRETE OVERLAY
5. SNOWPLOW DEFLECTOR
6. EXISTING CONCRETE BARRIER TYPE 50 OR 50A.
7. REMOVE AND REPLACE CONCRETE BARRIER TYPE 50A, SEE "BARRIER REPLACEMENT DETAILS" SHEET.

QUANTITIES

REMOVE ASPHALT CONCRETE SURFACING	14,373	SQFT
SALVAGE METAL BRIDGE RAILING	301	LF
PREPARE CONCRETE BRIDGE DECK SURFACE	21,935	SQFT
BRIDGE REMOVAL (PORTION), LOCATION A	LUMP	SUM
STRUCTURE EXCAVATION (BRIDGE)	266	CF
STRUCTURE BACKFILL (BRIDGE)	260	CF
AGGREGATE BASE (APPROACH SLAB)	29	CY
STRUCTURAL CONCRETE, BRIDGE	212	CF
STRUCTURAL CONCRETE, APPROACH SLAB (TYPE R)	294	CY
PAVING NOTCH EXTENSION	191	CF
FURNISH POLYESTER CONCRETE OVERLAY	1,368	CF
PLACE POLYESTER CONCRETE OVERLAY	21,935	SQFT
SNOWPLOW DEFLECTOR	52	EA
JOINT SEAL (MR 1")	256	LF
BAR REINFORCING STEEL (BRIDGE)	1,250	LB
CONCRETE BARRIER (TYPE 50A)	60	LF
CONCRETE BARRIER (TYPE 732R)	302	LF

NOTE:
THE CONTRACTOR SHALL VERIFY ALL CONTROLLING FIELD DIMENSIONS BEFORE ORDERING OR FABRICATING ANY MATERIAL.

2 **REVISED PER ADDENDUM No. 2 DATED FEBRUARY 25, 2011**

FOR CONSTRUCTION STAGING INFORMATION, SEE "STAGE CONSTRUCTION PLANS"

DESIGN ENGINEER

	BY	CHECKED		BY	CHECKED
DESIGN	D. Grenley / K. Holden	D. Desai / D. Soon			
DETAILS	A. Valdez / Y. Feng	D. Desai / E. Ortega	LAYOUT	David Grenley	Dhvani Desai
QUANTITIES	B. Hansen / B. Jenko	W. Hou / J. Dickerson	SPECIFICATIONS	Sirisha Nelapatla	PLANS AND SPECS COMPARED Sirisha Nelapatla

STATE OF CALIFORNIA
DEPARTMENT OF TRANSPORTATION

DIVISION OF ENGINEERING SERVICES
STRUCTURE DESIGN
DESIGN BRANCH 7

CU 03
EA 3E0901

BRIDGE NO. Various
POST MILE Various

I-80 REHAB
GENERAL PLAN No. 4

ORIGINAL SCALE IN INCHES FOR REDUCED PLANS 0 1 2 3

DISREGARD PRINTS BEARING EARLIER REVISION DATES

REVISION DATES: 3-26-09 6-2-09 6-24-09 7-1-09 9-1-09 10-2-09 10-16-09 2-4-10 6-15-10 1-10-11

SHEET 4 OF 12

STRUCTURES DESIGN GENERAL PLAN SHEET (ENGLISH) (REV.07-24-06)

FILE => 03_3e0901-a-gp-4.dgn

USERNAME => s135318 DATE PLOTTED => 18-FEB-2011 TIME PLOTTED => 09:54

DIST	COUNTY	ROUTE	POST MILES TOTAL PROJECT	SHEET No	TOTAL SHEETS
03	Pla	80	0.3/29.3	49	56

Kelly Ann Holden 2/4/11
REGISTERED CIVIL ENGINEER DATE

9-13-10
PLANS APPROVAL DATE

REGISTERED PROFESSIONAL ENGINEER Kelly Holden No. 42268 Exp. 3/31/2012 CIVIL STATE OF CALIFORNIA

The State of California or its officers or agents shall not be responsible for the accuracy or completeness of electronic copies of this plan sheet.

2

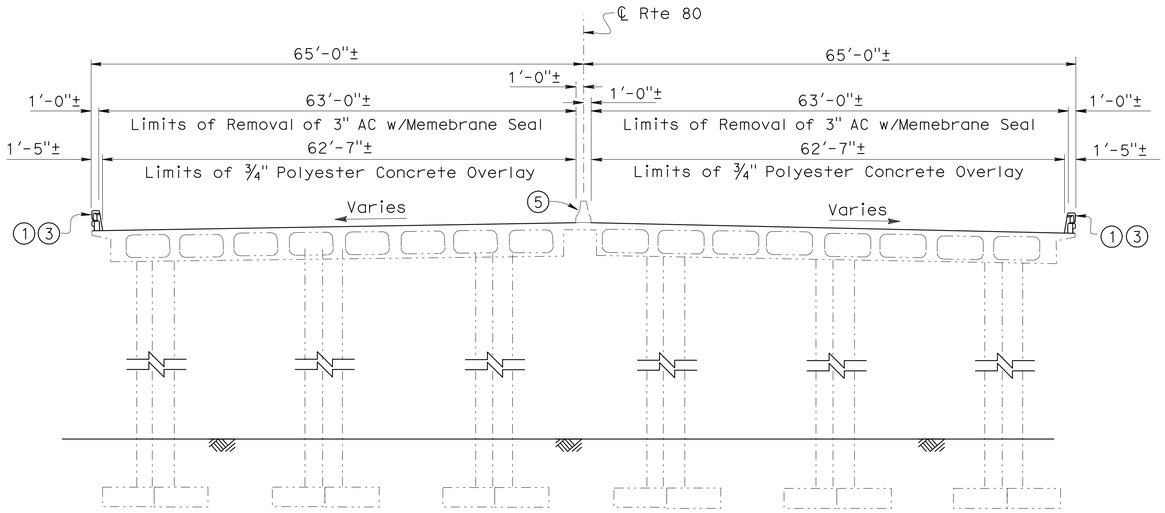

TYPICAL SECTION

1" = 10'

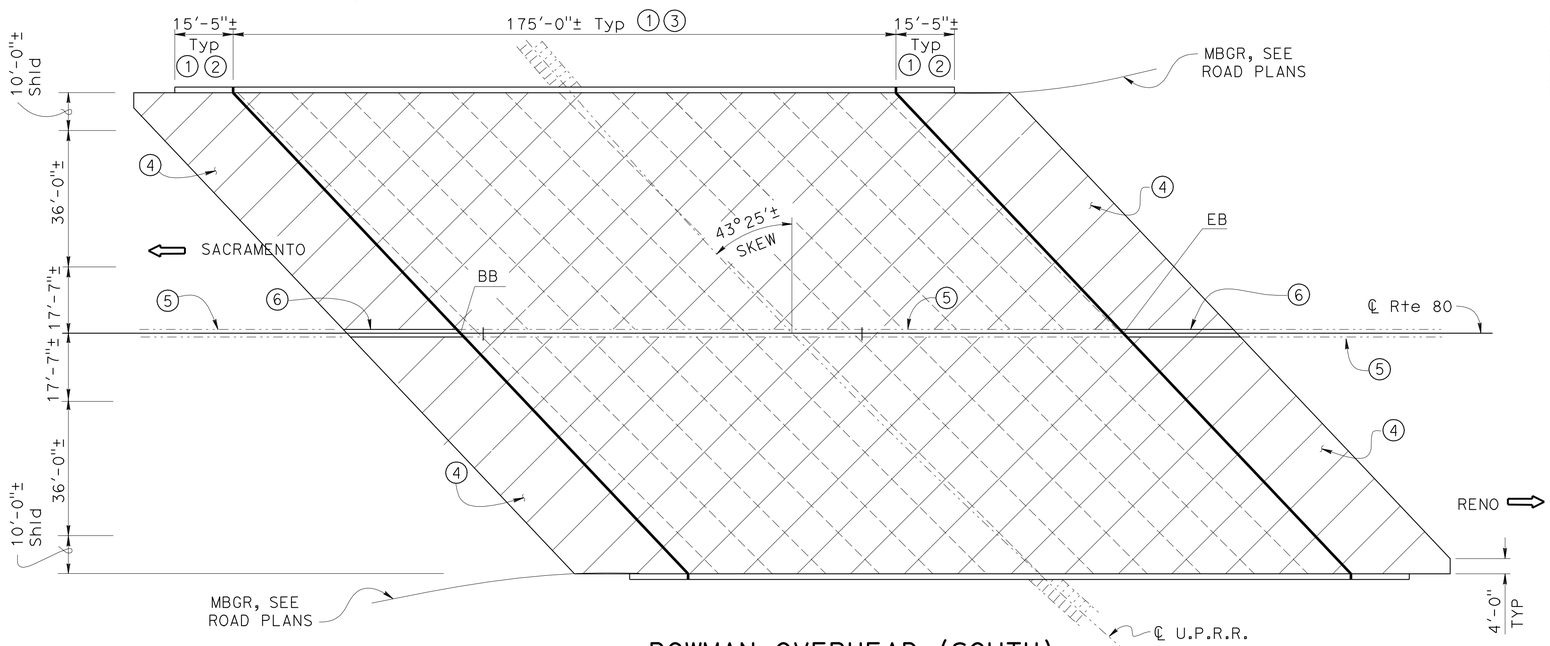

BOWMAN OVERHEAD (SOUTH)

Br No. 19-0023 Rte 80 PM 20.59

PLAN

1" = 20'

NOTES:

INDICATES EXISTING STRUCTURE

INDICATES LIMITS OF REMOVAL OF Approx 3" AC OVERLAY W/ MEMBRANE SEAL

INDICATES LIMITS OF ¾" POLYESTER CONCRETE OVERLAY

INDICATES LIMITS OF EXISTING JOINT SEAL REMOVAL, CLEAN AND PLACE NEW JOINT SEAL, SEE "JOINT SEAL DETAILS" SHEET.

1. REMOVE EXISTING CONCRETE BRIDGE RAIL AND REPLACE WITH CONCRETE BARRIER TYPE 732 R. SALVAGE EXISTING METAL RAILING. SEE "BARRIER REPLACEMENT DETAILS" SHEET.
2. REPLACE CONCRETE BARRIER ON WINGWALL
3. REPLACE CONCRETE BARRIER ON BRIDGE
4. STRUCTURE APPROACH SLAB TYPE R(30D) WITH ¾" POLYESTER CONCRETE OVERLAY
5. EXISTING CONCRETE BARRIER TYPE 50 OR 50A.
6. REMOVE AND REPLACE CONCRETE BARRIER TYPE 50A, SEE "BARRIER REPLACEMENT DETAILS" SHEET.

QUANTITIES

REMOVE ASPHALT CONCRETE SURFACING	21,875	SQFT
SALVAGE METAL BRIDGE RAILING	412	LF
PREPARE CONCRETE BRIDGE DECK SURFACE	29,837	SQFT
BRIDGE REMOVAL (PORTION), LOCATION B	LUMP	SUM
STRUCTURE EXCAVATION (BRIDGE)	251	CF
STRUCTURE BACKFILL (BRIDGE)	246	CF
AGGREGATE BASE (APPROACH SLAB)	30	CY
STRUCTURAL CONCRETE, BRIDGE	186	CF
STRUCTURAL CONCRETE, APPROACH SLAB (TYPE R)	307	CY
PAVING NOTCH EXTENSION	263	CF
FURNISH POLYESTER CONCRETE OVERLAY	1,865	CF
PLACE POLYESTER CONCRETE OVERLAY	29,837	SQFT
JOINT SEAL (MR 1")	353	LF
BAR REINFORCING STEEL (BRIDGE)	1,111	LB
CONCRETE BARRIER (TYPE 50A)	60	LF
CONCRETE BARRIER (TYPE 732R)	412	LF

NOTE:
THE CONTRACTOR SHALL VERIFY ALL CONTROLLING FIELD DIMENSIONS BEFORE ORDERING OR FABRICATING ANY MATERIAL.

2 **REVISED PER ADDENDUM No. 2 DATED FEBRUARY 25, 2011**

FOR CONSTRUCTION STAGING INFORMATION, SEE "ROAD PLANS"

Kelly Ann Holden
DESIGN ENGINEER

	BY	CHECKED		BY	CHECKED
DESIGN	D. Grenley / K. Holden	D. Desai / D. Soon			
DETAILS	A. Valdez / Y. Feng	D. Desai / E. Ortega	LAYOUT	David Grenley	Dhvani Desai
QUANTITIES	B. Hansen / B. Jenko	W. Hou / J. Dickerson	SPECIFICATIONS	Sirisha Nelapatla	PLANS AND SPECS COMPARED Sirisha Nelapatla

STATE OF CALIFORNIA
DEPARTMENT OF TRANSPORTATION

DIVISION OF ENGINEERING SERVICES
STRUCTURE DESIGN
DESIGN BRANCH 7

BRIDGE NO. Various
POST MILE Various

I-80 REHAB
GENERAL PLAN No. 5

ORIGINAL SCALE IN INCHES FOR REDUCED PLANS 0 1 2 3

CU 03
EA 3E0901

DISREGARD PRINTS BEARING EARLIER REVISION DATES

REVISION DATES: 6-2-09 2-4-10 4-15-10 1-10-11 7-2-09 7-28-09 9-3-09 10-2-09 10-28-09

SHEET 5 OF 12

STRUCTURES DESIGN GENERAL PLAN SHEET (ENGLISH) (REV.07-24-06)

FILE => 03_3e0901-a-gp-5.dgn

USERNAME => ttpierce DATE PLOTTED => 18-FEB-2011 TIME PLOTTED => 11:16

DIST	COUNTY	ROUTE	POST MILES TOTAL PROJECT	SHEET No	TOTAL SHEETS
03	Pla	80	0.3/29.3	50	56

REGISTERED CIVIL ENGINEER — DATE 2/4/11

9-13-10
PLANS APPROVAL DATE

The State of California or its officers or agents shall not be responsible for the accuracy or completeness of electronic copies of this plan sheet.

REGISTERED PROFESSIONAL ENGINEER — Kelly Holden No. 42268 Exp. 3/31/2012 CIVIL — STATE OF CALIFORNIA

2

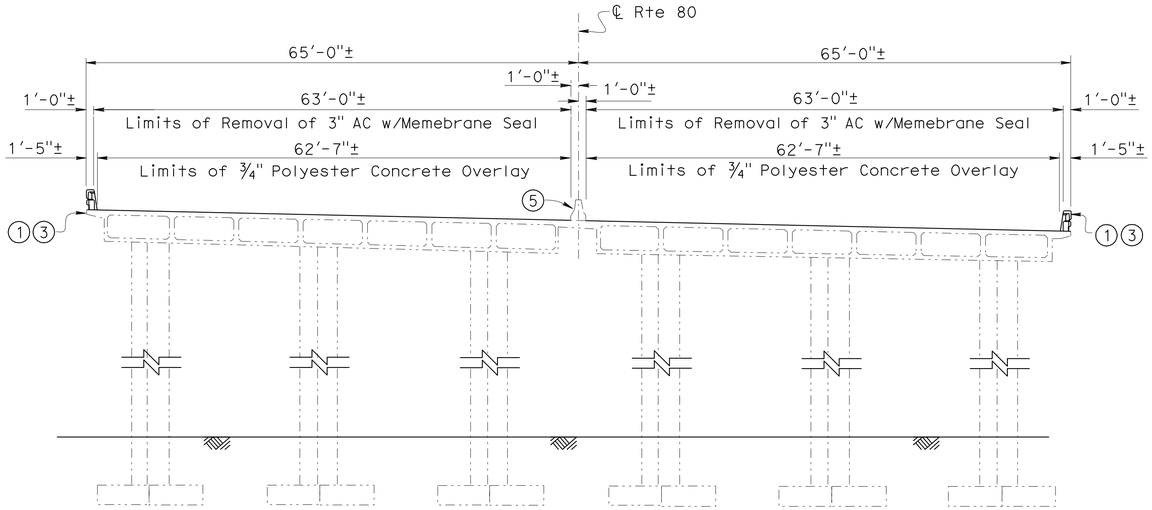

TYPICAL SECTION

1" = 10'

NOTES:

INDICATES EXISTING STRUCTURE

INDICATES LIMITS OF REMOVAL OF Approx 3" AC OVERLAY W/ MEMBRANE SEAL

INDICATES LIMITS OF ¾" POLYESTER CONCRETE OVERLAY

INDICATES LIMITS OF EXISTING JOINT SEAL REMOVAL, CLEAN AND PLACE NEW JOINT SEAL, SEE "JOINT SEAL DETAILS" SHEET.

1. REMOVE EXISTING CONCRETE BRIDGE RAIL AND REPLACE WITH CONCRETE BARRIER TYPE 732R. SALVAGE EXISTING METAL RAILING. SEE "BARRIER REPLACEMENT DETAILS" SHEET.
2. REPLACE CONCRETE BARRIER ON WINGWALL
3. REPLACE CONCRETE BARRIER ON BRIDGE
4. STRUCTURE APPROACH SLAB TYPE R(30D) WITH ¾" POLYESTER CONCRETE OVERLAY
5. EXISTING CONCRETE BARRIER TYPE 50 OR 50A.
6. REMOVE AND REPLACE CONCRETE BARRIER TYPE 50A, SEE "BARRIER REPLACEMENT DETAILS" SHEET.

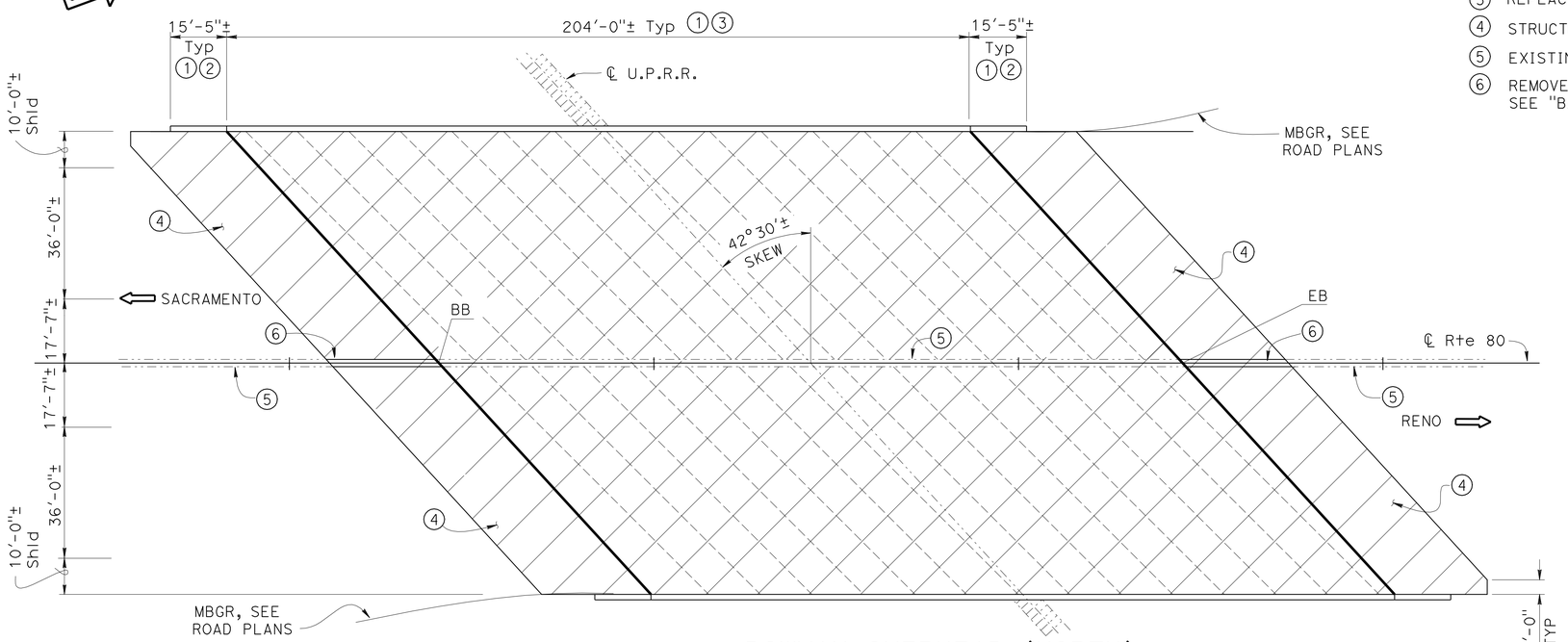

BOWMAN OVERHEAD (NORTH)

Br No. 19-0024 Rte 80 PM 20.69

PLAN
1" = 20'

2 **REVISED PER ADDENDUM No. 2 DATED FEBRUARY 25, 2011**

QUANTITIES

REMOVE ASPHALT CONCRETE SURFACING	25,500	SQFT
SALVAGE METAL BRIDGE RAILING	470	LF
PREPARE CONCRETE BRIDGE DECK SURFACE	33,562	SQFT
BRIDGE REMOVAL (PORTION), LOCATION C	LUMP	SUM
STRUCTURE EXCAVATION (BRIDGE)	251	CF
STRUCTURE BACKFILL (BRIDGE)	246	CF
AGGREGATE BASE (APPROACH SLAB)	30	CY
STRUCTURAL CONCRETE, BRIDGE	186	CF
STRUCTURAL CONCRETE, APPROACH SLAB (TYPE R)	307	CY
PAVING NOTCH EXTENSION	260	CF
FURNISH POLYESTER CONCRETE OVERLAY	2,092	CF
PLACE POLYESTER CONCRETE OVERLAY	33,562	SQFT
JOINT SEAL (MR 1")	348	LF
BAR REINFORCING STEEL (BRIDGE)	1,111	LB
CONCRETE BARRIER (TYPE 50A)	60	LF
CONCRETE BARRIER (TYPE 732R)	470	LF

NOTE:
THE CONTRACTOR SHALL VERIFY ALL CONTROLLING FIELD DIMENSIONS BEFORE ORDERING OR FABRICATING ANY MATERIAL.

FOR CONSTRUCTION STAGING INFORMATION, SEE "ROAD PLANS"

DESIGN ENGINEER

	BY	CHECKED			
DESIGN	D. Grenley / K. Holden	D. Desai / D. Soon			
DETAILS	A. Valdez / Y. Feng	D. Desai / E. Ortega	LAYOUT	David Grenley	Dhvani Desai
QUANTITIES	B. Hansen / B. Jenko	W. Hou / J. Dickerson	SPECIFICATIONS	Sirisha Nelapatla	PLANS AND SPECS COMPARED Sirisha Nelapatla

ORIGINAL SCALE IN INCHES FOR REDUCED PLANS 0 1 2 3

STATE OF CALIFORNIA
DEPARTMENT OF TRANSPORTATION

DIVISION OF ENGINEERING SERVICES
STRUCTURE DESIGN
DESIGN BRANCH 7

CU 03
EA 3E0901

BRIDGE NO. Various
POST MILE Various

I-80 REHAB
GENERAL PLAN No. 6

DISREGARD PRINTS BEARING EARLIER REVISION DATES

REVISION DATES: 4-3-09, 6-2-09, 6-12-09, 6-24-09, 7-3-09, 7-3-09, 9-1-09, 10-1-09, 10-14-09, 4-15-10

SHEET 6 OF 12

STRUCTURES DESIGN GENERAL PLAN SHEET (ENGLISH) (REV.07-24-06)

FILE => 03_3e0901-a-gp-6.add

USERNAME => ttpierce DATE PLOTTED => 18-FEB-2011 TIME PLOTTED => 11:16

DIST	COUNTY	ROUTE	POST MILES TOTAL PROJECT	SHEET No	TOTAL SHEETS
03	Pla	80	0.3/29.3	53	56

REGISTERED CIVIL ENGINEER — 2/4/11 DATE

9-13-10
PLANS APPROVAL DATE

REGISTERED PROFESSIONAL ENGINEER — Kelly Holden No. 42268 Exp. 3/31/2012 CIVIL — STATE OF CALIFORNIA

The State of California or its officers or agents shall not be responsible for the accuracy or completeness of electronic copies of this plan sheet.

2

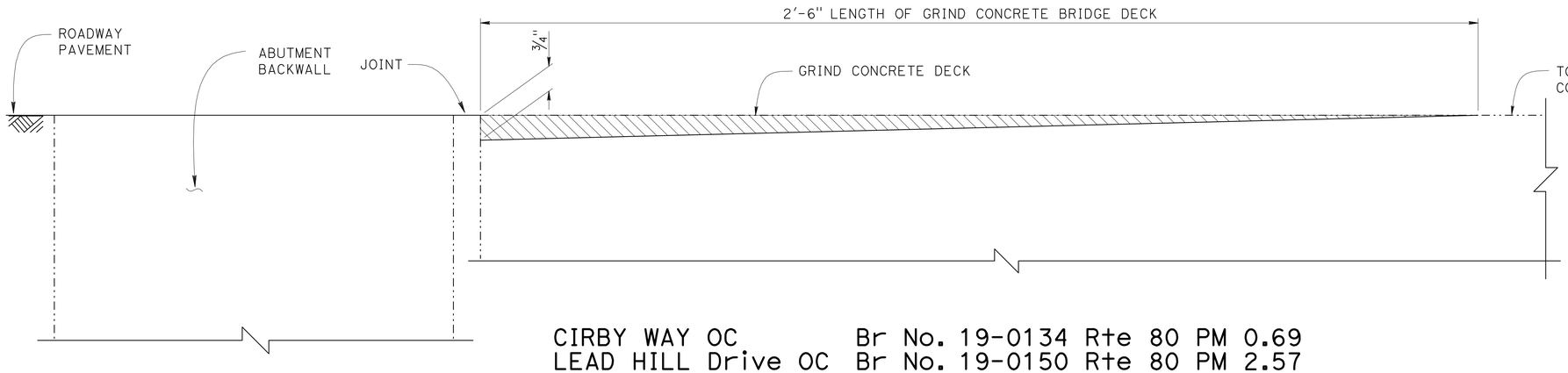

CIRBY WAY OC Br No. 19-0134 Rte 80 PM 0.69
LEAD HILL Drive OC Br No. 19-0150 Rte 80 PM 2.57
PENRYN Road OC Br No. 19-0099 Rte 80 PM 10.35

JOINT DETAIL CROSS SECTION

6" = 1'-0"

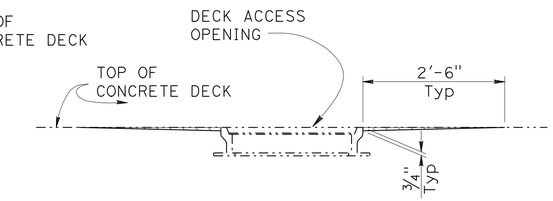

CIRBY WAY OC
Br No. 19-0134 Rte 80 PM 0.69
LEAD HILL Drive OC
Br No. 19-0150 Rte 80 PM 2.57

DECK ACCESS DETAIL

NO SCALE

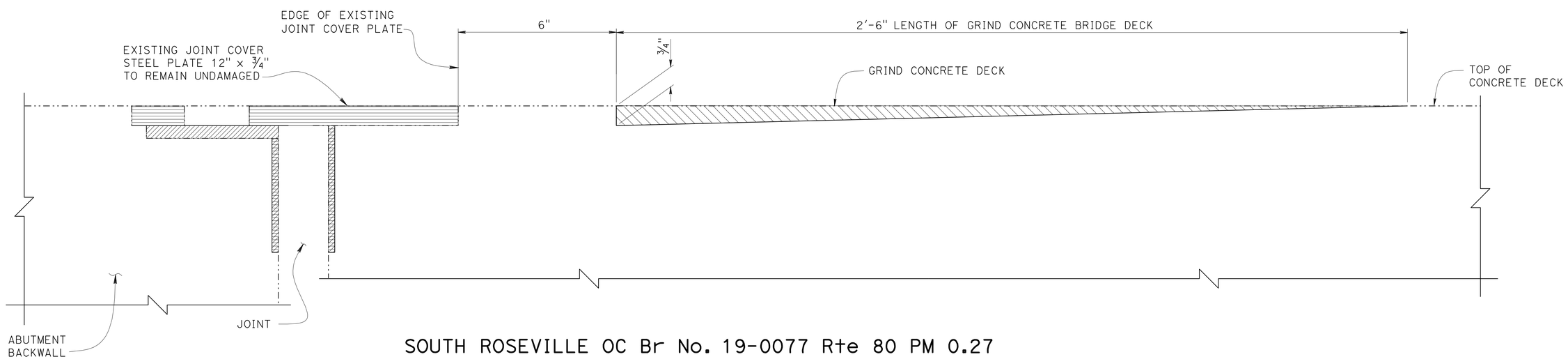

SOUTH ROSEVILLE OC Br No. 19-0077 Rte 80 PM 0.27

JOINT DETAIL CROSS SECTION

6" = 1'-0"

INDICATES LIMITS OF GRIND PCC BRIDGE DECK

NOTE:
THE CONTRACTOR SHALL VERIFY ALL CONTROLLING FIELD DIMENSIONS BEFORE ORDERING OR FABRICATING ANY MATERIAL.

2 **REVISED PER ADDENDUM No. 2 DATED FEBRUARY 25, 2011**

	BY	CHECKED
DESIGN	Kelly Holden	David Soon
DETAILS	Bruno Jenko	David Soon
QUANTITIES	Gerald Dickerson	Bruno Jenko

STATE OF CALIFORNIA
DEPARTMENT OF TRANSPORTATION

DIVISION OF ENGINEERING SERVICES
STRUCTURE DESIGN
DESIGN BRANCH 7

BRIDGE NO. Various
POST MILE Various

I-80 REHAB
GRIND BRIDGE DECK DETAILS

STRUCTURES DESIGN DETAIL SHEET (ENGLISH) (REV. 10/25/05)

ORIGINAL SCALE IN INCHES FOR REDUCED PLANS 0 1 2 3

CU 03
EA 3E0901

DISREGARD PRINTS BEARING EARLIER REVISION DATES

REVISION DATES: ~~8-26-09~~ ~~9-1-09~~ ~~10-2-09~~ ~~10-14-09~~ ~~1-3-11~~ 1-14-11

SHEET 9 OF 12

FILE => 03_3e0901-a-gp-det.add

USERNAME => trmikesl DATE PLOTTED => 18-FEB-2011 TIME PLOTTED => 11:29

DIST.	COUNTY	ROUTE	MILE POST TOTAL PROJECT	SHEET NO.	TOTAL SHEETS
03	Pla	80	0.3/29.3	54	56

REGISTERED ENGINEER - CIVIL DATE 2/4/11

9-13-10
PLANS APPROVAL DATE

REGISTERED PROFESSIONAL ENGINEER Kelly Holden No. 42268 Exp. 3/31/2012 CIVIL STATE OF CALIFORNIA

The State of California or its officers or agents shall not be responsible for the accuracy or completeness of electronic copies of this plan sheet.

2

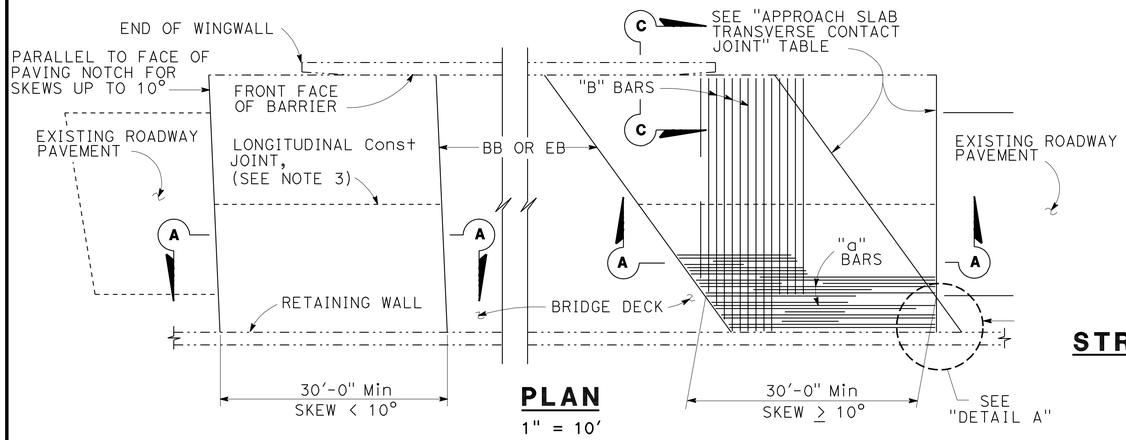

PLAN
1" = 10'

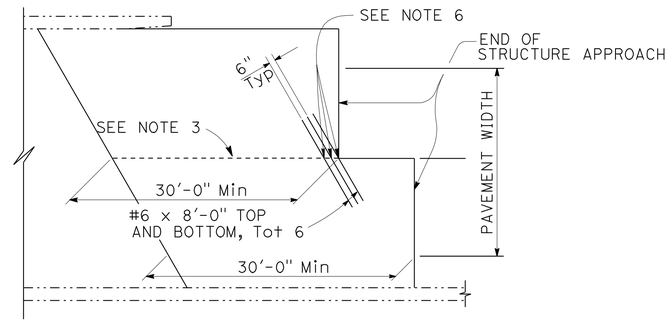

STRUCTURE APPROACH - END STAGGER DETAIL
NO SCALE

APPROACH SLAB TRANSVERSE CONTACT JOINT		
APPROACH SKEW	WITH AC ROADWAY PAVEMENT	WITH PCC ROADWAY PAVEMENT
< 10°	PARALLEL TO FACE OF PAVING NOTCH	PARALLEL TO FACE OF PAVING NOTCH
10° - 45°	PARALLEL TO FACE OF P N USE (DETAIL A)	STAGGER LINES 24' TO 36' APART
> 45°	PARALLEL TO FACE OF P N USE (DETAIL A)	STAGGER AT EACH LANE LINE

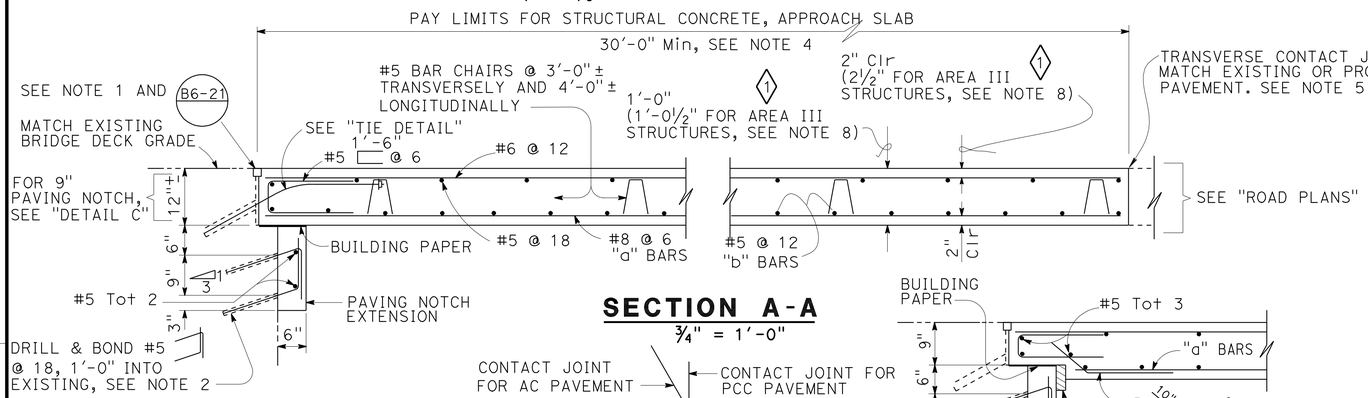

SECTION A-A
¾" = 1'-0"

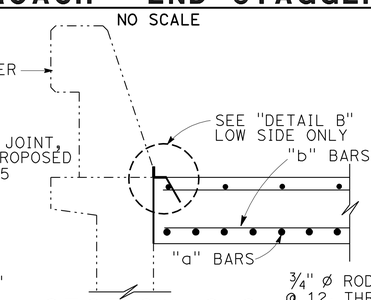

SECTION C-C
¾" = 1'-0"

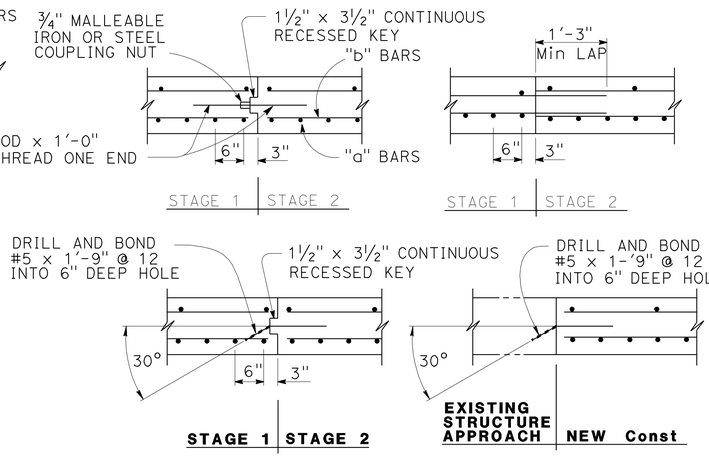

LONGITUDINAL CONSTRUCTION JOINT ALTERNATIVES
¾" = 1'-0"

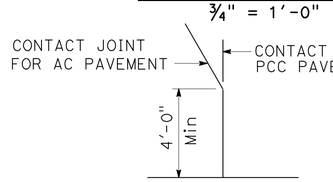

DETAIL A
NO SCALE

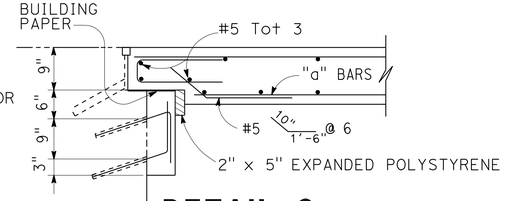

DETAIL C
¾" = 1'-0"

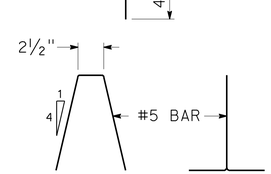

BAR CHAIR DETAIL
1½" = 1'-0"

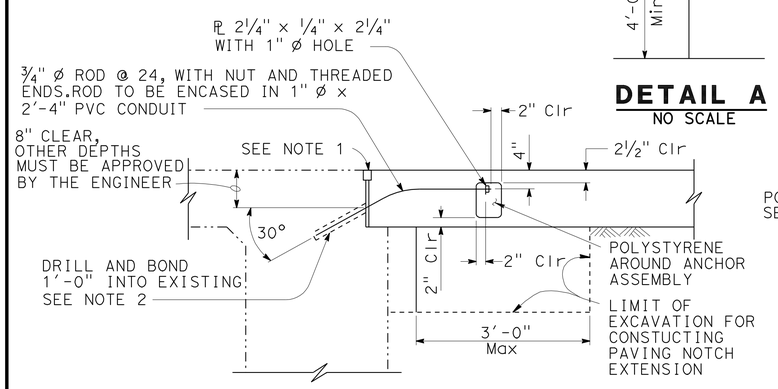

TIE DETAIL
¾" = 1'-0"

NOTE: FOR DETAILS NOT SHOWN, SEE "SECTION A-A".

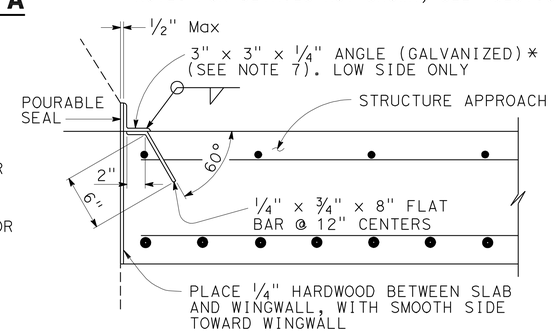

*(TO BE USED WITH TYPE 25 OR TYPE 27 CONCRETE BARRIER)

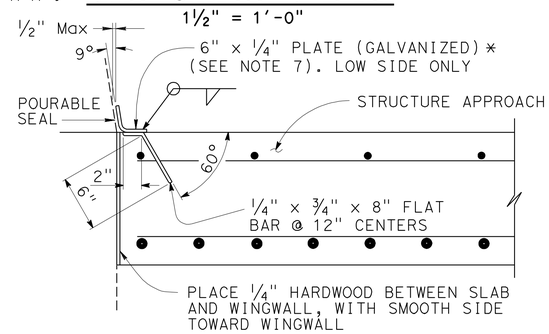

*(TO BE USED WITH TYPE 732 OR TYPE 736 CONCRETE BARRIER)

DETAIL B
1½" = 1'-0"

NOTES:

1. FOR DETAILS NOT SHOWN OR NOTED, SEE STRUCTURE PLANS. ADJUST BAR REINFORCEMENT TO CLEAR A SAWCUT FOR SEALED JOINT, WHEN REQUIRED.
2. SPACE TO AVOID EXISTING PRESTRESS ANCHORAGES AND MAIN REINFORCEMENT.
3. LONGITUDINAL CONSTRUCTION JOINTS, WHEN PERMITTED BY THE ENGINEER, SHALL BE LOCATED ON LANE LINES.
4. TRANSVERSE CONTACT JOINT SHALL BE A MINIMUM OF 5'-0" FROM AN EXISTING OR CONSTRUCTED WEAKENED PLANE JOINT.
5. FOR TRANSVERSE CONTACT JOINT WITH NEW PCC PAVING. REFER TO STANDARD PLAN P10.
6. COUPLERS ARE REQUIRED FOR STAGE CONSTRUCTION.
7. END ANGLE OR PLATE AT BEGINNING OF BARRIER TRANSITION, END OF WINGWALL OR END OF STRUCTURE APPROACH AS APPLICABLE.
8. THE FOLLOWING STRUCTURES ARE LOCATED WITHIN AREA III: BOWMAN UC 19-0042, BOWMAN OH SOUTH BR. NO. 19-0023, BOWMAN OH NORTH BR. NO.19-0024

NOTE:
THE CONTRACTOR SHALL VERIFY ALL CONTROLLING FIELD DIMENSIONS BEFORE ORDERING OR FABRICATING ANY MATERIAL.

2 REVISED PER ADDENDUM No. 2 DATED FEBRUARY 25, 2011

1 INCREASE THICKNESS FOR AREA III BRIDGES

STANDARD DRAWING

RELEASE DATE 3/14/05	DESIGN BY M.TRAFFALIS	CHECKED E.THORKILDSEN	RELEASED BY
FILE NO. xs3-140e	DETAILS BY R.YEE	CHECKED E.THORKILDSEN	
	SUBMITTED BY M.HA	DRAWING DATE 8/92	OFFICE CHIEF

STATE OF CALIFORNIA DEPARTMENT OF TRANSPORTATION

DIVISION OF ENGINEERING SERVICES

BRIDGE NO. Various
MILE POST Various

I-80 REHAB

STRUCTURE APPROACH TYPE R(30D)

DS OSD 2147A (ENGLISH) (REV. X/XX/XX)

ORIGINAL SCALE IN INCHES FOR REDUCED PLANS 0 1 2 3

CU 03
EA 3E0901

DISREGARD PRINTS BEARING EARLIER REVISION DATES 1-4-11

REVISION DATES (PRELIMINARY STAGE ONLY)

SHEET 10 OF 12

USERNAME => trpierce

03_3e0901-n-sap.dgn

DATE PLOTTED => 18-FEB-2011 TIME PLOTTED => 11:16

DIST	COUNTY	ROUTE	POST MILES TOTAL PROJECT	SHEET No	TOTAL SHEETS
03	Pla	80	0.3/29.3	55	56

REGISTERED CIVIL ENGINEER 2/4/11 DATE

9-13-10
PLANS APPROVAL DATE

REGISTERED PROFESSIONAL ENGINEER Kelly Holden No. 42268 Exp. 3/31/2012 CIVIL STATE OF CALIFORNIA

The State of California or its officers or agents shall not be responsible for the accuracy or completeness of electronic copies of this plan sheet.

2

JOINT SEAL TABLE

BRIDGE NAME and No.	LOCATION		TYPE OF JOINT SEAL	Min "MR" (IN)	APPROX LENGTH (FT)	SKEW (DEGREE)	EXISTING WATER STOP	DEPTH TO CLEAN (FT)
ROCKLIN ROAD UC 19-0094	Abut 1	BB	A	½	113'4"	42°15'±	N/A	N/A
	Abut 1	BW	A	1	113'4"	42°15'±	YES	1
	Abut 1	BB	A	1	44'-2"	42°15'±	N/A	N/A
	Abut 2	EB	A	½	113'-4"	42°15'±	N/A	N/A
	Abut 2	BW	A	1	113'-4"	42°15'±	YES	1
	Abut 2	EB	A	1	44'-2"	42°15'±	N/A	N/A
BOWMAN UC 19-0042	Abut 1	BB	A or B	1	130'-0"	0±	NA	N/A
	Abut 2	EB	A or B	1	130'-0"	0±	NA	N/A
BOWMAN OH SOUTH 19-0023	Abut 1	BB	A or B	1	177'-10"	43°25'±	NA	N/A
	Abut 4	EB	A or B	1	177'-10"	43°25'±	NA	N/A
BOWMAN OH NORTH 19-0024	Abut 1	BB	A or B	1	175'-3"	42°30'±	NA	N/A
	Abut 4	EB	A or B	1	175'-3"	42°30'±	NA	N/A
LEAD HILL DRIVE OC 19-0150	Abut 1	BW	A or B	1	76'-0"	0±	NO	1
	Abut 3	BW	A or B	1	76'-0"	0±	NO	1
PENRYN ROAD OC 19-0099	Abut 1	BW	B	2	49'-10"	46°59'±	NO	1
	Abut 5	BW	B	2	49'-10"	46°59'±	NO	1

LEGEND:

BB = PAVING NOTCH AT BEGINNING OF BRIDGE (BETWEEN APPROACH SLAB AND BRIDGE OR ABUTMENT BACKWALL)
EB = PAVING NOTCH AT END OF BRIDGE (BETWEEN BRIDGE OR ABUTMENT BACKWALL AND APPROACH SLAB)
BW = BETWEEN BRIDGE AND ABUTMENT BACKWALL

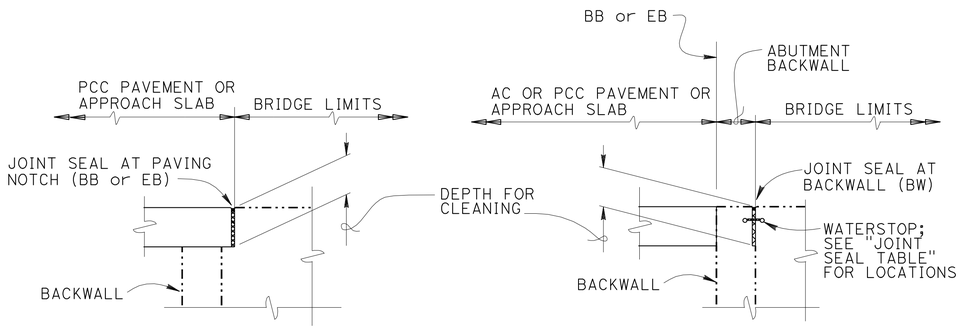

JOINT SEAL LOCATION

NO SCALE

THE FOLLOWING NOTES APPLY TO JOINT SEAL TYPE B:

1) SEAL MUST SATISFY BOTH MINIMUM MOVEMENT RATING (MR) AND MINIMUM W1 REQUIREMENTS.

2) MINIMUM W1 IS THE CALCULATED MAXIMUM WIDTH OF THE JOINT BASED ON FIELD MEASUREMENTS. AFTER THE JOINTS HAVE BEEN CLEANED, MINIMUM W1 IS TO BE VERIFIED BY THE ENGINEER.

3) W1 SHALL BE THE SMALLER OF THE VALUES DETERMINED AS FOLLOWS:

   A) 0.85 TIMES THE MANUFACTURER'S DESIGNED MINIMUM UNCOMPRESSED WIDTH OF THE SEAL.

   B) THE WIDTH OF THE SEAL ON THE THIRD SUCCESSIVE TEST CYCLE OF THE PRESSURE DEFLECTION TEST, WHEN COMPRESSED TO AN AVERAGE PRESSURE OF 3 PSI.

4) BEND TYPE B JOINT SEAL 6" UP INTO CURB OR RAIL ON THE LOW SIDE OF THE DECK WHERE DECK JOINT MATCHES CURB OR RAIL JOINT.

5) FOR DETAILS NOT SHOWN SEE RSP B6-21.

THE FOLLOWING NOTE APPLIES TO JOINT SEAL TYPE A:

INSTALL TYPE A JOINT SEAL 3" UP INTO CURB OR RAIL ON THE LOW SIDE OF THE DECK WHERE JOINT MATCHES CURB OR RAIL JOINT. FOR DETAILS NOT SHOWN SEE RSP B6-21.

NOTE:
THE CONTRACTOR SHALL VERIFY ALL CONTROLLING FIELD DIMENSIONS BEFORE ORDERING OR FABRICATING ANY MATERIAL.

2 **REVISED PER ADDENDUM No. 2 DATED FEBRUARY 25, 2011**

	BY	CHECKED
DESIGN	D. Grenley / K. Holden	D. Desai / D. Soon
DETAILS	Anthony Valdez	D. Desai / E. Ortega
QUANTITIES	Buster Hansen	Wendy Hou

STATE OF CALIFORNIA
DEPARTMENT OF TRANSPORTATION

DIVISION OF ENGINEERING SERVICES
STRUCTURE DESIGN
DESIGN BRANCH 7

BRIDGE NO. Various
POST MILE Various

I-80 REHAB
JOINT SEAL DETAILS

STRUCTURES DESIGN DETAIL SHEET (ENGLISH) (REV. 10/25/05)

ORIGINAL SCALE IN INCHES FOR REDUCED PLANS 0 1 2 3

CU 03
EA 3E0901

DISREGARD PRINTS BEARING EARLIER REVISION DATES

REVISION DATES: ~~10-15-09~~ ~~10-16-09~~ ~~4-8-10~~ 1-3-11

SHEET 11 OF 12

FILE => 03_3e0901q-g-jntdt.add

USERNAME => trmikesl DATE PLOTTED => 18-FEB-2011 TIME PLOTTED => 13:36

DIST	COUNTY	ROUTE	POST MILES TOTAL PROJECT	SHEET No	TOTAL SHEETS
03	Pla	80	0.3/29.3	56	56

REGISTERED CIVIL ENGINEER — DATE 2/4/11

9-13-10
PLANS APPROVAL DATE

REGISTERED PROFESSIONAL ENGINEER — Kelly Holden — No. 42268 — Exp. 3/31/2012 — CIVIL — STATE OF CALIFORNIA

The State of California or its officers or agents shall not be responsible for the accuracy or completeness of electronic copies of this plan sheet.

2

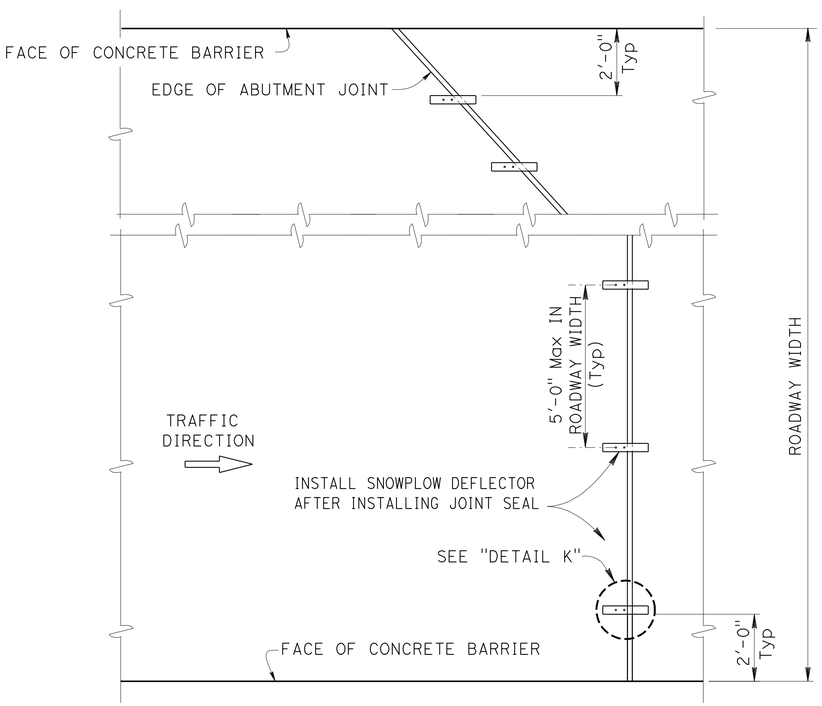

SNOWPLOW DEFLECTOR TYPICAL PLAN

NO SCALE

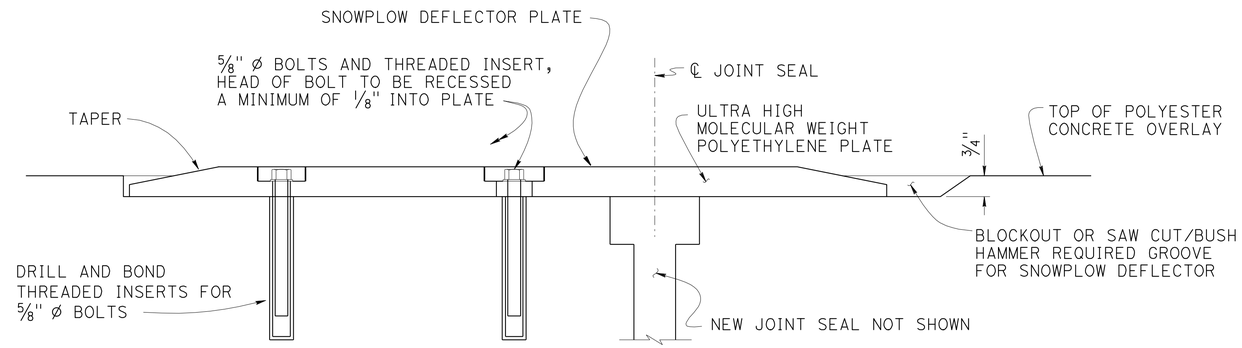

SECTION K-K

NO SCALE

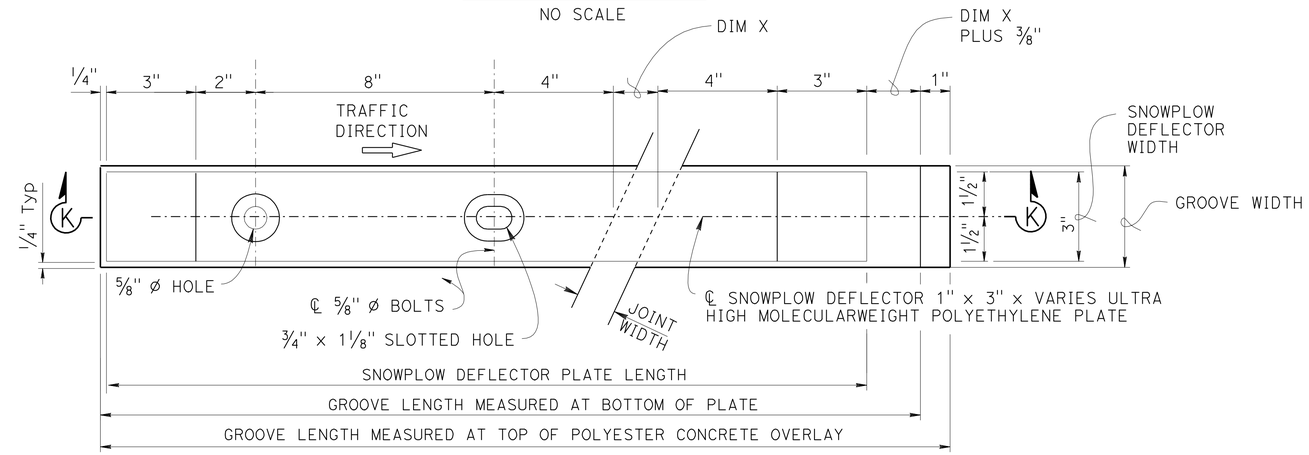

DETAIL K

NO SCALE

DIM X = JOINT WIDTH MEASURED ALONG ℄ OF SNOWPLOW DEFLECTOR

NOTE:
THE CONTRACTOR SHALL VERIFY ALL CONTROLLING FIELD DIMENSIONS BEFORE ORDERING OR FABRICATING ANY MATERIAL.

2 **REVISED PER ADDENDUM No. 2 DATED FEBRUARY 25, 2011**

	BY	CHECKED
DESIGN	D. Grenley / K. Holden	David Soon
DETAILS	Bruno Jenko	David Soon
QUANTITIES	David Soon	David Grenley

STATE OF CALIFORNIA
DEPARTMENT OF TRANSPORTATION

DIVISION OF ENGINEERING SERVICES
STRUCTURE DESIGN
DESIGN BRANCH 7

BRIDGE NO. Various
POST MILE Various

I-80 REHAB
SNOWPLOW DEFLECTOR DETAILS

STRUCTURES DESIGN DETAIL SHEET (ENGLISH) (REV. 10/25/05)

ORIGINAL SCALE IN INCHES FOR REDUCED PLANS 0 1 2 3

CU 03
EA 3E0901

DISREGARD PRINTS BEARING EARLIER REVISION DATES

REVISION DATES: 1-11-10 4-15-10 1-3-11

SHEET 12 OF 12

FILE => 03_3e0901-r-snwdef-det.dgn

USERNAME => trpierce DATE PLOTTED => 18-FEB-2011 TIME PLOTTED => 11:17

DIST	COUNTY	ROUTE	POST MILES TOTAL PROJECT	SHEET No	TOTAL SHEETS
03	Pla	80	0.3/29.3	56A	56

REGISTERED CIVIL ENGINEER — DATE 2/4/11

9-13-10
PLANS APPROVAL DATE

The State of California or its officers or agents shall not be responsible for the accuracy or completeness of electronic copies of this plan sheet.

REGISTERED PROFESSIONAL ENGINEER — Kelly Holden No. 42268 Exp. 3/31/2012 CIVIL — STATE OF CALIFORNIA

2

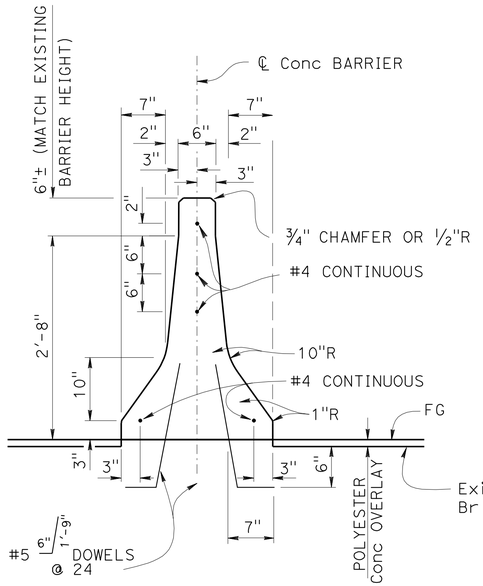

CONCRETE BARRIER TYPE 50A

1"=1'-0"

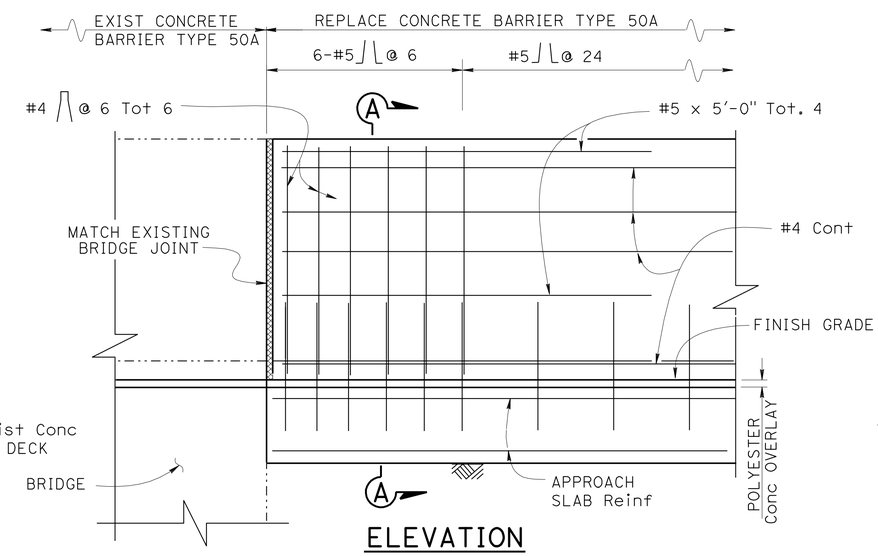

ELEVATION

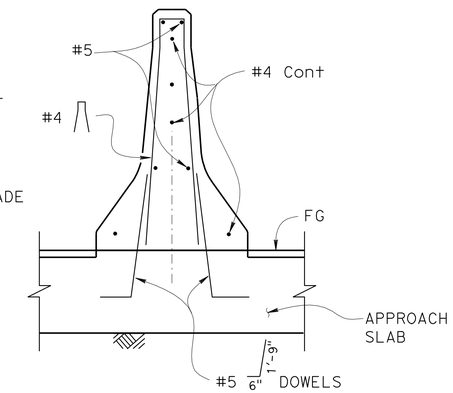

SECTION A-A

CONNECTION TO STRUCTURE

1"=1'-0"

NOTE:

1. WINGWALL AND CONCRETE BARRIER REINFORCEMENT SHALL BE EPOXY COATED FOR:
   BOWMAN UC Br No. 19-0042
   BOWMAN OH (SOUTH) Br No. 19-0023
   BOWMAN OH (NORTH) Br No. 19-0024

REPLACE MEDIAN CONCRETE BARRIER ON APPROACH SLAB

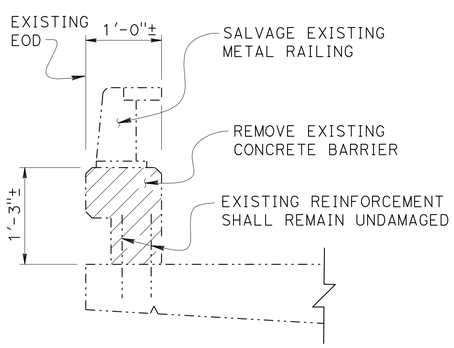

BARRIER REMOVAL

1"=1'-0"

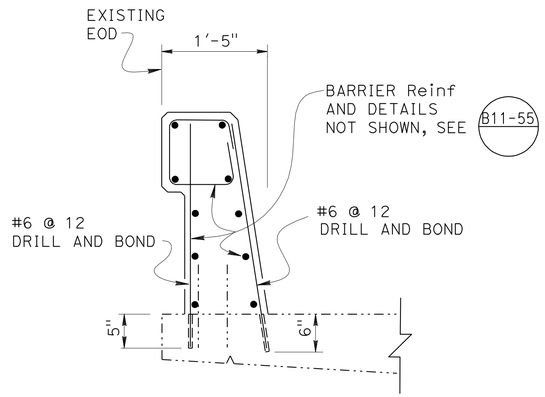

CONCRETE BARRIER TYPE 732R

1"=1'-0"

REPLACE CONCRETE BARRIER ON BRIDGE

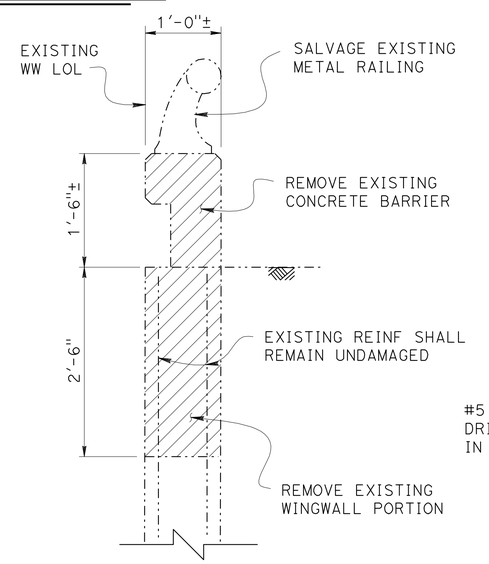

BARRIER & WINGWALL PORTION REMOVAL

1"=1'-0"

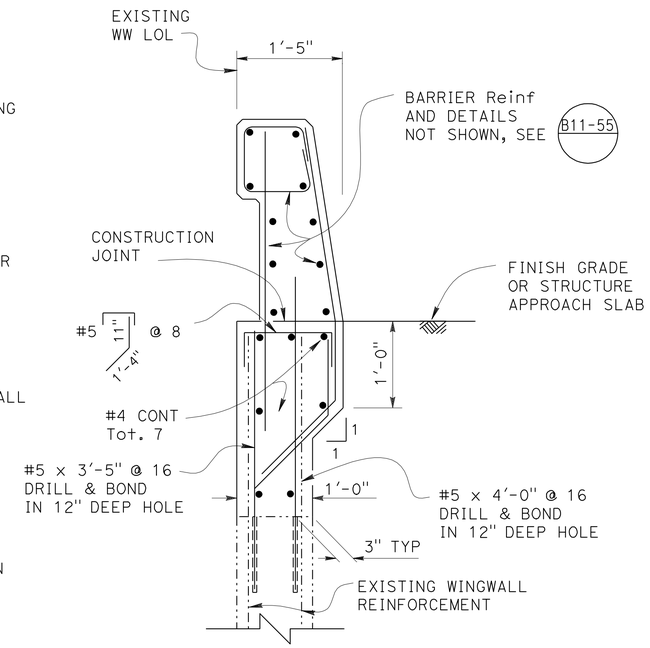

CONCRETE BARRIER TYPE 732R ON WINGWALL

1"=1'-0"

REPLACE CONCRETE BARRIER ON WINGWALL

NOTE:
THE CONTRACTOR SHALL VERIFY ALL CONTROLLING FIELD DIMENSIONS BEFORE ORDERING OR FABRICATING ANY MATERIAL.

2 ADDED PER ADDENDUM No. 2 DATED FEBRUARY 25, 2011

	BY	CHECKED
DESIGN	D. Grenley / K. Holden	D. Desai / D. Soon
DETAILS	A. Valdez/G. Dickerson	D. Desai / E. Ortega
QUANTITIES	Buster Hansen	Wendy Hou

STATE OF CALIFORNIA
DEPARTMENT OF TRANSPORTATION

DIVISION OF ENGINEERING SERVICES
STRUCTURE DESIGN
DESIGN BRANCH 7

BRIDGE NO. Various
POST MILE Various

I-80 REHAB
BARRIER REPLACEMENT DETAILS

STRUCTURES DESIGN DETAIL SHEET (ENGLISH) (REV. 10/25/05)

ORIGINAL SCALE IN INCHES FOR REDUCED PLANS 0 1 2 3

CU 03
EA 3E0901

DISREGARD PRINTS BEARING EARLIER REVISION DATES 1-4-11 1-15-11

REVISION DATES

SHEET 12A OF 12

FILE => 03_3e0901-s-brdt.add

USERNAME => trmikes1 DATE PLOTTED => 18-FEB-2011 TIME PLOTTED => 13:37

DIST	COUNTY	ROUTE	POST MILES TOTAL PROJECT	SHEET No	TOTAL SHEETS
03	Pla	80	0.3/29.3	56B	56

REGISTERED CIVIL ENGINEER — DATE 2/4/11

9-13-10
PLANS APPROVAL DATE

REGISTERED PROFESSIONAL ENGINEER — Kelly Holden — No. 42268 — Exp. 3/31/2012 — CIVIL — STATE OF CALIFORNIA

The State of California or its officers or agents shall not be responsible for the accuracy or completeness of electronic copies of this plan sheet.

2

CONCRETE SPALL REPAIR TABLE

BRIDGE NAME	BRIDGE NUMBER	SPALLED CONCRETE SURFACE AREA (SQ FT)
ROCKLIN ROAD UC	19 0094	3.0

LOCATIONS TO BE DETERMINED BY THE ENGINEER.

DECK REPAIR TABLE

REMOVE UNSOUND CONCRETE AND PATCH WITH RAPID SETTING CONCRETE

BRIDGE NAME	BRIDGE NUMBER	APPROXIMATE AREA DAMAGED (PERCENT)	APPROXIMATE DEPTH (d) (INCHES)	APPROXIMATE UNSOUND CONCRETE (CF)	RAPID-SET CONCRETE PATCH (CF)
ROCKLIN ROAD UC	19 0094	1	3	25.0	25.0

LOCATIONS TO BE DETERMINED BY THE ENGINEER.

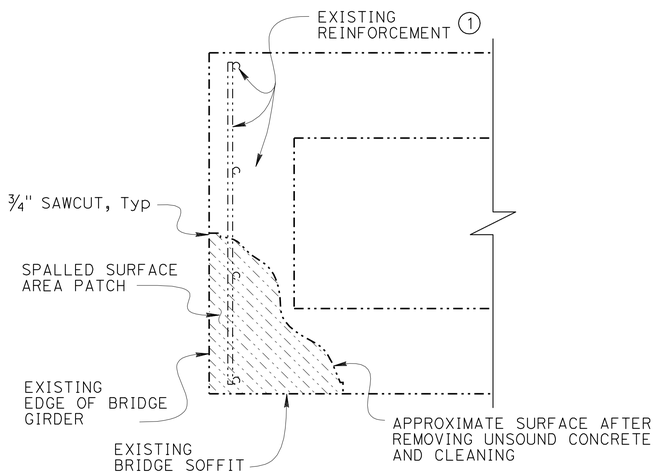

EXTERIOR GIRDER REPAIR DETAIL

NO SCALE

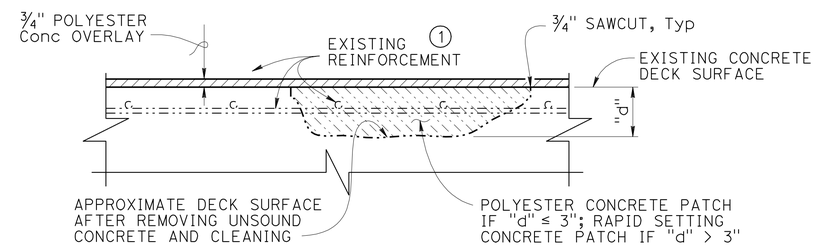

DECK REPAIR DETAIL

NO SCALE

NOTES:

1. REINFORCEMENT MAY BE ENCOUNTERED DURING CONCRETE REMOVAL AND IS TO REMAIN UNDAMAGED.

INDICATES UNSOUND CONCRETE REMOVAL AREA.

INDICATES ¾" POLYESTER CONCRETE REMOVAL

NOTE:
THE CONTRACTOR SHALL VERIFY ALL CONTROLLING FIELD DIMENSIONS BEFORE ORDERING OR FABRICATING ANY MATERIAL.

2 **ADDED PER ADDENDUM No. 2 DATED FEBRUARY 25, 2011**

	BY	CHECKED
DESIGN	Dhvani Desai	David Soon
DETAILS	Gerald Dickerson	David Soon
QUANTITIES	Gerald Dickerson	Bruno Jenko

STATE OF CALIFORNIA
DEPARTMENT OF TRANSPORTATION

DIVISION OF ENGINEERING SERVICES
STRUCTURE DESIGN
DESIGN BRANCH 7

BRIDGE NO. Various
POST MILE Various

I-80 REHAB
CONCRETE SPALL/DECK REPAIR DETAILS

STRUCTURES DESIGN DETAIL SHEET (ENGLISH) (REV. 10/25/05)

ORIGINAL SCALE IN INCHES FOR REDUCED PLANS 0 1 2 3

CU 03
EA 3E0901

DISREGARD PRINTS BEARING EARLIER REVISION DATES → 01-15-11

REVISION DATES

SHEET 12B OF 12

FILE => 03_3e0901-t-csdrdt.add

USERNAME => trmikes1 DATE PLOTTED => 18-FEB-2011 TIME PLOTTED => 13:37