ACNHP-P099(586)

Dist	COUNTY	ROUTE	POST MILES TOTAL PROJECT	SHEET No.	TOTAL SHEETS
03	But	99	30.1/T37.5	1	163

STATE OF CALIFORNIA

DEPARTMENT OF TRANSPORTATION

PROJECT PLANS FOR CONSTRUCTION ON

STATE HIGHWAY

IN BUTTE COUNTY
IN AND NEAR CHICO
FROM 0.5 MILE SOUTH OF SKYWAY OVERCROSSING
TO 0.2 MILE SOUTH OF GARNER LANE

TO BE SUPPLEMENTED BY STANDARD PLANS DATED 2010

INDEX OF PLANS

SHEET No.	DESCRIPTION
1	TITLE AND LOCATION MAP
2-3	TYPICAL CROSS SECTIONS
4-31	LAYOUTS
32-46	CONSTRUCTION DETAILS
47-62	UTILITY PLANS
63-64	CONSTRUCTION AREA SIGNS
65	TRAFFIC HANDLING PLAN
66-67	PAVEMENT DELINEATION DETAILS AND QUANTITIES
68-80	SIGN PLANS, DETAILS AND QUANTITIES
81-88	SUMMARY OF QUANTITIES
89	IRRIGATION SPRINKLER SCHEDULE
90-100	IRRIGATION PLAN AND QUANTITIES
101-104	EROSION CONTROL LEGEND, DETAILS AND QUANTITIES
105-112	ELECTRICAL PLANS
113-163	REVISED STANDARD PLANS

THE STANDARD PLANS LIST APPLICABLE TO THIS CONTRACT IS INCLUDED IN THE NOTICE TO BIDDERS AND SPECIAL PROVISIONS BOOK.

LOCATION MAP

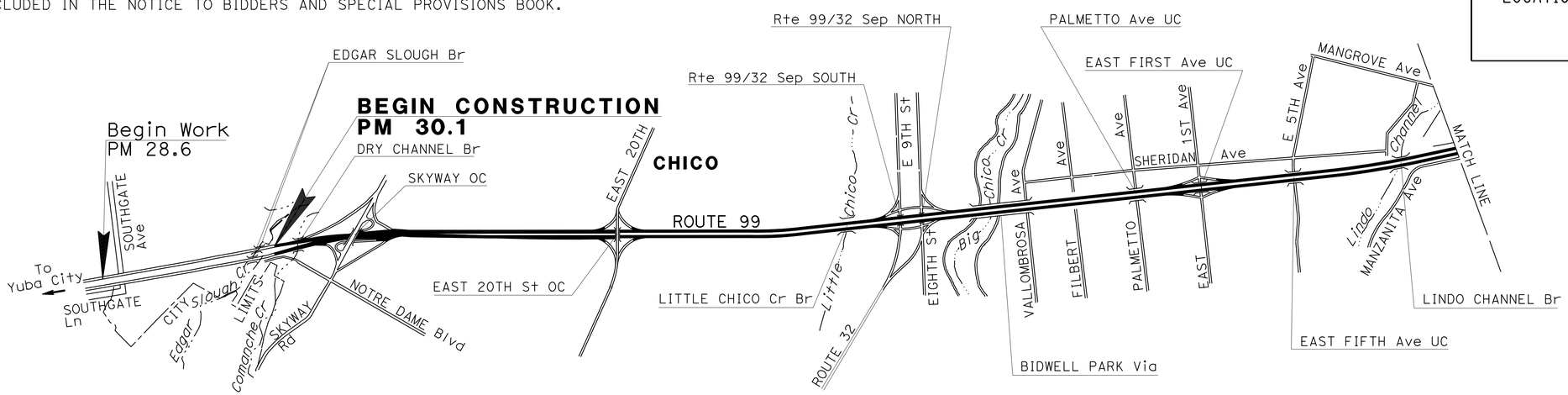

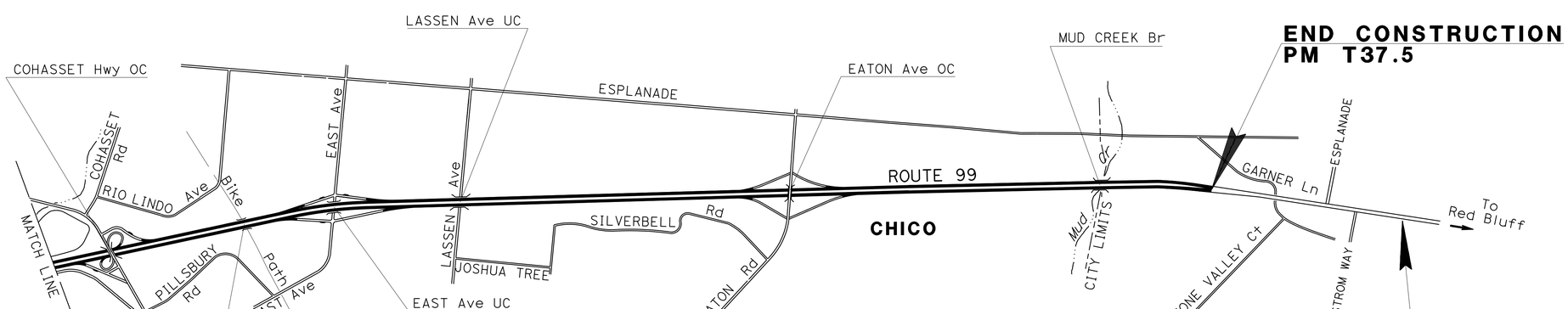

NO SCALE

THE CONTRACTOR SHALL POSSESS THE CLASS (OR CLASSES) OF LICENSE AS SPECIFIED IN THE "NOTICE TO BIDDERS."

PROJECT MANAGER: MATT R SOLANO

DESIGN MANAGER: DEANN SPANGLER

PROJECT ENGINEER REGISTERED CIVIL ENGINEER — DATE: 4-27-15

BALJINDER S. BRAR, No. C67847, Exp. 06/30/15, CIVIL — REGISTERED PROFESSIONAL ENGINEER — STATE OF CALIFORNIA

April 27, 2015
PLANS APPROVAL DATE

THE STATE OF CALIFORNIA OR ITS OFFICERS OR AGENTS SHALL NOT BE RESPONSIBLE FOR THE ACCURACY OR COMPLETENESS OF SCANNED COPIES OF THIS PLAN SHEET.

CONTRACT No.	03-2F3304
PROJECT ID	0300020612

LAST REVISION 06-18-15 — DATE PLOTTED => 29-JUN-2015 — TIME PLOTTED => 15:01

Dist	COUNTY	ROUTE	POST MILES TOTAL PROJECT	SHEET No.	TOTAL SHEETS
03	But	99	30.1/T37.5	2	163

REGISTERED CIVIL ENGINEER 4-27-15 DATE

4-27-15
PLANS APPROVAL DATE

REGISTERED PROFESSIONAL ENGINEER BALJINDER S. BRAR No. C 67847 Exp 6-30-15 CIVIL STATE OF CALIFORNIA

THE STATE OF CALIFORNIA OR ITS OFFICERS OR AGENTS SHALL NOT BE RESPONSIBLE FOR THE ACCURACY OR COMPLETENESS OF SCANNED COPIES OF THIS PLAN SHEET.

PAVEMENT CLIMATE REGION

INLAND VALLEY

NOTES:

1. DIMENSIONS OF THE PAVEMENT STRUCTURES (STRUCTURAL SECTIONS) ARE SUBJECT TO TOLERANCES SPECIFIED IN THE STANDARD SPECIFICATIONS.
2. EXACT LOCATIONS AND TYPES OF DIKES, MBGR, MGS, COLD PLANE AC Pvmt, SAFETY EDGE/Shld BACKING, IMPORTED BORROW, RSP, RUMBLE STRIP, INDIVIDUAL SLAB REPLACEMENT (RSC), SPALL REPAIR (FAST-SETTING CONCRETE) ARE SHOWN ON THE LAYOUTS, Const DETAILS AND THE SUMMARY OF QUANTITIES SHEETS.
3. COLD PLANE AC Pvmt (MAINLINE & Shldr)
   NB: PM 30.10 TO PM R30.37; PM R37.31 TO PM T37.50
   SB: PM 30.15 TO PM R30.45; PM T37.47 TO PM T37.50
3. THE SAFETY EDGE WILL BE CONSTRUCTED WITH EACH LIFT.
4. NO WORK ON BRIDGE DECKS, NO OVERLAY WORK UNDER OVERCROSSINGS.

ABBREVIATIONS:

RHMA-O - RUBBERIZED HOT MIX ASPHALT-OPEN GRADED (OPEN GRADED FRICTION COURSE)
HMA-A - HOT MIX ASPHALT (TYPE A)
LL - LANE LINE

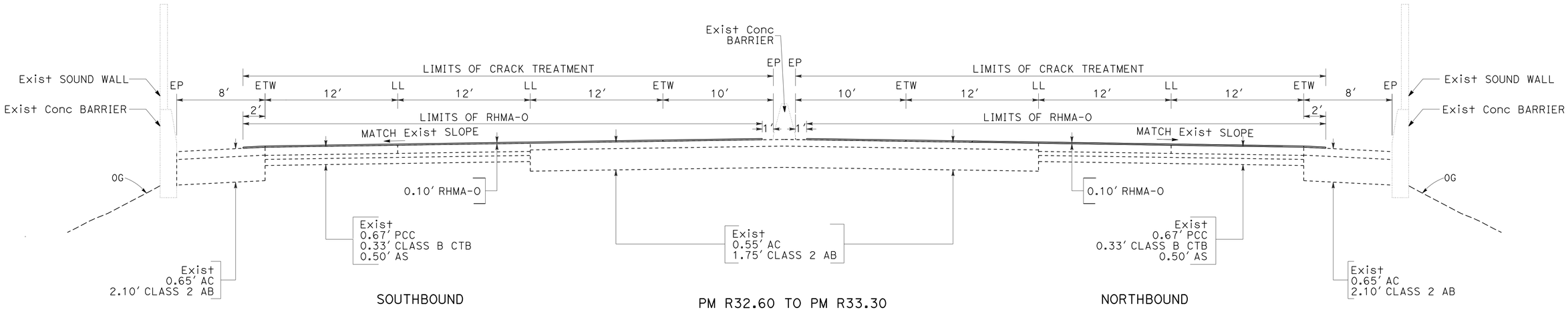

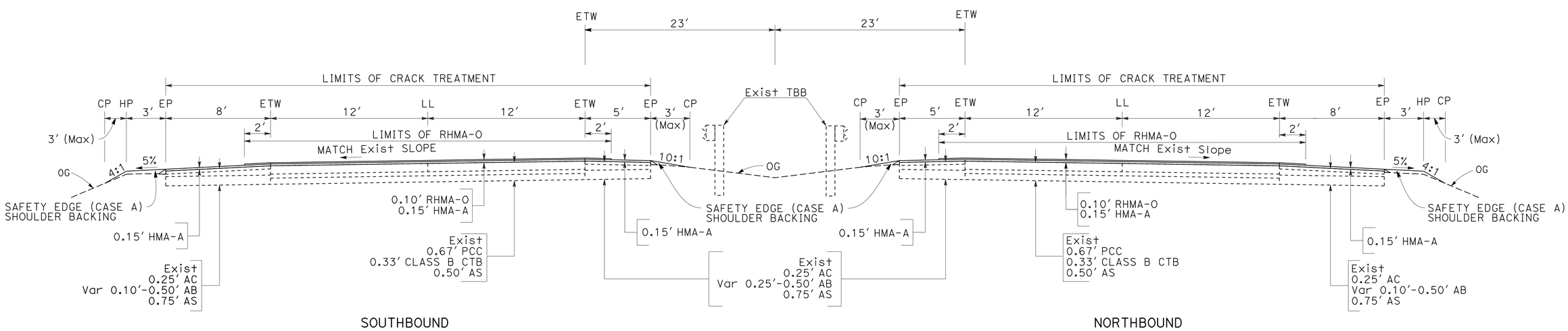

ROUTE 99

TYPICAL CROSS SECTIONS

NO SCALE

X-1

STATE OF CALIFORNIA - DEPARTMENT OF TRANSPORTATION
Caltrans® DESIGN

FUNCTIONAL SUPERVISOR: DEANN SPANGLER
CALCULATED-DESIGNED BY: BIPAN KAUSHAL
CHECKED BY: BALJINDER BRAR
REVISED BY / DATE REVISED

LAST REVISION 04-24-15 | DATE PLOTTED => 29-JUN-2015 | TIME PLOTTED => 14:06

Dist	COUNTY	ROUTE	POST MILES TOTAL PROJECT	SHEET No.	TOTAL SHEETS
03	But	99	30.1/T37.5	3	163

REGISTERED CIVIL ENGINEER 4-27-15 DATE

4-27-15
PLANS APPROVAL DATE

REGISTERED PROFESSIONAL ENGINEER BALJINDER S. BRAR No. C 67847 Exp 6-30-15 CIVIL STATE OF CALIFORNIA

THE STATE OF CALIFORNIA OR ITS OFFICERS OR AGENTS SHALL NOT BE RESPONSIBLE FOR THE ACCURACY OR COMPLETENESS OF SCANNED COPIES OF THIS PLAN SHEET.

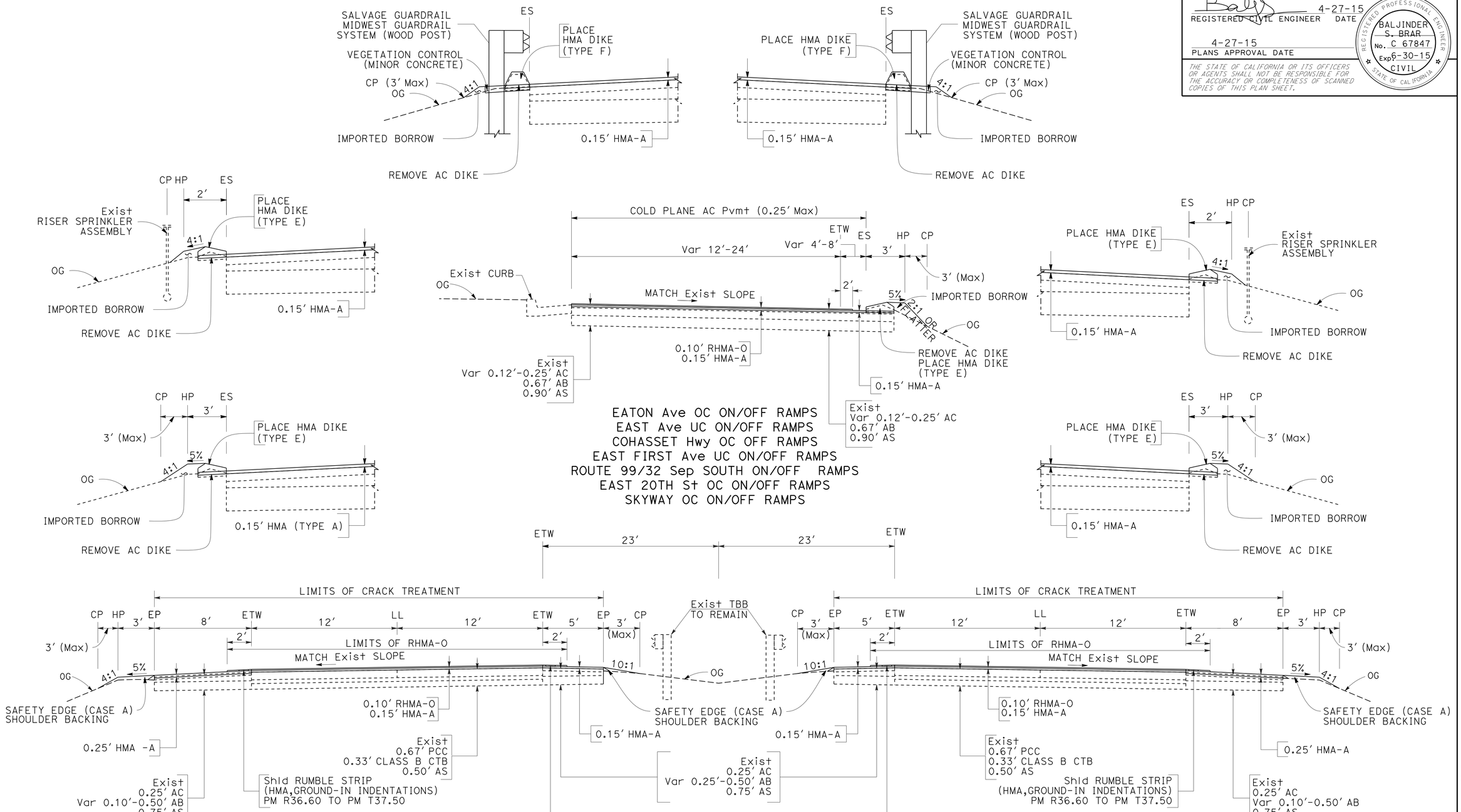

ROUTE 99

TYPICAL CROSS SECTIONS

NO SCALE

X-2

STATE OF CALIFORNIA - DEPARTMENT OF TRANSPORTATION
Caltrans® DESIGN

FUNCTIONAL SUPERVISOR: DEANN SPANGLER
CALCULATED-DESIGNED BY: BIPAN KAUSHAL
CHECKED BY: BALJINDER BRAR
REVISED BY
DATE REVISED

LAST REVISION 04-24-15 | DATE PLOTTED => 29-JUN-2015 | TIME PLOTTED => 14:06

Dist	COUNTY	ROUTE	POST MILES TOTAL PROJECT	SHEET No.	TOTAL SHEETS
03	But	99	30.1/T37.5	4	163

REGISTERED CIVIL ENGINEER 4-27-15 DATE

4-27-15
PLANS APPROVAL DATE

REGISTERED PROFESSIONAL ENGINEER BALJINDER S. BRAR No. C 67847 Exp. 6-30-15 CIVIL STATE OF CALIFORNIA

THE STATE OF CALIFORNIA OR ITS OFFICERS OR AGENTS SHALL NOT BE RESPONSIBLE FOR THE ACCURACY OR COMPLETENESS OF SCANNED COPIES OF THIS PLAN SHEET.

NOTES:

1. FOR ACCURATE RIGHT OF WAY DATA, CONTACT RIGHT OF WAY ENGINEERING AT THE DISTRICT OFFICE.
2. COLD PLANE AC Pvmt (MAINLINE & Shldr)
   NB: PM 30.10 TO PM R30.37; PM R37.31 TO PM T37.50
   SB: PM 30.15 TO PM R30.45; PM T37.47 TO PM T37.50
3. NO WORK ON BRIDGE DECKS.
4. NO OVERLAY WORK UNDER OVERCROSSINGS, SEE SHEET C-3.
5. FOR REMOVE DOWNDRAIN AT SAME LOCATION AS ADJUST DOWNDRAIN, SEE SHEET Q-8.

LEGEND:

- GRIND Exist Conc Pvmt (MAINLINE AT CONFORM) AND COLD PLANE AC Pvmt (MAINLINE, Shldr & RAMP)
- TEXTURED AND COLORED HOT MIX ASPHALT
- Exist GORE AREA
- Const STAGING AREA
- SAWCUT LINE
- RHMA-O (OGFC) LIMITS
- HMA (TYPE A) LIMITS

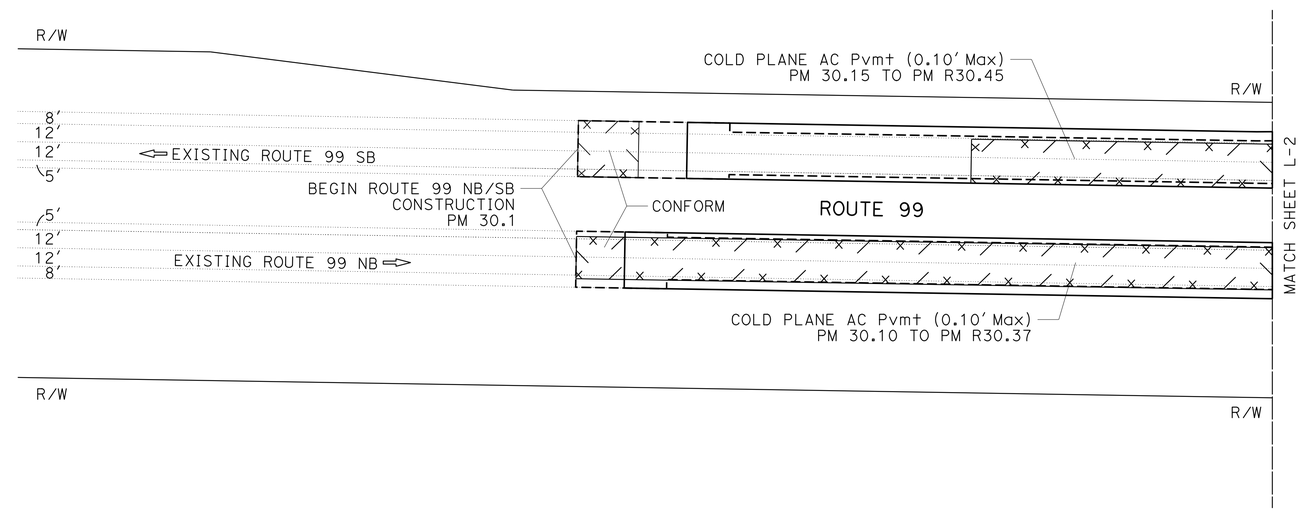

LAYOUT

SCALE: 1" = 50'

L-1

REVISED BY	DATE REVISED

CALCULATED-DESIGNED BY: BIPAN KAUSHAL
CHECKED BY: BALJINDER BRAR
FUNCTIONAL SUPERVISOR: DEANN SPANGLER

STATE OF CALIFORNIA - DEPARTMENT OF TRANSPORTATION
Caltrans® DESIGN

LAST REVISION 04-24-15 | DATE PLOTTED => 29-JUN-2015 | TIME PLOTTED => 14:06

Dist	COUNTY	ROUTE	POST MILES TOTAL PROJECT	SHEET No.	TOTAL SHEETS
03	But	99	30.1/T37.5	5	163

REGISTERED CIVIL ENGINEER 4-27-15 DATE

4-27-15
PLANS APPROVAL DATE

REGISTERED PROFESSIONAL ENGINEER BALJINDER S. BRAR No. C 67847 Exp 6-30-15 CIVIL STATE OF CALIFORNIA

THE STATE OF CALIFORNIA OR ITS OFFICERS OR AGENTS SHALL NOT BE RESPONSIBLE FOR THE ACCURACY OR COMPLETENESS OF SCANNED COPIES OF THIS PLAN SHEET.

NOTE:

1. FOR ACCURATE RIGHT OF WAY DATA, CONTACT RIGHT OF WAY ENGINEERING AT THE DISTRICT OFFICE.

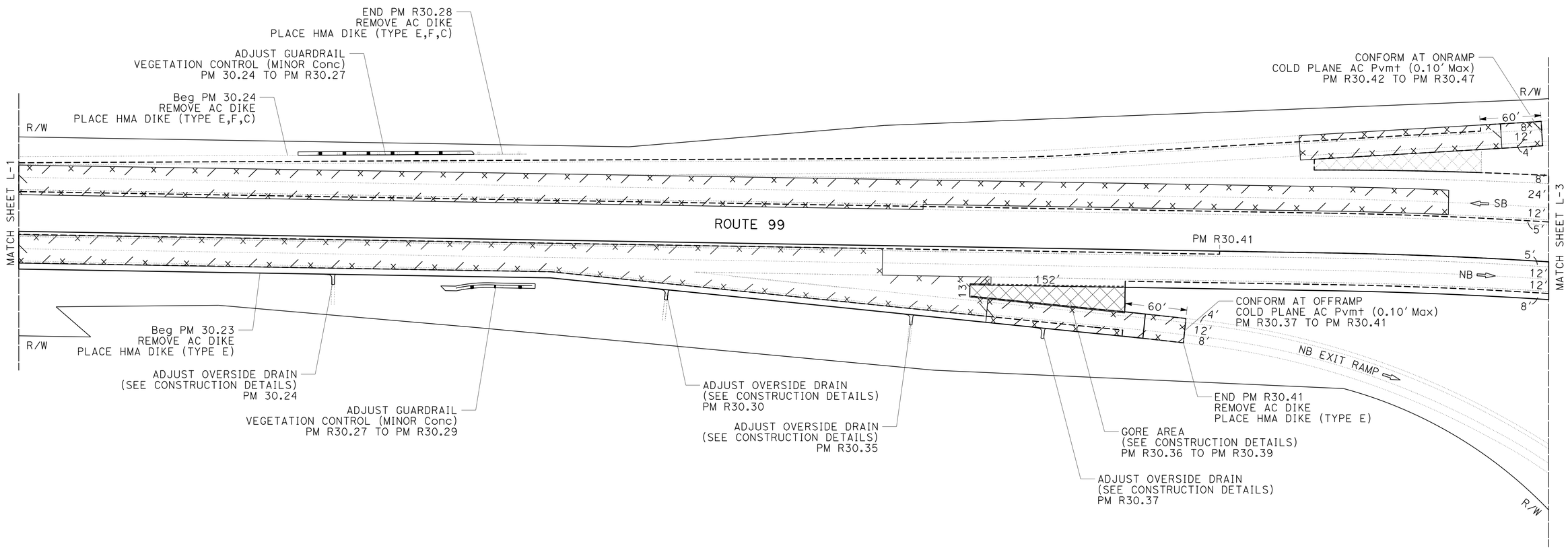

LAYOUT

SCALE: 1" = 50'

L-2

STATE OF CALIFORNIA - DEPARTMENT OF TRANSPORTATION
Caltrans DESIGN

FUNCTIONAL SUPERVISOR: DEANN SPANGLER

CALCULATED-DESIGNED BY: BIPAN KAUSHAL
CHECKED BY: BALJINDER BRAR

REVISED BY
DATE REVISED

LAST REVISION 04-24-15
DATE PLOTTED => 29-JUN-2015
TIME PLOTTED => 14:06

Dist	COUNTY	ROUTE	POST MILES TOTAL PROJECT	SHEET No.	TOTAL SHEETS
03	But	99	30.1/T37.5	6	163

REGISTERED CIVIL ENGINEER 4-27-15 DATE

4-27-15
PLANS APPROVAL DATE

REGISTERED PROFESSIONAL ENGINEER BALJINDER S. BRAR No. C 67847 Exp 6-30-15 CIVIL STATE OF CALIFORNIA

THE STATE OF CALIFORNIA OR ITS OFFICERS OR AGENTS SHALL NOT BE RESPONSIBLE FOR THE ACCURACY OR COMPLETENESS OF SCANNED COPIES OF THIS PLAN SHEET.

NOTE:

1. FOR ACCURATE RIGHT OF WAY DATA, CONTACT RIGHT OF WAY ENGINEERING AT THE DISTRICT OFFICE.

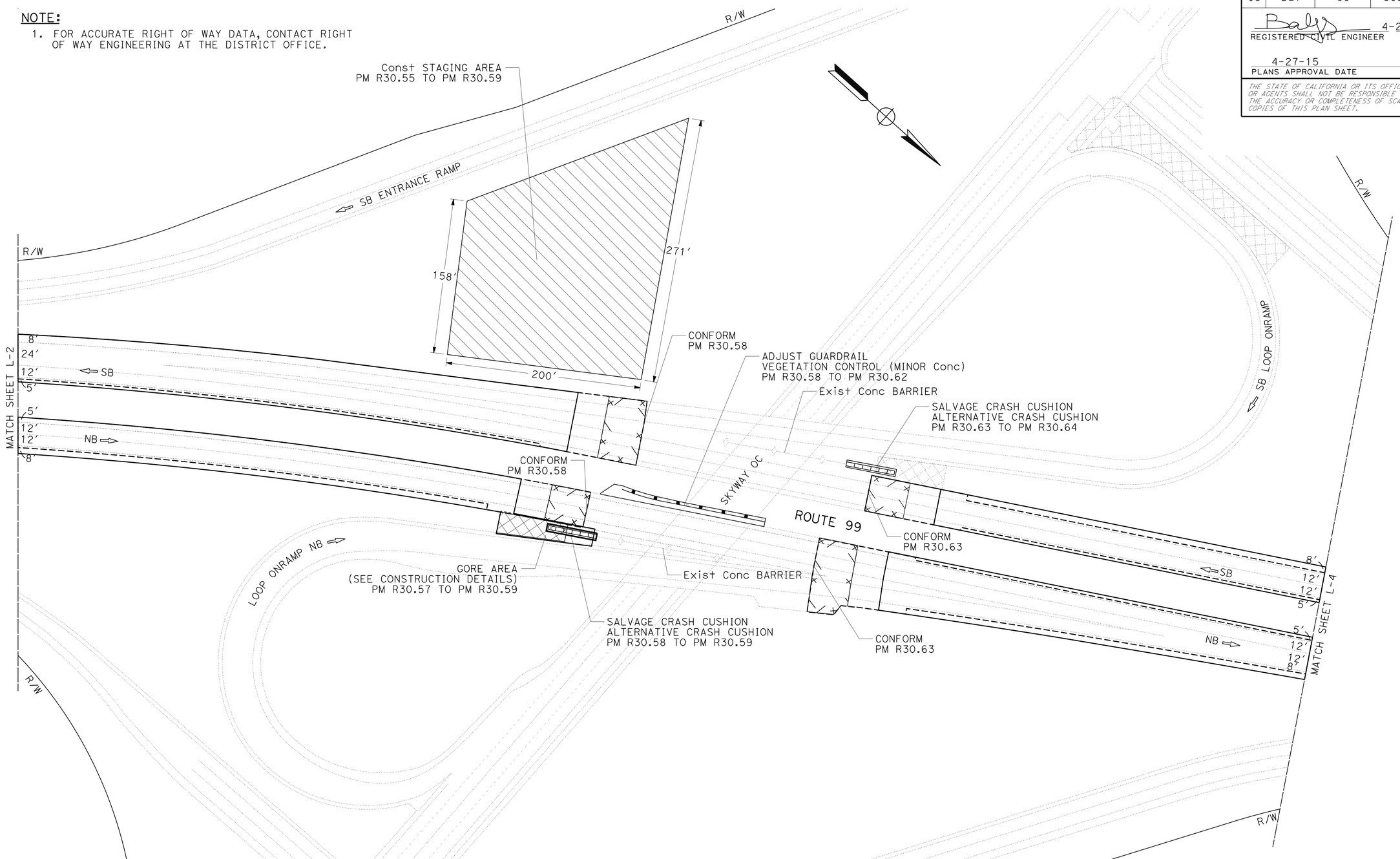

LAYOUT

SCALE: 1" = 50′

L-3

STATE OF CALIFORNIA - DEPARTMENT OF TRANSPORTATION

Caltrans® **DESIGN**

FUNCTIONAL SUPERVISOR: DEANN SPANGLER

CALCULATED-DESIGNED BY: BIPAN KAUSHAL

CHECKED BY: BALJINDER BRAR

REVISED BY

DATE REVISED

LAST REVISION 04-24-15 | DATE PLOTTED => 29-JUN-2015 | TIME PLOTTED => 14:06

Dist	COUNTY	ROUTE	POST MILES TOTAL PROJECT	SHEET No.	TOTAL SHEETS
03	But	99	30.1/T37.5	7	163

REGISTERED CIVIL ENGINEER 4-27-15 DATE

4-27-15
PLANS APPROVAL DATE

REGISTERED PROFESSIONAL ENGINEER BALJINDER S. BRAR No. C 67847 Exp. 6-30-15 CIVIL STATE OF CALIFORNIA

THE STATE OF CALIFORNIA OR ITS OFFICERS OR AGENTS SHALL NOT BE RESPONSIBLE FOR THE ACCURACY OR COMPLETENESS OF SCANNED COPIES OF THIS PLAN SHEET.

NOTE:

1. FOR ACCURATE RIGHT OF WAY DATA, CONTACT RIGHT OF WAY ENGINEERING AT THE DISTRICT OFFICE.

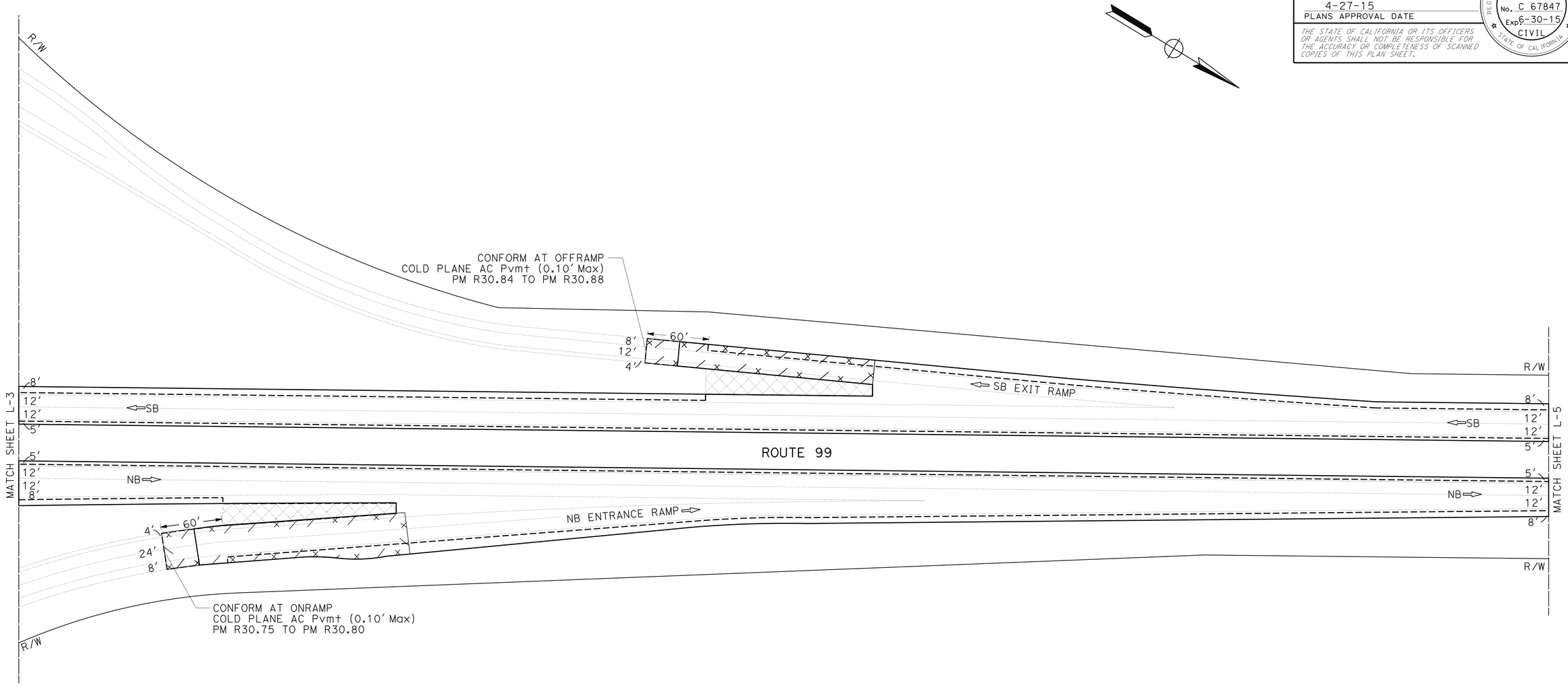

LAYOUT

SCALE: 1" = 50'

L-4

REVISED BY | DATE REVISED
BIPAN KAUSHAL | BALJINDER BRAR
CALCULATED-DESIGNED BY | CHECKED BY
FUNCTIONAL SUPERVISOR | DEANN SPANGLER
STATE OF CALIFORNIA - DEPARTMENT OF TRANSPORTATION
Caltrans DESIGN

LAST REVISION 04-24-15 | DATE PLOTTED => 29-JUN-2015 | TIME PLOTTED => 14:06

Dist	COUNTY	ROUTE	POST MILES TOTAL PROJECT	SHEET No.	TOTAL SHEETS
03	But	99	30.1/T37.5	8	163

REGISTERED CIVIL ENGINEER 4-27-15 DATE

4-27-15
PLANS APPROVAL DATE

REGISTERED PROFESSIONAL ENGINEER
BALJINDER S. BRAR
No. C 67847
Exp. 6-30-15
CIVIL
STATE OF CALIFORNIA

THE STATE OF CALIFORNIA OR ITS OFFICERS OR AGENTS SHALL NOT BE RESPONSIBLE FOR THE ACCURACY OR COMPLETENESS OF SCANNED COPIES OF THIS PLAN SHEET.

NOTE:

1. FOR ACCURATE RIGHT OF WAY DATA, CONTACT RIGHT OF WAY ENGINEERING AT THE DISTRICT OFFICE.

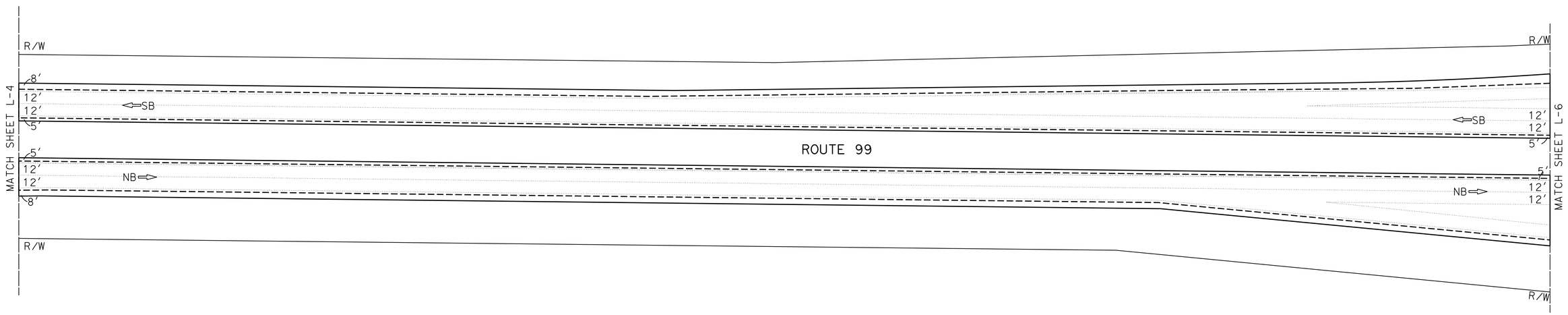

LAYOUT

SCALE: 1" = 50′

L-5

REVISED BY | DATE REVISED

BIPAN KAUSHAL | BALJINDER BRAR

CALCULATED-DESIGNED BY | CHECKED BY

FUNCTIONAL SUPERVISOR: DEANN SPANGLER

STATE OF CALIFORNIA - DEPARTMENT OF TRANSPORTATION

Caltrans® DESIGN

LAST REVISION 04-24-15 | DATE PLOTTED => 29-JUN-2015 | TIME PLOTTED => 14:06

Dist	COUNTY	ROUTE	POST MILES TOTAL PROJECT	SHEET No.	TOTAL SHEETS
03	But	99	30.1/T37.5	9	163

REGISTERED CIVIL ENGINEER 4-27-15 DATE

4-27-15
PLANS APPROVAL DATE

REGISTERED PROFESSIONAL ENGINEER BALJINDER S. BRAR No. C 67847 Exp 6-30-15 CIVIL STATE OF CALIFORNIA

THE STATE OF CALIFORNIA OR ITS OFFICERS OR AGENTS SHALL NOT BE RESPONSIBLE FOR THE ACCURACY OR COMPLETENESS OF SCANNED COPIES OF THIS PLAN SHEET.

NOTE:

1. FOR ACCURATE RIGHT OF WAY DATA, CONTACT RIGHT OF WAY ENGINEERING AT THE DISTRICT OFFICE.

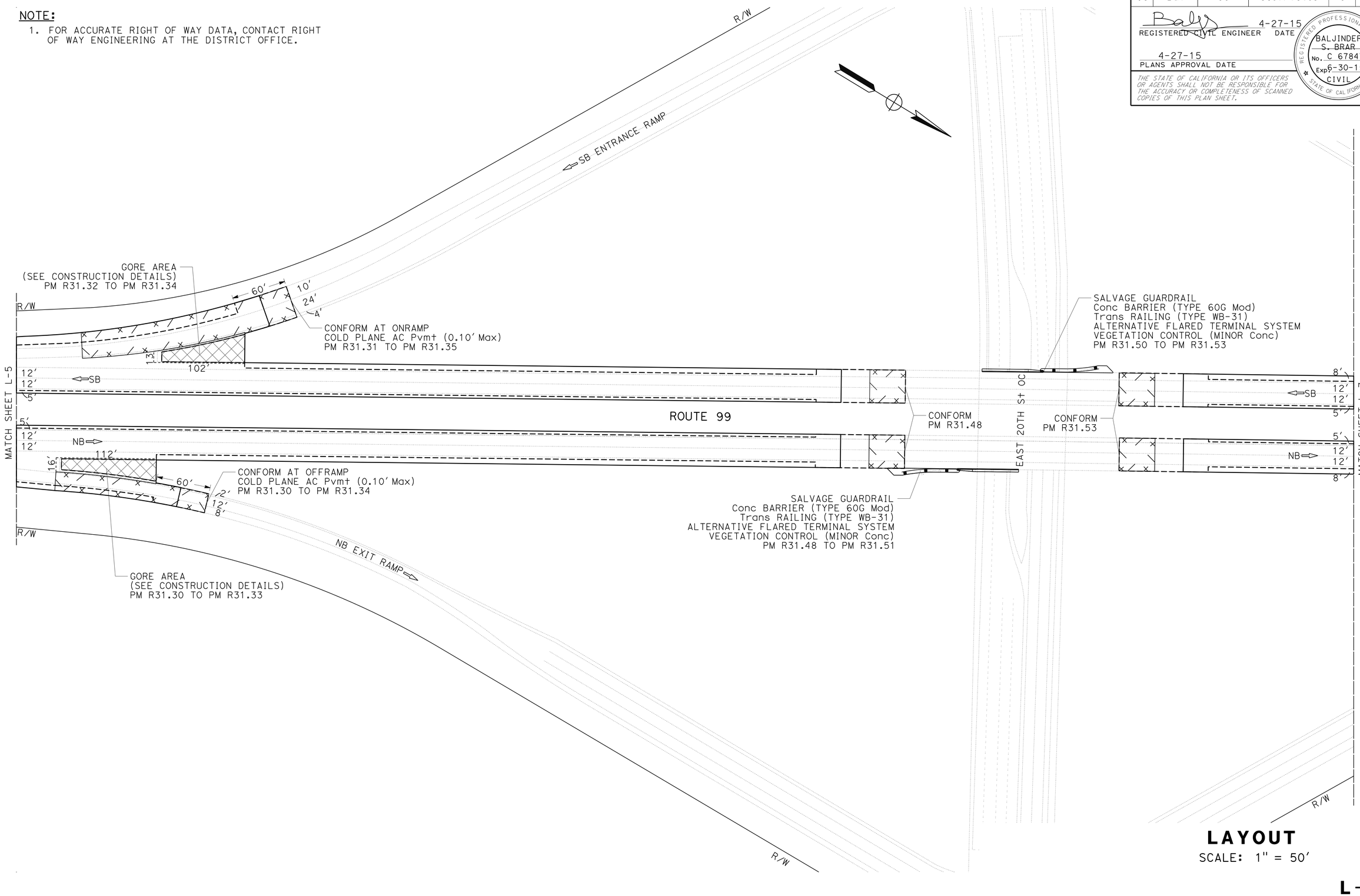

LAYOUT
SCALE: 1" = 50'

L-6

STATE OF CALIFORNIA - DEPARTMENT OF TRANSPORTATION
Caltrans® **DESIGN**

FUNCTIONAL SUPERVISOR: DEANN SPANGLER
CALCULATED-DESIGNED BY: BIPAN KAUSHAL
CHECKED BY: BALJINDER BRAR
REVISED BY
DATE REVISED

LAST REVISION 04-24-15 | DATE PLOTTED => 29-JUN-2015 | TIME PLOTTED => 14:06

Dist	COUNTY	ROUTE	POST MILES TOTAL PROJECT	SHEET No.	TOTAL SHEETS
03	But	99	30.1/T37.5	10	163

REGISTERED CIVIL ENGINEER 4-27-15 DATE

4-27-15
PLANS APPROVAL DATE

REGISTERED PROFESSIONAL ENGINEER BALJINDER S. BRAR No. C 67847 Exp. 6-30-15 CIVIL STATE OF CALIFORNIA

THE STATE OF CALIFORNIA OR ITS OFFICERS OR AGENTS SHALL NOT BE RESPONSIBLE FOR THE ACCURACY OR COMPLETENESS OF SCANNED COPIES OF THIS PLAN SHEET.

NOTE:

1. FOR ACCURATE RIGHT OF WAY DATA, CONTACT RIGHT OF WAY ENGINEERING AT THE DISTRICT OFFICE.

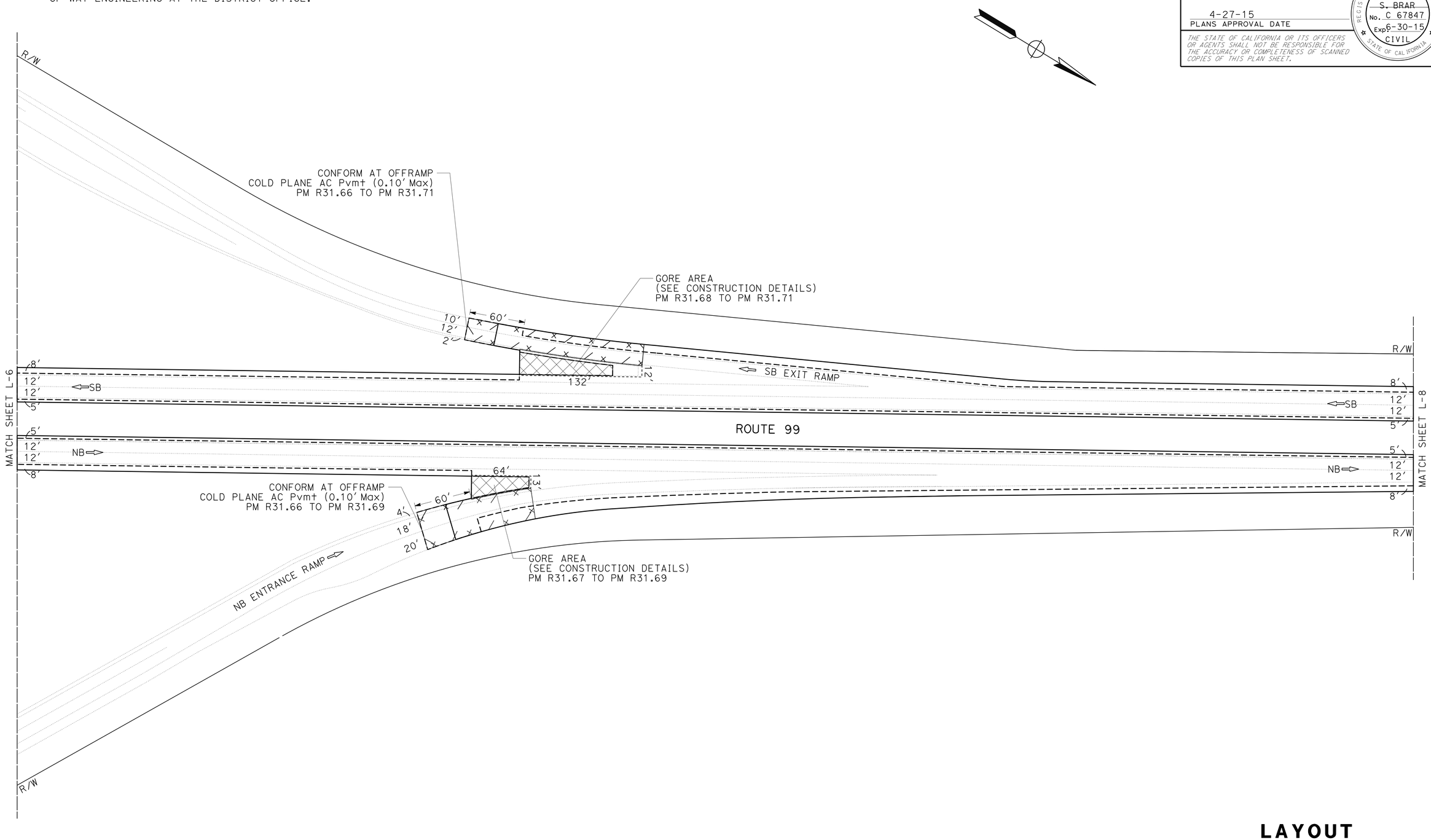

LAYOUT

SCALE: 1" = 50'

L-7

STATE OF CALIFORNIA - DEPARTMENT OF TRANSPORTATION

Caltrans® **DESIGN**

FUNCTIONAL SUPERVISOR: DEANN SPANGLER

CALCULATED-DESIGNED BY: BIPAN KAUSHAL

CHECKED BY: BALJINDER BRAR

REVISED BY

DATE REVISED

LAST REVISION 04-24-15

DATE PLOTTED => 29-JUN-2015

TIME PLOTTED => 14:06

Dist	COUNTY	ROUTE	POST MILES TOTAL PROJECT	SHEET No.	TOTAL SHEETS
03	But	99	30.1/T37.5	11	163

REGISTERED CIVIL ENGINEER 4-27-15 DATE

4-27-15
PLANS APPROVAL DATE

REGISTERED PROFESSIONAL ENGINEER
BALJINDER S. BRAR
No. C 67847
Exp. 6-30-15
CIVIL
STATE OF CALIFORNIA

THE STATE OF CALIFORNIA OR ITS OFFICERS OR AGENTS SHALL NOT BE RESPONSIBLE FOR THE ACCURACY OR COMPLETENESS OF SCANNED COPIES OF THIS PLAN SHEET.

NOTE:

1. FOR ACCURATE RIGHT OF WAY DATA, CONTACT RIGHT OF WAY ENGINEERING AT THE DISTRICT OFFICE.

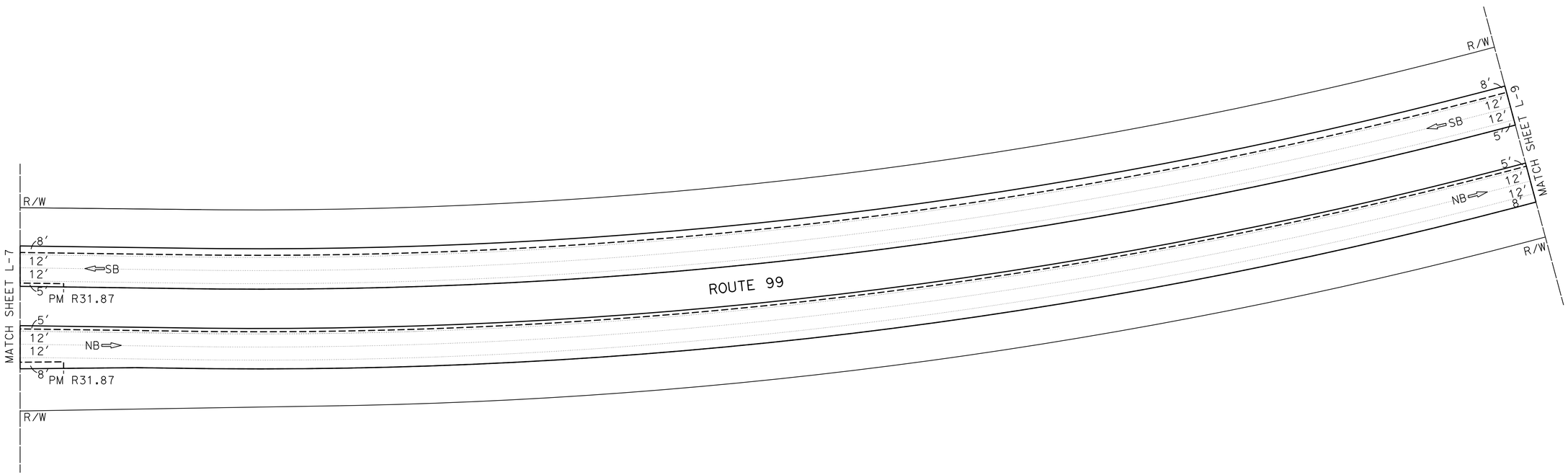

LAYOUT

SCALE: 1" = 50′

L-8

STATE OF CALIFORNIA - DEPARTMENT OF TRANSPORTATION
Caltrans® **DESIGN**

FUNCTIONAL SUPERVISOR: DEANN SPANGLER
CALCULATED-DESIGNED BY: BIPAN KAUSHAL
CHECKED BY: BALJINDER BRAR
REVISED BY
DATE REVISED

LAST REVISION 04-24-15
DATE PLOTTED => 29-JUN-2015
TIME PLOTTED => 14:06

Dist	COUNTY	ROUTE	POST MILES TOTAL PROJECT	SHEET No.	TOTAL SHEETS
03	But	99	30.1/T37.5	12	163

REGISTERED CIVIL ENGINEER 4-27-15 DATE

4-27-15
PLANS APPROVAL DATE

REGISTERED PROFESSIONAL ENGINEER BALJINDER S. BRAR No. C 67847 Exp 6-30-15 CIVIL STATE OF CALIFORNIA

THE STATE OF CALIFORNIA OR ITS OFFICERS OR AGENTS SHALL NOT BE RESPONSIBLE FOR THE ACCURACY OR COMPLETENESS OF SCANNED COPIES OF THIS PLAN SHEET.

NOTE:

1. FOR ACCURATE RIGHT OF WAY DATA, CONTACT RIGHT OF WAY ENGINEERING AT THE DISTRICT OFFICE.

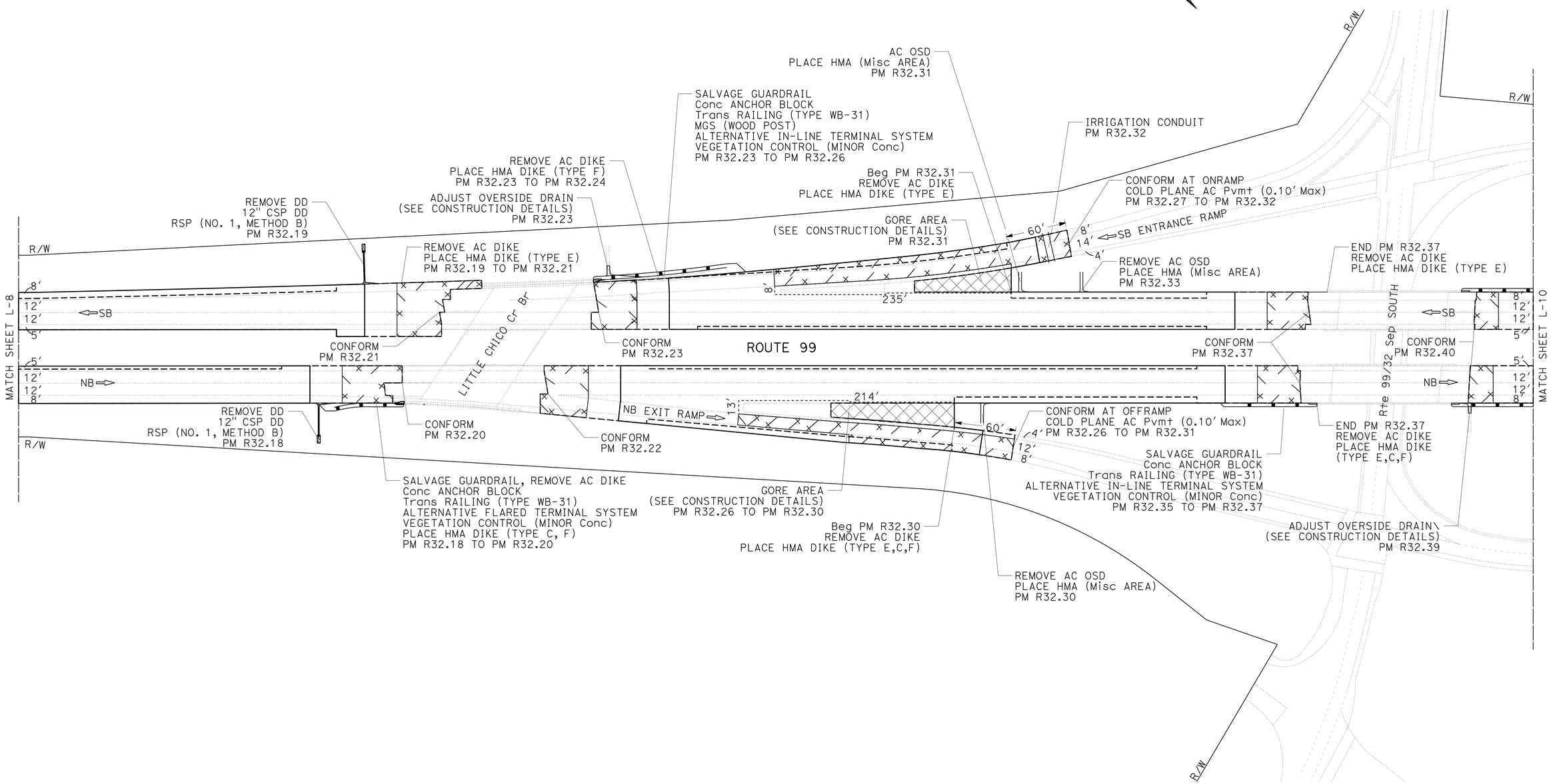

LAYOUT

SCALE: 1" = 50'

L-9

REVISED BY	DATE REVISED
BIPAN KAUSHAL	BALJINDER BRAR
CALCULATED-DESIGNED BY	CHECKED BY
FUNCTIONAL SUPERVISOR	DEANN SPANGLER

STATE OF CALIFORNIA - DEPARTMENT OF TRANSPORTATION

Caltrans® DESIGN

LAST REVISION 04-24-15 | DATE PLOTTED => 29-JUN-2015 | TIME PLOTTED => 14:06

Dist	COUNTY	ROUTE	POST MILES TOTAL PROJECT	SHEET No.	TOTAL SHEETS
03	But	99	30.1/T37.5	13	163

REGISTERED CIVIL ENGINEER 4-27-15 DATE

4-27-15
PLANS APPROVAL DATE

REGISTERED PROFESSIONAL ENGINEER BALJINDER S. BRAR No. C 67847 Exp. 6-30-15 CIVIL STATE OF CALIFORNIA

THE STATE OF CALIFORNIA OR ITS OFFICERS OR AGENTS SHALL NOT BE RESPONSIBLE FOR THE ACCURACY OR COMPLETENESS OF SCANNED COPIES OF THIS PLAN SHEET.

NOTE:

1. FOR ACCURATE RIGHT OF WAY DATA, CONTACT RIGHT OF WAY ENGINEERING AT THE DISTRICT OFFICE.

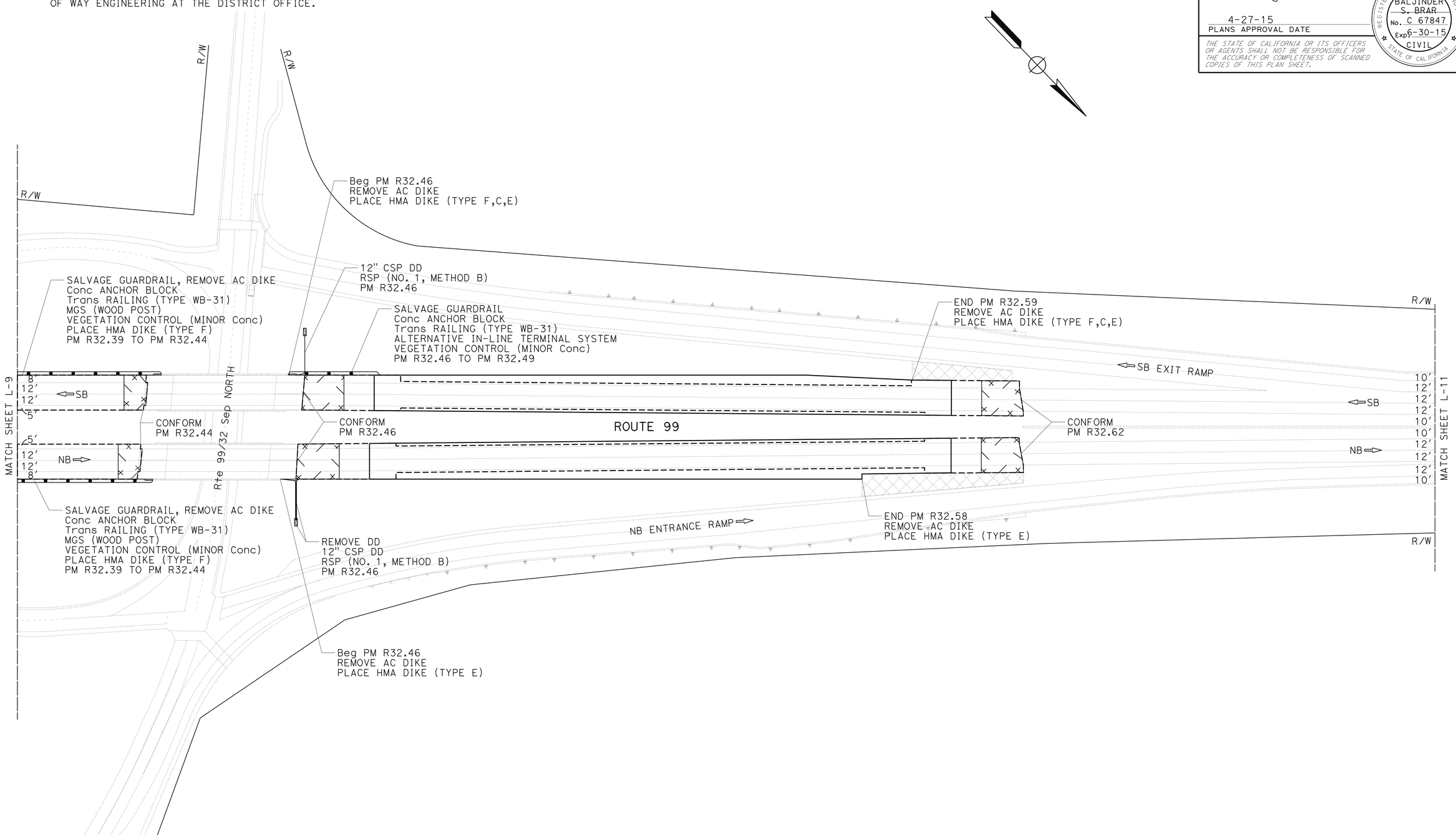

LAYOUT

SCALE: 1" = 50'

L-10

STATE OF CALIFORNIA - DEPARTMENT OF TRANSPORTATION

Caltrans® **DESIGN**

FUNCTIONAL SUPERVISOR: DEANN SPANGLER

CALCULATED-DESIGNED BY: BIPAN KAUSHAL

CHECKED BY: BALJINDER BRAR

REVISED BY

DATE REVISED

LAST REVISION 04-24-15

DATE PLOTTED => 29-JUN-2015
TIME PLOTTED => 14:06

Dist	COUNTY	ROUTE	POST MILES TOTAL PROJECT	SHEET No.	TOTAL SHEETS
03	But	99	30.1/T37.5	14	163

REGISTERED CIVIL ENGINEER 4-27-15 DATE

4-27-15
PLANS APPROVAL DATE

REGISTERED PROFESSIONAL ENGINEER BALJINDER S. BRAR No. C 67847 Exp. 6-30-15 CIVIL STATE OF CALIFORNIA

THE STATE OF CALIFORNIA OR ITS OFFICERS OR AGENTS SHALL NOT BE RESPONSIBLE FOR THE ACCURACY OR COMPLETENESS OF SCANNED COPIES OF THIS PLAN SHEET.

NOTE:

1. FOR ACCURATE RIGHT OF WAY DATA, CONTACT RIGHT OF WAY ENGINEERING AT THE DISTRICT OFFICE.

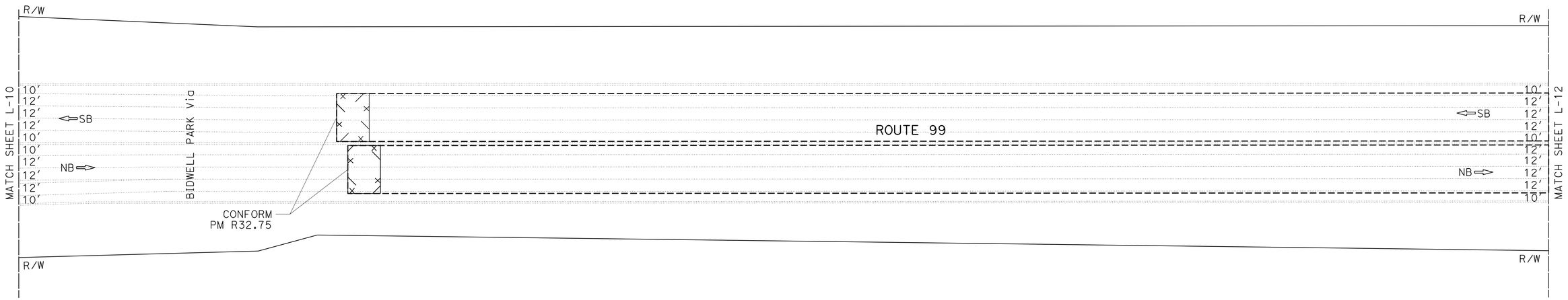

LAYOUT

SCALE: 1" = 50'

L-11

STATE OF CALIFORNIA - DEPARTMENT OF TRANSPORTATION
Caltrans® **DESIGN**

FUNCTIONAL SUPERVISOR: DEANN SPANGLER
CALCULATED-DESIGNED BY: BIPAN KAUSHAL
CHECKED BY: BALJINDER BRAR
REVISED BY
DATE REVISED

LAST REVISION DATE PLOTTED => 29-JUN-2015
04-24-15 TIME PLOTTED => 14:06

Dist	COUNTY	ROUTE	POST MILES TOTAL PROJECT	SHEET No.	TOTAL SHEETS
03	But	99	30.1/T37.5	15	163

REGISTERED CIVIL ENGINEER 4-27-15 DATE

4-27-15
PLANS APPROVAL DATE

REGISTERED PROFESSIONAL ENGINEER BALJINDER S. BRAR No. C 67847 Exp. 6-30-15 CIVIL STATE OF CALIFORNIA

THE STATE OF CALIFORNIA OR ITS OFFICERS OR AGENTS SHALL NOT BE RESPONSIBLE FOR THE ACCURACY OR COMPLETENESS OF SCANNED COPIES OF THIS PLAN SHEET.

NOTE:

1. FOR ACCURATE RIGHT OF WAY DATA, CONTACT RIGHT OF WAY ENGINEERING AT THE DISTRICT OFFICE.

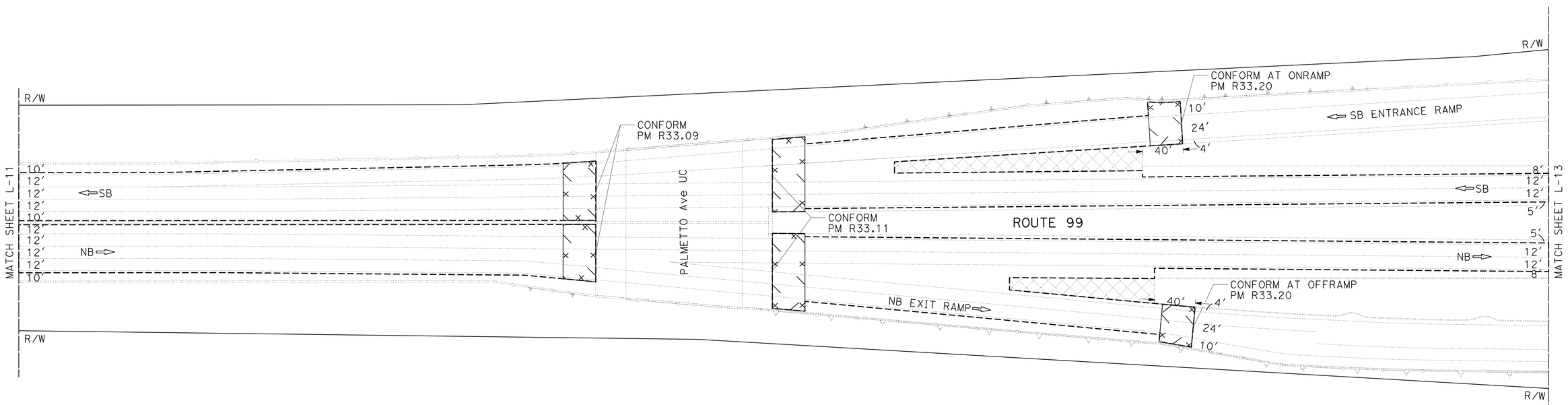

LAYOUT

SCALE: 1" = 50′

L-12

STATE OF CALIFORNIA - DEPARTMENT OF TRANSPORTATION

Caltrans® **DESIGN**

FUNCTIONAL SUPERVISOR: DEANN SPANGLER

CALCULATED-DESIGNED BY: BIPAN KAUSHAL

CHECKED BY: BALJINDER BRAR

REVISED BY

DATE REVISED

LAST REVISION 04-24-15

DATE PLOTTED => 29-JUN-2015
TIME PLOTTED => 14:06

Dist	COUNTY	ROUTE	POST MILES TOTAL PROJECT	SHEET No.	TOTAL SHEETS
03	But	99	30.1/T37.5	16	163

REGISTERED CIVIL ENGINEER 4-27-15 DATE

4-27-15
PLANS APPROVAL DATE

REGISTERED PROFESSIONAL ENGINEER BALJINDER S. BRAR No. C 67847 Exp 6-30-15 CIVIL STATE OF CALIFORNIA

THE STATE OF CALIFORNIA OR ITS OFFICERS OR AGENTS SHALL NOT BE RESPONSIBLE FOR THE ACCURACY OR COMPLETENESS OF SCANNED COPIES OF THIS PLAN SHEET.

NOTE:

1. FOR ACCURATE RIGHT OF WAY DATA, CONTACT RIGHT OF WAY ENGINEERING AT THE DISTRICT OFFICE.

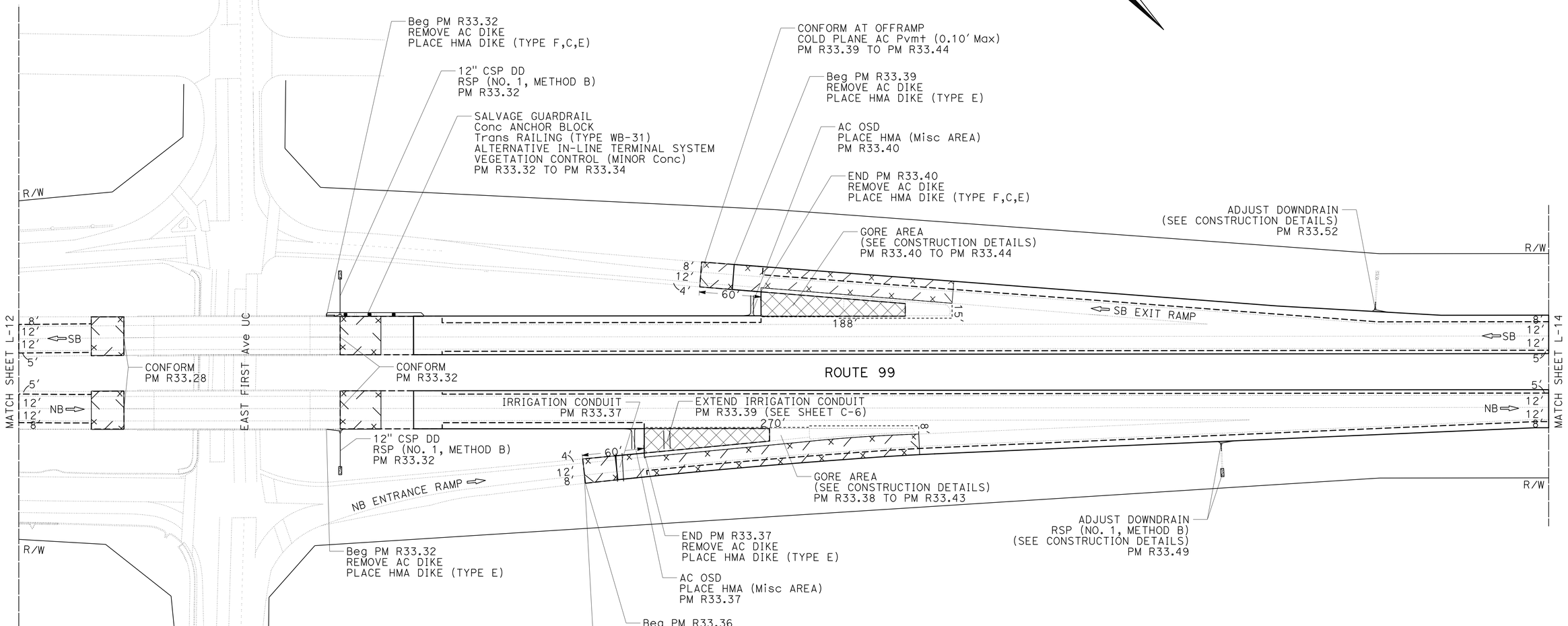

LAYOUT

SCALE: 1" = 50'

L-13

REVISED BY | DATE REVISED

BIPAN KAUSHAL | BALJINDER BRAR

CALCULATED-DESIGNED BY | CHECKED BY

FUNCTIONAL SUPERVISOR: DEANN SPANGLER

STATE OF CALIFORNIA - DEPARTMENT OF TRANSPORTATION

Caltrans® **DESIGN**

LAST REVISION 04-24-15 | DATE PLOTTED => 29-JUN-2015 | TIME PLOTTED => 14:06

Dist	COUNTY	ROUTE	POST MILES TOTAL PROJECT	SHEET No.	TOTAL SHEETS
03	But	99	30.1/T37.5	17	163

REGISTERED CIVIL ENGINEER 4-27-15 DATE

4-27-15
PLANS APPROVAL DATE

REGISTERED PROFESSIONAL ENGINEER BALJINDER S. BRAR No. C 67847 Exp 6-30-15 CIVIL STATE OF CALIFORNIA

THE STATE OF CALIFORNIA OR ITS OFFICERS OR AGENTS SHALL NOT BE RESPONSIBLE FOR THE ACCURACY OR COMPLETENESS OF SCANNED COPIES OF THIS PLAN SHEET.

NOTE:

1. FOR ACCURATE RIGHT OF WAY DATA, CONTACT RIGHT OF WAY ENGINEERING AT THE DISTRICT OFFICE.

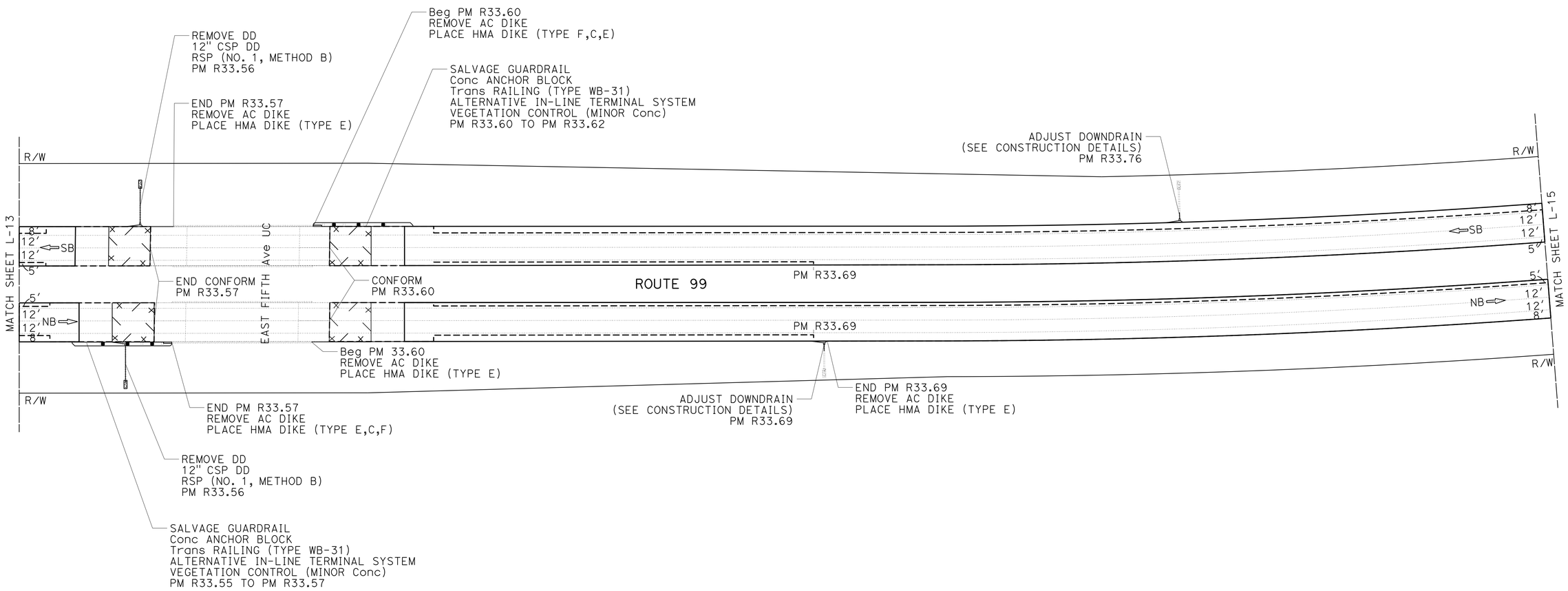

LAYOUT

SCALE: 1" = 50'

L-14

STATE OF CALIFORNIA - DEPARTMENT OF TRANSPORTATION
Caltrans DESIGN

FUNCTIONAL SUPERVISOR: DEANN SPANGLER
CALCULATED-DESIGNED BY: BIPAN KAUSHAL
CHECKED BY: BALJINDER BRAR
REVISED BY
DATE REVISED

LAST REVISION 04-24-15
DATE PLOTTED => 29-JUN-2015
TIME PLOTTED => 14:06

Dist	COUNTY	ROUTE	POST MILES TOTAL PROJECT	SHEET No.	TOTAL SHEETS
03	But	99	30.1/T37.5	18	163

REGISTERED CIVIL ENGINEER 4-27-15 DATE

4-27-15
PLANS APPROVAL DATE

REGISTERED PROFESSIONAL ENGINEER BALJINDER S. BRAR No. C 67847 Exp 6-30-15 CIVIL STATE OF CALIFORNIA

THE STATE OF CALIFORNIA OR ITS OFFICERS OR AGENTS SHALL NOT BE RESPONSIBLE FOR THE ACCURACY OR COMPLETENESS OF SCANNED COPIES OF THIS PLAN SHEET.

NOTE:

1. FOR ACCURATE RIGHT OF WAY DATA, CONTACT RIGHT OF WAY ENGINEERING AT THE DISTRICT OFFICE.

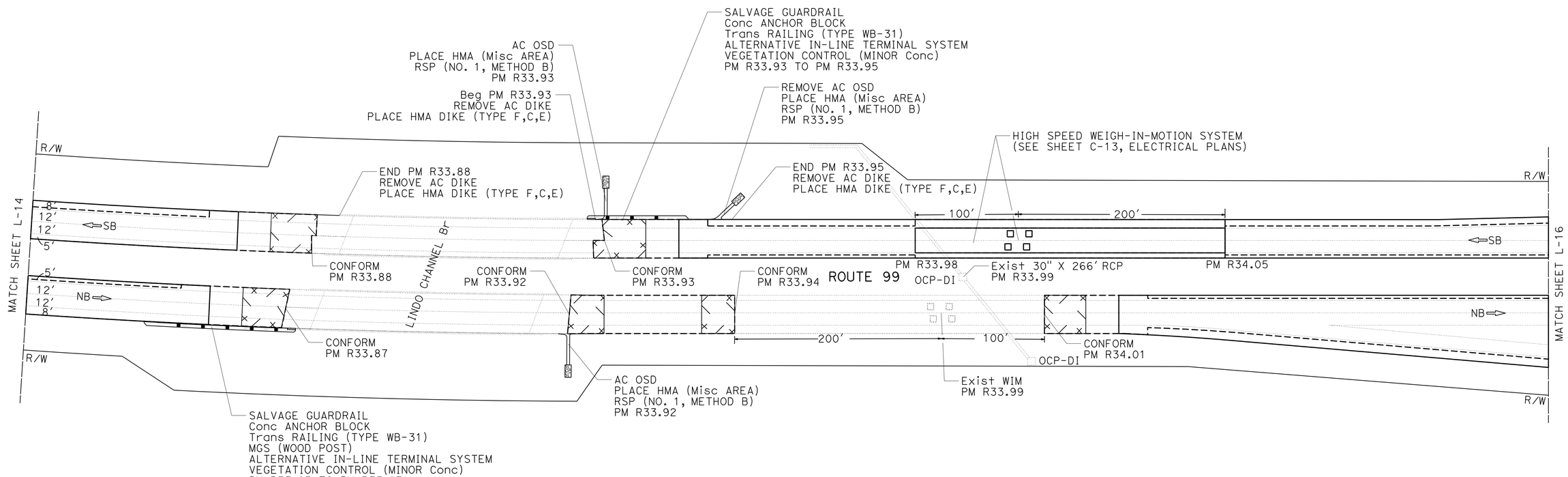

LAYOUT

SCALE: 1" = 50'

L-15

REVISED BY	DATE REVISED
BIPAN KAUSHAL	BALJINDER BRAR
CALCULATED-DESIGNED BY	CHECKED BY
FUNCTIONAL SUPERVISOR	DEANN SPANGLER

STATE OF CALIFORNIA - DEPARTMENT OF TRANSPORTATION

Caltrans® DESIGN

LAST REVISION 04-24-15 | DATE PLOTTED => 29-JUN-2015 | TIME PLOTTED => 14:06

Dist	COUNTY	ROUTE	POST MILES TOTAL PROJECT	SHEET No.	TOTAL SHEETS
03	But	99	30.1/T37.5	19	163

REGISTERED CIVIL ENGINEER 4-27-15 DATE

4-27-15
PLANS APPROVAL DATE

REGISTERED PROFESSIONAL ENGINEER BALJINDER S. BRAR No. C 67847 Exp. 6-30-15 CIVIL STATE OF CALIFORNIA

THE STATE OF CALIFORNIA OR ITS OFFICERS OR AGENTS SHALL NOT BE RESPONSIBLE FOR THE ACCURACY OR COMPLETENESS OF SCANNED COPIES OF THIS PLAN SHEET.

NOTE:

1. FOR ACCURATE RIGHT OF WAY DATA, CONTACT RIGHT OF WAY ENGINEERING AT THE DISTRICT OFFICE.

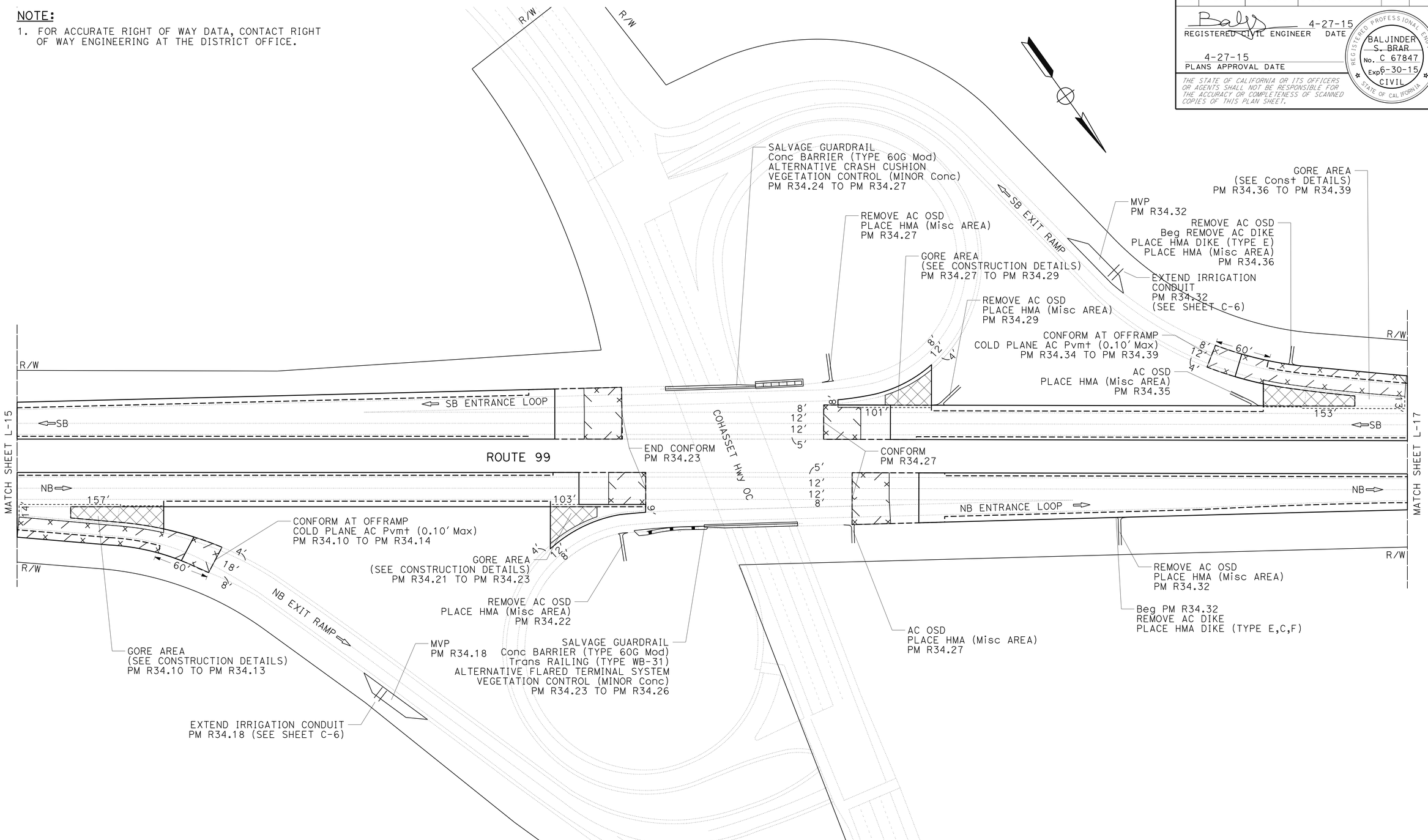

LAYOUT

SCALE: 1" = 50'

L-16

REVISED BY	DATE REVISED
BIPAN KAUSHAL	BALJINDER BRAR

CALCULATED-DESIGNED BY
CHECKED BY

FUNCTIONAL SUPERVISOR: DEANN SPANGLER

STATE OF CALIFORNIA - DEPARTMENT OF TRANSPORTATION

Caltrans® DESIGN

LAST REVISION 04-24-15 | DATE PLOTTED => 29-JUN-2015 | TIME PLOTTED => 14:06

Dist	COUNTY	ROUTE	POST MILES TOTAL PROJECT	SHEET No.	TOTAL SHEETS
03	But	99	30.1/T37.5	20	163

REGISTERED CIVIL ENGINEER 4-27-15 DATE

4-27-15
PLANS APPROVAL DATE

REGISTERED PROFESSIONAL ENGINEER BALJINDER S. BRAR No. C 67847 Exp 6-30-15 CIVIL STATE OF CALIFORNIA

THE STATE OF CALIFORNIA OR ITS OFFICERS OR AGENTS SHALL NOT BE RESPONSIBLE FOR THE ACCURACY OR COMPLETENESS OF SCANNED COPIES OF THIS PLAN SHEET.

NOTE:

1. FOR ACCURATE RIGHT OF WAY DATA, CONTACT RIGHT OF WAY ENGINEERING AT THE DISTRICT OFFICE.

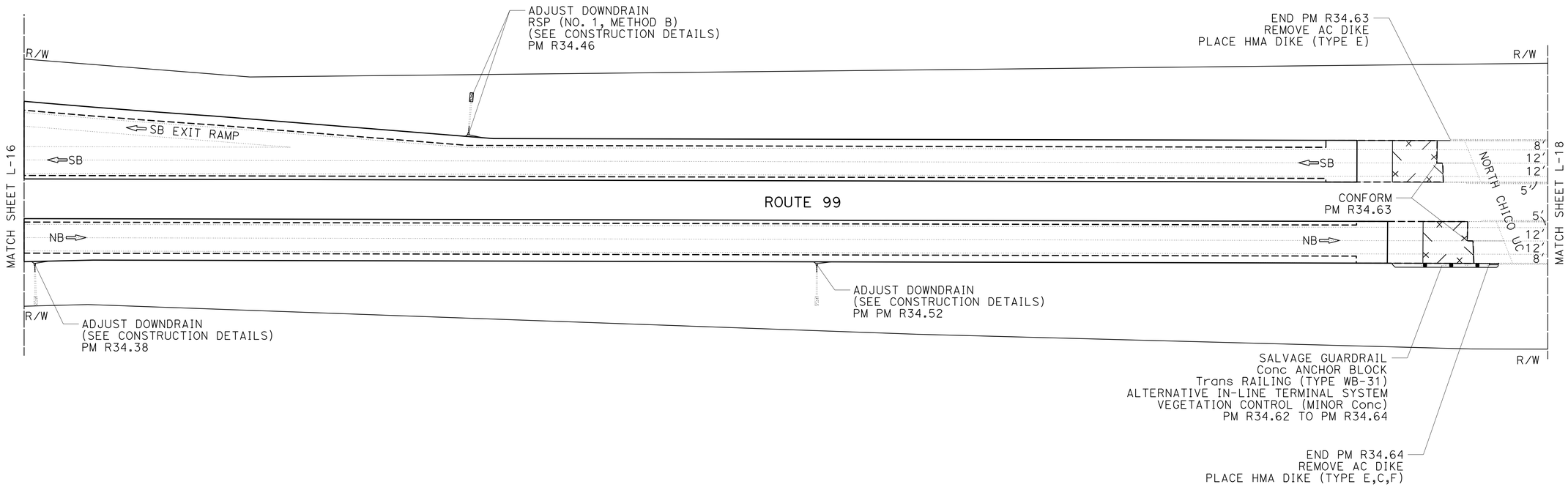

LAYOUT

SCALE: 1" = 50'

L-17

REVISED BY | DATE REVISED

BIPAN KAUSHAL | BALJINDER BRAR

CALCULATED-DESIGNED BY | CHECKED BY

FUNCTIONAL SUPERVISOR: DEANN SPANGLER

STATE OF CALIFORNIA - DEPARTMENT OF TRANSPORTATION

Caltrans® DESIGN

LAST REVISION 04-24-15 | DATE PLOTTED => 29-JUN-2015 | TIME PLOTTED => 14:06

Dist	COUNTY	ROUTE	POST MILES TOTAL PROJECT	SHEET No.	TOTAL SHEETS
03	But	99	30.1/T37.5	21	163

REGISTERED CIVIL ENGINEER 4-27-15 DATE

4-27-15
PLANS APPROVAL DATE

REGISTERED PROFESSIONAL ENGINEER BALJINDER S. BRAR No. C 67847 Exp 6-30-15 CIVIL STATE OF CALIFORNIA

THE STATE OF CALIFORNIA OR ITS OFFICERS OR AGENTS SHALL NOT BE RESPONSIBLE FOR THE ACCURACY OR COMPLETENESS OF SCANNED COPIES OF THIS PLAN SHEET.

NOTE:

1. FOR ACCURATE RIGHT OF WAY DATA, CONTACT RIGHT OF WAY ENGINEERING AT THE DISTRICT OFFICE.

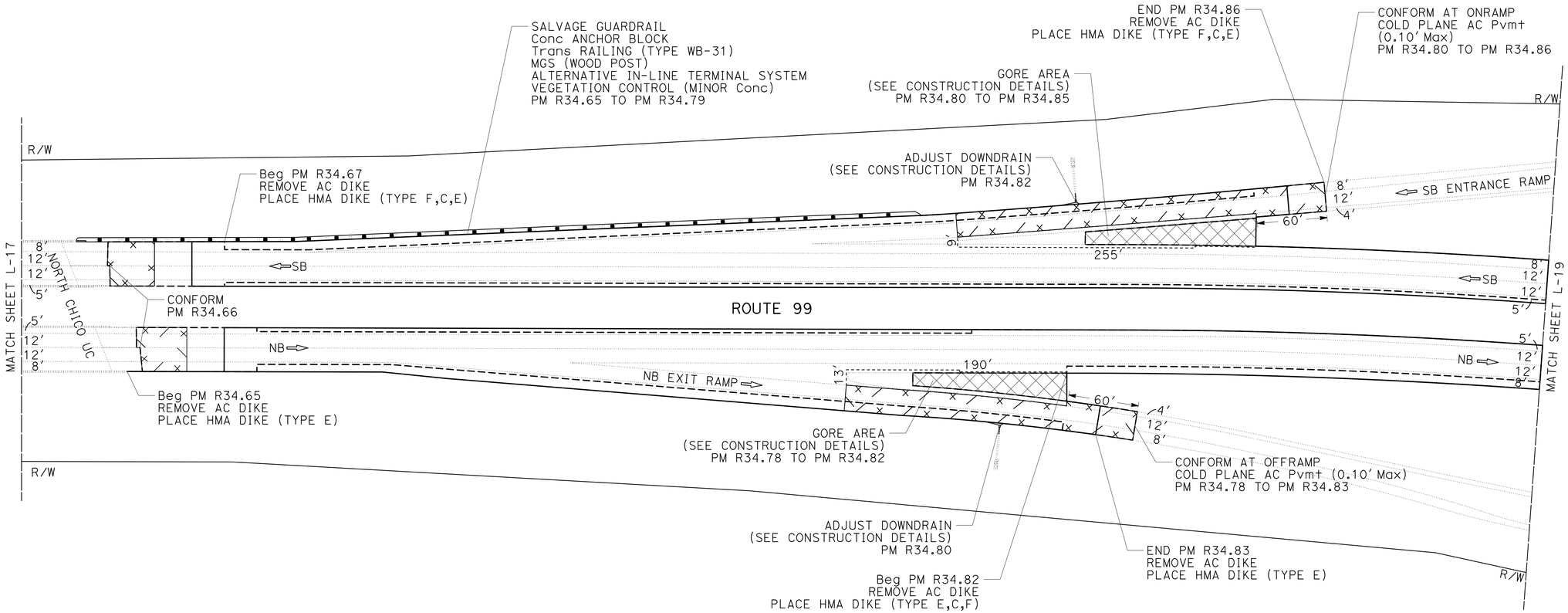

LAYOUT

SCALE: 1" = 50'

L-18

STATE OF CALIFORNIA - DEPARTMENT OF TRANSPORTATION

Caltrans® **DESIGN**

FUNCTIONAL SUPERVISOR: DEANN SPANGLER

CALCULATED-DESIGNED BY: BIPAN KAUSHAL

CHECKED BY: BALJINDER BRAR

REVISED BY

DATE REVISED

LAST REVISION 04-24-15

DATE PLOTTED => 29-JUN-2015
TIME PLOTTED => 14:06

Dist	COUNTY	ROUTE	POST MILES TOTAL PROJECT	SHEET No.	TOTAL SHEETS
03	But	99	30.1/T37.5	22	163

REGISTERED CIVIL ENGINEER 4-27-15 DATE

4-27-15
PLANS APPROVAL DATE

REGISTERED PROFESSIONAL ENGINEER BALJINDER S. BRAR No. C 67847 Exp 6-30-15 CIVIL STATE OF CALIFORNIA

THE STATE OF CALIFORNIA OR ITS OFFICERS OR AGENTS SHALL NOT BE RESPONSIBLE FOR THE ACCURACY OR COMPLETENESS OF SCANNED COPIES OF THIS PLAN SHEET.

NOTE:

1. FOR ACCURATE RIGHT OF WAY DATA, CONTACT RIGHT OF WAY ENGINEERING AT THE DISTRICT OFFICE.

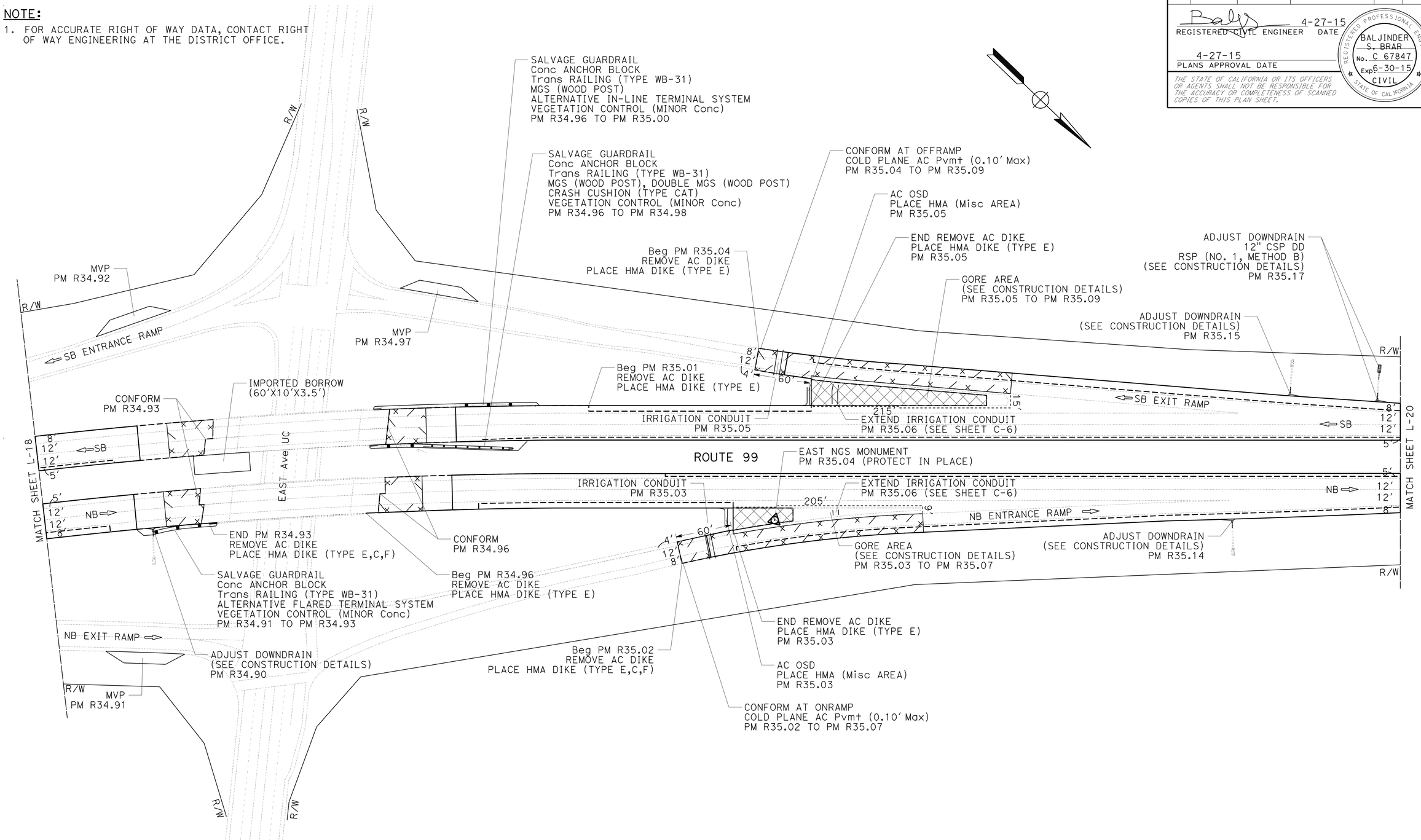

LAYOUT

SCALE: 1" = 50'

L-19

REVISED BY	DATE REVISED
BIPAN KAUSHAL	BALJINDER BRAR

CALCULATED-DESIGNED BY	CHECKED BY

FUNCTIONAL SUPERVISOR: DEANN SPANGLER

STATE OF CALIFORNIA - DEPARTMENT OF TRANSPORTATION

Caltrans® **DESIGN**

LAST REVISION 04-24-15 | DATE PLOTTED => 29-JUN-2015 | TIME PLOTTED => 14:06

Dist	COUNTY	ROUTE	POST MILES TOTAL PROJECT	SHEET No.	TOTAL SHEETS
03	But	99	30.1/T37.5	23	163

REGISTERED CIVIL ENGINEER 4-27-15 DATE

4-27-15
PLANS APPROVAL DATE

REGISTERED PROFESSIONAL ENGINEER BALJINDER S. BRAR No. C 67847 Exp 6-30-15 CIVIL STATE OF CALIFORNIA

THE STATE OF CALIFORNIA OR ITS OFFICERS OR AGENTS SHALL NOT BE RESPONSIBLE FOR THE ACCURACY OR COMPLETENESS OF SCANNED COPIES OF THIS PLAN SHEET.

NOTE:

1. FOR ACCURATE RIGHT OF WAY DATA, CONTACT RIGHT OF WAY ENGINEERING AT THE DISTRICT OFFICE.

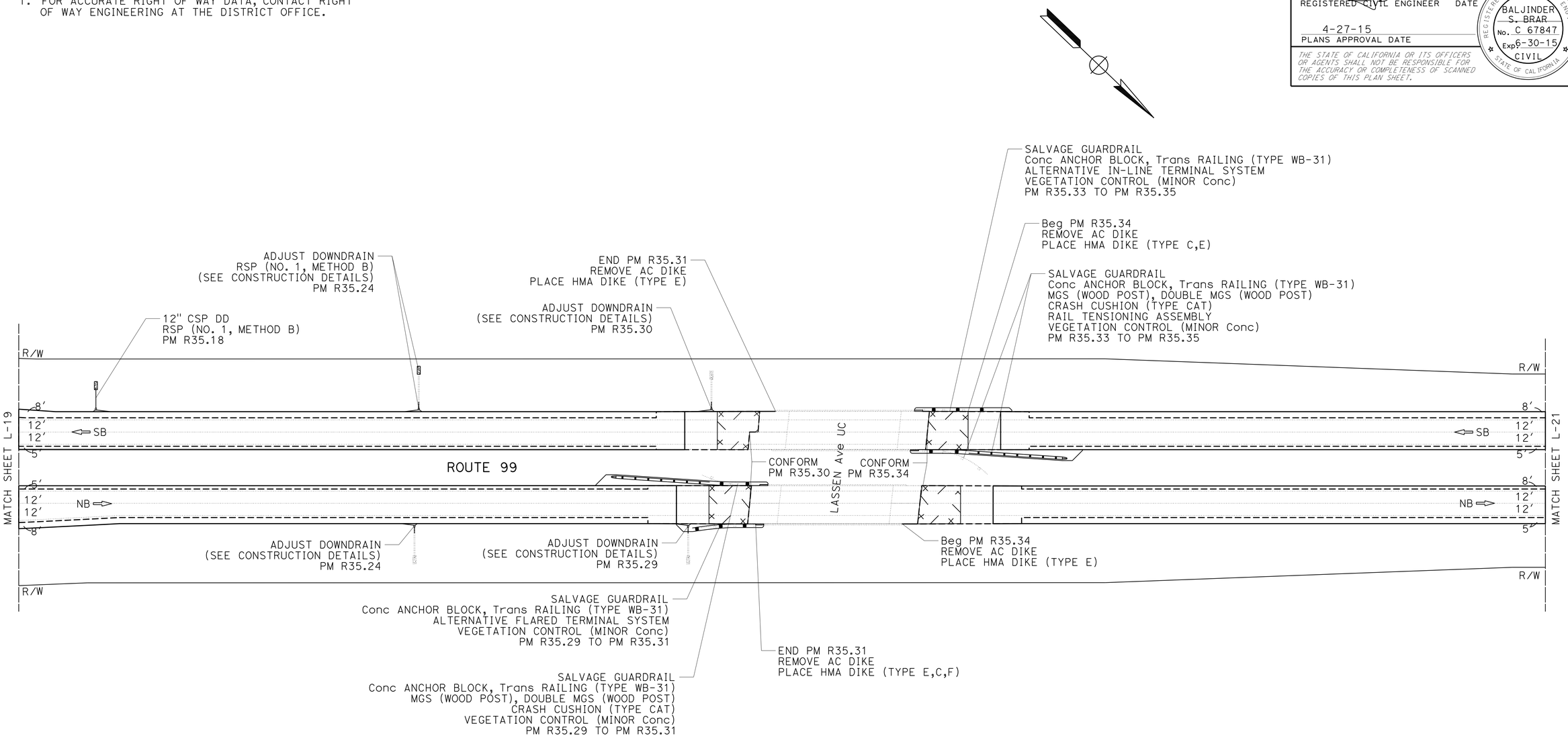

LAYOUT

SCALE: 1" = 50'

L-20

REVISED BY	DATE REVISED

CALCULATED-DESIGNED BY: BIPAN KAUSHAL
CHECKED BY: BALJINDER BRAR
FUNCTIONAL SUPERVISOR: DEANN SPANGLER

STATE OF CALIFORNIA - DEPARTMENT OF TRANSPORTATION
Caltrans® DESIGN

LAST REVISION 04-24-15 | DATE PLOTTED => 29-JUN-2015 | TIME PLOTTED => 14:06

Dist	COUNTY	ROUTE	POST MILES TOTAL PROJECT	SHEET No.	TOTAL SHEETS
03	But	99	30.1/T37.5	24	163

REGISTERED CIVIL ENGINEER 4-27-15 DATE

4-27-15
PLANS APPROVAL DATE

REGISTERED PROFESSIONAL ENGINEER BALJINDER S. BRAR No. C 67847 Exp. 6-30-15 CIVIL STATE OF CALIFORNIA

THE STATE OF CALIFORNIA OR ITS OFFICERS OR AGENTS SHALL NOT BE RESPONSIBLE FOR THE ACCURACY OR COMPLETENESS OF SCANNED COPIES OF THIS PLAN SHEET.

NOTE:

1. FOR ACCURATE RIGHT OF WAY DATA, CONTACT RIGHT OF WAY ENGINEERING AT THE DISTRICT OFFICE.

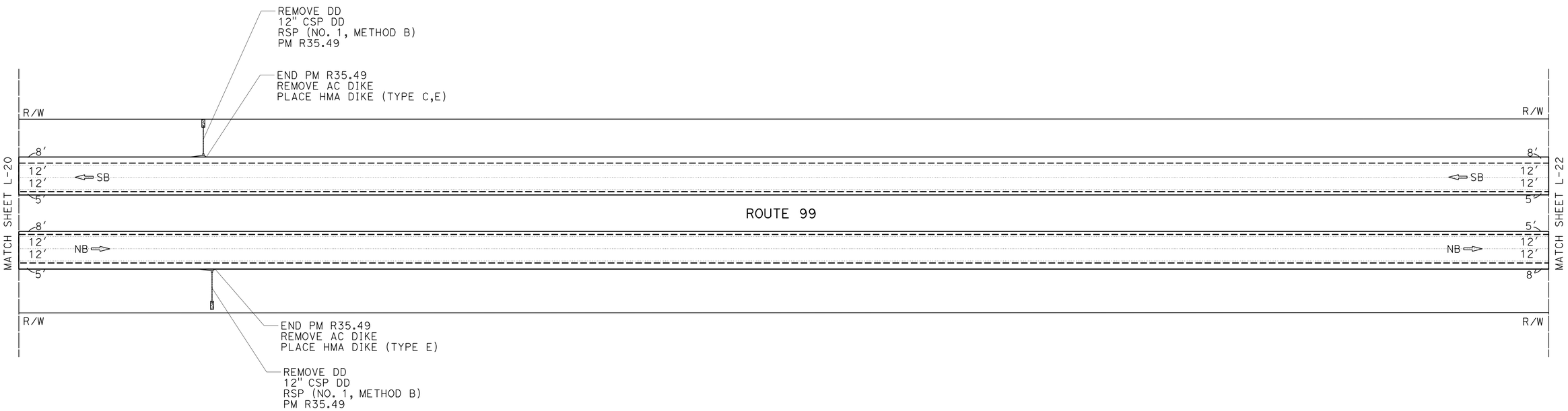

LAYOUT

SCALE: 1" = 50′

L-21

STATE OF CALIFORNIA - DEPARTMENT OF TRANSPORTATION

Caltrans® **DESIGN**

FUNCTIONAL SUPERVISOR: DEANN SPANGLER

CALCULATED-DESIGNED BY: BIPAN KAUSHAL

CHECKED BY: BALJINDER BRAR

REVISED BY

DATE REVISED

LAST REVISION 04-24-15

DATE PLOTTED => 29-JUN-2015

TIME PLOTTED => 14:06

Dist	COUNTY	ROUTE	POST MILES TOTAL PROJECT	SHEET No.	TOTAL SHEETS
03	But	99	30.1/T37.5	25	163

REGISTERED CIVIL ENGINEER 4-27-15 DATE

4-27-15
PLANS APPROVAL DATE

REGISTERED PROFESSIONAL ENGINEER
BALJINDER S. BRAR
No. C 67847
Exp. 6-30-15
CIVIL
STATE OF CALIFORNIA

THE STATE OF CALIFORNIA OR ITS OFFICERS OR AGENTS SHALL NOT BE RESPONSIBLE FOR THE ACCURACY OR COMPLETENESS OF SCANNED COPIES OF THIS PLAN SHEET.

NOTE:

1. FOR ACCURATE RIGHT OF WAY DATA, CONTACT RIGHT OF WAY ENGINEERING AT THE DISTRICT OFFICE.

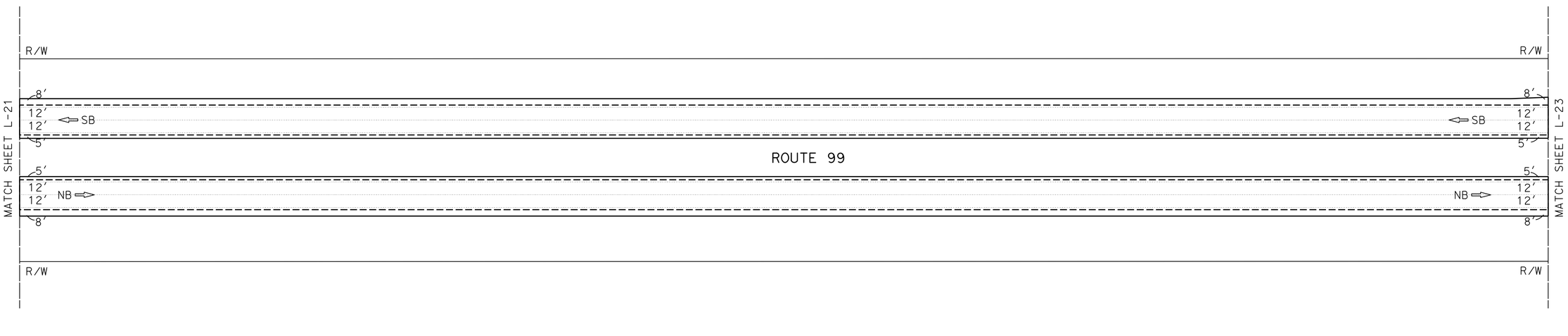

LAYOUT

SCALE: 1" = 50′

L-22

REVISED BY | DATE REVISED

BIPAN KAUSHAL | BALJINDER BRAR

CALCULATED-DESIGNED BY | CHECKED BY

FUNCTIONAL SUPERVISOR: DEANN SPANGLER

STATE OF CALIFORNIA - DEPARTMENT OF TRANSPORTATION

Caltrans® DESIGN

LAST REVISION 04-24-15 | DATE PLOTTED => 29-JUN-2015 | TIME PLOTTED => 14:06

Dist	COUNTY	ROUTE	POST MILES TOTAL PROJECT	SHEET No.	TOTAL SHEETS
03	But	99	30.1/T37.5	26	163

REGISTERED CIVIL ENGINEER 4-27-15 DATE

4-27-15
PLANS APPROVAL DATE

REGISTERED PROFESSIONAL ENGINEER BALJINDER S. BRAR No. C 67847 Exp 6-30-15 CIVIL STATE OF CALIFORNIA

THE STATE OF CALIFORNIA OR ITS OFFICERS OR AGENTS SHALL NOT BE RESPONSIBLE FOR THE ACCURACY OR COMPLETENESS OF SCANNED COPIES OF THIS PLAN SHEET.

NOTE:

1. FOR ACCURATE RIGHT OF WAY DATA, CONTACT RIGHT OF WAY ENGINEERING AT THE DISTRICT OFFICE.

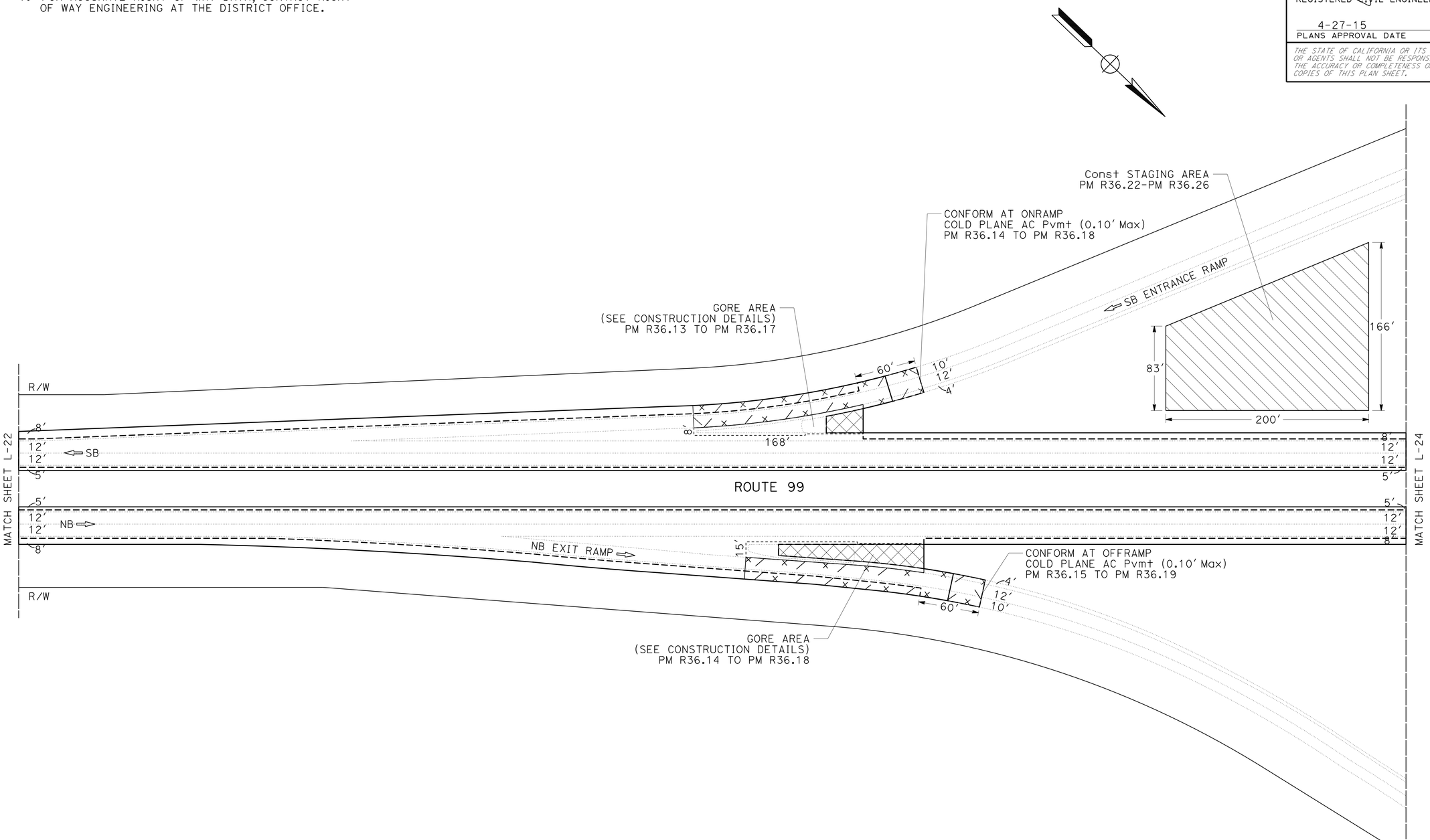

LAYOUT

SCALE: 1" = 50'

L-23

REVISED BY	DATE REVISED

CALCULATED-DESIGNED BY: BIPAN KAUSHAL
CHECKED BY: BALJINDER BRAR
FUNCTIONAL SUPERVISOR: DEANN SPANGLER

STATE OF CALIFORNIA - DEPARTMENT OF TRANSPORTATION
Caltrans DESIGN

LAST REVISION 04-24-15 | DATE PLOTTED => 29-JUN-2015 | TIME PLOTTED => 14:06

Dist	COUNTY	ROUTE	POST MILES TOTAL PROJECT	SHEET No.	TOTAL SHEETS
03	But	99	30.1/T37.5	27	163

REGISTERED CIVIL ENGINEER 4-27-15 DATE

4-27-15
PLANS APPROVAL DATE

REGISTERED PROFESSIONAL ENGINEER BALJINDER S. BRAR No. C 67847 Exp. 6-30-15 CIVIL STATE OF CALIFORNIA

THE STATE OF CALIFORNIA OR ITS OFFICERS OR AGENTS SHALL NOT BE RESPONSIBLE FOR THE ACCURACY OR COMPLETENESS OF SCANNED COPIES OF THIS PLAN SHEET.

NOTE:

1. FOR ACCURATE RIGHT OF WAY DATA, CONTACT RIGHT OF WAY ENGINEERING AT THE DISTRICT OFFICE.

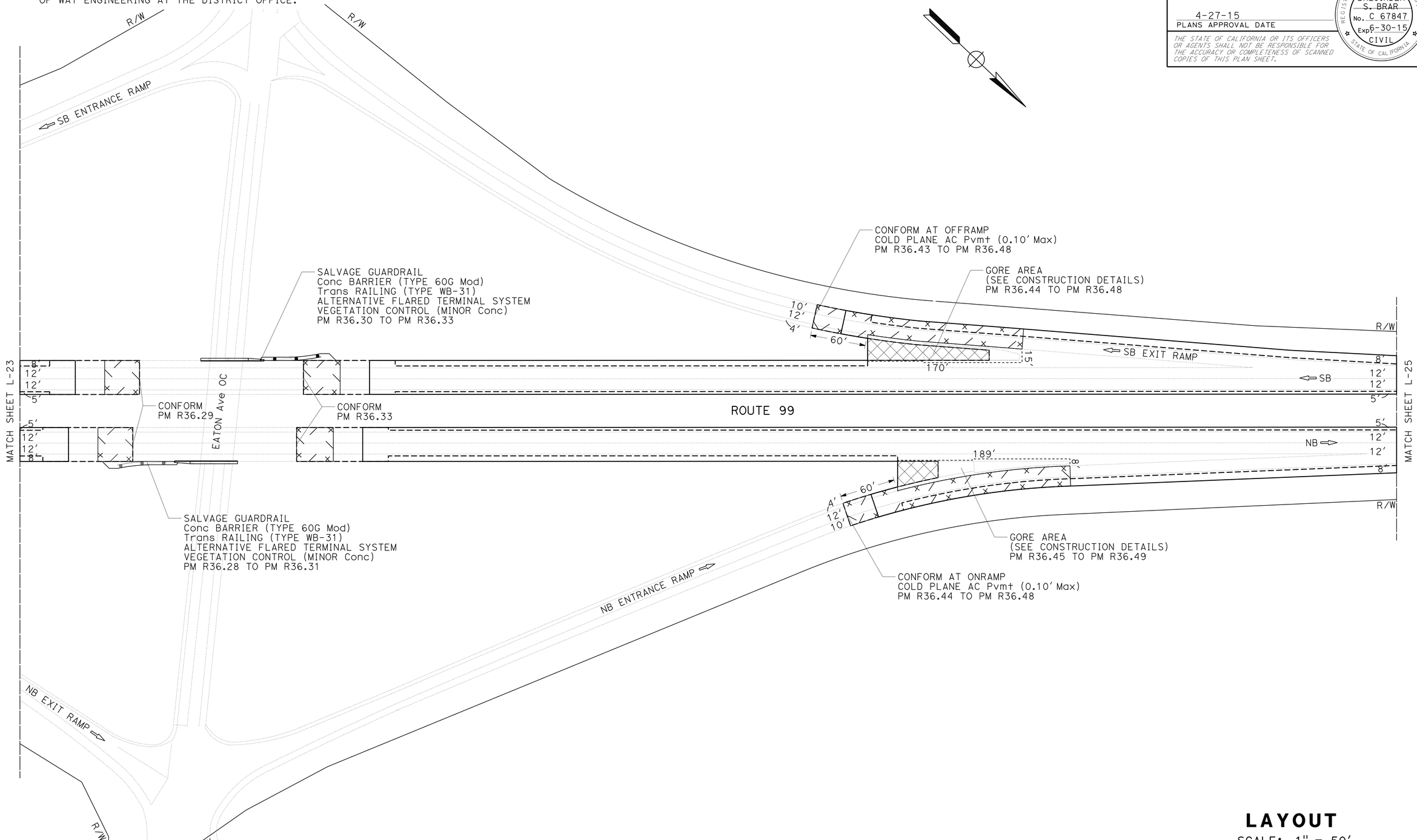

LAYOUT

SCALE: 1" = 50'

L-24

STATE OF CALIFORNIA - DEPARTMENT OF TRANSPORTATION

Caltrans® **DESIGN**

FUNCTIONAL SUPERVISOR: DEANN SPANGLER

CALCULATED-DESIGNED BY: BIPAN KAUSHAL

CHECKED BY: BALJINDER BRAR

REVISED BY

DATE REVISED

LAST REVISION 04-24-15 | DATE PLOTTED => 29-JUN-2015 | TIME PLOTTED => 14:06

Dist	COUNTY	ROUTE	POST MILES TOTAL PROJECT	SHEET No.	TOTAL SHEETS
03	But	99	30.1/T37.5	28	163

REGISTERED CIVIL ENGINEER 4-27-15 DATE

4-27-15
PLANS APPROVAL DATE

REGISTERED PROFESSIONAL ENGINEER BALJINDER S. BRAR No. C 67847 Exp. 6-30-15 CIVIL STATE OF CALIFORNIA

THE STATE OF CALIFORNIA OR ITS OFFICERS OR AGENTS SHALL NOT BE RESPONSIBLE FOR THE ACCURACY OR COMPLETENESS OF SCANNED COPIES OF THIS PLAN SHEET.

NOTE:

1. FOR ACCURATE RIGHT OF WAY DATA, CONTACT RIGHT OF WAY ENGINEERING AT THE DISTRICT OFFICE.

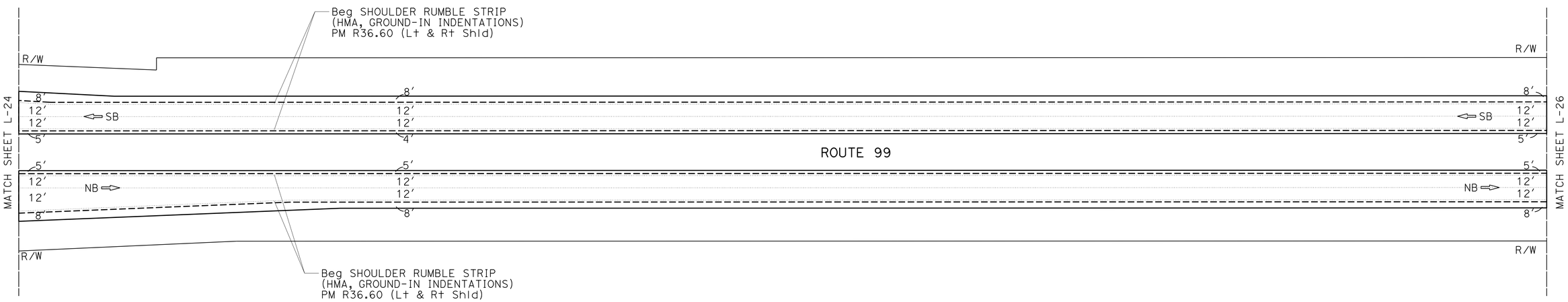

LAYOUT

SCALE: 1" = 50'

L-25

STATE OF CALIFORNIA - DEPARTMENT OF TRANSPORTATION

Caltrans® **DESIGN**

FUNCTIONAL SUPERVISOR: DEANN SPANGLER

CALCULATED-DESIGNED BY: BIPAN KAUSHAL

CHECKED BY: BALJINDER BRAR

REVISED BY

DATE REVISED

LAST REVISION 04-24-15

DATE PLOTTED => 29-JUN-2015

TIME PLOTTED => 14:06

Dist	COUNTY	ROUTE	POST MILES TOTAL PROJECT	SHEET No.	TOTAL SHEETS
03	But	99	30.1/T37.5	29	163

REGISTERED CIVIL ENGINEER 4-27-15 DATE

4-27-15
PLANS APPROVAL DATE

REGISTERED PROFESSIONAL ENGINEER BALJINDER S. BRAR No. C 67847 Exp. 6-30-15 CIVIL STATE OF CALIFORNIA

THE STATE OF CALIFORNIA OR ITS OFFICERS OR AGENTS SHALL NOT BE RESPONSIBLE FOR THE ACCURACY OR COMPLETENESS OF SCANNED COPIES OF THIS PLAN SHEET.

NOTE:

1. FOR ACCURATE RIGHT OF WAY DATA, CONTACT RIGHT OF WAY ENGINEERING AT THE DISTRICT OFFICE.

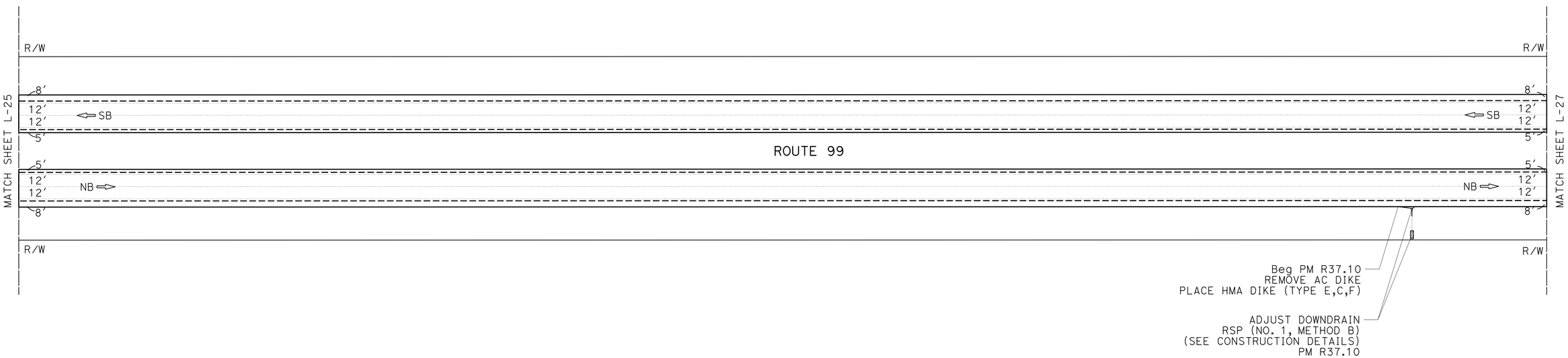

LAYOUT

SCALE: 1" = 50′

L-26

REVISED BY | DATE REVISED

BIPAN KAUSHAL | BALJINDER BRAR

CALCULATED-DESIGNED BY | CHECKED BY

FUNCTIONAL SUPERVISOR: DEANN SPANGLER

STATE OF CALIFORNIA - DEPARTMENT OF TRANSPORTATION

Caltrans® **DESIGN**

LAST REVISION 04-24-15 | DATE PLOTTED => 29-JUN-2015 | TIME PLOTTED => 14:07

Dist	COUNTY	ROUTE	POST MILES TOTAL PROJECT	SHEET No.	TOTAL SHEETS
03	But	99	30.1/T37.5	30	163

REGISTERED CIVIL ENGINEER 4-27-15 DATE

4-27-15
PLANS APPROVAL DATE

REGISTERED PROFESSIONAL ENGINEER BALJINDER S. BRAR No. C 67847 Exp 6-30-15 CIVIL STATE OF CALIFORNIA

THE STATE OF CALIFORNIA OR ITS OFFICERS OR AGENTS SHALL NOT BE RESPONSIBLE FOR THE ACCURACY OR COMPLETENESS OF SCANNED COPIES OF THIS PLAN SHEET.

NOTE:

1. FOR ACCURATE RIGHT OF WAY DATA, CONTACT RIGHT OF WAY ENGINEERING AT THE DISTRICT OFFICE.

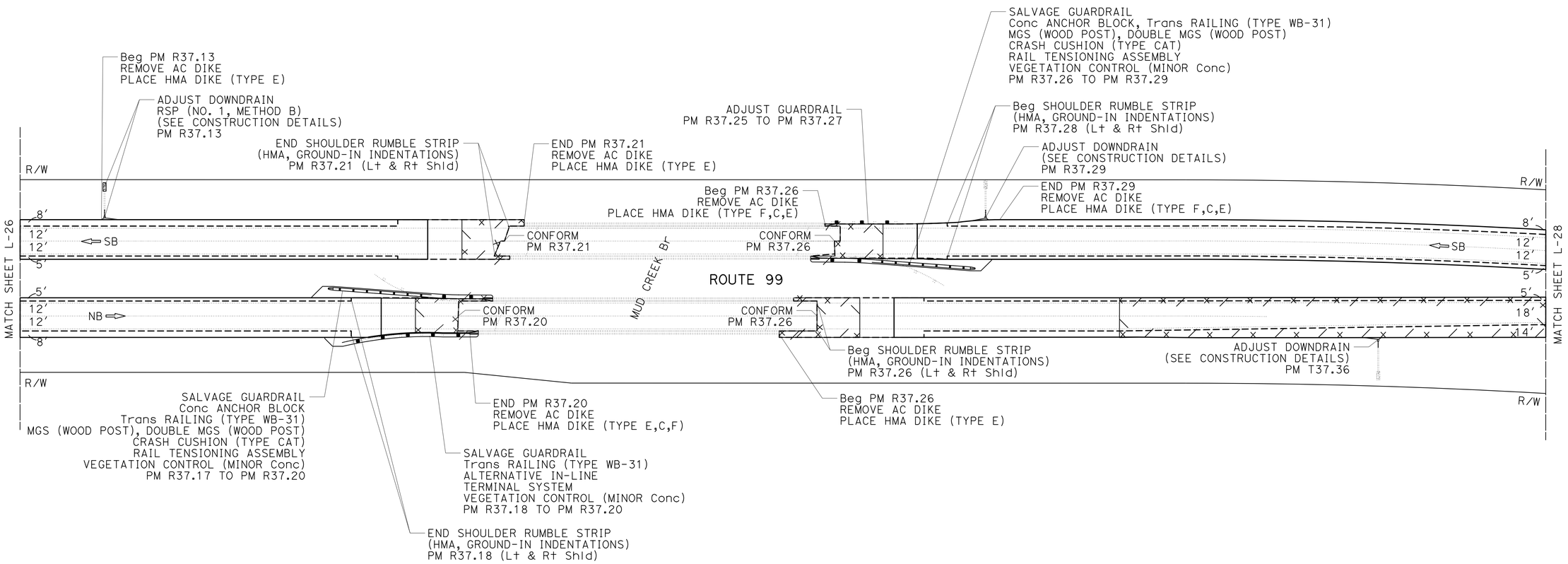

LAYOUT

SCALE: 1" = 50'

L-27

REVISED BY	DATE REVISED

CALCULATED-DESIGNED BY: BIPAN KAUSHAL
CHECKED BY: BALJINDER BRAR
FUNCTIONAL SUPERVISOR: DEANN SPANGLER

STATE OF CALIFORNIA - DEPARTMENT OF TRANSPORTATION
Caltrans DESIGN

LAST REVISION 04-24-15 | DATE PLOTTED => 29-JUN-2015 | TIME PLOTTED => 14:07

Dist	COUNTY	ROUTE	POST MILES TOTAL PROJECT	SHEET No.	TOTAL SHEETS
03	But	99	30.1/T37.5	31	163

REGISTERED CIVIL ENGINEER 4-27-15 DATE

4-27-15
PLANS APPROVAL DATE

REGISTERED PROFESSIONAL ENGINEER BALJINDER S. BRAR No. C 67847 Exp. 6-30-15 CIVIL STATE OF CALIFORNIA

THE STATE OF CALIFORNIA OR ITS OFFICERS OR AGENTS SHALL NOT BE RESPONSIBLE FOR THE ACCURACY OR COMPLETENESS OF SCANNED COPIES OF THIS PLAN SHEET.

NOTE:

1. FOR ACCURATE RIGHT OF WAY DATA, CONTACT RIGHT OF WAY ENGINEERING AT THE DISTRICT OFFICE.

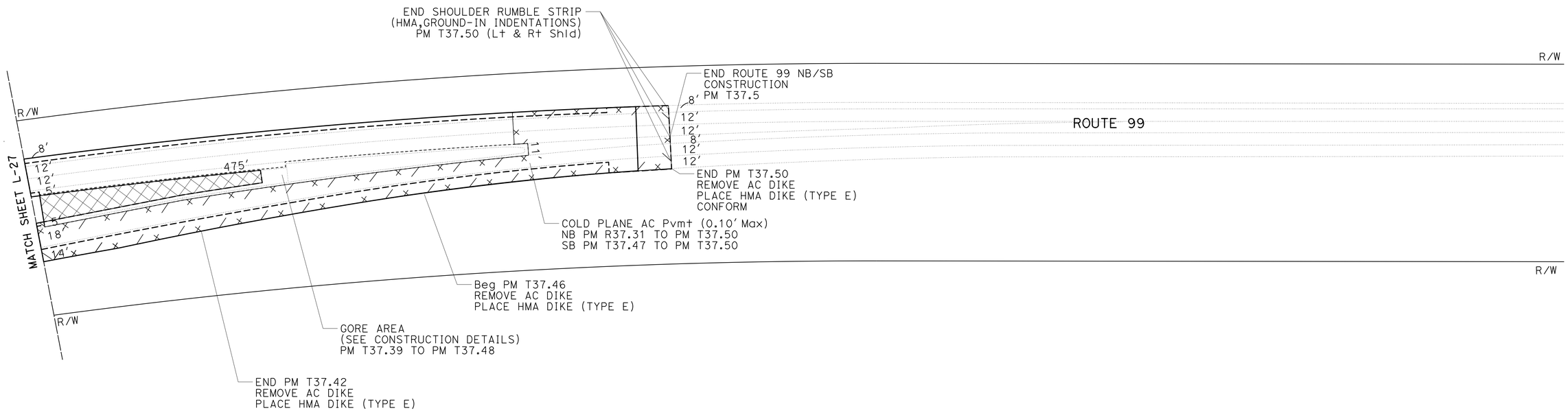

LAYOUT

SCALE: 1" = 50'

L-28

STATE OF CALIFORNIA - DEPARTMENT OF TRANSPORTATION
Caltrans® DESIGN

FUNCTIONAL SUPERVISOR: DEANN SPANGLER
CALCULATED-DESIGNED BY: BIPAN KAUSHAL
CHECKED BY: BALJINDER BRAR
REVISED BY
DATE REVISED

LAST REVISION 04-24-15
DATE PLOTTED => 29-JUN-2015
TIME PLOTTED => 14:07

Dist	COUNTY	ROUTE	POST MILES TOTAL PROJECT	SHEET No.	TOTAL SHEETS
03	But	99	30.1/T37.5	32	163

REGISTERED CIVIL ENGINEER 4-27-15 DATE

4-27-15
PLANS APPROVAL DATE

REGISTERED PROFESSIONAL ENGINEER BALJINDER S. BRAR No. C 67847 Exp 6-30-15 CIVIL STATE OF CALIFORNIA

THE STATE OF CALIFORNIA OR ITS OFFICERS OR AGENTS SHALL NOT BE RESPONSIBLE FOR THE ACCURACY OR COMPLETENESS OF SCANNED COPIES OF THIS PLAN SHEET.

LEGEND:

SPALL REPAIR (FAST-SETTING CONCRETE)

INDIVIDUAL SLAB REPLACEMENT (RSC)

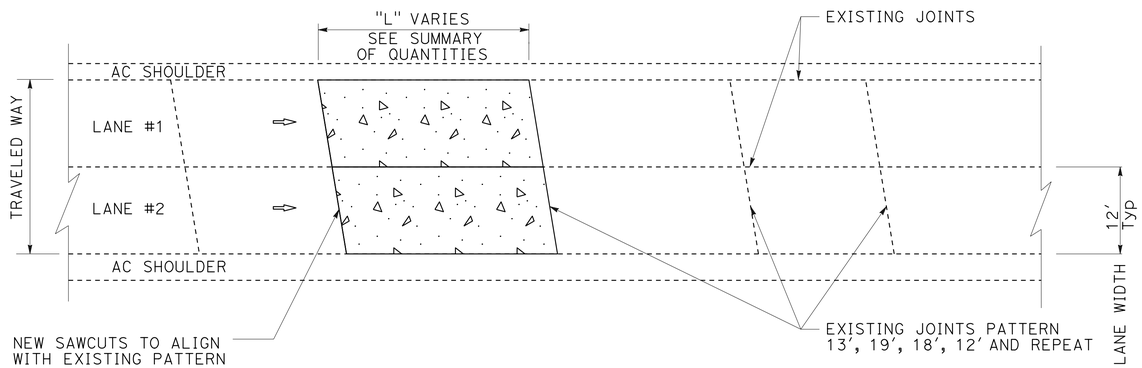

PLAN

INDIVIDUAL SLAB REPLACEMENT (RSC)

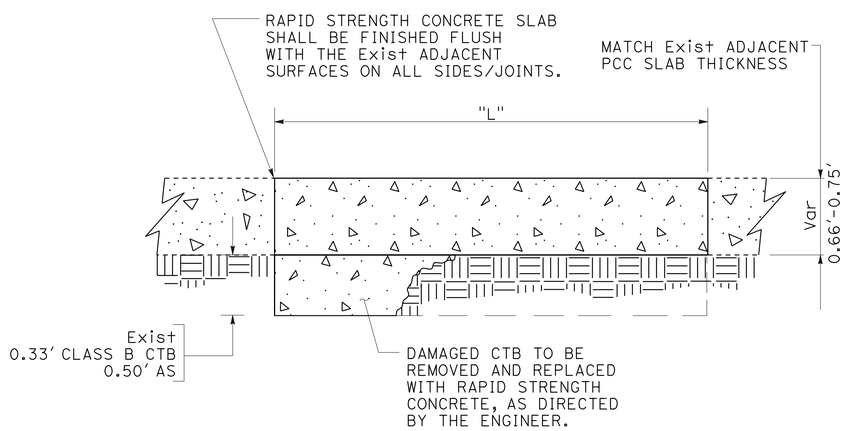

ELEVATION

Typ PCC INDIVIDUAL SLAB REPLACEMENT (RSC) DETAIL

(SEE REVISED Std PLAN RSP P8 DETAIL TYPE II)

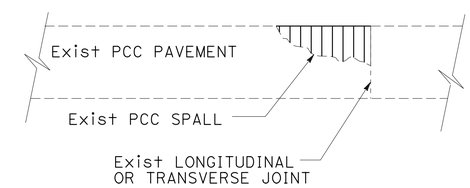

SPALL REPAIR (FAST-SETTING CONCRETE)

(SEE REVISED Std PLAN RSP P6 FOR DETAILS)

CONSTRUCTION DETAILS

NO SCALE

C-1

STATE OF CALIFORNIA - DEPARTMENT OF TRANSPORTATION
Caltrans DESIGN

FUNCTIONAL SUPERVISOR: DEANN SPANGLER
CALCULATED-DESIGNED BY: BIPAN KAUSHAL
CHECKED BY: BALJINDER BRAR
REVISED BY
DATE REVISED

LAST REVISION 04-24-15
DATE PLOTTED => 29-JUN-2015
TIME PLOTTED => 14:07

Dist	COUNTY	ROUTE	POST MILES TOTAL PROJECT	SHEET No.	TOTAL SHEETS
03	But	99	30.1/T37.5	33	163

REGISTERED CIVIL ENGINEER 4-27-15 DATE

4-27-15
PLANS APPROVAL DATE

REGISTERED PROFESSIONAL ENGINEER BALJINDER S. BRAR No. C 67847 Exp 6-30-15 CIVIL STATE OF CALIFORNIA

THE STATE OF CALIFORNIA OR ITS OFFICERS OR AGENTS SHALL NOT BE RESPONSIBLE FOR THE ACCURACY OR COMPLETENESS OF SCANNED COPIES OF THIS PLAN SHEET.

NOTE:

1. FOR ACCURATE RIGHT OF WAY DATA, CONTACT RIGHT OF WAY ENGINEERING AT THE DISTRICT OFFICE.

ABBREVIATION:

HMA-A - HOT MIX ASPHALT (TYPE A)

LEGEND:

HOT MIX ASPHALT (TYPE A)

CLASS 2 AB

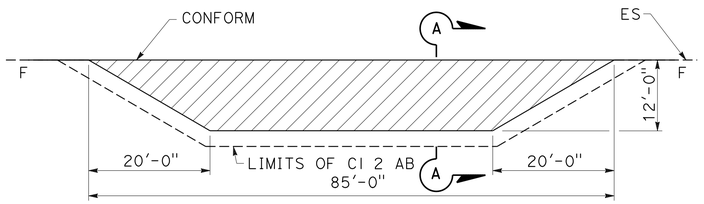

PLAN

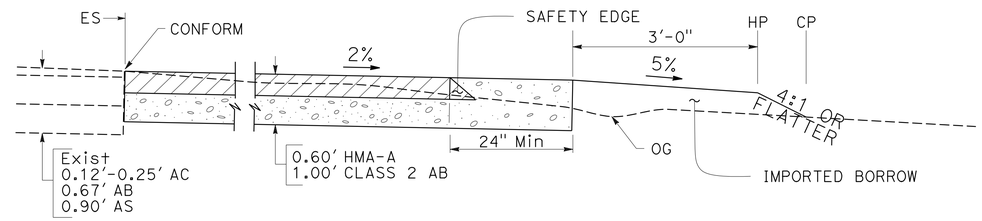

SECTION A-A

MAINTENANCE VEHICLE PULLOUT

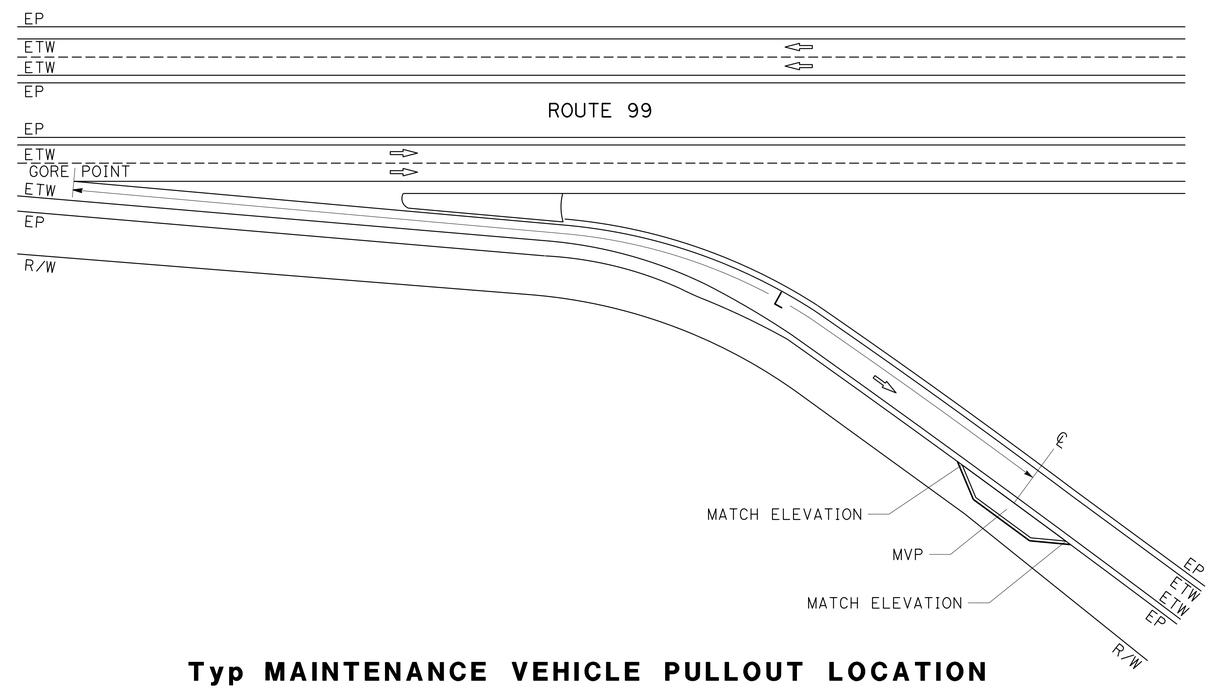

Typ MAINTENANCE VEHICLE PULLOUT LOCATION

MAINTENANCE VEHICHLE PULLOUT LOCATIONS

LOCATION	DIRECTION	DISTANCE FROM GORE POINT (L)
RAMP	NB/SB	LF
COHASSET Hwy OC OFFRAMP PM R34.18	NB	686
COHASSET Hwy OC OFFRAMP PM R34.32	SB	610
EAST Ave UC OFFRAMP PM R34.91	NB	928
EAST Ave UC ONRAMP PM R34.92	SB	761
EAST Ave UC OFFRAMP PM R34.97	SB	868

CONSTRUCTION DETAILS

NO SCALE

C-2

REVISED BY | DATE REVISED

BIPAN KAUSHAL | BALJINDER BRAR

CALCULATED-DESIGNED BY | CHECKED BY

FUNCTIONAL SUPERVISOR | DEANN SPANGLER

STATE OF CALIFORNIA - DEPARTMENT OF TRANSPORTATION

Caltrans® DESIGN

LAST REVISION 04-24-15 | DATE PLOTTED => 29-JUN-2015 | TIME PLOTTED => 14:07

Dist	COUNTY	ROUTE	POST MILES TOTAL PROJECT	SHEET No.	TOTAL SHEETS
03	But	99	30.1/T37.5	34	163

REGISTERED CIVIL ENGINEER 4-27-15 DATE

4-27-15
PLANS APPROVAL DATE

REGISTERED PROFESSIONAL ENGINEER BALJINDER S. BRAR No. C 67847 Exp 6-30-15 CIVIL STATE OF CALIFORNIA

THE STATE OF CALIFORNIA OR ITS OFFICERS OR AGENTS SHALL NOT BE RESPONSIBLE FOR THE ACCURACY OR COMPLETENESS OF SCANNED COPIES OF THIS PLAN SHEET.

LEGEND:

OVERLAY TAPER LIMITS

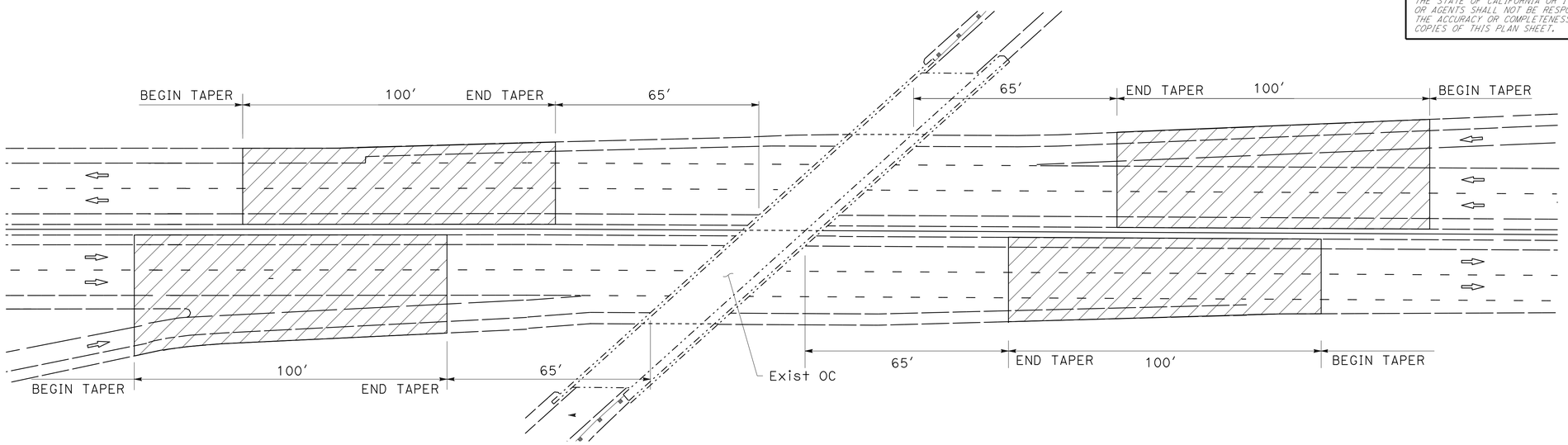

PLAN

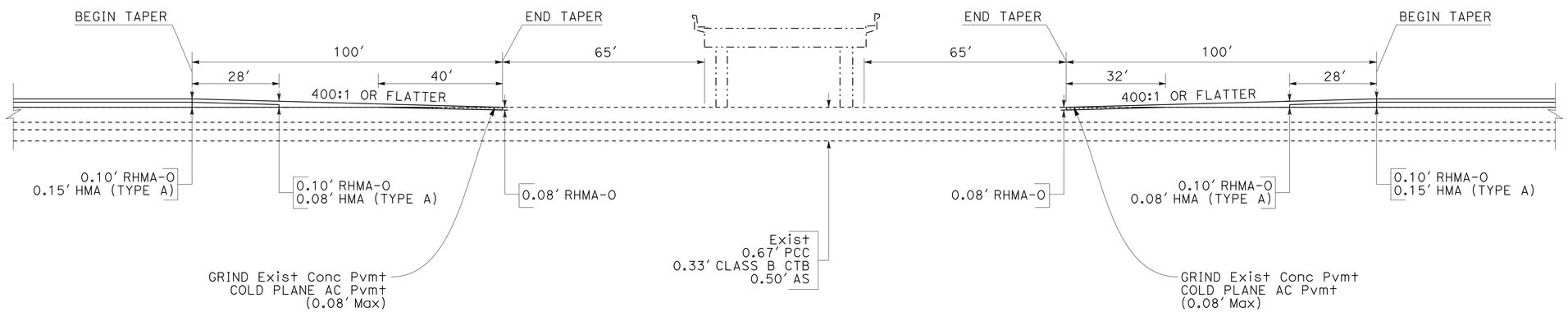

ELEVATION

OVERCROSSING PAVEMENT OVERLAY TAPER

SKYWAY OC Br No. 12-0167
EAST 20TH St OC Br No. 12-0169
COHASSET Hwy OC Br No. 12-0168
EATON Ave OC Br No. 12-0160

CONSTRUCTION DETAILS

NO SCALE

C-3

REVISED BY | DATE REVISED
BIPAN KAUSHAL | BALJINDER BRAR
CALCULATED-DESIGNED BY | CHECKED BY
FUNCTIONAL SUPERVISOR: DEANN SPANGLER
STATE OF CALIFORNIA - DEPARTMENT OF TRANSPORTATION
Caltrans DESIGN

LAST REVISION 04-24-15 | DATE PLOTTED => 29-JUN-2015 | TIME PLOTTED => 14:07

Dist	COUNTY	ROUTE	POST MILES TOTAL PROJECT	SHEET No.	TOTAL SHEETS
03	But	99	30.1/T37.5	35	163

REGISTERED CIVIL ENGINEER 4-27-15 DATE

4-27-15
PLANS APPROVAL DATE

REGISTERED PROFESSIONAL ENGINEER BALJINDER S. BRAR No. C 67847 Exp. 6-30-15 CIVIL STATE OF CALIFORNIA

THE STATE OF CALIFORNIA OR ITS OFFICERS OR AGENTS SHALL NOT BE RESPONSIBLE FOR THE ACCURACY OR COMPLETENESS OF SCANNED COPIES OF THIS PLAN SHEET.

LEGEND:

- HMA (TYPE A) AND RHMA-O
- HMA (TYPE A)
- RHMA-O
- GRIND Conc Pvmt AND COLD PLANE AC Pvmt

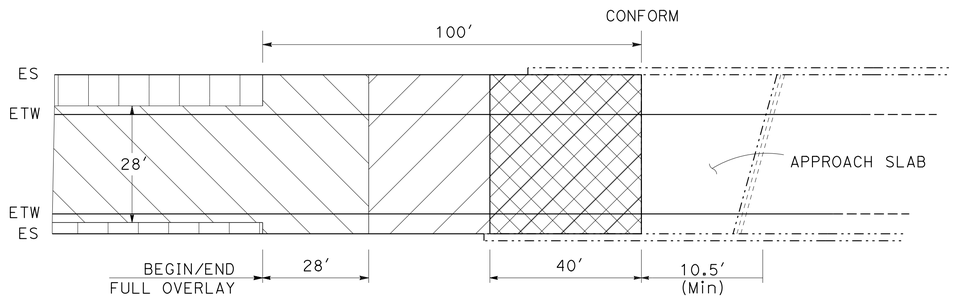

PLAN

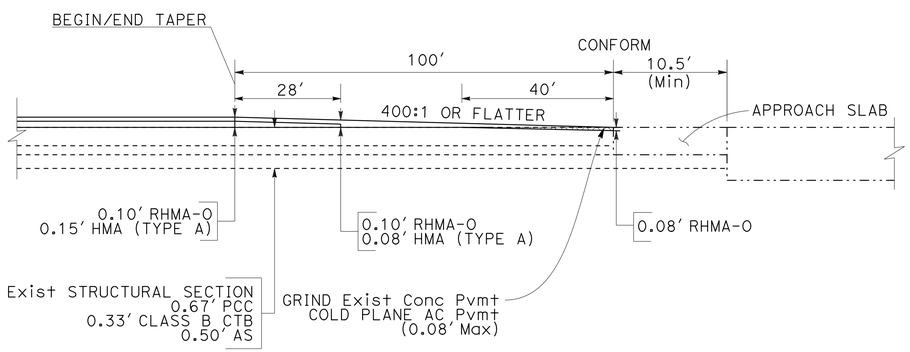

ELEVATION

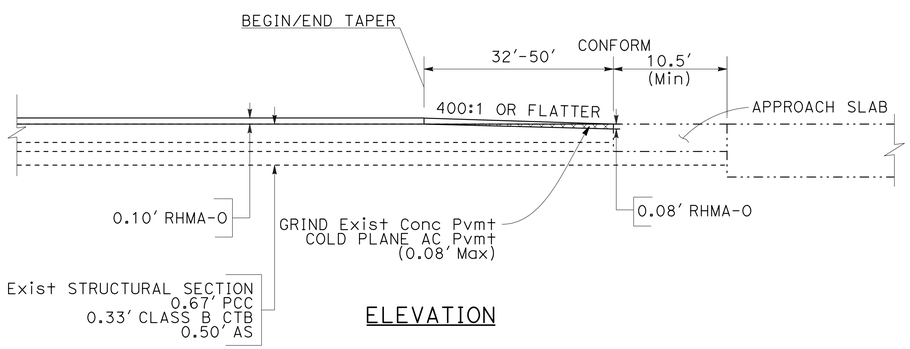

ELEVATION

BRIDGE APPROACH TAPER (Typ)

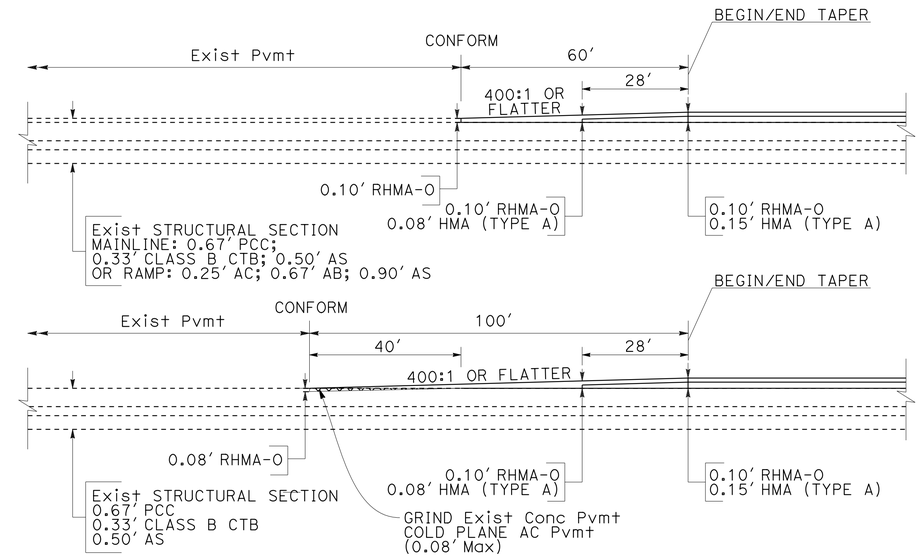

TRANSVERSE OVERLAY TAPER TO Exist PAVEMENT FOR MAINLINE AND RAMP (Typ)

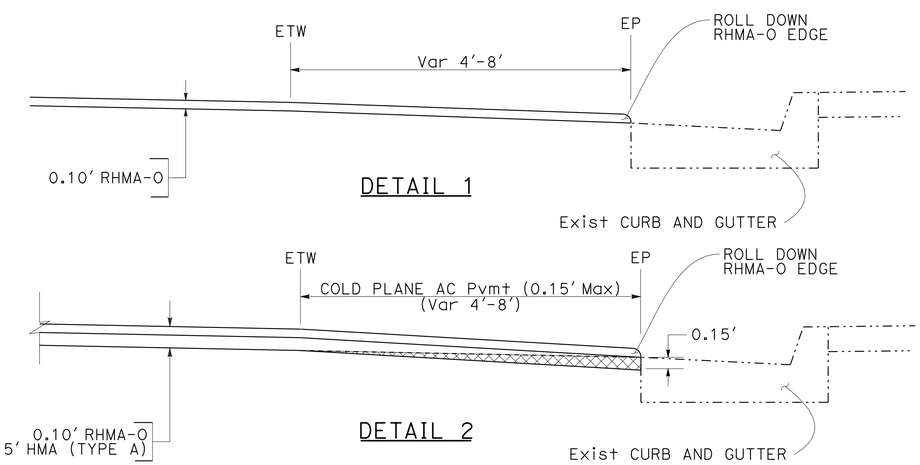

DETAIL 1

DETAIL 2

HMA Pvmt CONFORM TO EXISTING CURB AND GUTTER DETAIL (Typ)

CONSTRUCTION DETAILS

NO SCALE

C-4

STATE OF CALIFORNIA - DEPARTMENT OF TRANSPORTATION
Caltrans® DESIGN

FUNCTIONAL SUPERVISOR: DEANN SPANGLER
CALCULATED-DESIGNED BY: BIPAN KAUSHAL
CHECKED BY: BALJINDER BRAR
REVISED BY
DATE REVISED

LAST REVISION 04-24-15
DATE PLOTTED => 29-JUN-2015
TIME PLOTTED => 14:07

Dist	COUNTY	ROUTE	POST MILES TOTAL PROJECT	SHEET No.	TOTAL SHEETS
03	But	99	30.1/T37.5	36	163

REGISTERED CIVIL ENGINEER 4-27-15 DATE

4-27-15
PLANS APPROVAL DATE

REGISTERED PROFESSIONAL ENGINEER BALJINDER S. BRAR No. C 67847 Exp. 6-30-15 CIVIL STATE OF CALIFORNIA

THE STATE OF CALIFORNIA OR ITS OFFICERS OR AGENTS SHALL NOT BE RESPONSIBLE FOR THE ACCURACY OR COMPLETENESS OF SCANNED COPIES OF THIS PLAN SHEET.

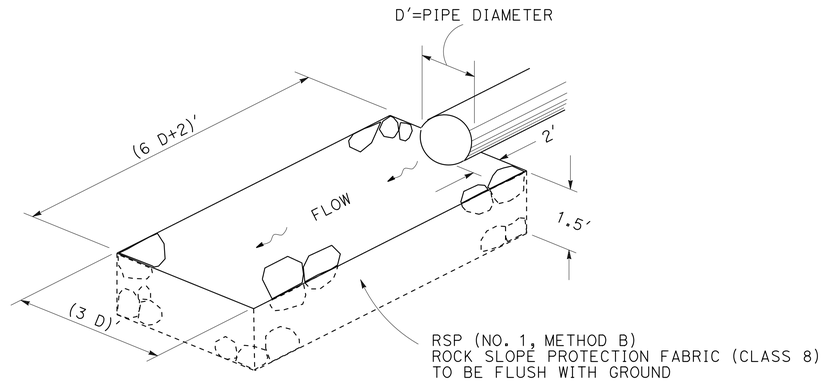

TYPICAL ROCK ENERGY DISSIPATOR AT DRAINAGE OUTLET

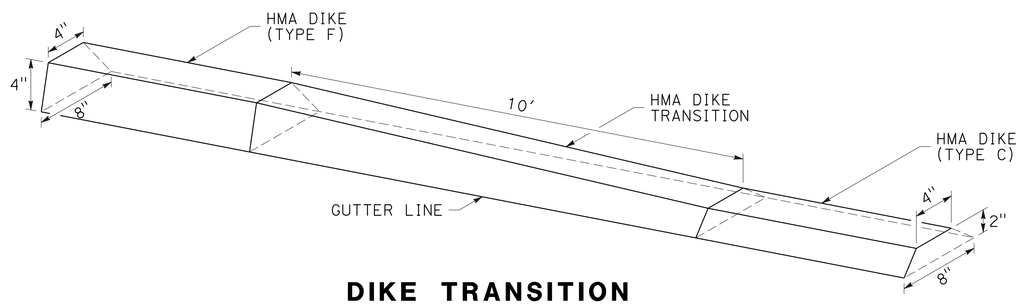

DIKE TRANSITION TYPE F TO TYPE C

(FOR DETAILS NOT SHOWN, SEE STANDARD PLAN RSP A87B)

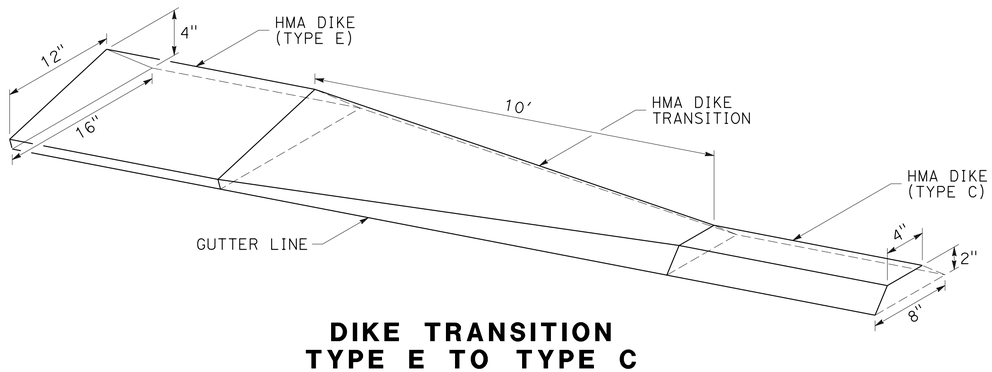

DIKE TRANSITION TYPE E TO TYPE C

(FOR DETAILS NOT SHOWN, SEE STANDARD PLAN RSP A87B)

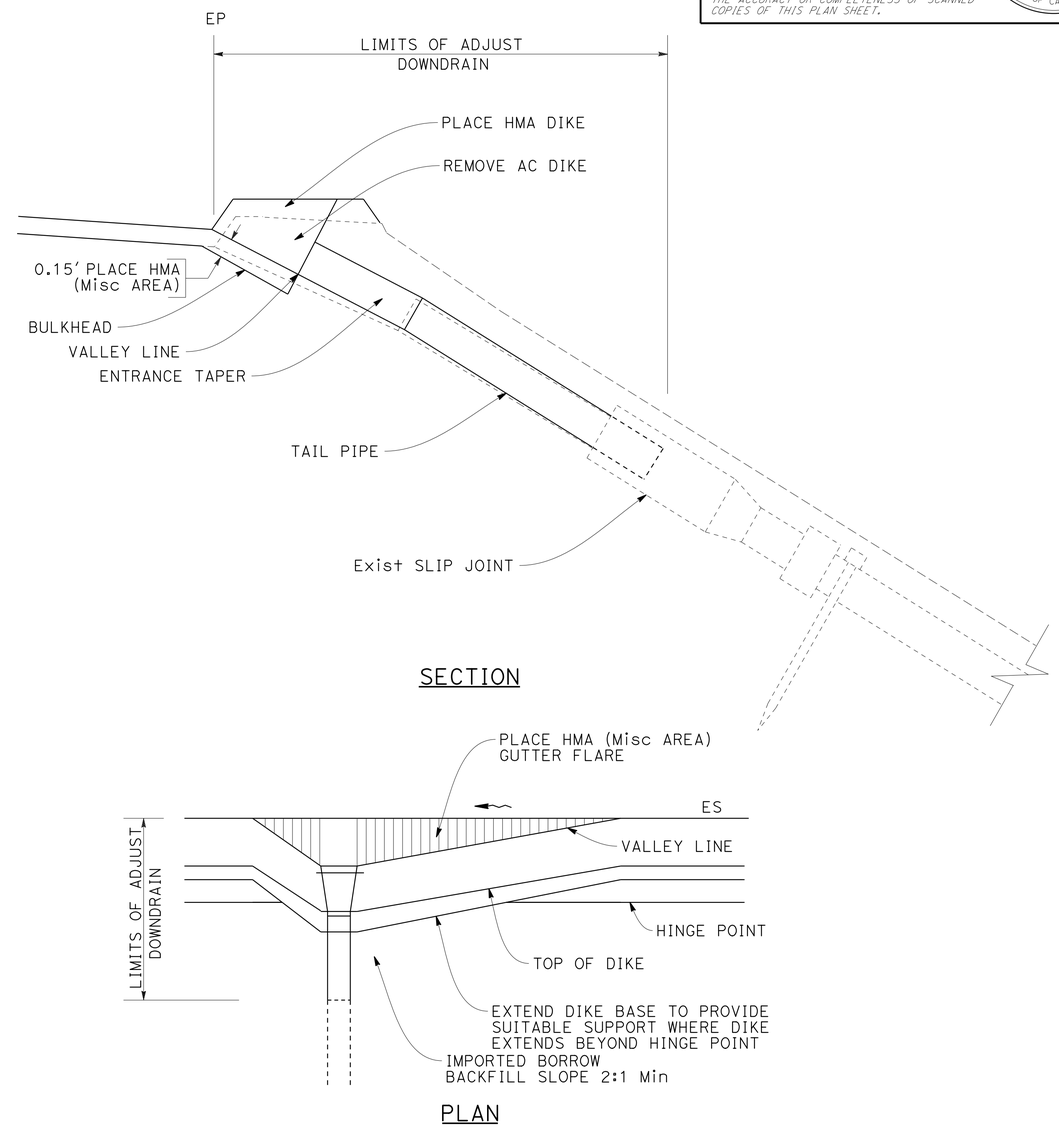

ADJUST DOWNDRAIN (12" CSP DOWNDRAIN)

(FOR DIMENSIONS SEE Std PLAN D87A)

CONSTRUCTION DETAILS

NO SCALE

C-5

REVISED BY	DATE REVISED
BIPAN KAUSHAL	BALJINDER BRAR
CALCULATED-DESIGNED BY	CHECKED BY
FUNCTIONAL SUPERVISOR	DEANN SPANGLER

STATE OF CALIFORNIA - DEPARTMENT OF TRANSPORTATION
Caltrans® DESIGN

LAST REVISION 04-24-15 | DATE PLOTTED => 29-JUN-2015 | TIME PLOTTED => 14:07

Dist	COUNTY	ROUTE	POST MILES TOTAL PROJECT	SHEET No.	TOTAL SHEETS
03	But	99	30.1/T37.5	37	163

REGISTERED CIVIL ENGINEER 4-27-15 DATE

4-27-15
PLANS APPROVAL DATE

REGISTERED PROFESSIONAL ENGINEER BALJINDER S. BRAR No. C 67847 Exp 6-30-15 CIVIL STATE OF CALIFORNIA

THE STATE OF CALIFORNIA OR ITS OFFICERS OR AGENTS SHALL NOT BE RESPONSIBLE FOR THE ACCURACY OR COMPLETENESS OF SCANNED COPIES OF THIS PLAN SHEET.

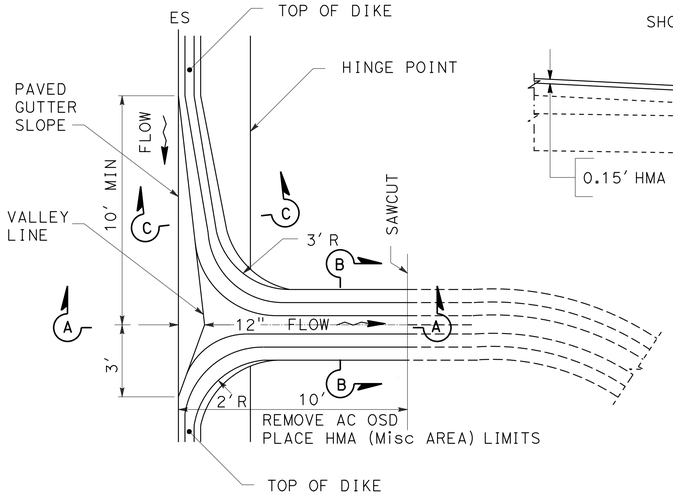

PLAN

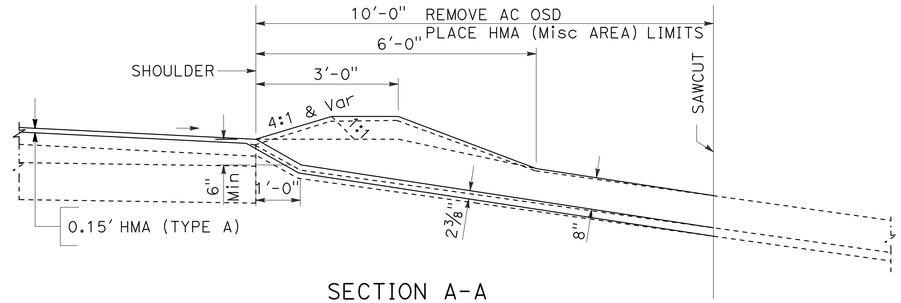

SECTION A-A

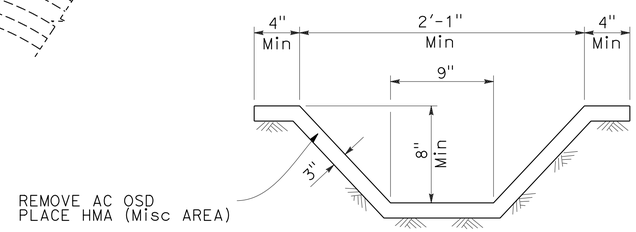

SECTION B-B

ADJUST OVERSIDE DRAIN

(SEE SHEET Q-8)

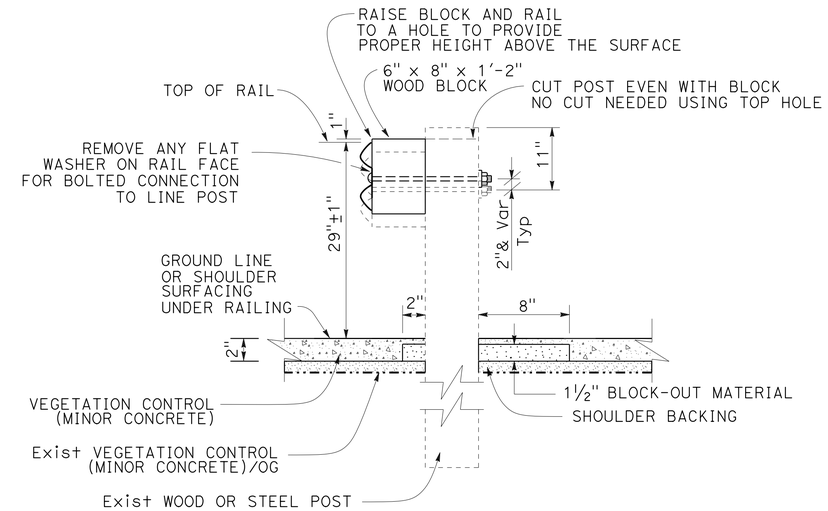

ADJUST MBGR ELEMENT

CHANGE IN RAIL ELEMENT HEIGHT 2" OR LESS

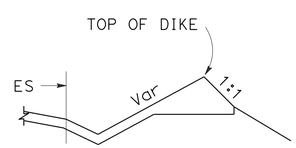

SECTION C-C

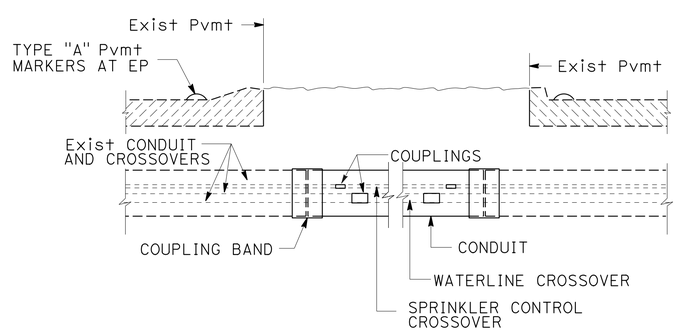

SECTION

EXTEND IRRIGATION CONDUIT

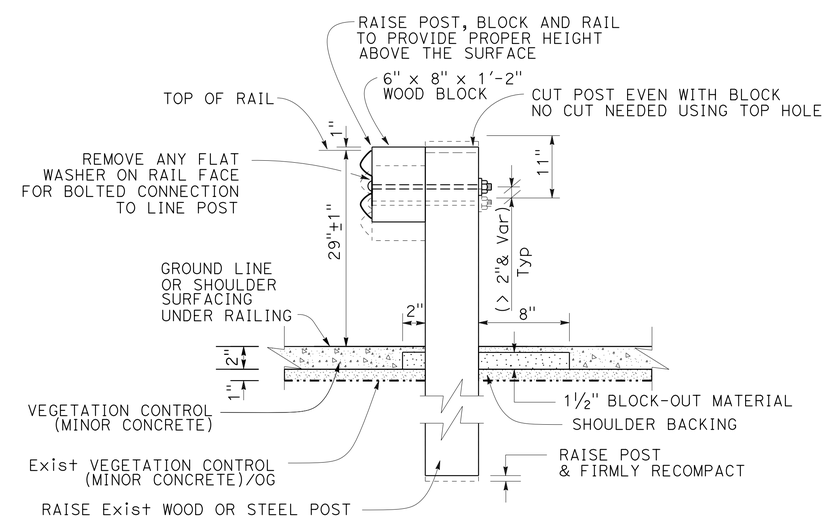

ADJUST MBGR ELEMENT

CHANGE IN RAIL ELEMENT HEIGHT > 2"

CONSTRUCTION DETAILS

NO SCALE

C-6

STATE OF CALIFORNIA - DEPARTMENT OF TRANSPORTATION
Caltrans® DESIGN

FUNCTIONAL SUPERVISOR: DEANN SPANGLER
CALCULATED-DESIGNED BY: BIPAN KAUSHAL
CHECKED BY: BALJINDER BRAR
REVISED BY
DATE REVISED

LAST REVISION 04-24-15
DATE PLOTTED => 29-JUN-2015
TIME PLOTTED => 14:07

Dist	COUNTY	ROUTE	POST MILES TOTAL PROJECT	SHEET No.	TOTAL SHEETS
03	But	99	30.1/T37.5	38	163

REGISTERED CIVIL ENGINEER 4-27-15 DATE

4-27-15
PLANS APPROVAL DATE

REGISTERED PROFESSIONAL ENGINEER BALJINDER S. BRAR No. C 67847 Exp 6-30-15 CIVIL STATE OF CALIFORNIA

THE STATE OF CALIFORNIA OR ITS OFFICERS OR AGENTS SHALL NOT BE RESPONSIBLE FOR THE ACCURACY OR COMPLETENESS OF SCANNED COPIES OF THIS PLAN SHEET.

NOTES:

1. THE CONTRACTOR MUST VERIFY ALL CONTROLLING FIELD DIMENSIONS BEFORE ORDERING OR FABRICATING ANY MATERIAL.
2. Conc ANCHOR BLOCK TO BE CONSTRUCTED AFTER HMA TAPERS ARE CONSTRUCTED

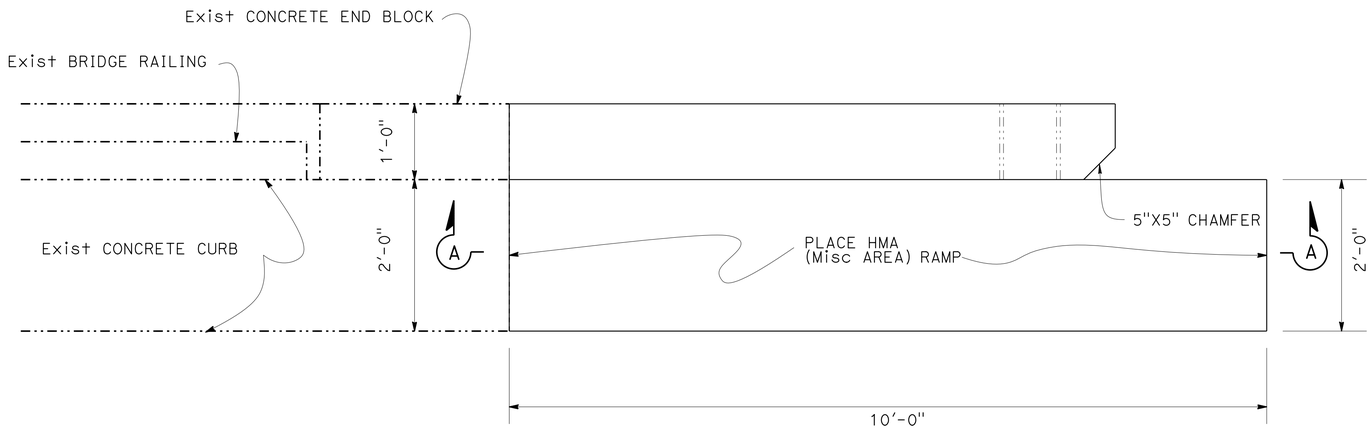

PLAN

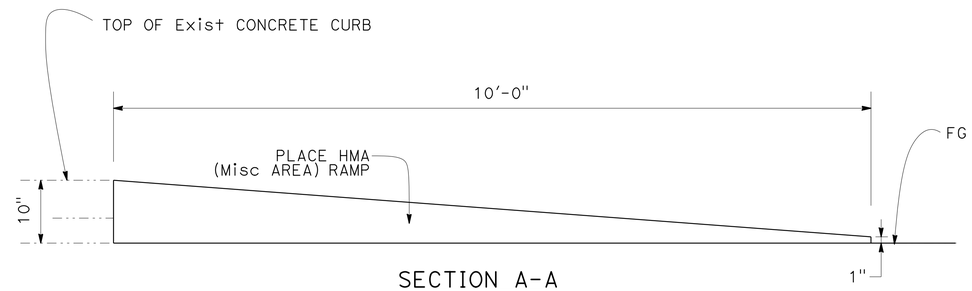

SECTION A-A

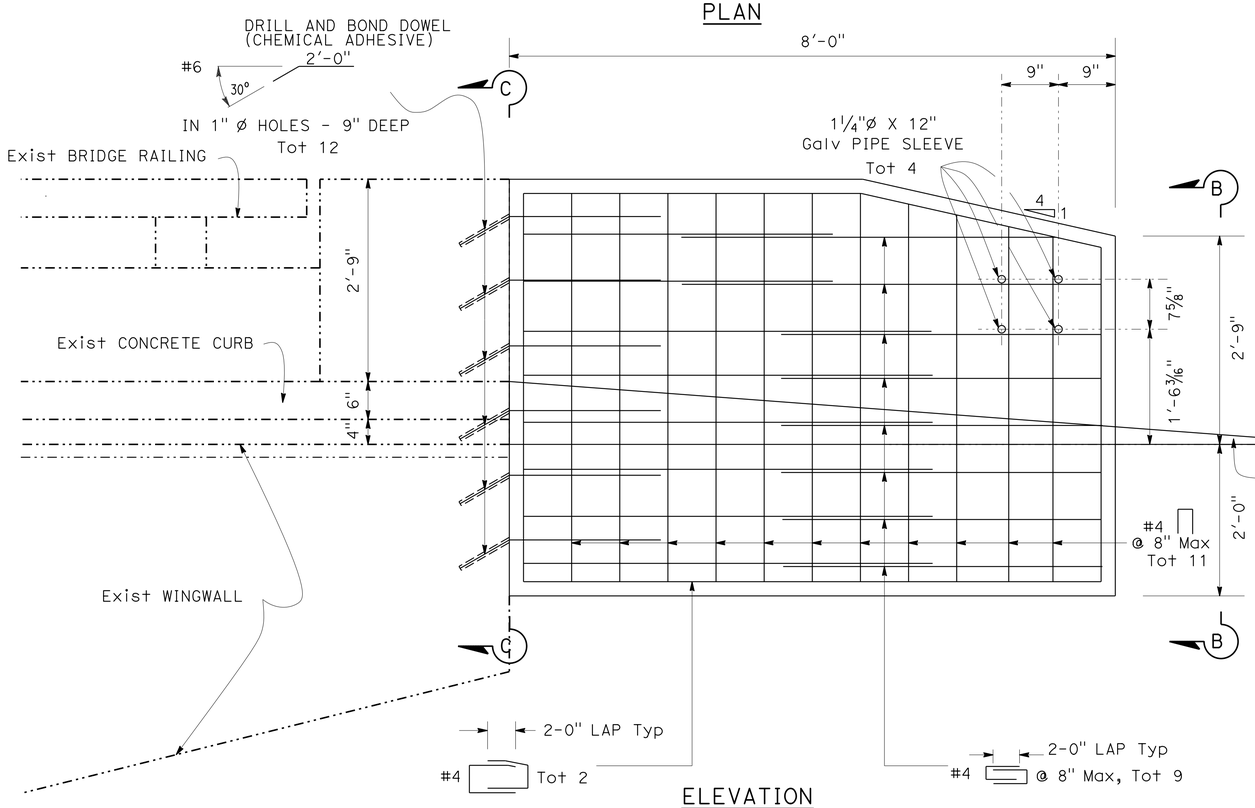

ELEVATION

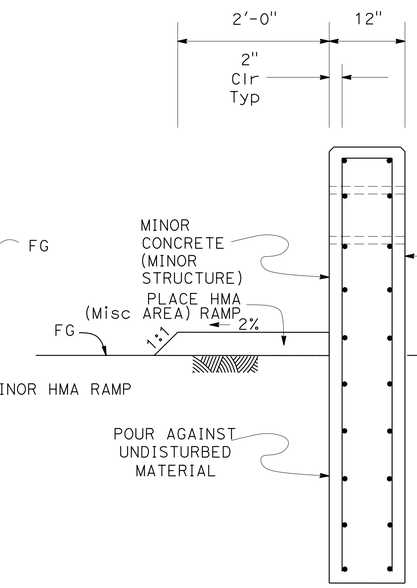

SECTION B-B

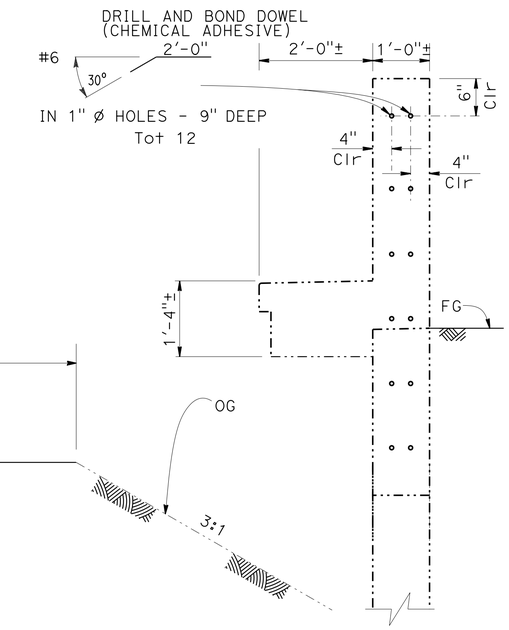

SECTION C-C

CONCRETE ANCHOR BLOCK AND MINOR HMA RAMP DETAIL
MUD CREEK BRIDGE PM R37.20 (NB/Lt&Rt); PM R37.25 (SB/Lt&Rt)
LITTLE CHICO CREEK BRIDGE PM R32.20 (NB/Rt); PM R32.23 (SB/Rt)

CONSTRUCTION DETAILS

NO SCALE

C-7

STATE OF CALIFORNIA - DEPARTMENT OF TRANSPORTATION
Caltrans® DESIGN
FUNCTIONAL SUPERVISOR: DEANN SPANGLER
CALCULATED-DESIGNED BY: BIPAN KAUSHAL
CHECKED BY: BALJINDER BRAR
REVISED BY
DATE REVISED

LAST REVISION 04-24-15 | DATE PLOTTED => 29-JUN-2015 | TIME PLOTTED => 14:07

Dist	COUNTY	ROUTE	POST MILES TOTAL PROJECT	SHEET No.	TOTAL SHEETS
03	But	99	30.1/T37.5	39	163

REGISTERED CIVIL ENGINEER 4-27-15 DATE

4-27-15
PLANS APPROVAL DATE

REGISTERED PROFESSIONAL ENGINEER BALJINDER S. BRAR No. C 67847 Exp. 6-30-15 CIVIL STATE OF CALIFORNIA

THE STATE OF CALIFORNIA OR ITS OFFICERS OR AGENTS SHALL NOT BE RESPONSIBLE FOR THE ACCURACY OR COMPLETENESS OF SCANNED COPIES OF THIS PLAN SHEET.

NOTES:

1. THE CONTRACTOR MUST VERIFY ALL CONTROLLING FIELD DIMENSIONS BEFORE ORDERING OR FABRICATING ANY MATERIAL.
2. Conc ANCHOR BLOCK TO BE CONSTRUCTED AFTER HMA TAPERS ARE CONSTRUCTED
3. CUT AND REMOVE PORTION OF TYPE 1 AND BAGR AS REQUIRED

LEGEND:
EXISTING STRUCTURE
NEW STRUCTURE

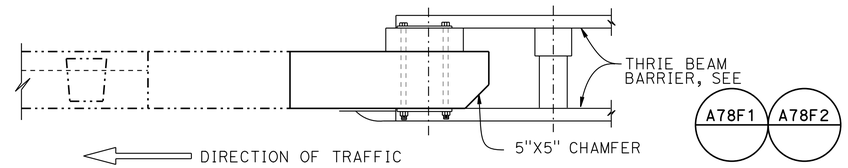

PLAN
3/4" = 1'-0"

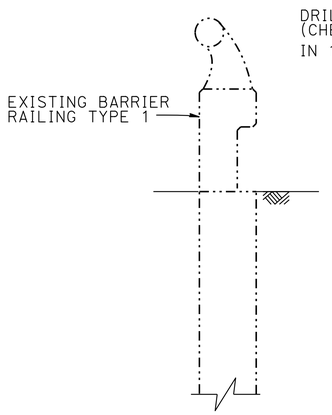

SECTION A-A
3/4" = 1'-0"

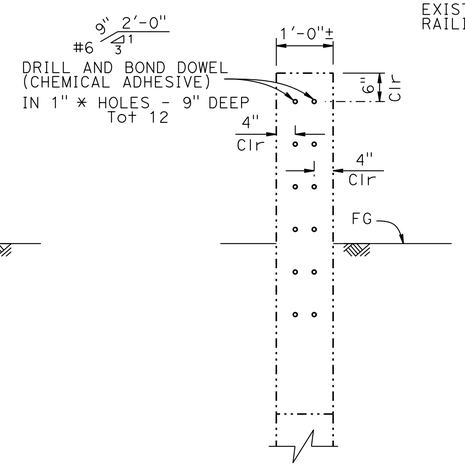

SECTION B-B
3/4" = 1'-0"

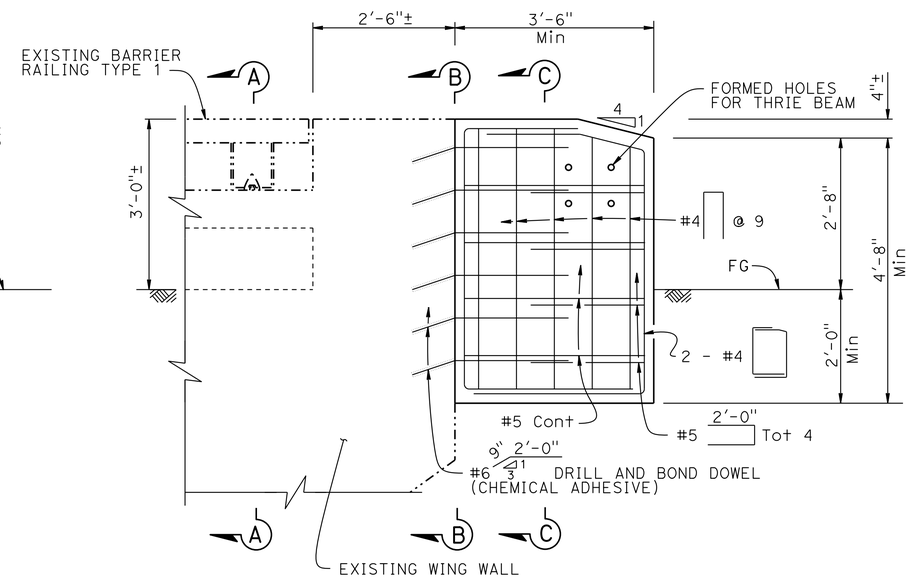

ELEVATION
3/4" = 1'-0"

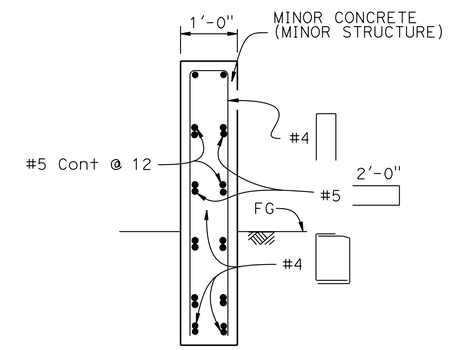

NOTE:
DRILL AND BOND DOWELS NOT SHOWN

SECTION C-C
3/4" = 1'-0"

CONCRETE ANCHOR BLOCK DETAIL
LASSEN Ave UC BRIDGE PM R35.30 (NB/Lt&Rt); PM R35.32 (SB/Lt&Rt)
EAST Ave UC BRIDGE PM R34.92 (NB/Rt); PM R34.96 (SB/Lt&Rt)
NORTH CHICO UC BRIDGE PM R34.62 (NB/Rt); PM R34.65 (SB/Rt)
LINDO CHANNEL BRIDGE PM R33.87 (NB/Rt); PM R33.92 (SB/Rt)
EAST FIFTH Ave UC BRIDGE PM R33.57 (NB/Rt); PM R33.60 (SB/Rt)
EAST FIRST Ave UC BRIDGE PM R33.31 (SB/Rt)
Rte 99/32 Sep NORTH BRIDGE PM R32.43 (NB/Rt); PM R32.45 (SB/Rt)
Rte 99/32 Sep SOUTH BRIDGE PM R32.37 (NB/Rt); PM R32.39 (SB/Rt)

CONSTRUCTION DETAILS

NO SCALE

C-8

STATE OF CALIFORNIA - DEPARTMENT OF TRANSPORTATION
Caltrans® DESIGN
FUNCTIONAL SUPERVISOR: DEANN SPANGLER
CALCULATED-DESIGNED BY: BIPAN KAUSHAL
CHECKED BY: BALJINDER BRAR
REVISED BY
DATE REVISED

LAST REVISION 04-24-15
DATE PLOTTED => 29-JUN-2015
TIME PLOTTED => 14:07

Dist	COUNTY	ROUTE	POST MILES TOTAL PROJECT	SHEET No.	TOTAL SHEETS
03	But	99	30.1/T37.5	40	163

REGISTERED CIVIL ENGINEER 4-27-15 DATE

4-27-15
PLANS APPROVAL DATE

REGISTERED PROFESSIONAL ENGINEER BALJINDER S. BRAR No. C 67847 Exp 6-30-15 CIVIL STATE OF CALIFORNIA

THE STATE OF CALIFORNIA OR ITS OFFICERS OR AGENTS SHALL NOT BE RESPONSIBLE FOR THE ACCURACY OR COMPLETENESS OF SCANNED COPIES OF THIS PLAN SHEET.

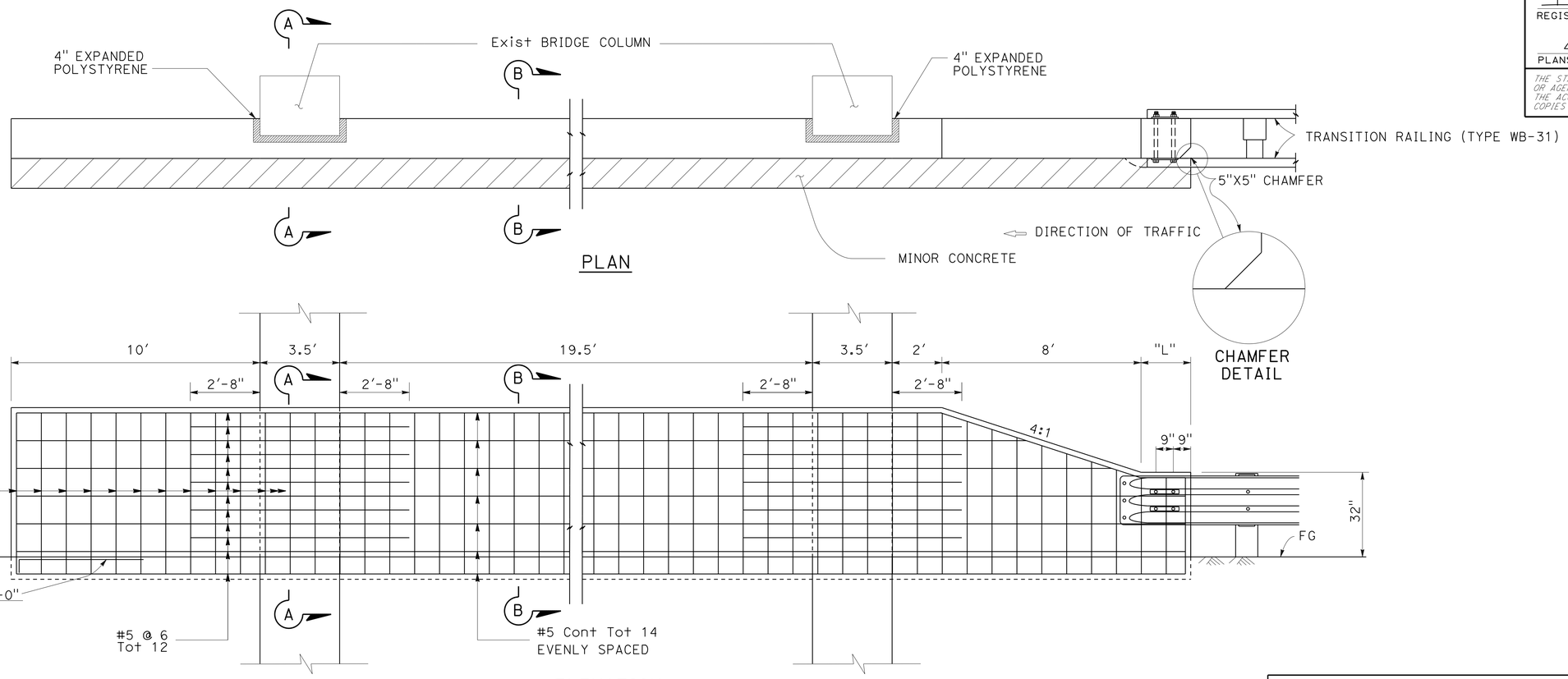

LOCATION		"L"	"W"
EAST 20TH St OC	NB (PM R31.48 TO PM R31.51)	2'	0.8'
	SB (PM R31.50 TO PM R31.53)	2'	0.8'
COHASSET Hwy OC	NB (PM R34.23 TO PM R34.26)	2'	1.7'
	SB (PM R34.24 TO PM R34.27)	2'	1.8'
EATON Ave OC	NB (PM R36.28 TO PM R36.31)	2'	0.7'
	SB (PM R36.30 TO PM R36.33)	2'	0.7'

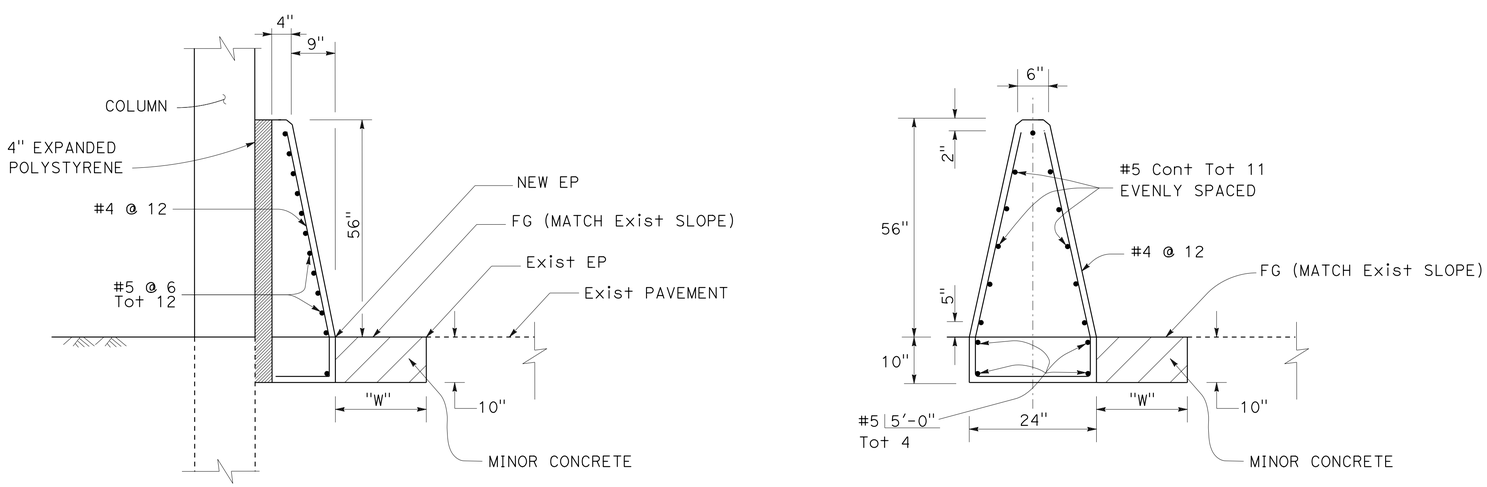

CONCRETE BARRIER (TYPE 60G MODIFIED)

CONSTRUCTION DETAILS

NO SCALE

C-9

STATE OF CALIFORNIA - DEPARTMENT OF TRANSPORTATION
Caltrans® DESIGN

FUNCTIONAL SUPERVISOR: DEANN SPANGLER

CALCULATED-DESIGNED BY: BIPAN KAUSHAL
CHECKED BY: BALJINDER BRAR

REVISED BY
DATE REVISED

LAST REVISION 04-24-15
DATE PLOTTED => 29-JUN-2015
TIME PLOTTED => 14:07

Dist	COUNTY	ROUTE	POST MILES TOTAL PROJECT	SHEET No.	TOTAL SHEETS
03	But	99	30.1/T37.5	41	163

REGISTERED CIVIL ENGINEER 4-27-15 DATE

4-27-15
PLANS APPROVAL DATE

REGISTERED PROFESSIONAL ENGINEER BALJINDER S. BRAR No. C 67847 Exp. 6-30-15 CIVIL STATE OF CALIFORNIA

THE STATE OF CALIFORNIA OR ITS OFFICERS OR AGENTS SHALL NOT BE RESPONSIBLE FOR THE ACCURACY OR COMPLETENESS OF SCANNED COPIES OF THIS PLAN SHEET.

NOTE:

1. FINISHED SURFACE OF TEXTURED AND COLORED HMA MAINTAINS THE EXISTING FLOWLINE

LEGEND:

TEXTURED AND COLORED HOT MIX ASPHALT

LIMITS OF 0.50' HMA (TYPE A)
1.0' Cl 2 AB
ROADWAY EXCAVATION

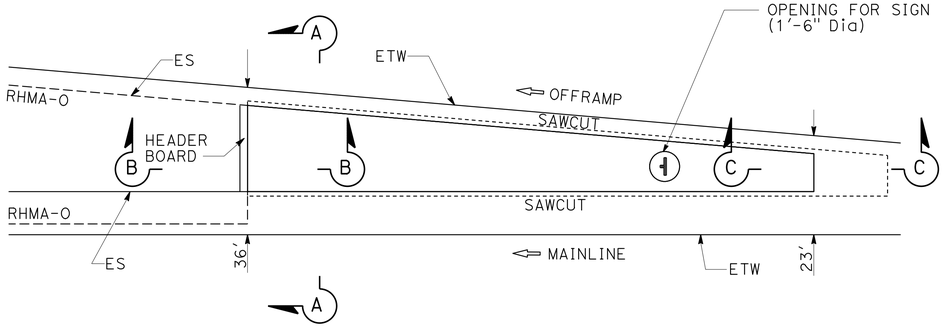

EAST 20th St OC SB OFFRAMP (PM R31.68 TO PM R31.71)
EAST 20th St OC NB OFFRAMP (PM R31.30 TO PM R31.33)
SKYWAY OC NB OFFRAMP (PM R30.36 TO PM R30.39)

PLAN (OFF RAMP)

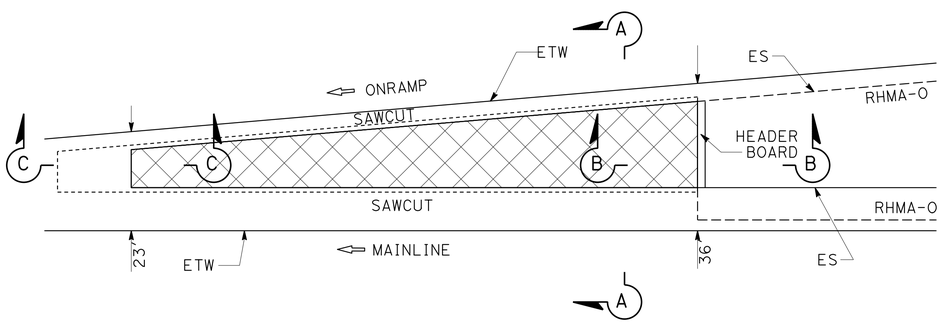

EAST 20th St OC NB ONRAMP (PM R31.67 TO PM R31.69)
EAST 20th St OC SB ONRAMP (PM R31.32 TO PM R31.34)
SKYWAY OC NB ONRAMP (PM R30.36 TO PM R30.39)

PLAN (ON RAMP)

TEXTURED AND COLORED HOT MIX ASPHALT (Typ)

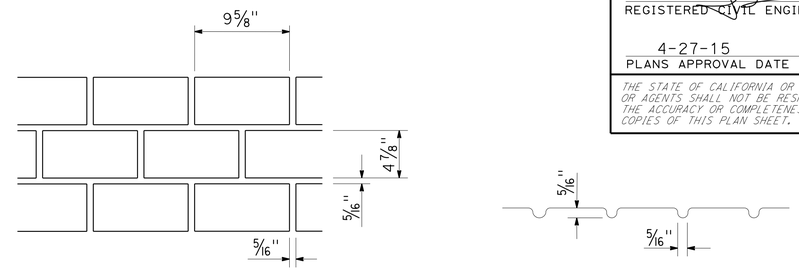

PLAN ELEVATION

RUNNING BOND PATTERN TEXTURE DETAIL

(FOR TEXTURED AND COLORED HMA)

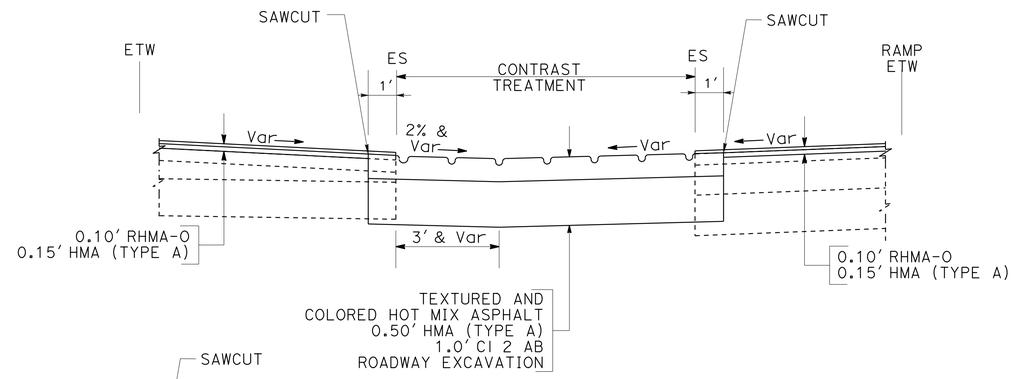

SECTION A-A

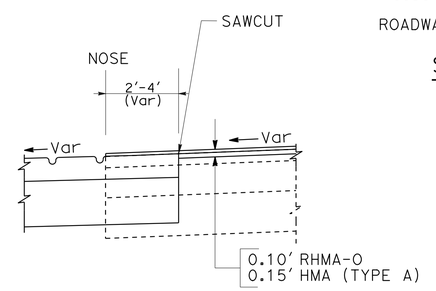

SECTION C-C

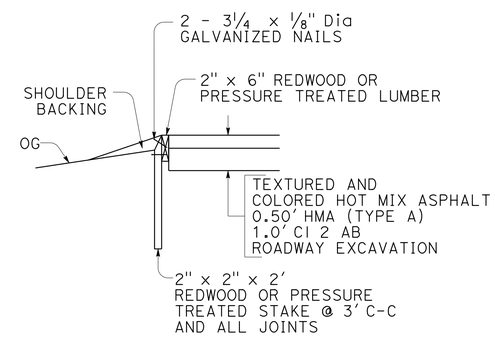

SECTION B-B

HEADER BOARD DETAIL

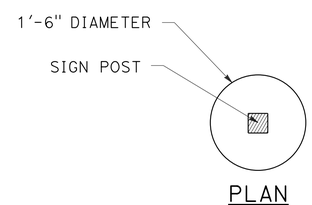

PLAN

OPENINGS FOR ONE-POST SIGN (Typ)

CONSTRUCTION DETAILS

NO SCALE

C-10

STATE OF CALIFORNIA - DEPARTMENT OF TRANSPORTATION
Caltrans® DESIGN

FUNCTIONAL SUPERVISOR: DEANN SPANGLER
CALCULATED-DESIGNED BY: BIPAN KAUSHAL
CHECKED BY: BALJINDER BRAR
REVISED BY
DATE REVISED

LAST REVISION 04-24-15
DATE PLOTTED => 29-JUN-2015
TIME PLOTTED => 14:07

Dist	COUNTY	ROUTE	POST MILES TOTAL PROJECT	SHEET No.	TOTAL SHEETS
03	But	99	30.1/T37.5	42	163

REGISTERED CIVIL ENGINEER 4-27-15 DATE

4-27-15
PLANS APPROVAL DATE

REGISTERED PROFESSIONAL ENGINEER BALJINDER S. BRAR No. C 67847 Exp. 6-30-15 CIVIL STATE OF CALIFORNIA

THE STATE OF CALIFORNIA OR ITS OFFICERS OR AGENTS SHALL NOT BE RESPONSIBLE FOR THE ACCURACY OR COMPLETENESS OF SCANNED COPIES OF THIS PLAN SHEET.

NOTES:

1. PROTECT IN PLACE EAST NGS MONUMENT PM R35.04 (NB)
2. FINISHED SURFACE OF TEXTURED AND COLORED HMA MAINTAINS THE EXISTING FLOWLINE

LEGEND:

- TEXTURED AND COLORED HOT MIX ASPHALT
- LIMITS OF 0.50' HMA (TYPE A) 1.0' CI 2 AB ROADWAY EXCAVATION
- LIMITS OF Exist CURB AND GUTTER

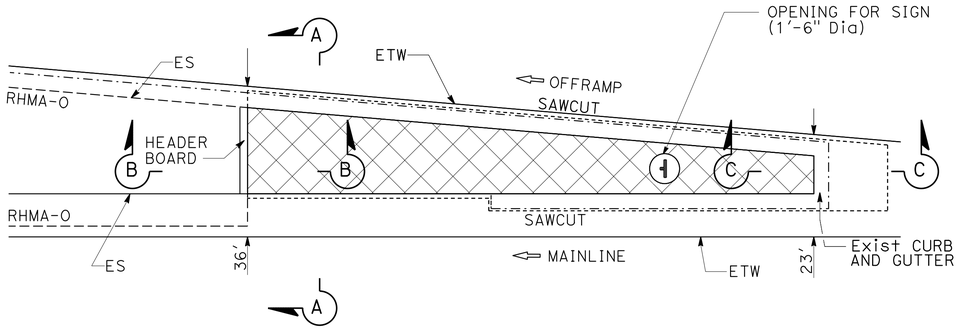

EATON Ave OC SB OFFRAMP (PM R36.44 TO PM R36.49)
EATON Ave OC NB OFFRAMP (PM R36.14 TO PM R36.18)
EAST Ave UC SB OFFRAMP (PM R35.05 TO PM R35.09)
EAST Ave UC NB OFFRAMP (PM R34.78 TO PM R34.82)
COHASSET Hwy OC SB OFFRAMP (PM R34.36 TO PM R34.39)
COHASSET Hwy OC NB OFFRAMP (PM R34.10 TO PM R34.13)
EAST FIRST Ave UC SB OFFRAMP (PM R33.40 TO PM R33.44)
Rte 99/32 Sep SOUTH NB OFFRAMP (PM R32.26 TO PM R32.30)

PLAN (OFF RAMP)

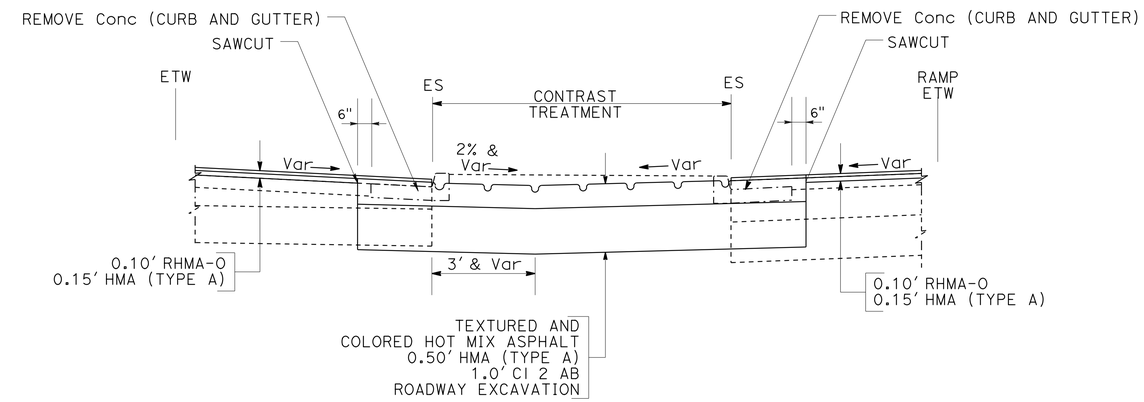

SECTION A-A

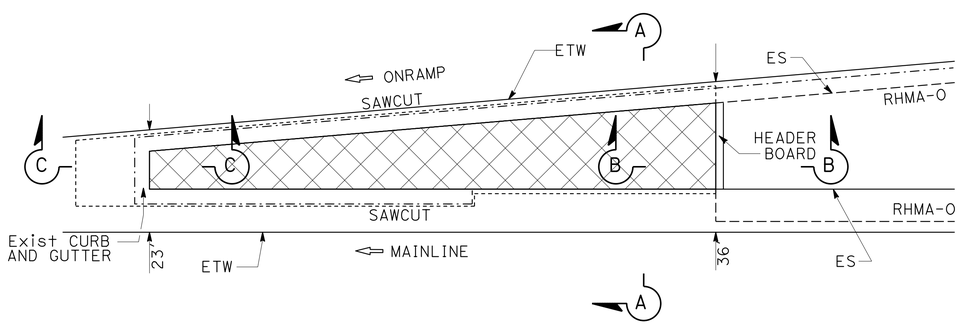

NB/SB CONNECTION (PM T37.39 TO PM T37.48)
EATON Ave OC NB ONRAMP (PM R36.45 TO PM R36.49)
EATON Ave OC SB ONRAMP (PM R36.13 TO PM R36.17)
EAST Ave UC NB ONRAMP (PM R35.03 TO PM R35.07)
EAST Ave UC SB ONRAMP (PM R34.80 TO PM R34.85)
COHASSET Hwy OC SB ONRAMP (PM R34.27 TO PM R34.29)
COHASSET Hwy OC NB ONRAMP (PM R34.21 TO PM R34.23)
EAST FIRST Ave UC NB ONRAMP (PM R33.38 TO PM R33.43)
Rte 99/32 Sep SOUTH SB ONRAMP (PM R32.27 TO PM R32.31)

PLAN (ON RAMP)

TEXTURED AND COLORED HOT MIX ASPHALT (Typ)

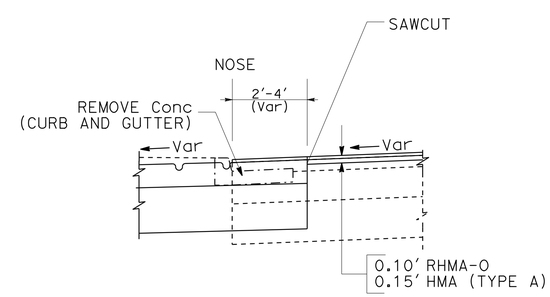

SECTION C-C

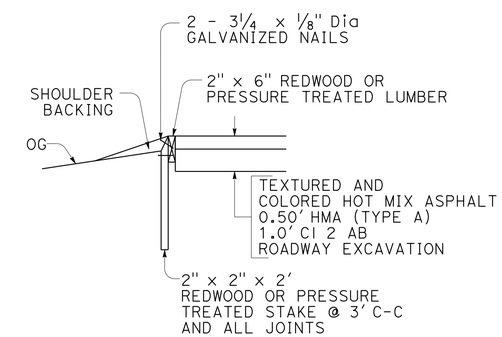

SECTION B-B

HEADER BOARD DETAIL

CONSTRUCTION DETAILS

NO SCALE

C-11

STATE OF CALIFORNIA - DEPARTMENT OF TRANSPORTATION
Caltrans® DESIGN
FUNCTIONAL SUPERVISOR: DEANN SPANGLER
CALCULATED-DESIGNED BY: BIPAN KAUSHAL
CHECKED BY: BALJINDER BRAR
REVISED BY
DATE REVISED

LAST REVISION 04-24-15
DATE PLOTTED => 29-JUN-2015
TIME PLOTTED => 14:07

Dist	COUNTY	ROUTE	POST MILES TOTAL PROJECT	SHEET No.	TOTAL SHEETS
03	But	99	30.1/T37.5	43	163

REGISTERED CIVIL ENGINEER 4-27-15 DATE

4-27-15
PLANS APPROVAL DATE

REGISTERED PROFESSIONAL ENGINEER BALJINDER S. BRAR No. C 67847 Exp. 6-30-15 CIVIL STATE OF CALIFORNIA

THE STATE OF CALIFORNIA OR ITS OFFICERS OR AGENTS SHALL NOT BE RESPONSIBLE FOR THE ACCURACY OR COMPLETENESS OF SCANNED COPIES OF THIS PLAN SHEET.

NOTES:

1. GRIND EXISTING SURFACES TO ACCOMODATE A MINIMUM TAPER THICKNESS OF 0.10′ WHEN EITHER:
   A. HMA MATERIAL SUCH AS RUBBERIZED, POLYMER MODIFIED OR OPEN GRADED IS UNSUITABLE FOR RAKING TO A MAXIMUM 0.02′ THICKNESS AT THE CONFORM.
   B. TEMPORARY TAPER WILL BE IN PLACE FOR MORE THAN 14 DAYS.
2. PERMANENT SURFACE MAY BE EXISTING OR NEW PAVEMENT.
3. ROADWAY SURFACE IS THE TOP OF EXISTING SURFACE OR THE TOP OF THE PLANED SURFACE.
4. FOR TEMPORARY TAPERS ON BRIDGE DECKS AND APPROACH SLABS, CONSTRUCT TEMPORARY TAPERS WITH POLYESTER CONCRETE.
5. IF AUTHORIZED, YOU MAY USE ALTERNATIVE MATERIALS OR METHODS TO PRODUCE THE REQUIRED TAPER.

LEGEND:

HMA MATERIAL (TEMPORARY TAPER) (SEE NOTE 4)

IF NECESSARY, COLD PLANE ASPHALT CONCRETE PAVEMENT AND GRIND EXISTING CONCRETE PAVEMENT PLACE HMA MATERIAL (SEE NOTE 1)

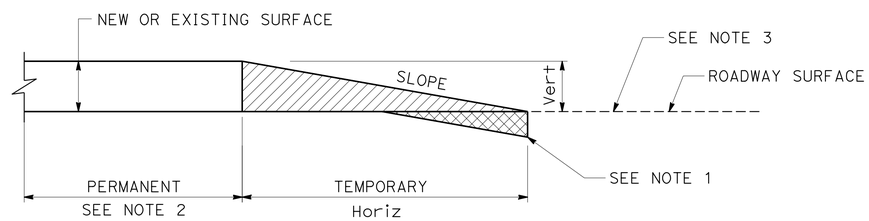

Vert	SLOPE RATIO Horiz/Vert
0-0.10′	70:1
GREATER THAN 0.10′	160:1

TYPICAL PAVING CONFORM FOR TEMPORARY CONSTRUCTION TAPERS

CONSTRUCTION DETAILS

NO SCALE **C-12**

STATE OF CALIFORNIA - DEPARTMENT OF TRANSPORTATION
Caltrans® DESIGN

FUNCTIONAL SUPERVISOR: DEANN SPANGLER
CALCULATED-DESIGNED BY: BIPAN KAUSHAL
CHECKED BY: BALJINDER BRAR
REVISED BY
DATE REVISED

LAST REVISION 04-24-15
DATE PLOTTED => 29-JUN-2015
TIME PLOTTED => 14:07

Dist	COUNTY	ROUTE	POST MILES TOTAL PROJECT	SHEET No.	TOTAL SHEETS
03	But	99	30.1/T37.5	44	163

REGISTERED CIVIL ENGINEER 4-27-15 DATE

4-27-15
PLANS APPROVAL DATE

REGISTERED PROFESSIONAL ENGINEER BALJINDER S. BRAR No. C 67847 Exp. 6-30-15 CIVIL STATE OF CALIFORNIA

THE STATE OF CALIFORNIA OR ITS OFFICERS OR AGENTS SHALL NOT BE RESPONSIBLE FOR THE ACCURACY OR COMPLETENESS OF SCANNED COPIES OF THIS PLAN SHEET.

NOTES:

1. SEE ELECTRICAL PLAN SHEETS FOR MORE INFORMATION.
2. CROSS SLOPES MATCH EXISTING OR AS DIRECTED BY THE ENGINEER.

LEGEND:

- GRIND Exist Conc Pvmt & COLD PLANE AC Pvmt
- INDIVIDUAL SLAB REPLACEMENT (RSC)
- 0.15′ HMA (TYPE A) AND 0.10′ RHMA-O
- 0.10′ RHMA-O
- 0.15′ HMA (TYPE A)

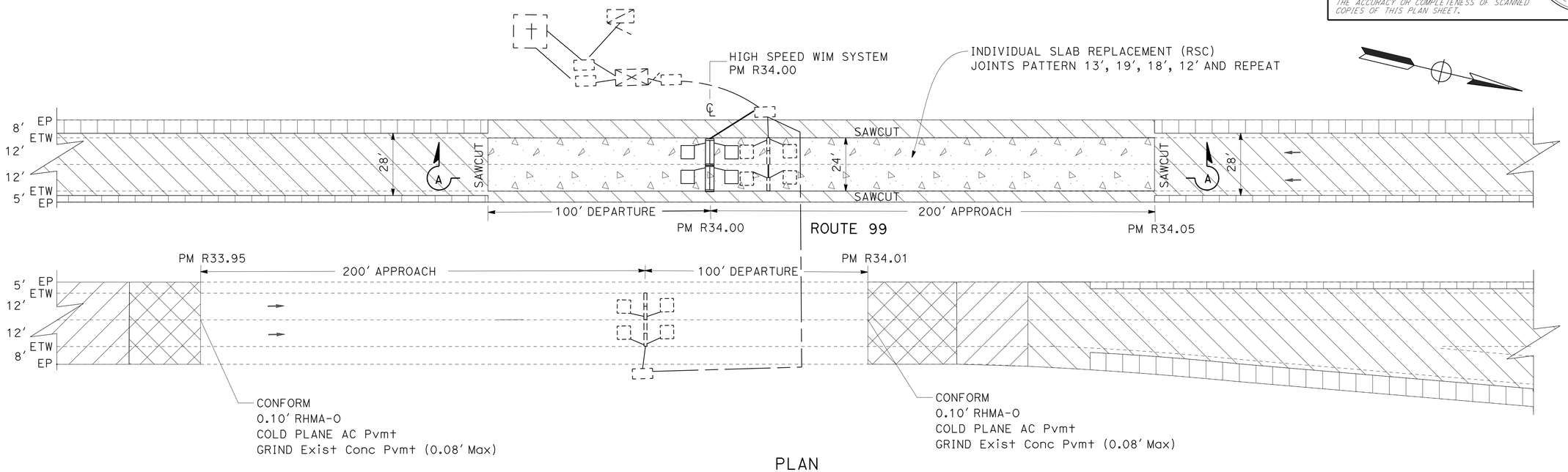

PLAN

HIGH SPEED WEIGH-IN-MOTION (WIM) SYSTEM PAVING DETAIL

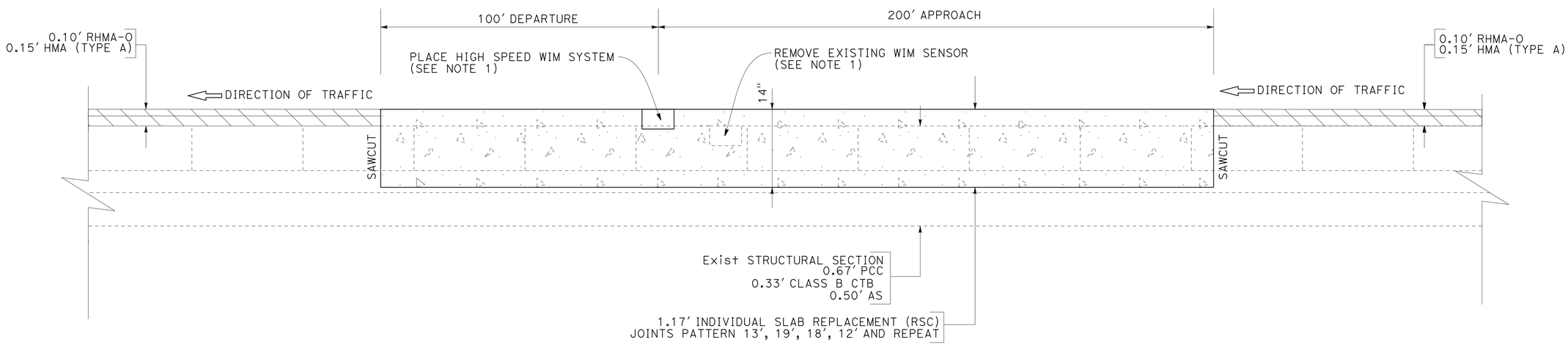

SECTION A-A

HIGH SPEED WEIGH-IN-MOTION (WIM) SYSTEM APPROACH/DEPARTURE SLAB DETAIL

(SB PM R34.00)

CONSTRUCTION DETAILS

NO SCALE

C-13

REVISED BY	DATE REVISED

CALCULATED-DESIGNED BY: BIPAN KAUSHAL
CHECKED BY: BALJINDER BRAR
FUNCTIONAL SUPERVISOR: DEANN SPANGLER

STATE OF CALIFORNIA - DEPARTMENT OF TRANSPORTATION
Caltrans® DESIGN

LAST REVISION 04-24-15 | DATE PLOTTED => 29-JUN-2015 | TIME PLOTTED => 14:07

Dist	COUNTY	ROUTE	POST MILES TOTAL PROJECT	SHEET No.	TOTAL SHEETS
03	But	99	30.1/T37.5	45	163

REGISTERED CIVIL ENGINEER 4-27-15 DATE

4-27-15
PLANS APPROVAL DATE

REGISTERED PROFESSIONAL ENGINEER BALJINDER S. BRAR No. C 67847 Exp 6-30-15 CIVIL STATE OF CALIFORNIA

THE STATE OF CALIFORNIA OR ITS OFFICERS OR AGENTS SHALL NOT BE RESPONSIBLE FOR THE ACCURACY OR COMPLETENESS OF SCANNED COPIES OF THIS PLAN SHEET.

NOTES:

1. TO PROTECT NEW ANCHOR BLOCK DURING CURE TIME, RE-HANG EXISTING RAIL ELEMENT IN EXISTING BOLT HOLES.
2. USE FOR TRANSITION ANCHOR BLOCKS LESS THAN 10'.

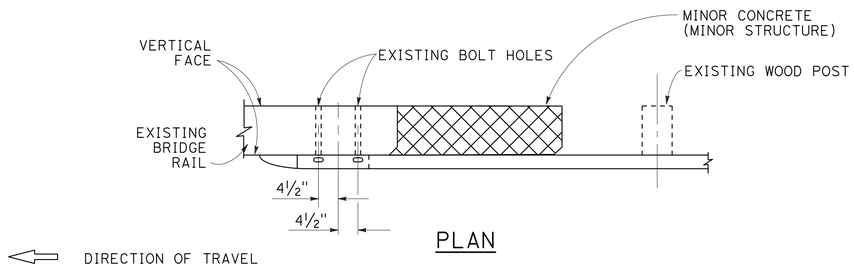

PLAN

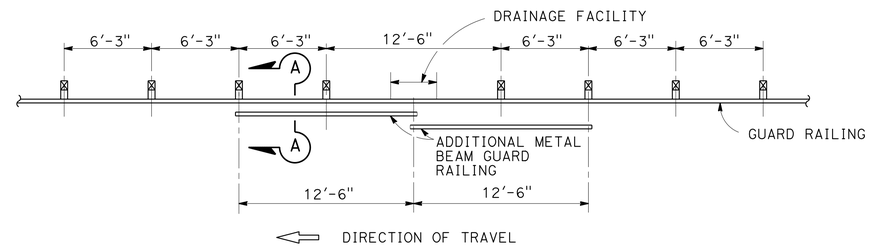

CASE 1
ONE POST OMITTED (SPLICE IN CENTER)

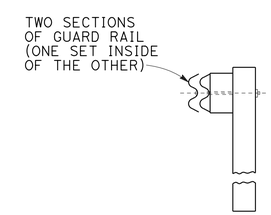

SECTION A-A

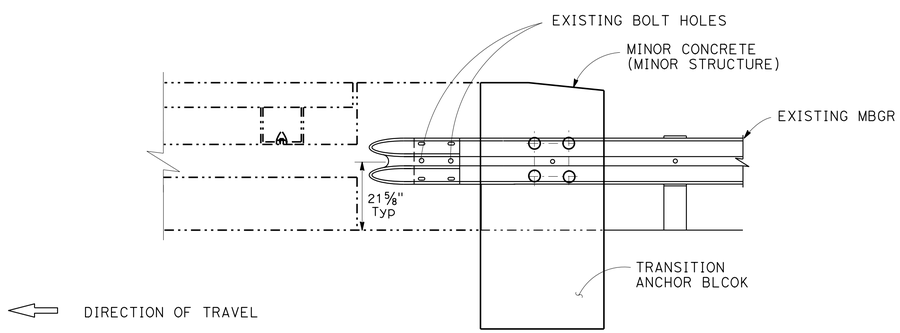

ELEVATION

TEMPORARY TRAFFIC PROTECTION DETAILS

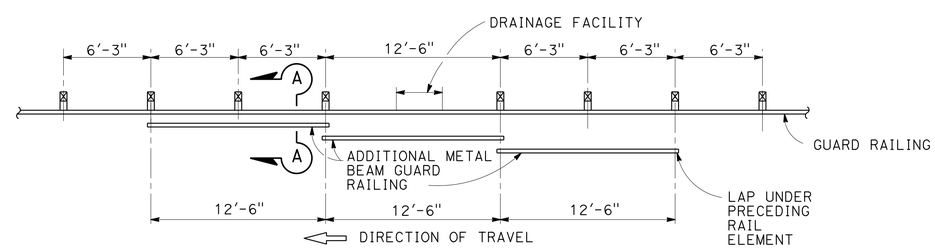

CASE 2
ONE POST OMITTED (SPLICE AT POSTS)

NESTED RAIL ELEMENTS

CONSTRUCTION DETAILS

NO SCALE **C-14**

STATE OF CALIFORNIA - DEPARTMENT OF TRANSPORTATION
Caltrans® DESIGN

FUNCTIONAL SUPERVISOR: DEANN SPANGLER
CALCULATED-DESIGNED BY: BIPAN KAUSHAL
CHECKED BY: BALJINDER BRAR
REVISED BY
DATE REVISED

LAST REVISION 04-24-15
DATE PLOTTED => 29-JUN-2015
TIME PLOTTED => 14:07

Dist	COUNTY	ROUTE	POST MILES TOTAL PROJECT	SHEET No.	TOTAL SHEETS
03	But	99	30.1/T37.5	46	163

REGISTERED CIVIL ENGINEER 4-27-15 DATE

4-27-15
PLANS APPROVAL DATE

REGISTERED PROFESSIONAL ENGINEER BALJINDER S. BRAR No. C 67847 Exp. 6-30-15 CIVIL STATE OF CALIFORNIA

THE STATE OF CALIFORNIA OR ITS OFFICERS OR AGENTS SHALL NOT BE RESPONSIBLE FOR THE ACCURACY OR COMPLETENESS OF SCANNED COPIES OF THIS PLAN SHEET.

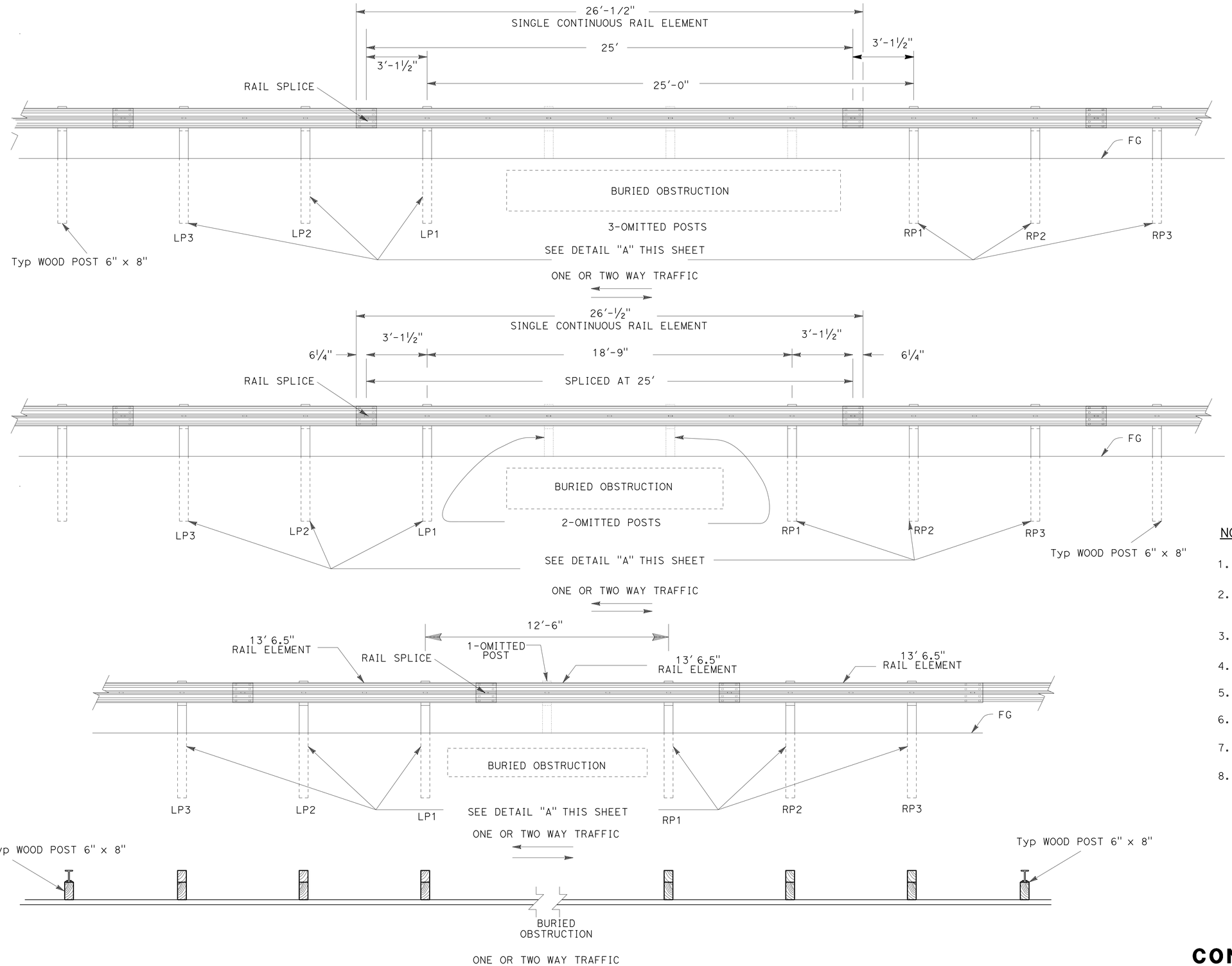

PLAN

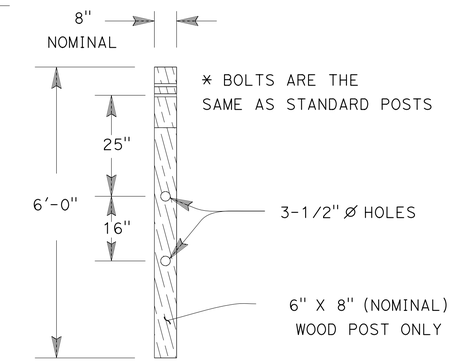

DETAIL "A" (LP/RP)

NOTES:

1. ALL RAIL ELEMENTS ARE MIDWEST GUARADRAIL SYSTEM
2. FOR DETAILS OF STANDARD HARDWARE USED TO CONSTRUCT MGS, SEE REVISED STANDARD PLAN A77M1
3. FOR DETAILS OF RAIL ELEMENT SPLICE, SEE RSP A77L1
4. MGS POST SPACINGS TO BE 6'-3" CENTER TO CENTER, EXCEPT OTHERWISE NOTED
5. WHERE PLACEMENT OF DIKE IS REQUIRED, SEE RSP A77N4
6. FOR PLACEMENT OF VEGETATION CONTROL SEE RSP A77N5
7. CRT POST TO BE WOOD ONLY SEE RSP A77N5
8. SEE STANDRAD PLAN RSP A77N5 AND RSP A87B FOR DIKE TYPE AND PLACEMENT LOCATION

CONSTRUCTION DETAILS

NO SCALE

C-15

STATE OF CALIFORNIA - DEPARTMENT OF TRANSPORTATION
Caltrans® DESIGN

FUNCTIONAL SUPERVISOR: DEANN SPANGLER

CALCULATED-DESIGNED BY: BIPAN KAUSHAL
CHECKED BY: BALJINDER BRAR

REVISED BY | DATE REVISED

LAST REVISION 04-24-15 | DATE PLOTTED => 29-JUN-2015 | TIME PLOTTED => 14:07

Dist	COUNTY	ROUTE	POST MILES TOTAL PROJECT	SHEET No.	TOTAL SHEETS
03	But	99	30.1/T37.5	47	163

REGISTERED CIVIL ENGINEER 4-27-15 DATE

4-27-15
PLANS APPROVAL DATE

REGISTERED PROFESSIONAL ENGINEER THIEN H. SLOCUM No. C 77253 Exp. 06-30-17 CIVIL STATE OF CALIFORNIA

THE STATE OF CALIFORNIA OR ITS OFFICERS OR AGENTS SHALL NOT BE RESPONSIBLE FOR THE ACCURACY OR COMPLETENESS OF SCANNED COPIES OF THIS PLAN SHEET.

NOTES:

1. FOR ACCURATE RIGHT OF WAY DATA, CONTACT RIGHT OF WAY ENGINEERING AT THE DISTRICT OFFICE.
2. UTILITY OWNERSHIP:
   ELECTRIC - PACIFIC GAS & ELECTRIC (PG&E)
   GAS - PACIFIC GAS & ELECTRIC (PG&E)
   COMMUNICATION CABLE - AMERICAN TELEPHONE & TELEGRAPH (AT&T)
   FIBER OPTIC - AMERICAN TELEPHONE & TELEGRAPH (AT&T)
   WATER - CALIFORNIA WATER SERVICE GROUP (CWS)

LEGEND:

--jt— JOINT OVERHEAD (AERIAL) - EXISTING

ABBREVIATION:

KV KILO-VOLT

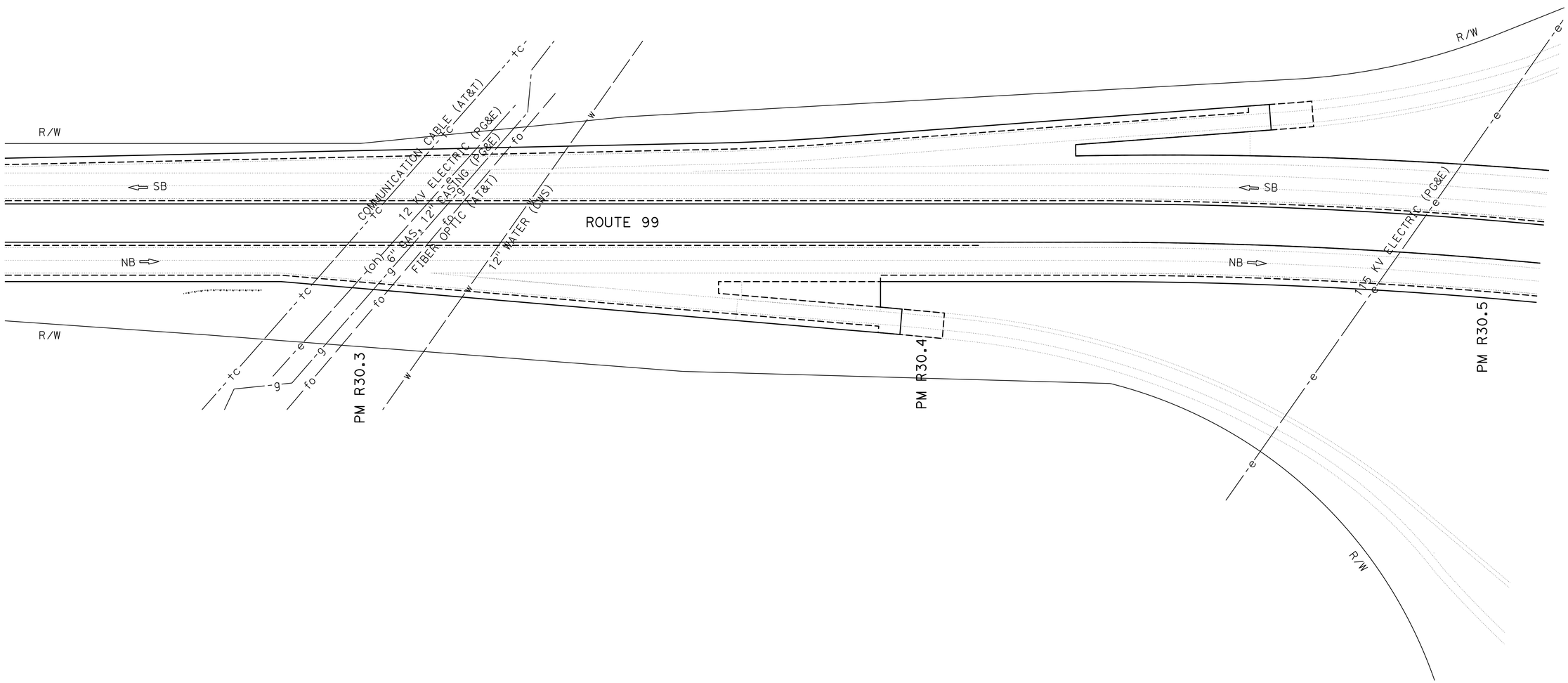

UTILITY PLAN

SCALE: 1"=50'

THIS PLAN TO BE USED FOR UTILITY INFORMATION ONLY

U-1

STATE OF CALIFORNIA - DEPARTMENT OF TRANSPORTATION
Caltrans® **DESIGN**

FUNCTIONAL SUPERVISOR: DANIEL R. RECHS

CALCULATED-DESIGNED BY: THIEN H. SLOCUM
CHECKED BY: RUSS F. PETTY

REVISED BY | DATE REVISED

LAST REVISION 04-20-15 | DATE PLOTTED => 29-JUN-2015 | TIME PLOTTED => 14:07

Dist	COUNTY	ROUTE	POST MILES TOTAL PROJECT	SHEET No.	TOTAL SHEETS
03	But	99	30.1/T37.5	48	163

REGISTERED CIVIL ENGINEER 4-27-15 DATE

4-27-15
PLANS APPROVAL DATE

REGISTERED PROFESSIONAL ENGINEER
THIEN H. SLOCUM
No. C 77253
Exp. 06-30-17
CIVIL
STATE OF CALIFORNIA

THE STATE OF CALIFORNIA OR ITS OFFICERS OR AGENTS SHALL NOT BE RESPONSIBLE FOR THE ACCURACY OR COMPLETENESS OF SCANNED COPIES OF THIS PLAN SHEET.

NOTE:

1. FOR ACCURATE RIGHT OF WAY DATA, CONTACT RIGHT OF WAY ENGINEERING AT THE DISTRICT OFFICE.

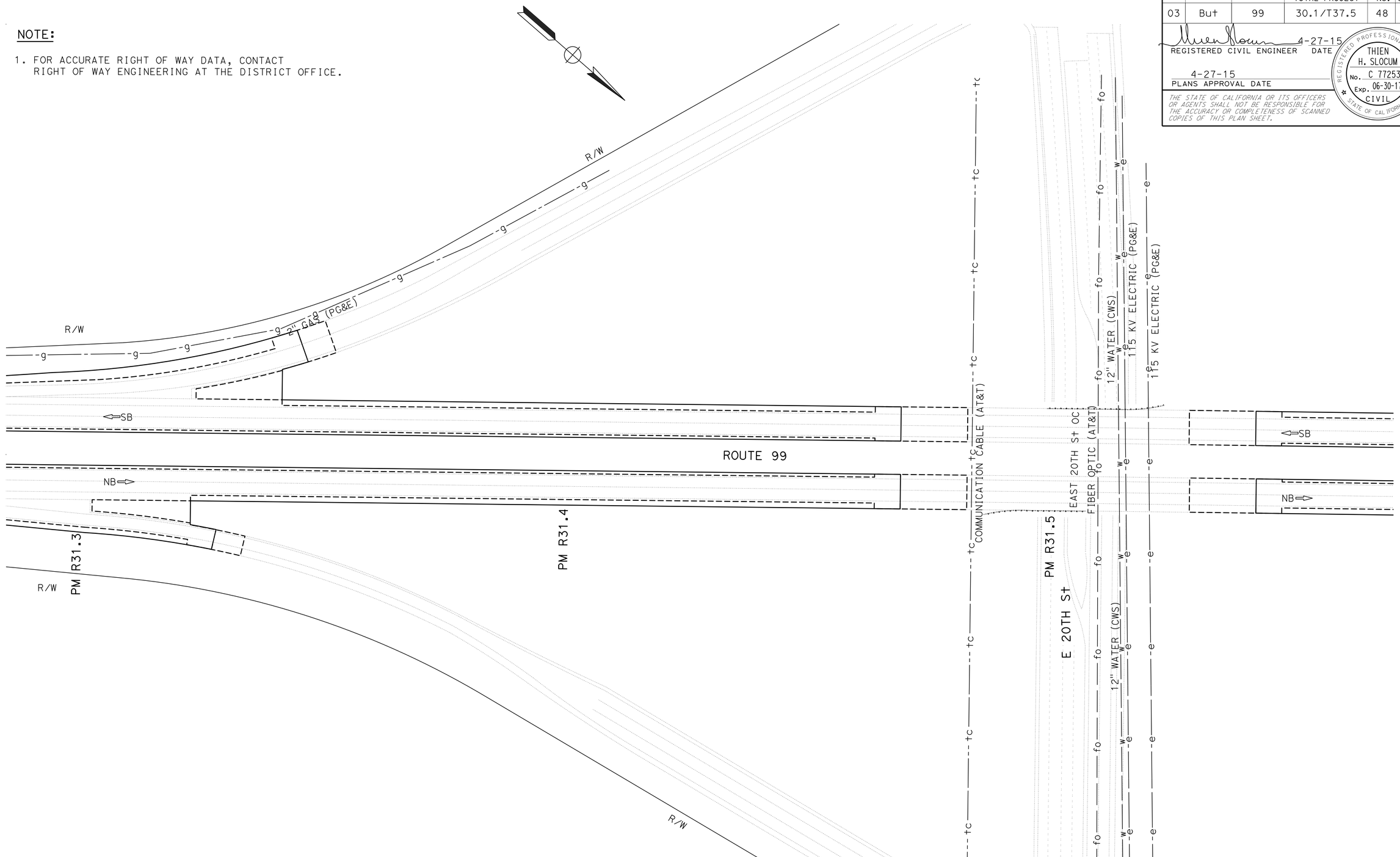

UTILITY PLAN

SCALE: 1"=50'

THIS PLAN TO BE USED FOR UTILITY INFORMATION ONLY

U-2

THIEN H. SLOCUM — REVISED BY
RUSS F. PETTY — DATE REVISED
CALCULATED-DESIGNED BY
CHECKED BY
FUNCTIONAL SUPERVISOR
DANIEL R. RECHS

STATE OF CALIFORNIA - DEPARTMENT OF TRANSPORTATION
Caltrans
DESIGN

LAST REVISION 04-20-15
DATE PLOTTED => 29-JUN-2015
TIME PLOTTED => 14:07

Dist	COUNTY	ROUTE	POST MILES TOTAL PROJECT	SHEET No.	TOTAL SHEETS
03	But	99	30.1/T37.5	49	163

4-27-15
REGISTERED CIVIL ENGINEER DATE

4-27-15
PLANS APPROVAL DATE

REGISTERED PROFESSIONAL ENGINEER
THIEN H. SLOCUM
No. C 77253
Exp. 06-30-17
CIVIL
STATE OF CALIFORNIA

THE STATE OF CALIFORNIA OR ITS OFFICERS OR AGENTS SHALL NOT BE RESPONSIBLE FOR THE ACCURACY OR COMPLETENESS OF SCANNED COPIES OF THIS PLAN SHEET.

NOTE:

1. FOR ACCURATE RIGHT OF WAY DATA, CONTACT RIGHT OF WAY ENGINEERING AT THE DISTRICT OFFICE.

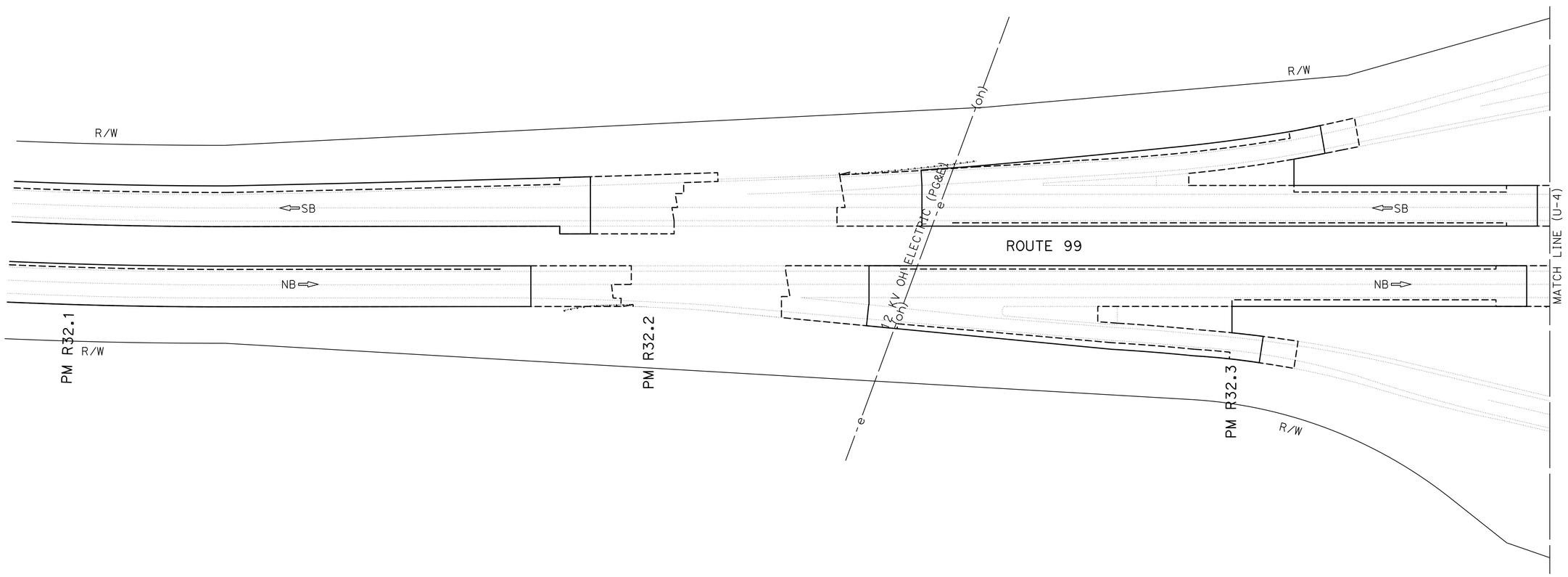

UTILITY PLAN

SCALE: 1"=50'

U-3

THIS PLAN TO BE USED FOR UTILITY INFORMATION ONLY

STATE OF CALIFORNIA - DEPARTMENT OF TRANSPORTATION
Caltrans
DESIGN

FUNCTIONAL SUPERVISOR: DANIEL R. RECHS
CALCULATED-DESIGNED BY: THIEN H. SLOCUM
CHECKED BY: RUSS F. PETTY
REVISED BY
DATE REVISED

LAST REVISION 04-20-15
DATE PLOTTED => 29-JUN-2015
TIME PLOTTED => 14:07

Dist	COUNTY	ROUTE	POST MILES TOTAL PROJECT	SHEET No.	TOTAL SHEETS
03	But	99	30.1/T37.5	50	163

REGISTERED CIVIL ENGINEER 4-27-15 DATE

4-27-15
PLANS APPROVAL DATE

REGISTERED PROFESSIONAL ENGINEER THIEN H. SLOCUM No. C 77253 Exp. 06-30-17 CIVIL STATE OF CALIFORNIA

THE STATE OF CALIFORNIA OR ITS OFFICERS OR AGENTS SHALL NOT BE RESPONSIBLE FOR THE ACCURACY OR COMPLETENESS OF SCANNED COPIES OF THIS PLAN SHEET.

NOTE:

1. FOR ACCURATE RIGHT OF WAY DATA, CONTACT RIGHT OF WAY ENGINEERING AT THE DISTRICT OFFICE.

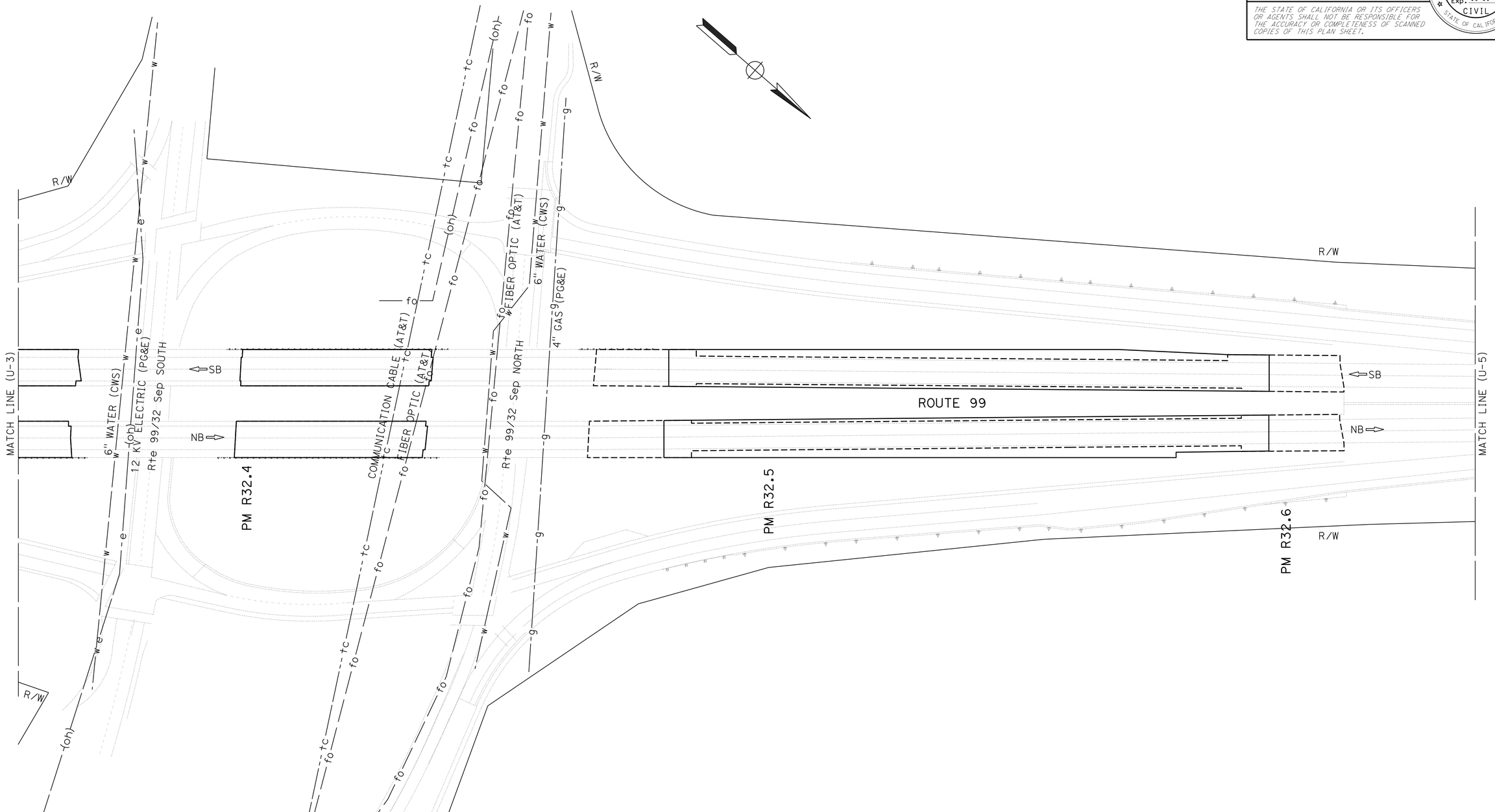

UTILITY PLAN

SCALE: 1"=50'

THIS PLAN TO BE USED FOR UTILITY INFORMATION ONLY

U-4

STATE OF CALIFORNIA - DEPARTMENT OF TRANSPORTATION
Caltrans DESIGN

FUNCTIONAL SUPERVISOR: DANIEL R. RECHS
CALCULATED-DESIGNED BY: THIEN H. SLOCUM
CHECKED BY: RUSS F. PETTY
REVISED BY
DATE REVISED

LAST REVISION 04-20-15
DATE PLOTTED => 29-JUN-2015
TIME PLOTTED => 14:07

Dist	COUNTY	ROUTE	POST MILES TOTAL PROJECT	SHEET No.	TOTAL SHEETS
03	But	99	30.1/T37.5	51	163

4-27-15
REGISTERED CIVIL ENGINEER DATE

4-27-15
PLANS APPROVAL DATE

REGISTERED PROFESSIONAL ENGINEER
THIEN H. SLOCUM
No. C 77253
Exp. 06-30-17
CIVIL
STATE OF CALIFORNIA

THE STATE OF CALIFORNIA OR ITS OFFICERS OR AGENTS SHALL NOT BE RESPONSIBLE FOR THE ACCURACY OR COMPLETENESS OF SCANNED COPIES OF THIS PLAN SHEET.

NOTE:

1. FOR ACCURATE RIGHT OF WAY DATA, CONTACT RIGHT OF WAY ENGINEERING AT THE DISTRICT OFFICE.

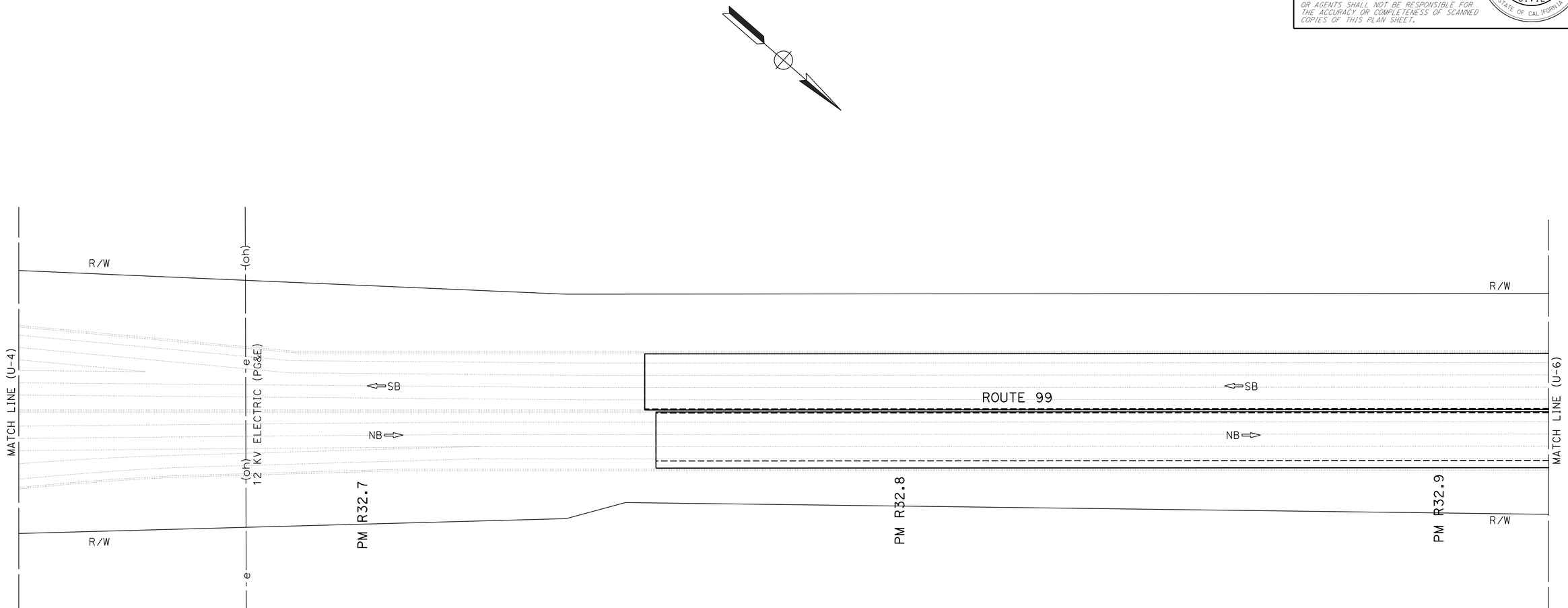

UTILITY PLAN

SCALE: 1"=50'

U-5

THIS PLAN TO BE USED FOR UTILITY INFORMATION ONLY

STATE OF CALIFORNIA - DEPARTMENT OF TRANSPORTATION
Caltrans
DESIGN

FUNCTIONAL SUPERVISOR: DANIEL R. RECHS
CALCULATED-DESIGNED BY: THIEN H. SLOCUM
CHECKED BY: RUSS F. PETTY
REVISED BY
DATE REVISED

LAST REVISION 04-20-15
DATE PLOTTED => 29-JUN-2015
TIME PLOTTED => 14:07

Dist	COUNTY	ROUTE	POST MILES TOTAL PROJECT	SHEET No.	TOTAL SHEETS
03	But	99	30.1/T37.5	52	163

4-27-15
REGISTERED CIVIL ENGINEER DATE

4-27-15
PLANS APPROVAL DATE

REGISTERED PROFESSIONAL ENGINEER
THIEN H. SLOCUM
No. C 77253
Exp. 06-30-17
CIVIL
STATE OF CALIFORNIA

THE STATE OF CALIFORNIA OR ITS OFFICERS OR AGENTS SHALL NOT BE RESPONSIBLE FOR THE ACCURACY OR COMPLETENESS OF SCANNED COPIES OF THIS PLAN SHEET.

NOTE:

1. FOR ACCURATE RIGHT OF WAY DATA, CONTACT RIGHT OF WAY ENGINEERING AT THE DISTRICT OFFICE.

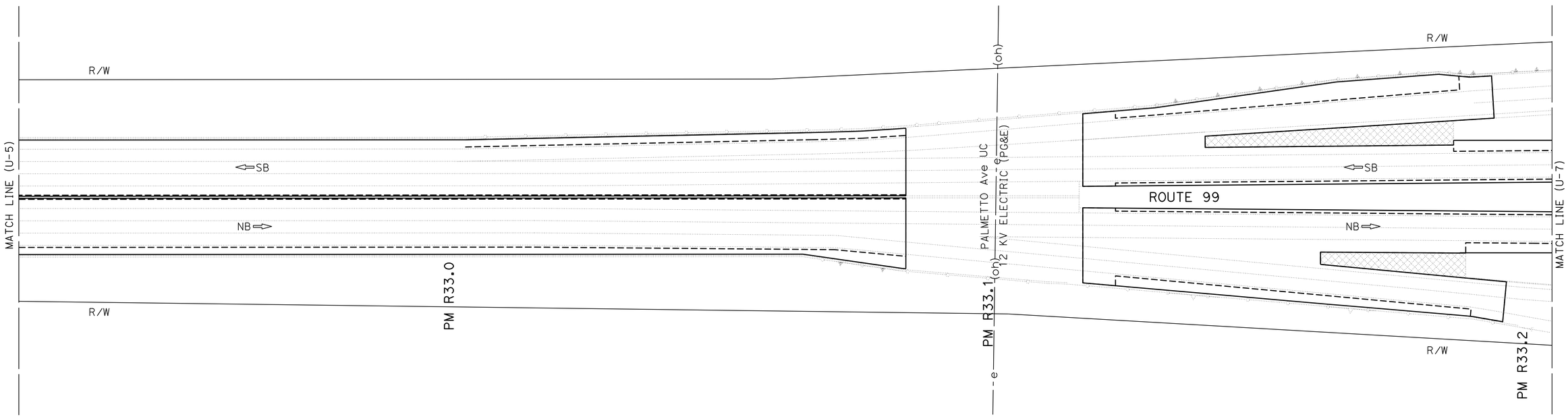

UTILITY PLAN

SCALE: 1"=50'

THIS PLAN TO BE USED FOR UTILITY INFORMATION ONLY

U-6

STATE OF CALIFORNIA - DEPARTMENT OF TRANSPORTATION
Caltrans
DESIGN

FUNCTIONAL SUPERVISOR: DANIEL R. RECHS
CALCULATED-DESIGNED BY: THIEN H. SLOCUM
CHECKED BY: RUSS F. PETTY
REVISED BY
DATE REVISED

LAST REVISION 04-20-15
DATE PLOTTED => 29-JUN-2015
TIME PLOTTED => 14:07

Dist	COUNTY	ROUTE	POST MILES TOTAL PROJECT	SHEET No.	TOTAL SHEETS
03	But	99	30.1/T37.5	53	163

4-27-15
REGISTERED CIVIL ENGINEER DATE

4-27-15
PLANS APPROVAL DATE

REGISTERED PROFESSIONAL ENGINEER
THIEN H. SLOCUM
No. C 77253
Exp. 06-30-17
CIVIL
STATE OF CALIFORNIA

THE STATE OF CALIFORNIA OR ITS OFFICERS OR AGENTS SHALL NOT BE RESPONSIBLE FOR THE ACCURACY OR COMPLETENESS OF SCANNED COPIES OF THIS PLAN SHEET.

NOTE:

1. FOR ACCURATE RIGHT OF WAY DATA, CONTACT RIGHT OF WAY ENGINEERING AT THE DISTRICT OFFICE.

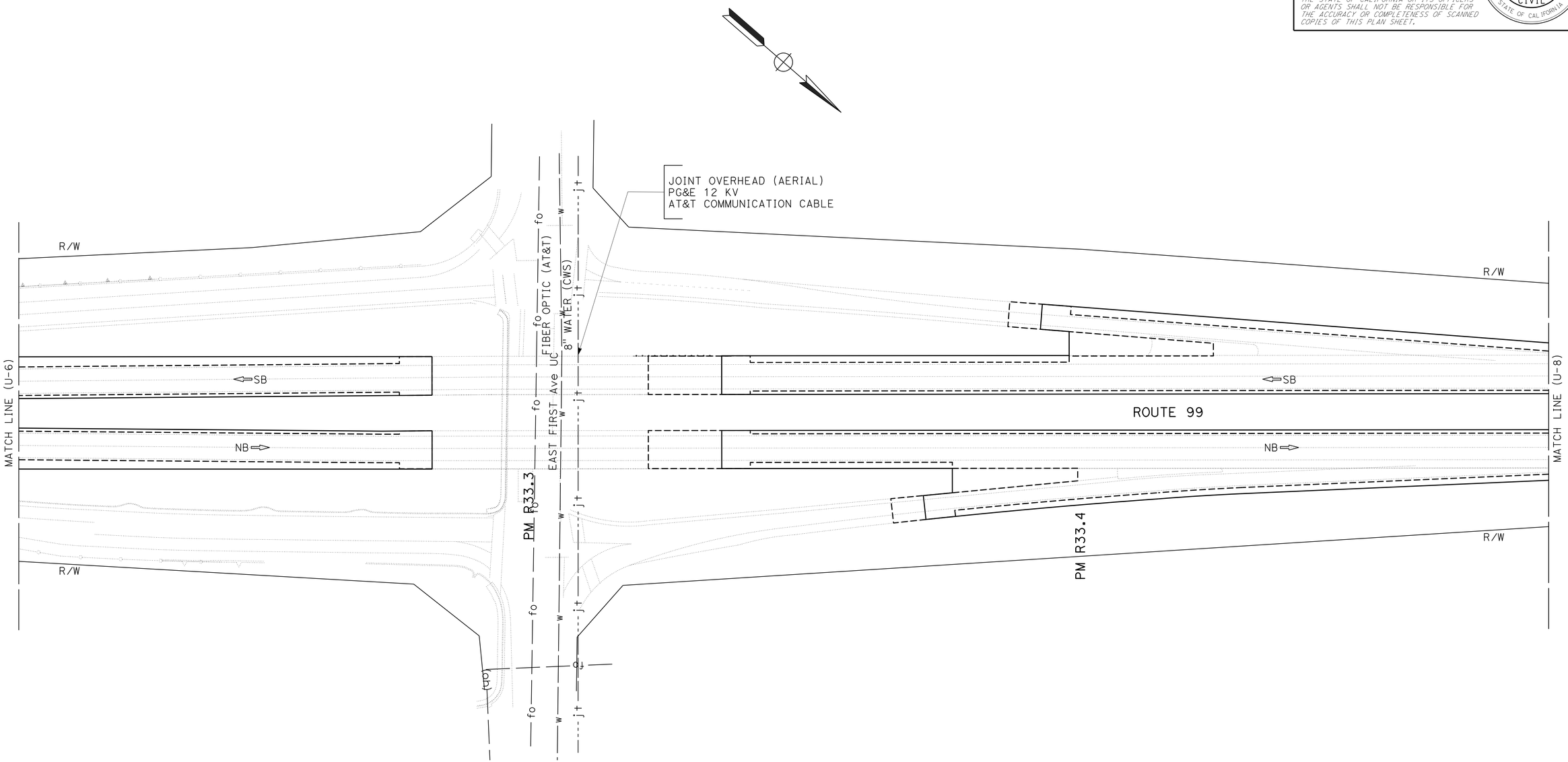

UTILITY PLAN

SCALE: 1"=50'

U-7

THIS PLAN TO BE USED FOR UTILITY INFORMATION ONLY

STATE OF CALIFORNIA - DEPARTMENT OF TRANSPORTATION
Caltrans
DESIGN

FUNCTIONAL SUPERVISOR: DANIEL R. RECHS

CALCULATED-DESIGNED BY: THIEN H. SLOCUM
CHECKED BY: RUSS F. PETTY

REVISED BY
DATE REVISED

LAST REVISION 04-20-15
DATE PLOTTED => 29-JUN-2015
TIME PLOTTED => 14:07

Dist	COUNTY	ROUTE	POST MILES TOTAL PROJECT	SHEET No.	TOTAL SHEETS
03	But	99	30.1/T37.5	54	163

4-27-15
REGISTERED CIVIL ENGINEER DATE

4-27-15
PLANS APPROVAL DATE

REGISTERED PROFESSIONAL ENGINEER
THIEN H. SLOCUM
No. C 77253
Exp. 06-30-17
CIVIL
STATE OF CALIFORNIA

THE STATE OF CALIFORNIA OR ITS OFFICERS OR AGENTS SHALL NOT BE RESPONSIBLE FOR THE ACCURACY OR COMPLETENESS OF SCANNED COPIES OF THIS PLAN SHEET.

NOTE:

1. FOR ACCURATE RIGHT OF WAY DATA, CONTACT RIGHT OF WAY ENGINEERING AT THE DISTRICT OFFICE.

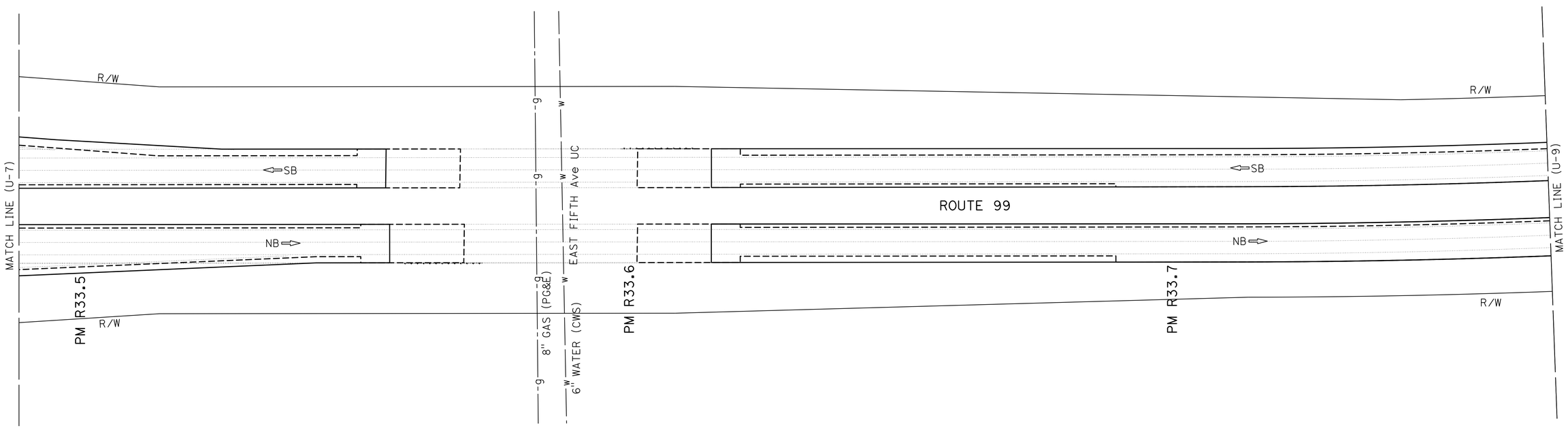

UTILITY PLAN

SCALE: 1"=50'

U-8

THIS PLAN TO BE USED FOR UTILITY INFORMATION ONLY

STATE OF CALIFORNIA - DEPARTMENT OF TRANSPORTATION
Caltrans
DESIGN

FUNCTIONAL SUPERVISOR: DANIEL R. RECHS
CALCULATED-DESIGNED BY: THIEN H. SLOCUM
CHECKED BY: RUSS F. PETTY
REVISED BY
DATE REVISED

LAST REVISION 04-20-15
DATE PLOTTED => 29-JUN-2015
TIME PLOTTED => 14:07

Dist	COUNTY	ROUTE	POST MILES TOTAL PROJECT	SHEET No.	TOTAL SHEETS
03	But	99	30.1/T37.5	55	163

4-27-15
REGISTERED CIVIL ENGINEER DATE

4-27-15
PLANS APPROVAL DATE

REGISTERED PROFESSIONAL ENGINEER
THIEN H. SLOCUM
No. C 77253
Exp. 06-30-17
CIVIL
STATE OF CALIFORNIA

THE STATE OF CALIFORNIA OR ITS OFFICERS OR AGENTS SHALL NOT BE RESPONSIBLE FOR THE ACCURACY OR COMPLETENESS OF SCANNED COPIES OF THIS PLAN SHEET.

NOTE:

1. FOR ACCURATE RIGHT OF WAY DATA, CONTACT RIGHT OF WAY ENGINEERING AT THE DISTRICT OFFICE.

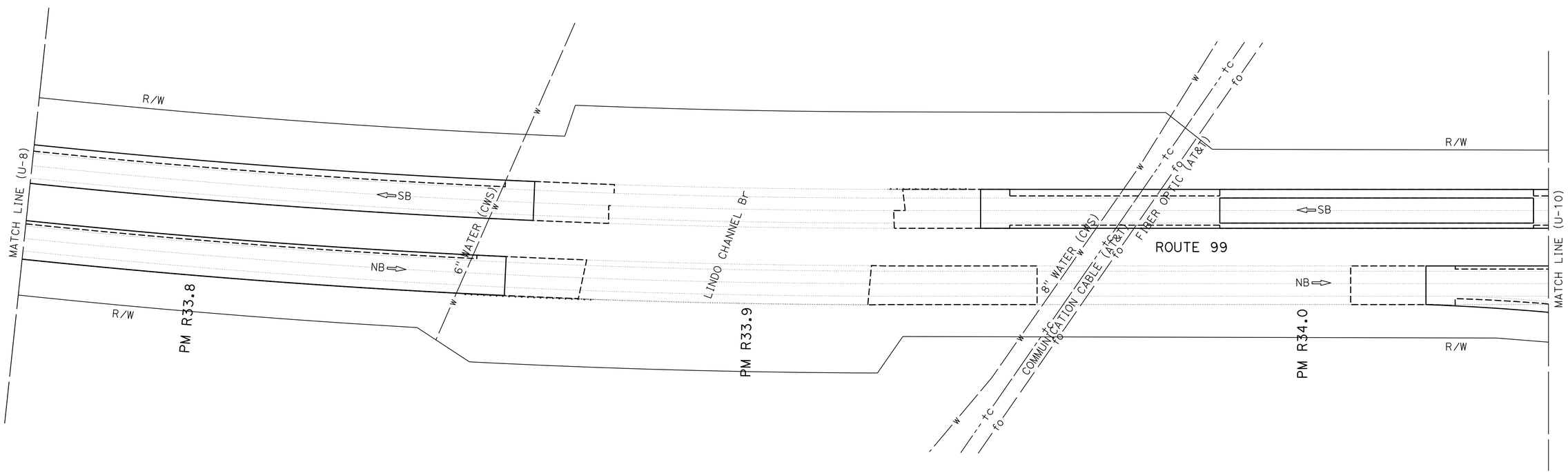

UTILITY PLAN

SCALE: 1"=50'

THIS PLAN TO BE USED FOR UTILITY INFORMATION ONLY

U-9

STATE OF CALIFORNIA - DEPARTMENT OF TRANSPORTATION
Caltrans
DESIGN

FUNCTIONAL SUPERVISOR: DANIEL R. RECHS
CALCULATED-DESIGNED BY: THIEN H. SLOCUM
CHECKED BY: RUSS F. PETTY
REVISED BY
DATE REVISED

LAST REVISION 04-20-15
DATE PLOTTED => 29-JUN-2015
TIME PLOTTED => 14:07

Dist	COUNTY	ROUTE	POST MILES TOTAL PROJECT	SHEET No.	TOTAL SHEETS
03	But	99	30.1/T37.5	56	163

REGISTERED CIVIL ENGINEER 4-27-15 DATE

4-27-15
PLANS APPROVAL DATE

REGISTERED PROFESSIONAL ENGINEER THIEN H. SLOCUM No. C 77253 Exp. 06-30-17 CIVIL STATE OF CALIFORNIA

THE STATE OF CALIFORNIA OR ITS OFFICERS OR AGENTS SHALL NOT BE RESPONSIBLE FOR THE ACCURACY OR COMPLETENESS OF SCANNED COPIES OF THIS PLAN SHEET.

NOTE:

1. FOR ACCURATE RIGHT OF WAY DATA, CONTACT RIGHT OF WAY ENGINEERING AT THE DISTRICT OFFICE.

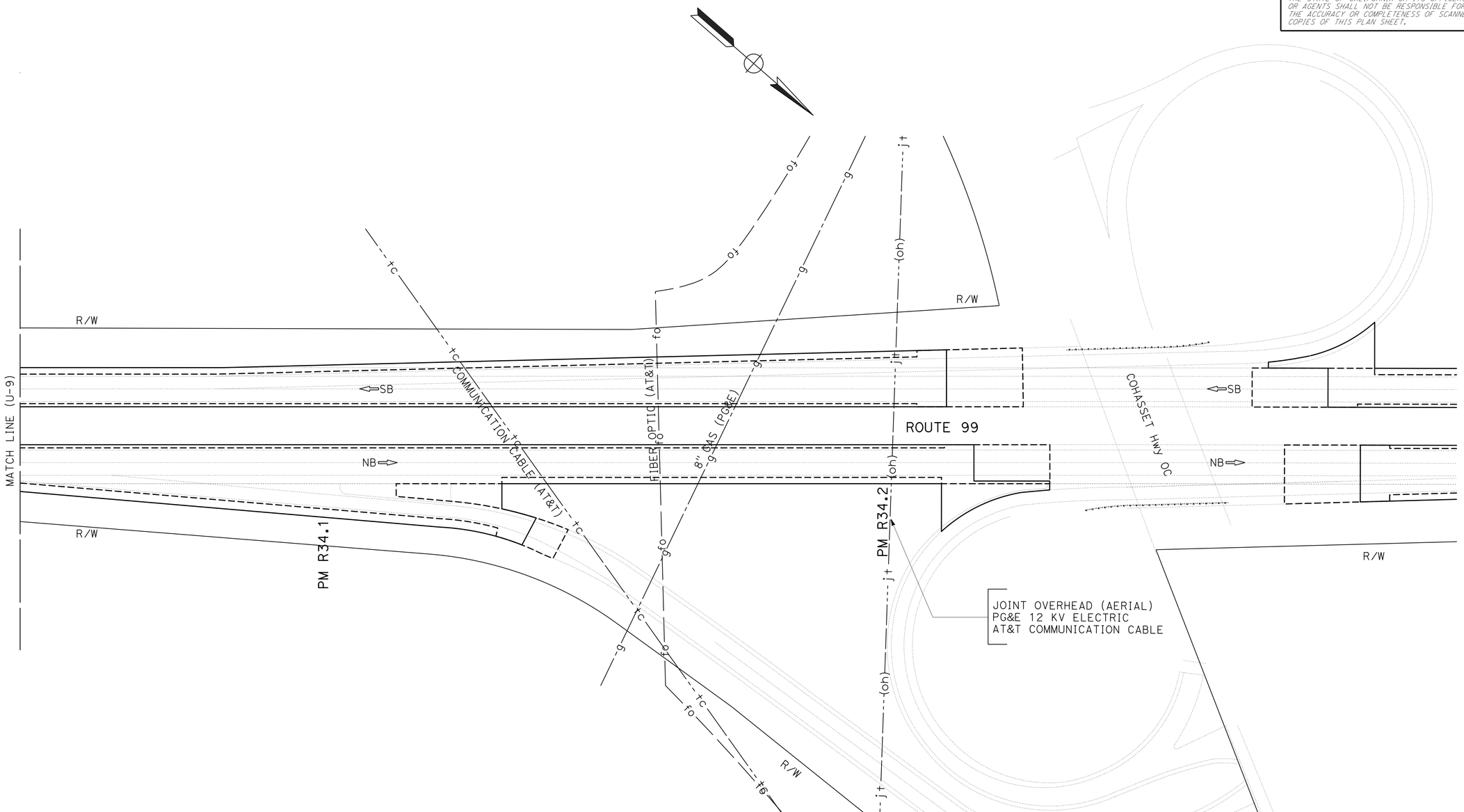

UTILITY PLAN

SCALE: 1"=50'

U-10

THIS PLAN TO BE USED FOR UTILITY INFORMATION ONLY

STATE OF CALIFORNIA - DEPARTMENT OF TRANSPORTATION
Caltrans DESIGN

FUNCTIONAL SUPERVISOR: DANIEL R. RECHS

CALCULATED-DESIGNED BY: THIEN H. SLOCUM
CHECKED BY: RUSS F. PETTY

REVISED BY / DATE REVISED

LAST REVISION 04-20-15 | DATE PLOTTED => 29-JUN-2015 | TIME PLOTTED => 14:07

Dist	COUNTY	ROUTE	POST MILES TOTAL PROJECT	SHEET No.	TOTAL SHEETS
03	But	99	30.1/T37.5	57	163

4-27-15
REGISTERED CIVIL ENGINEER DATE

4-27-15
PLANS APPROVAL DATE

REGISTERED PROFESSIONAL ENGINEER
THIEN H. SLOCUM
No. C 77253
Exp. 06-30-17
CIVIL
STATE OF CALIFORNIA

THE STATE OF CALIFORNIA OR ITS OFFICERS OR AGENTS SHALL NOT BE RESPONSIBLE FOR THE ACCURACY OR COMPLETENESS OF SCANNED COPIES OF THIS PLAN SHEET.

NOTE:

1. FOR ACCURATE RIGHT OF WAY DATA, CONTACT RIGHT OF WAY ENGINEERING AT THE DISTRICT OFFICE.

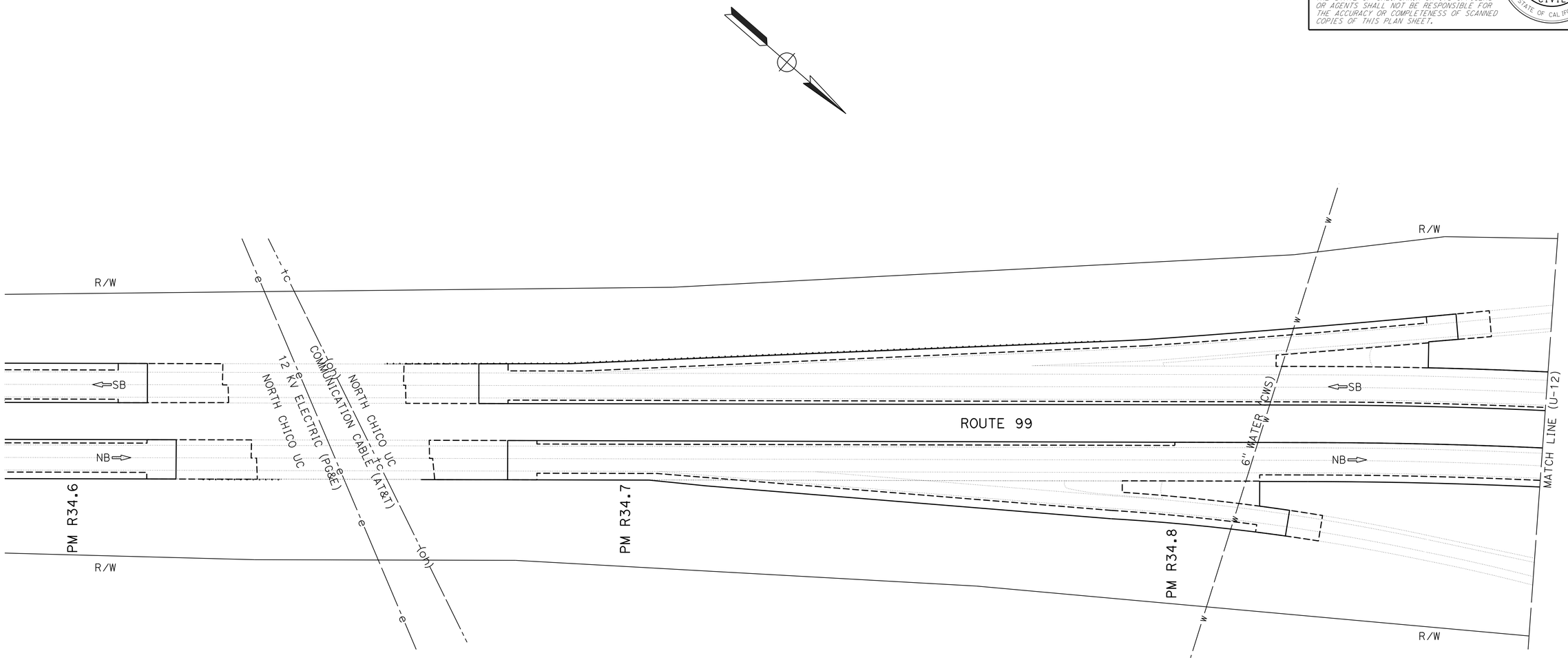

UTILITY PLAN

SCALE: 1"=50'

THIS PLAN TO BE USED FOR UTILITY INFORMATION ONLY

U-11

REVISED BY	DATE REVISED

CALCULATED-DESIGNED BY	CHECKED BY
THIEN H. SLOCUM	RUSS F. PETTY

FUNCTIONAL SUPERVISOR: DANIEL R. RECHS

STATE OF CALIFORNIA - DEPARTMENT OF TRANSPORTATION

Caltrans® **DESIGN**

LAST REVISION 04-20-15 | DATE PLOTTED => 29-JUN-2015 | TIME PLOTTED => 14:07

Dist	COUNTY	ROUTE	POST MILES TOTAL PROJECT	SHEET No.	TOTAL SHEETS
03	But	99	30.1/T37.5	58	163

REGISTERED CIVIL ENGINEER 4-27-15 DATE

4-27-15
PLANS APPROVAL DATE

REGISTERED PROFESSIONAL ENGINEER THIEN H. SLOCUM No. C 77253 Exp. 06-30-17 CIVIL STATE OF CALIFORNIA

THE STATE OF CALIFORNIA OR ITS OFFICERS OR AGENTS SHALL NOT BE RESPONSIBLE FOR THE ACCURACY OR COMPLETENESS OF SCANNED COPIES OF THIS PLAN SHEET.

NOTE:

1. FOR ACCURATE RIGHT OF WAY DATA, CONTACT RIGHT OF WAY ENGINEERING AT THE DISTRICT OFFICE.

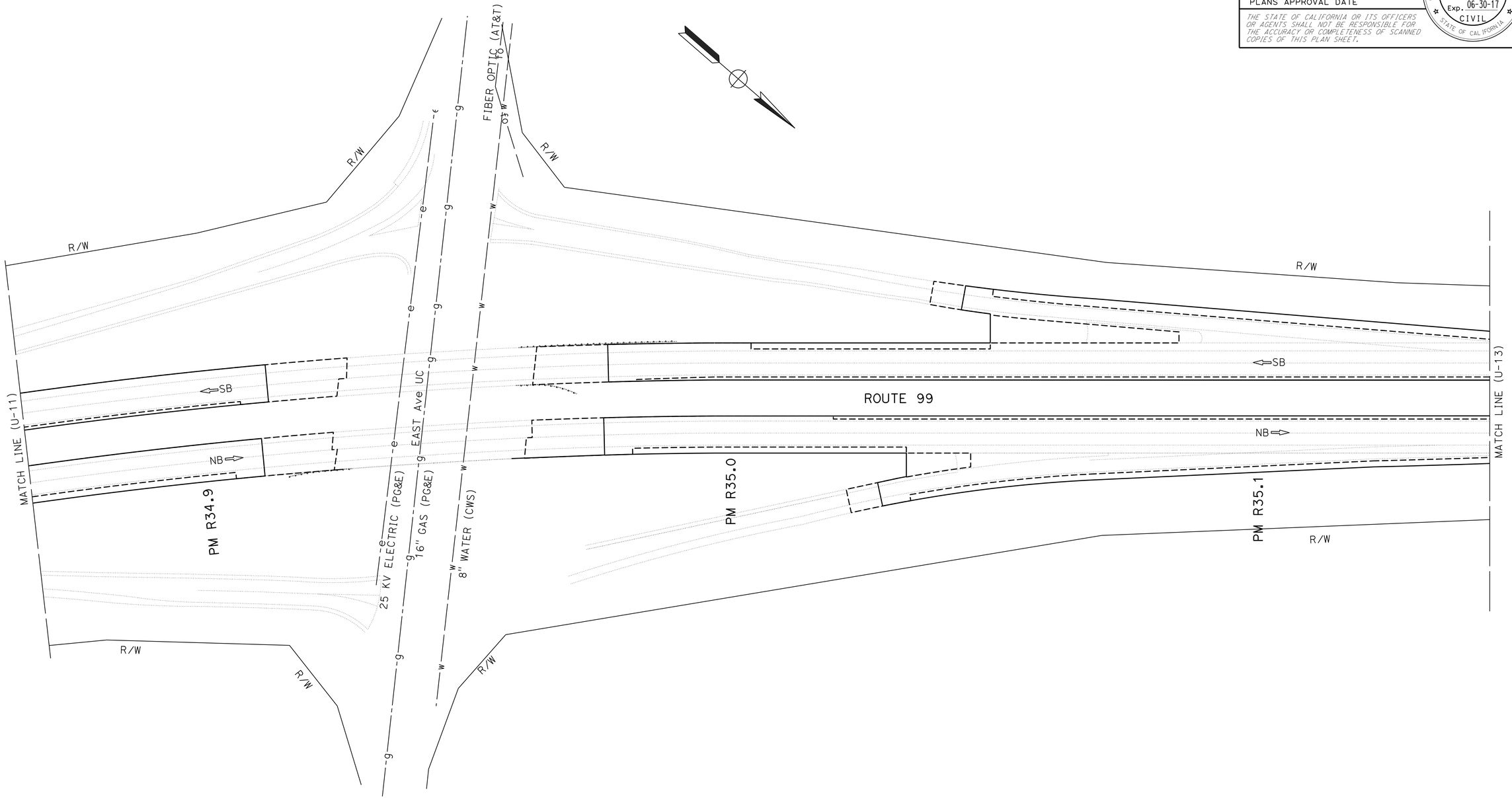

UTILITY PLAN

SCALE: 1"=50'

U-12

THIS PLAN TO BE USED FOR UTILITY INFORMATION ONLY

STATE OF CALIFORNIA - DEPARTMENT OF TRANSPORTATION
Caltrans DESIGN

FUNCTIONAL SUPERVISOR: DANIEL R. RECHS

CALCULATED-DESIGNED BY: THIEN H. SLOCUM
CHECKED BY: RUSS F. PETTY

REVISED BY | DATE REVISED

LAST REVISION 04-20-15 | DATE PLOTTED => 29-JUN-2015 | TIME PLOTTED => 14:07

Dist	COUNTY	ROUTE	POST MILES TOTAL PROJECT	SHEET No.	TOTAL SHEETS
03	But	99	30.1/T37.5	59	163

4-27-15
REGISTERED CIVIL ENGINEER DATE

4-27-15
PLANS APPROVAL DATE

REGISTERED PROFESSIONAL ENGINEER
THIEN H. SLOCUM
No. C 77253
Exp. 06-30-17
CIVIL
STATE OF CALIFORNIA

THE STATE OF CALIFORNIA OR ITS OFFICERS OR AGENTS SHALL NOT BE RESPONSIBLE FOR THE ACCURACY OR COMPLETENESS OF SCANNED COPIES OF THIS PLAN SHEET.

NOTE:

1. FOR ACCURATE RIGHT OF WAY DATA, CONTACT RIGHT OF WAY ENGINEERING AT THE DISTRICT OFFICE.

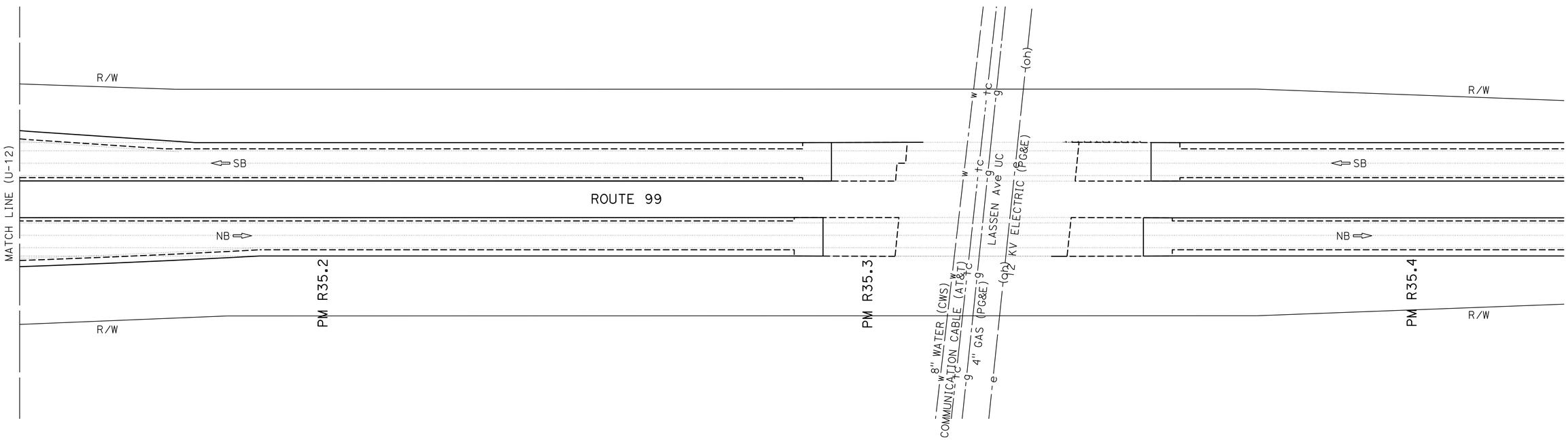

UTILITY PLAN

SCALE: 1"=50'

U-13

THIS PLAN TO BE USED FOR UTILITY INFORMATION ONLY

STATE OF CALIFORNIA - DEPARTMENT OF TRANSPORTATION
Caltrans DESIGN

FUNCTIONAL SUPERVISOR: DANIEL R. RECHS

CALCULATED-DESIGNED BY: THIEN H. SLOCUM
CHECKED BY: RUSS F. PETTY

REVISED BY
DATE REVISED

LAST REVISION 04-20-15
DATE PLOTTED => 29-JUN-2015
TIME PLOTTED => 14:07

Dist	COUNTY	ROUTE	POST MILES TOTAL PROJECT	SHEET No.	TOTAL SHEETS
03	But	99	30.1/T37.5	60	163

REGISTERED CIVIL ENGINEER 4-27-15 DATE

4-27-15
PLANS APPROVAL DATE

REGISTERED PROFESSIONAL ENGINEER THIEN H. SLOCUM No. C 77253 Exp. 06-30-17 CIVIL STATE OF CALIFORNIA

THE STATE OF CALIFORNIA OR ITS OFFICERS OR AGENTS SHALL NOT BE RESPONSIBLE FOR THE ACCURACY OR COMPLETENESS OF SCANNED COPIES OF THIS PLAN SHEET.

NOTE:

1. FOR ACCURATE RIGHT OF WAY DATA, CONTACT RIGHT OF WAY ENGINEERING AT THE DISTRICT OFFICE.

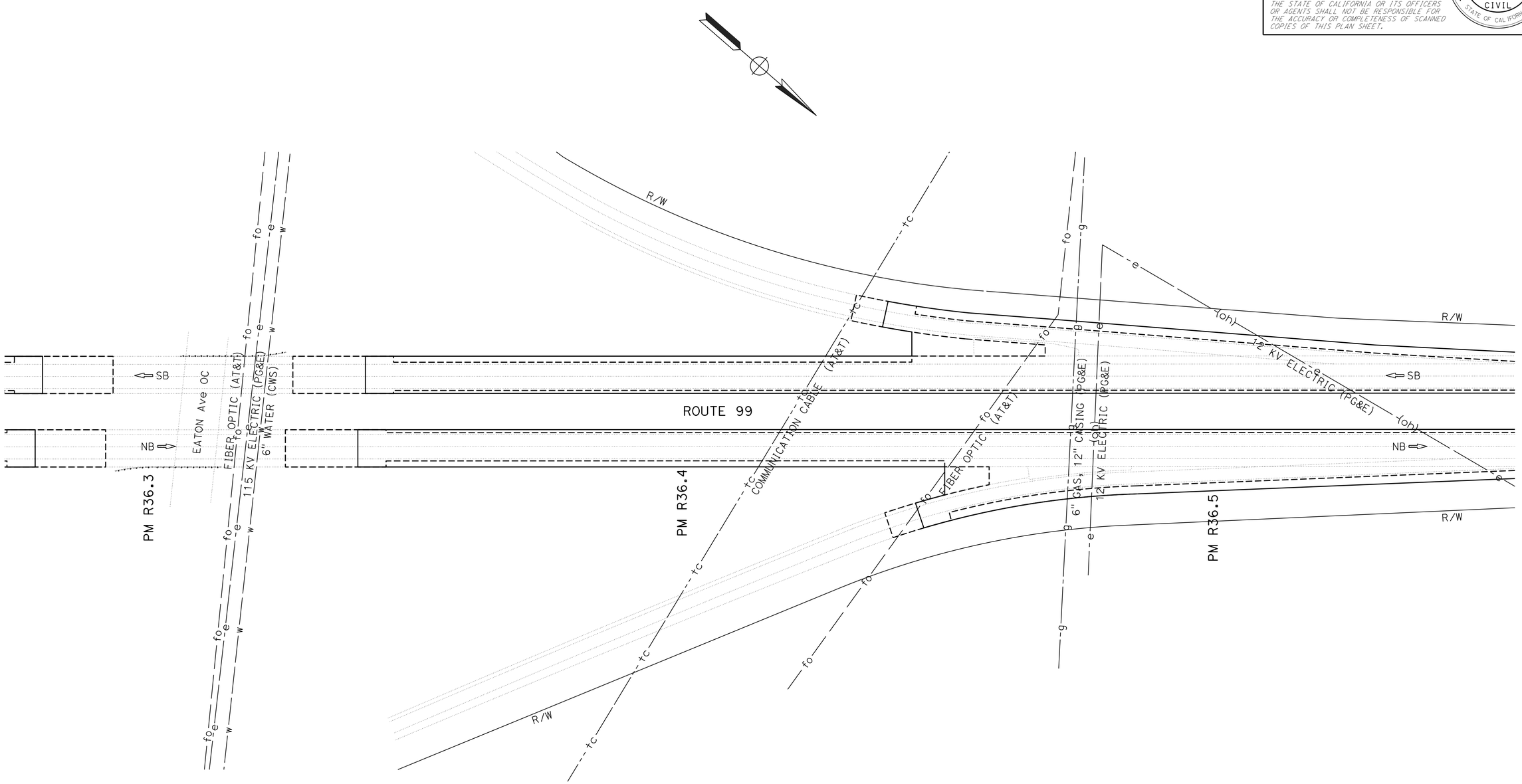

UTILITY PLAN

SCALE: 1"=50'

THIS PLAN TO BE USED FOR UTILITY INFORMATION ONLY

U-14

THIEN H. SLOCUM | REVISED BY
RUSS F. PETTY | DATE REVISED
CALCULATED-DESIGNED BY
CHECKED BY
FUNCTIONAL SUPERVISOR
DANIEL R. RECHS
STATE OF CALIFORNIA - DEPARTMENT OF TRANSPORTATION
Caltrans
DESIGN

LAST REVISION 04-20-15
DATE PLOTTED => 29-JUN-2015
TIME PLOTTED => 14:07

Dist	COUNTY	ROUTE	POST MILES TOTAL PROJECT	SHEET No.	TOTAL SHEETS
03	But	99	30.1/T37.5	61	163

REGISTERED CIVIL ENGINEER 4-27-15 DATE

4-27-15
PLANS APPROVAL DATE

REGISTERED PROFESSIONAL ENGINEER THIEN H. SLOCUM No. C 77253 Exp. 06-30-17 CIVIL STATE OF CALIFORNIA

THE STATE OF CALIFORNIA OR ITS OFFICERS OR AGENTS SHALL NOT BE RESPONSIBLE FOR THE ACCURACY OR COMPLETENESS OF SCANNED COPIES OF THIS PLAN SHEET.

NOTE:

1. FOR ACCURATE RIGHT OF WAY DATA, CONTACT RIGHT OF WAY ENGINEERING AT THE DISTRICT OFFICE.

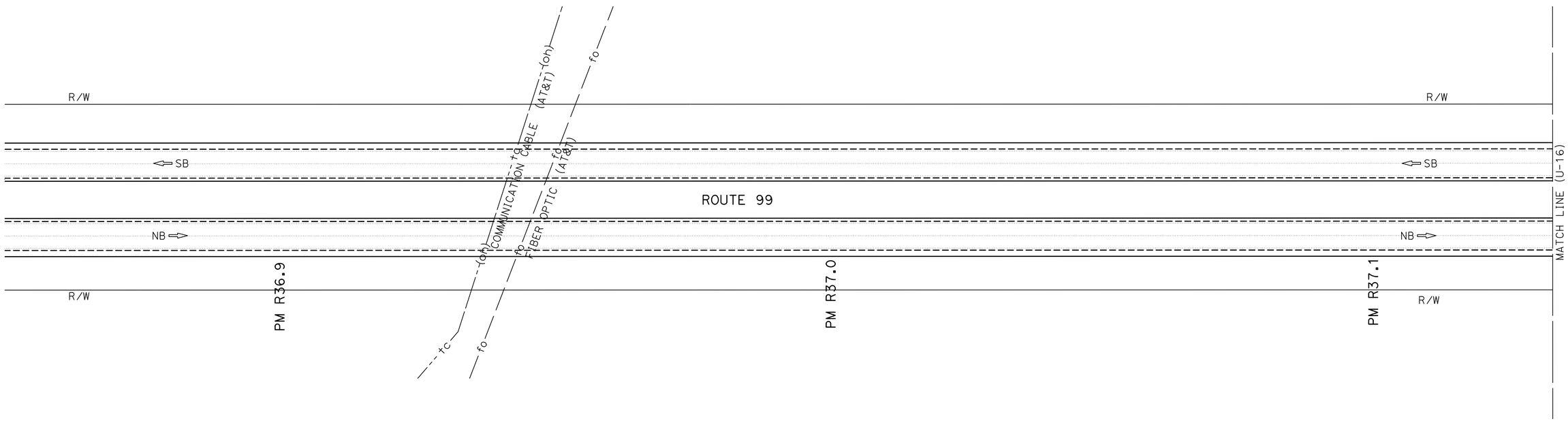

UTILITY PLAN

SCALE: 1"=50'

THIS PLAN TO BE USED FOR UTILITY INFORMATION ONLY

U-15

STATE OF CALIFORNIA - DEPARTMENT OF TRANSPORTATION
Caltrans® **DESIGN**

FUNCTIONAL SUPERVISOR: DANIEL R. RECHS
CALCULATED-DESIGNED BY: THIEN H. SLOCUM
CHECKED BY: RUSS F. PETTY
REVISED BY
DATE REVISED

LAST REVISION 04-20-15
DATE PLOTTED => 29-JUN-2015
TIME PLOTTED => 14:07

Dist	COUNTY	ROUTE	POST MILES TOTAL PROJECT	SHEET No.	TOTAL SHEETS
03	But	99	30.1/T37.5	62	163

REGISTERED CIVIL ENGINEER 4-27-15 DATE

4-27-15
PLANS APPROVAL DATE

REGISTERED PROFESSIONAL ENGINEER
THIEN H. SLOCUM
No. C 77253
Exp. 06-30-17
CIVIL
STATE OF CALIFORNIA

THE STATE OF CALIFORNIA OR ITS OFFICERS OR AGENTS SHALL NOT BE RESPONSIBLE FOR THE ACCURACY OR COMPLETENESS OF SCANNED COPIES OF THIS PLAN SHEET.

NOTE:

1. FOR ACCURATE RIGHT OF WAY DATA, CONTACT RIGHT OF WAY ENGINEERING AT THE DISTRICT OFFICE.

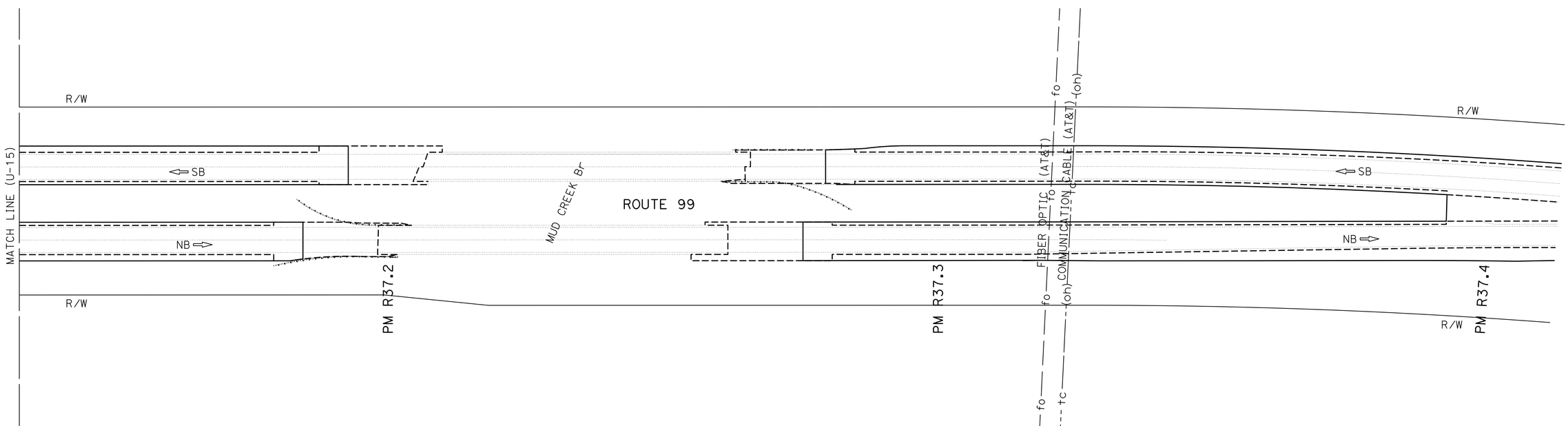

UTILITY PLAN

SCALE: 1"=50'

THIS PLAN TO BE USED FOR UTILITY INFORMATION ONLY

U-16

REVISED BY	DATE REVISED

CALCULATED-DESIGNED BY	CHECKED BY
THIEN H. SLOCUM	RUSS F. PETTY

FUNCTIONAL SUPERVISOR: DANIEL R. RECHS

STATE OF CALIFORNIA - DEPARTMENT OF TRANSPORTATION

Caltrans® DESIGN

LAST REVISION 04-20-15 | DATE PLOTTED => 29-JUN-2015 | TIME PLOTTED => 14:07

Dist	COUNTY	ROUTE	POST MILES TOTAL PROJECT	SHEET No.	TOTAL SHEETS
03	But	99	30.1/T37.5	63	163

REGISTERED CIVIL ENGINEER 4-27-15 DATE

4-27-15
PLANS APPROVAL DATE

REGISTERED PROFESSIONAL ENGINEER BALJINDER S. BRAR No. C 67847 Exp 6-30-15 CIVIL STATE OF CALIFORNIA

THE STATE OF CALIFORNIA OR ITS OFFICERS OR AGENTS SHALL NOT BE RESPONSIBLE FOR THE ACCURACY OR COMPLETENESS OF SCANNED COPIES OF THIS PLAN SHEET.

STATIONARY MOUNTED CONSTRUCTION AREA SIGNS

SIGN LETTER	SIGN CODE FEDERAL	SIGN CODE CALIFORNIA	SIGN MESSAGE	PANEL SIZE	NUMBER OF POST AND SIZE	NUMBER OF SIGNS
A	G20-1[Spec](8)		ROAD WORK NEXT 8 MILES	84" x 42"	2 - 4" x 6"	2
B		C40(Mod)	TRAFFIC FINES DOUBLED IN WORK ZONES	96" x 60"	2 - 6" x 6"	1
C	G20-1[Spec](8)		ROAD WORK NEXT 8 MILES	60" x 30"	2 - 4" x 4"	1
D		C40(Mod)	TRAFFIC FINES DOUBLED IN WORK ZONES	72" x 42"	2 - 4" x 6"	1
E	W20-1	C23	ROAD WORK AHEAD	48" x 48"	1 - 6" x 6"	16
F	G20-2	C14	END ROAD WORK	36" x 18"	1 - 4" x 4"	14
G		C14	END ROAD WORK	48" x 24"	1 - 4" x 6"	2

NOTE:
EXACT SIGN LOCATIONS TO BE DETERMINED BY THE ENGINEER.

SIGN DETAILS

(A) G20-1[Spec](8)

ROAD WORK
NEXT 8 MILES

8" C SERIES LETTERS

84"x42"

RETROREFLECTIVE ORANGE BACKGROUND WITH BLACK LEGEND AND BORDER.

(B) C40(Mod)<CA>

TRAFFIC FINES
DOUBLED IN
WORK ZONES

8" D SERIES LETTERS

96"x60"

RETROREFLECTIVE WHITE BACKGROUND WITH BLACK LEGEND AND BORDER.

(C) G20-1[Spec](8)

ROAD WORK
NEXT 8 MILES

6" C SERIES LETTERS

60"x30"

RETROREFLECTIVE ORANGE BACKGROUND WITH BLACK LEGEND AND BORDER.

(D) C40(Mod)<CA>

TRAFFIC FINES
DOUBLED IN
WORK ZONES

6" D SERIES LETTERS

72"x42"

RETROREFLECTIVE WHITE BACKGROUND WITH BLACK LEGEND AND BORDER.

LEGEND

(X) CONSTRUCTION AREA SIGN LETTER

<CA> CALIFORNIA SIGN CODE

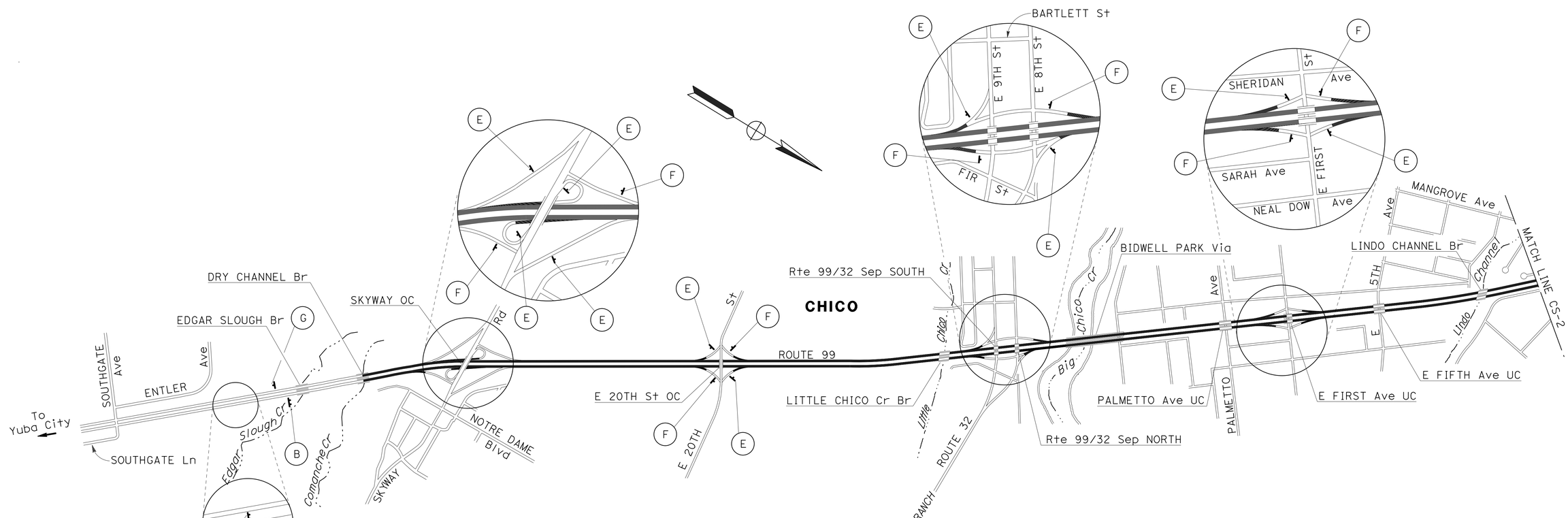

CONSTRUCTION AREA SIGNS

NO SCALE

APPROVED FOR CONSTRUCTION AREA SIGN WORK ONLY

CS-1

STATE OF CALIFORNIA - DEPARTMENT OF TRANSPORTATION
Caltrans DESIGN

FUNCTIONAL SUPERVISOR: DEANN SPANGLER
CALCULATED-DESIGNED BY: RALPH TOPHAM
CHECKED BY: JOHN KEBER
REVISED BY
DATE REVISED

LAST REVISION 04-24-15
DATE PLOTTED => 29-JUN-2015
TIME PLOTTED => 14:07

Dist	COUNTY	ROUTE	POST MILES TOTAL PROJECT	SHEET No.	TOTAL SHEETS
03	But	99	30.1/T37.5	64	163

REGISTERED CIVIL ENGINEER 4-27-15 DATE

4-27-15
PLANS APPROVAL DATE

REGISTERED PROFESSIONAL ENGINEER
BALJINDER S. BRAR
No. C 67847
Exp 6-30-15
CIVIL
STATE OF CALIFORNIA

THE STATE OF CALIFORNIA OR ITS OFFICERS OR AGENTS SHALL NOT BE RESPONSIBLE FOR THE ACCURACY OR COMPLETENESS OF SCANNED COPIES OF THIS PLAN SHEET.

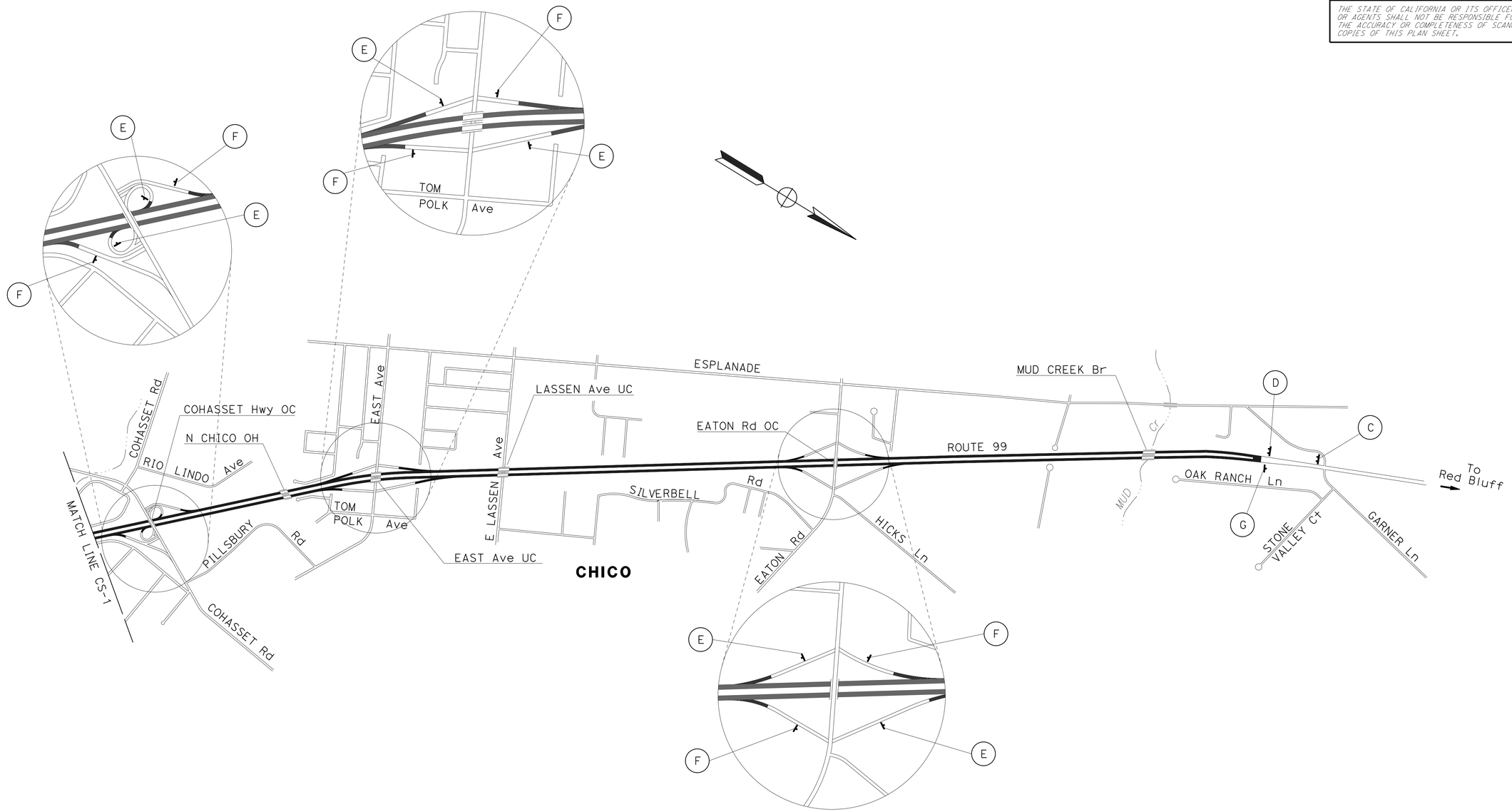

CONSTRUCTION AREA SIGNS

NO SCALE

APPROVED FOR CONSTRUCTION AREA SIGN WORK ONLY

CS-2

REVISED BY | DATE REVISED
RALPH TOPHAM | JOHN KEBER
CALCULATED-DESIGNED BY | CHECKED BY
FUNCTIONAL SUPERVISOR
DEANN SPANGLER

STATE OF CALIFORNIA - DEPARTMENT OF TRANSPORTATION
Caltrans® DESIGN

LAST REVISION 04-24-15 | DATE PLOTTED => 29-JUN-2015 | TIME PLOTTED => 14:07

Dist	COUNTY	ROUTE	POST MILES TOTAL PROJECT	SHEET No.	TOTAL SHEETS
03	But	99	30.1/T37.5	65	163

REGISTERED CIVIL ENGINEER 4-27-15 DATE

4-27-15
PLANS APPROVAL DATE

REGISTERED PROFESSIONAL ENGINEER BALJINDER S. BRAR No. C 67847 Exp. 6-30-15 CIVIL STATE OF CALIFORNIA

THE STATE OF CALIFORNIA OR ITS OFFICERS OR AGENTS SHALL NOT BE RESPONSIBLE FOR THE ACCURACY OR COMPLETENESS OF SCANNED COPIES OF THIS PLAN SHEET.

LEGEND:

- ALTERNATIVE TEMPORARY CRASH CUSHION
- • CHANNELIZER (SURFACE MOUNTED)
- (X) CONSTRUCTION AREA SIGN LETTER
- <CA> CALIFORNIA SIGN CODE

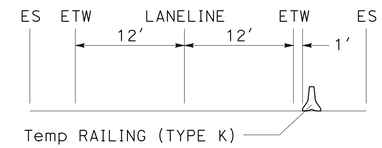

SECTION A-A

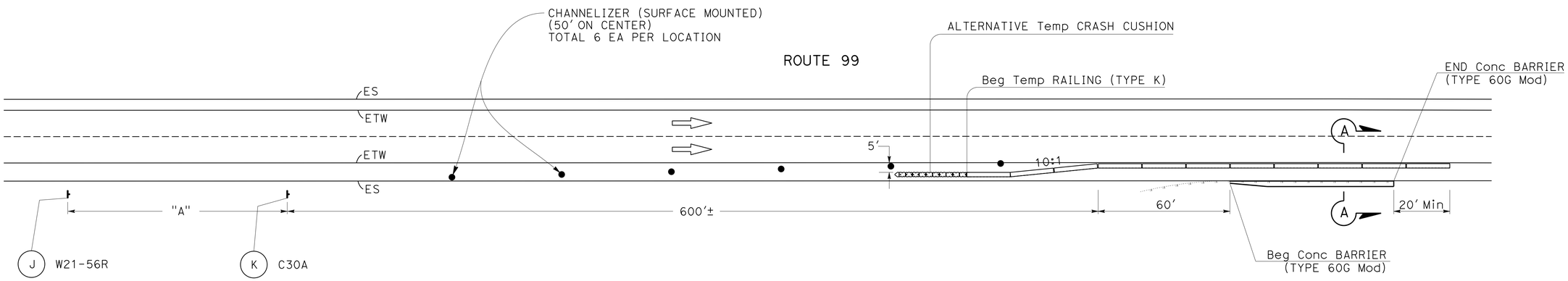

Typ TRAFFIC HANDLING FOR Conc BARRIER (TYPE 60G Mod)

TRAFFIC HANDLING QUANTITIES

LOCATION (PM)	DIRECTION		SIDE		TEMPORARY RAILING (TYPE K)	ALTERNATIVE TEMPORARY CRASH CUSHION	CHANNELIZER (SURFACE MOUNTED)	SPACING "A" (FT)
	NB	SB	Lt	Rt	LF	EA	EA	
PM R31.48 TO PM R31.51	X			X	200	1	6	500
PM R31.50 TO PM R31.53		X		X	200	1	6	500
PM R34.23 TO PM R34.26	X			X	240	1	6	500
PM R34.24 TO PM R34.27		X		X	240	1	6	500
PM R36.28 TO PM R36.31	X			X	200	1	6	500
PM R36.30 TO PM R36.33		X		X	200	1	6	500
TOTAL					1280	6	36	

ADDITIONAL STATIONARY MOUNTED CONSTRUCTION AREA SIGNS

SIGN LETTER	SIGN CODE		SIGN MESSAGE	PANEL SIZE	NUMBER OF POST AND SIZE	(N) NUMBER OF SIGNS
	FEDERAL	CALIFORNIA				
(J)	W21-56R		RIGHT SHOULDER CLOSED AHEAD	48" x 48"	1 - 6" x 6"	6
(K)		C30A	SHOULDER CLOSED	48" x 48"	1 - 6" x 6"	6

NOTE: (N) = NOT A SEPARATE PAY ITEM, FOR INFORMATION ONLY
EXACT SIGN LOCATIONS TO BE DETERMINED BY THE ENGINEER.

TRAFFIC HANDLING PLAN

NO SCALE

TH-1

REVISED BY | DATE REVISED
RALPH TOPHAM | JOHN KEBER
CALCULATED-DESIGNED BY | CHECKED BY
FUNCTIONAL SUPERVISOR: DEANN SPANGLER
STATE OF CALIFORNIA - DEPARTMENT OF TRANSPORTATION
Caltrans DESIGN

LAST REVISION 04-24-15 | DATE PLOTTED => 29-JUN-2015 | TIME PLOTTED => 14:07

Dist	COUNTY	ROUTE	POST MILES TOTAL PROJECT	SHEET No.	TOTAL SHEETS
03	But	99	30.1/T37.5	66	163

REGISTERED CIVIL ENGINEER 4-27-15 DATE

4-27-15
PLANS APPROVAL DATE

REGISTERED PROFESSIONAL ENGINEER BALJINDER S. BRAR No. C 67847 Exp. 6-30-15 CIVIL STATE OF CALIFORNIA

THE STATE OF CALIFORNIA OR ITS OFFICERS OR AGENTS SHALL NOT BE RESPONSIBLE FOR THE ACCURACY OR COMPLETENESS OF SCANNED COPIES OF THIS PLAN SHEET.

NOTE:

1. FOR DELINEATOR QUANTITIES SEE SUMMARY OF QUANTITIES SHEET Q-3, GORE AND RAMP ITEMS

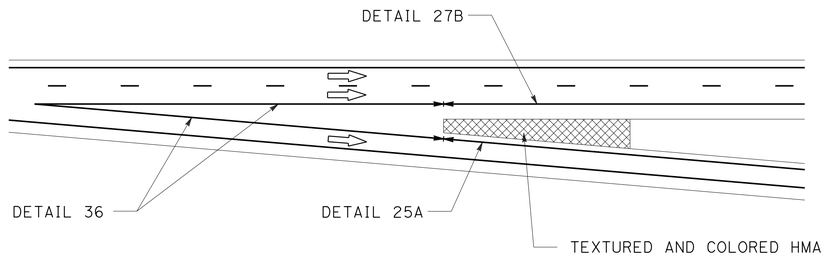

FREEWAY EXIT RAMP

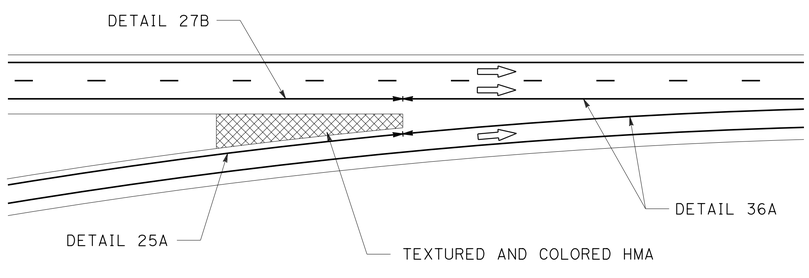

FREEWAY ENTRANCE RAMP

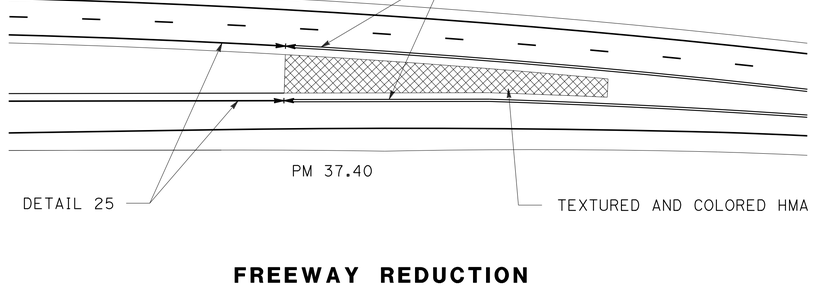

FREEWAY REDUCTION

LEGEND:

CHANGE IN STRIPING PATTERN

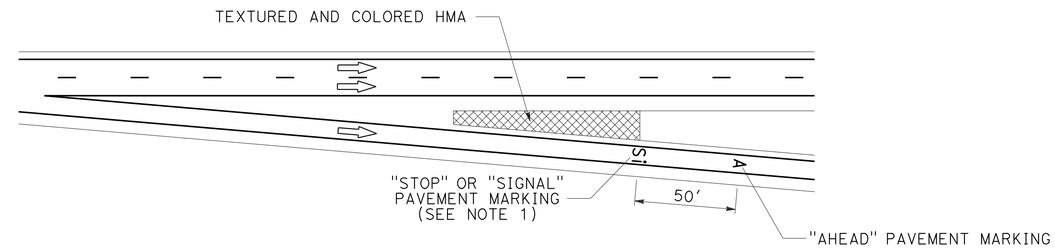

FREEWAY EXIT RAMP
PAVEMENT MARKING DETAIL

SB EXIT RAMP TO EAST FIRST Ave
NB EXIT RAMP TO EAST Ave
SB EXIT RAMP TO EAST Ave
NB EXIT RAMP TO EATON Rd
SB EXIT RAMP TO EATON Rd

NOTE:

1. "SIGNAL" PAVEMENT MARKING SHOWN.
   THE NB AND SB EXIT RAMPS TO EATON ROAD SHALL BE "STOP" PAVEMENT MARKINGS.
   ALL REMAINING EXIT RAMPS INDICATED SHALL BE "SIGNAL" PAVEMENT MARKINGS.

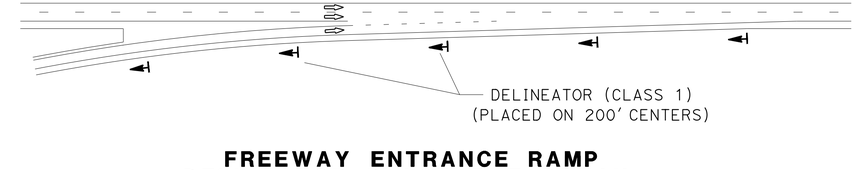

FREEWAY ENTRANCE RAMP
DELINEATOR PLACEMENT DETAIL

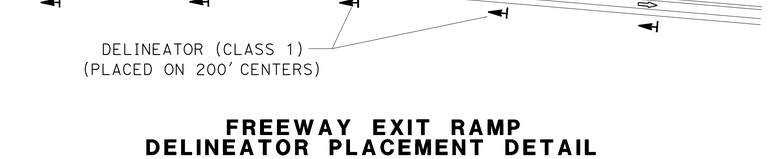

FREEWAY EXIT RAMP
DELINEATOR PLACEMENT DETAIL

PAVEMENT DELINEATION DETAILS

NO SCALE

PDD-1

STATE OF CALIFORNIA - DEPARTMENT OF TRANSPORTATION
Caltrans® DESIGN
FUNCTIONAL SUPERVISOR: DEANN SPANGLER
CALCULATED-DESIGNED BY: RALPH TOPHAM
CHECKED BY: JOHN KEBER
REVISED BY
DATE REVISED

LAST REVISION 04-24-15
DATE PLOTTED => 29-JUN-2015
TIME PLOTTED => 14:07

Dist	COUNTY	ROUTE	POST MILES TOTAL PROJECT	SHEET No.	TOTAL SHEETS
03	But	99	30.1/T37.5	67	163

REGISTERED CIVIL ENGINEER 4-27-15 DATE

4-27-15
PLANS APPROVAL DATE

REGISTERED PROFESSIONAL ENGINEER BALJINDER S. BRAR No. C 67847 Exp 6-30-15 CIVIL STATE OF CALIFORNIA

THE STATE OF CALIFORNIA OR ITS OFFICERS OR AGENTS SHALL NOT BE RESPONSIBLE FOR THE ACCURACY OR COMPLETENESS OF SCANNED COPIES OF THIS PLAN SHEET.

NOTE:

1. EWNV = ENHANCED WET NIGHT VISIBILITY

PAVEMENT DELINEATION QUANTITIES

DESCRIPTION	4" THERMOPLASTIC TRAFFIC STRIPE (EWNV)				4" THERMOPLASTIC TRAFFIC STRIPE (EWNV) (BROKEN 17-7)	4" THERMOPLASTIC TRAFFIC STRIPE (EWNV) (BROKEN 36-12)		8" THERMOPLASTIC TRAFFIC STRIPE (EWNV)			8" THERMOPLASTIC TRAFFIC STRIPE (EWNV) (BROKEN 12-3)	PAVEMENT MARKER (RETROREFLECTIVE)				THERMOPLASTIC PAVEMENT MARKING (EWNV)				
	DETAIL NUMBER				DETAIL NUMBER	DETAIL NUMBER		DETAIL NUMBER			DETAIL NUMBER	TYPE C	TYPE D	TYPE G	TYPE H	SIGNAL	STOP	AHEAD	TYPE V ARROW	TYPE VI ARROW
	25	25A	27B	29	9	12	14A	36	36A	38B	37									
	LF	LF	LF	LF	LF	LF	LF	LF	LF	LF	LF	EA	EA	EA	EA	SQFT	SQFT	SQFT	SQFT	SQFT
NB MAINLINE ROUTE 99	38,599			1378		37,591							29	784	805					
NB PM 30.1 TO SKYWAY Rd OFF		196	1681				144					4		28	9	32				
NB SKYWAY Rd OFF TO NB SKYWAY Rd LOOP ON		182	1588		248			520	298					38	8					
NB SKYWAY Rd LOOP ON TO NB SKYWAY Rd SLIP ON		154	1150		115				416					21	7					
NB SKYWAY SLIP ON TO EAST 20TH STREET OFF		218	2802				144					4			10	32		31		
NB EAST 20TH St OFF TO EAST 20TH St ON		153	2242		246			520	245					39	7					
NB EAST 20TH St ON TO Rte 32 OFF		268	3492				144					4			12	32		31		
NB Rte 32 OFF TO Rte 32 ON		216	1590					452	286					26	10					
NB Rte 32 ON TO EAST FIRST Ave OFF		219	3690				144			143	2145	8		152	10	64		31		
NB EAST FIRST Ave OFF TO EAST FIRST Ave ON		376	1560		157			541	304					35	16					
NB EAST FIRST Ave ON TO COHASSET Hwy OFF		250	3665				144					4			11				33	
NB COHASSET Hwy OFF TO COHASSET Hwy ON		160	902		192			540	279					35	7					
NB COHASSET Hwy ON TO EAST Ave OFF		192	3297				144					4			9	32		31		
NB EAST Ave OFF TO EAST Ave ON		275	1672		130			528	288					30	12					
NB EAST Ave ON TO EATON Ave OFF		254	6228				144					4			11		22	31		
NB EATON Ave OFF TO EATON Ave ON		269	1933		154			538	182					35	12					
NB EATON Ave ON TO PM T37.50			5690																33	126
SB MAINLINE ROUTE 99	38,251			1378		38,721							29	792	807					
SB PM 30.1 TO SKYWAY Rd SLIP ON		187	2118		244									5	8					
SB SKYWAY Rd SLIP ON TO SKYWAY Rd LOOP ON		168	1342		313				357					15						
SB SKYWAY Rd LOOP ON TO SKYWAY Rd OFF		91	1725					620	278					33	4					
SB SKYWAY Rd OFF TO EAST 20TH St ON		119	2562		220		144					4			5					
SB EAST 20TH St ON TO EAST 20TH St OFF		180	2235					554	255					40	8	32		31		
SB EAST 20TH St OFF TO Rte 32 ON		291	3269		133		144					4			3					
SB Rte 32 ON TO Rte 32 OFF		152	1792					541	153					23	7					
SB Rte 32 OFF TO EAST FIRST Ave ON		213	3402				144			141	2059	12		136	9					
SB EAST FIRST Ave ON TO EAST FIRST Ave OFF		238	1513					517	336					36	10	32		31		
SB EAST FIRST AVE OFF TO COHASSET Hwy ON		130	4603		244		144					4			6					
SB COHASSET Hwy ON TO COHASSET Hwy OFF		205	875					511	323					42	9	32		31		
SB COHASSET Hwy OFF TO EAST Ave UC ON		302	2580		136		144					4			13					
SB EAST Ave ON TO EAST Ave OFF		229	1721					511	279					38	10	32		31		
EAST Ave OFF TO EATON Ave ON		214	5675		157		144					4			9					
SB EATON Ave ON TO EATON Ave OFF		214	1975					511	281					34	20		22	31		
SB EATON Ave OFF TO PM T37.50			4914				144					4							66	
SUBTOTAL	76,850	6,315	85,483	2,756	2689	76,312	2,016	7,404	4,560	284	4204	68	58	2417	1884	320	44	310	132	126
TOTAL	171,404				2689	78,328		12,248			4204	4427				932				

REMOVE THERMOPLASTIC TRAFFIC STRIPE

LOCATION (PM)	REMOVE THERMOPLASTIC TRAFFIC STRIPE 8" WHITE	
	Det 37	Det 36A/38B
	LF	LF
NB MAINLINE AND RAMPS PM R32.60 TO R33.30	1,940	1,074
SB MAINLINE AND RAMPS PM R32.60 TO R33.30	2,036	1,030
SUBTOTAL	3,976	2,104
TOTAL	6080	

PAVEMENT DELINEATION QUANTITIES

PDQ-1

STATE OF CALIFORNIA - DEPARTMENT OF TRANSPORTATION
Caltrans DESIGN

FUNCTIONAL SUPERVISOR: DEANN SPANGLER
CALCULATED-DESIGNED BY: BIPAN KAUSHAL
CHECKED BY: BALJINDER BRAR
REVISED BY
DATE REVISED

LAST REVISION 04-24-15
DATE PLOTTED => 29-JUN-2015
TIME PLOTTED => 14:07

Dist	COUNTY	ROUTE	POST MILES TOTAL PROJECT	SHEET No.	TOTAL SHEETS
03	But	99	30.1/T37.5	68	163

REGISTERED CIVIL ENGINEER 4-27-15 DATE

4-27-15
PLANS APPROVAL DATE

REGISTERED PROFESSIONAL ENGINEER
JOHN R. KEBER
No. 40048
Exp. 12-31-15
CIVIL
STATE OF CALIFORNIA

THE STATE OF CALIFORNIA OR ITS OFFICERS OR AGENTS SHALL NOT BE RESPONSIBLE FOR THE ACCURACY OR COMPLETENESS OF SCANNED COPIES OF THIS PLAN SHEET.

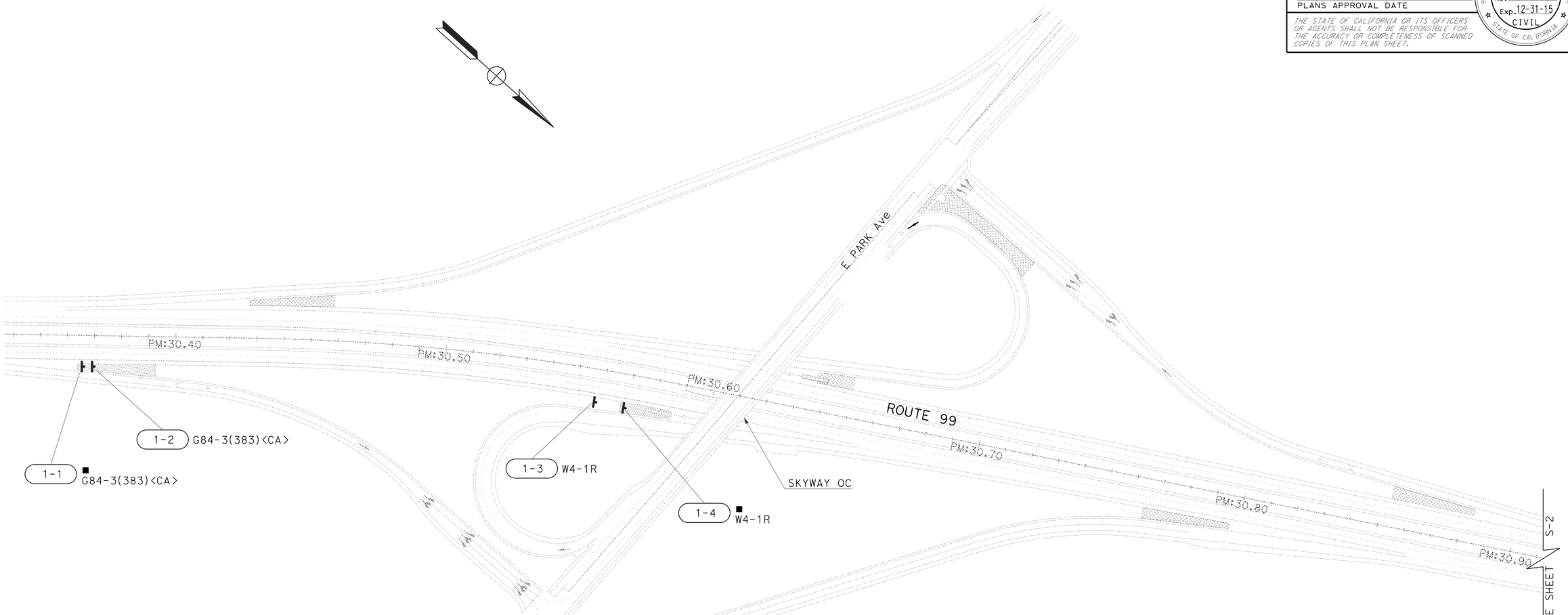

LEGEND

(Sht-No.)	ROADSIDE SIGN NUMBER
<CA>	CALIFORNIA SIGN CODE
■	REMOVE ROADSIDE SIGN
*	RELOCATE ROADSIDE SIGN

NOTES:

1. ALL EXISTING SIGNS NOT SHOWN FOR REMOVAL OR RELOCATION SHALL REMAIN IN PLACE.
2. ALL SIGN CODES SHOWN ARE FEDERAL SIGN CODES UNLESS OTHERWISE DESIGNATED AS CALIFORNIA SIGN CODES.

SIGN PLAN

SCALE: 1"=100'

S-1

APPROVED FOR SIGN WORK ONLY

STATE OF CALIFORNIA - DEPARTMENT OF TRANSPORTATION
Caltrans
TRAFFIC

FUNCTIONAL SUPERVISOR: NARAYAN SELWAL
CALCULATED-DESIGNED BY: JACK KEMMERLY
CHECKED BY: JOHN KEBER
REVISED BY
DATE REVISED

LAST REVISION 4-27-15
DATE PLOTTED => 29-JUN-2015
TIME PLOTTED => 14:07

Dist	COUNTY	ROUTE	POST MILES TOTAL PROJECT	SHEET No.	TOTAL SHEETS
03	But	99	30.1/T37.5	69	163

REGISTERED CIVIL ENGINEER 4-27-15 DATE

4-27-15
PLANS APPROVAL DATE

REGISTERED PROFESSIONAL ENGINEER
JOHN R. KEBER
No. 40048
Exp. 12-31-15
CIVIL
STATE OF CALIFORNIA

THE STATE OF CALIFORNIA OR ITS OFFICERS OR AGENTS SHALL NOT BE RESPONSIBLE FOR THE ACCURACY OR COMPLETENESS OF SCANNED COPIES OF THIS PLAN SHEET.

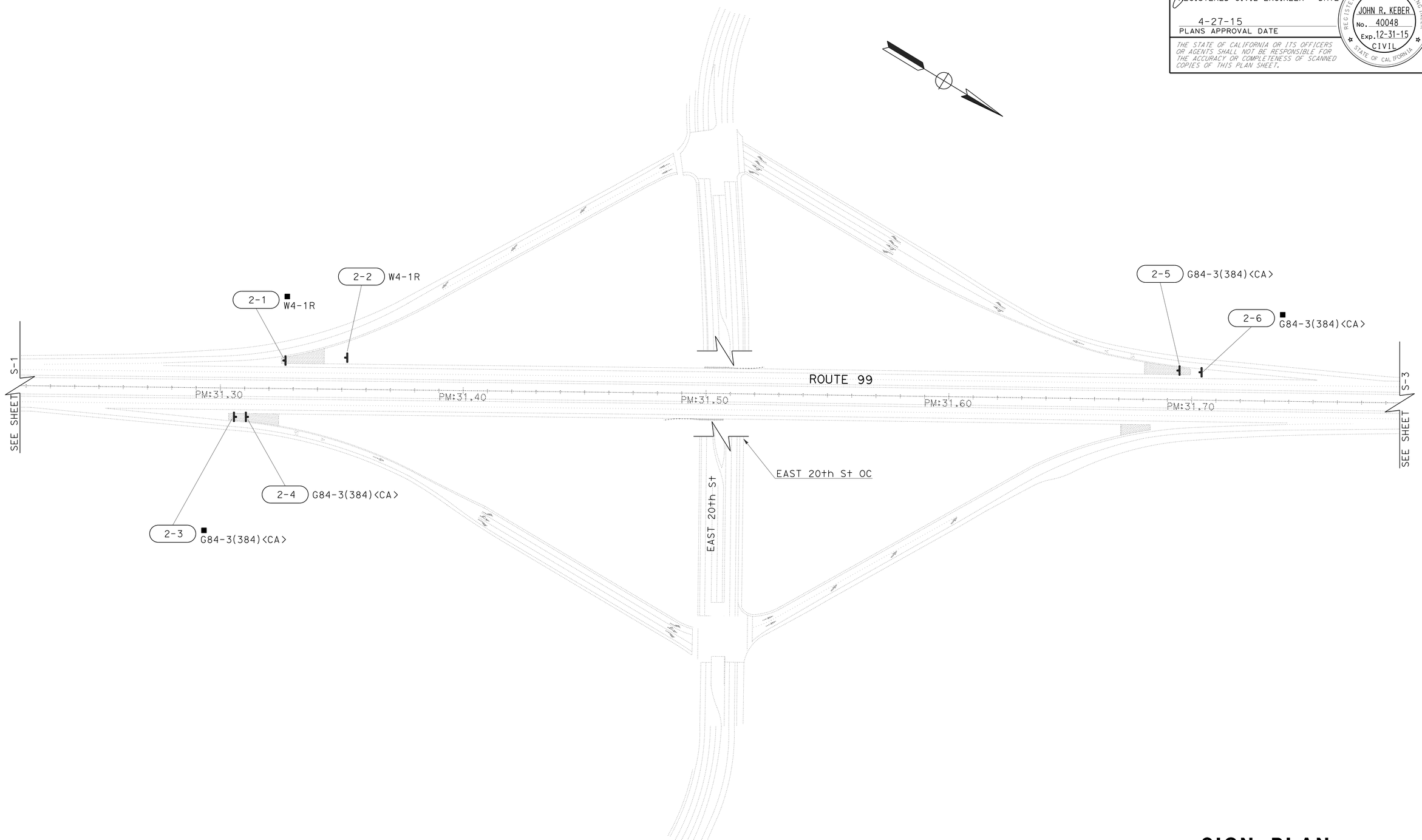

SIGN PLAN

SCALE: 1"=100'

S-2

APPROVED FOR SIGN WORK ONLY

STATE OF CALIFORNIA - DEPARTMENT OF TRANSPORTATION
Caltrans
TRAFFIC

FUNCTIONAL SUPERVISOR: NARAYAN SELWAL
CALCULATED-DESIGNED BY: JACK KEMMERLY
CHECKED BY: JOHN KEBER
REVISED BY
DATE REVISED

LAST REVISION 4-27-15
DATE PLOTTED => 29-JUN-2015
TIME PLOTTED => 14:07

Dist	COUNTY	ROUTE	POST MILES TOTAL PROJECT	SHEET No.	TOTAL SHEETS
03	But	99	30.1/T37.5	70	163

REGISTERED CIVIL ENGINEER 4-27-15 DATE

4-27-15
PLANS APPROVAL DATE

REGISTERED PROFESSIONAL ENGINEER
JOHN R. KEBER
No. 40048
Exp. 12-31-15
CIVIL
STATE OF CALIFORNIA

THE STATE OF CALIFORNIA OR ITS OFFICERS OR AGENTS SHALL NOT BE RESPONSIBLE FOR THE ACCURACY OR COMPLETENESS OF SCANNED COPIES OF THIS PLAN SHEET.

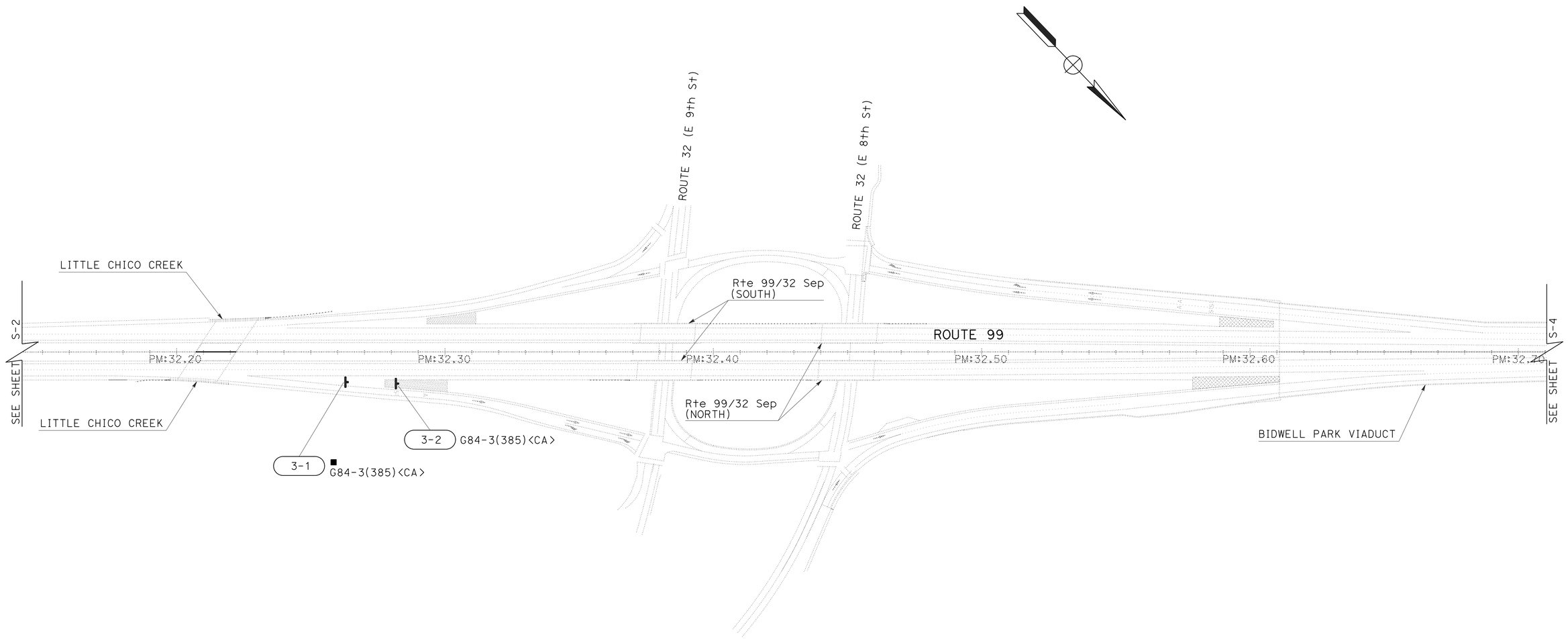

SIGN PLAN

SCALE: 1"=100'

S-3

APPROVED FOR SIGN WORK ONLY

STATE OF CALIFORNIA - DEPARTMENT OF TRANSPORTATION
Caltrans
TRAFFIC

FUNCTIONAL SUPERVISOR: NARAYAN SELWAL
CALCULATED-DESIGNED BY: JACK KEMMERLY
CHECKED BY: JOHN KEBER
REVISED BY
DATE REVISED

LAST REVISION 4-27-15
DATE PLOTTED => 29-JUN-2015
TIME PLOTTED => 14:07

Dist	COUNTY	ROUTE	POST MILES TOTAL PROJECT	SHEET No.	TOTAL SHEETS
03	But	99	30.1/T37.5	71	163

REGISTERED CIVIL ENGINEER 4-27-15 DATE

4-27-15
PLANS APPROVAL DATE

REGISTERED PROFESSIONAL ENGINEER
JOHN R. KEBER
No. 40048
Exp. 12-31-15
CIVIL
STATE OF CALIFORNIA

THE STATE OF CALIFORNIA OR ITS OFFICERS OR AGENTS SHALL NOT BE RESPONSIBLE FOR THE ACCURACY OR COMPLETENESS OF SCANNED COPIES OF THIS PLAN SHEET.

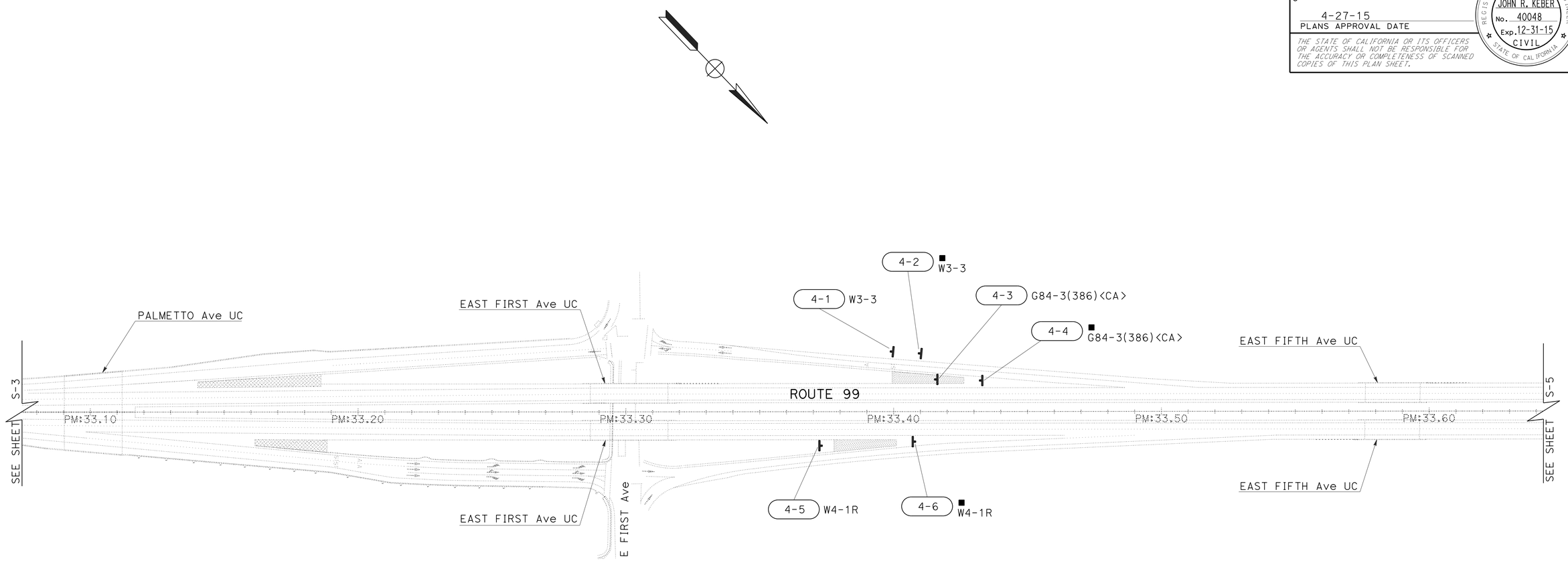

SIGN PLAN

SCALE: 1"=100'

S-4

APPROVED FOR SIGN WORK ONLY

STATE OF CALIFORNIA - DEPARTMENT OF TRANSPORTATION
Caltrans
TRAFFIC

FUNCTIONAL SUPERVISOR: NARAYAN SELWAL
CALCULATED-DESIGNED BY: JACK KEMMERLY
CHECKED BY: JOHN KEBER
REVISED BY
DATE REVISED

LAST REVISION 4-27-15
DATE PLOTTED => 29-JUN-2015
TIME PLOTTED => 14:07

Dist	COUNTY	ROUTE	POST MILES TOTAL PROJECT	SHEET No.	TOTAL SHEETS
03	But	99	30.1/T37.5	72	163

REGISTERED CIVIL ENGINEER 4-27-15 DATE

4-27-15
PLANS APPROVAL DATE

REGISTERED PROFESSIONAL ENGINEER
JOHN R. KEBER
No. 40048
Exp. 12-31-15
CIVIL
STATE OF CALIFORNIA

THE STATE OF CALIFORNIA OR ITS OFFICERS OR AGENTS SHALL NOT BE RESPONSIBLE FOR THE ACCURACY OR COMPLETENESS OF SCANNED COPIES OF THIS PLAN SHEET.

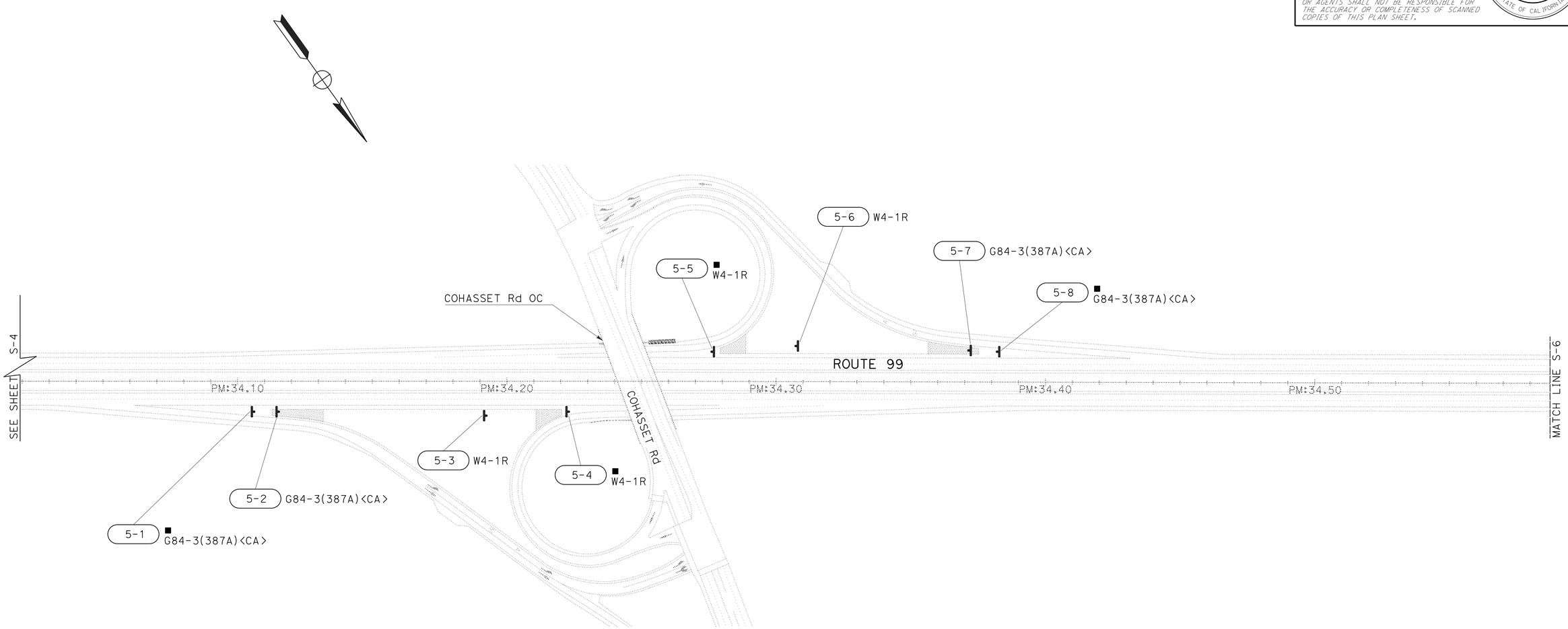

SIGN PLAN

SCALE: 1"=100'

S-5

APPROVED FOR SIGN WORK ONLY

STATE OF CALIFORNIA - DEPARTMENT OF TRANSPORTATION
Caltrans
TRAFFIC

FUNCTIONAL SUPERVISOR: NARAYAN SELWAL
CALCULATED-DESIGNED BY: JACK KEMMERLY
CHECKED BY: JOHN KEBER
REVISED BY
DATE REVISED

LAST REVISION 4-27-15
DATE PLOTTED => 29-JUN-2015
TIME PLOTTED => 14:07

Dist	COUNTY	ROUTE	POST MILES TOTAL PROJECT	SHEET No.	TOTAL SHEETS
03	But	99	30.1/T37.5	73	163

REGISTERED CIVIL ENGINEER 4-27-15 DATE

4-27-15
PLANS APPROVAL DATE

REGISTERED PROFESSIONAL ENGINEER
JOHN R. KEBER
No. 40048
Exp. 12-31-15
CIVIL
STATE OF CALIFORNIA

THE STATE OF CALIFORNIA OR ITS OFFICERS OR AGENTS SHALL NOT BE RESPONSIBLE FOR THE ACCURACY OR COMPLETENESS OF SCANNED COPIES OF THIS PLAN SHEET.

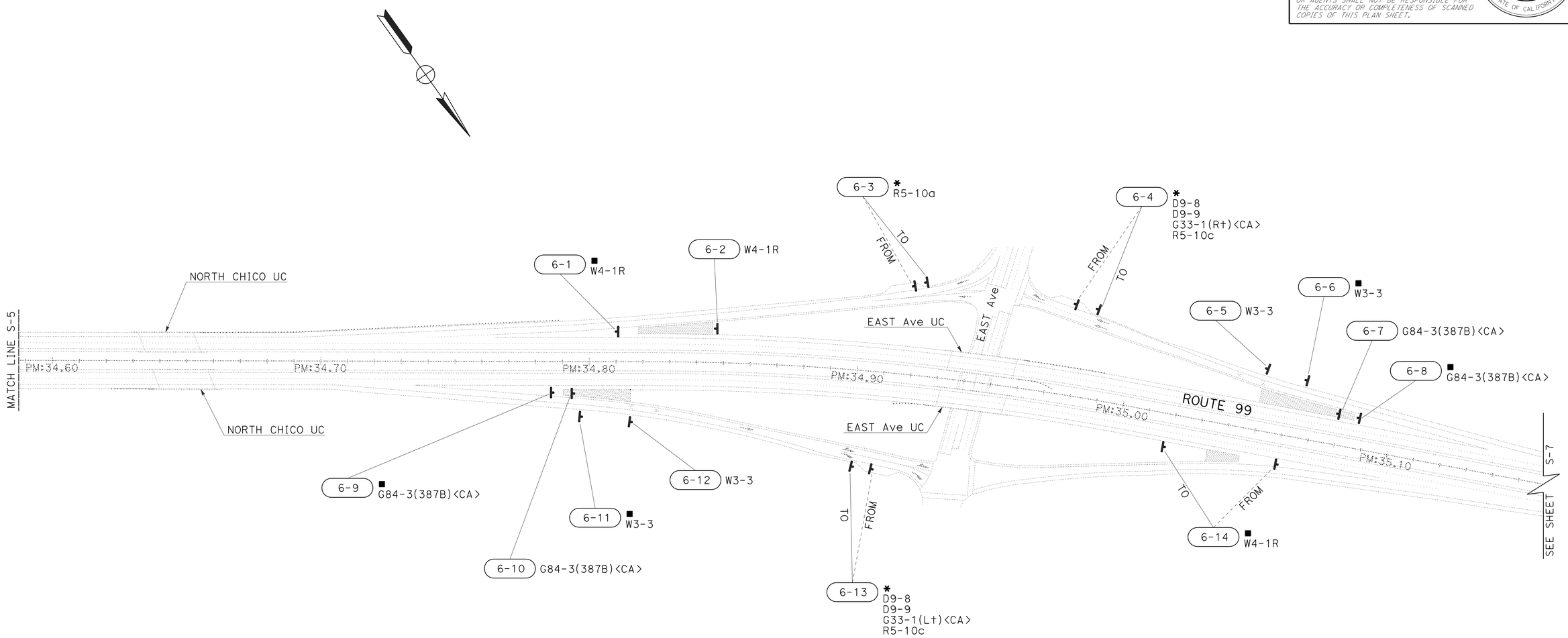

SIGN PLAN

SCALE: 1"=100'

S-6

APPROVED FOR SIGN WORK ONLY

REVISED BY | DATE REVISED

JACK KEMMERLY | JOHN KEBER

CALCULATED-DESIGNED BY | CHECKED BY

FUNCTIONAL SUPERVISOR: NARAYAN SELWAL

STATE OF CALIFORNIA - DEPARTMENT OF TRANSPORTATION

Caltrans

TRAFFIC

LAST REVISION 4-27-15 | DATE PLOTTED => 29-JUN-2015 | TIME PLOTTED => 14:07

Dist	COUNTY	ROUTE	POST MILES TOTAL PROJECT	SHEET No.	TOTAL SHEETS
03	But	99	30.1/T37.5	74	163

REGISTERED CIVIL ENGINEER 4-27-15 DATE

4-27-15
PLANS APPROVAL DATE

REGISTERED PROFESSIONAL ENGINEER
JOHN R. KEBER
No. 40048
Exp. 12-31-15
CIVIL
STATE OF CALIFORNIA

THE STATE OF CALIFORNIA OR ITS OFFICERS OR AGENTS SHALL NOT BE RESPONSIBLE FOR THE ACCURACY OR COMPLETENESS OF SCANNED COPIES OF THIS PLAN SHEET.

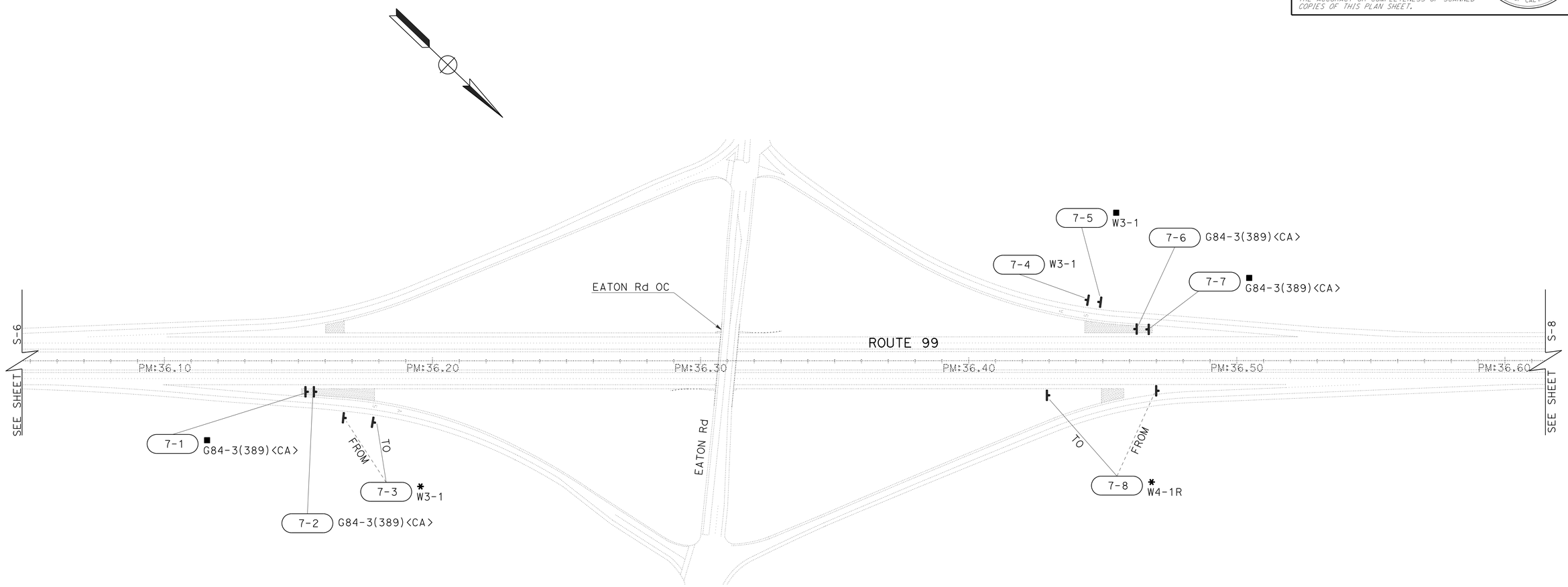

SIGN PLAN

SCALE: 1"=100'

S-7

APPROVED FOR SIGN WORK ONLY

STATE OF CALIFORNIA - DEPARTMENT OF TRANSPORTATION
Caltrans
TRAFFIC

FUNCTIONAL SUPERVISOR: NARAYAN SELWAL
CALCULATED-DESIGNED BY: JACK KEMMERLY
CHECKED BY: JOHN KEBER
REVISED BY
DATE REVISED

LAST REVISION 4-27-15
DATE PLOTTED => 29-JUN-2015
TIME PLOTTED => 14:07

Dist	COUNTY	ROUTE	POST MILES TOTAL PROJECT	SHEET No.	TOTAL SHEETS
03	But	99	30.1/T37.5	75	163

REGISTERED CIVIL ENGINEER 4-27-15 DATE

4-27-15
PLANS APPROVAL DATE

REGISTERED PROFESSIONAL ENGINEER
JOHN R. KEBER
No. 40048
Exp. 12-31-15
CIVIL
STATE OF CALIFORNIA

THE STATE OF CALIFORNIA OR ITS OFFICERS OR AGENTS SHALL NOT BE RESPONSIBLE FOR THE ACCURACY OR COMPLETENESS OF SCANNED COPIES OF THIS PLAN SHEET.

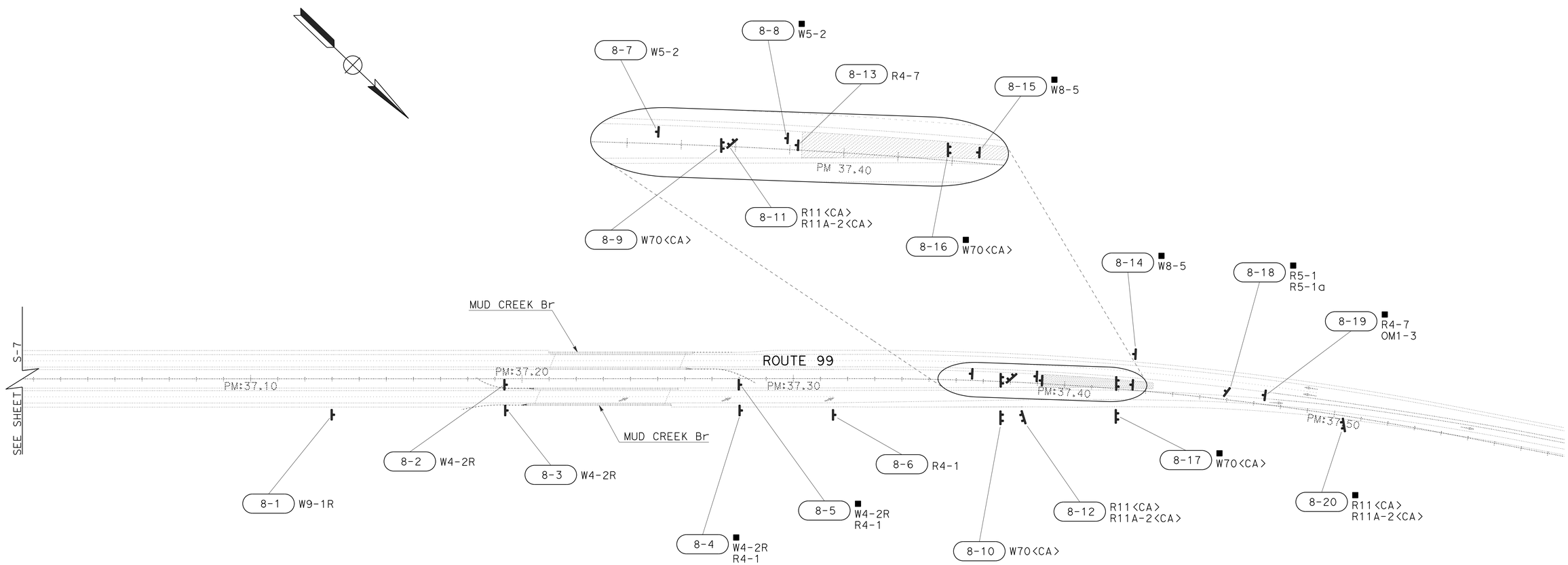

SIGN PLAN

SCALE: 1"=100'

S-8

APPROVED FOR SIGN WORK ONLY

STATE OF CALIFORNIA - DEPARTMENT OF TRANSPORTATION
Caltrans
TRAFFIC

FUNCTIONAL SUPERVISOR: NARAYAN SELWAL
CALCULATED-DESIGNED BY: JACK KEMMERLY
CHECKED BY: JOHN KEBER
REVISED BY
DATE REVISED

LAST REVISION 4-27-15
DATE PLOTTED => 29-JUN-2015
TIME PLOTTED => 14:07

Dist	COUNTY	ROUTE	POST MILES TOTAL PROJECT	SHEET No.	TOTAL SHEETS
03	But	99	30.1/T37.5	76	163

REGISTERED CIVIL ENGINEER 4-27-15 DATE

4-27-15
PLANS APPROVAL DATE

REGISTERED PROFESSIONAL ENGINEER JOHN R. KEBER No. 40048 Exp. 12-31-15 CIVIL STATE OF CALIFORNIA

THE STATE OF CALIFORNIA OR ITS OFFICERS OR AGENTS SHALL NOT BE RESPONSIBLE FOR THE ACCURACY OR COMPLETENESS OF SCANNED COPIES OF THIS PLAN SHEET.

NOTES:

1. THE SIGN POST SHALL HAVE 7/16" DIAMETER PERFORATIONS 1" ON CENTER ON ALL FOUR SIDES FOR THE FULL LENGTH.
2. USE TWO DRIVE RIVETS TO FASTEN ASSEMBLED SIGN AND SIGN POST INTO ANCHOR SLEEVE. INSTALL DRIVE RIVETS INTO THE SIDES FACING TRAFFIC.
3. ALL METAL SIGN POSTS AND ANCHOR SLEEVES SHALL BE GALVANIZED.
4. ALL ANCHOR SLEEVES SHALL BE EMBEDDED IN PCC.
5. BALANCED SINGLE POST INSTALLATIONS OF SINGLE SHEET ALUMINUM PANEL SIGNS REQUIRE BACK BRACES WHEN 2'-10" OR MORE IN LENGTH.
6. WOOD BLOCK SPACERS ARE NOT REQUIRED FOR SIGNS MOUNTED ON METAL POSTS.
7. ATTACH RECTANGULAR SIGN PANEL TO SIGN POST WITH BOLTS AT TOP AND BOTTOM. CENTER MAY BE ATTACHED WITH EITHER BOLT OR 3/8" DRIVE RIVET.
8. ATTACH DIAMOND SIGN PANEL TO SIGN POST WITH BOLT AT CENTER. TOP AND BOTTOM MAY BE ATTACHED WITH EITHER BOLTS OR 3/8" DRIVE RIVETS.
9. FOR DETAILS NOT SHOWN, SEE STANDARD PLANS RS1 AND RS2.

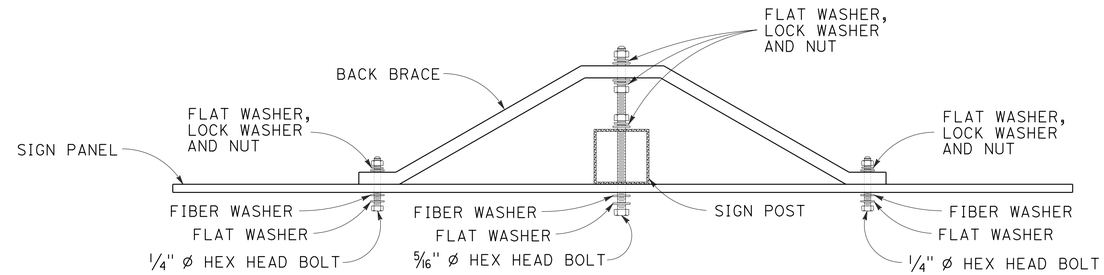

BACK BRACE MOUNTING DETAIL
SEE NOTES 6, 7 AND 8

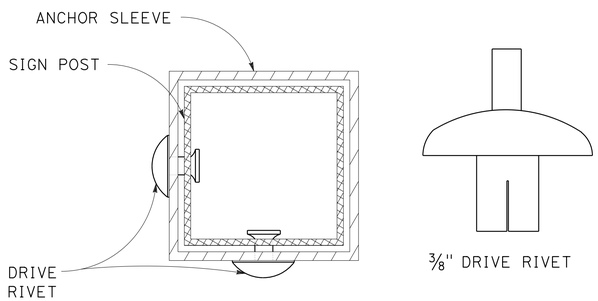

FASTENER DETAIL

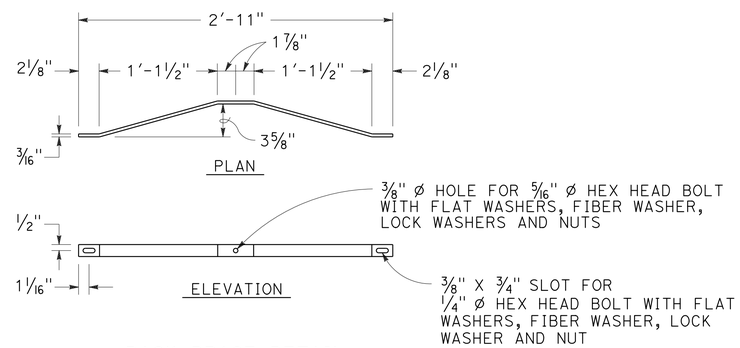

BACK BRACE DETAIL
SEE NOTE 5

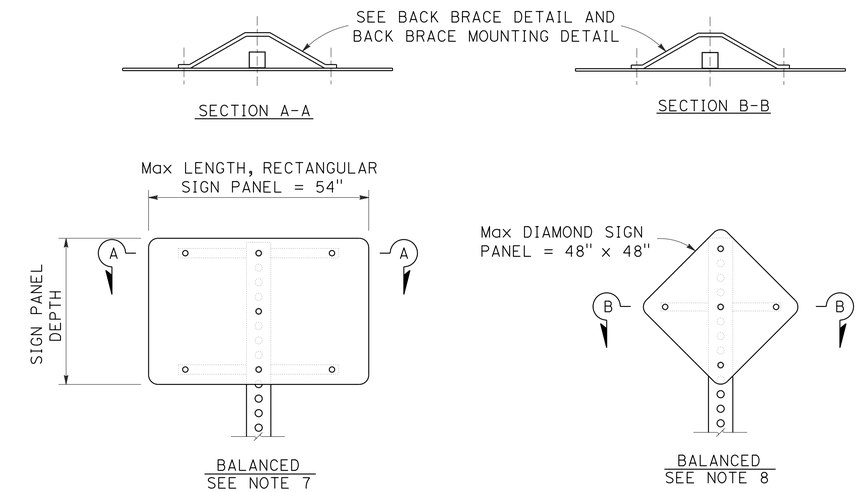

SINGLE POST INSTALLATION

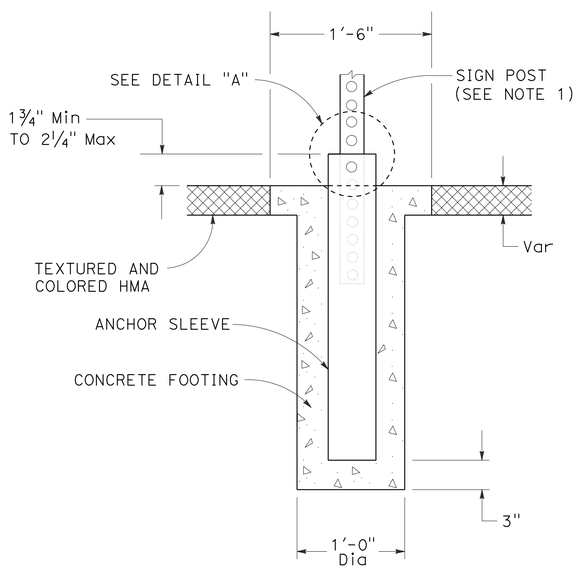

ANCHOR SLEEVE IN TEXTURED AND COLORED HMA DETAIL

FOR DETAILS NOT SHOWN, SEE "ANCHOR SLEEVE DETAIL".

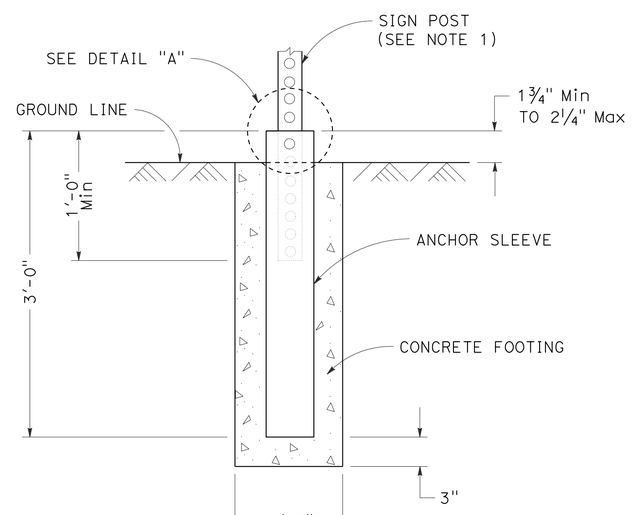

ANCHOR SLEEVE DETAIL

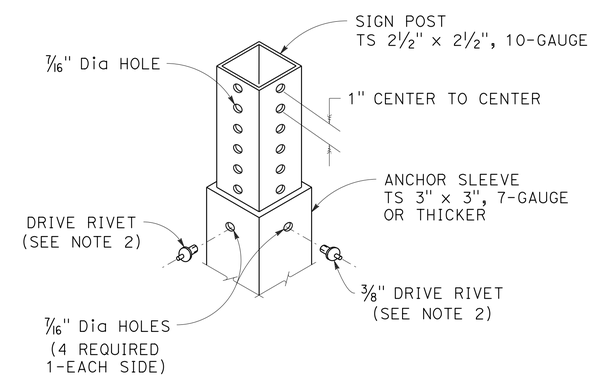

DETAIL "A"

SIGN DETAILS

NO SCALE

SD-1

REVISED BY	DATE REVISED

CALCULATED-DESIGNED BY: JACK KEMMERLY
CHECKED BY: JOHN KEBER
FUNCTIONAL SUPERVISOR: NARAYAN SELWAL

STATE OF CALIFORNIA - DEPARTMENT OF TRANSPORTATION
Caltrans
TRAFFIC

LAST REVISION 4-27-15
DATE PLOTTED => 29-JUN-2015
TIME PLOTTED => 14:07

Dist	COUNTY	ROUTE	POST MILES TOTAL PROJECT	SHEET No.	TOTAL SHEETS
03	But	99	30.1/T37.5	77	163

REGISTERED CIVIL ENGINEER 4-27-15 DATE

4-27-15
PLANS APPROVAL DATE

REGISTERED PROFESSIONAL ENGINEER JOHN R. KEBER No. 40048 Exp. 12-31-15 CIVIL STATE OF CALIFORNIA

THE STATE OF CALIFORNIA OR ITS OFFICERS OR AGENTS SHALL NOT BE RESPONSIBLE FOR THE ACCURACY OR COMPLETENESS OF SCANNED COPIES OF THIS PLAN SHEET.

ROADSIDE SIGN QUANTITIES

SIGN NUMBER (Sht-No.)	SIGN CODE	PANEL SIZE	"C" DIM IN FEET	POST SIZE AND LENGTH			ROADSIDE SIGN		REMOVE ROADSIDE SIGN	RELOCATE ROADSIDE SIGN	TREATED WOOD WASTE	REMARKS
				WOOD POST		METAL POST	ONE POST	TWO POST				
		INCHES		4"x6"	6"x6"	2½"x2½"	EA	EA	EA	EA	LB	
1-1	G84-3(383)<CA>								1		76	
1-2	G84-3(383)<CA>	48 x 60	7			14′	1					
1-3	W4-1R	48 x 48	7			14′	1					
1-4	W4-1R								1		78	
2-1	W4-1R								1		78	
2-2	W4-1R	48 x 48	7			14′	1					
2-3	G84-3(384)<CA>								1		76	
2-4	G84-3(384)<CA>	48 x 60	7			14′	1					
2-5	G84-3(384)<CA>	48 x 60	7			14′	1					
2-6	G84-3(384)<CA>								1		76	
3-1	G84-3(385)<CA>								1		76	
3-2	G84-3(385)<CA>	48 x 60	7			14′	1					
4-1	W3-3	48 x 48	7			14′	1					
4-2	W3-3								1		78	
4-3	G84-3(386)<CA>	48 x 60	7			14′	1					
4-4	G84-3(386)<CA>								1		76	
4-5	W4-1R	48 x 48	7			14′	1					
4-6	W4-1R								1		78	
5-1	G84-3(387A)<CA>								1		76	
5-2	G84-3(387A)<CA>	48 x 60	7			14′	1					
5-3	W4-1R	48 x 48	7			14′	1					
5-4	W4-1R								1		78	
5-5	W4-1R								1		78	
5-6	W4-1R	48 x 48	7			14′	1					
5-7	G84-3(387A)<CA>	48 x 60	7			14′	1					
5-8	G84-3(387A)<CA>								1		76	
SHEET TOTAL							13	0	13	0	1,000	————

NOTES:

1. EXACT LOCATION AND POSITION OF ROADSIDE SIGNS TO BE DETERMINED BY THE ENGINEER.
2. POST LENGTHS GIVEN ARE APPROXIMATE.
3. "C" DIM = VERTICAL CLEARANCE EP TO BOTTOM OF SIGN PANEL.
4. ALL SIGN CODES SHOWN ARE FEDERAL SIGN CODES UNLESS OTHERWISE DESIGNATED AS A CALIFORNIA SIGN CODE.
5. <CA> = CALIFORNIA SIGN CODE.
6. FOR ADDITIONAL TREATED WOOD WASTE INFORMATION, SEE SHEET Q-6.

REVISED BY | DATE REVISED
JOHN KEBER | JACK KEMMERLY
CALCULATED-DESIGNED BY | CHECKED BY
FUNCTIONAL SUPERVISOR | NARAYAN SELWAL
STATE OF CALIFORNIA - DEPARTMENT OF TRANSPORTATION
Caltrans
TRAFFIC

SIGN QUANTITIES

SQ-1

LAST REVISION 4-27-15 | DATE PLOTTED => 29-JUN-2015 | TIME PLOTTED => 14:07

Dist	COUNTY	ROUTE	POST MILES TOTAL PROJECT	SHEET No.	TOTAL SHEETS
03	But	99	30.1/T37.5	78	163

REGISTERED CIVIL ENGINEER 4-27-15 DATE

4-27-15
PLANS APPROVAL DATE

REGISTERED PROFESSIONAL ENGINEER JOHN R. KEBER No. 40048 Exp. 12-31-15 CIVIL STATE OF CALIFORNIA

THE STATE OF CALIFORNIA OR ITS OFFICERS OR AGENTS SHALL NOT BE RESPONSIBLE FOR THE ACCURACY OR COMPLETENESS OF SCANNED COPIES OF THIS PLAN SHEET.

ROADSIDE SIGN QUANTITIES (CONTINUED)

SIGN NUMBER (Sht-No.)	SIGN CODE	PANEL SIZE	"C" DIM IN FEET	POST SIZE AND LENGTH			ROADSIDE SIGN		REMOVE ROADSIDE SIGN	RELOCATE ROADSIDE SIGN	TREATED WOOD WASTE	REMARKS
				WOOD	POST	METAL POST	ONE POST	TWO POST				
		INCHES		4"x6"	6"x6"	2½"x2½"	EA	EA	EA	EA	LB	
6-1	W4-1R								1		78	
6-2	W4-1R	48 x 48	7			14′	1					
6-3	R5-10a									1		EXISTING METAL POST
6-4	D9-8 D9-9 G33-1(Rt)<CA> R5-10c									1		EXISTING METAL POST
6-5	W3-3	48 x 48	7			14′	1					
6-6	W3-3								1		78	
6-7	G84-3(387B)<CA>	48 x 60	7			14′	1					
6-8	G84-3(387B)<CA>								1		76	
6-9	G84-3(387B)<CA>								1			
6-10	G84-3(387B)<CA>	48 x 60	7			14′	1					
6-11	W3-3								1		78	
6-12	W3-3	48 x 48	7			14′	1					
6-13	D9-8 D9-9 G33-1(Lt)<CA> R5-10c									1		EXISTING METAL POST
6-14	W4-1R									1		EXISTING METAL POST
7-1	G84-3(389)<CA>								1			
7-2	G84-3(389)<CA>	48 x 60	7			14′	1					
7-3	W3-1									1		EXISTING METAL POST
7-4	W3-1	48 x 48	7			14′	1					
7-5	W3-1								1		78	
7-6	G84-3(389)<CA>	48 x 60	7			14′	1					
7-7	G84-3(389)<CA>								1		76	
7-8	W4-1R									1		EXISTING METAL POST
SHEET TOTAL							8	0	8	6	464	————

SIGN QUANTITIES

SQ-2

REVISED BY | DATE REVISED
JOHN KEBER | JACK KEMMERLY
CALCULATED-DESIGNED BY | CHECKED BY
FUNCTIONAL SUPERVISOR | NARAYAN SELWAL
STATE OF CALIFORNIA - DEPARTMENT OF TRANSPORTATION
Caltrans
TRAFFIC

LAST REVISION 4-27-15 | DATE PLOTTED => 29-JUN-2015 | TIME PLOTTED => 14:07

Dist	COUNTY	ROUTE	POST MILES TOTAL PROJECT	SHEET No.	TOTAL SHEETS
03	But	99	30.1/T37.5	79	163

REGISTERED CIVIL ENGINEER 4-27-15 DATE

4-27-15
PLANS APPROVAL DATE

REGISTERED PROFESSIONAL ENGINEER JOHN R. KEBER No. 40048 Exp. 12-31-15 CIVIL STATE OF CALIFORNIA

THE STATE OF CALIFORNIA OR ITS OFFICERS OR AGENTS SHALL NOT BE RESPONSIBLE FOR THE ACCURACY OR COMPLETENESS OF SCANNED COPIES OF THIS PLAN SHEET.

ROADSIDE SIGN QUANTITIES (CONTINUED)

SIGN NUMBER (Sht-No.)	SIGN CODE	PANEL SIZE	"C" DIM IN FEET	POST SIZE AND LENGTH			ROADSIDE SIGN		REMOVE ROADSIDE SIGN	RELOCATE ROADSIDE SIGN	TREATED WOOD WASTE	REMARKS
				WOOD	POST	METAL POST	ONE POST	TWO POST				
		INCHES		4"x6"	6"x6"	2½"x2½"	EA	EA	EA	EA	LB	
8-1	W9-1R	48 x 48	7			14′	1					
8-2	W4-2R	48 x 48	7			14′	1					
8-3	W4-2R	48 x 48	7			14′	1					
8-4	W4-2R R4-1								1		92	
8-5	W4-2R R4-1								1		92	
8-6	R4-1	36 x 48	7			14′	1					
8-7	W5-2	48 x 48	7			14′	1					
8-8	W5-2								1		78	
8-9	W70<CA>	60 x 60	7	20′				1				
8-10	W70<CA>	60 x 60	7	20′				1				
8-11	R11<CA> R11A-2<CA>	72 x 72 72 x 21	4		18′			1				
8-12	R11<CA> R11A-2<CA>	72 x 72 72 x 21	4		18′			1				
8-13	R4-7	48 x 60	7			14′	1					
8-14	W8-5								1		78	
8-15	W8-5								1		78	
8-16	W70<CA>								1		174	
8-17	W70<CA>								1		174	
8-18	R5-1 R5-1a								1		55	
8-19	R4-7 OM1-3								1		87	
8-20	R11<CA> R11A-2<CA>								1		138	
SHEET TOTAL							6	4	10	0	1,046	———
SHEET TOTAL FROM SQ-1							13	0	13	0	1,000	———
SHEET TOTAL FROM SQ-2							8	0	8	6	464	———
SUBTOTAL											2,510	———
TOTAL							27	4	31	6	———	———

REVISED BY | DATE REVISED

JOHN KEBER | JACK KEMMERLY

CALCULATED-DESIGNED BY | CHECKED BY

FUNCTIONAL SUPERVISOR: NARAYAN SELWAL

STATE OF CALIFORNIA - DEPARTMENT OF TRANSPORTATION

Caltrans

TRAFFIC

SIGN QUANTITIES

SQ-3

LAST REVISION 4-27-15 | DATE PLOTTED => 29-JUN-2015 | TIME PLOTTED => 14:08

Dist	COUNTY	ROUTE	POST MILES TOTAL PROJECT	SHEET No.	TOTAL SHEETS
03	But	99	30.1/T37.5	80	163

REGISTERED CIVIL ENGINEER 4-27-15 DATE

4-27-15
PLANS APPROVAL DATE

REGISTERED PROFESSIONAL ENGINEER JOHN R. KEBER No. 40048 Exp. 12-31-15 CIVIL STATE OF CALIFORNIA

THE STATE OF CALIFORNIA OR ITS OFFICERS OR AGENTS SHALL NOT BE RESPONSIBLE FOR THE ACCURACY OR COMPLETENESS OF SCANNED COPIES OF THIS PLAN SHEET.

NOTES:

1. ALL SIGN CODES SHOWN ARE FEDERAL SIGN CODES UNLESS OTHERWISE DESIGNATED AS A CALIFORNIA SIGN CODE.
2. <CA> = CALIFORNIA SIGN CODE.
3. FY = FLUORESCENT YELLOW.
4. ALL SIGN PANEL BACKGROUND SHEETING, WITH THE EXCEPTION OF WHITE, SHALL BE RETROREFLECTIVE ASTM TYPE XI.
5. ALL WHITE SIGN PANEL BACKGROUND SHEETING SHALL BE RETROREFLECTIVE ASTM TYPE VIII.
6. ALL SIGN PANEL LEGEND SHEETING, WITH THE EXCEPTION OF BLACK, SHALL BE RETROREFLECTIVE ASTM TYPE XI.
7. ALL BLACK SIGN PANEL LEGEND SHEETING SHALL BE NON-REFLECTIVE.

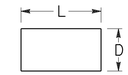

L = LENGTH OF PANEL
D = DEPTH OF PANEL

ROADSIDE SIGN PANEL QUANTITIES

SIGN CODE	SIGN MESSAGE/DESCRIPTION	PANEL SIZE L x D	PANEL AREA	NUMBER OF PANELS	BACKGROUND SHEETING COLOR	LEGEND SHEETING COLOR	PROTECTIVE-OVERLAY FILM (PREMIUM)	RETROREFLECTIVE SHEETING (TYPE XI)	FURNISH SINGLE SHEET ALUMINUM SIGN FOR RETROREFLECTIVE SHEETING (TYPE XI)		FURNISH SINGLE SHEET ALUMINUM SIGN	
									UNFRAMED	FRAMED	UNFRAMED	
									0.080"	0.080"	0.063"	0.080"
		INCHES	SQFT					SQFT	SQFT	SQFT	SQFT	SQFT
W3-1	STOP AHEAD SYMBOL	48 x 48	16.00	1	FY	RED BLACK	X	16.00	16.00			
W3-3	SIGNAL AHEAD SYMBOL	48 x 48	16.00	3	FY	RED GREEN BLACK	X	48.00	48.00			
W4-1R	MERGE FROM RIGHT SYMBOL	48 x 48	16.00	6	FY	BLACK	X	96.00	96.00			
W4-2R	RIGHT LANE ENDS SYMBOL	48 x 48	16.00	2	FY	BLACK	X	32.00	32.00			
W5-2	NARROW BRIDGE	48 x 48	16.00	1	FY	BLACK	X	16.00	16.00			
W9-1R	RIGHT LANE ENDS	48 x 48	16.00	1	FY	BLACK	X	16.00	16.00			
W70<CA>	CROSS TRAFFIC AHEAD	60 x 60	25.00	2	FY	BLACK	X	50.00		50.00		
R4-1	DO NOT PASS	36 x 48	12.00	1	WHITE	BLACK	X				12.00	
R4-7	KEEP RIGHT SYMBOL	48 x 60	20.00	1	WHITE	BLACK	X					20.00
R11<CA>	DO NOT ENTER	72 x 72	36.00	2	RED	WHITE	X	72.00		72.00		
R11A-2<CA>	WRONG WAY	72 x 21	10.50	2	RED	WHITE	X	21.00		21.00		
G84-3(383)<CA>	EXIT 383 WITH ARROW	48 x 60	20.00	1	GREEN	WHITE	X	20.00	20.00			
G84-3(384)<CA>	EXIT 384 WITH ARROW	48 x 60	20.00	2	GREEN	WHITE	X	40.00	40.00			
G84-3(385)<CA>	EXIT 385 WITH ARROW	48 x 60	20.00	1	GREEN	WHITE	X	20.00	20.00			
G84-3(386)<CA>	EXIT 386 WITH ARROW	48 x 60	20.00	1	GREEN	WHITE	X	20.00	20.00			
G84-3(387A)<CA>	EXIT 387A WITH ARROW	48 x 60	20.00	2	GREEN	WHITE	X	40.00	40.00			
G84-3(387B)<CA>	EXIT 387B WITH ARROW	48 x 60	20.00	2	GREEN	WHITE	X	40.00	40.00			
G84-3(389)<CA>	EXIT 389 WITH ARROW	48 x 60	20.00	2	GREEN	WHITE	X	40.00	40.00			
TOTAL								587.00	444.00	143.00	12.00	20.00

SIGN QUANTITIES

SQ-4

STATE OF CALIFORNIA - DEPARTMENT OF TRANSPORTATION
Caltrans
TRAFFIC

FUNCTIONAL SUPERVISOR: NARAYAN SELWAL
CALCULATED-DESIGNED BY: JOHN KEBER
CHECKED BY: JACK KEMMERLY
REVISED BY
DATE REVISED

LAST REVISION 4-27-15
DATE PLOTTED => 29-JUN-2015
TIME PLOTTED => 14:08

Dist	COUNTY	ROUTE	POST MILES TOTAL PROJECT	SHEET No.	TOTAL SHEETS
03	But	99	30.1/T37.5	81	163

REGISTERED CIVIL ENGINEER 4-27-15 DATE

4-27-15
PLANS APPROVAL DATE

REGISTERED PROFESSIONAL ENGINEER BALJINDER S. BRAR No. C 67847 Exp 6-30-15 CIVIL STATE OF CALIFORNIA

THE STATE OF CALIFORNIA OR ITS OFFICERS OR AGENTS SHALL NOT BE RESPONSIBLE FOR THE ACCURACY OR COMPLETENESS OF SCANNED COPIES OF THIS PLAN SHEET.

ROADWAY ITEMS

LOCATION (PM) FROM	LOCATION (PM) TO	DIRECTION	LANE NUMBER	(N) LENGTH	(N) Rt SHOULDER WIDTH	(N) LT SHOULDER WIDTH	ROADWAY EXCAVATION	PREPAVING GRINDING DAY	CLASS 2 AGGREGATE BASE	COLD PLANE ASPHALT Conc PAVEMENT (0.08' Max)	COLD PLANE ASPHALT Conc PAVEMENT (0.10' Max)	COLD PLANE ASPHALT Conc PAVEMENT (0.20' Max)	GRIND EXISTING CONCRETE PAVEMENT	CRACK TREATMENT	TACK COAT	HOT MIX ASPHALT (TYPE A)	RUBBERIZED HOT MIX ASPHALT-OPEN GRADED (OGFC)	PLACE HMA (Misc AREA)	MINOR HOT MIX ASPHALT	IMPORTED BORROW
		NB/SB	LF	LF	LF	LF	CY	EA	TON	SQYD	SQYD	SQYD	SQYD	LNMI	TON	TON	TON	SQYD	TON	CY
PM 30.10	PM R30.60	NB	1,2	2,640	8	5		0.4		53	5,616		107	1.74	3.44	1,212	682			
PM 30.10	PM R30.60	SB	1,2	2,640	8	5		0.4		239	5,506		213	2.18	4.40	1,492	914			
SKYWAY OC																				
PM R30.60	PM R31.50	NB	1,2	4,752	8	5		0.6		273	1,420		213	3.39	6.35	2,358	1,340			
PM R30.60	PM R31.50	SB	1,2	4,752	8	5		0.6		116	1,489		213	3.13	5.82	2,190	1,215			
EAST 20TH St OC																				
PM R31.50	PM R32.20	NB	1,2	3,696	8	5		0.5		136	504		241	2.38	4.55	1,646	986			
PM R31.50	PM R32.20	SB	1,2	3,696	8	5		0.5		244	496		229	2.31	4.33	1,586	923			
LITTLE CHICO Cr Br																				
PM R32.20	PM R32.37	NB	1,2	898	8	5		0.1		196	504		220	0.58	1.14	337	261			
PM R32.20	PM R32.37	SB	1,2	898	8	5		0.1		168	692		224	0.55	1.09	317	252			
Rte 99/32 Sep SOUTH																				
PM R32.37	PM R32.44	NB	1,2	370	8	5		0.1		66			128	0.11	0.16	-	55			
PM R32.37	PM R32.44	SB	1,2	370	8	5		0.1		65			127	0.11	0.16	-	55			
Rte 99/32 Sep NORTH																				
PM R32.44	PM R32.60	NB	1,2	845	8	5		0.1		127			232	0.47	0.83	279	179			
PM R32.44	PM R32.60	SB	1,2	845	8	5		0.1		123			227	0.46	0.82	274	178			
BIDWELL PARK Via																				
PM R32.60	PM R33.08	NB	1,2	2,534	8	5		0.3		181			178	1.31	1.61	-	632			
PM R32.60	PM R33.08	SB	1,2	2,534	8	5		0.3		193			178	1.33	1.64	-	645			
PALMETTO Ave UC																				
PM R33.08	PM R33.28	NB	1,2	1,056	8	5		0.1		364			193	0.66	0.86	-	320			
PM R33.08	PM R33.28	SB	1,2	1,056	8	5		0.1		368			193	0.61	0.81	-	298			
EAST FIRST Ave UC																				
PM R33.28	PM R33.57	NB	1,2	1,531	8	5		0.2		122	756		214	1.00	1.93	654	422			
PM R33.28	PM R33.57	SB	1,2	1,531	8	5		0.2		122	607		214	0.98	1.84	642	395			
EAST FIFTH Ave UC																				
PM R33.57	PM R33.87	NB	1,2	1,584	8	5		0.2		123			218	0.83	1.60	543	358			
PM R33.57	PM R33.87	SB	1,2	1,584	8	5		0.2		123			218	0.84	1.57	551	343			
LINDO CHANNEL Br																				
PM R33.87	PM R34.25	NB	1,2	2,006	8	5		0.2		191	570		388	0.93	1.74	542	391			
PM R33.87	PM R34.25	SB	1,2	2,006	8	5		0.2		208			229	0.91	1.61	584	337			
COHASSET Hwy OC																				
PM R34.25	PM R34.63	NB	1,2	2,006	8	5		0.3		209			220	1.22	2.21	808	466			
PM R34.25	PM R34.63	SB	1,2	2,006	8	5		0.3		115	548		220	1.30	2.42	874	515			
NORTH CHICO UC																				
PM R34.63	PM R34.93	NB	1,2	1,584	8	5		0.2		119	621		215	1.00	1.91	652	417			
PM R34.63	PM R34.93	SB	1,2	1,584	8	5		0.2		127	745		221	1.05	2.05	690	454			78
EAST Ave UC																				
PM R34.93	PM R35.31	NB	1,2	2,006	8	5		0.3		126	613		222	1.27	2.42	850	524			
PM R34.93	PM R35.31	SB	1,2	2,006	8	5		0.3		118	683		206	1.28	2.39	855	512			
LASSEN Ave UC																				
PM R35.31	PM R36.31	NB	1,2	5,280	8	5		0.6		115	619		208	3.15	5.76	2,218	1,193			
PM R35.31	PM R36.31	SB	1,2	5,280	8	5		0.6		115	582		208	3.18	5.82	2,242	1,204			
EATON Ave OC																				
PM R36.31	PM R37.20	NB	1,2	4,699	8	5		0.6		103	821		213	2.92	5.36	2,050	1,113			
PM R36.31	PM R37.20	SB	1,2	4,699	8	5		0.6		128	820		207	2.92	5.34	2,044	1,104			
MUD CREEK Br																				
PM R37.20	PM T37.50	NB	1,2	1,584	8	5		0.2		89	2,715	892	107	0.72	1.47	478	285			
PM R37.20	PM T37.50	SB	1,2	1,584	8	5		0.2		45	1,699	510	114	0.74	1.46	494	297			
GORE AND RAMP ITEMS SHEET Q-3							4473		5437							3,077				
MAINTENANCE VEHICLE PULLOUT ITEMS SHEET Q-3							295		390							165				353
SAFETY EDGE/SHOULDER BACKING SHEET Q-5																161.9				
DIKE SHEET Q-5; GUARD RAILING SHEET Q-6																540.1		13.2	6.0	2615
OVERSIDE DRAIN & CMP DOWNDRAIN (TYPE 1) SHEET Q-7, Q-8																		310.6	93.9	
SUBTOTAL							4768	10.0	5827	5210	28,626	1,402	6958	47.56	86.91	33,406	19,265	323.8	99.9	3046
TOTAL							4768	10.0	5827		35,238		6958	47.56	86.91	33,406	19,265	323.8	99.9	3046

(N) = NOT A SEPARATE PAY ITEM, FOR INFORMATION ONLY

SUMMARY OF QUANTITIES Q-1

REVISED BY | DATE REVISED
BIPAN KAUSHAL | BALJINDER BRAR
CALCULATED-DESIGNED BY | CHECKED BY
FUNCTIONAL SUPERVISOR | DEANN SPANGLER
STATE OF CALIFORNIA - DEPARTMENT OF TRANSPORTATION
Caltrans® DESIGN

LAST REVISION 04-24-15 | DATE PLOTTED => 29-JUN-2015 | TIME PLOTTED => 14:08

Dist	COUNTY	ROUTE	POST MILES TOTAL PROJECT	SHEET No.	TOTAL SHEETS
03	But	99	30.1/T37.5	82	163

REGISTERED CIVIL ENGINEER 4-27-15 DATE

4-27-15
PLANS APPROVAL DATE

REGISTERED PROFESSIONAL ENGINEER BALJINDER S. BRAR No. C 67847 Exp 6-30-15 CIVIL STATE OF CALIFORNIA

THE STATE OF CALIFORNIA OR ITS OFFICERS OR AGENTS SHALL NOT BE RESPONSIBLE FOR THE ACCURACY OR COMPLETENESS OF SCANNED COPIES OF THIS PLAN SHEET.

NOTE:

1. EXACT LOCATIONS OF WORK TO BE DETERMINED BY THE ENGINEER.

SPALL REPAIR (FAST-SETTING CONCRETE)

DIRECTION	LOCATION		SPALL REPAIR (FAST-SETTING CONCRETE)		
	BEGIN PM	LANE No.	SIZE (IN)		SQYD
NB	R30.41	#2 LANE	24	10	0.185
NB	R30.42	#2 LANE	10	24	0.185
NB	R30.48	#2 LANE	15	10	0.116
NB	R30.49	#1 LANE	15	10	0.116
NB	R30.52	#2 LANE	15	18	0.208
NB	R30.55	#1 LANE	15	10	0.116
NB	R30.55	#2 LANE	15	18	0.208
NB	R30.81	#2 LANE	15	12	0.139
NB	R30.84	#1 LANE	15	12	0.139
NB	R30.84	#2 LANE	15	12	0.139
NB	R30.85	#2 LANE	15	18	0.208
NB	R30.86	#2 LANE	15	12	0.139
NB	R30.86	#1 LANE	12	12	0.111
NB	R31.06	#2 LANE	15	12	0.139
NB	R31.08	#2 LANE	15	12	0.139
NB	R31.09	#2 LANE	15	10	0.116
NB	R31.11	#2 LANE	15	12	0.139
NB	R31.11	#2 LANE	15	10	0.116
NB	R31.20	#2 LANE	12	12	0.111
NB	R31.32	#1 LANE	15	12	0.139
NB	R31.33	#1 LANE	15	12	0.139
NB	R31.33	#2 LANE	15	12	0.139
NB	R31.35	#2 LANE	15	12	0.139
NB	R31.40	#1 LANE	15	18	0.208
NB	R31.44	#2 LANE	15	12	0.139
NB	R31.50	#1 LANE	15	10	0.116
NB	R31.50	#2 LANE	15	10	0.116
NB	R31.55	#2 LANE	15	10	0.116
NB	R31.55	#2 LANE	15	12	0.139
NB	R31.57	#2 LANE	15	10	0.116
NB	R31.59	#1 LANE	15	10	0.116
NB	R31.60	#2 LANE	15	12	0.139
NB	R31.63	#2 LANE	15	12	0.139
NB	R31.63	#2 LANE	15	10	0.116
NB	R31.64	#2 LANE	15	12	0.139
NB	R31.69	#2 LANE	15	24	0.278
NB	R31.69	#2 LANE	15	12	0.139
NB	R31.81	#2 LANE	12	16	0.148
NB	R31.85	#2 LANE	15	12	0.139
NB	R31.86	#2 LANE	15	10	0.116
NB	R31.87	#2 LANE	15	10	0.116
NB	R31.88	#2 LANE	15	10	0.116
NB	R31.90	#1 LANE	15	12	0.139
NB	R31.94	#2 LANE	15	12	0.139
NB	R31.95	#2 LANE	15	12	0.139
NB	R32.07	#1 LANE	15	10	0.116
NB	R32.07	#1 LANE	15	12	0.139
NB	R32.32	#2 LANE	15	12	0.139
NB	R32.46	#1 LANE	12	12	0.111
NB	R32.46	#2 LANE	18	12	0.167
NB	R32.46	#2 LANE	10	15	0.116
NB	R32.48	#2 LANE	10	24	0.185
NB	R32.51	#2 LANE	10	24	0.185
SUBTOTAL (1)					7.551

SPALL REPAIR (FAST-SETTING CONCRETE)

DIRECTION	LOCATION		SPALL REPAIR (FAST-SETTING CONCRETE)		
	BEGIN PM	LANE No.	SIZE (IN)		SQYD
NB	R32.53	#2 LANE	10	15	0.116
NB	R32.54	#2 LANE	10	15	0.116
NB	R32.54	#1 LANE	10	36	0.278
NB	R32.54	#1 LANE	10	24	0.185
NB	R32.54	#2 LANE	10	15	0.116
NB	R32.56	#1 LANE	10	15	0.116
NB	R32.56	#1 LANE	12	16	0.148
NB	R32.56	#1 LANE	10	24	0.185
NB	R32.58	#1 LANE	10	24	0.185
NB	R32.79	#1 LANE	12	18	0.167
NB	R33.60	#1 LANE	15	12	0.139
NB	R33.60	#2 LANE	15	12	0.139
NB	R33.71	#2 LANE	15	10	0.116
NB	R32.76	#1 LANE	10	15	0.116
NB	R32.76	#2 LANE	24	24	0.444
NB	R32.76	#1 LANE	10	15	0.116
NB	R34.73	#2 LANE	15	12	0.139
NB	R33.78	#2 LANE	15	10	0.116
NB	R33.78	#2 LANE	15	10	0.116
NB	R33.79	#2 LANE	15	10	0.116
NB	R33.82	#2 LANE	15	10	0.116
NB	R33.84	#1 LANE	15	12	0.139
NB	R32.88	#2 LANE	10	15	0.116
NB	R32.89	#2 LANE	10	15	0.116
NB	R32.90	#3 LANE	10	15	0.116
NB	R32.90	#2 LANE	10	15	0.116
NB	R32.94	#3 LANE	10	15	0.116
NB	R33.01	#3 LANE	10	15	0.116
NB	R33.92	#1 LANE	18	24	0.333
NB	R33.92	#1 LANE	10	24	0.185
NB	R33.93	#1 LANE	10	15	0.116
NB	R34.13	#1 LANE	10	15	0.116
NB	R34.21	#2 LANE	10	15	0.116
NB	R34.27	#2 LANE	10	15	0.116
NB	R34.32	#1 LANE	10	15	0.116
NB	R34.63	#2 LANE	10	15	0.116
NB	R34.66	#2 LANE	10	15	0.116
NB	R34.73	#2 LANE	10	108	0.833
NB	R34.74	#2 LANE	10	48	0.370
NB	R34.78	#2 LANE	10	15	0.116
NB	R34.83	#1 LANE	10	15	0.116
NB	R34.91	#1 LANE	10	15	0.116
NB	R34.92	#2 LANE	12	15	0.139
NB	R34.95	#2 LANE	10	15	0.116
NB	R34.95	#2 LANE	10	15	0.116
NB	R34.96	#1 LANE	24	48	0.889
NB	R34.98	#1 LANE	10	15	0.116
NB	R34.98	#2 LANE	10	15	0.116
NB	R35.00	#2 LANE	10	15	0.116
NB	R35.19	#1 LANE	10	15	0.116
NB	R35.28	#2 LANE	10	15	0.116
NB	R35.33	#1 LANE	10	15	0.116
NB	R35.33	#2 LANE	10	30	0.231
SUBTOTAL (2)					9.188

SPALL REPAIR (FAST-SETTING CONCRETE)

DIRECTION	LOCATION		SPALL REPAIR (FAST-SETTING CONCRETE)		
	BEGIN PM	LANE No.	SIZE (IN)		SQYD
NB	R35.43	#2 LANE	10	24	0.185
NB	R35.48	#2 LANE	10	20	0.154
NB	R35.48	#2 LANE	10	15	0.116
NB	R35.48	#2 LANE	10	15	0.116
NB	R35.54	#2 LANE	10	15	0.116
NB	R35.56	#2 LANE	10	15	0.116
NB	R35.62	#2 LANE	10	15	0.116
NB	R35.66	#2 LANE	10	15	0.116
NB	R35.70	#2 LANE	10	15	0.116
NB	R36.38	#2 LANE	10	15	0.116
NB	R36.40	#2 LANE	10	15	0.116
NB	R36.75	#2 LANE	10	15	0.116
NB	R36.83	#2 LANE	10	15	0.116
NB	R36.92	#2 LANE	10	18	0.139
NB	R36.93	#2 LANE	10	24	0.185
NB	R37.01	#2 LANE	10	48	0.370
NB	R37.03	#1 LANE	10	15	0.116
NB	R37.05	#2 LANE	10	24	0.185
NB	R37.05	#2 LANE	10	15	0.116
NB	R37.14	#2 LANE	10	24	0.185
NB	R37.14	#2 LANE	10	15	0.116
NB	R37.14	#2 LANE	10	15	0.116
NB	R37.17	#2 LANE	10	24	0.185
NB	R37.17	#2 LANE	10	15	0.116
NB	R37.17	#2 LANE	10	15	0.116
NB	R37.17	#2 LANE	10	15	0.116
SB	R30.50	#2 LANE	10	24	0.185
SB	R30.61	#2 LANE	10	15	0.116
SB	R30.67	#2 LANE	10	15	0.116
SB	R30.68	#2 LANE	10	15	0.116
SB	R30.75	#1 LANE	10	15	0.116
SB	R30.93	#2 LANE	10	24	0.185
SB	R30.97	#2 LANE	10	24	0.185
SB	R30.99	#2 LANE	10	15	0.116
SB	R30.99	#2 LANE	10	24	0.185
SB	R31.03	#2 LANE	10	24	0.185
SB	R31.08	#1 LANE	10	15	0.116
SB	R31.09	#1 LANE	10	15	0.116
SB	R31.10	#2 LANE	10	15	0.116
SB	R31.10	#2 LANE	10	15	0.116
SB	R31.14	#2 LANE	10	15	0.116
SB	R31.15	#2 LANE	10	15	0.116
SB	R31.25	#2 LANE	10	15	0.116
SB	R31.25	#2 LANE	10	15	0.116
SB	R31.54	#2 LANE	10	24	0.185
SB	R31.55	#2 LANE	10	24	0.185
SB	R31.55	#2 LANE	10	24	0.185
SB	R31.60	#2 LANE	12	50	0.463
SB	R31.60	#2 LANE	12	36	0.333
SB	R31.61	#1 LANE	12	36	0.333
SB	R31.88	#1 LANE	12	15	0.139
SB	R31.89	#2 LANE	12	72	0.667
SB	R31.91	#2 LANE	10	24	0.185
SUBTOTAL (3)					8.784

SPALL REPAIR (FAST-SETTING CONCRETE)

DIRECTION	LOCATION		SPALL REPAIR (FAST-SETTING CONCRETE)		
	BEGIN PM	LANE No.	SIZE (IN)		SQYD
SB	R31.92	#2 LANE	10	15	0.116
SB	R31.97	#1 LANE	10	24	0.185
SB	R31.98	#2 LANE	10	24	0.185
SB	R32.01	#2 LANE	15	15	0.174
SB	R32.02	#2 LANE	10	24	0.185
SB	R32.04	#2 LANE	10	24	0.185
SB	R32.18	#1 LANE	10	24	0.185
SB	R32.19	#1 LANE	12	15	0.139
SB	R32.19	#1 LANE	24	24	0.444
SB	R32.19	#1 LANE	24	24	0.444
SB	R32.22	#2 LANE	10	15	0.116
SB	R32.22	#1 LANE	12	24	0.222
SB	R32.22	#1 LANE	12	24	0.222
SB	R32.22	#1 LANE	12	48	0.444
SB	R32.23	#2 LANE	10	24	0.185
SB	R32.24	#2 LANE	10	15	0.116
SB	R32.24	#2 LANE	10	15	0.116
SB	R32.28	#2 LANE	10	36	0.278
SB	R32.33	#1 LANE	10	24	0.185
SB	R32.36	#1 LANE	24	24	0.444
SB	R32.48	#2 LANE	10	24	0.185
SB	R32.50	#2 LANE	10	15	0.116
SB	R32.76	#1 LANE	10	36	0.278
SB	R32.77	#1 LANE	10	15	0.116
SB	R32.79	#1 LANE	12	15	0.139
SB	R32.82	#1 LANE	15	15	0.174
SB	R33.18	#1 LANE	24	24	0.444
SB	R33.27	#2 LANE	12	15	0.139
SB	R33.27	#1 LANE	10	24	0.185
SB	R33.31	#2 LANE	10	72	0.556
SB	R33.31	#1 LANE	12	72	0.667
SB	R33.32	#1 LANE	12	36	0.333
SB	R33.32	#2 LANE	24	15	0.278
SB	R33.33	#1 LANE	10	15	0.116
SB	R33.38	#1 LANE	24	15	0.278
SB	R33.40	#1 LANE	12	15	0.139
SB	R33.40	#2 LANE	12	15	0.139
SB	R33.48	#2 LANE	10	15	0.116
SB	R33.48	#2 LANE	10	15	0.116
SB	R33.50	#2 LANE	10	15	0.116
SB	R33.53	#2 LANE	10	15	0.116
SB	R33.53	#2 LANE	10	15	0.116
SUBTOTAL (4)					9.432
SUBTOTAL (3)					8.784
SUBTOTAL (2)					9.188
SUBTOTAL (1)					7.551
SHEET Q-2 TOTAL					34.955

SUMMARY OF QUANTITIES
Q-2

REVISED BY | DATE REVISED
BIPAN KAUSHAL | BALJINDER BRAR
CALCULATED-DESIGNED BY | CHECKED BY
FUNCTIONAL SUPERVISOR
DEANN SPANGLER
STATE OF CALIFORNIA - DEPARTMENT OF TRANSPORTATION
Caltrans DESIGN

LAST REVISION 04-24-15 | DATE PLOTTED => 29-JUN-2015 | TIME PLOTTED => 14:08

Dist	COUNTY	ROUTE	POST MILES TOTAL PROJECT	SHEET No.	TOTAL SHEETS
03	But	99	30.1/T37.5	83	163

REGISTERED CIVIL ENGINEER 4-27-15 DATE

4-27-15
PLANS APPROVAL DATE

REGISTERED PROFESSIONAL ENGINEER BALJINDER S. BRAR No. C 67847 Exp. 6-30-15 CIVIL STATE OF CALIFORNIA

THE STATE OF CALIFORNIA OR ITS OFFICERS OR AGENTS SHALL NOT BE RESPONSIBLE FOR THE ACCURACY OR COMPLETENESS OF SCANNED COPIES OF THIS PLAN SHEET.

NOTE:

1. EXACT LOCATIONS OF WORK TO BE DETERMINED BY THE ENGINEER.

GORE AND RAMP ITEMS

LOCATION		* ROADWAY EXCAVATION	REMOVE CONCRETE (CURB AND GUTTER)	* CLASS 2 AGGREGATE BASE	* HOT MIX ASPHALT (TYPE A)	TEXTURED AND COLORED HOT MIX ASPHALT	DELINEATOR (CLASS 1) TYPE F
		CY	LF	TON	TON	SQYD	EA
SKYWAY OC RAMPS	NB OFF (PM R30.36 TO PM R30.39)	165		201	114	297	5
	NB ON (PM R30.36 TO PM R30.39)	114		138	78	153	6
	NB ON (PM R30.75 TO PM R30.80)						7
	SB ON (PM R30.43 TO PM R30.46)						7
	SB ON (PM R30.64 TO PM R30.65)						6
	SB OFF (PM R30.85 TO PM R30.88)						5
EAST 20TH St OC RAMPS	NB OFF (PM R31.30 TO PM R31.33)	131		159	90	203	5
	SB ON (PM R31.32 TO PM R31.34)	128		156	88	212	6
	NB ON (PM R31.67 TO PM R31.69)	68		82	47	119	6
	SB OFF (PM R31.68 TO PM R31.71)	141		171	97	189	5
Rte 99/32 Sep RAMPS	NB OFF (PM R32.26 TO PM R32.30)	247	320	301	170	253	5
	SB ON (PM R32.27 TO PM R32.31)	211	335	256	145	179	5
E FIRST Ave UC RAMPS	NB ON (PM R33.38 TO PM R33.43)	257	370	313	177	248	5
	SB OFF (PM R33.40 TO PM R33.44)	226	305	274	155	285	5
COHASSET Hwy OC RAMPS	NB OFF (PM R34.10 TO PM R34.13)	177	270	215	122	189	5
	NB ON (PM R34.21 TO PM R34.23)	119	210	144	82	130	5
	SB ON (PM R34.27 TO PM R34.29)	116	210	141	80	124	6
	SB OFF (PM R34.36 TO PM R34.39)	169	265	206	116	183	5
EAST Ave UC RAMPS	NB OFF (PM R34.78 TO PM R34.82)	211	285	257	145	245	5
	SB ON (PM R34.80 TO PM R34.85)	265	460	323	183	276	5
	NB ON (PM R35.03 TO PM R35.07)	189	360	230	130	133	5
	SB OFF (PM R35.05 TO PM R35.09)	284	335	345	195	400	5
EATON Ave OC RAMPS	SB ON (PM R36.13 TO PM R36.17)	147	275	179	101	81	5
	NB OFF (PM R36.14 TO PM R36.18)	207	280	252	143	264	5
	SB OFF (PM R36.44 TO PM R36.48)	197	275	239	135	243	5
	NB ON (PM R36.45 TO PM R36.49)	176	295	214	121	111	5
NB/SB CONNECTION	PM T37.39 TO PM T37.48	528	670	641	363	436	
SUBTOTAL		4473	5520	5437	3077	4953	139
TOTAL			5520			4953	139

* QUANTITY INCLUDED IN ROADWAY ITEMS TABLE SHEET Q-1

MAINTENANCE VEHICHLE PULLOUT ITEMS

LOCATION	DIRECTION	* ROADWAY EXCAVATION	* CLASS 2 AGGREGATE BASE	* HOT MIX ASPHALT (TYPE A)	* IMPORTED BORROW
RAMP	NB/SB	CY	TON	TON	CY
COHASSET Hwy OC OFFRAMP PM R34.18	NB	59	78	33	42
COHASSET Hwy OC OFFRAMP PM R34.32	SB	59	78	33	42
EAST Ave UC OFFRAMP PM R34.91	NB	59	78	33	89
EAST Ave UC ONRAMP PM R34.92	SB	59	78	33	138
EAST Ave UC OFFRAMP PM R34.97	SB	59	78	33	42
SUBTOTAL		295	390	165	353

* QUANTITY INCLUDED IN ROADWAY ITEMS TABLE SHEET Q-1

SPALL REPAIR (FAST-SETTING CONCRETE)

DIRECTION	LOCATION BEGIN PM	LOCATION LANE No.	SPALL REPAIR (FAST-SETTING CONCRETE) SIZE (IN)		SQYD
SB	R33.57	#2 LANE	10	15	0.116
SB	R33.57	#1 LANE	15	120	1.389
SB	R33.60	#2 LANE	10	36	0.278
SB	R33.60	#2 LANE	10	15	0.116
SB	R33.60	#2 LANE	10	15	0.116
SB	R33.64	#1 LANE	20	20	0.309
SB	R33.82	#2 LANE	10	15	0.116
SB	R33.82	#1 LANE	10	15	0.116
SB	R33.85	#2 LANE	10	15	0.116
SB	R33.87	#1 LANE	10	40	0.309
SB	R33.94	#2 LANE	20	24	0.309
SB	R33.94	#2 LANE	10	30	0.231
SB	R33.97	#2 LANE	24	24	0.444
SB	R33.99	#1 LANE	12	36	0.333
SB	R34.12	#2 LANE	12	24	0.222
SB	R34.15	#2 LANE	10	15	0.116
SB	R34.16	#2 LANE	10	36	0.278
SB	R34.38	#2 LANE	10	48	0.370
SB	R34.39	#2 LANE	10	48	0.370
SB	R34.44	#2 LANE	10	48	0.370
SB	R34.44	#2 LANE	10	15	0.116
SB	R34.46	#2 LANE	10	15	0.116
SB	R34.57	#2 LANE	10	48	0.370
SB	R34.67	#2 LANE	10	48	0.370
SB	R34.67	#1 LANE	10	15	0.116
SB	R34.68	#2 LANE	10	15	0.116
SB	R34.74	#2 LANE	10	15	0.116
SB	R34.76	#2 LANE	10	72	0.556
SB	R34.81	#2 LANE	10	15	0.116
SB	R34.86	#2 LANE	10	15	0.116
SB	R34.89	#2 LANE	10	15	0.116
SB	R34.89	#2 LANE	10	15	0.116
SB	R34.89	#2 LANE	10	15	0.116
SB	R34.92	#1 LANE	10	15	0.116
SB	R34.92	#1 LANE	10	15	0.116
SB	R34.92	#1 LANE	10	15	0.116
SB	R34.93	#2 LANE	10	15	0.116
SB	R34.97	#1 LANE	10	15	0.116
SB	R34.97	#1 LANE	10	15	0.116
SB	R34.99	#2 LANE	10	15	0.116
SB	R35.07	#2 LANE	10	36	0.278
SB	R35.08	#2 LANE	10	24	0.185
SB	R35.30	#1 LANE	12	48	0.444
SB	R35.60	#2 LANE	15	10	0.116
SB	R35.67	#2 LANE	36	10	0.278
SB	R35.86	#2 LANE	15	12	0.139
SB	R35.93	#2 LANE	10	10	0.077
SB	R35.96	#2 LANE	15	10	0.116
SB	R35.99	#2 LANE	15	10	0.116
SB	R36.18	#2 LANE	15	10	0.116
SB	R36.29	#2 LANE	24	10	0.185
SB	R36.30	#2 LANE	15	10	0.116
SB	R36.35	#2 LANE	15	10	0.116
SB	R36.42	#2 LANE	15	10	0.116
SB	R36.55	#2 LANE	15	10	0.116
SUBTOTAL (5)					11.806

SPALL REPAIR (FAST-SETTING CONCRETE)

DIRECTION	LOCATION BEGIN PM	LOCATION LANE No.	SPALL REPAIR (FAST-SETTING CONCRETE) SIZE (IN)		SQYD
SB	R36.61	#2 LANE	10	15	0.116
SB	R36.70	#2 LANE	24	10	0.185
SB	R36.83	#1 LANE	24	12	0.222
SB	R36.84	#1 LANE	21	10	0.162
SB	R36.84	#1 LANE	21	10	0.162
SB	R36.87	#2 LANE	15	10	0.116
SB	R36.97	#2 LANE	15	10	0.116
SB	R36.97	#2 LANE	15	10	0.116
SB	R36.98	#2 LANE	15	10	0.116
SB	R36.99	#2 LANE	15	10	0.116
SB	R37.02	#1 LANE	15	10	0.116
SB	R37.03	#2 LANE	15	10	0.116
SB	R37.04	#2 LANE	48	10	0.370
SB	R37.09	#1 LANE	15	10	0.116
SB	R37.10	#1 LANE	21	12	0.194
SB	R37.14	#2 LANE	72	10	0.556
SB	R37.15	#2 LANE	15	10	0.116
SB	R37.17	#2 LANE	15	10	0.116
SB	R37.18	#2 LANE	15	10	0.116
SB	R37.19	#2 LANE	15	10	0.116
SB	R37.25	#2 LANE	15	10	0.116
SB	R37.32	#1 LANE	15	10	0.116
SB	T37.37	#1 LANE	10	15	0.116
SUBTOTAL (6)					3.707
SUBTOTAL (5)					11.806
SHEET Q-2 TOTAL					34.955
TOTAL					50.468

SUMMARY OF QUANTITIES
Q-3

REVISED BY | DATE REVISED
BIPAN KAUSHAL | BALJINDER BRAR
CALCULATED-DESIGNED BY | CHECKED BY
FUNCTIONAL SUPERVISOR | DEANN SPANGLER
STATE OF CALIFORNIA - DEPARTMENT OF TRANSPORTATION
Caltrans® DESIGN

LAST REVISION 04-24-15 | DATE PLOTTED => 29-JUN-2015 | TIME PLOTTED => 14:08

NOTE:

1. EXACT LOCATIONS OF WORK TO BE DETERMINED BY THE ENGINEER.

Dist	COUNTY	ROUTE	POST MILES TOTAL PROJECT	SHEET No.	TOTAL SHEETS
03	But	99	30.1/T37.5	84	163

REGISTERED CIVIL ENGINEER 4-27-15 DATE

4-27-15
PLANS APPROVAL DATE

REGISTERED PROFESSIONAL ENGINEER BALJINDER S. BRAR No. C 67847 Exp. 6-30-15 CIVIL STATE OF CALIFORNIA

THE STATE OF CALIFORNIA OR ITS OFFICERS OR AGENTS SHALL NOT BE RESPONSIBLE FOR THE ACCURACY OR COMPLETENESS OF SCANNED COPIES OF THIS PLAN SHEET.

INDIVIDUAL SLAB REPLACEMENT (RAPID STRENGTH CONCRETE)

DIRECTION	LOCATION		INDIVIDUAL SLAB REPLACEMENT (RAPID STRENGTH CONCRETE)	
	BEGIN PM	LANE No.	LF (N)	CY
NB	R30.36	#2 LANE	19	5.7
NB	R30.49	#2 LANE	18	5.4
NB	R30.62	#2 LANE	18	5.4
NB	R30.71	#2 LANE	19	5.7
NB	R30.75	#2 LANE	18	5.4
NB	R30.75	#2 LANE	19	5.7
NB	R30.77	#2 LANE	18	5.4
NB	R30.78	#2 LANE	32	9.5
NB	R30.88	#2 LANE	30	8.9
NB	R30.90	#2 LANE	18	5.4
NB	R30.98	#1 LANE	12	3.6
NB	R30.36	#2 LANE	75	22.3
NB	R31.42	#2 LANE	49	14.6
NB	R31.51	#2 LANE	12	3.6
NB	R31.65	#2 LANE	37	11.0
NB	R31.68	#2 LANE	14	4.2
NB	R31.77	#1 LANE	12	3.6
NB	R31.77	#2 LANE	12	3.6
NB	R31.78	#2 LANE	12	3.6
NB	R31.91	#2 LANE	74	22.0
NB	R32.11	#1 LANE	25	7.4
NB	R32.26	#2 LANE	18	5.4
NB	R32.31	#2 LANE	19	5.7
NB	R32.37	#2 LANE	12	3.6
NB	R32.37	#1 LANE	12	3.6
NB	R32.42	#2 LANE	37	11.0
NB	R32.54	#2 LANE	12	3.6
NB	R32.56	#2 LANE	13	3.9
NB	R32.57	#1 LANE	18	5.4
NB	R32.57	#2 LANE	18	5.4
NB	R32.59	#2 LANE	18	5.4
NB	R32.77	#2 LANE	18	5.4
NB	R32.78	#1 LANE	18	5.4
NB	R32.78	#2 LANE	19	5.7
NB	R32.79	#1 LANE	13	3.9
NB	R32.79	#2 LANE	18	5.4
NB	R32.92	#3 LANE	19	5.7
NB	R32.94	#3 LANE	25	7.4
NB	R33.00	#3 LANE	19	5.7
NB	R33.06	#2 LANE	49	14.6
NB	R33.22	#1 LANE	18	5.4
NB	R33.22	#2 LANE	19	5.7
NB	R34.10	#2 LANE	18	5.4
NB	R34.12	#2 LANE	19	5.7
NB	R34.26	#2 LANE	19	5.7
NB	R34.29	#2 LANE	19	11.0
NB	R34.30	#1 LANE	32	9.5
NB	R34.34	#1 LANE	37	11.0
NB	R34.57	#2 LANE	19	5.7
NB	R34.70	#2 LANE	94	28.0
NB	R34.76	#2 LANE	19	5.7
NB	R34.79	#2 LANE	12	3.6
NB	R34.80	#2 LANE	19	5.7
		SUBTOTAL (1)		382.3

INDIVIDUAL SLAB REPLACEMENT (RAPID STRENGTH CONCRETE)

DIRECTION	LOCATION		INDIVIDUAL SLAB REPLACEMENT (RAPID STRENGTH CONCRETE)	
	BEGIN PM	LANE No.	LF (N)	CY
NB	R34.85	#2 LANE	13	3.9
NB	R34.86	#2 LANE	19	5.7
NB	R34.99	#2 LANE	13	3.9
NB	R35.00	#2 LANE	37	11.0
NB	R35.11	#2 LANE	19	5.7
NB	R35.13	#2 LANE	30	8.9
NB	R35.15	#2 LANE	19	5.7
NB	R35.18	#2 LANE	75	22.3
NB	R35.23	#2 LANE	112	33.4
NB	R35.32	#2 LANE	30	8.9
NB	R35.35	#2 LANE	19	5.7
NB	R35.42	#2 LANE	19	5.7
NB	R35.44	#2 LANE	18	5.4
NB	R35.45	#2 LANE	19	5.7
NB	R35.47	#2 LANE	19	5.7
NB	R35.49	#2 LANE	37	11.0
NB	R35.50	#2 LANE	32	9.5
NB	R35.50	#2 LANE	19	5.7
NB	R35.51	#1 LANE	19	5.7
NB	R35.51	#2 LANE	32	9.5
NB	R35.54	#2 LANE	19	5.7
NB	R35.55	#2 LANE	19	5.7
NB	R35.57	#2 LANE	19	5.7
NB	R35.58	#2 LANE	19	5.7
NB	R35.59	#2 LANE	19	5.7
NB	R35.60	#2 LANE	30	8.9
NB	R35.61	#2 LANE	19	5.7
NB	R35.64	#2 LANE	12	3.6
NB	R35.80	#2 LANE	19	5.7
NB	R35.83	#2 LANE	37	11.0
NB	R35.94	#2 LANE	19	5.7
NB	R36.02	#2 LANE	32	9.5
NB	R36.08	#2 LANE	19	5.7
NB	R36.09	#2 LANE	30	8.9
NB	R36.10	#2 LANE	37	11.0
NB	R36.12	#2 LANE	30	8.9
NB	R36.20	#2 LANE	49	14.6
NB	R36.23	#2 LANE	13	3.9
NB	R36.45	#2 LANE	25	7.4
NB	R36.48	#2 LANE	19	5.7
NB	R36.48	#2 LANE	19	5.7
NB	R36.54	#2 LANE	19	5.7
NB	R36.63	#2 LANE	19	5.7
NB	R36.74	#2 LANE	19	5.7
NB	R36.76	#2 LANE	19	5.7
NB	R36.78	#2 LANE	19	5.7
NB	R36.80	#2 LANE	37	11.0
NB	R36.81	#2 LANE	18	5.4
NB	R36.87	#2 LANE	49	14.6
NB	R36.88	#2 LANE	25	7.4
NB	R36.93	#2 LANE	19	5.7
NB	R36.95	#2 LANE	19	5.7
NB	R36.98	#2 LANE	19	5.7
		SUBTOTAL (2)		413.4

INDIVIDUAL SLAB REPLACEMENT (RAPID STRENGTH CONCRETE)

DIRECTION	LOCATION		INDIVIDUAL SLAB REPLACEMENT (RAPID STRENGTH CONCRETE)	
	BEGIN PM	LANE No.	LF (N)	CY
NB	R36.99	#2 LANE	32	9.5
NB	R37.03	#2 LANE	19	5.7
NB	R37.04	#2 LANE	32	9.5
NB	R37.06	#2 LANE	19	5.7
NB	R37.09	#2 LANE	32	9.5
NB	R37.10	#2 LANE	19	5.7
NB	R37.12	#2 LANE	30	8.9
NB	R37.26	#2 LANE	49	14.6
NB	R37.28	#2 LANE	30	8.9
NB	R37.28	#2 LANE	19	5.7
NB	R37.30	#2 LANE	30	8.9
NB	R37.30	#1 LANE	49	14.6
SB	R30.46	#2 LANE	25	7.4
SB	R30.49	#2 LANE	12	3.6
SB	R30.49	#1 LANE	94	28.0
SB	R30.51	#2 LANE	18	5.4
SB	R30.52	#2 LANE	19	5.7
SB	R30.52	#1 LANE	13	3.9
SB	R30.71	#2 LANE	30	8.9
SB	R30.76	#2 LANE	18	5.4
SB	R30.78	#2 LANE	19	5.7
SB	R30.82	#2 LANE	49	14.6
SB	R30.84	#2 LANE	25	7.4
SB	R31.01	#2 LANE	30	8.9
SB	R31.14	#2 LANE	19	5.7
SB	R31.18	#2 LANE	19	5.7
SB	R32.52	#2 LANE	18	5.4
SB	R32.53	#2 LANE	30	8.9
SB	R33.47	#2 LANE	19	5.7
SB	R33.55	#2 LANE	19	5.7
SB	R33.98	#1,2 LANE	100	102.0
SB	R34.00	#1,2 LANE	200	203.9
SB	R33.96	#2 LANE	19	5.7
SB	R34.23	#2 LANE	19	5.7
SB	R34.53	#2 LANE	32	9.5
SB	R34.69	#2 LANE	30	8.9
SB	R34.70	#2 LANE	19	5.7
SB	R34.72	#2 LANE	18	5.4
SB	R34.74	#2 LANE	25	7.4
SB	R34.75	#2 LANE	18	5.4
SB	R34.77	#2 LANE	25	7.4
SB	R35.16	#2 LANE	19	5.7
SB	R35.23	#2 LANE	19	5.7
SB	R35.26	#2 LANE	49	14.6
SB	R35.97	#2 LANE	19	5.7
SB	R36.39	#2 LANE	19	5.7
SB	R36.54	#2 LANE	19	5.7
SB	R36.57	#2 LANE	18	5.4
SB	R36.81	#2 LANE	19	5.7
SB	R36.90	#2 LANE	12	3.6
SB	R36.92	#2 LANE	25	7.4
SB	R36.96	#2 LANE	18	5.4
SB	R37.01	#2 LANE	19	5.7
		SUBTOTAL (3)		692.5

INDIVIDUAL SLAB REPLACEMENT (RAPID STRENGTH CONCRETE)

DIRECTION	LOCATION		INDIVIDUAL SLAB REPLACEMENT (RAPID STRENGTH CONCRETE)	
	BEGIN PM	LANE No.	LF (N)	CY
SB	R37.07	#2 LANE	25	7.4
SB	R37.09	#2 LANE	19	5.7
SB	R37.12	#2 LANE	18	5.4
SB	R37.12	#2 LANE	18	5.4
SB	R37.14	#2 LANE	19	5.7
SB	R37.18	#2 LANE	19	5.7
SB	T37.43	#2 LANE	19	5.7
SB	T37.46	#2 LANE	30	8.9
		SUBTOTAL (4)		49.9
		SUBTOTAL (3)		692.5
		SUBTOTAL (2)		413.4
		SUBTOTAL (1)		382.3
		TOTAL		1538.1

SUMMARY OF QUANTITIES
Q-4

REVISED BY | DATE REVISED
BIPAN KAUSHAL | BALJINDER BRAR
CALCULATED-DESIGNED BY | CHECKED BY
FUNCTIONAL SUPERVISOR
DEANN SPANGLER
STATE OF CALIFORNIA - DEPARTMENT OF TRANSPORTATION
Caltrans DESIGN

LAST REVISION 04-24-15 | DATE PLOTTED => 29-JUN-2015 | TIME PLOTTED => 14:08

Dist	COUNTY	ROUTE	POST MILES TOTAL PROJECT	SHEET No.	TOTAL SHEETS
03	But	99	30.1/T37.5	85	163

REGISTERED CIVIL ENGINEER 4-27-15 DATE

4-27-15
PLANS APPROVAL DATE

REGISTERED PROFESSIONAL ENGINEER BALJINDER S. BRAR No. C 67847 Exp 6-30-15 CIVIL STATE OF CALIFORNIA

THE STATE OF CALIFORNIA OR ITS OFFICERS OR AGENTS SHALL NOT BE RESPONSIBLE FOR THE ACCURACY OR COMPLETENESS OF SCANNED COPIES OF THIS PLAN SHEET.

SAFETY EDGE/SHOULDER BACKING

LOCATION (PM) FROM	TO	DIRECTION NB/SB	SIDE Lt/Rt	(N) LENGTH LF	(N) TOTAL THICKNESS OF SAFETY EDGE FT	(N) SAFETY EDGE (REVISED Std PLAN RSP P75) CASE	* HOT MIX ASPHALT (TYPE A) TON	SHOULDER BACKING TON
PM 30.10	PM R30.60	NB	Lt/Rt	4,442	0.15	A	6.6	389
PM 30.10	PM R30.60	SB	Lt/Rt	5,129	0.15	A	7.6	501
SKYWAY OC								
PM R30.60	PM R31.50	NB	Lt/Rt	9,096	0.15	A	13.5	989
PM R30.60	PM R31.50	SB	Lt/Rt	9,096	0.15	A	13.5	974
EAST 20TH St OC								
PM R31.50	PM R32.20	NB	Lt/Rt	7,030	0.15	A	10.5	747
PM R31.50	PM R32.20	SB	Lt/Rt	7,135	0.15	A	10.6	754
LITTLE CHICO Cr Br								
PM R32.20	PM R32.37	NB	Lt/Rt	1,222	0.15	A	1.8	146
PM R32.20	PM R32.37	SB	Lt/Rt	1,010	0.15	A	1.5	128
Rte 99/32 Sep SOUTH								
PM R32.37	PM R32.44			-	-	-	-	-
PM R32.37	PM R32.44			-	-	-	-	-
Rte 99/32 Sep NORTH								
PM R32.44	PM R32.60	NB	Lt/Rt	905	0.15	A	1.3	95
PM R32.44	PM R32.60	SB	Lt/Rt	905	0.15	A	1.3	94
BIDWELL PARK Via								
PM R32.60	PM R33.08			-	-	-	-	-
PM R32.60	PM R33.08			-	-	-	-	-
PALMETTO Ave UC								
PM R33.08	PM R33.28	NB	Lt/Rt	-	-	-	-	142
PM R33.08	PM R33.28	SB	Lt/Rt	-	-	-	-	143
EAST FIRST Ave UC								
PM R33.28	PM R33.57	NB	Lt/Rt	1,380	0.15	A	2.1	174
PM R33.28	PM R33.57	SB	Lt/Rt	1,380	0.15	A	2.1	177
EAST FIFTH Ave UC								
PM R33.57	PM R33.87	NB	Lt/Rt	2,270	0.15	A	3.4	245
PM R33.57	PM R33.87	SB	Lt/Rt	1,478	0.15	A	2.2	182
LINDO CHANNEL Br								
PM R33.87	PM R34.25	NB	Lt/Rt	3,228	0.15	A	4.8	368
PM R33.87	PM R34.25	SB	Lt/Rt	3,062	0.15	A	4.6	360
COHASSET Hwy OC								
PM R34.25	PM R34.63	NB	Lt/Rt	2,165	0.15	A	3.2	268
PM R34.25	PM R34.63	SB	Lt/Rt	2,338	0.15	A	3.5	278
NORTH CHICO UC								
PM R34.63	PM R34.93	NB	Lt/Rt	1,433	0.15	A	2.1	185
PM R34.63	PM R34.93	SB	Lt/Rt	1,908	0.15	A	2.8	227
EAST Ave UC								
PM R34.93	PM R35.31	NB	Lt/Rt	1,802	0.15	A	2.7	230
PM R34.93	PM R35.31	SB	Lt/Rt	1,908	0.15	A	2.8	232
LASSEN Ave UC								
PM R35.31	PM R36.31	NB	Lt/Rt	9,247	0.15	A	13.8	1,000
PM R35.31	PM R36.31	SB	Lt/Rt	9,247	0.15	A	13.8	1,000
EATON Ave OC								
PM R36.31	PM R37.20	NB	Lt/Rt	8,501	0.15	A	12.7	913
PM R36.31	PM R37.20	SB	Lt/Rt	8,870	0.15	A	13.2	936
MUD CREEK Br								
PM R37.20	PM T37.50	NB	Lt/Rt	898	0.15	A	1.3	155
PM R37.20	PM T37.50	SB	Lt/Rt	1,742	0.15	A	2.6	62
SUBTOTAL							161.9	12,094
TOTAL								12,094

* QUANTITY INCLUDED IN ROADWAY ITEMS TABLE SHEET Q-1
(N) = NOT A SEPARATE PAY ITEM, FOR INFORMATION ONLY

DIKE

LOCATION (PM)	DIRECTION NB	DIRECTION SB	SIDE Lt	SIDE Rt	REMOVE ASPHALT CONCRETE DIKE LF	* IMPORTED BORROW CY	PLACE HOT MIX ASPHALT DIKE (TYPE C) LF	PLACE HOT MIX ASPHALT DIKE (TYPE E) LF	PLACE HOT MIX ASPHALT DIKE (TYPE F) LF	* HOT MIX ASPHALT (TYPE A) TON
PM R30.23 TO PM R30.41	X			X	910.0	118		910.0		24.4
PM R30.24 TO PM R30.28		X		X	221.0	14	75.0	35.0	111.0	3.0
PM R32.18 TO PM R32.20	X			X	83.0	8	62.5		25.0	0.8
PM R32.19 TO PM R32.21		X		X	30.0	4		30.0		0.8
PM R32.23 TO PM R32.24		X		X	50.0				50.0	0.7
PM R32.30 TO PM R32.37	X			X	350.0	42	75.0	250.0	25.0	7.6
PM R32.31 TO PM R32.37		X		X	315.0	41		315.0		8.5
PM R32.39 TO PM R32.44	X			X	231.0				231.0	3.1
PM R32.39 TO PM R32.44		X		X	231.0				231.0	3.1
PM R32.46 TO PM R32.58	X			X	615.0	80		615.0		16.5
PM R32.46 TO PM R32.59		X		X	635.0	82	75.0	535.0	25.0	15.3
PM R33.32 TO PM R33.37	X			X	300.0	39		300.0		8.0
PM R33.32 TO PM R33.40		X		X	400.0	49	75.0	300.0	25.0	9.0
PM R33.36 TO PM R33.57	X			X	1,085.0	137	75.0	985.0	25.0	27.4
PM R33.39 TO PM R33.57		X		X	980.0	127		980.0		26.3
PM R33.60 TO PM R33.69	X			X	480.0	62		480.0		12.9
PM R33.60 TO PM R33.88		X		X	1,460.0	186	75.0	1,360.0	25.0	37.4
PM R33.93 TO PM R33.95		X		X	125.0	13	75.0	25.0	25.0	1.6
PM R34.32 TO PM R34.64	X			X	1,620.0	207	75.0	1,520.0	25.0	41.6
PM R34.36 TO PM R34.63		X		X	1,500.0	194		1,500.0		40.2
PM R34.65 TO PM R34.83	X			X	860.0	111		860.0		23.1
PM R34.67 TO PM R34.86		X		X	940.0	52	75.0	325.0	540.0	16.7
PM R34.82 TO PM R34.93	X			X	580.0	72	62.5	492.5	25.0	14.0
PM R34.96 TO PM R35.03	X			X	395.0	51		395.0		10.6
PM R35.01 TO PM R35.05		X		X	240.0	31		240.0		6.4
PM R35.02 TO PM R35.31	X			X	1,500.0	191	62.5	1,412.5	25.0	38.7
PM R35.04 TO PM R35.31		X		X	1,430.0	185		1,430.0		38.4
PM R35.34 TO PM R35.49	X			X	820.0	106		820.0		22.0
PM R35.34 TO PM R35.49		X		X	820.0	106	75.0	745.0		20.6
PM R37.10 TO PM R37.20	X			X	540.0	67	75.0	440.0	25.0	12.7
PM R37.13 TO PM R37.21		X		X	370.0	48		370.0		9.9
PM R37.26 TO PM T37.42	X			X	820.0	106		820.0		22.0
PM R37.26 TO PM R37.29		X		X	165.0	18	75.0	65.0	25.0	2.7
PM T37.46 TO PM T37.50	X			X	525.0	68		525.0		14.1
SUBTOTAL					21,626.0	2615	1087.5	19,080.0	1463.0	540.1
TOTAL					21,626.0		1087.5	19,080.0	1463.0	

* QUANTITY INCLUDED IN ROADWAY ITEMS TABLE SHEET Q-1

SUMMARY OF QUANTITIES
Q-5

STATE OF CALIFORNIA - DEPARTMENT OF TRANSPORTATION
Caltrans DESIGN
FUNCTIONAL SUPERVISOR: DEANN SPANGLER
CALCULATED-DESIGNED BY: BIPAN KAUSHAL
CHECKED BY: BALJINDER BRAR
REVISED BY
DATE REVISED

LAST REVISION 04-24-15 | DATE PLOTTED => 29-JUN-2015 | TIME PLOTTED => 14:08

Dist	COUNTY	ROUTE	POST MILES TOTAL PROJECT	SHEET No.	TOTAL SHEETS
03	But	99	30.1/T37.5	86	163

REGISTERED CIVIL ENGINEER 4-27-15 DATE

4-27-15
PLANS APPROVAL DATE

REGISTERED PROFESSIONAL ENGINEER BALJINDER S. BRAR No. C 67847 Exp 6-30-15 CIVIL STATE OF CALIFORNIA

THE STATE OF CALIFORNIA OR ITS OFFICERS OR AGENTS SHALL NOT BE RESPONSIBLE FOR THE ACCURACY OR COMPLETENESS OF SCANNED COPIES OF THIS PLAN SHEET.

GUARD RAILING

LOCATION (PM)	DIRECTION NB	DIRECTION SB	SIDE L+	SIDE R+	SALVAGE CRASH CUSHION EA	SALVAGE GUARDRAIL LF	TREATED WOOD WASTE LB	ADJUST GUARDRAIL LF	MIDWEST GUARDRAIL SYSTEM (WOOD POST) LF	DOUBLE MIDWEST GUARDRAIL SYSTEM (WOOD POST) LF	ALTERNATIVE FLARED TERMINAL SYSTEM EA	ALTERNATIVE IN-LINE TERMINAL SYSTEM EA	TRANSITION RAILING (TYPE WB-31) EA	CRASH CUSHION (TYPE CAT) EA	RAIL TENSIONING ASSEMBLY EA	(N) END CAP (TYPE TC) EA	ALTERNATIVE CRASH CUSHION EA	MINOR CONCRETE (MINOR STRUCTURE) CY	(N) DRILL AND BOND DOWEL (CHEMICAL ADHESIVE) EA	CONCRETE BARRIER (TYPE 60G MODIFIED) LF	(N) MINOR CONCRETE CY	VEGETATION CONTROL (MINOR CONCRETE) SQYD	* PLACE HMA (Misc AREA) SQYD	* MINOR HOT MIX ASPHALT TON	OBJECT MARKER (TYPE L-1) EA	(N) Temp TRAFFIC PROTECTION (Const DETAILS C-14) EA	REMARKS (MGS LAYOUT TYPE)
PM R30.24 TO PM R30.27		X		X				150.00														63					11D
PM R30.27 TO PM R30.29	X			X				75.00														47			1		16B
PM R30.58 TO PM R30.59	X			X	1												1										
PM R30.58 TO PM R30.62	X		X					150.00														169					12E
PM R30.63 TO PM R30.64		X		X	1												1										
PM R31.48 TO PM R31.51	X			X		100.00	753				1		1			1				48.5	2.2	45			1		12B
PM R31.50 TO PM R31.53		X		X		140.00	983				1		1			1				48.5	2.2	46			1		12B
PM R32.18 TO PM R32.20	X			X		62.50	538				1		1			1		1.9	12			43	2.2	1.0	1	1	12B
PM R32.23 TO PM R32.26		X		X		100.00	753		25.00			1	1			1		1.9	12			117	2.2	1.0		1	12A
PM R32.35 TO PM R32.37	X			X		75.00	610					1	1			1		1.9	12			36				1	12A
PM R32.39 TO PM R32.44	X			X		231.25	1,506		190.25				1			2		3.8	24			87				2	12D
PM R32.39 TO PM R32.44		X		X		231.25	1,506		190.25				1			2		3.8	24			86				2	12D
PM R32.46 TO PM R32.49		X		X		75.00	610					1	1			1		1.9	12			36				1	12A
PM R33.32 TO PM R33.34		X		X		75.00	610					1	1			1		1.9	12			37				1	12A
PM R33.55 TO PM R33.57	X			X		75.00	610					1	1			1		1.9	12			37				1	12A
PM R33.60 TO PM R33.62		X		X		75.00	610					1	1			1		1.9	12			37				1	12A
PM R33.85 TO PM R33.87	X			X		125.00	897		50.00			1	1			1		1.9	12			57				1	12A
PM R33.93 TO PM R33.95		X		X		75.00	610					1	1			1		1.9	12			38				1	12A
PM R34.23 TO PM R34.26	X			X		137.50	968				1		1			1				94.5	5.0	35			1		12B
PM R34.24 TO PM R34.27		X		X		137.50	968										1			94.5	5.3	27					
PM R34.62 TO PM R34.64	X			X		75.00	610					1	1			1		1.9	12			37				1	12A
PM R34.65 TO PM R34.79		X		X		700.00	4,195		625.00			1	1			1		1.9	12			285				1	12A
PM R34.91 TO PM R34.93	X			X		62.50	538				1		1			1		1.9	12			44			1	1	12B
PM R34.96 TO PM R35.00		X		X		156.25	1,076		81.25			1	1			1		1.9	12			70				1	12A
PM R34.96 TO PM R34.98		X	X			62.50	538		25.00	75.00			1	1	1	1		1.9	12			124			1	1	12E
PM R35.29 TO PM R35.31	X			X		62.50	538				1		1			1		1.9	12			44			1	1	12B
PM R35.29 TO PM R35.31	X		X			62.50	538		25.00	75.00			1	1	1	1		1.9	12			124			1	1	12E
PM R35.33 TO PM R35.35		X		X		75.00	610					1	1			1		1.9	12			36				1	12A
PM R35.33 TO PM R35.35		X	X			75.00	610		25.00	75.00			1	1	1	1		1.9	12			124			1	1	12E
PM R36.28 TO PM R36.31	X			X		100.00	753				1		1			1				48.5	1.0	42			1		12B
PM R36.30 TO PM R36.33		X		X		100.00	753				1		1			1				48.5	1.0	42			1		12B
PM R37.18 TO PM R37.20	X			X		75.00	610					1	1			1						69	2.2	1.0			12A
PM R37.17 TO PM R37.20	X		X			118.75	861		25.00	75.00			1	1	1	1		1.9	12			124	2.2	1.0	1	1	12E
PM R37.25 TO PM R37.27		X		X				75.00															2.2	1.0			12A
PM R37.26 TO PM R37.29		X	X			131.25	932		25.00	75.00			1	1	1	1		1.9	12			124	2.2	1.0	1	1	12E
SUBTOTAL FROM SHEET SQ-3							2,510																				
SUBTOTAL					2	3571.25	28,204	450.00	1286.75	375.00	8	13	28	5	5		3	45.6		383.0		2332	13.2	6.0	14		
TOTAL					2	3571.25	28,204	450.00	1286.75	375.00	8	13	28	5	5		3	45.6		383.0		2332			14		

* QUANTITY INCLUDED IN ROADWAY ITEMS TABLE SHEET Q-1
(N) = NOT A SEPARATE PAY ITEM, FOR INFORMATION ONLY

REVISED BY | DATE REVISED
BIPAN KAUSHAL | BALJINDER BRAR
CALCULATED-DESIGNED BY | CHECKED BY
FUNCTIONAL SUPERVISOR | DEANN SPANGLER
STATE OF CALIFORNIA - DEPARTMENT OF TRANSPORTATION
Caltrans® DESIGN

SUMMARY OF QUANTITIES
Q-6

LAST REVISION 04-24-15 | DATE PLOTTED => 29-JUN-2015 | TIME PLOTTED => 14:08

Dist	COUNTY	ROUTE	POST MILES TOTAL PROJECT	SHEET No.	TOTAL SHEETS
03	But	99	30.1/T37.5	87	163

REGISTERED CIVIL ENGINEER 4-27-15 DATE

4-27-15
PLANS APPROVAL DATE

REGISTERED PROFESSIONAL ENGINEER BALJINDER S. BRAR No. C 67847 Exp 6-30-15 CIVIL STATE OF CALIFORNIA

THE STATE OF CALIFORNIA OR ITS OFFICERS OR AGENTS SHALL NOT BE RESPONSIBLE FOR THE ACCURACY OR COMPLETENESS OF SCANNED COPIES OF THIS PLAN SHEET.

OVERSIDE DRAIN & CMP DOWNDRAIN (TYPE 1)

LOCATION (PM)	DIRECTION NB	DIRECTION SB	SIDE L†	SIDE R†	REMOVE ASPHALT CONCRETE OVERSIDE DRAIN EA	REMOVE DOWNDRAIN EA	12" ENTRANCE TAPER EA	12" CORRUGATED STEEL PIPE DOWNDRAIN (.064" THICK) LF	12" ANCHOR ASSEMBLY EA	12" DOWNDRAIN SLIP JOINT EA	PLACE HOT MIX ASPHALT (Misc AREA) * SQYD	MINOR HOT MIX ASPHALT * TON	ROCK SLOPE PROTECTION (NO. 1, METHOD B) TON	ROCK SLOPE PROTECTION FABRIC (CLASS 8) SQYD	REMARKS
PM R32.18	X			X		1	1	30	3	1	9.5	1.6	2.7	6.3	CSP DD PER L-9, RSP(8'x3'x1.5')
PM R32.19		X		X		1	1	30	3	1	9.5	1.6	2.7	6.3	CSP DD PER L-9, RSP(8'x3'x1.5')
PM R32.30	X			X	1						10.6	1.8			AC OSD PER L-9 (20')
PM R32.31		X		X							10.6	1.8			AC OSD PER L-9 (20')
PM R32.33		X		X	1						10.6	1.8			AC OSD PER L-9 (20')
PM R32.46	X	X		X		1	2	80	8	2	19.0	3.2	5.4	12.7	CSP DD PER L-10, RSP(8'x3'x1.5')
PM R33.32	X	X		X			2	70	6	2	19.0	3.2	5.4	12.7	CSP DD PER L-13, RSP(8'x3'x1.5')
PM R33.37	X			X							10.6	1.8			AC OSD PER L-13 (20')
PM R33.40		X		X							10.6	1.8			AC OSD PER L-13 (20')
PM R33.49	X			X									2.7	6.3	RSP(8'x3'x1.5') PER L-13
PM R33.56	X	X		X		2	2	70	6	2	19.0	3.2	5.4	12.7	CSP DD PER L-14, RSP(8'x3'x1.5')
PM R33.92	X			X							14.3	2.5	8.1	14.0	AC OSD PER L-15, RSP(12'x6'x1.5')
PM R33.93		X		X							14.3	2.5	8.1	14.0	AC OSD PER L-15, RSP(12'x6'x1.5')
PM R33.95		X		X	1						10.6	1.8	8.1	14.0	AC OSD PER L-15, RSP(12'x6'x1.5')
PM R34.22	X			X	1						14.3	2.5			AC OSD PER L-16 (30')
PM R34.27	X			X							10.6	1.8			AC OSD PER L-16 (20')
PM R34.27		X		X	1						14.3	2.5			AC OSD PER L-16 (30')
PM R34.29		X		X	1						14.3	2.5			AC OSD PER L-16 (30')
PM R34.32	X			X	1						14.3	2.5			AC OSD PER L-16 (30')
PM R34.35		X		X							14.3	2.5			AC OSD PER L-16 (30')
PM R34.36		X		X	1						10.6	1.8			AC OSD PER L-16 (20')
PM R34.46		X		X									2.7	6.3	RSP(8'x3'x1.5') PER L-17
PM R35.03	X			X							10.6	1.8			AC OSD PER L-19 (20')
PM R35.05		X		X							10.6	1.8			AC OSD PER L-19 (20')
PM R35.17		X		X				10					2.7	6.3	CSP DD PER L-19, RSP(8'x3'x1.5')
PM R35.18		X		X			1	20	2	1	9.5	1.6	2.7	6.3	CSP DD PER L-20, RSP(8'x3'x1.5')
PM R35.24		X		X									2.7	6.3	RSP(8'x3'x1.5') PER L-20
PM R35.49	X	X		X		2	2	70	6	2	19.0	3.2	5.3	12.7	CSP DD PER L-21, RSP(8'x3'x1.5')
PM R37.10	X			X									2.7	6.3	RSP(8'x3'x1.5') PER L-26
PM R37.13		X		X									2.7	6.3	RSP(8'x3'x1.5') PER L-27
SUBTOTAL					8	7	11	380	34	11	310.6	53.1	70.1	149.5	
TOTAL					8	7	11	380	34	11			70.1	149.5	

* QUANTITY INCLUDED IN ROADWAY ITEMS TABLE SHEET Q-1

IRRIGATION CONDUIT

LOCATION (PM)	DIRECTION NB	DIRECTION SB	SIDE L†	SIDE R†	CONDUIT CORRUGATED STEEL PIPE (0.064 INCH THICK) 6" LF	CONDUIT CORRUGATED STEEL PIPE (0.064 INCH THICK) 8" LF	CB	OL	(N) PLASTIC PIPE (CLASS 315) (SUPPLY LINE) SIZE (INCH)	(N) CONTROL AND NEUTRAL CONDUCTOR ELECTRICAL CONDUIT SIZE (INCH)
PM R32.32		X		X	--	30			2	2
PM R33.37	X			X	--	28			3	2
PM R33.39	X			X	18	--	X		3	2
PM R34.18	X			X	18	--	X		3	2
PM R34.32		X		X	18	--	X		3	2
PM R35.03	X			X	--	28			3	2
PM R35.05		X		X	--	28			2	2
PM R35.06	X			X	6	--	X		3	2
PM R35.06		X		X	21	--	X		3	2
TOTAL					81	114				

(N) - NOT A SEPARATE PAY ITEM FOR INFORMATION ONLY

SHOULDER RUMBLE STRIP (HMA, GROUND-IN INDENTATIONS)

LOCATION (PM)	DIRECTION NB	DIRECTION SB	SIDE L†	SIDE R†	STA
PM R36.60 TO PM R37.18	X		X	X	64
PM R36.60 TO PM R37.21		X	X	X	66
PM R37.26 TO PM T37.50	X		X	X	27
PM R37.28 TO PM T37.50		X	X	X	25
TOTAL					182

SUMMARY OF QUANTITIES
Q-7

REVISED BY | DATE REVISED
BIPAN KAUSHAL | BALJINDER BRAR
CALCULATED-DESIGNED BY | CHECKED BY
FUNCTIONAL SUPERVISOR: DEANN SPANGLER
STATE OF CALIFORNIA - DEPARTMENT OF TRANSPORTATION
Caltrans DESIGN

LAST REVISION 04-24-15 | DATE PLOTTED => 29-JUN-2015 | TIME PLOTTED => 14:08

Dist	COUNTY	ROUTE	POST MILES TOTAL PROJECT	SHEET No.	TOTAL SHEETS
03	But	99	30.1/T37.5	88	163

REGISTERED CIVIL ENGINEER 4-27-15 DATE

4-27-15
PLANS APPROVAL DATE

REGISTERED PROFESSIONAL ENGINEER BALJINDER S. BRAR No. C 67847 Exp. 6-30-15 CIVIL STATE OF CALIFORNIA

THE STATE OF CALIFORNIA OR ITS OFFICERS OR AGENTS SHALL NOT BE RESPONSIBLE FOR THE ACCURACY OR COMPLETENESS OF SCANNED COPIES OF THIS PLAN SHEET.

ADJUST DOWNDRAIN

LOCATION (PM)	DIRECTION		SIDE		(N) REMOVE DOWNDRAIN	(N) 12" ENTRANCE TAPER	(N) 12" CORRUGATED STEEL PIPE DOWNDRAIN (.064" THICK)	(N) 12" ANCHOR ASSEMBLY	(N) PLACE HOT MIX ASPHALT (Misc AREA)	* MINOR HOT MIX ASPHALT	ADJUST DOWNDRAIN	REMARKS
	NB	SB	L†	R†	EA	EA	LF	EA	SQYD	TON	EA	
PM R33.49	X			X	1	1	6	1	9.5	1.6	1	REMOVE CSP DD (9.7')
PM R33.52		X		X	1	1	6	1	9.5	1.6	1	REMOVE CSP DD (9.7')
PM R33.69	X			X	1	1	6	1	9.5	1.6	1	REMOVE CSP DD (9.7')
PM R33.76		X		X	1	1	6	1	9.5	1.6	1	REMOVE CSP DD (9.7')
PM R34.38	X			X	1	1	6	1	9.5	1.6	1	REMOVE CSP DD (9.7')
PM R34.46		X		X	1	1	6	1	9.5	1.6	1	REMOVE CSP DD (9.7')
PM R34.52	X			X	1	1	6	1	9.5	1.6	1	REMOVE CSP DD (9.7')
PM R34.80	X			X	1	1	6	1	9.5	1.6	1	REMOVE CSP DD (9.7')
PM R34.82		X		X	1	1	6	1	9.5	1.6	1	REMOVE CSP DD (9.7')
PM R34.90	X			X	1	1	6	1	9.5	1.6	1	REMOVE CSP DD (9.7')
PM R35.14	X			X	1	1	6	1	9.5	1.6	1	REMOVE CSP DD (9.7')
PM R35.15		X		X	1	1	6	1	9.5	1.6	1	REMOVE CSP DD (9.7')
PM R35.17		X		X	1	1	6	1	9.5	1.6	1	REMOVE CSP DD (9.7')
PM R35.24	X			X	1	1	6	1	9.5	1.6	1	REMOVE CSP DD (9.7')
PM R35.24		X		X	1	1	6	1	9.5	1.6	1	REMOVE CSP DD (9.7')
PM R35.29	X			X	1	1	6	1	9.5	1.6	1	REMOVE CSP DD (9.7')
PM R35.30		X		X	1	1	6	1	9.5	1.6	1	REMOVE CSP DD (9.7')
PM R37.10	X			X	1	1	6	1	9.5	1.6	1	REMOVE CSP DD (9.7')
PM R37.13		X		X	1	1	6	1	9.5	1.6	1	REMOVE CSP DD (9.7')
PM R37.29		X		X	1	1	6	1	9.5	1.6	1	REMOVE CSP DD (9.7')
PM T37.36	X			X	1	1	6	1	9.5	1.6	1	REMOVE CSP DD (9.7')
SUBTOTAL										33.6	21	
TOTAL											21	

* QUANTITY INCLUDED IN ROADWAY ITEMS TABLE SHEET Q-1
(N) = NOT A SEPARATE PAY ITEM, FOR INFORMATION ONLY

ADJUST OVERSIDE DRAIN

LOCATION (PM)	DIRECTION		SIDE		(N) REMOVE ASPHALT CONCRETE OVERSIDE DRAIN	(N) PLACE HOT MIX ASPHALT (Misc AREA)	* MINOR HOT MIX ASPHALT	ADJUST OVERSIDE DRAIN	REMARKS
	NB	SB	L†	R†	EA	SQYD	TON	EA	
PM 30.24	X			X	1	9.5	1.2	1	REMOVE OSD (10'x3.3')
PM R30.30	X			X	1	9.5	1.2	1	REMOVE OSD (10'x3.3')
PM R30.35	X			X	1	9.5	1.2	1	REMOVE OSD (10'x3.3')
PM R30.37	X			X	1	9.5	1.2	1	REMOVE OSD (10'x3.3')
PM R32.23		X		X	1	9.5	1.2	1	REMOVE OSD (10'x3.3')
PM R32.39	X			X	1	9.5	1.2	1	REMOVE OSD (10'x3.3')
SUBTOTAL							7.2	6	
TOTAL								6	

* QUANTITY INCLUDED IN ROADWAY ITEMS TABLE SHEET Q-1
(N) = NOT A SEPARATE PAY ITEM, FOR INFORMATION ONLY

TEMPORARY DRAINAGE INLET PROTECTION

LOCATION				TEMPORARY DRAINAGE INLET PROTECTION	
PM	DIRECTION	SIDE	OFFSET (FROM ETW)	SIZE	EA
	NB/SB	L†/R†	LF	INCH X INCH	
R32.23	NB	R†	8	36 X 24	1
R32.75	NB	R†	8	36 X 24	1
R32.77	NB	R†	8	36 X 24	1
R32.82	NB	R†	8	36 X 24	1
R32.86	NB	R†	8	36 X 24	1
R32.91	NB	R†	8	36 X 24	1
R32.98	NB	R†	8	36 X 24	1
R33.02	NB	R†	8	36 X 24	1
R33.07	NB	R†	8	36 X 24	1
R33.13	NB	R†	8	36 X 24	1
R33.13	NB	R†	6	36 X 24	1
R33.15	NB	R†	8	36 X 24	1
R33.15	NB	R†	22	36 X 24	1
R33.16	NB	R†	15	36 X 24	1
R33.16	NB	R†	22	36 X 24	1
R32.60	SB	R†	6	36 X 24	1
R32.61	SB	R†	6	36 X 24	1
R32.62	SB	R†	6	36 X 24	1
R32.67	SB	R†	6	36 X 24	1
R32.72	SB	R†	8	36 X 24	1
R32.75	SB	R†	8	36 X 24	1
R32.76	SB	R†	8	36 X 24	1
R32.81	SB	R†	8	36 X 24	1
R32.85	SB	R†	8	36 X 24	1
R32.90	SB	R†	8	36 X 24	1
R32.98	SB	R†	8	36 X 24	1
R33.02	SB	R†	8	36 X 24	1
R33.07	SB	R†	8	36 X 24	1
TOTAL					28

SUMMARY OF QUANTITIES
Q-8

STATE OF CALIFORNIA - DEPARTMENT OF TRANSPORTATION
Caltrans® DESIGN

FUNCTIONAL SUPERVISOR: DEANN SPANGLER
CALCULATED-DESIGNED BY: BIPAN KAUSHAL
CHECKED BY: BALJINDER BRAR
REVISED BY
DATE REVISED

LAST REVISION 04-24-15
DATE PLOTTED => 29-JUN-2015
TIME PLOTTED => 14:08

Dist	COUNTY	ROUTE	POST MILES TOTAL PROJECT	SHEET No.	TOTAL SHEETS
03	But	99	30.1/T37.5	89	163

LICENSED LANDSCAPE ARCHITECT

4-27-15
PLANS APPROVAL DATE

LICENSED LANDSCAPE ARCHITECT JAMES G. WILLIAMSON No. 5415 Signature 02-29-16 Renewal Date 04-27-15 Date STATE OF CALIFORNIA

THE STATE OF CALIFORNIA OR ITS OFFICERS OR AGENTS SHALL NOT BE RESPONSIBLE FOR THE ACCURACY OR COMPLETENESS OF SCANNED COPIES OF THIS PLAN SHEET.

IRRIGATION LEGEND

SYMBOL	DESCRIPTION	SPRAY PATTERN	OPERATING PRESSURE (psi)	PRESSURE COMPENSATING	PLUS/MINUS 5% DISCHARGE: GALLONS PER MINUTE (GPM)	PLUS/MINUS 5% DISCHARGE: GALLONS PER HOUR (GPH)	PLUS/MINUS 5%: RADIUS (ft)	PLUS/MINUS 5%: WIDTH x LENGTH (ft)	FLOW SHUTOFF DEVICE	SPRINKLER ASSEMBLY: RISER: TYPE	SPRINKLER ASSEMBLY: RISER: MATERIAL: PLASTIC	SPRINKLER ASSEMBLY: RISER: MATERIAL: GALVANIZED	SPRINKLER ASSEMBLY: RISER: SIZE (IPS INCH)	SPRINKLER ASSEMBLY: RISER: HEIGHT (INCH)	SPRINKLER ASSEMBLY: POP-UP: TYPE	SPRINKLER ASSEMBLY: POP-UP: INLET CONNECTION (NPT INCH)	SPRINKLER ASSEMBLY: POP-UP: SPRINKLER PROTECTOR (TYPE)	SPRINKLER ASSEMBLY: TREE WELL: HEIGHT (INCH)	REMARKS
1	SPRINKLER ASSEMBLY (RISER)	H	30	--	5.5	--	44	--	--	IV	--	X	¾	12	--	--	--	--	SIDE IMPACT
8	SPRINKLER ASSEMBLY (POP-UP GEAR DRIVEN)	H	30	--	4.2	--	38	--	--	--	--	--	--	--	II	¾	I	--	12" POP-UP

X IN BOX DENOTES REQUIREMENT

APPLICABLE WHEN CIRCLED BELOW:

1 - SEE SPECIAL PROVISIONS.
2 - IF A PRESSURE COMPENSATING DEVICE IS SPECIFIED, THE DISCHARGE AND RADII SHOWN REFLECT ITS USE.
3 - VINYL-COATED CAST IRON HOUSING.
4 - SWING JOINTS REQUIRED ADJACENT TO SHOULDERS, CURBS, SIDEWALKS, AND DIKES.
5 - UNLESS OTHERWISE SHOWN ON PLANS.

IRRIGATION SPRINKLER SCHEDULE

ISS-1

REVISED BY	DATE REVISED

CALCULATED-DESIGNED BY: J. WILLIAMSON
CHECKED BY: T.C. JOHNSON
SENIOR LANDSCAPE ARCHITECT: T.C. JOHNSON

STATE OF CALIFORNIA - DEPARTMENT OF TRANSPORTATION
Caltrans
LANDSCAPE ARCHITECTURE

LAST REVISION 03-19-15
DATE PLOTTED => 29-JUN-2015
TIME PLOTTED => 14:08

Dist	COUNTY	ROUTE	POST MILES TOTAL PROJECT	SHEET No.	TOTAL SHEETS
03	But	99	30.1/T37.5	90	163

LICENSED LANDSCAPE ARCHITECT

4-27-15
PLANS APPROVAL DATE

LICENSED LANDSCAPE ARCHITECT JAMES G. WILLIAMSON No. 5415 Signature 02-29-16 Renewal Date 04-27-15 Date STATE OF CALIFORNIA

THE STATE OF CALIFORNIA OR ITS OFFICERS OR AGENTS SHALL NOT BE RESPONSIBLE FOR THE ACCURACY OR COMPLETENESS OF SCANNED COPIES OF THIS PLAN SHEET.

NOTES:

1. FOR ACCURATE RIGHT OF WAY DATA, CONTACT RIGHT OF WAY ENGINEERING AT THE DISTRICT OFFICE.
2. DUPLICATE IRRIGATION CONTROLLER IDENTIFICATION LETTERS HAVE BEEN CHANGED TO "B2", "C2", AND "D2" FOR CLARIFICATION PURPOSES.
3. ALL MAINLINE PIPE AT MANIFOLDS SHALL MATCH BALL VALVE SIZE AT MANIFOLD.

LEGEND:

ROADWAY WORK AFFECTING EXISTING IRRIGATION SYSTEM

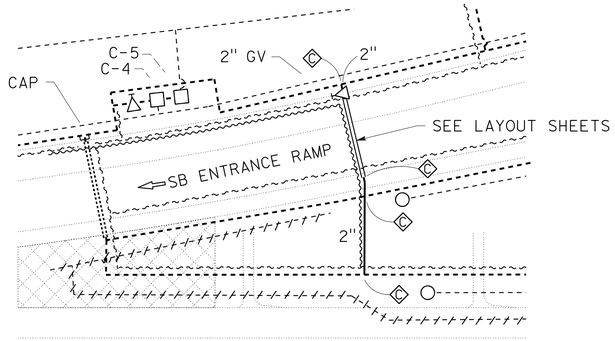

DETAIL A
SCALE 1"=20'

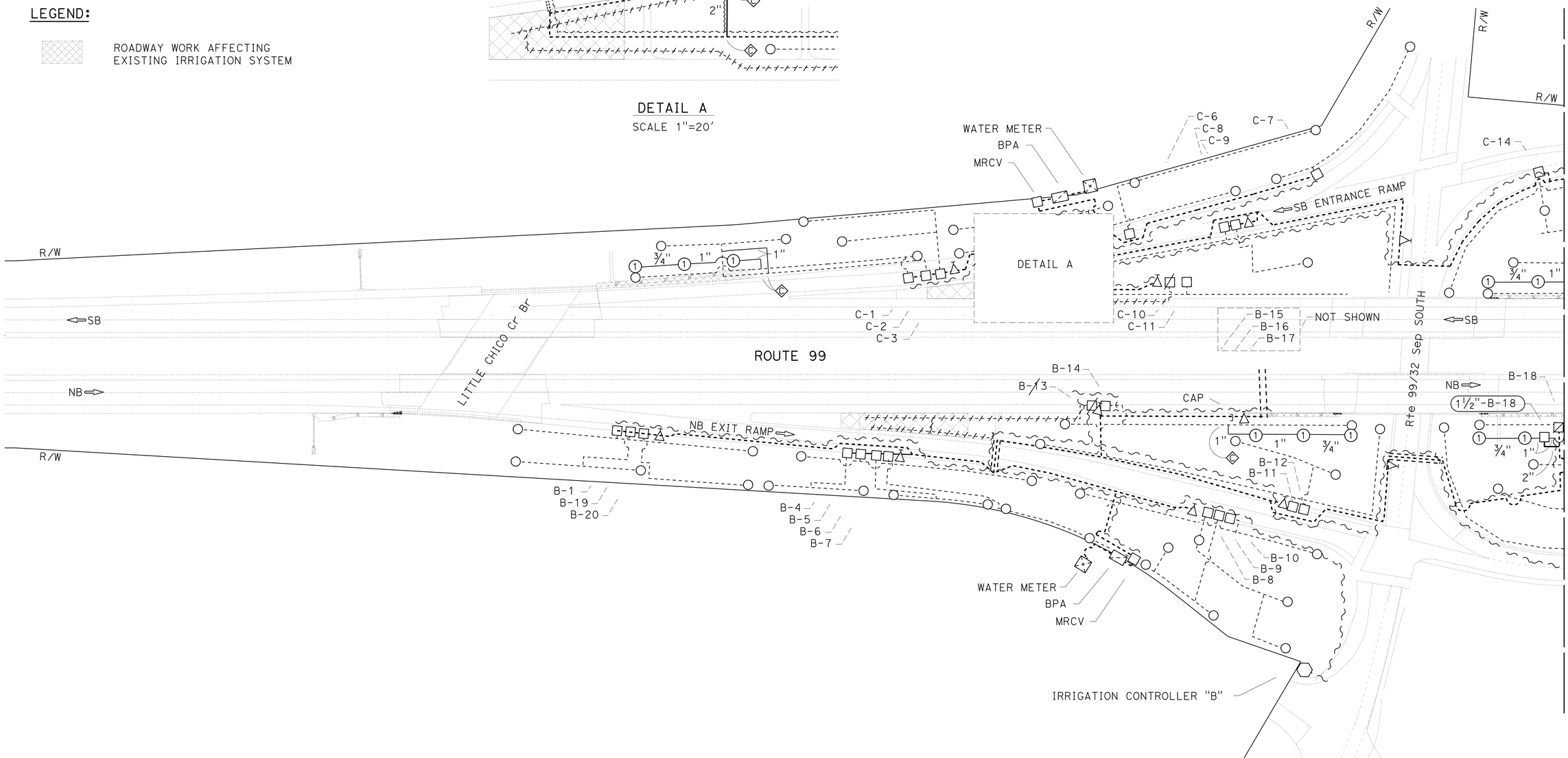

IRRIGATION PLAN

SCALE 1'=50"

APPROVED FOR IRRIGATION WORK ONLY

IP-1

STATE OF CALIFORNIA - DEPARTMENT OF TRANSPORTATION
LANDSCAPE ARCHITECTURE
Caltrans®

SENIOR LANDSCAPE ARCHITECT: T.C. JOHNSON
CALCULATED-DESIGNED BY: J. WILLIAMSON
CHECKED BY: T.C. JOHNSON
REVISED BY
DATE REVISED

LAST REVISION 04-21-15
DATE PLOTTED => 29-JUN-2015
TIME PLOTTED => 14:08

Dist	COUNTY	ROUTE	POST MILES TOTAL PROJECT	SHEET No.	TOTAL SHEETS
03	But	99	30.1/T37.5	91	163

LICENSED LANDSCAPE ARCHITECT

4-27-15
PLANS APPROVAL DATE

LICENSED LANDSCAPE ARCHITECT
JAMES G. WILLIAMSON
No. 5415
Signature
02-29-16
Renewal Date
04-27-15
Date
STATE OF CALIFORNIA

THE STATE OF CALIFORNIA OR ITS OFFICERS OR AGENTS SHALL NOT BE RESPONSIBLE FOR THE ACCURACY OR COMPLETENESS OF SCANNED COPIES OF THIS PLAN SHEET.

NOTE:

FOR ACCURATE RIGHT OF WAY DATA, CONTACT RIGHT OF WAY ENGINEERING AT THE DISTRICT OFFICE.

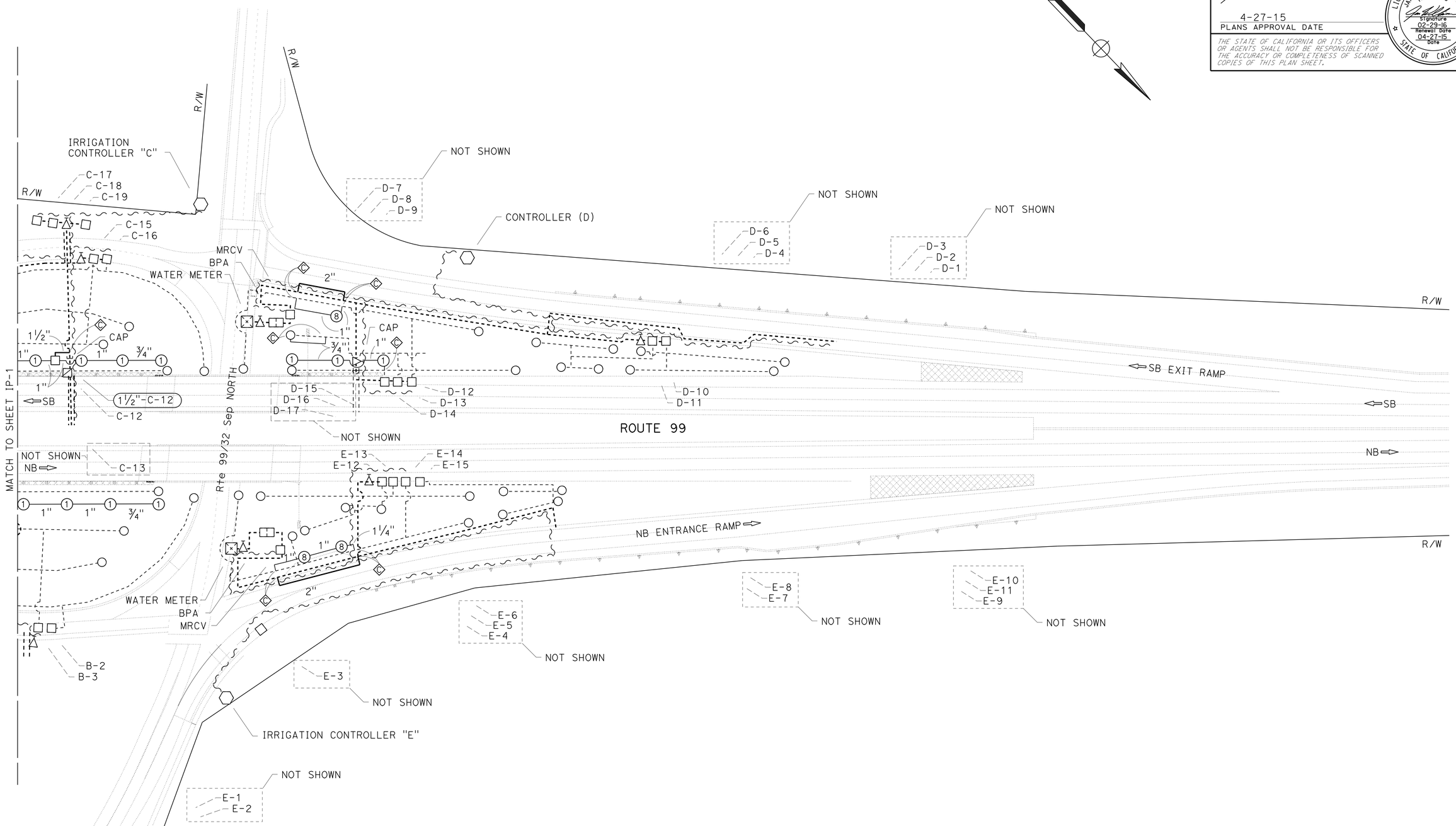

IRRIGATION PLAN

SCALE 1'=50"

APPROVED FOR IRRIGATION WORK ONLY

IP-2

STATE OF CALIFORNIA - DEPARTMENT OF TRANSPORTATION
Caltrans
LANDSCAPE ARCHITECTURE

SENIOR LANDSCAPE ARCHITECT: T.C. JOHNSON
CALCULATED-DESIGNED BY: J. WILLIAMSON
CHECKED BY: T.C. JOHNSON
REVISED BY
DATE REVISED

LAST REVISION 04-21-15
DATE PLOTTED => 29-JUN-2015
TIME PLOTTED => 14:08

Dist	COUNTY	ROUTE	POST MILES TOTAL PROJECT	SHEET No.	TOTAL SHEETS
03	But	99	30.1/T37.5	92	163

LICENSED LANDSCAPE ARCHITECT

4-27-15
PLANS APPROVAL DATE

LICENSED LANDSCAPE ARCHITECT JAMES G. WILLIAMSON No. 5415 Signature 02-29-16 Renewal Date 04-27-15 Date STATE OF CALIFORNIA

THE STATE OF CALIFORNIA OR ITS OFFICERS OR AGENTS SHALL NOT BE RESPONSIBLE FOR THE ACCURACY OR COMPLETENESS OF SCANNED COPIES OF THIS PLAN SHEET.

NOTE:

FOR ACCURATE RIGHT OF WAY DATA, CONTACT RIGHT OF WAY ENGINEERING AT THE DISTRICT OFFICE.

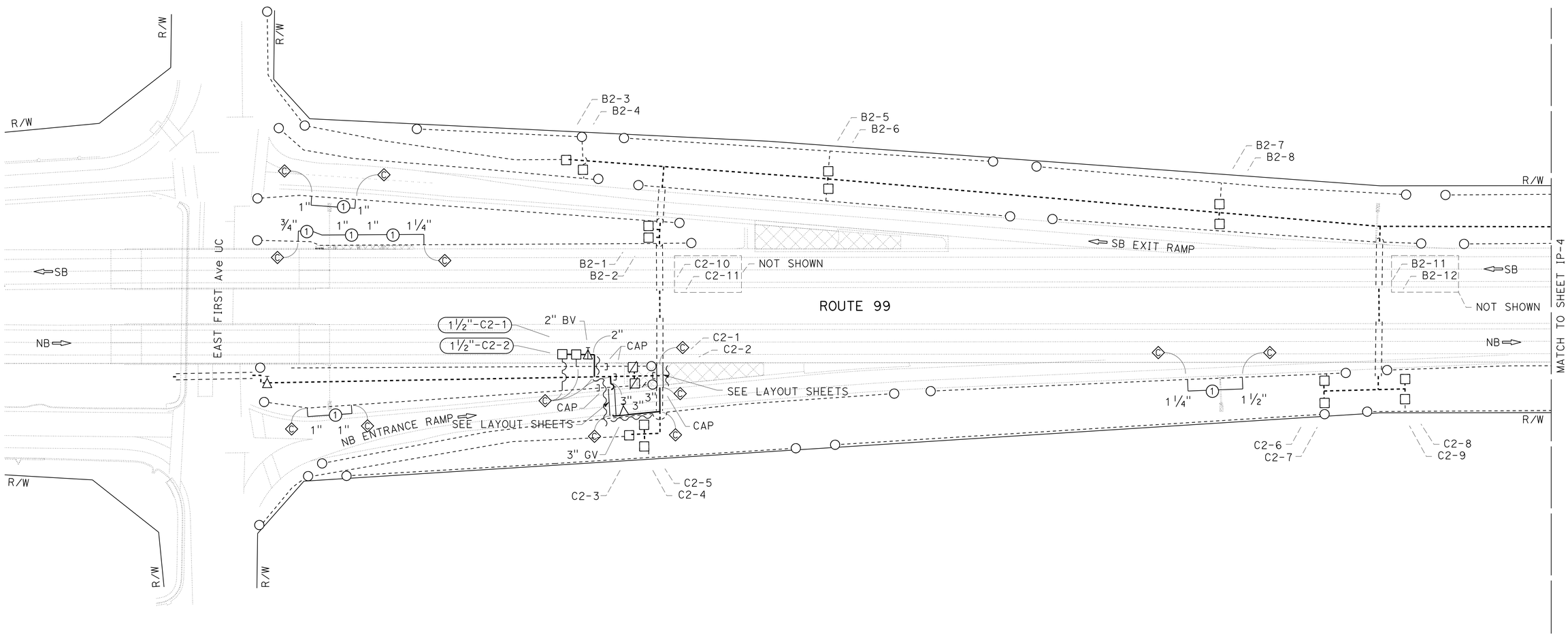

IRRIGATION PLAN

SCALE 1'=50"

APPROVED FOR IRRIGATION WORK ONLY

IP-3

STATE OF CALIFORNIA - DEPARTMENT OF TRANSPORTATION
LANDSCAPE ARCHITECTURE
Caltrans

SENIOR LANDSCAPE ARCHITECT: T.C. JOHNSON
CALCULATED-DESIGNED BY: J. WILLIAMSON
CHECKED BY: T.C. JOHNSON
REVISED BY
DATE REVISED

LAST REVISION 03-19-15
DATE PLOTTED => 29-JUN-2015
TIME PLOTTED => 14:08

Dist	COUNTY	ROUTE	POST MILES TOTAL PROJECT	SHEET No.	TOTAL SHEETS
03	But	99	30.1/T37.5	93	163

LICENSED LANDSCAPE ARCHITECT

4-27-15
PLANS APPROVAL DATE

LICENSED LANDSCAPE ARCHITECT JAMES G. WILLIAMSON No. 5415 Signature 02-29-16 Renewal Date 04-27-15 Date STATE OF CALIFORNIA

THE STATE OF CALIFORNIA OR ITS OFFICERS OR AGENTS SHALL NOT BE RESPONSIBLE FOR THE ACCURACY OR COMPLETENESS OF SCANNED COPIES OF THIS PLAN SHEET.

NOTE:

FOR ACCURATE RIGHT OF WAY DATA, CONTACT
RIGHT OF WAY ENGINEERING AT THE DISTRICT OFFICE.

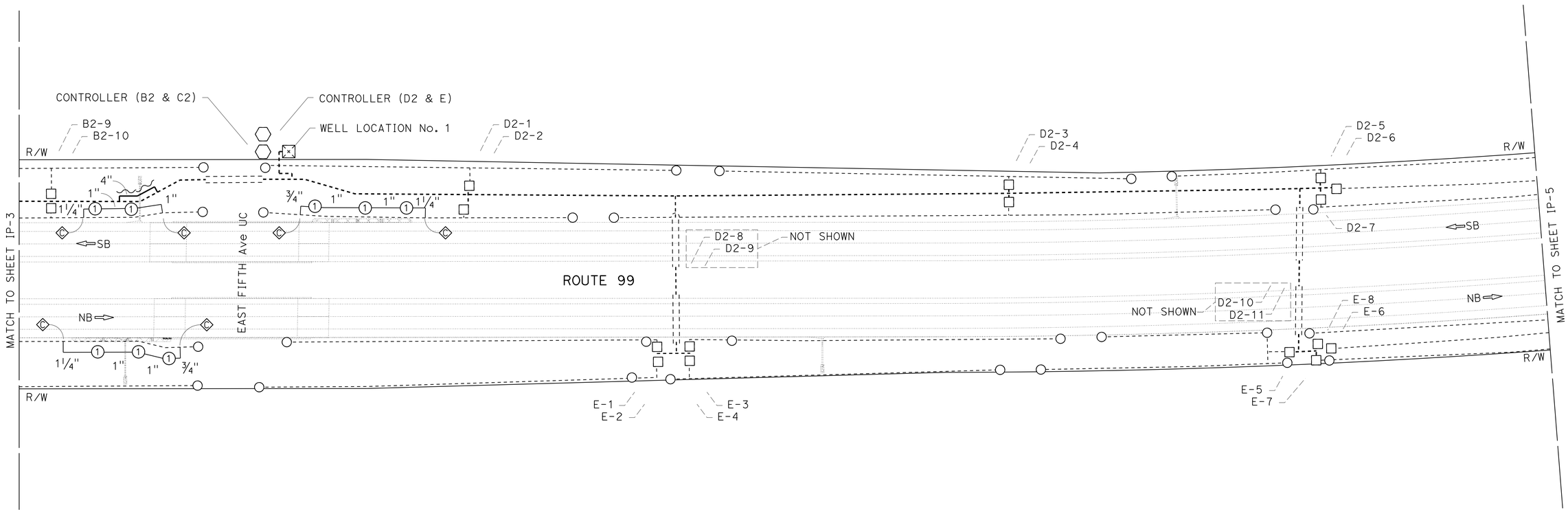

IRRIGATION PLAN

SCALE 1'=50"

APPROVED FOR IRRIGATION WORK ONLY

IP-4

STATE OF CALIFORNIA - DEPARTMENT OF TRANSPORTATION
Caltrans
LANDSCAPE ARCHITECTURE

SENIOR LANDSCAPE ARCHITECT: T.C. JOHNSON
CALCULATED-DESIGNED BY: J. WILLIAMSON
CHECKED BY: T.C. JOHNSON
REVISED BY
DATE REVISED

LAST REVISION 04-21-15
DATE PLOTTED => 29-JUN-2015
TIME PLOTTED => 14:08

Dist	COUNTY	ROUTE	POST MILES TOTAL PROJECT	SHEET No.	TOTAL SHEETS
03	But	99	30.1/T37.5	94	163

LICENSED LANDSCAPE ARCHITECT

4-27-15
PLANS APPROVAL DATE

LICENSED LANDSCAPE ARCHITECT
JAMES G. WILLIAMSON
No. 5415
Signature
02-29-16
Renewal Date
04-27-15
Date
STATE OF CALIFORNIA

THE STATE OF CALIFORNIA OR ITS OFFICERS OR AGENTS SHALL NOT BE RESPONSIBLE FOR THE ACCURACY OR COMPLETENESS OF SCANNED COPIES OF THIS PLAN SHEET.

NOTE:

FOR ACCURATE RIGHT OF WAY DATA, CONTACT
RIGHT OF WAY ENGINEERING AT THE DISTRICT OFFICE.

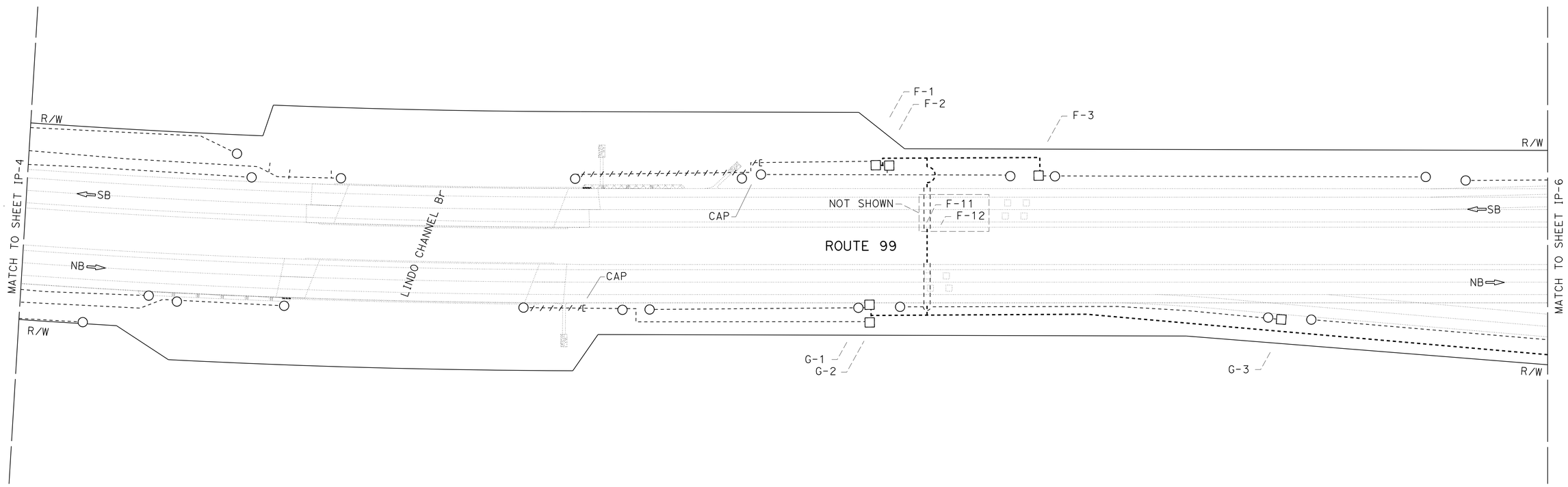

APPROVED FOR IRRIGATION WORK ONLY

IRRIGATION PLAN

SCALE 1'=50"

IP-5

REVISED BY	DATE REVISED

CALCULATED-DESIGNED BY	CHECKED BY
J. WILLIAMSON	T.C. JOHNSON

SENIOR LANDSCAPE ARCHITECT
T.C. JOHNSON

STATE OF CALIFORNIA - DEPARTMENT OF TRANSPORTATION
Caltrans
LANDSCAPE ARCHITECTURE

LAST REVISION 04-21-15
DATE PLOTTED => 29-JUN-2015
TIME PLOTTED => 14:08

Dist	COUNTY	ROUTE	POST MILES TOTAL PROJECT	SHEET No.	TOTAL SHEETS
03	But	99	30.1/T37.5	95	163

LICENSED LANDSCAPE ARCHITECT

4-27-15
PLANS APPROVAL DATE

LICENSED LANDSCAPE ARCHITECT JAMES G. WILLIAMSON No. 5415 Signature 02-29-16 Renewal Date 04-27-15 Date STATE OF CALIFORNIA

THE STATE OF CALIFORNIA OR ITS OFFICERS OR AGENTS SHALL NOT BE RESPONSIBLE FOR THE ACCURACY OR COMPLETENESS OF SCANNED COPIES OF THIS PLAN SHEET.

NOTE:

FOR ACCURATE RIGHT OF WAY DATA, CONTACT RIGHT OF WAY ENGINEERING AT THE DISTRICT OFFICE.

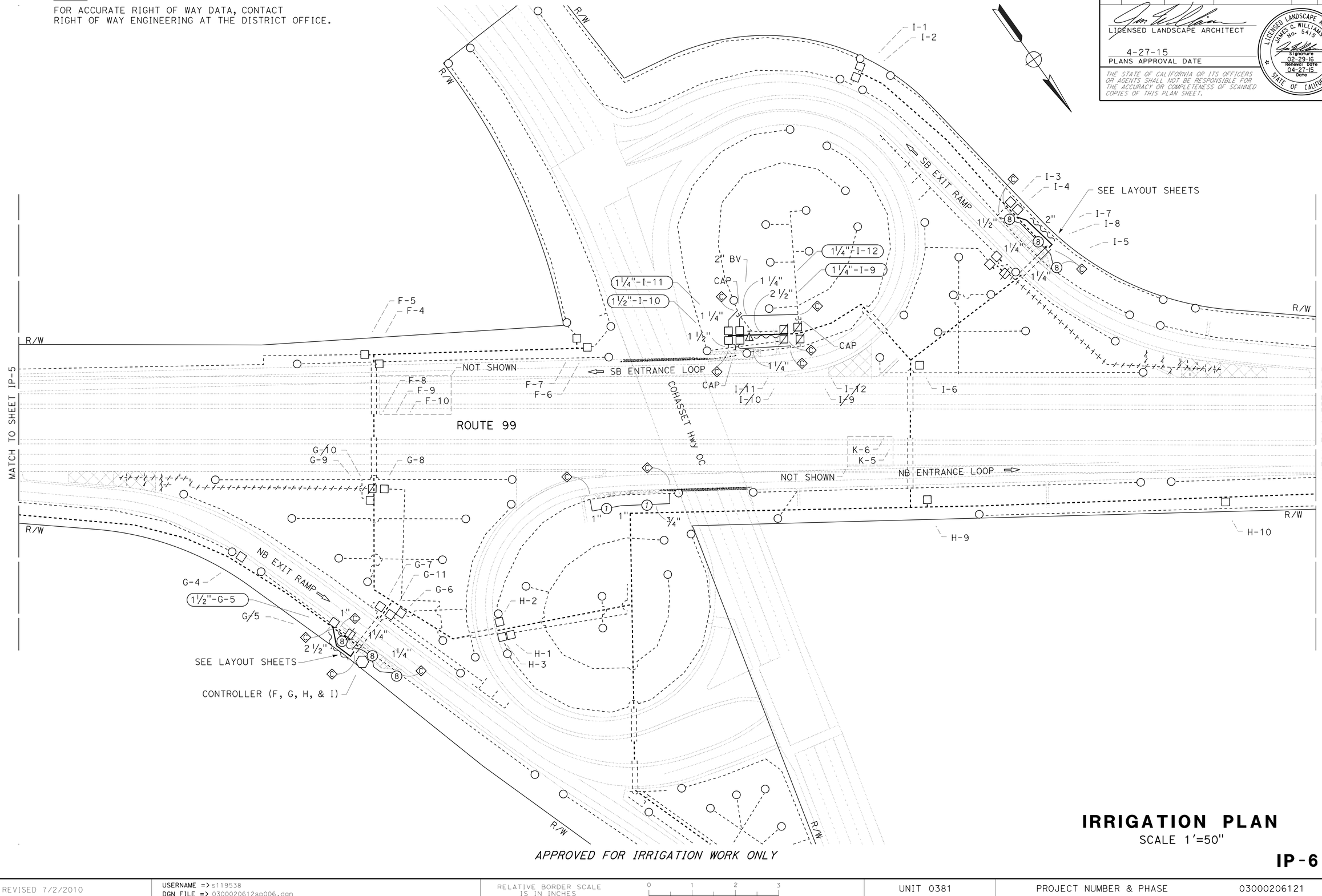

APPROVED FOR IRRIGATION WORK ONLY

IRRIGATION PLAN

SCALE 1'=50"

IP-6

STATE OF CALIFORNIA - DEPARTMENT OF TRANSPORTATION

Caltrans®

LANDSCAPE ARCHITECTURE

SENIOR LANDSCAPE ARCHITECT: T.C. JOHNSON

CALCULATED-DESIGNED BY: J. WILLIAMSON

CHECKED BY: T.C. JOHNSON

REVISED BY

DATE REVISED

LAST REVISION 04-21-15

DATE PLOTTED => 29-JUN-2015

TIME PLOTTED => 14:08

Dist	COUNTY	ROUTE	POST MILES TOTAL PROJECT	SHEET No.	TOTAL SHEETS
03	But	99	30.1/T37.5	96	163

LICENSED LANDSCAPE ARCHITECT

4-27-15
PLANS APPROVAL DATE

LICENSED LANDSCAPE ARCHITECT
JAMES G. WILLIAMSON
No. 5415
Signature
02-29-16
Renewal Date
04-27-15
Date
STATE OF CALIFORNIA

THE STATE OF CALIFORNIA OR ITS OFFICERS OR AGENTS SHALL NOT BE RESPONSIBLE FOR THE ACCURACY OR COMPLETENESS OF SCANNED COPIES OF THIS PLAN SHEET.

NOTE:

FOR ACCURATE RIGHT OF WAY DATA, CONTACT
RIGHT OF WAY ENGINEERING AT THE DISTRICT OFFICE.

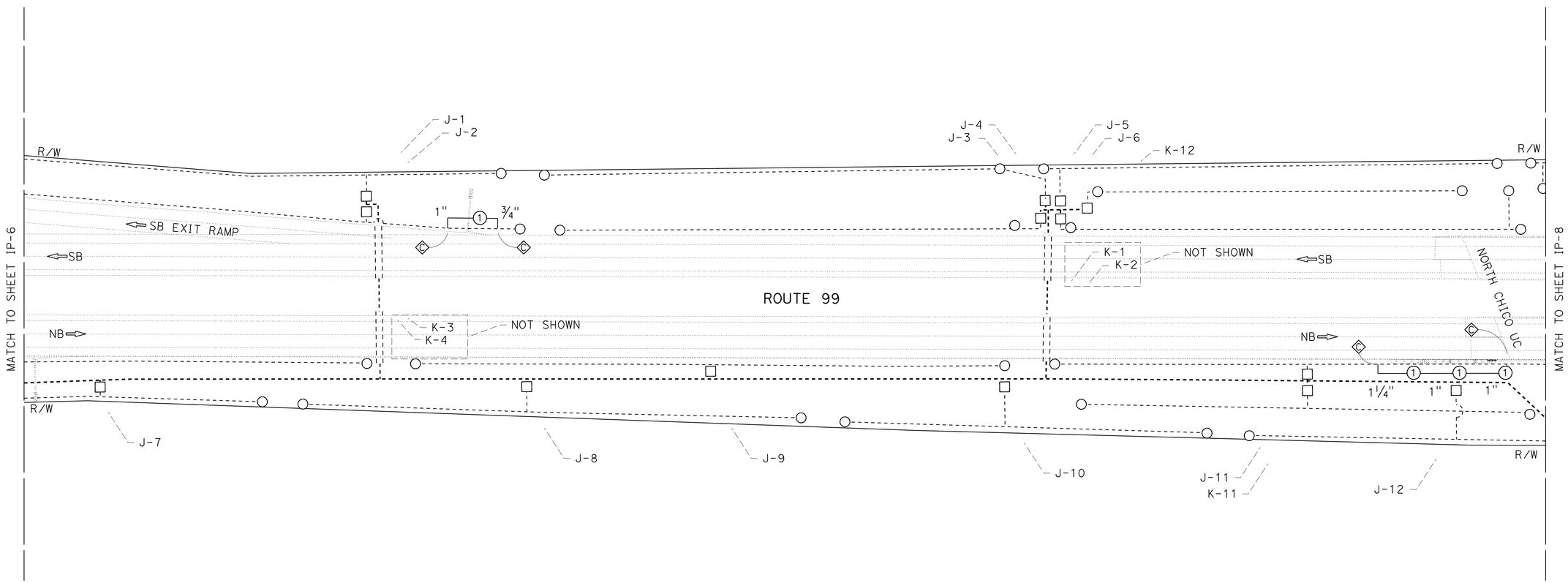

IRRIGATION PLAN

SCALE 1'=50"

APPROVED FOR IRRIGATION WORK ONLY

IP-7

STATE OF CALIFORNIA - DEPARTMENT OF TRANSPORTATION
Caltrans
LANDSCAPE ARCHITECTURE

SENIOR LANDSCAPE ARCHITECT: T.C. JOHNSON

CALCULATED-DESIGNED BY: J. WILLIAMSON
CHECKED BY: T.C. JOHNSON

REVISED BY
DATE REVISED

LAST REVISION 04-21-15
DATE PLOTTED => 29-JUN-2015
TIME PLOTTED => 14:08

Dist	COUNTY	ROUTE	POST MILES TOTAL PROJECT	SHEET No.	TOTAL SHEETS
03	But	99	30.1/T37.5	97	163

LICENSED LANDSCAPE ARCHITECT

4-27-15
PLANS APPROVAL DATE

LICENSED LANDSCAPE ARCHITECT JAMES G. WILLIAMSON No. 5415 Signature 02-29-16 Renewal Date 04-27-15 Date STATE OF CALIFORNIA

THE STATE OF CALIFORNIA OR ITS OFFICERS OR AGENTS SHALL NOT BE RESPONSIBLE FOR THE ACCURACY OR COMPLETENESS OF SCANNED COPIES OF THIS PLAN SHEET.

NOTE:

FOR ACCURATE RIGHT OF WAY DATA, CONTACT RIGHT OF WAY ENGINEERING AT THE DISTRICT OFFICE.

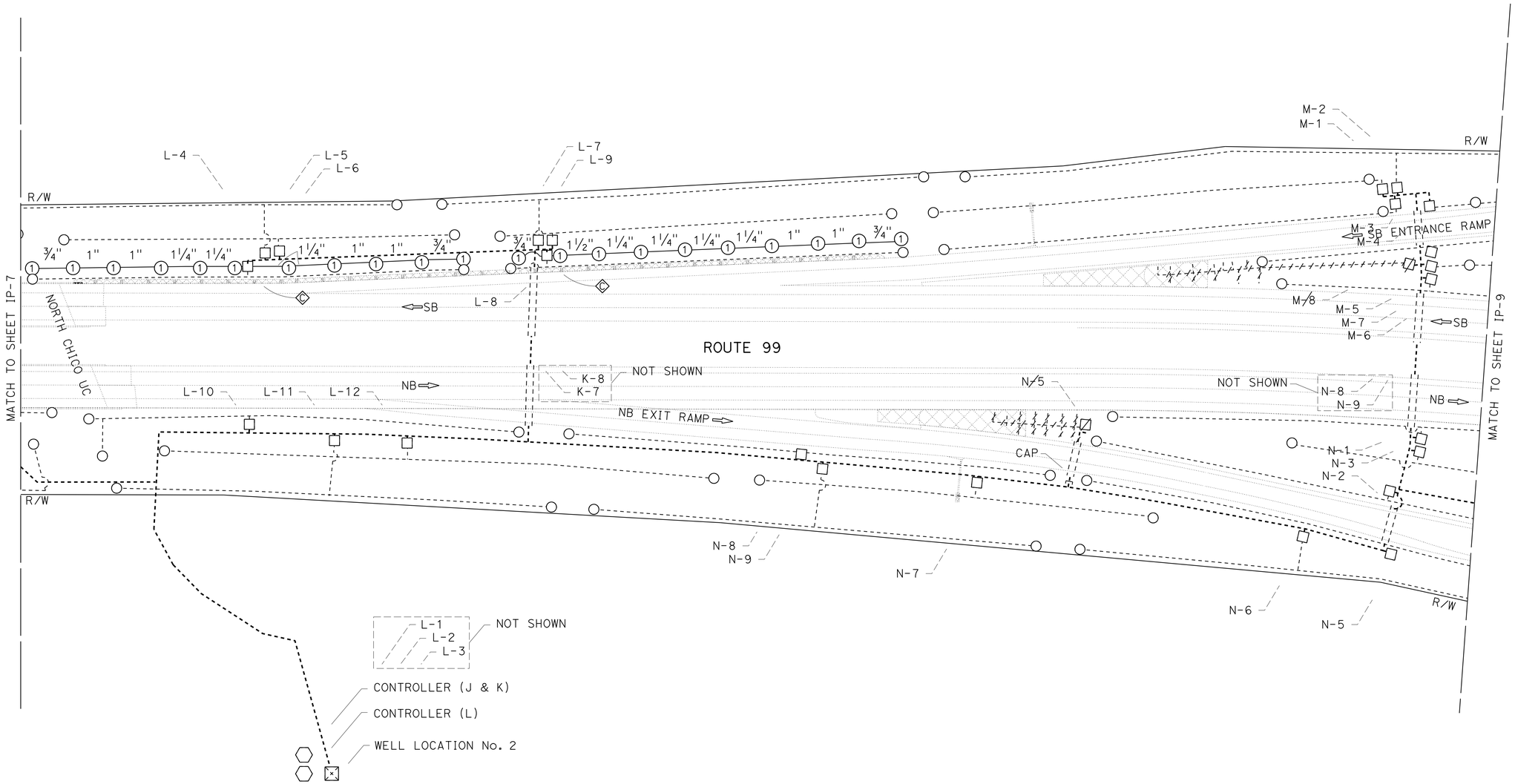

APPROVED FOR IRRIGATION WORK ONLY

IRRIGATION PLAN

SCALE 1'=50"

IP-8

STATE OF CALIFORNIA - DEPARTMENT OF TRANSPORTATION

Caltrans

LANDSCAPE ARCHITECTURE

SENIOR LANDSCAPE ARCHITECT: T.C. JOHNSON

CALCULATED-DESIGNED BY: J. WILLIAMSON

CHECKED BY: T.C.JOHNSON

REVISED BY

DATE REVISED

LAST REVISION 04-21-15

DATE PLOTTED => 29-JUN-2015

TIME PLOTTED => 14:08

Dist	COUNTY	ROUTE	POST MILES TOTAL PROJECT	SHEET No.	TOTAL SHEETS
03	But	99	30.1/T37.5	98	163

LICENSED LANDSCAPE ARCHITECT

4-27-15
PLANS APPROVAL DATE

LICENSED LANDSCAPE ARCHITECT
JAMES G. WILLIAMSON
No. 5415
Signature
02-29-16
Renewal Date
04-27-15
Date
STATE OF CALIFORNIA

THE STATE OF CALIFORNIA OR ITS OFFICERS OR AGENTS SHALL NOT BE RESPONSIBLE FOR THE ACCURACY OR COMPLETENESS OF SCANNED COPIES OF THIS PLAN SHEET.

NOTE:

FOR ACCURATE RIGHT OF WAY DATA, CONTACT RIGHT OF WAY ENGINEERING AT THE DISTRICT OFFICE.

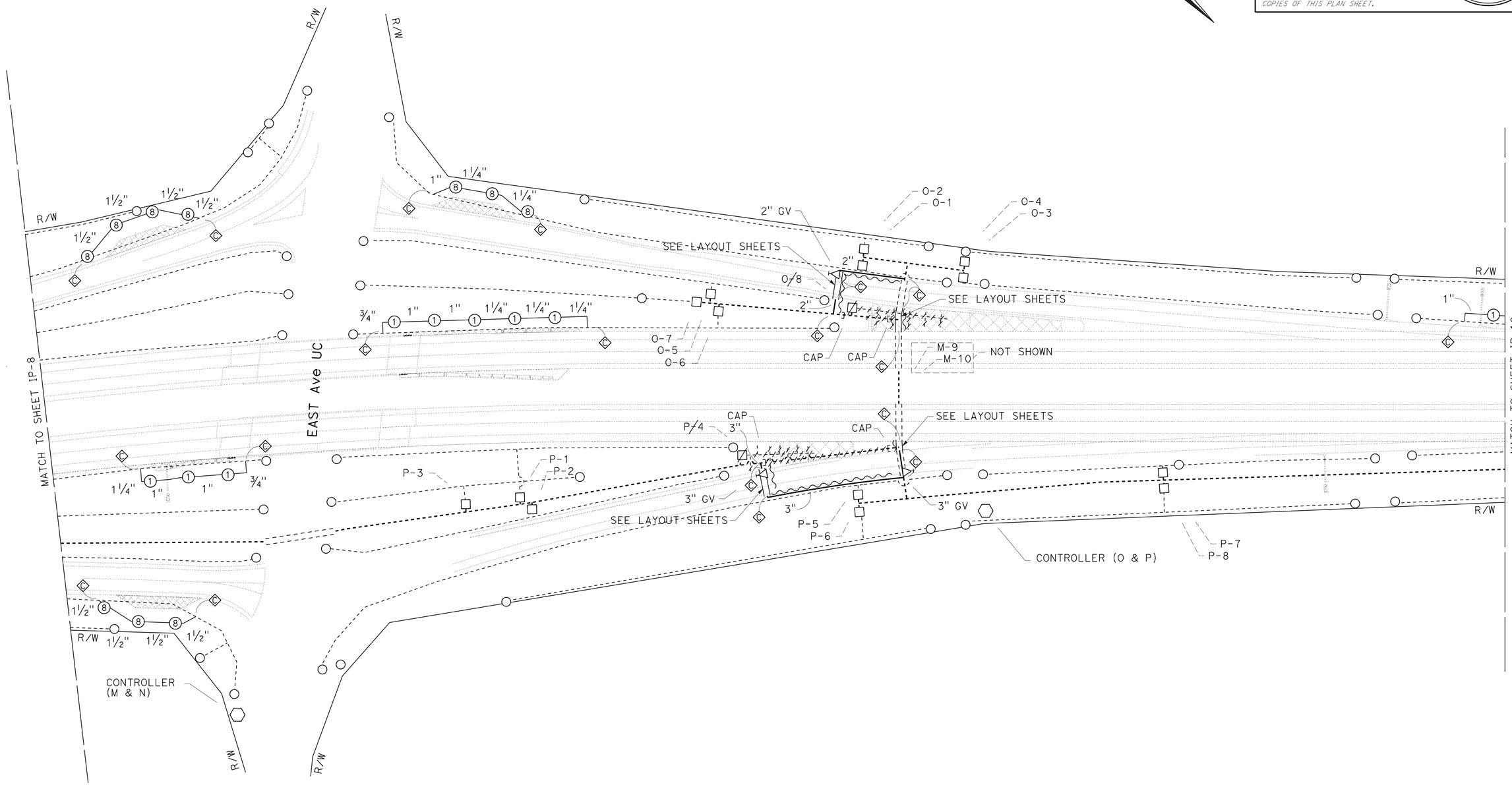

IRRIGATION PLAN

SCALE 1'=50"

APPROVED FOR IRRIGATION WORK ONLY

IP-9

STATE OF CALIFORNIA - DEPARTMENT OF TRANSPORTATION
Caltrans
LANDSCAPE ARCHITECTURE

SENIOR LANDSCAPE ARCHITECT: T.C. JOHNSON
CALCULATED-DESIGNED BY: J. WILLIAMSON
CHECKED BY: T.C.JOHNSON
REVISED BY
DATE REVISED

LAST REVISION 03-19-15
DATE PLOTTED => 29-JUN-2015
TIME PLOTTED => 14:08

Dist	COUNTY	ROUTE	POST MILES TOTAL PROJECT	SHEET No.	TOTAL SHEETS
03	But	99	30.1/T37.5	99	163

LICENSED LANDSCAPE ARCHITECT

4-27-15
PLANS APPROVAL DATE

LICENSED LANDSCAPE ARCHITECT
JAMES G. WILLIAMSON
No. 5415
Signature
02-29-16
Renewal Date
04-27-15
Date
STATE OF CALIFORNIA

THE STATE OF CALIFORNIA OR ITS OFFICERS OR AGENTS SHALL NOT BE RESPONSIBLE FOR THE ACCURACY OR COMPLETENESS OF SCANNED COPIES OF THIS PLAN SHEET.

NOTE:

FOR ACCURATE RIGHT OF WAY DATA, CONTACT
RIGHT OF WAY ENGINEERING AT THE DISTRICT OFFICE.

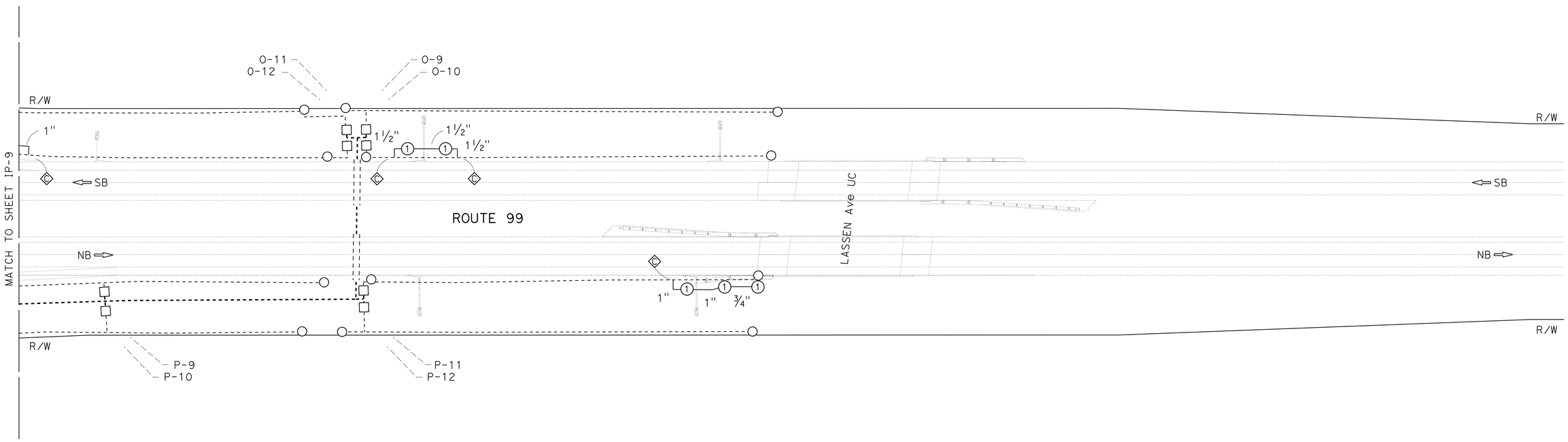

APPROVED FOR IRRIGATION WORK ONLY

IRRIGATION PLAN

SCALE 1'=50"

IP-10

J. WILLIAMSON — CALCULATED-DESIGNED BY
T.C.JOHNSON — CHECKED BY
REVISED BY
DATE REVISED
T.C. JOHNSON — SENIOR LANDSCAPE ARCHITECT
STATE OF CALIFORNIA - DEPARTMENT OF TRANSPORTATION
Caltrans
LANDSCAPE ARCHITECTURE

LAST REVISION 04-21-15
DATE PLOTTED => 29-JUN-2015
TIME PLOTTED => 14:08

Dist	COUNTY	ROUTE	POST MILES TOTAL PROJECT	SHEET No.	TOTAL SHEETS
03	But	99	30.1/T37.5	100	163

LICENSED LANDSCAPE ARCHITECT

4-27-15
PLANS APPROVAL DATE

LICENSED LANDSCAPE ARCHITECT JAMES G. WILLIAMSON No. 5415 Signature 02-29-16 Renewal Date 04-27-15 Date STATE OF CALIFORNIA

THE STATE OF CALIFORNIA OR ITS OFFICERS OR AGENTS SHALL NOT BE RESPONSIBLE FOR THE ACCURACY OR COMPLETENESS OF SCANNED COPIES OF THIS PLAN SHEET.

IRRIGATION QUANTITIES

	CONTROLLER LETTER	VALVE NUMBER	SHEET NUMBER	RCV 1¼"	RCV 1½"	GV 2"	GV 3"	BV 2"	PLASTIC PIPE (SCHEDULE 40) (SUPPLY LINE) ¾"	1"	1¼"	1½"	PLASTIC PIPE (CLASS 315) (SUPPLY LINE) 2"	2½"	3"	4"	SPRINKLER ASSEMBLY RISER	POP-UP (GEAR DRIVEN)
				EA	EA	EA	EA	EA	LF	LF	LF	LF	LF	LF	LF	LF	EA	EA
SUBTOTALS PER VALVE ON LATERAL SUPPLY SIDE OF CONTROL VALVE	B	14	--	--	--	--	--	--	40	60	--	--	--	--	--	--	3	--
		18	--	--	--	--	--	--	80	120	--	--	--	--	--	--	6	--
	C	1	--	--	--	--	--	--	40	60	--	--	--	--	--	--	3	--
		2	--	--	--	--	--	--	--	40	--	--	--	--	--	--	--	--
		12	--	--	--	--	--	--	80	120	--	--	--	--	--	--	6	--
	D	12	--	--	--	--	--	--	--	50	--	--	--	--	--	--	--	1
		13	--	--	--	--	--	--	--	35	--	--	--	--	--	--	--	--
		14	--	--	--	--	--	--	40	40	--	--	--	--	--	--	3	--
	E	14	--	--	--	--	--	--	--	70	10	--	--	--	--	--	--	2
	B2	1	--	--	--	--	--	--	--	40	--	--	--	--	--	--	1	--
		2	--	--	--	--	--	--	10	80	30	--	--	--	--	--	3	--
		10	--	--	--	--	--	--	--	70	10	--	--	--	--	--	2	--
	C2	2	--	--	--	--	--	--	--	40	--	--	--	--	--	--	1	--
		6	--	--	--	--	--	--	--	--	20	20	--	--	--	--	1	--
		8	--	--	--	--	--	--	10	80	30	--	--	--	--	--	3	--
	D2	2	--	--	--	--	--	--	10	80	20	--	--	--	--	--	3	--
	G	5	--	--	--	--	--	--	--	15	80	--	--	--	--	--	--	3
	H	2	--	--	--	--	--	--	30	60	--	--	--	--	--	--	2	--
	I	3	--	--	--	--	--	--	--	--	80	20	--	--	--	--	--	3
		9	--	--	--	--	--	--	--	--	60	--	--	--	--	--	--	--
		10	--	--	--	--	--	--	--	--	--	10	--	--	--	--	--	--
		11	--	--	--	--	--	--	--	--	20	--	--	--	--	--	--	--
		12	--	--	--	--	--	--	--	--	60	--	--	--	--	--	--	--
	J	2	--	--	--	--	--	--	10	30	--	--	--	--	--	--	1	--
		11	--	--	--	--	--	--	--	80	30	--	--	--	--	--	3	--
	L	4	--	--	--	--	--	--	80	160	160	--	--	--	--	--	11	--
		8	--	--	--	--	--	--	80	80	160	40	--	--	--	--	10	--
	M	4	--	--	--	--	--	--	--	--	--	120	--	--	--	--	--	4
	N	1	--	--	--	--	--	--	20	80	10	--	--	--	--	--	3	--
		5	--	--	--	--	--	--	--	--	--	120	--	--	--	--	--	3
	O	1	--	--	--	--	--	--	--	20	80	--	--	--	--	--	--	3
		6	--	--	--	--	--	--	10	80	110	--	--	--	--	--	5	--
		10	--	--	--	--	--	--	--	--	--	60	--	--	--	--	2	--
		12	--	--	--	--	--	--	--	40	--	--	--	--	--	--	1	--
	P	11	--	--	--	--	--	--	40	60	--	--	--	--	--	--	3	--
SUBTOTALS PER SHEET ON MAIN SUPPLY SIDE OF CONTROL VALVE		IP-1	--	1	1	--	--	--	--	--	--	--	50	--	--	--	--	--
		IP-2	--	1	--	--	--	--	--	--	--	10	140	--	--	--	--	--
		IP-3	--	2	--	1	1	--	--	--	--	--	10	--	125	--	--	--
		IP-4	--	--	--	--	--	--	--	--	--	--	--	--	--	40	--	--
		IP-6	3	2	--	1	--	--	--	--	--	--	100	120	--	--	--	--
		IP-9	--	--	1	2	--	--	--	--	--	--	110	--	210	--	--	--
TOTAL				3	6	2	4	1	580	1,690	970	400	410	120	335	40	76	19

STATE OF CALIFORNIA - DEPARTMENT OF TRANSPORTATION

Caltrans

LANDSCAPE ARCHITECTURE

SENIOR LANDSCAPE ARCHITECT: T.C. JOHNSON

CALCULATED-DESIGNED BY: J. WILLIAMSON

CHECKED BY: T.C. JOHNSON

REVISED BY

DATE REVISED

IRRIGATION QUANTITIES

IQ-1

LAST REVISION 04-21-15

DATE PLOTTED => 29-JUN-2015
TIME PLOTTED => 14:08

Dist	COUNTY	ROUTE	POST MILES TOTAL PROJECT	SHEET No.	TOTAL SHEETS
03	But	99	30.1/T37.5	101	163

LICENSED LANDSCAPE ARCHITECT

4-27-15
PLANS APPROVAL DATE

LICENSED LANDSCAPE ARCHITECT JAMES G. WILLIAMSON No. 5415 Signature 02-29-16 Renewal Date 04-27-15 Date STATE OF CALIFORNIA

THE STATE OF CALIFORNIA OR ITS OFFICERS OR AGENTS SHALL NOT BE RESPONSIBLE FOR THE ACCURACY OR COMPLETENESS OF SCANNED COPIES OF THIS PLAN SHEET.

NOTES

1. APPLY EROSION CONTROL MATERIALS TO AREAS DISTURBED BY CONSTRUCTION ACTIVITIES.
2. DECOMPACT SOIL SURFACE PRIOR TO APPLYING EROSION CONTROL (BONDED FIBER MATRIX)

EROSION CONTROL (BONDED FIBER MATRIX)

SEQUENCE	ITEM DESCRIPTION	MATERIAL		APPLICATION RATE
		DESCRIPTION	TYPE	
STEP 1	EROSION CONTROL (BONDED FIBER MATRIX)	TACKIFIER	BONDED FIBER MATRIX	500 LB/ACRE
		SEED	--	50 LB/ACRE
		FERTILIZER	ORGANIC	1200 LB/ACRE
STEP 2	EROSION CONTROL (BONDED FIBER MATRIX)	TACKIFIER	BONDED FIBER MATRIX	3500 LB/ACRE

SEED MIX

BOTANICAL NAME (COMMON NAME)	PERCENT GERMINATION (MINIMUM)	POUNDS PURE LIVE SEED PER ACRE (SLOPE MEASUREMENT)
BROMUS CARINATUS (CALIFORNIA BROME)	80	16
ESCHSCHOLZIA CALIFORNICUM (CALIFORNIA POPPY)	75	4
HORDEUM B. CALIFORNICUM (CALIFORNIA BARLEY)	80	10
LUPINUS BICOLOR (PIGMY-LEAVED LUPINE)	80	10
NASSELLA PULCHRA (PURPLE NEEDLEGRASS)	70	10

EROSION CONTROL LEGEND

ECL-1

REVISED BY | DATE REVISED
J. WILLIAMSON | T.C. JOHNSON
CALCULATED-DESIGNED BY | CHECKED BY
SENIOR LANDSCAPE ARCHITECT: T.C. JOHNSON
STATE OF CALIFORNIA - DEPARTMENT OF TRANSPORTATION
Caltrans
LANDSCAPE ARCHITECTURE

LAST REVISION 03-19-15 | DATE PLOTTED => 29-JUN-2015 | TIME PLOTTED => 14:08

Dist	COUNTY	ROUTE	POST MILES TOTAL PROJECT	SHEET No.	TOTAL SHEETS
03	But	99	30.1/T37.5	102	163

LICENSED LANDSCAPE ARCHITECT

4-27-15
PLANS APPROVAL DATE

LICENSED LANDSCAPE ARCHITECT
JAMES G. WILLIAMSON
No. 5415
Signature
02-29-16
Renewal Date
04-27-15
Date
STATE OF CALIFORNIA

THE STATE OF CALIFORNIA OR ITS OFFICERS OR AGENTS SHALL NOT BE RESPONSIBLE FOR THE ACCURACY OR COMPLETENESS OF SCANNED COPIES OF THIS PLAN SHEET.

NOTE:

FOR ACCURATE RIGHT OF WAY DATA, CONTACT RIGHT OF WAY ENGINEERING AT THE DISTRICT OFFICE.

LEGEND:

LIMITS OF DISTURBANCE

DECOMPACT SOIL SURFACE

EROSION CONTROL (BONDED FIBER MATRIX)

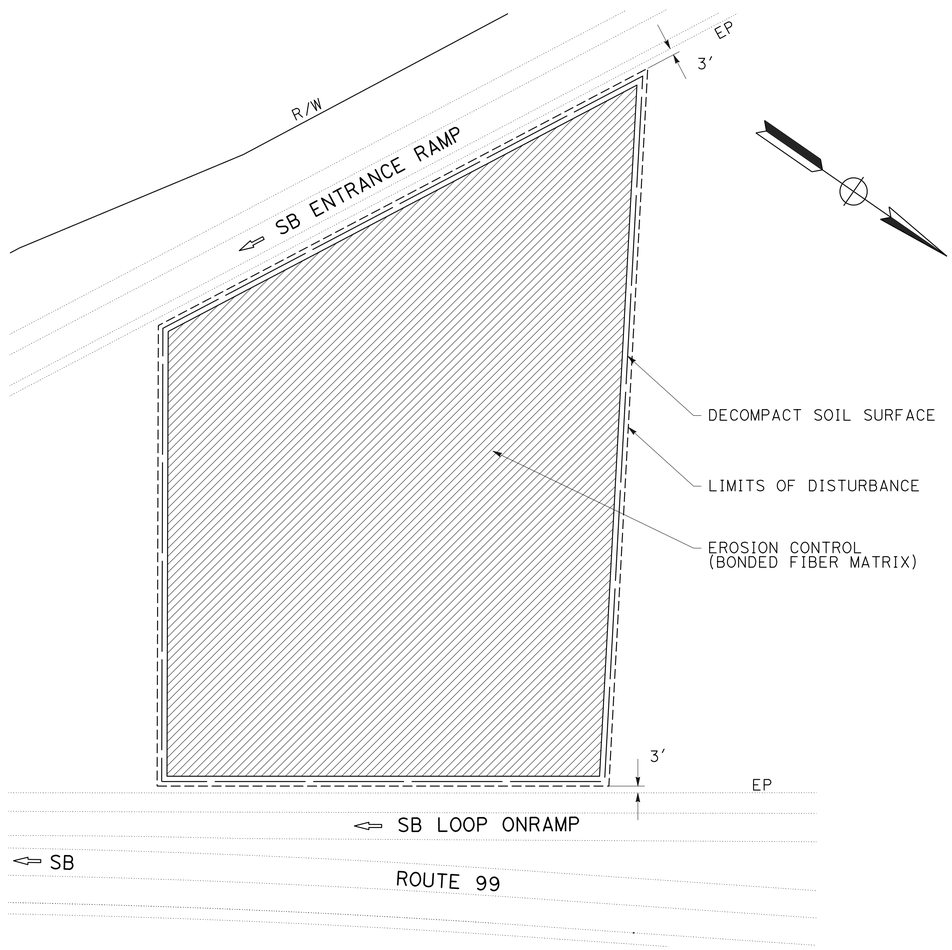

PM R30.55 to PM R30.59

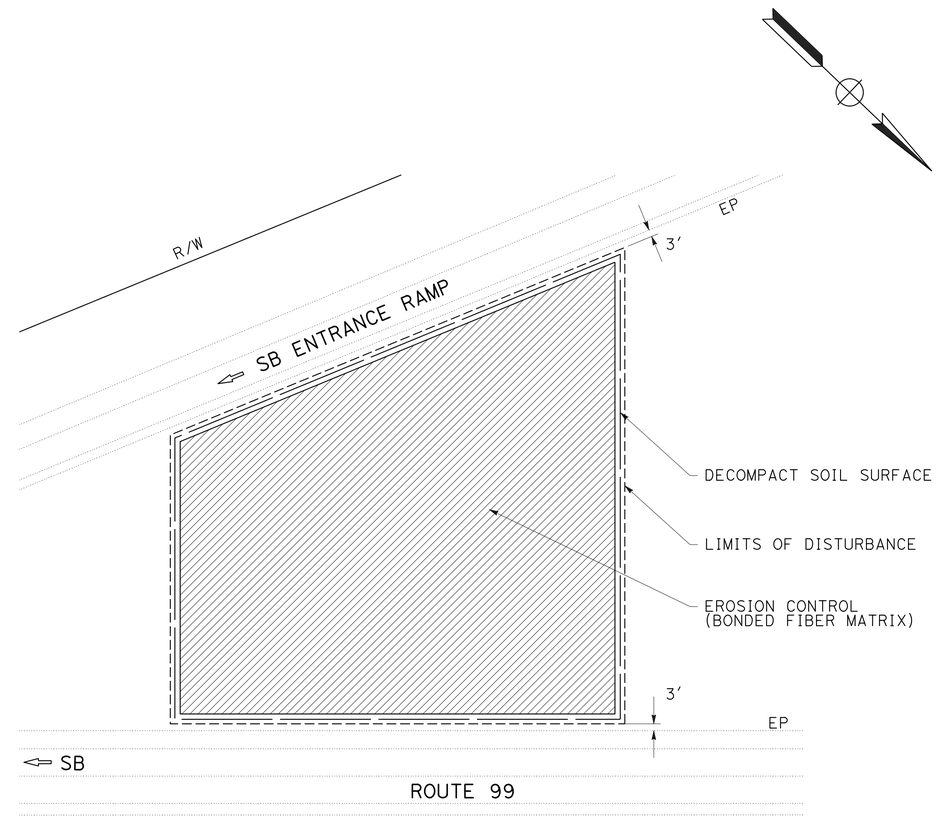

PM R36.22 to PM R36.26

PLAN

EROSION CONTROL AT Const STAGING AREA LOCATIONS (Typ)

EROSION CONTROL DETAILS

NO SCALE

APPROVED FOR EROSION CONTROL WORK ONLY

ECD-1

STATE OF CALIFORNIA - DEPARTMENT OF TRANSPORTATION
Caltrans
LANDSCAPE ARCHITECTURE

SENIOR LANDSCAPE ARCHITECT: T.C. JOHNSON

CALCULATED-DESIGNED BY: J. WILLIAMSON
CHECKED BY: T.C. JOHNSON

REVISED BY
DATE REVISED

LAST REVISION 04-21-15
DATE PLOTTED => 29-JUN-2015
TIME PLOTTED => 14:08

Dist	COUNTY	ROUTE	POST MILES TOTAL PROJECT	SHEET No.	TOTAL SHEETS
03	But	99	30.1/T37.5	103	163

LICENSED LANDSCAPE ARCHITECT

4-27-15
PLANS APPROVAL DATE

LICENSED LANDSCAPE ARCHITECT JAMES G. WILLIAMSON No. 5415 Signature 02-29-16 Renewal Date 04-27-15 Date STATE OF CALIFORNIA

THE STATE OF CALIFORNIA OR ITS OFFICERS OR AGENTS SHALL NOT BE RESPONSIBLE FOR THE ACCURACY OR COMPLETENESS OF SCANNED COPIES OF THIS PLAN SHEET.

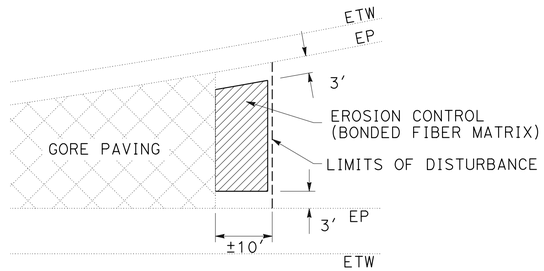

PLAN

EROSION CONTROL AT GORE PAVING LOCATIONS (Typ)

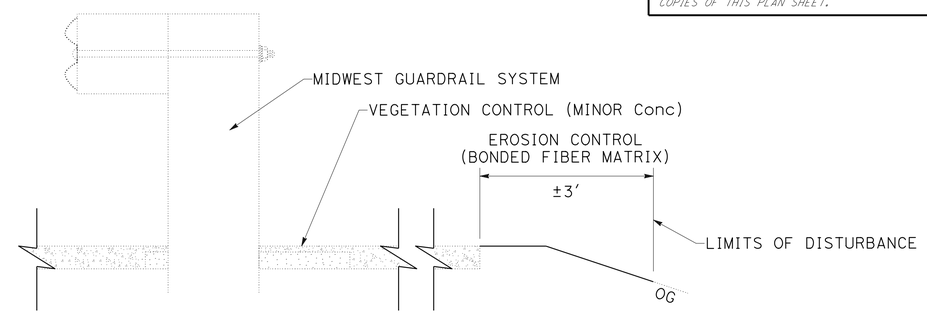

SECTION

EROSION CONTROL AT VEGETATION CONTROL LOCATIONS (Typ)

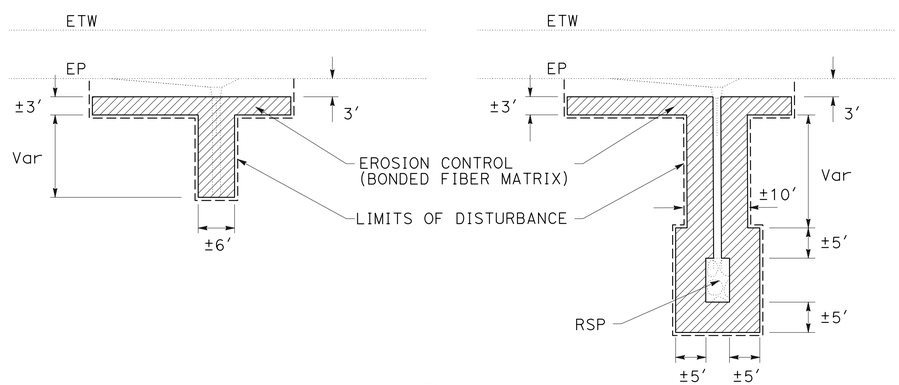

PLAN

EROSION CONTROL AT REMOVE, ADJUST, OR PLACE OVERSIDE DRAIN AND DOWNDRAIN LOCATIONS (Typ)

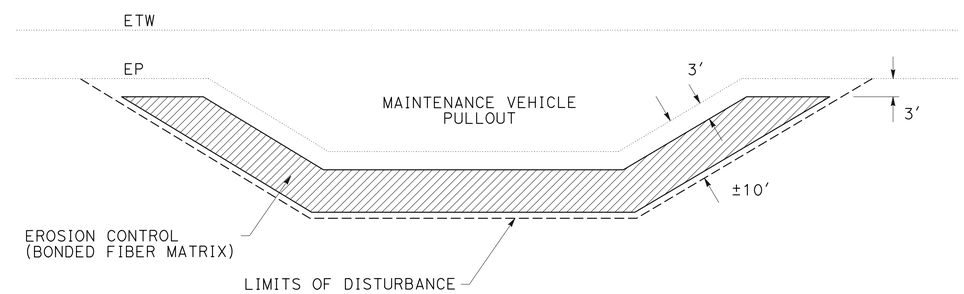

PLAN

EROSION CONTROL AT MAINTENANCE VEHICLE LOCATIONS (Typ)

EROSION CONTROL DETAILS

NO SCALE

APPROVED FOR EROSION CONTROL WORK ONLY

ECD-2

STATE OF CALIFORNIA - DEPARTMENT OF TRANSPORTATION
Caltrans
LANDSCAPE ARCHITECTURE

SENIOR LANDSCAPE ARCHITECT: T.C. JOHNSON
CALCULATED-DESIGNED BY: J. WILLIAMSON
CHECKED BY: T.C. JOHNSON
REVISED BY
DATE REVISED

LAST REVISION 04-21-15
DATE PLOTTED => 29-JUN-2015
TIME PLOTTED => 14:08

Dist	COUNTY	ROUTE	POST MILES TOTAL PROJECT	SHEET No.	TOTAL SHEETS
03	But	99	30.1/T37.5	104	163

LICENSED LANDSCAPE ARCHITECT

4-27-15
PLANS APPROVAL DATE

LICENSED LANDSCAPE ARCHITECT
JAMES G. WILLIAMSON
No. 5415
Signature
02-29-16
Renewal Date
04-27-15
Date
STATE OF CALIFORNIA

THE STATE OF CALIFORNIA OR ITS OFFICERS OR AGENTS SHALL NOT BE RESPONSIBLE FOR THE ACCURACY OR COMPLETENESS OF SCANNED COPIES OF THIS PLAN SHEET.

EROSION CONTROL (TABLE 1)

POST MILE	DIRECTION		SIDE		EROSION CONTROL (BONDED FIBER MATRIX)	DECOMPACT SOIL SURFACE	COMMENTS
	NB	SB	Lt	Rt	SQFT	SQFT	
30.24	X			X	250	--	OVERSIDE DRAIN
R30.27 TO R30.29	X			X	250	--	VEGETATION CONTROL
R30.30	X			X	250	--	OVERSIDE DRAIN
R30.35	X			X	250	--	OVERSIDE DRAIN
R30.36 TO R30.39	X			X	200	--	GORE
R30.37	X			X	250	--	OVERSIDE DRAIN
R30.55 TO R30.59		X		X	50,000	50,000	CONSTRUCTION STAGING AREA
R30.57 TO R30.59	X			X	150	--	GORE
R31.30 TO R31.33	X			X	200	--	GORE
R31.32 TO R31.34		X		X	300	--	GORE
R31.48 TO R31.51	X			X	450	--	VEGETATION CONTROL
R31.50 TO R31.53		X		X	450	--	VEGETATION CONTROL
R31.67 TO R31.69	X			X	250	--	GORE
R31.68 TO R31.71		X		X	250	--	GORE
R32.18	X			X	850	--	DOWNDRAIN
R32.18 TO R32.20	X			X	250	--	VEGETATION CONTROL
R32.19		X		X	800	--	DOWNDRAIN
R32.23		X		X	250	--	OVERSIDE DRAIN
R32.23 TO R32.26		X		X	450	--	VEGETATION CONTROL
R32.26 TO R32.30	X			X	200	--	GORE
R32.27 TO R32.31		X		X	200	--	GORE
R32.30	X			X	300	--	OVERSIDE DRAIN
R32.31		X		X	300	--	OVERSIDE DRAIN
R32.33		X		X	350	--	OVERSIDE DRAIN
R32.35 TO R32.37	X			X	300	--	VEGETATION CONTROL
R32.39	X			X	250	--	OVERSIDE DRAIN
R32.39 TO R32.44	X			X	700	--	VEGETATION CONTROL
R32.39 TO R32.44		X		X	700	--	VEGETATION CONTROL
R32.46		X		X	950	--	DOWNDRAIN
R32.46	X			X	950	--	DOWNDRAIN
R32.46 TO R32.49		X		X	300	--	VEGETATION CONTROL
R33.32	X			X	750	--	DOWNDRAIN
R33.32		X		X	650	--	DOWNDRAIN
R33.32 TO R33.34		X		X	300	--	VEGETATION CONTROL
R33.37	X			X	450	--	OVERSIDE DRAIN
R33.38 TO R33.43	X			X	250	--	GORE
R33.40		X		X	300	--	OVERSIDE DRAIN
R33.40 TO R33.44		X		X	250	--	GORE
R33.49	X			X	900	--	DOWNDRAIN
R33.52		X		X	350	--	DOWNDRAIN
R33.55 TO R33.57	X			X	300	--	VEGETATION CONTROL
R33.56	X			X	900	--	DOWNDRAIN
R33.56		X		X	1,000	--	DOWNDRAIN
R33.60 TO R33.62		X		X	300	--	VEGETATION CONTROL
R33.69	X			X	350	--	DOWNDRAIN
R33.76		X		X	350	--	DOWNDRAIN
R33.85 TO R33.87	X			X	450	--	VEGETATION CONTROL
R33.92	X			X	650	--	OVERSIDE DRAIN
R33.93		X		X	650	--	OVERSIDE DRAIN
R33.93 TO R33.95		X		X	300	--	VEGETATION CONTROL
R33.95		X		X	650	--	OVERSIDE DRAIN
R34.10 TO R34.13	X			X	250	--	GORE
R34.18	X			X	1,000	--	MVP
R34.21 TO R34.23	X			X	400	--	GORE
SUBTOTAL					73,350	50,000	

EROSION CONTROL (TABLE 2)

POST MILE	DIRECTION		SIDE		EROSION CONTROL (BONDED FIBER MATRIX)	DECOMPACT SOIL SURFACE	COMMENTS
	NB	SB	Lt	Rt	SQFT	SQFT	
R34.22	X			X	750	--	OVERSIDE DRAIN
R34.23 TO R34.26	X			X	250	--	VEGETATION CONTROL
R34.24 TO R34.27		X		X	450	--	VEGETATION CONTROL
R34.27		X		X	750	--	OVERSIDE DRAIN
R34.27	X			X	750	--	OVERSIDE DRAIN
R34.27 TO R34.29		X		X	400	--	GORE
R34.29		X		X	550	--	OVERSIDE DRAIN
R34.32		X		X	1,000	--	MVP
R34.32	X			X	450	--	OVERSIDE DRAIN
R34.35		X		X	600	--	OVERSIDE DRAIN
R34.36 TO R34.39		X		X	250	--	GORE
R34.36		X		X	650	--	OVERSIDE DRAIN
R34.38	X			X	350	--	DOWNDRAIN
R34.46		X		X	900	--	DOWNDRAIN
R34.52	X			X	350	--	DOWNDRAIN
R34.62 TO R34.64	X			X	300	--	VEGETATION CONTROL
R34.65 TO R34.79		X		X	2,150	--	VEGETATION CONTROL
R34.78 TO R34.82	X			X	250	--	GORE
R34.80	X			X	350	--	DOWNDRAIN
R34.80 TO R34.85		X		X	250	--	GORE
R34.82		X		X	350	--	DOWNDRAIN
R34.91	X			X	1,000	--	MVP
R34.92		X		X	1,000	--	MVP
R34.90	X			X	350	--	DOWNDRAIN
R34.91 TO R34.93	X			X	250	--	VEGETATION CONTROL
R34.96 TO R35.00		X		X	550	--	VEGETATION CONTROL
R34.97		X		X	1,000	--	MVP
R35.03	X			X	300	--	OVERSIDE DRAIN
R35.03 TO R35.07	X			X	250	--	GORE
R35.06		X		X	300	--	OVERSIDE DRAIN
R35.05 TO R35.09		X		X	250	--	GORE
R35.14	X			X	350	--	DOWNDRAIN
R35.15		X		X	350	--	DOWNDRAIN
R35.17		X		X	650	--	DOWNDRAIN
R35.18		X		X	350	--	DOWNDRAIN
R35.24		X		X	650	--	DOWNDRAIN
R35.24	X			X	350	--	DOWNDRAIN
R35.29	X			X	350	--	DOWNDRAIN
R35.29 TO R35.31	X			X	250	--	VEGETATION CONTROL
R35.30		X		X	350	--	DOWNDRAIN
R35.33 TO R35.35		X		X	300	--	VEGETATION CONTROL
R35.49		X		X	700	--	DOWNDRAIN
R35.49	X			X	700	--	DOWNDRAIN
R36.13 TO R36.17		X		X	250	--	GORE
R36.14 TO R36.18	X			X	250	--	GORE
R36.22 TO R36.26		X		X	32,000	32,000	CONSTRUCTION STAGING AREA
R36.28 TO R36.31	X			X	250	--	VEGETATION CONTROL
R36.30 TO R36.33		X		X	250	--	VEGETATION CONTROL
R36.44 TO R36.48		X		X	250	--	GORE
R36.45 TO R36.49	X			X	300	--	GORE
R37.10	X			X	350	--	DOWNDRAIN
R37.13		X		X	700	--	DOWNDRAIN
R37.18 TO R37.20	X			X	450	--	VEGETATION CONTROL
R37.29		X		X	350	--	DOWNDRAIN
T37.36	X			X	350	--	DOWNDRAIN
SUBTOTAL TABLE 1					73,350	50,000	
TOTAL					131,800	82,000	

EROSION CONTROL QUANTITIES

ECQ-1

REVISED BY	DATE REVISED
J. WILLIAMSON	T.C. JOHNSON
CALCULATED-DESIGNED BY	CHECKED BY
SENIOR LANDSCAPE ARCHITECT	T.C. JOHNSON

STATE OF CALIFORNIA - DEPARTMENT OF TRANSPORTATION
Caltrans
LANDSCAPE ARCHITECTURE

LAST REVISION 04-21-15
DATE PLOTTED => 29-JUN-2015
TIME PLOTTED => 14:08

Dist	COUNTY	ROUTE	POST MILES TOTAL PROJECT	SHEET No.	TOTAL SHEETS
03	But	99	30.1/T37.5	105	163

H. Golban 4-27-15
REGISTERED ELECTRICAL ENGINEER DATE

4-27-15
PLANS APPROVAL DATE

REGISTERED PROFESSIONAL ENGINEER
HABIB GOLBAN
No. 17928
Exp. 09-30-16
ELECTRICAL
STATE OF CALIFORNIA

THE STATE OF CALIFORNIA OR ITS OFFICERS OR AGENTS SHALL NOT BE RESPONSIBLE FOR THE ACCURACY OR COMPLETENESS OF SCANNED COPIES OF THIS PLAN SHEET.

LEGEND:

1 ABANDON EXISTING TYPE A LOOPS.

2 RC Exist LOOP CONDUCTORS.

ABBREVIATION:

SLC SCALE LEAD-IN-CABLE

ELECTRICAL ELEMENTS SCHEDULE

LOCATION	PM	DIRECTION	ELEMENT	COMMENTS
1	R30.79	NB/SB	TMS (COUNT)	SEE E-1, DETAIL A
2	R31.33	SB	TMS (COUNT)	SEE E-1, DETAIL B
3	R31.68	NB	TMS (COUNT)	SEE E-2, DETAIL C
4	R32.55	NB/SB	TMS (COUNT)	SEE E-2, DETAIL D
5	R33.08	NB/SB	TMS (COUNT)	SEE E-3, DETAIL E
6	R33.17	NB/SB	TMS (COUNT)	SEE E-3, DETAIL F
7	R34.00	SB	WIM	SEE E-5, DETAIL H
8	R36.70	NB/SB	TMS (COUNT)	SEE E-4, DETAIL G

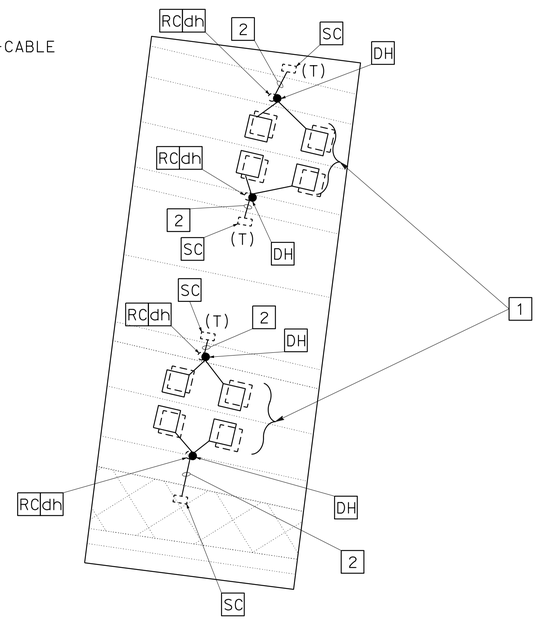

DETAIL A

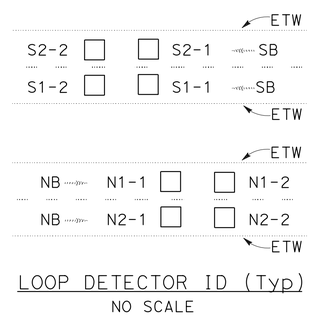

LOOP DETECTOR ID (Typ)
NO SCALE

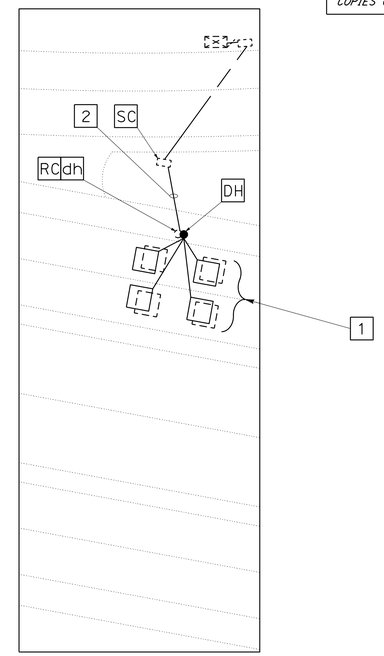

DETAIL B

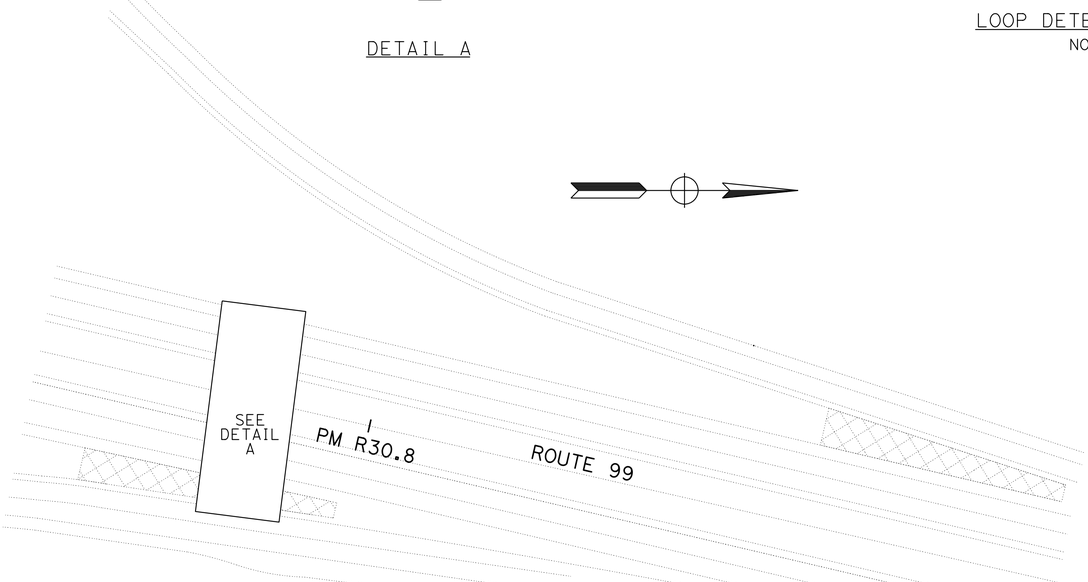

LOCATION 1

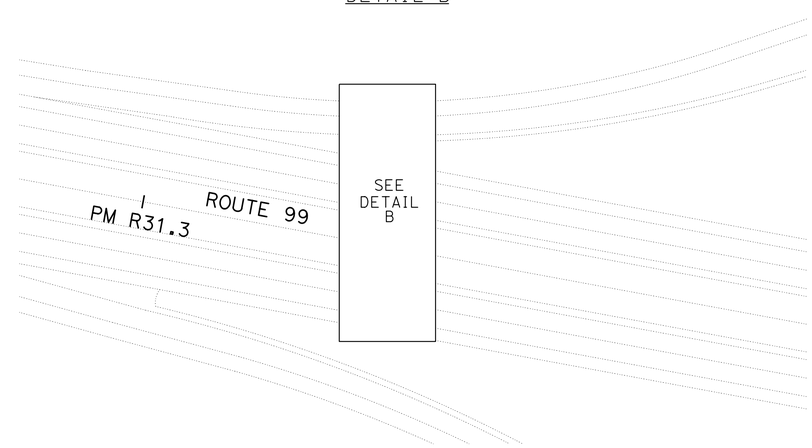

LOCATION 2

MODIFY TRAFFIC MONITORING STATION (COUNT)

NO SCALE

APPROVED FOR ELECTRICAL WORK ONLY

E-1

REVISED BY	DATE REVISED

CALCULATED-DESIGNED BY	CHECKED BY
JAMIE KOJAK	HABIB GOLBAN

FUNCTIONAL SUPERVISOR: DAVID A. GAMBOA

STATE OF CALIFORNIA - DEPARTMENT OF TRANSPORTATION
Caltrans
ELECTRICAL DESIGN

LAST REVISION 06-24-15
DATE PLOTTED => 29-JUN-2015
TIME PLOTTED => 14:08

Dist	COUNTY	ROUTE	POST MILES TOTAL PROJECT	SHEET No.	TOTAL SHEETS
03	But	99	30.1/T37.5	106	163

H. Golban 4-27-15
REGISTERED ELECTRICAL ENGINEER DATE

4-27-15
PLANS APPROVAL DATE

REGISTERED PROFESSIONAL ENGINEER
HABIB GOLBAN
No. 17928
Exp. 09-30-16
ELECTRICAL
STATE OF CALIFORNIA

THE STATE OF CALIFORNIA OR ITS OFFICERS OR AGENTS SHALL NOT BE RESPONSIBLE FOR THE ACCURACY OR COMPLETENESS OF SCANNED COPIES OF THIS PLAN SHEET.

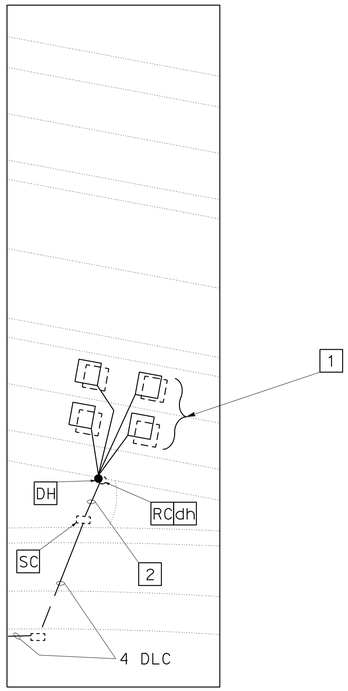

DETAIL C

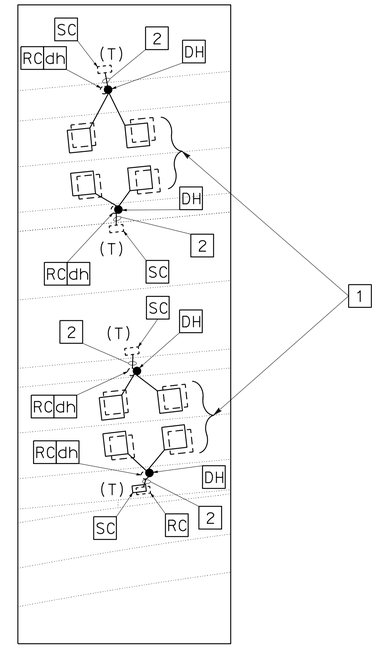

DETAIL D

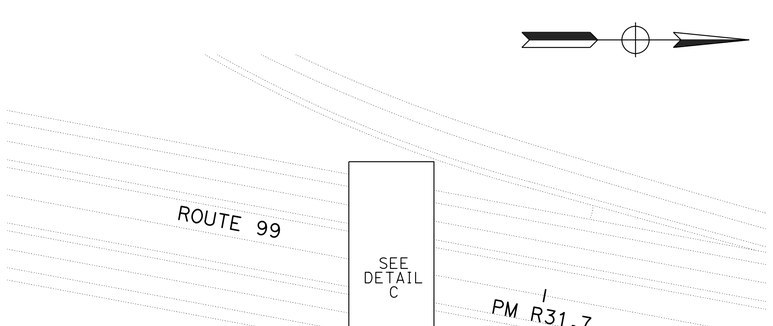

LOCATION 3

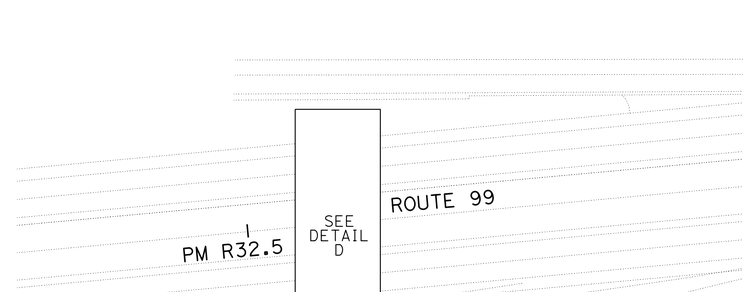

LOCATION 4

MODIFY TRAFFIC MONITORING STATION (COUNT)

NO SCALE

APPROVED FOR ELECTRICAL WORK ONLY

E-2

STATE OF CALIFORNIA - DEPARTMENT OF TRANSPORTATION
Caltrans
ELECTRICAL DESIGN

FUNCTIONAL SUPERVISOR: DAVID A. GAMBOA
CALCULATED-DESIGNED BY: JAMIE KOJAK
CHECKED BY: HABIB GOLBAN
REVISED BY
DATE REVISED

LAST REVISION 06-24-15
DATE PLOTTED => 29-JUN-2015
TIME PLOTTED => 14:08

Dist	COUNTY	ROUTE	POST MILES TOTAL PROJECT	SHEET No.	TOTAL SHEETS
03	But	99	30.1/T37.5	107	163

H. Golban 4-27-15
REGISTERED ELECTRICAL ENGINEER DATE

4-27-15
PLANS APPROVAL DATE

REGISTERED PROFESSIONAL ENGINEER
HABIB GOLBAN
No. 17928
Exp. 09-30-16
ELECTRICAL
STATE OF CALIFORNIA

THE STATE OF CALIFORNIA OR ITS OFFICERS OR AGENTS SHALL NOT BE RESPONSIBLE FOR THE ACCURACY OR COMPLETENESS OF SCANNED COPIES OF THIS PLAN SHEET.

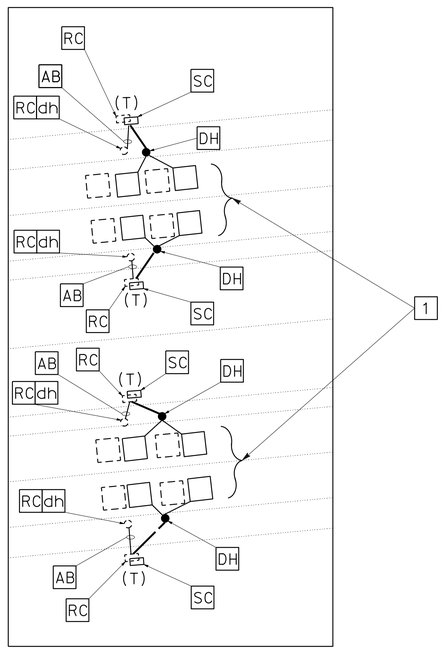

DETAIL E

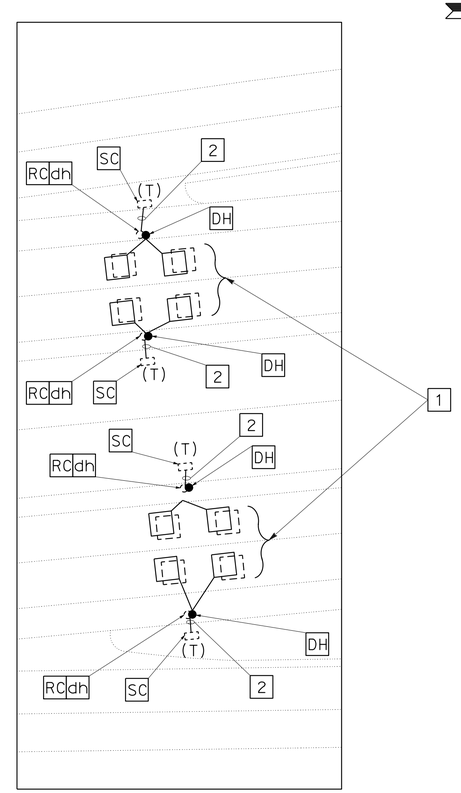

DETAIL F

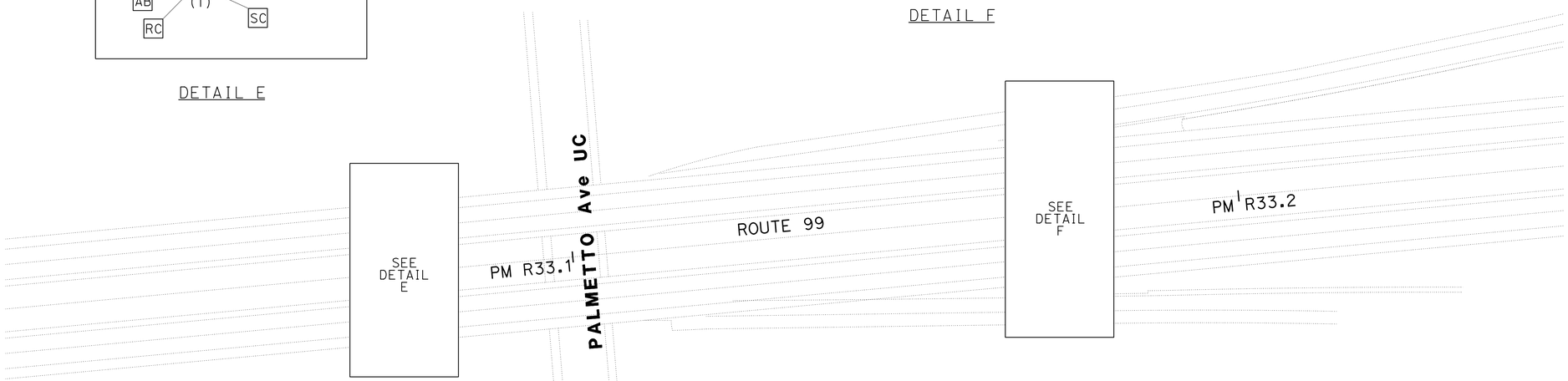

LOCATION 5

LOCATION 6

MODIFY TRAFFIC MONITORING STATION (COUNT)

NO SCALE

APPROVED FOR ELECTRICAL WORK ONLY

E-3

STATE OF CALIFORNIA - DEPARTMENT OF TRANSPORTATION
Caltrans® **OFFICE OF ELECTRICAL DESIGN**

FUNCTIONAL SUPERVISOR: DAVID A. GAMBOA
CALCULATED-DESIGNED BY: JAMIE KOJAK
CHECKED BY: HABIB GOLBAN
REVISED BY
DATE REVISED

LAST REVISION 06-24-15
DATE PLOTTED => 29-JUN-2015
TIME PLOTTED => 14:08

Dist	COUNTY	ROUTE	POST MILES TOTAL PROJECT	SHEET No.	TOTAL SHEETS
03	But	99	30.1/T37.5	108	163

H. Golban 4-27-15
REGISTERED ELECTRICAL ENGINEER DATE

4-27-15
PLANS APPROVAL DATE

REGISTERED PROFESSIONAL ENGINEER
HABIB GOLBAN
No. 17928
Exp. 09-30-16
ELECTRICAL
STATE OF CALIFORNIA

THE STATE OF CALIFORNIA OR ITS OFFICERS OR AGENTS SHALL NOT BE RESPONSIBLE FOR THE ACCURACY OR COMPLETENESS OF SCANNED COPIES OF THIS PLAN SHEET.

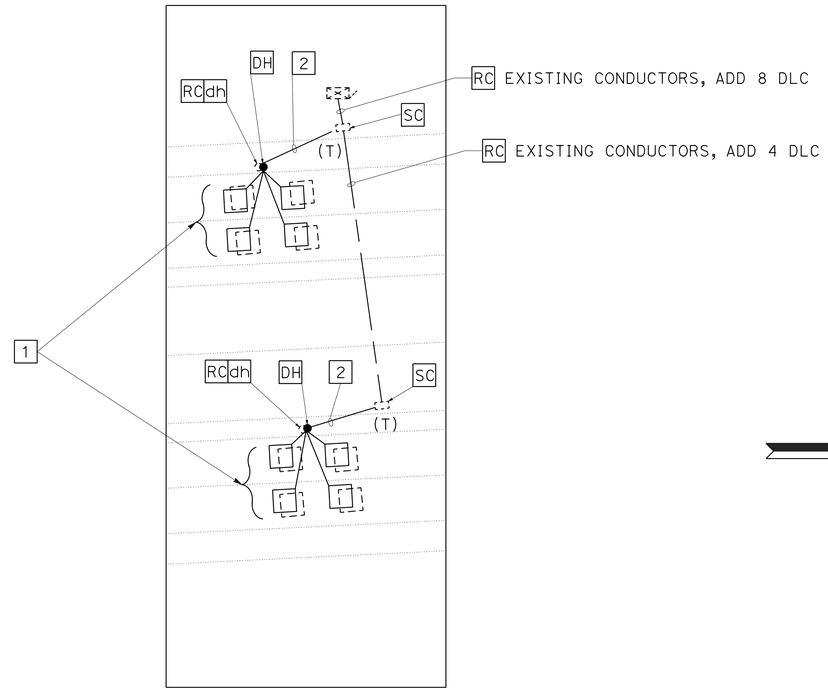

DETAIL G

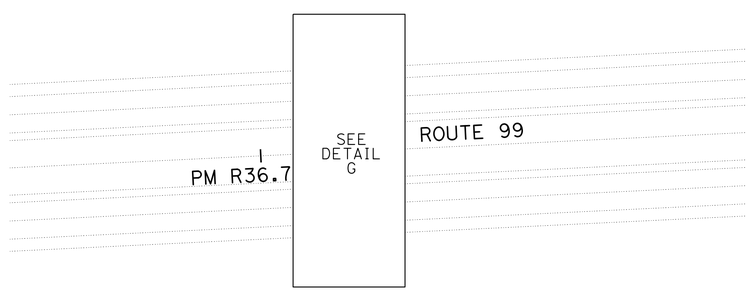

LOCATION 8

MODIFY TRAFFIC MONITORING STATION (COUNT)

NO SCALE

E-4

APPROVED FOR ELECTRICAL WORK ONLY

STATE OF CALIFORNIA - DEPARTMENT OF TRANSPORTATION
Caltrans
ELECTRICAL DESIGN

FUNCTIONAL SUPERVISOR: DAVID A. GAMBOA
CALCULATED-DESIGNED BY: JAMIE KOJAK
CHECKED BY: HABIB GOLBAN
REVISED BY
DATE REVISED

LAST REVISION OG-24-15
DATE PLOTTED => 29-JUN-2015
TIME PLOTTED => 14:08

Dist	COUNTY	ROUTE	POST MILES TOTAL PROJECT	SHEET No.	TOTAL SHEETS
03	But	99	30.1/T37.5	109	163

H. Golban 4-27-15
REGISTERED ELECTRICAL ENGINEER DATE

4-27-15
PLANS APPROVAL DATE

REGISTERED PROFESSIONAL ENGINEER
HABIB GOLBAN
No. 17928
Exp. 09-30-16
ELECTRICAL
STATE OF CALIFORNIA

THE STATE OF CALIFORNIA OR ITS OFFICERS OR AGENTS SHALL NOT BE RESPONSIBLE FOR THE ACCURACY OR COMPLETENESS OF SCANNED COPIES OF THIS PLAN SHEET.

NOTE:

FOR ACCURATE RIGHT OF WAY DATA, CONTACT RIGHT OF WAY ENGINEERING AT THE DISTRICT OFFICE.

LEGEND (THIS SHEET ONLY):

[1] Exist 8 DLC, 8 SLC, [RC] 4 SLC, ADD 4 SLC.

SYMBOLS (WIM SYSTEM):

LIMITS OF PCC PAVEMENT REPLACEMENT

WIM SCALE

Exist WIM SCALE

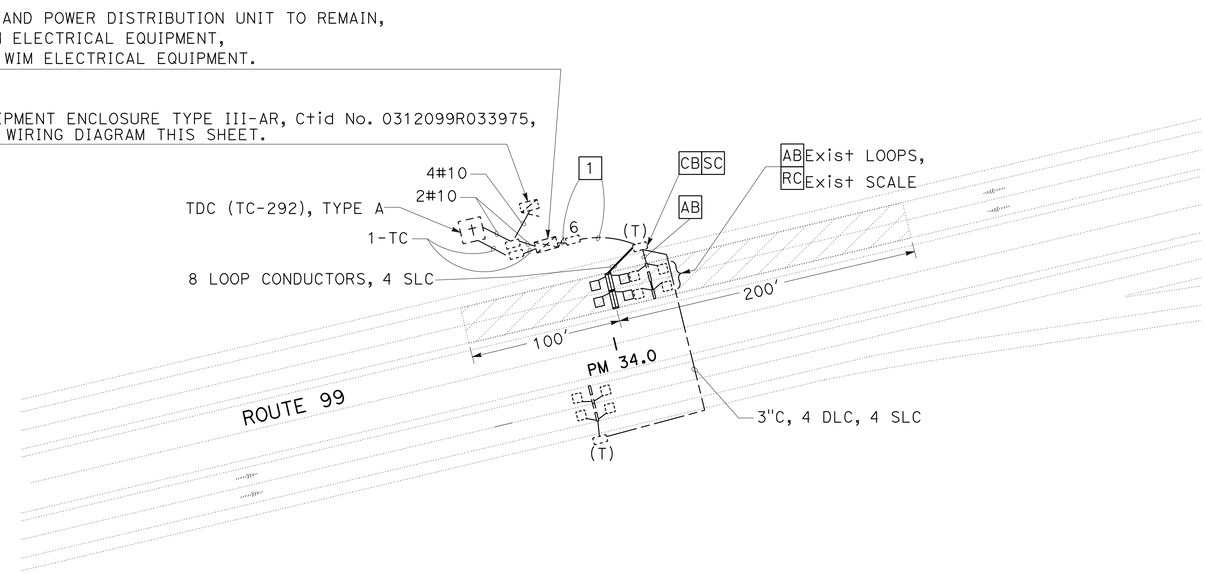

DETAIL H

LOCATION 7

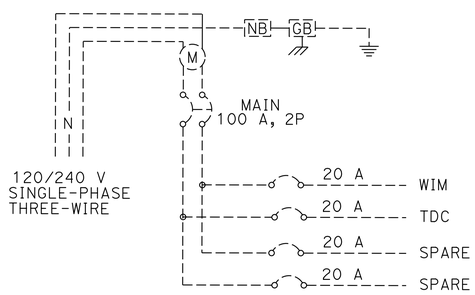

EXISTING SERVICE WIRING DIAGRAM

Ctid No. 0312099R033975

WIRING DIAGRAM LEGEND:

[NB] Exist NEUTRAL BUS

[GB] Exist GROUND BUS

(M) Exist METER SOCKET

HIGH SPEED WEIGH-IN-MOTION SYSTEM

NO SCALE

E-5

APPROVED FOR ELECTRICAL WORK ONLY

REVISED BY	DATE REVISED
JAMIE KOJAK	HABIB GOLBAN
CALCULATED-DESIGNED BY	CHECKED BY
FUNCTIONAL SUPERVISOR	DAVID A. GAMBOA

STATE OF CALIFORNIA - DEPARTMENT OF TRANSPORTATION
Caltrans
ELECTRICAL DESIGN

LAST REVISION 06-24-15
DATE PLOTTED => 29-JUN-2015
TIME PLOTTED => 14:08

Dist	COUNTY	ROUTE	POST MILES TOTAL PROJECT	SHEET No.	TOTAL SHEETS
03	But	99	30.1/T37.5	110	163

H. Golban 4-27-15
REGISTERED ELECTRICAL ENGINEER DATE

4-27-15
PLANS APPROVAL DATE

REGISTERED PROFESSIONAL ENGINEER HABIB GOLBAN No. 17928 Exp. 09-30-16 ELECTRICAL STATE OF CALIFORNIA

THE STATE OF CALIFORNIA OR ITS OFFICERS OR AGENTS SHALL NOT BE RESPONSIBLE FOR THE ACCURACY OR COMPLETENESS OF SCANNED COPIES OF THIS PLAN SHEET.

NOTES:

1. INSTALL NON-METALLIC BUSHING AT ROADWAY END OF CONDUIT.
2. INSTALL DUCT SEAL COMPOUND TO EACH END OF ROADWAY CONDUIT BEFORE INSTALLING EPOXY, OR OTHER APPROVED MATERIALS.
3. END OF 3"C AND 2" PP RESTS ON BOTTOM OF PAVEMENT NOTCH; 3"C BOTTOM MUST BE ABOVE 2" PP BOTTOM.

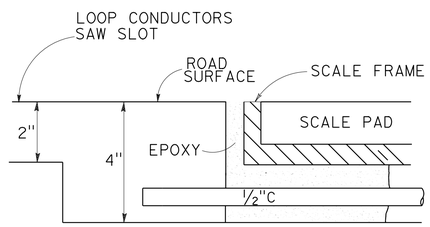

SECTION E-E

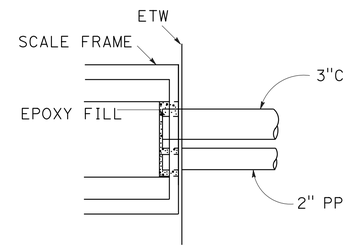

PLAN VIEW

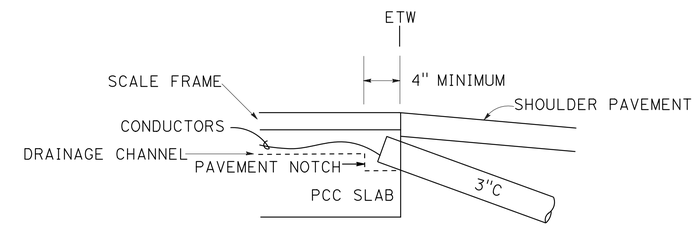

CROSS SECTION

CONDUIT AND 2" PP TERMINATION DETAILS

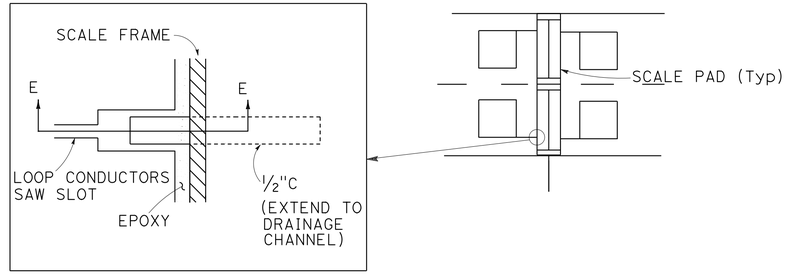

PLAN VIEW

LOOP HOME RUN DETAILS

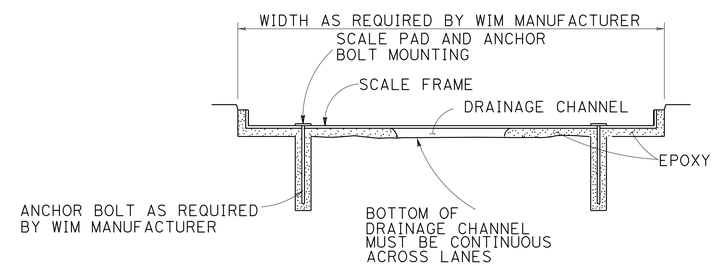

SCALE FRAME INSTALLATION DETAIL
(Typ)

HIGH SPEED WEIGH-IN-MOTION SYSTEM

NO SCALE

E-6

APPROVED FOR ELECTRICAL WORK ONLY

STATE OF CALIFORNIA - DEPARTMENT OF TRANSPORTATION
Caltrans
ELECTRICAL DESIGN

FUNCTIONAL SUPERVISOR: DAVID A. GAMBOA
CALCULATED-DESIGNED BY: JAMIE KOJAK
CHECKED BY: HABIB GOLBAN
REVISED BY
DATE REVISED

LAST REVISION 06-24-15
DATE PLOTTED => 29-JUN-2015
TIME PLOTTED => 14:08

Dist	COUNTY	ROUTE	POST MILES TOTAL PROJECT	SHEET No.	TOTAL SHEETS
03	But	99	30.1/T37.5	111	163

H. Golban 4-27-15
REGISTERED ELECTRICAL ENGINEER DATE

4-27-15
PLANS APPROVAL DATE

REGISTERED PROFESSIONAL ENGINEER
HABIB GOLBAN
No. 17928
Exp. 09-30-16
ELECTRICAL
STATE OF CALIFORNIA

THE STATE OF CALIFORNIA OR ITS OFFICERS OR AGENTS SHALL NOT BE RESPONSIBLE FOR THE ACCURACY OR COMPLETENESS OF SCANNED COPIES OF THIS PLAN SHEET.

NOTES:

1. THE WIM ENGINEER WILL VERIFY THE FINAL LOCATION OF THE WIM SCALES PRIOR TO ANY WORK IN THE TRAVELLED WAY OR SHOULDERS.
2. EDGE DRAIN OUTLET MUST CONFORM TO TYPE C OUTLET WITH OUTLET COVER AS SHOWN ON STANDARD PLAN D99B EXCEPT THAT PIPE SHALL BE 2".
3. WIM SCALE MUST MATCH EXISTING ROADWAY PROFILE AND CROSS-SLOPE.
4. EXACT CONFIGURATION AND INSTALLATION PROCEDURES OF SCALE FRAME AND LOOP DETECTORS MUST CONFORM TO THE REQUIREMENTS OF THE WIM MANUFACTURER.

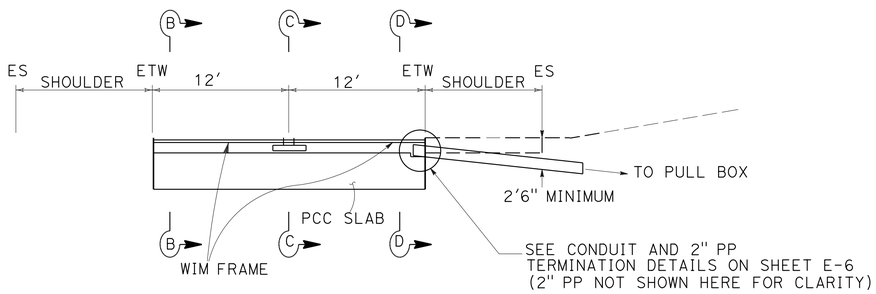

SECTION A-A

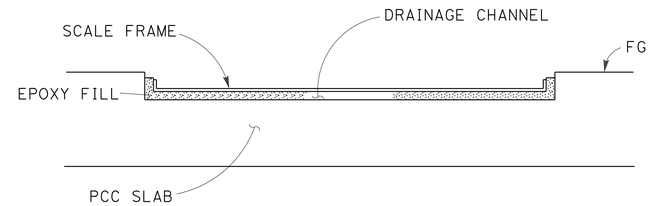

SECTION B-B

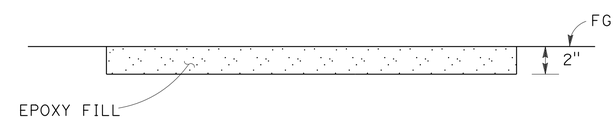

SECTION C-C

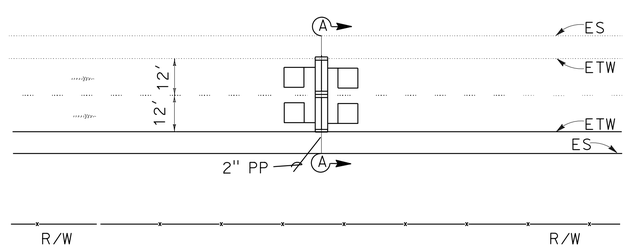

TYPICAL INSTALLATION DETAIL

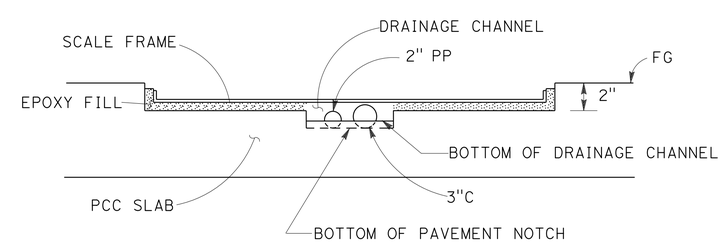

SECTION D-D

HIGH SPEED WEIGH-IN-MOTION SYSTEM

NO SCALE

E-7

APPROVED FOR ELECTRICAL WORK ONLY

STATE OF CALIFORNIA - DEPARTMENT OF TRANSPORTATION
Caltrans®
ELECTRICAL DESIGN

FUNCTIONAL SUPERVISOR: DAVID A. GAMBOA
CALCULATED-DESIGNED BY: JAMIE KOJAK
CHECKED BY: HABIB GOLBAN
REVISED BY
DATE REVISED

LAST REVISION 06-24-15
DATE PLOTTED => 29-JUN-2015
TIME PLOTTED => 14:08

Dist	COUNTY	ROUTE	POST MILES TOTAL PROJECT	SHEET No.	TOTAL SHEETS
03	But	99	30.1/T37.5	112	163

H. Golban 4-27-15
REGISTERED ELECTRICAL ENGINEER DATE

4-27-15
PLANS APPROVAL DATE

REGISTERED PROFESSIONAL ENGINEER
HABIB GOLBAN
No. 17928
Exp. 09-30-16
ELECTRICAL
STATE OF CALIFORNIA

THE STATE OF CALIFORNIA OR ITS OFFICERS OR AGENTS SHALL NOT BE RESPONSIBLE FOR THE ACCURACY OR COMPLETENESS OF SCANNED COPIES OF THIS PLAN SHEET.

NOTE:
ITEMS SHOWN IN THE TABLES ARE NOT A SEPARATE PAY ITEM, FOR INFORMATION ONLY.

MODIFY TRAFFIC MONITORING STATION (COUNT)

SHEET No.	HAND HOLE	TYPE A LOOP	1½" TYPE 3 CONDUIT	TYPE B DLC	PULL BOX No. 5 (T)
	EA	EA	LF	LF	EA
E-1	5	12			
E-2	5	12			1
E-3	8	16	20		4
E-4	2	8		950	

HIGH SPEED WEIGH-IN-MOTION SYSTEM

SHEET No.	TYPE A LOOP	SCALE PAD	STEEL FRAME	WIM SYSTEM EQUIPMENT	SCALE LEAD-IN-CABLE
	EA	EA	EA	EA	LF
E-5	4	4	4	1	400

ELECTRICAL QUANTITIES

E-8

REVISED BY | DATE REVISED
JAMIE KOJAK | HABIB GOLBAN
CALCULATED-DESIGNED BY | CHECKED BY
FUNCTIONAL SUPERVISOR
DAVID A. GAMBOA

STATE OF CALIFORNIA - DEPARTMENT OF TRANSPORTATION
Caltrans
ELECTRICAL DESIGN

LAST REVISION 06-24-15
DATE PLOTTED => 29-JUN-2015
TIME PLOTTED => 14:08

M

Maint	MAINTENANCE
Max	MAXIMUM
MB	METAL BEAM
MBB	METAL BEAM BARRIER
MBGR	METAL BEAM GUARD RAILING
Med	MEDIAN
MGS	MIDWEST GUARDRAIL SYSTEM
MH	MANHOLE
Min	MINIMUM
Misc	MISCELLANEOUS
Misc I & S	MISCELLANEOUS IRON AND STEEL
Mkr	MARKER
Mod	MODIFIED,
	MODIFY
Mon	MONUMENT
MP	METAL PLATE
MPGR	METAL PLATE GUARD RAILING
MR	MOVEMENT RATING
MSE	MECHANICALLY STABILIZED EMBANKMENT
Mt	MOUNTAIN, MOUNT
Mtl	MATERIAL
MVP	MAINTENANCE VEHICLE PULLOUT

N

N	NORTH
NB	NORTHBOUND
No.	NUMBER (MUST HAVE PERIOD)
Nos.	NUMBERS (MUST HAVE PERIOD)
NPS	NOMINAL PIPE SIZE
NS	NEAR SIDE
NSP	NEW STANDARD PLAN
NTS	NOT TO SCALE

O

Oblr	OBLITERATE
OC	OVERCROSSING
OD	OUTSIDE DIAMETER
OF	OUTSIDE FACE
OG	ORIGINAL GROUND
OGAC	OPEN GRADED ASPHALT CONCRETE
OGFC	OPEN GRADED FRICTION COURSE
OH	OVERHEAD
OHWM	ORDINARY HIGH WATER MARK
O-O	OUT TO OUT
Opp	OPPOSITE
OSD	OVERSIDE DRAIN

P

p	PAGE
PAP	PERFORATED ALUMINUM PIPE
PB	PULL BOX
PC	POINT OF CURVATURE,
	PRECAST
PCC	POINT OF COMPOUND CURVE,
	PORTLAND CEMENT CONCRETE
PCMS	PORTABLE CHANGEABLE MESSAGE SIGN
PCP	PERFORATED CONCRETE PIPE,
	PRESTRESSED CONCRETE PIPE
PCVC	POINT OF COMPOUND VERTICAL CURVE
PEC	PERMIT TO ENTER AND CONSTRUCT
Ped	PEDESTRIAN
Ped OC	PEDESTRIAN OVERCROSSING
Ped UC	PEDESTRIAN UNDERCROSSING
Perm Mtl	PERMEABLE MATERIAL

P continued

PG	PROFILE GRADE
PI	POINT OF INTERSECTION
PJP	PARTIAL JOINT PENETRATION
Pkwy	PARKWAY
ℙ,PL	PLATE
P/L	PROPERTY LINE
PM	POST MILE,
	TIME FROM NOON TO MIDNIGHT
PN	PAVING NOTCH
POC	POINT OF HORIZONTAL CURVE
POT	POINT OF TANGENT
POVC	POINT OF VERTICAL CURVE
PP	PIPE PILE,
	PLASTIC PIPE,
	POWER POLE
PPL	PREFORMED PERMEABLE LINER
PPP	PERFORATED PLASTIC PIPE
PRC	POINT OF REVERSE CURVE
PRF	PAVEMENT REINFORCING FABRIC
PRVC	POINT OF REVERSE VERTICAL CURVE
PS&E	PLANS, SPECIFICATIONS AND ESTIMATES
PS, P/S	PRESTRESSED
PSP	PERFORATED STEEL PIPE
PT	POINT OF TANGENCY
PVC	POLYVINYL CHLORIDE
Pvmt	PAVEMENT

Q

Qty	QUANTITY

R

R	RADIUS
R & D	REMOVE AND DISPOSE
R & S	REMOVE AND SALVAGE
R/C	RATE OF CHANGE
RCA	REINFORCED CONCRETE ARCH
RCB	REINFORCED CONCRETE BOX
RCP	REINFORCED CONCRETE PIPE
RCPA	REINFORCED CONCRETE PIPE ARCH
Rd	ROAD
Reinf	REINFORCED,
	REINFORCEMENT,
	REINFORCING
Rel	RELOCATE
Repl	REPLACEMENT
Ret	RETAINING
Rev	REVISED, REVISION
Rdwy	ROADWAY
RHMA	RUBBERIZED HOT MIX ASPHALT
Riv	RIVER
RM	ROAD-MIXED
RP	RADIUS POINT,
	REFERENCE POINT
RR	RAILROAD
RSP	ROCK SLOPE PROTECTION,
	REVISED STANDARD PLAN
Rt	RIGHT
Rte	ROUTE
RW	REDWOOD,
	RETAINING WALL
R/W	RIGHT OF WAY
Rwy	RAILWAY

S

S	SOUTH,
	SUPPLEMENT
SAE	STRUCTURE APPROACH EMBANKMENT
Salv	SALVAGE
SAPP	STRUCTURAL ALUMINUM PLATE PIPE
SB	SOUTHBOUND
SC	SAND CUSHION
SCSP	SLOTTED CORRUGATED STEEL PIPE
SD	STORM DRAIN
Sec	SECOND,
	SECTION
Sep	SEPARATION
SG	SUBGRADE
Shld	SHOULDER
Sht	SHEET
Sim	SIMILAR
℄	STATION LINE
SM	SELECTED MATERIAL
Spec	SPECIAL,
	SPECIFICATIONS
SPP	SLOTTED PLASTIC PIPE
SS	SLOPE STAKE
SSBM	STRAP AND SADDLE BRACKET METHOD
SSD	STRUCTURAL SECTION DRAIN
SSPA	STRUCTURAL STEEL PLATE ARCH
SSPP	STRUCTURAL STEEL PLATE PIPE
SSPPA	STRUCTURAL STEEL PLATE PIPE ARCH
SSRP	STEEL SPIRAL RIB PIPE
St	STREET
Sta	STATION
STBB	SINGLE THRIE BEAM BARRIER
Std	STANDARD
Str	STRUCTURE
Surf	SURFACING
SW	SIDEWALK,
	SOUND WALL
Swr	SEWER
Sym	SYMMETRICAL
S4S	SURFACE 4 SIDES

T

T	SEMI-TANGENT
Tan	TANGENT
TBB	THRIE BEAM BARRIER
Tbr	TIMBER
TC	TOP OF CURB
TCB	TRAFFIC CONTROL BOX
TCE	TEMPORARY CONSTRUCTION EASEMENT
Tel	TELEPHONE
Temp	TEMPORARY
TG	TOP OF GRADE
Tot	TOTAL
TP	TELEPHONE POLE
TPB	TREATED PERMEABLE BASE
TPM	TREATED PERMEABLE MATERIAL
Trans	TRANSITION

T continued

TS	TRANSVERSE,
	TRAFFIC SIGNAL,
	TUBULAR STEEL
Typ	TYPICAL

U

UC	UNDERCROSSING
UD	UNDERDRAIN
UG	UNDERGROUND
UON	UNLESS OTHERWISE NOTED
UP	UNDERPASS

V

V	VALVE,
	DESIGN SPEED
Var	VARIABLE,
	VARIES
VC	VERTICAL CURVE
VCP	VITRIFIED CLAY PIPE
Vert	VERTICAL
Via	VIADUCT
Vol	VOLUME

W

W	WEST,
	WIDTH
WB	WESTBOUND
WH	WEEP HOLE
WM	WIRE MESH
WS	WATER SURFACE
WSP	WELDED STEEL PIPE
Wt	WEIGHT
WV	WATER VALVE
WW	WINGWALL
WWLOL	WINGWALL LAYOUT LINE

X

X Sec	CROSS SECTION
Xing	CROSSING

Y

Yr	YEAR
Yrs	YEARS

Dist	COUNTY	ROUTE	POST MILES TOTAL PROJECT	SHEET No.	TOTAL SHEETS
03	But	99	30.1/T37.5	113	163

Grace M. Tsushima
REGISTERED CIVIL ENGINEER

July 19, 2013
PLANS APPROVAL DATE

REGISTERED PROFESSIONAL ENGINEER
Grace M. Tsushima
No. C49814
Exp. 9-30-14
CIVIL
STATE OF CALIFORNIA

THE STATE OF CALIFORNIA OR ITS OFFICERS OR AGENTS SHALL NOT BE RESPONSIBLE FOR THE ACCURACY OR COMPLETENESS OF SCANNED COPIES OF THIS PLAN SHEET.

TO ACCOMPANY PLANS DATED 4-27-15

UNIT OF MEASUREMENT SYMBOLS:

Some of the symbols used in the project plan quantity tables and in the Bid Item List are:

TABLE A

SYMBOL USED	DEFINITIONS
ACRE	ACRE
CF	CUBIC FOOT
CY	CUBIC YARD
EA	EACH
GAL	GALLON
LB	POUND
LF	LINEAR FOOT
SQFT	SQUARE FOOT
SQYD	SQUARE YARD
STA	100 FEET
TAB	TABLET
TON	2,000 POUNDS

Some of the symbols used in the plans other than in the project plan quantity tables are:

TABLE B

SYMBOL USED	DEFINITIONS
ksi	KIPS PER SQUARE INCH
ksf	KIPS PER SQUARE FOOT
psi	POUNDS PER SQUARE INCH
psf	POUNDS PER SQUARE FOOT
lb/ft^3, pcf	POUNDS PER CUBIC FOOT
tsf	TONS PER SQUARE FOOT
mph, MPH *	MILES PER HOUR
ø	NOMINAL DIAMETER
oz	OUNCE
lb	POUND
kip	1,000 POUNDS
cal	CALORIE
ft	FOOT OR FEET
gal	GALLON

* For use on a sign panel only

STATE OF CALIFORNIA
DEPARTMENT OF TRANSPORTATION

ABBREVIATIONS (SHEET 2 OF 2)

NO SCALE

RSP A10B DATED JULY 19, 2013 SUPERSEDES STANDARD PLAN A10B DATED MAY 20, 2011 - PAGE 2 OF THE STANDARD PLANS BOOK DATED 2010.

REVISED STANDARD PLAN RSP A10B

2010 REVISED STANDARD PLAN RSP A10B

6-7-13

Dist	COUNTY	ROUTE	POST MILES TOTAL PROJECT	SHEET No.	TOTAL SHEETS
03	But	99	30.1/T37.5	114	163

REGISTERED CIVIL ENGINEER

July 19, 2013
PLANS APPROVAL DATE

REGISTERED PROFESSIONAL ENGINEER Roberta L. McLaughlin No. C40375 Exp. 3-31-15 CIVIL STATE OF CALIFORNIA

THE STATE OF CALIFORNIA OR ITS OFFICERS OR AGENTS SHALL NOT BE RESPONSIBLE FOR THE ACCURACY OR COMPLETENESS OF SCANNED COPIES OF THIS PLAN SHEET.

TO ACCOMPANY PLANS DATED 4-27-15

EXIT RAMP NEUTRAL AREA (GORE) TREATMENT

DETAIL 36

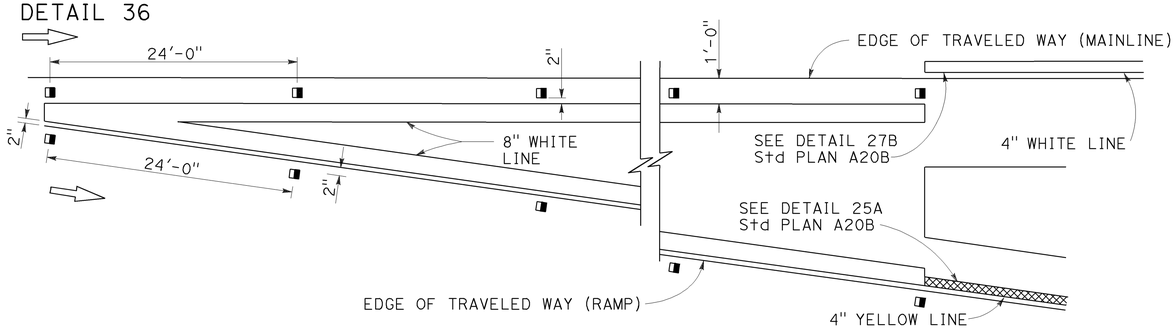

ENTRANCE RAMP NEUTRAL AREA (MERGE) TREATMENT

DETAIL 36A

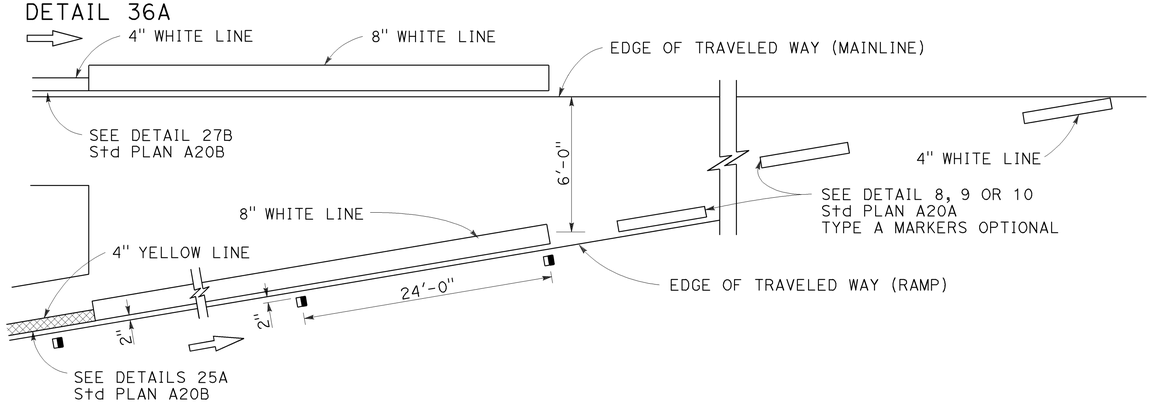

ENTRANCE RAMP NEUTRAL AREA (ACCELERATION LANE) TREATMENT

DETAIL 36B

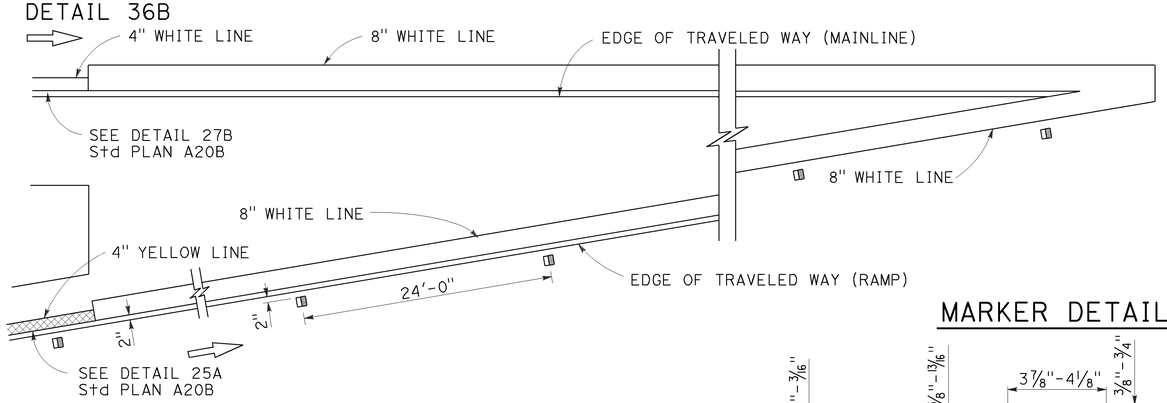

LANE DROP AT EXIT RAMPS

DETAIL 37

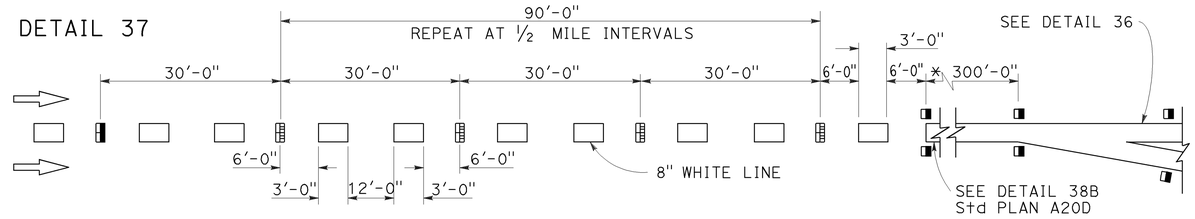

DETAIL 37A

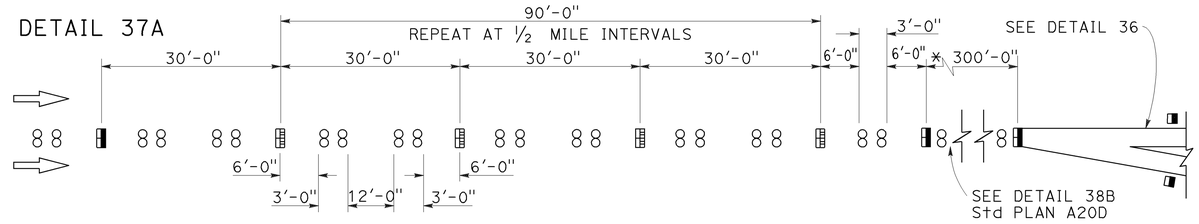

* The solid channelizing line shown may be omitted on short auxiliary lanes where weaving length is critical.

LANE DROP AT INTERSECTIONS

DETAIL 37B

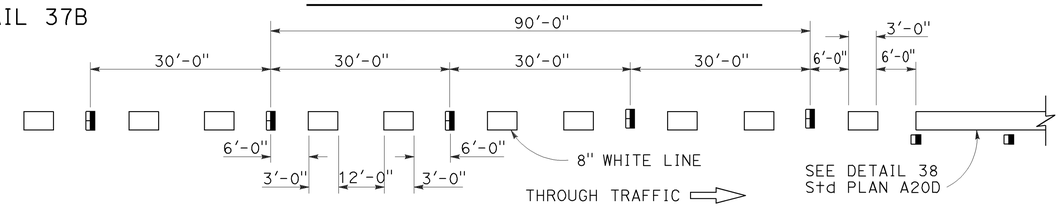

DETAIL 37C

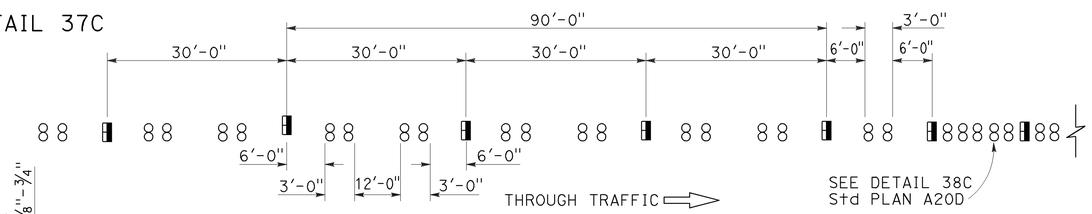

MARKER DETAILS

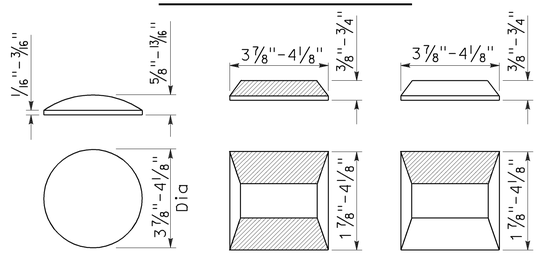

RETROREFLECTIVE FACE

LEGEND:

MARKERS

- ○ TYPE A WHITE NON-REFLECTIVE
- ⊟ TYPE C RED-CLEAR RETROREFLECTIVE
- ◨ TYPE G ONE-WAY CLEAR RETROREFLECTIVE

STATE OF CALIFORNIA
DEPARTMENT OF TRANSPORTATION

PAVEMENT MARKERS AND TRAFFIC LINE TYPICAL DETAILS

NO SCALE

RSP A20C DATED JULY 19, 2013 SUPERSEDES STANDARD PLAN A20C DATED MAY 20, 2011 - PAGE 11 OF THE STANDARD PLANS BOOK DATED 2010.

REVISED STANDARD PLAN RSP A20C

2010 REVISED STANDARD PLAN RSP A20C

4-29-13

Dist	COUNTY	ROUTE	POST MILES TOTAL PROJECT	SHEET No.	TOTAL SHEETS
03	But	99	30.1/T37.5	115	163

REGISTERED CIVIL ENGINEER

April 20, 2012
PLANS APPROVAL DATE

REGISTERED PROFESSIONAL ENGINEER
Roberta L. McLaughlin
No. C40375
Exp. 3-31-13
CIVIL
STATE OF CALIFORNIA

THE STATE OF CALIFORNIA OR ITS OFFICERS OR AGENTS SHALL NOT BE RESPONSIBLE FOR THE ACCURACY OR COMPLETENESS OF SCANNED COPIES OF THIS PLAN SHEET.

TO ACCOMPANY PLANS DATED 4-27-15

2010 REVISED STANDARD PLAN RSP A24A

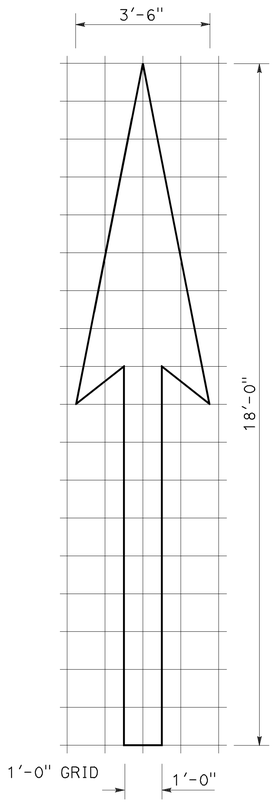

A=25 ft^2

TYPE I 18'-0" ARROW

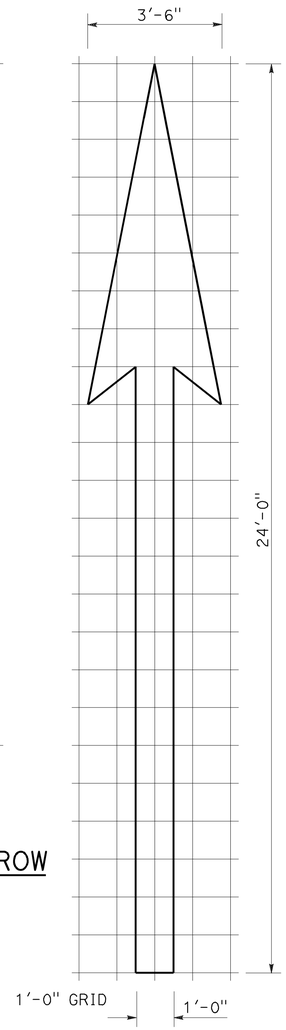

A=31 ft^2

TYPE I 24'-0" ARROW

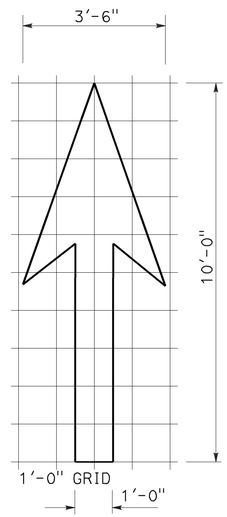

A=14 ft^2

TYPE I 10'-0" ARROW

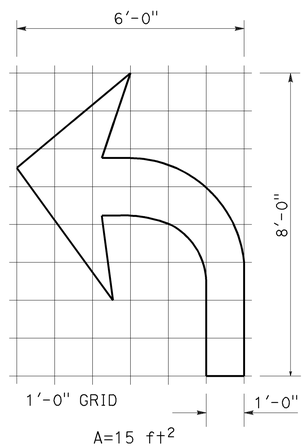

A=15 ft^2

TYPE IV (L) ARROW

(For Type IV (R) arrow, use mirror image)

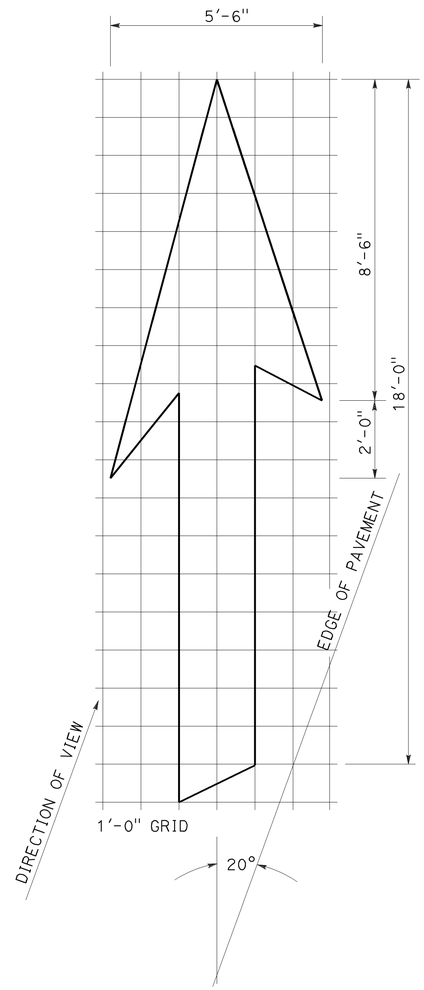

A=42 ft^2

TYPE VI ARROW

Right lane drop arrow
(For left lane, use mirror image)

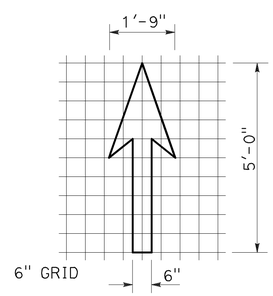

A=3.5 ft^2

BIKE LANE ARROW

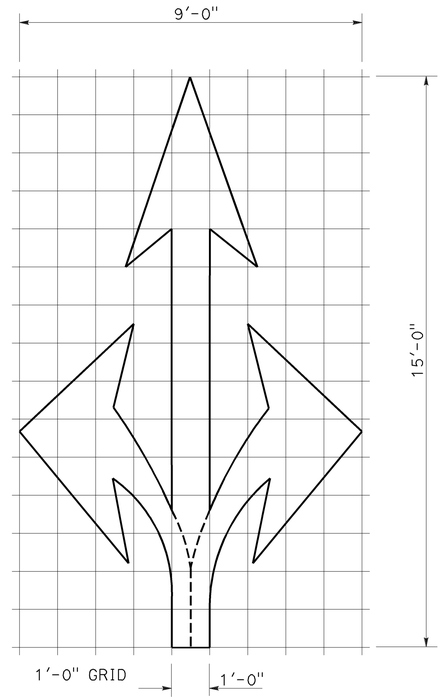

A=36 ft^2

TYPE VIII ARROW

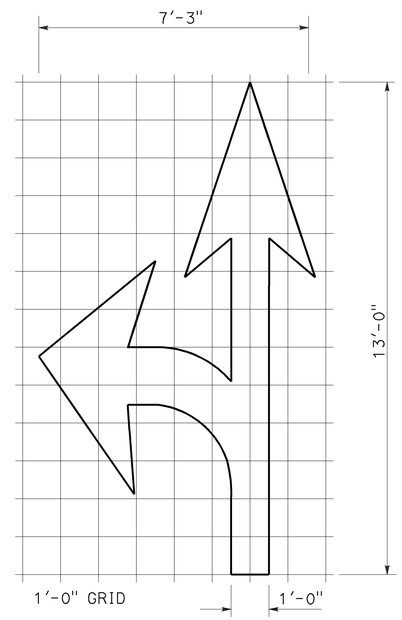

A=27 ft^2

TYPE VII (L) ARROW

(For Type VII (R) arrow, use mirror image)

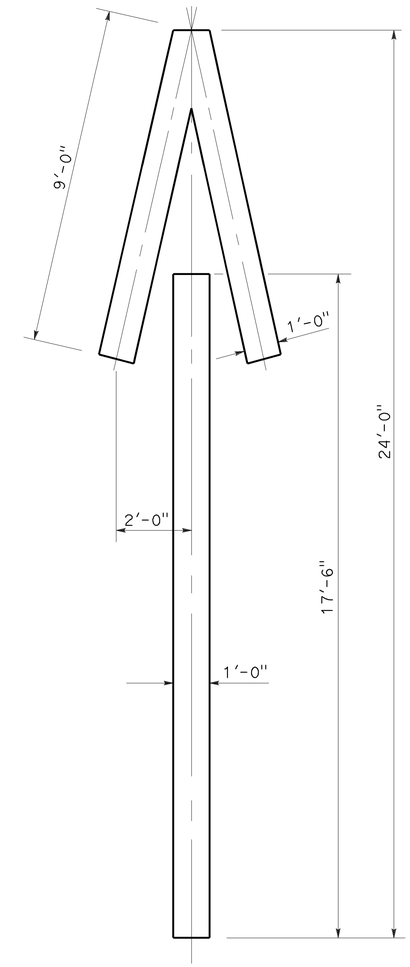

A=33 ft^2

TYPE V ARROW

NOTE:
Minor variations in dimensions may be accepted by the Engineer.

STATE OF CALIFORNIA
DEPARTMENT OF TRANSPORTATION

PAVEMENT MARKINGS ARROWS

NO SCALE

RSP A24A DATED APRIL 20, 2012 SUPERSEDES STANDARD PLAN A24A DATED MAY 20, 2011 - PAGE 13 OF THE STANDARD PLANS BOOK DATED 2010.

REVISED STANDARD PLAN RSP A24A

3-14-12

Dist	COUNTY	ROUTE	POST MILES TOTAL PROJECT	SHEET No.	TOTAL SHEETS
03	But	99	30.1/T37.5	116	163

Randell D. Hiatt
REGISTERED CIVIL ENGINEER

July 19, 2013
PLANS APPROVAL DATE

REGISTERED PROFESSIONAL ENGINEER
Randell D. Hiatt
No. C50200
Exp. 6-30-15
CIVIL
STATE OF CALIFORNIA

THE STATE OF CALIFORNIA OR ITS OFFICERS OR AGENTS SHALL NOT BE RESPONSIBLE FOR THE ACCURACY OR COMPLETENESS OF SCANNED COPIES OF THIS PLAN SHEET.

TO ACCOMPANY PLANS DATED 4-27-15

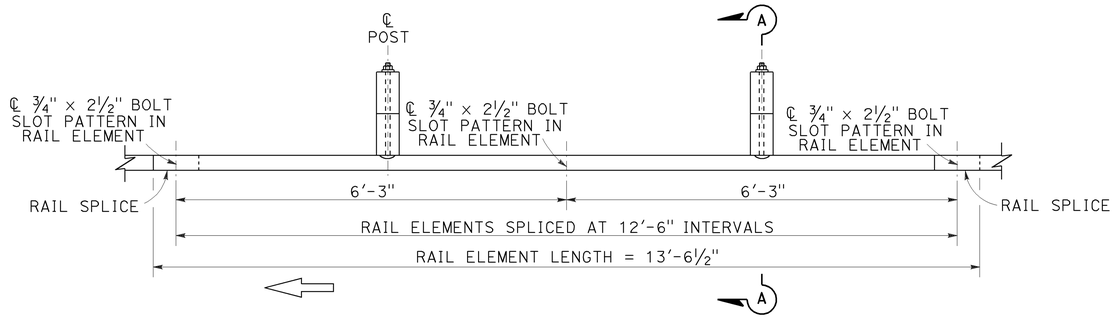

PLAN

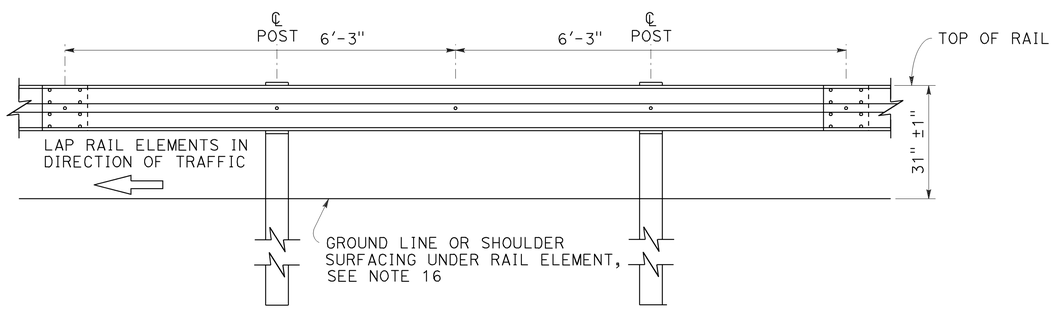

ELEVATION

MIDWEST GUARDRAIL SYSTEM WITH WOOD POST AND BLOCKS

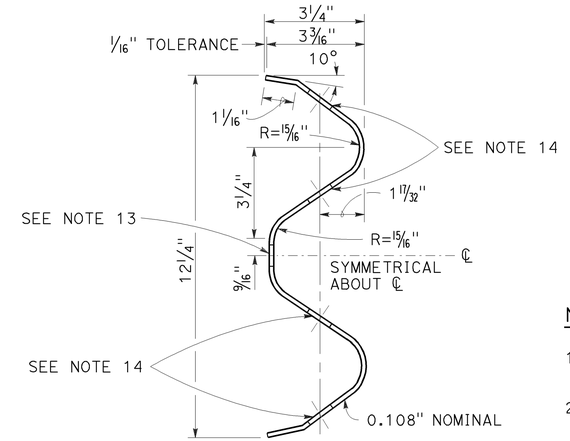

SECTION THRU RAIL ELEMENT

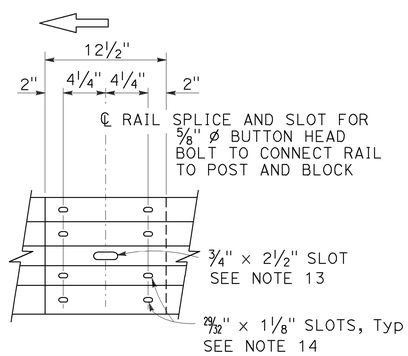

ELEVATION

RAIL ELEMENT SPLICE DETAIL

a) Connect the over lapped end of the rail elements with ⅝" ø × 1⅜" button head oval shoulder splice bolts inserted into the 29/32" × 1⅛" slots and bolted together with ⅝" ø recessed hex nuts. Recess of hex nut points toward rail element. A total of 8 bolts and nuts are to be used at each rail splice connection.

b) The ends of the rail elements are to be overlapped in the direction of traffic (see details).

c) Where end cap is to be attached to the end of a rail element, a total of 4 of the above described splice bolts and nuts are to be used.

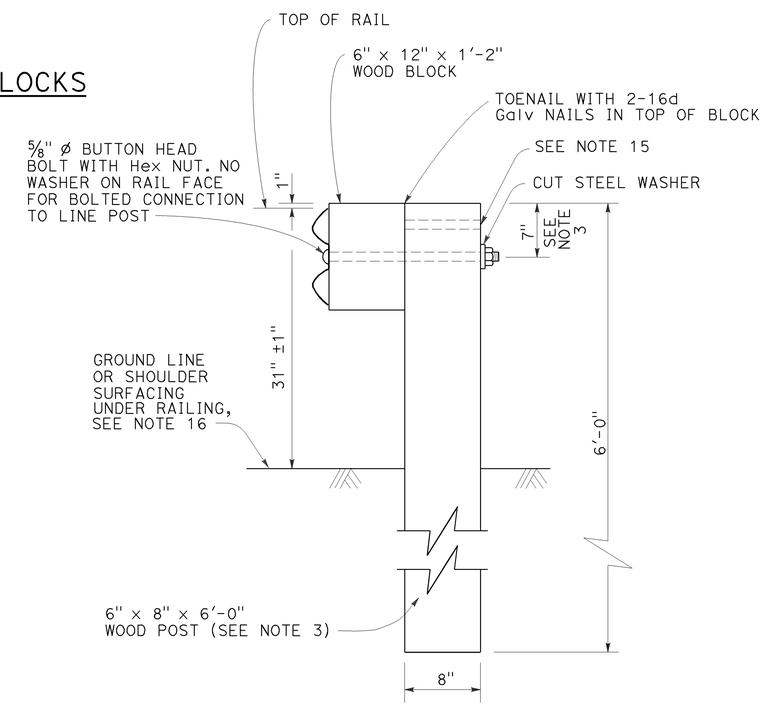

SECTION A-A

TYPICAL WOOD LINE POST INSTALLATION

See Note 4

NOTES:

1. For details of steel post installations, see Revised Standard Plan RSP A77L2.
2. For details of standard hardware used to construct MGS, see Revised Standard Plan RSP A77M1.
3. For details of wood posts and wood blocks used to construct MGS, see Revised Standard Plan RSP A77N1.
4. For additional installation details, see Revised Standard Plan RSP A77N3.
5. MGS post spacing to be 6'-3" center to center, except as otherwise noted.
6. For MGS typical layouts, see the A77P, A77Q and A77R Series of Standard Plans.
7. If railing is connected to terminal system end treatment, use 31" height terminal system end treatment.
8. For MGS end anchor details, see Revised Standard Plans RSP A77S1 and RSP A77T2.
9. For details of MGS transition to bridge railing, see Revised Standard Plan RSP A77U4.
10. For additional details of MSG connection to bridge railing, see Revised Standard Plans RSP A77U1, RSP A77U2 and RSP A77V1.
11. For MGS connection details to abutments and walls, see Revised Standard Plan RSP A77U3.
12. For typical MGS delineation and dike positioning details, see Revised Standard Plan RSP A77N4.
13. Slotted hole for bolted connection of rail element to block and post. See "Section Thru Rail Element".
14. Slotted holes for splice bolts to overlap ends of rail element. See "Section Thru Rail Element".
15. Additional hole in uppermost portion of line post is for potential future adjustments of railing height. See Revised Standard Plan RSP A77N1.
16. Install posts in soil.

STATE OF CALIFORNIA
DEPARTMENT OF TRANSPORTATION

MIDWEST GUARDRAIL SYSTEM STANDARD RAILING SECTION (WOOD POST WITH WOOD BLOCK)

NO SCALE

RSP A77L1 DATED JULY 19, 2013 SUPPLEMENTS STANDARD PLANS BOOK DATED 2010.

REVISED STANDARD PLAN RSP A77L1

2010 REVISED STANDARD PLAN RSP A77L1

Dist	COUNTY	ROUTE	POST MILES TOTAL PROJECT	SHEET No.	TOTAL SHEETS
03	But	99	30.1/T37.5	117	163

Randell D. Hiatt
REGISTERED CIVIL ENGINEER

July 19, 2013
PLANS APPROVAL DATE

REGISTERED PROFESSIONAL ENGINEER
Randell D. Hiatt
No. C50200
Exp. 6-30-15
CIVIL
STATE OF CALIFORNIA

THE STATE OF CALIFORNIA OR ITS OFFICERS OR AGENTS SHALL NOT BE RESPONSIBLE FOR THE ACCURACY OR COMPLETENESS OF SCANNED COPIES OF THIS PLAN SHEET.

TO ACCOMPANY PLANS DATED 4-27-15

2010 REVISED STANDARD PLAN RSP A77L3

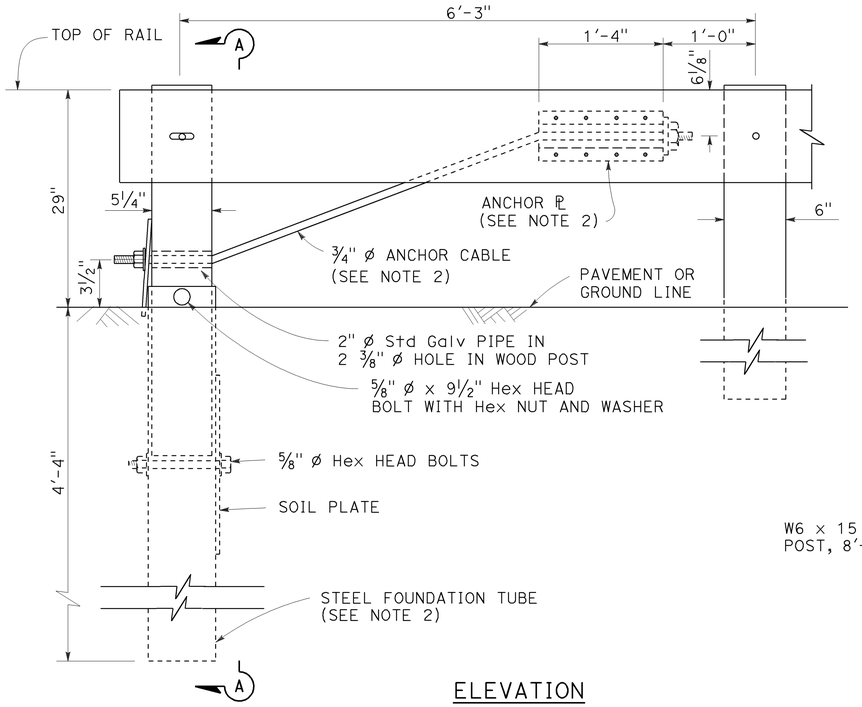

ELEVATION
END ANCHOR
ASSEMBLY (TYPE SFT)

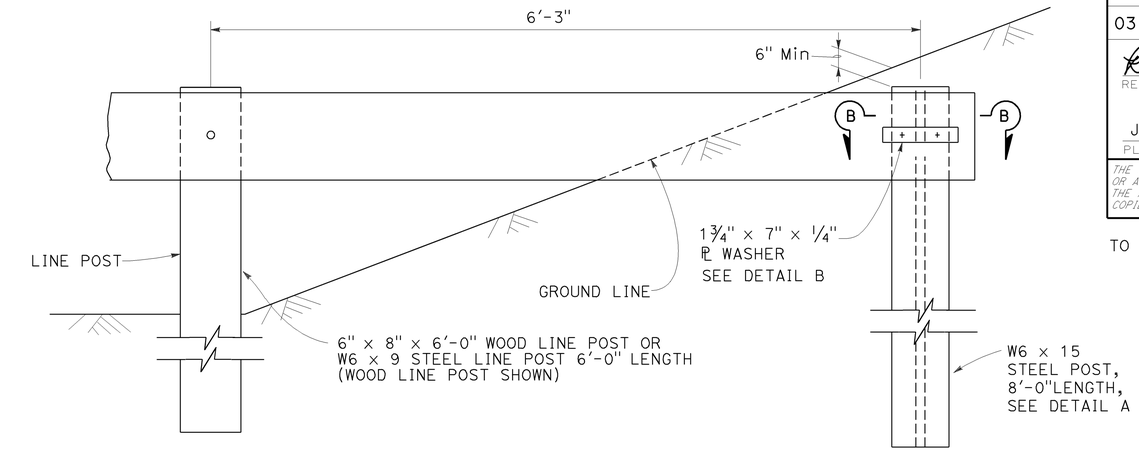

BURIED POST END ANCHOR

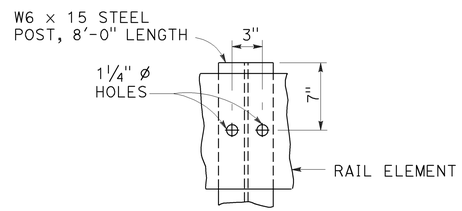

DETAIL A

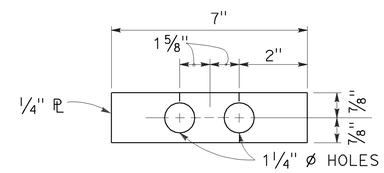

DETAIL B

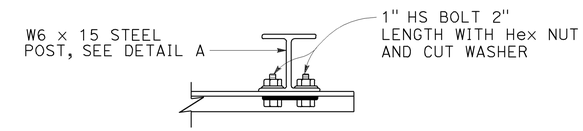

SECTION B-B

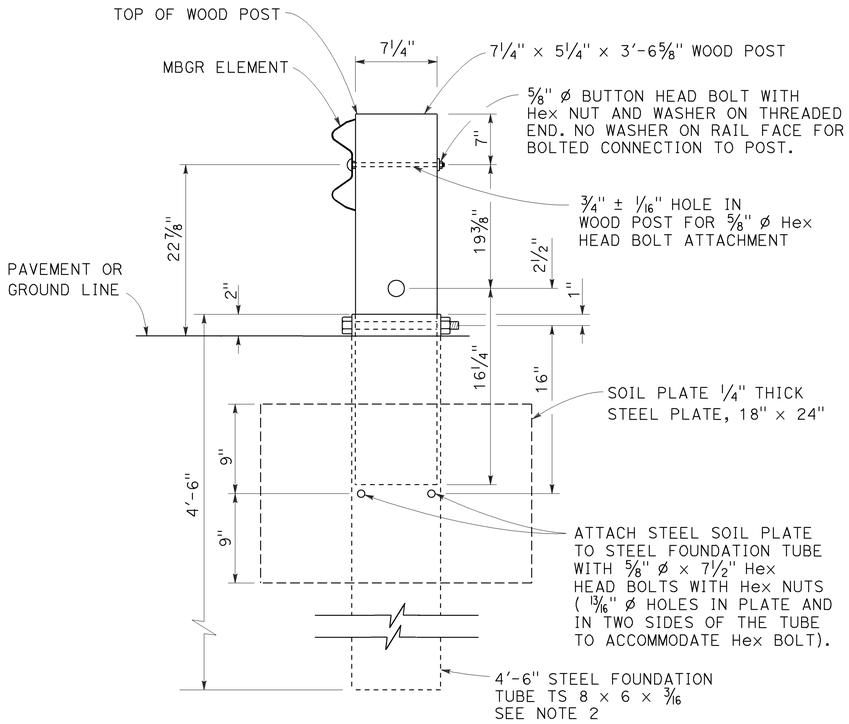

SECTION A-A

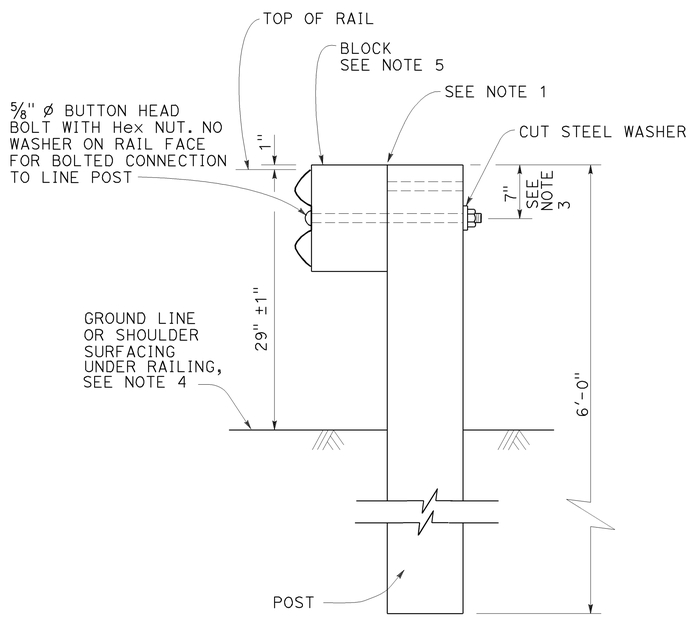

TYPICAL LINE
POST INSTALLATION

NOTES:

1. For wood post and wood block, toenail with 2-16d Galv nails in top of block. For steel post and notched wood or plastic block, notched face of block faces steel post.
2. A 6'-0" Length steel foundation tube, TS 8 x 6 x 3/16, without a soil plate, may be furnished and installed in place of the 4'-6" length steel foundation tube and soil plate shown, Minimum embadment of the 6'-0" length tube shall be 5'-9". A 5/8" Ø Hex head bolt and nut shall be installed in the hole in the 6'-0" length tube to keep the wood post from dropping into the tube.
3. To connect railing to 27" terminal system end treatment, transition the top of railing height at a ratio of 120:1 to terminal system end treatment height plus one 12'-6" standard railing section at the transitioned height for a horizontal connection to the end treatment.
4. Install posts in soil.
5. See Revised Standard Plans RSP A77N1 and RSP A77N2 for details.
6. Holes excavation in the slope to construct the buried post end anchor shall be backfilled with selected earth, placed in layers approximately 1'-0" thick. Each layer shall be moistened and thoroughly compacted.

STATE OF CALIFORNIA
DEPARTMENT OF TRANSPORTATION

METAL BEAM GUARD RAILING RECONSTRUCT INSTALLATION

NO SCALE

RSP A77L3 DATED JULY 19, 2013 SUPPLEMENTS THE STANDARD PLANS BOOK DATED 2010.

REVISED STANDARD PLAN RSP A77L3

7-16-13

Dist	COUNTY	ROUTE	POST MILES TOTAL PROJECT	SHEET No.	TOTAL SHEETS
03	But	99	30.1/T37.5	118	163

Randell D. Hiatt
REGISTERED CIVIL ENGINEER

July 19, 2013
PLANS APPROVAL DATE

REGISTERED PROFESSIONAL ENGINEER
Randell D. Hiatt
No. C50200
Exp. 6-30-15
CIVIL
STATE OF CALIFORNIA

THE STATE OF CALIFORNIA OR ITS OFFICERS OR AGENTS SHALL NOT BE RESPONSIBLE FOR THE ACCURACY OR COMPLETENESS OF SCANNED COPIES OF THIS PLAN SHEET.

TO ACCOMPANY PLANS DATED 4-27-15

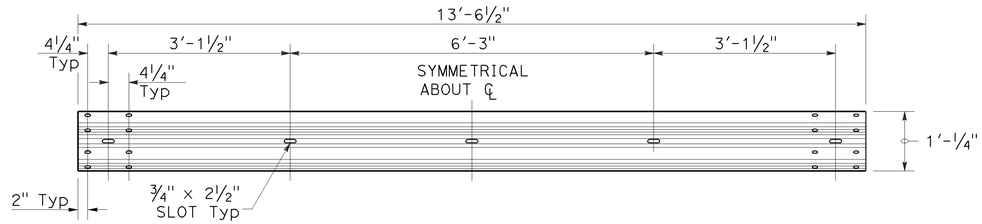

TYPICAL RAIL ELEMENT

NOTE:

1. Slotted holes for splice bolts to overlap ends of rail element.

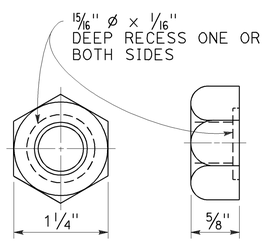

⅝" Ø RECESS NUT

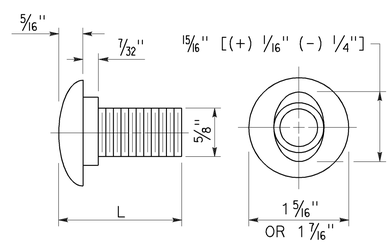

⅝" Ø BUTTON HEAD BOLT

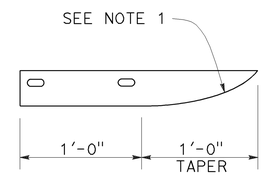

PLAN

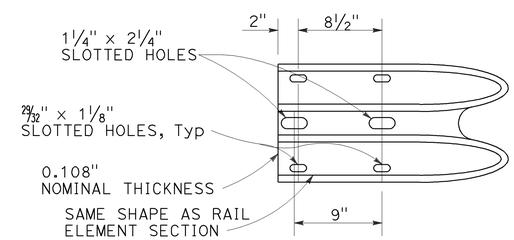

ELEVATION

END CAP
(TYPE A)

BUTTON HEAD BOLT

L	THREAD LENGTH
1⅜"	FULL THREAD LENGTH
2"	FULL THREAD LENGTH
10"	4" Min THREAD LENGTH
18"	4" Min THREAD LENGTH
20"	4" Min THREAD LENGTH
22"	4" Min THREAD LENGTH
26"	4" Min THREAD LENGTH
36"	4" Min THREAD LENGTH
** 2¾"	2" Min THREAD LENGTH
** 19"	4" Min THREAD LENGTH

** For nested rail applications.

STATE OF CALIFORNIA
DEPARTMENT OF TRANSPORTATION

MIDWEST GUARDRAIL SYSTEM STANDARD HARDWARE

NO SCALE

RSP A77M1 DATED JULY 19, 2013 SUPPLEMENTS THE STANDARD PLANS BOOK DATED 2010.

REVISED STANDARD PLAN RSP A77M1

2010 REVISED STANDARD PLAN RSP A77M1

7-3-13

Dist	COUNTY	ROUTE	POST MILES TOTAL PROJECT	SHEET No.	TOTAL SHEETS
03	But	99	30.1/T37.5	119	163

Randell D. Hiatt
REGISTERED CIVIL ENGINEER

July 19, 2013
PLANS APPROVAL DATE

REGISTERED PROFESSIONAL ENGINEER
Randell D. Hiatt
No. C50200
Exp. 6-30-15
CIVIL
STATE OF CALIFORNIA

THE STATE OF CALIFORNIA OR ITS OFFICERS OR AGENTS SHALL NOT BE RESPONSIBLE FOR THE ACCURACY OR COMPLETENESS OF SCANNED COPIES OF THIS PLAN SHEET.

TO ACCOMPANY PLANS DATED 4-27-15

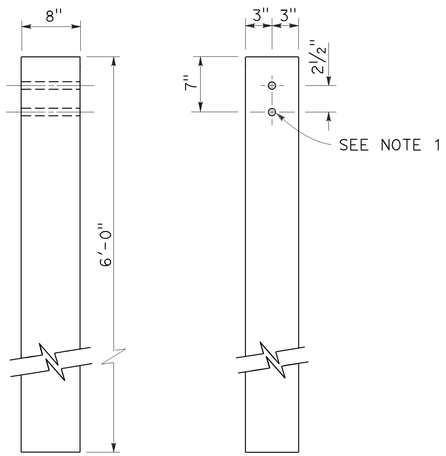

SIDE FRONT

6" x 8" WOOD POST
See Note 3

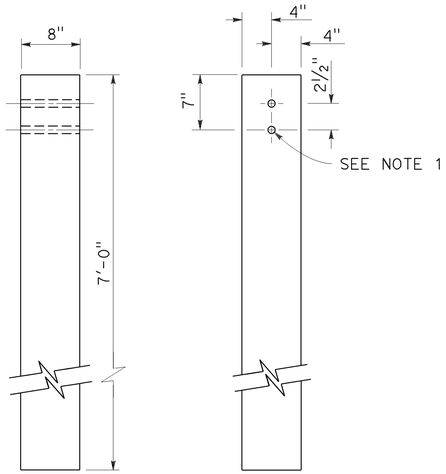

SIDE FRONT

8" x 8" WOOD POST
See Note 4

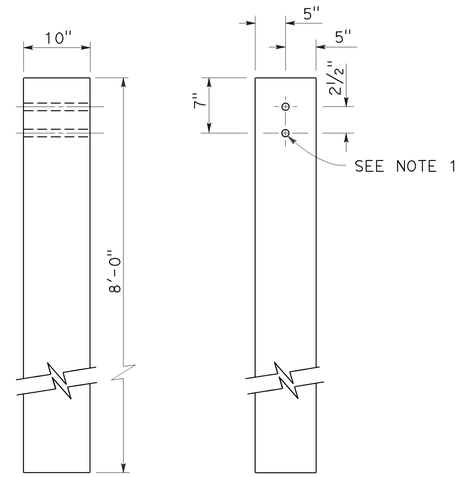

SIDE FRONT

10" x 10" WOOD POST
See Note 5

NOTES:

1. All holes in wood posts and blocks shall be ¾" Dia ± 1/16".
2. Dimensions shown for wood post are nominal.
3. This post and block combination used for standard line post sections of MGS.
4. This post and 8" x 12" block combination used for line post sections of MGS on narrow roadways.
5. This post and 8" x 12" block combination is typically used where strengthened line post sections of MGS are warranted to shield fixed objects.
6. See Revised Standard Plan RSP A77L3 for use of 6" x 8" and 8" x 8" wood blocks.

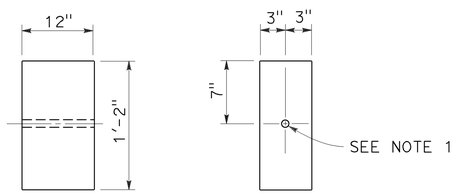

SIDE FRONT

6" x 12" WOOD BLOCK
See Note 3

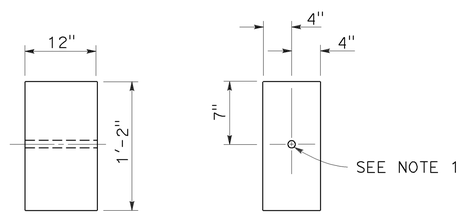

SIDE FRONT

8" x 12" WOOD BLOCK

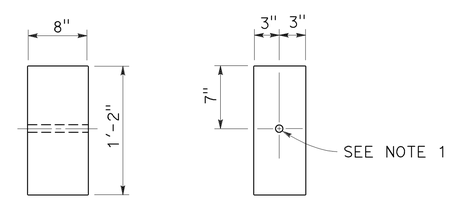

SIDE FRONT

6" x 8" WOOD BLOCK
Only for use with metal beam guard rail see Note 6

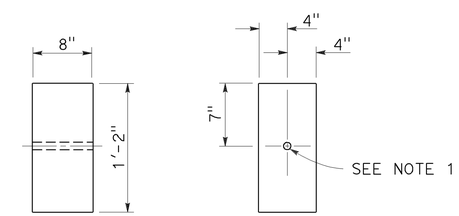

SIDE FRONT

8" x 8" WOOD BLOCK
Only for use with metal beam guard rail see Note 6

STATE OF CALIFORNIA
DEPARTMENT OF TRANSPORTATION

MIDWEST GUARDRAIL SYSTEM WOOD POST AND WOOD BLOCK DETAILS

NO SCALE

RSP A77N1 DATED JULY 19, 2013 SUPPLEMENTS THE STANDARD PLANS BOOK DATED 2010.

REVISED STANDARD PLAN RSP A77N1

2010 REVISED STANDARD PLAN RSP A77N1

7-3-13

Dist	COUNTY	ROUTE	POST MILES TOTAL PROJECT	SHEET No.	TOTAL SHEETS
03	But	99	30.1/T37.5	120	163

Randell D. Hiatt
REGISTERED CIVIL ENGINEER

November 15, 2013
PLANS APPROVAL DATE

REGISTERED PROFESSIONAL ENGINEER
Randell D. Hiatt
No. C50200
Exp. 6-30-15
CIVIL
STATE OF CALIFORNIA

THE STATE OF CALIFORNIA OR ITS OFFICERS OR AGENTS SHALL NOT BE RESPONSIBLE FOR THE ACCURACY OR COMPLETENESS OF SCANNED COPIES OF THIS PLAN SHEET.

TO ACCOMPANY PLANS DATED 4-27-15

2010 REVISED STANDARD PLAN RSP A77N3

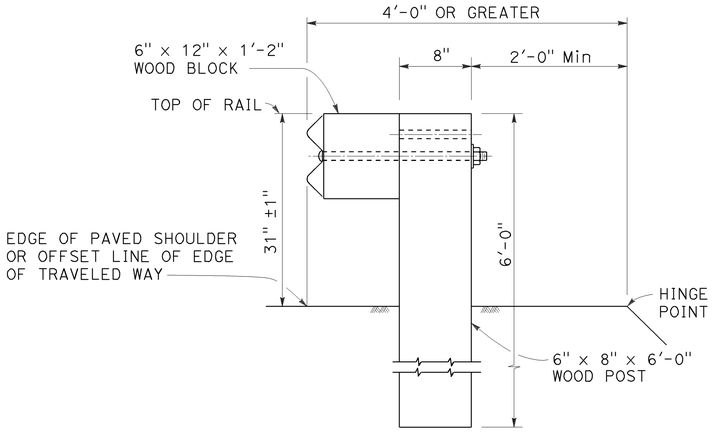

DETAIL A

TYPICAL ROADWAY INSTALLATION

See Note 1

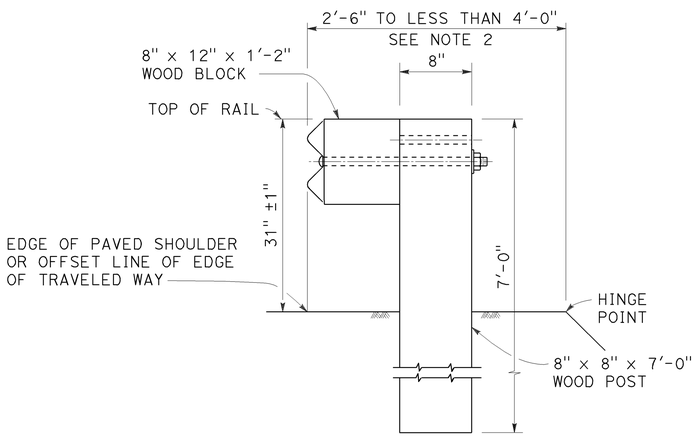

DETAIL B

NARROW ROADWAY INSTALLATION

See Note 1

POST EMBEDMENT

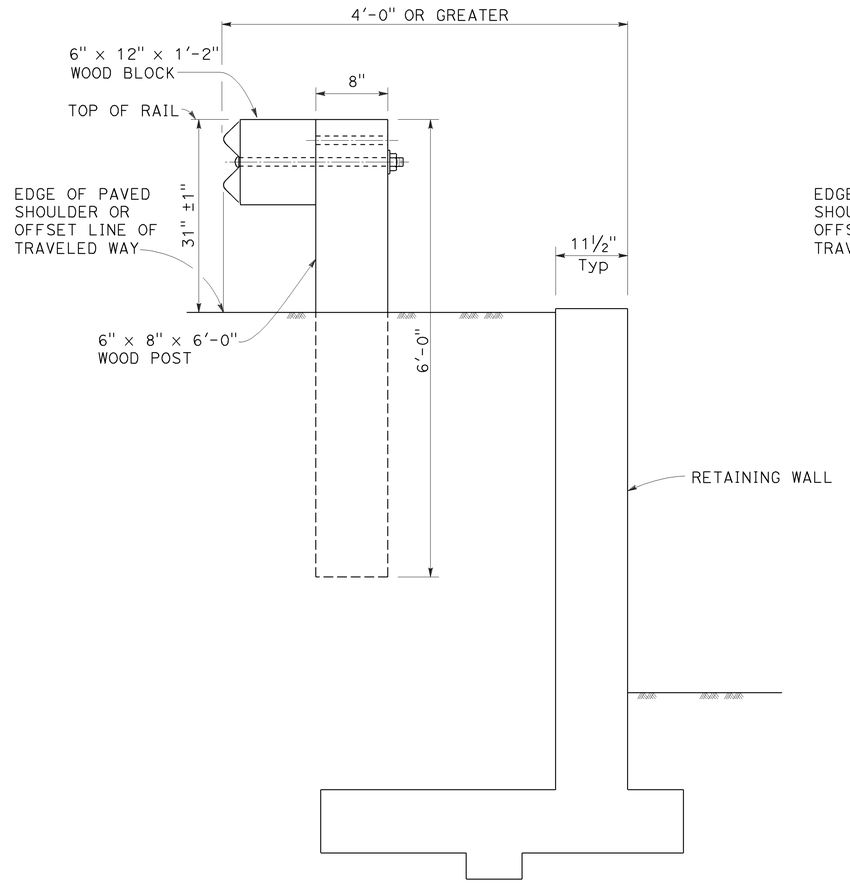

DETAIL C

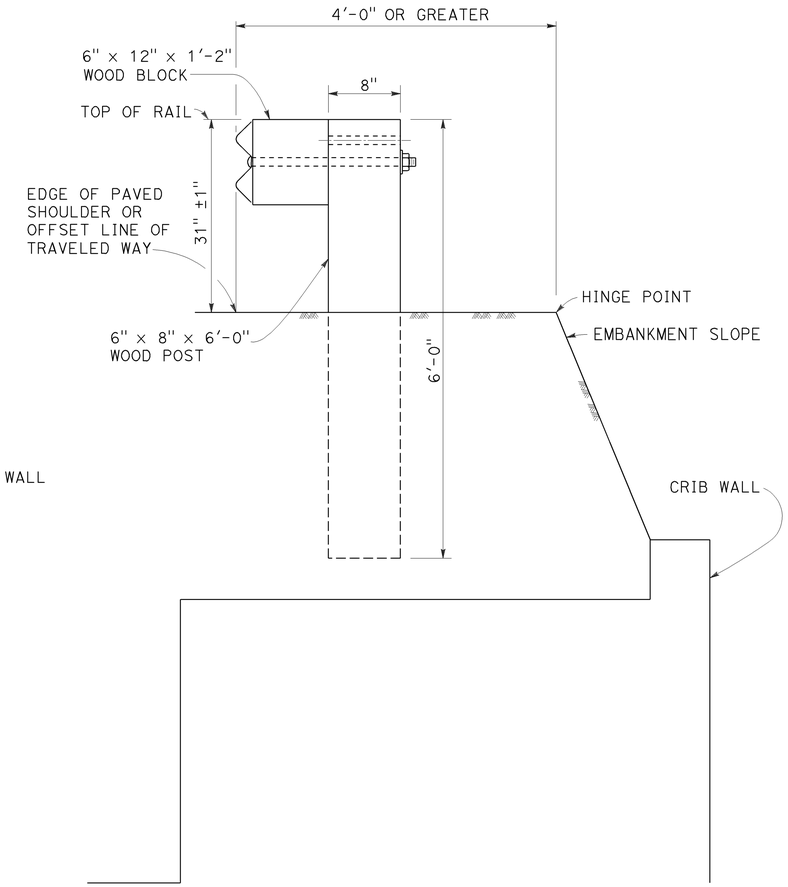

DETAIL D

INSTALLATION AT EARTH RETAINING WALLS

NOTES:

1. These installation details also applicable to steel line post installations. For Detail A, C, and D, where steel line post installations are constructed, W6 x 8.5 or W6 x 9 steel post, 6'-0" in length, with 6" x 12" x 1'-2" notched wood blocks or notched recycled plastic blocks are to be used in place of the size of wood post and wood block shown. For Detail B, where steel line post installations are constructed, W6 x 15 steel post, 8'-0" in length, with 8" x 12" x 1'-2" notched wood blocks or notched recycled plastic blocks are to be used in place of the size of wood post and wood block shown. For additional installation details, see Revised Standard Plan RSP A77L1 and RSP A77L2.
2. Where the distance between the face of the rail and the hinge point is less than 2'-6", see the Project Plans for special details.
3. For dike positioning with MGS installations, see Revised Standard Plan RSP A77N4.

STATE OF CALIFORNIA
DEPARTMENT OF TRANSPORTATION

MIDWEST GUARDRAIL SYSTEM TYPICAL LINE POST EMBEDMENT AND HINGE POINT OFFSET DETAILS

NO SCALE

RSP A77N3 DATED NOVEMBER 15, 2013 SUPERSEDES RSP A77N3
DATED JULY 19, 2013 THAT SUPPLEMENTS THE STANDARD PLANS BOOK DATED 2010.

REVISED STANDARD PLAN RSP A77N3

10-29-13

Dist	COUNTY	ROUTE	POST MILES TOTAL PROJECT	SHEET No.	TOTAL SHEETS
03	But	99	30.1/T37.5	121	163

Randell D. Hiatt
REGISTERED CIVIL ENGINEER

July 19, 2013
PLANS APPROVAL DATE

REGISTERED PROFESSIONAL ENGINEER
Randell D. Hiatt
No. C50200
Exp. 6-30-15
CIVIL
STATE OF CALIFORNIA

THE STATE OF CALIFORNIA OR ITS OFFICERS OR AGENTS SHALL NOT BE RESPONSIBLE FOR THE ACCURACY OR COMPLETENESS OF SCANNED COPIES OF THIS PLAN SHEET.

TO ACCOMPANY PLANS DATED 4-27-15

NOTES:

1. When necessary to place dike more than 7" in front of face of MGS, only Type C dike may be used. For dike details, see Revised Standard Plan RSP A87B.
2. For standard railing post embedment, see Revised Standard Plan RSP A77N3.
3. MGS delineation to be used where shown on the Project Plans.
4. When dike or curb is placed under MGS, the maximum height of the dike or curb shall be 6". Mountable dike should not be used. For dike and curb details, see Revised Standard Plans RSP A87A and RSP A87B.
5. For details of typical distance between the face of rail and hinge point, see Revised Standard Plan RSP A77N3.
6. For steel line posts, use 1/4 - 20 self-tapping screws in 0.22" diameter holes or 1/4" bolts in 9/32" diameter holes.

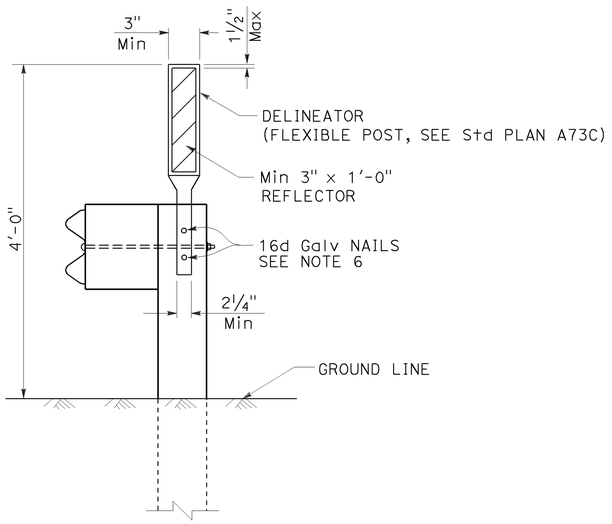

MGS DELINEATION

See Note 3

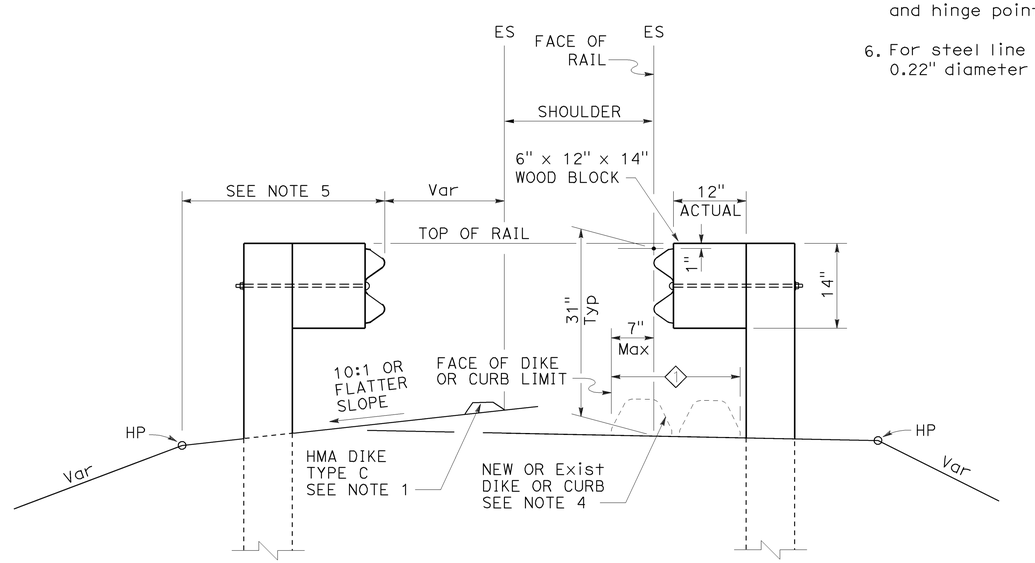

DIKE POSITIONING

See Note 1

1 PERMISSIBLE DIKE OR CURB PLACEMENT AREA

STATE OF CALIFORNIA
DEPARTMENT OF TRANSPORTATION

MIDWEST GUARDRAIL SYSTEM TYPICAL RAILING DELINEATION AND DIKE POSITIONING DETAILS

NO SCALE

RSP A77N4 DATED JULY 19, 2013 SUPPLEMENTS THE STANDARD PLANS BOOK DATED 2010.

REVISED STANDARD PLAN RSP A77N4

2010 REVISED STANDARD PLAN RSP A77N4

Dist	COUNTY	ROUTE	POST MILES TOTAL PROJECT	SHEET No.	TOTAL SHEETS
03	But	99	30.1/T37.5	122	163

Randell D. Hiatt
REGISTERED CIVIL ENGINEER

July 19, 2013
PLANS APPROVAL DATE

REGISTERED PROFESSIONAL ENGINEER
Randell D. Hiatt
No. C50200
Exp. 6-30-15
CIVIL
STATE OF CALIFORNIA

THE STATE OF CALIFORNIA OR ITS OFFICERS OR AGENTS SHALL NOT BE RESPONSIBLE FOR THE ACCURACY OR COMPLETENESS OF SCANNED COPIES OF THIS PLAN SHEET.

TO ACCOMPANY PLANS DATED 4-27-15

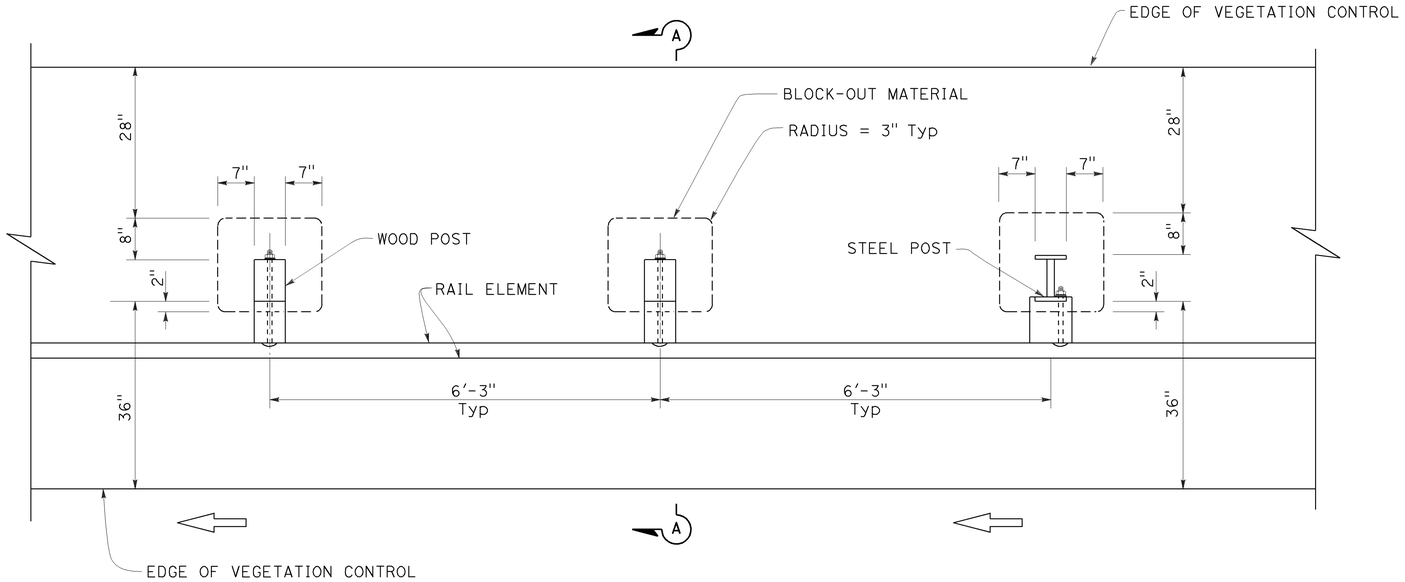

PLAN

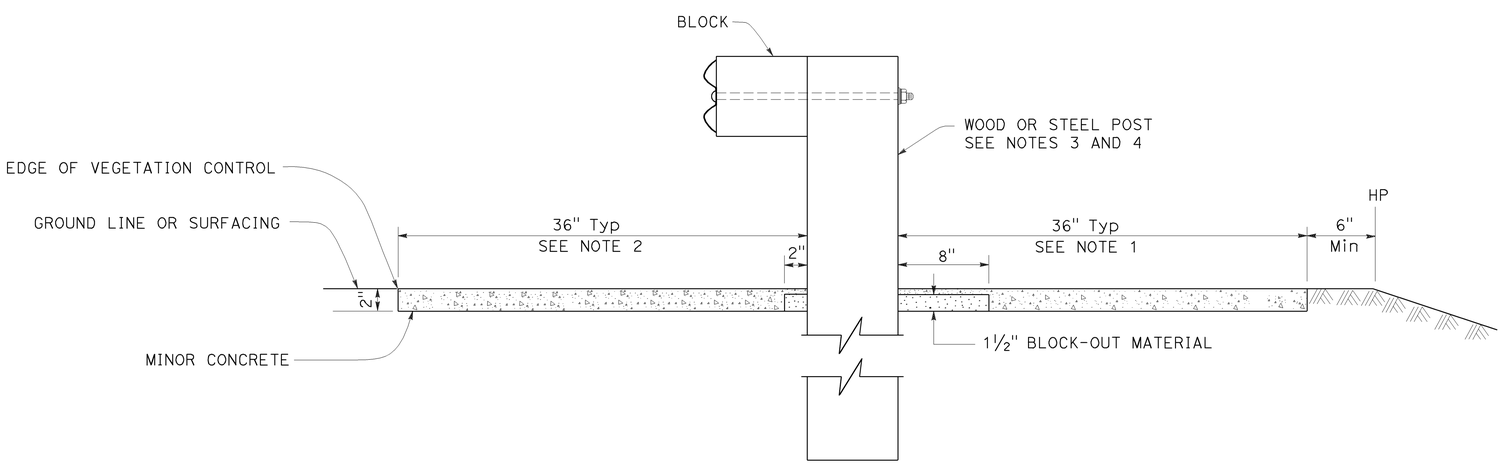

SECTION A-A

NOTES:

1. Where the distance between back of post and hinge point is less than 42", construct vegetation control to 6" from hinge point while maintaining the 8" block-out at back of post. If the 8" block-out at back of post can not be maintained, construct vegetation control flush with the back edge of post.
2. Where dike is constructed under railing, construct vegetation control to back edge of dike. Where paved shoulder is constructed within 36" in front of the post, construct vegetation control to the edge of paved shoulder.
3. For wood post sizes, see Revised Standard Plan RSP A77N1.
4. For steel post sizes, see Revised Standard Plan RSP A77N2.
5. For details not shown, see Revised Standard Plans RSP A77L1 and RSP A77L2.

STATE OF CALIFORNIA
DEPARTMENT OF TRANSPORTATION

MIDWEST GUARDRAIL SYSTEM TYPICAL VEGETATION CONTROL STANDARD RAILING SECTION

NO SCALE

RSP A77N5 DATED JULY 19, 2013 SUPPLEMENTS THE STANDARD PLANS BOOK DATED 2010.

REVISED STANDARD PLAN RSP A77N5

2010 REVISED STANDARD PLAN RSP A77N5

7-3-13

Dist	COUNTY	ROUTE	POST MILES TOTAL PROJECT	SHEET No.	TOTAL SHEETS
03	But	99	30.1/T37.5	123	163

Randell D. Hiatt
REGISTERED CIVIL ENGINEER

July 19, 2013
PLANS APPROVAL DATE

REGISTERED PROFESSIONAL ENGINEER
Randell D. Hiatt
No. C50200
Exp. 6-30-15
CIVIL
STATE OF CALIFORNIA

THE STATE OF CALIFORNIA OR ITS OFFICERS OR AGENTS SHALL NOT BE RESPONSIBLE FOR THE ACCURACY OR COMPLETENESS OF SCANNED COPIES OF THIS PLAN SHEET.

TO ACCOMPANY PLANS DATED 4-27-15

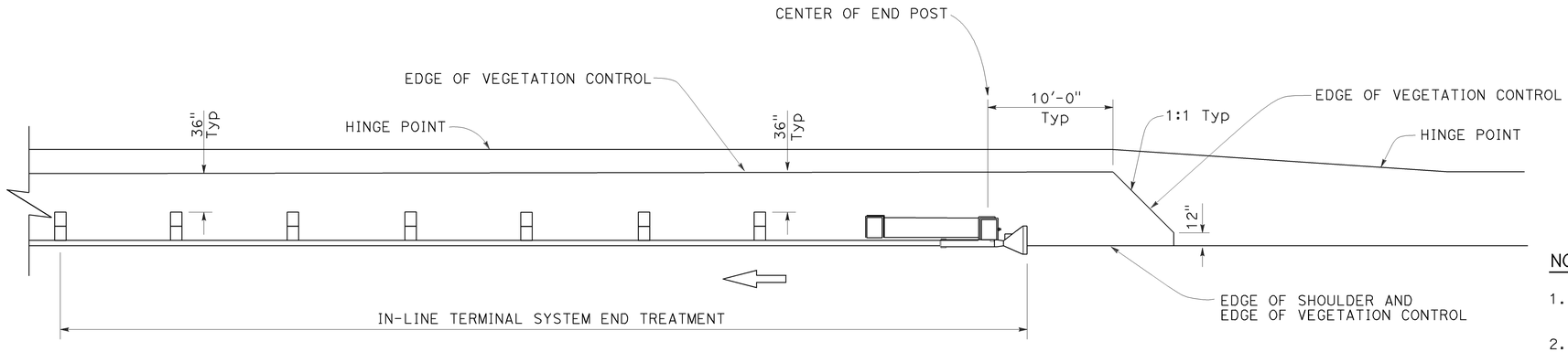

PLAN

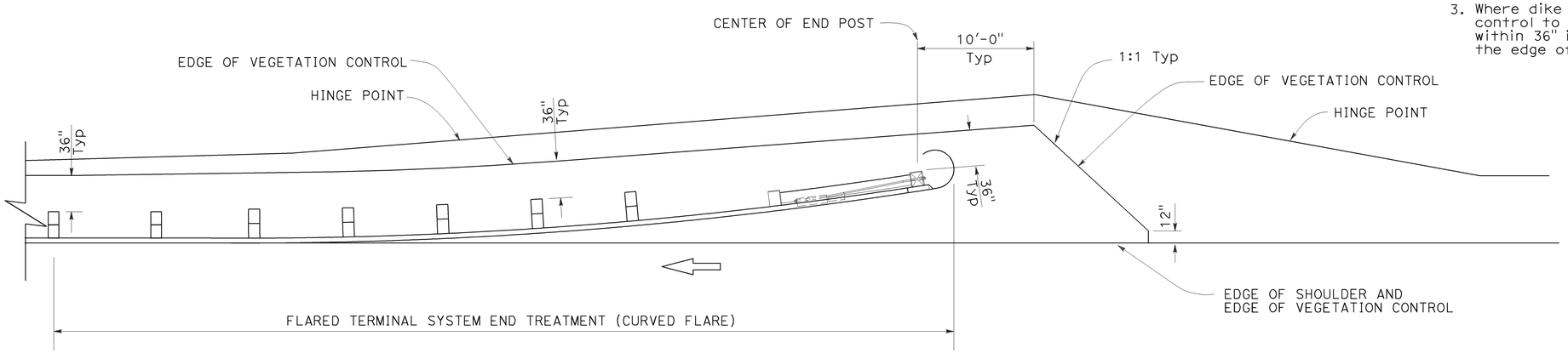

PLAN

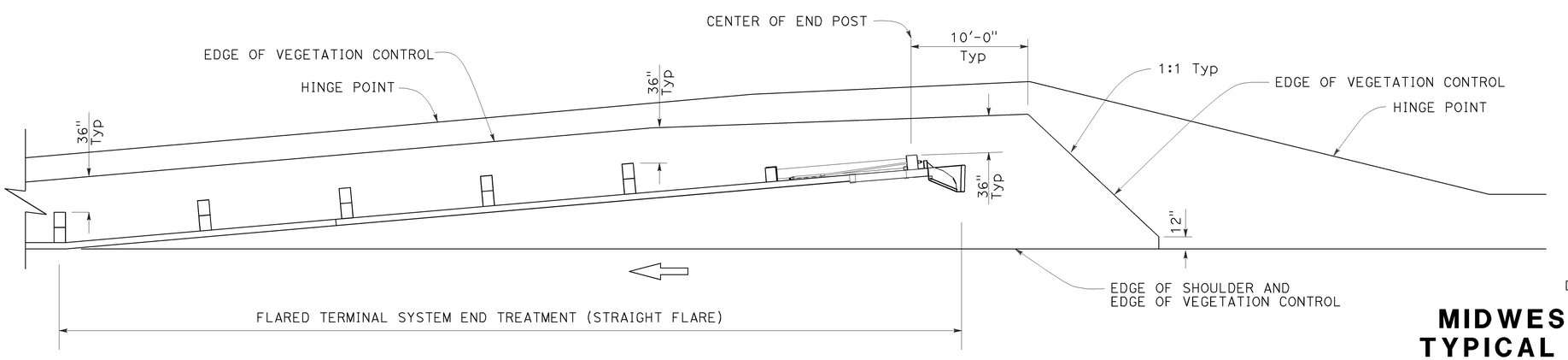

PLAN

NOTES:

1. See Revised Standard Plan RSP A77N5 for additional vegetation control details.
2. Where the distance between back of post and hinge point is less than 42", construct vegetation control to 6" from hinge point while maintaining the 8" block-out at back of post. If the 8" block-out at back of post can not be maintained, construct vegetation control flush with the back edge of post.
3. Where dike is constructed under railing, construct vegetation control to back edge of dike. Where paved shoulder is constructed within 36" in front of the post, construct vegetation control to the edge of paved shoulder.

STATE OF CALIFORNIA
DEPARTMENT OF TRANSPORTATION

MIDWEST GUARDRAIL SYSTEM TYPICAL VEGETATION CONTROL FOR TERMINAL SYSTEM END TREATMENTS

NO SCALE

RSP A77N6 DATED JULY 19, 2013 SUPPLEMENTS THE STANDARD PLANS BOOK DATED 2010.

REVISED STANDARD PLAN RSP A77N6

2010 REVISED STANDARD PLAN RSP A77N6

6-12-13

Dist	COUNTY	ROUTE	POST MILES TOTAL PROJECT	SHEET No.	TOTAL SHEETS
03	But	99	30.1/T37.5	124	163

Randell D. Hiatt
REGISTERED CIVIL ENGINEER

July 19, 2013
PLANS APPROVAL DATE

REGISTERED PROFESSIONAL ENGINEER
Randell D. Hiatt
No. C50200
Exp. 6-30-15
CIVIL
STATE OF CALIFORNIA

THE STATE OF CALIFORNIA OR ITS OFFICERS OR AGENTS SHALL NOT BE RESPONSIBLE FOR THE ACCURACY OR COMPLETENESS OF SCANNED COPIES OF THIS PLAN SHEET.

TO ACCOMPANY PLANS DATED 4-27-15

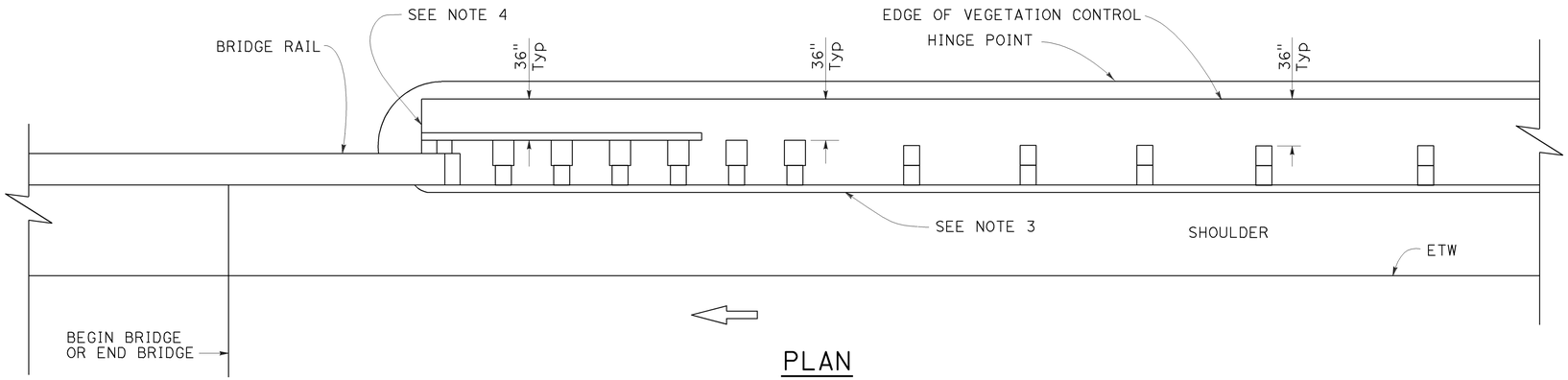

PLAN

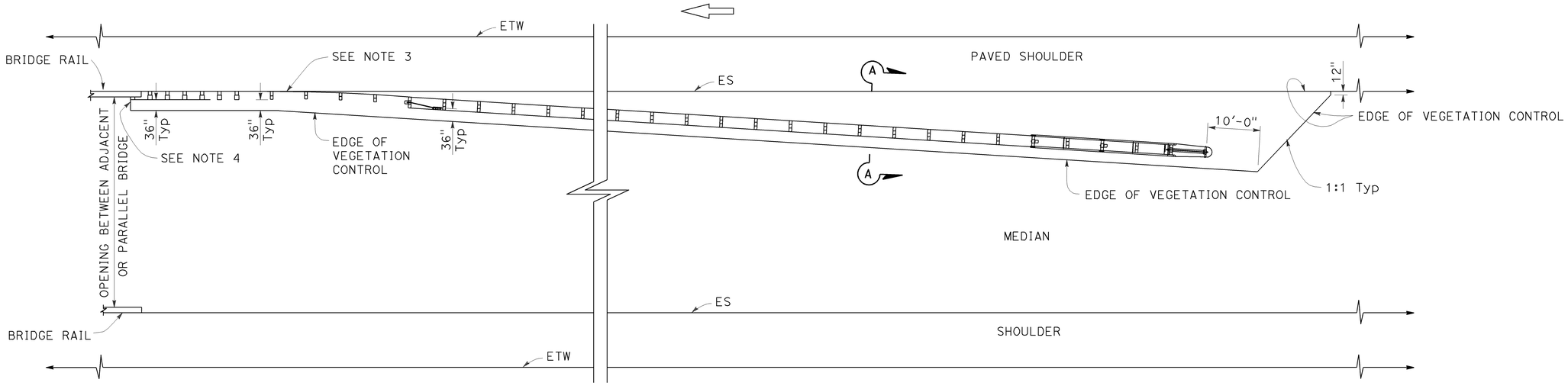

PLAN

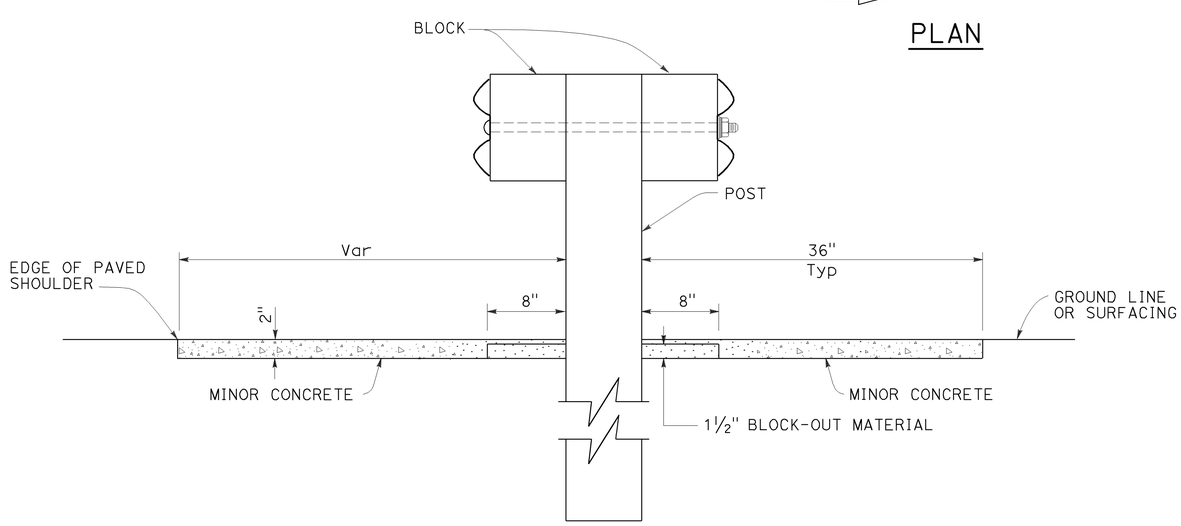

SECTION A-A

NOTES:

1. See Revised Standard Plan RSP A77N5 for additional vegetation control details.
2. Where the distance between back of post and hinge point is less than 42", construct vegetation control to 6" from hinge point while maintaining the 8" block-out at back of post. If the 8" block-out at back of post can not be maintained, construct vegetation control flush with the back edge of post.
3. Where dike is constructed under railing, construct vegetation control to back edge of dike. Where paved shoulder is constructed within 36" in front of the post, construct vegetation control to the edge of paved shoulder.
4. End vegetation control at end of backside rail element.

STATE OF CALIFORNIA
DEPARTMENT OF TRANSPORTATION

MIDWEST GUARDRAIL SYSTEM TYPICAL VEGETATION CONTROL AT STRUCTURE APPROACH

NO SCALE

RSP A77N7 DATED JULY 19, 2013 SUPPLEMENTS THE STANDARD PLANS BOOK DATED 2010.

REVISED STANDARD PLAN RSP A77N7

2010 REVISED STANDARD PLAN RSP A77N7

6-12-13

Dist	COUNTY	ROUTE	POST MILES TOTAL PROJECT	SHEET No.	TOTAL SHEETS
03	But	99	30.1/T37.5	125	163

Randell D. Hiatt
REGISTERED CIVIL ENGINEER

July 19, 2013
PLANS APPROVAL DATE

REGISTERED PROFESSIONAL ENGINEER
Randell D. Hiatt
No. C50200
Exp. 6-30-15
CIVIL
STATE OF CALIFORNIA

THE STATE OF CALIFORNIA OR ITS OFFICERS OR AGENTS SHALL NOT BE RESPONSIBLE FOR THE ACCURACY OR COMPLETENESS OF SCANNED COPIES OF THIS PLAN SHEET.

TO ACCOMPANY PLANS DATED 4-27-15

NOTES:

1. See Revised Standard Plan RSP A77N5 for additional vegetation control details.
2. Where the distance between back of post and hinge point is less than 42", construct vegetation control to 6" from hinge point while maintaining the 8" block-out at back of post. If the 8" block-out at back of post can not be maintained, construct vegetation control flush with the back edge of post.
3. Where dike is constructed under railing, construct vegetation control to back edge of dike. Where paved shoulder is constructed within 36" in front of the post, construct vegetation control to the edge of paved shoulder.

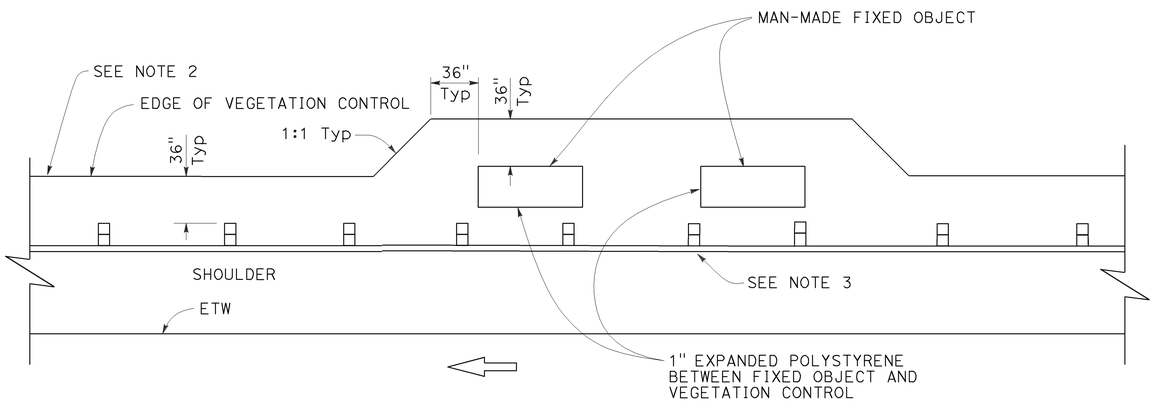

PLAN

Fixed object(s) on shoulder

STATE OF CALIFORNIA
DEPARTMENT OF TRANSPORTATION

MIDWEST GUARDRAIL SYSTEM TYPICAL VEGETATION CONTROL AT FIXED OBJECT

NO SCALE

RSP A77N8 DATED JULY 19, 2013 SUPPLEMENTS THE STANDARD PLANS BOOK DATED 2010.

REVISED STANDARD PLAN RSP A77N8

2010 REVISED STANDARD PLAN RSP A77N8

6-12-13

Dist	COUNTY	ROUTE	POST MILES TOTAL PROJECT	SHEET No.	TOTAL SHEETS
03	But	99	30.1/T37.5	126	163

Randell D. Hiatt
REGISTERED CIVIL ENGINEER

July 19, 2013
PLANS APPROVAL DATE

REGISTERED PROFESSIONAL ENGINEER
Randell D. Hiatt
No. C50200
Exp. 6-30-15
CIVIL
STATE OF CALIFORNIA

THE STATE OF CALIFORNIA OR ITS OFFICERS OR AGENTS SHALL NOT BE RESPONSIBLE FOR THE ACCURACY OR COMPLETENESS OF SCANNED COPIES OF THIS PLAN SHEET.

TO ACCOMPANY PLANS DATED 4-27-15

NOTES:

1. See Revised Standard Plan RSP A77N5 for additional vegetation control details.
2. Where dike is constructed under railing, construct vegetation control to back edge of dike. Where paved shoulder is constructed within 36" in front of the post, construct vegetation control to the edge of paved shoulder.

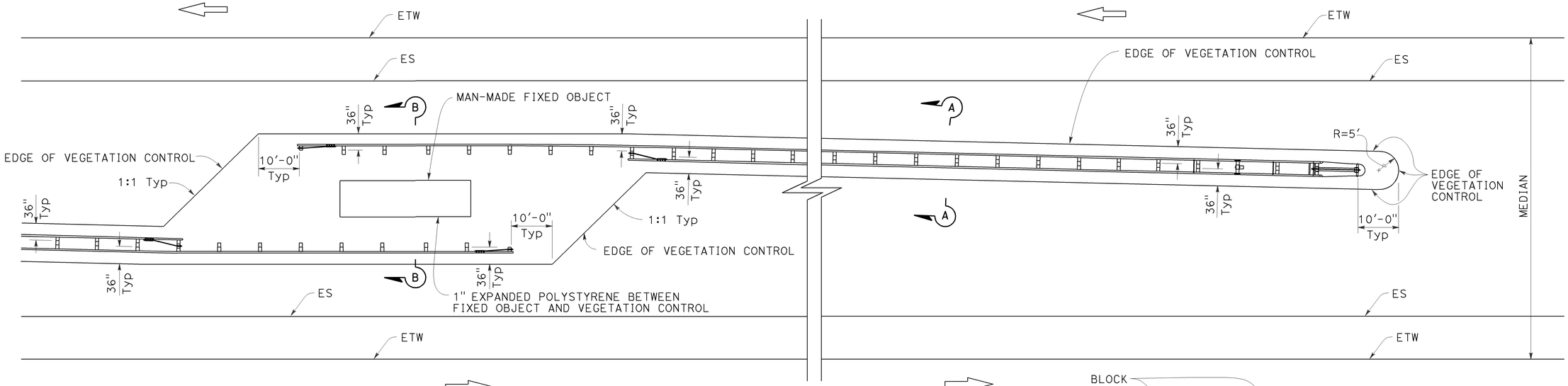

PLAN

Fixed object(s) in median

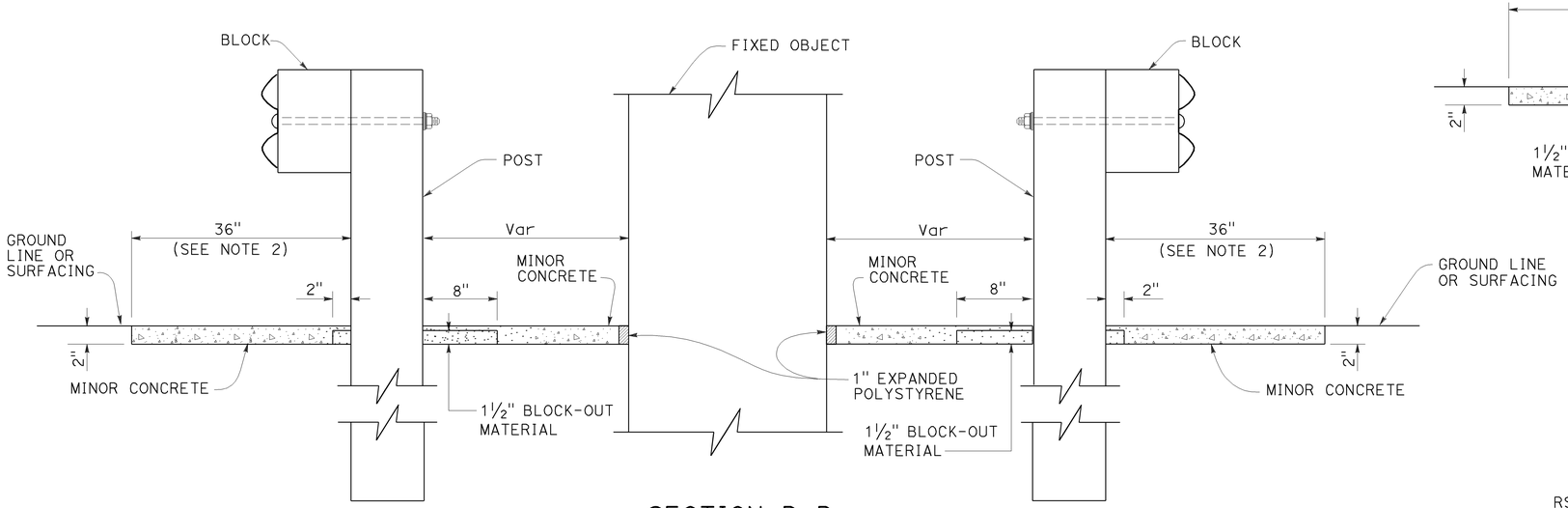

SECTION B-B

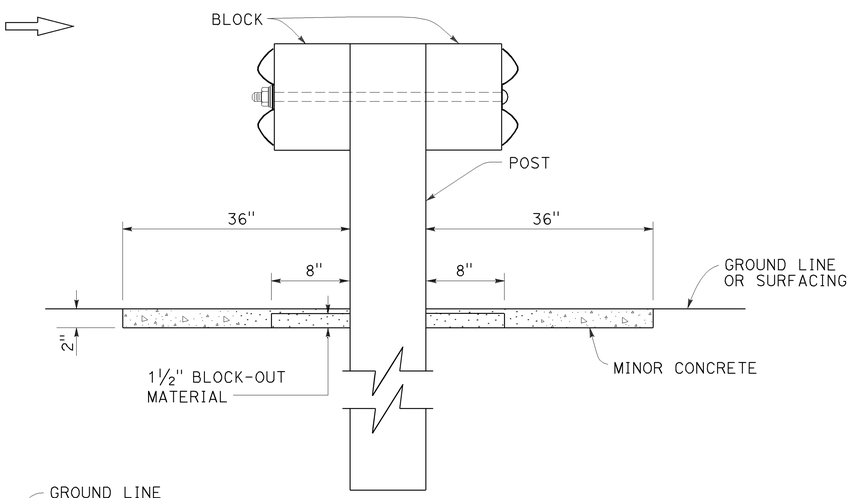

SECTION A-A

STATE OF CALIFORNIA
DEPARTMENT OF TRANSPORTATION

MIDWEST GUARDRAIL SYSTEM TYPICAL VEGETATION CONTROL AT FIXED OBJECT

NO SCALE

RSP A77N9 DATED JULY 19, 2013 SUPPLEMENTS THE STANDARD PLANS BOOK DATED 2010.

REVISED STANDARD PLAN RSP A77N9

2010 REVISED STANDARD PLAN RSP A77N9

6-12-13

Dist	COUNTY	ROUTE	POST MILES TOTAL PROJECT	SHEET No.	TOTAL SHEETS
03	But	99	30.1/T37.5	127	163

Randell D. Hiatt
REGISTERED CIVIL ENGINEER

July 19, 2013
PLANS APPROVAL DATE

REGISTERED PROFESSIONAL ENGINEER
Randell D. Hiatt
No. C50200
Exp. 6-30-15
CIVIL
STATE OF CALIFORNIA

THE STATE OF CALIFORNIA OR ITS OFFICERS OR AGENTS SHALL NOT BE RESPONSIBLE FOR THE ACCURACY OR COMPLETENESS OF SCANNED COPIES OF THIS PLAN SHEET.

TO ACCOMPANY PLANS DATED 4-27-15

2010 REVISED STANDARD PLAN RSP A77N10

NOTES:

1. See Revised Standard Plan RSP A77N5 for additional vegetation control details.
2. Where dike is constructed under railing, construct vegetation control to back edge of dike. Where paved shoulder is constructed within 36" in front of the post, construct vegetation control to the edge of paved shoulder.

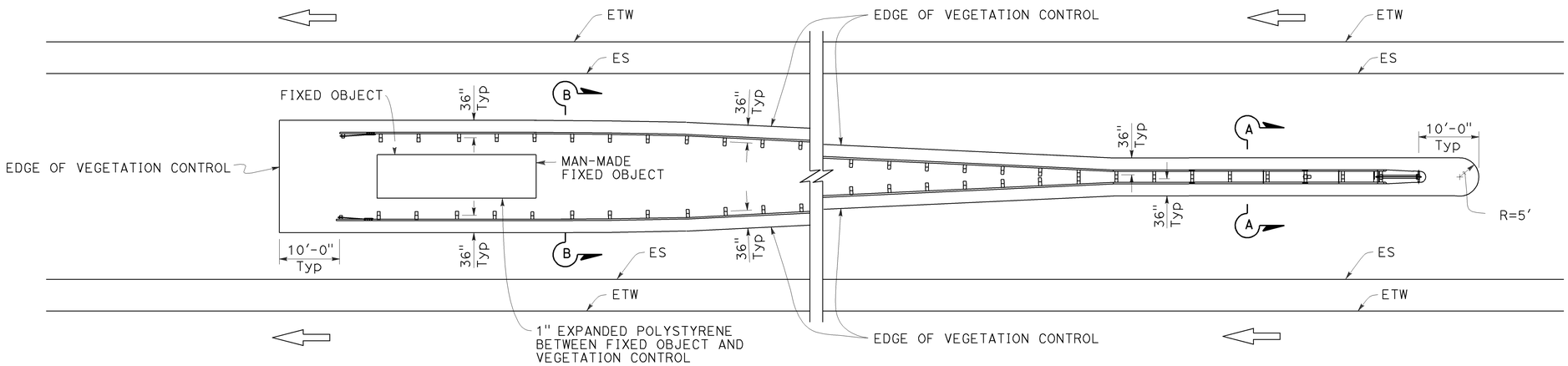

PLAN

Fixed object(s) between separate roadbeds
(One-Way Traffic)

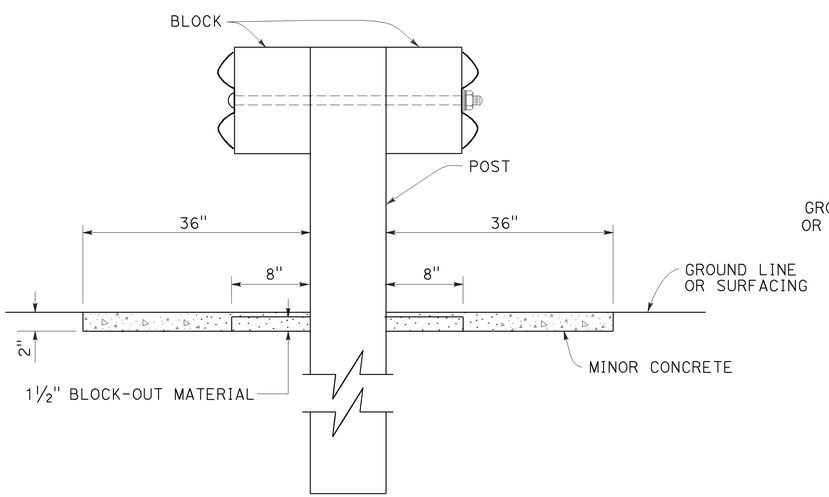

SECTION A-A

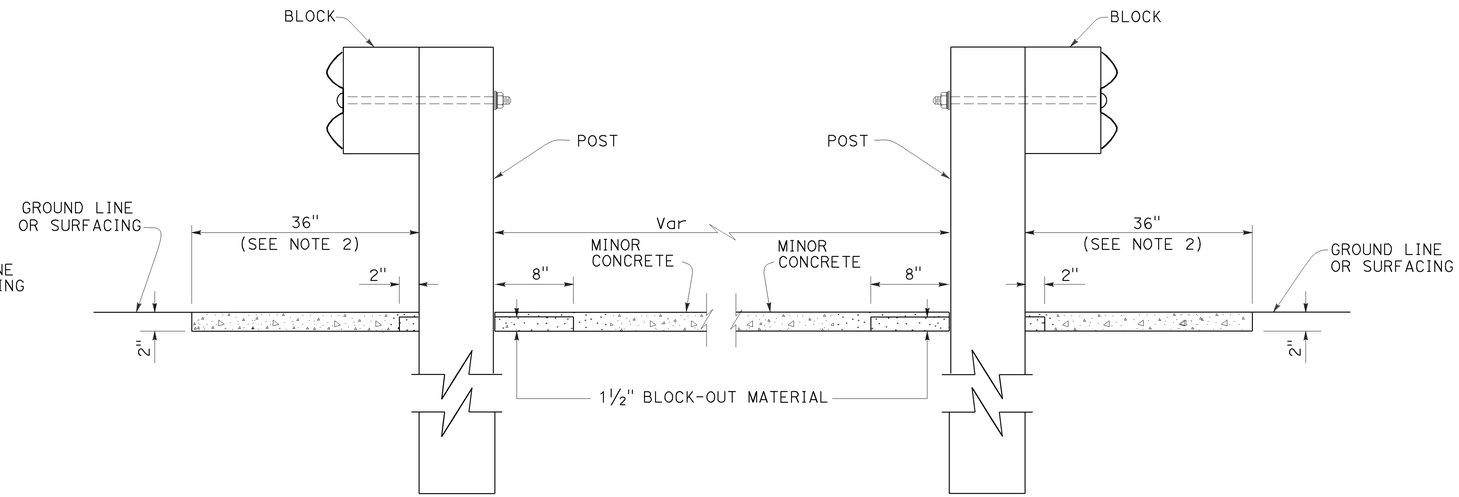

SECTION B-B

STATE OF CALIFORNIA
DEPARTMENT OF TRANSPORTATION

MIDWEST GUARDRAIL SYSTEM TYPICAL VEGETATION CONTROL AT FIXED OBJECT

NO SCALE

RSP A77N10 DATED JULY 19, 2013 SUPPLEMENTS THE STANDARD PLANS BOOK DATED 2010.

REVISED STANDARD PLAN RSP A77N10

6-12-13

Dist	COUNTY	ROUTE	POST MILES TOTAL PROJECT	SHEET No.	TOTAL SHEETS
03	But	99	30.1/T37.5	128	163

Randell D. Hiatt
REGISTERED CIVIL ENGINEER

November 15, 2013
PLANS APPROVAL DATE

REGISTERED PROFESSIONAL ENGINEER
Randell D. Hiatt
No. C50200
Exp. 6-30-15
CIVIL
STATE OF CALIFORNIA

THE STATE OF CALIFORNIA OR ITS OFFICERS OR AGENTS SHALL NOT BE RESPONSIBLE FOR THE ACCURACY OR COMPLETENESS OF SCANNED COPIES OF THIS PLAN SHEET.

TO ACCOMPANY PLANS DATED 4-27-15

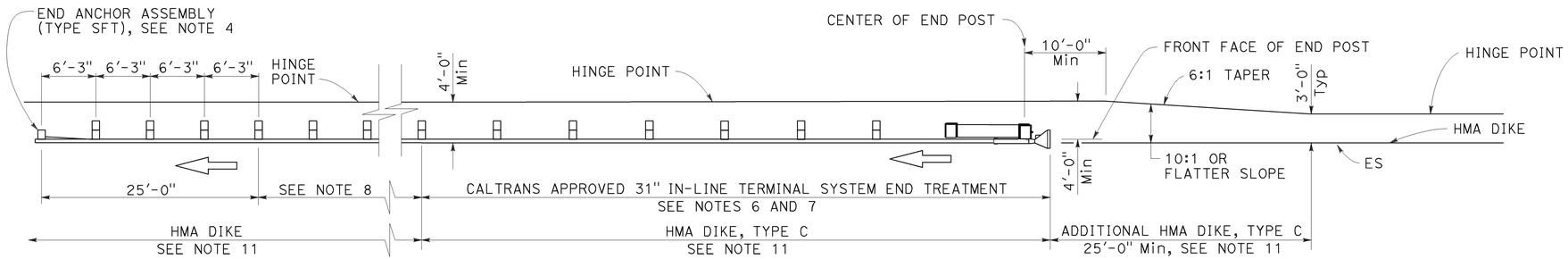

TYPE 11A LAYOUT

(Embankment MGS installation with 31" in-line end treatment at traffic approach end of railing) see Note 5

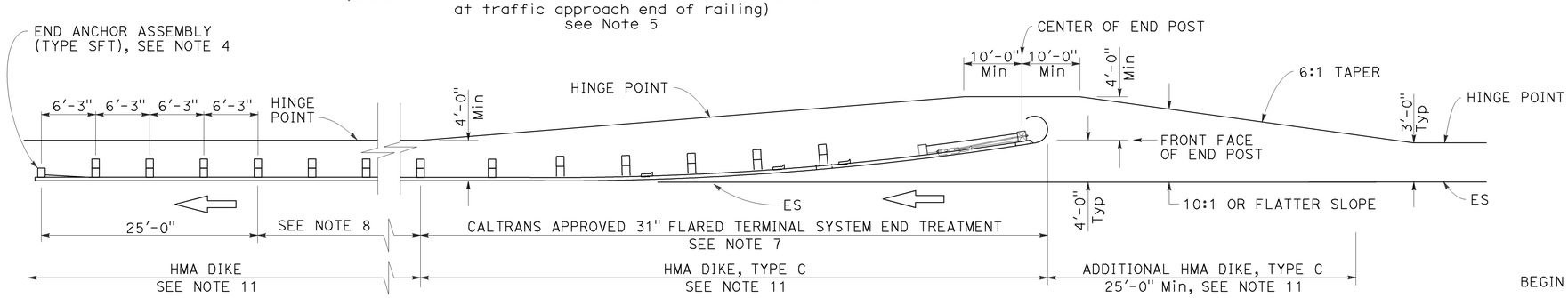

TYPE 11B LAYOUT

(Embankment MGS installation with 31" flared end treatment at traffic approach end of railing) see Note 5

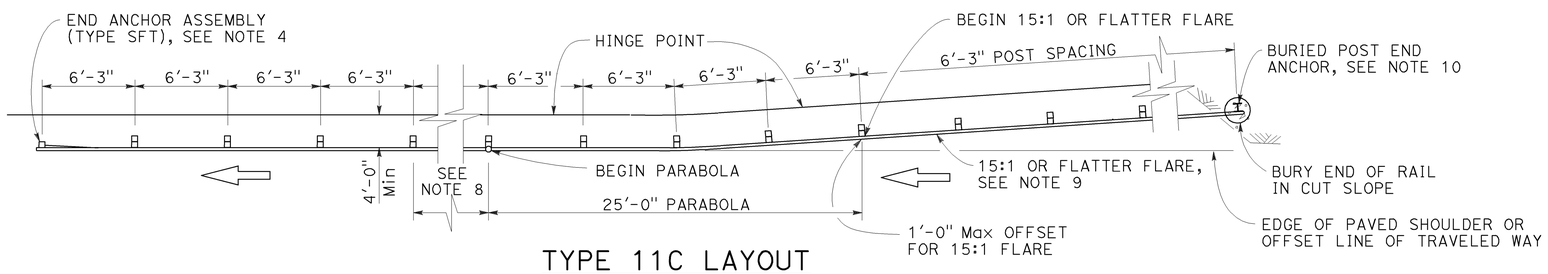

TYPE 11C LAYOUT

(Embankment MGS installation with buried end anchor treatment at traffic approach end of railing) see Notes 5 and 11

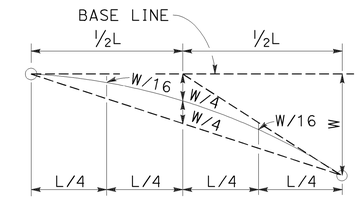

TYPICAL PARABOLIC LAYOUT

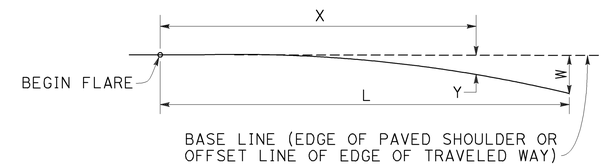

$$Y = \frac{WX^2}{L^2}$$

Y = OFFSET FROM BASE LINE
W = MAXIMUM OFFSET
X = DISTANCE ALONG BASE LINE
L = LENGTH OF FLARE

PARABOLIC FLARE OFFSETS

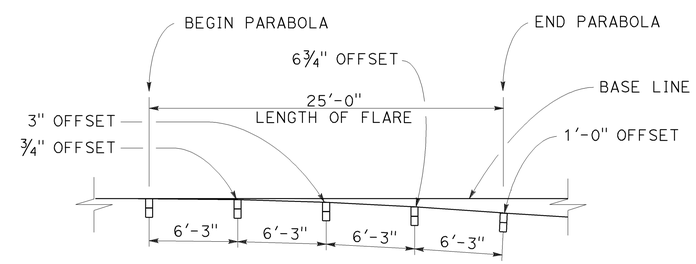

TYPICAL FLARE OFFSETS FOR 1 FOOT Max END OFFSET

NOTES:

1. Line post, blocks and hardware to be used are shown on Revised Standard Plans RSP A77L1, RSP A77L2, RSP A77M1, RSP A77N1 and RSP A77N2.
2. MGS post spacing to be 6'-3" center to center, except as otherwise noted.
3. Except as noted, line posts are 6" x 8" x 6'-0" wood with 6" x 12" x 1'-2" wood blocks. W6 x 8.5 or W6 x 9 steel posts, 6'-0" in length, with 6" x 12" x 1'-2" notched wood blocks or recycled plastic blocks may be used for 6" x 8" x 6'-0" wood post with 6" x 12" x 1'-2" wood blocks where applicable and when specified.
4. For End Anchor Assembly (Type SFT) details, see Revised Standard Plan RSP A77S1.
5. Layout Types 11A, 11B or 11C are typically used where MGS is recommended to shield embankment slopes and a crashworthy end treatment is required for only one direction of traffic.
6. 31" in-line terminal system end treatments are used where site conditions will not accommodate a flared end treatment.
7. The type of 31" terminal system end treatment to be used will be shown on the Project Plans.
8. Dependent on site conditions (embankment height and side slope), construction of additional MGS (length equal to multiples of 12'-6" with 6'-3" post spacing) may be advisable.
9. The 15:1 or flatter flare used with buried end anchors is based on the edge of the paved shoulder or offset line of edge of the traveled way. The length of MGS within the 15:1 or flatter flare is based on site conditions and should be a length equal to multiples of 12'-6".
10. For details of the buried post end anchor used with Type 11C Layout, see Revised Standard Plan RSP A77T2.
11. Where placement of dike is required with MGS installations, see Revised Standard Plan RSP A77N4 for dike positioning details.

STATE OF CALIFORNIA
DEPARTMENT OF TRANSPORTATION

MIDWEST GUARDRAIL SYSTEM TYPICAL LAYOUTS FOR EMBANKMENTS

NO SCALE

RSP A77P1 DATED NOVEMBER 15, 2013 SUPERSEDES RSP A77P1 DATED JULY 19, 2013 THAT SUPPLEMENTS THE STANDARD PLANS BOOK DATED 2010.

REVISED STANDARD PLAN RSP A77P1

2010 REVISED STANDARD PLAN RSP A77P1

10-4-13

Dist	COUNTY	ROUTE	POST MILES TOTAL PROJECT	SHEET No.	TOTAL SHEETS
03	But	99	30.1/T37.5	129	163

Randell D. Hiatt
REGISTERED CIVIL ENGINEER

July 19, 2013
PLANS APPROVAL DATE

REGISTERED PROFESSIONAL ENGINEER
Randell D. Hiatt
No. C50200
Exp. 6-30-15
CIVIL
STATE OF CALIFORNIA

THE STATE OF CALIFORNIA OR ITS OFFICERS OR AGENTS SHALL NOT BE RESPONSIBLE FOR THE ACCURACY OR COMPLETENESS OF SCANNED COPIES OF THIS PLAN SHEET.

TO ACCOMPANY PLANS DATED 4-27-15

2010 REVISED STANDARD PLAN RSP A77P2

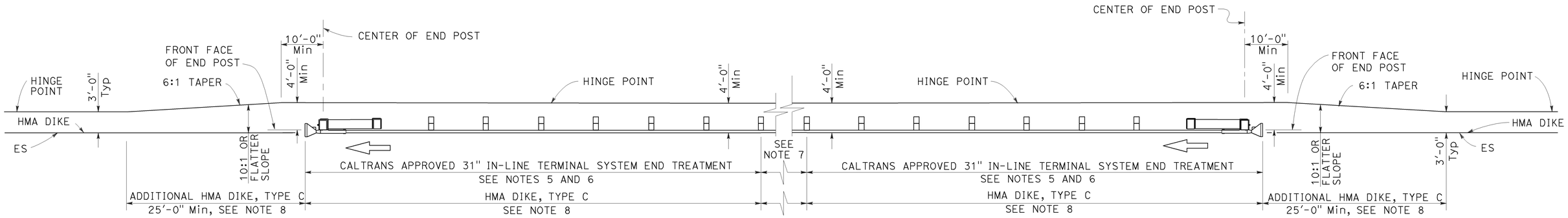

TYPE 11D LAYOUT

(Embankment MGS installation with
31" in-line end treatment at each end of railing)
See Note 4

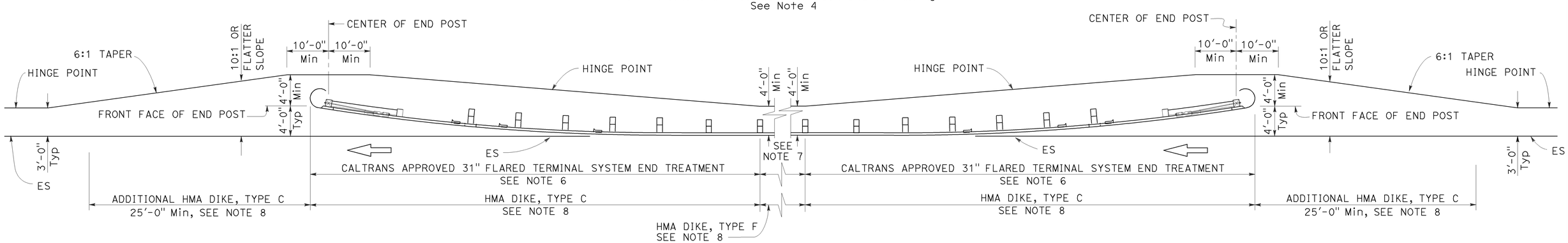

TYPE 11E LAYOUT

(Embankment MGS installation with
31" flared end treatment at each end of railing)
See Note 4

NOTES:

1. Line post, blocks and hardware to be used are shown on Revised Standard Plans RSP A77L1, RSP A77L2, RSP A77M1, RSP A77N1 and RSP A77N2.
2. MGS post spacing to be 6'-3" center to center, except as otherwise noted.
3. Except as noted, line posts are 6" x 8" x 6'-0" wood with 6" x 12" x 1'-2" wood blocks. W6 x 8.5 or W6 x 9 steel posts, 6'-0" in length, with 6" x 12" x 1'-2" notched wood blocks or plastic blocks may be used for 6" x 8" x 6'-0" wood post with 6" x 12" x 1'-2" wood blocks where applicable and when specified.
4. Layout Types 11D through 11L, shown on the A77P Series of Standard Plans, are typically used where MGS is recommended to shield embankment slopes and a crashworthy 31" end treatment is required for both directions of traffic.
5. 31" in-line terminal system end treatments are used where site conditions will not accommodate a flared end treatment.
6. The type of 31" terminal system end treatment to be used will be shown on the Project Plans.
7. Dependent on site conditions (embankment height and side slope), construction of additional MGS (length equal to multiples of 12'-6" with 6'-3" post spacing) may be advisable.
8. Where placement of dike is required with MGS installations, see Revised Standard Plan RSP A77N4 for dike positioning details.

STATE OF CALIFORNIA
DEPARTMENT OF TRANSPORTATION

MIDWEST GUARDRAIL SYSTEM TYPICAL LAYOUTS FOR EMBANKMENTS

NO SCALE

RSP A77P2 DATED JULY 19, 2013 SUPPLEMENTS THE STANDARD PLANS BOOK DATED 2010.

REVISED STANDARD PLAN RSP A77P2

Dist	COUNTY	ROUTE	POST MILES TOTAL PROJECT	SHEET No.	TOTAL SHEETS
03	But	99	30.1/T37.5	130	163

Randell D. Hiatt
REGISTERED CIVIL ENGINEER

July 19, 2013
PLANS APPROVAL DATE

REGISTERED PROFESSIONAL ENGINEER
Randell D. Hiatt
No. C50200
Exp. 6-30-15
CIVIL
STATE OF CALIFORNIA

THE STATE OF CALIFORNIA OR ITS OFFICERS OR AGENTS SHALL NOT BE RESPONSIBLE FOR THE ACCURACY OR COMPLETENESS OF SCANNED COPIES OF THIS PLAN SHEET.

TO ACCOMPANY PLANS DATED 4-27-15

2010 REVISED STANDARD PLAN RSP A77Q1

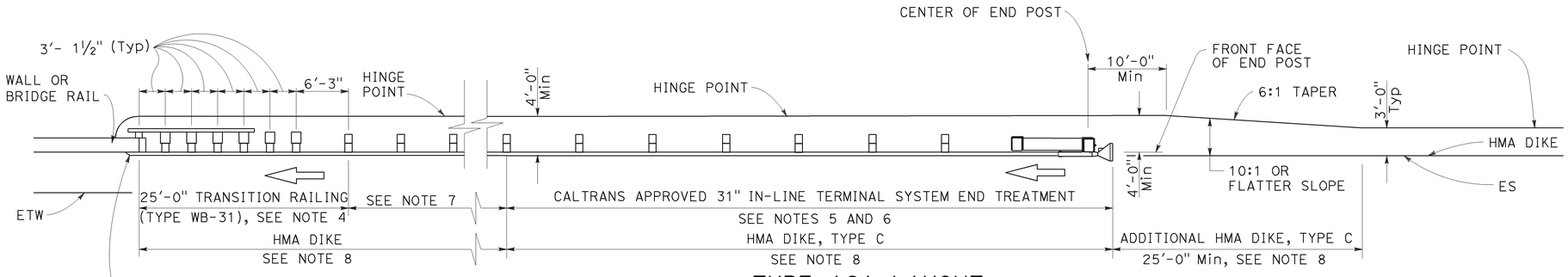

TYPE 12A LAYOUT

(MGS installation at structure approach with
31" In-line end treatment at traffic approach end of railing)
See Notes 9

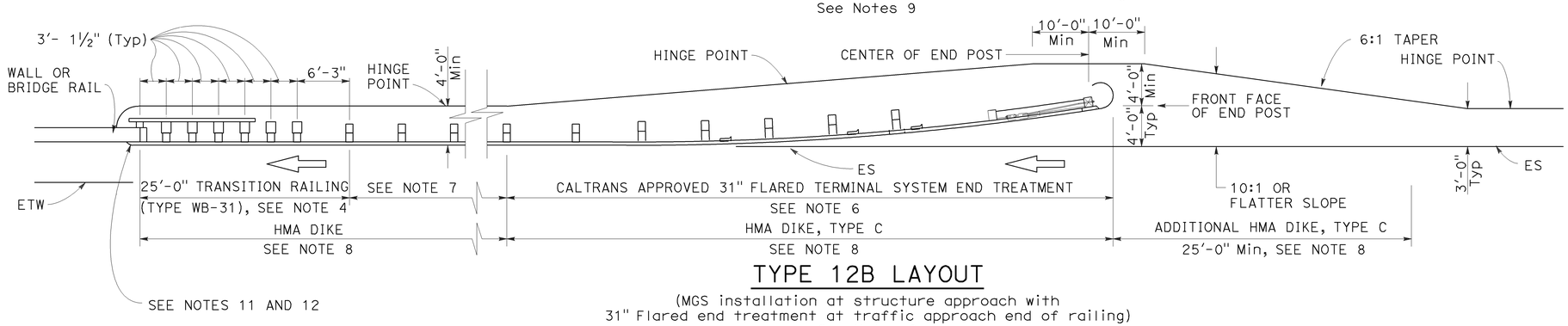

TYPE 12B LAYOUT

(MGS installation at structure approach with
31" Flared end treatment at traffic approach end of railing)
See Notes 9

NOTES:

1. Line post, blocks and hardware to be used are shown on Revised Standard Plans RSP A77L1, RSP A77L2, RSP A77M1, RSP A77N1 and RSP A77N2.
2. MGS post spacing to be 6'-3" center to center, except as otherwise noted.
3. Except as noted, line posts are 6" x 8" x 6'-0" wood with 6" x 12" x 1'-2" wood blocks. W6 x 8.5 or W6 x 9 steel posts, 6'-0" in length, with 6" x 12" x 1'-2" notched wood blocks or plastic blocks may be used for 6" x 8" x 6'-0" wood posts with 6" x 12" x 1'-2" wood blocks where applicable and when specified.
4. For Transition Railing (Type WB-31) details for Types 12A and 12B Layouts, see Revised Standard Plan RSP A77U4.
5. 31" in-line terminal system end treatments are used where site conditions will not accommodate a 31" flared end treatment.
6. The type 31" of terminal system end treatment to be used will be shown on the Project Plans.
7. Dependent on site conditions (embankment height, side slopes, or other fixed objects), it may be advisable to construct additional guard railing (a length equal to multiples of 12'-6" with 6'-3" post spacing) between the transition railing and end treatment. A 12.5 degree angle of departure can be drawn on the Project Plans from the edge of traveled way through the outer most point of the fixed object to determine the additional length of railing needed.
8. Where placement of dike is required with guard railing installations, see Revised Standard Plan RSP A77N4 for dike positioning details.
9. Type 12A or Type 12B Layouts are typically used:
   a. To the right of approaching traffic, at the end of a structure, on two-lane conventional highway where the roadbed width across the structure is less than 40 feet.
   b. To the left of approaching traffic, at the end of a structure, on two-lane conventional highway where the roadbed width across the structure is less than 40 feet.
   c. To the right of approaching traffic at the end of each structure on multilane freeways or expressways with separate adjacent or parallel bridges.
   d. To the right of approaching traffic at the end of the structure on multilane freeways or expressways with decked median on the bridge.
10. See Revised Standard Plan RSP A77Q3 for typical layout used left of approaching traffic at the ends of each structure on multilane freeways or expressways with separate adjacent or parallel bridges.
11. For additional details of typical connections to bridge rail, see Connection Detail AA on Revised Standard Plans RSP A77U1 and RSP A77U2 and Connection Detail FF on Revised Standard Plans RSP A77V1 and RSP A77V2.
12. For additional details of a typical connection to walls or abutments, see Revised Standard Plan RSP A77U3.

STATE OF CALIFORNIA
DEPARTMENT OF TRANSPORTATION

MIDWEST GUARDRAIL SYSTEM TYPICAL LAYOUTS FOR STRUCTURE APPROACH

NO SCALE

RSP A77Q1 DATED JULY 19, 2013 SUPPLEMENTS THE STANDARD PLANS BOOK DATED 2010.

REVISED STANDARD PLAN RSP A77Q1

Dist	COUNTY	ROUTE	POST MILES TOTAL PROJECT	SHEET No.	TOTAL SHEETS
03	But	99	30.1/T37.5	131	163

Randell D. Hiatt
REGISTERED CIVIL ENGINEER

July 19, 2013
PLANS APPROVAL DATE

REGISTERED PROFESSIONAL ENGINEER
Randell D. Hiatt
No. C50200
Exp. 6-30-15
CIVIL
STATE OF CALIFORNIA

THE STATE OF CALIFORNIA OR ITS OFFICERS OR AGENTS SHALL NOT BE RESPONSIBLE FOR THE ACCURACY OR COMPLETENESS OF SCANNED COPIES OF THIS PLAN SHEET.

TO ACCOMPANY PLANS DATED 4-27-15

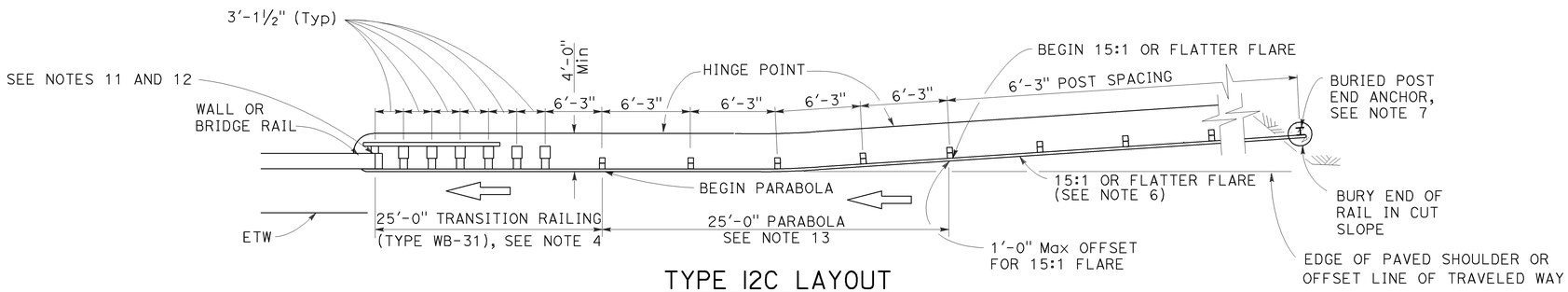

TYPE 12C LAYOUT

(MGS installation at structure approach with a Buried end anchor treatment at traffic approach end of railing)
See Notes 8 and 9

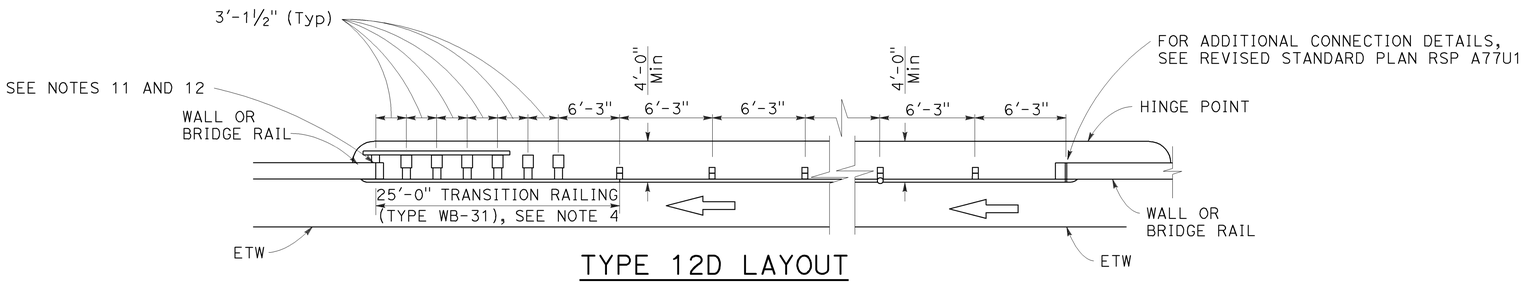

TYPE 12D LAYOUT

(Continuous MGS installation between structures)
See Notes 5 and 9

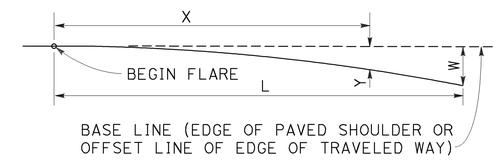

$$Y = \frac{WX^2}{L^2}$$

Y = OFFSET FROM BASE LINE
W = MAXIMUM OFFSET
X = DISTANCE ALONG BASE LINE
L = LENGTH OF FLARE

PARABOLIC FLARE OFFSETS

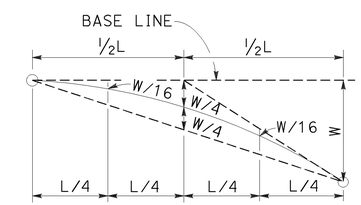

TYPICAL PARABOLIC LAYOUT

NOTES:

1. Line post, blocks and hardware to be used are shown on Revised Standard Plans RSP A77L1, RSP A77L2, RSP A77M1, RSP A77N1 and RSP A77N2.
2. MGS post spacing to be 6'-3" center to center, except as otherwise noted.
3. Except as noted, line posts are 6" x 8" x 6'-0" m wood with 6" x 12" x 1'-2" wood blocks. W6 x 8.5 or W6 x 9 steel posts, 6'-0" in length, with 6" x 12" x 1'-2" notched wood blocks or plastic blocks may be used for 6" x 8" x 6'-0" wood posts with 6" x 12" x 1'-2" wood blocks where applicable and when specified.
4. For Transition Railing (Type WB-31) details for Types 12C and 12D Layouts, see Revised Standard Plan RSP A77U4.
5. Type 12D layout is typically used where continous MGS is recommended between structures.
6. The 15:1 or flatter flare for Type 12C Layout is based on the edge of the paved shoulder or offset line of edge of the traveled way. The length of MGS with the 15:1 or flatter flare is based on site conditions and should be a length equal to multiples of 12'-6".
7. For details of the buried post end anchor used with Type 12C Layout, see Revised Standard Plan RSP A77T2.
8. Where placement of dike is required with MGS installations, see Revised Standard Plan RSP A77N4 for dike positioning details.
9. Type 12C Layout is typically used:
   a. To the right of approaching traffic, at the end of the structure, on two-lane conventional highway where the roadbed width across the structure is less than 40 feet.
   b. To the left of approaching traffic, at each of a structure, on two-lane conventional highway where the roadbed width across the structure is less than 40 feet.
   c. To the right of approaching traffic at the end of each structure on multilane freeways or expressways with separate adjacent or parallel bridges.
   d. To the right of approaching traffic at the end of the structure on multilane freeways or expressways with decked median on the bridge.
10. See Revised Standard Plan RSP A77Q3 for typical layout used left of approaching traffic at the ends of each structure on multilane freeways or expressways with separate adjacent or parallel bridges.
11. For additional details of typical connections to bridge rail, see Connection Detail AA on Revised Standard Plans RSP A77U1 and RSP A77U2 and Connection Detail FF on Revised Standard Plans RSP A77V1 and RSP A77V2.
12. For additional details of a typical connection to walls or abutments, see Revised Standard Plan RSP A77U3.
13. For typical flare offsets for 25'-0" length parabola with maximum offset of 1'-0", see Revised Standard Plan RSP A77P1.

STATE OF CALIFORNIA
DEPARTMENT OF TRANSPORTATION

MIDWEST GUARDRAIL SYSTEM TYPICAL LAYOUTS FOR STRUCTURE APPROACH AND BETWEEN STRUCTURES

NO SCALE

RSP A77Q2 DATED JULY 19, 2013 SUPPLEMENTS THE STANDARD PLANS BOOK DATED 2010.

REVISED STANDARD PLAN RSP A77Q2

2010 REVISED STANDARD PLAN RSP A77Q2

7-8-13

Dist	COUNTY	ROUTE	POST MILES TOTAL PROJECT	SHEET No.	TOTAL SHEETS
03	But	99	30.1/T37.5	132	163

Randell D. Hiatt
REGISTERED CIVIL ENGINEER

July 19, 2013
PLANS APPROVAL DATE

REGISTERED PROFESSIONAL ENGINEER
Randell D. Hiatt
No. C50200
Exp. 6-30-15
CIVIL
STATE OF CALIFORNIA

THE STATE OF CALIFORNIA OR ITS OFFICERS OR AGENTS SHALL NOT BE RESPONSIBLE FOR THE ACCURACY OR COMPLETENESS OF SCANNED COPIES OF THIS PLAN SHEET.

TO ACCOMPANY PLANS DATED 4-27-15

2010 REVISED STANDARD PLAN RSP A77Q3

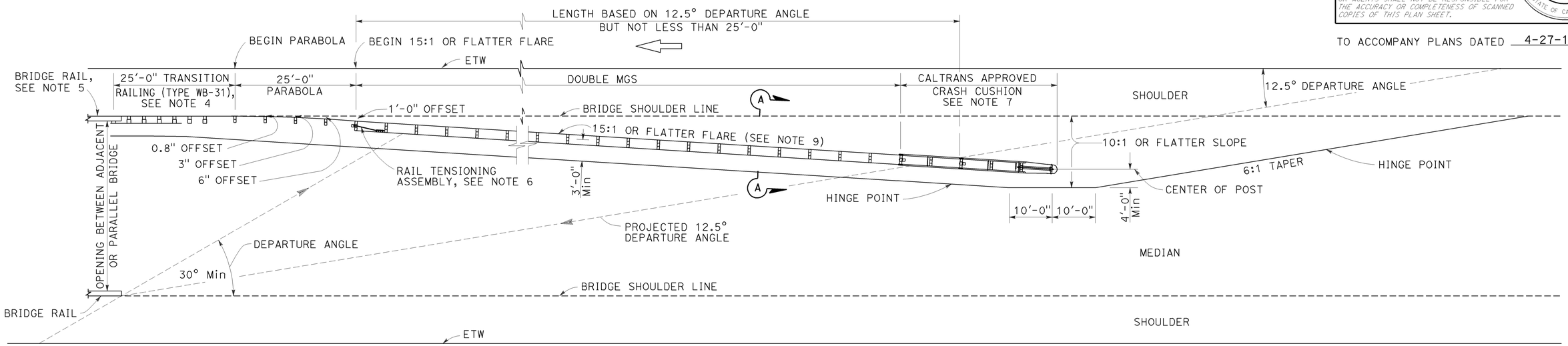

TYPE 12E LAYOUT

See Note 9

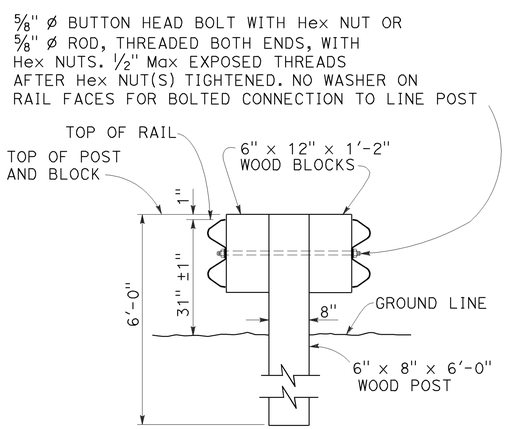

SECTION A-A
TYPICAL DOUBLE MIDWEST GUARDRAIL SYSTEM

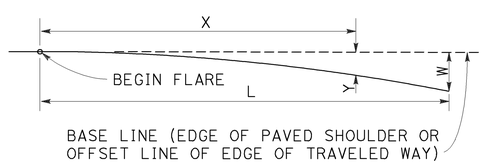

$$Y = \frac{WX^2}{L^2}$$

Y = OFFSET FROM BASE LINE
W = MAXIMUM OFFSET
X = DISTANCE ALONG BASE LINE
L = LENGTH OF FLARE

PARABOLIC FLARE OFFSETS

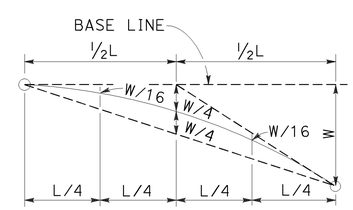

TYPICAL PARABOLIC LAYOUT

NOTES:

1. Line post, blocks and hardware to be used are shown on Revised Standard Plans RSP A77L1, RSP A77L2, RSP A77M1, RSP A77N1 and RSP A77N2.
2. MGS post spacing to be 6'-3" center to center, except as otherwise noted.
3. Except as noted, line posts are 6" x 8" x 6'-0" wood with 6" x 12" x 1'-2" wood blocks. W6 x 8.5 or W6 x 9 steel posts, 6'-0" in length, with 6" x 12" x 1'-2" notched wood blocks or notched recycled plastic blocks may be used for 6" x 8" x 6'-0" wood line posts with 6" x 12" x 1'-2" wood blocks where applicable and when specified.
4. For Transition Railing (Type WB-31) details, see Revised Standard Plan RSP A77U4.
5. For additional details of a typical connection to bridge rail, see Connection Detail AA on Revised Standard Plan RSP A77U1.
6. For Rail Tensioning Assembly details, see Revised Standard Plan RSP A77S2.
7. The type of Crash Cushion to be used will be shown on the Project Plans.
8. Type 12E Layout is typically used left of approaching traffic at the end of each structure on multilane freeways or expressways where a median type barrier is not constructed between separated roadbeds.
9. The 15:1 or flatter flare is measured off of the edge of traveled way.

STATE OF CALIFORNIA
DEPARTMENT OF TRANSPORTATION

MIDWEST GUARDRAIL SYSTEM TYPICAL LAYOUTS FOR STRUCTURE APPROACH

NO SCALE

RSP A77Q3 DATED JULY 19, 2013 SUPPLEMENTS THE STANDARD PLANS BOOK DATED 2010.

REVISED STANDARD PLAN RSP A77Q3

Dist	COUNTY	ROUTE	POST MILES TOTAL PROJECT	SHEET No.	TOTAL SHEETS
03	But	99	30.1/T37.5	133	163

Randell D. Hiatt
REGISTERED CIVIL ENGINEER

July 19, 2013
PLANS APPROVAL DATE

REGISTERED PROFESSIONAL ENGINEER
Randell D. Hiatt
No. C50200
Exp. 6-30-15
CIVIL
STATE OF CALIFORNIA

THE STATE OF CALIFORNIA OR ITS OFFICERS OR AGENTS SHALL NOT BE RESPONSIBLE FOR THE ACCURACY OR COMPLETENESS OF SCANNED COPIES OF THIS PLAN SHEET.

TO ACCOMPANY PLANS DATED 4-27-15

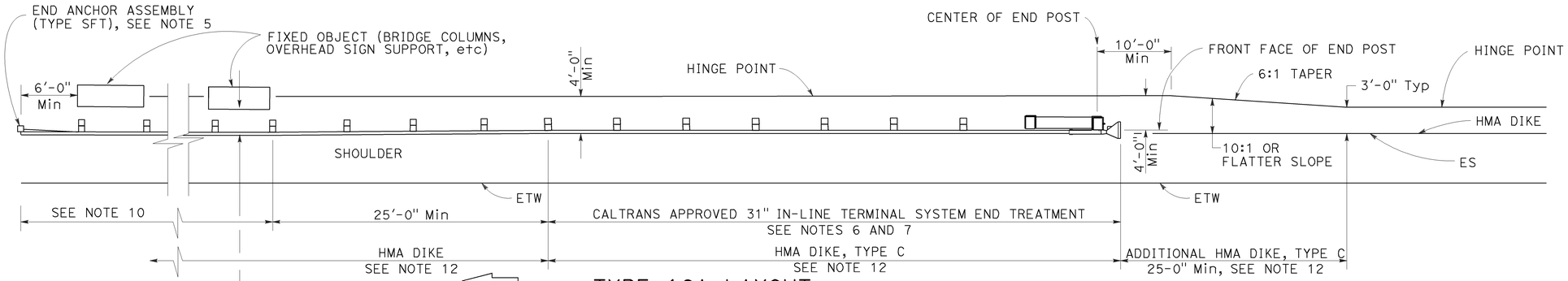

TYPE 16A LAYOUT

(MGS installation at roadside fixed object or objects with 31" in-line end treatment at traffic approach end of railing)
See Notes 11 and 12

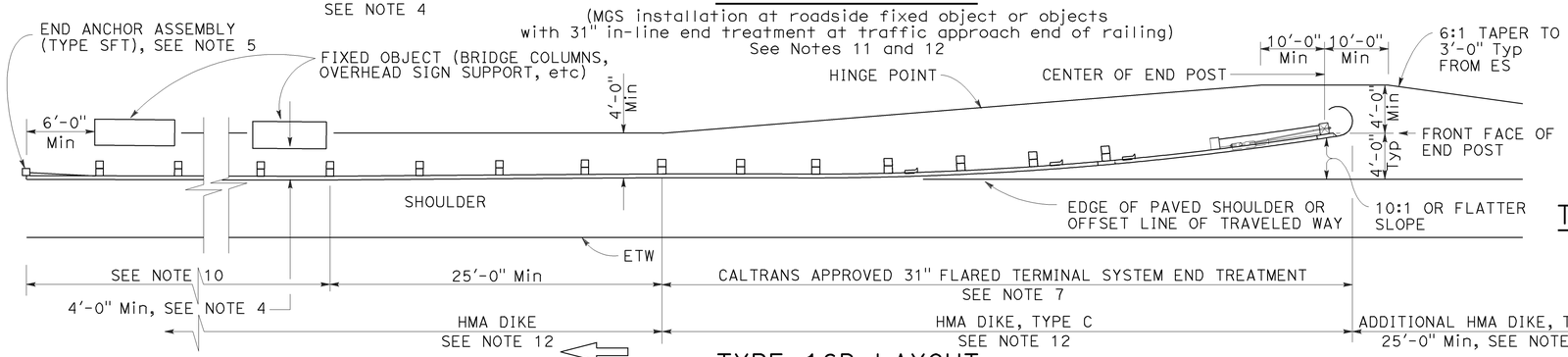

TYPE 16B LAYOUT

(MGS installation at roadside fixed object or objects with 31' flared end treatment at traffic approach end of railing)
See Notes 11 and 12

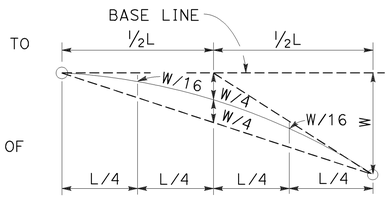

TYPIC AL PARABOLIC LAYOUT

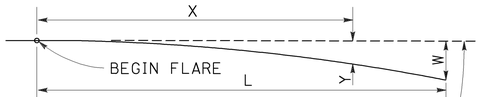

BASE LINE (EDGE OF PAVED SHOULDER OR OFFSET LINE OF EDGE OF TRAVELED WAY)

$$Y = \frac{WX^2}{L^2}$$

Y = OFFSET FROM BASE LINE
W = MAXIMUM OFFSET
X = DISTANCE ALONG BASE LINE
L = LENGTH OF FLARE

PARABOLIC FLARE OFFSETS

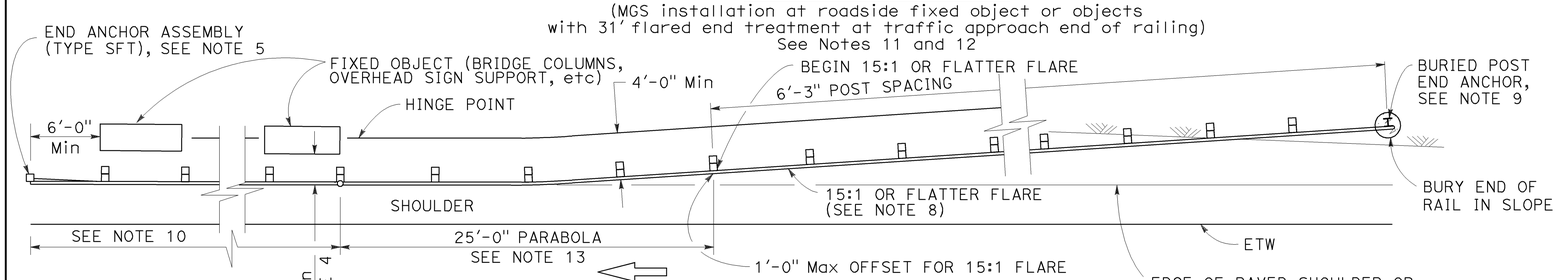

TYPE 16C LAYOUT

(MGS installation at roadside fixed object or objects with a buried end anchor treatment at traffic approach end of railing)
See Notes 11 and 12

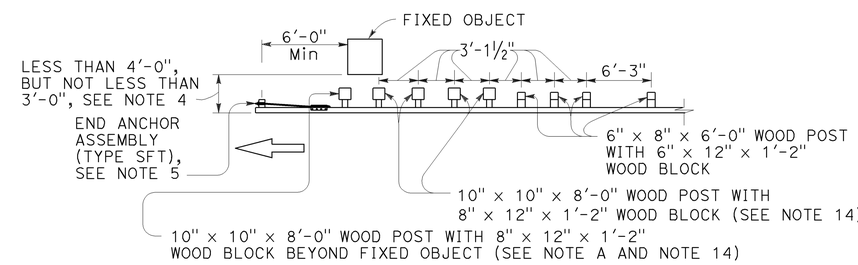

NOTE A: For a series of fixed objects (bridge columns, overhead sign supports, etc.) additional 10" x 10" x 8'-0" wood post with 8" x 12" x 1'-2" wood blocks at 3'-1½" center to center spacing are to be used between fixed objects.

STRENGTHENED MIDWEST GUARDRAIL SYSTEM SECTIONS FOR FIXED OBJECT

Use strengthened MGS sections with Types 16A, 16B or 16C layouts where minimum clearance between the face of the railing and fixed object(s) is less than 4'-0", but not less than 3'-0". See Note 4

NOTES:

1. Line post, blocks and hardware to be used are shown on Revised Standard Plans RSP A77L1, RSP A77L2, RSP A77M1, RSP A77N1 and RSP A77N2.
2. MGS post spacing to be 6'-3" center to center, except as otherwise noted.
3. Except as noted, line posts are 6" x 8" x 6'-0" wood with 6" x 12" x 1'-2" wood blocks. W6 x 8.5 or W6 x 9 steel posts, 6'-0" in length, with 6" x 12" x 1'-2" notched wood blocks or notched recycled plastic blocks may be used for 6" x 8" x 6'-0" wood line posts with 6" x 12" x 1'-2" wood blocks where applicable and when specified.
4. A 4'-0" minimum clearance is required between the face of the railing and the face of a fixed object located directly behind MGS sections with post spacing of 6'-3". Construct MGS as shown in the detail "Strengthened Midwest Guardrail System Sections for Fixed Object" on this plan, where the clearance between the face of the railing and the face of a fixed object is less than 4'-0", but not less than 3'-0". Where the clearance is less than 3'-0", a concrete wall or barrier should be constructed to shield the fixed object(s).
5. For End Anchor Assembly (Type SFT) details, see Revised Standard Plan RSP A77S1.
6. 31" in-line terminal system end treatments are used where site conditions will not accommodate a 31" flared end treatment.
7. The type of 31" terminal system to be used will be shown on the Project Plans.
8. The 15:1 or flatter flare used with Type 16C Layout is based on the edge of the paved shoulder or offset line of edge of the traveled way. The length of MGS within the 15:1 or flatter flare is based on site conditions and should be a length equal to multiples of 12'-6".
9. For details of the Buried Post End Anchor used with Type 16C Layout, see Revised Standard Plan RSP A77T2.
10. As site conditions dictate, construct additional MGS to shield fixed object(s). Additional MGS length equal to multiples of 12'-6". Post spacing at 6'-3" except as specified in Note 4.
11. Layout Types 16A, 16B or 16C are typically used where MGS is recommended to shield roadside fixed object(s) and a crashworthy 31" end treatment is required for only one direction of traffic.
12. Where placement of dike is required with MGS, see Revised Standard Plan RSP A77N4 for dike positioning details.
13. For typical flare offsets for 25'-0" length parabola with maximum offset of 1'-0", see Revised Standard Plan RSP A77P1.
14. W6 x 15 steel post, 8'-0" in length, with 8" x 12" x 1'-2" notched wood block or notched recycled plastic blocks may be used in place of the 10" x 10" x 8'-0" wood post with 8" x 12" x 1'-2" wood block shown in the detail "Strengthened Midwest Guardrail System Sections for Fixed Object".

STATE OF CALIFORNIA
DEPARTMENT OF TRANSPORTATION

MIDWEST GUARDRAIL SYSTEM TYPICAL LAYOUTS FOR ROADSIDE FIXED OBJECTS

NO SCALE

RSP A77R3 DATED JULY 19, 2013 SUPPLEMENTS THE STANDARD PLANS BOOK DATED 2010.

REVISED STANDARD PLAN RSP A77R3

2010 REVISED STANDARD PLAN RSP A77R3

6-20-13

Dist	COUNTY	ROUTE	POST MILES TOTAL PROJECT	SHEET No.	TOTAL SHEETS
03	But	99	30.1/T37.5	134	163

Randell D. Hiatt
REGISTERED CIVIL ENGINEER

July 19, 2013
PLANS APPROVAL DATE

REGISTERED PROFESSIONAL ENGINEER
Randell D. Hiatt
No. C50200
Exp. 6-30-15
CIVIL
STATE OF CALIFORNIA

THE STATE OF CALIFORNIA OR ITS OFFICERS OR AGENTS SHALL NOT BE RESPONSIBLE FOR THE ACCURACY OR COMPLETENESS OF SCANNED COPIES OF THIS PLAN SHEET.

TO ACCOMPANY PLANS DATED 4-27-15

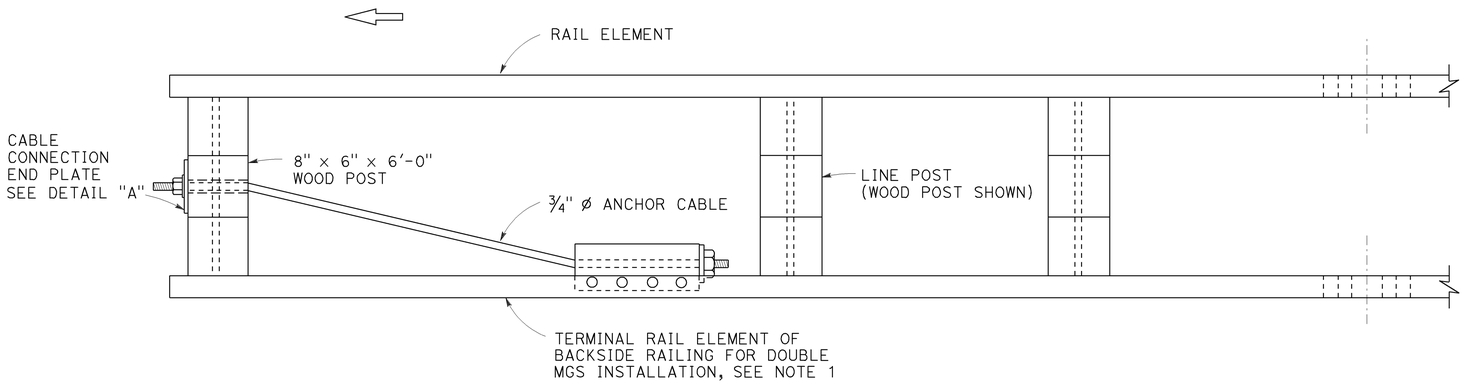

PLAN

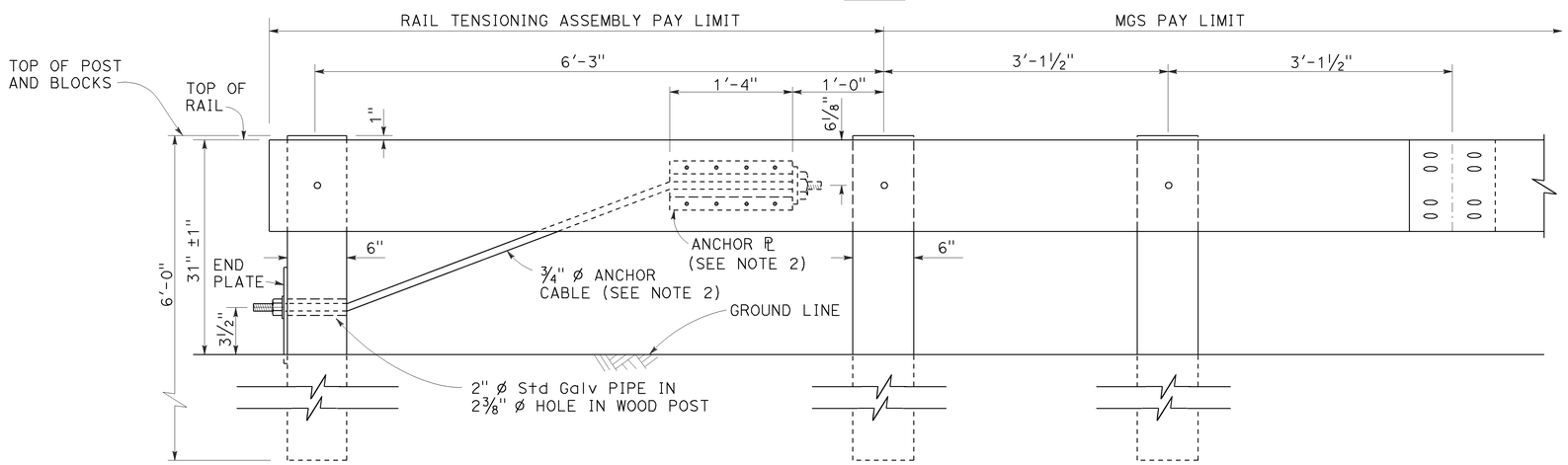

ELEVATION
RAIL TENSIONING ASSEMBLY
See Note 1

NOTES:

1. See Revised Standard Plans RSP A77Q3 and RSP A77R1 for typical use of rail tensioning assembly.
2. For details of the anchor plate and ¾" cable, see Revised Standard Plan RSP A77S3.

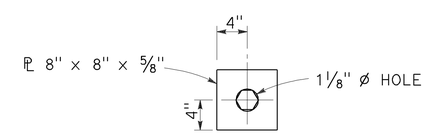

DETAIL "A"
CABLE CONNECTION END PLATE

STATE OF CALIFORNIA
DEPARTMENT OF TRANSPORTATION

MIDWEST GUARDRAIL SYSTEM RAIL TENSIONING ASSEMBLY

NO SCALE

RSP A77S2 DATED JULY 19, 2013 SUPPLEMENTS THE STANDARD PLANS BOOK DATED 2010.

REVISED STANDARD PLAN RSP A77S2

2010 REVISED STANDARD PLAN RSP A77S2

7-3-13

Dist	COUNTY	ROUTE	POST MILES TOTAL PROJECT	SHEET No.	TOTAL SHEETS
03	But	99	30.1/T37.5	135	163

Randell D. Hiatt
REGISTERED CIVIL ENGINEER

November 15, 2013
PLANS APPROVAL DATE

REGISTERED PROFESSIONAL ENGINEER
Randell D. Hiatt
No. C50200
Exp. 6-30-15
CIVIL
STATE OF CALIFORNIA

THE STATE OF CALIFORNIA OR ITS OFFICERS OR AGENTS SHALL NOT BE RESPONSIBLE FOR THE ACCURACY OR COMPLETENESS OF SCANNED COPIES OF THIS PLAN SHEET.

TO ACCOMPANY PLANS DATED 4-27-15

2010 REVISED STANDARD PLAN RSP A77S3

NOTE:

See Revised Standard Plans RSP A77S1, RSP A77S2 and RSP A77T1 for typical use of anchor cable and anchor plate.

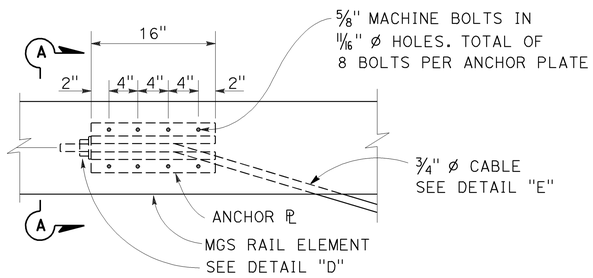

ANCHOR PLATE DETAIL
(MGS shown, TBB similar)

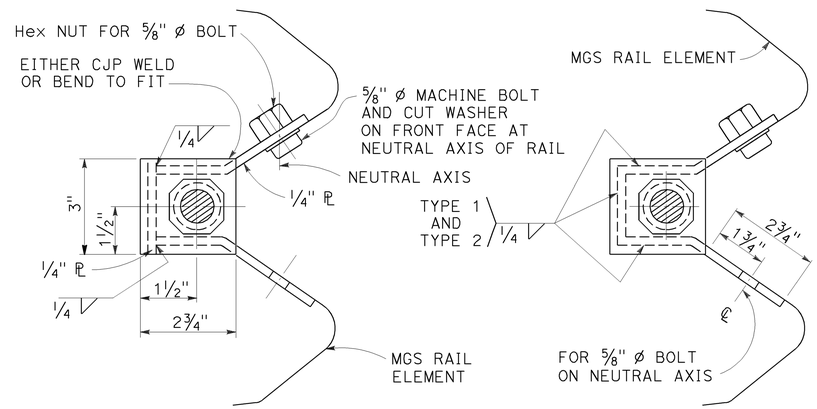

NOTE:
Dimensioning applies to both types.

SECTION A-A
(ALTERNATIVE TYPE 1)

SECTION A-A
(ALTERNATIVE TYPE 2)

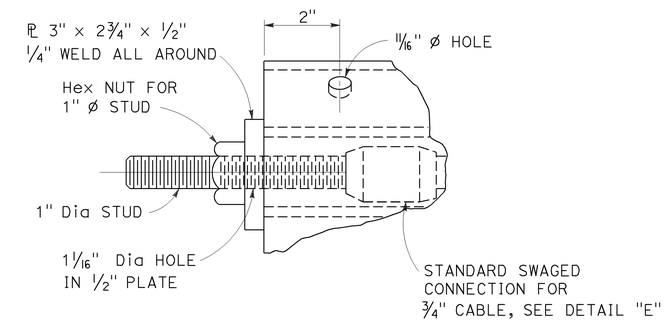

DETAIL "D"

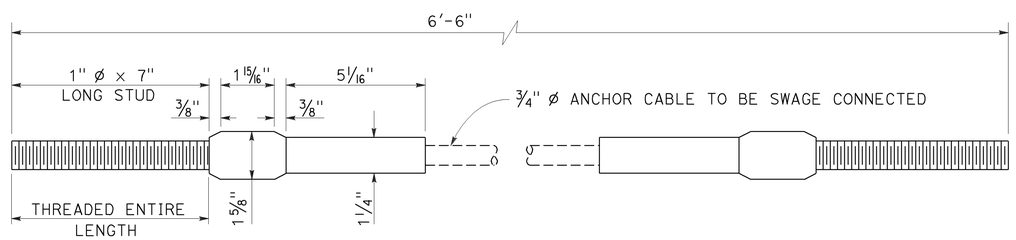

ANCHOR CABLE WITH
SWAGED FITTING AND STUD
DETAIL "E"

STATE OF CALIFORNIA
DEPARTMENT OF TRANSPORTATION

METAL RAILING ANCHOR CABLE AND ANCHOR PLATE DETAILS

NO SCALE

RSP A77S3 DATED NOVEMBER 15, 2013 SUPERSEDES RSP A77S3
DATED JULY 19, 2013 THAT SUPPLEMENTS THE STANDARD PLANS BOOK DATED 2010.

REVISED STANDARD PLAN RSP A77S3

10-4-13

Dist	COUNTY	ROUTE	POST MILES TOTAL PROJECT	SHEET No.	TOTAL SHEETS
03	But	99	30.1/T37.5	136	163

Randell D. Hiatt
REGISTERED CIVIL ENGINEER

November 15, 2013
PLANS APPROVAL DATE

REGISTERED PROFESSIONAL ENGINEER
Randell D. Hiatt
No. C50200
Exp. 6-30-15
CIVIL
STATE OF CALIFORNIA

THE STATE OF CALIFORNIA OR ITS OFFICERS OR AGENTS SHALL NOT BE RESPONSIBLE FOR THE ACCURACY OR COMPLETENESS OF SCANNED COPIES OF THIS PLAN SHEET.

TO ACCOMPANY PLANS DATED 4-27-15

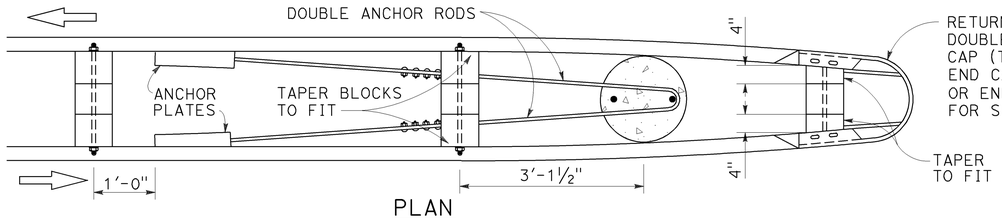

PLAN
See Note 4

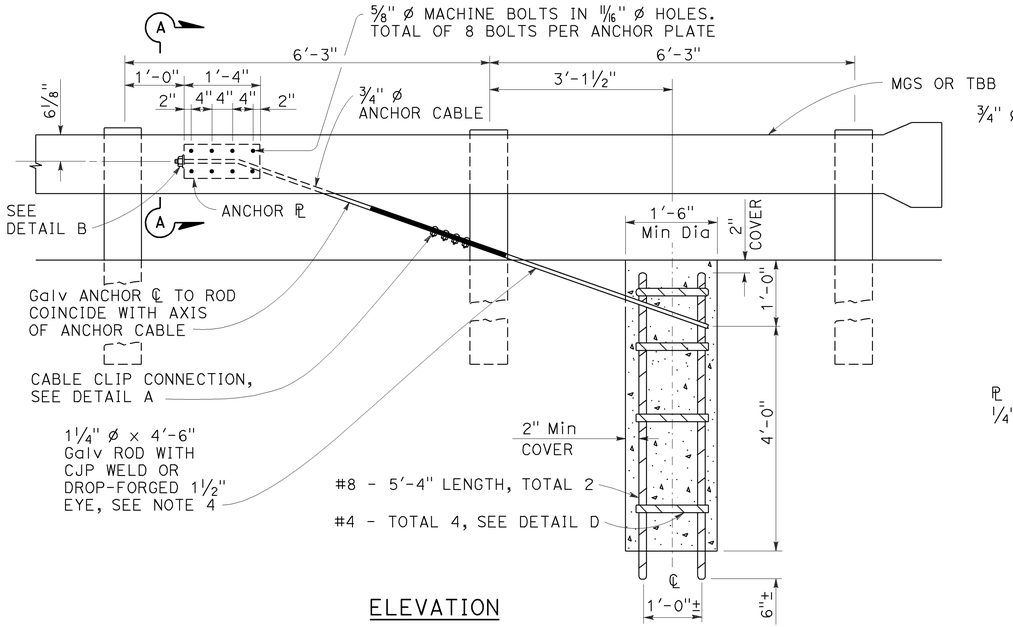

ELEVATION
END ANCHOR ASSEMBLY
(TYPE CA)
(Wood post, MGS shown, details similar for Thrie Beam Barrier.)

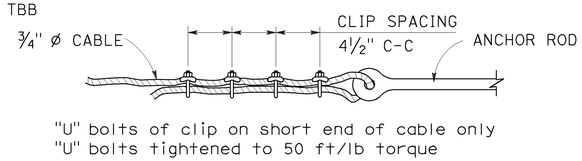

DETAIL A
CABLE CLIP CONNECTION

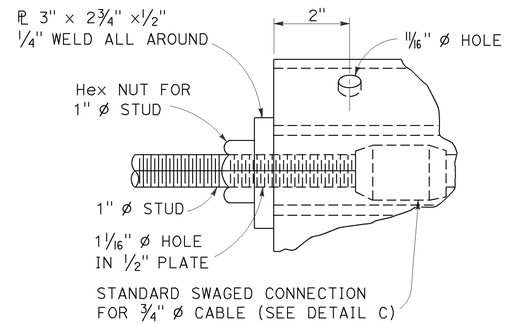

DETAIL B

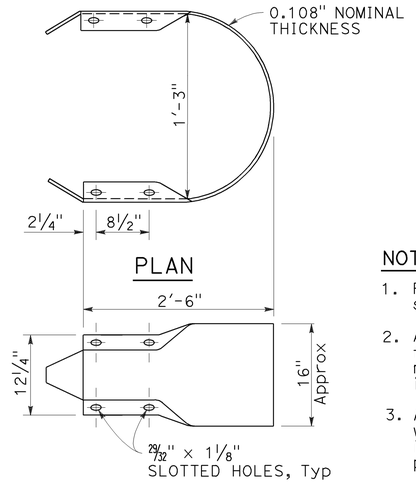

PLAN

ELEVATION
RETURN CAP
(TYPE A)

NOTES:

1. For typical use of this type of end anchor, see Revised Standard Plan RSP A78E2.
2. Anchor cable to be parallel to railing for straight runs of rail. Anchor cable may have angle point at anchor plate if railing is curved.
3. Anchor rod hooks to be in contact with anchor reinforcement when concrete is placed. Wire ties may be used to position anchor rods.
4. Single sided railing installations require only one anchor plate, anchor rod and anchor cable. Single sided railing will not have a rail element or blockouts on backside of line posts as shown in the plan view.

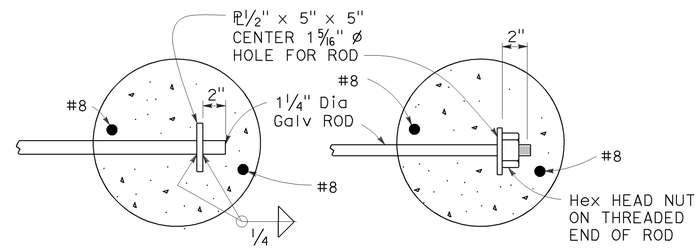

OPTIONAL ENDS ON SINGLE ANCHOR ROD
(Not to be used for double anchors)

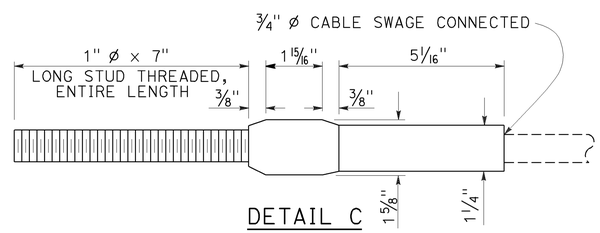

DETAIL C

ANCHOR CABLE WITH
SWAGED FITTING AND STUD

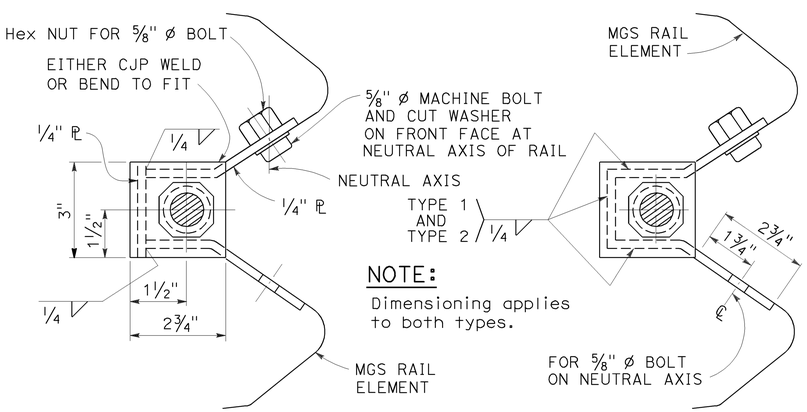

SECTION A-A
(Alternative Type 1)

SECTION A-A
(Alternative Type 2)

ANCHOR PLATE DETAILS

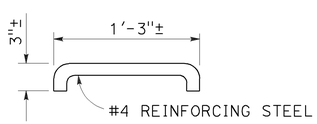

DETAIL D

NOTE:
Use two 1¼" Ø Galv rods with hook and eye for double MGS anchor.

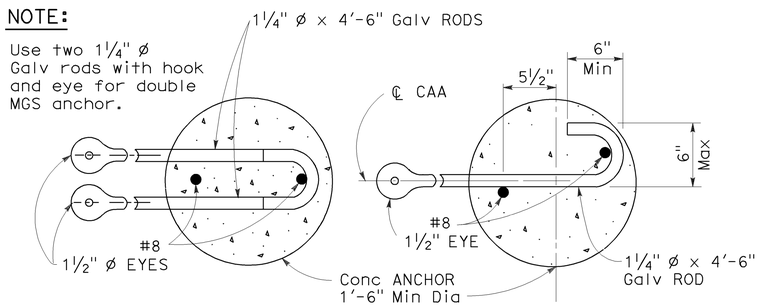

DOUBLE ANCHOR SINGLE ANCHOR

ANCHOR RODS

STATE OF CALIFORNIA
DEPARTMENT OF TRANSPORTATION

METAL RAILING END ANCHOR ASSEMBLY (TYPE CA)

NO SCALE

RSP A77T1 DATED NOVEMBER 15, 2013 SUPERSEDES RSP A77T1 DATED JULY 19, 2013 THAT SUPPLEMENTS THE STANDARD PLANS BOOK DATED 2010.

REVISED STANDARD PLAN RSP A77T1

2010 REVISED STANDARD PLAN RSP A77T1

10-22-13

Dist	COUNTY	ROUTE	POST MILES TOTAL PROJECT	SHEET No.	TOTAL SHEETS
03	But	99	30.1/T37.5	137	163

Randell D. Hiatt
REGISTERED CIVIL ENGINEER

July 19, 2013
PLANS APPROVAL DATE

REGISTERED PROFESSIONAL ENGINEER
Randell D. Hiatt
No. C50200
Exp. 6-30-15
CIVIL
STATE OF CALIFORNIA

THE STATE OF CALIFORNIA OR ITS OFFICERS OR AGENTS SHALL NOT BE RESPONSIBLE FOR THE ACCURACY OR COMPLETENESS OF SCANNED COPIES OF THIS PLAN SHEET.

TO ACCOMPANY PLANS DATED 4-27-15

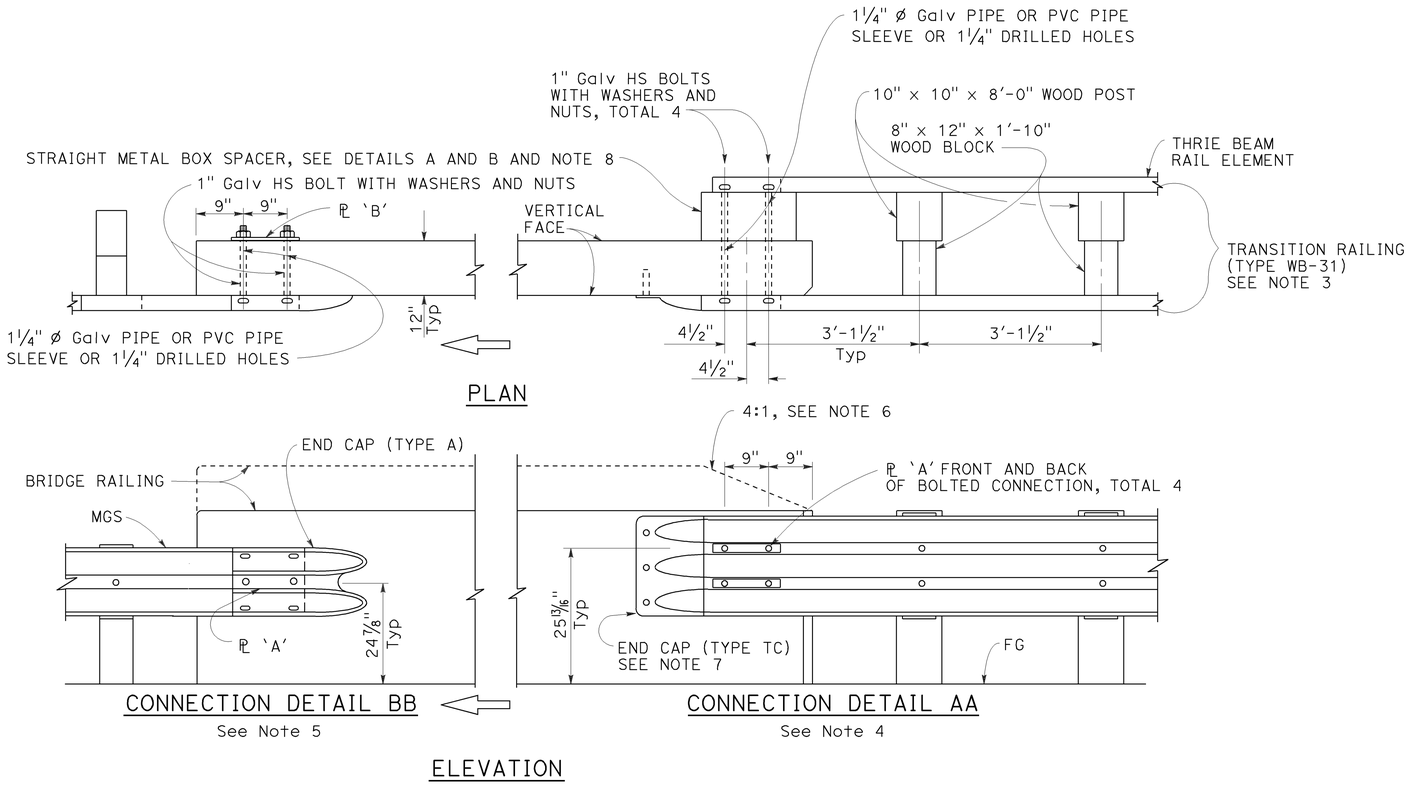

MIDWEST GUARDRAIL SYSTEM CONNECTION TO BRIDGE RAILING WITHOUT SIDEWALK

NOTES:

1. See Revised Standard Plan RSP A77U2 for additional connection details to bridges without sidewalks.
2. Additional details of posts, blocks and hardware are shown on Revised Standard Plans RSP A77M1, RSP A77N1 and RSP A77N2.
3. For additional details of Transition Railing (Type WB-31), see Revised Standard Plan RSP A77U4. Transition Railing (Type WB-31) transitions the 12 gauge MGS railing section to a heavier gage nested thrie beam railing section which is connected to the concrete bridge railing.
4. For typical use of Connection Detail AA, see Layout Types 12A and 12B on Revised Standard Plan RSP A77Q1, Layout Types 12C and 12D on Revised Standard Plan RSP A77Q2, and Layout Type 12E on Revised Standard Plan RSP A77Q3.
5. For typical use of Connection Detail BB, see Layout Type 12D (structure departure railing connection) on Revised Standard Plan RSP A77Q2 and Layout Type 12DD on Revised Standard Plan RSP A77Q5.
6. Where the height of the bridge railing exceeds the height of the thrie beam railing by more than 1" at Connection Detail AA, taper the top of the end of the bridge railing at 4:1 to match the top elevation of the thrie beam rail.
7. For details of End Cap (Type TC), see Revised Standard Plan RSP A77U4.
8. See Revised Standard Plan RSP A77U4 for additional details regarding depth dimension for straight metal box spacer.

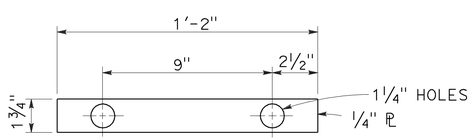

PLATE 'A'

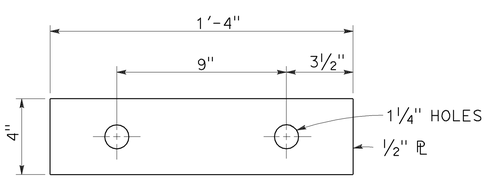

PLATE 'B'
(For backside of connection BB)

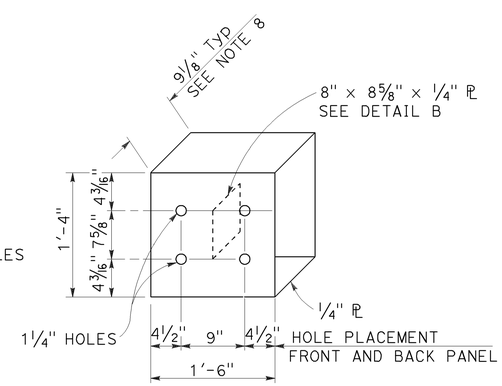

DETAIL A

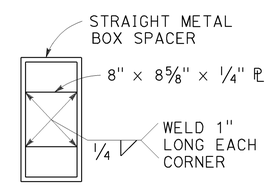

DETAIL B

STRAIGHT METAL BOX SPACER

STATE OF CALIFORNIA
DEPARTMENT OF TRANSPORTATION

MIDWEST GUARDRAIL SYSTEM CONNECTIONS TO BRIDGE RAILINGS WITHOUT SIDEWALKS DETAILS No. 1

NO SCALE

RSP A77U1 DATED JULY 19, 2013 SUPPLEMENTS THE STANDARD PLANS BOOK DATED 2010.

REVISED STANDARD PLAN RSP A77U1

2010 REVISED STANDARD PLAN RSP A77U1

7-8-13

Dist	COUNTY	ROUTE	POST MILES TOTAL PROJECT	SHEET No.	TOTAL SHEETS
03	But	99	30.1/T37.5	138	163

Randell D. Hiatt
REGISTERED CIVIL ENGINEER

July 19, 2013
PLANS APPROVAL DATE

REGISTERED PROFESSIONAL ENGINEER
Randell D. Hiatt
No. C50200
Exp. 6-30-15
CIVIL
STATE OF CALIFORNIA

THE STATE OF CALIFORNIA OR ITS OFFICERS OR AGENTS SHALL NOT BE RESPONSIBLE FOR THE ACCURACY OR COMPLETENESS OF SCANNED COPIES OF THIS PLAN SHEET.

TO ACCOMPANY PLANS DATED 4-27-15

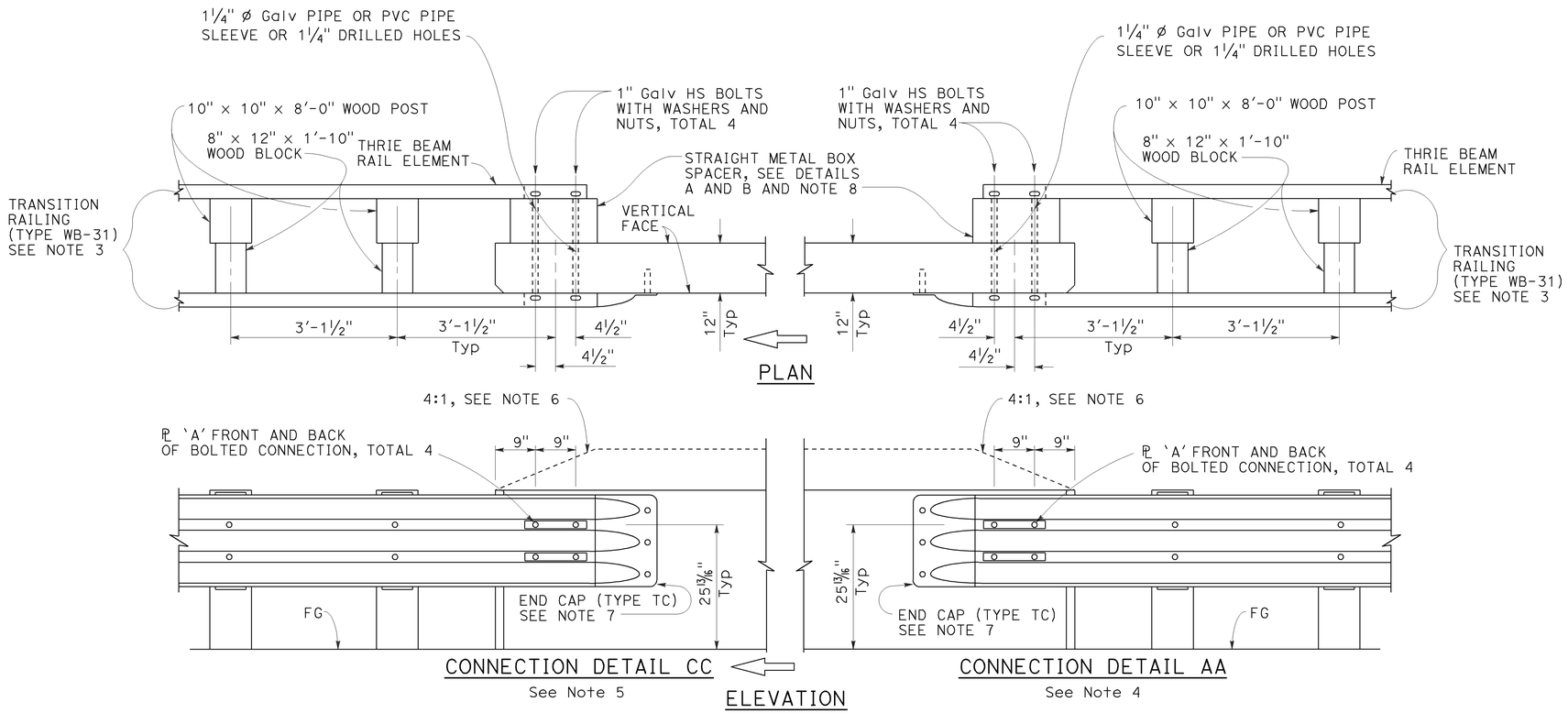

MIDWEST GUARDRAIL SYSTEM CONNECTION TO BRIDGE RAILING WITHOUT SIDEWALK

NOTES:

1. See Revised Standard Plan RSP A77U1 for additional connection details to bridges without sidewalks.
2. Additional details of posts, blocks and hardware are shown on Revised Standard Plans RSP A77M1, RSP A77N1 and RSP A77N2.
3. For additional details of Transition Railing (Type WB-31), see Revised Standard Plan RSP A77U4. Transition Railing (Type WB-31) transitions the 12 gauge MGS railing section to a heavier gage nested thrie beam railing section which is connected to the concrete bridge railing.
4. For typical use of Connection Detail AA, see Layout Types 12A and 12B on Revised Standard Plan RSP A77Q1, Layout Types 12C and 12D on Revised Standard Plan RSP A77Q2, and Layout Type 12E on Revised Standard Plan RSP A77Q3.
5. For typical use of Connection Detail CC, see Layout Types 12AA and 12BB on Revised Standard Plan RSP A77Q4 and Layout Type 12CC on Revised Standard Plan RSP A77Q5.
6. Where the height of the bridge railing exceeds the height of the thrie beam railing by more than 1" at Connection Detail AA and connection Detail CC, taper the top of the end of the bridge railing at 4:1 to match the top elevation of the thrie beam railing.
7. For details of End Cap (Type TC), see Revised Standard Plan RSP A77U4.
8. See Revised Standard Plan RSP A77U4 for additional details regarding depth dimension for straight metal box spacer.

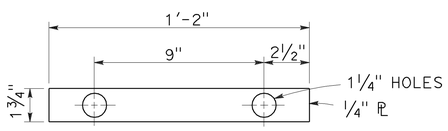

PLATE 'A'

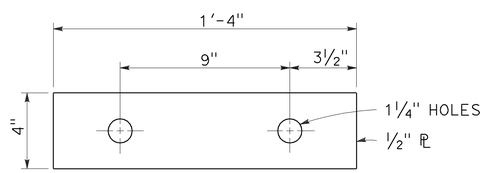

PLATE 'B'
(For backside of connection BB)

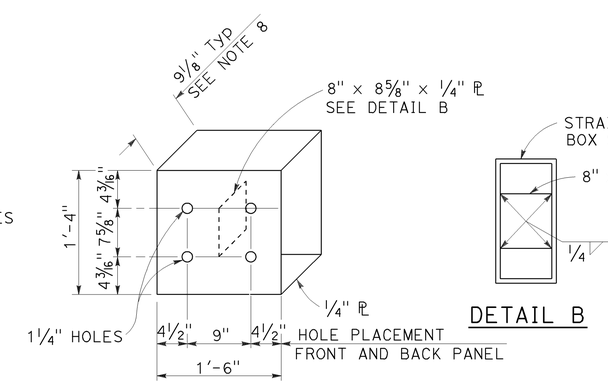

STATE OF CALIFORNIA
DEPARTMENT OF TRANSPORTATION

MIDWEST GUARDRAIL SYSTEM CONNECTIONS TO BRIDGE RAILINGS WITHOUT SIDEWALKS DETAILS No. 2

NO SCALE

RSP A77U2 DATED JULY 19, 2013 SUPPLEMENTS THE STANDARD PLANS BOOK DATED 2010.

REVISED STANDARD PLAN RSP A77U2

2010 REVISED STANDARD PLAN RSP A77U2

6-20-13

Dist	COUNTY	ROUTE	POST MILES TOTAL PROJECT	SHEET No.	TOTAL SHEETS
03	But	99	30.1/T37.5	139	163

Randell D. Hiatt
REGISTERED CIVIL ENGINEER

July 19, 2013
PLANS APPROVAL DATE

REGISTERED PROFESSIONAL ENGINEER
Randell D. Hiatt
No. C50200
Exp. 6-30-15
CIVIL
STATE OF CALIFORNIA

THE STATE OF CALIFORNIA OR ITS OFFICERS OR AGENTS SHALL NOT BE RESPONSIBLE FOR THE ACCURACY OR COMPLETENESS OF SCANNED COPIES OF THIS PLAN SHEET.

TO ACCOMPANY PLANS DATED 4-27-15

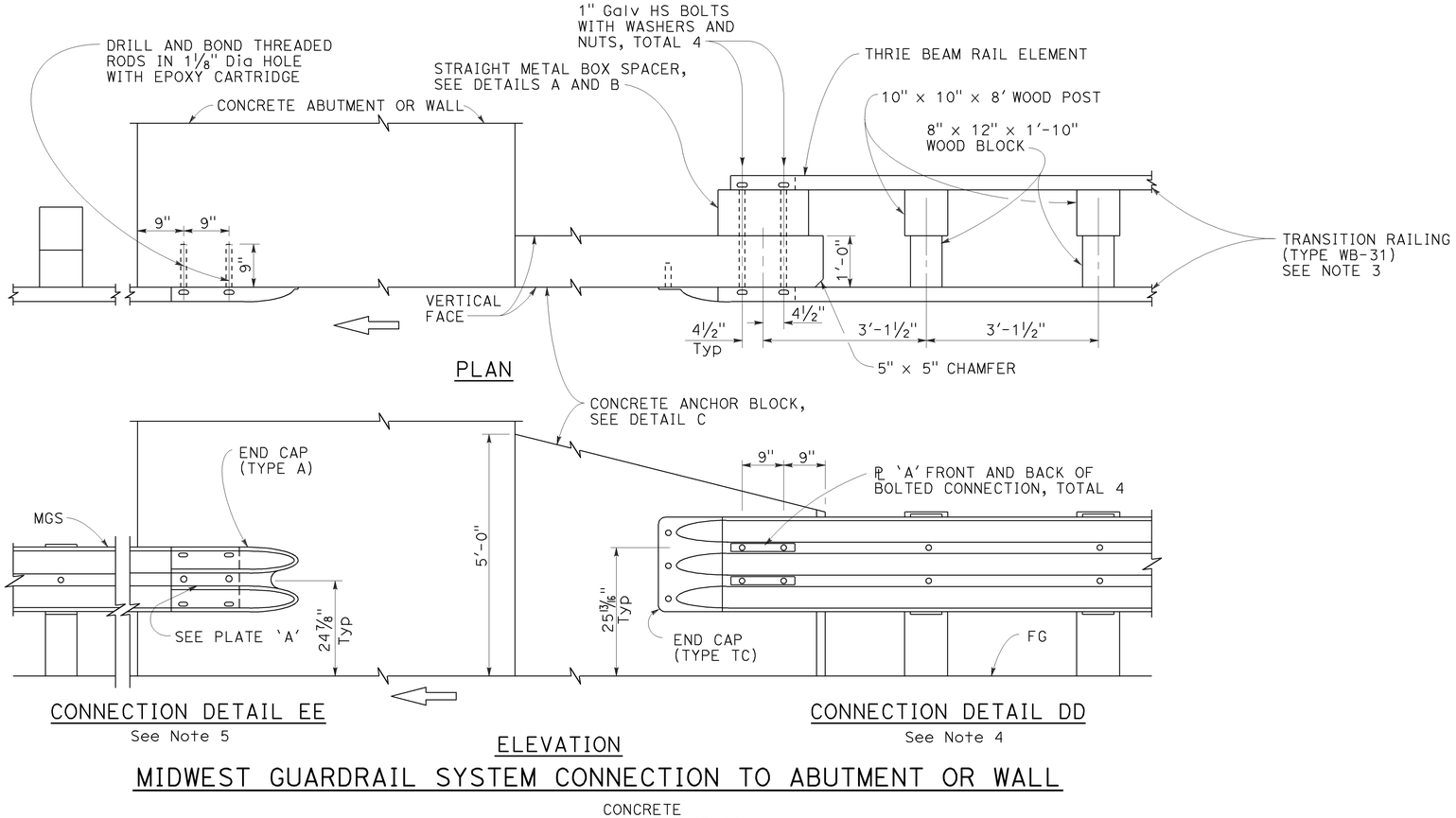

MIDWEST GUARDRAIL SYSTEM CONNECTION TO ABUTMENT OR WALL

NOTES:

1. These connection details apply to abutments and walls.
2. Additional details of posts, blocks and hardware are shown on Revised Standard Plans RSP A77M1, RSP A77N1 and RSP A77N2.
3. For additional details of Transition Railing (Type WB-31), see Revised Standard Plan RSP A77U4. Transition Railing (Type WB-31) transitions the 12 gauge MGS railing section to a heavier gage nested thrie beam railingsection which is connected to the concrete anchor block.
4. For typical use of Connection Details DD, see Layout Types 12A and 12B on Revised Standard Plan RSP A77Q1 and Layout Types 12C and 12D on Revised Standard Plan RSP A77Q2.
5. For typical use of Connection Detail EE, see Layout Type 12D on Revised Standard Plan RSP A77Q2 and Layout Type 12DD on Revised Standard Plan RSP A77Q5.

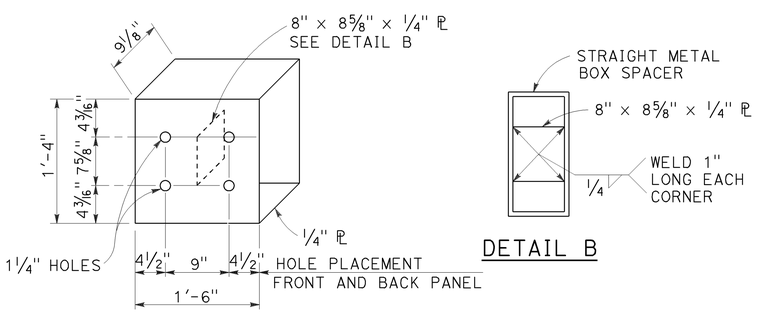

STRAIGHT METAL BOX SPACER

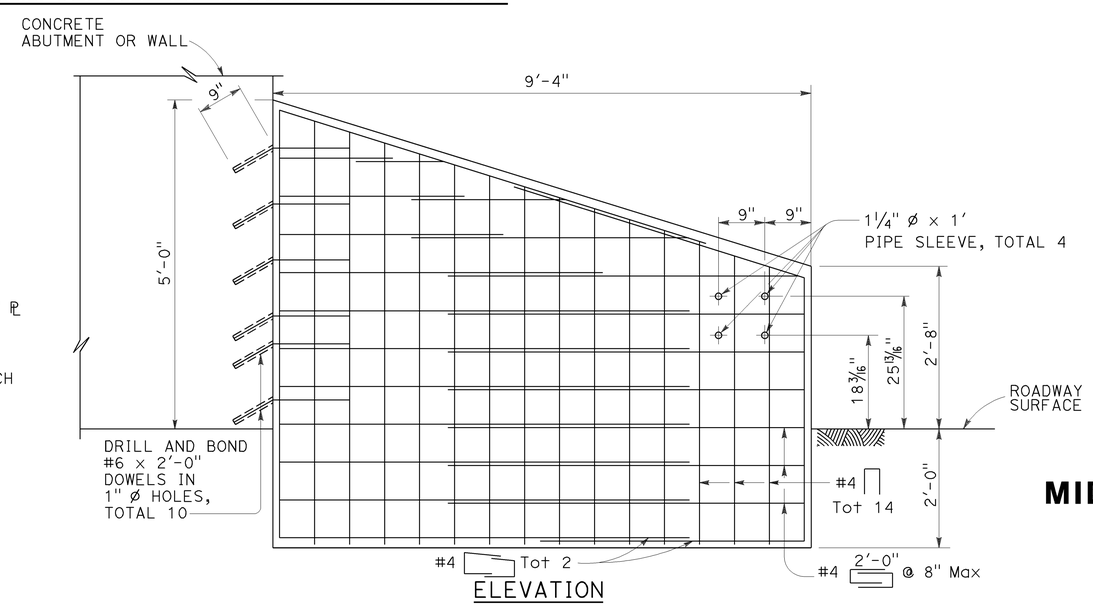

ANCHOR BLOCK FOR TRANSITION RAILING CONNECTION

DETAIL C

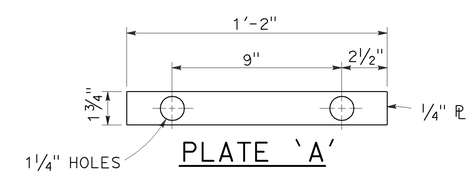

STATE OF CALIFORNIA
DEPARTMENT OF TRANSPORTATION

MIDWEST GUARDRAIL SYSTEM CONNECTIONS TO ABUTMENTS AND WALLS

NO SCALE

RSP A77U3 DATED JULY 19, 2013 SUPPLEMENTS THE STANDARD PLANS BOOK DATED 2010.

REVISED STANDARD PLAN RSP A77U3

2010 REVISED STANDARD PLAN RSP A77U3

7-8-13

Dist	COUNTY	ROUTE	POST MILES TOTAL PROJECT	SHEET No.	TOTAL SHEETS
03	But	99	30.1/T37.5	140	163

Randell D. Hiatt
REGISTERED CIVIL ENGINEER

January 23, 2015
PLANS APPROVAL DATE

REGISTERED PROFESSIONAL ENGINEER
Randell D. Hiatt
No. C50200
Exp. 6-30-15
CIVIL
STATE OF CALIFORNIA

THE STATE OF CALIFORNIA OR ITS OFFICERS OR AGENTS SHALL NOT BE RESPONSIBLE FOR THE ACCURACY OR COMPLETENESS OF SCANNED COPIES OF THIS PLAN SHEET.

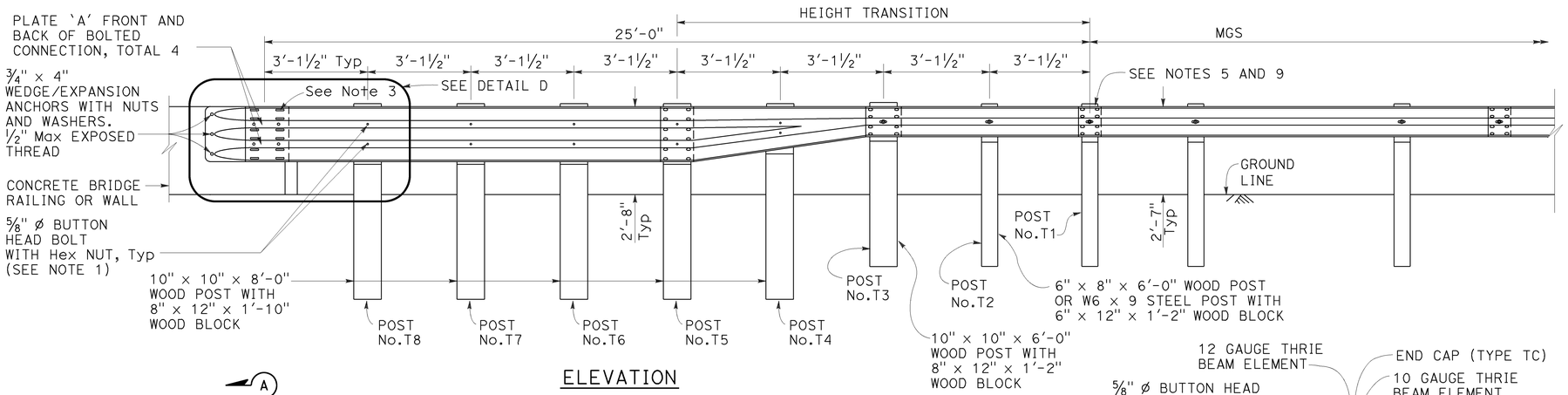

ELEVATION

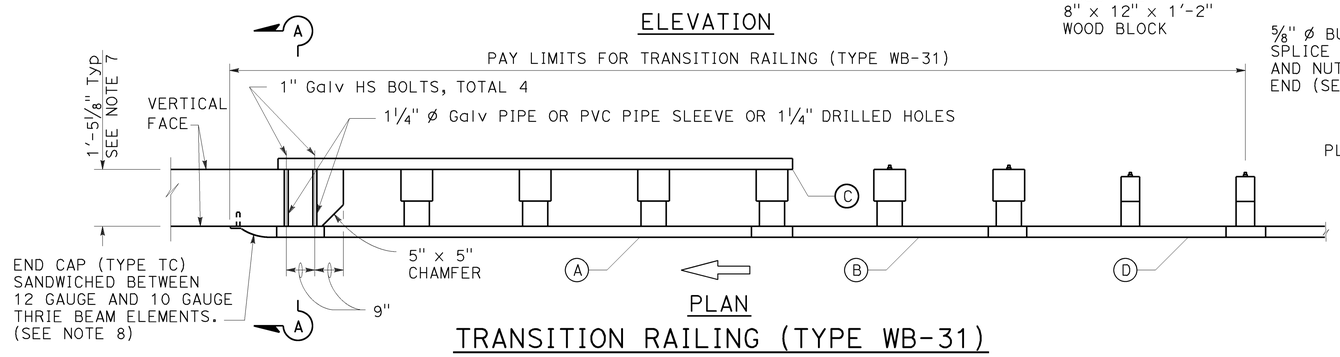

PLAN

TRANSITION RAILING (TYPE WB-31)

(No Blockout Attachment)

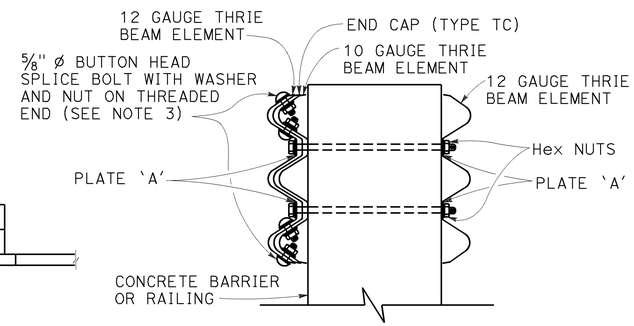

SECTION A-A

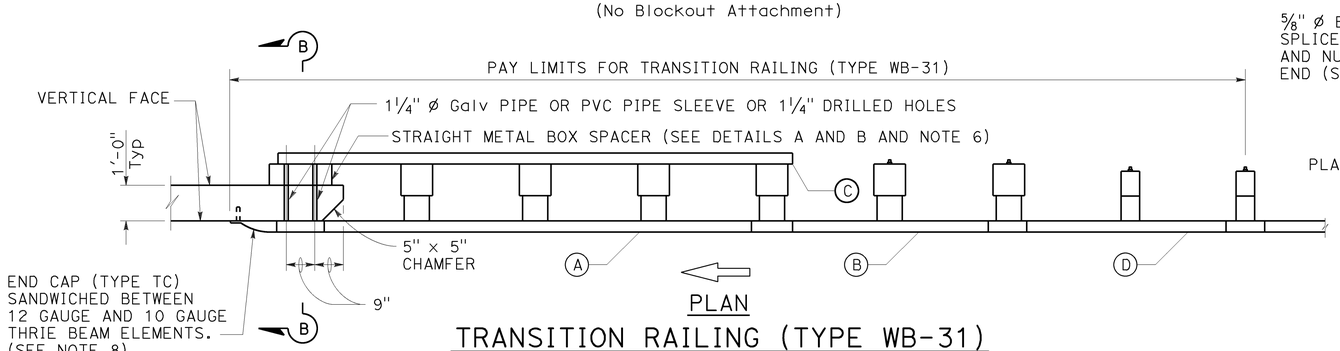

PLAN

TRANSITION RAILING (TYPE WB-31)

(Blockout Attachment)

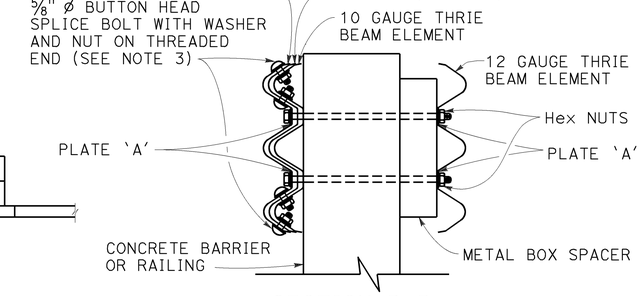

SECTION B-B

LEGEND:

- (A) NESTED THRIE BEAM ELEMENTS (ONE 12 GAUGE ELEMENT NESTED OVER ONE 10 GAUGE ELEMENT).
- (B) ONE ASYMMETRICAL 10 GAUGE "W" BEAM TO THRIE BEAM ELEMENT.
- (C) ONE 12 GAUGE THRIE BEAM ELEMENT.
- (D) ONE 10 GAUGE "W" BEAM RAIL ELEMENT (7'-3 1/2"LENGTH)

10 GAUGE = 0.138" THICK
12 GAUGE = 0.108" THICK

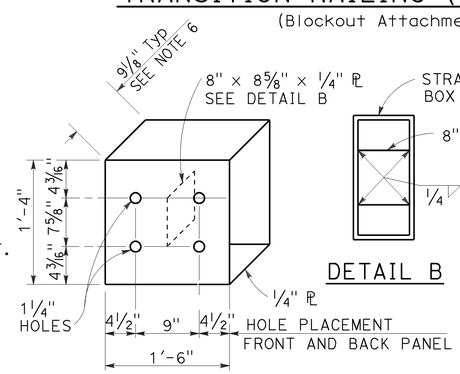

DETAIL A

STRAIGHT METAL BOX SPACER

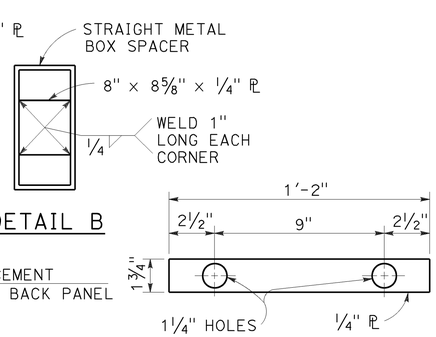

DETAIL B

DETAIL C

PLATE 'A'

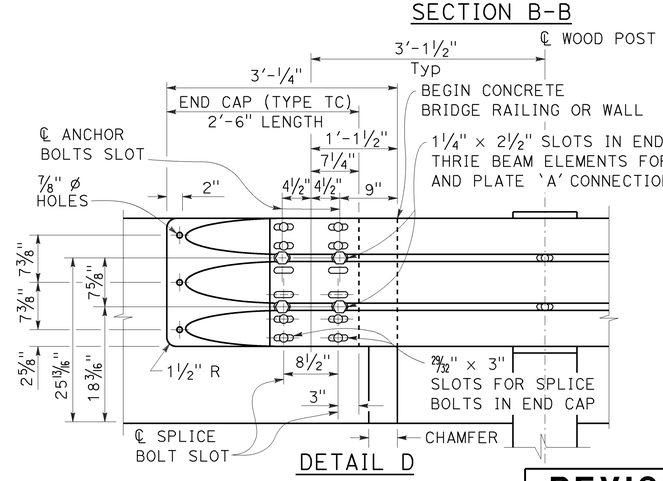

DETAIL D

NOTES:

TO ACCOMPANY PLANS DATED 4-27-15

1. Use 5/8" ø Button head bolts and hex nuts for connections to posts. No washer on rail face for bolted connections to post.
2. The nested rail elements, end cap, and 'W' beam to thrie beam element may be spliced together prior to bolting the elements to the wood post and concrete barrier or railing.
3. Exterior splice bolt holes for rail element splices at Post No. T5 and the connection to the concrete barrier or railing shall be the standard 29/32" x 1 1/8" slot size. Interior splice bolt holes at these locations may be increased up to 1 1/4" ø. Only the top 4 and the bottom 4 splice bolts with washers and nuts are required for rail splices at Post No. T5 and the connection to the concrete barrier or railing.
4. The top elevation of Posts No. T2 through No. T7 shall not project more than 1" above the top elevation of the rail element.
5. Typically, the railing connected to Transition Railing (Type WB-31) will be either standard railing section of MGS with height transition ratio of 150:1 or a Caltrans approved 31" end treatment attached to Post No. T1.
6. The depth of the metal box spacer varies from the 9 1/8" to 1 1/2" and is dependent on the width of the concrete railing or wall. The combined dimension for the depth of the metal box spacer plus the width of railing or wall is typically 21 1/8". Where the space between the backside of the concrete railing or wall and the rear thrie beam element is less than 1 1/2", metal plates similar to Plate 'A' are to be used as spacers.
7. Where the width of the concrete railing or wall is greater than 17 1/8", wood blocks are to be used to fill the space created between the backside of Posts No. T5 through No. T8 and the rear thrie beam element. These wood blocks shall be 8" in width and 1'-2" in length. The dimension between the front thrie beam element and the rear thrie beam element is to match the width of the concrete railing or wall.
8. End cap may be installed over 12 gauge and 10 gauge thrie beam elements where transition railing is installed on the departure end of bridge railing.
9. Conform standard railing section height to 31" at Post No. T1 using height transition ratio of 150:1.

STATE OF CALIFORNIA
DEPARTMENT OF TRANSPORTATION

MIDWEST GUARDRAIL SYSTEM TRANSITION RAILING (TYPE WB-31)

NO SCALE

RSP A77U4 DATED JANUARY 23, 2015 SUPERSEDES RSP A77U4 DATED NOVEMBER 15, 2013 AND RSP A77U4 DATED JULY 19, 2013 THAT SUPPLEMENTS THE STANDARD PLANS BOOK DATED 2010.

REVISED STANDARD PLAN RSP A77U4

2010 REVISED STANDARD PLAN RSP A77U4

1-8-15

Dist	COUNTY	ROUTE	POST MILES TOTAL PROJECT	SHEET No.	TOTAL SHEETS
03	But	99	30.1/T37.5	141	163

REGISTERED CIVIL ENGINEER

July 19, 2013
PLANS APPROVAL DATE

REGISTERED PROFESSIONAL ENGINEER
Michael Janzen
No. 44788
Exp. 03-31-14
CIVIL
STATE OF CALIFORNIA

THE STATE OF CALIFORNIA OR ITS OFFICERS OR AGENTS SHALL NOT BE RESPONSIBLE FOR THE ACCURACY OR COMPLETENESS OF SCANNED COPIES OF THIS PLAN SHEET.

TO ACCOMPANY PLANS DATED 4-27-15

2010 REVISED STANDARD PLAN RSP A87B

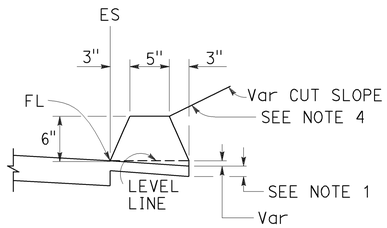

TYPE A
See Note 3

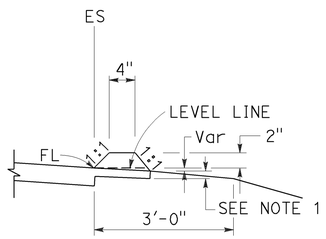

TYPE C

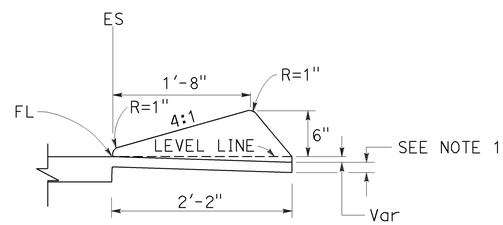

TYPE D

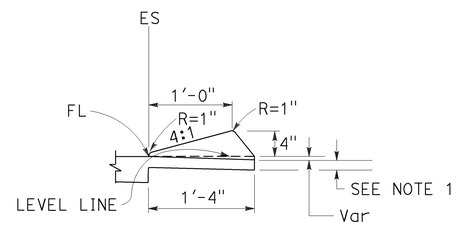

TYPE E

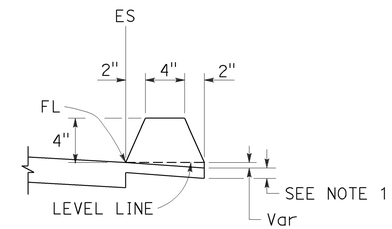

TYPE F
See Note 5

DIKES

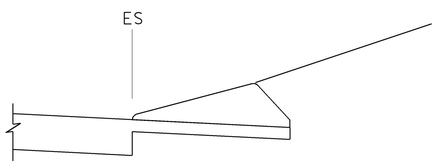

CASE C-1
Cut Slope

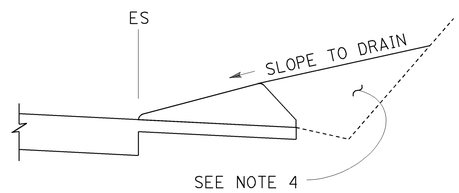

CASE C-2
Cut Slope

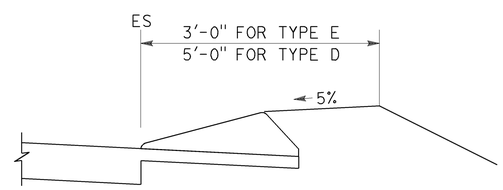

CASE F

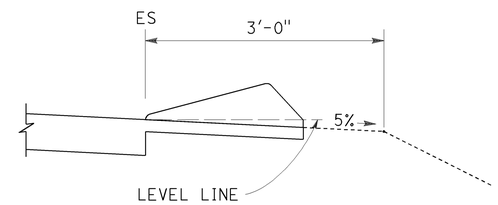

CASE R
See Note 2

TYPE D AND E BACKFILL DETAILS

NOTES:

1. For HMA shoulders only, extend top layer of HMA placed on the shoulder under dike with no joint at the ES. For projects with OGFC shoulders, do not extend OGFC under dike. See project plans for modified dike detail.
2. Case R applies to retrofit only projects where restrictive conditions do not provide enough width for Case F backfill.
3. Type A dike only to be used where restrictive slope conditions do not provide enough width to use Type D or Type E dike.
4. Fill and compact with excavated material to top of dike.
5. Use Type F dike, where dike is required with guard railing installations. See Revised Standard Plan RSP A77N4 for dike positioning details.

DIKE QUANTITIES

TYPE	CUBIC YARDS PER LINEAR FOOT
A	0.0135
C	0.0038
D	0.0293
E	0.0130
F	0.0066

Quantities based on 5% cross slope.

STATE OF CALIFORNIA
DEPARTMENT OF TRANSPORTATION

HOT MIX ASPHALT DIKES

NO SCALE

RSP A87B DATED JULY 19, 2013 SUPERSEDES STANDARD PLAN A87B
DATED MAY 20, 2011 - PAGE 120 OF THE STANDARD PLANS BOOK DATED 2010.

REVISED STANDARD PLAN RSP A87B

Dist	COUNTY	ROUTE	POST MILES TOTAL PROJECT	SHEET No.	TOTAL SHEETS
03	But	99	30.1/T37.5	142	163

William K. Farnbach
REGISTERED CIVIL ENGINEER

July 19, 2013
PLANS APPROVAL DATE

REGISTERED PROFESSIONAL ENGINEER
William K. Farnbach
No. C49042
Exp. 9-30-14
CIVIL
STATE OF CALIFORNIA

THE STATE OF CALIFORNIA OR ITS OFFICERS OR AGENTS SHALL NOT BE RESPONSIBLE FOR THE ACCURACY OR COMPLETENESS OF SCANNED COPIES OF THIS PLAN SHEET.

TO ACCOMPANY PLANS DATED 4-27-15

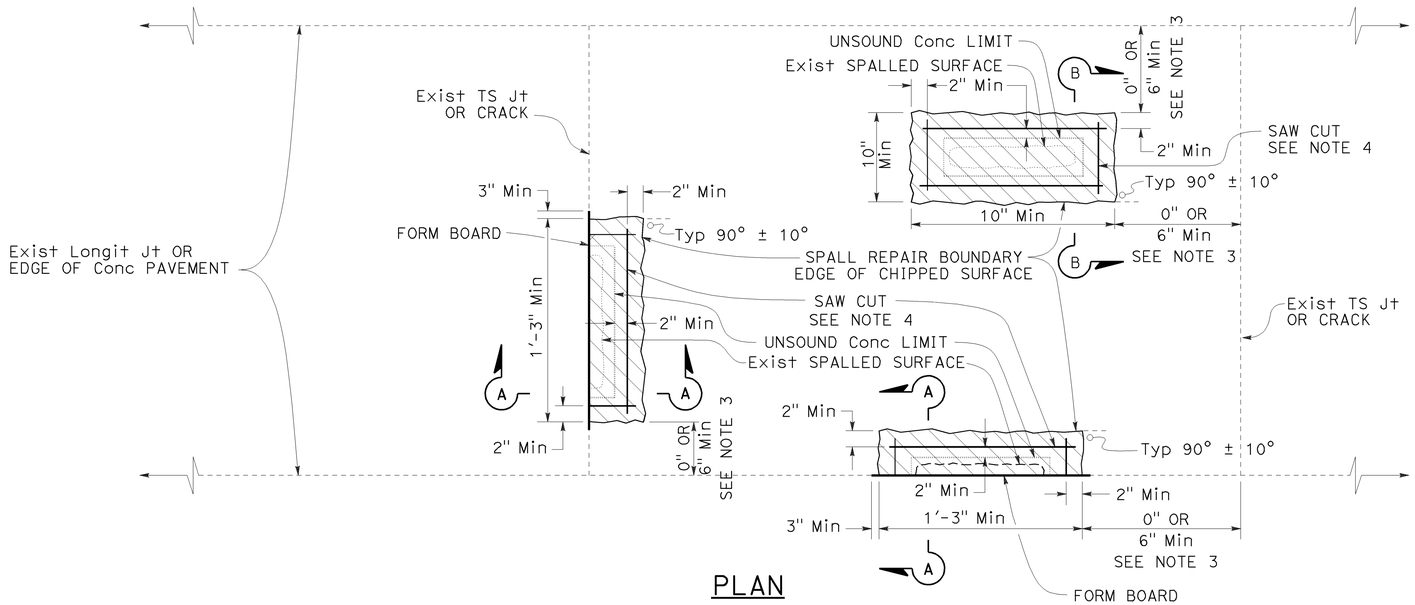

PLAN

LEGEND

SPALL REPAIR

NOTES:

1. See Project Plans for spall repair locations.
2. Combine spall repair areas closer than 2' apart.
3. If the spall repair area is less than 6" from a joint, extend the repair to the joint.
4. Cut at least 2" beyond the rectangular limits of unsound concrete determined by the Engineer. Determine the saw cut depth using the following table:

Conc MATERIAL	SAW CUT DEPTH	
	Min	Max
FAST-SETTING	2"	3½"
POLYESTER	1½"	3½"

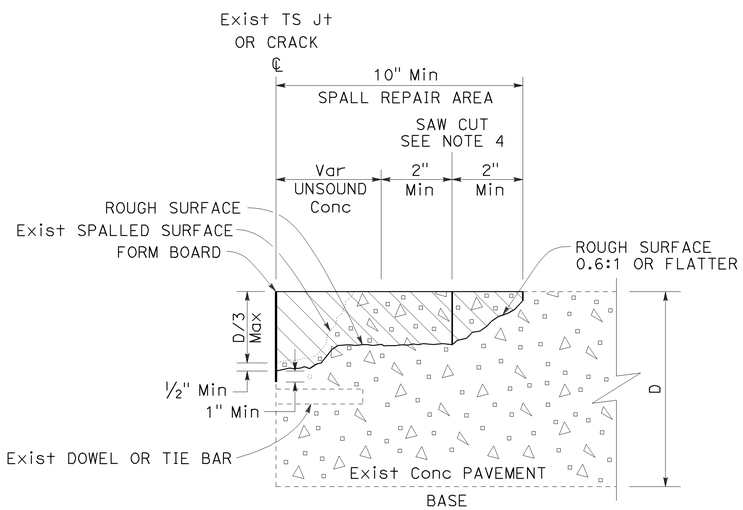

SECTION A-A

JOINT, CRACK, OR EDGE OF CONCRETE PAVEMENT REPAIR

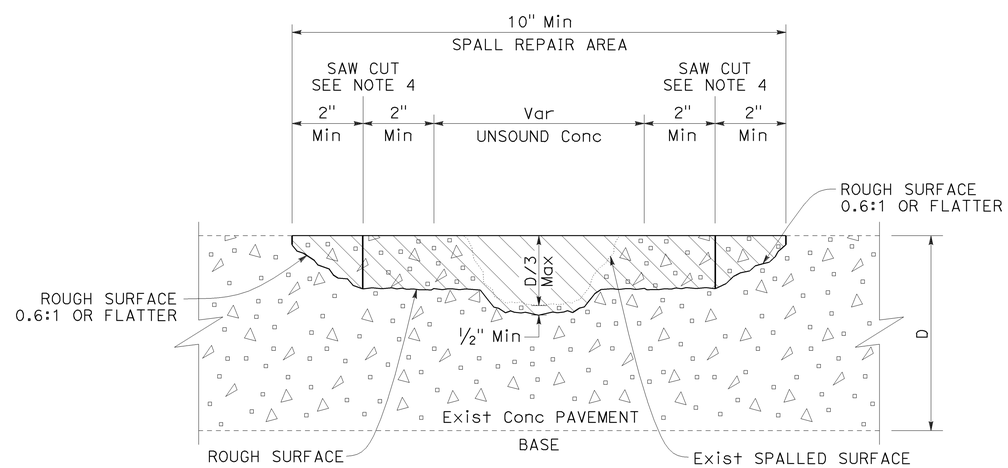

SECTION B-B

MISCELLANEOUS SPALL REPAIR

STATE OF CALIFORNIA
DEPARTMENT OF TRANSPORTATION

SPALL REPAIR

NO SCALE

RSP P6 DATED JULY 19, 2013 SUPPLEMENTS THE STANDARD PLANS BOOK DATED 2010.

REVISED STANDARD PLAN RSP P6

2010 REVISED STANDARD PLAN RSP P6

5-31-13

Dist	COUNTY	ROUTE	POST MILES TOTAL PROJECT	SHEET No.	TOTAL SHEETS
03	But	99	30.1/T37.5	143	163

William K. Farnbach
REGISTERED CIVIL ENGINEER

July 19, 2013
PLANS APPROVAL DATE

REGISTERED PROFESSIONAL ENGINEER William K. Farnbach No. C49042 Exp. 9-30-14 CIVIL STATE OF CALIFORNIA

THE STATE OF CALIFORNIA OR ITS OFFICERS OR AGENTS SHALL NOT BE RESPONSIBLE FOR THE ACCURACY OR COMPLETENESS OF SCANNED COPIES OF THIS PLAN SHEET.

TO ACCOMPANY PLANS DATED 4-27-15

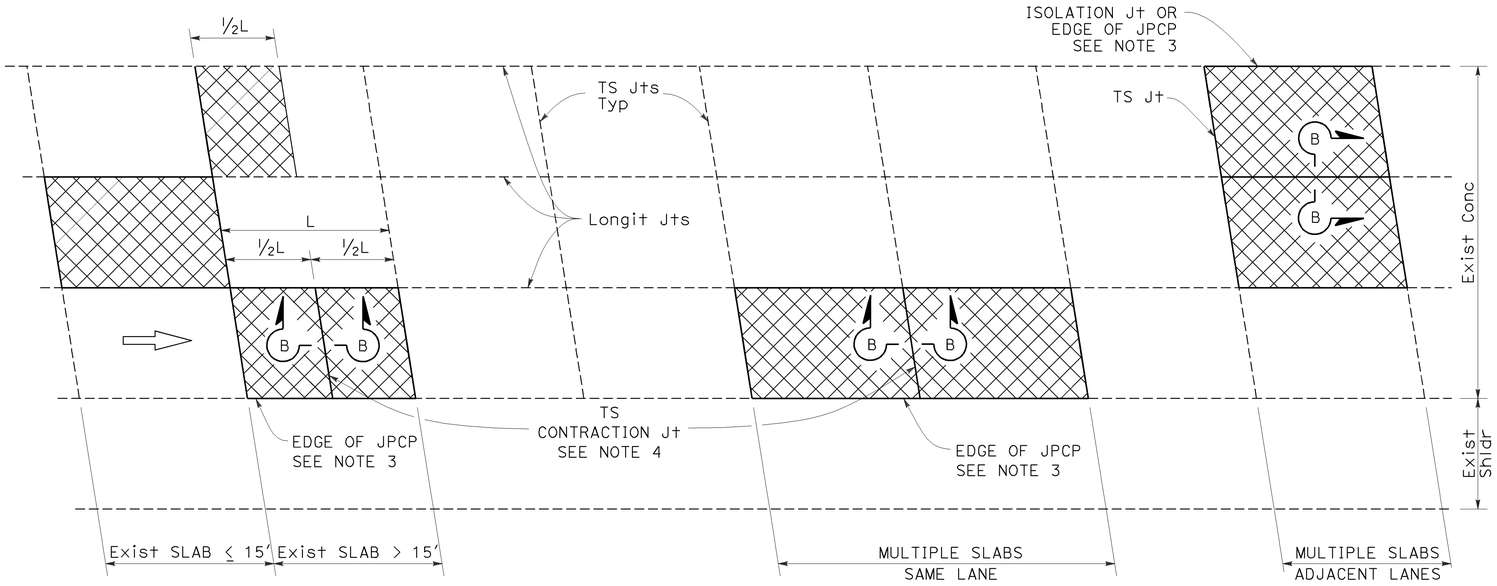

PLAN

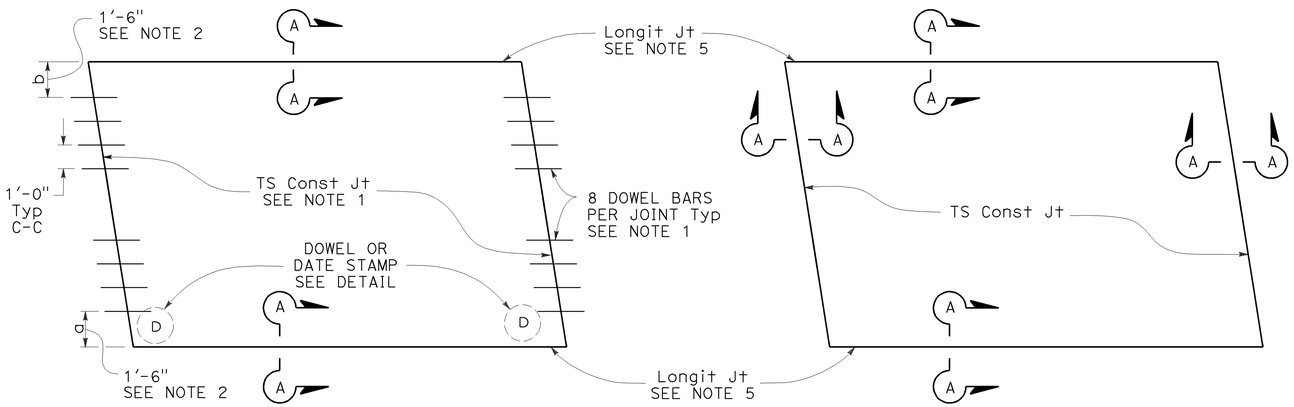

TYPE I
See Design Note 1

TYPE II
See Design Note 2

SLAB LAYOUT

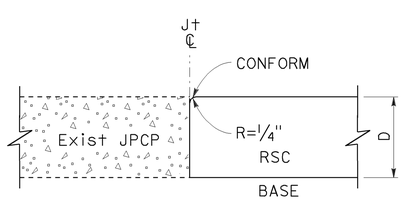

SECTION A-A

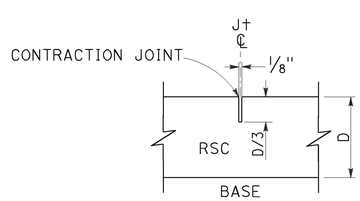

SECTION B-B

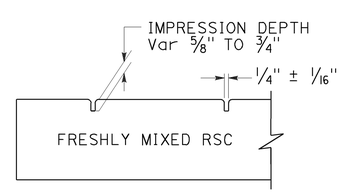

SECTION C-C

LEGEND:

RSC RAPID STRENGTH CONCRETE

INDIVIDUAL SLAB REPLACEMENT WITH RSC

NOTES:

1. For details not shown, see Revised Standard Plan RSP P10.
2. Where the existing outside shoulder is asphalt concrete pavement, "a" = 1'-0" and "b" = 2'-0".
3. Use side forms where edge of RSC pavement is adjacent to asphalt concrete.
4. Transverse contraction joint to match skew of existing joint. Omit dowel bars.
5. Do not place tie bars at longitudinal joints.

DESIGN NOTES:

1. For concrete slab repair with at least 5 years design life.
2. For short term repairs < 5 yrs design life or for slab replacements with cracking and seating.

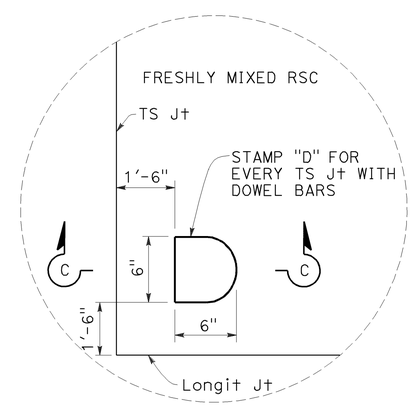

DOWEL STAMP DETAIL

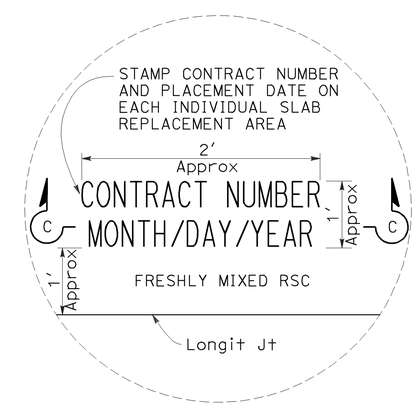

DATE STAMP DETAIL

STATE OF CALIFORNIA
DEPARTMENT OF TRANSPORTATION

INDIVIDUAL SLAB REPLACEMENT WITH RAPID STRENGTH CONCRETE

NO SCALE

RSP P8 DATED JULY 19, 2013 SUPERSEDES RSP P8 DATED APRIL 20, 2012 AND STANDARD PLAN P8 DATED MAY 20, 2011 - PAGE 130 OF THE STANDARD PLANS BOOK DATED 2010.

REVISED STANDARD PLAN RSP P8

2010 REVISED STANDARD PLAN RSP P8

5-31-13

DIST	COUNTY	ROUTE	POST MILES TOTAL PROJECT	SHEET No.	TOTAL SHEETS
03	But	99	30.1/T37.5	144	163

REGISTERED CIVIL ENGINEER

November 15, 2013
PLANS APPROVAL DATE

REGISTERED PROFESSIONAL ENGINEER Cornelis M. Hakim No. C55610 Exp. 12-31-14 CIVIL STATE OF CALIFORNIA

THE STATE OF CALIFORNIA OR ITS OFFICERS OR AGENTS SHALL NOT BE RESPONSIBLE FOR THE ACCURACY OR COMPLETENESS OF SCANNED COPIES OF THIS PLAN SHEET.

TO ACCOMPANY PLANS DATED 4-27-15

2010 REVISED STANDARD PLAN RSP P74

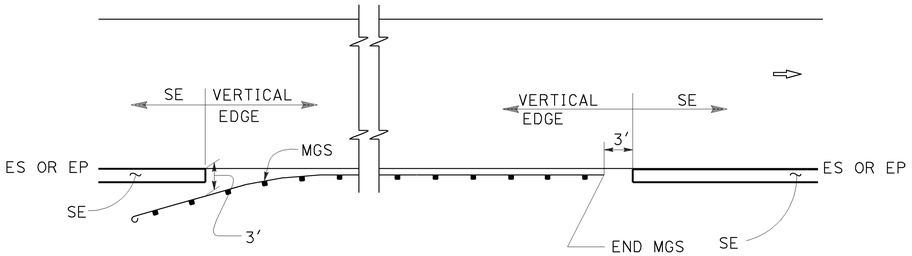

MGS

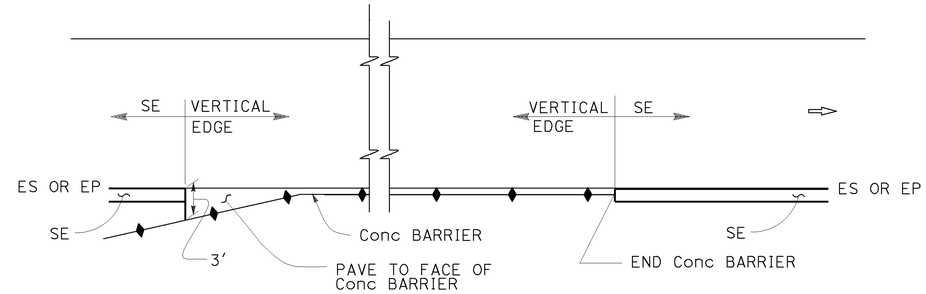

CONCRETE BARRIER

ABBREVIATIONS:

SE SAFETY EDGE

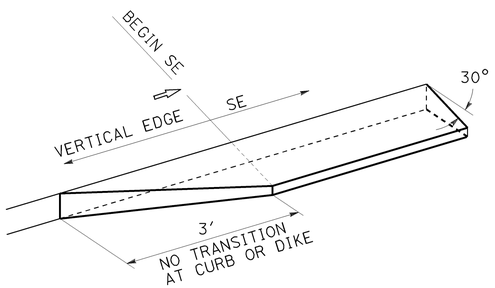

TRANSITION DETAIL FOR CONCRETE ONLY

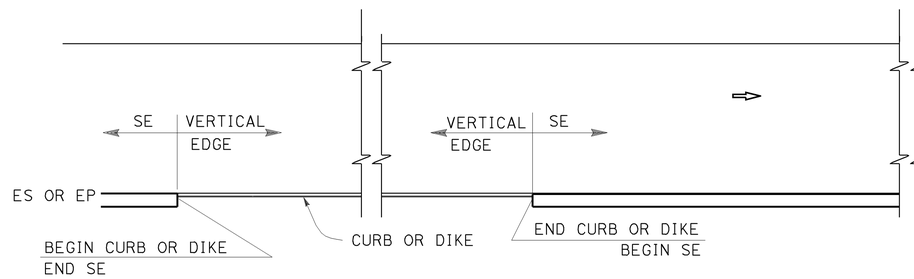

CURB OR DIKE

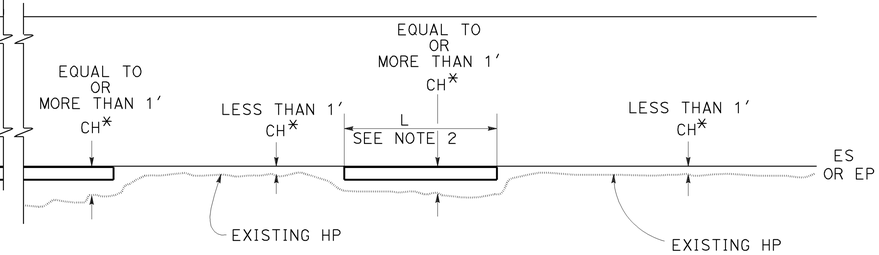

NARROW SIDE SLOPE

* CH = Distance from ES or EP to existing HP.

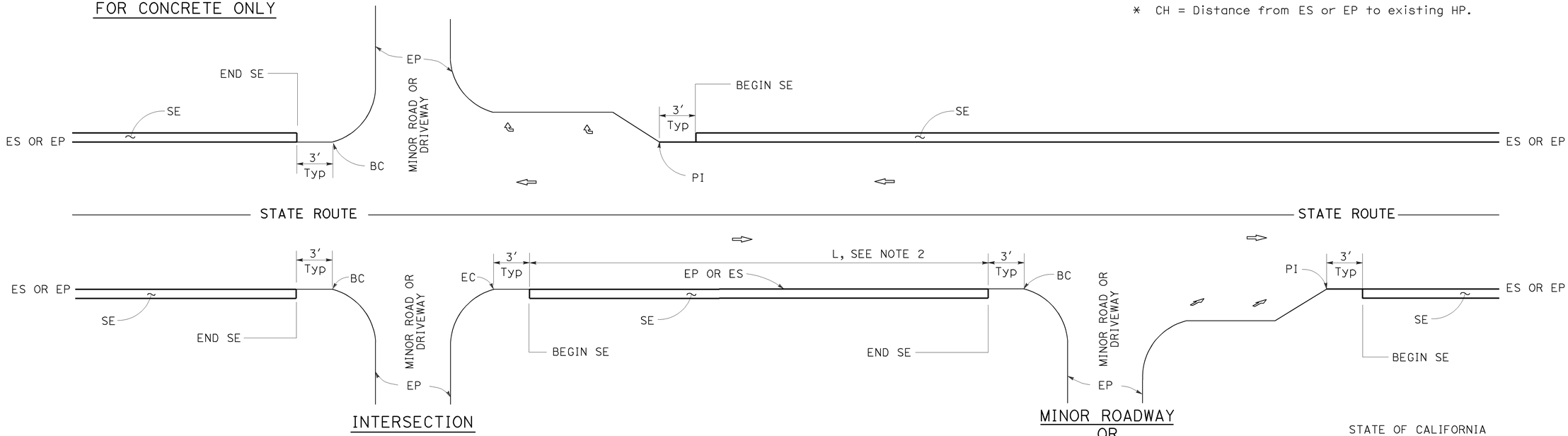

INTERSECTION

MINOR ROADWAY OR DRIVEWAY

DRIVEWAY AND INTERSECTION

NOTES:

1. For details not shown, see Revised Standard Plans RSP P75 and RSP P76.
2. Safety edge is optional when L is less than 30′.

STATE OF CALIFORNIA
DEPARTMENT OF TRANSPORTATION

PAVEMENT EDGE TREATMENTS

NO SCALE

RSP P74 DATED NOVEMBER 15, 2013 SUPERSEDES RSP P74 DATED JANUARY 20, 2012 THAT SUPPLEMENTS THE STANDARD PLANS BOOK DATED 2010.

REVISED STANDARD PLAN RSP P74

10-11-13

DIST	COUNTY	ROUTE	POST MILES TOTAL PROJECT	SHEET No.	TOTAL SHEETS
03	But	99	30.1/T37.5	145	163

REGISTERED CIVIL ENGINEER

November 15, 2013
PLANS APPROVAL DATE

REGISTERED PROFESSIONAL ENGINEER Cornelis M. Hakim No. C55610 Exp. 12-31-14 CIVIL STATE OF CALIFORNIA

THE STATE OF CALIFORNIA OR ITS OFFICERS OR AGENTS SHALL NOT BE RESPONSIBLE FOR THE ACCURACY OR COMPLETENESS OF SCANNED COPIES OF THIS PLAN SHEET.

TO ACCOMPANY PLANS DATED 4-27-15

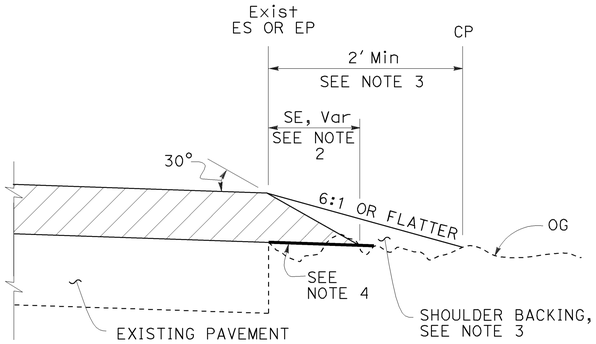

CASE A
Safety Edge

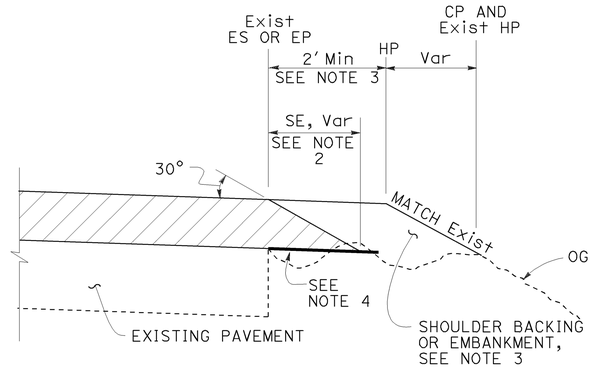

CASE B
Safety Edge

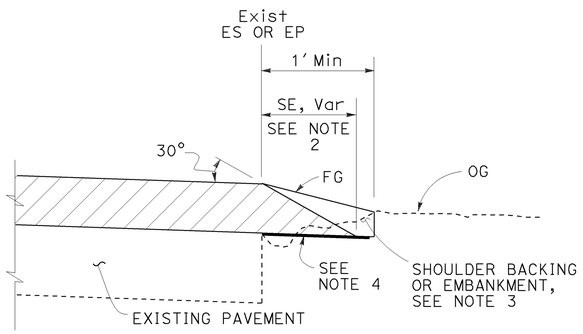

CASE C
Safety Edge

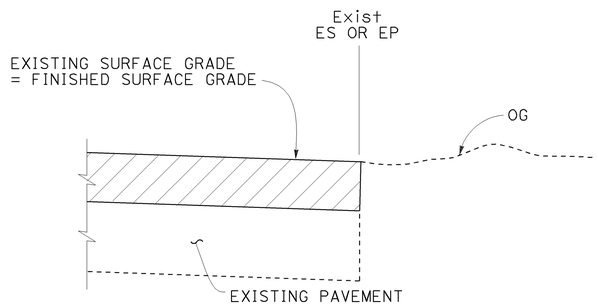

CASE D
Vertical Edge

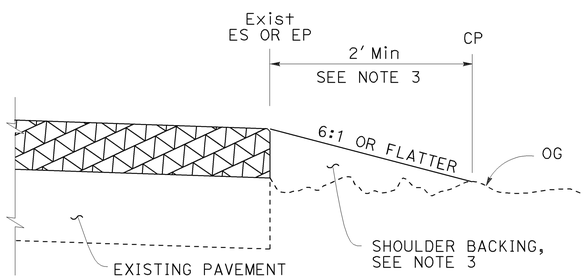

CASE E
Vertical Edge

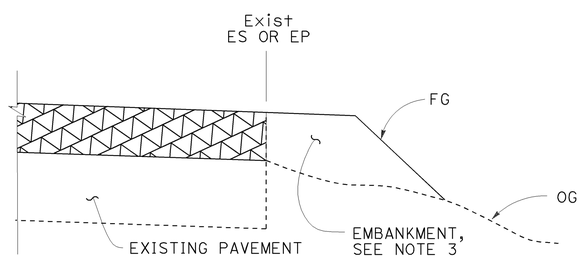

CASE F
Vertical Edge
* See Table A and Revised Std Plan RSP P74

LEGEND:

- HMA OVERLAY
- HMA OR CONCRETE OVERLAY
- CONCRETE OVERLAY

ABBREVIATIONS:

SE SAFETY EDGE
TT TOTAL THICKNESS OF SE

TABLE A
EDGE TREATMENT FOR VARIOUS OVERLAY THICKNESS AND CONDITIONS

	OVERLAY THICKNESS	
FIELD CONDITION	LESS THAN 0.15′	0.15′ OR MORE
Exist SLOPE 6:1 OR FLATTER	CASE E	CASE A
Exist SLOPE 3:1 TO 6:1	CASE E	CASE B
Exist SLOPE STEEPER THAN 3:1	CASE F	CASE F
CUT SECTION (REPLACE, COLD PLANE, MILL PAVEMENT)	CASE D	CASE C

ADDITIONAL HMA OR CONCRETE QUANTITIES FOR SE/SIDE/MILE

TYPICAL CROSS SECTION	TT	TOTAL ADDITIONAL MATERIAL FOR SE/SIDE/MILE		
		HMA (TON)	CONCRETE (CY)*	CONCRETE (CY)**
TT	0.15′	NA	NA	NA
	0.20′	13.7	NA	NA
	0.30′	30.9	NA	NA
	0.40′	54.9	NA	NA
	0.45′	69.4	NA	NA
TT 0.43′	0.50′	84.2	NA	NA
	0.60′	113.9	NA	NA
	0.70′	143.6	70.9	94.2
	0.80′	173.3	85.6	112.2
	0.90′	203.0	100.3	130.2
	1.00′	232.7	114.9	148.2
	1.10′	262.4	129.6	166.2
	1.20′	292.1	144.3	184.2

* For Detail "A"
** For Optional Detail "A"

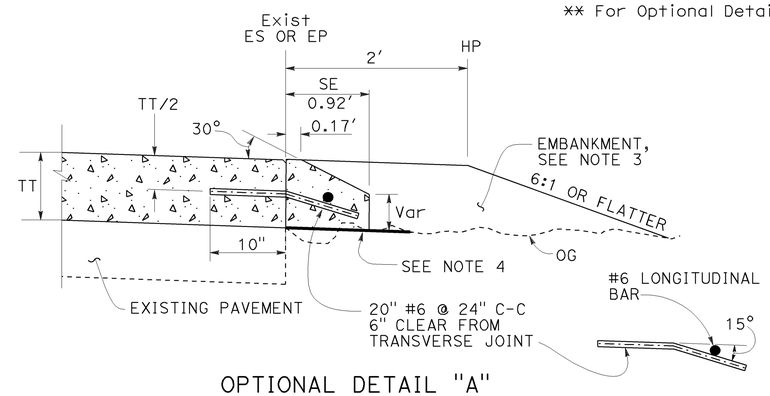

OPTIONAL DETAIL "A"
For concrete overlay
See Note 5

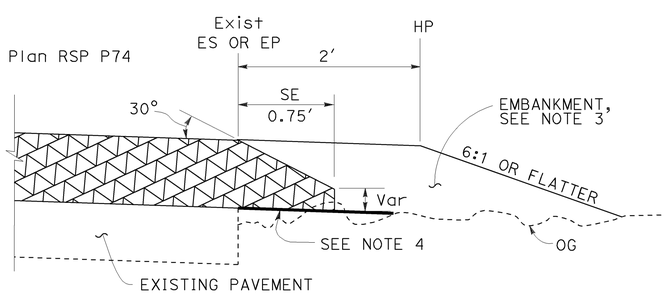

DETAIL "A"
For HMA overlay thickness more than 0.43′ or concrete overlay

NOTES:

1. For limits of safety edge and vertical edge treatments, see Revised Standard Plan RSP P74.
2. Details shown for HMA overlay thickness less than 0.43′. See Detail "A" for HMA overlay thickness more than 0.43′ or concrete overlay.
3. For locations and limits of shoulder backing or embankment see project plans.
4. Grade existing ground to place safety edge. 1′ minimum width
5. Safety edge transverse joint must match overlay transverse joint. End of #6 longitudinal bar must be 2" ±½" clear from transverse joint.
6. Safety edge is not needed in the area of MGS, barrier, right turn lane and acceleration lane. See Revised Standard Plan RSP P74.

STATE OF CALIFORNIA
DEPARTMENT OF TRANSPORTATION

PAVEMENT EDGE TREATMENTS-OVERLAYS

NO SCALE

RSP P75 DATED NOVEMBER 15, 2013 SUPERSEDES RSP P75 DATED JANUARY 20, 2012 THAT SUPPLEMENTS THE STANDARD PLANS BOOK DATED 2010.

REVISED STANDARD PLAN RSP P75

2010 REVISED STANDARD PLAN RSP P75

10-4-13

Dist	COUNTY	ROUTE	POST MILES TOTAL PROJECT	SHEET No.	TOTAL SHEETS
03	But	99	30.1/T37.5	146	163

Gregory A. Balzer
LICENSED LANDSCAPE ARCHITECT

July 19, 2013
PLANS APPROVAL DATE

THE STATE OF CALIFORNIA OR ITS OFFICERS OR AGENTS SHALL NOT BE RESPONSIBLE FOR THE ACCURACY OR COMPLETENESS OF SCANNED COPIES OF THIS PLAN SHEET.

LICENSED LANDSCAPE ARCHITECT — Gregory A. Balzer — 2576 — 02-28-15 Renewal Date — 7-19-13 Date — STATE OF CALIFORNIA

TO ACCOMPANY PLANS DATED 4-27-15

A

AB	AGGREGATE BASE
ABS	ACRYLONITRILE-BUTADIENE-STYRENE
AC	ASPHALT CONCRETE
ACC	ARMOR-CLAD CONDUCTORS
Adj	ADJACENT/ADJUSTABLE
AIC	AUXILIARY IRRIGATION CONTROLLER
Alt	ALTERNATIVE
AMEND	AMENDMENT
ARV	AIR RELEASE VALVE
AUTO	AUTOMATIC
AUX	AUXILIARY
AVB	ATMOSPHERIC VACUUM BREAKER

B

B&B	BALLED AND BURLAPPED
B/B	BRASS/BRONZE
B/B/PL	BRASS/BRONZE/PLASTIC
B/PL	BRASS/PLASTIC
BFM	BONDED FIBER MATRIX
Bit Ctd	BITUMINOUS COATED
BP	BOOSTER PUMP
BPA	BACKFLOW PREVENTER ASSEMBLY
BPE	BACKFLOW PREVENTER ENCLOSURE
BV	BALL VALVE

C

C	CONDUIT
CAP	CORRUGATED ALUMINUM PIPE
CARV	COMBINATION AIR RELEASE VALVE
CB	COUPLING BAND
CCA	CAM COUPLER ASSEMBLY
CEC	CONTROLLER ENCLOSURE CABINET
CHDPE	CORRUGATED HIGH DENSITY POLYETHYLENE
CL	CHAIN LINK
CNC	CONTROL AND NEUTRAL CONDUCTORS
Conc	CONCRETE
CP	COPPER PIPE
CS	COMPOST SOCK
CSP	CORRUGATED STEEL PIPE
CST	CENTER STRIP
CV	CHECK VALVE

D

Dia	DIAMETER
DIP	DUCTILE IRON PIPE
DIT	DRIP IRRIGATION TUBING
DG	DECOMPOSED GRANITE
DN	DIAMETER NOMINAL
DVA	DRIP VALVE ASSEMBLY

E

EC	EROSION CONTROL
ECTC	EROSION CONTROL TECHNOLOGY COUNCIL
Elect	ELECTRIC/ELECTRICAL
Elev	ELEVATION
ELL	ELBOW
ENCL	ENCLOSURE
EP	EDGE OF PAVEMENT
ES	EDGE OF SHOULDER
EST	END STRIP
ESTB	ESTABLISHMENT
ETW	EDGE OF TRAVELED WAY

F

F	FULL CIRCLE
F/P	FULL/PART CIRCLE
FCV	FLOW CONTROL VALVE
FERT	FERTILIZER
FG	FINISHED GRADE
FH	FLEXIBLE HOSE
FIPT	FEMALE IRON PIPE THREAD
FIS	FERTILIZER INJECTOR SYSTEM
FL	FLOW LINE
FR	FIBER ROLL
FS	FLOW SENSOR
FSC	FLOW SENSOR CABLE
FV	FLUSH VALVE

G

Galv	GALVANIZED
GARV	GARDEN VALVE
GARVA	GARDEN VALVE ASSEMBLY
GM	GRAVEL MULCH
GPH	GALLONS PER HOUR
GPM	GALLONS PER MINUTE
GSP	GALVANIZED STEEL PIPE
GV	GATE VALVE

H

H	HALF CIRCLE
HDPE	HIGH DENSITY POLYETHYLENE
HP	HORSEPOWER/HINGE POINT
HPL	HIGH PRESSURE LINE
Hwy	HIGHWAY

I

IC	IRRIGATION CONTROLLER
ICC	IRRIGATION CONTROLLER(S) IN CONTROLLER ENCLOSURE CABINET
ID	INSIDE DIAMETER
IFS	IRRIGATION FILTRATION SYSTEM
IPS	IRON PIPE SIZE
IPT	IRON PIPE THREAD
Irr	IRRIGATION

L

L	LENGTH

M

Max	MAXIMUM
MBGR	METAL BEAM GUARD RAILING
MCV	MANUAL CONTROL VALVE
MIC	MASTER IRRIGATION CONTROLLER
Min	MINIMUM
MIPT	MALE IRON PIPE THREAD
Misc	MISCELLANEOUS
Mtl	MATERIAL
MVP	MAINTENANCE VEHICLE PULLOUT

N

NCN	NO COMMON NAME
NL	NOZZLE LINE
No.	NUMBER
NPT	NATIONAL PIPE THREAD

O

O/C	ON CENTER
OD	OUTSIDE DIAMETER
OL	OVERLAP

P

P	PART CIRCLE
PB	PULL BOX
PCC	PORTLAND CEMENT CONCRETE
PE	POLYETHYLENE
Pkt	PACKET
PL	PLASTIC
PLS	PURE LIVE SEED
PLT	PLANT/PLANTING
PLT ESTB	PLANT ESTABLISHMENT
PM	POST MILE
PR	PRESSURE RATED
PRLV	PRESSURE RELIEF VALVE
PRV	PRESSURE REGULATING VALVE
PVC	POLYVINYL CHLORIDE
Pvmt	PAVEMENT

Q

Q	QUARTER CIRCLE
QCV	QUICK COUPLING VALVE

R

R	RADIUS
RCP	REINFORCED CONCRETE PIPE
RCV	REMOTE CONTROL VALVE
RCVM	REMOTE CONTROL VALVE (MASTER)
RCVMF	REMOTE CONTROL VALVE (MASTER) W/FLOW SENSOR
RCVP	REMOTE CONTROL VALVE W/PRESSURE REGULATOR
RCW	RECYCLED WATER
RECP	ROLLED EROSION CONTROL PRODUCT
REQ	REQUIRED
RICS	REMOTE IRRIGATION CONTROL SYSTEM
R/W	RIGHT OF WAY

S

S	SLIP
SCH	SCHEDULE
SF	STATE-FURNISHED
Shld	SHOULDER
Sq	SQUARE
SST	SIDE STRIP
Sta	STATION
Std	STANDARD
SW	SIDEWALK/SOUND WALL

T

T	THIRD CIRCLE/THREAD
TLS	TRUCK LOADING STANDPIPE
TQ	THREE QUARTER CIRCLE
TRM	TURF REINFORCEMENT MAT
TT	TWO-THIRDS CIRCLE
TWSA	TREE WELL SPRINKLER ASSEMBLY
Typ	TYPICAL

U

UG	UNDERGROUND

W

W	WIDTH
W/	WITH
WM	WATER METER
WS	WYE STRAINER
WSA	WYE STRAINER ASSEMBLY
WSP	WELDED STEEL PIPE
WWM	WELDED WIRE MESH

NOTE:

For additional abbreviations, see Standard Plans A10A and A10B.

STATE OF CALIFORNIA
DEPARTMENT OF TRANSPORTATION

LANDSCAPE AND EROSION CONTROL ABBREVIATIONS

NO SCALE

RSP H1 DATED JULY 19, 2013 SUPERSEDES STANDARD PLAN H1 DATED MAY 20, 2011 - PAGE 218 OF THE STANDARD PLANS BOOK DATED 2010.

REVISED STANDARD PLAN RSP H1

2010 REVISED STANDARD PLAN RSP H1

6-28-13

Dist	COUNTY	ROUTE	POST MILES TOTAL PROJECT	SHEET No.	TOTAL SHEETS
03	But	99	30.1/T37.5	147	163

Gregory A. Balzer
LICENSED LANDSCAPE ARCHITECT

November 15, 2013
PLANS APPROVAL DATE

LICENSED LANDSCAPE ARCHITECT
Gregory A. Balzer 2576
03-28-14
Renewal Date
11-15-13
Date
STATE OF CALIFORNIA

THE STATE OF CALIFORNIA OR ITS OFFICERS OR AGENTS SHALL NOT BE RESPONSIBLE FOR THE ACCURACY OR COMPLETENESS OF SCANNED COPIES OF THIS PLAN SHEET.

TO ACCOMPANY PLANS DATED 4-27-15

2010 REVISED STANDARD PLAN RSP H2

EXISTING	NEW	ITEM DESCRIPTION
		WATER METER (WM)
		BACKFLOW PREVENTER ASSEMBLY (BPA)
		BACKFLOW PREVENTER ENCLOSURE (BPE)
		BOOSTER PUMP (BP)
		TRUCK LOADING STANDPIPE (TLS)
	FS	FLOW SENSOR (FS)
		MASTER IRRIGATION CONTROLLER (MIC)
		AUXILIARY IRRIGATION CONTROLLER (AIC)
		IRRIGATION CONTROLLER (IC) IRRIGATION CONTROLLER (IC) (BATTERY) IRRIGATION CONTROLLER (IC) (SOLAR) IRRIGATION CONTROLLER (IC) (TWO WIRE) IRRIGATION CONTROLLER(S) IN CONTROLLER ENCLOSURE CABINET (ICC)
acc	ACC	ARMOR-CLAD CONDUCTORS (ACC)
cnc	CNC	CONTROL AND NEUTRAL CONDUCTORS (CNC)
		IRRIGATION CONDUIT
		EXTEND IRRIGATION CONDUIT
dip	DIP	DUCTILE IRON PIPE (SUPPLY LINE) (MAIN) (DIP)
		GALVANIZED STEEL PIPE (SUPPLY LINE) (MAIN) (GSP)
		GALVANIZED STEEL PIPE (SUPPLY LINE) (LATERAL) (GSP)
		PLASTIC PIPE (SUPPLY LINE) (MAIN)
		PLASTIC PIPE (SUPPLY LINE) (LATERAL)
cp	CP	COPPER PIPE (SUPPLY LINE)
dit	DIT	DRIP IRRIGATION TUBING
		REMOTE CONTROL VALVE (RCV) REMOTE CONTROL VALVE (MASTER) (RCVM) REMOTE CONTROL VALVE (MASTER) W/FLOW METER (RCVMF)
P	P	REMOTE CONTROL VALVE W/PRESSURE REGULATOR (RCVP)
		EXISTING MANUAL CONTROL VALVE (MCV)
	V	DRIP VALVE ASSEMBLY (DVA)
	Y	WYE STRAINER ASSEMBLY (WSA)

EXISTING	NEW	ITEM DESCRIPTION
		GATE VALVE (GV)
		BALL VALVE (BV)
		QUICK COUPLING VALVE (QCV)
		CAM COUPLER ASSEMBLY (CCA)
		GARDEN VALVE ASSEMBLY (GARVA)
		PRESSURE REGULATING VALVE (PRV)
		PRESSURE RELIEF VALVE (PRLV)
		FLOW CONTROL VALVE (FCV)
		COMBINATION AIR RELEASE VALVE (CARV)
		CHECK VALVE (CV)
		FLUSH VALVE (FV)
		EXISTING NOZZLE LINE W/TURNING UNION
		EXISTING IRRIGATION SYSTEM
		EXISTING IRRIGATION SYSTEM TO BE REMOVED
		CHAIN LINK GATE
		QUICK COUPLING VALVE W/SPRINKLER PROTECTOR
3	3	SPRINKLER W/SPRINKLER PROTECTOR
	C	CONNECT TO EXISTING SYSTEM
		CAP
		CAP EXISTING
	\\\FR\\\	FIBER ROLL
	\\\CS\\\	COMPOST SOCK

- RCV SIZE
- IRRIGATION CONTROLLER
- CONTROLLER STATION
- VALVE IN PARALLEL (IF APPLICABLE)
- GPM
- QUANTITY OF SPRINKLERS (WHEN SHOWN)

* 2½"-A-2b-40-60

VALVE CODE

* VALVE CODES FOR EXISTING VALVES ARE SHOWN IN A DASHED ENCLOSURE.

STATE OF CALIFORNIA
DEPARTMENT OF TRANSPORTATION

LANDSCAPE AND EROSION CONTROL SYMBOLS

NO SCALE

RSP H2 DATED NOVEMBER 15, 2013 SUPERSEDES RSP H2 DATED JULY 19, 2013 AND STANDARD PLAN H2 DATED MAY 20, 2011 - PAGE 219 OF THE STANDARD PLANS BOOK DATED 2010.

REVISED STANDARD PLAN RSP H2

10-9-13

Dist	COUNTY	ROUTE	POST MILES TOTAL PROJECT	SHEET No.	TOTAL SHEETS
03	But	99	30.1/T37.5	148	163

LICENSED LANDSCAPE ARCHITECT

July 19, 2013
PLANS APPROVAL DATE

THE STATE OF CALIFORNIA OR ITS OFFICERS OR AGENTS SHALL NOT BE RESPONSIBLE FOR THE ACCURACY OR COMPLETENESS OF SCANNED COPIES OF THIS PLAN SHEET.

LICENSED LANDSCAPE ARCHITECT — Gregory A. Belzer — 2516 — 02-28-15 Renewal Date — 7-19-13 Date — STATE OF CALIFORNIA

TO ACCOMPANY PLANS DATED 4-27-15

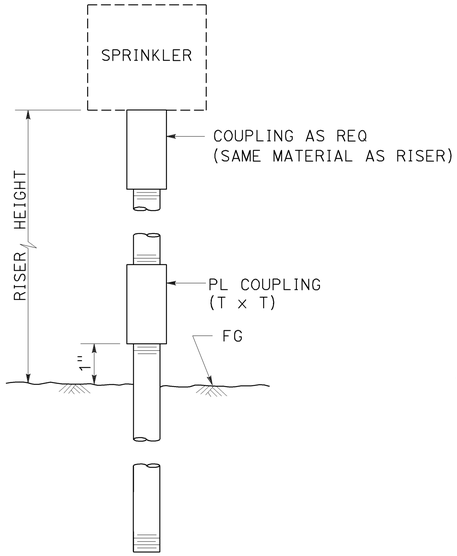

ELEVATION

RISER SPRINKLER ASSEMBLY TYPE I

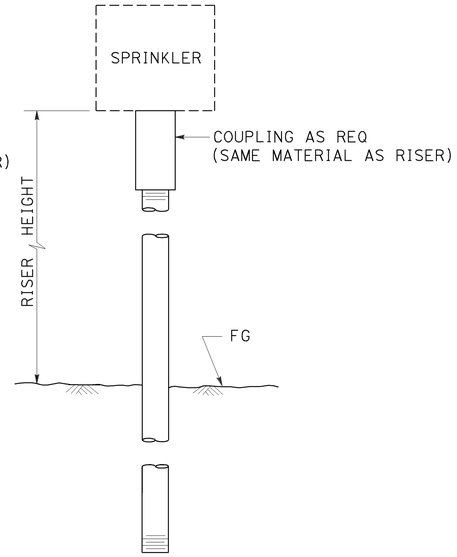

ELEVATION

RISER SPRINKLER ASSEMBLY TYPE II

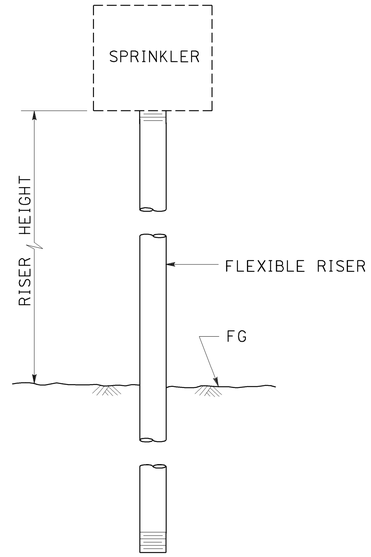

ELEVATION

RISER SPRINKLER ASSEMBLY TYPE III

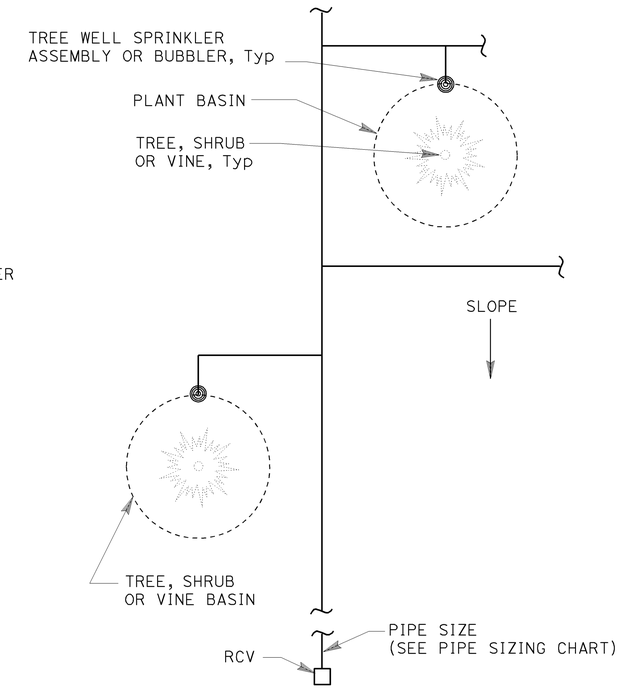

PLAN

NOTES:

1. Install tree well sprinkler assembly on up-hill side of plant when on slope.
2. Install bubbler within basin.

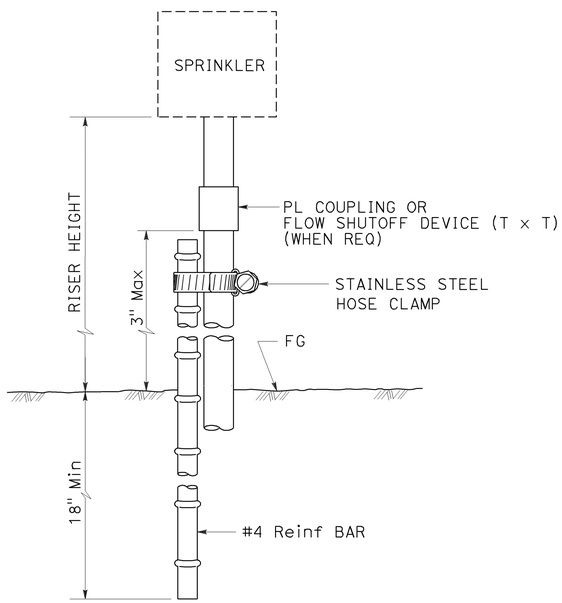

ELEVATION

RISER SPRINKLER ASSEMBLY TYPE IV

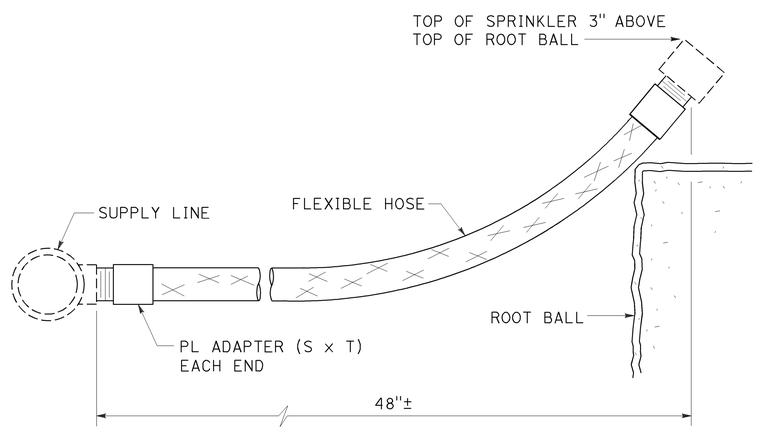

ELEVATION

RISER SPRINKLER ASSEMBLY TYPE V

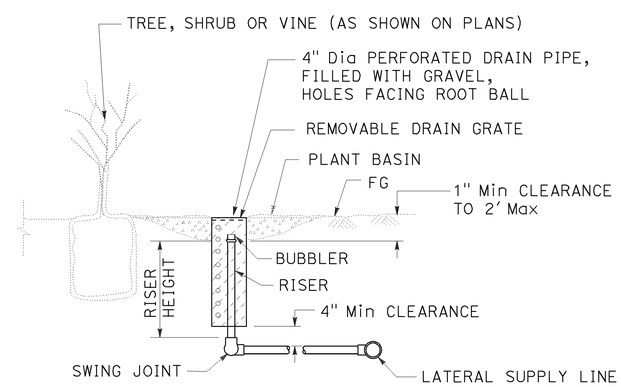

SECTION

TREE WELL SPRINKLER ASSEMBLY

STATE OF CALIFORNIA
DEPARTMENT OF TRANSPORTATION

LANDSCAPE DETAILS

NO SCALE

RSP H5 DATED JULY 19, 2013 SUPERSEDES STANDARD PLAN H5
DATED MAY 20, 2011 - PAGE 222 OF THE STANDARD PLANS BOOK DATED 2010.

REVISED STANDARD PLAN RSP H5

2010 REVISED STANDARD PLAN RSP H5

6-28-13

Dist	COUNTY	ROUTE	POST MILES TOTAL PROJECT	SHEET No.	TOTAL SHEETS
03	But	99	30.1/T37.5	149	163

Gregory A. Balzer
LICENSED LANDSCAPE ARCHITECT

July 19, 2013
PLANS APPROVAL DATE

LICENSED LANDSCAPE ARCHITECT
Gregory A. Balzer 2576
Expiration Date 2-28-15
Renewal Date 7-19-13
Date
STATE OF CALIFORNIA

THE STATE OF CALIFORNIA OR ITS OFFICERS OR AGENTS SHALL NOT BE RESPONSIBLE FOR THE ACCURACY OR COMPLETENESS OF SCANNED COPIES OF THIS PLAN SHEET.

TO ACCOMPANY PLANS DATED 4-27-15

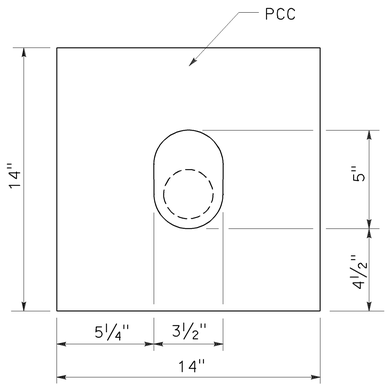

PLAN

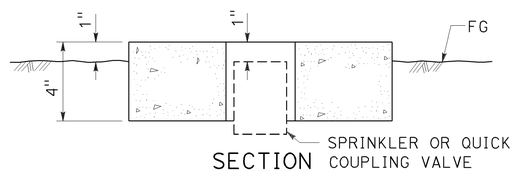

SECTION

SPRINKLER PROTECTOR TYPE I

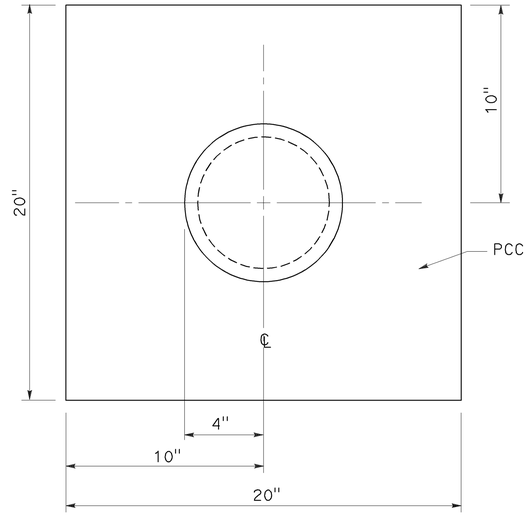

PLAN

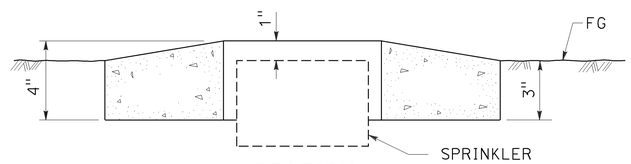

SECTION

SPRINKLER PROTECTOR TYPE II

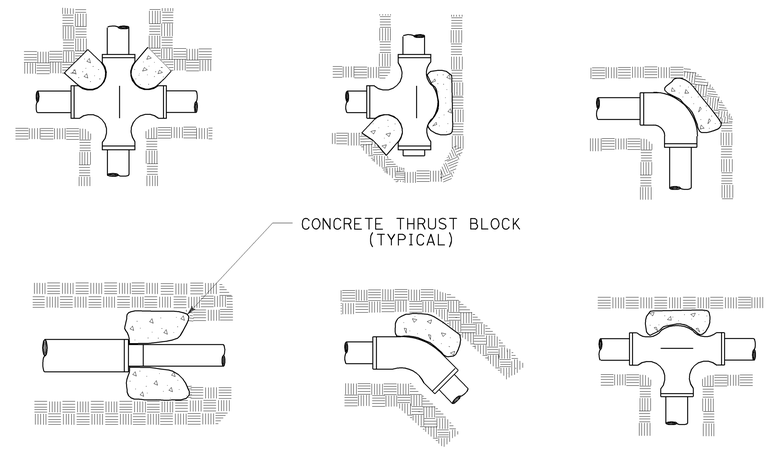

TYPICAL THRUST BLOCKS

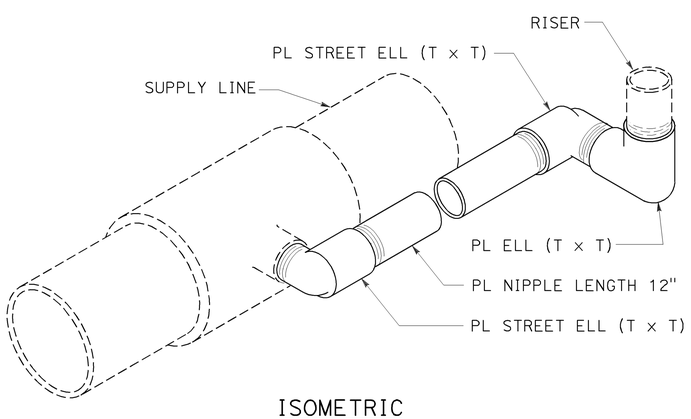

ISOMETRIC

POP-UP SPRINKLER ASSEMBLY TYPE I

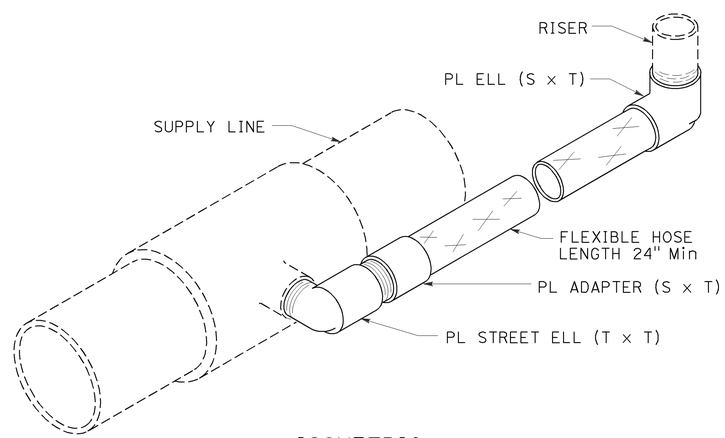

ISOMETRIC

POP-UP SPRINKLER ASSEMBLY TYPE II

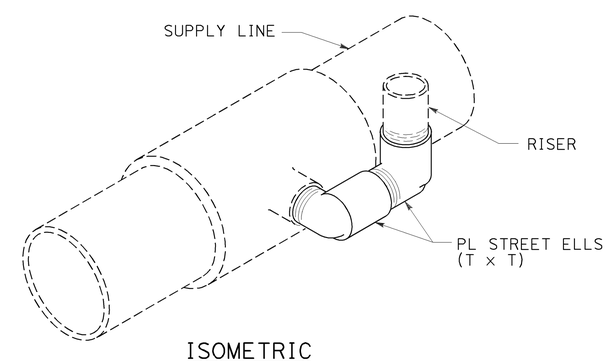

ISOMETRIC

POP-UP SPRINKLER ASSEMBLY TYPE III

STATE OF CALIFORNIA
DEPARTMENT OF TRANSPORTATION

LANDSCAPE DETAILS

NO SCALE

RSP H6 DATED JULY 19, 2013 SUPERSEDES STANDARD PLAN H6
DATED MAY 20, 2011 - PAGE 223 OF THE STANDARD PLANS BOOK DATED 2010.

REVISED STANDARD PLAN RSP H6

2010 REVISED STANDARD PLAN RSP H6

6-28-13

Dist	COUNTY	ROUTE	POST MILES TOTAL PROJECT	SHEET No.	TOTAL SHEETS
03	But	99	30.1/T37.5	150	163

Gregory A. Balzer
LICENSED LANDSCAPE ARCHITECT

July 19, 2013
PLANS APPROVAL DATE

THE STATE OF CALIFORNIA OR ITS OFFICERS OR AGENTS SHALL NOT BE RESPONSIBLE FOR THE ACCURACY OR COMPLETENESS OF SCANNED COPIES OF THIS PLAN SHEET.

LICENSED LANDSCAPE ARCHITECT — Gregory A. Balzer — 2016 — 2-28-15 Renewal Date — 7-19-13 Date — STATE OF CALIFORNIA

TO ACCOMPANY PLANS DATED 4-27-15

2010 REVISED STANDARD PLAN RSP H7

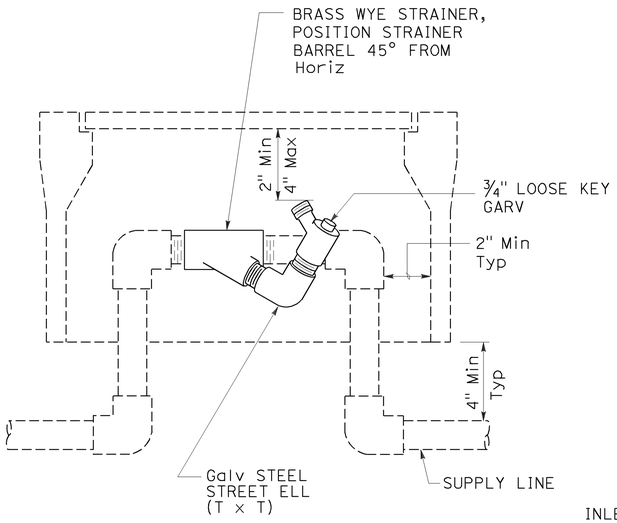

ELEVATION
WYE STRAINER ASSEMBLY

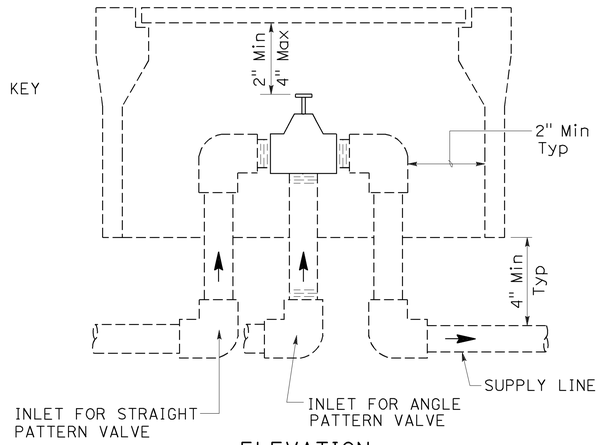

ELEVATION
VALVE

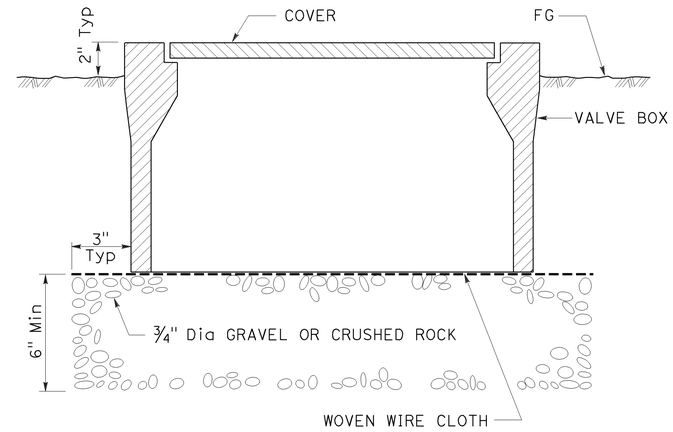

SECTION
VALVE BOX

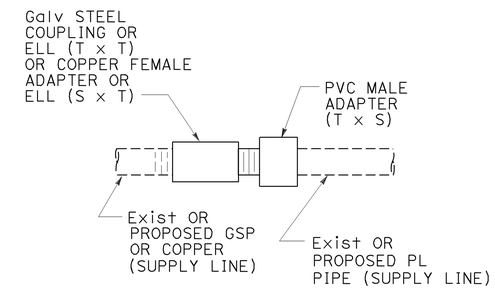

GALVANIZED OR COPPER PIPE CONNECTION TO PLASTIC PIPE

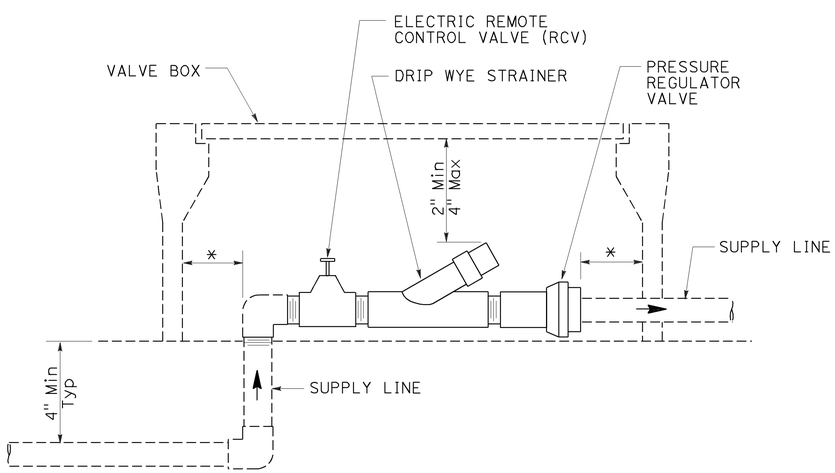

* 2" CLEARANCE ON ALL SIDES

ELEVATION
DRIP VALVE ASSEMBLY

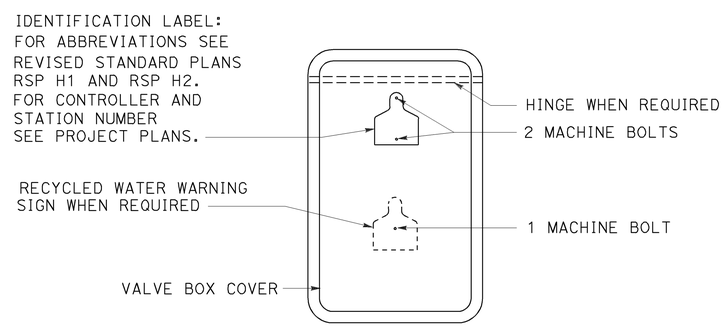

PLAN

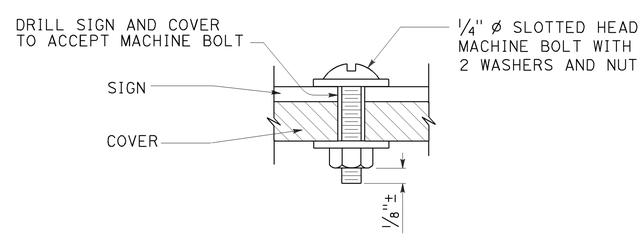

SECTION
VALVE BOX IDENTIFICATION

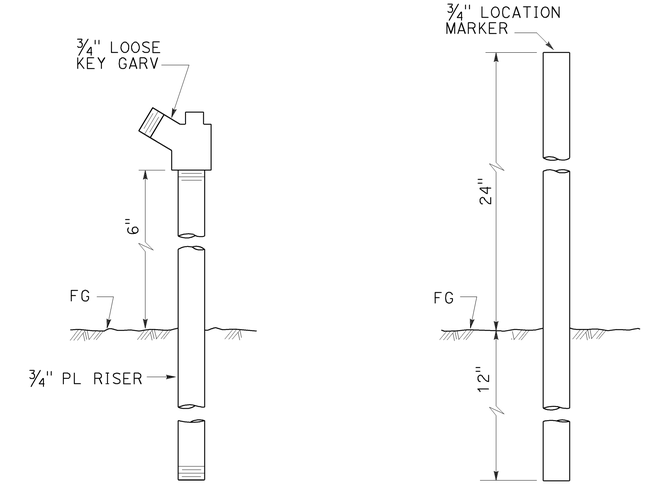

ELEVATION
GARDEN VALVE ASSEMBLY

ELEVATION
LOCATION MARKER

GARDEN VALVE ASSEMBLY

STATE OF CALIFORNIA
DEPARTMENT OF TRANSPORTATION

LANDSCAPE DETAILS

NO SCALE

RSP H7 DATED JULY 19, 2013 SUPERSEDES STANDARD PLAN H7
DATED MAY 20, 2011 - PAGE 224 OF THE STANDARD PLANS BOOK DATED 2010.

REVISED STANDARD PLAN RSP H7

6-20-13

Dist	COUNTY	ROUTE	POST MILES TOTAL PROJECT	SHEET No.	TOTAL SHEETS
03	But	99	30.1/T37.5	151	163

Gregory A. Balzer
LICENSED LANDSCAPE ARCHITECT

July 19, 2013
PLANS APPROVAL DATE

LICENSED LANDSCAPE ARCHITECT
Gregory A. Balzer 2576
STATE OF CALIFORNIA
2-28-15
Renewal Date
7-19-13
Date

THE STATE OF CALIFORNIA OR ITS OFFICERS OR AGENTS SHALL NOT BE RESPONSIBLE FOR THE ACCURACY OR COMPLETENESS OF SCANNED COPIES OF THIS PLAN SHEET.

TO ACCOMPANY PLANS DATED 4-27-15

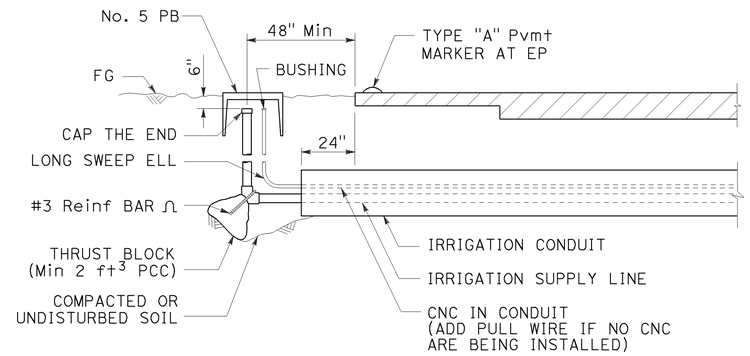

SECTION

IRRIGATION CONDUIT

UNDER TRAVELED WAY

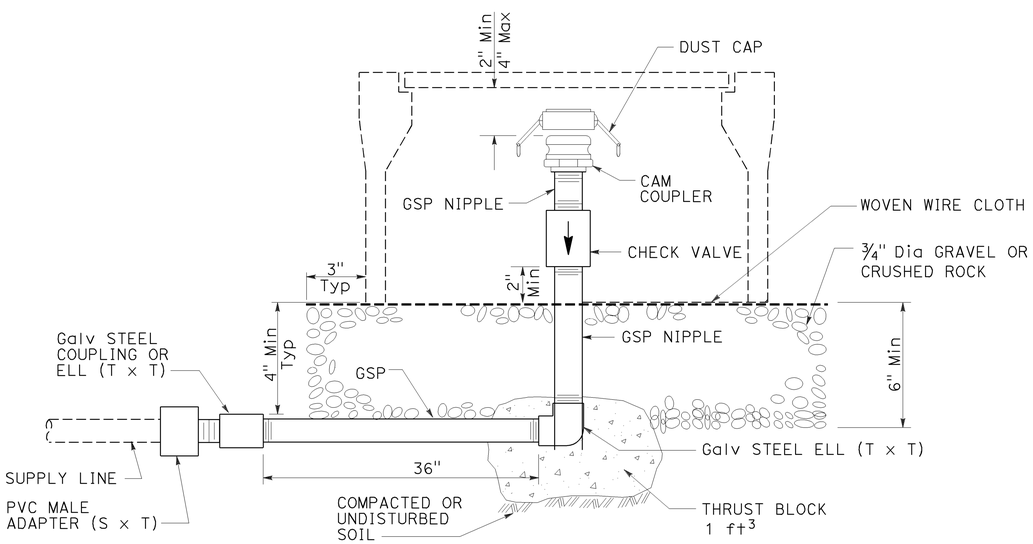

ELEVATION

CAM COUPLER ASSEMBLY

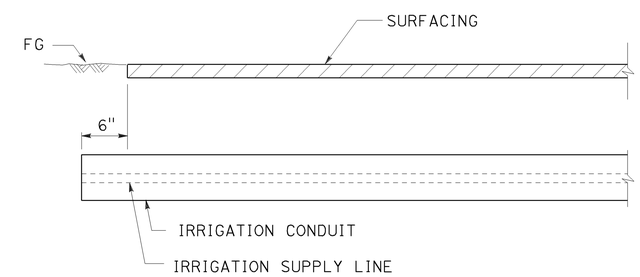

SECTION

IRRIGATION CONDUIT

UNDER SIDEWALKS, DRIVEWAYS AND PATHS

STATE OF CALIFORNIA
DEPARTMENT OF TRANSPORTATION

LANDSCAPE DETAILS

NO SCALE

RSP H9 DATED JULY 19, 2013 SUPERSEDES STANDARD PLAN H9
DATED MAY 20, 2011 - PAGE 226 OF THE STANDARD PLANS BOOK DATED 2010.

REVISED STANDARD PLAN RSP H9

2010 REVISED STANDARD PLAN RSP H9

6-28-13

Dist	COUNTY	ROUTE	POST MILES TOTAL PROJECT	SHEET No.	TOTAL SHEETS
03	But	99	30.1/T37.5	152	163

Gregory A. Balzer
LICENSED LANDSCAPE ARCHITECT

July 19, 2013
PLANS APPROVAL DATE

LICENSED LANDSCAPE ARCHITECT
Gregory A. Balzer 2576
Expires 2-28-15
Renewal Date
7-19-13
Date
STATE OF CALIFORNIA

THE STATE OF CALIFORNIA OR ITS OFFICERS OR AGENTS SHALL NOT BE RESPONSIBLE FOR THE ACCURACY OR COMPLETENESS OF SCANNED COPIES OF THIS PLAN SHEET.

TO ACCOMPANY PLANS DATED 4-27-15

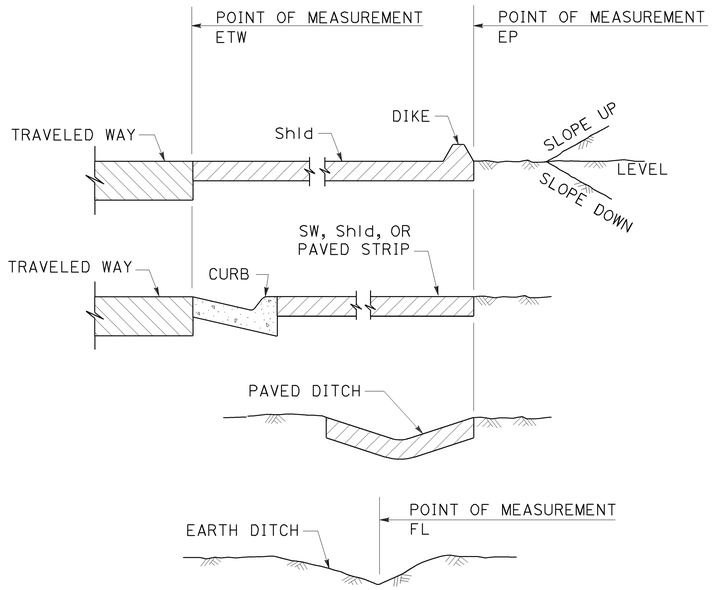

SECTION
POINTS OF MEASUREMENT

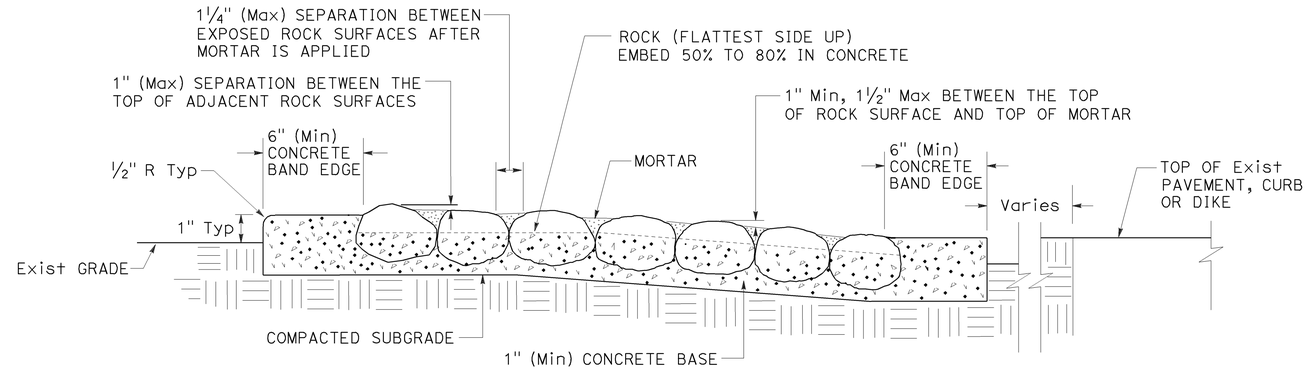

SECTION
ROCK BLANKET

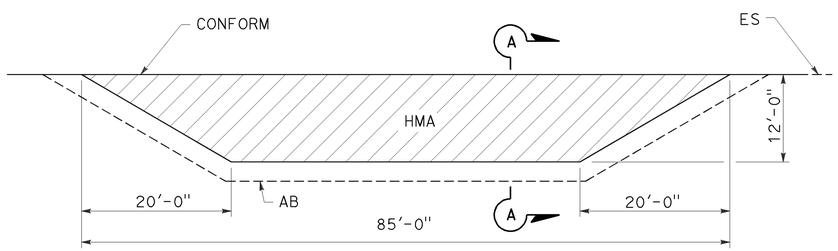

PLAN

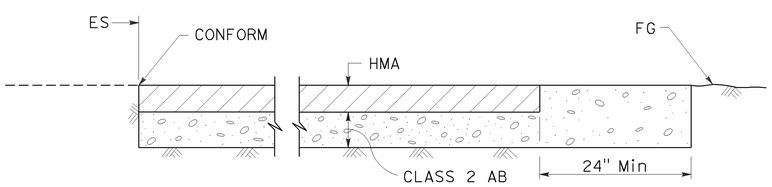

SECTION A-A
MAINTENANCE VEHICLE PULLOUT

STATE OF CALIFORNIA
DEPARTMENT OF TRANSPORTATION

LANDSCAPE DETAILS

NO SCALE

RSP H9A DATED JULY 19, 2013 SUPPLEMENTS THE STANDARD PLANS BOOK DATED 2010.

REVISED STANDARD PLAN RSP H9A

2010 REVISED STANDARD PLAN RSP H9A

6-21-13

Dist	COUNTY	ROUTE	POST MILES TOTAL PROJECT	SHEET No.	TOTAL SHEETS
03	But	99	30.1/T37.5	153	163

REGISTERED CIVIL ENGINEER

July 19, 2013
PLANS APPROVAL DATE

REGISTERED PROFESSIONAL ENGINEER Gurinderpal Bhullar No. C48815 Exp. 9-30-14 CIVIL STATE OF CALIFORNIA

THE STATE OF CALIFORNIA OR ITS OFFICERS OR AGENTS SHALL NOT BE RESPONSIBLE FOR THE ACCURACY OR COMPLETENESS OF SCANNED COPIES OF THIS PLAN SHEET.

TO ACCOMPANY PLANS DATED 4-27-15

2010 REVISED STANDARD PLAN RSP T9

TABLE 1

TAPER LENGTH CRITERIA AND CHANNELIZING DEVICE SPACING

SPEED (S)	MINIMUM TAPER LENGTH * FOR WIDTH OF OFFSET 12 FEET (W)				MAXIMUM CHANNELIZING DEVICE SPACING		
					X	Y	Z **
	TANGENT 2L	MERGING L	SHIFTING L/2	SHOULDER L/3	TAPER	TANGENT	CONFLICT
mph	ft	ft	ft	ft	ft	ft	ft
20	160	80	40	27	20	40	10
25	250	125	63	42	25	50	12
30	360	180	90	60	30	60	15
35	490	245	123	82	35	70	17
40	640	320	160	107	40	80	20
45	1080	540	270	180	45	90	22
50	1200	600	300	200	50	100	25
55	1320	660	330	220	55	110	27
60	1440	720	360	240	60	120	30
65	1560	780	390	260	65	130	32
70	1680	840	420	280	70	140	35

* - For other offsets, use the following merging taper length formula for L:
For speed of 40 mph or less, $L = WS^2/60$
For speed of 45 mph or more, $L = WS$

Where: L = Taper length in feet
W = Width of offset in feet
S = Posted speed limit, off-peak 85th-percentile speed prior to work starting, or the anticipated operating speed in mph

** - Use for taper and tangent sections where there are no pavement markings or where there is a conflict between existing pavement markings and channelizers (CA).

TABLE 2

LONGITUDINAL BUFFER SPACE AND FLAGGER STATION SPACING

SPEED *	Min D **	DOWNGRADE Min D ***		
		-3%	-6%	-9%
mph	ft	ft	ft	ft
20	115	116	120	126
25	155	158	165	173
30	200	205	215	227
35	250	257	271	287
40	305	315	333	354
45	360	378	400	427
50	425	446	474	507
55	495	520	553	593
60	570	598	638	686
65	645	682	728	785
70	730	771	825	891

* - Speed is posted speed limit, off-peak 85th-percentile speed prior to work starting, or the anticipated operating speed in mph

** - Longitudinal buffer space or flagger station spacing

*** - Use on sustained downgrade steeper than -3 percent and longer than 1 mile.

TABLE 3

ADVANCE WARNING SIGN SPACING

ROAD TYPE	DISTANCE BETWEEN SIGNS *		
	A	B	C
	ft	ft	ft
URBAN - 25 mph OR LESS	100	100	100
URBAN - MORE THAN 25 mph TO 40 mph	250	250	250
URBAN - MORE THAN 40 mph	350	350	350
RURAL	500	500	500
EXPRESSWAY / FREEWAY	1000	1500	2640

* - The distances are approximate, are intended for guidance purposes only, and should be applied with engineering judgment. These distances should be adjusted by the Engineer for field conditions, if necessary, by increasing or decreasing the recommmended distances.

STATE OF CALIFORNIA
DEPARTMENT OF TRANSPORTATION

TRAFFIC CONTROL SYSTEM TABLES FOR LANE AND RAMP CLOSURES

NO SCALE

RSP T9 DATED JULY 19, 2013 SUPERSEDES RSP T9 DATED APRIL 19, 2013 THAT SUPPLEMENTS THE STANDARD PLANS BOOK DATED 2010.

REVISED STANDARD PLAN RSP T9

4-30-13

TO ACCOMPANY PLANS DATED 4-27-15

Dist	COUNTY	ROUTE	POST MILES TOTAL PROJECT	SHEET No.	TOTAL SHEETS
03	But	99	30.1/T37.5	154	163

REGISTERED CIVIL ENGINEER

April 19, 2013
PLANS APPROVAL DATE

REGISTERED PROFESSIONAL ENGINEER Gurinderpal Bhullar No. C48815 Exp. 9-30-14 CIVIL STATE OF CALIFORNIA

THE STATE OF CALIFORNIA OR ITS OFFICERS OR AGENTS SHALL NOT BE RESPONSIBLE FOR THE ACCURACY OR COMPLETENESS OF SCANNED COPIES OF THIS PLAN SHEET.

NOTES:

See Revised Standard Plan RSP T9 for tables.

Use cone spacing X for taper segment, Y for tangent segment or Z for conflict situations, as approriate, per Table 1, unless X, Y, or Z cone spacing is shown on this sheet.

Unless otherwise specified in the special provisions, all temporary warning signs shall have black legend on fluorescent orange background.

California codes are designated by (CA). Otherwise, Federal (MUTCD) codes are shown.

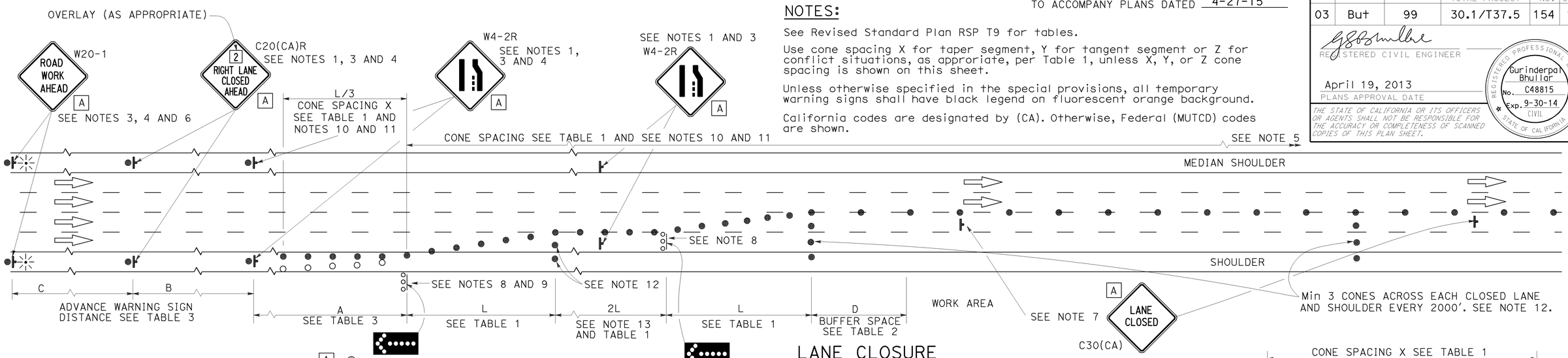

LANE CLOSURE

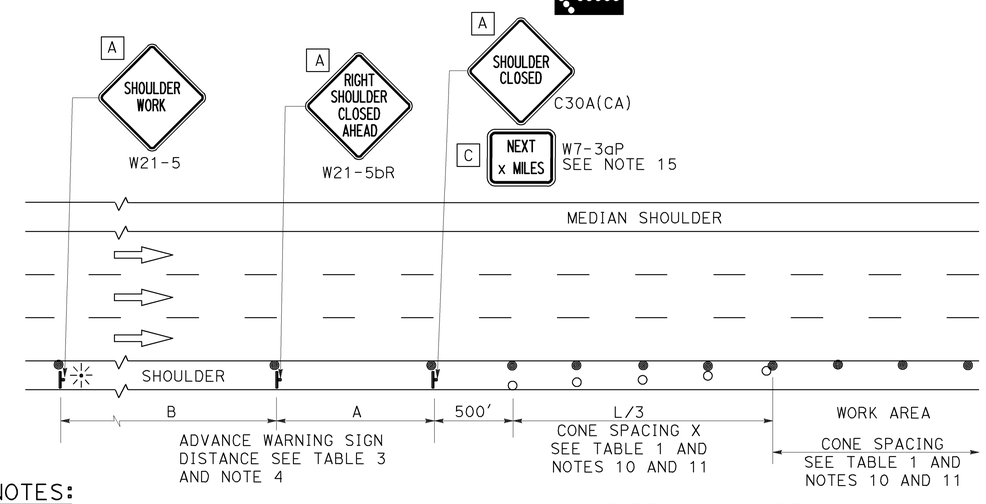

SHOULDER CLOSURE

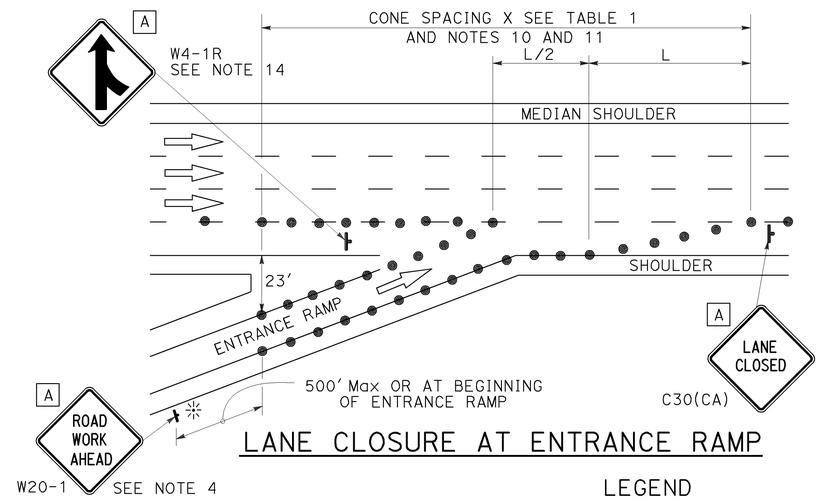

LANE CLOSURE AT ENTRANCE RAMP

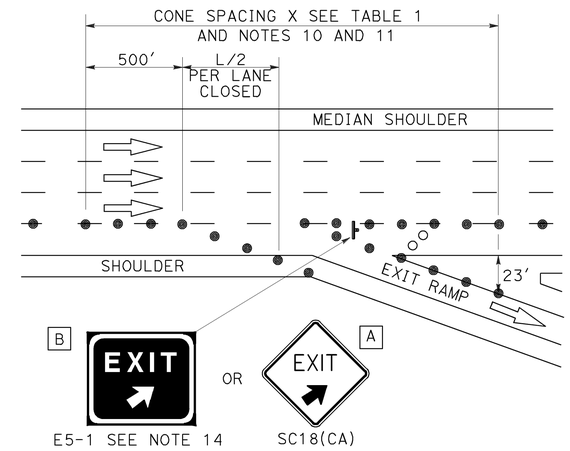

LANE CLOSURE AT EXIT RAMP

NOTES:

1. Median lane closures shall conform to the details as shown except that C20(CA)L and W4-2L signs shall be used.
2. At least one person shall be assigned to provide full time maintenance of traffic control devices for lane closures.
3. Duplicate sign installations are not required:
   a) On opposite shoulder if at least one-half of the available lanes remain open to traffic.
   b) In the median if the width of the median shoulder is less than 8' and the outside lanes are to be closed.
4. Each advance warning sign on each side of the roadway shall be equipped with at least two flags for daytime closure. Each flag shall be at least 16" x 16" in size and shall be orange or fluorescent red-orange in color. Flashing beacons shall be placed at the locations indicated for lane closure during hours of darkness.
5. A G20-2 "END ROAD WORK" sign, with minimum size of 48" x 24" as appropriate, shall be placed at the end of the lane closure unless the end of work area is obvious or ends within a larger project's limits.
6. If the W20-1 sign would follow within 2000' of a stationary W20-1 or G20-1 "ROAD WORK NEXT _____ MILES", use a C20(CA) sign for the first advance warning sign.
7. Place a C30(CA) sign every 2000' throughout length of lane closure.
8. One flashing arrow sign for each lane closed. The flashing arrow signs shall be Type I.
9. A minimum 1500' of sight distance shall be provided where possible for vehicles approaching the first flashing arrow sign. Lane closures shall not begin at top of crest vertical curve or on a horizontal curve.
10. All cones used for lane closures during the hours of darkness shall be fitted with retroreflective bands (or sleeves) as specified in the specifications.
11. Portable delineators, placed at one-half the spacing indicated for traffic cones may be used instead of cones for daytime closures only.
12. Unless otherwise specified in the special provisions, a minimum of 3 cones shall be placed transversely across each closed lane and shoulder at each location where a taper across a traffic lane ends and every 2000' as shown on the "Lane Closure" detail. Two Type II barricades may be used instead of the 3 cones. The transverse alignment of the cones or barricades on the closed shoulder may be shifted from the transverse alignment to provide access to the work.
13. Unless otherwise specified in the special provisions, the 2L tangent shown along lane lines shall be used between the L tapers required for each closed traffic lane.
14. Unless otherwise specified in the special provisions, the E5-1 or SC18(CA) and W4-1 signs shall be used as shown.
15. A W7-3aP "NEXT____ MILES" plaque must be used if theshoulder closure extends beyond the distance that can be perceived by road users.

LEGEND

- TRAFFIC CONE
- TRAFFIC CONE (OPTIONAL TAPER)
- TEMPORARY TRAFFIC CONTROL SIGN
- FLASHING ARROW SIGN (FAS)
- FAS SUPPORT OR TRAILER
- PORTABLE FLASHING BEACON

SIGN PANEL SIZE (Min)

A	48" x 48"
B	72" x 60"
C	36" x 30"

STATE OF CALIFORNIA
DEPARTMENT OF TRANSPORTATION

TRAFFIC CONTROL SYSTEM FOR LANE CLOSURE ON FREEWAYS AND EXPRESSWAYS

NO SCALE

RSP T10 DATED APRIL 19, 2013 SUPERSEDES STANDARD PLAN T10 DATED MAY 20, 2011 - PAGE 237 OF THE STANDARD PLANS BOOK DATED 2010.

REVISED STANDARD PLAN RSP T10

2010 REVISED STANDARD PLAN RSP T10

12-18-12

Dist	COUNTY	ROUTE	POST MILES TOTAL PROJECT	SHEET No.	TOTAL SHEETS
03	But	99	30.1/T37.5	155	163

REGISTERED CIVIL ENGINEER

April 19, 2013
PLANS APPROVAL DATE

REGISTERED PROFESSIONAL ENGINEER Gurinderpal Bhullar No. C48815 Exp. 9-30-14 CIVIL STATE OF CALIFORNIA

THE STATE OF CALIFORNIA OR ITS OFFICERS OR AGENTS SHALL NOT BE RESPONSIBLE FOR THE ACCURACY OR COMPLETENESS OF SCANNED COPIES OF THIS PLAN SHEET.

TO ACCOMPANY PLANS DATED 4-27-15

TYPICAL RAMP CLOSURES

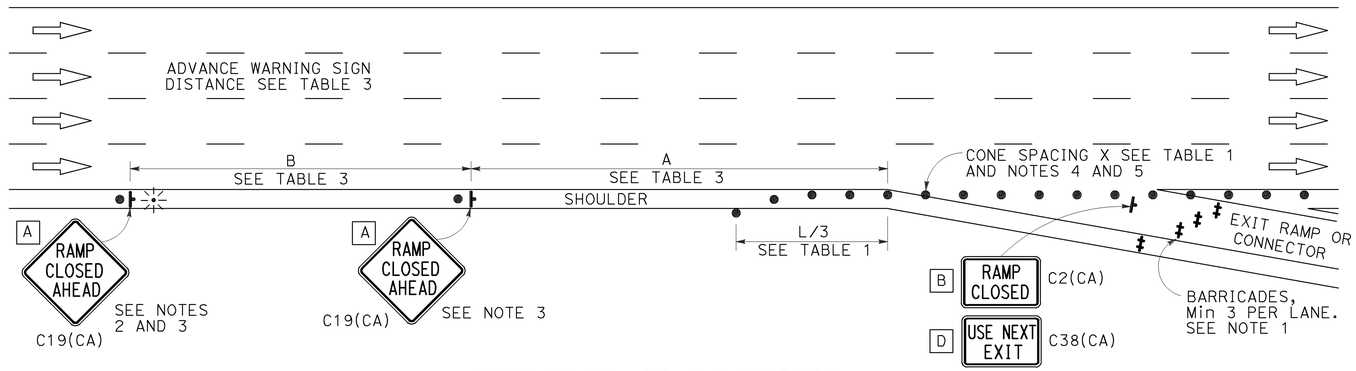

EXIT RAMP OR CONNECTOR

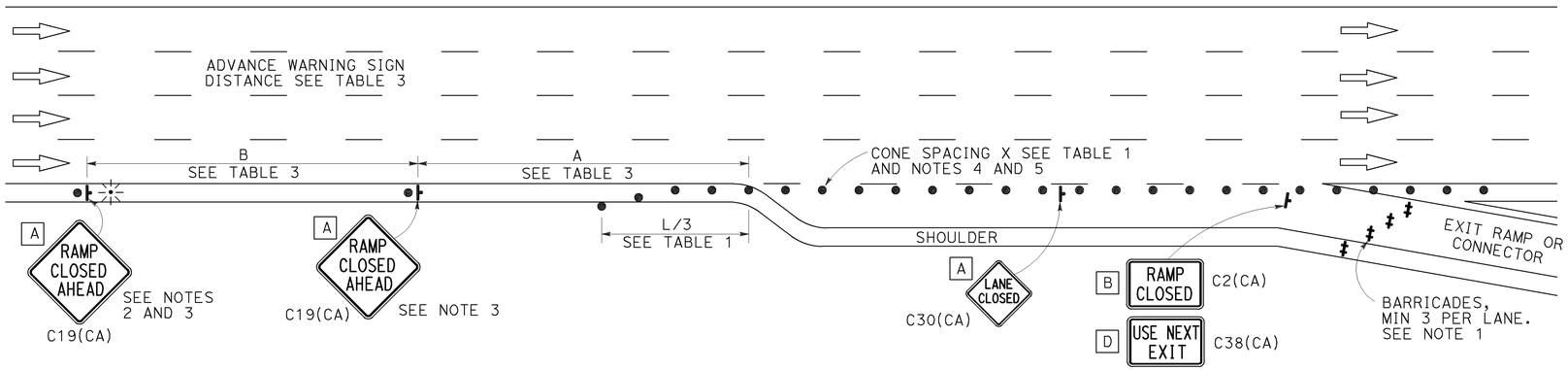

EXIT RAMP OR CONNECTOR WITH ADDITIONAL LANE

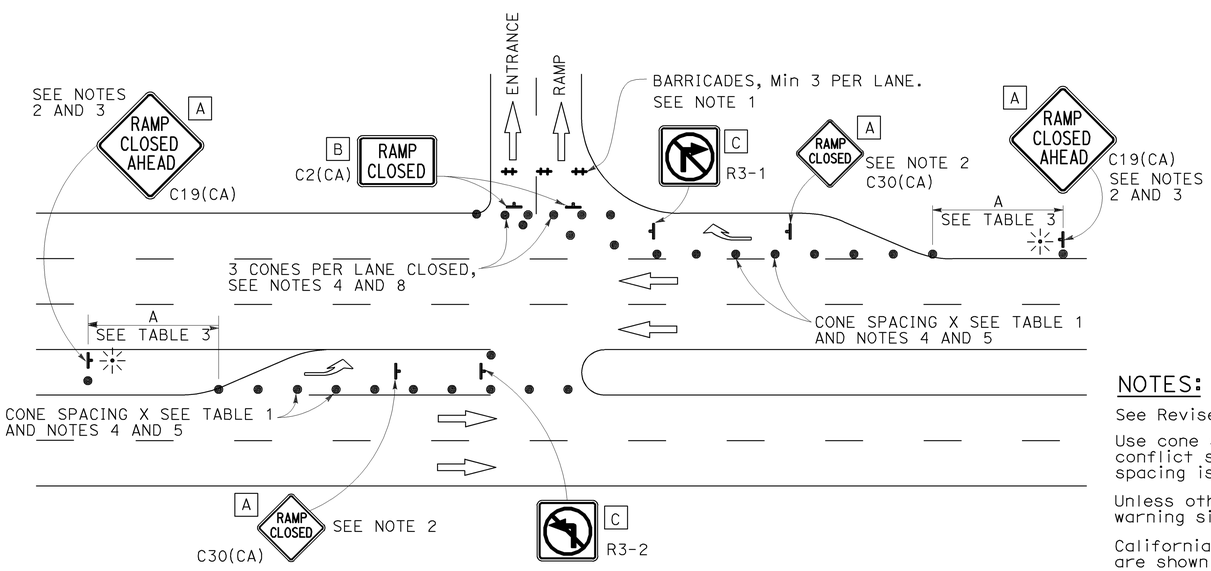

ENTRANCE RAMP WITH TURNING POCKETS

SIGN PANEL SIZE (Min)

- A 48" × 48"
- B 48" × 30"
- C 36" × 36"
- D 48" × 36"

LEGEND

- TRAFFIC CONE
- TEMPORARY TRAFFIC CONTROL SIGN
- BARRICADES
- PORTABLE FLASHING BEACON

NOTES:

1. Barricades shall be Type I, II, or III for closures lasting one week or less and Type III for closures lasting longer than one week.
2. In addition to placing the C19(CA) "RAMP CLOSED AHEAD" and C30(CA) "RAMP CLOSED" signs, black on orange overlay plates with the word "CLOSED" may be mounted, as directed by the Engineer, on all guide signs that refer to the closed ramp. The letter size on the overlay shall be the same as the guide sign.
3. Each advance C19(CA) "RAMP CLOSED AHEAD" sign shall be equipped with at least two flags for daytime closure. Each flag shall be at least 16" × 16" in size and shall be orange or fluorescent red-orange in color. A flashing beacon shall be placed on top of the first C19(CA) sign during hours of darkness.
4. All cones used for ramp closures during the hours of darkness shall be fitted with retroreflective bands (or sleeves) as specified in the specifications.
5. Portable delineators, placed at one-half the spacing indicated for traffic cones, may be used instead of cones for daytime ramp closures only.
6. At least one person shall be assigned to provide full time maintenance of traffic control devices, unless otherwise directed by the Engineer.
7. The existing "EXIT" signs shall be covered during ramp closures.
8. A minimum of 3 cones shall be placed transversely across each closed lane and shoulder.

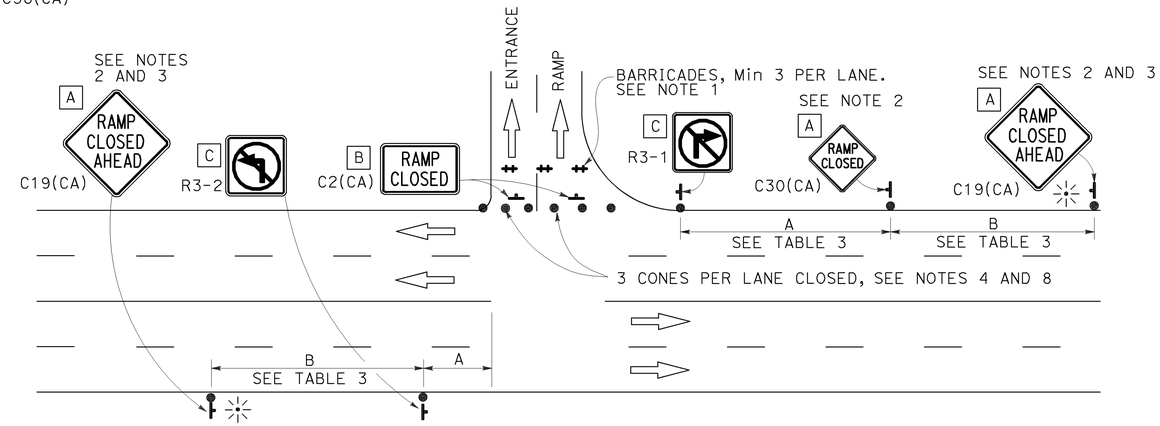

ENTRANCE RAMP WITHOUT TURNING POCKETS

NOTES:

See Revised Standard Plan RSP T9 for tables.

Use cone spacing X for taper segment, Y for tangent segment or Z for conflict situations, as approriate, per Table 1, unless X, Y, or Z cone spacing is shown on this sheet.

Unless otherwise specified in the special provisions, all temporary warning signs shall have black legend on fluorescent orange background.

California codes are designated by (CA). Otherwise, Federal (MUTCD) codes are shown.

STATE OF CALIFORNIA
DEPARTMENT OF TRANSPORTATION

TRAFFIC CONTROL SYSTEM FOR RAMP CLOSURE

NO SCALE

RSP T14 DATED APRIL 19, 2013 SUPERSEDES STANDARD PLAN T14
DATED MAY 20, 2011 - PAGE 242 OF THE STANDARD PLANS BOOK DATED 2010.

REVISED STANDARD PLAN RSP T14

2010 REVISED STANDARD PLAN RSP T14

12-18-12

Dist	COUNTY	ROUTE	POST MILES TOTAL PROJECT	SHEET No.	TOTAL SHEETS
03	But	99	30.1/T37.5	156	163

REGISTERED CIVIL ENGINEER

April 19, 2013
PLANS APPROVAL DATE

REGISTERED PROFESSIONAL ENGINEER Gurinderpal Bhullar No. C48815 Exp. 9-30-14 CIVIL STATE OF CALIFORNIA

THE STATE OF CALIFORNIA OR ITS OFFICERS OR AGENTS SHALL NOT BE RESPONSIBLE FOR THE ACCURACY OR COMPLETENESS OF SCANNED COPIES OF THIS PLAN SHEET.

TO ACCOMPANY PLANS DATED 4-27-15

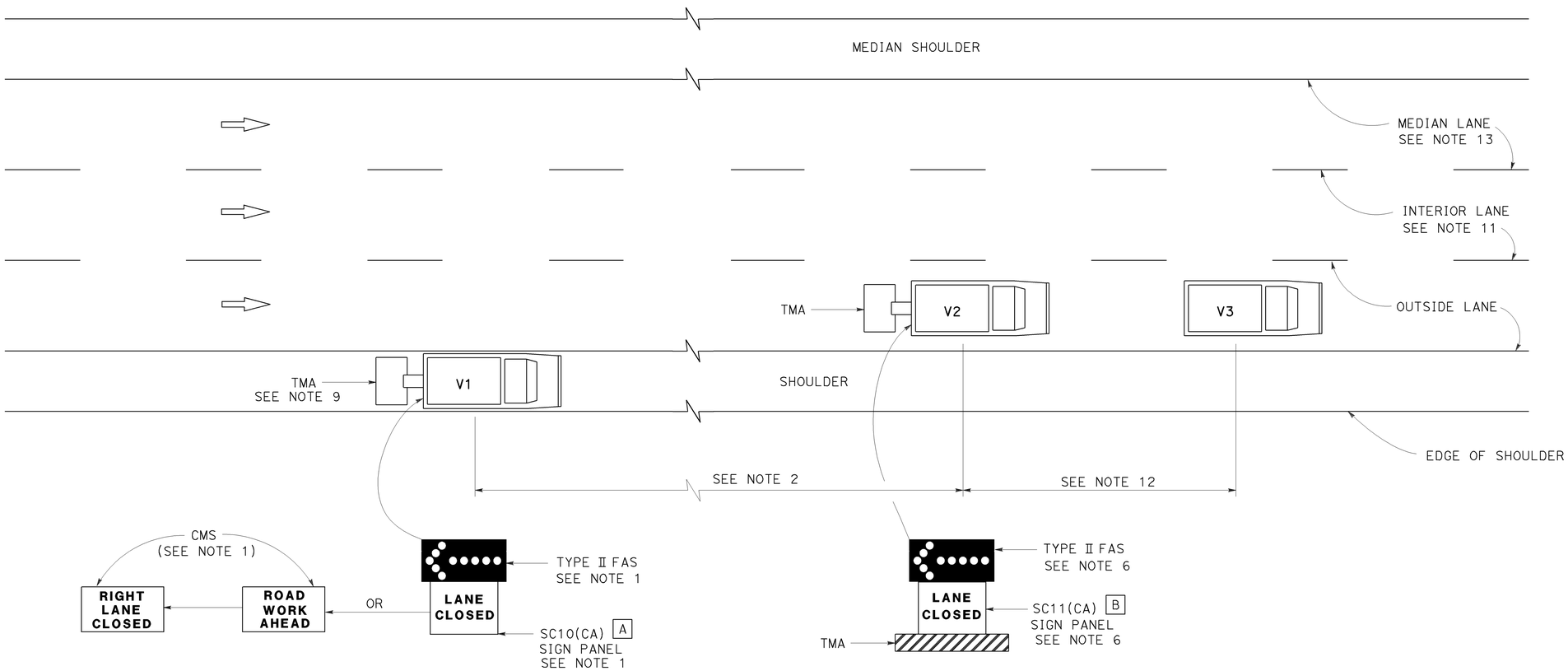

MOVING LANE CLOSURE ON MEDIAN LANE OR OUTSIDE LANE OF MULTILANE HIGHWAYS

SIGN PANEL SIZE (Min)

A 66" x 36"

B 54" x 42"

LEGEND

V1	SIGN VEHICLE
V2	SHADOW VEHICLE
V3	WORK/APPLICATION VEHICLE
	FLASHING ARROW SIGN (FAS)
CMS	CHANGEABLE MESSAGE SIGN
TMA	TRUCK-MOUNTED ATTENUATOR

NOTES:

1. Either a changeable message sign or a SC10(CA) sign panel and a Type II flashing arrow sign shall be mounted on the rear of sign vehicle V1. The changeable message sign shall be sequenced to show the "ROAD WORK AHEAD" message first, followed by the "RIGHT LANE CLOSED" message. For median lane closure, the flashing arrow symbol shall be reversed with the arrowhead on the right and the changeable message sign shall show "LEFT LANE CLOSED".
2. If traffic queues develop, sign vehicle V1 should be positioned upstream from the end of queue. Sign vehicle V1 shall be positioned where highly visible when shoulders are not available.
3. A minimum sight distance of 1500′ should be provided in advance of sign vehicle V1.
4. Sign vehicle V1 should remain at the beginning of horizontal or vertical curves until the other vehicles (V2 and V3) are far enough beyond the curve to resume the minimum sight distance of 1500′.
5. Vehicle-mounted sign panels shall have Type III or above retroreflective sheeting, black on white, or black on fluorescent orange, with 6" minimum series D letters per Caltrans sign specifications.
6. Shadow vehicle V2 shall be equipped with a truck-mounted attenuator. The sign panel shown and a Type II flashing arrow sign shall be mounted on the rear of shadow vehicle V2. For median lane closure the flashing arrow sign symbol shall be displayed with the arrowhead on the right.
7. All vehicles used for lane closures shall be equipped with two-way radios, and the vehicle operators shall maintain communication during the work or application operation.
8. All vehicles shall be equipped with flashing or rotating amber lights.
9. If sign vehicle V1 encroaches into the traffic lane due to insufficient shoulder width, sign vehicle V1 shall be equipped with a truck-mounted attenuator. Sign vehicle V1 shall stay as close to the edge of shoulder as practicable.
10. Where workers would be on foot in the work area, a stationary type lane closure (Revised Standard Plan T10, T11, etc., as applicable) shall be used instead of this plan.
11. For moving lane closure on interior lane of multilane highways, use Revised Standard Plan T16.
12. The spacing between work vehicle(s) and the shadow vehicles, and between each shadow vehicle should be minimized to deter road users from driving in between.
13. When the work/application vehicle V3 occupies the median lane, sign vehicle V1 should drive in the median shoulder and indicate left lane closed ahead.

STATE OF CALIFORNIA
DEPARTMENT OF TRANSPORTATION

TRAFFIC CONTROL SYSTEM FOR MOVING LANE CLOSURE ON MULTILANE HIGHWAYS

NO SCALE

RSP T15 DATED APRIL 19, 2013 SUPERSEDES STANDARD PLAN T15
DATED MAY 20, 2011 - PAGE 243 OF THE STANDARD PLANS BOOK DATED 2010.

REVISED STANDARD PLAN RSP T15

2010 REVISED STANDARD PLAN RSP T15

12-18-12

Dist	COUNTY	ROUTE	POST MILES TOTAL PROJECT	SHEET No.	TOTAL SHEETS
03	But	99	30.1/T37.5	157	163

REGISTERED CIVIL ENGINEER

April 19, 2013
PLANS APPROVAL DATE

REGISTERED PROFESSIONAL ENGINEER Gurinderpal Bhullar No. C48815 Exp. 9-30-14 CIVIL STATE OF CALIFORNIA

THE STATE OF CALIFORNIA OR ITS OFFICERS OR AGENTS SHALL NOT BE RESPONSIBLE FOR THE ACCURACY OR COMPLETENESS OF SCANNED COPIES OF THIS PLAN SHEET.

TO ACCOMPANY PLANS DATED 4-27-15

2010 REVISED STANDARD PLAN RSP T16

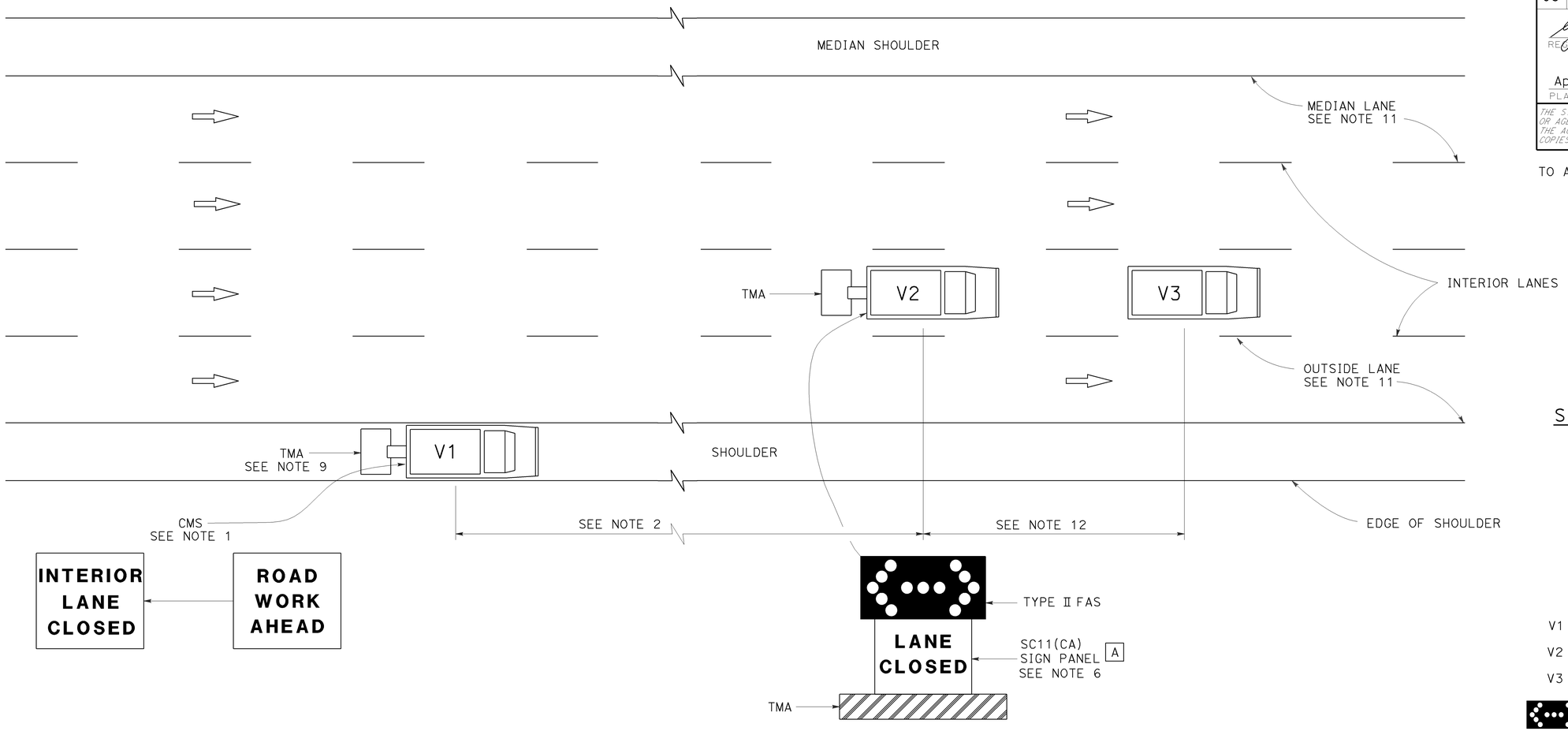

SIGN PANEL SIZE (Min)

A 54" x 42"

LEGEND

V1	SIGN VEHICLE
V2	SHADOW VEHICLE
V3	WORK/APPLICATION VEHICLE
	FLASHING ARROW SIGN (FAS) IN FLASHING DOUBLE ARROW MODE
CMS	CHANGEABLE MESSAGE SIGN
TMA	TRUCK-MOUNTED ATTENUATOR

MOVING LANE CLOSURE ON INTERIOR LANE OF MULTILANE HIGHWAYS

NOTES:

1. A changeable message sign shall be mounted on the rear of sign vehicle V1. The changeable message sign shall be sequenced to show the "ROAD WORK AHEAD" message first, followed by the "INTERIOR LANE CLOSED" message. The message "CENTER LANE CLOSED" may be used in place of the "INTERIOR LANE CLOSED" message.
2. If traffic queues develop, sign vehicle V1 should be positioned upstream from the end of queue. Sign vehicle V1 shall be positioned where highly visible when shoulders are not available.
3. A minimum sight distance of 1500′ should be provided in advance of sign vehicle V1.
4. Sign vehicle V1 should remain at the beginning of horizontal or vertical curves until the other vehicles (V2 and V3) are far enough beyond the curve to resume the minimum sight distance of 1500′.
5. Vehicle-mounted sign panels shall have Type III or above retroreflective sheeting, black on white, or black on fluorescent orange, with 6" minimum series D letters per Caltrans sign specifications.
6. Shadow vehicle V2 shall be equipped with a truck-mounted attenuator. The sign panel shown and a Type II flashing arrow sign shall be mounted on the rear of shadow vehicle V2.
7. All vehicles used for lane closures shall be equipped with two-way radios, and the vehicle operators shall maintain communication during the work or application operation.
8. All vehicles shall be equipped with flashing or rotating amber lights.
9. If sign vehicle V1 encroaches into the traffic lane due to insufficient shoulder width, sign vehicle V1 shall be equipped with a truck-mounted attenuator. Sign vehicle V1 shall stay as close to the edge of shoulder as practicable.
10. Where workers would be on foot in the work area, a stationary type lane closure (Revised Standard Plan T10, T11 etc., as applicable) shall be used instead of this plan.
11. For moving lane closure on median lane or outside lane of multilane highways, use Revised Standard Plan T15.
12. The spacing between work vehicle(s) and the shadow vehicles, and between each shadow vehicle should be minimized to deter road users from driving in between.

STATE OF CALIFORNIA
DEPARTMENT OF TRANSPORTATION

TRAFFIC CONTROL SYSTEM FOR MOVING LANE CLOSURE ON MULTILANE HIGHWAYS

NO SCALE

RSP T16 DATED APRIL 19, 2013 SUPERSEDES STANDARD PLAN T16
DATED MAY 20, 2011 - PAGE 244 OF THE STANDARD PLANS BOOK DATED 2010.

REVISED STANDARD PLAN RSP T16

12-18-12

Dist	COUNTY	ROUTE	POST MILES TOTAL PROJECT	SHEET No.	TOTAL SHEETS
03	But	99	30.1/T37.5	158	163

Theresa Gabriel
REGISTERED ELECTRICAL ENGINEER

July 19, 2013
PLANS APPROVAL DATE

REGISTERED PROFESSIONAL ENGINEER Theresa Aziz Gabriel No. E15129 Exp. 6-30-14 ELECTRICAL STATE OF CALIFORNIA

THE STATE OF CALIFORNIA OR ITS OFFICERS OR AGENTS SHALL NOT BE RESPONSIBLE FOR THE ACCURACY OR COMPLETENESS OF SCANNED COPIES OF THIS PLAN SHEET.

TO ACCOMPANY PLANS DATED 4-27-15

LEGEND:

AB	ABANDON. IF APPLIED TO CONDUIT, REMOVE CONDUCTORS
BC	INSTALL PULL BOX IN EXISTING CONDUIT RUN
BP	PEDESTRIAN BARRICADE, TYPE AS INDICATED ON PLAN
CB	INSTALL CONDUIT INTO EXISTING PULL BOX
CC	CONNECT NEW AND EXISTING CONDUIT. REMOVE EXISTING CONDUCTORS AND INSTALL CONDUCTORS AS INDICATED
CF	CONDUIT TO REMAIN FOR FUTURE USE. REMOVE CONDUCTORS. INSTALL PULL TAPE
DH	DETECTOR HANDHOLE
FA	FOUNDATION TO BE ABANDONED
IS	INSTALL SIGN ON SIGNAL MAST ARM
NS	NO SLIP BASE ON STANDARD
PEC	PHOTOELECTRIC CONTROL
PEU	PHOTOELECTRIC UNIT
RC	EQUIPMENT OR MATERIAL TO BE REMOVED AND BECOME THE PROPERTY OF THE CONTRACTOR
RE	REMOVE ELECTROLIER, FUSES AND BALLAST. TAPE ENDS OF CONDUCTORS
RL	RELOCATE EQUIPMENT
RR	REMOVE AND REUSE EQUIPMENT
RS	REMOVE AND SALVAGE EQUIPMENT
SC	SPLICE NEW TO EXISTING CONDUCTORS
SD	SERVICE DISCONNECT
TSP	TELEPHONE SERVICE POINT

ABBREVIATIONS

APS	ACCESSIBLE PEDESTRIAN SIGNAL
BBS	BATTERY BACKUP SYSTEM
BC	BOLT CIRCLE
BPB	BICYCLE PUSH BUTTON
C	CONDUIT
CB	CIRCUIT BREAKER
CCTV	CLOSED CIRCUIT TELEVISION
Ckt	CIRCUIT
CMS	CHANGEABLE MESSAGE SIGN
Ctid	CALTRANS IDENTIFICATION
Comm	COMMUNICATION
DLC	LOOP DETECTOR LEAD-IN CABLE
EMS	EXTINGUISHABLE MESSAGE SIGN
EVUC	EMERGENCY VEHICLE UNIT CABLE
EVUD	EMERGENCY VEHICLE UNIT DETECTOR
FB	FLASHING BEACON
FBCA	FLASHING BEACON CONTROL ASSEMBLY
FBS	FLASHING BEACON WITH SLIP BASE
FO	FIBER OPTIC
G	EQUIPMENT GROUNDING CONDUCTOR
GB	GROUND BUS
GFCI	GROUND FAULT CIRCUIT INTERRUPTER
HAR	HIGHWAY ADVISORY RADIO
Hex	HEXAGONAL
HPS	HIGH PRESSURE SODIUM
IISNS	INTERNALLY ILLUMINATED STREET NAME SIGN
ISL	INDUCTION SIGN LIGHTING
LED	LIGHT EMITTING DIODE
LMA	LUMINAIRE MAST ARM
LPS	LOW PRESSURE SODIUM
Ltg	LIGHTING
Lum	LUMINAIRE
M	METERED
MAT	MAST ARM MOUNTING TOP ATTACHMENT
MAS	MAST ARM MOUNTING SIDE ATTACHMENT
M/M	MULTIPLE TO MULTIPLE TRANSFORMER
Mtg	MOUNTING
MV	MERCURY VAPOR LIGHTING FIXTURE
MVDS	MICROWAVE VEHICLE DETECTION SYSTEM
N	NEUTRAL (GROUNDED CONDUCTOR)
NB	NEUTRAL BUS
NC	NORMALLY CLOSE
NO	NORMALLY OPEN
P	CIRCUIT BREAKER'S POLE
PB	PULL BOX
PBA	PUSH BUTTON ASSEMBLY
PEC	PHOTOELECTRIC CONTROL
Ped	PEDESTRIAN
PEU	PHOTOELECTRIC UNIT
PT	CONDUIT WITH PULL TAPE
RE	RELOCATED EQUIPMENT
RM	RAMP METERING
RWIS	ROADSIDE WEATHER INFORMATION SYSTEM
SB	SLIP BASE
SIC	SIGNAL INTERCONNECT CABLE
Sig	SIGNAL
SMA	SIGNAL MAST ARM
SNS	STREET NAME SIGN
SP	SERVICE POINT
TDC	TELEPHONE DEMARCATION CABINET
TMS	TRAFFIC MONITORING STATION
TOS	TRAFFIC OPERATIONS SYSTEM
Veh	VEHICLE
VIVDS	VIDEO IMAGE VEHICLE DETECTION SYSTEM
WIM	WEIGH-IN-MOTION
Xfmr	TRANSFORMER

SOFFIT AND WALL MOUNTED LUMINAIRES

PENDANT, 70 W HPS UNLESS OTHERWISE SPECIFIED

FLUSH, 70 W HPS UNLESS OTHERWISE SPECIFIED

WALL SURFACE, 70 W HPS UNLESS OTHERWISE SPECIFIED

EXISTING SOFFIT OR WALL LUMINAIRE TO REMAIN UNMODIFIED

EXISTING SOFFIT OR WALL LUMINAIRE TO BE MODIFIED AS SPECIFIED

NOTE:

Arrow indicates "street side" of luminaire.

COMMONLY USED SYMBOLS FOR UNITED STATES CUSTOMARY UNITS OF MEASUREMENT:

SYMBOL USED	DEFINITIONS
Ω	OHMS
min	MINUTE
s	SECOND
bps	BITS PER SECOND
Bps	BYTES PER SECOND
A	AMPERE
V	VOLT
V(dc)	VOLT (DIRECT CURRENT)
V(ac)	VOLT (ALTERNATING CURRENT)
FC	FOOT - CANDLE
W	WATTS
VA	VOLT-AMPERE
M	MEGA
k	KILO
m	MILLI
μ	MICRO
P	PICO
Hz	HERTZ

MISCELLANEOUS ELECTROLIERS

NEW	EXISTING	
		LUMINAIRE ON WOOD POLE
		NON-STANDARD ELECTROLIER (SEE PROJECT NOTES OR PROJECT PLANS)
		CITY ELECTROLIER
		ELECTROLIER FOUNDATION (FUTURE INSTALLATION)

NOTES:

1. HPS luminaires shall be 310 W HPS when installed on Type 21, 21D, 30, 31 and 32 Standards, unless otherwise specified. HPS luminaires shall be 200 W when installed on other type standards or poles, unless otherwise specified.
2. LED luminaires shall be 235 W when installed on Type 21, 21D, 30, 31 and 32 Standards, unless otherwise specified. LED luminaires shall be 165 W when installed on other type standards or poles, unless otherwise specified.
3. Luminaires shall be the cutoff type, ANSI Type III medium cutoff lighting distribution, unless otherwise specified.

STANDARD ELECTROLIER

NEW	EXISTING	STANDARD TYPE
		15
		15D
		15 STRUCTURE
		15D STRUCTURE
		21
		21D
		21 STRUCTURE
		21D STRUCTURE
		30
		31
		32

STATE OF CALIFORNIA
DEPARTMENT OF TRANSPORTATION

ELECTRICAL SYSTEMS (LEGEND AND ABBREVIATIONS)

NO SCALE

RSP ES-1A DATED JULY 19, 2013 SUPERSEDES STANDARD PLAN ES-1A DATED MAY 20, 2011 - PAGE 425 OF THE STANDARD PLANS BOOK DATED 2010.

REVISED STANDARD PLAN RSP ES-1A

2010 REVISED STANDARD PLAN RSP ES-1A

Dist	COUNTY	ROUTE	POST MILES TOTAL PROJECT	SHEET No.	TOTAL SHEETS
03	But	99	30.1/T37.5	159	163

Theresa Gabriel
REGISTERED ELECTRICAL ENGINEER

July 19, 2013
PLANS APPROVAL DATE

REGISTERED PROFESSIONAL ENGINEER
Theresa Aziz Gabriel
No. E15129
Exp. 6-30-14
ELECTRICAL
STATE OF CALIFORNIA

THE STATE OF CALIFORNIA OR ITS OFFICERS OR AGENTS SHALL NOT BE RESPONSIBLE FOR THE ACCURACY OR COMPLETENESS OF SCANNED COPIES OF THIS PLAN SHEET.

TO ACCOMPANY PLANS DATED 4-27-15

CONDUIT

NEW	EXISTING	
		LIGHTING CONDUIT, UNLESS OTHERWISE INDICATED OR NOTED
		TRAFFIC SIGNAL CONDUIT
C	c	COMMUNICATION CONDUIT
T	t	TELEPHONE CONDUIT
F	f	FIRE ALARM CONDUIT
FO	fo	FIBER OPTIC CONDUIT
		CONDUIT TERMINATION
R	r	CONDUIT RISER ATTACHED TO THE STRUCTURE OR SERVICE POLE

SERVICE EQUIPMENT

NEW	EXISTING	
OH	oh	OVERHEAD LINES
U	U	WOOD POLE, "U" INDICATES UTILITY OWNED
		POLE GUY WITH ANCHOR
		UTILITY TRANSFORMER - GROUND MOUNTED
III	III	SERVICE EQUIPMENT ENCLOSURE TYPE. DOOR INDICATES FRONT OF ENCLOSURE
T	t	TELEPHONE DEMARCATION CABINET

POLE-MOUNTED SERVICE DESIGNATION

TYPE H SERVICE, 28'-10" — TYPE OF INSTALLATION AND POLE HEIGHT ABOVE GRADE

FLASHING BEACON

NEW	EXISTING	
R	R	FLASHING BEACON (ONE VEHICLE SIGNAL HEAD WITH BACKPLATE AND VISOR) "R" INDICATES RED INDICATION, "Y" INDICATES YELLOW INDICATION
Y Y	Y Y	FLASHING BEACON WITH TYPE 15-FBS STANDARD AND A SIGN.
R R	R R	FLASHING BEACON WITH TYPES 9, 9A OR 9B SIGN UNLESS OTHERWISE SPECIFIED OR INDICATED

SIGNAL EQUIPMENT

NEW	EXISTING	
C	C	PEDESTRIAN SIGNAL HEAD "C" INDICATES COUNTDOWN PEDESTRIAN HEAD
		PUSH BUTTON ASSEMBLY POST
		PEDESTRIAN BARRICADE
		VEHICLE SIGNAL HEAD (WITH BACKPLATE AND 3-SECTIONS: RED, YELLOW AND GREEN)
		VEHICLE SIGNAL HEAD WITH ANGLE VISOR
PV	PV	MODIFICATIONS OF BASIC SYMBOL: "L" INDICATES ALL NON-ARROW SECTIONS LOUVERED "LG" INDICATES LOUVERED GREEN SECTION ONLY "PV" INDICATES ALL 12" SECTIONS PROGRAMMED VISIBILITY "8" INDICATES ALL 8" SECTIONS (ONLY WHEN SPECIFIED)
		VEHICLE SIGNAL HEAD CONSISTING OF RED, YELLOW AND GREEN LEFT ARROW SECTIONS
		VEHICLE SIGNAL HEAD CONSISTING OF RED AND YELLOW SECTIONS WITH AN UP GREEN ARROW SECTION
		VEHICLE SIGNAL HEAD (5 SECTION) CONSISTING OF RED, YELLOW AND GREEN SECTIONS WITH YELLOW AND GREEN RIGHT ARROW SECTIONS
		TYPE 15TS STANDARD WITH VEHICLE SIGNAL HEAD AND LUMINAIRE
		TYPE 21TS STANDARD WITH VEHICLE SIGNAL HEAD AND LUMINAIRE
		STANDARD WITH LUMINAIRE AND SIGNAL MAST ARMS AND ATTACHED VEHICLE SIGNAL HEADS
		TYPE 1 STANDARD WITH ATTACHED VEHICLE SIGNAL HEADS
		STANDARD WITH A SIGNAL MAST ARM, ATTACHED VEHICLE SIGNAL HEADS AND INTERNALLY ILLUMINATED STREET NAME SIGN
		CONTROLLER ASSEMBLY. DOOR INDICATES FRONT OF CABINET

SIGNAL EQUIPMENT Cont

NEW	EXISTING	
		GUARD POST
		TYPE 1 STANDARD WITH RAMP METERING SIGN
		OPTICAL DETECTOR FOR THE EMERGENCY VEHICLE DETECTION SYSTEM

NOTES:

1. All signal sections shall be 12" unless shown otherwise.
2. Signal heads shall be provided with backplates unless shown otherwise.

ILLUMINATED OVERHEAD SIGN

NEW	EXISTING	
		SINGLE POST, SINGLE ILLUMINATED SIGN, BALANCED BUTTERFLY
		SINGLE POST, DOUBLE ILLUMINATED SIGN, BALANCED BUTTERFLY
		SINGLE POST, SINGLE ILLUMINATED SIGN, FULL CANTILEVER
		DOUBLE POST, SINGLE ILLUMINATED SIGN
		SINGLE ILLUMINATED SIGN MOUNTED ON STRUCTURE
		DOUBLE POST, SINGLE ILLUMINATED SIGN WITH ELECTROLIER

STATE OF CALIFORNIA
DEPARTMENT OF TRANSPORTATION

ELECTRICAL SYSTEMS (LEGEND AND ABBREVIATIONS)

NO SCALE

RSP ES-1B DATED JULY 19, 2013 SUPERSEDES STANDARD PLAN ES-1B DATED MAY 20, 2011 - PAGE 426 OF THE STANDARD PLANS BOOK DATED 2010.

REVISED STANDARD PLAN RSP ES-1B

2010 REVISED STANDARD PLAN RSP ES-1B

7-15-13

Dist	COUNTY	ROUTE	POST MILES TOTAL PROJECT	SHEET No.	TOTAL SHEETS
03	But	99	30.1/T37.5	160	163

Theresa Gabriel
REGISTERED ELECTRICAL ENGINEER

July 19, 2013
PLANS APPROVAL DATE

REGISTERED PROFESSIONAL ENGINEER
Theresa Aziz Gabriel
No. E15129
Exp. 6-30-14
ELECTRICAL
STATE OF CALIFORNIA

THE STATE OF CALIFORNIA OR ITS OFFICERS OR AGENTS SHALL NOT BE RESPONSIBLE FOR THE ACCURACY OR COMPLETENESS OF SCANNED COPIES OF THIS PLAN SHEET.

TO ACCOMPANY PLANS DATED 4-27-15

EQUIPMENT IDENTIFICATION

ILLUMINATED SIGN IDENTIFICATION NUMBER:

SIGN No. 12345
10 ISL SCI 1.0

- SIGN NUMBER - PLACE ON POST OR STRUCTURE
- TRANSFORMER RATING (kVA)
- LIGHTING CONTROL TYPE
- NUMBER AND TYPE OF FIXTURES

DO NOT PLACE ON STANDARD OR STRUCTURE

ELECTROLIER OR EQUIPMENT IDENTIFICATION NUMBER:

12345 - 15'-0"

- MAST ARM LENGTH, IF SHOWN. DO NOT PLACE ON STANDARD OR STRUCTURE
- EQUIPMENT NUMBER - PLACE ON STANDARD OR STRUCTURE. EXISTING EQUIPMENT NUMBERS ARE SHOWN IN PARENTHESIS

CONDUIT AND CONDUCTOR IDENTIFICATION:

1½"C, 2#10, 15#14, 2 DLC, 12P#18

- PAIR
- NUMBER AND SIZE OF CONDUCTORS AND CABLES
- SIZE OF CONDUIT IN INCHES

ø1, ø2, ø2P, etc.	TRAFFIC PHASE IDENTIFICATION FOR SIGNAL FACES, DETECTORS AND PHASE DIAGRAMS
1 2 3	LEGEND NUMBERS
A B C	EQUIPMENT, SIGNAL POLES, INSTALLATION OR ITEMS
1 2 3	CONDUIT RUN NUMBERS

SIGNAL AND LIGHTING STANDARD (TYPICAL DESIGNATION):

19A - 3 - 100

- WIND VELOCITY = 100 mph
- CASE 3 ARM LOADING
- STANDARD TYPE
- STANDARD PLAN SHEET NUMBER
- DETAIL, NUMBER, SECTION, TYPE OR ELEVATION

MISCELLANEOUS EQUIPMENT

NEW	EXISTING	
CMS	cms	CHANGEABLE MESSAGE SIGN
		CLOSED CIRCUIT TELEVISION CAMERA
		HIGHWAY ADVISORY RADIO POLE AND ANTENNA
EMS	ems	EXTINGUISHABLE MESSAGE SIGN
M V	m v	DETECTION DEVICE M = MICROWAVE SENSOR V = VIDEO IMAGE SENSOR

WIRING DIAGRAM LEGEND

----	EXTERNAL CONDUCTOR
———	CONDUCTOR OR BUS
	TIE POINT
	CONTACTOR COIL
	CONTACTOR, NO CONTACT
	TERMINAL BLOCKS
	CONTACTOR, NC CONTACT
	ENCLOSURE BOND
	GROUNDING ELECTRODE
	CIRCUIT BREAKER
	RECEPTACLE

PULL BOXES

NEW	EXISTING	
		PULL BOX, No. 5 UNLESS OTHERWISE INDICATED OR NOTED
3	9A(21)	PULL BOX, ADDITIONAL DESIGNATIONS OR DESCRIPTIONS

3 No. 3½ PULL BOX
5 No. 5 PULL BOX
6 No. 6 PULL BOX
7 No. 7 (CEILING PULL BOX)
8 No. 8 (PENDANT SOFFIT PULL BOX)
9 No. 9 PULL BOX
9A No. 9A PULL BOX

(C) COMMUNICATIONS PULL BOX
(E) PULL BOX WITH EXTENSION
(S) SPRINKLER CONTROL PULL BOX
(21) ANCHOR BOLTS AND CONDUIT FOR FUTURE INSTALLATION OF TYPE 21 STANDARD
(T) TRAFFIC PULL BOX

VEHICLE DETECTORS

5 J 9 U

- VEHICLE DETECTOR DESIGNATION
- U = UPPER
  L = LOWER
- SLOT NUMBER IN INPUT FILE
- INPUT FILE (I OR J)
- PHASE

NEW	EXISTING	
		TYPE A DETECTOR LOOP. OUTLINE OF SAWCUT SHOWN
		TYPE B DETECTOR LOOP. OUTLINE OF SAWCUT SHOWN
		TYPE C DETECTOR LOOP. OUTLINE OF SAWCUT SHOWN
		TYPE D DETECTOR LOOP. OUTLINE OF SAWCUT SHOWN
		TYPE E DETECTOR LOOP. OUTLINE OF SAWCUT SHOWN
		TYPE Q DETECTOR LOOP. OUTLINE OF SAWCUT SHOWN
		MAGNETIC DETECTOR
DH	dh	DETECTOR HANDHOLE
		MICROWAVE OR VIDEO DETECTION ZONE

STATE OF CALIFORNIA
DEPARTMENT OF TRANSPORTATION

ELECTRICAL SYSTEMS (LEGEND AND ABBREVIATIONS)

NO SCALE

RSP ES-1C DATED JULY 19, 2013 SUPERSEDES STANDARD PLAN ES-1C DATED MAY 20, 2011 - PAGE 427 OF THE STANDARD PLANS BOOK DATED 2010.

REVISED STANDARD PLAN RSP ES-1C

2010 REVISED STANDARD PLAN RSP ES-1C

7-11-13

Dist	COUNTY	ROUTE	POST MILES TOTAL PROJECT	SHEET No.	TOTAL SHEETS
03	But	99	30.1/T37.5	161	163

Theresa Gabriel
REGISTERED ELECTRICAL ENGINEER

July 19, 2013
PLANS APPROVAL DATE

REGISTERED PROFESSIONAL ENGINEER
Theresa Aziz Gabriel
No. E15129
Exp. 6-30-14
ELECTRICAL
STATE OF CALIFORNIA

THE STATE OF CALIFORNIA OR ITS OFFICERS OR AGENTS SHALL NOT BE RESPONSIBLE FOR THE ACCURACY OR COMPLETENESS OF SCANNED COPIES OF THIS PLAN SHEET.

TO ACCOMPANY PLANS DATED 4-27-15

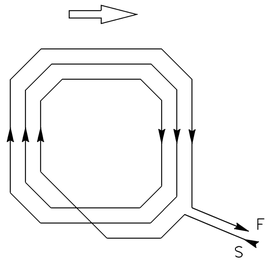

WINDING DETAIL

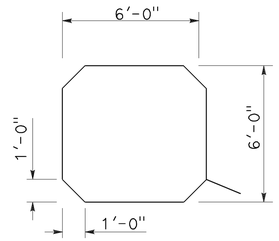

SAWCUT DETAIL

TYPE A LOOP DETECTOR CONFIGURATION

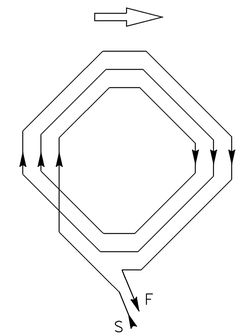

WINDING DETAIL

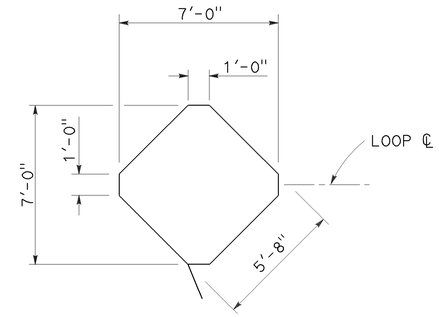

SAWCUT DETAIL

TYPE B LOOP DETECTOR CONFIGURATION

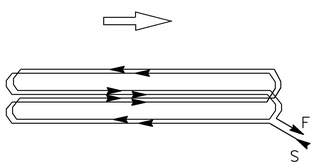

WINDING DETAIL

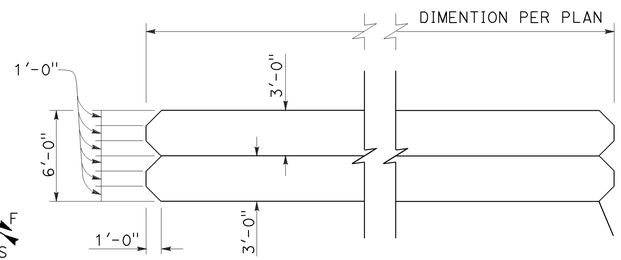

SAWCUT DETAIL

TYPE C LOOP DETECTOR CONFIGURATION

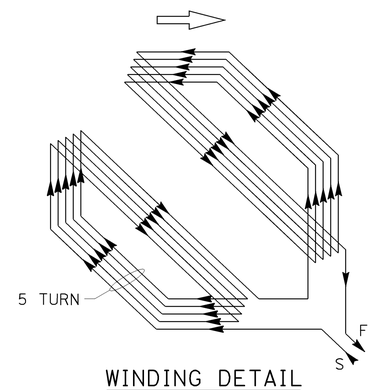

WINDING DETAIL

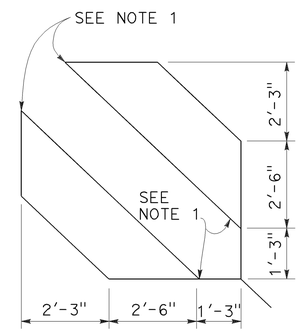

SAWCUT DETAIL

TYPE D LOOP DETECTOR CONFIGURATION

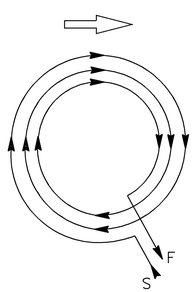

WINDING DETAIL

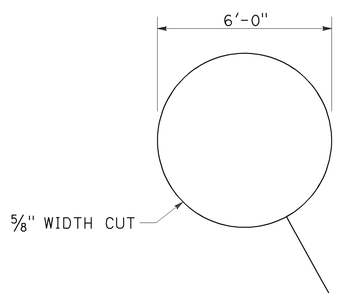

SAWCUT DETAIL

TYPE E LOOP DETECTOR CONFIGURATION

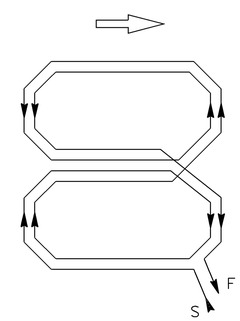

WINDING DETAIL

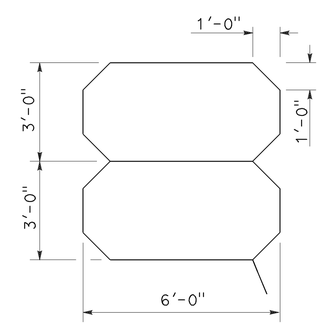

SAWCUT DETAIL

TYPE Q LOOP DETECTOR CONFIGURATION

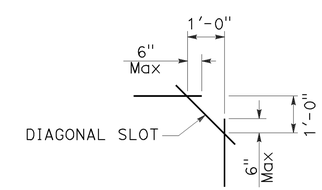

PLAN VIEW OF DIAGONAL SLOT AT CORNERS

NOTES:

1. Round corners of acute angle sawcuts to prevent damage to conductors.
2. Typical distance separating loops from edge to edge is 10' for Type A, B, D and E installation in single lane.

STATE OF CALIFORNIA
DEPARTMENT OF TRANSPORTATION

ELECTRICAL SYSTEMS (DETECTORS)

NO SCALE

RSP ES-5B DATED JULY 19, 2013 SUPERSEDES STANDARD PLAN ES-5B DATED MAY 20, 2011 - PAGE 449 OF THE STANDARD PLANS BOOK DATED 2010.

REVISED STANDARD PLAN RSP ES-5B

2010 REVISED STANDARD PLAN RSP ES-5B

7-9-13

Dist	COUNTY	ROUTE	POST MILES TOTAL PROJECT	SHEET No.	TOTAL SHEETS
03	But	99	30.1/T37.5	162	163

Theresa Gabriel
REGISTERED ELECTRICAL ENGINEER

July 19, 2013
PLANS APPROVAL DATE

REGISTERED PROFESSIONAL ENGINEER Theresa Aziz Gabriel No. E15129 Exp. 6-30-14 ELECTRICAL STATE OF CALIFORNIA

THE STATE OF CALIFORNIA OR ITS OFFICERS OR AGENTS SHALL NOT BE RESPONSIBLE FOR THE ACCURACY OR COMPLETENESS OF SCANNED COPIES OF THIS PLAN SHEET.

TO ACCOMPANY PLANS DATED 4-27-15

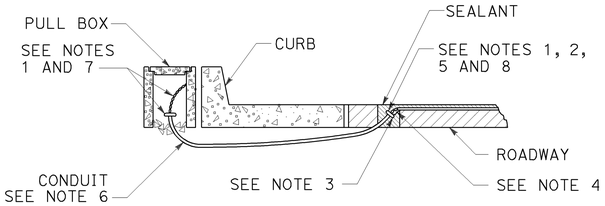

TYPE A
CURB TERMINATION DETAIL

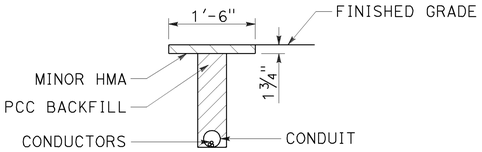

"T" TRENCH
DETAIL T

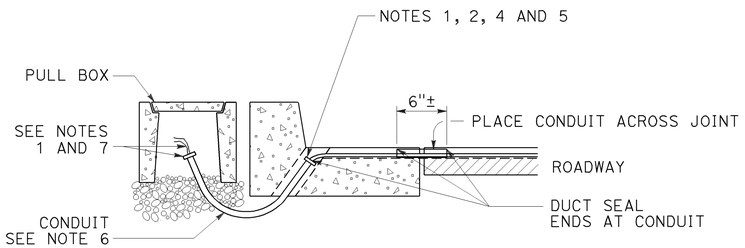

CROSS SECTION

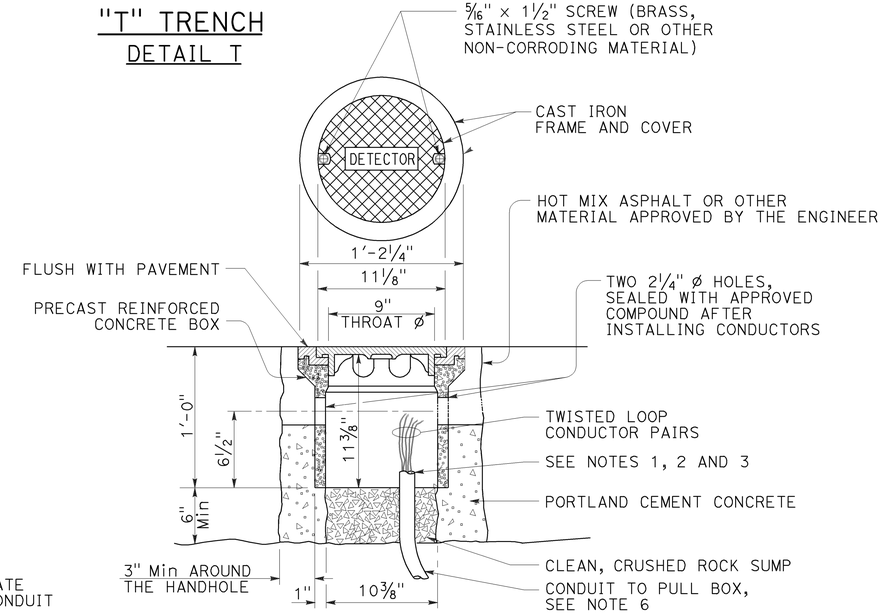

DETECTOR HANDHOLE DETAIL

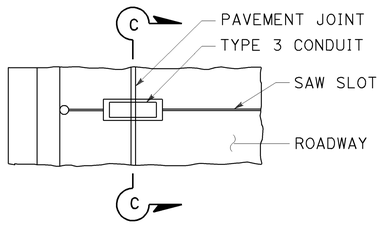

PLAN VIEW

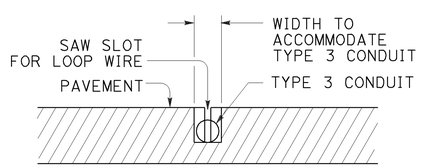

SECTION C-C

TYPE B
CURB TERMINATION DETAIL

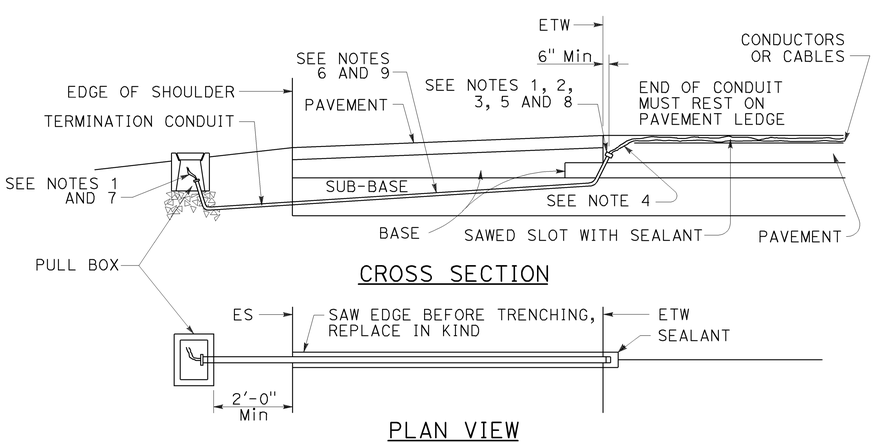

CROSS SECTION

PLAN VIEW

SHOULDER TERMINATION DETAILS

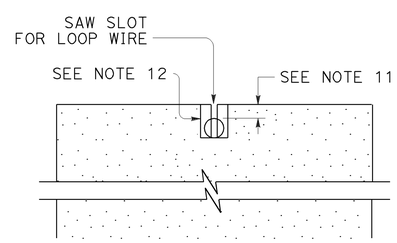

SECTION A-A

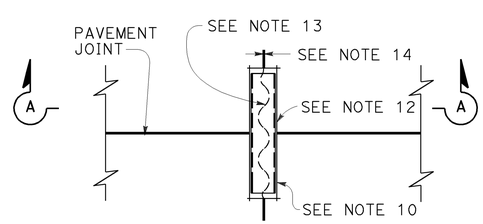

PLAN VIEW

TYPICAL LOOP LEAD-IN DETAIL AT PAVEMENT JOINT

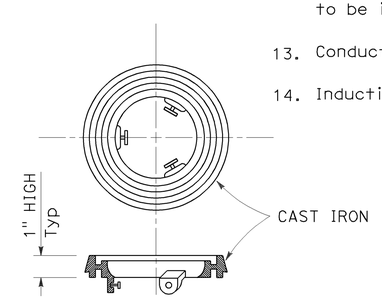

LOCKING GRADE RING

NOTES:

1. Bushing shall be used at end of conduit.
2. Tape detector conductors or cables 3" each side of bushings.
3. Install duct seal compound to each end of termination conduit before installing sealant.
4. Round all sharp edges where detector conductors or cables have to pass.
5. End of conduit shall be 3⅛" below roadway surface.
6. Conduit size / Loop conductors
   - 1"C minimum — 1 to 2 pairs
   - 1½"C minimum — 3 to 4 pairs
   - 2"C minimum — 5 or more pairs
7. Splice detector conductors or cables to detector lead-in-cable.
8. Location of detector handhole when shown on plans.
9. When the shoulder and traveled way are paved with the same material and there is no joint between them, the conduit shall extend only 2'-0" into the shoulder pavement.
10. ¾"C, Type 3 conduit 6" long minimum, plug both ends with duct compound to keep out sealant.
11. ½" Minimum between top of conduit and pavement surface.
12. Sawcut shall not exceed 1" in width and ⅛" longer than conduit to be installed.
13. Conductors with ½" minimum slack inside conduit.
14. Inductive loop detector saw slot.

STATE OF CALIFORNIA
DEPARTMENT OF TRANSPORTATION

ELECTRICAL SYSTEMS (CURB TERMINATION AND HANDHOLE)

NO SCALE

RSP ES-5D DATED JULY 19, 2013 SUPERSEDES STANDARD PLAN ES-5D DATED MAY 20, 2011 - PAGE 451 OF THE STANDARD PLANS BOOK DATED 2010.

REVISED STANDARD PLAN RSP ES-5D

2010 REVISED STANDARD PLAN RSP ES-5D

7-9-13

DIST	COUNTY	ROUTE	POST MILES TOTAL PROJECT	SHEET NO.	TOTAL SHEETS
03	But	99	30.1/T37.5	163	163

Theresa Gabriel
REGISTERED ELECTRICAL ENGINEER

July 19, 2013
PLANS APPROVAL DATE

REGISTERED PROFESSIONAL ENGINEER Theresa Aziz Gabriel No. E15129 Exp. 6-30-14 ELECTRICAL STATE OF CALIFORNIA

THE STATE OF CALIFORNIA OR ITS OFFICERS OR AGENTS SHALL NOT BE RESPONSIBLE FOR THE ACCURACY OR COMPLETENESS OF SCANNED COPIES OF THIS PLAN SHEET.

TO ACCOMPANY PLANS DATED 4-27-15

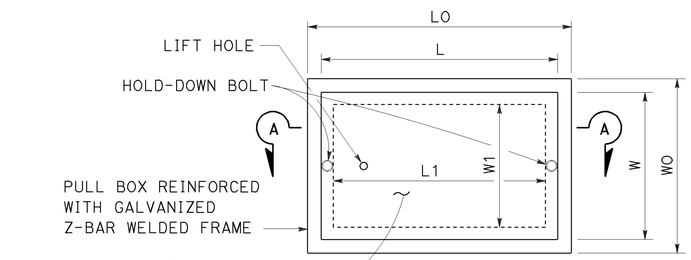

TOP VIEW

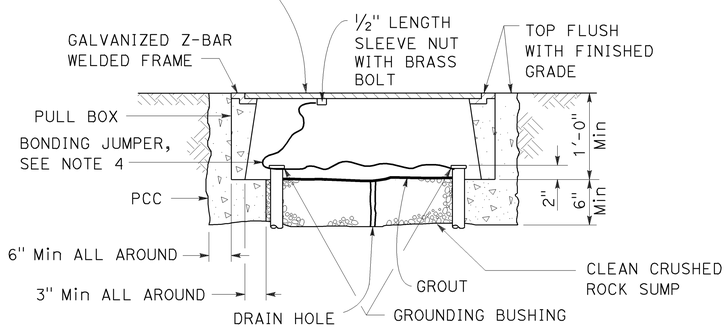

SECTION A-A

No. 3½(T), No. 5(T) AND No. 6(T) TRAFFIC PULL BOX

NOTES:

1. Traffic pull box shall be provided with steel cover and special concrete footing. Steel cover shall have embossed non-skid pattern.
2. Steel reinforcing shall be as regularly used in the standard products of the respective manufacturer.
3. Pull box covers shall be marked as follows: "SERVICE" Service circuits between service point and service disconnect; "SPRINKLER-CONTROL" Sprinkler control circuits, 50 V or less; "CALTRANS" On all pull boxes, except pull boxes marked "SPRINKLER-CONTROL"; and "TELEPHONE" Telephone service.
   A) No. 3½(T) pull box.
      1) "SIGNAL" - Traffic signal circuits with or without lighting or sign lighting circuits.
      2) "LIGHTING" - Lighting or sign lighting circuits where voltage is under 600 V.
   B) No. 5(T) or 6(T) pull box.
      1) "TRAFFIC SIGNAL" - Traffic signal circuits with or without lighting or sign lighting circuits.
      2) "LIGHTING" - Lighting or sign lighting circuits where voltage is under 600 V.
      3) "LIGHTING-HIGH VOLTAGE" - Lighting or sign lighting circuits where voltage is above 600 V.
      4) "IRRIGATION" - Circuits to irrigation controller 120 V or more.
      5) "RAMP METER" - Ramp meter circuits.
      6) "COUNT STATION" - Count or speed monitor circuits.
      7) "COMMUNICATION" - Communication circuits.
      8) "TOS COMMUNICATIONS" - TOS communications line.
      9) "TOS POWER" - TOS power.
      10) "TDC POWER" - Telephone demarcation cabinet power.
      11) "CCTV" - Closed circuit television circuits.
      12) "TMS" - Traffic monitoring station circuits.
      13) "CMS" - Changeable message sign circuits.
      14) "HAR" - Highway advisory radio circuits.
      15) "BOOSTER PUMP" - Booster pump circuit.
4. Bonding jumper for metal covers shall be 3' long, minimum.
5. The nominal dimensions of the opening in which the cover sets shall be the same as the cover dimensions except the length and width dimensions shall be ⅛" greater.
6. Covers and boxes shall be interchangeable with California standard male and female gages. When interchanged with a standard male or female gage, the top surfaces shall be flush within ⅛".

DIMENSION TABLE

PULL BOX	PULL BOX						COVER				
	MINIMUM * THICKNESS	MINIMUM DEPTH BOX AND EXTENSION	WO	LO	L1	W1	L **	W **	R	EDGE THICKNESS	EDGE TAPER
No. 3½(T)	1½"	1'-0"	1'-5"± 1"	1'-8⅞"±	1'-2½"±	10⅝"± 1"	1'-8"±	1'-1¾"±	0"	½"	NONE
No. 5(T)	1¾"	1'-0"	1'-11½"± 1"	2'-5½"±	1'-7"±	1'-1"± 1"	2'-3"±	1'-4"±	0"	½"	NONE
No. 6(T)	2"	1'-0"	2'-6"± 1"	2'-11½"±	1'-11½"±	1'-5"± 1"	2'-9"±	1'-8"±	0"	½"	NONE

* EXCLUDING CONDUIT WEB ** TOP DIMENSION

STATE OF CALIFORNIA
DEPARTMENT OF TRANSPORTATION

ELECTRICAL SYSTEMS (TRAFFIC PULL BOX)

NO SCALE

RSP ES-8B DATED JULY 19, 2013 SUPERSEDES RSP ES-8B DATED JANUARY 20, 2012 THAT SUPPLEMENTS THE STANDARD PLANS BOOK DATED 2010.

REVISED STANDARD PLAN RSP ES-8B

2010 REVISED STANDARD PLAN RSP ES-8B