INDEX OF PLANS

INDEX OF PLANS

SHEET No.	DESCRIPTION
1	TITLE AND LOCATION MAP
2-4	TYPICAL CROSS SECTIONS
5-9	CONSTRUCTION DETAILS
10-11	CONSTRUCTION AREA SIGNS
12-14	TRAFFIC HANDLING PLAN, DETAILS AND QUANTITIES
15-18	PAVEMENT DELINEATION PLAN, DETAIL AND QUANTITIES
19-21	SUMMARY OF QUANTITIES
22-27	ELECTRICAL PLANS
28-39	REVISED AND NEW STANDARD PLANS

THE STANDARD PLANS LIST APPLICABLE TO THIS CONTRACT IS INCLUDED IN THE NOTICE TO CONTRACTORS AND SPECIAL PROVISIONS BOOK.

STATE OF CALIFORNIA

DEPARTMENT OF TRANSPORTATION

STP-P113(032)E

Dist	COUNTY	ROUTE	POST MILES TOTAL PROJECT	SHEET No.	TOTAL SHEETS
03	Yol	113	R0.0/R11.1	1	39

PROJECT PLANS FOR CONSTRUCTION ON

STATE HIGHWAY

IN AND NEAR DAVIS
FROM SOLANO COUNTY LINE
TO 0.4 MILE NORTH OF ROUTE 5/113 SEPARATION/OVERHEAD

TO BE SUPPLEMENTED BY STANDARD PLANS DATED MAY 2006

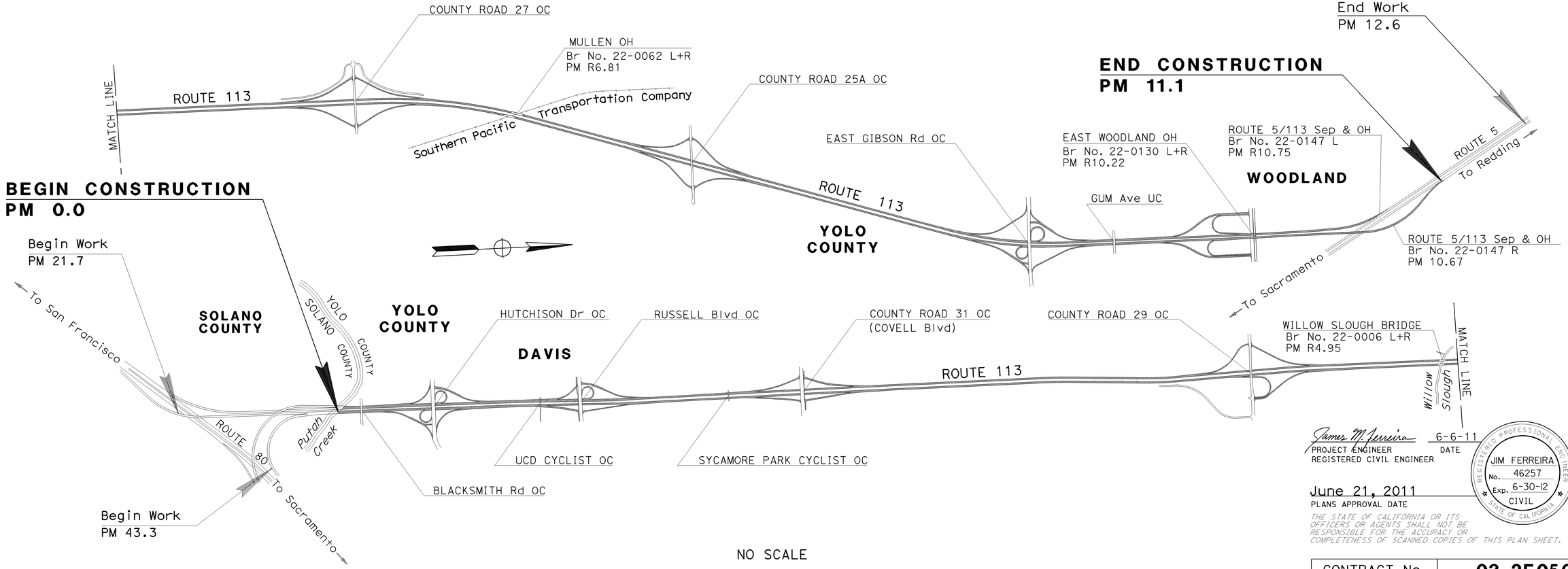

NO SCALE

THE CONTRACTOR SHALL POSSESS THE CLASS (OR CLASSES) OF LICENSE AS SPECIFIED IN THE "NOTICE TO BIDDERS."

James M Ferreira 6-6-11
PROJECT ENGINEER DATE
REGISTERED CIVIL ENGINEER

REGISTERED PROFESSIONAL ENGINEER
JIM FERREIRA
No. 46257
Exp. 6-30-12
CIVIL
STATE OF CALIFORNIA

June 21, 2011
PLANS APPROVAL DATE

THE STATE OF CALIFORNIA OR ITS OFFICERS OR AGENTS SHALL NOT BE RESPONSIBLE FOR THE ACCURACY OR COMPLETENESS OF SCANNED COPIES OF THIS PLAN SHEET.

PROJECT MANAGER: BRIAN TOEPFER
DESIGN ENGINEER: BRIAN TOEPFER

CONTRACT No.	03-2F0504
PROJECT ID	0300020452

LAST REVISION: DATE PLOTTED => 31-AUG-2011 TIME PLOTTED => 09:11
00-00-00

Dist	COUNTY	ROUTE	POST MILES TOTAL PROJECT	SHEET No.	TOTAL SHEETS
03	Yol	113	R0.0/R11.1	2	39

James M Ferreira 6-6-11
REGISTERED CIVIL ENGINEER DATE

6-21-11
PLANS APPROVAL DATE

REGISTERED PROFESSIONAL ENGINEER
JIM FERREIRA
No. 48257
Exp. 6-30-12
CIVIL
STATE OF CALIFORNIA

THE STATE OF CALIFORNIA OR ITS OFFICERS OR AGENTS SHALL NOT BE RESPONSIBLE FOR THE ACCURACY OR COMPLETENESS OF SCANNED COPIES OF THIS PLAN SHEET.

NOTES:

1. DIMENSIONS OF THE STRUCTURAL SECTIONS ARE SUBJECT TO TOLERANCES SPECIFIED IN THE STANDARD SPECIFICATIONS.
2. SUPERELEVATIONS AS SHOWN OR AS DIRECTED BY THE ENGINEER
3. EXISTING UTILITY FACILITIES HAVE NOT BEEN PLOTTED ON THESE PLANS.
4. FOR COMPLETE RIGHT OF WAY, SEE RIGHT OF WAY RECORDS AT DISTRICT OFFICE
5. FOR LOCATIONS AND QUANTITIES, SEE CONSTRUCTION DETAILS AND SUMMARY OF QUANTITIES.
6. 0.10' RHMA-O SHALL BE PLACED OVER THE FULL WIDTH OF SHOULDERS LESS THAN 4.1' WIDE, AND OVER THE FULL WIDTH OF SHOULDERS ON THE HIGH SIDE OF SUPERELEVATED CURVES.
7. FOR LOCATIONS AND QUANTITIES OF "REPLACE CONCRETE PAVEMENT (RAPID STRENGTH CONCRETE) SEE CONSTRUCTION DETAILS AND SUMMARY OF QUANTITIES.

ABBREVIATIONS:

RHMA-O = RUBBERIZED HOT MIX ASPHALT (OPEN GRADED)

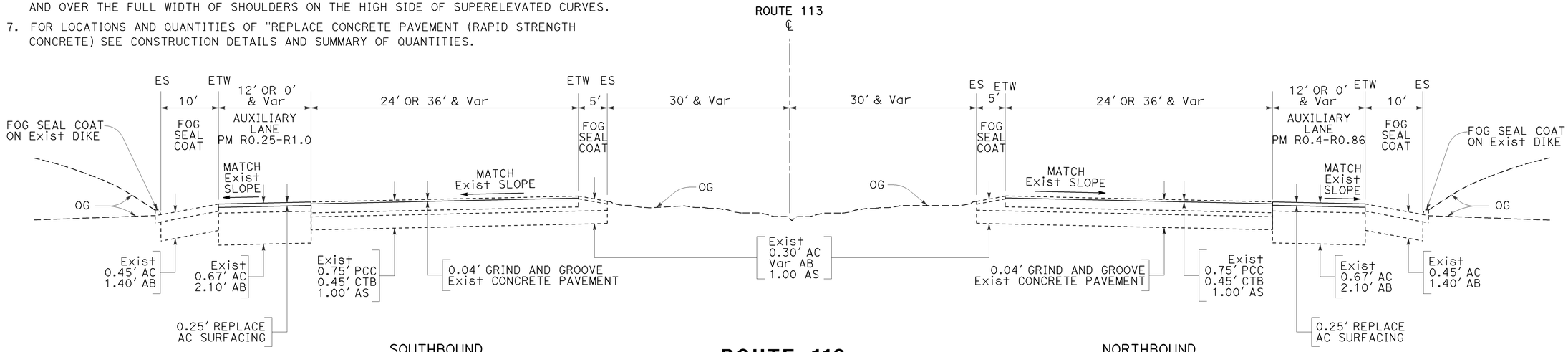

SOUTHBOUND
PM R0.25 TO R1.50

ROUTE 113
MAINLINE

NORTHBOUND
PM R0.20 TO R1.50

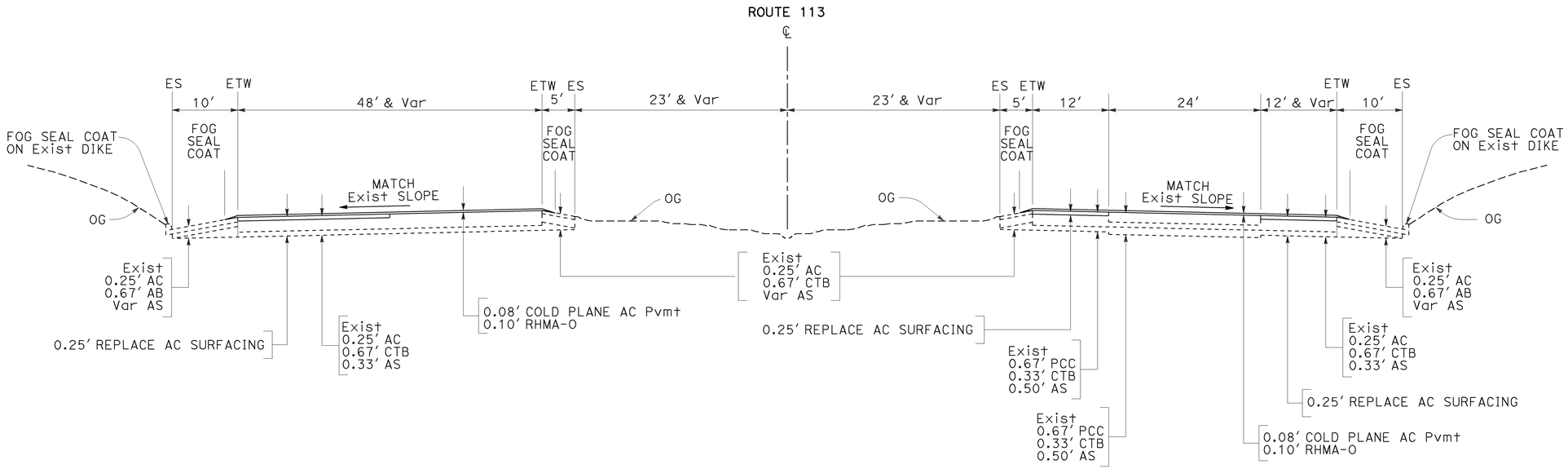

SOUTHBOUND
PM R0.00 TO R0.25

ROUTE 113
MAINLINE

NORTHBOUND
PM R0.0 TO R0.20

TYPICAL CROSS SECTIONS

NO SCALE

X-1

STATE OF CALIFORNIA - DEPARTMENT OF TRANSPORTATION
MAINTENANCE
FUNCTIONAL SUPERVISOR: BRIAN TOEPFER
CALCULATED-DESIGNED BY: JIM FERREIRA
CHECKED BY: BRIAN TOEPFER
REVISED BY
DATE REVISED

LAST REVISION 00-00-00
DATE PLOTTED => 31-AUG-2011
TIME PLOTTED => 09:11

NOTES:

1. EXISTING UTILITY FACILITIES HAVE NOT BEEN PLOTTED ON THESE PLANS.

2. FOR COMPLETE RIGHT OF WAY, SEE RIGHT OF WAY RECORDS AT DISTRICT OFFICE

Dist	COUNTY	ROUTE	POST MILES TOTAL PROJECT	SHEET No.	TOTAL SHEETS
03	Yol	113	R0.0/R11.1	3	39

James M Ferreira 6-6-11
REGISTERED CIVIL ENGINEER DATE

6-21-11
PLANS APPROVAL DATE

REGISTERED PROFESSIONAL ENGINEER
JIM FERREIRA
No. 48257
Exp. 6-30-12
CIVIL
STATE OF CALIFORNIA

THE STATE OF CALIFORNIA OR ITS OFFICERS OR AGENTS SHALL NOT BE RESPONSIBLE FOR THE ACCURACY OR COMPLETENESS OF SCANNED COPIES OF THIS PLAN SHEET.

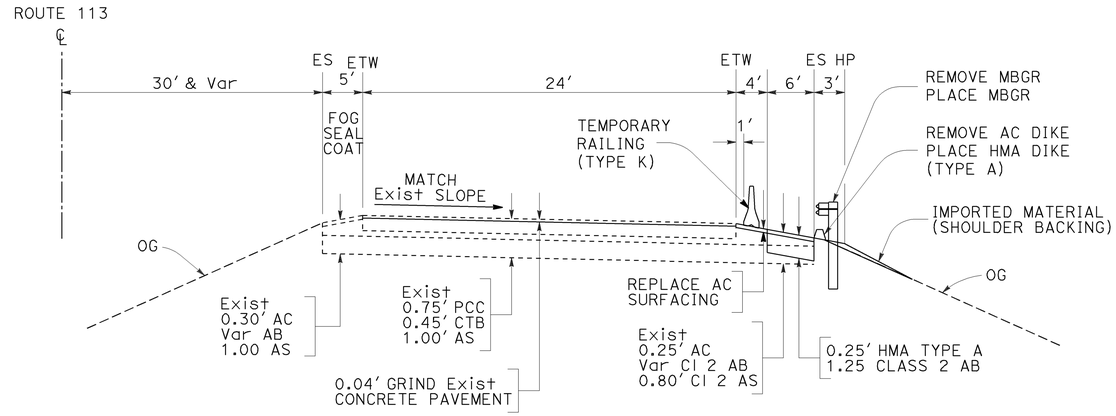

NORTHBOUND

PM R10.08 TO R10.67

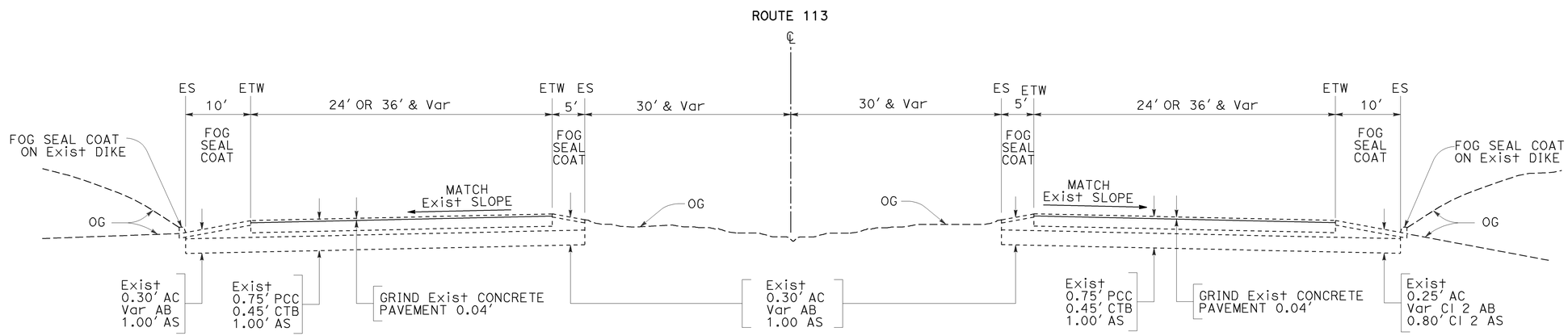

SOUTHBOUND

PM R1.50 TO R11.1

NORTHBOUND

PM R1.50 TO R10.08
PM R10.67 TO R11.1

ROUTE 113

MAINLINE

TYPICAL CROSS SECTIONS

NO SCALE

X-2

STATE OF CALIFORNIA - DEPARTMENT OF TRANSPORTATION
MAINTENANCE
Caltrans

CALCULATED-DESIGNED BY: JIM FERREIRA
CHECKED BY: BRIAN TOEPFER
FUNCTIONAL SUPERVISOR: BRIAN TOEPFER
REVISED BY / DATE REVISED

LAST REVISION: DATE PLOTTED => 31-AUG-2011
00-00-00 TIME PLOTTED => 09:11

BORDER LAST REVISED 7/2/2010
USERNAME => s134507
DGN FILE => 0300020452ca002.dgn
RELATIVE BORDER SCALE IS IN INCHES 0 1 2 3
UNIT 0484
PROJECT NUMBER & PHASE 03000204521

Dist	COUNTY	ROUTE	POST MILES TOTAL PROJECT	SHEET No.	TOTAL SHEETS
03	Yol	113	R0.0/R11.1	4	39

James M Ferreira 6-6-11
REGISTERED CIVIL ENGINEER DATE

REGISTERED PROFESSIONAL ENGINEER
JIM FERREIRA
No. 48257
Exp. 6-30-12
CIVIL
STATE OF CALIFORNIA

6-21-11
PLANS APPROVAL DATE

THE STATE OF CALIFORNIA OR ITS OFFICERS OR AGENTS SHALL NOT BE RESPONSIBLE FOR THE ACCURACY OR COMPLETENESS OF SCANNED COPIES OF THIS PLAN SHEET.

NOTES:

1. EXISTING UTILITY FACILITIES HAVE NOT BEEN PLOTTED ON THESE PLANS.
2. FOR COMPLETE RIGHT OF WAY, SEE RIGHT OF WAY RECORDS AT DISTRICT OFFICE

ABBREVIATIONS:

RHMA-O = RUBBERIZED HOT MIX ASPHALT (OPEN GRADED)

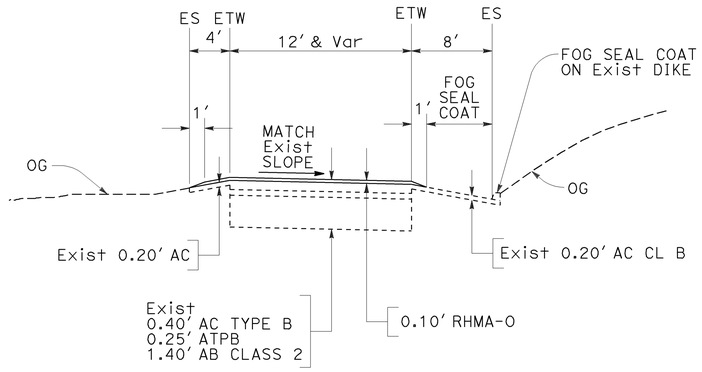

SB HUTCHISON ON RAMP
SB HUTCHISON LOOP ON RAMP
SB RUSSELL ON RAMP

NB HUTCHISON ON RAMP
NB HUTCHISON LOOP ON RAMP
NB RUSSELL ON RAMP

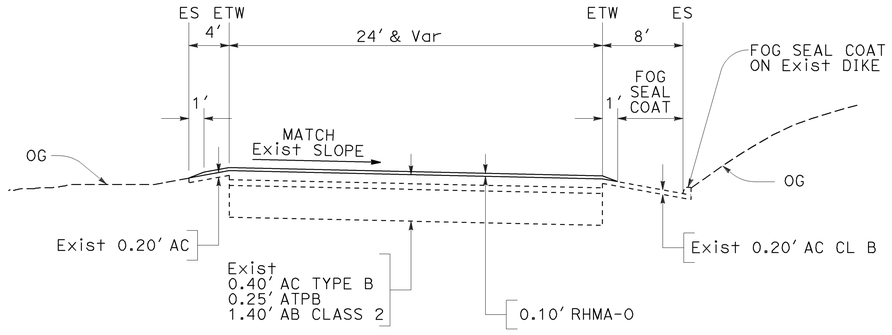

SB HUTCHISON OFF RAMP
SB RUSSELL OFF RAMP
SB COUNTY ROAD 31 OFF RAMP (COVELL Blvd)
SB COUNTY ROAD 31 ON RAMP (COVELL Blvd)

NB HUTCHISON OFF RAMP
NB RUSSELL OFF RAMP
NB COUNTY ROAD 31 OFF RAMP (COVELL Blvd)
NB COUNTY ROAD 31 ON RAMP (COVELL Blvd)

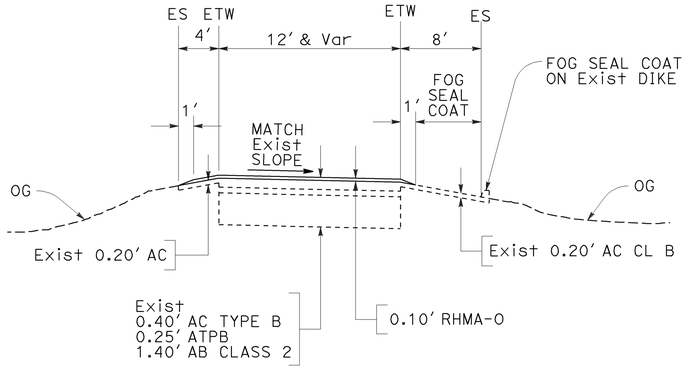

SB COUNTY ROAD 29 OFF RAMP
SB COUNTY ROAD 29 ON RAMP
SB COUNTY ROAD 27 OFF RAMP
SB COUNTY ROAD 27 ON RAMP
SB COUNTY ROAD 25A OFF RAMP
SB COUNTY ROAD 25A ON RAMP
SB EAST GIBSON LOOP ON RAMP
SB EAST GIBSON ON RAMP
SB EAST MAIN ON RAMP

NB COUNTY ROAD 29 OFF RAMP
NB COUNTY ROAD 29 ON RAMP
NB COUNTY ROAD 27 OFF RAMP
NB COUNTY ROAD 27 ON RAMP
NB COUNTY ROAD 25A OFF RAMP
NB COUNTY ROAD 25A ON RAMP
NB EAST GIBSON LOOP ON RAMP
NB EAST GIBSON ON RAMP
NB EAST MAIN ON RAMP

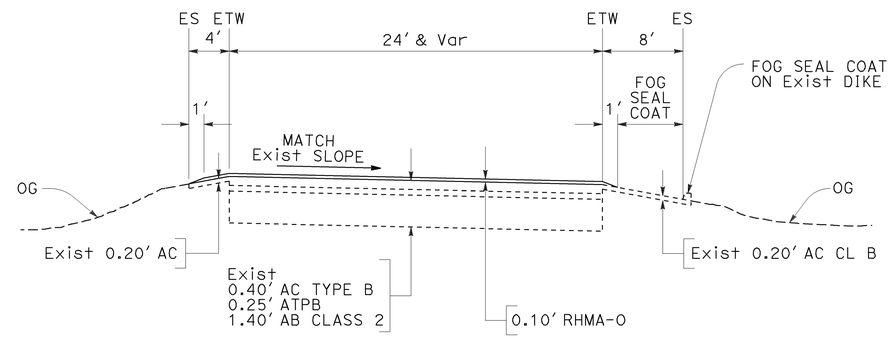

SB EAST GIBSON OFF RAMP
SB EAST MAIN OFF RAMP

NB EAST GIBSON OFF RAMP
NB EAST MAIN OFF RAMP

TYPICAL CROSS SECTIONS

NO SCALE

X-3

REVISED BY | DATE REVISED
JIM FERREIRA | BRIAN TOEPFER
CALCULATED-DESIGNED BY | CHECKED BY
FUNCTIONAL SUPERVISOR: BRIAN TOEPFER
STATE OF CALIFORNIA - DEPARTMENT OF TRANSPORTATION
Caltrans® MAINTENANCE

LAST REVISION 00-00-00 | DATE PLOTTED => 31-AUG-2011 | TIME PLOTTED => 09:11

BORDER LAST REVISED 7/2/2010 | USERNAME => s134507 | DGN FILE => 0300020452ca003.dgn | RELATIVE BORDER SCALE IS IN INCHES 0 1 2 3 | UNIT 0484 | PROJECT NUMBER & PHASE 03000204521

Dist	COUNTY	ROUTE	POST MILES TOTAL PROJECT	SHEET No.	TOTAL SHEETS
03	Yol	113	R0.0/R11.1	5	39

James M Ferreira 6-6-11
REGISTERED CIVIL ENGINEER DATE

6-21-11
PLANS APPROVAL DATE

REGISTERED PROFESSIONAL ENGINEER
JIM FERREIRA
No. 48257
Exp. 6-30-12
CIVIL
STATE OF CALIFORNIA

THE STATE OF CALIFORNIA OR ITS OFFICERS OR AGENTS SHALL NOT BE RESPONSIBLE FOR THE ACCURACY OR COMPLETENESS OF SCANNED COPIES OF THIS PLAN SHEET.

NOTES:

1. EXISTING UTILITY FACILITIES HAVE NOT BEEN PLOTTED ON THESE PLANS.
2. CONFORM LOCATIONS AS SHOWN ON THE PLANS OR AS DIRECTED BY THE ENGINEER.
3. NOTE THAT DISTANCE L IS MUCH LONGER THAN APPEARS ON DETAIL.

ABBREVIATIONS:

RHMA-O - RUBBERIZED HOT MIX ASPHALT (OPEN GRADED)

LEGEND:

0.10' RHMA-O

0.25' REPLACE AC SURFACING

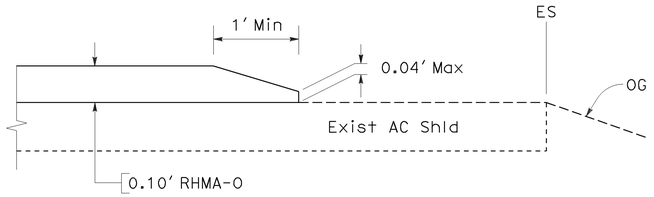

HMA OVERLAY EDGE TAPER

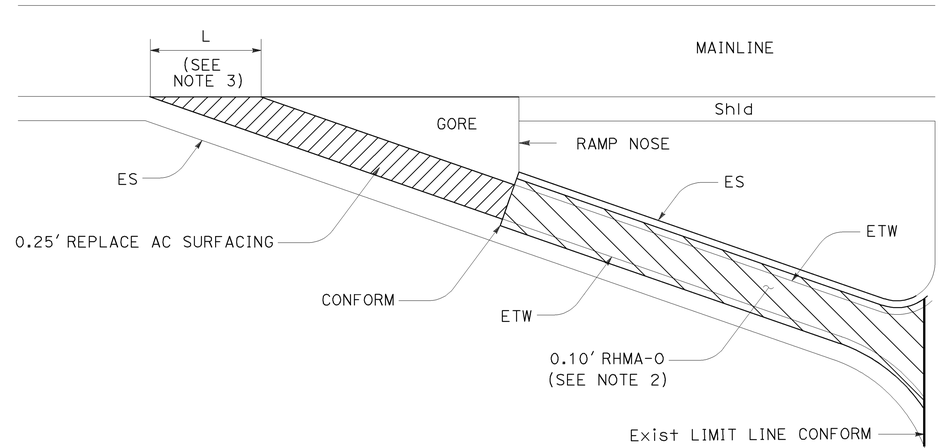

RAMPS - LIMITS OF WORK
(OFF RAMP SHOWN - ON RAMP SIMILAR)

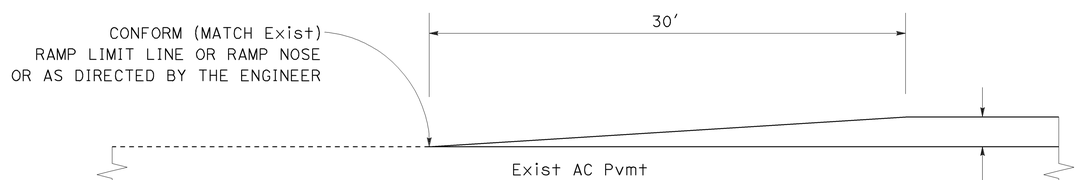

CONFORM (PROFILE)

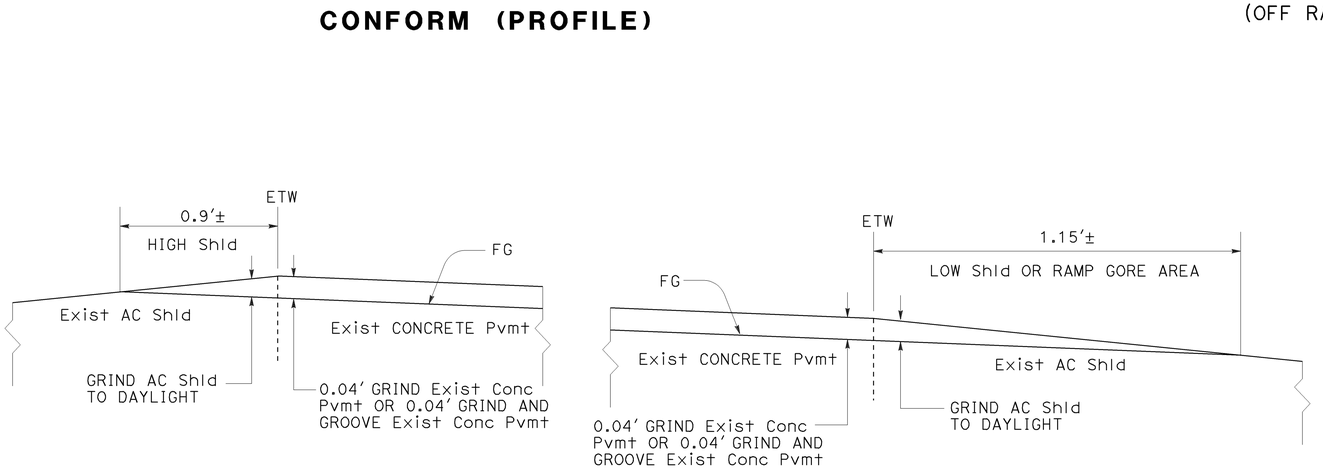

DAYLIGHT GRIND FOR MAINLINE AC SHOULDERS

CONSTRUCTION DETAILS

NO SCALE

C-1

STATE OF CALIFORNIA - DEPARTMENT OF TRANSPORTATION
MAINTENANCE
Caltrans

REVISED BY	DATE REVISED

CALCULATED-DESIGNED BY: JIM FERREIRA
CHECKED BY: BRIAN TOEPFER
FUNCTIONAL SUPERVISOR: BRIAN TOEPFER

LAST REVISION | DATE PLOTTED => 31-AUG-2011
00-00-00 | TIME PLOTTED => 09:11

BORDER LAST REVISED 7/2/2010 | USERNAME => s134507 | DGN FILE => 0300020452ga001.dgn | RELATIVE BORDER SCALE IS IN INCHES 0 1 2 3 | UNIT 0484 | PROJECT NUMBER & PHASE 03000204521

NOTES:

1. EXISTING UTILITY FACILITIES HAVE NOT BEEN PLOTTED ON THESE PLANS.

Dist	COUNTY	ROUTE	POST MILES TOTAL PROJECT	SHEET No.	TOTAL SHEETS
03	Yol	113	R0.0/R11.1	6	39

James M Ferreira 6-6-11
REGISTERED CIVIL ENGINEER DATE

6-21-11
PLANS APPROVAL DATE

REGISTERED PROFESSIONAL ENGINEER
JIM FERREIRA
No. 48257
Exp. 6-30-12
CIVIL
STATE OF CALIFORNIA

THE STATE OF CALIFORNIA OR ITS OFFICERS OR AGENTS SHALL NOT BE RESPONSIBLE FOR THE ACCURACY OR COMPLETENESS OF SCANNED COPIES OF THIS PLAN SHEET.

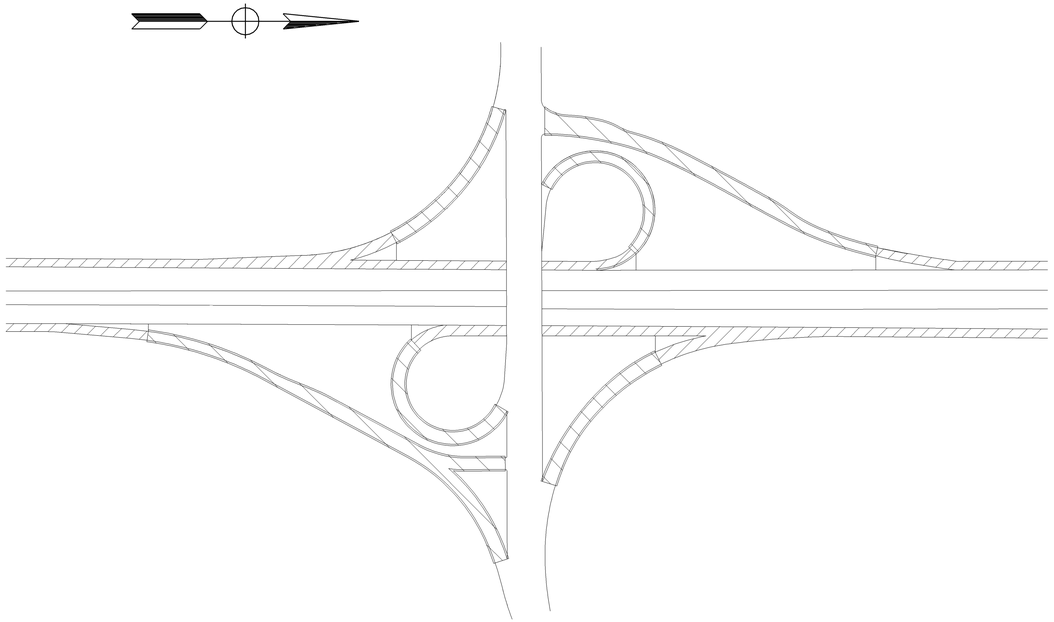

HUTCHISON DRIVE RAMPS

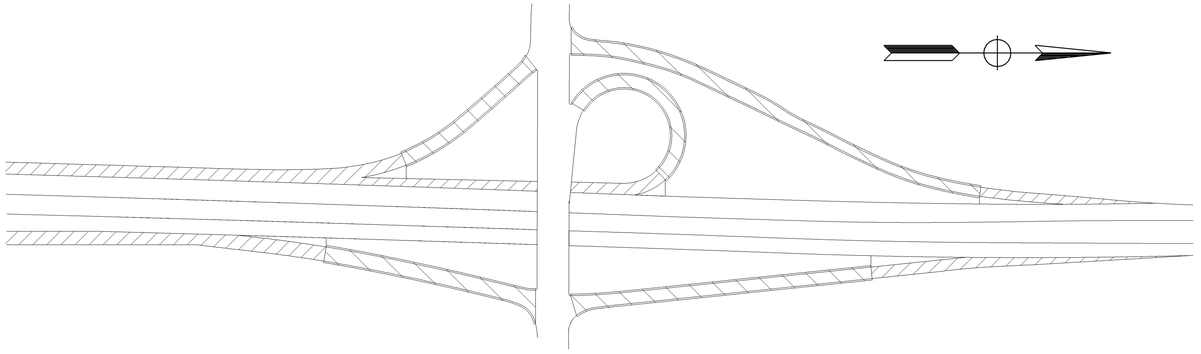

RUSSELL BOULEVARD RAMPS

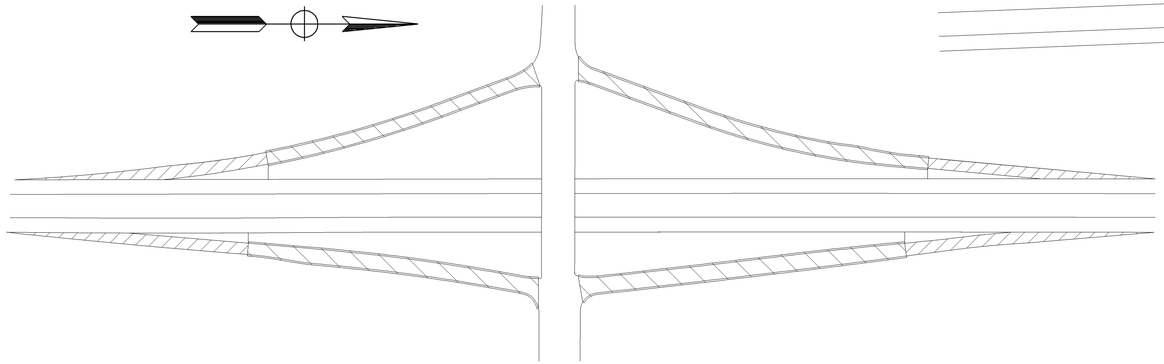

COUNTY ROAD 31 RAMPS
(COVELL BOULEVARD)

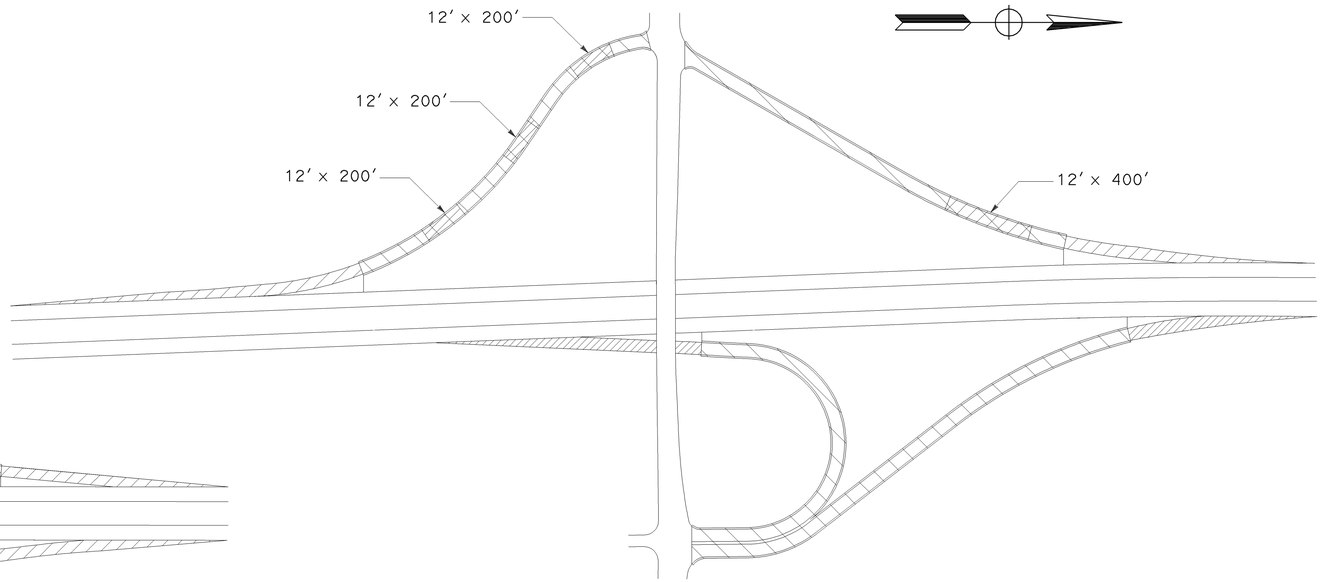

COUTY ROAD 29 RAMPS

CONSTRUCTION DETAILS

NO SCALE

C-2

STATE OF CALIFORNIA - DEPARTMENT OF TRANSPORTATION
MAINTENANCE
Caltrans

FUNCTIONAL SUPERVISOR: BRIAN TOEPFER
CALCULATED-DESIGNED BY: JIM FERREIRA
CHECKED BY: BRIAN TOEPFER
REVISED BY
DATE REVISED

LAST REVISION
DATE PLOTTED => 31-AUG-2011
TIME PLOTTED => 09:11
00-00-00

BORDER LAST REVISED 7/2/2010
USERNAME => s134507
DGN FILE => 0300020452ga002.dgn
RELATIVE BORDER SCALE IS IN INCHES 0 1 2 3
UNIT 0484
PROJECT NUMBER & PHASE 03000204521

NOTES:

1. EXISTING UTILITY FACILITIES HAVE NOT BEEN PLOTTED ON THESE PLANS.

Dist	COUNTY	ROUTE	POST MILES TOTAL PROJECT	SHEET No.	TOTAL SHEETS
03	Yol	113	R0.0/R11.1	7	39

James M Ferreira 6-6-11
REGISTERED CIVIL ENGINEER DATE

6-21-11
PLANS APPROVAL DATE

REGISTERED PROFESSIONAL ENGINEER
JIM FERREIRA
No. 48257
Exp. 6-30-12
CIVIL
STATE OF CALIFORNIA

THE STATE OF CALIFORNIA OR ITS OFFICERS OR AGENTS SHALL NOT BE RESPONSIBLE FOR THE ACCURACY OR COMPLETENESS OF SCANNED COPIES OF THIS PLAN SHEET.

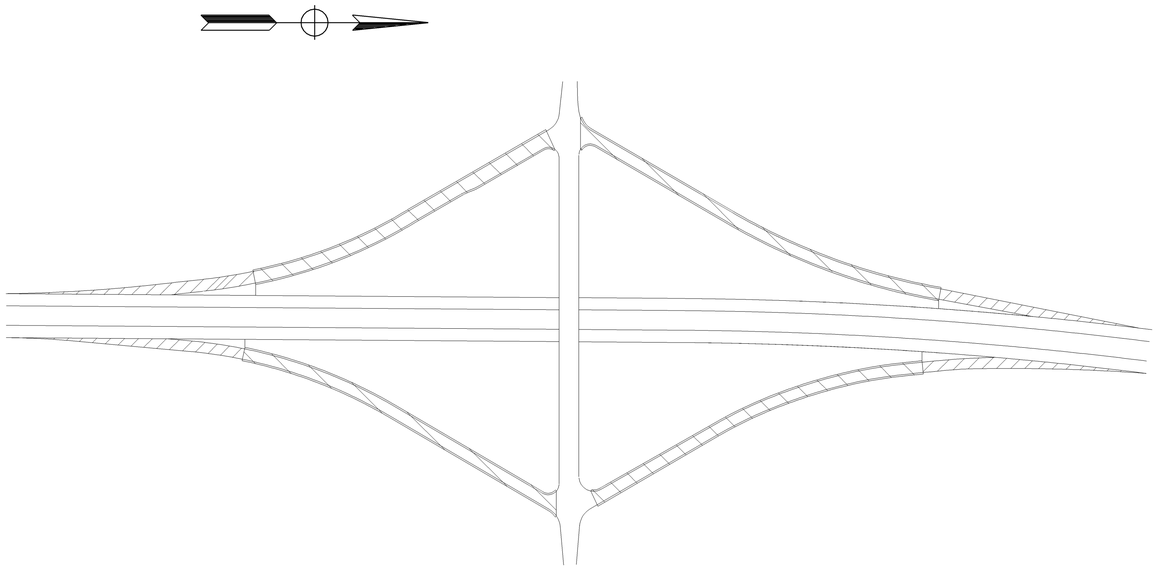

COUNTY ROAD 27 RAMPS

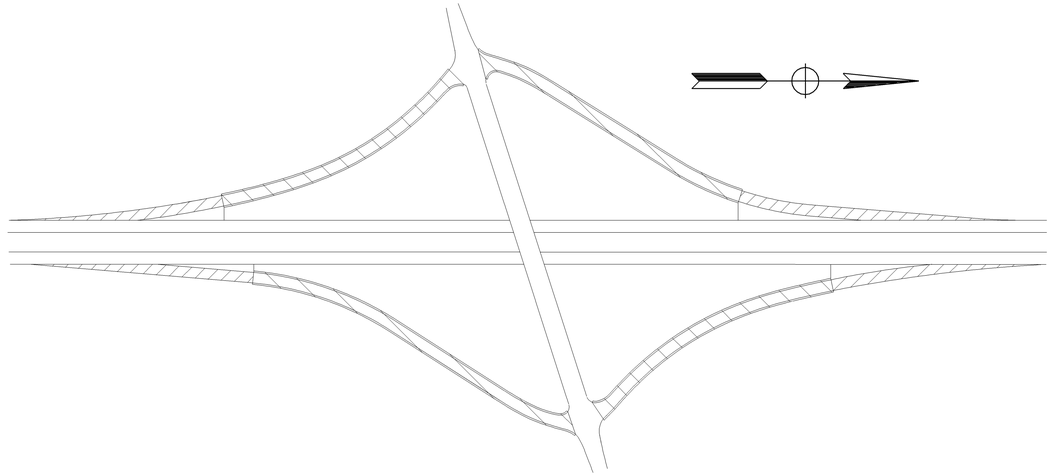

COUNTY ROAD 25A RAMPS

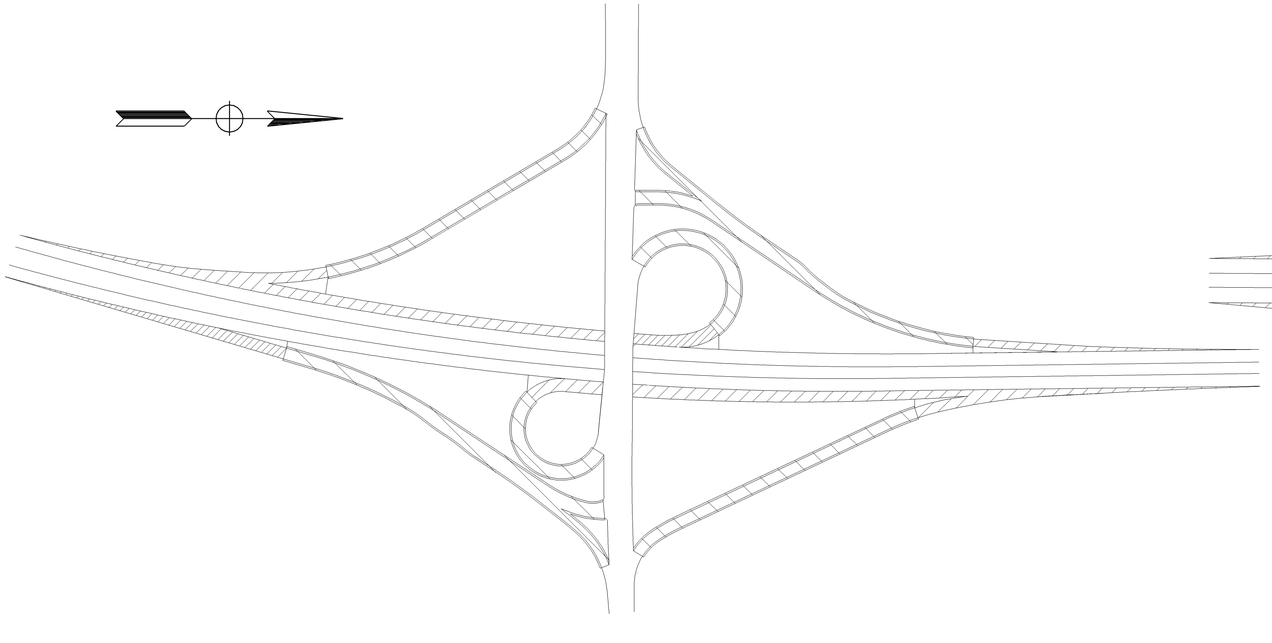

EAST GIBSON ROAD RAMPS

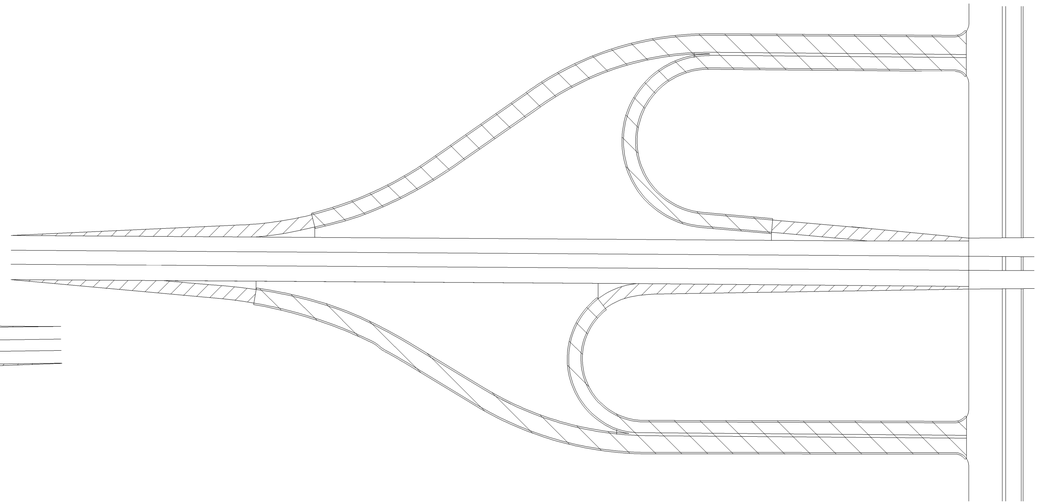

EAST MAIN STREET RAMPS

CONSTRUCTION DETAILS

NO SCALE

C-3

REVISED BY | DATE REVISED
JIM FERREIRA | BRIAN TOEPFER
CALCULATED-DESIGNED BY | CHECKED BY
FUNCTIONAL SUPERVISOR: BRIAN TOEPFER
STATE OF CALIFORNIA - DEPARTMENT OF TRANSPORTATION
Caltrans® MAINTENANCE

LAST REVISION 00-00-00 | DATE PLOTTED => 31-AUG-2011 | TIME PLOTTED => 09:11

BORDER LAST REVISED 7/2/2010 | USERNAME => s134507 | DGN FILE => 0300020452ga003.dgn | RELATIVE BORDER SCALE IS IN INCHES 0 1 2 3 | UNIT 0484 | PROJECT NUMBER & PHASE 03000204521

NOTES:

1. CRACK TREATMENT FOR CONCRETE PAVEMENT SHALL BE PERFORMED AFTER THE CONCRETE PAVEMENT SURFACE HAS BEEN GRINDED.

LEGEND:

SEAL JOINT (EXISTING CONCRETE PAVEMENT)

CRACK TREATMENT

Dist	COUNTY	ROUTE	POST MILES TOTAL PROJECT	SHEET No.	TOTAL SHEETS
03	Yol	113	R0.0/R11.1	8	39

James M Ferreira 6-6-11
REGISTERED CIVIL ENGINEER DATE

6-21-11
PLANS APPROVAL DATE

REGISTERED PROFESSIONAL ENGINEER
JIM FERREIRA
No. 48257
Exp. 6-30-12
CIVIL
STATE OF CALIFORNIA

THE STATE OF CALIFORNIA OR ITS OFFICERS OR AGENTS SHALL NOT BE RESPONSIBLE FOR THE ACCURACY OR COMPLETENESS OF SCANNED COPIES OF THIS PLAN SHEET.

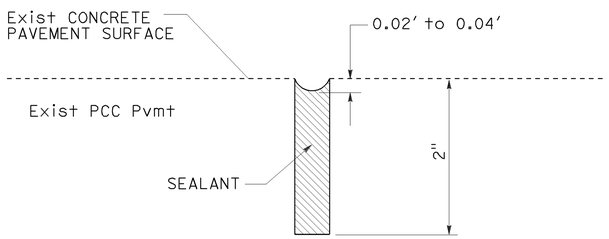

SEAL JOINT (EXISTING CONCRETE PAVEMENT)

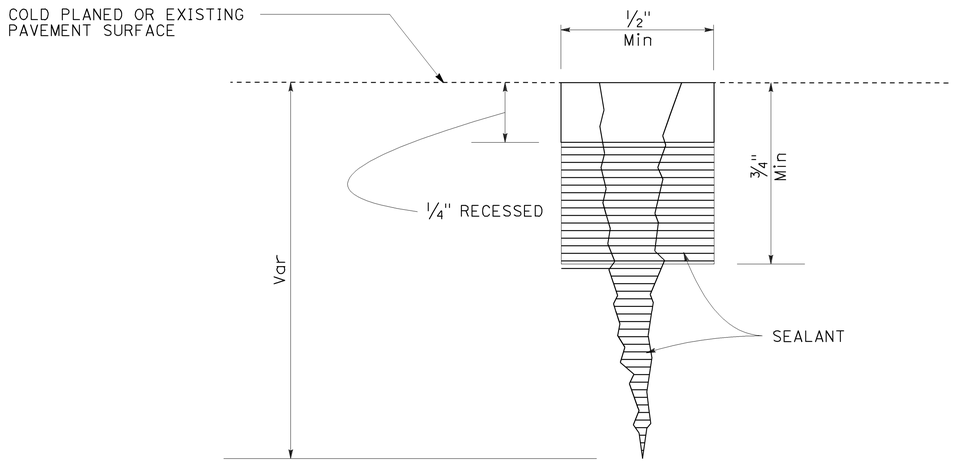

CRACK TREATMENT DETAIL

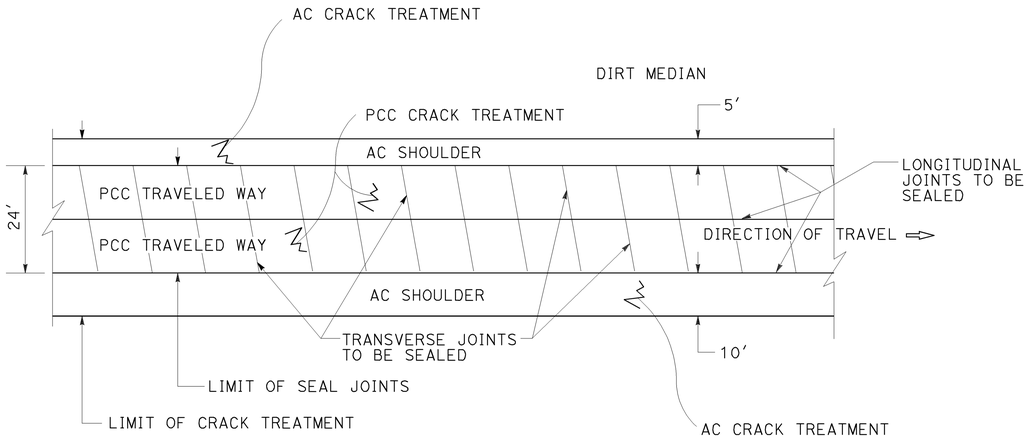

PLAN

SEAL JOINT AND CRACK TREATMENT DETAIL

MAINLINE

CONSTRUCTION DETAILS

NO SCALE

C-4

REVISED BY | DATE REVISED
JIM FERREIRA | BRIAN TOEPFER
CALCULATED-DESIGNED BY | CHECKED BY
FUNCTIONAL SUPERVISOR: BRIAN TOEPFER
STATE OF CALIFORNIA - DEPARTMENT OF TRANSPORTATION
Caltrans® MAINTENANCE

LAST REVISION | DATE PLOTTED => 31-AUG-2011
00-00-00 | TIME PLOTTED => 09:11

Dist	COUNTY	ROUTE	POST MILES TOTAL PROJECT	SHEET No.	TOTAL SHEETS
03	Yol	113	R0.0/R11.1	9	39

James M Ferreira 6-6-11
REGISTERED CIVIL ENGINEER DATE

6-21-11
PLANS APPROVAL DATE

REGISTERED PROFESSIONAL ENGINEER — JIM FERREIRA No. 48257 Exp. 6-30-12 CIVIL — STATE OF CALIFORNIA

THE STATE OF CALIFORNIA OR ITS OFFICERS OR AGENTS SHALL NOT BE RESPONSIBLE FOR THE ACCURACY OR COMPLETENESS OF SCANNED COPIES OF THIS PLAN SHEET.

NOTES:

1. EXISTING BARRIER DIMENSIONS SHALL BE VERIFIED BY THE CONTRACTOR IN THE FIELD BEFORE FABRICATING ANY END CONNECTION TO CONFORM WITH EXISTING CONDITIONS.
2. BRIDGE RAIL ANCHOR BLOCKS SHALL BE SHIELDED FROM TRAFFIC UNTIL FINAL MBGR CONNECTION OCCURS

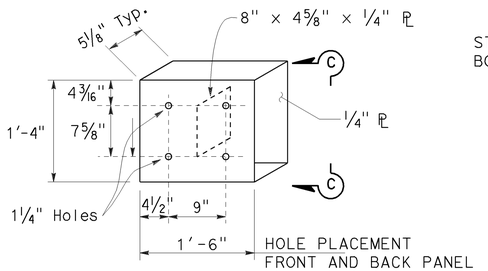

DETAIL B

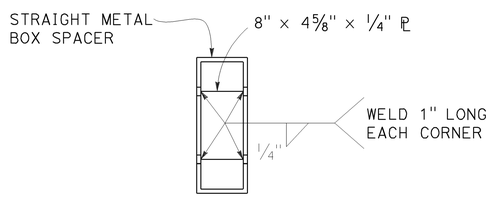

SECTION C-C

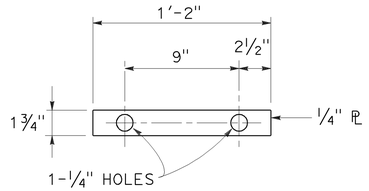

PLATE D

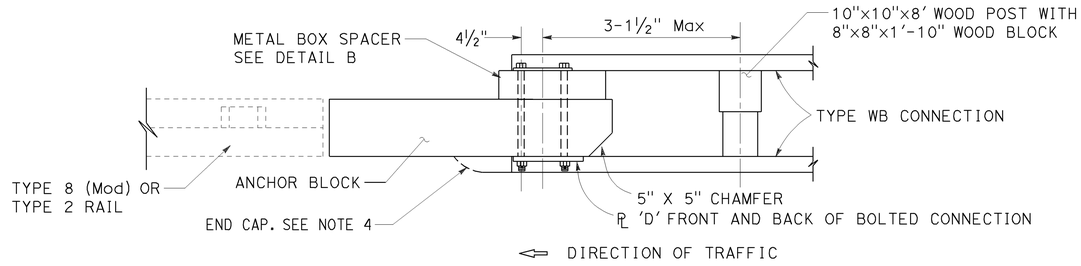

PLAN

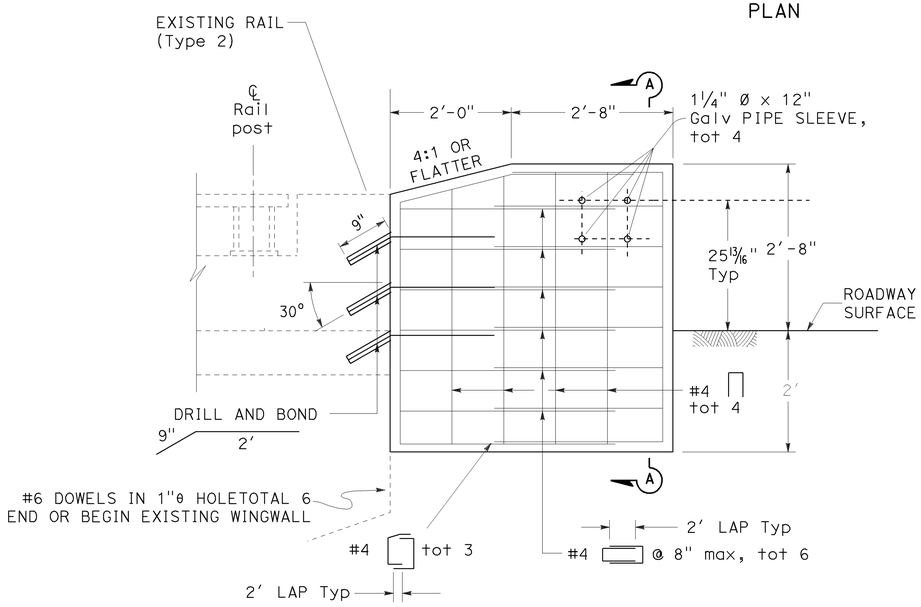

ELEVATION

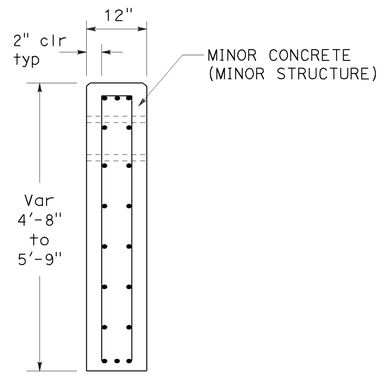

SECTION A-A

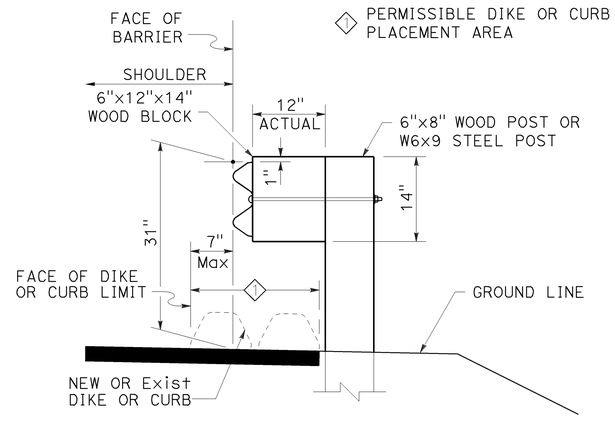

TYPICAL SECTION WITH DIKE

BRIDGE RAIL ANCHOR BLOCK
EAST WOODLAND OVEHEAD (Br No. 22-0130 L&R)
ROUTE 5/113 SEPARATION & OVERHEAD (Br. No. 22-0152 L&R)

CONSTRUCTION DETAILS

NO SCALE

C-5

STATE OF CALIFORNIA - DEPARTMENT OF TRANSPORTATION
Caltrans® MAINTENANCE
FUNCTIONAL SUPERVISOR: BRIAN TOEPFER
CALCULATED-DESIGNED BY: JIM FERREIRA
CHECKED BY: BRIAN TOEPFER
REVISED BY
DATE REVISED
LAST REVISION
DATE PLOTTED => 31-AUG-2011
TIME PLOTTED => 09:11
00-00-00

BORDER LAST REVISED 7/2/2010
USERNAME => s134507
DGN FILE => 03000020452ga005.dgn
RELATIVE BORDER SCALE IS IN INCHES 0 1 2 3
UNIT 0484
PROJECT NUMBER & PHASE 03000204521

Dist	COUNTY	ROUTE	POST MILES TOTAL PROJECT	SHEET No.	TOTAL SHEETS
03	Yol	113	R0.0/R11.1	10	39

REGISTERED CIVIL ENGINEER 6-18-11 DATE

6-21-11
PLANS APPROVAL DATE

REGISTERED PROFESSIONAL ENGINEER Jeffrey S. Jewett No. 49233 Exp. 9-30-12 CIVIL STATE OF CALIFORNIA

THE STATE OF CALIFORNIA OR ITS OFFICERS OR AGENTS SHALL NOT BE RESPONSIBLE FOR THE ACCURACY OR COMPLETENESS OF SCANNED COPIES OF THIS PLAN SHEET.

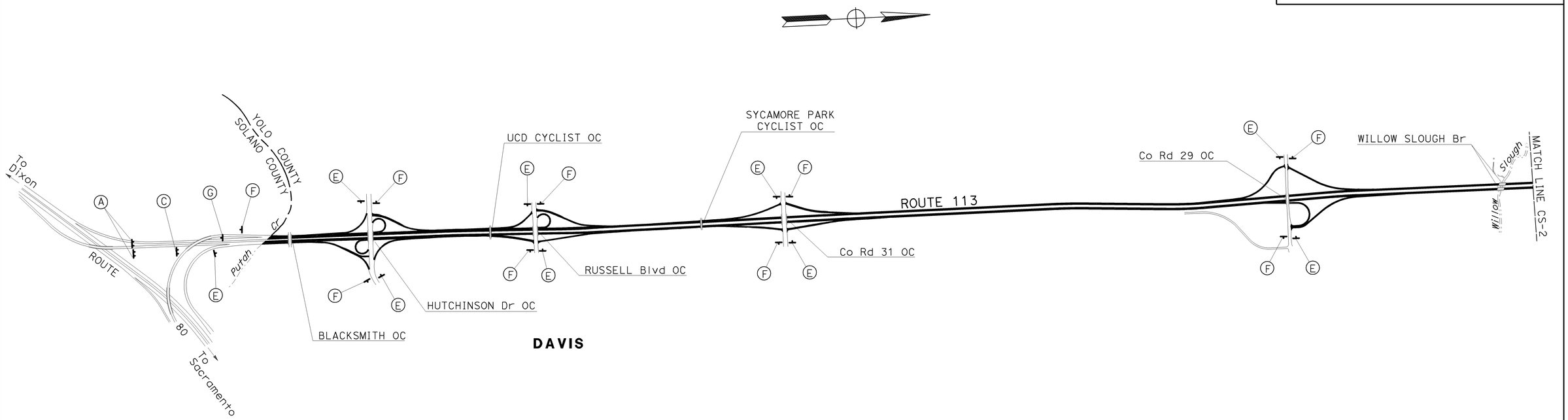

STATIONARY MOUNTED CONSTRUCTION AREA SIGNS

SIGN LETTER	SIGN CODE FEDERAL	SIGN CODE CALIFORNIA	PANEL SIZE	SIGN MESSAGE	NUMBER OF POST AND SIZE	NUMBER OF SIGNS
A	G20-1[Spec](11)		84" X 42"	ROAD WORK NEXT 11 MILES	2 - 4" X 6"	2
B	G20-1[Spec](11)		60" X 30"	ROAD WORK NEXT 11 MILES	2 - 4" X 4"	1
C		C40(Mod)	96" X 60"	TRAFFIC FINES DOUBLED IN WORK ZONES	2 - 6" X 6"	1
D		C40(MOd)	72" X 42"	TRAFFIC FINES DOUBLED IN WORK ZONES	2 - 4" X 6"	1
E	W20-1	C23	48" X 48"	ROAD WORK AHEAD	1 - 6" X 6"	18
F	G20-2	C14	36" X 18"	END ROAD WORK	1 - 4" X 4"	19
G		C14	48" X 24"	END ROAD WORK	1 - 4" X 6"	1

NOTE: EXACT SIGN LOCATION TO BE DETERMINED BY THE ENGINEER.

SIGN DETAILS

A G20-1[Spec](11)
ROAD WORK NEXT 11 MILES
8" C SERIES LETTERS
84"X42"
ORANGE BACKGROUND WITH BLACK LEGEND AND BORDERS.

C C40(Mod)<CA>
TRAFFIC FINES DOUBLED IN WORK ZONES
8" D SERIES LETTERS
96"X60"
RETROREFLECTIVE WHITE BACKGROUND WITH BLACK LEGEND AND BORDERS.

B G20-1[Spec](11)
ROAD WORK NEXT 11 MILES
6" C SERIES LETTERS
60"X30"
ORANGE BACKGROUND WITH BLACK LEGEND AND BORDERS.

D C40(Mod)<CA>
TRAFFIC FINES DOUBLED IN WORK ZONES
6" D SERIES LETTERS
72"X42"
RETROREFLECTIVE WHITE BACKGROUND WITH BLACK LEGEND AND BORDERS.

LEGEND:

- (X) CONSTRUCTION AREA SIGN LETTER
- SIGN - SINGLE POST
- SIGN - TWO POST
- <CA> CALIFORNIA SIGN CODE

CONSTRUCTION AREA SIGNS

NO SCALE

CS-1

STATE OF CALIFORNIA - DEPARTMENT OF TRANSPORTATION
Caltrans
TRAFFIC
FUNCTIONAL SUPERVISOR: JOHN KEBER
CALCULATED-DESIGNED BY: JACK KEMMERLY
CHECKED BY: JEFFREY S. JEWETT
REVISED BY
DATE REVISED

LAST REVISION 00-00-00
DATE PLOTTED => 31-AUG-2011
TIME PLOTTED => 09:11

Dist	COUNTY	ROUTE	POST MILES TOTAL PROJECT	SHEET No.	TOTAL SHEETS
03	Yol	113	R0.0/R11.1	11	39

REGISTERED CIVIL ENGINEER — 6-18-11 DATE

6-21-11
PLANS APPROVAL DATE

Jeffrey S Jewett
No. 49233
Exp. 9-30-12
CIVIL
REGISTERED PROFESSIONAL ENGINEER
STATE OF CALIFORNIA

THE STATE OF CALIFORNIA OR ITS OFFICERS OR AGENTS SHALL NOT BE RESPONSIBLE FOR THE ACCURACY OR COMPLETENESS OF SCANNED COPIES OF THIS PLAN SHEET.

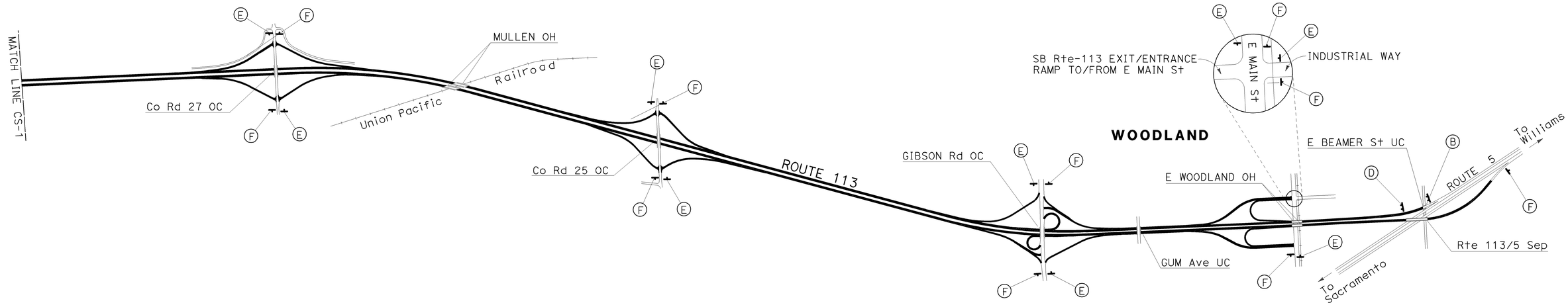

CONSTRUCTION AREA SIGNS

NO SCALE

CS-2

REVISED BY | DATE REVISED
JACK KEMMERLY | JEFFREY S. JEWETT
CALCULATED-DESIGNED BY | CHECKED BY
FUNCTIONAL SUPERVISOR: JOHN KEBER
STATE OF CALIFORNIA - DEPARTMENT OF TRANSPORTATION
Caltrans
TRAFFIC

LAST REVISION | DATE PLOTTED => 31-AUG-2011
00-00-00 | TIME PLOTTED => 09:11

BORDER LAST REVISED 7/2/2010 | USERNAME => s134507 | DGN FILE => 03000204521a002.dgn | RELATIVE BORDER SCALE IS IN INCHES 0 1 2 3 | UNIT 0390 | PROJECT NUMBER & PHASE 03000204521

Dist	COUNTY	ROUTE	POST MILES TOTAL PROJECT	SHEET No.	TOTAL SHEETS
03	Yol	113	R0.0/R11.1	12	39

James M Ferreira 6-6-11
REGISTERED CIVIL ENGINEER DATE

6-21-11
PLANS APPROVAL DATE

REGISTERED PROFESSIONAL ENGINEER
JIM FERREIRA
No. 48257
Exp. 6-30-12
CIVIL
STATE OF CALIFORNIA

THE STATE OF CALIFORNIA OR ITS OFFICERS OR AGENTS SHALL NOT BE RESPONSIBLE FOR THE ACCURACY OR COMPLETENESS OF SCANNED COPIES OF THIS PLAN SHEET.

NOTES:

1. ALL SIGN CODES SHOWN ARE FEDERAL SIGN CODES UNLESS OTHERWISE DESIGNATED AS CALIFORNIA SIGN CODES.
2. FOR ADDITIONAL CONSTRUCTION AREA SIGNS, SEE SHEET CS-1.

LEGEND:

- (X) CONSTRUCTION AREA SIGN LETTER
- <CA> CALIFORNIA SIGN CODE
- SIGN - SINGLE POST
- DIRECTION OF TRAVEL

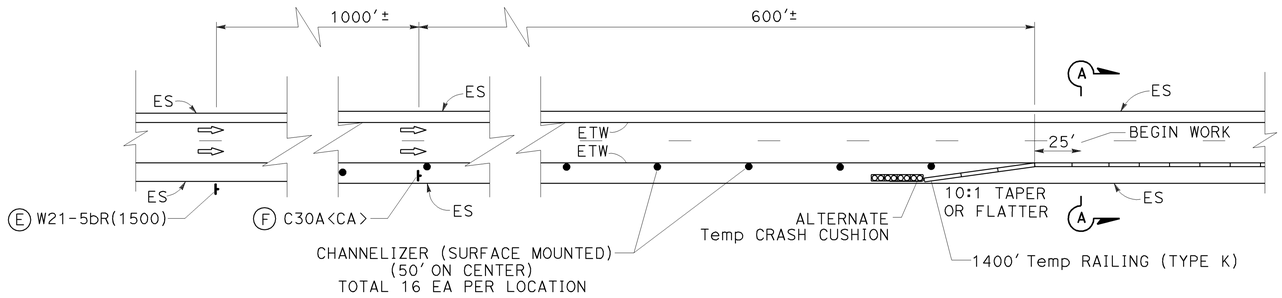

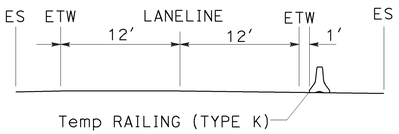

SECTION A-A

TEMPORARY RAILING (TYPE K) (TYPICAL)

ADDITIONAL STATIONARY MOUNTED CONSTRUCTION AREA SIGNS

SIGN LETTER	SIGN CODE		PANEL SIZE	SIGN MESSAGE	NUMBER OF POST AND SIZE	NUMBER OF SIGNS
	FEDERAL	CALIFORNIA				
(E)	W21-5bR(1500)		48" x 48"	RIGHT SHOULDER CLOSED 1500 FT	1 - 6" x 6"	1
(F)		C30A	48" x 48"	SHOULDER CLOSED	SEE NOTE 2	1

NOTE:

1. EXACT SIGN LOCATIONS TO BE DETERMINED BY THE ENGINEER.
2. PLACE ON TYPE II BARRICADE, OR AS DIRECTED BY THE ENGINEER.

TRAFFIC HANDLING PLAN

NO SCALE

TH-1

REVISED BY | DATE REVISED
JIM FERREIRA | BRIAN TOEPFER
CALCULATED-DESIGNED BY | CHECKED BY
FUNCTIONAL SUPERVISOR: BRIAN TOEPFER
STATE OF CALIFORNIA - DEPARTMENT OF TRANSPORTATION
Caltrans® MAINTENANCE

LAST REVISION 00-00-00 | DATE PLOTTED => 31-AUG-2011 | TIME PLOTTED => 09:11

BORDER LAST REVISED 7/2/2010 | USERNAME => s134507 | DGN FILE => 0300020452md001.dgn | RELATIVE BORDER SCALE IS IN INCHES 0 1 2 3 | UNIT 0484 | PROJECT NUMBER & PHASE 03000204521

Dist	COUNTY	ROUTE	POST MILES TOTAL PROJECT	SHEET No.	TOTAL SHEETS
03	Yol	113	R0.0/R11.1	13	39

James M Ferreira 6-6-11
REGISTERED CIVIL ENGINEER DATE

6-21-11
PLANS APPROVAL DATE

REGISTERED PROFESSIONAL ENGINEER — JIM FERREIRA — No. 48257 — Exp. 6-30-12 — CIVIL — STATE OF CALIFORNIA

THE STATE OF CALIFORNIA OR ITS OFFICERS OR AGENTS SHALL NOT BE RESPONSIBLE FOR THE ACCURACY OR COMPLETENESS OF SCANNED COPIES OF THIS PLAN SHEET.

NOTES:

1. TO PROTECT NEW ANCHOR BLOCK DURING CURE TIME, RE-HANG EXISTING RAIL ELEMENT IN EXISTING BOLT HOLES.

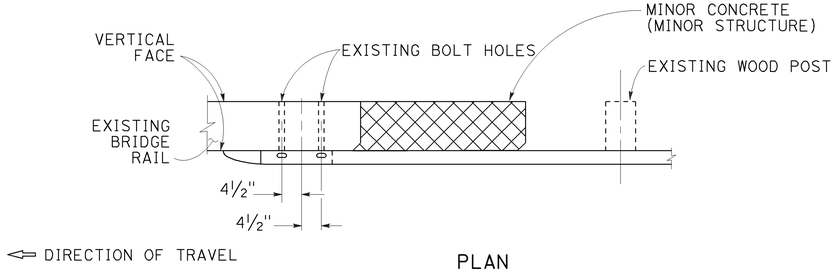

PLAN

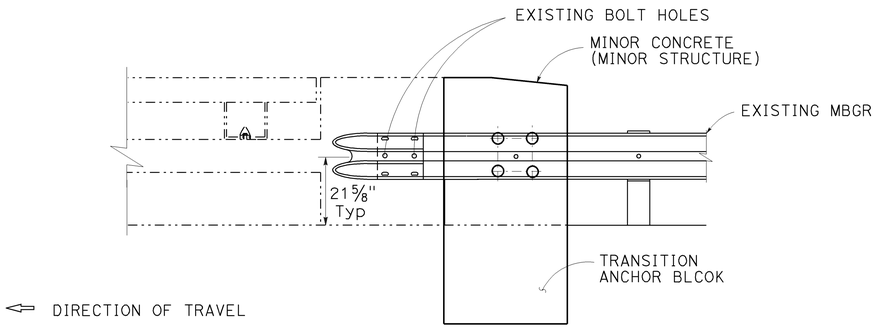

ELEVATION

TEMPORARY TRAFFIC PROTECTION DETAILS

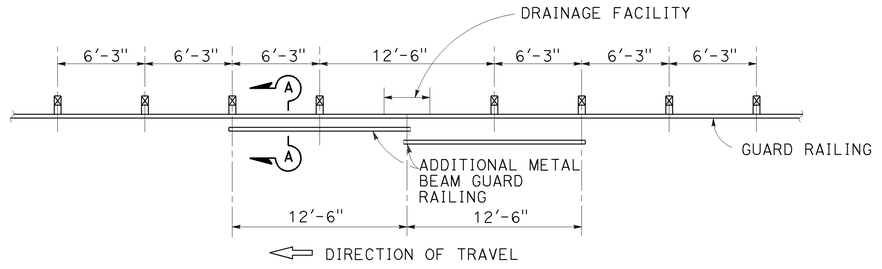

CASE 1
ONE POST OMITTED (SPLICE IN CENTER)

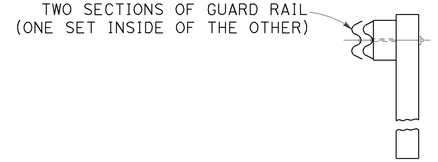

SECTION A-A

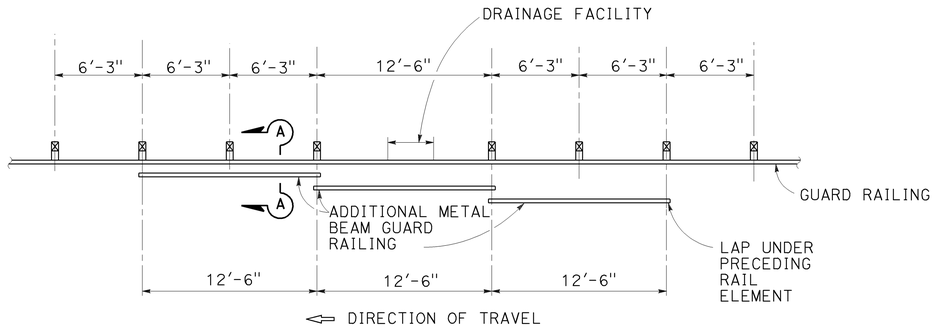

CASE 2
ONE POST OMITTED (SPLICE AT POSTS)

NESTED RAIL ELEMENTS

FOR DETAILS NOT SHOWN SEE STANDARD PLAN A77A1.

TRAFFIC HANDLING DETAILS

NO SCALE

THD-1

REVISED BY | DATE REVISED
JIM FERREIRA | BRIAN TOEPFER
CALCULATED-DESIGNED BY | CHECKED BY
FUNCTIONAL SUPERVISOR: BRIAN TOEPFER
STATE OF CALIFORNIA - DEPARTMENT OF TRANSPORTATION
MAINTENANCE
Caltrans

LAST REVISION 00-00-00 | DATE PLOTTED => 31-AUG-2011 | TIME PLOTTED => 09:11

BORDER LAST REVISED 7/2/2010 | USERNAME => s134507 | DGN FILE => 0300020452me001.dgn | RELATIVE BORDER SCALE IS IN INCHES 0 1 2 3 | UNIT 0484 | PROJECT NUMBER & PHASE 03000204521

Dist	COUNTY	ROUTE	POST MILES TOTAL PROJECT	SHEET No.	TOTAL SHEETS
03	Yol	113	R0.0/R11.1	14	39

James M. Ferreira 6-6-11
REGISTERED CIVIL ENGINEER DATE

6-21-11
PLANS APPROVAL DATE

REGISTERED PROFESSIONAL ENGINEER
JIM FERREIRA
No. 48257
Exp. 6-30-12
CIVIL
STATE OF CALIFORNIA

THE STATE OF CALIFORNIA OR ITS OFFICERS OR AGENTS SHALL NOT BE RESPONSIBLE FOR THE ACCURACY OR COMPLETENESS OF SCANNED COPIES OF THIS PLAN SHEET.

TEMPORARY RAILING (TYPE K)

NB/SB	PM	TEMPORARY RAILING (TYPE K)
		LF
NB	10.08 TO 10.67	3,200
TOTAL		3,200

CHANNELIZER (SURFACE MOUNTED)

NB/SB	PM	CHANNELIZER (SURFACE MOUNTED)
		EA
NB	9.93 TO 10.08	16
TOTAL		16

ALTERNATIVE TEMPORARY CRASH CUSHION

NB/SB	PM	ALTERNATIVE TEMPORARY CRASH CUSHION
		EA
NB	10.08	1
TOTAL		1

TRAFFIC HANDLING QUANTITIES

THQ-1

REVISED BY | DATE REVISED
JIM FERREIRA | BRIAN TOEPFER
CALCULATED-DESIGNED BY | CHECKED BY
FUNCTIONAL SUPERVISOR: BRIAN TOEPFER
STATE OF CALIFORNIA - DEPARTMENT OF TRANSPORTATION
Caltrans® MAINTENANCE

LAST REVISION | DATE PLOTTED => 31-AUG-2011
00-00-00 | TIME PLOTTED => 09:11

BORDER LAST REVISED 7/2/2010 | USERNAME => s134507 | DGN FILE => 0300020452mf001.dgn | RELATIVE BORDER SCALE IS IN INCHES 0 1 2 3 | UNIT 0484 | PROJECT NUMBER & PHASE 03000204521

Dist	COUNTY	ROUTE	POST MILES TOTAL PROJECT	SHEET No.	TOTAL SHEETS
03	Yol	113	R0.0/R11.1	15	39

Jeffrey S Jewett 6-18-11
REGISTERED CIVIL ENGINEER DATE

6-21-11
PLANS APPROVAL DATE

REGISTERED PROFESSIONAL ENGINEER — Jeffrey S Jewett — No. 49233 — Exp. 9-30-12 — CIVIL — STATE OF CALIFORNIA

THE STATE OF CALIFORNIA OR ITS OFFICERS OR AGENTS SHALL NOT BE RESPONSIBLE FOR THE ACCURACY OR COMPLETENESS OF SCANNED COPIES OF THIS PLAN SHEET.

PAVEMENT DELINEATION QUANTITIES

DESCRIPTION	4" THERMOPLASTIC TRAFFIC STRIPE				4" THERMOPLASTIC TRAFFIC STRIPE (BROKEN 17-7)	4" THERMOPLASTIC TRAFFIC STRIPE (BROKEN 36-12)		8" THERMOPLASTIC TRAFFIC STRIPE				8" THERMOPLASTIC TRAFFIC STRIPE (BROKEN 12-3)	PAVEMENT MARKER (RETROREFLECTIVE)				PAVEMENT MARKER (NON-REFLECTIVE)
	DETAIL NUMBER				DETAIL NUMBER	DETAIL NUMBER		DETAIL NUMBER				DETAIL NUMBER	TYPE C	TYPE D	TYPE G	TYPE H	TYPE AY
	21/23	25	25A	27B	9	12	14A	36	36A	38	38B	37					
	LF	LF	LF	LF	LF	LF	LF	LF	LF	LF	LF	LF	EA	EA	EA	EA	EA
NB MAINLINE ROUTE 113		58,555		60,931	2,218	56,390	3,168	4,224	2,376			4,910	396		1,500	1,221	
SB MAINLINE ROUTE 113		56,654		59,453	1,848	59,558	3,168	5,280	2,798			5,174	415		1,452	1,181	
NB EXIT RAMP TO HUTCHISON ROAD			1,270	1,270	310			150							14	54	
SB ENTRANCE RAMP FROM EB HUTCHISON ROAD			580	560												25	
NB ENTRANCE RAMP FROM EB HUTCHISON ROAD			560	510												24	
SB ENTRANCE RAMP FROM WB HUTCHISON ROAD			540	510												24	
NB ENTRANCE RAMP FROM WB HUTCHISON ROAD			660	650												29	
SB EXIT RAMP TO HUTCHISON ROAD			1,020	1,040	580					135					20	44	
NB EXIT RAMP TO RUSSELL Blvd			760	780	460										11	33	
SB ENTRANCE RAMP FROM EB RUSSELL Blvd			460	470												20	
SB ENTRANCE RAMP FROM WB RUSSELL Blvd			560	510												24	
NB ENTRANCE RAMP FROM RUSSELL Blvd			980	990												42	
SB EXIT RAMP TO RUSSELL Blvd			1,140	1,150						490					21	49	
NB EXIT RAMP TO COUNTY ROAD 31 ON RAMP/COVELL Blvd			860	860	350					240					27	37	
SB ENTRANCE RAMP FROM COUNTY ROAD 31 OFF RAMP/COVELL Blvd			920	920												39	
NB ENTRANCE RAMP FROM COUNTY ROAD 31 OFF RAMP/COVELL Blvd			960	960	460										20	41	
SB EXIT RAMP TO COUNTY ROAD 31 ON RAMP/COVELL Blvd			1,060	1,050	580					250					36	45	
SB ENTRANCE RAMP FROM COUNTY ROAD 29			1,110	1,130												47	
NB EXIT RAMP TO COUNTY ROAD 29	390		800	1,170										36		34	163
NB ENTRANCE RAMP FROM COUNTY ROAD 29	410		1,000	1,400										36		43	171
SB EXIT RAMP TO COUNTY ROAD 29			1,340	1,350												57	
NB EXIT RAMP TO COUNTY ROAD 27			1,320	1,320												56	
SB ENTRANCE RAMP FROM COUNTY ROAD 27			1,310	1,320												56	
NB ENTRANCE RAMP FROM COUNTY ROAD 27			1,390	1,420												59	
SB EXIT RAMP TO COUNTY ROAD 27			1,540	1,530												65	
NB EXIT RAMP TO COUNTY ROAD 25A			1,360	1,360												58	
SB ENTRANCE RAMP FROM COUNTY ROAD 25A			1,190	1,210												51	
NB ENTRANCE RAMP FROM COUNTY ROAD 25A			1,170	1,160												50	
SB EXIT RAMP TO COUNTY ROAD 25A			1,340	1,330												57	
NB EXIT RAMP TO GIBSON ROAD			1,510	1,510	360			200			140				39	16	
SB ENTRANCE RAMP FROM GIBSON ROAD			1,440	1,440												61	
NB ENTRANCE RAMP FROM EB GIBSON ROAD			590	530												26	
SB ENTRANCE RAMP FROM WB GIBSON ROAD			680	630												29	
NB ENTRANCE RAMP FROM WB GIBSON ROAD			1,310	1,270												56	
SB EXIT RAMP TO GIBSON ROAD			1,560	1,560	420			200			140				42	66	
NB EXIT RAMP TO E MAIN STREET	920		1,130	2,040	1,630					200				79	78	48	383
SB ENTRANCE RAMP FROM E MAIN STREET	770		1,110	1,890	1,410									66	60	47	321
NB ENTRANCE RAMP FROM E MAIN STREET	920		470	1,350										79		21	383
SB EXIT RAMP TO E MAIN STREET	760		860	1,570										65		37	317
SUB TOTAL	4,170	115,209	37,860	162,104	10,626	115,948	6,336	10,054	5,174	1,315	280	10,084	811	361	3,320	3,972	1,738
TOTAL	319,343				10,626	122,284		16,823				10,084	8,464				1,738

NOTE: THE DETAIL 23 SHALL BE PLACED ON THE DETAIL 21.

PAVEMENT DELINEATION QUANTITIES
PDQ-1

REVISED BY | DATE REVISED
JACK KEMMERLY | JEFFREY S. JEWETT
CALCULATED-DESIGNED BY | CHECKED BY
FUNCTIONAL SUPERVISOR: JOHN KEBER

STATE OF CALIFORNIA - DEPARTMENT OF TRANSPORTATION
Caltrans®
TRAFFIC

LAST REVISION | DATE PLOTTED => 31-AUG-2011
00-00-00 | TIME PLOTTED => 09:11

BORDER LAST REVISED 7/2/2010
USERNAME => s134507
DGN FILE => 0300020452nc001.dgn
RELATIVE BORDER SCALE IS IN INCHES 0 1 2 3
UNIT 0390
PROJECT NUMBER & PHASE 03000204521

Dist	COUNTY	ROUTE	POST MILES TOTAL PROJECT	SHEET No.	TOTAL SHEETS
03	Yol	113	R0.0/R11.1	16	39

Jeffrey S Jewett 6-18-11
REGISTERED CIVIL ENGINEER DATE

6-21-11
PLANS APPROVAL DATE

REGISTERED PROFESSIONAL ENGINEER — Jeffrey S Jewett — No. 49233 — Exp. 9-30-12 — CIVIL — STATE OF CALIFORNIA

THE STATE OF CALIFORNIA OR ITS OFFICERS OR AGENTS SHALL NOT BE RESPONSIBLE FOR THE ACCURACY OR COMPLETENESS OF SCANNED COPIES OF THIS PLAN SHEET.

THERMOPLASTIC PAVEMENT MARKING

DESCRIPTION	TYPE I (24') ARROW	TYPE II ARROW	TYPE III ARROW	TYPE II (B) ARROW	TYPE III (B) ARROW	TYPE V ARROW	TYPE VI ARROW	SIGNAL	STOP	AHEAD	LIMIT LINE	CROSSWALK	12" YELLOW DIAGONAL	SUBTOTAL
	SQFT	SQFT	SQFT	SQFT	SQFT	SQFT	SQFT	SQFT	SQFT	SQFT	SQFT	SQFT	SQFT	SQFT
NB MAINLINE ROUTE 113							252							252
NB EXIT RAMP TO HUTCHISON ROAD						132			22			90		244
SB ENTRANCE RAMP FROM EB HUTCHISON ROAD												47		47
NB ENTRANCE RAMP FROM EB HUTCHISON ROAD												50		50
SB ENTRANCE RAMP FROM WB HUTCHISON ROAD												50		50
NB ENTRANCE RAMP FROM WB HUTCHISON ROAD												45		45
SB EXIT RAMP TO HUTCHISON ROAD			168			33			88	31		130		450
NB EXIT RAMP TO RUSSELL Blvd		90	84			66		32		31		120		423
SB ENTRANCE RAMP FROM EB RUSSELL Blvd												80		80
SB ENTRANCE RAMP FROM WB RUSSELL Blvd												50		50
NB ENTRANCE RAMP FROM RUSSELL Blvd	31											125		156
SB EXIT RAMP TO RUSSELL Blvd		135	126			33		32		31		100		457
NB EXIT RAMP TO COUNTY ROAD 31/COVELL Blvd		90	84			66		32		31		95		398
SB ENTRANCE RAMP FROM COUNTY ROAD 31/COVELL Blvd	31											96		127
NB ENTRANCE RAMP FROM COUNTY ROAD 31/COVELL Blvd	62											103		165
SB EXIT RAMP TO COUNTY ROAD 31/COVELL Blvd		90	84			66		32		31		81		384
SB ENTRANCE RAMP FROM COUNTY ROAD 29	31													31
NB EXIT RAMP TO COUNTY ROAD 29						99			44	31	42			216
NB ENTRANCE RAMP FROM COUNTY ROAD 29	62												300	362
SB EXIT RAMP TO COUNTY ROAD 29						66			66	31	65			228
NB EXIT RAMP TO COUNTY ROAD 27						66			66	31	83			246
SB ENTRANCE RAMP FROM COUNTY ROAD 27	31													31
NB ENTRANCE RAMP FROM COUNTY ROAD 27	31													31
SB EXIT RAMP TO COUNTY ROAD 27						66			66	31	80			243
NB EXIT RAMP TO COUNTY ROAD 25A						66			66	31	84			247
SB ENTRANCE RAMP FROM COUNTY ROAD 25A	31													31
NB ENTRANCE RAMP FROM COUNTY ROAD 25A	31													31
SB EXIT RAMP TO COUNTY ROAD 25A						66			66	31	90			253
NB EXIT RAMP TO GIBSON ROAD			84			132		32		31	53			332
SB EXIT RAMP TO GIBSON ROAD			84			99		32		31	36			282
NB EXIT RAMP TO E MAIN STREET			84		146	132		64		62		162		650
SB ENTRANCE RAMP FROM E MAIN STREET	124						126							250
NB ENTRANCE RAMP FROM E MAIN STREET	62												575	637
SB EXIT RAMP TO E MAIN STREET				59		99		32		31		160		381
TOTAL	7,860													

PAVEMENT DELINEATION QUANTITIES

PDQ-2

REVISED BY | DATE REVISED
JACK KEMMERLY | JEFFREY S. JEWETT
CALCULATED-DESIGNED BY | CHECKED BY
FUNCTIONAL SUPERVISOR
JOHN KEBER

STATE OF CALIFORNIA - DEPARTMENT OF TRANSPORTATION
Caltrans
TRAFFIC

LAST REVISION DATE PLOTTED => 31-AUG-2011
00-00-00 TIME PLOTTED => 09:11

BORDER LAST REVISED 7/2/2010 | USERNAME => s134507 | DGN FILE => 0300020452nc002.dgn | RELATIVE BORDER SCALE IS IN INCHES 0 1 2 3 | UNIT 0390 | PROJECT NUMBER & PHASE 03000204521

Dist	COUNTY	ROUTE	POST MILES TOTAL PROJECT	SHEET No.	TOTAL SHEETS
03	Yol	113	R0.0/R11.1	17	39

Jeffrey S Jewett 6-18-11
REGISTERED CIVIL ENGINEER DATE

6-21-11
PLANS APPROVAL DATE

REGISTERED PROFESSIONAL ENGINEER — Jeffrey S Jewett — No. 49233 — Exp. 9-30-12 — CIVIL — STATE OF CALIFORNIA

THE STATE OF CALIFORNIA OR ITS OFFICERS OR AGENTS SHALL NOT BE RESPONSIBLE FOR THE ACCURACY OR COMPLETENESS OF SCANNED COPIES OF THIS PLAN SHEET.

REMOVE THERMOPLASTIC PAVEMENT MARKING

DESCRIPTION	TYPE I (24') ARROW	TYPE II ARROW	TYPE III ARROW	TYPE III (B) ARROW	TYPE V ARROW	TYPE VI ARROW	SIGNAL	STOP	AHEAD	LIMIT LINE	CROSSWALK	SUBTOTAL	12" YELLOW DIAGONAL
	SQFT	SQFT	SQFT	SQFT	SQFT	SQFT	SQFT	SQFT	SQFT	SQFT	SQFT	SQFT	SQFT
NB EXIT RAMP TO HUTCHISON ROAD					132			22			90	244	
SB ENTRANCE RAMP FROM EB HUTCHISON ROAD											47	47	
NB ENTRANCE RAMP FROM EB HUTCHISON ROAD											50	50	
SB ENTRANCE RAMP FROM WB HUTCHISON ROAD											50	50	
NB ENTRANCE RAMP FROM WB HUTCHISON ROAD											45	45	
SB EXIT RAMP TO HUTCHISON ROAD			168		33			88	31		130	450	
NB EXIT RAMP TO RUSSELL Blvd		90	84				32		31		120	357	
SB ENTRANCE RAMP FROM EB RUSSELL Blvd											80	80	
SB ENTRANCE RAMP FROM WB RUSSELL Blvd											50	50	
NB ENTRANCE RAMP FROM RUSSELL Blvd	31										125	156	
SB EXIT RAMP TO RUSSELL Blvd			168				32		31		100	331	
NB EXIT RAMP TO COUNTY ROAD 31/COVELL Blvd		90	84		66		32		31		95	398	
SB ENTRANCE RAMP FROM COUNTY ROAD 31/COVELL Blvd	31										96	127	
NB ENTRANCE RAMP FROM COUNTY ROAD 31/COVELL Blvd	62										103	165	
SB EXIT RAMP TO COUNTY ROAD 31/COVELL Blvd		90	84		66		32		31		81	384	
SB ENTRANCE RAMP FROM COUNTY ROAD 29	31											31	
NB EXIT RAMP TO COUNTY ROAD 29					99			44	31	42		216	
NB ENTRANCE RAMP FROM COUNTY ROAD 29	31				33							64	300
SB EXIT RAMP TO COUNTY ROAD 29					66			66	31	65		228	
NB EXIT RAMP TO COUNTY ROAD 27					66			66	31	83		246	
SB ENTRANCE RAMP FROM COUNTY ROAD 27	31											31	
NB ENTRANCE RAMP FROM COUNTY ROAD 27	31											31	
SB EXIT RAMP TO COUNTY ROAD 27					66			66	31	80		243	
NB EXIT RAMP TO COUNTY ROAD 25A					66			66	31	84		247	
SB ENTRANCE RAMP FROM COUNTY ROAD 25A	31											31	
NB ENTRANCE RAMP FROM COUNTY ROAD 25A	31											31	
SB EXIT RAMP TO COUNTY ROAD 25A					66			66	31	90		253	
NB EXIT RAMP TO GIBSON ROAD			84		132		32		31	53		332	
SB EXIT RAMP TO GIBSON ROAD			84		99		32		31	36		282	
NB EXIT RAMP TO E MAIN STREET			42	73	132		64		62		162	535	
SB ENTRANCE RAMP FROM E MAIN STREET					132	126						258	
NB ENTRANCE RAMP FROM E MAIN STREET	31				33							64	575
SB EXIT RAMP TO E MAIN STREET	31				99		32		31		160	353	
										TOTAL		6,410	875

PAVEMENT DELINEATION QUANTITIES

PDQ-3

REVISED BY | DATE REVISED
JACK KEMMERLY | JEFFREY S. JEWETT
CALCULATED-DESIGNED BY | CHECKED BY
FUNCTIONAL SUPERVISOR
JOHN KEBER

STATE OF CALIFORNIA - DEPARTMENT OF TRANSPORTATION
Caltrans®
TRAFFIC

LAST REVISION | DATE PLOTTED => 31-AUG-2011
00-00-00 | TIME PLOTTED => 09:11

BORDER LAST REVISED 7/2/2010

USERNAME => s134507
DGN FILE => 0300020452nc003.dgn

RELATIVE BORDER SCALE IS IN INCHES 0 1 2 3

UNIT 0390

PROJECT NUMBER & PHASE 03000204521

Dist	COUNTY	ROUTE	POST MILES TOTAL PROJECT	SHEET No.	TOTAL SHEETS
03	Yol	113	R0.0/R11.1	18	39

Jeffrey S Jewett 6-18-11
REGISTERED CIVIL ENGINEER DATE

6-21-11
PLANS APPROVAL DATE

REGISTERED PROFESSIONAL ENGINEER
Jeffrey S Jewett
No. 49233
Exp. 9-30-12
CIVIL
STATE OF CALIFORNIA

THE STATE OF CALIFORNIA OR ITS OFFICERS OR AGENTS SHALL NOT BE RESPONSIBLE FOR THE ACCURACY OR COMPLETENESS OF SCANNED COPIES OF THIS PLAN SHEET.

REMOVE TRAFFIC STRIPE

DESCRIPTION	LINEAR FEET
8" EXIT RAMP GORE STRIPING	20,108
8" ENTRANCE RAMP GORE STRIPING	10,348
8" LANE DROP STRIPING	4,034
8" CHANNELIZING LINE	3,190
TOTAL	37,680

CALCULATED-DESIGNED BY: JACK KEMMERLY
CHECKED BY: JEFFREY S. JEWETT
REVISED BY
DATE REVISED
FUNCTIONAL SUPERVISOR: JOHN KEBER
STATE OF CALIFORNIA - DEPARTMENT OF TRANSPORTATION
Caltrans
TRAFFIC

PAVEMENT DELINEATION QUANTITIES

PDQ-4

LAST REVISION DATE PLOTTED => 31-AUG-2011
TIME PLOTTED => 09:11
00-00-00

NOTES:

1. NO FOG SEAL ON PCC PAVEMENT FOR MAINLINE TRAVELED WAY.

Dist	COUNTY	ROUTE	POST MILES TOTAL PROJECT	SHEET No.	TOTAL SHEETS
03	Yol	113	R0.0/R11.1	19	39

James M Ferreira 6-6-11
REGISTERED CIVIL ENGINEER DATE

6-21-11
PLANS APPROVAL DATE

REGISTERED PROFESSIONAL ENGINEER
JIM FERREIRA
No. 48257
Exp. 6-30-12
CIVIL
STATE OF CALIFORNIA

THE STATE OF CALIFORNIA OR ITS OFFICERS OR AGENTS SHALL NOT BE RESPONSIBLE FOR THE ACCURACY OR COMPLETENESS OF SCANNED COPIES OF THIS PLAN SHEET.

ROADWAY QUANTITITES

NB or SB	PM	DESCRIPTION	COLD PLANE ASPHALT CONCRETE PAVEMENT	ASPHALTIC EMULSION (FOG SEAL COAT)	CRACK TREATMENT	REPLACE ASPHALT CONCRETE SURFACING	RUBBERIZED HOT MIX ASPHALT (OPEN GRADED)	TACK COAT	SEAL JOINT (EXISTING CONCRETE PAVEMENT)	GRIND EXISTING CONCRETE PAVEMENT	GRIND AND GROOVE EXISTING CONCRETE
			SQYD	TON	LNMI	CY	TON	TON	LF	SQYD	SQYD
SB	R0.0 TO R0.25	MAINLINE	7,100			180	500	2.4			
NB	R0.0 TO R0.20	MAINLINE	5,700			140	400	2.8			
SB	R0.25 TO R1.00	MAINLINE AUXILIARY LANE				440					
NB	R0.40 TO R0.86	MAINLINE AUXILIARY LANE				260					
SB	R0.25 TO R1.50	MAINLINE									15,000
NB	R0.20 TO R1.50	MAINLINE									20,000
SB	R1.50 TO R11.0	MAINLINE		28.0	38.2				50,000	160,000	
NB	R1.50 TO R11.1	MAINLINE		27.0	37.2				50,000	164,000	
SB	R0.15 TO R0.32	HUTCHISON ROAD ON RAMP		0.80	0.7	90	240	1.1			
NB	R0.17 TO R0.22	HUTCHISON ROAD OFF RAMP		0.85	0.8	40	300	1.4			
SB	R0.22 TO R0.45	HUTCHISON ROAD LOOP ON RAMP		0.45	0.4	120	140	0.7			
NB	R0.37 TO R0.64	HUTCHISON ROAD LOOP ON RAMP		0.50	0.5	60	150	0.7			
SB	R0.60 TO R0.64	HUTCHISON ROAD OFF RAMP		0.55	0.7	30	270	1.3			
NB	R0.52 TO R0.77	HUTCHISON ROAD ON RAMP		0.95	0.8	110	270	1.3			
SB	R0.75 TO R0.98	RUSSELL Blvd ON RAMP		0.65	0.6	80	200	0.9			
NB	R0.87 TO R0.94	RUSSELL Blvd OFF RAMP		0.45	0.8	40	200	0.9			
SB	R0.88 TO R1.12	RUSSELL Blvd LOOP ON RAMP		0.45	0.4	200	140	0.7			
SB	R1.28 TO R1.38	RUSSELL Blvd OFF RAMP		0.65	0.8	50	200	0.9			
NB	R1.27 TO R1.52	RUSSELL Blvd ON RAMP		0.65	0.7	110	200	0.9			
SB	R1.64 TO R1.90	COUNTY ROAD 31 ON RAMP (COVELL Blvd)		0.65	0.7	110	230	1.1			
NB	R1.82 TO R1.90	COUNTY ROAD 31 OFF RAMP (COVELL Blvd)		0.50	0.6	50	220	1.0			
SB	R2.28 TO R2.36	COUNTY ROAD 31 OFF RAMP (COVELL Blvd)		0.55	0.7	50	270	1.2			
NB	R2.27 TO R2.52	COUNTY ROAD 31 ON RAMP (COVELL Blvd)		0.70	0.8	110	310	1.4			
SB	R3.92 TO R4.10	COUNTY ROAD 29 ON RAMP		0.75	0.8	120	280	1.2			
NB	R4.09 TO R4.10	COUNTY ROAD 29 OFF RAMP		0.50	0.6	50	260	1.1			
SB	R4.10 TO R4.33	COUNTY ROAD 29 OFF RAMP		0.70	0.7	90	260	1.1			
NB	R4.10 TO R4.34	COUNTY ROAD 29 ON RAMP		0.80	0.9	130	330	1.4			
SB	R5.87 TO R6.11	COUNTY ROAD 27 ON RAMP		0.80	0.8	100	300	1.2			
NB	R5.88 TO R6.11	COUNTY ROAD 27 OFF RAMP		0.70	0.7	40	270	1.1			
SB	R6.11 TO R6.37	COUNTY ROAD 27 OFF RAMP		0.80	0.7	50	280	1.2			
NB	R6.11 TO R6.35	COUNTY ROAD 27 ON RAMP		0.85	0.8	100	310	1.3			
SB	R7.42 TO R7.66	COUNTY ROAD 25 ON RAMP		0.75	0.8	100	280	1.2			
NB	R7.45 TO R7.66	COUNTY ROAD 25 OFF RAMP		0.70	0.7	40	270	1.1			
SB	R7.66 TO R7.86	COUNTY ROAD 25 OFF RAMP		0.70	0.7	40	270	1.1			
NB	R7.66 TO R7.88	COUNTY ROAD 25 ON RAMP		0.70	0.7	100	270	1.1			
SB	R8.74 TO R8.96	EAST GIBSON ROAD ON RAMP		0.80	0.9	100	270	1.3			
NB	R8.98 TO R8.98	EAST GIBSON ROAD OFF RAMP		0.90	0.9	50	350	1.7			
SB	R9.05 TO R9.27	EAST GIBSON ROAD LOOP ON RAMP		0.50	0.6	100	100	0.5			
NB	R9.18 TO R9.28	EAST GIBSON ROAD LOOP ON RAMP		0.50	0.6	90	160	0.7			
SB	R9.46 TO R9.51	EAST GIBSON ROAD OFF RAMP		0.85	0.9	40	310	1.4			
NB	R9.19 TO R9.37	EAST GIBSON ROAD ON RAMP		0.85	0.8	100	250	1.2			
SB	R7.42 TO R7.66	EAST MAIN STREET ON RAMP		1.10	1.3	70	510	2.4			
NB	R7.45 TO R7.66	EAST MAIN STREET OFF RAMP		0.95	0.9	40	530	2.5			
SB	R7.66 TO R7.86	EAST MAIN STREET OFF RAMP		0.75	0.7	40	270	1.2			
NB	R7.66 TO R7.88	EAST MAIN STREET ON RAMP		0.70	1.1	140	280	1.3			
		TOTAL	12,800	81.00	103.0	4000	10,650	49.0	100,000	324,000	35,000

REVISED BY | DATE REVISED
JIM FERREIRA | BRIAN TOEPFER
CALCULATED-DESIGNED BY | CHECKED BY
FUNCTIONAL SUPERVISOR: BRIAN TOEPFER
STATE OF CALIFORNIA - DEPARTMENT OF TRANSPORTATION
MAINTENANCE
Caltrans

LAST REVISION | DATE PLOTTED => 31-AUG-2011
00-00-00 | TIME PLOTTED => 09:11

SUMMARY OF QUANTITIES

Q-1

BORDER LAST REVISED 7/2/2010 | USERNAME => s134507 | DGN FILE => 0300020452pa001.dgn | RELATIVE BORDER SCALE IS IN INCHES 0 1 2 3 | UNIT 0484 | PROJECT NUMBER & PHASE 03000204521

Dist	COUNTY	ROUTE	POST MILES TOTAL PROJECT	SHEET No.	TOTAL SHEETS
03	Yol	113	R0.0/R11.1	20	39

James M. Ferreira 6-6-11
REGISTERED CIVIL ENGINEER DATE

6-21-11
PLANS APPROVAL DATE

REGISTERED PROFESSIONAL ENGINEER
JIM FERREIRA
No. 48257
Exp. 6-30-12
CIVIL
STATE OF CALIFORNIA

THE STATE OF CALIFORNIA OR ITS OFFICERS OR AGENTS SHALL NOT BE RESPONSIBLE FOR THE ACCURACY OR COMPLETENESS OF SCANNED COPIES OF THIS PLAN SHEET.

IMPORTED MATERIAL (SHOULDER BACKING)

NB or SB	LOCATION		IMPORTED MATERIAL (SHOULDER BACKING)
	PM	SIDE	TON
NB	R10.08 TO R10.67	Rt	3600
		TOTAL	3600

REPAIR SPALLED JOINTS

NB or SB	PM	REPAIR SPALLED JOINTS
		SQYD
NB	R0.20 TO R11.1	5
SB	R0.25 TO R11.0	5
	TOTAL	10

REMOVE ASPHALT CONCRETE DIKE

NB or SB	LOCATION			REMOVE ASPHALT CONCRETE DIKE
	PM	DESCRIPTION	SIDE	LF
NB	R10.08 TO R10.67	MAINLINE	Rt	3130
NB	R1.82 TO R1.90	COUNTY ROAD 31 ON RAMP (COVELL Blvd)	Rt	720
NB	R2.27 TO R2.52	COUNTY ROAD 31 OFF RAMP (COVELL Blvd)	Lt	1050
			TOTAL	4900

REPLACE CONCRETE PAVEMENT (RAPID STRENGTH CONCRETE)

NB or SB	LOCATION		REPLACE CONCRETE PAVEMENT (RAPID STRENGTH CONCRETE)	
	PM	DESCRIPTION	LF (N)	CY
NB	R3.45 TO R3.455	#1 LANE	25	9.2
NB	R3.45 TO R3.466	#2 LANE	87	32.0
NB	R3.462 TO R3.466	#1 LANE	25	9.2
NB	R4.75 TO R4.756	#1 LANE	31	11.4
NB	R4.75 TO R4.756	#2 LANE	31	11.4
NB	R2.65 TO R2.653	#2 LANE	18	6.7
NB	R2.665 TO R2.673	#1 LANE	25	9.2
NB	R10.47 TO R10.472	#2 LANE	13	4.8
SB	R1.45 TO R1.454	#2 LANE	19	7.0
SB	R3.45 TO R3.452	#2 LANE	12	4.4
SB	R3.85 TO R3.853	#2 LANE	18	6.6
SB	R3.859 TO R3.865	#2 LANE	31	11.4
SB	R4.15 TO R4.154	#2 LANE	19	7.0
SB	R4.25 TO R4.257	#2 LANE	37	13.6
SB	R4.262 TO R4.265	#2 LANE	18	6.6
			TOTAL	150.5

(N) - NOT A SEPARATE PAY ITEM, FOR INFORMATION ONLY.

MINOR CONCRETE (MINOR STRUCTURE)

NB or SB	PM	DESCRIPTION	BB or EB	L+ or R+	BRIDGE RAIL ANCHOR BLOCK	
					MINOR CONCRETE (MINOR STRUCTURE)	(N) MISCELLANEOUS IRON AND STEEL
					CY	LB
SB	R10.20	EAST MAIN St UC	BB	Lt	0.8	141
SB	R10.26	EAST MAIN St UC	EB	Lt	0.8	141
NB	R10.21	EAST MAIN St UC	BB	Rt	0.8	141
NB	R10.21	EAST MAIN St UC	EB	Rt	0.8	141
NB	R10.66	Rte 5/113 Sep/OH	BB	Lt	0.8	141
NB	R10.66	Rte 5/113 Sep/OH	BB	Rt	0.8	141
NB	R10.75	Rte 5/113 Sep/OH	EB	Lt	0.8	141
NB	R10.75	Rte 5/113 Sep/OH	EB	Rt	0.8	141
				TOTAL	6.4	

(N) - NOT A SEPARATE PAY ITEM, FOR INFORMATION ONLY.

SUMMARY OF QUANTITIES
Q-2

CALCULATED-DESIGNED BY: JIM FERREIRA
CHECKED BY: BRIAN TOEPFER
FUNCTIONAL SUPERVISOR: BRIAN TOEPFER
REVISED BY / DATE REVISED:
STATE OF CALIFORNIA - DEPARTMENT OF TRANSPORTATION
MAINTENANCE
Caltrans

LAST REVISION DATE PLOTTED => 31-AUG-2011
00-00-00 TIME PLOTTED => 09:11

BORDER LAST REVISED 7/1/2010
USERNAME => s134507
DGN FILE => 0300020452pa002.dgn
RELATIVE BORDER SCALE IS IN INCHES 0 1 2 3
UNIT 0484
PROJECT NUMBER & PHASE 03000204521

NOTES:

Dist	COUNTY	ROUTE	POST MILES TOTAL PROJECT	SHEET No.	TOTAL SHEETS
03	Yol	113	R0.0/R11.1	21	39

James M Ferreira 6-6-11
REGISTERED CIVIL ENGINEER DATE

6-21-11
PLANS APPROVAL DATE

REGISTERED PROFESSIONAL ENGINEER
JIM FERREIRA
No. 48257
Exp. 6-30-12
CIVIL
STATE OF CALIFORNIA

THE STATE OF CALIFORNIA OR ITS OFFICERS OR AGENTS SHALL NOT BE RESPONSIBLE FOR THE ACCURACY OR COMPLETENESS OF SCANNED COPIES OF THIS PLAN SHEET.

HOT MIX ASPHALT

NB or SB	LOCATION			PLACE HOT MIX APHALT DIKE (TYPE A)	PLACE HOT MIX ASPHALT (MISCELLANEOUS AREA)	HOT MIX ASPHALT (TYPE A)
	PM	DESCRIPTION	SIDE	LF	SQYD	TON
NB	R10.08 TO R10.67	MAINLINE	R†	3130	2300	450
NB	R1.82 TO R1.90	COUNTY ROAD 31 ON RAMP (COVELL Blvd)	R†	720		20
NB	R2.27 TO R2.52	COUNTY ROAD 31 OFF RAMP (COVELL Blvd)	L†	1050		30
			TOTAL	4900	2300	500

ROADWAY EXCAVATION

NB or SB	LOCATION		ROADWAY EXCAVATION
	PM	SIDE	CY
NB	R10.08 TO R10.67	R†	1100
		TOTAL	1100

TRANSITION RAILING (TYPE WB)

NB or SB	PM	DESCRIPTION	BB or EB	L† or R†	TRANSITION RAILING (TYPE WB)
					EA
NB	R4.94	WILLOW SLOUGH	BB	L†	1
NB	R4.94	WILLOW SLOUGH	BB	R†	1
SB	R4.97	WILLOW SLOUGH	EB	L†	1
SB	R4.97	WILLOW SLOUGH	EB	R†	1
SB	R6.81	MULLEN OH	BB	L†	1
NB	R6.77	MULLEN OH	BB	L†	1
NB	R6.77	MULLEN OH	BB	R†	1
SB	R6.87	MULLEN OH	EB	L†	1
SB	R6.87	MULLEN OH	EB	R†	1
NB	R6.82	MULLEN OH	EB	R†	1
SB	R10.20	EAST WOODLAND Sep & OH	BB	L†	1
SB	R10.26	EAST WOODLAND Sep & OH	EB	L†	1
NB	R10.21	EAST WOODLAND Sep & OH	BB	R†	1
NB	R10.21	EAST WOODLAND Sep & OH	EB	R†	1
NB	R10.66	Rte 5/113 Sep & OH	BB	L†	1
NB	R10.66	Rte 5/113 Sep & OH	BB	R†	1
NB	R10.75	Rte 5/113 Sep & OH	EB	L†	1
NB	R10.75	Rte 5/113 Sep & OH	EB	R†	1
				TOTAL	18

CLASS 2 AGGREGATE BASE

NB or SB	LOCATION		CLASS 2 AGGREGATE BASE
	PM	SIDE	CY
NB	R10.08 TO R10.67	R†	900
		TOTAL	900

METAL BEAM GUARD RAILING

NB or SB	LOCATION		REMOVE METAL BEAM GUARD RAILING	METAL BEAM GUARD RAILING
	PM	SIDE	LF	LF
NB	R10.08 TO R10.67	R†	3200	3200
		TOTAL	3200	3200

SUMMARY OF QUANTITIES

Q-3

REVISED BY | DATE REVISED
JIM FERREIRA | BRIAN TOEPFER
CALCULATED-DESIGNED BY | CHECKED BY
FUNCTIONAL SUPERVISOR: BRIAN TOEPFER
STATE OF CALIFORNIA - DEPARTMENT OF TRANSPORTATION
MAINTENANCE
Caltrans

LAST REVISION | DATE PLOTTED => 31-AUG-2011
00-00-00 | TIME PLOTTED => 09:11

BORDER LAST REVISED 7/2/2010 | USERNAME => s134507 | DGN FILE => 0300020452pa003.dgn | RELATIVE BORDER SCALE IS IN INCHES 0 1 2 3 | UNIT 0484 | PROJECT NUMBER & PHASE 03000204521

Dist	COUNTY	ROUTE	POST MILES TOTAL PROJECT	SHEET No.	TOTAL SHEETS
03	Yol	113	R0.0/R11.1	22	39

Mary Ann Hudspeth 6-15-11
REGISTERED ELECTRICAL ENGINEER DATE

6-21-11
PLANS APPROVAL DATE

REGISTERED PROFESSIONAL ENGINEER
MARY ANN HUDSPETH
No. 17245
Exp. 06-30-12
ELECTRICAL
STATE OF CALIFORNIA

THE STATE OF CALIFORNIA OR ITS OFFICERS OR AGENTS SHALL NOT BE RESPONSIBLE FOR THE ACCURACY OR COMPLETENESS OF SCANNED COPIES OF THIS PLAN SHEET.

QUANTITIES

LOCATION	DESCRIPTION	Approx POST MILE	DETECTOR HANDHOLE	PIEZO SENSORS	TYPE A LOOPS	TYPE A LOOPS (6' X 12')	TYPE E LOOPS	TYPE D LOOPS
1	ROUTE 113 AND RUSSELL Blvd, S SIDE OF OC, COUNT STATION 715	R0.87	4		6	1		
	ROUTE 113 AND RUSSELL Blvd, NB OFF-RAMP	R1.08	2		6			3
	ROUTE 113 AND RUSSELL Blvd, SB OFF-RAMP	R1.08	2		6			3
2	ROUTE 113 AND COUNTY ROAD 31 (COVELL Blvd), NB OFF-RAMP	R2.08	2		8			2
	ROUTE 113 AND COUNTY ROAD 31 (COVELL Blvd), SB OFF-RAMP	R2.08	2		8			2
3	ROUTE 113 AND COUNTY ROAD 29, N SIDE OF OC COUNT STATION 716	R4.98	4	8			4	
4	ROUTE 113 AND E GIBSON ROAD, NB OFF-RAMP	R9.23	2		8			2
	ROUTE 113 AND E GIBSON ROAD, SB OFF-RAMP	R9.23	2		8			2
5	ROUTE 113 AND E MAIN St, NB OFF-RAMP	R10.15	2		8			2
	ROUTE 113 AND E MAIN St, SB OFF-RAMP	R10.15	2		5			1
	ROUTE 113 AND E MAIN St, COUNT STATIONS 717 (NB) AND 719 (SB)	R10.24	10		16			

GENERAL NOTES:

1. PIEZOELECTRIC AXLE SENSOR SHALL MATCH EXISTING ROADWAY PROFILE AND CROSS-SLOPE.

PROJECT NOTE:

[1] [RC] EXISTING PULL BOX, EXISTING LOOP CONDUCTORS, EXISTING DETECTOR HANDHOLE AND EXISTING CONDUIT THAT ENTERS pb FROM THE DETECTOR HANDHOLE. [BC].

[2] [RC] EXISTING LOOP CONDUCTORS, EXISTING DETECTOR HANDHOLE AND EXISTING CONDUIT THAT ENTERS pb FROM THE DETECTOR HANDHOLE. [CB] AND [SC].

ABBREVIATIONS:

CTID - CALTRANS IDENTIFICATION NUMBER
mlc - magnetometer detector lead-in cable
PG&E - PACIFIC GAS AND ELECTRIC COMPANY
stc - EXISTING SCREENED TRANSMISSION CABLE
STC - SCREENED TRNASMISSION CABLE

LEGEND:

- EXISTING PIEZOELECTRIC AXLE SENSOR
- PIEZOELECTRIC AXLE SENSOR

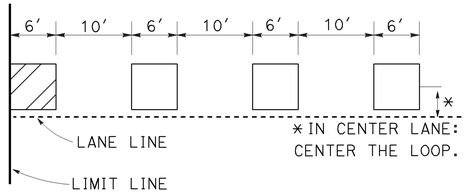

TYPICAL TYPE A AND TYPE D LOOP DETAIL

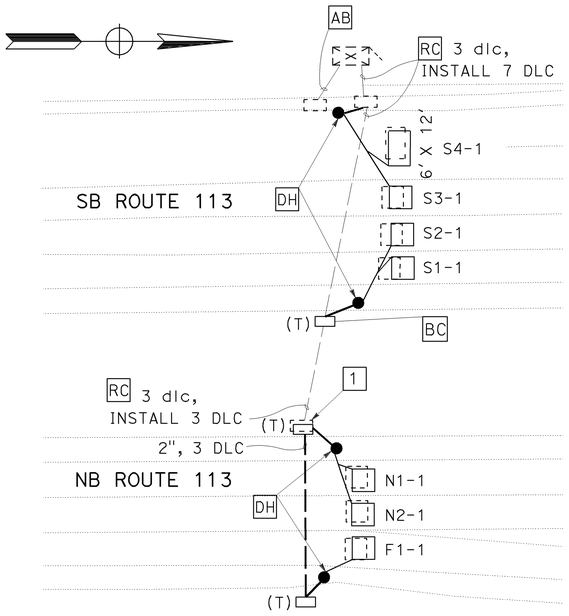

COUNT STATION No. 715

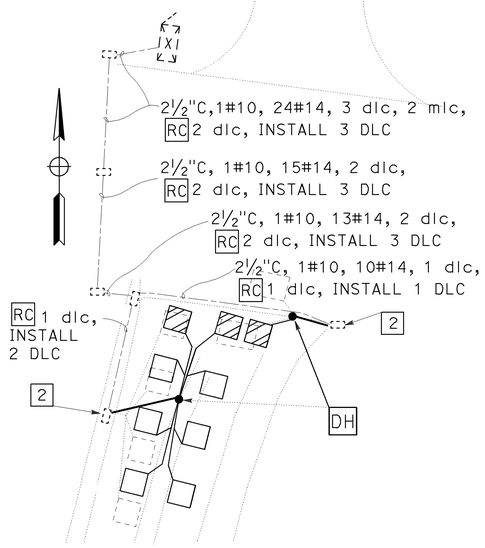

NB OFF-RAMP

LOCATION 1

ROUTE 113 AND RUSSELL BLVD

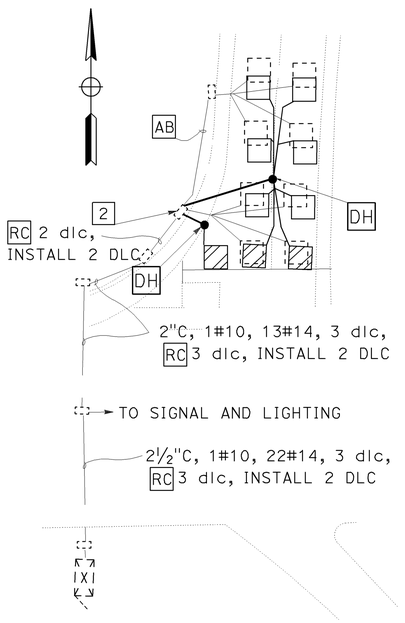

SB OFF-RAMP

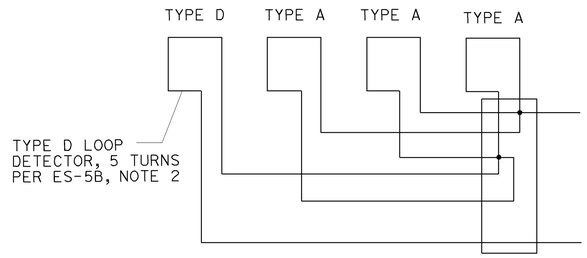

TYPICAL 1D + 3A LOOP CONNECTION

N1-2

1 = ENTERING
2 = LEAVING
LANE NUMBER

1 = 1ST LANE FROM THE LEFT
2 = 2ND LANE FROM THE LEFT
3 = 3RD LANE FROM THE LEFT
4 = 4TH LANE FROM THE LEFT
5 = 5TH LANE FROM THE LEFT

E = EASTBOUND
W = WESTBOUND
N = NORTHBOUND
S = SOUTHBOUND
O = ONRAMP
F = OFFRAMP

FREEWAY MAINLINE DETECTOR

DETECTOR IDENTIFICATION

APPROVED FOR ELECTRICAL WORK ONLY

DETECTOR LOOP

NO SCALE

E-1

STATE OF CALIFORNIA - DEPARTMENT OF TRANSPORTATION
ELECTRICAL DESIGN
Caltrans

CALCULATED-DESIGNED BY
CHECKED BY
FUNCTIONAL SUPERVISOR: STEVEN BLOCK
REVISED BY: ZAHRA NIKNAFS
DATE REVISED: MARY ANN HUDSPETH

LAST REVISION
DATE PLOTTED => 31-AUG-2011
TIME PLOTTED => 09:11
06-15-11

BORDER LAST REVISED 7/2/2010
USERNAME => s134507
DGN FILE => 0300020452ua001.dgn
RELATIVE BORDER SCALE IS IN INCHES 0 1 2 3
UNIT 0402
PROJECT NUMBER & PHASE 03000204521

Dist	COUNTY	ROUTE	POST MILES TOTAL PROJECT	SHEET No.	TOTAL SHEETS
03	Yol	113	R0.0/R11.1	23	39

Mary Ann Hudspeth 6-15-11
REGISTERED ELECTRICAL ENGINEER DATE

6-21-11
PLANS APPROVAL DATE

REGISTERED PROFESSIONAL ENGINEER
MARY ANN HUDSPETH
No. 17245
Exp. 06-30-12
ELECTRICAL
STATE OF CALIFORNIA

THE STATE OF CALIFORNIA OR ITS OFFICERS OR AGENTS SHALL NOT BE RESPONSIBLE FOR THE ACCURACY OR COMPLETENESS OF SCANNED COPIES OF THIS PLAN SHEET.

PROJECT NOTES:

2 RC EXISTING LOOP CONDUCTORS, EXISTING DETECTOR HANDHOLE AND EXISTING CONDUIT THAT ENTERS pb FROM THE DETECTOR HANDHOLE. CB AND SC.

3 RC EXISTING LOOP CONDUCTORS, EXISTING SCREENED TRANSMISSION CABLE, AND EXISTING PULL BOX. AB EXISTING ROADWAY CONDUIT AND EXISTING PIEZOELECTRIC AXLE SENSORS.

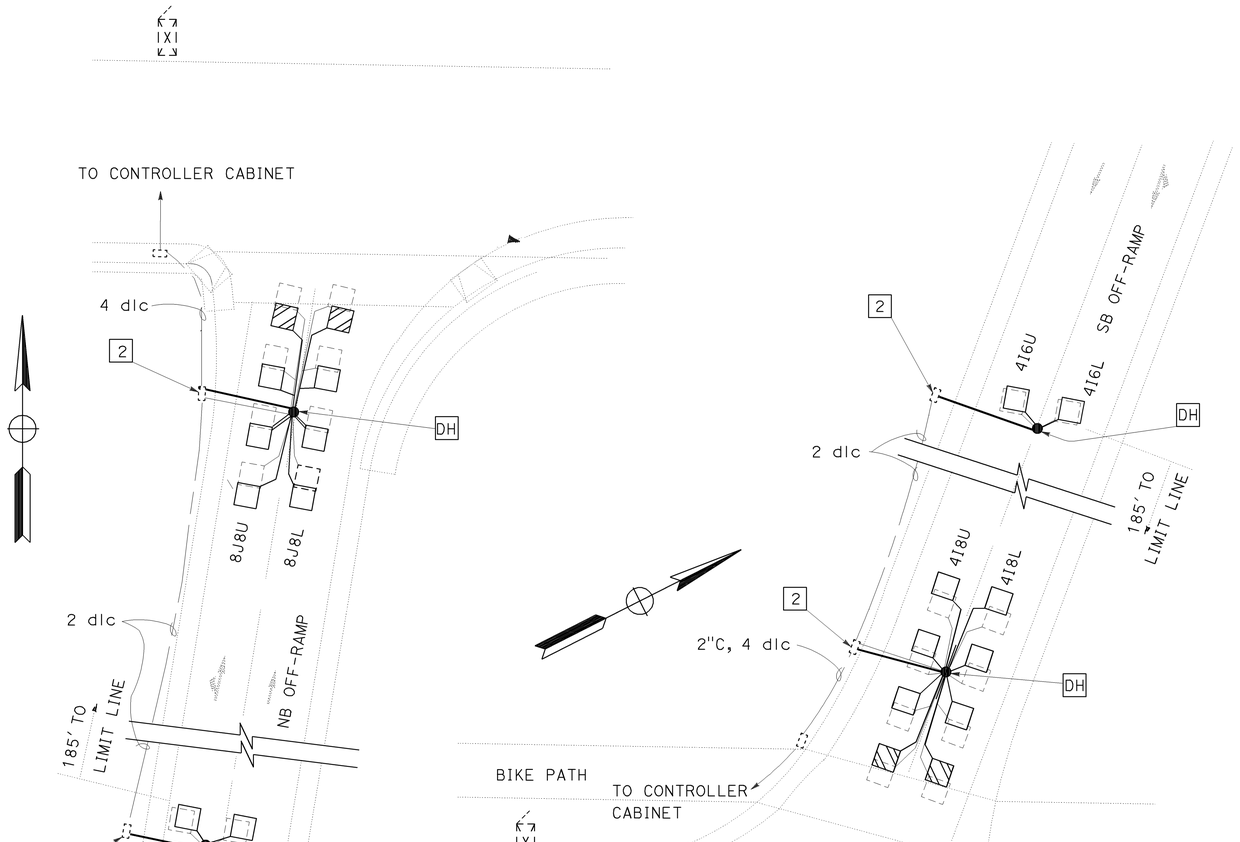

NB OFF-RAMP

SB OFF-RAMP

LOCATION 2

ROUTE 113 AND COUNTY ROAD 31 (COVELL Blvd)

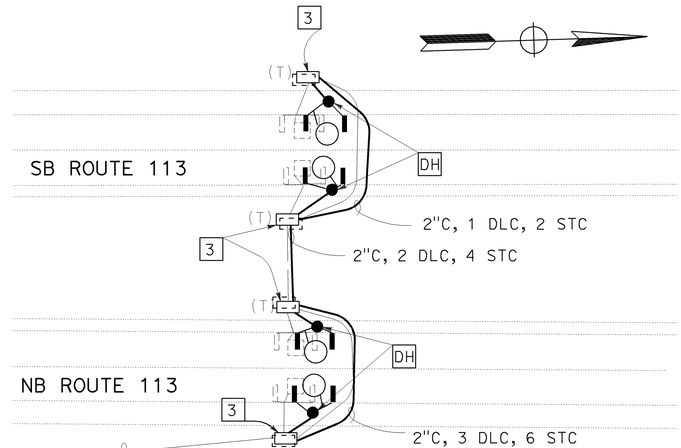

LOCATION 3

ROUTE 113 AND COUNTY ROAD 29, N SIDE OF OC
CS No. 716

APPROVED FOR ELECTRICAL WORK ONLY

MODIFY AUTOMATIC VEHICLE CLASSIFICATION SYSTEM DETECTOR LOOP

NO SCALE

E-2

STATE OF CALIFORNIA - DEPARTMENT OF TRANSPORTATION
Caltrans
ELECTRICAL DESIGN
FUNCTIONAL SUPERVISOR: STEVEN BLOCK
CALCULATED-DESIGNED BY: ZAHRA NIKNAFS
CHECKED BY: MARY ANN HUDSPETH
REVISED BY
DATE REVISED

LAST REVISION | DATE PLOTTED => 31-AUG-2011
TIME PLOTTED => 09:11
06-15-11

BORDER LAST REVISED 7/2/2010 | USERNAME => s134507 | DGN FILE => 0300020452ua002.dgn | RELATIVE BORDER SCALE IS IN INCHES 0 1 2 3 | UNIT 0402 | PROJECT NUMBER & PHASE 03000204521

Dist	COUNTY	ROUTE	POST MILES TOTAL PROJECT	SHEET No.	TOTAL SHEETS
03	YOL	113	R0.0/R11.1	24	39

Mary Ann Hudspeth 6-15-11
REGISTERED ELECTRICAL ENGINEER DATE

6-21-11
PLANS APPROVAL DATE

REGISTERED PROFESSIONAL ENGINEER
MARY ANN HUDSPETH
No. 17245
Exp. 06-30-12
ELECTRICAL
STATE OF CALIFORNIA

THE STATE OF CALIFORNIA OR ITS OFFICERS OR AGENTS SHALL NOT BE RESPONSIBLE FOR THE ACCURACY OR COMPLETENESS OF SCANNED COPIES OF THIS PLAN SHEET.

PROJECT NOTE:

2 RC EXISTING LOOP CONDUCTORS, EXISTING DETECTOR HANDHOLE AND EXISTING CONDUIT THAT ENTERS pb FROM THE DETECTOR HANDHOLE. CB AND SC.

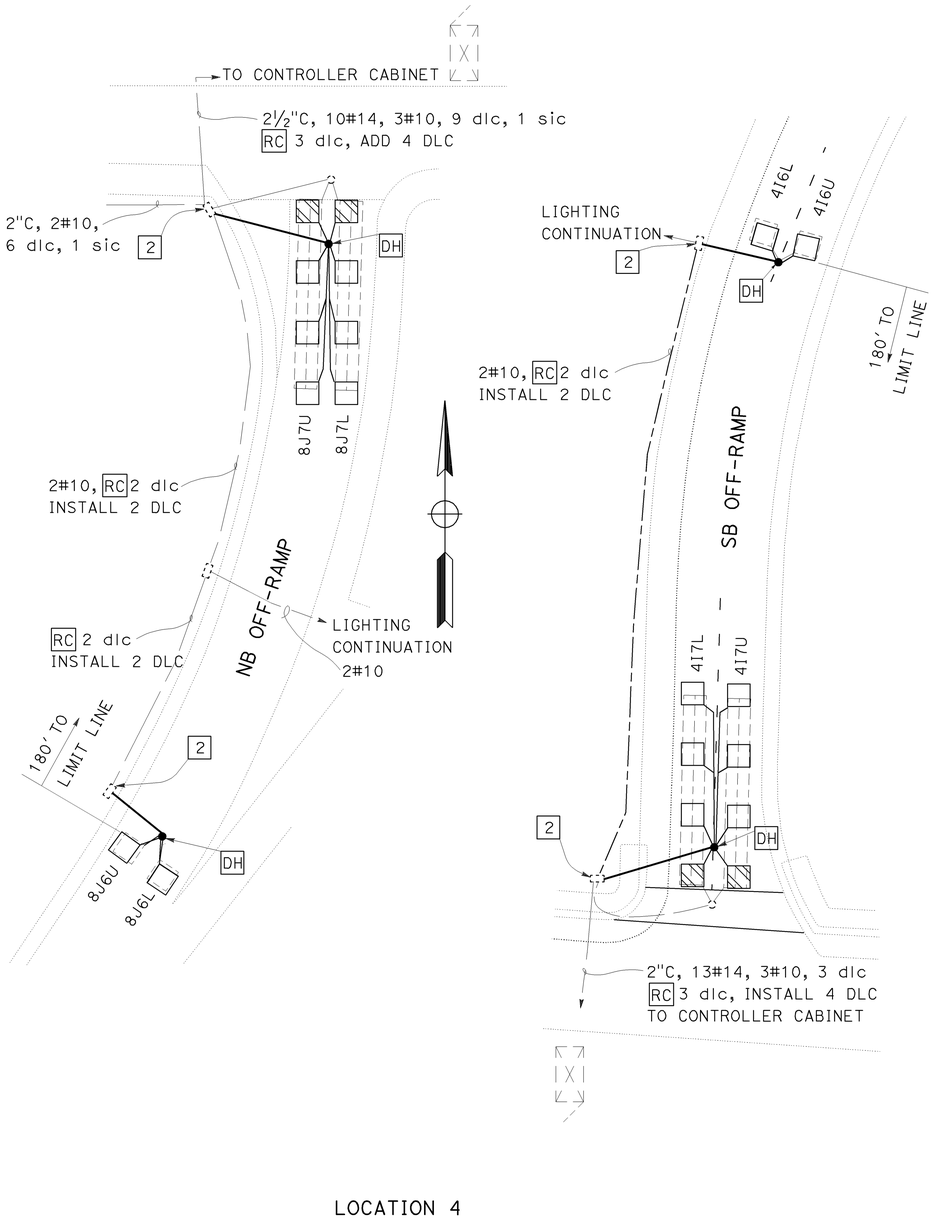

LOCATION 4

ROUTE 113 AND E GIBSON ROAD

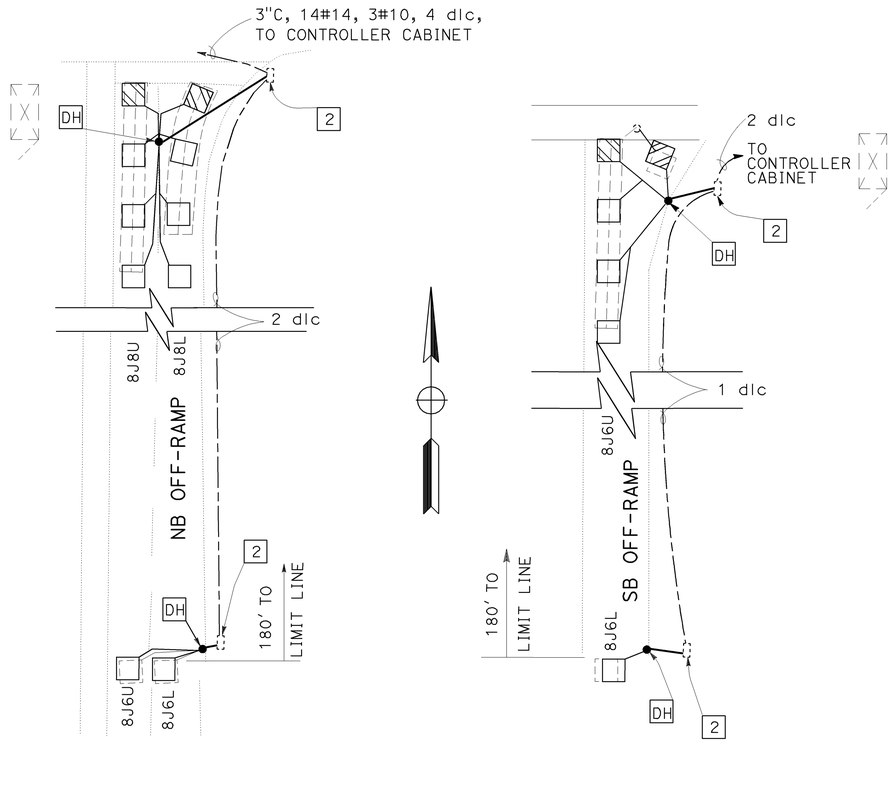

LOCATION 5

ROUTE 113 AND E MAIN STREET

DETECTOR LOOP

NO SCALE

E-3

APPROVED FOR ELECTRICAL WORK ONLY

STATE OF CALIFORNIA - DEPARTMENT OF TRANSPORTATION
ELECTRICAL DESIGN

CALCULATED-DESIGNED BY	EPIFANIO A. CARRASCO II ZAHRA NIKNAFS	FUNCTIONAL SUPERVISOR	STEVEN BLOCK
CHECKED BY	MARY ANN HUDSPETH		

REVISED BY	DATE REVISED

LAST REVISION DATE PLOTTED => 31-AUG-2011
06-15-11 TIME PLOTTED => 09:11

BORDER LAST REVISED 7/2/2010 | USERNAME => s134507 DGN FILE => 0300020452ua003.dgn | RELATIVE BORDER SCALE IS IN INCHES 0 1 2 3 | UNIT 0402 | PROJECT NUMBER & PHASE 03000204521

Dist	COUNTY	ROUTE	POST MILES TOTAL PROJECT	SHEET No.	TOTAL SHEETS
03	Yol	113	R0.0/R11.1	25	39

Mary Ann Hudspeth 6-15-11
REGISTERED ELECTRICAL ENGINEER DATE

6-21-11
PLANS APPROVAL DATE

REGISTERED PROFESSIONAL ENGINEER
MARY ANN HUDSPETH
No. 17245
Exp. 06-30-12
ELECTRICAL
STATE OF CALIFORNIA

THE STATE OF CALIFORNIA OR ITS OFFICERS OR AGENTS SHALL NOT BE RESPONSIBLE FOR THE ACCURACY OR COMPLETENESS OF SCANNED COPIES OF THIS PLAN SHEET.

PROJECT NOTE:

4 RC EXISTING LOOP CONDUCTORS, EXISTING DETECTOR HANDHOLE AND EXISTING CONDUIT BETWEEN DETECTOR HANDHOLE AND pb. CB .

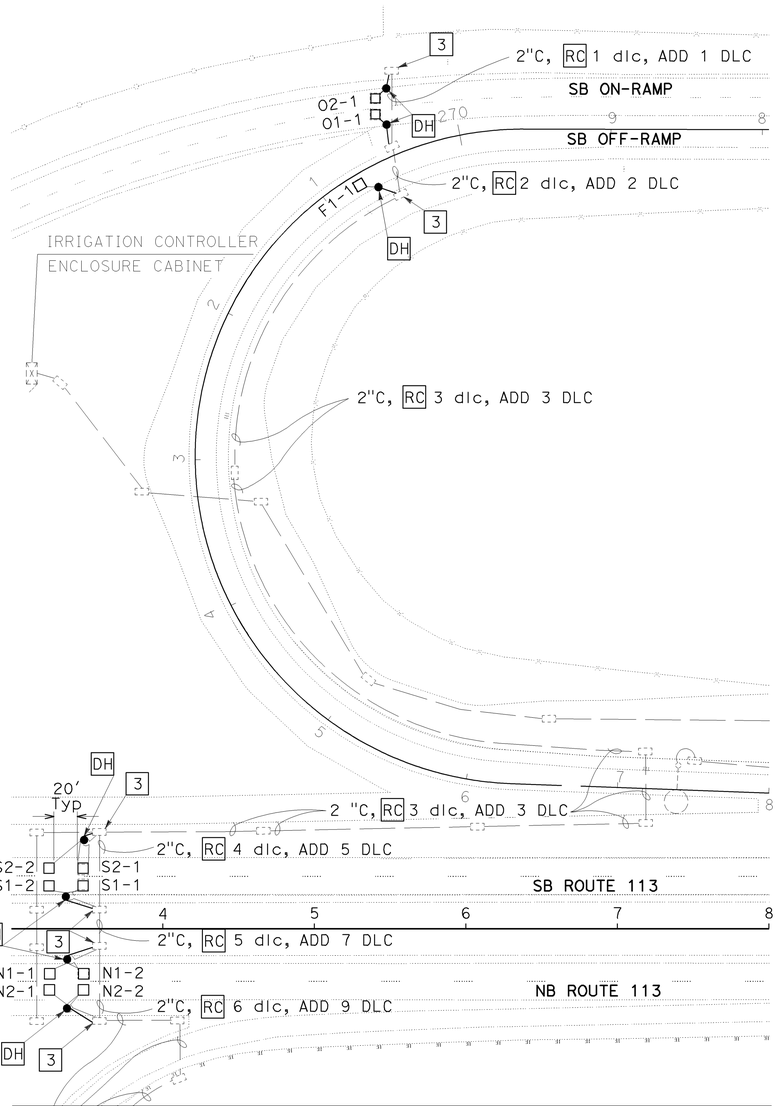

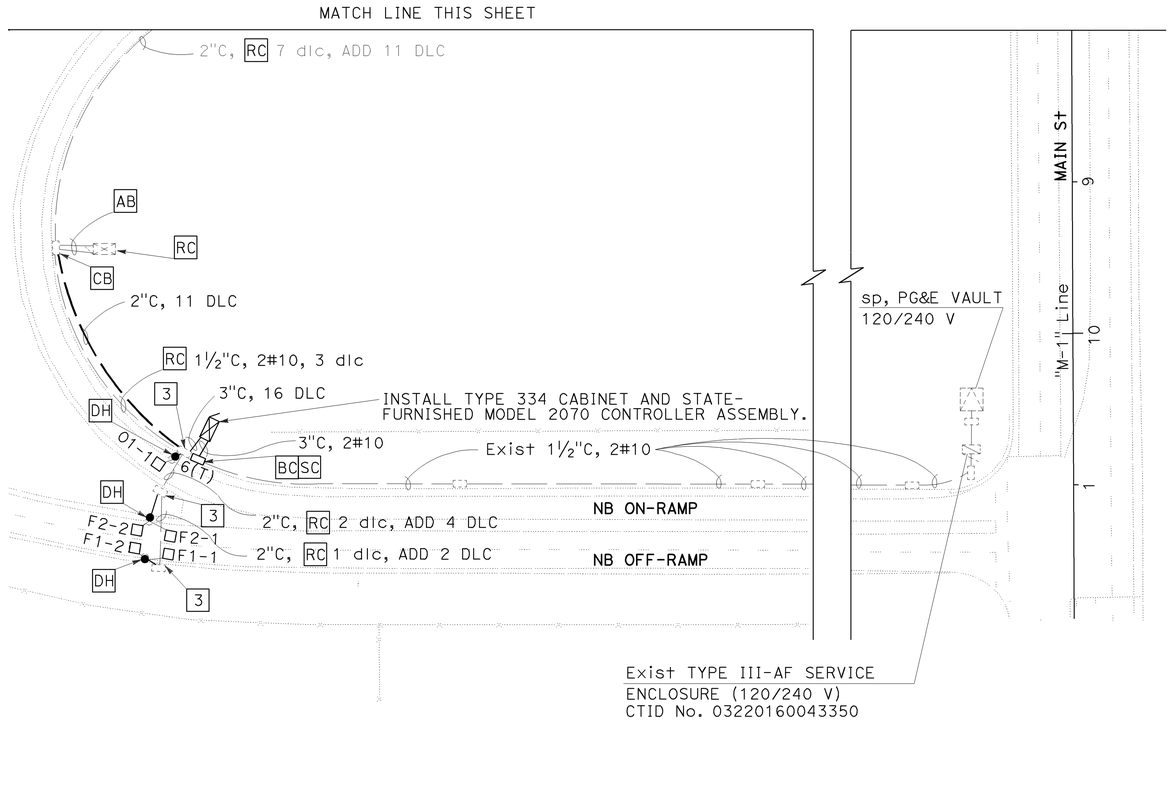

LOCATION 5

ROUTE 113 AND E MAIN STREET

COUNT STATION No. 717 (NB)
COUNT STATION No. 719 (SB)

MODIFY TRAFFIC MONITORING STATION

NO SCALE

APPROVED FOR ELECTRICAL WORK ONLY

E-4

STATE OF CALIFORNIA - DEPARTMENT OF TRANSPORTATION
ELECTRICAL DESIGN
FUNCTIONAL SUPERVISOR: STEVEN BLOCK
CALCULATED-DESIGNED BY: EPIFANIO A. CARRASCO II
CHECKED BY: MARY ANN HUDSPETH
REVISED BY | DATE REVISED

P:\proj5\03\2f050\drafting\03000204521ua004.dgn

LAST REVISION | DATE PLOTTED => 31-AUG-2011 | TIME PLOTTED => 09:11
06-15-11

BORDER LAST REVISED 7/2/2010 | USERNAME => s134507 | DGN FILE => 03000204521ua004.dgn | RELATIVE BORDER SCALE IS IN INCHES 0 1 2 3 | UNIT 0402 | PROJECT NUMBER & PHASE 03000204521

Dist	COUNTY	ROUTE	POST MILES TOTAL PROJECT	SHEET No.	TOTAL SHEETS
03	Yol	113	R0.0/R11.1	26	39

Mary Ann Hudspeth 6-15-11
REGISTERED ELECTRICAL ENGINEER DATE

6-21-11
PLANS APPROVAL DATE

REGISTERED PROFESSIONAL ENGINEER
MARY ANN HUDSPETH
No. 17245
Exp. 06-30-12
ELECTRICAL
STATE OF CALIFORNIA

THE STATE OF CALIFORNIA OR ITS OFFICERS OR AGENTS SHALL NOT BE RESPONSIBLE FOR THE ACCURACY OR COMPLETENESS OF SCANNED COPIES OF THIS PLAN SHEET.

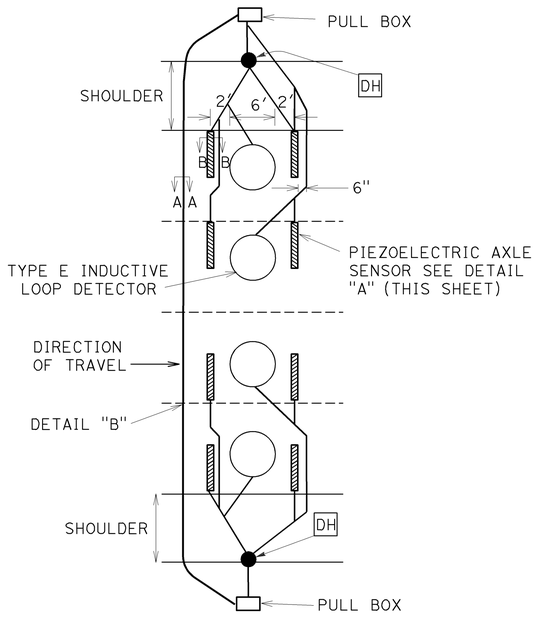

TYPICAL PIEZOELECTRIC AXLE SENSOR INSTALLATION

(SEE PLAN SHEET FOR NUMBER OF LANES)

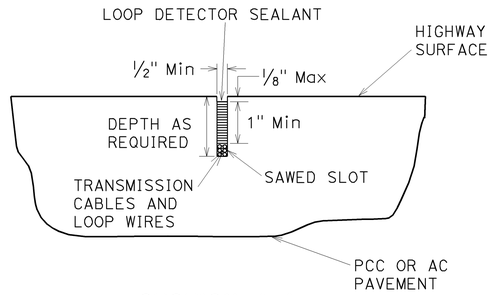

SECTION A-A

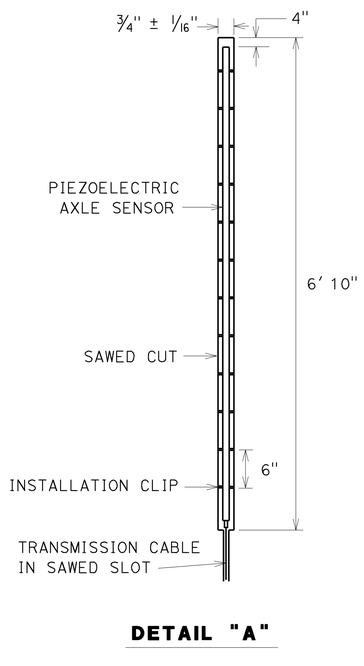

DETAIL "A"

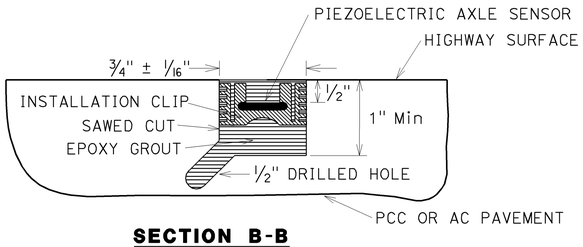

SECTION B-B

PIEZOELECTRIC AXLE SENSOR INSTALLATION PROCEDURE:

(IN THE CASE THIS PROCUDURE CONFLICTS WITH THE MANUFACTURER'S PROCEDURE, THE MANUFACTURER'S PROCEDURE TAKES PRECEDENCE.)

1. MARK THE POSITION OF THE AXLE SENSORS AS DIRECTED BY THE ENGINEER. AXLE SENSOR CHANNELS MUST BE PERPENDICULAR TO TRAFFIC.
2. MARK THE POSITION OF THE LOOP DETECTORS. THE DETECTORS SHALL BE CENTERED IN THE LANE AND BETWEEN THE AXLE SENSORS.
3. MARK THE HOME RUN CUTS AS SHOWN IN THE AXLE SENSOR INSTALLATION DETAIL.
4. USING A CONCRETE SAW, CUT THE AXLE SENSOR CHANNELS ¾" WIDE BY 1" DEEP IN A SINGLE PASS. CUTS SHALL BE STRAIGHT AND TRUE.
5. CUT THE LOOP DETECTORS AND HOME RUNS IN ACCORDANCE WITH CALTRANS SPECIFICATIONS.
6. DRILL ½" Dia HOLES, 1" DEEP AT A 45 DEGREE ANGLE AT THE BOTTOM CORNERS OF EACH AXLE SENSOR CHANNEL. HOLES SHALL BE 1' APART AND ON ALTERNATING SIDES OF THE CHANNEL.
7. WASH OUT THE CHANNELS AND ALL SAW CUTS THOROUGHLY WITH HIGH PRESSURE WATER. DRY COMPLETELY WITH AN AIR COMPRESSOR. IN PCC PAVEMENT ONLY, WIPE OUT THE CHANNELS WITH LACQUER THINNER AND CLEAN COTTON RAGS.
8. PLACE 4" DUCT TAPE STRIPS ON THE PAVEMENT AROUND THE CHANNELS.
9. ENSURE THAT EACH SENSOR IS STRAIGHT AND FLAT. BEND EACH END DOWN SLIGHTLY AND PLACE THE INSTALLATION CLIPS ON THE SENSOR.
10. BLOCK OFF THE CABLE END OF THE CHANNEL WITH DUCT SEAL TO PREVENT THE GROUT FLOWING OUT OF THE CHANNEL.
11. INSERT SENSOR EPOXY CARTRIDGE INTO CAULKING GUN. ATTACH STATIC MIXING TUBE ONTO CARTRIDGE.
12. WHILE WEARING PROTECTIVE GLOVES, HALF FILL THE CHANNEL WITH SENSOR EPOXY. ENSURE THAT THE BOTTOM OF THE CHANNEL IS COMPLETELY COVERED, AND THAT THE HOLES DRILLED IN STEP 6 ARE FILLED.
13. PLACE THE SENSOR IN THE CHANNEL WITH THE BRASS ELEMENT ½" BELOW THE ROAD SURFACE WITH NO VOIDS BENEATH THE SENSOR.
14. COMPLETELY FILL THE CHANNEL WITH SENSOR EPOXY. SMOOTH OUT THE EPOXY ON TOP OF THE SENSOR TO ROAD LEVEL WITH NO TROUGH ON TOP.
15. WHEN SENSOR EPOXY HAS BEGUN TO SET, REMOVE THE DUCT TAPE FROM THE PAVEMENT. REMOVE THE DUCT SEAL FROM THE END OF THE CHANNEL.
16. INSTALL THE LOOP DETECTORS AS PER CALTRANS SPECIFICATIONS.
17. INSTALL ALL LEAD-IN CABLES IN THE HOME RUN SLOTS, INSTALLING TYPE 3 CONDUIT AT THE EXPANSION JOINT CROSSINGS. PULL CABLES THROUGH STUB-OUT CONDUIT AND COIL IN PULL BOX.
18. SEAL ALL SAW CUTS. ELASTOMERIC SEALANT ONLY SHALL BE USED IN ALL CUTS CONTAINING SCREENED TRANSMISSION CABLES.
19. REMOVE ANY HIGH SPOTS IN THE SENSOR EPOXY WITH A HAND GRINDER.
20. CLEAN UP THE SITE. WHEN ALL SEALANTS ARE COMPLETELY CURED, LANES MAY BE OPENED TO TRAFFIC.

MODIFY AUTOMATIC VEHICLE CLASSIFICATION SYSTEM

NO SCALE

APPROVED FOR ELECTRICAL WORK ONLY

E-5

REVISED BY	DATE REVISED

CALCULATED-DESIGNED BY: ZAHRA NIKNAFS
CHECKED BY: MARY ANN HUDSPETH
FUNCTIONAL SUPERVISOR: STEVEN BLOCK

STATE OF CALIFORNIA - DEPARTMENT OF TRANSPORTATION
Caltrans®
TRAFFIC ELECTRICAL DESIGN MARYSVILLE

P:\proj5\03\2f050\drafting\03000204521ua005.dgn

LAST REVISION | DATE PLOTTED => 31-AUG-2011
TIME PLOTTED => 09:11
06-15-11

BORDER LAST REVISED 7/2/2010 | USERNAME => s134507 | DGN FILE => 0300020452ua005.dgn | RELATIVE BORDER SCALE IS IN INCHES 0 1 2 3 | UNIT 0402 | PROJECT NUMBER & PHASE 03000204521

Dist	COUNTY	ROUTE	POST MILES TOTAL PROJECT	SHEET No.	TOTAL SHEETS
03	Yol	113	R0.0/R11.1	27	39

Mary Ann Hudspeth 6-15-11
REGISTERED ELECTRICAL ENGINEER DATE

6-21-11
PLANS APPROVAL DATE

REGISTERED PROFESSIONAL ENGINEER
MARY ANN HUDSPETH
No. 17245
Exp. 06-30-12
ELECTRICAL
STATE OF CALIFORNIA

THE STATE OF CALIFORNIA OR ITS OFFICERS OR AGENTS SHALL NOT BE RESPONSIBLE FOR THE ACCURACY OR COMPLETENESS OF SCANNED COPIES OF THIS PLAN SHEET.

PROJECT NOTES (THIS SHEET ONLY):

1. INSTALL GPRS MODEM, 8-PORT ETHERNET SWITCH, AND 2 ETHERNET EXTENDERS ON DIN RAIL AS SHOWN IN DETAILS "B" AND "D".
2. REMOVE BLANK PLATE.
3. INSTALL GPRS ANTENNA ON TOP OF CABINET AND RUN ANTENNA CABLE PER MANUFACTURER RECOMMENDATION.
4. INSTALL HALF SHELVES AS SHOWN.
5. INSTALL SURGE SUPPRESSORS AND RJ-11 MODULAR JACKS AS SHOWN.
6. REMOVE EXISTING TERMINAL BLOCK TBO. INSTALL 2-12 POSITION TERMINAL BLOCKS ON DIN RAIL. LABEL TERMINAL BLOCKS AS SHOWN ON A PERMANENT LABEL.
7. INSTALL ETHERNET POWER CONTROLLER.
8. INSTALL POWER STRIP.
9. CONNECT SOLID 10 AWG GROUND WIRE TO EQUIPMENT GROUND.
10. USE 2 PAIR, 22 AWG, STRANDED AND TINNED COPPER WIRES WITH PVC JACKET TYPE INSULATION AS SPECIFIED IN THE SPECIAL PROVISIONS.

ABBREVIATIONS:

BK	BLACK
EQ	EQUIPMENT
GPRS	GENERAL PACKET RADIO SERVICE
GR	GREEN
ITS	INTELLIGENT TRANSPORATION SYSTEM
RD	RED
TB	TERMINAL BLOCK
TBS	TERMINAL BLOCK - SERVICE
TC	TELEPHONE CABLE
YL	YELLOW

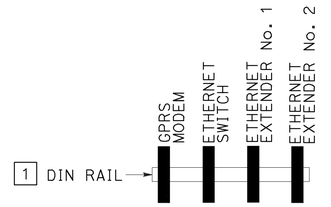

EQUIPMENT INSTALLATION ON DIN RAIL (TYPICAL)
DETAIL "D"

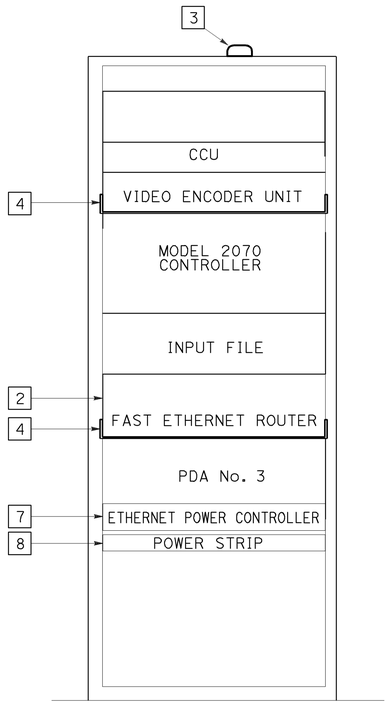

DETAIL "A"
ITS CABINET LAYOUT DETAIL (TYPICAL)

334 CONTROLLER CABINET
(FRONT VIEW)

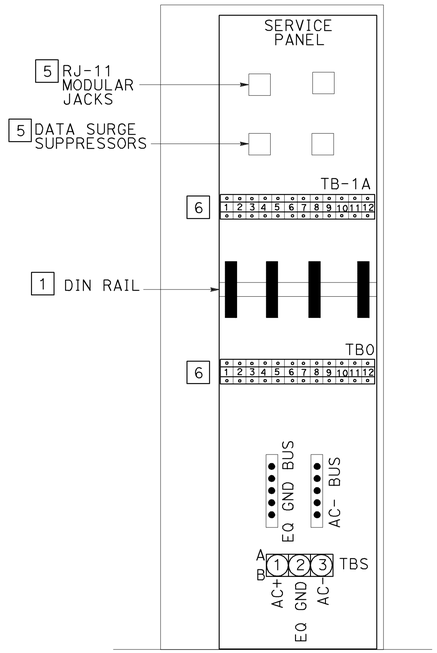

DETAIL "B"
ITS CABINET ASSEMBLY LAYOUT (TYPICAL)

334 CONTROLLER CABINET
(RIGHT SIDE, REAR VIEW)

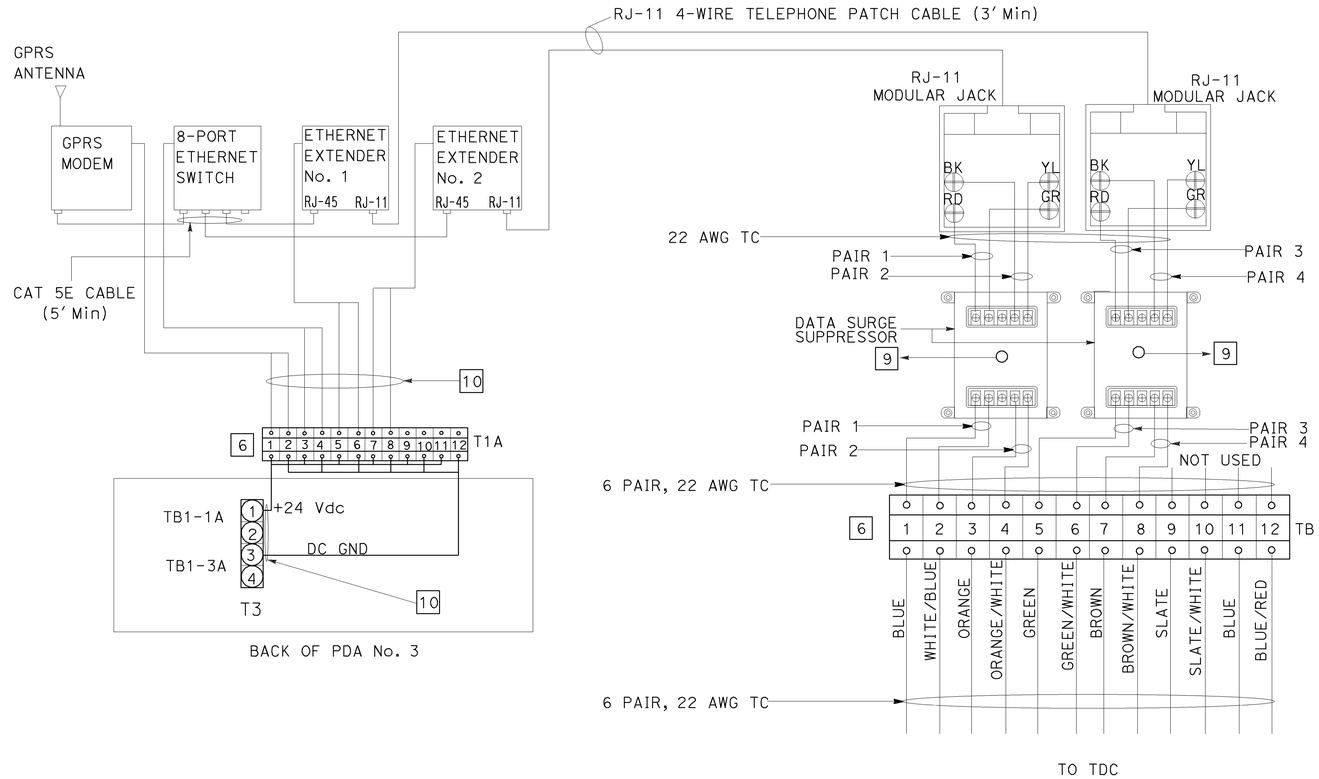

EQUIPMENT INTERCONNECTION (TYPICAL)
DETAIL "C"

INTELLIGENT TRANSPORTATION SYSTEM
(INTERCONNECT DETAILS)
(ITS CABINET LAYOUT DETAILS)

APPROVED FOR ELECTRICAL WORK ONLY

NO SCALE

E-6

REVISED BY | DATE REVISED
BERHANU ZERGAW | MARY ANN HUDSPETH
CALCULATED-DESIGNED BY | CHECKED BY
FUNCTIONAL SUPERVISOR: STEVEN BLOCK
STATE OF CALIFORNIA - DEPARTMENT OF TRANSPORTATION
Caltrans

LAST REVISION | DATE PLOTTED => 31-AUG-2011
06-15-11 | TIME PLOTTED => 09:11

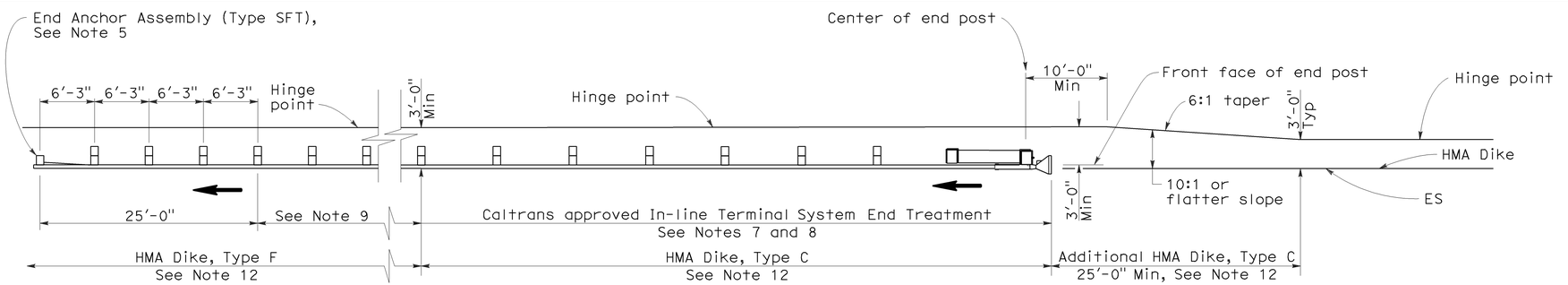

TYPE 11A LAYOUT

(EMBANKMENT GUARD INSTALLATION WITH IN-LINE END TREATMENT AT TRAFFIC APPROACH END OF RAILING)
See Note 6

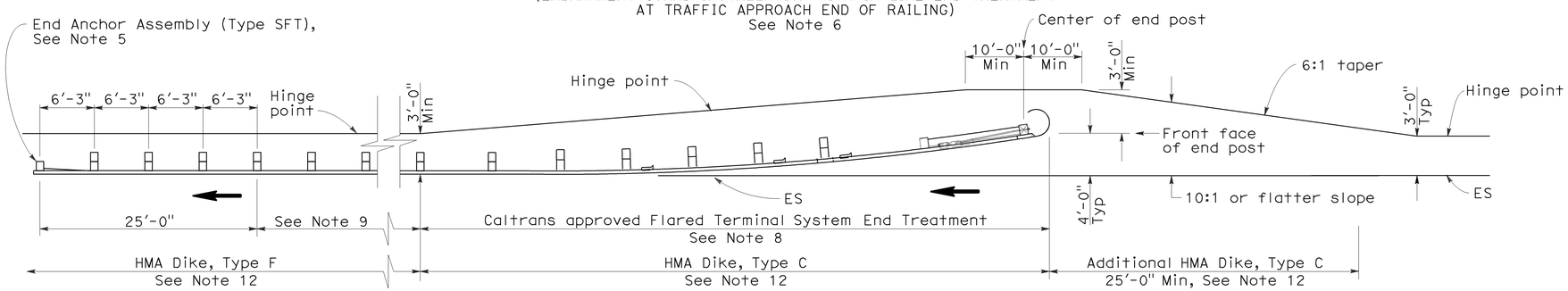

TYPE 11B LAYOUT

(EMBANKMENT GUARD RAILING INSTALLATION WITH FLARED END TREATMENT AT TRAFFIC APPROACH END OF RAILING)
See Note 6

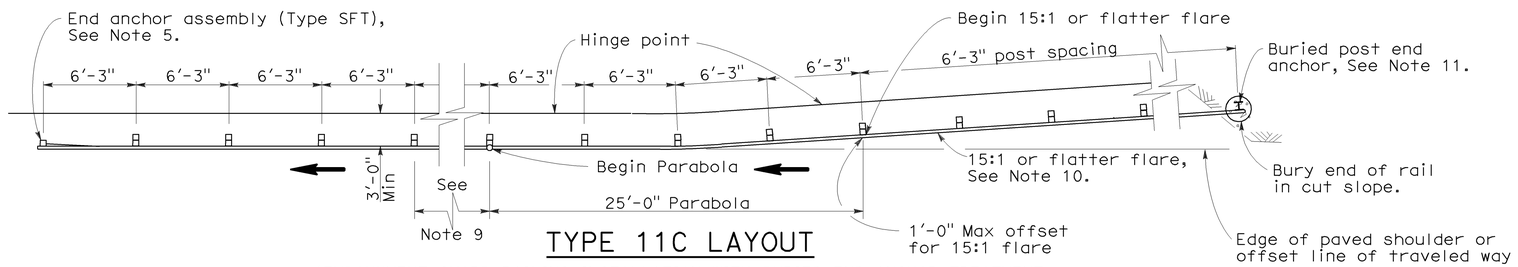

TYPE 11C LAYOUT

(EMBANKMENT GUARD RAILING INSTALLATION WITH BURIED END ANCHOR TREATMENT AT TRAFFIC APPROACH END OF RAILING)
See Notes 6 and 12

NOTES:

1. Line post, blocks and hardware to be used are shown on Standard Plans A77A1, A77A2, A77B1, A77C1, and A77C2.
2. Guard rail post spacing to be 6'-3" center to center, except as otherwise noted.
3. Except as noted, line posts are 6" x 8" x 6'-0" wood with 6" x 8" x 1'-2" wood blocks. W6 x 9 steel posts, 6'-0" in length, with 6" x 8" x 1'-2" notched wood blocks or recycled plastic blocks may be used for 6" x 8" x 6'-0" wood post with 6" x 8" x 1'-2" wood blocks where applicable and when specified.
4. Direction of adjacent traffic indicated by ➞.
5. For End Anchor Assembly (Type SFT) details, see Standard Plan A77H1.
6. Layout Types 11A, 11B or 11C are typically used where guard railing is recommended to shield embankment slopes and a crashworthy end treatment is required for only one direction of traffic.
7. In-line Terminal System End Treatments are used where site conditions will not accommodate a flared end treatment.
8. The type of terminal system end treatment to be used will be shown on the Project Plans.
9. Dependent on site conditions (embankment height and side slope), construction of additional guard railing (length equal to multiples of 12'-6" with 6'-3" post spacing) may be advisable.
10. The 15:1 or flatter flare used with buried end anchors is based on the edge of the paved shoulder or offset line of edge of the traveled way. The length of guard railing within the 15:1 or flatter flare is based on site conditions and should be a length equal to multiples of 12'-6".
11. For details of the buried post end anchor used with Type 11C Layout, see Standard Plan A77I2.
12. Where placement of dike is required with guard railing installations, see Revised Standard Plan RSP A77C4 for dike positioning details.

DIST	COUNTY	ROUTE	POST MILES TOTAL PROJECT	SHEET NO.	TOTAL SHEETS
03	Yol	113	R0.0/R11.1	28	39

Randell D. Hiatt
REGISTERED CIVIL ENGINEER

June 6, 2008
PLANS APPROVAL DATE

REGISTERED PROFESSIONAL ENGINEER — Randell D. Hiatt — No. C50200 — Exp. 6-30-09 — CIVIL — STATE OF CALIFORNIA

The State of California or its officers or agents shall not be responsible for the accuracy or completeness of electronic copies of this plan sheet.

To accompany plans dated 6-21-11

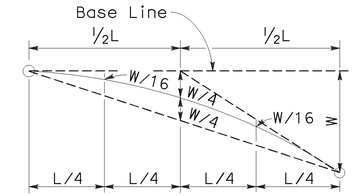

TYPICAL PARABOLIC LAYOUT

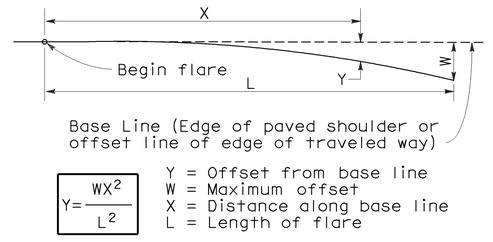

$$Y = \frac{WX^2}{L^2}$$

Y = Offset from base line
W = Maximum offset
X = Distance along base line
L = Length of flare

PARABOLIC FLARE OFFSETS

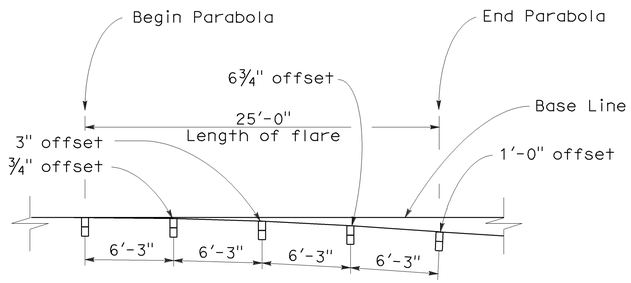

TYPICAL FLARE OFFSETS FOR 1 FOOT MAX END OFFSET

STATE OF CALIFORNIA
DEPARTMENT OF TRANSPORTATION

METAL BEAM GUARD RAILING TYPICAL LAYOUTS FOR EMBANKMENTS

NO SCALE

RSP A77E1 DATED JUNE 6, 2008 SUPERSEDES STANDARD PLAN A77E1
DATED MAY 1, 2006 - PAGE 48 OF THE STANDARD PLANS BOOK DATED MAY 2006.

REVISED STANDARD PLAN RSP A77E1

2006 REVISED STANDARD PLAN RSP A77E1

12-10-07

DIST	COUNTY	ROUTE	POST MILES TOTAL PROJECT	SHEET NO.	TOTAL SHEETS
03	Yol	113	R0.0/R11.1	29	39

Randell D. Hiatt
REGISTERED CIVIL ENGINEER

June 6, 2008
PLANS APPROVAL DATE

Randell D. Hiatt
No. C50200
Exp. 6-30-09
CIVIL
REGISTERED PROFESSIONAL ENGINEER
STATE OF CALIFORNIA

The State of California or its officers or agents shall not be responsible for the accuracy or completeness of electronic copies of this plan sheet.

To accompany plans dated 6-21-11

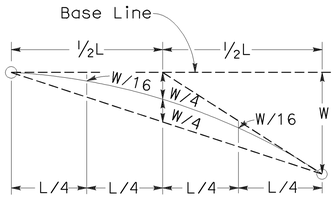

TYPICAL PARABOLIC LAYOUT

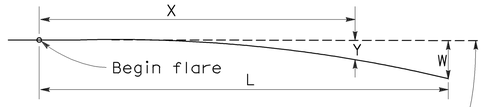

$$Y = \frac{WX^2}{L^2}$$

Y = Offset from base line
W = Maximum offset
X = Distance along base line
L = Length of flare

PARABOLIC FLARE OFFSETS

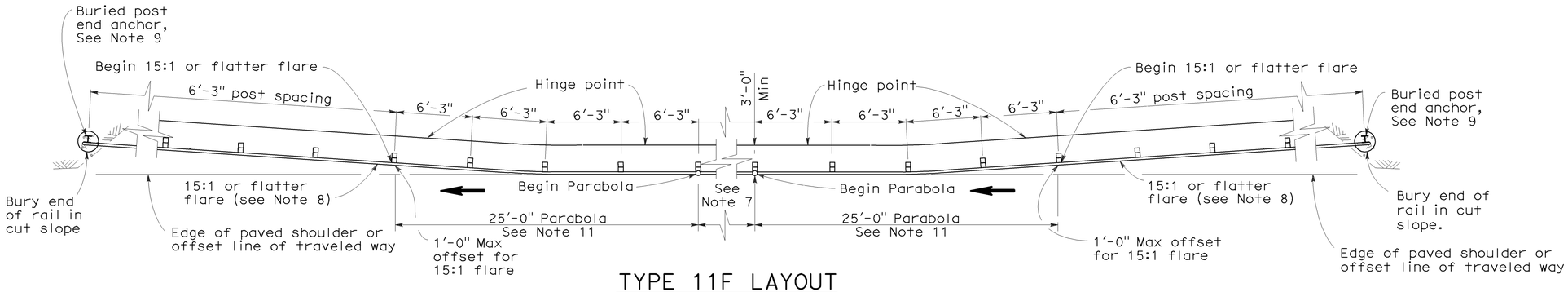

TYPE 11F LAYOUT

(EMBANKMENT GUARD RAILING INSTALLATION WITH A BURIED END ANCHOR TREATMENT AT EACH END OF RAILING)
See Notes 5 and 10

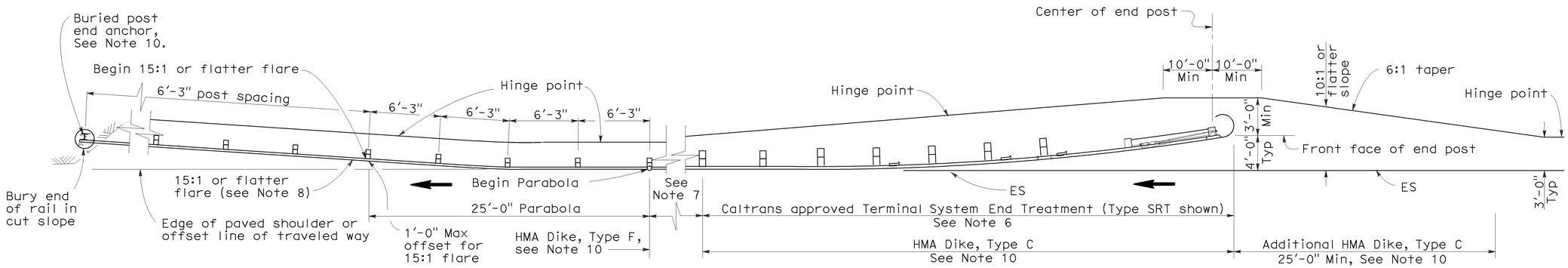

TYPE 11G LAYOUT

(EMBANKMENT GUARD RAILING INSTALLATION WITH FLARED END TREATMENT AND A BURIED END ANCHOR TREATMENT AT THE ENDS OF RAILING)
See Notes 5 and 10

NOTES:

1. Line post, blocks and hardware to be used are shown on Standard Plans A77A1, A77A2, A77B1, A77C1 and A77C2.
2. Guard rail post spacing to be 6'-3" center to center, except as otherwise noted.
3. Except as noted, line posts are 6" x 8" x 6'-0" wood with 6" x 8" x 1'-2" wood blocks. W6 x 9 steel posts, 6'-0" in length, with 6" x 8" x 1'-2" notched wood blocks or plastic blocks may be used for 6" x 8" x 6'-0" wood post with 6" x 8" x 1'-2" wood blocks where applicable and when specified.
4. Direction of adjacent traffic indicated by ⟶.
5. Layout Types 11D through 11L, shown on the A77E Series of Revised Standard Plans, are typically used where guard railing is recommended to shield embankment slopes and a crashworthy end treatment is required for both directions of traffic.
6. The type of terminal system end treatment to be used will be shown on the Project Plans.
7. Dependent on site conditions (embankment height and side slope), construction of additional guard railing (length equal to multiples of 12'-6" with 6'-3" post spacing) may be advisable.
8. The 15:1 or flatter flare used with buried end anchors is based on the edge of the paved shoulder or offset line of edge of the traveled way. The length of guard railing within the 15:1 or flatter flare is based on site conditions and should be a length equal to multiples of 12'-6".
9. For details of the buried post end anchor used with Type 11F and 11G Layouts, see Standard Plan A77I2.
10. Where placement of dike is required with guard railing installations, see Revised Standard Plan RSP A77C4 for dike positioning details.
11. For typical flare offsets for 25'-0" length parabola with maximum offset of 1'-0", see Revised Standard Plan RSP A77E1.

STATE OF CALIFORNIA
DEPARTMENT OF TRANSPORTATION

METAL BEAM GUARD RAILING TYPICAL LAYOUTS FOR EMBANKMENTS

NO SCALE

RSP A77E3 DATED JUNE 6, 2008 SUPERSEDES STANDARD PLAN A77E3
DATED MAY 1, 2006 - PAGE 50 OF THE STANDARD PLANS BOOK DATED MAY 2006.

REVISED STANDARD PLAN RSP A77E3

2006 REVISED STANDARD PLAN RSP A77E3

12-10-07

Dist	COUNTY	ROUTE	POST MILES TOTAL PROJECT	SHEET No.	TOTAL SHEETS
03	Yol	113	R0.0/R11.1	30	39

Randell D. Hiatt
REGISTERED CIVIL ENGINEER

May 20, 2011
PLANS APPROVAL DATE

To accompany plans dated 6-21-11

Randell D. Hiatt
No. C50200
Exp. 6-30-11
CIVIL
REGISTERED PROFESSIONAL ENGINEER
STATE OF CALIFORNIA

The State of California or its officers or agents shall not be responsible for the accuracy or completeness of electronic copies of this plan sheet.

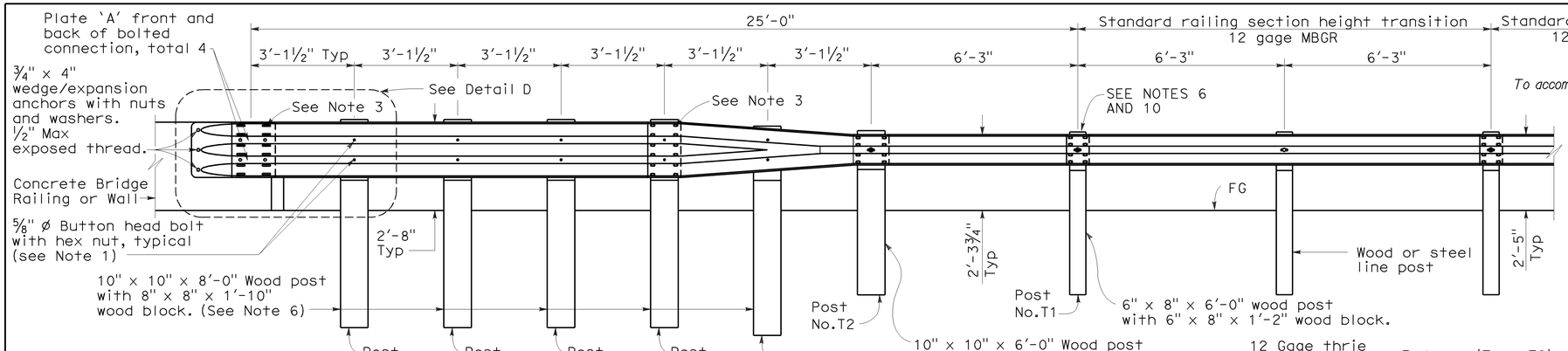

ELEVATION

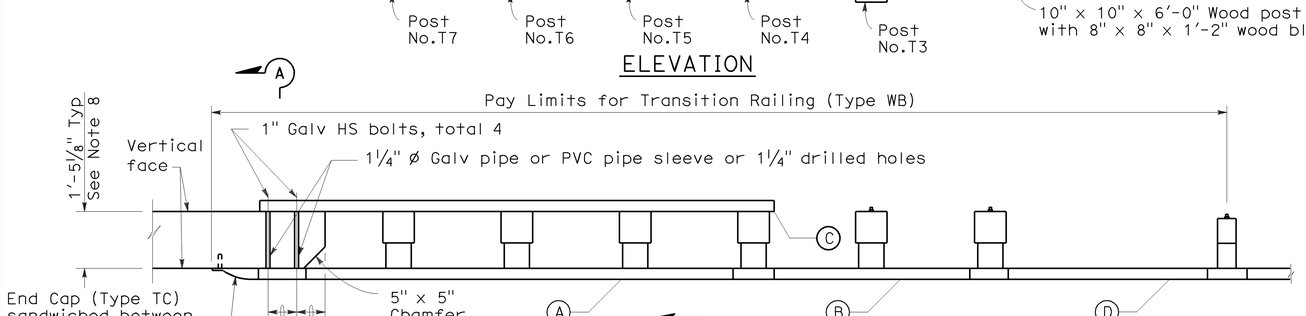

PLAN

TRANSITION RAILING (TYPE WB)

(No Blockout Attachment)

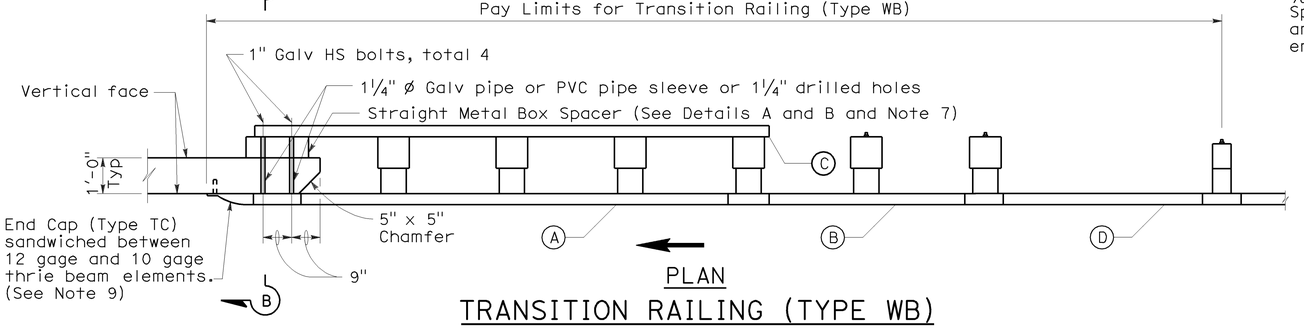

PLAN

TRANSITION RAILING (TYPE WB)

(Blockout Attachment)

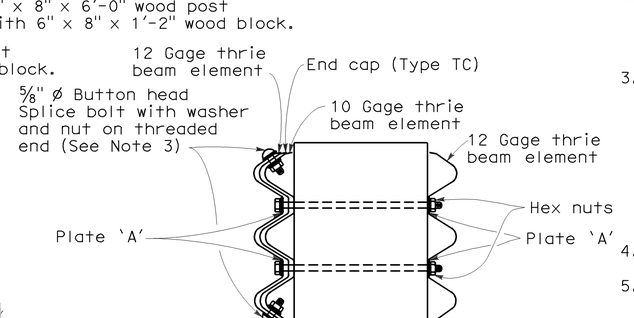

SECTION A-A

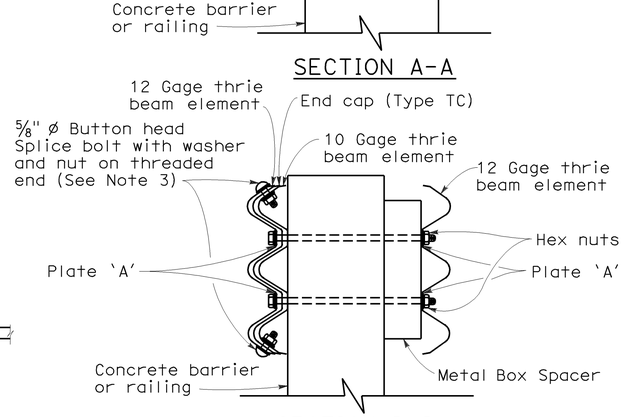

SECTION B-B

LEGEND

- (A) Nested thrie beam elements (one 12 gage element nested over one 10 gage element).
- (B) One 10 gage "W" beam to thrie beam element.
- (C) One 12 gage thrie beam element.
- (D) One 10 gage "W" beam rail element (7'-3½" length)

10 gage = 0.135" thick

12 gage = 0.108" thick

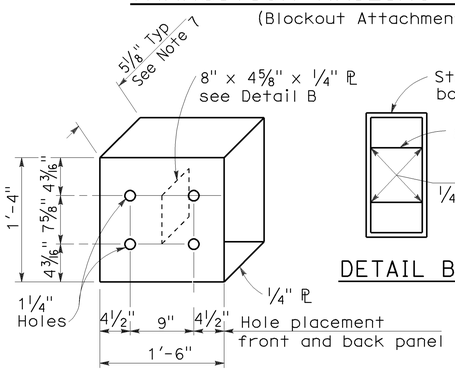

DETAIL A

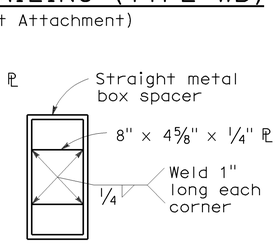

DETAIL B

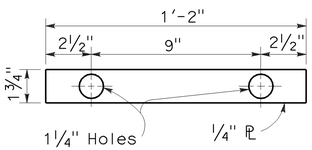

DETAIL C

STRAIGHT METAL BOX SPACER

PLATE 'A'

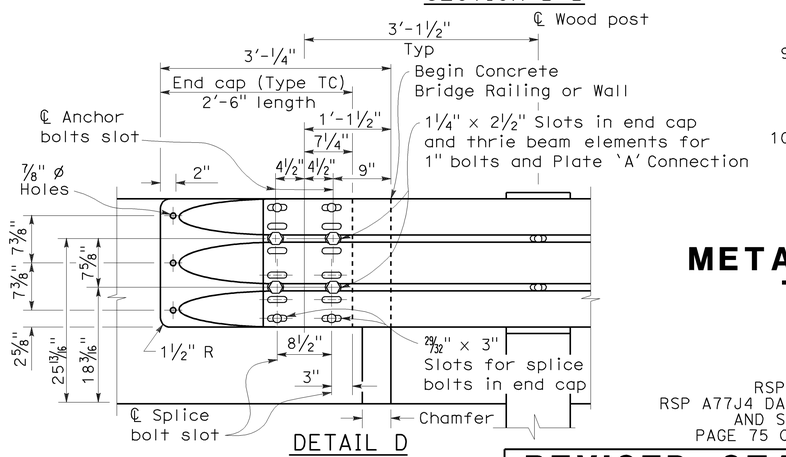

DETAIL D

NOTES:

1. Use ⅝" ø Button head bolts and hex nuts for connections to posts. No washer on rail face for bolted connections to post.
2. The nested rail elements, end cap, and 'W' beam to thrie beam element may be spliced together prior to bolting the elements to the wood post and concrete barrier or railing.
3. Exterior splice bolt holes for rail element splices at Post No. T4 and the connection to the concrete barrier or railing shall be the standard 29/32" x 1⅛" slot size. Interior splice bolt holes at these locations may be increased up to 1¼" ø. Only the top 2 and the bottom 2 splice bolts with washers and nuts are required for rail splices at Post No. T4 and the connection to the concrete barrier or railing.
4. Direction of adjacent traffic indicated by ➡.
5. The top elevation of Posts No. T2 through No. T7 shall not project more than 1" above the top elevation of the rail element.
6. Typically, the railing connected to Transition Railing (Type WB) will be either standard railing section of metal beam guard railing with height transition ratio of 120:1 or an approved Caltrans end treatment attached to Post No. T1.
7. The depth of the metal box spacer varies from the 5⅛" to 1½" and is dependent on the width of the concrete railing or wall. The combined dimension for the depth of the metal box spacer plus the width of railing or wall is typically 17⅞". Where the space between the backside of the concrete railing or wall and the rear thrie beam element is less than 1½", metal plates similar to Plate 'A' are to be used as spacers.
8. Where the width of the concrete railing or wall is greater than 17⅞", wood blocks are to be used to fill the space created between the backside of Posts No. T4 through No. T7 and the rear thrie beam element. These wood blocks shall be 8" in width and 1'-2" in length. The dimension between the front thrie beam element and the rear thrie beam element is to match the width of the concrete railing or wall.
9. End cap may be installed over 12 gage and 10 gage thrie beam elements where transition railing is installed on the departure end of bridge railing.
10. Conform standard railing section height to 2'-3¾" at Post No. T1 using height transition ratio of 120:1.

STATE OF CALIFORNIA
DEPARTMENT OF TRANSPORTATION

METAL BEAM GUARD RAILING TRANSITION RAILING (TYPE WB)

NO SCALE

RSP A77J4 DATED MAY 20, 2011 SUPERSEDES
RSP A77J4 DATED JUNE 5, 2009, RSP A77J4 DATED JUNE 6, 2008
AND STANDARD PLAN A77J4 DATED MAY 1, 2006 -
PAGE 75 OF THE STANDARD PLANS BOOK DATED MAY 2006.

REVISED STANDARD PLAN RSP A77J4

2006 REVISED STANDARD PLAN RSP A77J4

5-14-09

DIST	COUNTY	ROUTE	POST MILES TOTAL PROJECT	SHEET NO.	TOTAL SHEETS
03	Yol	113	R0.0/R11.1	31	39

REGISTERED CIVIL ENGINEER

June 5, 2009
PLANS APPROVAL DATE

Glenn DeCou
No. C34547
Exp. 9-30-09
CIVIL
REGISTERED PROFESSIONAL ENGINEER
STATE OF CALIFORNIA

The State of California or its officers or agents shall not be responsible for the accuracy or completeness of electronic copies of this plan sheet.

To accompany plans dated 6-21-11

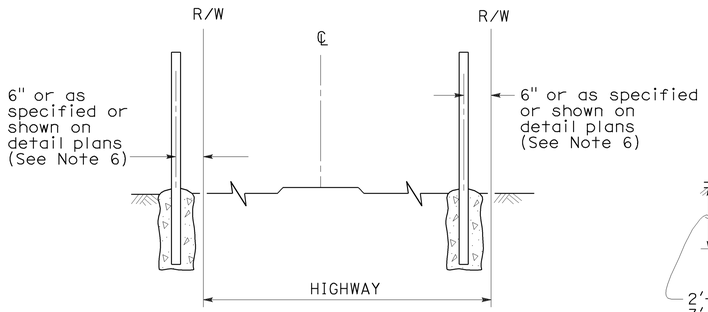

OTHER HIGHWAYS — FREEWAYS

FENCE LOCATION

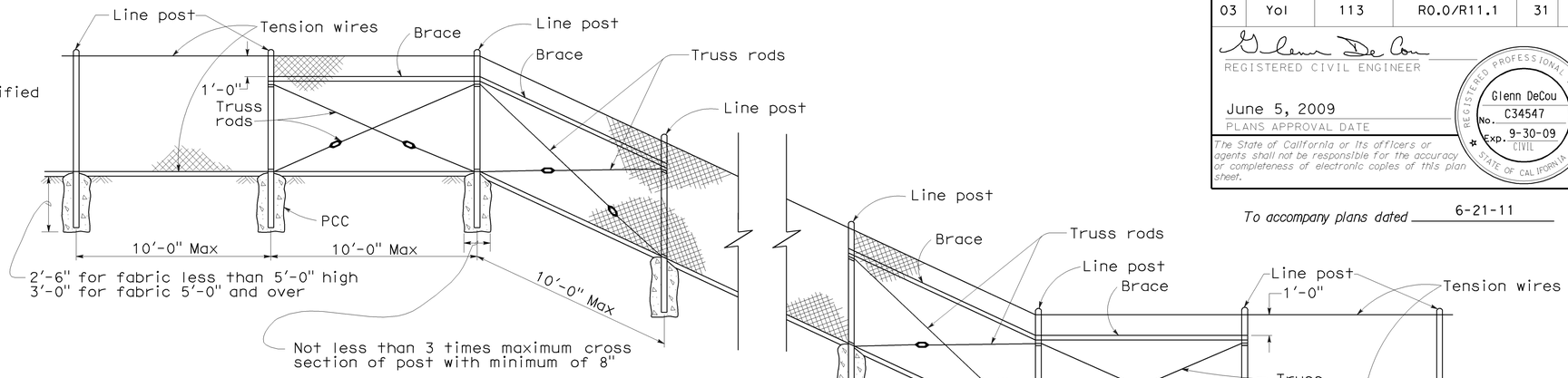

CHAIN LINK FENCE ON SHARP BREAK IN GRADE

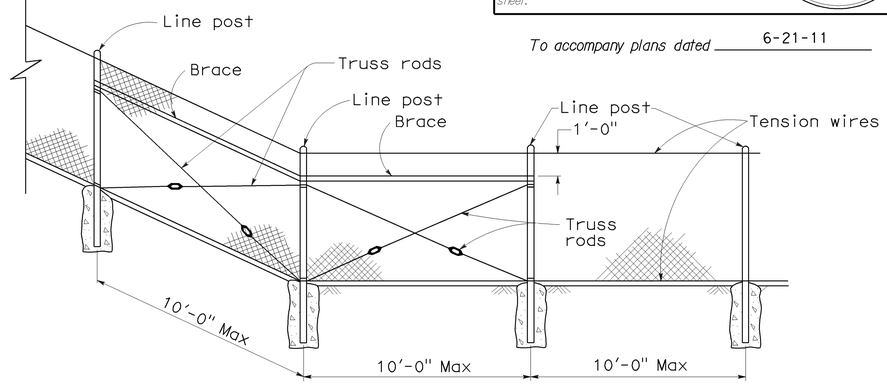

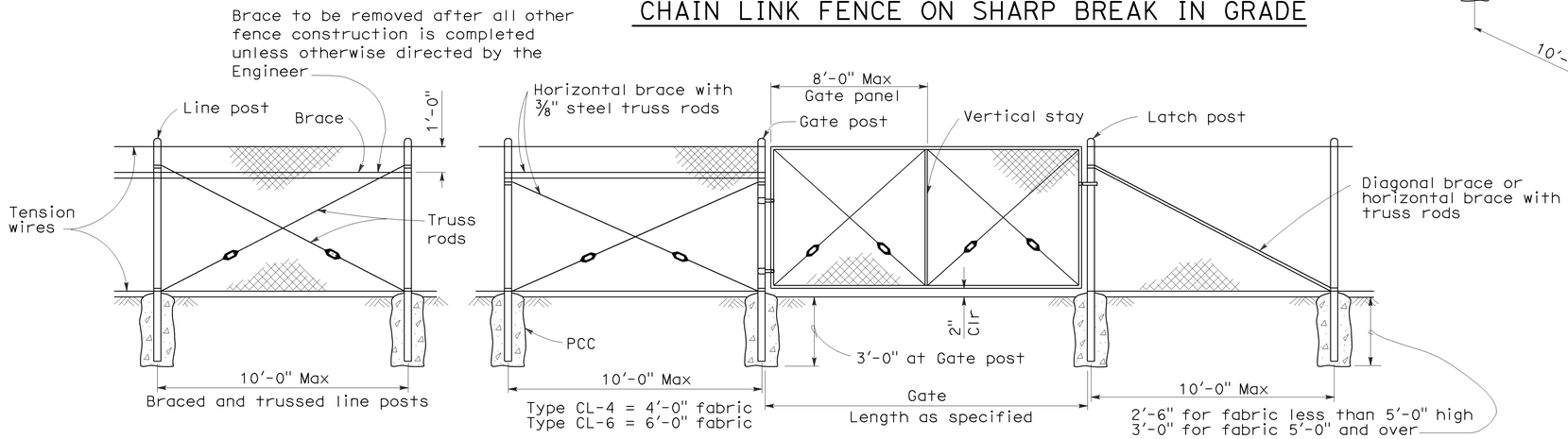

CHAIN LINK GATE INSTALLATION

GATE POST

FENCE HEIGHT	GATE WIDTHS	NOMINAL ID	WEIGHT PER FOOT
6'-0" and Less	Up thru 6'-0"	2½"	4.95 LB
	Over 6'-0" thru 12'-0"	4"	10.79 LB
	Over 12'-0" thru 18'-0"	5"	14.62 LB
	Over 18'-0" to 24'-0" Max	6"	18.97 LB
Over 6'-0"	Up thru 6'-0"	3"	7.58 LB
	Over 6'-0" thru 12'-0"	5"	14.62 LB
	Over 12'-0" thru 18'-0"	6"	18.97 LB
	Over 18'-0" to 24'-0" Max	8"	28.55 LB

Above post dimensions and weights are minimums. Larger sizes may be used on approval of the Engineer.

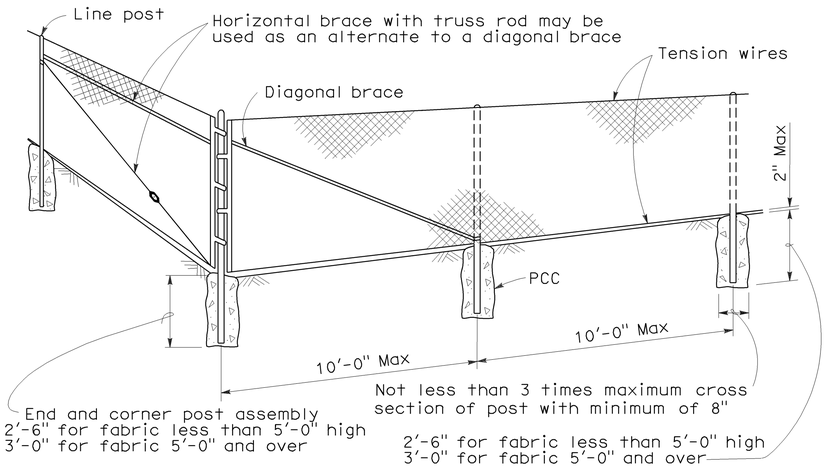

CORNER POST

NOTES:

1. The below table shows examples of post and brace sections which may comply with the Specifications.
2. Sections shown in the tables must also comply with the strength requirements and other provisions of the Specifications.
3. Other sections which comply with the strength requirements and other provisions of the Specifications may be used on approval of the Engineer.
4. Options exercised shall be uniform on any one project.
5. Dimensions shown are nominal.
6. Offset to be 2'-0" at monument locations, measured at right angles to R/W lines. Taper to achieve offset to be at least 20'-0" long.

TYPICAL MEMBER DIMENSIONS (See Notes)

FENCE HEIGHT	LINE POSTS			END, LATCH & CORNER POSTS			BRACES			
	ROUND ID	H	ROLL FORMED	ROUND ID	ROLL FORMED		ROUND ID	H	ROLL FORMED	
6' & less	1½"	1⅞" × 1⅝"	1⅞" × 1⅝"	2"	3½" × 3½"	2" × 1¾"	1¼"	1½" × 1⅝"	1⅝" × 1¼"	1¾" × 1¼"
Over 6'	2"	2¼" × 2"	2" × 1¾"	2½"	3½" × 3½"	2½" × 2½"	1¼"	1½" × 1⅝"	1⅝" × 1¼"	1¾" × 1¼"

STATE OF CALIFORNIA
DEPARTMENT OF TRANSPORTATION

CHAIN LINK FENCE

NO SCALE

RSP A85 DATED JUNE 5, 2009 SUPERSEDES STANDARD PLAN A85
DATED MAY 1, 2006 - PAGE 111 OF THE STANDARD PLANS BOOK DATED MAY 2006.

REVISED STANDARD PLAN RSP A85

2006 REVISED STANDARD PLAN RSP A85

5-7-09

DIST	COUNTY	ROUTE	POST MILES TOTAL PROJECT	SHEET NO.	TOTAL SHEETS
03	Yol	113	R0.0/R11.1	32	39

Randell D. Hiatt
REGISTERED CIVIL ENGINEER

June 6, 2008
PLANS APPROVAL DATE

REGISTERED PROFESSIONAL ENGINEER — Randell D. Hiatt — No. C50200 — Exp. 6-30-09 — CIVIL — STATE OF CALIFORNIA

The State of California or its officers or agents shall not be responsible for the accuracy or completeness of electronic copies of this plan sheet.

To accompany plans dated 6-21-11

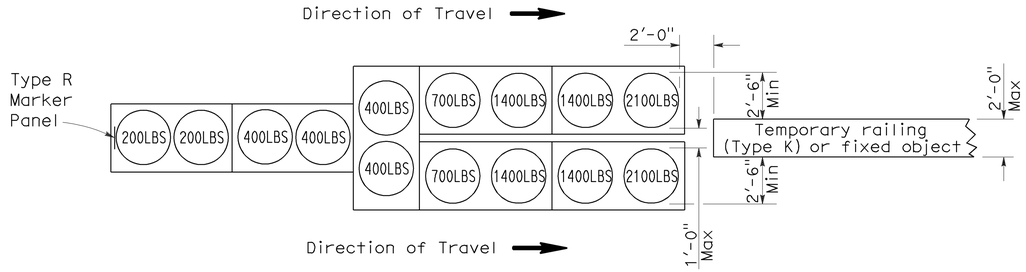

ARRAY 'TU14'

Approach speed 45 mph or more

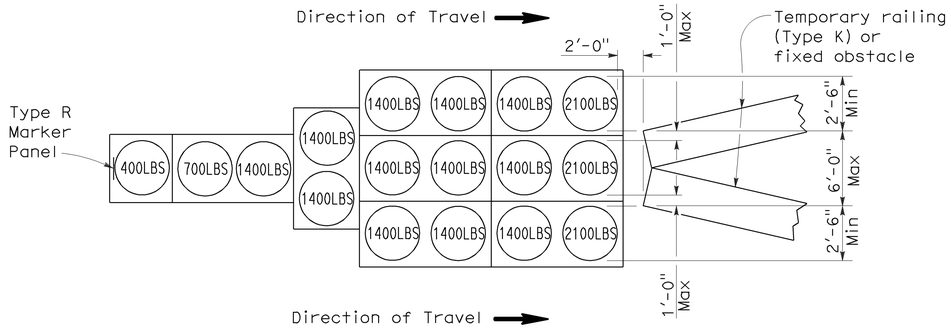

ARRAY 'TU17'

Approach speed less than 45 mph

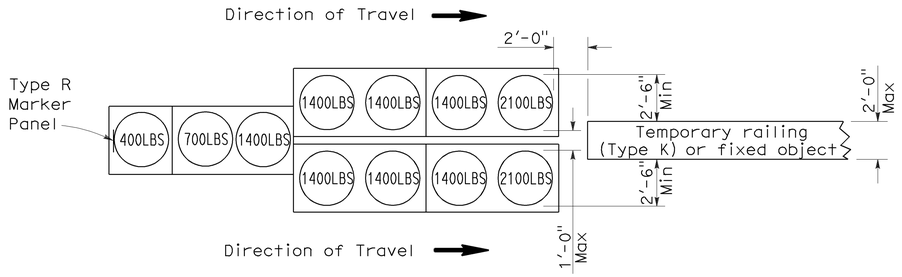

ARRAY 'TU11'

Approach speed less than 45 mph

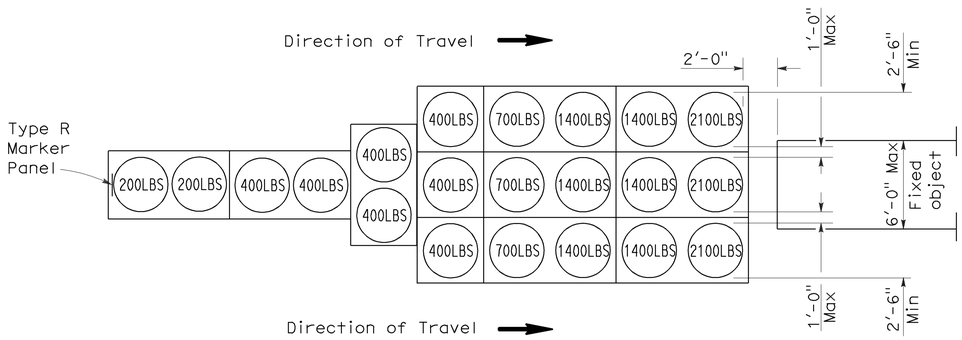

ARRAY 'TU21'

Approach speed 45 mph or more

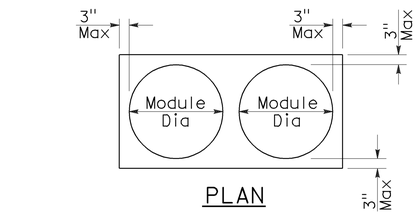

PLAN

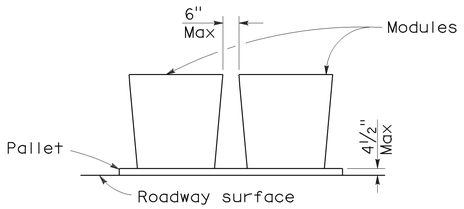

ELEVATION

CRASH CUSHION PALLET DETAIL

See Note 7

NOTES:

1. (XXX) Indicates sand filled module location and weight of sand in pounds for each module. Module spacing is based on the greater diameter of the module.
2. All sand weights are nominal.
3. Temporary crash cushion arrays shall not encroach on the traveled way.
4. Place the top of Type R marker panel 1" below the module lid.
5. Refer to Standard Plan A73B for marker details.
6. Approach speeds indicated conform to NCHRP 350 Report criteria.
7. Use of pallets is optional.

STATE OF CALIFORNIA
DEPARTMENT OF TRANSPORTATION

TEMPORARY CRASH CUSHION, SAND FILLED (UNIDIRECTIONAL)

NO SCALE

RSP T1A DATED JUNE 6, 2008 SUPERSEDES STANDARD PLAN T1A
DATED MAY 1, 2006 - PAGE 211 OF THE STANDARD PLANS BOOK DATED MAY 2006.

REVISED STANDARD PLAN RSP T1A

2006 REVISED STANDARD PLAN RSP T1A

5-15-08

DIST	COUNTY	ROUTE	POST MILES TOTAL PROJECT	SHEET NO.	TOTAL SHEETS
03	Yol	113	R0.0/R11.1	33	39

Randell D. Hiatt
REGISTERED CIVIL ENGINEER

June 6, 2008
PLANS APPROVAL DATE

REGISTERED PROFESSIONAL ENGINEER
Randell D. Hiatt
No. C50200
Exp. 6-30-09
CIVIL
STATE OF CALIFORNIA

The State of California or its officers or agents shall not be responsible for the accuracy or completeness of electronic copies of this plan sheet.

To accompany plans dated 6-21-11

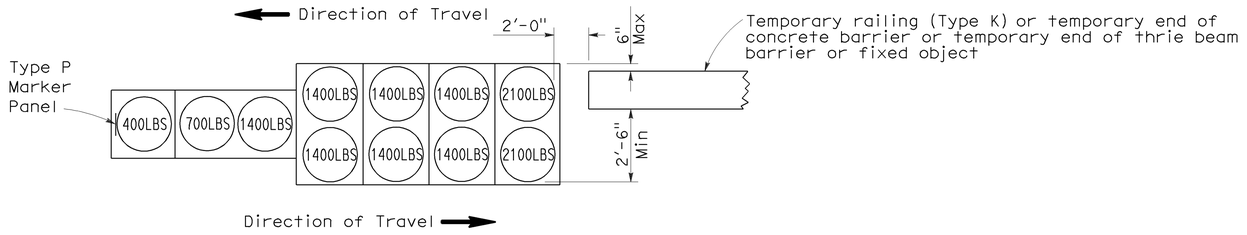

ARRAY 'TB11'

Approach speed less than 45 mph

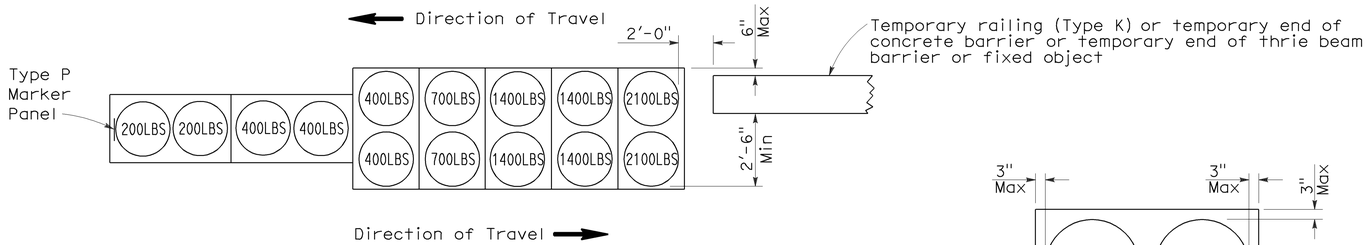

ARRAY 'TB14'

Approach speed 45 mph or more

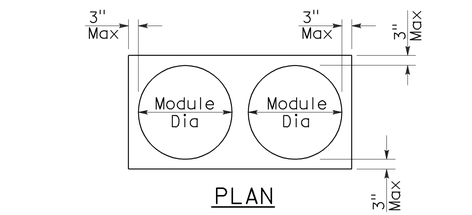

PLAN

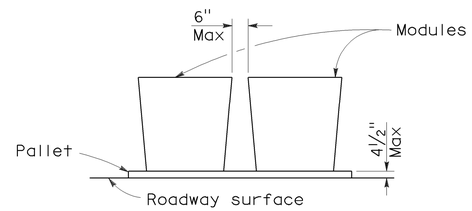

ELEVATION

CRASH CUSHION PALLET DETAIL

See Note 7

NOTES:

1. (XXX) Indicates sand filled module location and weight of sand in pounds for each module. Module spacing is based on the greater diameter of the module.
2. All sand weights are nominal.
3. Temporary crash cushion arrays shall not encroach on the traveled way.
4. Place the Type P marker panel so that the bottom of the panel rests upon the pallet.
5. Refer to Standard Plan A73B for marker details.
6. Approach speeds indicated conform to NCHRP 350 Report criteria.
7. Use of pallets is optional.

STATE OF CALIFORNIA
DEPARTMENT OF TRANSPORTATION

TEMPORARY CRASH CUSHION, SAND FILLED (BIDIRECTIONAL)

NO SCALE

RSP T1B DATED JUNE 6, 2008 SUPERSEDES STANDARD PLAN T1B
DATED MAY 1, 2006 - PAGE 212 OF THE STANDARD PLANS BOOK DATED MAY 2006.

REVISED STANDARD PLAN RSP T1B

2006 REVISED STANDARD PLAN RSP T1B

5-15-08

DIST	COUNTY	ROUTE	POST MILES TOTAL PROJECT	SHEET NO.	TOTAL SHEETS
03	Yol	113	R0.0/R11.1	34	39

Randell D. Hiatt
REGISTERED CIVIL ENGINEER

June 6, 2008
PLANS APPROVAL DATE

REGISTERED PROFESSIONAL ENGINEER
Randell D. Hiatt
No. C50200
Exp. 6-30-09
CIVIL
STATE OF CALIFORNIA

The State of California or its officers or agents shall not be responsible for the accuracy or completeness of electronic copies of this plan sheet.

To accompany plans dated 6-21-11

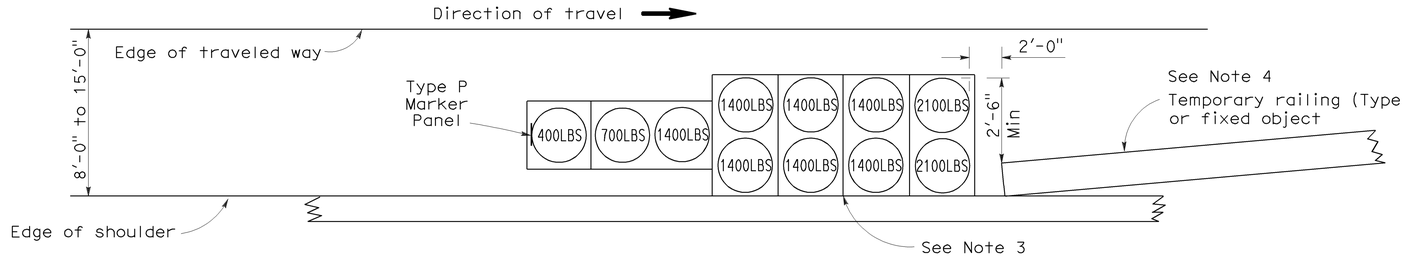

ARRAY 'TS11'

Approach speed less than 45 mph
See Note 9

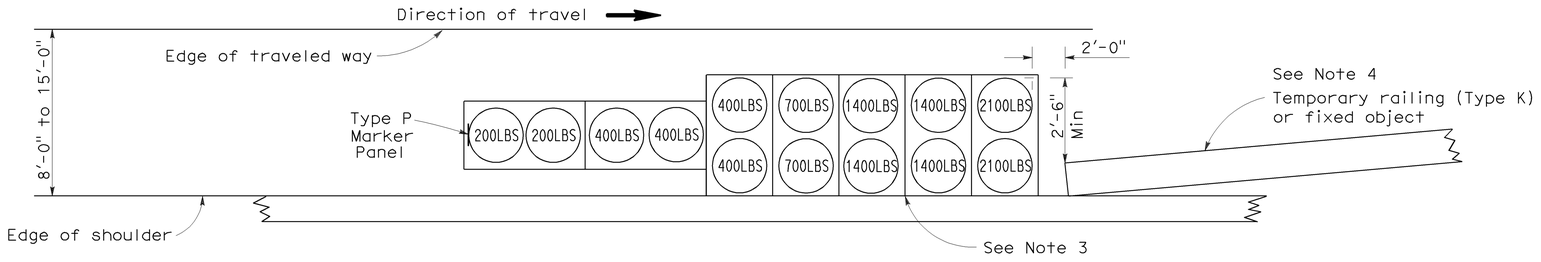

ARRAY 'TS14'

Approach speed 45 mph or more
See Note 9

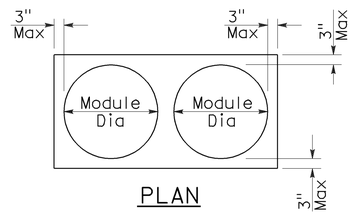

PLAN

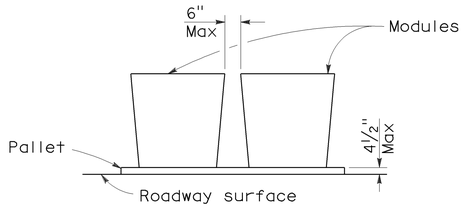

ELEVATION

CRASH CUSHION PALLET DETAIL

See Note 11

NOTES:

1. (XXX) Indicates sand filled module location and weight of sand in pounds for each module. Module spacing is based on the greater diameter of the module.
2. All sand weights are nominal.
3. The temporary crash cushion arrays shown on this plan shall be used only in locations where there will be traffic on one side of the temporary crash cushion array.
4. If the fixed object or approach end of the temporary railing is less than 15'-0" from the edge of traveled way, a temporary crash cushion is required in a construction or work zone.
5. Temporary crash cushion arrays shall not encroach on the traveled way.
6. Arrays for median shoulders shall conform to details shown on this plan for outside shoulders.
7. Place the Type P marker panel so that the bottom of the panel rests upon the pallet and faces traffic.
8. Refer to Standard Plan A73B for marker details.
9. For shoulder widths less than 8'-0", appropriate approved crash cushion protection, other than sand filled modules, shall be provided at fixed objects and at approach ends of temporary railing. The specific type of crash cushion shall be as shown on the project plans or as specified in the Special Provisions, or if not shown on the project plans or specified in the Special Provisions, shall be as approved by the Engineer.
10. Approach speeds indicated conform to NCHRP 350 Report criteria.
11. Use of pallets is optional.

STATE OF CALIFORNIA
DEPARTMENT OF TRANSPORTATION

TEMPORARY CRASH CUSHION, SAND FILLED (SHOULDER INSTALLATIONS)

NO SCALE

RSP T2 DATED JUNE 6, 2008 SUPERSEDES STANDARD PLAN T2
DATED MAY 1, 2006 - PAGE 213 OF THE STANDARD PLANS BOOK DATED MAY 2006.

REVISED STANDARD PLAN RSP T2

2006 REVISED STANDARD PLAN RSP T2

5-15-08

DIST	COUNTY	ROUTE	POST MILES TOTAL PROJECT	SHEET NO.	TOTAL SHEETS
03	Yol	113	R0.0/R11.1	35	39

Greg W. Edwards
REGISTERED CIVIL ENGINEER

November 17, 2006
PLANS APPROVAL DATE

REGISTERED PROFESSIONAL ENGINEER — Greg W. Edwards — No. C36386 — Exp. 6-30-08 CIVIL — STATE OF CALIFORNIA

The State of California or its officers or agents shall not be responsible for the accuracy or completeness of electronic copies of this plan sheet.

To accompany plans dated 6-21-11

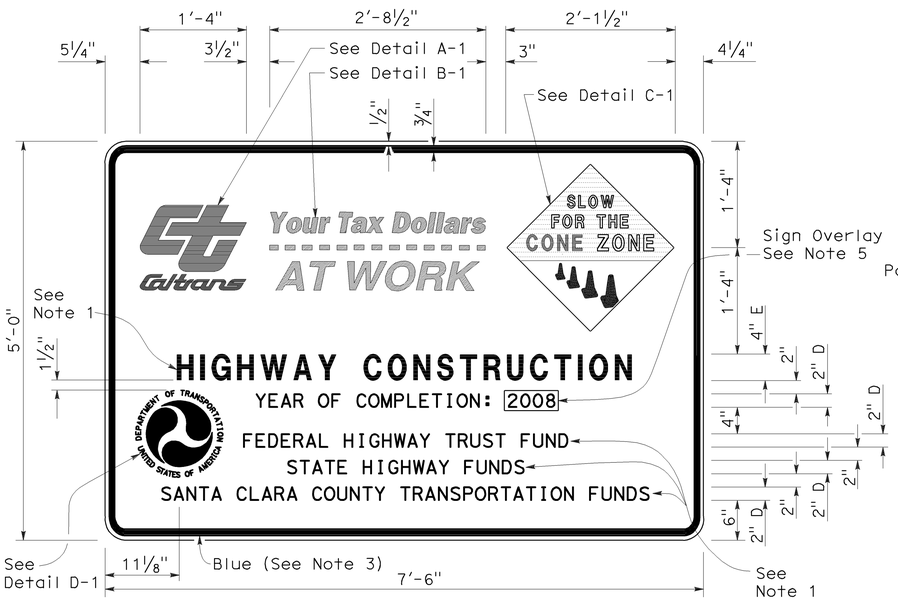

TYPE 1

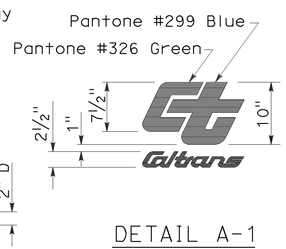

DETAIL A-1

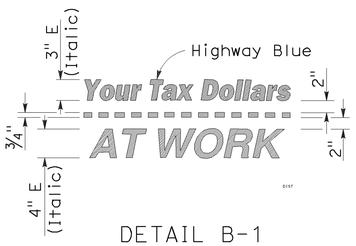

DETAIL B-1
(See Note 3)

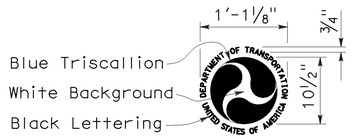

DETAIL D-1
(See Note 6)

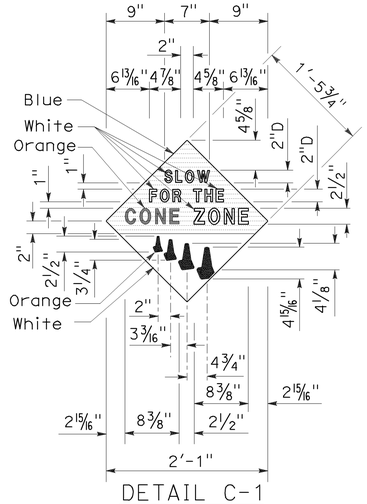

DETAIL C-1
(See Note 4)

NOTES:

1. The sign messages shown for type of project and fund types are examples only. See the Special Provisions for the applicable type of project and fund type messages to be used.
2. Except as otherwise shown, the legend of sign shall be black on a white background (non-reflective).
3. The border of the signs and details "B-1" and "B-2" shall be blue (non-reflective).
4. The diamond in details "C-1" and "C-2" shall be blue for the background of message, " SLOW FOR THE CONE ZONE", and white background for the orange cones. The color and type of font for the "SLOW FOR THE CONE ZONE" message shall be: "SLOW" white D; "FOR THE" white D; "CONE" orange Arial font; "ZONE" white Arial font.
5. Year of completion of project construction shown on the overlay is an example only. See the Special Provisions.
6. Use when the Project involves Federal Highway Trust Fund.

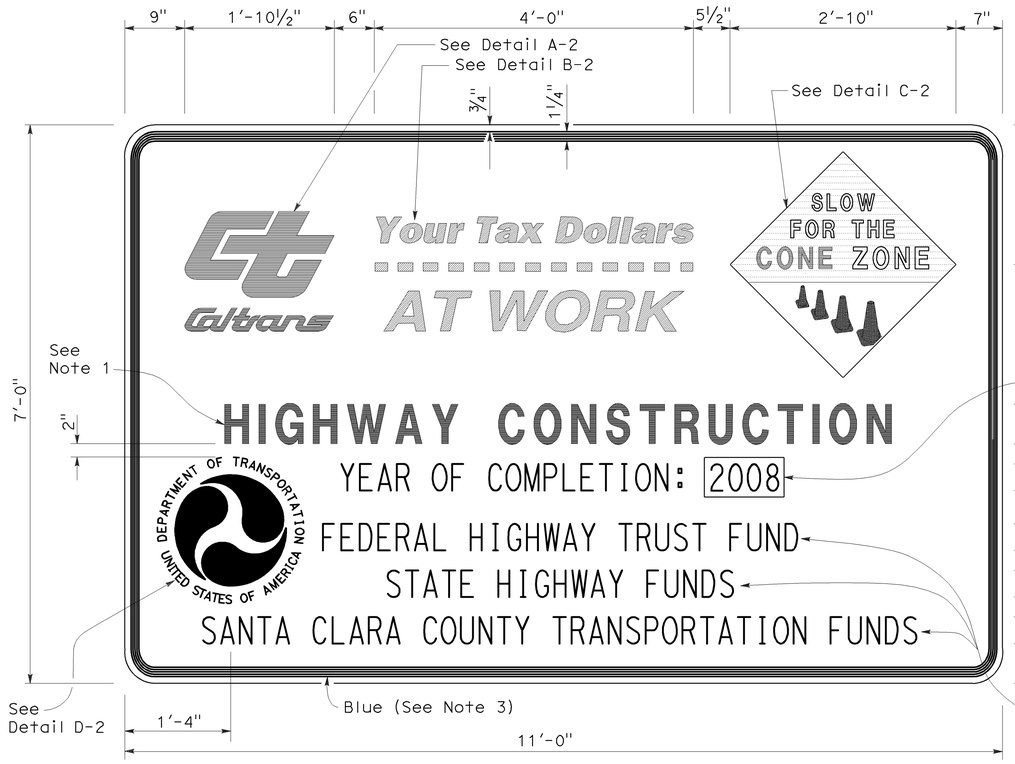

TYPE 2

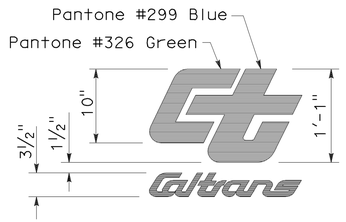

DETAIL A-2

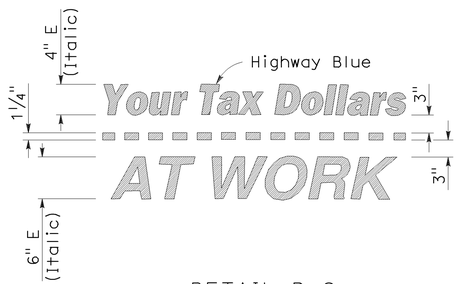

DETAIL B-2
(See Note 3)

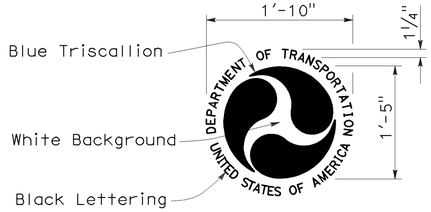

DETAIL D-2
(See Note 6)

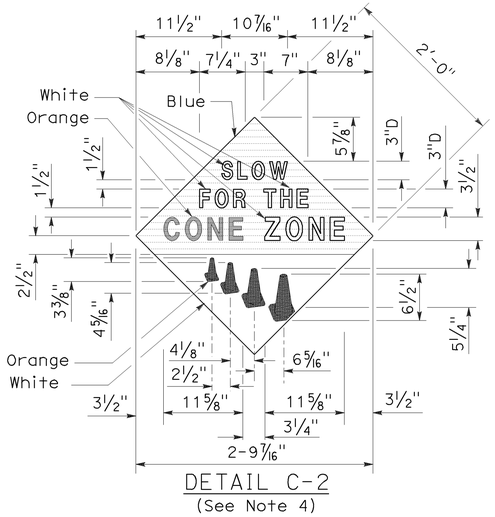

DETAIL C-2
(See Note 4)

STATE OF CALIFORNIA
DEPARTMENT OF TRANSPORTATION

CONSTRUCTION PROJECT FUNDING IDENTIFICATION SIGNS

NO SCALE

RSP T7 DATED NOVEMBER 17, 2006 SUPERSEDES STANDARD PLAN T7
DATED MAY 1, 2006 - PAGE 217 OF THE STANDARD PLANS BOOK DATED MAY 2006.

REVISED STANDARD PLAN RSP T7

2006 REVISED STANDARD PLAN RSP T7

9-7-06

DIST	COUNTY	ROUTE	POST MILES TOTAL PROJECT	SHEET NO.	TOTAL SHEETS
03	Yol	113	R0.0/R11.1	36	39

Robert B Schott
LICENSED LANDSCAPE ARCHITECT

August 15, 2008
PLANS Approval DATE

LICENSED LANDSCAPE ARCHITECT
Robert B. Schott 3695
Robert B Schott
Signature
11-04-08
Renewal Date
08-11-08
Date
STATE OF CALIFORNIA

The State of California or its officers or agents shall not be responsible for the accuracy or completeness of electronic copies of this plan sheet.

To accompany plans dated 6-21-11

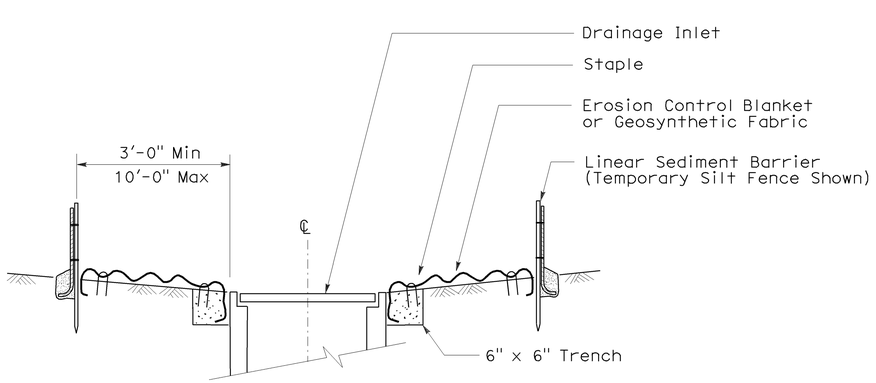

SECTION A-A

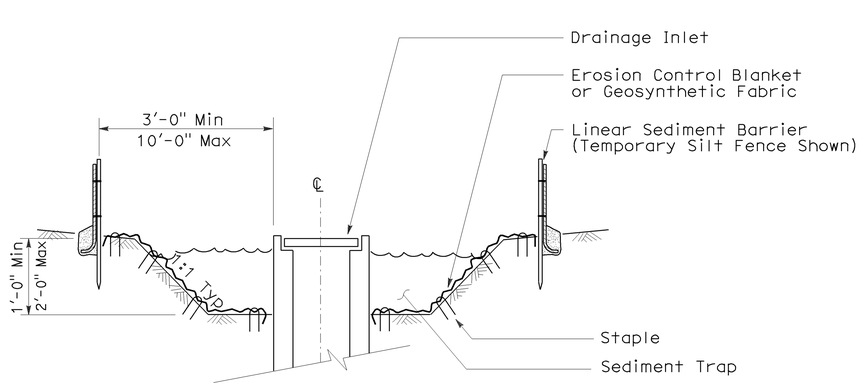

SECTION B-B

NOTES:

1. See Standard Plan T51 for Temporary Silt Fence.
2. Dimensions may vary to fit field conditions.

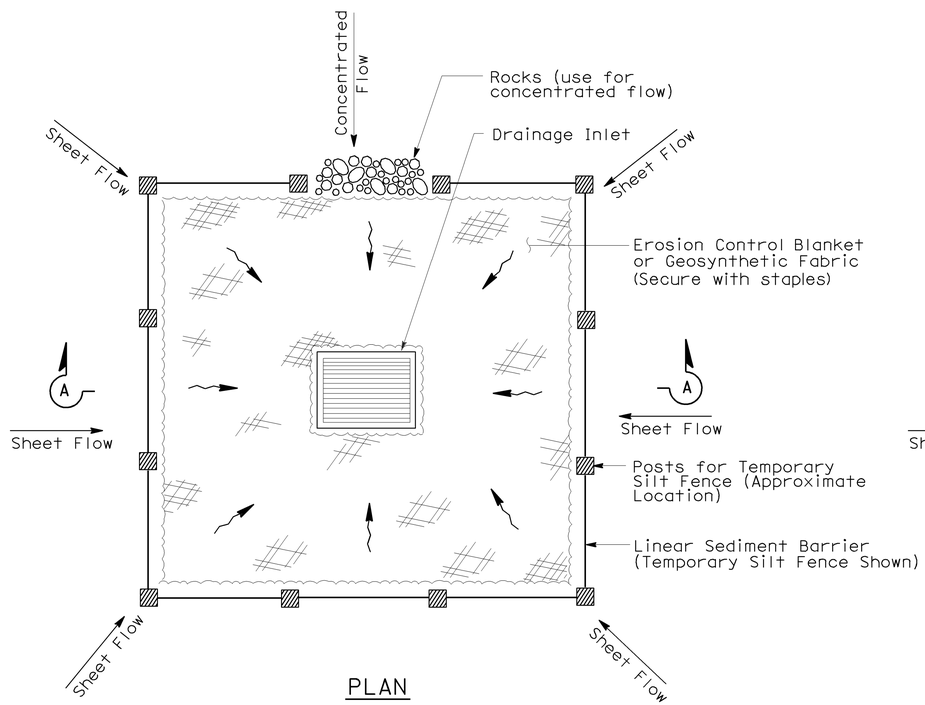

PLAN

TEMPORARY DRAINAGE INLET PROTECTION (TYPE 1)

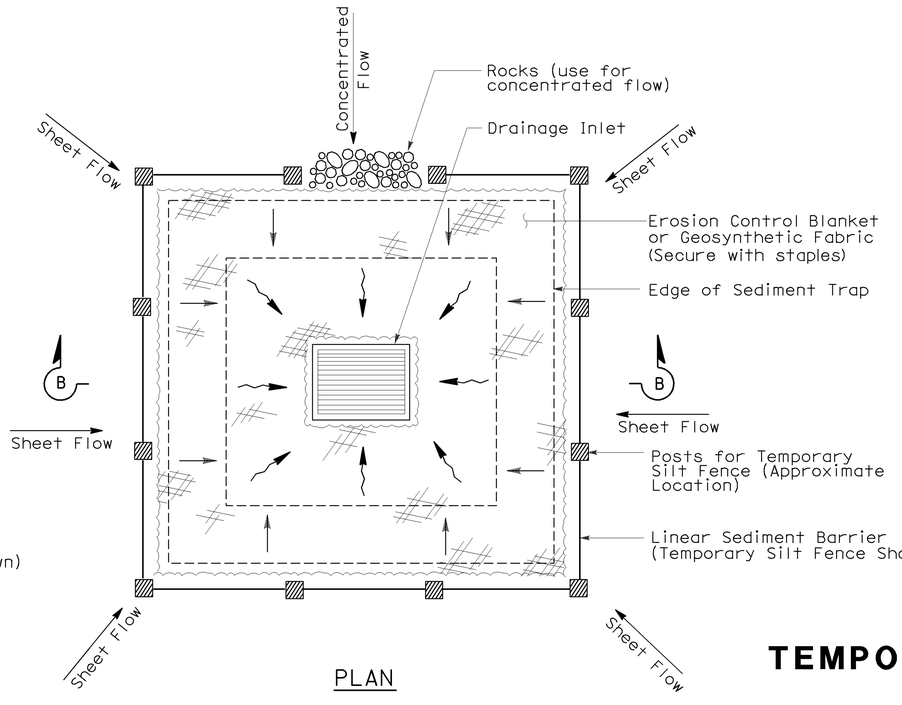

PLAN

TEMPORARY DRAINAGE INLET PROTECTION (TYPE 2) (EXCAVATED SEDIMENT TRAP)

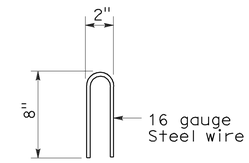

STAPLE DETAIL

STATE OF CALIFORNIA
DEPARTMENT OF TRANSPORTATION

TEMPORARY WATER POLLUTION CONTROL DETAILS (TEMPORARY DRAINAGE INLET PROTECTION)

NO SCALE

Nsp t61 dated august 15, 2008 supplements the standard plans book dated may 2006.

NEW STANDARD PLAN NSP T61

2006 NEW STANDARD PLAN NSP T61

7-11-08

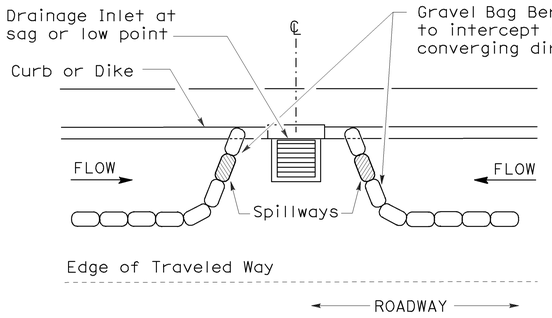

PLAN

CONFIGURATION FOR SAG POINT INLET (GRAVEL BAG BERM)

GRAVEL BAG BERM (TYPE 3A) SPACING TABLE

SLOPE OF ROADWAY (PERCENT)	1 to 3.9	4 to 5.9	6 to 7.9	8 to 10	10+
INTERVAL BETWEEN BERM	100′	75′	50′	25′	12′

For slope of less than 1%, install barriers only if erosion/sediment is prevalent

DIST	COUNTY	ROUTE	POST MILES TOTAL PROJECT	SHEET NO.	TOTAL SHEETS
03	Yol	113	R0.0/R11.1	37	39

Robert B Schott
LICENSED LANDSCAPE ARCHITECT

August 15, 2008
PLANS APPROVAL DATE

LICENSED LANDSCAPE ARCHITECT — Robert B. Schott 3835 — Registration Date 11-04-08 — Renewal Date 08-11-08 — Date — STATE OF CALIFORNIA

The State of California or its officers or agents shall not be responsible for the accuracy or completeness of electronic copies of this plan sheet.

To accompany plans dated 6-21-11

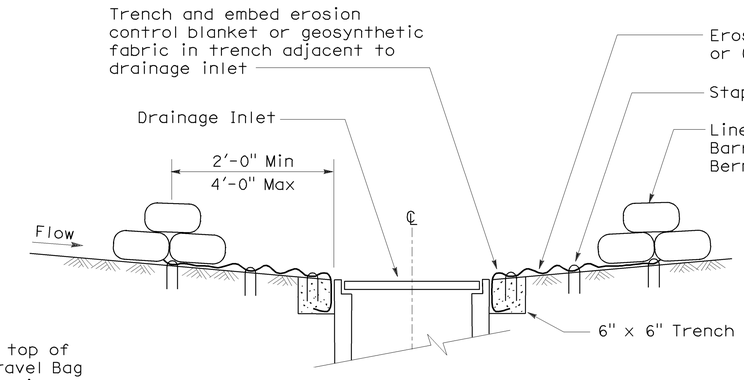

SECTION A-A

NOTES:

1. Place safety cones adjacent to drainage inlet protection.
2. Dimensions may vary to fit field conditions.
3. Install a minimum of 3 gravel bag berms upstream of each drainage inlet to be protected.
4. Position erosion control blanket or geosynthetic fabric at edge of concrete apron and secure in trench.
5. Erosion control blanket or geosynthetic fabric is not required if the area adjacent to the drainage inlet is vegetated or paved.

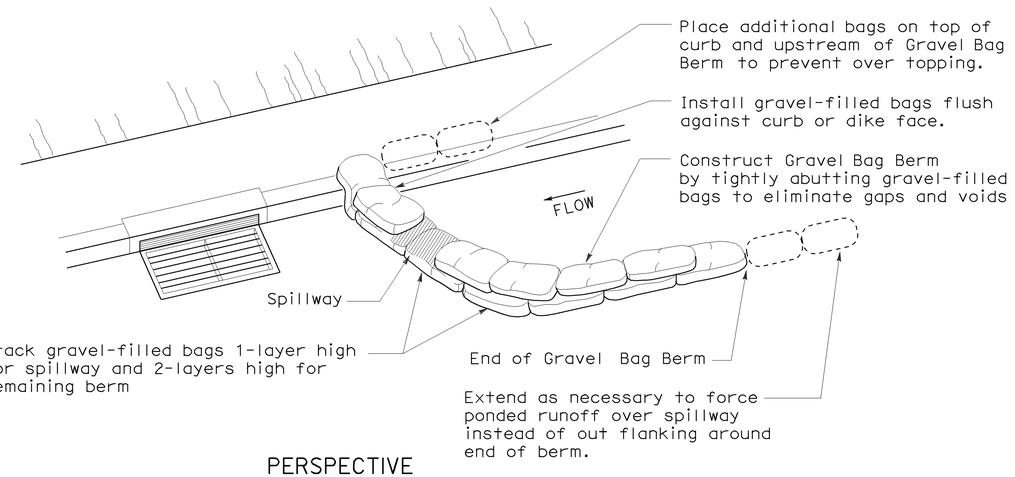

PERSPECTIVE

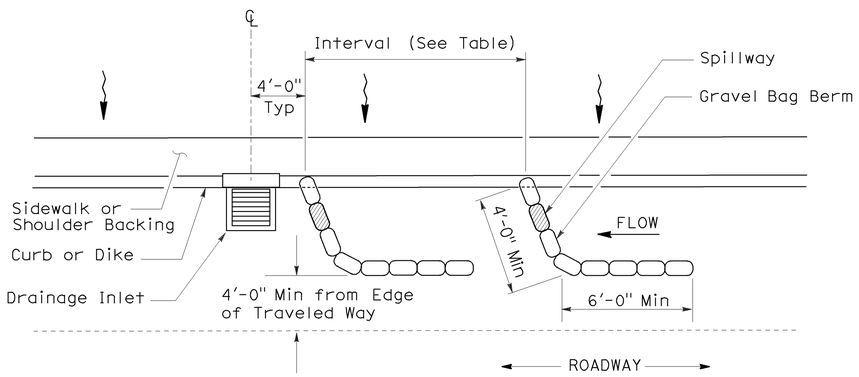

PLAN

TEMPORARY DRAINAGE INLET PROTECTION (TYPE 3A) (GRAVEL BAG BERM)

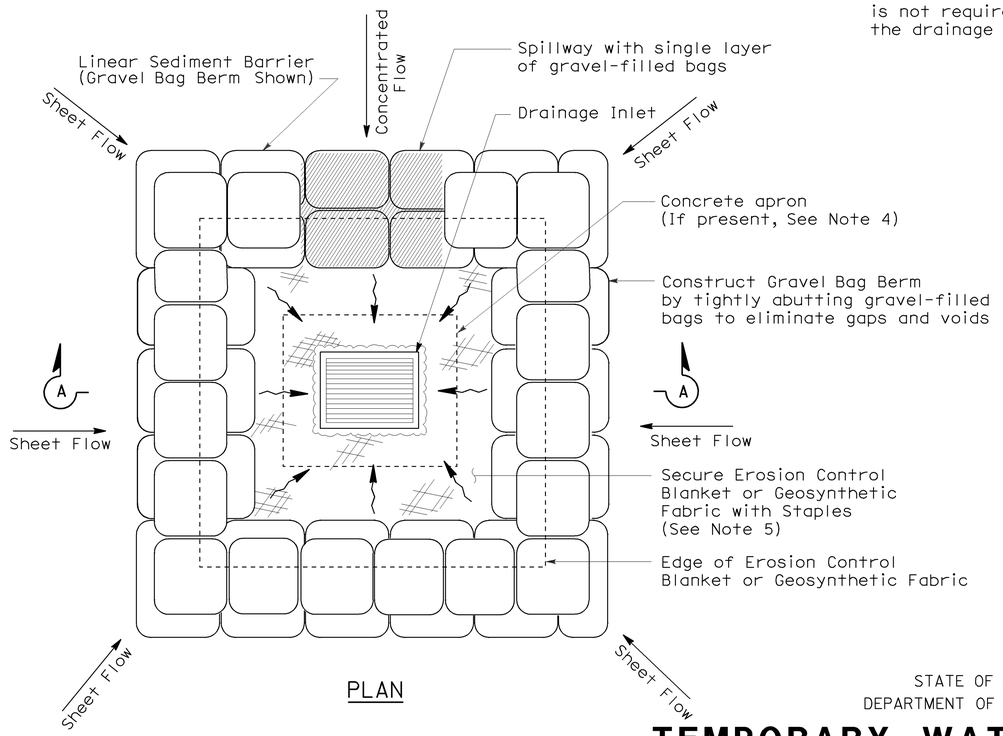

PLAN

TEMPORARY DRAINAGE INLET PROTECTION (TYPE 3B)

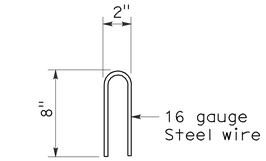

STAPLE DETAIL

STATE OF CALIFORNIA
DEPARTMENT OF TRANSPORTATION

TEMPORARY WATER POLLUTION CONTROL DETAILS (TEMPORARY DRAINAGE INLET PROTECTION)

NO SCALE

NSP T62 DATED AUGUST 15, 2008 SUPPLEMENTS THE STANDARD PLANS BOOK DATED MAY 2006.

NEW STANDARD PLAN NSP T62

2006 NEW STANDARD PLAN NSP T62

7-11-08

FLEXIBLE SEDIMENT BARRIER SPACING TABLE

SLOPE OF ROADWAY (PERCENT)	0 to 0.9	1 to 1.9	2 to 2.9	3 to 4	5+
INTERVAL BETWEEN BARRIERS	50′	35′	30′	25′	20′
ANGLE FROM FACE OF CURB	70°	70°	70°	45°	45°
SUGGESTED BARRIER LENGTH	6′	6′	6′	6′	6′

DIST	COUNTY	ROUTE	POST MILES TOTAL PROJECT	SHEET NO.	TOTAL SHEETS
03	Yol	113	R0.0/R11.1	38	39

Robert B Schott
LICENSED LANDSCAPE ARCHITECT

August 15, 2008
PLANS APPROVAL DATE

LICENSED LANDSCAPE ARCHITECT — Robert B. Schott 3835 — Registration Date 11-04-08 — Renewal Date 08-11-08 — Date — STATE OF CALIFORNIA

The State of California or its officers or agents shall not be responsible for the accuracy or completeness of electronic copies of this plan sheet.

To accompany plans dated 6-21-11

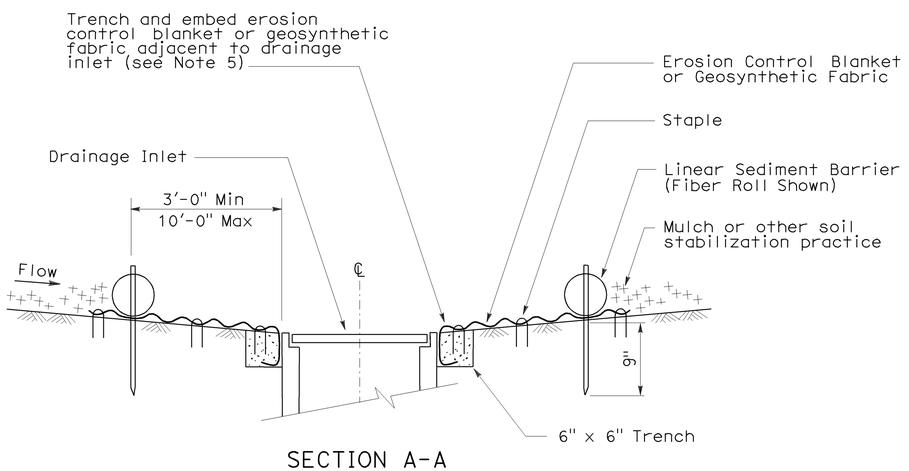

SECTION A-A

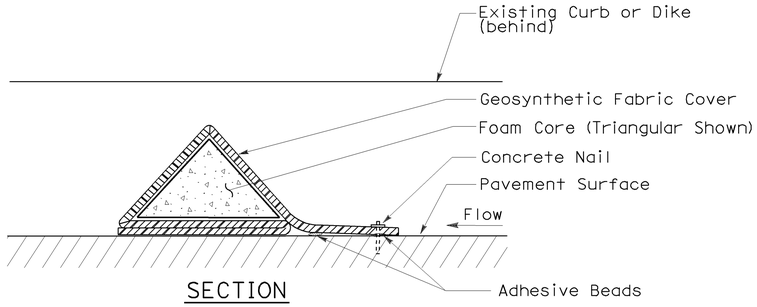

SECTION

FLEXIBLE SEDIMENT BARRIER DETAIL (FOAM BARRIER SHOWN)

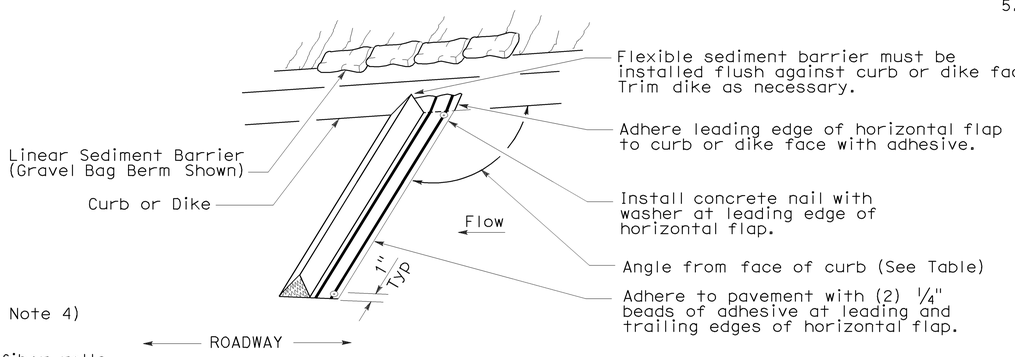

PERSPECTIVE

NOTES:

1. See Standard Plan T51 for Temporary Silt Fence.
2. Dimensions may vary to fit field conditions.
3. Install a minimum of 3 flexible sediment barriers upstream of each drainage inlet to be protected.
4. Position erosion control blanket or geosynthetic fabric at edge of concrete apron and secure in trench.
5. Erosion control blanket or geosynthetic fabric is not required if the area adjacent to the drainage inlet is vegetated.

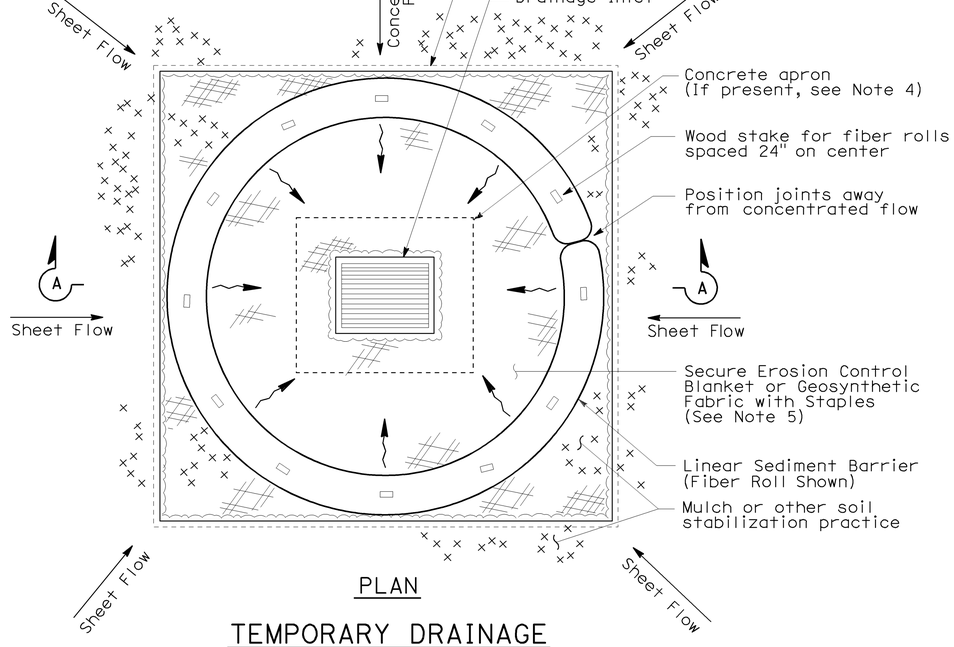

PLAN

TEMPORARY DRAINAGE INLET PROTECTION (TYPE 4A)

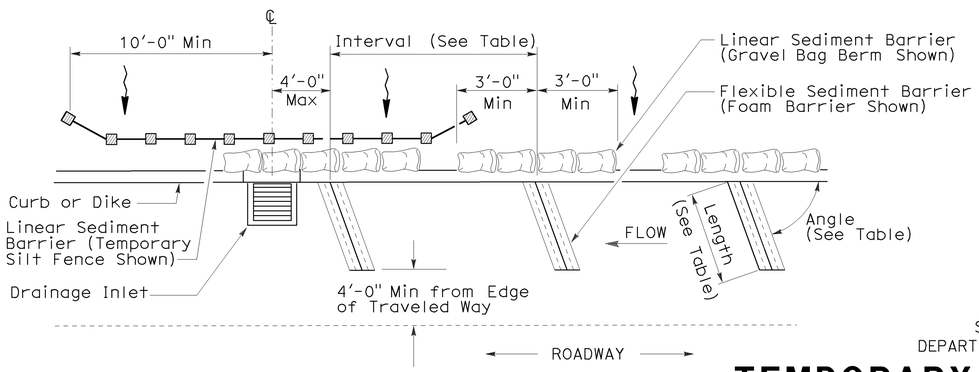

PLAN

TEMPORARY DRAINAGE INLET PROTECTION (TYPE 4B) FLEXIBLE SEDIMENT BARRIER

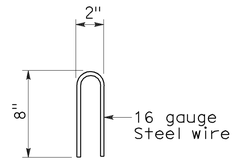

STAPLE DETAIL

STATE OF CALIFORNIA
DEPARTMENT OF TRANSPORTATION

TEMPORARY WATER POLLUTION CONTROL DETAILS (TEMPORARY DRAINAGE INLET PROTECTION)

NO SCALE

NSP T63 DATED AUGUST 15, 2008 SUPPLEMENTS THE STANDARD PLANS BOOK DATED MAY 2006.

NEW STANDARD PLAN NSP T63

2006 NEW STANDARD PLAN NSP T63

7-11-08

DIST	COUNTY	ROUTE	POST MILES TOTAL PROJECT	SHEET NO.	TOTAL SHEETS
03	Yol	113	R0.0/R11.1	39	39

LICENSED LANDSCAPE ARCHITECT

August 15, 2008
PLANS APPROVAL DATE

LICENSED LANDSCAPE ARCHITECT
Robert B. Schott 3695
Signature
11-04-08
Renewal Date
08-11-08
Date
STATE OF CALIFORNIA

The State of California or its officers or agents shall not be responsible for the accuracy or completeness of electronic copies of this plan sheet.

To accompany plans dated 6-21-11

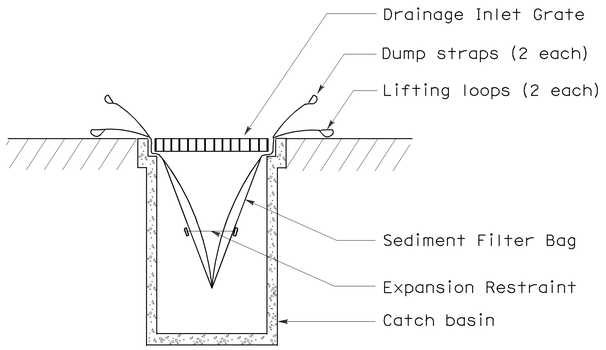

SECTION B-B

SEDIMENT FILTER BAG DETAIL

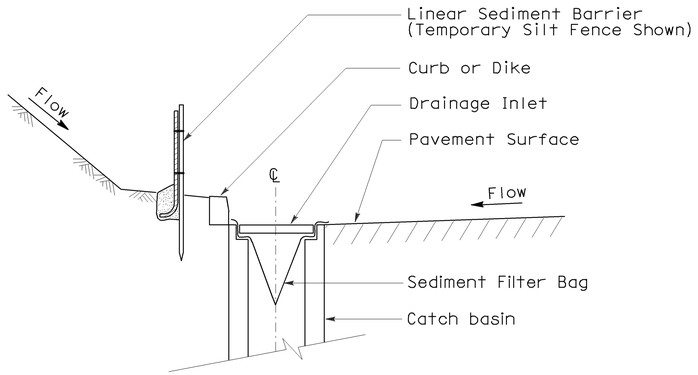

SECTION A-A

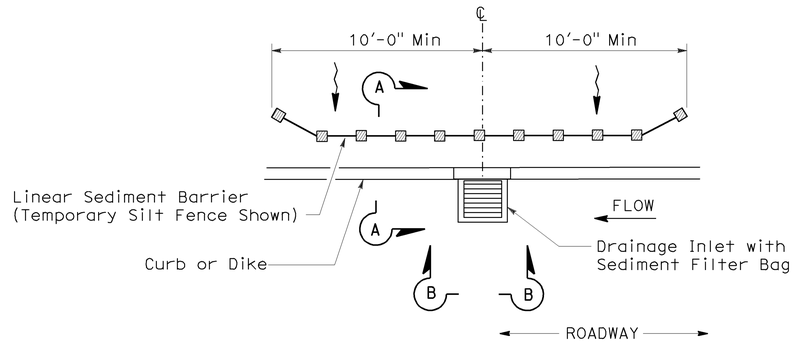

PLAN

TEMPORARY DRAINAGE INLET PROTECTION (TYPE 5) (SEDIMENT FILTER BAG)

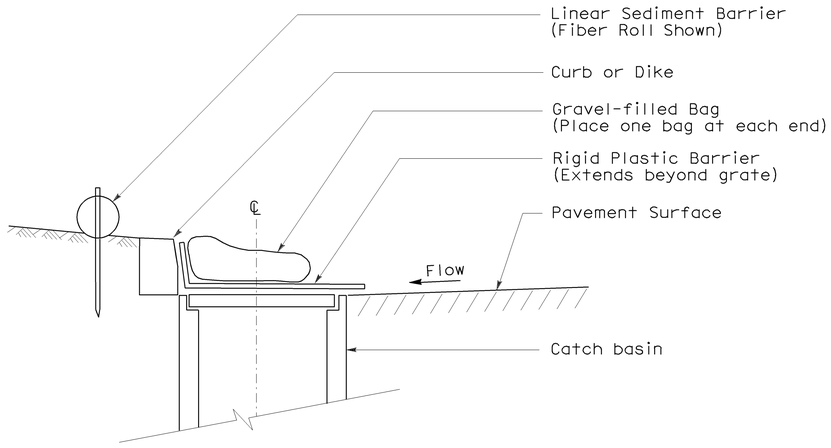

SECTION

TEMPORARY DRAINAGE INLET PROTECTION (TYPE 6A) (CATCH BASIN WITH GRATE)

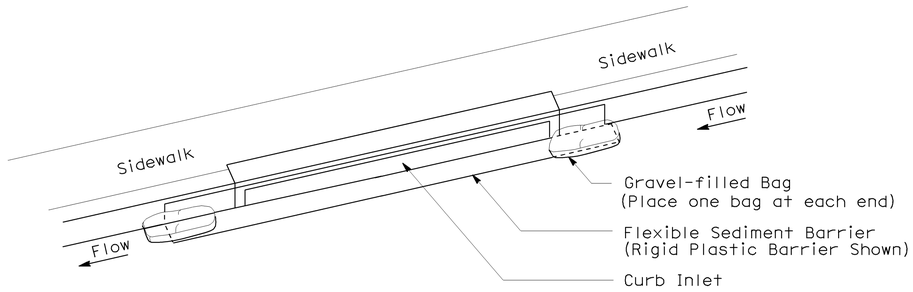

PERSPECTIVE

TEMPORARY DRAINAGE INLET PROTECTION (TYPE 6B) (CURB INLET WITHOUT GRATE)

NOTES:

1. See Standard Plan T51 for Temporary Silt Fence.
2. Dimensions may vary to fit field conditions.

STATE OF CALIFORNIA
DEPARTMENT OF TRANSPORTATION

TEMPORARY WATER POLLUTION CONTROL DETAILS (TEMPORARY DRAINAGE INLET PROTECTION)

NO SCALE

NSP T64 DATED AUGUST 15, 2008 SUPPLEMENTS
THE STANDARD PLANS BOOK DATED MAY 2006.

NEW STANDARD PLAN NSP T64

2006 NEW STANDARD PLAN NSP T64

7-11-08