INDEX OF PLANS

SHEET No.	DESCRIPTION
1	TITLE AND LOCATION MAP
2-3	TYPICAL CROSS SECTIONS
4-13	CONSTRUCTION DETAILS
14-15	CONSTRUCTION AREA SIGNS
16	PAVEMENT DELINEATION QUANTITIES
17-18	SUMMARY OF QUANTITIES
19-21	ELECTRICAL PLANS
22-35	NEW AND REVISED STANDARD PLANS

STRUCTURE PLANS

36-37	COUNTRY ROAD 101 UC

THE STANDARD PLANS LIST APPLICABLE TO THIS CONTRACT IS INCLUDED IN THE NOTICE TO BIDDERS AND SPECIAL PROVISIONS BOOK.

STATE OF CALIFORNIA

DEPARTMENT OF TRANSPORTATION

ACIM-0056(337)E

Dist	COUNTY	ROUTE	POST MILES TOTAL PROJECT	SHEET No.	TOTAL SHEETS
03	Yol	5	0.3/R14.0	1	37

PROJECT PLANS FOR CONSTRUCTION ON

STATE HIGHWAY

IN YOLO COUNTY IN AND NEAR WOODLAND FROM 0.3 MILE WEST OF SACRAMENTO RIVER BRIDGE TO 0.2 MILE NORTH OF ADAMS CREEK BRIDGE

TO BE SUPPLEMENTED BY STANDARD PLANS DATED MAY 2006

LOCATION MAP

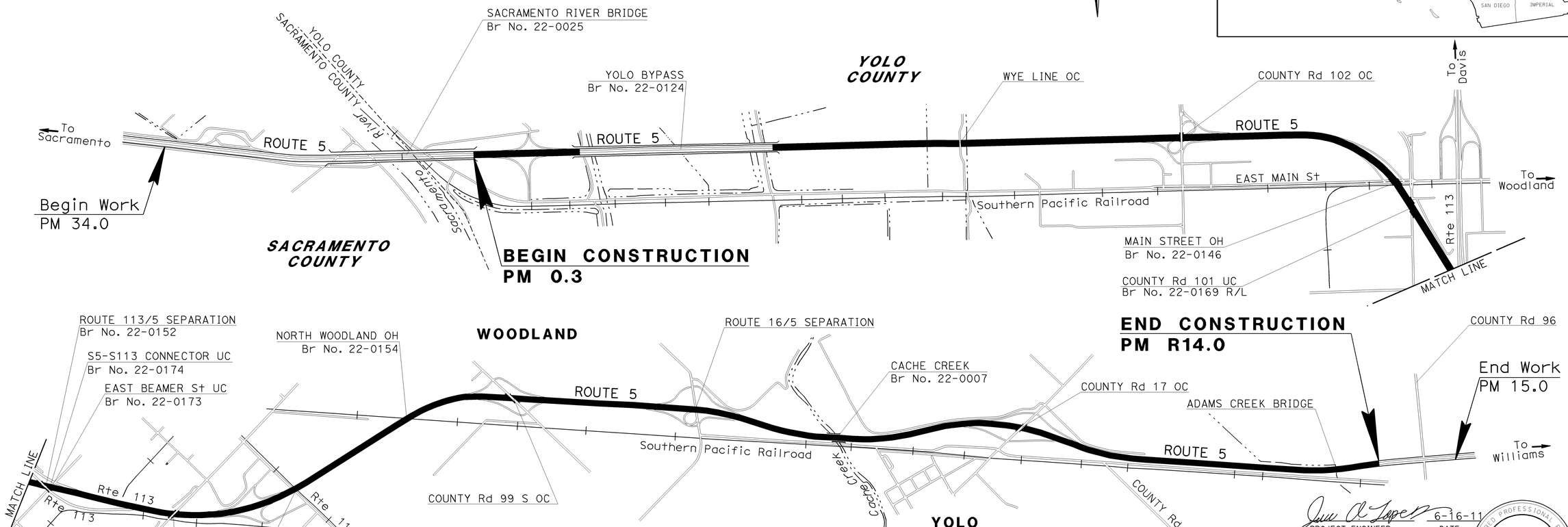

PROJECT MANAGER: DOUG LANGE

DESIGN ENGINEER: NESAR FORMOLI

Jose A. Lopez 6-16-11
PROJECT ENGINEER DATE
REGISTERED CIVIL ENGINEER

REGISTERED PROFESSIONAL ENGINEER
JOSE LOPEZ
No. 64619
Exp. 6-30-13
CIVIL
STATE OF CALIFORNIA

August 15, 2011
PLANS APPROVAL DATE

THE STATE OF CALIFORNIA OR ITS OFFICERS OR AGENTS SHALL NOT BE RESPONSIBLE FOR THE ACCURACY OR COMPLETENESS OF SCANNED COPIES OF THIS PLAN SHEET.

THE CONTRACTOR SHALL POSSESS THE CLASS (OR CLASSES) OF LICENSE AS SPECIFIED IN THE "NOTICE TO BIDDERS."

CONTRACT No.	03-2F0104
PROJECT ID	0300020442

LAST REVISION 00-00-00 | DATE PLOTTED => 25-AUG-2011 | TIME PLOTTED => 13:18

BORDER LAST REVISED 7/2/2010 | CALTRANS WEB SITE IS: HTTP//WWW.DOT.CA.GOV/ | RELATIVE BORDER SCALE IS IN INCHES 0 1 2 3 | USERNAME => s134507 | DGN FILE => 0300020442ab001.dgn | UNIT 0334 | PROJECT NUMBER & PHASE 03000204421

Dist	COUNTY	ROUTE	POST MILES TOTAL PROJECT	SHEET No.	TOTAL SHEETS
03	Yol	5	0.3/R14.0	2	37

6-16-11
REGISTERED CIVIL ENGINEER DATE

8-15-11
PLANS APPROVAL DATE

REGISTERED PROFESSIONAL ENGINEER
JOSE LOPEZ
No. 64619
Exp. 6-30-13
CIVIL
STATE OF CALIFORNIA

THE STATE OF CALIFORNIA OR ITS OFFICERS OR AGENTS SHALL NOT BE RESPONSIBLE FOR THE ACCURACY OR COMPLETENESS OF SCANNED COPIES OF THIS PLAN SHEET.

NOTES:

1. DIMENSIONS OF THE STRUCTURAL SECTIONS ARE SUBJECT TO TOLERANCES AS SPECIFIED IN THE STANDARD SPECIFICATIONS.
2. SUPERELEVATION AS SHOWN OR AS DIRECTED BY THE ENGINEER.
3. EXISTING UTILITIES HAVE NOT BEEN PLOTTED ON THESE PLANS.
4. NO WORK ON BRIDGES.
5. PAVE RHMA-O TO EDGE OF PAVEMENT THROUGH HIGH SIDE OF SUPER.
6. SEE SHEET C-3 FOR RUMBLE STRIP PLACEMENT

LEGEND:

RHMA-O	RUBBERIZED HOT MIX ASPHALT (OPEN GRADED)
HMA-A	HOT-MIX ASPHALT TYPE-A
RHMA-G	RUBBERIZED HOT MIX ASPHALT (GAP GRADED)
LL	LANE LINE
CP	CATCH POINT
Imp Matl	IMPORTED MATERIAL (SHOULDER BACKING)

DESIGN DESIGNATION

ADT (2011)= 36,200 D=52%
ADT (2031)= 63,000 T=16%
V=70 MPH

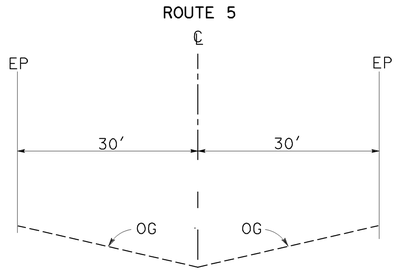

PM 6.6 To 14.0

EXISTING STRUCTURAL SECTIONS

E-1
- 0.15′-0.45′ AC
- 0.20′-0.35′ AC
- 0.65′-0.85′ AB
- 0.50′ AS

E-2
- 0.06′ - 0.10′ OGAC
- 0.15′-0.35′ AC
- PRF
- 0.00′ - 0.10′ AC
- 0.67′ CRACKED PCCP
- 0.35′ CTB
- 0.50′ AS

STRUCTURAL SECTIONS

S-1
- COLD PLANE OGAC Pvmt (0.06′ - 0.10′ Max)
- 0.10′ RHMA-O
- 0.20′ RHMA-G

S-2
- 0.10′ RHMA-O
- (VARIABLE AS NEEDED)
- 1.20′ HMA-A

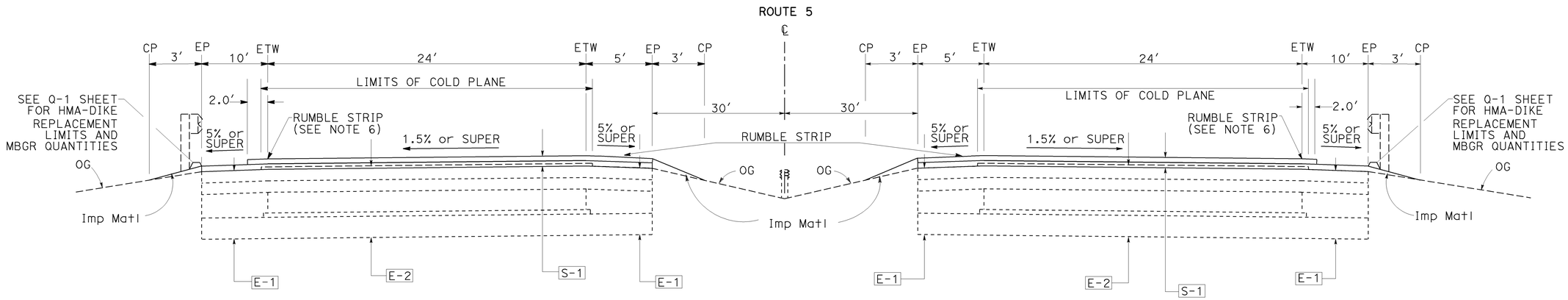

SOUTHBOUND
PM 0.3 To 0.9
PM 2.5 To 6.6
PM 6.7 To 14.0

ROUTE 5

NORTHBOUND
PM 0.3 To 0.9
PM 2.5 To 6.5
PM 6.6 To 14.0

TYPICAL CROSS SECTIONS

NO SCALE

X-1

REVISED BY | DATE REVISED
J. LOPEZ | J. LOPEZ
CALCULATED-DESIGNED BY | CHECKED BY
FUNCTIONAL SUPERVISOR: NESAR FORMOLI
STATE OF CALIFORNIA - DEPARTMENT OF TRANSPORTATION
Caltrans
NORTH REGION
OFFICE OF ADVANCE PLANNING

LAST REVISION 00-00-00 | DATE PLOTTED => 25-AUG-2011 | TIME PLOTTED => 13:18

BORDER LAST REVISED 7/2/2010 | USERNAME => s134507 | DGN FILE => 0300020442ca001.dgn | RELATIVE BORDER SCALE IS IN INCHES 0 1 2 3 | UNIT 03216 | PROJECT NUMBER & PHASE 03000204421

Dist	COUNTY	ROUTE	POST MILES TOTAL PROJECT	SHEET No.	TOTAL SHEETS
03	Yol	5	0.3/R14.0	3	37

6-16-11
REGISTERED CIVIL ENGINEER DATE

JOSE LOPEZ No. 64619 Exp. 6-30-13 CIVIL — REGISTERED PROFESSIONAL ENGINEER — STATE OF CALIFORNIA

8-15-11
PLANS APPROVAL DATE

THE STATE OF CALIFORNIA OR ITS OFFICERS OR AGENTS SHALL NOT BE RESPONSIBLE FOR THE ACCURACY OR COMPLETENESS OF SCANNED COPIES OF THIS PLAN SHEET.

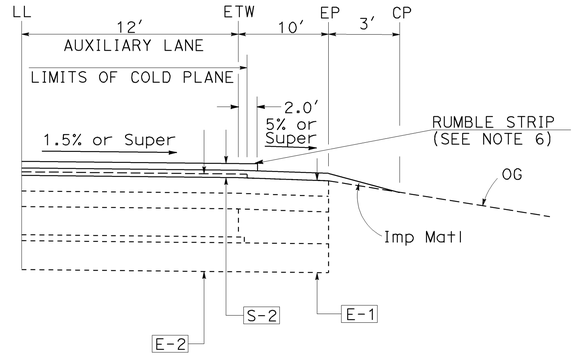

NORTHBOUND
PM 7.5 To 7.9

ROUTE 5

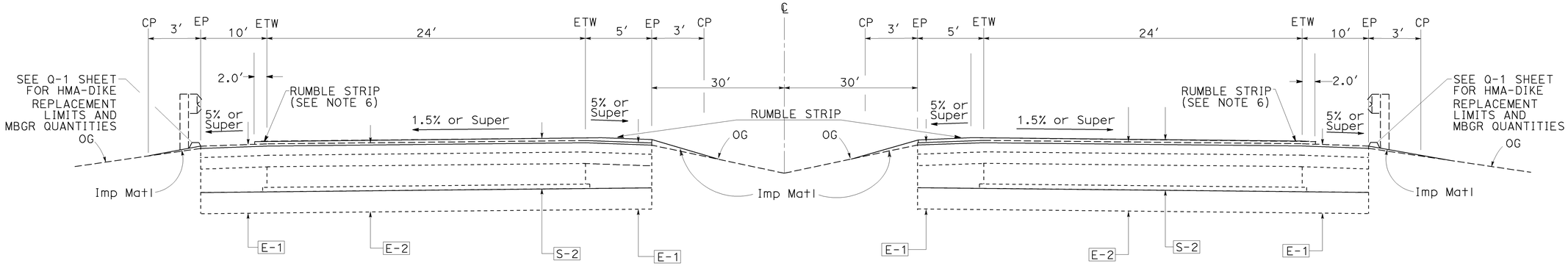

SOUTHBOUND
PM 6.6 To 6.7

ROUTE 5

NORTHBOUND
PM 6.5 To 6.6

TYPICAL CROSS SECTIONS

NO SCALE

X-2

STATE OF CALIFORNIA - DEPARTMENT OF TRANSPORTATION
NORTH REGION
OFFICE OF ADVANCE PLANNING
Caltrans

FUNCTIONAL SUPERVISOR: NESAR FORMOLI

CALCULATED-DESIGNED BY: J. LOPEZ
CHECKED BY: J. LOPEZ

REVISED BY | DATE REVISED

LAST REVISION | DATE PLOTTED => 25-AUG-2011 | TIME PLOTTED => 13:18 | 00-00-00

BORDER LAST REVISED 7/2/2010

USERNAME => s134507
DGN FILE => 0300020442ca002.dgn

RELATIVE BORDER SCALE IS IN INCHES 0 1 2 3

UNIT 03216

PROJECT NUMBER & PHASE 03000204421

Dist	COUNTY	ROUTE	POST MILES TOTAL PROJECT	SHEET No.	TOTAL SHEETS
03	Yol	5	0.3/14.0	4	37

6-16-11
REGISTERED CIVIL ENGINEER DATE

JOSE LOPEZ No. 64619 Exp. 6-30-13 CIVIL — REGISTERED PROFESSIONAL ENGINEER — STATE OF CALIFORNIA

8-15-11
PLANS APPROVAL DATE

THE STATE OF CALIFORNIA OR ITS OFFICERS OR AGENTS SHALL NOT BE RESPONSIBLE FOR THE ACCURACY OR COMPLETENESS OF SCANNED COPIES OF THIS PLAN SHEET.

NOTE:

EXACT CONFORM LIMITS TO BE DETERMINED BY ENGINEER.

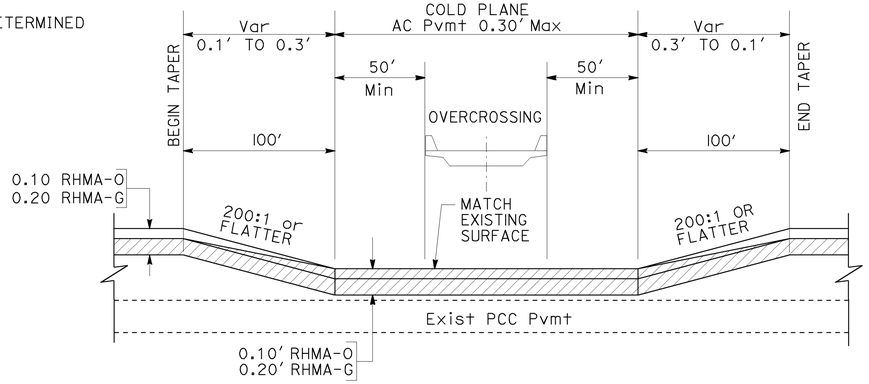

SECTION A-A

OVERHEAD CLEARANCE CONFORM

WYE LINE OC, COUNTY ROAD 102 OC,
ROUTE 113/5 SEPERATION, EAST KENTUCKY AVE OC,
COUNTY ROAD 99S OC, ROUTE 16/5 SEPERATION,
COUNTY ROAD 17 OC

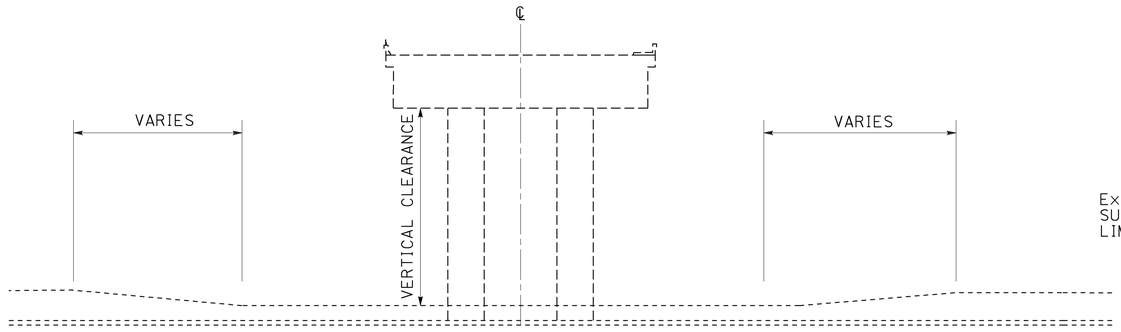

EXIST BRIDGE CLEARANCE PAVEMENT TRANSITION AT OVERCROSSINGS

LEGEND:

COLD PLANE AC PAVEMENT

DIRECTION OF TRAFFIC

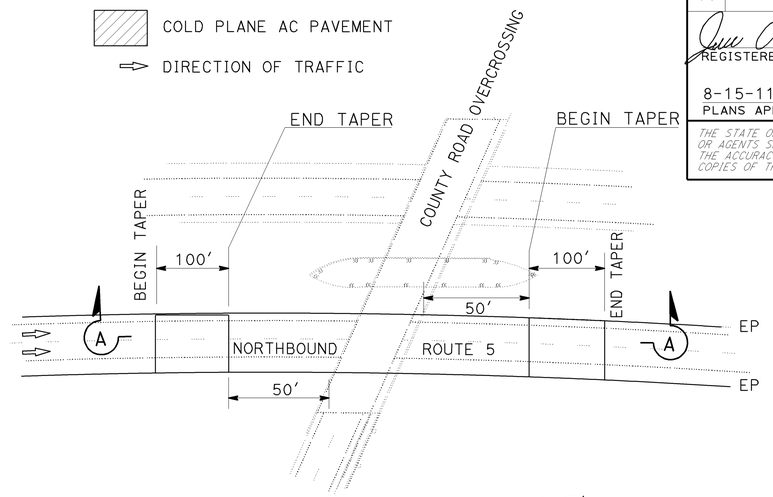

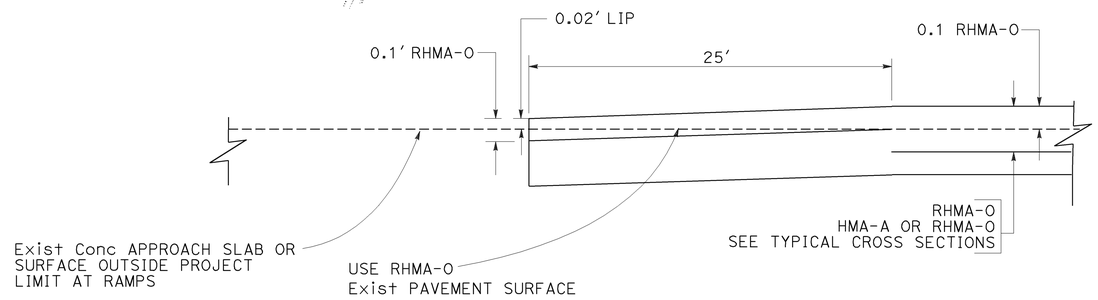

LONGITUDINAL TRANSITION TO Exist Conc APPROACH SLAB/DEPARTURE, RAMPS AND UNDER BRIDGES

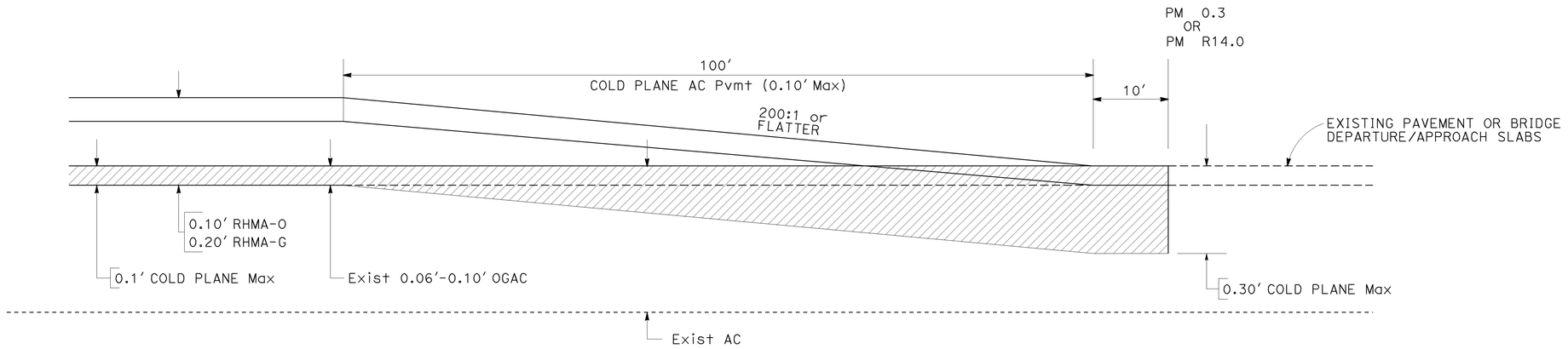

CONFORM DETAIL AT NORTHBOUND AND SOUTHBOUND PM 0.30 AND PM 14.0

CONSTRUCTION DETAILS

NO SCALE

C-1

STATE OF CALIFORNIA - DEPARTMENT OF TRANSPORTATION
NORTH REGION
OFFICE OF ADVANCE PLANNING
Caltrans

FUNCTIONAL SUPERVISOR: NESAR FORMOLI

CALCULATED-DESIGNED BY: J. LOPEZ
CHECKED BY:

REVISED BY | DATE REVISED

LAST REVISION | DATE PLOTTED => 25-AUG-2011
00-00-00 | TIME PLOTTED => 13:18

BORDER LAST REVISED 7/2/2010

USERNAME => s134507
DGN FILE => 0300020442ga001.dgn

RELATIVE BORDER SCALE IS IN INCHES 0 1 2 3

UNIT 03216

PROJECT NUMBER & PHASE 03000204421

NOTES:

1. COUNTY ROAD 101 UC
   SEE STRUCTURE PLANS FOR SLAB REPLACEMENT

LEGEND:

- COLD PLANE AC Pvmt 0.1' 0.3'
- COLD PLANE AC Pvmt 0.2' Max
- COLD PLANE AC Pvmt
- ROADWAY EXCAVATION
- DIRECTION OF TRAFFIC
- ROADWAY EXCAVATION TO BE REMOVED AND REPLACED AS DIRECTED BY ENGINEER

Dist	COUNTY	ROUTE	POST MILES TOTAL PROJECT	SHEET No.	TOTAL SHEETS
03	Yol	5	0.3/R14.0	5	37

6-16-11
REGISTERED CIVIL ENGINEER DATE

JOSE LOPEZ No. 64619 Exp. 6-30-13 CIVIL — REGISTERED PROFESSIONAL ENGINEER — STATE OF CALIFORNIA

8-15-11
PLANS APPROVAL DATE

THE STATE OF CALIFORNIA OR ITS OFFICERS OR AGENTS SHALL NOT BE RESPONSIBLE FOR THE ACCURACY OR COMPLETENESS OF SCANNED COPIES OF THIS PLAN SHEET.

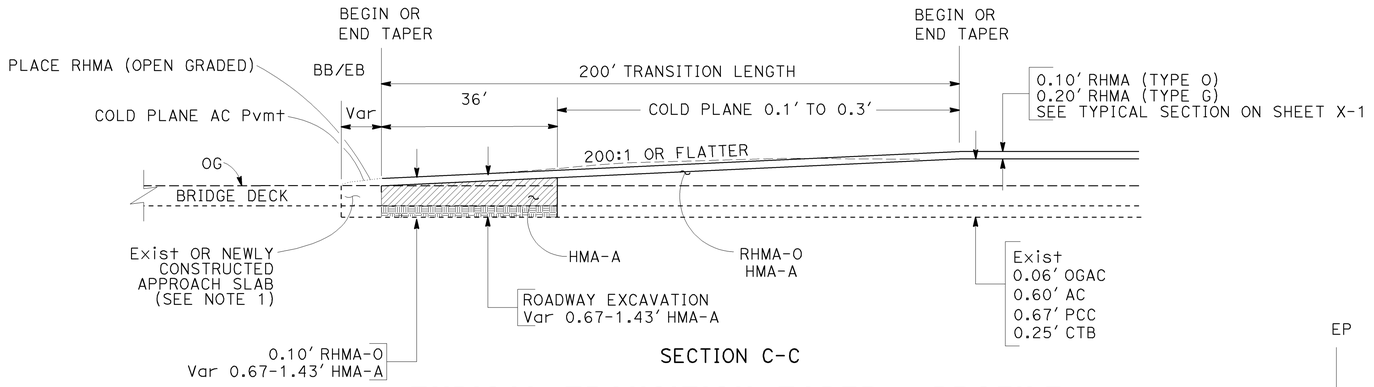

SECTION C-C

TYPICAL TRANSITION TAPER - PROFILE

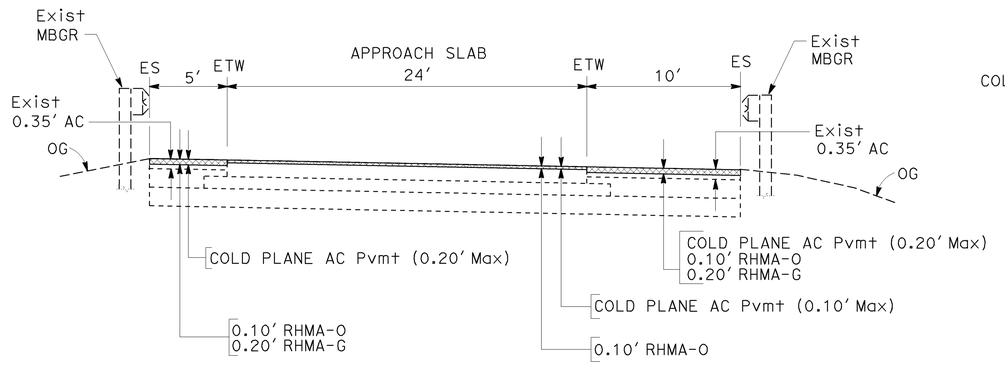

SECTION B-B

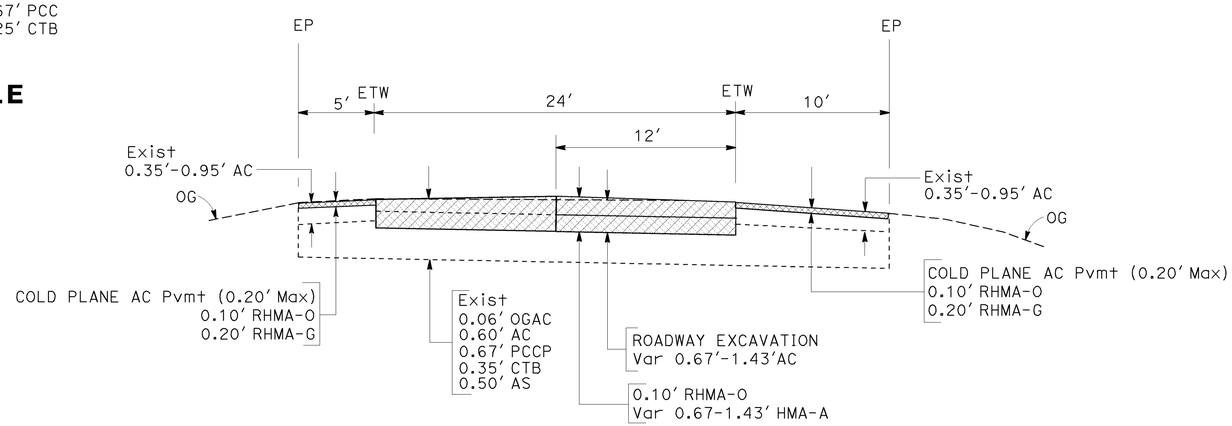

SECTION A-A

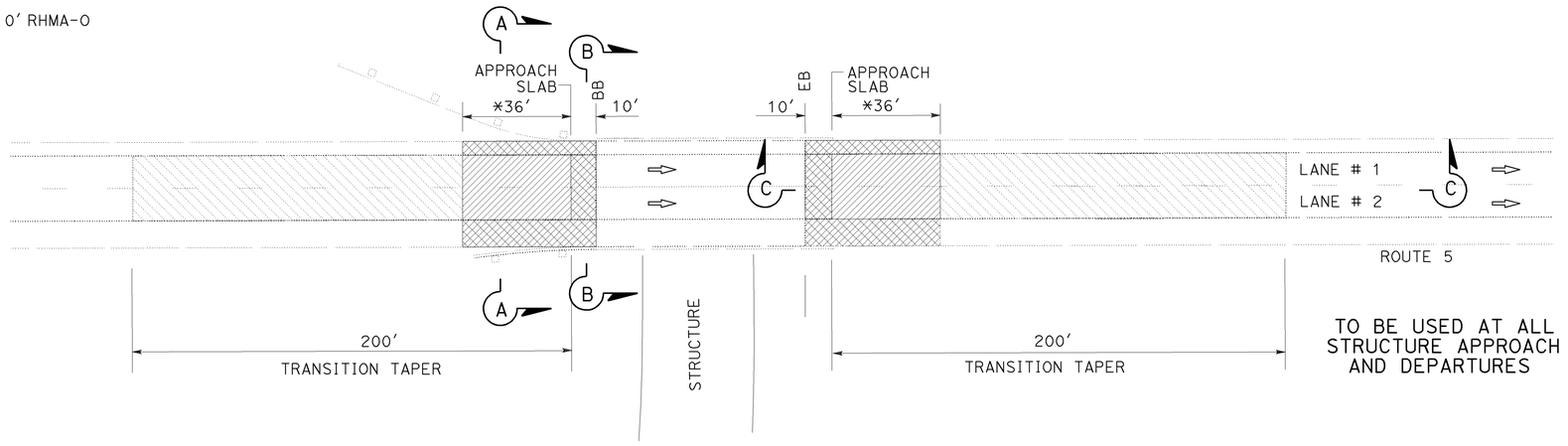

TO BE USED AT ALL STRUCTURE APPROACH AND DEPARTURES

NOTE: * - LENGTH OF ROADWAY EXCAVATION

ROADWAY EXCAVATION LOCATIONS

STRUCTURE NAME	BRIDGE NUMBER	POST MILE
SACRAMENTO RIVER BRIDGE	22-0025 R/L	0.35
YOLO BYPASS	22-0124 R/L	0.84
MAIN STREET OH	22-0146 R/L	6.46
COUNTY Rd 101 UC**	22-0169 R/L	6.63
EAST BEAMER St UC	22-0173 R/L	7.10
S5-S113 CONNECTOR UC	22-0174 R	7.11
ROUTE 5/113 SEPARATION & OH	22-0152 R/L	8.26
NORTH WOODLAND OH	22-0154 R/L	8.87
CACHE CREEK	22-0007 R/L	11.44

** - SEE STRUCTURE PLANS FOR BRIDGE APPROACH SLAB REPLACEMENT

CONSTRUCTION DETAILS

NO SCALE

C-2

REVISED BY: J. LOPEZ
DATE REVISED:
CALCULATED-DESIGNED BY: J. LOPEZ
CHECKED BY:
FUNCTIONAL SUPERVISOR: NESAR FORMOLI

STATE OF CALIFORNIA - DEPARTMENT OF TRANSPORTATION
NORTH REGION
OFFICE OF ADVANCE PLANNING

LAST REVISION 00-00-00
DATE PLOTTED => 25-AUG-2011
TIME PLOTTED => 13:18

BORDER LAST REVISED 7/2/2010
USERNAME => s134507
DGN FILE => 0300020442ga002.dgn
RELATIVE BORDER SCALE IS IN INCHES 0 1 2 3
UNIT 03216
PROJECT NUMBER & PHASE 03000204421

Dist	COUNTY	ROUTE	POST MILES TOTAL PROJECT	SHEET No.	TOTAL SHEETS
03	Yol	5	0.3/R14.0	6	37

REGISTERED CIVIL ENGINEER 6-16-11 DATE

8-15-11
PLANS APPROVAL DATE

REGISTERED PROFESSIONAL ENGINEER JOSE LOPEZ No. 64619 Exp. 6-30-13 CIVIL STATE OF CALIFORNIA

THE STATE OF CALIFORNIA OR ITS OFFICERS OR AGENTS SHALL NOT BE RESPONSIBLE FOR THE ACCURACY OR COMPLETENESS OF SCANNED COPIES OF THIS PLAN SHEET.

NOTES:

1. RUMBLE STRIPS SHALL NOT BE PLACED ON BRIDGE STRUCTURES OR APPROACH SLABS.
2. FOR DETAILS NOT SHOWN, SEE STANDARD PLANS A40B

LEGEND:

DIRECTION OF TRAVEL

SHOULDER RUMBLE STRIP

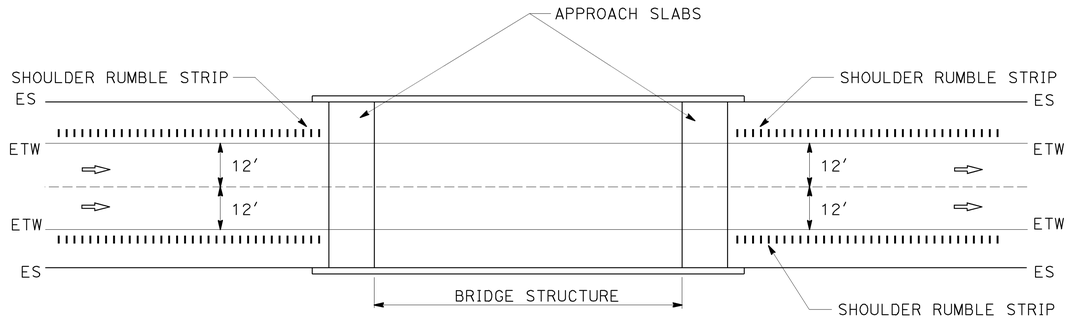

SHOULDER RUMBLE STRIPS AT BRIDGE APPROACH

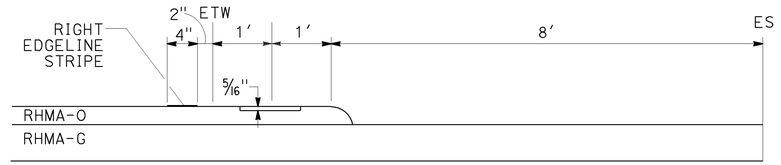

RUMBLE STRIP PLACEMENT RIGHT OF DIRECTION OF TRAVEL

(SEE STANDARD PLAN A404)

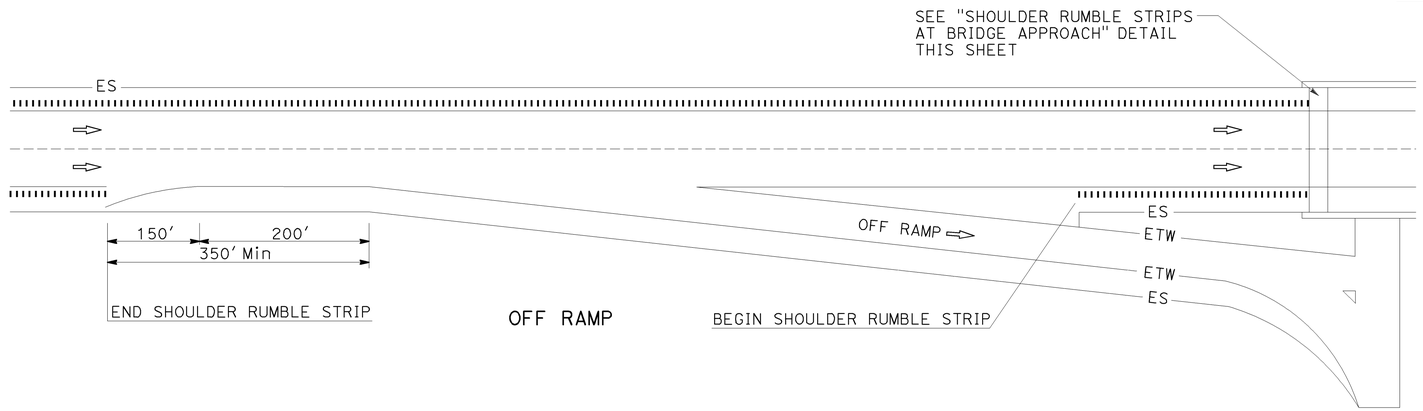

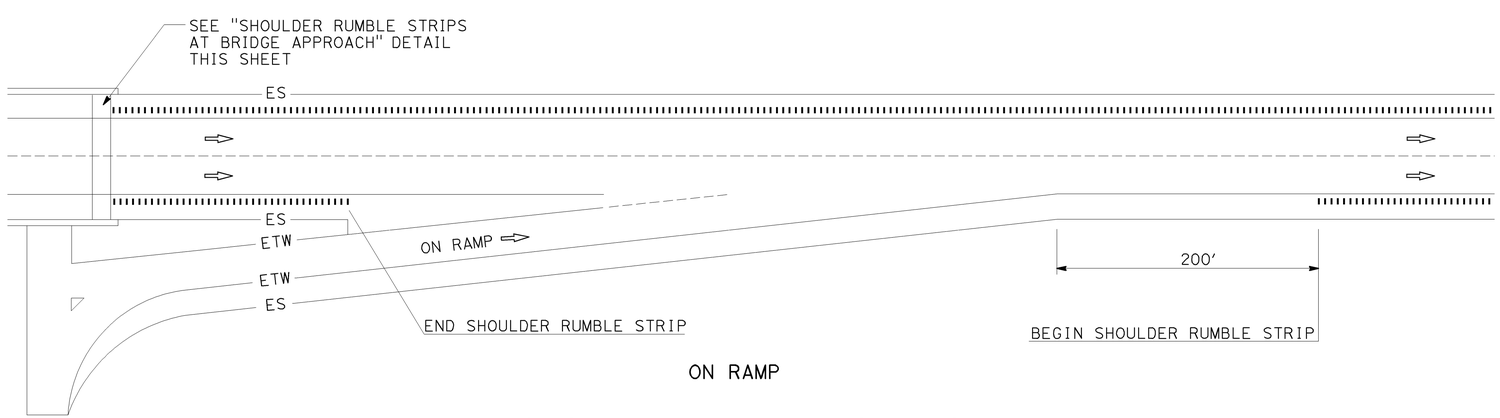

SHOULDER RUMBLE STRIPS AT RAMP LOCATIONS

CONSTRUCTION DETAILS

NO SCALE

C-3

STATE OF CALIFORNIA - DEPARTMENT OF TRANSPORTATION
Caltrans
NORTH REGION
OFFICE OF ADVANCE PLANNING

FUNCTIONAL SUPERVISOR: NESAR FORMOLI
CALCULATED-DESIGNED BY: J. LOPEZ
CHECKED BY: J. LOPEZ
REVISED BY
DATE REVISED

LAST REVISION 00-00-00
DATE PLOTTED => 25-AUG-2011
TIME PLOTTED => 13:18

Dist	COUNTY	ROUTE	POST MILES TOTAL PROJECT	SHEET No.	TOTAL SHEETS
03	Yol	5	0.3/R14.0	7	37

6-16-11
REGISTERED CIVIL ENGINEER DATE

JOSE LOPEZ
No. 64619
Exp. 6-30-13
CIVIL
REGISTERED PROFESSIONAL ENGINEER
STATE OF CALIFORNIA

8-15-11
PLANS APPROVAL DATE

THE STATE OF CALIFORNIA OR ITS OFFICERS OR AGENTS SHALL NOT BE RESPONSIBLE FOR THE ACCURACY OR COMPLETENESS OF SCANNED COPIES OF THIS PLAN SHEET.

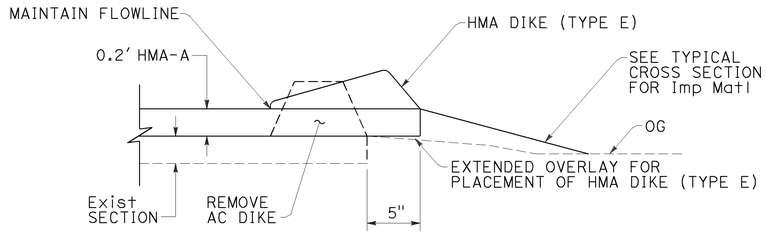

HMA DIKE (TYPE E)

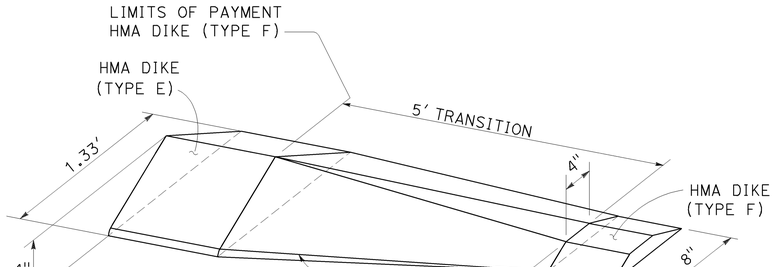

TYPE E

DIKE TRANSITION
TYPE F TO TYPE E

TYPE F

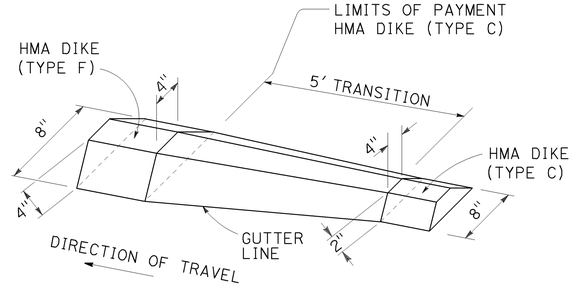

TYPE F

DIKE TRANSITION
TYPE C TO TYPE F

TYPE C

CONSTRUCTION DETAILS
NO SCALE

C-4

STATE OF CALIFORNIA - DEPARTMENT OF TRANSPORTATION
Caltrans®
NORTH REGION
OFFICE OF ADVANCE PLANNING

FUNCTIONAL SUPERVISOR: NESAR FORMOLI
CALCULATED-DESIGNED BY: J. LOPEZ
CHECKED BY: J. LOPEZ
REVISED BY
DATE REVISED

LAST REVISION DATE PLOTTED => 25-AUG-2011
TIME PLOTTED => 13:18
00-00-00

BORDER LAST REVISED 7/2/2010
USERNAME => s134507
DGN FILE => 0300020442ga004.dgn
RELATIVE BORDER SCALE IS IN INCHES 0 1 2 3
UNIT 03216
PROJECT NUMBER & PHASE 03000204421

Dist	COUNTY	ROUTE	POST MILES TOTAL PROJECT	SHEET No.	TOTAL SHEETS
03	Yol	5	0.3/R14.0	8	37

6-16-11
REGISTERED CIVIL ENGINEER DATE

8-15-11
PLANS APPROVAL DATE

REGISTERED PROFESSIONAL ENGINEER
JOSE LOPEZ
No. 64619
Exp. 6-30-13
CIVIL
STATE OF CALIFORNIA

THE STATE OF CALIFORNIA OR ITS OFFICERS OR AGENTS SHALL NOT BE RESPONSIBLE FOR THE ACCURACY OR COMPLETENESS OF SCANNED COPIES OF THIS PLAN SHEET.

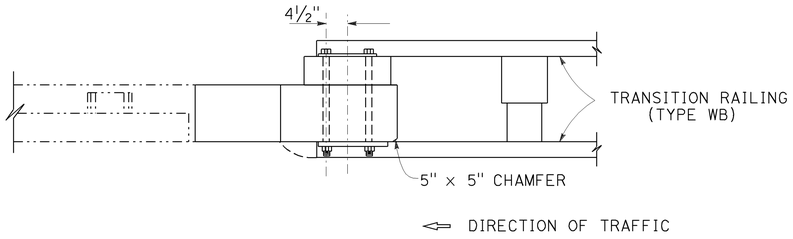

PLAN

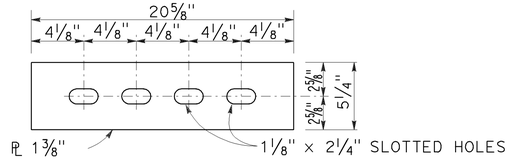

SPLICE PLATE

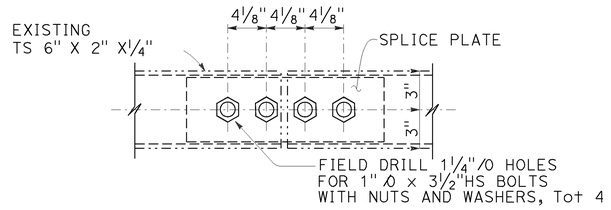

MODIFIED TUBE RAIL SPLICE DETAIL

SEE NOTE 3

NOTES:

1. FOR DETAILS NOT SHOWN, SEE STANDARD PLANS.
2. EXISTING BARRIER DIMENSIONS SHALL BE VERIFIED BY THE CONTRACTOR IN THE FIELD BEFORE FABRICATING ANY END CONNECTION TO CONFORM WITH EXISTING CONDITIONS.
3. IF TYPE 9 RAIL IS NOT CONTINUOUS OVER 2 POSTS, USE RAIL SPLICE DETAIL AT EXISTING EXPANSION JOINT.

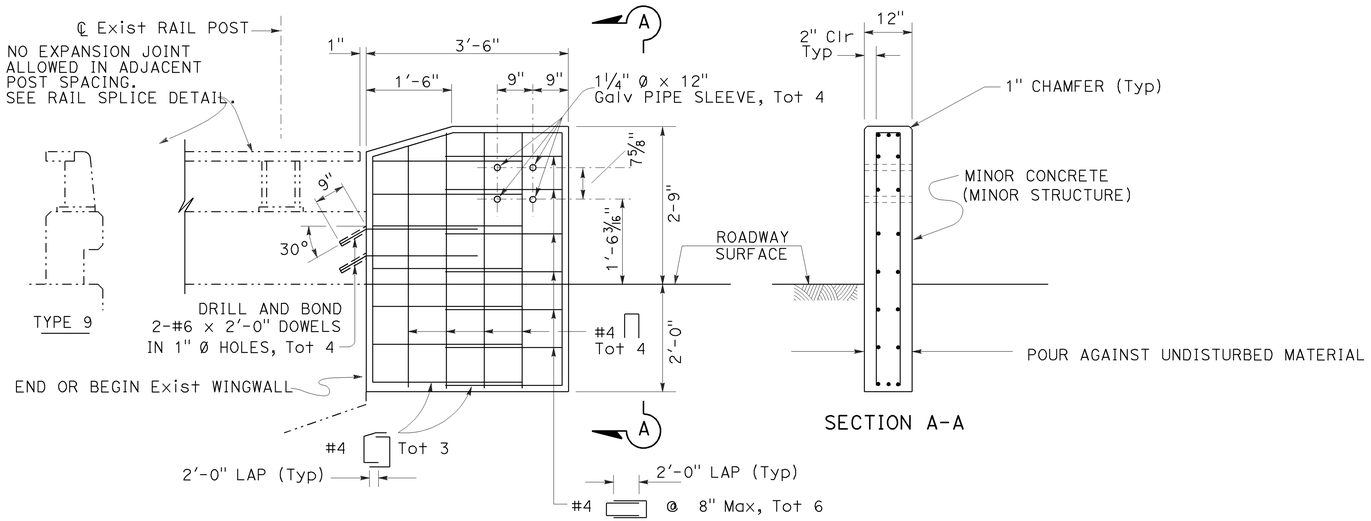

ELEVATION

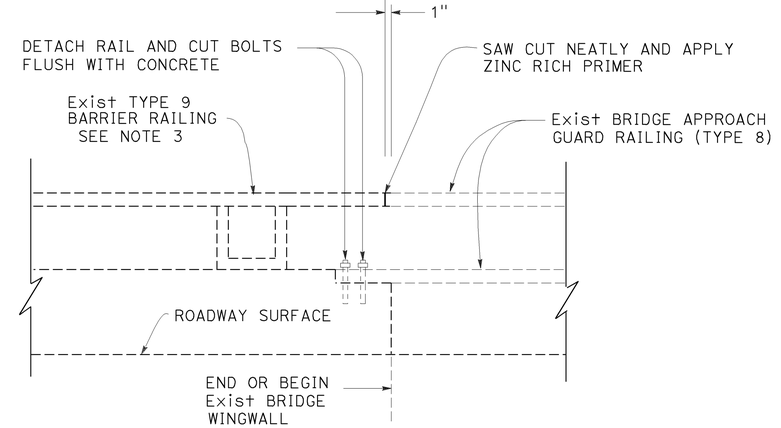

BRIDGE APPROACH GUARD RAILING REMOVAL DETAIL

CONSTRUCTION DETAILS (CONCRETE END BLOCK)

NO SCALE

C-5

STATE OF CALIFORNIA - DEPARTMENT OF TRANSPORTATION
NORTH REGION
OFFICE OF ADVANCE PLANNING
Caltrans
FUNCTIONAL SUPERVISOR: NESAR FORMOLI
CALCULATED-DESIGNED BY
CHECKED BY
J. LOPEZ
REVISED BY
DATE REVISED

LAST REVISION DATE PLOTTED => 25-AUG-2011
TIME PLOTTED => 13:18
00-00-00

BORDER LAST REVISED 7/2/2010
USERNAME => s134507
DGN FILE => 0300020442ga005.dgn
RELATIVE BORDER SCALE IS IN INCHES 0 1 2 3
UNIT 03216
PROJECT NUMBER & PHASE 03000204421

Dist	COUNTY	ROUTE	POST MILES TOTAL PROJECT	SHEET No.	TOTAL SHEETS
03	Yol	5	0.3/R14.0	9	37

6-16-11
REGISTERED CIVIL ENGINEER DATE

8-15-11
PLANS APPROVAL DATE

REGISTERED PROFESSIONAL ENGINEER
JOSE LOPEZ
No. 64619
Exp. 6-30-13
CIVIL
STATE OF CALIFORNIA

THE STATE OF CALIFORNIA OR ITS OFFICERS OR AGENTS SHALL NOT BE RESPONSIBLE FOR THE ACCURACY OR COMPLETENESS OF SCANNED COPIES OF THIS PLAN SHEET.

NOTES:

1. APPLICATION OF NESTED RAIL TO BE DETERMINED BY ENGINEER.
2. TO BE USED ONLY IF UTILITY CONFLICTS ARE ENCOUNTERED IN SECTIONS THAT HAVE STANDARD RAILING MBGR.
3. NOT FOR USE IF UTILITY CONFLICTS ARE ENCOUNTERED IN LOCATIONS THAT REQUIRE TRANSITION RAILING (TYPE WB), ALTERNATIVE IN-LINE OR ALTERNATIVE FLARED TERMINAL SYSYEMS.
4. EXISTING UTILITY FACILITIES HAVE NOT BEEN POSITIVELY LOCATED.

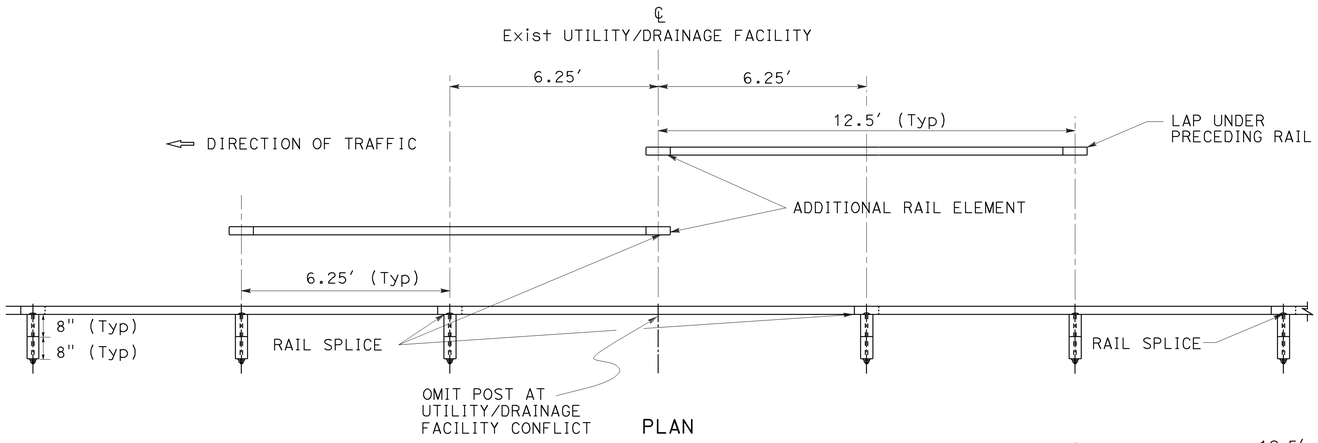

PLAN

2-RAIL NESTED METAL BEAM GUARD RAIL ELEMENT (SPLICE IN CENTER)

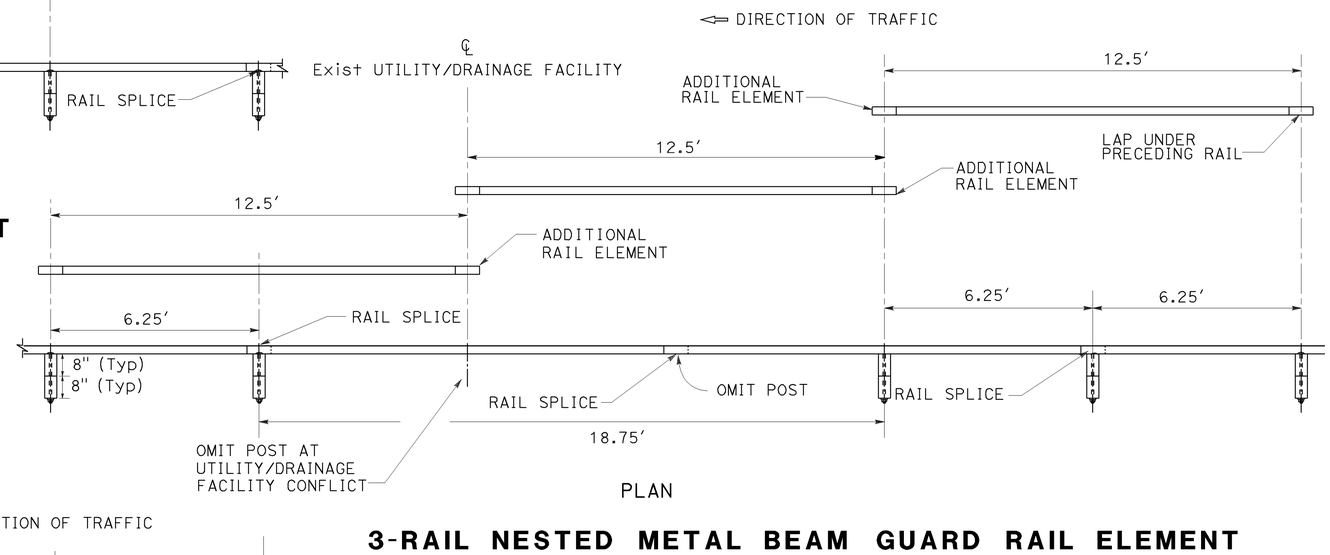

PLAN

3-RAIL NESTED METAL BEAM GUARD RAIL ELEMENT (TWO POSTS OMITTED)

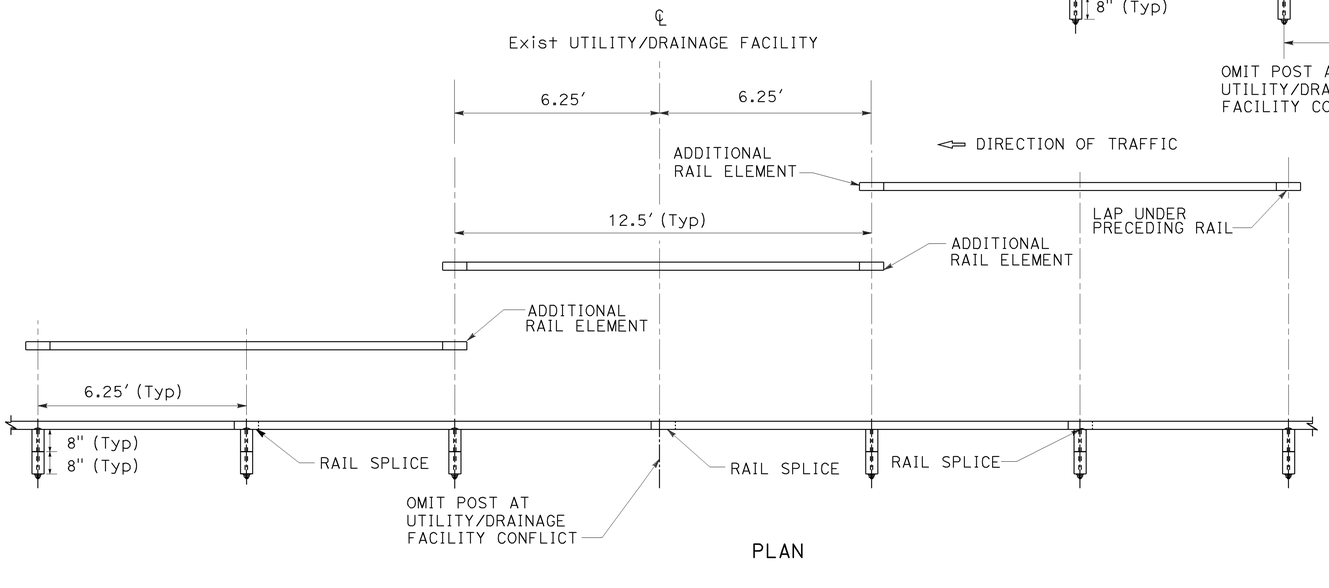

PLAN

3-RAIL NESTED METAL BEAM GUARD RAIL ELEMENT (SPLICE AT POSTS)

CONSTRUCTION DETAILS

NO SCALE

C-6

STATE OF CALIFORNIA - DEPARTMENT OF TRANSPORTATION
NORTH REGION
OFFICE OF ADVANCE PLANNING
FUNCTIONAL SUPERVISOR: NESAR FORMOLI
CALCULATED-DESIGNED BY: J. LOPEZ
CHECKED BY:
REVISED BY
DATE REVISED

LAST REVISION | DATE PLOTTED => 25-AUG-2011
00-00-00 | TIME PLOTTED => 13:18

BORDER LAST REVISED 7/2/2010
USERNAME => s134507
DGN FILE => 0300020442ga006.dgn
RELATIVE BORDER SCALE IS IN INCHES 0 1 2 3
UNIT 03216
PROJECT NUMBER & PHASE 03000204421

Dist	COUNTY	ROUTE	POST MILES TOTAL PROJECT	SHEET No.	TOTAL SHEETS
03	Yol	5	0.3/R14.0	10	37

6-16-11
REGISTERED CIVIL ENGINEER DATE

8-15-11
PLANS APPROVAL DATE

REGISTERED PROFESSIONAL ENGINEER — JOSE LOPEZ No. 64619 Exp. 6-30-13 CIVIL — STATE OF CALIFORNIA

THE STATE OF CALIFORNIA OR ITS OFFICERS OR AGENTS SHALL NOT BE RESPONSIBLE FOR THE ACCURACY OR COMPLETENESS OF SCANNED COPIES OF THIS PLAN SHEET.

LEGEND:

IMPORTED MATERIAL (SHOULDER BACKING)

DIRECTION OF FLOW

W= WIDTH OF ROUTING = WIDTH OF CRACK + 1/4" Min

D= DEPTH OF ROUTING = W + 1/4" Min

COLD PLANE AC PAVEMENT

NOTES:

1. ALL CRACKS 1/4" WIDE OR GREATER ARE TO BE ROUTED AND SEALED.
2. IF ANY PART OF CRACKS IS 1/4" OR WIDER, THEN THE ENTIRE CRACK WILL BE ROUTED AND SEALED.
3. NO SEALANT MATERIAL WILL BE ALLOWED ON AC PAVEMENT SURFACE.

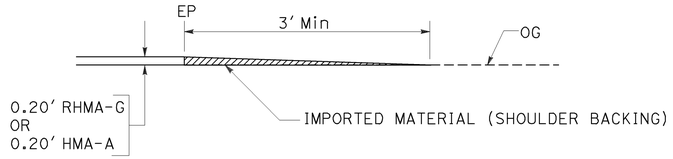

SHOULDER BACKING CONSTRUCTION

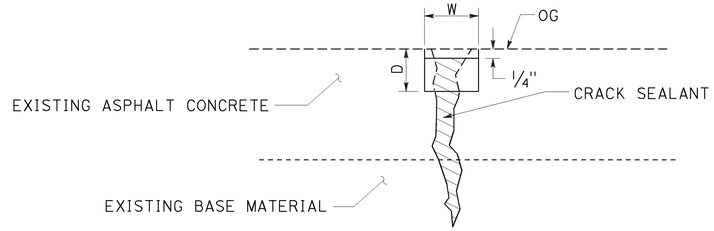

TYPICAL CROSS SECTION

CRACK TREATMENT

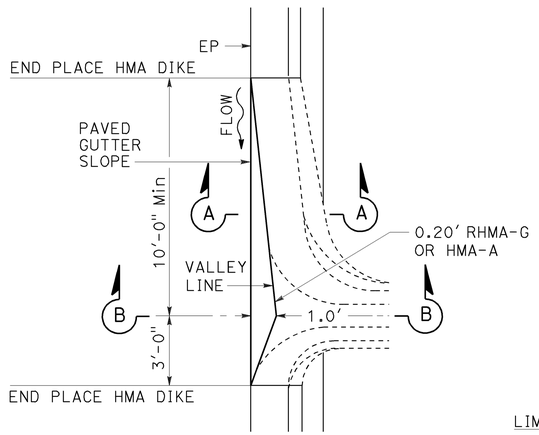

PLAN

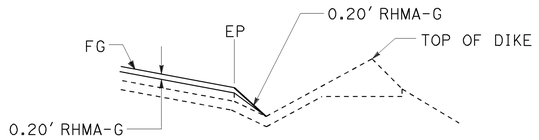

SECTION A-A

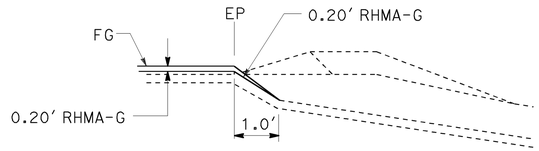

SECTION B-B

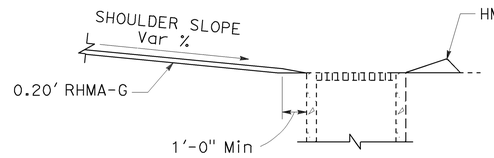

SECTION C-C

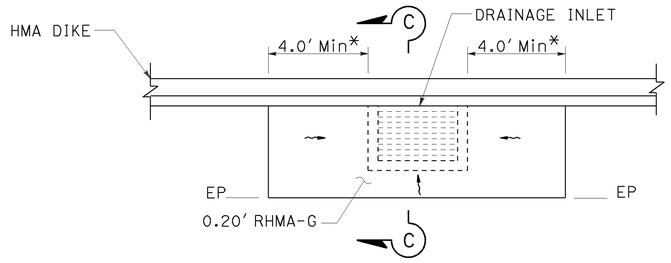

PLAN

INLET DEPRESSION

* EXACT OFFSET TO BE DETERMINED BY THE ENGINEER

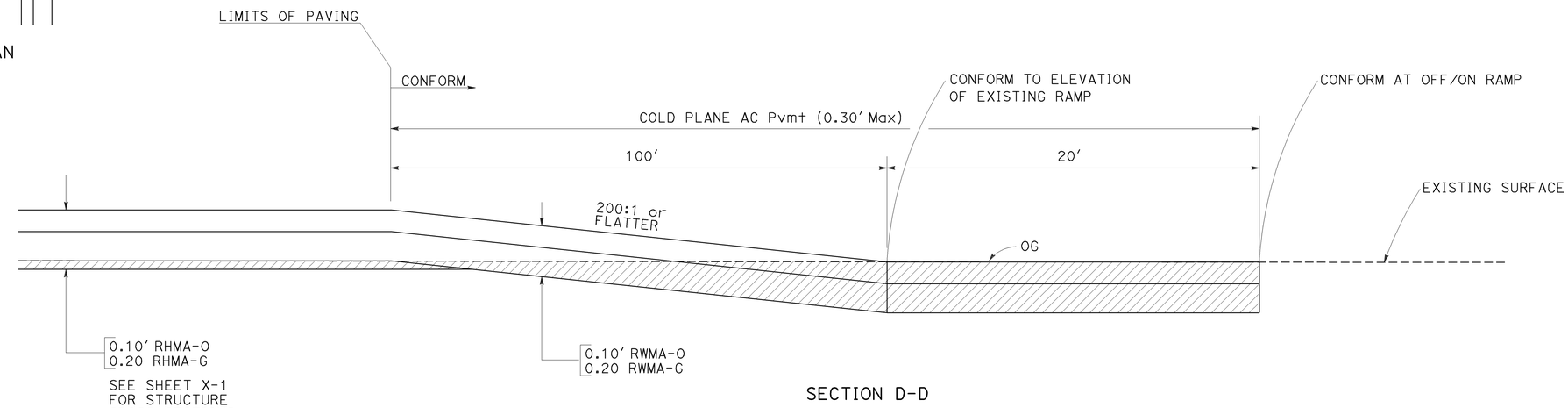

SECTION D-D

RAMP PAVEMENT TAPER PROFILE

CONSTRUCTION DETAILS

NO SCALE

C-7

STATE OF CALIFORNIA - DEPARTMENT OF TRANSPORTATION
NORTH REGION
OFFICE OF ADVANCE PLANNING
Caltrans

FUNCTIONAL SUPERVISOR: NESAR FORMOLI
CALCULATED-DESIGNED BY: J. LOPEZ
CHECKED BY: J. LOPEZ
REVISED BY
DATE REVISED

LAST REVISION DATE PLOTTED => 25-AUG-2011
00-00-00 TIME PLOTTED => 13:18

BORDER LAST REVISED 7/2/2010

USERNAME => s134507
DGN FILE => 0300020442ga007.dgn

RELATIVE BORDER SCALE IS IN INCHES 0 1 2 3

UNIT 03216

PROJECT NUMBER & PHASE 03000204421

Dist	COUNTY	ROUTE	POST MILES TOTAL PROJECT	SHEET No.	TOTAL SHEETS
03	Yol	5	0.3/R14.0	11	37

6-16-11
REGISTERED CIVIL ENGINEER DATE

8-15-11
PLANS APPROVAL DATE

REGISTERED PROFESSIONAL ENGINEER
JOSE LOPEZ
No. 64619
Exp. 6-30-13
CIVIL
STATE OF CALIFORNIA

THE STATE OF CALIFORNIA OR ITS OFFICERS OR AGENTS SHALL NOT BE RESPONSIBLE FOR THE ACCURACY OR COMPLETENESS OF SCANNED COPIES OF THIS PLAN SHEET.

NOTES:
1. ALL DIMENSIONS SHALL BE VERIFIED IN THE FIELD PRIOR TO FABRICATION.
2. FOR MBGR DETAILS NOT SHOWN, SEE STANDARD PLANS RSP A77A2 AND A77C2.
3. ALL POST SPACING 6.25' C-C.
4. POST SPACING & OTHER DIMENSIONS TO BE VERIFIED IN THE FIELD BY THE CONTRACTOR.

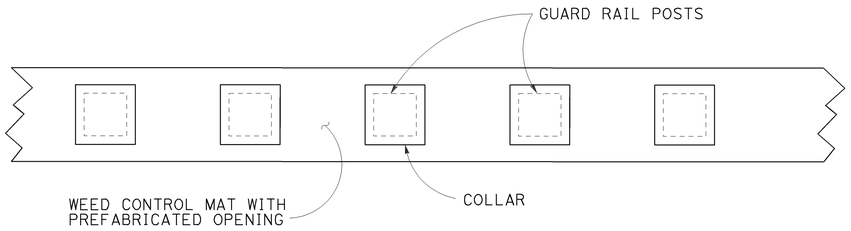

PLAN

GUARD RAILING WEED CONTROL MAT (FIBER)

AT WOOD POST

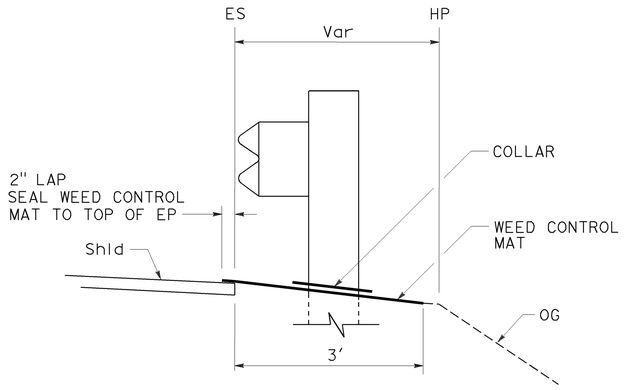

GUARD RAILING WEED CONTROL MAT (FIBER)

WITHOUT DIKE

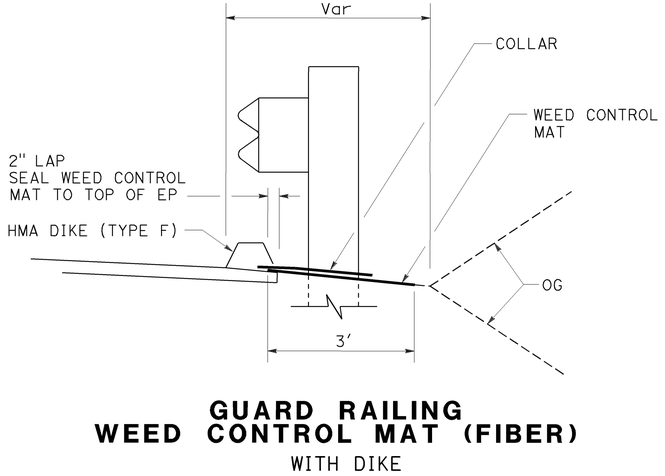

GUARD RAILING WEED CONTROL MAT (FIBER)

WITH DIKE

LEGEND:

LIMITS OF PAVING (CONFORM)

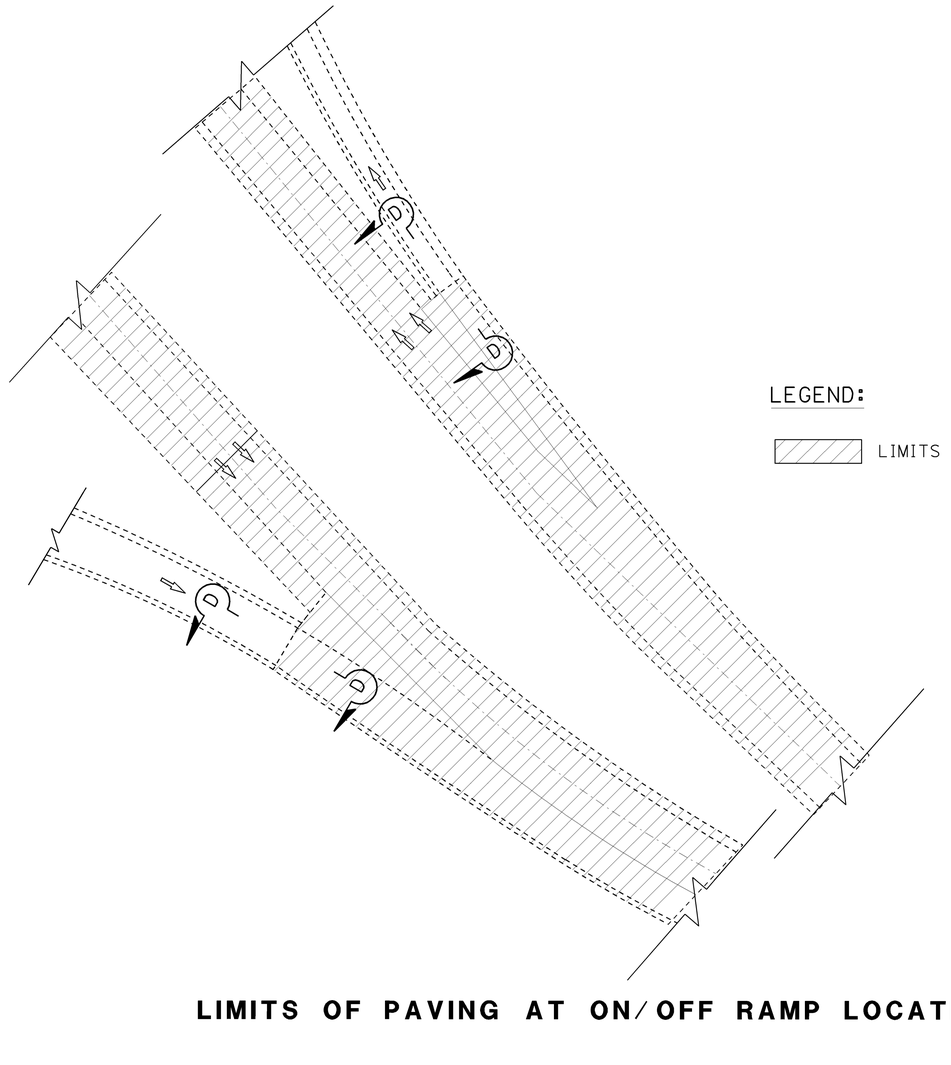

LIMITS OF PAVING AT ON/OFF RAMP LOCATIONS

CONSTRUCTION DETAILS

NO SCALE

C-8

REVISED BY | DATE REVISED
J. LOPEZ | J. LOPEZ
CALCULATED-DESIGNED BY | CHECKED BY
FUNCTIONAL SUPERVISOR: NESAR FORMOLI

STATE OF CALIFORNIA - DEPARTMENT OF TRANSPORTATION
Caltrans
NORTH REGION
OFFICE OF ADVANCE PLANNING

LAST REVISION DATE PLOTTED => 25-AUG-2011
00-00-00 TIME PLOTTED => 13:18

BORDER LAST REVISED 7/2/2010
USERNAME => s134507
DGN FILE => 0300020442ga008.dgn
RELATIVE BORDER SCALE IS IN INCHES 0 1 2 3
UNIT 03216
PROJECT NUMBER & PHASE 03000204421

Dist	COUNTY	ROUTE	POST MILES TOTAL PROJECT	SHEET No.	TOTAL SHEETS
03	Yol	5	0.3/R14.0	12	37

6-16-11
REGISTERED CIVIL ENGINEER DATE

8-15-11
PLANS APPROVAL DATE

REGISTERED PROFESSIONAL ENGINEER
JOSE LOPEZ
No. 64619
Exp. 6-30-13
CIVIL
STATE OF CALIFORNIA

THE STATE OF CALIFORNIA OR ITS OFFICERS OR AGENTS SHALL NOT BE RESPONSIBLE FOR THE ACCURACY OR COMPLETENESS OF SCANNED COPIES OF THIS PLAN SHEET.

NOTES:

1. DIMENSIONS OF THE STRUCTURAL SECTIONS ARE SUBJECT TO TOLERANCES SPECIFIED IN THE STANDARD SPECIFICATIONS.
2. MATCH EXISTING CROSS SLOPE OR SUPERELEVATION OR AS DIRECTED BY THE ENGINEER.
3. THE OUTLINE OF THE AC AND PCC TO BE REMOVED SHALL BE SAWCUT FULL DEPTH.
4. CONCRETE PAVEMENT SHALL BE REMOVED BY NON-IMPACT METHODS.
5. LOCATION AND LENGTH OF ROADWAY EXCAVATION SHALL BE DETERMINED BY ENGINEER.

LEGEND:

CONCTRETE PAVEMENT

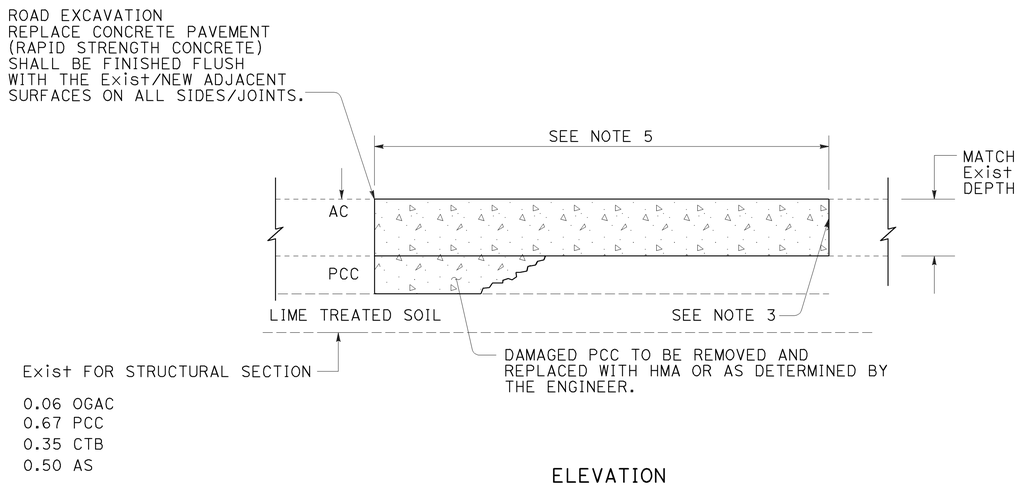

ELEVATION

ROADWAY EXCAVATION (REMOVE CONCRETE PAVEMENT)

(SEE STRUCTURAL PLANS)

CONSTRUCTION DETAILS

NO SCALE

C-9

REVISED BY	DATE REVISED

CALCULATED-DESIGNED BY	CHECKED BY
J. LOPEZ	J. LOPEZ

FUNCTIONAL SUPERVISOR: NESAR FORMOLI

STATE OF CALIFORNIA - DEPARTMENT OF TRANSPORTATION
Caltrans®
NORTH REGION
OFFICE OF ADVANCE PLANNING

LAST REVISION 00-00-00
DATE PLOTTED => 25-AUG-2011
TIME PLOTTED => 13:18

BORDER LAST REVISED 7/2/2010

USERNAME => s134507
DGN FILE => 0300020442ga009.dgn

RELATIVE BORDER SCALE IS IN INCHES 0 1 2 3

UNIT 03216

PROJECT NUMBER & PHASE 03000204421

Dist	COUNTY	ROUTE	POST MILES TOTAL PROJECT	SHEET No.	TOTAL SHEETS
03	Yol	5	0.3/R14.0	13	37

6-16-11
REGISTERED CIVIL ENGINEER DATE

8-15-11
PLANS APPROVAL DATE

REGISTERED PROFESSIONAL ENGINEER
JOSE LOPEZ
No. 64619
Exp. 6-30-13
CIVIL
STATE OF CALIFORNIA

THE STATE OF CALIFORNIA OR ITS OFFICERS OR AGENTS SHALL NOT BE RESPONSIBLE FOR THE ACCURACY OR COMPLETENESS OF SCANNED COPIES OF THIS PLAN SHEET.

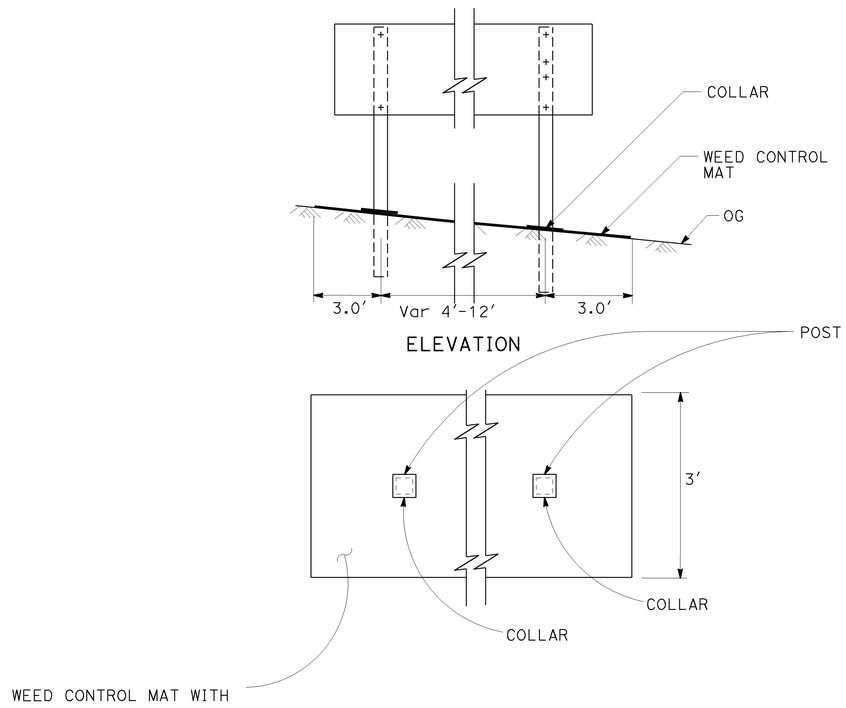

DOUBLE POST SIGN WEED CONTROL MAT (FIBER)

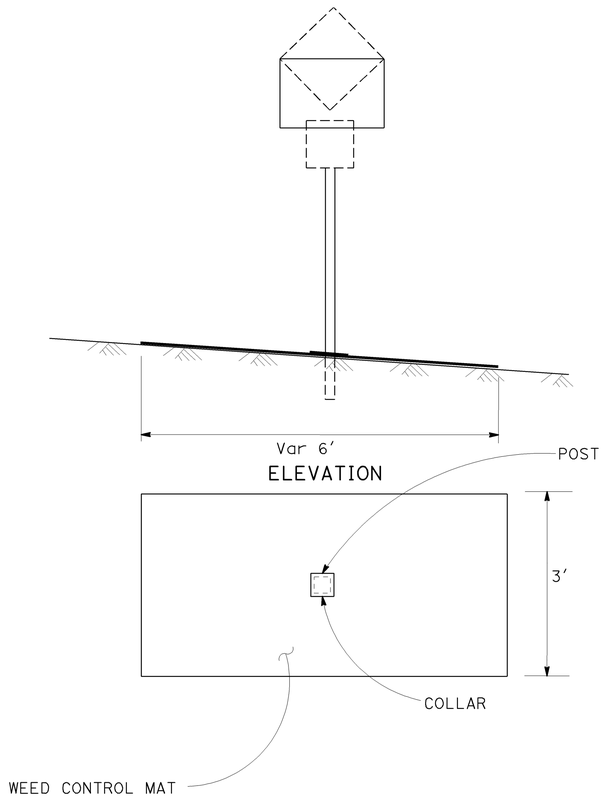

SINGLE POST SIGN WEED CONTROL MAT (FIBER)

CONSTRUCTION DETAILS

NO SCALE

C-10

STATE OF CALIFORNIA - DEPARTMENT OF TRANSPORTATION
NORTH REGION
OFFICE OF ADVANCE PLANNING
FUNCTIONAL SUPERVISOR: NESAR FORMOLI
CALCULATED-DESIGNED BY
CHECKED BY
J. LOPEZ
J. LOPEZ
REVISED BY
DATE REVISED
LAST REVISION
DATE PLOTTED => 25-AUG-2011
TIME PLOTTED => 13:18

BORDER LAST REVISED 7/2/2010
USERNAME => s134507
DGN FILE => 0300020442ga010.dgn
RELATIVE BORDER SCALE IS IN INCHES 0 1 2 3
UNIT 03216
PROJECT NUMBER & PHASE 03000204421

Dist	COUNTY	ROUTE	POST MILES TOTAL PROJECT	SHEET No.	TOTAL SHEETS
03	Yol	5	0.3/R14.0	14	37

John R. Keber 8-11-11
REGISTERED CIVIL ENGINEER DATE

8-15-11
PLANS APPROVAL DATE

REGISTERED PROFESSIONAL ENGINEER — John R. Keber No. 40048 Exp. 12-31-11 CIVIL — STATE OF CALIFORNIA

THE STATE OF CALIFORNIA OR ITS OFFICERS OR AGENTS SHALL NOT BE RESPONSIBLE FOR THE ACCURACY OR COMPLETENESS OF SCANNED COPIES OF THIS PLAN SHEET.

STATIONARY MOUNTED CONSTRUCTION AREA SIGNS

SIGN LETTER	SIGN CODE		PANEL SIZE	SIGN MESSAGE	NUMBER OF POST AND SIZE	NUMBER OF SIGNS
	FEDERAL	CALIFORNIA				
(A)	G20-1[Spec](15)		84" x 42"	ROAD WORK NEXT 15 MILES	2 - 4" x 6"	4
(B)		C14	48" x 24"	END ROAD WORK	1 - 4" x 6"	2
(C)	W20-1	C23	48" x 48"	ROAD WORK AHEAD	1 - 6" x 6"	17
(D)	G20-2	C14	36" x 18"	END ROAD WORK	1 - 4" x 4"	14
(E)		C40(Mod)	96" x 60"	TRAFFIC FINES DOUBLED IN WORK ZONES	2 - 6" x 6"	2

NOTE: EXACT SIGN LOCATIONS TO BE DETERMINED BY THE ENGINEER.

SIGN DETAILS

(A) G20-1[Spec](15)

ROAD WORK NEXT 15 MILES

8" C SERIES LETTERS

84"x42"

ORANGE BACKGROUND WITH BLACK LETTERS AND BORDERS.

(E) C40(Mod)<CA>

TRAFFIC FINES DOUBLED IN WORK ZONES

8" D SERIES LETTERS

96"x60"

WHITE RETROREFLECTIVE BACKGROUND WITH BLACK LETTERS AND BORDERS.

LEGEND

(X)	CONSTRUCTION AREA SIGN LETTER
↑	SIGN - SINGLE POST
↑↑	SIGN - TWO POST
<CA>	CALIFORNIA SIGN CODE

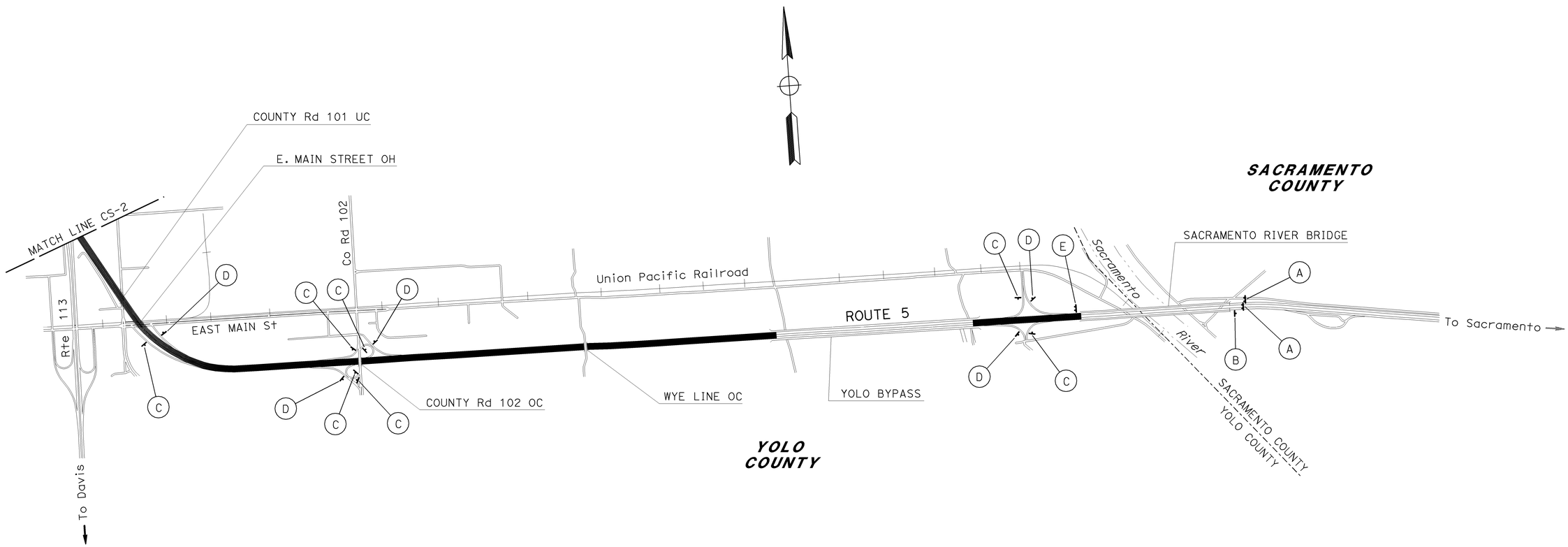

APPROVED FOR CONSTRUCTION AREA SIGN WORK ONLY

CONSTRUCTION AREA SIGNS

NO SCALE

CS-1

CALCULATED-DESIGNED BY J. LOFTUS
CHECKED BY J. KEBER
REVISED BY
DATE REVISED
FUNCTIONAL SUPERVISOR SERGIO ACEVES
STATE OF CALIFORNIA - DEPARTMENT OF TRANSPORTATION
TRAFFIC
Caltrans

LAST REVISION 8-8-11
DATE PLOTTED => 25-AUG-2011
TIME PLOTTED => 13:18

BORDER LAST REVISED 7/2/2010
USERNAME => s134507
DGN FILE => 03000204421a001.dgn
RELATIVE BORDER SCALE IS IN INCHES 0 1 2 3
UNIT 0390
PROJECT NUMBER & PHASE 03000204421

Dist	COUNTY	ROUTE	POST MILES TOTAL PROJECT	SHEET No.	TOTAL SHEETS
03	Yol	5	0.3/R14.0	15	37

John R. Keber 8-11-11
REGISTERED CIVIL ENGINEER DATE

8-15-11
PLANS APPROVAL DATE

REGISTERED PROFESSIONAL ENGINEER
John R. Keber
No. 40048
Exp. 12-31-11
CIVIL
STATE OF CALIFORNIA

THE STATE OF CALIFORNIA OR ITS OFFICERS OR AGENTS SHALL NOT BE RESPONSIBLE FOR THE ACCURACY OR COMPLETENESS OF SCANNED COPIES OF THIS PLAN SHEET.

CALCULATED-DESIGNED BY: J. LOFTUS
CHECKED BY: J. KEBER
REVISED BY
DATE REVISED
FUNCTIONAL SUPERVISOR: SERGIO ACEVES

STATE OF CALIFORNIA - DEPARTMENT OF TRANSPORTATION
TRAFFIC

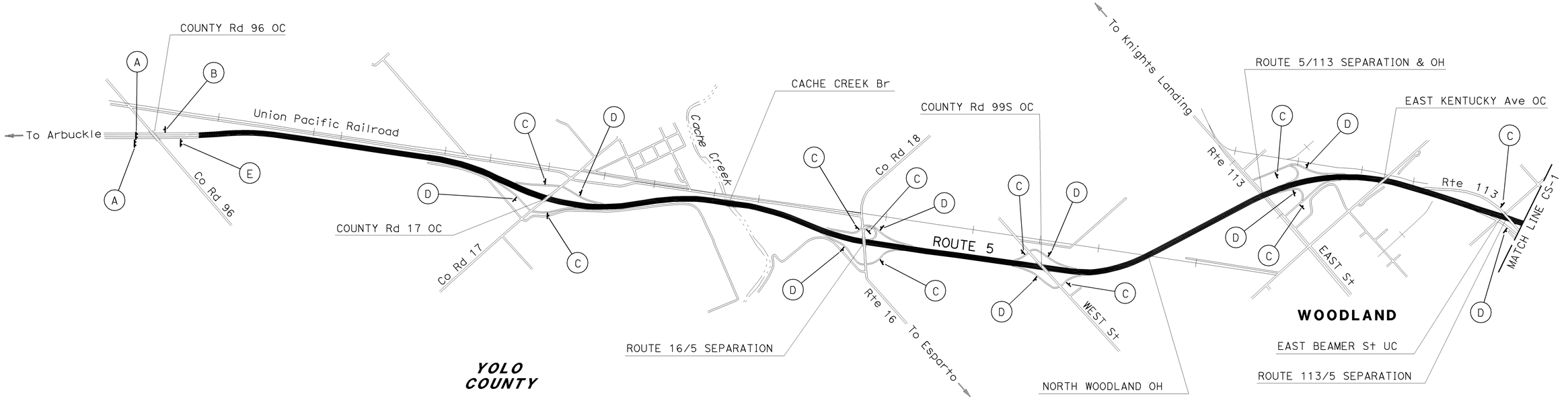

CONSTRUCTION AREA SIGNS

NO SCALE

CS-2

APPROVED FOR CONSTRUCTION AREA SIGN WORK ONLY

LAST REVISION: DATE PLOTTED => 25-AUG-2011, TIME PLOTTED => 13:18
8-8-11

BORDER LAST REVISED 7/2/2010

USERNAME => s134507
DGN FILE => 03000204421a002.dgn

RELATIVE BORDER SCALE IS IN INCHES 0 1 2 3

UNIT 0390

PROJECT NUMBER & PHASE 03000204421

Dist	COUNTY	ROUTE	POST MILES TOTAL PROJECT	SHEET No.	TOTAL SHEETS
03	Yol	5	0.3/R14.0	16	37

John R. Keber 8-11-11
REGISTERED CIVIL ENGINEER DATE

8-15-11
PLANS APPROVAL DATE

REGISTERED PROFESSIONAL ENGINEER — John R. Keber No. 40048 Exp. 12-31-11 CIVIL — STATE OF CALIFORNIA

THE STATE OF CALIFORNIA OR ITS OFFICERS OR AGENTS SHALL NOT BE RESPONSIBLE FOR THE ACCURACY OR COMPLETENESS OF SCANNED COPIES OF THIS PLAN SHEET.

DELINEATOR

DESCRIPTION	DELINEATOR (CLASS 1)		
	TYPE F		TYPE G
	NB	SB	NB
	EACH	EACH	EACH
EXIT RAMPS TO ROAD 22	4	4	
ENTRANCE RAMPS FROM ROAD 22	5	5	
EXIT RAMPS TO ROAD 102	5	5	
LOOP ENTRANCE RAMPS FROM ROAD 102	6	6	
SLIP ENTRANCE RAMPS FROM ROAD 102	8	6	
MAINLINE CURVE, BC=PM 5.96, EC=R6.57		20	20
EXIT RAMP TO MAIN STREET AND RTE 113 SOUTH	5		
CONNECTOR TO/FROM RTE 113 SOUTH	5	5	
EXIT RAMPS TO RTE 113 NORTH AND EAST STREET	6	5	
ENTRANCE RAMPS FROM RTE 113 NORTH AND EAST STREET	4	6	
MAINLINE CURVE, BC=R8.93, EC=R9.28		14	14
EXIT RAMPS TO WEST STREET	5	5	
ENTRANCE RAMPS FROM WEST STREET	6		
EXIT RAMPS TO RTE 16 (AND ROAD 18)	5	5	
LOOP ENTRANCE RAMP FROM RTE 16	5		
SLIP ENTRANCE RAMPS FROM RTE 16 (AND ROAD 18)	5	6	
EXIT RAMPS TO YOLO (AND ROAD 17)	5	5	
ENTRANCE RAMPS FROM YOLO (AND ROAD 17)	4	8	
SUBTOTAL	83	105	34
TOTAL	222		

NOTE: EXACT DELINEATOR LOCATIONS TO BE DETERMINED BY THE ENGINEER.

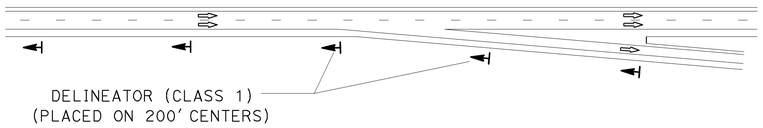

EXIT RAMP DELINEATOR PLACEMENT (TYPICAL)

NO SCALE

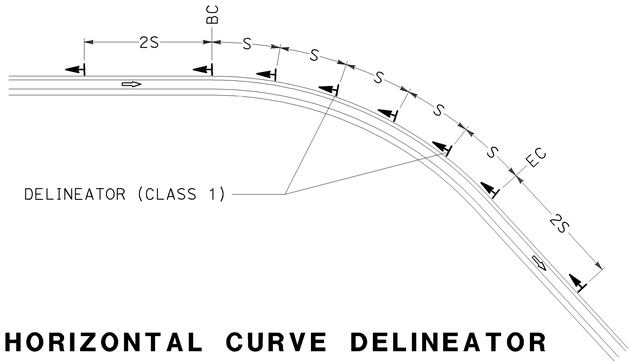

HORIZONTAL CURVE DELINEATOR PLACEMENT (TYPICAL)

NO SCALE

LEGEND

S= DELINEATOR SPACING (160')

⇨ DIRECTION OF TRAVEL

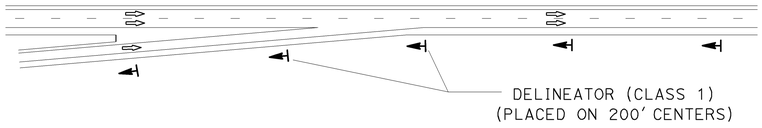

ENTRANCE RAMP DELINEATOR PLACEMENT (TYPICAL)

NO SCALE

OBJECT MARKER

DESCRIPTION	OBJECT MARKER TYPE L-1
	EACH
NB MAINLINE ROUTE 5	3
SB MAINLINE ROUTE 5	3
TOTAL	6

NOTE: OBJECT MARKERS TO BE INSTALLED AT ALTERNATIVE FLARED END SECTION LOCATIONS. EXACT OBJECT MARKER LOCATIONS TO BE DETERMINED BY THE ENGINEER.

PAVEMENT DELINEATION QUANTITIES

DESCRIPTION	4" THERMOPLASTIC TRAFFIC STRIPE		4" THERMOPLASTIC TRAFFIC STRIPE (BROKEN 17-7)	4" THERMOPLASTIC TRAFFIC STRIPE (BROKEN 36-12)		8" THERMOPLASTIC TRAFFIC STRIPE			8" THERMOPLASTIC TRAFFIC STRIPE (BROKEN 12-3)	PAVEMENT MARKER (RETROREFLECTIVE)		
	DETAIL NUMBER		DETAIL NUMBER	DETAIL NUMBER		DETAIL NUMBER			DETAIL NUMBER	TYPE C	TYPE G	TYPE H
	25	27B	9	12	14A	36	36A	38B	37			
	LF	LF	LF	LF	LF	LF	LF	LF	LF	EACH	EACH	EACH
NB MAINLINE ROUTE 5	62,928	65,440	765	60,480	2,448	4,910	2,512	300	1,467	76	1,710	1,312
SB MAINLINE ROUTE 5	62,907	64,961	525	60,603	2,304	3,936	2,054			64	1,528	1,312
SUBTOTAL	125,835	130,401	1,290	121,083	4,752	8,846	4,566	300	1,467	140	3,238	2,624
TOTAL	256,236		1,290	125,835		13,712			1,467	6,002		

PAVEMENT DELINEATION QUANTITIES

PDQ-1

REVISED BY | DATE REVISED
J. LOFTUS | J. KEBER
CALCULATED-DESIGNED BY | CHECKED BY
FUNCTIONAL SUPERVISOR: SERGIO ACEVES
STATE OF CALIFORNIA - DEPARTMENT OF TRANSPORTATION
TRAFFIC

P:\proj5\03\2f010\drafting\0300020442nc001.dgn

LAST REVISION DATE PLOTTED => 25-AUG-2011
8-11-11 TIME PLOTTED => 13:18

Dist	COUNTY	ROUTE	POST MILES TOTAL PROJECT	SHEET No.	TOTAL SHEETS
03	Yol	5	0.3/R14.0	17	37

6-16-11
REGISTERED CIVIL ENGINEER DATE

JOSE LOPEZ No. 64619 Exp. 6-30-13 CIVIL — REGISTERED PROFESSIONAL ENGINEER — STATE OF CALIFORNIA

8-15-11
PLANS APPROVAL DATE

THE STATE OF CALIFORNIA OR ITS OFFICERS OR AGENTS SHALL NOT BE RESPONSIBLE FOR THE ACCURACY OR COMPLETENESS OF SCANNED COPIES OF THIS PLAN SHEET.

ROADWAY QUANTITIES

ROUTE	LOCATION / DESCRIPTION	DIRECTION	RUBERIZED HOT MIX ASPHALT (GAP GRADED)	RUBERIZED HOT MIX ASPHALT (OPEN GRADED)	HOT-MIX ASPHALT TYPE-A *	IMPORTED MATERIAL (SHOULDER BACKING)	TACK COAT	COLD PLANE AC PAVEMENT (0.06' TO 0.10' MAX.)	CRACK TREATMENT	ROADWAY EXCAVATION
		NB/SB	TON	TON	TON	TON	TON	SQYD	LANE MILE	CY
Yol	PM 0.3 TO 6.5 & PM 6.6 TO R14.0	NB	35,448	16,529	725	2302	103	179,661	23.6	640
Yol	PM 0.3 TO 6.6 & PM 6.7 TO R14.0	SB	35,333	16,471	653	2302	103	179,661	23.3	576
Yol	PM 6.5 TO 6.6 (FULL DEPTH REPLACEMENT)	NB		133	1595	18	0.4			1048
Yol	PM 6.6 TO 6.7 (FULL DEPTH REPLACEMENT)	SB		66	797	10	0.2			729
	SUBTOTAL		70,781	33,199		4632	207	359,322	47	2993
	TOTAL		70,781	33,199	3770	4632	207	359,322	47	2993

* SEE Q-2 FOR TOTAL QUANTITY

RUMBLE STRIP

LOCATION			MEDIAN SHOULDER	RIGHT SHOULDER
PM TO PM	DIRECTION	L†/R†	STA	STA
0.30 TO 0.82	NB	R†	27	
2.48 TO R14.0	NB	R†	608	
0.30 TO 0.82	NB	L†		27
2.48 TO R14.0	NB	L†		608
0.30 TO 0.82	SB	R†	27	
2.48 TO R14.0	SB	R†	608	
0.30 TO 0.82	SB	L†		27
2.48 TO R14.0	SB	L†		608
SUBTOTAL			1271	1271
TOTAL			2542	

MBGR QUANTITIES

ROUTE	LOCATION / DESCRIPTION	DIRECTION	REMOVE METAL BEAM GUARD RAILING	ADJUST METAL BEAM GUARD RAILING	RECONSTRUCT METAL BEAM GUARD RAILING	METAL BEAM GUARD RAILING (WOOD POST)	ALTERNATIVE FLARED TERMINAL SYSTEM	ALTERNATIVE IN-LINE TERMINAL SYSTEM	TRANSITION RAILING (TYPE WB)	END CAP (TYPE A)	WEED CONTROL MAT (FIBER)**	MINOR CONCRETE (MINOR STRUCTURE)***
		NB/SB	LF	LF	LF	LF	EA	EA	EA	EA	SQYD	CY
Yol	PM 2.48 TO 2.70 - OUTSIDE Shldr	NB			1085						362	
Yol	AT PM 6.23 PROTECTING OVERHEAD SIGN STRUCTURE	NB	38	50			1				29	
Yol	PM 6.35 TO 6.47 - OUTSIDE Shldr	NB	50	563				1		1	204	
Yol	PM 6.52 TO 6.64 - OUTSIDE Shldr	NB	550			550			1	1	183	1
Yol	PM 6.68 TO 6.75 - OUTSIDE Shldr	NB		375							125	
Yol	PM 7.03 TO 7.05 - OUTSIDE Shldr	NB	38	63			1		1		34	1
Yol	AT PM 7.88 - OUTSIDE Shldr	NB	50	38		100		1			46	
Yol	PM 8.08 TO 8.24 - OUTSIDE Shldr	NB	50	913				1			906	
Yol	PM 8.29 TO 8.49 - OUTSIDE Shldr	NB		1025							683	
Yol	PM 8.64 TO 8.88 - OUTSIDE Shldr	NB	50	1275				1			850	
Yol	PM 8.93 TO 9.08 - OUTSIDE Shldr	NB		788							525	
Yol	PM 10.50 TO 10.52 - OUTSIDE Shldr	NB	38	75			1				38	
Yol	PM 11.50 TO 11.54 - OUTSIDE Shldr	SB	50	225				1	1		92	1
Yol	AT PM 11.10 PROTECTING OVERHEAD SIGN STRUCTURE	SB	38	25			1				21	
Yol	PM 9.14 TO 8.92 - OUTSIDE Shldr	SB	1200			1150		1	1		400	1
Yol	PM 8.67 TO 8.88 - OUTSIDE Shldr	SB		1063							345	
Yol	PM 8.32 TO 8.53 - OUTSIDE Shldr	SB	38	1038			1				359	
Yol	PM 8.08 TO 8.24 - OUTSIDE Shldr	SB		320							183	
Yol	PM 6.70 TO 6.81 - OUTSIDE Shldr	SB	38	550			1		1		84	1
Yol	PM 6.60 TO 6.65 - OUTSIDE Shldr	SB	213			213			1		354	1
Yol	PM 6.38 TO 6.54 - OUTSIDE Shldr	SB		850							363	
Yol	PM 2.53 TO 2.75 - OUTSIDE Shldr	SB	50	1088				1			123	
	SUBTOTAL		2491	10,324	1085	2013	6	7	6	2	6309	6
	TOTAL		2491	10,324	1085	2013	6	7	6	2	6309	6

** SEE Q-2 FOR FINAL QUANTITIES
*** SEE SHEET C-5 FOR CONSTRUCTION DETAILS

HMA DIKE QUANTITIES

ROUTE	LOCATION / DESCRIPTION	DIRECTION	REMOVE ASPHALT CONCRETE DIKE	PLACE HMA DIKE (TYPE C)	PLACE HMA DIKE (TYPE E)	PLACE HMA DIKE (TYPE F)	HOT MIX ASPHALT (TYPE A) *
		NB/SB	LF	LF	LF	LF	TON
Yol	PM 0.34 TO RD. 22 NB OFF RAMP - OUTSIDE Shldr	NB	1160		1160		30
Yol	ROAD 22 NB ON RAMP TO PM 0.81 - OUTSIDE Shldr	NB	1500		1500		39
Yol	PM 0.81 TO 0.82 - OUTSIDE Shldr	NB	75	75			1
Yol	PM 0.82 TO 0.82 - OUTSIDE Shldr	NB	25			25	
Yol	PM 2.48 TO 2.69 - OUTSIDE Shldr	NB	1095	25		1070	14
Yol	PM 6.27 TO 6.34 - OUTSIDE Shldr	NB	400		400		10
Yol	PM 6.34 TO 6.35 - OUTSIDE Shldr	NB	75	75			1
Yol	PM 6.35 TO 6.46 - OUTSIDE Shldr	NB	540			540	7
Yol	PM 6.52 TO 6.63 - OUTSIDE Shldr	NB	525			525	7
Yol	PM 6.68 TO 6.79 - OUTSIDE Shldr	NB	570			570	8
Yol	HWY 113 NB ON RAMP TO PM 8.23 - OUTSIDE Shldr	NB	1070			1070	14
Yol	PM 8.29 TO 8.87 - OUTSIDE Shldr	NB	3055			3055	40
Yol	PM 8.92 TO 9.09 - OUTSIDE Shldr	NB	935			935	12
Yol	PM 11.67 TO 11.51 - OUTSIDE Shldr	SB	860	75	560	225	18
Yol	PM 11.46 TO 11.28 - OUTSIDE Shldr	SB	1000		1000		26
Yol	PM 9.14 TO 8.93 - OUTSIDE Shldr	SB	1140	50		1090	15
Yol	PM 8.88 TO 8.59 - OUTSIDE Shldr	SB	1560			1560	21
Yol	PM 8.58 TO 8.33 - OUTSIDE Shldr	SB	1330	75		1255	17
Yol	PM 8.28 TO HWY 113 SB OFF RAMP- OUTSIDE Shldr	SB	875			875	12
Yol	PM 6.85 TO 6.70 - OUTSIDE Shldr	SB	780	75		705	10
Yol	PM 6.65 TO 6.60 - OUTSIDE Shldr	SB	210			210	3
Yol	PM 6.54 TO 6.50 - OUTSIDE Shldr	SB	210			210	3
Yol	PM 2.74 TO 2.53 - OUTSIDE Shldr	SB	1130	50		1080	15
Yol	PM 0.87 TO RD. 22 SB OFF RAMP - OUTSIDE Shldr	SB	1275		1275		33
Yol	RD. 22 SB ON RAMP TO PM 0.30 - OUTSIDE Shldr	SB	1503	63	1415	25	38
	SUBTOTAL		22,898	563	7310	15,025	394
	TOTAL		22,898	563	7310	15,025	394

* SEE Q-2 FOR TOTAL QUANTITY

SUMMARY OF QUANTITIES

Q-1

REVISED BY	DATE REVISED
J. LOPEZ	

CALCULATED-DESIGNED BY	CHECKED BY
J. LOPEZ	

FUNCTIONAL SUPERVISOR: NESAR FORMOLI

STATE OF CALIFORNIA - DEPARTMENT OF TRANSPORTATION
NORTH REGION
OFFICE OF ADVANCE PLANNING

Caltrans

LAST REVISION: DATE PLOTTED => 25-AUG-2011 TIME PLOTTED => 13:18
00-00-00

BORDER LAST REVISED 7/2/2010 | USERNAME => s134507 DGN FILE => 0300020442pa001.dgn | RELATIVE BORDER SCALE IS IN INCHES 0 1 2 3 | UNIT 03216 | PROJECT NUMBER & PHASE 03000204421

Dist	COUNTY	ROUTE	POST MILES TOTAL PROJECT	SHEET No.	TOTAL SHEETS
03	Yol	5	0.3/R14.0	18	37

6-16-11
REGISTERED CIVIL ENGINEER DATE

REGISTERED PROFESSIONAL ENGINEER
JOSE LOPEZ
No. 64619
Exp. 6-30-13
CIVIL
STATE OF CALIFORNIA

8-15-11
PLANS APPROVAL DATE

THE STATE OF CALIFORNIA OR ITS OFFICERS OR AGENTS SHALL NOT BE RESPONSIBLE FOR THE ACCURACY OR COMPLETENESS OF SCANNED COPIES OF THIS PLAN SHEET.

TEMPORARY DRAINAGE INLET PROTECTION

LOCATION	EA
SEE STRUCTURE PLANS FOR CONCRETE PLACEMENT VICINITY	22

TEMPORARY CONCRETE WASHOUT FACILITY

LOCATION	LS
EXISTING STORM DRINDAGE INLETS WITHIN PM LIMITS 0.3 TO 14.0	1

WEED CONTROL MAT (FIBER) FOR SIGN POST AND MBGR

	PM LOCATIONS	No. SIGNS	SQYD
NB	0.34*, 0.46, 0.48, 0.61, 0.70, 2.77, 2.95, 3.04*, 4.45*, 4.74*, 4.88*, 5.19*, 5.34, 5.46, 5.64, 6.27, 6.37, 7.28*, 7.46, 7.62, 7.71, 7.76*, 7.81*, 7.94, 8.08, 8.29*, 8.48, 8.56*, 9.18*, 9.20, 9.26, 9.46, 9.51, 9.77*, 10.22, 10.59, 10.65, 10.74, 10.93, 11.21, 11.32 11.35, 11.41*, 11.51, 11.96*, 12.07, 12.16, 12.47, 13.71	49	140
SB	13.76, 12.70, 12.60, 12.52, 12.40, 12.24, 12.15*, 11.80*, 11.00, 10.95, 10.69, 10.45, 10.37, 10.25, 9.63*, 9.55, 9.44, 9.23, 9.11, 8.97*, 8.55, 8.21, 8.14, 7.99, 7.97, 7.30, 7.21, 7.17*, 6.70*, 6.39, 6.30, 6.07*, 5.94, 9.92, 5.81*, 5.73, 5.60, 5.30, 5.31*, 5.18, 5.05*, 4.49, 4.50*, 3.32*, 2.73, 2.68, 2.53*, 0.84*, 0.74, 0.62, 0.55, 0.40*	52	160
	SUBTOTAL		300
	NB / SB FROM SHEET Q-1		6309
	TOTAL		6609

* SIGNS WITH DOUBLE POST

HOT MIX ASPHALT (TYPE A)

HMA-A	TON
FROM ROADWAY QUANTITIES	3770
FROM HMA DIKE QUANTITIES	394
	4164

SUMMARY OF QUANTITIES

Q-2

REVISED BY | DATE REVISED
J. LOPEZ | J. LOPEZ
CALCULATED-DESIGNED BY | CHECKED BY
FUNCTIONAL SUPERVISOR: NESAR FORMOLI
STATE OF CALIFORNIA - DEPARTMENT OF TRANSPORTATION
Caltrans® NORTH REGION OFFICE OF ADVANCE PLANNING

LAST REVISION | DATE PLOTTED => 25-AUG-2011
00-00-00 | TIME PLOTTED => 13:18

BORDER LAST REVISED 7/2/2010
USERNAME => s134507
DGN FILE => 0300020442pa002.dgn
RELATIVE BORDER SCALE IS IN INCHES 0 1 2 3
UNIT 03216
PROJECT NUMBER & PHASE 03000204421

Dist	COUNTY	ROUTE	POST MILES TOTAL PROJECT	SHEET No.	TOTAL SHEETS
03	Yol	5	0.3/R14.0	19	37

H. Golban 6-15-11
REGISTERED ELECTRICAL ENGINEER DATE

8-15-11
PLANS APPROVAL DATE

HABIB GOLBAN No. E17928 Exp. 09/30/12 ELECTRICAL — REGISTERED PROFESSIONAL ENGINEER — STATE OF CALIFORNIA

THE STATE OF CALIFORNIA OR ITS OFFICERS OR AGENTS SHALL NOT BE RESPONSIBLE FOR THE ACCURACY OR COMPLETENESS OF SCANNED COPIES OF THIS PLAN SHEET.

PROJECT NOTES (THIS SHEET ONLY)

1 RC LOOP WIRES CONDUCTORS INSTALL LOOP WIRES CONDUCTORS.
2 RC dh INSTALL DH
3 4 dlc To Existing Controller
4 RC 3 dlc, INSTALL 3 DLC
5 3"C, 6 DLC
6 INSTALL 334 CABINET WITH TERMINAL BOARD

LOCATION OF CONSTRUCTION

LOC	COUNTY/ROUTE Yol/05 PM	DESCRIPTION	COMMENTS
1	0.10	COUNT STATION 60	SEE DETAIL"A" THIS SHEET
2	5.35	MAIN LINE RAMP METERING SYSTEM	SEE DETAIL"B" THIS SHEET
3	6.28	COUNT STATION 70	SEE DETAIL"C" THIS SHEET

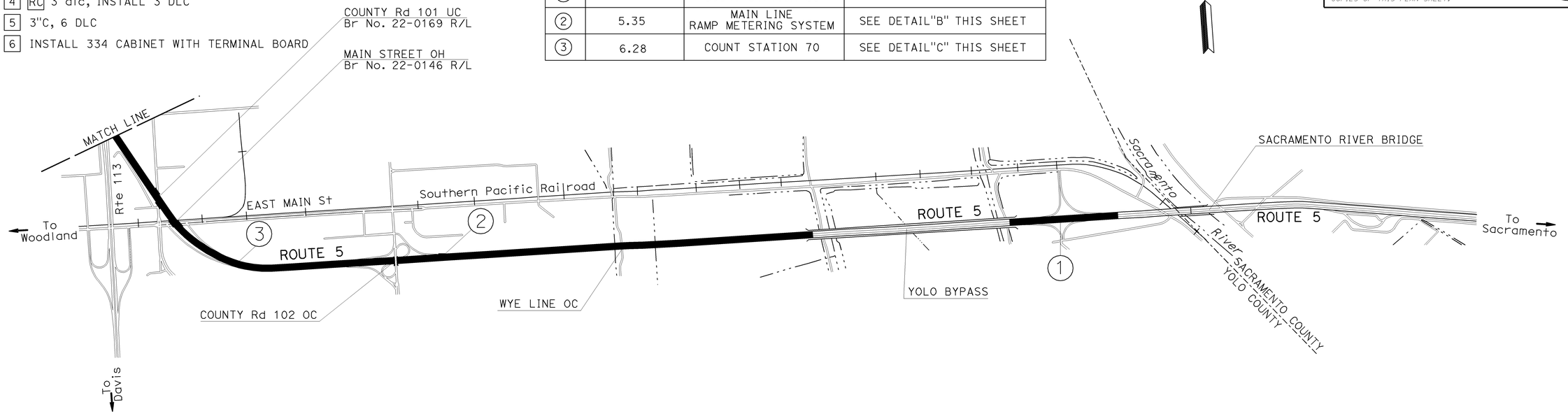

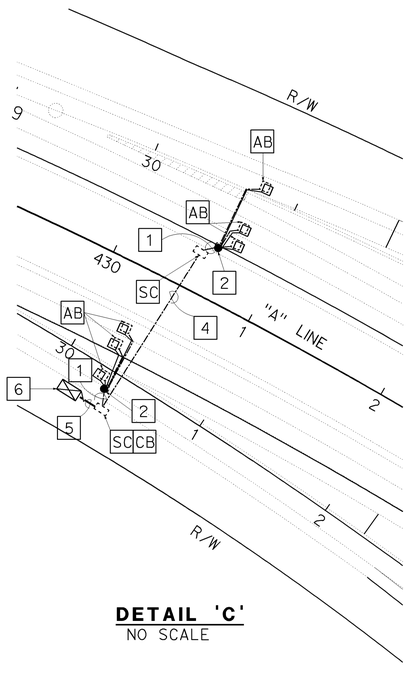

DETAIL 'C'
NO SCALE

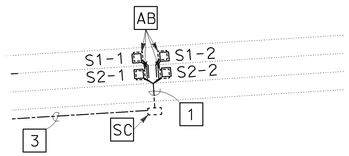

DETAIL' B'
NO SCALE

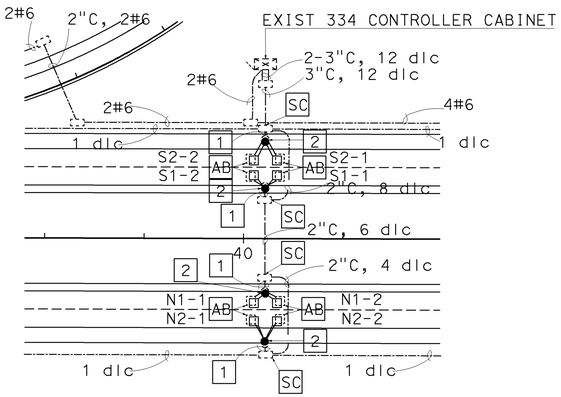

DETAIL 'A'
NO SCALE

THIS PLAN IS ACCURATE FOR ELECTRICAL WORK ONLY

REPLACE LOOPS DETECTOR

SCALE 1"= 50'

E-1

STATE OF CALIFORNIA - DEPARTMENT OF TRANSPORTATION
ELECTRICAL DESIGN
FUNCTIONAL SUPERVISOR: NELSON LEE
CALCULATED-DESIGNED BY: OANH D. NGUYEN
CHECKED BY: HABIB GOLBAN
REVISED BY | DATE REVISED

LAST REVISION | DATE PLOTTED => 25-AUG-2011 | TIME PLOTTED => 13:18 | 06-01-11

BORDER LAST REVISED 7/1/2010 | USERNAME => s134507 | DGN FILE => 0300020442ua001.dgn | RELATIVE BORDER SCALE IS IN INCHES 0 1 2 3 | UNIT 0402 | PROJECT NUMBER & PHASE 03000204421

Dist	COUNTY	ROUTE	POST MILES TOTAL PROJECT	SHEET No.	TOTAL SHEETS
03	Yol	5	0.3/R14.0	20	37

6-15-11
REGISTERED ELECTRICAL ENGINEER DATE

HABIB GOLBAN
No. E17928
Exp. 09/30/12
ELECTRICAL
REGISTERED PROFESSIONAL ENGINEER
STATE OF CALIFORNIA

8-15-11
PLANS APPROVAL DATE

THE STATE OF CALIFORNIA OR ITS OFFICERS OR AGENTS SHALL NOT BE RESPONSIBLE FOR THE ACCURACY OR COMPLETENESS OF SCANNED COPIES OF THIS PLAN SHEET.

PROJECT NOTES (THIS SHEET ONLY)

1. EXIST SERVICE EQUIPMENT ENCLOSURE CTID No. 0322005R007700
2. EXIST CONTROLLER CABINET
3. AB EXISTING 2 PIEZO ELECTRIC AXLE SENSORS AND 1 INDUCTIVE LOOP
4. INSTALL 2 PIEZO ELECTRIC AXLE SENSORS AND 1 INDUCTIVE LOOP FOR DETAIL SEE DETAIL C THIS SHEET
5. RC LOOP CONDUCTORS, 2 stc, INSTALL LOOP CONDUCTORS, 2 STC
6. RC 3 dlc, 6 stc, ADD 2 DLC, 6 STC
7. RC 2 dlc, 4 stc, ADD 2 DLC, 4 STC
8. RC 4 dlc, 8 stc, ADD 4 DLC, 8 STC
9. RC 3 dlc, 6 stc, ADD 3 DLC, 6 STC
10. RC 2 dlc, 4 stc, ADD 2 DLC, 4 STC
11. RC 1 dlc, 2 stc, ADD 1 DLC, 2 STC
12. RC LOOP CONDUCTORS, 4 stc, INSTALL LOOP CONDUCTORS, 4 STC

LEGEND AND ABREVIATION

CTID - CALTRAN IDENTIFICATION
stc - SCREENED TRANSMISSION CABLE
stc - EXISTING SCREENED TRANSMISSION CABLE
|□| - PROPOSED 2 PIEZO ELECTRIC AXLE SENSORS, 1 INDUCTIVE LOOP
⊡ - EXISTING 2 PIEZO ELECTRIC AXLE SENSORS, 1 INDUCTIVE LOOP

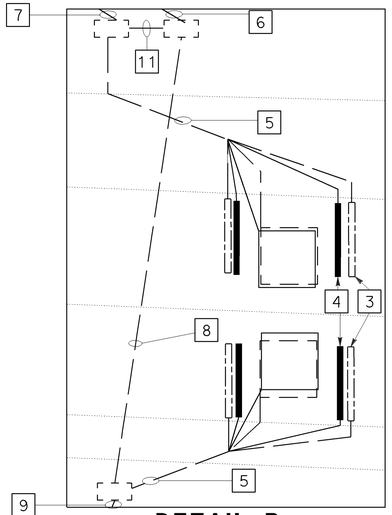

DETAIL B
NO SCALE

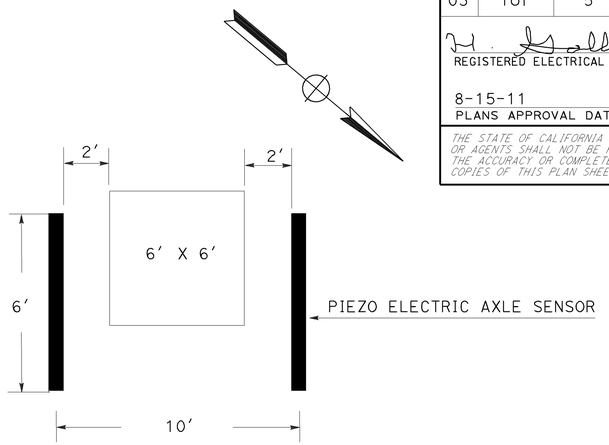

DETAIL C
SCALE SHOWN

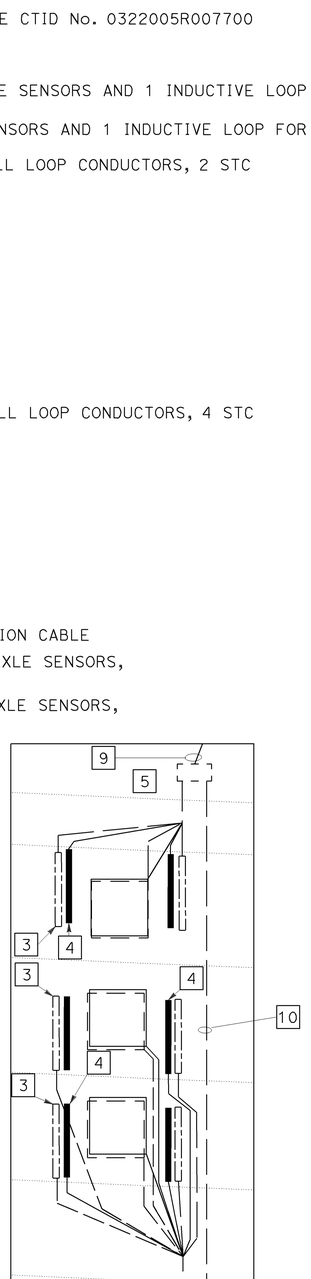

DETAIL A
NO SCALE

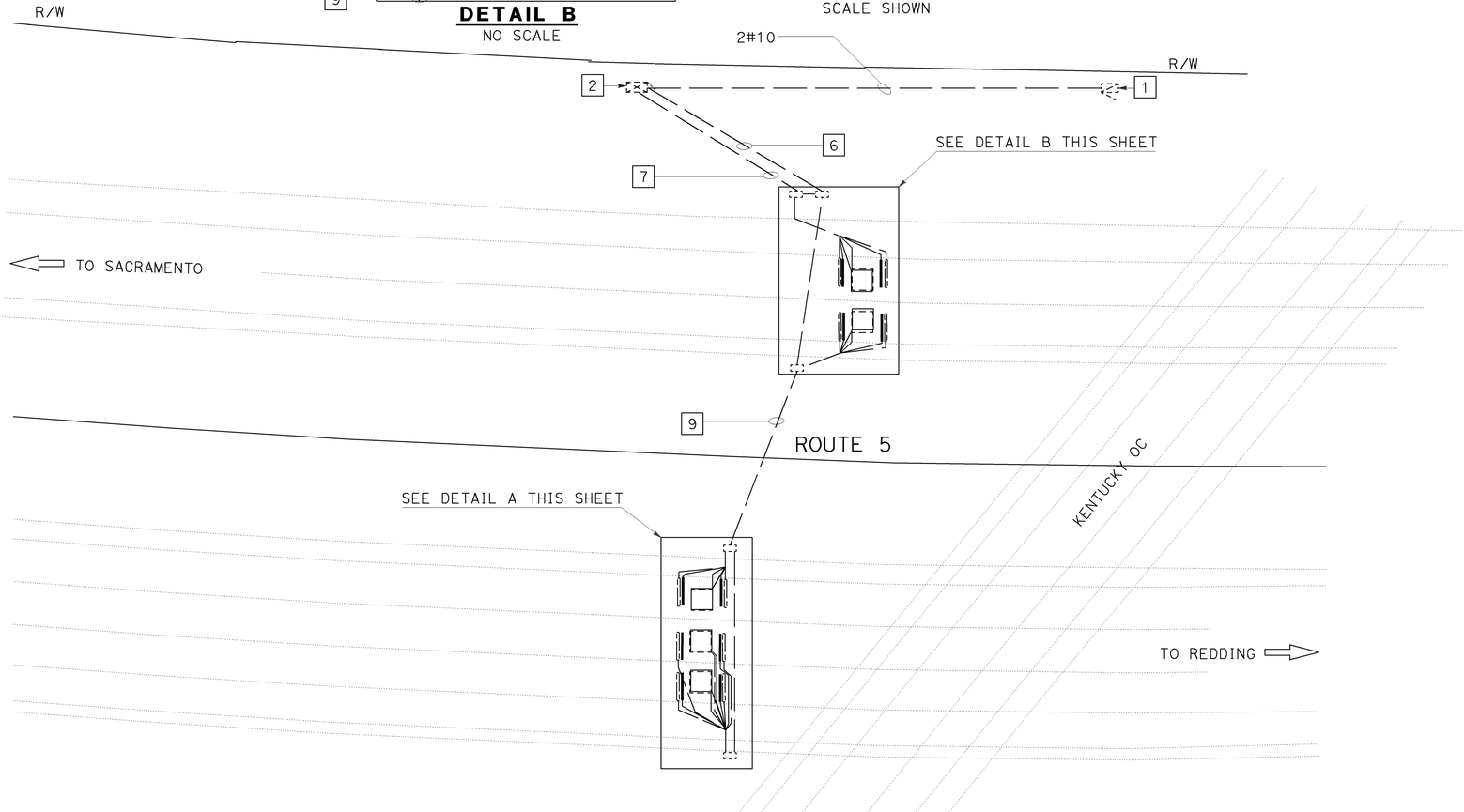

THIS PLAN IS ACCURATE FOR ELECTRICAL WORK ONLY

MODIFY AUTOMATIC VEHICLE CLASSIFICATION SYSTEM

SCALE: 1" = 20'

E-2

CALCULATED-
DESIGNED BY OANH D. NGUYEN
CHECKED BY HABIB GOLBAN
REVISED BY
DATE REVISED
FUNCTIONAL SUPERVISOR NELSON LEE

STATE OF CALIFORNIA - DEPARTMENT OF TRANSPORTATION
Caltrans® ELECTRICAL DESIGN

LAST REVISION DATE PLOTTED => 25-AUG-2011
TIME PLOTTED => 13:18

BORDER LAST REVISED 7/1/2010
USERNAME => s134507
DGN FILE => 0300020442ua002.dgn
RELATIVE BORDER SCALE IS IN INCHES 0 1 2 3
UNIT 0402
PROJECT NUMBER & PHASE 03000204421

Dist	COUNTY	ROUTE	POST MILES TOTAL PROJECT	SHEET No.	TOTAL SHEETS
03	Sac	05	0.3/R14.0	21	37

H. Golban 6-15-11
REGISTERED ELECT. ENGINEER DATE

8-15-11
PLANS APPROVAL DATE

REGISTERED PROFESSIONAL ENGINEER
HABIB GOLBAN
No. E17928
Exp. 09/30/12
ELECT.
STATE OF CALIFORNIA

THE STATE OF CALIFORNIA OR ITS OFFICERS OR AGENTS SHALL NOT BE RESPONSIBLE FOR THE ACCURACY OR COMPLETENESS OF SCANNED COPIES OF THIS PLAN SHEET.

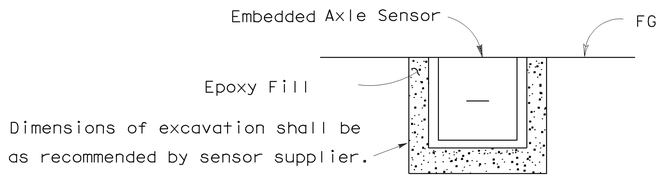

SECTION F-F

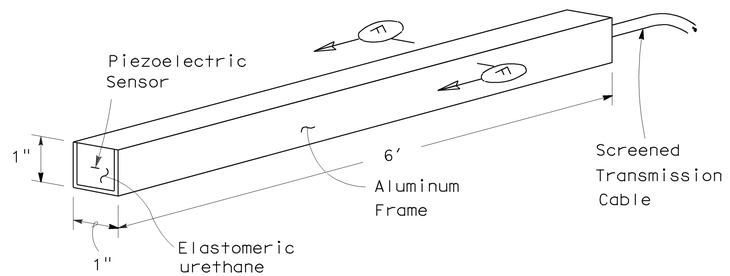

EMBEDDED AXLE SENSOR

"PIEZO" DETAIL
NO SCALE

ELECTRICAL DETAILS

NO SCALE

E-3

THIS PLAN IS ACCURATE FOR ELECTRICAL WORK ONLY

STATE OF CALIFORNIA - DEPARTMENT OF TRANSPORTATION
Caltrans
OFFICE OF ELECTRICAL DESIGN

FUNCTIONAL SUPERVISOR: NELSON LEE
CALCULATED-DESIGNED BY: OANH D NGUYEN
CHECKED BY: HABIB GOLBAN
REVISED BY
DATE REVISED

LAST REVISION 06-01-11
DATE PLOTTED => 25-AUG-2011
TIME PLOTTED => 13:18

Dist	COUNTY	ROUTE	POST MILES TOTAL PROJECT	SHEET No.	TOTAL SHEETS
03	Yol	5	0.3/R14.0	22	37

Randell D. Hiatt
REGISTERED CIVIL ENGINEER

May 20, 2011
PLANS APPROVAL DATE

REGISTERED PROFESSIONAL ENGINEER
Randell D. Hiatt
No. C50200
Exp. 6-30-11
CIVIL
STATE OF CALIFORNIA

The State of California or its officers or agents shall not be responsible for the accuracy or completeness of electronic copies of this plan sheet.

To accompany plans dated 8-15-11

NOTES:

1. When necessary to place dike in front of face of guard railing, only Type C dike may be used. For dike details, see Standard Plan A87B.
2. For standard railing post embedment, see Standard Plans A77C3.
3. Guard railing delineation to be used where shown on the Project Plans.
4. When dike or curb is placed under guard railing, the maximum height of the dike or curb shall be 4". Mountable dike should not be used. For dike and curb details, see Standard Plans A87A and A87B.
5. For details of typical distance between the face of rail and hinge point, see Standard Plan A77C3.
6. For steel line posts, use ¼ - 20 self-tapping screws in 0.22" diameter holes or ¼" bolts in 9/32" diameter holes.

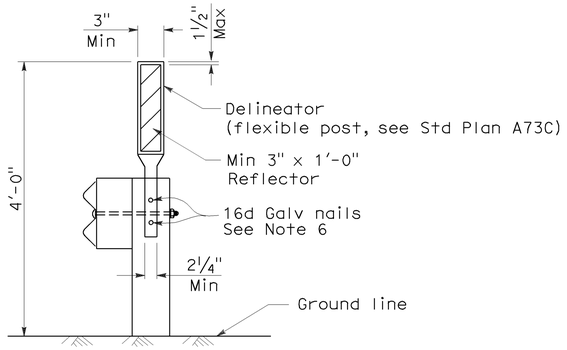

GUARD RAILING DELINEATION
See Note 3

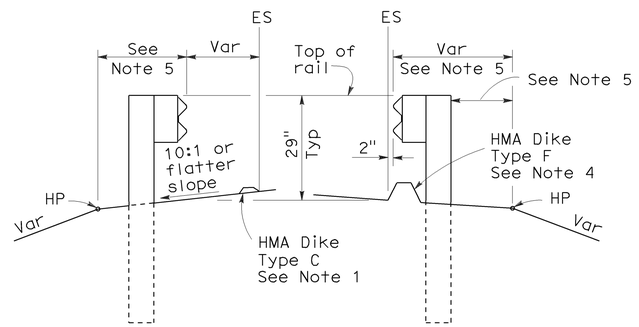

DIKE POSITIONING
See Note 1

STATE OF CALIFORNIA
DEPARTMENT OF TRANSPORTATION

METAL BEAM GUARD RAILING TYPICAL RAILING DELINEATION AND DIKE POSITIONING DETAILS

NO SCALE

RSP A77C4 DATED MAY 20, 2011 SUPERSEDES RSP A77C4 DATED JUNE 6, 2008 AND STANDARD PLAN A77C4 DATED MAY 1, 2006 - PAGE 47 OF THE STANDARD PLANS BOOK DATED MAY 2006.

REVISED STANDARD PLAN RSP A77C4

2006 REVISED STANDARD PLAN RSP A77C4

3-10-11

Dist	COUNTY	ROUTE	POST MILES TOTAL PROJECT	SHEET No.	TOTAL SHEETS
03	Yol	5	0.3/R14.0	23	37

Randell D. Hiatt
REGISTERED CIVIL ENGINEER

May 20, 2011
PLANS APPROVAL DATE

To accompany plans dated 8-15-11

REGISTERED PROFESSIONAL ENGINEER — Randell D. Hiatt — No. C50200 — Exp. 6-30-11 — CIVIL — STATE OF CALIFORNIA

The State of California or its officers or agents shall not be responsible for the accuracy or completeness of electronic copies of this plan sheet.

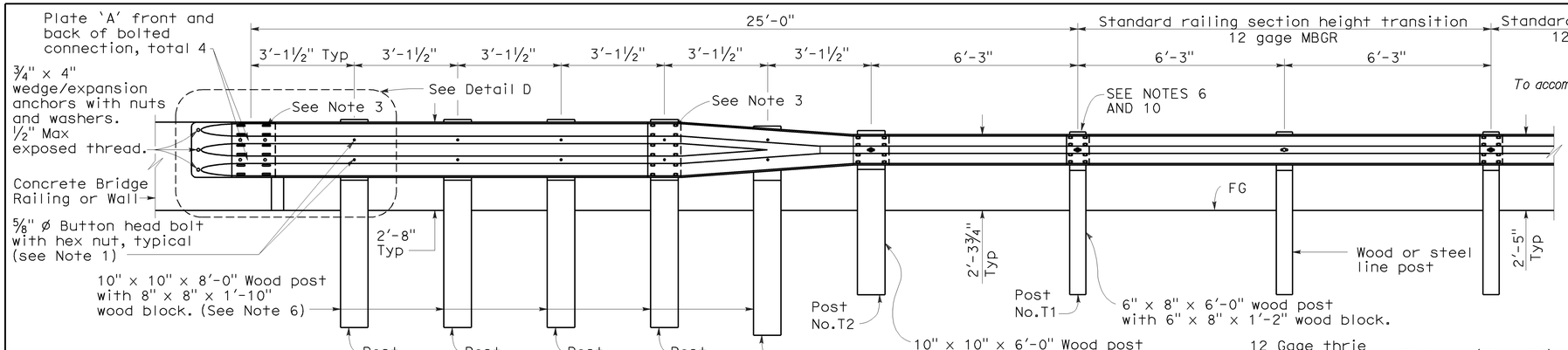

ELEVATION

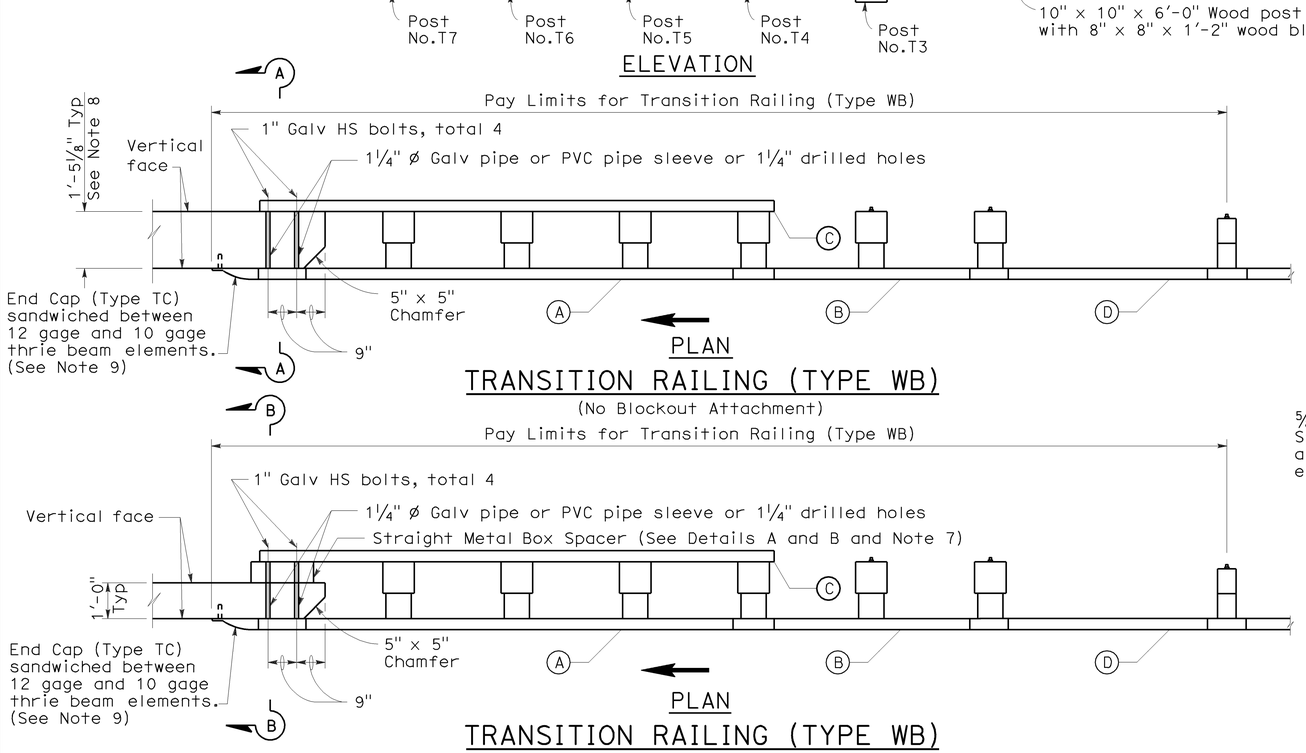

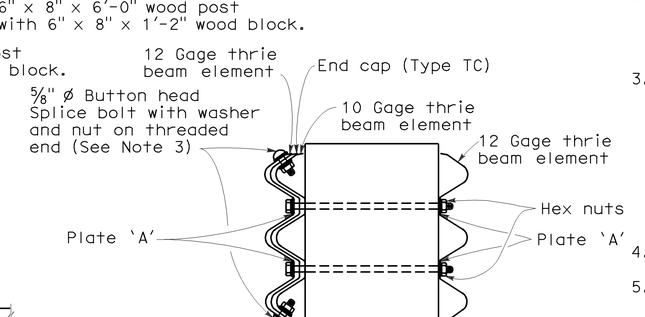

SECTION A-A

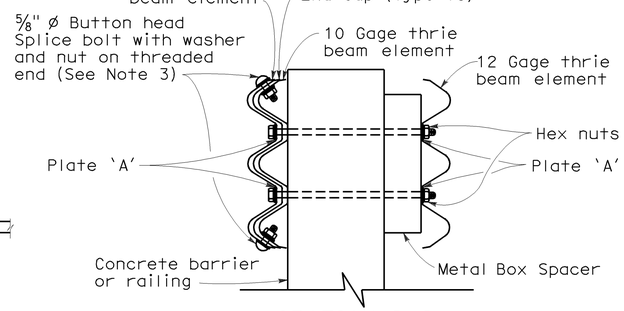

SECTION B-B

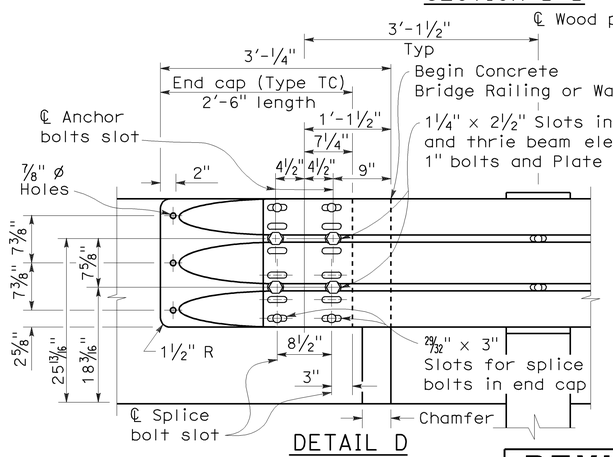

DETAIL D

LEGEND

- (A) Nested thrie beam elements (one 12 gage element nested over one 10 gage element).
- (B) One 10 gage "W" beam to thrie beam element.
- (C) One 12 gage thrie beam element.
- (D) One 10 gage "W" beam rail element (7'-3½" length)

10 gage = 0.135" thick

12 gage = 0.108" thick

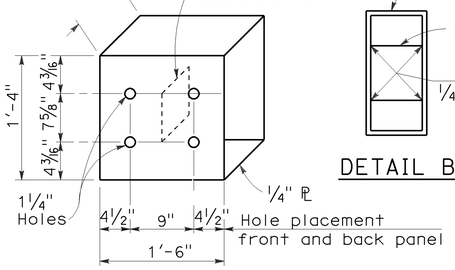

DETAIL A

STRAIGHT METAL BOX SPACER

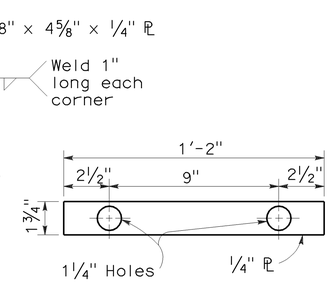

DETAIL B

DETAIL C

PLATE 'A'

NOTES:

1. Use ⅝" ø Button head bolts and hex nuts for connections to posts. No washer on rail face for bolted connections to post.
2. The nested rail elements, end cap, and 'W' beam to thrie beam element may be spliced together prior to bolting the elements to the wood post and concrete barrier or railing.
3. Exterior splice bolt holes for rail element splices at Post No. T4 and the connection to the concrete barrier or railing shall be the standard ²⁹⁄₃₂" x 1⅛" slot size. Interior splice bolt holes at these locations may be increased up to 1¼" ø. Only the top 2 and the bottom 2 splice bolts with washers and nuts are required for rail splices at Post No. T4 and the connection to the concrete barrier or railing.
4. Direction of adjacent traffic indicated by ➡.
5. The top elevation of Posts No. T2 through No. T7 shall not project more than 1" above the top elevation of the rail element.
6. Typically, the railing connected to Transition Railing (Type WB) will be either standard railing section of metal beam guard railing with height transition ratio of 120:1 or an approved Caltrans end treatment attached to Post No. T1.
7. The depth of the metal box spacer varies from the 5⅛" to 1½" and is dependent on the width of the concrete railing or wall. The combined dimension for the depth of the metal box spacer plus the width of railing or wall is typically 17⅞". Where the space between the backside of the concrete railing or wall and the rear thrie beam element is less than 1½", metal plates similar to Plate 'A' are to be used as spacers.
8. Where the width of the concrete railing or wall is greater than 17⅞", wood blocks are to be used to fill the space created between the backside of Posts No. T4 through No. T7 and the rear thrie beam element. These wood blocks shall be 8" in width and 1'-2" in length. The dimension between the front thrie beam element and the rear thrie beam element is to match the width of the concrete railing or wall.
9. End cap may be installed over 12 gage and 10 gage thrie beam elements where transition railing is installed on the departure end of bridge railing.
10. Conform standard railing section height to 2'-3¾" at Post No. T1 using height transition ratio of 120:1.

STATE OF CALIFORNIA
DEPARTMENT OF TRANSPORTATION

METAL BEAM GUARD RAILING TRANSITION RAILING (TYPE WB)

NO SCALE

RSP A77J4 DATED MAY 20, 2011 SUPERSEDES
RSP A77J4 DATED JUNE 5, 2009, RSP A77J4 DATED JUNE 6, 2008
AND STANDARD PLAN A77J4 DATED MAY 1, 2006 -
PAGE 75 OF THE STANDARD PLANS BOOK DATED MAY 2006.

REVISED STANDARD PLAN RSP A77J4

2006 REVISED STANDARD PLAN RSP A77J4

5-14-09

DIST	COUNTY	ROUTE	POST MILES TOTAL PROJECT	SHEET NO.	TOTAL SHEETS
03	Yol	5	0.3/R14.0	24	37

Randell D. Hiatt
REGISTERED CIVIL ENGINEER

June 6, 2008
PLANS APPROVAL DATE

REGISTERED PROFESSIONAL ENGINEER — Randell D. Hiatt — No. C50200 — Exp. 6-30-09 — CIVIL — STATE OF CALIFORNIA

The State of California or its officers or agents shall not be responsible for the accuracy or completeness of electronic copies of this plan sheet.

To accompany plans dated 8-15-11

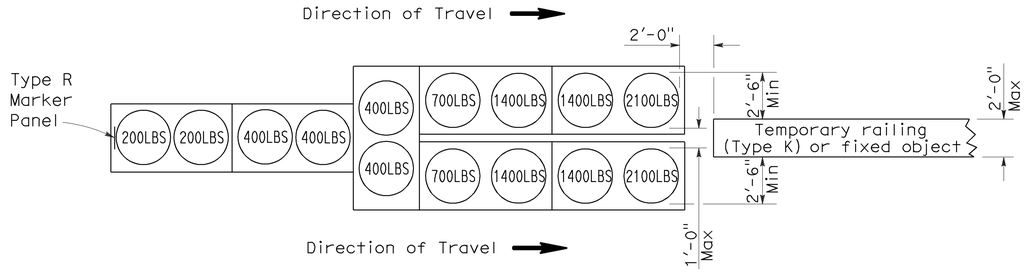

ARRAY 'TU14'

Approach speed 45 mph or more

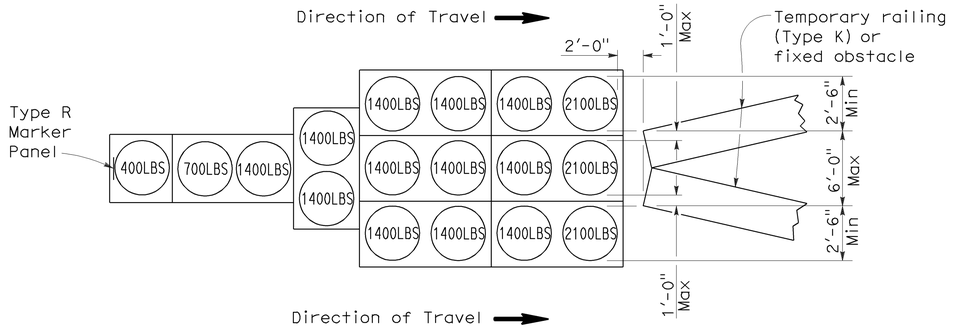

ARRAY 'TU17'

Approach speed less than 45 mph

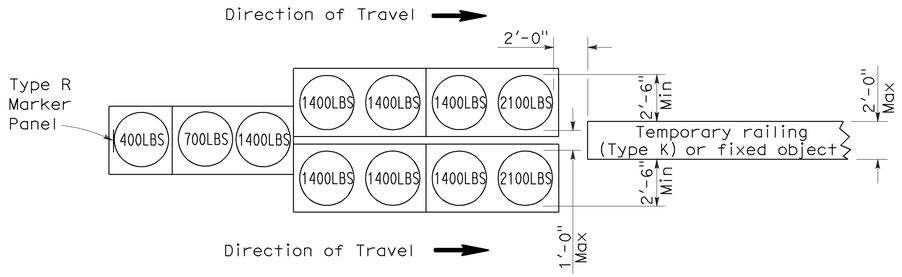

ARRAY 'TU11'

Approach speed less than 45 mph

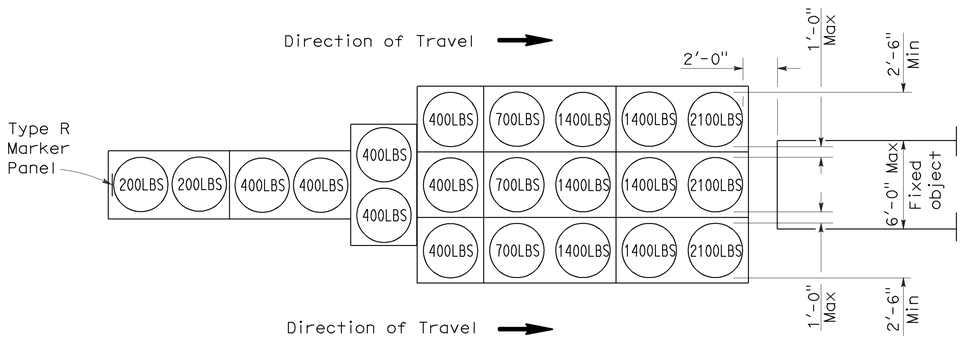

ARRAY 'TU21'

Approach speed 45 mph or more

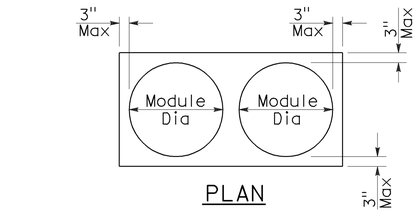

PLAN

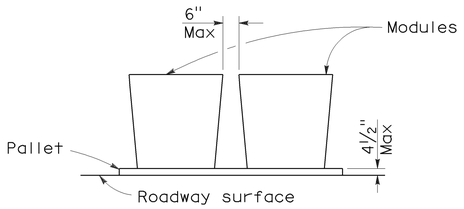

ELEVATION

CRASH CUSHION PALLET DETAIL

See Note 7

NOTES:

1. (XXX) Indicates sand filled module location and weight of sand in pounds for each module. Module spacing is based on the greater diameter of the module.
2. All sand weights are nominal.
3. Temporary crash cushion arrays shall not encroach on the traveled way.
4. Place the top of Type R marker panel 1" below the module lid.
5. Refer to Standard Plan A73B for marker details.
6. Approach speeds indicated conform to NCHRP 350 Report criteria.
7. Use of pallets is optional.

STATE OF CALIFORNIA
DEPARTMENT OF TRANSPORTATION

TEMPORARY CRASH CUSHION, SAND FILLED (UNIDIRECTIONAL)

NO SCALE

RSP T1A DATED JUNE 6, 2008 SUPERSEDES STANDARD PLAN T1A
DATED MAY 1, 2006 - PAGE 211 OF THE STANDARD PLANS BOOK DATED MAY 2006.

REVISED STANDARD PLAN RSP T1A

2006 REVISED STANDARD PLAN RSP T1A

5-15-08

DIST	COUNTY	ROUTE	POST MILES TOTAL PROJECT	SHEET NO.	TOTAL SHEETS
03	Yol	5	0.3/R14.0	25	37

Randell D. Hiatt
REGISTERED CIVIL ENGINEER

June 6, 2008
PLANS APPROVAL DATE

REGISTERED PROFESSIONAL ENGINEER
Randell D. Hiatt
No. C50200
Exp. 6-30-09
CIVIL
STATE OF CALIFORNIA

The State of California or its officers or agents shall not be responsible for the accuracy or completeness of electronic copies of this plan sheet.

To accompany plans dated 8-15-11

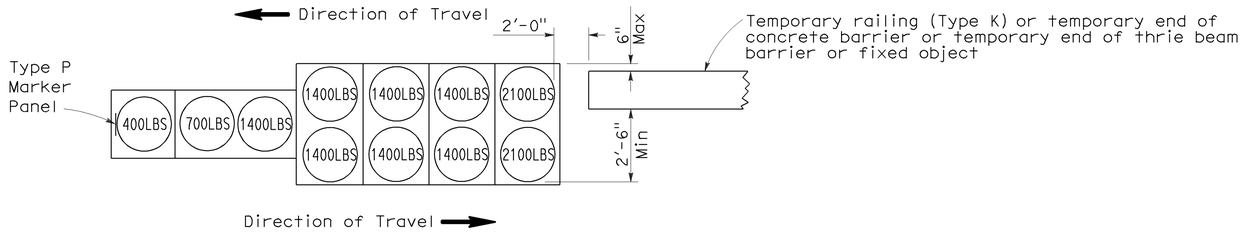

ARRAY 'TB11'

Approach speed less than 45 mph

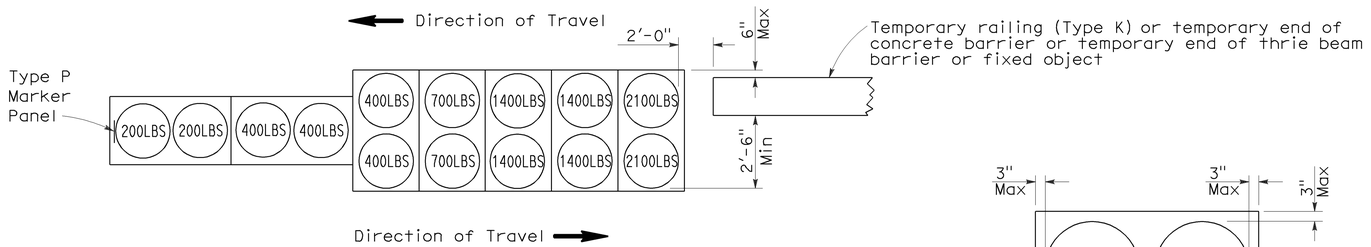

ARRAY 'TB14'

Approach speed 45 mph or more

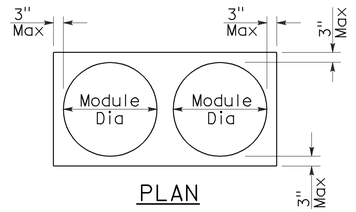

PLAN

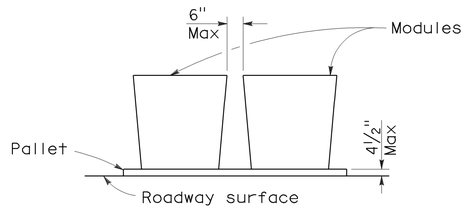

ELEVATION

CRASH CUSHION PALLET DETAIL

See Note 7

NOTES:

1. (XXX) Indicates sand filled module location and weight of sand in pounds for each module. Module spacing is based on the greater diameter of the module.
2. All sand weights are nominal.
3. Temporary crash cushion arrays shall not encroach on the traveled way.
4. Place the Type P marker panel so that the bottom of the panel rests upon the pallet.
5. Refer to Standard Plan A73B for marker details.
6. Approach speeds indicated conform to NCHRP 350 Report criteria.
7. Use of pallets is optional.

STATE OF CALIFORNIA
DEPARTMENT OF TRANSPORTATION

TEMPORARY CRASH CUSHION, SAND FILLED (BIDIRECTIONAL)

NO SCALE

RSP T1B DATED JUNE 6, 2008 SUPERSEDES STANDARD PLAN T1B
DATED MAY 1, 2006 - PAGE 212 OF THE STANDARD PLANS BOOK DATED MAY 2006.

REVISED STANDARD PLAN RSP T1B

2006 REVISED STANDARD PLAN RSP T1B

5-15-08

DIST	COUNTY	ROUTE	POST MILES TOTAL PROJECT	SHEET NO.	TOTAL SHEETS
03	Yol	5	0.3/R14.0	26	37

Randell D. Hiatt
REGISTERED CIVIL ENGINEER

June 6, 2008
PLANS APPROVAL DATE

REGISTERED PROFESSIONAL ENGINEER
Randell D. Hiatt
No. C50200
Exp. 6-30-09
CIVIL
STATE OF CALIFORNIA

The State of California or its officers or agents shall not be responsible for the accuracy or completeness of electronic copies of this plan sheet.

To accompany plans dated 8-15-11

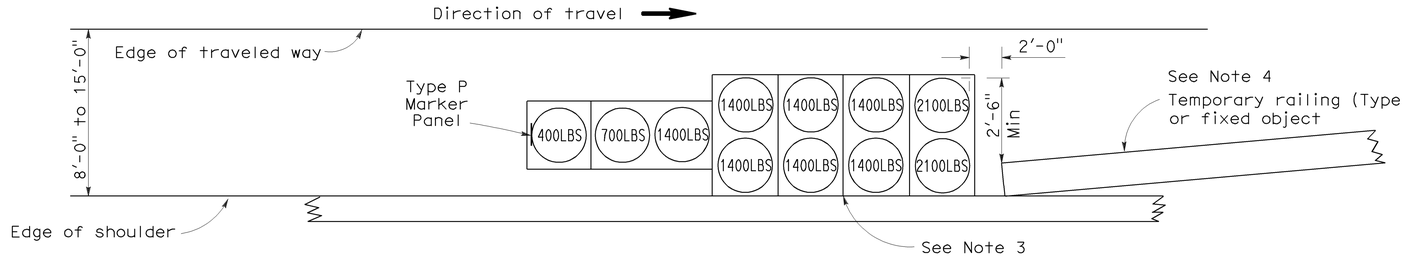

ARRAY 'TS11'

Approach speed less than 45 mph
See Note 9

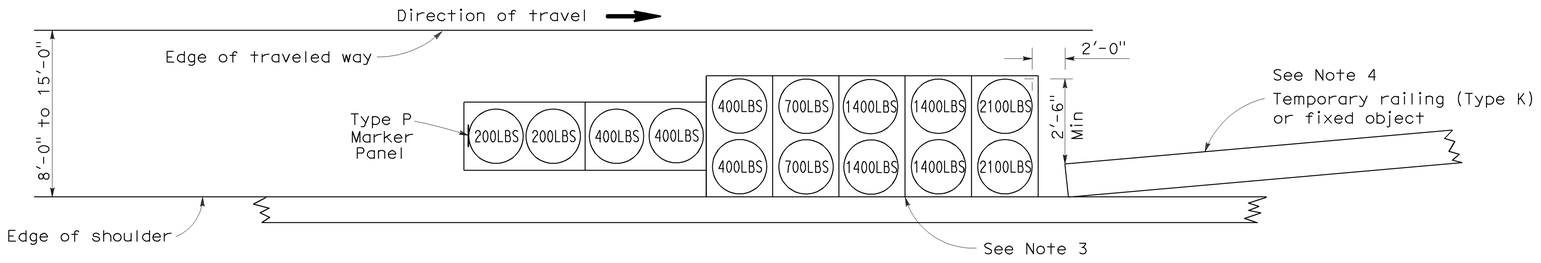

ARRAY 'TS14'

Approach speed 45 mph or more
See Note 9

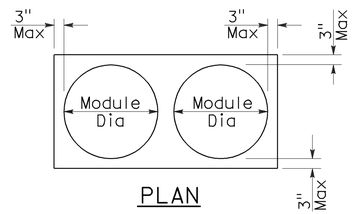

PLAN

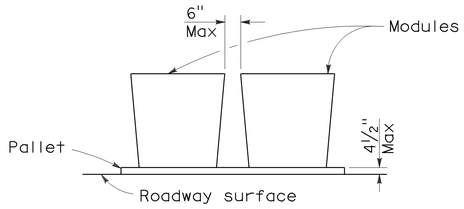

ELEVATION

CRASH CUSHION PALLET DETAIL

See Note 11

NOTES:

1. (XXX) Indicates sand filled module location and weight of sand in pounds for each module. Module spacing is based on the greater diameter of the module.
2. All sand weights are nominal.
3. The temporary crash cushion arrays shown on this plan shall be used only in locations where there will be traffic on one side of the temporary crash cushion array.
4. If the fixed object or approach end of the temporary railing is less than 15'-0" from the edge of traveled way, a temporary crash cushion is required in a construction or work zone.
5. Temporary crash cushion arrays shall not encroach on the traveled way.
6. Arrays for median shoulders shall conform to details shown on this plan for outside shoulders.
7. Place the Type P marker panel so that the bottom of the panel rests upon the pallet and faces traffic.
8. Refer to Standard Plan A73B for marker details.
9. For shoulder widths less than 8'-0", appropriate approved crash cushion protection, other than sand filled modules, shall be provided at fixed objects and at approach ends of temporary railing. The specific type of crash cushion shall be as shown on the project plans or as specified in the Special Provisions, or if not shown on the project plans or specified in the Special Provisions, shall be as approved by the Engineer.
10. Approach speeds indicated conform to NCHRP 350 Report criteria.
11. Use of pallets is optional.

STATE OF CALIFORNIA
DEPARTMENT OF TRANSPORTATION

TEMPORARY CRASH CUSHION, SAND FILLED (SHOULDER INSTALLATIONS)

NO SCALE

RSP T2 DATED JUNE 6, 2008 SUPERSEDES STANDARD PLAN T2
DATED MAY 1, 2006 - PAGE 213 OF THE STANDARD PLANS BOOK DATED MAY 2006.

REVISED STANDARD PLAN RSP T2

2006 REVISED STANDARD PLAN RSP T2

5-15-08

DIST	COUNTY	ROUTE	POST MILES TOTAL PROJECT	SHEET NO.	TOTAL SHEETS
03	Yol	5	0.3/R14.0	27	37

Robert B Schott
LICENSED LANDSCAPE ARCHITECT

August 15, 2008
PLANS Approval DATE

LICENSED LANDSCAPE ARCHITECT
Robert B. Schott 3635
Signature
11-04-08
Renewal Date
08-11-08
Date
STATE OF CALIFORNIA

The State of California or its officers or agents shall not be responsible for the accuracy or completeness of electronic copies of this plan sheet.

To accompany plans dated 8-15-11

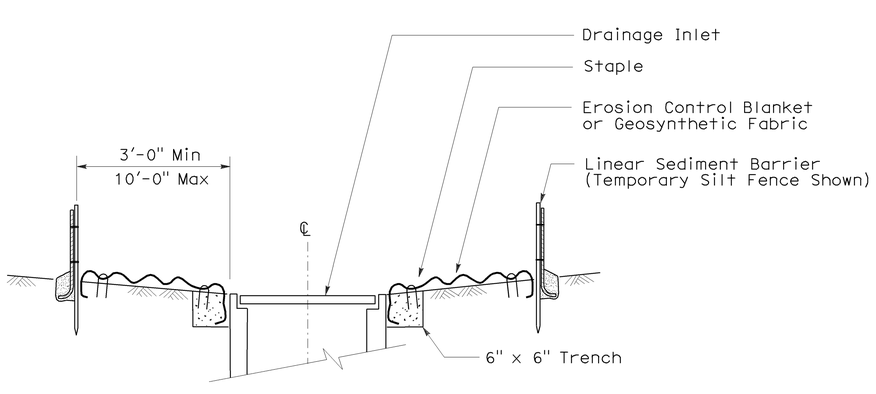

SECTION A-A

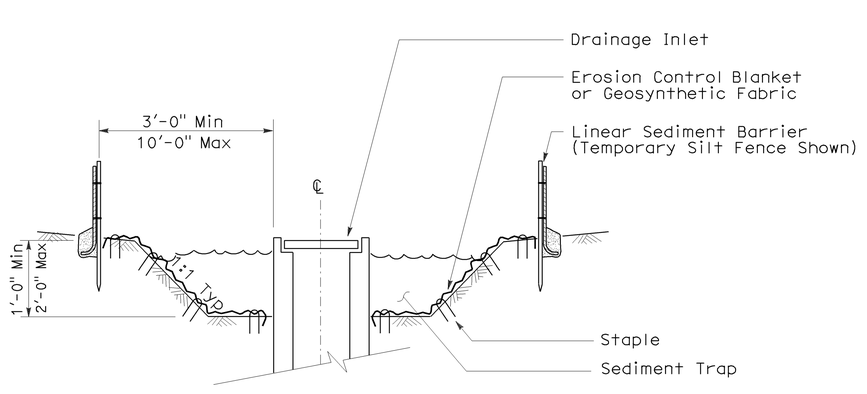

SECTION B-B

NOTES:

1. See Standard Plan T51 for Temporary Silt Fence.
2. Dimensions may vary to fit field conditions.

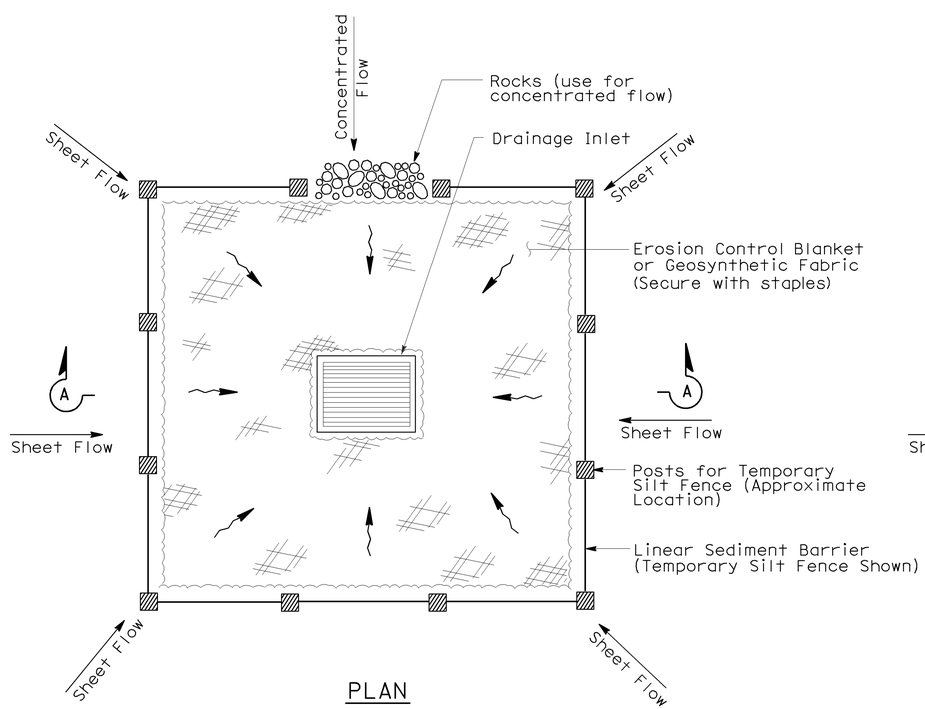

PLAN

TEMPORARY DRAINAGE INLET PROTECTION (TYPE 1)

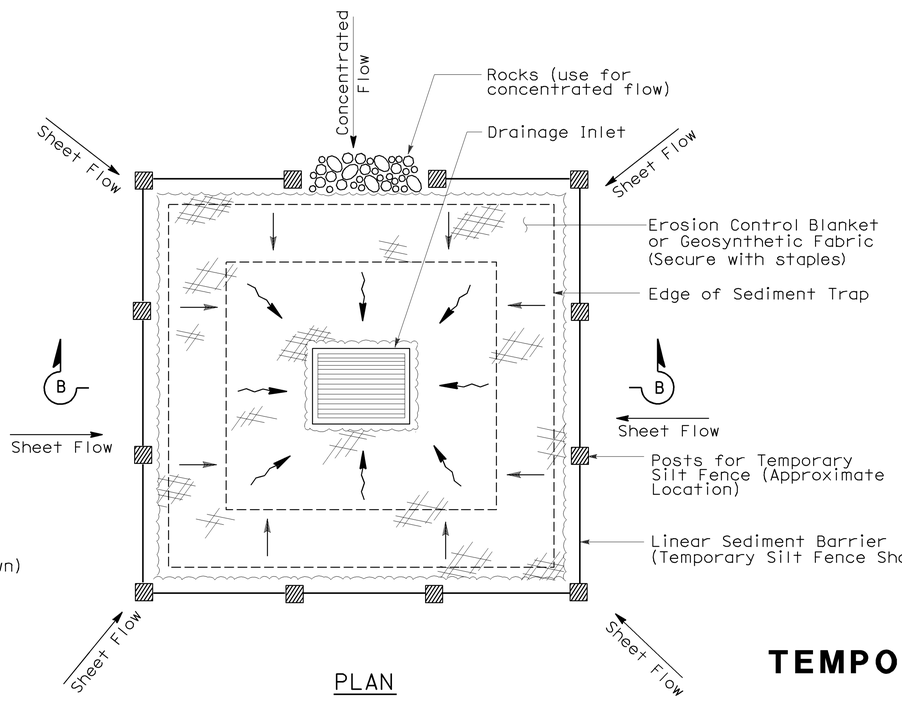

PLAN

TEMPORARY DRAINAGE INLET PROTECTION (TYPE 2) (EXCAVATED SEDIMENT TRAP)

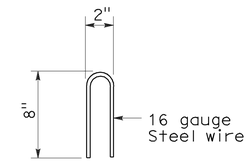

STAPLE DETAIL

STATE OF CALIFORNIA
DEPARTMENT OF TRANSPORTATION

TEMPORARY WATER POLLUTION CONTROL DETAILS (TEMPORARY DRAINAGE INLET PROTECTION)

NO SCALE

Nsp t61 dated august 15, 2008 supplements the standard plans book dated may 2006.

NEW STANDARD PLAN NSP T61

2006 NEW STANDARD PLAN NSP T61

7-11-08

DIST	COUNTY	ROUTE	POST MILES TOTAL PROJECT	SHEET NO.	TOTAL SHEETS
03	Yol	5	0.3/R14.0	28	37

Robert B Schott
LICENSED LANDSCAPE ARCHITECT

August 15, 2008
PLANS APPROVAL DATE

LICENSED LANDSCAPE ARCHITECT
Robert B. Schott 3695
Signature
11-04-08
Renewal Date
08-11-08
Date
STATE OF CALIFORNIA

The State of California or its officers or agents shall not be responsible for the accuracy or completeness of electronic copies of this plan sheet.

To accompany plans dated 8-15-11

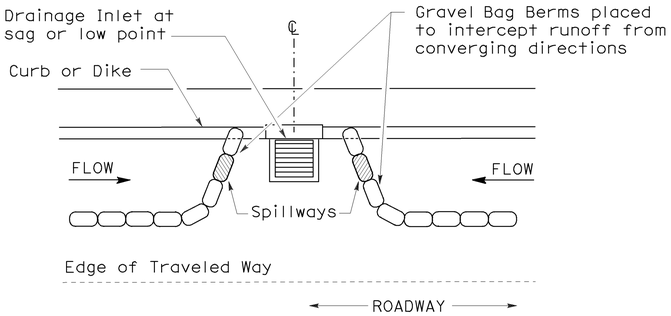

PLAN

CONFIGURATION FOR SAG POINT INLET (GRAVEL BAG BERM)

GRAVEL BAG BERM (TYPE 3A) SPACING TABLE

SLOPE OF ROADWAY (PERCENT)	1 to 3.9	4 to 5.9	6 to 7.9	8 to 10	10+
INTERVAL BETWEEN BERM	100′	75′	50′	25′	12′

For slope of less than 1%, install barriers only if erosion/sediment is prevalent

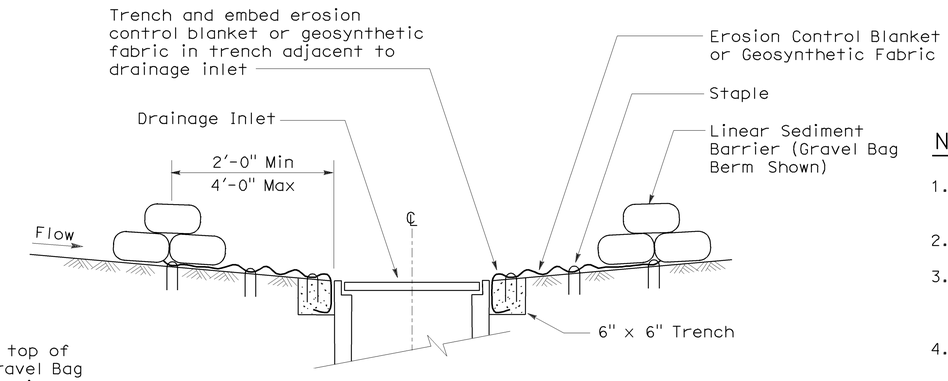

SECTION A-A

NOTES:

1. Place safety cones adjacent to drainage inlet protection.
2. Dimensions may vary to fit field conditions.
3. Install a minimum of 3 gravel bag berms upstream of each drainage inlet to be protected.
4. Position erosion control blanket or geosynthetic fabric at edge of concrete apron and secure in trench.
5. Erosion control blanket or geosynthetic fabric is not required if the area adjacent to the drainage inlet is vegetated or paved.

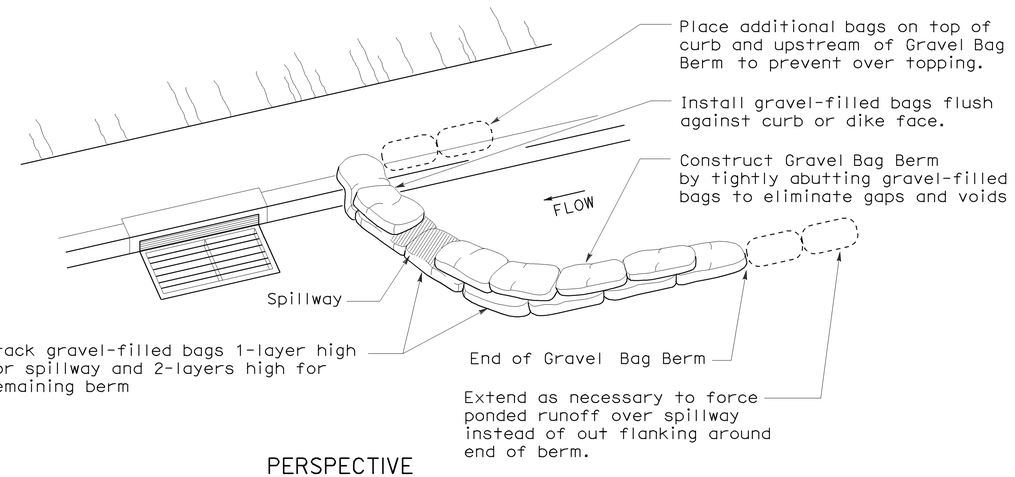

PERSPECTIVE

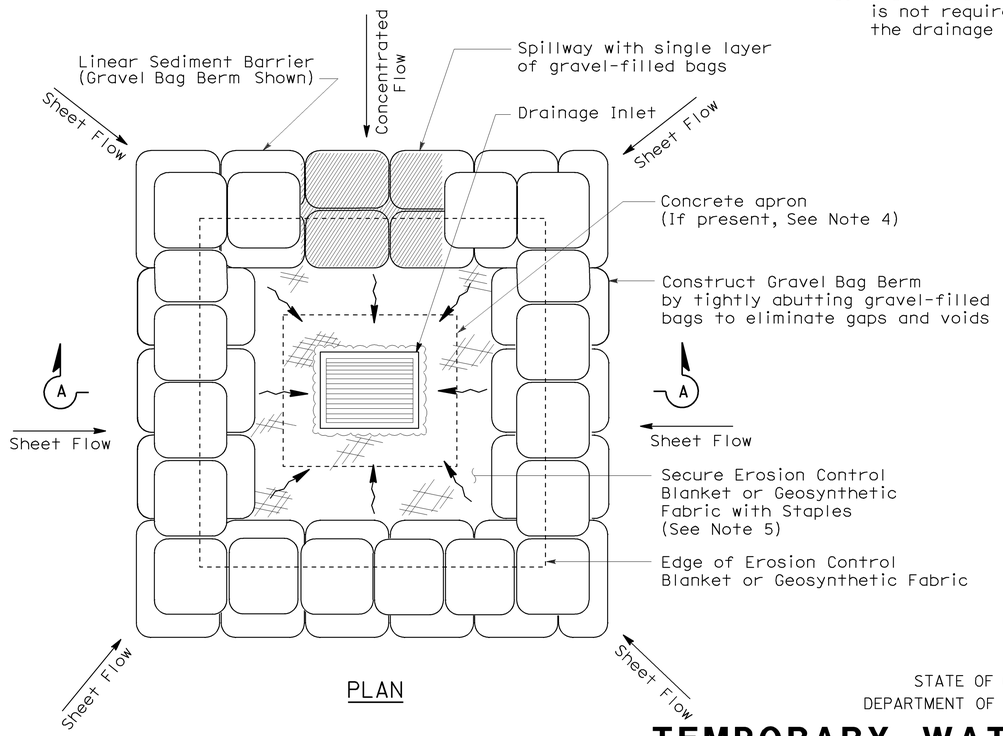

PLAN

TEMPORARY DRAINAGE INLET PROTECTION (TYPE 3B)

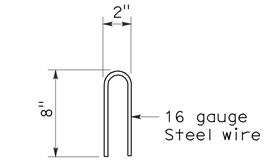

STAPLE DETAIL

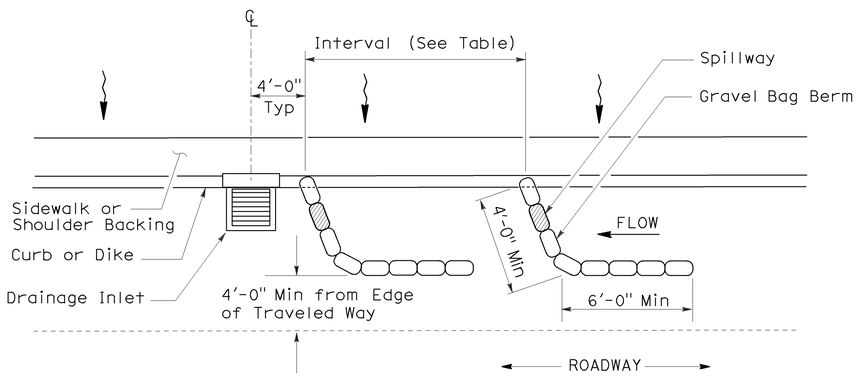

PLAN

TEMPORARY DRAINAGE INLET PROTECTION (TYPE 3A) (GRAVEL BAG BERM)

STATE OF CALIFORNIA
DEPARTMENT OF TRANSPORTATION

TEMPORARY WATER POLLUTION CONTROL DETAILS (TEMPORARY DRAINAGE INLET PROTECTION)

NO SCALE

NSP T62 DATED AUGUST 15, 2008 SUPPLEMENTS
THE STANDARD PLANS BOOK DATED MAY 2006.

NEW STANDARD PLAN NSP T62

2006 NEW STANDARD PLAN NSP T62

7-11-08

FLEXIBLE SEDIMENT BARRIER SPACING TABLE

SLOPE OF ROADWAY (PERCENT)	0 to 0.9	1 to 1.9	2 to 2.9	3 to 4	5+
INTERVAL BETWEEN BARRIERS	50′	35′	30′	25′	20′
ANGLE FROM FACE OF CURB	70°	70°	70°	45°	45°
SUGGESTED BARRIER LENGTH	6′	6′	6′	6′	6′

DIST	COUNTY	ROUTE	POST MILES TOTAL PROJECT	SHEET NO.	TOTAL SHEETS
03	Yol	5	0.3/R14.0	29	37

Robert B Schott
LICENSED LANDSCAPE ARCHITECT

August 15, 2008
PLANS APPROVAL DATE

LICENSED LANDSCAPE ARCHITECT — Robert B. Schott 3835 — Registration Date 11-04-08 — Renewal Date 08-11-08 — Date — STATE OF CALIFORNIA

The State of California or its officers or agents shall not be responsible for the accuracy or completeness of electronic copies of this plan sheet.

To accompany plans dated 8-15-11

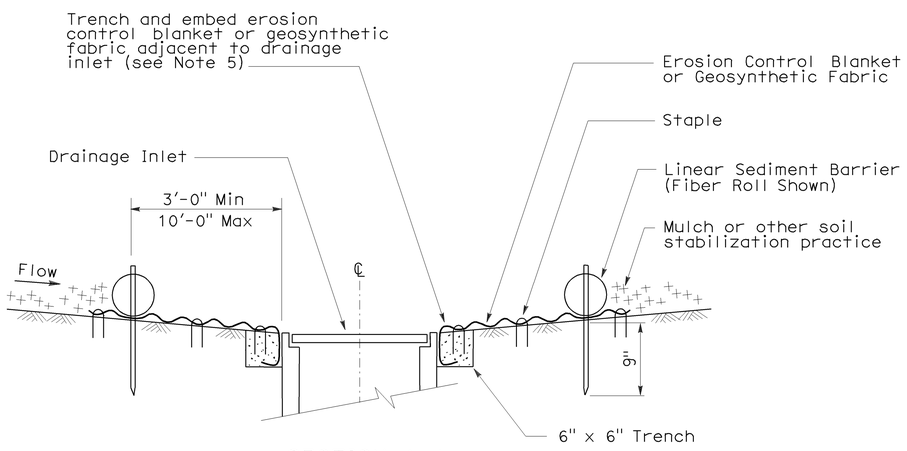

SECTION A-A

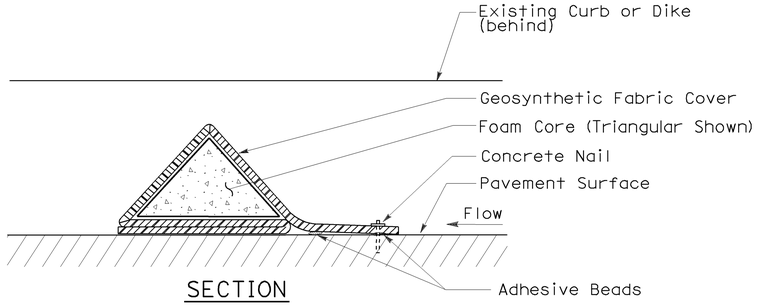

SECTION

FLEXIBLE SEDIMENT BARRIER DETAIL (FOAM BARRIER SHOWN)

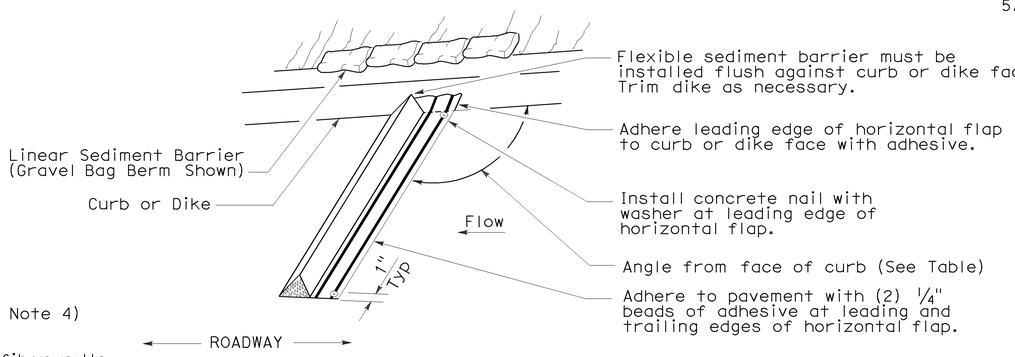

PERSPECTIVE

NOTES:

1. See Standard Plan T51 for Temporary Silt Fence.
2. Dimensions may vary to fit field conditions.
3. Install a minimum of 3 flexible sediment barriers upstream of each drainage inlet to be protected.
4. Position erosion control blanket or geosynthetic fabric at edge of concrete apron and secure in trench.
5. Erosion control blanket or geosynthetic fabric is not required if the area adjacent to the drainage inlet is vegetated.

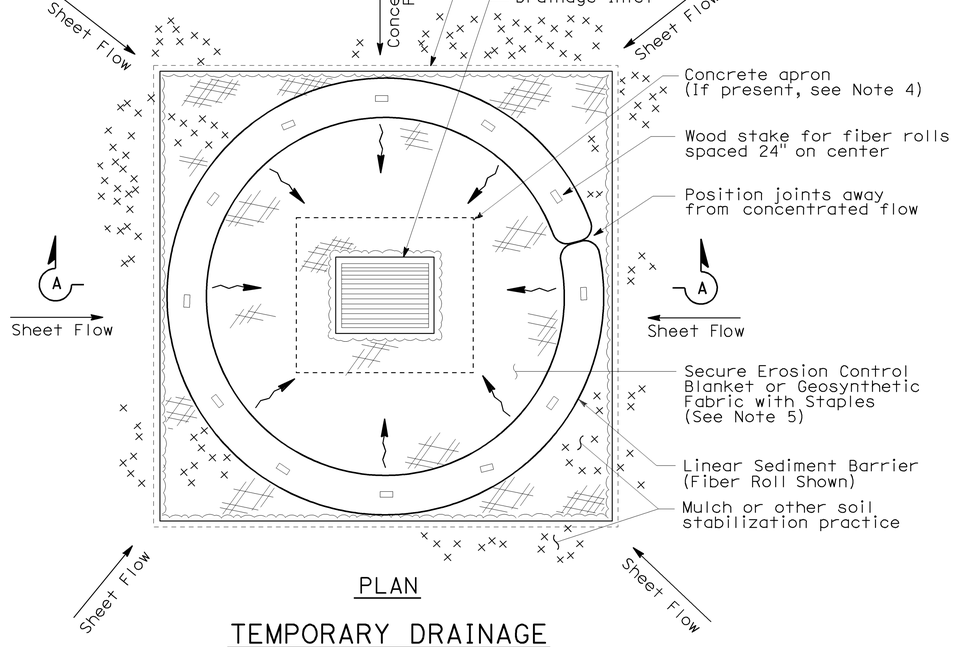

PLAN

TEMPORARY DRAINAGE INLET PROTECTION (TYPE 4A)

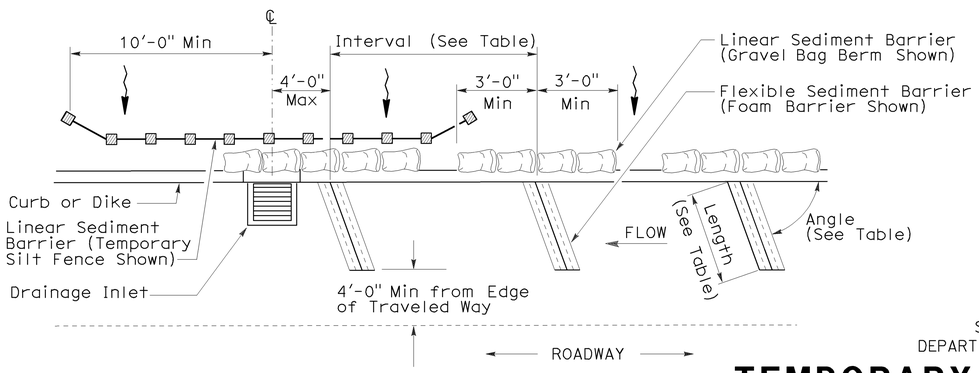

PLAN

TEMPORARY DRAINAGE INLET PROTECTION (TYPE 4B) FLEXIBLE SEDIMENT BARRIER

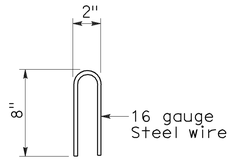

STAPLE DETAIL

STATE OF CALIFORNIA
DEPARTMENT OF TRANSPORTATION

TEMPORARY WATER POLLUTION CONTROL DETAILS (TEMPORARY DRAINAGE INLET PROTECTION)

NO SCALE

NSP T63 DATED AUGUST 15, 2008 SUPPLEMENTS THE STANDARD PLANS BOOK DATED MAY 2006.

NEW STANDARD PLAN NSP T63

2006 NEW STANDARD PLAN NSP T63

7-11-08

DIST	COUNTY	ROUTE	POST MILES TOTAL PROJECT	SHEET NO.	TOTAL SHEETS
03	Yol	5	0.3/R14.0	30	37

Robert B Schott
LICENSED LANDSCAPE ARCHITECT

August 15, 2008
PLANS APPROVAL DATE

LICENSED LANDSCAPE ARCHITECT
Robert B. Schott 3695
Signature
11-04-08
Renewal Date
08-11-08
Date
STATE OF CALIFORNIA

The State of California or its officers or agents shall not be responsible for the accuracy or completeness of electronic copies of this plan sheet.

To accompany plans dated 8-15-11

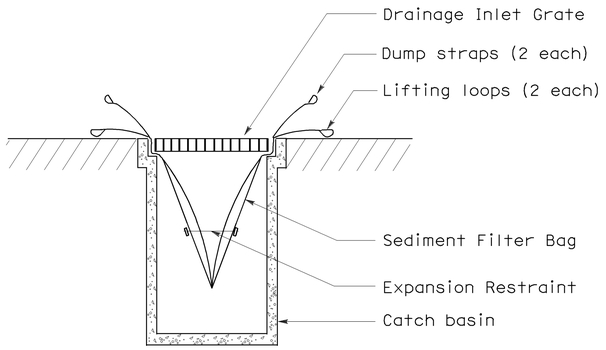

SECTION B-B

SEDIMENT FILTER BAG DETAIL

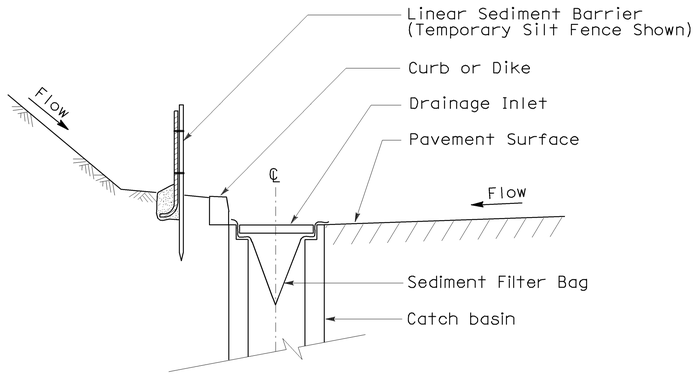

SECTION A-A

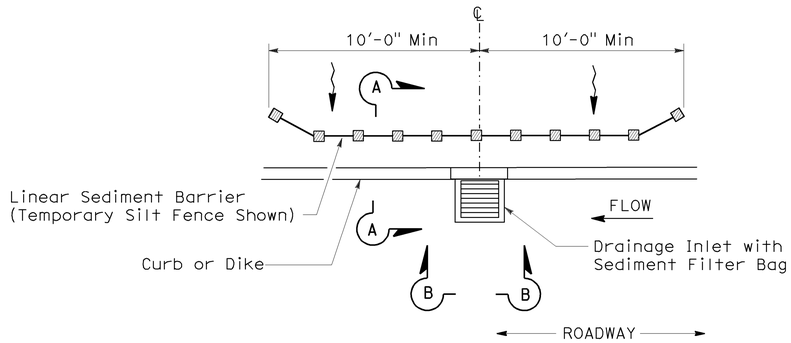

PLAN

TEMPORARY DRAINAGE INLET PROTECTION (TYPE 5) (SEDIMENT FILTER BAG)

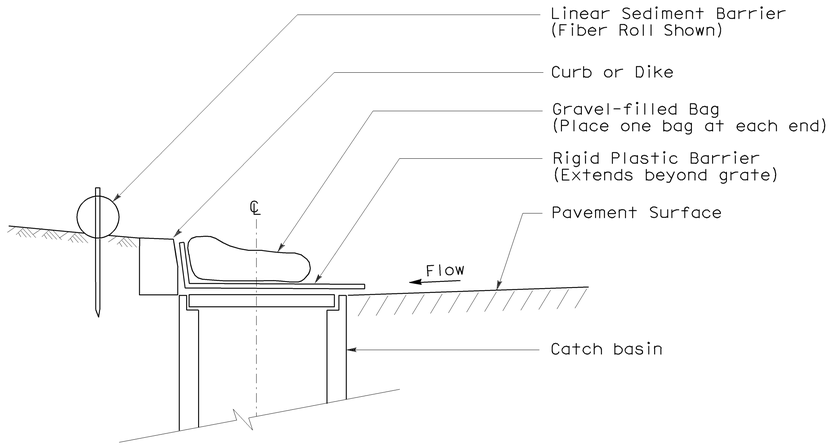

SECTION

TEMPORARY DRAINAGE INLET PROTECTION (TYPE 6A) (CATCH BASIN WITH GRATE)

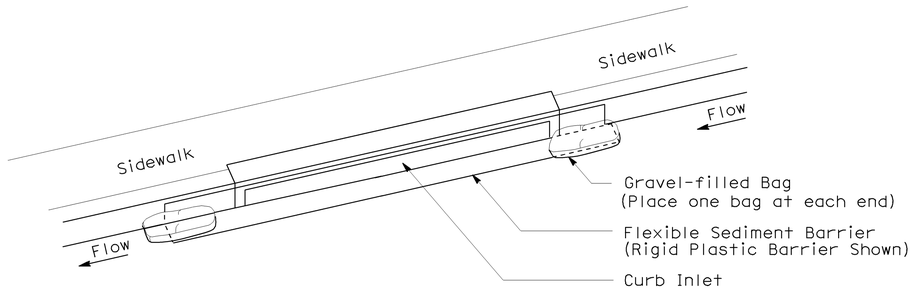

PERSPECTIVE

TEMPORARY DRAINAGE INLET PROTECTION (TYPE 6B) (CURB INLET WITHOUT GRATE)

NOTES:

1. See Standard Plan T51 for Temporary Silt Fence.
2. Dimensions may vary to fit field conditions.

STATE OF CALIFORNIA
DEPARTMENT OF TRANSPORTATION

TEMPORARY WATER POLLUTION CONTROL DETAILS (TEMPORARY DRAINAGE INLET PROTECTION)

NO SCALE

NSP T64 DATED AUGUST 15, 2008 SUPPLEMENTS
THE STANDARD PLANS BOOK DATED MAY 2006.

NEW STANDARD PLAN NSP T64

2006 NEW STANDARD PLAN NSP T64

7-11-08

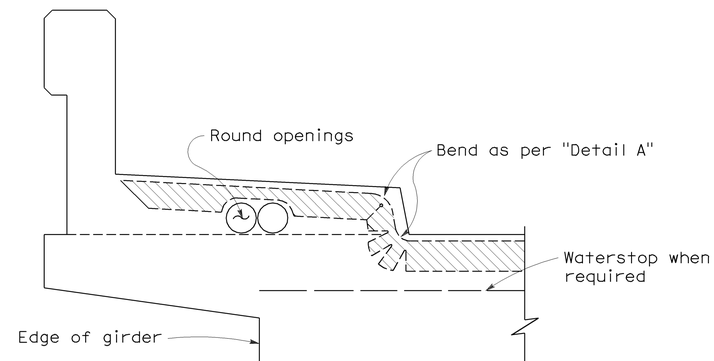

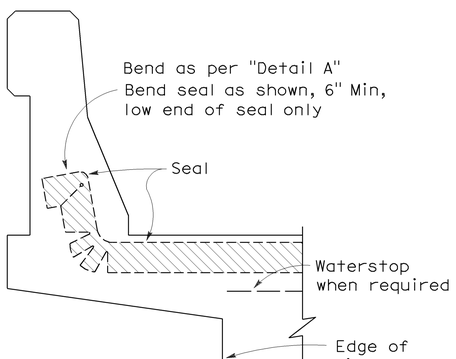

NOTE:

Type "B" seal shown. Type "A" seals to comform to the general path of seal shown, cuts for bending not required. Bend Type "A" seals 3" up into curb or barrier rail on only the low end of the seal.

CONCRETE BARRIER AND SIDEWALK

CONCRETE BARRIER

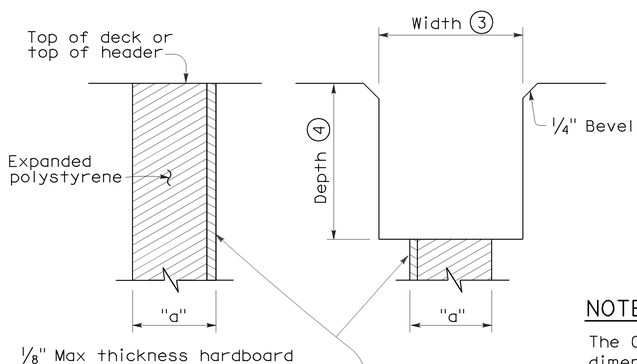

FORMING DETAIL SAWCUT DETAIL

NOTE:

The Contractor shall verify all controlling field dimensions before ordering or fabricatiing any material.

DIST	COUNTY	ROUTE	POST MILES TOTAL PROJECT	SHEET NO.	TOTAL SHEETS
03	Yol	5	0.3/R14.0	31	37

REGISTERED CIVIL ENGINEER

Efthymios Delis No. C51434 Exp. 6-30-08 CIVIL — REGISTERED PROFESSIONAL ENGINEER — STATE OF CALIFORNIA

October 5, 2007
PLANS APPROVAL DATE

The State of California or its officers or agents shall not be responsible for the accuracy or completeness of electronic copies of this plan sheet.

To accompany plans dated 8-15-11

JOINT SEALS DETAILS

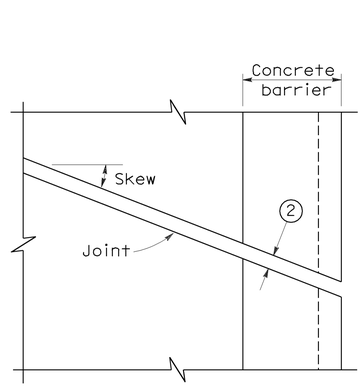

PLAN OF JOINT (SKEW ≤ 20°)

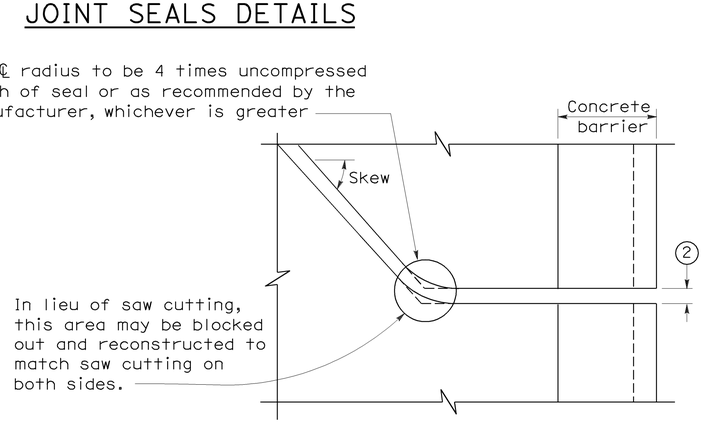

PLAN OF JOINT (SKEW > 20°)

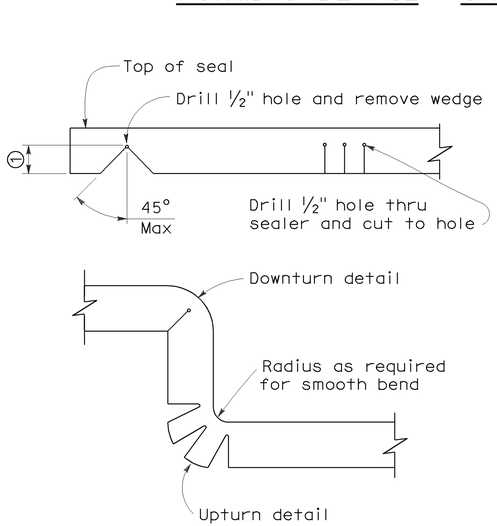

DETAIL A

NOTES:

1. Make smooth cuts from the bottom of seal to 1½" clear of top leaving at least one complete cell between the top of the cut and top of the seal. When necessary cut back of seal to clear conduit and round openings.
2. Opening in barrier to match width of sawn deck joint.
3. Sawcut groove widths shall be as ordered by the Engineer.
4. Depth of sawcut: Type A - Depth to be 2" minimum.
   Type B - Depth to be equal to or greater than the depth of seal measured along the contact surface, when compressed to minimum width position (W_2) plus dimensions shown.
5. MR (movement rating) as shown on other plan sheets.
6. Other depths must be approved by the Engineer.

DIMENSIONS "a" OF JOINT REQUIRED

Movement Rating (MR) (5)	Bridge Type	"a" Dimension Deck Concrete Placed		
		Winter	Fall-Spring	Summer
2"	All except CIP/PS	1½"	1¼"	¾"
	CIP/PS	1¼"	1"	½"
1½"	All except CIP/PS	1¼"	1"	½"
	CIP/PS	1"	¾"	½"
1"	All except CIP/PS	1"	¾"	½"
	CIP/PS	¾"	½"	½"
½"	All except CIP/PS	¾"	¾"	½"
	CIP/PS	½"	½"	½"

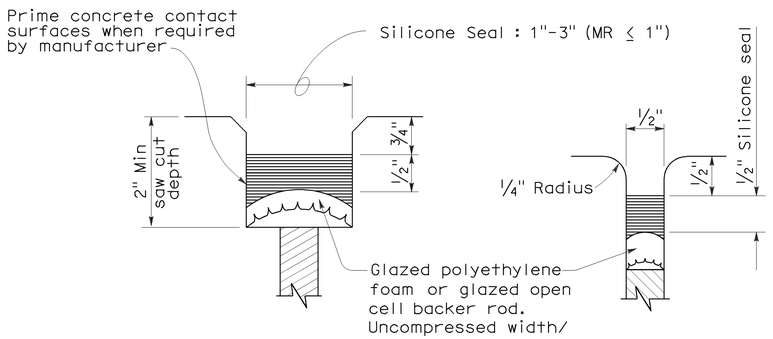

TYPE A SEAL

Movement rating : Silicone = 1" Max

TYPE AL SEAL

Longitudinal joints only

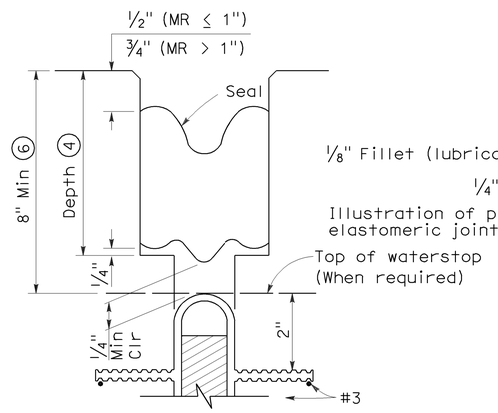

TYPE B JOINT SEAL
IN MINIMUM WIDTH POSITION (W_2)

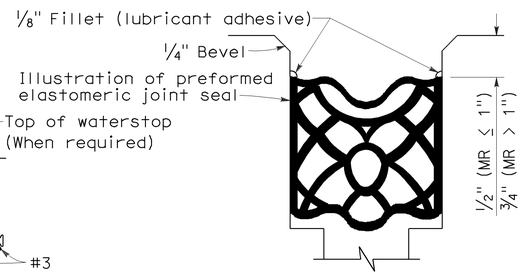

TYPE B SEAL

Movement Rating ≤ 2"

STATE OF CALIFORNIA
DEPARTMENT OF TRANSPORTATION

JOINT SEALS (MAXIMUM MOVEMENT RATING = 2")

NO SCALE

RSP B6-21 DATED OCTOBER 5, 2007 SUPERSEDES STANDARD PLAN B6-21 DATED MAY 1, 2006 - PAGE 258 OF THE STANDARD PLANS BOOK DATED MAY 2006.

REVISED STANDARD PLAN RSP B6-21

2006 REVISED STANDARD PLAN RSP B6-21

5-8-07

ELECTROLIERS

STANDARD TYPES
15, 15D
15 STRUCTURE
21, 21D STRUCTURE
30
31
32
35
36-20A

High mast light pole

Double Arm lighting standard

Existing electrolier

Electrolier foundation (Future installation)

NOTES:

1. Luminaires shall be 310 W HPS when installed on Type 21, 21D, 30, 31, 32, 35 and 36-20A Standards, unless otherwise specified. Luminaires shall be 200 W HPS when installed on other type standards or poles, unless otherwise specified.
2. Luminaires shall be the cutoff type, ANSI Type III medium cutoff lighting distribution, unless otherwise specified.
3. Variations noted adjacent to symbol on project plans.

Electrolier (see project notes or project plans)

Luminaire on wood pole

STANDARD NOTES:

- AB Abandon. If applied to conduit, remove conductors.
- BC Install pull box in existing conduit run.
- BP Pedestrian barricade, type as indicated on plan.
- CB Install conduit into existing pull box.
- CC Connect new and existing conduit. Remove existing conductors and install conductors as indicated.
- CF Conduit to remain for future use. Remove conductors. Install pull wire or rope.
- DH Detector handhole.
- FA Foundation to be abandoned.
- IS Install sign on signal mast arm.
- NS No slip base on standard.
- PEC Photoelectric control.
- PEU Photoelectric unit.
- RC Equipment or material to be removed and become the property of the Contractor.
- RE Remove electrolier, fuses and ballast. Tape ends of conductors.
- RL Relocate equipment.
- RR Remove and reuse equipment.
- RS Remove and salvage equipment.
- SC Splice new to existing conductors.
- SD Service disconnect.
- SF Standard to remain for future use. Remove luminaire, pole conductors, fuses and ballast.
- TSP Telephone service point.

ABBREVIATIONS AND EQUIPMENT DESIGNATIONS

PROPOSED	EXISTING	
BBS	bbs	Battery backup system
BC	bc	Bolt circle
C	C	Conduit
CCTV	cctv	Closed circuit television
CKT	ckt	Circuit
CMS	cms	Changeable message sign
DLC	dlc	Loop detector lead-in cable
EMS	ems	Extinguishable message sign
EVC	evc	Emergency vehicle cable
EVD	evd	Emergency vehicle detector
FB	fb	Flashing beacon
FBCA	fbca	Flashing beacon control assembly
FBS	fbs	Flashing beacon with slip base
FO	fo	Fiber optic
G	G	Ground (Equipment Grounding Conductor)
GFCI	GFCI	Ground fault circuit interrupt
HAR	har	Highway advisory radio
HEX	hex	Hexagonal
HPS	hps	High pressure sodium
IISNS	iisns	Internally illuminated street name sign
ISL	isl	Induction sign lighting
LED	led	Light emitting diode
LMA	lma	Luminaire mast arm
LPS	lps	Low pressure sodium
LTG	ltg	Lighting
LUM	lum	Luminaire
MAT	mat	Mast arm mounting vehicle signal faces, top attachment
MAS	mas	Mast arm mounting vehicle signal faces, side attachment
MAS-4A	mas-4A	Mast arm mounting vehicle signal faces,
MAS-4B	mas-4B	side attachment - 4 signal section
MAS-4C	mas-4C	
MAS-5A	mas-5A	Mast arm mounting vehicle signal faces,
MAS-5B	mas-5B	side attachment - 5 signal section
MC	mc	Mercury contactor
M/M	m/m	Multiple to multiple transformer
MT	mt	Conduit with pull wire or rope only
MTG	mtg	Mounting
	mv	Mercury vapor lighting fixture
N	N	Neutral (Grounded Conductor)
NC	NC	Normally closed
NO	NO	Normally open
PB	pb	Pull box
PEC	pec	Photoelectric control (Type I, II, III, IV or V as shown)
PED	ped	Pedestrian
PEU	peu	Photoelectric unit
PPB	ppb	Pedestrian push button
RL		Relocated equipment
RM	rm	Ramp metering
SB	sb	Slip base
SIC	sic	Signal interconnect cable
SIG	sig	Signal
SMA	sma	Signal mast arm
SNS	sns	Street name sign
SP	sp	Service point
TDC	tdc	Telephone demarcation cabinet
TMS	tms	Traffic monitoring station
TOS	tos	Traffic Operations System
VEH	veh	Vehicle
XFMR	xfmr	Transformer
COMM	comm	Communication
RWIS	rwis	Roadway weather information system

DIST	COUNTY	ROUTE	POST MILES TOTAL PROJECT	SHEET NO.	TOTAL SHEETS
03	Yol	5	0.3/R14.0	32	37

Jeffrey G. McRae
REGISTERED ELECTRICAL ENGINEER

REGISTERED PROFESSIONAL ENGINEER
Jeffery G. McRae
No. E14512
Exp. 6-30-08
ELECTRICAL
STATE OF CALIFORNIA

October 5, 2007
PLANS APPROVAL DATE

The State of California or its officers or agents shall not be responsible for the accuracy or completeness of electronic copies of this plan sheet.

To accompany plans dated 8-15-11

SOFFIT AND WALL MOUNTED LUMINAIRES

- Pendant, 70 W HPS unless otherwise specified.
- Flush, 70 W HPS unless otherwise specified.
- Wall surface, 70 W HPS unless otherwise specified.
- Existing soffit or wall luminaire to remain unmodified.
- (M) Existing soffit or wall luminaire to be modified as specified.

NOTE:
Arrow indicates "street side" of luminaire.

STATE OF CALIFORNIA
DEPARTMENT OF TRANSPORTATION

ELECTRICAL SYSTEMS (SYMBOLS AND ABBREVIATIONS)

NO SCALE

RSP ES-1A DATED OCTOBER 5, 2007 SUPERSEDES STANDARD PLAN ES-1A
DATED MAY 1, 2006 - PAGE 400 OF THE STANDARD PLANS BOOK DATED MAY 2006.

REVISED STANDARD PLAN RSP ES-1A

2006 REVISED STANDARD PLAN RSP ES-1A

7-10-07

CONDUIT

PROPOSED	EXISTING	
— — —	— — —	Lighting Conduit, unless otherwise indicated or noted
— - — - —	— - — - —	Traffic signal conduit
—C— —	—c— —	Communication conduit
—T— —	—t— —	Telephone conduit
—F— —	—f— —	Fire alarm conduit
—FO— —	—fo— —	Fiber optic conduit
— — —]	— — —]	Conduit termination (RSP ES-9A C)
R	r	Conduit riser in/on structure or service pole

SERVICE EQUIPMENT

PROPOSED	EXISTING	
—OH—	—oh—	Overhead lines
U	U	Wood pole "U" indicates utility owned
		Pole guy with anchor
		Utility transformer - ground mounted
III		Service equipment enclosure type
		Service equipment enclosure door indicates front of enclosure
T	t	Telephone demarcation cabinet

POLE-MOUNTED SERVICE DESIGNATION

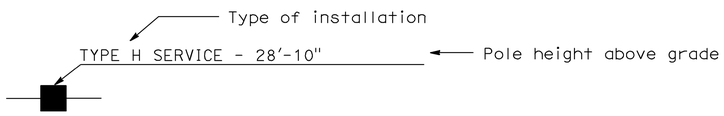

ILLUMINATED OVERHEAD SIGN

PROPOSED	EXISTING	
		Overhead sign - Single post
		Overhead sign - Two post
		Overhead sign - Mounted on structure
		Overhead sign with electrolier

SIGNAL EQUIPMENT

PROPOSED	EXISTING	
		Pedestrian signal face
		Pedestrian push button post
		Pedestrian barricade
		Vehicle signal face (with backplate, 3-Section: red, yellow and green)
		Vehicle signal face with angle visors
PV	PV	Modifications of basic symbols: "L" Indicates all non-arrow sections louvered "LG" Indicates louvered green section only "PV" Indicates 12" programmed visibility sections "8" indicates all 8" sections (only when specified)
		Type 15TS and Vehicle signal face
		Vehicle signal face with red, yellow and green left arrow sections
		Vehicle signal face with red and yellow sections and up green arrow
		Vehicle signal face (5 Section) with red, yellow and green sections and yellow and green right arrows
		Type 1 Standard and attached vehicle signal faces
		Standard with signal mast arm only and attached vehicle signal faces and internally illuminated street name sign
		Type 33 Standard, Left-turn vehicle signal face and sign
		Standard with luminaire and signal mast arms and attached vehicle signal faces
		Cantilever flashing beacon Type 9 Frame, with a sign unless otherwise specified or indicated
		Type 15-FBS Standard with two vehicle signal face sections with lens, backplate and visor with a sign
R	Y	Flashing beacon. One vehicle signal face section with lens, backplate and visor. "R" indicates red indication, "Y" indicates yellow indication
		Controller assembly. Door indicates front of cabinet

DIST	COUNTY	ROUTE	POST MILES TOTAL PROJECT	SHEET NO.	TOTAL SHEETS
03	Yol	5	0.3/R14.0	33	37

Jeffery G. McRae
REGISTERED ELECTRICAL ENGINEER

REGISTERED PROFESSIONAL ENGINEER
Jeffery G. McRae
No. E14512
Exp. 6-30-08
ELECTRICAL
STATE OF CALIFORNIA

October 5, 2007
PLANS APPROVAL DATE

The State of California or its officers or agents shall not be responsible for the accuracy or completeness of electronic copies of this plan sheet.

To accompany plans dated 8-15-11

SIGNAL EQUIPMENT Cont

PROPOSED	EXISTING	
●	○	Guard post
		Type 1 Standard with "Meter On" sign
		Emergency Vehicle detector

NOTES:

1. All signal sections shall be 12" unless shown otherwise.
2. Signal heads shall be provided with backplates unless shown otherwise.
3. Signal indication shall be LED.

STATE OF CALIFORNIA
DEPARTMENT OF TRANSPORTATION

ELECTRICAL SYSTEMS (SYMBOLS AND ABBREVIATIONS)

NO SCALE

RSP ES-1B DATED OCTOBER 5, 2007 SUPERCEDES STANDARD PLAN ES-1B
DATED MAY 1, 2006 - PAGE 401 OF THE STANDARD PLANS BOOK DATED MAY 2006.

REVISED STANDARD PLAN RSP ES-1B

2006 REVISED STANDARD PLAN RSP ES-1B

7-10-07

DIST	COUNTY	ROUTE	POST MILES TOTAL PROJECT	SHEET NO.	TOTAL SHEETS
03	Yol	5	0.3/R14.0	34	37

Jeffery G. McRae
REGISTERED ELECTRICAL ENGINEER

October 5, 2007
PLANS APPROVAL DATE

REGISTERED PROFESSIONAL ENGINEER — Jeffery G. McRae — No. E14512 — Exp. 6-30-08 — ELECTRICAL — STATE OF CALIFORNIA

The State of California or its officers or agents shall not be responsible for the accuracy or completeness of electronic copies of this plan sheet.

To accompany plans dated 8-15-11

EQUIPMENT IDENTIFICATION

ILLUMINATED SIGN IDENTIFICATION NUMBER:

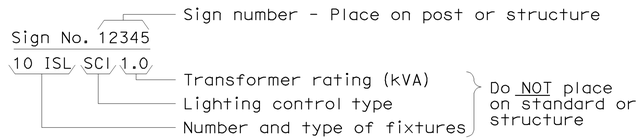

ELECTROLIER OR EQUIPMENT IDENTIFICATION NUMBER:

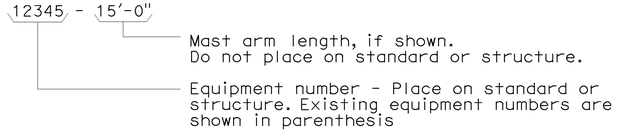

CONDUIT AND CONDUCTOR IDENTIFICATION:

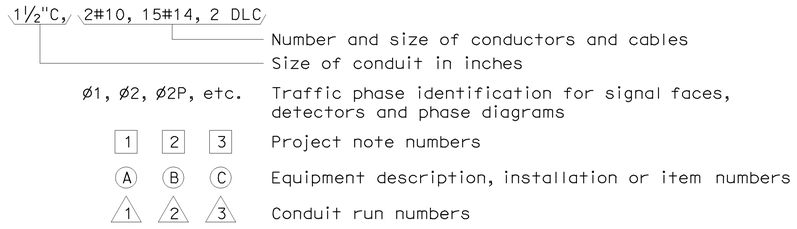

SIGNAL AND LIGHTING STANDARD (TYPICAL DESIGNATION):

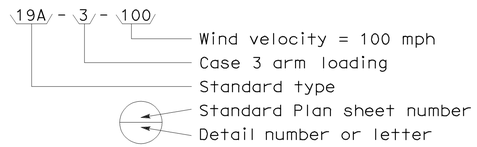

WIRING DIAGRAM LEGEND

P	Pole
CB	Circuit breaker
A	Ampere
V	Volt
M	Metered
UM	Unmetered
NB	Neutral bus
GB	Ground bus
G	Equipment grounding conductor
N	Grounded conductor (Neutral)

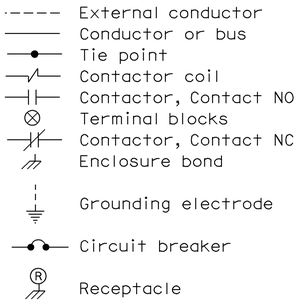

PULL BOXES

PROPOSED	EXISTING	
		Pull box-No. 5 unless otherwise indicated or noted.
3	9A(21)	Pull box-Additional designations or descriptions

3 = No. 3½ pull box
5 = No. 5 pull box
6 = No. 6 pull box
7 = No. 7 (Ceiling pull box)
8 = No. 8 (Pendant soffit pull box)
9 = No. 9 pull box
9A = No. 9A pull box

(C) = Communications pull box
(E) = Pull box with extension
(S) = Sprinkler control pull box
(21) = Anchor bolts and conduit for future installation of Type 21 Standard
(T) = Traffic pull box

MISCELLANEOUS EQUIPMENT

PROPOSED	EXISTING	
CMS	cms	Changeable message sign
		Closed circuit television camera
		Highway advisory radio pole and antenna
EMS	ems	Extinguishable message sign
M V	m v	Detection device M = Microwave sensor V = Video image sensor

VEHICLE DETECTORS

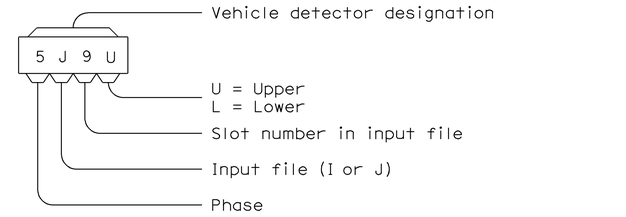

PROPOSED	EXISTING	
		Type A detector loop. Outline of sawcut shown.
		Type B detector loop. Outline of sawcut shown.
		Type C detector loop. Outline of sawcut shown.
		Type D detector loop. Outline of sawcut shown.
		Type E detector loop. Outline of sawcut shown.
		Type Q detector loop. Outline of sawcut shown.
		Magnetic detector
DH	dh	Detector handhole
		Microwave or video detection zone

STATE OF CALIFORNIA
DEPARTMENT OF TRANSPORTATION

ELECTRICAL SYSTEMS (SYMBOLS AND ABBREVIATIONS)

NO SCALE

RSP ES-1C DATED OCTOBER 5, 2007 SUPERCEDES STANDARD PLAN ES-1C
DATED MAY 1, 2006 - PAGE 402 OF THE STANDARD PLANS BOOK DATED MAY 2006.

REVISED STANDARD PLAN RSP ES-1C

2006 REVISED STANDARD PLAN RSP ES-1C

7-10-07

DIST	COUNTY	ROUTE	POST MILES TOTAL PROJECT	SHEET NO.	TOTAL SHEETS
03	Yol	5	0.3/R14.0	35	37

Jeffery G. McRae
REGISTERED ELECTRICAL ENGINEER

October 5, 2007
PLANS APPROVAL DATE

REGISTERED PROFESSIONAL ENGINEER
Jeffery G. McRae
No. E14512
Exp. 6-30-08
ELECTRICAL
STATE OF CALIFORNIA

The State of California or its officers or agents shall not be responsible for the accuracy or completeness of electronic copies of this plan sheet.

To accompany plans dated 8-15-11

LOOP INSTALLATION PROCEDURE

1. Loops shall be centered in lanes.
2. Saw slots in pavement for loop conductors as shown in details.
3. Distance between side of loop and a lead-in saw cut from adjacent detectors shall be 2'-0" minimum. Distance between lead-in saw cuts shall be 6" minimum.
4. Bottom of saw slot shall be smooth with no sharp edges.
5. Slots shall be washed until clean, blown out and thoroughly dried before installing loop conductors.
6. Adjacent loops on the same sensor unit channel shall be wound in opposite directions.
7. Identify and tag loop circuit pairs in the pull box with loop number, start (S) and finish (F) of conductor. Identify and tag lead-in-cable with sensor number and phase.
8. Install loop conductor in slot using a 3/16" to 1/4" thick wood paddle. Hold loop conductors with wood paddles (at the bottom of the sawed slot) during sealant placement.
9. No more than 2 twisted pairs shall be installed in one sawed slot.
10. Allow additional 5'-0" of slack length of conductor for the lead-in run to pull box.
11. The additional length of each conductor for each loop shall be twisted together into a pair (6 turns per 3'-4" minimum) before being placed in the slot and conduit leading to pull box.
12. Test each loop circuit for continuity, circuit resistance and insulation resistance at the pull box before filling slots.
13. Fill slots as shown in details.
14. Splice loop conductors to lead-in-cable. Splices shall be soldered.
15. End of lead-in-cable and Type 2 loop conductor shall be waterproofed prior to installing in conduit to prevent moisture from entering the cable.
16. Lead-in-cable shall not be spliced between the pull box and the controller cabinet terminals.
17. Test each loop circuit for continuity, circuit resistance and insulation resistance at the controller cabinet location.
18. Where loop conductors are not to be spliced to a lead-in-cable, the ends of the conductors shall be taped and waterproofed with electrical insulating coating.

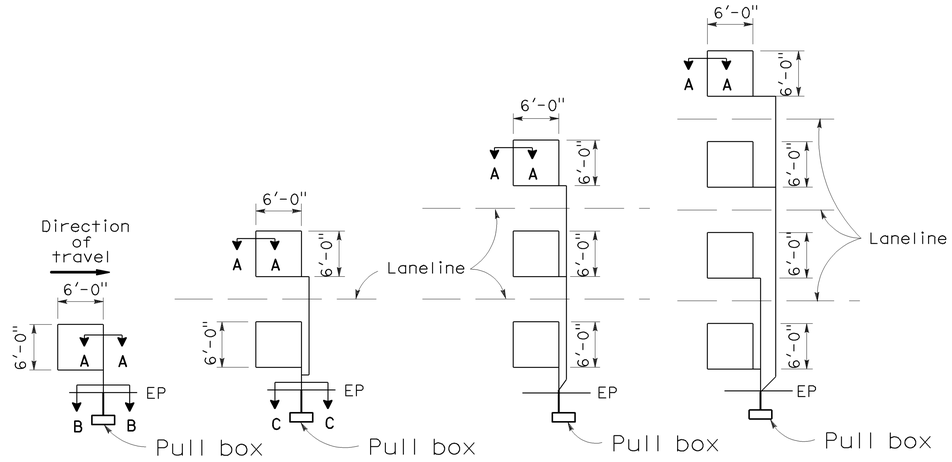

TYPE 1A INSTALLATION | TYPE 2A INSTALLATION | TYPE 3A INSTALLATION | TYPE 4A INSTALLATION

SAWCUT DETAILS

(Type A loop detector configurations illustrated)

1. 1A thru 4A = 1 Type A loop configuration in each lane.
2. 1B thru 4B = 1 Type B loop configuration in each lane.
3. 1C = 1 Type C loop configuration entering lanes as required.
4. 1D thru 4D = 1 Type D loop configuration in each lane.
5. 1E thru 4E = 1 Type E loop configuration in each lane.
6. 1Q thru 4Q = 1 Type Q loop configuration in each lane. (Use Type A, B, C, D, E or Q loop detector configurations only when specified or shown on plans)

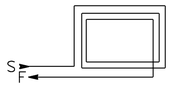

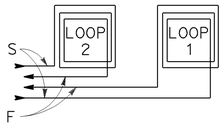

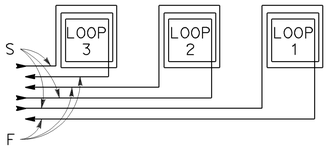

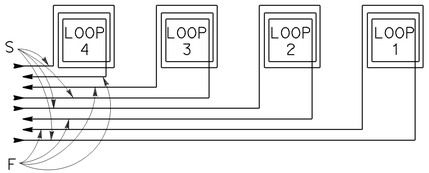

WINDING DETAILS

See Notes 6 and 7

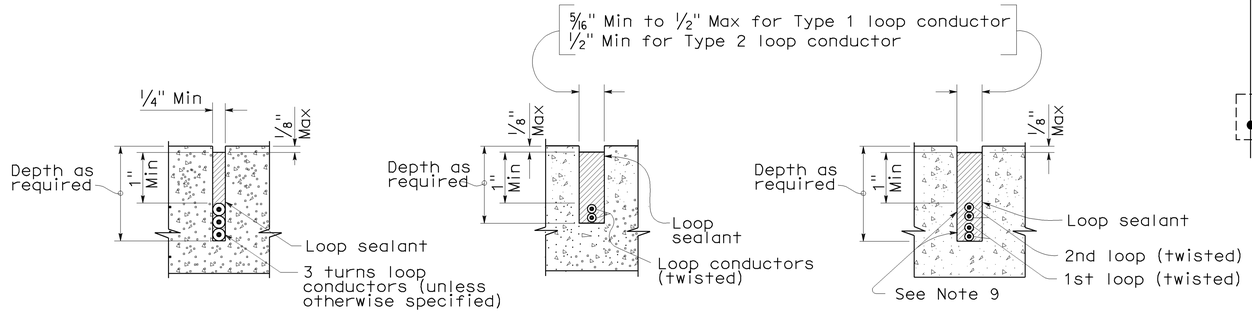

SECTION A-A | SECTION B-B | SECTION C-C

SLOT DETAILS - TYPE 1 AND TYPE 2 LOOP CONDUCTOR

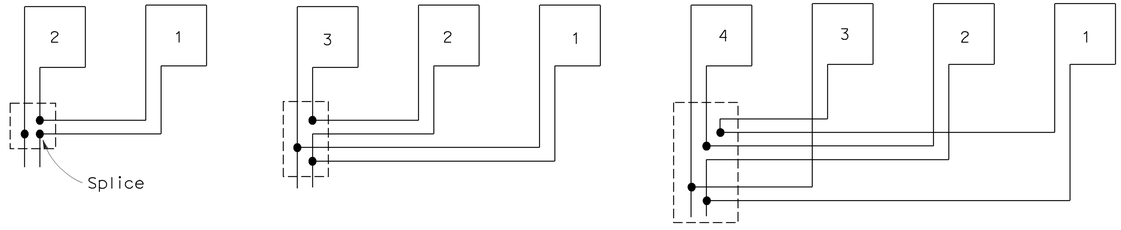

TYPICAL LOOP CONNECTIONS

(Dashed lines represent the pull box)

STATE OF CALIFORNIA
DEPARTMENT OF TRANSPORTATION

ELECTRICAL SYSTEMS (DETECTORS)

NO SCALE

RSP ES-5A DATED OCTOBER 5, 2007 SUPERCEDES STANDARD PLAN ES-5A
DATED MAY 1, 2006 - PAGE 423 OF THE STANDARD PLANS BOOK DATED MAY 2006.

REVISED STANDARD PLAN RSP ES-5A

2006 REVISED STANDARD PLAN RSP ES-5A

8-17-07

DIST	COUNTY	ROUTE	POST MILES TOTAL PROJECT	SHEET NO.	TOTAL SHEETS
03	YOL	5	0.3/R14.0	36	37

T J Powell 5-11-11
REGISTERED CIVIL ENGINEER DATE

8-15-11
PLANS APPROVAL DATE

THE STATE OF CALIFORNIA OR ITS OFFICERS OR AGENTS SHALL NOT BE RESPONSIBLE FOR THE ACCURACY OR COMPLETENESS OF ELECTRONIC COPIES OF THIS PLAN SHEET.

REGISTERED PROFESSIONAL ENGINEER
TIMOTHY J. POWELL
No. C 61037
Exp. 12-31-12
CIVIL
STATE OF CALIFORNIA

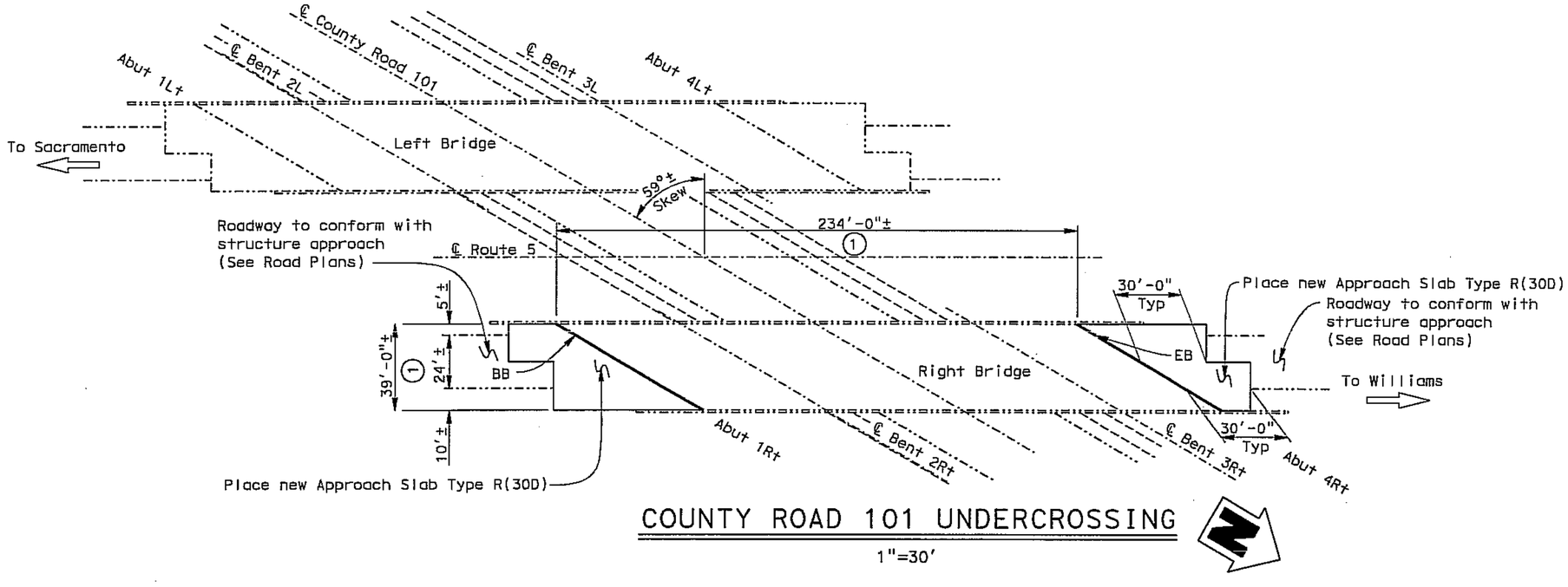

COUNTY ROAD 101 UNDERCROSSING

1"=30'

NOTES

Indicates existing structure.

Indicates remove existing joint seal & place new joint seal.

(1) Indicates remove AC from bridge deck and steel shot blast clean.

JOINT SEAL TABLE

BRIDGE NAME	BRIDGE NUMBER	LOCATION	MINIMUM "MR" (INCH)	APPROXIMATE LENGTH (FEET)
COUNTY ROAD 101 UC	22-0169R	Abut 1	1	77
		Abut 4	1	77

COUNTY ROAD 101 UC BR. NO. 22-0169R

QUANTITIES

REMOVE ASPHALT CONCRETE SURFACING	338	SQFT
AGGREGATE BASE (APPROACH SLAB)	12	CY
STRUCTURAL CONCRETE, APPROACH SLAB (TYPE R)	116	CY
PAVING NOTCH EXTENSION	76	CF
JOINT SEAL (MR 1")	153	LF

STANDARD PLANS DATED MAY 2006

SHEET NO.	TITLE
A10A	ACRONYMS AND ABBREVIATIONS (SHEET 1 OF 2)
A10B	ACRONYMS AND ABBREVIATIONS (SHEET 2 OF 2)
RSP B6-21	JOINT SEALS (MAXIMUM MOVEMENT RATING = 2")

INDEX TO PLANS

SHEET NO.	TITLE
1	GENERAL PLAN
2	STRUCTURE APPROACH TYPE R(30D)

(1) Standard Plan Sheet No.
Detail No.

NOTE:
THE CONTRACTOR SHALL VERIFY ALL CONTROLLING FIELD DIMENSIONS BEFORE ORDERING OR FABRICATING ANY MATERIAL.

Michael J. Lee 5-11-11
DESIGN ENGINEER

DESIGN	BY Timothy Powell	CHECKED Franz Espinoza	LAYOUT	BY Trung Lam	CHECKED Timothy Powell
DETAILS	BY Trung Lam	CHECKED Franz Espinoza	SPECIFICATIONS	BY Jennifer Ramirez	PLANS AND SPECIFICATIONS COMPARED Timothy Powell
QUANTITIES	BY Timothy Powell	CHECKED Franz Espinoza			

STATE OF CALIFORNIA
DEPARTMENT OF TRANSPORTATION

DIVISION OF MAINTENANCE
STRUCTURE MAINTENANCE DESIGN

BRIDGE NO. 22-0169R
POST MILE 6.7

COUNTRY ROAD 101 UC
GENERAL PLAN

STRUCTURES MAINTENANCE GENERAL PLAN & DETAIL SHEET (ENGLISH) (REV. 10/17/07)

ORIGINAL SCALE IN INCHES FOR REDUCED PLANS 0 1 2 3

CU 03
EA 2F0101

DISREGARD PRINTS BEARING EARLIER REVISION DATES

REVISION DATES: 2-18-11 | 3-29-11 | 4-06-11 | 5-02-11 | 5-11-11

SHEET 1 OF 2

DATE PLOTTED => 11-MAY-2011 TIME PLOTTED => 10:29
USERNAME => TLOM

DIST	COUNTY	ROUTE	KILOMETER POST TOTAL PROJECT	SHEET No	TOTAL SHEETS
03	YOL	5	0.3/R14.0	37	37

T J Powell 5-11-11
REGISTERED CIVIL ENGINEER

8-15-11
PLANS APPROVAL DATE

REGISTERED PROFESSIONAL ENGINEER — TIMOTHY J. POWELL — No. C 61037 — Exp. 12-31-12 — CIVIL — STATE OF CALIFORNIA

The State of California or its officers or agents shall not be responsible for the accuracy or completeness of electronic copies of this plan sheet.

To get to the Caltrans web site, go to: http://www.dot.ca.gov

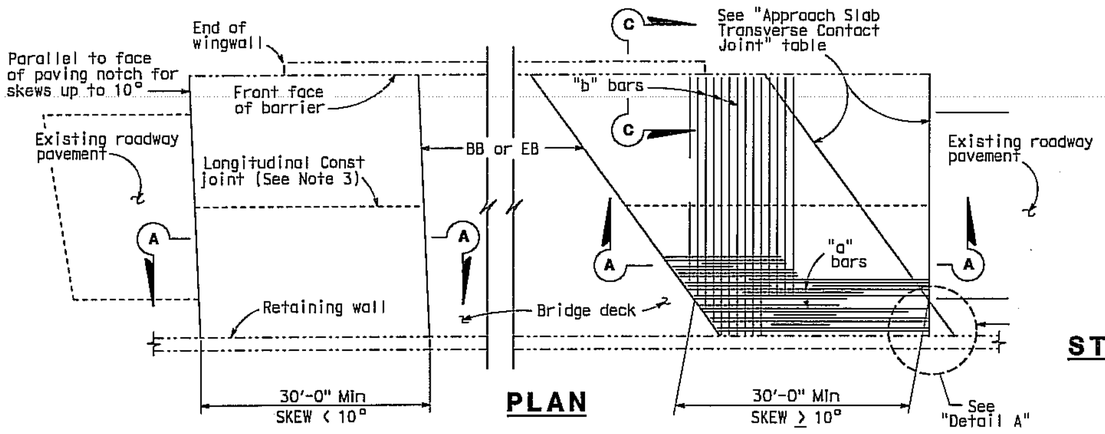

PLAN

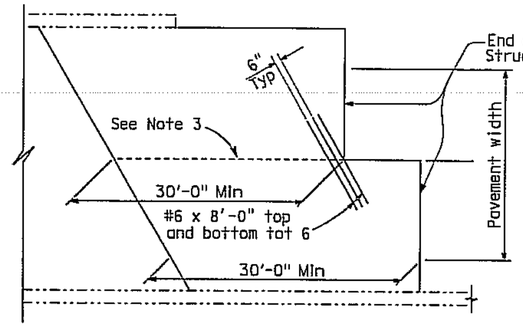

STRUCTURE APPROACH - END STAGGER DETAIL

APPROACH SLAB TRANSVERSE CONTACT JOINT		
APPROACH SKEW	WITH AC ROADWAY PAVEMENT	WITH PCC ROADWAY PAVEMENT
< 10°	Parallel to face of paving notch	Parallel to face of paving notch
10° - 45°	Parallel to face of P N use (Detail A)	Stagger lines 24' to 36' apart
> 45°	Parallel to face of P N use (Detail A)	Stagger at each lane line

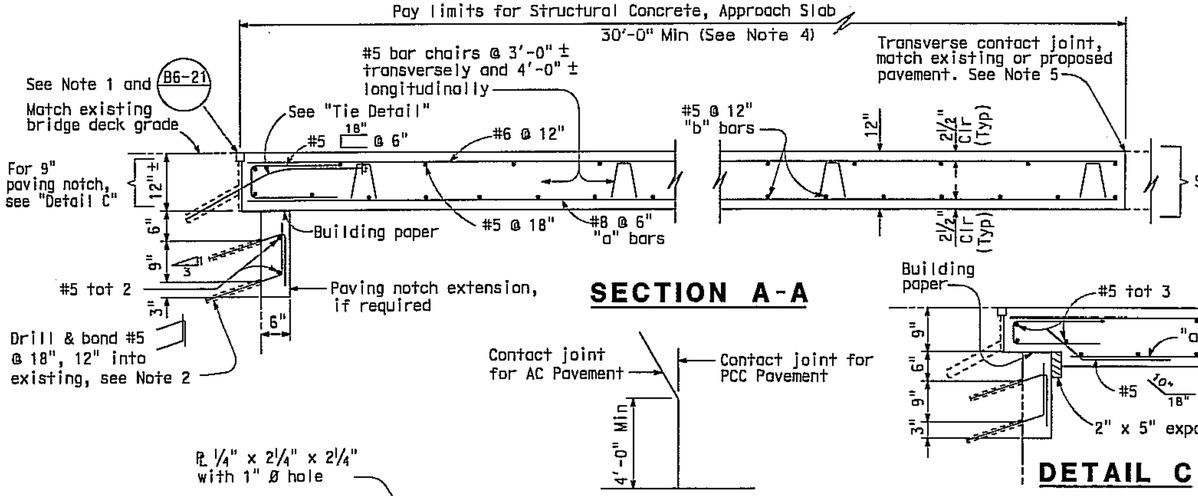

SECTION A-A

DETAIL A

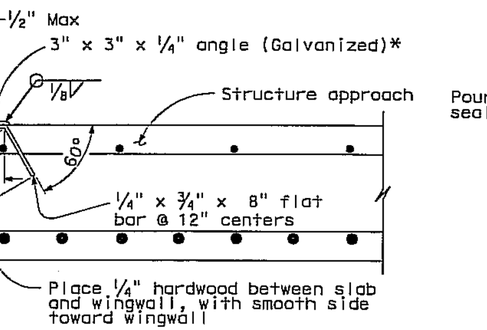

DETAIL C

NOTE: For details not shown, see "Section A-A".

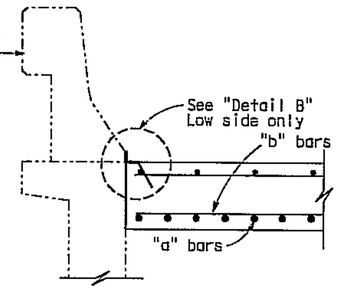

SECTION C-C

BAR CHAIR DETAIL

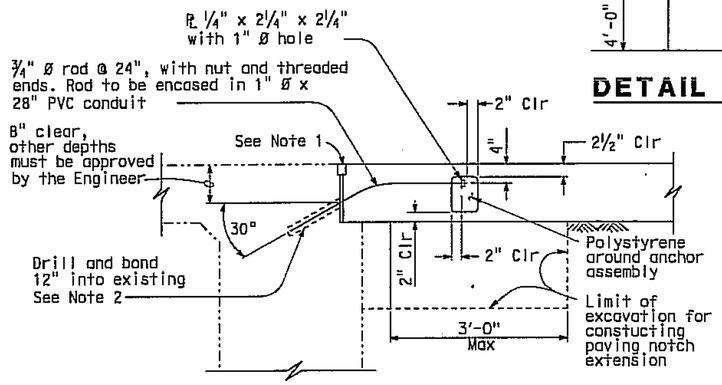

TIE DETAIL

***(TO BE USED WITH TYPE 25 OR TYPE 27 CONCRETE BARRIER)**

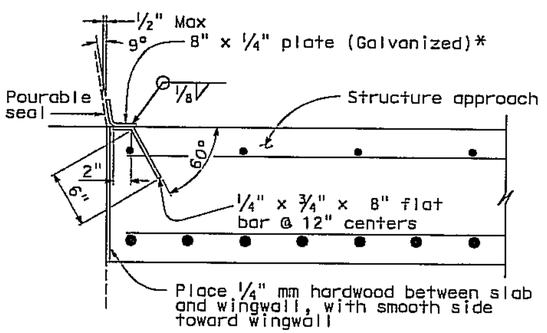

***(TO BE USED WITH TYPE 732 OR TYPE 736 CONCRETE BARRIER)**

DETAIL B

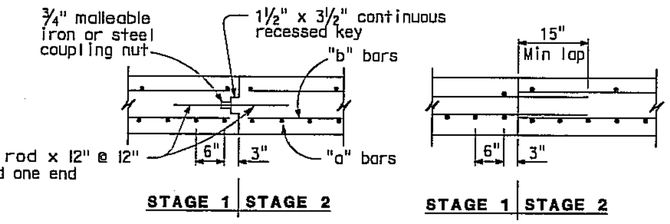

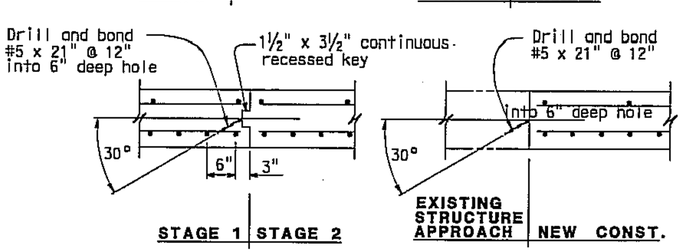

LONGITUDINAL CONSTRUCTION JOINT ALTERNATIVES

NOTES:

1. For details not shown or noted, see Structure Plans. Adjust bar reinforcement to clear a sawcut for sealed joint, when required.
2. Space to avoid existing prestress anchorages and main reinforcement.
3. Longitudinal construction joints, when permitted by the Engineer, shall be located on lane lines.
4. Transverse contact joint shall be a minimum of 5'-0" from an existing or constructed weakened plane joint.
5. For transverse contact joint with new PCC paving, refer to Standard Plan P10.

NOTE:
THE CONTRACTOR SHALL VERIFY ALL CONTROLLING FIELD DIMENSIONS BEFORE ORDERING OR FABRICATING ANY MATERIAL.

NO SCALE

	BY	CHECKED
DESIGN	Timothy Powell	Franz Espinoza
DETAILS	Trung Lam	Franz Espinoza
QUANTITIES	Timothy Powell	Franz Espinoza

STATE OF CALIFORNIA
DEPARTMENT OF TRANSPORTATION

DIVISION OF MAINTENANCE
STRUCTURE MAINTENANCE DESIGN

CU 03
EA 2F0101

BRIDGE NO. 22-0169R
KILOMETER POST 6.7

COUNTY ROAD 101 UC

STRUCTURE APPROACH TYPE R(30D)

STRUCTURES MAINTENANCE GNERAL PLAN & DETAIL SHEET (METRIC) (REV. (10/6/99)

DISREGARD PRINTS BEARING EARLIER REVISION DATES →

REVISION DATES (PRELIMINARY STAGE ONLY): 02-15-11 3-29-11 4-25-11 5-02-11 5-11-11

SHEET 2 OF 2

DATE PLOTTED => 11-MAY-2011 TIME PLOTTED => 09:57
SEERNAME => TLam