Dist	COUNTY	ROUTE	POST MILES TOTAL PROJECT	SHEET No.	TOTAL SHEETS
03	Sac	5501		1	172

STATE OF CALIFORNIA

DEPARTMENT OF TRANSPORTATION

PROJECT PLANS FOR BUILDING CONSTRUCTION

IN SACRAMENTO COUNTY
IN SACRAMENTO
AT THE TRANSPORTATION LABORATORY
AT 5900 FOLSOM BOULEVARD

TO BE SUPPLEMENTED BY STANDARD PLANS DATED MAY 2006

INDEX OF PLANS

SHEET No.	DESCRIPTION
1	TITLE AND LOCATION MAP
2	LAYOUT
3-10	CONSTRUCTION DETAILS
11-20	DRAINAGE PLANS, PROFILES, DETAILS AND QUANTITIES
21-22	UTILITY PLANS
23-24	PAVEMENT DELINEATION PLAN, DETAILS AND QUANTITIES
25	SUMMARY OF QUANTITIES
26-~~34~~ 34A	REVISED AND NEW STANDARD PLANS

BUILDING PLANS

35-37	GENERAL PLAN
38-69	ARCHITECTURAL PLANS
70-86	STRUCTURAL PLANS
87-115	MECHANICAL PLANS
116-~~172~~ 172D	ELECTRICAL PLANS

2

5

THE STANDARD PLANS LIST APPLICABLE TO THIS CONTRACT IS INCLUDED IN THE NOTICE TO BIDDERS AND SPECIAL PROVISIONS BOOK.

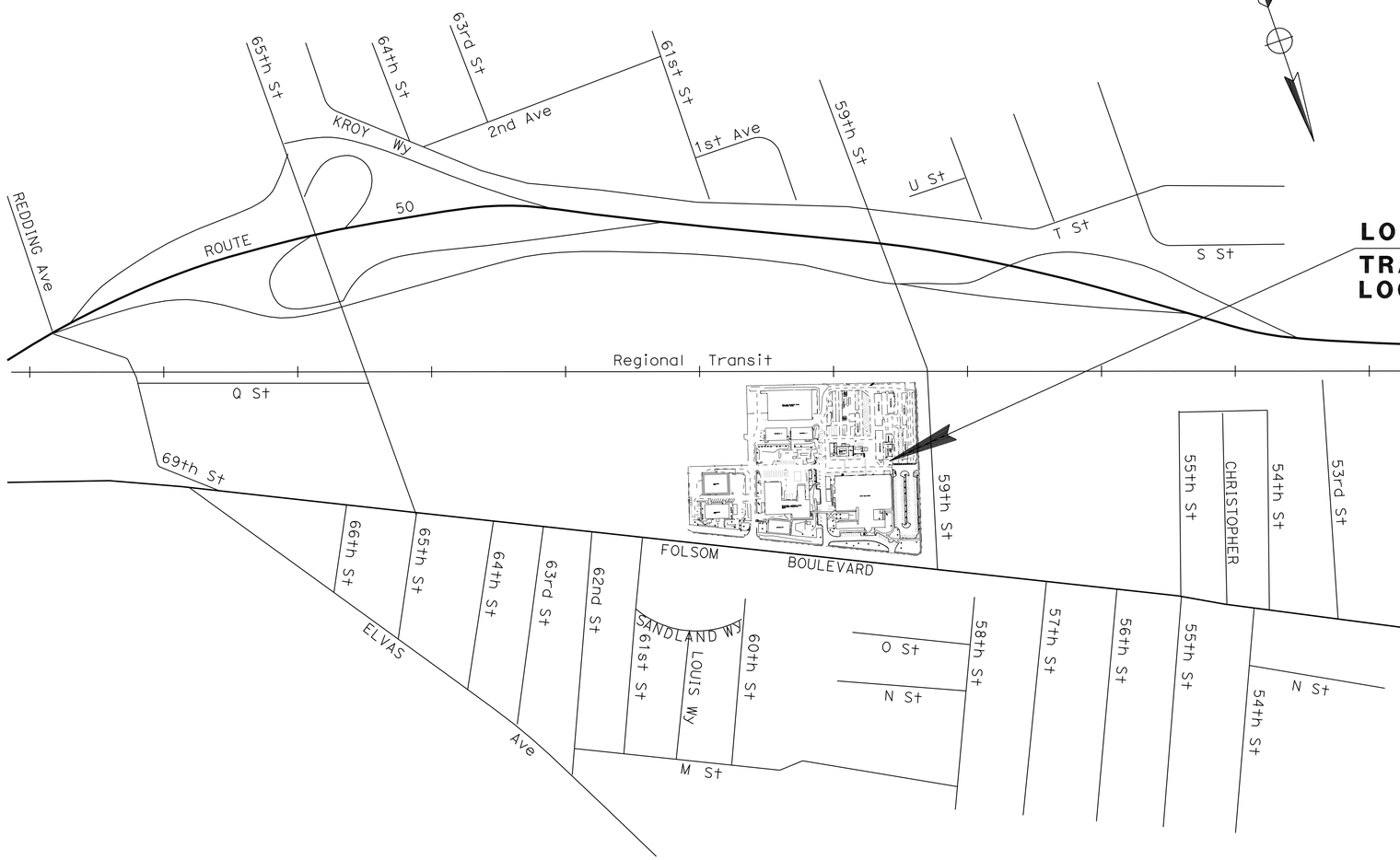

LOCATION OF CONSTRUCTION
TRANSPORTATION LABORATORY
LOCATION CODE No. 5501

LOCATION MAP

2 **REVISED PER ADDENDUM No. 2 DATED FEBRUARY 26, 2010**

NO SCALE

5 **REVISED PER ADDENDUM No. 5 DATED APRIL 8, 2010**

THE CONTRACTOR SHALL POSSESS THE CLASS (OR CLASSES) OF LICENSE AS SPECIFIED IN THE "NOTICE TO BIDDERS."

Melanie Collins 7-01-09
PROJECT ENGINEER DATE
REGISTERED CIVIL ENGINEER

November 23, 2009
PLANS APPROVAL DATE

REGISTERED PROFESSIONAL ENGINEER
M. COLLINS
No. 61633
Exp. 6-30-11
CIVIL
STATE OF CALIFORNIA

THE STATE OF CALIFORNIA OR ITS OFFICERS OR AGENTS SHALL NOT BE RESPONSIBLE FOR THE ACCURACY OR COMPLETENESS OF SCANNED COPIES OF THIS PLAN SHEET.

PROJECT MANAGER C. PERI

DESIGN ENGINEER O. VASQUEZ

LAST REVISION 07-01-09

DATE PLOTTED => 06-APR-2010
TIME PLOTTED => 11:29

CONTRACT No. **03-2C8444**

Dist	COUNTY	ROUTE	POST MILES TOTAL PROJECT	SHEET No.	TOTAL SHEETS
03	Sac	5501		12	172

A. A. Lotfalian 7-01-09
REGISTERED CIVIL ENGINEER DATE

11-23-09
PLANS APPROVAL DATE

REGISTERED PROFESSIONAL ENGINEER
A. LOTFALIAN
No. 42493
Exp. 3-31-10
CIVIL
STATE OF CALIFORNIA

THE STATE OF CALIFORNIA OR ITS OFFICERS OR AGENTS SHALL NOT BE RESPONSIBLE FOR THE ACCURACY OR COMPLETENESS OF SCANNED COPIES OF THIS PLAN SHEET.

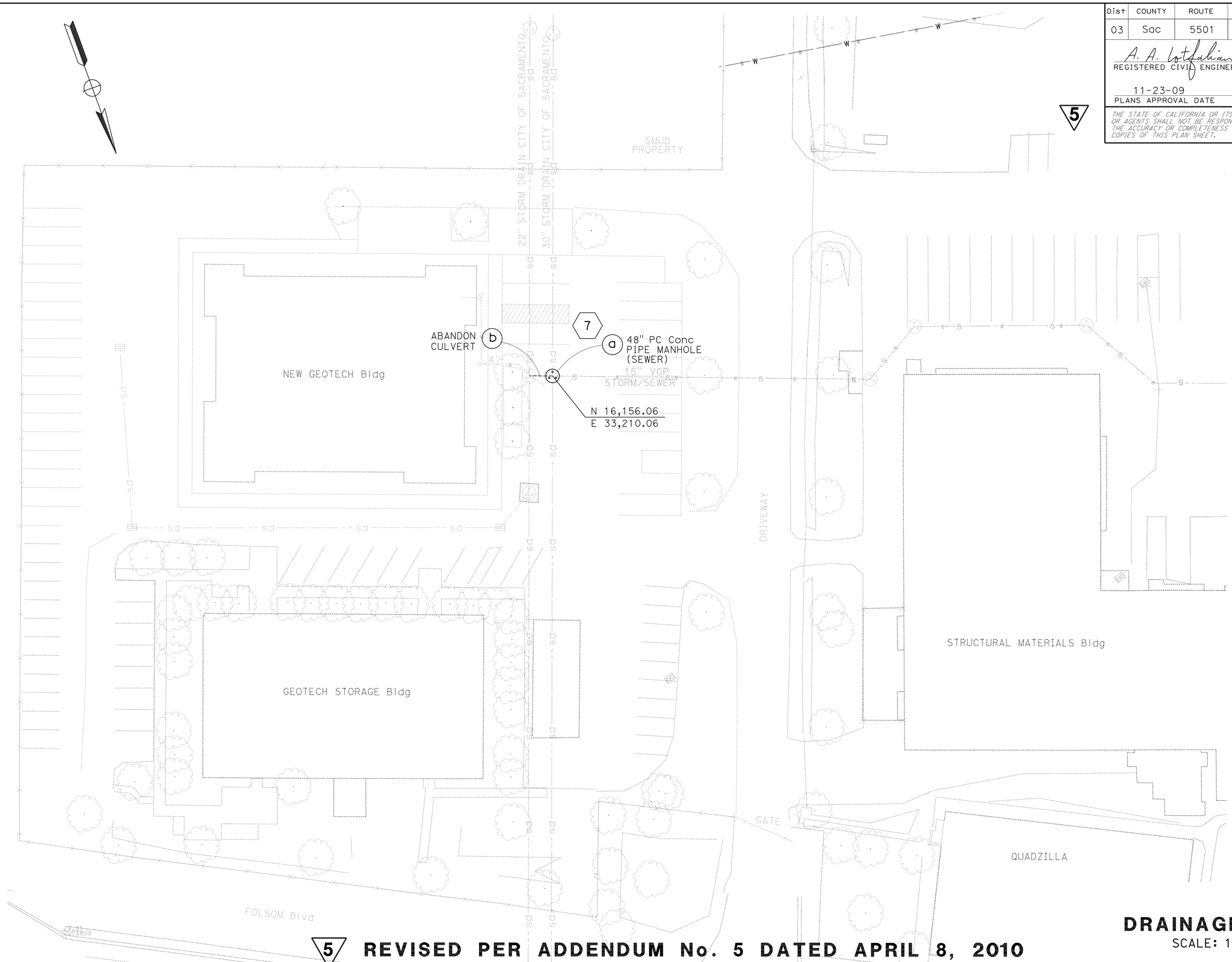

5 **REVISED PER ADDENDUM No. 5 DATED APRIL 8, 2010**

THIS PLAN ACCURATE FOR DRAINAGE WORK ONLY

DRAINAGE PLAN

SCALE: 1"=20'

D-2

STATE OF CALIFORNIA - DEPARTMENT OF TRANSPORTATION
Caltrans
NORTH REGION
OFFICE OF DESIGN, SOUTH
DESIGN BRANCH S13

FUNCTIONAL SUPERVISOR: OSCAR VASQUEZ
CALCULATED-DESIGNED BY: A. LOTFALIAN
CHECKED BY: O. VASQUEZ
REVISED BY
DATE REVISED

LAST REVISION 05-01-09 | DATE PLOTTED => 06-APR-2010 | TIME PLOTTED => 13:53

I N D E X O F S H E E T S

DIST.	COUNTY	ROUTE	POST MILES TOTAL PROJECT	SHEET NO.	TOTAL SHEETS
03	Sac	5501		35	172

LICENSED ARCHITECT DATE

LICENSED ARCHITECT C.A. SANCHEZ No. C-15201 Exp. 12-31-09 STATE OF CALIFORNIA

11-23-09
PLANS APPROVAL DATE

The State of California or its officers or agents shall not be responsible for the accuracy or completeness of electronic copies of this plan sheet.

ACCESSIBILITY DESIGN APPROVAL STAMP
DOT / DES / OTA
03-2C8441
DISTRICT - EA
Reviewed by:
Date: 06-29-09

CALIFORNIA STATE FIRE MARSHAL
APPROVED
Approval of this plan does not authorize or approve any omission or deviation from applicable regulations. Final approval is subject to field inspection. One set of approved plans shall be available on the project site at all times.
Reviewed by: STEPHEN GUARINO
Approval date: 11-24-09

ARCHITECTURAL

COMMON SHEETS

GP-1 INDEX OF SHEETS
GP-2 SITE PLAN
GP-3 BUILDING DATA

A0-1 ARCHITECTURAL ABBREVIATIONS AND SYMBOLS
A0-3.1 ACCESSIBILITY STANDARD DETAILS
A0-3.2 ACCESSIBILITY STANDARD DETAILS
A0-3.3 ACCESSIBILITY STANDARD DETAILS
A0-3.4 ACCESSIBILITY STANDARD DETAILS
A0-3.5 ACCESSIBILITY STANDARD DETAILS

BUILDING 6: STORAGE BUILDING

A6-0 DEMOLITON PLAN
A6-1 OVERALL FLOOR PLAN
A6-2 PARTIAL FLOOR PLAN - 1
A6-2.1 WALL TYPE DETAILS
A6-3 PARTIAL FLOOR PLAN - 2
5 A6-3.1 CASEMENT 1
A6-3.2 CASEMENT 2
A6-4 DOOR, WINDOW SCHEDULES & DETAILS
A6-5 FINISH AND COLOR SCHEDULES
A6-6 ELEVATIONS
A6-7 SECTION
A6-7.1 SECTION
A6-8 REFLECTED CEILING PLAN
A6-9 ROOF PLAN
A6-10 INTERIOR ELEVATIONS
A6-11 DETAILS
A6-12 DETAILS

BUILDING 7: REPAIR SHOP

A7-1 FLOOR PLAN
A7-1.1 RESTROOM & INTERIOR ELEVATIONS
A7-2 DOOR,WINDOW SCHEDULES & DETAILS
A7-3 FINISH AND COLOR SCHEDULES
A7-4 ELEVATIONS
A7-5 SECTIONS
A7-5.1 SECTION
A7-6 REFLECTED CEILING PLAN
A7-7 ROOF PLAN
A7-8 INTERIOR ELEVATIONS
A7-9 DETAILS

STRUCTURAL

COMMON SHEETS

ST-1 LEGEND AND DESIGN NOTES
ST-2 CONCRETE STANDARD
ST-3 COLD-FORMED STEEL DETAILS 1
ST-4 COLD-FORMED STEEL DETAILS 2
ST-5 COLD-FORMED STEEL DETAILS 3
ST-6 FOUINDATION DETAIL 1
ST-7 FOUINDATION DETAIL 2

ST-L1 LOG OF TEST BORINGS 1
ST-L2 LOG OF TEST BORINGS 2
ST-L3 LOG OF TEST BORINGS 3

BUILDING 6: STORAGE BUILDING

ST6-1 FOUNDATION PLAN
ST6-2 CEILING AND WALL FRAMING
ST6-3 BUILDING SECTION

BUILDING 7: REPAIR SHOP

ST7-1 FOUNDATION PLAN
ST7-2 CEILING FRAMING PLAN
ST7-3 BUILDING SECTIONS
ST7-4 ISOLATION PAD AND EQUIPMENT PITS

MECHANICAL

COMMON SHEETS

M0-0 ABBREVIATION AND LEGENDS
M0-1 EXISTING SITE PLAN
M0-2 REMODELED SITE PLAN
M0-3 TITLE 24 COMPLIANCE CERTIFICATES
M0-4 TITLE 24 COMPLIANCE CERTIFICATES

BUILDING 6: STORAGE BUILDING

M6-1 HVAC PLAN
M6-2 HVAC PLAN
M6-3 HVAC PLAN
M6-4 HVAC PLAN
M6-5 HVAC PLAN
M6-6 FIRE WATER CONNECTION/DETAILS
M6-7 PLUMBING PLAN
M6-8 PLUMBING PLAN
M6-9 PLUMBING PLAN
M6-10 RESTROOM/CORROSION LAB PLUMBING
M6-11 PLUMBING PLAN
M6-12 RESTROOM/CORROSION LAB ISOMETRIC
M6-13 PLUMBING ISOMETRICS
M6-14 DUST COLLECTION DETAILS
M6-15 FUME EXHAUST DETAILS

BUILDING 7: REPAIR SHOP

M7-1 HVAC PLAN
M7-2 OFFICE - HVAC PLAN
M7-3 PLUMBING PLAN
M7-4 OFFICE - PLUMBING PLAN
M7-5 PLUMBING ISOMETRICS
M7-6 HVAC SECTIONS/DETAILS
M7-7 MECHANICAL DETAILS 1
M7-8 MECHANICAL DETAILS 2
M7-9 MECHANICAL DETAILS 3

ELECTRICAL

COMMON SHEETS

EE0-1 LEGEND
EE0-2 TITLE 24 FORMS - SCHEDULE 1
EE0-3 TITLE 24 FORMS - SCHEDULE 2
EE0-4 TITLE 24 FORMS SCHEDULE 3
EE0-5 POWER SITE PLAN
EE0-6 COMMUNICATION SITE PLAN
EE0-7 POWER SINGLE LINE DIAGRAM
EE0-8 PARTIAL ELECTRICAL SITE PLAN
EE0-9 POWER DISTRIBUTION DIAGRAM

BUILDING 6: STORAGE BUILDING

EE6-0.1 PANEL KEY
EE6-1.1 LIGHTING PLAN - NORTH
EE6-1.2 LIGHTING PLAN - CENTER SOUTH
EE6-1.3 LIGHTING PLAN
EE6-1.4 OUTSIDE LIGHTING PLAN
EE6-2.1 POWER PLAN - NORTH
EE6-2.2 POWER - SOUTH
EE6-2.3 ENLARGED POWER PLAN 1
EE6-2.4 ENLARGED POWER PLAN 2
EE6-2.5 ELECTRIC DOORS POWER PLAN
EE6-3.1 HVAC POWER PLAN 1
EE6-3.2 HVAC POWER PLAN 2
EE6-4.1 COMMUNICATION PLAN - NORTH
EE6-4.2 COMMUNICATION PLAN - SOUTH
EE6-4.3 INTRUSION ALARM PLAN - NORTH
EE6-4.4 INTRUSION ALARM PLAN - SOUTH
EE6-4.5 INTRUSION ALARM ZONE SCHEDULE
EE6-4.6 FIRE ALARM PLAN
EE6-5.1 ELECTRICAL DETAILS
EE6-5.2 MULTI- OUTLET ASSEMBLY DETAILS
EE6-6.1 PANEL SCHEDULES 1
EE6-6.2 PANEL SCHEDULES 2
EE6-6.3 PANEL SCHEDULES 3
EE6-7.1 SCHEMATIC DIAGRAM 1
EE6-7.2 SCHEMATIC DIAGRAM 2
EE6-7.3 SCHEMATIC DIAGRAM 3
EE6-7.4 SCHEMATIC DIAGRAM 4

BUILDING 7: REPAIR SHOP

EE7-0.1 PANEL KEY
EE7-1.1 LIGHTING PLAN
EE7-1.2 OUTSIDE LIGHTING PLAN
EE7-2.1 POWER PLAN 1
EE7-2.2 POWER PLAN 2
EE7-3.1 HVAC POWER PLAN 1
EE7-3.2 HVAC POWER PLAN 2
EE7-4.1 COMMUNICATION PLAN
EE7-4.2 INTRUSION ALARM PLAN
EE7-4.3 INTRUSION ALARM ZONE SCHEDULE
EE7-5.1 ELECTRICAL DETAILS 1
EE7-5.2 ELECTRICAL DETAILS 2
EE7-5.3 ELECTRICAL DETAILS 3
EE7-6.1 PANEL SCHEDULES
EE7-7.1 SCHEMATIC DIAGRAM 1
EE7-7.2 SCHEMATIC DIAGRAM 2
EE7-7.3 SCHEMATIC DIAGRAM 3
EE7-7.4 SCHEMATIC DIAGRAM 4

COMMON SHEETS

EE8-1 SCHEMATIC DIAGRAM
EE8-2 LIGHTING FIXTURES SCHEDULE
EE8-3 GROUNDING DETAILS

5 PHOTOVOLTAIC SHEETS

EE9-1 PHOTOVOLTAIC SITE PLAN
EE9-2 SINGLE LINE DIAGRAM GRID-TIED PHOTOVOLTAIC SYSTEM
EE9-3 STORAGE ROOF PLAN
EE9-4 ELEVATION AND DETAILS

5 REVISED PER ADDENDUM No. 5 DATED APRIL 8, 2010

THE CONTRACTOR SHALL VERIFY
ALL CONTROLLING FIELD MEASURE BEFORE
ORDERING FABRICATING ALL MATERIALS.

R E Travis
DESIGN SUPERVISOR
DOUG LOWE
DESIGN ARCHITECT

DESIGNER CARLOS SANCHEZ
DRAWN BY CARLOS SANCHEZ
CHECKED BY:
STRUCTURAL REVIEW

SHEET LEGEND
A-1 ARCHITECTURAL ST-1 STRUCTURAL
M-1 MECHANICAL EE-1 ELECTRICAL
W-1 WATER SUPPLY SS-1 SANITARY

STATE OF CALIFORNIA
DEPARTMENT OF TRANSPORTATION

DIVISION OF ENGINEERING SERVICES
ARCHITECTURAL AND STRUCTURAL DESIGN

BRIDGE NO.
POST MILE

PHASE 4
"A" BUILDING

TRANSLAB REPAIR PROJECT
INDEX OF SHEETS

SHEET GP-1

GP_1_index.add
DS OSD Imperial Rev. 10/07 06-APR-2010 11:30

ORIGINAL SCALE IN INCHES FOR REDUCED PLANS 0 1 2 3

CU 03263
EA 2C8441

DISREGARD PRINTS BEARING EARLIER REVISION DATES
REVISION DATES (PRELIMINARY STAGE ONLY) 07 06-01-09
SHEET X OF X

06-APR-2010 11:30
GP_1_index.add

DIST.	COUNTY	ROUTE	POST MILES TOTAL PROJECT	SHEET NO.	TOTAL SHEETS
03	Sac	5501		36	172

LICENSED ARCHITECT DATE

LICENSED ARCHITECT C.A. SANCHEZ No. C-15201 Exp. 12-31-11 STATE OF CALIFORNIA

5

11-23-09
PLANS APPROVAL DATE

The State of California or its officers or agents shall not be responsible for the accuracy or completeness of electronic copies of this plan sheet.

ACCESSIBILITY DESIGN APPROVAL STAMP
DOT / DES / OTA
03-2C8441
DISTRICT - EA
Reviewed by:
Date: 06-29-09

CALIFORNIA STATE FIRE MARSHAL
APPROVED
Approval of this plan does not authorize or approve any omission or deviation from applicable regulations. Final approval is subject to field inspection. One set of approved plans shall be available on the project site at all times.
Reviewed by: STEPHEN GUARINO
Approval date: 07-01-09

5 **REVISED PER ADDENDUM No. 5 DATED APRIL 8, 2010**

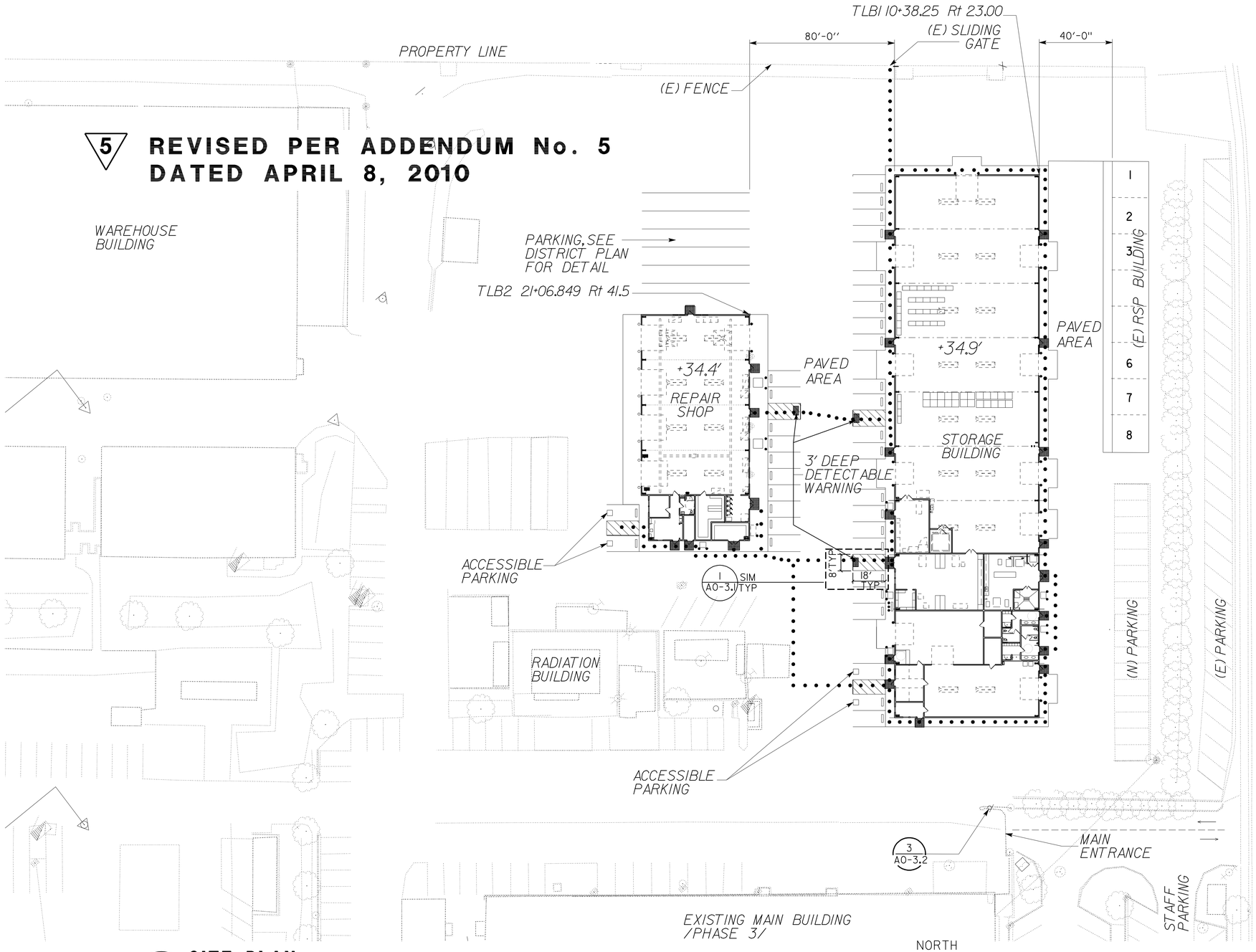

1 SITE PLAN

SCALE : 1" = 30'-0"

NOTE: SEE FLOOR PLANS FOR PATH OF TRAVEL AT BLDGS.

ACCESSIBILITY NOTES

1. IN ADDITION TO STRIPED WALKWAYS (POTS) INDICATED ON THE SITE PLAN, REFER TO FLOOR PLANS FOR ADDITIONAL STRIPED WALWAYS (POTS) AROUND BUILDINGS.

2. STRIPED WALKWAYS (POTS) SHALL BE MINIMUM 48" WIDE, MINIMUM 80" HEAD CLEARANCE, MAXIMUM 5% SLOPE IN THE DIRECTION OF TRAVEL, MAX. 2% CROSS SLOPE, MAX. 1/2" LEVEL CHANGE W/MAX 1:2 SLOPE. LEVEL CHANGE NOT EXCEEDING 1/4" MAY BE VERTICAL. ANY LEVEL CHANGE EXCEEDS 1/2" SHALL BE ACCOMMODATED BY CODE- COMPLIANT CURB RAMP. ANY SLOPE IN THE DIRECTION OF TRAVEL EXCEEDS 5% SHALL BE ACCOMMODATED BY CODE-COMPLIANT RAMP.

3. STRIPED WALKWAY (POT) SURFACE SHALL BE FIRM, STABLE, SLIP RESISTANT, W/O LOOSE GRAVEL, SAND, CHIPS, ETC. ANY PLANTER/GRATE/COVERIN OR ADJACENT TO STRIPED WALKWAYS SHALL REQUIRE EDGE PROTECTION OF MIN. 6" HIGH CURB IF LEVEL CHANGE BETWEEN STRIPED WALKWAYS AND PLANTER/ GRATE/COVER EXCEEDS 4".

4. IF ANY STRIPED WALKWAYS (POT) ARE LESS THAN 60" WIDE, THEN PASSING SPACE AT LEAST 60"X60" SHALL BE LOCATED AT REASONABLE INTERVALS NOT TO EXCEED 200'.

5. EXTERIOR GATES AT POT SHALL HAVE AT LEAST ONE LEAF PROVIDING UNOBSTRUCTED OPENING WIDTH OF MIN. 32", AND A SIGN STATING 'GATES TO REMAIN OPEN DURING BUSINESS HOURS' WITH BRAILLE BELOW THE TEXT, ALL CONFORMING TO CBC 1117B.5.

6. ALL DOORS SHALL HAVE CLEAR LEVEL AREAS ON BOTH SIDES OF DOORS W/MAX 2% SLOPE IN ANY DIRECTION. EXTERIOR CLEAR LEVEL AREAS SHALL BE MIN. 60"X60" IN THE DIRECTION OF DOOR SWING (INCLUDING MIN. 24" PAST DOOR STRIKE EDGE) FOR SINGLE DOOR OR MIN. 60" DEEP BY A WIDTH EQUIVALENT TO THE DOUBLE-DOOR WIDTH FOR PAIR DOORS. INTERIOR CLEAR LEVEL AREAS SHALL BE MIN. 60"DEEP BY 54" WIDE IN THE DIRECTION OF DOOR SWING (INCLUDING MIN. 18" PAST DOOR STRIKE EDGE) FOR A SINGLE DOOR (OR MIN. 60" DEEP BY A WIDTH EQUIVALENT TO THE DOUBLE-DOOR WIDTH FOR PAIR DOORS). AND MIN. 48"X48" OPPOSITE DOOR SWING (INCLUDING MIN. 12" PAST DOOR STRIKE EDGE IF DOOR HAS BOTH A LATCH AND A CLOSER) FOR A SINGLE DOOR, OR MIN. 48" DEEP BY A WIDTH EQUIVALENT TO THE DOUBLE-DOOR WIDTH FOR PAIR DOORS).

7. LEVEL CHANGE AT THE DOORWAY, INCLUDING THRESHOLD THICKNESS, SHALL BE MAX. 1/2" W/MAX 1:2 SLOPE. LEVEL CHANGE NOT EXCEEDING 1/4" MAY BE VERTICAL.

8. AISLES FORMED BY EQUIPMENT/STORED MATERIALS/WALLS AT ANY ROOM OR SPACE SHALL BE MIN. 36' WIDE IF SERVING ONE SIDE, AND MIN. 44" WIDE IF SERVING BOTH SIDES.

9. IN ADDITION TO THE CODE REQUIREMENTS CITED ON SHEET EE6-4.6, FIRE ALARM SHALL ALSO CONFORM TO ADA 4.28, CBC907.9.1, AND 907.9.2 AND NFPA 72. FIRE ALARM SHALL BE PLACED 80" ABOVE THE FLOOR OR 6" BELOW THE CEILING, WHICHEVER IS LOWER.

NOTE: THESE SERVICE BAYS ARE LIMITED TO GASOLINE & DIESEL FUEL VEHICLES ONLY. SEE SHEET A7-1.

LEGEND:

..... *PATH OF TRAVE (P.O.T.) FOR CONTRACT APPROVAL ONLY NOT FOR CONSTRUCTION PURPOSES*

DESIGN	BY SING TSE	CHECKED CARLOS SANCHEZ	
DETAILS	BY	CHECKED	
QUANTITIES	BY	CHECKED	

STATE OF CALIFORNIA
DEPARTMENT OF TRANSPORTATION

DIVISION OF ENGINEERING SERVICES
ARCHITECTURAL AND STRUCTURAL DESIGN

CU 03263
EA 2C8441

BRIDGE NO.
POST MILE

PHASE 4

TRANSLAB REPAIR PROJECT

SITE PLAN

SHEET GP-2

ORIGINAL SCALE IN INCHES FOR REDUCED PLANS 0 1 2 3

DISREGARD PRINTS BEARING EARLIER REVISION DATES

REVISION DATES (PRELIMINARY STAGE ONLY) 07 06-01-09

SHEET X OF X

gp_2.add
DS OSD Imperial Rev. 10/07 07-APR-2010 10:35

07-APR-2010 10:35
gp_2.add

DIST.	COUNTY	ROUTE	POST MILES TOTAL PROJECT	SHEET NO.	TOTAL SHEETS
03	Sac	5501		45	172

LICENSED ARCHITECT DATE

LICENSED ARCHITECT C.A. SANCHEZ No. C-15201 Exp. 12-31-11 STATE OF CALIFORNIA

11-23-09
PLANS APPROVAL DATE

The State of California or its officers or agents shall not be responsible for the accuracy or completeness of electronic copies of this plan sheet.

1 REVISED PER ADDENDUM No. 1 DATED FEBRUARY 10, 2010

5 REVISED PER ADDENDUM No. 5 DATED APRIL 8, 2010

LEGEND:

THESE KEYNOTES APPLY TO THIS SHEET ONLY

4'-0" L x 2'-6" W x 6'-0" H METAL SHELVING. TYP. OF 200 LOCATION AS DIRECTED BY ENGINEER

4'-0" L x 4'-0" W x 4'-0" H PALLET RACKS. TYP. OF 80 LOCATION AS DIRECTED BY ENGINEER

FE SURFACE MOUNTED FIRE EXTINGUISHER

ELECTRICAL PANELS OVER 2x6 METAL STUDS, TYP. SEE ELECT. SHEETS

TRANSLUCENT PANEL ABOVE

LOAD BEARING WALL-6" METAL STUD WALL

1-HOUR WALL

ACCESSIBILITY DESIGN APPROVAL STAMP DOT / DES / OTA
03-2C8441
DISTRICT - EA
Reviewed by: YA WANG
Date: 06-29-09

CALIFORNIA STATE FIRE MARSHAL APPROVED
Approval of this plan does not authorize or approve any omission or deviation from applicable regulations. Final approval is subject to field inspection. One set of approved plans shall be available on the project site at all times.
Reviewed by: STEPHEN GUARINO
Approval date: 07-01-09

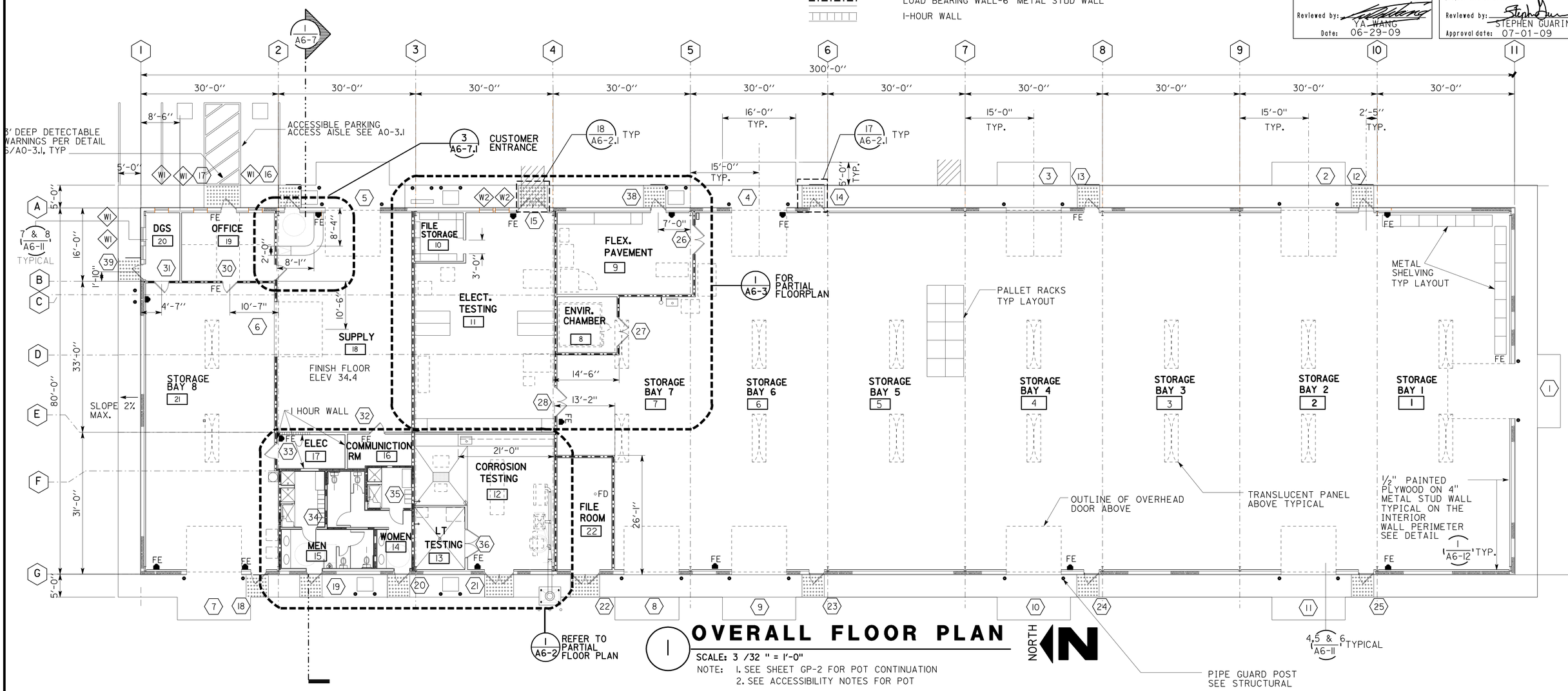

OVERALL FLOOR PLAN

SCALE: 3 /32 " = 1'-0"

NOTE: 1. SEE SHEET GP-2 FOR POT CONTINUATION
2. SEE ACCESSIBILITY NOTES FOR POT

	BY	CHECKED
DESIGN	SING TSE	CARLOS SANCHEZ
DETAILS		
QUANTITIES		

STATE OF CALIFORNIA DEPARTMENT OF TRANSPORTATION

DIVISION OF ENGINEERING SERVICES ARCHITECTURAL AND STRUCTURAL DESIGN

BRIDGE NO. | POST MILE

PHASE 4 — STORAGE

TRANSLAB REPAIR PROJECT — OVERALL FLOOR PLAN

SHEET A6-1

CU 03263
EA 2C8441

ORIGINAL SCALE IN INCHES FOR REDUCED PLANS 0 1 2 3

DISREGARD PRINTS BEARING EARLIER REVISION DATES

REVISION DATES (PRELIMINARY STAGE ONLY): 07 06-01-09 07-01-09

SHEET X OF X

a6_1.dgn
DS OSD Imperial Rev. 10/07 05-APR-2010 09:47

05-APR-2010 09:47

a6_1.dgn

DIST.	COUNTY	ROUTE	POST MILES TOTAL PROJECT	SHEET NO.	TOTAL SHEETS
03	Sac	5501		46	172

LICENSED ARCHITECT DATE

LICENSED ARCHITECT C.A. SANCHEZ No. C-15201 Exp. 12-31-11 STATE OF CALIFORNIA

11-23-09
PLANS APPROVAL DATE

The State of California or its officers or agents shall not be responsible for the accuracy or completeness of electronic copies of this plan sheet.

1

5

ACCESSIBILITY DESIGN APPROVAL STAMP
DOT / DES / OTA
03-2C8441
DISTRICT - EA
Reviewed by:
Date: 06-29-09

CALIFORNIA STATE FIRE MARSHAL APPROVED
Approval of this plan does not authorize or approve any omission or deviation from applicable regulations. Final approval is subject to field inspection. One set of approved plans shall be available on the project site at all times.
Reviewed by: STEPHEN GUARINO
Approval date: 07-01-09

LEGEND

1-HR WALL 6" METAL STUD WITH 5/8" GYPBD EACH SIDE

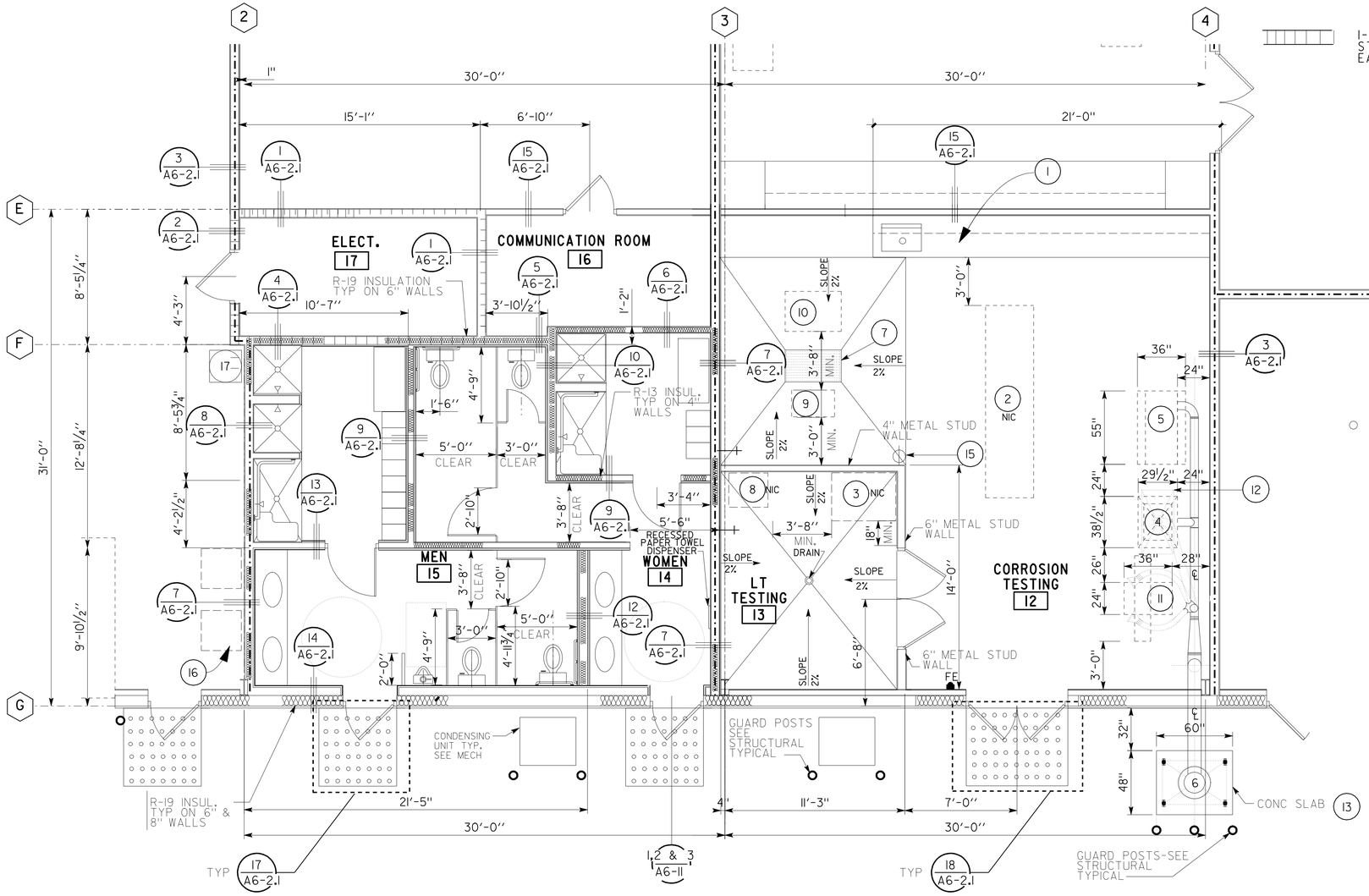

1 **ENLARGED FLOOR PLAN**
SCALE: 1/4" = 1'-0"

NORTH

KEYNOTES :

THESE KEYNOTES APPLY TO THIS SHEET ONLY

1. STAINLESS STEEL COUNTER/SINK. (18'-0" L x 2'-6"W x 2'-10" H) WITH LOWER AND UPPER CASEWORKS
2. 12'-0" X 3'-0" WOODEN PROCESSING ISLAND WITH RUBBER MAT ALL SIDES OPEN WITH NO CABINETS (STATE FURNISHED-NIC)
3. MOVABLE WORKBENCH WITH CASTER ROLLER (4'-0"Lx3'-0"W) (STATE FURNISHED-NIC)
4. (R) CRUSHER (4'-0"x4'-0"x4'-0")
5. (R) PULVERIZER (6'-0"X4'-0"x5'-0")
6. (R) HEPA DUST COLLECTOR (4'-0"x4'-0"x7'-0")
7. ~~GRATED FLOOR SUMP (3'-0"x2'-0") (2'-0" BELOW FINISH GRADE)~~ SAND INTERCEPTOR SEE MECH. SHEETS
8. DE-IONIZED WATER FILTERING SYSYTEM-NIC. SEE STRUCTURAL AND
9. (R) TILE SAW (2'-0"x4'-0"x5'-0") PROVIDE WATER HOOKUP, DRAIN TO FLOOR SUMP. SEE MECH. SHEETS
10. (R) BLOCK SAW (5'-0"x4'-0"x6'-0") PROVIDE WATER HOOKUP, DRAIN TO FLOOR SUMP. SEE MECH. SHEETS
11. (R) MILLING MACHINE
12. (R) 4'-0"X 2'-0"X 20" MET HOOD 7'-5" ABOVE THE CRUSHER.
13. CONCRETE SLAB 60"X 48"X 12" THICK. 3/8" DIAM SST MECH. EXPANSION ANCHORS. 2 EA. COLUMN BASE. 5" EMBEDED- SUBMIT FOR APPROVAL
14. NOT USED
15. EMERGENCY EYE WASH. SEE MECH. SHEETS
16. ELECTRIC WASHER AND DRYER (N.I.C.) SEE MECH. SHEETS FOR HOOK UPS
17. GAS WATER HEATER

NOTE:
RELOCATED EQUIPMENT WILL COME FROM THE STORAGE LOCATED ON THE PREMISES.

5 **REVISED PER ADDENDUM No. 5 DATED APRIL 8, 2010**

1 **REVISED PER ADDENDUM No. 1 DATED FEBRUARY 10, 2010**

DESIGN	BY SING TSE	CHECKED CARLOS SANCHEZ	
DETAILS	BY	CHECKED	
QUANTITIES	BY	CHECKED	

STATE OF CALIFORNIA DEPARTMENT OF TRANSPORTATION

DIVISION OF ENGINEERING SERVICES ARCHITECTURAL AND STRUCTURAL DESIGN

BRIDGE NO. POST MILE

PHASE 4 STORAGE

TRANSLAB REPAIR PROJECT
PARTIAL FLOOR PLAN - 1

SHEET A6-2

a6_2.add
DS OSD Imperial Rev. 10/07 07-APR-2010 10:42

ORIGINAL SCALE IN INCHES FOR REDUCED PLANS 0 1 2 3

CU 03263
EA 2C8441

DISREGARD PRINTS BEARING EARLIER REVISION DATES

REVISION DATES (PRELIMINARY STAGE ONLY) 07-06-09

SHEET X OF X

07-APR-2010 10:42
a6_2.add

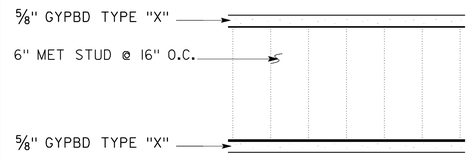

WALL WIDTH: 5 1/4"

1 1-HR WALL

SCALE: 3"=1'-0" U404

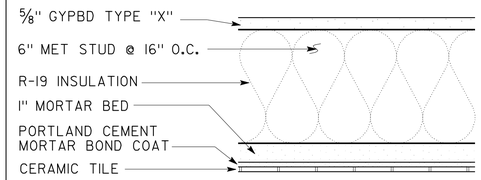

WALL WIDTH: 8 1/8"
TCNA W241-09

5 PLUMBING WALL

SCALE: 3"=1'-0"

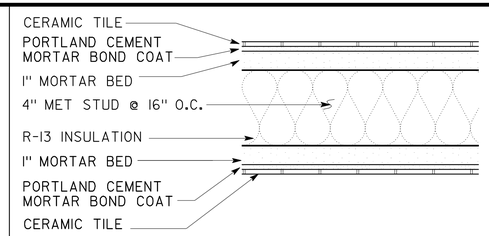

WALL WIDTH: 7"
TCNA W241-09

9 WALL TYPE

SCALE: 3"=1'-0"

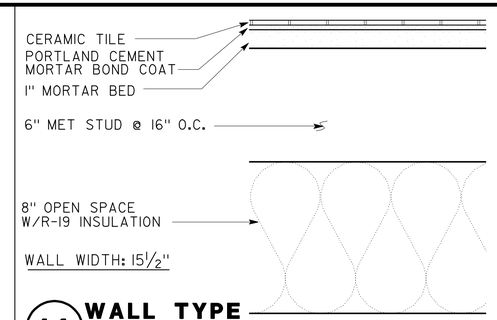

WALL WIDTH: 15 1/2"

14 WALL TYPE

SCALE: 3"=1'-0"

DIST.	COUNTY	ROUTE	POST MILES TOTAL PROJECT	SHEET NO.	TOTAL SHEETS
03	Sac	5501		47	172

LICENSED ARCHITECT DATE

LICENSED ARCHITECT C.A. SANCHEZ No. C-15201 Exp. 12-31-11 STATE OF CALIFORNIA

11-23-09
PLANS APPROVAL DATE

The State of California or its officers or agents shall not be responsible for the accuracy or completeness of electronic copies of this plan sheet.

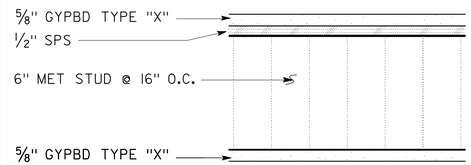

WALL WIDTH: 7 3/4"

2 1-HR WALL

SCALE: 3"=1'-0" U404

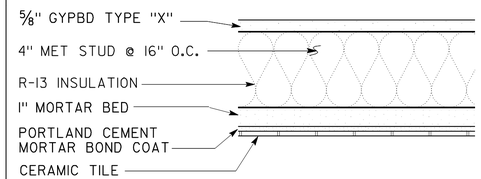

WALL WIDTH: 8 1/8"
TCNA W241-09

6 WALL TYPE

SCALE: 3"=1'-0"

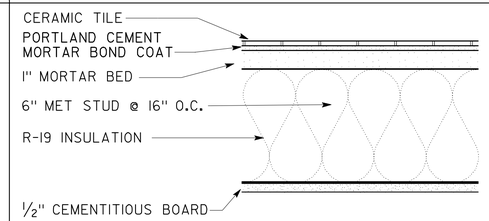

WALL WIDTH: 8"

10 WALL TYPE

SCALE: 3"=1'-0"

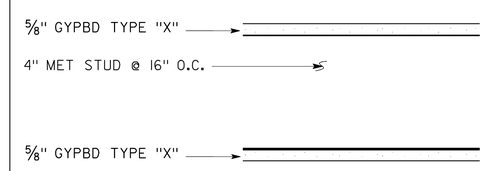

WALL WIDTH: 5 1/4"

5 **REVISED PER ADDENDUM No. 5 DATED APRIL 8, 2010**

15 WALL TYPE

SCALE: 3"=1'-0"

ACCESSIBILITY DESIGN APPROVAL STAMP
DOT / DES / OTA
03-2C8441
DISTRICT - EA
Reviewed by: [signature]
Date: 06-29-09

CALIFORNIA STATE FIRE MARSHAL APPROVED
Approval of this plan does not authorize or approve any omission or deviation from applicable regulations. Final approval is subject to field inspection. One set of approved plans shall be available on the project site at all times.
Reviewed by: STEPHEN GUARINO
Approval date: 07-01-09

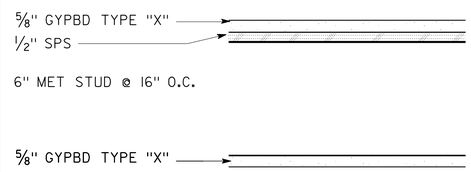

WALL WIDTH: 7 3/4"

3 BEARING WALL

SCALE: 3"=1'-0"

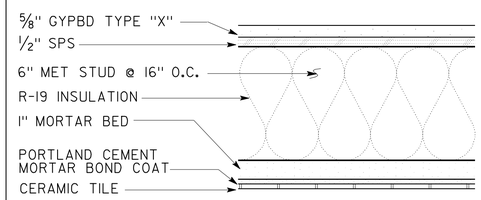

WALL WIDTH: 8 5/8"
TCNA W241-09

7 WALL TYPE

SCALE: 3"=1'-0"

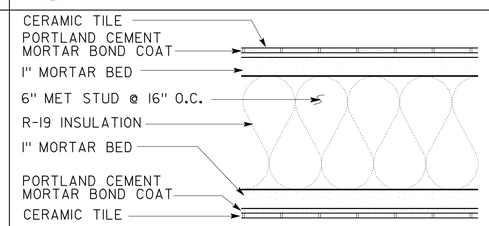

WALL WIDTH: 9"
TCNA W241-09

12 WALL TYPE

SCALE: 3"=1'-0"

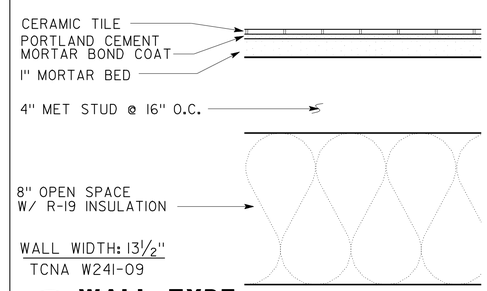

WALL WIDTH: 13 1/2"
TCNA W241-09

16 WALL TYPE

SCALE: 3"=1'-0"

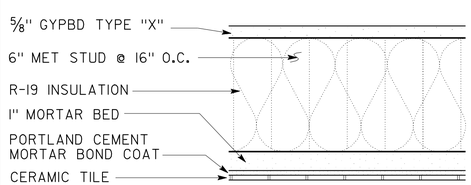

WALL WIDTH: 8 1/8"
TCNA W241-09

4 1-HR PLUMBING WALL

SCALE: 3"=1'-0" U404

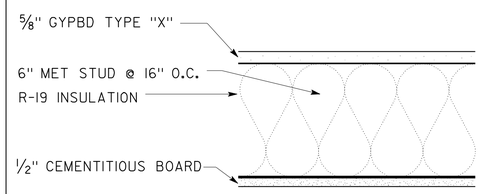

WALL WIDTH: 7 1/8"

8 WALL TYPE

SCALE: 3"=1'-0"

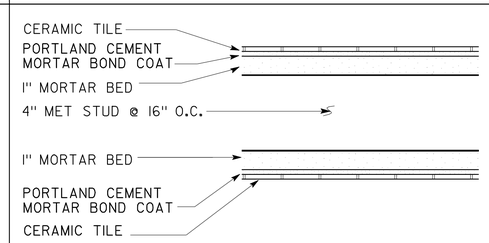

WALL WIDTH: 7"
TCNA W241-09

13 WALL TYPE

SCALE: 3"=1'-0"

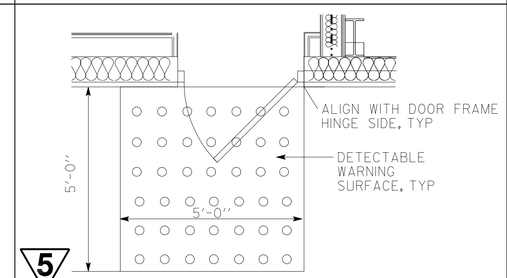

5

17 DETECTABLE WARNING, SINGLE EXTERIOR DOOR, TYP

SCALE: NO SCALE SEE 6/A0-3.1 FOR ADDITIONAL NOTES

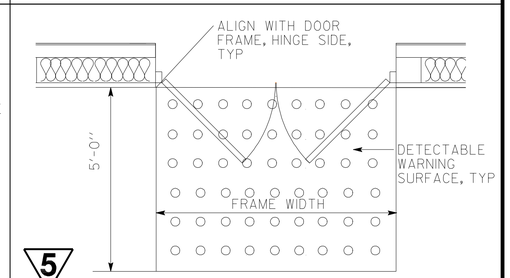

5

18 DETECTABLE WARNING, DOUBLE EXTERIOR DOOR, TYP

SCALE: NO SCALE SEE 6/A0-3.1 FOR ADDITIONAL NOTES

	BY	CHECKED
DESIGN	BY	CHECKED
DETAILS	BY	CHECKED
QUANTITIES	BY	CHECKED

STATE OF CALIFORNIA
DEPARTMENT OF TRANSPORTATION

DIVISION OF ENGINEERING SERVICES
ARCHITECTURAL AND STRUCTURAL DESIGN

BRIDGE NO.
POST MILE

PHASE 4 — STORAGE

TRANSLAB REPAIR PROJECT
WALL TYPES DETAILS

SHEET A6-2.1

a6_2_1.add
DS OSD Imperial Rev. 10/07 06-APR-2010 11:30

ORIGINAL SCALE IN INCHES FOR REDUCED PLANS 0 1 2 3

CU 03263
EA 2C8441

DISREGARD PRINTS BEARING EARLIER REVISION DATES - 07

REVISION DATES (PRELIMINARY STAGE ONLY) SHEET OF

06-APR-2010 11:30

a6_2_1.add

DIST.	COUNTY	ROUTE	POST MILES TOTAL PROJECT	SHEET NO.	TOTAL SHEETS
03	Sac	5501		48	172

LICENSED ARCHITECT DATE

LICENSED ARCHITECT C.A. SANCHEZ No. C-15201 Exp. 12-31-11 STATE OF CALIFORNIA

11-23-09
PLANS APPROVAL DATE

The State of California or its officers or agents shall not be responsible for the accuracy or completeness of electronic copies of this plan sheet.

5

ACCESSIBILITY DESIGN APPROVAL STAMP DOT / DES / OTA
03-2C8441
DISTRICT - EA
Reviewed by:
Date: 06-29-09

CALIFORNIA STATE FIRE MARSHAL APPROVED
Approval of this plan does not authorize or approve any omission or deviation from applicable regulations. Final approval is subject to field inspection. One set of approved plans shall be available on the project site at all times.
Reviewed by: STEPHEN GUARINO
Approval date: 07-01-09

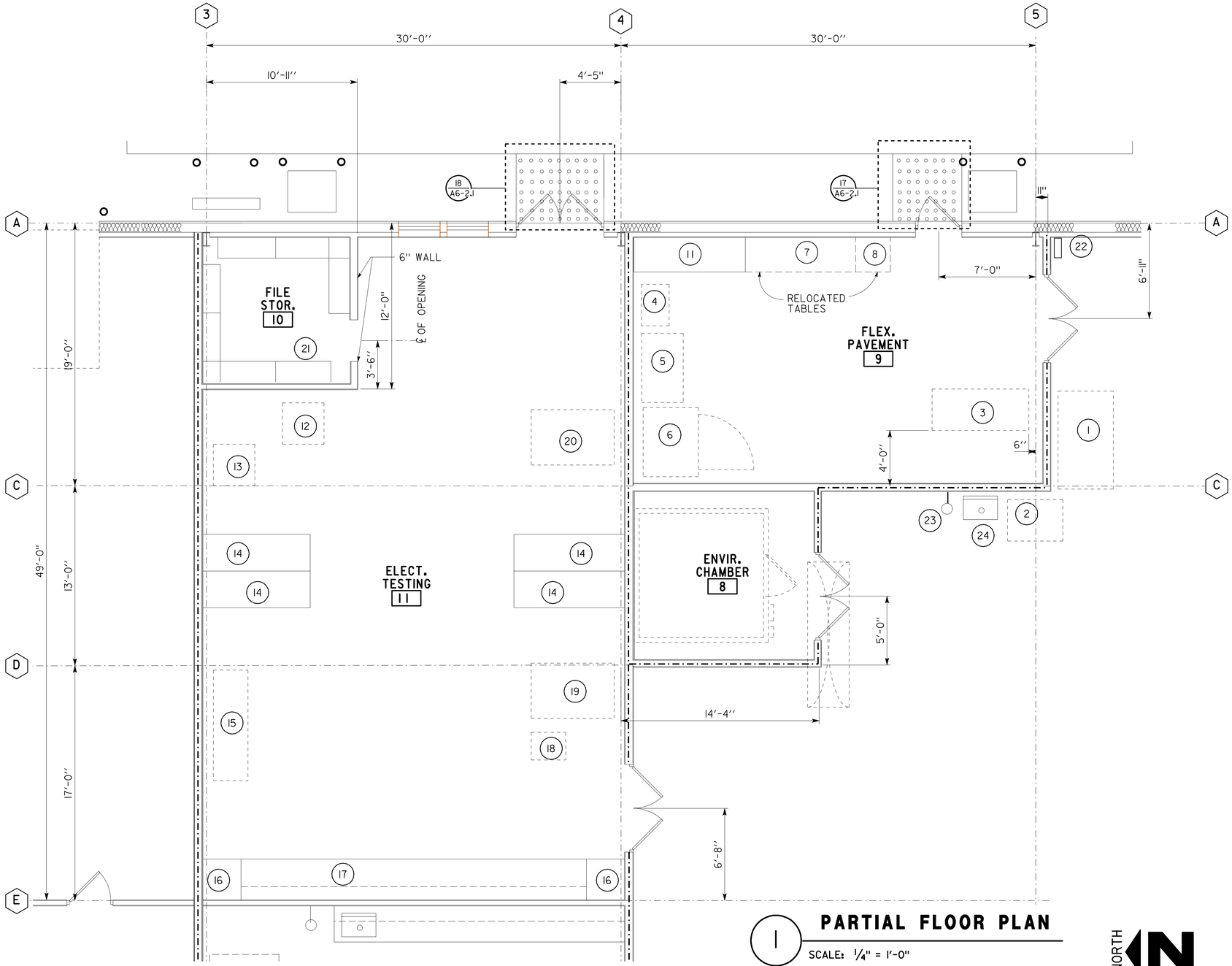

1 **PARTIAL FLOOR PLAN**
SCALE: 1/4" = 1'-0"

5 **REVISED PER ADDENDUM No. 5 DATED APRIL 8, 2010**

KEYNOTES : THESE KEYNOTES APPLY TO SHEET ONLY

1. (R) SAW (85"Lx40"W)
2. (R) CORE RIG (4'-0"Lx3'-0"W)
3. (R) LINEAR COMPACTOR (82"Lx38"W)
4. (R) SCALE (3'-0"Lx2'-0"W)
5. (R) MIXER (5'-0"Lx3'-0"W)
6. (R) OVEN (5'-0"Lx4'-0"W)
7. (R) GLUING JIG (8'-0"Lx2'-0"W) ON TABLE
8. (R) DRILL PRESS (3'-0"Lx2'-6"W) ON TABLE
9. NOT USED
10. NOT USED
11. 2'-6"D x 6'-0"L x 3'-0"H LAMINATED MAPLE TOP HEAVY DUTY WORK BENCH
12. (R) BALLAST TESTER
13. (R) SHAKE TABLE
14. 8'-0" L x 2'-6" W x 3'-0" H WORK BENCH, TYP. of 4, NON CONDUCTIVE BENCH TOP SEE SHEET A6-3.2, DETAILS 1, 2, 3, 4 AND 5
15. (R) CMS PMM TESTER
16. 3'-0" L x 3'-0" W x 7'-0" H CABINET, TYP. of 2 SEE SHEET A6-3.2, DETAILS 1 AND 2
17. 24'-0" L x 3'-0" W x 3'-0" H WORKBENCH SEE SHEET A6-3.2, DETAILS 1, 2 AND 3
18. (R) MONITOR TESTER
19. (R) SUB ZERO CHAMBER
20. (R) TENNEY TESTER
21. 4'-0" L x 1'-6" W x 6'-0" H METAL SHELVING, TYP. OF 7; SEE SHEET A6-3.1
22. ELECTRICAL PANEL. SEE ELECT. SHEET
23. EMRGENCY EYE WASH. SEE MECH. SHEET
24. SINK. SEE MECH. SHEET

NOTE:

RELOCATED EQUIPMENT SHALL BE MOVED BY THE CONTRACTOR FROM THE STORAGE LOCATED ON THE PREMISES.

DESIGN	BY SING TSE	CHECKED CARLOS SANCHEZ	
DETAILS	BY	CHECKED	
QUANTITIES	BY	CHECKED	

STATE OF CALIFORNIA DEPARTMENT OF TRANSPORTATION

DIVISION OF ENGINEERING SERVICES ARCHITECTURAL AND STRUCTURAL DESIGN

BRIDGE NO. / POST MILE

PHASE 4 — STORAGE

TRANSLAB REPAIR PROJECT

PARTIAL FLOOR PLAN - 2

SHEET A6-3

a6_3.add
DS OSD Imperial Rev. 10/07 05-APR-2010 09:48

ORIGINAL SCALE IN INCHES FOR REDUCED PLANS 0 1 2 3

CU 03263
EA 2C8441

DISREGARD PRINTS BEARING EARLIER REVISION DATES

REVISION DATES (PRELIMINARY STAGE ONLY) 07 06-01-09

SHEET X OF X

05-APR-2010 09:48
a6_3.add

DIST.	COUNTY	ROUTE	POST MILES TOTAL PROJECT	SHEET NO.	TOTAL SHEETS
03	Sac	5501		48A	172

LICENSED ARCHITECT — 3/23/2010 DATE

LICENSED ARCHITECT C.A. SANCHEZ No. C-15201 Exp. 12-31-11 STATE OF CALIFORNIA

11-23-09
PLANS APPROVAL DATE

The State of California or its officers or agents shall not be responsible for the accuracy or completeness of electronic copies of this plan sheet.

ACCESSIBILITY DESIGN APPROVAL STAMP
DOT / DES / OTA
03-2C8441
DISTRICT - EA
Reviewed by: YA WANG
Date: 06-29-11

CALIFORNIA STATE FIRE MARSHAL
APPROVED
Approval of this plan does not authorize or approve any omission or deviation from applicable regulations. Final approval is subject to field inspection. One set of approved plans shall be available on the project site at all times.
Reviewed by: STEPHEN GUARINO
Approval date: 07-01-09

CORROSION TESTING
12

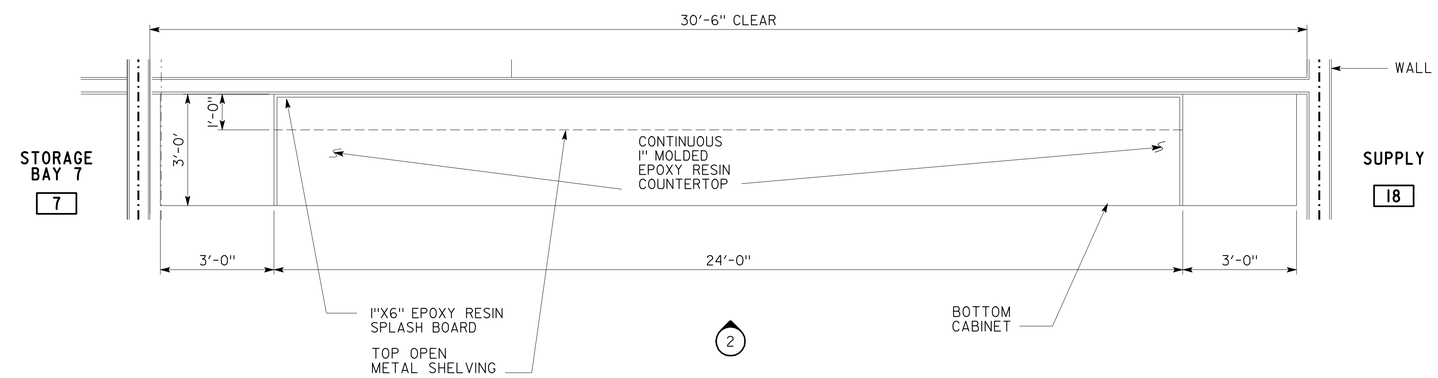

1 PLAN

SCALE: 1/2" = 1'-0"

NOTE: REFER TO KEYNOTES 17 ON A6-3

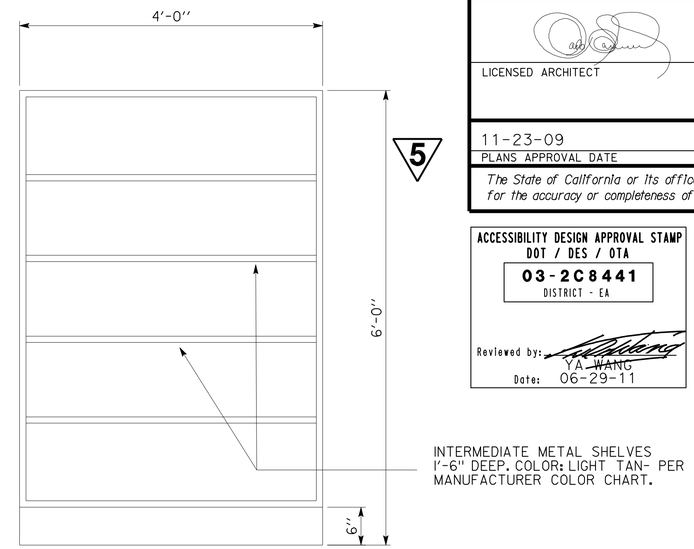

4 METAL SHELF

SCALE: 1" = 1'-0"

REFER TO FILE ROOM No. 10 NOTE: 21 DRAWING A6-3. TOTAL 7 UNITS

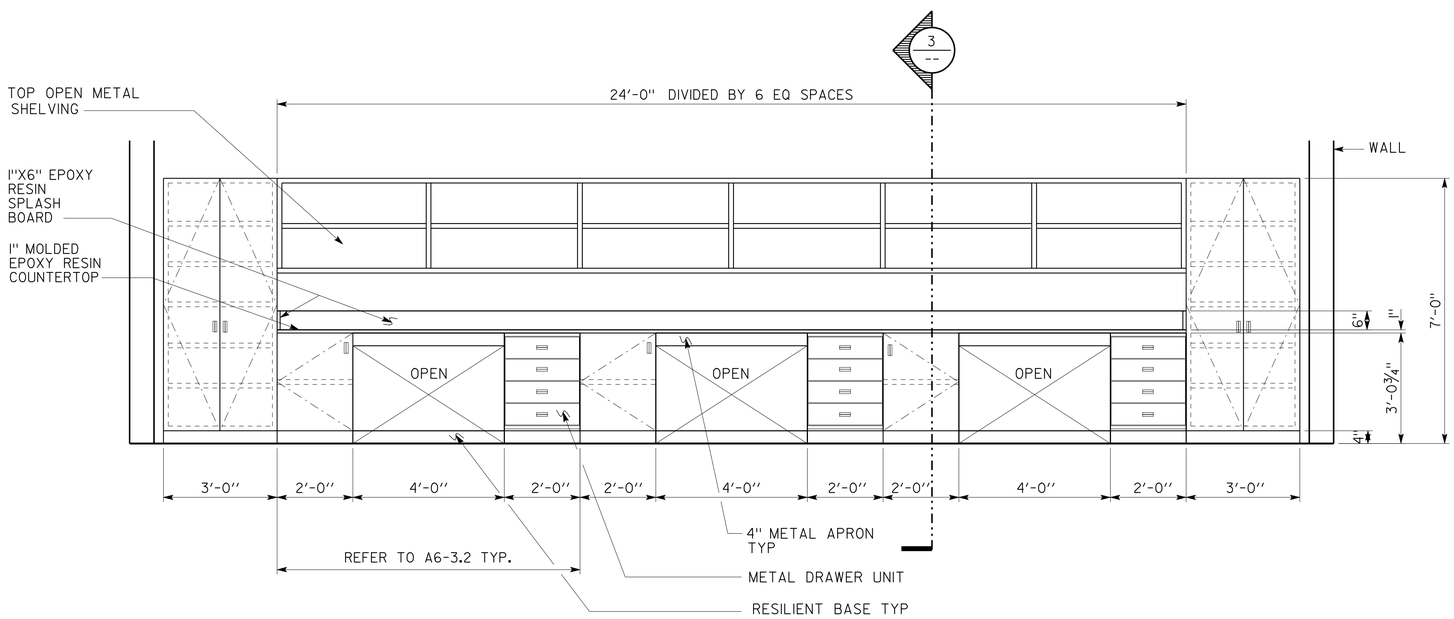

2 ELEVATION

SCALE: 1/2" = 1'-0"

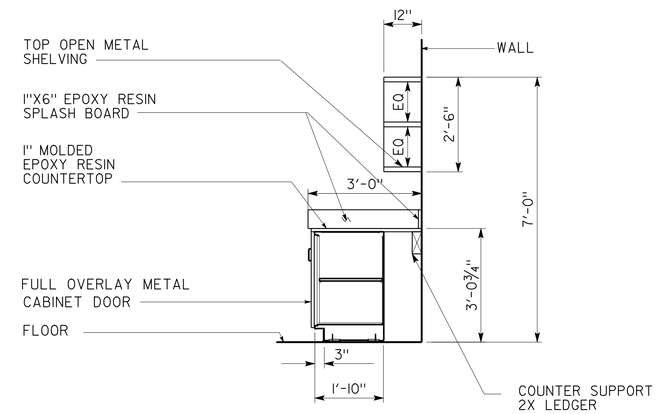

3 SECTION

SCALE: 1/2" = 1'-0"

5 ADDED PER ADDENDUM No. 5 DATED APRIL 8, 2010

DESIGN	BY CARLOS SANCHEZ	CHECKED WARREN LAI	
DETAILS	BY	CHECKED	
QUANTITIES	BY	CHECKED	

STATE OF CALIFORNIA DEPARTMENT OF TRANSPORTATION

DIVISION OF ENGINEERING SERVICES ARCHITECTURAL AND STRUCTURAL DESIGN

BRIDGE NO. | POST MILE

PHASE 4 — STORAGE

TRANSLAB REPAIR PROJECT — CASEMENT 1

SHEET A6-3.1

a6_3_1.add
DS OSD Imperial Rev. 10/07 06-APR-2010 11:30

ORIGINAL SCALE IN INCHES FOR REDUCED PLANS 0 1 2 3

CU 03263
EA 2C8441

DISREGARD PRINTS BEARING EARLIER REVISION DATES

REVISION DATES (PRELIMINARY STAGE ONLY): 07-01-09 07-01-09

SHEET X OF X

06-APR-2010 11:30

a6_3_1.add

DIST.	COUNTY	ROUTE	POST MILES TOTAL PROJECT	SHEET NO.	TOTAL SHEETS
03	Sac	5501		48B	172

LICENSED ARCHITECT — DATE 3/23/2010

LICENSED ARCHITECT C.A. SANCHEZ No. C-15201 Exp. 12-31-11 STATE OF CALIFORNIA

11-23-09
PLANS APPROVAL DATE

The State of California or its officers or agents shall not be responsible for the accuracy or completeness of electronic copies of this plan sheet.

5

ACCESSIBILITY DESIGN APPROVAL STAMP
DOT / DES / OTA
03-2C8441
DISTRICT - EA
Reviewed by: YA WANG
Date: 06-29-11

CALIFORNIA STATE FIRE MARSHAL
APPROVED
Approval of this plan does not authorize or approve any omission or deviation from applicable regulations. Final approval is subject to field inspection. One set of approved plans shall be available on the project site at all times.
Reviewed by: STEPHEN GUARINO
Approval date: 07-01-09

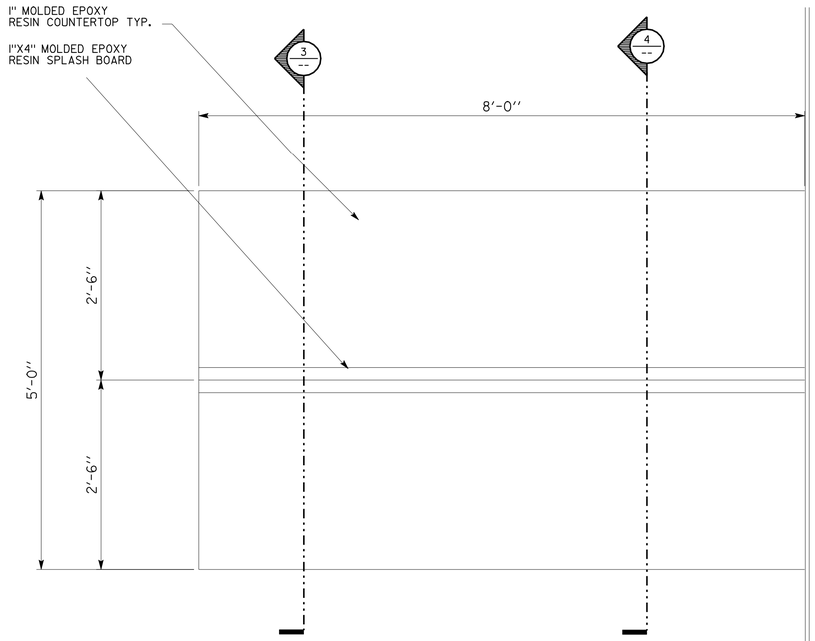

1 PARTIAL FLOOR PLAN

SCALE: 1" = 1'-0"
NOTE: REFER TO KEYNOTES 14 ON A6-3

NORTH N

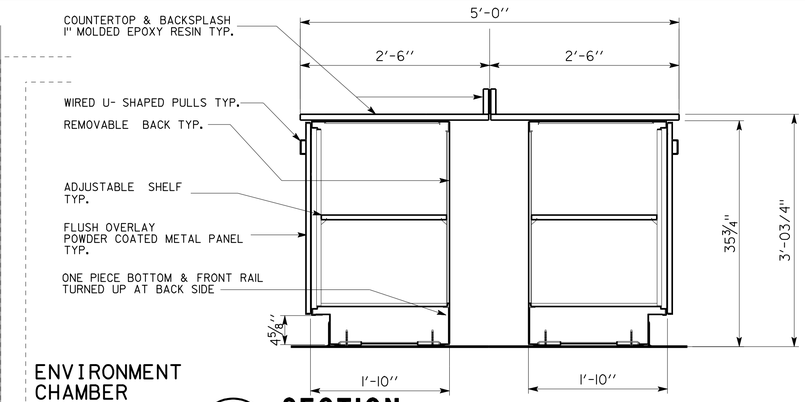

ENVIRONMENT CHAMBER

3 SECTION

SCALE: 1" = 1'-0"

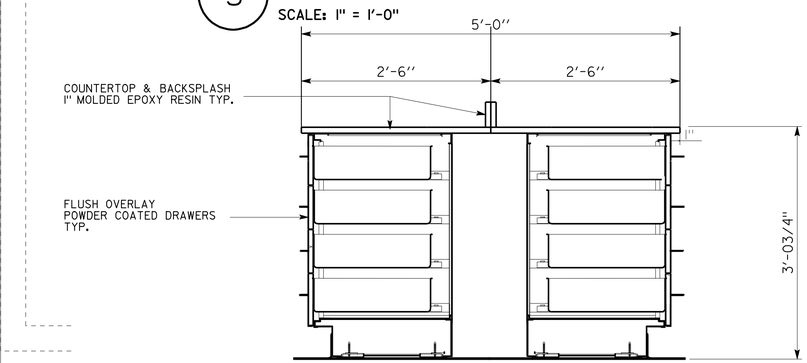

4 SECTION

SCALE: 1" = 1'-0"

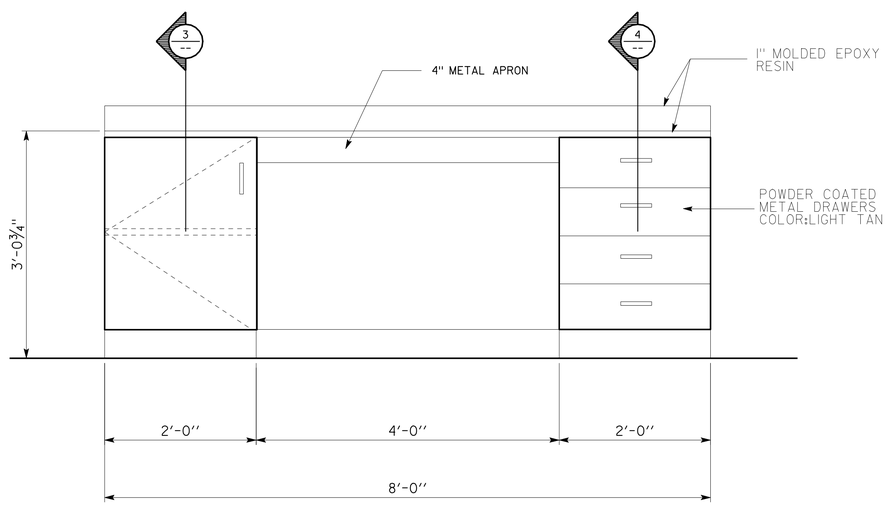

2 FRONT ELEVATION TYP.

SCALE: 1" = 1'-0"

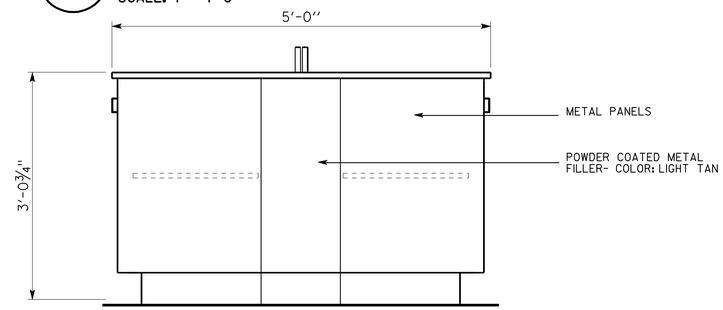

5 SIDE ELEVATION

SCALE: 1" = 1'-0"

5 **ADDED PER ADDENDUM No. 5 DATED APRIL 8, 2010**

DESIGN	BY CARLOS SANCHEZ	CHECKED WARREN LAI	
DETAILS	BY	CHECKED	
QUANTITIES	BY	CHECKED	

STATE OF CALIFORNIA DEPARTMENT OF TRANSPORTATION

DIVISION OF ENGINEERING SERVICES ARCHITECTURAL AND STRUCTURAL DESIGN

BRIDGE NO. | POST MILE

PHASE 4 — X

TRANSLAB REPAIR PROJECT — CASEMENT 2

SHEET A6-3.2

a6_3_2.add
DS OSD Imperial Rev. 10/07 06-APR-2010 11:30

ORIGINAL SCALE IN INCHES FOR REDUCED PLANS 0 1 2 3

CU 03263
EA 2C8441

DISREGARD PRINTS BEARING EARLIER REVISION DATES

REVISION DATES (PRELIMINARY STAGE ONLY) 07-01-09 07-01-09

SHEET X OF X

06-APR-2010 11:30

a6_3_2.add

DOOR SCHEDULE

NOTE: SEE DETAIL 1 THIS SHEET FOR TYPICAL DOOR FRAME ANCHORAGE

DOOR NUMBER	DOOR TYPE	DOOR WIDTH	DOOR HEIGHT	DOOR THICK.	DOOR MATERIAL	DOOR GLASS	FRAME MATERIAL	FRAME WIDTH	HARDWARE GROUP	ROOM NAME SIGN	DETAILS (5) HEAD	DETAILS (5) JAMB	DETAILS (5) THRESH	PMF: HM: STL: PR: REMARKS	SIGN TYPES DETAILS
1	C	12'-0"	14'-0"	-	STL	●	STL	-		STORAGE BAY 1	4/A6-11	5/A6-11	6/A6-11		1/A0-3.3
2	C	12'-0"	12'-0"	-	STL	●	STL	-		STORAGE BAY 2	4/A6-11	5/A6-11	6/A6-11		1/A0-3.3
3	C	12'-0"	12'-0"	-	STL	●	STL	-		STORAGE BAY 4	4/A6-11	5/A6-11	6/A6-11		1/A0-3.3
4	C	12'-0"	12'-0"	-	STL	●	STL	-		STORAGE BAY 6	4/A6-11	5/A6-11	6/A6-11		1/A0-3.3
5	D	12'-0"	10'-0"	-	STL		STL	-		SUPPLY	4/A6-11 ~~9/A6-11~~	5/A6-11	6/A6-11	5 DETAILS SIMILAR	1/A0-3.3
6	D	12'-0"	10'-0"	-	STL		STL	-		SUPPLY	4/A6-11 ~~9/A6-11~~	5/A6-11	6/A6-11		1/A0-3.3
7	C	12'-0"	12'-0"	-	STL	●	STL	-		STORAGE BAY 8	4/A6-11	5/A6-11	6/A6-11		1/A0-3.3
8	C	12'-0"	12'-0"	-	STL	●	STL	-		STORAGE BAY 7	4/A6-11	5/A6-11	6/A6-11		1/A0-3.3
9	C	12'-0"	12'-0"	-	STL	●	STL	-		STORAGE BAY 6	4/A6-11	5/A6-11	6/A6-11		1/A0-3.3
10	C	12'-0"	12'-0"	-	STL	●	STL	-		STORAGE BAY 4	4/A6-11	5/A6-11	6/A6-11		1/A0-3.3
11	C	12'-0"	12'-0"	-	STL	●	STL	-		STORAGE BAY 2	4/A6-11	5/A6-11	6/A6-11		
12	A	3'-0"	7'-0"	1 3/4"	HM	●	PMF	5 3/4"	1	STORAGE BAY 2	1/A6-11	2/A6-11	3/A6-11	EXTERIOR DOOR	1, 2, & 6 /A0-3.3
13	A	3'-0"	7'-0"	1 3/4"	HM	●	PMF	5 3/4"	1	STORAGE BAY 4	1/A6-11	2/A6-11	3/A6-11	EXTERIOR DOOR	1, 2, & 6 /A0-3.3
14	A	3'-0"	7'-0"	1 3/4"	HM	●	PMF	5 3/4"	1	STORAGE BAY 6	1/A6-11	2/A6-11	3/A6-11	EXTERIOR DOOR	1, 2, & 6 /A0-3.3
15	A-1	PR3'-0"	7'-0"	1 3/4"	HM	●	PMF	5 3/4"	2	ELECT. TESTING	1/A6-11	2/A6-11	3/A6-11	EXTERIOR DOOR	1, 2, & 6 /A0-3.3
16	A-1	3'-0"	7'-0"	1 3/4"	HM	●	PMF	5 3/4"	1	SUPPLY	1/A6-11	2/A6-11	3/A6-11	EXTERIOR DOOR	1, 2, & 6 /A0-3.3
17	A-1	3'-0"	7'-0"	1 3/4"	HM	●	PMF	5 3/4"	1	OFFICE	1/A6-11	2/A6-11	3/A6-11	EXTERIOR DOOR	1, 2, & 6 /A0-3.3
18	A	3'-0"	7'-0"	1 3/4"	HM	●	PMF	5 3/4"	1	STORAGE BAY 8	1/A6-11	2/A6-11	3/A6-11	EXTERIOR DOOR	1, 2, & 6 /A0-3.3
19	B	3'-0"	7'-0"	1 3/4"	HM		PMF	5 3/4"	1	MEN	1/A6-11	2/A6-11	3/A6-11	EXTERIOR DOOR	3C & 4C/A0-3.3
20	B	3'-0"	7'-0"	1 3/4"	HM		PMF	5 3/4"	1	WOMEN	1/A6-11	2/A6-11	3/A6-11	EXTERIOR DOOR	3B & 4B/A0-3.3
21	A-1	PR3'-0"	7'-0"	1 3/4"	HM	●	PMF	5 3/4"	2	CORROSION TESTING	1/A6-11	2/A6-11	3/A6-11	EXTERIOR DOOR	1, 2, & 6 /A0-3.3
22	A	PR3'-0"	7'-0"	1 3/4"	HM	●	PMF	5 3/4"	2	FILE ROOM	1/A6-11	2/A6-11	3/A6-11	EXTERIOR DOOR	1, 2, & 6 /A0-3.3
23	A	3'-0"	7'-0"	1 3/4"	HM	●	PMF	5 3/4"	1	STORAGE BAY 6	1/A6-11	2/A6-11	3/A6-11	EXTERIOR DOOR	1, 2, & 6 /A0-3.3
24	A	3'-0"	7'-0"	1 3/4"	HM	●	PMF	5 3/4"	1	STORAGE BAY 4	1/A6-11	2/A6-11	3/A6-11	EXTERIOR DOOR	1, 2, & 6 /A0-3.3
25	A	3'-0"	7'-0"	1 3/4"	HM	●	PMF	5 3/4"	1	STORAGE BAY 2	1/A6-11	2/A6-11	3/A6-11	EXTERIOR DOOR	1, 2, & 6 /A0-3.3
26	A-1	PR3'-0"	7'-0"	1 3/4"	HM	●	PMF	5 3/4"	3	FLEX PAVEMENT	3/-	3/-	2/-		1/A0-3.3
27	A-1	PR3'-0"	7'-0"	1 3/4"	HM	●	PMF	5 3/4"	3	ENVIR. CHAMBER	3/-	3/-	2/-		1/A0-3.3
28	A-1	PR3'-0"	7'-0"	1 3/4"	HM	●	PMF	5 3/4"	3	ELECT. TESTING	3/-	3/-	2/-		1/A0-3.3
29	A	3'-0"	7'-0"	1 3/4"	HM	●	PMF	5 3/4"	4	OFFICE	3/-	3/-	2/-		1/A0-3.3
30	A-1	3'-0"	7'-0"	1 3/4"	HM	●	PMF	5 3/4"	4	OFFICE	3/-	3/-	2/-		1/A0-3.3
31	A-1	3'-0"	7'-0"	1 3/4"	HM	●	PMF	5 3/4"	4	DGS	3/-	3/-	2/-		1/A0-3.3
32	B	3'-0"	7'-0"	1 3/4"	HM		PMF	5 3/4"	5	COMMUNICATION ROOM	3/-	3/-	2/-		1/A0-3.3
33	B	3'-0"	7'-0"	1 3/4"	HM		PMF	5 3/4"	5	ELECT. ROOM	3/-	3/-	2/-		1/A0-3.3
34	B	3'-0"	7'-0"	1 3/4"	HM		PMF	5 3/4"	6	LOCKER	3/-	3/-	2/-		1/A0-3.3
35	B	3'-0"	7'-0"	1 3/4"	HM		PMF	5 3/4"	6	SHOWER	3/-	3/-	2/-		1/A0-3.3
36	A	PR2'-6"	7'-0"	1 3/4"	HM	●	PMF	5 3/4"	3	LT. TESTING	3/-	3/-	2/-		1/A0-3.3
37	B	PR2'-6"	7'-0"	1 3/4"	HM		PMF	5 3/4"	3	DUST COLLECTOR	3/-	3/-	2/-		1/A0-3.3
38	A-1	3'-0"	7'-0"	1 3/4"	HM	●	PMF	5 3/4"	1	FLEX PAVEMENT	1/A6-11	2/A6-11	3/A6-11	EXTERIOR DOOR	1, 2, & 6 /A0-3.3
39	A-1	3'-0"	7'-0"	1 3/4"	HM	●	PMF	5 3/4"	1	DGS	1/A6-11	2/A6-11	3/A6-11	EXTERIOR DOOR	1, 2, & 6 /A0-3.3

WINDOW TYPES

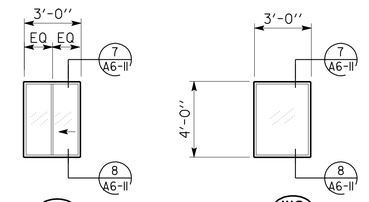

W1 ALUMINUM SLIDING WINDOW (WITH HORIZONTAL BLINDS)

W2 ALUMINUM FIXED WINDOW SEE DWG A6-6

LOUVER TYPES

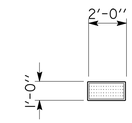

DIST.	COUNTY	ROUTE	POST MILES TOTAL PROJECT	SHEET NO.	TOTAL SHEETS
03	Sac	5501		49	172

LICENSED ARCHITECT DATE

LICENSED ARCHITECT C.A. SANCHEZ No. C-15201 Exp. 12-31-09 STATE OF CALIFORNIA

11-23-09
PLANS APPROVAL DATE

The State of California or its officers or agents shall not be responsible for the accuracy or completeness of electronic copies of this plan sheet.

ACCESSIBILITY DESIGN APPROVAL STAMP
DOT / DES / OTA
03-2C8441
DISTRICT - EA
Reviewed by:
Date: 06-29-09

CALIFORNIA STATE FIRE MARSHAL
APPROVED
Approval of this plan does not authorize or approve any omission or deviation from applicable regulations. Final approval is subject to field inspection. One set of approved plans shall be available on the project site at all times.
Reviewed by: STEPHEN GUARINO
Approval date: 07-01-09

DOOR TYPES

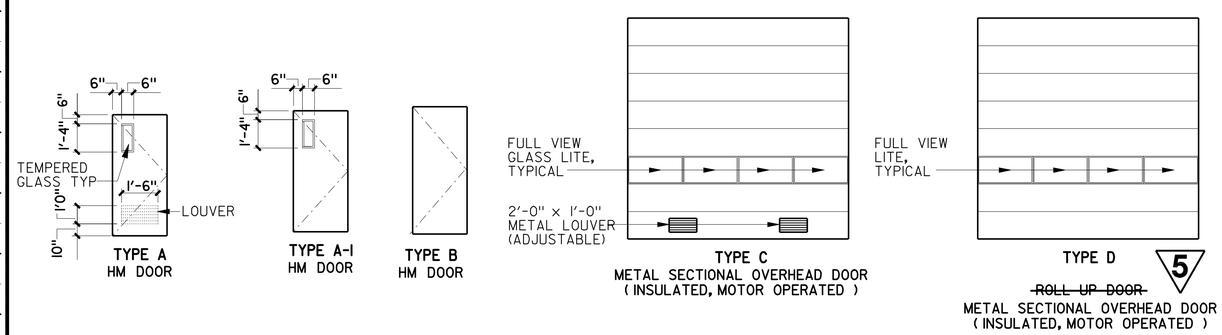

5 REVISED PER ADDENDUM No. 5 DATED APRIL 8, 2010

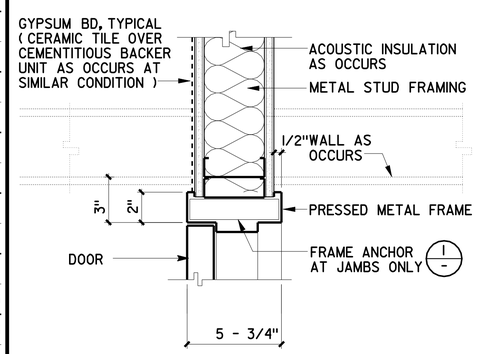

HEAD/JAMB
3 TYP INTERIOR DOOR. UON
SCALE: NTS

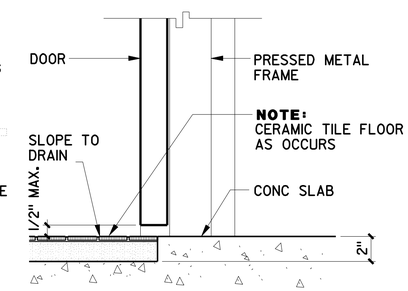

THRESHOLD
2 TYPICAL INTERIOR DOOR
SCALE: NTS

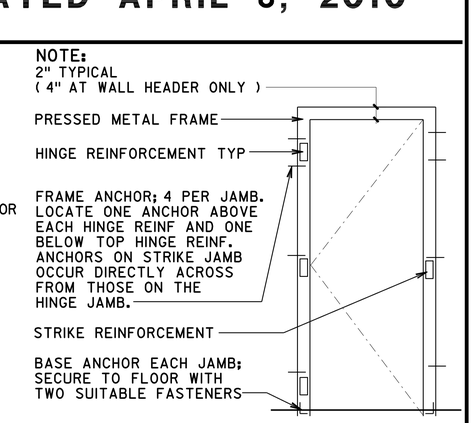

1 TYPICAL DOOR FRAME ANCHORAGE
SCALE: NTS

DESIGN	BY		CHECKED
DETAILS	BY		CHECKED
QUANTITIES	BY		CHECKED

STATE OF CALIFORNIA
DEPARTMENT OF TRANSPORTATION

DIVISION OF ENGINEERING SERVICES
ARCHITECTURAL AND STRUCTURAL DESIGN

CU 03263
EA 2C8441

BRIDGE NO.
POST MILE

PHASE 4
STORAGE

TRANSLAB REPAIR PROJECT
DOOR, WINDOW SCHEDULES AND DETAILS

SHEET A6-4

ORIGINAL SCALE IN INCHES FOR REDUCED PLANS 0 1 2 3

DISREGARD PRINTS BEARING EARLIER REVISION DATES

REVISION DATES (PRELIMINARY STAGE ONLY) 07 06-01-09

SHEET X OF X

a6_4_dw_sched.add
DS OSD Imperial Rev. 10/07 06-APR-2010 11:30

06-APR-2010 11:30

a6_4_dw_sched.add

ROOM FINISH SCHEDULE

NO.	ROOM NAME	FLOOR: RUBBER TILE	FLOOR: CERAMIC TILE	FLOOR: CONCRETE	FLOOR: VCT TILE	BASE: RUBBER BASE	BASE: CERAMIC TILE	BASE: EXPOSED CONC. CURB	WALLS NORTH: 5/8" GYPSUM BOARD	WALLS NORTH: CERAMIC TILE	WALLS NORTH: F. R. P. PANEL	WALLS NORTH: PLYWOOD WAINSCOT	WALLS EAST: 5/8" GYPSUM BOARD	WALLS EAST: CERAMIC TILE	WALLS EAST: F. R. P. PANEL	WALLS EAST: PLYWOOD WAINSCOT	WALLS SOUTH: 5/8" GYPSUM BOARD	WALLS SOUTH: CERAMIC TILE	WALLS SOUTH: F. R. P. PANEL	WALLS SOUTH: PLYWOOD WAINSCOT	WALLS WEST: 5/8" GYPSUM BOARD	WALLS WEST: CERAMIC TILE	WALLS WEST: F. R. P. PANEL	WALLS WEST: PLYWOOD WAINSCOT	CEILING: 5/8" GYPSUM BOARD	CEILING: EXPOSED FRAMING	CEILING HEIGHT	REMARKS
1	STORAGE BAY 1			1				22					3			23	3			23	3			23		13	VARIES	PAINTED 4'-0" x 8'-0" x1/2" PLYWOOD WAINSCOT
2	STORAGE BAY 2			1				22					3			23					3			23		13	VARIES	PAINTED 4'-0" x 8'-0" x1/2" PLYWOOD WAINSCOT
3	STORAGE BAY 3			1				22					3			23					3			23		13	VARIES	PAINTED 4'-0" x 8'-0" x1/2" PLYWOOD WAINSCOT
4	STORAGE BAY 4			1				22					3			23					3			23		13	VARIES	PAINTED 4'-0" x 8'-0" x1/2" PLYWOOD WAINSCOT
5	STORAGE BAY 5			1				22					3			23					3			23		13	VARIES	PAINTED 4'-0" x 8'-0" x1/2" PLYWOOD WAINSCOT
6	STORAGE BAY 6			1					3				3			23					3			23		13	VARIES	PAINTED 4'-0" x 8'-0" x1/2" PLYWOOD WAINSCOT
7	STORAGE BAY 7			1					3				3								3			23		13	VARIES	PAINTED 4'-0" x 8'-0" x1/2" PLYWOOD WAINSCOT
8	ENVIRONMENTAL CHAMBER			1		2			3				3				3				3				3		12'-0"	
9	FLEX PAVEMENT				14	2			3				3				3				3						12'-0"	
10	FILE STORAGE				14	2			3				3				3				3				3		12'-0"	
11	ELECTRICAL TESTING				14	2			3				3				3				3				3		12'-0"	
12	CORROSION TESTING				14	2			3				3				3				3				3		12'-0"	
13	LONG TERM TESTING				14	2			3				3				3				3				3		12'-0"	
14	WOMEN		21				19			19				19				19				19			3		9'-0"	
15	MEN		21				19			19				19				19				19			3		9'-0"	
16	COMMUNICATION ROOM			1		2						23				23				23				23	3		9'-0"	
17	ELECT. ROOM			1		2			3				3				3				3				3		9'-0"	
18	SUPPLY				14	2			3				3				3				3				3		12'-0"	
19	OFFICE	15				2			3				3				3				3				3		9'-0"	
20	DGS	15				2			3				3				3				3				3		9'-0"	
21	STORAGE BAY 8			1				22	3			23	3			23	3			23	3			23		13	VARIES	PAINTED 4'-0" x 8'-0" x1/2" PLYWOOD WAINSCOT
22	FILE ROOM			1				22	3				3				3				3				3		12'-0"	

F. R. P. PANEL = FIBERGLASS REINFORCED POLYESTER PANEL

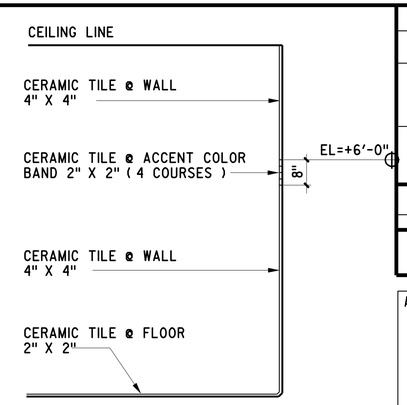

1 CERAMIC TILE PATTERN AND SIZE

NO SCALE

DIST.	COUNTY	ROUTE	POST MILES TOTAL PROJECT	SHEET NO.	TOTAL SHEETS
03	Sac	5501		50	172

LICENSED ARCHITECT — DATE

LICENSED ARCHITECT C.A. SANCHEZ No. C-15201 Exp. 12-31-09 STATE OF CALIFORNIA

11-23-09
PLANS APPROVAL DATE

The State of California or its officers or agents shall not be responsible for the accuracy or completeness of electronic copies of this plan sheet.

ACCESSIBILITY DESIGN APPROVAL STAMP
DOT / DES / OTA
03-2C8441
DISTRICT - EA
Reviewed by:
Date: 06-29-09

CALIFORNIA STATE FIRE MARSHAL
APPROVED
Approval of this plan does not authorize or approve any omission or deviation from applicable regulations. Final approval is subject to field inspection. One set of approved plans shall be available on the project site at all times.
Reviewed by: STEPHEN GUARINO
Approval date: 07-01-09

INTERIOR COLOR / FINISH NOTES

MANUFACTURER'S DESIGNATIONS USED TO INDICATE COLOR, PATTERN, TYPE, CONFIGURATION ETC. ARE FOR REFERENCE ONLY AND ARE NOT INTENDED TO SHOW A PREFERENCE FOR A PARTICULAR BRAND.

1	EXPOSED CONCRETE FLOOR	CLEAR SMOOTH FINISH - CONCRETE HARDENER AND SEALER
2	4" RUBBER BASE	JOHNSONITE, CHARCOAL (DC-20)/ OR BURKE-CHARCOAL
3	GYPSUM BOARD WALL & CEILING	KELLY MOORE, DIAMOND WHITE (WS27) - SEMI-GLOSS PAINT
4	EXPOSED MECHANICAL DUCTING	KELLY MOORE, DIAMOND WHITE (WS27)
5	F. R. P. PANEL	TO BE SELECTED FROM MFR STANDARD COLORS
6	DOORS AND DOOR FRAMES	KELLY MOORE, CITIFIED (KM700-M)
7	WINDOW TRIM, SILL AND APRON	KELLY MOORE, CITIFIED (KM700-M)
8	TOILET PARTITION AND SCREEN	STAINLESS STEEL
9	METAL LOCKERS	TO BE SELECTED FROM MFR STANDARD COLORS
10	HORIZONTAL BLINDS	TO BE SELECTED FROM MFR STANDARD COLORS
11	STEEL SHELVING	TO BE SELECTED FROM MFR STANDARD COLORS
12	STEEL JOIST	KELLY MOORE, DIAMOND WHITE (WS27)
13	EXPOSED ROOF DECKING & FASTENERS	KELLY MOORE, DIAMOND WHITE (WS27)
14	VCT TILE 12" x 12" x 1/8"	MULTI-ECRU-EXCELON BY ARMSTRONG
15	RUBBER FLOOR 12" x 12" x 1/8"	BURKE MARBLE TILE 527M CLAY

EXTERIOR COLOR / FINISH NOTES

MANUFACTURER'S DESIGNATIONS USED TO INDICATE COLOR, PATTERN, TYPE, CONFIGURATION ETC. ARE FOR REFERENCE ONLY AND ARE NOT INTENDED TO SHOW A PREFERENCE FOR A PARTICULAR BRAND.

PREFINISHED METAL WALL PANEL	~~COLOR TO MATCH EXISTING RSP BUILDING~~
PREFINISHED METAL ROOF PANEL	~~COLOR TO MATCH EXISTING RSP BUILDING~~
EXPOSED RAIN WATER LEADER	~~COLOR TO MATCH EXISTING RSP BUILDING~~
PREFINISHED METAL COPING	~~COLOR TO MATCH EXISTING RSP BUILDING~~
SECTIONAL OVERHEAD DOORS/LOUVERS	KELLY MOORE, CITIFIED (KM700-M)
STEEL ANGLE JAMBS (OVERHEAD DOORS)	KELLY MOORE, CITIFIED (KM700-M)
METAL DOORS/FRAMES (SWINGING)	KELLY MOORE, CITIFIED (KM700-M)
PREFINISHED ALUMINUM WINDOW FRAME	~~CLEAR ANODIZED~~

5

GUARD POST	CALTRANS ORANGE
ROOF JACKS AND VENTS	KELLY MOORE, DIAMOND WHITE (WS27)

MANUFACTURER'S STANDARD COLOR PALETTE

16	PLASTIC LAMINATE COUNTER TOP & SPLASHES	FORMICA, CONCRETE 437-58	BREAK ROOM
17	PLASTIC LAMINATE WALL & BASE CABINETS	FORMICA, BIRCH 921-58	BREAK ROOM
18	POLISHED PORCELAIN TILE @ WALL	DALTILE, ARCTIC WHITE 6570 — GROUT (SEALED): CUSTOM BUILDING PRODUCTS COLOR APPROVED BY THE STATE	BREAK ROOM
19	POLISHED PORCELAIN TILE @ WALL	DALTILE, ARTIC WHITE 6570 — GROUT (SEALED): CUSTOM BUILDING PRODUCTS COLOR APPROVED BY THE STATE	MEN (MEN) LOCKER (MEN) SHOWER
20	POLISHED PORCELAIN TILE @ ACCENT BAND	DALTILE, SUEDE GRAY 6553 — GROUT (SEALED): CUSTOM BUILDING PRODUCTS COLOR APPROVED BY THE STATE	MEN (MEN) LOCKER (MEN) SHOWER
21	MATTE PORCELAIN TILE @ FLOOR	DALTILE, SUEDE GRAY SPECKLE D208 (SEALED) — DELOREAN GRAY #165 @ FLOOR	WOMEN (WOMEN) LOCKER (WOMEN) SHOWER
22	CONCRETE CURB	KELLY MOORE - CORTEZ 73 - GRAY COLOR	WOMEN (WOMEN) LOCKER (WOMEN) SHOWER
23	PLYWOOD 1/2" (4' x 8')	KELLY MOORE - CORTEZ 73 - GRAY COLOR - SEMI-GLOSS	UNISEX RESTROOM

NOTE : SEE DETAIL 1 FOR CERAMIC TILE PATTERN AND SIZE

5 **REVISED PER ADDENDUM No. 5 DATED APRIL 8, 2010**

	BY	CHECKED
DESIGN		
DETAILS		
QUANTITIES		

STATE OF CALIFORNIA
DEPARTMENT OF TRANSPORTATION

DIVISION OF ENGINEERING SERVICES
ARCHITECTURAL AND STRUCTURAL DESIGN

BRIDGE NO.
POST MILE

PHASE 4 — STORAGE

TRANSLAB REPAIR PROJECT
FINISH AND COLOR SCHEDULES

SHEET A6-5

a6_5_fin_sched.add
DS OSD Imperial Rev. 10/07 07-APR-2010 10:35

ORIGINAL SCALE IN INCHES FOR REDUCED PLANS 0 1 2 3

CU 03263
EA 2C8441

DISREGARD PRINTS BEARING EARLIER REVISION DATES

REVISION DATES (PRELIMINARY STAGE ONLY) 07 06-01-09

SHEET X OF X

07-APR-2010 10:35
a6_5_fin_sched.add

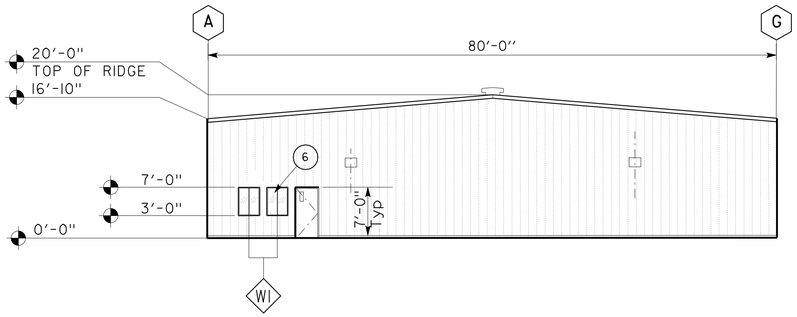

1 NORTH ELEVATION

SCALE: 3/32" = 1'-0"

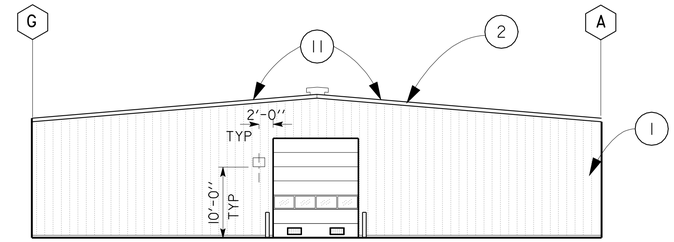

2 SOUTH ELEVATION

SCALE: 3/32" = 1'-0"

KEYNOTES :

THESE KEYNOTES APPLY TO THIS SHEET ONLY

1. METAL SIDING, TYP.
2. METAL ROOF PANEL, TYP.
3. PREFINISHED METAL GUTTER, TYP.
4. PREFINISHED METAL DOWNSPOUTS, TYP.
5. SECTIONAL DOOR, TYP.
6. HORIZONTAL WINDOW SLIDER (3'-0"W x 4'-0" H), TYP.
7. MECH. UNIT. SEE MECH SHEETS
8. GUARD POST, TYP.
9. WALL MOUNTED LIGHT FIXTURE, SEE ELECT. SHTS.
10. ACCESSIBLE BUILDING SIGN, SEE ...3, 4 & 5/A0-3.3
11. SOLAR PV INSTALLATION NOT SHOWN FOR CLARITY.

5

DIST.	COUNTY	ROUTE	POST MILES TOTAL PROJECT	SHEET NO.	TOTAL SHEETS
03	Sac	5501		51	172

LICENSED ARCHITECT DATE

LICENSED ARCHITECT C.A. SANCHEZ No. C-15201 Exp. 12-31-09 STATE OF CALIFORNIA

11-23-09
PLANS APPROVAL DATE

The State of California or its officers or agents shall not be responsible for the accuracy or completeness of electronic copies of this plan sheet.

ACCESSIBILITY DESIGN APPROVAL STAMP
DOT / DES / OTA
03-2C8441
DISTRICT - EA
Reviewed by:
Date: 06-29-09

CALIFORNIA STATE FIRE MARSHAL
APPROVED
Approval of this plan does not authorize or approve any omission or deviation from applicable regulations. Final approval is subject to field inspection. One set of approved plans shall be available on the project site at all times.
Reviewed by: STEPHEN GUARINO
Approval date: 07-01-09

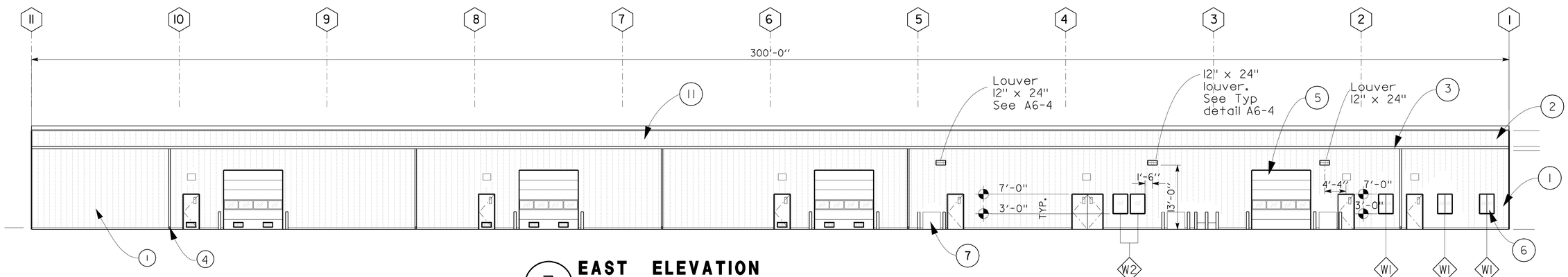

3 EAST ELEVATION

SCALE: 3/32" = 1'-0"

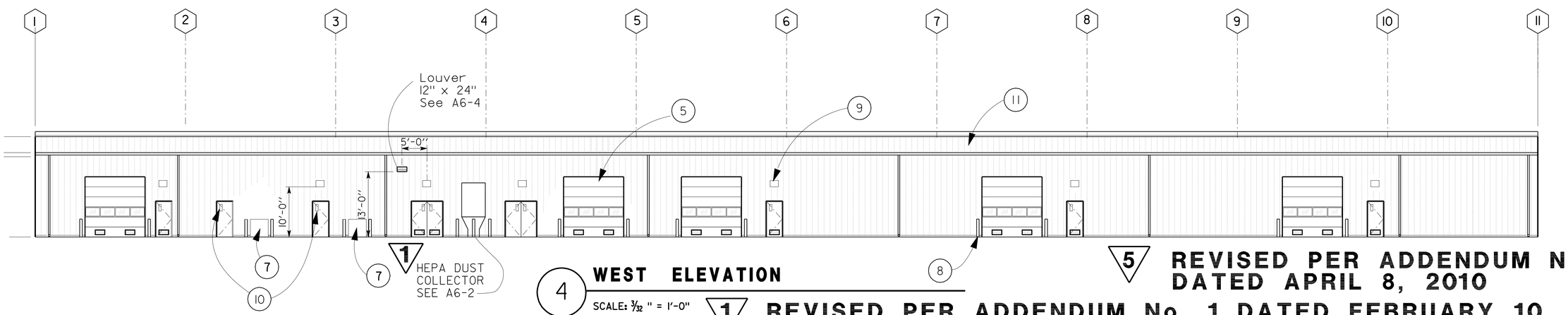

4 WEST ELEVATION

SCALE: 3/32" = 1'-0"

1 REVISED PER ADDENDUM No. 1 DATED FEBRUARY 10, 2010

5 REVISED PER ADDENDUM No. 5 DATED APRIL 8, 2010

DESIGN	BY SING TSE ~~CARLOS SANCHEZ~~	CHECKED CARLOS SANCHEZ	
DETAILS	BY C. BOYER	CHECKED	
QUANTITIES	BY	CHECKED	

STATE OF CALIFORNIA DEPARTMENT OF TRANSPORTATION

DIVISION OF ENGINEERING SERVICES ARCHITECTURAL AND STRUCTURAL DESIGN

BRIDGE NO. | POST MILE | PHASE 4 | STORAGE | TRANSLAB REPAIR PROJECT | ELEVATIONS | SHEET A6-6

a6_6_elev.add
DS OSD Imperial Rev. 10/07 05-APR-2010 09:49

ORIGINAL SCALE IN INCHES FOR REDUCED PLANS 0 1 2 3

CU 03263
EA 2C8441

DISREGARD PRINTS BEARING EARLIER REVISION DATES

REVISION DATES (PRELIMINARY STAGE ONLY) 07 06-01-09 | SHEET X | OF X

05-APR-2010 09:49
a6_6_elev.add

DIST.	COUNTY	ROUTE	POST MILES TOTAL PROJECT	SHEET NO.	TOTAL SHEETS
03	Sac	5501		52	172

LICENSED ARCHITECT DATE

LICENSED ARCHITECT C.A. SANCHEZ No. C-15201 Exp. 12-31-09 STATE OF CALIFORNIA

11-23-09
PLANS APPROVAL DATE

The State of California or its officers or agents shall not be responsible for the accuracy or completeness of electronic copies of this plan sheet.

ACCESSIBILITY DESIGN APPROVAL STAMP
DOT / DES / OTA
03-2C8441
DISTRICT - EA
Reviewed by: YA WANG
Date: 06-29-09

CALIFORNIA STATE FIRE MARSHAL
APPROVED
Approval of this plan does not authorize or approve any omission or deviation from applicable regulations. Final approval is subject to field inspection. One set of approved plans shall be available on the project site at all times.
Reviewed by: STEPHEN GUARINO
Approval date: 07-01-09

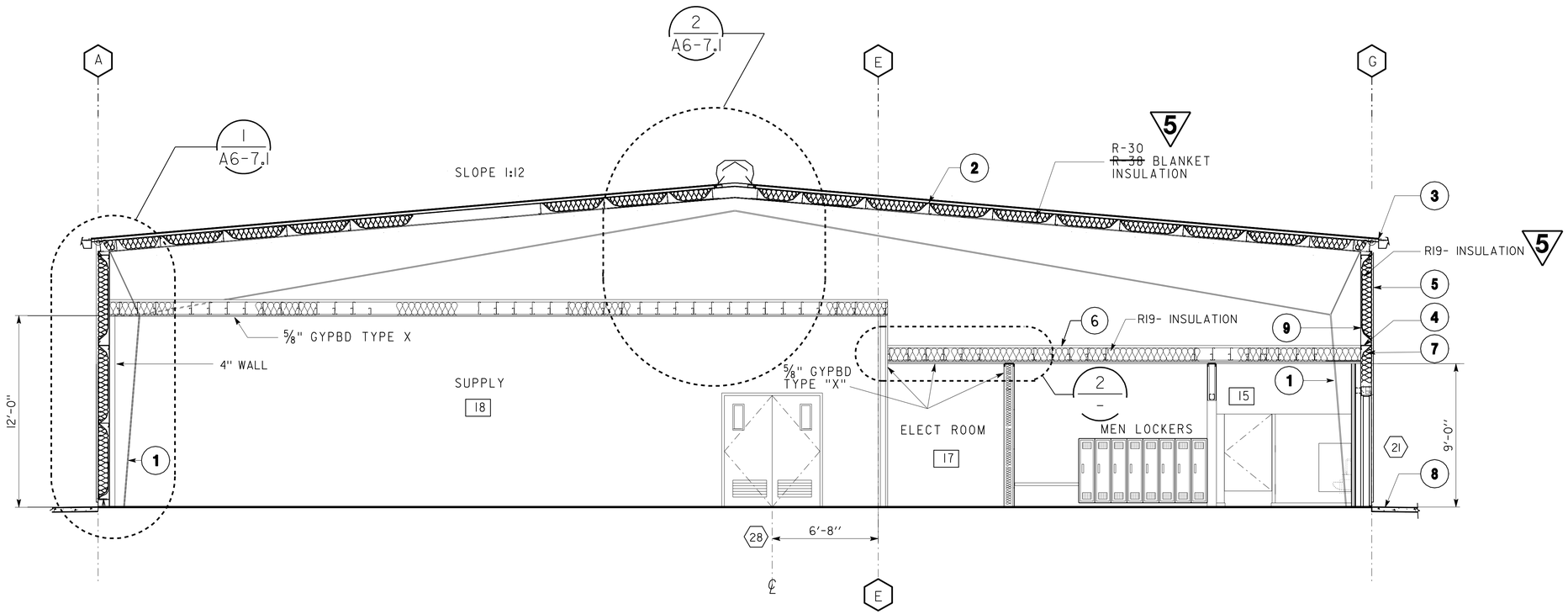

1 SECTION

SCALE 1/4"=1'-0"

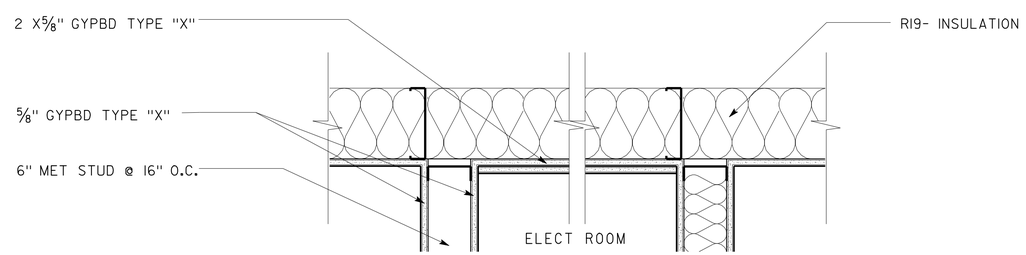

2 1 HR WALL AND CEILING

SCALE NONE

KEYNOTES :

THESE KEYNOTES APPLY TO THIS SHEET ONLY

1. PREFABRICATED TAPERED COLUMN, TYP.
2. CONTINUOUS SPAN PURLIN, TYP.
3. EAVE STRUT,TYP.
4. GIRT,TYP.
5. METAL WALL PANEL WITH BASE TRIM AND BASE CLOSURE AND BASE TUBE .TYP.
6. CEILING JOISTS WITH INSULATION
7. R-19 ~~R-13~~ WALL INSULATION, TYP. (5)
8. CONCRETE CURB, TYP. (1 / A6-7.1)
9. 1/2" GYP. BD. OVER METAL STUD, TYP.

5 REVISED PER ADDENDUM No. 5 DATED APRIL 8, 2010

DESIGN	BY ~~CARLOS SANCHEZ~~ SING TSE	CHECKED CARLOS SANCHEZ	
DETAILS	BY	CHECKED	
QUANTITIES	BY	CHECKED	

STATE OF CALIFORNIA
DEPARTMENT OF TRANSPORTATION

DIVISION OF ENGINEERING SERVICES
ARCHITECTURAL AND STRUCTURAL DESIGN

BRIDGE NO.
POST MILE

PHASE 4 | STORAGE

TRANSLAB REPAIR PROJECT
SECTION

SHEET A6-7

a6_7_sec.add
DS OSD Imperial Rev. 10/07 05-APR-2010 09:49

ORIGINAL SCALE IN INCHES FOR REDUCED PLANS 0 1 2 3

CU 03263
EA 2C8441

DISREGARD PRINTS BEARING EARLIER REVISION DATES

REVISION DATES (PRELIMINARY STAGE ONLY) 07 06-01-09 07-01-09

SHEET X OF X

05-APR-2010 09:49

a6_7_sec.add

DIST.	COUNTY	ROUTE	POST MILES TOTAL PROJECT	SHEET NO.	TOTAL SHEETS
03	Sac	5501		53	172

LICENSED ARCHITECT DATE

LICENSED ARCHITECT C.A. SANCHEZ No. C-15201 Exp. 12-31-09 STATE OF CALIFORNIA

11-23-09
PLANS APPROVAL DATE

The State of California or its officers or agents shall not be responsible for the accuracy or completeness of electronic copies of this plan sheet.

ACCESSIBILITY DESIGN APPROVAL STAMP
DOT / DES / OTA
03-2C8441
DISTRICT - EA
Reviewed by: YA WANG
Date: 06-29-09

CALIFORNIA STATE FIRE MARSHAL
APPROVED
Approval of this plan does not authorize or approve any omission or deviation from applicable regulations. Final approval is subject to field inspection. One set of approved plans shall be available on the project site at all times.
Reviewed by: STEPHEN GUARINO
Approval date: 07-01-09

5 **REVISED PER ADDENDUM No. 5 DATED APRIL 8, 2010**

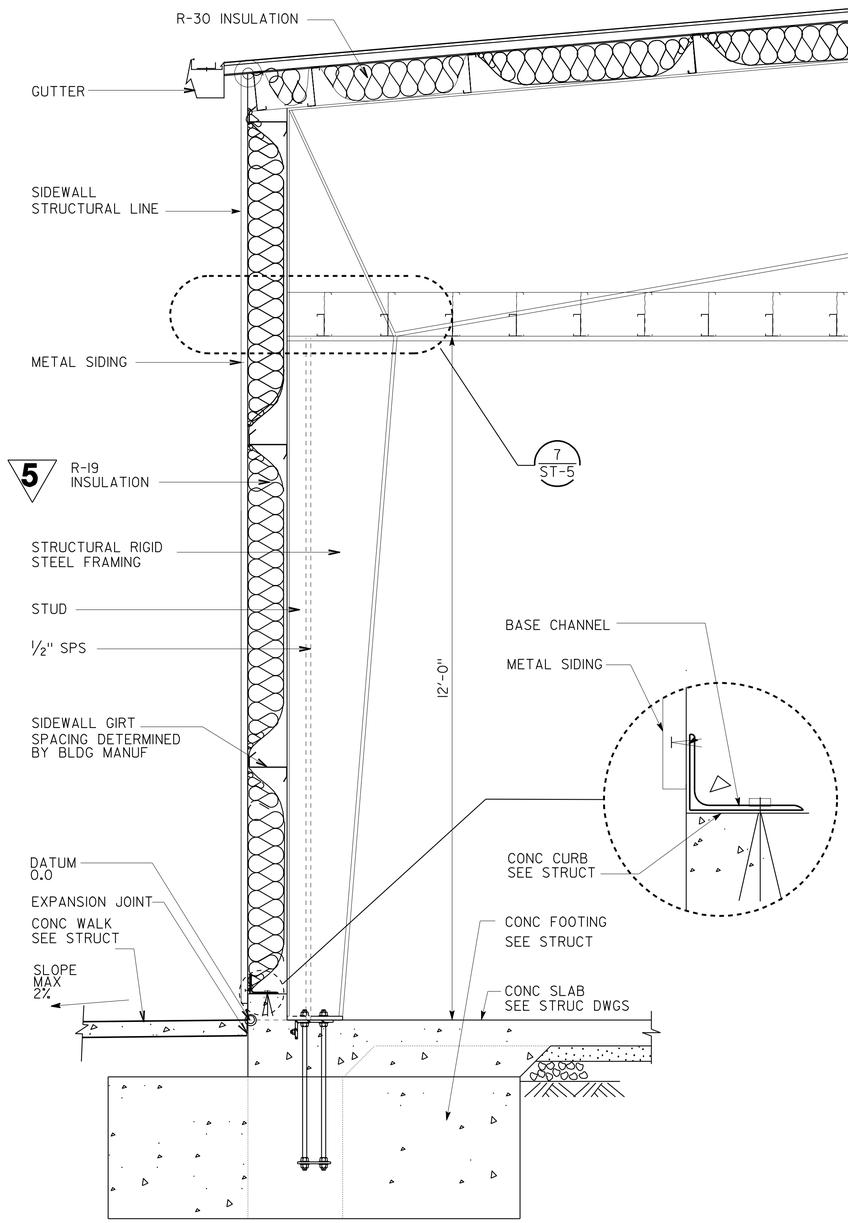

1 **WALL DETAIL**
SCALE ¾"=1'-0"

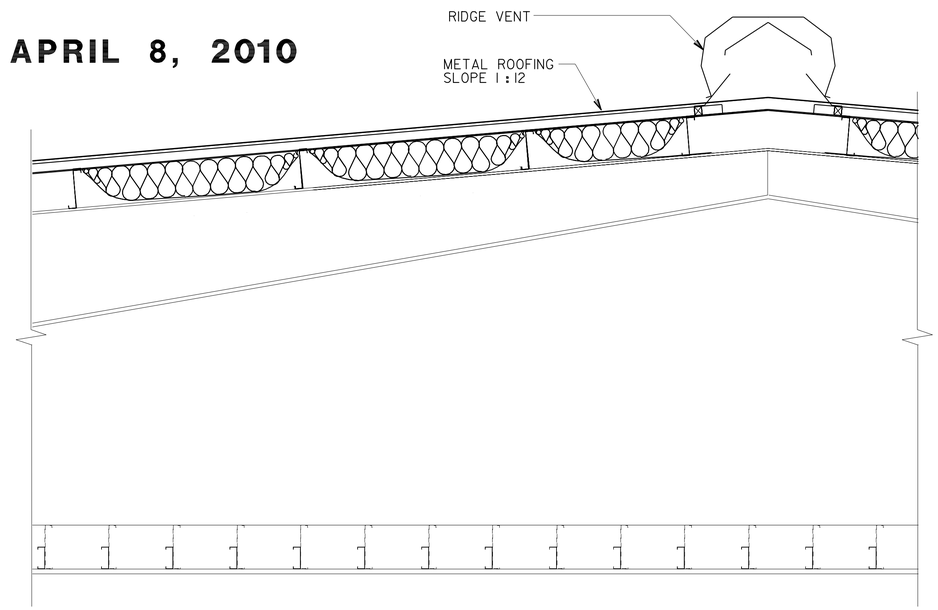

2 **ROOF DETAIL**
SCALE ¾"=1'-0"

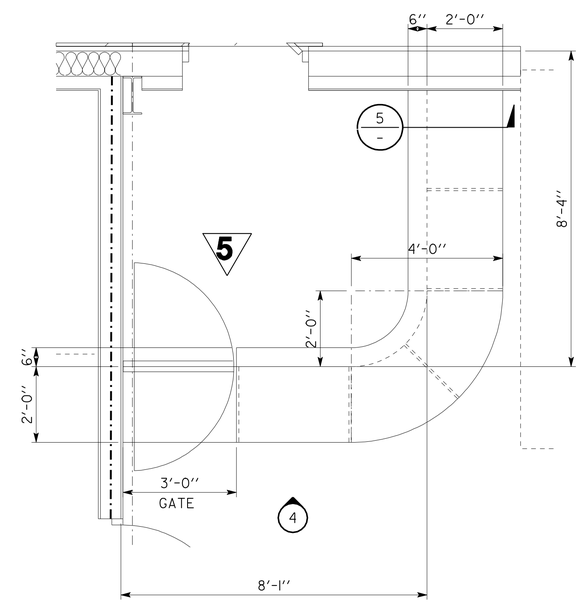

3 **CUSTOMER ENTRANCE PLAN**
SCALE ½"=1'-0" **STORAGE BUILDING 6**
PLAN NORTH

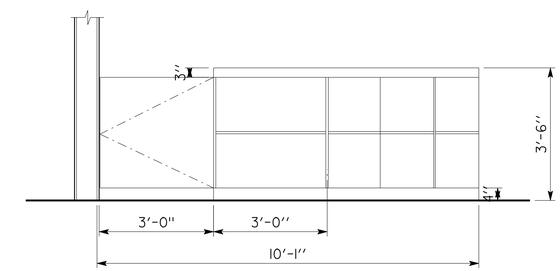

4 **ELEVATION**
SCALE ½"=1'-0"

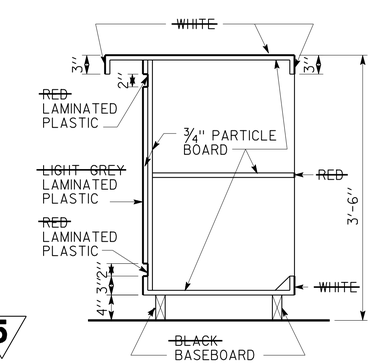

5 **SECTION**
SCALE 1"=1'-0"

DESIGN	BY SING TSE ~~CARLOS SANCHEZ~~	CHECKED CARLOS SANCHEZ	STATE OF CALIFORNIA DEPARTMENT OF TRANSPORTATION	DIVISION OF ENGINEERING SERVICES ARCHITECTURAL AND STRUCTURAL DESIGN	BRIDGE NO.	PHASE 4	TRANSLAB REPAIR PROJECT	SHEET A6-7.1
DETAILS	BY	CHECKED			POST MILE	STORAGE	SECTION	
QUANTITIES	BY	CHECKED						

a6_7.1_det.add
DS OSD Imperial Rev. 10/07 06-APR-2010 11:31

ORIGINAL SCALE IN INCHES FOR REDUCED PLANS 0 1 2 3

CU 03263
EA 2C8441

DISREGARD PRINTS BEARING EARLIER REVISION DATES

REVISION DATES (PRELIMINARY STAGE ONLY) 07 06-01-09 07-01-09 SHEET X OF X

06-APR-2010 11:31
a6_7.1_det.add

DIST.	COUNTY	ROUTE	POST MILES TOTAL PROJECT	SHEET NO.	TOTAL SHEETS
03	Sac	5501		54	172

LICENSED ARCHITECT DATE

LICENSED ARCHITECT C.A. SANCHEZ No. C-15201 Exp. 12-31-09 STATE OF CALIFORNIA

11-23-09
PLANS APPROVAL DATE

The State of California or its officers or agents shall not be responsible for the accuracy or completeness of electronic copies of this plan sheet.

GENERAL NOTES

1. PROVIDE GYP. BD. WALL AND CEILING IN ALL SHADED AREAS.
2. PROVIDE WALL AND CEILINGS INSULATION
3. LIGHTING FIXTURE LAYOUTS, SEE ELECT.

KEYNOTES :

THESE KEYNOTES APPLY TO THIS SHEET ONLY

1. TAPERED COLUMN, TYP.
2. CONTINUOUS SPAN PURLIN, TYP.
3. METAL ROOF PANEL, TYP.
4. SECTIONAL DOOR TRACKS, TYP.
5. ELECTRIC DOOR OPERATOR, TYP.
6. GYP.BD. TYP.
7. 10'-6" x 3'-0" TRANSLUCENT PANEL, TYP.

LEGEND :

THESE KEYNOTES APPLY TO THIS SHEET ONLY

- SUPPLY DIFFUSER, SEE MECH.
- RETURN DIFFUSER, SEE MECH.
- LIGHTING. SEE ELECT.
- SURFACE MOUNTED LIGHTING. SEE ELECT.
- 12'-0" — THIS NUMBER INDICATES CEILING HEIGHT
- GYPBD ON 9'-0" HIGH CEILING
- GYPBD ON 12'-0" HIGH CEILING

ACCESSIBILITY DESIGN APPROVAL STAMP
DOT / DES / OTA
03-2C8441
DISTRICT - EA
Reviewed by: YA WANG
Date: 06-29-09

CALIFORNIA STATE FIRE MARSHAL
APPROVED
Approval of this plan does not authorize or approve any omission or deviation from applicable regulations. Final approval is subject to field inspection. One set of approved plans shall be available on the project site at all times.
Reviewed by: STEPHEN GUARINO
Approval date: 07-01-09

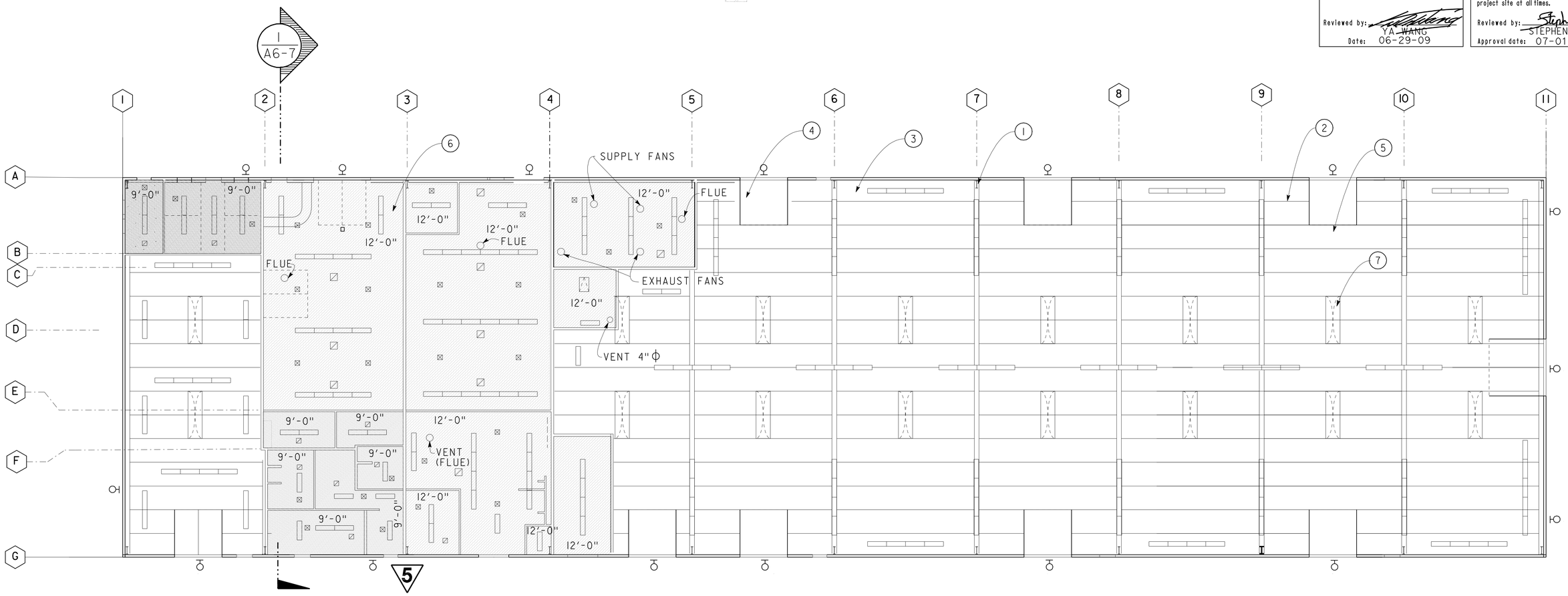

1 REFLECTED CEILING PLAN

SCALE: 3 /32 " = 1'-0"

NORTH N

5 REVISED PER ADDENDUM No. 5 DATED APRIL 8, 2010

DESIGN	BY ~~CARLOS SANCHEZ~~ SING TSE	CHECKED CARLOS SANCHEZ	
DETAILS	BY	CHECKED	
QUANTITIES	BY	CHECKED	

STATE OF CALIFORNIA DEPARTMENT OF TRANSPORTATION

DIVISION OF ENGINEERING SERVICES ARCHITECTURAL AND STRUCTURAL DESIGN

CU 03263
EA 2C8441

BRIDGE NO.
POST MILE

PHASE 4 — STORAGE

TRANSLAB REPAIR PROJECT
REFLECTED CEILING PLAN

SHEET A6-8

ORIGINAL SCALE IN INCHES FOR REDUCED PLANS 0 1 2 3

DISREGARD PRINTS BEARING EARLIER REVISION DATES →

REVISION DATES (PRELIMINARY STAGE ONLY) 07 06-01-09 07-01-09

SHEET X OF X

a6_8_rcp.add
DS OSD Imperial Rev. 10/07 05-APR-2010 09:49

05-APR-2010 09:49
a6_8_rcp.add

DIST.	COUNTY	ROUTE	POST MILES TOTAL PROJECT	SHEET NO.	TOTAL SHEETS
03	Sac	5501		55	172

LICENSED ARCHITECT DATE

LICENSED ARCHITECT C.A. SANCHEZ No. C-15201 Exp. 12-31-09 STATE OF CALIFORNIA

11-23-09
PLANS APPROVAL DATE

The State of California or its officers or agents shall not be responsible for the accuracy or completeness of electronic copies of this plan sheet.

ACCESSIBILITY DESIGN APPROVAL STAMP
DOT / DES / OTA
03-2C8441
DISTRICT - EA
Reviewed by:
Date: 06-29-09

CALIFORNIA STATE FIRE MARSHAL APPROVED
Approval of this plan does not authorize or approve any omission or deviation from applicable regulations. Final approval is subject to field inspection. One set of approved plans shall be available on the project site at all times.
Reviewed by: STEPHEN GUARINO
Approval date: 07-01-09

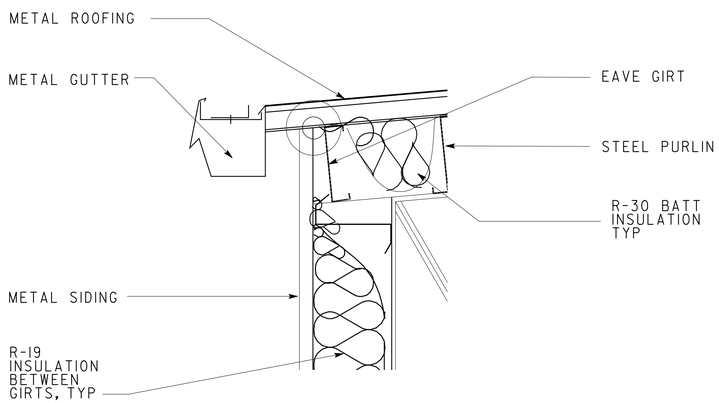

1 EAVE DETAIL

SCALE: 1-½" = 1'-0"

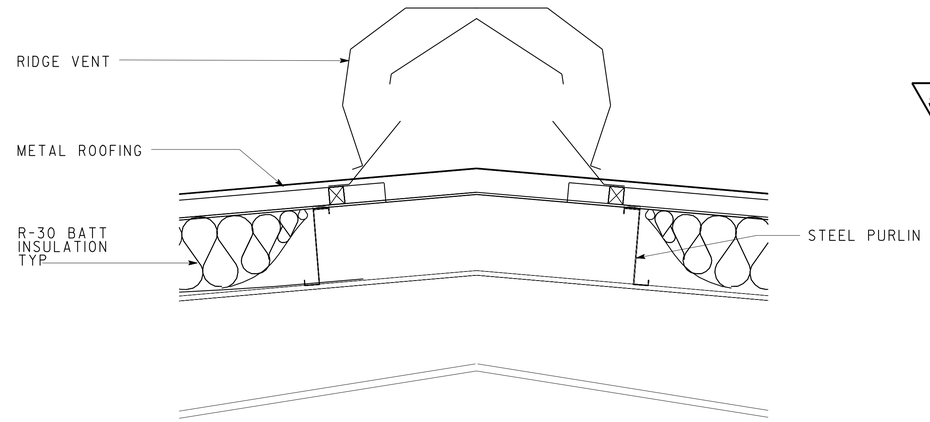

2 RIDGE DETAIL

SCALE: 1-½" = 1'-0"

5

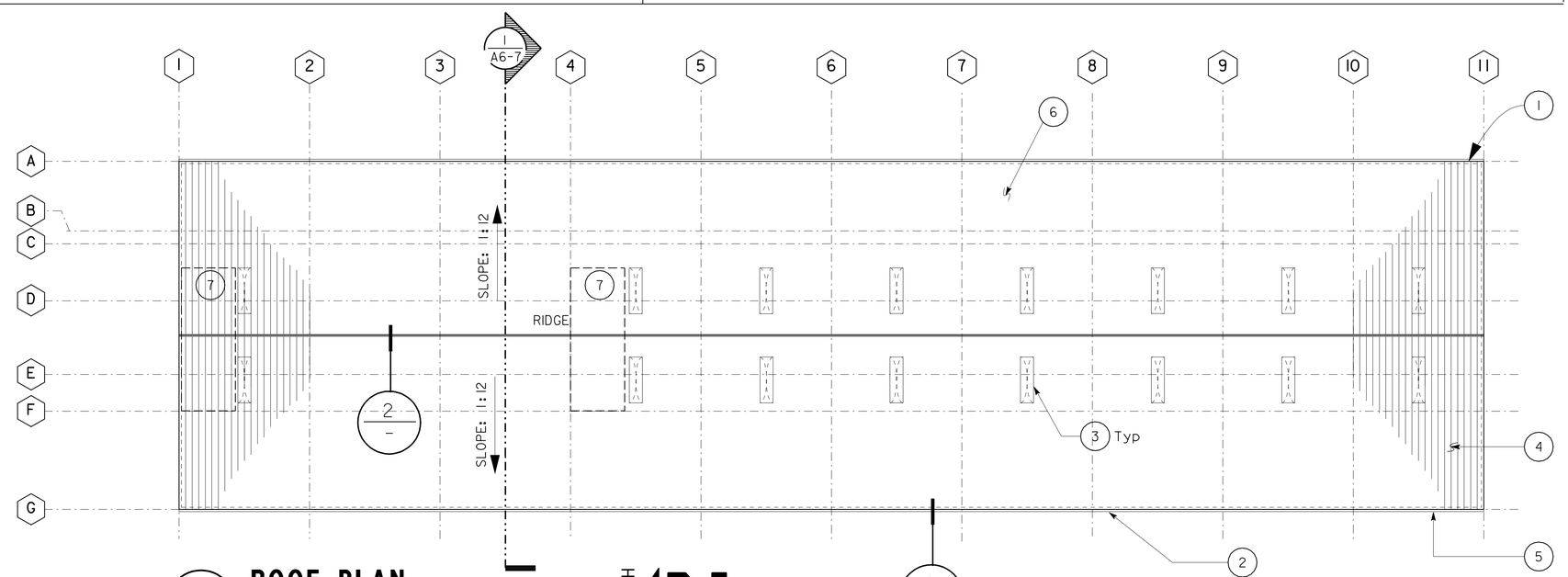

3 ROOF PLAN

SCALE: 1/16" = 1'-0"

KEYNOTES :

THESE KEYNOTES APPLY TO THIS SHEET ONLY

1. PREFINISHED METAL ROOF PANEL, TYP.
2. PREFINISHED METAL GUTTER AND DOWNSPOUT TYP.
3. 3'-0" x 10'-6" TRANSLUCENT PANEL, TYP.
4. METAL ROOF PANEL
5. METAL GUTTER SEE DETAIL 1/-
6. SOLAR PV INSTALLATION NOT SHOWN FOR CLARITY
7. ROOF PENETRATION ZONE, SEE MECHANICAL SHEETS FOR PENETRATION LOCATION

5 **REVISED PER ADDENDUM No. 5 DATED APRIL 8, 2010**

DESIGN	BY	CHECKED
DETAILS	BY	CHECKED
QUANTITIES	BY	CHECKED

STATE OF CALIFORNIA DEPARTMENT OF TRANSPORTATION

DIVISION OF ENGINEERING SERVICES ARCHITECTURAL AND STRUCTURAL DESIGN

BRIDGE NO. | POST MILE

PHASE 4 | STORAGE

TRANSLAB REPAIR PROJECT

ROOF PLAN

SHEET A6-9

a6_9_roof.add
DS OSD Imperial Rev. 10/07 06-APR-2010 11:31

ORIGINAL SCALE IN INCHES FOR REDUCED PLANS 0 1 2 3

CU 03263
EA 2C8441

DISREGARD PRINTS BEARING EARLIER REVISION DATES

REVISION DATES (PRELIMINARY STAGE ONLY) - -07 | SHEET | OF

06-APR-2010 11:31

a6_9_roof.add

DIST.	COUNTY	ROUTE	POST MILES TOTAL PROJECT	SHEET NO.	TOTAL SHEETS
03	Sac	5501		56	172

LICENSED ARCHITECT DATE

LICENSED ARCHITECT C.A. SANCHEZ No. C-15201 Exp. 12-31-09 STATE OF CALIFORNIA

11-23-09
PLANS APPROVAL DATE

The State of California or its officers or agents shall not be responsible for the accuracy or completeness of electronic copies of this plan sheet.

ACCESSIBILITY DESIGN APPROVAL STAMP
DOT / DES / OTA
03-2C8441
DISTRICT - EA
Reviewed by:
Date: 06-29-09

CALIFORNIA STATE FIRE MARSHAL
APPROVED
Approval of this plan does not authorize or approve any omission or deviation from applicable regulations. Final approval is subject to field inspection. One set of approved plans shall be available on the project site at all times.
Reviewed by: STEPHEN GUARINO
Approval date: 07-01-09

KEYNOTES :

THESE KEYNOTES APPLY TO THIS SHEET ONLY

1. LOCKER,TYP.
2. RECESSED PAPER TOWEL DISPENSER AND WASTE RECEPTACLE FURNISHED BY THE STATE
3. GRAB BAR, TYP.
4. RECESSED TOILET SEAT COVER DISPENSER
5. METAL TOILET PARTITION,TYP.
6. PARTITON MTD TOILET TISSUE DISPENSER
7. LAVATORY MOUNTED SOAP DISPENSER, TYP.
8. INSULATE HOT WATER AND WASTE LINE,TYP.
9. MIRROR, TYP.
10. WATER CLOSET,TYP.
11. SEMI-RECESSED TOILET TISSUE DISPENSER
12. LAVATORY~~, TYP.~~ AND COUNTER, TYP. 5
13. SINGLE LEVER MIXED VALVE
14. SOAP DISH
15. SWING DOWN SHOWER SEAT
16. 5'-0" FLEX HOSE
17. FIBERGLASS SHOWER UNIT
18. 3'-0" GRAB BAR
19. METAL URINAL SCREEN,TYP.
20. URINAL
21. CERAMIC TILE, 4"x4"x1/4", TYP.
22. 2X4 BENCH
23. EMERGENCY EYE WASH SEE MECH DWG
24. STAINLESS STEEL COUNTER/ SINK 18'-0"X 2'-6"X 2'-10" HIGH W/ LOWER AND UPPER CABINETS
25. SOAP DISPENSER

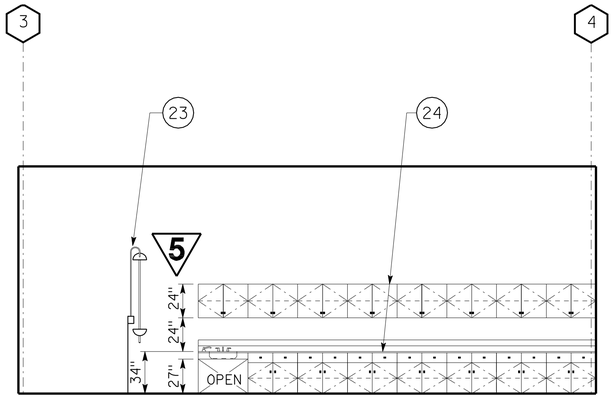

EAST

3 CORROSION TESTING 12

SCALE 1/4" = 1'-0"

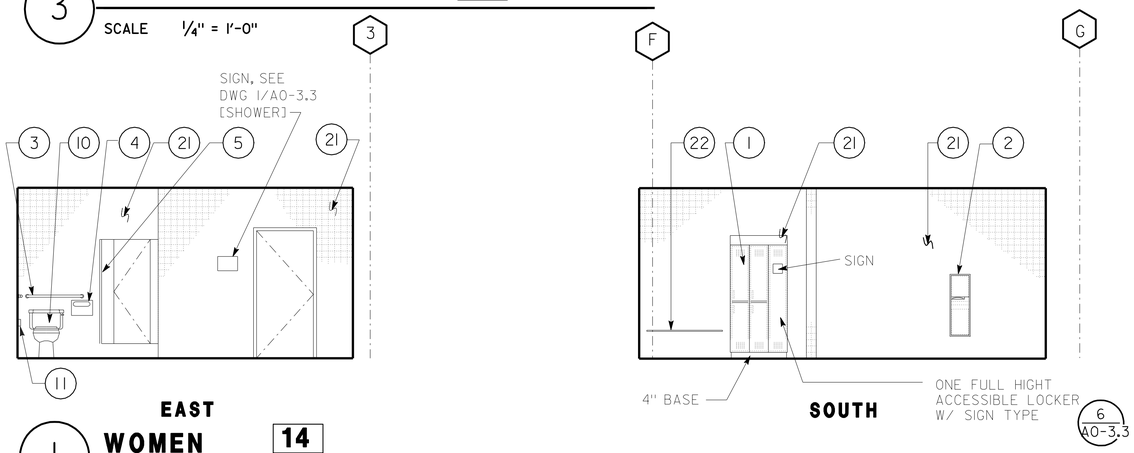

1 WOMEN 14

SCALE 1/4" = 1'-0"

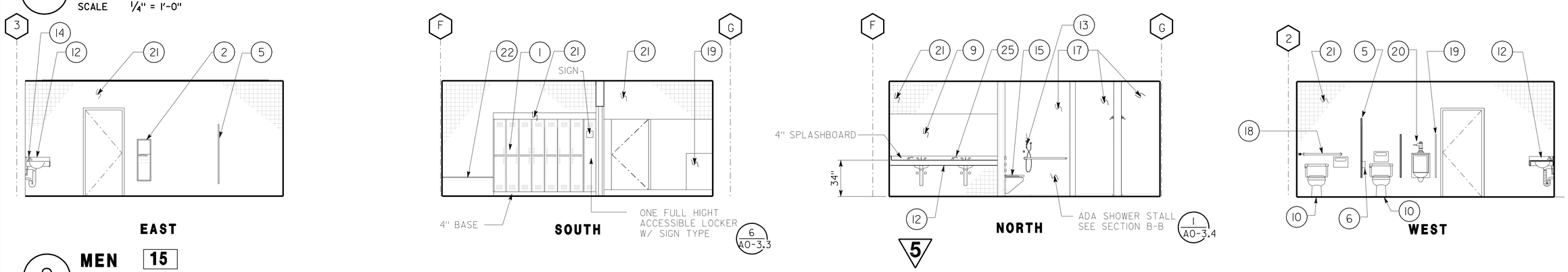

2 MEN 15

SCALE 1/4" = 1'-0"

5 REVISED PER ADDENDUM No. 5 DATED APRIL 8, 2010

DESIGN	BY	CHECKED
DETAILS	BY	CHECKED
QUANTITIES	BY	CHECKED

STATE OF CALIFORNIA DEPARTMENT OF TRANSPORTATION

DIVISION OF ENGINEERING SERVICES ARCHITECTURAL AND STRUCTURAL DESIGN

BRIDGE NO.
POST MILE

PHASE 4 STORAGE

TRANSLAB REPAIR PROJECT
INTERIOR ELEVATIONS

SHEET A6-10

a6_10_int_elev.add
DS OSD Imperial Rev. 10/07 05-APR-2010 09:49

ORIGINAL SCALE IN INCHES FOR REDUCED PLANS 0 1 2 3

CU 03263
EA 2C8441

DISREGARD PRINTS BEARING EARLIER REVISION DATES

REVISION DATES (PRELIMINARY STAGE ONLY) 07 06-01-09

SHEET X OF X

05-APR-2010 09:49
a6_10_int_elev.add

DIST.	COUNTY	ROUTE	POST MILES TOTAL PROJECT	SHEET NO.	TOTAL SHEETS
03	Sac	5501		57	172

ACCESSIBILITY DESIGN APPROVAL STAMP
DOT / DES / OTA
03-2C8441
DISTRICT - EA
Reviewed by: [signature]
Date: 06-29-09

CALIFORNIA STATE FIRE MARSHAL
APPROVED
Approval of this plan does not authorize or approve any omission or deviation from applicable regulations. Final approval is subject to field inspection. One set of approved plans shall be available on the project site at all times.
Reviewed by: STEPHEN GUARINO
Approval date: 07-01-09

LICENSED ARCHITECT — DATE

LICENSED ARCHITECT C.A. SANCHEZ No. C-15201 Exp. 12-31-09 STATE OF CALIFORNIA

11-23-09
PLANS APPROVAL DATE

The State of California or its officers or agents shall not be responsible for the accuracy or completeness of electronic copies of this plan sheet.

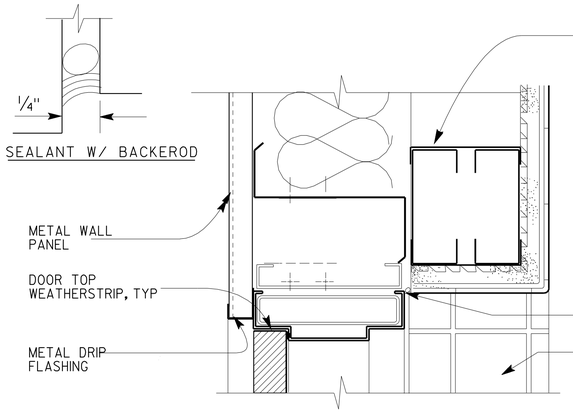

1 **EXTERIOR DOOR HEAD @ RESTROOM**
SCALE: 3"=1'-0"

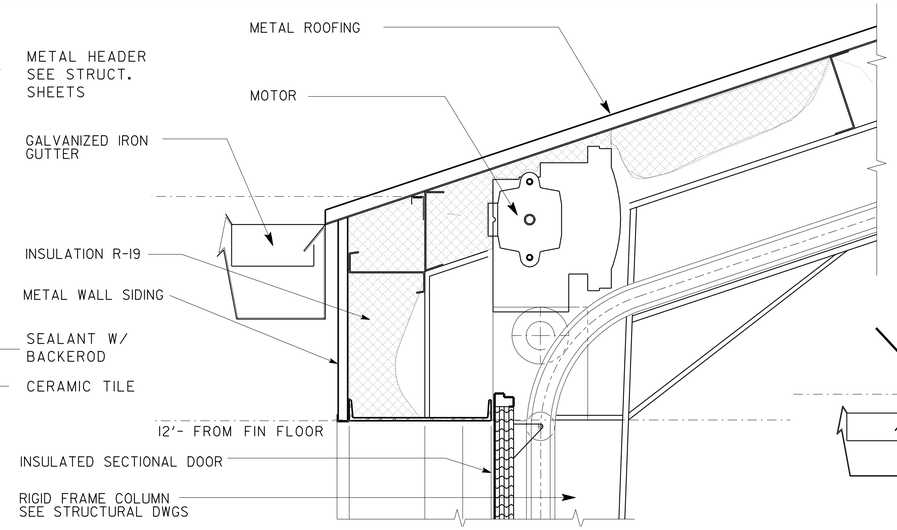

4 **SECTIONAL DOOR HEAD**
SCALE: 1½"=1'-0"

NOTES

1. WINDOWS LOCATED IN THE OFFICE AND DGS SHALL HAVE ⅝" TYPE X GYPSUM BOARD INSTEAD OF ½" PLYWOOD AS INDICATED.

THE SHEET METAL SHALL BE REPLACED WITH ⅝" TYPE X GYPSUM BOARD.

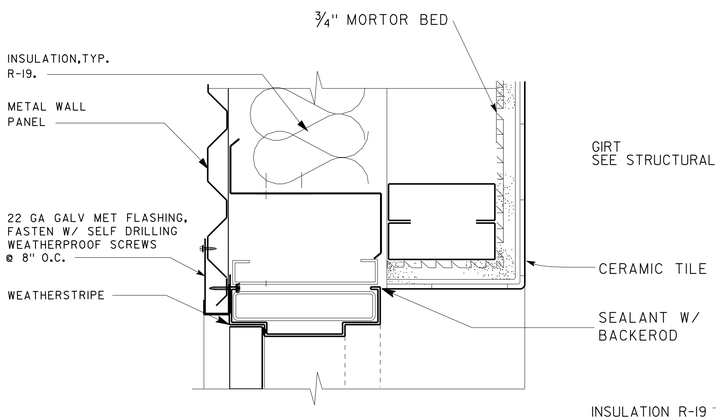

2 **EXTERIOR DOOR JAMB @ RESTROOM**
SCALE: 3"=1'-0"

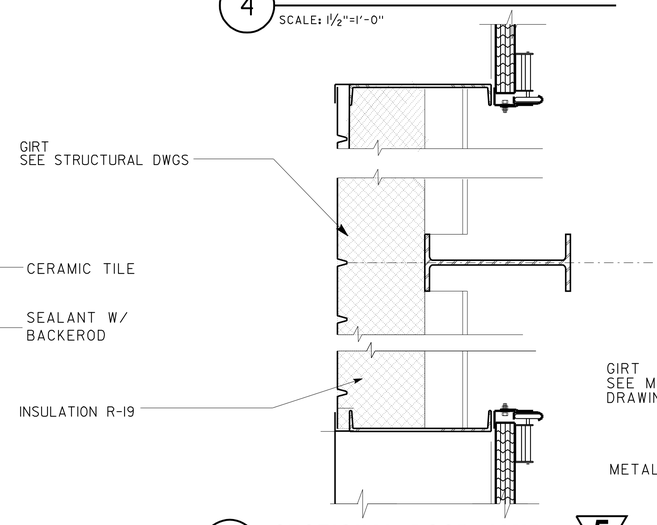

5 **SECTIONAL DOOR JAMB** 5
SCALE: 1½"=1'-0" **DOOR 6 SIM**

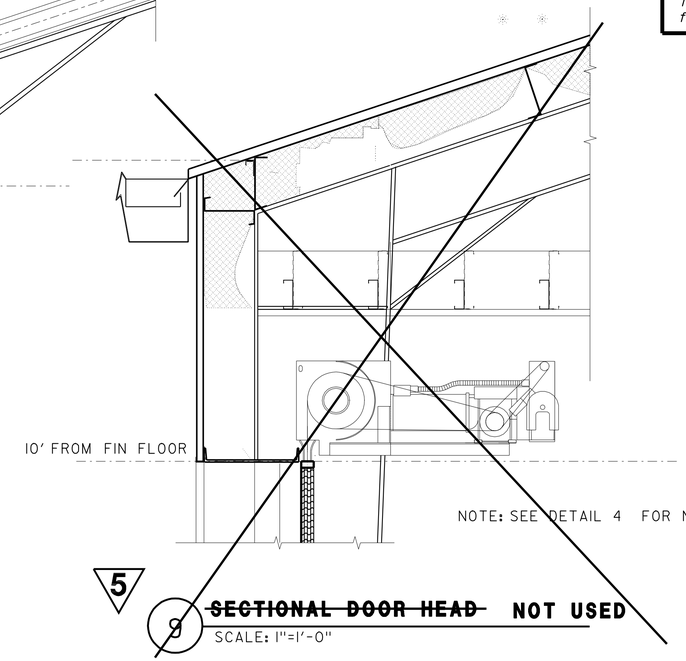

NOTE: SEE DETAIL 4 FOR NOTES

5 9 ~~**SECTIONAL DOOR HEAD**~~ **NOT USED**
SCALE: 1"=1'-0"

5 **REVISED PER ADDENDUM No. 5 DATED APRIL 8, 2010**

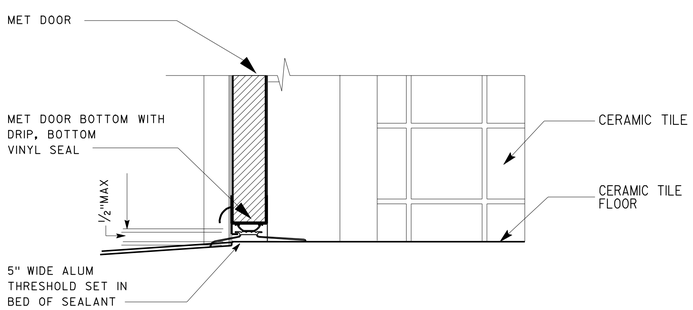

3 **EXTERIOR DOOR SILL @ RESTROOM**
SCALE: 3"=1'-0"

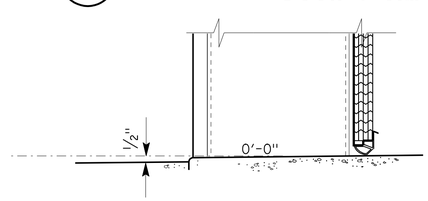

6 **SECTIONAL DOOR SILL** 5
SCALE: 1½"=1'-0" **DOOR 6 SIM**

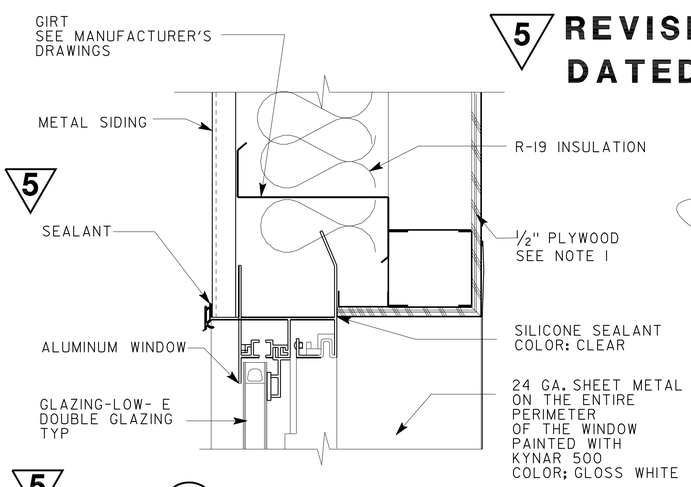

7 **WINDOW HEAD DETAIL TYPICAL**
SCALE: 3"=1'-0"

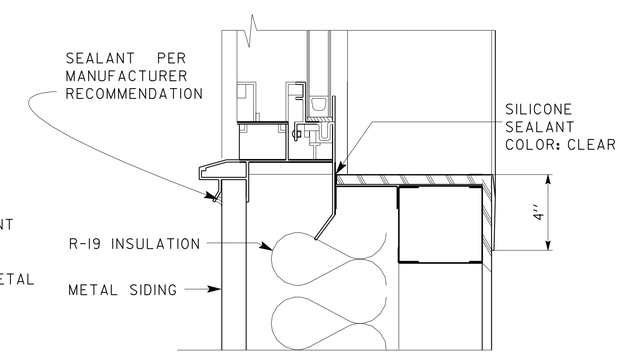

8 **WINDOW SILL DETAIL TYPICAL**
SCALE: 1½"=1'-0"

DESIGN	BY		CHECKED
DETAILS	BY		CHECKED
QUANTITIES	BY		CHECKED

STATE OF CALIFORNIA DEPARTMENT OF TRANSPORTATION

DIVISION OF ENGINEERING SERVICES ARCHITECTURAL AND STRUCTURAL DESIGN

BRIDGE NO. — POST MILE

PHASE 4 — STORAGE

TRANSLAB REPAIR PROJECT — DETAILS

SHEET A6-11

a6_11_det.add
DS OSD Imperial Rev. 10/07 05-APR-2010 09:49

ORIGINAL SCALE IN INCHES FOR REDUCED PLANS 0 1 2 3

CU 03263
EA 2C8441

DISREGARD PRINTS BEARING EARLIER REVISION DATES

REVISION DATES (PRELIMINARY STAGE ONLY) 07 06-01-09 — SHEET — OF

05-APR-2010 09:49

a6_11_det.add

DIST.	COUNTY	ROUTE	POST MILES TOTAL PROJECT	SHEET NO.	TOTAL SHEETS
03	Sac	5501		59	172

LICENSED ARCHITECT — DATE

LICENSED ARCHITECT C.A. SANCHEZ No. C-15201 Exp. 12-31-11 STATE OF CALIFORNIA

11-23-09
PLANS APPROVAL DATE

The State of California or its officers or agents shall not be responsible for the accuracy or completeness of electronic copies of this plan sheet.

5

ACCESSIBILITY DESIGN APPROVAL STAMP DOT / DES / OTA
03-2C8441
DISTRICT - EA
Reviewed by:
Date: 06-29-09

CALIFORNIA STATE FIRE MARSHAL APPROVED
Approval of this plan does not authorize or approve any omission or deviation from applicable regulations. Final approval is subject to field inspection. One set of approved plans shall be available on the project site at all times.
Reviewed by: STEPHEN GUARINO
Approval date: 07-01-09

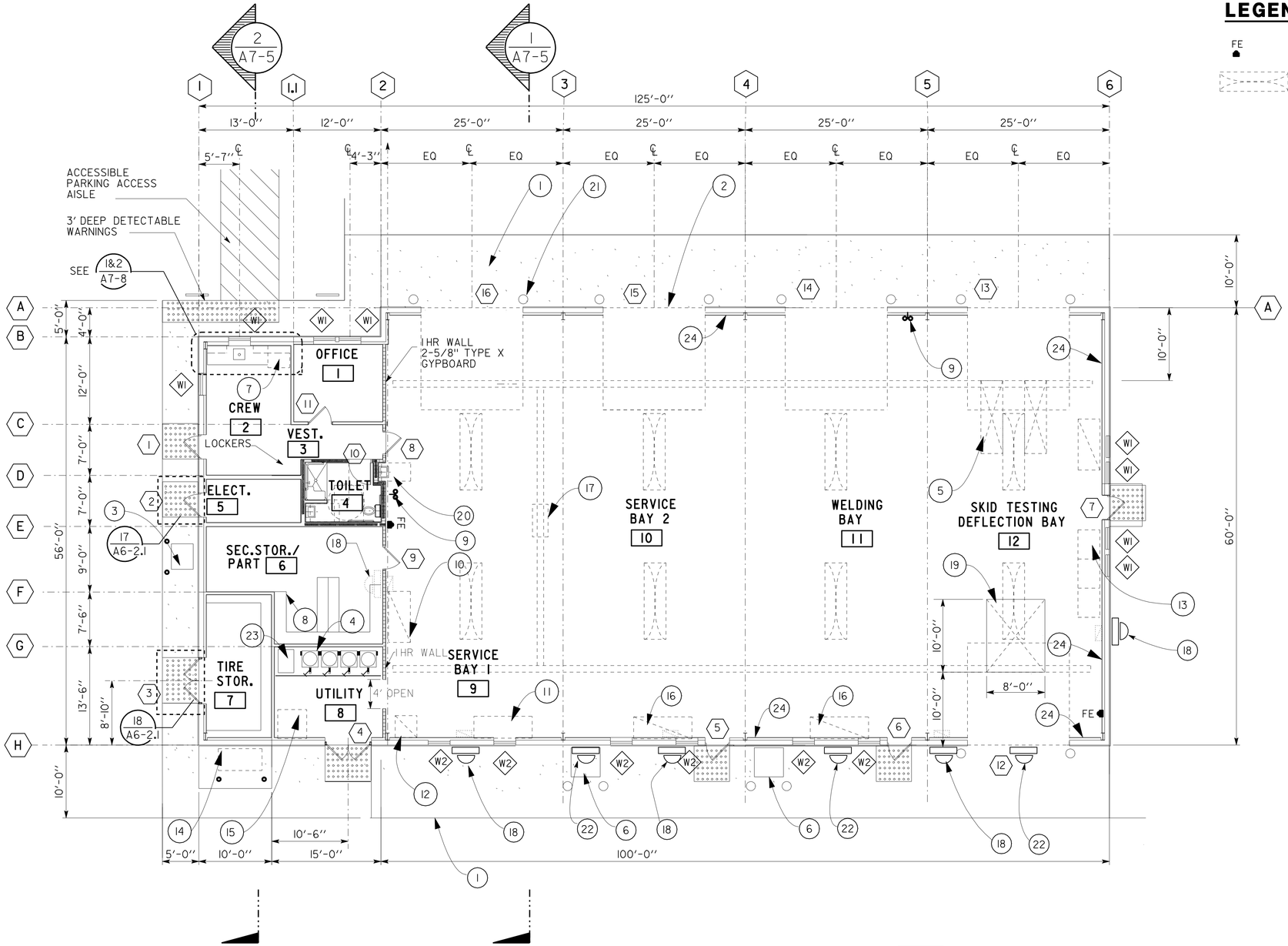

1 FLOOR PLAN

SCALE: 1/8 " = 1'-0"

NOTE:
1. SEE SHEET GP-2 FOR POT CONTINUATION
2. SEE ACCESSIBILITY NOTES FOR POT.

LEGEND:

FE — SURFACE MOUNTED FIRE EXTINGUISHER

TRANSLUCENT PANEL

KEYNOTES:

THESE KEYNOTES APPLY TO THIS SHEET ONLY

1. CONCRETE APRON (SLOPE AT 1%), TYP.
2. SECTIONAL DOOR, TYP.
3. CONDENSING UNIT, SEE MECH.
4. (R) PORTABLE LUBRICATION SYSTEM
5. 3-0" x 10'-0" x 4" RECESSED CONC. PIT SEE STRUCT. SHEETS
6. MECH. UNIT, SEE MECH SHEETS
7. REFRIGERATOR
8. METAL SHELVING, SEE 4/A6-3.1
9. EMERGENCY EYE WASH / SHOWER SEE MECH. SHEETS
10. (R) 3'-0" x 7'-0" WORK BENCH
11. (R) DRILL PRESS & METAL GRINDER
12. (R)3'-0" X 3'-0" X 7'-0" SOLVENT TANK
13. (R) TIRE MACHINE; TIRE CHANGER & TIRE STORAGE
14. (R)4'-0" X 6'-0" X 5'-0" RECYCABLE OIL CONTAINER
15. (R) 4'-0" X 4'-0" X 3'-0" PAN DRAIN
16. (R) 4'-0" X 4'-0" WELDING TABLE
17. TROLLEY & HOIST SEE MECH. SHEETS
18. DECLASSIFICATION EXHAUST FAN SEE MECH. SHEETS
19. 8-0" x 10'-0" x 4" ISOLATION PAD SEE SHEET ST7-1
20. SERVICE SINK SEE MECH. SHEETS
21. GUARD POST, TYP.
22. FUME EXHAUST FAN SEE MECH. SHEETS
23. COMPRESSOR SEE MECH. SHEETS
24. 4' X 8' X 1/2" PLYWOOD

5 **REVISED PER ADDENDUM No. 5 DATED APRIL 8, 2010**

NOTE:
RELOCATED EQUIPMENT SHALL BE MOVED BY THE CONTRACTOR FROM THE STORAGE LOCATED ON THE PREMISES.

	BY	CHECKED
DESIGN	SING TSE	CARLOS SANCHEZ
DETAILS		
QUANTITIES		

STATE OF CALIFORNIA DEPARTMENT OF TRANSPORTATION

DIVISION OF ENGINEERING SERVICES ARCHITECTURAL AND STRUCTURAL DESIGN

BRIDGE NO. / POST MILE

PHASE 4 — REPAIR SHOP

TRANSLAB REPAIR PROJECT — FLOOR PLAN

SHEET A7-1

a7_1.add
DS OSD Imperial Rev. 10/07 07-APR-2010 10:37

ORIGINAL SCALE IN INCHES FOR REDUCED PLANS 0 1 2 3

CU 03263
EA 2C8441

DISREGARD PRINTS BEARING EARLIER REVISION DATES

REVISION DATES (PRELIMINARY STAGE ONLY) 07 06-01-09

SHEET X OF X

07-APR-2010 10:37
a7_1.add

DIST.	COUNTY	ROUTE	POST MILES TOTAL PROJECT	SHEET NO.	TOTAL SHEETS
03	Sac	5501		60	172

LICENSED ARCHITECT DATE

LICENSED ARCHITECT C.A. SANCHEZ No. C-15201 Exp. 12-31-09 STATE OF CALIFORNIA

11-23-09
PLANS APPROVAL DATE

The State of California or its officers or agents shall not be responsible for the accuracy or completeness of electronic copies of this plan sheet.

ACCESSIBILITY DESIGN APPROVAL STAMP
DOT / DES / OTA
03-2C8441
DISTRICT - EA
Reviewed by:
Date: 06-29-09

CALIFORNIA STATE FIRE MARSHAL
APPROVED
Approval of this plan does not authorize or approve any omission or deviation from applicable regulations. Final approval is subject to field inspection. One set of approved plans shall be available on the project site at all times.
Reviewed by: STEPHEN GUARINO
Approval date: 07-01-09

NOTE:

FOR ROOM SIGNS, SEE DETAIL 1/A0-3.3. REPLACE "CREW ROOM" FOR THE NAME OF THE ROOM IN QUESTION.

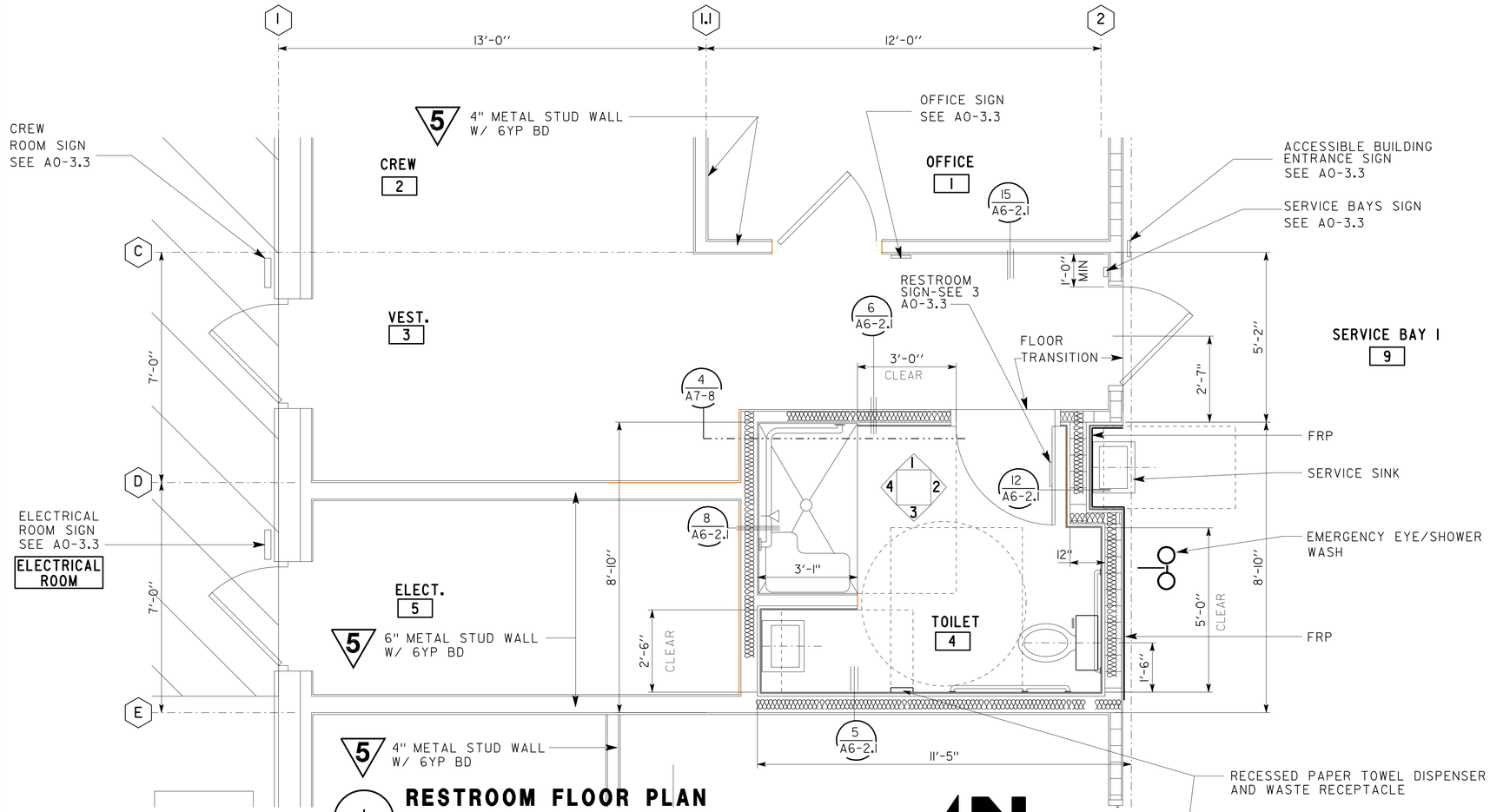

1 **RESTROOM FLOOR PLAN**
SCALE : 1/2 " = 1'-0"

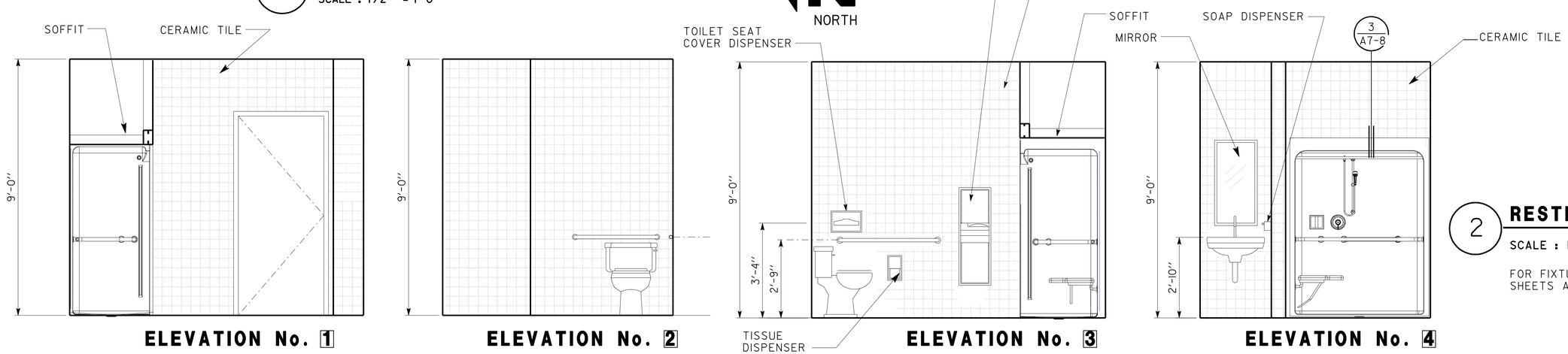

ELEVATION No. 1 ELEVATION No. 2 ELEVATION No. 3 ELEVATION No. 4

2 **RESTROOM ELEVATIONS**
SCALE : 1/2 " = 1'-0"

FOR FIXTURES HEIGHT REFER TO SHEETS A0-3.4 AND A0-3.5

5 **REVISED PER ADDENDUM No. 5 DATED APRIL 8, 2010**

DESIGN	BY	CHECKED
DETAILS	BY	CHECKED
QUANTITIES	BY	CHECKED

STATE OF CALIFORNIA DEPARTMENT OF TRANSPORTATION

DIVISION OF ENGINEERING SERVICES ARCHITECTURAL AND STRUCTURAL DESIGN

BRIDGE NO.
POST MILE

PHASE 4 REPAIR SHOP

TRANSLAB REPAIR PROJECT
RESTROOM & INTERIOR ELEVATIONS

SHEET A7-1.1

a7_1_1.add
DS OSD Imperial Rev. 10/07 05-APR-2010 09:50

ORIGINAL SCALE IN INCHES FOR REDUCED PLANS 0 1 2 3

CU 03263
EA 2C8441

DISREGARD PRINTS BEARING EARLIER REVISION DATES

REVISION DATES (PRELIMINARY STAGE ONLY) 07 06-01-09

SHEET X OF X

05-APR-2010 09:50 DATE PLOTTED => 05-APR-2010 TIME PLOTTED => 09:50

USERNAME => trmikesl
DGN FILE => a7_1_1.add

a7_1_1.add

ROOM FINISH SCHEDULE

NO.	ROOM NAME	FLOOR: RUBBER TILE	FLOOR: CERAMIC TILE	FLOOR: CONCRETE	BASE: RUBBER BASE	BASE: CERAMIC TILE	BASE: EXPOSED CONC. CURB	WALLS NORTH: 5/8" GYPSUM BOARD	WALLS NORTH: CERAMIC TILE	WALLS NORTH: PLYWOOD WAINSCOT	WALLS EAST: 5/8" GYPSUM BOARD	WALLS EAST: CERAMIC TILE	WALLS EAST: PLYWOOD WAINSCOT	WALLS SOUTH: 5/8" GYPSUM BOARD	WALLS SOUTH: CERAMIC TILE	WALLS SOUTH: PLYWOOD WAINSCOT	WALLS WEST: 5/8" GYPSUM BOARD	WALLS WEST: CERAMIC TILE	WALLS WEST: PLYWOOD WAINSCOT	CEILING: 5/8" GYPSUM BOARD	CEILING: EXPOSED FRAMING	CEILING HEIGHT	REMARKS
1	OFFICE	15			2			3			3			3			3			3		9'-0"	
2	CREW	15			2			3			3			3			3			3		9'-0"	
3	VEST.	15			2						3			3			3			3		9'-0"	
4	TOILET		21			19			19			19			19			19		3		9'-0"	
5	ELECT.			1			22			14			14			14			14	3		9'-0"	
6	SECURED STORAGE / PART			1			22	3			3			3			3			3		9'-0"	
7	TIRE STORAGE			1			22	3			3			3			3			3		9'-0"	
8	UTILITY			1			22	3			3			3			3			3		9'-0"	
9	SERVICE BAY 1			1			22	3		14	3		14				3		14		13	VARIES	PAINTED 4'-0" x 8'-0" x 1/2" PLYWOOD WAINSCOT
10	SERVICE BAY 2			1			22				3		14				3		14		13	VARIES	PAINTED 4'-0" x 8'-0" x 1/2" PLYWOOD WAINSCOT
11	WELDING BAY			1			22				3		14				3		14		13	VARIES	PAINTED 4'-0" x 8'-0" x 1/2" PLYWOOD WAINSCOT
12	SKID TESTING/DEFLECTION BAY			1			22				3		14	3		2	3		14		13	VARIES	PAINTED 4'-0" x 8'-0" x 1/2" PLYWOOD WAINSCOT

F. R. P. PANEL = FIBERGLASS REINFORCED POLYESTER PANEL

5

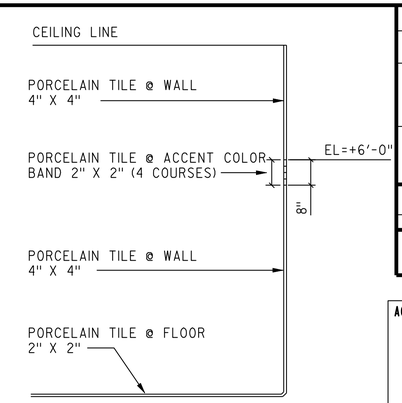

1 **CERAMIC TILE PATTERN AND SIZE**

NO SCALE

DIST.	COUNTY	ROUTE	POST MILES TOTAL PROJECT	SHEET NO.	TOTAL SHEETS
03	Sac	5501		62	172

LICENSED ARCHITECT — DATE

LICENSED ARCHITECT C.A. SANCHEZ No. C-15201 Exp. 12-31-09 STATE OF CALIFORNIA

11-23-09
PLANS APPROVAL DATE

The State of California or its officers or agents shall not be responsible for the accuracy or completeness of electronic copies of this plan sheet.

ACCESSIBILITY DESIGN APPROVAL STAMP DOT / DES / OTA
03-2C8441
DISTRICT - EA
Reviewed by:
Date: 06-29-09

CALIFORNIA STATE FIRE MARSHAL APPROVED
Approval of this plan does not authorize or approve any omission or deviation from applicable regulations. Final approval is subject to field inspection. One set of approved plans shall be available on the project site at all times.
Reviewed by: STEPHEN GUARINO
Approval date: 07-01-09

INTERIOR COLOR / FINISH NOTES

MANUFACTURER'S DESIGNATIONS USED TO INDICATE COLOR, PATTERN, TYPE, CONFIGURATION ETC. ARE FOR REFERENCE ONLY AND ARE NOT INTENDED TO SHOW A PREFERENCE FOR A PARTICULAR BRAND.

1. EXPOSED CONCRETE FLOOR — CLEAR SMOOTH FINISH - CONCRETE HARDENER AND SEALER
2. RUBBER BASE — JOHNSONITE, CHARCOAL (DC-20)
3. GYPSUM BOARD WALL & CEILING — KELLY MOORE, DIAMOND WHITE (WS27)
4. EXPOSED MECHANICAL DUCTING — KELLY MOORE, DIAMOND WHITE (WS27)
5. F. R. P. PANEL — TO BE SELECTED FROM MFR STANDARD COLORS
6. DOORS AND DOOR FRAMES — KELLY MOORE, CITIFIED (KM700-M)
7. WINDOW TRIM, SILL AND APRON — KELLY MOORE, CITIFIED (KM700-M)
8. TOILET PARTITION AND SCREEN — STAINLESS STEEL
9. METAL LOCKERS — TO BE SELECTED FROM MFR STANDARD COLORS
10. HORIZONTAL BLINDS — TO BE SELECTED FROM MFR STANDARD COLORS
11. STEEL SHELVING — TO BE SELECTED FROM MFR STANDARD COLORS
12. STEEL JOIST — KELLY MOORE, DIAMOND WHITE (WS27)
13. EXPOSED ROOF DECKING & FASTNERS — KELLY MOORE, DIAMOND WHITE (WS27)
14. PLYWOOD 1/2" (4' X 8') — KELLY MOORE, CORTEZ 73 - GRAY COLOR SEMI-GLOSS
15. RUBBER FLOOR TILE (12" X 12" X 1/8") — BURKE MARBLE TILE 527M CLAY

16	PLASTIC LAMINATE COUNTER TOP & SPLASHES	FORMICA, CONCRETE 437-58	BREAK ROOM
17	PLASTIC LAMINATE WALL & BASE CABINETS	FORMICA, BIRCH 921-58	BREAK ROOM
18	POLISHED PORCELAIN TILE @ WALL	DALTILE, ARCTIC WHITE 6570 — GROUT (SEALED): CUSTOM BUILDING PRODUCTS COLOR TO BE APPROVED BY THE STATE	BREAK ROOM
19	POLISHED PORCELAIN TILE @ WALL	DALTILE, ARCTIC WHITE 6570 — GROUT (SEALED): CUSTOM BUILDING PRODUCTS COLOR TO BE APPROVED BY THE STATE	UNISEX RESTROOM
20	POLISHED PORCELAIN TILE @ ACCENT BAND	DALTILE, SUEDE GRAY 6553	UNISEX RESTROOM
21	MATTE PORCELAIN TILE @ FLOOR (2" X 2" X 1/4")	DALTILE, SUEDE GRAY SPECKLE D208 (SEALED) — DELOREAN GRAY #165 @ FLOOR	UNISEX RESTROOM
22	CONCRETE CURB	KELLY MOORE, CORTEZ 73 - GRAY COLOR	UNISEX RESTROOM

NOTE : SEE DETAIL 1 FOR CERAMIC TILE PATTERN AND SIZE

EXTERIOR COLOR / FINISH NOTES

MANUFACTURER'S DESIGNATIONS USED TO INDICATE COLOR, PATTERN, TYPE, CONFIGURATION ETC. ARE FOR REFERENCE ONLY AND ARE NOT INTENDED TO SHOW A PREFERENCE FOR A PARTICULAR BRAND.

- PREFINISHED METAL WALL PANEL — ~~COLOR TO MATCH THE EXISTING RSP BUILDING~~
- PREFINISHED METAL ROOF PANEL — ~~COLOR TO MATCH THE EXISTING RSP BUILDING~~
- EXPOSED RAIN WATER LEADER — ~~COLOR TO MATCH THE EXISTING RSP BUILDING~~
- PREFINISHED METAL COPING — KELLY MOORE, CITIFIED (KM700-M)
- SECTIONAL OVERHEAD DOORS/LOUVERS — KELLY MOORE, CITIFIED (KM700-M)
- STEEL ANGLE JAMBS (OVERHEAD DOORS) — KELLY MOORE, CITIFIED (KM700-M)
- METAL DOORS/FRAMES (SWINGING) — KELLY MOORE, CITIFIED (KM700-M)
- PREFINISHED ALUMINUM WINDOW FRAME — ~~CLEAR ANODIZED~~
- GUARD POST — CALTRANS ORANGE
- ROOF JACKS AND VENTS — KELLY MOORE, DIAMOND WHITE (WS27)

5

MANUFACTURER'S STANDARD COLOR PALETTE

5 **REVISED PER ADDENDUM No. 5 DATED APRIL 8, 2010**

DESIGN	BY	CHECKED
DETAILS	BY	CHECKED
QUANTITIES	BY	CHECKED

STATE OF CALIFORNIA DEPARTMENT OF TRANSPORTATION

DIVISION OF ENGINEERING SERVICES ARCHITECTURAL AND STRUCTURAL DESIGN

BRIDGE NO. — POST MILE

PHASE 4 — REPAIR SHOP

TRANSLAB REPAIR PROJECT — FINISH AND COLOR SCHEDULES

SHEET A7-3

a7_3_fin_sched.add
DS OSD Imperial Rev. 10/07 05-APR-2010 09:50

ORIGINAL SCALE IN INCHES FOR REDUCED PLANS 0 1 2 3

CU 03263
EA 2C8441

DISREGARD PRINTS BEARING EARLIER REVISION DATES → - 07

REVISION DATES (PRELIMINARY STAGE ONLY) SHEET OF

05-APR-2010 09:50 DATE PLOTTED => 05-APR-2010 TIME PLOTTED => 09:50

USERNAME => trmikesl
DGN FILE => a7_3_fin_sched.add

a7_3_fin_sched.add

DIST.	COUNTY	ROUTE	POST MILES TOTAL PROJECT	SHEET NO.	TOTAL SHEETS
03	Sac	5501		64	172

LICENSED ARCHITECT DATE

LICENSED ARCHITECT C.A. SANCHEZ No. C-15201 Exp. 12-31-09 STATE OF CALIFORNIA

11-23-09
PLANS APPROVAL DATE

The State of California or its officers or agents shall not be responsible for the accuracy or completeness of electronic copies of this plan sheet.

ACCESSIBILITY DESIGN APPROVAL STAMP DOT / DES / OTA
03-2C8441
DISTRICT - EA
Reviewed by:
Date: 06-29-09

CALIFORNIA STATE FIRE MARSHAL APPROVED
Approval of this plan does not authorize or approve any omission or deviation from applicable regulations. Final approval is subject to field inspection. One set of approved plans shall be available on the project site at all times.
Reviewed by: STEPHEN GUARINO
Approval date: 07-01-09

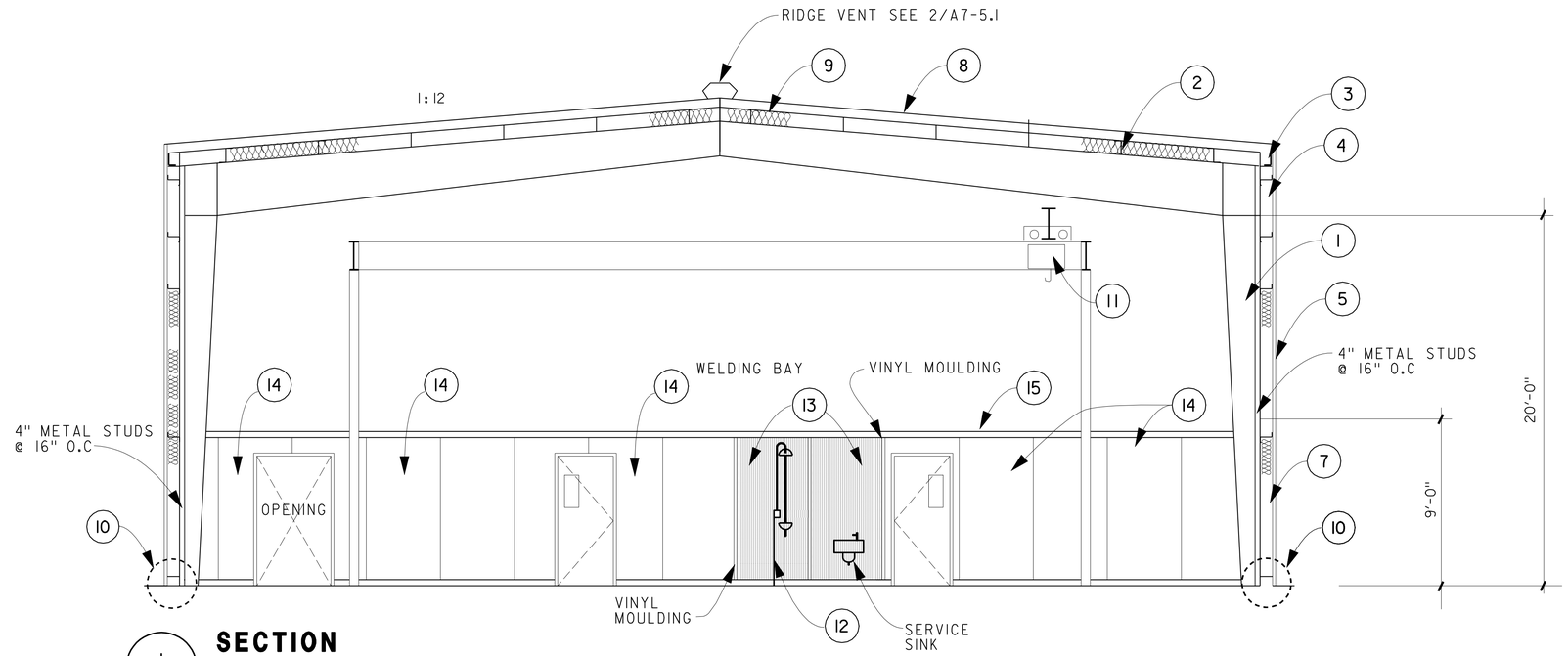

1 **SECTION**
SCALE 1/4"=1'-0"

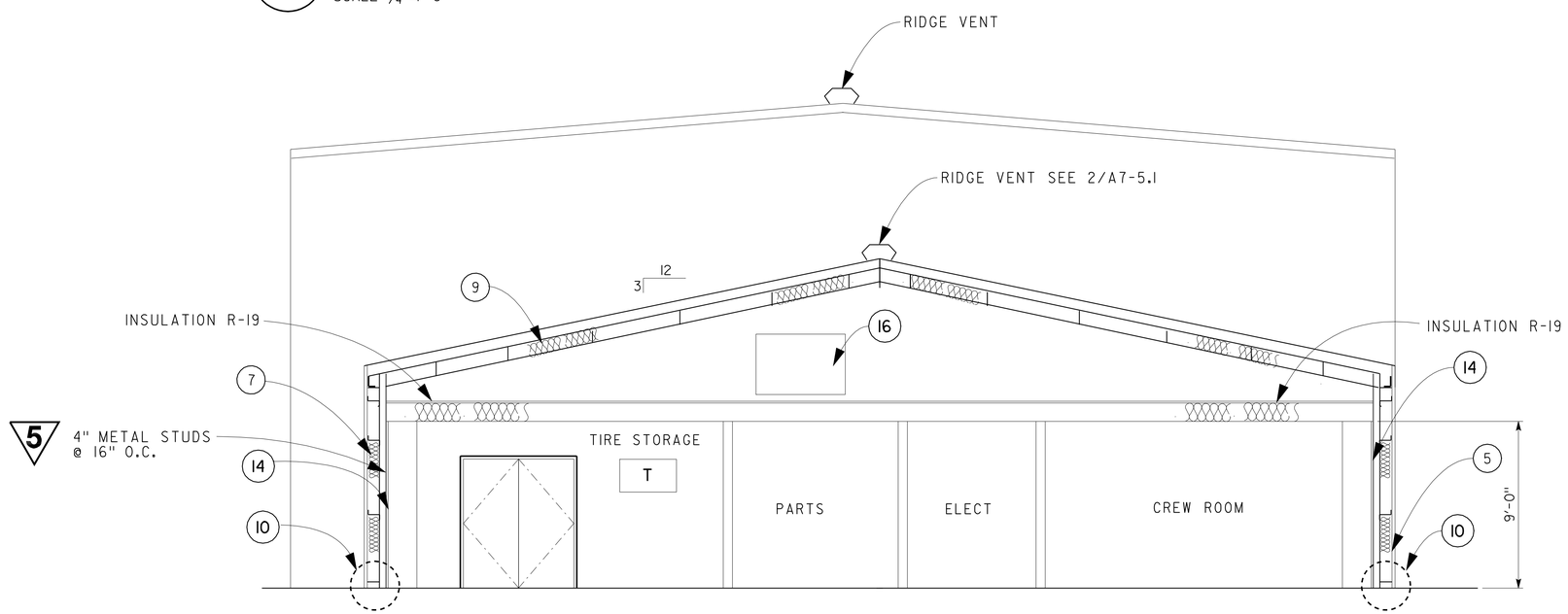

2 **SECTION**
SCALE 1/4"=1'-0"

KEYNOTES :

THESE KEYNOTES APPLY TO THIS SHEET ONLY

1. TAPERED COLUMN, TYP.
2. CONTINUOUS SPAN PURLIN, TYP.
3. EAVE STRUT,TYP.
4. GIRT,TYP.
5. METAL WALL PANEL WITH BASE TRIM AND BASE CLOSURE. TYP.
6. NOT USED
7. WALL INSULATION, TYP. (R-19)
8. METAL ROOF PANEL, TYP.
9. ROOF INSULATION,TYP. (R-30)
10. CONCRETE CURB, TYP. (1/A7-5.1)
11. BRIDGE CRANE
12. EMERGENCY SHOWER
13. 4'-0" X 8'-0" FIBERGLASS REINFORCED POLYSTER PANEL
14. 4'-0" X 8'-0" X 1/2" PAINTED PLYWOOD WAINSCOT
15. WOOD TRIM, TYP. 1" X 6" PAINTED
16. MECH. UNIT. SEE MECH. SHEETS

5 **REVISED PER ADDENDUM No. 5 DATED APRIL 8, 2010**

DESIGN	BY	CHECKED
DETAILS	BY	CHECKED
QUANTITIES	BY	CHECKED

STATE OF CALIFORNIA DEPARTMENT OF TRANSPORTATION

DIVISION OF ENGINEERING SERVICES ARCHITECTURAL AND STRUCTURAL DESIGN

BRIDGE NO. | POST MILE

PHASE 4 REPAIR SHOP

TRANSLAB REPAIR PROJECT
SECTIONS

SHEET **A7-5**

a7_5_sec_1.add
DS OSD Imperial Rev. 10/07 05-APR-2010 09:50

ORIGINAL SCALE IN INCHES FOR REDUCED PLANS 0 1 2 3

CU 03263
EA 2C8441

DISREGARD PRINTS BEARING EARLIER REVISION DATES → REVISION DATES (PRELIMINARY STAGE ONLY) - 07 SHEET OF

05-APR-2010 09:50 DATE PLOTTED => 05-APR-2010 TIME PLOTTED => 09:50

USERNAME => trmikesl
DGN FILE => a7_5_sec_1.add

a7_5_sec_1.add

DIST.	COUNTY	ROUTE	POST MILES TOTAL PROJECT	SHEET NO.	TOTAL SHEETS
03	Sac	5501		65	172

LICENSED ARCHITECT DATE

LICENSED ARCHITECT C.A. SANCHEZ No. C-15201 Exp. 12-31-09 STATE OF CALIFORNIA

11-23-09
PLANS APPROVAL DATE

The State of California or its officers or agents shall not be responsible for the accuracy or completeness of electronic copies of this plan sheet.

ACCESSIBILITY DESIGN APPROVAL STAMP
DOT / DES / OTA
03-2C8441
DISTRICT - EA
Reviewed by:
Date: 06-29-09

CALIFORNIA STATE FIRE MARSHAL
APPROVED
Approval of this plan does not authorize or approve any omission or deviation from applicable regulations. Final approval is subject to field inspection. One set of approved plans shall be available on the project site at all times.
Reviewed by: STEPHEN GUARINO
Approval date: 07-01-09

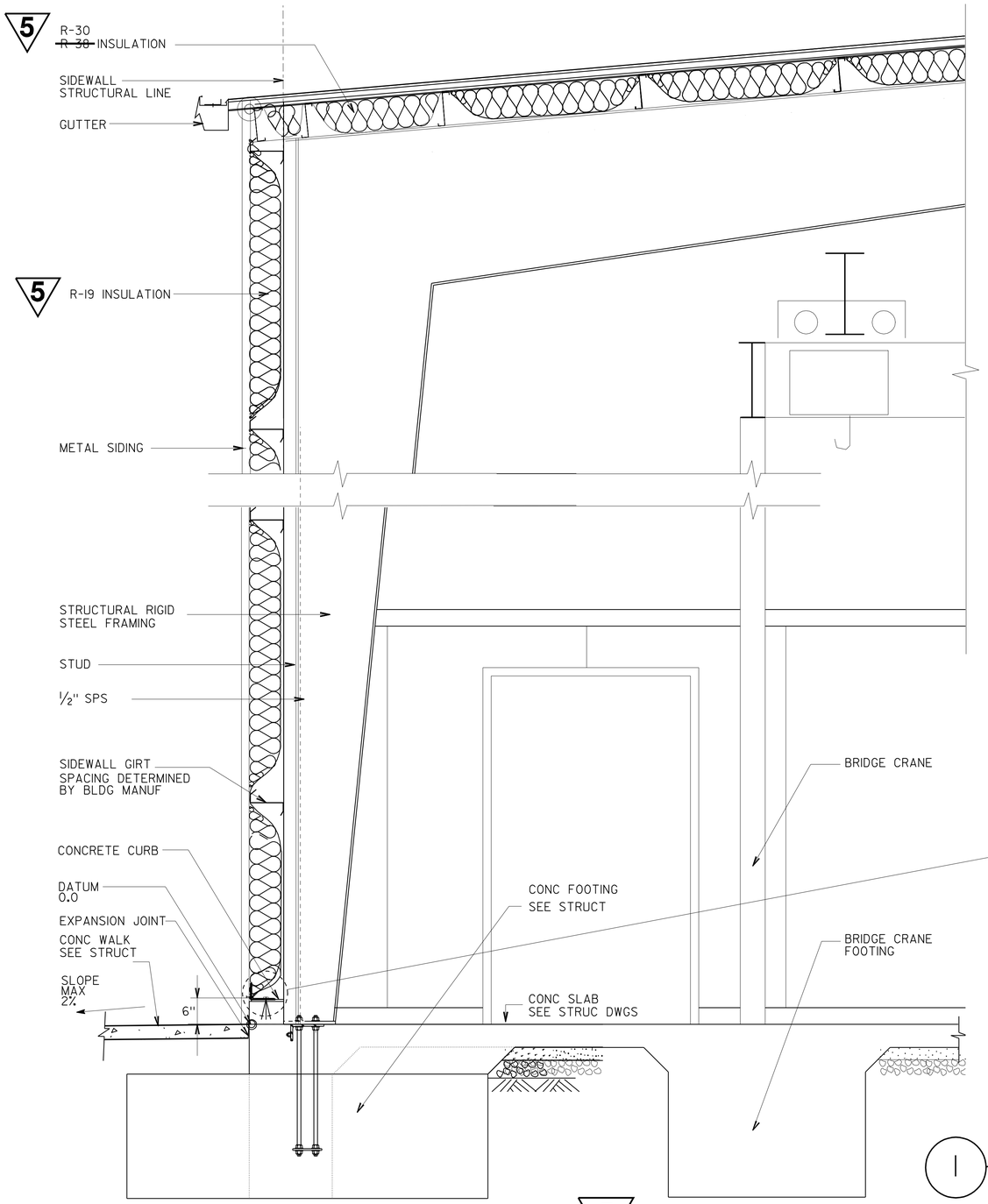

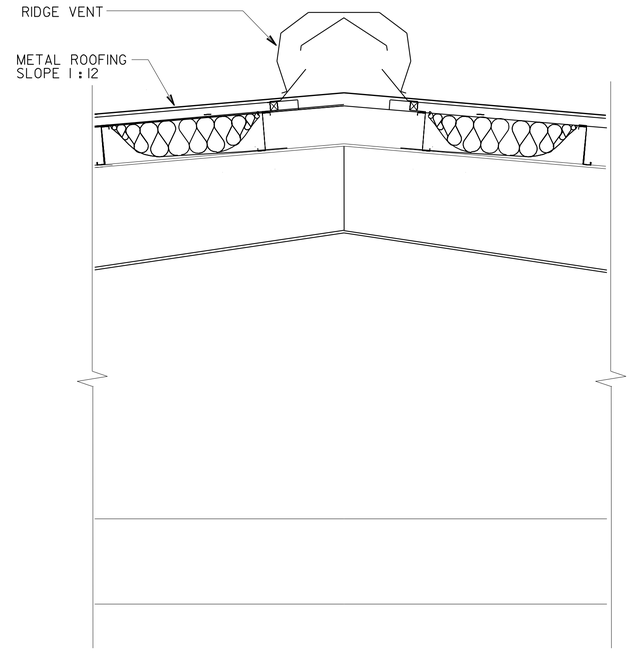

2 **ROOF DETAIL**

SCALE 3/4"=1'-0"

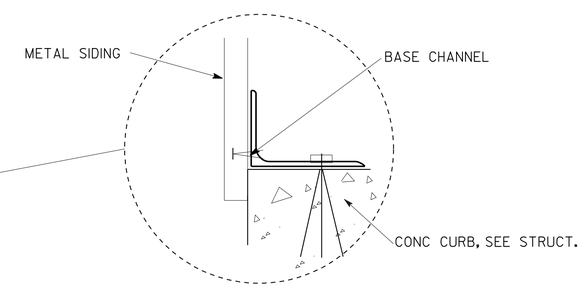

1 **WALL DETAIL**

SCALE 3/4"=1'-0"

5 **REVISED PER ADDENDUM No. 5 DATED APRIL 8, 2010**

DESIGN	BY		CHECKED
DETAILS	BY		CHECKED
QUANTITIES	BY		CHECKED

STATE OF CALIFORNIA DEPARTMENT OF TRANSPORTATION

DIVISION OF ENGINEERING SERVICES ARCHITECTURAL AND STRUCTURAL DESIGN

BRIDGE NO.
POST MILE

PHASE 4 REPAIR SHOP

TRANSLAB REPAIR PROJECT
SECTION

SHEET **A7-5.1**

a7_5.1_sec_1.add
DS OSD Imperial Rev. 10/07 05-APR-2010 09:50

ORIGINAL SCALE IN INCHES FOR REDUCED PLANS 0 1 2 3

CU 03263
EA 2C8441

DISREGARD PRINTS BEARING EARLIER REVISION DATES →

REVISION DATES (PRELIMINARY STAGE ONLY) - 07

SHEET OF

05-APR-2010 09:50 DATE PLOTTED => 05-APR-2010 TIME PLOTTED => 09:50

a7_5.1_sec_1.add

USERNAME => trmikesl
DGN FILE => a7_5.1_sec_1.add

DIST.	COUNTY	ROUTE	POST MILES TOTAL PROJECT	SHEET NO.	TOTAL SHEETS
03	Sac	5501		75	172

REGISTERED CIVIL ENGINEER 05-29-09 DATE

REGISTERED PROFESSIONAL ENGINEER Tom R. Mesich No. 46748 Exp. 6-30-11 CIVIL STATE OF CALIFORNIA

11-23-09
PLANS APPROVAL DATE

The State of California or its officers or agents shall not be responsible for the accuracy or completeness of electronic copies of this plan sheet.

CALIFORNIA STATE FIRE MARSHAL APPROVED
Approval of this plan does not authorize or approve any omission or deviation from applicable regulations. Final approval is subject to field inspection. One set of approved plans shall be available on the project site at all times.
Reviewed by: STEPHEN GUARINO
Approval date: 07-01-09

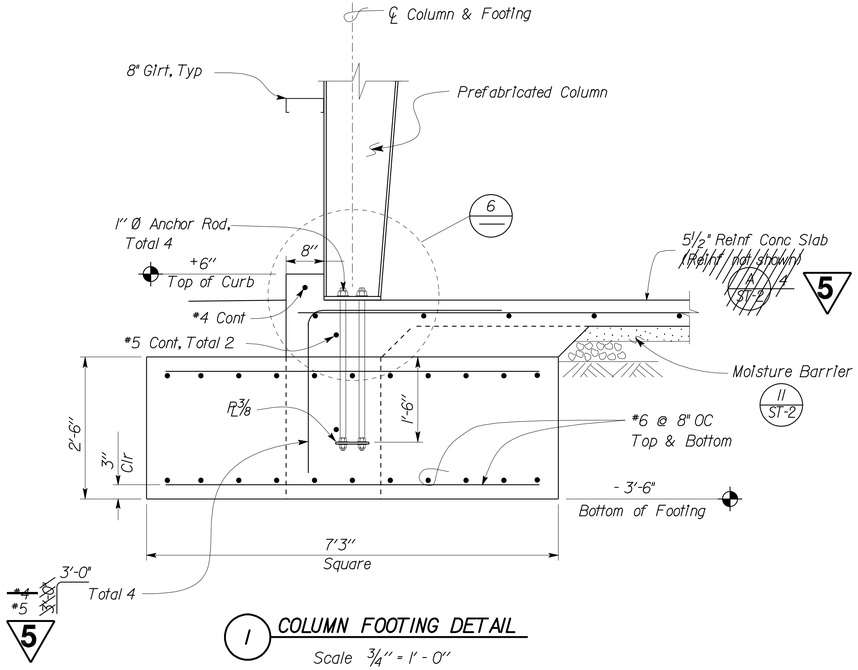

1 COLUMN FOOTING DETAIL
Scale ¾" = 1' - 0"

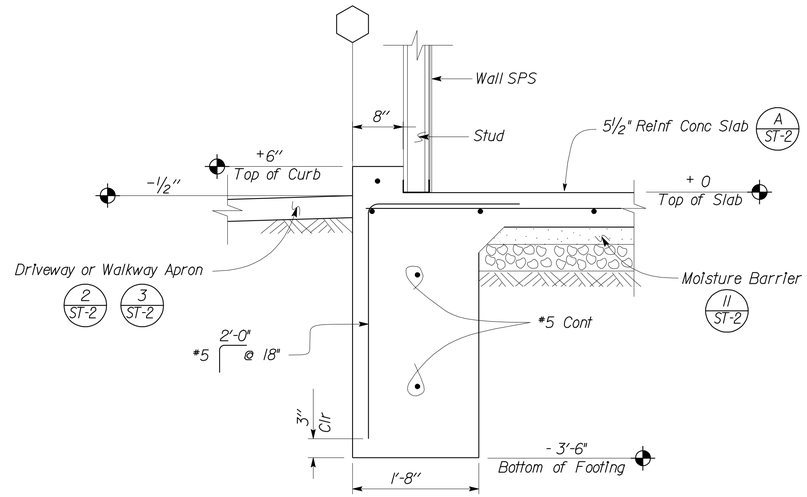

2 PERIMETER FOOTING DETAIL
Scale 1" = 1' - 0"

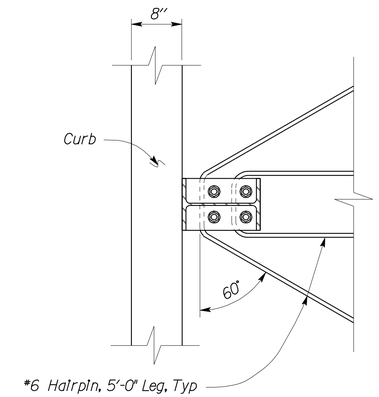

3 FRAME TIE PLAN
Scale 1" = 1' - 0"

NOTE;
Limits of Over-Excavation and Structure Backfill not Shown. See Specifications.

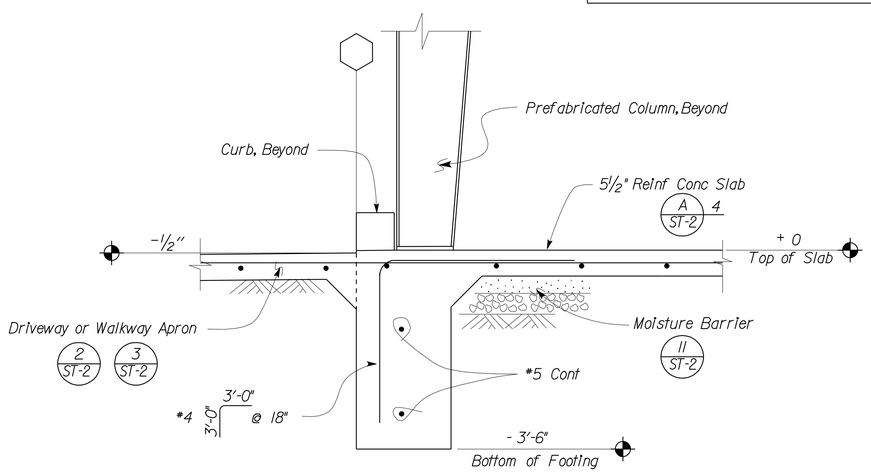

4 COLUMN AT DOOR OPENING
Scale ¾" = 1' - 0"

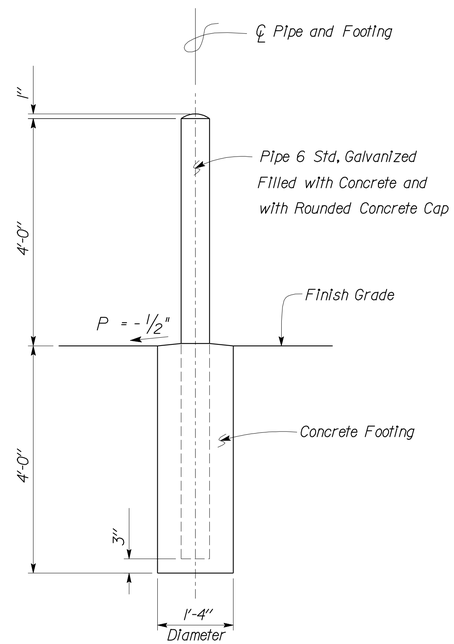

5 PIPE GUARD POST DETAIL
Scale ¾" = 1' - 0"

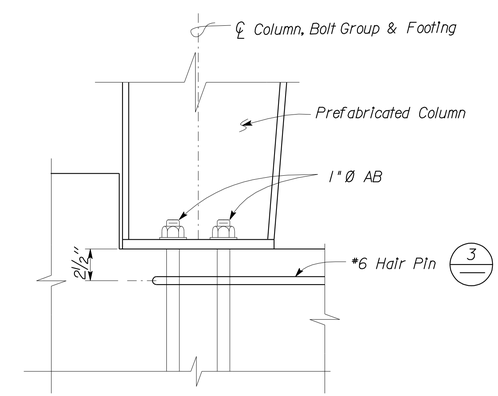

6 FRAME TIE ELEVATION
Scale 2" = 1' - 0"

5 **REVISED PER ADDENDUM No. 5 DATED APRIL 8, 2010**

	BY	CHECKED
DESIGN	Tom Mesich	Dai Lu
DETAILS	Tom Mesich	Dai Lu
QUANTITIES		

STATE OF CALIFORNIA
DEPARTMENT OF TRANSPORTATION

DIVISION OF ENGINEERING SERVICES
ARCHITECTURAL AND STRUCTURAL DESIGN

CU 03263
EA 2C8441

BRIDGE NO.
POST MILE

PHASE 4 | TRANSLAB REPAIR PROJECT

FOUNDATION DETAILS I

SHEET ST-6

DOES SD Imperial Rev. 9/02

ORIGINAL SCALE IN INCHES FOR REDUCED PLANS 0 1 2 3

DISREGARD PRINTS BEARING EARLIER REVISION DATES → REVISION DATES (PRELIMINARY STAGE ONLY) - 06

SHEET OF

05-APR-2010 09:50

st_06.add

DIST.	COUNTY	ROUTE	POST MILES TOTAL PROJECT	SHEET NO.	TOTAL SHEETS
03	Sac	5501		80	172

REGISTERED CIVIL ENGINEER — 05-29-09 DATE

REGISTERED PROFESSIONAL ENGINEER — Tom R. Mesich — No. 46748 — Exp. 6-30-11 — CIVIL — STATE OF CALIFORNIA

11-23-09
PLANS APPROVAL DATE

The State of California or its officers or agents shall not be responsible for the accuracy or completeness of electronic copies of this plan sheet.

CALIFORNIA STATE FIRE MARSHAL APPROVED
Approval of this plan does not authorize or approve any omission or deviation from applicable regulations. Final approval is subject to field inspection. One set of approved plans shall be available on the project site at all times.
Reviewed by: STEPHEN GUARINO
Approval date: 07-01-09

A PRE-ENGINEERED BUILDING DESIGN NOTES

1. Rigid Frames shall be provided at lines 1 through 11
2. Braced Frames shall be provided at lines A and G between 6 and 7 and between 8 and 9
3. For General Design Notes, see A / ST-1
4. For Design Loads, see B
5. Collateral Loads shall include :
   - Wall & Ceiling Light Fixtures
   - Wall Mounted Exhaust Fans
   - Wall Mounted Furnace
   - Overhead Doors
   - Fire Sprinklers
   - Seismic mass
   - Solar Roof Panels
6. Deflection Limits :
   - Story drift = H/100
   - Framing Members = L/180
   - Roof Panels and Purlins = L/240
7. Maximum Roof Purlin spacing shall be 5'-0" OC.
8. Provide Framing for all Wall and Roof Penetrations.
9. Girts shall be the Exterior Type
10. Provide Translucent Roof Panels. See Architecture for locations.
11. Anchor bolts shown are minimum. Builder shall follow building manufacturer requirements.
12. The building design shall not transmit moment to the footings.

5

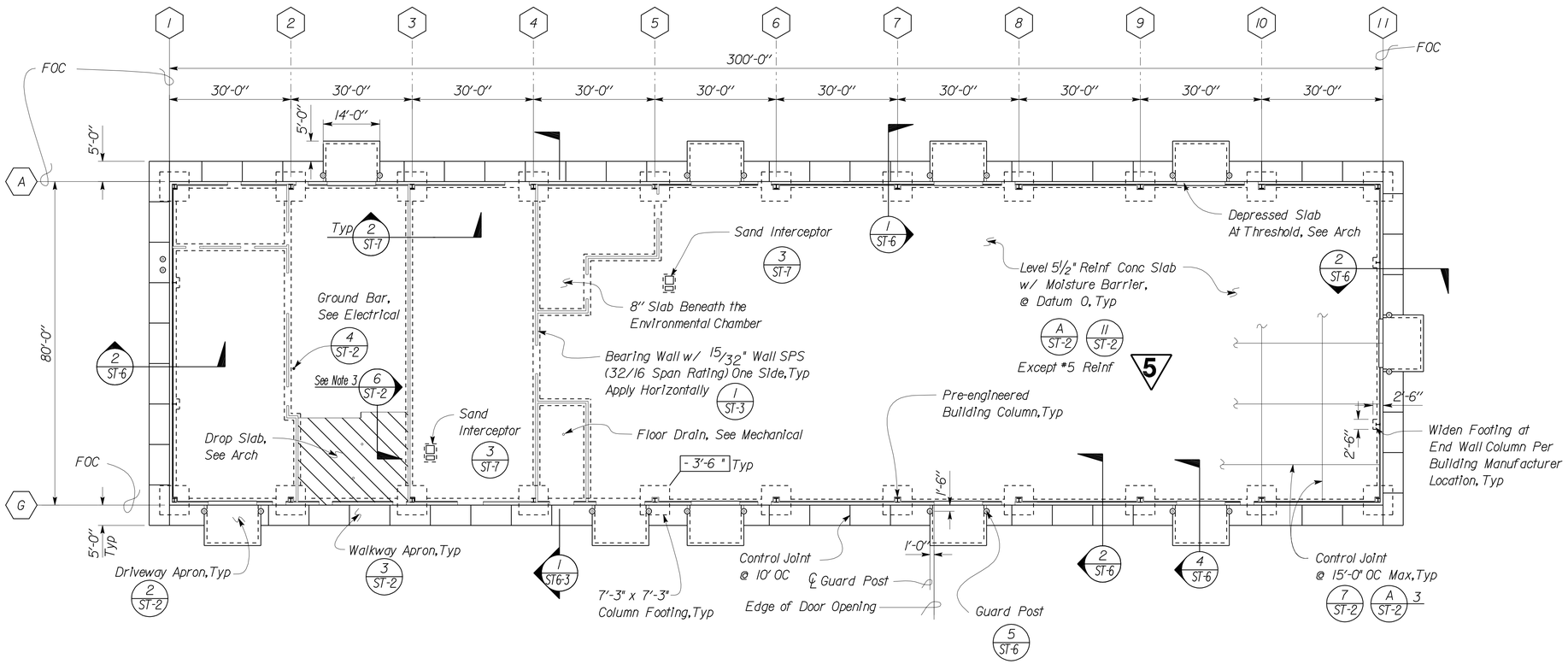

Datum 0'-0" = Elevation 34.9'

1 FOUNDATION PLAN
Scale 1/16" = 1'-0"

NOTES:
1. See Architectural for Partition Wall Layout
2. See ST 6-2 and ST 6-3 for Limits of Soil Over-Excavation and Structure Backfill.
3. Partition Wall Footings In Tiled Areas shall be placed on Raised Curbs at Datum 0.

B DESIGN LOADS

1. LIVE:

Roof = 20 psf

2. SEISMIC:

Importance Factor = 1.0
Site Class = D
Spectral Response Accelerations:
S_S = 0.577 S_{DS} = 0.515
Spectral Response Coefficients:
S_1 = 0.240 S_{D1} = 0.307
Design Category = D

Seismic Force-Resisting System:

North - South	East - West
Ordinary Steel Concentrically Braced Frame	Ordinary Steel Moment Frame
R = 3.25	R = 3.5
C_S = 0.158	C_S = 0.147

3. WIND:

Importance Factor = 1.0
Basic Wind Speed = 85 mph (3 sec gust)
Exposure C

5 **REVISED PER ADDENDUM No. 5 DATED APRIL 8, 2010**

	BY	CHECKED
DESIGN	Tom Mesich	Dai Lu
DETAILS	Tom Mesich	Dai Lu
QUANTITIES		

STATE OF CALIFORNIA
DEPARTMENT OF TRANSPORTATION

DIVISION OF ENGINEERING SERVICES
ARCHITECTURAL AND STRUCTURAL DESIGN

BRIDGE NO.
POST MILE

PHASE 4
STORAGE BUILDING

TRANSLAB REPAIR PROJECT
FOUNDATION PLAN

SHEET ST6-1

DOES SD Imperial Rev. 9/02

ORIGINAL SCALE IN INCHES FOR REDUCED PLANS 0 1 2 3

CU 03263
EA 2C8441

DISREGARD PRINTS BEARING EARLIER REVISION DATES → 06-15-07 11-09-07

REVISION DATES (PRELIMINARY STAGE ONLY) SHEET OF

05-APR-2010 09:51
st6_01.add

NOTES

1. All mechanical equipment, and flue and vent penetrations shall terminate in the roof zone specified, see sheets M6-2 and M6-7.

CALIFORNIA STATE FIRE MARSHAL APPROVED
Approval of this plan does not authorize or approve any omission or deviation from applicable regulations. Final approval is subject to field inspection. One set of approved plans shall be available on the project site at all times.
Reviewed by: STEPHEN GUARINO
Approval date: 07-01-09

DIST.	COUNTY	ROUTE	POST MILES TOTAL PROJECT	SHEET NO.	TOTAL SHEETS
03	Sac	5501		92	172

REGISTERED ENGINEER-MECHANICAL — 12-28-09 DATE

REGISTERED PROFESSIONAL ENGINEER — Jack Wheeler — No. 21648 — Exp. 06-30-11 — MECH — STATE OF CALIFORNIA

11-23-09
PLANS APPROVAL DATE

The State of California or its officers or agents shall not be responsible for the accuracy or completeness of electronic copies of this plan sheet.

5 1

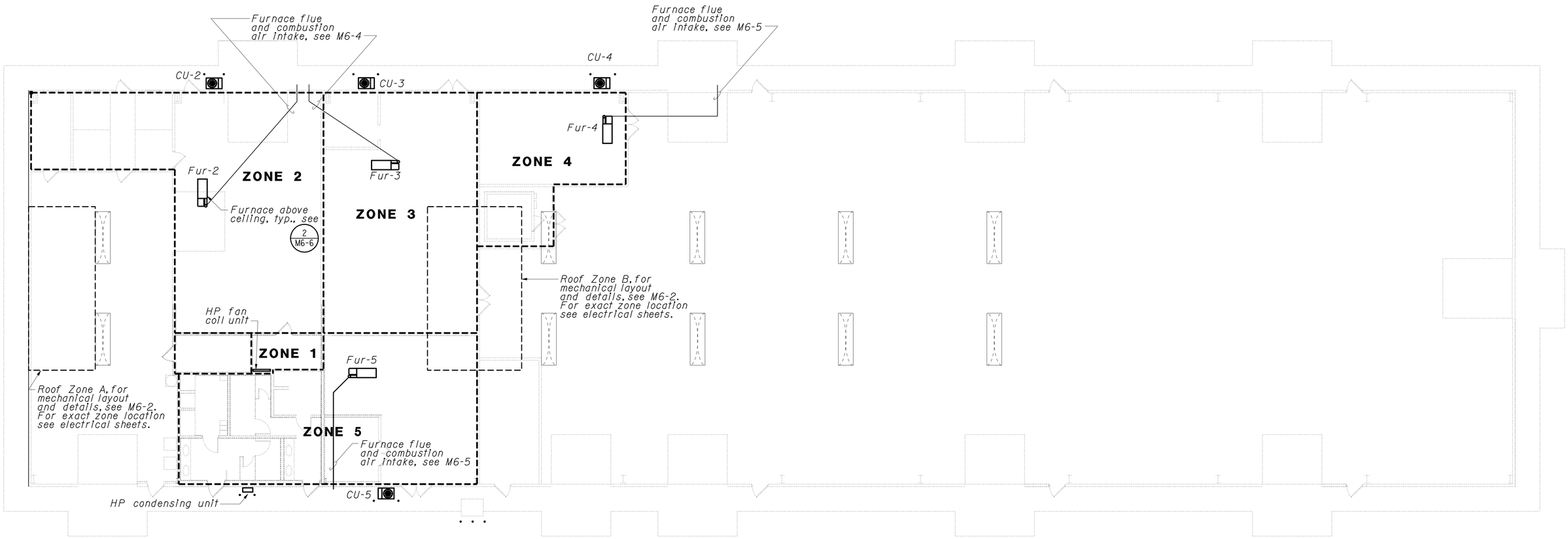

5 **REVISED PER ADDENDUM No. 5 DATED APRIL 8, 2010**

HVAC EQUIPMENT/ZONE PLAN

1" = 10'-0"

NORTH

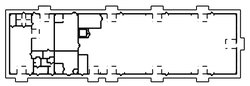

STORAGE BLDG. KEY PLAN

1 **REVISED PER ADDENDUM No. 1 DATED FEBRUARY 10, 2010**

THIS DRAWING ACCURATE FOR MECHANICAL WORK ONLY

	BY	CHECKED
DESIGN	Thomas Dietsch	Alvin Kwan
DETAILS	Thomas Dietsch	Alvin Kwan
QUANTITIES	Thomas Dietsch	Alvin Kwan

STATE OF CALIFORNIA DEPARTMENT OF TRANSPORTATION

DIVISION OF STRUCTURES
ELECTRICAL-MECHANICAL-WATER AND WASTEWATER DESIGN

BRIDGE NO.
POST MILE

PHASE 4
STORAGE BUILDING

TRANSLAB REPAIR PROJECT
HVAC PLAN

SHEET **M6-1**

BKW DOS ELEC(1/93)

ORIGINAL SCALE IN INCHES FOR REDUCED PLANS 0 1 2 3

CU 03263
EA 2C8441

DISREGARD PRINTS BEARING EARLIER REVISION DATES

REVISION DATES (PRELIMINARY STAGE ONLY) 02-23-09 05-27-09 07-01-09 12-17-09 01-19-08 02-14-08 10-15-08 12-15-08

SHEET OF

USERNAME => trmikesl
DGN FILE => m6_1.dgn

DATE PLOTTED => 05-APR-2010
TIME PLOTTED => 09:51

VI=1

NOTES

1. All mechanical equipment, and flue and vent penetrations shall terminate in the roof zone specified, see sheets M6-2 and M6-7.

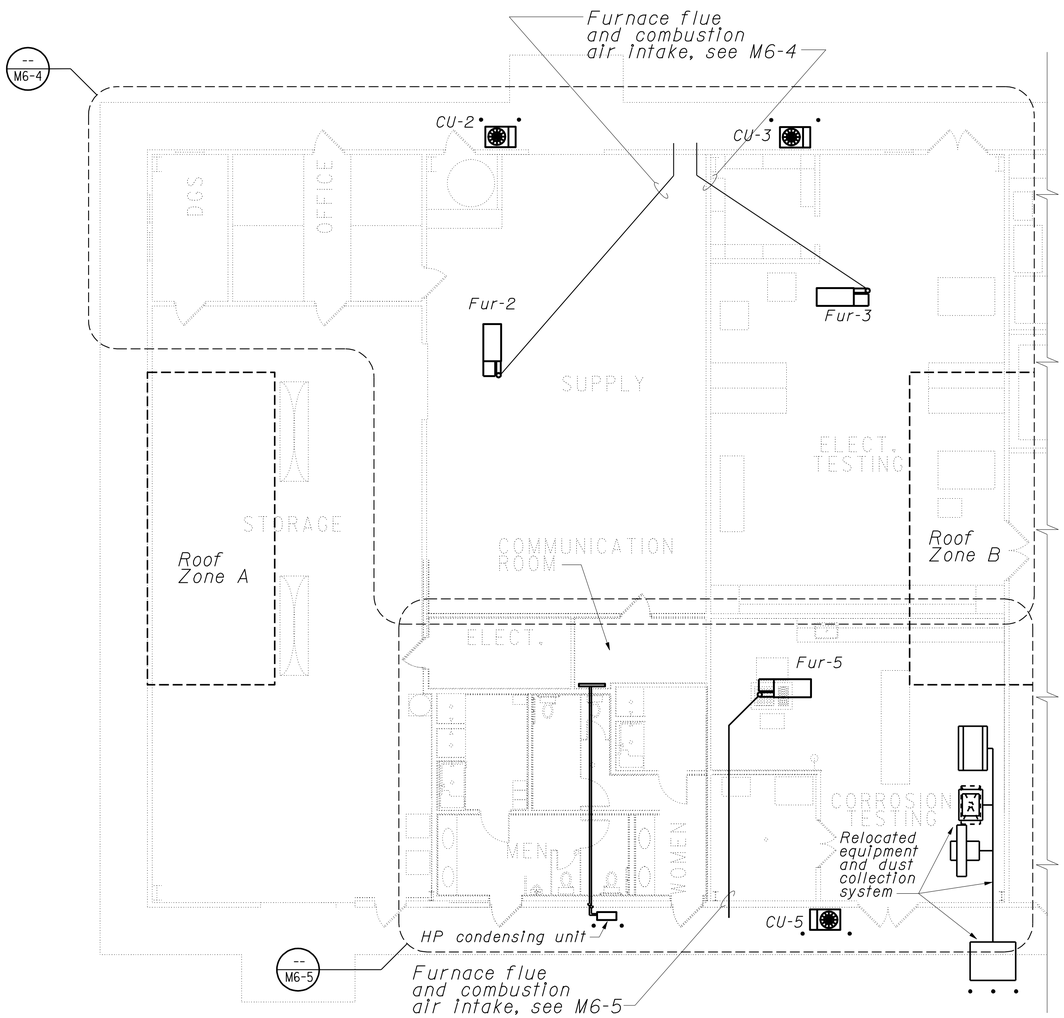

HVAC PLAN

1/8" = 1'-0"

NORTH

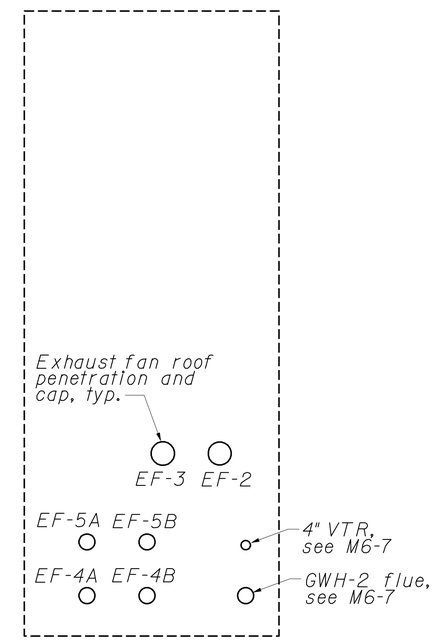

0.1 ROOF ZONE A

No Scale

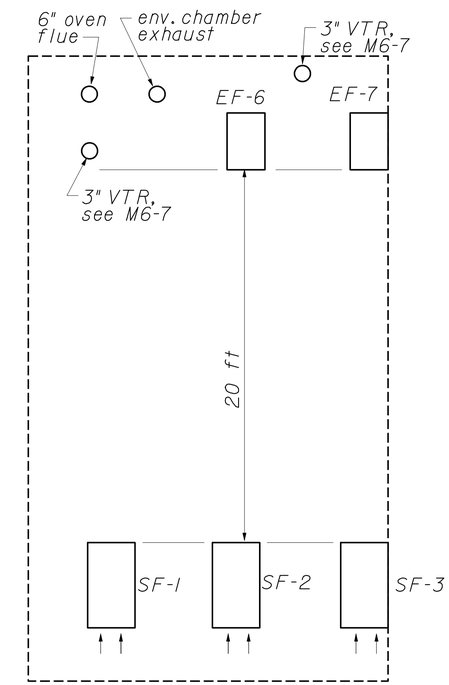

0.2 ROOF ZONE B

No Scale

CALIFORNIA STATE FIRE MARSHAL APPROVED

Approval of this plan does not authorize or approve any omission or deviation from applicable regulations. Final approval is subject to field inspection. One set of approved plans shall be available on the project site at all times.

Reviewed by: STEPHEN GUARINO

Approval date: 07-01-09

DIST.	COUNTY	ROUTE	POST MILES TOTAL PROJECT	SHEET NO.	TOTAL SHEETS
03	Sac	5501		93	172

REGISTERED ENGINEER-MECHANICAL — 12-28-09 DATE

REGISTERED PROFESSIONAL ENGINEER — Jack Wheeler — No. 21648 — Exp. 06-30-11 — MECH — STATE OF CALIFORNIA

11-23-09 PLANS APPROVAL DATE

The State of California or its officers or agents shall not be responsible for the accuracy or completeness of electronic copies of this plan sheet.

5 REVISED PER ADDENDUM No. 5 DATED APRIL 8, 2010

1 REVISED PER ADDENDUM No. 1 DATED FEBRUARY 10, 2010

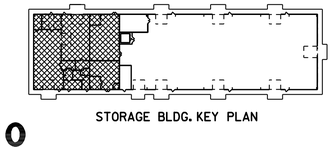

STORAGE BLDG. KEY PLAN

THIS DRAWING ACCURATE FOR MECHANICAL WORK ONLY

	BY	CHECKED
DESIGN	Thomas Dietsch	Alvin Kwan
DETAILS	Thomas Dietsch	Alvin Kwan
QUANTITIES	Thomas Dietsch	Alvin Kwan

STATE OF CALIFORNIA DEPARTMENT OF TRANSPORTATION

DIVISION OF STRUCTURES ELECTRICAL-MECHANICAL-WATER AND WASTEWATER DESIGN

BRIDGE NO. | POST MILE | PHASE 4 | STORAGE BUILDING

TRANSLAB REPAIR PROJECT

HVAC PLAN

SHEET M6-2

BKW DOS ELEC(1/93)

ORIGINAL SCALE IN INCHES FOR REDUCED PLANS 0 1 2 3

CU 03263 EA 2C8441

DISREGARD PRINTS BEARING EARLIER REVISION DATES — REVISION DATES (PRELIMINARY STAGE ONLY) 02-23-09 05-27-09 07-06-09 12-17-09 07-16-08 02-11-08 10-15-08 12-15-08

SHEET OF

USERNAME => trmikesl

DGN FILE => m6_2.dgn

DATE PLOTTED => 05-APR-2010

TIME PLOTTED => 09:51

DIST.	COUNTY	ROUTE	POST MILES TOTAL PROJECT	SHEET NO.	TOTAL SHEETS
03	Sac	5501		94	172

REGISTERED ENGINEER-MECHANICAL — 12-28-09 DATE

REGISTERED PROFESSIONAL ENGINEER — Jack Wheeler — No. 21648 — Exp. 06-30-11 — MECH — STATE OF CALIFORNIA

11-23-09
PLANS APPROVAL DATE

CALIFORNIA STATE FIRE MARSHAL APPROVED
Approval of this plan does not authorize or approve any omission or deviation from applicable regulations. Final approval is subject to field inspection. One set of approved plans shall be available on the project site at all times.
Reviewed by: STEPHEN GUARINO
Approval date: 07-01-09

5 1

The State of California or its officers or agents shall not be responsible for the accuracy or completeness of electronic copies of this plan sheet.

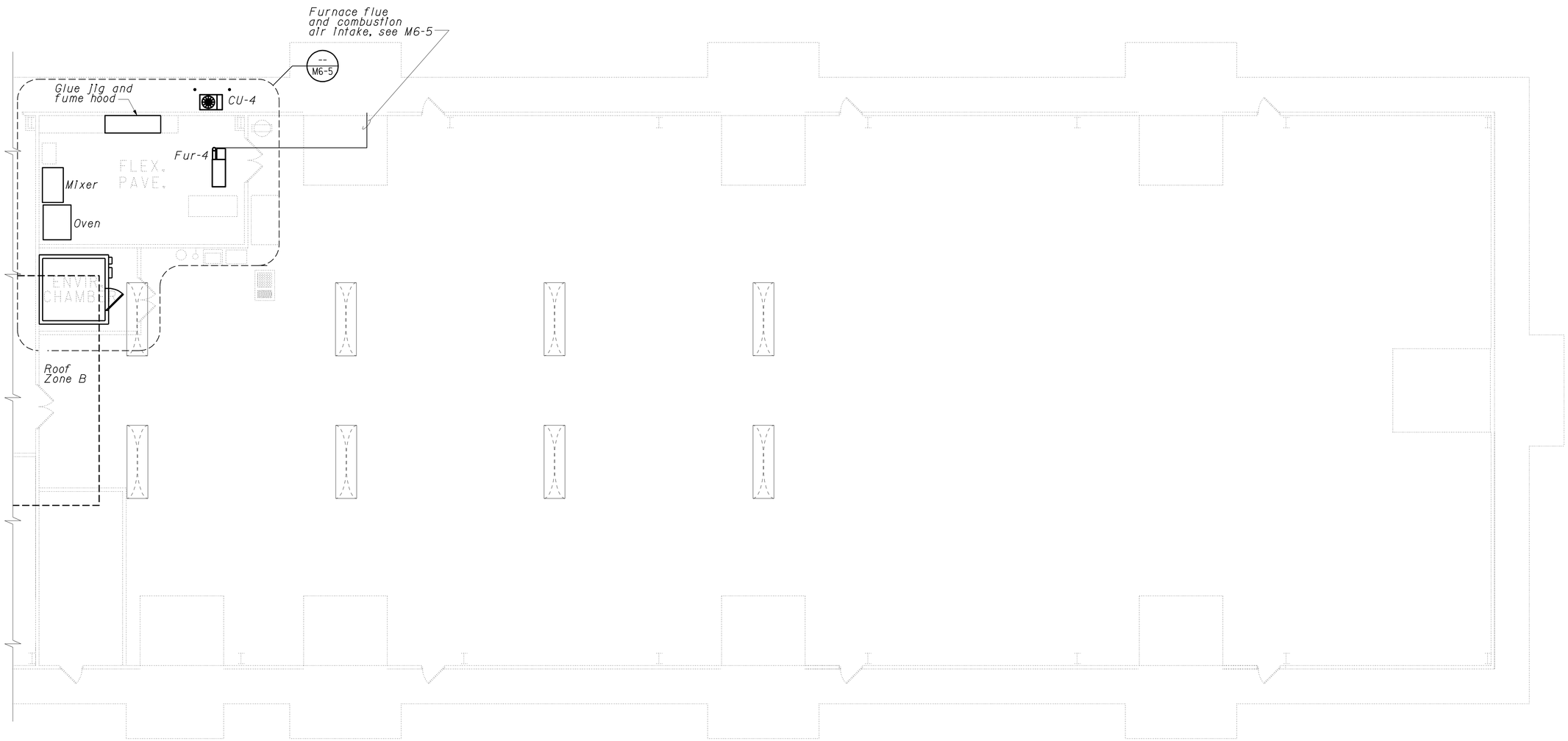

5 **REVISED PER ADDENDUM No. 5 DATED APRIL 8, 2010**

HVAC PLAN
1" = 10'-0"

NORTH

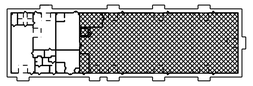

STORAGE BLDG. KEY PLAN

THIS DRAWING ACCURATE FOR MECHANICAL WORK ONLY

1 **REVISED PER ADDENDUM No. 1 DATED FEBRUARY 10, 2010**

	BY	CHECKED
DESIGN	Thomas Dietsch	Alvin Kwan
DETAILS	Thomas Dietsch	Alvin Kwan
QUANTITIES	Thomas Dietsch	Alvin Kwan

STATE OF CALIFORNIA
DEPARTMENT OF TRANSPORTATION

DIVISION OF STRUCTURES
ELECTRICAL-MECHANICAL-WATER AND WASTEWATER DESIGN

BRIDGE NO.
POST MILE

PHASE 4
STORAGE BUILDING

TRANSLAB REPAIR PROJECT
HVAC PLAN

SHEET **M6-3**

BKW DOS ELEC(1/93)

ORIGINAL SCALE IN INCHES FOR REDUCED PLANS 0 1 2 3

CU 03263
EA 2C8441

DISREGARD PRINTS BEARING EARLIER REVISION DATES

REVISION DATES (PRELIMINARY STAGE ONLY): 02-23-09 05-27-09 07-06-09 12-17-09 01-16-08 02-11-08 10-15-08 12-15-08

SHEET OF

DATE PLOTTED => 05-APR-2010
TIME PLOTTED => 09:51

USERNAME => trmikesl
DGN FILE => m6_3.dgn

VI=1

DIST.	COUNTY	ROUTE	POST MILES TOTAL PROJECT	SHEET NO.	TOTAL SHEETS
03	Sac	5501		95	172

REGISTERED ENGINEER-MECHANICAL — 12-28-09 DATE

REGISTERED PROFESSIONAL ENGINEER — Jack Wheeler — No. 21648 — Exp. 06-30-11 — MECH — STATE OF CALIFORNIA

11-23-09
PLANS APPROVAL DATE

CALIFORNIA STATE FIRE MARSHAL APPROVED
Approval of this plan does not authorize or approve any omission or deviation from applicable regulations. Final approval is subject to field inspection. One set of approved plans shall be available on the project site at all times.
Reviewed by: STEPHEN GUARINO
Approval date: 07-01-09

The State of California or its officers or agents shall not be responsible for the accuracy or completeness of electronic copies of this plan sheet.

EQUIPMENT

Fur-2	Furnace 2 - 100,000 BTUH input, 2,000 cfm @ 0.5 in.w.c., ¾hp, 120V - 1 Phase
CU-2	Condensing Unit 2 - 60,000 BTUH nominal cooling capacity, 6 kW, 208V - 1 Phase
coil-2	Coil 2 - 60,000 BTUH nominal cooling capacity
Fur-3	Furnace 3 - 80,000 BTUH input, 1,600 cfm @ 0.6 in.w.c., 1/3 hp, 120V - 1 Phase
CU-3	Condensing Unit 3 - 48,000 BTUH nominal cooling capacity, 4.7 kW, 208V - 1 Phase
coil-3	Coil 3 - 48,000 BTUH nominal cooling capacity

NOTES

1. Flue shall penetrate ~~roof~~ wall ~~in a roof cap.~~ and terminate 15 FT above finished floor. Ensure maximum horizontal clearance from outside air louvers. (5)

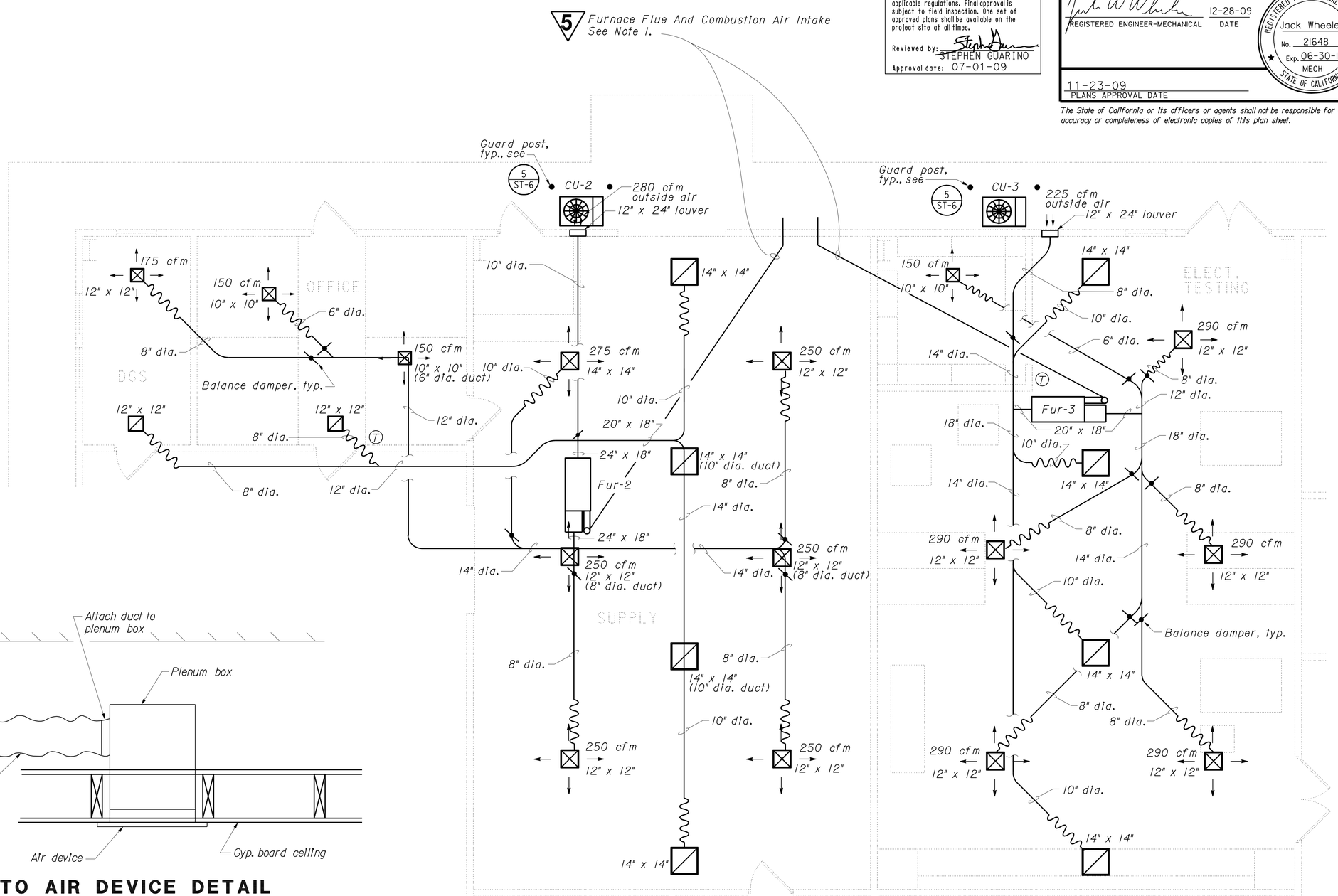

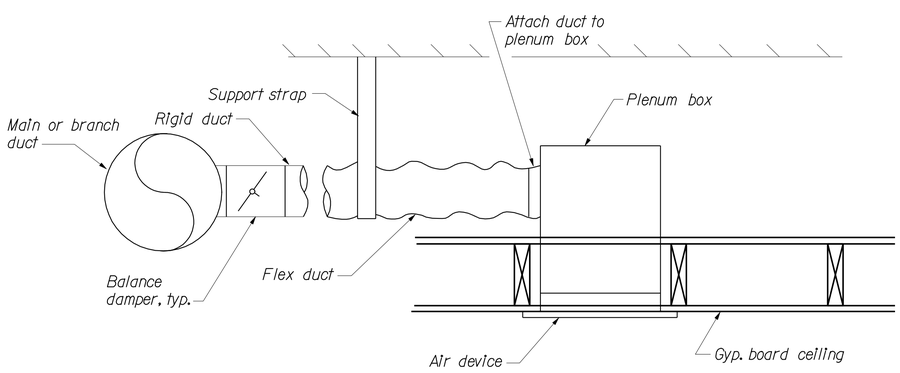

1 **DUCT TO AIR DEVICE DETAIL**
No Scale

HVAC PLAN
1/4" = 1'-0"

5 **REVISED PER ADDENDUM No. 5 DATED APRIL 8, 2010**
THIS DRAWING ACCURATE FOR MECHANICAL WORK ONLY

	BY	CHECKED
DESIGN	Thomas Dietsch	Alvin Kwan
DETAILS	Thomas Dietsch	Alvin Kwan
QUANTITIES	Thomas Dietsch	Alvin Kwan

STATE OF CALIFORNIA
DEPARTMENT OF TRANSPORTATION

DIVISION OF STRUCTURES
ELECTRICAL-MECHANICAL-WATER AND WASTEWATER DESIGN

BRIDGE NO. | POST MILE | PHASE 4 | STORAGE BUILDING

TRANSLAB REPAIR PROJECT
HVAC PLAN

SHEET **M6-4**

BKW DOS ELEC(I/93)

ORIGINAL SCALE IN INCHES FOR REDUCED PLANS 0 1 2 3

CU 03263
EA 2C8441

DISREGARD PRINTS BEARING EARLIER REVISION DATES

REVISION DATES (PRELIMINARY STAGE ONLY): 02-23-09 05-27-09 07-06-09 12-17-09 01-16-08 02-14-08 10-15-08 12-15-08

SHEET OF

USERNAME => trmikesl
DGN FILE => m6_4.dgn

DATE PLOTTED => 06-APR-2010
TIME PLOTTED => 13:53

VI=1

DIST.	COUNTY	ROUTE	POST MILES TOTAL PROJECT	SHEET NO.	TOTAL SHEETS
03	Sac	5501		96	172

REGISTERED ENGINEER-MECHANICAL — 12-28-09 DATE

REGISTERED PROFESSIONAL ENGINEER — Jack Wheeler — No. 21648 — Exp. 06-30-11 — MECH — STATE OF CALIFORNIA

11-23-09
PLANS APPROVAL DATE

The State of California or its officers or agents shall not be responsible for the accuracy or completeness of electronic copies of this plan sheet.

CALIFORNIA STATE FIRE MARSHAL APPROVED
Approval of this plan does not authorize or approve any omission or deviation from applicable regulations. Final approval is subject to field inspection. One set of approved plans shall be available on the project site at all times.
Reviewed by: STEPHEN GUARINO
Approval date: 07-01-09

5 1

EQUIPMENT

Fur-4	Furnace 4 - 40,000 BTUH input, 1,000 cfm @ 0.5 in.w.c., 1/3 hp, 120V - 1 Phase
CU-4	Condensing Unit 4 - 30,000 BTUH nominal cooling capacity, 2.7 kW, 208V - 1 Phase
coil-4	Coil 4 - 30,000 BTUH nominal cooling capacity
Fur-5	Furnace 5 - 80,000 BTUH input, 1,600 cfm @ 0.6 in.w.c., 1/3 hp, 120V - 1 Phase
CU-5	Condensing Unit 5 - 48,000 BTUH nominal cooling capacity, 4.7 kW, 208V - 1 Phase
coil-5	Coil 5 - 48,000 BTUH nominal cooling capacity
EF-2	Exhaust Fan 2 (ceiling mounted) - 600 CFM @ 0.25 in.w.c., 0.5 kW, 120V - 1 Phase
EF-3	Exhaust Fan 3 (ceiling mounted) - 300 CFM @ 0.25 in.w.c., 0.3 kW, 120V - 1 Phase
HP	Heat Pump (ductless, split system heat pump) - 13,000 BTUH nominal cooling capacity, 1.5 kW, 10,000 BTUH nominal reverse cycle heat, 1.5 kW, 208V - 1 Phase

EQUIPMENT, continued

EF-4A EF-4B	Exhaust Fan 4 (ceiling mounted) - 130 cfm @ 0.25 in.w.c., 0.12 kW, 120V - 1 Phase, 5 sones
EF-5A EF-5B	Exhaust Fan 5 (ceiling mounted) - 50 cfm @ 0.25 in.w.c., 50 Watts, 120V - 1 Phase, 4 sones

9. Flue shall penetrate ceiling in an attic insulation shield, maintaining 2" minimum clearance to combustibles and terminate in a roof cap at Roof Zone B, see m6-2

NOTES

1. Flue shall penetrate wall 15 ft above finished floor. Ensure maximum horizontal clearance from outside air louvers.
2. Maintain 10 ft minimum distance between supply fans, and exhaust fans and flues.
3. EF-2 is a backup exhaust fan to be used in the event of an HP shutdown. Exhaust duct shall be 12" dia or equivalent, and terminate through the roof in a roof cap.
4. EF-3 shall exhaust through a 10" dia. duct or equivalent, and terminate through the roof in a roof cap. EF-3 controlled by thermostat, min. range from 80 deg F to 105 deg F.
5. For information relating to relocated equipment, see Architectural sheets.
6. Install top of unit at 7 FT above finished floor.
7. Terminate at Roof Zone A, see M6-1 and M6-2.
8. Terminate at Roof Zone B, see M6-1 and M6-2.

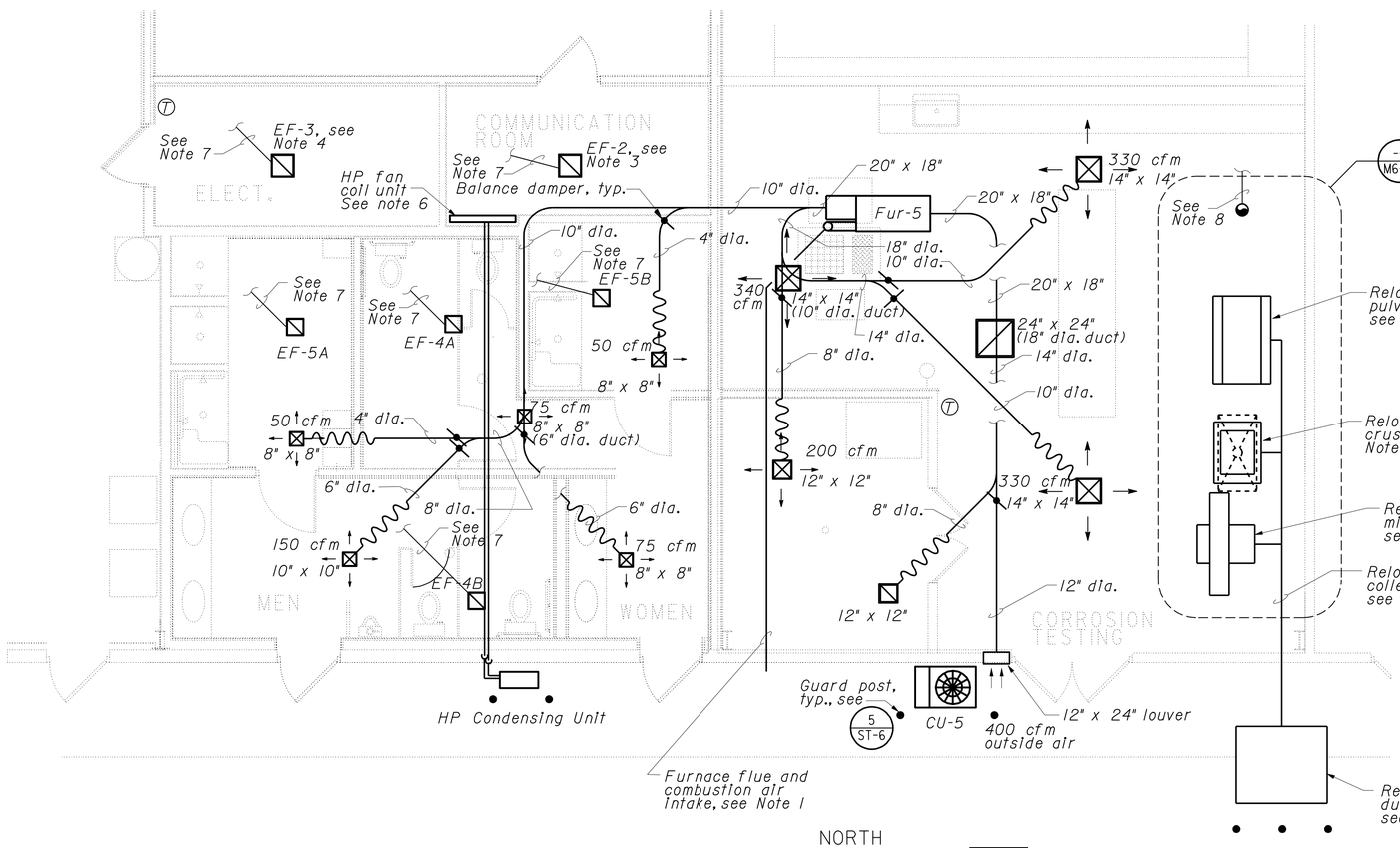

HVAC PLAN
1/4" = 1'-0"
NORTH

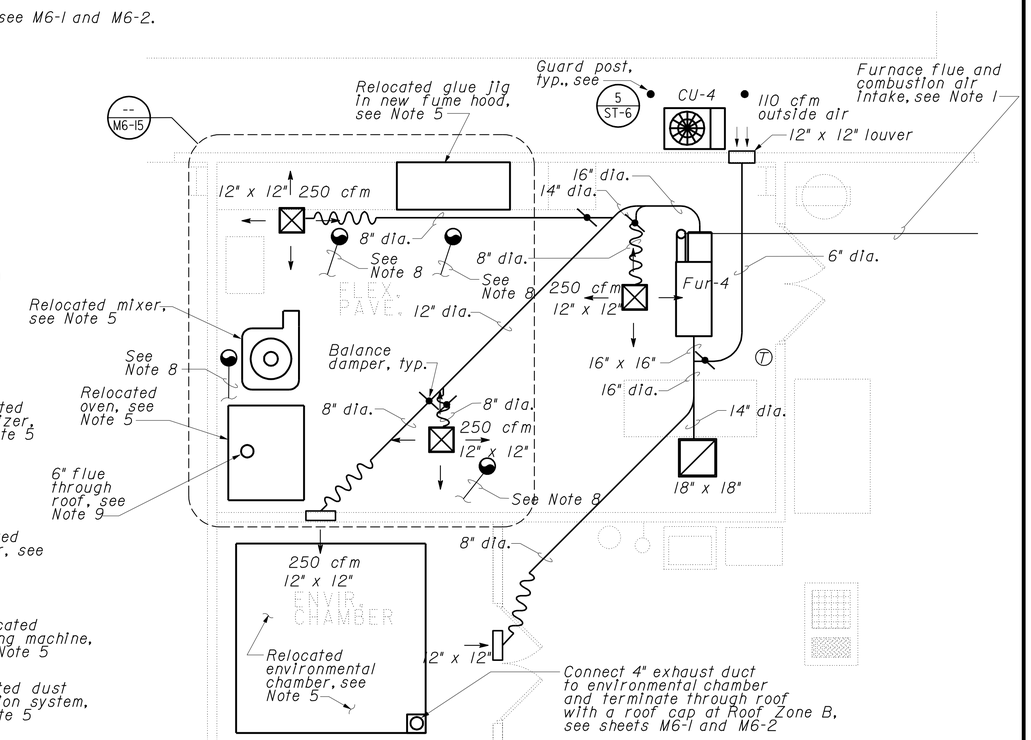

HVAC PLAN
1/4" = 1'-0"
NORTH

5 REVISED PER ADDENDUM No. 5 DATED APRIL 8, 2010

1 REVISED PER ADDENDUM No. 1 DATED FEBRUARY 10, 2010

THIS DRAWING ACCURATE FOR MECHANICAL WORK ONLY

	BY	CHECKED
DESIGN	Thomas Dietsch	Alvin Kwan
DETAILS	Thomas Dietsch	Alvin Kwan
QUANTITIES	Thomas Dietsch	Alvin Kwan

STATE OF CALIFORNIA
DEPARTMENT OF TRANSPORTATION

DIVISION OF STRUCTURES
ELECTRICAL-MECHANICAL-WATER AND WASTEWATER DESIGN

BRIDGE NO.
POST MILE

PHASE 4
STORAGE BUILDING

TRANSLAB REPAIR PROJECT
HVAC PLAN

SHEET **M6-5**

BKW DOS ELEC(1/93)

ORIGINAL SCALE IN INCHES FOR REDUCED PLANS 0 1 2 3

CU 03263
EA 2C8441

DISREGARD PRINTS BEARING EARLIER REVISION DATES

REVISION DATES (PRELIMINARY STAGE ONLY): 02-23-09 05-27-09 07-06-09 12-21-09 01-16-08 02-14-08 10-15-08 12-15-08

SHEET OF

USERNAME => trmikesl
DGN FILE => m6_5.dgn

DATE PLOTTED => 05-APR-2010
TIME PLOTTED => 09:51

DIST.	COUNTY	ROUTE	POST MILES TOTAL PROJECT	SHEET NO.	TOTAL SHEETS
03	Sac	5501		97	172

REGISTERED ENGINEER-MECHANICAL — 07-01-09 DATE

REGISTERED PROFESSIONAL ENGINEER — Jack Wheeler — No. 21648 — Exp. 06-30-11 — MECH — STATE OF CALIFORNIA

11-23-09
PLANS APPROVAL DATE

CALIFORNIA STATE FIRE MARSHAL APPROVED
Approval of this plan does not authorize or approve any omission or deviation from applicable regulations. Final approval is subject to field inspection. One set of approved plans shall be available on the project site at all times.
Reviewed by: STEPHEN GUARINO
Approval date: 07-01-09

The State of California or its officers or agents shall not be responsible for the accuracy or completeness of electronic copies of this plan sheet.

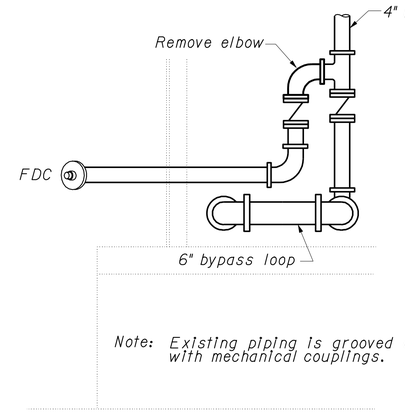

A — EXISTING FDC/ RISER CONNECTION
No Scale

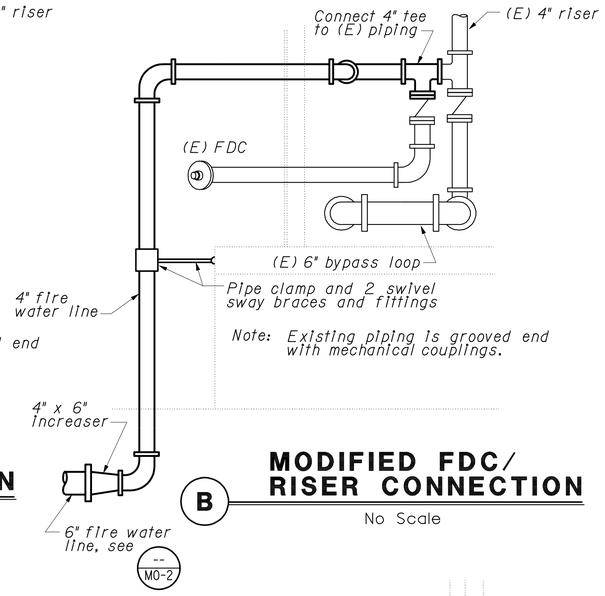

B — MODIFIED FDC/ RISER CONNECTION
No Scale

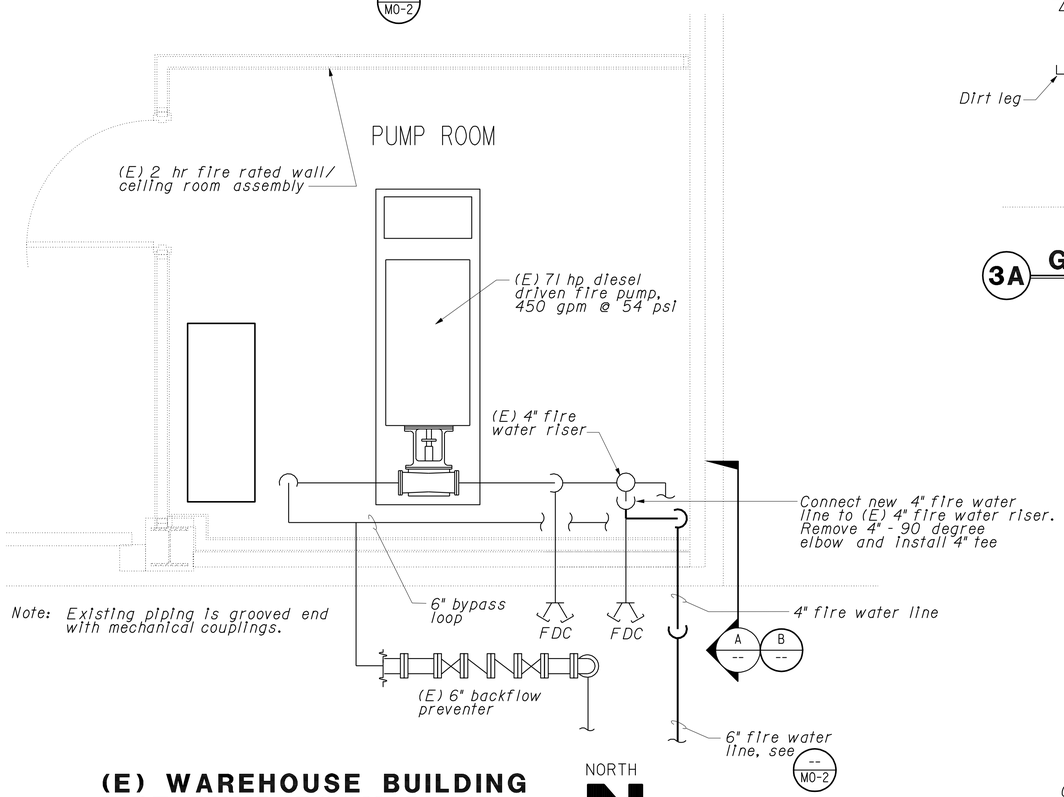

(E) WAREHOUSE BUILDING FIRE PUMP ROOM PLAN
No Scale
THIS DRAWING ACCURATE FOR MECHANICAL WORK ONLY

NORTH

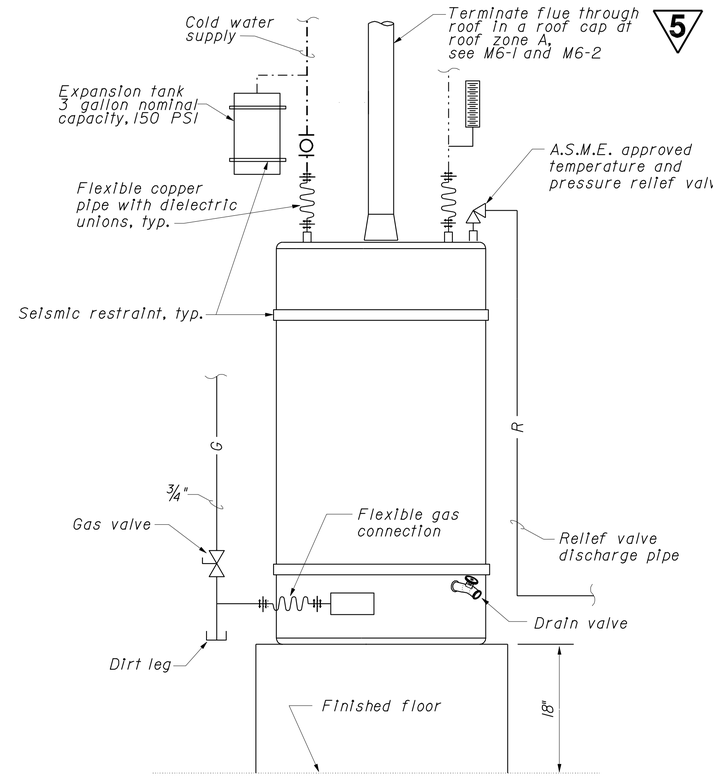

3A — GAS WATER HEATER - 2
No Scale

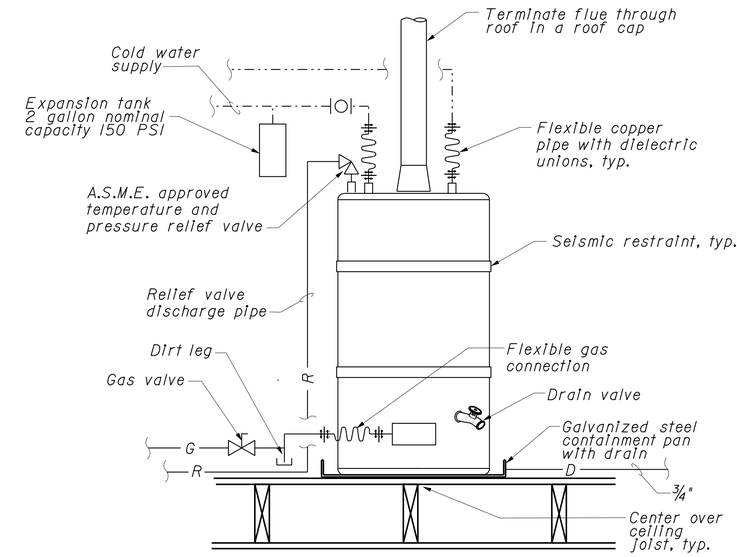

3B — GAS WATER HEATER - 1
No Scale

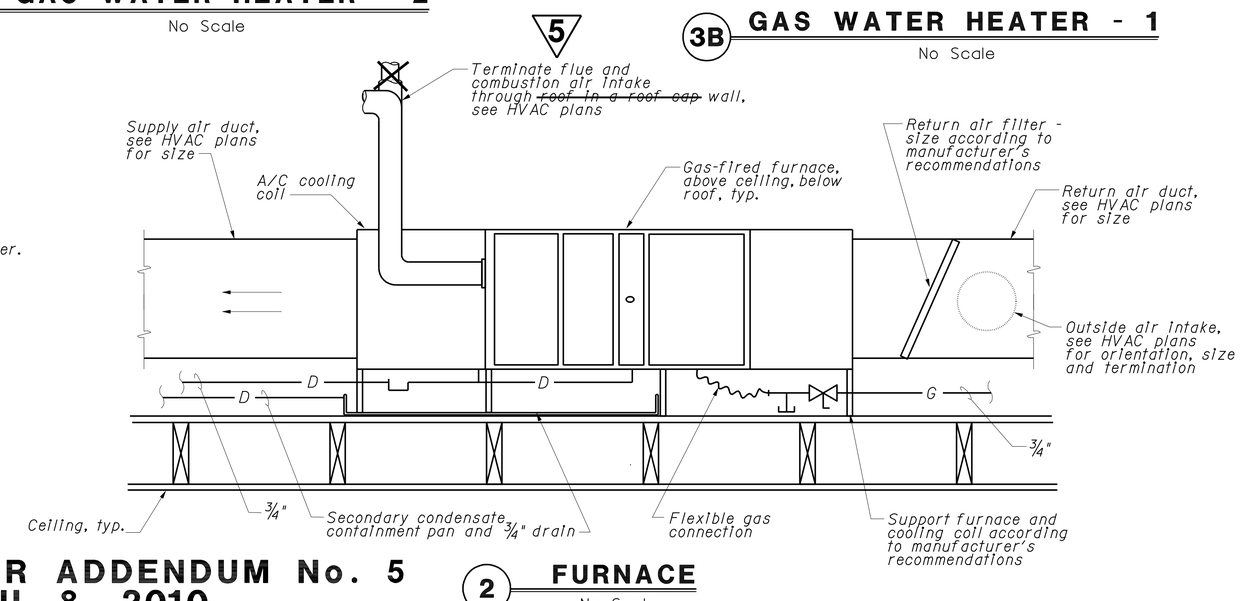

2 — FURNACE
No Scale

5 **REVISED PER ADDENDUM No. 5 DATED APRIL 8, 2010**

DESIGN	BY Thomas Dietsch	CHECKED Alvin Kwan	
DETAILS	BY Thomas Dietsch	CHECKED Alvin Kwan	
QUANTITIES	BY Thomas Dietsch	CHECKED Alvin Kwan	

STATE OF CALIFORNIA DEPARTMENT OF TRANSPORTATION

DIVISION OF STRUCTURES
ELECTRICAL-MECHANICAL-WATER AND WASTEWATER DESIGN

CU 03263
EA 2C8441

BRIDGE NO.
POST MILE

PHASE 4

TRANSLAB REPAIR PROJECT
FIRE WATER CONNECTION/DETAILS

SHEET **M6-6**

BKW DOS ELEC(1/93)

ORIGINAL SCALE IN INCHES FOR REDUCED PLANS 0 1 2 3

DISREGARD PRINTS BEARING EARLIER REVISION DATES → 02-23-09 05-27-09 07-01-09 12-07-07 01-18-08 02-11-08 10-15-08 12-15-08

SHEET OF

DATE PLOTTED => 06-APR-2010
TIME PLOTTED => 11:31

USERNAME => trmikesl
DGN FILE => m6_6.dgn

VI=1

CALIFORNIA STATE FIRE MARSHAL APPROVED
Approval of this plan does not authorize or approve any omission or deviation from applicable regulations. Final approval is subject to field inspection. One set of approved plans shall be available on the project site at all times.
Reviewed by: STEPHEN GUARINO
Approval date: 07-01-09

DIST.	COUNTY	ROUTE	POST MILES TOTAL PROJECT	SHEET NO.	TOTAL SHEETS
03	Sac	5501		98	172

REGISTERED ENGINEER-MECHANICAL — 12-28-09 DATE
REGISTERED PROFESSIONAL ENGINEER Jack Wheeler No. 21648 Exp. 06-30-11 MECH STATE OF CALIFORNIA
11-23-09 PLANS APPROVAL DATE

1

The State of California or its officers or agents shall not be responsible for the accuracy or completeness of electronic copies of this plan sheet.

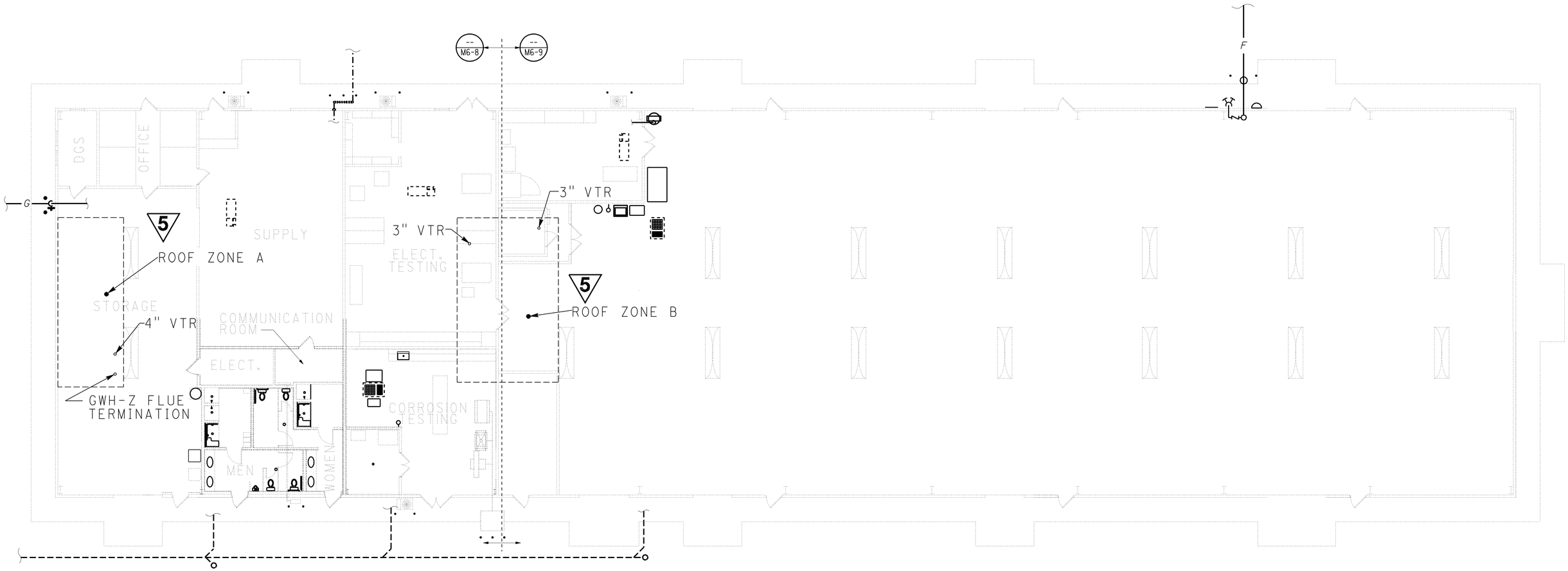

5 **REVISED PER ADDENDUM No. 5 DATED APRIL 8, 2010**

PLUMBING PLAN

1" = 10'-0"

NORTH

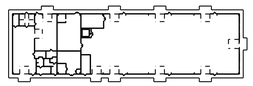

STORAGE BLDG. KEY PLAN

THIS DRAWING ACCURATE FOR MECHANICAL WORK ONLY

1 **REVISED PER ADDENDUM No. 1 DATED FEBRUARY 10, 2010**

	BY	CHECKED
DESIGN	Thomas Dietsch	Alvin Kwan
DETAILS	Thomas Dietsch	Alvin Kwan
QUANTITIES	Thomas Dietsch	Alvin Kwan

STATE OF CALIFORNIA DEPARTMENT OF TRANSPORTATION

DIVISION OF STRUCTURES ELECTRICAL-MECHANICAL-WATER AND WASTEWATER DESIGN

BRIDGE NO. / POST MILE

PHASE 4 — STORAGE BUILDING

TRANSLAB REPAIR PROJECT

PLUMBING PLAN

SHEET **M6-7**

BKW DOS ELEC(1/93)

ORIGINAL SCALE IN INCHES FOR REDUCED PLANS 0 1 2 3

CU 03263
EA 2C8441

DISREGARD PRINTS BEARING EARLIER REVISION DATES → 02-23-09 05-27-09 07-01-09 12-21-09 01-10-08 02-11-08 10-15-08 12-15-08

REVISION DATES (PRELIMINARY STAGE ONLY) SHEET OF

USERNAME => trmikesl
DGN FILE => m6_7.dgn

DATE PLOTTED => 05-APR-2010
TIME PLOTTED => 09:51

VI=1

DIST.	COUNTY	ROUTE	POST MILES TOTAL PROJECT	SHEET NO.	TOTAL SHEETS
03	Sac	5501		101	172

REGISTERED ENGINEER-MECHANICAL — 07-01-09 DATE

REGISTERED PROFESSIONAL ENGINEER Jack Wheeler No. 21648 Exp. 06-30-11 MECH STATE OF CALIFORNIA

11-23-09 PLANS APPROVAL DATE

The State of California or its officers or agents shall not be responsible for the accuracy or completeness of electronic copies of this plan sheet.

CALIFORNIA STATE FIRE MARSHAL APPROVED

Approval of this plan does not authorize or approve any omission or deviation from applicable regulations. Final approval is subject to field inspection. One set of approved plans shall be available on the project site at all times.

Reviewed by: STEPHEN GUARINO

Approval date: 07-01-09

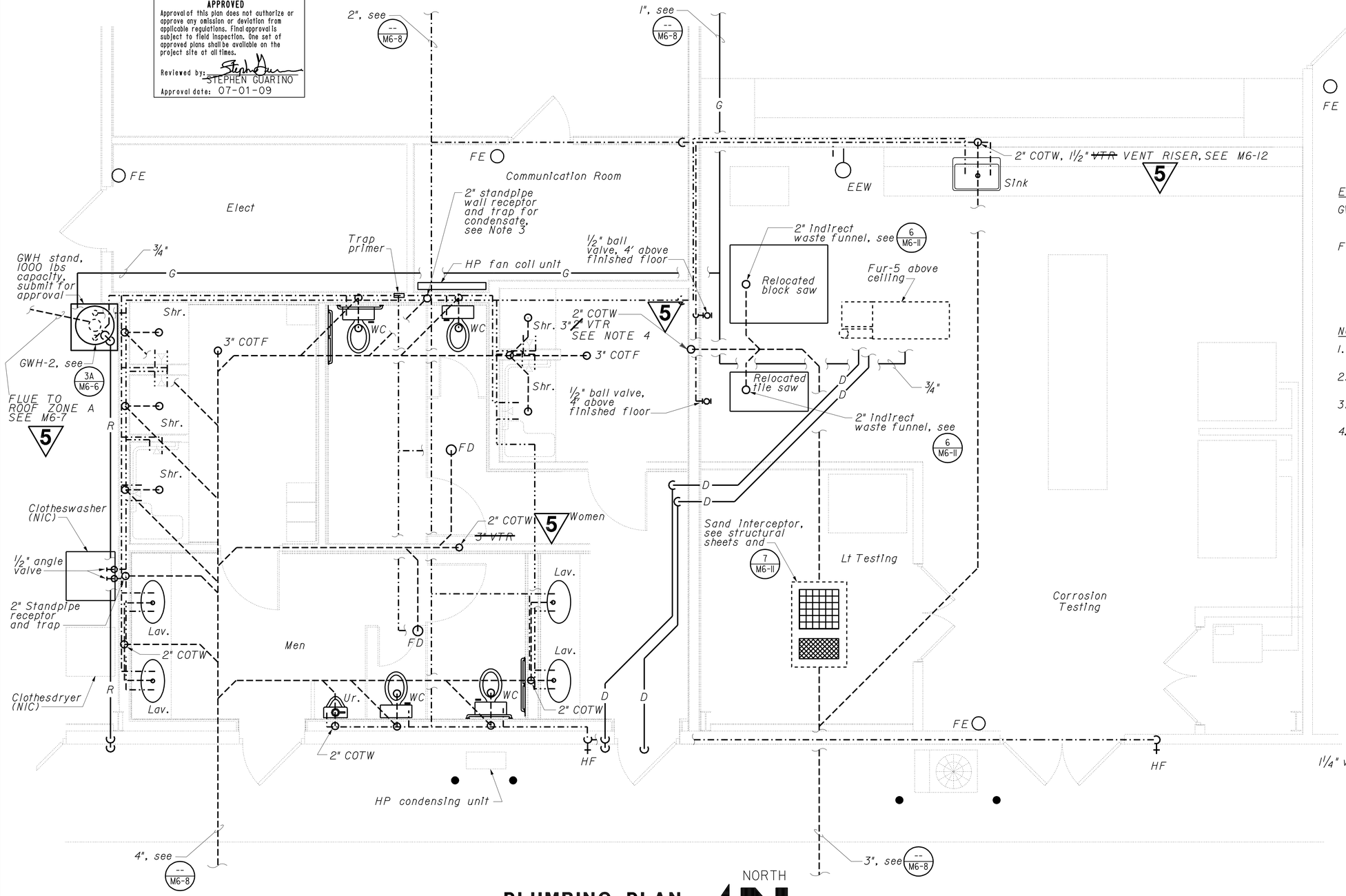

PLUMBING PLAN

3/8" = 1'-0"

THIS DRAWING ACCURATE FOR MECHANICAL WORK ONLY

5 **REVISED PER ADDENDUM No. 5 DATED APRIL 8, 2010**

EQUIPMENT

GWH-2 Gas Water Heater 2 - 75 Gallon, 75,000 BTUH input, min.

FE Fire Extinguisher - bracket mounted 2A:10B:C. Top of fire extinguisher shall be mounted 42" above finished floor

NOTES

1. Terminate condensate line and relief valve discharge line 4" above finished grade.
2. Terminate secondary containment drain line above door as shown.
3. Condensate drain shall connect to 2" standpipe receptor, see Sheet M6-12.
4. Terminate 3" VTR at roof zone B, see M6-7. 5

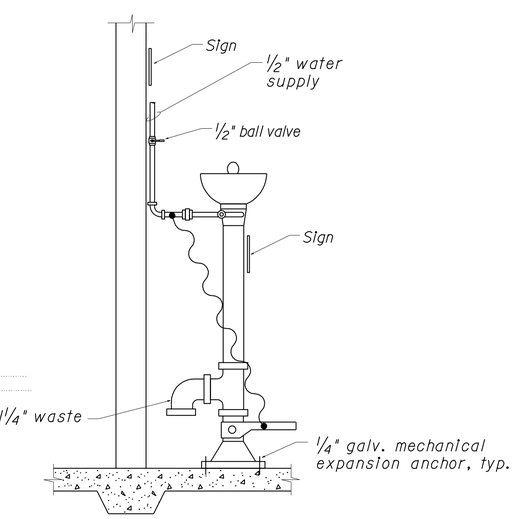

5 **EMERGENCY EYEWASH**

No Scale

NOTE: Emergency eyewash shall be ADA/barrier-free type

DESIGN	BY Thomas Dietsch	CHECKED Alvin Kwan	STATE OF CALIFORNIA DEPARTMENT OF TRANSPORTATION	DIVISION OF STRUCTURES ELECTRICAL-MECHANICAL-WATER AND WASTEWATER DESIGN	BRIDGE NO.	PHASE 4	TRANSLAB REPAIR PROJECT
DETAILS	BY Thomas Dietsch	CHECKED Alvin Kwan			POST MILE	STORAGE BUILDING	RESTROOM/CORROSION LAB PLUMBING
QUANTITIES	BY Thomas Dietsch	CHECKED Alvin Kwan					

SHEET **M6-10**

BKW DOS ELEC(1/93)

ORIGINAL SCALE IN INCHES FOR REDUCED PLANS 0 1 2 3

CU 03263
EA 2C8441

DISREGARD PRINTS BEARING EARLIER REVISION DATES

REVISION DATES (PRELIMINARY STAGE ONLY): 02-23-09, 05-27-09, 07-01-09, 12-07-07, 01-10-08, 02-14-08, 10-15-08, 11-10-08, 12-15-08

SHEET OF

USERNAME => trmikesl
DGN FILE => m6_10.add

DATE PLOTTED => 06-APR-2010
TIME PLOTTED => 11:31

VI=I

DIST.	COUNTY	ROUTE	POST MILES TOTAL PROJECT	SHEET NO.	TOTAL SHEETS
03	Sac	5501		102	172

REGISTERED ENGINEER-MECHANICAL — 07-01-09 DATE

REGISTERED PROFESSIONAL ENGINEER — Jack Wheeler — No. 21648 — Exp. 06-30-11 — MECH — STATE OF CALIFORNIA

11-23-09
PLANS APPROVAL DATE

The State of California or its officers or agents shall not be responsible for the accuracy or completeness of electronic copies of this plan sheet.

CALIFORNIA STATE FIRE MARSHAL APPROVED
Approval of this plan does not authorize or approve any omission or deviation from applicable regulations. Final approval is subject to field inspection. One set of approved plans shall be available on the project site at all times.
Reviewed by: STEPHEN GUARINO
Approval date: 07-01-09

NOTES

1. Terminate condensate line 4" above finished grade.
2. Terminate secondary containment drain line above door as shown.

AC-2 Air Compressor - 5 hp, 14 cfm @ 175 psi, 80 gallon vertical receiver, 208V - 3 Phase

FE Fire Extinguisher - bracket mounted 2A:10B:C. Top of fire extinguisher shall be mounted 42" above finished floor

EWH Electric Water Heater - 6 Gallon, 1.5 kW, 120V - 1 Phase

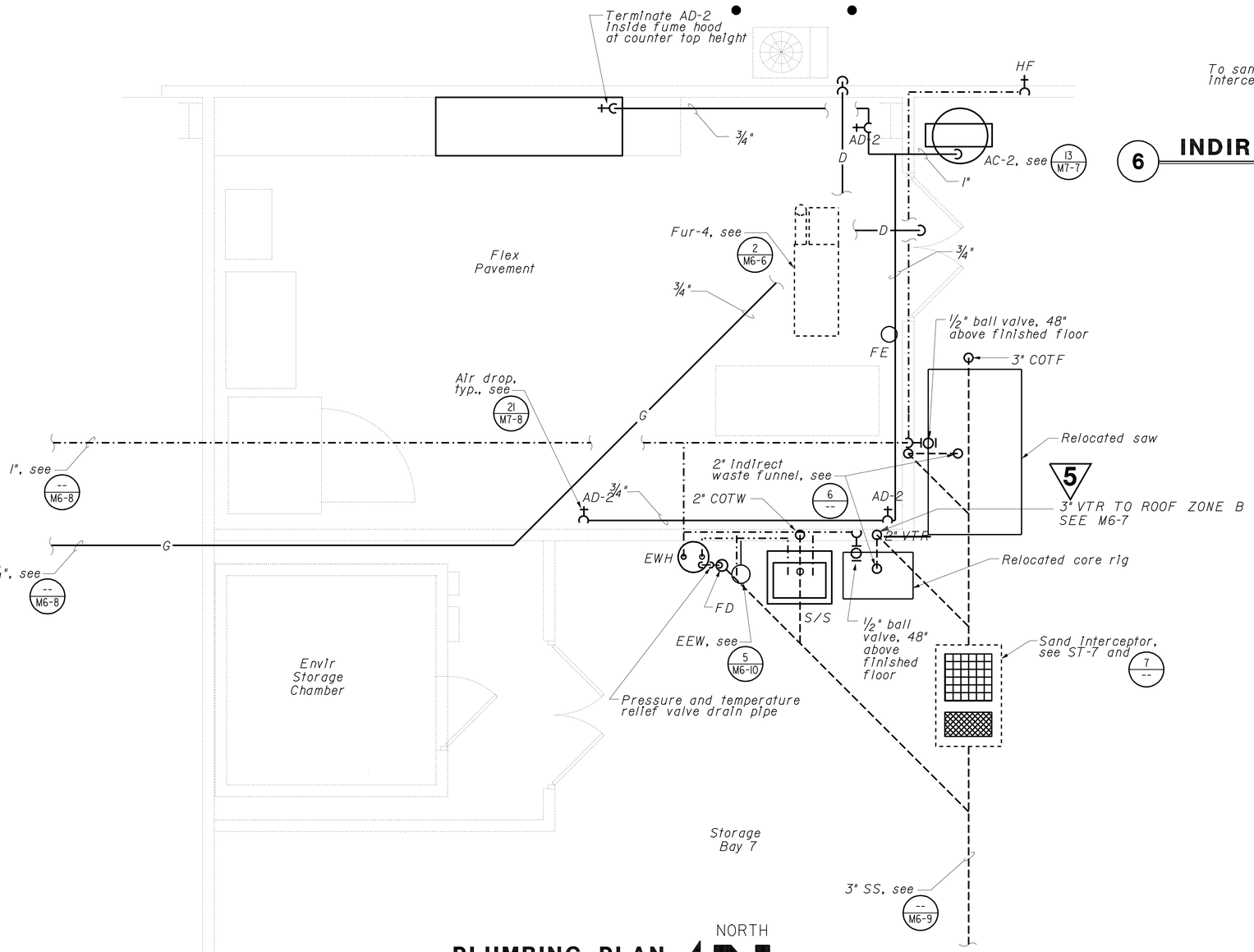

PLUMBING PLAN
3/8" = 1'-0"

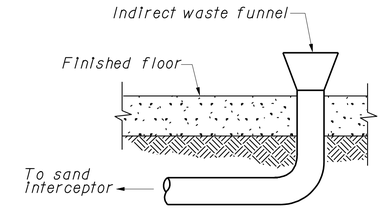

6 INDIRECT WASTE FUNNEL DETAIL
No Scale

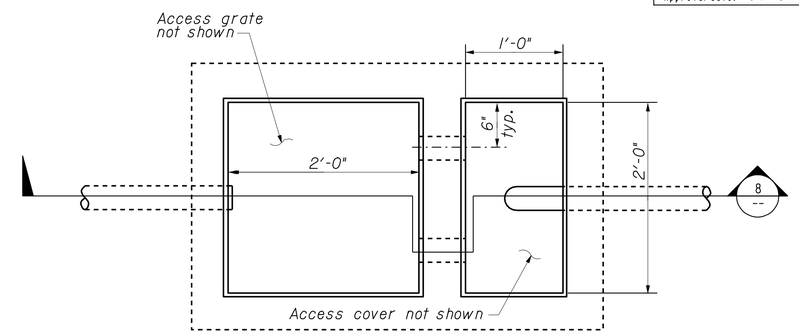

7 SAND INTERCEPTOR DETAIL
No Scale

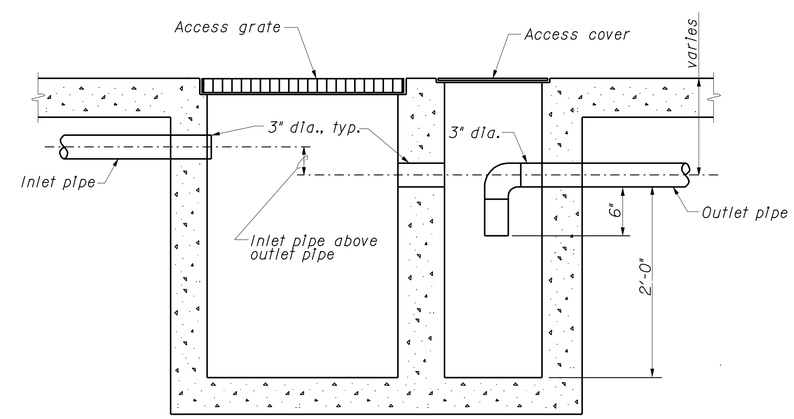

8 SAND INTERCEPTOR SECTION
No Scale

THIS DRAWING ACCURATE FOR MECHANICAL WORK ONLY

5 REVISED PER ADDENDUM No. 5 DATED APRIL 8, 2010

	BY	CHECKED
DESIGN	Thomas Dietsch	Alvin Kwan
DETAILS	Thomas Dietsch	Alvin Kwan
QUANTITIES	Thomas Dietsch	Alvin Kwan

STATE OF CALIFORNIA
DEPARTMENT OF TRANSPORTATION

DIVISION OF STRUCTURES
ELECTRICAL-MECHANICAL-WATER AND WASTEWATER DESIGN

BRIDGE NO.
POST MILE

PHASE 4
STORAGE BUILDING

TRANSLAB REPAIR PROJECT
PLUMBING PLAN

SHEET **M6-11**

BKW DOS ELEC(1/93)

ORIGINAL SCALE IN INCHES FOR REDUCED PLANS 0 1 2 3

CU 03263
EA 2C8441

DISREGARD PRINTS BEARING EARLIER REVISION DATES

REVISION DATES (PRELIMINARY STAGE ONLY): 02-23-09 03-27-09 07-01-09 12-07-07 01-18-08 02-14-08 10-15-08 12-15-08

SHEET OF

USERNAME => trmikesl
DGN FILE => m6_11.dgn

DATE PLOTTED => 05-APR-2010
TIME PLOTTED => 09:52

VI=1

DIST.	COUNTY	ROUTE	POST MILES TOTAL PROJECT	SHEET NO.	TOTAL SHEETS
03	Sac	5501		103	172

REGISTERED ENGINEER-MECHANICAL — 12-28-09 DATE

REGISTERED PROFESSIONAL ENGINEER — Jack Wheeler — No. 21648 — Exp. 06-30-11 — MECH — STATE OF CALIFORNIA

11-23-09
PLANS APPROVAL DATE

The State of California or its officers or agents shall not be responsible for the accuracy or completeness of electronic copies of this plan sheet.

CALIFORNIA STATE FIRE MARSHAL APPROVED
Approval of this plan does not authorize or approve any omission or deviation from applicable regulations. Final approval is subject to field inspection. One set of approved plans shall be available on the project site at all times.
Reviewed by: STEPHEN GUARINO
Approval date: 07-01-09

PLUMBING SCHEDULE

FIXTURE	DRAINAGE ROUGH IN	TRAP SIZE	VENT SIZE	MINIMUM CONNECTIONS COLD WATER	MINIMUM CONNECTIONS HOT WATER
LAVATORY	2"	1½"	2"	½"	½"
WATER CLOSET	3"	--	2"	¾"	--
URINAL	2"	2"	2"	1"	--
SHOWER	2"	2"	2"	¾"	¾"
EMERGENCY EYEWASH	--	--	--	¾"	--
FLOOR DRAIN	2"	2"	2"	--	--
INDIRECT WASTE FUNNEL	2"	--	2"	--	--
SINK	2"	1½"	2"	¾"	¾"
HOSE FAUCET	--	--	--	¾"	--

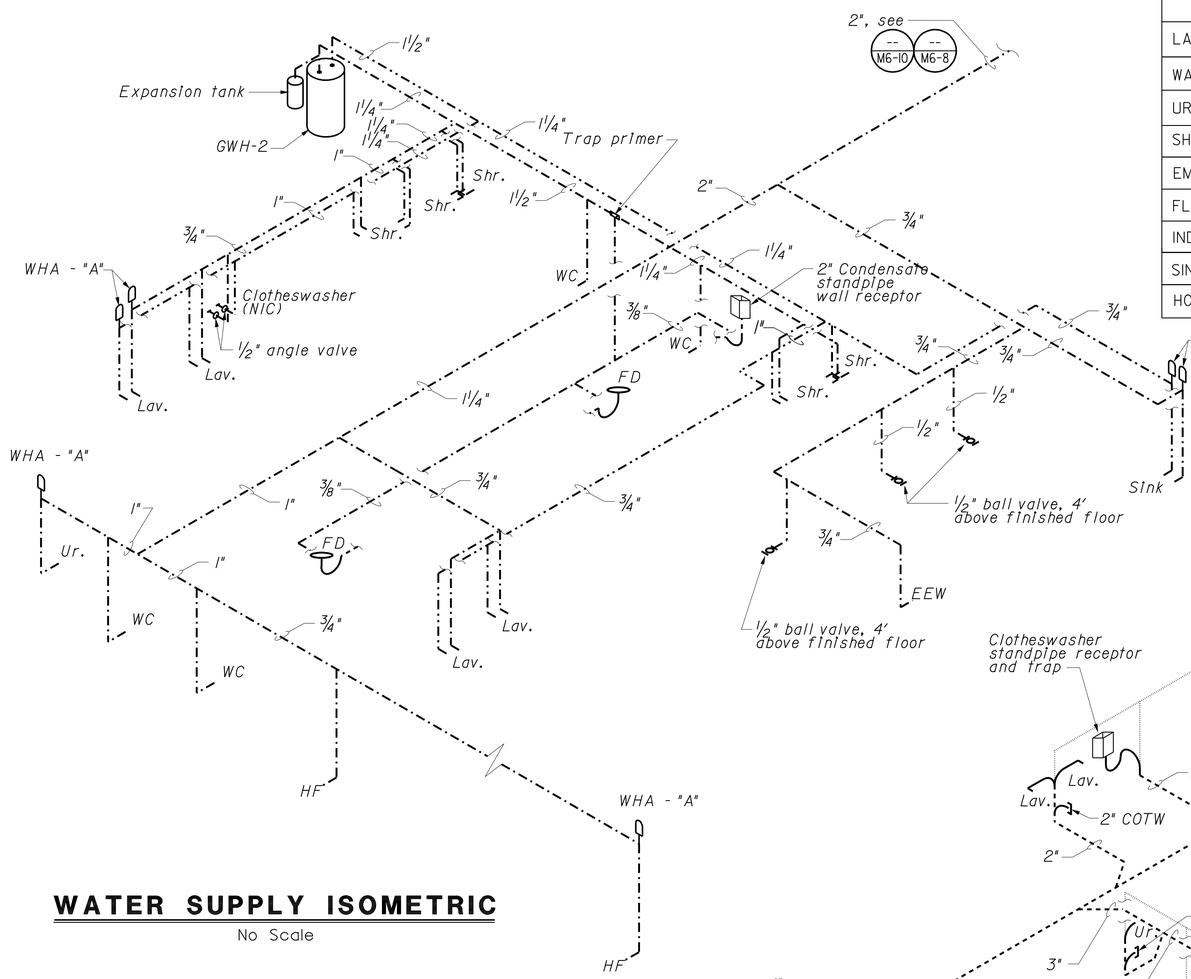

WATER SUPPLY ISOMETRIC

No Scale

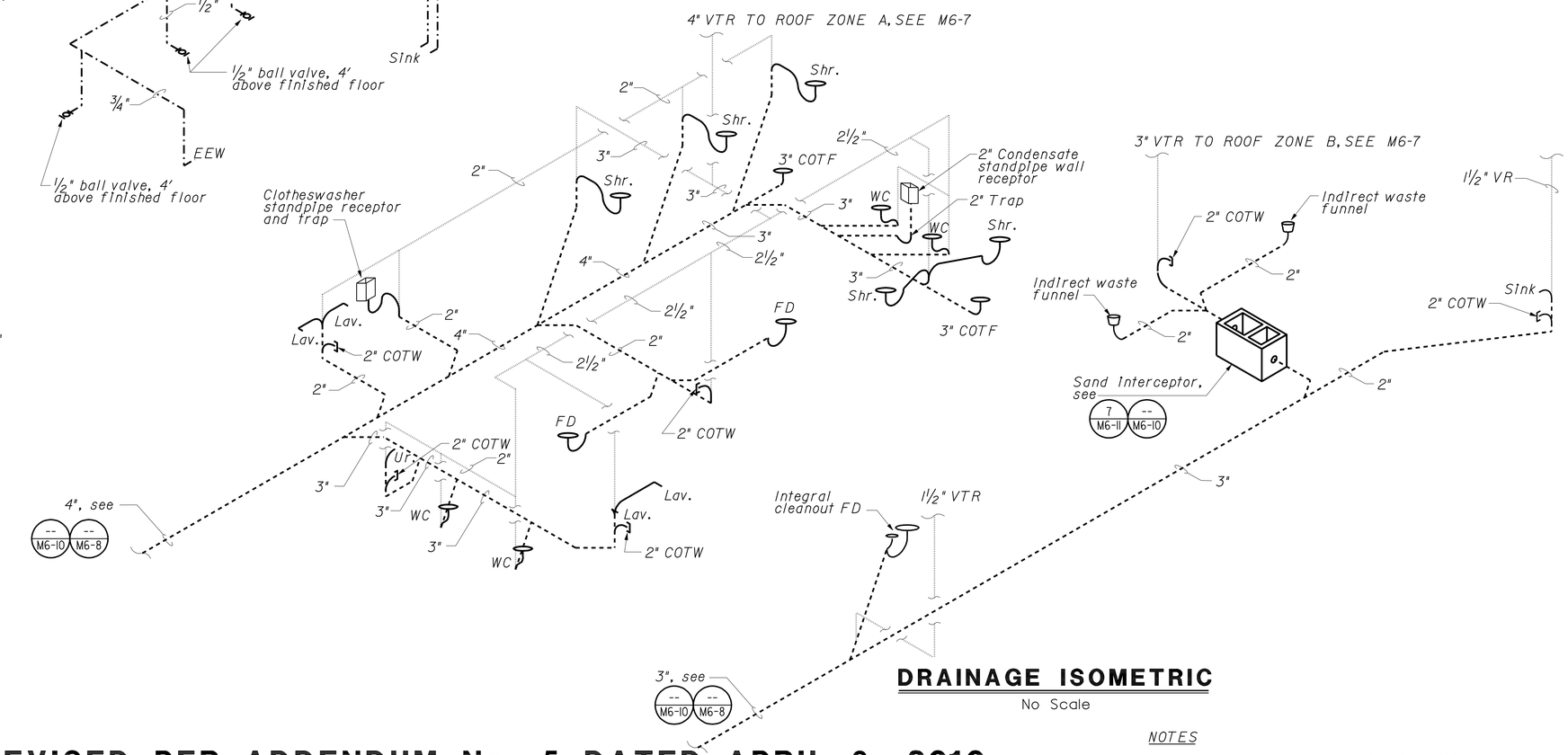

DRAINAGE ISOMETRIC

No Scale

5 REVISED PER ADDENDUM No. 5 DATED APRIL 8, 2010

1 REVISED PER ADDENDUM No. 1 DATED FEBRUARY 10, 2010

THIS DRAWING ACCURATE FOR MECHANICAL WORK ONLY

NOTES

1. Automatic trap primer shall have integral vacuum breaker and gasketed cover. Automatic trap primers and water hammer arresters shall be installed for accessibility through access doors, unless accessible from above the ceiling.

	BY	CHECKED
DESIGN	Thomas Dietsch	Alvin Kwan
DETAILS	Thomas Dietsch	Alvin Kwan
QUANTITIES	Thomas Dietsch	Alvin Kwan

STATE OF CALIFORNIA
DEPARTMENT OF TRANSPORTATION

DIVISION OF STRUCTURES
ELECTRICAL-MECHANICAL-WATER AND WASTEWATER DESIGN

BRIDGE NO.
POST MILE

PHASE 4
STORAGE BUILDING

TRANSLAB REPAIR PROJECT
RESTROOM/CORROSION LAB ISOMETRICS

SHEET **M6-12**

BKW DOS ELEC(1/93)

ORIGINAL SCALE IN INCHES FOR REDUCED PLANS 0 1 2 3

CU 03263
EA 2C8441

DISREGARD PRINTS BEARING EARLIER REVISION DATES

REVISION DATES (PRELIMINARY STAGE ONLY): 02-23-09 05-27-09 07-06-09 12-21-09 01-08-08 02-11-08 10-15-08 11-10-08 12-15-08

SHEET OF

USERNAME => trmikesl
DGN FILE => m6_12.dgn

DATE PLOTTED => 05-APR-2010
TIME PLOTTED => 09:52

VI=1

DIST.	COUNTY	ROUTE	POST MILES TOTAL PROJECT	SHEET NO.	TOTAL SHEETS
03	Sac	5501		104	172

REGISTERED ENGINEER-MECHANICAL — 07-01-09 DATE

REGISTERED PROFESSIONAL ENGINEER — Jack Wheeler — No. 21648 — Exp. 06-30-11 — MECH — STATE OF CALIFORNIA

11-23-09
PLANS APPROVAL DATE

The State of California or its officers or agents shall not be responsible for the accuracy or completeness of electronic copies of this plan sheet.

CALIFORNIA STATE FIRE MARSHAL APPROVED
Approval of this plan does not authorize or approve any omission or deviation from applicable regulations. Final approval is subject to field inspection. One set of approved plans shall be available on the project site at all times.
Reviewed by: STEPHEN GUARINO
Approval date: 07-01-09

PLUMBING SCHEDULE

FIXTURE	DRAINAGE ROUGH IN	TRAP SIZE	VENT SIZE	MINIMUM CONNECTIONS COLD WATER	MINIMUM CONNECTIONS HOT WATER
EMERGENCY EYEWASH	--	--	--	3/4"	--
INDIRECT WASTE FUNNEL	2"	--	2"	--	--
SERVICE SINK	3"	3"	2"	3/4"	3/4"
FLOOR DRAIN	2"	2"	2"	--	--
HOSE FAUCET	--	--	--	3/4"	--

NOTES:

1. *Water hammer arresters shall be installed for accessibility through access doors, unless accessible from above the ceiling.*

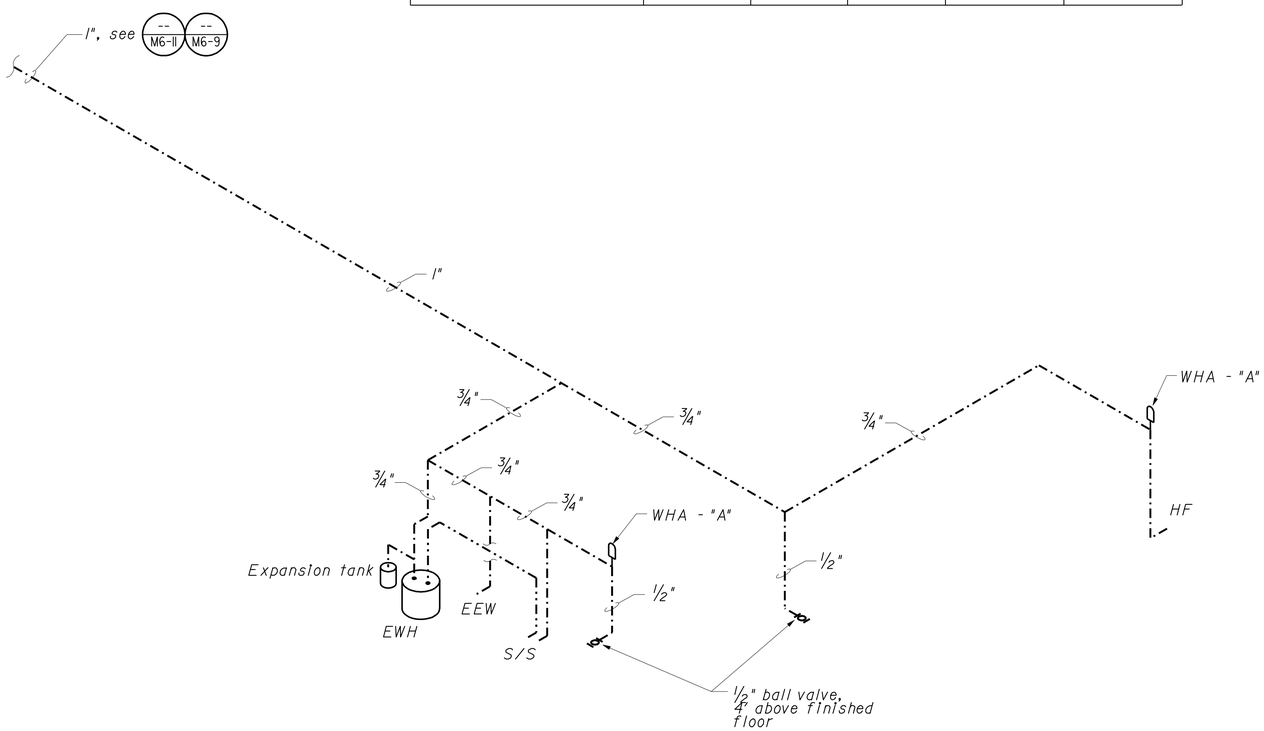

WATER SUPPLY ISOMETRIC

No Scale

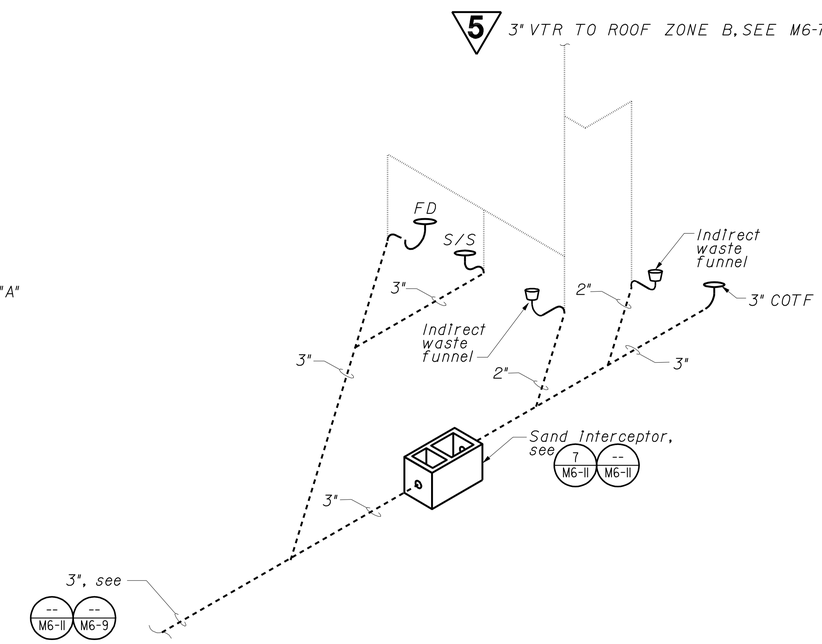

DRAINAGE ISOMETRIC

No Scale

THIS DRAWING ACCURATE FOR MECHANICAL WORK ONLY

5 REVISED PER ADDENDUM No. 5 DATED APRIL 8, 2010

	BY	CHECKED
DESIGN	Thomas Dietsch	Alvin Kwan
DETAILS	Thomas Dietsch	Alvin Kwan
QUANTITIES	Thomas Dietsch	Alvin Kwan

STATE OF CALIFORNIA DEPARTMENT OF TRANSPORTATION

DIVISION OF STRUCTURES
ELECTRICAL-MECHANICAL-WATER AND WASTEWATER DESIGN

BRIDGE NO. | POST MILE | PHASE 4 | STORAGE BUILDING

TRANSLAB REPAIR PROJECT

PLUMBING ISOMETRICS

SHEET **M6-13**

BKW DOS ELEC(1/93)

ORIGINAL SCALE IN INCHES FOR REDUCED PLANS 0 1 2 3

CU 03263
EA 2C8441

DISREGARD PRINTS BEARING EARLIER REVISION DATES → 02-23-09 05-22-09 07-01-09 12-07-07 01-18-08 02-11-08 10-15-08 12-15-08

REVISION DATES (PRELIMINARY STAGE ONLY) | SHEET | OF

VI=1

DIST.	COUNTY	ROUTE	POST MILES TOTAL PROJECT	SHEET NO.	TOTAL SHEETS
03	Sac	5501		105	172

REGISTERED ENGINEER-MECHANICAL — 12-28-09 DATE

REGISTERED PROFESSIONAL ENGINEER — Jack Wheeler — No. 21648 — Exp. 06-30-11 — MECH — STATE OF CALIFORNIA

11-23-09
PLANS APPROVAL DATE

The State of California or its officers or agents shall not be responsible for the accuracy or completeness of electronic copies of this plan sheet.

CALIFORNIA STATE FIRE MARSHAL APPROVED
Approval of this plan does not authorize or approve any omission or deviation from applicable regulations. Final approval is subject to field inspection. One set of approved plans shall be available on the project site at all times.
Reviewed by: STEPHEN GUARINO
Approval date: 07-01-09

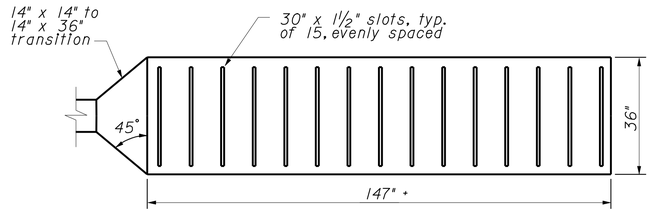

D SUPPLY AIR MANIFOLD
No Scale

EQUIPMENT:

SF-1 Supply Fan 1 - 800 CFM @ 0.5 in.w.c., ¼hp, 208V - 3 Phase

1

5

NOTES:

1. Maintain clearance between supply fans, and exhaust fans, flues and vents, see roof zone B detail, M6-2.
2. For information relating to relocated equipment and dust collection system, see Sheet A6-2.

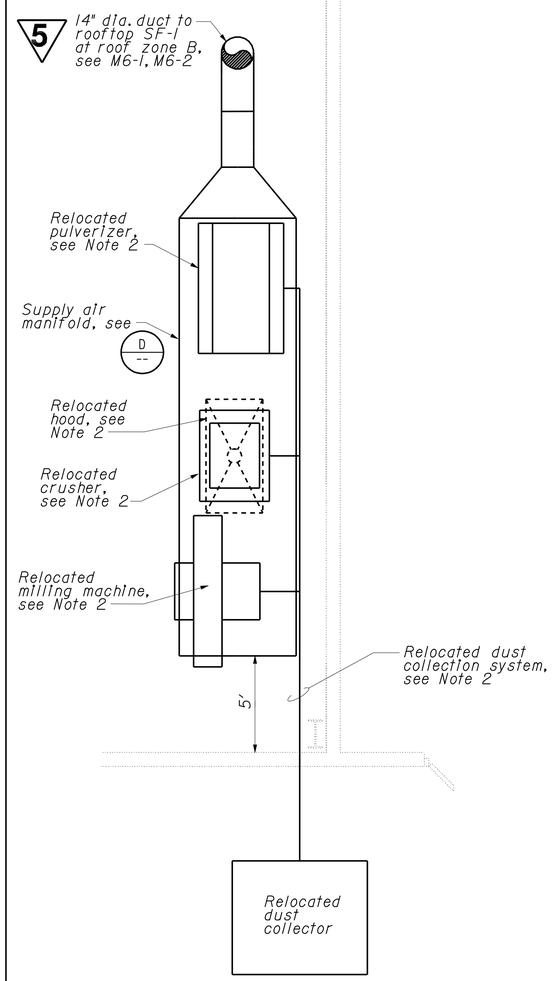

9 DUST COLLECTION SYSTEM
No Scale

THIS DRAWING ACCURATE FOR MECHANICAL WORK ONLY

NORTH

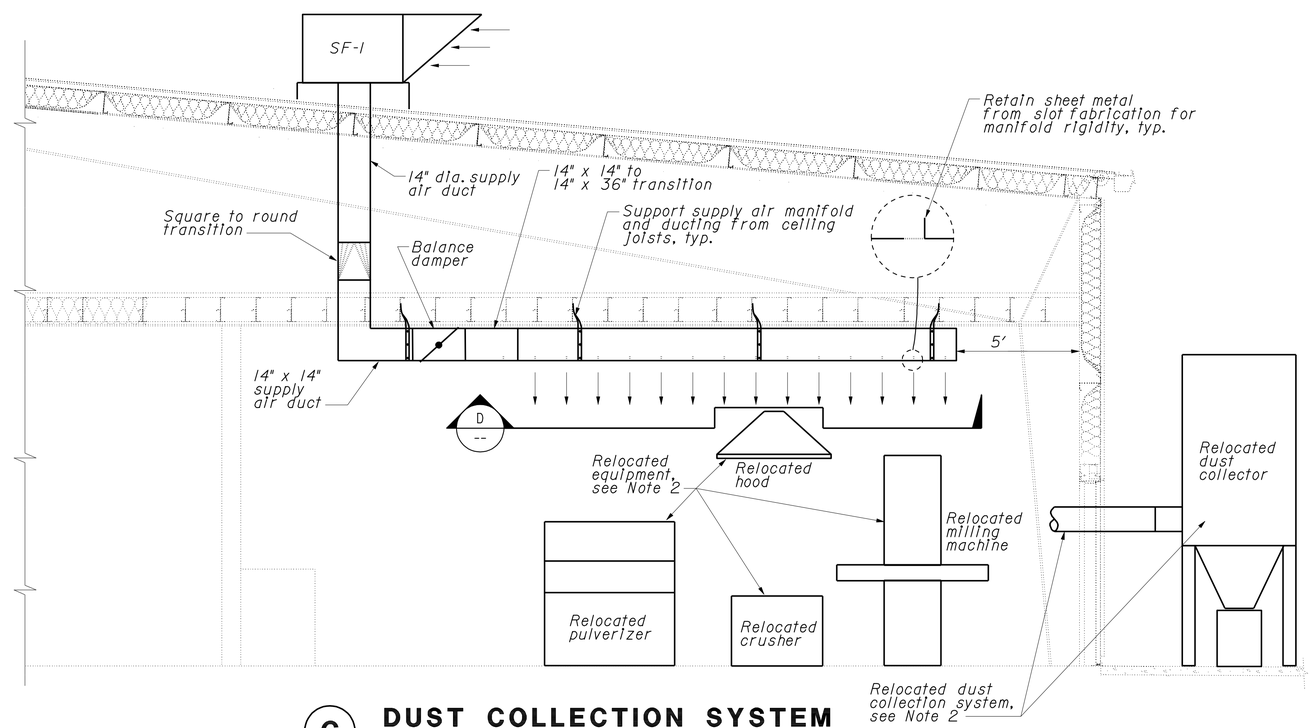

C DUST COLLECTION SYSTEM
No Scale

1 REVISED PER ADDENDUM No. 1 DATED FEBRUARY 10, 2010

5 REVISED PER ADDENDUM No. 5 DATED APRIL 8, 2010

DATE PLOTTED => 05-APR-2010
TIME PLOTTED => 09:52

	BY	CHECKED
DESIGN	Thomas Dietsch	Alvin Kwan
DETAILS	Thomas Dietsch	Alvin Kwan
QUANTITIES	Thomas Dietsch	Alvin Kwan

STATE OF CALIFORNIA
DEPARTMENT OF TRANSPORTATION

DIVISION OF STRUCTURES
ELECTRICAL-MECHANICAL-WATER AND WASTEWATER DESIGN

BRIDGE NO.
POST MILE

PHASE 4
STORAGE BUILDING

TRANSLAB REPAIR PROJECT
DUST COLLECTION DETAILS

SHEET **M6-14**

BKW DOS ELEC(1/93)

ORIGINAL SCALE IN INCHES FOR REDUCED PLANS 0 1 2 3

CU 03263
EA 2C8441

DISREGARD PRINTS BEARING EARLIER REVISION DATES

REVISION DATES (PRELIMINARY STAGE ONLY): 02-23-09, 05-27-09, 07-06-09, 12-22-09, 01-18-08, 02-11-08, 10-15-08, 12-15-08

SHEET OF

USERNAME => trmikesl
DGN FILE => m6_14.dgn

VI=1

DIST.	COUNTY	ROUTE	POST MILES TOTAL PROJECT	SHEET NO.	TOTAL SHEETS
03	Sac	5501		106	172

REGISTERED ENGINEER-MECHANICAL — 07-01-09 DATE

REGISTERED PROFESSIONAL ENGINEER Jack Wheeler No. 21648 Exp. 06-30-11 MECH STATE OF CALIFORNIA

11-23-09
PLANS APPROVAL DATE

The State of California or its officers or agents shall not be responsible for the accuracy or completeness of electronic copies of this plan sheet.

CALIFORNIA STATE FIRE MARSHAL APPROVED
Approval of this plan does not authorize or approve any omission or deviation from applicable regulations. Final approval is subject to field inspection. One set of approved plans shall be available on the project site at all times.
Reviewed by: STEPHEN GUARINO
Approval date: 07-01-09

5

EQUIPMENT:

EF-6 Exhaust Fan 6 (laboratory roof exhaust fan) - 1,500 CFM @ 0.75 in.w.c., 1.0 hp, 208V - 3 Phase

EF-7 Exhaust Fan 7 (laboratory roof exhaust fan) - 1,500 CFM @ 0.75 in.w.c., 1.0 hp, 208V - 3 Phase

SF-2 Supply Fan 2 - 1,300 CFM @ 0.5 in.w.c., 1/3 hp, 208V - 3 Phase

SF-3 Supply Fan 3 - 1,300 CFM @ 0.5 in.w.c., 1/3 hp, 208V - 3 Phase

NOTES:

1. Maintain clearances between supply fans, and exhaust fans, flues and vents, see Roof Zone B detail on M6-2.

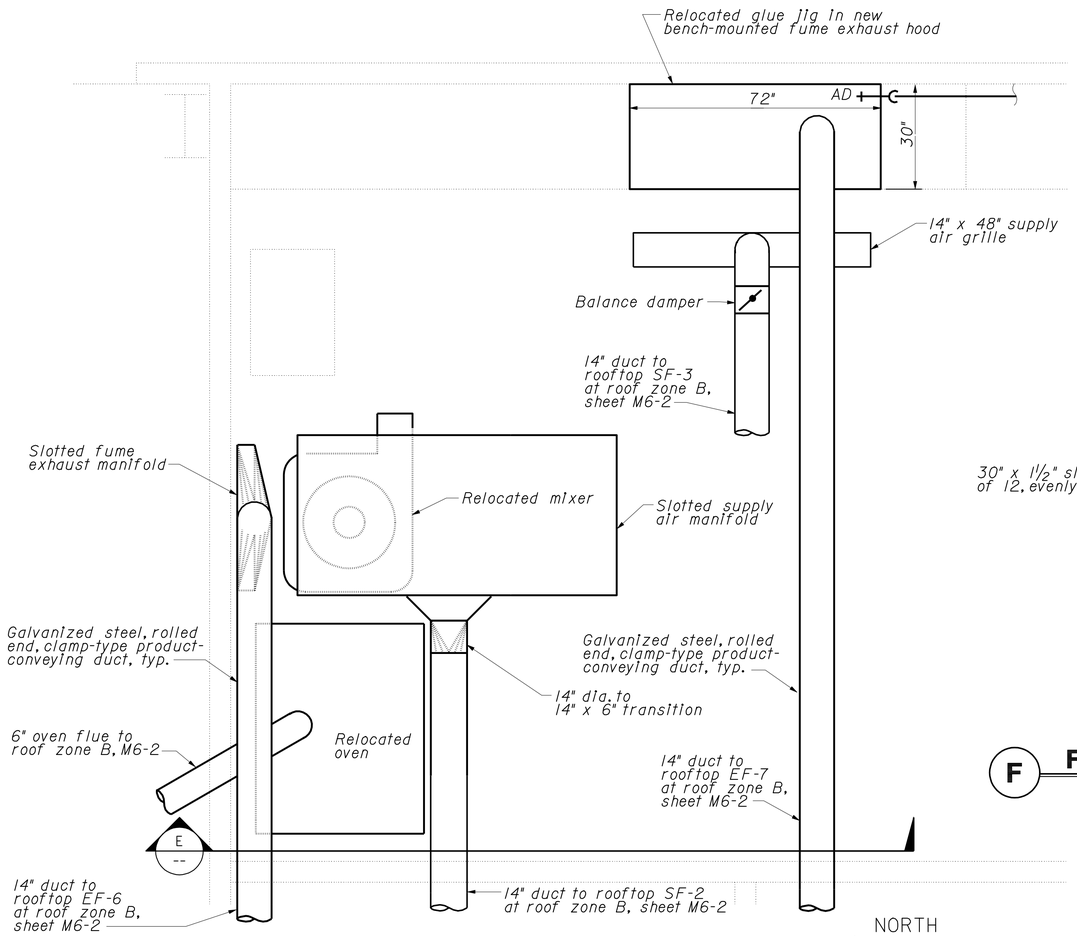

10 FUME EXHAUST SYSTEM
No Scale

NORTH

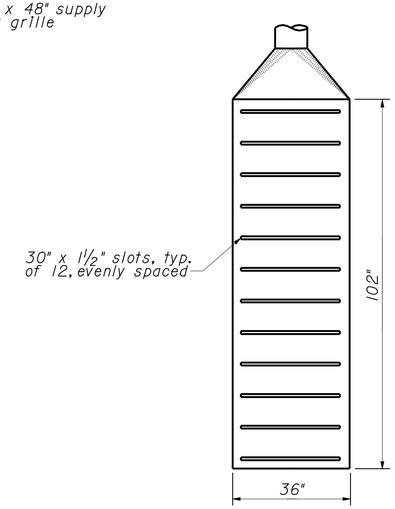

F FUME EXHAUST MANIFOLD
No Scale

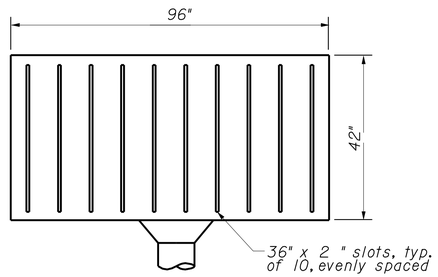

G SUPPLY AIR MANIFOLD
No Scale

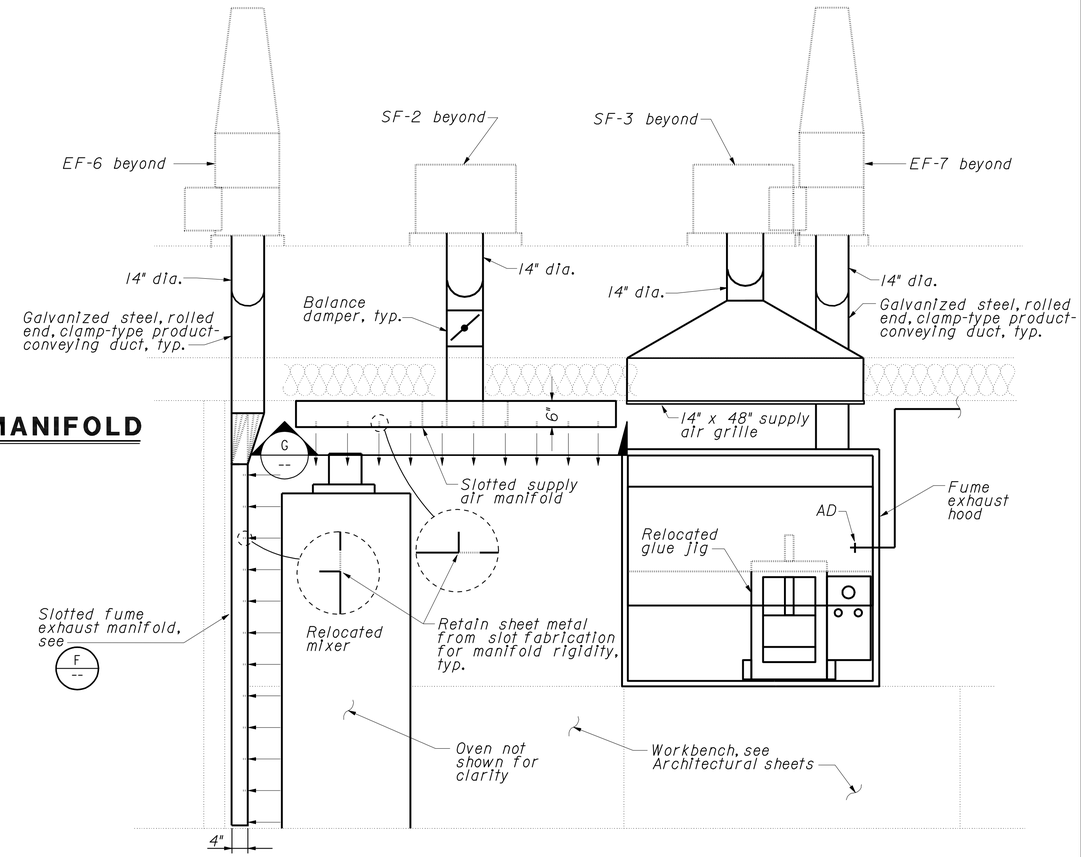

E FUME EXHAUST SYSTEM
No Scale

5 **REVISED PER ADDENDUM No. 5 DATED APRIL 8, 2010**

THIS DRAWING ACCURATE FOR MECHANICAL WORK ONLY

	BY	CHECKED
DESIGN	Thomas Dietsch	Alvin Kwan
DETAILS	Thomas Dietsch	Alvin Kwan
QUANTITIES	Thomas Dietsch	Alvin Kwan

STATE OF CALIFORNIA DEPARTMENT OF TRANSPORTATION

DIVISION OF STRUCTURES
ELECTRICAL-MECHANICAL-WATER AND WASTEWATER DESIGN

BRIDGE NO. | POST MILE | PHASE 4 | STORAGE BUILDING

TRANSLAB REPAIR PROJECT
FUME EXHAUST DETAILS

SHEET **M6-15**

BKW DOS ELEC(1/93)

ORIGINAL SCALE IN INCHES FOR REDUCED PLANS 0 1 2 3

CU 03263
EA 2C8441

DISREGARD PRINTS BEARING EARLIER REVISION DATES

REVISION DATES (PRELIMINARY STAGE ONLY) 02-23-09 05-27-09 07-01-09 12-07-07 01-16-08 02-11-08 10-15-08 12-15-08

SHEET OF

USERNAME => trmikesl
DGN FILE => m6_15.dgn

DATE PLOTTED => 05-APR-2010
TIME PLOTTED => 09:52

DIST.	COUNTY	ROUTE	POST MILES TOTAL PROJECT	SHEET NO.	TOTAL SHEETS
03	Sac	5501		120	172

Christine H. Mamaril
REGISTERED ELECTRICAL ENGINEER — DATE 5-28-09

REGISTERED PROFESSIONAL ENGINEER — C.H.MAMARIL — No. 12801 — Exp. 9-30-10 — ELEC — STATE OF CALIFORNIA

11-23-09
PLANS APPROVAL DATE

The State of California or its officers or agents shall not be responsible for the accuracy or completeness of electronic copies of this plan sheet.

1

CALIFORNIA STATE FIRE MARSHAL APPROVED
Approval of this plan does not authorize or approve any omission or deviation from applicable regulations. Final approval is subject to field inspection. One set of approved plans shall be available on the project site at all times.
Reviewed by: STEPHEN GUARINO
Approval date: 07-01-09

5 **REVISED PER ADDENDUM No. 5 DATED APRIL 8, 2010**

1 **REVISED PER ADDENDUM No. 1 DATED FEBRUARY 10, 2010**

SITE PLAN
SCALE 1" = 30'-0"

General Notes:

A. *Unless otherwise noted, all pull boxes shown on this sheet shall be traffic rated No.6 (T).*

B. *For continuation of conduits to new buildings, see "Panel Key" plans.*

C. *Sawcut existing asphalt paved area for the installation of new underground conduit system and pull boxes. Patch damaged and disturbed surfaces to match existing surfaces.*

D. *For existing conduit to "RSP" building see sheet EE0-8.*

5 E. *For site work regarding the grid connected photovoltaic system, see sheet EE9-1.*

Notes:

1. *Existing 4" C, Install 4*350 kcmil, 3*400 kcmil, 1*2/0G.*
2. *Existing 4" C, Install 3*400 kcmil, 1*2/0G.*
3. *Existing 4"C, Install 4*350 kcmil, 1*2/0G.*
4. *4" C, 3*400 kcmil, 1*2/0G.*
5. *4" C, 4*350 kcmil, 1*2/0G.*
6. *Extend existing conduit to MCCI and terminate conductors for various circuit breakers per single line diagram on Sheet EE0-7 and note 7 on this sheet.*
7. *Use existing 250 A, 3-pole spare circuit breaker for the Repair Shop and Install new 300 A, 3-pole circuit breaker CB in space 5-1 for the Storage Building. Existing MCC is Cutler Hammer Freedom 2100 with Type HJD circuit breakers.*
8. 5 *Traffic rated electrical vault, size as required.*
9. 5 *Storage building disconnect, 3-pole, 400 A frame, 300 A trip, 600 V molded case circuit breaker with adjustable magnetic trip initially set to 6X the ampere trip rating. Disconnect shall be suitable to be used as service disconnect. Disconnect shall be surface mounted in a NEMA type 1 enclosure.*

THIS DRAWING ACCURATE FOR ELECTRICAL WORK ONLY

DESIGN SUPERVISOR — DESIGN ENGINEER

	BY	CHECKED
DESIGN	C. H. Mamaril	Jesse Sandhu/CAE
DETAILS	Ed D. Tapalla 10/07	C. H. Mamaril
QUANTITIES	C. H. Mamaril	Jesse Sandhu

STATE OF CALIFORNIA
DEPARTMENT OF TRANSPORTATION

DIVISION OF ENGINEERING SERVICES
ELECTRICAL-MECHANICAL-WATER AND WASTEWATER DESIGN

BRIDGE NO.
POST MILE

PHASE 4 — TRANSLAB REPAIR PROJECT
POWER SITE PLAN

SHEET EE0-5

DOES SD Imperial Rev. 9/02

ORIGINAL SCALE IN INCHES FOR REDUCED PLANS 0 1 2 3

CU 03263
EA 2C8441

DISREGARD PRINTS BEARING EARLIER REVISION DATES → 2/23/09 5/28/09 1/19/07 11/16/07 12/17/07 1/16/08 2/14/08 11/17/08 12/18/08 12/19/08

REVISION DATES (PRELIMINARY STAGE ONLY) SHEET OF

06-APR-2010 11:31

ee0_05.add

DIST.	COUNTY	ROUTE	POST MILES TOTAL PROJECT	SHEET NO.	TOTAL SHEETS
03	Sac	5501		172A	172

Jasvinder S Sandhu 3-22-10
REGISTERED ELECTRICAL ENGINEER DATE

REGISTERED PROFESSIONAL ENGINEER J.S.SANDHU No. 11803 Exp. 9-30-10 ELEC STATE OF CALIFORNIA

11-23-09
PLANS APPROVAL DATE

The State of California or its officers or agents shall not be responsible for the accuracy or completeness of electronic copies of this plan sheet.

5

CALIFORNIA STATE FIRE MARSHAL
APPROVED
Approval of this plan does not authorize or approve any omission or deviation from applicable regulations. Final approval is subject to field inspection. One set of approved plans shall be available on the project site at all times.
Reviewed by: JASON D. DeWITT
Approval date: 3-24-10

General Notes:

A. *The Contractor shall verify true north prior to installation of PV system.*

B. *All AC/DC feeder conductors and equipment grounding conductors shall be sized to meet or exceed the following:*

- *Total net voltage drop of the PV system from PV source to the existing MSB shall not exceed 2%.*
- *Upon occurrence of any kind of fault at any point in the system, over current protective devices shall trip within ½ cycle.*

C. *Not all electrical/mechanical equipment and conduit systems are shown.*

D. *Location of all existing conduit systems as shown are approximate only. Contractor shall verify the exact location of all conduit systems in the field where required. This work shall be considered as part of the building lump sump work and no extra compensation shall be paid.*

E. *Sawcut existing paved surfaces at places where required for installation of underground conduit system and repair disturbed surfaces to match existing.*

F. *For photovoltaic system single line diagram, see sheet EE9-2.*

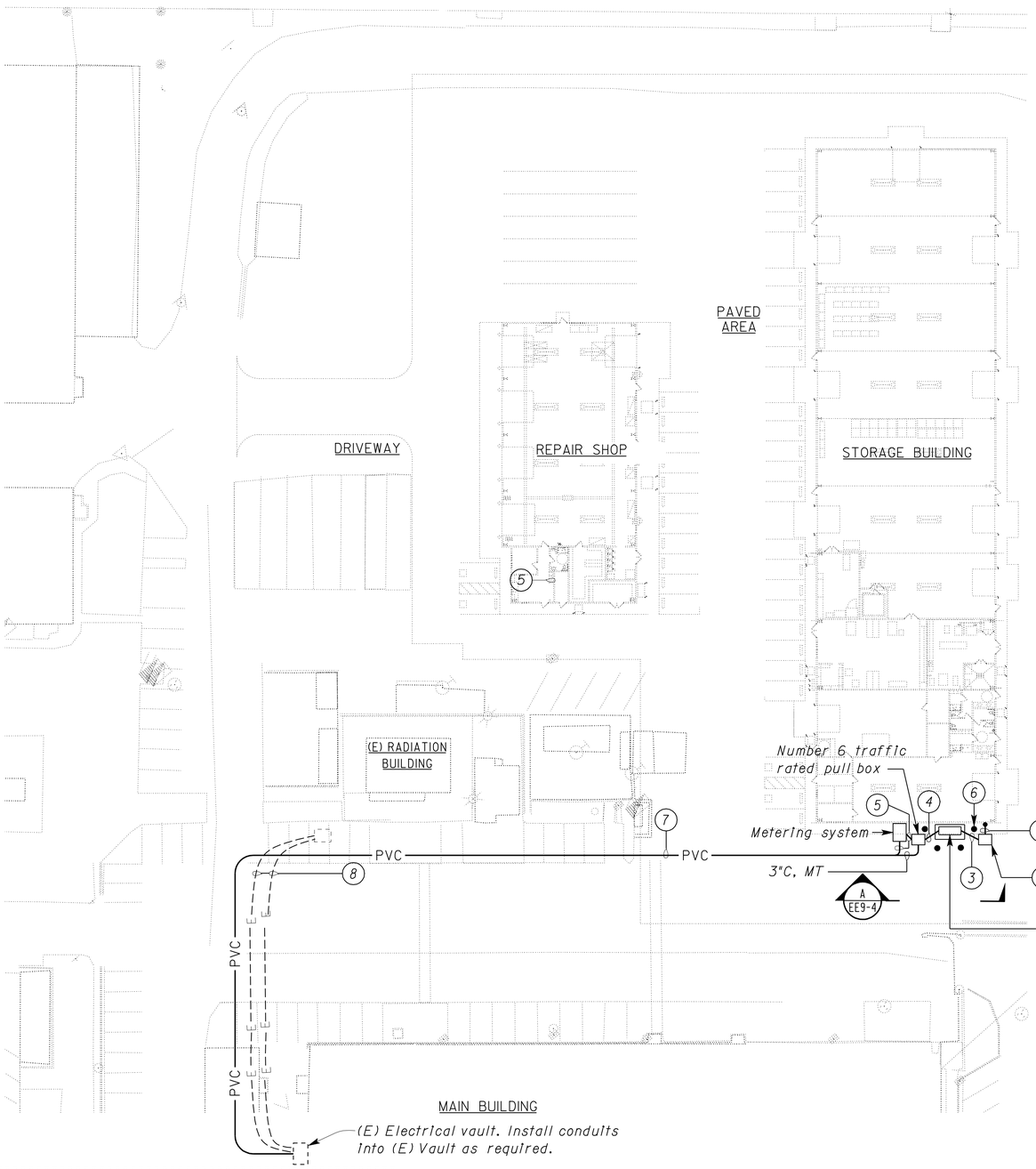

SITE PLAN
SCALE 1" = 30'-0"

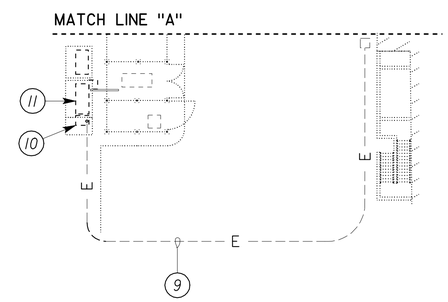

PARTIAL SITE PLAN
NO SCALE

Notes:

1. *Conduits, MC, with DC conductors and equipment grounding conductors from PV Array Circuit Combiner boxes. Size and number of conductors required.*
2. *Traffic rated pull box, size pull box as required. Install ground rod inside the pull box and connect equipment grounding conductors to it using ground clamp.*
3. *(2) 4"C, MC, with DC conductors and equipment grounding conductors to Fused Sub-Array Combiner Inside Utility Interactive Inverter Cabinet.*
4. *3"C, MC, five conductors; three phase, one neutral and one equipment grounding conductor and 3"C, MC, MT.*
5. *3"C, MC, five conductors; three phase, one neutral and one equipment grounding conductor.*
6. *Fixed pipe guard post, typical. Install 4 fixed pipe guard posts, maximum four feet from center to center, to protect Utility Interactive Inverter Cabinet. For fixed pipe guard post details, see detail 1 on sheet EE9-4.*
7. *3"C, five conductors; three phase, one neutral and one equipment grounding conductor and 3"C, MT.*
8. *Existing concrete backfilled trench. Cross new conduit system underneath existing conduit system.*
9. *Existing (3) 6"C, 4-750 MCM, 1-250 MCM G and existing (2) 4"C with pull rope. Install five conductors; three phase, one neutral and one equipment grounding conductor in one existing 4"C.*
10. *Existing electrical vault. Existing electrical vault is connected to existing MSB with concrete lined conductors trench. Install new conductors between existing vault and 200 ampere circuit breaker as required. Terminate conductors at circuit breaker, existing neutral bus and at existing ground bus as required.*
11. *Existing MSB is Zinsco, 480/277 volt, 3-phase, 4-wire switchboard with 2400 ampere main circuit breaker. Install 200-ampere, 3-pole molded case circuit breaker in lowest available space for connecting PV system. New circuit breaker shall have interrupting capacity (AIC) of 42,000 symmetrical at 480 volts. Install screw on type nameplate with letter height of ¼" to read "PHOTOVOLTAIC SYSTEM" at the side of new 3-pole circuit breaker. Install screw on type sign on existing Panel MSB with letter height of ½" to read "THIS PANEL FED BY MULTIPLE SOURCES (UTILITY AND SOLAR)".*

5 **ADDED PER ADDENDUM No. 5 DATED APRIL 8, 2010**

	BY	CHECKED
DESIGN	Javid Amirazodi	J. S. Sandhu
DETAILS	Ed D.Tapalla 3/10	Javid Amirazodi
QUANTITIES	Javid Amirazodi	J. S. Sandhu

STATE OF CALIFORNIA
DEPARTMENT OF TRANSPORTATION

DIVISION OF ENGINEERING SERVICES
ELECTRICAL-MECHANICAL-WATER AND WASTEWATER DESIGN

CU 03263
EA 2C8441

BRIDGE NO.
POST MILE

PHASE 4 **TRANSLAB REPAIR PROJECT**

PHOTOVOLTAIC SITE PLAN

SHEET **EE9-1**

DOES SD Imperial Rev. 9/02

ORIGINAL SCALE IN INCHES FOR REDUCED PLANS 0 1 2 3

DISREGARD PRINTS BEARING EARLIER REVISION DATES → 3/22/10

REVISION DATES (PRELIMINARY STAGE ONLY) SHEET OF

06-APR-2010 11:32

ee9_1.add

DIST.	COUNTY	ROUTE	POST MILES TOTAL PROJECT	SHEET NO.	TOTAL SHEETS
03	Sac	5501		172B	172

Jasvinder S Sandhu 3-22-10
REGISTERED ELECTRICAL ENGINEER DATE

REGISTERED PROFESSIONAL ENGINEER J.S.SANDHU No. 11803 Exp. 9-30-10 ELEC STATE OF CALIFORNIA

11-23-09
PLANS APPROVAL DATE

The State of California or its officers or agents shall not be responsible for the accuracy or completeness of electronic copies of this plan sheet.

5

CALIFORNIA STATE FIRE MARSHAL
APPROVED
Approval of this plan does not authorize or approve any omission or deviation from applicable regulations. Final approval is subject to field inspection. One set of approved plans shall be available on the project site at all times.
Reviewed by: JASON D. DeWITT
Approval date: 3-24-10

Photovoltaic Module

Each PV module shall be of minimum 280 watt at Standard Test Condition, polycrystalline silicon cell type module with interconnection connectors rated for 90°C. PV modules shall be UL 1703 listed with a maximum system voltage of 600 VDC. PV module manufacturer shall be one of those manufacturers listed as eligible California Solar Initiative (CSI) PV module manufacturer.

Photovoltaic Array Circuit Combiner Box

PV array circuit combiner box shall be factory assembled, combiner box with fused input circuits, two isolated DC bus bars, ground bus bar, all enclosed inside NEMA 3R lockable hinged cover enclosure. The combiner box shall be UL 1741 listed.

PV array circuit combiner box shall have the following components:
- DIN Rail mounted touch safe fuse holders with fuse rated for 600 VDC.
- Positive DC bus bar, Negative DC bus bar and ground bus bar.
- DIN rail mounted Grid-Tie surge arrestor: The surge arrestor shall be Type I heavy duty surge protector rated for over 600 VDC, withstand 40kA induced transient surges and compatible to use with grounded PV arrays.

Utility Interactive Inverter Cabinet

Utility Interactive Inverter Cabinet shall be outdoor type, factory assembled system consisting of the following equipment:
- NEMA 3R enclosure.
- 135 kW, 480/277 V, 3-phase, 4-wire, at a power factor of 0.99 or greater.
- Fused sub-array combiner, with minimum of 4 array inputs for positive DC, negative DC, and DC ground bus bars. Positive array inputs fuse shall be sized to match loading.
- Built-in DC and AC disconnect switches, size to match loading.
- Integrated 135 kW, 480/277 V, 3-phase, 4-wire, output isolation type transformer.
- Ground fault protection.
- Integrated AC and DC surge protections.
- Integrated AC and DC contactors.
- Pre-charge circuit.
- Human machine interface (HMI). AC/DC Inverter's HMI shall be equipped with LCD and keypad displaying main menu. HMI main menu shall display system monitoring, status and faults, and operation. Monitoring menu shall display system status, metering, daily, weekly and monthly energy production. Status and faults menu shall display status messages, system output, and number of faults. Operation menu shall display control and settings.
- Local and remote monitoring systems capabilities.
- AC ground bus bars.

Enclosure shall be NEMA 3R, 14-gauge, and powder-coated standard factory finish steel enclosure. All screws, latches, hinge pins and similar hardware shall be stainless steel. HMI, AC and DC disconnect switches and equipment rating labels shall be mounted on the exterior door. Exterior door shall have interlock switch and be lockable with a padlock. The cabinet shall have MEV13 rated filtered, top entry forced air cooling system with one fan, sloped roof, and shall be suitable for seismic zone 4 compliance.

DC/AC Inverter shall be rated at maximum continuous output power of 135 kW, with input operating voltage range between 310 to 600 VDC, and maximum DC input current shall be 454 A. Inverter shall be capable of operating at ambient temperature range (Full power) of -4°F to +122°F. DC/AC Inverter manufacturer shall be one of those manufacturers listed as an eligible California Solar Initiative (CSI) DC/AC Inverter manufacturer.

General Notes:

A. Provide and install all necessary warning labels/markings per Article 690 of California Electrical Code (CEC) and the State Fire Marshal's guideline for solar PV installation.

B. Solar PV installation shall comply with the latest guideline from California Department of Forestry & Fire Protection, Office of the State Fire Marshal and latest Program Handbook from California Solar Initiative (CSI), unless otherwise noted.

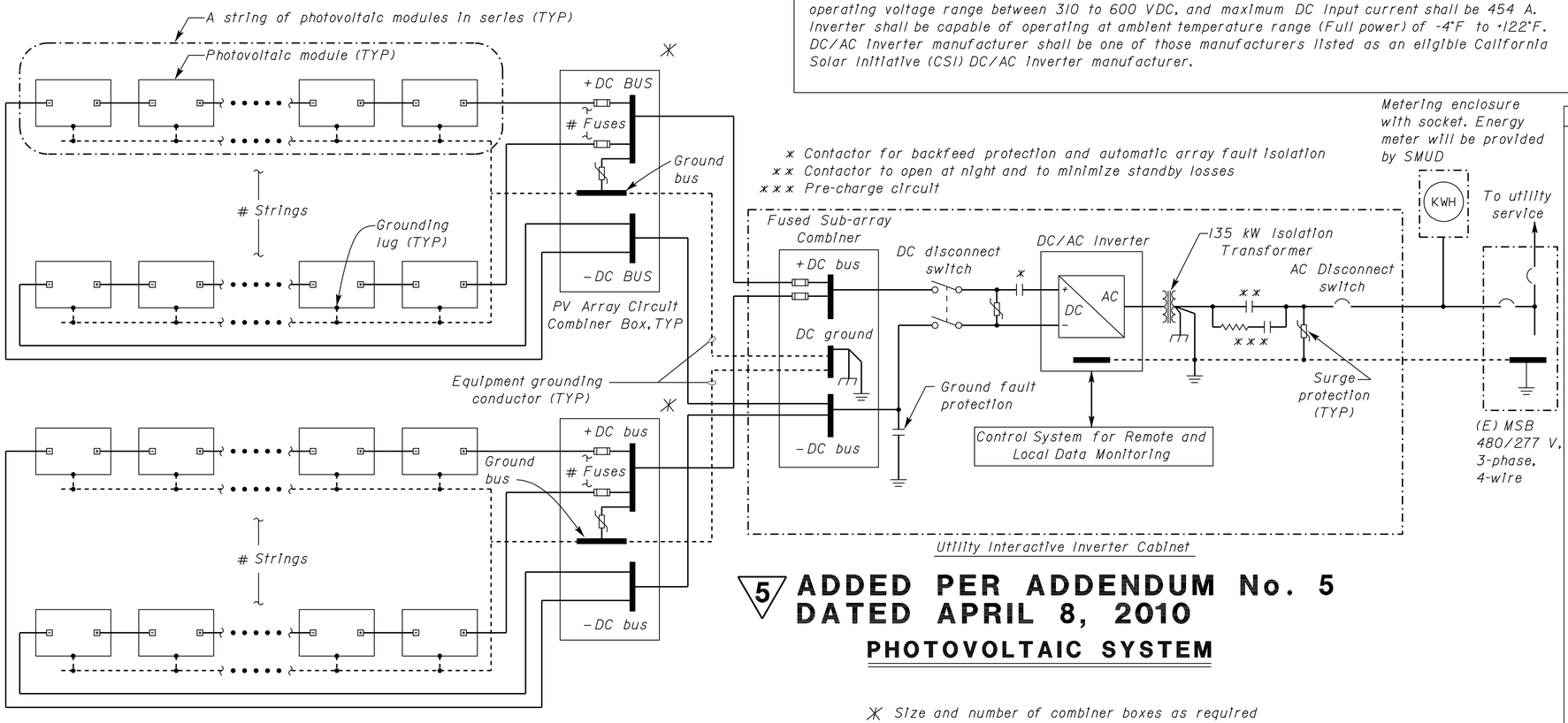

5 ADDED PER ADDENDUM No. 5 DATED APRIL 8, 2010

PHOTOVOLTAIC SYSTEM

* Size and number of combiner boxes as required for the photovoltaic system installed.

Photovoltaic System Requirements

Photovoltaic System complete design and installation details inclusive of all Engineering calculations signed by an Professional Engineer of the respective field (both Electrical and Civil Engineering) in the State of California shall be submitted for approval by the Contractor. The PV design shall meet or exceed the following requirements;

1) The total designed output capacity of photovoltaic system at Storage roof shall be equal to 135 kW of the CEC AC rating. Number of PV module per string shall be arranged in a manner to meet or exceed the following:
- Maximum system voltage based on lowest expected ambient temperature at the site (Voc maximum on coldest day) shall be no less than 1% of the Inverter's maximum input DC voltage range.
- Maximum system power voltage based on average high ambient temperature at the site (Vmp on warmest day) shall be 20% greater than the Inverter's minimum input DC voltage range.

2) Photovoltaic system module row spacing shall be designed to prevent shading from adjacent module.

3) All wiring except at module interconnection shall be concealed inside conduit system.

4) Photovoltaic system modules structural support system shall be designed to withstand wind forces of 85-mile per hour.

5) Photovoltaic system wiring and protective devices shall meet or exceed the requirements of all applicable codes.

6) PV Array Circuit Combiner Boxes locations as shown are conceptual. The Contractor shall install the combiner boxes at locations that best suit the photovoltaic system strings layout.

7) PV modules installed on different slopes and/or orientation shall not be part of the same string except PV modules installed on flat roof.

	BY	CHECKED
DESIGN	Javid Amirazodi	J. S. Sandhu
DETAILS	Ed D.Tapalla 3/10	Javid Amirazodi
QUANTITIES	Javid Amirazodi	J. S. Sandhu

STATE OF CALIFORNIA
DEPARTMENT OF TRANSPORTATION

DIVISION OF ENGINEERING SERVICES
ELECTRICAL-MECHANICAL-WATER AND WASTEWATER DESIGN

BRIDGE NO.
POST MILE

PHASE 4 TRANSLAB REPAIR PROJECT

SINGLE LINE DIAGRAM
GRID-TIED PHOTOVOLTAIC SYSTEM

SHEET EE9-2

DOES SD Imperial Rev. 9/02

ORIGINAL SCALE IN INCHES FOR REDUCED PLANS 0 1 2 3

CU 03263
EA 2C8441

DISREGARD PRINTS BEARING EARLIER REVISION DATES → 3/22/10

REVISION DATES (PRELIMINARY STAGE ONLY) SHEET OF

07-APR-2010 10:27

ee9_2.add

DIST.	COUNTY	ROUTE	POST MILES TOTAL PROJECT	SHEET NO.	TOTAL SHEETS
03	Sac	5501		172C	172

Jasvinder S Sandhu 3-22-10
REGISTERED ELECTRICAL ENGINEER DATE

REGISTERED PROFESSIONAL ENGINEER J.S.SANDHU No. 11803 Exp. 9-30-10 ELEC STATE OF CALIFORNIA

11-23-09
PLANS APPROVAL DATE

The State of California or its officers or agents shall not be responsible for the accuracy or completeness of electronic copies of this plan sheet.

CALIFORNIA STATE FIRE MARSHAL
APPROVED
Approval of this plan does not authorize or approve any omission or deviation from applicable regulations. Final approval is subject to field inspection. One set of approved plans shall be available on the project site at all times.
Reviewed by: JASON D. DeWITT
Approval date: 3-24-10

General notes:

A. *Provide and install approved conduit support on top of the roof to support conduit system and junction boxes. Conduit support shall be one-piece and non metallic type. For conduit support details, see detail 2 on sheet EE9-4.*

B. *All exposed conduits shall be galvanized rigid steel, with minimum size 3/4".*

C. *No DC wiring except at the module connector shall be exposed.*

D. *Use type CGB connectors at conduit terminations to exposed conductors.*

E. *DC conduit/conductors between PV modules and PV Array Circuit Combiner Boxes are not shown.*

F. *Storage height from ground to the highest edge of the roof is approximately 16'-10".*

G. *For PV rack mounting, see roof attachment detail 3 on sheet EE9-4.*

H. *Provide and install all necessary warning labels/markings per Article 690 of California Electrical Code (CEC) and the State Fire Marshal's guideline for solar PV installation.*

I. *Solar PV installation shall comply with the latest guideline from California Department of Forestry & Fire Protection, Office of the State Fire Marshal and latest Program Handbook from California Solar Initiative (CSI), unless otherwise noted.*

5

Notes:

(1) *Conduit, MC with DC conductors and equipment grounding conductor to Utility-interactive Inverter Cabinet. Size conduit and conductors as required to comply with voltage drop requirements as described on general notes of sheet EE9-1. For continuation, see sheet EE9-1.*

(2) *Only four roof mounted PV Array Circuit Combiner Boxes and conduit home runs are shown. It is the contractor's responsibility to size and select number of combiner boxes as required per this photovoltaic system installation work. Compensation for this work shall be considered as part of the photovoltaic system lump sump item and no additional compensation will be allowed.*

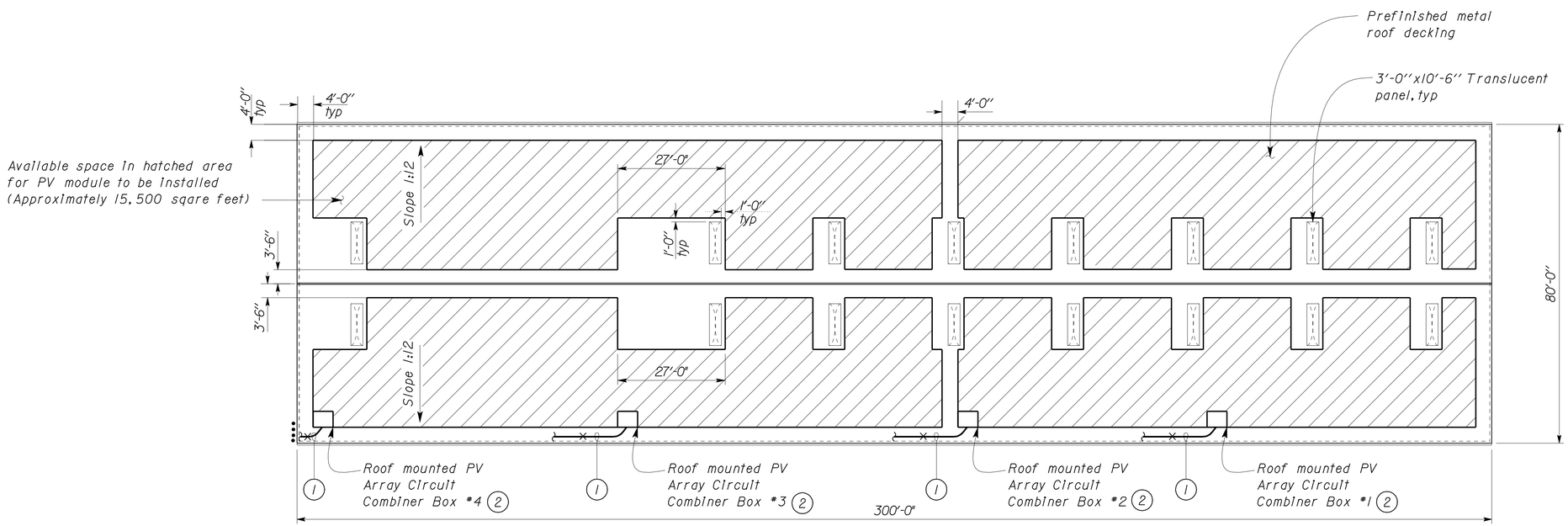

ROOF PLAN

SCALE 1/16" = 1'-0"

5 **ADDED PER ADDENDUM No. 5 DATED APRIL 8, 2010**

	BY	CHECKED
DESIGN	Javid Amirazodi	J. S. Sandhu
DETAILS	Ed D.Tapalla 3/10	Javid Amirazodi
QUANTITIES	Javid Amirazodi	J. S. Sandhu

STATE OF CALIFORNIA DEPARTMENT OF TRANSPORTATION

DIVISION OF ENGINEERING SERVICES
ELECTRICAL-MECHANICAL-WATER AND WASTEWATER DESIGN

BRIDGE NO.
POST MILE

PHASE 4 **TRANSLAB REPAIR PROJECT**

STORAGE ROOF PLAN

SHEET **EE9-3**

DOES SD Imperial Rev. 9/02

ORIGINAL SCALE IN INCHES FOR REDUCED PLANS 0 1 2 3

CU 03263
EA 2C8441

DISREGARD PRINTS BEARING EARLIER REVISION DATES → 3/22/10

REVISION DATES (PRELIMINARY STAGE ONLY) SHEET OF

07-APR-2010 10:29

ee9_3.add

DIST.	COUNTY	ROUTE	POST MILES TOTAL PROJECT	SHEET NO.	TOTAL SHEETS
03	Sac	5501		172D	172

Jasvinder S Sandhu 3-22-10
REGISTERED ELECTRICAL ENGINEER DATE

REGISTERED PROFESSIONAL ENGINEER J.S.SANDHU No. 11803 Exp. 9-30-10 ELEC STATE OF CALIFORNIA

11-23-09
PLANS APPROVAL DATE

The State of California or its officers or agents shall not be responsible for the accuracy or completeness of electronic copies of this plan sheet.

5

CALIFORNIA STATE FIRE MARSHAL
APPROVED
Approval of this plan does not authorize or approve any omission or deviation from applicable regulations. Final approval is subject to field inspection. One set of approved plans shall be available on the project site at all times.
Reviewed by: JASON D. DeWITT
Approval date: 3-24-10

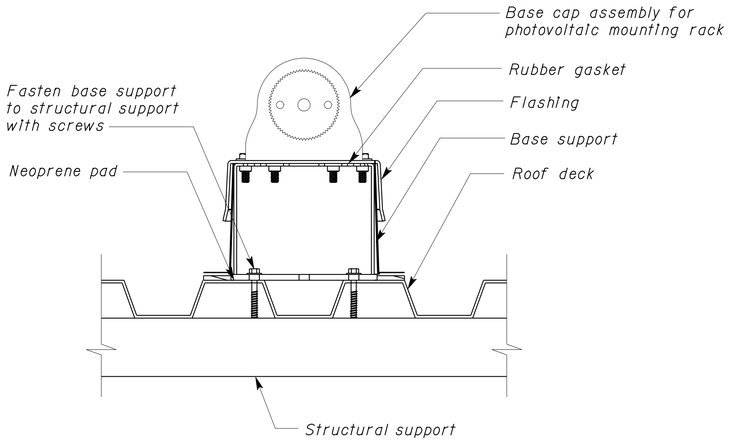

3 **ROOF ATTACHMENT DETAIL**
NO SCALE

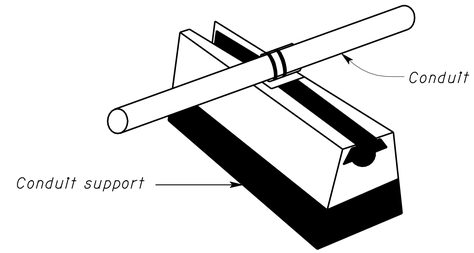

2 **ROOF MOUNTED CONDUIT SUPPORT**
NO SCALE

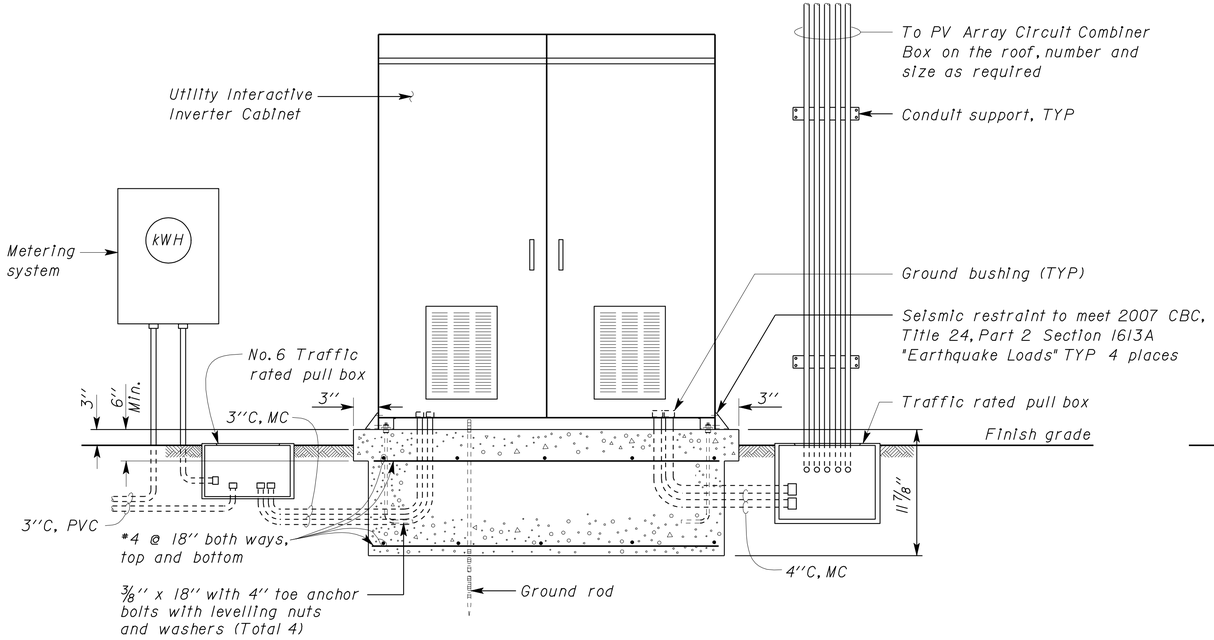

FRONT VIEW

A **ELEVATION**
NO SCALE

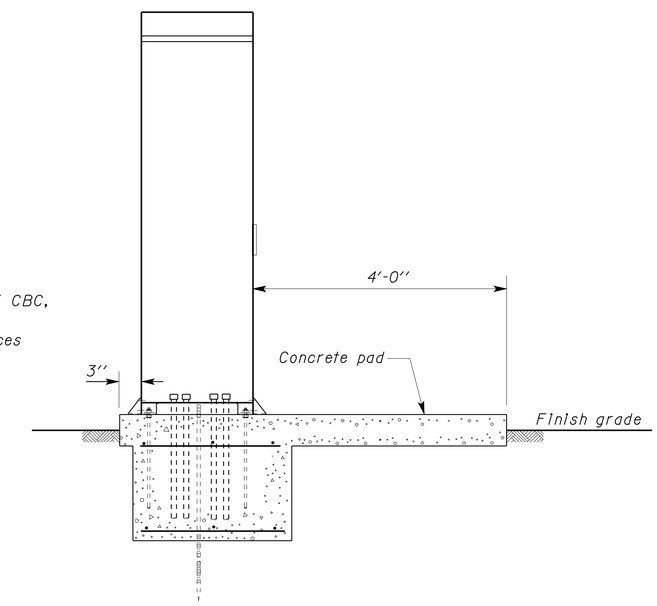

SIDE VIEW

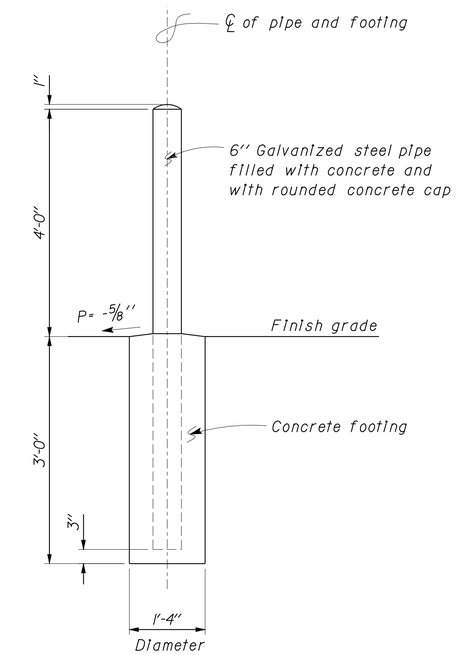

1 **FIXED PIPE GUARD POST**
NO SCALE

5 **ADDED PER ADDENDUM No. 5 DATED APRIL 8, 2010**

DESIGN	BY Javid Amirazodi	CHECKED J. S. Sandhu	
DETAILS	BY Ed D.Tapalla 3/10	CHECKED Javid Amirazodi	
QUANTITIES	BY Javid Amirazodi	CHECKED J. S. Sandhu	

STATE OF CALIFORNIA DEPARTMENT OF TRANSPORTATION

DIVISION OF ENGINEERING SERVICES
ELECTRICAL-MECHANICAL-WATER AND WASTEWATER DESIGN

BRIDGE NO.
POST MILE

PHASE 4 **TRANSLAB REPAIR PROJECT**

ELEVATION AND DETAILS

SHEET **EE9-4**

DOES SD Imperial Rev. 9/02

ORIGINAL SCALE IN INCHES FOR REDUCED PLANS 0 1 2 3

CU 03263
EA 2C8441

DISREGARD PRINTS BEARING EARLIER REVISION DATES → 3/22/10

REVISION DATES (PRELIMINARY STAGE ONLY) SHEET OF

06-APR-2010 11:32

ee9_4.dgn