Dist	COUNTY	ROUTE	POST MILES TOTAL PROJECT	SHEET No.	TOTAL SHEETS
03	Nev,Sac,Sut, Yol,Yub	5,20,49,50,51, 80,99	Var	21	50

Stephen J. Wright 8-25-10
REGISTERED CIVIL ENGINEER DATE

8-30-10
PLANS APPROVAL DATE

REGISTERED PROFESSIONAL ENGINEER
STEPHEN T. WRIGHT
No. 52942
Exp. 12-31-10
CIVIL
STATE OF CALIFORNIA

THE STATE OF CALIFORNIA OR ITS OFFICERS OR AGENTS SHALL NOT BE RESPONSIBLE FOR THE ACCURACY OR COMPLETENESS OF SCANNED COPIES OF THIS PLAN SHEET.

STATIONARY MOUNTED CONSTRUCTION AREA SIGNS

SIGN LETTER	SIGN CODE		PANEL SIZE	SIGN MESSAGE	NUMBER OF SIGNS
	FEDERAL	CALIFORNIA			
(A)	W20-1	C23	48" x 48"	ROAD WORK AHEAD	4
(B)	G20-2	C14	36" x 18"	END ROAD WORK	21
(C)		C24	48" x 48"	SHOULDER WORK AHEAD	8
(D)		C30A	48" x 48"	SHOULDER CLOSED	8

LEGEND

(X) CONSTRUCTION AREA SIGN LETTER
<CA> CALIFORNIA SIGN CODE
CONSTRUCTION AREA SIGN
DIRECTION OF TRAVEL

NOTES:

1. EXACT SIGN LOCATIONS TO BE DETERMINED BY THE ENGINEER.
2. SOME LOCATIONS MAY REQUIRE SIGNS TO BE PLACED BY SSBM.
3. C14<CA> IS TO BE PLACED 500'± AFTER WORK ZONE.
4. FOR LOCATION OF C24<CA> AND C30A<CA>, SEE TEMPORARY RAILING (TYPE K) DETAIL SHEET C-18.
5. EXISTING ULITILTY FACILITIES HAVE NOT BEEN PLOTTED ON THESE PLANS.
6. EXISTING CALTRANS ELECTRICAL UTILITIES HAVE NOT BEEN PLOTTED ON THESE PLANS. FIELD VERIFY LOCATIONS WITH ENGINEER BEFORE BEGINING WORK.

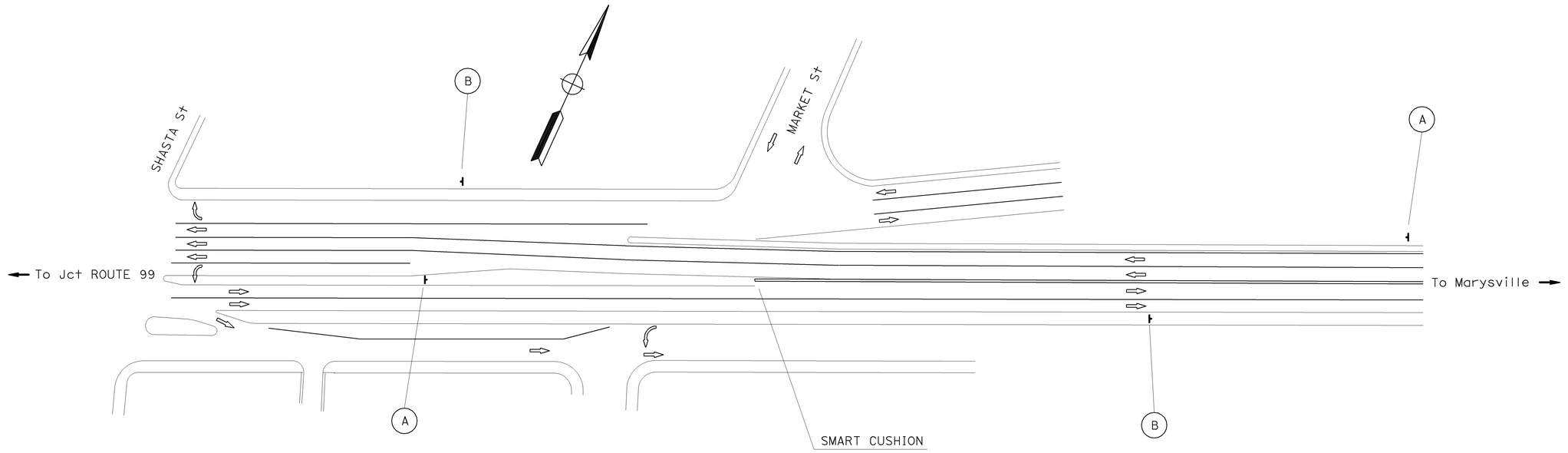

LOCATION 37

Sut 20 - PM 16.72

NOTE: THIS PLAN ACCURATE FOR CONSTRUCTION AREA SIGN WORK ONLY.

CONSTRUCTION AREA SIGNS

NO SCALE

CS-1

STATE OF CALIFORNIA - DEPARTMENT OF TRANSPORTATION
Caltrans
TRAFFIC DESIGN
FUNCTIONAL SUPERVISOR: JOSEPH W. HORTON
CALCULATED-DESIGNED BY
CHECKED BY
CHUCK COOK
STEPHEN WRIGHT
REVISED BY
DATE REVISED

LAST REVISION 08-11-10
DATE PLOTTED => 31-AUG-2010
TIME PLOTTED => 09:17

BORDER LAST REVISED 7/1/2010
USERNAME => s128033
DGN FILE => 31f4401a001.dgn
RELATIVE BORDER SCALE IS IN INCHES 0 1 2 3
UNIT 0389
PROJECT NUMBER & PHASE 03000200241

INDEX OF PLANS

SHEET No.	DESCRIPTION
1	TITLE AND LOCATION MAP
2-20	CONSTRUCTION DETAILS
21-22	CONSTRUCTION AREA SIGNS
23-26	DETOUR PLANS
27-28	SUMMARY OF QUANTITIES
29-50	NEW AND REVISED STANDARD PLANS

THE STANDARD PLANS LIST APPLICABLE TO THIS CONTRACT IS INCLUDED IN THE NOTICE TO BIDDERS AND SPECIAL PROVISIONS BOOK.

LOCATIONS OF CONSTRUCTION

COUNTY	LOCATION	ROUTE	PM
Nev	1	20	R16.550
	2	20	R16.873
	3	49	R13.268
Sac	4	5	22.273
	5	DELETED	
	6	5	22.453
	7	DELETED	
	8	5	22.848
	9	DELETED	
	10	DELETED	
	11	5	23.537
	12	5	23.884
	13	5	24.774
	14	5	26.502
	15	5	26.769
	16	5	26.800
	17	5	26.961
	18	50	L0.273
	19	50	L0.444
	20	50	L0.509
	21	50	L2.348
	22	DELETED	
	23	DELETED	
	24	51	0.095
	25	51	0.240
	26	51	0.580
	27	51	0.768
	28	51	1.065
	29	51	1.251
	30	51	3.931
	31	99	21.962
	32	99	23.985
	33	99	R24.294
Yol	34	DELETED	
	35	50	2.299
	36	80	R10.198
Sut	37	20	16.720
Yub	38	20	0.540
Sac	39	51	0.090
Sac	40	80	M9.187

THE CONTRACTOR SHALL POSSESS THE CLASS (OR CLASSES) OF LICENSE AS SPECIFIED IN THE "NOTICE TO BIDDERS."

STATE OF CALIFORNIA

DEPARTMENT OF TRANSPORTATION

HSSTP-000C(325)E

PROJECT PLANS FOR CONSTRUCTION ON

STATE HIGHWAY

IN NEVADA, SACRAMENTO, SUTTER, YUBA, AND YOLO COUNTIES AT VARIOUS LOCATIONS

TO BE SUPPLEMENTED BY STANDARD PLANS DATED MAY 2006

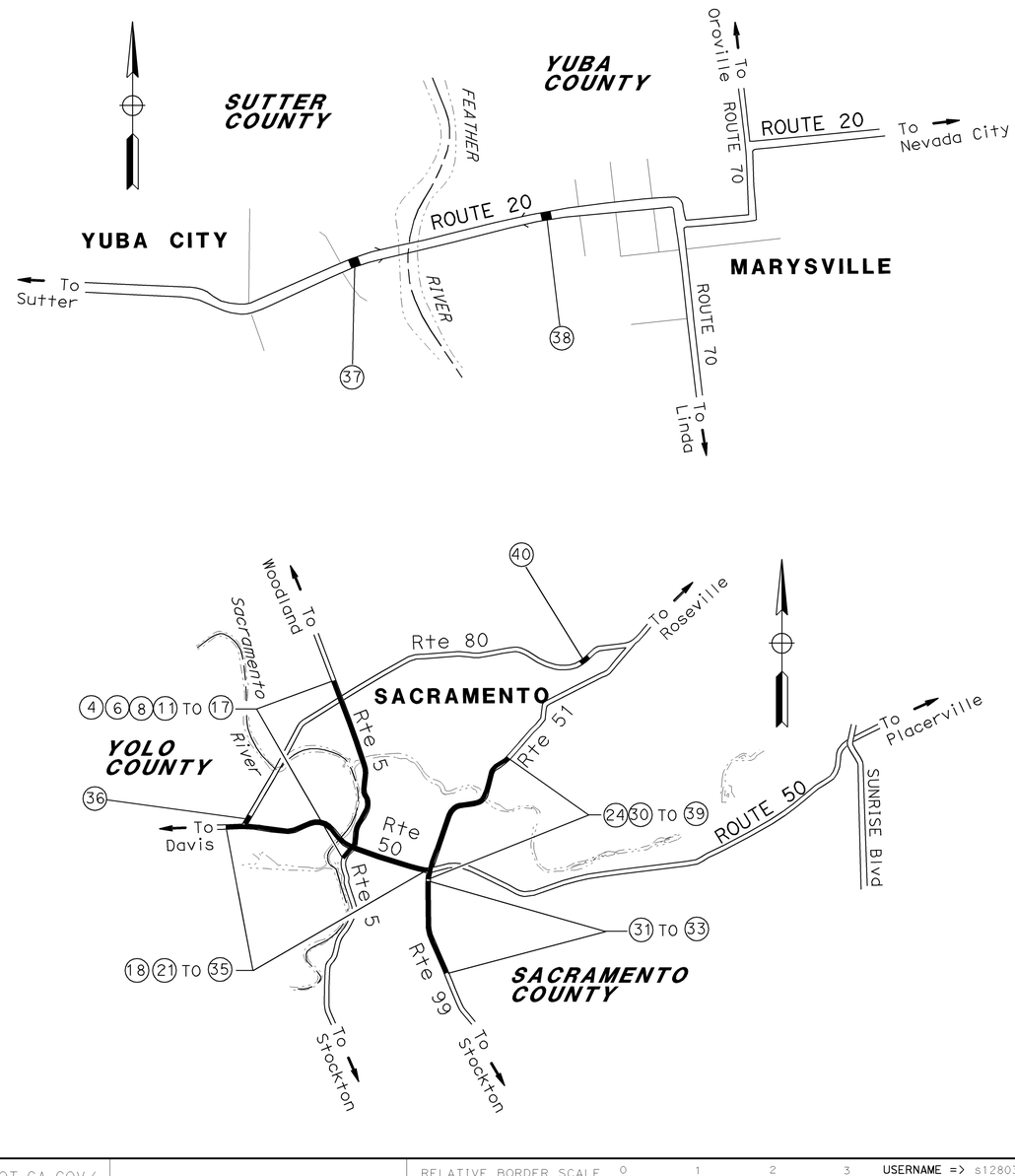

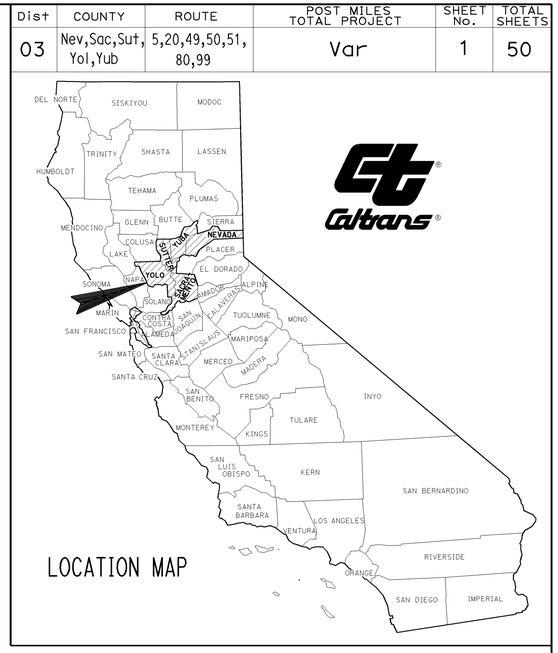

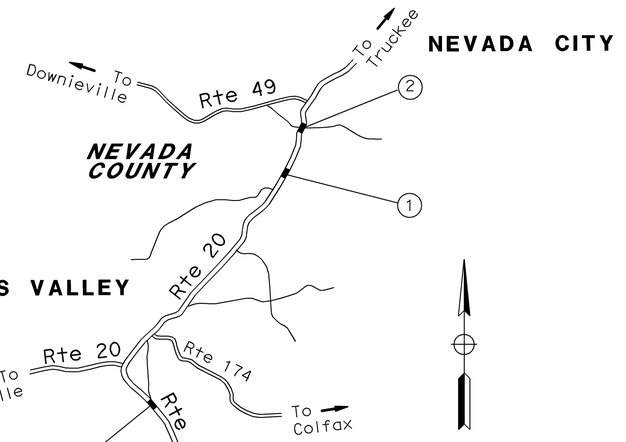

NO SCALE

Dist	COUNTY	ROUTE	POST MILES TOTAL PROJECT	SHEET No.	TOTAL SHEETS
03	Nev,Sac,Sut, Yol,Yub	5,20,49,50,51, 80,99	Var	1	50

Stephen J. Wright 8-25-10
PROJECT ENGINEER DATE
REGISTERED CIVIL ENGINEER

REGISTERED PROFESSIONAL ENGINEER
STEPHEN T. WRIGHT
No. 52942
Exp. 12-31-10
CIVIL
STATE OF CALIFORNIA

August 30, 2010
PLANS APPROVAL DATE

THE STATE OF CALIFORNIA OR ITS OFFICERS OR AGENTS SHALL NOT BE RESPONSIBLE FOR THE ACCURACY OR COMPLETENESS OF SCANNED COPIES OF THIS PLAN SHEET.

CONTRACT No.	03-1F4404
PROJECT ID	0300020024

PROJECT MANAGER: CLARK PERI
DESIGN ENGINEER: JOSEPH W. HORTON

LAST REVISION: DATE PLOTTED => 31-AUG-2010
TIME PLOTTED => 12:45
08-23-10

BORDER LAST REVISED 7/1/2010 | CALTRANS WEB SITE IS: HTTP//WWW.DOT.CA.GOV/ | RELATIVE BORDER SCALE IS IN INCHES 0 1 2 3 | USERNAME => s128033 DGN FILE => 31F440ab001.dgn | UNIT 0389 | PROJECT NUMBER & PHASE 03000200241

NOTES:
1. FOR DETAILS NOT SHOWN, SEE STANDARD PLANS.
2. SEE MANUFACTURER'S PLANS FOR CRASH CUSHION INSTALLATION DETAILS.
3. EXISTING ULTILITY FACILITIES HAVE NOT BEEN PLOTTED ON THESE PLANS.
4. EXISTING CALTRANS ELECTRICAL IS PRESENT. CO-ORDINATE WITH ENGINEER BEFORE WORK TO LOCATE EXISTING ELECTRICAL IN THE FIELD.
5. THE CONTRACTOR SHALL VERIFY ALL CONTROLLING FIELD DIMENSIONS BEFORE ORDERING OR FABRICATING ANY MATERIAL.
6. PER MANUFACTURER'S DIRECTION, CRASH CUSHION TO BE ISOLATED ON ONE SIDE OF BRIDGE JOINT.

Dist	COUNTY	ROUTE	POST MILES TOTAL PROJECT	SHEET No.	TOTAL SHEETS
03	Nev,Sac,Sut, Yol,Yub	5,20,49,50,51, 80,99	Var	2	50

Stephen T. Wright 8-25-10
REGISTERED CIVIL ENGINEER DATE

8-30-10
PLANS APPROVAL DATE

REGISTERED PROFESSIONAL ENGINEER — STEPHEN T. WRIGHT No. 52942 Exp.12-31-10 CIVIL — STATE OF CALIFORNIA

THE STATE OF CALIFORNIA OR ITS OFFICERS OR AGENTS SHALL NOT BE RESPONSIBLE FOR THE ACCURACY OR COMPLETENESS OF SCANNED COPIES OF THIS PLAN SHEET.

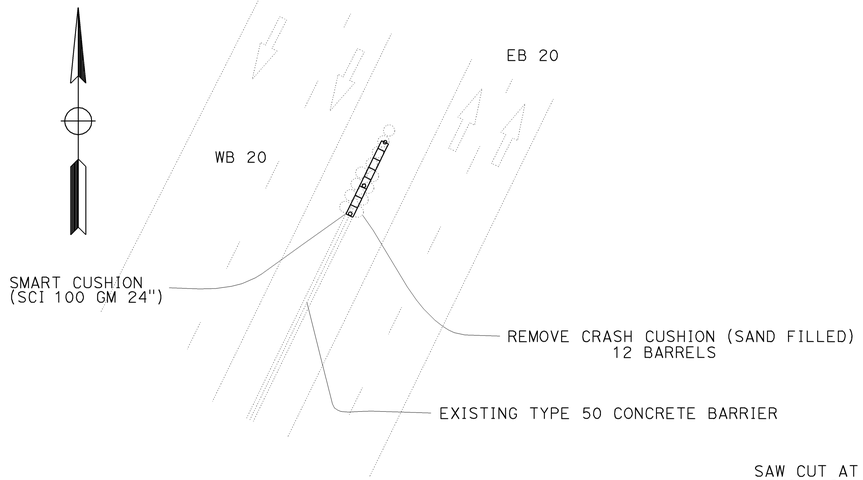

LOCATION 1

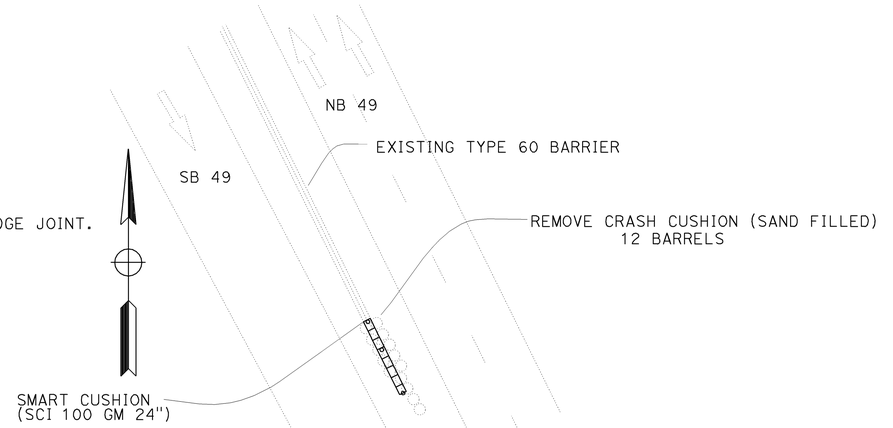

LOCATION 3

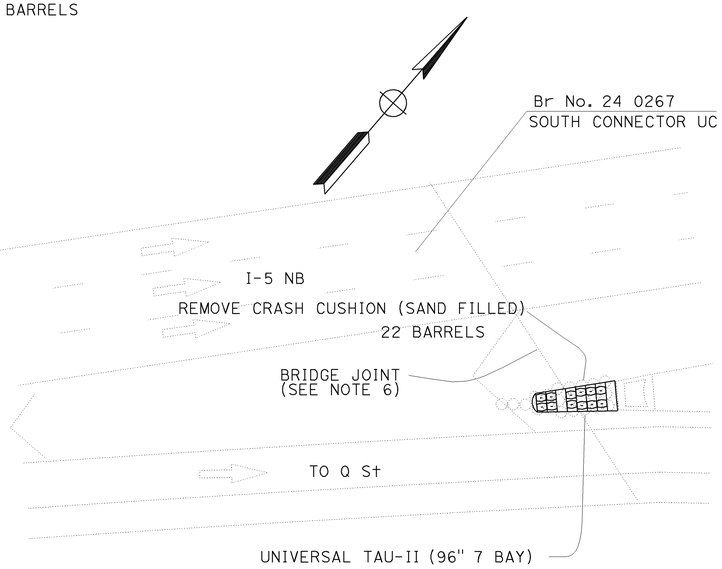

LOCATION 6

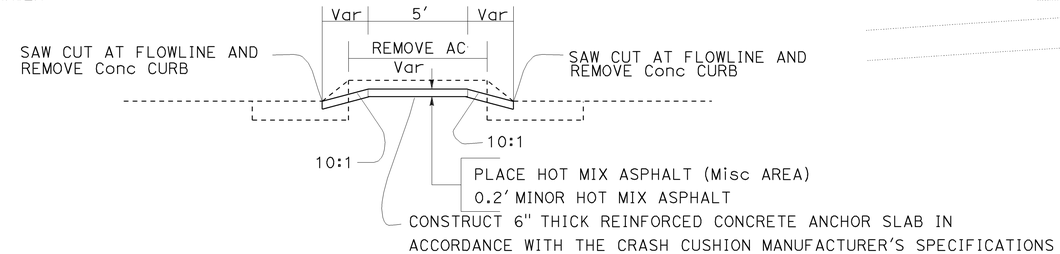

SECTION B-B
NO SCALE

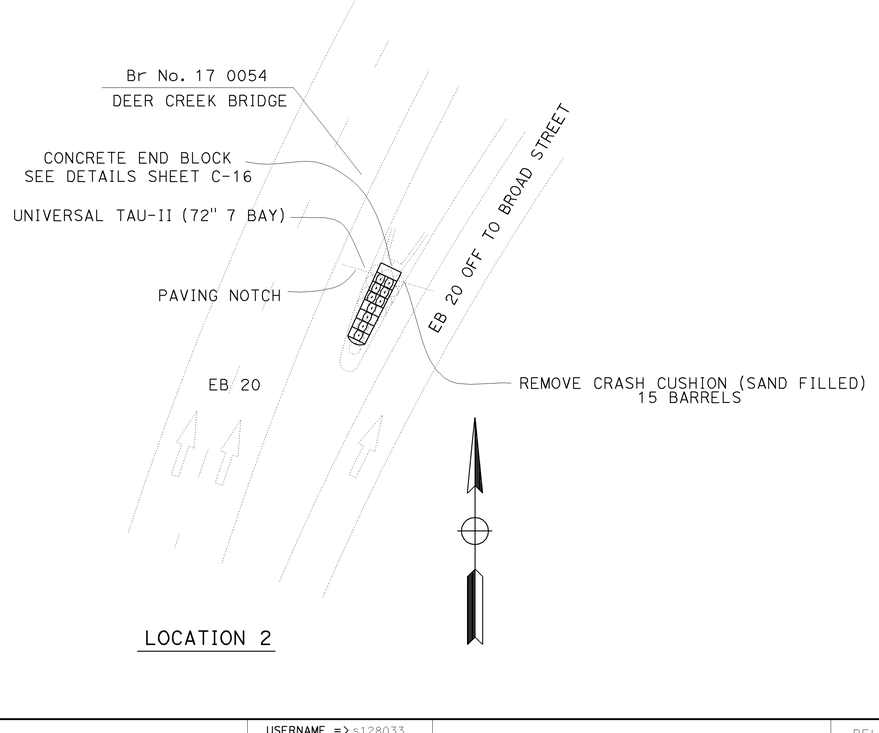

LOCATION 2

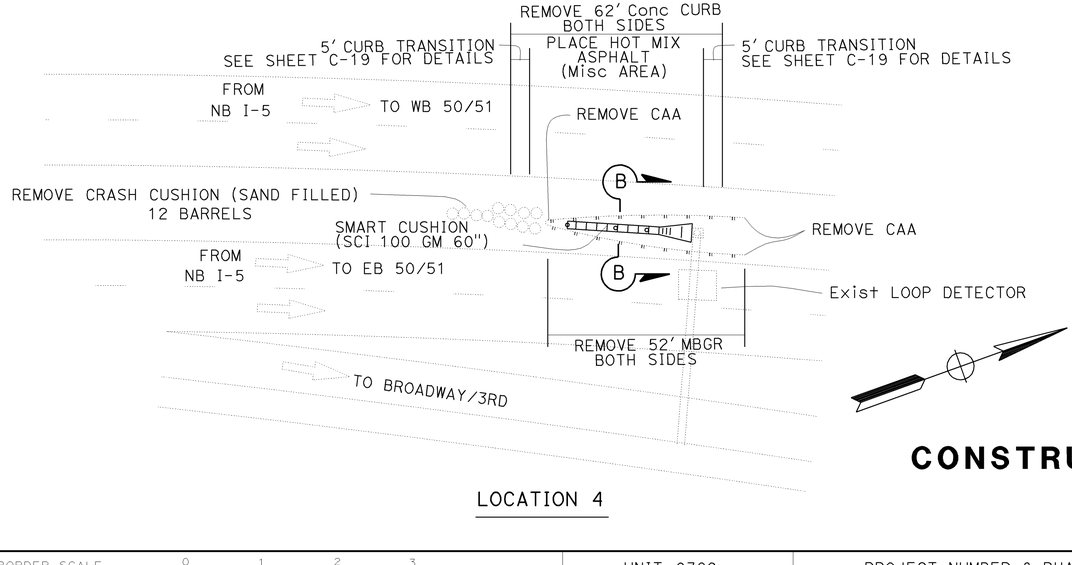

LOCATION 4

CONSTRUCTION DETAILS

NO SCALE

C-1

STATE OF CALIFORNIA - DEPARTMENT OF TRANSPORTATION
TRAFFIC DESIGN
FUNCTIONAL SUPERVISOR: JOESPH W. HORTON
CALCULATED-DESIGNED BY: STEPHEN WRIGHT
CHECKED BY: DEANN SPANGLER
REVISED BY
DATE REVISED

LAST REVISION | DATE PLOTTED => 31-AUG-2010 | 08-23-10 | TIME PLOTTED => 09:17

BORDER LAST REVISED 7/1/2010 | USERNAME => s128033 | DGN FILE => 31f440ga001.dgn | RELATIVE BORDER SCALE IS IN INCHES 0 1 2 3 | UNIT 0389 | PROJECT NUMBER & PHASE 03000200241

Dist	COUNTY	ROUTE	POST MILES TOTAL PROJECT	SHEET No.	TOTAL SHEETS
03	Nev,Sac,Sut, Yol,Yub	5,20,49,50,51, 80,99	Var	3	50

Stephen T. Wright 8-25-10
REGISTERED CIVIL ENGINEER DATE

8-30-10
PLANS APPROVAL DATE

THE STATE OF CALIFORNIA OR ITS OFFICERS OR AGENTS SHALL NOT BE RESPONSIBLE FOR THE ACCURACY OR COMPLETENESS OF SCANNED COPIES OF THIS PLAN SHEET.

REGISTERED PROFESSIONAL ENGINEER
STEPHEN T. WRIGHT
No. 52942
Exp. 12-31-10
CIVIL
STATE OF CALIFORNIA

NOTES:
1. FOR DETAILS NOT SHOWN, SEE STANDARD PLANS.
2. SEE MANUFACTURER'S PLANS FOR CRASH CUSHION INSTALLATION DETAILS.
3. EXISTING ULTILITY FACILITIES HAVE NOT BEEN PLOTTED ON THESE PLANS.
4. EXISTING CALTRANS ELECTRICAL IS PRESENT. CO-ORDINATE WITH ENGINEER BEFORE WORK TO LOCATE EXISTING ELECTRICAL IN THE FIELD.
5. THE CONTRACTOR SHALL VERIFY ALL CONTROLLING FIELD DIMENSIONS BEFORE ORDERING OR FABRICATING ANY MATERIAL.
6. PER MANUFACTURER'S DIRECTION, CRASH CUSHION TO BE ISOLATED ON ONE SIDE OF BRIDGE JOINT.
7. WHEN PLACING MBGR POSTS IN EXISTING AC, SEE TYPICAL MBGR AC BLOCK OUT DETAILS SHEET C-19.

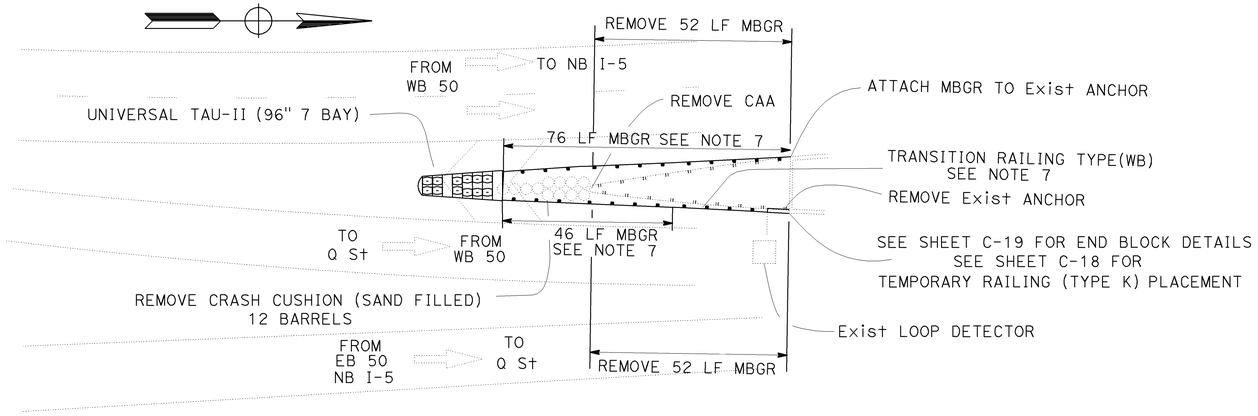

LOCATION 8

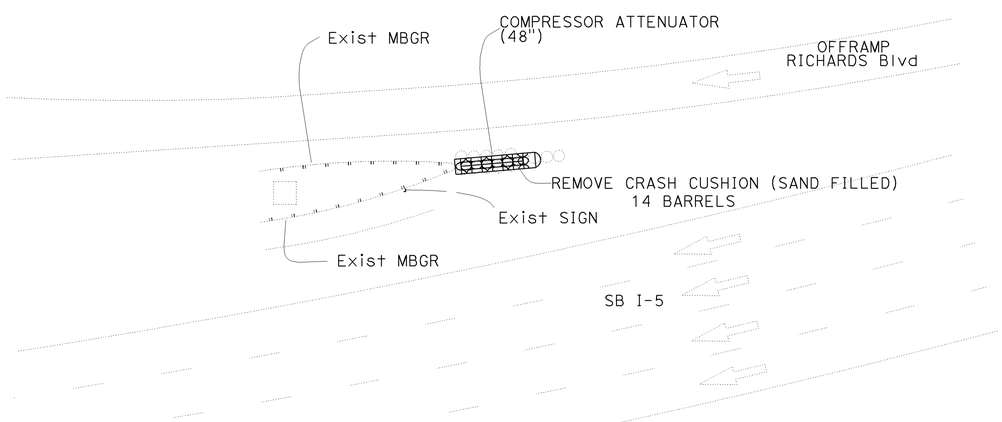

LOCATION 13

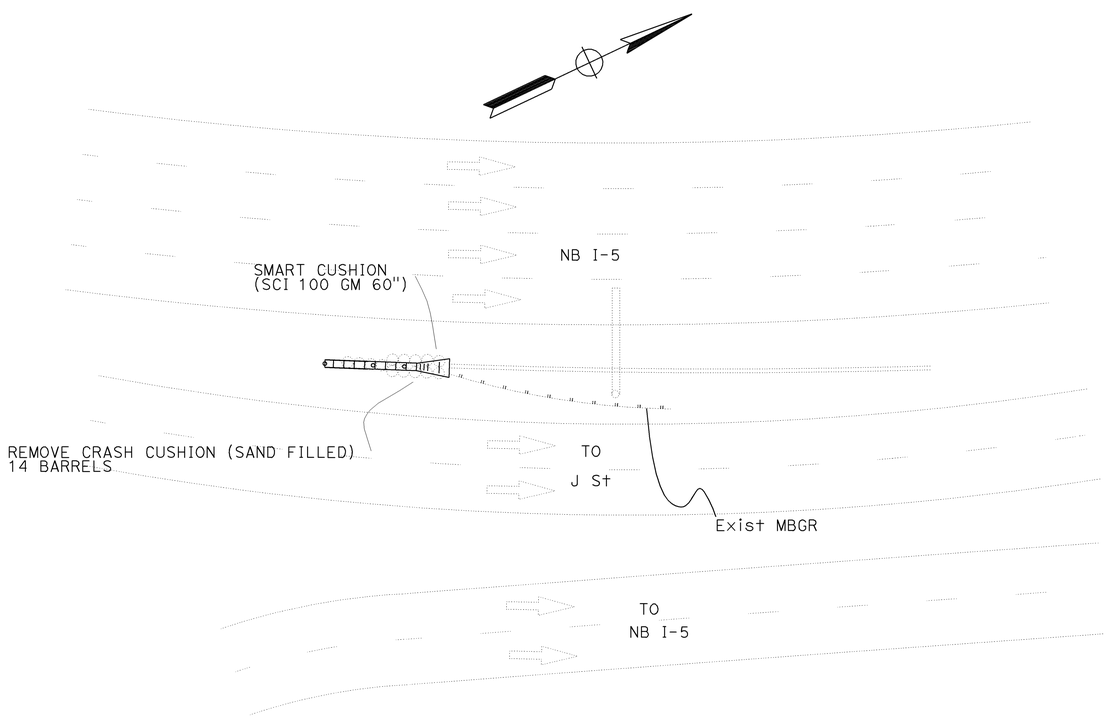

LOCATION 11

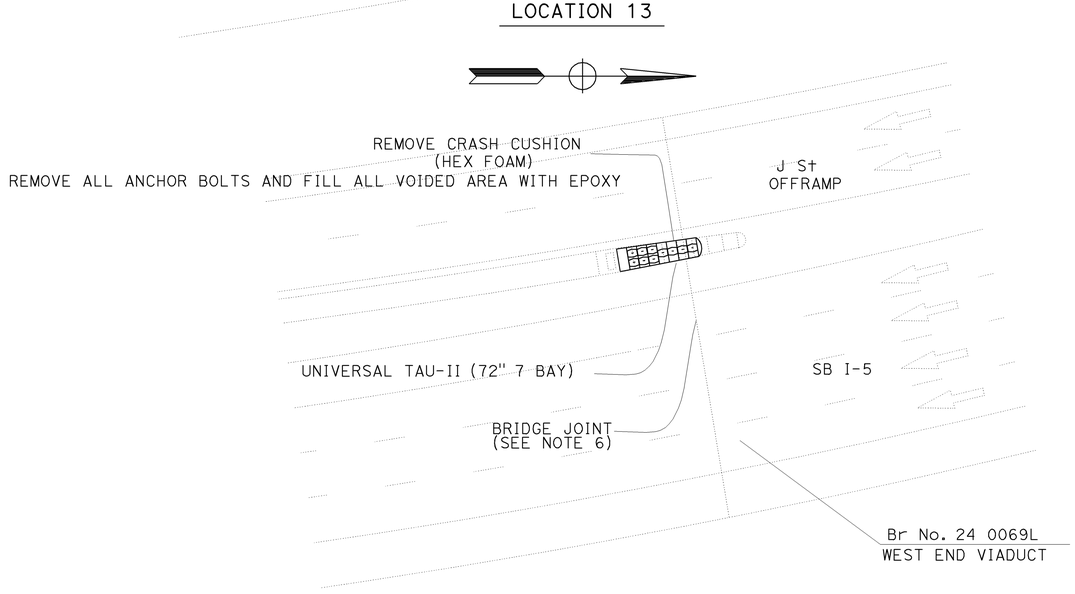

LOCATION 12

CONSTRUCTION DETAILS

NO SCALE

C-2

STATE OF CALIFORNIA - DEPARTMENT OF TRANSPORTATION
TRAFFIC DESIGN
FUNCTIONAL SUPERVISOR: JOESPH W. HORTON
CALCULATED-DESIGNED BY: STEPHEN WRIGHT
CHECKED BY: DEANN SPANGLER
REVISED BY
DATE REVISED

LAST REVISION DATE PLOTTED => 31-AUG-2010
TIME PLOTTED => 09:17

BORDER LAST REVISED 7/1/2010
USERNAME => s128033
DGN FILE => 31f440ga002.dgn
RELATIVE BORDER SCALE IS IN INCHES 0 1 2 3
UNIT 0389
PROJECT NUMBER & PHASE 03000200241

NOTES:
1. FOR DETAILS NOT SHOWN, SEE STANDARD PLANS.
2. SEE MANUFACTURER'S PLANS FOR CRASH CUSHION INSTALLATION DETAILS.
3. EXISTING ULTILITY FACILITIES HAVE NOT BEEN PLOTTED ON THESE PLANS.
4. EXISTING CALTRANS ELECTRICAL IS PRESENT. CO-ORDINATE WITH ENGINEER BEFORE WORK TO LOCATE EXISTING ELECTRICAL IN THE FIELD.
5. THE CONTRACTOR SHALL VERIFY ALL CONTROLLING FIELD DIMENSIONS BEFORE ORDERING OR FABRICATING ANY MATERIAL.

Dist	COUNTY	ROUTE	POST MILES TOTAL PROJECT	SHEET No.	TOTAL SHEETS
03	Nev,Sac,Sut, Yol,Yub	5,20,49,50,51, 80,99	Var	4	50

Stephen T. Wright 8-25-10
REGISTERED CIVIL ENGINEER DATE

8-30-10
PLANS APPROVAL DATE

STEPHEN T. WRIGHT No. 52942 Exp. 12-31-10 CIVIL — REGISTERED PROFESSIONAL ENGINEER — STATE OF CALIFORNIA

THE STATE OF CALIFORNIA OR ITS OFFICERS OR AGENTS SHALL NOT BE RESPONSIBLE FOR THE ACCURACY OR COMPLETENESS OF SCANNED COPIES OF THIS PLAN SHEET.

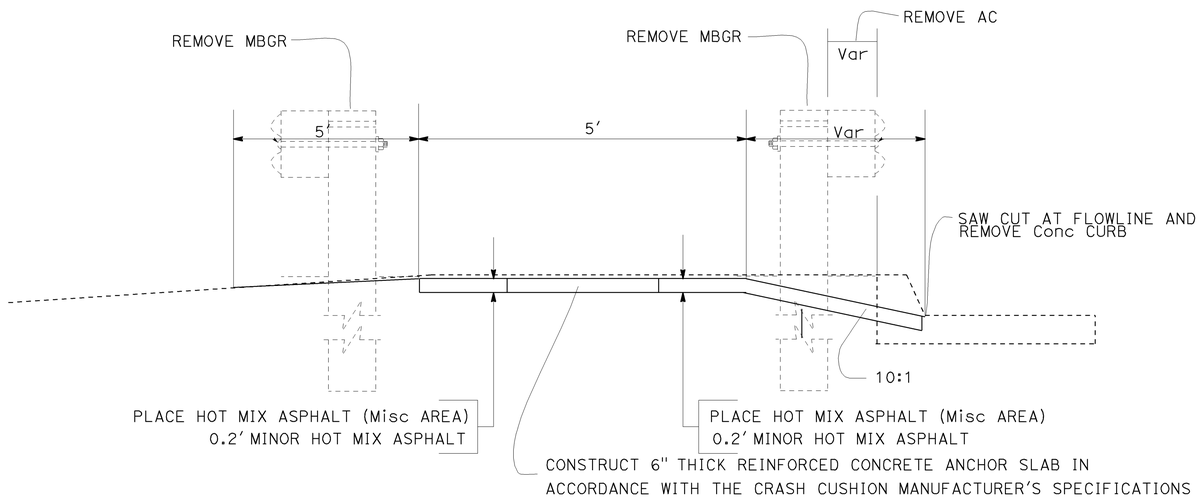

SECTION A-A

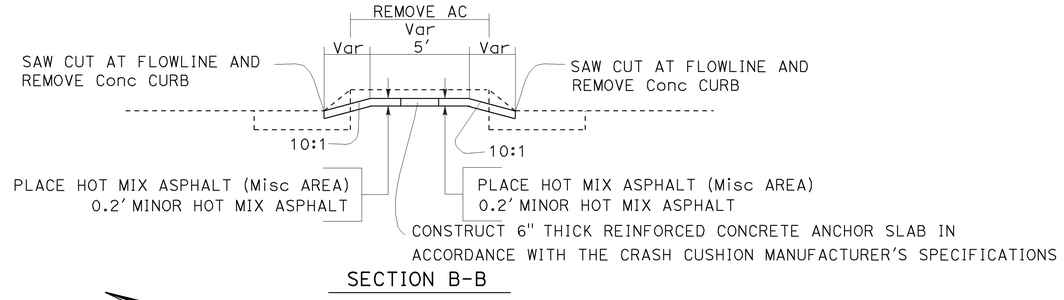

SECTION B-B

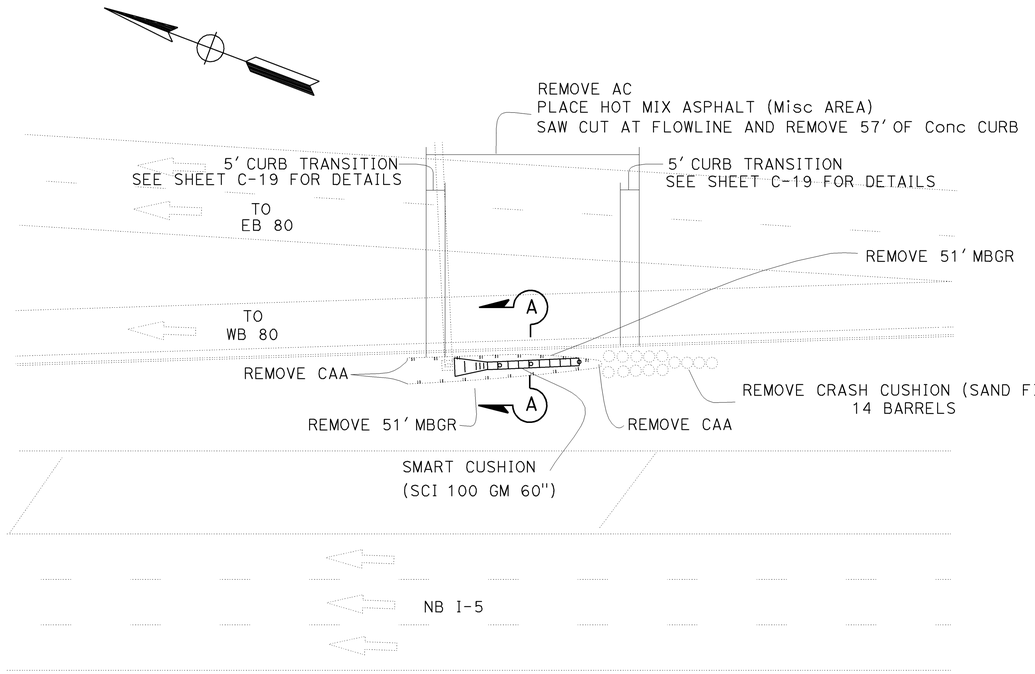

LOCATION 14

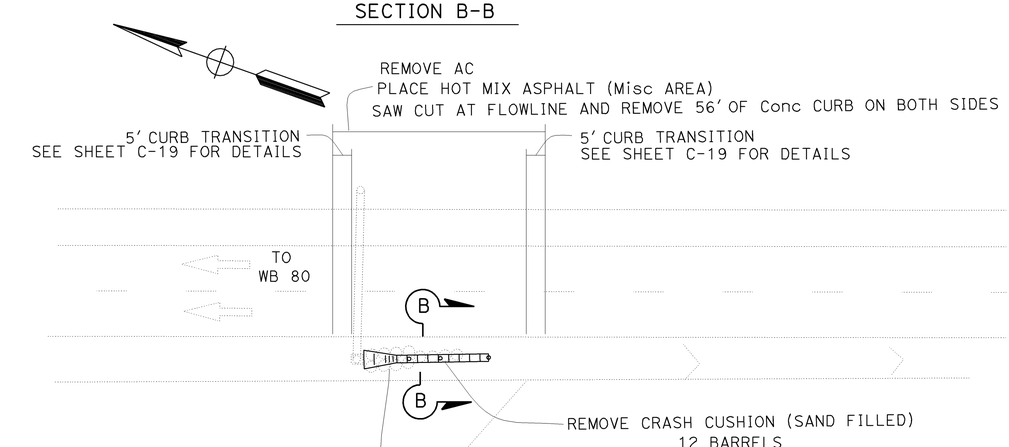

LOCATION 15

CONSTRUCTION DETAILS

NO SCALE

C-3

STATE OF CALIFORNIA - DEPARTMENT OF TRANSPORTATION
TRAFFIC DESIGN
FUNCTIONAL SUPERVISOR: JOESPH W. HORTON
CALCULATED-DESIGNED BY: STEPHEN WRIGHT
CHECKED BY: DEANN SPANGLER
REVISED BY | DATE REVISED

LAST REVISION 08-23-10
DATE PLOTTED => 31-AUG-2010
TIME PLOTTED => 09:17

BORDER LAST REVISED 7/1/2010
USERNAME => s128033
DGN FILE => 31f440ga003.dgn
RELATIVE BORDER SCALE IS IN INCHES 0 1 2 3
UNIT 0389
PROJECT NUMBER & PHASE 03000200241

Dist	COUNTY	ROUTE	POST MILES TOTAL PROJECT	SHEET No.	TOTAL SHEETS
03	Nev,Sac,Sut, Yol,Yub	5,20,49,50,51, 80,99	Var	5	50

Stephen J. Wright 8-25-10
REGISTERED CIVIL ENGINEER DATE

8-30-10
PLANS APPROVAL DATE

REGISTERED PROFESSIONAL ENGINEER
STEPHEN T. WRIGHT
No. 52942
Exp. 12-31-10
CIVIL
STATE OF CALIFORNIA

THE STATE OF CALIFORNIA OR ITS OFFICERS OR AGENTS SHALL NOT BE RESPONSIBLE FOR THE ACCURACY OR COMPLETENESS OF SCANNED COPIES OF THIS PLAN SHEET.

NOTES:
1. FOR DETAILS NOT SHOWN, SEE STANDARD PLANS.
2. SEE MANUFACTURER'S PLANS FOR CRASH CUSHION INSTALLATION DETAILS.
3. EXISTING ULTILITY FACILITIES HAVE NOT BEEN PLOTTED ON THESE PLANS.
4. EXISTING CALTRANS ELECTRICAL IS PRESENT. CO-ORDINATE WITH ENGINEER BEFORE WORK TO LOCATE EXISTING ELECTRICAL IN THE FIELD.
5. THE CONTRACTOR SHALL VERIFY ALL CONTROLLING FIELD DIMENSIONS BEFORE ORDERING OR FABRICATING ANY MATERIAL.

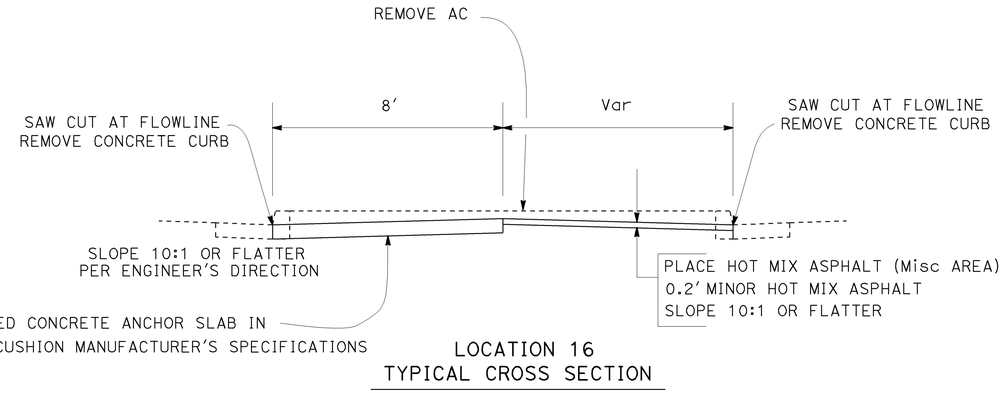

LOCATION 16
TYPICAL CROSS SECTION

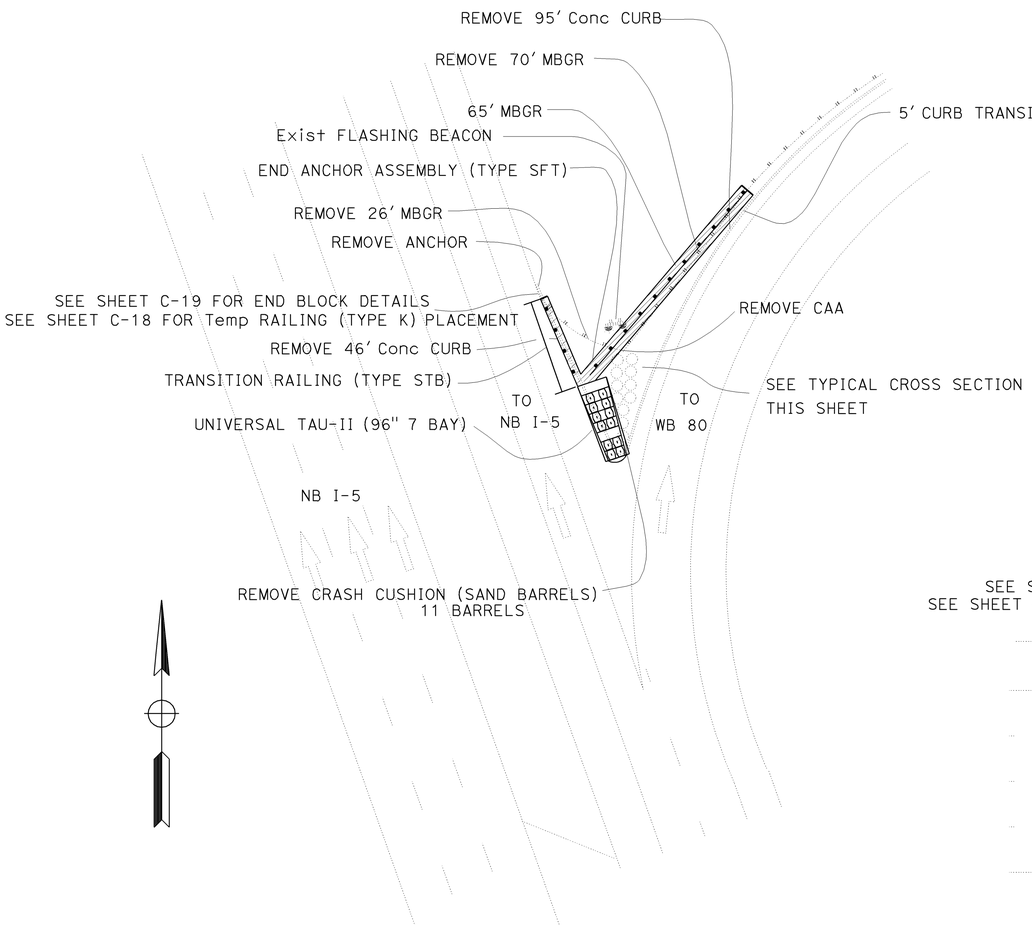

LOCATION 16

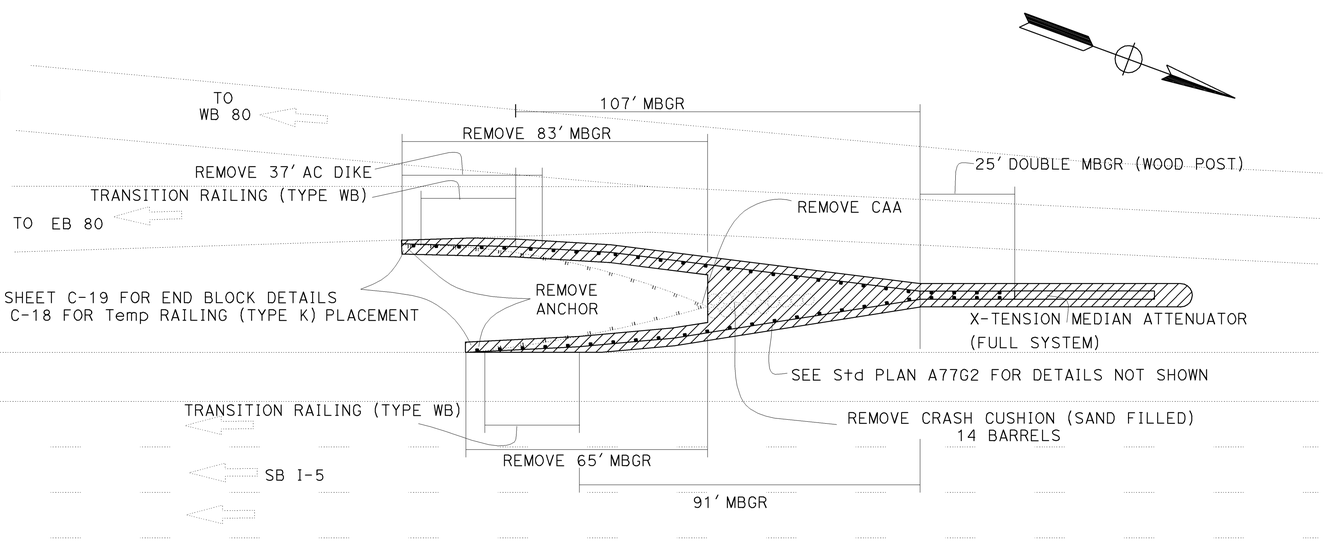

LOCATION 17

LEGEND

VEGETATION CONTROL (MINOR CONCRETE)

CONSTRUCTION DETAILS
NO SCALE

C-4

STATE OF CALIFORNIA - DEPARTMENT OF TRANSPORTATION
TRAFFIC DESIGN
FUNCTIONAL SUPERVISOR: JOESPH W. HORTON
CALCULATED-DESIGNED BY: STEPHEN WRIGHT
CHECKED BY: DEANN SPANGLER
REVISED BY
DATE REVISED

LAST REVISION DATE PLOTTED => 31-AUG-2010
TIME PLOTTED => 09:17

BORDER LAST REVISED 7/1/2010
USERNAME => s128033
DGN FILE => 31F440ga004.dgn
RELATIVE BORDER SCALE IS IN INCHES 0 1 2 3
UNIT 0389
PROJECT NUMBER & PHASE 03000200241

Dist	COUNTY	ROUTE	POST MILES TOTAL PROJECT	SHEET No.	TOTAL SHEETS
03	Nev,Sac,Sut, Yol,Yub	5,20,49,50,51, 80,99	Var	6	50

Stephen T. Wright 8-25-10
REGISTERED CIVIL ENGINEER DATE

REGISTERED PROFESSIONAL ENGINEER
STEPHEN T. WRIGHT
No. 52942
Exp. 12-31-10
CIVIL
STATE OF CALIFORNIA

8-30-10
PLANS APPROVAL DATE

THE STATE OF CALIFORNIA OR ITS OFFICERS OR AGENTS SHALL NOT BE RESPONSIBLE FOR THE ACCURACY OR COMPLETENESS OF SCANNED COPIES OF THIS PLAN SHEET.

NOTES:
1. FOR DETAILS NOT SHOWN, SEE STANDARD PLANS.
2. SEE MANUFACTURER'S PLANS FOR CRASH CUSHION INSTALLATION DETAILS.
3. EXISTING ULTILITY FACILITIES HAVE NOT BEEN PLOTTED ON THESE PLANS.
4. EXISTING CALTRANS ELECTRICAL IS PRESENT. CO-ORDINATE WITH ENGINEER BEFORE WORK TO LOCATE EXISTING ELECTRICAL IN THE FIELD.
5. THE CONTRACTOR SHALL VERIFY ALL CONTROLLING FIELD DIMENSIONS BEFORE ORDERING OR FABRICATING ANY MATERIAL.

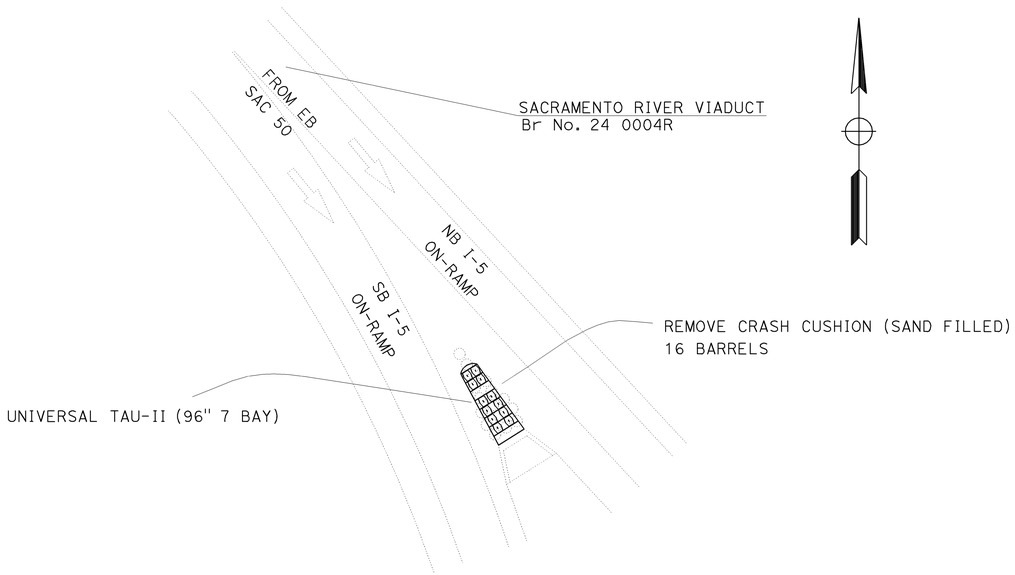

LOCATION 18

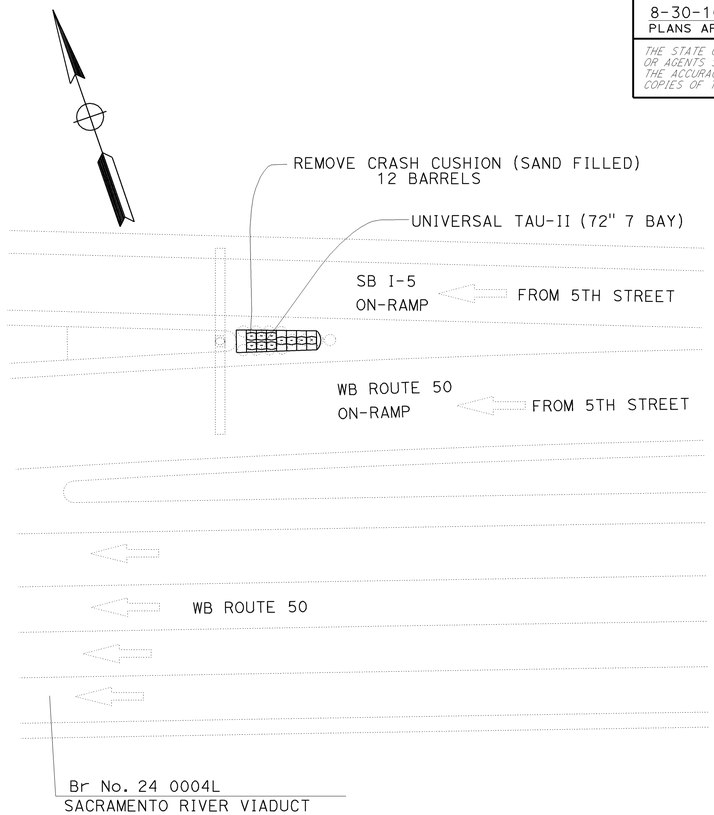

LOCATION 19

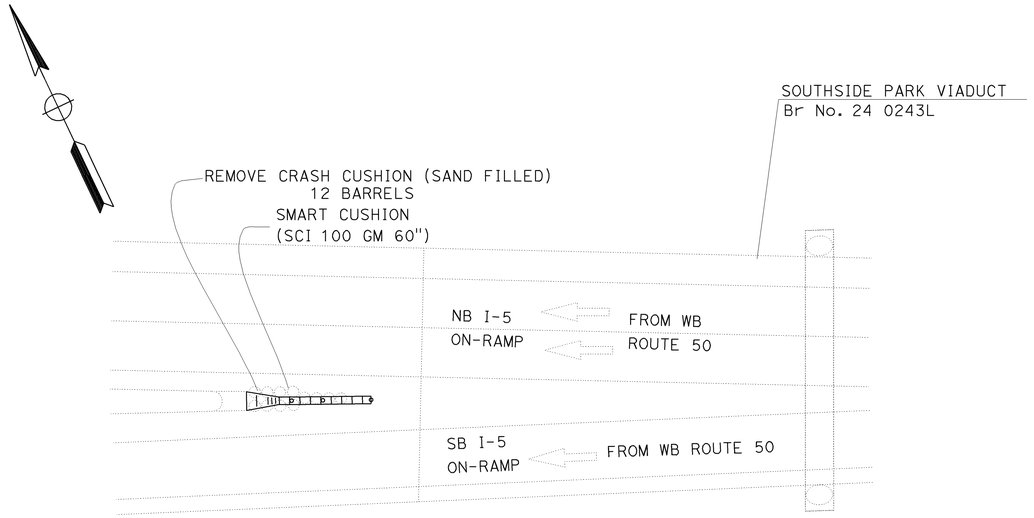

LOCATION 20

CONSTRUCTION DETAILS

NO SCALE

C-5

STATE OF CALIFORNIA - DEPARTMENT OF TRANSPORTATION
TRAFFIC DESIGN
Caltrans
FUNCTIONAL SUPERVISOR: JOESPH W. HORTON
CALCULATED-DESIGNED BY: STEPHEN WRIGHT
CHECKED BY: DEANN SPANGLER
REVISED BY
DATE REVISED

LAST REVISION DATE PLOTTED => 31-AUG-2010
TIME PLOTTED => 09:17

BORDER LAST REVISED 7/1/2010
USERNAME => s128033
DGN FILE => 31f440ga005.dgn
RELATIVE BORDER SCALE IS IN INCHES 0 1 2 3
UNIT 0389
PROJECT NUMBER & PHASE 03000200241

NOTES:
1. FOR DETAILS NOT SHOWN, SEE STANDARD PLANS.
2. SEE MANUFACTURER'S PLANS FOR CRASH CUSHION INSTALLATION DETAILS.
3. EXISTING ULTILITY FACILITIES HAVE NOT BEEN PLOTTED ON THESE PLANS.
4. EXISTING CALTRANS ELECTRICAL IS PRESENT. CO-ORDINATE WITH ENGINEER BEFORE WORK TO LOCATE EXISTING ELECTRICAL IN THE FIELD.
5. THE CONTRACTOR SHALL VERIFY ALL CONTROLLING FIELD DIMENSIONS BEFORE ORDERING OR FABRICATING ANY MATERIAL.

Dist	COUNTY	ROUTE	POST MILES TOTAL PROJECT	SHEET No.	TOTAL SHEETS
03	Nev,Sac,Sut, Yol,Yub	5,20,49,50,51, 80,99	Var	7	50

Stephen T. Wright 8-25-10
REGISTERED CIVIL ENGINEER DATE

8-30-10
PLANS APPROVAL DATE

REGISTERED PROFESSIONAL ENGINEER
STEPHEN T. WRIGHT
No. 52942
Exp. 12-31-10
CIVIL
STATE OF CALIFORNIA

THE STATE OF CALIFORNIA OR ITS OFFICERS OR AGENTS SHALL NOT BE RESPONSIBLE FOR THE ACCURACY OR COMPLETENESS OF SCANNED COPIES OF THIS PLAN SHEET.

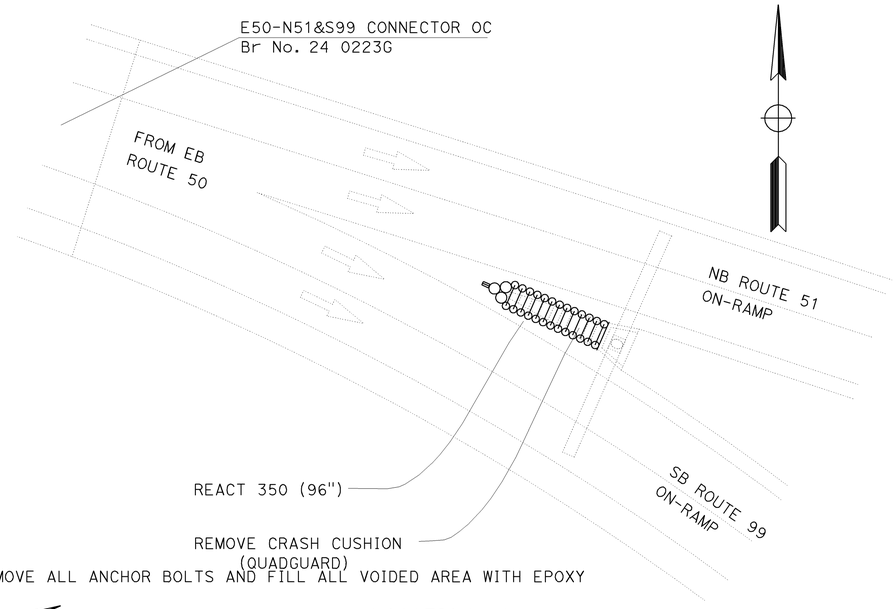

REMOVE ALL ANCHOR BOLTS AND FILL ALL VOIDED AREA WITH EPOXY

LOCATION 21

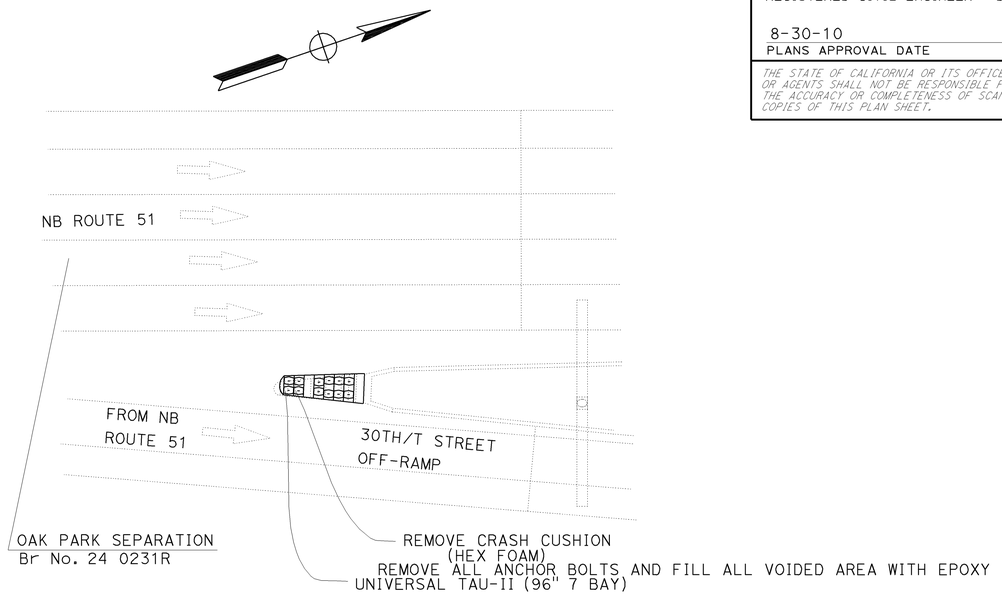

LOCATION 24

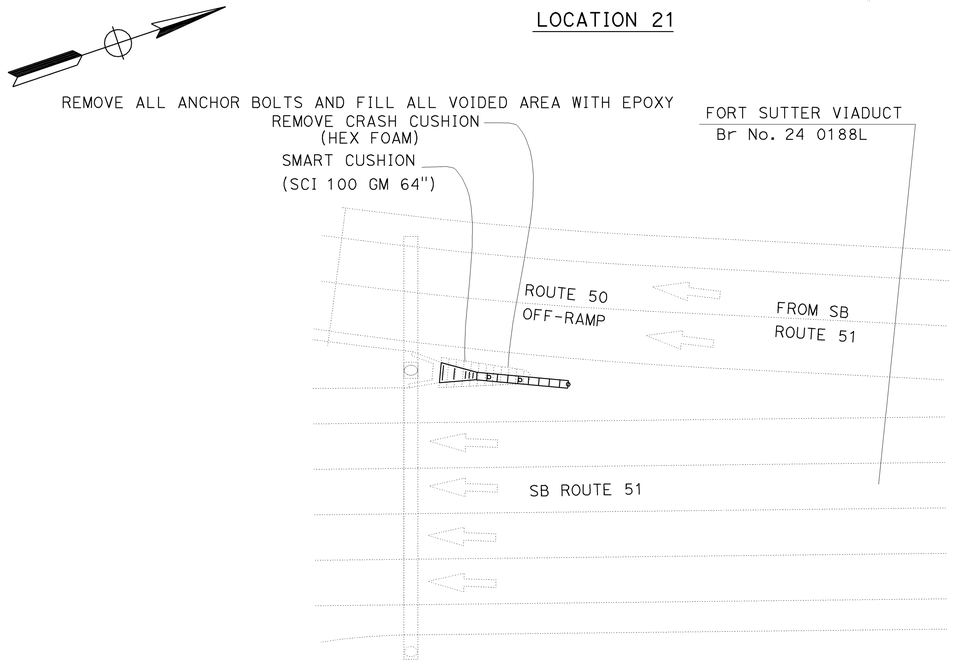

LOCATION 25

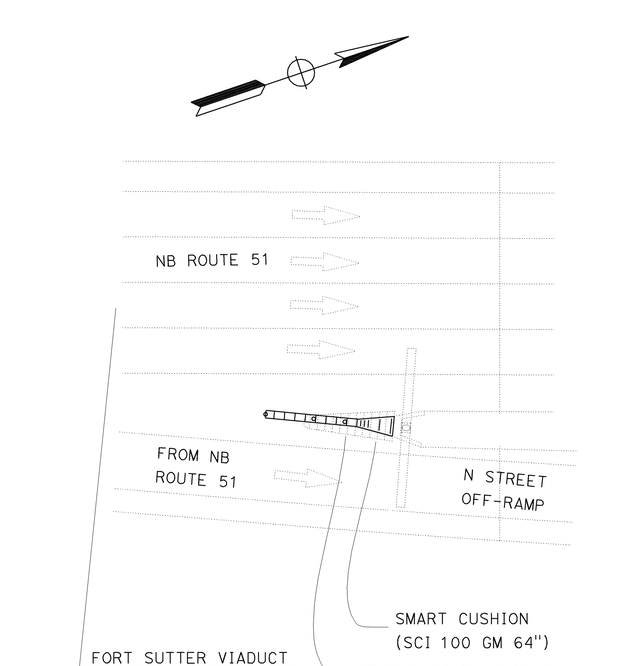

REMOVE ALL ANCHOR BOLTS AND FILL ALL VOIDED AREA WITH EPOXY

LOCATION 26

CONSTRUCTION DETAILS

NO SCALE

C-6

STATE OF CALIFORNIA - DEPARTMENT OF TRANSPORTATION
TRAFFIC DESIGN
FUNCTIONAL SUPERVISOR: JOESPH W. HORTON
CALCULATED-DESIGNED BY: STEPHEN WRIGHT
CHECKED BY: DEANN SPANGLER
REVISED BY | DATE REVISED

LAST REVISION 08-23-10
DATE PLOTTED => 31-AUG-2010
TIME PLOTTED => 09:17

NOTES: 1. FOR DETAILS NOT SHOWN, SEE STANDARD PLANS.
2. SEE MANUFACTURER'S PLANS FOR CRASH CUSHION INSTALLATION DETAILS.
3. EXISTING ULTILITY FACILITIES HAVE NOT BEEN PLOTTED ON THESE PLANS.
4. EXISTING CALTRANS ELECTRICAL IS PRESENT. CO-ORDINATE WITH ENGINEER BEFORE WORK TO LOCATE EXISTING ELECTRICAL IN THE FIELD.
5. THE CONTRACTOR SHALL VERIFY ALL CONTROLLING FIELD DIMENSIONS BEFORE ORDERING OR FABRICATING ANY MATERIAL.

Dist	COUNTY	ROUTE	POST MILES TOTAL PROJECT	SHEET No.	TOTAL SHEETS
03	Nev,Sac,Sut, Yol,Yub	5,20,49,50,51, 80,99	Var	8	50

Stephen T. Wright 8-25-10
REGISTERED CIVIL ENGINEER DATE

8-30-10
PLANS APPROVAL DATE

REGISTERED PROFESSIONAL ENGINEER
STEPHEN T. WRIGHT
No. 52942
Exp. 12-31-10
CIVIL
STATE OF CALIFORNIA

THE STATE OF CALIFORNIA OR ITS OFFICERS OR AGENTS SHALL NOT BE RESPONSIBLE FOR THE ACCURACY OR COMPLETENESS OF SCANNED COPIES OF THIS PLAN SHEET.

REMOVE ALL ANCHOR BOLTS AND FILL ALL VOIDED AREA WITH EPOXY
REMOVE CRASH CUSHION (HEX FOAM)
SMART CUSHION (SCI 100 GM 64")
FORT SUTTER VIADUCT Br No. 24 0188L
P STREET OFF-RAMP
FROM SB ROUTE 51
SB ROUTE 51

LOCATION 27

UNIVERSAL TAU-II (96" 7 BAY)
REMOVE CONCRETE (MISCELLANEOUS)
REMOVE CRASH CUSHION (HEX FOAM)
J STREET OFF-RAMP
FROM SB ROUTE 51
SB ROUTE 51
H STREET UC

LOCATION 29

FORT SUTTER VIADUCT Br No. 24 0188R
NB ROUTE 51
FROM NB ROUTE 51
H STREET OFF-RAMP
UNIVERSAL TAU-II (96" 7 BAY)
REMOVE CRASH CUSHION (HEX FOAM)
REMOVE ALL ANCHOR BOLTS AND FILL ALL VOIDED AREA WITH EPOXY

LOCATION 28

TO SB ROUTE 160
ARDEN WAY ON-RAMP
SB ROUTE 160
SB ROUTE 51
REMOVE CRASH CUSHION (SAND FILLED) 12 BARRELS
COMPRESSOR ATTENUATOR (48")

LOCATION 30

CONSTRUCTION DETAILS

NO SCALE

C-7

REVISED BY | DATE REVISED
STEPHEN WRIGHT | DEANN SPANGLER
CALCULATED-DESIGNED BY | CHECKED BY
FUNCTIONAL SUPERVISOR: JOESPH W. HORTON
STATE OF CALIFORNIA - DEPARTMENT OF TRANSPORTATION
TRAFFIC DESIGN
Caltrans

LAST REVISION | DATE PLOTTED => 31-AUG-2010 | TIME PLOTTED => 09:17
08-23-10

BORDER LAST REVISED 7/1/2010 | USERNAME => s128033 | DGN FILE => 31f440ga007.dgn | RELATIVE BORDER SCALE IS IN INCHES 0 1 2 3 | UNIT 0389 | PROJECT NUMBER & PHASE 03000200241

Dist	COUNTY	ROUTE	POST MILES TOTAL PROJECT	SHEET No.	TOTAL SHEETS
03	Nev,Sac,Sut, Yol,Yub	5,20,49,50,51, 80,99	Var	9	50

Stephen T. Wright 8-25-10
REGISTERED CIVIL ENGINEER DATE

8-30-10
PLANS APPROVAL DATE

REGISTERED PROFESSIONAL ENGINEER
STEPHEN T. WRIGHT
No. 52942
Exp. 12-31-10
CIVIL
STATE OF CALIFORNIA

THE STATE OF CALIFORNIA OR ITS OFFICERS OR AGENTS SHALL NOT BE RESPONSIBLE FOR THE ACCURACY OR COMPLETENESS OF SCANNED COPIES OF THIS PLAN SHEET.

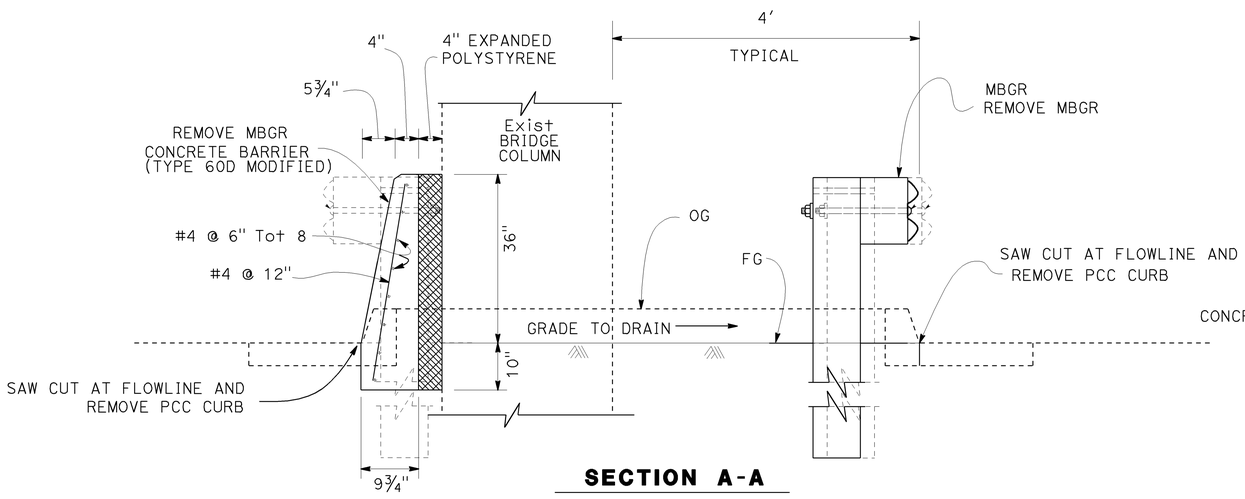

SECTION A-A

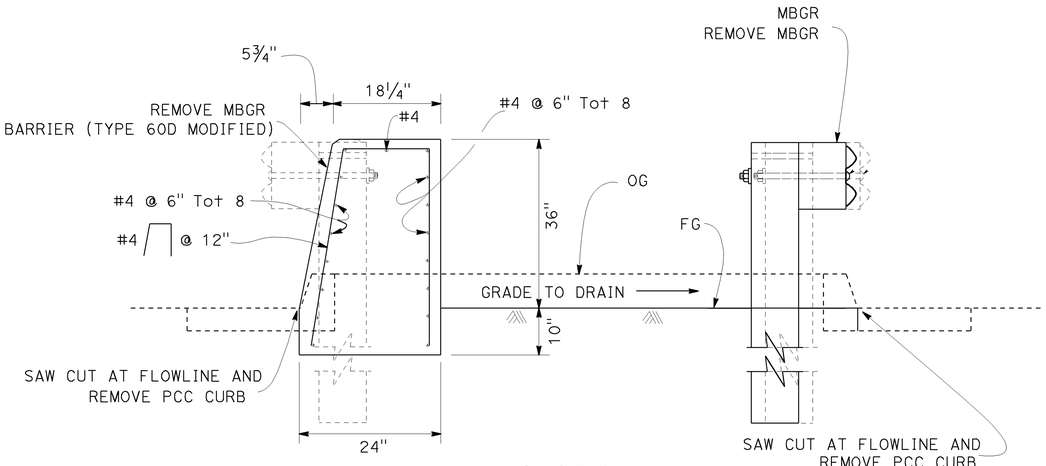

SECTION B-B

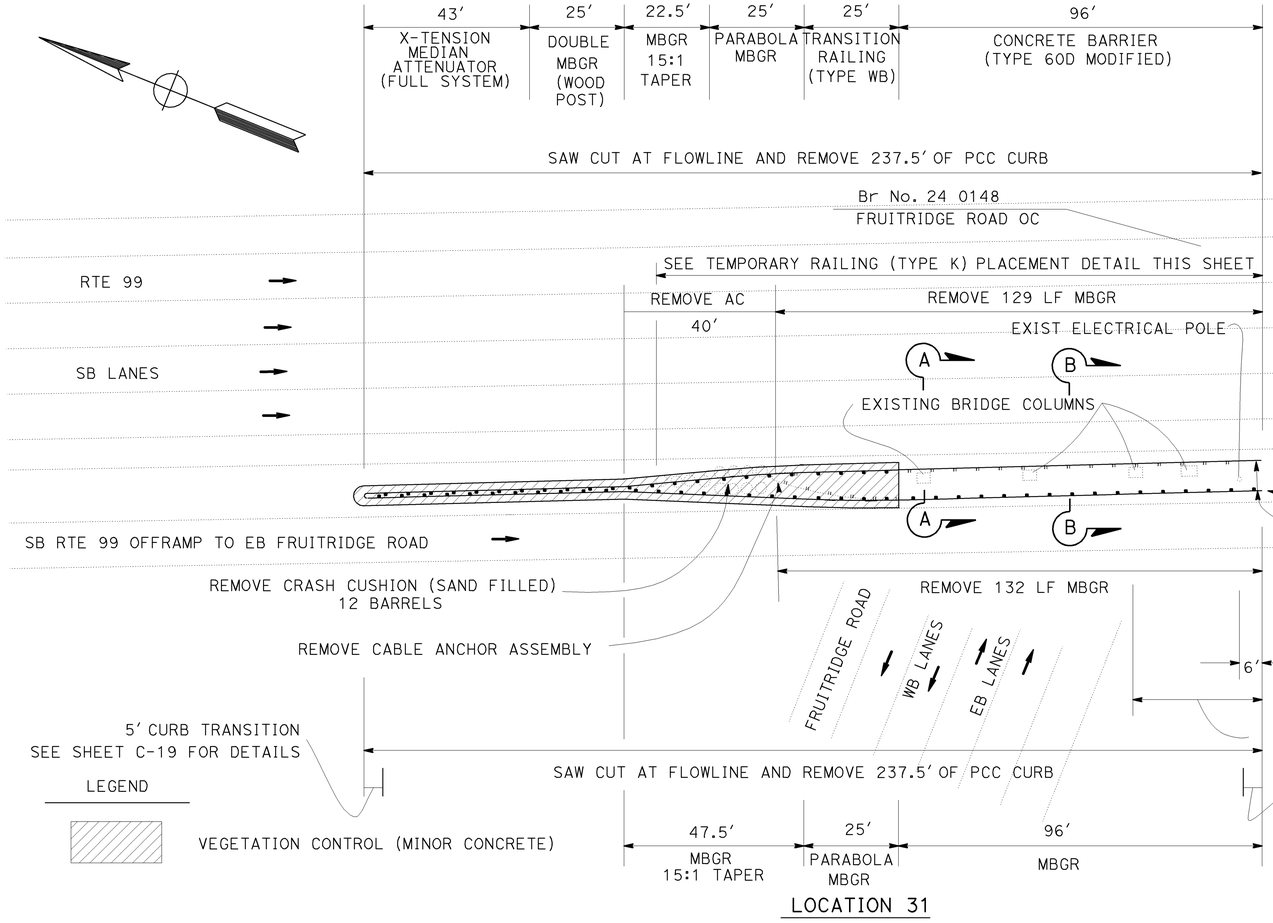

LOCATION 31

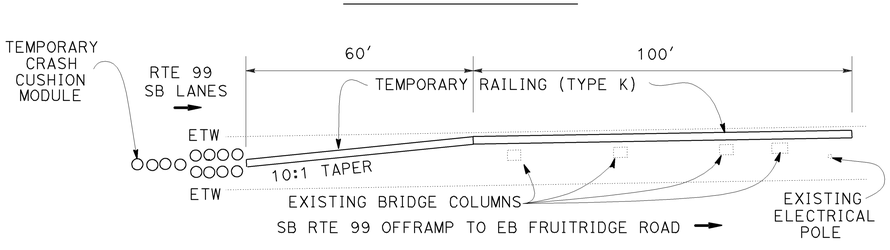

TEMPORARY RAILING (TYPE K) PLACEMENT DETAIL

NOTES:

1. FOR DETAILS NOT SHOWN, SEE STANDARD PLANS.
2. SEE MANUFACTURER'S PLANS FOR X-TENSION MEDIAN ATTENUATOR INSTALLATION DETAILS.
3. EXISTING ULTILITY FACILITIES HAVE NOT BEEN PLOTTED ON THESE PLANS.
4. EXISTING CALTRANS ELECTRICAL IS PRESENT. CO-ORDINATE WITH ENGINEER BEFORE WORK TO LOCATE EXISTING ELECTRICAL IN THE FIELD.
5. THE CONTRACTOR SHALL VERIFY ALL CONTROLLING FIELD DIMENSIONS BEFORE ORDERING OR FABRICATING ANY MATERIAL.

CONSTRUCTION DETAILS

NO SCALE

C-8

CALCULATED-DESIGNED BY	REVISED BY	DATE REVISED
A. G. CHIN		
CHECKED BY		
STEPHEN WRIGHT		
FUNCTIONAL SUPERVISOR		
JOESPH W. HORTON		

STATE OF CALIFORNIA - DEPARTMENT OF TRANSPORTATION
TRAFFIC DESIGN

LAST REVISION DATE PLOTTED => 31-AUG-2010
TIME PLOTTED => 09:17
08-23-10

Dist	COUNTY	ROUTE	POST MILES TOTAL PROJECT	SHEET No.	TOTAL SHEETS
03	Nev,Sac,Sut, Yol,Yub	5,20,49,50,51, 80,99	Var	10	50

Stephen T. Wright 8-25-10
REGISTERED CIVIL ENGINEER DATE

REGISTERED PROFESSIONAL ENGINEER
STEPHEN T. WRIGHT
No. 52942
Exp. 12-31-10
CIVIL
STATE OF CALIFORNIA

8-30-10
PLANS APPROVAL DATE

THE STATE OF CALIFORNIA OR ITS OFFICERS OR AGENTS SHALL NOT BE RESPONSIBLE FOR THE ACCURACY OR COMPLETENESS OF SCANNED COPIES OF THIS PLAN SHEET.

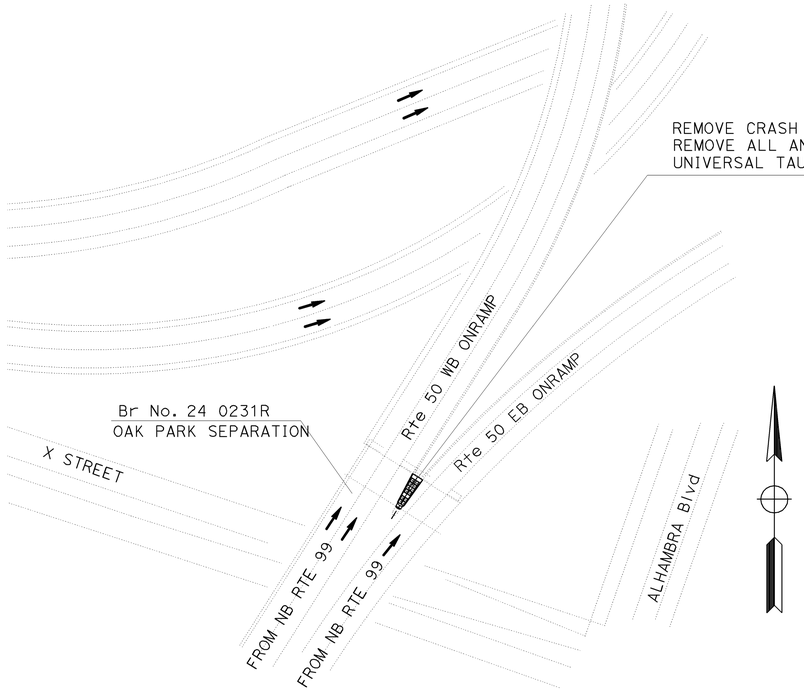

LOCATION 33

NOTES:

1. FOR DETAILS NOT SHOWN, SEE STANDARD PLANS.
2. SEE MANUFACTURER'S PLANS FOR CRASH CUSHION INSTALLATION DETAILS.
3. EXISTING ULTILITY FACILITIES HAVE NOT BEEN PLOTTED ON THESE PLANS.
4. EXISTING CALTRANS ELECTRICAL IS PRESENT. CO-ORDINATE WITH ENGINEER BEFORE WORK TO LOCATE EXISTING ELECTRICAL IN THE FIELD.
5. THE CONTRACTOR SHALL VERIFY ALL CONTROLLING FIELD DIMENSIONS BEFORE ORDERING OR FABRICATING ANY MATERIAL.

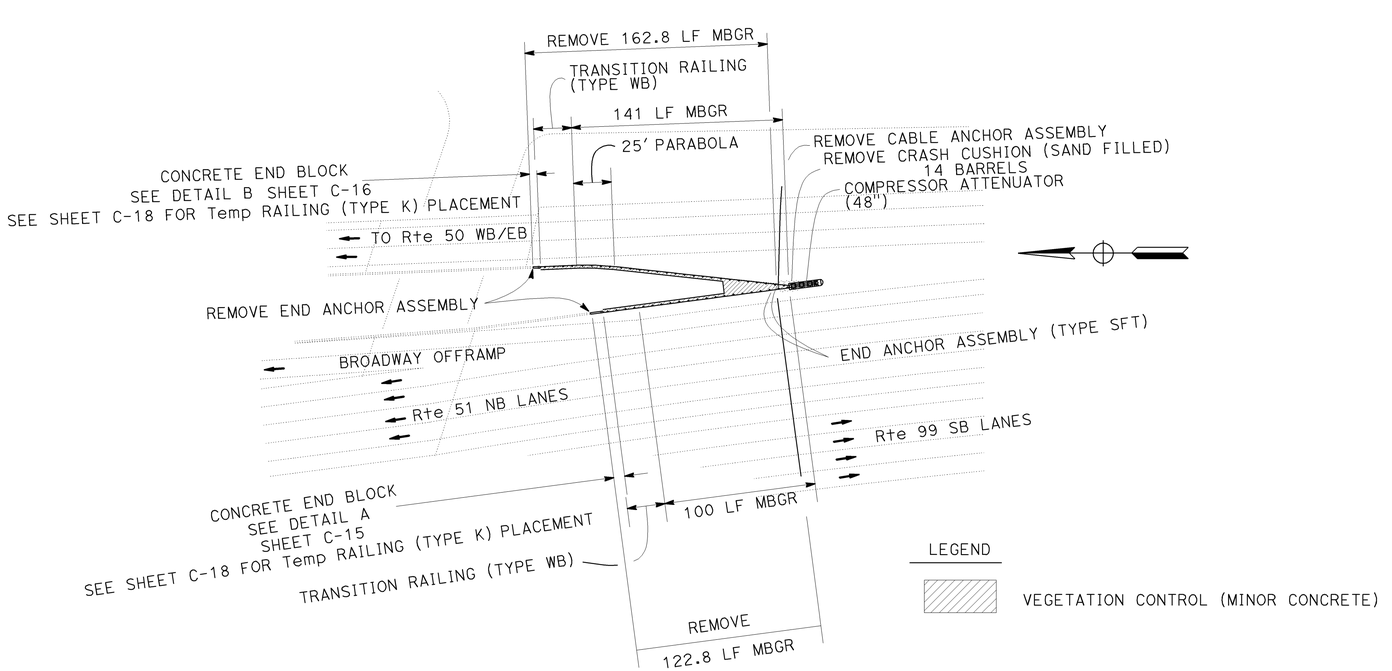

LOCATION 32

CONSTRUCTION DETAILS

NO SCALE

C-9

A. G. CHIN — CALCULATED-DESIGNED BY
STEPHEN WRIGHT — CHECKED BY
JOESPH W. HORTON — FUNCTIONAL SUPERVISOR
REVISED BY / DATE REVISED

STATE OF CALIFORNIA - DEPARTMENT OF TRANSPORTATION
TRAFFIC DESIGN

LAST REVISION 08-23-10
DATE PLOTTED => 31-AUG-2010
TIME PLOTTED => 09:17

Dist	COUNTY	ROUTE	POST MILES TOTAL PROJECT	SHEET No.	TOTAL SHEETS
03	Nev,Sac,Sut, Yol,Yub	5,20,49,50,51, 80,99	Var	11	50

Stephen T. Wright 8-25-10
REGISTERED CIVIL ENGINEER DATE

8-30-10
PLANS APPROVAL DATE

REGISTERED PROFESSIONAL ENGINEER
STEPHEN T. WRIGHT
No. 52942
Exp. 12-31-10
CIVIL
STATE OF CALIFORNIA

THE STATE OF CALIFORNIA OR ITS OFFICERS OR AGENTS SHALL NOT BE RESPONSIBLE FOR THE ACCURACY OR COMPLETENESS OF SCANNED COPIES OF THIS PLAN SHEET.

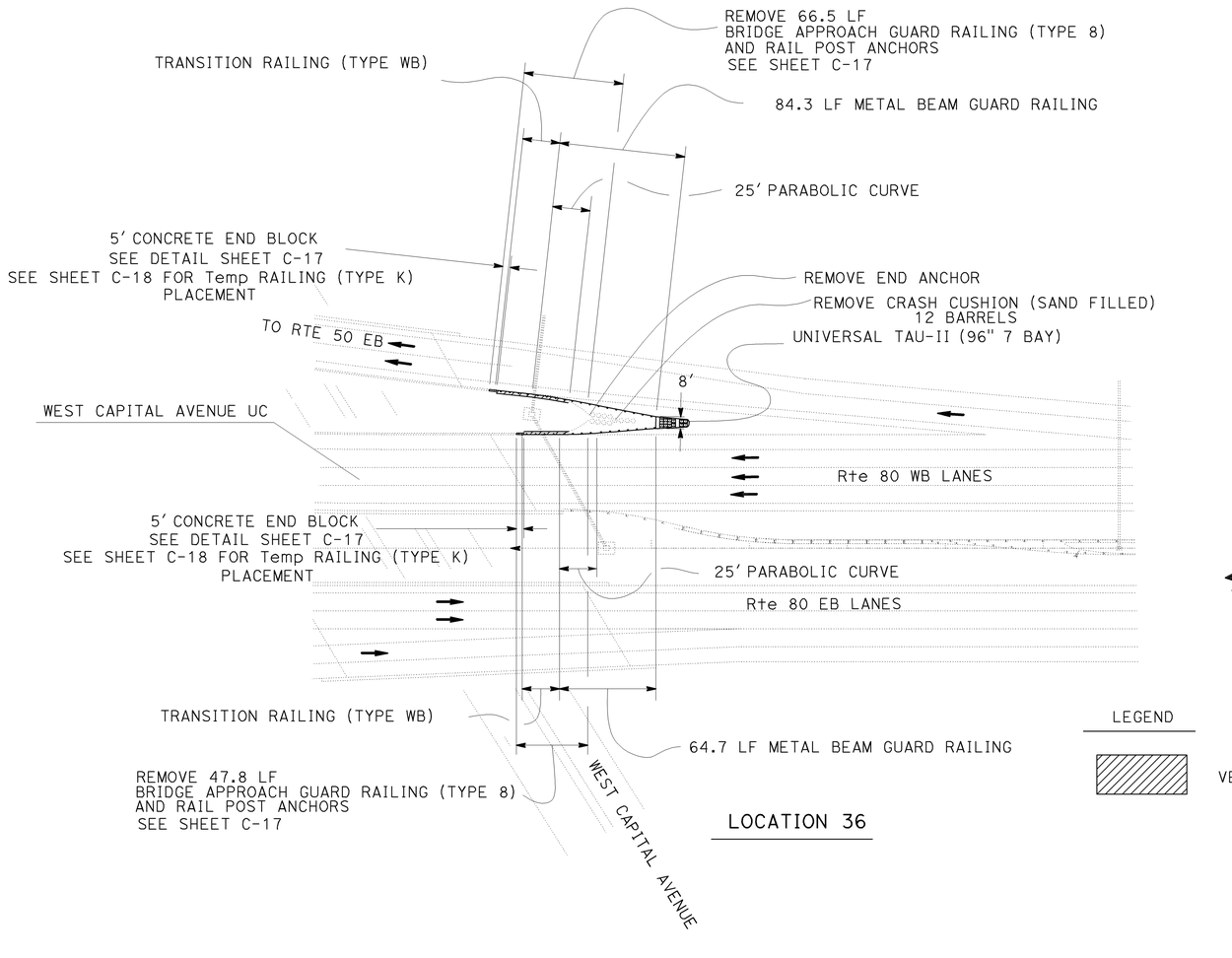

LOCATION 36

LEGEND

VEGETATION CONTROL (MINOR CONCRETE)

NOTES:

1. FOR DETAILS NOT SHOWN, SEE STANDARD PLANS.
2. SEE MANUFACTURER'S PLANS FOR CRASH CUSHION INSTALLATION DETAILS.
3. EXISTING ULTILITY FACILITIES HAVE NOT BEEN PLOTTED ON THESE PLANS.
4. EXISTING CALTRANS ELECTRICAL IS PRESENT. CO-ORDINATE WITH ENGINEER BEFORE WORK TO LOCATE EXISTING ELECTRICAL IN THE FIELD.
5. THE CONTRACTOR SHALL VERIFY ALL CONTROLLING FIELD DIMENSIONS BEFORE ORDERING OR FABRICATING ANY MATERIAL.

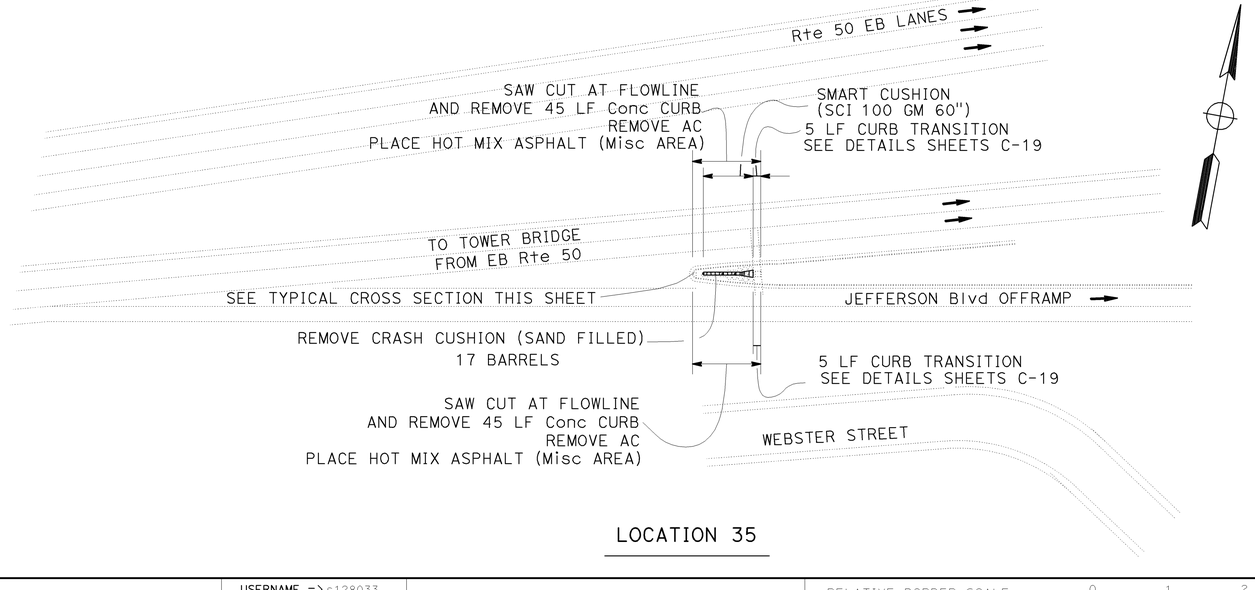

LOCATION 35

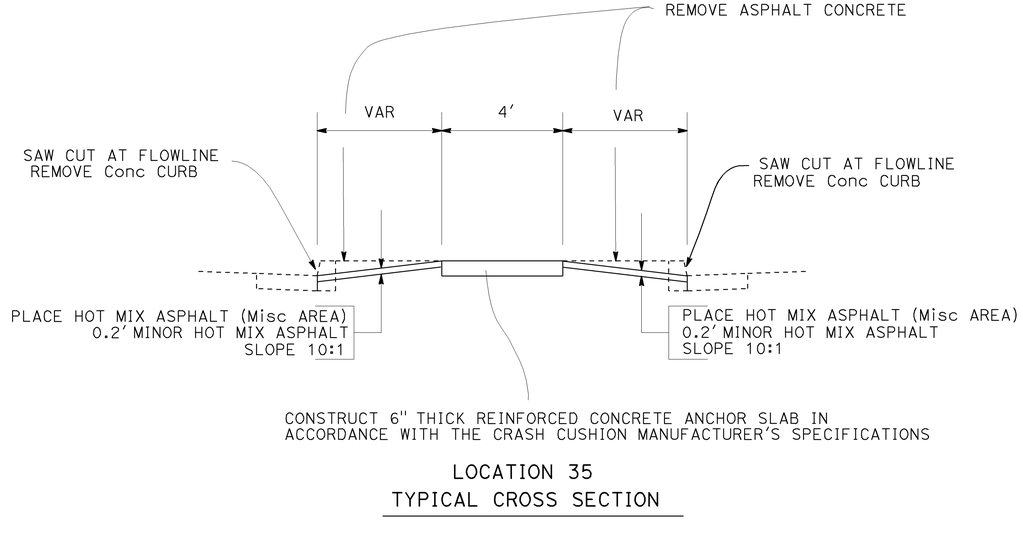

LOCATION 35
TYPICAL CROSS SECTION

CONSTRUCTION DETAILS

NO SCALE

C-10

STATE OF CALIFORNIA - DEPARTMENT OF TRANSPORTATION
TRAFFIC DESIGN
FUNCTIONAL SUPERVISOR: JOESPH W. HORTON
CALCULATED-DESIGNED BY: A. G. CHIN
CHECKED BY: STEPHEN WRIGHT
REVISED BY
DATE REVISED

LAST REVISION 08-23-10
DATE PLOTTED => 31-AUG-2010
TIME PLOTTED => 09:17

BORDER LAST REVISED 7/1/2010
USERNAME => s128033
DGN FILE => 31f440ga010.dgn
RELATIVE BORDER SCALE IS IN INCHES 0 1 2 3
UNIT 0389
PROJECT NUMBER & PHASE 03000200241

Dist	COUNTY	ROUTE	POST MILES TOTAL PROJECT	SHEET No.	TOTAL SHEETS
03	Nev,Sac,Sut, Yol,Yub	5,20,49,50,51, 80,99	Var	12	50

Stephen T. Wright 8-25-10
REGISTERED CIVIL ENGINEER DATE

8-30-10
PLANS APPROVAL DATE

REGISTERED PROFESSIONAL ENGINEER
STEPHEN T. WRIGHT
No. 52942
Exp. 12-31-10
CIVIL
STATE OF CALIFORNIA

THE STATE OF CALIFORNIA OR ITS OFFICERS OR AGENTS SHALL NOT BE RESPONSIBLE FOR THE ACCURACY OR COMPLETENESS OF SCANNED COPIES OF THIS PLAN SHEET.

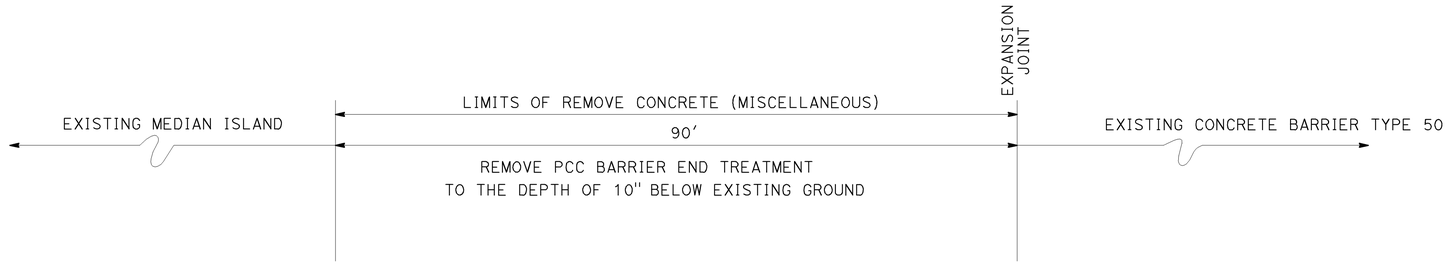

ELEVATION

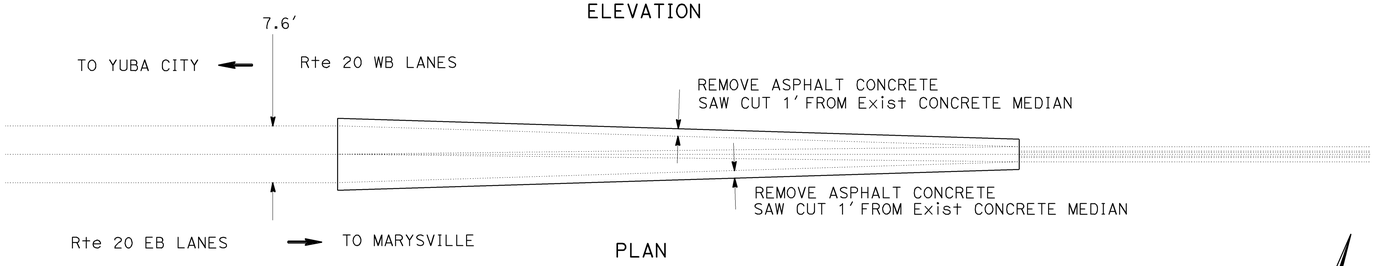

PLAN

STAGE 1

1. SAW CUT EXISTING AC PAVEMENT 1' FROM Exist CONCRETE MEDIAN.
2. REMOVE EXISTING CONCRETE BARRIER AT JOINT OF EXISTING CONCRETE BARRIER TYPE 50 AND EXISTING MEDIAN ISLAND TO A DEPTH OF 10" BELOW EXISTING BASE OF CONRETE BARRIER.
3. PROTECT BARRIER END WITH TEMPORARY CRASH CUSHION MODULE AT END OF EACH WORKING DAY. SEE TEMPORARY CRASH CUSHION MODULE DETAILS THIS SHEET.

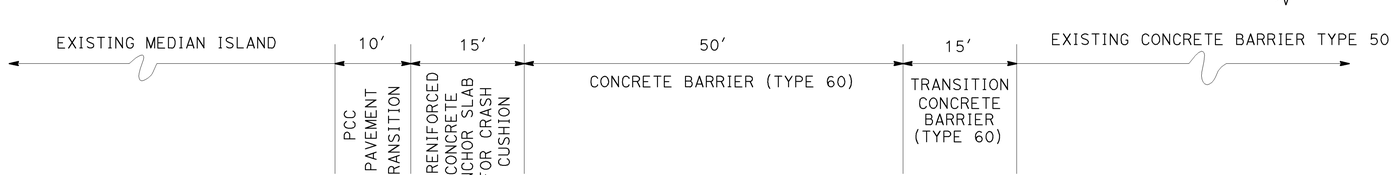

ELEVATION

PLAN

STAGE 2

1. CONSTRUCT CONCRETE BARRIER TYPE 60 WITH TRANSITION FROM CONCRETE BARRIER TYPE 50 AND END ANCHOR, FOR DETAILS NOT SHOWN SEE STANDARD PLAN A76B.
2. CONSTRUCT CONCRETE ANCHOR SLAB FOR CRASH CUSHION, SEE MANUFACTURER'S PLANS FOR DETAILS.
3. BACKFILL SURROUNDING AREA WITH AC AND MATCH EXISTING PAVEMENT ELEVATION, AND PCC PAVEMENT BETWEEN END OF BARRIER AND EXISTING MEDIAN ISLAND, TAPER TO CONFORM.
4. INSTALL SMART CUSHION (24") PER MANUFACTURER'S PLANS.

LOCATION 37

NOTES:

1. FOR DETAILS NOT SHOWN, SEE STANDARD PLANS.
2. SEE MANUFACTURER'S PLANS FOR CRASH CUSHION INSTALLATION DETAILS.
3. EXISTING ULTILITY FACILITIES HAVE NOT BEEN PLOTTED ON THESE PLANS.
4. EXISTING CALTRANS ELECTRICAL IS PRESENT. CO-ORDINATE WITH ENGINEER BEFORE WORK TO LOCATE EXISTING ELECTRICAL IN THE FIELD.
5. THE CONTRACTOR SHALL VERIFY ALL CONTROLLING FIELD DIMENSIONS BEFORE ORDERING OR FABRICATING ANY MATERIAL.

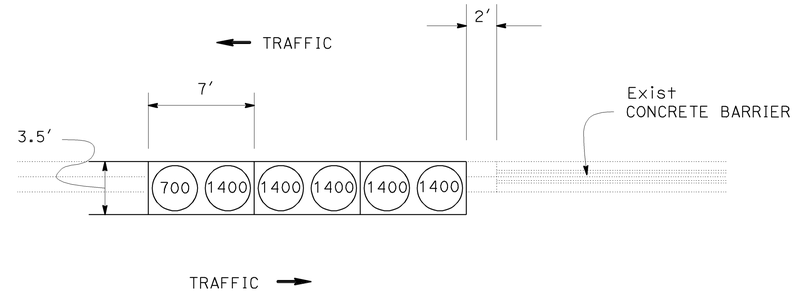

TEMPORARY CRASH CUSHION MODULE DETAILS

(XXXX) WEIGHT OF SAND IN POUNDS FOR EACH MODULE

CONSTRUCTION DETAILS

NO SCALE

C-11

REVISED BY | DATE REVISED
A. G. CHIN | STEPHEN WRIGHT
CALCULATED-DESIGNED BY | CHECKED BY
FUNCTIONAL SUPERVISOR: JOESPH W. HORTON
STATE OF CALIFORNIA - DEPARTMENT OF TRANSPORTATION
Caltrans® TRAFFIC DESIGN

LAST REVISION 08-19-10
DATE PLOTTED => 31-AUG-2010
TIME PLOTTED => 09:17

BORDER LAST REVISED 7/1/2010
USERNAME => s128033
DGN FILE => 31f440ga011.dgn
RELATIVE BORDER SCALE IS IN INCHES 0 1 2 3
UNIT 0389
PROJECT NUMBER & PHASE 03000200241

Dist	COUNTY	ROUTE	POST MILES TOTAL PROJECT	SHEET No.	TOTAL SHEETS
03	Nev,Sac,Sut, Yol,Yub	5,20,49,50,51, 80,99	Var	13	50

Stephen J. Wright 8-25-10
REGISTERED CIVIL ENGINEER DATE

8-30-10
PLANS APPROVAL DATE

REGISTERED PROFESSIONAL ENGINEER
STEPHEN T. WRIGHT
No. 52942
Exp. 12-31-10
CIVIL
STATE OF CALIFORNIA

THE STATE OF CALIFORNIA OR ITS OFFICERS OR AGENTS SHALL NOT BE RESPONSIBLE FOR THE ACCURACY OR COMPLETENESS OF SCANNED COPIES OF THIS PLAN SHEET.

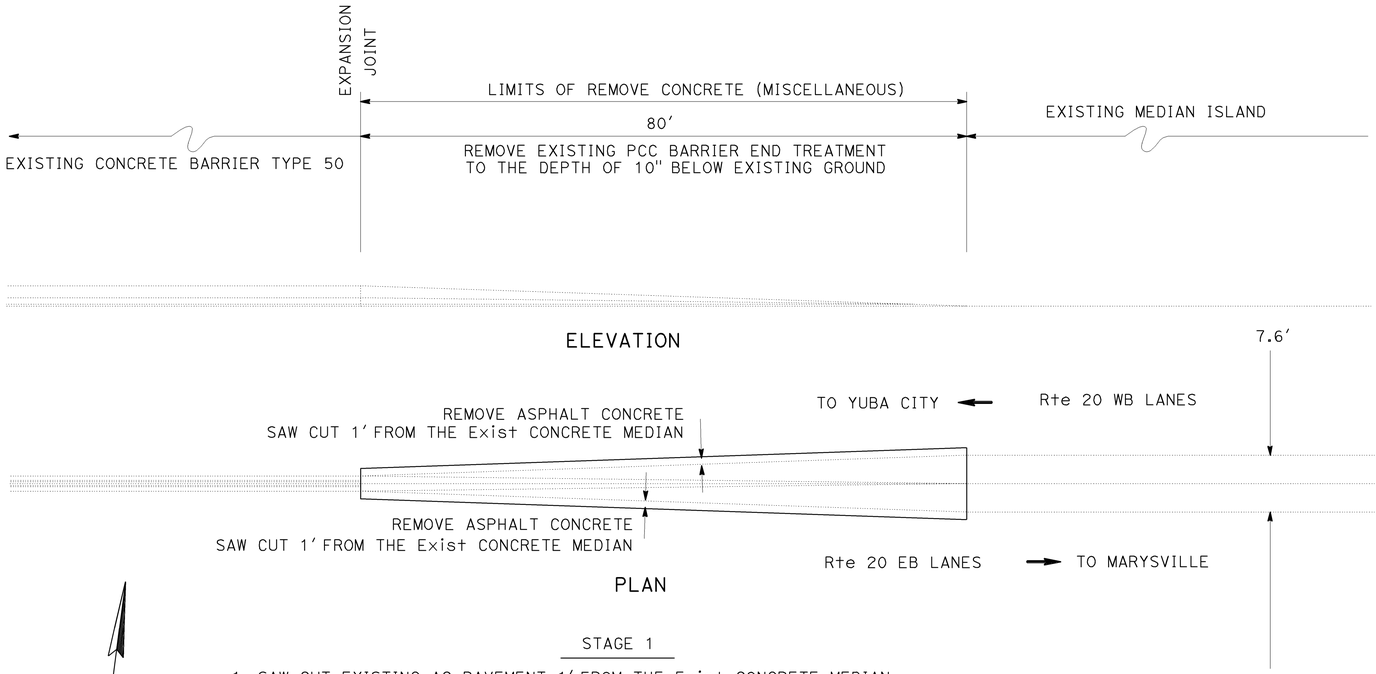

STAGE 1

1. SAW CUT EXISTING AC PAVEMENT 1' FROM THE Exist CONCRETE MEDIAN.
2. REMOVE EXISTING CONCRETE BARRIER AT JOINT OF EXISTING CONCRETE BARRIER TYPE 50 AND EXISTING MEDIAN ISLAND TO A DEPTH OF 10" BELOW EXISTING BASE OF CONRETE BARRIER.
3. PROTECT BARRIER END WITH TEMPORARY CRASH CUSHION MODULE AT END OF EACH WORKING DAY. SEE TEMPORARY CRASH CUSHION MODULE DETAILS THIS SHEET.

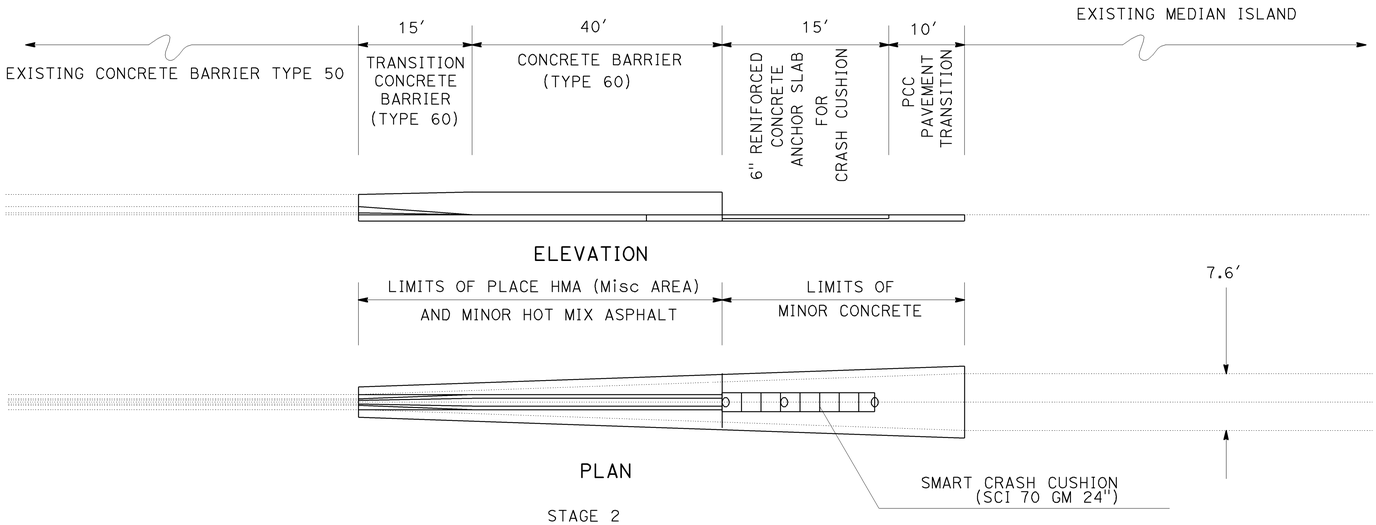

STAGE 2

1. CONSTRUCT CONCRETE BARRIER TYPE 60 WITH TRANSITION FROM CONCRETE BARRIER TYPE 50 AND END ANCHOR, FOR DETAILS NOT SHOWN SEE STANDARD PLAN A76B.
2. CONSTRUCT CONCRETE ANCHOR SLAB FOR CRASH CUSHION, SEE MANUFACTURER'S PLANS FOR DETAILS.
3. BACKFILL SURROUND AREA WITH AC AND MATCH EXISTING PAVEMENT ELEVATION, AND PCC PAVEMENT BETWEEN END OF BARRIER AND EXISTING MEDIAN ISLAND, TAPER TO CONFORM.
4. INSTALL SMART CUSHION (24") PER MANUFACTURER'S PLANS.

LOCATION 38

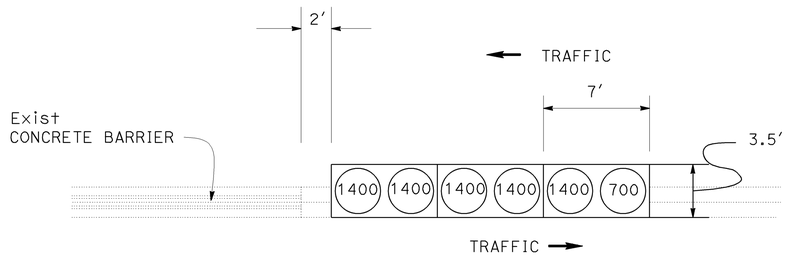

TEMPORARY CRASH CUSHION MODULE DETAILS

(XXXX) WEIGHT OF SAND IN POUNDS FOR EACH MODULE

NOTES:

1. FOR DETAILS NOT SHOWN, SEE STANDARD PLANS.
2. SEE MANUFACTURER'S PLANS FOR CRASH CUSHION INSTALLATION DETAILS.
3. EXISTING ULTILITY FACILITIES HAVE NOT BEEN PLOTTED ON THESE PLANS.
4. EXISTING CALTRANS ELECTRICAL IS PRESENT. CO-ORDINATE WITH ENGINEER BEFORE WORK TO LOCATE EXISTING ELECTRICAL IN THE FIELD.
5. THE CONTRACTOR SHALL VERIFY ALL CONTROLLING FIELD DIMENSIONS BEFORE ORDERING OR FABRICATING ANY MATERIAL.

CONSTRUCTION DETAILS

NO SCALE

C-12

REVISED BY | DATE REVISED
A. G. CHIN | STEPHEN WRIGHT
CALCULATED-DESIGNED BY | CHECKED BY
FUNCTIONAL SUPERVISOR: JOESPH W. HORTON
STATE OF CALIFORNIA - DEPARTMENT OF TRANSPORTATION
Caltrans
TRAFFIC DESIGN

LAST REVISION | DATE PLOTTED => 31-AUG-2010 | TIME PLOTTED => 09:17

BORDER LAST REVISED 7/1/2010 | USERNAME => s128033 | DGN FILE => 31f440ga012.dgn | RELATIVE BORDER SCALE IS IN INCHES 0 1 2 3 | UNIT 0389 | PROJECT NUMBER & PHASE 03000200241

Dist	COUNTY	ROUTE	POST MILES TOTAL PROJECT	SHEET No.	TOTAL SHEETS
03	Nev,Sac,Sut, Yol,Yub	5,20,49,50,51, 80,99	Var	14	50

Stephen T. Wright 8-25-10
REGISTERED CIVIL ENGINEER DATE

8-30-10
PLANS APPROVAL DATE

REGISTERED PROFESSIONAL ENGINEER
STEPHEN T. WRIGHT
No. 52942
Exp. 12-31-10
CIVIL
STATE OF CALIFORNIA

THE STATE OF CALIFORNIA OR ITS OFFICERS OR AGENTS SHALL NOT BE RESPONSIBLE FOR THE ACCURACY OR COMPLETENESS OF SCANNED COPIES OF THIS PLAN SHEET.

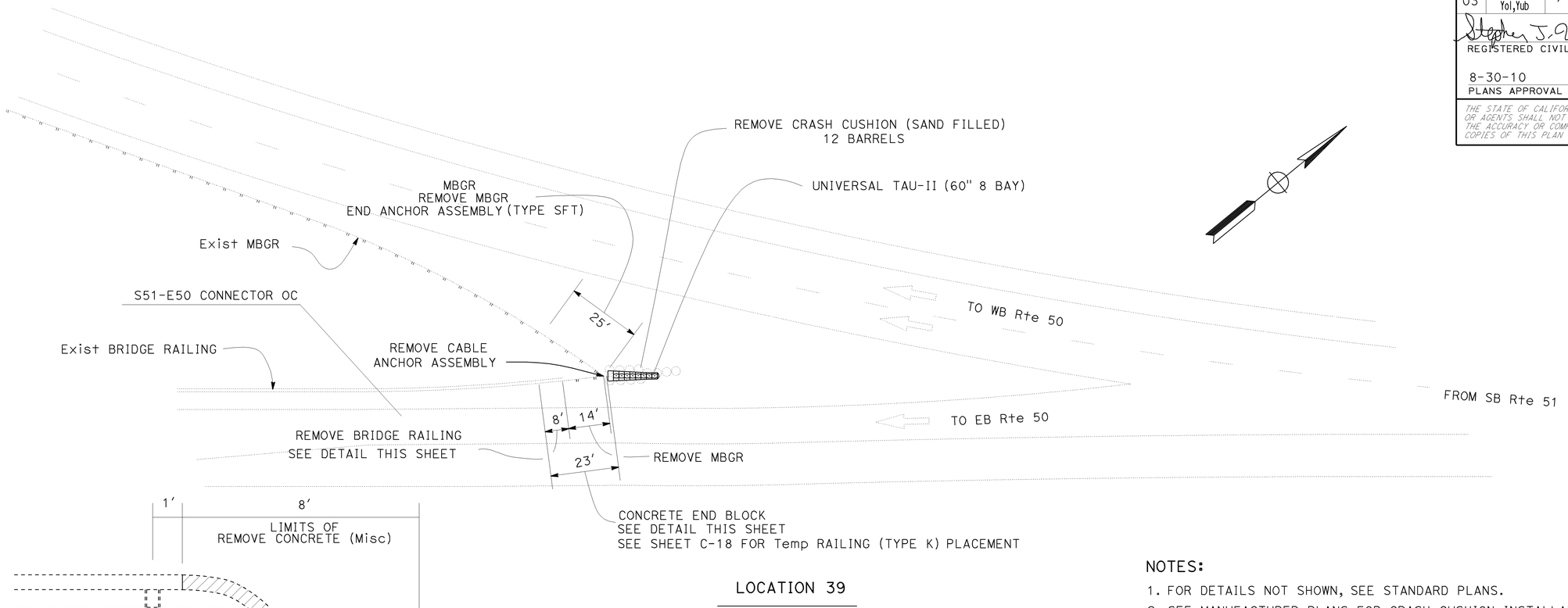

LOCATION 39

ELEVATION
REMOVE EXISTING BRIDGE RAILING DETAILS

REMOVE CONCRETE AND STEEL RAIL

NOTES:

1. FOR DETAILS NOT SHOWN, SEE STANDARD PLANS.
2. SEE MANUFACTURER PLANS FOR CRASH CUSHION INSTALLATION DETAILS.
3. EXISTING ULTILITY FACILITIES HAVE NOT BEEN PLOTTED IN THESE PLANS.
4. EXISTING CALTRANS ELECTRICAL IS PRESENT. CO-ORDINATE WITH ENGINEER BEFORE WORK TO LOCATE EXISTING ELECTRICAL IN THE FIELD.
5. THE CONTRACTOR SHALL VERIFY ALL CONTROLLING FIELD DIMENSIONS BEFORE ORDERING OR FABRICATING ANY MATERIAL.
6. EXISTING BARRIER DIMENSIONS SHALL BE VERIFIED BY THE CONSTRACTOR IN FIELD BEFORE FRABRICATING ANY END CONNECTION TO CONFORM WITH EXISTING CONDITION.
7. SAW CUT METAL RAIL NEATLY AND REMOVE PORTION AS REQUIRED. APPLY ZINC RICH PRIMER TO SAW CUT.

ELEVATION
CONCRETE END BLOCK

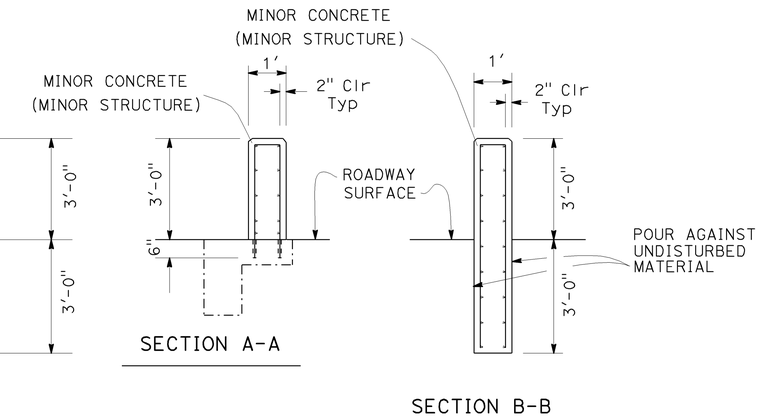

CONSTRUCTION DETAILS

NO SCALE

C-13

STATE OF CALIFORNIA - DEPARTMENT OF TRANSPORTATION
Caltrans®
TRAFFIC DESIGN
FUNCTIONAL SUPERVISOR: JOESPH W. HORTON
CALCULATED-DESIGNED BY
CHECKED BY
A. G. CHIN
STEPHEN WRIGHT
REVISED BY
DATE REVISED

LAST REVISION DATE PLOTTED => 31-AUG-2010
TIME PLOTTED => 09:17

BORDER LAST REVISED 7/1/2010
USERNAME => s128033
DGN FILE => 31f440ga013.dgn
RELATIVE BORDER SCALE IS IN INCHES 0 1 2 3
UNIT 0389
PROJECT NUMBER & PHASE 03000200241

Dist	COUNTY	ROUTE	POST MILES TOTAL PROJECT	SHEET No.	TOTAL SHEETS
03	Nev,Sac,Sut, Yol,Yub	5,20,49,50,51, 80,99	Var	15	50

Stephen T. Wright 8-25-10
REGISTERED CIVIL ENGINEER DATE

8-30-10
PLANS APPROVAL DATE

REGISTERED PROFESSIONAL ENGINEER
STEPHEN T. WRIGHT
No. 52942
Exp. 12-31-10
CIVIL
STATE OF CALIFORNIA

THE STATE OF CALIFORNIA OR ITS OFFICERS OR AGENTS SHALL NOT BE RESPONSIBLE FOR THE ACCURACY OR COMPLETENESS OF SCANNED COPIES OF THIS PLAN SHEET.

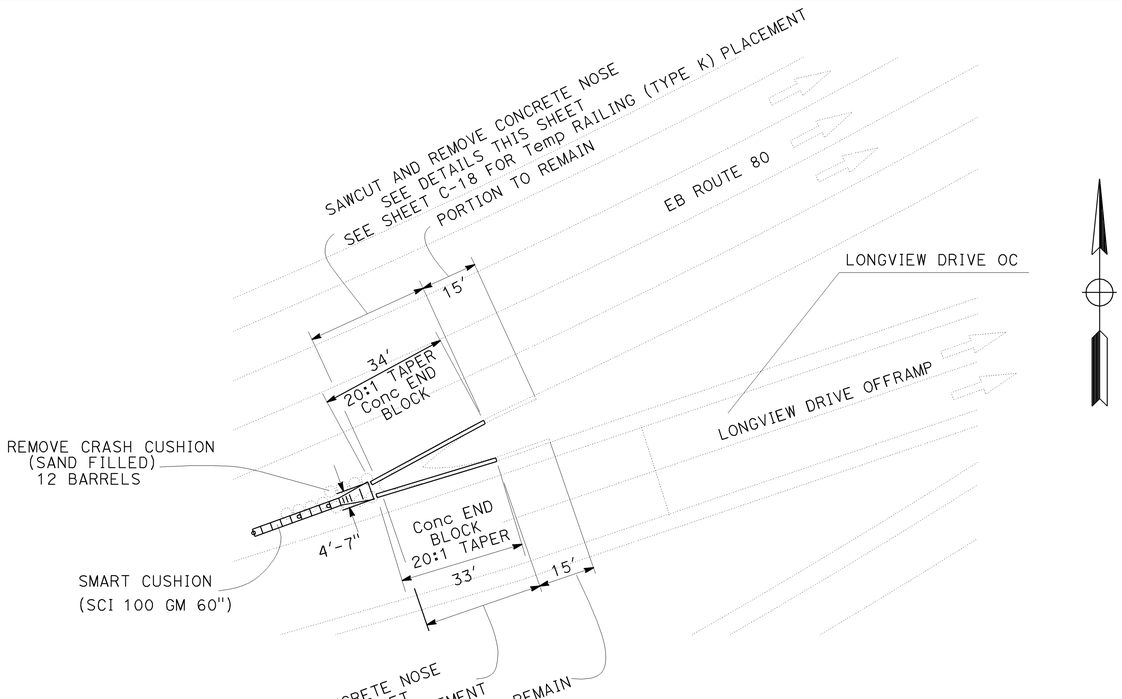

LOCATION 40

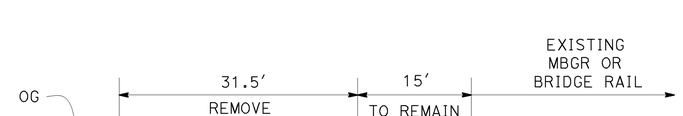

ELEVATION

REMOVE CONCRETE NOSE DETAILS

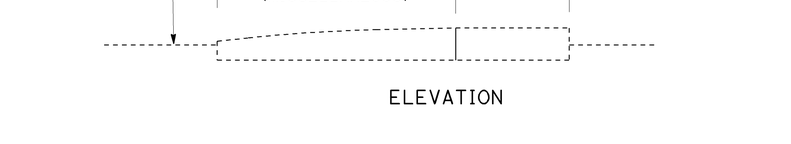

ELEVATION

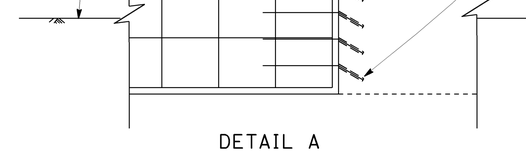

VIEW A-A

CONCRETE END BLOCK DETAILS

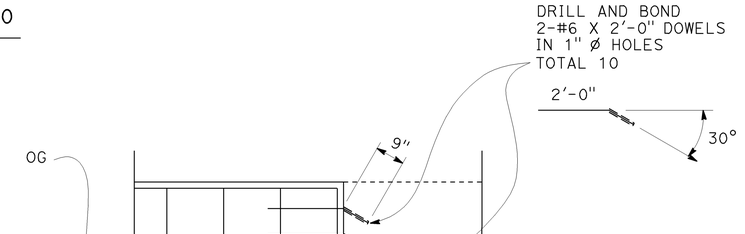

DETAIL A

NOTES:

1. FOR DETAILS NOT SHOWN, SEE STANDARD PLANS.
2. SEE MANUFACTURER'S PLANS FOR CRASH CUSHION INSTALLATION DETAILS.
3. EXISTING ULTILITY FACILITIES HAVE NOT BEEN PLOTTED ON THESE PLANS.
4. EXISTING CALTRANS ELECTRICAL IS PRESENT. CO-ORDINATE WITH ENGINEER BEFORE WORK TO LOCATE EXISTING ELECTRICAL IN THE FIELD.
5. THE CONTRACTOR SHALL VERIFY ALL CONTROLLING FIELD DIMENSIONS BEFORE ORDERING OR FABRICATING ANY MATERIAL.

CONSTRUCTION DETAILS

NO SCALE

C-14

STATE OF CALIFORNIA - DEPARTMENT OF TRANSPORTATION
TRAFFIC DESIGN
FUNCTIONAL SUPERVISOR: JOESPH W. HORTON
CALCULATED-DESIGNED BY: A. G. CHIN
CHECKED BY: STEPHEN WRIGHT
REVISED BY
DATE REVISED

LAST REVISION DATE PLOTTED => 31-AUG-2010
TIME PLOTTED => 09:17

BORDER LAST REVISED 7/1/2010
USERNAME => s128033
DGN FILE => 31f440ga014.dgn
RELATIVE BORDER SCALE IS IN INCHES 0 1 2 3
UNIT 0389
PROJECT NUMBER & PHASE 03000200241

Dist	COUNTY	ROUTE	POST MILES TOTAL PROJECT	SHEET No.	TOTAL SHEETS
03	Nev,Sac,Sut, Yol,Yub	5,20,49,50,51, 80,99	Var	16	50

Stephen T. Wright 8-25-10
REGISTERED CIVIL ENGINEER DATE

STEPHEN T. WRIGHT No. 52942 Exp. 12-31-10 CIVIL — REGISTERED PROFESSIONAL ENGINEER — STATE OF CALIFORNIA

8-30-10
PLANS APPROVAL DATE

THE STATE OF CALIFORNIA OR ITS OFFICERS OR AGENTS SHALL NOT BE RESPONSIBLE FOR THE ACCURACY OR COMPLETENESS OF SCANNED COPIES OF THIS PLAN SHEET.

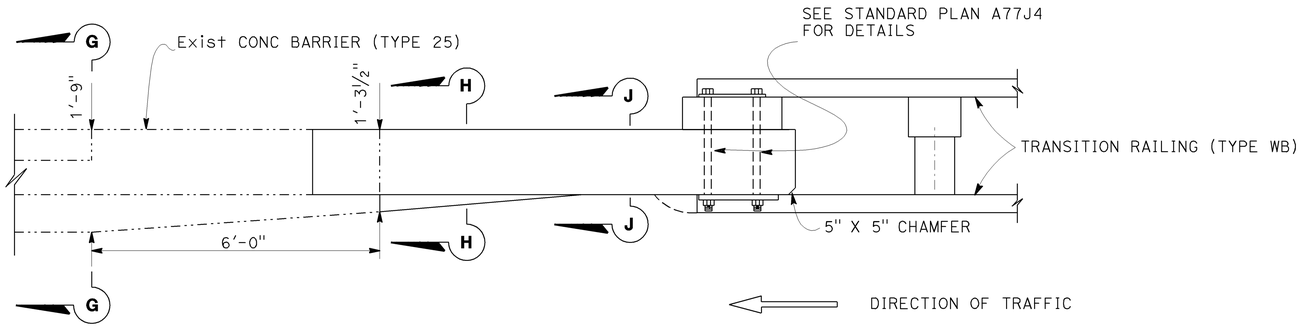

PLAN

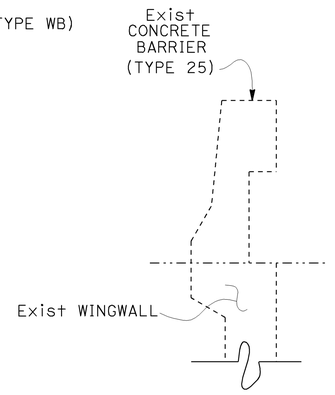

SECTION G-G

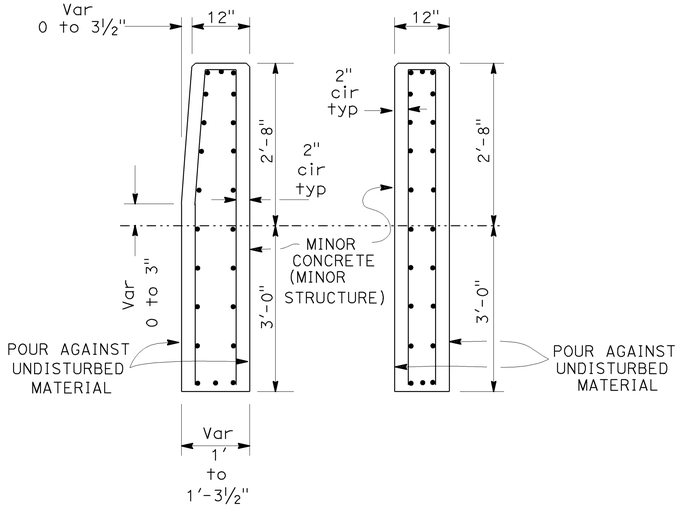

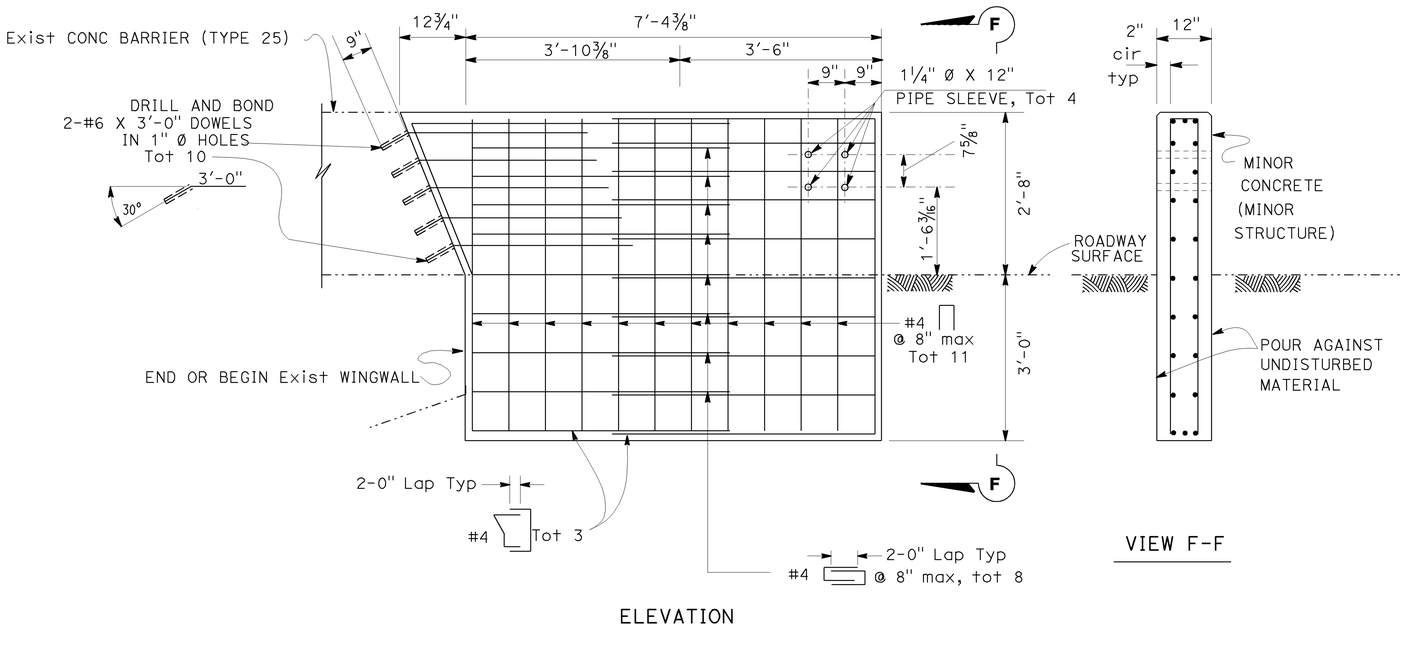

ELEVATION

VIEW F-F

SECTION H-H

SECTION J-J

LOCATION 32

CONCRETE END BLOCK - DETAIL A

NOTES:

1. FOR DETAILS NOT SHOWN, SEE STANDARD PLANS.
2. EXISTING BARRIER DIMENSIONS SHALL BE VERIFIED BY THE CONTRACTOR IN THE FIELD BEFORE FABRICATING ANY END CONNECTION TO CONFORM WITH EXISTING CONDITIONS.
3. EXISTING ULITILTY FACILITIES HAVE NOT BEEN PLOTTED ON THESE PLANS.
4. EXISTING CALTRANS ELECTRICAL IS PRESENT. CO-ORDINATE WITH ENGINEER BEFORE WORK TO LOCATE EXISTING ELECTRICAL IN THE FIELD.
5. THE CONTRACTOR SHALL VERIFY ALL CONTROLLING FIELD DIMENSIONS BEFORE ORDERING OR FABRICATION AND MATERIAL.

CONSTRUCTION DETAILS

NO SCALE

C-15

STATE OF CALIFORNIA - DEPARTMENT OF TRANSPORTATION
TRAFFIC DESIGN
Caltrans
FUNCTIONAL SUPERVISOR: JOESPH W. HORTON
CALCULATED-DESIGNED BY: A. G. CHIN
CHECKED BY: STEPHEN WRIGHT
DETAILED BY
REVISED BY
DATE REVISED

LAST REVISION 08-23-10
DATE PLOTTED => 31-AUG-2010
TIME PLOTTED => 09:17

Dist	COUNTY	ROUTE	POST MILES TOTAL PROJECT	SHEET No.	TOTAL SHEETS
03	Nev,Sac,Sut, Yol,Yub	5,20,49,50,51, 80,99	Var	17	50

Stephen T. Wright 8-25-10
REGISTERED CIVIL ENGINEER DATE

8-30-10
PLANS APPROVAL DATE

STEPHEN T. WRIGHT No. 52942 Exp. 12-31-10 CIVIL — REGISTERED PROFESSIONAL ENGINEER — STATE OF CALIFORNIA

THE STATE OF CALIFORNIA OR ITS OFFICERS OR AGENTS SHALL NOT BE RESPONSIBLE FOR THE ACCURACY OR COMPLETENESS OF SCANNED COPIES OF THIS PLAN SHEET.

NOTES:

1. FOR DETAILS NOT SHOWN, SEE STANDARD PLANS.
2. EXISTING BARRIER DIMENSIONS SHALL BE VERIFIED BY THE CONTRACTOR IN THE FIELD BEFORE FABRICATING ANY END CONNECTION TO CONFORM WITH EXISTING CONDITIONS.
3. EXISTING ULITILTY FACILITIES HAVE NOT BEEN PLOTTED ON THESE PLANS.
4. EXISTING CALTRANS ELECTRICAL UTILITIES HAVE NOT BEEN PLOTTED ON THESE PLANS. FIELD VERIFY LOCATIONS WITH ENGINEER BEFORE BEGINING WORK.
5. THE CONTRACTOR SHALL VERIFY ALL CONTROLLING FIELD DIMENSIONS BEFORE ORDERING OR FABRICATION ANY MATERIAL.

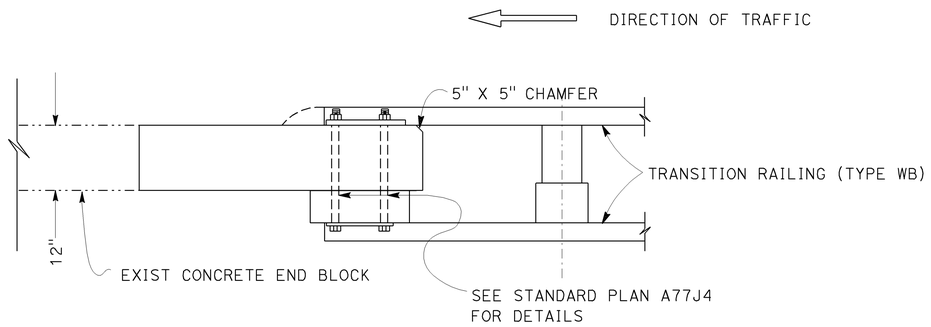

PLAN

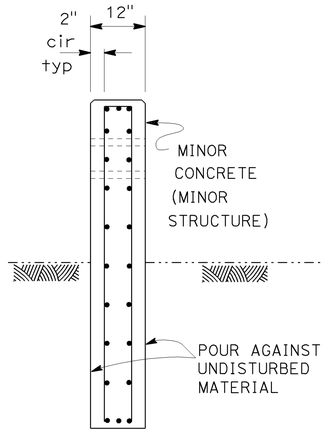

VIEW A-A

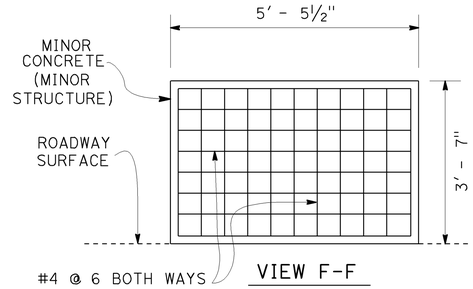

VIEW F-F

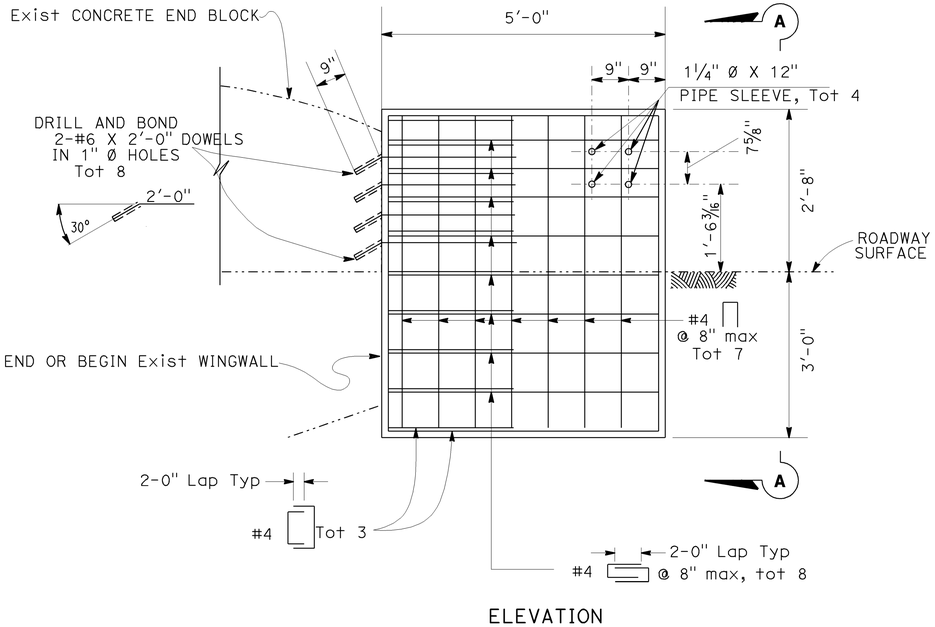

ELEVATION

LOCATION 32

CONCRETE END BLOCK - DETAIL B

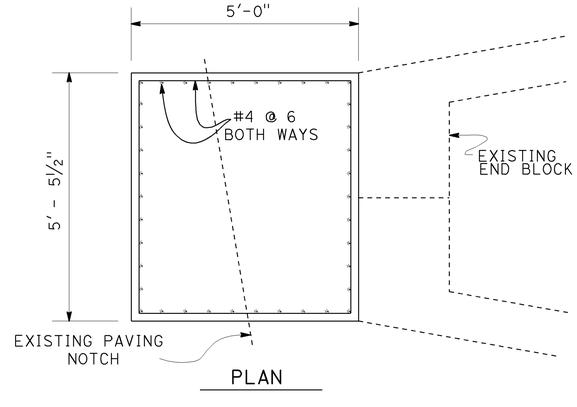

PLAN

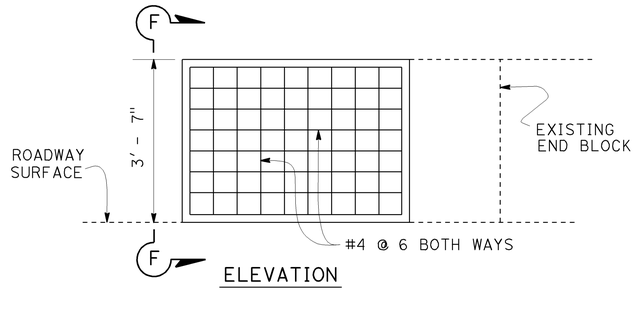

ELEVATION

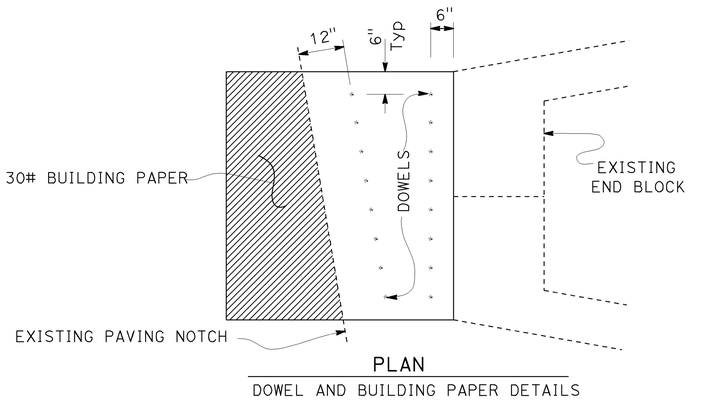

PLAN

DOWEL AND BUILDING PAPER DETAILS

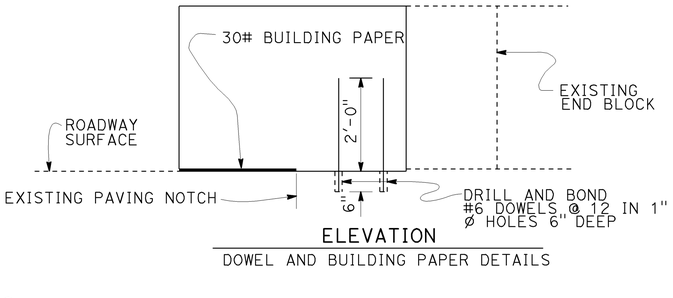

ELEVATION

DOWEL AND BUILDING PAPER DETAILS

LOCATION 2

CONCRETE END BLOCK DETAILS

CONSTRUCTION DETAILS

NO SCALE

C-16

STATE OF CALIFORNIA - DEPARTMENT OF TRANSPORTATION
Caltrans® TRAFFIC DESIGN
FUNCTIONAL SUPERVISOR: JOESPH W. HORTON
CALCULATED-DESIGNED BY: A. G. CHIN
CHECKED BY: STEPHEN WRIGHT
REVISED BY
DATE REVISED

LAST REVISION DATE PLOTTED => 31-AUG-2010
TIME PLOTTED => 09:17

Dist	COUNTY	ROUTE	POST MILES TOTAL PROJECT	SHEET No.	TOTAL SHEETS
03	Nev,Sac,Sut, Yol,Yub	5,20,49,50,51, 80,99	Var	18	50

Stephen T. Wright 8-25-10
REGISTERED CIVIL ENGINEER DATE

8-30-10
PLANS APPROVAL DATE

REGISTERED PROFESSIONAL ENGINEER
STEPHEN T. WRIGHT
No. 52942
Exp. 12-31-10
CIVIL
STATE OF CALIFORNIA

THE STATE OF CALIFORNIA OR ITS OFFICERS OR AGENTS SHALL NOT BE RESPONSIBLE FOR THE ACCURACY OR COMPLETENESS OF SCANNED COPIES OF THIS PLAN SHEET.

NOTES:
1. FOR DETAILS NOT SHOWN, SEE STANDARD PLANS.
2. EXISTING BARRIER DIMENSIONS SHALL BE VERIFIED BY THE CONTRACTOR IN THE FIELD BEFORE FABRICATING ANY END CONNECTION TO CONFORM WITH EXISTING CONDITIONS.
3. ALL PLATES AND BOLTS ARE GALVANIZED.
4. IF RAIL IS NOT CONTINUOUS OVER 2 POSTS, USE RAIL SPLICE DETAIL AT EXISTING EXPANSION JOINT.
5. EXTERIOR SPLICE BOLT HOLES SHALL BE THE STANDARD 1" X 1⅛" SLOT SIZE FOR RAIL SPLICES AT POST NO. T4 AND THE CONNECTION TO THE CONCRETE BARRIER OR RAILING. INTERIOR SPLICE BOLT HOLES MAY BE INCREASED UP TO 1⅛" ø. WASHERS SHALL BE USED WITH SPLICE BOLTS ON BACK SIDE OF RAIL ELEMENT AT POST NO. T4 AND CONNECTION TO THE CONCRETE BARRIER OR RAILING.
5. THE CONTRACTOR SHALL VERIFY ALL CONTROLLING FIELD DIMENSIONS BEFORE ORDERING OR FABRICATING ANY MATERIAL.
6. EXISTING ULITILTY FACILITIES HAVE NOT BEEN PLOTTED ON THESE PLANS.
7. EXISTING CALTRANS ELECTRICAL UTILITIES HAVE NOT BEEN PLOTTED ON THESE PLANS. FIELD VERIFY LOCATIONS WITH ENGINEER BEFORE BEGINING WORK.

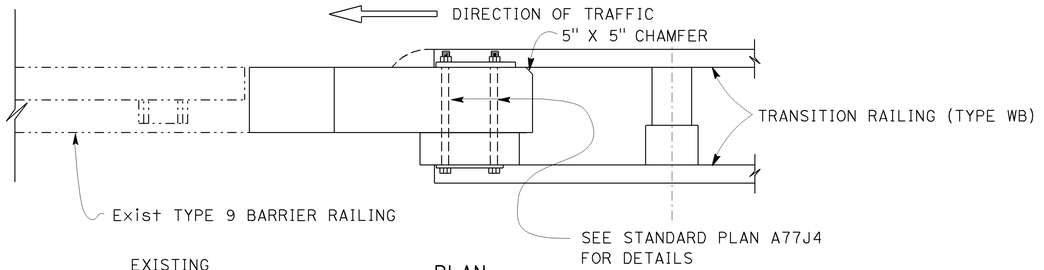

PLAN

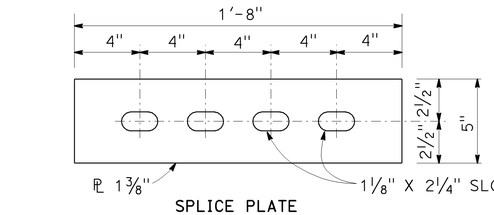

SPLICE PLATE

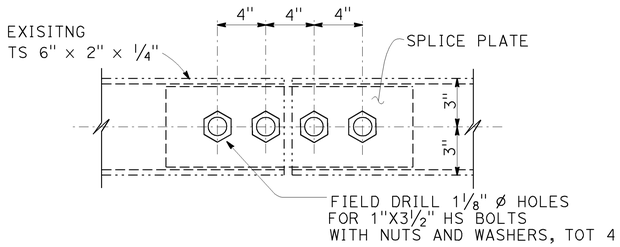

MODIFIED TUBE

RAIL SPLICE DETAIL

SEE NOTE 4 AND NOTE 5

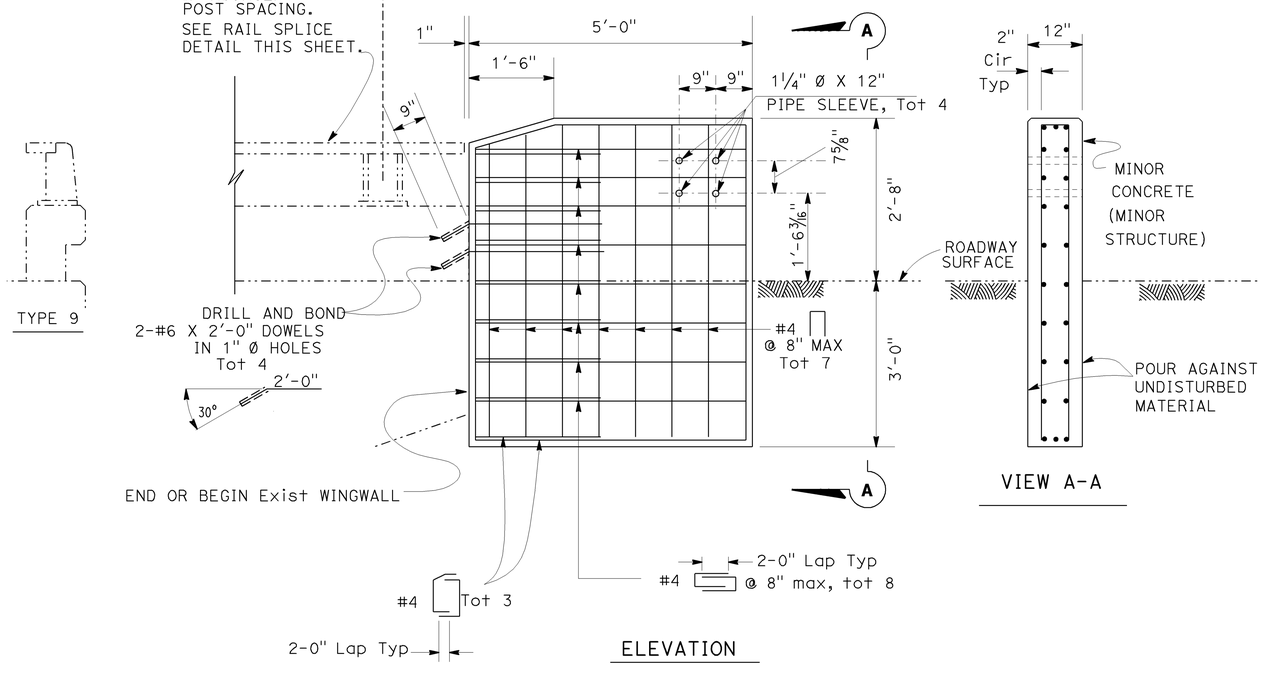

ELEVATION

VIEW A-A

LOCATION 36

CONCRETE END BLOCK

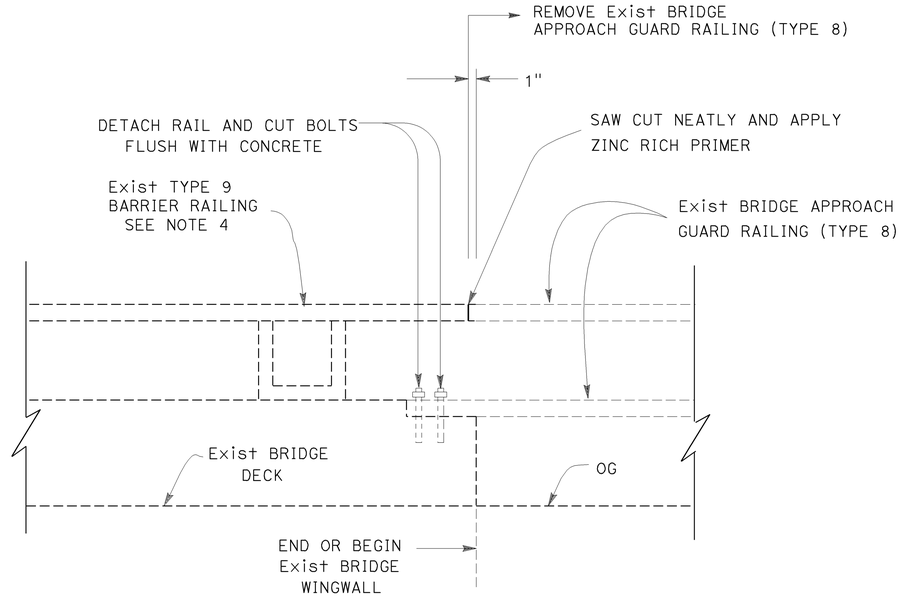

BRIDGE APPROACH GUARD RAILING (TYPE 8) REMOVAL DETAIL

CONSTRUCTION DETAILS

NO SCALE

C-17

CALCULATED-DESIGNED BY: A. G. CHIN
CHECKED BY: STEPHEN WRIGHT
FUNCTIONAL SUPERVISOR: JOESPH W. HORTON
STATE OF CALIFORNIA - DEPARTMENT OF TRANSPORTATION
TRAFFIC DESIGN
Caltrans
REVISED BY | DATE REVISED

LAST REVISION 08-23-10
DATE PLOTTED => 31-AUG-2010
TIME PLOTTED => 09:17

BORDER LAST REVISED 7/1/2010
USERNAME => s128033
DGN FILE => 31f440ga017.dgn
RELATIVE BORDER SCALE IS IN INCHES 0 1 2 3
UNIT 0389
PROJECT NUMBER & PHASE 03000200241

NOTE: 1. APPLICATION OF NESTED RAIL TO BE DETERMINED BY ENGINEER.

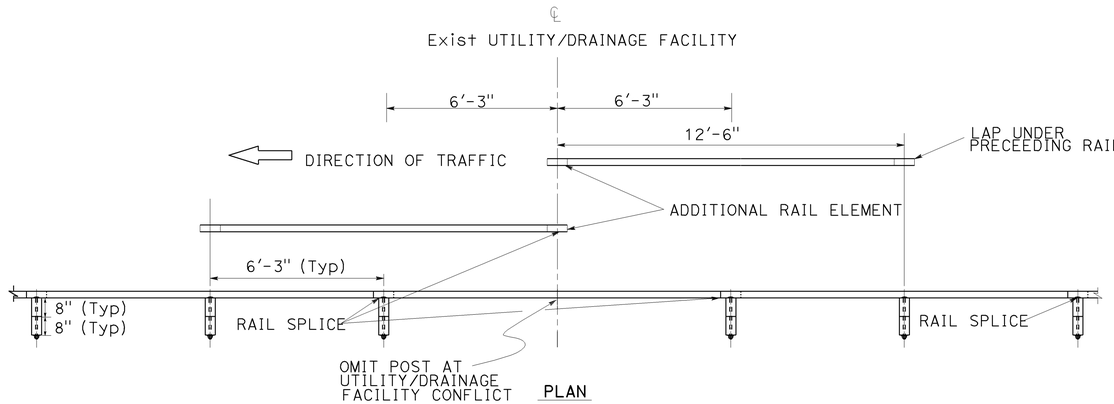

2-RAIL NESTED MBGR ELEMENT
(SPLICE IN CENTER)

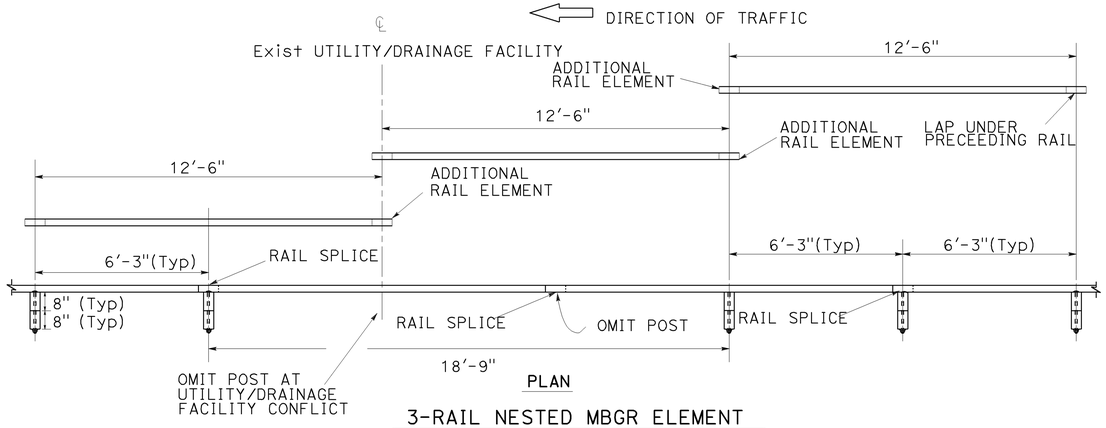

3-RAIL NESTED MBGR ELEMENT
(TWO POSTS OMITTED)

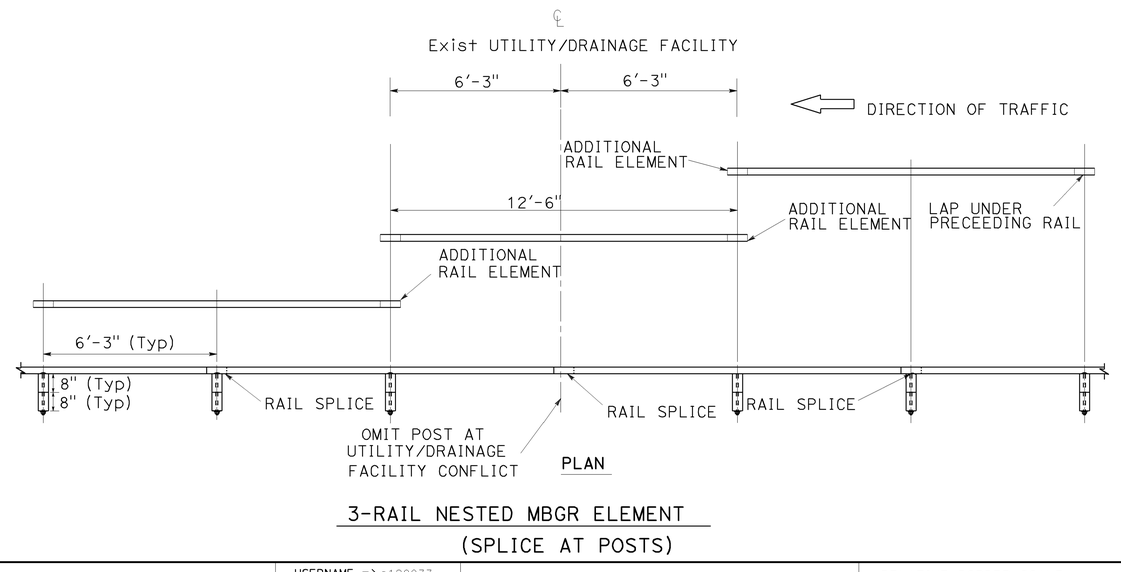

3-RAIL NESTED MBGR ELEMENT
(SPLICE AT POSTS)

LEGEND

- (X) CONSTRUCTION AREA SIGN LETTER
- <CA> CALIFORNIA SIGN CODE
- ↓ SIGN - SINGLE POST
- ⇨ DIRECTION OF TRAVEL

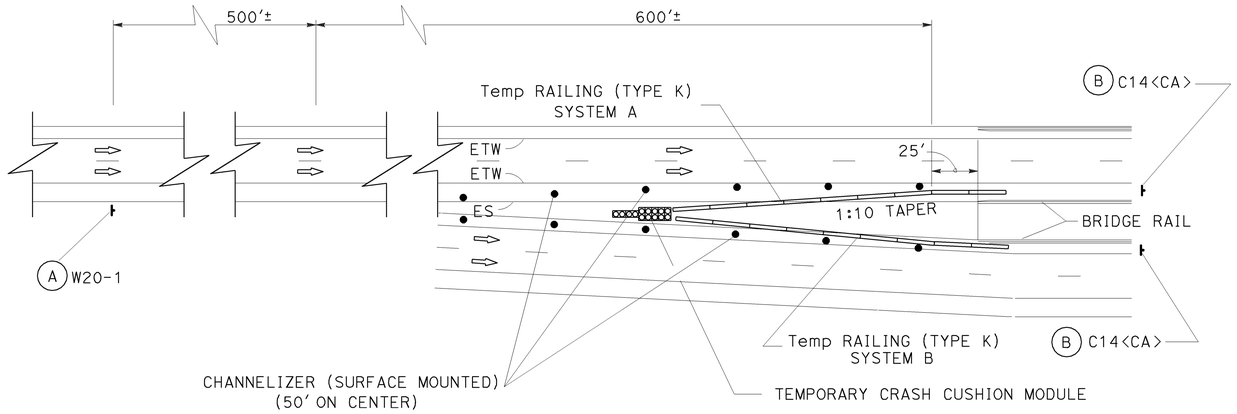

TEMPORARY RAILING (TYPE K)
(TYPICAL)

NOTES:

1. ALL SIGN CODES SHOWN ARE FEDERAL SIGN CODES UNLESS OTHERWISE DESIGNATED AS CALIFORNIA SIGN CODES.

LOCATION	TEMPORARY RAILING (TYPE K)	
	SYSTEM A	SYSTEM B
8		1
16	1	
17	1	1
32	1	1
36	1	1
39	1	
40	1	1

STATIONARY MOUNTED CONSTRUCTION AREA SIGNS

SIGN LETTER	SIGN CODE		PANEL SIZE	SIGN MESSAGE	NUMBER OF SIGNS
	FEDERAL	CALIFORNIA			
(A)	W20-1	C23	48" x 48"	ROAD WORK AHEAD	7
(B)	G20-2	C14	48" x 24"	END ROAD WORK	14

NOTES:

1. EXACT SIGN LOCATIONS TO BE DETERMINED BY THE ENGINEER.
2. SOME LOCATIONS MAY REQUIRE SIGNS TO BE PLACED BY SSBM.

CONSTRUCTION DETAILS

NO SCALE

C-18

Dist	COUNTY	ROUTE	POST MILES TOTAL PROJECT	SHEET No.	TOTAL SHEETS
03	Nev,Sac,Sut, Yol,Yub	5,20,49,50,51, 80,99	Var	19	50

Stephen J. Wright 8-25-10
REGISTERED CIVIL ENGINEER DATE

8-30-10
PLANS APPROVAL DATE

STEPHEN T. WRIGHT No. 52942 Exp. 12-31-10 CIVIL — REGISTERED PROFESSIONAL ENGINEER — STATE OF CALIFORNIA

THE STATE OF CALIFORNIA OR ITS OFFICERS OR AGENTS SHALL NOT BE RESPONSIBLE FOR THE ACCURACY OR COMPLETENESS OF SCANNED COPIES OF THIS PLAN SHEET.

CALCULATED-DESIGNED BY: A. G. CHIN
CHECKED BY: STEPHEN WRIGHT
FUNCTIONAL SUPERVISOR: JOESPH W. HORTON
REVISED BY
DATE REVISED
STATE OF CALIFORNIA - DEPARTMENT OF TRANSPORTATION
TRAFFIC DESIGN
Caltrans

DATE PLOTTED => 31-AUG-2010
TIME PLOTTED => 09:17
LAST REVISION 08-23-10

Dist	COUNTY	ROUTE	POST MILES TOTAL PROJECT	SHEET No.	TOTAL SHEETS
03	Nev,Sac,Sut, Yol,Yub	5,20,49,50,51, 80,99	Var	20	50

Stephen T. Wright 8-25-10
REGISTERED CIVIL ENGINEER DATE

8-30-10
PLANS APPROVAL DATE

STEPHEN T. WRIGHT No. 52942 Exp. 12-31-10 CIVIL — REGISTERED PROFESSIONAL ENGINEER — STATE OF CALIFORNIA

THE STATE OF CALIFORNIA OR ITS OFFICERS OR AGENTS SHALL NOT BE RESPONSIBLE FOR THE ACCURACY OR COMPLETENESS OF SCANNED COPIES OF THIS PLAN SHEET.

NOTES:

1. FOR DETAILS NOT SHOWN, SEE STANDARD PLANS.
2. SAW CUT METAL RAIL NEATLY AND REMOVE PORTION AS REQUIRED. APPLY ZINC RICH PRIMER TO SAW CUT.
3. EXISTING ULITILTY FACILITIES HAVE NOT BEEN PLOTTED ON THESE PLANS.
4. EXISTING CALTRANS ELECTRICAL UTILITIES HAVE NOT BEEN PLOTTED ON THESE PLANS. FIELD VERIFY LOCATIONS WITH ENGINEER BEFORE BEGINING WORK.
5. THE CONTRACTOR SHALL VERIFY ALL CONTROLLING FIELD DIMENSIONS BEFORE ORDERING OR FABRICATING ANY MATERIAL.

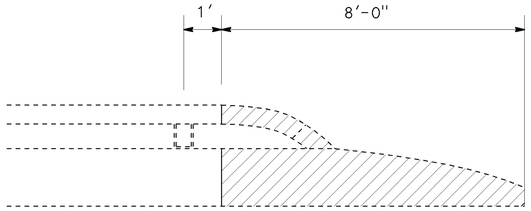

ELEVATION

REMOVE EXISTING BRIDGE RAILING DETAILS

REMOVE CONCRETE AND STEEL RAIL

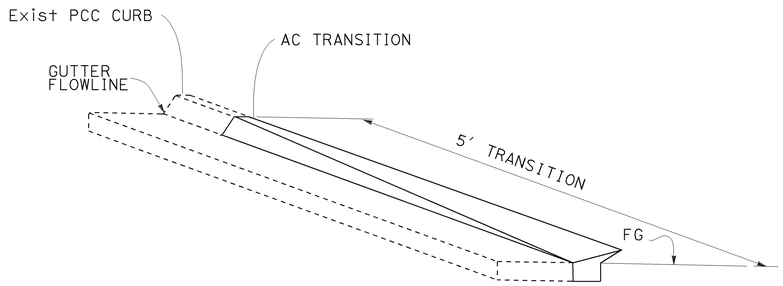

CURB TRANSITION

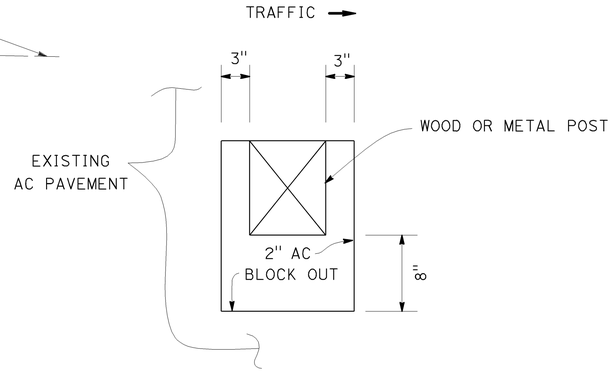

MBGR SINGLE POST DETAIL

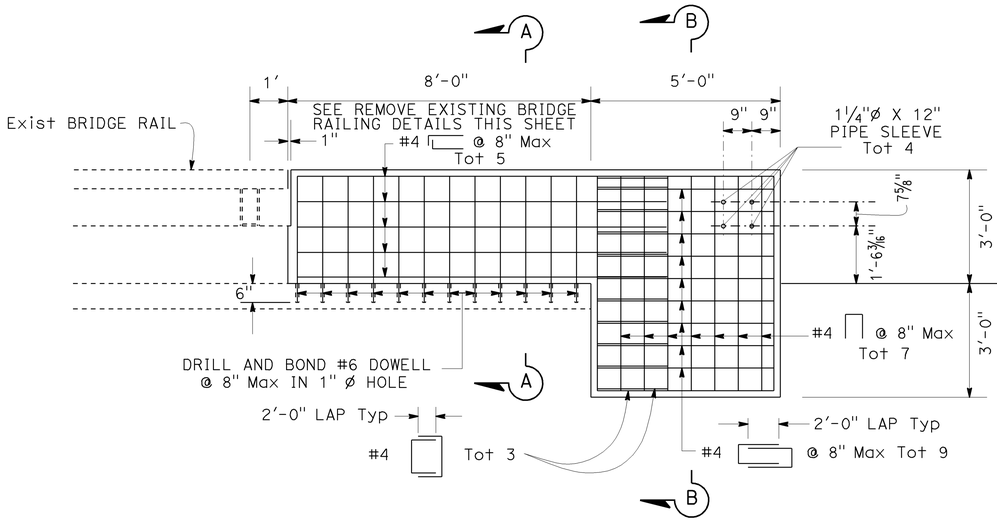

ELEVATION

CONCRETE END BLOCK

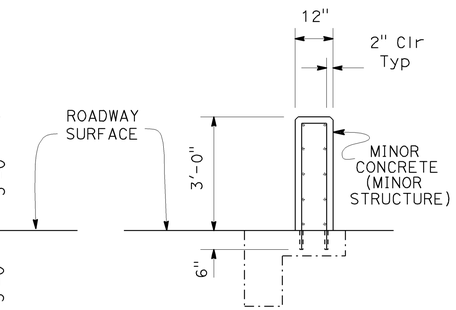

SECTION A-A

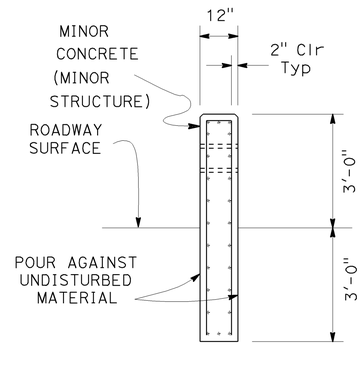

SECTION B-B

LOCATION 8, 16, AND 17

MBGR DOUBLE POST DETAIL

TYPICAL MBGR AC BLOCK OUT DETAILS

CONSTRUCTION DETAILS

NO SCALE

C-19

CALCULATED-DESIGNED BY: A. G. CHIN
CHECKED BY: STEPHEN WRIGHT
REVISED BY
DATE REVISED
FUNCTIONAL SUPERVISOR: JOESPH W. HORTON
STATE OF CALIFORNIA - DEPARTMENT OF TRANSPORTATION
TRAFFIC DESIGN
Caltrans

LAST REVISION DATE PLOTTED => 31-AUG-2010
TIME PLOTTED => 09:17
08-23-10

BORDER LAST REVISED 7/1/2010
USERNAME => s128033
DGN FILE => 31F440ga019.dgn
RELATIVE BORDER SCALE IS IN INCHES 0 1 2 3
UNIT 0389
PROJECT NUMBER & PHASE 03000200241

Dist	COUNTY	ROUTE	POST MILES TOTAL PROJECT	SHEET No.	TOTAL SHEETS
03	Nev,Sac,Sut, Yol,Yub	5,20,49,50,51, 80,99	Var	22	50

Stephen T. Wright 8-25-10
REGISTERED CIVIL ENGINEER DATE

8-30-10
PLANS APPROVAL DATE

REGISTERED PROFESSIONAL ENGINEER
STEPHEN T. WRIGHT
No. 52942
Exp. 12-31-10
CIVIL
STATE OF CALIFORNIA

THE STATE OF CALIFORNIA OR ITS OFFICERS OR AGENTS SHALL NOT BE RESPONSIBLE FOR THE ACCURACY OR COMPLETENESS OF SCANNED COPIES OF THIS PLAN SHEET.

NOTES:

1. EXISTING ULITILTY FACILITIES HAVE NOT BEEN PLOTTED ON THESE PLANS.
2. EXISTING CALTRANS ELECTRICAL UTILITIES HAVE NOT BEEN PLOTTED ON THESE PLANS. FIELD VERIFY LOCATIONS WITH ENGINEER BEFORE BEGINING WORK.

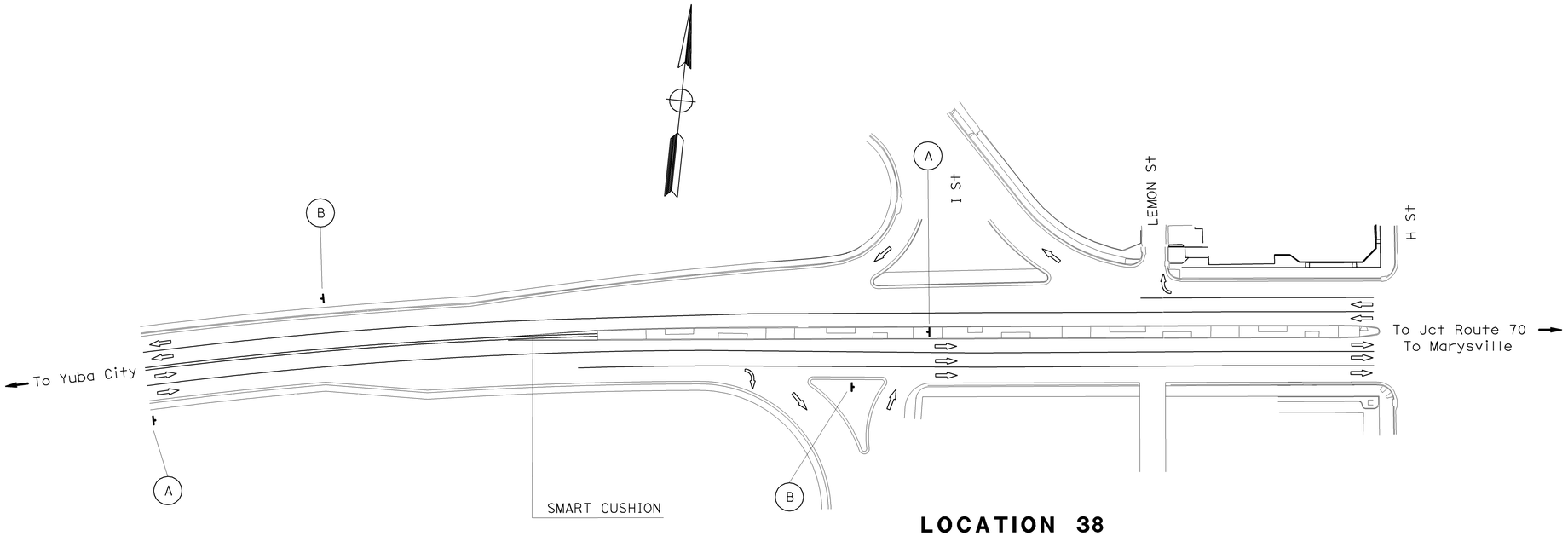

LOCATION 38

Yub 20 - PM 0.54

CONSTRUCTION AREA SIGNS

NO SCALE

CS-2

NOTE: THIS PLAN ACCURATE FOR CONSTRUCTION AREA SIGN WORK ONLY.

STATE OF CALIFORNIA - DEPARTMENT OF TRANSPORTATION
Caltrans
TRAFFIC DESIGN

FUNCTIONAL SUPERVISOR: JOSEPH W. HORTON
CALCULATED-DESIGNED BY: CHUCK COOK
CHECKED BY: STEPHEN WRIGHT
REVISED BY
DATE REVISED

LAST REVISION 08-11-10
DATE PLOTTED => 31-AUG-2010
TIME PLOTTED => 09:17

\\Sv03s01\cadd\proj4\03\1f440\drafting\31f440la002.dgn

BORDER LAST REVISED 7/1/2010
USERNAME => s128033
DGN FILE => 31f440la002.dgn
RELATIVE BORDER SCALE IS IN INCHES 0 1 2 3
UNIT 0389
PROJECT NUMBER & PHASE 03000200241

Dist	COUNTY	ROUTE	POST MILES TOTAL PROJECT	SHEET No.	TOTAL SHEETS
03	Nev,Sac,Sut, Yol,Yub	5,20,49,50,51, 80,99	Var	23	50

Stephen T. Wright 8-25-10
REGISTERED CIVIL ENGINEER DATE

8-30-10
PLANS APPROVAL DATE

REGISTERED PROFESSIONAL ENGINEER
STEPHEN T. WRIGHT
No. 52942
Exp. 12-31-10
CIVIL
STATE OF CALIFORNIA

THE STATE OF CALIFORNIA OR ITS OFFICERS OR AGENTS SHALL NOT BE RESPONSIBLE FOR THE ACCURACY OR COMPLETENESS OF SCANNED COPIES OF THIS PLAN SHEET.

NOTES:

1. THIS PLAN ACCURATE FOR DETOUR CONSTRUCTION WORK ONLY.
2. EXISTING UTILITY FACILITIES HAVE NOT BEEN PLOTTED ON THESE PLANS.
3. ALL SIGN CODES SHOWN ARE FEDERAL SIGN CODES UNLESS OTHERWISE DESIGNATED AS CALIFORNIA SIGN CODES.
4. EXISTING CALTRANS ELECTRICAL UTILITIES HAVE NOT BEEN PLOTTED ON THESE PLANS. FIELD VERIFY LOCATIONS WITH ENGINEER BEFORE BEGINING WORK.

ABBREVIATIONS

PCMS - PORTABLE CHANGEABLE MESSAGE SIGN

LEGEND

<CA> CALIFORNIA SIGN CODE

⇦ DIRECTION OF DETOUR TRAFFIC

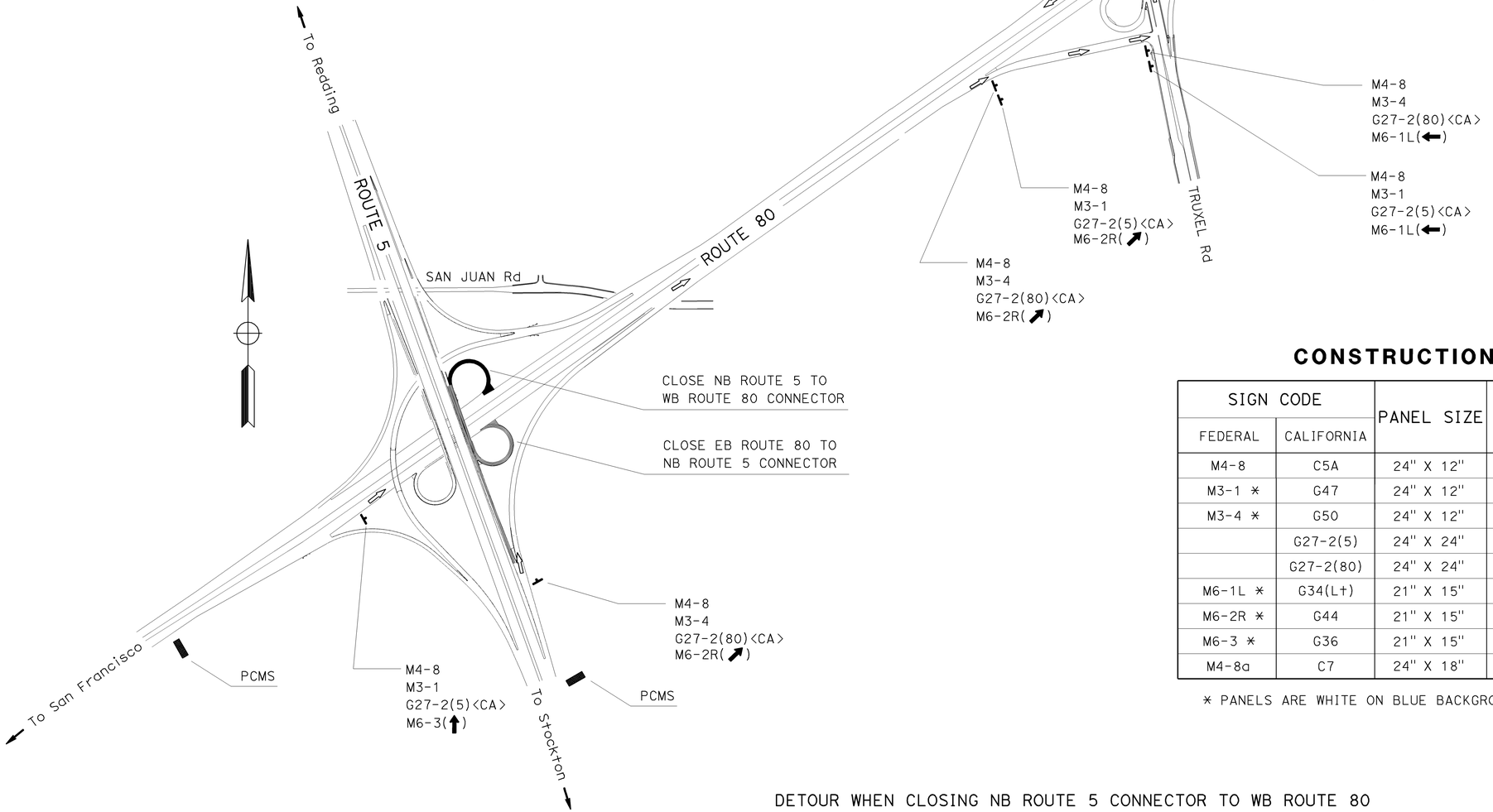

CONSTRUCTION AREA SIGNS

SIGN CODE		PANEL SIZE	SIGN MESSAGE	NUMBER OF SIGNS
FEDERAL	CALIFORNIA			
M4-8	C5A	24" X 12"	DETOUR	8
M3-1 *	G47	24" X 12"	NORTH	4
M3-4 *	G50	24" X 12"	WEST	4
	G27-2(5)	24" X 24"	INTERSTATE 5	4
	G27-2(80)	24" X 24"	INTERSTATE 80	4
M6-1L *	G34(Lt)	21" X 15"	DIRECTIONAL ARROW (⇦)	2
M6-2R *	G44	21" X 15"	DIRECTIONAL ARROW (↗)	5
M6-3 *	G36	21" X 15"	DIRECTIONAL ARROW (↑)	1
M4-8a	C7	24" X 18"	END DETOUR	1

* PANELS ARE WHITE ON BLUE BACKGROUND

DETOUR WHEN CLOSING NB ROUTE 5 CONNECTOR TO WB ROUTE 80

DETOUR PLAN

NO SCALE

DE-1

CALCULATED-DESIGNED BY
CHECKED BY
REVISED BY
DATE REVISED
CHUCK COOK
JOESPH W. HORTON
FUNCTIONAL SUPERVISOR
JOESPH W. HORTON
STATE OF CALIFORNIA - DEPARTMENT OF TRANSPORTATION
TRAFFIC DESIGN
Caltrans

LAST REVISION DATE PLOTTED => 31-AUG-2010
TIME PLOTTED => 09:17
08-11-10

BORDER LAST REVISED 7/1/2010
USERNAME => s128033
DGN FILE => 31f440mg001.dgn
RELATIVE BORDER SCALE IS IN INCHES 0 1 2 3
UNIT 0389
PROJECT NUMBER & PHASE 03000200241

Dist	COUNTY	ROUTE	POST MILES TOTAL PROJECT	SHEET No.	TOTAL SHEETS
03	Ney,Sac,Sut, Yol,Yub	5,20,49,50,51, 80,99	Var	24	50

Stephen T. Wright 8-25-10
REGISTERED CIVIL ENGINEER DATE

8-30-10
PLANS APPROVAL DATE

STEPHEN T. WRIGHT No. 52942 Exp. 12-31-10 CIVIL — REGISTERED PROFESSIONAL ENGINEER — STATE OF CALIFORNIA

THE STATE OF CALIFORNIA OR ITS OFFICERS OR AGENTS SHALL NOT BE RESPONSIBLE FOR THE ACCURACY OR COMPLETENESS OF SCANNED COPIES OF THIS PLAN SHEET.

NOTES:

1. THIS PLAN ACCURATE FOR DETOUR CONSTRUCTION WORK ONLY.
2. EXISTING UTILITY FACILITIES HAVE NOT BEEN PLOTTED ON THESE PLANS.
3. ALL SIGN CODES SHOWN ARE FEDERAL SIGN CODES UNLESS OTHERWISE DESIGNATED AS CALIFORNIA SIGN CODES.
4. EXISTING CALTRANS ELECTRICAL UTILITIES HAVE NOT BEEN PLOTTED ON THESE PLANS. FIELD VERIFY LOCATIONS WITH ENGINEER BEFORE BEGINING WORK.

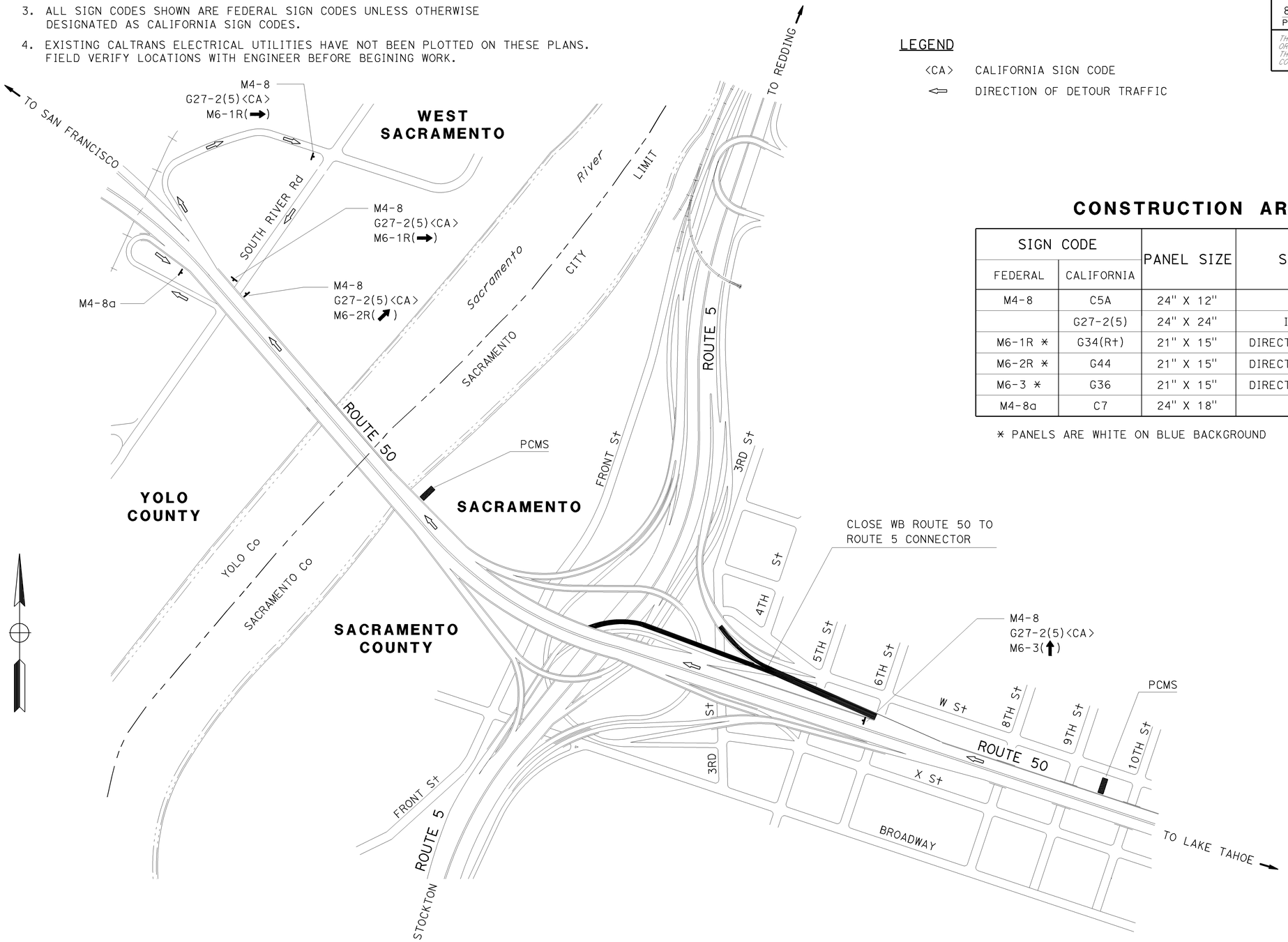

DETOUR WHEN CLOSING WB ROUTE 50 CONNECTOR TO ROUTE 5

ABBREVIATIONS

PCMS - PORTABLE CHANGEABLE MESSAGE SIGN

LEGEND

<CA> CALIFORNIA SIGN CODE

⇦ DIRECTION OF DETOUR TRAFFIC

CONSTRUCTION AREA SIGNS

SIGN CODE		PANEL SIZE	SIGN MESSAGE	NUMBER OF SIGNS
FEDERAL	CALIFORNIA			
M4-8	C5A	24" X 12"	DETOUR	4
	G27-2(5)	24" X 24"	INTERSTATE 5	4
M6-1R *	G34(R†)	21" X 15"	DIRECTIONAL ARROW (→)	2
M6-2R *	G44	21" X 15"	DIRECTIONAL ARROW (↗)	1
M6-3 *	G36	21" X 15"	DIRECTIONAL ARROW (↑)	1
M4-8a	C7	24" X 18"	END DETOUR	1

* PANELS ARE WHITE ON BLUE BACKGROUND

DETOUR PLAN

NO SCALE

DE-2

CALCULATED-DESIGNED BY: CHUCK COOK
CHECKED BY: JOESPH W. HORTON
REVISED BY / DATE REVISED
FUNCTIONAL SUPERVISOR: JOESPH W. HORTON

STATE OF CALIFORNIA - DEPARTMENT OF TRANSPORTATION
TRAFFIC DESIGN

LAST REVISION: DATE PLOTTED => 31-AUG-2010
08-11-10 TIME PLOTTED => 09:17

BORDER LAST REVISED 7/1/2010
USERNAME => s128033
DGN FILE => 31f440mg002.dgn
RELATIVE BORDER SCALE IS IN INCHES 0 1 2 3
UNIT 0389
PROJECT NUMBER & PHASE 03000200241

Dist	COUNTY	ROUTE	POST MILES TOTAL PROJECT	SHEET No.	TOTAL SHEETS
03	Nev,Sac,Sut, Yol,Yub	5,20,49,50,51, 80,99	Var	25	50

Stephen T. Wright 8-25-10
REGISTERED CIVIL ENGINEER DATE

STEPHEN T. WRIGHT No. 52942 Exp. 12-31-10 CIVIL — REGISTERED PROFESSIONAL ENGINEER — STATE OF CALIFORNIA

8-30-10
PLANS APPROVAL DATE

THE STATE OF CALIFORNIA OR ITS OFFICERS OR AGENTS SHALL NOT BE RESPONSIBLE FOR THE ACCURACY OR COMPLETENESS OF SCANNED COPIES OF THIS PLAN SHEET.

NOTES:

1. THIS PLAN ACCURATE FOR DETOUR CONSTRUCTION WORK ONLY.
2. EXISTING UTILITY FACILITIES HAVE NOT BEEN PLOTTED ON THESE PLANS.
3. ALL SIGN CODES SHOWN ARE FEDERAL SIGN CODES UNLESS OTHERWISE DESIGNATED AS CALIFORNIA SIGN CODES.
4. EXISTING CALTRANS ELECTRICAL UTILITIES HAVE NOT BEEN PLOTTED ON THESE PLANS. FIELD VERIFY LOCATIONS WITH ENGINEER BEFORE BEGINING WORK.

ABBREVIATIONS

PCMS - PORTABLE CHANGEABLE MESSAGE SIGN

LEGEND

<CA> CALIFORNIA SIGN CODE

⇦ DIRECTION OF DETOUR TRAFFIC

CONSTRUCTION AREA SIGNS

SIGN CODE		PANEL SIZE	SIGN MESSAGE	NUMBER OF SIGNS
FEDERAL	CALIFORNIA			
M4-8	C5A	24" X 12"	DETOUR	7
M3-3 *	G48	24" X 12"	SOUTH	7
	G27-2(5)	24" X 24"	INTERSTATE 5	7
M6-1L *	G34(L†)	21" X 15"	DIRECTIONAL ARROW (⬅)	1
M6-1R *	G34(R†)	21" X 15"	DIRECTIONAL ARROW (➡)	1
M6-3 *	G36	21" X 15"	DIRECTIONAL ARROW (⬆)	5
M4-8a	C7	24" X 18"	END DETOUR	1

* PANELS ARE WHITE ON BLUE BACKGROUND

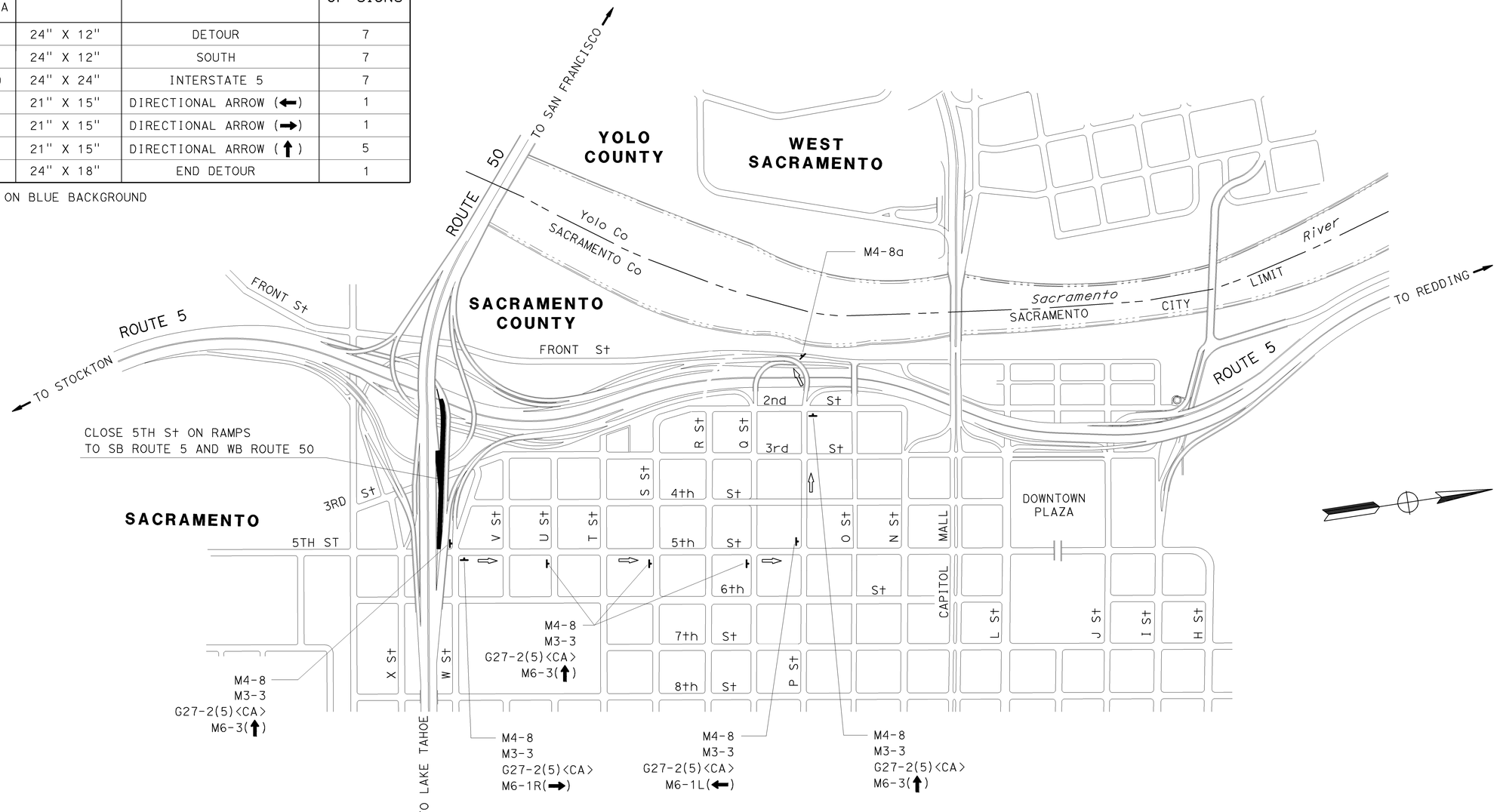

DETOUR WHEN CLOSING 5TH St ON RAMP TO SB ROUTE 5 AND WB ROUTE 50

DETOUR PLAN

NO SCALE

DE-3

REVISED BY | DATE REVISED
CHUCK COOK | JOESPH W. HORTON
CALCULATED-DESIGNED BY | CHECKED BY
FUNCTIONAL SUPERVISOR | JOESPH W. HORTON
STATE OF CALIFORNIA - DEPARTMENT OF TRANSPORTATION
TRAFFIC DESIGN

LAST REVISION | DATE PLOTTED => 31-AUG-2010
08-11-10 | TIME PLOTTED => 09:17

BORDER LAST REVISED 7/1/2010 | USERNAME => s128033 | DGN FILE => 31f440mg003.dgn | RELATIVE BORDER SCALE IS IN INCHES 0 1 2 3 | UNIT 0389 | PROJECT NUMBER & PHASE 03000200241

Dist	COUNTY	ROUTE	POST MILES TOTAL PROJECT	SHEET No.	TOTAL SHEETS
03	Nev,Sac,Sut, Yol,Yub	5,20,49,50,51, 80,99	Var	26	50

Stephen T. Wright 8-25-10
REGISTERED CIVIL ENGINEER DATE

8-30-10
PLANS APPROVAL DATE

REGISTERED PROFESSIONAL ENGINEER
STEPHEN T. WRIGHT
No. 52942
Exp. 12-31-10
CIVIL
STATE OF CALIFORNIA

THE STATE OF CALIFORNIA OR ITS OFFICERS OR AGENTS SHALL NOT BE RESPONSIBLE FOR THE ACCURACY OR COMPLETENESS OF SCANNED COPIES OF THIS PLAN SHEET.

NOTES:

1. THIS PLAN ACCURATE FOR DETOUR CONSTRUCTION WORK ONLY.
2. EXISTING UTILITY FACILITIES HAVE NOT BEEN PLOTTED ON THESE PLANS.
3. ALL SIGN CODES SHOWN ARE FEDERAL SIGN CODES UNLESS OTHERWISE DESIGNATED AS CALIFORNIA SIGN CODES.
4. EXISTING CALTRANS ELECTRICAL UTILITIES HAVE NOT BEEN PLOTTED ON THESE PLANS. FIELD VERIFY LOCATIONS WITH ENGINEER BEFORE BEGINING WORK.

ABBREVIATIONS

PCMS - PORTABLE CHANGEABLE MESSAGE SIGN

LEGEND

<CA> CALIFORNIA SIGN CODE

⇦ DIRECTION OF DETOUR TRAFFIC

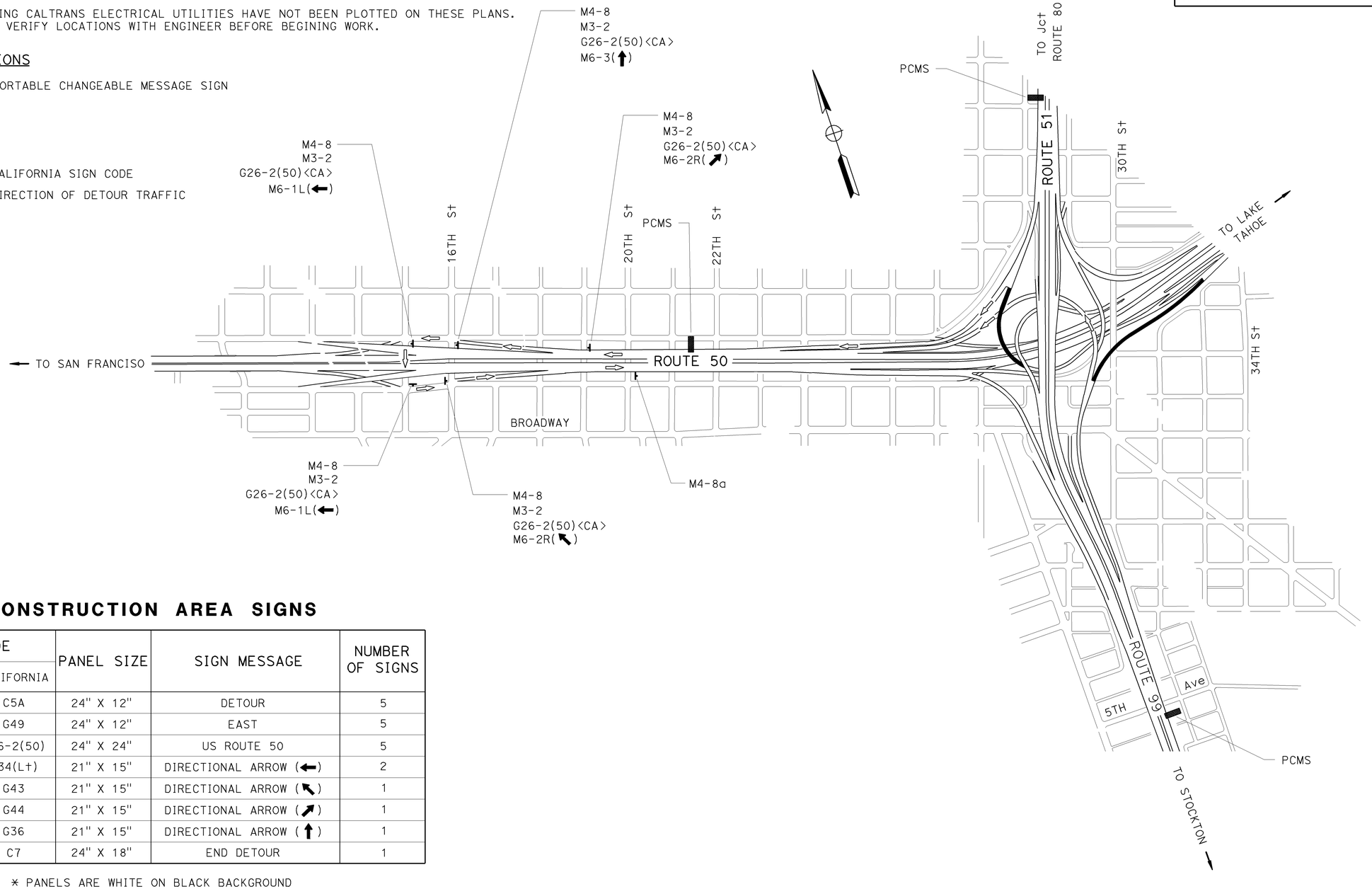

CONSTRUCTION AREA SIGNS

SIGN CODE		PANEL SIZE	SIGN MESSAGE	NUMBER OF SIGNS
FEDERAL	CALIFORNIA			
M4-8	C5A	24" X 12"	DETOUR	5
M3-2 *	G49	24" X 12"	EAST	5
	G26-2(50)	24" X 24"	US ROUTE 50	5
M6-1L *	G34(Lt)	21" X 15"	DIRECTIONAL ARROW (←)	2
M6-2L *	G43	21" X 15"	DIRECTIONAL ARROW (↖)	1
M6-2R *	G44	21" X 15"	DIRECTIONAL ARROW (↗)	1
M6-3 *	G36	21" X 15"	DIRECTIONAL ARROW (↑)	1
M4-8a	C7	24" X 18"	END DETOUR	1

* PANELS ARE WHITE ON BLACK BACKGROUND

DETOUR WHEN CLOSING SB ROUTE 51 CONNECTOR TO EB ROUTE 50

DETOUR PLAN

NO SCALE

DE-4

REVISED BY | DATE REVISED

CALCULATED-DESIGNED BY | CHECKED BY

CHUCK COOK | JOESPH W. HORTON

FUNCTIONAL SUPERVISOR: JOESPH W. HORTON

STATE OF CALIFORNIA - DEPARTMENT OF TRANSPORTATION

TRAFFIC DESIGN

Caltrans

LAST REVISION | DATE PLOTTED => 31-AUG-2010 | TIME PLOTTED => 09:17

08-11-10

BORDER LAST REVISED 7/1/2010

USERNAME => s128033
DGN FILE => 31f440mg004.dgn

RELATIVE BORDER SCALE IS IN INCHES 0 1 2 3

UNIT 0389

PROJECT NUMBER & PHASE 03000200241

Dist	COUNTY	ROUTE	POST MILES TOTAL PROJECT	SHEET No.	TOTAL SHEETS
03	Nev,Sac,Sut, Yol,Yub	5,20,49,50,51, 80,99	Var	27	50

Stephen T. Wright 8-25-10
REGISTERED CIVIL ENGINEER DATE

8-30-10
PLANS APPROVAL DATE

REGISTERED PROFESSIONAL ENGINEER
STEPHEN T. WRIGHT
No. 52942
Exp. 12-31-10
CIVIL
STATE OF CALIFORNIA

THE STATE OF CALIFORNIA OR ITS OFFICERS OR AGENTS SHALL NOT BE RESPONSIBLE FOR THE ACCURACY OR COMPLETENESS OF SCANNED COPIES OF THIS PLAN SHEET.

RAILING

LOC No.	REMOVE METAL BEAM GUARD RAILING	REMOVE ANCHOR (N)	REMOVE BRIDGE APPROACH GUARD RAILING (TYPE 8)	TEMPORARY RAILING (TYPE K)	METAL BEAM GUARD RAILING	DOUBLE METAL BEAM GUARD RAILING (WOOD POST)	TRANSITION RAILING (TYPE STB)	TRANSITION RAILING (TYPE WB)	END ANCHOR ASSEMBLY (TYPE SFT)	VEGETATION CONTROL (MINOR CONCRETE)
	LF	EA	LF	LF	LF	LF	EA	EA	EA	SQYD
1										
2										
3										
4	104	3								
6										
8	104	2		80	122			1		
11										
12										
13										
14	102	3								
15										
16	96	2		60	65		1		1	35
17	148	3		300	198	25		2		210
18										
19										
20										
21										
24										
25										
26										
27										
28										
29										
30										
31	261	3		160	216	25		1	1	185
32	286	3		360	241			2	2	80
33										
35										
36		1	115	260	149			2		20
37										
38										
39	39	1		40	25				1	
40				160						
TOTAL	1140	21	115	1420	1016	50	1	8	5	530

(N) NOT A SEPARATE PAY ITEM, FOR INFORMATION ONLY.

PORTLAND CEMENT CONCRETE

LOC No.	REMOVE CONCRETE CURB	REMOVE CONCRETE (MISCELLANEOUS)	MINOR CONCRETE (MINOR STRUCTURE)	MINOR CONCRETE	CONCRETE BARRIER (TYPE 60)	CONCRETE BARRIER (TYPE 60D MODIFIED)
	LF	CY	CY	CY	LF	LF
1						
2			4.0			
3						
4	124					
6						
8			2.0			
11						
12						
13						
14	57					
15	112					
16	141		2.0			
17			4.0			
18						
19						
20						
21						
24						
25						
26						
27						
28						
29		3				
30						
31	475					96
32			2.7			
33						
35	90					
36			2.1			
37		30		6	65	
38		27		6	55	
39		1	4.2			
40		13	13.1			
TOTAL	999	74	34.1	12	120	96

ASPHALT CONCRETE

LOC No.	REMOVE AC DIKE	REMOVE ASPHALT CONCRETE	MINOR HOT MIX ASPHALT	PLACE HOT MIX ASPHALT (MISCELLANEOUS AREA)
	LF	SQYD	TON	SQYD
1				
2				
3				
4		97	14.4	97
6				
8				
11				
12				
13				
14		51	7.6	51
15		50	7.5	50
16		45	6.7	45
17	37			
18				
19				
20				
21				
24				
25				
26				
27				
28				
29				
30				
31		54	0.1	1
32				
33				
35		38	5.7	38
36				
37		63	9.3	63
38		56	8.2	56
39				
40				
TOTAL	37	454	59.5	401

TRAFFIC CONTROL

LOC No.	CHANNELIZER (SURFACE MOUNTED)
	EA
1	
2	
3	
4	
6	
8	12
11	
12	
13	
14	
15	
16	10
17	12
18	
19	
20	
21	
24	
25	
26	
27	
28	
29	
30	
31	
32	12
33	
35	
36	12
37	
38	
39	10
40	12
TOTAL	80

SUMMARY OF QUANTITIES

Q-1

STATE OF CALIFORNIA - DEPARTMENT OF TRANSPORTATION
TRAFFIC DESIGN
FUNCTIONAL SUPERVISOR: JOESPH W. HORTON
CALCULATED-DESIGNED BY: STEPHEN T. WRIGHT
CHECKED BY: DEANN SPANGLER
REVISED BY
DATE REVISED

LAST REVISION DATE PLOTTED => 31-AUG-2010
TIME PLOTTED => 12:45

BORDER LAST REVISED 7/1/2010
USERNAME => s128033
DGN FILE => 31f440pa001.dgn
RELATIVE BORDER SCALE IS IN INCHES 0 1 2 3
UNIT 0389
PROJECT NUMBER & PHASE 03000200241

Dist	COUNTY	ROUTE	POST MILES TOTAL PROJECT	SHEET No.	TOTAL SHEETS
03	Nev,Sac,Sut, Yol,Yub	5,20,49,50,51, 80,99	Var	28	50

Stephen T. Wright 8-25-10
REGISTERED CIVIL ENGINEER DATE

8-30-10
PLANS APPROVAL DATE

REGISTERED PROFESSIONAL ENGINEER
STEPHEN T. WRIGHT
No. 52942
Exp. 12-31-10
CIVIL
STATE OF CALIFORNIA

THE STATE OF CALIFORNIA OR ITS OFFICERS OR AGENTS SHALL NOT BE RESPONSIBLE FOR THE ACCURACY OR COMPLETENESS OF SCANNED COPIES OF THIS PLAN SHEET.

CRASH CUSHIONS

LOC NO.	REMOVE CRASH CUSHION		REMOVE CRASH CUSHION (SAND FILLED)		TEMPORARY CRASH CUSHION MODULE	BARRIER SYSTEMS, INC. UNIVERSAL TAU-II (60" 8 BAY)	BARRIER SYSTEMS, INC. UNIVERSAL TAU-II (72" 7 BAY)	BARRIER SYSTEMS, INC. UNIVERSAL TAU-II (96" 7 BAY)	SCI PRODUCTS, INC. SMART CUSHION (SCI 70 GM 24")	SCI PRODUCTS, INC. SMART CUSHION (SCI 100 GM 24")	SCI PRODUCTS, INC. SMART CUSHION (SCI 100 GM 60")	SCI PRODUCTS, INC. SMART CUSHION (SCI 100 GM 64")	ENERGY ABSORPTION SYSTEM, INC. REACT 350 (96")	TRAFFIX DEVICES, INC. COMPRESSOR ATTENUATOR (48")	BARRIER SYSTEMS, INC. X-TENSION MEDIAN ATTENUATOR (FULL SYSTEM)	COMMENTS
	EA	TYPE (N)	EA	BARRELS (N)	EA	EA	EA	EA	EA	EA	EA	EA	EA	EA	EA	
1			1	12						1						REQUIRES NEW 6" REINFORCED CONCRETE ANCHOR SLAB AND TRANSITION TO TYPE 50 BARRIER
2			1	15			1									REQUIRES NEW 6" REINFORCED CONCRETE ANCHOR SLAB
3			1	12						1						REQUIRES NEW 6" REINFORCED CONCRETE ANCHOR SLAB AND TRANSITION TO TYPE 60 BARRIER
4			1	12							1					REQUIRES TRANSITION GORE ASSEMBLY AND NEW 6" REINFORCED CONCRETE ANCHOR SLAB
6			1	22				1								TO BE ATTACHED TO EXISTING PCC DECK
8			1	12	14			1								REQUIRES NEW 6" REINFORCED CONCRETE ANCHOR SLAB
11			1	14							1					REQUIRES TRANSITION GORE ASSEMBLY AND NEW 6" REINFORCED CONCRETE ANCHOR SLAB
12	1	HEX FOAM					1									TO BE ATTACHED TO EXISTING PCC DECK
13			1	14										1		REQUIRES NEW 6" REINFORCED CONCRETE ANCHOR SLAB
14			1	14							1					REQUIRES TRANSITION GORE ASSEMBLY AND NEW 6" REINFORCED CONCRETE ANCHOR SLAB
15			1	12							1					REQUIRES TRANSITION GORE ASSEMBLY AND NEW 6" REINFORCED CONCRETE ANCHOR SLAB
16			1	11	14			1								REQUIRES NEW 6" REINFORCED CONCRETE ANCHOR SLAB
17			1	14	14										1	
18			1	16				1								TO BE ATTACHED TO EXISTING PCC DECK
19			1	12			1									TO BE ATTACHED TO EXISTING PCC DECK
20			1	12							1					TO BE ATTACHED TO EXISTING PCC DECK; REQUIRES TRANSITION GORE ASSEMBLY
21	1	QUADGUARD											1			TO BE ATTACHED TO EXISTING PCC DECK
24	1	HEX FOAM						1								TO BE ATTACHED TO EXISTING PCC DECK
25	1	HEX FOAM										1				TO BE ATTACHED TO EXISTING PCC DECK; REQUIRES TRANSITION GORE ASSEMBLY
26	1	HEX FOAM										1				TO BE ATTACHED TO EXISTING PCC DECK; REQUIRES TRANSITION GORE ASSEMBLY
27	1	HEX FOAM										1				TO BE ATTACHED TO EXISTING PCC DECK; REQUIRES TRANSITION GORE ASSEMBLY
28	1	HEX FOAM						1								TO BE ATTACHED TO EXISTING PCC DECK
29	1	HEX FOAM						1								REQUIRES REMOVAL OF Exist PCC FOUNDATION PAD; REQUIRES NEW 6" REINFORCED CONCRETE ANCHOR SLAB
30			1	12										1		REQUIRES NEW 6" REINFORCED CONCRETE ANCHOR SLAB
31			1	12	14										1	
32			1	14	14									1		REQUIRES NEW 6" REINFORCED CONCRETE ANCHOR SLAB
33	1	HEX FOAM						1								TO BE ATTACHED TO EXISTING PCC DECK
35			1	17							1					REQUIRES TRANSITION GORE ASSEMBLY AND NEW 6" REINFORCED CONCRETE ANCHOR SLAB
36			1	12	14			1								REQUIRES NEW 6" REINFORCED CONCRETE ANCHOR SLAB
37					6				1							REQUIRES NEW 6" REINFORCED CONCRETE ANCHOR SLAB AND TRANSITION TO TYPE 60 BARRIER
38					6				1							REQUIRES NEW 6" REINFORCED CONCRETE ANCHOR SLAB AND TRANSITION TO TYPE 60 BARRIER
39			1	12	14	1										REQUIRES NEW 6" REINFORCED CONCRETE ANCHOR SLAB
40			1	12	14						1					REQUIRES TRANSITION GORE ASSEMBLY AND NEW 6" REINFORCED CONCRETE ANCHOR SLAB
TOTAL	9		22	295	124	1	3	9	2	2	7	3	1	3	2	

SUMMARY OF QUANTITIES
Q-2

CALCULATED-DESIGNED BY: STEPHEN T. WRIGHT
CHECKED BY: DEANN SPANGLER
REVISED BY
DATE REVISED
FUNCTIONAL SUPERVISOR: JOESPH W. HORTON
STATE OF CALIFORNIA - DEPARTMENT OF TRANSPORTATION
Caltrans® TRAFFIC DESIGN

LAST REVISION 08-23-10
DATE PLOTTED => 31-AUG-2010
TIME PLOTTED => 09:17

BORDER LAST REVISED 7/1/2010
USERNAME => s128033
DGN FILE => 31f440pa002.dgn
RELATIVE BORDER SCALE IS IN INCHES 0 1 2 3
UNIT 0389
PROJECT NUMBER & PHASE 03000200241

DIST	COUNTY	ROUTE	POST MILES TOTAL PROJECT	SHEET NO.	TOTAL SHEETS
03	Nev,Sac,Sut,Yol,Yub	5,20,49,50,51,80,99	Var	29	50

Randell D. Hiatt
REGISTERED CIVIL ENGINEER

June 6, 2008
PLANS APPROVAL DATE

REGISTERED PROFESSIONAL ENGINEER — Randell D. Hiatt — No. C50200 — Exp. 6-30-09 — CIVIL — STATE OF CALIFORNIA

The State of California or its officers or agents shall not be responsible for the accuracy or completeness of electronic copies of this plan sheet.

To accompany plans dated August 30, 2010

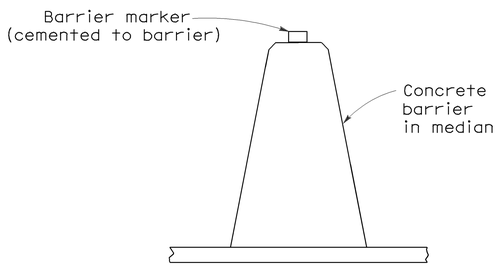

CONCRETE BARRIER TYPE 60 DELINEATION

See Notes 7 and 8

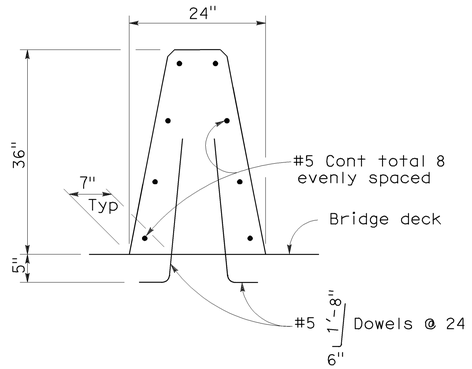

CONCRETE BARRIER TYPE 60A

Details similar to Type 60 except as noted.

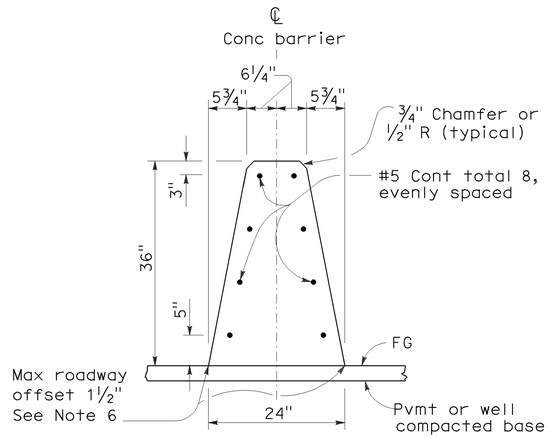

CONCRETE BARRIER TYPE 60

NOTES:

1. See Standard Plan A76B for details of Concrete Barrier Type 60 end anchors, connection to structures and transitions to Concrete Barrier Type 50 and Concrete Barrier Type 60S.
2. See Standard Plan A76C for Concrete Barrier Type 60 transitions at bridge column and sign pedestals.
3. Where glare screen is required on Concrete Barrier Type 60, use Concrete Barrier Type 60G.
4. Where the concrete barrier is added to the face of existing concrete structure, match existing weep holes.
5. Expansion joints in concrete barrier shall be located at all deck, pavement and principal wall joints. Expansion joint filler material shall be the same size as joint or ½" minimum.
6. Where roadway offset is greater than 1½", see Concrete Barrier Type 60C.
7. Barrier delineation to be used when required by the Special Provisions.
8. Spacing of barrier markers to match spacing of raised pavement markers on the adjacent median edgeline pavement delineation.
9. Reinforcing stirrup not required for roadway offsets less than 1'-0".
10. For roadway surfaces offset greater than 1½" to 3", no rebars required. For roadway surfaces offset greater than 3" to 8" use two #4 rebars at 3" above the lower roadway surface. For roadway surfaces offset greater than 8" to 12", use two #4 rebars at 3" above the lower roadway surface and two #4 rebars at 8" above the lower roadway surface. For roadway surfaces offset greater than 12" to 36", use two #4 rebars at 3" above the lower roadway surface and two #4 rebars at every 8" increment vertical spacing above the first two #4 rebars.

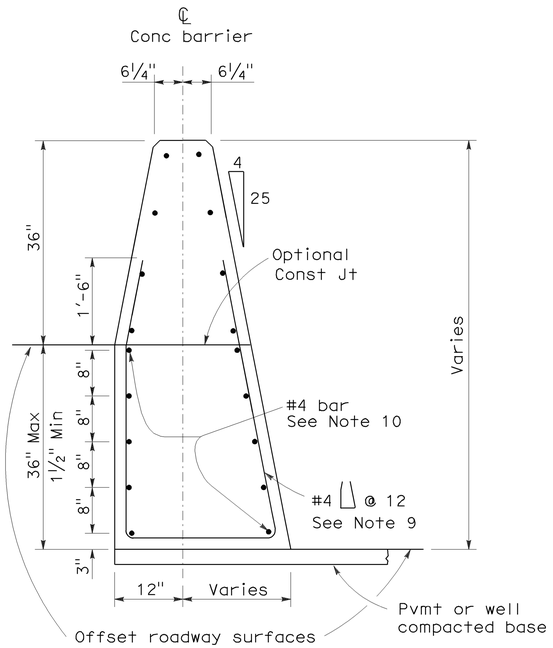

CONCRETE BARRIER TYPE 60C

Details similar to Type 60 except as noted.
Concrete barrier end anchor when necessary.
36" roadway surfaces offset shown.

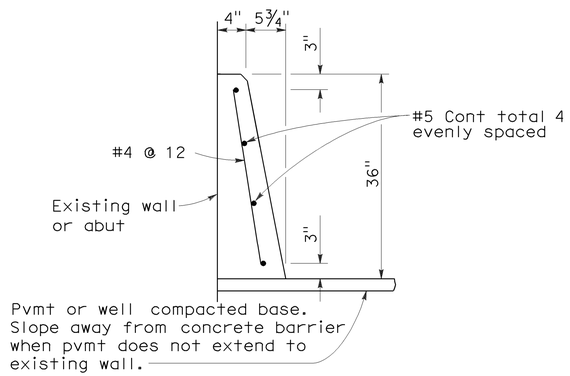

CONCRETE BARRIER TYPE 60D

STATE OF CALIFORNIA
DEPARTMENT OF TRANSPORTATION

CONCRETE BARRIER TYPE 60

NO SCALE

RSP A76A DATED JUNE 6, 2008 SUPERSEDES STANDARD PLAN A76A
DATED MAY 1, 2006 - PAGE 29 OF THE STANDARD PLANS BOOK DATED MAY 2006.

REVISED STANDARD PLAN RSP A76A

2006 REVISED STANDARD PLAN RSP A76A

5-21-08

DIST	COUNTY	ROUTE	POST MILES TOTAL PROJECT	SHEET NO.	TOTAL SHEETS
03	Nev,Sac,Sut,Yol,Yub	5,20,49,50,51,80,99	Var	30	50

Randell D. Hiatt
REGISTERED CIVIL ENGINEER

June 6, 2008
PLANS APPROVAL DATE

REGISTERED PROFESSIONAL ENGINEER
Randell D. Hiatt
No. C50200
Exp. 6-30-09
CIVIL
STATE OF CALIFORNIA

The State of California or its officers or agents shall not be responsible for the accuracy or completeness of electronic copies of this plan sheet.

To accompany plans dated August 30, 2010

NOTES:

1. When necessary to place dike in front of face of guard railing, only Type C dike may be used. For dike details, see Standard Plan A87B.
2. For standard railing post embedment, see Standard Plans A77C3.
3. Guard railing delineation to be used where shown on the Project Plans.
4. When dike or curb is placed under guard railing, the maximum height of the dike or curb shall be 4". Mountable dike should not be used. For dike and curb details, see Revised Standard Plans RSP A87A and Standard Plan A87B.
5. For details of typical distance between the face of rail and hinge point, see Standard Plan A77C3.

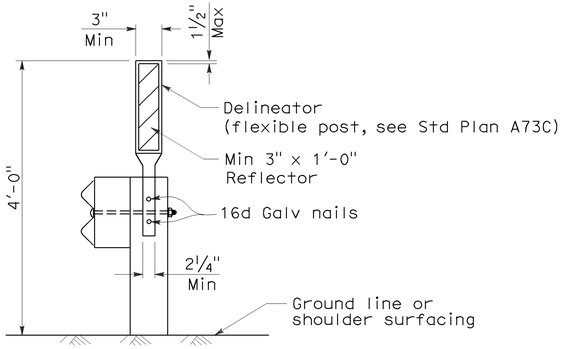

GUARD RAILING DELINEATION
See Note 3

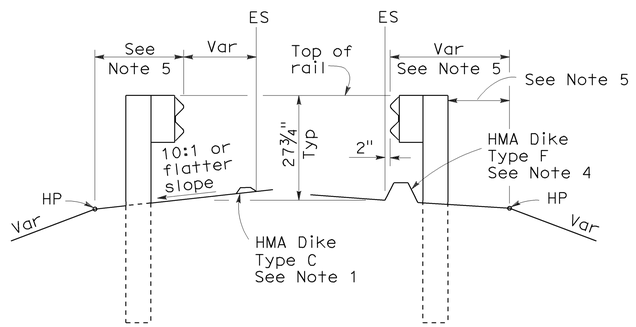

DIKE POSITIONING
See Note 1

STATE OF CALIFORNIA
DEPARTMENT OF TRANSPORTATION

METAL BEAM GUARD RAILING TYPICAL RAILING DELINEATION AND DIKE POSITIONING DETAILS

NO SCALE

RSP A77C4 DATED JUNE 6, 2008 SUPERSEDES STANDARD PLAN A77C4
DATED MAY 1, 2006 - PAGE 47 OF THE STANDARD PLANS BOOK DATED MAY 2006.

REVISED STANDARD PLAN RSP A77C4

2006 REVISED STANDARD PLAN RSP A77C4

12-10-07

DIST	COUNTY	ROUTE	POST MILES TOTAL PROJECT	SHEET NO.	TOTAL SHEETS
03	Nev,Sac,Sut,Yol,Yub	5,20,49,50,51,80,99	Var	31	50

Randell D. Hiatt
REGISTERED CIVIL ENGINEER

October 20, 2006
PLANS APPROVAL DATE

REGISTERED PROFESSIONAL ENGINEER
Randell D. Hiatt
No. C50200
Exp. 6-30-07
CIVIL
STATE OF CALIFORNIA

The State of California or its officers or agents shall not be responsible for the accuracy or completeness of electronic copies of this plan sheet.

To accompany plans dated August 30, 2010

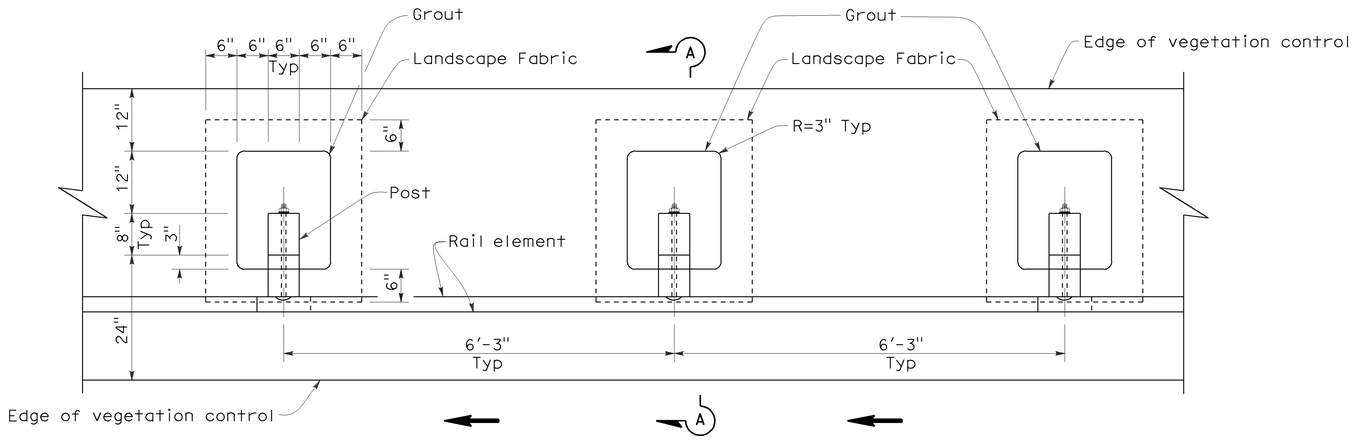

PLAN

NOTES:

1. Where the distance between back of post and hinge point is less than 24", vegetation control to be constructed flush with the back edge of the post.
2. Where dike is constructed under railing, construct vegetation control to back edge of dike. Where paved shoulder is constructed within 24" in front of the post, construct vegetation control to the edge of paved shoulder.
3. Direction of adjacent traffic indicated by ← .

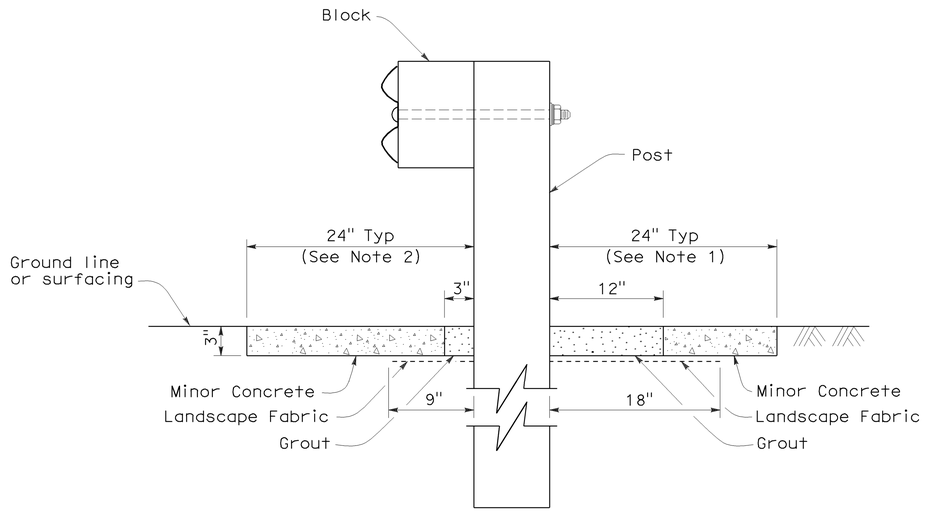

SECTION A-A

STATE OF CALIFORNIA
DEPARTMENT OF TRANSPORTATION

METAL BEAM GUARD RAILING
TYPICAL VEGETATION CONTROL
STANDARD RAILING SECTION

NO SCALE

NSP A77C5 DATED OCTOBER 20, 2006 SUPPLEMENTS THE STANDARD PLANS BOOK DATED MAY 2006.

NEW STANDARD PLAN NSP A77C5

2006 NEW STANDARD PLAN NSP A77C5

7-17-06

DIST	COUNTY	ROUTE	POST MILES TOTAL PROJECT	SHEET NO.	TOTAL SHEETS
03	Nev,Sac,Sut,Yol,Yub	5,20,49,50,51,80,99	Var	32	50

Randell D. Hiatt
REGISTERED CIVIL ENGINEER

October 20, 2006
PLANS APPROVAL DATE

REGISTERED PROFESSIONAL ENGINEER
Randell D. Hiatt
No. C50200
Exp. 6-30-07
CIVIL
STATE OF CALIFORNIA

The State of California or its officers or agents shall not be responsible for the accuracy or completeness of electronic copies of this plan sheet.

To accompany plans dated August 30, 2010

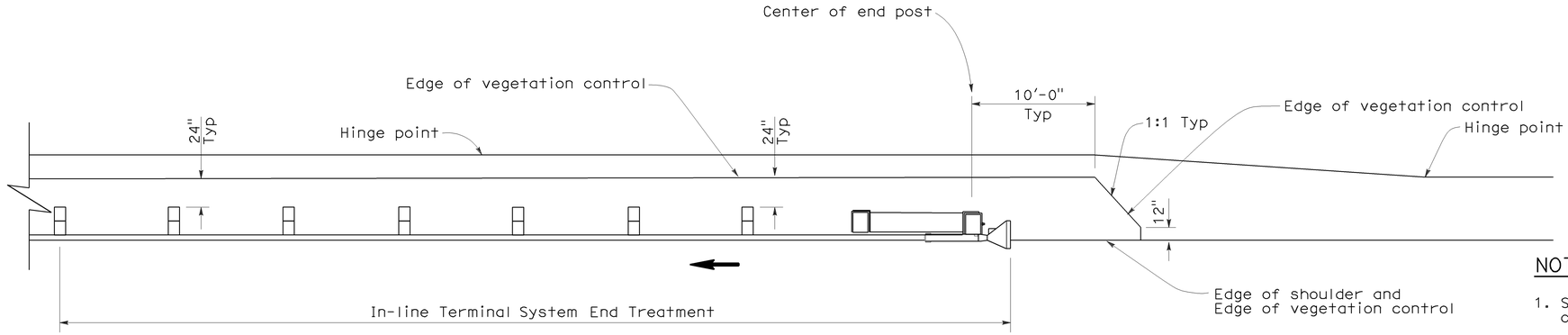

PLAN

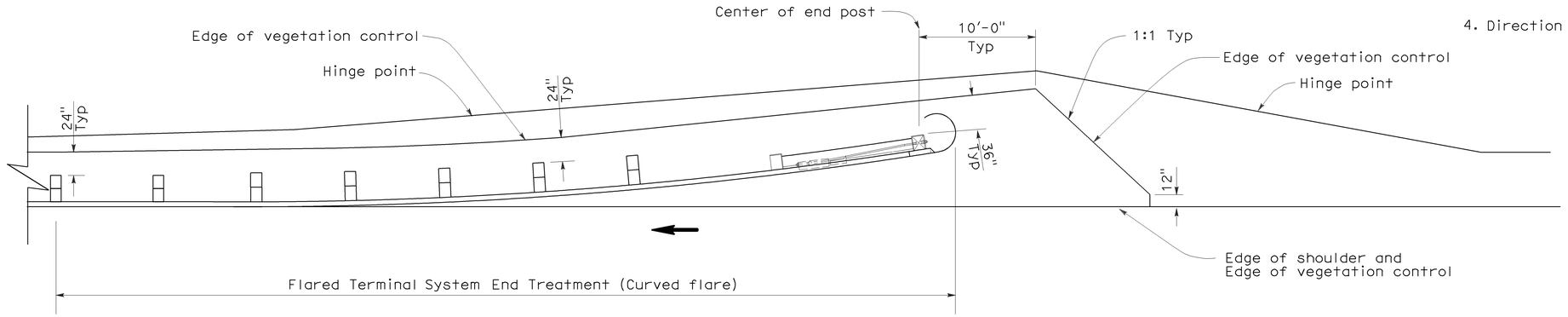

PLAN

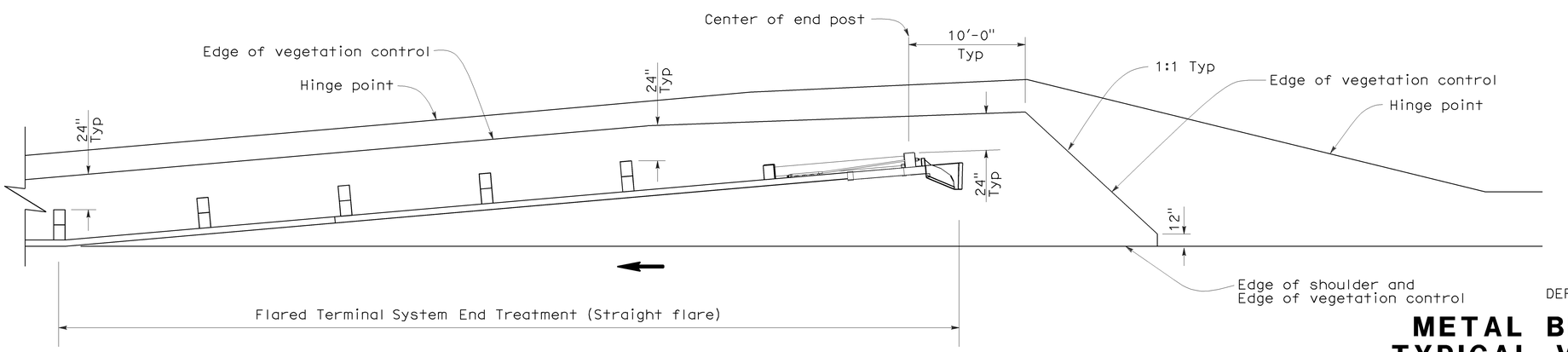

PLAN

NOTES:

1. See New Standard Plan NSP A77C5 for additional vegetation control details.
2. Where the distance between back of post and hinge point is less than 24", vegetation control to be constructed flush with the back edge of the post.
3. Where dike is constructed under railing, construct vegetation control to back edge of dike. Where paved shoulder is constructed within 24" in front of the post, construct vegetation control to the edge of paved shoulder.
4. Direction of adjacent traffic indicated by ←.

STATE OF CALIFORNIA
DEPARTMENT OF TRANSPORTATION

METAL BEAM GUARD RAILING
TYPICAL VEGETATION CONTROL
FOR TERMINAL SYSTEM END TREATMENTS

NO SCALE

NSP A77C6 DATED OCTOBER 20, 2006 SUPPLEMENTS THE STANDARD PLANS BOOK DATED MAY 2006.

NEW STANDARD PLAN NSP A77C6

2006 NEW STANDARD PLAN NSP A77C6

7-17-06

DIST	COUNTY	ROUTE	POST MILES TOTAL PROJECT	SHEET NO.	TOTAL SHEETS
03	Nev,Sac,Sut,Yol,Yub	5,20,49,50, 51,80,99	Var	33	50

Randell D. Hiatt
REGISTERED CIVIL ENGINEER

October 20, 2006
PLANS APPROVAL DATE

REGISTERED PROFESSIONAL ENGINEER
Randell D. Hiatt
No. C50200
Exp. 6-30-07
CIVIL
STATE OF CALIFORNIA

The State of California or its officers or agents shall not be responsible for the accuracy or completeness of electronic copies of this plan sheet.

To accompany plans dated August 30, 2010

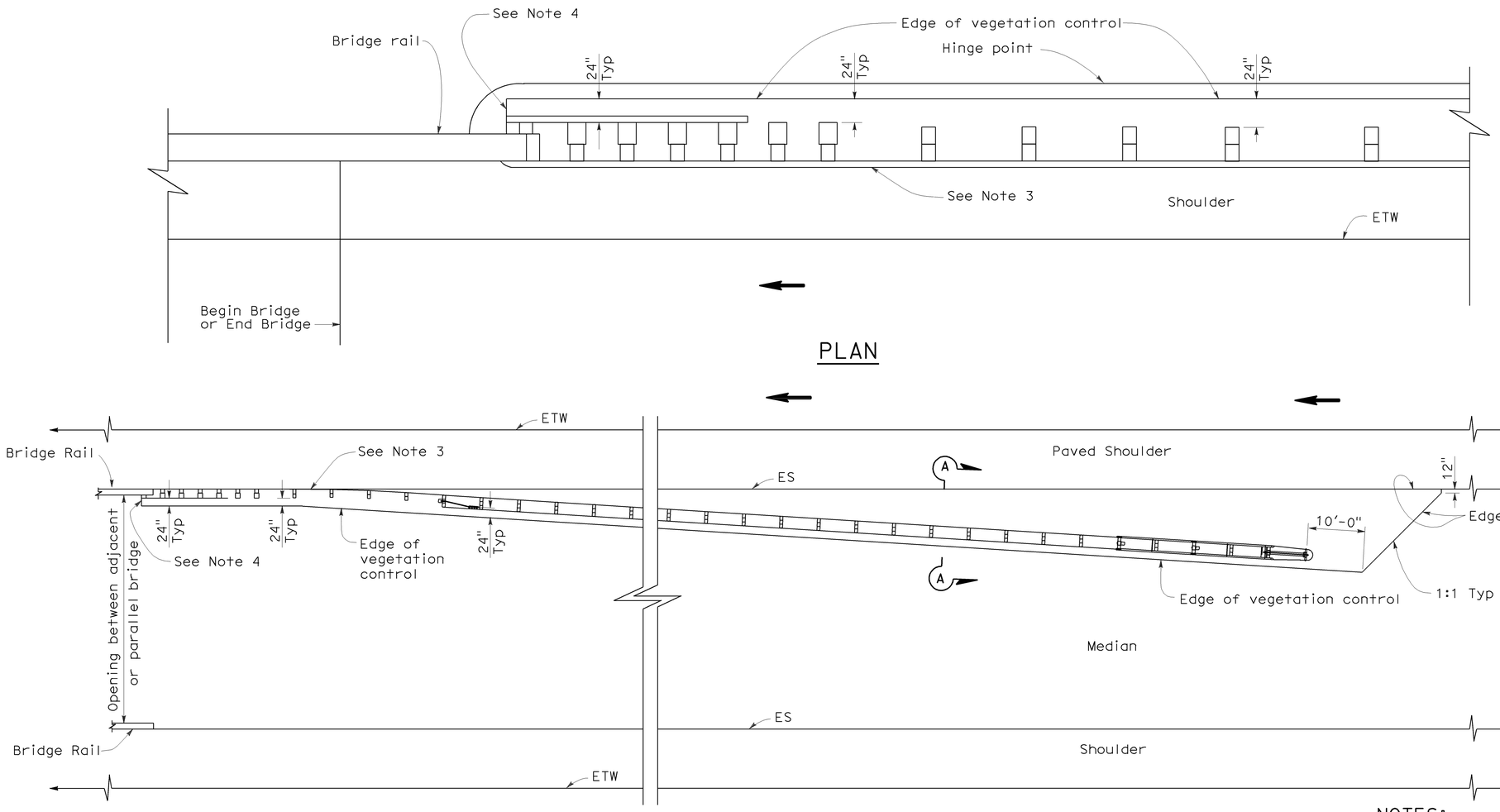

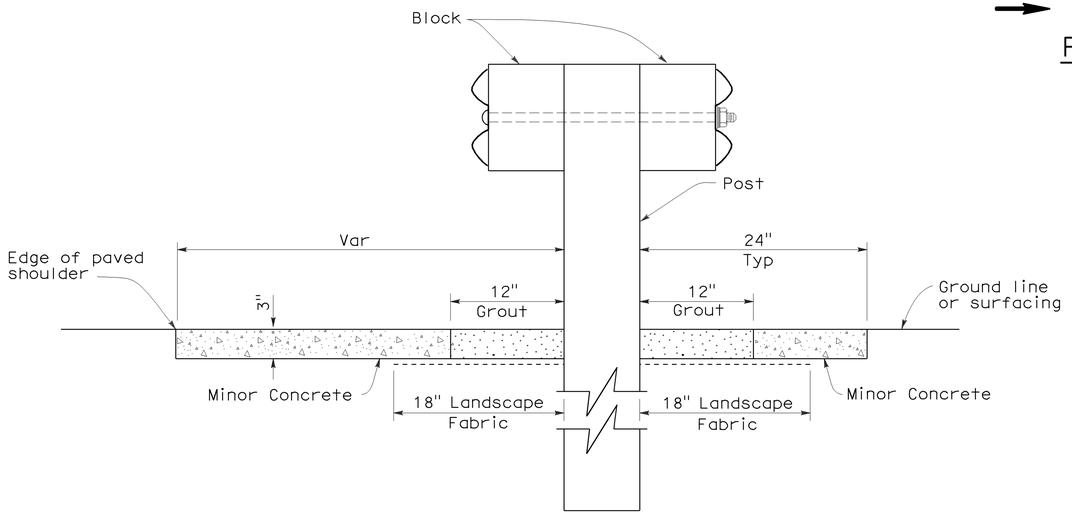

SECTION A-A

NOTES:

1. See New Standard Plan NSP A77C5 for additional vegetation control details.
2. Where the distance between back of post and hinge point is less than 24", vegetation control to be constructed flush with the back edge of the post.
3. Where dike is constructed under railing, construct vegetation control to back edge of dike. Where paved shoulder is constructed within 24" in front of the post, construct vegetation control to the edge of paved shoulder.
4. End vegetation control at end of backside rail element.
5. Direction of adjacent traffic indicated by ←.

STATE OF CALIFORNIA
DEPARTMENT OF TRANSPORTATION

METAL BEAM GUARD RAILING TYPICAL VEGETATION CONTROL AT STRUCTURE APPROACH AND DEPARTURE

NO SCALE

NSP A77C7 DATED OCTOBER 20, 2006 SUPPLEMENTS THE STANDARD PLANS BOOK DATED MAY 2006.

NEW STANDARD PLAN NSP A77C7

2006 NEW STANDARD PLAN NSP A77C7

7-17-06

DIST	COUNTY	ROUTE	POST MILES TOTAL PROJECT	SHEET NO.	TOTAL SHEETS
03	Nev,Sac,Sut,Yol,Yub	5,20,49,50,51,80,99	Var	34	50

Randell D. Hiatt
REGISTERED CIVIL ENGINEER

REGISTERED PROFESSIONAL ENGINEER
Randell D. Hiatt
No. C50200
Exp. 6-30-07
CIVIL
STATE OF CALIFORNIA

October 20, 2006
PLANS APPROVAL DATE

The State of California or its officers or agents shall not be responsible for the accuracy or completeness of electronic copies of this plan sheet.

To accompany plans dated August 30, 2010

NOTES:

1. See New Standard Plan NSP A77C5 for additional vegetation control details.
2. Where the distance between back of post and hinge point is less than 24", vegetation control to be constructed flush with the back edge of the post.
3. Where dike is constructed under railing, construct vegetation control to back edge of dike. Where paved shoulder is constructed within 24" in front of the post, construct vegetation control to the edge of paved shoulder.
4. Direction of adjacent traffic indicated by ←.

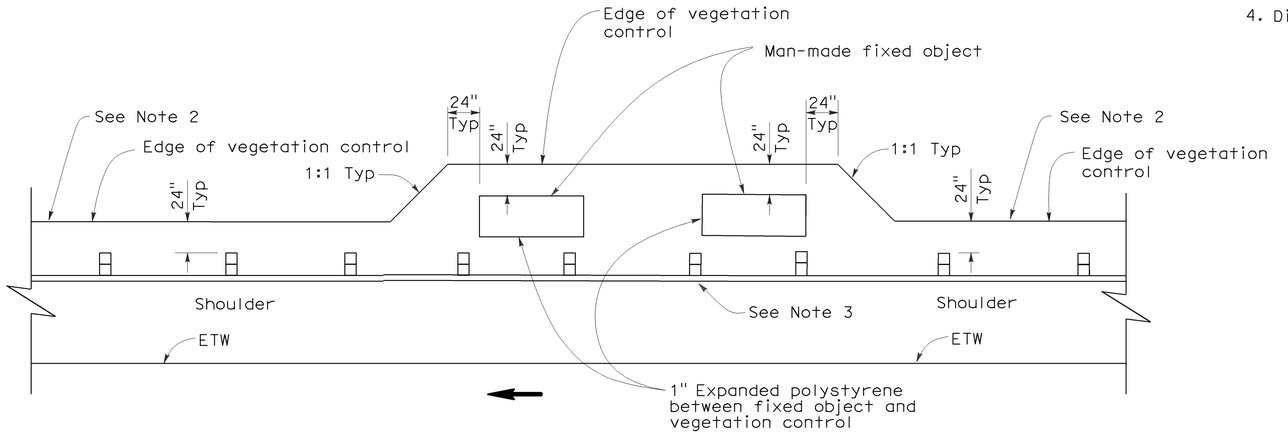

PLAN

FIXED OBJECT(S) ON SHOULDER

STATE OF CALIFORNIA
DEPARTMENT OF TRANSPORTATION

METAL BEAM GUARD RAILING
TYPICAL VEGETATION CONTROL AT FIXED OBJECT

NO SCALE

NSP A77C8 DATED OCTOBER 20, 2006 SUPPLEMENTS THE STANDARD PLANS BOOK DATED MAY 2006.

NEW STANDARD PLAN NSP A77C8

2006 NEW STANDARD PLAN NSP A77C8

7-17-06

NOTES:

1. See New Standard Plan NSP A77C5 for additional vegetation control details.
2. Where dike is constructed under railing, construct vegetation control to back edge of dike. Where paved shoulder is constructed within 24" in front of the post, construct vegetation control to the edge of paved shoulder.
3. Direction of adjacent traffic indicated by ← .

DIST	COUNTY	ROUTE	POST MILES TOTAL PROJECT	SHEET NO.	TOTAL SHEETS
03	Nev,Sac,Sut,Yol,Yub	5,20,49,50,51,80,99	Var	35	50

Randell D. Hiatt
REGISTERED CIVIL ENGINEER

October 20, 2006
PLANS APPROVAL DATE

REGISTERED PROFESSIONAL ENGINEER — Randell D. Hiatt — No. C50200 — Exp. 6-30-07 — CIVIL — STATE OF CALIFORNIA

The State of California or its officers or agents shall not be responsible for the accuracy or completeness of electronic copies of this plan sheet.

To accompany plans dated August 30, 2010

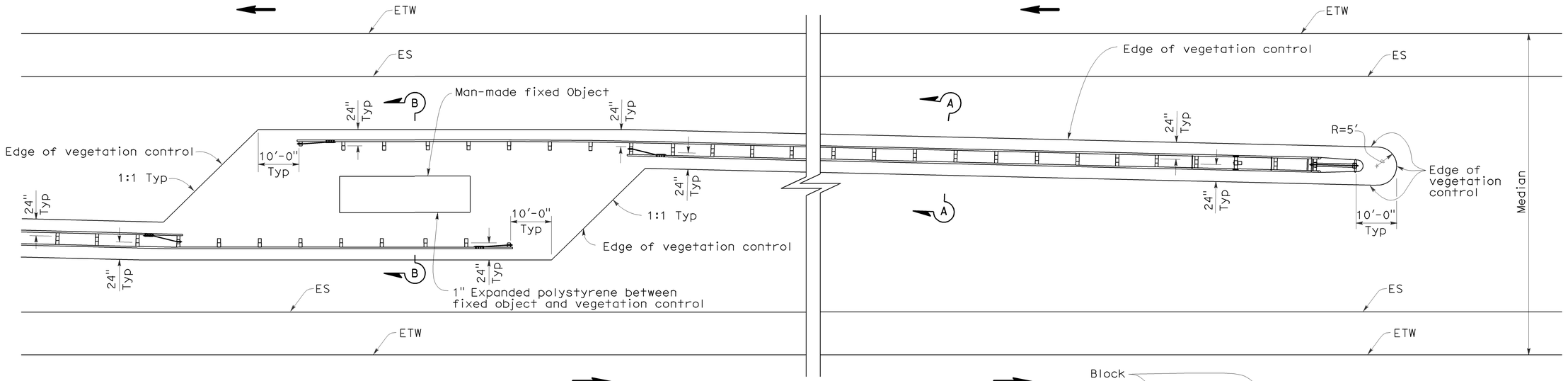

PLAN

FIXED OBJECT(S) IN MEDIAN

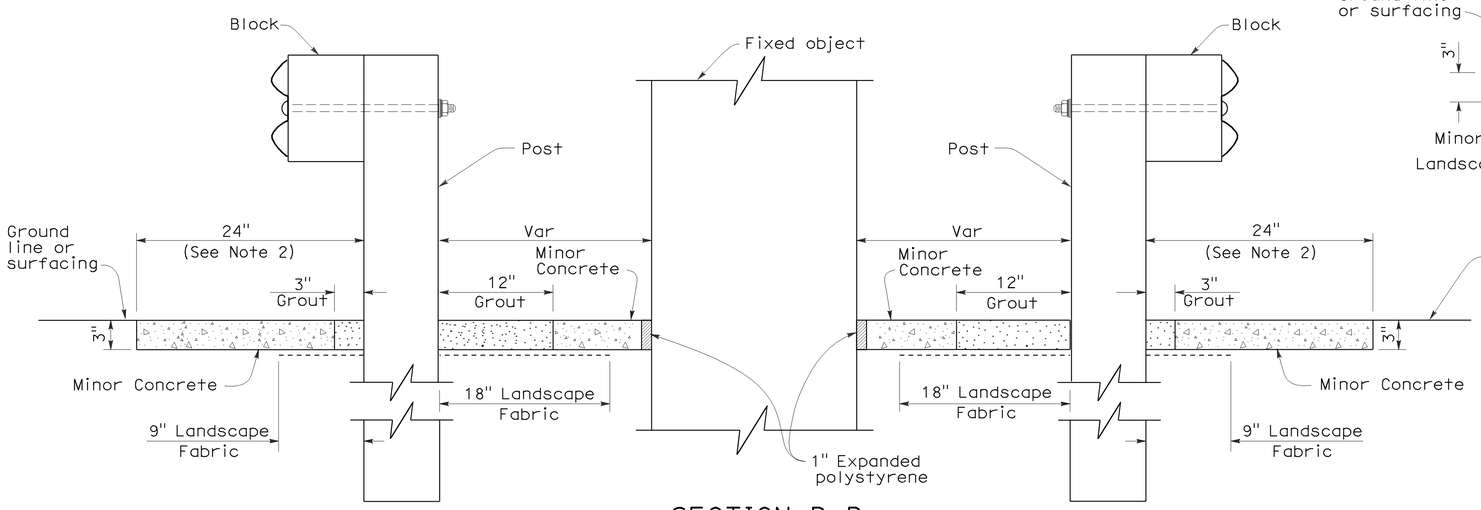

SECTION B-B

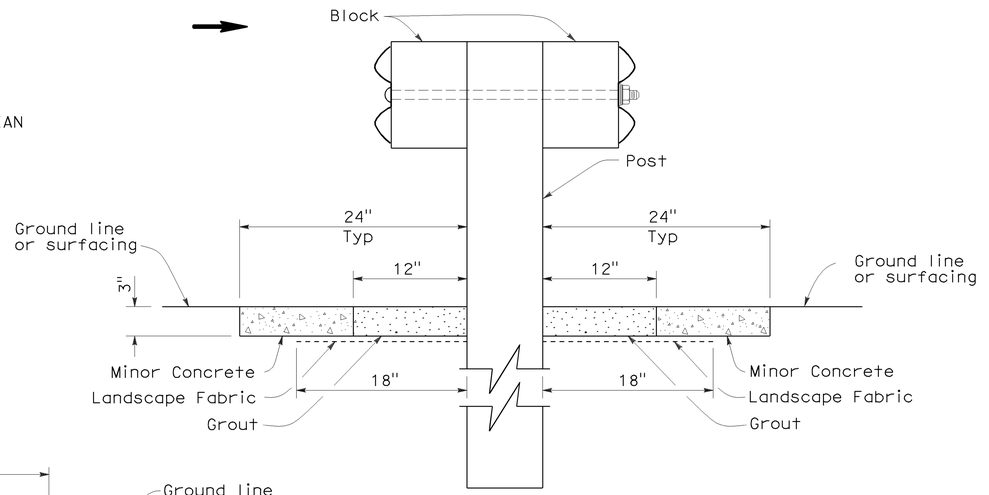

SECTION A-A

STATE OF CALIFORNIA
DEPARTMENT OF TRANSPORTATION

METAL BEAM GUARD RAILING TYPICAL VEGETATION CONTROL AT FIXED OBJECT

NO SCALE

NSP A77C9 DATED OCTOBER 20, 2006 SUPPLEMENTS THE STANDARD PLANS BOOK DATED MAY 2006.

NEW STANDARD PLAN NSP A77C9

2006 NEW STANDARD PLAN NSP A77C9

7-17-06

NOTES:

1. See New Standard Plan NSP A77C5 for additional vegetation control details.
2. Where dike is constructed under railing, construct vegetation control to back edge of dike. Where paved shoulder is constructed within 24" in front of the post, construct vegetation control to the edge of paved shoulder.
3. Direction of adjacent traffic indicated by ⟵.

DIST	COUNTY	ROUTE	POST MILES TOTAL PROJECT	SHEET NO.	TOTAL SHEETS
03	Nev,Sac,Sut,Yol,Yub	5,20,49,50,51,80,99	Var	36	50

Randell D. Hiatt
REGISTERED CIVIL ENGINEER

October 20, 2006
PLANS APPROVAL DATE

REGISTERED PROFESSIONAL ENGINEER — Randell D. Hiatt — No. C50200 — Exp. 6-30-07 — CIVIL — STATE OF CALIFORNIA

The State of California or its officers or agents shall not be responsible for the accuracy or completeness of electronic copies of this plan sheet.

To accompany plans dated August 30, 2010

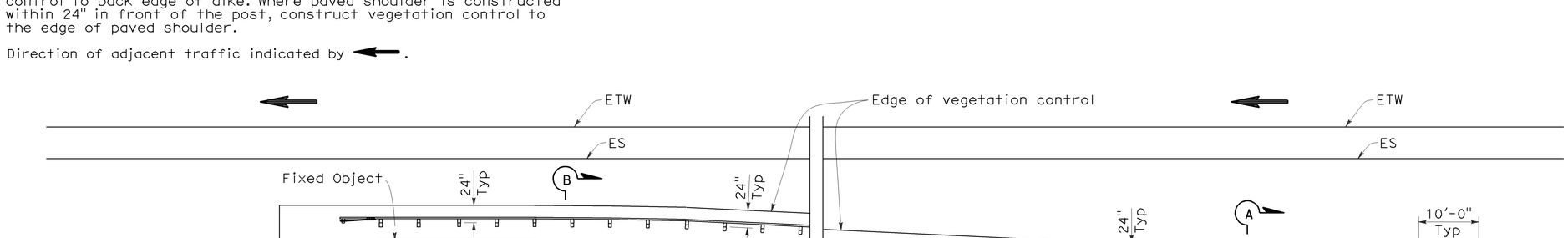

PLAN

FIXED OBJECT(S) BETWEEN SEPARATE ROADBEDS
(ONE-WAY TRAFFIC)

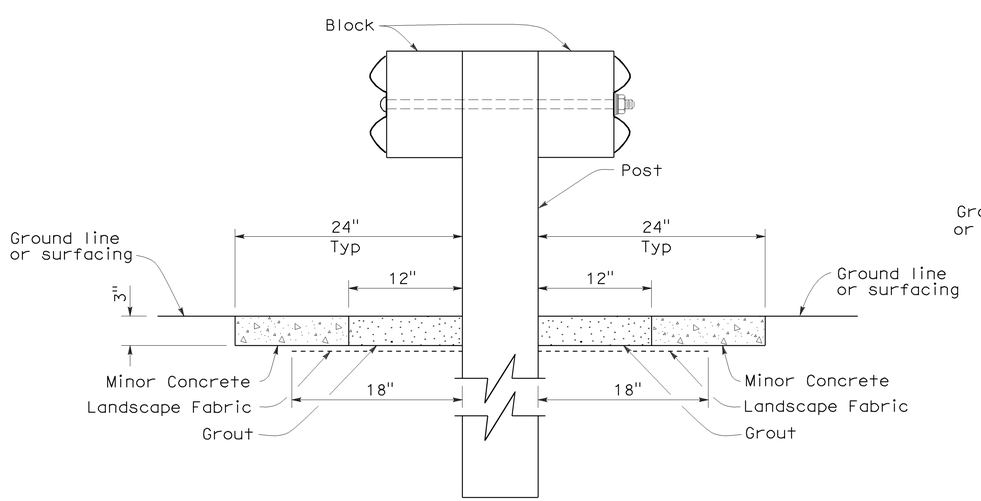

SECTION A-A

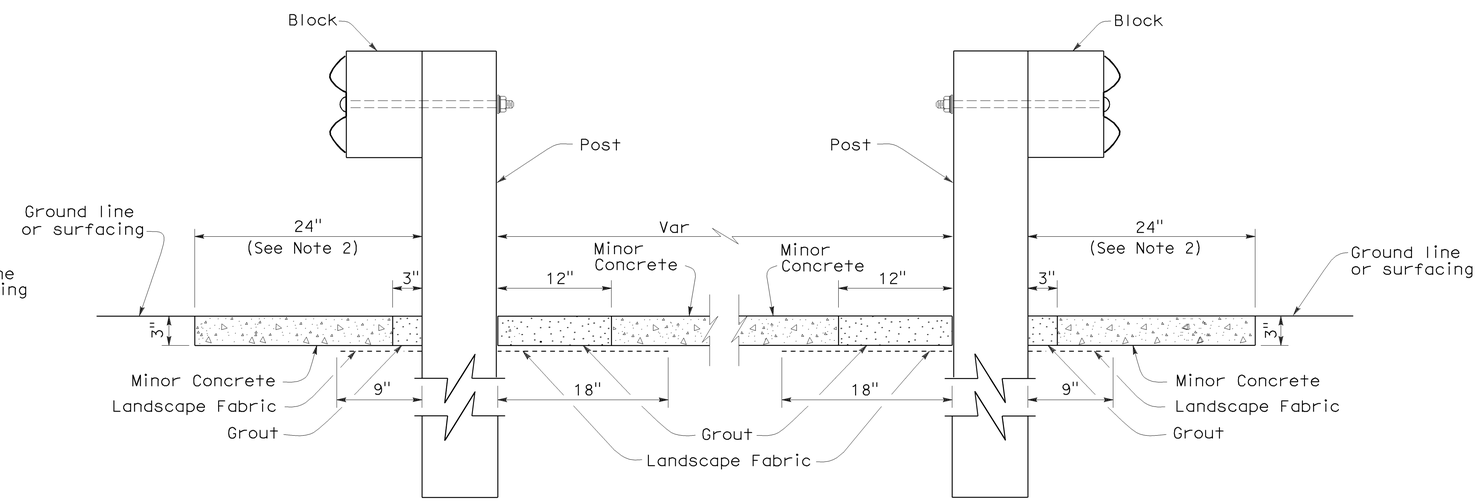

SECTION B-B

STATE OF CALIFORNIA
DEPARTMENT OF TRANSPORTATION

METAL BEAM GUARD RAILING TYPICAL VEGETATION CONTROL AT FIXED OBJECT

NO SCALE

NSP A77C10 DATED OCTOBER 20, 2006 SUPPLEMENTS THE STANDARD PLANS BOOK DATED MAY 2006.

NEW STANDARD PLAN NSP A77C10

2006 NEW STANDARD PLAN NSP A77C10

7-17-06

DIST	COUNTY	ROUTE	POST MILES TOTAL PROJECT	SHEET NO.	TOTAL SHEETS
03	Nev,Sac,Sut,Yol,Yub	5,20,49,50, 51,80,99	Var	37	50

Randell D. Hiatt
REGISTERED CIVIL ENGINEER

June 6, 2008
PLANS APPROVAL DATE

REGISTERED PROFESSIONAL ENGINEER — Randell D. Hiatt — No. C50200 — Exp. 6-30-09 — CIVIL — STATE OF CALIFORNIA

The State of California or its officers or agents shall not be responsible for the accuracy or completeness of electronic copies of this plan sheet.

To accompany plans dated August 30, 2010

NOTES:

1. Line post, blocks and hardware to be used are shown on Standard Plans A77A1, A77A2, A77B1, A77C1 and A77C2.
2. Guard railing post spacing to be 6'-3" center to center, except as otherwise noted.
3. Except as noted, line posts are 6" x 8" x 6'-0" wood with 6" x 8" x 1'-2" wood blocks. W6 x 9 steel posts, 6'-0" in length, with 6" x 8" x 1'-2" notched wood blocks or notched recycled plastic blocks may be used for 6" x 8" x 6'-0" wood line posts with 6" x 8" x 1'-2" wood blocks where applicable and when specified.
4. A 4'-0" minimum clearance is required between the face of the railing and the face of a fixed object located directly behind standard guard railing section with post spacing of 6'-3". Construct guard railing as shown in the detail "Strengthened Railing Sections for Fixed Objects" on this plan, where the clearance between the face of the railing and the face of a fixed object is less than 4'-0", but not less than 2'-3". Where the clearance is less than 2'-3", a concrete wall or barrier should be constructed to shield the fixed object(s).
5. Direction of adjacent traffic indicated by ➡.
6. For End Anchor Assembly (Type SFT) details, see Standard Plan A77H1.
7. Type of crash cushion to be used will be shown on the Project Plans.
8. Type 15A layout is typically used on multilane freeways or expressways to shield fixed objects in the area between separated one-way roadbeds.
9. For typical flare offsets for 25'-0" length parabola with maximum offset of 1'-0", see Revised Standard Plan RSP A77E1.
10. The 15:1 or flatter flare is measured off of the edge of the traveled way.
11. W6 x 15 steel post, 8'-0" in length, with 8" x 8" x 1'-2" notched wood block or notched recycled plastic blocks may be used in place of the 10" x 10" x 8'-0" wood post with 8" x 8" x 1'-2" wood block shown in the "Strengthened Railing Sections Detail".

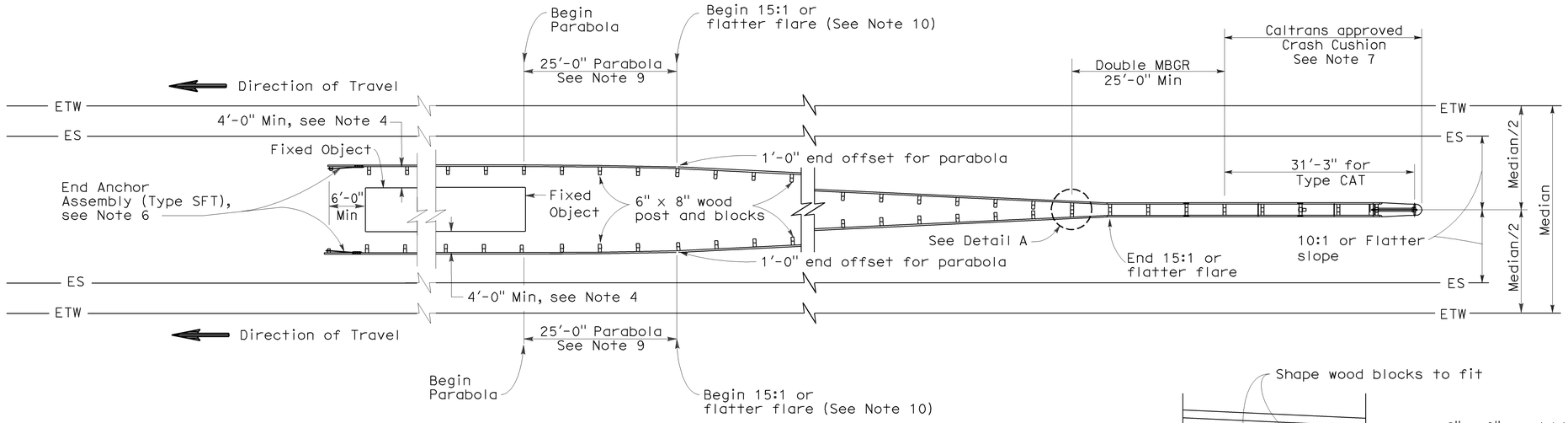

TYPE 15A LAYOUT

See Note 9

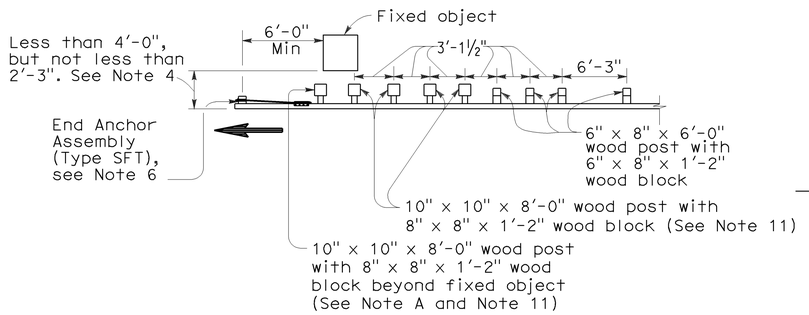

NOTE A: For a series of fixed objects (bridge columns, overhead sign supports, etc.) additional 10" x 10" x 8'-0" wood post with 8" x 8" x 1'-2" wood blocks at 3'-1½" center to center spacing are to be used between fixed objects.

STRENGTHENED RAILING SECTIONS FOR FIXED OBJECT

Use strengthened railing sections with Type 15A layout where minimum clearance between the face of the guard railing and the fixed object(s) is less than 4'-0", but not less than 2'-3". See Note 4.

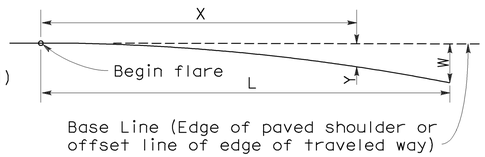

$$Y = \frac{WX^2}{L^2}$$

Y = Offset from base line
W = Maximum offset
X = Distance along base line
L = Length of flare

PARABOLIC FLARE OFFSETS

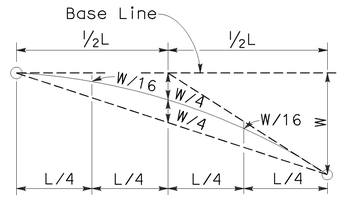

TYPICAL PARABOLIC LAYOUT

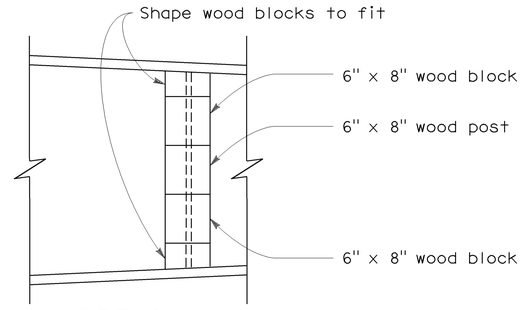

DETAIL A

STATE OF CALIFORNIA
DEPARTMENT OF TRANSPORTATION

METAL BEAM GUARD RAILING TYPICAL LAYOUTS FOR FIXED OBJECTS BETWEEN SEPARATE ROADBEDS (ONE-WAY TRAFFIC)

NO SCALE

RSP A77G2 DATED JUNE 6, 2008 SUPERSEDES STANDARD PLAN A77G2
DATED MAY 1, 2006 - PAGE 60 OF THE STANDARD PLANS BOOK DATED MAY 2006.

REVISED STANDARD PLAN RSP A77G2

2006 REVISED STANDARD PLAN RSP A77G2

12-10-07

DIST	COUNTY	ROUTE	POST MILES TOTAL PROJECT	SHEET NO.	TOTAL SHEETS
03	Nev,Sac,Sut,Yol,Yub	5,20,49,50,51,80,99	Var	38	50

Randell D. Hiatt
REGISTERED CIVIL ENGINEER

June 5, 2009
PLANS APPROVAL DATE

REGISTERED PROFESSIONAL ENGINEER — Randell D. Hiatt — No. C50200 — Exp. 6-30-09 — CIVIL — STATE OF CALIFORNIA

The State of California or its officers or agents shall not be responsible for the accuracy or completeness of electronic copies of this plan sheet.

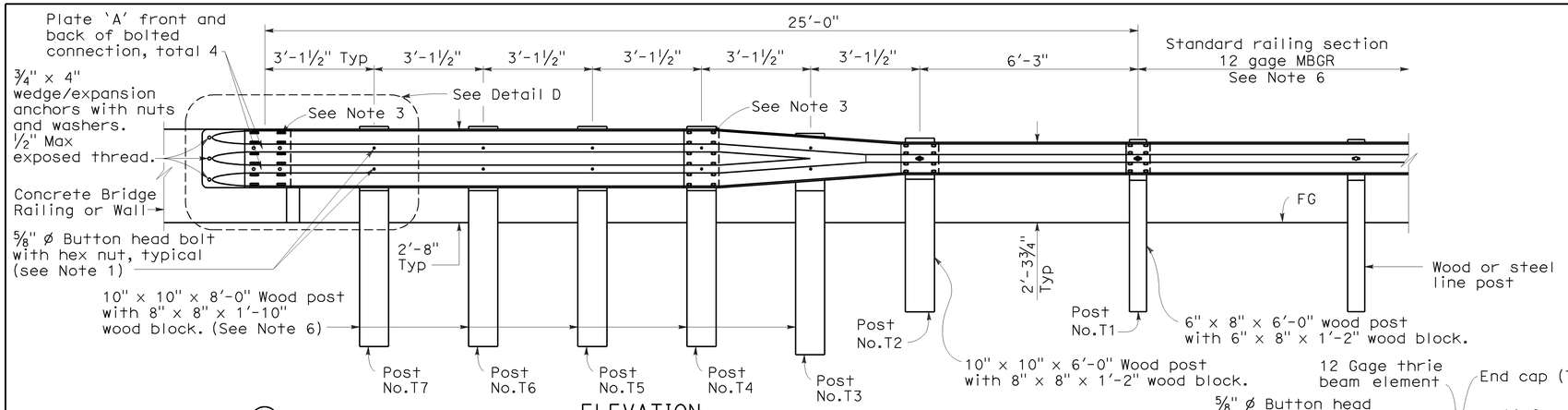

ELEVATION

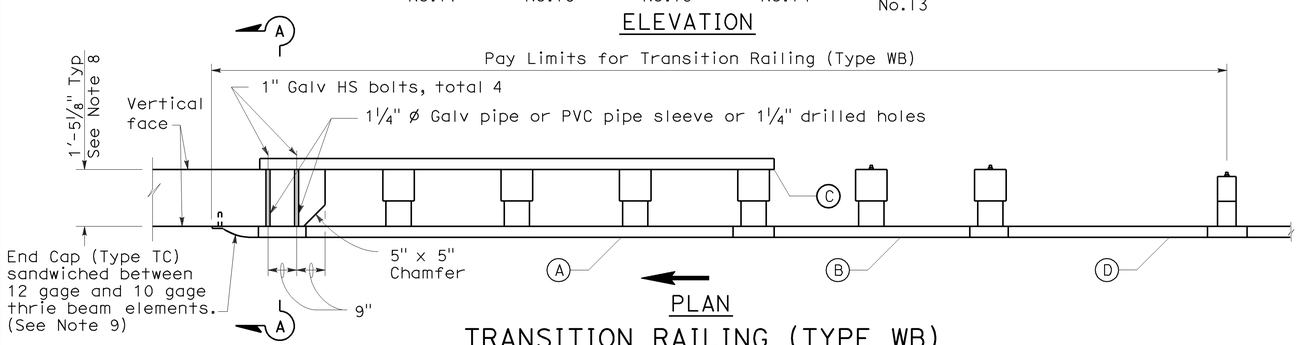

PLAN

TRANSITION RAILING (TYPE WB)

(No Blockout Attachment)

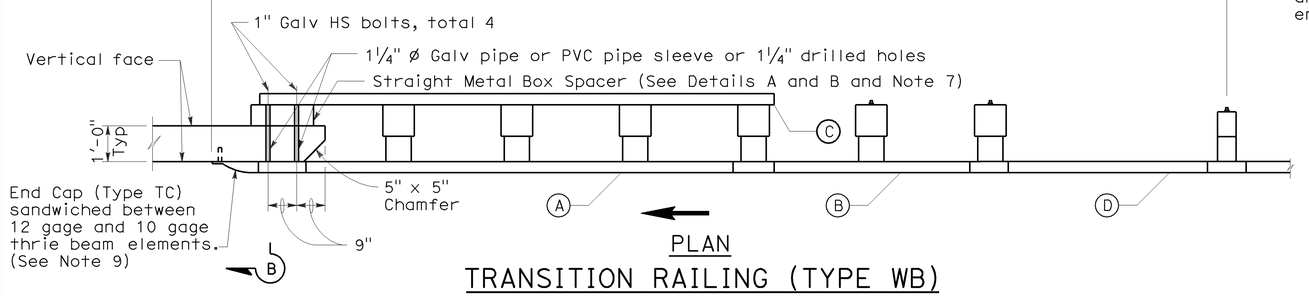

PLAN

TRANSITION RAILING (TYPE WB)

(Blockout Attachment)

LEGEND

- (A) Nested thrie beam elements (one 12 gage element nested over one 10 gage element).
- (B) One 10 gage "W" beam to thrie beam element.
- (C) One 12 gage thrie beam element.
- (D) One 10 gage "W" beam rail element (7'-3½" length)

  10 gage = 0.135" thick

  12 gage = 0.108" thick

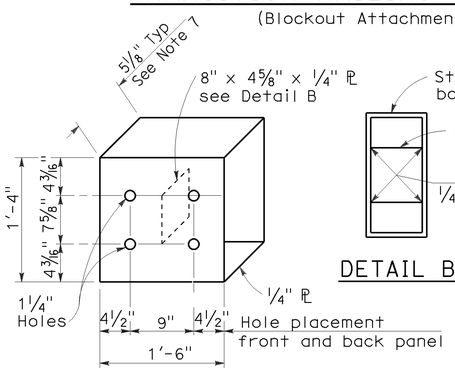

DETAIL A

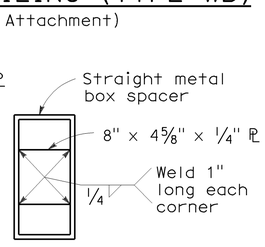

DETAIL B

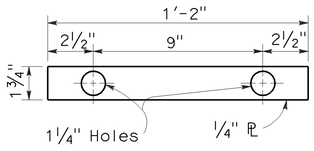

DETAIL C

STRAIGHT METAL BOX SPACER

PLATE 'A'

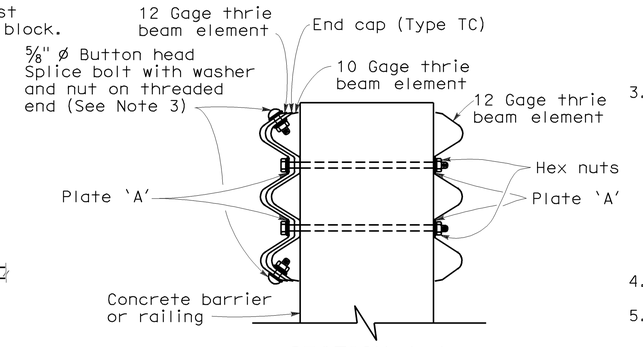

SECTION A-A

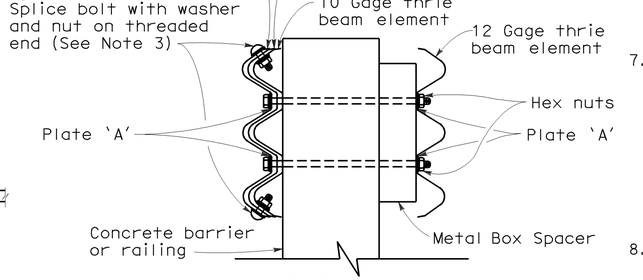

SECTION B-B

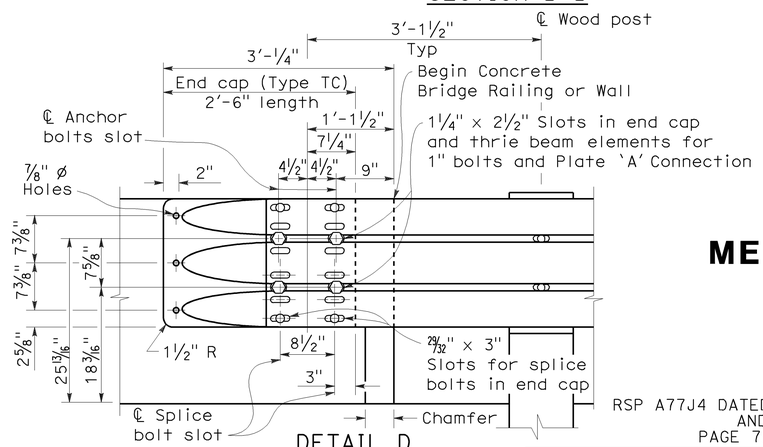

DETAIL D

NOTES:

To accompany plans dated August 30, 2010

1. Use 5/8 " ø Button head bolts and hex nuts for connections to posts. No washer on rail face for bolted connections to post.
2. The nested rail elements, end cap, and 'W' beam to thrie beam element may be spliced together prior to bolting the elements to the wood post and concrete barrier or railing.
3. Exterior splice bolt holes for rail element splices at Post No.T4 and the connection to the concrete barrier or railing shall be the standard 29/32 " x 1 1/8 " slot size. Interior splice bolt holes at these locations may be increased up to 1 1/4 " ø. Only the top 2 and the bottom 2 splice bolts with washers and nuts are required for rail splices at Post No.T4 and the connection to the concrete barrier or railing.
4. Direction of adjacent traffic indicated by →.
5. The top elevation of Post Nos.T2 through T7 shall not project more than 1" above the top elevation of the rail element.
6. Typically, the railing connected to Transition Railing (Type WB) will be either standard railing section of metal beam guard railing or an approved Caltrans end treatment attached to Post No.T1.
7. The depth of the metal box spacer varies from the 5 1/8 " to 1 1/2 " and is dependent on the width of the concrete railing or wall. The combined dimension for the depth of the metal box spacer plus the width of railing or wall is typically 17 1/8 ". Where the space between the backside of the concrete railing or wall and the rear thrie beam element is less than 1 1/2 ", metal plates similar to Plate 'A' are to be used as spacers.
8. Where the width of the concrete railing or wall is greater than 17 1/8 ", wood blocks are to be used to fill the space created between the backside of Posts No.4 through No.7 and the rear thrie beam element. These wood blocks shall be 8" in width and 1'-2" in length. The dimension between the front thrie beam element and the rear thrie beam element is to match the width of the concrete railing or wall.
9. End cap may be installed over 12 gage and 10 gage thrie beam elements where transition railing is installed on the departure end of bridge railing.

STATE OF CALIFORNIA
DEPARTMENT OF TRANSPORTATION

METAL BEAM GUARD RAILING TRANSITION RAILING (TYPE WB)

NO SCALE

RSP A77J4 DATED JUNE 5, 2009 SUPERSEDES RSP A77J4 DATED JUNE 6, 2008 AND STANDARD PLAN A77J4 DATED MAY 1, 2006 - PAGE 75 OF THE STANDARD PLANS BOOK DATED MAY 2006.

REVISED STANDARD PLAN RSP A77J4

2006 REVISED STANDARD PLAN RSP A77J4

5-14-09

DIST	COUNTY	ROUTE	POST MILES TOTAL PROJECT	SHEET NO.	TOTAL SHEETS
03	Nev,Sac,Sut,Yol,Yub	5,20,49,50,51,80,99	Var	39	50

Randell D. Hiatt
REGISTERED CIVIL ENGINEER

June 6, 2008
PLANS APPROVAL DATE

REGISTERED PROFESSIONAL ENGINEER — Randell D. Hiatt — No. C50200 — Exp. 6-30-09 — CIVIL — STATE OF CALIFORNIA

The State of California or its officers or agents shall not be responsible for the accuracy or completeness of electronic copies of this plan sheet.

To accompany plans dated August 30, 2010

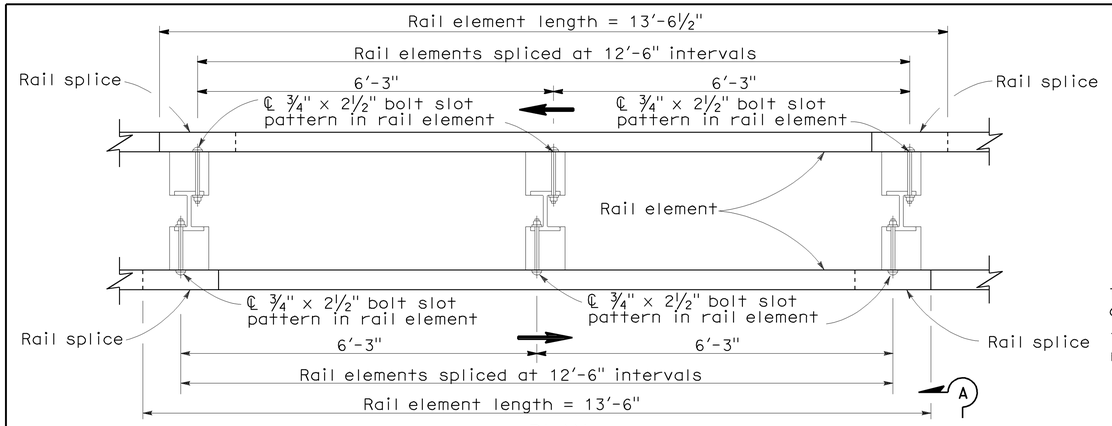

PLAN

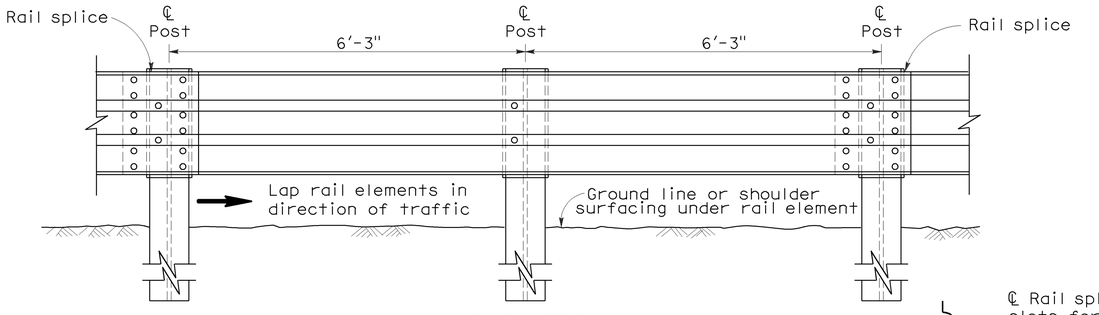

ELEVATION

DOUBLE THRIE BEAM BARRIER

(Steel post with notched wood or notched plastic blocks)
See Note 1

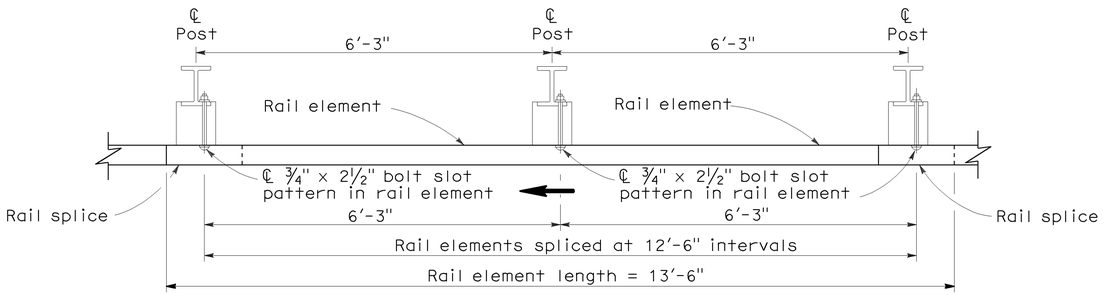

PLAN

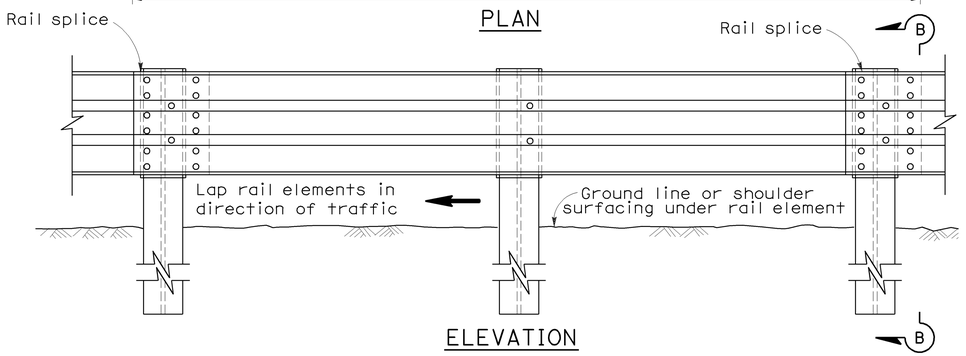

ELEVATION

SINGLE THRIE BEAM BARRIER

(Steel post with notched wood or notched plastic blocks)
See Note 1

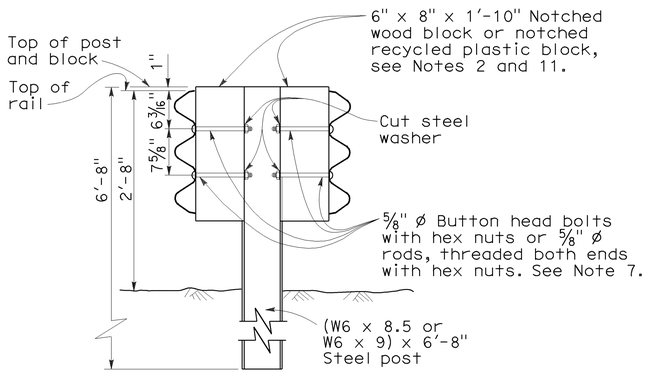

SECTION A-A

TYPICAL STEEL LINE POST INSTALLATION

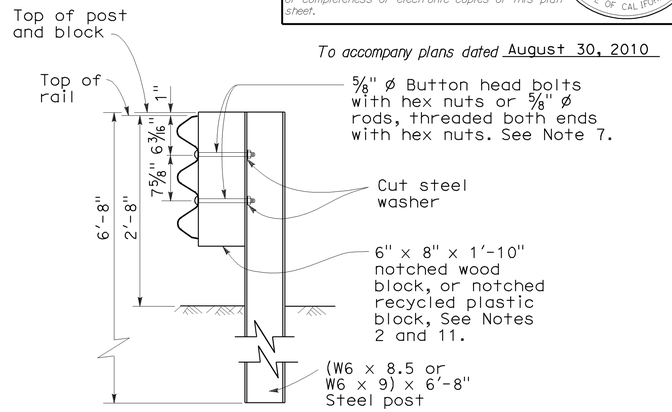

SECTION B-B

TYPICAL STEEL LINE POST INSTALLATION

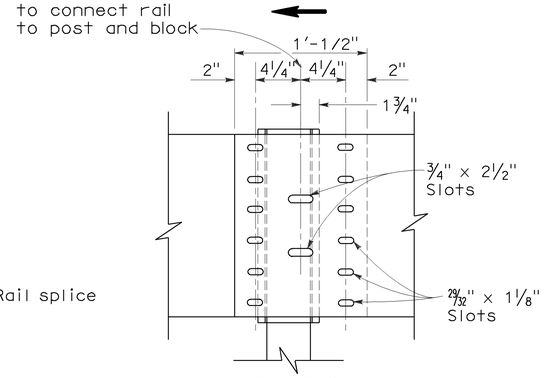

ELEVATION

RAIL ELEMENT SPLICE DETAIL

a) Connect the overlapped ends of the thrie beam rail elements with ⅝" ø x 1⅛" button head oval shoulder bolts inserted into the 29/32" x 1⅛" slots and bolted together with ⅝" ø x 1⅛" recessed hex nuts. Recess of hex nut points toward rail element. A total of 12 bolts and nuts are to be used at each rail splice connection.

b) The ends of the rail elements are to be overlapped in the direction of traffic (see details).

c) Where end cap is to be attached to the end of a rail element, a total of 4 of the above described splice bolts and nuts are to be used. Where a return cap is to be attached to the ends of rail elements, a total of 8 of the above described splice bolts and nuts are to be used.

NOTES:

1. For details of the cross section of the thrie beam rail element and details for wood post with wood block installations, see Standard Plan A78A.
2. For details of standard hardware, posts and blocks used to construct thrie beam barrier, see Revised Standard Plan RSP A78C1 and Standard Plan A78C2.
3. Thrie beam barrier post spacing to be 6′-3" center to center, except as otherwise noted.
4. Top of barrier rail to be 2′-8" above ground line or shoulder surfacing under the rail element.
5. For barrier end treatments and barrier connections, see Standard Plans A78E1, A78E2 and A78E3, Revised Standard Plans RSPs A78F1 and A78F2, Standard Plan A78G and Revised Standard Plan RSP A78H.
6. For connection to Concrete Barrier, see Revised Standard Plan RSP A78I.
7. Attach rail element to block and steel post with 2 bolts or rods on approaching traffic side of block and post web. No washer on rail face for rod or bolted connections to line post.
8. For details of thrie beam barrier on bridges, see Standard Plan A78D2. For details of thrie beam barrier at fixed objects, see Standard Plan A78D1.
9. Direction of traffic indicated by ⟶.
10. Notched face of block faces steel post.

STATE OF CALIFORNIA
DEPARTMENT OF TRANSPORTATION

THRIE BEAM BARRIER STANDARD BARRIER RAILING SECTION (STEEL POST WITH NOTCHED WOOD BLOCK OR NOTCHED RECYCLED PLASTIC BLOCK)

NO SCALE

RSP A78B DATED JUNE 6, 2008 SUPERSEDES STANDARD PLAN A78B DATED MAY 1, 2006 - PAGE 84 OF THE STANDARD PLANS BOOK DATED MAY 2006.

REVISED STANDARD PLAN RSP A78B

2006 REVISED STANDARD PLAN RSP A78B

5-14-08

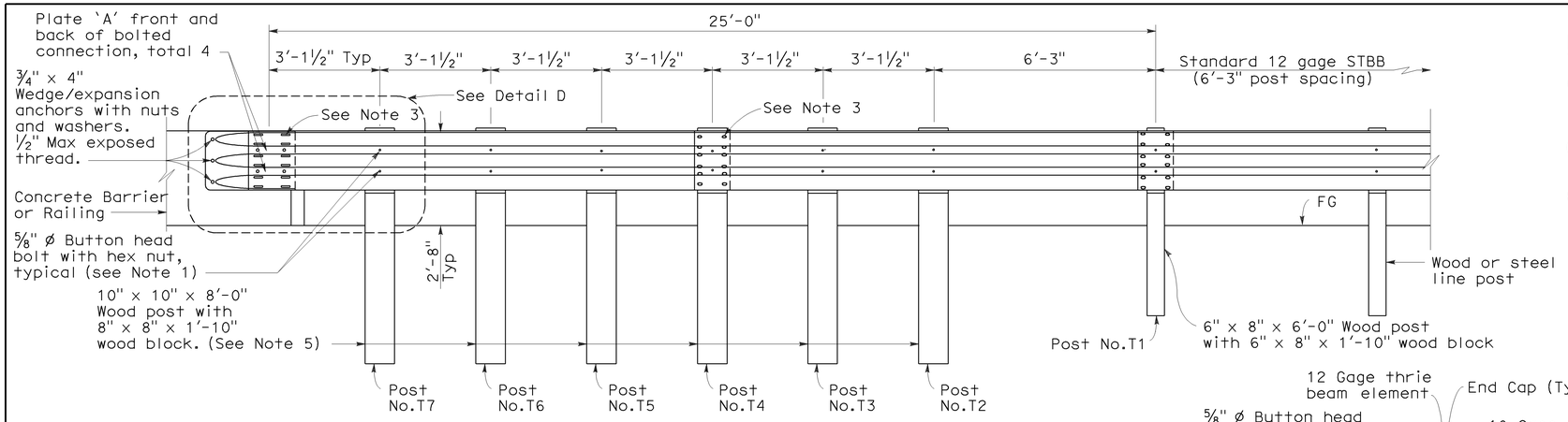

ELEVATION

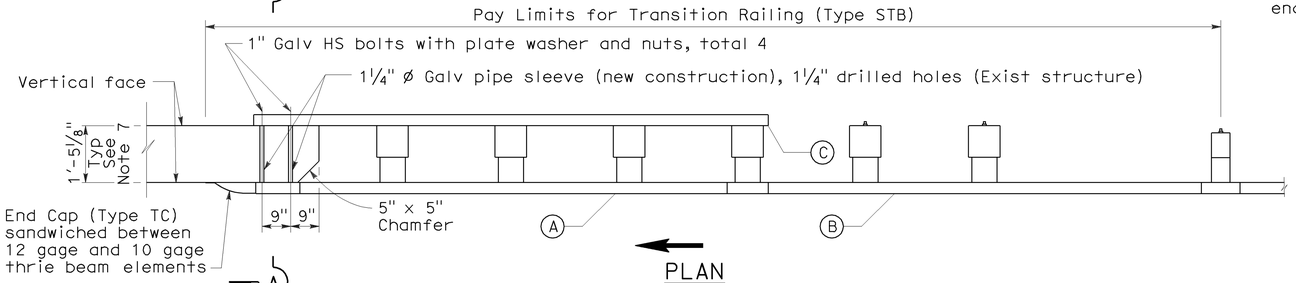

PLAN

TRANSITION RAILING (TYPE STB)

(No Blockout Attachment)

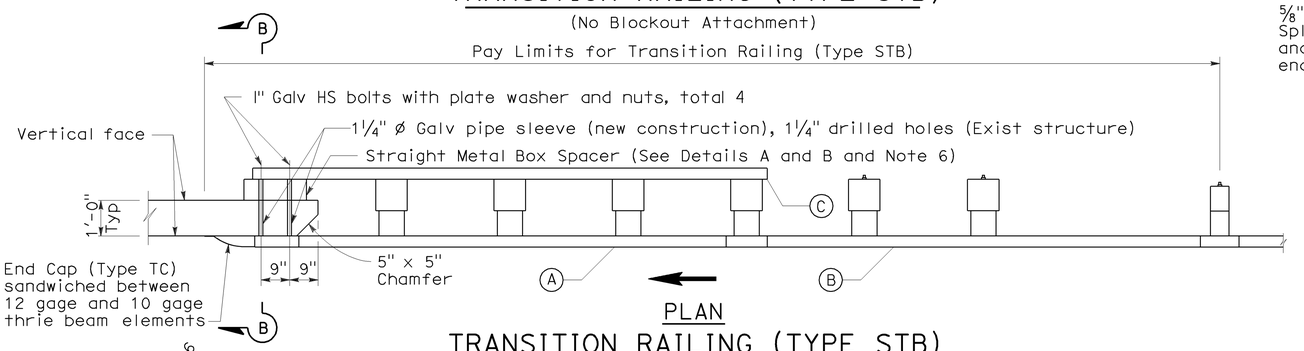

PLAN

TRANSITION RAILING (TYPE STB)

(Blockout Attachment)

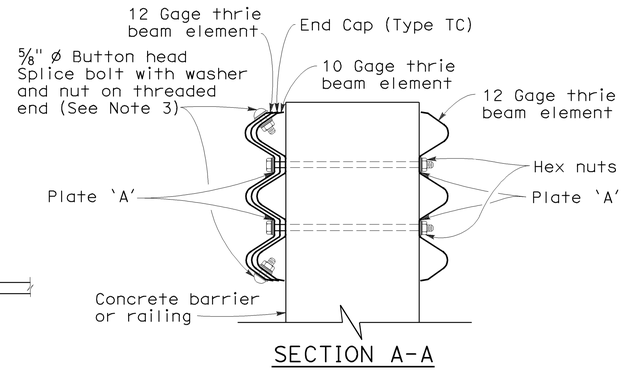

SECTION A-A

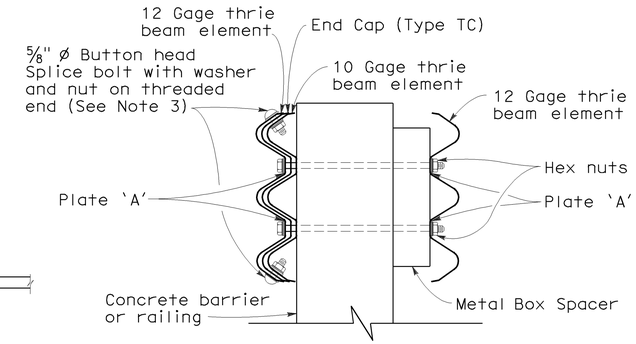

SECTION B-B

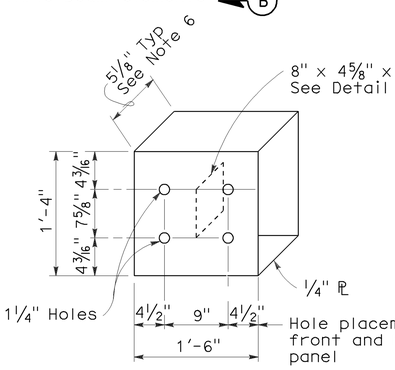

DETAIL A

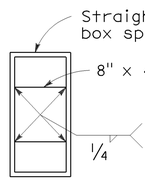

DETAIL B

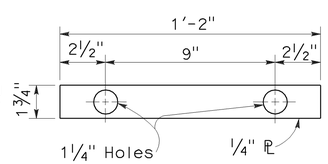

DETAIL C

STRAIGHT METAL BOX SPACER

PLATE 'A'

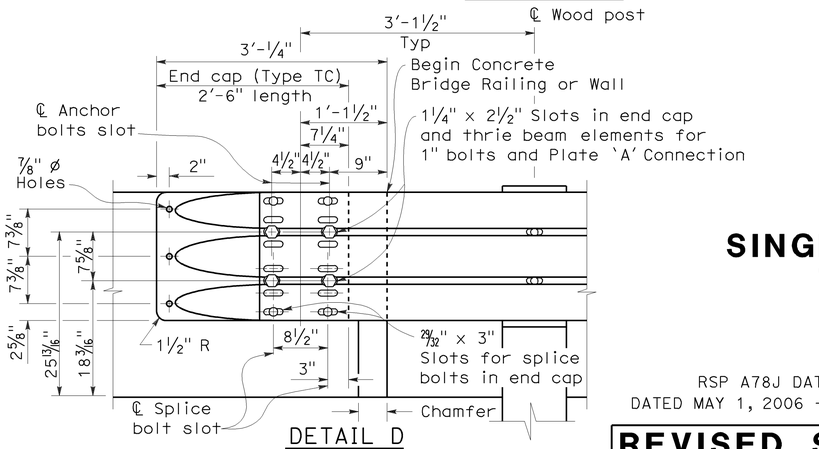

DETAIL D

LEGEND

(A) Nested thrie beam elements (one 12 gage element nested over one 10 gage element).

(B) One 10 gage thrie beam element.

(C) One 12 gage thrie beam element.

10 gage = 0.135" thick

12 gage = 0.108" thick

DIST	COUNTY	ROUTE	POST MILES TOTAL PROJECT	SHEET NO.	TOTAL SHEETS
03	Nev,Sac,Sut,Yol,Yub	5,20,49,50, 51,80,99	Var	40	50

Randell D. Hiatt
REGISTERED CIVIL ENGINEER

June 6, 2008
PLANS APPROVAL DATE

REGISTERED PROFESSIONAL ENGINEER — Randell D. Hiatt — No. C50200 — Exp. 6-30-09 — CIVIL — STATE OF CALIFORNIA

The State of California or its officers or agents shall not be responsible for the accuracy or completeness of electronic copies of this plan sheet.

To accompany plans dated August 30, 2010

NOTES:

1. Use ⅝" ø Button head bolts and hex nuts for connection to posts. No washer on rail face for bolted connections to post.
2. The nested rail elements, end cap and single 10 gage thrie beam element, may be spliced together prior to bolting the elements to the wood post and concrete barrier or railing.
3. Exterior splice bolt holes for rail element splices at Post No.T4 and the connection to the concrete barrier or railing shall be the standard 29⁄32" x 1⅛" slot size. Interior splice bolt holes at these locations may be increased up to 1¼" ø. Only the top 2 and the bottom 2 splice bolts with washers and nuts are required for rail splices at Post No.T4 and the connection to the concrete barrier or railing.
4. Direction of adjacent traffic indicated by ⟶.
5. The top elevation of Post Nos.T2 through T7 shall not project more than 1" above the top elevation of the rail element.
6. The depth of the metal box spacer varies from the 5⅛" to 1½" and is dependent on the width of the concrete railing or wall. The combined dimension for the depth of the metal box spacer plus the width of railing or wall is typically 17⅛". Where the space between the backside of the concrete railing or wall and the rear thrie beam element is less than 1½" metal plates similar to Plate 'A' are to be used as spacers.
7. Where the width of the concrete railing or wall is greater than 17⅛", wood blocks are to be used to fill the space created between the backside of Post No.4 through No.7 and the rear thrie beam element. These wood blocks shall be 8" in width and 1'-2" in length. The dimension between the front thrie beam element and the rear thrie beam element is to match the width of the concrete railing or wall.
8. For details of End Cap (Type TC), see Revised Standard Plan RSP A78C1.

STATE OF CALIFORNIA
DEPARTMENT OF TRANSPORTATION

SINGLE THRIE BEAM BARRIER TRANSITION RAILING (TYPE STB)

NO SCALE

RSP A78J DATED JUNE 6, 2008 SUPERSEDES STANDARD PLAN A78J
DATED MAY 1, 2006 - PAGE 97 OF THE STANDARD PLANS BOOK DATED MAY 2006.

REVISED STANDARD PLAN RSP A78J

2006 REVISED STANDARD PLAN RSP A78J

5-1-08

DIST	COUNTY	ROUTE	POST MILES TOTAL PROJECT	SHEET NO.	TOTAL SHEETS
03	Nev,Sac,Sut,Yol,Yub	5,20,49,50,51,80,99	Var	41	50

Randell D. Hiatt
REGISTERED CIVIL ENGINEER

June 6, 2008
PLANS APPROVAL DATE

REGISTERED PROFESSIONAL ENGINEER
Randell D. Hiatt
No. C50200
Exp. 6-30-09
CIVIL
STATE OF CALIFORNIA

The State of California or its officers or agents shall not be responsible for the accuracy or completeness of electronic copies of this plan sheet.

To accompany plans dated August 30, 2010

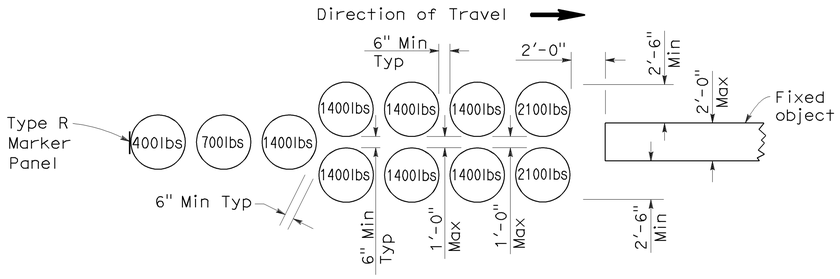

ARRAY 'U11'

Approach speed less than 45 mph

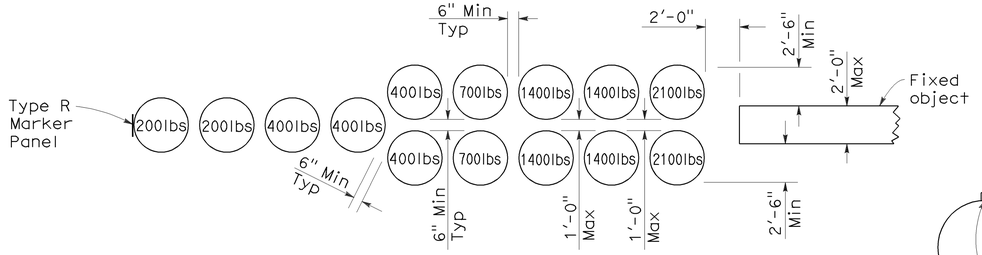

ARRAY 'U14'

Approach speed 45 mph or more

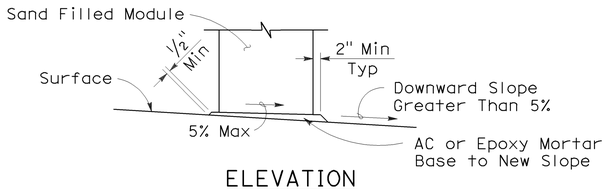

ELEVATION

SLOPED SEAT DETAIL

(See Note 4)

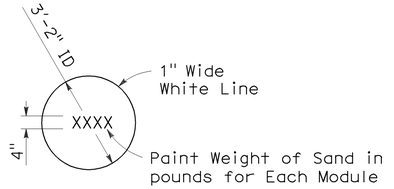

PAINTING DETAIL

(See Note 5)

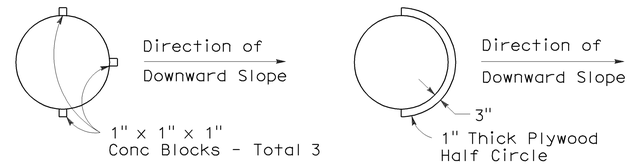

ALTERNATIVE 1 ALTERNATIVE 2

PLAN

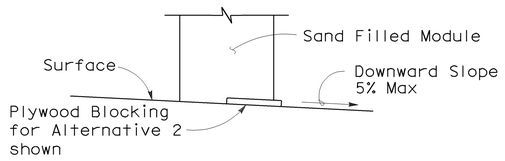

ELEVATION

BRIDGE DECK MODULE BLOCKING DETAILS

(See Note 6)

NOTES:

1. (XXX) Indicates module location and mass of sand in pounds for each module. Module spacing is based on the greater diameter of the modules.
2. All sand weights are nominal.
3. Each module is to contain amount of sand indicated, supported according to the manufacturer's instructions.
4. Modules shall be placed on asphalt concrete, epoxy mortar or concrete surface. Modules to be placed on surfacing with greater than 5% downward slope shall be seated as shown.
5. Mass of sand and outline of each module shall be painted on the surface at each module location.
6. Module blocking, epoxied to the deck surface, is required for all modules placed on bridge decks. Two acceptable alternatives are shown. Other alternatives recommended by the manufacturer and approved by the Engineer will be accepted.
7. Place the top of the Type R marker panel 1" below the module lid.
8. Approach speeds indicated conform to NCHRP Report criteria.

STATE OF CALIFORNIA
DEPARTMENT OF TRANSPORTATION

CRASH CUSHION, SAND FILLED (UNIDIRECTIONAL)

NO SCALE

RSP A81A DATED JUNE 6, 2008 SUPERSEDES STANDARD PLAN A81A
DATED MAY 1, 2006 - PAGE 99 OF THE STANDARD PLANS BOOK DATED MAY 2006.

REVISED STANDARD PLAN RSP A81A

2006 REVISED STANDARD PLAN RSP A81A

5-15-08

DIST	COUNTY	ROUTE	POST MILES TOTAL PROJECT	SHEET NO.	TOTAL SHEETS
03	Nev,Sac,Sut,Yol,Yub	5,20,49,50,51,80,99	Var	42	50

Randell D. Hiatt
REGISTERED CIVIL ENGINEER

June 6, 2008
PLANS APPROVAL DATE

REGISTERED PROFESSIONAL ENGINEER — Randell D. Hiatt — No. C50200 — Exp. 6-30-09 — CIVIL — STATE OF CALIFORNIA

The State of California or its officers or agents shall not be responsible for the accuracy or completeness of electronic copies of this plan sheet.

To accompany plans dated August 30, 2010

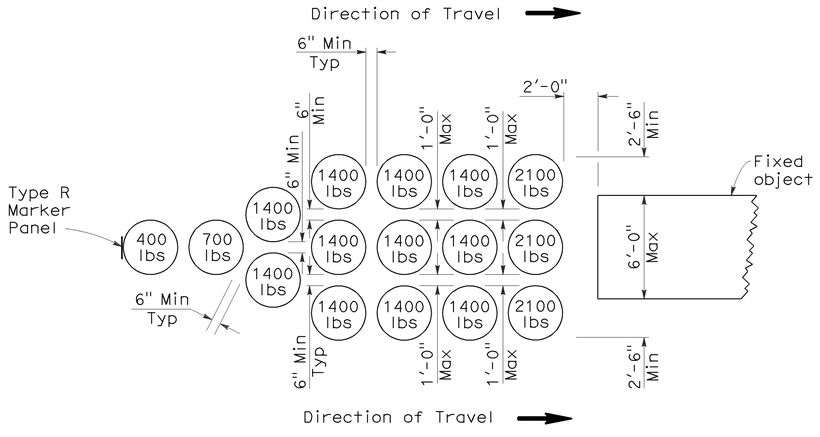

ARRAY 'U16'

Approach speed less than 45 mph

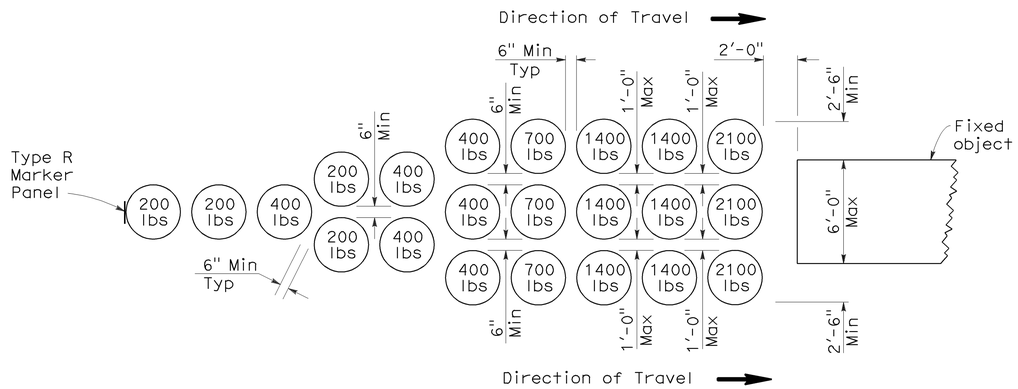

ARRAY 'U21'

Approach speed 45 mph or more

NOTES:

1. (XXX) Indicates module location and weight of sand in pounds for each module. Module spacing is based on the greater diameter of the modules.
2. All sand weights are nominal.
3. Each module is to contain amount of sand indicated, supported according to the manufacturer's instructions.
4. Modules shall be placed on asphalt concrete, epoxy mortar or concrete surface. Modules to be placed on surfacing with greater than 5% downward slope shall be seated as shown.
5. Mass of sand and outline of each module shall be painted on the surface at each module location.
6. Module blocking, epoxied to the deck surface, is required for all modules placed on bridge decks. Two acceptable alternatives are shown. Other alternatives recommended by the manufacturer and approved by the Engineer will be accepted.
7. Place the top of the Type R marker panel 1" below the module lid.
8. Approach speeds indicated conform to NCHRP Report criteria.

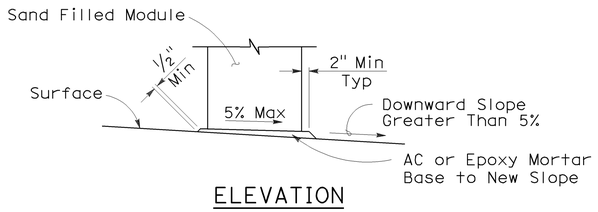

ELEVATION

SLOPED SEAT DETAIL

(See Note 4)

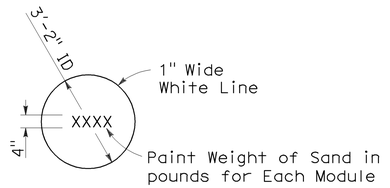

PAINTING DETAIL

(See Note 5)

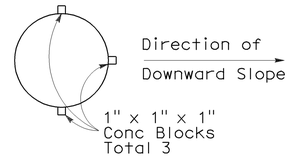

ALTERNATIVE 1

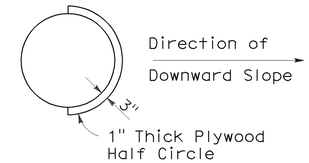

ALTERNATIVE 2

PLAN

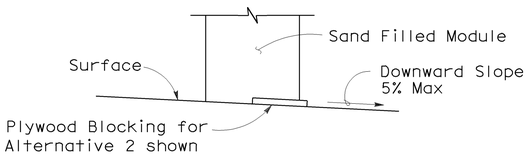

ELEVATION

BRIDGE DECK MODULE BLOCKING DETAILS

(See Note 6)

STATE OF CALIFORNIA
DEPARTMENT OF TRANSPORTATION

CRASH CUSHION, SAND FILLED (UNIDIRECTIONAL)

NO SCALE

RSP A81B DATED JUNE 6, 2008 SUPERSEDES STANDARD PLAN A81B
DATED MAY 1, 2006 - PAGE 100 OF THE STANDARD PLANS BOOK DATED MAY 2006.

REVISED STANDARD PLAN RSP A81B

2006 REVISED STANDARD PLAN RSP A81B

5-15-08

DIST	COUNTY	ROUTE	POST MILES TOTAL PROJECT	SHEET NO.	TOTAL SHEETS
03	Nev,Sac,Sut,Yol,Yub	5,20,49,50,51,80,99	Var	43	50

Randell D. Hiatt
REGISTERED CIVIL ENGINEER

June 6, 2008
PLANS APPROVAL DATE

REGISTERED PROFESSIONAL ENGINEER — Randell D. Hiatt — No. C50200 — Exp. 6-30-09 — CIVIL — STATE OF CALIFORNIA

The State of California or its officers or agents shall not be responsible for the accuracy or completeness of electronic copies of this plan sheet.

To accompany plans dated August 30, 2010

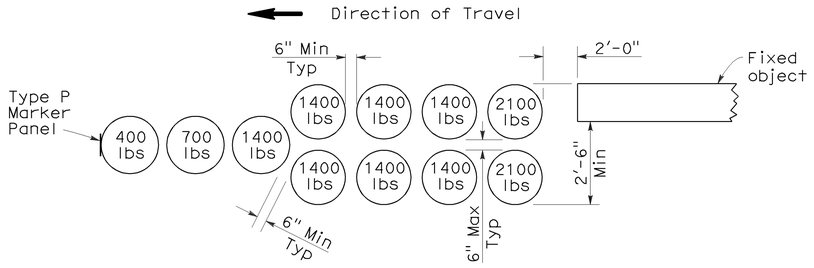

ARRAY 'B11'

Approach speed less than 45 mph

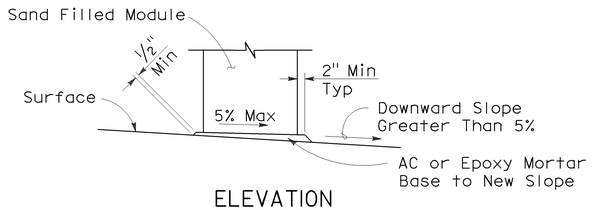

ELEVATION

SLOPED SEAT DETAIL

(See Note 5)

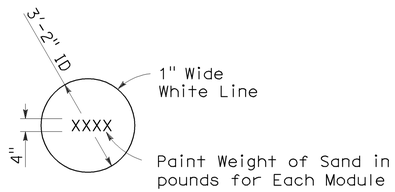

PAINTING DETAIL

(See Note 6)

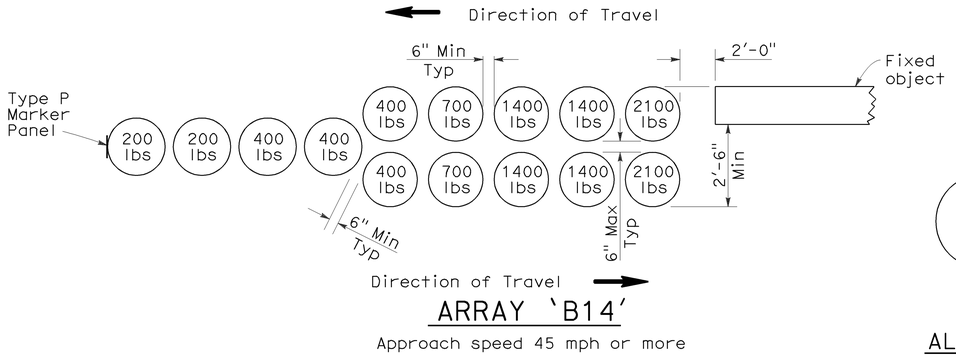

ARRAY 'B14'

Approach speed 45 mph or more

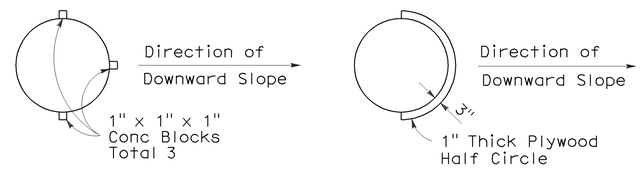

PLAN

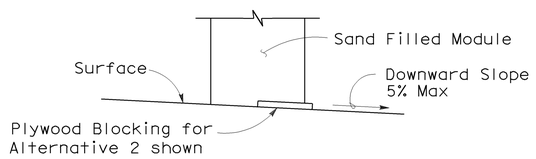

ELEVATION

BRIDGE DECK MODULE BLOCKING DETAILS

(See Note 7)

NOTES:

1. (XXX) Indicates module location and weight of sand in pounds for each module. Module spacing is based on the greater diameter of the module.
2. All sand weights are nominal.
3. Each module is to contain amount of sand indicated, supported according to the manufacturer's instructions.
4. Bidirectional crash cushion arrays may be angled toward approaching traffic. Amount of angle not to exceed 10 degrees.
5. Modules shall be placed on asphalt concrete, epoxy mortar or concrete surface. Modules to be placed on surfacing with greater than 5% downward slope shall be seated as shown.
6. Mass of sand and outline of each module shall be painted on the surface at each module location.
7. Module blocking, epoxied to the deck surface, is required for all modules placed on bridge decks. Two acceptable alternatives are shown. Other alternatives recommended by the manufacturer and approved by the Engineer will be accepted.
8. Place the Type P marker panel so that the bottom of the panel is at the bottom of the module.
9. Approach speeds indicated conform to NCHRP Report criteria.

STATE OF CALIFORNIA
DEPARTMENT OF TRANSPORTATION

CRASH CUSHION, SAND FILLED (BIDIRECTIONAL)

NO SCALE

RSP A81C DATED JUNE 6, 2008 SUPERSEDES STANDARD PLAN A81C
DATED MAY 1, 2006 - PAGE 101 OF THE STANDARD PLANS BOOK DATED MAY 2006.

REVISED STANDARD PLAN RSP A81C

2006 REVISED STANDARD PLAN RSP A81C

5-15-08

DIST	COUNTY	ROUTE	POST MILES TOTAL PROJECT	SHEET NO.	TOTAL SHEETS
03	Nev,Sac,Sut,Yol,Yub	5,20,49,50,51,80,99	Var	44	50

Randell D. Hiatt
REGISTERED CIVIL ENGINEER

June 6, 2008
PLANS APPROVAL DATE

REGISTERED PROFESSIONAL ENGINEER — Randell D. Hiatt — No. C50200 — Exp. 6-30-09 — CIVIL — STATE OF CALIFORNIA

The State of California or its officers or agents shall not be responsible for the accuracy or completeness of electronic copies of this plan sheet.

To accompany plans dated August 30, 2010

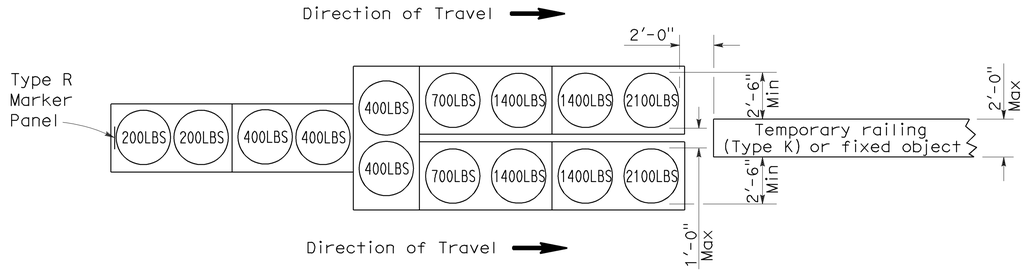

ARRAY 'TU14'

Approach speed 45 mph or more

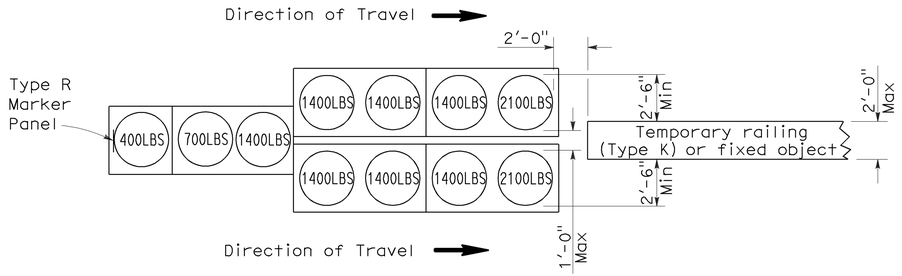

ARRAY 'TU11'

Approach speed less than 45 mph

ARRAY 'TU21'

Approach speed 45 mph or more

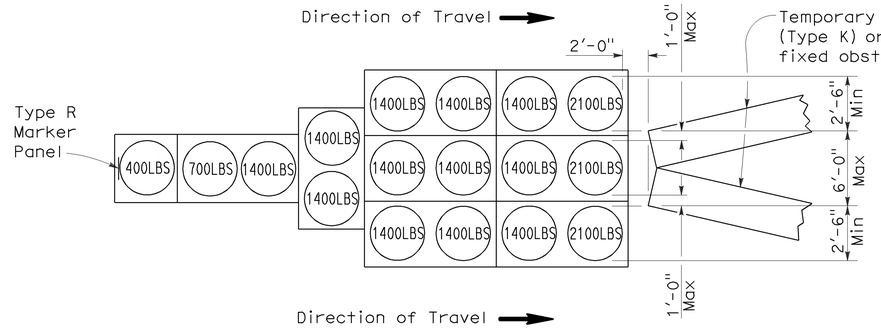

ARRAY 'TU17'

Approach speed less than 45 mph

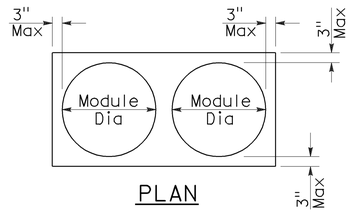

PLAN

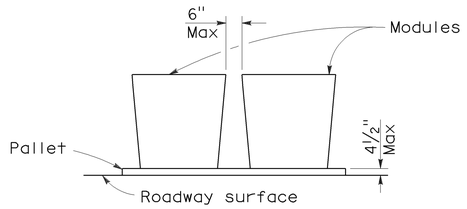

ELEVATION

CRASH CUSHION PALLET DETAIL

See Note 7

NOTES:

1. (XXX) Indicates sand filled module location and weight of sand in pounds for each module. Module spacing is based on the greater diameter of the module.
2. All sand weights are nominal.
3. Temporary crash cushion arrays shall not encroach on the traveled way.
4. Place the top of Type R marker panel 1" below the module lid.
5. Refer to Standard Plan A73B for marker details.
6. Approach speeds indicated conform to NCHRP 350 Report criteria.
7. Use of pallets is optional.

STATE OF CALIFORNIA
DEPARTMENT OF TRANSPORTATION

TEMPORARY CRASH CUSHION, SAND FILLED (UNIDIRECTIONAL)

NO SCALE

RSP T1A DATED JUNE 6, 2008 SUPERSEDES STANDARD PLAN T1A
DATED MAY 1, 2006 - PAGE 211 OF THE STANDARD PLANS BOOK DATED MAY 2006.

REVISED STANDARD PLAN RSP T1A

2006 REVISED STANDARD PLAN RSP T1A

5-15-08

DIST	COUNTY	ROUTE	POST MILES TOTAL PROJECT	SHEET NO.	TOTAL SHEETS
03	Nev,Sac,Sut,Yol,Yub	5,20,49,50,51,80,99	Var	45	50

Randell D. Hiatt
REGISTERED CIVIL ENGINEER

June 6, 2008
PLANS APPROVAL DATE

REGISTERED PROFESSIONAL ENGINEER — Randell D. Hiatt — No. C50200 — Exp. 6-30-09 — CIVIL — STATE OF CALIFORNIA

The State of California or its officers or agents shall not be responsible for the accuracy or completeness of electronic copies of this plan sheet.

To accompany plans dated August 30, 2010

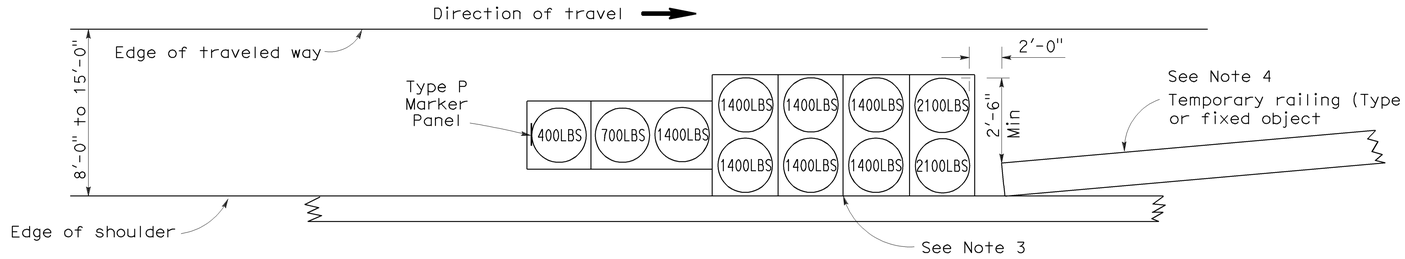

ARRAY 'TS11'

Approach speed less than 45 mph
See Note 9

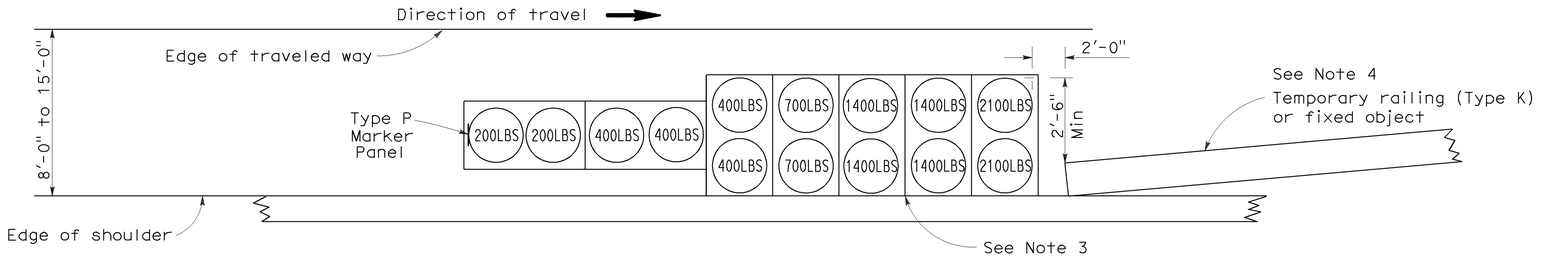

ARRAY 'TS14'

Approach speed 45 mph or more
See Note 9

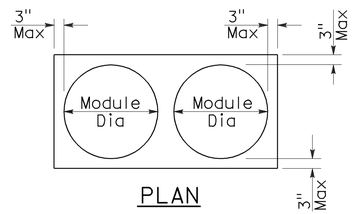

PLAN

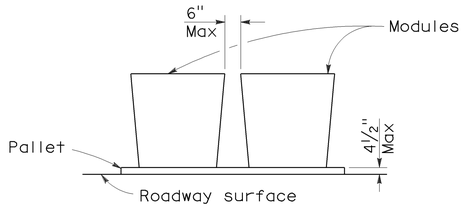

ELEVATION

CRASH CUSHION PALLET DETAIL

See Note 11

NOTES:

1. (XXX) Indicates sand filled module location and weight of sand in pounds for each module. Module spacing is based on the greater diameter of the module.
2. All sand weights are nominal.
3. The temporary crash cushion arrays shown on this plan shall be used only in locations where there will be traffic on one side of the temporary crash cushion array.
4. If the fixed object or approach end of the temporary railing is less than 15'-0" from the edge of traveled way, a temporary crash cushion is required in a construction or work zone.
5. Temporary crash cushion arrays shall not encroach on the traveled way.
6. Arrays for median shoulders shall conform to details shown on this plan for outside shoulders.
7. Place the Type P marker panel so that the bottom of the panel rests upon the pallet and faces traffic.
8. Refer to Standard Plan A73B for marker details.
9. For shoulder widths less than 8'-0", appropriate approved crash cushion protection, other than sand filled modules, shall be provided at fixed objects and at approach ends of temporary railing. The specific type of crash cushion shall be as shown on the project plans or as specified in the Special Provisions, or if not shown on the project plans or specified in the Special Provisions, shall be as approved by the Engineer.
10. Approach speeds indicated conform to NCHRP 350 Report criteria.
11. Use of pallets is optional.

STATE OF CALIFORNIA
DEPARTMENT OF TRANSPORTATION

TEMPORARY CRASH CUSHION, SAND FILLED (SHOULDER INSTALLATIONS)

NO SCALE

RSP T2 DATED JUNE 6, 2008 SUPERSEDES STANDARD PLAN T2
DATED MAY 1, 2006 - PAGE 213 OF THE STANDARD PLANS BOOK DATED MAY 2006.

REVISED STANDARD PLAN RSP T2

2006 REVISED STANDARD PLAN RSP T2

5-15-08

DIST	COUNTY	ROUTE	POST MILES TOTAL PROJECT	SHEET NO.	TOTAL SHEETS
03	Nev,Sac,Sut,Yol,Yub	5,20,49,50,51,80,99	Var	46	50

Robert B Schott
LICENSED LANDSCAPE ARCHITECT

April 3, 2009
PLANS APPROVAL DATE

LICENSED LANDSCAPE ARCHITECT — Robert B. Schott 3835 — 11-30-10 Renewal Date — 2-25-09 Date — STATE OF CALIFORNIA

The State of California or its officers or agents shall not be responsible for the accuracy or completeness of electronic copies of this plan sheet.

To accompany plans dated August 30, 2010

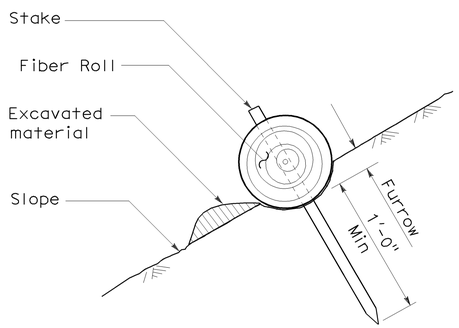

SECTION

TEMPORARY FIBER ROLL (TYPE 1)

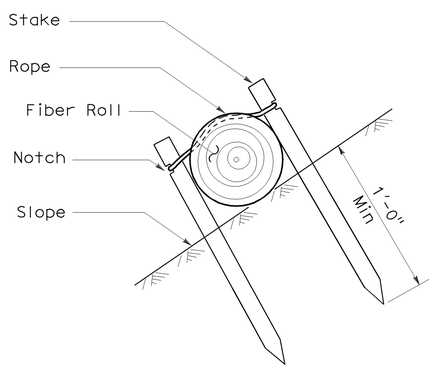

SECTION

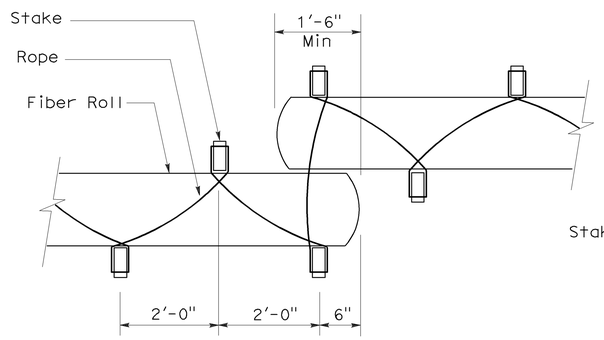

PLAN

TEMPORARY FIBER ROLL (TYPE 2)

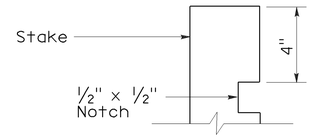

ELEVATION

STAKE NOTCH DETAIL

NOTES:

1. Temporary fiber roll spacing varies depending upon slope inclination.
2. Installations shown in the perspectives are for slope inclination of 10:1 and steeper.

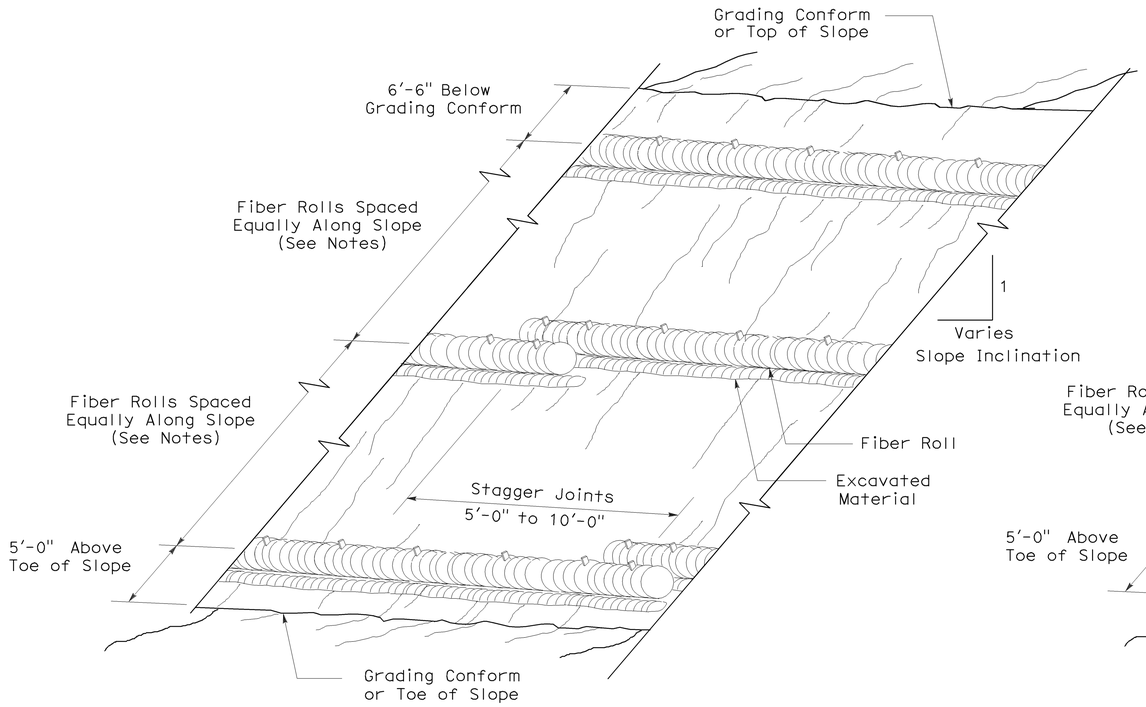

PERSPECTIVE

TEMPORARY FIBER ROLL (TYPE 1)

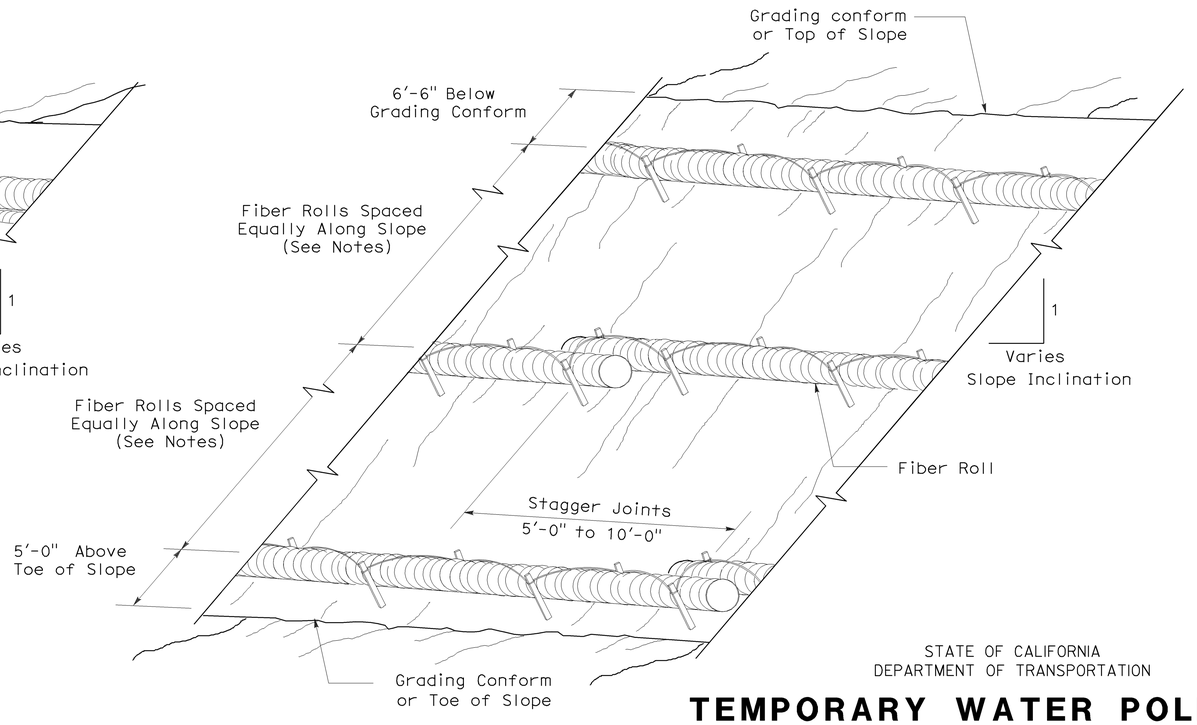

PERSPECTIVE

TEMPORARY FIBER ROLL (TYPE 2)

STATE OF CALIFORNIA
DEPARTMENT OF TRANSPORTATION

TEMPORARY WATER POLLUTION CONTROL DETAILS (TEMPORARY FIBER ROLL)

NO SCALE

RSP T56 DATED APRIL 3, 2009 SUPERSEDES STANDARD PLAN T56
DATED MAY 1, 2006 - PAGE 232 OF THE STANDARD PLANS BOOK DATED MAY 2006.

REVISED STANDARD PLAN RSP T56

2006 REVISED STANDARD PLAN RSP T56

2-23-09

DIST	COUNTY	ROUTE	POST MILES TOTAL PROJECT	SHEET NO.	TOTAL SHEETS
03	Nev,Sac, Sut,Yol, Yub	5,20,49,50, 51,80,99	Var	47	50

Robert B Schott
LICENSED LANDSCAPE ARCHITECT

August 15, 2008
PLANS Approval DATE

LICENSED LANDSCAPE ARCHITECT
Robert B. Schott 3695
Signature
11-04-08
Renewal Date
08-11-08
Date
STATE OF CALIFORNIA

The State of California or its officers or agents shall not be responsible for the accuracy or completeness of electronic copies of this plan sheet.

To accompany plans dated August 30, 2010

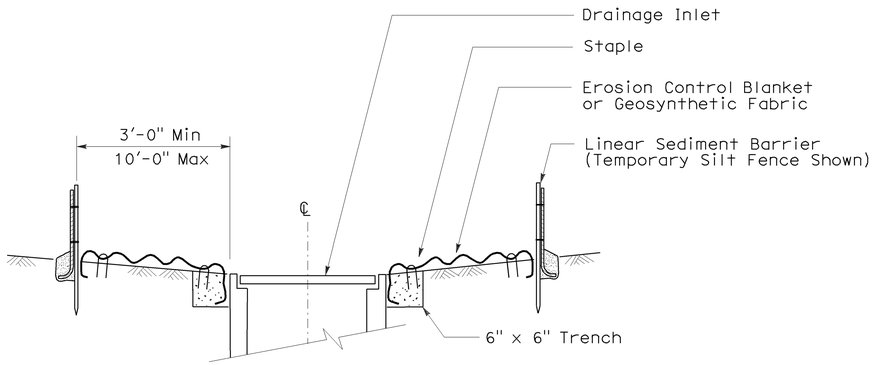

SECTION A-A

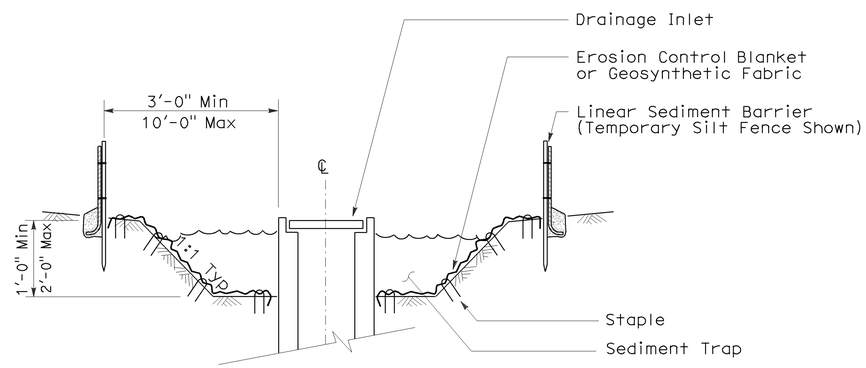

SECTION B-B

NOTES:

1. See Standard Plan T51 for Temporary Silt Fence.
2. Dimensions may vary to fit field conditions.

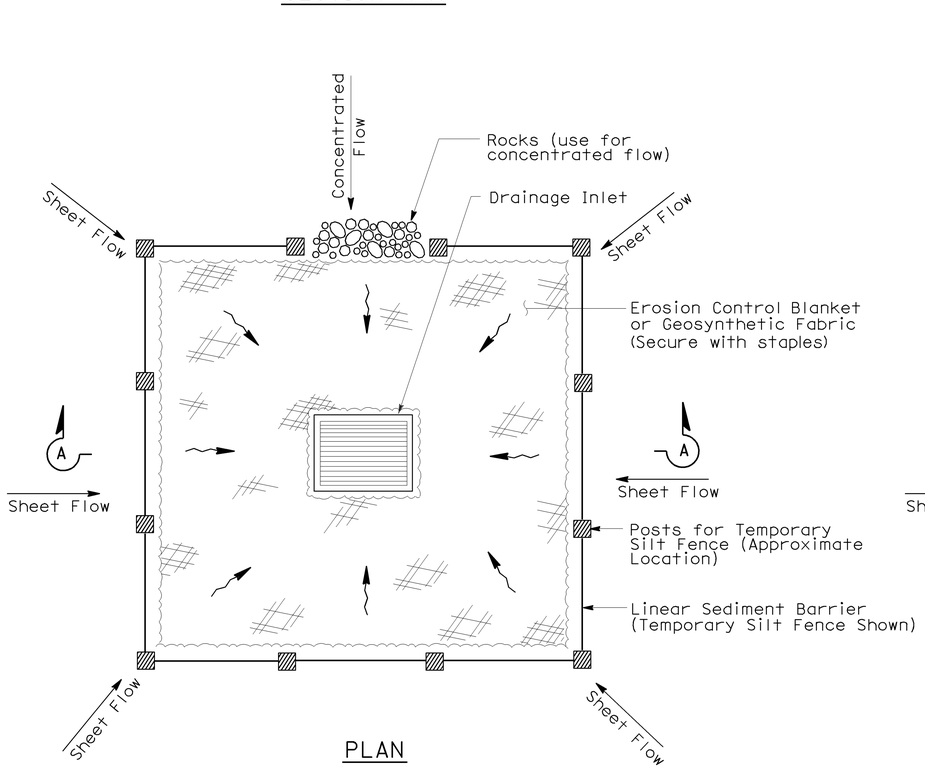

PLAN

TEMPORARY DRAINAGE INLET PROTECTION (TYPE 1)

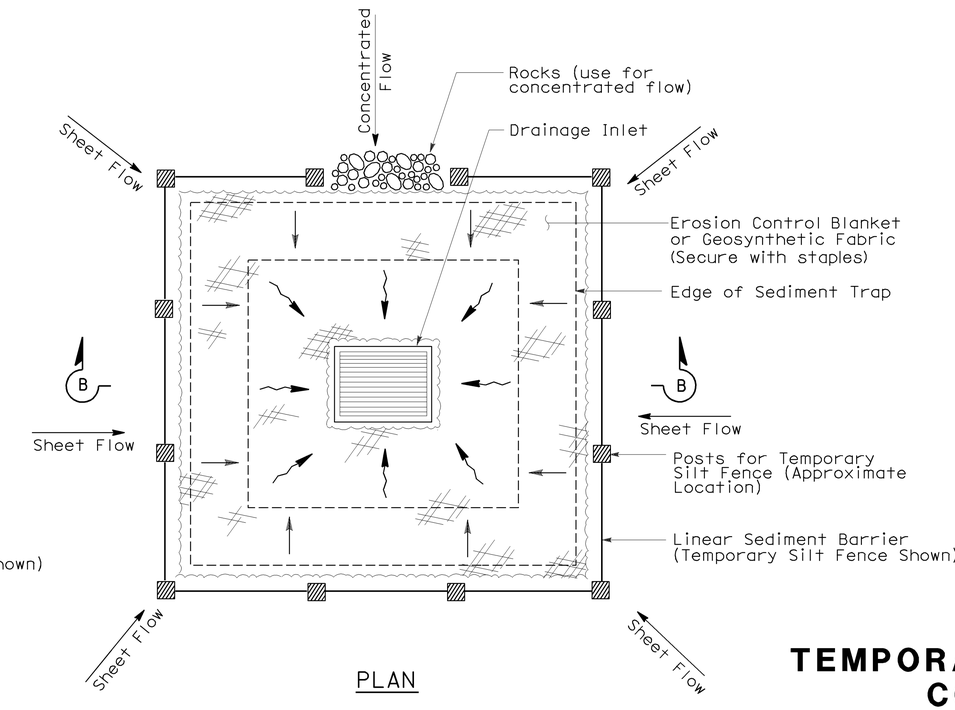

PLAN

TEMPORARY DRAINAGE INLET PROTECTION (TYPE 2) (EXCAVATED SEDIMENT TRAP)

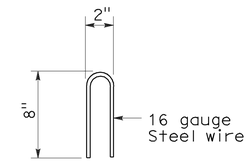

STAPLE DETAIL

STATE OF CALIFORNIA
DEPARTMENT OF TRANSPORTATION

TEMPORARY WATER POLLUTION CONTROL DETAILS (TEMPORARY DRAINAGE INLET PROTECTION)

NO SCALE

Nsp t61 dated august 15, 2008 supplements the standard plans book dated may 2006.

NEW STANDARD PLAN NSP T61

2006 NEW STANDARD PLAN NSP T61

7-11-08

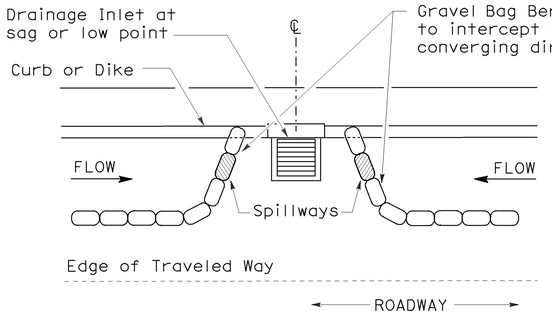

PLAN

CONFIGURATION FOR SAG POINT INLET (GRAVEL BAG BERM)

GRAVEL BAG BERM (TYPE 3A) SPACING TABLE

SLOPE OF ROADWAY (PERCENT)	1 to 3.9	4 to 5.9	6 to 7.9	8 to 10	10+
INTERVAL BETWEEN BERM	100′	75′	50′	25′	12′

For slope of less than 1%, install barriers only if erosion/sediment is prevalent

DIST	COUNTY	ROUTE	POST MILES TOTAL PROJECT	SHEET NO.	TOTAL SHEETS
03	Nev,Sac,Sut,Yol,Yub	5,20,49,50, 51,80,99	Var	48	50

Robert B Schott
LICENSED LANDSCAPE ARCHITECT

August 15, 2008
PLANS APPROVAL DATE

LICENSED LANDSCAPE ARCHITECT — Robert B. Schott 3695 — Signature — 11-04-08 Renewal Date — 08-11-08 Date — STATE OF CALIFORNIA

The State of California or its officers or agents shall not be responsible for the accuracy or completeness of electronic copies of this plan sheet.

To accompany plans dated August 30, 2010

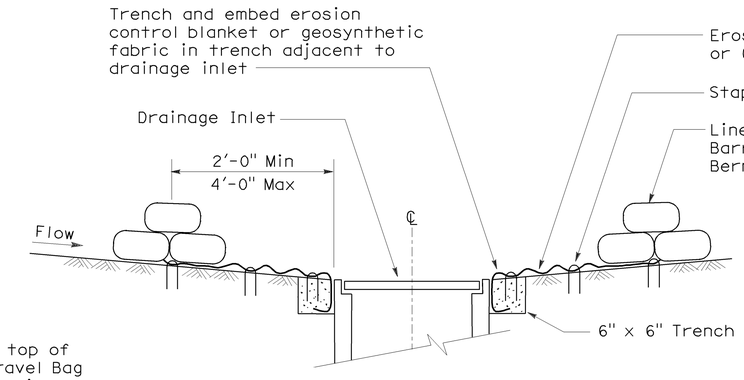

SECTION A-A

NOTES:

1. Place safety cones adjacent to drainage inlet protection.
2. Dimensions may vary to fit field conditions.
3. Install a minimum of 3 gravel bag berms upstream of each drainage inlet to be protected.
4. Position erosion control blanket or geosynthetic fabric at edge of concrete apron and secure in trench.
5. Erosion control blanket or geosynthetic fabric is not required if the area adjacent to the drainage inlet is vegetated or paved.

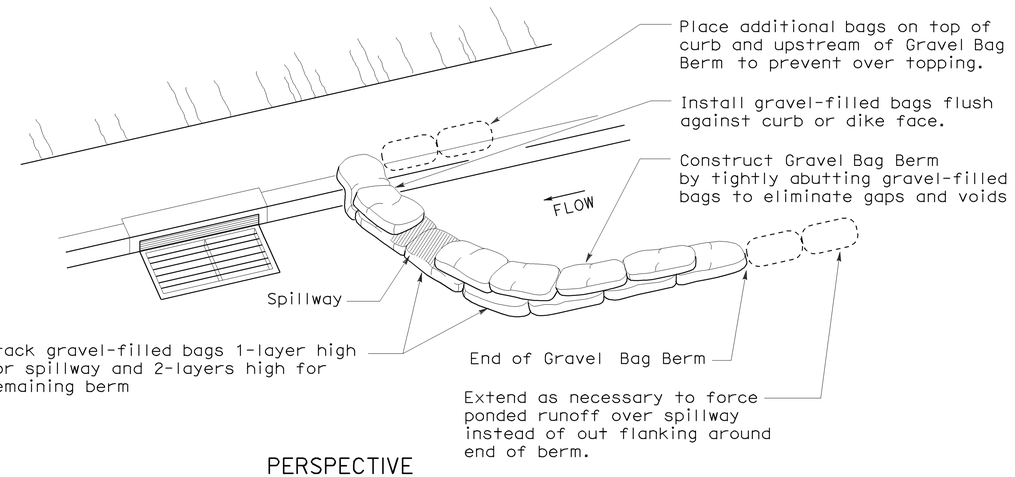

PERSPECTIVE

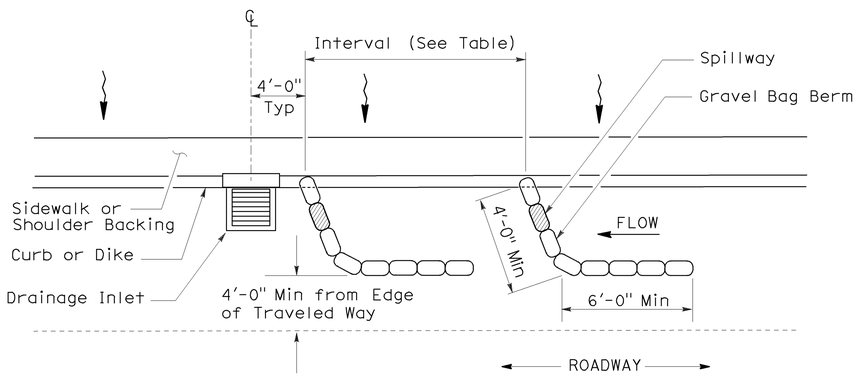

PLAN

TEMPORARY DRAINAGE INLET PROTECTION (TYPE 3A) (GRAVEL BAG BERM)

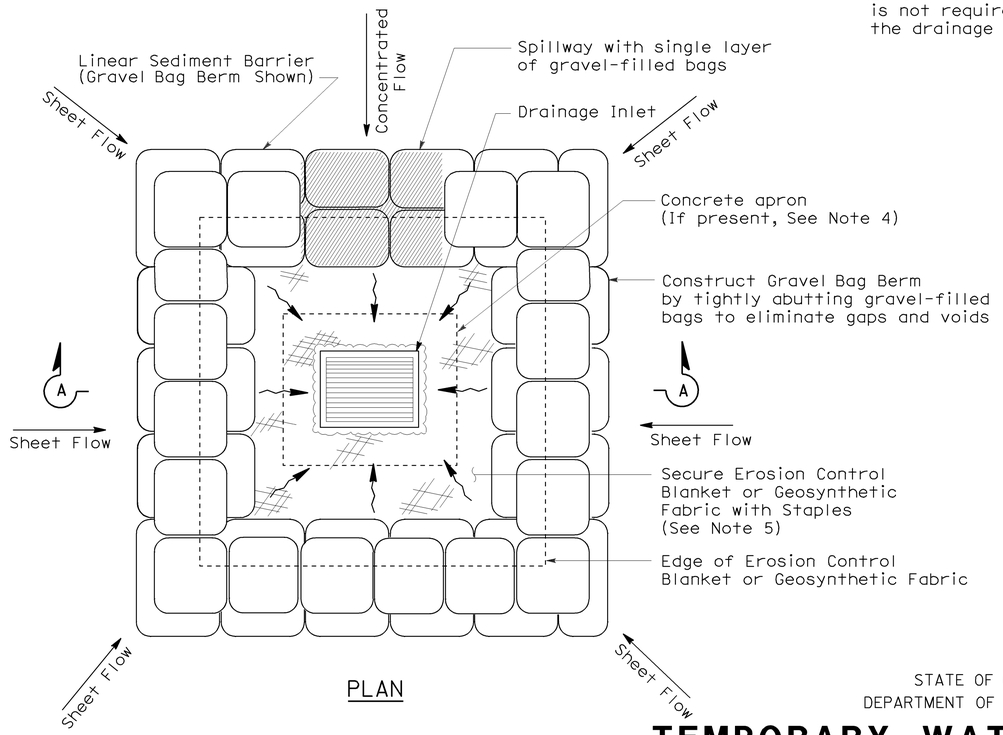

PLAN

TEMPORARY DRAINAGE INLET PROTECTION (TYPE 3B)

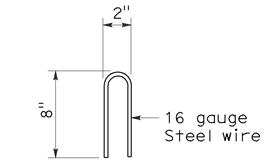

STAPLE DETAIL

STATE OF CALIFORNIA
DEPARTMENT OF TRANSPORTATION

TEMPORARY WATER POLLUTION CONTROL DETAILS (TEMPORARY DRAINAGE INLET PROTECTION)

NO SCALE

NSP T62 DATED AUGUST 15, 2008 SUPPLEMENTS THE STANDARD PLANS BOOK DATED MAY 2006.

NEW STANDARD PLAN NSP T62

2006 NEW STANDARD PLAN NSP T62

7-11-08

DIST	COUNTY	ROUTE	POST MILES TOTAL PROJECT	SHEET NO.	TOTAL SHEETS
03	Nev,Sac,Sut,Yol,Yub	5,20,49,50,51,80,99	Var	49	50

Robert B Schott
LICENSED LANDSCAPE ARCHITECT

August 15, 2008
PLANS APPROVAL DATE

Robert B. Schott 3835 — LICENSED LANDSCAPE ARCHITECT — STATE OF CALIFORNIA
Registration Date 11-04-08
Renewal Date 08-11-08
Date

The State of California or its officers or agents shall not be responsible for the accuracy or completeness of electronic copies of this plan sheet.

To accompany plans dated August 30, 2010

FLEXIBLE SEDIMENT BARRIER SPACING TABLE

SLOPE OF ROADWAY (PERCENT)	0 to 0.9	1 to 1.9	2 to 2.9	3 to 4	5+
INTERVAL BETWEEN BARRIERS	50′	35′	30′	25′	20′
ANGLE FROM FACE OF CURB	70°	70°	70°	45°	45°
SUGGESTED BARRIER LENGTH	6′	6′	6′	6′	6′

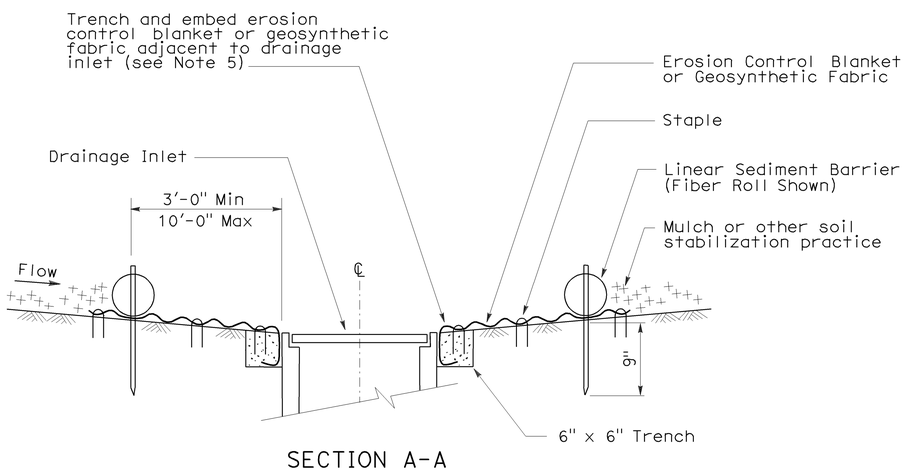

SECTION A-A

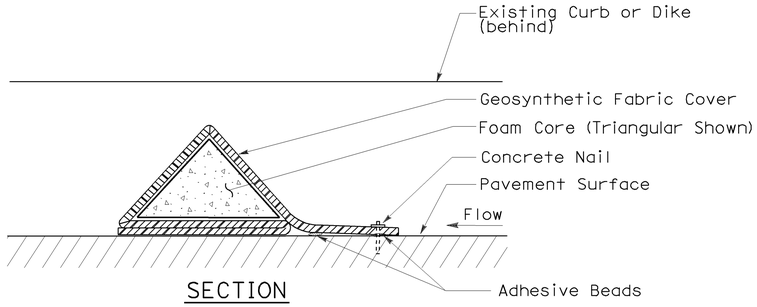

SECTION

FLEXIBLE SEDIMENT BARRIER DETAIL (FOAM BARRIER SHOWN)

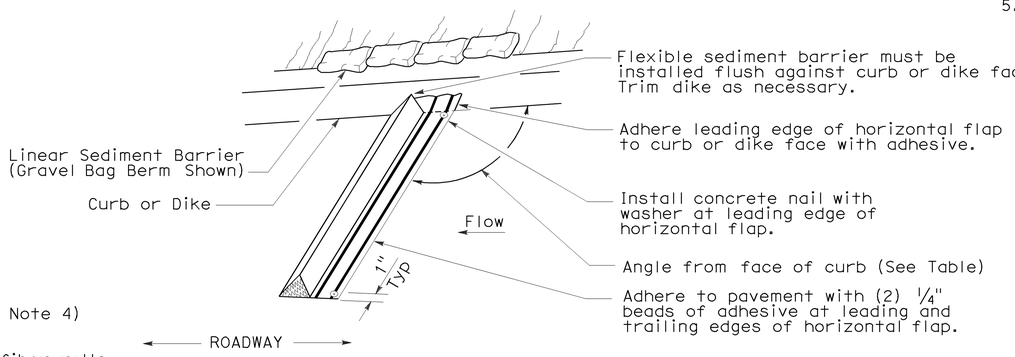

PERSPECTIVE

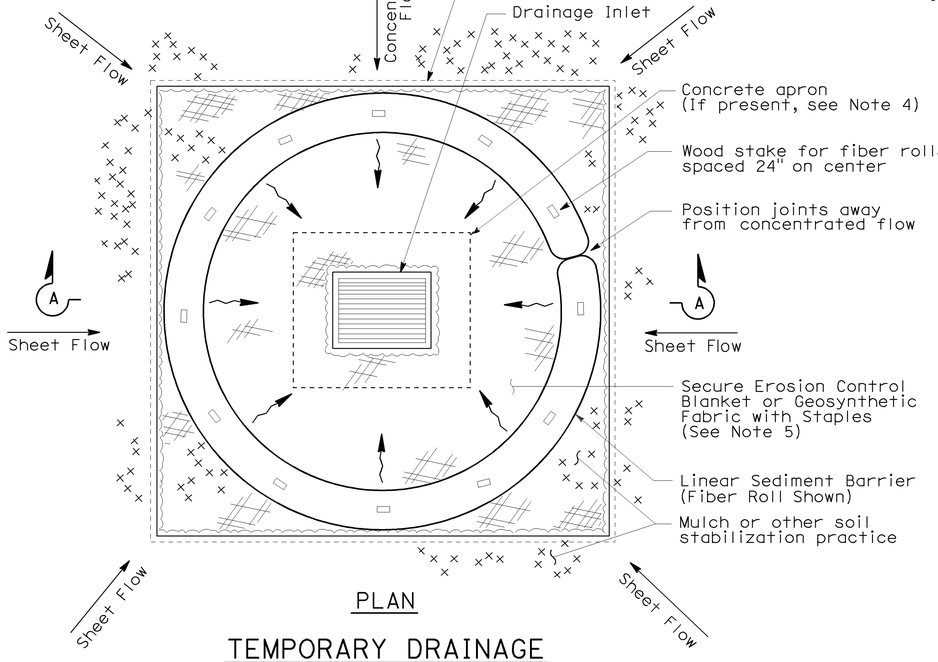

PLAN

TEMPORARY DRAINAGE INLET PROTECTION (TYPE 4A)

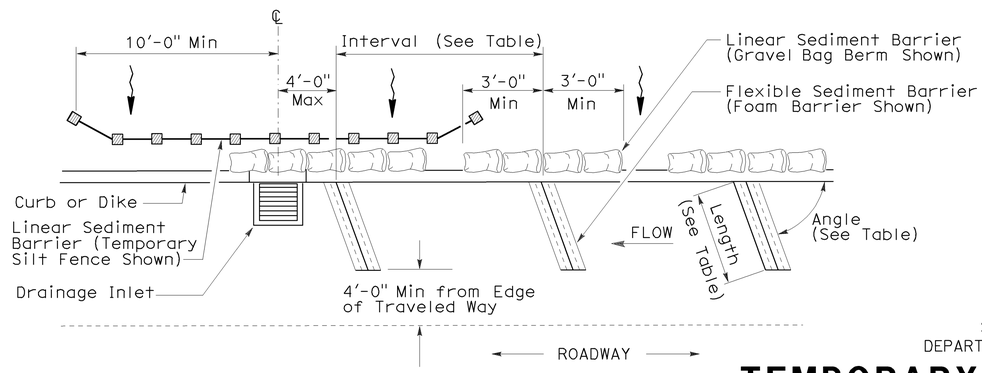

PLAN

TEMPORARY DRAINAGE INLET PROTECTION (TYPE 4B) FLEXIBLE SEDIMENT BARRIER

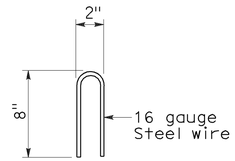

STAPLE DETAIL

NOTES:

1. See Standard Plan T51 for Temporary Silt Fence.
2. Dimensions may vary to fit field conditions.
3. Install a minimum of 3 flexible sediment barriers upstream of each drainage inlet to be protected.
4. Position erosion control blanket or geosynthetic fabric at edge of concrete apron and secure in trench.
5. Erosion control blanket or geosynthetic fabric is not required if the area adjacent to the drainage inlet is vegetated.

STATE OF CALIFORNIA
DEPARTMENT OF TRANSPORTATION

TEMPORARY WATER POLLUTION CONTROL DETAILS (TEMPORARY DRAINAGE INLET PROTECTION)

NO SCALE

NSP T63 DATED AUGUST 15, 2008 SUPPLEMENTS THE STANDARD PLANS BOOK DATED MAY 2006.

NEW STANDARD PLAN NSP T63

2006 NEW STANDARD PLAN NSP T63

7-11-08

DIST	COUNTY	ROUTE	POST MILES TOTAL PROJECT	SHEET NO.	TOTAL SHEETS
03	Nev,Sac, Sut,Yol, Yub	5,20,49,50, 51,80,99	Var	50	50

Robert B Schott
LICENSED LANDSCAPE ARCHITECT

August 15, 2008
PLANS APPROVAL DATE

LICENSED LANDSCAPE ARCHITECT
Robert B. Schott 3695
Signature
11-04-08
Renewal Date
08-11-08
Date
STATE OF CALIFORNIA

The State of California or its officers or agents shall not be responsible for the accuracy or completeness of electronic copies of this plan sheet.

To accompany plans dated August 30, 2010

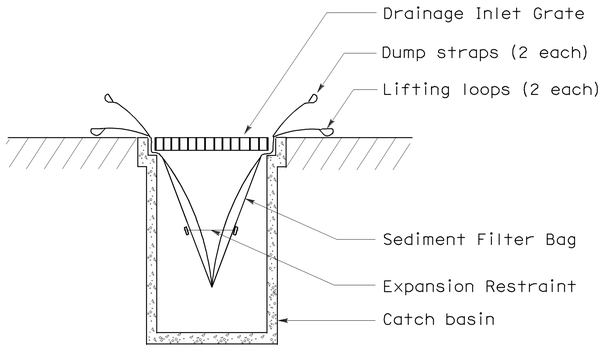

SECTION B-B

SEDIMENT FILTER BAG DETAIL

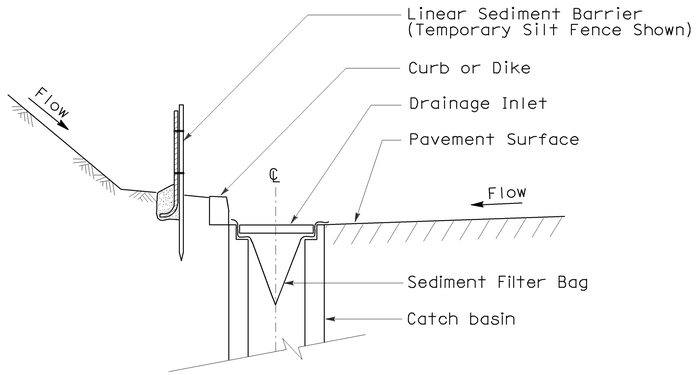

SECTION A-A

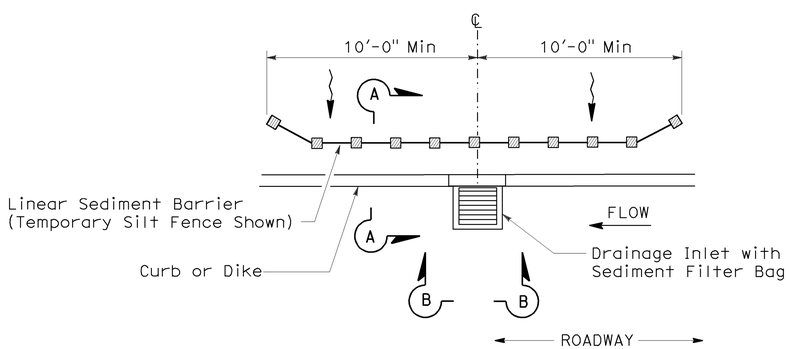

PLAN

TEMPORARY DRAINAGE INLET PROTECTION (TYPE 5) (SEDIMENT FILTER BAG)

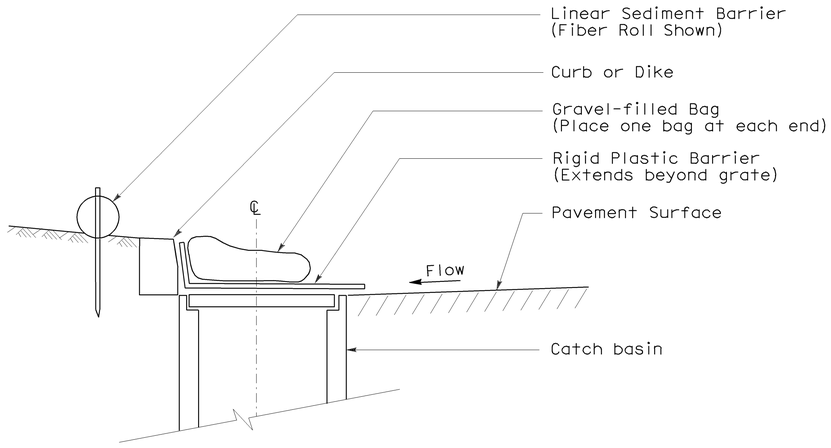

SECTION

TEMPORARY DRAINAGE INLET PROTECTION (TYPE 6A) (CATCH BASIN WITH GRATE)

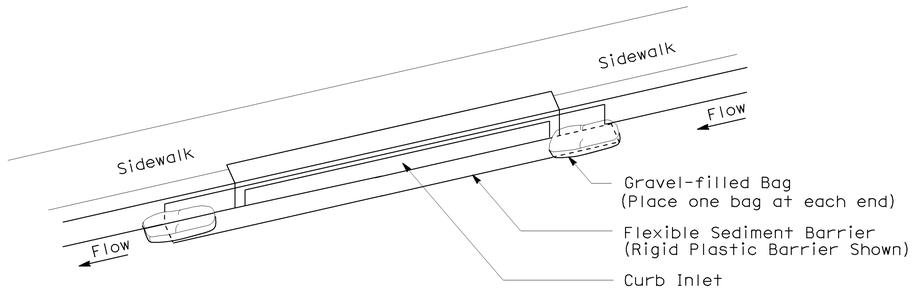

PERSPECTIVE

TEMPORARY DRAINAGE INLET PROTECTION (TYPE 6B) (CURB INLET WITHOUT GRATE)

NOTES:

1. See Standard Plan T51 for Temporary Silt Fence.
2. Dimensions may vary to fit field conditions.

STATE OF CALIFORNIA
DEPARTMENT OF TRANSPORTATION

TEMPORARY WATER POLLUTION CONTROL DETAILS (TEMPORARY DRAINAGE INLET PROTECTION)

NO SCALE

NSP T64 DATED AUGUST 15, 2008 SUPPLEMENTS
THE STANDARD PLANS BOOK DATED MAY 2006.

NEW STANDARD PLAN NSP T64

2006 NEW STANDARD PLAN NSP T64

7-11-08