INDEX OF PLANS

SHEET No.	DESCRIPTION
1	TITLE AND LOCATION MAP
2-3	TYPICAL CROSS SECTIONS
4-7	LAYOUTS
8-9	CONSTRUCTION DETAILS
10-11	EROSION CONTROL PLANS
12	CONSTRUCTION AREA SIGNS
13-17	STAGE CONSTRUCTION PLANS AND QUANTITIES
18-21	PAVEMENT DELINEATION AND SIGN PLANS
22	PAVEMENT DELINEATION QUANTITIES
23-26	SIGN DETAILS AND QUANTITIES
27	SUMMARY OF QUANTITIES
28-29	ELECTRICAL PLANS
30-49	NEW AND REVISED STANDARD PLANS

STRUCTURE PLANS

50-65	RETAINING WALL FOUNDATION PLAN

THE STANDARD PLANS LIST APPLICABLE TO THIS CONTRACT IS INCLUDED IN THE NOTICE TO BIDDERS AND SPECIAL PROVISIONS BOOK.

STATE OF CALIFORNIA

DEPARTMENT OF TRANSPORTATION

STPLN-6203(049)

PROJECT PLANS FOR CONSTRUCTION ON

STATE HIGHWAY

IN SACRAMENTO COUNTY IN SACRAMENTO FROM 0.8 MILE NORTH OF ARENA BOULEVARD OVERCROSSING TO 0.5 MILE NORTH OF DEL PASO ROAD OVERCROSSING

TO BE SUPPLEMENTED BY STANDARD PLANS DATED MAY 2006

Dist	COUNTY	ROUTE	POST MILES TOTAL PROJECT	SHEET No.	TOTAL SHEETS
03	Sac	5	28.8/29.5	1	65

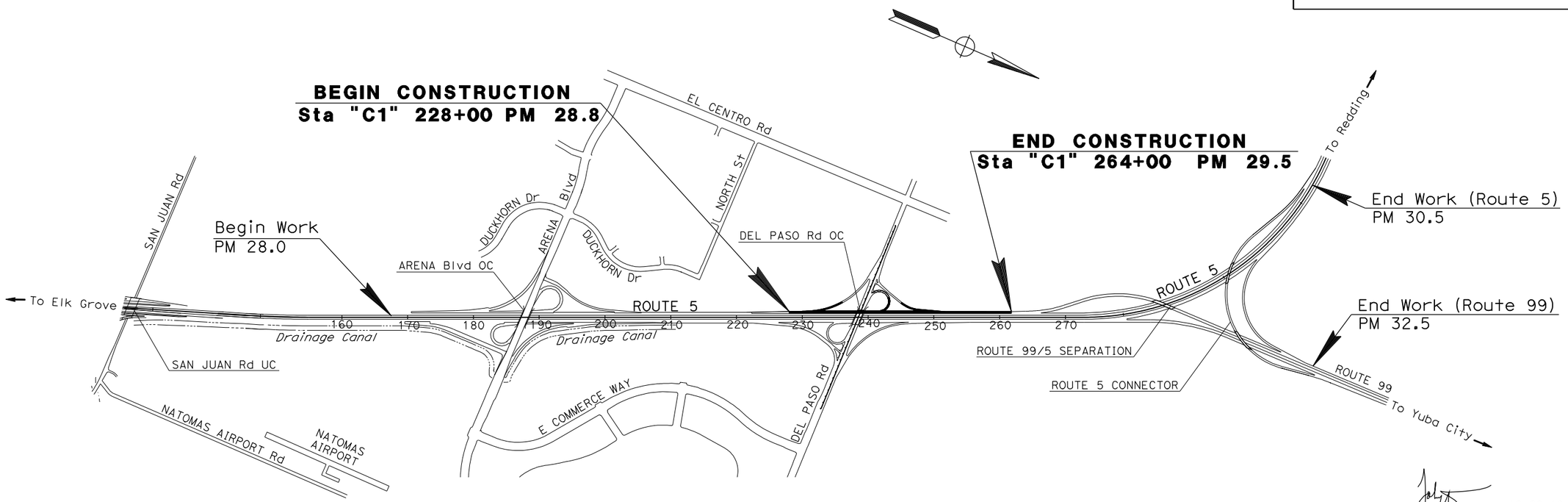

NO SCALE

PROJECT MANAGER: REBECCA MOWRY

DESIGN ENGINEER: ROBERT POLGAR

12-22-10
PROJECT ENGINEER — DATE
REGISTERED CIVIL ENGINEER

March 21, 2011
PLANS APPROVAL DATE

REGISTERED PROFESSIONAL ENGINEER — JOHNY TAN — No. 64316 — Exp. 6-30-11 — CIVIL — STATE OF CALIFORNIA

THE STATE OF CALIFORNIA OR ITS OFFICERS OR AGENTS SHALL NOT BE RESPONSIBLE FOR THE ACCURACY OR COMPLETENESS OF SCANNED COPIES OF THIS PLAN SHEET.

THE CONTRACTOR SHALL POSSESS THE CLASS (OR CLASSES) OF LICENSE AS SPECIFIED IN THE "NOTICE TO BIDDERS."

CONTRACT No.	03-1F1804
PROJECT ID	0300001104

LAST REVISION 00-00-00

DATE PLOTTED => 27-MAY-2011
TIME PLOTTED => 09:37

Dist	COUNTY	ROUTE	POST MILES TOTAL PROJECT	SHEET No.	TOTAL SHEETS
03	Sac	5	28.8/29.5	2	65

REGISTERED CIVIL ENGINEER — 12-22-10 DATE

JOHNY TAN No. 64316 Exp. 6-30-11 CIVIL — REGISTERED PROFESSIONAL ENGINEER — STATE OF CALIFORNIA

3-21-11
PLANS APPROVAL DATE

THE STATE OF CALIFORNIA OR ITS OFFICERS OR AGENTS SHALL NOT BE RESPONSIBLE FOR THE ACCURACY OR COMPLETENESS OF SCANNED COPIES OF THIS PLAN SHEET.

NOTES:

1. DIMENSIONS OF THE PAVEMENT STRUCTURES (STRUCTURAL SECTIONS) ARE SUBJECT TO TOLERANCEES SPECIFIED IN THE STANDARD SPECIFICATIONS.
2. SUPERELEVATION AS SHOWN OR AS DIRECTED BY THE ENGINEER.

ABBREVIATIONS:

RAC - RUBBERIZED ASPHALT CONCRETE
LTS - LIME TREATED SUBBASE
RHMA-O - RUBBERIZED HOT MIX ASPHALT (TYPE O)
HMA-A - HOT MIX ASPHALT (TYPE A)

TYPICAL PAVEMENT STRUCTURAL SECTIONS

1 — Exist
0.10' RAC (TYPE O)
0.75' AC (TYPE A)
1.05' Cl 2 AB
1.28' LTS

2 — Exist
0.70' AC
1.10' Cl 2 AB
1.75' AS

3 — 0.75' HMA-A
2.70' Cl 2 AB

4 — COLD PLANE AC Pvmt (0.10' Max)
0.15' HMA-A

5 — Exist
0.08' OGAC
0.29' AC
0.50' Cl 2 AB
1.08' AS

6 — 0.50' HMA-A
1.35' Cl 2 AB

7 — 0.10' RHMA-O

DESIGN DESIGNATION

2011 ADT = 66,980 D=6%
2021 ADT = 79,450
2031 ADT = 91,930 T=8%
DHV = 9,460
10 YEAR TI=13.5
20 YEAR TI=14.5

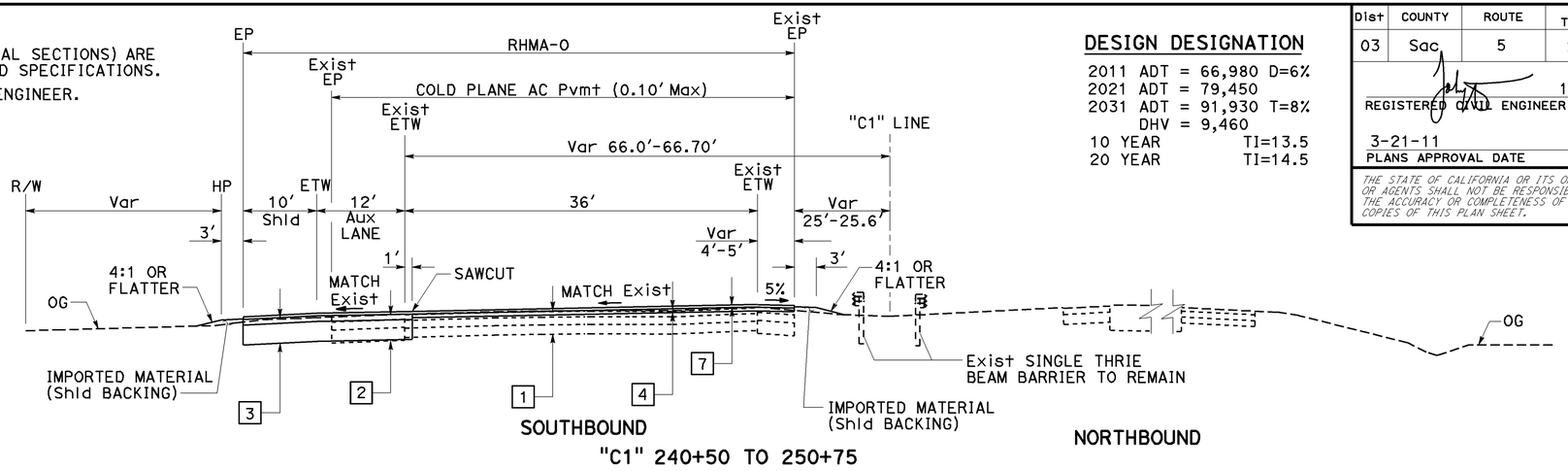

"C1" 240+50 TO 250+75

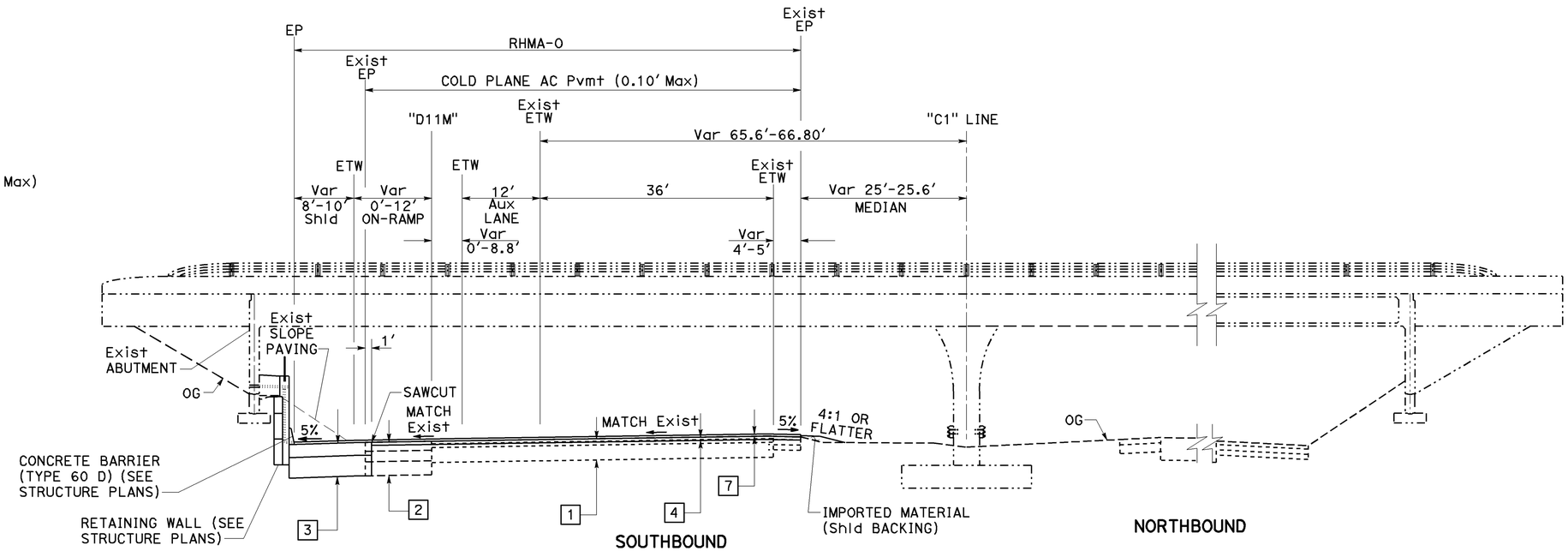

"C1" 237+50 TO 240+50

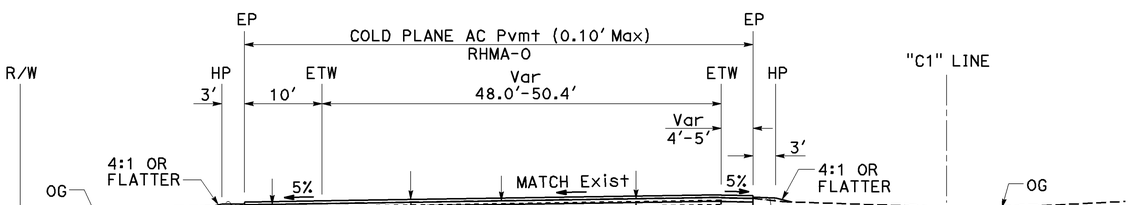

SOUTHBOUND

"C1" 228+00 TO 231+66.70
"C1" 233+28 TO 237+50
"C1" 250+75 TO 264+00

ROUTE 5

TYPICAL CROSS SECTIONS

NO SCALE

X-1

STATE OF CALIFORNIA - DEPARTMENT OF TRANSPORTATION
NORTH REGION
PROJECT DEVELOPMENT
Caltrans
FUNCTIONAL SUPERVISOR: ROBERT POLGAR
CALCULATED-DESIGNED BY: JOHNY TAN
CHECKED BY
REVISED BY
DATE REVISED

LAST REVISION: DATE PLOTTED => 25-MAY-2011 TIME PLOTTED => 14:06
00-00-00

BORDER LAST REVISED 7/2/2010
USERNAME => s134507
DGN FILE => 0300001104ca001.dgn
RELATIVE BORDER SCALE IS IN INCHES 0 1 2 3
UNIT 0322
PROJECT NUMBER & PHASE 03000011041

Dist	COUNTY	ROUTE	POST MILES TOTAL PROJECT	SHEET No.	TOTAL SHEETS
03	Sac	5	28.8/29.5	3	65

12-22-10
REGISTERED CIVIL ENGINEER DATE

3-21-11
PLANS APPROVAL DATE

REGISTERED PROFESSIONAL ENGINEER
JOHNY TAN
No. 64316
Exp. 6-30-11
CIVIL
STATE OF CALIFORNIA

THE STATE OF CALIFORNIA OR ITS OFFICERS OR AGENTS SHALL NOT BE RESPONSIBLE FOR THE ACCURACY OR COMPLETENESS OF SCANNED COPIES OF THIS PLAN SHEET.

SB DEL PASO ROAD OFF-RAMP
DESIGN DESIGNATION

2011 ADT = 630
2021 ADT = 940
2031 ADT = 1250 T=3%
10 YEAR TI=9
20 YEAR TI=10

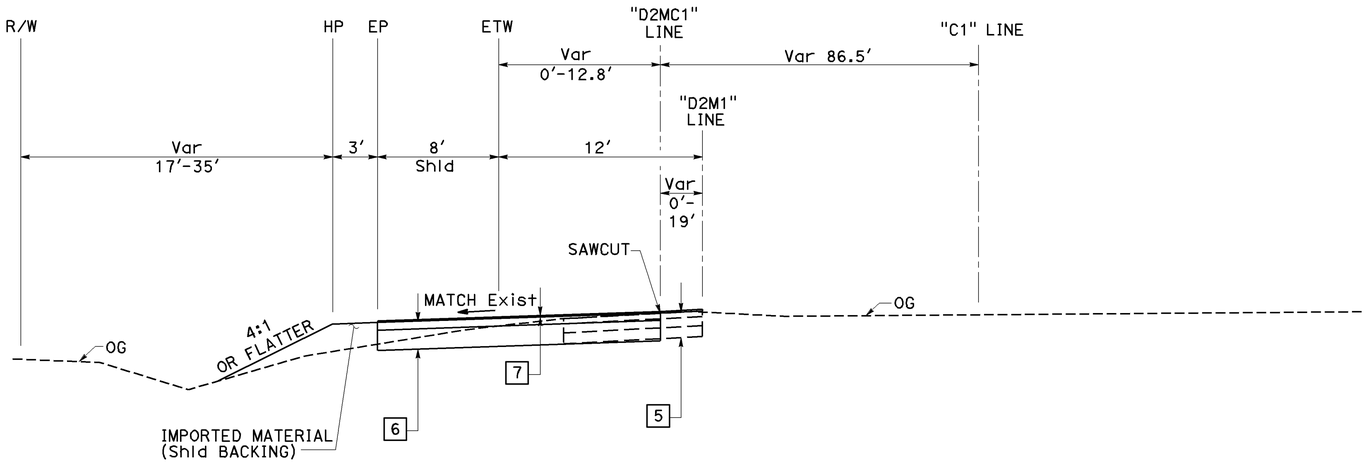

"D2MC1" 50+75 TO 53+00

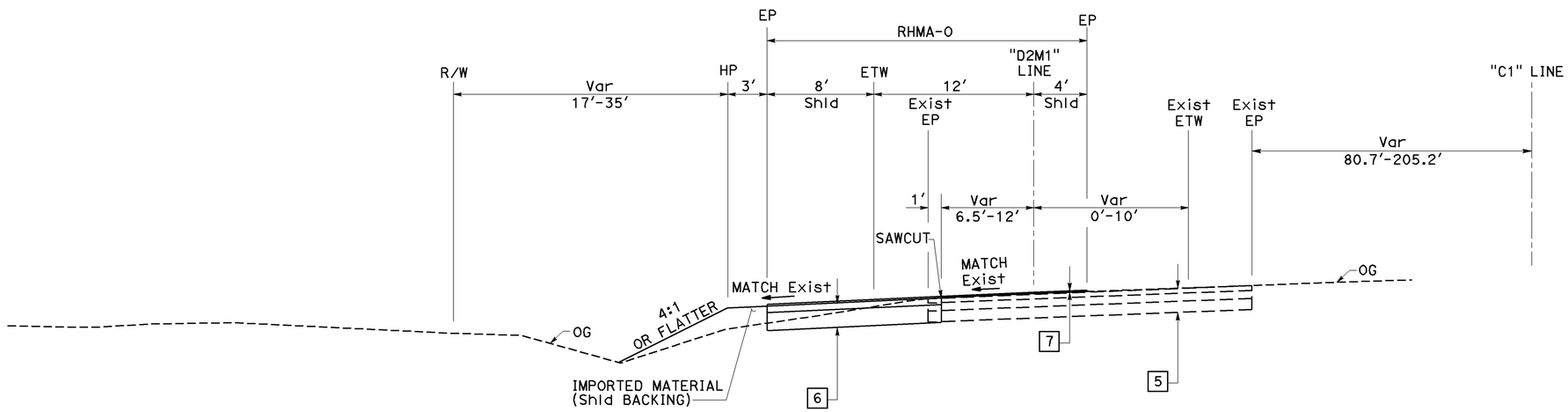

"D2M1" 44+63 TO 50+75

SB DEL PASO ROAD OFF-RAMP

TYPICAL CROSS SECTIONS

NO SCALE

X-2

STATE OF CALIFORNIA - DEPARTMENT OF TRANSPORTATION
NORTH REGION
PROJECT DEVELOPMENT

FUNCTIONAL SUPERVISOR: ROBERT POLGAR

CALCULATED-DESIGNED BY: JOHNY TAN
CHECKED BY:

REVISED BY: JT
DATE REVISED:

LAST REVISION: 00-00-00
DATE PLOTTED => 25-MAY-2011
TIME PLOTTED => 14:06

BORDER LAST REVISED 7/2/2010
USERNAME => s134507
DGN FILE => 0300001104ca002.dgn
RELATIVE BORDER SCALE IS IN INCHES 0 1 2 3
UNIT 0322
PROJECT NUMBER & PHASE 03000011041

Dist	COUNTY	ROUTE	POST MILES TOTAL PROJECT	SHEET No.	TOTAL SHEETS
03	Sac	5	28.8/29.5	4	65

12-22-10
REGISTERED CIVIL ENGINEER DATE

3-21-11
PLANS APPROVAL DATE

REGISTERED PROFESSIONAL ENGINEER
JOHNY TAN
No. 64316
Exp. 6-30-11
CIVIL
STATE OF CALIFORNIA

THE STATE OF CALIFORNIA OR ITS OFFICERS OR AGENTS SHALL NOT BE RESPONSIBLE FOR THE ACCURACY OR COMPLETENESS OF SCANNED COPIES OF THIS PLAN SHEET.

NOTE:

FOR ACCURATE RIGHT OF WAY DATA, CONTACT RIGHT OF WAY ENGINEERING AT THE DISTRICT OFFICE.

LEGEND

- TEXTURED PAVING (SEE CONSTRUCTION DETAILS)
- CONFORM
- OBLITERATE SURFACING
- SAWCUT
- TEMPORARY FENCE (TYPE ESA)

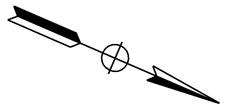

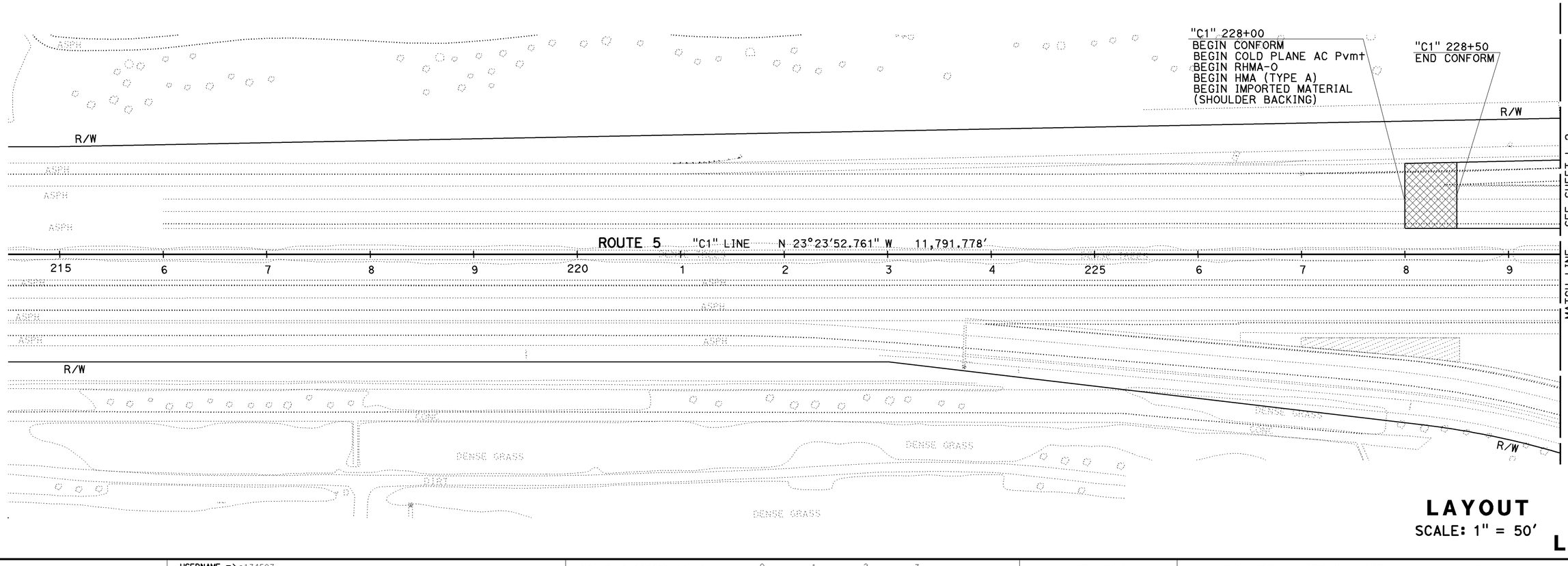

LAYOUT
SCALE: 1" = 50'

L-1

STATE OF CALIFORNIA - DEPARTMENT OF TRANSPORTATION
NORTH REGION
PROJECT DEVELOPMENT

FUNCTIONAL SUPERVISOR: ROBERT POLGAR

CALCULATED-DESIGNED BY: JOHNY TAN
CHECKED BY: JT

DATE REVISED	REVISED BY

LAST REVISION DATE PLOTTED => 25-MAY-2011
00-00-00 TIME PLOTTED => 14:06

BORDER LAST REVISED 7/2/2010

USERNAME => s134507
DGN FILE => 0300001104ea001.dgn

RELATIVE BORDER SCALE IS IN INCHES 0 1 2 3

UNIT 0322

PROJECT NUMBER & PHASE 03000011041

Dist	COUNTY	ROUTE	POST MILES TOTAL PROJECT	SHEET No.	TOTAL SHEETS
03	Sac	5	28.8/29.5	5	65

12-22-10
REGISTERED CIVIL ENGINEER DATE

3-21-11
PLANS APPROVAL DATE

REGISTERED PROFESSIONAL ENGINEER
JOHNY TAN
No. 64316
Exp. 6-30-11
CIVIL
STATE OF CALIFORNIA

THE STATE OF CALIFORNIA OR ITS OFFICERS OR AGENTS SHALL NOT BE RESPONSIBLE FOR THE ACCURACY OR COMPLETENESS OF SCANNED COPIES OF THIS PLAN SHEET.

NOTE:

FOR ACCURATE RIGHT OF WAY DATA, CONTACT
RIGHT OF WAY ENGINEERING AT THE DISTRICT OFFICE.

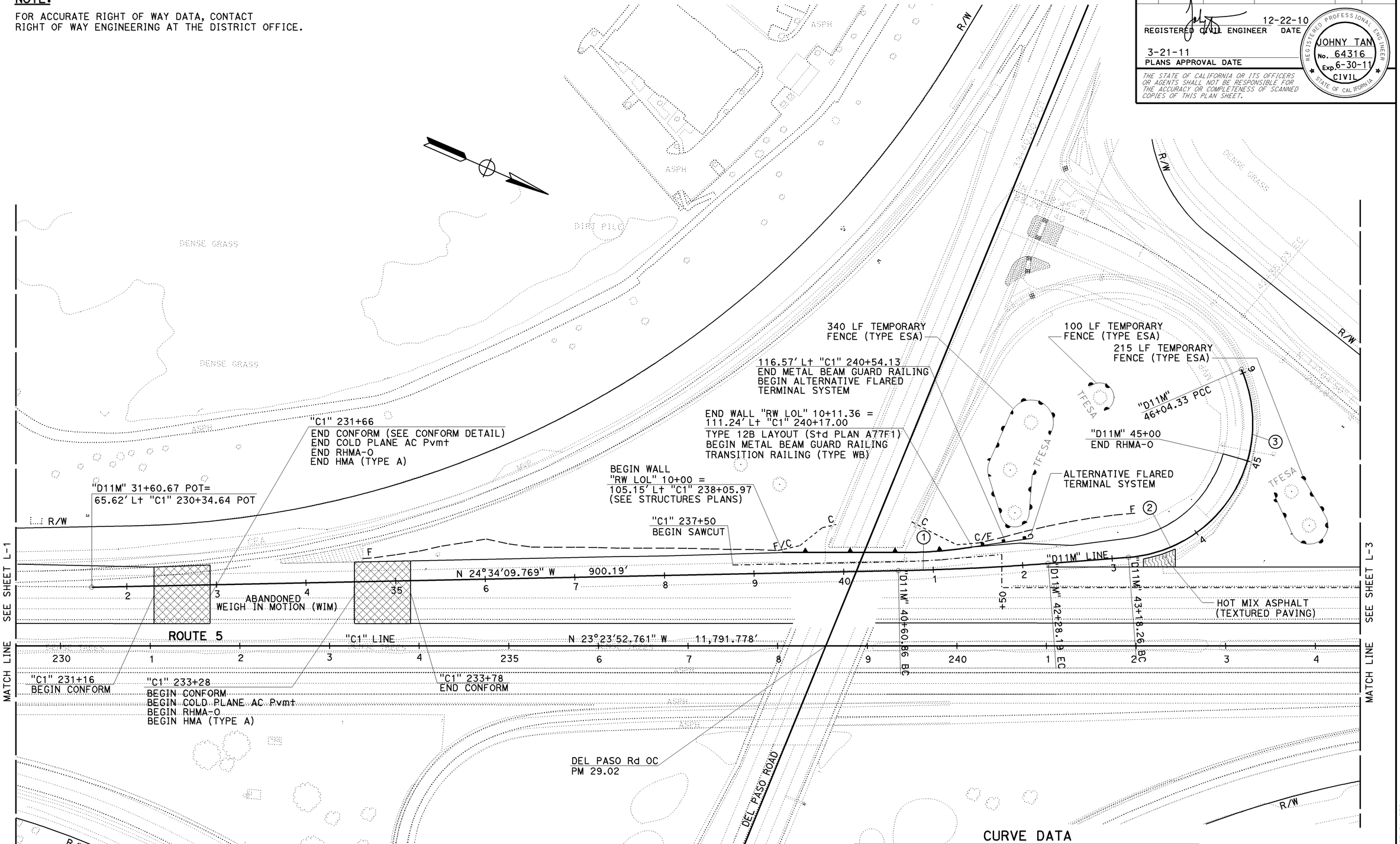

CURVE DATA

No. ⓐ	R	Δ	T	L
1	3000′	3°11′30"	83.58′	167.11′
2	150′	109°16′13"	211.34′	286.07′
3	156′	123°31′01"	290.43′	336.30′

LAYOUT
SCALE: 1" = 50′

L-2

STATE OF CALIFORNIA - DEPARTMENT OF TRANSPORTATION
NORTH REGION
PROJECT DEVELOPMENT
Caltrans

FUNCTIONAL SUPERVISOR: ROBERT POLGAR
CALCULATED-DESIGNED BY: JOHNY TAN
CHECKED BY
REVISED BY
DATE REVISED
JT

LAST REVISION DATE PLOTTED => 25-MAY-2011
TIME PLOTTED => 14:06
00-00-00

BORDER LAST REVISED 7/2/2010
USERNAME => s134507
DGN FILE => 0300001104ea002.dgn
RELATIVE BORDER SCALE IS IN INCHES 0 1 2 3
UNIT 0322
PROJECT NUMBER & PHASE 03000011041

Dist	COUNTY	ROUTE	POST MILES TOTAL PROJECT	SHEET No.	TOTAL SHEETS
03	Sac	5	28.8/29.5	6	65

12-22-10
REGISTERED CIVIL ENGINEER DATE

3-21-11
PLANS APPROVAL DATE

REGISTERED PROFESSIONAL ENGINEER
JOHNY TAN
No. 64316
Exp. 6-30-11
CIVIL
STATE OF CALIFORNIA

THE STATE OF CALIFORNIA OR ITS OFFICERS OR AGENTS SHALL NOT BE RESPONSIBLE FOR THE ACCURACY OR COMPLETENESS OF SCANNED COPIES OF THIS PLAN SHEET.

NOTE:

FOR ACCURATE RIGHT OF WAY DATA, CONTACT
RIGHT OF WAY ENGINEERING AT THE DISTRICT OFFICE.

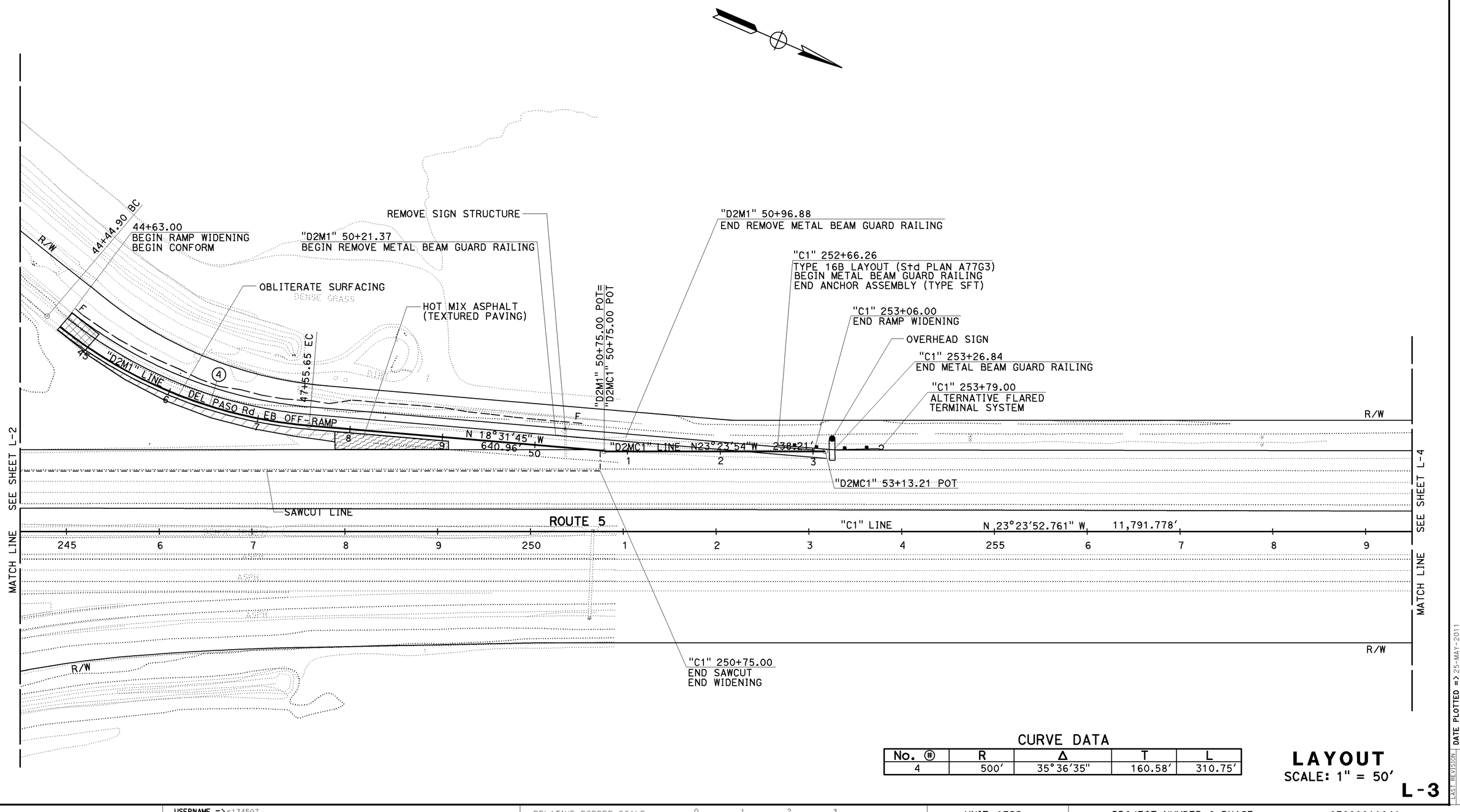

CURVE DATA

No. ④	R	Δ	T	L
4	500′	35°36′35"	160.58′	310.75′

LAYOUT
SCALE: 1" = 50′

L-3

STATE OF CALIFORNIA - DEPARTMENT OF TRANSPORTATION
NORTH REGION
PROJECT DEVELOPMENT
Caltrans
FUNCTIONAL SUPERVISOR: ROBERT POLGAR
CALCULATED-DESIGNED BY: JOHNY TAN
CHECKED BY: JT
REVISED BY
DATE REVISED

LAST REVISION DATE PLOTTED => 25-MAY-2011
00-00-00 TIME PLOTTED => 14:06

BORDER LAST REVISED 7/2/2010
USERNAME => s134507
DGN FILE => 0300001104ea003.dgn
RELATIVE BORDER SCALE IS IN INCHES 0 1 2 3
UNIT 0322
PROJECT NUMBER & PHASE 03000011041

Dist	COUNTY	ROUTE	POST MILES TOTAL PROJECT	SHEET No.	TOTAL SHEETS
03	Sac	5	28.8/29.5	7	65

12-22-10
REGISTERED CIVIL ENGINEER DATE

3-21-11
PLANS APPROVAL DATE

REGISTERED PROFESSIONAL ENGINEER
JOHNY TAN
No. 64316
Exp. 6-30-11
CIVIL
STATE OF CALIFORNIA

THE STATE OF CALIFORNIA OR ITS OFFICERS OR AGENTS SHALL NOT BE RESPONSIBLE FOR THE ACCURACY OR COMPLETENESS OF SCANNED COPIES OF THIS PLAN SHEET.

NOTE:

FOR ACCURATE RIGHT OF WAY DATA, CONTACT
RIGHT OF WAY ENGINEERING AT THE DISTRICT OFFICE.

CURVE DATA

No. ℗	R	Δ	T	L
5	3000.00′	3°11′29"	83.57′	167.10′
6	1750.00′	13°37′03"	208.94′	415.92′
7	1762.00′	40°49′47"	655.80′	1255.62′

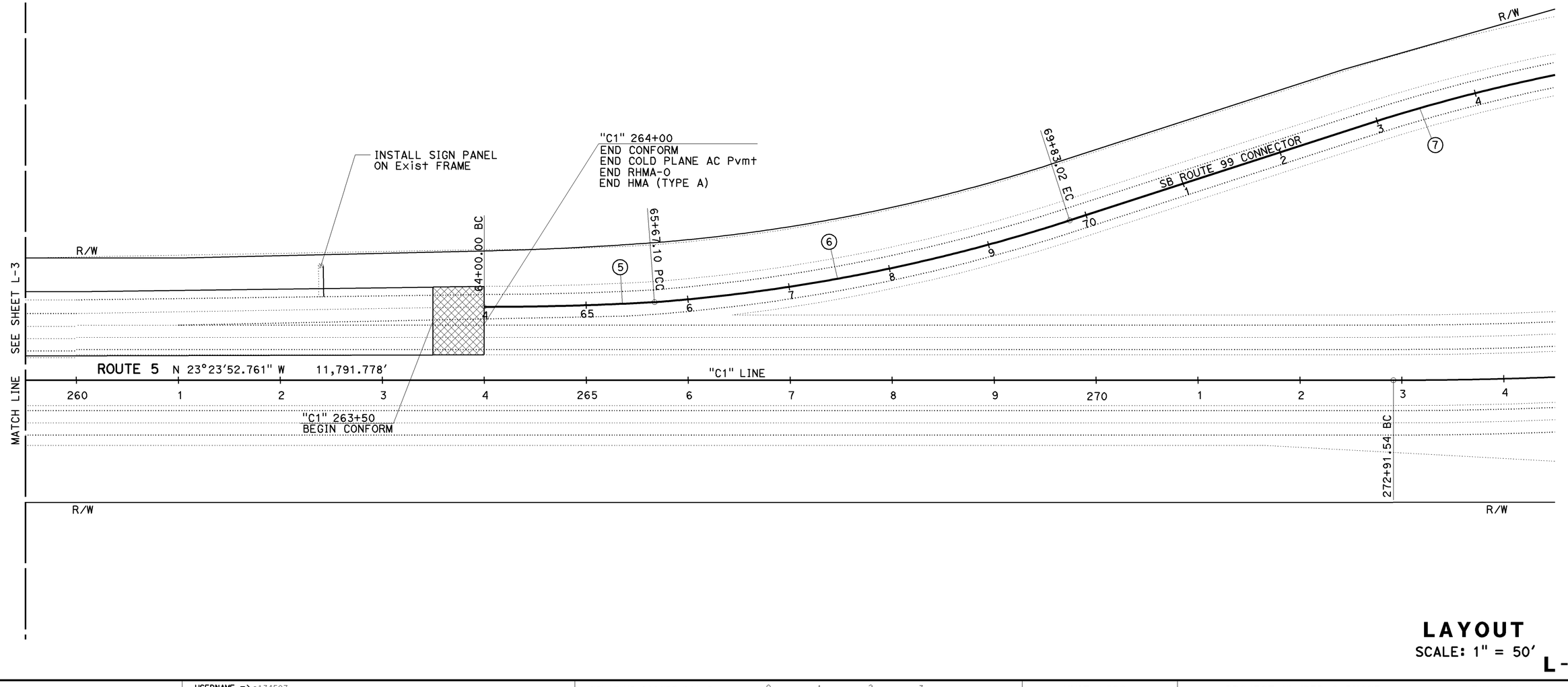

LAYOUT

SCALE: 1" = 50′

L-4

STATE OF CALIFORNIA - DEPARTMENT OF TRANSPORTATION
NORTH REGION
PROJECT DEVELOPMENT

FUNCTIONAL SUPERVISOR: ROBERT POLGAR

CALCULATED-DESIGNED BY: JOHNY TAN
CHECKED BY: JT

DATE REVISED	REVISED BY

LAST REVISION: 00-00-00
DATE PLOTTED => 25-MAY-2011
TIME PLOTTED => 14:06

BORDER LAST REVISED 7/2/2010

USERNAME => s134507
DGN FILE => 0300001104ea004.dgn

RELATIVE BORDER SCALE IS IN INCHES 0 1 2 3

UNIT 0322

PROJECT NUMBER & PHASE 03000011041

Dist	COUNTY	ROUTE	POST MILES TOTAL PROJECT	SHEET No.	TOTAL SHEETS
03	Sac	5	28.8/29.5	8	65

12-22-10
REGISTERED CIVIL ENGINEER DATE

3-21-11
PLANS APPROVAL DATE

REGISTERED PROFESSIONAL ENGINEER
JOHNY TAN
No. 64316
Exp. 6-30-11
CIVIL
STATE OF CALIFORNIA

THE STATE OF CALIFORNIA OR ITS OFFICERS OR AGENTS SHALL NOT BE RESPONSIBLE FOR THE ACCURACY OR COMPLETENESS OF SCANNED COPIES OF THIS PLAN SHEET.

ABBREVIATIONS

RHMA-O - RUBBERIZED HOT MIX ASPHALT (TYPE O)
HMA-A - HOT MIX ASPHALT (TYPE A)

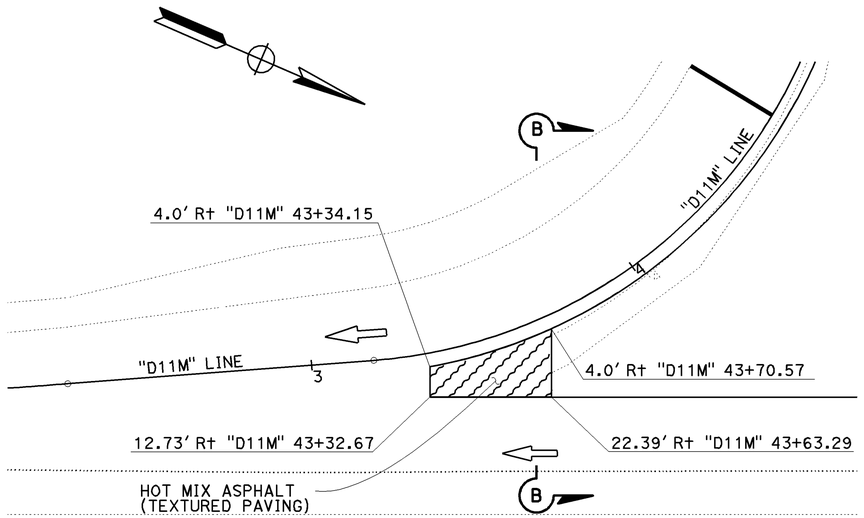

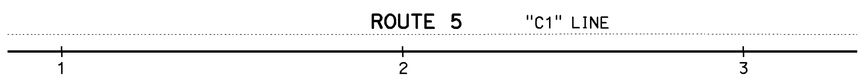

PLAN
SB DEL PASO Rd ON-RAMP
"D11M" 43+32.67 TO 43+70.57

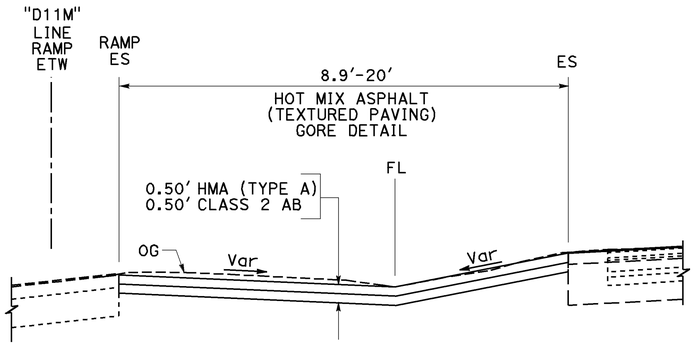

SECTION B-B

HOT MIX ASPHALT (TEXTURED PAVING) GORE DETAIL

DEL PASO Rd ON-RAMP
"D11M" 43+32.67 TO 43+70.57

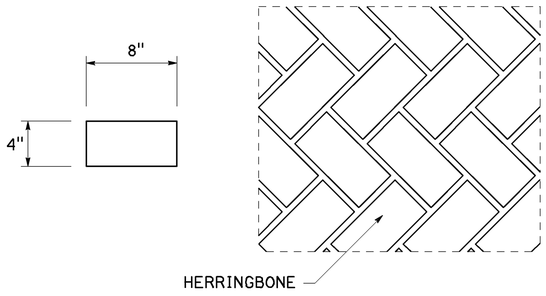

PLAN

HOT MIX ASPHALT (TEXTURED PAVING)

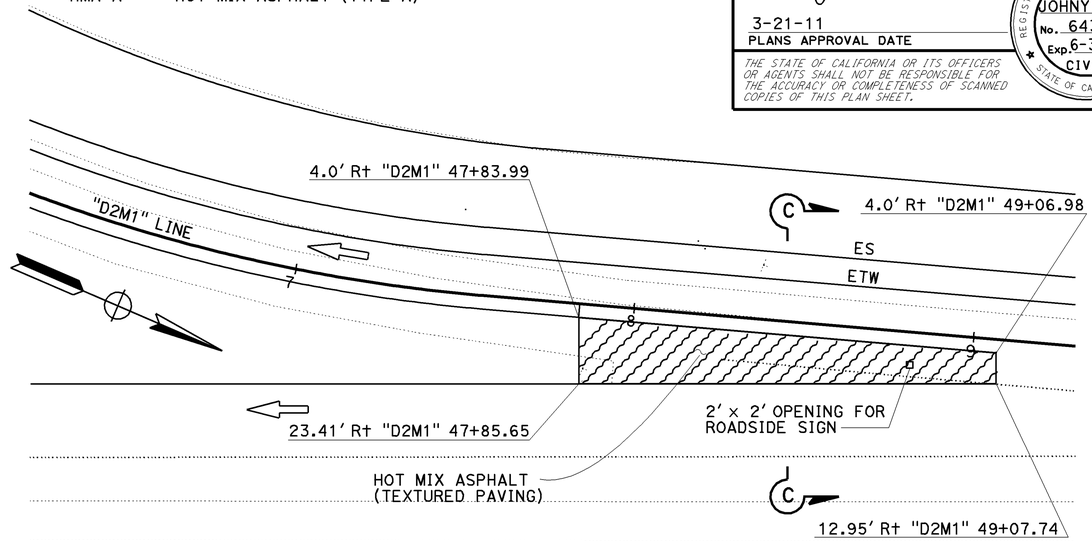

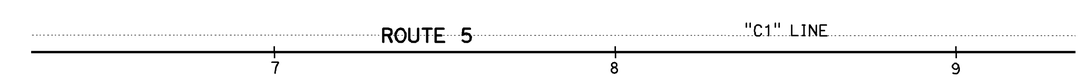

PLAN
SB DEL PASO Rd OFF-RAMP
"D2M1" 47+83.99 TO 49+07.74

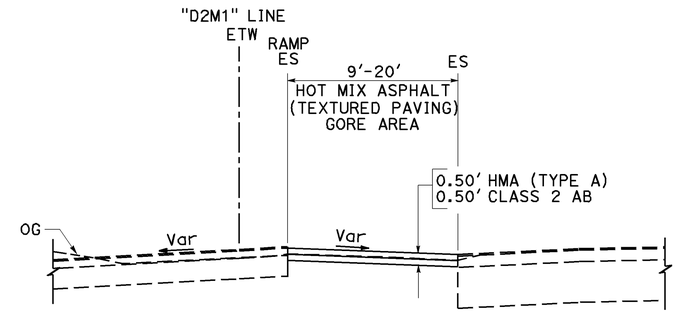

SECTION C-C

HOT MIX ASPHALT (TEXTURED PAVING) GORE DETAIL

SB DEL PASO Rd OFF-RAMP
"D2M1" 47+83.99 TO 49+07.74

CONSTRUCTION DETAILS

NO SCALE

C-1

STATE OF CALIFORNIA - DEPARTMENT OF TRANSPORTATION
NORTH REGION
PROJECT DEVELOPMENT
Caltrans
FUNCTIONAL SUPERVISOR: ROBERT POLGAR
CALCULATED-DESIGNED BY: JT
CHECKED BY:
REVISED BY: JOHNY TAN
DATE REVISED:

LAST REVISION 00-00-00
DATE PLOTTED => 25-MAY-2011
TIME PLOTTED => 14:06

BORDER LAST REVISED 7/2/2010
USERNAME => s134507
DGN FILE => 0300001104ga001.dgn
RELATIVE BORDER SCALE IS IN INCHES 0 1 2 3
UNIT 0322
PROJECT NUMBER & PHASE 03000011041

Dist	COUNTY	ROUTE	POST MILES TOTAL PROJECT	SHEET No.	TOTAL SHEETS
03	Sac	5	28.8/29.5	9	65

12-22-10
REGISTERED CIVIL ENGINEER DATE

3-21-11
PLANS APPROVAL DATE

REGISTERED PROFESSIONAL ENGINEER
JOHNY TAN
No. 64316
Exp. 6-30-11
CIVIL
STATE OF CALIFORNIA

THE STATE OF CALIFORNIA OR ITS OFFICERS OR AGENTS SHALL NOT BE RESPONSIBLE FOR THE ACCURACY OR COMPLETENESS OF SCANNED COPIES OF THIS PLAN SHEET.

LEGEND

COLD PLANE AC (0.25' Max)

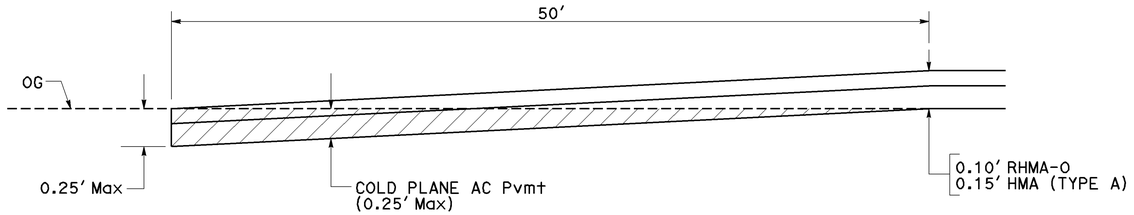

CONFORM
"C1" 228+00 TO 228+50
"C1" 231+16 TO 231+66
"C1" 233+28 TO 233+78
"C1" 263+50 TO 264+00

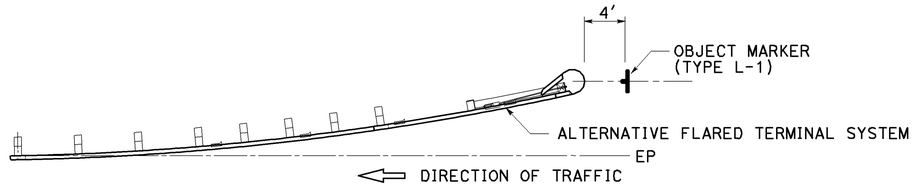

OBJECT MARKER
(TYPE L-1)

CONSTRUCTION DETAILS

NO SCALE

C-2

JOHNY TAN | JT | CALCULATED-DESIGNED BY | CHECKED BY
REVISED BY | DATE REVISED

STATE OF CALIFORNIA - DEPARTMENT OF TRANSPORTATION
NORTH REGION
PROJECT DEVELOPMENT
FUNCTIONAL SUPERVISOR
ROBERT POLGAR

LAST REVISION 00-00-00 | DATE PLOTTED => 25-MAY-2011 | TIME PLOTTED => 14:06

BORDER LAST REVISED 7/2/2010 | USERNAME => s134507 | DGN FILE => 0300001104ga002.dgn | RELATIVE BORDER SCALE IS IN INCHES 0 1 2 3 | UNIT 0322 | PROJECT NUMBER & PHASE 03000011041

Dist	COUNTY	ROUTE	POST MILES TOTAL PROJECT	SHEET No.	TOTAL SHEETS
03	Sac	5	28.7/29.4	10	65

LICENSED LANDSCAPE ARCHITECT

3-21-11
PLANS APPROVAL DATE

LICENSED LANDSCAPE ARCHITECT
JAMES G. WILLIAMSON
No. 5413
Signature
02-29-12
Renewal Date
08-18-09
Date
STATE OF CALIFORNIA

THE STATE OF CALIFORNIA OR ITS OFFICERS OR AGENTS SHALL NOT BE RESPONSIBLE FOR THE ACCURACY OR COMPLETENESS OF SCANNED COPIES OF THIS PLAN SHEET.

NOTE:

FOR ACCURATE RIGHT OF WAY DATA, CONTACT
RIGHT OF WAY ENGINEERING AT THE DISTRICT OFFICE.

LEGEND:

EC (BFM) - EROSION CONTROL (BONDED FIBER MATRIX)

- EROSION CONTROL (BFM)

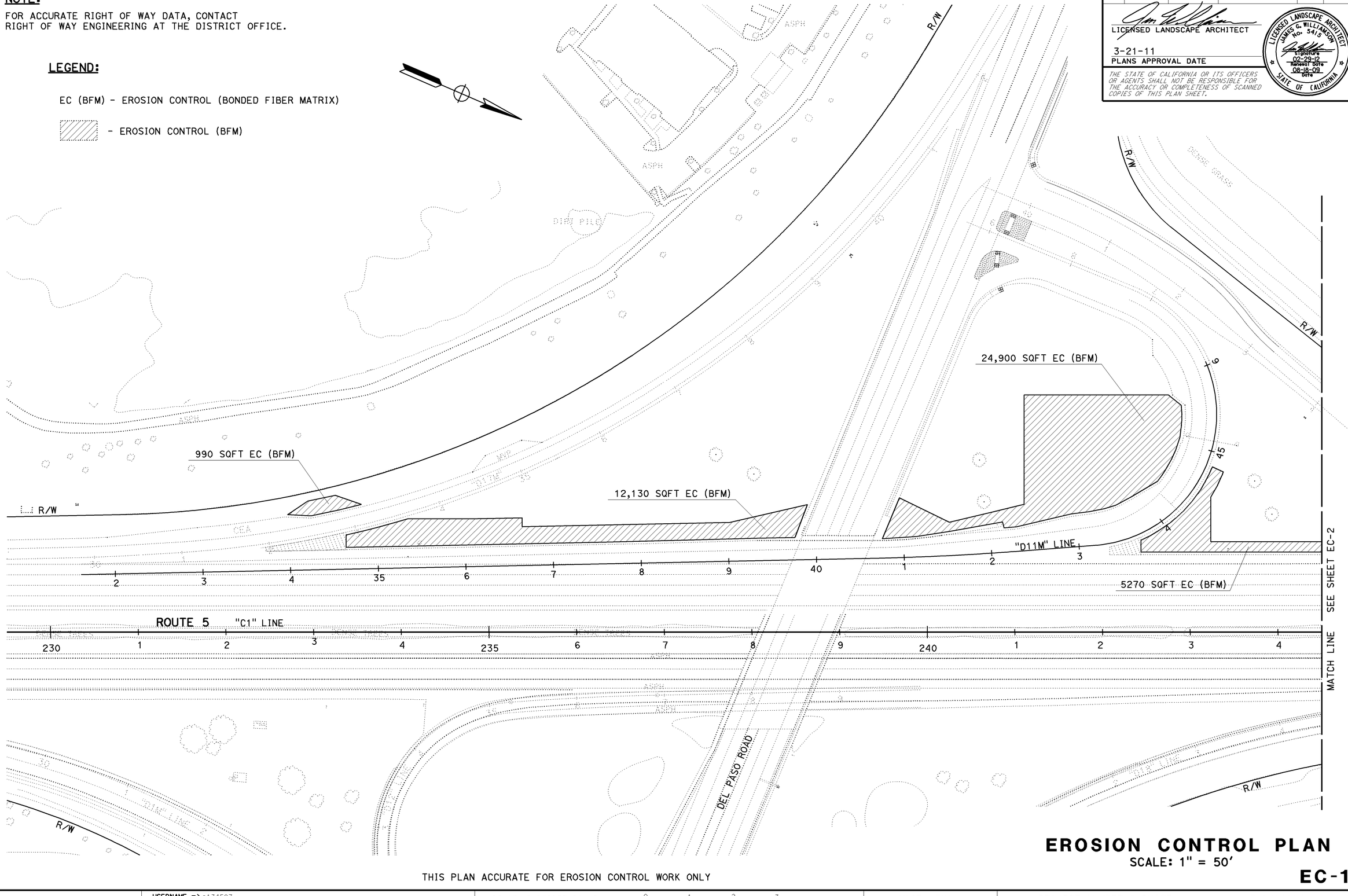

EROSION CONTROL PLAN

SCALE: 1" = 50'

THIS PLAN ACCURATE FOR EROSION CONTROL WORK ONLY

EC-1

STATE OF CALIFORNIA - DEPARTMENT OF TRANSPORTATION
LANDSCAPE ARCHITECTURE
SENIOR LANDSCAPE ARCHITECT: KENNETH MURRAY
CALCULATED-DESIGNED BY: J. WILLIAMSON
CHECKED BY: K. MURRAY
REVISED BY
DATE REVISED

LAST REVISION DATE PLOTTED => 25-MAY-2011
TIME PLOTTED => 14:06

BORDER LAST REVISED 7/2/2010

USERNAME => s134507
DGN FILE => 0300001104ge001.dgn

RELATIVE BORDER SCALE IS IN INCHES 0 1 2 3

UNIT 0381

PROJECT NUMBER & PHASE 03000011041

Dist	COUNTY	ROUTE	POST MILES TOTAL PROJECT	SHEET No.	TOTAL SHEETS
03	SAC	5	28.7/29.4	11	65

LICENSED LANDSCAPE ARCHITECT

3-21-11
PLANS APPROVAL DATE

LICENSED LANDSCAPE ARCHITECT
JAMES G. WILLIAMSON
No. 5415
Signature
02-29-12
Renewal Date
XX-XX-XX
Date
STATE OF CALIFORNIA

THE STATE OF CALIFORNIA OR ITS OFFICERS OR AGENTS SHALL NOT BE RESPONSIBLE FOR THE ACCURACY OR COMPLETENESS OF SCANNED COPIES OF THIS PLAN SHEET.

NOTE:

FOR ACCURATE RIGHT OF WAY DATA, CONTACT
RIGHT OF WAY ENGINEERING AT THE DISTRICT OFFICE.

EROSION CONTROL QUANTITIES

STATION	LOCATION	EROSION CONTROL (BONDED FIBER MATRIX) SQFT
"C1" 232+70 TO "C1" 233+50	Lt	990
"C1" 233+40 TO "C1" 238+60	Lt	12,130
"C1" 239+50 TO "C1" 242+90	Lt	24,900
"C1" 242+40 TO "C1" 244+50	Lt	5,270
"C1" 244+50 TO "C1" 247+90	Lt	8,630
"C1" 244+90 TO "C1" 253+90	Lt	13,145
TOTAL		65,065

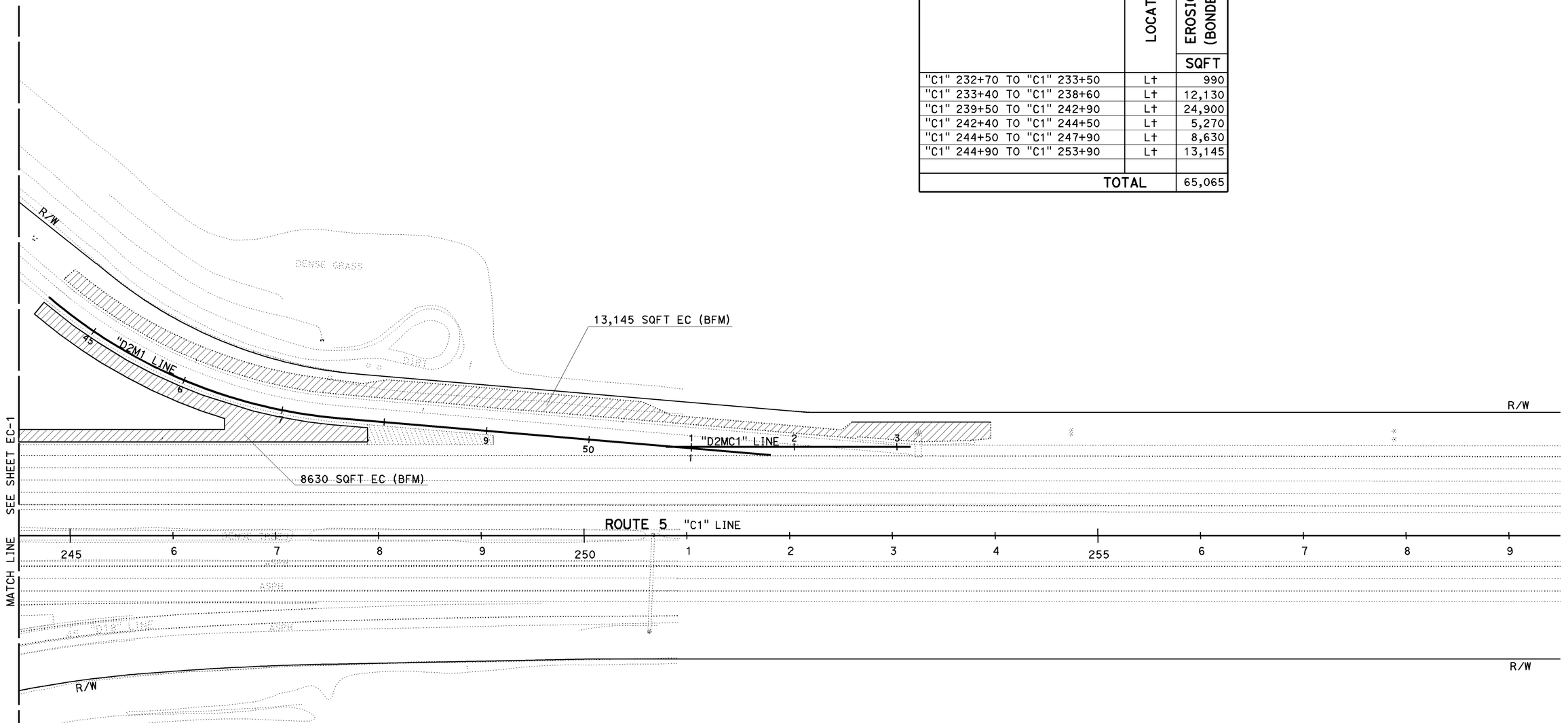

EROSION CONTROL PLAN

SCALE: 1" = 50'

EC-2

THIS PLAN ACCURATE FOR EROSION CONTROL WORK ONLY

STATE OF CALIFORNIA - DEPARTMENT OF TRANSPORTATION
LANDSCAPE ARCHITECTURE
SENIOR LANDSCAPE ARCHITECT: KENNETH MURRAY
CALCULATED-DESIGNED BY: J. WILLIAMSON
CHECKED BY: K. MURRAY
REVISED BY
DATE REVISED

LAST REVISION
DATE PLOTTED => 25-MAY-2011
TIME PLOTTED => 14:06

BORDER LAST REVISED 7/2/2010
USERNAME => s134507
DGN FILE => 0300001104ge002.dgn
RELATIVE BORDER SCALE IS IN INCHES 0 1 2 3
UNIT 0381
PROJECT NUMBER & PHASE 03000011041

Dist	COUNTY	ROUTE	POST MILES TOTAL PROJECT	SHEET No.	TOTAL SHEETS
03	Sac	5	28.8/29.5	12	65

12-22-10
REGISTERED CIVIL ENGINEER DATE

3-21-11
PLANS APPROVAL DATE

REGISTERED PROFESSIONAL ENGINEER
JOHNY TAN
No. 64316
Exp. 6-30-11
CIVIL
STATE OF CALIFORNIA

THE STATE OF CALIFORNIA OR ITS OFFICERS OR AGENTS SHALL NOT BE RESPONSIBLE FOR THE ACCURACY OR COMPLETENESS OF SCANNED COPIES OF THIS PLAN SHEET.

NOTES:

1. LOCATION OF CONSTRUCTION AREA SIGNS SHOWN ARE APPROXIMATE. EXACT SIGN LOCATION IS TO BE DETERMINED BY THE ENGINEER.
2. SEE SC & DE SHEETS FOR ADDITIONAL CONSTRUCTION AREA SIGNS.

LEGEND:

- CONSTRUCTION AREA SIGN SINGLE POST
- CONSTRUCTION AREA SIGN TWO POST

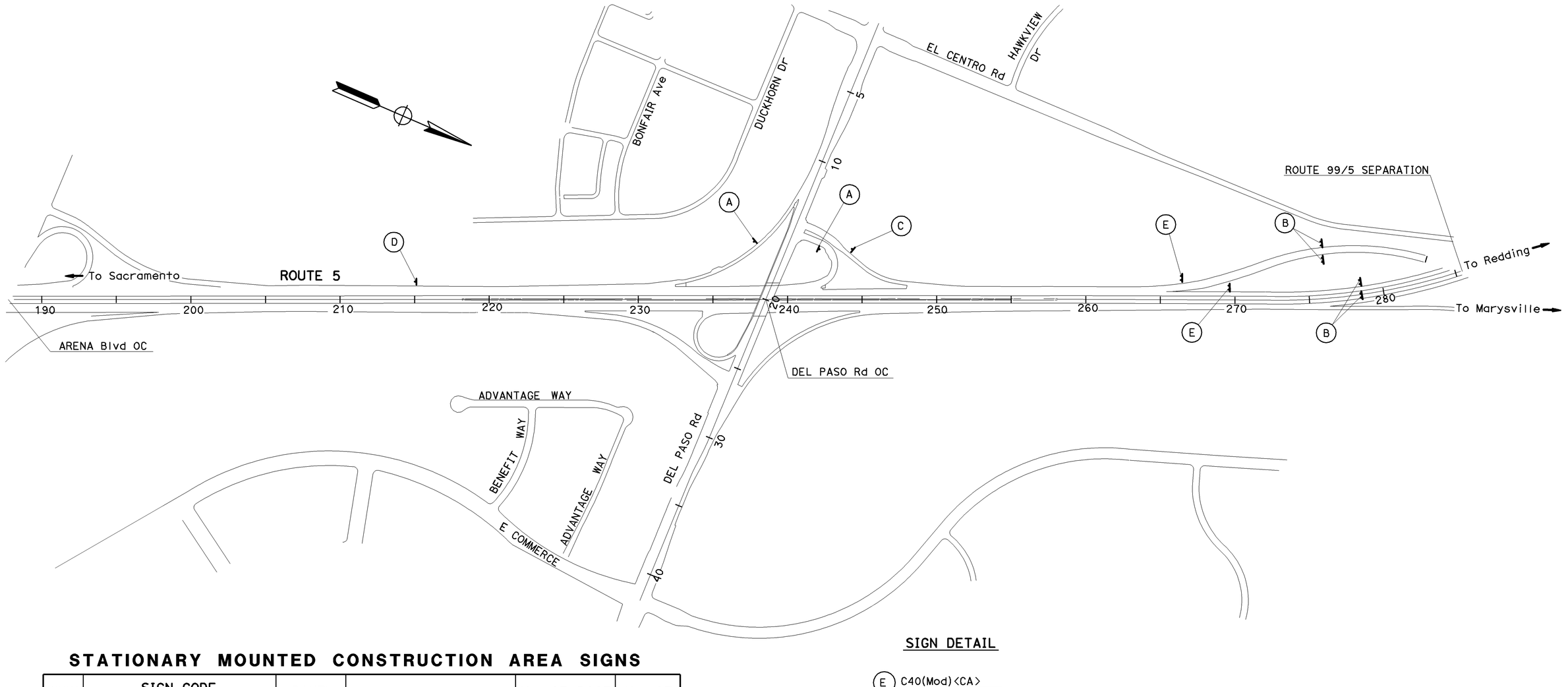

STATIONARY MOUNTED CONSTRUCTION AREA SIGNS

SIGN No.	SIGN CODE		PANEL SIZE	SIGN MESSAGE	No. OF POST AND SIZE	No. OF SIGNS
	FEDERAL	CALIFORNIA				
(A)	W20-1	C23	48" x 48"	ROAD WORK AHEAD	1 - 6" x 6"	2
(B)	W20-1	C23	60" x 60"	ROAD WORK AHEAD	2 - 4" x 6"	4
(C)	G20-2	C14	36" x 18"	END ROAD WORK	1 - 4" x 4"	1
(D)		C14	48" x 24"	END ROAD WORK	1 - 4" x 6"	1
(E)		C40A (Mod)	96" x 60"	TRAFFIC FINES DOUBLED IN WORK ZONES	2 - 6" x 6"	2

SIGN DETAIL

(E) C40(Mod)<CA>

TRAFFIC FINES DOUBLED IN WORK ZONES

8" D SERIES LETTERS

96"x60"

RETROREFLECTIVE WHITE BACKGROUND WITH BLACK LEGEND AND BORDER.

CONSTRUCTION AREA SIGNS

NO SCALE

CS-1

THIS PLAN ACCURATE FOR CONSTRUCTION AREA SIGN WORK ONLY

STATE OF CALIFORNIA - DEPARTMENT OF TRANSPORTATION
NORTH REGION
PROJECT DEVELOPMENT
Caltrans

FUNCTIONAL SUPERVISOR: ROBERT POLGAR

CALCULATED-DESIGNED BY: JOHNY TAN
CHECKED BY: JT

REVISED BY | DATE REVISED

LAST REVISION | DATE PLOTTED => 25-MAY-2011 | TIME PLOTTED => 14:06 | 00-00-00

BORDER LAST REVISED 7/2/2010

USERNAME => s134507
DGN FILE => 03000011041a001.dgn

RELATIVE BORDER SCALE IS IN INCHES 0 1 2 3

UNIT 0322

PROJECT NUMBER & PHASE 03000011041

NOTE:

FOR ACCURATE RIGHT OF WAY DATA, CONTACT
RIGHT OF WAY ENGINEERING AT THE DISTRICT OFFICE.

LEGEND

- CONSTRUCT THIS STAGE
- CONSTRUCT STAGE 3 (TYPICAL RAMP CLOSURE T14)
- OBLITERATE SURFACE AREA
- (P) STRIPING DETAIL (PAINT)
- BEGIN OR END STRIPING DETAIL
- CHANNELIZER (SURFACE MOUNTED) @ 50' C-C
- TEMPORARY RAILING (TYPE K)

SECTION A-A
STAGE 1

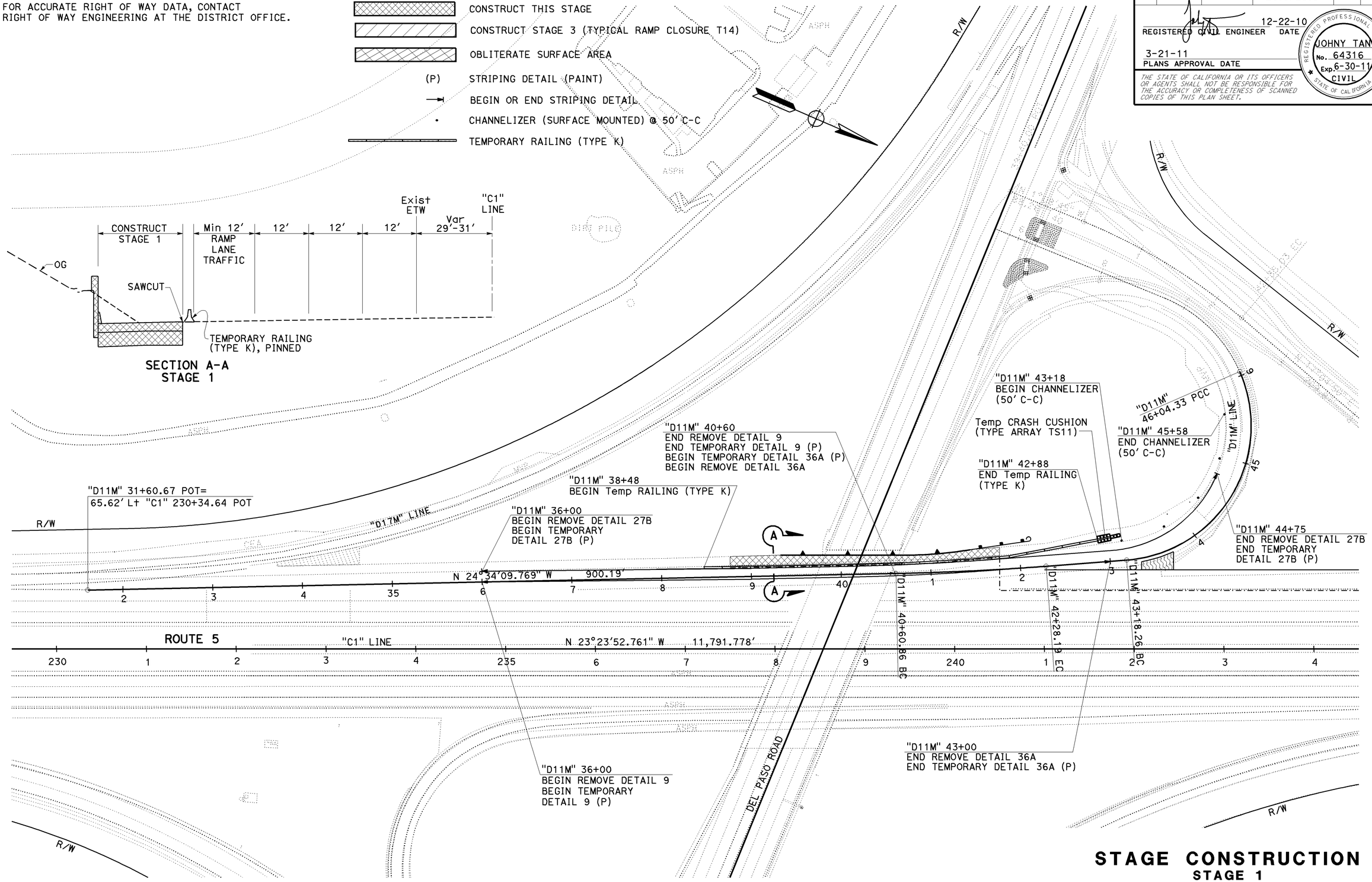

STAGE CONSTRUCTION
STAGE 1
SCALE: 1" = 50'

SC-1

THIS PLAN ACCURATE FOR STAGE CONSTRUCTION WORK ONLY

Dist	COUNTY	ROUTE	POST MILES TOTAL PROJECT	SHEET No.	TOTAL SHEETS
03	Sac	5	28.8/29.5	13	65

12-22-10
REGISTERED CIVIL ENGINEER DATE

JOHNY TAN
No. 64316
Exp. 6-30-11
CIVIL
REGISTERED PROFESSIONAL ENGINEER
STATE OF CALIFORNIA

3-21-11
PLANS APPROVAL DATE

THE STATE OF CALIFORNIA OR ITS OFFICERS OR AGENTS SHALL NOT BE RESPONSIBLE FOR THE ACCURACY OR COMPLETENESS OF SCANNED COPIES OF THIS PLAN SHEET.

REVISED BY	DATE REVISED
JT	

CALCULATED-DESIGNED BY: JOHNY TAN
CHECKED BY:

FUNCTIONAL SUPERVISOR: ROBERT POLGAR

STATE OF CALIFORNIA - DEPARTMENT OF TRANSPORTATION
NORTH REGION
PROJECT DEVELOPMENT

Caltrans

LAST REVISION: DATE PLOTTED => 25-MAY-2011
00-00-00 TIME PLOTTED => 14:06

BORDER LAST REVISED 7/2/2010
USERNAME => s134507
DGN FILE => 0300001104ma001.dgn
RELATIVE BORDER SCALE IS IN INCHES 0 1 2 3
UNIT 0322
PROJECT NUMBER & PHASE 03000011041

Dist	COUNTY	ROUTE	POST MILES TOTAL PROJECT	SHEET No.	TOTAL SHEETS
03	Sac	5	28.8/29.5	14	65

REGISTERED CIVIL ENGINEER — 12-22-10 DATE

3-21-11
PLANS APPROVAL DATE

REGISTERED PROFESSIONAL ENGINEER — JOHNY TAN No. 64316 Exp. 6-30-11 CIVIL — STATE OF CALIFORNIA

THE STATE OF CALIFORNIA OR ITS OFFICERS OR AGENTS SHALL NOT BE RESPONSIBLE FOR THE ACCURACY OR COMPLETENESS OF SCANNED COPIES OF THIS PLAN SHEET.

TYPICAL SECTION STAGE 2

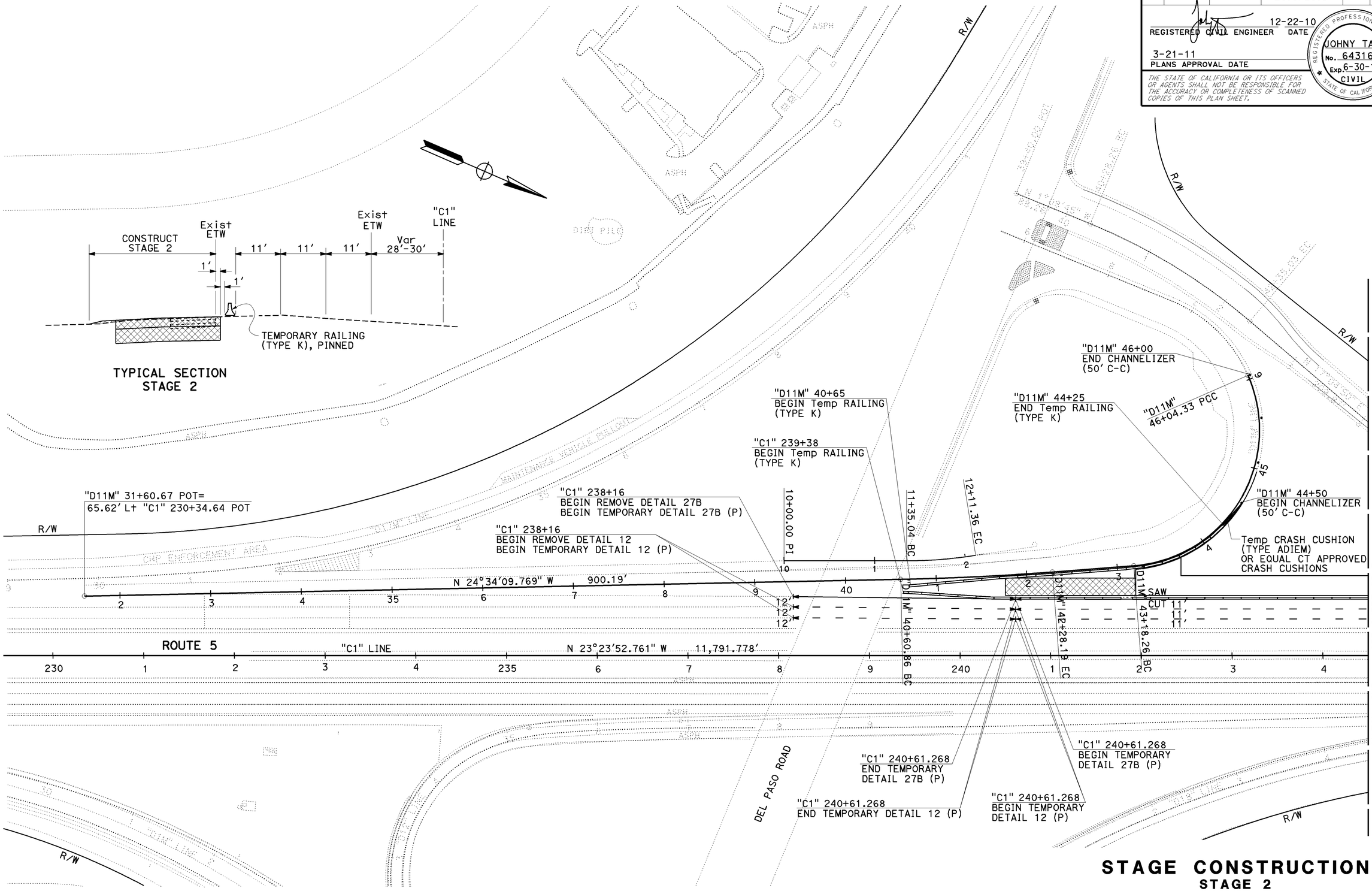

STAGE CONSTRUCTION
STAGE 2
SCALE: 1" = 50′

SC-2

THIS PLAN ACCURATE FOR STAGE CONSTRUCTION WORK ONLY

STATE OF CALIFORNIA - DEPARTMENT OF TRANSPORTATION
NORTH REGION
PROJECT DEVELOPMENT

FUNCTIONAL SUPERVISOR: ROBERT POLGAR

CALCULATED-DESIGNED BY: JOHNY TAN
CHECKED BY: JT
REVISED BY:
DATE REVISED:

LAST REVISION — DATE PLOTTED => 25-MAY-2011 — TIME PLOTTED => 14:06
00-00-00

BORDER LAST REVISED 7/2/2010

USERNAME => s134507
DGN FILE => 0300001104ma002.dgn

RELATIVE BORDER SCALE IS IN INCHES 0 1 2 3

UNIT 0322

PROJECT NUMBER & PHASE 03000011041

Dist	COUNTY	ROUTE	POST MILES TOTAL PROJECT	SHEET No.	TOTAL SHEETS
03	Sac	5	28.8/29.5	15	65

12-22-10
REGISTERED CIVIL ENGINEER DATE

3-21-11
PLANS APPROVAL DATE

REGISTERED PROFESSIONAL ENGINEER
JOHNY TAN
No. 64316
Exp. 6-30-11
CIVIL
STATE OF CALIFORNIA

THE STATE OF CALIFORNIA OR ITS OFFICERS OR AGENTS SHALL NOT BE RESPONSIBLE FOR THE ACCURACY OR COMPLETENESS OF SCANNED COPIES OF THIS PLAN SHEET.

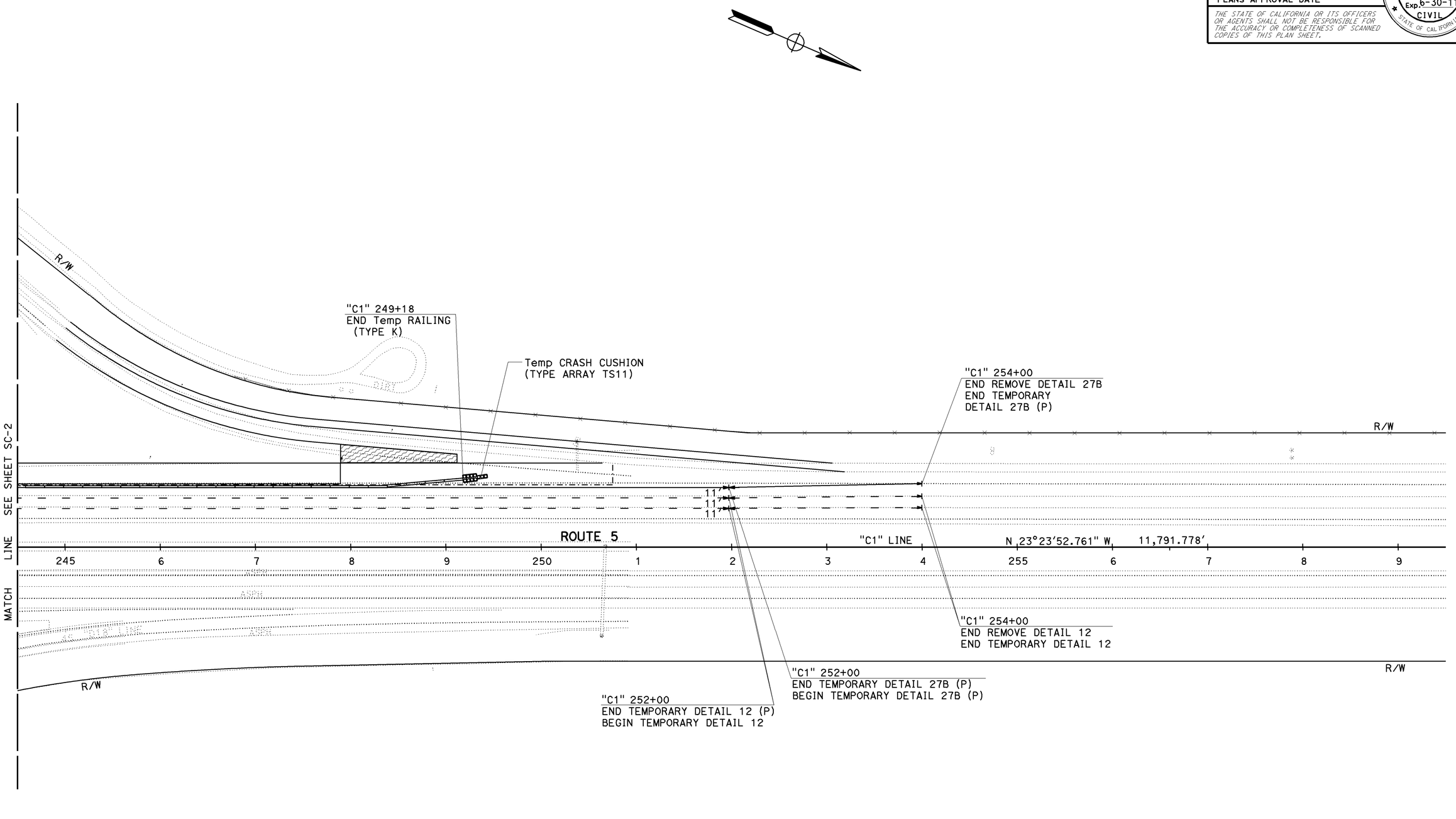

STAGE CONSTRUCTION

STAGE 2

SCALE: 1" = 50'

SC-3

THIS PLAN ACCURATE FOR STAGE CONSTRUCTION WORK ONLY

STATE OF CALIFORNIA - DEPARTMENT OF TRANSPORTATION
NORTH REGION
PROJECT DEVELOPMENT

FUNCTIONAL SUPERVISOR: ROBERT POLGAR

CALCULATED-DESIGNED BY: JOHNY TAN
CHECKED BY:

REVISED BY: JT
DATE REVISED:

LAST REVISION DATE PLOTTED => 25-MAY-2011
TIME PLOTTED => 14:06
00-00-00

BORDER LAST REVISED 7/2/2010

USERNAME => s134507
DGN FILE => 0300001104ma003.dgn

RELATIVE BORDER SCALE IS IN INCHES 0 1 2 3

UNIT 0322

PROJECT NUMBER & PHASE 03000011041

Dist	COUNTY	ROUTE	POST MILES TOTAL PROJECT	SHEET No.	TOTAL SHEETS
03	Sac	5	28.8/29.5	16	65

REGISTERED CIVIL ENGINEER 12-22-10 DATE

3-21-11
PLANS APPROVAL DATE

REGISTERED PROFESSIONAL ENGINEER JOHNY TAN No. 64316 Exp. 6-30-11 CIVIL STATE OF CALIFORNIA

THE STATE OF CALIFORNIA OR ITS OFFICERS OR AGENTS SHALL NOT BE RESPONSIBLE FOR THE ACCURACY OR COMPLETENESS OF SCANNED COPIES OF THIS PLAN SHEET.

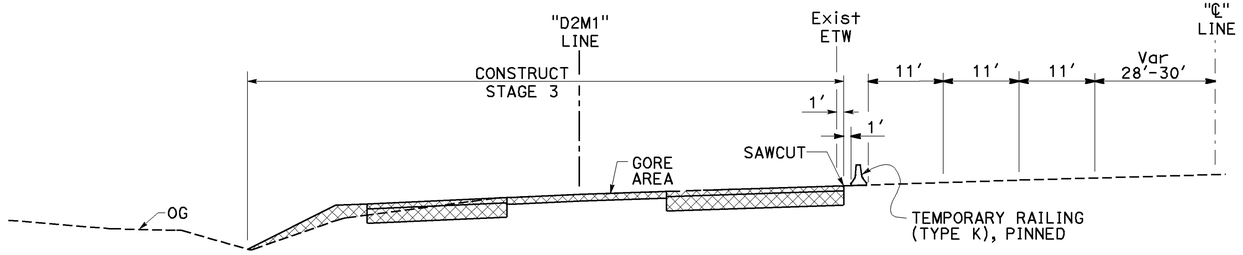

TYPICAL SECTION
STAGE 3

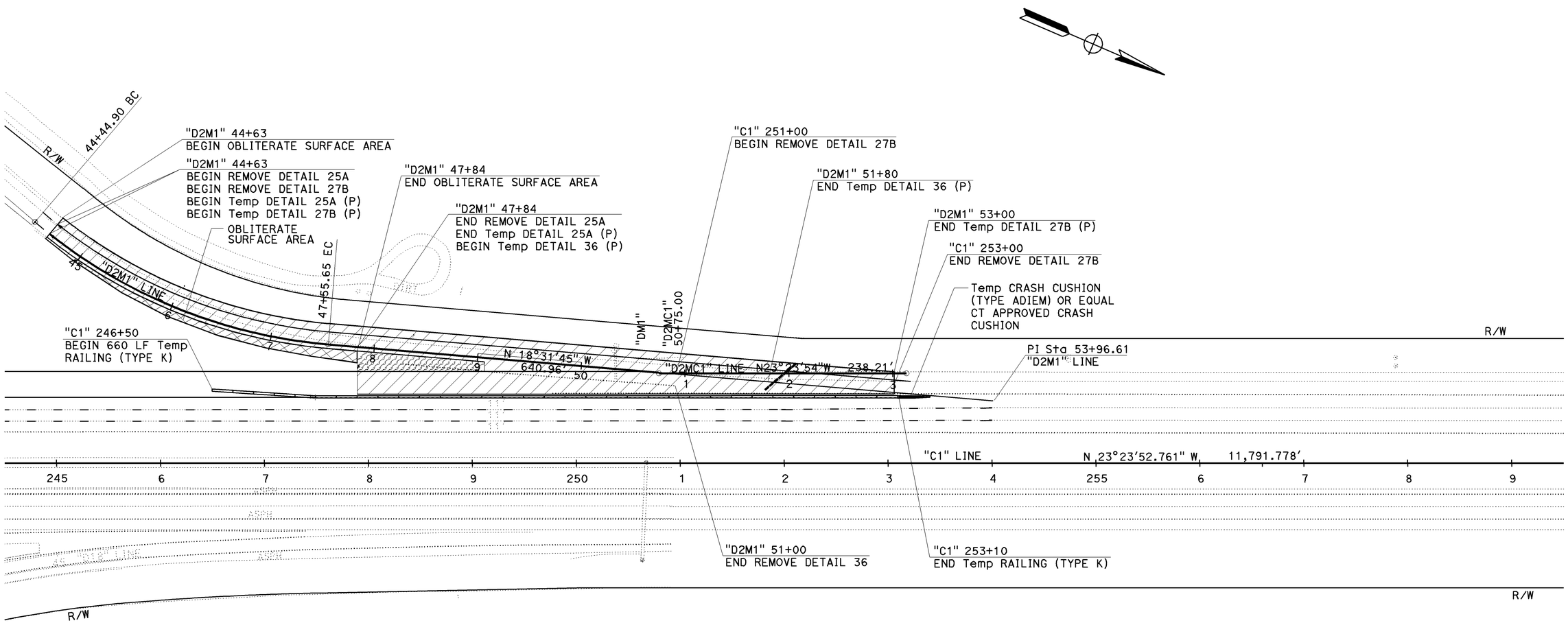

STAGE CONSTRUCTION
STAGE 3
SCALE: 1" = 50'

SC-4

THIS PLAN ACCURATE FOR STAGE CONSTRUCTION WORK ONLY

STATE OF CALIFORNIA - DEPARTMENT OF TRANSPORTATION
Caltrans
NORTH REGION PROJECT DEVELOPMENT

FUNCTIONAL SUPERVISOR: ROBERT POLGAR
CALCULATED-DESIGNED BY: JOHNY TAN
CHECKED BY:
REVISED BY: JT
DATE REVISED:

LAST REVISION 00-00-00
DATE PLOTTED => 25-MAY-2011
TIME PLOTTED => 14:06

Dist	COUNTY	ROUTE	POST MILES TOTAL PROJECT	SHEET No.	TOTAL SHEETS
03	Sac	5	28.8/29.5	17	65

12-22-10
REGISTERED CIVIL ENGINEER DATE

3-21-11
PLANS APPROVAL DATE

REGISTERED PROFESSIONAL ENGINEER
JOHNY TAN
No. 64316
Exp. 6-30-11
CIVIL
STATE OF CALIFORNIA

THE STATE OF CALIFORNIA OR ITS OFFICERS OR AGENTS SHALL NOT BE RESPONSIBLE FOR THE ACCURACY OR COMPLETENESS OF SCANNED COPIES OF THIS PLAN SHEET.

REMOVE THERMOPLASTIC TRAFFIC STRIPE

STAGE	STATION	DETAIL No.	LANE No.	REMOVE THERMOPLASTIC TRAFFIC STRIPE	
				WHITE	YELLOW (HAZARDOUS WASTE)
				LF	LF
1	"D11M" 36+00 TO "D11M" 40+60	9		460	
	"D11M" 36+00 TO "D11M" 44+75	27B	1	875	
	"D11M" 40+60 TO "D11M" 43+00	36A		240	
2	"C1" 238+16 TO "C1" 254+00	27B	3	1,584	
	"C1" 238+16 TO "C1" 254+00	12	2	1,584	
	"C1" 238+16 TO "C1" 254+00	12	1	1,584	
3	"D2M1" 44+63 TO "D2M1" 47+84	25A	1		321
	"D2M1" 44+63 TO "D2M1" 53+00	27B	1	873	
	"D2M1" 47+84 TO "D2M1" 51+00	36	1	316	
TOTAL				7,516	321

TRAFFIC CONTROL ITEMS

STAGE	STATION	TEMPORARY RAILING (TYPE K)	(N) TEMPORARY CRASH CUSHION (ARRAY TS11)	TEMPORARY CRASH CUSHION MODULE	TEMPORARY CRASH CUSHION (TYPE ADIEM)	CHANNELIZER (SURFACE MOUNTED)
		LF	EA	EA	EA	EA
1	"D11M" 38+48 TO "D11M" 42+88	440	1	22		5
2	"D11M" 40+65 TO "D11M" 44+25	360			1	5
	"C1" 239+38 TO "C1" 249+18	980	1	22		
3	"C1" 246+50 TO "C1" 253+10	660			1	
TOTAL		2440	2	44	2	10

(N) - NOT A SEPARATE PAY ITEM, FOR INFORMATION ONLY

TEMPORARY TRAFFIC STRIPE

STAGE	STATION	DETAIL No.	LANE No.	TEMPORARY TRAFFIC STRIPE (PAINT)			TEMPORARY PAVEMENT MARKER	
				SOLID WHITE	BROKEN WHITE	SOLID YELLOW	TYPE G	TYPE H
				LF	LF	LF	EA	EA
1	"D11M" 36+00 TO "D11M" 44+75	27B	1	875				
	"D11M" 36+00 TO "D11M" 40+60	9	1	460			10	
	"D11M" 40+60 TO "D11M" 43+00	36A	1	240			11	
2	"C1" 238+16 TO "C1" 240+61	27B	3	245				
	"C1" 238+16 TO "C1" 240+61	12	2		245		6	
	"C1" 238+16 TO "C1" 240+61	12	1		245		6	
	"C1" 240+61 TO "C1" 252+00	27B	3	1,139				
	"C1" 240+61 TO "C1" 252+00	12	2		1,139		25	
	"C1" 240+61 TO "C1" 252+00	12	1		1,139		25	
	"C1" 252+00 TO "C1" 254+00	27B	3	200				
	"C1" 252+00 TO "C1" 254+00	12	2		200		5	
	"C1" 252+00 TO "C1" 254+00	12	1		200		5	
3	"D2M1" 44+63 TO "D2M1" 53+00	27B	1	837				
	"D2M1" 44+63 TO "D2M1" 47+84	25A	1			321		16
	"D2M1" 47+84 TO "D2M1" 51+00	36	1	316			18	
SUBTOTAL				4,312	3,168	321	111	16
TOTAL				7,801			127	

STAGE CONSTRUCTION QUANTITIES

SCQ-1

REVISED BY	JT				
DATE REVISED					
CALCULATED-DESIGNED BY	JOHNY TAN				
CHECKED BY					
FUNCTIONAL SUPERVISOR	ROBERT POLGAR				
STATE OF CALIFORNIA - DEPARTMENT OF TRANSPORTATION	NORTH REGION PROJECT DEVELOPMENT				

LAST REVISION 00-00-00
DATE PLOTTED => 25-MAY-2011
TIME PLOTTED => 14:06

BORDER LAST REVISED 7/2/2010
USERNAME => s134507
DGN FILE => 0300001104mc001.dgn
RELATIVE BORDER SCALE IS IN INCHES 0 1 2 3
UNIT 0322
PROJECT NUMBER & PHASE 03000011041

Dist	COUNTY	ROUTE	POST MILES TOTAL PROJECT	SHEET No.	TOTAL SHEETS
03	Sac	5	28.7/29.4	18	65

REGISTERED CIVIL ENGINEER — 12-21-10 DATE

3-21-11
PLANS APPROVAL DATE

REGISTERED PROFESSIONAL ENGINEER — John R. Keber No. 40048 Exp. 12-31-11 CIVIL — STATE OF CALIFORNIA

THE STATE OF CALIFORNIA OR ITS OFFICERS OR AGENTS SHALL NOT BE RESPONSIBLE FOR THE ACCURACY OR COMPLETENESS OF SCANNED COPIES OF THIS PLAN SHEET.

LEGEND

LIMIT OF STRIPING PATTERN	ROADSIDE SIGN NUMBER
CHANGE IN STRIPING PATTERN	OVERHEAD SIGN NUMBER
No. PAVEMENT DELINEATION DETAIL NUMBER	<CA> CALIFORNIA SIGN CODE
LL LIMIT LINE	SIGN - SINGLE POST
Si "SIGNAL" PAVEMENT MARKING	SIGN - TWO POST
A "AHEAD" PAVEMENT MARKING	SIGN (SSBM)
DELINEATOR (CLASS 1) OR OBJECT MARKER	REMOVE ROADSIDE SIGN
HIGHWAY POST MARKER	RESET ROADSIDE SIGN
	RELOCATE ROADSIDE SIGN

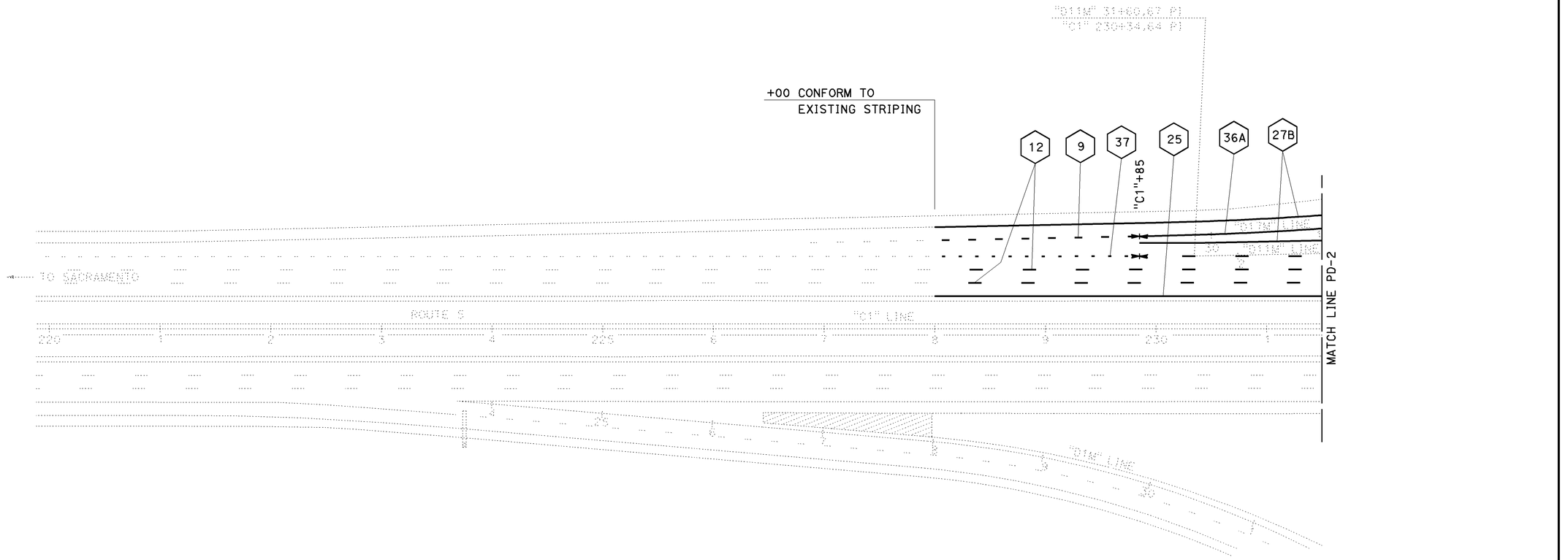

NOTES:

1. ALL LANES SHALL BE 12′ WIDE UNLESS OTHERWISE SHOWN.
2. ALL DELINEATORS (CLASS 1) SHALL BE TYPE F.
3. ALL DELINEATORS (CLASS 1) SHALL BE INSTALLED ON 200′ CENTERS.
4. ALL EXISTING SIGNS NOT SHOWN FOR REMOVAL, RELOCATING OR RESETTING SHALL REMAIN IN PLACE.
5. ALL SIGN CODES SHOWN ARE FEDERAL SIGN CODES UNLESS OTHERWISE DESIGNATED AS CALIFORNIA SIGN CODES.
6. THIS PLAN ACCURATE FOR PAVEMENT DELINEATION AND SIGN WORK ONLY.

PAVEMENT DELINEATION AND SIGN PLAN

SCALE: 1"=50′

PD-1

REVISED BY | DATE REVISED

CHUCK COOK | JOHN KEBER

CALCULATED-DESIGNED BY | CHECKED BY

FUNCTIONAL SUPERVISOR: JOSEPH W. HORTON

STATE OF CALIFORNIA - DEPARTMENT OF TRANSPORTATION

TRAFFIC

Caltrans

LAST REVISION 12-02-10 | DATE PLOTTED => 25-MAY-2011 | TIME PLOTTED => 14:06

Dist	COUNTY	ROUTE	POST MILES TOTAL PROJECT	SHEET No.	TOTAL SHEETS
03	Sac	5	28.7/29.4	19	65

John R. Keber 12-21-10
REGISTERED CIVIL ENGINEER DATE

3-21-11
PLANS APPROVAL DATE

REGISTERED PROFESSIONAL ENGINEER
John R. Keber
No. 40048
Exp. 12-31-11
CIVIL
STATE OF CALIFORNIA

THE STATE OF CALIFORNIA OR ITS OFFICERS OR AGENTS SHALL NOT BE RESPONSIBLE FOR THE ACCURACY OR COMPLETENESS OF SCANNED COPIES OF THIS PLAN SHEET.

REVISED BY	DATE REVISED

CALCULATED-DESIGNED BY: CHUCK COOK
CHECKED BY: JOHN KEBER
FUNCTIONAL SUPERVISOR: JOSEPH W. HORTON

STATE OF CALIFORNIA - DEPARTMENT OF TRANSPORTATION
TRAFFIC
Caltrans

+88 CONFORM TO EXISTING STRIPING

2-1 W4-1R

2-2 W4-1R

2-3 W4-1R

DEL PASO RD OC BR NO. 24-195

5 SAC 29 05 +14

5 SAC 29 00 +38

+04 CONFORM TO EXISTING STRIPING

"B11M" 46+04.331 EC

25 36A 27B 25A 12 9 14A 36A 12 27B 9 LL 27B 25A

"C1"+35 "C1"+57 "C1"+01 "C1" +35 L-1

MATCH LINE PD-1

MATCH LINE PD-3

ROUTE 5

"C1" LINE

"C1" 238+53.80 POT=
"B" 2040.00 POT

AS-125

G83-1<CA> 288"x100"
99 Yuba City Marysville ONLY
REMOVE LAMINATED SIGN PANEL

G83-1<CA> 288"x100"
99 Yuba City Marysville EXIT 525B ONLY
16"UC-12"LC
INSTALL LAMINATED SIGN PANEL

PAVEMENT DELINEATION AND SIGN PLAN

SCALE: 1"=50'

PD-2

NOTE: THIS PLAN ACCURATE FOR PAVEMENT DELINEATION AND SIGNING WORK ONLY.

LAST REVISION 12-02-10
DATE PLOTTED => 25-MAY-2011
TIME PLOTTED => 14:06

BORDER LAST REVISED 7/1/2010
USERNAME => s134507
DGN FILE => 0300001104na002.dgn
RELATIVE BORDER SCALE IS IN INCHES 0 1 2 3
UNIT 0389
PROJECT NUMBER & PHASE 03000011041

Dist	COUNTY	ROUTE	POST MILES TOTAL PROJECT	SHEET No.	TOTAL SHEETS
03	Sac	5	28.7/29.4	20	65

John R. Keber 12-21-10
REGISTERED CIVIL ENGINEER DATE

3-21-11
PLANS APPROVAL DATE

REGISTERED PROFESSIONAL ENGINEER
John R. Keber
No. 40048
Exp. 12-31-11
CIVIL
STATE OF CALIFORNIA

THE STATE OF CALIFORNIA OR ITS OFFICERS OR AGENTS SHALL NOT BE RESPONSIBLE FOR THE ACCURACY OR COMPLETENESS OF SCANNED COPIES OF THIS PLAN SHEET.

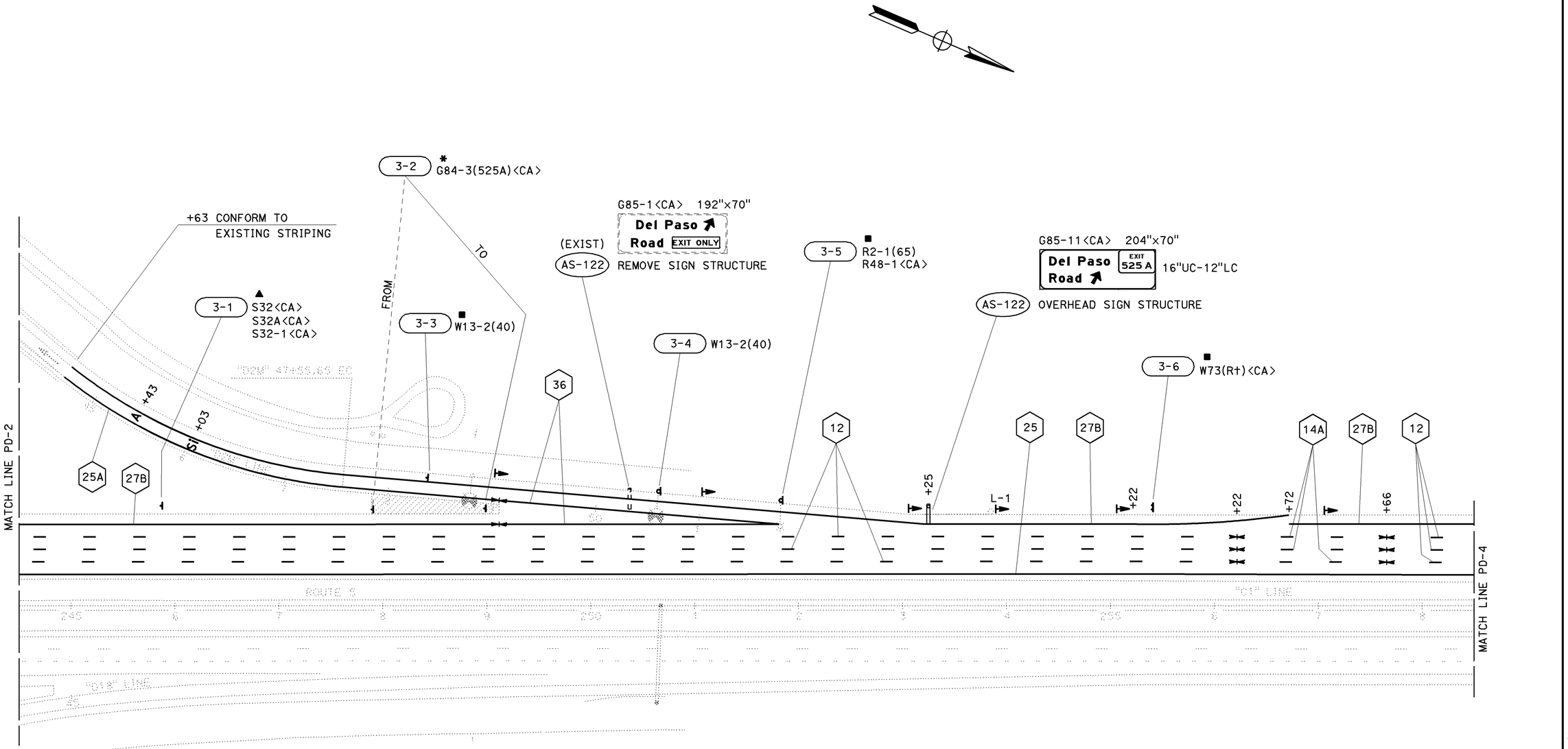

PAVEMENT DELINEATION AND SIGN PLAN

SCALE: 1"=50'

NOTE: THIS PLAN ACCURATE FOR PAVEMENT DELINEATION AND SIGNING WORK ONLY.

PD-3

STATE OF CALIFORNIA - DEPARTMENT OF TRANSPORTATION
TRAFFIC
Caltrans

FUNCTIONAL SUPERVISOR: JOSEPH W. HORTON
CALCULATED-DESIGNED BY: CHUCK COOK
CHECKED BY: JOHN KEBER
REVISED BY
DATE REVISED

LAST REVISION DATE PLOTTED => 25-MAY-2011
TIME PLOTTED => 14:06
12-02-10

BORDER LAST REVISED 7/1/2010
USERNAME => s134507
DGN FILE => 0300001104na003.dgn
RELATIVE BORDER SCALE IS IN INCHES 0 1 2 3
UNIT 0389
PROJECT NUMBER & PHASE 03000011041

Dist	COUNTY	ROUTE	POST MILES TOTAL PROJECT	SHEET No.	TOTAL SHEETS
03	Sac	5	28.7/29.4	21	65

John R. Keber 12-21-10
REGISTERED CIVIL ENGINEER DATE

3-21-11
PLANS APPROVAL DATE

REGISTERED PROFESSIONAL ENGINEER
John R. Keber
No. 40048
Exp. 12-31-11
CIVIL
STATE OF CALIFORNIA

THE STATE OF CALIFORNIA OR ITS OFFICERS OR AGENTS SHALL NOT BE RESPONSIBLE FOR THE ACCURACY OR COMPLETENESS OF SCANNED COPIES OF THIS PLAN SHEET.

G83-5<CA> 264"x70"
Del Paso Rd EXIT 525 A
EXIT ONLY
REMOVE LAMINATED SIGN PANEL

G83-5<CA> 264"x70"
Del Paso Rd EXIT 525 A
1/4 MILE
16"UC-12"LC
12" E
INSTALL LAMINATED SIGN PANEL

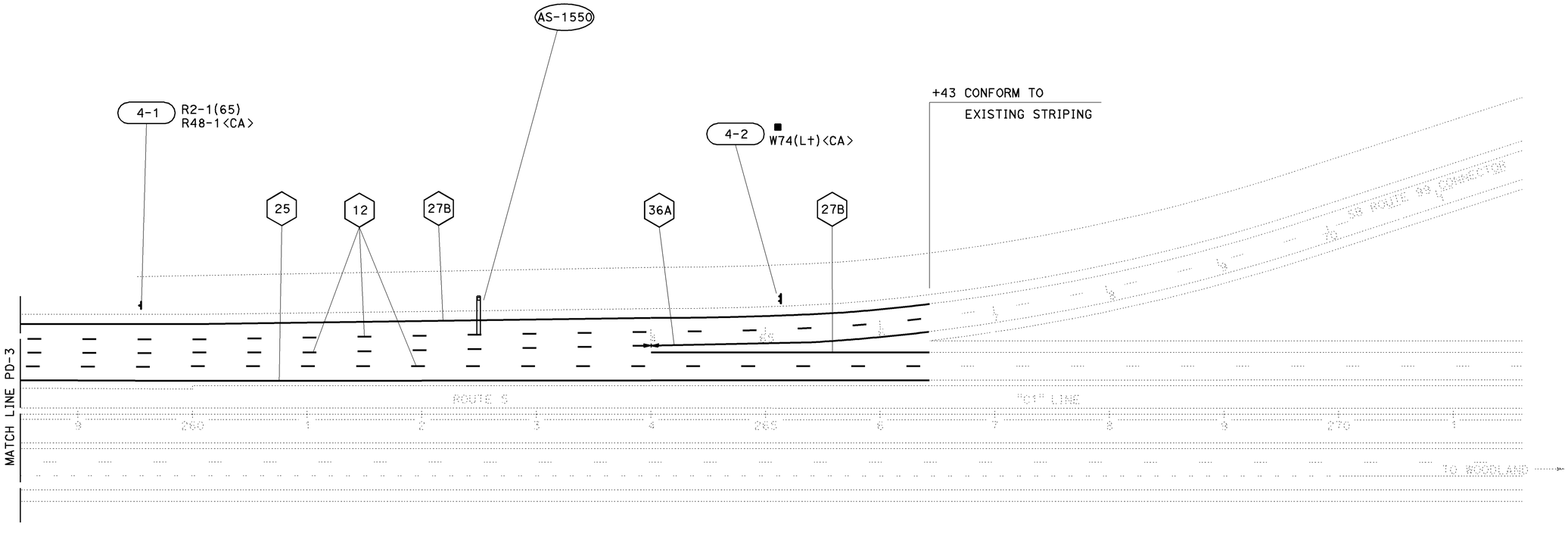

NOTE: THIS PLAN ACCURATE FOR PAVEMENT DELINEATION AND SIGNING WORK ONLY.

PAVEMENT DELINEATION AND SIGN PLAN

SCALE: 1"=50'

PD-4

STATE OF CALIFORNIA - DEPARTMENT OF TRANSPORTATION
TRAFFIC
FUNCTIONAL SUPERVISOR: JOSEPH W. HORTON
CALCULATED-DESIGNED BY: JOHN KEBER
CHECKED BY: CHUCK COOK
REVISED BY | DATE REVISED

LAST REVISION DATE PLOTTED => 25-MAY-2011
TIME PLOTTED => 14:06
12-02-10

BORDER LAST REVISED 7/1/2010
USERNAME => s134507
DGN FILE => 0300001104na004.dgn
RELATIVE BORDER SCALE IS IN INCHES 0 1 2 3
UNIT 0389
PROJECT NUMBER & PHASE 03000011041

Dist	COUNTY	ROUTE	POST MILES TOTAL PROJECT	SHEET No.	TOTAL SHEETS
03	Sac	5	28.7/29.4	22	65

John R. Keber 12-21-10
REGISTERED CIVIL ENGINEER DATE

3-21-11
PLANS APPROVAL DATE

REGISTERED PROFESSIONAL ENGINEER
John R. Keber
No. 40048
Exp. 12-31-11
CIVIL
STATE OF CALIFORNIA

THE STATE OF CALIFORNIA OR ITS OFFICERS OR AGENTS SHALL NOT BE RESPONSIBLE FOR THE ACCURACY OR COMPLETENESS OF SCANNED COPIES OF THIS PLAN SHEET.

4" THERMOPLASTIC TRAFFIC STRIPE

DETAIL NUMBER	LINEAR FEET
25	3,843
25A	807
27B	5,427
TOTAL	10,077

4" THERMOPLASTIC TRAFFIC STRIPE (BROKEN 36 - 12)

DETAIL NUMBER	LINEAR FEET
12	10,237
14A	864
TOTAL	11,101

4" THERMOPLASTIC TRAFFIC STRIPE (BROKEN 17 - 7)

DETAIL NUMBER	LINEAR FEET
9	629
TOTAL	629

8" THERMOPLASTIC TRAFFIC STRIPE

DETAIL NUMBER	LINEAR FEET
36	538
36A	777
37	185
TOTAL	1,500

PAVEMENT MARKER

DETAIL NUMBER	RETROREFLECTIVE		
	TYPE C	TYPE G	TYPE H
	EACH	EACH	EACH
9		15	
12		215	
14A	24		
25			82
25A			35
36		24	
36A		34	
37		16	
SUBTOTAL	24	304	117
TOTAL	445		

THERMOPLASTIC PAVEMENT MARKING

DESCRIPTION	NUMBER	SQUARE FEET
"SIGNAL"	1	32
"AHEAD"	1	31
LIMIT LINE	1	28
TOTAL		91

DELINEATOR - OBJECT MARKER - HIGHWAY POST MARKER

SHEET NUMBER	DELINEATOR (CLASS 1)	OBJECT MARKER (TYPE L-1)	HIGHWAY POST MARKER
	TYPE F-1 (EACH)	(EACH)	(EACH)
PD-2	4	1	2
PD-3	5	1	
TOTAL	9	2	2

PAVEMENT DELINEATION QUANTITIES

PDQ-1

REVISED BY	DATE REVISED

CALCULATED-DESIGNED BY: CHUCK COOK
CHECKED BY: JOHN KEBER
FUNCTIONAL SUPERVISOR: JOSEPH W. HORTON

STATE OF CALIFORNIA - DEPARTMENT OF TRANSPORTATION
Caltrans
TRAFFIC

LAST REVISION DATE PLOTTED => 25-MAY-2011
12-02-10 TIME PLOTTED => 14:06

Dist	COUNTY	ROUTE	POST MILES TOTAL PROJECT	SHEET No.	TOTAL SHEETS
03	Sac	5	28.7/29.4	23	65

John R. Keber 12-21-10
REGISTERED CIVIL ENGINEER DATE

3-21-11
PLANS APPROVAL DATE

REGISTERED PROFESSIONAL ENGINEER
John R. Keber
No. 40048
Exp. 12-31-11
CIVIL
STATE OF CALIFORNIA

THE STATE OF CALIFORNIA OR ITS OFFICERS OR AGENTS SHALL NOT BE RESPONSIBLE FOR THE ACCURACY OR COMPLETENESS OF SCANNED COPIES OF THIS PLAN SHEET.

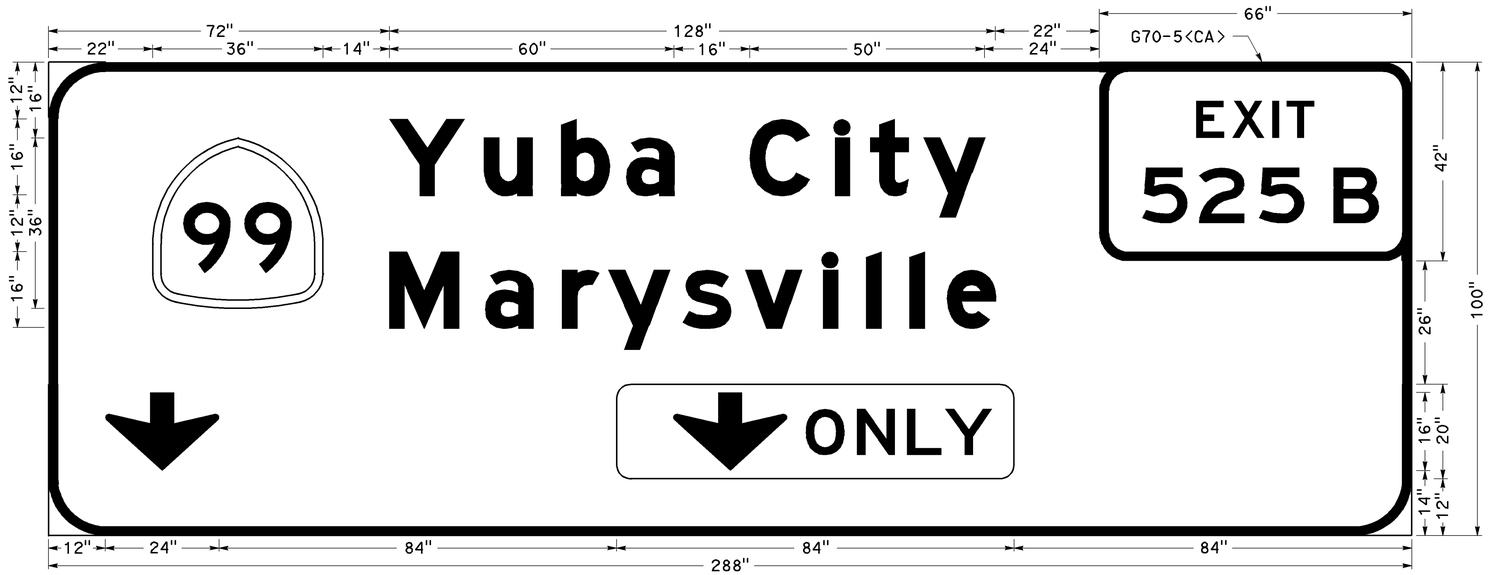

G83-1<CA>
12" RADIUS, 2" BORDER, WHITE ON GREEN: [YUBA CITY] EMOD [MARYSVILLE] EMOD:
6" RADIUS, 2' BORDER, WHITE ON GREEN: [EXIT] E [525B] E:
"SHIELD" G28-1<CA> - 36"x36": 16.5" DOWN ARROW 270° : W61F<CA>

AS-125

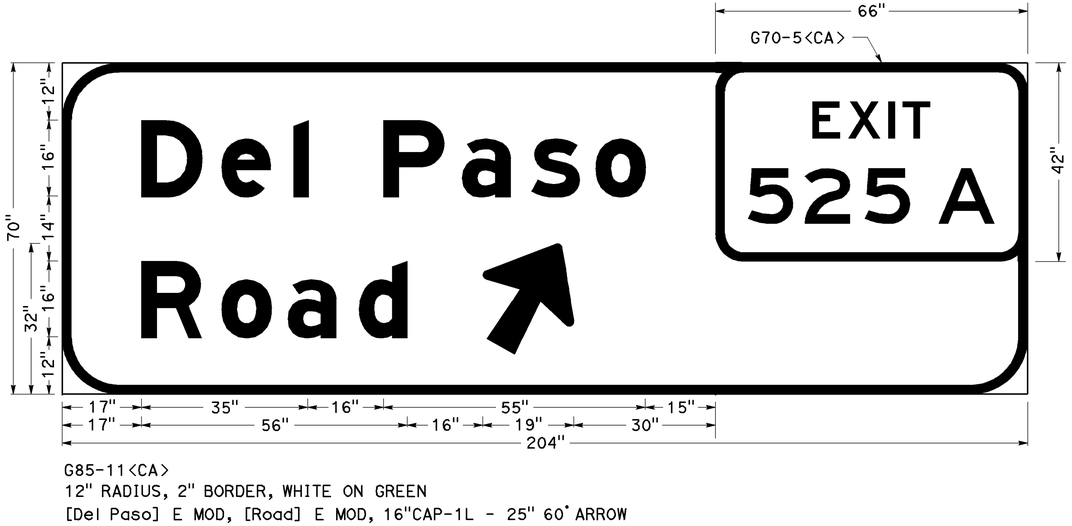

G85-11<CA>
12" RADIUS, 2" BORDER, WHITE ON GREEN
[Del Paso] E MOD, [Road] E MOD, 16"CAP-1L - 25" 60° ARROW

AS-122

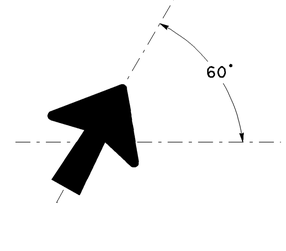

SIGN ARROW
ORIENTATION DETAIL

SIGN DETAILS
NO SCALE

SD-1

REVISED BY | DATE REVISED
CHUCK COOK | JOHN KEBER
CALCULATED-DESIGNED BY | CHECKED BY
FUNCTIONAL SUPERVISOR: JOSEPH W. HORTON
STATE OF CALIFORNIA - DEPARTMENT OF TRANSPORTATION
TRAFFIC
Caltrans

LAST REVISION DATE PLOTTED => 25-MAY-2011
12-02-10 TIME PLOTTED => 14:06

BORDER LAST REVISED 7/1/2010 | USERNAME => s134507 | DGN FILE => 0300001104ob001.dgn | RELATIVE BORDER SCALE IS IN INCHES 0 1 2 3 | UNIT 0389 | PROJECT NUMBER & PHASE 03000011041

Dist	COUNTY	ROUTE	POST MILES TOTAL PROJECT	SHEET No.	TOTAL SHEETS
03	Sac	5	28.7/29.4	24	65

John R. Keber 12-21-10
REGISTERED CIVIL ENGINEER DATE

3-21-11
PLANS APPROVAL DATE

REGISTERED PROFESSIONAL ENGINEER
John R. Keber
No. 40048
Exp. 12-31-11
CIVIL
STATE OF CALIFORNIA

THE STATE OF CALIFORNIA OR ITS OFFICERS OR AGENTS SHALL NOT BE RESPONSIBLE FOR THE ACCURACY OR COMPLETENESS OF SCANNED COPIES OF THIS PLAN SHEET.

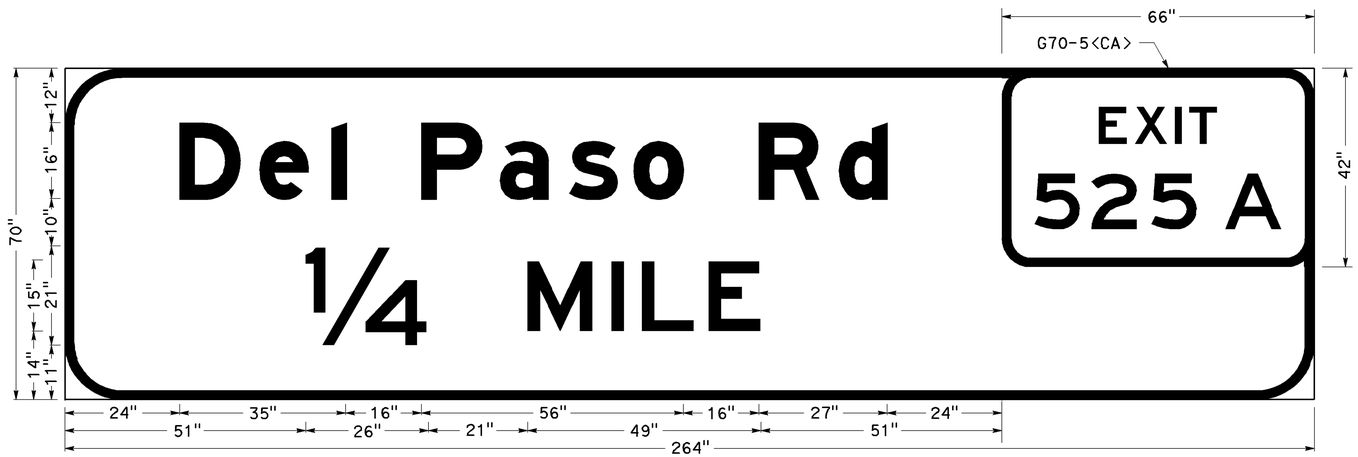

G83-5<CA>
12" RADIUS, 2" BORDER, WHITE ON GREEN
[Del Paso Rd] E MOD, [1/4] E, [MILE] E

AS-1550

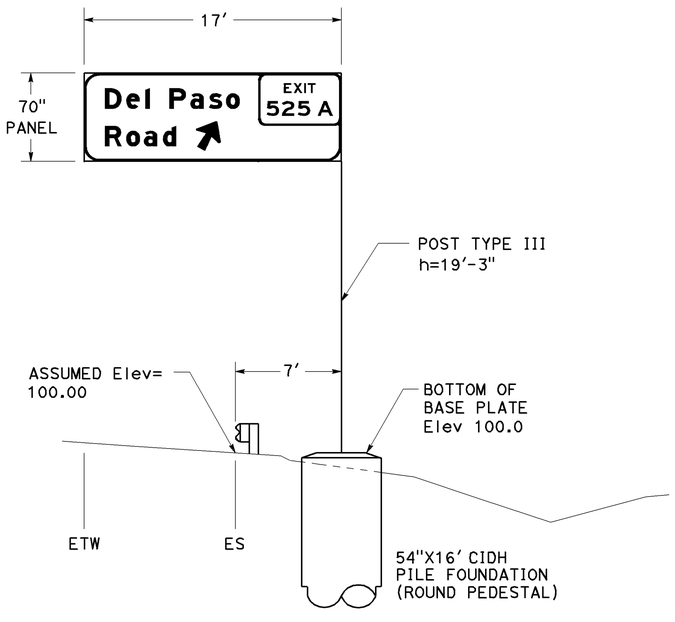

AS-122

Sta "C1" 253+25 FSBT

NOTES:

1. h = DISTANCE FROM BOTTOM OF FRAME TO BOTTOM OF BASE PLATE.
2. OVERHEAD SIGN PANELS SHALL BE LAMINATED TYPE A.
3. ASSUMED ELEVATIONS ARE AT FINISHED GRADE.

SIGN DETAILS

NO SCALE

SD-2

CALCULATED-DESIGNED BY
CHECKED BY

FUNCTIONAL SUPERVISOR
JOSEPH W. HORTON

REVISED BY
DATE REVISED

CHUCK COOK
JOHN KEBER

STATE OF CALIFORNIA - DEPARTMENT OF TRANSPORTATION
TRAFFIC

LAST REVISION 12-02-10
DATE PLOTTED => 25-MAY-2011
TIME PLOTTED => 14:06

Dist	COUNTY	ROUTE	POST MILES TOTAL PROJECT	SHEET No.	TOTAL SHEETS
03	Sac	5	28.7/29.4	25	65

John R. Keber 12-21-10
REGISTERED CIVIL ENGINEER DATE

3-21-11
PLANS APPROVAL DATE

REGISTERED PROFESSIONAL ENGINEER
John R. Keber
No. 40048
Exp. 12-31-11
CIVIL
STATE OF CALIFORNIA

THE STATE OF CALIFORNIA OR ITS OFFICERS OR AGENTS SHALL NOT BE RESPONSIBLE FOR THE ACCURACY OR COMPLETENESS OF SCANNED COPIES OF THIS PLAN SHEET.

OVERHEAD SIGN QUANTITIES

SIGN NUMBER (No.)	SHEET NUMBER	FURNISH SIGN STRUCTURE (TRUSS)	INSTALL SIGN STRUCTURE (TRUSS)	54" CIDH CONCRETE PILE (SIGN FOUNDATION)	INSTALL SIGN PANEL ON EXISTING FRAME			REMOVE SIGN STRUCTURE
		LB	LB	LF	PANEL TYPE	PANEL SIZE IN INCHES	PANEL AREA SQFT	EA
AS-125	PD-2				LAMINATED	288 x 100	200.00	
AS-122 (Exist)	PD-3							1
AS-122	PD-3	9,354	9,354	16				
AS-1550	PD-4				LAMINATED	264 x 70	128.33	
TOTAL		9,354	9,354	16	———		328.33	1

OVERHEAD SIGN PANEL QUANTITIES (CONTRACTOR-FURNISHED)

SIGN NUMBER (No.)	SIGN CODE	SIGN MESSAGE/DESCRIPTION	SIGN SIZE L X D (INCHES)	SIGN AREA (SQFT)	NUMBER OF SIGNS	BACKGROUND		LEGEND		PROTECTIVE OVERLAY	FURNISH LAMINATED PANEL SIGN (1"-TYPE A)
						SHEETING COLOR	RETROREFLECTIVE ASTM TYPE	SHEETING COLOR	RETROREFLECTIVE ASTM TYPE	PREMIUM	SQFT
AS-125	G83-1<CA>	ROUTE SHIELD(99) ~ Yuba City ~ EXIT 525 B Marysville VERTICAL DOWN ARROW: 24" x 16.5" ~ W61F<CA>	288 x 100	200.00	1	GREEN	III	WHITE	IX	X	200.00
AS-122	G85-11<CA>	EXIT 525 A Del Paso Road ~ 1 LINE - 60° ARROW	204 x 70	99.17	1	GREEN	III	WHITE	IX	X	99.17
AS-1550	G83-5<CA>	EXIT 525 A Del Paso Rd ~ 1/4 MILE	264 x 70	128.33	1	GREEN	III	WHITE	IX	X	128.33
TOTAL											427.50

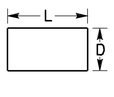

L = LENGTH OF SIGN
D = DEPTH OF SIGN

NOTES:

1. CALIFORNIA SIGN CODES ARE DESIGNATED BY <CA>.
2. USE RETROREFLECTIVE ASTM III YELLOW SHEETING FOR THE W61F<CA> PANEL.

SIGN QUANTITIES

SQ-1

REVISED BY | DATE REVISED
CHUCK COOK | JOHN KEBER
CALCULATED-DESIGNED BY | CHECKED BY
FUNCTIONAL SUPERVISOR: JOSEPH W. HORTON
STATE OF CALIFORNIA - DEPARTMENT OF TRANSPORTATION
TRAFFIC
Caltrans

LAST REVISION 12-02-10 | DATE PLOTTED => 25-MAY-2011 | TIME PLOTTED => 14:06

BORDER LAST REVISED 7/1/2010 | USERNAME => s134507 | DGN FILE => 0300001104oc001.dgn | RELATIVE BORDER SCALE IS IN INCHES 0 1 2 3 | UNIT 0389 | PROJECT NUMBER & PHASE 03000011041

Dist	COUNTY	ROUTE	POST MILES TOTAL PROJECT	SHEET No.	TOTAL SHEETS
03	Sac	5	28.7/29.4	26	65

John R. Keber 12-21-10
REGISTERED CIVIL ENGINEER DATE

3-21-11
PLANS APPROVAL DATE

REGISTERED PROFESSIONAL ENGINEER
John R. Keber
No. 40048
Exp. 12-31-11
CIVIL
STATE OF CALIFORNIA

THE STATE OF CALIFORNIA OR ITS OFFICERS OR AGENTS SHALL NOT BE RESPONSIBLE FOR THE ACCURACY OR COMPLETENESS OF SCANNED COPIES OF THIS PLAN SHEET.

ROADSIDE SIGN QUANTITIES

SIGN NUMBER (Sht-No.)	SIGN CODE FEDERAL	SIGN CODE CALIFORNIA	PANEL SIZE (INCHES)	"C" DIM IN FEET	POST SIZE AND LENGTH 6" X 6"	ROADSIDE SIGN ONE POST (EACH)	INSTALL SIGN (SSBM) (EACH)	REMOVE ROADSIDE SIGN (EACH)	RESET ROADSIDE SIGN (EACH)	RELOCATE ROADSIDE SIGN (EACH)	REMARKS
2-1	W4-1R	W59(Rt)						1			
2-2	W4-1R	W59(Rt)	48 x 48	7			1				SEE NOTE 4
2-3	W4-1R	W59(Rt)							1		
3-1		S32 S32A S32-1							1		
3-2		G84-3(525A)								1	
3-3	W13-2(40)	W72(40)						1			
3-4	W13-2(40)	W72(40)	48 x 60	7			1				SEE NOTE 4
3-5	R2-1(65)	R2(65) R48-1						1 1			
3-6		W73(Rt)						1			
4-1	R2-1(65)	R2(65) R48-1	48 x 60 36 x 18	5	18'	1					
4-2		W74(Lt)						1			
TOTAL						1	2	6	2	1	

NOTES:

1. EXACT LOCATION AND POSITION OF ROADSIDE SIGNS TO BE DETERMINED BY THE ENGINEER.
2. POST LENGTHS GIVEN ARE APPROXIMATE.
3. "C" DIM = VERTICAL CLEARANCE EP TO BOTTOM OF SIGN PANEL.
4. SIGN PANEL TO BE MOUNTED ON ELECTROLIER.

ROADSIDE SIGN PANEL QUANTITIES (CONTRACTOR-FURNISHED)

SIGN CODE	SIGN MESSAGE/DESCRIPTION	SIGN SIZE L X D (INCHES)	SIGN AREA (SQFT)	NUMBER OF SIGNS	BACKGROUND SHEETING COLOR	BACKGROUND RETROREFLECTIVE ASTM TYPE	LEGEND SHEETING COLOR	PROTECTIVE OVERLAY PREMIUM	FURNISH SINGLE SHEET ALUMINUM SIGN UNFRAMED 0.063" SQFT	FURNISH SINGLE SHEET ALUMINUM SIGN UNFRAMED 0.080" SQFT
R2-1(65)	SPEED LIMIT 65	48 x 60	20.00	1	WHITE	III	BLACK	X		20.00
R48-1<CA>	RADAR ENFORCED	38 x 18	4.50	1	WHITE	III	BLACK	X	4.50	
W4-1R	MERGE (Symbol)	48 x 48	16.00	1	YELLOW	IX	BLACK	X		16.00
W13-2(40)	EXIT 40 MPH	48 x 60	20.00	1	YELLOW	IX	BLACK	X		20.00
TOTAL									4.50	56.00

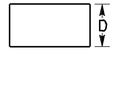

L = LENGTH OF SIGN
D = DEPTH OF SIGN

NOTE: CALIFORNIA SIGN CODES ARE DESIGNATED BY <CA>. OTHERWISE, FEDERAL SIGN CODES ARE SHOWN.

SIGN QUANTITIES

SQ-2

CHUCK COOK — CALCULATED-DESIGNED BY
JOHN KEBER — CHECKED BY
JOSEPH W. HORTON — FUNCTIONAL SUPERVISOR
STATE OF CALIFORNIA - DEPARTMENT OF TRANSPORTATION
TRAFFIC
Caltrans

REVISED BY | DATE REVISED

LAST REVISION | DATE PLOTTED => 25-MAY-2011
12-02-10 | TIME PLOTTED => 14:06

Dist	COUNTY	ROUTE	POST MILES TOTAL PROJECT	SHEET No.	TOTAL SHEETS
03	Sac	5	28.8/29.5	27	65

12-22-10
REGISTERED CIVIL ENGINEER DATE

3-21-11
PLANS APPROVAL DATE

REGISTERED PROFESSIONAL ENGINEER
JOHNY TAN
No. 64316
Exp. 6-30-11
CIVIL
STATE OF CALIFORNIA

THE STATE OF CALIFORNIA OR ITS OFFICERS OR AGENTS SHALL NOT BE RESPONSIBLE FOR THE ACCURACY OR COMPLETENESS OF SCANNED COPIES OF THIS PLAN SHEET.

ROADWAY QUANTITIES

STATION LIMITS	ROADWAY EXCAVATION	(N) EMBANKMENT	RUBBERIZED HOT MIX ASPHALT (OPEN GRADED)	HOT MIX ASPHALT (TYPE A)	TACK COAT	CLASS 2 AGGREGATE BASE	COLD PLANE ASPHALT CONCRETE PAVEMENT	IMPORTED MATERIAL (SHOULDER BACKING)	HOT MIX ASPHALT (TEXTURED PAVING)	OBLITERATE SURFACE AREA
	CY	CY	TON	TON	TON	CY	SQYD	TON	SQYD	SQYD
"C1" 228+00.00 TO "C1" 231+66.70			168.8	259.0	0.43		2,119	40.0		
"C1" 233+28.00 TO "C1" 237+50.00			194.2	297.4	0.49		2,931	46.0		
"C1" 237+50.00 TO "C1" 250+75.00	3,759	34	610.0	2,484.0	1.56	2,851.0	7,133	144.0		
"C1" 250+75.00 TO "C1" 264+00.00			610.0	916.3	1.52		6,783	141.0		
"D2M1" 44+63.00 TO "D2M1" 50+75.00	112	349	106.5	127.0	0.27	259.0		133.0		
"D2M1" 44+63.00 TO "D2M1" 47+84.00										224
"D2MC1" 50+75.00 TO "D2MC1" 53+00.00	173	59	33.0	47.0	0.10	127.0		24.5		
SB DEL PASO Rd ON-RAMP GORE	9			18.0	0.01	9.0			54	
SB DEL PASO Rd OFF-RAMP GORE	32			64.9	0.03	32.5			195	
"D11M" 40+50.00 TO 45+00.00			122.0		0.12					
TOTAL	4,085	442	1,844.5	4,213.6	4.53	3,278.5	18,966	528.5	249	224

(N) - NOT A SEPARATE PAY ITEM, FOR INFORMATION ONLY

METAL BEAM GUARD RAILING

STATION LIMITS	LOCATION	METAL BEAM GUARD RAILING (WOOD POST)	ALTERNATIVE FLARED TERMINAL SYSTEM	END ANCHOR ASSEMBLY (TYPE SFT)	VEGETATION CONTROL (MINOR CONCRETE)	REMOVE METAL BEAM GUARD RAILING	TRANSITION RAILING (TYPE WB)
		LF	EA	EA	SQYD	LF	EA
"C1" 240+17.19 TO "C1" 240+54.13	Lt	37.5	1		51.0		1
"C1" 252+66.26 TO "C1" 253+26.84	Lt	62.5	1	1	97.0		
"D2M1" 50+21.37 TO "D2M1" 50+96.88	Lt					75.5	
TOTAL		100.0	2	1	148.0	75.5	1

CONSTRUCTION SITE BEST MANAGEMENT PRACTICES (BMPS)

STATION LIMITS	TEMPORARY SILT FENCE
	LF
"C1" 237+50 TO "C1" 240+50	210
"C1" 242+43 TO "C1" 247+89	546
"D2M1" 44+63.00 TO "D2M1" 51+00	637
"C1" 251+00 TO "C1" 253+00	200
TOTAL	1,593

TEMPORARY FENCE (TYPE ESA)

STATION LIMITS	TEMPORARY FENCE (TYPE ESA)
	LF
"C1" 240+34 Lt TO "C1" 241+08 Lt	340
"C1" 241+43 Lt TO "C1" 241+75 Lt	100
"C1" 243+54 Lt TO "C1" 244+15 Lt	215
TOTAL	655

SUMMARY OF QUANTITIES

Q-1

STATE OF CALIFORNIA - DEPARTMENT OF TRANSPORTATION
NORTH REGION
PROJECT DEVELOPMENT
Caltrans

FUNCTIONAL SUPERVISOR: ROBERT POLGAR
CALCULATED-DESIGNED BY: JOHNY TAN
CHECKED BY:
REVISED BY: JT
DATE REVISED:

LAST REVISION DATE PLOTTED => 25-MAY-2011
TIME PLOTTED => 14:06
00-00-00

BORDER LAST REVISED 7/2/2010
USERNAME => s134507
DGN FILE => 0300001104pa001.dgn
RELATIVE BORDER SCALE IS IN INCHES 0 1 2 3
UNIT 0322
PROJECT NUMBER & PHASE 03000011041

Dist	COUNTY	ROUTE	POST MILES TOTAL PROJECT	SHEET No.	TOTAL SHEETS
03	Sac	5	28.7/29.4	28	65

H. Golban 1-3-11
REGISTERED ELECTRICAL ENGINEER DATE

3-21-11
PLANS APPROVAL DATE

H. GOLBAN No. E17928 Exp. 09/30/10 ELECT. — REGISTERED PROFESSIONAL ENGINEER — STATE OF CALIFORNIA

THE STATE OF CALIFORNIA OR ITS OFFICERS OR AGENTS SHALL NOT BE RESPONSIBLE FOR THE ACCURACY OR COMPLETENESS OF SCANNED COPIES OF THIS PLAN SHEET.

PROJECT NOTES (THIS SHEET ONLY):

1 ABANDONED WEIGH-IN-MOTION PLATES AND LOOPS

2 FOR WIRING DIAGRAM SEE E-2

ABBREVIATIONS:

tc EXISTING TELEPHONE CABLE

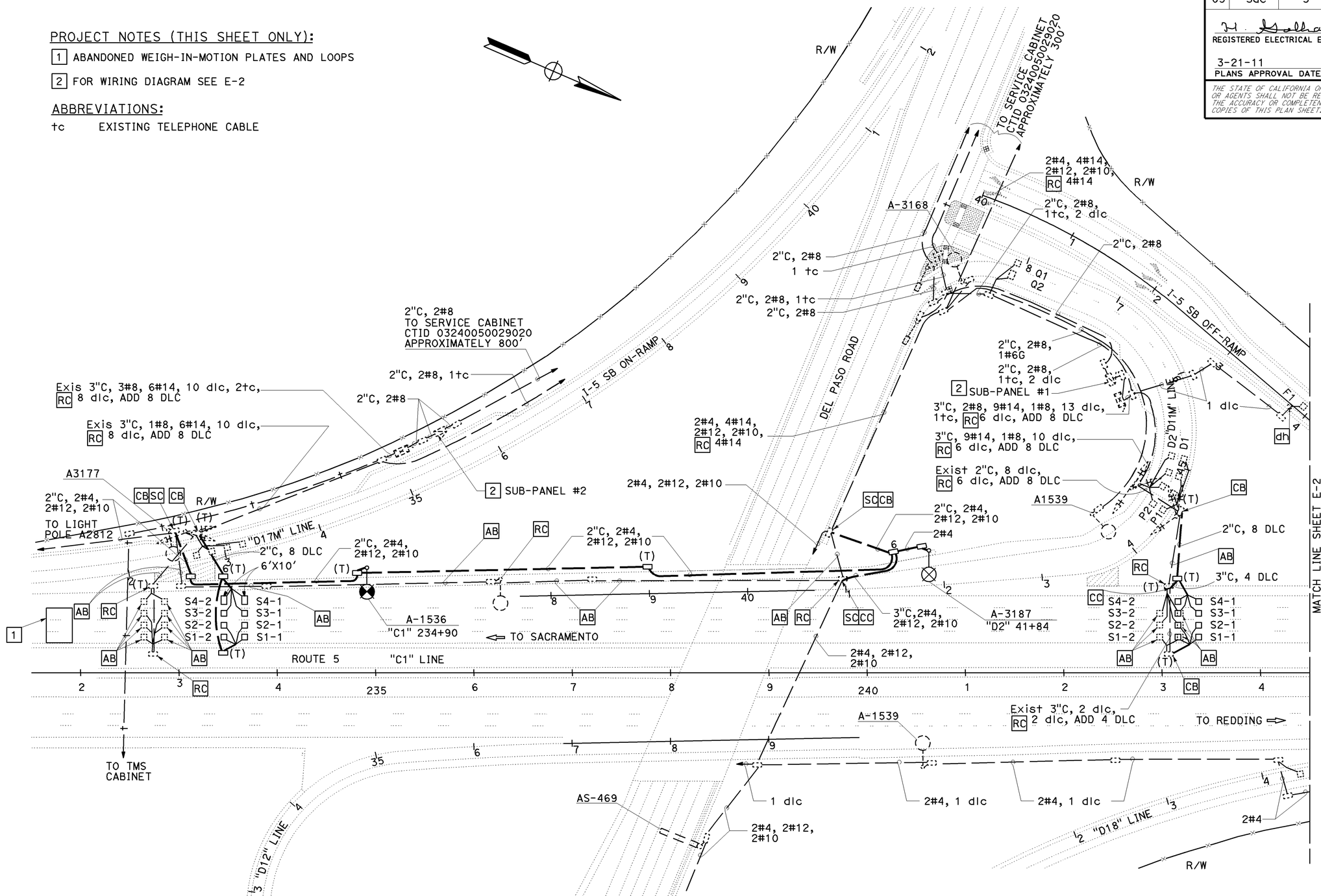

MODIFY LIGHTING
MODIFY RAMP METERING SYSTEM

SCALE 1"=50'

E-1

THIS PLAN ACCURATE FOR ELECTRICAL WORK ONLY

STATE OF CALIFORNIA - DEPARTMENT OF TRANSPORTATION
OFFICE OF ELECTRICAL DESIGN
FUNCTIONAL SUPERVISOR: NELSON LEE
CALCULATED-DESIGNED BY: JAMIE KOJAK
CHECKED BY: HABIB GOLBAN
REVISED BY
DATE REVISED

LAST REVISION DATE PLOTTED => 25-MAY-2011
TIME PLOTTED => 14:06
00-00-00

BORDER LAST REVISED 7/2/2010
USERNAME => s134507
DGN FILE => 0300001104ua001.dgn
RELATIVE BORDER SCALE IS IN INCHES 0 1 2 3
UNIT 0403
PROJECT NUMBER & PHASE 03000011041

Dist	COUNTY	ROUTE	POST MILES TOTAL PROJECT	SHEET No.	TOTAL SHEETS
03	Sac	5	28.7/29.4	29	65

H. Golban 1-3-11
REGISTERED ELECTRICAL ENGINEER DATE

3-21-11
PLANS APPROVAL DATE

REGISTERED PROFESSIONAL ENGINEER — H. GOLBAN No. E17928 Exp. 09/30/10 ELECT. — STATE OF CALIFORNIA

THE STATE OF CALIFORNIA OR ITS OFFICERS OR AGENTS SHALL NOT BE RESPONSIBLE FOR THE ACCURACY OR COMPLETENESS OF SCANNED COPIES OF THIS PLAN SHEET.

PROJECT NOTES (THIS SHEET ONLY):

1 RR 2 ISL-SC3A INCLUDING BALLAST TO THE NEW AS-122 AT 253+20.

WIRING DIAGRAM SYMBOLS

- C — CONTACTOR
- NB — NEUTRAL BUS
- GB — GROUND BUS
- AUTO-TEST SWITCH
- PHOTOELECTRIC UNIT
- M — METER SOCKET WITH MANUAL CIRCUIT CLOSING DEVICE
- XFMR — TRANSFORMER

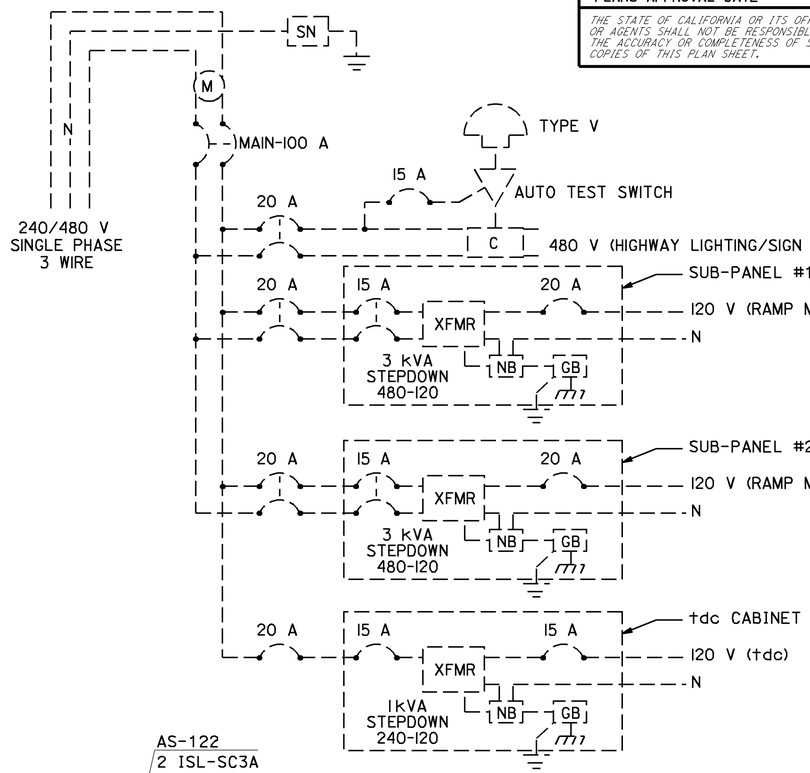

EXISTING SERVICE WIRING DIAGRAM
CTID No. 0324005029020

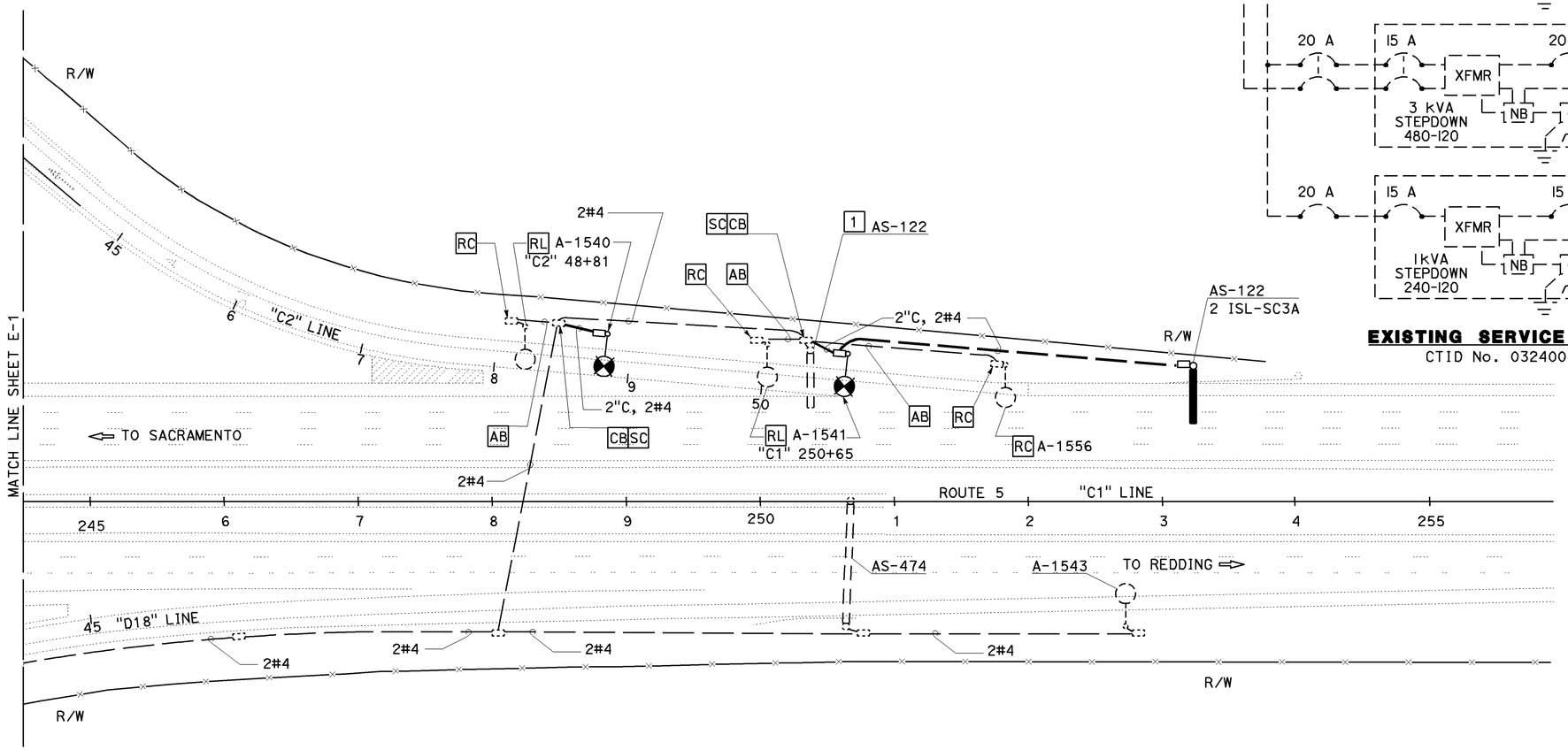

MODIFY LIGHTING AND SIGN ILLUMINATION

SCALE 1"=50'

E-2

THIS PLAN ACCURATE FOR ELECTRICAL WORK ONLY

STATE OF CALIFORNIA - DEPARTMENT OF TRANSPORTATION
OFFICE OF ELECTRICAL DESIGN
FUNCTIONAL SUPERVISOR: NELSON LEE
CALCULATED-DESIGNED BY: JAMIE KOJAK
CHECKED BY: HABIB GOLBAN
REVISED BY
DATE REVISED

LAST REVISION DATE PLOTTED => 25-MAY-2011
00-00-00 TIME PLOTTED => 14:06

BORDER LAST REVISED 7/2/2010 | USERNAME => s134507 | DGN FILE => 0300001104ua002.dgn | RELATIVE BORDER SCALE IS IN INCHES 0 1 2 3 | UNIT 0403 | PROJECT NUMBER & PHASE 03000011041

DIST	COUNTY	ROUTE	POST MILES TOTAL PROJECT	SHEET NO.	TOTAL SHEETS
03	Sac	5	28.8/29.5	30	65

Randell D. Hiatt
REGISTERED CIVIL ENGINEER

October 20, 2006
PLANS APPROVAL DATE

REGISTERED PROFESSIONAL ENGINEER
Randell D. Hiatt
No. C50200
Exp. 6-30-07
CIVIL
STATE OF CALIFORNIA

The State of California or its officers or agents shall not be responsible for the accuracy or completeness of electronic copies of this plan sheet.

To accompany plans dated 3-21-11

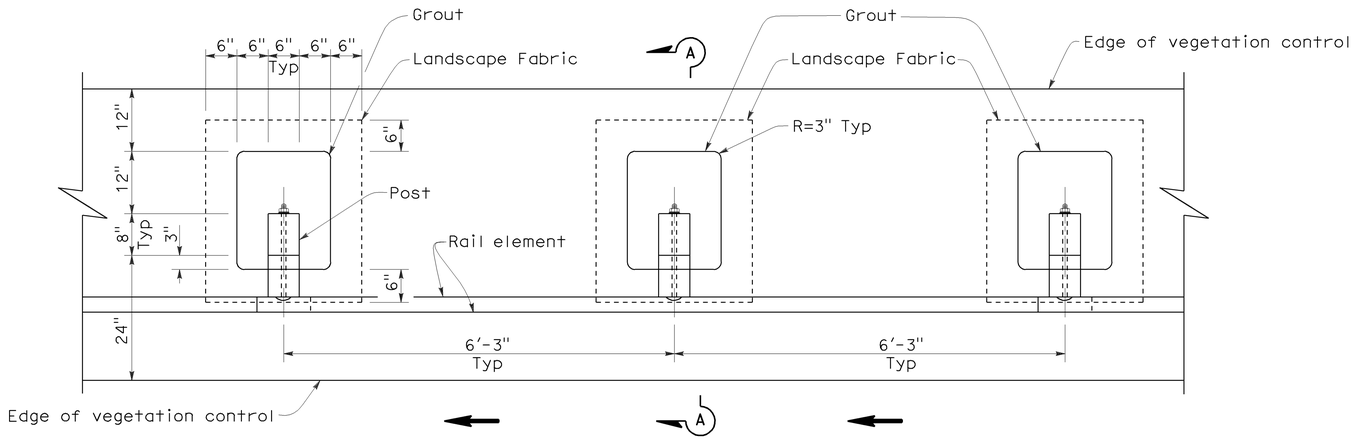

PLAN

NOTES:

1. Where the distance between back of post and hinge point is less than 24", vegetation control to be constructed flush with the back edge of the post.
2. Where dike is constructed under railing, construct vegetation control to back edge of dike. Where paved shoulder is constructed within 24" in front of the post, construct vegetation control to the edge of paved shoulder.
3. Direction of adjacent traffic indicated by ← .

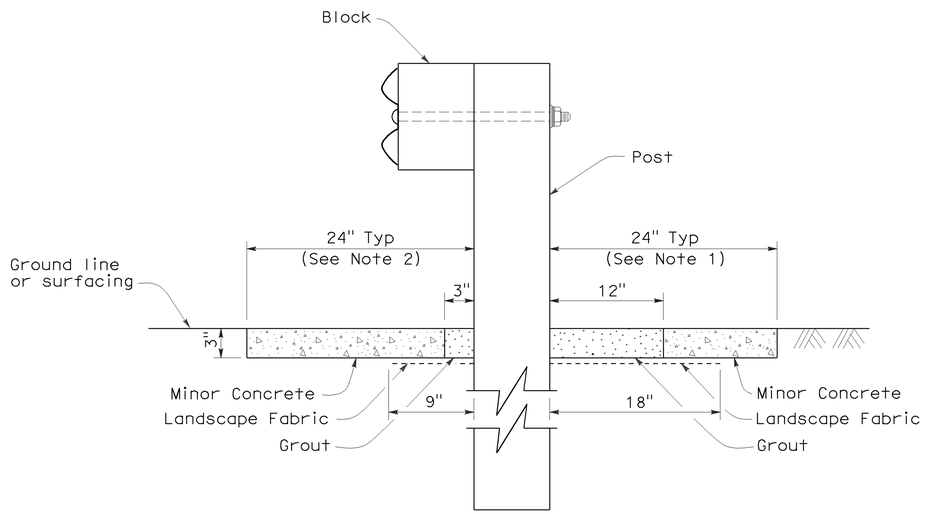

SECTION A-A

STATE OF CALIFORNIA
DEPARTMENT OF TRANSPORTATION

METAL BEAM GUARD RAILING
TYPICAL VEGETATION CONTROL
STANDARD RAILING SECTION

NO SCALE

NSP A77C5 DATED OCTOBER 20, 2006 SUPPLEMENTS THE STANDARD PLANS BOOK DATED MAY 2006.

NEW STANDARD PLAN NSP A77C5

2006 NEW STANDARD PLAN NSP A77C5

7-17-06

DIST	COUNTY	ROUTE	POST MILES TOTAL PROJECT	SHEET NO.	TOTAL SHEETS
03	Sac	5	28.8/29.5	31	65

Randell D. Hiatt
REGISTERED CIVIL ENGINEER

October 20, 2006
PLANS APPROVAL DATE

REGISTERED PROFESSIONAL ENGINEER
Randell D. Hiatt
No. C50200
Exp. 6-30-07
CIVIL
STATE OF CALIFORNIA

The State of California or its officers or agents shall not be responsible for the accuracy or completeness of electronic copies of this plan sheet.

To accompany plans dated 3-21-11

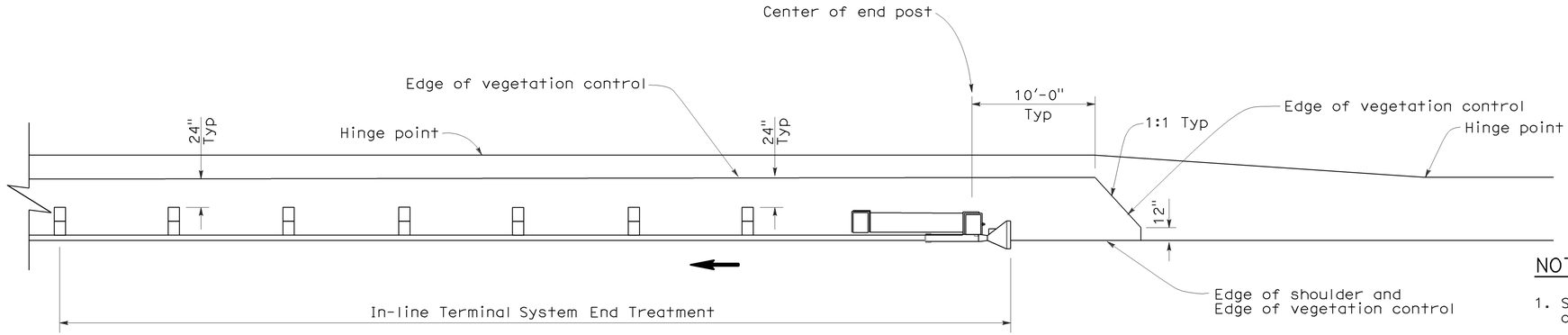

PLAN

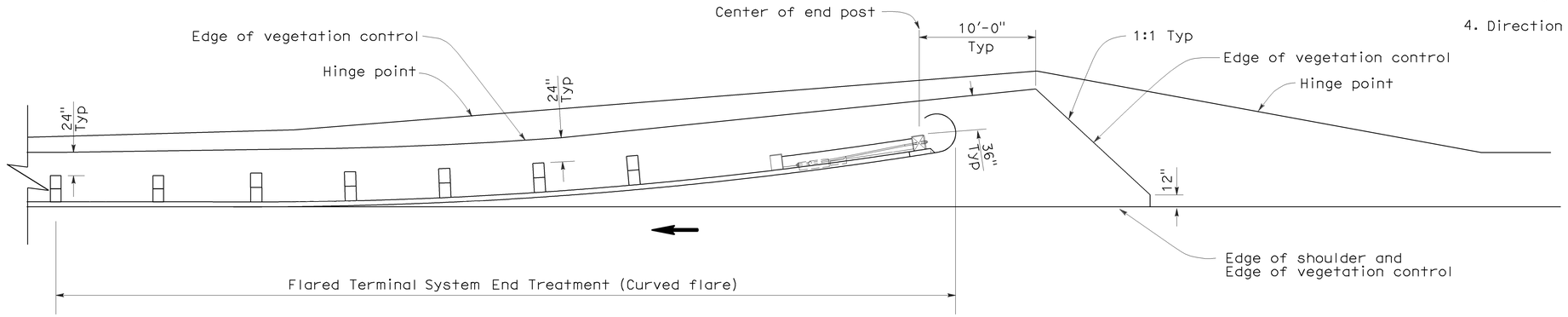

PLAN

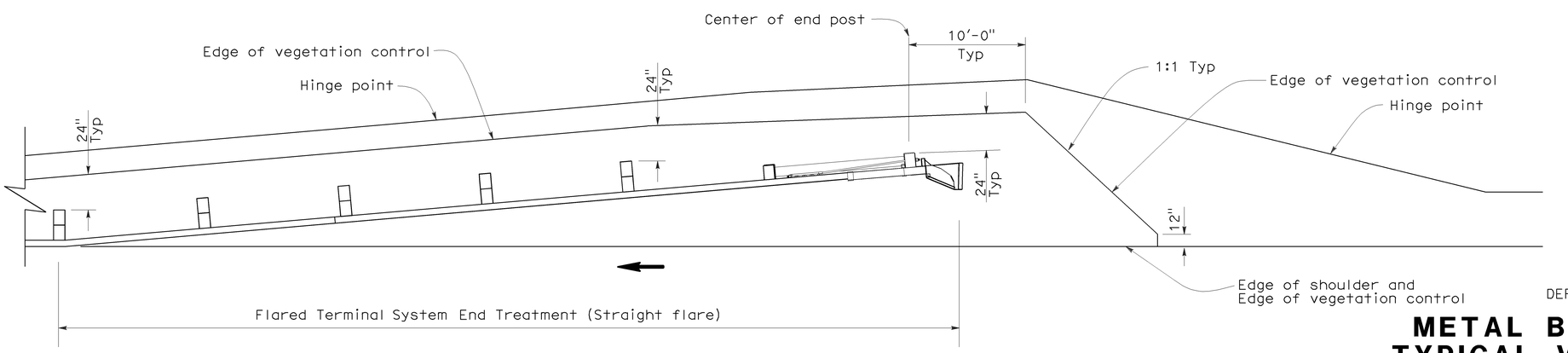

PLAN

NOTES:

1. See New Standard Plan NSP A77C5 for additional vegetation control details.
2. Where the distance between back of post and hinge point is less than 24", vegetation control to be constructed flush with the back edge of the post.
3. Where dike is constructed under railing, construct vegetation control to back edge of dike. Where paved shoulder is constructed within 24" in front of the post, construct vegetation control to the edge of paved shoulder.
4. Direction of adjacent traffic indicated by ←.

STATE OF CALIFORNIA
DEPARTMENT OF TRANSPORTATION

METAL BEAM GUARD RAILING
TYPICAL VEGETATION CONTROL
FOR TERMINAL SYSTEM END TREATMENTS

NO SCALE

NSP A77C6 DATED OCTOBER 20, 2006 SUPPLEMENTS THE STANDARD PLANS BOOK DATED MAY 2006.

NEW STANDARD PLAN NSP A77C6

2006 NEW STANDARD PLAN NSP A77C6

7-17-06

DIST	COUNTY	ROUTE	POST MILES TOTAL PROJECT	SHEET NO.	TOTAL SHEETS
03	Sac	5	28.8/29.5	32	65

Randell D. Hiatt
REGISTERED CIVIL ENGINEER

REGISTERED PROFESSIONAL ENGINEER
Randell D. Hiatt
No. C50200
Exp. 6-30-07
CIVIL
STATE OF CALIFORNIA

October 20, 2006
PLANS APPROVAL DATE

The State of California or its officers or agents shall not be responsible for the accuracy or completeness of electronic copies of this plan sheet.

To accompany plans dated 3-21-11

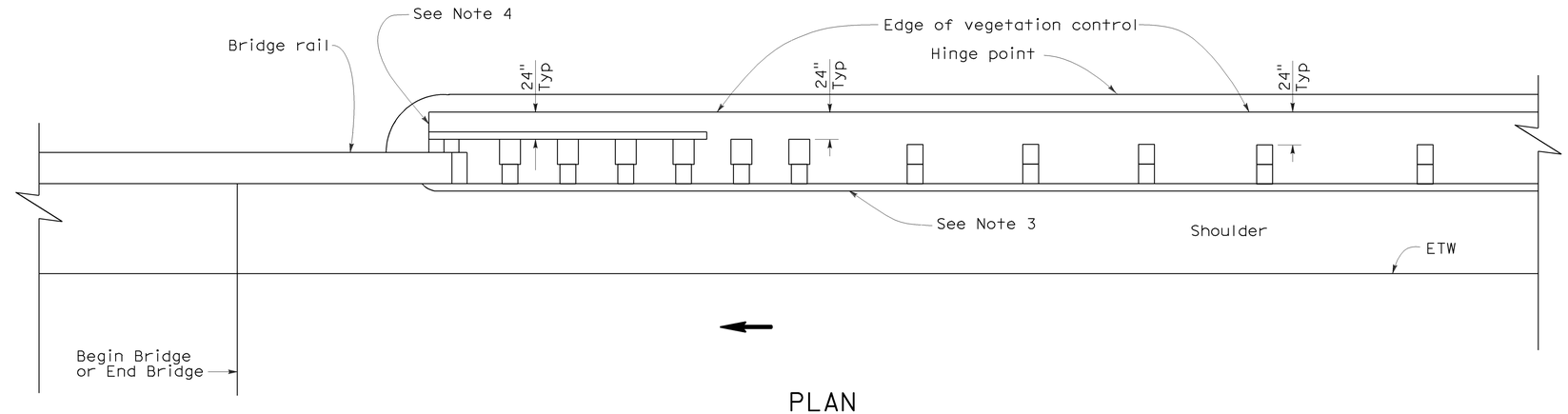

PLAN

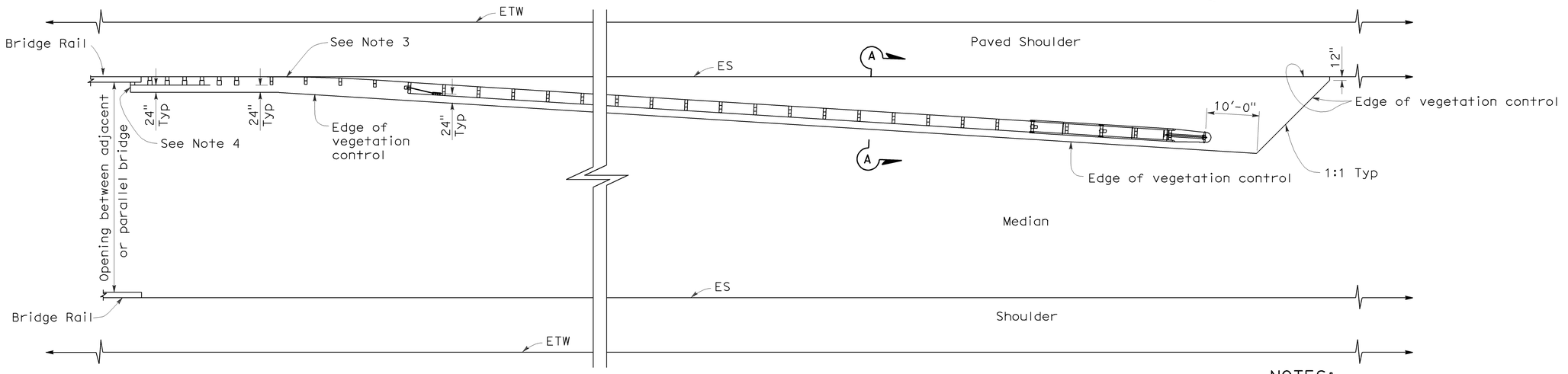

PLAN

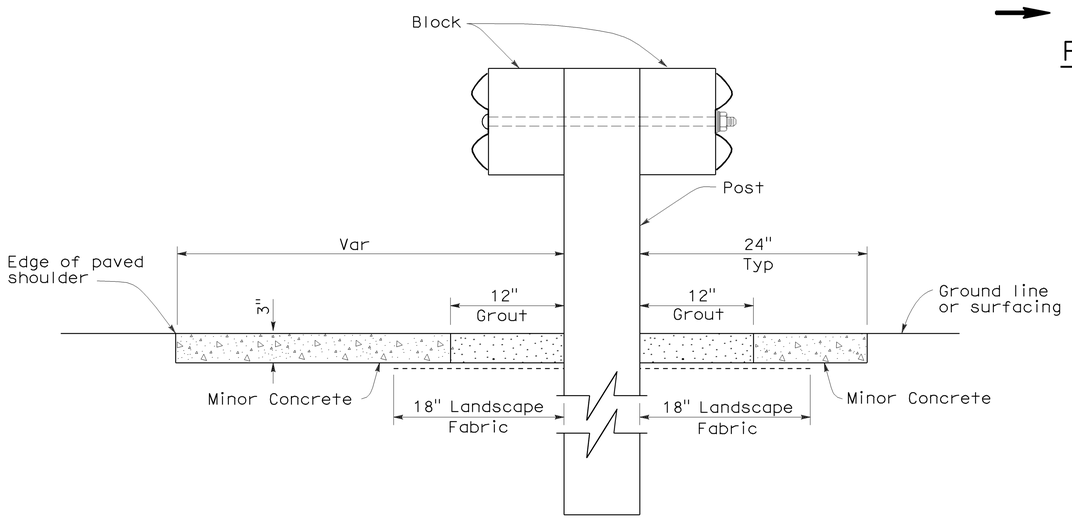

SECTION A-A

NOTES:

1. See New Standard Plan NSP A77C5 for additional vegetation control details.
2. Where the distance between back of post and hinge point is less than 24", vegetation control to be constructed flush with the back edge of the post.
3. Where dike is constructed under railing, construct vegetation control to back edge of dike. Where paved shoulder is constructed within 24" in front of the post, construct vegetation control to the edge of paved shoulder.
4. End vegetation control at end of backside rail element.
5. Direction of adjacent traffic indicated by ←.

STATE OF CALIFORNIA
DEPARTMENT OF TRANSPORTATION

METAL BEAM GUARD RAILING TYPICAL VEGETATION CONTROL AT STRUCTURE APPROACH AND DEPARTURE

NO SCALE

NSP A77C7 DATED OCTOBER 20, 2006 SUPPLEMENTS THE STANDARD PLANS BOOK DATED MAY 2006.

NEW STANDARD PLAN NSP A77C7

2006 NEW STANDARD PLAN NSP A77C7

7-17-06

DIST	COUNTY	ROUTE	POST MILES TOTAL PROJECT	SHEET NO.	TOTAL SHEETS
03	Sac	5	28.8/29.5	33	65

Randell D. Hiatt
REGISTERED CIVIL ENGINEER

REGISTERED PROFESSIONAL ENGINEER
Randell D. Hiatt
No. C50200
Exp. 6-30-07
CIVIL
STATE OF CALIFORNIA

October 20, 2006
PLANS APPROVAL DATE

The State of California or its officers or agents shall not be responsible for the accuracy or completeness of electronic copies of this plan sheet.

To accompany plans dated 3-21-11

NOTES:

1. See New Standard Plan NSP A77C5 for additional vegetation control details.
2. Where the distance between back of post and hinge point is less than 24", vegetation control to be constructed flush with the back edge of the post.
3. Where dike is constructed under railing, construct vegetation control to back edge of dike. Where paved shoulder is constructed within 24" in front of the post, construct vegetation control to the edge of paved shoulder.
4. Direction of adjacent traffic indicated by ←.

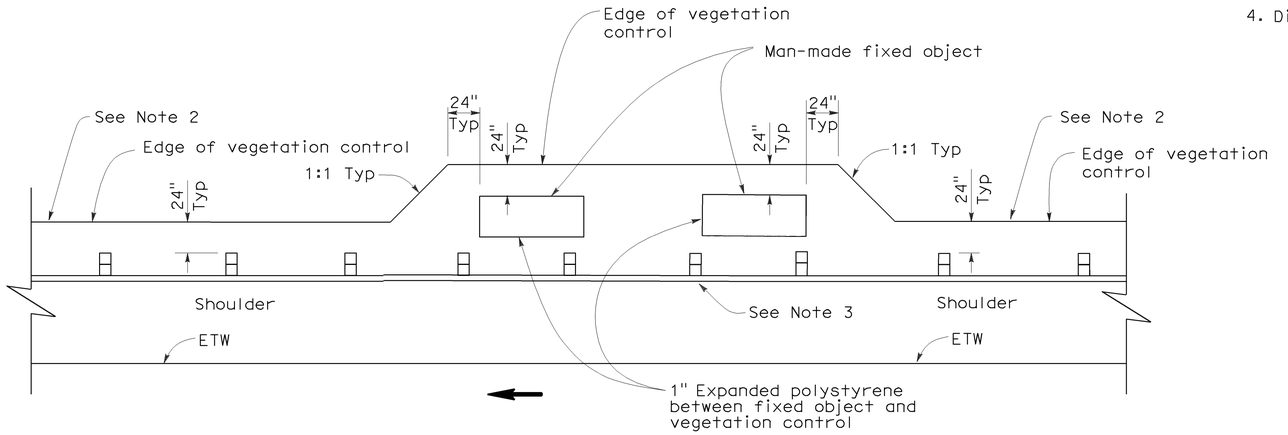

PLAN

FIXED OBJECT(S) ON SHOULDER

STATE OF CALIFORNIA
DEPARTMENT OF TRANSPORTATION

METAL BEAM GUARD RAILING
TYPICAL VEGETATION CONTROL AT FIXED OBJECT

NO SCALE

NSP A77C8 DATED OCTOBER 20, 2006 SUPPLEMENTS THE STANDARD PLANS BOOK DATED MAY 2006.

NEW STANDARD PLAN NSP A77C8

2006 NEW STANDARD PLAN NSP A77C8

7-17-06

DIST	COUNTY	ROUTE	POST MILES TOTAL PROJECT	SHEET NO.	TOTAL SHEETS
03	Sac	5	28.8/29.5	34	65

Robert B Schott
LICENSED LANDSCAPE ARCHITECT

April 3, 2009
PLANS APPROVAL DATE

LICENSED LANDSCAPE ARCHITECT — Robert B. Schott 3695 — Signature — 11-30-10 Renewal Date — 2-25-09 Date — STATE OF CALIFORNIA

The State of California or its officers or agents shall not be responsible for the accuracy or completeness of electronic copies of this plan sheet.

To accompany plans dated 3-21-11

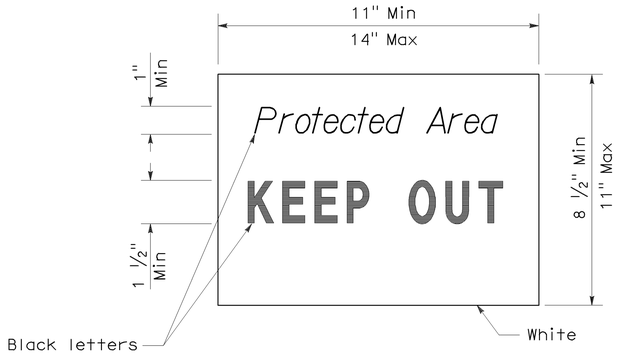

SIGN DETAIL

NOTE:

1. Temporary silt fence and temporary straw bale barrier shown for reference purposes only.

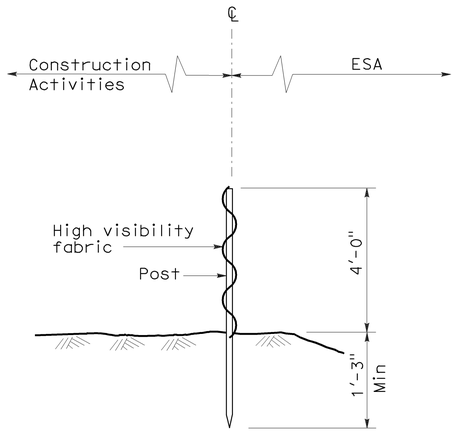

SECTION
TEMPORARY FENCE (TYPE ESA)

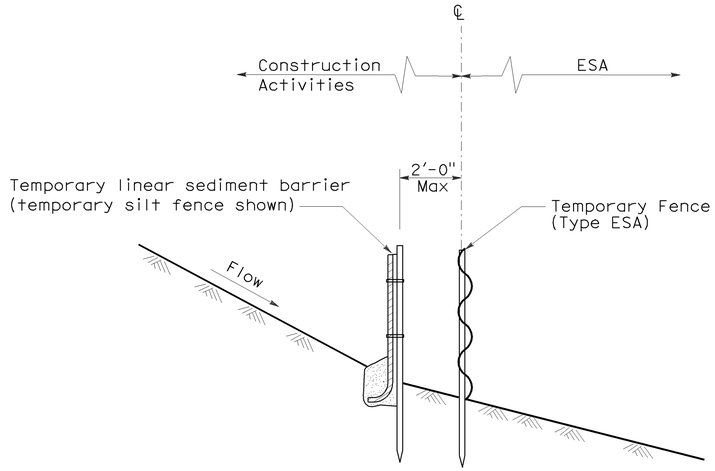

SECTION
PLACEMENT DETAIL FOR TEMPORARY LINEAR SEDIMENT BARRIER USED WITH TEMPORARY FENCE (TYPE ESA)
(See Note 1)

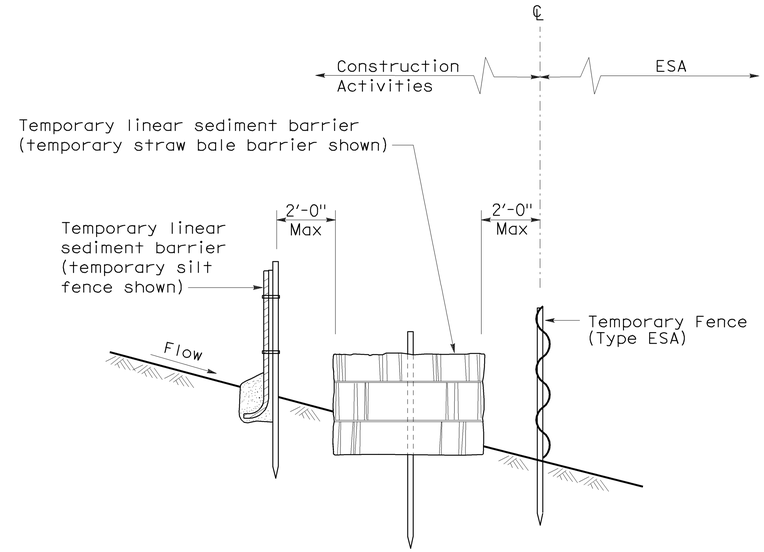

SECTION
PLACEMENT DETAIL FOR TEMPORARY SILT FENCE AND TEMPORARY STRAW BALE BARRIER USED WITH TEMPORARY FENCE (TYPE ESA)
(See Note 1)

STATE OF CALIFORNIA
DEPARTMENT OF TRANSPORTATION

TEMPORARY WATER POLLUTION CONTROL DETAILS [TEMPORARY FENCE (TYPE ESA)]

NO SCALE

NSP T65 DATED APRIL 3, 2009 SUPPLEMENTS THE STANDARD PLANS BOOK DATED MAY 2006.

NEW STANDARD PLAN NSP T65

2006 NEW STANDARD PLAN NSP T65

1-7-09

ELECTROLIERS

STANDARD TYPES
15, 15D
15 STRUCTURE
21, 21D STRUCTURE
30
31
32
35
36-20A

High mast light pole

Double Arm lighting standard

Existing electrolier

Electrolier foundation (Future installation)

NOTES:

1. Luminaires shall be 310 W HPS when installed on Type 21, 21D, 30, 31, 32, 35 and 36-20A Standards, unless otherwise specified. Luminaires shall be 200 W HPS when installed on other type standards or poles, unless otherwise specified.
2. Luminaires shall be the cutoff type, ANSI Type III medium cutoff lighting distribution, unless otherwise specified.
3. Variations noted adjacent to symbol on project plans.

Electrolier (see project notes or project plans)

Luminaire on wood pole

STANDARD NOTES:

- AB Abandon. If applied to conduit, remove conductors.
- BC Install pull box in existing conduit run.
- BP Pedestrian barricade, type as indicated on plan.
- CB Install conduit into existing pull box.
- CC Connect new and existing conduit. Remove existing conductors and install conductors as indicated.
- CF Conduit to remain for future use. Remove conductors. Install pull wire or rope.
- DH Detector handhole.
- FA Foundation to be abandoned.
- IS Install sign on signal mast arm.
- NS No slip base on standard.
- PEC Photoelectric control.
- PEU Photoelectric unit.
- RC Equipment or material to be removed and become the property of the Contractor.
- RE Remove electrolier, fuses and ballast. Tape ends of conductors.
- RL Relocate equipment.
- RR Remove and reuse equipment.
- RS Remove and salvage equipment.
- SC Splice new to existing conductors.
- SD Service disconnect.
- SF Standard to remain for future use. Remove luminaire, pole conductors, fuses and ballast.
- TSP Telephone service point.

ABBREVIATIONS AND EQUIPMENT DESIGNATIONS

PROPOSED	EXISTING	
BBS	bbs	Battery backup system
BC	bc	Bolt circle
C	C	Conduit
CCTV	cctv	Closed circuit television
CKT	ckt	Circuit
CMS	cms	Changeable message sign
DLC	dlc	Loop detector lead-in cable
EMS	ems	Extinguishable message sign
EVC	evc	Emergency vehicle cable
EVD	evd	Emergency vehicle detector
FB	fb	Flashing beacon
FBCA	fbca	Flashing beacon control assembly
FBS	fbs	Flashing beacon with slip base
FO	fo	Fiber optic
G	G	Ground (Equipment Grounding Conductor)
GFCI	GFCI	Ground fault circuit interrupt
HAR	har	Highway advisory radio
HEX	hex	Hexagonal
HPS	hps	High pressure sodium
IISNS	iisns	Internally illuminated street name sign
ISL	isl	Induction sign lighting
LED	led	Light emitting diode
LMA	lma	Luminaire mast arm
LPS	lps	Low pressure sodium
LTG	ltg	Lighting
LUM	lum	Luminaire
MAT	mat	Mast arm mounting vehicle signal faces, top attachment
MAS	mas	Mast arm mounting vehicle signal faces, side attachment
MAS-4A	mas-4A	Mast arm mounting vehicle signal faces,
MAS-4B	mas-4B	side attachment - 4 signal section
MAS-4C	mas-4C	
MAS-5A	mas-5A	Mast arm mounting vehicle signal faces,
MAS-5B	mas-5B	side attachment - 5 signal section
MC	mc	Mercury contactor
M/M	m/m	Multiple to multiple transformer
MT	mt	Conduit with pull wire or rope only
MTG	mtg	Mounting
	mv	Mercury vapor lighting fixture
N	N	Neutral (Grounded Conductor)
NC	NC	Normally closed
NO	NO	Normally open
PB	pb	Pull box
PEC	pec	Photoelectric control (Type I, II, III, IV or V as shown)
PED	ped	Pedestrian
PEU	peu	Photoelectric unit
PPB	ppb	Pedestrian push button
RL		Relocated equipment
RM	rm	Ramp metering
SB	sb	Slip base
SIC	sic	Signal interconnect cable
SIG	sig	Signal
SMA	sma	Signal mast arm
SNS	sns	Street name sign
SP	sp	Service point
TDC	tdc	Telephone demarcation cabinet
TMS	tms	Traffic monitoring station
TOS	tos	Traffic Operations System
VEH	veh	Vehicle
XFMR	xfmr	Transformer
COMM	comm	Communication
RWIS	rwis	Roadway weather information system

DIST	COUNTY	ROUTE	POST MILES TOTAL PROJECT	SHEET NO.	TOTAL SHEETS
03	Sac	5	28.8/29.5	35	65

Jeffery G. McRae
REGISTERED ELECTRICAL ENGINEER

REGISTERED PROFESSIONAL ENGINEER
Jeffery G. McRae
No. E14512
Exp. 6-30-08
ELECTRICAL
STATE OF CALIFORNIA

October 5, 2007
PLANS APPROVAL DATE

The State of California or its officers or agents shall not be responsible for the accuracy or completeness of electronic copies of this plan sheet.

To accompany plans dated 3-21-11

SOFFIT AND WALL MOUNTED LUMINAIRES

- Pendant, 70 W HPS unless otherwise specified.
- Flush, 70 W HPS unless otherwise specified.
- Wall surface, 70 W HPS unless otherwise specified.
- Existing soffit or wall luminaire to remain unmodified.
- (M) Existing soffit or wall luminaire to be modified as specified.

NOTE:
Arrow indicates "street side" of luminaire.

STATE OF CALIFORNIA
DEPARTMENT OF TRANSPORTATION

ELECTRICAL SYSTEMS (SYMBOLS AND ABBREVIATIONS)

NO SCALE

RSP ES-1A DATED OCTOBER 5, 2007 SUPERSEDES STANDARD PLAN ES-1A DATED MAY 1, 2006 - PAGE 400 OF THE STANDARD PLANS BOOK DATED MAY 2006.

REVISED STANDARD PLAN RSP ES-1A

2006 REVISED STANDARD PLAN RSP ES-1A

7-10-07

CONDUIT

PROPOSED	EXISTING	
— — —	— — —	Lighting Conduit, unless otherwise indicated or noted
— - — - —	— - — - —	Traffic signal conduit
—C— —	—c— —	Communication conduit
—T— —	—t— —	Telephone conduit
—F— —	—f— —	Fire alarm conduit
—FO— —	—fo— —	Fiber optic conduit
— — —]	— — —]	Conduit termination (RSP ES-9A C)
R	r	Conduit riser in/on structure or service pole

SERVICE EQUIPMENT

PROPOSED	EXISTING	
—OH—	—oh—	Overhead lines
U	U	Wood pole "U" indicates utility owned
		Pole guy with anchor
		Utility transformer - ground mounted
III		Service equipment enclosure type
		Service equipment enclosure door indicates front of enclosure
T	t	Telephone demarcation cabinet

POLE-MOUNTED SERVICE DESIGNATION

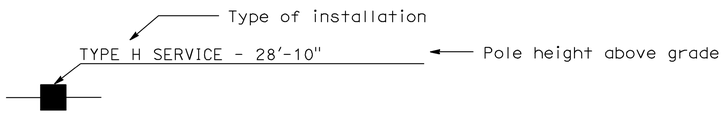

ILLUMINATED OVERHEAD SIGN

PROPOSED	EXISTING	
		Overhead sign - Single post
		Overhead sign - Two post
		Overhead sign - Mounted on structure
		Overhead sign with electrolier

SIGNAL EQUIPMENT

PROPOSED	EXISTING	
		Pedestrian signal face
		Pedestrian push button post
		Pedestrian barricade
		Vehicle signal face (with backplate, 3-Section: red, yellow and green)
		Vehicle signal face with angle visors
PV	PV	Modifications of basic symbols: "L" Indicates all non-arrow sections louvered "LG" Indicates louvered green section only "PV" indicates 12" programmed visibility sections "8" indicates all 8" sections (only when specified)
		Type 15TS and Vehicle signal face
		Vehicle signal face with red, yellow and green left arrow sections
		Vehicle signal face with red and yellow sections and up green arrow
		Vehicle signal face (5 Section) with red, yellow and green sections and yellow and green right arrows
		Type 1 Standard and attached vehicle signal faces
		Standard with signal mast arm only and attached vehicle signal faces and internally illuminated street name sign
		Type 33 Standard, Left-turn vehicle signal face and sign
		Standard with luminaire and signal mast arms and attached vehicle signal faces
		Cantilever flashing beacon Type 9 Frame, with a sign unless otherwise specified or indicated
		Type 15-FBS Standard with two vehicle signal face sections with lens, backplate and visor with a sign
R	Y	Flashing beacon. One vehicle signal face section with lens, backplate and visor. "R" indicates red indication, "Y" indicates yellow indication
		Controller assembly. Door indicates front of cabinet

DIST	COUNTY	ROUTE	POST MILES TOTAL PROJECT	SHEET NO.	TOTAL SHEETS
03	Sac	5	28.8/29.5	36	65

Jeffery G. McRae
REGISTERED ELECTRICAL ENGINEER

REGISTERED PROFESSIONAL ENGINEER
Jeffery G. McRae
No. E14512
Exp. 6-30-08
ELECTRICAL
STATE OF CALIFORNIA

October 5, 2007
PLANS APPROVAL DATE

The State of California or its officers or agents shall not be responsible for the accuracy or completeness of electronic copies of this plan sheet.

To accompany plans dated 3-21-11

SIGNAL EQUIPMENT Cont

PROPOSED	EXISTING	
●	○	Guard post
		Type 1 Standard with "Meter On" sign
		Emergency Vehicle detector

NOTES:

1. All signal sections shall be 12" unless shown otherwise.
2. Signal heads shall be provided with backplates unless shown otherwise.
3. Signal indication shall be LED.

STATE OF CALIFORNIA
DEPARTMENT OF TRANSPORTATION

ELECTRICAL SYSTEMS (SYMBOLS AND ABBREVIATIONS)

NO SCALE

RSP ES-1B DATED OCTOBER 5, 2007 SUPERCEDES STANDARD PLAN ES-1B DATED MAY 1, 2006 - PAGE 401 OF THE STANDARD PLANS BOOK DATED MAY 2006.

REVISED STANDARD PLAN RSP ES-1B

2006 REVISED STANDARD PLAN RSP ES-1B

7-10-07

DIST	COUNTY	ROUTE	POST MILES TOTAL PROJECT	SHEET NO.	TOTAL SHEETS
03	Sac	5	28.8/29.5	37	65

Jeffery G. McRae
REGISTERED ELECTRICAL ENGINEER

October 5, 2007
PLANS APPROVAL DATE

REGISTERED PROFESSIONAL ENGINEER
Jeffery G. McRae
No. E14512
Exp. 6-30-08
ELECTRICAL
STATE OF CALIFORNIA

The State of California or its officers or agents shall not be responsible for the accuracy or completeness of electronic copies of this plan sheet.

To accompany plans dated 3-21-11

EQUIPMENT IDENTIFICATION

ILLUMINATED SIGN IDENTIFICATION NUMBER:

Sign No. 12345 — Sign number - Place on post or structure

10 ISL SCI 1.0
- Transformer rating (kVA)
- Lighting control type
- Number and type of fixtures

Do NOT place on standard or structure

ELECTROLIER OR EQUIPMENT IDENTIFICATION NUMBER:

12345 - 15'-0"
- Mast arm length, if shown. Do not place on standard or structure.
- Equipment number - Place on standard or structure. Existing equipment numbers are shown in parenthesis

CONDUIT AND CONDUCTOR IDENTIFICATION:

1½"C, 2#10, 15#14, 2 DLC
- Number and size of conductors and cables
- Size of conduit in inches

Ø1, Ø2, Ø2P, etc. — Traffic phase identification for signal faces, detectors and phase diagrams

1 2 3 — Project note numbers

A B C — Equipment description, installation or item numbers

1 2 3 — Conduit run numbers

SIGNAL AND LIGHTING STANDARD (TYPICAL DESIGNATION):

19A - 3 - 100
- Wind velocity = 100 mph
- Case 3 arm loading
- Standard type
- Standard Plan sheet number
- Detail number or letter

MISCELLANEOUS EQUIPMENT

PROPOSED	EXISTING	
CMS	cms	Changeable message sign
		Closed circuit television camera
		Highway advisory radio pole and antenna
EMS	ems	Extinguishable message sign
M V	m v	Detection device M = Microwave sensor V = Video image sensor

WIRING DIAGRAM LEGEND

P	Pole
CB	Circuit breaker
A	Ampere
V	Volt
M	Metered
UM	Unmetered
NB	Neutral bus
GB	Ground bus
G	Equipment grounding conductor
N	Grounded conductor (Neutral)

- External conductor
- Conductor or bus
- Tie point
- Contactor coil
- Contactor, Contact NO
- Terminal blocks
- Contactor, Contact NC
- Enclosure bond
- Grounding electrode
- Circuit breaker
- Receptacle

PULL BOXES

PROPOSED	EXISTING	
		Pull box-No. 5 unless otherwise indicated or noted.
3	9A(21)	Pull box-Additional designations or descriptions

3 = No. 3½ pull box
5 = No. 5 pull box
6 = No. 6 pull box
7 = No. 7 (Ceiling pull box)
8 = No. 8 (Pendant soffit pull box)
9 = No. 9 pull box
9A = No. 9A pull box

(C) = Communications pull box
(E) = Pull box with extension
(S) = Sprinkler control pull box
(21) = Anchor bolts and conduit for future installation of Type 21 Standard
(T) = Traffic pull box

VEHICLE DETECTORS

5 J 9 U
- Vehicle detector designation
- U = Upper, L = Lower
- Slot number in input file
- Input file (I or J)
- Phase

PROPOSED	EXISTING	
		Type A detector loop. Outline of sawcut shown.
		Type B detector loop. Outline of sawcut shown.
		Type C detector loop. Outline of sawcut shown.
		Type D detector loop. Outline of sawcut shown.
		Type E detector loop. Outline of sawcut shown.
		Type Q detector loop. Outline of sawcut shown.
		Magnetic detector
DH	dh	Detector handhole
		Microwave or video detection zone

STATE OF CALIFORNIA
DEPARTMENT OF TRANSPORTATION

ELECTRICAL SYSTEMS (SYMBOLS AND ABBREVIATIONS)

NO SCALE

RSP ES-1C DATED OCTOBER 5, 2007 SUPERCEDES STANDARD PLAN ES-1C DATED MAY 1, 2006 - PAGE 402 OF THE STANDARD PLANS BOOK DATED MAY 2006.

REVISED STANDARD PLAN RSP ES-1C

2006 REVISED STANDARD PLAN RSP ES-1C

7-10-07

DIST	COUNTY	ROUTE	POST MILES TOTAL PROJECT	SHEET NO.	TOTAL SHEETS
03	Sac	5	28.8/29.5	38	65

Jeffery G. McRae
REGISTERED ELECTRICAL ENGINEER

October 5, 2007
PLANS APPROVAL DATE

REGISTERED PROFESSIONAL ENGINEER
Jeffery G. McRae
No. E14512
Exp. 6-30-08
ELECTRICAL
STATE OF CALIFORNIA

The State of California or its officers or agents shall not be responsible for the accuracy or completeness of electronic copies of this plan sheet.

To accompany plans dated 3-21-11

NOTES-TYPE III SERVICE EQUIPMENT ENCLOSURES:

1. Service equipment enclosure and metering equipment shall meet the requirements of the service utility. The meter area shall have a sealable, lockable, weathertight cover that can be removed without the use of tools.

2. Service equipment enclosures shall be factory wired and conform to NEMA standards.

3. Dimensions of service equipment enclosures shall meet the requirements of the service utility.

4. The dead front panels on Type III service equipment enclosures shall have a continuous stainless steel or aluminum piano hinge. The panel in front of the breakers shall be secured with a latch or captive screws. No live parts shall be mounted on the dead front panel.

5. The exterior door shall have provisions for padlocking. The padlock hole shall be a minimum diameter of 7/16".

6. Enclosures housing transformers of more than one kVA shall have effective screened ventilation louver of not less than 50 square inches. Screen shall be stainless steel No. 304, with a No. 10 size mesh. Framed screen shall be secured with at least four bolts.

7. Fasteners on the exterior of the enclosure shall be vandal-resistant and shall not be removable from the exterior. Exterior screws, nuts, bolts and washers shall be stainless steel.

8. Landing lugs for incoming service conductors shall be compatible with either copper or aluminum conductors sized to suit the conductors shown on the plan. Landing lugs shall be copper or tin-plated aluminum. Neutral bus shall be rated for 125 A and be suitable for copper or aluminum conductors unless otherwise specified. The terminal shall include but not be limited to:

   a) Incoming terminals (landing lugs)
   b) Neutral lugs
   c) Solid neutral terminal strip

9. At least 6 standard single pole circuit breaker spaces, 3/4" nominal, shall be provided for branch circuits. Circuit breaker interiors shall be copper. Interiors of enclosure shall accept plug-in or cable-in/cable-out circuit breakers.

10. Control wiring shall be 600 V, 14 stranded machine tool wire. Where subject to flexing, 19 strand wire shall be used.

11. Main bus shall be rated for 125 A and shall be tin-plated copper.

12. A plastic laminated wiring diagram shall be provided with brass mounting eyelets and attached to the inside of the enclosure and the wiring diagram shall be affixed to the interior with a UL or ETL approved method.

13. An engraved phenolic nameplate on the dead front panel indicating the function of each circuit or device shall be installed with stainless steel rivets or stainless steel screws:

    a) Adjacent to the breaker or device with character size a minimum of 1/8".

    b) At the top of the exterior door panel indicating State system number, voltage level and number of phases with character size a minimum of 3/16".

14. The plan shows the approximate location of devices within the enclosure. Components may be rearranged, however, the "working" clearances within the service equipment enclosure shall be maintained.

15. In unpaved areas a raised portland cement concrete pad 2'-0" x 4" x width of foundation shall be constructed in front of new service equipment enclosure installation. Pad shall be set to elevation of foundation.

16. Foundation shall extend 2" minimum beyond edge of service equipment enclosure.

17. Internal bus, where shown, is typical only. Alternative design of proposed service equipment enclosure shall be submitted to the Engineer for approval.

18. Plug-in circuit breakers may be mounted in the vertical or horizontal position. Cable-in/cable-out circuit breakers shall be mounted in the vertical position.

19. Type III-AF and Type III-BF service equipment enclosures shall have the meter viewing windows located on the front side of the service equipment enclosures.

20. Type III-AR and Type III-BR service equipment enclosures shall be similarly constructed as Type III-AF and Type III-BF respectively, except the meter viewing windows shall be located on the back side of the service equipment enclosures.

21. Minimum clearance shall be required for front and back of service equipment enclosure per National Electrical Code, Article 110.26, "Spaces About Electric Equipment (600 Volts, Nominal, or Less)."

STATE OF CALIFORNIA
DEPARTMENT OF TRANSPORTATION

ELECTRICAL SYSTEMS (SERVICE EQUIPMENT NOTES TYPE III SERIES)

NO SCALE

RSP ES-2C DATED OCTOBER 5, 2007 SUPERCEDES STANDARD PLAN ES-2C
DATED MAY 1, 2006 - PAGE 405 OF THE STANDARD PLANS BOOK DATED MAY 2006.

REVISED STANDARD PLAN RSP ES-2C

2006 REVISED STANDARD PLAN RSP ES-2C

7-10-07

DIST	COUNTY	ROUTE	POST MILES TOTAL PROJECT	SHEET NO.	TOTAL SHEETS
03	Sac	5	28.8/29.5	39	65

Jeffery G. McRae
REGISTERED ELECTRICAL ENGINEER

REGISTERED PROFESSIONAL ENGINEER
Jeffery G. McRae
No. E14512
Exp. 6-30-08
ELECTRICAL
STATE OF CALIFORNIA

October 5, 2007
PLANS APPROVAL DATE

The State of California or its officers or agents shall not be responsible for the accuracy or completeness of electronic copies of this plan sheet.

To accompany plans dated 3-21-11

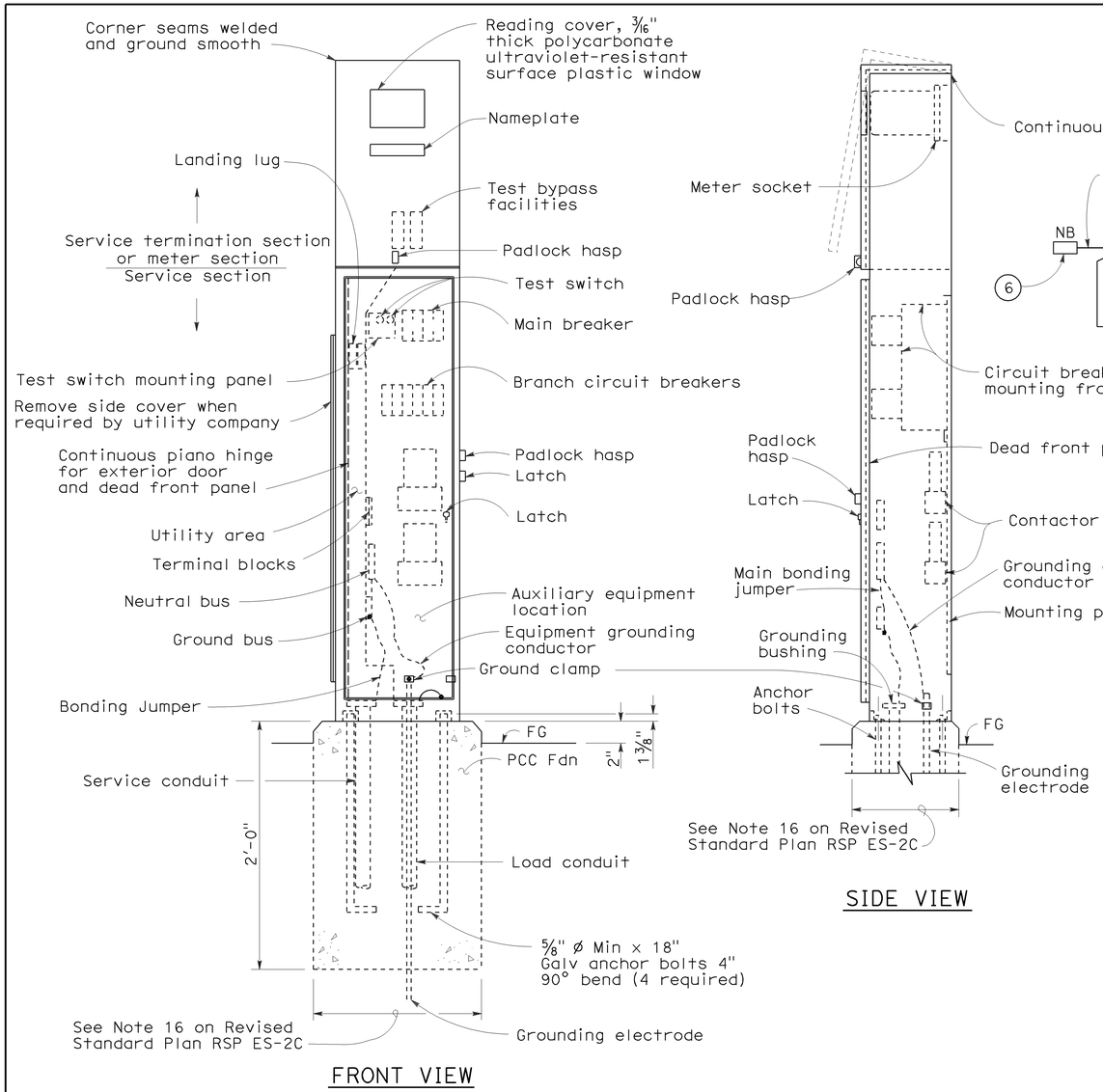

TYPE Ⅲ-AF SERVICE EQUIPMENT ENCLOSURE (TYPICAL)

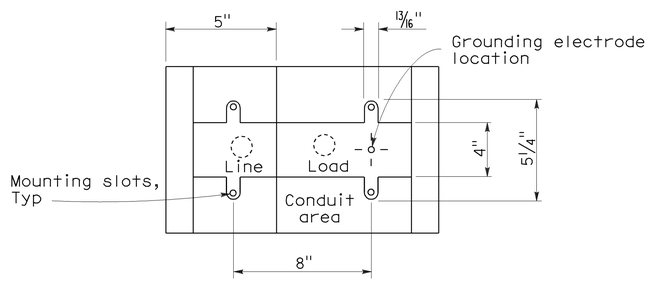

BASE FOR TYPE Ⅲ-A SERVICE EQUIPMENT ENCLOSURE

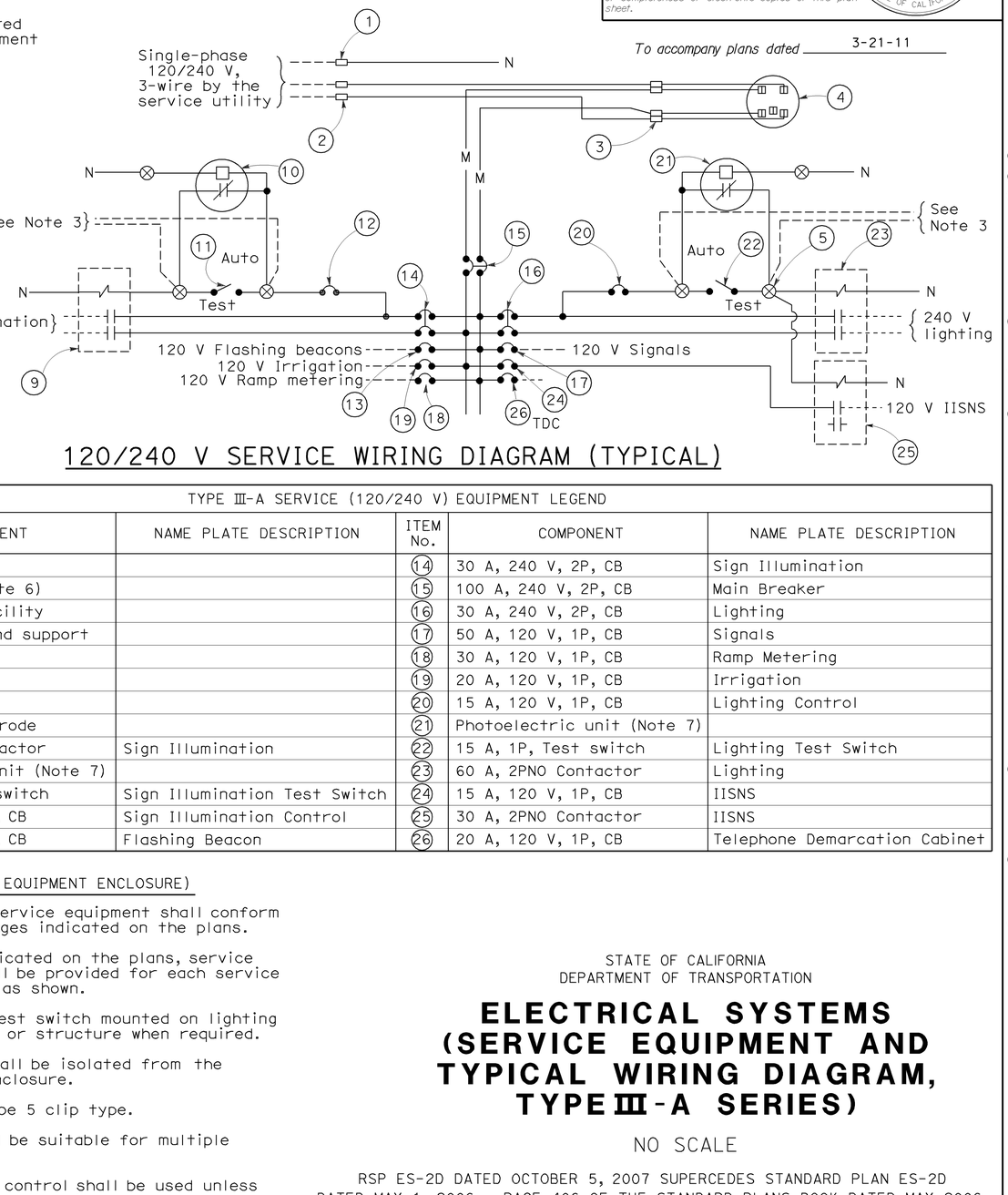

120/240 V SERVICE WIRING DIAGRAM (TYPICAL)

TYPE Ⅲ-A SERVICE (120/240 V) EQUIPMENT LEGEND

ITEM No.	COMPONENT	NAME PLATE DESCRIPTION	ITEM No.	COMPONENT	NAME PLATE DESCRIPTION
1	Neutral lug		14	30 A, 240 V, 2P, CB	Sign Illumination
2	Landing lug (Note 6)		15	100 A, 240 V, 2P, CB	Main Breaker
3	Test bypass facility		16	30 A, 240 V, 2P, CB	Lighting
4	Meter socket and support		17	50 A, 120 V, 1P, CB	Signals
5	Terminal blocks		18	30 A, 120 V, 1P, CB	Ramp Metering
6	Neutral bus		19	20 A, 120 V, 1P, CB	Irrigation
7	Ground bus		20	15 A, 120 V, 1P, CB	Lighting Control
8	Grounding electrode		21	Photoelectric unit (Note 7)	
9	30 A, 2PNO Contactor	Sign Illumination	22	15 A, 1P, Test switch	Lighting Test Switch
10	Photoelectric unit (Note 7)		23	60 A, 2PNO Contactor	Lighting
11	15 A, 1P, Test switch	Sign Illumination Test Switch	24	15 A, 120 V, 1P, CB	IISNS
12	15 A, 120 V, 1P, CB	Sign Illumination Control	25	30 A, 2PNO Contactor	IISNS
13	15 A, 120 V, 1P, CB	Flashing Beacon	26	20 A, 120 V, 1P, CB	Telephone Demarcation Cabinet

NOTES: (FOR SERVICE EQUIPMENT ENCLOSURE)

1. Voltage ratings of service equipment shall conform to the service voltages indicated on the plans.
2. Unless otherwise indicated on the plans, service equipment items shall be provided for each service equipment enclosure as shown.
3. Connect to remote test switch mounted on lighting standards, sign post or structure when required.
4. Items No. (1) and (6) shall be isolated from the service equipment enclosure.
5. Meter sockets shall be 5 clip type.
6. The landing lug shall be suitable for multiple conductors.
7. Type Ⅴ photoelectric control shall be used unless otherwise indicated on the plans.

STATE OF CALIFORNIA
DEPARTMENT OF TRANSPORTATION

ELECTRICAL SYSTEMS (SERVICE EQUIPMENT AND TYPICAL WIRING DIAGRAM, TYPE Ⅲ-A SERIES)

NO SCALE

RSP ES-2D DATED OCTOBER 5, 2007 SUPERCEDES STANDARD PLAN ES-2D DATED MAY 1, 2006 - PAGE 406 OF THE STANDARD PLANS BOOK DATED MAY 2006.

REVISED STANDARD PLAN RSP ES-2D

2006 REVISED STANDARD PLAN RSP ES-2D

7-10-07

NOTES: (FOR SERVICE EQUIPMENT ENCLOSURE)

1. Voltage ratings of service equipment shall conform to the service voltages indicated on the plans.
2. Unless otherwise indicated on the plans, service equipment items shall be provided for each service equipment enclosure as shown.
3. Connect to remote test switch mounted on lighting standards, sign post or structure when required.
4. Items No. (1) and (6) shall be isolated from the service equipment enclosure.
5. Meter sockets shall be the 7 clip type.
6. The landing lug shall be suitable for multiple conductors.
7. Type V photoelectric control shall be used unless otherwise indicated on the plans.
8. Service pedestal shall meet the requirements of EUSERC 308 or 309 in addition to the information given on this sheet.
9. Color of insulation of the neutral shall be gray for the 277/480 V system and shall be white for the 120/240 V system.
10. 120/240 V transformer grounded circuit conductor (neutral conductor).
11. 120/240 V transformer grounding electrode conductor.
12. 120/240 V system neutral bus and ground bus.
13. 120/240 V enclosure bonding jumper.

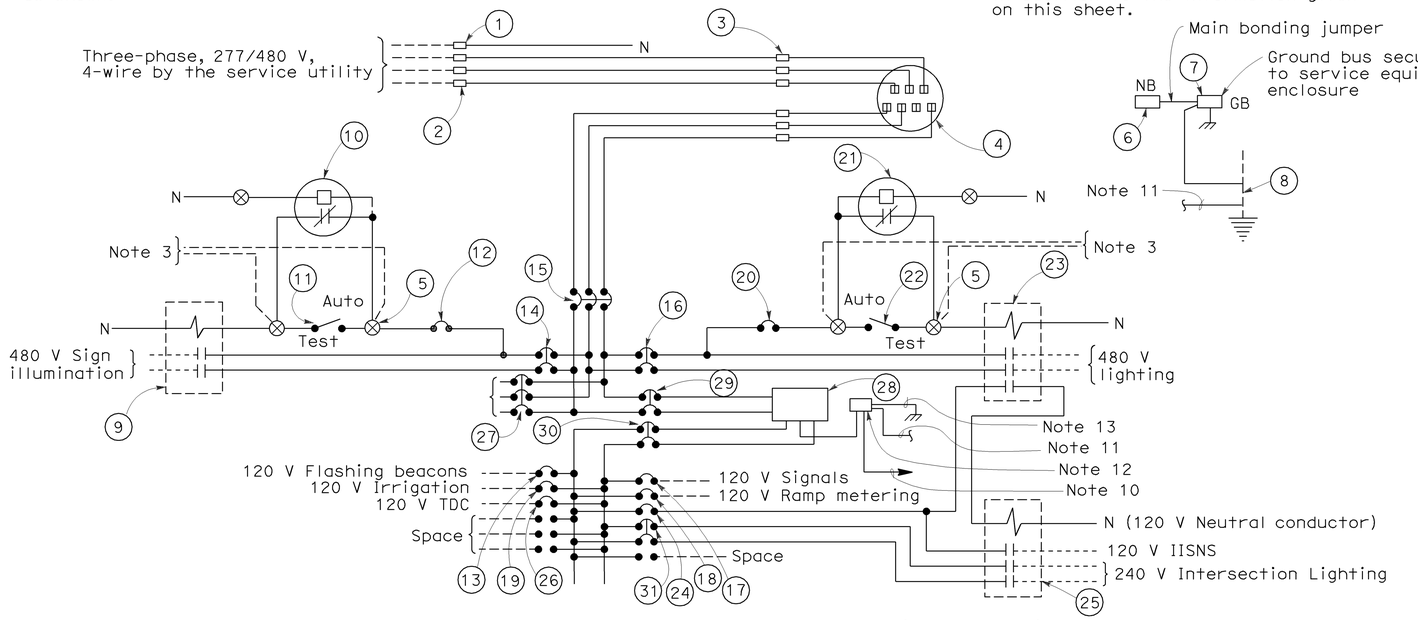

277/480 V SERVICE WIRING DIAGRAM (TYPICAL)

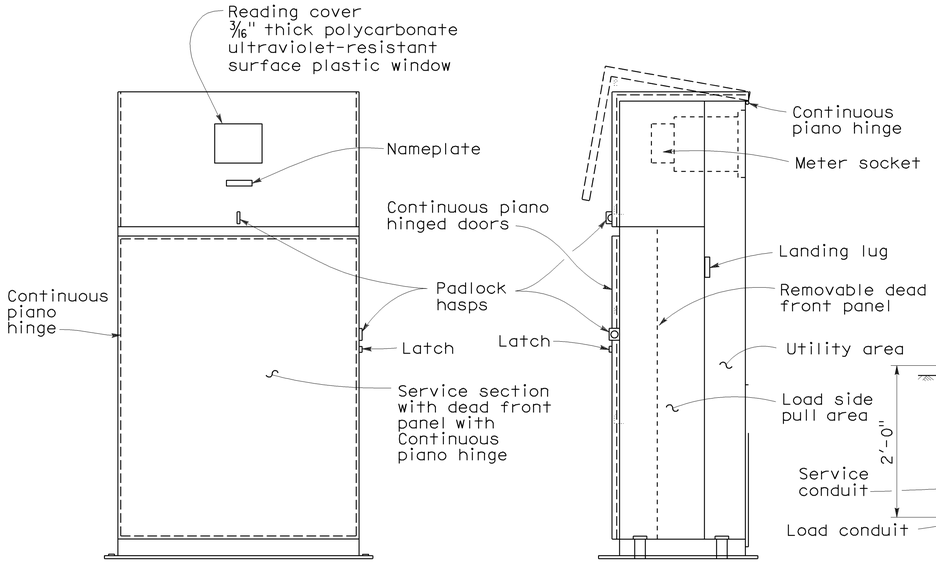

FRONT VIEW SIDE VIEW

TYPE III-DF SERVICE EQUIPMENT ENCLOSURE WITH PROVISIONS FOR ONE 100 A METER (TYPICAL)

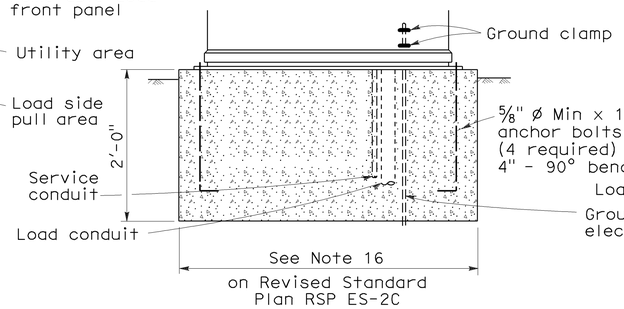

FRONT VIEW

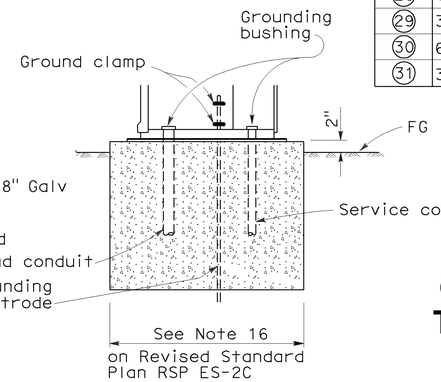

SIDE VIEW

TYPE III-D SERVICE EQUIPMENT ENCLOSURE FOUNDATION DETAILS

DIST	COUNTY	ROUTE	POST MILES TOTAL PROJECT	SHEET NO.	TOTAL SHEETS
03	Sac	5	28.8/29.5	40	65

Jeffery G. McRae
REGISTERED ELECTRICAL ENGINEER

October 5, 2007
PLANS APPROVAL DATE

REGISTERED PROFESSIONAL ENGINEER — Jeffery G. McRae — No. E14512 — Exp. 6-30-08 — ELECTRICAL — STATE OF CALIFORNIA

The State of California or its officers or agents shall not be responsible for the accuracy or completeness of electronic copies of this plan sheet.

To accompany plans dated 3-21-11

TYPE III-D SERVICE (277/480 V) EQUIPMENT LEGEND

ITEM No.	COMPONENT	NAME PLATE DESCRIPTION
(1)	Neutral lug	
(2)	Landing lug	
(3)	Test bypass facility	
(4)	Meter socket and support	
(5)	Terminal blocks	
(6)	Neutral bus	
(7)	Ground bus	
(8)	Grounding electrode	
(9)	30 A, 2PNO Contactor	Sign Illumination (480 V)
(10)	Photoelectric unit (Note 7)	
(11)	15 A, 1P, Test switch	Sign Illumination Test Switch (277 V)
(12)	15 A, 277 V, 1P, CB	Sign Illumination Control (277 V)
(13)	15 A, 120 V, 1P, CB	Flashing Beacon (120 V)
(14)	15 A, 480 V, 2P, CB	Sign Illumination (480 V)
(15)	100 A, 480 V, 3P, CB	Main Breaker (480 V)
(16)	15 A, 480 V, 2P, CB	Lighting (480 V)
(17)	50 A, 120 V, 1P, CB	Signals (120 V)
(18)	30 A, 120 V, 1P, CB	Ramp Metering (120 V)
(19)	20 A, 120 V, 1P, CB	Irrigation (120 V)
(20)	15 A, 277 V, 1P, CB	Lighting Control (277 V)
(21)	Photoelectric unit (Note 7)	
(22)	15 A, 1P, Test switch	Lighting Test Switch (277 V)
(23)	30 A, 3PNO Contactor	Lighting (480 V)
(24)	15 A, 120 V, 1P, CB	IISNS (120 V)
(25)	30 A, 3PNO Contactor	Intersection Lighting (240 V)
(26)	20 A, 120 V, 1P, CB	Telephone Demarcation Cabinet (120 V)
(27)	20 A, 480 V,3P,CB	Spare
(28)	10 kVA, 480-120/240 V Transformer	10 kVA, 480-120/240 V, 1ø
(29)	30 A, 480 V,2P,CB	Xfmr Primary (480 V)
(30)	60 A, 240 V,2P,CB	Xfmr Secondary (240 V)
(31)	30 A, 240 V, 2P, CB	Intersection Lighting (240 V)

STATE OF CALIFORNIA
DEPARTMENT OF TRANSPORTATION

ELECTRICAL SYSTEMS (SERVICE EQUIPMENT AND TYPICAL WIRING DIAGRAM, TYPE III-D SERIES)

NO SCALE

RSP ES-2G DATED OCTOBER 5, 2007 SUPERCEDES STANDARD PLAN ES-2G DATED MAY 1, 2006 - PAGE 409 OF THE STANDARD PLANS BOOK DATED MAY 2006.

REVISED STANDARD PLAN RSP ES-2G

2006 REVISED STANDARD PLAN RSP ES-2G

8-17-07

DIST	COUNTY	ROUTE	POST MILES TOTAL PROJECT	SHEET NO.	TOTAL SHEETS
03	Sac	5	28.8/29.5	41	65

Jeffery G. McRae
REGISTERED ELECTRICAL ENGINEER

REGISTERED PROFESSIONAL ENGINEER
Jeffery G. McRae
No. E14512
Exp. 6-30-10
ELECTRICAL
STATE OF CALIFORNIA

June 6, 2008
PLANS APPROVAL DATE

The State of California or its officers or agents shall not be responsible for the accuracy or completeness of electronic copies of this plan sheet.

To accompany plans dated 3-21-11

VISORS

(Right angle is reversed of figure)

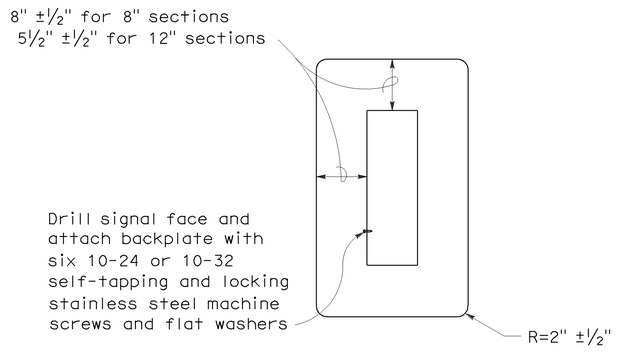

8" AND 12" SECTIONS

BACKPLATE

1/16" minimum thickness
3001-14 aluminum, or plastic when specified

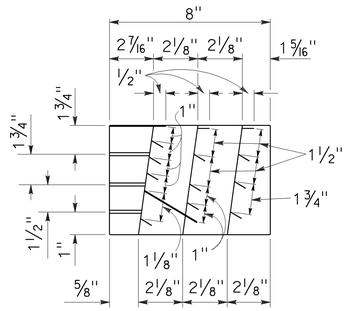

SECTION A-A

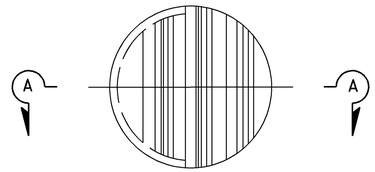

FRONT VIEW

DIRECTIONAL LOUVER

Directional louvers shall be oriented as directed by the Engineer and secured in place with one plated brass machine screw and nut.

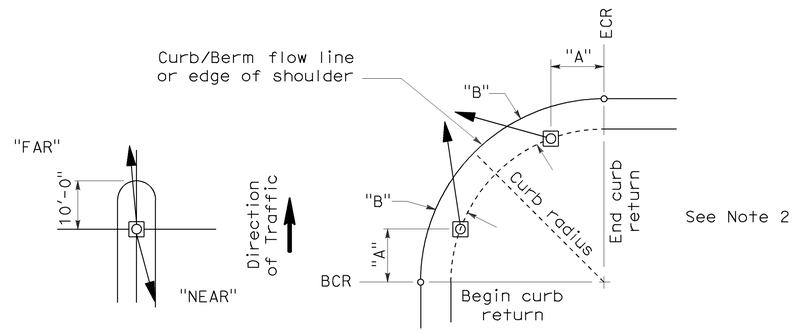

NOTES:

1. Typical signal pole placement unless dimensioned on plans.
2. For "A" and "B" dimensions, see Pole Schedule, or as directed by the Engineer.

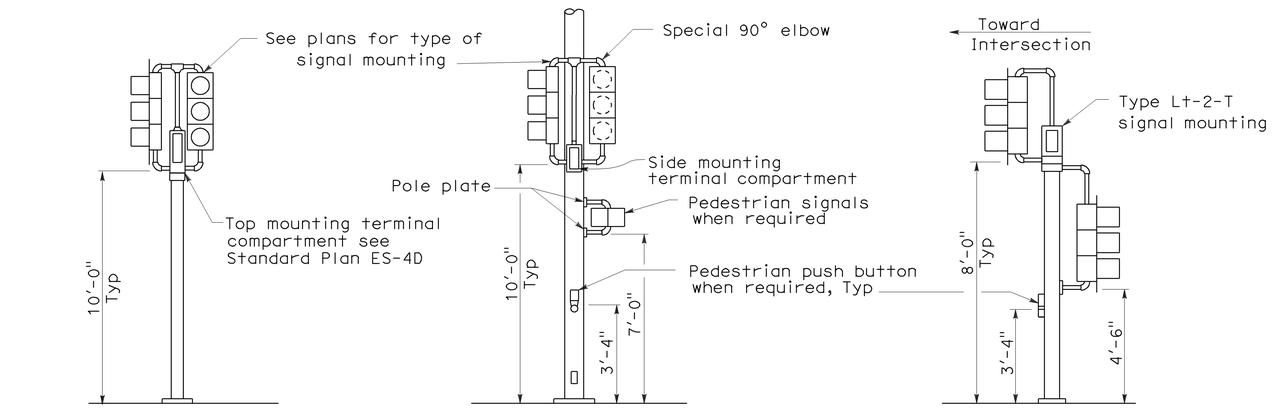

TOP MOUNTED SIGNALS (TV)

Type 1-A, 1-B, 1-C and 1-D standard as indicated on the plans

SIDE MOUNTED SIGNALS (SV AND SP)

Normally used on standards with luminaire or signal mast arm

LEFT TURN LANE SIGNAL

Type 1-A, 1-B, 1-C and 1-D standard as indicated on plans

TYPICAL SIGNAL INSTALLATIONS

SIGNAL STANDARD PLACEMENT DIMENSIONS AND EQUIPMENT LOCATIONS

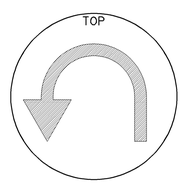

U-TURN SIGNAL FACE

BICYCLE SIGNAL FACE

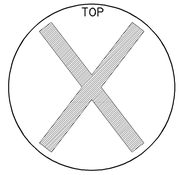

LANE CONTROL SIGNAL FACE

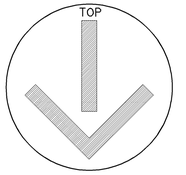

LANE CONTROL SIGNAL FACE

STATE OF CALIFORNIA
DEPARTMENT OF TRANSPORTATION

ELECTRICAL SYSTEMS (SIGNAL HEADS AND MOUNTINGS)

NO SCALE

RSP ES-4C DATED JUNE 6, 2008 SUPERSEDES STANDARD PLAN ES-4C DATED MAY 1, 2006 - PAGE 420 OF THE STANDARD PLANS BOOK DATED MAY 2006.

REVISED STANDARD PLAN RSP ES-4C

2006 REVISED STANDARD PLAN RSP ES-4C

5-19-08

DIST	COUNTY	ROUTE	POST MILES TOTAL PROJECT	SHEET NO.	TOTAL SHEETS
03	Sac	5	28.8/29.5	42	65

Jeffery G. McRae
REGISTERED ELECTRICAL ENGINEER

REGISTERED PROFESSIONAL ENGINEER
Jeffery G. McRae
No. E14512
Exp. 6-30-10
ELECTRICAL
STATE OF CALIFORNIA

June 6, 2008
PLANS APPROVAL DATE

The State of California or its officers or agents shall not be responsible for the accuracy or completeness of electronic copies of this plan sheet.

To accompany plans dated 3-21-11

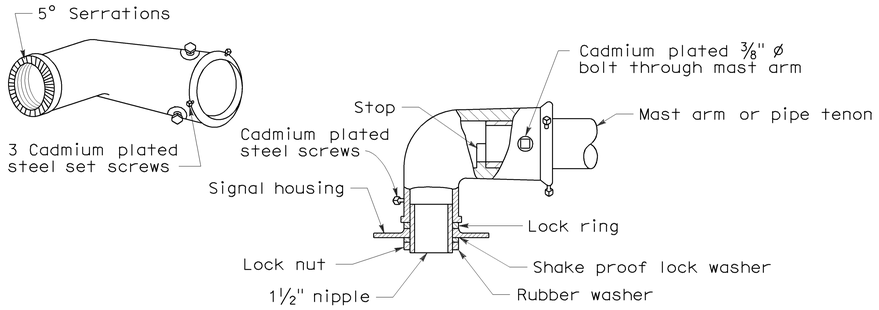

MAST ARM MOUNTING - TYPE "MAT"

For 2 NPS pipe, see Note 1.

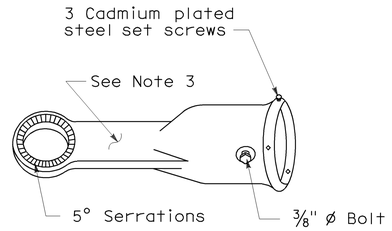

MAST ARM MOUNTING - TYPE "MAS"

For 2 NPS pipe. See Note 1.

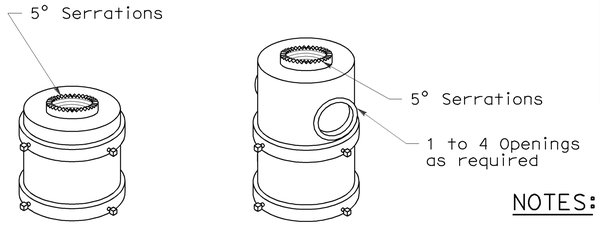

For one mounting For mulitiple mountings

TOP MOUNTINGS

For 4 NPS pipe, see Note 2.

NOTES:

1. After mast arm signal has been plumbed and secured, drill 7/16" hole through mast arm tenon in line with slip fitter hole. Place a cadmium plated ⅜" ø galvanized bolt with washer under bolt head through hole and secure with washer, nut, and locknut. Seal openings between mast arm mountings and mast arm with mastic.
2. (a) Threaded top mounted slip fitter openings shall be 1½ NPS.
   (b) Serrations in fittings shall match those on bottom of signal heads or in lock ring.
   (c) Top opening shall be offset when backplate is used.
3. Wireway shall have a cross section area of 0.95 square inch minimum. Minimum width of ½".

SIGNAL SLIP FITTERS

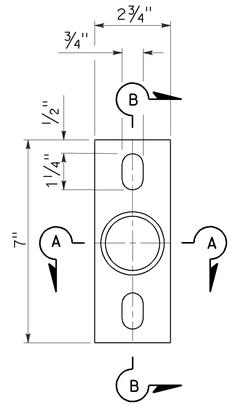

POLE PLATE

For side mountings

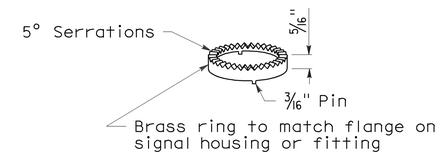

LOCK RING

Use where locking ring is not integral with signal housing or fitting.

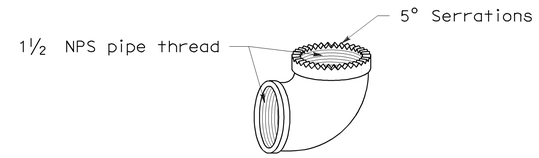

SPECIAL 90° ELBOW

One for each signal head, except those with special slip fitter mounting

MISCELLANEOUS MOUNTING HARDWARE

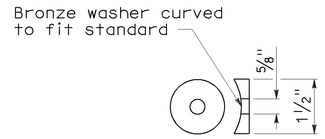

DETAIL "C"

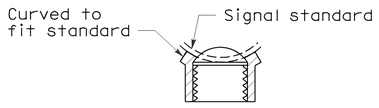

SECTION A-A

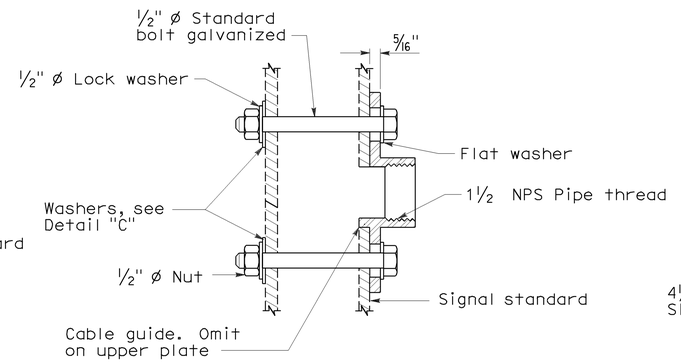

SECTION B-B

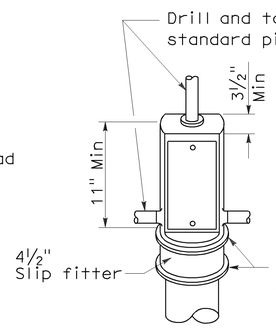

TOP MOUNTING

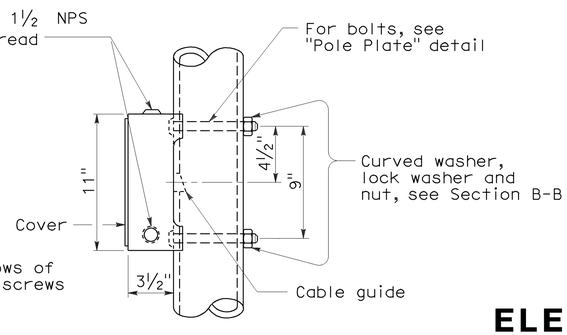

SIDE MOUNTING

TERMINAL COMPARTMENTS

STATE OF CALIFORNIA
DEPARTMENT OF TRANSPORTATION

ELECTRICAL SYSTEMS (SIGNAL HEADS AND MOUNTINGS)

NO SCALE

RSP ES-4D DATED June 6, 2008 SUPERSEDES STANDARD PLAN ES-4D
DATED MAY 1, 2006 - PAGE 421 OF THE STANDARD PLANS BOOK DATED MAY 2006.

REVISED STANDARD PLAN RSP ES-4D

2006 REVISED STANDARD PLAN RSP ES-4D

5-19-08

DIST	COUNTY	ROUTE	POST MILES TOTAL PROJECT	SHEET NO.	TOTAL SHEETS
03	Sac	5	28.8/29.5	43	65

Jeffery G. McRae
REGISTERED ELECTRICAL ENGINEER

REGISTERED PROFESSIONAL ENGINEER
Jeffery G. McRae
No. E14512
Exp. 6-30-08
ELECTRICAL
STATE OF CALIFORNIA

October 5, 2007
PLANS APPROVAL DATE

The State of California or its officers or agents shall not be responsible for the accuracy or completeness of electronic copies of this plan sheet.

To accompany plans dated 3-21-11

LOOP INSTALLATION PROCEDURE

1. Loops shall be centered in lanes.
2. Saw slots in pavement for loop conductors as shown in details.
3. Distance between side of loop and a lead-in saw cut from adjacent detectors shall be 2'-0" minimum. Distance between lead-in saw cuts shall be 6" minimum.
4. Bottom of saw slot shall be smooth with no sharp edges.
5. Slots shall be washed until clean, blown out and thoroughly dried before installing loop conductors.
6. Adjacent loops on the same sensor unit channel shall be wound in opposite directions.
7. Identify and tag loop circuit pairs in the pull box with loop number, start (S) and finish (F) of conductor. Identify and tag lead-in-cable with sensor number and phase.
8. Install loop conductor in slot using a 3/16" to 1/4" thick wood paddle. Hold loop conductors with wood paddles (at the bottom of the sawed slot) during sealant placement.
9. No more than 2 twisted pairs shall be installed in one sawed slot.
10. Allow additional 5'-0" of slack length of conductor for the lead-in run to pull box.
11. The additional length of each conductor for each loop shall be twisted together into a pair (6 turns per 3'-4" minimum) before being placed in the slot and conduit leading to pull box.
12. Test each loop circuit for continuity, circuit resistance and insulation resistance at the pull box before filling slots.
13. Fill slots as shown in details.
14. Splice loop conductors to lead-in-cable. Splices shall be soldered.
15. End of lead-in-cable and Type 2 loop conductor shall be waterproofed prior to installing in conduit to prevent moisture from entering the cable.
16. Lead-in-cable shall not be spliced between the pull box and the controller cabinet terminals.
17. Test each loop circuit for continuity, circuit resistance and insulation resistance at the controller cabinet location.
18. Where loop conductors are not to be spliced to a lead-in-cable, the ends of the conductors shall be taped and waterproofed with electrical insulating coating.

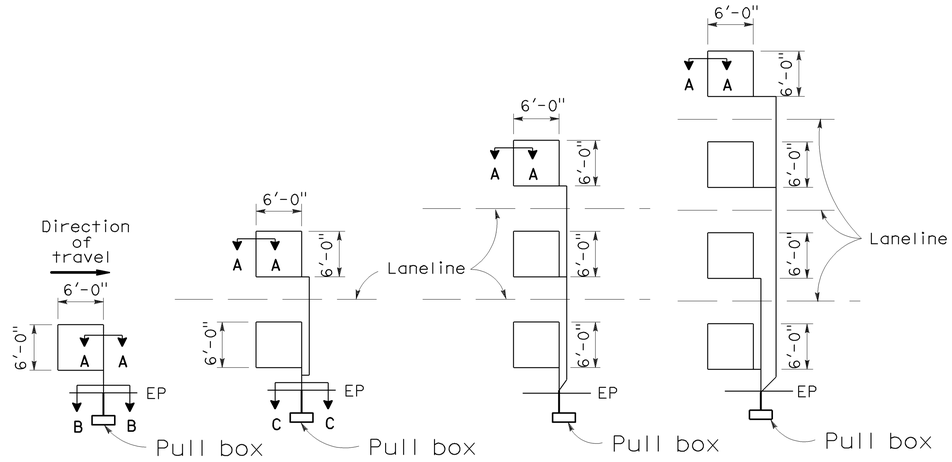

TYPE 1A INSTALLATION | TYPE 2A INSTALLATION | TYPE 3A INSTALLATION | TYPE 4A INSTALLATION

SAWCUT DETAILS

(Type A loop detector configurations illustrated)

1. 1A thru 4A = 1 Type A loop configuration in each lane.
2. 1B thru 4B = 1 Type B loop configuration in each lane.
3. 1C = 1 Type C loop configuration entering lanes as required.
4. 1D thru 4D = 1 Type D loop configuration in each lane.
5. 1E thru 4E = 1 Type E loop configuration in each lane.
6. 1Q thru 4Q = 1 Type Q loop configuration in each lane. (Use Type A, B, C, D, E or Q loop detector configurations only when specified or shown on plans)

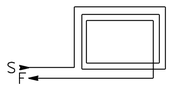

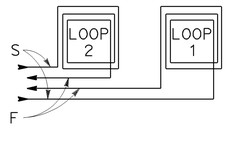

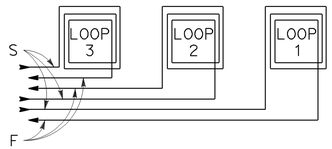

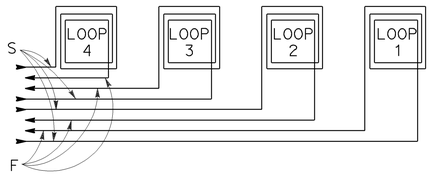

WINDING DETAILS

See Notes 6 and 7

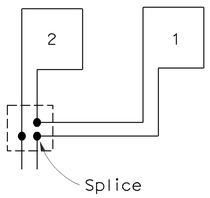

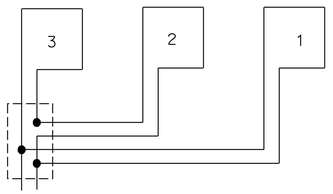

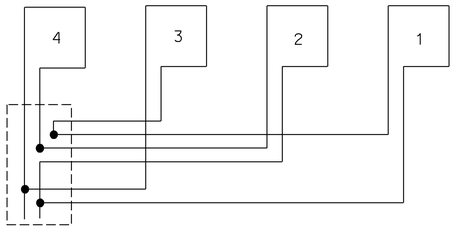

TYPICAL LOOP CONNECTIONS

(Dashed lines represent the pull box)

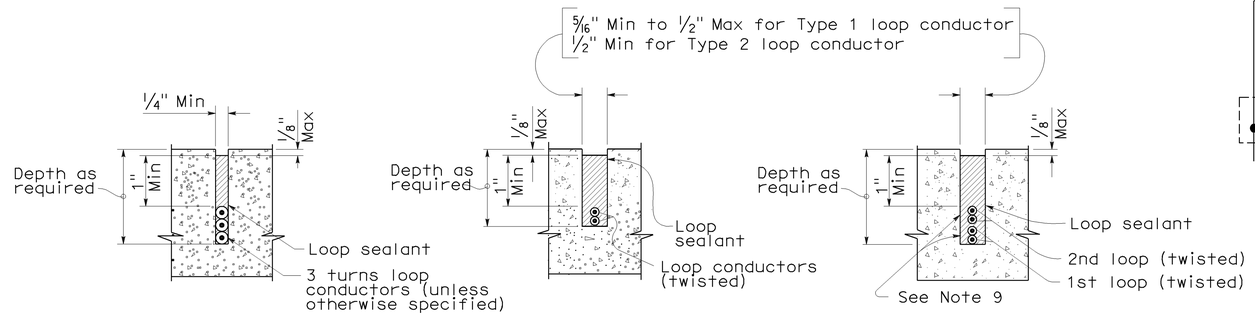

SECTION A-A | SECTION B-B | SECTION C-C

SLOT DETAILS - TYPE 1 AND TYPE 2 LOOP CONDUCTOR

STATE OF CALIFORNIA
DEPARTMENT OF TRANSPORTATION

ELECTRICAL SYSTEMS (DETECTORS)

NO SCALE

RSP ES-5A DATED OCTOBER 5, 2007 SUPERCEDES STANDARD PLAN ES-5A DATED MAY 1, 2006 - PAGE 423 OF THE STANDARD PLANS BOOK DATED MAY 2006.

REVISED STANDARD PLAN RSP ES-5A

2006 REVISED STANDARD PLAN RSP ES-5A

8-17-07

LUMINAIRE ARM DATA

PROJECTED LENGTH	THICKNESS	MINIMUM OD @ POLE	MOUNTING HEIGHT
* 6'-0"	0.1196"	3¼"	36'-9"±
8'-0"		3½"	37'-3"±
10'-0"		3¾"	38'-0"±
12'-0"		3¾"	39'-0"±
15'-0"		4¼"	39'-6"±
** 20'-0"	0.1793"	5"	37'-0"±

* Type 30 - arm length 6'-0" - 15'-0" maximum
** Type 31 - arm lengths 20'-0"

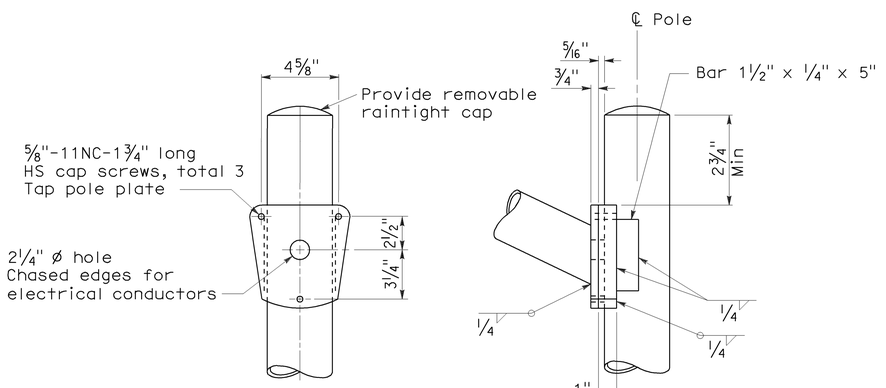

DETAIL A - TYPE 30

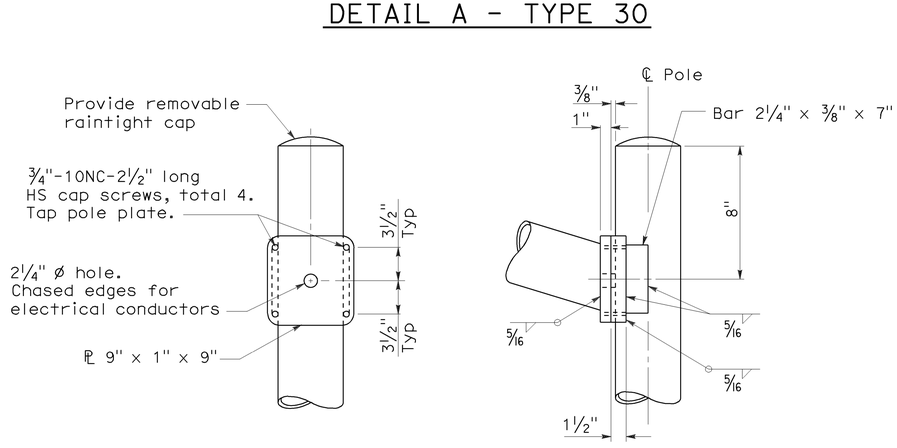

DETAIL A - TYPE 31

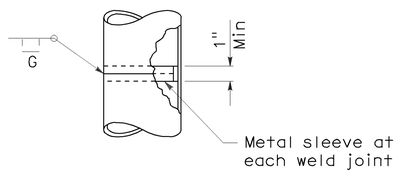

POLE SPLICE

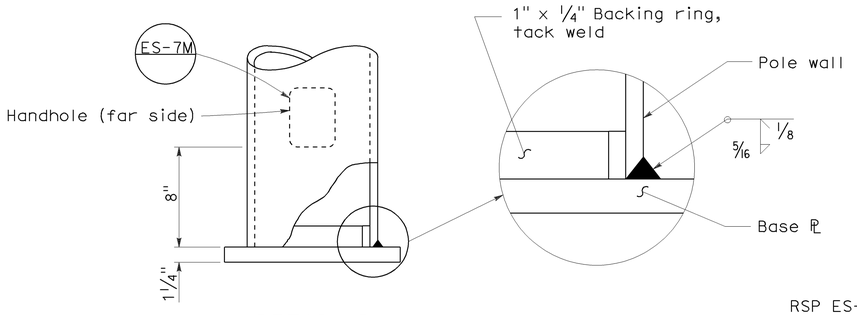

DETAIL B

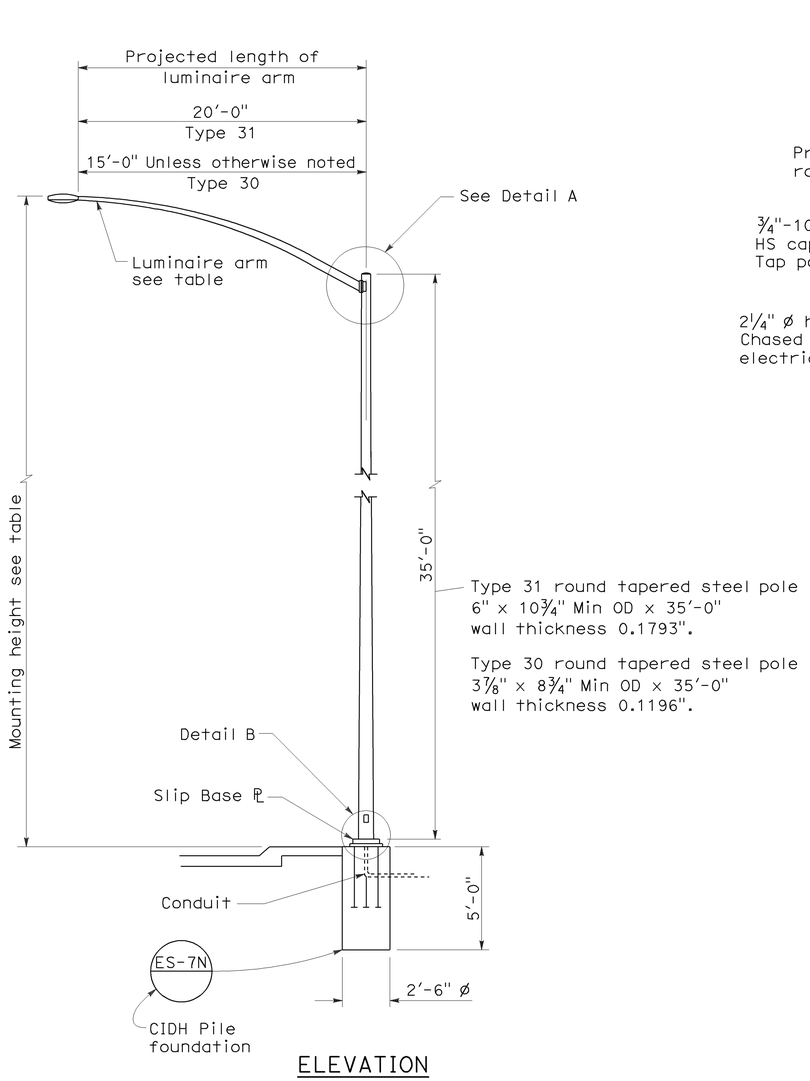

ELEVATION

DIST	COUNTY	ROUTE	POST MILES TOTAL PROJECT	SHEET NO.	TOTAL SHEETS
03	Sac	5	28.8/29.5	44	65

REGISTERED CIVIL ENGINEER

January 18, 2008
PLANS APPROVAL DATE

REGISTERED PROFESSIONAL ENGINEER
Stanley P. Johnson
No. C57793
Exp. 03-31-08
CIVIL
STATE OF CALIFORNIA

The State of California or its officers or agents shall not be responsible for the accuracy or completeness of electronic copies of this plan sheet.

To accompany plans dated 3-21-11

NOTES:

1. Sheet steel shall have a minimum yield of 48,000 psi.
2. For slip base details see Standard Plan ES-6F.
3. For Type 30 fixed base use Type 15 base plate, and foundation shown on Revised Standard Plan RSP ES-6A. Use 1¼" Dia x 3'-6" x 4" anchor bolts.
4. For Type 31 fixed base use Type 32 base plate, anchor bolts and foundation on Standard Plan ES-6G.
5. Handhole shall be located on downstream side of traffic unless noted otherwise on plans.
6. For additional general notes refer to Standard Plan ES-7M.

STATE OF CALIFORNIA
DEPARTMENT OF TRANSPORTATION

ELECTRICAL SYSTEMS (LIGHTING STANDARD TYPES 30 AND 31)

NO SCALE

RSP ES-6E DATED JANUARY 18, 2008 SUPERCEDES STANDARD PLAN ES-6E
DATED MAY 1, 2006 - PAGE 430 OF THE STANDARD PLANS BOOK DATED MAY 2006.

REVISED STANDARD PLAN RSP ES-6E

2006 REVISED STANDARD PLAN RSP ES-6E

11-19-07

DIST	COUNTY	ROUTE	POST MILES TOTAL PROJECT	SHEET NO.	TOTAL SHEETS
03	Sac	5	28.8/29.5	45	65

REGISTERED CIVIL ENGINEER

October 5, 2007
PLANS APPROVAL DATE

REGISTERED PROFESSIONAL ENGINEER
Stanley P. Johnson
No. C57793
Exp. 3-31-08
CIVIL
STATE OF CALIFORNIA

The State of California or its officers or agents shall not be responsible for the accuracy or completeness of electronic copies of this plan sheet.

To accompany plans dated 3-21-11

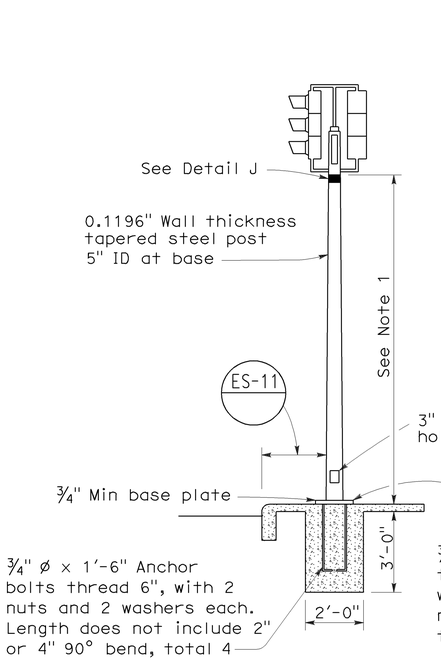

TYPE 1-A STANDARD

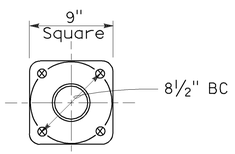

BASE PLATE
For Type 1-A
For Type 1-C
For Type 1-D

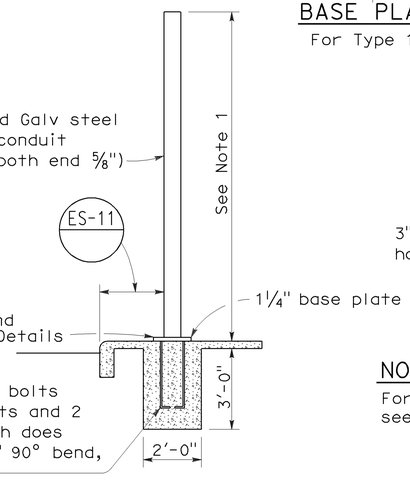

TYPE 1-B STANDARD

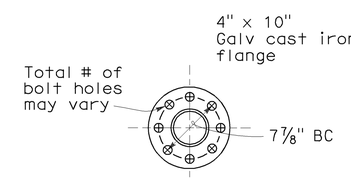

BASE PLATE
For Type 1-B

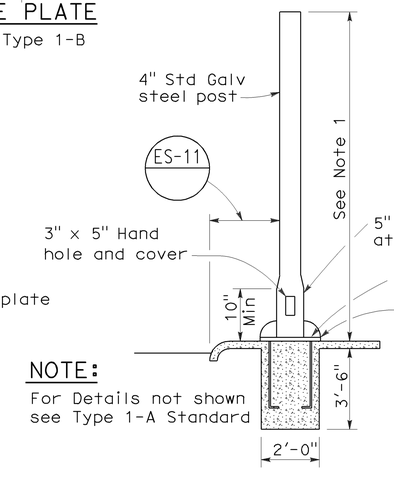

NOTE:
For Details not shown see Type 1-A Standard

TYPE 1-C STANDARD

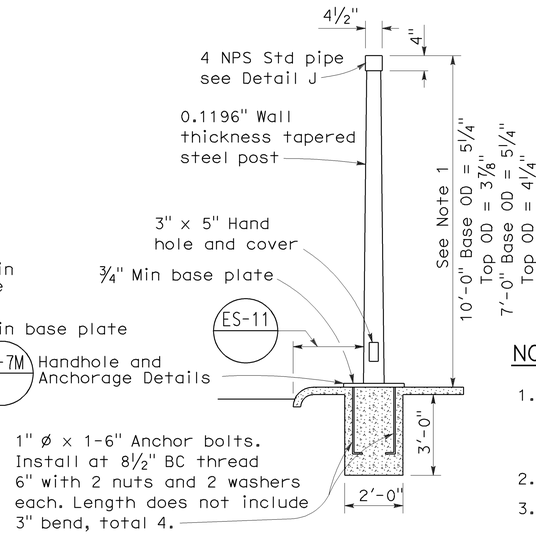

TYPE 1-D STANDARD

TYPE 1 SIGNAL STANDARDS

NOTES:

1. Standards shall be 10'-0" ± 2" for vehicle signals and 7'-0" ± 2" for pedestrian signals unless otherwise noted on plans.
2. Top of standards shall be 4½" OD.
3. Conduits shall extend 2" maximum above finished surface of foundation and for Types 1-A, 1-C and 1-D shall be sloped toward handhole.
4. Anchor bolts shall be bonded to conduit or grounding conductor.
5. Conduit between standard and adjacent pull box shall be 2" minimum.
6. Paint numbers on roadway side facing traffic when electrolier or post is left of direction of traffic.

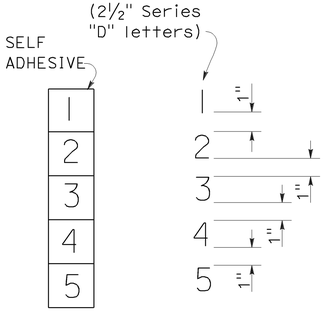

NUMBER DETAIL

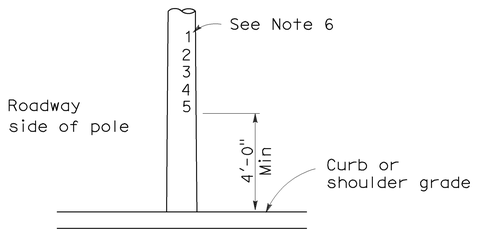

TYPICAL NUMBER FORMAT

LOCATION OF EQUIPMENT NUMBERS ON STANDARDS AND POSTS

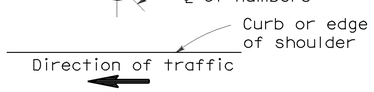

PLAN

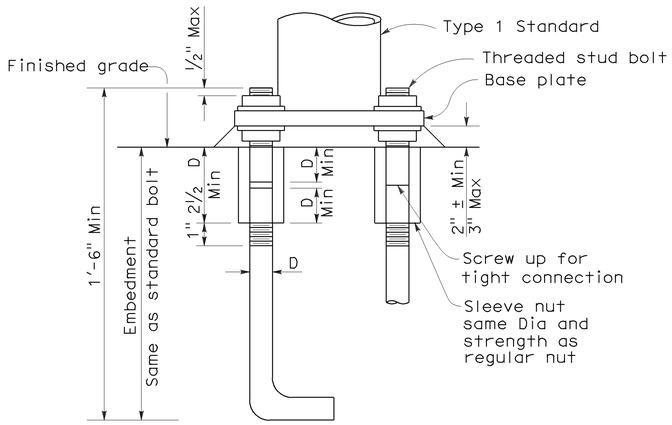

ANCHOR BOLTS WITH SLEEVE NUTS

Sleeve nuts to be used only when shown or specified on Project Plans

D = Diameter of anchor bolt

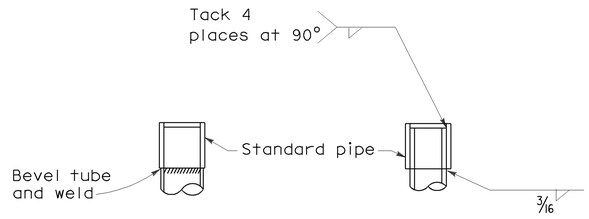

DETAIL J

Tube may be inserted into pipe or butted as required

STATE OF CALIFORNIA
DEPARTMENT OF TRANSPORTATION

ELECTRICAL SYSTEMS (SIGNAL AND LIGHTING STANDARD TYPE 1 STANDARD AND EQUIPMENT NUMBERING)

NO SCALE

RSP ES-7B DATED OCTOBER 5, 2007 SUPERCEDES STANDARD PLAN ES-7B DATED MAY 1, 2006 - PAGE 438 OF THE STANDARD PLANS BOOK DATED MAY 2006.

REVISED STANDARD PLAN RSP ES-7B

7-10-07

DIST	COUNTY	ROUTE	POST MILES TOTAL PROJECT	SHEET NO.	TOTAL SHEETS
03	Sac	5	28.8/29.5	46	65

Jeffery G. McRae
REGISTERED ELECTRICAL ENGINEER

REGISTERED PROFESSIONAL ENGINEER
Jeffery G. McRae
No. E14512
Exp. 6-30-08
ELECTRICAL
STATE OF CALIFORNIA

October 5, 2007
PLANS APPROVAL DATE

The State of California or its officers or agents shall not be responsible for the accuracy or completeness of electronic copies of this plan sheet.

To accompany plans dated 3-21-11

NOTES: (FOR LIGHTING AND SIGN ILLUMINATION CONTROL)

1. The ballast voltages of lighting fixtures and luminaires shall match line service voltages.
2. Voltage rating of photoelectric controls shall conform to the service voltage indicated on the plans.
3. Terminal strip shall be provided for wiring to fixtures.
4. Type SC1A, SC2A, SC3A controls are similar to Types SC1, SC2 and SC3 controls respectively except test switch and wiring are not required.

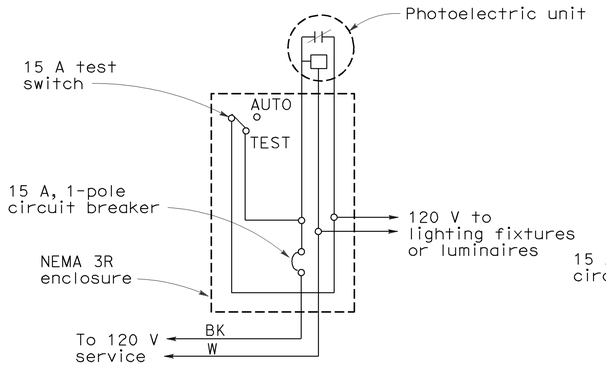

TYPE LC1 CONTROL

For 120 V unswitched circuit with no more than 800 W load.

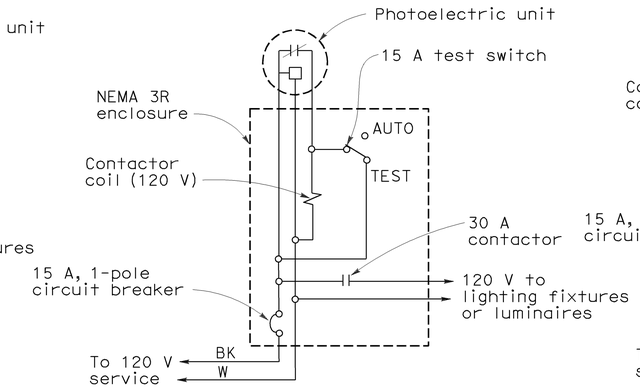

TYPE LC2 CONTROL

For 120 V unswitched circuit

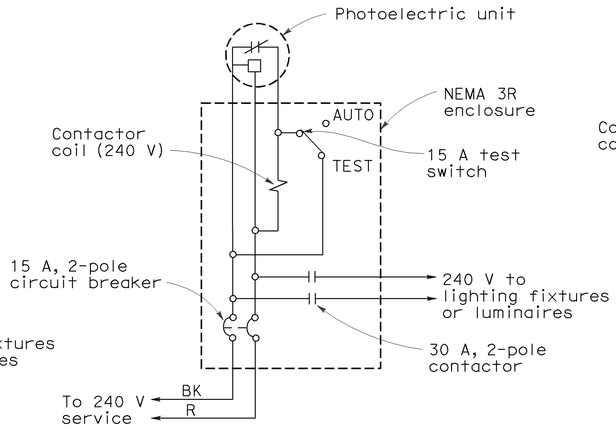

TYPE LC3 CONTROL

For 240 V and 480 V unswitched circuits

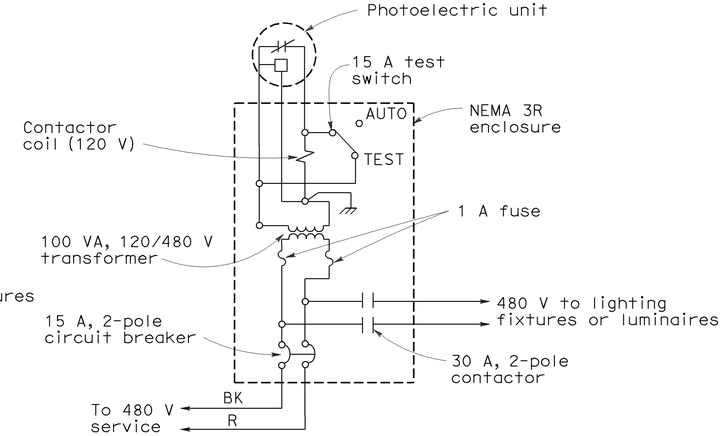

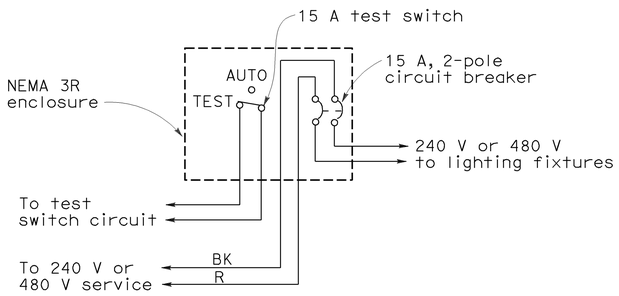

TYPE SC1 CONTROL

For 240 V or 480 V switched circuit, see Note 4 for Type SC1A

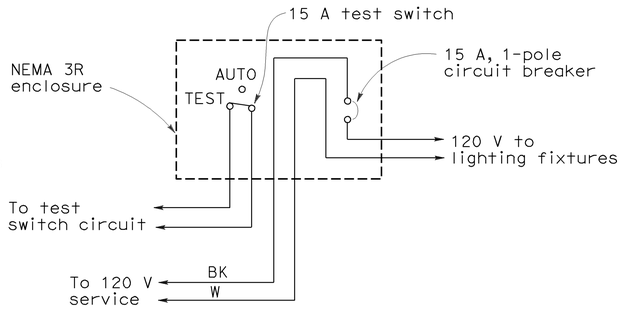

TYPE SC2 CONTROL

For 120 V switched circuit, see Note 4 for Type SC2A

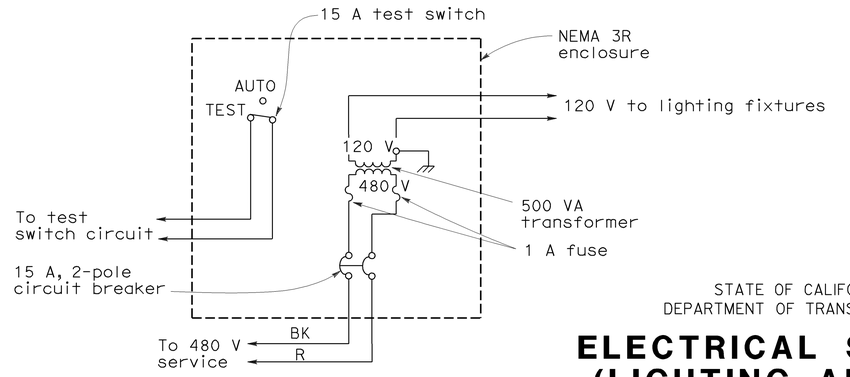

TYPE SC3 CONTROL

For 480 V switched sign circuit, see Note 4 for Type SC3A

STATE OF CALIFORNIA
DEPARTMENT OF TRANSPORTATION

ELECTRICAL SYSTEMS (LIGHTING AND SIGN ILLUMINATION CONTROL)

NO SCALE

RSP ES-15D DATED OCTOBER 5, 2007 SUPERCEDES STANDARD PLAN ES-15D DATED MAY 1, 2006 - PAGE 472 OF THE STANDARD PLANS BOOK DATED MAY 2006.

REVISED STANDARD PLAN RSP ES-15D

2006 REVISED STANDARD PLAN RSP ES-15D

9-10-07

DIST	COUNTY	ROUTE	POST MILES TOTAL PROJECT	SHEET NO.	TOTAL SHEETS
03	Sac	5	28.8/29.5	47	65

Randell D. Hiatt
REGISTERED CIVIL ENGINEER

June 6, 2008
PLANS APPROVAL DATE

REGISTERED PROFESSIONAL ENGINEER
Randell D. Hiatt
No. C50200
Exp. 6-30-09
CIVIL
STATE OF CALIFORNIA

The State of California or its officers or agents shall not be responsible for the accuracy or completeness of electronic copies of this plan sheet.

To accompany plans dated 3-21-11

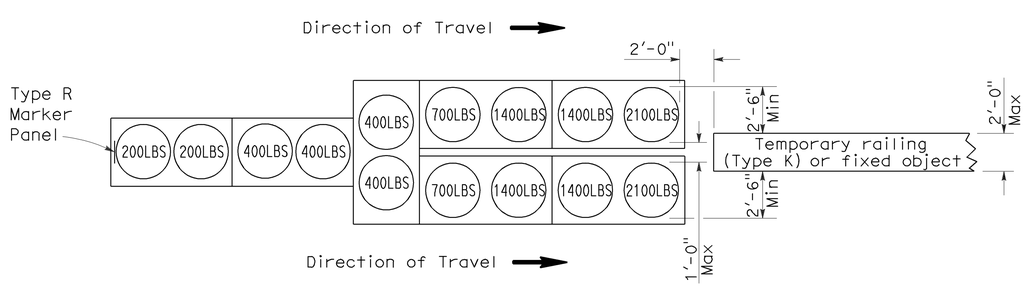

ARRAY 'TU14'

Approach speed 45 mph or more

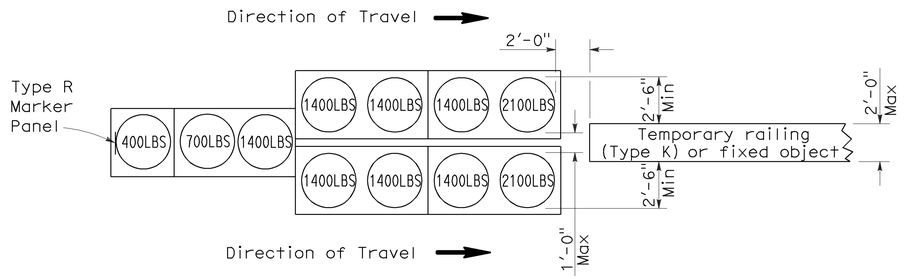

ARRAY 'TU11'

Approach speed less than 45 mph

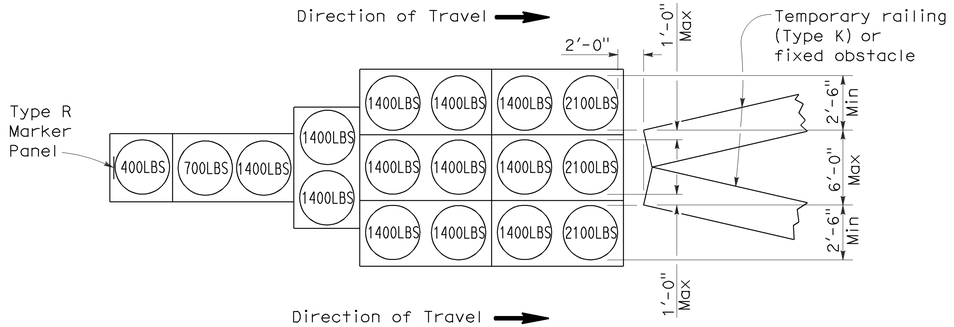

ARRAY 'TU17'

Approach speed less than 45 mph

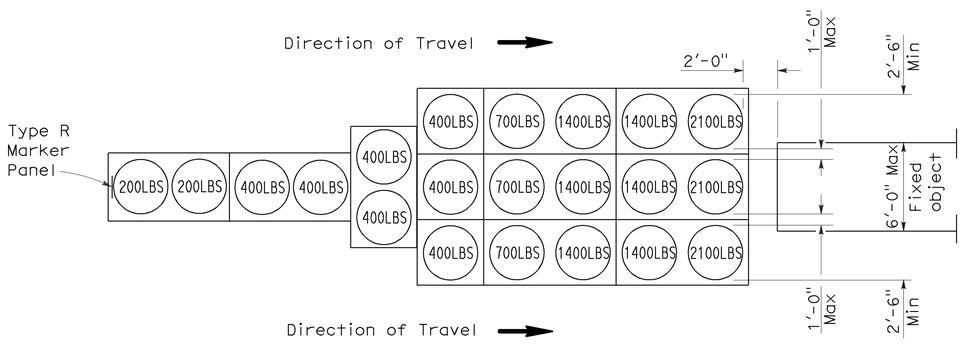

ARRAY 'TU21'

Approach speed 45 mph or more

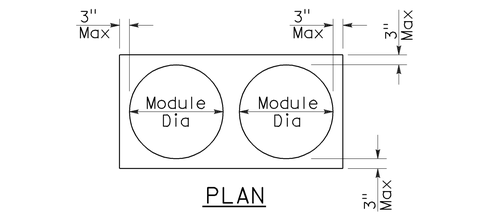

PLAN

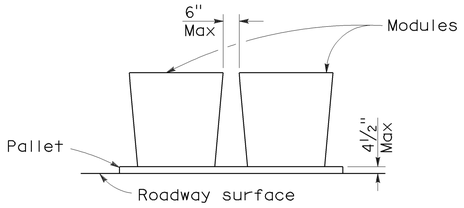

ELEVATION

CRASH CUSHION PALLET DETAIL

See Note 7

NOTES:

1. (XXX) Indicates sand filled module location and weight of sand in pounds for each module. Module spacing is based on the greater diameter of the module.
2. All sand weights are nominal.
3. Temporary crash cushion arrays shall not encroach on the traveled way.
4. Place the top of Type R marker panel 1" below the module lid.
5. Refer to Standard Plan A73B for marker details.
6. Approach speeds indicated conform to NCHRP 350 Report criteria.
7. Use of pallets is optional.

STATE OF CALIFORNIA
DEPARTMENT OF TRANSPORTATION

TEMPORARY CRASH CUSHION, SAND FILLED (UNIDIRECTIONAL)

NO SCALE

RSP T1A DATED JUNE 6, 2008 SUPERSEDES STANDARD PLAN T1A
DATED MAY 1, 2006 - PAGE 211 OF THE STANDARD PLANS BOOK DATED MAY 2006.

REVISED STANDARD PLAN RSP T1A

2006 REVISED STANDARD PLAN RSP T1A

5-15-08

DIST	COUNTY	ROUTE	POST MILES TOTAL PROJECT	SHEET NO.	TOTAL SHEETS
03	Sac	5	28.8/29.5	48	65

Randell D. Hiatt
REGISTERED CIVIL ENGINEER

June 6, 2008
PLANS APPROVAL DATE

REGISTERED PROFESSIONAL ENGINEER — Randell D. Hiatt — No. C50200 — Exp. 6-30-09 — CIVIL — STATE OF CALIFORNIA

The State of California or its officers or agents shall not be responsible for the accuracy or completeness of electronic copies of this plan sheet.

To accompany plans dated 3-21-11

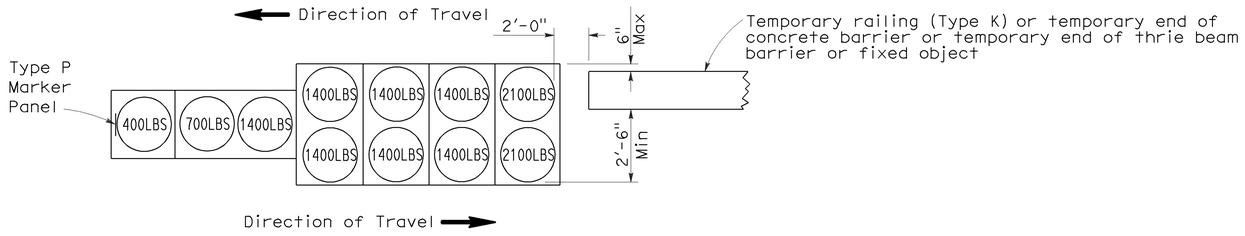

ARRAY 'TB11'

Approach speed less than 45 mph

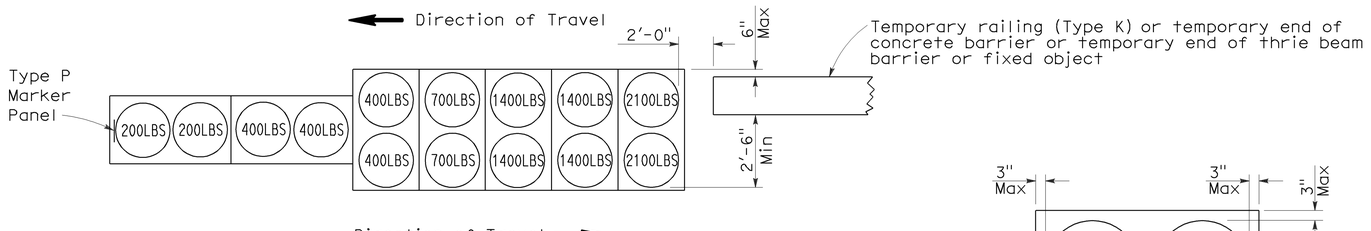

ARRAY 'TB14'

Approach speed 45 mph or more

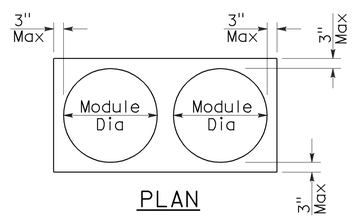

PLAN

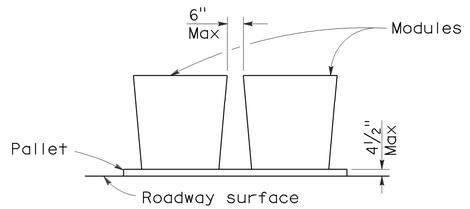

ELEVATION

CRASH CUSHION PALLET DETAIL

See Note 7

NOTES:

1. (XXX) Indicates sand filled module location and weight of sand in pounds for each module. Module spacing is based on the greater diameter of the module.
2. All sand weights are nominal.
3. Temporary crash cushion arrays shall not encroach on the traveled way.
4. Place the Type P marker panel so that the bottom of the panel rests upon the pallet.
5. Refer to Standard Plan A73B for marker details.
6. Approach speeds indicated conform to NCHRP 350 Report criteria.
7. Use of pallets is optional.

STATE OF CALIFORNIA
DEPARTMENT OF TRANSPORTATION

TEMPORARY CRASH CUSHION, SAND FILLED (BIDIRECTIONAL)

NO SCALE

RSP T1B DATED JUNE 6, 2008 SUPERSEDES STANDARD PLAN T1B
DATED MAY 1, 2006 - PAGE 212 OF THE STANDARD PLANS BOOK DATED MAY 2006.

REVISED STANDARD PLAN RSP T1B

2006 REVISED STANDARD PLAN RSP T1B

5-15-08

DIST	COUNTY	ROUTE	POST MILES TOTAL PROJECT	SHEET NO.	TOTAL SHEETS
03	Sac	5	28.8/29.5	49	65

Randell D. Hiatt
REGISTERED CIVIL ENGINEER

June 6, 2008
PLANS APPROVAL DATE

REGISTERED PROFESSIONAL ENGINEER
Randell D. Hiatt
No. C50200
Exp. 6-30-09
CIVIL
STATE OF CALIFORNIA

The State of California or its officers or agents shall not be responsible for the accuracy or completeness of electronic copies of this plan sheet.

To accompany plans dated 3-21-11

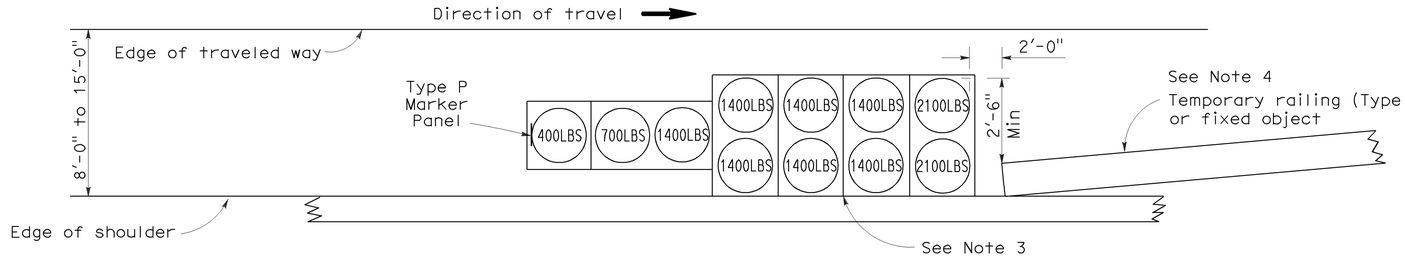

ARRAY 'TS11'

Approach speed less than 45 mph
See Note 9

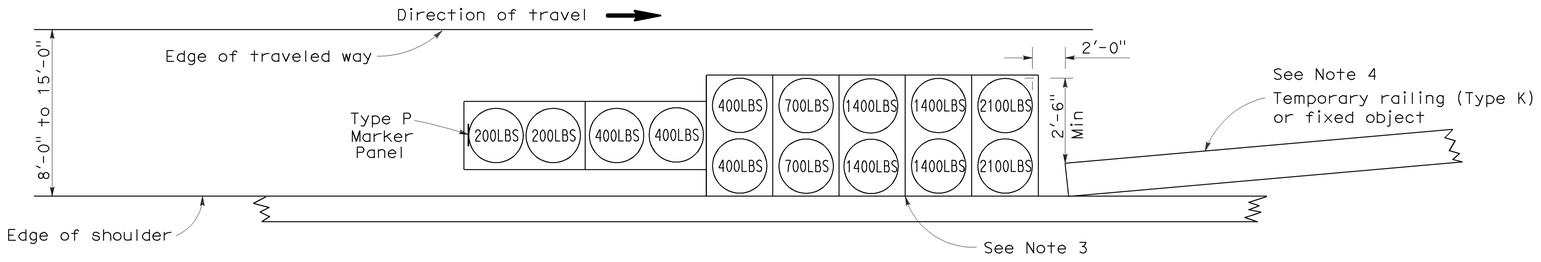

ARRAY 'TS14'

Approach speed 45 mph or more
See Note 9

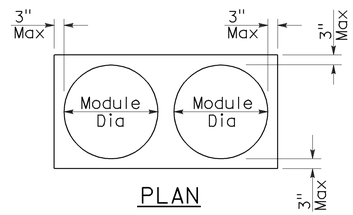

PLAN

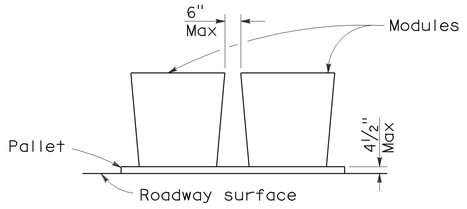

ELEVATION

CRASH CUSHION PALLET DETAIL

See Note 11

NOTES:

1. (XXX) Indicates sand filled module location and weight of sand in pounds for each module. Module spacing is based on the greater diameter of the module.
2. All sand weights are nominal.
3. The temporary crash cushion arrays shown on this plan shall be used only in locations where there will be traffic on one side of the temporary crash cushion array.
4. If the fixed object or approach end of the temporary railing is less than 15'-0" from the edge of traveled way, a temporary crash cushion is required in a construction or work zone.
5. Temporary crash cushion arrays shall not encroach on the traveled way.
6. Arrays for median shoulders shall conform to details shown on this plan for outside shoulders.
7. Place the Type P marker panel so that the bottom of the panel rests upon the pallet and faces traffic.
8. Refer to Standard Plan A73B for marker details.
9. For shoulder widths less than 8'-0", appropriate approved crash cushion protection, other than sand filled modules, shall be provided at fixed objects and at approach ends of temporary railing. The specific type of crash cushion shall be as shown on the project plans or as specified in the Special Provisions, or if not shown on the project plans or specified in the Special Provisions, shall be as approved by the Engineer.
10. Approach speeds indicated conform to NCHRP 350 Report criteria.
11. Use of pallets is optional.

STATE OF CALIFORNIA
DEPARTMENT OF TRANSPORTATION

TEMPORARY CRASH CUSHION, SAND FILLED (SHOULDER INSTALLATIONS)

NO SCALE

RSP T2 DATED JUNE 6, 2008 SUPERSEDES STANDARD PLAN T2
DATED MAY 1, 2006 - PAGE 213 OF THE STANDARD PLANS BOOK DATED MAY 2006.

REVISED STANDARD PLAN RSP T2

2006 REVISED STANDARD PLAN RSP T2

5-15-08

DIST	COUNTY	ROUTE	POST MILES TOTAL PROJECT	SHEET No	TOTAL SHEETS
03	Sac	5	28.8/29.5	50	65

Eric Watson 7/22/10
REGISTERED CIVIL ENGINEER DATE

3-21-11
PLANS APPROVAL DATE

REGISTERED PROFESSIONAL ENGINEER — Eric Watson No. 64273 Exp. 6-30-11 CIVIL — STATE OF CALIFORNIA

The State of California or its officers or agents shall not be responsible for the accuracy or completeness of electronic copies of this plan sheet.

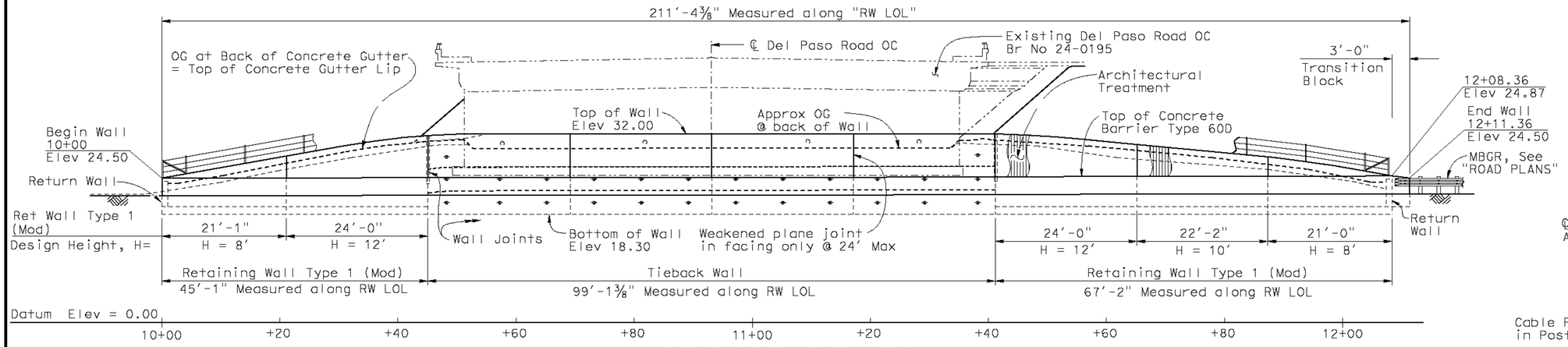

DEVELOPED ELEVATION

1" = 10'

Legend:

- Indicates tieback locations
- Indicates existing structure

QUANTITIES

REMOVE CONCRETE	15	CY
STRUCTURE EXCAVATION (RETAINING WALL)	365	CY
STRUCTURE EXCAVATION (TIEBACK WALL)	120	CY
STRUCTURE BACKFILL (RETAINING WALL)	242	CY
STRUCTURE BACKFILL (TIEBACK WALL)	35	CY
TIEBACK ANCHOR	26	EA
STRUCTURAL CONCRETE, RETAINING WALL	145	CY
ARCHITECTURAL TREATMENT	1,180	SQFT
BAR REINFORCING STEEL (RETAINING WALL)	30,300	LB
SHOTCRETE	55	CY
SLOPE PAVING (CONCRETE)	9	CY
MINOR CONCRETE (GUTTER)	120	LF
CABLE RAILING	209	LF
CONCRETE BARRIER (TYPE 60D)	212	LF

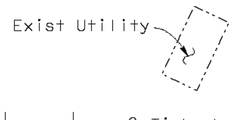

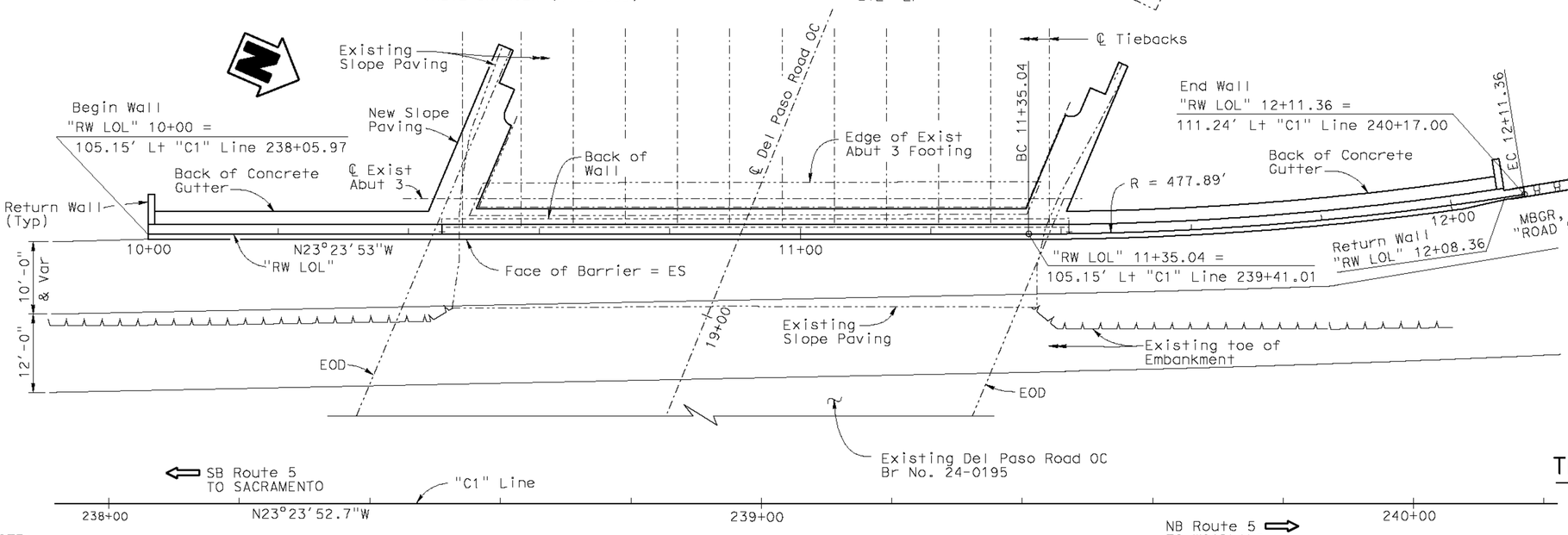

PLAN

1" = 10'

NOTE:
THE CONTRACTOR SHALL VERIFY ALL CONTROLLING FIELD DIMENSIONS BEFORE ORDERING OR FABRICATING ANY MATERIAL.

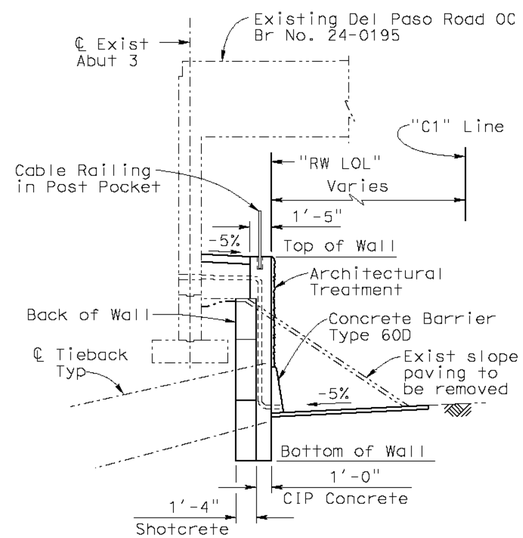

THROUGH TIEBACK WALL

Note:
Slope paving instead of concrete gutter from "RW LOL" Sta 10+45.08 to 11+41.19

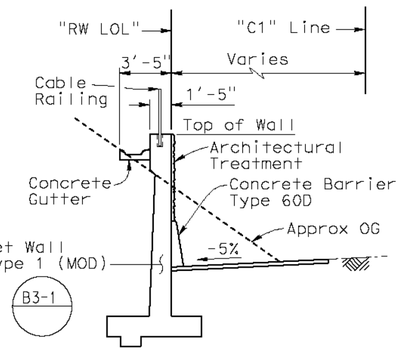

THROUGH RETAINING WALL TYPE 1 (MOD)

"RW LOL" Sta 10+00.00 to 10+45.08
and Sta 11+41.19 to 12+08.36

TYPICAL SECTION

1" = 5'

Jeff Sims, DESIGN ENGINEER	DESIGN	BY Eric Watson	CHECKED P. Vijitakula	LOAD & RESISTANCE FACTOR DESIGN	LIVE LOADING:		
	DETAILS	BY Jie Tang	CHECKED P. Vijitakula	LAYOUT	BY Eric Watson	CHECKED P. Vijitakula	
	QUANTITIES	BY D. Sessions/V.Shostak	CHECKED E.Watson/K.Lee	SPECIFICATIONS	BY Tony Huang	PLANS AND SPECS COMPARED Tony Huang	

ORIGINAL SCALE IN INCHES FOR REDUCED PLANS 0 1 2 3

STATE OF CALIFORNIA
DEPARTMENT OF TRANSPORTATION

DIVISION OF ENGINEERING SERVICES
STRUCTURE DESIGN
DESIGN BRANCH 1

CU 03
EA 1F1801

BRIDGE NO. 24E0013
POST MILE 29.02

DEL PASO ROAD OC RETAINING WALL
GENERAL PLAN

DISREGARD PRINTS BEARING EARLIER REVISION DATES →

REVISION DATES: 04/16/10 05/05/10 07/01/10 7/13/10 7/21/10

SHEET 1 OF 16

STRUCTURES DESIGN GENERAL PLAN SHEET (ENGLISH) (REV.07-24-06)

FILE => 24e0013-a-gp01.dgn

USERNAME => BHuddles DATE PLOTTED => 22-JUL-2010 TIME PLOTTED => 15:24

DIST	COUNTY	ROUTE	POST MILES TOTAL PROJECT	SHEET NO	TOTAL SHEETS
03	Sac	5	28.8/29.5	51	65

Eric Watson 7/22/10
REGISTERED CIVIL ENGINEER DATE

3-21-11
PLANS APPROVAL DATE

REGISTERED PROFESSIONAL ENGINEER — Eric Watson No. 64273 Exp. 6-30-11 CIVIL — STATE OF CALIFORNIA

The State of California or its officers or agents shall not be responsible for the accuracy or completeness of electronic copies of this plan sheet.

To get to the Caltrans web site, go to: http://www.dot.ca.gov

INDEX TO PLANS

SHEET NO. TITLE

1	GENERAL PLAN
2	INDEX TO PLANS
3	FOUNDATION PLAN
4	STRUCTURE PLAN NO. 1
5	STRUCTURE PLAN NO. 2
6	TYPICAL WALL SECTIONS
7	RETAINING WALL DETAILS NO. 1
8	RETAINING WALL DETAILS NO. 2
9	RETAINING WALL DETAILS NO. 3
10	RETAINING WALL DETAILS NO. 4
11	RETAINING WALL DETAILS NO. 5
12	SLOPE PAVING
13	LOG OF TEST BORINGS 1 OF 4
14	LOG OF TEST BORINGS 2 OF 4
15	LOG OF TEST BORINGS 3 OF 4
16	LOG OF TEST BORINGS 4 OF 4

STANDARD PLANS DATED MAY, 2006

A62B	LIMITS OF PAYMENT FOR EXCAVATION AND BACKFILL
A76A	CONCRETE BARRIER TYPE 60
BO-1	BRIDGE DETAILS
BO-3	BRIDGE DETAILS
B3-1	RETAINING WALL TYPE 1 H = 4' THROUGH 30'
B3-9	Retaining Wall Details NO. 2
B11-47	CABLE RAILING

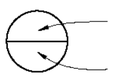

NOTE:
THE CONTRACTOR SHALL VERIFY ALL CONTROLLING FIELD DIMENSIONS BEFORE ORDERING OR FABRICATING ANY MATERIAL.

GENERAL NOTES

DESIGN: Caltrans Bridge Design Specifications - April 2000 (LFD)
(1996 AASHTO with Interims and Revisions by Caltrans

STRUCTURAL STEEL:

fy = 36 ksi
fs = 20 ksi

REINFORCED CONCRETE:

f'c = 3600 psi
fy = 60 ksi

WORKING STRESS DESIGN:

f_c = 1440 psi
f_s = 24 ksi
n = 9

REINFORCED SHOTCRETE

f'c = 4000 psi
f'ci = 3600 psi
fy = 60 ksi

WALL DESIGN LOADING

Lateral Earth Load: Based on Coulomb theory.
Live Load on Abutment: 2' Surcharge

SOIL PARAMETERS

For determination of design lateral earth load
ø = 28°
γ = 120 pcf

FOOTING PRESSURE

Design
2.7 ksf

Allowable
3.0 ksf

DESIGN	BY Eric Watson	CHECKED P. Vijitakula	STATE OF CALIFORNIA DEPARTMENT OF TRANSPORTATION	DIVISION OF ENGINEERING SERVICES STRUCTURE DESIGN DESIGN BRANCH 1	BRIDGE NO. 24E0013	DEL PASO ROAD OC RETAINING WALL
DETAILS	BY Jie Tang	CHECKED P. Vijitakula			POST MILE 29.02	INDEX TO PLANS
QUANTITIES	BY D.Sessions/V.Shostak	CHECKED E.Watson/K.Lee				

STRUCTURES DESIGN DETAIL SHEET (ENGLISH) (REV. 10/25/05)

ORIGINAL SCALE IN INCHES FOR REDUCED PLANS 0 1 2 3

CU 03
EA 1F1801

DISREGARD PRINTS BEARING EARLIER REVISION DATES →

REVISION DATES: 07/20/10 | 07/04/10 | 07/13/10 | 07/21/10

SHEET 2 OF 16

FILE => 24e0013-a-itp.dgn

USERNAME => BHuddles DATE PLOTTED => 22-JUL-2010 TIME PLOTTED => 15:24

CURVE DATA

No.	R	Δ	T	L
Ⓐ	477.89	9°08'58"	38.24	76.31

[xx.xx] - Indicates bottom of footing elevation

DIST	COUNTY	ROUTE	POST MILES TOTAL PROJECT	SHEET NO	TOTAL SHEETS
03	Sac	5	28.8/29.5	52	65

Eric Watson 7/22/10
REGISTERED CIVIL ENGINEER DATE

3-21-11
PLANS APPROVAL DATE

REGISTERED PROFESSIONAL ENGINEER — Eric Watson — No. 64273 — Exp. 6-30-11 — CIVIL — STATE OF CALIFORNIA

The State of California or its officers or agents shall not be responsible for the accuracy or completeness of electronic copies of this plan sheet.

To get to the Caltrans web site, go to: http://www.dot.ca.gov

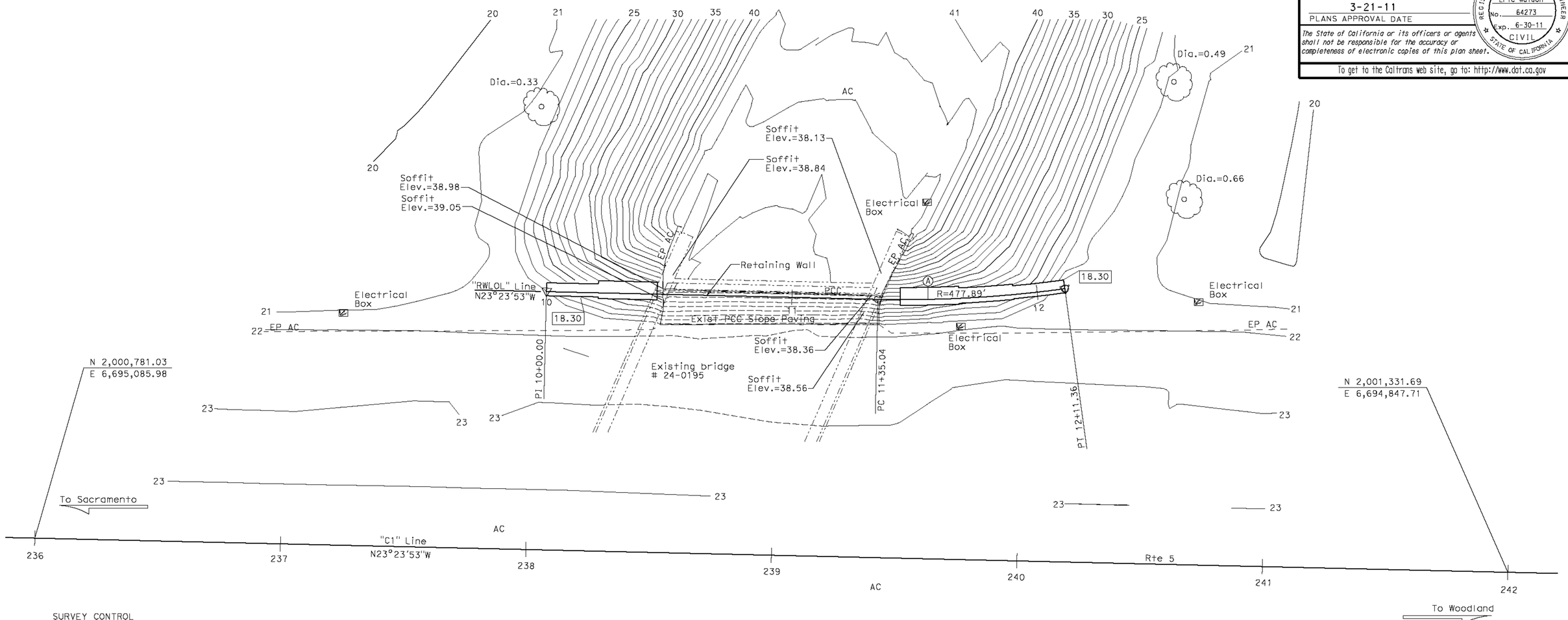

SURVEY CONTROL

SAC 5 28.95 (Not Shown On Plan)
CADT Brass Disk In Conc/Pipe
93.35 FT Rt. ℄ Rte 5
Sta. 233+79.02
N 2,000,615.29
E 6,695,259.41
Elev. = 19.93

SAC 5 29.30 (Not Shown On Plan)
CADT Brass Disk In Conc/Pipe
102.06 FT Rt. ℄ Rte 5
Sta. 252+36.00
N 2,002,323.29
E 6,694,529.96
Elev. = 20.05

NOTE:
THE CONTRACTOR SHALL VERIFY ALL CONTROLLING FIELD DIMENSIONS BEFORE ORDERING OR FABRICATING ANY MATERIAL.

PRELIMINARY INVESTIGATION SECTION

SCALE 1"=20'	VERT.DATUM NGVD29	PHOTOGRAMMETRY AS OF: X			
	HORZ.DATUM NAD83 (1991.35)	SURVEYED BY District/J.Pallares	CHECKED BY S.Sou	02/2010	
	ALIGNMENT TIES Dist.Traverse Sheet	DRAFTED BY T.Zolnikov	02/2010 CHECKED BY J.Pallares	02/2010	

DESIGN	BY Eric Watson	CHECKED P. Vijitakula
DETAILS	BY Jie Tang	CHECKED P. Vijitakula
QUANTITIES	BY D.Sessions/V.Shostak	CHECKED E.Watson/K.Lee

STATE OF CALIFORNIA
DEPARTMENT OF TRANSPORTATION

DIVISION OF ENGINEERING SERVICES
STRUCTURE DESIGN
DESIGN BRANCH 1

BRIDGE NO. 24E0013
POST MILE 29.02

DEL PASO ROAD OC RETAINING WALL
FOUNDATION PLAN

STRUCTURES FOUNDATION PLAN SHEET (ENGLISH) (REV. 10/25/05)

ORIGINAL SCALE IN INCHES FOR REDUCED PLANS 0 1 2 3

CU 03
EA 1F1801

FILE => 24e0013-c-fp101.dgn

DISREGARD PRINTS BEARING EARLIER REVISION DATES

REVISION DATES: 02/26/10 | 03/15/10 | 04/30/10 | 05/05/10 | 07/01/10 | 07/21/10

SHEET 3 OF 16

USERNAME => BHuddles DATE PLOTTED => 22-JUL-2010 TIME PLOTTED => 15:25

DIST	COUNTY	ROUTE	POST MILES TOTAL PROJECT	SHEET NO	TOTAL SHEETS
03	Sac	5	28.8/29.5	53	65

Eric Watson 7/22/10
REGISTERED CIVIL ENGINEER DATE

3-21-11
PLANS APPROVAL DATE

REGISTERED PROFESSIONAL ENGINEER — Eric Watson — No. 64273 — Exp. 6-30-11 — CIVIL — STATE OF CALIFORNIA

The State of California or its officers or agents shall not be responsible for the accuracy or completeness of electronic copies of this plan sheet.

To get to the Caltrans web site, go to: http://www.dot.ca.gov

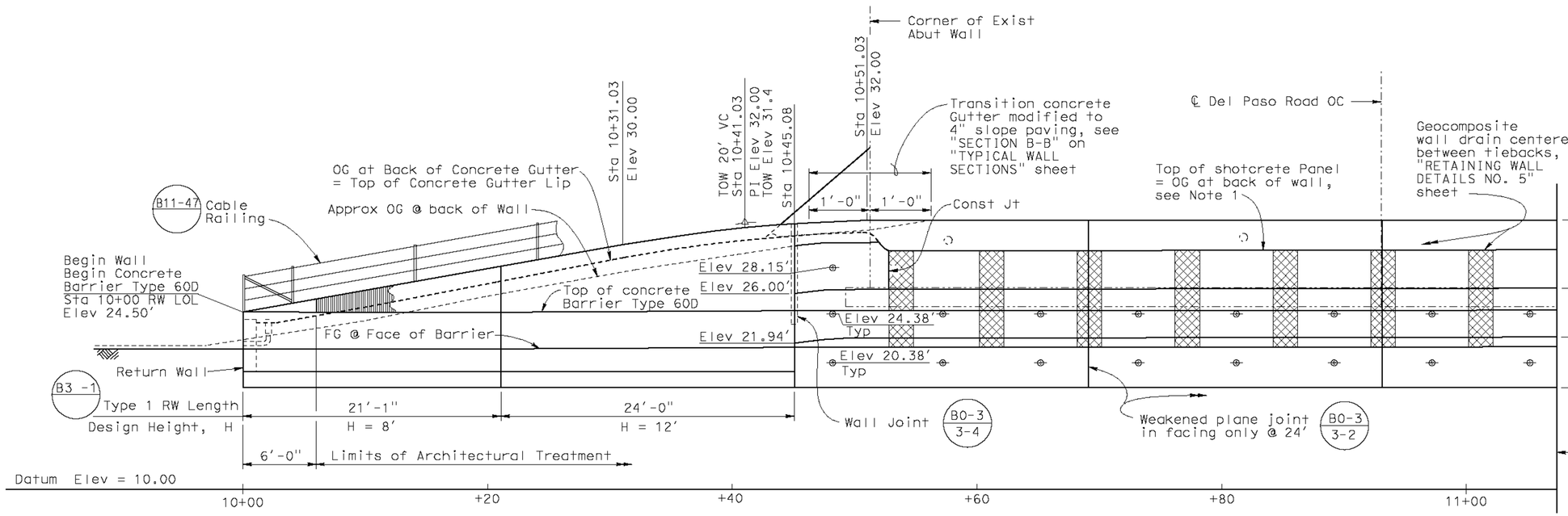

DEVELOPED ELEVATION
1" = 5'

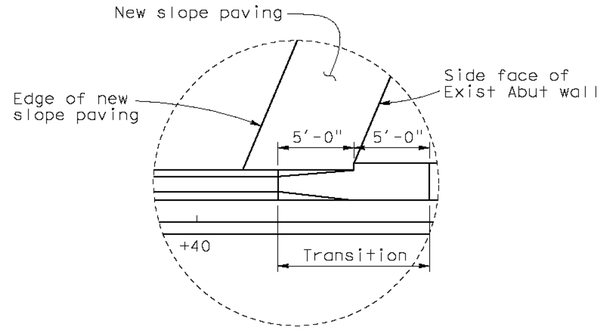

DETAIL A
1"= 5'

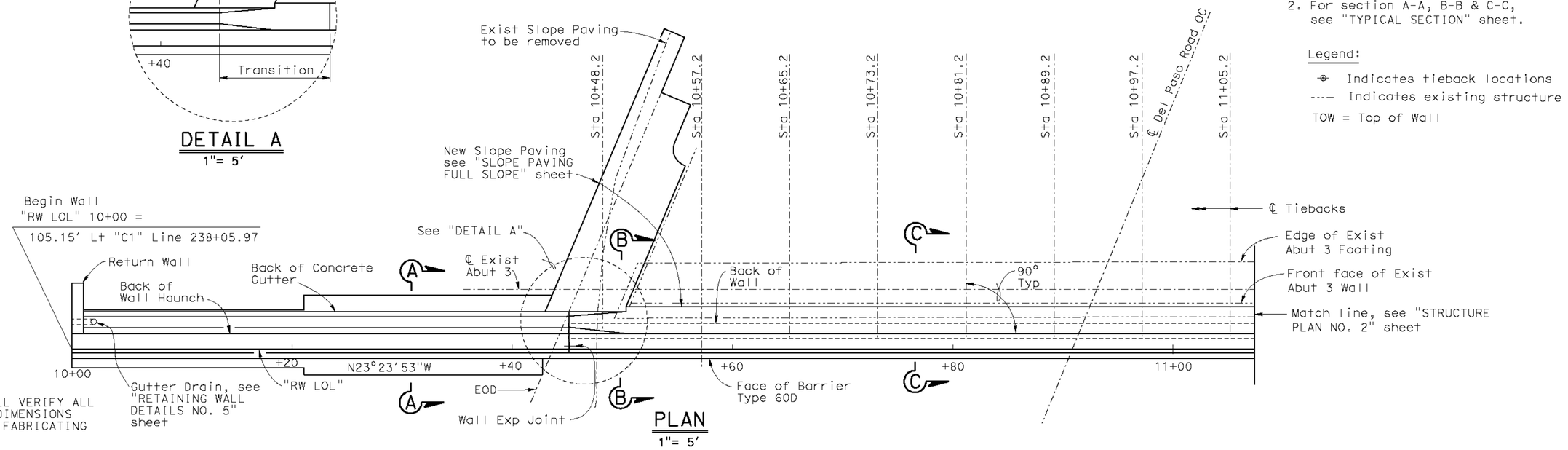

PLAN
1"= 5'

NOTE:
THE CONTRACTOR SHALL VERIFY ALL CONTROLLING FIELD DIMENSIONS BEFORE ORDERING OR FABRICATING ANY MATERIAL.

Notes:

1. Shotcrete pannel above top of Exist footing to be placed after all tieback Panels below are complete and tiebacks are locked off. See "Tieback Wall Construction Sequence" on "RETAINING WALL DETAILS NO. 2" sheet.
2. For section A-A, B-B & C-C, see "TYPICAL SECTION" sheet.

Legend:

⊕ Indicates tieback locations
---- Indicates existing structure
TOW = Top of Wall

DESIGN	Eric Watson	P. Vijitakula	
DETAILS	Jie Tang	P. Vijitakula	
QUANTITIES	D.Sessions/V.Shostak	E.Watson/K.Lee	

STATE OF CALIFORNIA
DEPARTMENT OF TRANSPORTATION

DIVISION OF ENGINEERING SERVICES
STRUCTURE DESIGN
DESIGN BRANCH 1

CU 03
EA 1F1801

BRIDGE NO. 24E0013
POST MILE 29.02

DEL PASO ROAD OC RETAINING WALL
STRUCTURE PLAN NO. 1

STRUCTURES DESIGN DETAIL SHEET (ENGLISH) (REV. 10/25/05)

ORIGINAL SCALE IN INCHES FOR REDUCED PLANS 0 1 2 3

DISREGARD PRINTS BEARING EARLIER REVISION DATES

REVISION DATES: 04/27/10 | 05/03/10 | 05/06/10 | 07/01/10 | 7/13/10 | 7/21/10

SHEET 4 OF 16

FILE => 24e0013-c-sp01.dgn

USERNAME => BHuddles DATE PLOTTED => 22-JUL-2010 TIME PLOTTED => 15:25

DIST	COUNTY	ROUTE	POST MILES TOTAL PROJECT	SHEET NO	TOTAL SHEETS
03	Sac	5	28.8/29.5	54	65

Eric Watson 7/22/10
REGISTERED CIVIL ENGINEER DATE

3-21-11
PLANS APPROVAL DATE

REGISTERED PROFESSIONAL ENGINEER — Eric Watson No. 64273 Exp. 6-30-11 CIVIL — STATE OF CALIFORNIA

The State of California or its officers or agents shall not be responsible for the accuracy or completeness of electronic copies of this plan sheet.

To get to the Caltrans web site, go to: http://www.dot.ca.gov

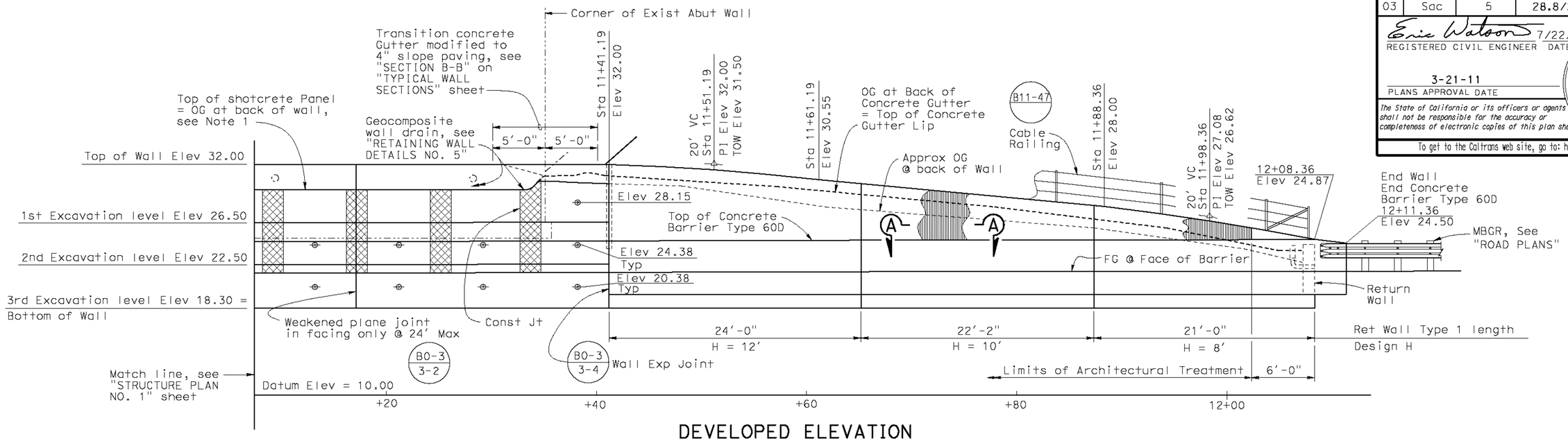

DEVELOPED ELEVATION

1" = 5'

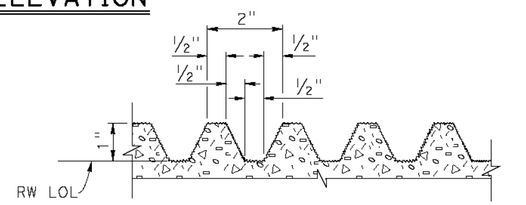

ARCHITECTURAL TREATMENT
(FRACTURED RIB)

SECTION A-A

6" = 1'-0"

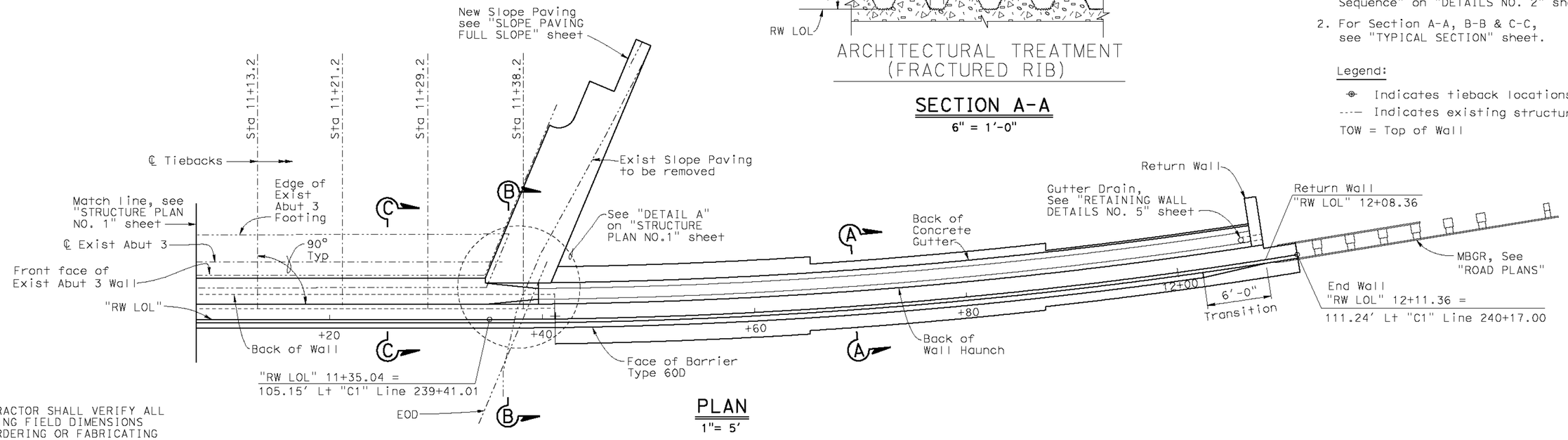

PLAN

1"= 5'

NOTE:
THE CONTRACTOR SHALL VERIFY ALL CONTROLLING FIELD DIMENSIONS BEFORE ORDERING OR FABRICATING ANY MATERIAL.

Notes:

1. Shotcrete pannel above top of Exist footing to be placed after all tieback Panels below are complete and tiebacks are locked off. See "Tieback Wall Construction Sequence" on "DETAILS NO. 2" sheet.
2. For Section A-A, B-B & C-C, see "TYPICAL SECTION" sheet.

Legend:

- ⊕ Indicates tieback locations
- ---— Indicates existing structure

TOW = Top of Wall

	BY	CHECKED
DESIGN	Eric Watson	P. Vijitakula
DETAILS	Jie Tang	P. Vijitakula
QUANTITIES	D.Sessions/V.Shostak	E.Watson/K.Lee

STATE OF CALIFORNIA
DEPARTMENT OF TRANSPORTATION

DIVISION OF ENGINEERING SERVICES
STRUCTURE DESIGN
DESIGN BRANCH 1

BRIDGE NO. 24E0013
POST MILE 29.02

DEL PASO ROAD OC RETAINING WALL
STRUCTURE PLAN NO. 2

STRUCTURES DESIGN DETAIL SHEET (ENGLISH) (REV. 10/25/05)

ORIGINAL SCALE IN INCHES FOR REDUCED PLANS 0 1 2 3

CU 03
EA 1F1801

DISREGARD PRINTS BEARING EARLIER REVISION DATES

REVISION DATES: 04/23/10 | 05/03/10 | 05/05/10 | 7/1/10 | 7/12/10 | 7/21/10

SHEET 5 OF 16

FILE => 24e0013-c-sp02.dgn

USERNAME => BHuddles DATE PLOTTED => 22-JUL-2010 TIME PLOTTED => 15:25

DIST	COUNTY	ROUTE	POST MILES TOTAL PROJECT	SHEET NO	TOTAL SHEETS
03	Sac	5	28.8/29.5	55	65

Eric Watson 7/22/10
REGISTERED CIVIL ENGINEER DATE

3-21-11
PLANS APPROVAL DATE

REGISTERED PROFESSIONAL ENGINEER — Eric Watson — No. 64273 — Exp. 6-30-11 — CIVIL — STATE OF CALIFORNIA

The State of California or its officers or agents shall not be responsible for the accuracy or completeness of electronic copies of this plan sheet.

To get to the Caltrans web site, go to: http://www.dot.ca.gov

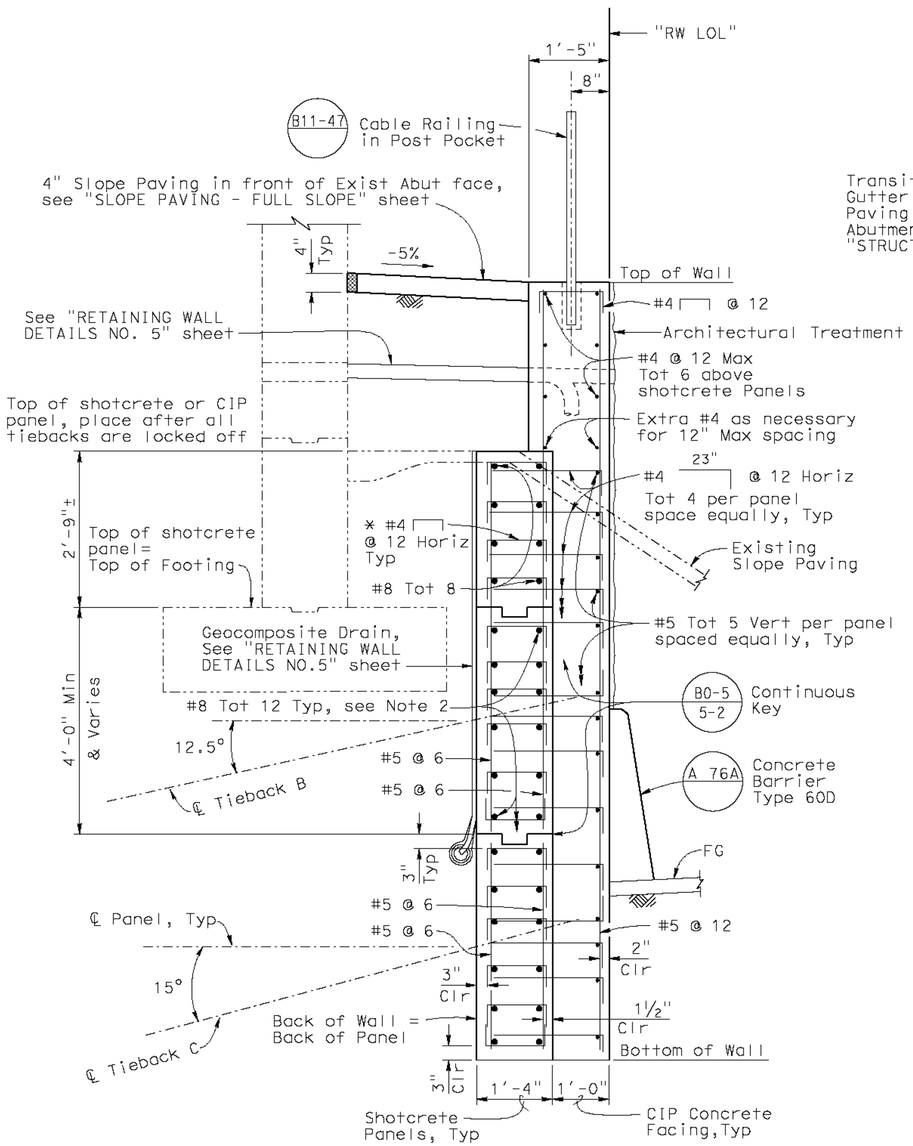

* Place #4 ties as shown for each pair of #8 bar

SECTION C-C

¾" = 1'-0"

Sta 10+51.25 To Sta 11+35.10

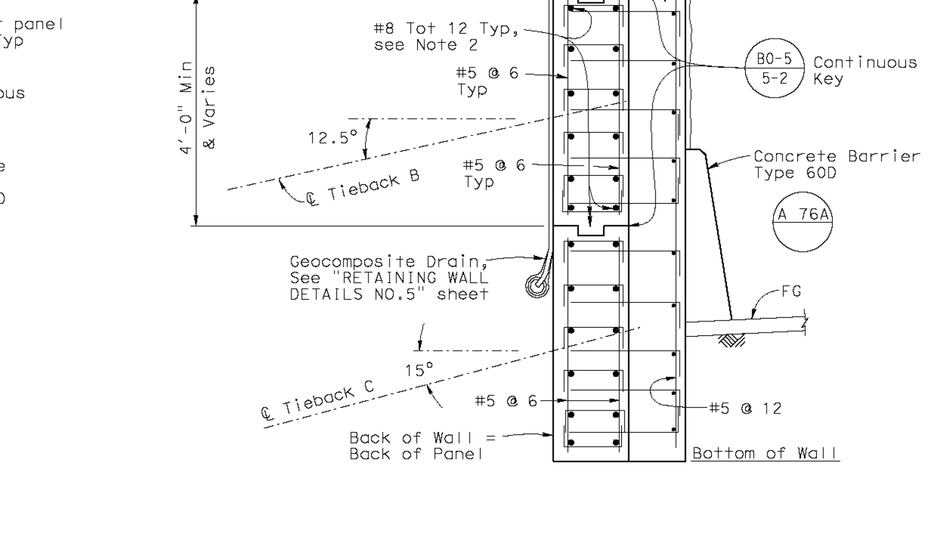

SECTION B-B

¾" = 1'-0"

Sta 10+45.08 To Sta 10+51.25
Sta 11+35.10 To Sta 11+41.19

Notes:

1. Where OG at back of panel is above the bottom of the concrete gutter, keep the top of the panel at bottom of gutter elevation.
2. Extend 5' beyond vertical Const Jt, see "STRUCTURE PLAN NO. 1 & 2" sheets. Place to avoid formed holes for tiebacks.
3. For location of "SECTION A-A", "SECTION B-B" and "SECTION C-C", see "STRUCTURE PLAN NO. 1 & 2" sheets.

* - Bottom of gutter Elev may vary from bottom of haunch

SECTION A-A

¾" = 1'-0"

Sta 10+00.00 To Sta 10+45.08
Sta 11+41.19 To Sta 12+08.36

Retaining Wall Type 1 (Mod) For details not shown see Std Plan B3-1

NOTE:
THE CONTRACTOR SHALL VERIFY ALL CONTROLLING FIELD DIMENSIONS BEFORE ORDERING OR FABRICATING ANY MATERIAL.

	BY	CHECKED
DESIGN	Eric Watson	P. Vijitakula
DETAILS	Jie Tang	P. Vijitakula
QUANTITIES	D.Sessions/V.Shostak	E.Watson/K.Lee

STATE OF CALIFORNIA
DEPARTMENT OF TRANSPORTATION

DIVISION OF ENGINEERING SERVICES
STRUCTURE DESIGN
DESIGN BRANCH 1

BRIDGE NO. 24E0013
POST MILE 29.02

DEL PASO ROAD OC RETAINING WALL

TYPICAL WALL SECTIONS

STRUCTURES DESIGN DETAIL SHEET (ENGLISH) (REV. 10/25/05)

ORIGINAL SCALE IN INCHES FOR REDUCED PLANS 0 1 2 3

CU 03
EA 1F1801

DISREGARD PRINTS BEARING EARLIER REVISION DATES

REVISION DATES: 04/29/10 05/05/10 7/1/10 7/13/10 7/15/10 7/21/10

SHEET 6 OF 16

FILE => 24e0013-d-ts01.dgn

USERNAME => BHuddles DATE PLOTTED => 22-JUL-2010 TIME PLOTTED => 15:25

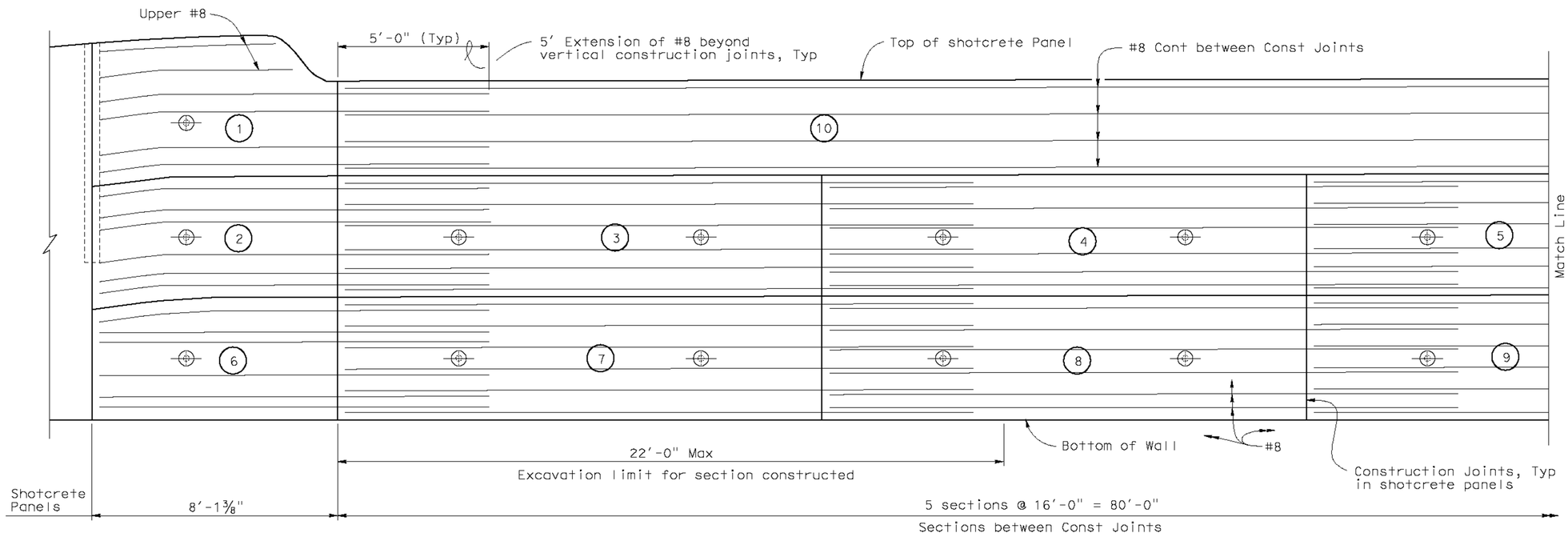

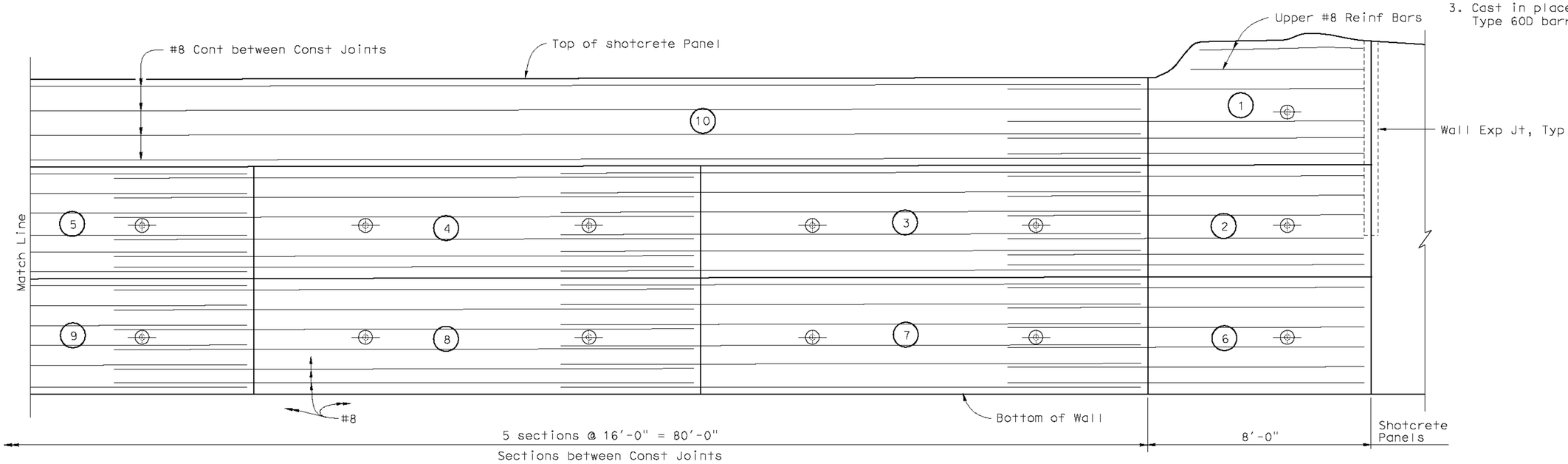

NOTE:
THE CONTRACTOR SHALL VERIFY ALL CONTROLLING FIELD DIMENSIONS BEFORE ORDERING OR FABRICATING ANY MATERIAL.

ELEVATION

½" = 1'-0"

DIST	COUNTY	ROUTE	POST MILES TOTAL PROJECT	SHEET NO	TOTAL SHEETS
03	Sac	5	28.8/29.5	56	65

Eric Watson 7/22/10
REGISTERED CIVIL ENGINEER DATE

3-21-11
PLANS APPROVAL DATE

REGISTERED PROFESSIONAL ENGINEER — Eric Watson No. 64273 Exp. 6-30-11 CIVIL — STATE OF CALIFORNIA

The State of California or its officers or agents shall not be responsible for the accuracy or completeness of electronic copies of this plan sheet.

To get to the Caltrans web site, go to: http://www.dot.ca.gov

Notes:

1. Construct panels in a sequence such that the maximum length of excavation does not exceed 22'-0", once panel is complete and tiebacks locked off the adjacent excavation can be made. Construct panels in the order in which they are numbered.

   (X) - Denotes panel number

2. See "RETAINING WALL DETAILS NO. 2" for other "WALL CONSTRUCTION SEQUENCE" notes.

3. Cast in place facing wall joints and Type 60D barrier not shown.

	BY	CHECKED
DESIGN	Eric Watson	P. Vijitakula
DETAILS	Jie Tang	P. Vijitakula
QUANTITIES	D.Sessions/E.Watson	E.Watson/K.Lee

STATE OF CALIFORNIA
DEPARTMENT OF TRANSPORTATION

DIVISION OF ENGINEERING SERVICES
STRUCTURE DESIGN
DESIGN BRANCH 1

BRIDGE NO. 24E0013
POST MILE 29.02

DEL PASO ROAD OC RETAINING WALL
RETAINING WALL DETAILS NO. 1

STRUCTURES DESIGN DETAIL SHEET (ENGLISH) (REV. 10/25/05)

ORIGINAL SCALE IN INCHES FOR REDUCED PLANS 0 1 2 3

CU 03
EA 1F1801

DISREGARD PRINTS BEARING EARLIER REVISION DATES →

REVISION DATES										SHEET	OF
05/06/10	7/8/10	7/15/10	7/22/10							7	16

FILE => 24e0013-g-dt01.dgn

USERNAME => BHuddles DATE PLOTTED => 22-JUL-2010 TIME PLOTTED => 15:25

DIST	COUNTY	ROUTE	POST MILES TOTAL PROJECT	SHEET NO	TOTAL SHEETS
03	Sac	5	28.8/29.5	57	65

Eric Watson 7/22/10
REGISTERED CIVIL ENGINEER DATE

3-21-11
PLANS APPROVAL DATE

REGISTERED PROFESSIONAL ENGINEER — Eric Watson No. 64273 Exp. 6-30-11 CIVIL — STATE OF CALIFORNIA

The State of California or its officers or agents shall not be responsible for the accuracy or completeness of electronic copies of this plan sheet.

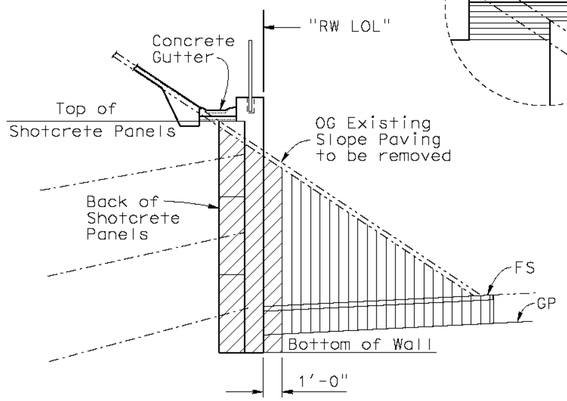

EXCAVATION

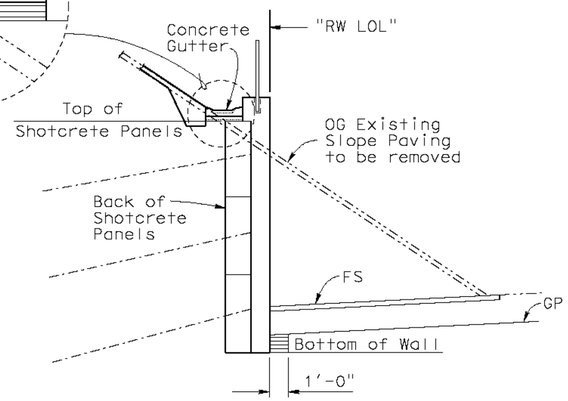

STRUCTURE BACKFILL

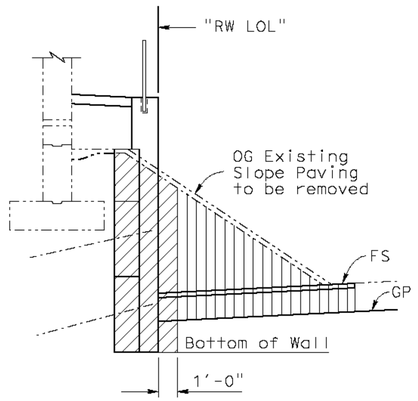

EXCAVATION

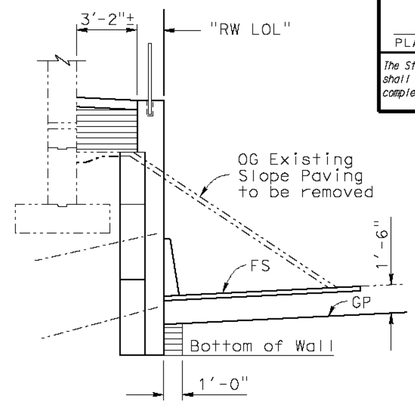

STRUCTURE BACKFILL

LIMIT OF PAYMENT FOR EXCAVATION AND BACKFILL (@ STATION 10+45.08 TO STATION 11+41.19)

NO SCALE

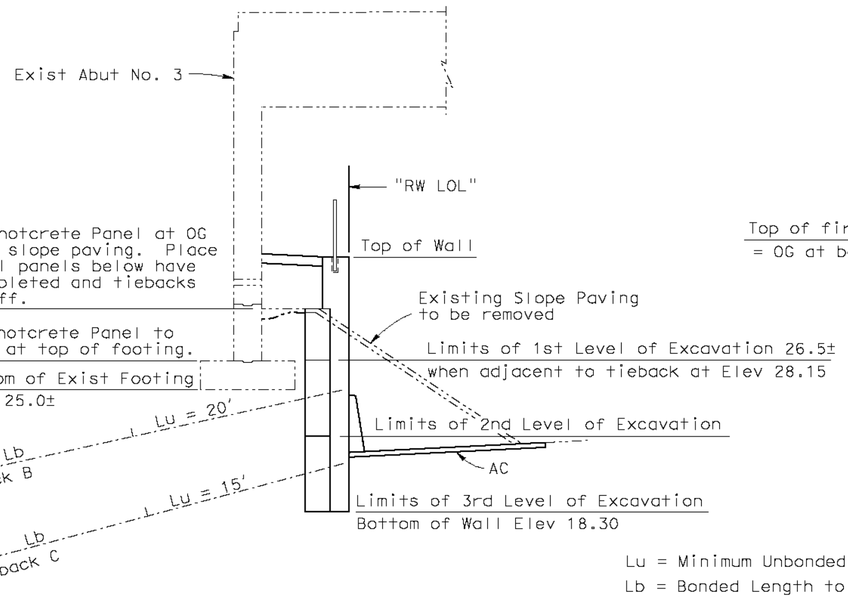

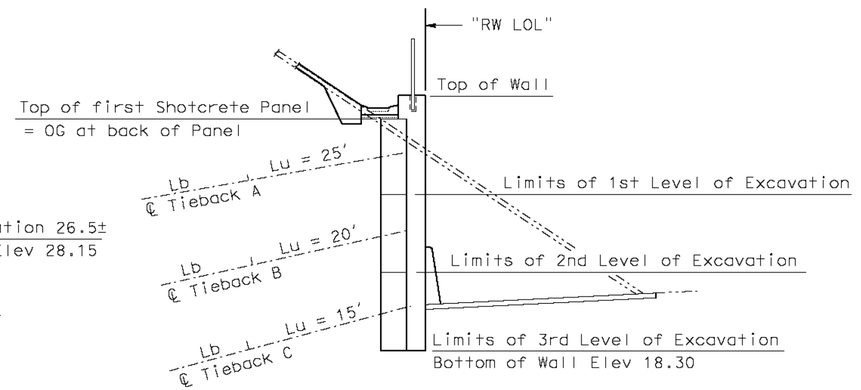

Lu = Minimum Unbonded Length
Lb = Bonded Length to be determined by the contractor

Legend:
- Structure Excavation, Tieback Wall
- Structure Backfill, Tieback Wall
- Roadway Excavation
- Structure Excavation, Retaining Wall
- Structure Backfill, Retaining Wall

NOTE:
THE CONTRACTOR SHALL VERIFY ALL CONTROLLING FIELD DIMENSIONS BEFORE ORDERING OR FABRICATING ANY MATERIAL.

TIEBACK WALL CONSTRUCTION SEQUENCE

NO SCALE

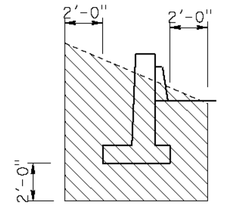

EXCAVATION

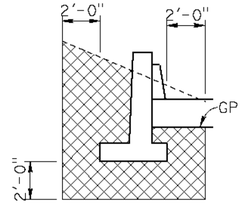

BACKFILL

Remove unsuitable foundation material and replace with Structure Backfill.

OVEREXCAVATION AND BACKFILL (@ STA 11+41.19 TO STA 12+08.36)

NO SCALE

TIEBACK WALL CONSTRUCTION SEQUENCE:

1. Remove existing slope paving.
2. Excavate sequentially to each level shown and install the wall drains, shotcrete panel, and tiebacks for that level. See "RETAINING WALL DETAILS NO. 1" sheet for limits of panel excavation.
3. Tiebacks for each level shall be tensioned and locked off prior to beginning excavation for the next level.
4. When constructing Type 1 wall section adjacent to tieback panel, soil behind tieback panel must be stabilized and remain undisturbed.
5. Install all levels of shotcrete panels prior to placing the cast in place (CIP) concrete facing.

		BY	CHECKED
DESIGN		Eric Watson	P. Vijitakula
DETAILS		Jie Tang	P. Vijitakula
QUANTITIES		D.Sessions/V.Shostak	E.Watson/K.Lee

STATE OF CALIFORNIA
DEPARTMENT OF TRANSPORTATION

DIVISION OF ENGINEERING SERVICES
STRUCTURE DESIGN
DESIGN BRANCH 1

CU 03
EA 1F1801

BRIDGE NO. 24E0013
POST MILE 29.02

DEL PASO ROAD OC RETAINING WALL
RETAINING WALL DETAILS NO. 2

STRUCTURES DESIGN DETAIL SHEET (ENGLISH) (REV. 10/25/05)

ORIGINAL SCALE IN INCHES FOR REDUCED PLANS 0 1 2 3

DISREGARD PRINTS BEARING EARLIER REVISION DATES

REVISION DATES								SHEET	OF
05/04/10	05/05/10	7/2/10	7/13/10	7/22/10				8	16

CU 03
EA 1F1801
FILE => 24e0013-g-dt02.dgn

USERNAME => BHuddles DATE PLOTTED => 22-JUL-2010 TIME PLOTTED => 15:25

DIST	COUNTY	ROUTE	POST MILES TOTAL PROJECT	SHEET NO	TOTAL SHEETS
03	Sac	5	28.8/29.5	58	65

Eric Watson 7/22/10
REGISTERED CIVIL ENGINEER DATE

3-21-11
PLANS APPROVAL DATE

REGISTERED PROFESSIONAL ENGINEER — Eric Watson No. 64273 Exp. 6-30-11 CIVIL — STATE OF CALIFORNIA

The State of California or its officers or agents shall not be responsible for the accuracy or completeness of electronic copies of this plan sheet.

To get to the Caltrans web site, go to: http://www.dot.ca.gov

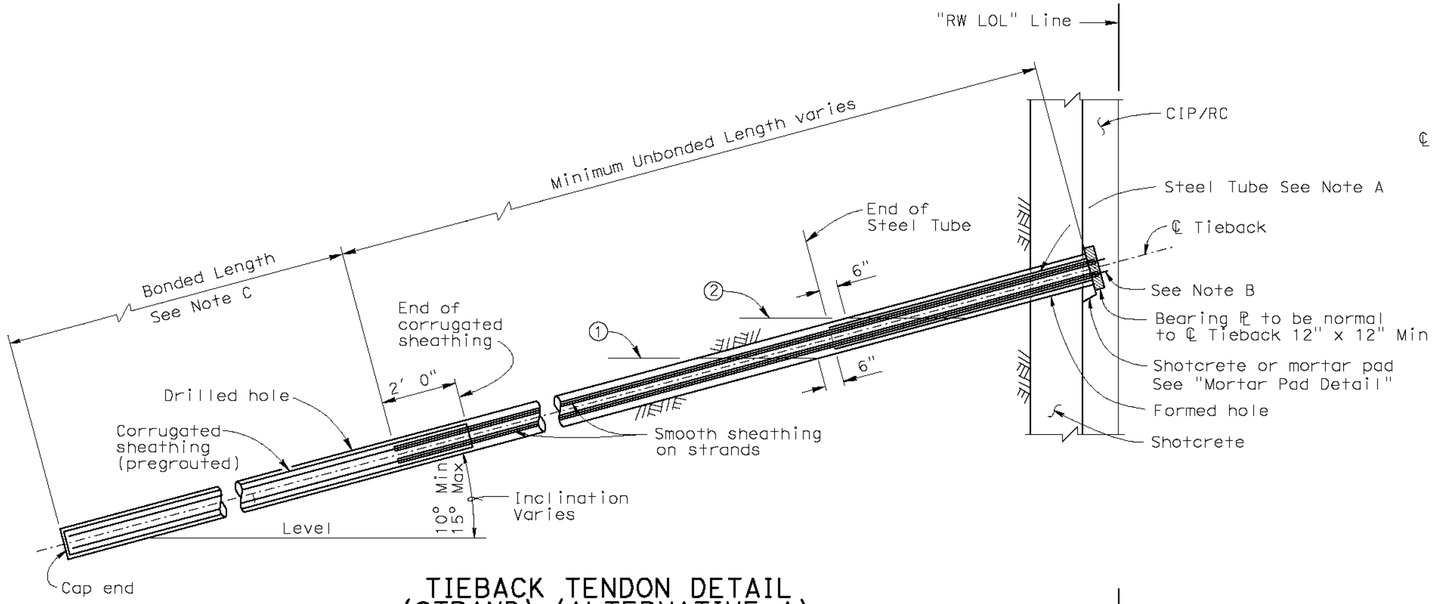

TIEBACK TENDON DETAIL (STRAND)-(ALTERNATIVE A)

NO SCALE

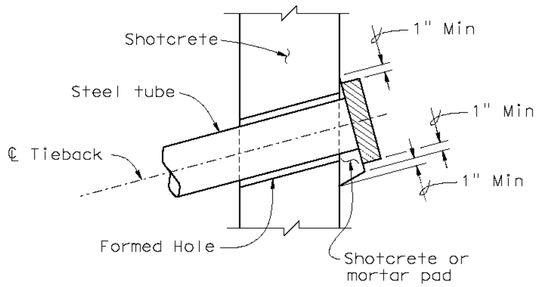

MORTAR PAD DETAIL

NO SCALE

NOTES:

A. Steel tube, Min length = 4', Min thickness = 3/16", welded to bearing plate. Galvanize after fabrication.

B. 2" Min concrete cover over tieback anchorage and tendon.

C. The Bonded Length shall be determined by the Contractor

Legend:

① Level of initial grouting
② Level of secondary grouting
③ Level of initial grouting inside corrugated sheathing

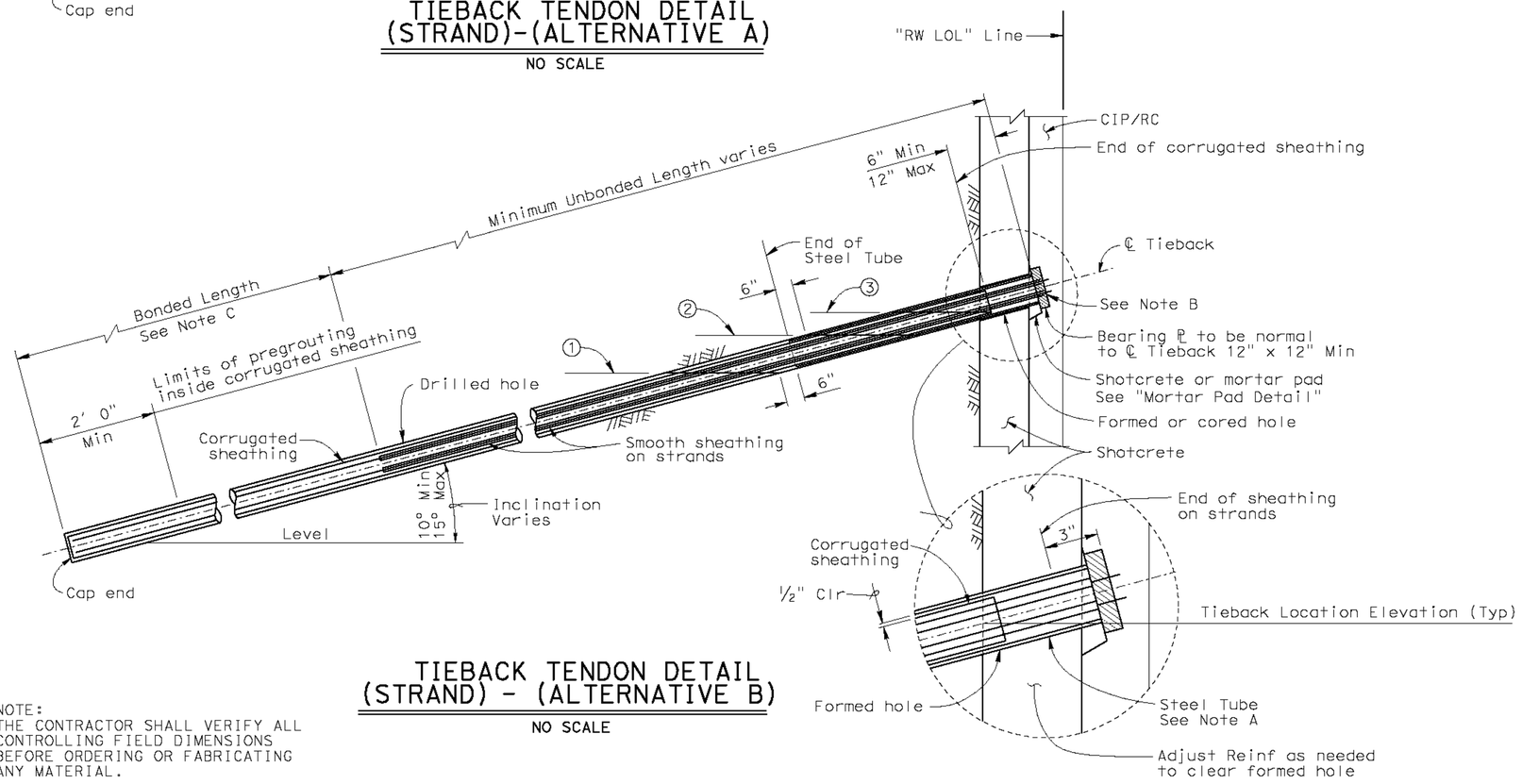

TIEBACK TENDON DETAIL (STRAND) - (ALTERNATIVE B)

NO SCALE

NOTE:
THE CONTRACTOR SHALL VERIFY ALL CONTROLLING FIELD DIMENSIONS BEFORE ORDERING OR FABRICATING ANY MATERIAL.

PRESTRESSING (TIEBACKS)

PRESTRESSING STEEL:
Strands - ASTM designation: A416
T = Design force per Tieback. See Table
f_{pu} = Minimum tensile strength of prestressing steel (kips/in^2)
A_s (Min) = Minimum cross sectional area of prestressing steel in Tieback tendon.

$$A_s \text{ (Min)} = \frac{1.5\ T}{0.75\ f_{pu}}$$

Minimum Shotcrete Strength:
f'_c = 4000 psi at 28 days
f'_{ci} = 3600 psi at time of stressing of tendons

Table of Design Forces in Tiebacks	
Station Limits	Tieback Design Force T kips
Tieback A	T = 100 kips
Tieback B	T = 125 kips
Tieback C	T = 100 kips

	BY	CHECKED
DESIGN	Eric Watson	P. Vijitakula
DETAILS	Jie Tang	P. Vijitakula
QUANTITIES	D.Sessions/V.Shostak	E.Watson/K.Lee

STATE OF CALIFORNIA
DEPARTMENT OF TRANSPORTATION

DIVISION OF ENGINEERING SERVICES
STRUCTURE DESIGN
DESIGN BRANCH 1

BRIDGE NO. 24E0013
POST MILE 29.02

RETAINING WALL 1
RETAINING WALL DETAILS NO. 3

STRUCTURES DESIGN DETAIL SHEET (ENGLISH) (REV. 10/25/05)

ORIGINAL SCALE IN INCHES FOR REDUCED PLANS 0 1 2 3

CU 03
EA 1F1801

DISREGARD PRINTS BEARING EARLIER REVISION DATES →

REVISION DATES: 04/23/10 | 05/05/10 | 07/01/10 | 07/13/10 | 07/21/10

SHEET 9 OF 16

FILE => 24e0013-g-dt03.dgn

USERNAME => BHudgles DATE PLOTTED => 22-JUL-2010 TIME PLOTTED => 15:26

DIST	COUNTY	ROUTE	POST MILES TOTAL PROJECT	SHEET NO	TOTAL SHEETS
03	Sac	5	28.8/29.5	59	65

Eric Watson 7/22/10
REGISTERED CIVIL ENGINEER DATE

3-21-11
PLANS APPROVAL DATE

REGISTERED PROFESSIONAL ENGINEER — Eric Watson No. 64273 Exp. 6-30-11 CIVIL — STATE OF CALIFORNIA

The State of California or its officers or agents shall not be responsible for the accuracy or completeness of electronic copies of this plan sheet.

To get to the Caltrans web site, go to: http://www.dot.ca.gov

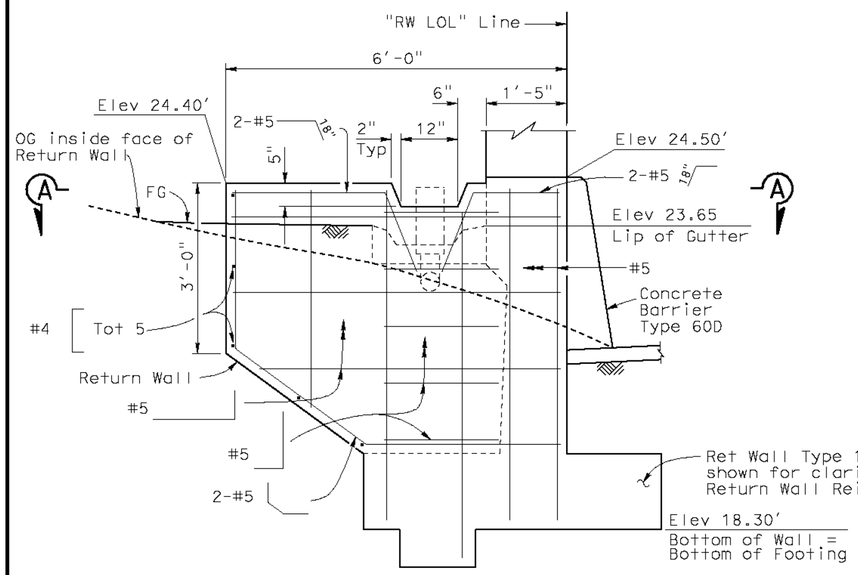

RETURN WALL ELEVATION AT BEGIN WALL

3/4" = 1'-0"

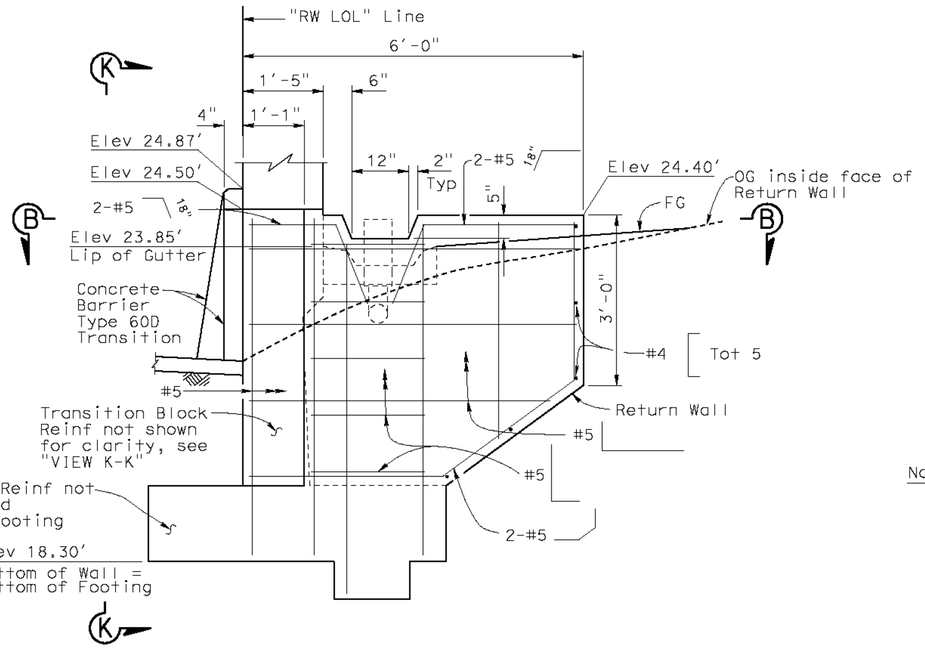

RETURN WALL ELEVATION AT END WALL

3/4" = 1'-0"

Notes:

1. Reinforcement for barrier is omitted for clarity.
2. For wall drain with pipe dome detail, see "RETAINING WALL DETAILS NO. 5" sheet.

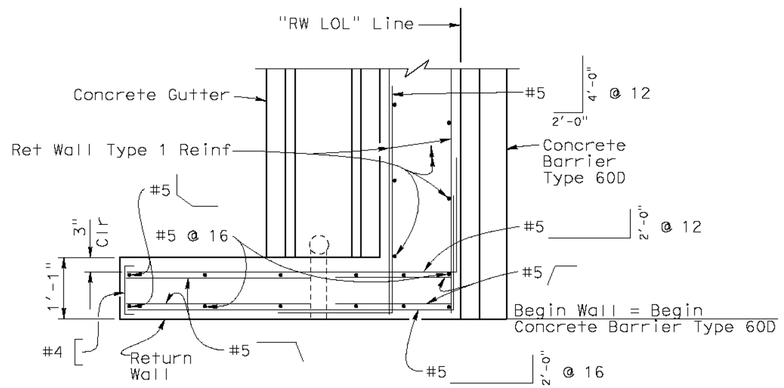

SECTION A-A

3/4" = 1'-0"

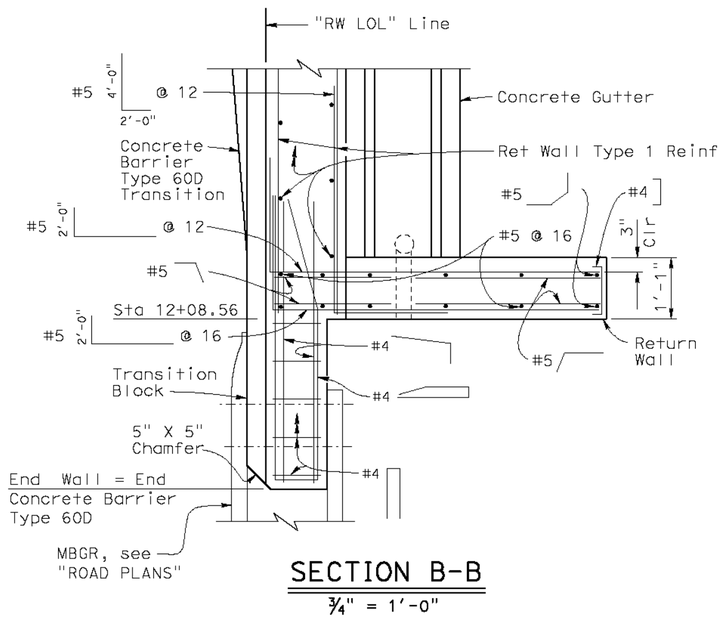

SECTION B-B

3/4" = 1'-0"

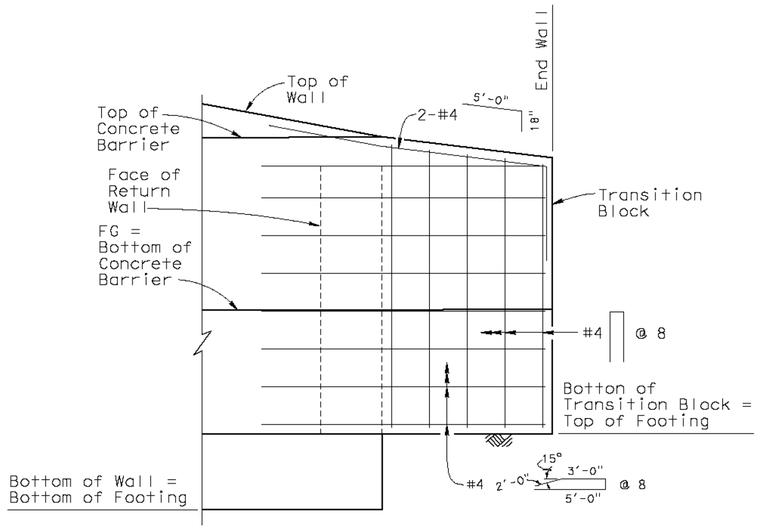

VIEW K-K

3/4" = 1'-0"

NOTE:
THE CONTRACTOR SHALL VERIFY ALL CONTROLLING FIELD DIMENSIONS BEFORE ORDERING OR FABRICATING ANY MATERIAL.

DESIGN	BY Eric Watson	CHECKED P. Vijitakula	
DETAILS	BY Jie Tang	CHECKED P. Vijitakula	
QUANTITIES	BY D.Sessions/V.Shostak	CHECKED E.Watson/K.Lee	

STATE OF CALIFORNIA
DEPARTMENT OF TRANSPORTATION

DIVISION OF ENGINEERING SERVICES
STRUCTURE DESIGN
DESIGN BRANCH 1

BRIDGE NO. 24E0013
POST MILE 29.02

DEL PASO ROAD OC RETAINING WALL
RETAINING WALL DETAILS NO. 4

STRUCTURES DESIGN DETAIL SHEET (ENGLISH) (REV. 10/25/05)

ORIGINAL SCALE IN INCHES FOR REDUCED PLANS 0 1 2 3

CU 03
EA 1F1801

DISREGARD PRINTS BEARING EARLIER REVISION DATES

REVISION DATES										SHEET	OF
04/27/10	05/05/10	07/01/10	07/22/10							10	16

FILE => 24e0013-g-dt04.dgn

USERNAME => BHuddles DATE PLOTTED => 22-JUL-2010 TIME PLOTTED => 15:26

DIST	COUNTY	ROUTE	POST MILES TOTAL PROJECT	SHEET NO	TOTAL SHEETS
03	Sac	5	28.8/29.5	60	65

Eric Watson 7/22/10
REGISTERED CIVIL ENGINEER DATE

3-21-11
PLANS APPROVAL DATE

REGISTERED PROFESSIONAL ENGINEER — Eric Watson No. 64273 Exp. 6-30-11 CIVIL — STATE OF CALIFORNIA

The State of California or its officers or agents shall not be responsible for the accuracy or completeness of electronic copies of this plan sheet.

To get to the Caltrans web site, go to: http://www.dot.ca.gov

GUTTER DRAIN DETAILS

1" = 1'-0"

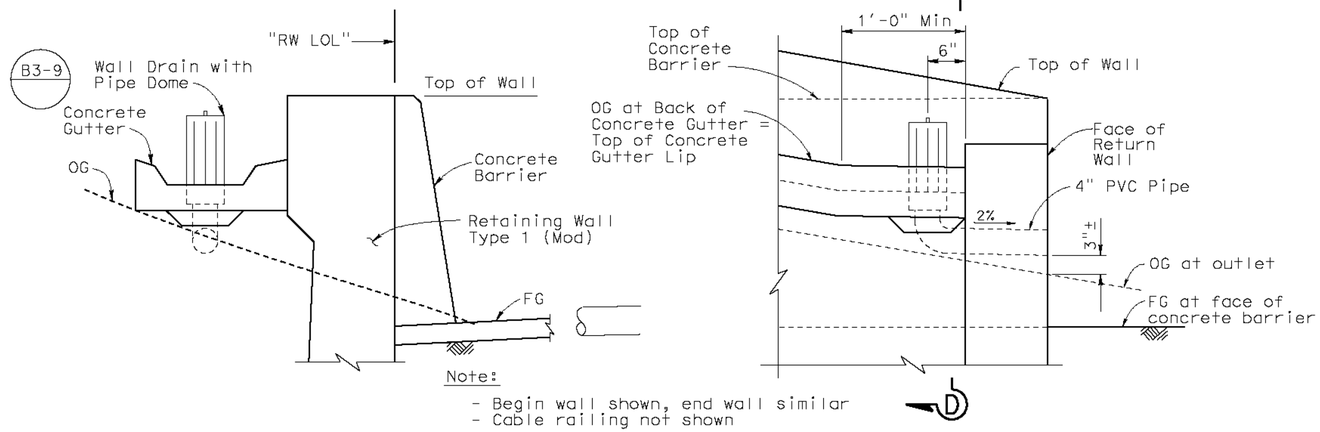

SECTION D-D

REAR ELEVATION

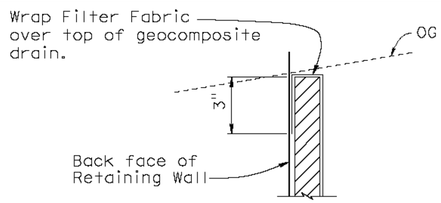

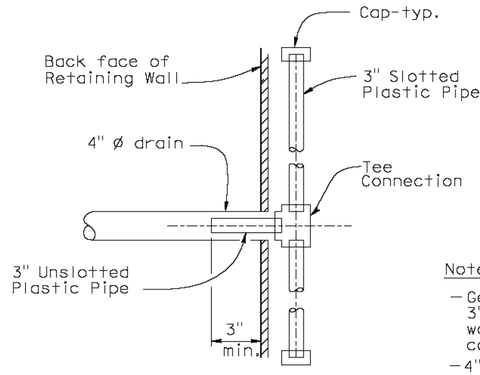

SECTION A-A

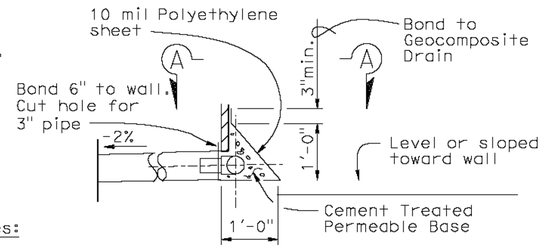

Notes:

- Geocomposite drain, cement treated permeable base, and 3"ø slotted plastic pipe continuous behind retaining wall. Cap ends of pipe. Provide "Tee" connection at each 4" ø drain.
- 4" ø drains at 25' max center to center located 3"± above finished grade at face of concrete barrier.

GEOCOMPOSITE DRAIN DETAILS

NO SCALE

ALTERNATIVE TO BRIDGE DETAIL — BO-3 / 3-1

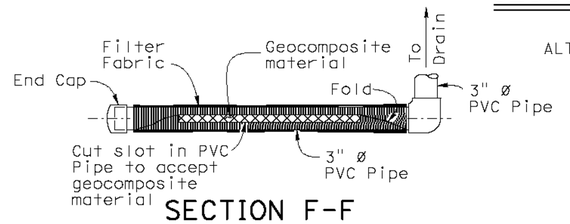

SECTION F-F

NO SCALE

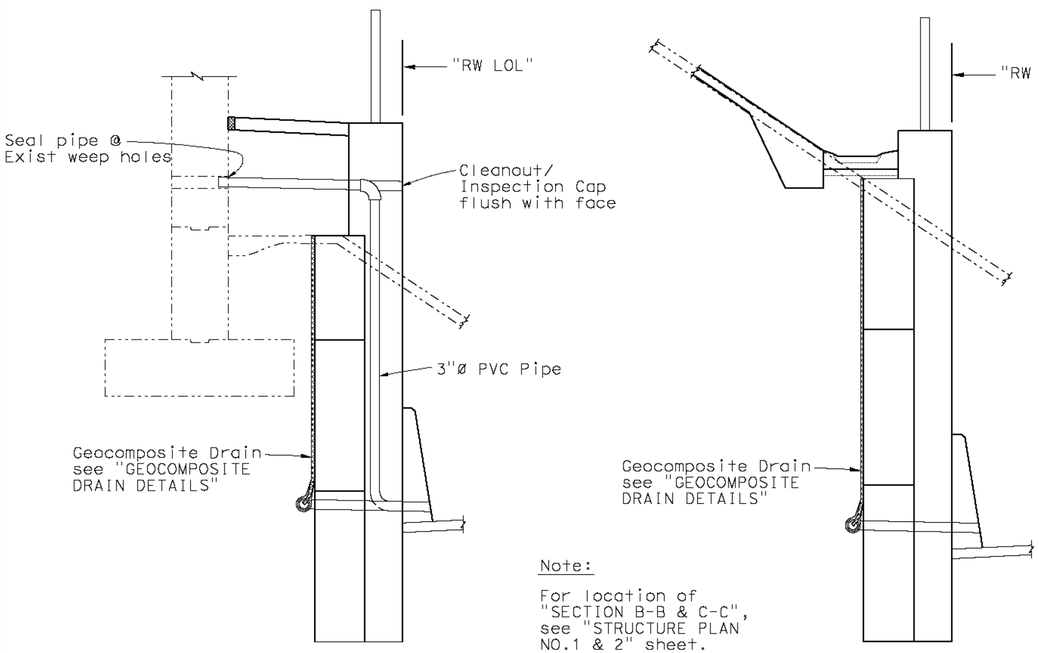

SECTION C-C

½" = 1'-0"

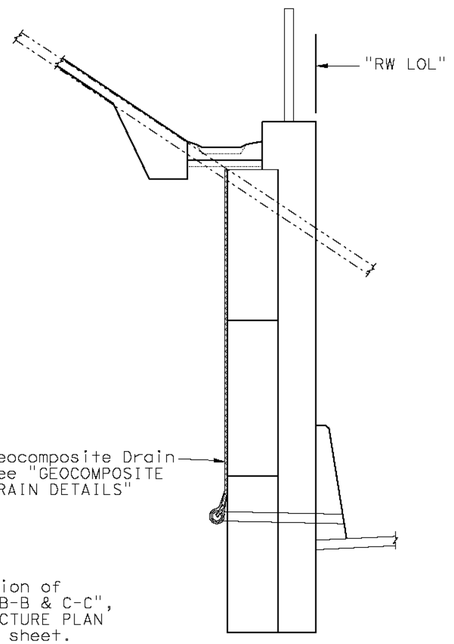

Note:

For location of "SECTION B-B & C-C", see "STRUCTURE PLAN NO.1 & 2" sheet.

SECTION B-B

½" = 1'-0"

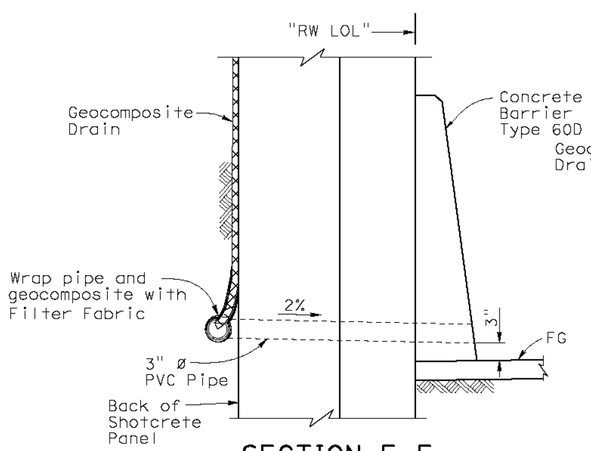

SECTION E-E

1" = 1'-0"

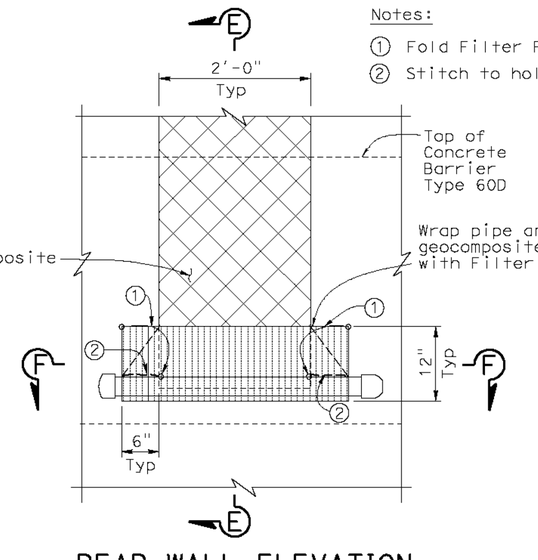

Notes:

① Fold Filter Fabric over.
② Stitch to hold in place.

REAR WALL ELEVATION

1" = 1'-0"

NOTE:
THE CONTRACTOR SHALL VERIFY ALL CONTROLLING FIELD DIMENSIONS BEFORE ORDERING OR FABRICATING ANY MATERIAL.

DESIGN	BY Eric Watson	CHECKED P.Viji-Takula	STATE OF CALIFORNIA DEPARTMENT OF TRANSPORTATION	DIVISION OF ENGINEERING SERVICES STRUCTURE DESIGN DESIGN BRANCH 1	BRIDGE NO. 24E0013	DEL PASO ROAD OC RETAINING WALL	
DETAILS	BY Jie Tang	CHECKED P.Viji-Takula			POST MILE 29.02	RETAINING WALL DETAILS NO. 5	
QUANTITIES	BY X	CHECKED X					

STRUCTURES DESIGN DETAIL SHEET (ENGLISH) (REV. 10/25/05)

ORIGINAL SCALE IN INCHES FOR REDUCED PLANS 0 1 2 3

CU 03
EA 1F1801

DISREGARD PRINTS BEARING EARLIER REVISION DATES

REVISION DATES: 04/30/10 05/28/10 07/01/10

SHEET 11 OF 16

FILE => 24e0013-g-dt05.dgn

USERNAME => BHuddles DATE PLOTTED => 22-JUL-2010 TIME PLOTTED => 15:26

DIST.	COUNTY	ROUTE	POST MILES TOTAL PROJECT	SHEET NO.	TOTAL SHEETS
03	Sac	80	28.8/29.5	61	65

Caltrans Metric

Eric Watson 7/22/10
REGISTERED ENGINEER - CIVIL

3-21-11
PLANS APPROVAL DATE

REGISTERED PROFESSIONAL ENGINEER — Eric Watson No. 64273 Exp. 6-30-11 CIVIL — STATE OF CALIFORNIA

The State of California or its officers or agents shall not be responsible for the accuracy or completeness of electronic copies of this plan sheet.

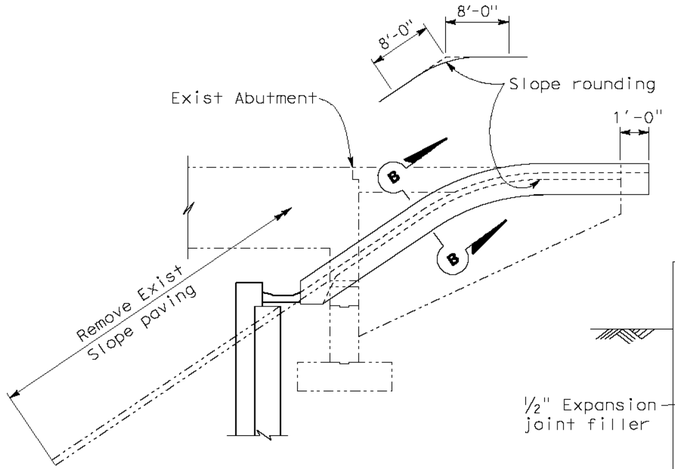

EXISTING WINGWALL ELEVATION

2

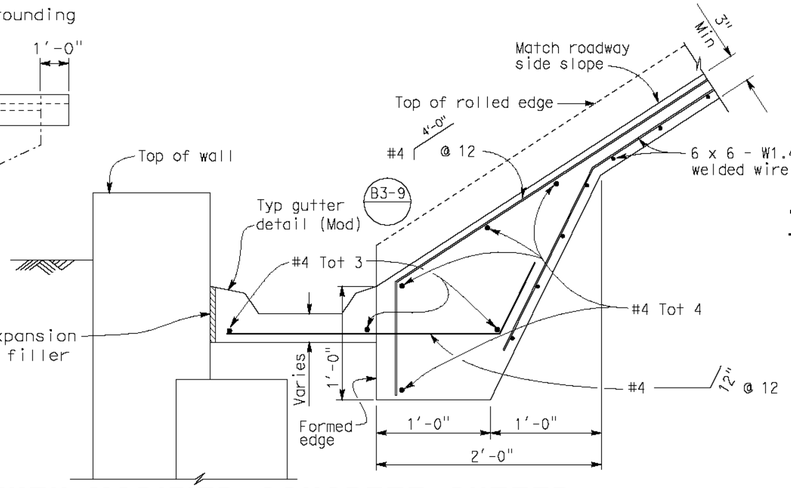

WITH MODIFIED CONCRETE GUTTER

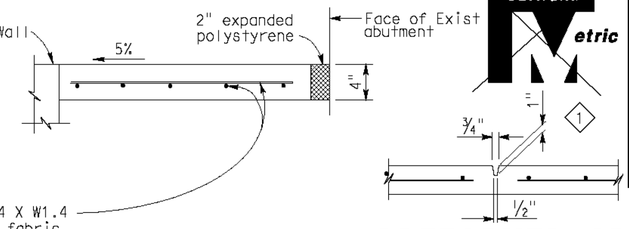

PREFORMED GROOVE

THROUGH ABUTMENT

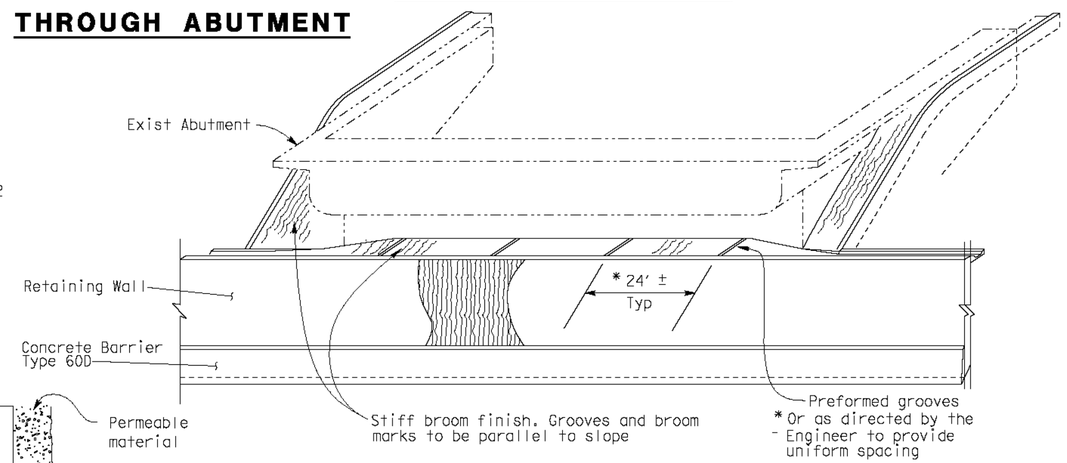

Note: For actual limits of slope paving on this project, see sketch below.

PART TYPICAL SECTION - CONCRETE PAVING

2

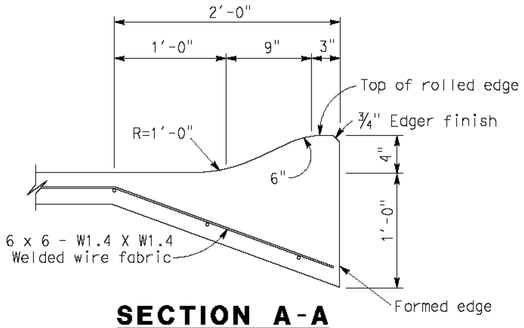

SECTION A-A

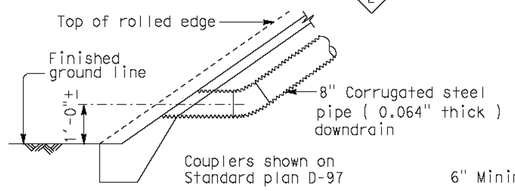

TYPICAL - NO CURB

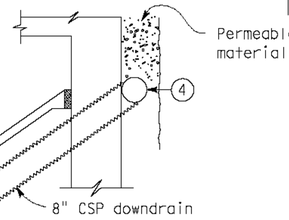

TYPICAL - DRAIN CONNECTION

PICTORIAL VIEW OF TYPICAL INSTALLATION

2

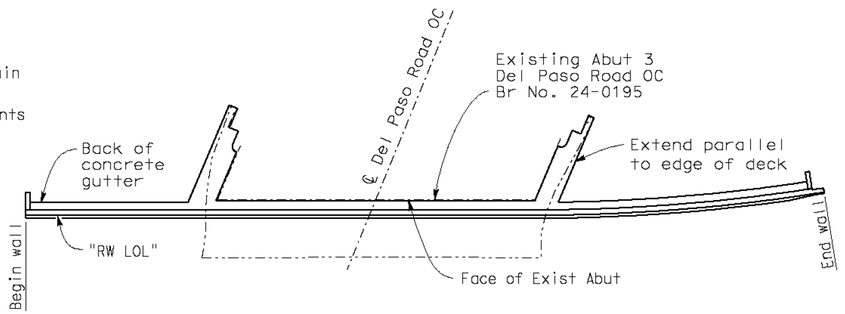

LIMITS OF SLOPE PAVING

NO SCALE

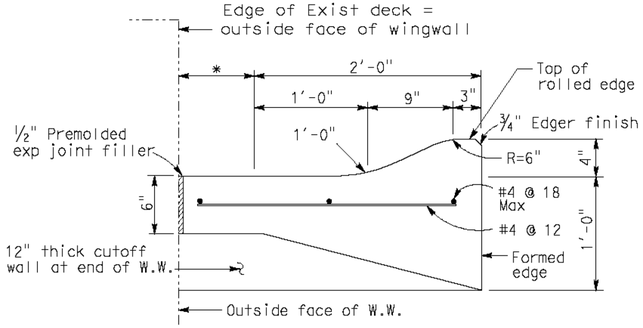

SECTION B-B

2

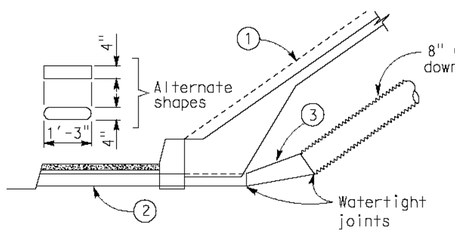

TYPICAL - WITH SIDEWALK

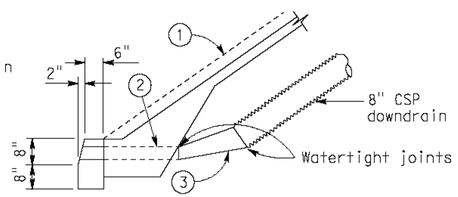

TYPICAL - WITH CURB

DRAINAGE DETAILS

Note: Drainage details are only applicable when B0-3 3-5 is indicated on detail sheets.

NOTE:
THE CONTRACTOR SHALL VERIFY ALL CONTROLLING FIELD DIMENSIONS BEFORE ORDERING OR FABRICATING ANY MATERIAL.

*This dimension becomes zero when edge of deck is at outside face of W.W.

(1) Top of rolled edge

(2) Conduit: 0.064" galv corrugated steel or 0.109" smooth galv steel

(3) Taper: 0.064" / 0.109" smooth galv steel

(4) 4" Perforated steel pipe (0.064" thick) underdrain behind abutment. Connect to downdrain as shown on limits of Slope Paving & Drainage layout.

SPECIAL DETAILS

STANDARD DRAWING				
RELEASE DATE Revised	DESIGN	BY	CHECKED	RELEASED BY
FILE NO. xs4-210	DETAILS	BY R. YEE	CHECKED	Roberto Anolli OFFICE CHIEF
	SUBMITTED	BY C.W. PURKISS	DRAWING DATE 3/89	

DS OSD 2147A (METRIC) (REV. 2/25/97)

1 Dimensions converted from SI to English.
2 Modified Detail

ORIGINAL SCALE IN MILLIMETERS FOR REDUCED PLANS 0 10 20 30 40 50 60 70 80 90 100

STATE OF CALIFORNIA DEPARTMENT OF TRANSPORTATION

DIVISION OF ENGINEERING SERVICES

CU 03
EA 1F1801

BRIDGE NO.	DEL PASO ROAD OC RETAINING WALL
24E0013	
POST MILE 29.02	SLOPE PAVING - FULL SLOPE

DISREGARD PRINTS BEARING EARLIER REVISION DATES →

REVISION DATES (PRELIMINARY STAGE ONLY)											SHEET	OF
05/04/10											12	16

USERNAME => BHuddles

DATE PLOTTED => 22-JUL-2010 TIME PLOTTED => 15:26

24e0013-u-slop.dgn

DIST	COUNTY	ROUTE	POST MILES TOTAL PROJECT	SHEET NO	TOTAL SHEETS
03	Sac	5	28.8/29.5	62	65

William Webster 7-16-10
CERTIFIED ENGINEERING GEOLOGIST

3-21-11
PLANS APPROVAL DATE

The State of California or its officers or agents shall not be responsible for the accuracy or completeness of electronic copies of this plan sheet.

PROFESSIONAL GEOLOGIST
William Webster
No. 2485
Exp. 02-28-11
CERTIFIED ENGINEERING GEOLOGIST
STATE OF CALIFORNIA

This LOTB sheet was prepared in accordance with the Caltrans Soil & Rock Logging, Classification, & Presentation Manual (June 2007).

BENCH MARK

SAC 5 28.95 (Not Shown On Plan)
CADT Brass Disk In Conc/Pipe
93.35 Ft Rt Rte 5 ℄
Sta 233+79.02
N 2,000,615.29
E 6,695,259.41
Elev = 19.93'

SAC 5 29.30 (Not Shown On Plan)
CADT Brass Disk In Conc/Pipe
102.06 Ft Rt Rte 5 ℄
Sta 252+36.00
N 2,002,323.29
E 6,694,529.96
Elev = 20.05

NGVD29

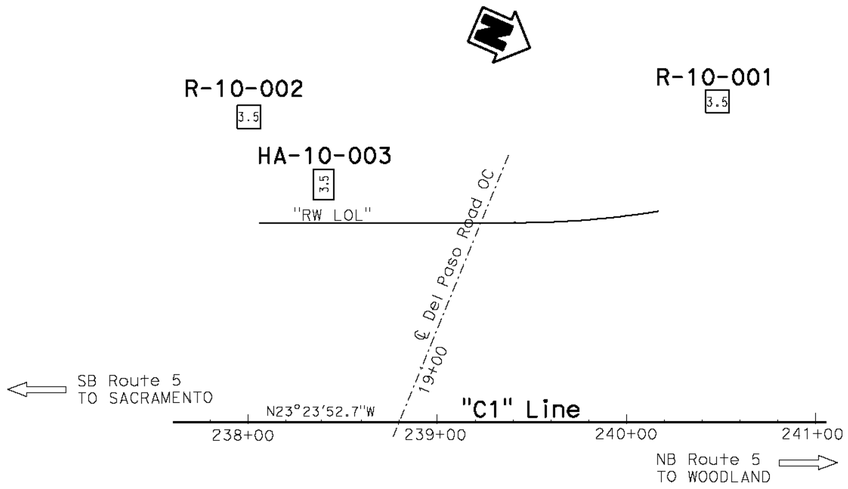

PLAN
1" = 40'

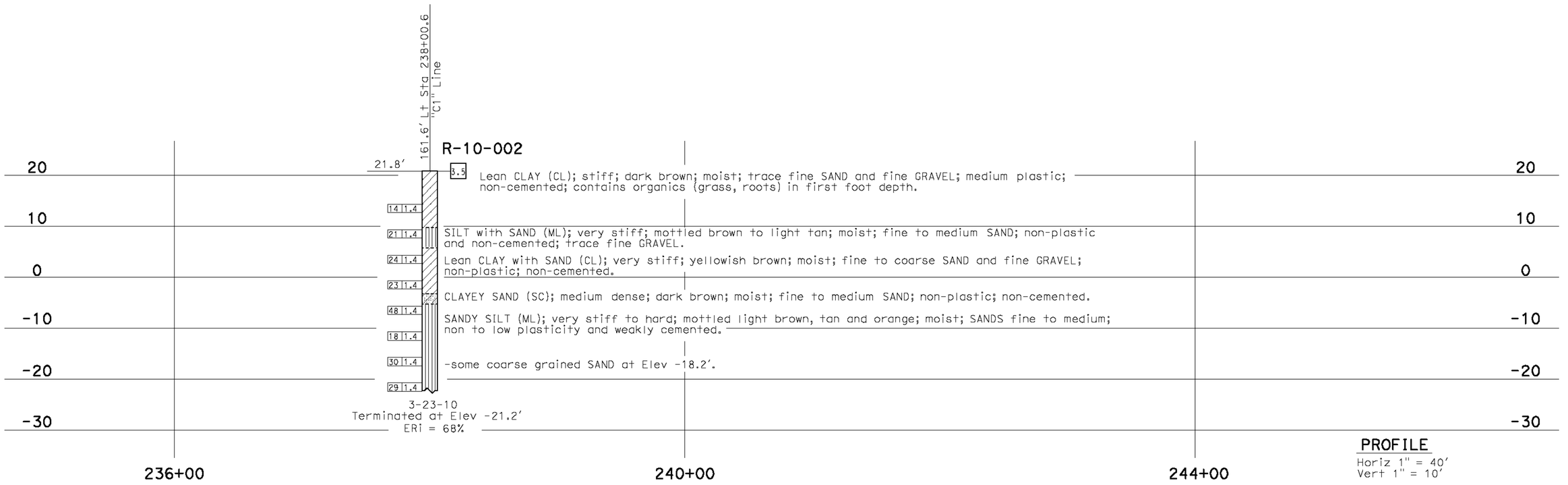

PROFILE
Horiz 1" = 40'
Vert 1" = 10'

ENGINEERING SERVICES		GEOTECHNICAL SERVICES		STATE OF CALIFORNIA DEPARTMENT OF TRANSPORTATION	DIVISION OF ENGINEERING SERVICES STRUCTURE DESIGN	BRIDGE NO.	DEL PASO ROAD OC RETAINING WALL
FUNCTIONAL SUPERVISOR	DRAWN BY: F. Nguyen 7/10	FIELD INVESTIGATION BY:			DESIGN BRANCH	24E0013	
NAME: D. Brittsan	CHECKED BY: J. Martin	B. Webster				POST MILES 29.2	LOG OF TEST BORINGS 1 OF 4

OGS CIVIL LOG OF TEST BORINGS SHEET

ORIGINAL SCALE IN INCHES FOR REDUCED PLANS 0 1 2 3

CU 03
EA 1F1801

DISREGARD PRINTS BEARING EARLIER REVISION DATES

REVISION DATES: 07-08-10 | 01-12-10 | 07-16-10

SHEET 13 OF 16

FILE => 24e0013-z-ltb01.dgn

USERNAME => BHuddles DATE PLOTTED => 22-JUL-2010 TIME PLOTTED => 15:27

DIST	COUNTY	ROUTE	POST MILES TOTAL PROJECT	SHEET NO	TOTAL SHEETS
03	Sac	5	28.8/29.5	63	65

William Webster 7-16-10
CERTIFIED ENGINEERING GEOLOGIST

PROFESSIONAL GEOLOGIST
William Webster
No. 2485
Exp. 02-28-11
CERTIFIED ENGINEERING GEOLOGIST
STATE OF CALIFORNIA

3-21-11
PLANS APPROVAL DATE

The State of California or its officers or agents shall not be responsible for the accuracy or completeness of electronic copies of this plan sheet.

This LOTB sheet was prepared in accordance with the Caltrans Soil & Rock Logging, Classification, & Presentation Manual (June 2007).

FOR PLAN VIEW, SEE
"LOG OF TEST BORINGS" 1 OF 4

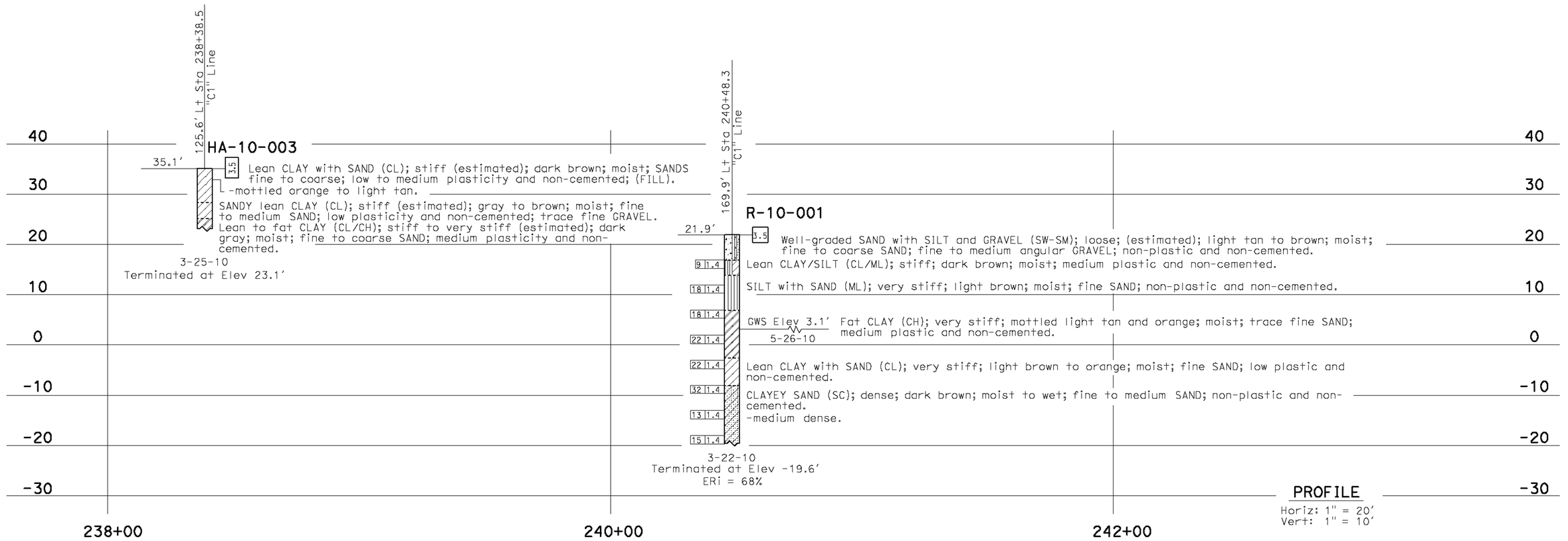

PROFILE
Horiz: 1" = 20'
Vert: 1" = 10'

ENGINEERING SERVICES		GEOTECHNICAL SERVICES		STATE OF CALIFORNIA DEPARTMENT OF TRANSPORTATION	DIVISION OF ENGINEERING SERVICES STRUCTURE DESIGN	BRIDGE NO. 24E0013	DEL PASO ROAD OC RETAINING WALL
FUNCTIONAL SUPERVISOR	DRAWN BY: F. Nguyen 7/10	FIELD INVESTIGATION BY:			DESIGN BRANCH	POST MILES 29.2	LOG OF TEST BORINGS 2 OF 4
NAME: D. Brittsan	CHECKED BY: J. Martin	B. Webster					

OGS CIVIL LOG OF TEST BORINGS SHEET	ORIGINAL SCALE IN INCHES FOR REDUCED PLANS 0 1 2 3	CU 03 EA 1F1801	DISREGARD PRINTS BEARING EARLIER REVISION DATES	REVISION DATES 07-08-10 01-12-10 01-16-10	SHEET 14	OF 16

FILE => 24e0013-z-1tb02.dgn

USERNAME => BHuddles DATE PLOTTED => 22-JUL-2010 TIME PLOTTED => 15:27

REFERENCE: CALTRANS SOIL & ROCK LOGGING, CLASSIFICATION, AND PRESENTATION MANUAL (JUNE 2007)

DIST	COUNTY	ROUTE	POST MILES TOTAL PROJECT	SHEET NO	TOTAL SHEETS
03	Sac	5	28.8/29.5	64	65

William Webster 7-16-10
CERTIFIED ENGINEERING GEOLOGIST

PROFESSIONAL GEOLOGIST — William Webster — No. 2485 — Exp. 02-28-11 — CERTIFIED ENGINEERING GEOLOGIST — STATE OF CALIFORNIA

3-21-11
PLANS APPROVAL DATE

The State of California or its officers or agents shall not be responsible for the accuracy or completeness of electronic copies of this plan sheet.

CEMENTATION

Description	Criteria
Weak	Crumbles or breaks with handling or little finger pressure.
Moderate	Crumbles or breaks with considerable finger pressure.
Strong	Will not crumble or break with finger pressure.

BOREHOLE IDENTIFICATION

Symbol	Hole Type	Description
Size	A	Auger Boring
Size	R P	Rotary drilled boring Rotary percussion boring (air)
Size	R	Rotary drilled diamond core
Size	HD HA	Hand driven (1-inch soil tube) Hand Auger
●	D	Dynamic Cone Penetration Boring
▲	CPT	Cone Penetration Test (ASTM D 5778-95)
⬚	O	Other

Note: Size in inches.

CONSISTENCY OF COHESIVE SOILS

Description	Unconfined Compressive Strength (tsf)	Pocket Penetrometer Measurement (tsf)	Torvane Measurement (tsf)	Field Approximation
Very Soft	< 0.25	< 0.25	< 0.12	Easily penetrated several inches by fist
Soft	0.25 to 0.50	0.25 to 0.50	0.12 to 0.25	Easily penetrated several inches by thumb
Medium Stiff	0.50 to 1.0	0.50 to 1.0	0.25 to 0.50	Penetrated several inches by thumb with moderate effort
Stiff	1 to 2	1 to 2	0.50 to 1.0	Readily indented by thumb but penetrated only with great effort
Very Stiff	2 to 4	2 to 4	1.0 to 2.0	Readily indented by thumbnail
Hard	> 4.0	> 4.0	> 2.0	Indented by thumbnail with difficulty

PLASTICITY OF FINE-GRAINED SOILS

Description	Criteria
Nonplastic	A 1/8-inch thread cannot be rolled at any water content.
Low	The thread can barely be rolled and the lump cannot be formed when drier than the plastic limit.
Medium	The thread is easy to roll and not much time is required to reach the plastic limit. The thread cannot be rerolled after reaching the plastic limit. The lump crumbles when drier than the plastic limit.
High	It takes considerable time rolling and kneading to reach the plastic limit. The thread can be rerolled several times after reaching the plastic limit. The lump can be formed without crumbling when drier than the plastic limit.

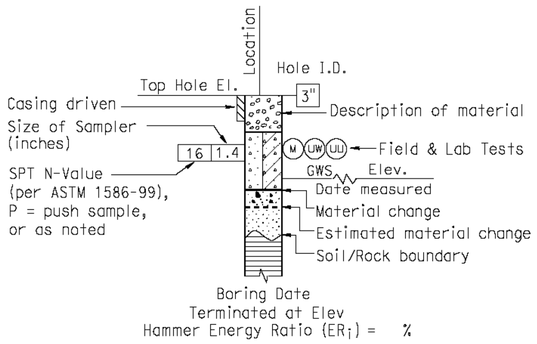

ROTARY BORING

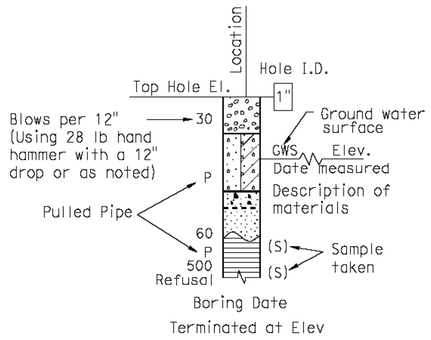

HAND BORING

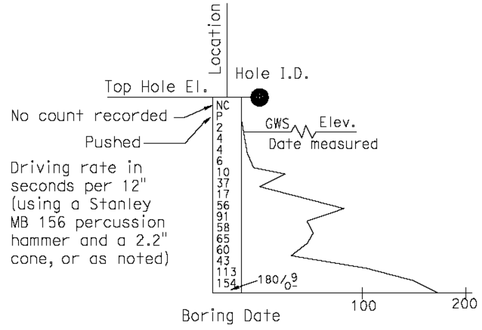

DYNAMIC CONE PENETRATION BORING

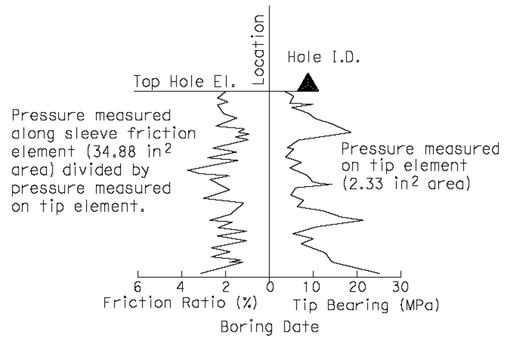

CONE PENETRATION TEST (CPT) SOUNDING

ENGINEERING SERVICES	GEOTECHNICAL SERVICES	STATE OF CALIFORNIA DEPARTMENT OF TRANSPORTATION	DIVISION OF ENGINEERING SERVICES STRUCTURE DESIGN	BRIDGE NO.	DEL PASO ROAD OC RETAINING WALL
	PREPARED BY: F. Nguyen 7/10		DESIGN BRANCH	24E0013 POST MILE 29.2	LOG OF TEST BORINGS 3 OF 4

GS LOTB SOIL LEGEND

ORIGINAL SCALE IN INCHES FOR REDUCED PLANS 0 1 2 3

CU 03
EA 1F1801

DISREGARD PRINTS BEARING EARLIER REVISION DATES →

REVISION DATES

SHEET	OF
15	16

FILE => 24e0013-z-1tb03.dgn

USERNAME => BHuddles DATE PLOTTED => 22-JUL-2010 TIME PLOTTED => 15:27

REFERENCE: CALTRANS SOIL & ROCK LOGGING, CLASSIFICATION, AND PRESENTATION MANUAL (JUNE 2007)

GROUP SYMBOLS AND NAMES

Graphic/Symbol	Group Names	Graphic/Symbol	Group Names
GW	Well-graded GRAVEL Well-graded GRAVEL with SAND	CL	Lean CLAY Lean CLAY with SAND Lean CLAY with GRAVEL SANDY lean CLAY SANDY lean CLAY with GRAVEL GRAVELLY lean CLAY GRAVELLY lean CLAY with SAND
GP	Poorly graded GRAVEL Poorly graded GRAVEL with SAND		
GW-GM	Well-graded GRAVEL with SILT Well-graded GRAVEL with SILT and SAND	CL-ML	SILTY CLAY SILTY CLAY with SAND SILTY CLAY with GRAVEL SANDY SILTY CLAY SANDY SILTY CLAY with GRAVEL GRAVELLY SILTY CLAY GRAVELLY SILTY CLAY with SAND
GW-GC	Well-graded GRAVEL with CLAY (or SILTY CLAY) Well-graded GRAVEL with CLAY and SAND (or SILTY CLAY and SAND)		
GP-GM	Poorly graded GRAVEL with SILT Poorly graded GRAVEL with SILT and SAND	ML	SILT SILT with SAND SILT with GRAVEL SANDY SILT SANDY SILT with GRAVEL GRAVELLY SILT GRAVELLY SILT with SAND
GP-GC	Poorly graded GRAVEL with CLAY (or SILTY CLAY) Poorly graded GRAVEL with CLAY and SAND (or SILTY CLAY and SAND)		
GM	SILTY GRAVEL SILTY GRAVEL with SAND	OL	ORGANIC lean CLAY ORGANIC lean CLAY with SAND ORGANIC lean CLAY with GRAVEL SANDY ORGANIC lean CLAY SANDY ORGANIC lean CLAY with GRAVEL GRAVELLY ORGANIC lean CLAY GRAVELLY ORGANIC lean CLAY with SAND
GC	CLAYEY GRAVEL CLAYEY GRAVEL with SAND		
GC-GM	SILTY, CLAYEY GRAVEL SILTY, CLAYEY GRAVEL with SAND	OL	ORGANIC SILT ORGANIC SILT with SAND ORGANIC SILT with GRAVEL SANDY ORGANIC SILT SANDY ORGANIC SILT with GRAVEL GRAVELLY ORGANIC SILT GRAVELLY ORGANIC SILT with SAND
SW	Well-graded SAND Well-graded SAND with GRAVEL		
SP	Poorly graded SAND Poorly graded SAND with GRAVEL	CH	Fat CLAY Fat CLAY with SAND Fat CLAY with GRAVEL SANDY fat CLAY SANDY fat CLAY with GRAVEL GRAVELLY fat CLAY GRAVELLY fat CLAY with SAND
SW-SM	Well-graded SAND with SILT Well-graded SAND with SILT and GRAVEL		
SW-SC	Well-graded SAND with CLAY (or SILTY CLAY) Well-graded SAND with CLAY and GRAVEL (or SILTY CLAY and GRAVEL)	MH	Elastic SILT Elastic SILT with SAND Elastic SILT with GRAVEL SANDY elastic SILT SANDY elastic SILT with GRAVEL GRAVELLY elastic SILT GRAVELLY elastic SILT with SAND
SP-SM	Poorly graded SAND with SILT Poorly graded SAND with SILT and GRAVEL		
SP-SC	Poorly graded SAND with CLAY (or SILTY CLAY) Poorly graded SAND with CLAY and GRAVEL (or SILTY CLAY and GRAVEL)	OH	ORGANIC fat CLAY ORGANIC fat CLAY with SAND ORGANIC fat CLAY with GRAVEL SANDY ORGANIC fat CLAY SANDY ORGANIC fat CLAY with GRAVEL GRAVELLY ORGANIC fat CLAY GRAVELLY ORGANIC fat CLAY with SAND
SM	SILTY SAND SILTY SAND with GRAVEL		
SC	CLAYEY SAND CLAYEY SAND with GRAVEL	OH	ORGANIC elastic SILT ORGANIC elastic SILT with SAND ORGANIC elastic SILT with GRAVEL SANDY ORGANIC elastic SILT SANDY ORGANIC elastic SILT with GRAVEL GRAVELLY ORGANIC elastic SILT GRAVELLY ORGANIC elastic SILT with SAND
SC-SM	SILTY, CLAYEY SAND SILTY, CLAYEY SAND with GRAVEL		
PT	PEAT	OL/OH	ORGANIC SOIL ORGANIC SOIL with SAND ORGANIC SOIL with GRAVEL SANDY ORGANIC SOIL SANDY ORGANIC SOIL with GRAVEL GRAVELLY ORGANIC SOIL GRAVELLY ORGANIC SOIL with SAND
	COBBLES COBBLES and BOULDERS BOULDERS		

FIELD AND LABORATORY TESTING

- (C) Consolidation (ASTM D 2435)
- (CL) Collapse Potential (ASTM D 5333)
- (CP) Compaction Curve (CTM 216)
- (CR) Corrosivity Testing (CTM 643, CTM 422, CTM 417)
- (CU) Consolidated Undrained Triaxial (ASTM D 4767)
- (DS) Direct Shear (ASTM D 3080)
- (EI) Expansion Index (ASTM D 4829)
- (M) Moisture Content (ASTM D 2216)
- (OC) Organic Content-% (ASTM D 2974)
- (P) Permeability (CTM 220)
- (PA) Particle Size Analysis (ASTM D 422)
- (PI) Plasticity Index (AASHTO T 90) Liquid Limit (AASHTO T 89)
- (PL) Point Load Index (ASTM D 5731)
- (PM) Pressure Meter
- (PP) Pocket Penetrometer
- (R) R-Value (CTM 301)
- (SE) Sand Equivalent (CTM 217)
- (SG) Specific Gravity (AASHTO T 100)
- (SL) Shrinkage Limit (ASTM D 427)
- (SW) Swell Potential (ASTM D 4546)
- (TV) Pocket Torvane
- (UC) Unconfined Compression-Soil (ASTM D 2166) Unconfined Compression-Rock (ASTM D 2938)
- (UU) Unconsolidated Undrained Triaxial (ASTM D 2850)
- (UW) Unit Weight (ASTM D 4767)
- (VS) Vane Shear (AASHTO T 223)

DIST	COUNTY	ROUTE	POST MILES TOTAL PROJECT	SHEET NO	TOTAL SHEETS
03	Sac	5	28.8/29.5	65	65

William Webster 7-16-10
CERTIFIED ENGINEERING GEOLOGIST

3-21-11
PLANS APPROVAL DATE

PROFESSIONAL GEOLOGIST — William Webster No. 2485 Exp. 02-28-11 CERTIFIED ENGINEERING GEOLOGIST — STATE OF CALIFORNIA

The State of California or its officers or agents shall not be responsible for the accuracy or completeness of electronic copies of this plan sheet.

APPARENT DENSITY OF COHESIONLESS SOILS

Description	SPT N_{60} (Blows / 12 inches)
Very loose	0 - 4
Loose	5 - 10
Medium Dense	11 - 30
Dense	31 - 50
Very Dense	> 50

MOISTURE

Description	Criteria
Dry	Absence of moisture, dusty, dry to the touch
Moist	Damp but no visible water
Wet	Visible free water, usually soil is below water table

PERCENT OR PROPORTION OF SOILS

Description	Criteria
Trace	Particles are present but estimated to be less than 5%
Few	5 to 10%
Little	15 to 25%
Some	30 to 45%
Mostly	50 to 100%

PARTICLE SIZE

Description		Size
Boulder		> 12"
Cobble		3" to 12"
Gravel	Coarse	3/4" to 3"
	Fine	No. 4 to 3/4"
Sand	Coarse	No. 10 to No. 4
	Medium	No. 40 to No. 10
	Fine	No. 200 to No. 40

ENGINEERING SERVICES	GEOTECHNICAL SERVICES	STATE OF CALIFORNIA DEPARTMENT OF TRANSPORTATION	DIVISION OF ENGINEERING SERVICES STRUCTURE DESIGN	BRIDGE NO. 24E0013	DEL PASO ROAD OC RETAINING WALL
	PREPARED BY: F. Nguyen 7/10		DESIGN BRANCH	POST MILE 29.2	LOG OF TEST BORINGS 4 OF 4

GS LOTB SOIL LEGEND

ORIGINAL SCALE IN INCHES FOR REDUCED PLANS 0 1 2 3

CU 03 EA 1F1801

DISREGARD PRINTS BEARING EARLIER REVISION DATES →

REVISION DATES

SHEET 16 OF 16

FILE => 24e0013-z-1tb04.dgn

USERNAME => BHuddles DATE PLOTTED => 22-JUL-2010 TIME PLOTTED => 15:27