Dist	COUNTY	ROUTE	POST MILES TOTAL PROJECT	SHEET No.	TOTAL SHEETS
03	Sac	99	0.1/12.0	1	73

STATE OF CALIFORNIA
DEPARTMENT OF TRANSPORTATION

PROJECT PLANS FOR CONSTRUCTION ON
STATE HIGHWAY

IN SACRAMENTO COUNTY NEAR GALT FROM 0.1 MILE SOUTH OF CRYSTAL WAY TO 1.9 MILES NORTH OF GRANT LINE ROAD

TO BE SUPPLEMENTED BY STANDARD PLANS DATED MAY 2006

INDEX OF PLANS

SHEET No.	DESCRIPTION
1	TITLE AND LOCATION MAP
2-3	TYPICAL CROSS SECTIONS
4-20	CONSTRUCTION DETAILS
21-22	CONSTRUCTION AREA SIGNS
23-25	STAGE CONSTRUCTION AND TRAFFIC HANDLING PLANS
26-29	DETOUR PLANS
30	SIGN PLAN DETAILS AND QUANTITIES
31-43	SUMMARY OF QUANTITIES
44-46	ELECTRICAL PLANS
47-70	REVISED AND NEW STANDARD PLANS

STRUCTURE PLANS

71-73	ROUTE 99 BRIDGES

THE STANDARD PLANS LIST APPLICABLE TO THIS CONTRACT IS INCLUDED IN THE NOTICE TO CONTRACTORS AND SPECIAL PROVISIONS BOOK

LOCATION MAP

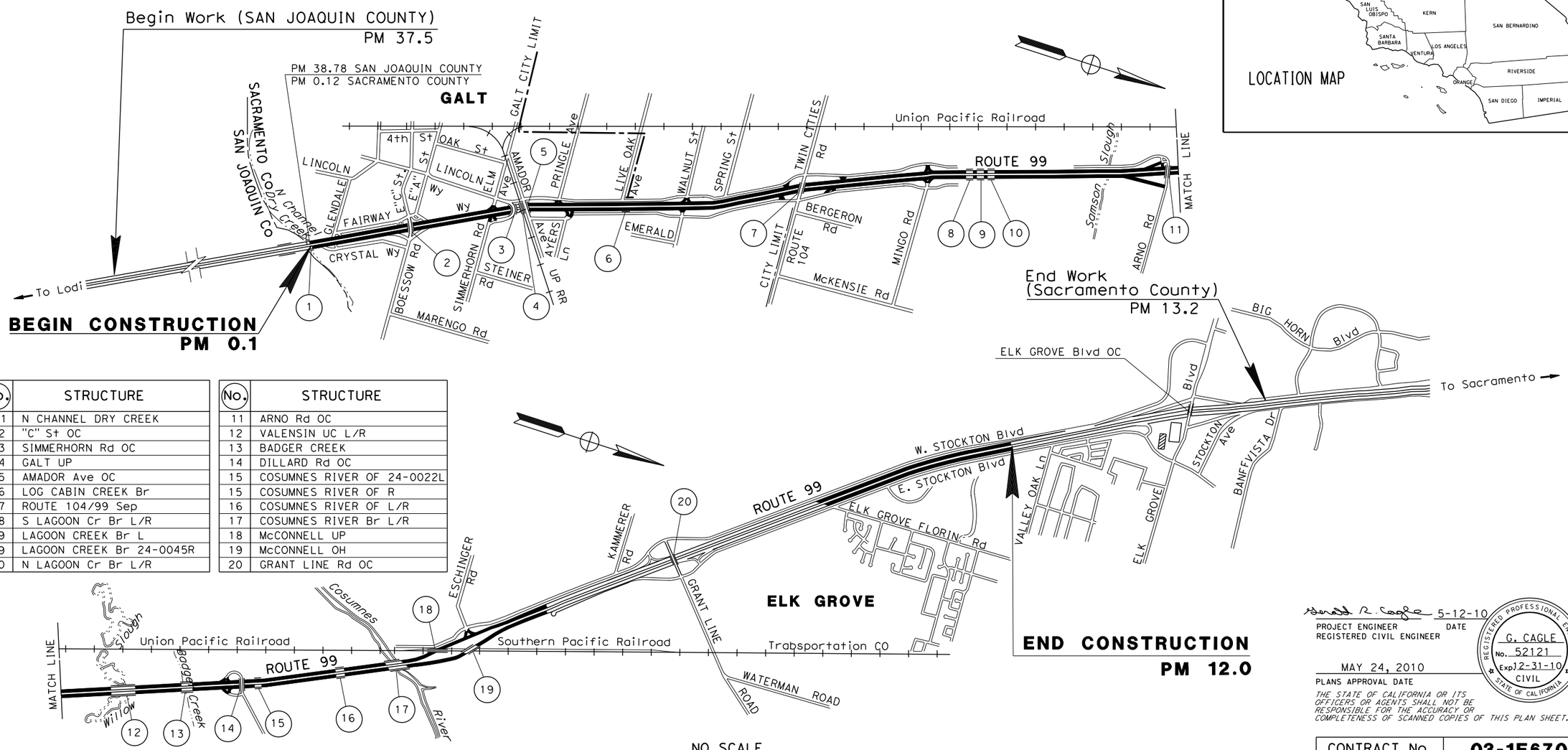

No.	STRUCTURE
1	N CHANNEL DRY CREEK
2	"C" St OC
3	SIMMERHORN Rd OC
4	GALT UP
5	AMADOR Ave OC
6	LOG CABIN CREEK Br
7	ROUTE 104/99 Sep
8	S LAGOON Cr Br L/R
9	LAGOON CREEK Br L
9	LAGOON CREEK Br 24-0045R
10	N LAGOON Cr Br L/R

No.	STRUCTURE
11	ARNO Rd OC
12	VALENSIN UC L/R
13	BADGER CREEK
14	DILLARD Rd OC
15	COSUMNES RIVER OF 24-0022L
15	COSUMNES RIVER OF R
16	COSUMNES RIVER OF L/R
17	COSUMNES RIVER Br L/R
18	McCONNELL UP
19	McCONNELL OH
20	GRANT LINE Rd OC

THE CONTRACTOR SHALL POSSESS THE CLASS (OR CLASSES) OF LICENSE AS SPECIFIED IN THE "NOTICE TO BIDDERS."

PROJECT MANAGER M. MILLARD
DESIGN ENGINEER G. OGAZ

5-12-10
PROJECT ENGINEER REGISTERED CIVIL ENGINEER DATE

REGISTERED PROFESSIONAL ENGINEER G. CAGLE No. 52121 Exp. 12-31-10 CIVIL STATE OF CALIFORNIA

MAY 24, 2010
PLANS APPROVAL DATE

THE STATE OF CALIFORNIA OR ITS OFFICERS OR AGENTS SHALL NOT BE RESPONSIBLE FOR THE ACCURACY OR COMPLETENESS OF SCANNED COPIES OF THIS PLAN SHEET.

CONTRACT No.	03-1E6704
PROJECT ID	0300001092

DATE PLOTTED => 6/30/2010
TIME PLOTTED => 8:36:40 AM
LAST REVISION 00-00-00

Dist	COUNTY	ROUTE	POST MILES TOTAL PROJECT	SHEET No.	TOTAL SHEETS
03	Sac	99	0.1/12.0	2	73

REGISTERED CIVIL ENGINEER 5-24-10 DATE

5-24-10
PLANS APPROVAL DATE

REGISTERED PROFESSIONAL ENGINEER G. CAGLE No. 52121 Exp. 12-31-10 CIVIL STATE OF CALIFORNIA

THE STATE OF CALIFORNIA OR ITS OFFICERS OR AGENTS SHALL NOT BE RESPONSIBLE FOR THE ACCURACY OR COMPLETENESS OF SCANNED COPIES OF THIS PLAN SHEET.

NOTES:

1. MATCH EXISTING CROSS SLOPE ALL LOCATIONS.
2. SEE CONSTRUCTION DETAILS AND SUMMARY OF QUANTITIES SHEETS FOR HMA DIKE AND MBGR LOCATIONS.
3. PROJECT LIMITS ARE FROM EB NORTH CHANNEL DRY CREEK BRIDGE L/R TO PM 12.0, NB AND SB ROUTE 99.
4. NO WORK ON EXISTING STRUCTURES UNLESS OTHERWISE SHOWN IN THE PLANS.
5. POST MILES ARE APPROXIMATE.
6. TEMPORARY PAVEMENT WIDENING. SEE CONSTRUCTION DETAILS AND STAGE CONSTRUCTION AND TRAFFIC HANDLING PLANS FOR DETAILS.
7. DIMENSIONS OF THE STRUCTURAL SECTIONS ARE SUBJECT TO TOLERANCES SPECIFIED IN THE STANDARD SPECIFICATIONS.

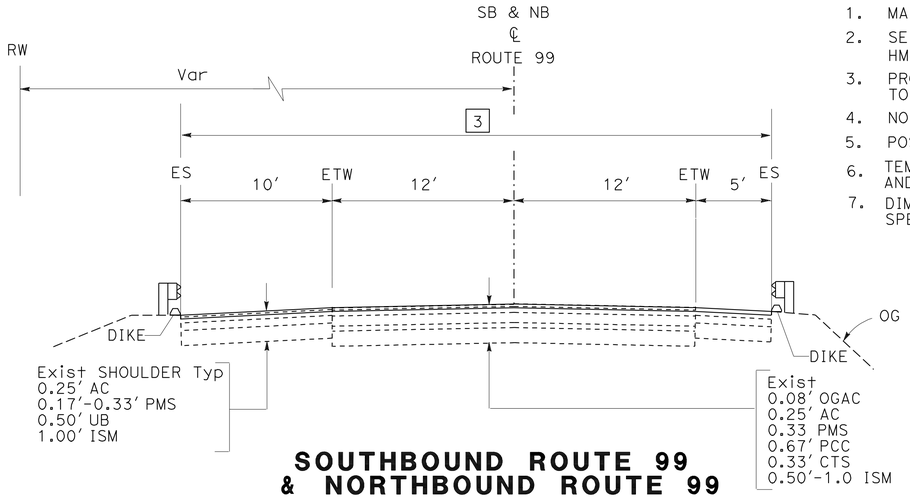

SOUTHBOUND ROUTE 99
& NORTHBOUND ROUTE 99

SB PM 4.96 TO 5.00
SB PM 5.07 TO 5.10
NB PM 4.97 TO 5.00
NB PM 5.05 TO 5.08

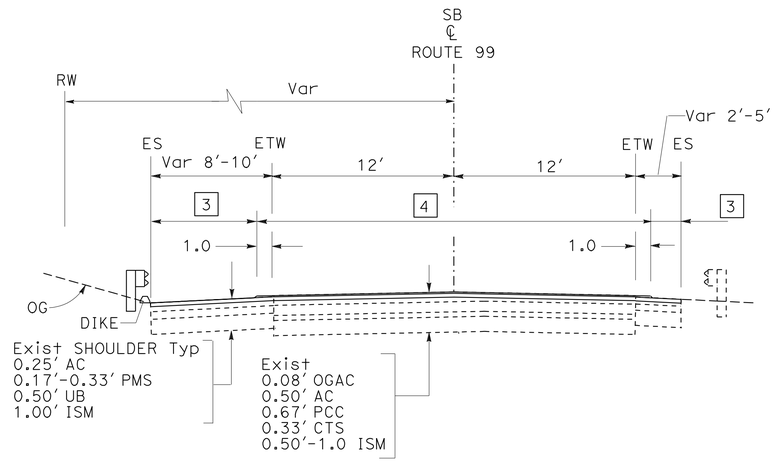

SOUTHBOUND ROUTE 99

PM 0.77 TO 0.85
PM 2.33 TO 2.40
PM 5.98 TO 6.07
PM 6.87 TO 6.96
PM 7.33 TO 7.45
PM 8.53 TO 8.81

STRUCTURAL SECTIONS

1	0.25′ HMA
2	COLD PLANE 0.08′ OGAC 0.1′ RWMA-O 0.25′ HMA
3	COLD PLANE 0.27′ AC 0.25′ HMA
4	COLD PLANE 0.08′ OGAC AND 0.27′ AC 0.1′ RWMA-O 0.25′ HMA
5	COLD PLANE 0.08′ OGAC 0.1′ RWMA-O
6	1.15′ REPLACE CONCRETE PAVEMENT (RAPID STRENGTH CONCRETE) 0.25′ HMA
7	0.7′ HMA 2.0′ AB (CLASS 2)
8	FOG SEAL
9	1.15′ JPCP 0.25′ HMA

LEGEND

No	STRUCTURAL SECTION
No Exist	EXISTING STRUCTURAL SECTION

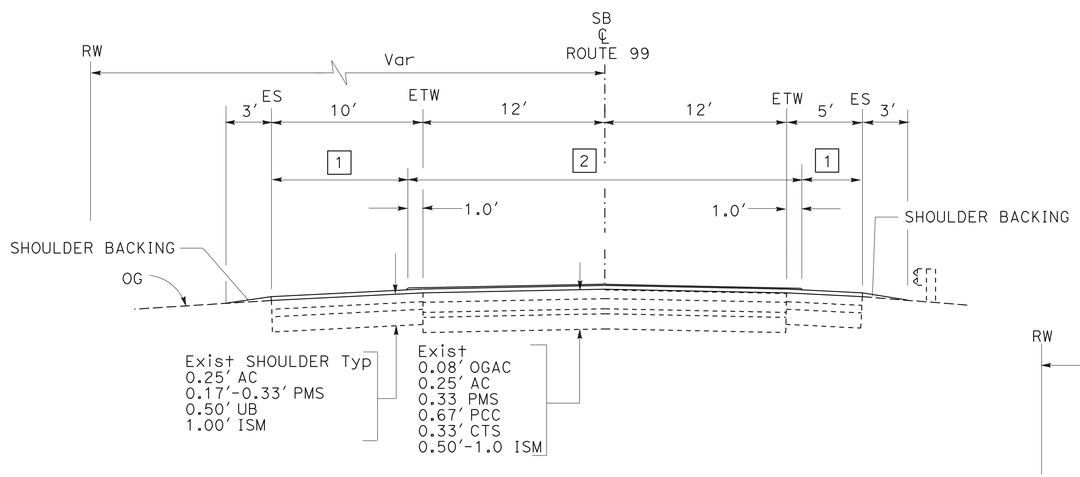

SOUTHBOUND ROUTE 99

PM 0.14 TO 0.77
PM 0.85 TO 1.38
PM 1.82 TO 2.33
PM 2.40 TO 3.39
PM 3.73 TO 4.93
PM 5.10 TO 5.98
PM 6.07 TO 6.56
PM 6.58 TO 6.86
PM 7.02 TO 7.33
PM 7.49 TO 7.93
PM 8.05 TO 8.40
PM 8.81 TO 9.35
PM 10.7 TO 12.0

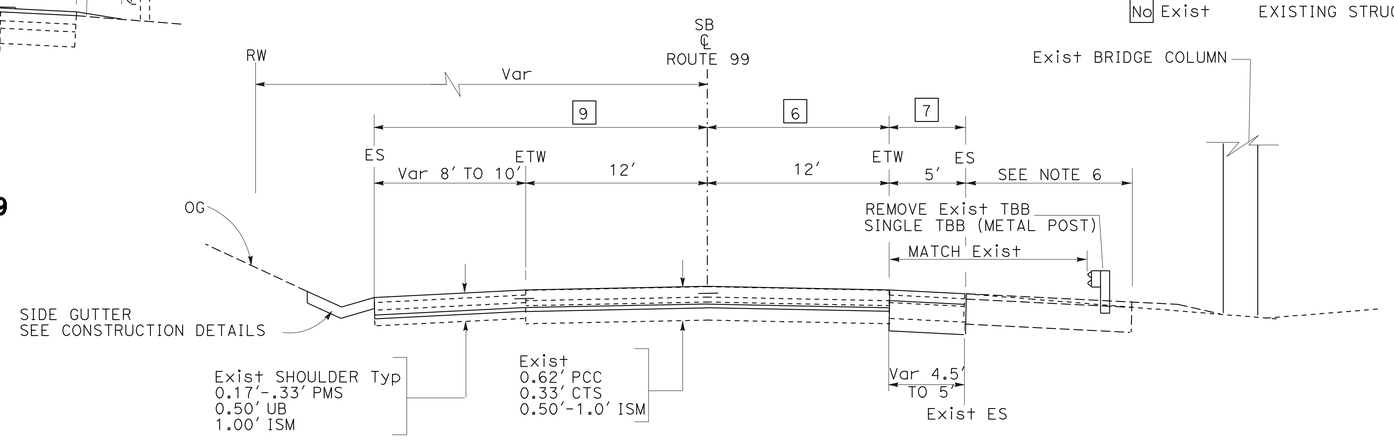

SOUTHBOUND ROUTE 99

PM 1.38 TO 1.82
PM 3.39 TO 3.73

ABBREVIATIONS

CTS	CEMENT TREATED SUBBASE
ISM	IMPORTED SUBBASE MATERIAL
PMS	PLANT MIX SURFACING (TYPE B)
RWMA-O	RUBBERIZED WARM MIX ASPHALT (TYPE O)
UB	UNTREATED BASE
WIM	WEIGH IN MOTION

TYPICAL CROSS SECTIONS

NO SCALE

X-1

STATE OF CALIFORNIA - DEPARTMENT OF TRANSPORTATION
Caltrans
NORTH REGION
OFFICE OF DESIGN, SOUTH
DESIGN BRANCH 2

FUNCTIONAL SUPERVISOR: GILBERT OGAZ
CALCULATED-DESIGNED BY: G. CAGLE
CHECKED BY: G. CAGLE
REVISED BY: G. CAGLE
DATE REVISED:

LAST REVISION 00-00-00
DATE PLOTTED => 30-JUN-2010
TIME PLOTTED => 08:20

Dist	COUNTY	ROUTE	POST MILES TOTAL PROJECT	SHEET No.	TOTAL SHEETS
03	Sac	99	0.1/12.0	3	73

REGISTERED CIVIL ENGINEER 5-24-10 DATE

5-24-10
PLANS APPROVAL DATE

REGISTERED PROFESSIONAL ENGINEER G. CAGLE No. 52121 Exp. 12-31-10 CIVIL STATE OF CALIFORNIA

THE STATE OF CALIFORNIA OR ITS OFFICERS OR AGENTS SHALL NOT BE RESPONSIBLE FOR THE ACCURACY OR COMPLETENESS OF SCANNED COPIES OF THIS PLAN SHEET.

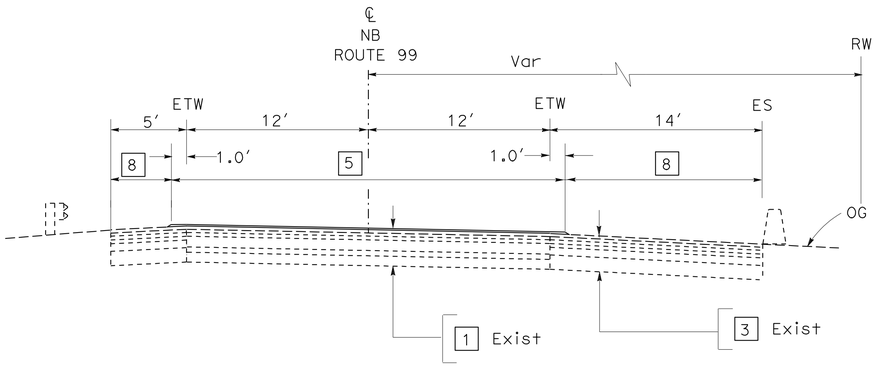

NORTHBOUND ROUTE 99

PM 10.84 TO 12.0

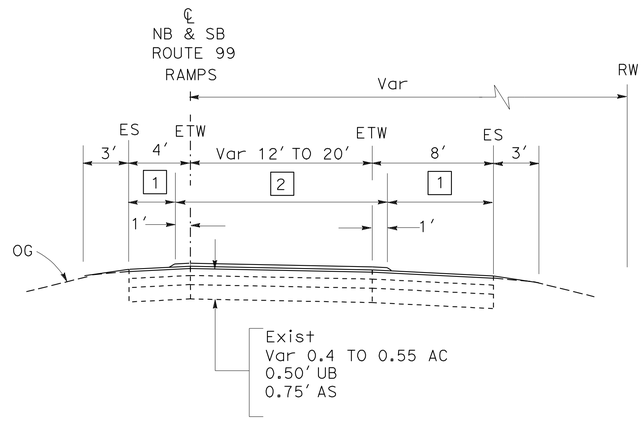

RAMPS

(SEE SUMMARY OF QUANTITIES FOR LOCATIONS)

EXISTING STRUCTURAL SECTION (THIS SHEET ONLY)

1 Exist
0.06′ OGAC
0.15′ AC (TYPE A ¾" Max GRADING)
PRF
0.50′ AC (TYPE A 1½" Max GRADING)
CRACK AND SEAT Exist PCC
0.67′ PCC
0.33′ CTS
0.50′ AS

2 Exist
0.06′ OGAC
0.15′ AC (TYPE A ¾" Max GRADING)
PRF
0.50′ AC (TYPE A 1½" Max GRADING)
2.05′ CL 2 AB

3 Exist
0.15′ AC (TYPE A ¾" Max GRADING)
0.50′ AC (TYPE A 1½" Max GRADING)
0.25 AC
0.50 UB
0.75 AS

4 Exist
0.15′ AC (TYPE A ¾" Max GRADING)
0.50′ AC (TYPE A 1½" Max GRADING)
0.50 CL 2 AB
0.35′ AS

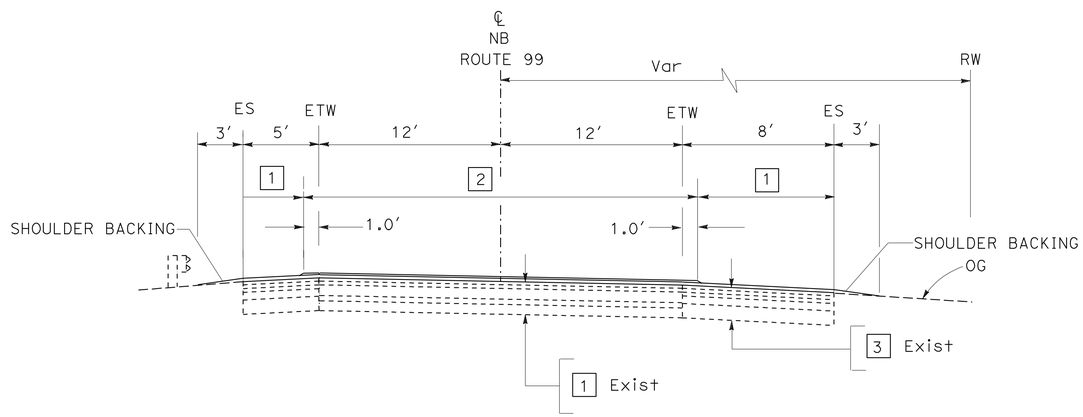

NORTHBOUND ROUTE 99

PM 0.14 TO 0.79
PM 0.87 TO 1.56
PM 1.70 TO 2.33
PM 2.40 TO 3.51
PM 3.60 TO 4.94
PM 5.11 TO 5.60
PM 5.68 TO 5.99
PM 6.08 TO 6.57
PM 6.59 TO 6.88
PM 7.04 TO 7.35
PM 7.52 TO 7.92
PM 8.09 TO 8.43
PM 8.57 TO 8.84
PM 8.90 TO 9.49

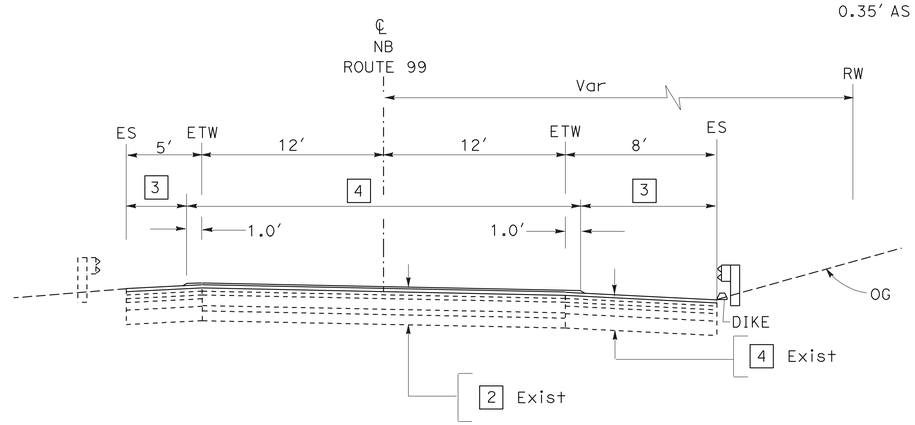

NORTHBOUND ROUTE 99

PM 0.79 TO 0.87
PM 1.56 TO 1.70
PM 2.33 TO 2.40
PM 3.51 TO 3.60
PM 5.60 TO 5.68
PM 5.99 TO 6.08
PM 6.89 TO 6.98
PM 7.35 TO 7.47

TYPICAL CROSS SECTIONS

NO SCALE

X-2

STATE OF CALIFORNIA - DEPARTMENT OF TRANSPORTATION
NORTH REGION
OFFICE OF DESIGN, SOUTH
DESIGN BRANCH 2

FUNCTIONAL SUPERVISOR: GILBERT OGAZ
CALCULATED-DESIGNED BY: G. CAGLE
CHECKED BY: G. CAGLE
REVISED BY: G. CAGLE
DATE REVISED:

LAST REVISION 00-00-00
DATE PLOTTED => 30-JUN-2010
TIME PLOTTED => 08:20

Dist	COUNTY	ROUTE	POST MILES TOTAL PROJECT	SHEET No.	TOTAL SHEETS
03	Sac	99	0.1/12.0	4	73

REGISTERED CIVIL ENGINEER 5-24-10 DATE

5-24-10
PLANS APPROVAL DATE

REGISTERED PROFESSIONAL ENGINEER G. CAGLE No. 52121 Exp. 12-31-10 CIVIL STATE OF CALIFORNIA

THE STATE OF CALIFORNIA OR ITS OFFICERS OR AGENTS SHALL NOT BE RESPONSIBLE FOR THE ACCURACY OR COMPLETENESS OF SCANNED COPIES OF THIS PLAN SHEET.

NOTE: 1. SEE TYPICAL CROSS SECTION SHEETS FOR DETAILS NOT SHOWN.

* d = DISTANCE FROM RAMP GORE PAVING OR COUNTY ROAD EP LIMIT TO RAMP CONFORM LIMIT (SEE SUMMARY OF QUANTITY SHEETS).

** PAVE TO Exist LIMITS

LEGEND:

- PAVEMENT TRANSITION TAPER
- T-X — PAVEMENT TRANSITION TAPER TYPE (SEE CONSTRUCTION DETAILS)
- No. — STRUCTURAL SECTION NUMBER (SEE TYPICAL SECTIONS)
- No. Temp — TEMPORARY STRUCTURAL SECTION NUMBER (SEE CONSTRUCTION DETAILS & STAGE CONSTRUCTION & TRAFFIC HANDLING PLANS)

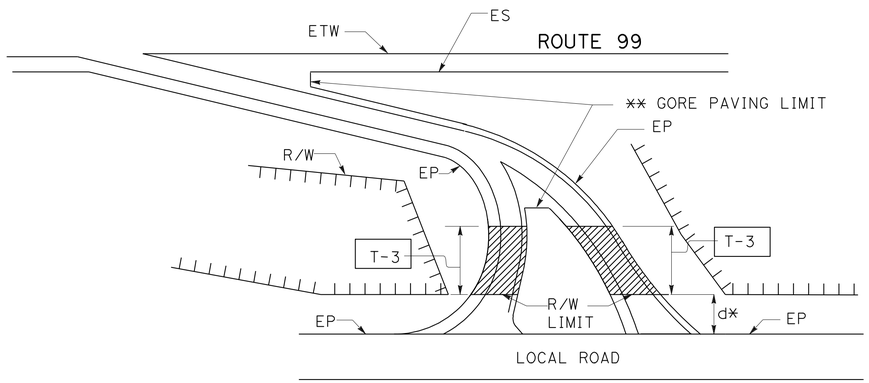

RAMP PAVING LIMITS
NB TWIN CITIES Rd EXIT/ENTRANCE

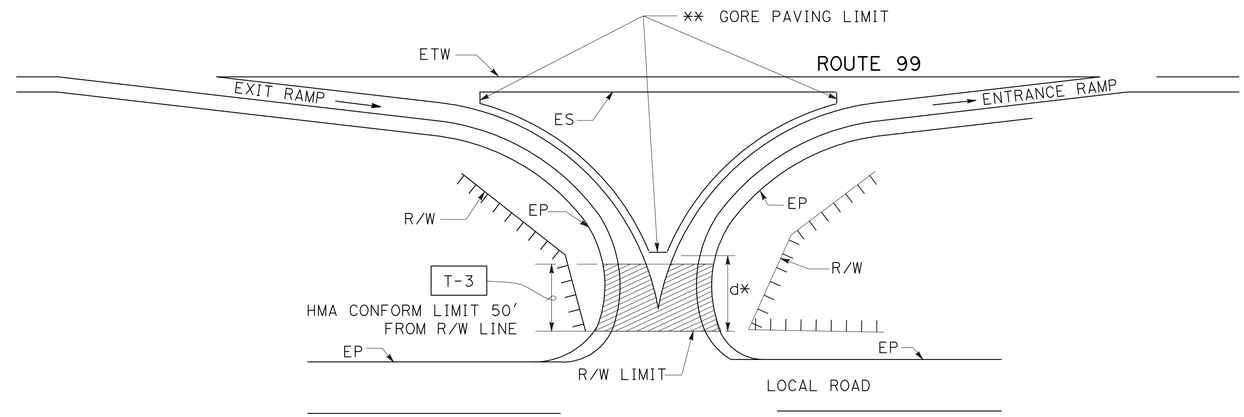

RAMP PAVING LIMITS
NB CRYSTAL WAY
NB SIMMERHORN Rd
NB MINGO Rd
NB ARNO Rd
NB/SB WALNUT Ave
SB PRINGLE Ave
NB AYERS LANE
SB WEST STOCKTON Blvd
SB ESCHINGER Rd

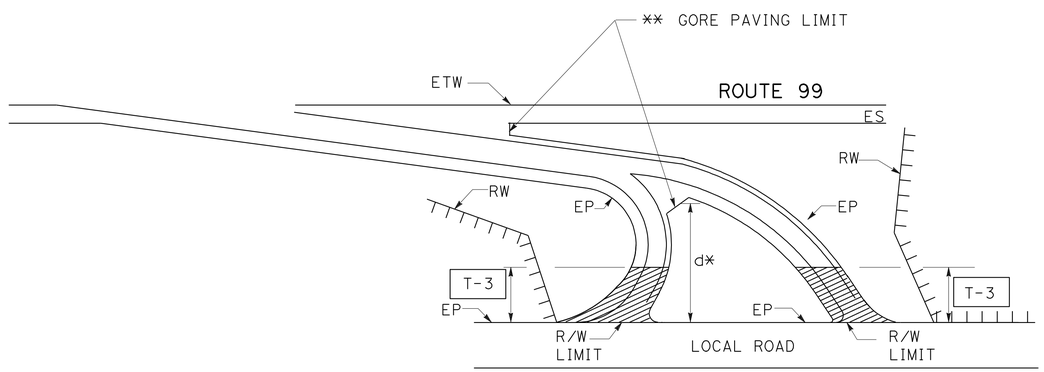

RAMP PAVING LIMITS
SB TWIN CITIES Rd EXIT/ENTRANCE

TEMPORARY STRUCTURAL SECTIONS

1 Temp	0.35' HMA 1.00' AB (CLASS 2)
2 Temp	0.35' HMA 1.65' AB (CLASS 2)

CONSTRUCTION DETAILS
NO SCALE

C-1

STATE OF CALIFORNIA - DEPARTMENT OF TRANSPORTATION
Caltrans
NORTH REGION
OFFICE OF DESIGN, SOUTH
DESIGN BRANCH 2

FUNCTIONAL SUPERVISOR: GILBERT OGAZ
CALCULATED-DESIGNED BY: G. CAGLE
CHECKED BY:
REVISED BY: G. CAGLE
DATE REVISED:

LAST REVISION 00-00-00 | DATE PLOTTED => 30-JUN-2010 | TIME PLOTTED => 08:20

Dist	COUNTY	ROUTE	POST MILES TOTAL PROJECT	SHEET No.	TOTAL SHEETS
03	Sac	99	0.1/12.0	5	73

REGISTERED CIVIL ENGINEER 5-24-10 DATE

5-24-10
PLANS APPROVAL DATE

REGISTERED PROFESSIONAL ENGINEER G. CAGLE No. 52121 Exp. 12-31-10 CIVIL STATE OF CALIFORNIA

THE STATE OF CALIFORNIA OR ITS OFFICERS OR AGENTS SHALL NOT BE RESPONSIBLE FOR THE ACCURACY OR COMPLETENESS OF SCANNED COPIES OF THIS PLAN SHEET.

* d = DISTANCE FROM RAMP GORE PAVING OR COUNTY ROAD EP LIMIT TO RAMP CONFORM LIMIT (SEE SUMMARY OF QUANTITY SHEETS).

** PAVE TO Exist LIMITS

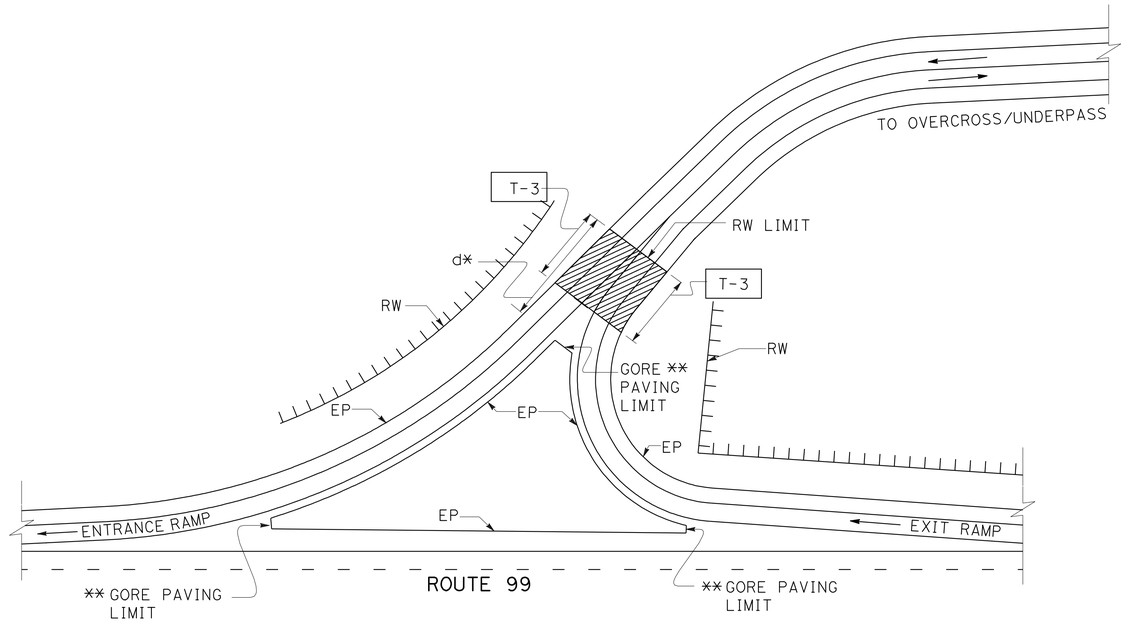

RAMP PAVING LIMITS

NB/SB DILLARD Rd
SB FAIRWAY Dr
SB ARNO Rd
SB ELM Ave

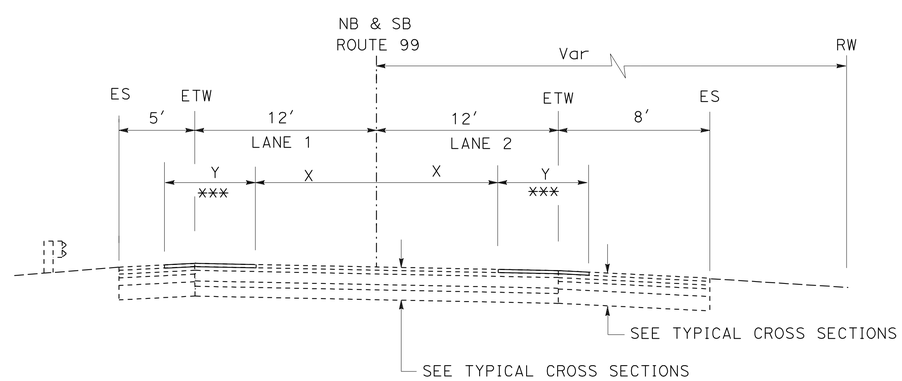

X DISTANCE FROM CENTERLINE

Y WIDTH OF REPLACE AC SURFACING

*** REMOVE 0.25' Exist DGAC AND REPLACE WITH 0.25' HOT MIX ASPHALT

REPLACE AC SURFACING

(SEE SUMMARY OF QUANTITIES SHEETS FOR LOCATIONS)

CONSTRUCTION DETAILS

NO SCALE

C-2

STATE OF CALIFORNIA - DEPARTMENT OF TRANSPORTATION
Caltrans
NORTH REGION
OFFICE OF DESIGN, SOUTH
DESIGN BRANCH 2

FUNCTIONAL SUPERVISOR: GILBERT OGAZ

CALCULATED-DESIGNED BY: G. CAGLE
CHECKED BY: G. CAGLE
REVISED BY: G. CAGLE
DATE REVISED:

LAST REVISION 00-00-00
DATE PLOTTED => 30-JUN-2010
TIME PLOTTED => 08:21

Dist	COUNTY	ROUTE	POST MILES TOTAL PROJECT	SHEET No.	TOTAL SHEETS
03	Sac	99	0.1/12.0	6	73

REGISTERED CIVIL ENGINEER 5-24-10 DATE

5-24-10
PLANS APPROVAL DATE

REGISTERED PROFESSIONAL ENGINEER G. CAGLE No. 52121 Exp. 12-31-10 CIVIL STATE OF CALIFORNIA

THE STATE OF CALIFORNIA OR ITS OFFICERS OR AGENTS SHALL NOT BE RESPONSIBLE FOR THE ACCURACY OR COMPLETENESS OF SCANNED COPIES OF THIS PLAN SHEET.

LEGEND (THIS PAGE ONLY)

COLD PLANE AC PAVEMENT - DEPTH = 0.08′ TO 0.35′

** MEASURED FROM THE EDGE OF BRIDGE SOFFIT

ABBREVIATIONS:

WIM WEIGH IN MOTION STATION

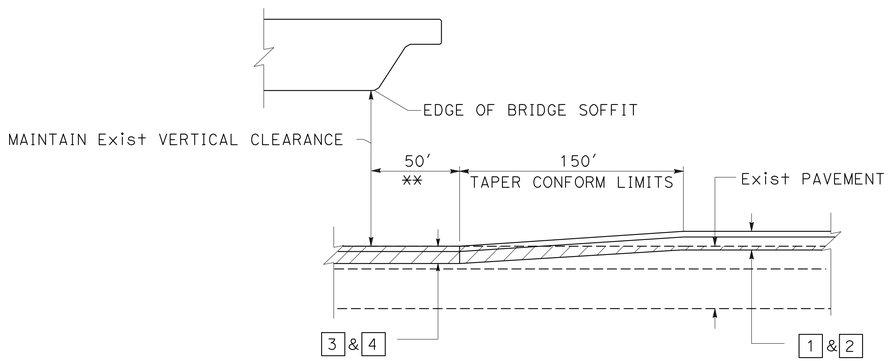

T-1

AT OVERCROSSING AND OVERHEAD STRUCTURES

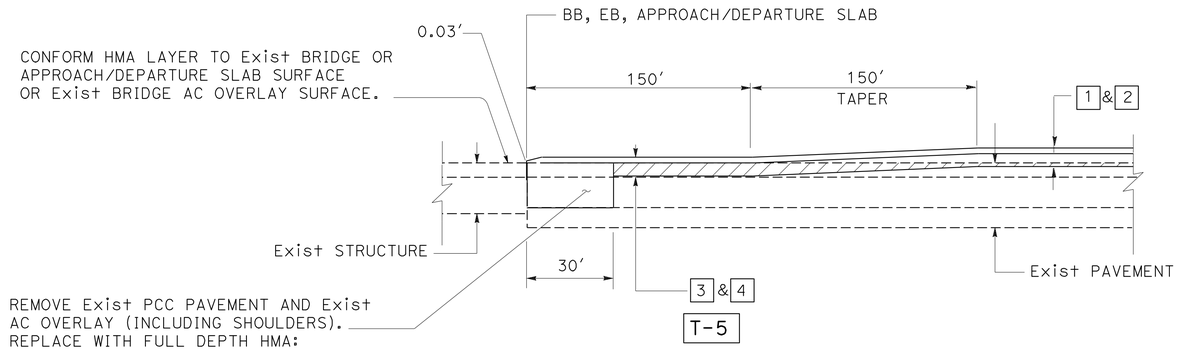

T-5

AT Exist BRIDGE CONFORM LOCATIONS

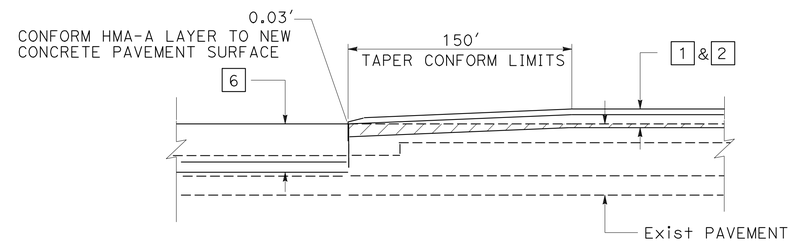

T-4

HMA TO PCC CONFORM LOCATIONS

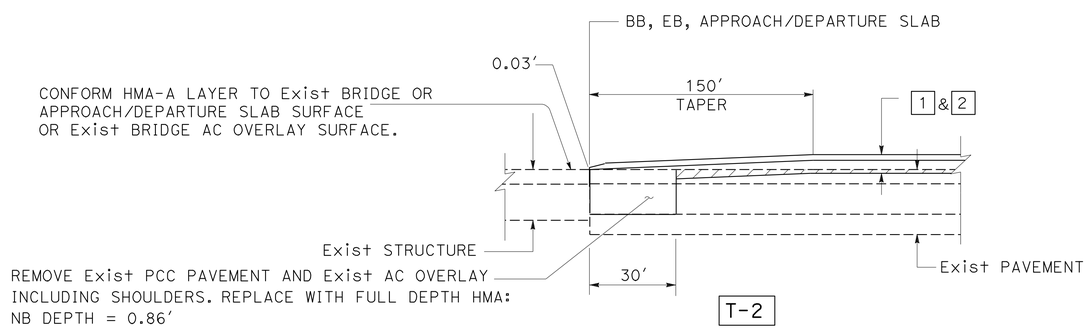

T-2

AT Exist BRIDGE CONFORM LOCATIONS

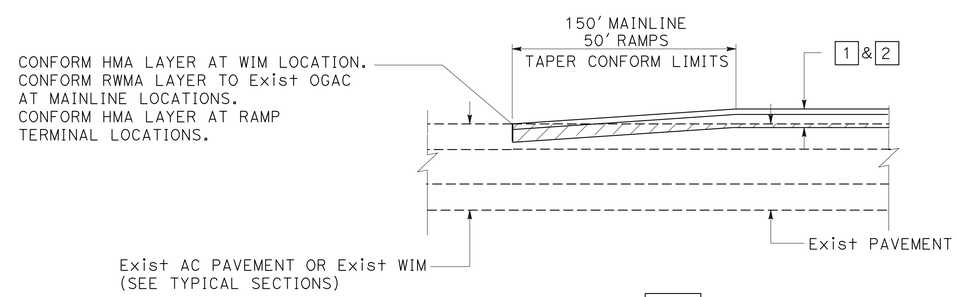

T-3

AT MAINLINE, WIM AND RAMP CONFORM LOCATIONS

PAVEMENT TRANSITION TAPERS

SEE SUMMARY OF QUANTITIES SHEETS FOR LOCATIONS

CONSTRUCTION DETAILS

NO SCALE

C-3

STATE OF CALIFORNIA - DEPARTMENT OF TRANSPORTATION
Caltrans
NORTH REGION
OFFICE OF DESIGN, SOUTH
DESIGN BRANCH 2

FUNCTIONAL SUPERVISOR: GILBERT OGAZ
CALCULATED-DESIGNED BY: G. CAGLE
CHECKED BY: G. CAGLE
REVISED BY: G. CAGLE
DATE REVISED

LAST REVISION 00-00-00
DATE PLOTTED => 30-JUN-2010
TIME PLOTTED => 08:21

Dist	COUNTY	ROUTE	POST MILES TOTAL PROJECT	SHEET No.	TOTAL SHEETS
03	Sac	99	0.1/12.0	7	73

REGISTERED CIVIL ENGINEER 5-24-10 DATE

5-24-10
PLANS APPROVAL DATE

REGISTERED PROFESSIONAL ENGINEER G. CAGLE No. 52121 Exp. 12-31-10 CIVIL STATE OF CALIFORNIA

THE STATE OF CALIFORNIA OR ITS OFFICERS OR AGENTS SHALL NOT BE RESPONSIBLE FOR THE ACCURACY OR COMPLETENESS OF SCANNED COPIES OF THIS PLAN SHEET.

NOTE: SEE STD PLAN A40B FOR DETAILS NOT SHOWN.

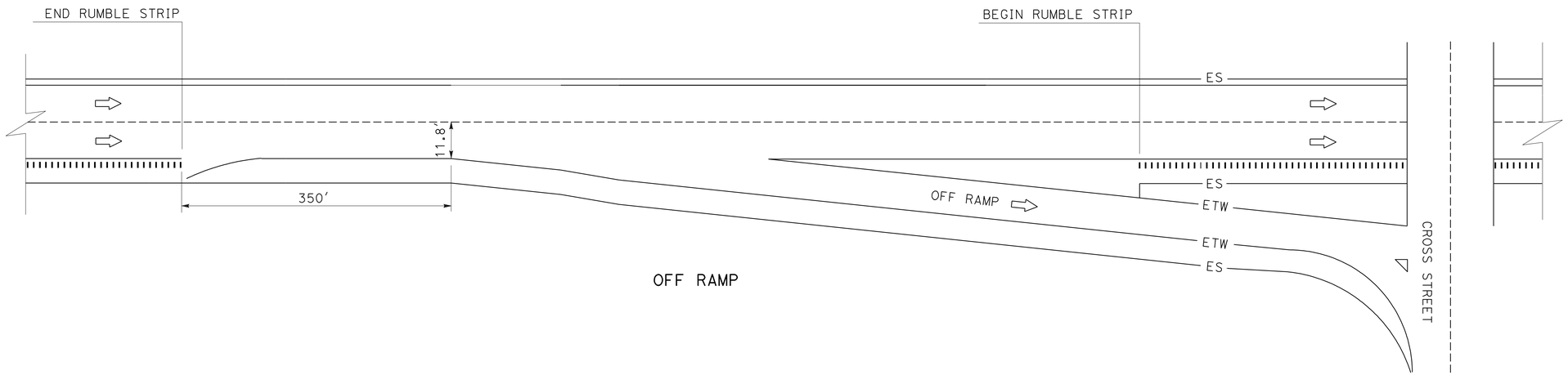

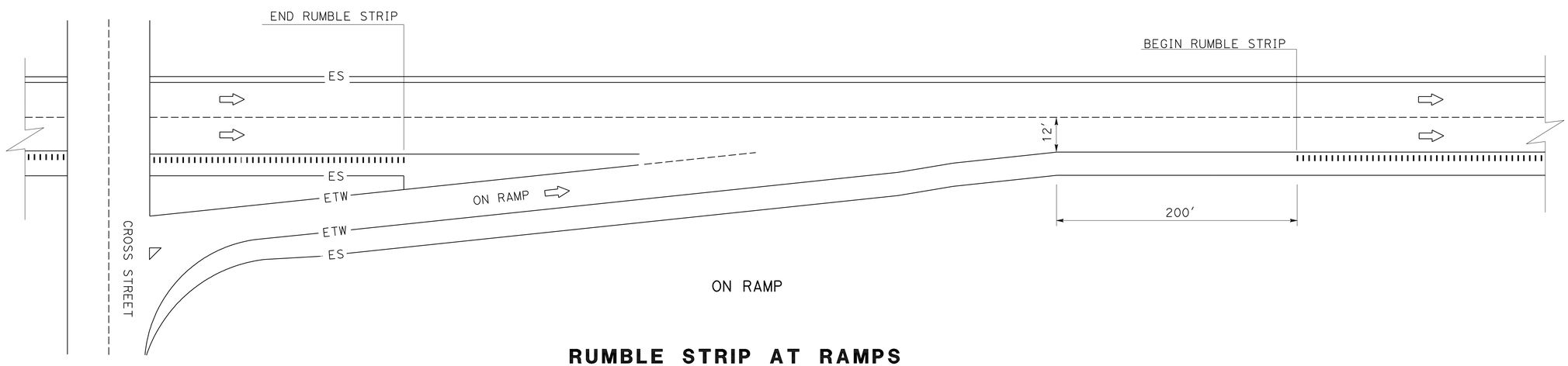

RUMBLE STRIP AT RAMPS

CONSTRUCTION DETAILS

NO SCALE

C-4

STATE OF CALIFORNIA - DEPARTMENT OF TRANSPORTATION
Caltrans
NORTH REGION
OFFICE OF DESIGN, SOUTH
DESIGN BRANCH 2

FUNCTIONAL SUPERVISOR: GILBERT OGAZ

CALCULATED-DESIGNED BY: G. CAGLE
CHECKED BY: G. CAGLE
REVISED BY: G. CAGLE
DATE REVISED:

LAST REVISION 00-00-00
DATE PLOTTED => 30-JUN-2010
TIME PLOTTED => 08:21

Dist	COUNTY	ROUTE	POST MILES TOTAL PROJECT	SHEET No.	TOTAL SHEETS
03	Sac	99	0.1/12.0	8	73

REGISTERED CIVIL ENGINEER 5-24-10 DATE

5-24-10
PLANS APPROVAL DATE

REGISTERED PROFESSIONAL ENGINEER G. CAGLE No. 52121 Exp. 12-31-10 CIVIL STATE OF CALIFORNIA

THE STATE OF CALIFORNIA OR ITS OFFICERS OR AGENTS SHALL NOT BE RESPONSIBLE FOR THE ACCURACY OR COMPLETENESS OF SCANNED COPIES OF THIS PLAN SHEET.

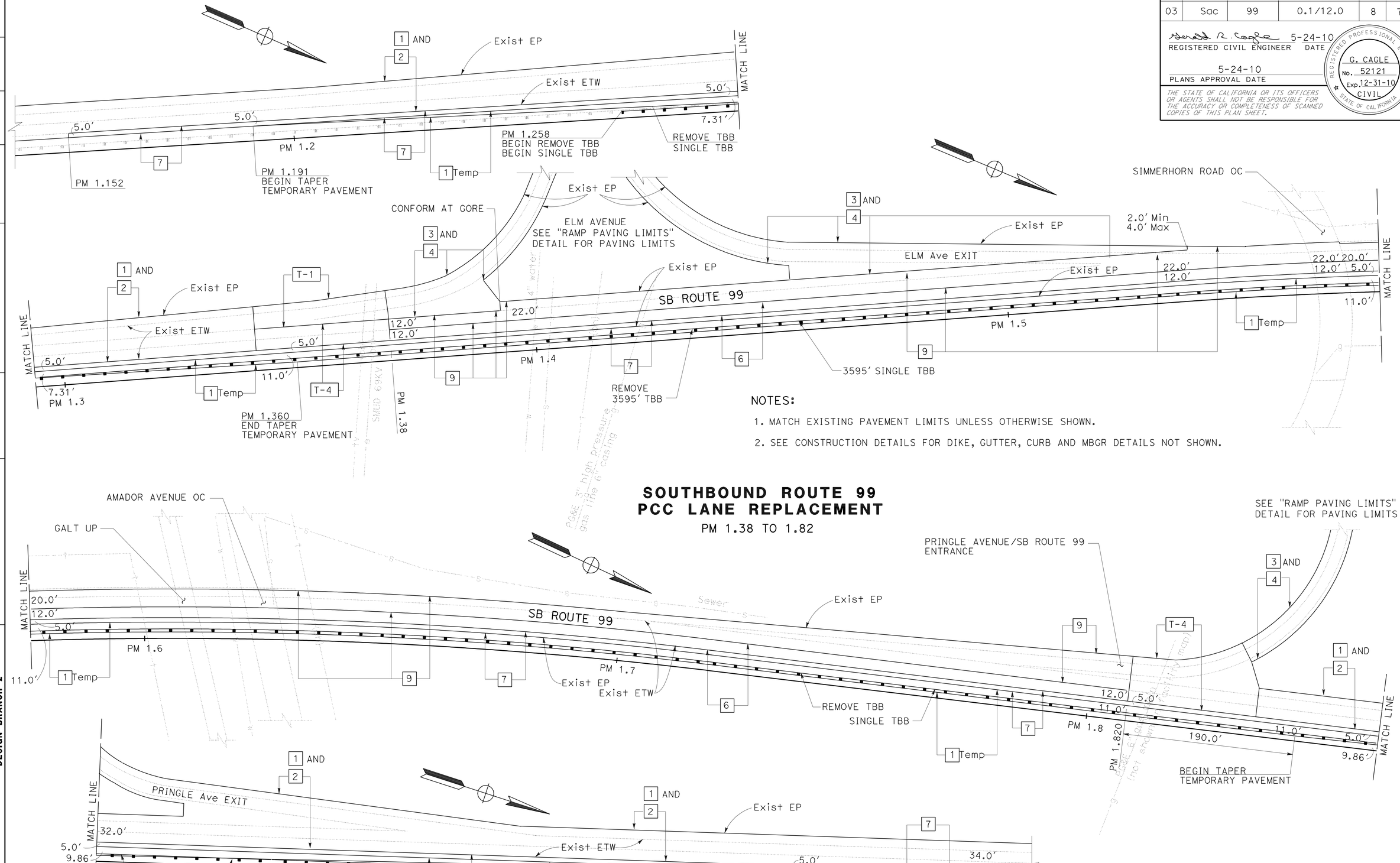

NOTES:

1. MATCH EXISTING PAVEMENT LIMITS UNLESS OTHERWISE SHOWN.
2. SEE CONSTRUCTION DETAILS FOR DIKE, GUTTER, CURB AND MBGR DETAILS NOT SHOWN.

SOUTHBOUND ROUTE 99
PCC LANE REPLACEMENT

PM 1.38 TO 1.82

CONSTRUCTION DETAILS

NO SCALE

C-5

STATE OF CALIFORNIA - DEPARTMENT OF TRANSPORTATION
NORTH REGION
OFFICE OF DESIGN, SOUTH
DESIGN BRANCH 2

FUNCTIONAL SUPERVISOR: GILBERT OGAZ

CALCULATED-DESIGNED BY: G. CAGLE
CHECKED BY: G. CAGLE
REVISED BY: G. CAGLE
DATE REVISED:

LAST REVISION 00-00-00
DATE PLOTTED => 30-JUN-2010
TIME PLOTTED => 08:21

Dist	COUNTY	ROUTE	POST MILES TOTAL PROJECT	SHEET No.	TOTAL SHEETS
03	Sac	99	0.1/12.0	9	73

REGISTERED CIVIL ENGINEER 5-24-10 DATE

5-24-10
PLANS APPROVAL DATE

REGISTERED PROFESSIONAL ENGINEER G. CAGLE No. 52121 Exp. 12-31-10 CIVIL STATE OF CALIFORNIA

THE STATE OF CALIFORNIA OR ITS OFFICERS OR AGENTS SHALL NOT BE RESPONSIBLE FOR THE ACCURACY OR COMPLETENESS OF SCANNED COPIES OF THIS PLAN SHEET.

NOTES:

1. MATCH EXISTING PAVEMENT LIMITS UNLESS OTHERWISE SHOWN.
2. SEE CONSTRUCTION DETAILS FOR DIKE, GUTTER, CURB AND MBGR DETAILS NOT SHOWN.

* MAINTAIN Exist FLOWLINE

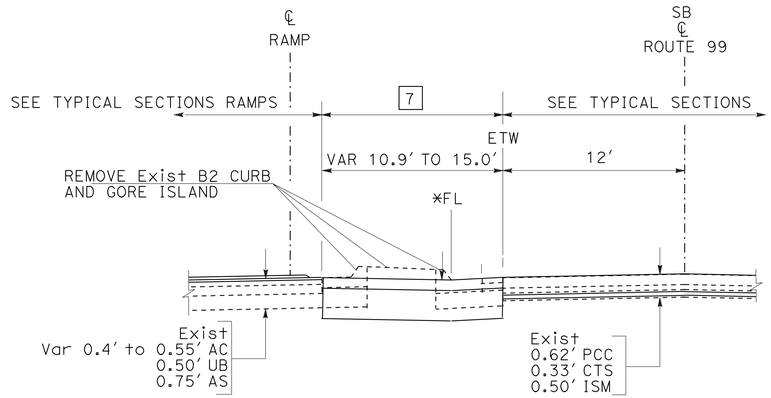

SECTION A-A

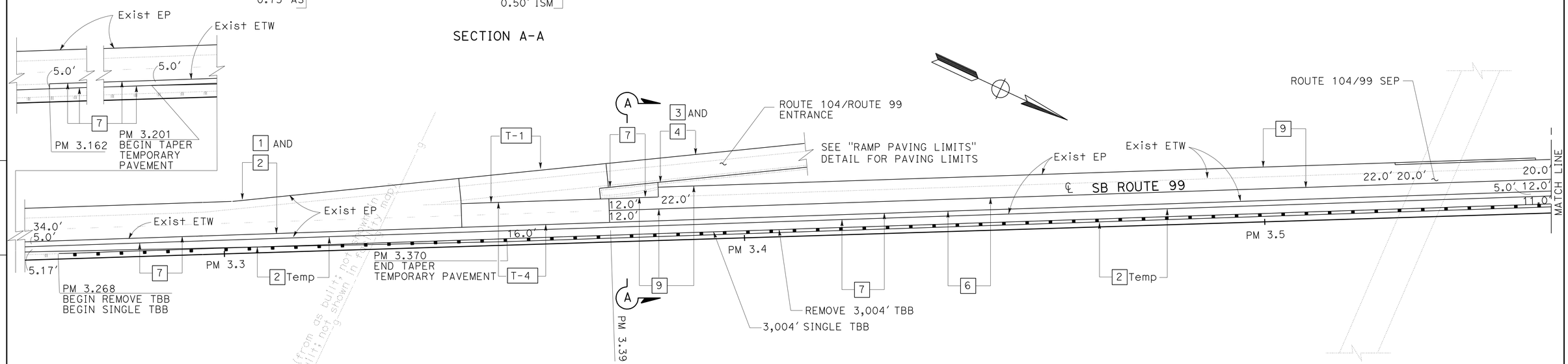

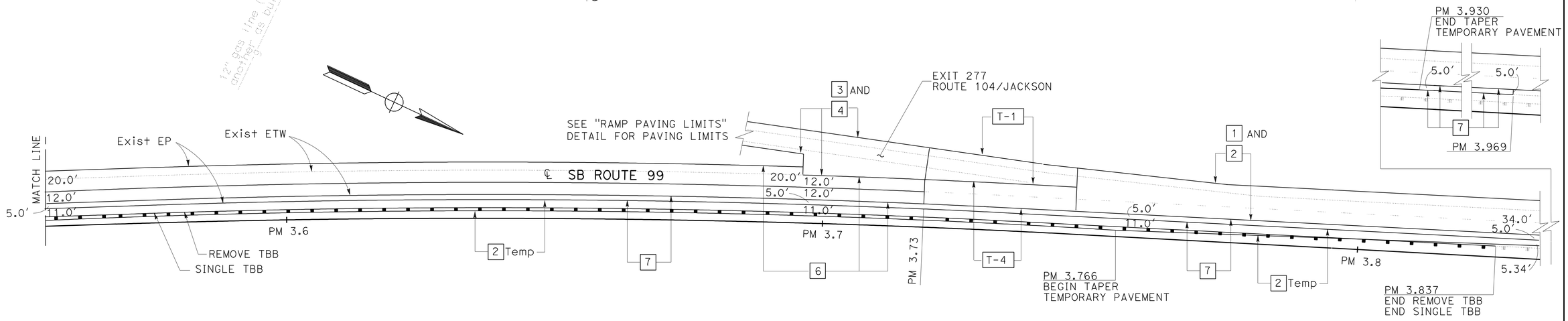

SOUTHBOUND ROUTE 99
PCC LANE REPLACEMENT

PM 3.39 TO 3.73

CONSTRUCTION DETAILS

NO SCALE

C-6

STATE OF CALIFORNIA - DEPARTMENT OF TRANSPORTATION
NORTH REGION
OFFICE OF DESIGN, SOUTH
DESIGN BRANCH 2

FUNCTIONAL SUPERVISOR: GILBERT OGAZ
CALCULATED-DESIGNED BY: G. CAGLE
CHECKED BY: G. CAGLE
REVISED BY: G. CAGLE
DATE REVISED:

LAST REVISION 00-00-00
DATE PLOTTED => 30-JUN-2010
TIME PLOTTED => 08:21

Dist	COUNTY	ROUTE	POST MILES TOTAL PROJECT	SHEET No.	TOTAL SHEETS
03	Sac	99	0.1/12.0	10	73

REGISTERED CIVIL ENGINEER 5-24-10 DATE

5-24-10
PLANS APPROVAL DATE

REGISTERED PROFESSIONAL ENGINEER JUSTIN UNCK No. C65889 Exp. 12-31-11 CIVIL STATE OF CALIFORNIA

THE STATE OF CALIFORNIA OR ITS OFFICERS OR AGENTS SHALL NOT BE RESPONSIBLE FOR THE ACCURACY OR COMPLETENESS OF SCANNED COPIES OF THIS PLAN SHEET.

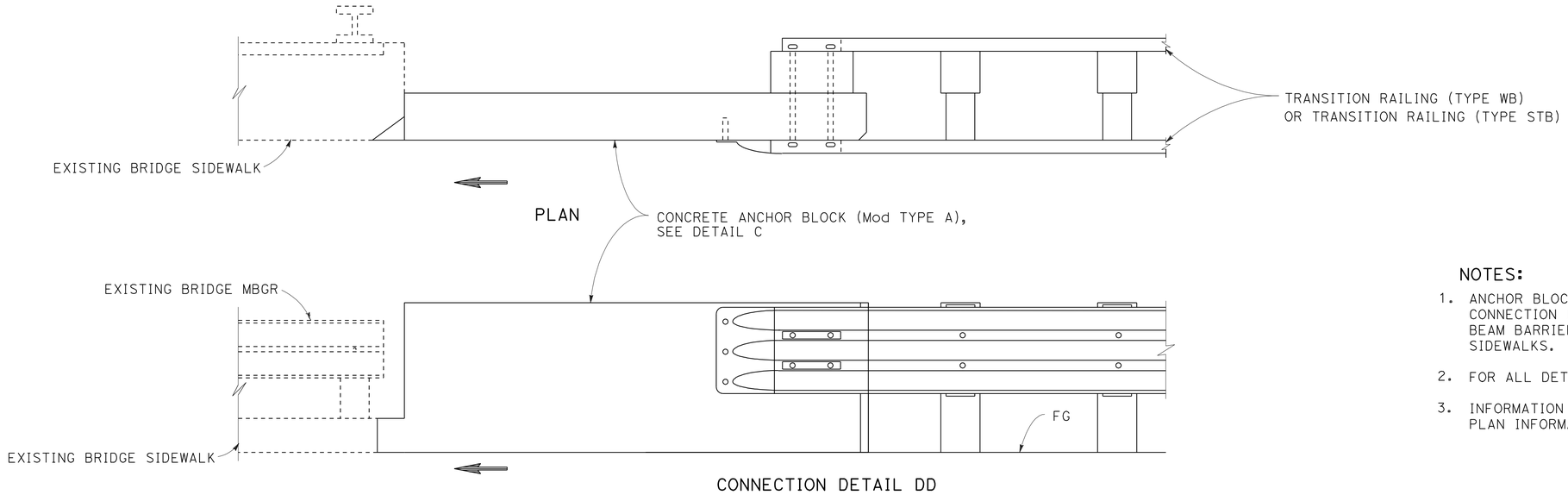

ELEVATION

METAL BEAM GUARD RAILING OR SINGLE THRIE BEAM BARRIER CONNECTIONS TO BRIDGES WITH MBGR AND SIDEWALKS

NOTES:

1. ANCHOR BLOCK (Mod TYPE A) FOR TRANSITION RAILING CONNECTION IS TO BE USED FOR MBGR OR SINGLE THRIE BEAM BARRIER CONNECTIONS TO BRIDGES WITH MBGR AND SIDEWALKS.
2. FOR ALL DETAILS NOT SHOWN, SEE STANDARD PLAN A77J3 OR A78G.
3. INFORMATION SHOWN ON THIS PAGE SUPERSEDES STANDARD PLAN INFORMATION.

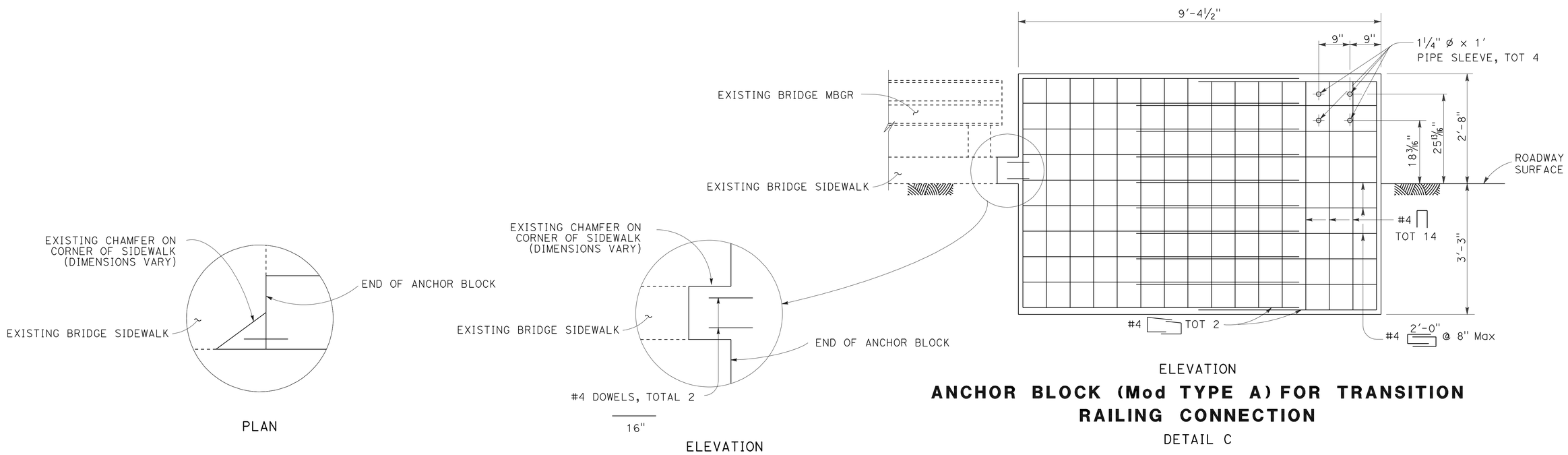

ELEVATION

ANCHOR BLOCK (Mod TYPE A) FOR TRANSITION RAILING CONNECTION

DETAIL C

CONSTRUCTION DETAILS

NO SCALE

C-7

STATE OF CALIFORNIA - DEPARTMENT OF TRANSPORTATION
Caltrans
NORTH REGION
OFFICE OF DESIGN, SOUTH
DESIGN BRANCH 2

FUNCTIONAL SUPERVISOR: GIBERT OGAZ

CALCULATED-DESIGNED BY: JUSTIN A UNCK
CHECKED BY: JUSTIN A UNCK

REVISED BY: J. UNCK
DATE REVISED:

LAST REVISION 00-00-00
DATE PLOTTED => 30-JUN-2010
TIME PLOTTED => 08:21

Dist	COUNTY	ROUTE	POST MILES TOTAL PROJECT	SHEET No.	TOTAL SHEETS
03	Sac	99	0.1/12.0	11	73

REGISTERED CIVIL ENGINEER 5-24-10 DATE

5-24-10
PLANS APPROVAL DATE

REGISTERED PROFESSIONAL ENGINEER JUSTIN UNCK No. C65889 Exp. 12-31-11 CIVIL STATE OF CALIFORNIA

THE STATE OF CALIFORNIA OR ITS OFFICERS OR AGENTS SHALL NOT BE RESPONSIBLE FOR THE ACCURACY OR COMPLETENESS OF SCANNED COPIES OF THIS PLAN SHEET.

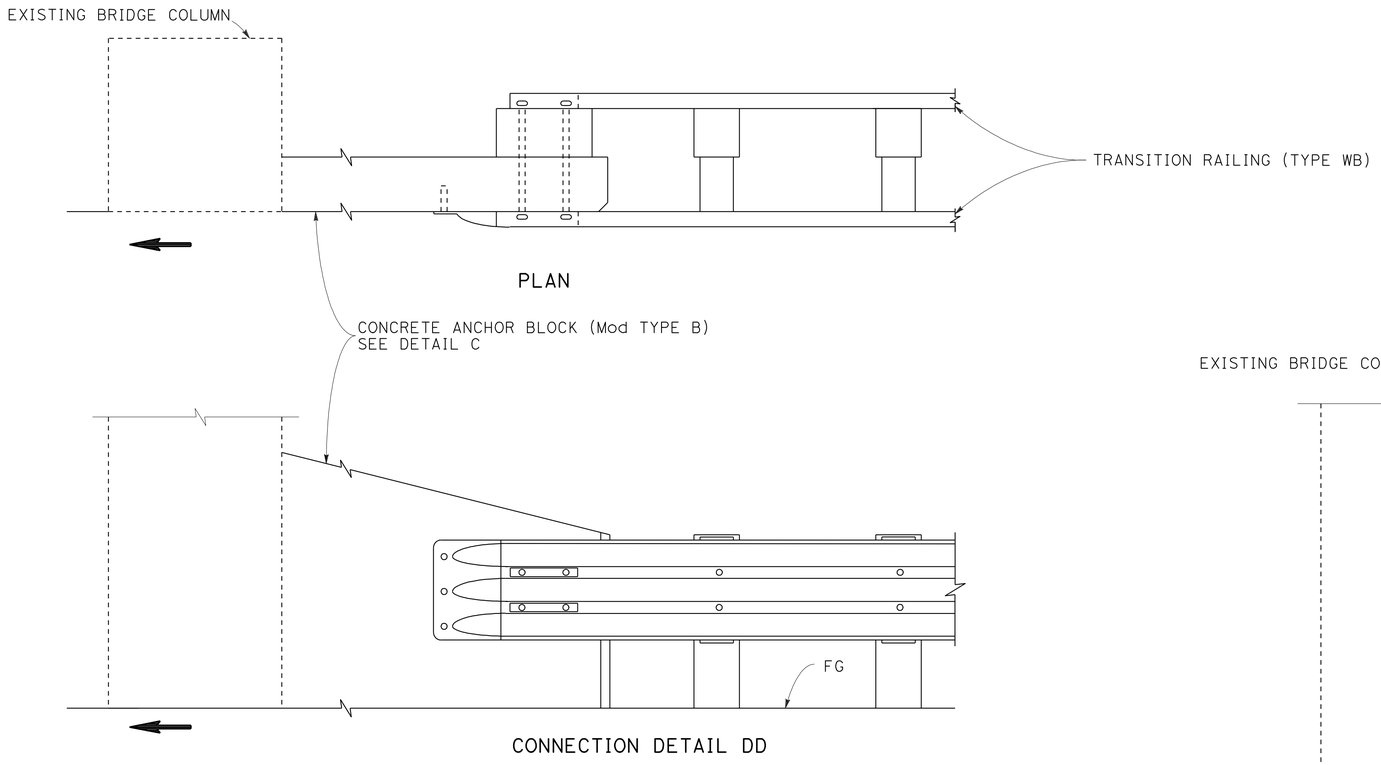

ELEVATION

METAL BEAM GUARD RAILING CONNECTIONS TO BRIDGE COLUMNS

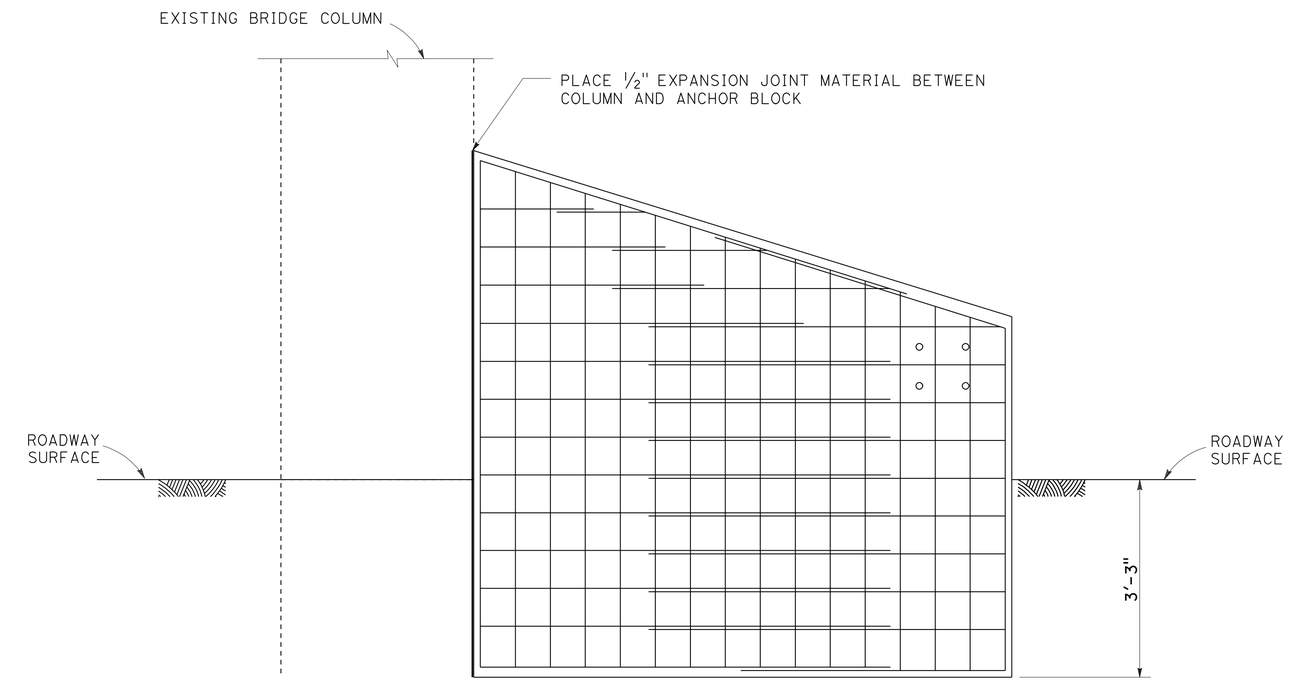

ELEVATION

ANCHOR BLOCK (Mod TYPE B) FOR TRANSITION RAILING CONNECTION

DETAIL C

NOTES:

1. ANCHOR BLOCK (Mod TYPE B) FOR TRANSITION RAILING CONNECTION IS TO BE USED FOR MBGR CONNECTIONS TO BRIDGE COLUMNS.
2. FOR ALL DETAILS NOT SHOWN, SEE STANDARD PLAN A77J3 OR A78G.
3. INFORMATION SHOWN ON THIS PAGE SUPERSEDES STANDARD PLAN INFORMATON.

CONSTRUCTION DETAILS

NO SCALE

C-8

STATE OF CALIFORNIA - DEPARTMENT OF TRANSPORTATION
NORTH REGION
OFFICE OF DESIGN, SOUTH
DESIGN BRANCH 2

FUNCTIONAL SUPERVISOR: GIBERT OGAZ
CALCULATED-DESIGNED BY: JUSTIN A UNCK
CHECKED BY: JUSTIN A UNCK
REVISED BY: J. UNCK
DATE REVISED:

LAST REVISION 00-00-00 | DATE PLOTTED => 30-JUN-2010 | TIME PLOTTED => 08:21

Dist	COUNTY	ROUTE	POST MILES TOTAL PROJECT	SHEET No.	TOTAL SHEETS
03	Sac	99	0.1/12.0	12	73

REGISTERED CIVIL ENGINEER 5-24-10 DATE

5-24-10
PLANS APPROVAL DATE

REGISTERED PROFESSIONAL ENGINEER JUSTIN UNCK No. C65889 Exp. 12-31-11 CIVIL STATE OF CALIFORNIA

THE STATE OF CALIFORNIA OR ITS OFFICERS OR AGENTS SHALL NOT BE RESPONSIBLE FOR THE ACCURACY OR COMPLETENESS OF SCANNED COPIES OF THIS PLAN SHEET.

NOTE

SEE "STRENGTHENED RAILING SECTION" DETAILS, CONSTRUCTION DETAILS.

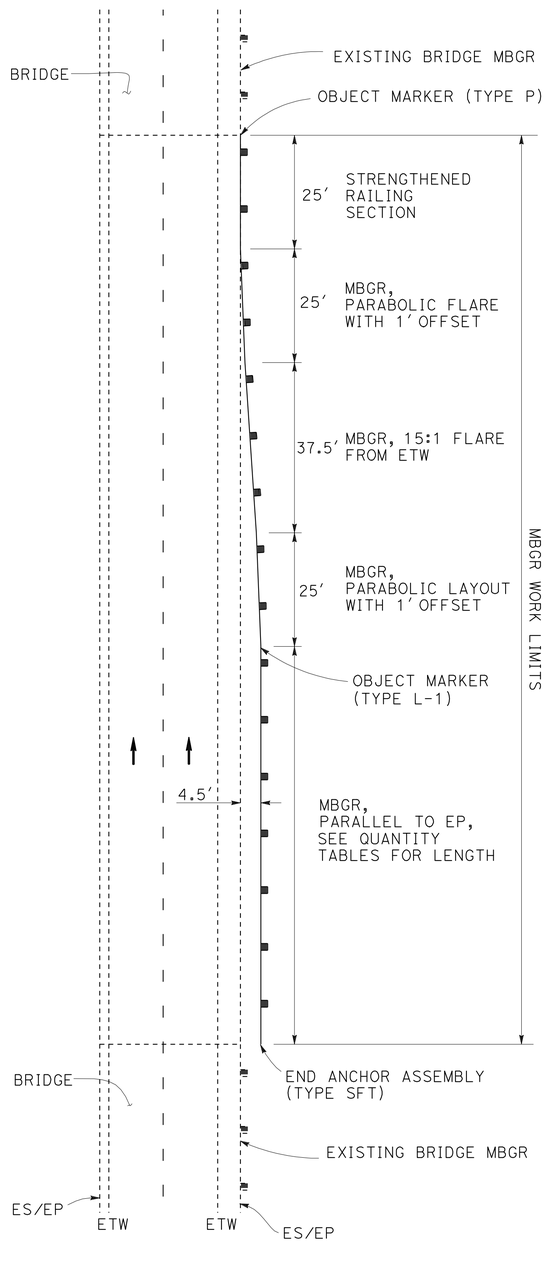

LAGOON Cr BRIDGE APPROACH, SOUTHBOUND
SOUTH LAGOON Cr BRIDGE APPROACH, SOUTHBOUND

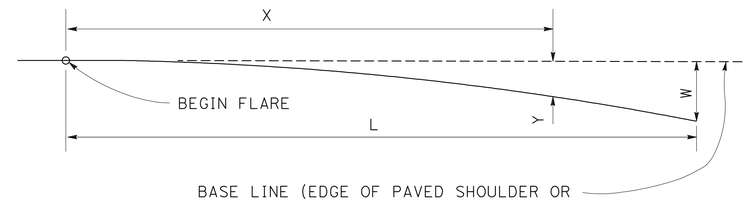

$$Y = \frac{WX^2}{L^2}$$

Y = OFFSET FROM BASE LINE
W = MAXIMUM OFFSET
X = DISTANCE ALONG BASE LINE
L = LENGTH OF FLARE

PARABOLIC FLARE OFFSETS

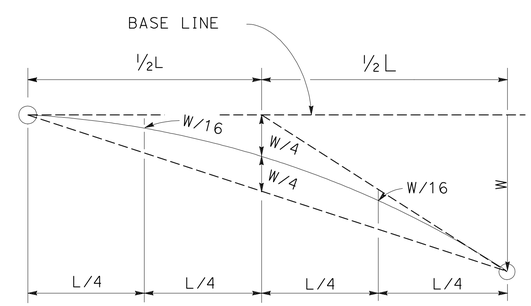

TYPICAL PARABOLIC LAYOUT

CONSTRUCTION DETAILS

NO SCALE

C-9

STATE OF CALIFORNIA - DEPARTMENT OF TRANSPORTATION
Caltrans
NORTH REGION
OFFICE OF DESIGN, SOUTH
DESIGN BRANCH 2

FUNCTIONAL SUPERVISOR: GIBERT OGAZ
CALCULATED-DESIGNED BY: JUSTIN A UNCK
CHECKED BY: JUSTIN A UNCK
REVISED BY: J. UNCK
DATE REVISED:

LAST REVISION 00-00-00
DATE PLOTTED => 30-JUN-2010
TIME PLOTTED => 08:21

Dist	COUNTY	ROUTE	POST MILES TOTAL PROJECT	SHEET No.	TOTAL SHEETS
03	Sac	99	0.1/12.0	13	73

REGISTERED CIVIL ENGINEER 5-24-10 DATE

5-24-10
PLANS APPROVAL DATE

REGISTERED PROFESSIONAL ENGINEER JUSTIN UNCK No. C65889 Exp. 12-31-11 CIVIL STATE OF CALIFORNIA

THE STATE OF CALIFORNIA OR ITS OFFICERS OR AGENTS SHALL NOT BE RESPONSIBLE FOR THE ACCURACY OR COMPLETENESS OF SCANNED COPIES OF THIS PLAN SHEET.

NOTES:

1. W6 x 9 STEEL POST, 6'-0" IN LENGTH, WITH 6" x 8" x 1'-2" NOTCHED WOOD BLOCK OR NOTCHED RECYCLED PLASTIC BLOCK MAY BE USED IN PLACE OF THE 6" x 8" x 6'-0" WOOD POST WITH 6" x 8" x 1'-2" WOOD BLOCK.
2. W6 x 15 STEEL POST, 8'-0" IN LENGTH, WITH 8" x 8" x 1'-2" NOTCHED WOOD BLOCK OR NOTCHED RECYCLED PLASTIC BLOCK MAY BE USED IN PLACE OF THE 10" x 10" x 8'-0" WOOD POST WITH 8" x 8" x 1'-2" WOOD BLOCK.

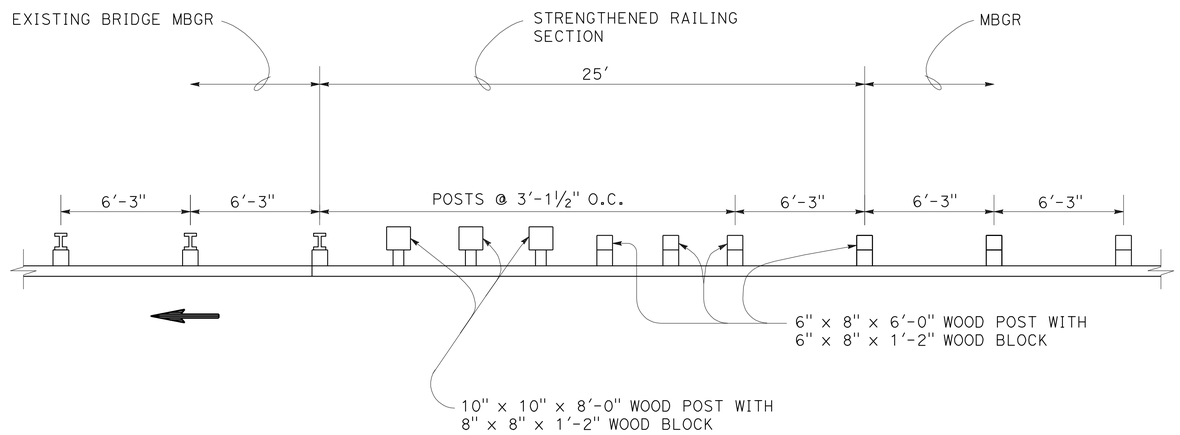

STRENGTHENED RAILING SECTION

CONSTRUCTION DETAILS
NO SCALE

C-10

STATE OF CALIFORNIA - DEPARTMENT OF TRANSPORTATION
Caltrans
NORTH REGION
OFFICE OF DESIGN, SOUTH
DESIGN BRANCH 2

FUNCTIONAL SUPERVISOR: GIBERT OGAZ
CALCULATED-DESIGNED BY: JUSTIN A UNCK
CHECKED BY: JUSTIN A UNCK
REVISED BY: J. UNCK
DATE REVISED:

LAST REVISION 00-00-00
DATE PLOTTED => 30-JUN-2010
TIME PLOTTED => 08:22

Dist	COUNTY	ROUTE	POST MILES TOTAL PROJECT	SHEET No.	TOTAL SHEETS
03	Sac	99	0.1/12.0	14	73

REGISTERED CIVIL ENGINEER 5-24-10 DATE

5-24-10
PLANS APPROVAL DATE

REGISTERED PROFESSIONAL ENGINEER JUSTIN UNCK No. C65889 Exp. 12-31-11 CIVIL STATE OF CALIFORNIA

THE STATE OF CALIFORNIA OR ITS OFFICERS OR AGENTS SHALL NOT BE RESPONSIBLE FOR THE ACCURACY OR COMPLETENESS OF SCANNED COPIES OF THIS PLAN SHEET.

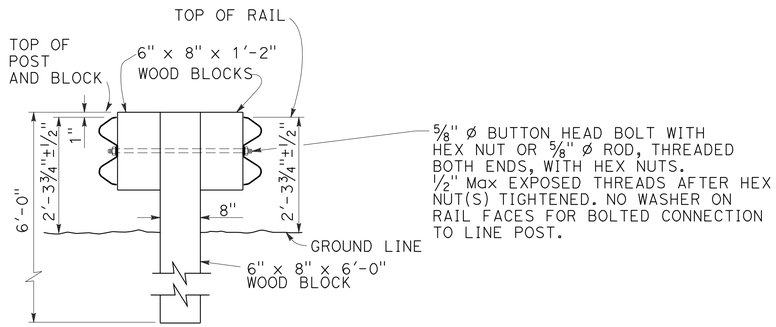

TYPICAL DOUBLE METAL BEAM GUARD RAILING

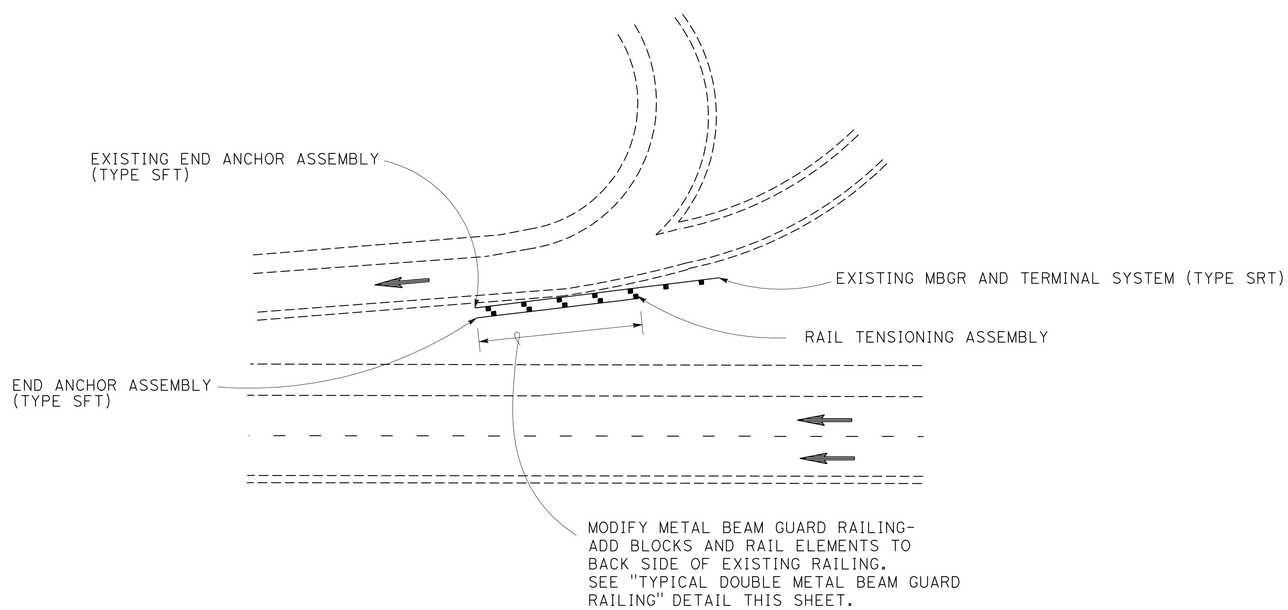

SB ONRAMP Rte 104/99 SEPARATION
NB ONRAMP Rte 104/99 SEPARATION

CONSTRUCTION DETAILS

NO SCALE

C-11

STATE OF CALIFORNIA - DEPARTMENT OF TRANSPORTATION
Caltrans
NORTH REGION
OFFICE OF DESIGN, SOUTH
DESIGN BRANCH 2

FUNCTIONAL SUPERVISOR: GIBERT OGAZ
CALCULATED-DESIGNED BY: JUSTIN A UNCK
CHECKED BY: JUSTIN A UNCK
REVISED BY: J. UNCK
DATE REVISED:

LAST REVISION 00-00-00 | DATE PLOTTED => 30-JUN-2010 | TIME PLOTTED => 08:22

Dist	COUNTY	ROUTE	POST MILES TOTAL PROJECT	SHEET No.	TOTAL SHEETS
03	Sac	99	0.1/12.0	15	73

REGISTERED CIVIL ENGINEER 5-24-10 DATE

5-24-10
PLANS APPROVAL DATE

REGISTERED PROFESSIONAL ENGINEER JUSTIN UNCK No. C65889 Exp. 12-31-11 CIVIL STATE OF CALIFORNIA

THE STATE OF CALIFORNIA OR ITS OFFICERS OR AGENTS SHALL NOT BE RESPONSIBLE FOR THE ACCURACY OR COMPLETENESS OF SCANNED COPIES OF THIS PLAN SHEET.

NOTE:

1. FOR METAL BEAM GUARD RAILING (SPECIAL), USE "W" BEAM TO THRIE BEAM ELEMENT TO CONNECT END OF TRANSITION RAIL TO EXISTING MBGR (MAKE RAILING CONTINUOUS). USE WOOD BLOCKS TO GRADUALLY TRANSITION RAILING AS NEEDED. DRILL AND BOND THREADED RODS IN 1⅛" Dia HOLES WITH EPOXY CARTRIDGE. Min 9" EMBEDMENT INTO CONCRETE USING 1" GALV HS BOLTS WITH WASHERS AND NUTS. LAP RAIL ELEMENTS IN THE DIRECTION OF TRAFFIC.

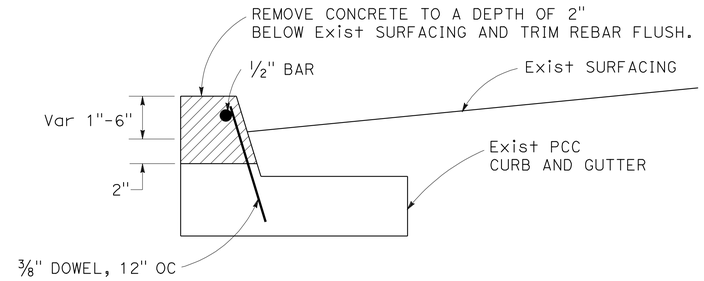

REMOVE CONCRETE CURB

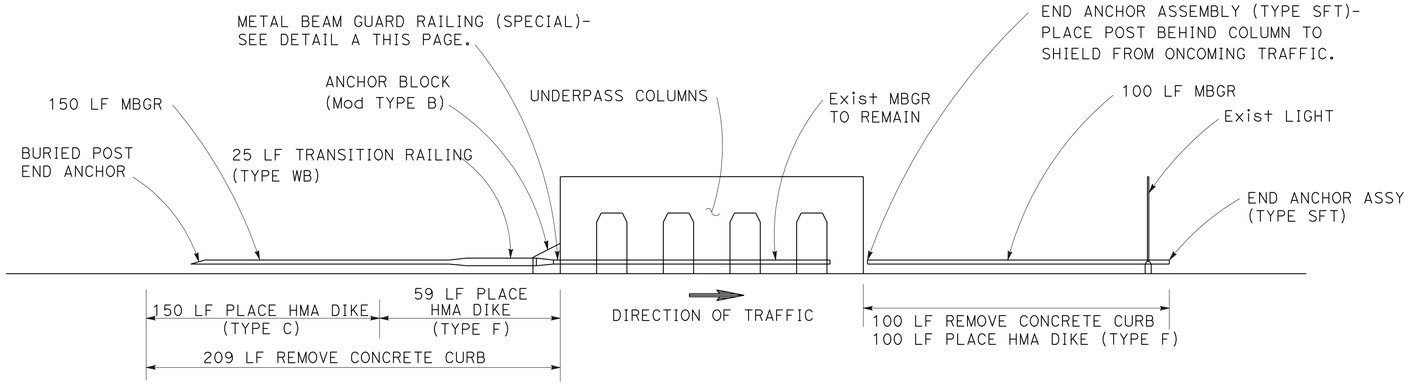

MEDIAN ELEVATION

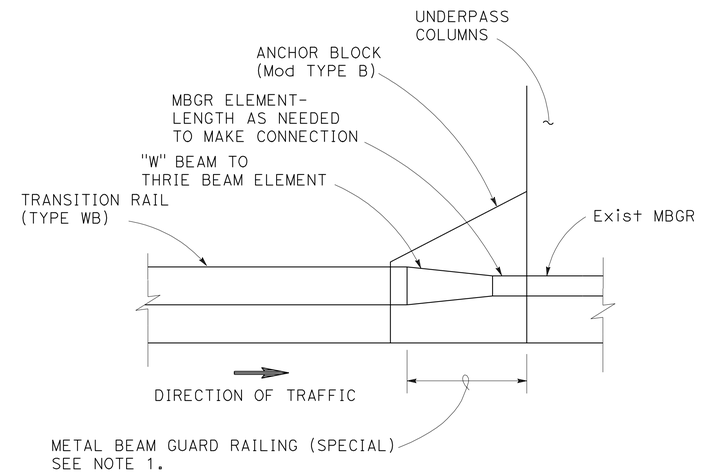

DETAIL A

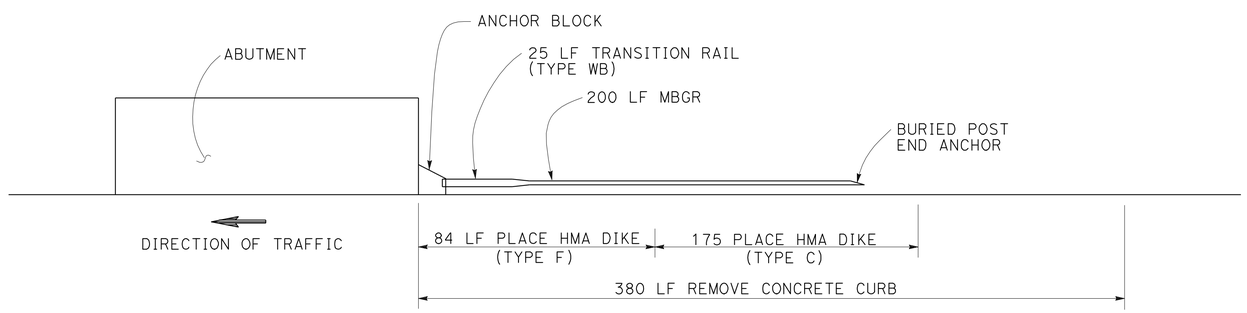

OUTSIDE ELEVATION

MCCONNEL UNDERPASS

CONSTRUCTION DETAILS

NO SCALE

C-12

STATE OF CALIFORNIA - DEPARTMENT OF TRANSPORTATION
Caltrans
NORTH REGION
OFFICE OF DESIGN, SOUTH
DESIGN BRANCH 2

FUNCTIONAL SUPERVISOR: GIBERT OGAZ
CALCULATED-DESIGNED BY: JUSTIN A UNCK
CHECKED BY: JUSTIN A UNCK
REVISED BY: J. UNCK
DATE REVISED:

LAST REVISION 00-00-00
DATE PLOTTED => 30-JUN-2010
TIME PLOTTED => 08:22

Dist	COUNTY	ROUTE	POST MILES TOTAL PROJECT	SHEET No.	TOTAL SHEETS
03	Sac	99	0.1/12.0	16	73

REGISTERED CIVIL ENGINEER 5-24-10 DATE

5-24-10
PLANS APPROVAL DATE

REGISTERED PROFESSIONAL ENGINEER JUSTIN UNCK No. C65889 Exp. 12-31-11 CIVIL STATE OF CALIFORNIA

THE STATE OF CALIFORNIA OR ITS OFFICERS OR AGENTS SHALL NOT BE RESPONSIBLE FOR THE ACCURACY OR COMPLETENESS OF SCANNED COPIES OF THIS PLAN SHEET.

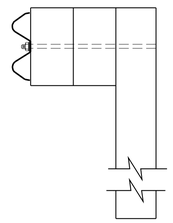

ALTERNATIVE 1
USE TWO BLOCKS

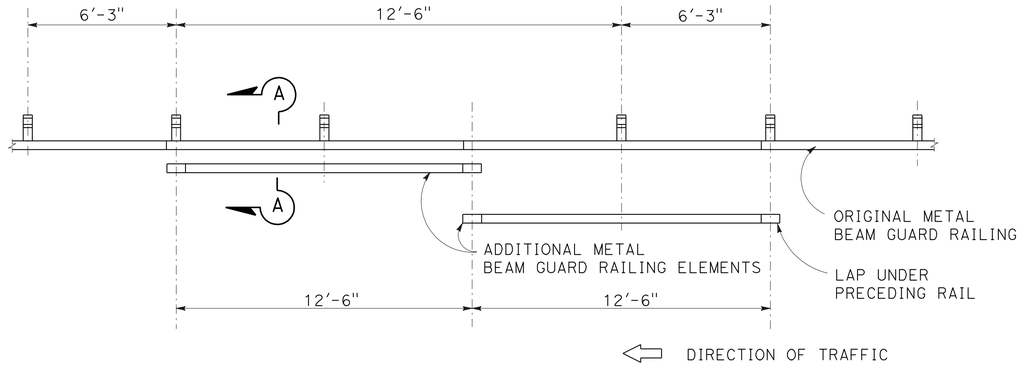

ALTERNATIVE 2
ONE POST OMITTED (SPLICE IN CENTER)

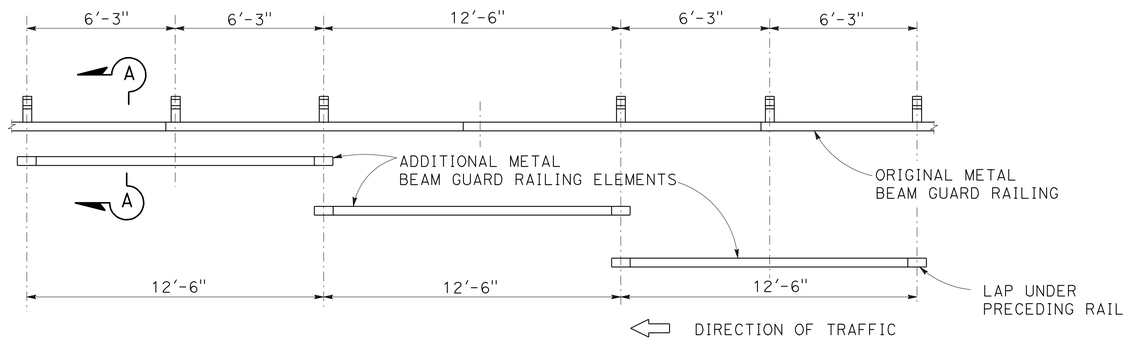

ALTERNATIVE 3
ONE POST OMITTED (SPLICE AT POSTS)

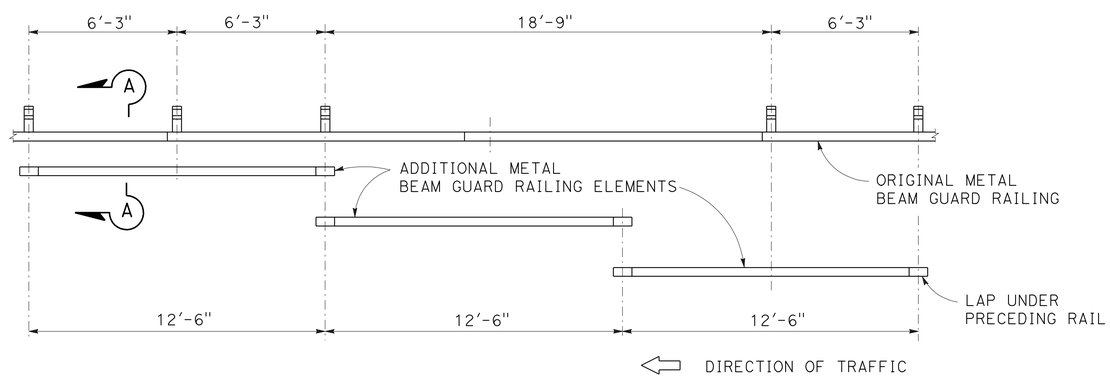

ALTERNATIVE 4
TWO POSTS OMITTED

ADJUSTMENT AT DRAINAGE INLET

NOTES:

1. THIS DETAIL TO BE USED ON LINE POSTS ONLY. DO NOT USE ON TRANSITION RAILING OR TERMINAL SYSTEM POSTS.
2. ALTERNATIVE 1 IS THE PREFERRED ALTERNATIVE AND SHOULD BE USED WHEN POSSIBLE.
3. USE ALTERNATIVE 2 OR ALTERNATIVE 3 WHEN ONE POST IS OMITTED.
4. USE ALTERNATIVE 4 WHEN TWO POSTS ARE OMITTED.
5. FOR OTHER DETAILS, SEE STANDARD PLAN A77A1 AND A77A2.

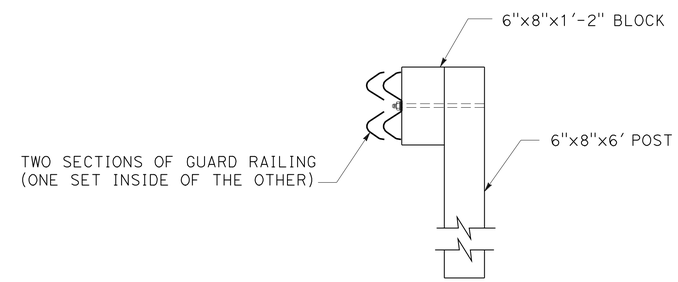

SECTION A-A

CONSTRUCTION DETAILS

NO SCALE

C-13

STATE OF CALIFORNIA - DEPARTMENT OF TRANSPORTATION
Caltrans
NORTH REGION
OFFICE OF DESIGN, SOUTH
DESIGN BRANCH 2

FUNCTIONAL SUPERVISOR: GIBERT OGAZ
CALCULATED-DESIGNED BY: JUSTIN A UNCK
CHECKED BY: JUSTIN A UNCK
REVISED BY: J. UNCK
DATE REVISED:

LAST REVISION 00-00-00 | DATE PLOTTED => 30-JUN-2010 | TIME PLOTTED => 08:22

Dist	COUNTY	ROUTE	POST MILES TOTAL PROJECT	SHEET No.	TOTAL SHEETS
03	Sac	99	0.1/12.0	17	73

REGISTERED CIVIL ENGINEER 5-24-10 DATE

5-24-10
PLANS APPROVAL DATE

REGISTERED PROFESSIONAL ENGINEER JUSTIN UNCK No. C65889 Exp. 12-31-11 CIVIL STATE OF CALIFORNIA

THE STATE OF CALIFORNIA OR ITS OFFICERS OR AGENTS SHALL NOT BE RESPONSIBLE FOR THE ACCURACY OR COMPLETENESS OF SCANNED COPIES OF THIS PLAN SHEET.

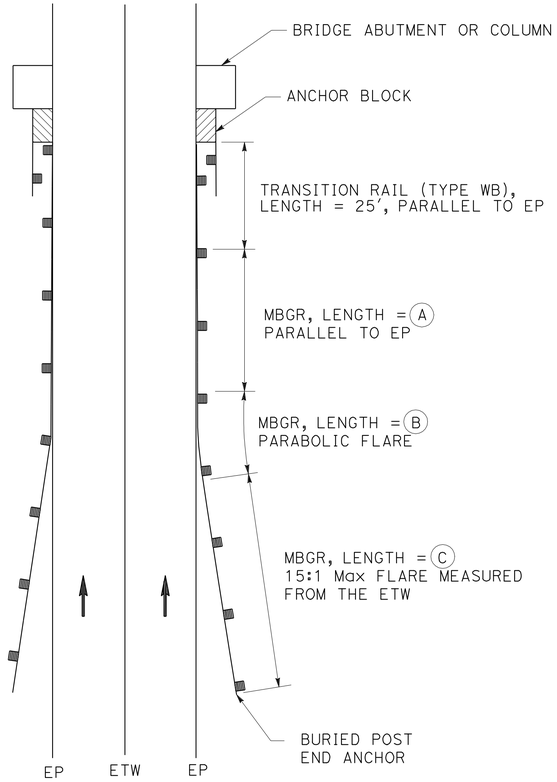

FLARED LAYOUT

NOTES:

1. FOR DETAILS NOT SHOWN, SEE "TYPE 12C LAYOUT" ON Std PLAN A77F2.
2. FOR PARABOLIC FLARE INFORMATION, SEE DETAILS ELSEWHERE THIS PLAN SET.

LOCATION	(A)	(B)	(C)*
SB AMADOR Ave OVERCROSSING APPROACH	12.5'	25'	75'
SB Rte 104/99 Sep APPROACH	50'	25'	100'
SB MCCONNEL UNDER PASS APPROACH, MEDIAN	25'	25'	125'
SB MCCONNEL UNDER PASS APPROACH, OUTSIDE	50'	25'	125'
NB SIMMERHORN Rd OVERCROSSING APPROACH	0'	25'	112.5'
NB Rte 104/99 Sep APPROACH	0'	25'	100'

* LENGTH (C) TO BE ADJUSTED AS NEEDED TO OBTAIN Std PLAN COVER DEPTH FOR BURIED POST END ANCHOR, OR AS DIRECTED BY THE ENGINEER.

NOTES:

1. POSTMILES ARE APPROXIMATE.
2. SEE TYPICAL CROSS SECTIONS FOR SHOULDER STRUCTURAL SECTION.
3. EXISTING AC SURFACING, AC DIKE AND BASE MATERIAL REMOVED UNDER ROADWAY EXCAVATION.

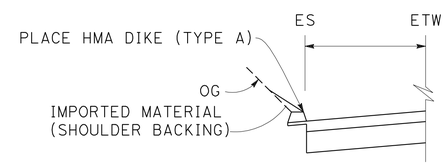

PM 3.390 TO PM 3.528

SECTION A-A

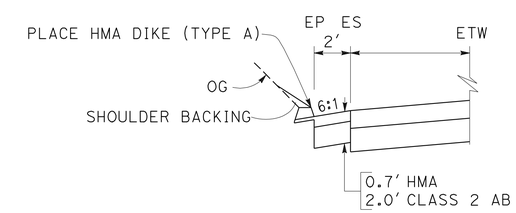

PM 3.528 TO PM 3.537
PM 3.560 TO PM 3.649

SECTION B-B

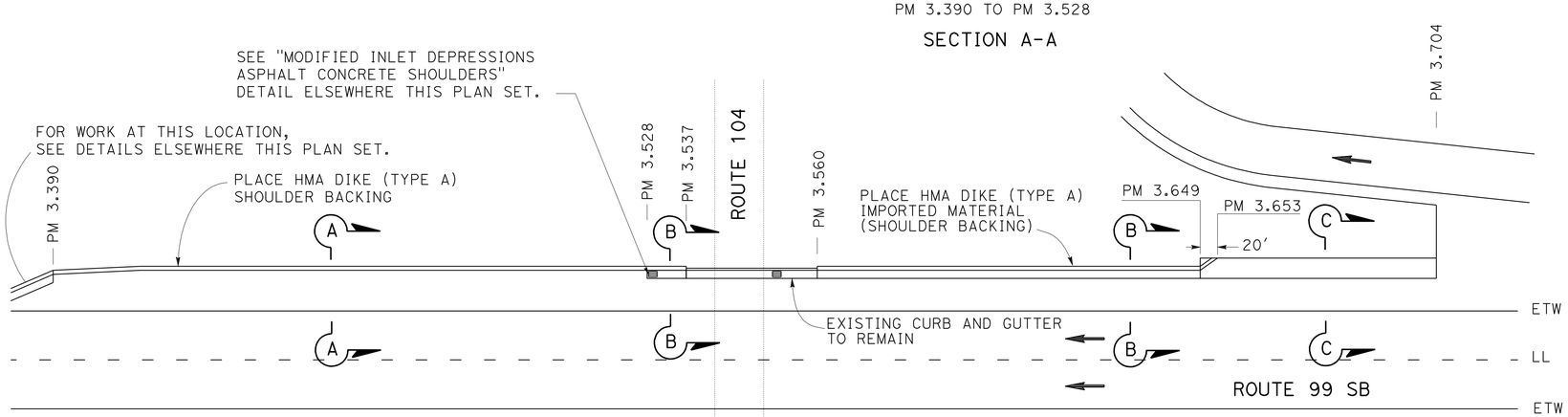

ROUTE 104/99 SEPARATION SIDE GUTTERS

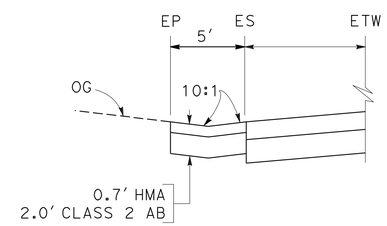

PM 3.649 TO PM 3.704

SECTION C-C

CONSTRUCTION DETAILS

NO SCALE

C-14

STATE OF CALIFORNIA - DEPARTMENT OF TRANSPORTATION
NORTH REGION
OFFICE OF DESIGN, SOUTH
DESIGN BRANCH 2

FUNCTIONAL SUPERVISOR: GIBERT OGAZ
CALCULATED-DESIGNED BY: JUSTIN A UNCK
CHECKED BY: JUSTIN A UNCK
REVISED BY: J. UNCK
DATE REVISED:

LAST REVISION 00-00-00
DATE PLOTTED => 30-JUN-2010
TIME PLOTTED => 08:22

Dist	COUNTY	ROUTE	POST MILES TOTAL PROJECT	SHEET No.	TOTAL SHEETS
03	Sac	99	0.1/12.0	18	73

REGISTERED CIVIL ENGINEER 5-24-10 DATE

5-24-10
PLANS APPROVAL DATE

REGISTERED PROFESSIONAL ENGINEER JUSTIN UNCK No. C65889 Exp. 12-31-11 CIVIL STATE OF CALIFORNIA

THE STATE OF CALIFORNIA OR ITS OFFICERS OR AGENTS SHALL NOT BE RESPONSIBLE FOR THE ACCURACY OR COMPLETENESS OF SCANNED COPIES OF THIS PLAN SHEET.

NOTES:

1. POSTMILES ARE APPROXIMATE.
2. SEE TYPICAL CROSS SECTIONS FOR SHOULDER STRUCTURAL SECTION.
3. EXISTING AC SURFACING, AC DIKE AND BASE MATERIAL REMOVED UNDER ROADWAY EXCAVATION.

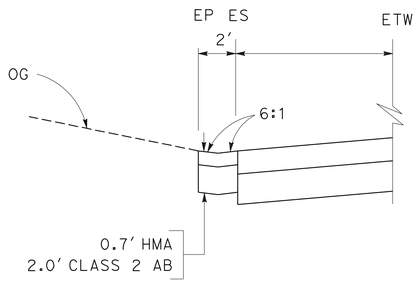

PM 1.569 TO PM 1.573
PM 1.639 TO PM 1.679

SECTION A-A

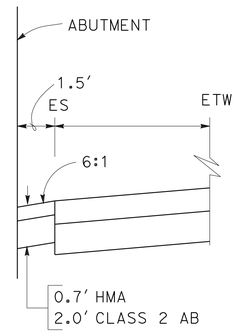

PM 1.573 TO PM 1.581
PM 1.618 TO PM 1.639

SECTION B-B

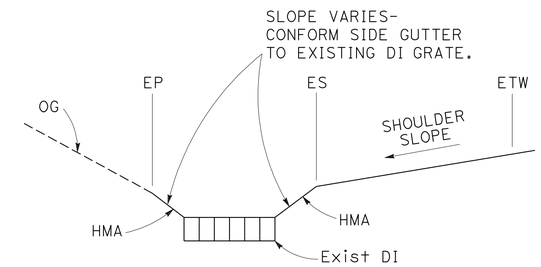

PAVING AT DRAINAGE INLET IN SIDE GUTTER

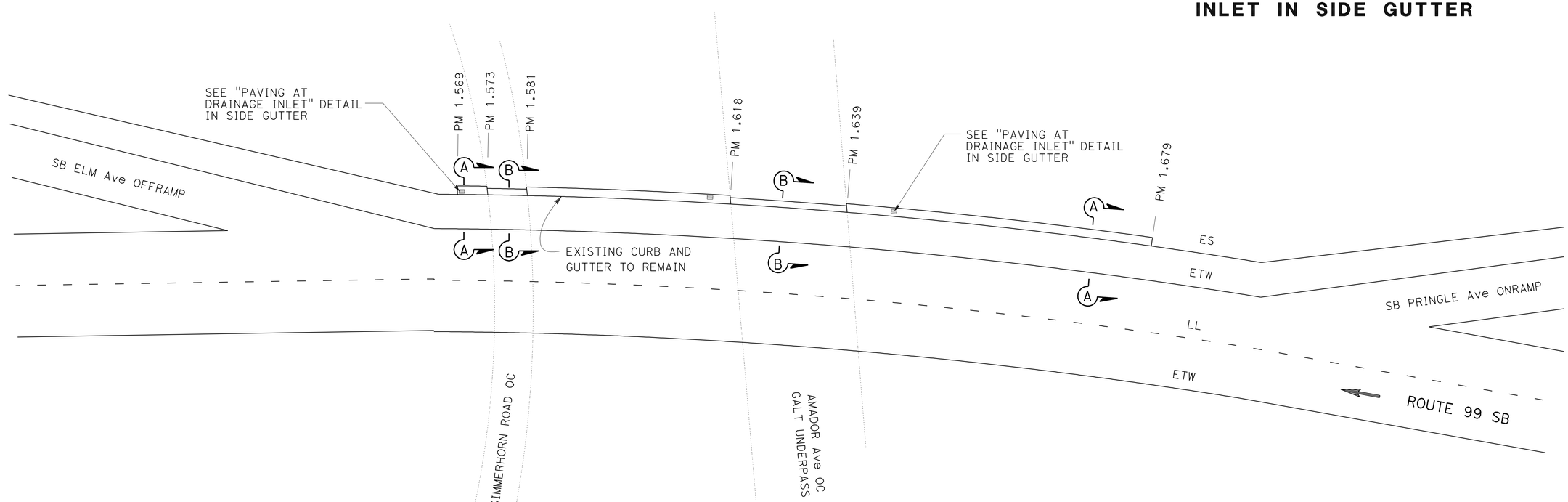

AMADOR Ave/SIMMERHORN Rd OVERCROSSING SIDE GUTTERS

CONSTRUCTION DETAILS

NO SCALE

C-15

STATE OF CALIFORNIA - DEPARTMENT OF TRANSPORTATION
NORTH REGION
OFFICE OF DESIGN, SOUTH
DESIGN BRANCH 2

FUNCTIONAL SUPERVISOR: GIBERT OGAZ

CALCULATED-DESIGNED BY: JUSTIN A UNCK
CHECKED BY: JUSTIN A UNCK
REVISED BY: J. UNCK
DATE REVISED:

LAST REVISION 00-00-00
DATE PLOTTED => 30-JUN-2010
TIME PLOTTED => 08:22

Dist	COUNTY	ROUTE	POST MILES TOTAL PROJECT	SHEET No.	TOTAL SHEETS
03	Sac	99	0.1/12.0	19	73

REGISTERED CIVIL ENGINEER 5-24-10 DATE

5-24-10
PLANS APPROVAL DATE

REGISTERED PROFESSIONAL ENGINEER JUSTIN UNCK No. C65889 Exp. 12-31-11 CIVIL STATE OF CALIFORNIA

THE STATE OF CALIFORNIA OR ITS OFFICERS OR AGENTS SHALL NOT BE RESPONSIBLE FOR THE ACCURACY OR COMPLETENESS OF SCANNED COPIES OF THIS PLAN SHEET.

NOTES:

1. TEMPORARY CRASH CUSHION (ARRAY TS14) SHOULD ONLY BE USED ON SHOULDERS 8′ OR WIDER.
2. TEMPORARY CRASH CUSHION (TYPE ABSORB 350) SHOULD BE INSTALLED ACCORDING TO THE MANUFACTURER'S GUIDANCE

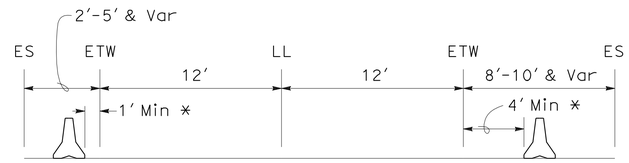

* DISTANCE MAY BE REDUCED WITH APPROVAL OF THE ENGINEER.

TYPICAL SECTION
TEMPORARY RAIL (TYPE K)

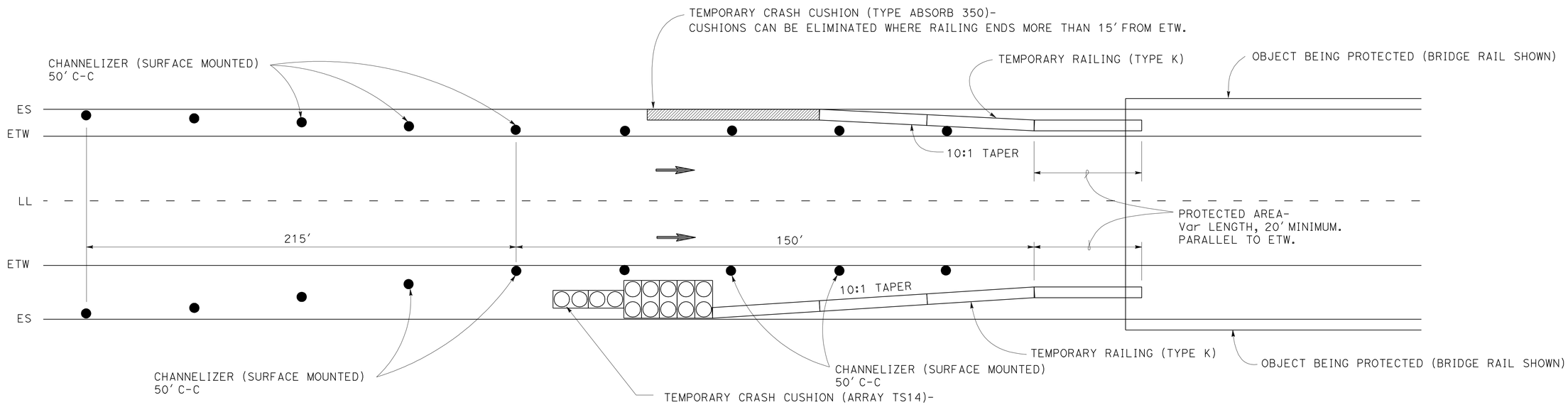

TYPICAL LAYOUT
TEMPORARY RAIL (TYPE K)

TYPICAL TEMPORARY RAILING (TYPE K) AND TEMPORARY CRASH CUSHION PLACEMENT

CONSTRUCTION DETAILS

NO SCALE

C-16

STATE OF CALIFORNIA - DEPARTMENT OF TRANSPORTATION
NORTH REGION
OFFICE OF DESIGN, SOUTH
DESIGN BRANCH 2

Caltrans

FUNCTIONAL SUPERVISOR: GIBERT OGAZ
CALCULATED-DESIGNED BY: JUSTIN A UNCK
CHECKED BY: JUSTIN A UNCK
REVISED BY: J. UNCK
DATE REVISED:

LAST REVISION: 00-00-00
DATE PLOTTED => 30-JUN-2010
TIME PLOTTED => 08:22

Dist	COUNTY	ROUTE	POST MILES TOTAL PROJECT	SHEET No.	TOTAL SHEETS
03	Sac	99	0.1/12.0	20	73

REGISTERED CIVIL ENGINEER 5-24-10 DATE

5-24-10
PLANS APPROVAL DATE

REGISTERED PROFESSIONAL ENGINEER JUSTIN UNCK No. C65889 Exp. 12-31-11 CIVIL STATE OF CALIFORNIA

THE STATE OF CALIFORNIA OR ITS OFFICERS OR AGENTS SHALL NOT BE RESPONSIBLE FOR THE ACCURACY OR COMPLETENESS OF SCANNED COPIES OF THIS PLAN SHEET.

NOTE

FOR ALL DETAILS NOT SHOWN, SEE STANDARD PLAN D78C.

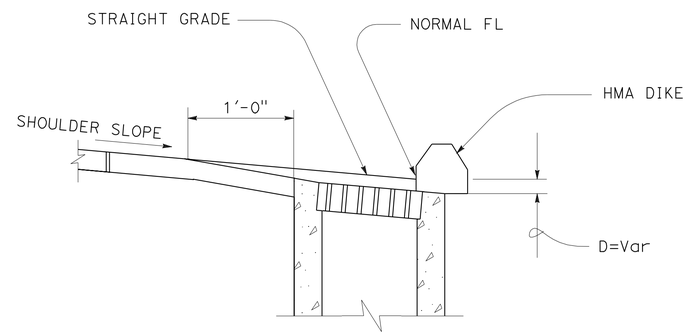

D VARIES DUE TO FIXED SHOULDER SLOPE AND GRATE FL ELEVATIONS (EXISTING CONDITIONS).

TYPICAL SECTION

MODIFIED INLET DEPRESSIONS
ASPHALT CONCRETE SHOULDERS

Rte 104/99 SEPARATION (24-144) (TWIN CITIES Rd), SOUTHBOUND AND NORTHBOUND
MCCONNELL UNDERPASS (24-48L), SOUTHBOUND
GALT UNDERPASS (24-60), NORTHBOUND

CONSTRUCTION DETAILS

NO SCALE

C-17

STATE OF CALIFORNIA - DEPARTMENT OF TRANSPORTATION
Caltrans
NORTH REGION
OFFICE OF DESIGN, SOUTH
DESIGN BRANCH 2

FUNCTIONAL SUPERVISOR: GIBERT OGAZ

CALCULATED-DESIGNED BY: JUSTIN A UNCK
CHECKED BY: JUSTIN A UNCK

REVISED BY: J. UNCK
DATE REVISED:

LAST REVISION 00-00-00 | DATE PLOTTED => 30-JUN-2010 | TIME PLOTTED => 08:22

Dist	COUNTY	ROUTE	POST MILES TOTAL PROJECT	SHEET No.	TOTAL SHEETS
03	Sac	99	0.1/12.0	21	73

REGISTERED CIVIL ENGINEER 5-24-10 DATE

5-24-10
PLANS APPROVAL DATE

REGISTERED PROFESSIONAL ENGINEER JUSTIN UNCK No. C65889 Exp. 12-31-11 CIVIL STATE OF CALIFORNIA

THE STATE OF CALIFORNIA OR ITS OFFICERS OR AGENTS SHALL NOT BE RESPONSIBLE FOR THE ACCURACY OR COMPLETENESS OF SCANNED COPIES OF THIS PLAN SHEET.

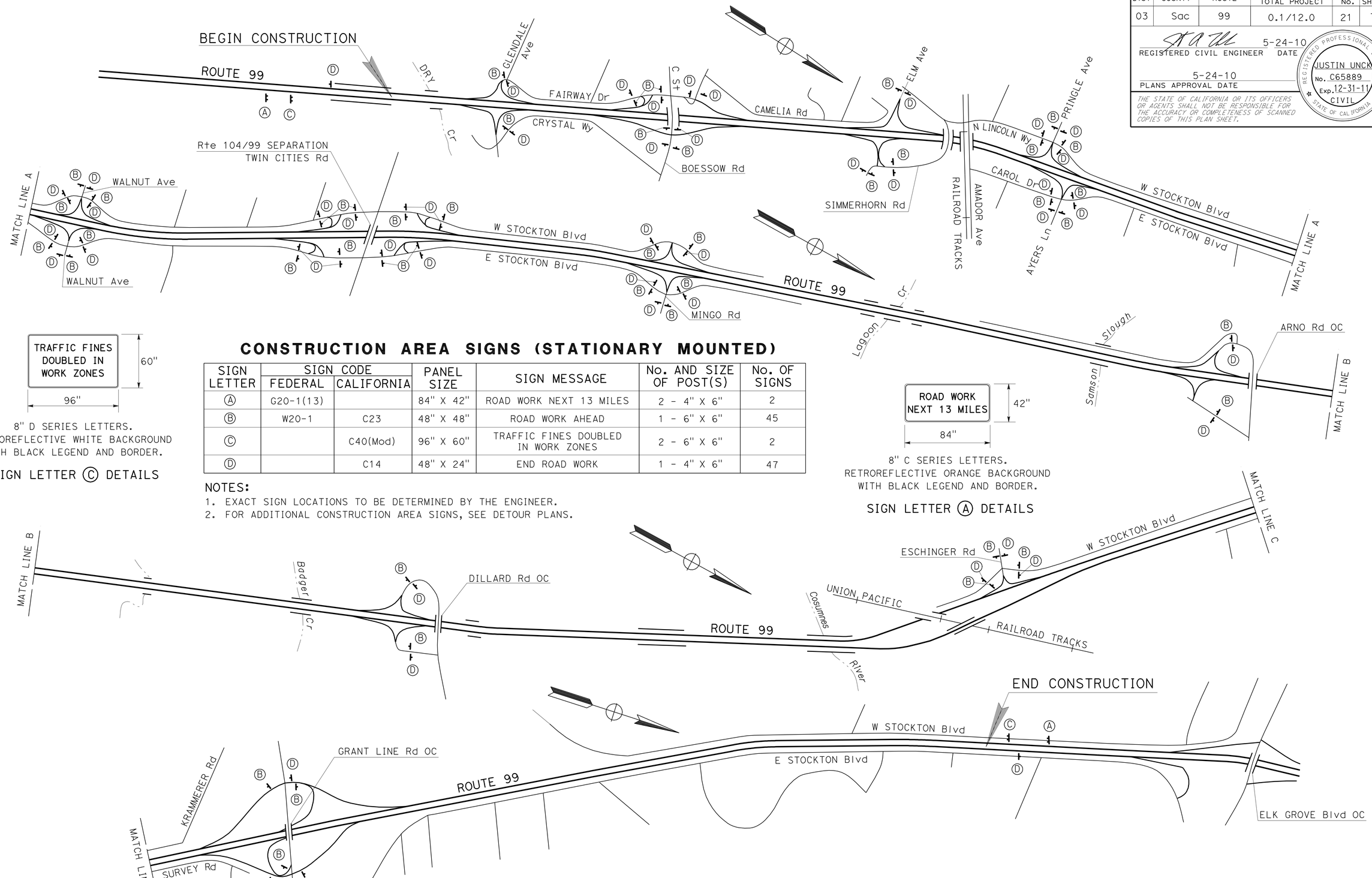

TRAFFIC FINES DOUBLED IN WORK ZONES
60"
96"

8" D SERIES LETTERS.
RETROREFLECTIVE WHITE BACKGROUND
WITH BLACK LEGEND AND BORDER.

SIGN LETTER Ⓒ DETAILS

CONSTRUCTION AREA SIGNS (STATIONARY MOUNTED)

SIGN LETTER	SIGN CODE FEDERAL	SIGN CODE CALIFORNIA	PANEL SIZE	SIGN MESSAGE	No. AND SIZE OF POST(S)	No. OF SIGNS
Ⓐ	G20-1(13)		84" X 42"	ROAD WORK NEXT 13 MILES	2 - 4" X 6"	2
Ⓑ	W20-1	C23	48" X 48"	ROAD WORK AHEAD	1 - 6" X 6"	45
Ⓒ		C40(Mod)	96" X 60"	TRAFFIC FINES DOUBLED IN WORK ZONES	2 - 6" X 6"	2
Ⓓ		C14	48" X 24"	END ROAD WORK	1 - 4" X 6"	47

NOTES:
1. EXACT SIGN LOCATIONS TO BE DETERMINED BY THE ENGINEER.
2. FOR ADDITIONAL CONSTRUCTION AREA SIGNS, SEE DETOUR PLANS.

ROAD WORK NEXT 13 MILES
42"
84"

8" C SERIES LETTERS.
RETROREFLECTIVE ORANGE BACKGROUND
WITH BLACK LEGEND AND BORDER.

SIGN LETTER Ⓐ DETAILS

THIS PLAN ACCURATE FOR CONSTRUCTION AREA SIGN WORK ONLY.

CONSTRUCTION AREA SIGNS

NO SCALE

CS-1

STATE OF CALIFORNIA - DEPARTMENT OF TRANSPORTATION
Caltrans
NORTH REGION
OFFICE OF DESIGN, SOUTH
DESIGN BRANCH 2

FUNCTIONAL SUPERVISOR: GIBERT OGAZ
CALCULATED-DESIGNED BY: JUSTIN A UNCK
CHECKED BY: JUSTIN A UNCK
REVISED BY: J. UNCK
DATE REVISED:

LAST REVISION 00-00-00
DATE PLOTTED => 30-JUN-2010
TIME PLOTTED => 08:23

Dist	COUNTY	ROUTE	POST MILES TOTAL PROJECT	SHEET No.	TOTAL SHEETS
03	Sac	99	0.1/12.0	22	73

REGISTERED CIVIL ENGINEER 5-24-10 DATE

5-24-10
PLANS APPROVAL DATE

REGISTERED PROFESSIONAL ENGINEER G. CAGLE No. 52121 Exp. 12-31-10 CIVIL STATE OF CALIFORNIA

THE STATE OF CALIFORNIA OR ITS OFFICERS OR AGENTS SHALL NOT BE RESPONSIBLE FOR THE ACCURACY OR COMPLETENESS OF SCANNED COPIES OF THIS PLAN SHEET.

LEGEND

PCMS

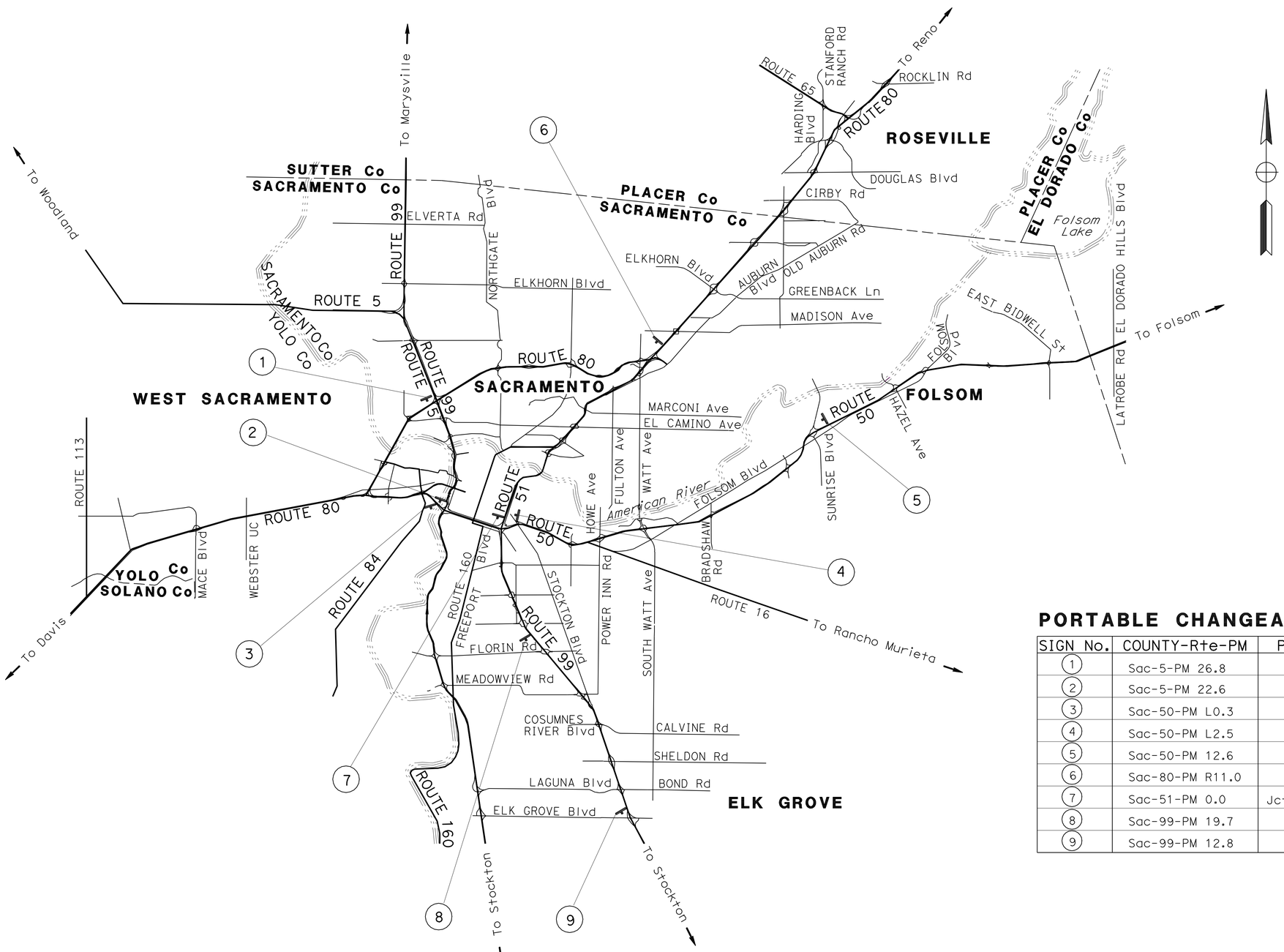

PORTABLE CHANGEABLE MESSAGE SIGNS (PCMS)

SIGN No.	COUNTY-Rte-PM	PCMS LOCATION	No. OF PCMS	DIRECTION
1	Sac-5-PM 26.8	Jct Rte 80	1	SB
2	Sac-5-PM 22.6	Jct Rte 50	1	SB
3	Sac-50-PM L0.3	Jct Rte 5	1	EB
4	Sac-50-PM L2.5	Jct Rte 99	1	WB
5	Sac-50-PM 12.6	SUNRISE Blvd	1	WB
6	Sac-80-PM R11.0	Jct Rte 51	1	WB
7	Sac-51-PM 0.0	Jct Rte 50 & Rte 99	1	WB
8	Sac-99-PM 19.7	FLORIN Rd	1	SB
9	Sac-99-PM 12.8	ELK GROVE Blvd	1	SB

NOTES

1. ADD 2 PCMS FOR RAMP CLOSURES
2. TWO SPARE PCMS WILL BE ON STAND BY TO BE USED AT ENGINEERS DISCRETION
3. EXACT PCMS LOCATION TO BE DETERMINED BY ENGINEER

THIS PLAN ACCURATE FOR CONSTRUCTION AREA SIGN WORK ONLY.

CONSTRUCTION AREA SIGNS

NO SCALE

CS-2

STATE OF CALIFORNIA - DEPARTMENT OF TRANSPORTATION
NORTH REGION
OFFICE OF DESIGN, SOUTH
DESIGN BRANCH 2

FUNCTIONAL SUPERVISOR: GILBERT OGAZ

CALCULATED-DESIGNED BY: G. CAGLE
CHECKED BY: G. CAGLE
REVISED BY: G. CAGLE
DATE REVISED

LAST REVISION DATE PLOTTED => 30-JUN-2010
TIME PLOTTED => 08:23

Dist	COUNTY	ROUTE	POST MILES TOTAL PROJECT	SHEET No.	TOTAL SHEETS
03	Sac	99	0.1/12.0	23	73

REGISTERED CIVIL ENGINEER 5-24-10 DATE

5-24-10
PLANS APPROVAL DATE

REGISTERED PROFESSIONAL ENGINEER G. CAGLE No. 52121 Exp. 12-31-10 CIVIL STATE OF CALIFORNIA

THE STATE OF CALIFORNIA OR ITS OFFICERS OR AGENTS SHALL NOT BE RESPONSIBLE FOR THE ACCURACY OR COMPLETENESS OF SCANNED COPIES OF THIS PLAN SHEET.

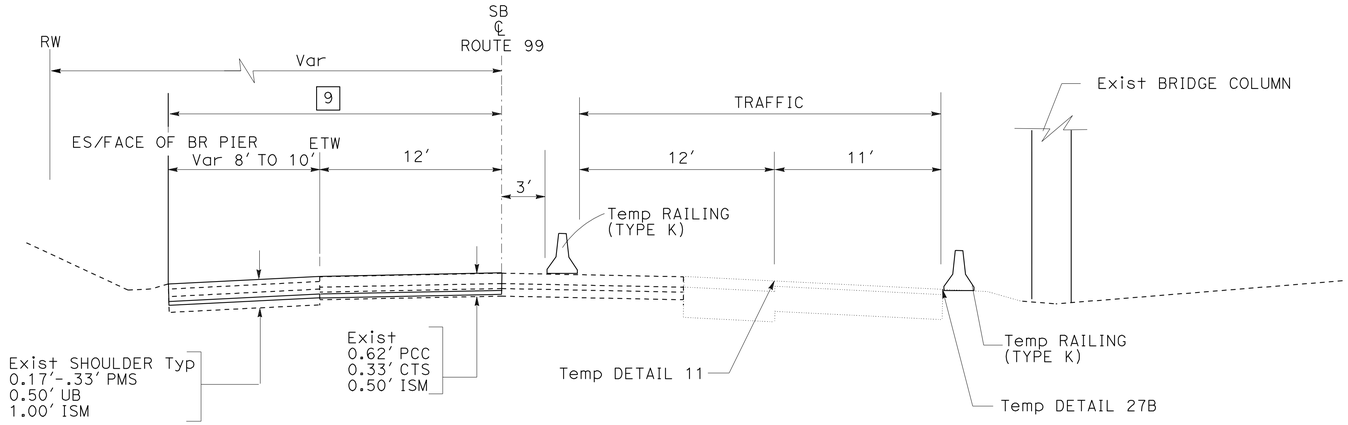

SOUTHBOUND ROUTE 99

PM 1.38 TO 1.82
PM 3.39 TO 3.73

STAGE 2

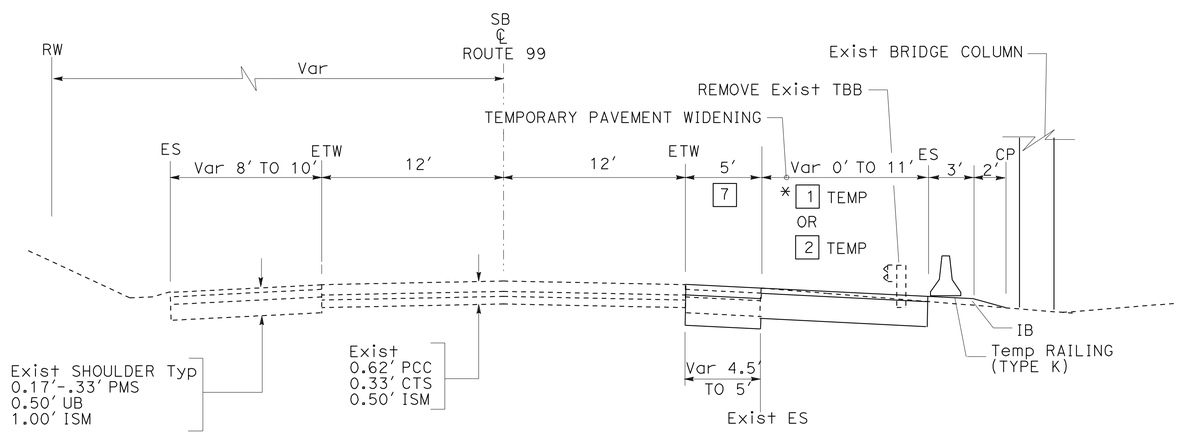

SOUTHBOUND ROUTE 99

PM 1.157 TO 2.060
PM 3.162 TO 3.970

STAGE 1

PCC LANE REPLACEMENT
TRAFFIC HANDLING

LEGEND

NO — STRUCTURAL SECTION NUMBER (SEE TYPICAL SECTIONS)

NO TEMP — TEMPORATRY STRUCTURAL SECTION NUMBER (SEE CONSTRUCTION DETATILS)

NOTE: TEMPORARY STRUCTURAL SECTION FOR TEMPORARY PAVEMENT WIDENING SHALL BE REMOVED THROUGH THE HMA LAYER ONLY WHEN NO LONGER NEEDED FOR CONSTRUCTION STAGING AND THEN BACKFILLED WITH IB.

* SEE CONSTRUCTION DETATILS

TEMPORARY TRAFFIC STRIPE

STAGE	POST MILE		DIRECTION	DETAIL No. PAINT 11	24	27B	38
				LF	LF	LF	LF
2	1.157	2.060	SB	4,795	4,795	1,130	400
	3.162	3.970	SB	4,267	4,267	1,130	400
				9,062	9,062	2,260	800
			TOTAL	21,184			

REMOVE TRAFFIC STRIPE

STAGE	POST MILE		DIRECTION	DETAIL No. PAINT 12	25	27B	36	MARKERS 12	25	36
				LF	LF	LF	LF	EA	EA	EA
2	1.157	2.060	SB	608	4,795	1,000	230	51	100	10
	3.162	3.970	SB	608	4,267	1,000	230	51	89	10
			SUB TOTAL	1,216	9,062	2,000	460	102	189	20
			TOTAL	12,738				311		

TEMPORARY PAVEMENT WIDENING

STAGE	POST MILE		DIRECTION	HMA (TYPE A)	CLASS 2 AB	ROADWAY EXCAVATION	IMPORTED BORROW
				TON	CY	CY	CY
1	1.157	2.060	SB	976.5	1,425.0	1,924.0	214.0
	3.162	3.970	SB	829.0	1,996.5	2,420.0	181.5
3	1.157	2.060	SB			499.0	499.0
	3.162	3.970	SB			423.5	423.5
			TOTAL	1,805.5	3,421.5	5,266.5	1,318.0

STAGE 1 & 2
STAGE CONSTRUCTION AND TRAFFIC HANDLING PLAN

NO SCALE

SC-1

STATE OF CALIFORNIA - DEPARTMENT OF TRANSPORTATION
NORTH REGION
OFFICE OF DESIGN, SOUTH
DESIGN BRANCH 2

FUNCTIONAL SUPERVISOR: GILBERT OGAZ
CALCULATED-DESIGNED BY: G. CAGLE
CHECKED BY: G. CAGLE
REVISED BY: G. CAGLE
DATE REVISED:

LAST REVISION 00-00-00
DATE PLOTTED => 30-JUN-2010
TIME PLOTTED => 08:23

Dist	COUNTY	ROUTE	POST MILES TOTAL PROJECT	SHEET No.	TOTAL SHEETS
03	Sac	99	0.1/12.0	24	73

REGISTERED CIVIL ENGINEER 5-24-10 DATE

5-24-10
PLANS APPROVAL DATE

REGISTERED PROFESSIONAL ENGINEER G. CAGLE No. 52121 Exp. 12-31-10 CIVIL STATE OF CALIFORNIA

THE STATE OF CALIFORNIA OR ITS OFFICERS OR AGENTS SHALL NOT BE RESPONSIBLE FOR THE ACCURACY OR COMPLETENESS OF SCANNED COPIES OF THIS PLAN SHEET.

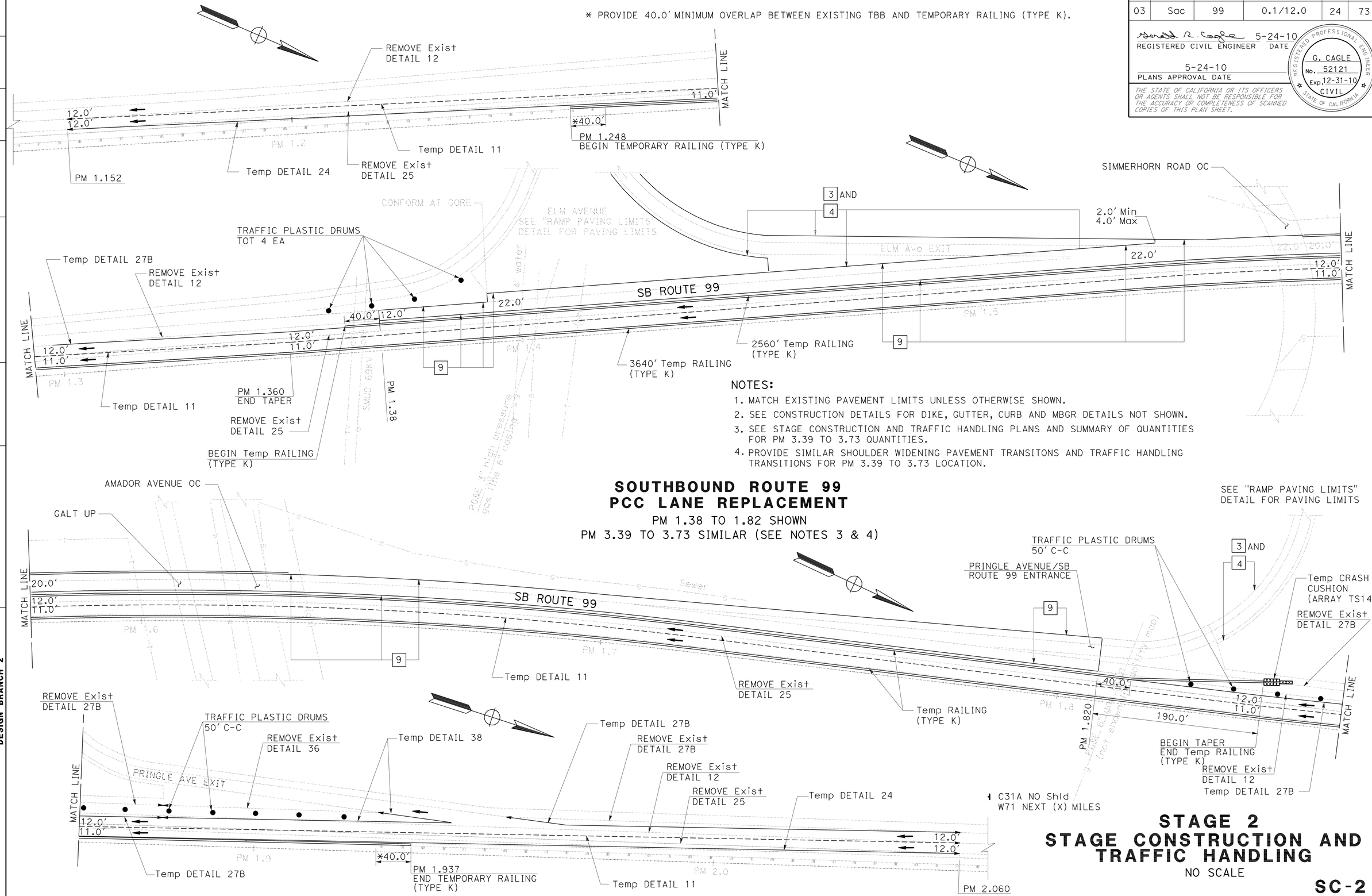

NOTES:

1. MATCH EXISTING PAVEMENT LIMITS UNLESS OTHERWISE SHOWN.
2. SEE CONSTRUCTION DETAILS FOR DIKE, GUTTER, CURB AND MBGR DETAILS NOT SHOWN.
3. SEE STAGE CONSTRUCTION AND TRAFFIC HANDLING PLANS AND SUMMARY OF QUANTITIES FOR PM 3.39 TO 3.73 QUANTITIES.
4. PROVIDE SIMILAR SHOULDER WIDENING PAVEMENT TRANSITONS AND TRAFFIC HANDLING TRANSITIONS FOR PM 3.39 TO 3.73 LOCATION.

SOUTHBOUND ROUTE 99 PCC LANE REPLACEMENT

PM 1.38 TO 1.82 SHOWN
PM 3.39 TO 3.73 SIMILAR (SEE NOTES 3 & 4)

STAGE 2 STAGE CONSTRUCTION AND TRAFFIC HANDLING

NO SCALE

SC-2

STATE OF CALIFORNIA - DEPARTMENT OF TRANSPORTATION
NORTH REGION
OFFICE OF DESIGN, SOUTH
DESIGN BRANCH 2

FUNCTIONAL SUPERVISOR: GILBERT OGAZ
CALCULATED-DESIGNED BY: G. CAGLE
CHECKED BY: G. CAGLE
REVISED BY: G. CAGLE
DATE REVISED

LAST REVISION 00-00-00
DATE PLOTTED => 30-JUN-2010
TIME PLOTTED => 08:23

Dist	COUNTY	ROUTE	POST MILES TOTAL PROJECT	SHEET No.	TOTAL SHEETS
03	Sac	99	0.1/12.0	25	73

REGISTERED CIVIL ENGINEER 5-24-10 DATE

5-24-10
PLANS APPROVAL DATE

REGISTERED PROFESSIONAL ENGINEER G. CAGLE No. 52121 Exp. 12-31-10 CIVIL STATE OF CALIFORNIA

THE STATE OF CALIFORNIA OR ITS OFFICERS OR AGENTS SHALL NOT BE RESPONSIBLE FOR THE ACCURACY OR COMPLETENESS OF SCANNED COPIES OF THIS PLAN SHEET.

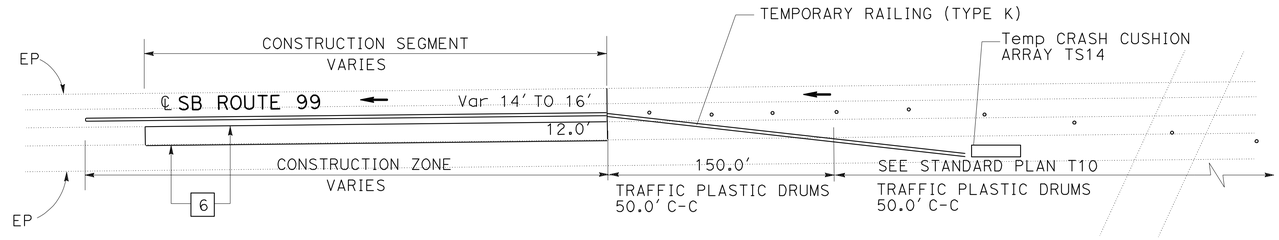

TYPICAL TRAFFIC HANDLING LAYOUT
STAGE STAGE 3

PM 1.38 TO 1.82
PM 3.39 TO 3.73

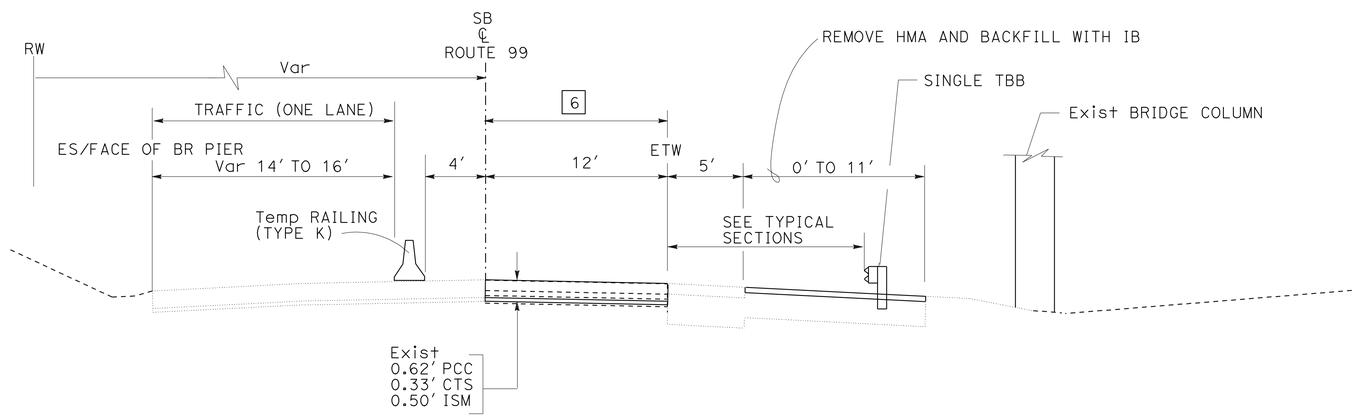

SOUTHBOUND ROUTE 99

PM 1.38 TO 1.82
PM 3.39 TO 3.73

STAGE 3

PCC LANE REPLACEMENT
TRAFFIC HANDLING

STAGE 3
STAGE CONSTRUCTION AND TRAFFIC HANDLING PLAN

NO SCALE

SC-3

REVISED BY: G. CAGLE
DATE REVISED
CALCULATED-DESIGNED BY: G. CAGLE
CHECKED BY
FUNCTIONAL SUPERVISOR: GILBERT OGAZ

STATE OF CALIFORNIA - DEPARTMENT OF TRANSPORTATION
Caltrans
NORTH REGION
OFFICE OF DESIGN, SOUTH
DESIGN BRANCH 2

LAST REVISION 00-00-00
DATE PLOTTED => 30-JUN-2010
TIME PLOTTED => 08:23

Dist	COUNTY	ROUTE	POST MILES TOTAL PROJECT	SHEET No.	TOTAL SHEETS
03	Sac	99	0.1/12.0	26	73

REGISTERED CIVIL ENGINEER 5-24-10 DATE

5-24-10
PLANS APPROVAL DATE

REGISTERED PROFESSIONAL ENGINEER JUSTIN UNCK No. C65889 Exp. 12-31-11 CIVIL STATE OF CALIFORNIA

THE STATE OF CALIFORNIA OR ITS OFFICERS OR AGENTS SHALL NOT BE RESPONSIBLE FOR THE ACCURACY OR COMPLETENESS OF SCANNED COPIES OF THIS PLAN SHEET.

NOTES:

1. ONRAMP CLOSURES SHALL UTILIZE TYPICAL RAMP CLOSURES AS SHOWN ON STANDARD PLAN T14, TRAFFIC CONTROL SYSTEM FOR RAMP CLOSURE.
2. EXACT SIGN LOCATIONS TO BE DETERMINED BY THE ENGINEER.
3. FOR ADDITIONAL CONSTRUCTION AREA SIGNS, SEE CONSTRUCTION AREA SIGN PLANS.
4. ONE PCMS SHALL BE USED IN ADVANCE OF FREEWAY OFFRAMP DETOURS.

LEGEND

- SIGN
- DIRECTION OF DETOUR TRAFFIC
- T14 Std PLAN T14, TRAFFIC CONTROL SYSTEM FOR RAMP CLOSURE
- <CA> CALIFORNIA SIGN CODE

CONSTRUCTION AREA SIGNS

SIGN CODE FEDERAL	SIGN CODE CALIFORNIA	SIGN MESSAGE	SIGN PANEL SIZE (MINIMUM)	QUANTITY (THIS SHEET)
M4-10L	C5(Lt)	DETOUR (LEFT ARROW)	48" X 18"	5
M4-10R	C5(Rt)	DETOUR (RIGHT ARROW)	48" X 18"	14
	SC3<CA>	DETOUR (AHEAD ARROW)	48" X 18"	1
M4-8a	C7	END DETOUR	24" X 18"	6

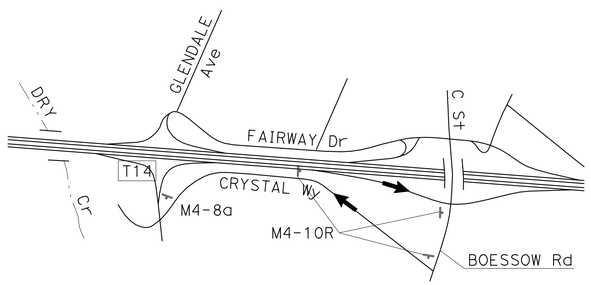

CRYSTAL WAY EXIT

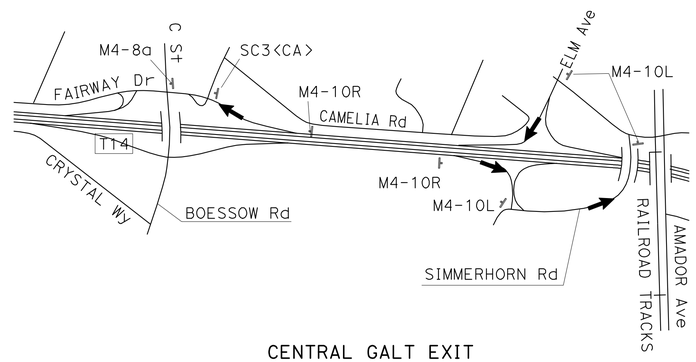

CENTRAL GALT EXIT

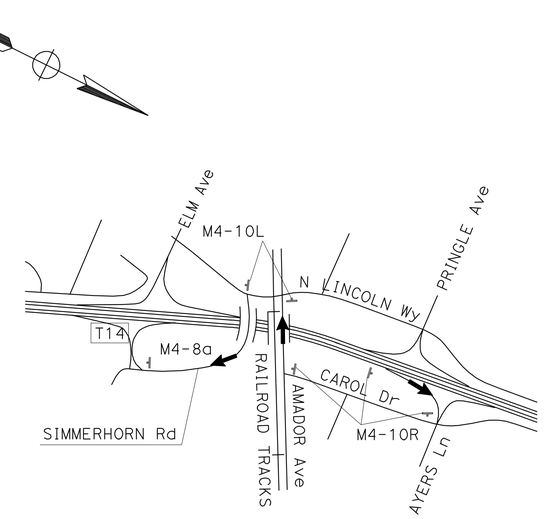

SIMMERHORN ROAD EXIT

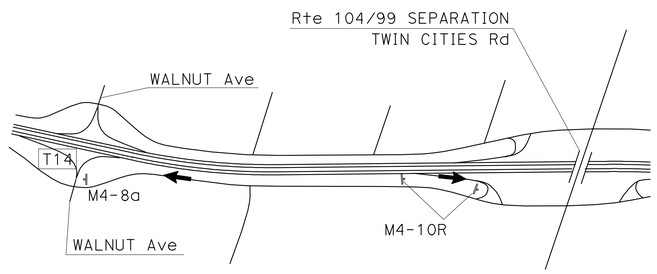

WALNUT AVENUE EXIT

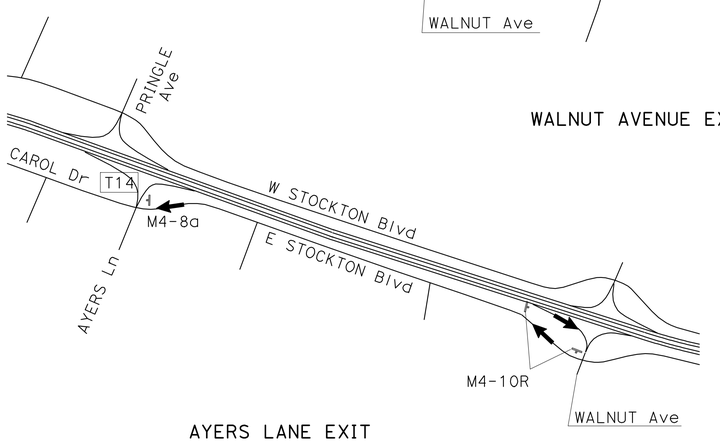

AYERS LANE EXIT

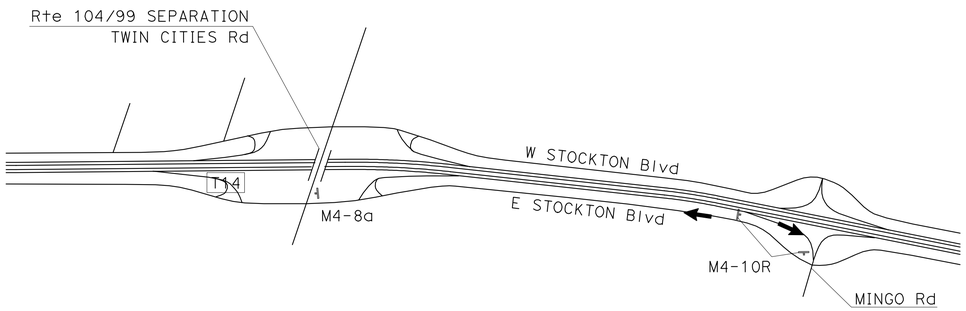

Rte 104/ TWIN CITIES ROAD EXIT

ON RAMPS AND NORTHBOUND OFF RAMPS

THIS PLAN ACCURATE FOR DETOUR CONSTRUCTION WORK ONLY.

DETOUR PLAN

NO SCALE

DE-1

STATE OF CALIFORNIA - DEPARTMENT OF TRANSPORTATION
Caltrans
NORTH REGION
OFFICE OF DESIGN, SOUTH
DESIGN BRANCH 2

FUNCTIONAL SUPERVISOR: GIBERT OGAZ

CALCULATED-DESIGNED BY: JUSTIN A UNCK
CHECKED BY: JUSTIN A UNCK

REVISED BY: J. UNCK
DATE REVISED:

LAST REVISION 00-00-00
DATE PLOTTED => 30-JUN-2010
TIME PLOTTED => 08:23

Dist	COUNTY	ROUTE	POST MILES TOTAL PROJECT	SHEET No.	TOTAL SHEETS
03	Sac	99	0.1/12.0	27	73

REGISTERED CIVIL ENGINEER 5-24-10 DATE

5-24-10
PLANS APPROVAL DATE

REGISTERED PROFESSIONAL ENGINEER JUSTIN UNCK No. C65889 Exp. 12-31-11 CIVIL STATE OF CALIFORNIA

THE STATE OF CALIFORNIA OR ITS OFFICERS OR AGENTS SHALL NOT BE RESPONSIBLE FOR THE ACCURACY OR COMPLETENESS OF SCANNED COPIES OF THIS PLAN SHEET.

CONSTRUCTION AREA SIGNS

SIGN CODE FEDERAL	SIGN CODE CALIFORNIA	SIGN MESSAGE	SIGN PANEL SIZE (MINIMUM)	QUANTITY (THIS SHEET)
M4-10L	C5(L+)	DETOUR (LEFT ARROW)	48" X 18"	3
M4-10R	C5(R+)	DETOUR (RIGHT ARROW)	48" X 18"	6
	SC3<CA>	DETOUR (AHEAD ARROW)	48" X 18"	2
M4-8a	C7	END DETOUR	24" X 18"	3

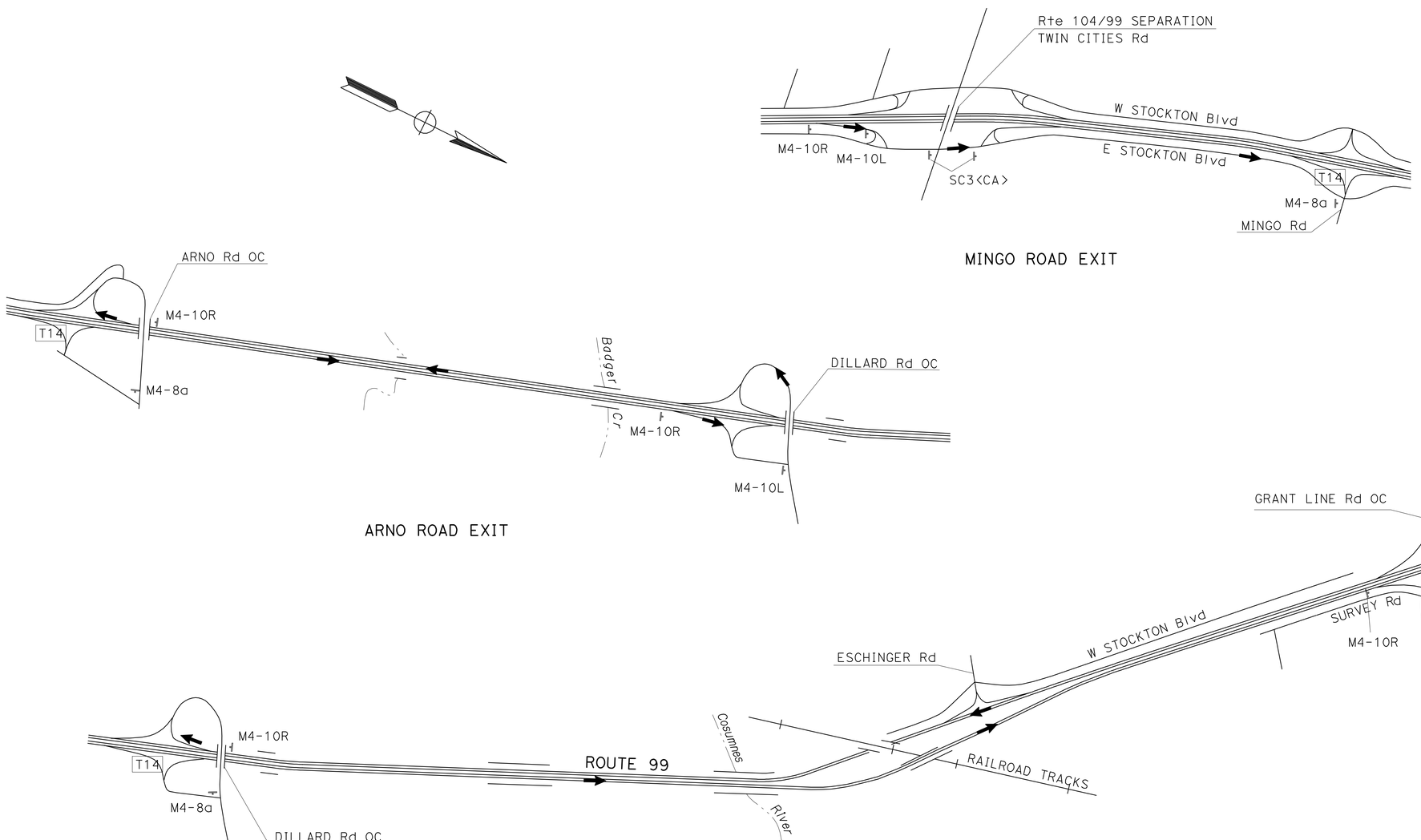

NORTHBOUND OFF RAMPS

THIS PLAN ACCURATE FOR DETOUR CONSTRUCTION WORK ONLY.

DETOUR PLAN
NO SCALE

DE-2

STATE OF CALIFORNIA - DEPARTMENT OF TRANSPORTATION
Caltrans
NORTH REGION
OFFICE OF DESIGN, SOUTH
DESIGN BRANCH 2

FUNCTIONAL SUPERVISOR: GIBERT OGAZ
CALCULATED-DESIGNED BY: JUSTIN A UNCK
CHECKED BY: JUSTIN A UNCK
REVISED BY: J. UNCK
DATE REVISED:

LAST REVISION DATE PLOTTED => 30-JUN-2010
00-00-00 TIME PLOTTED => 08:23

Dist	COUNTY	ROUTE	POST MILES TOTAL PROJECT	SHEET No.	TOTAL SHEETS
03	Sac	99	0.1/12.0	28	73

REGISTERED CIVIL ENGINEER 5-24-10 DATE

5-24-10
PLANS APPROVAL DATE

REGISTERED PROFESSIONAL ENGINEER JUSTIN UNCK No. C65889 Exp. 12-31-11 CIVIL STATE OF CALIFORNIA

THE STATE OF CALIFORNIA OR ITS OFFICERS OR AGENTS SHALL NOT BE RESPONSIBLE FOR THE ACCURACY OR COMPLETENESS OF SCANNED COPIES OF THIS PLAN SHEET.

CONSTRUCTION AREA SIGNS

SIGN CODE FEDERAL	SIGN CODE CALIFORNIA	SIGN MESSAGE	SIGN PANEL SIZE (MINIMUM)	QUANTITY (THIS SHEET)
M4-10L	C5(L†)	DETOUR (LEFT ARROW)	48" X 18"	1
M4-10R	C5(R†)	DETOUR (RIGHT ARROW)	48" X 18"	11
	SC3<CA>	DETOUR (AHEAD ARROW)	48" X 18"	8
M4-8a	C7	END DETOUR	24" X 18"	7

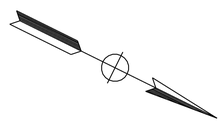

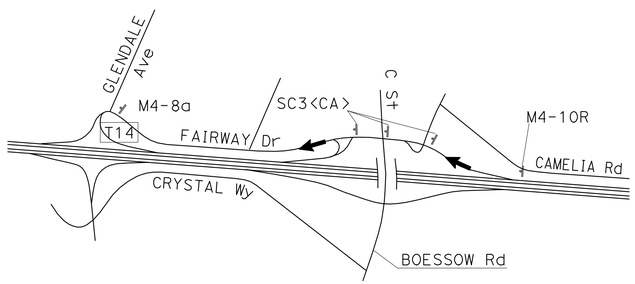

FAIRWAY DRIVE EXIT

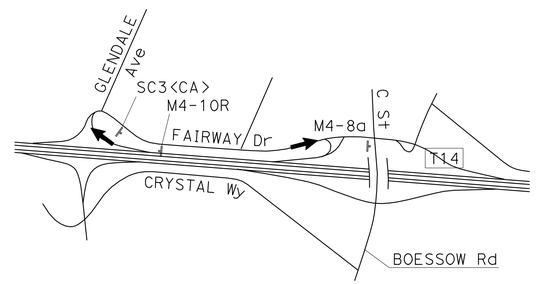

CENTRAL GALT EXIT

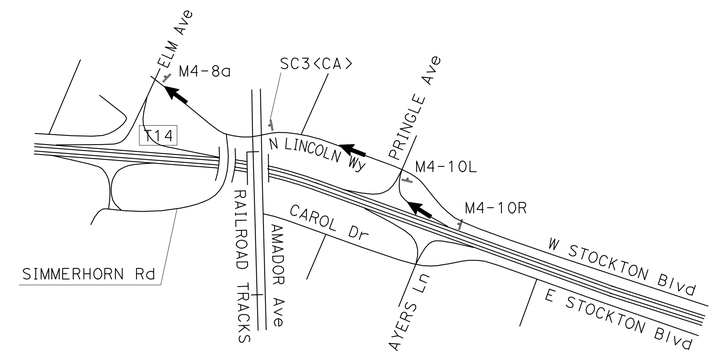

ELM AVENUE EXIT

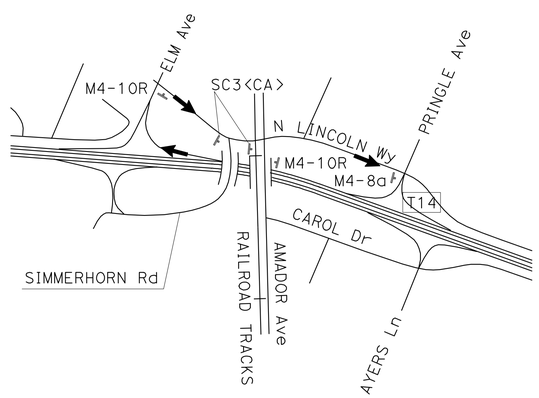

PRINGLE AVENUE EXIT

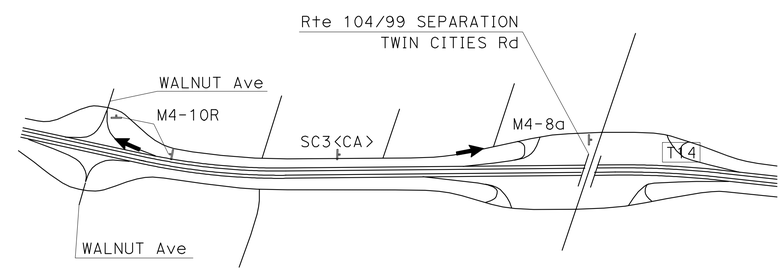

Rte 104/ TWIN CITIES ROAD EXIT

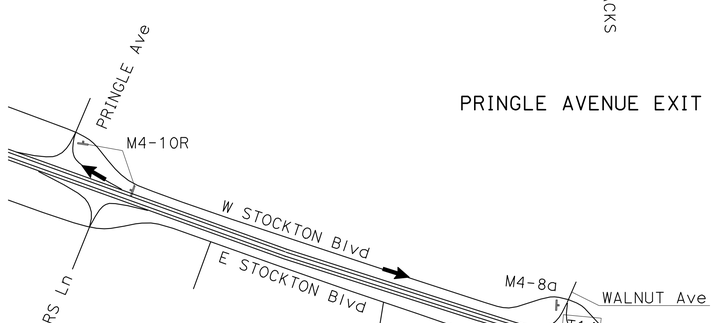

WALNUT AVENUE EXIT

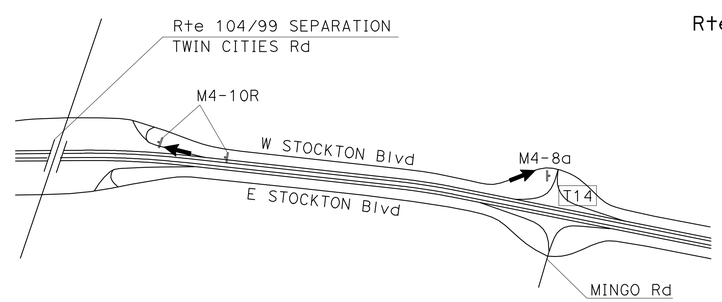

W STOCKTON Blvd EXIT

SOUTHBOUND OFF RAMPS

THIS PLAN ACCURATE FOR DETOUR CONSTRUCTION WORK ONLY.

DETOUR PLAN
NO SCALE

DE-3

STATE OF CALIFORNIA - DEPARTMENT OF TRANSPORTATION
NORTH REGION
OFFICE OF DESIGN, SOUTH
DESIGN BRANCH 2

FUNCTIONAL SUPERVISOR: GIBERT OGAZ
CALCULATED-DESIGNED BY: JUSTIN A UNCK
CHECKED BY: JUSTIN A UNCK
REVISED BY: J. UNCK
DATE REVISED:

LAST REVISION 00-00-00
DATE PLOTTED => 30-JUN-2010
TIME PLOTTED => 08:24

Dist	COUNTY	ROUTE	POST MILES TOTAL PROJECT	SHEET No.	TOTAL SHEETS
03	Sac	99	0.1/12.0	29	73

REGISTERED CIVIL ENGINEER 5-24-10 DATE

5-24-10
PLANS APPROVAL DATE

REGISTERED PROFESSIONAL ENGINEER JUSTIN UNCK No. C65889 Exp. 12-31-11 CIVIL STATE OF CALIFORNIA

THE STATE OF CALIFORNIA OR ITS OFFICERS OR AGENTS SHALL NOT BE RESPONSIBLE FOR THE ACCURACY OR COMPLETENESS OF SCANNED COPIES OF THIS PLAN SHEET.

CONSTRUCTION AREA SIGNS

SIGN CODE FEDERAL	SIGN CODE CALIFORNIA	SIGN MESSAGE	SIGN PANEL SIZE (MINIMUM)	QUANTITY (THIS SHEET)	GRAND TOTAL (DE-1 THROUGH DE-4)
M4-10L	C5(Lt)	DETOUR (LEFT ARROW)	48" X 18"	7	16
M4-10R	C5(Rt)	DETOUR (RIGHT ARROW)	48" X 18"	8	39
	SC3<CA>	DETOUR (AHEAD ARROW)	48" X 18"	0	11
M4-8a	C7	END DETOUR	24" X 18"	3	19

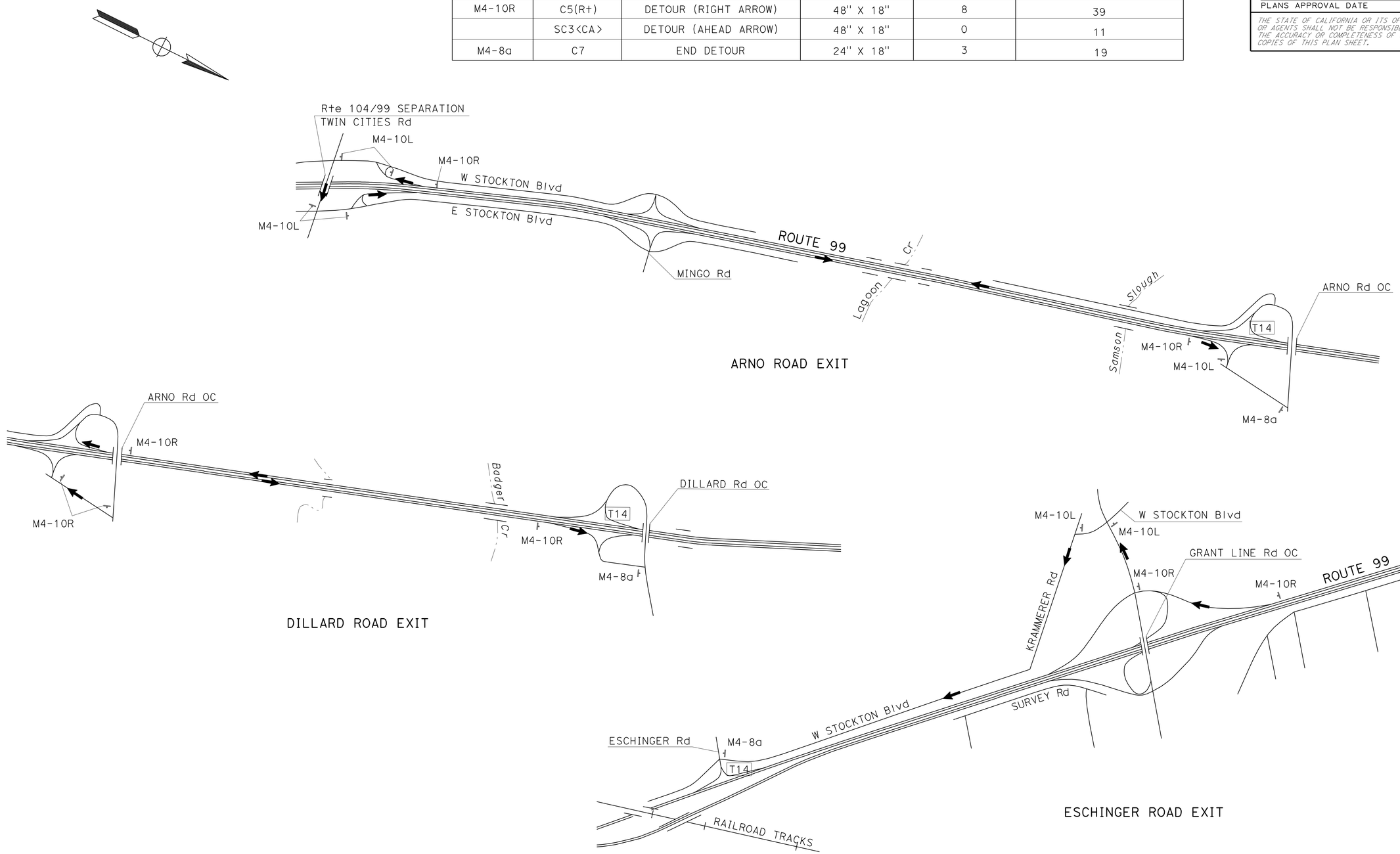

SOUTHBOUND OFF RAMPS

THIS PLAN ACCURATE FOR DETOUR CONSTRUCTION WORK ONLY.

DETOUR PLAN

NO SCALE

DE-4

STATE OF CALIFORNIA - DEPARTMENT OF TRANSPORTATION
Caltrans
NORTH REGION
OFFICE OF DESIGN, SOUTH
DESIGN BRANCH 2

FUNCTIONAL SUPERVISOR: GIBERT OGAZ
CALCULATED-DESIGNED BY: JUSTIN A UNCK
CHECKED BY: JUSTIN A UNCK
REVISED BY: J. UNCK
DATE REVISED:

LAST REVISION 00-00-00
DATE PLOTTED => 30-JUN-2010
TIME PLOTTED => 08:24

Dist	COUNTY	ROUTE	POST MILES TOTAL PROJECT	SHEET No.	TOTAL SHEETS
03	Sac	99	0.1/12.0	30	73

REGISTERED CIVIL ENGINEER 5-24-10 DATE

5-24-10
PLANS APPROVAL DATE

REGISTERED PROFESSIONAL ENGINEER G. CAGLE No. 52121 Exp. 12-31-10 CIVIL STATE OF CALIFORNIA

THE STATE OF CALIFORNIA OR ITS OFFICERS OR AGENTS SHALL NOT BE RESPONSIBLE FOR THE ACCURACY OR COMPLETENESS OF SCANNED COPIES OF THIS PLAN SHEET.

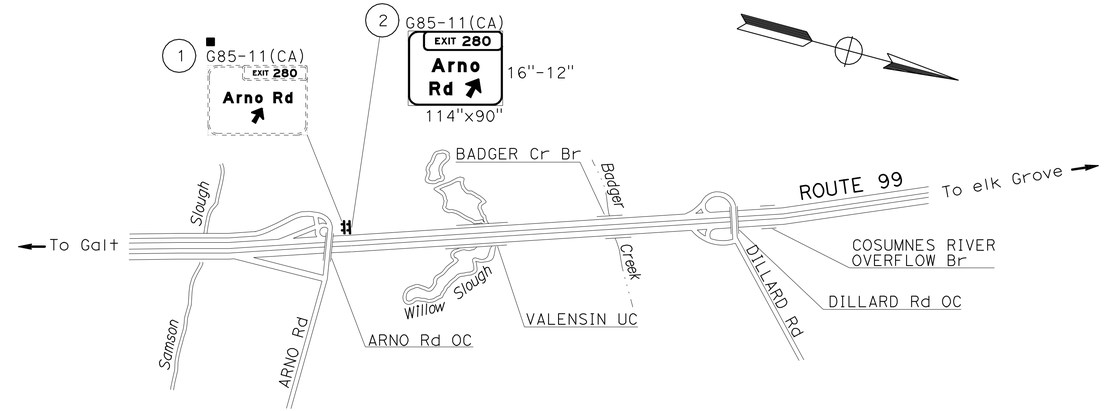

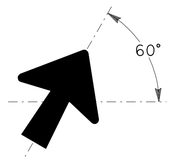

SIGN ARROW ORIENTATION DETAIL

LEGEND

(No.)	ROADSIDE SIGN NUMBER
(CA)	CALIFORNIA SIGN CODE
‡	SIGN - TWO POST
■	REMOVE ROADSIDE SIGN

ROADSIDE SIGN QUANTITIES

SIGN NUMBER (No.)	SIGN CODE	PANEL SIZE (INCHES)	"C" DIM IN FEET	POST SIZE AND LENGTH 6" X 8"	ROADSIDE SIGN TWO POST (EACH)	REMOVE ROADSIDE SIGN (EACH)
1	G85-11(CA)					1
2	G85-11(CA)	114 x 90	7	22'	1	
		TOTAL			1	1

NOTES:

1. EXACT LOCATION AND POSITION OF ROADSIDE SIGNS TO BE DETERMINED BY THE ENGINEER.
2. POST LENGTHS GIVEN ARE APPROXIMATE.
3. "C" DIM = VERTICAL CLEARANCE EP TO BOTTOM OF SIGN PANEL.

SIGN NUMBER 1
G85-11(CA)

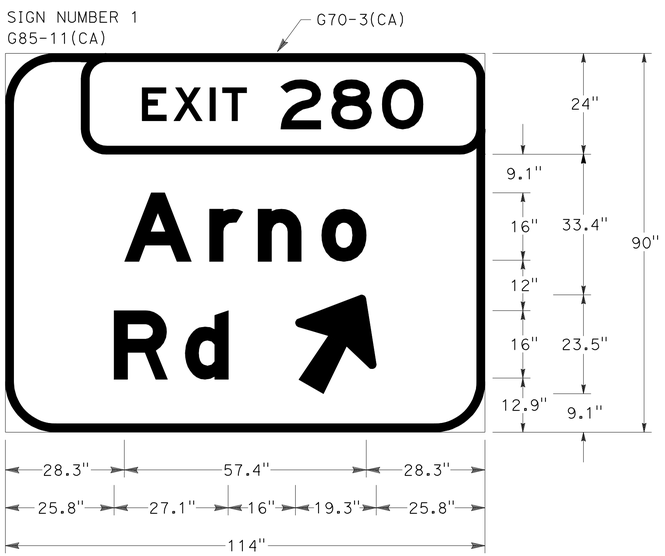

2" BORDER, 12" RADIUS
G70-3(CA)
"Arno" - 16"-12" E Mod
"Rd" - 16"-12" E Mod
"Arrow" - 16"-12" 1-LINE 60°

SIGN DETAILS

ROADSIDE SIGN PANEL QUANTITIES (CONTRACTOR-FURNISHED)

SIGN CODE	SIGN MESSAGE	SIGN SIZE L X D (INCHES)	SIGN AREA (SQFT)	NUMBER OF SIGNS	BACKGROUND SHEETING COLOR	BACKGROUND RETROREFLECTIVE ASTM TYPE	LEGEND SHEETING COLOR	LEGEND RETROREFLECTIVE ASTM TYPE	PROTECTIVE OVERLAY PREMIUM	FURNISH SINGLE SHEET ALUMINUM SIGN FRAMED 0.080" SQFT
G85-11(CA)	SEE "SIGN DETAILS"	114 x 90	71.25	1	GREEN	III	WHITE	IX	X	71.25
									TOTAL	71.25

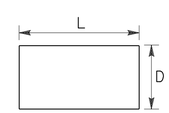

L = LENGTH OF SIGN
D = DEPTH OF SIGN

SIGN PLAN, DETAILS AND QUANTITIES

NO SCALE

S-1

STATE OF CALIFORNIA - DEPARTMENT OF TRANSPORTATION
Caltrans
NORTH REGION
OFFICE OF DESIGN, SOUTH
DESIGN BRANCH 2

FUNCTIONAL SUPERVISOR: GILBERT OGAZ

CALCULATED-DESIGNED BY: G. CAGLE
CHECKED BY: G. CAGLE
REVISED BY: G. CAGLE
DATE REVISED

LAST REVISION 00-00-00
DATE PLOTTED => 30-JUN-2010
TIME PLOTTED => 08:24

Dist	COUNTY	ROUTE	POST MILES TOTAL PROJECT	SHEET No.	TOTAL SHEETS
03	Sac	99	0.1/12.0	31	73

REGISTERED CIVIL ENGINEER 5-24-10 DATE

5-24-10
PLANS APPROVAL DATE

REGISTERED PROFESSIONAL ENGINEER G. CAGLE No. 52121 Exp. 12-31-10 CIVIL STATE OF CALIFORNIA

THE STATE OF CALIFORNIA OR ITS OFFICERS OR AGENTS SHALL NOT BE RESPONSIBLE FOR THE ACCURACY OR COMPLETENESS OF SCANNED COPIES OF THIS PLAN SHEET.

ROADWAY QUANTITIES

DIRECTION	POSTMILE FROM	POSTMILE TO	COLD PLANE AC PAVEMENT Max 0.08′	COLD PLANE AC PAVEMENT Max 0.27′	COLD PLANE AC PAVEMENT Max 0.35′	HMA	RUBBERIZED WMA (TYPE O)	REPLACE CONCRETE PAVEMENT (RAPID STRENGTH CONCRETE)	JOINTED PLAIN CONCRETE PAVEMENT	CLASS 2 AB	IMPORTED MATERIAL (SHOULDER BACKING)	ROADWAY EXCAVATION	ASPHALTIC EMULSION (FOG SEAL COAT)	IMPORTED BORROW
			SQYD			TON	TON	CY	CY	CY	TON	CY	CY	CY
SB	0.14	0.77	9,292.8			2,312.1	646.2				161.7			
	0.77	0.85		183.0	404.4	298.6	79.6							
	0.83	1.38	8,162.9			2,025.1	567.0				140.4			
	1.38	1.82				2,648.0		1,187.4	2,176.4	1,775.6		6,492.1		
	1.82	2.33	7,572.7			1,898.4	527.3				131.1			
	2.33	2.40		101.1	202.2	261.3	69.7							
	2.40	3.39	15,687.5			3,684.2	1,056.8				514.7			
	3.39	3.73				2,163.1		917.5	1,533.2	1,634.9		5,910.8		
	3.73	4.93	17,950.8			4,510.7	1,311.6				311.7			
	4.96	5.00	915.2			149.3								
	5.07	5.10	686.4			112.0								
	5.10	5.98	13,472.2			3,292.1	1,031.7				226.5			
	5.98	6.07		202.2	404.4	346.6	94.9							
	6.07	6.56	7,047.0			1,828.8	487.7				125.8			
	6.58	6.86	3,767.6			1,026.4	273.7				70.5			
	6.87	6.96		693.3	1,300.0	335.9	89.6							
	7.02	7.33	4,769.6			1,141.9	327.6				79.1			
	7.33	7.45		693.3	1,386.7	464.0	129.7							
	7.49	7.93	5,857.3			1,642.2	437.9				112.9			
	8.05	8.40	4,911.6			1,287.5	348.3				89.8			
	8.53	8.81		2,134.9	4,269.8	1,033.6	290.6							
	8.81	9.35	8,500.2			2,070.0	554.6				137.6			
SB	10.71	12.00	19,310.7			4,829.6	1,287.9				332.2			
NB	0.14	0.79	10,125.9			2,424.1	700.5				166.8			
	0.79	0.87		171.1	404.4	283.3	79.6							
	0.87	1.56	11,551.5			2,466.2	726.2				177.1			
	1.56	1.70		542.1	1,281.3	495.7	139.3							
	1.70	2.33	11,088.0			2,389.6	705.5				161.7			
	2.33	2.40		30.6	72.2	247.9	69.7							
	2.40	3.51	18,585.6			4,023.2	1,197.8				284.9			
	3.51	3.60		171.1	404.4	318.7	89.6							
	3.60	4.94	21,583.5			4,812.8	1,391.9				343.9			
	4.97	5.00	651.2			106.2								
	5.05	5.08	651.2			106.2								
	5.11	5.60	7,474.1			1,735.0	487.7				125.8			
	5.60	5.68		146.7	346.7	283.3	79.6							
	5.68	5.99	5,256.5			1,143.6	339.5				79.6			
	5.99	6.08		146.7	346.7	363.1	104.0							
	6.08	6.57	7,474.1			1,735.0	487.7				125.8			
	6.59	6.88	4,423.5			1,026.9	288.6				74.4			
	6.89	6.98		580.6	1,372.2	318.7	89.6				23.1			
	7.04	7.35	4,550.2			1,107.5	324.8				79.3			
	7.35	7.47		598.9	1,415.6	424.9	119.4							
	7.52	7.92	5,674.2			1,416.4	398.1				102.7			
	8.09	8.43	5,186.1			1,345.5	378.2				97.5			
	8.57	8.84	3,264.2			956.0	268.7				69.3			
	8.90	9.49	7,626.7			1,770.5	497.6				128.3			
NB	10.84	12.00	17,266.8				1,154.5						5.1	
		SUBTOTAL	270,337.8	6,395.6	13,611.0	70,682.0	19,730.5	2,104.9		3,410.5	4,474.2	12,402.9	5.1	
		FROM RAMPS	31,559.5			9,910.7	2,059.0				468.7			
		FROM RAMPS TRANSITION TAPERS		5,135.4		1,836.8								
		FROM MAINLINE TRANSITION TAPERS		41,269.2		1,780.0						909.0		
		FROM PLACE HMA DIKE				539.5								
		FROM SIDE GUTTERS				162.0				236.0		318.0		
		FROM DOWNDRAINS AND OVERSIDE DRAINS				0.28								
		FROM STAGE CONSTRUCTION				1,805.5				3,421.5		5,266.5		1,318.0
		TOTAL		368,308.5		86,696.18	21,789.5	2,104.9	3,709.6	7,068.0	4,942.9	18,896.4	5.1	1,318.0

SUMMARY OF QUANTITIES

Q-1

STATE OF CALIFORNIA - DEPARTMENT OF TRANSPORTATION
NORTH REGION
OFFICE OF DESIGN, SOUTH
DESIGN BRANCH 2

FUNCTIONAL SUPERVISOR: GILBERT OGAZ
CALCULATED-DESIGNED BY: G. CAGLE
CHECKED BY: G. CAGLE
REVISED BY: G. CAGLE
DATE REVISED:

LAST REVISION 00-00-00
DATE PLOTTED => 30-JUN-2010
TIME PLOTTED => 08:24

Dist	COUNTY	ROUTE	POST MILES TOTAL PROJECT	SHEET No.	TOTAL SHEETS
03	Sac	99	0.1/12.0	32	73

REGISTERED CIVIL ENGINEER 5-24-10 DATE

5-24-10
PLANS APPROVAL DATE

REGISTERED PROFESSIONAL ENGINEER G. CAGLE No. 52121 Exp. 12-31-10 CIVIL STATE OF CALIFORNIA

THE STATE OF CALIFORNIA OR ITS OFFICERS OR AGENTS SHALL NOT BE RESPONSIBLE FOR THE ACCURACY OR COMPLETENESS OF SCANNED COPIES OF THIS PLAN SHEET.

RAMP QUANTITIES

DIRECTION	LOCATION		COLD PLANE AC PAVEMENT (0.08' Max)	HMA	RUBBERIZED HMA (TYPE O)	IMPORTED MATERIAL (SHOULDER BACKING)
			SQYD	TON	TON	TON
SB	FAIRWAY DRIVE	EXIT	766.8	213.2	50.0	11.9
		ENTRANCE	531.7	147.8	34.7	8.2
	SIMMERHORN Rd	EXIT	1,312.7	364.9	85.7	20.3
		ENTRANCE	976.6	271.5	63.7	15.1
	PRINGLE Ave	EXIT	842.5	234.2	55.0	12.9
		ENTRANCE	621.6	172.8	40.6	9.6
	WALNUT Ave	EXIT	743.1	206.6	48.5	11.4
		ENTRANCE	508.0	141.2	33.1	7.9
	TWIN CITIES ROAD	EXIT	978.2	271.9	63.8	15.1
		ENTRANCE	1,106.0	307.5	72.2	17.0
	WEST STOCKTON Blvd	EXIT	1,010.7	259.8	65.9	12.3
		ENTRANCE	661.3	163.6	43.2	8.1
	ARNO ROAD	EXIT	818.9	227.6	53.4	12.6
		ENTRANCE	752.6	209.2	49.1	11.6
	DILLARD ROAD	EXIT	804.7	223.7	52.5	12.4
		ENTRANCE	880.4	244.8	57.4	13.7
SB	ESCHINGER ROAD	EXIT	687.9	191.2	44.9	10.7
		ENTRANCE	642.2	178.5	41.9	10.0
NB	CRYSTAL WAY	EXIT	919.8	255.7	60.0	14.2
		ENTRANCE	574.3	159.7	37.5	8.9
	BOESSOW ROAD	EXIT	1,580.0	423.0	103.1	22.2
		ENTRANCE	1,542.3	424.5	100.6	19.1
	ELM Ave	EXIT	1,019.2	1,700.1	66.5	15.8
		ENTRANCE	895.7	199.1	58.4	7.2
	AYERS Ln	EXIT	1,082.6	274.5	70.6	13.1
		ENTRANCE	731.8	182.3	47.7	8.4
	WALNUT Ave	EXIT	852.0	236.9	55.6	13.1
		ENTRANCE	680.6	174.5	44.4	8.6
	TWIN CITIES ROAD	EXIT	1,049.2	291.7	68.5	16.1
		ENTRANCE	1,143.9	318.0	74.6	17.7
	MINGO ROAD	EXIT	1,120.8	265.0	73.1	24.5
		ENTRANCE	761.7	178.2	49.7	16.6
	ARNO ROAD	EXIT	1,025.3	259.7	66.9	12.4
		ENTRANCE	512.8	142.6	33.5	7.9
NB	DILLARD ROAD	EXIT	812.6	225.9	53.0	12.6
		ENTRANCE	609.0	169.3	39.7	9.5
		TOTAL	31,559.5	9,910.7	2,059.0	468.7

SEAL PAVEMENT JOINT

DIRECTION	POSTMILE		SEAL PAVEMENT JOINT	
			LONGITUDINAL	TRANSVERSE
	FROM	TO	LF	LF
SB	1.38	1.82	2,323.2	5,851.0
	3.39	3.73	1,795.2	4,521.2
		SUBTOTAL	4,118.4	10,372.2
		TOTAL	14,490.6	

SHOULDER RUMBLE STRIP

DIRECTION	POSTMILE		LOCATION	SHOULDER RUMBLE STRIP	
				HMA, GROUND-IN INDENTATIONS	PCC, GROUND-IN INDENTATIONS
	FROM	TO		STA	STA
NB	0.14	9.35	R+	322	
			L+	446	
NB	10.71	12.00	R+	68	
			L+	68	
SB	0.14	9.36	R+		
			L+		41
SB	10.71	12.00	R+	68	
			L+	68	
		TOTAL		2180	41

TACK COAT

DIRECTION	POSTMILE/ LOACATION		TACK COAT
	FROM	TO	TON
SB	0.14	9.35	37.7
	10.71	12.0	5.5
NB	0.14	9.49	36.2
	10.84	12.0	1.5
SB	SB RAMPS		4.4
NB	NB RAMPS		6.1
		TOTAL	91.4

SUMMARY OF QUANTITIES

Q-2

REVISED BY G. CAGLE
DATE REVISED
CALCULATED-DESIGNED BY G. CAGLE
CHECKED BY
FUNCTIONAL SUPERVISOR GILBERT OGAZ

STATE OF CALIFORNIA - DEPARTMENT OF TRANSPORTATION
Caltrans
NORTH REGION
OFFICE OF DESIGN, SOUTH
DESIGN BRANCH 2

LAST REVISION 00-00-00
DATE PLOTTED => 30-JUN-2010
TIME PLOTTED => 08:24

Dist	COUNTY	ROUTE	POST MILES TOTAL PROJECT	SHEET No.	TOTAL SHEETS
03	Sac	99	0.1/12.0	33	73

REGISTERED CIVIL ENGINEER 5-24-10 DATE

5-24-10
PLANS APPROVAL DATE

REGISTERED PROFESSIONAL ENGINEER G. CAGLE No. 52121 Exp. 12-31-10 CIVIL STATE OF CALIFORNIA

THE STATE OF CALIFORNIA OR ITS OFFICERS OR AGENTS SHALL NOT BE RESPONSIBLE FOR THE ACCURACY OR COMPLETENESS OF SCANNED COPIES OF THIS PLAN SHEET.

NOTES:

* SEE ROADWAY SUMMARY OF QUANTITIES FOR HMA (TYPE A) QUANTITY.

** FOR FULL DEPTH REPLACEMENT ON TRANSITION TAPERS T-2 AND T-5 (SEE CONSTRUCTION DETAILS).

*** SOUTH OF OVERCROSSING

**** NORTH OF OVERCROSSING

MAINLINE PAVEMENT TRANSITION TAPERS

DIR	LOCATION	TYPE	BRIDGE POST MILE	BEGIN BRIDGE ***	END BRIDGE ****	COLD PLANE AC (VAR 0.08' TO 0.35')	ROADWAY EXCAVATION **	HMA **
						SQYD	CY	TON
NB	NORTH CHANNEL DRY CREEK	T-5	0.14		X	1,170	38	74.4
	C STREET OVERCROSSING	T-1	0.80	X	X	1,300		*
	SIMMERHORN Rd OVERCROSSING	T-1	1.57	X		650		*
	AMADOR Ave OC	T-1	1.62		X	650		*
	LOG CABIN Br	T-1	2.36	X	X	1,300		*
	TWIN CITIES ROAD 104-99 SEP	T-1	3.53	X	X	1,300		*
	SOUTH LAGOON CREEK	T-5	4.91	X		1,170	38	74.4
	NORTH LAGOON CREEK	T-5	5.06		X	1,170	38	74.4
	ARNO ROAD OVERCROSSING	T-1	6.01	X	X	1,300		*
	VALENSIN UC	T-5	6.54	X	X	2,340	76	148.8
	WEIGH IN MOTION STATION	T-3	6.88	X		650		*
	BADGER CREEK (DEP)	T-2	6.96		X	520	38	74.4
	DILLARD ROAD OC	T-1	7.36	X		650		*
	CONSUMNES RIVER OVERFLOW	T-5	7.45	X	X	2,340	76	148.8
	CONSUMNES RIVER OVERFLOW	T-5	7.92	X	X	2,340	76	148.8
	CONSUMNES RIVER BRIDGE	T-2/T-5	8.40	X (T-5)	X (T-2)	1,690	76	148.8
	MC CONNELL OH	T-2	8.74	X	X	1,040	76	148.8
NB	MAINLINE CONFORM	T-3	12.0			650		*
								*
SB	NORTH CHANNEL DRY CREEK	T-5	0.14		X	1,170	29	56.8
	C STREET OVERCROSSING	T-1	0.80	X	X	1,300		*
	ELM Ave ENTRANCE RAMP	T-1/T-4	1.38			945.3		*
	PRINGLE Ave ENTRANCE RAMP	T-4	1.82			1021.0		*
	LOG CABIN Br	T-1	2.36	X	X	1,300		*
	RTE 104/99 ENTRANCE	T-1/T-4	3.39			974.4		*
	RTE 104/JACKSON EXIT	T-1/T-4	3.73			888.5		*
	SOUTH LAGOON CREEK	T-2	4.91	X		520	29	56.8
	NORTH LAGOON CREEK	T-5	5.06		X	1,170	29	56.8
	ARNO ROAD OVERCROSSING	T-1	6.01	X	X	1,300		*
	VALENSIN UC	T-2/T-5	6.54	X (T-2)	X (T-5)	1,690	58	113.6
	WEIGH IN MOTION STATION	T-3	6.88	X		650		*
	BADGER CREEK	T-2	6.96		X	520	29	56.8
	DILLARD ROAD OC	T-1	7.36	X		650		*
	CONSUMNES RIVER OVERFLOW	T-5	7.45	X	X	1,690	58	113.6
	CONSUMNES RIVER OVERFLOW	T-2	7.92	X	X	1,040	58	113.6
	CONSUMNES RIVER BRIDGE	T-2	8.40	X	X	1,040	58	113.6
	MC CONNELL UP	T-2	8.81	X	X	520	29	56.8
SB	MAINLINE CONFORM	T-3	12.0			650		*
TOTAL						41,269.2	909	1780.0

RAMP TRANSITION TAPERS

RAMPS	POST MILE	TRANSITION TAPER T-3 (N)	COLD PLANE AC Var 0.08'-0.25'
		EA	SY
NB CRYSTAL WAY ON RAMP/OFF RAMP	0.31	1	302.9
NB SIMMERHORN Rd ON RAMP/OFF RAMP	1.38	1	217.1
NB AYERS LANE ON RAMP/OFF RAMP	1.92	1	362.5
NB WALNUT Ave	2.69	1	212.1
NB TWIN CITIES OFF RAMP	3.38	2	157.8
NB TWIN CITIES ENTRANCE	3.65	2	234.9
NB MINGO Rd ON RAMP/OFF RAMP	4.36	1	299.8
NB ARNO Rd	5.85	1	346.7
NB DILLARD Rd	7.25	1	287.7
SB FAIRWAY DRIVE ON RAMP/OFF RAMP	0.35	1	234.6
SB ELM Ave	1.48	1	211.4
SB PRINGLE Ave	1.90	1	299.2
SB WALNUT Ave ON RAMP/OFF RAMP	2.75	1	299.4
SB TWIN CITIES ON RAMP	3.40	2	279.7
SB TWIN CITIES OFF RAMP	3.70	2	242.8
SB WEST STOCKTON Blvd	4.40	1	324.4
SB ARNO Rd	5.91	1	285.7
SB DILLARD Rd	7.28	1	244.7
SB ESCHINGER Rd	8.98	1	292.0
TOTAL		23	5135.4

SUMMARY OF QUANTITIES

Q-3

STATE OF CALIFORNIA - DEPARTMENT OF TRANSPORTATION
Caltrans
NORTH REGION
OFFICE OF DESIGN, SOUTH
DESIGN BRANCH 2

FUNCTIONAL SUPERVISOR: GILBERT OGAZ
CALCULATED-DESIGNED BY: G. CAGLE
CHECKED BY: G. CAGLE
REVISED BY: G. CAGLE
DATE REVISED:

LAST REVISION 00-00-00
DATE PLOTTED => 30-JUN-2010
TIME PLOTTED => 08:24

Dist	COUNTY	ROUTE	POST MILES TOTAL PROJECT	SHEET No.	TOTAL SHEETS
03	Sac	99	0.1/12.0	34	73

REGISTERED CIVIL ENGINEER 5-24-10 DATE

5-24-10
PLANS APPROVAL DATE

REGISTERED PROFESSIONAL ENGINEER G. CAGLE No. 52121 Exp. 12-31-10 CIVIL STATE OF CALIFORNIA

THE STATE OF CALIFORNIA OR ITS OFFICERS OR AGENTS SHALL NOT BE RESPONSIBLE FOR THE ACCURACY OR COMPLETENESS OF SCANNED COPIES OF THIS PLAN SHEET.

* SEE CONSTRUCTION DETAIL SHEETS

DIGOUT QUANTITIES (TABLE 1)

DIRECTION	POSTMILE FROM	POSTMILE TO	LENGTH FT	WIDTH * X FT	WIDTH * Y FT	LANE	REPLACE AC SURFACING CY	CRACK TREATMENT LNMI
NB	0.21	0.31	528	9	6	2	29.3	
	0.31	0.40	475	0	12	2	52.8	
	0.40	0.79				2		0.39
	0.86	0.94				2		0.08
	1.03	1.08				1		0.05
	1.31	1.34				2		0.03
	1.39	1.49				2		0.10
	1.38	1.4				1		0.02
	1.49	1.58				2		0.09
	1.69	1.74				2		0.05
	1.85	1.86	53	10	6	2	2.9	
	2.03	2.35				2		0.32
	2.43	2.44				2		0.01
	2.62	2.76				1		0.14
	2.63	2.66	158	9	6	2	8.8	
	2.76	2.8				2		0.04
	2.80	2.86	317	9	6	2	17.6	
	2.94	2.95	53	6	6	2	2.9	
	2.97	2.99	106	6	6	2	5.9	
	3.04	3.08	212	6	6	2	11.8	
	3.21	3.25	212	6	6	2	11.8	
	3.25	3.41				2		0.16
	3.58	3.59	53	0	6	2	2.9	
	3.69	3.70	53	0	6	1&2	2.9	
	3.83	3.97				2		0.14
	4.12	4.58				2		0.46
	4.60	4.66				1		0.06
	4.81	4.86				1		0.05
	5.17	6.53				1&2		2.72
	6.65	6.71				2		0.06
	7.07	7.37				2		0.3
	7.37	7.39	106	2	12	2	11.8	
	7.39	7.44	264	9	6	2	14.7	
	7.55	7.66				2		0.11
	7.66	7.78	634	7	6	2	35.2	
	7.81	7.87	317	7	6	2	17.6	
	7.78	7.81						0.03
	7.87	7.89	106	3	6	1	5.9	
	7.91	7.92	53	0	12	2	5.9	
	8.31	8.34	158	7	6	2	8.8	
NB	8.62	8.81				1&2		0.38
SUBTOTAL TABLE 1							249.6	5.8

DIGOUT QUANTITIES (TABLE 2)

DIRECTION	POSTMILE FROM	POSTMILE TO	LENGTH FT	WIDTH * X FT	WIDTH * Y FT	LANE	REPLACE AC SURFACING CY	CRACK TREATMENT LNMI
SB	0.83	0.84	53	0	12	2	5.9	
	1.92	1.94	158	0	6	2	8.8	
	2.68	2.69				2		0.01
	2.74	2.81	370	0	6	2	20.6	
	3.08	3.10				2		0.02
	3.15	3.16				2		0.01
	4.32	4.33				2		0.01
	4.39	4.45	317	0	6	2	17.6	
	4.95	5.98	158	0	12	2	17.6	
	5.03	5.04	53	0	12	2	5.9	
	5.07	5.08	53	0	12	2	5.9	
	5.09	5.12				2		0.03
	5.20	5.21	53	0	6	2	2.9	
	5.21	5.32				2		0.11
	5.44	5.46	106	0	6	2	5.9	
	5.54	5.58				2		0.04
	5.65	5.66				2		0.01
	5.78	5.85				2		0.07
	5.91	5.93				2		0.02
	6.02	6.05				2		0.03
	6.24	6.30				2		0.06
	7.11	7.33	1162	0	12	2	129.1	
	7.11	7.33				1		0.22
	7.4	7.42				2		0.02
	7.85	7.89				2		0.04
SB	10.69	12.00				2		1.31
SUBTOTAL TABLE 2							220.2	2.01
FROM TABLE 1							249.6	5.79
TOTAL							469.7	7.8

SUMMARY OF QUANTITIES

Q-4

STATE OF CALIFORNIA - DEPARTMENT OF TRANSPORTATION
Caltrans
NORTH REGION
OFFICE OF DESIGN, SOUTH
DESIGN BRANCH 2

FUNCTIONAL SUPERVISOR: GILBERT OGAZ
CALCULATED-DESIGNED BY: G. CAGLE
CHECKED BY: G. CAGLE
REVISED BY: G. CAGLE
DATE REVISED:

LAST REVISION 00-00-00
DATE PLOTTED => 30-JUN-2010
TIME PLOTTED => 08:24

Dist	COUNTY	ROUTE	POST MILES TOTAL PROJECT	SHEET No.	TOTAL SHEETS
03	Sac	99	0.1/12.0	35	73

REGISTERED CIVIL ENGINEER 5-24-10 DATE

5-24-10
PLANS APPROVAL DATE

REGISTERED PROFESSIONAL ENGINEER G. CAGLE No. 52121 Exp. 12-31-10 CIVIL STATE OF CALIFORNIA

THE STATE OF CALIFORNIA OR ITS OFFICERS OR AGENTS SHALL NOT BE RESPONSIBLE FOR THE ACCURACY OR COMPLETENESS OF SCANNED COPIES OF THIS PLAN SHEET.

NOTE:

EXACT DELINEATOR LOCATIONS TO BE DETERMINED BY THE ENGINEER.

PAVEMENT MARKERS AND TRAFFIC LINES

DIRECTION	LOCATION PM/DESCRIPTION	THERMOPLASTIC PAVEMENT MARKING					4" THERMOPLASTIC TRAFFIC STRIPE			4" THERMOPLASTIC TRAFFIC STRIPE				8" THERMOPLASTIC TRAFFIC STRIPE		PAVEMENT MARKER RETROREFLECTIVE			DELINEATOR CLASS 1	
		ARROWS		WORDS		LIMIT LINE	BROKEN 17-7	BROKEN 36-12								TYPE			TYPE	
							DETAIL No.			DETAIL No.				DETAIL No.						
		TYPE I (24'-0")	TYPE V	STOP	AHEAD		9	12	14A	21	25	25A	27B	36	36A	C	G	H	F	G
NB/SB		SQFT		SQFT			LF			LF				LF		EA			EA	
NB	ROUTE 99, PM 0.12 TO PM 9.35							48,471			48,471		47,309				1,053	1,053	47	4
NB	ROUTE 99, PM 10.84 TO PM 12.00							6,125			6,125		6,125				129	129		11
SB	ROUTE 99, PM 0.12 TO PM 9.35							48,819			48,819		46,548				1,058	1,058	45	12
SB	ROUTE 99, PM 10.84 TO PM 12.00							6,832			6,832		6,832				143	143	11	2
NB	CRYSTAL WAY OFF RAMP		66						144			300	650	528		4	23	26	2	6
	CRYSTAL WAY ON RAMP	31					53					276	320		66		6	24		6
	CENTRAL GALT OFF RAMP								144					543		4	24		5	3
	CENTRAL GALT ON RAMP						106								142		10		7	4
	SIMMERHORN Rd OFF RAMP		66	22	31				288	160		245	481	528		8	23	21	2	7
	SIMMERHORN Rd ON RAMP	31					53					187	242		72		6	17	3	5
	AYERS Ln OFF RAMP		66	66	31	32			144	200		245	501	532		4	23	21	4	7
	AYERS Ln ON RAMP	31					54					216	239		86		7	19		6
	WALNUT Ave OFF RAMP		66	44	31	32			288	200		271	485	498		8	22	24	3	7
	WALNUT Ave ON RAMP	31					32					220	289		85		6	19		6
	TWIN CITIES Rd OFF RAMP		132	44	31	32			288			395	619	522		8	23	34	4	12
	TWIN CITIES Rd ON RAMP	62					106					475	594		190		12	41	3	10
	MINGO Rd OFF RAMP		66						288	200		260	480	528		8	23	23	3	7
	MINGO Rd ON RAMP	31					158					178	296		101		10	16		5
	ARNO OFF RAMP		66						432	200		250	494	556		12	24	22	2	8
	ARNO ON RAMP	31					53					240	290		88		7	21		6
	DILLARD ROAD OFF RAMP		66						432	240		238	494	514		12	22	21	2	7
	DILLARD ROAD ON RAMP	31					53					241	348		115		8	21		5
	GRANT LINE ROAD OFF RAMP								288							8				
NB	ELK GROVE Blvd OFF RAMP								288							8			3	8
SB	FAIRWAY DRIVE OFF RAMP		66						144			68	436	590		4	26	7	3	
	FAIRWAY DRIVE ON RAMP	31					72					167	263		229		13	15		6
	CENTRAL GALT OFF RAMP								144					534		4	23		3	7
	CENTRAL GALT ON RAMP						93								135					5
	ELM Ave OFF RAMP		66	22	31				144	128		415	667	528		4	23	36		10
	ELM Ave ON RAMP	31					217					332	512		175		14	29		6
	WALNUT Ave OFF RAMP		66						288	80		236	416	462		8	20	21	2	8
	WALNUT Ave ON RAMP	31					53					165	230		91		7	15	2	5
	TWIN CITIES Rd OFF RAMP		132						288			363	537	458		8	20	31	3	11
	TWIN CITIES Rd ON RAMP	62					53					547	437		100		7	47		5
	PRINGLE Ave OFF RAMP		66	44	31	36			288	200		266	479	476		8	21	23	2	8
	PRINGLE Ave ON RAMP	31					158					207	249		90		9	18	2	5
	WEST STOCKTON Blvd OFF RAMP		66						432	200		241	484	560		12	24	21		7
	WEST STOCKTON Blvd ON RAMP	31					53					162	224		93		7	15	1	6
	ARNO Rd OFF RAMP		66						432	200		220	482	528		12	23	19	3	5
	ARNO Rd ON RAMP	31					53					305	440		154		10	26	2	5
	DILLARD ROAD OFF RAMP		66						432	200		190	476	528		12	23	17	3	7
	DILLARD ROAD ON RAMP	31					106					272	533		200		13	24	2	8
	ESCHINGER Rd OFF RAMP		66						144	120		113	417	590		4	26	10	3	4
	ESCHINGER Rd ON RAMP	31					158					150	363		229		15	14	1	5
SB	GRANT LINE ROAD OFF RAMP								288							8				
	SUBTOTAL	589	1,254	242	186	132	1,684	110,247	6,048	2,328	110,247	8,656	121,281	10,003	2,441	168	2,986	3,141	178	277
	TOTAL	2,403					1,684	116,295		242,512				12,444		6,295			455	

SUMMARY OF QUANTITIES

Q-5

STATE OF CALIFORNIA - DEPARTMENT OF TRANSPORTATION
Caltrans
NORTH REGION
OFFICE OF DESIGN, SOUTH
DESIGN BRANCH 2

FUNCTIONAL SUPERVISOR: GILBERT OGAZ

CALCULATED-DESIGNED BY: G. CAGLE
CHECKED BY: G. CAGLE
REVISED BY: G. CAGLE
DATE REVISED:

LAST REVISION 00-00-00 | DATE PLOTTED => 30-JUN-2010 | TIME PLOTTED => 08:25

Dist	COUNTY	ROUTE	POST MILES TOTAL PROJECT	SHEET No.	TOTAL SHEETS
03	Sac	99	0.1/12.0	36	73

REGISTERED CIVIL ENGINEER 5-24-10 DATE

5-24-10
PLANS APPROVAL DATE

REGISTERED PROFESSIONAL ENGINEER JUSTIN UNCK No. C65889 Exp. 12-31-11 CIVIL STATE OF CALIFORNIA

THE STATE OF CALIFORNIA OR ITS OFFICERS OR AGENTS SHALL NOT BE RESPONSIBLE FOR THE ACCURACY OR COMPLETENESS OF SCANNED COPIES OF THIS PLAN SHEET.

NOTES:

1. SEE METAL BEAM GUARD RAIL QUANTITIES AND TYPICAL LAYOUTS IN THE STANDARD PLANS FOR PLACEMENT OF HMA DIKE AT MBGR INSTALLATIONS.
2. AT SB RTE 104/99 SEPARATION, HMA DIKE REMOVAL IS INCLUDED IN ROADWAY EXCAVATION WORK.
3. SEE "ROADWAY QUANTITIES" FOR FOR GRAND TOTALS NOT GIVEN THIS SHEET.
4. TRANSITIONS BETWEEN HMA DIKE TYPES AND FROM HMA DIKE TO CONCRETE CURB SHOULD BE DONE OVER A 5' LENGTH TO PROVIDE A SMOOTH TRANSITION.

PLACE HMA DIKE

ROW No.	DIRECTION NB/SB	LOCATION (MEDIAN/ OUTSIDE)	APPROXIMATE PM FROM	APPROXIMATE PM TO	LOCATION DESCRIPTION	REMOVE AC DIKE LF	PLACE HMA DIKE TYPE A LF	PLACE HMA DIKE TYPE C LF	PLACE HMA DIKE TYPE E LF	PLACE HMA DIKE TYPE F LF	HMA TON	NOTES
1	SB	OUTSIDE	0.150	0.162	NORTH CHANNEL DRY Cr APPROACH	63		38		25	0.61	
2	SB	RAMP	0.250		SB FAIRWAY DRIVE ON RAMP	268			268		6.82	
3	SB	RAMP	0.700		SB ON RAMP C St OVERCROSSING	200			200		5.09	
4	SB	OUTSIDE	0.810	0.822	C St OVERCROSSING APPROACH (24-140)	50		38		25	0.61	
5	SB	RAMP	0.890		SB OFF RAMP C St OVERCROSSING	177			177		4.51	
6	SB	OUTSIDE	3.390	3.537	Rte 104/99 Sep DEPARTURE (24-144) (TWIN CITIES Rd)	NOTE 2	776				20.51	SEE "ROUTE 104/99 SEPARATION SIDE GUTTERS" DETAIL
7	SB	OUTSIDE	3.560	3.653	Rte 104/99 Sep APPROACH (24-144) (TWIN CITIES Rd)	NOTE 2	491				12.98	SEE "ROUTE 104/99 SEPARATION SIDE GUTTERS" DETAIL
8	SB	OUTSIDE	4.948	4.957	SOUTH LAGOON Cr APPROACH (24-28)	50						
9	SB	OUTSIDE	5.028	5.042	LAGOON Cr APPROACH(24-25)	75						
10	SB	OUTSIDE	5.088	5.102	NORTH LAGOON Cr APPROACH (24-27)	75						
11	SB	OUTSIDE	6.023	6.037	ARNO Rd OVERCROSSING APPROACH (24-151)	75		38		37	0.76	
12	SB	OUTSIDE	6.545	6.547	VALENSIN UNDERCROSSING DEPARTURE (24-46)	11						
13	SB	OUTSIDE	6.565	6.577	VALENSIN UNDERCROSSING APPROACH (24-46)	63						
14	SB	OUTSIDE	7.374	7.388	DILLARD Rd OVERCROSSING APPROACH	75		25		50	0.83	
15	SB	OUTSIDE	7.446	7.447	COSUMNES RIVER OVERFLOW DEPARTURE (24-22)	5			5		0.13	
16	SB	OUTSIDE	7.482	7.927	BETWEEN COSUMNES RIVER OVERFLOWS (24-22 AND 24-21)	2,350		63	2,249	38	58.20	
17	SB	OUTSIDE	8.047	8.397	BETWEEN COSUMNES Riv AND COSUMNES Riv OF(24-21 AND 24-20)	1,848			1,848		47.04	
18	SB	OUTSIDE	8.527	8.626	COSUMNES RIVER APPROACH (24-20)	523			523		13.31	
19	SB	MEDIAN	8.729	8.747	MCCONNELL UNDERPASS DEPARTURE (24-48L)					100	1.29	SEE "MCCONNELL UNDERPASS" DETAILS
20	SB	OUTSIDE	8.749	8.798	MCCONNELL UNDERPASS APPROACH (24-48L)			175		84	2.39	SEE "MCCONNELL UNDERPASS" DETAILS
21	SB	MEDIAN	8.766	8.806	MCCONNELL UNDERPASS APPROACH (24-48L)			150		59	1.88	SEE "MCCONNELL UNDERPASS" DETAILS
22												
23	NB	OUTSIDE	0.129	0.150	NORTH CHANNEL DRY Cr APPROACH	112.5		63		50	1.11	
24	NB	OUTSIDE	0.185	0.250	NORTH CHANNEL DRY Cr DEPARTURE	343			343		8.73	
25	NB	RAMP	0.665		NB C St OFF RAMP	760			760		19.35	
26	NB	RAMP	0.940		NB C St ON RAMP	504			504		12.83	
27	NB	RAMP	1.442		NB SIMMERHORN Rd ON RAMP	250			250		6.36	
28	NB	OUTSIDE	1.442	1.595	SIMMERHORN Rd OVERCROSSING APPROACH (24-138)	818	621	163		25	17.95	
29	NB	OUTSIDE	1.605	1.642	BETWEEN SIMMERHORN Rd OC AND GALT UNDERPASS (24-60)	195				195	2.52	
30	NB	OUTSIDE	1.665	1.770	AMADOR Ave OVERCROSSING DEPARTURE (24-139)	554	554				14.64	
31	NB	RAMP	1.770	1.850	NB AYERS LANE OFFRAMP, EXIT 275B	422			422		10.74	
32	NB	OUTSIDE	3.385	3.552	Rte 104/99 Sep APPROACH (24-144) (TWIN CITIES Rd)	882		150	698	25	19.21	
33	NB	OUTSIDE	3.592	3.690	Rte 104/99 Sep DEPARTURE (24-144) (TWIN CITIES Rd)	517			517		13.16	
34	NB	OUTSIDE	4.913	4.940	SOUTH LAGOON Cr APPROACH (24-28)	143		63	42	38	2.03	
35	NB	OUTSIDE	4.964	5.002	BETWEEN SOUTH LAGOON Cr AND LAGOON Cr BRIDGES (24-25)	200				200	2.58	
36	NB	OUTSIDE	5.048	5.081	BETWEEN LAGOON Cr AND NORTH LAGOON Cr BRIDGES (24-27)	175				175	2.26	
37	NB	OUTSIDE	5.560	5.640	SAMSON SLOUGH APPROACH	422		63	109	250	6.47	
38	NB	OUTSIDE	5.650	5.730	SAMSON SLOUGH DEPARTURE	422			422		10.74	
39	NB	OUTSIDE	6.542	6.572	VALENSIN UNDERCROSSING APPROACH (24-46)	158		63	57	38	2.41	
40	NB	OUTSIDE	6.590	6.670	VALENSIN UNDERCROSSING DEPARTURE (24-46)	422			422		10.74	
41	NB	OUTSIDE	6.935	6.990	BADGER Cr BRIDGE APPROACH	290		63	189	38	5.77	
42	NB	OUTSIDE	7.035	7.040	BADGER Cr BRIDGE DEPARTURE	26			26		0.66	
43	NB	OUTSIDE	7.575	7.960	BETWEEN COSUMNES RIVER OVERFLOWS (24-22 AND 24-21)	2,033		63	1,932	38	50.14	
44	NB	OUTSIDE	8.085	8.435	BETWEEN COSUMNES RIVER OVERFLOW AND COSUMNES RIVER (24-20)	1,848		63	1,747	38	45.43	
45	NB	MEDIAN	8.560	8.840	BETWEEN COSUMNES RIVER AND MCCONNELL OH (24-73)	1,478				1,478	19.10	
46	NB	OUTSIDE	8.562	8.610	COSUMNES RIVER DEPARTURE (24-20)	253				253	3.27	
47	NB	MEDIAN	8.898	9.160	MCCONNELL OVERHEAD DEPARTURE	1,384			106	1278	19.21	TYPE E DIKE PLACED PAST END OF MBGR
48	NB	OUTSIDE	8.915	9.490	MCCONNELL OVERHEAD DEPARTURE	3,036			948	2,088	51.11	TYPE E DIKE PLACED PAST END OF MBGR
					SUBTOTAL						535.48	
					TOTAL	23,556.5	2,442	1,281	14,764	6,625	NOTE 3	

SUMMARY OF QUANTITIES

Q-6

STATE OF CALIFORNIA - DEPARTMENT OF TRANSPORTATION
Caltrans
NORTH REGION
OFFICE OF DESIGN, SOUTH
DESIGN BRANCH 2

FUNCTIONAL SUPERVISOR: GIBERT OGAZ
CALCULATED-DESIGNED BY: JUSTIN A UNCK
CHECKED BY: JUSTIN A UNCK
REVISED BY: J. UNCK
DATE REVISED:

LAST REVISION 00-00-00
DATE PLOTTED => 30-JUN-2010
TIME PLOTTED => 08:25

Dist	COUNTY	ROUTE	POST MILES TOTAL PROJECT	SHEET No.	TOTAL SHEETS
03	Sac	99	0.1/12.0	37	73

REGISTERED CIVIL ENGINEER 5-24-10 DATE

5-24-10
PLANS APPROVAL DATE

REGISTERED PROFESSIONAL ENGINEER JUSTIN UNCK No. C65889 Exp. 12-31-11 CIVIL STATE OF CALIFORNIA

THE STATE OF CALIFORNIA OR ITS OFFICERS OR AGENTS SHALL NOT BE RESPONSIBLE FOR THE ACCURACY OR COMPLETENESS OF SCANNED COPIES OF THIS PLAN SHEET.

NOTES:

1. SEE "ROADWAY QUANTITIES" FOR GRAND TOTALS NOT GIVEN THIS SHEET.

REMOVE CONCRETE

DIRECTION	LOCATION	APPROXIMATE PM		LOCATION DESCRIPTION	REMOVE CONCRETE CURB	NOTES
NB/SB	(MEDIAN/OUTSIDE)	FROM	TO		LF	
SB	MEDIAN	8.729	8.747	MCCONNELL UNDERPASS DEPARTURE (24-48L)	100	SEE "REMOVE CONCRETE CURB" DETAILS.
	OUTSIDE	8.749	8.821	MCCONNELL UNDERPASS APPROACH (24-48L)	380	SEE "REMOVE CONCRETE CURB" DETAILS.
SB	MEDIAN	8.766	8.806	MCCONNELL UNDERPASS APPROACH (24-48L)	209	SEE "REMOVE CONCRETE CURB" DETAILS.
				TOTAL	689	

SIDE GUTTERS

DIRECTION	LOCATION	APPROXIMATE PM		LOCATION DESCRIPTION	ROADWAY EXCAVATION	CLASS 2 AB	HMA	NOTES
NB/SB	(MEDIAN/OUTSIDE)	FROM	TO		CY	CY	TON	
SB	OUTSIDE	1.569	1.573	SIMMERHORN Rd OVERCROSSING DEPARTURE (24-138)	4.2	3.1	2.1	SEE "AMADOR Ave/SIMMERHORN Rd OVERCROSSING SIDE GUTTERS" DETAILS
	OUTSIDE	1.573	1.581	UNDER SIMMERHORN Rd OVERCROSSING (24-138)	6.3	4.7	3.2	SEE "AMADOR Ave/SIMMERHORN Rd OVERCROSSING SIDE GUTTERS" DETAILS
	OUTSIDE	1.618	1.639	UNDER AMADOR Ave OC/GALT UNDERPASS	16.6	12.3	8.5	SEE "AMADOR Ave/SIMMERHORN Rd OVERCROSSING SIDE GUTTERS" DETAILS
	OUTSIDE	1.639	1.679	AMADOR Ave OVERCROSSING APPROACH (24-139)	42.2	31.3	21.4	SEE "AMADOR Ave/SIMMERHORN Rd OVERCROSSING SIDE GUTTERS" DETAILS
	OUTSIDE	3.528	3.537	Rte 104/99 Sep DEPARTURE (24-144) (TWIN CITIES Rd)	9.6	7.1	4.9	SEE "ROUTE 104/99 SEPARATION SIDE GUTTER" DETAILS
	OUTSIDE	3.560	3.649	Rte 104/99 Sep APPROACH (24-144) (TWIN CITIES Rd)	94.0	69.6	47.8	SEE "ROUTE 104/99 SEPARATION SIDE GUTTER" DETAILS
SB	OUTSIDE	3.649	3.704	Rte 104/99 Sep APPROACH (24-144) (TWIN CITIES Rd)	145.0	107.4	73.6	SEE "ROUTE 104/99 SEPARATION SIDE GUTTER" DETAILS
				SUBTOTAL	317.9	235.5	161.5	
				TOTAL	NOTE 1	NOTE 1	NOTE 1	

DOWNDRAINS AND OVERSIDE DRAINS

DIRECTION	LOCATION	APPROXIMATE PM	LOCATION DESCRIPTION	REMOVE ENTRANCE TAPER	REMOVE PIPE	TAPERED INLET	FLUME ANCHOR ASSEMBLY	CORRUGATED STEEL FLUME DOWNDRAIN	IMPORTED BORROW	PLACE HMA (Misc AREA)	HMA	NOTES
NB/SB	(MEDIAN/OUTSIDE)			EA	LF	EA	EA	LF	CY	SQYD	TON	
NB	OUTSIDE	0.21	NORTH CHANNEL DRY Cr DEPARTURE			1	2	20		0.88	0.14	INSTALL FLUME DOWNDRAIN PER STANDARD PLAN D87D.
NB	MEDIAN	8.57	COSUMNES RIVER DEPARTURE (24-20)	1	20	1	2	20	3	0.88	0.14	REMOVE EXISTING DOWNDRAIN, BACKFILL ERODED AREA AND INSTALL FLUME DOWNDRAIN PER STANDARD PLAN D87D
			SUBTOATAL								0.28	
			TOTAL	1	20	2	4	40	3	1.76	NOTE 1	

SUMMARY OF QUANTITIES

Q-7

STATE OF CALIFORNIA - DEPARTMENT OF TRANSPORTATION
Caltrans
NORTH REGION
OFFICE OF DESIGN, SOUTH
DESIGN BRANCH 2

FUNCTIONAL SUPERVISOR: GIBERT OGAZ
CALCULATED-DESIGNED BY: JUSTIN A UNCK
CHECKED BY: JUSTIN A UNCK
REVISED BY: J. UNCK
DATE REVISED:

LAST REVISION 00-00-00 | DATE PLOTTED => 30-JUN-2010 | TIME PLOTTED => 08:25

Dist	COUNTY	ROUTE	POST MILES TOTAL PROJECT	SHEET No.	TOTAL SHEETS
03	Sac	99	0.1/12.0	38	73

REGISTERED CIVIL ENGINEER 5-24-10 DATE

5-24-10
PLANS APPROVAL DATE

REGISTERED PROFESSIONAL ENGINEER JUSTIN UNCK No. C65889 Exp. 12-31-11 CIVIL STATE OF CALIFORNIA

THE STATE OF CALIFORNIA OR ITS OFFICERS OR AGENTS SHALL NOT BE RESPONSIBLE FOR THE ACCURACY OR COMPLETENESS OF SCANNED COPIES OF THIS PLAN SHEET.

TEMPORARY RAILING AND CRASH CUSHIONS

DIRECTION	LOCATION	APPROXIMATE PM	LOCATION DESCRIPTION	TEMPORARY RAILING (TYPE K)	TEMPORARY TRAFFIC SCREEN	TEMPORARY CRASH CUSHION MODULE	TERMPORARY CRASH CUSHION (TYPE ABSORB 350)	TRAFFIC PLASTIC DRUM	CHANNELIZER (SURFACE MOUNTED)	NOTES
NB/SB	(MEDIAN/OUTSIDE)			LF	LF	EA	EA	EA	EA	
SB	OUTSIDE	0.150	NORTH CHANNEL DRY Cr APPROACH	140	140				10	EXTEND RAILING PAST 15' FROM ETW
	RAMP	0.676	SB ONRAMP C St OVERCROSSING	120	120				10	EXTEND RAILING PAST 15' FROM ETW
	OUTSIDE	0.808	C St OVERCROSSING APPROACH (24-140)	140	140				10	EXTEND RAILING PAST 15' FROM ETW
	OUTSIDE	1.581	SIMMERHORN Rd OVERCROSSING APPROACH (24-138)	80	80	14			10	"ARRAY TS14"
	OUTSIDE	1.639	AMADOR Ave OVERCROSSING APPROACH (24-139)	80	80	14			10	"ARRAY TS14"
	OUTSIDE	3.547	Rte 104/99 Sep APPROACH (24-144) (TWIN CITIES Rd)	80	80	14			10	"ARRAY TS14"
	OUTSIDE	4.948	SOUTH LAGOON Cr APPROACH (24-28)	140	140				10	EXTEND RAILING PAST 15' FROM ETW
	OUTSIDE	5.028	LAGOON Cr APPROACH(24-25)	140	140				10	EXTEND RAILING PAST 15' FROM ETW
	OUTSIDE	5.088	NORTH LAGOON Cr APPROACH (24-27)	140	140				10	EXTEND RAILING PAST 15' FROM ETW
	OUTSIDE	6.021	ARNO Rd OVERCROSSING APPROACH (24-151)	140	140				10	EXTEND RAILING PAST 15' FROM ETW
	OUTSIDE	6.565	VALENSIN UNDERCROSSING APPROACH (24-46)	140	140				10	EXTEND RAILING PAST 15' FROM ETW
	OUTSIDE	7.012	BADGER Cr BRIDGE APPROACH	80	80	14			10	"ARRAY TS14"
	OUTSIDE	7.372	DILLARD Rd OVERCROSSING APPROACH	140	140				10	EXTEND RAILING PAST 15' FROM ETW
	OUTSIDE	7.478	COSUMNES RIVER OVERFLOW APPROACH (24-22)	80	80	14			10	"ARRAY TS14"
	OUTSIDE	8.047	COSUMNES RIVER OVERFLOW APPROACH (24-21)	100	100	14			10	"ARRAY TS14"
	MEDIAN	8.050	COSUMNES RIVER OVERFLOW APPROACH (24-21)	120	120				10	PLACE RAILING END BEHIND EXISTING THRIE BEAM
	OUTSIDE	8.527	COSUMNES RIVER APPROACH (24-20)	80	80	14			10	"ARRAY TS14"
	OUTSIDE	8.749	MCCONNELL UNDERPASS APPROACH (24-48L)	80	80		1		10	ELEVEN ELEMENT SYSTEM
SB	MEDIAN	8.766	MCCONNELL UNDERPASS APPROACH (24-48L)	80	80		1		10	ELEVEN ELEMENT SYSTEM
NB	OUTSIDE	0.150	NORTH CHANNEL DRY Cr APPROACH	80	80	14			10	"ARRAY TS14"
	OUTSIDE	0.825	C St OVERCROSSING APPROACH (24-140)	140	140				10	EXTEND RAILING PAST 15' FROM ETW
	OUTSIDE	1.595	SIMMERHORN Rd OVERCROSSING APPROACH (24-138)	80	80	14			10	"ARRAY TS14"
	OUTSIDE	1.642	GALT UNDERPASS APPROACH (24-60)	80	80	14			10	"ARRAY TS14"
	OUTSIDE	3.552	Rte 104/99 Sep APPROACH (24-144) (TWIN CITIES Rd)	80	80	14			10	"ARRAY TS14"
	OUTSIDE	4.940	SOUTH LAGOON Cr APPROACH (24-28)	80	80	14			10	"ARRAY TS14"
	OUTSIDE	5.002	LAGOON Cr APPROACH (24-25)	200	200				10	CLOSE GAP BETWEEN BRIDGES
	OUTSIDE	5.081	NORTH LAGOON Cr APPROACH (24-27)	180	180				10	CLOSE GAP BETWEEN BRIDGES
	OUTSIDE	5.640	SAMSON SLOUGH APPROACH	300	300	14			10	"ARRAY TS14"
	OUTSIDE	6.040	ARNO Rd OVERCROSSING APPROACH (24-151)	140	140				10	EXTEND RAILING PAST 15' FROM ETW
	OUTSIDE	6.570	VALENSIN UNDERCROSSING APPROACH (24-46)	80	80	14			10	"ARRAY TS14"
	OUTSIDE	6.990	BADGER Cr BRIDGE APPROACH	80	80	14			10	"ARRAY TS14"
	OUTSIDE	7.395	DILLARD Rd OVERCROSSING APPROACH	140	140				10	EXTEND RAILING PAST 15' FROM ETW
	OUTSIDE	7.960	COSUMNES RIVER OVERFLOW APPROACH (24-21)	80	80	14			10	"ARRAY TS14"
	OUTSIDE	8.435	COSUMNES RIVER APPROACH (24-20)	80	80	14			10	"ARRAY TS14"
	OUTSIDE	8.840	MCCONNELL OVERHEAD APPROACH (24-73)	100	100	14			10	"ARRAY TS14"
NB	MEDIAN	8.840	MCCONNELL OVERHEAD APPROACH (24-73)	100	100		1		10	ELEVEN ELEMENT SYSTEM
SB	MEDIAN (STAGE 3)	1.380/1.820	ELM Ave ENTRANCE TO PRINGLE Ave ENTRANCE	2,560	2,560	14		28		"ARRAY TS14". PCC LANE RECONSTRUCTION
	OUTSIDE (STAGE 2)	1.380/1.820	ELM Ave ENTRANCE TO PRINGLE Ave ENTRANCE	6,200	2,560	14		10		"ARRAY TS14". PCC LANE RECONSTRUCTION
	MEDIAN (STAGE 3)	3.390/3.730	AT Rte 104/99 SEPARATION	2,040	2,040	14		28		"ARRAY TS14". PCC LANE RECONSTRUCTION
SB	OUTSIDE (STAGE 2)	3.390/3.730	AT Rte 104/99 SEPARATION	5,160	2,040	14		10		"ARRAY TS14". PCC LANE RECONSTRUCTION
			TOTAL	20,080	13,320	308	3	76	360	

SUMMARY OF QUANTITIES

Q-8

STATE OF CALIFORNIA - DEPARTMENT OF TRANSPORTATION
Caltrans
NORTH REGION
OFFICE OF DESIGN, SOUTH
DESIGN BRANCH 2

FUNCTIONAL SUPERVISOR: GIBERT OGAZ
CALCULATED-DESIGNED BY: JUSTIN A UNCK
CHECKED BY: JUSTIN A UNCK
REVISED BY: J. UNCK
DATE REVISED:

LAST REVISION 00-00-00 | DATE PLOTTED => 30-JUN-2010 | TIME PLOTTED => 08:25

Dist	COUNTY	ROUTE	POST MILES TOTAL PROJECT	SHEET No.	TOTAL SHEETS
03	Sac	99	0.1/12.0	39	73

REGISTERED CIVIL ENGINEER 5-24-10 DATE

5-24-10
PLANS APPROVAL DATE

REGISTERED PROFESSIONAL ENGINEER JUSTIN UNCK No. C65889 Exp. 12-31-11 CIVIL STATE OF CALIFORNIA

THE STATE OF CALIFORNIA OR ITS OFFICERS OR AGENTS SHALL NOT BE RESPONSIBLE FOR THE ACCURACY OR COMPLETENESS OF SCANNED COPIES OF THIS PLAN SHEET.

NOTE

REMOVAL OF EXISTING TERMINAL SYSTEMS IS PAID PER LINEAR FOOT UNDER THE REMOVE METAL BEAM GUARD RAIL ITEM.

METAL BEAM GUARD RAILING

ROW No.	DIRECTION	LOCATION	APPROXIMATE PM		LOCATION DESCRIPTION	EXISTING MBGR OR BARRIER					MBGR OR BARRIER																			
											TRAILING END						RAILING OR BARRIER					LEADING END						OTHER		
											ANCHOR BLOCK																			
						REMOVE MBGR	(N) REMOVE TERMINAL SYSTEM	(N) REMOVE END ANCHOR ASSEMBLY	(N) REMOVE BURIED POST END ANCHOR	REMOVE THRIE BEAM BARRIER	MINOR CONCRETE (MINOR STRUCTURE)	(N) STANDARD PLAN	(N) (Mod TYPE A)	(N) (Mod TYPE B)	(N) CONNECTIONS TO BRIDGE RAILINGS, ABUTMENTS, BRIDGE COLUMNS AND BRIDGES WITH MBGR	END ANCHOR ASSEMBLY (TYPE SFT)	TRANSITION RAILING (TYPE WB)	TRANSITION RAILING (TYPE STB)	METAL BEAM GUARD RAILING	METAL BEAM GUARD RAILING (7' POST)	MODIFY METAL BEAM GUARD RAILING	SINGLE THRIE BEAM BARRIER (STEEL POST)	ALTERNATIVE FLARED TERMINAL SYSTEM	ALTERNATIVE IN-LINE TERMINAL SYSTEM	(N) CONECTIONS TO BRIDGE RAILINGS, ABUTMENTS, BRIDGE COLUMNS AND BRIDGES WITH MBGR	END ANCHOR ASSEMBLY (TYPE SFT)	(N) BURIED POST END ANCHOR	RAIL TENSIONING ASSEMBLY	METAL BEAM GUARD RAILING (SPECIAL)	GUARD RAILING LAYOUT TYPE
	NB/SB	(MEDIAN/ OUTSIDE)	FROM	TO		LF	EA	EA	EA	LF	CY	EA	EA	EA	EA	EA	EA	EA	LF	LF	LF	LF	EA	EA	EA	EA	EA	EA	EA	
1	SB	OUTSIDE	0.150	0.162	NORTH CHANNEL DRY Cr APPROACH	62.5	1								1		1						1							12B
2	SB	RAMP	0.676		SB ON RAMP C St OVER CROSSING	75										1			75				1							16B
3	SB	OUTSIDE	0.808	0.822	C St OVERCROSSING APPROACH (24-140)	62.5	1				2.46			1	1		1						1							12B
4	SB	OUTSIDE	1.581	1.614	SIMMERHORN Rd OVERCROSSING APPROACH (24-138)	75			1		2.01	1			1		1		175						1					12D
5	SB	OUTSIDE	1.639	1.667	AMADOR Ave OVERCROSSING APPROACH (24-139)	75			1		2.01	1			1		1		112.5								1			12C
6	SB	RAMP	3.439		SB ON RAMP FROM Rte 104/99 SEPERATION											1					50							1		
7	SB	OUTSIDE	3.547	3.587	Rte 104/99 Sep APPROACH (24-144) (TWIN CITIES Rd)	75					2.46			1	1		1		175								1			12C
8	SB	OUTSIDE	4.948	4.986	SOUTH LAGOON Cr APPROACH (24-28)	75	1												200							1				
9	SB	OUTSIDE	5.028	5.061	LAGOON Cr APPROACH (24-25)	75	1												175							1				
10	SB	OUTSIDE	5.088	5.102	NORTH LAGOON Cr APPROACH (24-27)	75	1												37.5				1							12B
11	SB	OUTSIDE	6.021	6.037	ARNO Rd OVERCROSSING APPROACH (24-151)	75	1				2.46			1	1		1		12.5				1							12B
12	SB	OUTSIDE	6.565	6.579	VALENSIN UNDERCROSSING APPROACH (24-46)	75	1												37.5				1							
13	SB	OUTSIDE	7.012	7.029	BADGER Cr BRIDGE APPROACH	87.5	1								1		1		25				1							12B
14	SB	OUTSIDE	7.478	7.492	COSUMNES RIVER OVERFLOW APPROACH (24-22)	75	1								1		1		12.5				1							12B
15	SB	OUTSIDE	8.047	8.079	COSUMNES RIVER OVERFLOW APPROACH (24-21)	75	1				2.07		1		1		1		87.5					1						12A
16	SB	MEDIAN	8.050	8.078	COSUMNES RIVER OVERFLOW APPROACH (24-21)					112.5	2.07		1		1			1				112.5								
17	SB	OUTSIDE	8.527	8.541	COSUMNES RIVER APPROACH (24-20)	75	1								1		1		12.5				1							12B
18	SB	MEDIAN	8.729	8.747	MCCONNELL UNDERPASS DEPARTURE (24-48L)														100							2				
19	SB	OUTSIDE	8.749	8.793	MCCONNELL UNDERPASS APPROACH (24-48L)	137.5					2.01	1					1		200								1			12C
20	SB	MEDIAN	8.766	8.801	MCCONNELL UNDERPASS APPROACH (24-48L)	87.5					2.46			1			1		150								1		1	12C

METAL BEAM GUARD RAILING QUANTITIES CONTINUE ON FOLLOWING SHEETS

(N) - NOT A SEPARATE PAY ITEM; FOR INFORMATIONAL PURPOSES ONLY.

SUMMARY OF QUANTITIES

STATE OF CALIFORNIA - DEPARTMENT OF TRANSPORTATION
Caltrans
NORTH REGION
OFFICE OF DESIGN, SOUTH
DESIGN BRANCH 2
FUNCTIONAL SUPERVISOR GIBERT OGAZ
CALCULATED-DESIGNED BY JUSTIN A UNCK
CHECKED BY JUSTIN A UNCK
REVISED BY J. UNCK
DATE REVISED
LAST REVISION 00-00-00
DATE PLOTTED => 30-JUN-2010
TIME PLOTTED => 08:25
BORDER LAST REVISED 7/1/2010
USERNAME => s130875
DGN FILE => 31e670pa009.dgn
RELATIVE BORDER SCALE IS IN INCHES 0 1 2 3
UNIT 0322
PROJECT NUMBER & PHASE 03000010921

Dist	COUNTY	ROUTE	POST MILES TOTAL PROJECT	SHEET No.	TOTAL SHEETS
03	Sac	99	0.1/12.0	40	73

REGISTERED CIVIL ENGINEER 5-24-10 DATE

5-24-10
PLANS APPROVAL DATE

REGISTERED PROFESSIONAL ENGINEER JUSTIN UNCK No. C65889 Exp. 12-31-11 CIVIL STATE OF CALIFORNIA

THE STATE OF CALIFORNIA OR ITS OFFICERS OR AGENTS SHALL NOT BE RESPONSIBLE FOR THE ACCURACY OR COMPLETENESS OF SCANNED COPIES OF THIS PLAN SHEET.

METAL BEAM GUARD RAILING

ROW No.	NOTES
1	
2	
3	
4	
5	SEE "FLARED LAYOUT" CONSTRUCTION DETAILS FOR ADDITIONAL LAYOUT INFORMATION. USE "ADJUSTMENT AT DRAINAGE INLET" CONSTRUCTION DETAIL IF EXISTING DRAINAGE INLETS INTERFERE WITH POST PLACEMENT
6	SEE "SB ON RAMP Rte 104/99 Sep" CONSTRUCTION DETAILS.
7	SEE "FLARED LAYOUT" CONSTRUCTION DETAILS FOR ADDITIONAL LAYOUT INFORMATION. USE "ADJUSTMENT AT DRAINAGE INLET" CONSTRUCTION DETAIL IF EXISTING DRAINAGE INLETS INTERFERE WITH POST PLACEMENT
8	SEE "SOUTH LAGOON CREEK APPROACH, SOUTHBOUND" CONSTRUCTION DETAILS FOR LAYOUT. CONNECT TO THE BRIDGE MBGR USING A "STRENGTHENED RAILING SECTION" AS SHOWN IN THE CONSTRUCTION DETAILS
9	SEE "LAGOON CREEK APPROACH, SOUTHBOUND" CONSTRUCTION DETAILS FOR LAYOUT. CONNECT TO THE BRIDGE MBGR USING A "STRENGTHENED RAILING SECTION" AS SHOWN IN THE CONSTRUCTION DETAILS
10	CONNECT TO THE BRIDGE MBGR USING A "STRENGTHENED RAILING SECTION" AS SHOWN IN THE CONSTRUCTION DETAILS
11	
12	CONNECT TO THE BRIDGE MBGR USING A "STRENGTHENED RAILING SECTIONS" AS SHOWN IN THE CONSTRUCTION DETAILS
13	
14	
15	UP TO THE TRANSITION RAIL (TYPE WB), USE A PARABOLIC LAYOUT TO FLARE THE MBGR AT 15:1 OVER TO THE PAVEMENT EDGE
16	UP TO THE TRANSITION RAIL (TYPE STB), USE A PARABOLIC LAYOUT TO FLARE THE THRIE BEAM BARRIER AT 15:1 OVER TO THE EXISTING BARRIER FOR RECONNECTION. SEE LAYOUT TYPE 25A IN THE STANDARD PLANS
17	INSTALLATION WILL CONNECT TO TEMPORARY RAIL (TYPE K)
18	SEE "MCCONNELL UNDERPASS" DETAILS FOR ADDITIONAL LAYOUT INFORMATION
19	SEE "FLARED LAYOUT" DETAILS FOR ADDITIONAL LAYOUT INFORMATION
20	SEE "MCCONNELL UNDERPASS" DETAILS AND "FLARED LAYOUT" DETAILS FOR ADDITIONAL LAYOUT INFORMATION
	METAL BEAM GUARD RAILING QUANTITIES CONTINUE ON FOLLOWING SHEETS

SUMMARY OF QUANTITIES

Q-10

STATE OF CALIFORNIA - DEPARTMENT OF TRANSPORTATION
Caltrans
NORTH REGION
OFFICE OF DESIGN, SOUTH
DESIGN BRANCH 2

FUNCTIONAL SUPERVISOR: GIBERT OGAZ
CALCULATED-DESIGNED BY: JUSTIN A UNCK
CHECKED BY: JUSTIN A UNCK
REVISED BY: J. UNCK
DATE REVISED:

LAST REVISION 00-00-00
DATE PLOTTED => 30-JUN-2010
TIME PLOTTED => 08:25

Dist	COUNTY	ROUTE	POST MILES TOTAL PROJECT	SHEET No.	TOTAL SHEETS
03	Sac	99	0.1/12.0	41	73

REGISTERED CIVIL ENGINEER 5-24-10 DATE

5-24-10
PLANS APPROVAL DATE

REGISTERED PROFESSIONAL ENGINEER JUSTIN UNCK No. C65889 Exp. 12-31-11 CIVIL STATE OF CALIFORNIA

THE STATE OF CALIFORNIA OR ITS OFFICERS OR AGENTS SHALL NOT BE RESPONSIBLE FOR THE ACCURACY OR COMPLETENESS OF SCANNED COPIES OF THIS PLAN SHEET.

METAL BEAM GUARD RAILING

ROW No.	DIRECTION NB/SB	LOCATION (MEDIAN/ OUTSIDE)	APPROXIMATE PM FROM	APPROXIMATE PM TO	LOCATION DESCRIPTION	EXISTING MBGR OR BARRIER: REMOVE MBGR (LF)	(N) REMOVE TERMINAL SYSTEM (EA)	(N) REMOVE END ANCHOR ASSEMBLY (EA)	(N) REMOVE BURIED POST END ANCHOR (EA)	REMOVE THRIE BEAM BARRIER (LF)	MBGR OR BARRIER – TRAILING END: MINOR CONCRETE (MINOR STRUCTURE) (CY)	ANCHOR BLOCK: STANDARD PLAN (N) (EA)	ANCHOR BLOCK: (Mod TYPE A) (N) (EA)	ANCHOR BLOCK: (Mod TYPE B) (N) (EA)	(N) CONNECTIONS TO BRIDGE RAILINGS, ABUTMENTS, BRIDGE COLUMNS AND BRIDGES WITH MBGR (EA)	END ANCHOR ASSEMBLY (TYPE SFT) (EA)	RAILING OR BARRIER: TRANSITION RAILING (TYPE WB) (EA)	TRANSITION RAILING (TYPE STB) (EA)	METAL BEAM GUARD RAILING (LF)	METAL BEAM GUARD RAILING (7' POST) (LF)	MODIFY METAL BEAM GUARD RAILING (LF)	LEADING END: SINGLE THRIE BEAM BARRIER (STEEL POST) (LF)	ALTERNATIVE FLARED TERMINAL SYSTEM (EA)	ALTERNATIVE IN-LINE TERMINAL SYSTEM (EA)	(N) CONCECTIONS TO BRIDGE RAILINGS, ABUTMENTS, BRIDGE COLUMNS AND BRIDGES WITH MBGR (EA)	END ANCHOR ASSEMBLY (TYPE SFT) (EA)	(N) BURIED POST END ANCHOR (EA)	OTHER: RAIL TENSIONING ASSEMBLY (EA)	METAL BEAM GUARD RAILING (SPECIAL) (EA)	GUARD RAILING LAYOUT TYPE
21	NB	OUTSIDE	0.133	0.150	NORTH CHANNEL DRY Cr APPROACH	87.5	1								1		1			25			1							12B
22	NB	OUTSIDE	0.811	0.825	C St OVERCROSSING APPROACH (24-140)		1				2.46			1	1		1						1							12B
23	NB	MEDIAN	1.239		JUST SOUTH OF "SIMMERHORN Rd EXIT 275A" SIGN					12.5												12.5								
24	NB	MEDIAN	1.258		JUST SOUTH OF "SIMMERHORN Rd EXIT 275A" SIGN					12.5												12.5								
25	NB	OUTSIDE	1.563	1.595	SIMMERHORN Rd OVERCROSSING APPROACH (24-138)	75	1				2.01	1			1		1		137.5								1			12C
26	NB	OUTSIDE	1.605	1.642	GALT UNDERPASS APPROACH (24-60)	75	1				2.01	1			1		1		200						1					12D
27	NB	OUTSIDE	3.522	3.552	Rte 104/99 Sep APPROACH (24-144) (TWIN CITIES Rd)	75	1				2.46			1	1		1		125								1			12C
28	NB	RAMP	3.690		NB ON RAMP Rte 104/99 SEPARATION											1					125							1		
29	NB	OUTSIDE	4.926	4.940	SOUTH LAGOON Cr APPROACH (24-28)	75	1								1		1		12.5				1							12B
30	NB	OUTSIDE	4.964	5.002	LAGOON Cr APPROACH (24-25)	200									1		1		175						1					12D
31	NB	OUTSIDE	5.048	5.081	NORTH LAGOON Cr APPROACH (24-27)	175									1		1		150						1					12D
32	NB	OUTSIDE	5.586	5.640	SAMSON SLOUGH APPROACH	287.5	1								1		1			225			1							12B
33	NB	OUTSIDE	6.024	6.040	ARNO Rd OVERCROSSING APPROACH (24-151)	75	1				2.46			1	1		1		12.5				1							12B
34	NB	OUTSIDE	6.556	6.570	VALENSIN UNDERCROSSING APPROACH (24-46)	75	1								1		1		12.5				1							12B
35	NB	OUTSIDE	6.976	6.990	BADGER Cr BRIDGE APPROACH	75	1								1		1		12.5				1							12B
36	NB	OUTSIDE	7.946	7.960	COSUMNES RIVER OVERFLOW APPROACH (24-21)	75	1								1		1			12.5			1							12B
37	NB	OUTSIDE	8.418	8.435	COSUMNES RIVER APPROACH (24-20)	87.5	1								1		1		25				1							12B
38	NB	MEDIAN	8.560	8.840	MCCONNELL OVERHEAD APPROACH (24-73)	87.5	1								1		1		1,453						1					12D
39	NB	OUTSIDE	8.562	8.840	MCCONNELL OVERHEAD APPROACH (24-73)	87.5	1								1		1			1443					1					12D
40	NB	MEDIAN	8.898	9.140	MCCONNELL OVERHEAD DEPARTURE (24-73)											1			1,284						1					12DD
41	NB	OUTSIDE	8.915	9.310	MCCONNELL OVERHEAD DEPARTURE (24-73)											1			2,088						1					12DD
42	SB	MEDIAN	3.268	3.837	ELM Ave ENTRANCE TO PRINGLE Ave ENTRANCE					3,532												3,532								
43	SB	MEDIAN	3.258	3.837	AT Rte 104/99 SEPARATION					3,057												3,057								
					SUBTOTAL										29	3									8	4				
					MOVE SELECTED QUANTITIES FROM "LEADING END" TO "TRAILING END"										8	4														
					TOTAL	2,950.5	27	0	2	6,725.5	31.41	5	2	7	35	7	28	1	7,275.0	1,705.5	175	6,726.5	18	1			6	2	1	

(N) - NOT A SEPARATE PAY ITEM; FOR INFORMATIONAL PURPOSES ONLY.

SUMMARY OF QUANTITIES

Q-11

STATE OF CALIFORNIA - DEPARTMENT OF TRANSPORTATION
Caltrans
NORTH REGION
OFFICE OF DESIGN, SOUTH
DESIGN BRANCH 2

FUNCTIONAL SUPERVISOR: GIBERT OGAZ
CALCULATED-DESIGNED BY: JUSTIN A UNCK
CHECKED BY: JUSTIN A UNCK
REVISED BY: J. UNCK
DATE REVISED:

LAST REVISION 00-00-00 | DATE PLOTTED => 30-JUN-2010 | TIME PLOTTED => 08:25

Dist	COUNTY	ROUTE	POST MILES TOTAL PROJECT	SHEET No.	TOTAL SHEETS
03	Sac	99	0.1/12.0	42	73

REGISTERED CIVIL ENGINEER 5-24-10 DATE

5-24-10
PLANS APPROVAL DATE

REGISTERED PROFESSIONAL ENGINEER JUSTIN UNCK No. C65889 Exp. 12-31-11 CIVIL STATE OF CALIFORNIA

THE STATE OF CALIFORNIA OR ITS OFFICERS OR AGENTS SHALL NOT BE RESPONSIBLE FOR THE ACCURACY OR COMPLETENESS OF SCANNED COPIES OF THIS PLAN SHEET.

METAL BEAM GUARD RAILING

ROW No.	NOTES
21	
22	
23	REPLACE DAMAGED THRIE BEAM. SANITARY SEWER 6" LINE IN VICINITY OF THIS WORK
24	REPLACE DAMAGED THRIE BEAM. SANITARY SEWER 6" LINE IN VICINITY OF THIS WORK
25	SEE "FLARED LAYOUT" CONSTRUCTION DETAILS FOR ADDITIONAL LAYOUT INFORMATION
26	USE "ADJUSTMENT AT DRAINAGE INLET" CONSTRUCTION DETAIL IF EXISTING DRAINAGE INLETS INTERFERE WITH POST PLACEMENT
27	SEE "FLARED LAYOUT" CONSTRUCTION DETAIL FOR ADDITIONAL LAYOUT INFORMATION. USE ADJUSTMENT AT DRAINAGE INLET" CONSTRUCTION DETAIL IF EXISTING DRAINAGE INLET INTERFERES WITH POST PLACEMENT
28	SEE "NB ON RAMP Rte 104/99 Sep" CONSTRUCTION DETAILS
29	
30	
31	
32	
33	
34	
35	
36	
37	
38	
39	
40	
41	
42	
43	

SUMMARY OF QUANTITIES

Q-12

STATE OF CALIFORNIA - DEPARTMENT OF TRANSPORTATION
Caltrans
NORTH REGION
OFFICE OF DESIGN, SOUTH
DESIGN BRANCH 2

FUNCTIONAL SUPERVISOR: GIBERT OGAZ
CALCULATED-DESIGNED BY: JUSTIN A UNCK
CHECKED BY: JUSTIN A UNCK
REVISED BY: J. UNCK
DATE REVISED:

LAST REVISION 00-00-00 | DATE PLOTTED => 30-JUN-2010 | TIME PLOTTED => 08:26

Dist	COUNTY	ROUTE	POST MILES TOTAL PROJECT	SHEET No.	TOTAL SHEETS
03	Sac	99	0.1/12.0	43	73

REGISTERED CIVIL ENGINEER 5-24-10 DATE

5-24-10
PLANS APPROVAL DATE

REGISTERED PROFESSIONAL ENGINEER JUSTIN UNCK No. C65889 Exp. 12-31-11 CIVIL STATE OF CALIFORNIA

THE STATE OF CALIFORNIA OR ITS OFFICERS OR AGENTS SHALL NOT BE RESPONSIBLE FOR THE ACCURACY OR COMPLETENESS OF SCANNED COPIES OF THIS PLAN SHEET.

MARKERS AND OBJECT MARKERS

DIRECTION	LOCATION	RAILING OR BARRIER APPROXIMATE PM		LOCATION DESCRIPTION	OBJECT MARKER (TYPE L-1)	OBJECT MARKER (TYPE P)	MARKER PLACEMENT NOTES
NB/SB	(MEDIAN/OUTSIDE)	FROM	TO		EA	EA	
SB	OUTSIDE	0.150	0.162	NORTH CHANNEL DRY Cr APPROACH	2		AT RETURN CAP; AT CONCRETE BARRIER
	RAMP	0.676		SB ON RAMP C St OVERCROSSING	2		AT RETURN CAP; AT END OF AIt FLARED END TERMINAL SYSTEM
	OUTSIDE	0.808	0.822	C St OVERCROSSING APPROACH (24-140)	2		AT RETURN CAP; AT ANCHOR BLOCK
	OUTSIDE	1.581	1.614	SIMMERHORN Rd OVERCROSSING APPROACH (24-138)	1		AT ANCHOR BLOCK
	OUTSIDE	1.639	1.667	AMADOR Ave OVERCROSSING APPROACH (24-139)	2		AT EMBANKMENT ENTRY; AT ANCHOR BLOCK
	RAMP	3.439		SB ONRAMP FROM Rte 104/99 SEPARATION	2		AT RETURN CAP; AT END OF AIt FLARED END TERMINAL SYSTEM
	OUTSIDE	3.547	3.587	Rte 10/99 Sep APPROACH (24-144) (TWIN CITIES Rd)	2		AT EMBANKMENT ENTRY; AT ANCHOR BLOCK
	OUTSIDE	4.948	4.986	SOUTH LAGOON Cr APPROACH (24-28)	1	1(Rt)	SEE "SOUTH LAGOON Cr BRIDGE APPROACH" DETAILS
	OUTSIDE	5.028	5.061	LAGOON Cr APPROACH (24-25)	1	1(Rt)	SEE "LAGOON Cr BRIDGE APPROACH" DETAILS
	OUTSIDE	5.088	5.102	NORTH LAGOON Cr APPROACH (24-27)	1	1(Rt)	AT RETURN CAP (L-1 MARKER); AT BRIDGE MBGR CONNECTION (P MARKER)
	OUTSIDE	6.021	6.037	ARNO Rd OVERCROSSING APPROACH (24-151)	2		AT RETURN CAP; AT ANCHOR BLOCK
	OUTSIDE	6.565	6.579	VALENSIN UNDERCROSSING APPROACH (24-26)	2		AT RETURN CAP; AT BRIDGE MBGR CONNECTION
	OUTSIDE	7.012	7.029	BADGER Cr BRIDGE APPROACH	2		AT RETURN CAP; AT CONCRETE BARRIER
	OUTSIDE	7.372	7.390	DILLARD Rd OVERSCROSSING APPROACH	2		AT RETURN CAP; AT ANCHOR BLOCK
	OUTSIDE	7.478	7.492	COSUMNES RIVER OVERFLOW APPROACH (24-22)	1	1(Rt)	AT RETURN CAP (L-1 MARKER); AT CONCRETE BARRIER (P MARKER)
	OUTSIDE	8.047	8.079	COSUMNES RIVER OVERFLOW APPROACH (24-21)	1	1(Rt)	AT RETURN CAP (L-1 MARKER); AT ANCHOR BLOCK (P MARKER)
	MEDIAN	8.050	8.078	COSUMNES RIVER OVERFLOW APPROACH (24-21)		1(Lt)	AT ANCHOR BLOCK (P MARKER); AT 48 FOOT INTERVALS (MEDIAN BARRIER MARKER). SEE NOTE 1.
	OUTSIDE	8.527	8.541	COSUMNES RIVER APPROACH (24-20)	1	1(Rt)	AT RETURN CAP (L-1 MARKER); AT K-RAIL (P MARKER)
	OUTSIDE	8.749	8.793	MCCONNELL UNDERPASS APPROACH (24-48L)	1	1(Rt)	AT EMBANKMENT ENTRY (L-1 MARKER); AT ANCHOR BLOCK (P MARKER)
SB	MEDIAN	8.766	8.801	MCCONNELL UNDERPASS APPROACH (24-48L)	1	1(Lt)	AT EMBANKMENT ENTRY (L-1 MARKER); AT ANCHOR BLOCK (P MARKER)
NB	OUTSIDE	0.133	0.150	NORTH CHANNEL DRY Cr APPROACH	2		AT RETURN CAP; AT BARRIER RAIL
	OUTSIDE	0.811	0.825	C St OVERCROSSING APPROACH (24-140)	2		AT RETURN CAP; AT ANCHOR BLOCK
	OUTSIDE	1.563	1.595	SIMMERHORN Rd OVERCROSSING APPROACH (24-138)	2		AT EMBANKMENT ENTRY; AT ANCHOR BLOCK
	OUTSIDE	1.605	1.642	GALT UNDERPASS APPROACH (24-60)	1		AT ANCHOR BLOCK
	OUTSIDE	3.522	3.552	Rte 104/99 Sep APPROACH (24-144) (TWIN CITIES Rd)	2		AT EMBANKMENT ENTRY; AT ANCHOR BLOCK
	RAMP	3.690		NB ONRAMP Rte 104/99 SEPARATION	2		AT RETURN CAP; AT END OF AIt FLARED END TERMINAL SYSTEM
	OUTSIDE	4.926	4.940	SOUTH LAGOON Cr APPROACH (24-28)	2		AT RETURN CAP; AT BARRIER RAIL
	OUTSIDE	4.964	5.002	LAGOON Cr APPROACH (24-25)	1		AT BARRIER RAIL
	OUTSIDE	5.048	5.081	NORTH LAGOON Cr APPROACH (24-27)	1		AT BARRIER RAIL
	OUTSIDE	5.586	5.640	SAMSON SLOUGH APPROACH	2		AT RETURN CAP; AT CONCRETE BARRIER
	OUTSIDE	6.024	6.040	ARNO Rd OVERCROSSING APPROACH (24-151)	2		AT RETURN CAP; AT ANCHOR BLOCK
	OUTSIDE	6.556	6.570	VALENSIN UNGERCROSSING APPROACH (24-46)	2		AT RETURN CAP; AT CONCRETE BARRIER
	OUTSIDE	6.976	6.990	BADGER Cr BRIDGE APPROACH	2		AT RETURN CAP; AT CONCRETE BARRIER
	OUTSIDE	7.379	7.395	DILLARD Rd OVERCROSSING APPROACH	2		AT RETURN CAP; AT CONCRETE BARRIER
	OUTSIDE	7.946	7.960	COSUMNES RIVER OVERFLOW APPROACH (24-21)	2		AT RETURN CAP; AT CONCRETE BARRIER
	OUTSIDE	8.418	8.435	COSUMNES RIVER APPROACH (24-20)	2		AT RETURN CAP; AT CONCRETE BARRIER
	MEDIAN	8.816	8.840	MCCONNELL OVERHEAD APPROACH (24-73)		1(Lt)	AT CONCRETE BARRIER
NB	OUTSIDE	8.823	8.840	MCCONNELL OVERHEAD APPROACH (24-73)	1		AT CONCRETE BARRIER
				GRAND TOTAL	59	10	

SUMMARY OF QUANTITIES

Q-13

STATE OF CALIFORNIA - DEPARTMENT OF TRANSPORTATION
Caltrans
NORTH REGION
OFFICE OF DESIGN, SOUTH
DESIGN BRANCH 2

FUNCTIONAL SUPERVISOR: GIBERT OGAZ
CALCULATED-DESIGNED BY: JUSTIN A UNCK
CHECKED BY: JUSTIN A UNCK
REVISED BY: J. UNCK
DATE REVISED:

LAST REVISION 00-00-00
DATE PLOTTED => 30-JUN-2010
TIME PLOTTED => 08:26

Dist	COUNTY	ROUTE	POST MILES TOTAL PROJECT	SHEET No.	TOTAL SHEETS
03	SAC	99	0.12/12.0	44	73

Normanye 5-13-10
REGISTERED CIVIL ENGINEER DATE

5-24-10
PLANS APPROVAL DATE

REGISTERED PROFESSIONAL ENGINEER NORMAN YE No. E-16913 Exp.6/30/11 ELECTRICAL STATE OF CALIFORNIA

THE STATE OF CALIFORNIA OR ITS OFFICERS OR AGENTS SHALL NOT BE RESPONSIBLE FOR THE ACCURACY OR COMPLETENESS OF SCANNED COPIES OF THIS PLAN SHEET.

ELECTRICAL EQUIPMENT SCHEDULE

LOC	APPROXIMATED LOCATIONS	PM	ELEMENT	No. OF LOOPS	PAVEMENT SENSOR	SUBSURFACE TEMP. SENSOR	COMMENTS
1	SAN JOAQUIN/SAC COUNTY LINE	0.12	TMS (COUNT)		-	-	SEE DETAIL"A" SHEET E-2
2	EAST OF TWIN CITIES ROAD	3.53	TMS (COUNT)	10	-	-	SEE DETAIL"B" SHEET E-2
3	McCONNELL OVERHEAD	8.80	RWIS	-	1	1	SEE DETAIL"C" SHEET E-3 REPLACING EXISTING RPU AND WEATHER SENSORS (SEE SPEC. FOR DETAILS)
4	NORTH OF GRANT LINE ROAD	11.0	TMS	8	-	-	SEE DETAIL"D" SHEET E-3
5	SOUTH OF ELK GROVE BLVD	12.0	TMS	10	-	-	SEE DETAIL"E" SHEET E-3

GENERAL NOTES:

AB Exist LOOPS WHERE SHOWN

PROJECT NOTES:

1. Exist TYPE 334 CONTROLLER CABINET
2. SPLICE NEW LOOP WIRES TO Exist dlc
3. Exist RWIS TOWER WITH RPU
4. THE EXACT LOCATIONS AND INSTALLATION SHALL FOLLOW MANUFACUTURER'S INSTRUCTIONS

ABBREVIATIONS

RWIS ROADSIDE WEATHER INFORMATION SYSTEM
RPU REMOTE PROCESSING UNIT
SLI SENSOR LEAD-IN-CABLE
TMS TRAFFIC MONITORING STATION

SYMBOLS:

- Exist RWIS TOWER
- Exist SUBSURFACE TEMPERATURE PROBE WITH PAVEMENT SENSOR
- Exist SURFACE PAVEMENT SENSOR
- SUBSURFACE TEMPERATURE PROBE WITH PAVEMENT SENSOR
- SURFACE PAVEMENT SENSOR

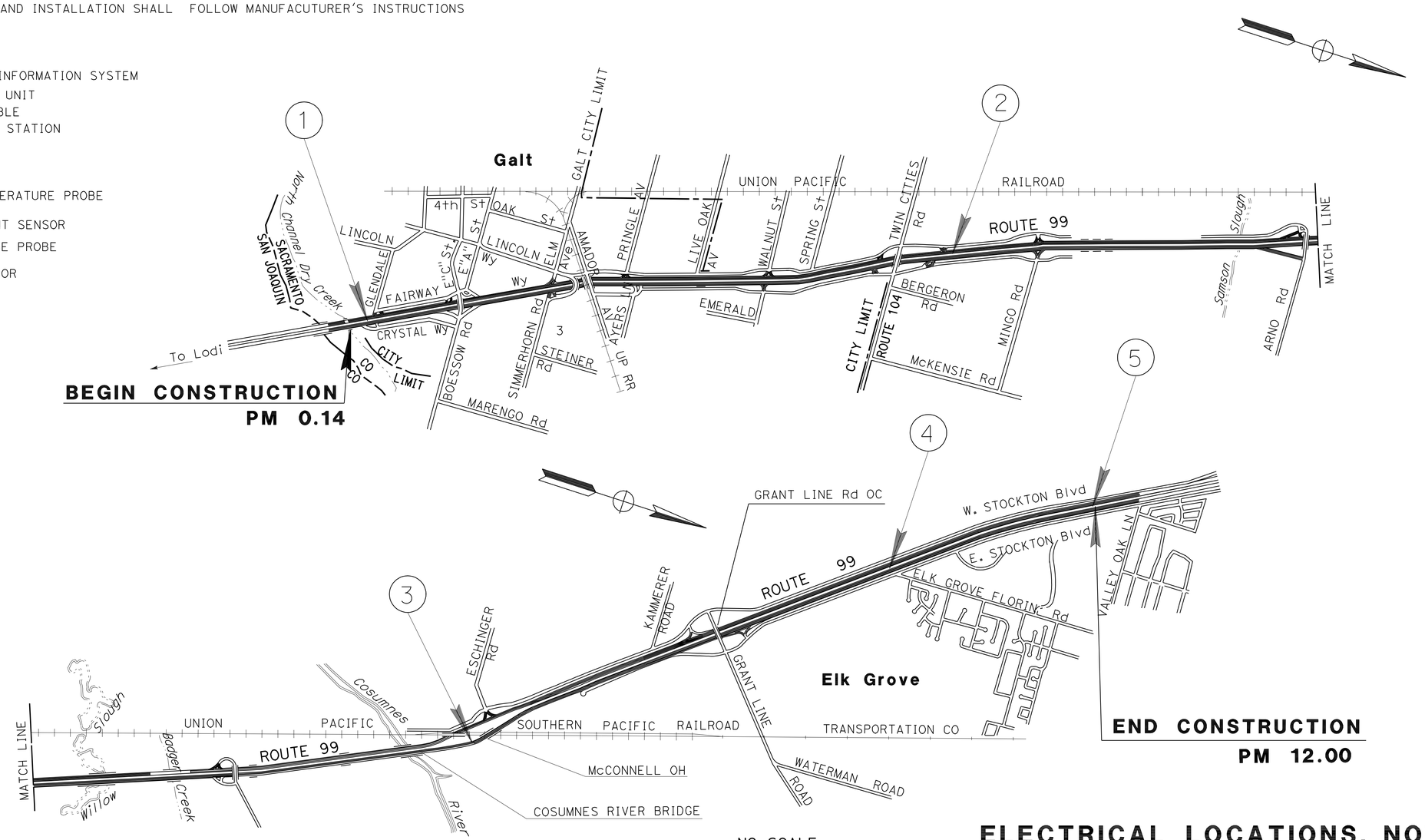

ELECTRICAL LOCATIONS, NOTES, ABBREVIATIONS AND SYMBOLS

THIS PLAN ACURATE FOR ELECTRICAL WORK ONLY

E-1

STATE OF CALIFORNIA - DEPARTMENT OF TRANSPORTATION
ELECTRICAL DESIGN
Caltrans

FUNCTIONAL SUPERVISOR: NELSON LEE
CALCULATED-DESIGNED BY: JAMIE KOJAK
CHECKED BY: NORMAN YE
REVISED BY
DATE REVISED

LAST REVISION 00-00-00
DATE PLOTTED => 30-JUN-2010
TIME PLOTTED => 08:26

Dist	COUNTY	ROUTE	POST MILES TOTAL PROJECT	SHEET No.	TOTAL SHEETS
03	SAC	99	0.12/12.0	45	73

REGISTERED CIVIL ENGINEER 5-13-10 DATE

5-24-10
PLANS APPROVAL DATE

REGISTERED PROFESSIONAL ENGINEER
NORMAN YE
No. E-16913
Exp. 6/30/11
ELECTRICAL
STATE OF CALIFORNIA

THE STATE OF CALIFORNIA OR ITS OFFICERS OR AGENTS SHALL NOT BE RESPONSIBLE FOR THE ACCURACY OR COMPLETENESS OF SCANNED COPIES OF THIS PLAN SHEET.

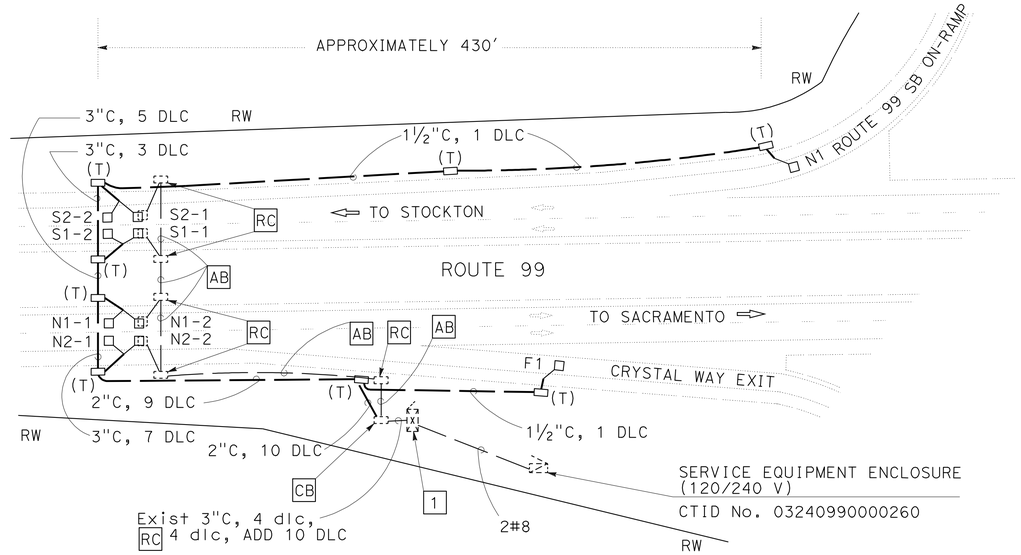

COUNT STATION
(Sac 99, PM 0.12)
(LOCATION 1)

DETAIL "A"

NO SCALE

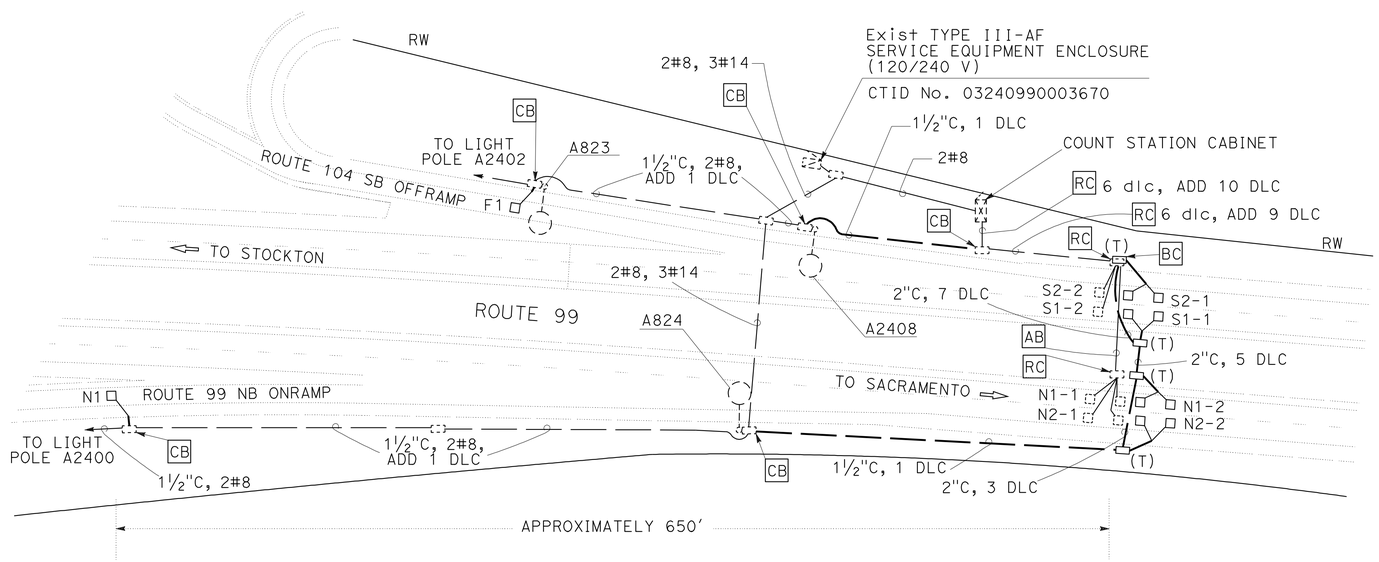

COUNT STATION
(Sac 99, PM 3.53
(LOCATION 2)

DETAIL "B"

NO SCALE

MODIFY TRAFFIC MONITORING STATION (COUNT)

(LOCATION 1 AND 2)

NO SCALE

E-2

STATE OF CALIFORNIA - DEPARTMENT OF TRANSPORTATION
Caltrans
ELECTRICAL DESIGN

FUNCTIONAL SUPERVISOR: NELSON LEE
CALCULATED-DESIGNED BY: JAMIE KOJAK
CHECKED BY: NORMAN YE
REVISED BY
DATE REVISED

LAST REVISION 00-00-00
DATE PLOTTED => 30-JUN-2010
TIME PLOTTED => 08:26

Dist	COUNTY	ROUTE	POST MILES TOTAL PROJECT	SHEET No.	TOTAL SHEETS
03	SAC	99	0.12/12.0	46	73

REGISTERED CIVIL ENGINEER 5-13-10 DATE

5-24-10
PLANS APPROVAL DATE

REGISTERED PROFESSIONAL ENGINEER
NORMAN YE
No. E-16913
Exp. 6/30/11
ELECTRICAL
STATE OF CALIFORNIA

THE STATE OF CALIFORNIA OR ITS OFFICERS OR AGENTS SHALL NOT BE RESPONSIBLE FOR THE ACCURACY OR COMPLETENESS OF SCANNED COPIES OF THIS PLAN SHEET.

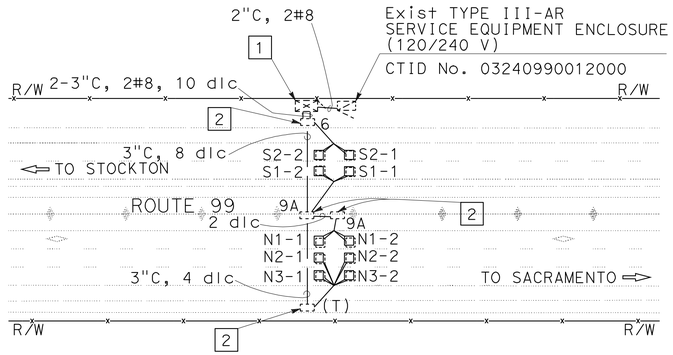

TRAFFIC MONITORING STATION
(Sac 99, PM 12.00)
(LOCATION 5)

DETAIL "E"

NO SCALE

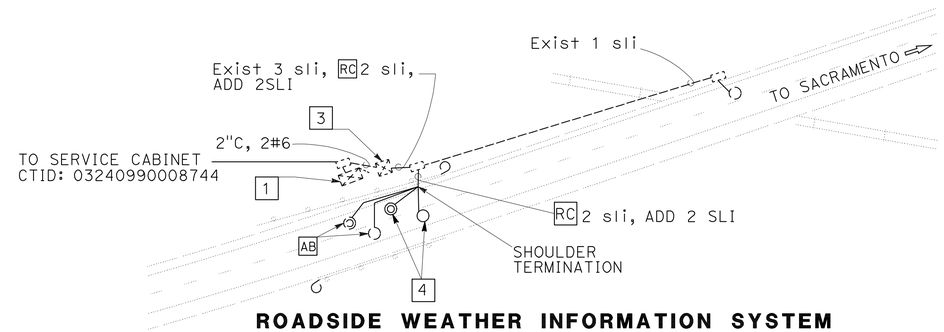

ROADSIDE WEATHER INFORMATION SYSTEM
MC CONNELL OH
(Sac 99, PM 8.8)
(LOCATION 3)

DETAIL "C"

NO SCALE

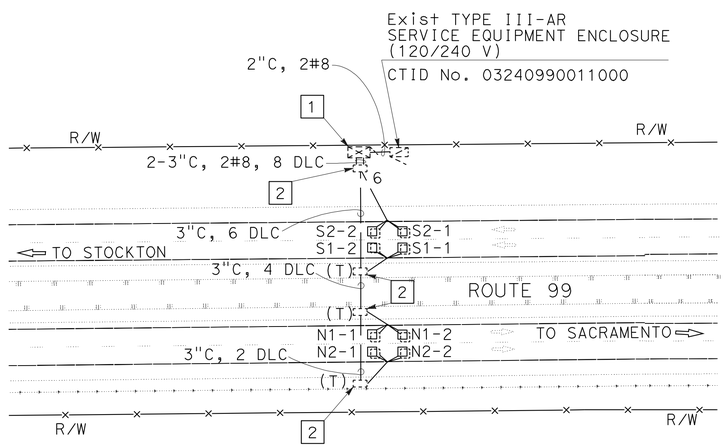

TRAFFIC MONITORING STATION
(Sac 99, PM 11.00)
(LOCATION 4)

DETAIL "D"

NO SCALE

MODIFY TRAFFIC MONITORING STATION
MODIFY ROADSIDE WEATHER INFORMATION SYSTEM

(LOCATION 3,4,5)

NO SCALE

E-3

STATE OF CALIFORNIA - DEPARTMENT OF TRANSPORTATION
Caltrans
ELECTRICAL DESIGN
FUNCTIONAL SUPERVISOR: NELSON LEE
CALCULATED-DESIGNED BY: JAMIE KOJAK
CHECKED BY: NORMAN YE
REVISED BY
DATE REVISED

LAST REVISION 00-00-00
DATE PLOTTED => 30-JUN-2010
TIME PLOTTED => 08:26

DIST	COUNTY	ROUTE	POST MILES TOTAL PROJECT	SHEET NO.	TOTAL SHEETS
03	Sac	99	0.1/12.0	47	73

Randell D. Hiatt
REGISTERED CIVIL ENGINEER

June 6, 2008
PLANS APPROVAL DATE

REGISTERED PROFESSIONAL ENGINEER
Randell D. Hiatt
No. C50200
Exp. 6-30-09
CIVIL
STATE OF CALIFORNIA

The State of California or its officers or agents shall not be responsible for the accuracy or completeness of electronic copies of this plan sheet.

To accompany plans dated 5-24-10

NOTES:

1. When necessary to place dike in front of face of guard railing, only Type C dike may be used. For dike details, see Standard Plan A87B.
2. For standard railing post embedment, see Standard Plans A77C3.
3. Guard railing delineation to be used where shown on the Project Plans.
4. When dike or curb is placed under guard railing, the maximum height of the dike or curb shall be 4". Mountable dike should not be used. For dike and curb details, see Revised Standard Plans RSP A87A and Standard Plan A87B.
5. For details of typical distance between the face of rail and hinge point, see Standard Plan A77C3.

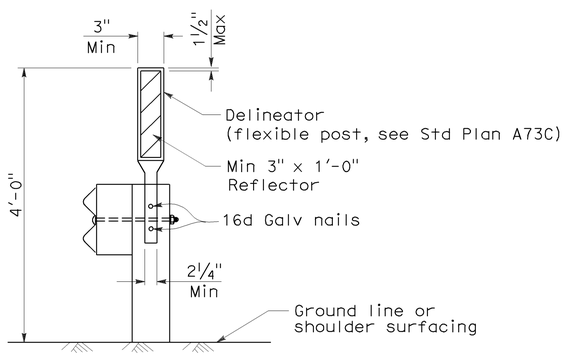

GUARD RAILING DELINEATION

See Note 3

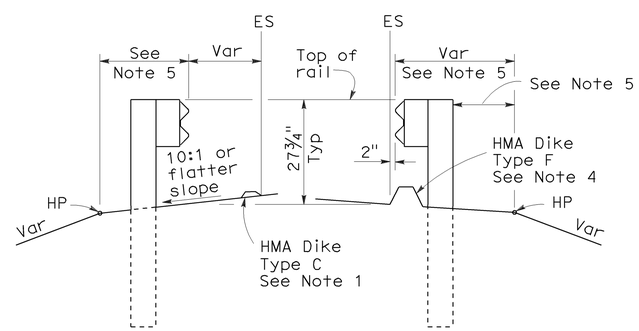

DIKE POSITIONING

See Note 1

STATE OF CALIFORNIA
DEPARTMENT OF TRANSPORTATION

METAL BEAM GUARD RAILING TYPICAL RAILING DELINEATION AND DIKE POSITIONING DETAILS

NO SCALE

RSP A77C4 DATED JUNE 6, 2008 SUPERSEDES STANDARD PLAN A77C4
DATED MAY 1, 2006 - PAGE 47 OF THE STANDARD PLANS BOOK DATED MAY 2006.

REVISED STANDARD PLAN RSP A77C4

2006 REVISED STANDARD PLAN RSP A77C4

12-10-07

DIST	COUNTY	ROUTE	POST MILES TOTAL PROJECT	SHEET NO.	TOTAL SHEETS
03	Sac	99	0.1/12.0	48	73

Randell D. Hiatt
REGISTERED CIVIL ENGINEER

June 6, 2008
PLANS APPROVAL DATE

REGISTERED PROFESSIONAL ENGINEER
Randell D. Hiatt
No. C50200
Exp. 6-30-09
CIVIL
STATE OF CALIFORNIA

The State of California or its officers or agents shall not be responsible for the accuracy or completeness of electronic copies of this plan sheet.

To accompany plans dated 5-24-10

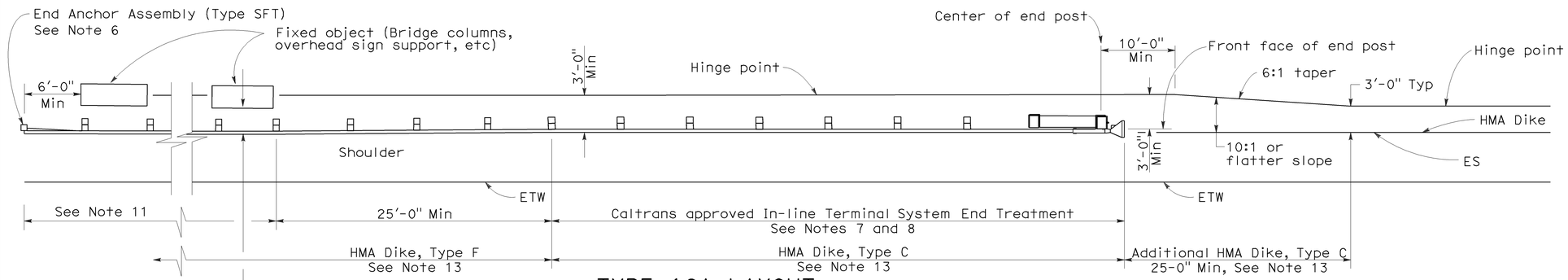

TYPE 16A LAYOUT

(GUARD RAILING INSTALLATION AT ROADSIDE FIXED OBJECT OR OBJECTS WITH AN IN-LINE END TREATMENT AT TRAFFIC APPROACH END OF RAILING)
See Notes 12 and 13

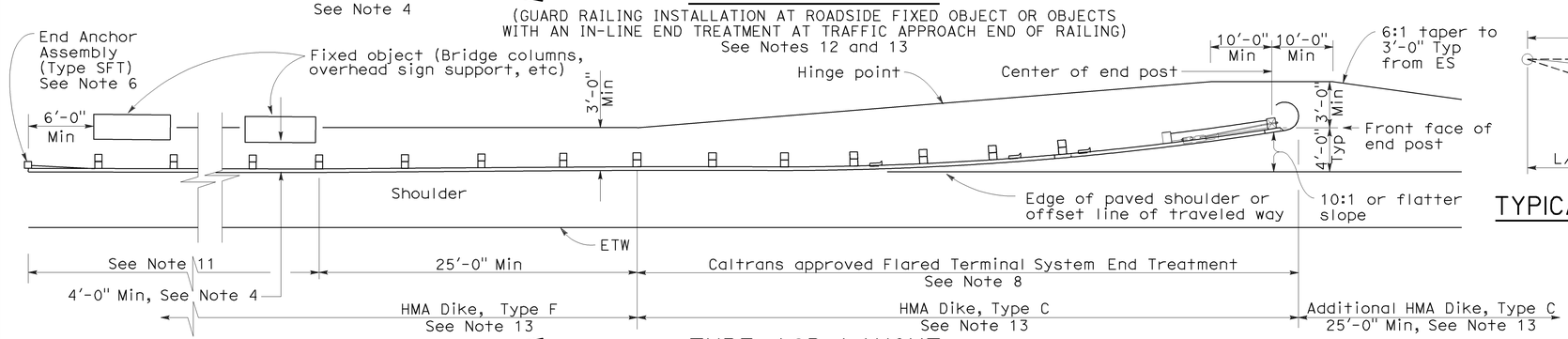

TYPE 16B LAYOUT

(GUARD RAILING INSTALLATION AT ROADSIDE FIXED OBJECT OR OBJECTS WITH A FLARED END TREATMENT AT TRAFFIC APPROACH END OF RAILING)
See Notes 12 and 13

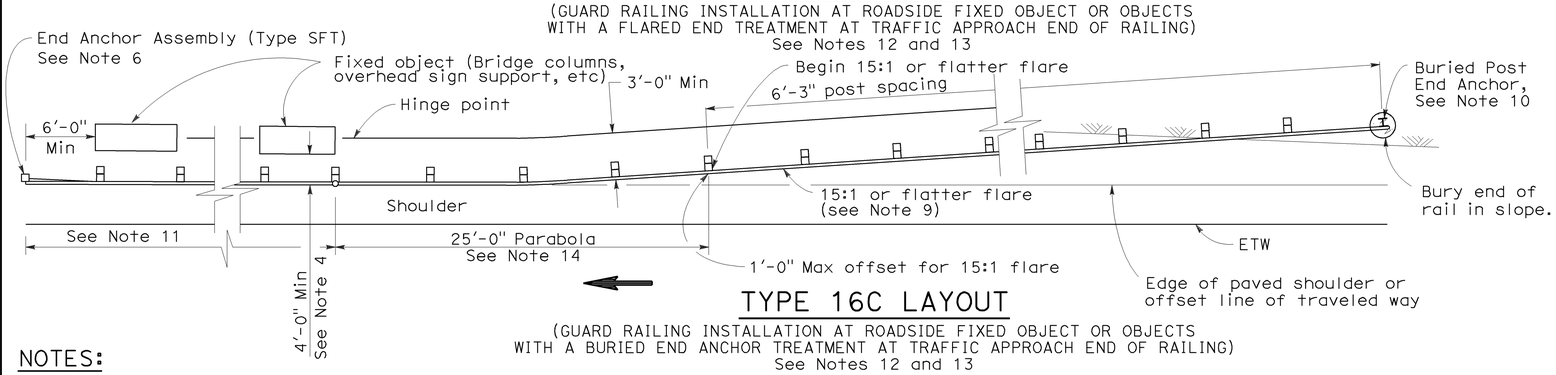

TYPE 16C LAYOUT

(GUARD RAILING INSTALLATION AT ROADSIDE FIXED OBJECT OR OBJECTS WITH A BURIED END ANCHOR TREATMENT AT TRAFFIC APPROACH END OF RAILING)
See Notes 12 and 13

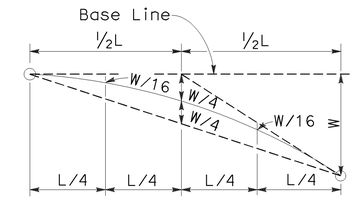

TYPICAL PARABOLIC LAYOUT

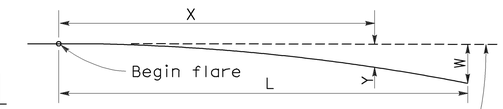

Base Line (Edge of paved shoulder or offset line of edge of traveled way)

$$Y = \frac{WX^2}{L^2}$$

Y = Offset from base line
W = Maximum offset
X = Distance along base line
L = Length of flare

PARABOLIC FLARE OFFSETS

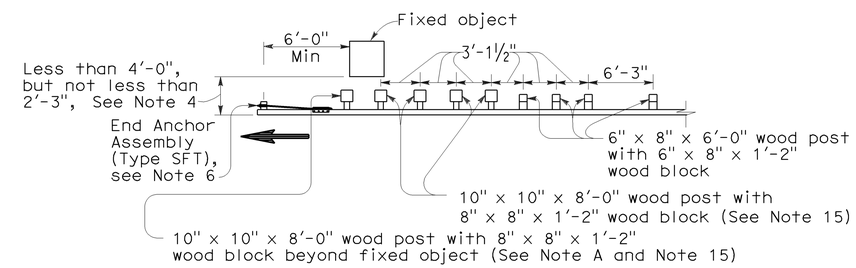

NOTE A: For a series of fixed objects (bridge columns, overhead sign supports, etc.) additional 10" x 10" x 8'-0" wood post with 8" x 8" x 1'-2" wood blocks at 3'-1½" center to center spacing are to be used between fixed objects.

STRENGTHENED RAILING SECTIONS FOR FIXED OBJECT

Use strengthened railing sections with Types 16A, 16B or 16C Layouts where minimum clearance between the face of the guard railing and fixed object(s) is less than 4'-0", but not less than 2'-3". See Note 4

NOTES:

1. Line post, blocks and hardware to be used are shown on Revised Standard Plans A77A1, A77A2, A77B1, A77C1 and A77C2.
2. Guard railing post spacing to be 6'-3" center to center, except as otherwise noted.
3. Except as noted, line posts are 6" x 8" x 6'-0" wood with 6" x 8" x 1'-2" wood blocks. W6 x 9 steel posts, 6'-0" in length, with 6" x 8" x 1'-2" notched wood blocks or notched recycled plastic blocks may be used for 6" x 8" x 6'-0" wood line posts with 6" x 8" x 1'-2" wood blocks where applicable and when specified.
4. A 4'-0" minimum clearance is required between the face of the railing and the face of a fixed object located directly behind standard guard railing sections with post spacing of 6'-3". Construct guard railing as shown in the detail "Strengthened Railing Sections for Fixed Objects" on this plan, where the clearance between the face of the railing and the face of a fixed object is less than 4'-0", but not less than 2'-3". Where the clearance is less than 2'-3", a concrete wall or barrier should be constructed to shield the fixed object(s).
5. Direction of adjacent traffic indicated by ⟶.
6. For End Anchor Assembly (Type SFT) details, see Standard Plan A77H1.
7. In-line Terminal System End Treatments are used where site conditions will not accommodate a flared end treatment.
8. The type of terminal system to be used will be shown on the Project Plans.
9. The 15:1 or flatter flare used with Type 16C Layout is based on the edge of the paved shoulder or offset line of edge of the traveled way. The length of guard railing within the 15:1 or flatter flare is based on site conditions and should be a length equal to multiples of 12'-6".
10. For details of the Buried Post End Anchor used with Type 16C Layout, see Standard Plan A77I2.
11. As site conditions dictate, construct additional guard railing to shield fixed object(s). Additional guard railing length equal to multiples of 12'-6". Post spacing at 6'-3" except as specified in Note 4.
12. Layout Types 16A, 16B or 16C are typically used where guard railing is recommended to shield roadside fixed object(s) and a crashworthy end treatment is required for only one direction of traffic.
13. Where placement of dike is required with guard railing, see Revised Standard Plan RSP A77C4 for dike positioning details.
14. For typical flare offsets for 25'-0" length parabola with maximum offset of 1'-0", see Revised Standard Plan RSP A77E1.
15. W6 x 15 steel post, 8'-0" in length, with 8" x 8" x 1'-2" notched wood block or notched recycled plastic blocks may be used in place of the 10" x 10" x 8'-0" wood post with 8" x 8" x 1'-2" wood block shown in the "Strengthened Railing Sections Detail".

STATE OF CALIFORNIA
DEPARTMENT OF TRANSPORTATION

METAL BEAM GUARD RAILING TYPICAL LAYOUTS FOR ROADSIDE FIXED OBJECTS

NO SCALE

RSP A77G3 DATED JUNE 6, 2008 SUPERSEDES STANDARD PLAN A77G3 DATED MAY 1, 2006 - PAGE 61 OF THE STANDARD PLANS BOOK DATED MAY 2006.

REVISED STANDARD PLAN RSP A77G3

2006 REVISED STANDARD PLAN RSP A77G3

12-10-07

DIST	COUNTY	ROUTE	POST MILES TOTAL PROJECT	SHEET NO.	TOTAL SHEETS
03	Sac	99	0.1/12.0	49	73

Randell D. Hiatt
REGISTERED CIVIL ENGINEER

June 6, 2008
PLANS APPROVAL DATE

REGISTERED PROFESSIONAL ENGINEER
Randell D. Hiatt
No. C50200
Exp. 6-30-09
CIVIL
STATE OF CALIFORNIA

The State of California or its officers or agents shall not be responsible for the accuracy or completeness of electronic copies of this plan sheet.

To accompany plans dated 5-24-10

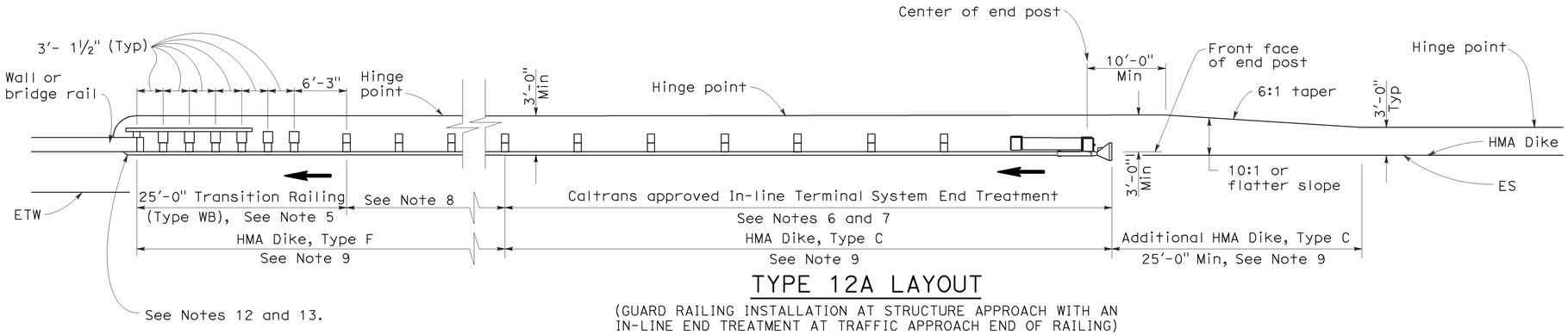

TYPE 12A LAYOUT

(GUARD RAILING INSTALLATION AT STRUCTURE APPROACH WITH AN IN-LINE END TREATMENT AT TRAFFIC APPROACH END OF RAILING)
See Notes 10

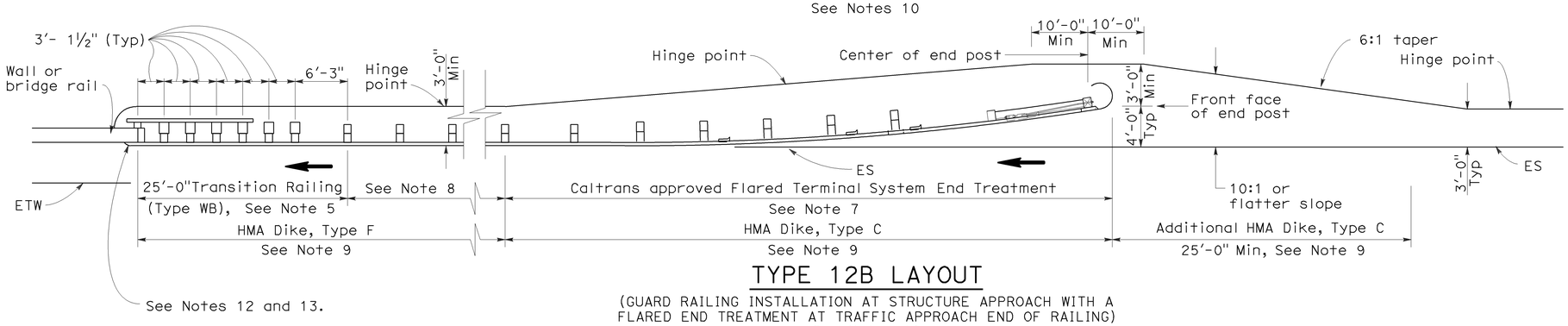

TYPE 12B LAYOUT

(GUARD RAILING INSTALLATION AT STRUCTURE APPROACH WITH A FLARED END TREATMENT AT TRAFFIC APPROACH END OF RAILING)
See Notes 10

NOTES:

1. Line post, blocks and hardware to be used are shown on Standard Plans A77A1, A77A2, A77B1, A77C1 and A77C2.
2. Guard rail post spacing to be 6'-3" center to center, except as otherwise noted.
3. Except as noted, line posts are 6" x 8" x 6'-0" wood with 6" x 8" x 1'-2" wood blocks. W6 x 9 steel posts, 6'-0" in length, with 6" x 8" x 1'-2" notched wood blocks or plastic blocks may be used for 6" x 8" x 6'-0" wood posts with 6" x 8" x 1'-2" wood blocks where applicable and when specified.
4. Direction of adjacent traffic indicated by ➡.
5. For Transition Railing (Type WB) details for Types 12A and 12B Layouts, see Standard Plan A77J4.
6. In-line Terminal System End Treatments are used where site conditions will not accommodate a flared end treatment.
7. The type of terminal system end treatment to be used will be shown on the Project Plans.
8. Dependent on site conditions (embankment height, side slopes, or other fixed objects), it may be advisable to construct additional guard railing (a length equal to multiples of 12'-6" with 6'-3" post spacing) between the transition railing and end treatment.
9. Where placement of dike is required with guard railing installations, see Revised Standard Plan RSP A77C4 for dike positioning details.
10. Type 12A or Type 12B Layouts are typically used:
    a. To the right of approaching traffic, at the end of a structure, on two-lane conventional highway where the roadbed width across the structure is less than 40 feet.
    b. To the left of approaching traffic, at the end of a structure, on two-lane conventional highway where the roadbed width across the structure is less than 40 feet.
    c. To the right of approaching traffic at the end of each structure on multilane freeways or expressways with separate adjacent or parallel bridges.
    d. To the right of approaching traffic at the end of the structure on multilane freeways or expressways with decked median on the bridge.
11. See Revised Standard Plan RSP A77F3 for typical layout used left of approaching traffic at the ends of each structure on multilane freeways or expressways with separate adjacent or parallel bridges.
12. For additional details of typical connections to bridge rail, see Connection Detail AA on Revised Standard Plans RSP A77J1 and RSP A77J2 and Connection Detail FF on Standard Plans A77K1 and A77K2.
13. For additional details of a typical connection to walls or abutments, see Standard Plan A77J3.

STATE OF CALIFORNIA
DEPARTMENT OF TRANSPORTATION

METAL BEAM GUARD RAILING TYPICAL LAYOUTS FOR STRUCTURE APPROACH

NO SCALE

RSP A77F1 DATED JUNE 6, 2008 SUPERSEDES STANDARD PLAN A77F1
DATED MAY 1, 2006 - PAGE 54 OF THE STANDARD PLANS BOOK DATED MAY 2006.

REVISED STANDARD PLAN RSP A77F1

2006 REVISED STANDARD PLAN RSP A77F1

12-10-07

DIST	COUNTY	ROUTE	POST MILES TOTAL PROJECT	SHEET NO.	TOTAL SHEETS
03	Sac	99	0.1/12.0	50	73

Randell D. Hiatt
REGISTERED CIVIL ENGINEER

June 6, 2008
PLANS APPROVAL DATE

REGISTERED PROFESSIONAL ENGINEER
Randell D. Hiatt
No. C50200
Exp. 6-30-09
CIVIL
STATE OF CALIFORNIA

The State of California or its officers or agents shall not be responsible for the accuracy or completeness of electronic copies of this plan sheet.

To accompany plans dated 5-24-10

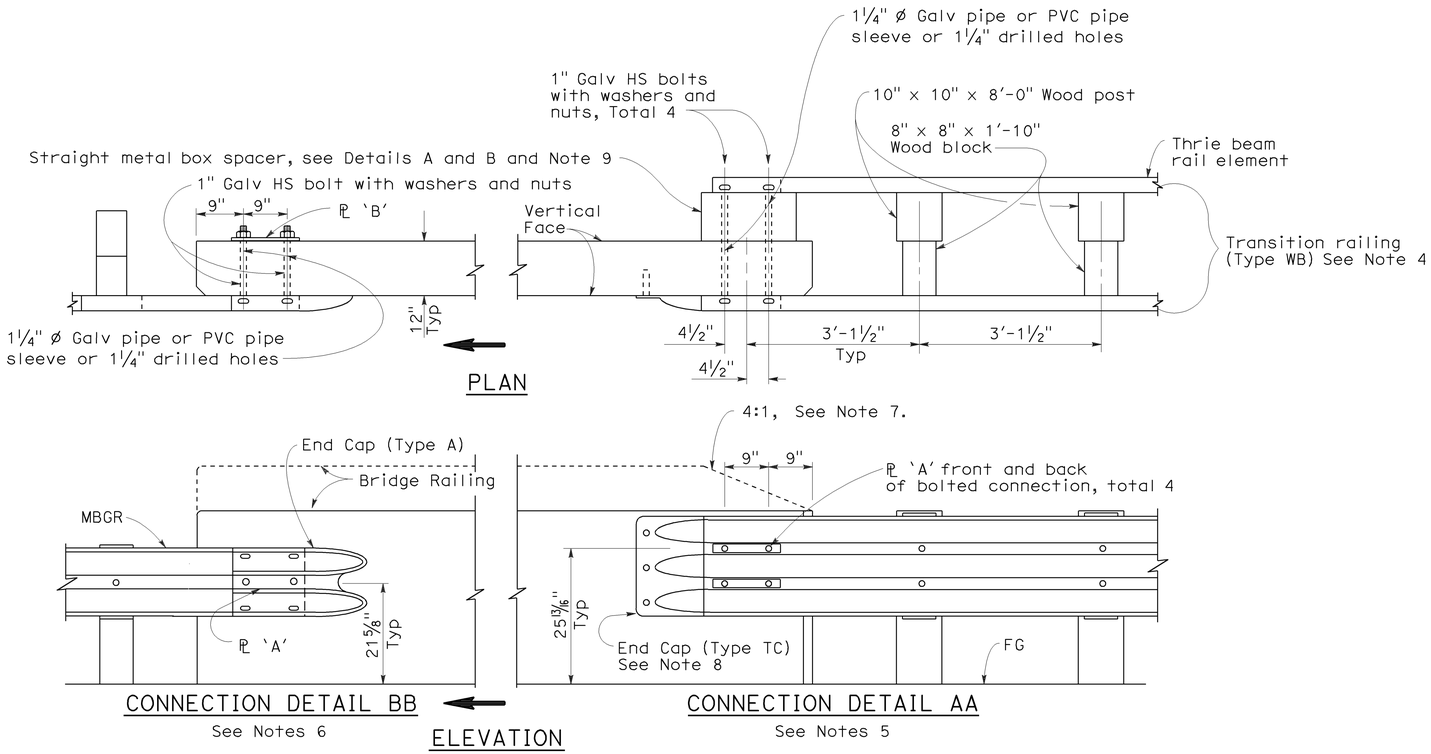

GUARD RAILING CONNECTION TO BRIDGE RAILING WITHOUT SIDEWALK

NOTES:

1. See Revised Standard Plan RSP A77J2 for additional connection details to bridges without sidewalks.
2. Additional details of posts, blocks and hardware are shown on Standard Plan A77B1, A77C1 and A77C2.
3. Direction of adjacent traffic indicated by ➡.
4. For additional details of Transition Railing (Type WB), see Standard Plan A77J4. Transition Railing (Type WB) transitions the 12 gage w-beam standard railing section of guard railing to a heavier gage nested thrie beam railing section which is connected to the concrete bridge railing.
5. For typical use of Connection Detail AA, see Layout Types 12A and 12B on Revised Standard Plan RSP A77F1, Layout Types 12C and 12D on Standard Plan A77F2, and Layout Type 12E on Revised Standard Plan RSP A77F3.
6. For typical use of Connection Detail BB, see Layout Type 12D (structure departure railing connection) on Standard Plan A77F2 and Layout Type 12DD on Standard Plan A77F5.
7. Where the height of the bridge railing exceeds the height of the thrie beam railing by more than 1" at Connection Detail AA, taper the top of the end of the bridge railing at 4:1 to match the top elevation of the thrie beam rail.
8. For details of End Cap (Type TC), see Standard Plan A77J4.
9. See Standard Plan A77J4 for additional details regarding depth dimension for straight metal box spacer.

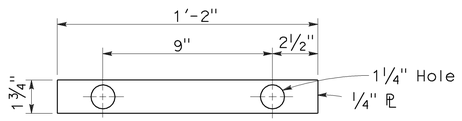

PLATE 'A'

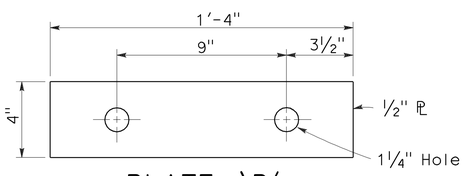

PLATE 'B'
(For backside of connection BB)

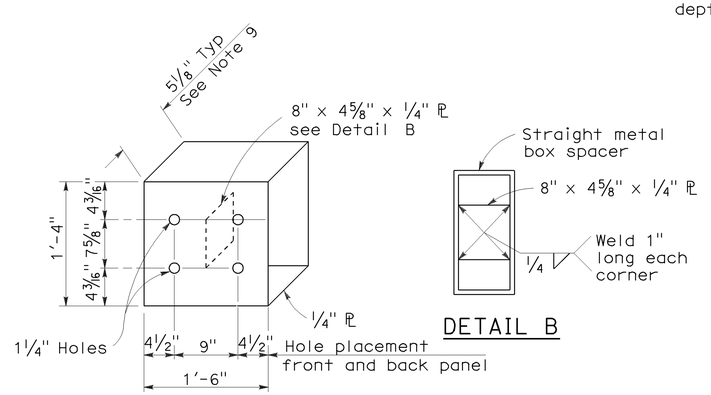

DETAIL A

STRAIGHT METAL BOX SPACER

STATE OF CALIFORNIA
DEPARTMENT OF TRANSPORTATION

METAL BEAM GUARD RAILING CONNECTIONS TO BRIDGE RAILINGS WITHOUT SIDEWALKS DETAILS No.1

NO SCALE

RSP A77J1 DATED JUNE 6, 2008 SUPERSEDES STANDARD PLAN A77J1
DATED MAY 1, 2006 - PAGE 72 OF THE STANDARD PLANS BOOK DATED MAY 2006.

REVISED STANDARD PLAN RSP A77J1

2006 REVISED STANDARD PLAN RSP A77J1

12-10-07

DIST	COUNTY	ROUTE	POST MILES TOTAL PROJECT	SHEET NO.	TOTAL SHEETS
03	Sac	99	0.1/12.0	51	73

Randell D. Hiatt
REGISTERED CIVIL ENGINEER

June 5, 2009
PLANS APPROVAL DATE

REGISTERED PROFESSIONAL ENGINEER Randell D. Hiatt No. C50200 Exp. 6-30-09 CIVIL STATE OF CALIFORNIA

The State of California or its officers or agents shall not be responsible for the accuracy or completeness of electronic copies of this plan sheet.

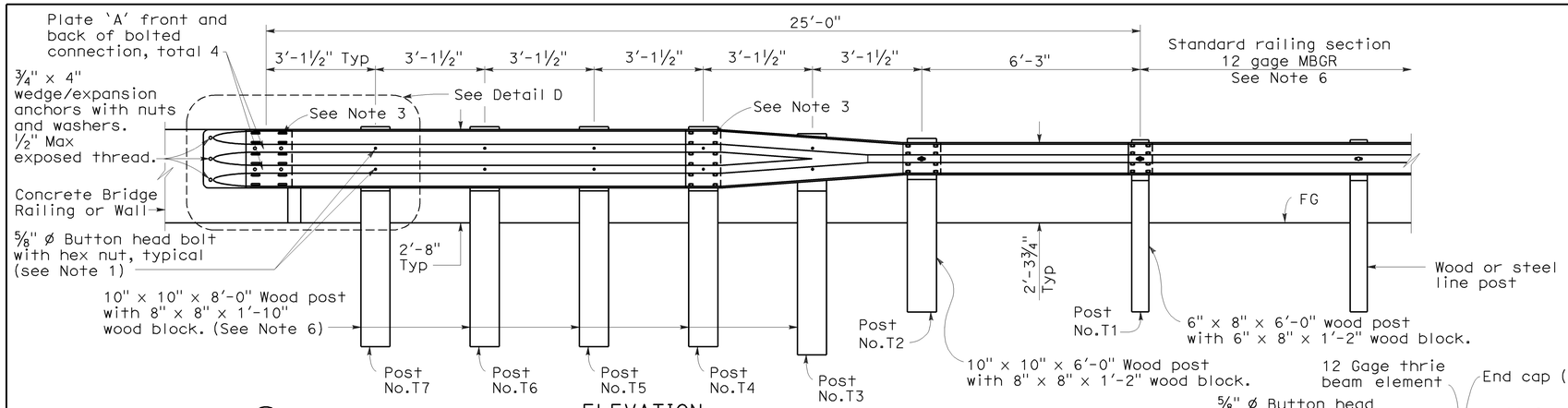

ELEVATION

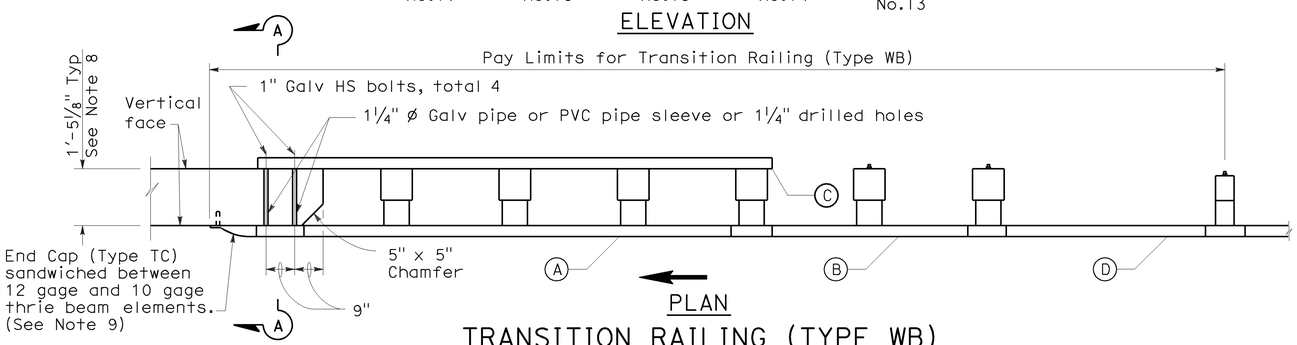

PLAN

TRANSITION RAILING (TYPE WB)

(No Blockout Attachment)

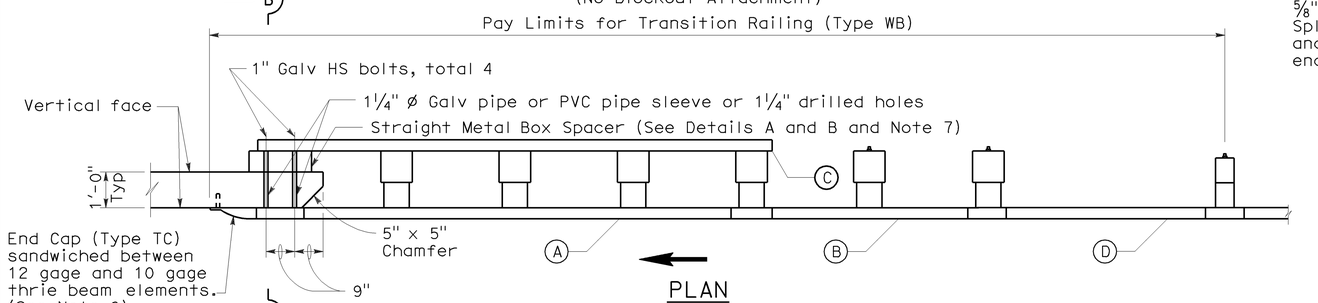

PLAN

TRANSITION RAILING (TYPE WB)

(Blockout Attachment)

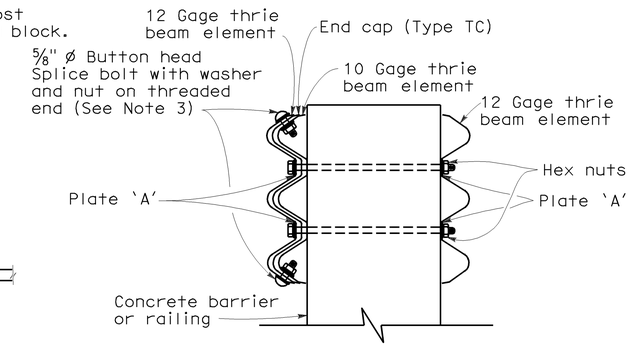

SECTION A-A

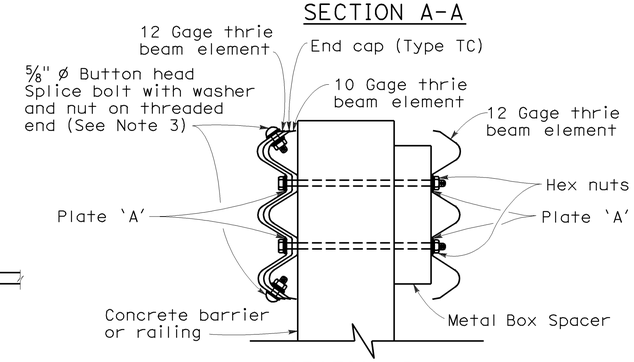

SECTION B-B

NOTES:

To accompany plans dated 5-24-10

1. Use 5/8 " ø Button head bolts and hex nuts for connections to posts. No washer on rail face for bolted connections to post.
2. The nested rail elements, end cap, and 'W' beam to thrie beam element may be spliced together prior to bolting the elements to the wood post and concrete barrier or railing.
3. Exterior splice bolt holes for rail element splices at Post No.T4 and the connection to the concrete barrier or railing shall be the standard 29/32 " x 1 1/8 " slot size. Interior splice bolt holes at these locations may be increased up to 1 1/4 " ø. Only the top 2 and the bottom 2 splice bolts with washers and nuts are required for rail splices at Post No.T4 and the connection to the concrete barrier or railing.
4. Direction of adjacent traffic indicated by →.
5. The top elevation of Post Nos.T2 through T7 shall not project more than 1" above the top elevation of the rail element.
6. Typically, the railing connected to Transition Railing (Type WB) will be either standard railing section of metal beam guard railing or an approved Caltrans end treatment attached to Post No.T1.
7. The depth of the metal box spacer varies from the 5 1/8 " to 1 1/2 " and is dependent on the width of the concrete railing or wall. The combined dimension for the depth of the metal box spacer plus the width of railing or wall is typically 17 1/8 ". Where the space between the backside of the concrete railing or wall and the rear thrie beam element is less than 1 1/2 ", metal plates similar to Plate 'A' are to be used as spacers.
8. Where the width of the concrete railing or wall is greater than 17 1/8 ", wood blocks are to be used to fill the space created between the backside of Posts No.4 through No.7 and the rear thrie beam element. These wood blocks shall be 8" in width and 1'-2" in length. The dimension between the front thrie beam element and the rear thrie beam element is to match the width of the concrete railing or wall.
9. End cap may be installed over 12 gage and 10 gage thrie beam elements where transition railing is installed on the departure end of bridge railing.

LEGEND

- (A) Nested thrie beam elements (one 12 gage element nested over one 10 gage element).
- (B) One 10 gage "W" beam to thrie beam element.
- (C) One 12 gage thrie beam element.
- (D) One 10 gage "W" beam rail element (7'-3½" length)

10 gage = 0.135" thick

12 gage = 0.108" thick

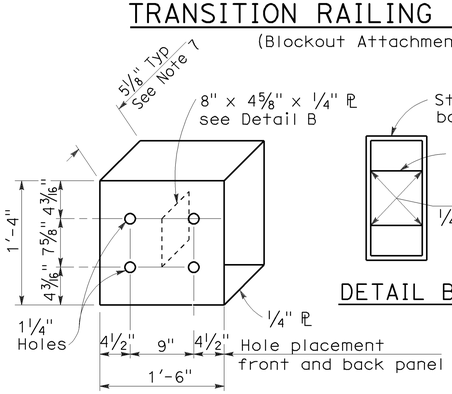

DETAIL A

STRAIGHT METAL BOX SPACER

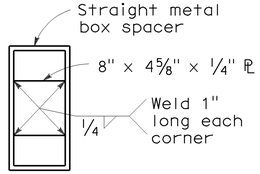

DETAIL B

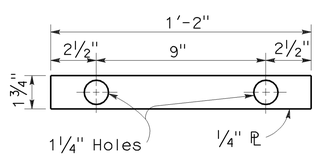

DETAIL C

PLATE 'A'

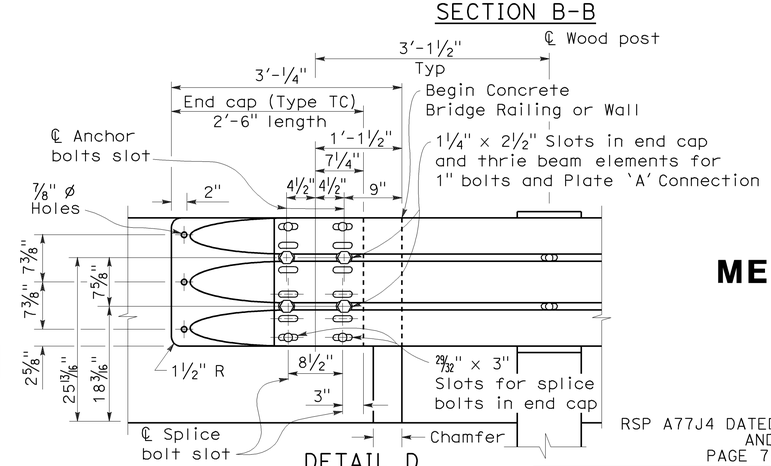

DETAIL D

STATE OF CALIFORNIA
DEPARTMENT OF TRANSPORTATION

METAL BEAM GUARD RAILING TRANSITION RAILING (TYPE WB)

NO SCALE

RSP A77J4 DATED JUNE 5, 2009 SUPERSEDES RSP A77J4 DATED JUNE 6, 2008 AND STANDARD PLAN A77J4 DATED MAY 1, 2006 - PAGE 75 OF THE STANDARD PLANS BOOK DATED MAY 2006.

REVISED STANDARD PLAN RSP A77J4

2006 REVISED STANDARD PLAN RSP A77J4

5-14-09

DIST	COUNTY	ROUTE	POST MILES TOTAL PROJECT	SHEET No.	TOTAL SHEETS
03	Sac	99	0.1/12.0	52	73

Randell D. Hiatt
REGISTERED CIVIL ENGINEER

June 6, 2008
PLANS APPROVAL DATE

REGISTERED PROFESSIONAL ENGINEER
Randell D. Hiatt
No. C50200
Exp. 6-30-09
CIVIL
STATE OF CALIFORNIA

The State of California or its officers or agents shall not be responsible for the accuracy or completeness of electronic copies of this plan sheet.

To accompany plans dated 5-24-10

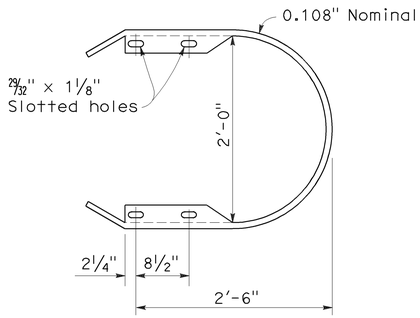

RETURN CAP
(TYPE TA)

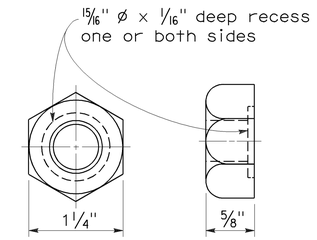

5/8" ø RECESS NUT

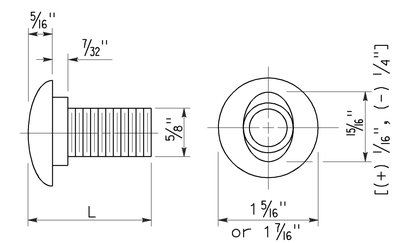

5/8" ø BUTTON HEAD BOLT

L	THREAD LENGTH
1 1/4"	full thread length
2"	full thread length
9 1/2"	4" Min thread length
18"	4" Min thread length

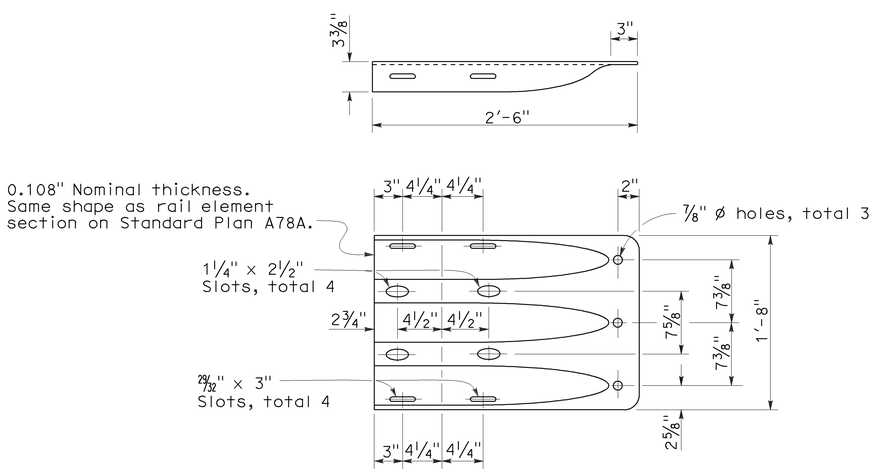

END CAP
(TYPE TC)

STATE OF CALIFORNIA
DEPARTMENT OF TRANSPORTATION

THRIE BEAM BARRIER STANDARD HARDWARE DETAILS

NO SCALE

RSP A78C1 DATED JUNE 6, 2008 SUPERSEDES STANDARD PLAN A78C1
DATED MAY 1, 2006 - PAGE 85 OF THE STANDARD PLANS BOOK DATED MAY 2006.

REVISED STANDARD PLAN RSP A78C1

2006 REVISED STANDARD PLAN RSP A78C1

4-21-08

DIST	COUNTY	ROUTE	POST MILES TOTAL PROJECT	SHEET NO.	TOTAL SHEETS
03	Sac	99	0.1/12.0	53	73

Randell D. Hiatt
REGISTERED CIVIL ENGINEER

June 6, 2008
PLANS APPROVAL DATE

REGISTERED PROFESSIONAL ENGINEER
Randell D. Hiatt
No. C50200
Exp. 6-30-09
CIVIL
STATE OF CALIFORNIA

The State of California or its officers or agents shall not be responsible for the accuracy or completeness of electronic copies of this plan sheet.

To accompany plans dated 5-24-10

NOTES:

1. Line post, blocks and hardware to be used are shown on Standard Plans A78A, A78B, A78C1, and A78C2.
2. Post spacing to be 6′-3″ center to center, except as otherwise noted.
3. Except as noted, line posts are 6″ x 8″ x 6′-0″ wood with 6″ x 8″ x 1′-10″ wood blocks. (W6 x 9) steel posts, 6′-8″ in length, with 6″ x 8″ x 1′-10″ notched wood blocks or notched recycled plastic blocks may be used for 6″ x 8″ x 6′-0″ wood posts with 6″ x 8″ x 1′-10″ wood blocks where applicable and when specified.
4. Direction of adjacent traffic indicated by ⟶.
5. For Transition Railing (Type DTB) details, see Standard Plan A78K.
6. The 15:1 or flatter flare is measured off of the edge of traveled way.

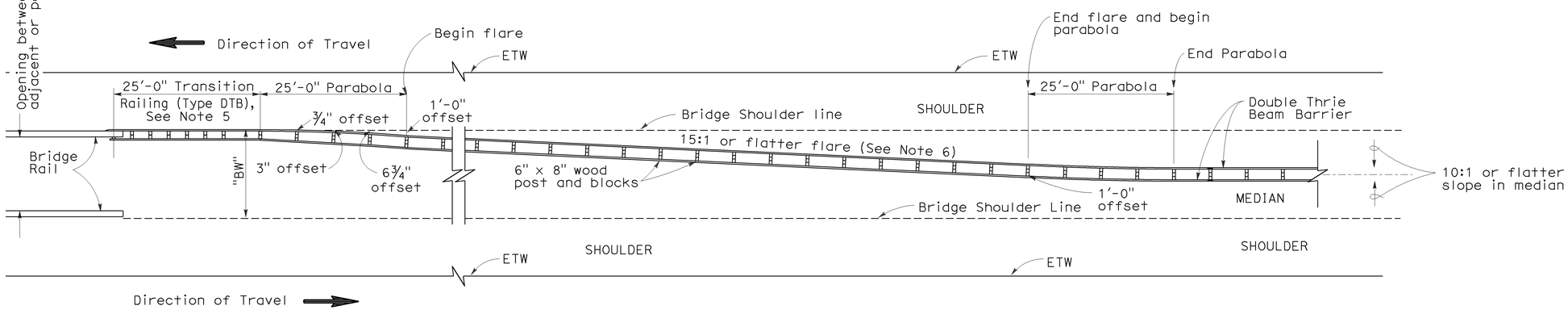

TYPE 25A CONNECTION LAYOUT

STATE OF CALIFORNIA
DEPARTMENT OF TRANSPORTATION

THRIE BEAM BARRIER TYPICAL LAYOUT FOR CONNECTION TO BRIDGE RAILING

RSP A78H DATED JUNE 6, 2008 SUPERSEDES STANDARD PLAN A78H
DATED MAY 1, 2006 - PAGE 95 OF THE STANDARD PLANS BOOK DATED MAY 2006.

REVISED STANDARD PLAN RSP A78H

2006 REVISED STANDARD PLAN RSP A78H

12-10-07

DIST	COUNTY	ROUTE	POST MILES TOTAL PROJECT	SHEET NO.	TOTAL SHEETS
03	Sac	99	0.1/12.0	54	73

Randell D. Hiatt
REGISTERED CIVIL ENGINEER

June 6, 2008
PLANS APPROVAL DATE

REGISTERED PROFESSIONAL ENGINEER Randell D. Hiatt No. C50200 Exp. 6-30-09 CIVIL STATE OF CALIFORNIA

The State of California or its officers or agents shall not be responsible for the accuracy or completeness of electronic copies of this plan sheet.

To accompany plans dated 5-24-10

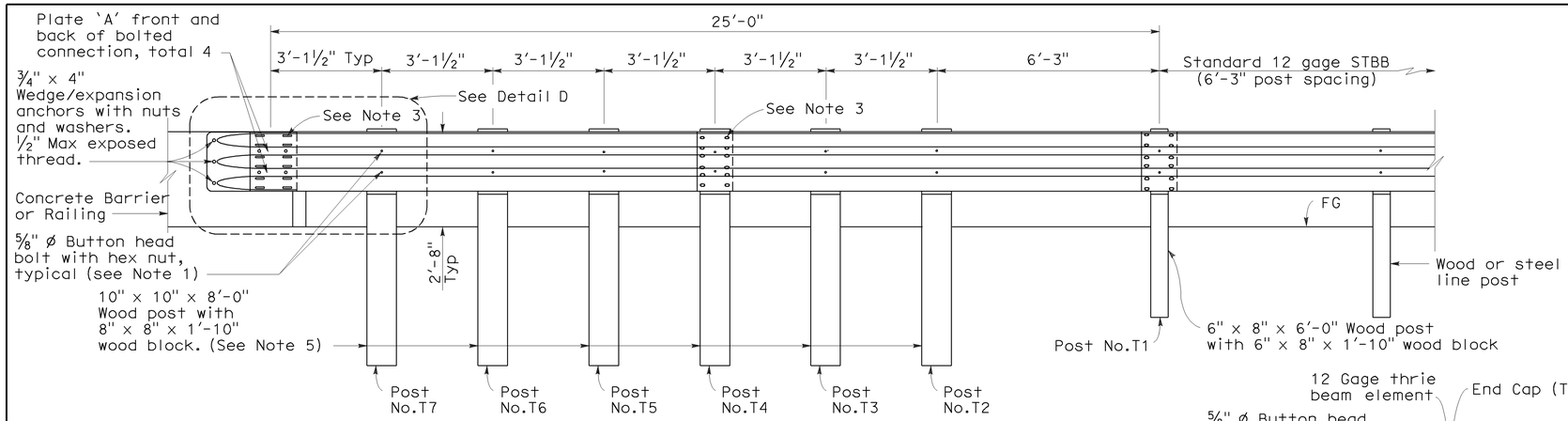

ELEVATION

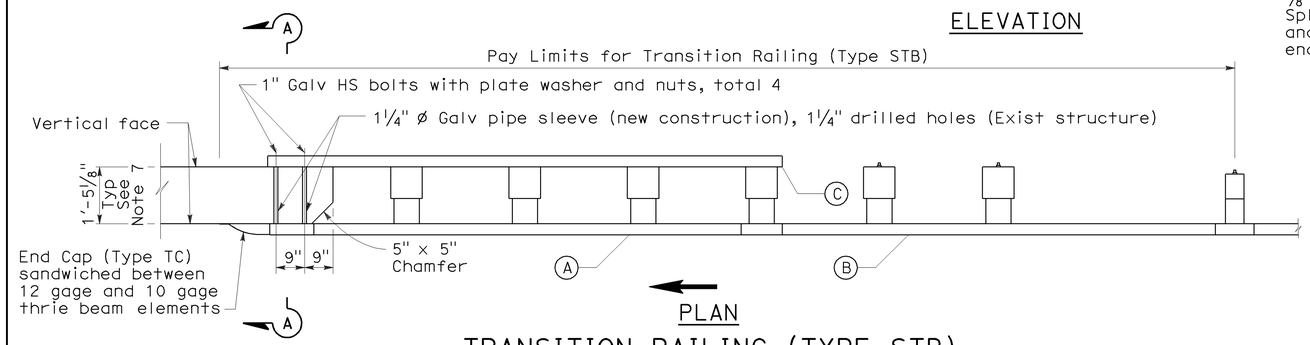

PLAN

TRANSITION RAILING (TYPE STB)

(No Blockout Attachment)

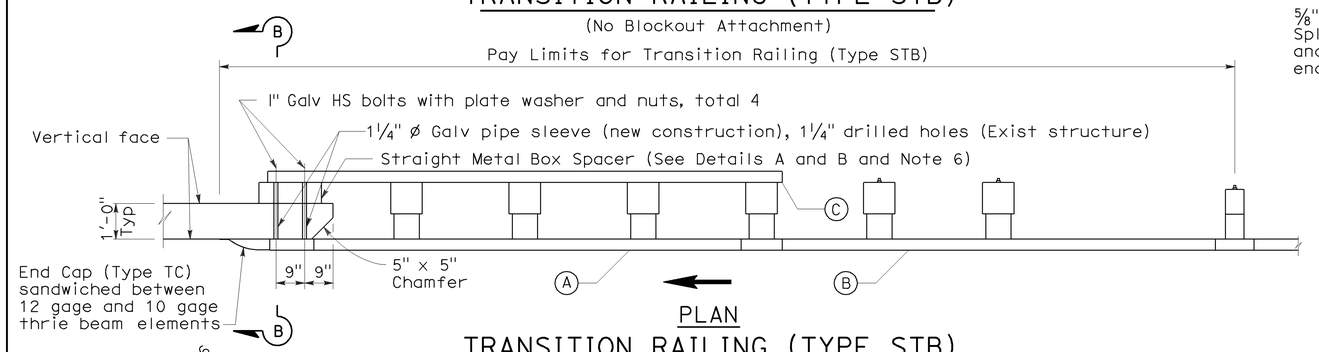

PLAN

TRANSITION RAILING (TYPE STB)

(Blockout Attachment)

LEGEND

(A) Nested thrie beam elements (one 12 gage element nested over one 10 gage element).

(B) One 10 gage thrie beam element.

(C) One 12 gage thrie beam element.

10 gage = 0.135" thick

12 gage = 0.108" thick

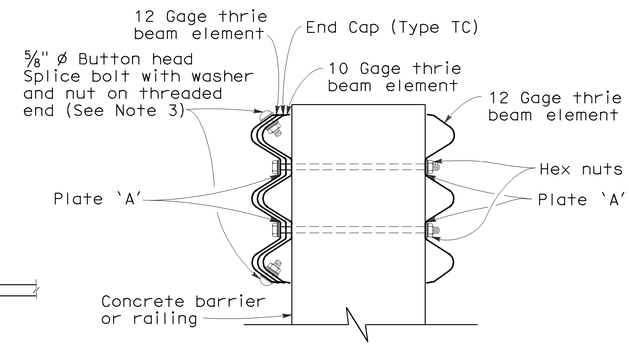

SECTION A-A

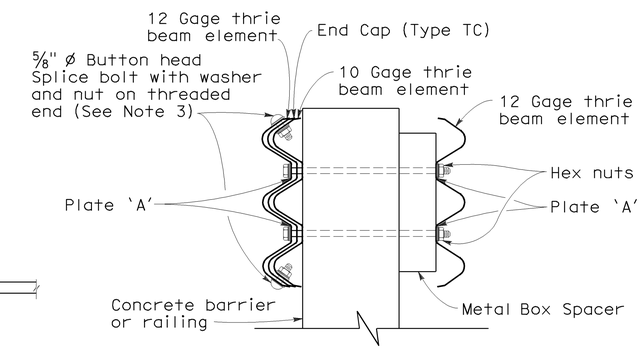

SECTION B-B

NOTES:

1. Use ⅝" ø Button head bolts and hex nuts for connection to posts. No washer on rail face for bolted connections to post.
2. The nested rail elements, end cap and single 10 gage thrie beam element, may be spliced together prior to bolting the elements to the wood post and concrete barrier or railing.
3. Exterior splice bolt holes for rail element splices at Post No.T4 and the connection to the concrete barrier or railing shall be the standard 29/32" x 1⅛" slot size. Interior splice bolt holes at these locations may be increased up to 1¼" ø. Only the top 2 and the bottom 2 splice bolts with washers and nuts are required for rail splices at Post No.T4 and the connection to the concrete barrier or railing.
4. Direction of adjacent traffic indicated by ⟶.
5. The top elevation of Post Nos.T2 through T7 shall not project more than 1" above the top elevation of the rail element.
6. The depth of the metal box spacer varies from the 5⅛" to 1½" and is dependent on the width of the concrete railing or wall. The combined dimension for the depth of the metal box spacer plus the width of railing or wall is typically 17⅛". Where the space between the backside of the concrete railing or wall and the rear thrie beam element is less than 1½" metal plates similar to Plate 'A' are to be used as spacers.
7. Where the width of the concrete railing or wall is greater than 17⅛", wood blocks are to be used to fill the space created between the backside of Post No.4 through No.7 and the rear thrie beam element. These wood blocks shall be 8" in width and 1'-2" in length. The dimension between the front thrie beam element and the rear thrie beam element is to match the width of the concrete railing or wall.
8. For details of End Cap (Type TC), see Revised Standard Plan RSP A78C1.

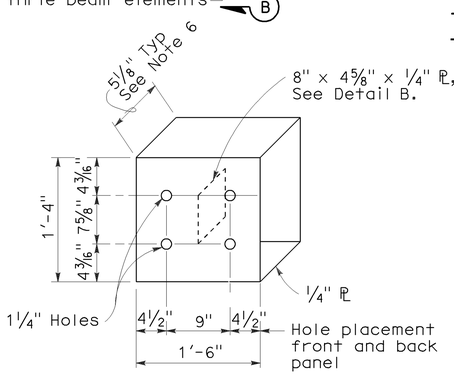

DETAIL A

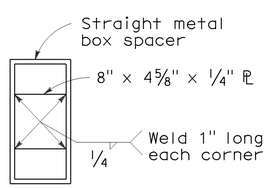

DETAIL B

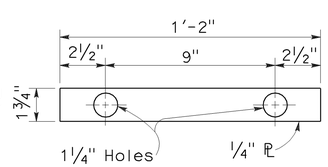

DETAIL C

STRAIGHT METAL BOX SPACER

PLATE 'A'

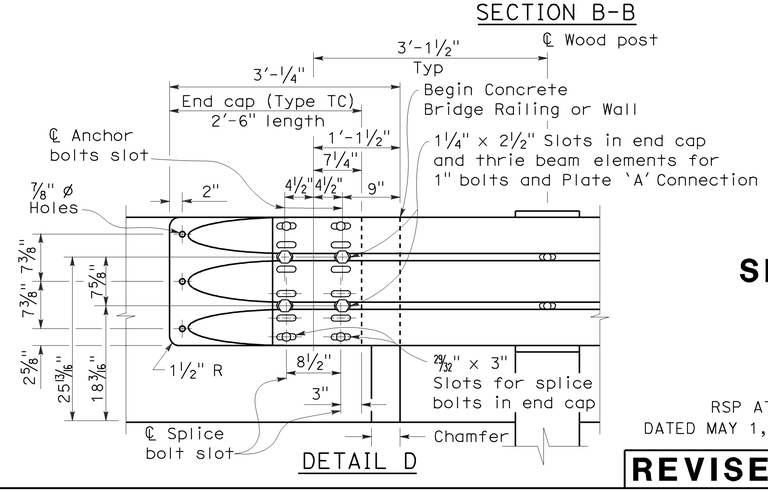

DETAIL D

STATE OF CALIFORNIA
DEPARTMENT OF TRANSPORTATION

SINGLE THRIE BEAM BARRIER TRANSITION RAILING (TYPE STB)

NO SCALE

RSP A78J DATED JUNE 6, 2008 SUPERSEDES STANDARD PLAN A78J DATED MAY 1, 2006 - PAGE 97 OF THE STANDARD PLANS BOOK DATED MAY 2006.

REVISED STANDARD PLAN RSP A78J

2006 REVISED STANDARD PLAN RSP A78J

5-1-08

DIST	COUNTY	ROUTE	POST MILES TOTAL PROJECT	SHEET NO.	TOTAL SHEETS
03	Sac	99	0.1/12.0	55	73

William K. Farnbach
REGISTERED CIVIL ENGINEER

May 15, 2009
PLANS APPROVAL DATE

REGISTERED PROFESSIONAL ENGINEER William K. Farnbach No. C49042 Exp. 9-30-10 CIVIL STATE OF CALIFORNIA

The State of California or its officers or agents shall not be responsible for the accuracy or completeness of electronic copies of this plan sheet.

To accompany plans dated 5-24-10

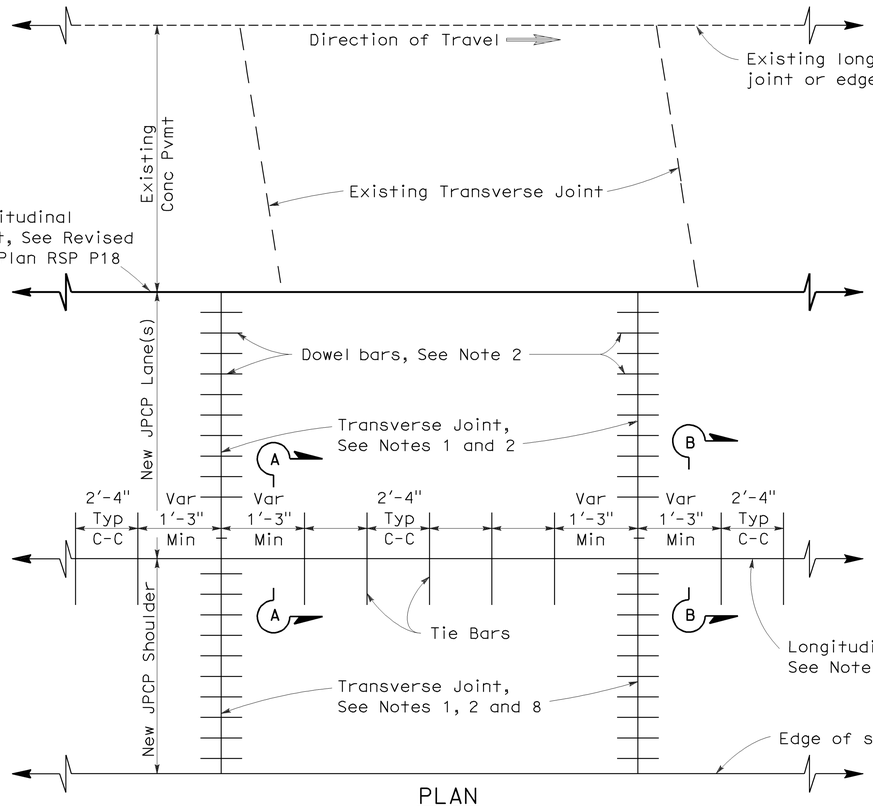

PLAN
LANE/SHOULDER ADDITION OR RECONSTRUCTION
See Notes 6 and 7

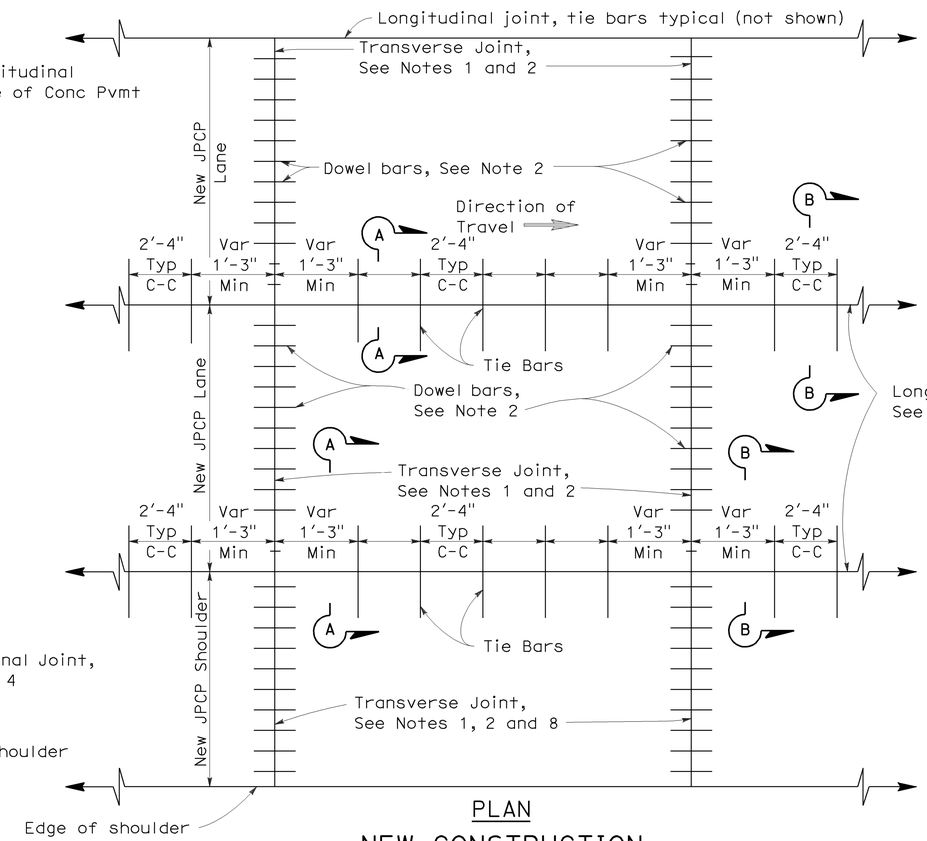

PLAN
NEW CONSTRUCTION
See Notes 6 and 7

NOTES:

1. Transverse joints shall be constructed at right angles to the longitudinal pavement joints in new jointed plain concrete pavement and spaced at successive repeated intervals of 12', 15', 13' and 14'.
2. For transverse joint and dowel bar details not shown, See Revised Standard Plan RSP P10.
3. Construct longitudinal contraction joints as shown in Section A-A when more than one lane or shoulder widths are placed at one time. If constructing one lane at a time, use longitudinal construction joint, as shown in Section B-B.
4. For additional longitudinal joint details, see Revised Standard Plan RSP P18.
5. If fresh concrete is placed adjacent to existing concrete, the top corner of the new hardened concrete does not need to be rounded to the 1/4" radius as shown.
6. Joint spacing patterns do not apply to intersections.
7. Details can also apply to inside widening.
8. Dowel bars may be omitted from shoulders when the shoulder cross slope is not the same as the adjacent traffic lane.

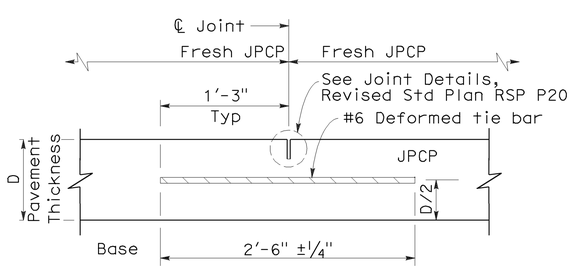

SECTION A-A
LONGITUDINAL CONTRACTION JOINT

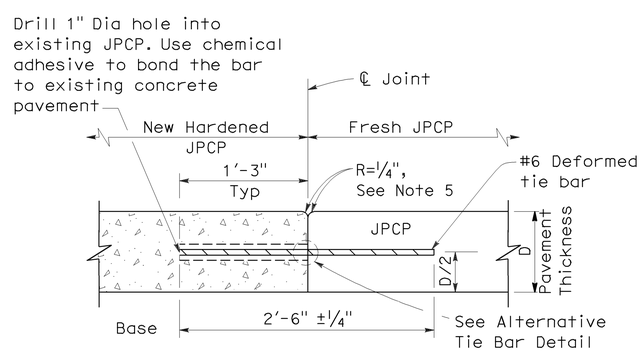

SECTION B-B
LONGITUDINAL CONSTRUCTION JOINT

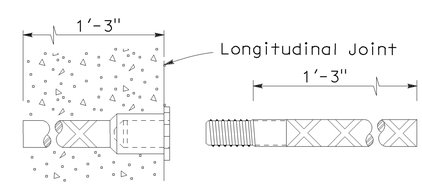

ALTERNATIVE TIE BAR SPLICE DETAIL
(Splice Coupler)

TIE BAR DETAILS

STATE OF CALIFORNIA
DEPARTMENT OF TRANSPORTATION

JOINTED PLAIN CONCRETE PAVEMENT

NO SCALE

RSP P1 DATED MAY 15, 2009 SUPERSEDES STANDARD PLAN P1
DATED MAY 1, 2006 - PAGE 119 OF THE STANDARD PLANS BOOK DATED MAY 2006.

REVISED STANDARD PLAN RSP P1

2006 REVISED STANDARD PLAN RSP P1

5-8-09

DIST	COUNTY	ROUTE	POST MILES TOTAL PROJECT	SHEET NO.	TOTAL SHEETS
03	Sac	99	0.1/12.0	56	73

William K. Farnbach
REGISTERED CIVIL ENGINEER

May 15, 2009
PLANS APPROVAL DATE

REGISTERED PROFESSIONAL ENGINEER William K. Farnbach No. C49042 Exp. 9-30-10 CIVIL STATE OF CALIFORNIA

The State of California or its officers or agents shall not be responsible for the accuracy or completeness of electronic copies of this plan sheet.

To accompany plans dated 5-24-10

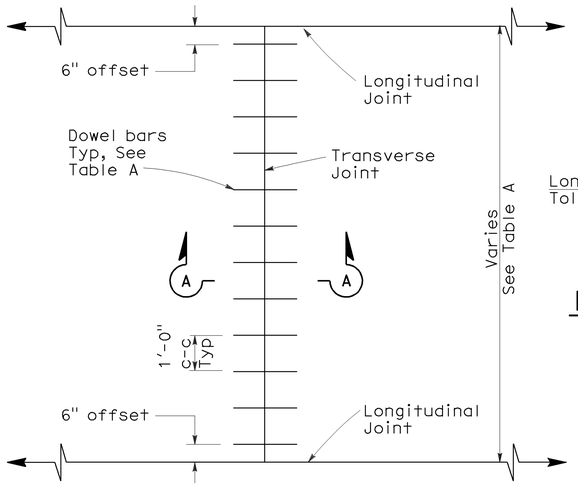

TRANSVERSE JOINT DOWEL BAR LAYOUT

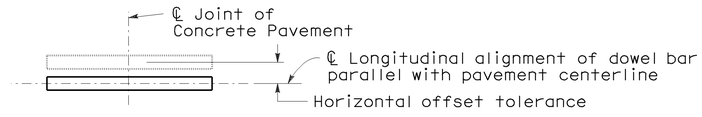

PLAN

HORIZONTAL OFFSET TOLERANCE

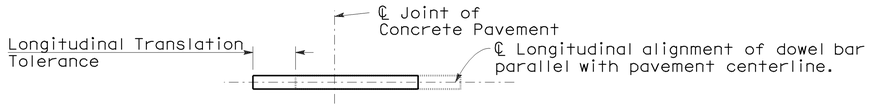

PLAN

LONGITUDINAL TRANSLATION TOLERANCE

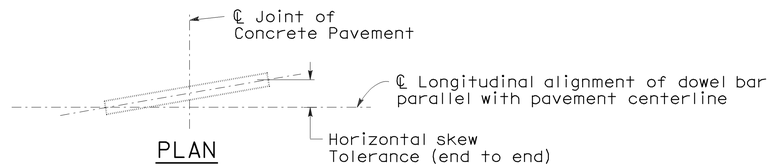

PLAN

HORIZONTAL SKEW TOLERANCE

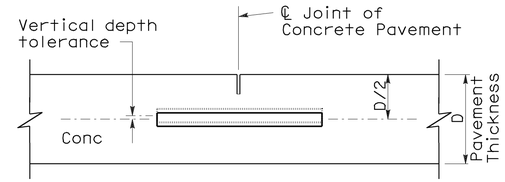

ELEVATION

VERTICAL DEPTH TOLERANCE

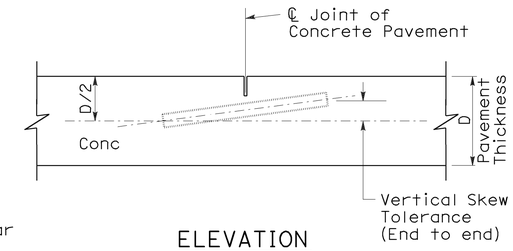

ELEVATION

VERTICAL SKEW TOLERANCE

NOTES:

1. See Revised Standard Plan RSP P1 for typical dowel bar placement and locations.
2. 1½" Dia smooth dowel bars are to be used with a pavement thickness, D, equal to or greater than 0.70 feet. For pavement thickness, D, less than 0.70 feet, use 1¼" Dia smooth dowel bars.
3. For widths not shown, see Project Plans.
4. If fresh concrete pavement is placed adjacent to existing concrete pavement, the top corner of the existing concrete pavement does not need to be rounded to the ¼" radius, as shown.

TABLE A (See Note 3)

Dowel Bar Transverse Spacing Table	
Width between Longitudinal Joints	Number of Dowels between Longitudinal Joints
14'-0"	14
13'-0"	13
12'-0"	12
11'-0"	11
10'-0"	10
8'-0"	8
5'-0"	5
4'-0"	4

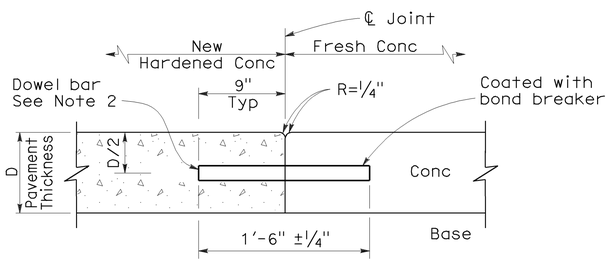

SECTION A-A

TRANSVERSE CONSTRUCTION JOINT DETAIL

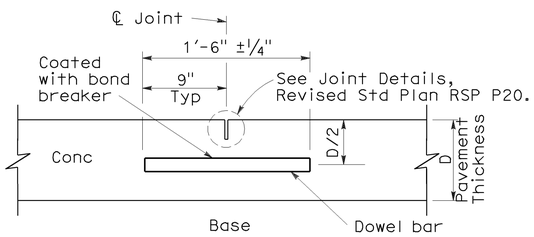

TRANSVERSE CONTRACTION JOINT

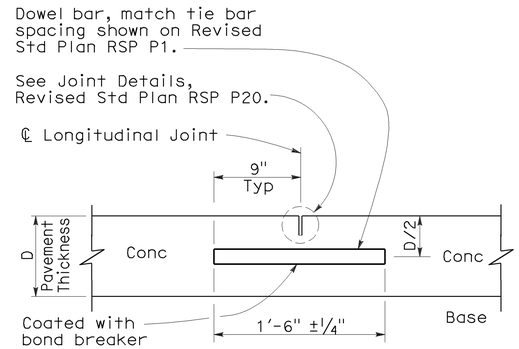

LONGITUDINAL CONTRACTION JOINT WITH DOWEL BARS

(See Revised Std Plan RSP P18)

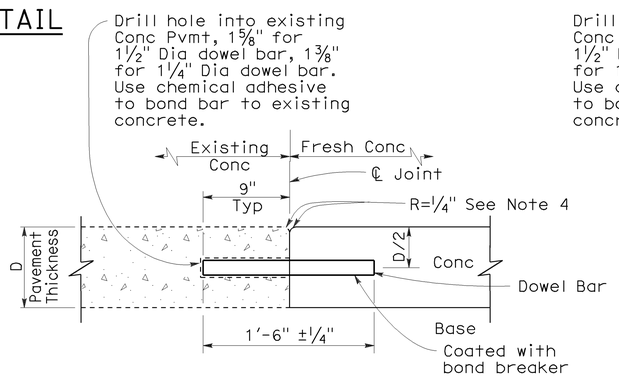

TRANSVERSE CONSTRUCTION JOINT FOR EXISTING CONCRETE PAVEMENT

(Drill and bond locations)

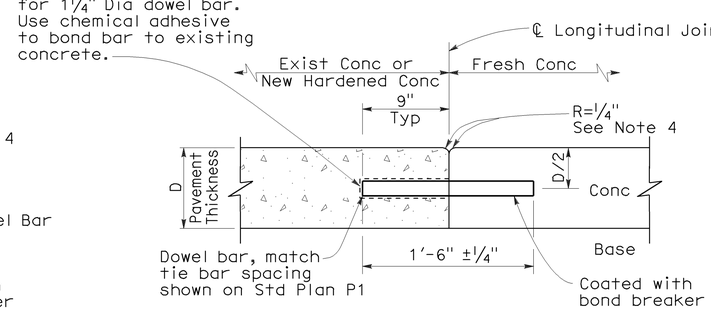

LONGITUDINAL CONSTRUCTION JOINT WITH DOWEL BARS

(See Revised Std Plan RSP P18)

STATE OF CALIFORNIA
DEPARTMENT OF TRANSPORTATION

CONCRETE PAVEMENT-DOWEL BAR DETAILS

NO SCALE

RSP P10 DATED MAY 15, 2009 SUPERSEDES STANDARD PLAN P10 DATED MAY 1, 2006 - PAGE 124 OF THE STANDARD PLANS BOOK DATED MAY 2006.

REVISED STANDARD PLAN RSP P10

2006 REVISED STANDARD PLAN RSP P10

5-8-09

DIST	COUNTY	ROUTE	POST MILES TOTAL PROJECT	SHEET NO.	TOTAL SHEETS
03	Sac	99	0.1/12.0	57	73

William K. Farnbach
REGISTERED CIVIL ENGINEER

May 15, 2009
PLANS APPROVAL DATE

REGISTERED PROFESSIONAL ENGINEER
William K. Farnbach
No. C49042
Exp. 9-30-10
CIVIL
STATE OF CALIFORNIA

The State of California or its officers or agents shall not be responsible for the accuracy or completeness of electronic copies of this plan sheet.

To accompany plans dated 5-24-10

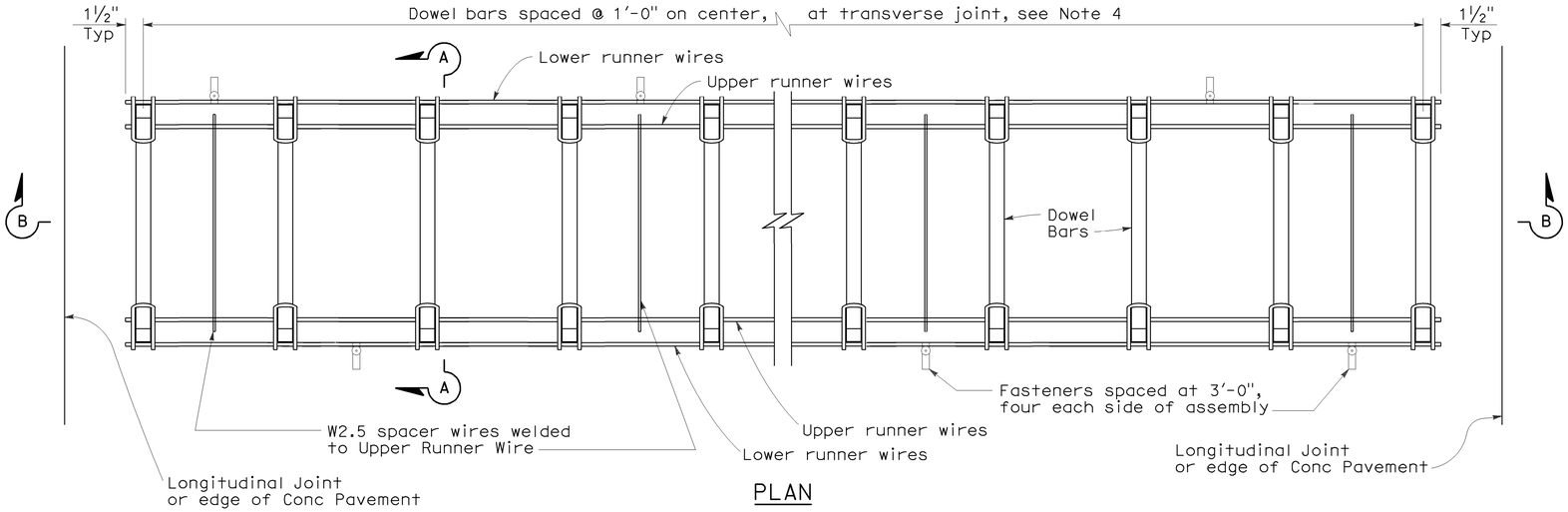

PLAN
DOWEL BAR BASKET (TRANSVERSE JOINT)
See Note 1

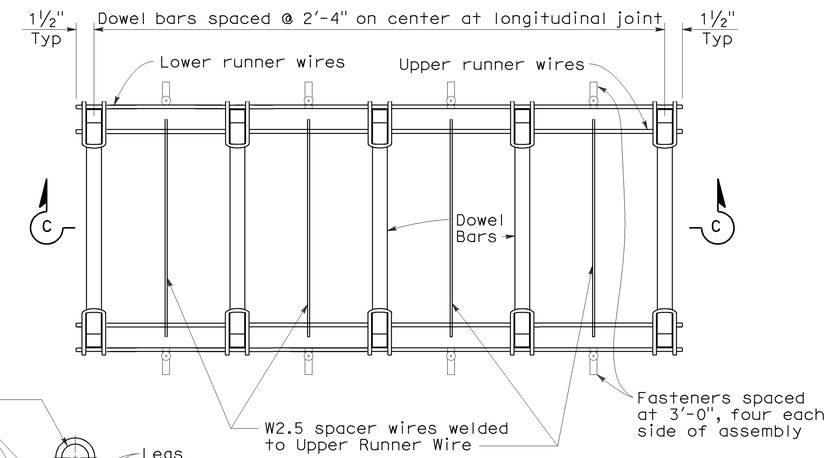

PLAN
DOWEL BAR BASKET (LONGITUDINAL JOINT)
See Note 1

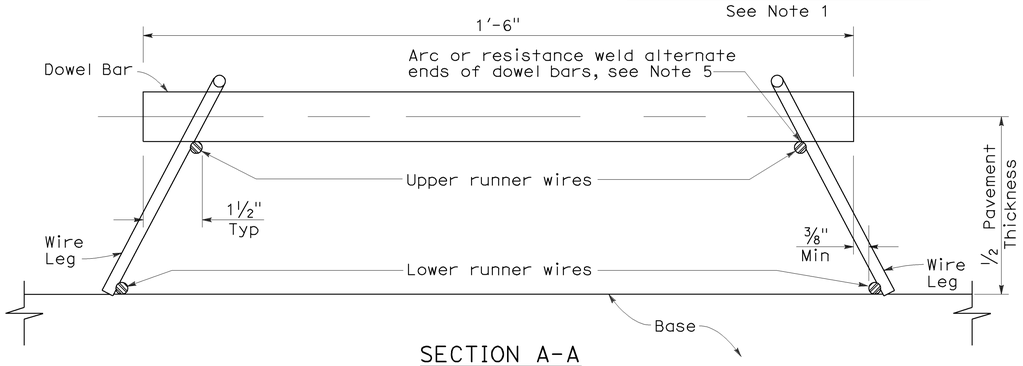

SECTION A-A

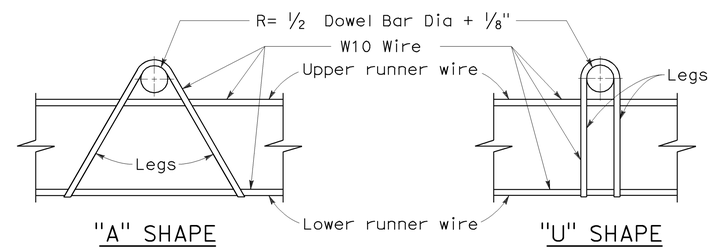

"A" SHAPE "U" SHAPE

ASSEMBLY FRAME DETAILS

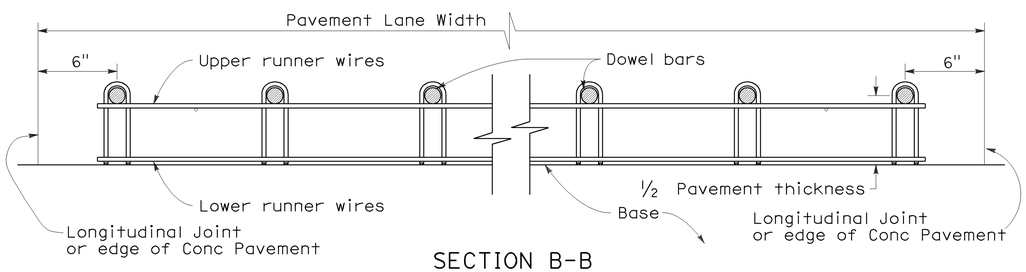

SECTION B-B
See Note 1

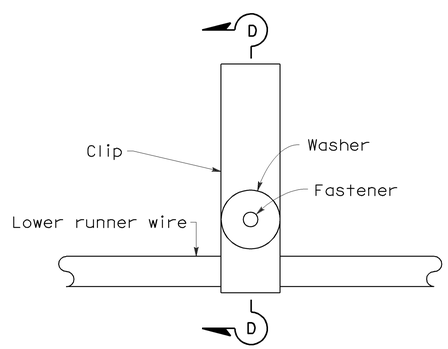

PLAN

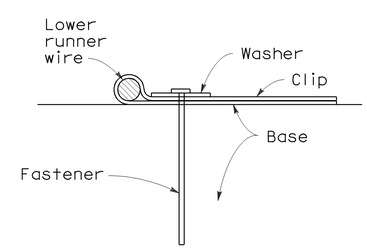

SECTION D-D

FASTENER DETAIL

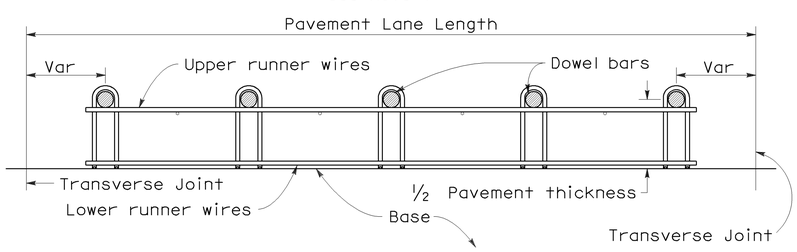

SECTION C-C
See Notes 1 and 4

NOTES:

1. "U" frame shape assembly shown. "U" frame shape or "A" frame shape are acceptable.
2. Wire sizes shown are minimum required.
3. All wire intersections are to be resistance welded.
4. Use tie bar spacing for longitudinal dowel bar locations. See Revised Std Plans RSPs P1, P2, and P3 for tie bar requirements.
5. Weld may be at top or bottom of dowel bar.

STATE OF CALIFORNIA
DEPARTMENT OF TRANSPORTATION

CONCRETE PAVEMENT-DOWEL BAR BASKET DETAILS

NO SCALE

RSP P12 DATED MAY 15, 2009 SUPERSEDES RSP P12 DATED NOVEMBER 17, 2006 AND STANDARD PLAN P12 DATED MAY 1, 2006 - PAGE 125 OF THE STANDARD PLANS BOOK DATED MAY 2006.

REVISED STANDARD PLAN RSP P12

2006 REVISED STANDARD PLAN RSP P12

5-8-09

DIST	COUNTY	ROUTE	POST MILES TOTAL PROJECT	SHEET NO.	TOTAL SHEETS
03	Sac	99	0.1/12.0	58	73

William K. Farnbach
REGISTERED CIVIL ENGINEER

May 15, 2009
PLANS APPROVAL DATE

REGISTERED PROFESSIONAL ENGINEER
William K. Farnbach
No. C49042
Exp. 9-30-10
CIVIL
STATE OF CALIFORNIA

The State of California or its officers or agents shall not be responsible for the accuracy or completeness of electronic copies of this plan sheet.

To accompany plans dated 5-24-10

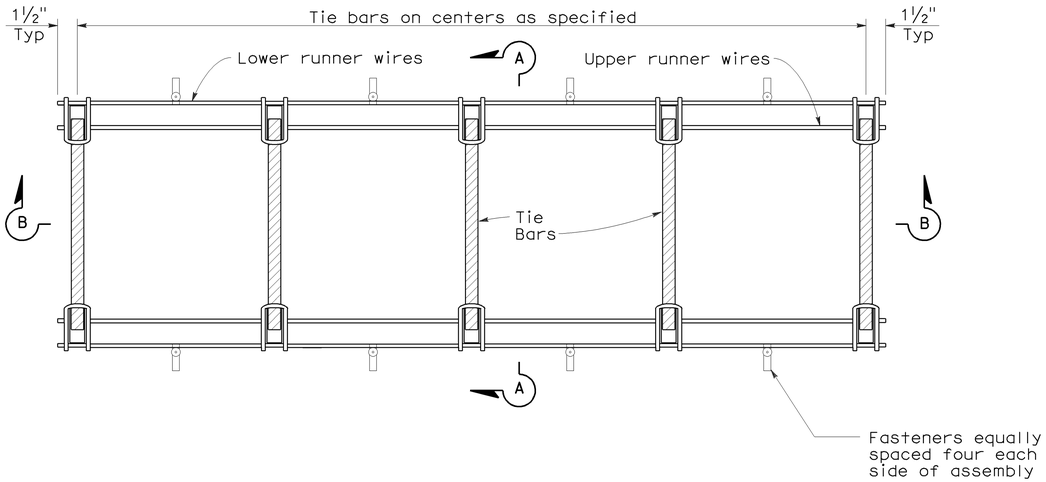

PLAN

TIE BAR BASKET

(TIE BARS AT LONGITUDINAL JOINT)
See Note 1

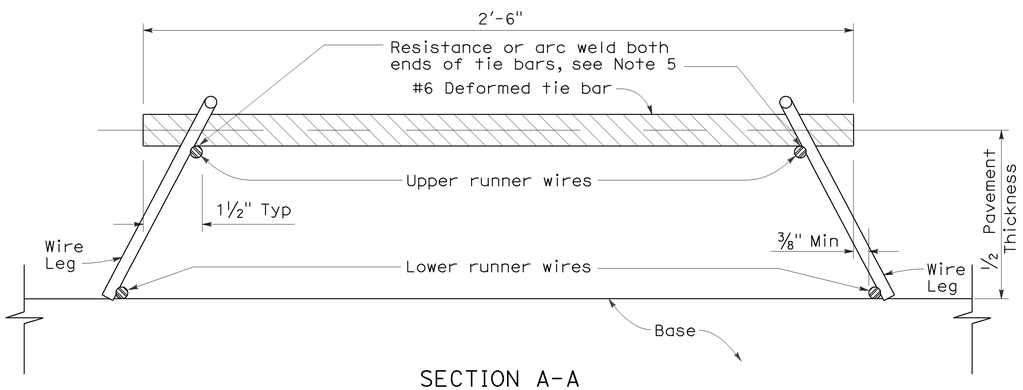

SECTION A-A

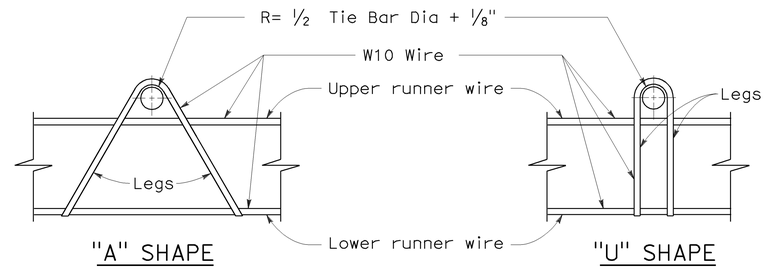

ASSEMBLY FRAME DETAILS

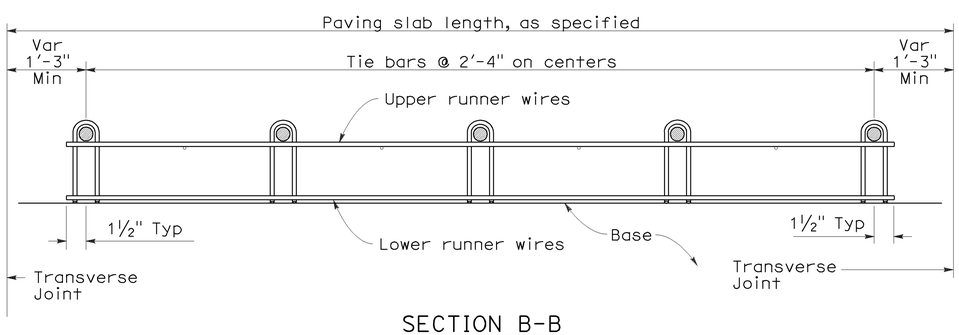

SECTION B-B
See Note 1

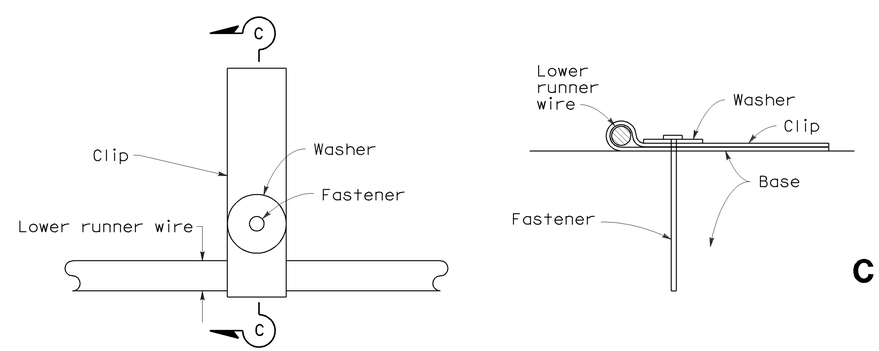

PLAN

SECTION C-C

FASTENER DETAIL

NOTES:

1. "U" frame shape assembly shown. "U" frame shape or "A" frame shape are acceptable.
2. Wire sizes shown are minimum required.
3. All wire intersections are to be resistance welded.
4. Not for use on nondoweled skewed jointed plain concrete pavement.
5. Weld may be at top or bottom of tie bar.

STATE OF CALIFORNIA
DEPARTMENT OF TRANSPORTATION

CONCRETE PAVEMENT-TIE BAR BASKET DETAILS

NO SCALE

RSP P17 DATED MAY 15, 2009 SUPERSEDES RSP P17 DATED NOVEMBER 17, 2006 AND STANDARD PLAN P17 DATED MAY 1, 2006 - PAGE 126 OF THE STANDARD PLANS BOOK DATED MAY 2006.

REVISED STANDARD PLAN RSP P17

2006 REVISED STANDARD PLAN RSP P17

5-8-09

DIST	COUNTY	ROUTE	POST MILES TOTAL PROJECT	SHEET NO.	TOTAL SHEETS
03	Sac	99	0.1/12.0	59	73

William K. Farnbach
REGISTERED CIVIL ENGINEER

June 5, 2009
PLANS APPROVAL DATE

REGISTERED PROFESSIONAL ENGINEER
William K. Farnbach
No. C49042
Exp. 9-30-10
CIVIL
STATE OF CALIFORNIA

The State of California or its officers or agents shall not be responsible for the accuracy or completeness of electronic copies of this plan sheet.

To accompany plans dated 5-24-10

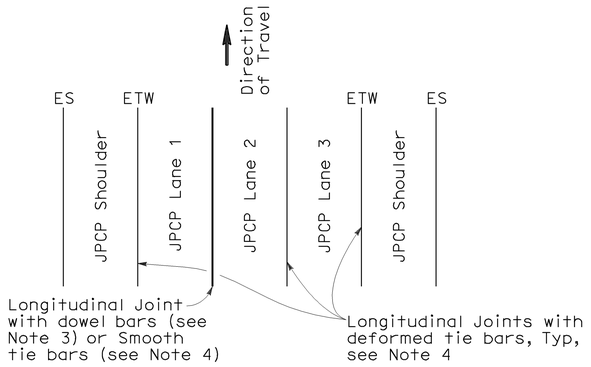

3 LANES WITH TIED CONCRETE SHOULDERS
PLAN

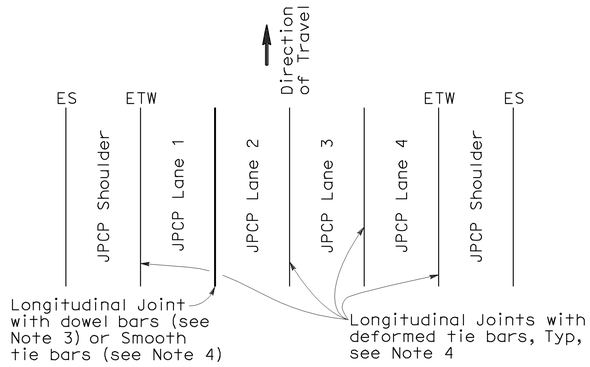

4 LANES WITH TIED CONCRETE SHOULDERS
PLAN

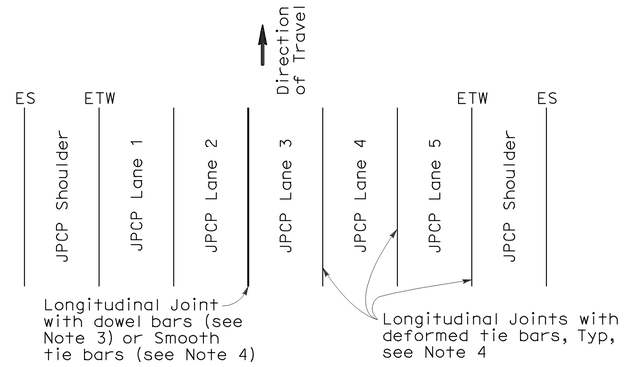

5 LANES WITH TIED CONCRETE SHOULDERS
PLAN

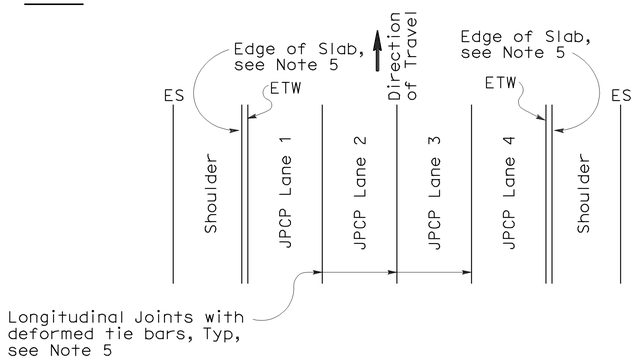

4 LANES OR LESS WITH WIDENED SLAB
PLAN

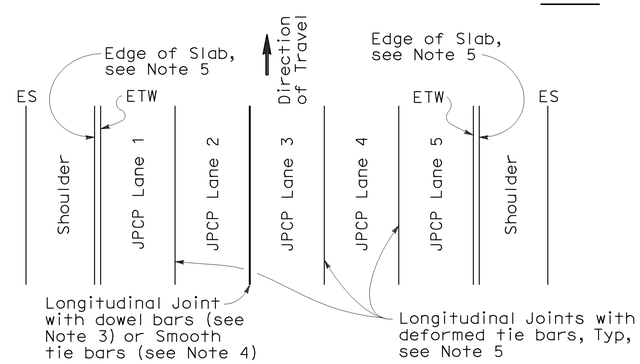

5 LANES WITH WIDENED SLAB
PLAN

NEW CONSTRUCTION

Location of Longitudinal Joints
(For JPCP)

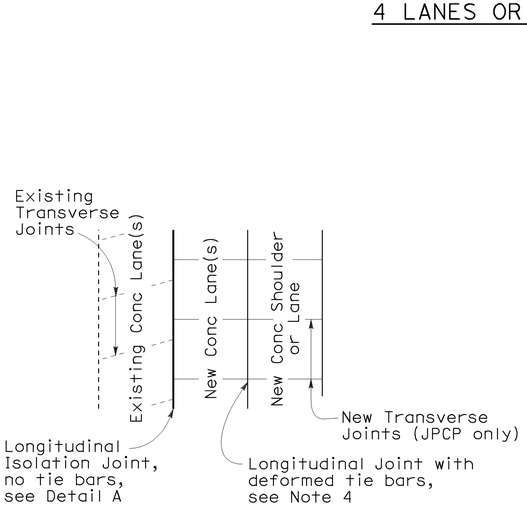

CASE 1
PLAN

Transverse Joints do not align between new and existing

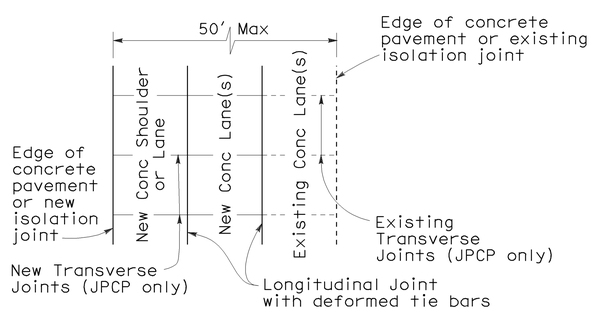

CASE 2
PLAN

Transverse Joints align between new and existing

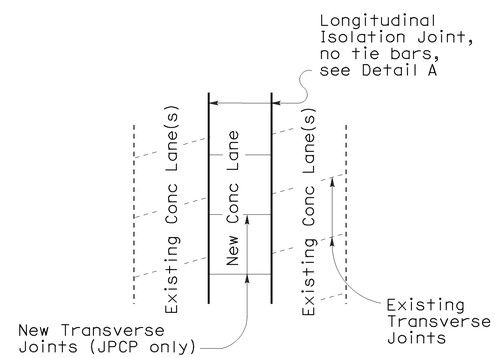

CASE 3 (INTERIOR LANE REPLACEMENT)
PLAN

Transverse Joints do not align between new and existing

LANE/SHOULDER ADDITION OR RECONSTRUCTION

(For JPCP and CRCP)

NOTES:

1. Where Lean Concrete Base is not used as base material, the joint filler material used for the longitudinal isolation joint shall only extend to the bottom of the new concrete slab. See Detail A.
2. Use 5/8" ±1/16" dimension for silicone sealant.
3. See Revised Standard Plan RSP P10 for longitudinal joint with dowel bars.
4. See Revised Standard Plan RSP P1.
5. See Revised Standard Plan RSP P2.

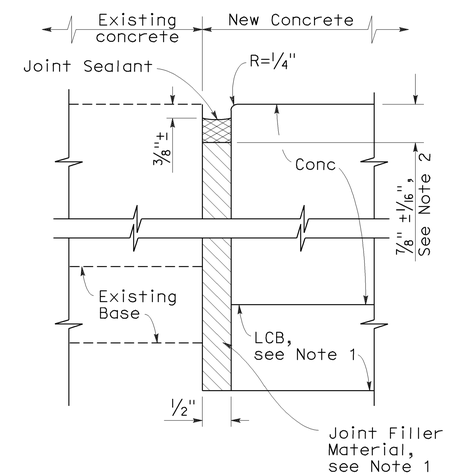

DETAIL A

ISOLATION JOINT

STATE OF CALIFORNIA
DEPARTMENT OF TRANSPORTATION

CONCRETE PAVEMENT-LANE SCHEMATICS AND ISOLATION JOINT DETAIL

NO SCALE

RSP P18 DATED JUNE 5, 2009 SUPERSEDES RSP P18 DATED MAY 15, 2009, RSP P18 DATED NOVEMBER 17, 2006 AND STANDARD PLAN P18 DATED MAY 1, 2006 - PAGE 127 OF THE STANDARD PLANS BOOK DATED MAY 2006.

REVISED STANDARD PLAN RSP P18

2006 REVISED STANDARD PLAN RSP P18

5-14-09

NOTE:

1. Tie bars, dowel bars, and reinforcement are not shown in joint seal details, see Revised Standard Plans RSP P1, RSP P3, RSP P10, RSP P35, RSP P45, or RSP P46 as applicable.

DIST	COUNTY	ROUTE	POST MILES TOTAL PROJECT	SHEET NO.	TOTAL SHEETS
03	Sac	99	0.1/12.0	60	73

William K. Farnbach
REGISTERED CIVIL ENGINEER

May 15, 2009
PLANS APPROVAL DATE

REGISTERED PROFESSIONAL ENGINEER William K. Farnbach No. C49042 Exp. 9-30-10 CIVIL STATE OF CALIFORNIA

The State of California or its officers or agents shall not be responsible for the accuracy or completeness of electronic copies of this plan sheet.

To accompany plans dated 5-24-10

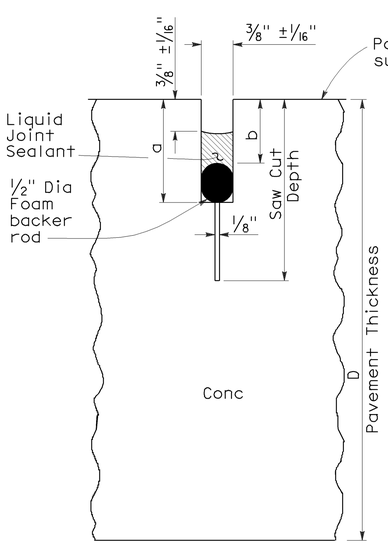

LIQUID SEALANT

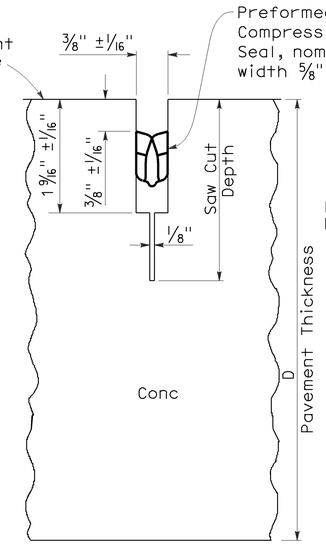

COMPRESSION SEAL

TYPE A1

Transverse Contraction Joints

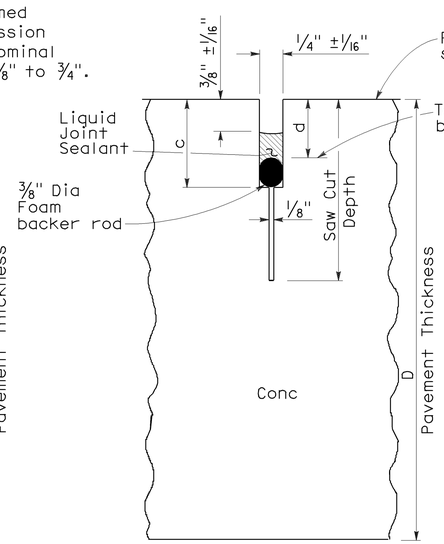

LIQUID SEALANT

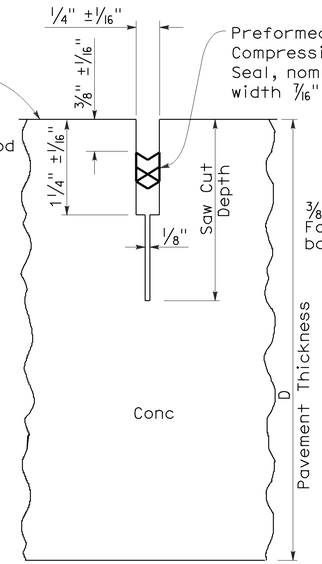

COMPRESSION SEAL

TYPE A2

Longitudinal Contraction Joints

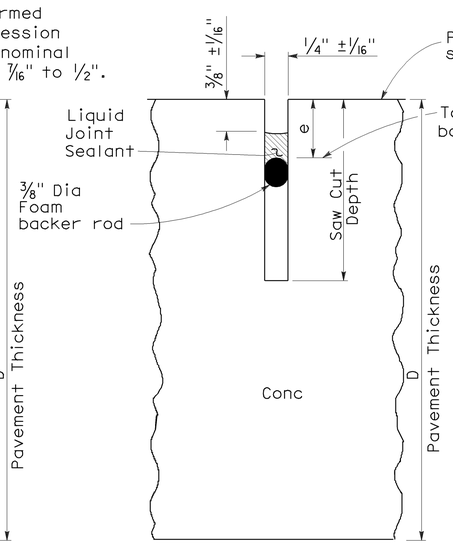

LIQUID SEALANT

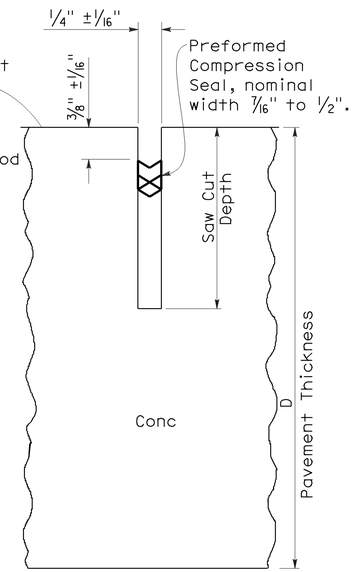

COMPRESSION SEAL

TYPE B

Longitudinal or Transverse Contraction Joint

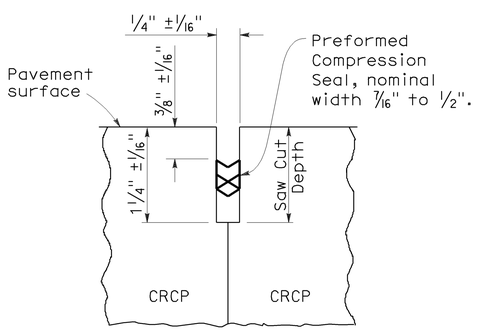

COMPRESSION SEAL

TYPE C

Transverse and Longitudinal Construction Joints (For CRCP)

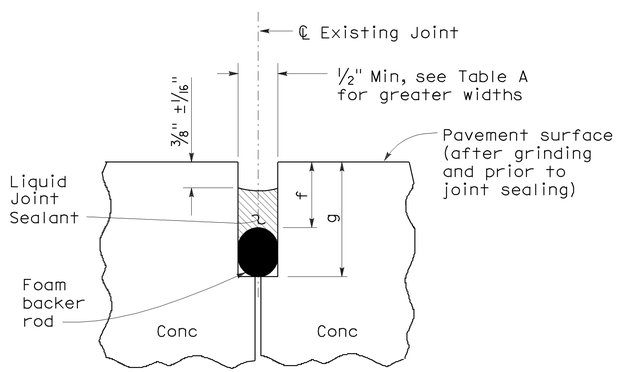

LIQUID SEALANT

TYPE R

Retrofit Transverse and Longitudinal Joints

LIQUID SEALANT RESERVOIR DEPTH

LIQUID SEALANT MATERIAL	3/8" Joint Width Type A1		1/4" Joint Width Type A2		1/4" Joint Width Type B
	DIMENSION		DIMENSION		DIMENSION
	a	b	c	d	e
SILCONE	1" ±1/16"	5/8" ±1/16"	15/16" ±1/16"	9/16" ±1/16"	9/16" ±1/16"
ASPHALT RUBBER	1 3/16" ±1/16"	3/4" ±1/16"	1 1/16" ±1/16"	11/16" ±1/16"	11/16" ±1/16"

TABLE A (TYPE R JOINT)

Sawn Joint Width	Backer Rod Diameter ± 1/16"	DIMENSION "f"	DIMENSION "g"
1"	1 5/16"	7/8"	2 1/4"
7/8"	1 3/16"	13/16"	2"
3/4"	1"	3/4"	1 3/4"
5/8"	7/8"	11/16"	1 1/2"
1/2"	11/16"	5/8"	1 1/4"

STATE OF CALIFORNIA
DEPARTMENT OF TRANSPORTATION

CONCRETE PAVEMENT-JOINT DETAILS

NO SCALE

RSP P20 DATED MAY 15, 2009 SUPERSEDES STANDARD PLAN P20
DATED MAY 1, 2006 - PAGE 128 OF THE STANDARD PLANS BOOK DATED MAY 2006.

REVISED STANDARD PLAN RSP P20

2006 REVISED STANDARD PLAN RSP P20

5-8-09

DIST	COUNTY	ROUTE	POST MILES TOTAL PROJECT	SHEET NO.	TOTAL SHEETS
03	Sac	99	0.1/12.0	61	73

William K. Farnbach
REGISTERED CIVIL ENGINEER

May 15, 2009
PLANS APPROVAL DATE

REGISTERED PROFESSIONAL ENGINEER William K. Farnbach No. C49042 Exp. 9-30-10 CIVIL STATE OF CALIFORNIA

The State of California or its officers or agents shall not be responsible for the accuracy or completeness of electronic copies of this plan sheet.

To accompany plans dated 5-24-10

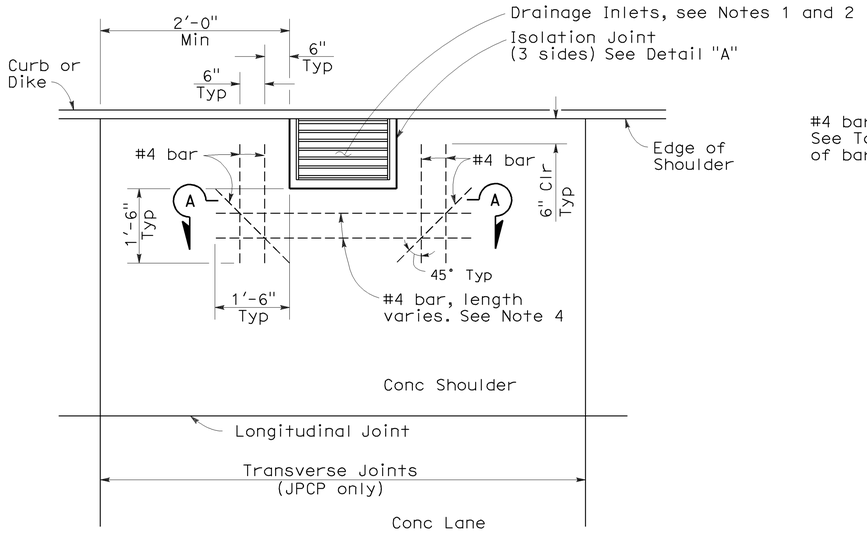

CASE 1

Transverse joint more than 2'-0" clear of drainage inlet wall or no transverse joint

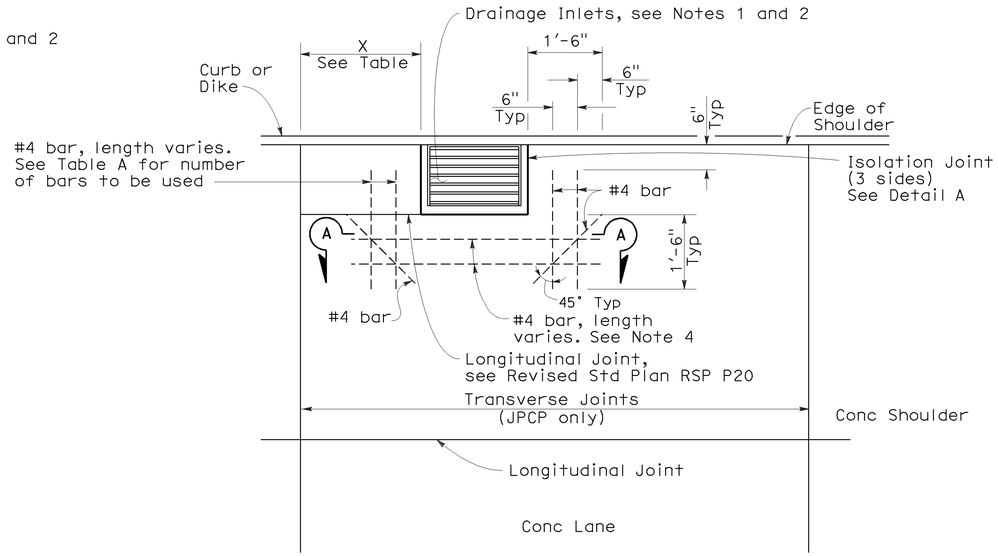

CASE 3

Transverse joint within 2'-0" of drainage inlet wall, or matches drainage inlet wall.

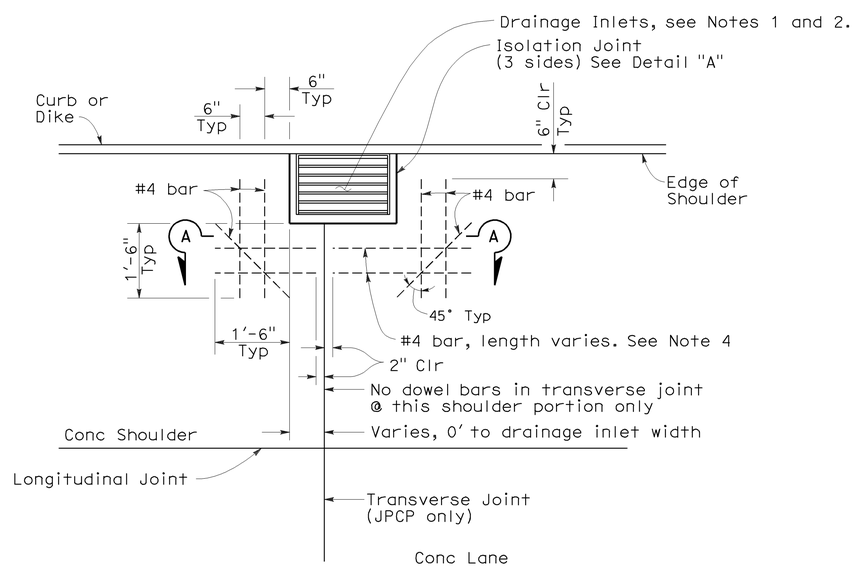

CASE 2

Transverse joint intersects drainage inlet, or matches drainage inlet wall.

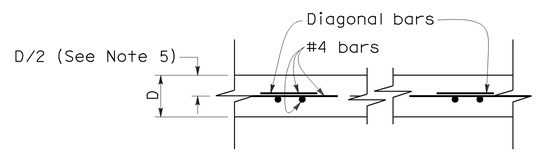

SECTION A-A

D = Pavement Thickness

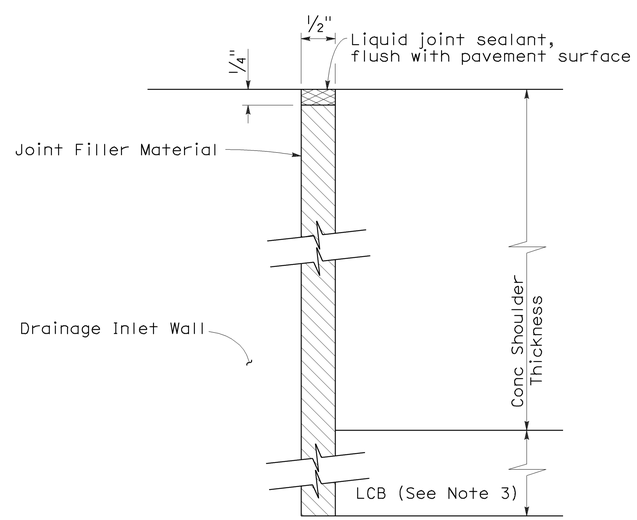

DETAIL "A"

ISOLATION JOINT AROUND DRAINAGE INLET

NOTES:

1. Refer to Project Plans for location and Type of drainage inlets.
2. Top of inlet shall be flush with shoulder surface.
3. Extend joint filler material to bottom of Lean Concrete Base. Where Lean Concrete Base is not used as base material, the joint filler material shall only extend to the bottom of the new concrete pavement.
4. For Jointed Plain Concrete Pavement only. For Continuously Reinforced Concrete Pavement, terminate pavement steel reinforcement 2" clear from all outside edges of isolation joint.
5. For Jointed Plain Concrete Pavement only. For Continuously Reinforced Concrete Pavement, see New Standard Plan NSP P4.
6. Dowel and tie bars not shown, see Revised Standard Plan RSP P1.

TABLE A

DISTANCE X	BARS REQUIRED
2'-0" to 1'-6"	2
1'-6" to 9"	1 @ X/2
9" or less	None

STATE OF CALIFORNIA
DEPARTMENT OF TRANSPORTATION

CONCRETE PAVEMENT-DRAINAGE INLET DETAILS No. 1

NO SCALE

RSP P45 DATED MAY 15, 2009 SUPERSEDES STANDARD PLAN P45 DATED MAY 1, 2006 - PAGE 132 OF THE STANDARD PLANS BOOK DATED MAY 2006.

REVISED STANDARD PLAN RSP P45

2006 REVISED STANDARD PLAN RSP P45

4-2-09

DIST	COUNTY	ROUTE	POST MILES TOTAL PROJECT	SHEET NO.	TOTAL SHEETS
03	Sac	99	0.1/12.0	62	73

William K. Farnbach
REGISTERED CIVIL ENGINEER

May 15, 2009
PLANS APPROVAL DATE

REGISTERED PROFESSIONAL ENGINEER William K. Farnbach No. C49042 Exp. 9-30-10 CIVIL STATE OF CALIFORNIA

The State of California or its officers or agents shall not be responsible for the accuracy or completeness of electronic copies of this plan sheet.

To accompany plans dated 5-24-10

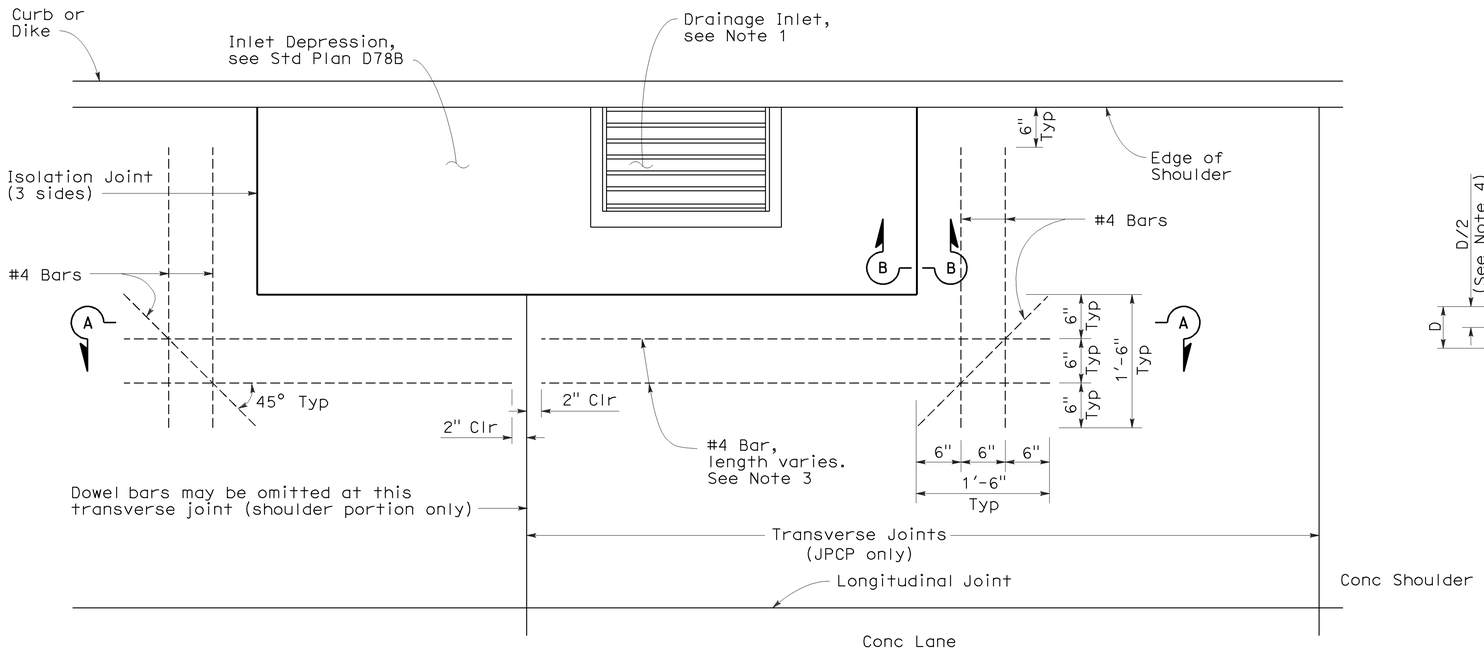

CASE A

Transverse Joint intersects inlet depression or no transverse joints.

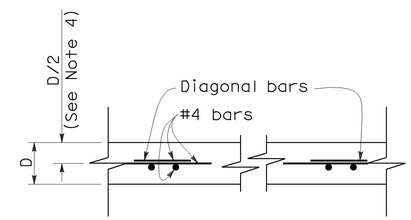

SECTION A-A

D = Pavement Thickness

TABLE A

DISTANCE X	BARS REQUIRED
2'-0" to 1'-6"	2
1'-6" to 1'-0"	1
1'-0" or less	None

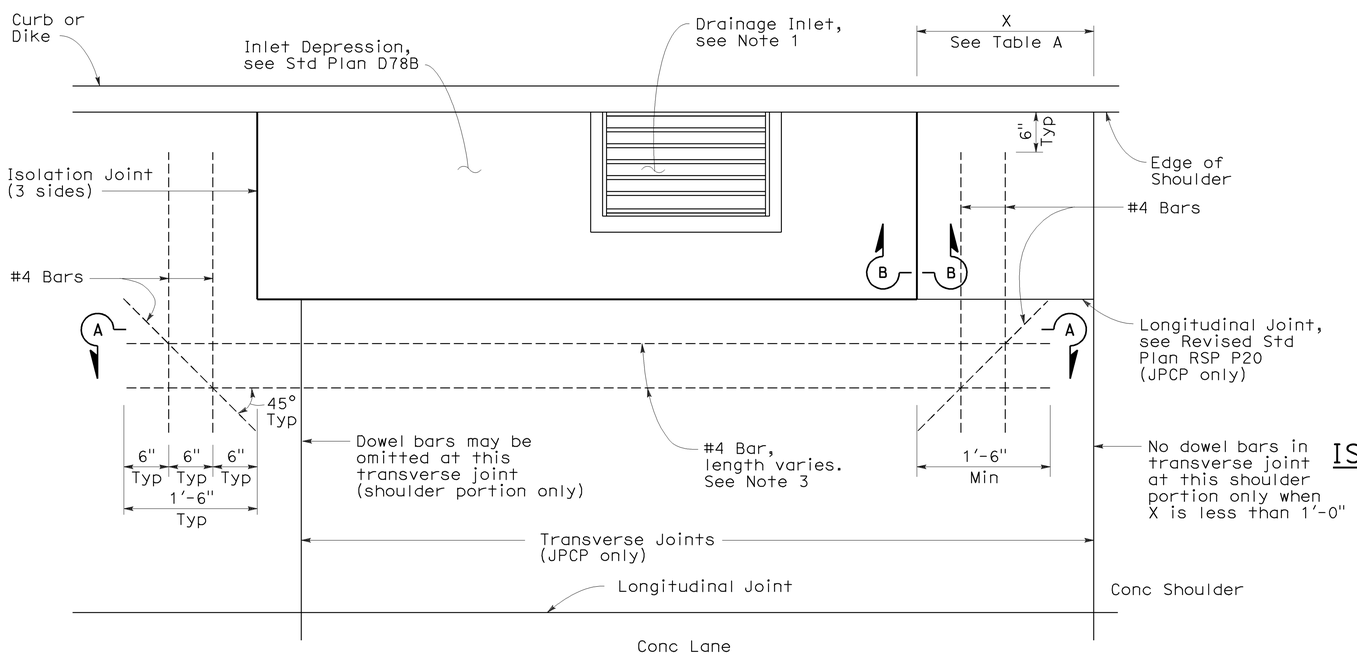

CASE B

Transverse Joint within 2'-0" of edge of inlet depression.

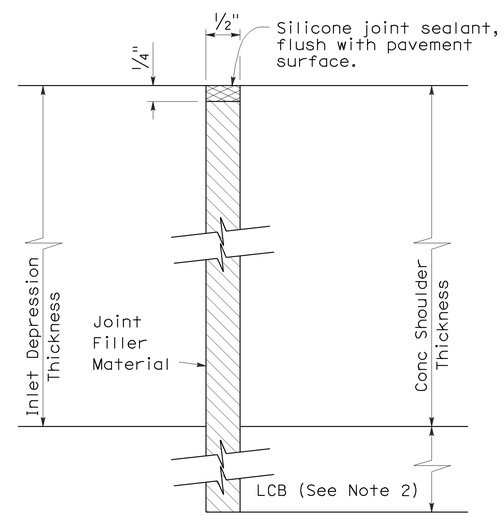

SECTION B-B

ISOLATION JOINT AROUND INLET DEPRESSION

NOTES:

1. Refer to Project Plans for location and type of drainage inlets.
2. Extend joint filler material to bottom of Lean Concrete Base. Where Lean Concrete Base is not used as base material, the joint filler material shall only extend to the bottom of the new concrete pavement.
3. For Jointed Plain Concrete Pavement only. For Continuously Reinforced Concrete Pavement, terminate pavement steel reinforcement 2" clear from all outside edges of isolation joint.
4. For Jointed Plain Concrete Pavement only. For Continuously Reinforced Concrete Pavement, see New Standard Plan NSP P4.

STATE OF CALIFORNIA
DEPARTMENT OF TRANSPORTATION

CONCRETE PAVEMENT-DRAINAGE INLET DETAILS No. 2

NO SCALE

RSP P46 DATED MAY 15, 2009 SUPERSEDES STANDARD PLAN P46
DATED MAY 1, 2006 - PAGE 133 OF THE STANDARD PLANS BOOK DATED MAY 2006.

REVISED STANDARD PLAN RSP P46

2006 REVISED STANDARD PLAN RSP P46

4-2-09

DIST	COUNTY	ROUTE	POST MILES TOTAL PROJECT	SHEET NO.	TOTAL SHEETS
03	Sac	99	0.1/12.0	63	73

Randell D. Hiatt
REGISTERED CIVIL ENGINEER

June 6, 2008
PLANS APPROVAL DATE

REGISTERED PROFESSIONAL ENGINEER
Randell D. Hiatt
No. C50200
Exp. 6-30-09
CIVIL
STATE OF CALIFORNIA

The State of California or its officers or agents shall not be responsible for the accuracy or completeness of electronic copies of this plan sheet.

To accompany plans dated 5-24-10

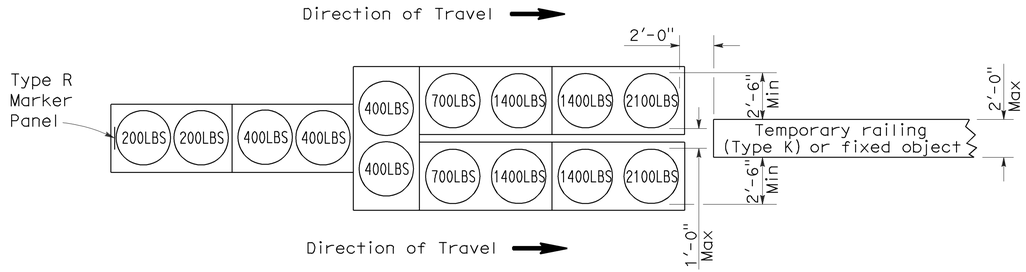

ARRAY 'TU14'

Approach speed 45 mph or more

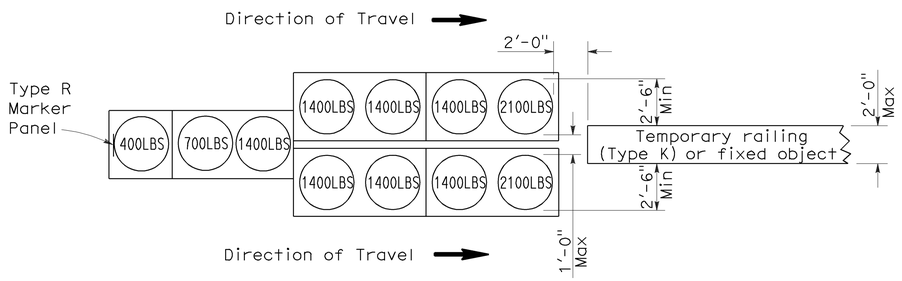

ARRAY 'TU11'

Approach speed less than 45 mph

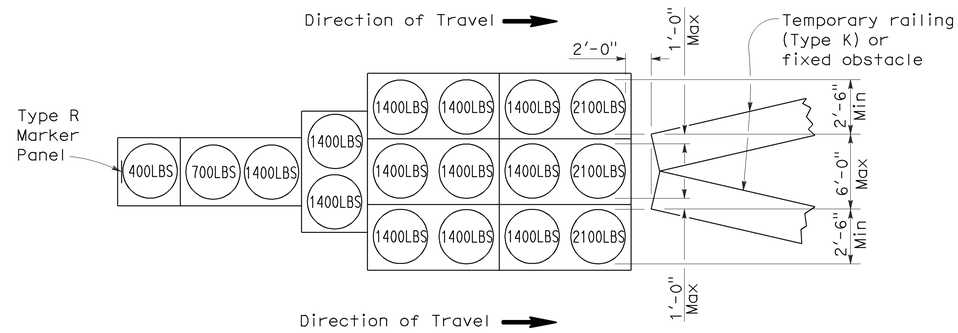

ARRAY 'TU17'

Approach speed less than 45 mph

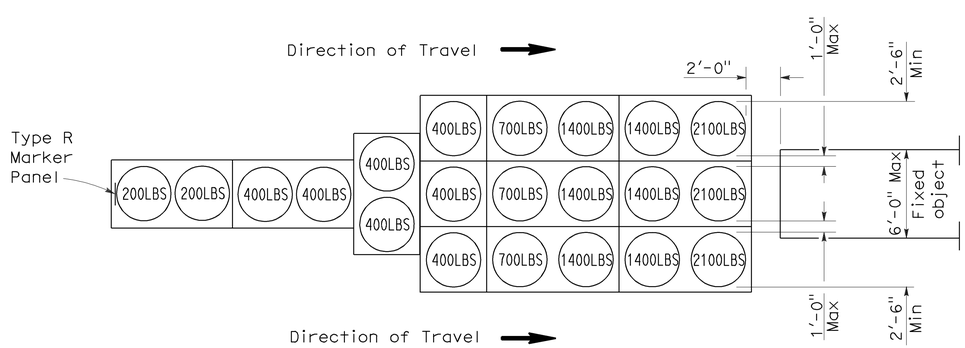

ARRAY 'TU21'

Approach speed 45 mph or more

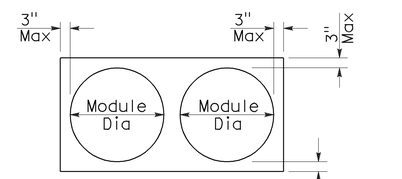

PLAN

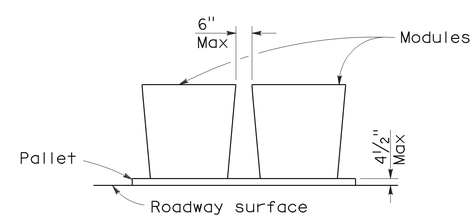

ELEVATION

CRASH CUSHION PALLET DETAIL

See Note 7

NOTES:

1. (XXX) Indicates sand filled module location and weight of sand in pounds for each module. Module spacing is based on the greater diameter of the module.
2. All sand weights are nominal.
3. Temporary crash cushion arrays shall not encroach on the traveled way.
4. Place the top of Type R marker panel 1" below the module lid.
5. Refer to Standard Plan A73B for marker details.
6. Approach speeds indicated conform to NCHRP 350 Report criteria.
7. Use of pallets is optional.

STATE OF CALIFORNIA
DEPARTMENT OF TRANSPORTATION

TEMPORARY CRASH CUSHION, SAND FILLED (UNIDIRECTIONAL)

NO SCALE

RSP T1A DATED JUNE 6, 2008 SUPERSEDES STANDARD PLAN T1A
DATED MAY 1, 2006 - PAGE 211 OF THE STANDARD PLANS BOOK DATED MAY 2006.

REVISED STANDARD PLAN RSP T1A

2006 REVISED STANDARD PLAN RSP T1A

DIST	COUNTY	ROUTE	POST MILES TOTAL PROJECT	SHEET NO.	TOTAL SHEETS
03	Sac	99	0.1/12.0	64	73

Randell D. Hiatt
REGISTERED CIVIL ENGINEER

June 6, 2008
PLANS APPROVAL DATE

REGISTERED PROFESSIONAL ENGINEER
Randell D. Hiatt
No. C50200
Exp. 6-30-09
CIVIL
STATE OF CALIFORNIA

The State of California or its officers or agents shall not be responsible for the accuracy or completeness of electronic copies of this plan sheet.

To accompany plans dated 5-24-10

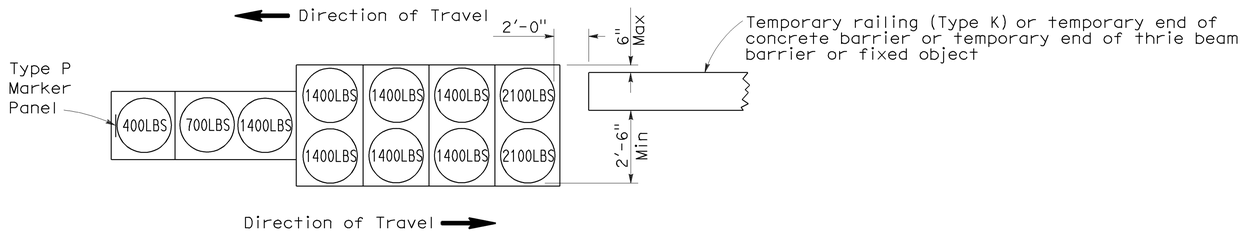

ARRAY 'TB11'

Approach speed less than 45 mph

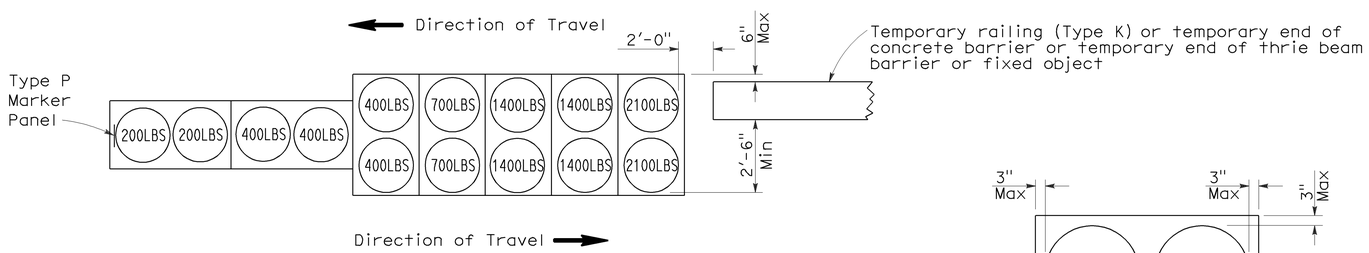

ARRAY 'TB14'

Approach speed 45 mph or more

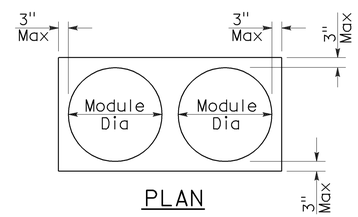

PLAN

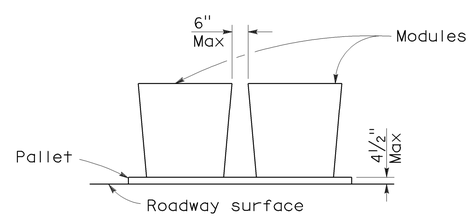

ELEVATION

CRASH CUSHION PALLET DETAIL

See Note 7

NOTES:

1. (XXX) Indicates sand filled module location and weight of sand in pounds for each module. Module spacing is based on the greater diameter of the module.
2. All sand weights are nominal.
3. Temporary crash cushion arrays shall not encroach on the traveled way.
4. Place the Type P marker panel so that the bottom of the panel rests upon the pallet.
5. Refer to Standard Plan A73B for marker details.
6. Approach speeds indicated conform to NCHRP 350 Report criteria.
7. Use of pallets is optional.

STATE OF CALIFORNIA
DEPARTMENT OF TRANSPORTATION

TEMPORARY CRASH CUSHION, SAND FILLED (BIDIRECTIONAL)

NO SCALE

RSP T1B DATED JUNE 6, 2008 SUPERSEDES STANDARD PLAN T1B
DATED MAY 1, 2006 - PAGE 212 OF THE STANDARD PLANS BOOK DATED MAY 2006.

REVISED STANDARD PLAN RSP T1B

2006 REVISED STANDARD PLAN RSP T1B

5-15-08

DIST	COUNTY	ROUTE	POST MILES TOTAL PROJECT	SHEET NO.	TOTAL SHEETS
03	Sac	99	0.1/12.0	65	73

Randell D. Hiatt
REGISTERED CIVIL ENGINEER

June 6, 2008
PLANS APPROVAL DATE

REGISTERED PROFESSIONAL ENGINEER
Randell D. Hiatt
No. C50200
Exp. 6-30-09
CIVIL
STATE OF CALIFORNIA

The State of California or its officers or agents shall not be responsible for the accuracy or completeness of electronic copies of this plan sheet.

To accompany plans dated 5-24-10

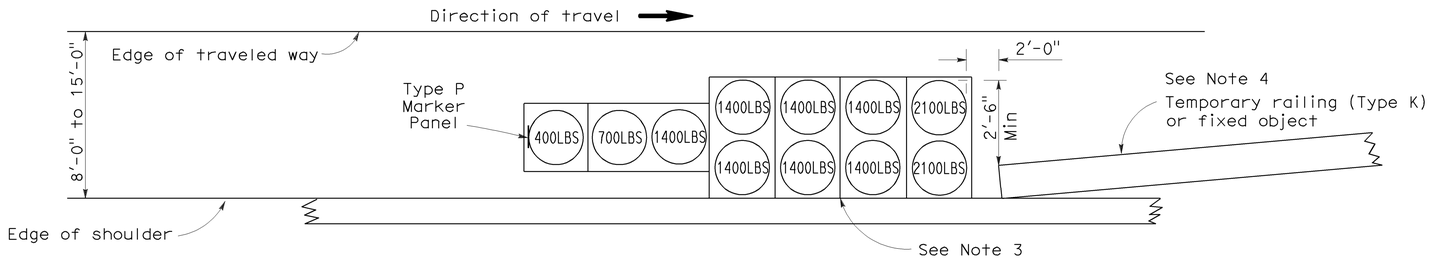

ARRAY 'TS11'

Approach speed less than 45 mph
See Note 9

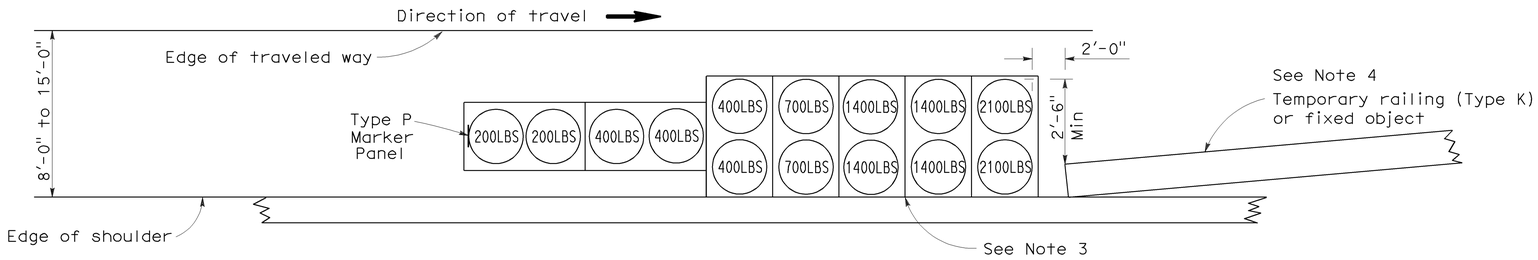

ARRAY 'TS14'

Approach speed 45 mph or more
See Note 9

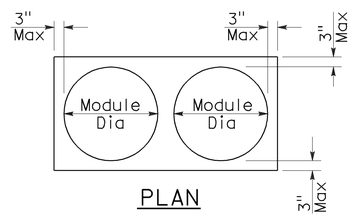

PLAN

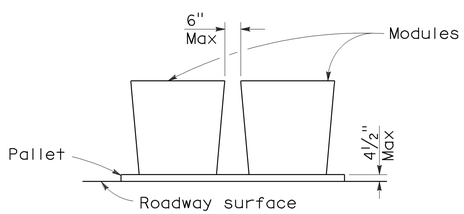

ELEVATION

CRASH CUSHION PALLET DETAIL

See Note 11

NOTES:

1. (XXX) Indicates sand filled module location and weight of sand in pounds for each module. Module spacing is based on the greater diameter of the module.
2. All sand weights are nominal.
3. The temporary crash cushion arrays shown on this plan shall be used only in locations where there will be traffic on one side of the temporary crash cushion array.
4. If the fixed object or approach end of the temporary railing is less than 15'-0" from the edge of traveled way, a temporary crash cushion is required in a construction or work zone.
5. Temporary crash cushion arrays shall not encroach on the traveled way.
6. Arrays for median shoulders shall conform to details shown on this plan for outside shoulders.
7. Place the Type P marker panel so that the bottom of the panel rests upon the pallet and faces traffic.
8. Refer to Standard Plan A73B for marker details.
9. For shoulder widths less than 8'-0", appropriate approved crash cushion protection, other than sand filled modules, shall be provided at fixed objects and at approach ends of temporary railing. The specific type of crash cushion shall be as shown on the project plans or as specified in the Special Provisions, or if not shown on the project plans or specified in the Special Provisions, shall be as approved by the Engineer.
10. Approach speeds indicated conform to NCHRP 350 Report criteria.
11. Use of pallets is optional.

STATE OF CALIFORNIA
DEPARTMENT OF TRANSPORTATION

TEMPORARY CRASH CUSHION, SAND FILLED (SHOULDER INSTALLATIONS)

NO SCALE

RSP T2 DATED JUNE 6, 2008 SUPERSEDES STANDARD PLAN T2
DATED MAY 1, 2006 - PAGE 213 OF THE STANDARD PLANS BOOK DATED MAY 2006.

REVISED STANDARD PLAN RSP T2

2006 REVISED STANDARD PLAN RSP T2

5-15-08

DIST	COUNTY	ROUTE	POST MILES TOTAL PROJECT	SHEET NO.	TOTAL SHEETS
03	Sac	99	0.1/12.0	66	73

LICENSED LANDSCAPE ARCHITECT

April 3, 2009
PLANS APPROVAL DATE

The State of California or its officers or agents shall not be responsible for the accuracy or completeness of electronic copies of this plan sheet.

LICENSED LANDSCAPE ARCHITECT — Robert B. Schott — 3635 — 11-30-10 Renewal Date — 2-25-09 Date — STATE OF CALIFORNIA

To accompany plans dated 5-24-10

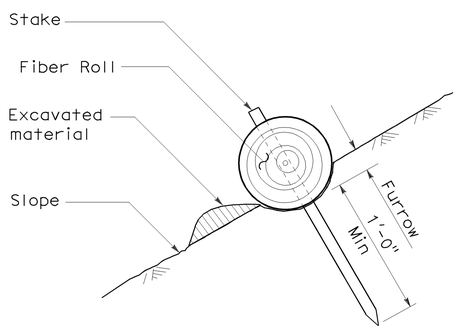

SECTION

TEMPORARY FIBER ROLL (TYPE 1)

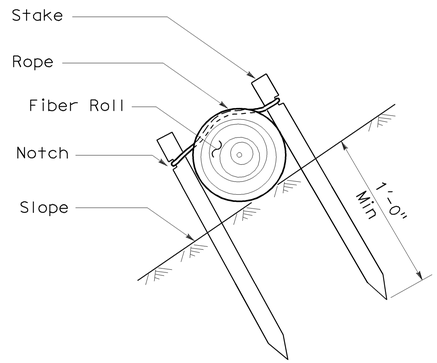

SECTION

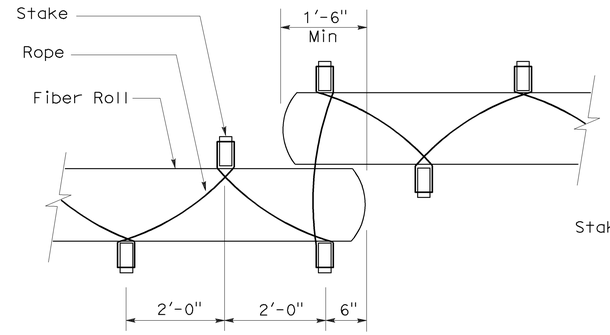

PLAN

TEMPORARY FIBER ROLL (TYPE 2)

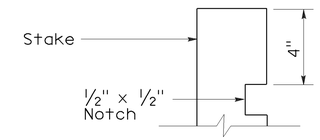

ELEVATION

STAKE NOTCH DETAIL

NOTES:

1. Temporary fiber roll spacing varies depending upon slope inclination.
2. Installations shown in the perspectives are for slope inclination of 10:1 and steeper.

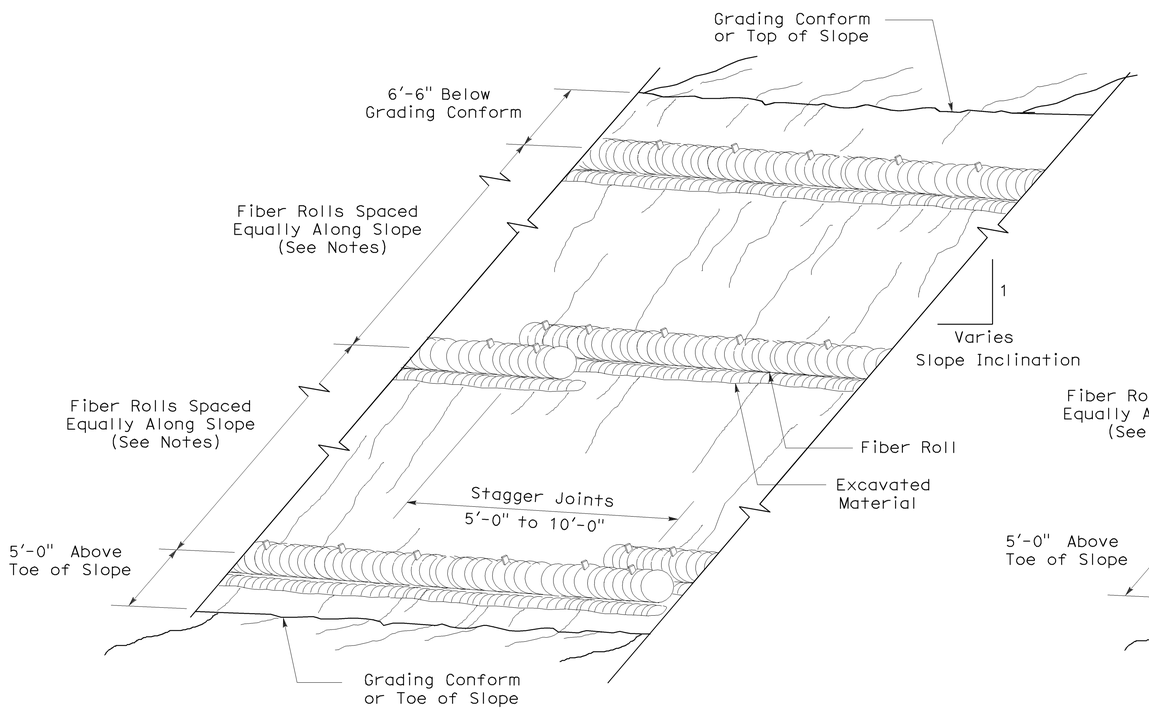

PERSPECTIVE

TEMPORARY FIBER ROLL (TYPE 1)

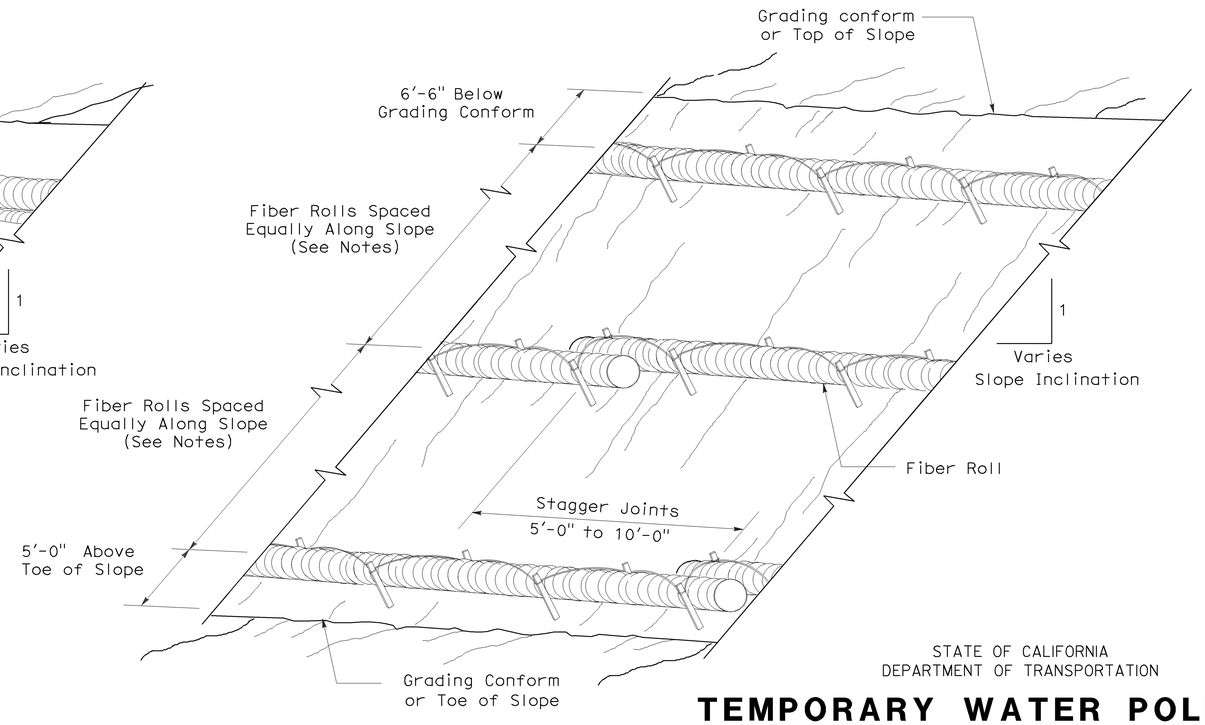

PERSPECTIVE

TEMPORARY FIBER ROLL (TYPE 2)

STATE OF CALIFORNIA
DEPARTMENT OF TRANSPORTATION

TEMPORARY WATER POLLUTION CONTROL DETAILS (TEMPORARY FIBER ROLL)

NO SCALE

RSP T56 DATED APRIL 3, 2009 SUPERSEDES STANDARD PLAN T56
DATED MAY 1, 2006 - PAGE 232 OF THE STANDARD PLANS BOOK DATED MAY 2006.

REVISED STANDARD PLAN RSP T56

2006 REVISED STANDARD PLAN RSP T56

2-23-09

DIST	COUNTY	ROUTE	POST MILES TOTAL PROJECT	SHEET NO.	TOTAL SHEETS
03	Sac	99	0.1/12.0	67	73

REGISTERED ELECTRICAL ENGINEER

October 5, 2007
PLANS APPROVAL DATE

REGISTERED PROFESSIONAL ENGINEER Jeffery G. McRae No. E14512 Exp. 6-30-08 ELECTRICAL STATE OF CALIFORNIA

The State of California or its officers or agents shall not be responsible for the accuracy or completeness of electronic copies of this plan sheet.

To accompany plans dated 5-24-10

ELECTROLIERS

STANDARD TYPES
15, 15D
15 STRUCTURE
21, 21D STRUCTURE
30
31
32
35
36-20A

High mast light pole

Double Arm lighting standard

Existing electrolier

Electrolier foundation (Future installation)

NOTES:

1. Luminaires shall be 310 W HPS when installed on Type 21, 21D, 30, 31, 32, 35 and 36-20A Standards, unless otherwise specified. Luminaires shall be 200 W HPS when installed on other type standards or poles, unless otherwise specified.
2. Luminaires shall be the cutoff type, ANSI Type Ⅲ medium cutoff lighting distribution, unless otherwise specified.
3. Variations noted adjacent to symbol on project plans.

Electrolier (see project notes or project plans)

Luminaire on wood pole

STANDARD NOTES:

- AB — Abandon. If applied to conduit, remove conductors.
- BC — Install pull box in existing conduit run.
- BP — Pedestrian barricade, type as indicated on plan.
- CB — Install conduit into existing pull box.
- CC — Connect new and existing conduit. Remove existing conductors and install conductors as indicated.
- CF — Conduit to remain for future use. Remove conductors. Install pull wire or rope.
- DH — Detector handhole.
- FA — Foundation to be abandoned.
- IS — Install sign on signal mast arm.
- NS — No slip base on standard.
- PEC — Photoelectric control.
- PEU — Photoelectric unit.
- RC — Equipment or material to be removed and become the property of the Contractor.
- RE — Remove electrolier, fuses and ballast. Tape ends of conductors.
- RL — Relocate equipment.
- RR — Remove and reuse equipment.
- RS — Remove and salvage equipment.
- SC — Splice new to existing conductors.
- SD — Service disconnect.
- SF — Standard to remain for future use. Remove luminaire, pole conductors, fuses and ballast.
- TSP — Telephone service point.

ABBREVIATIONS AND EQUIPMENT DESIGNATIONS

PROPOSED	EXISTING	
BBS	bbs	Battery backup system
BC	bc	Bolt circle
C	C	Conduit
CCTV	cctv	Closed circuit television
CKT	ckt	Circuit
CMS	cms	Changeable message sign
DLC	dlc	Loop detector lead-in cable
EMS	ems	Extinguishable message sign
EVC	evc	Emergency vehicle cable
EVD	evd	Emergency vehicle detector
FB	fb	Flashing beacon
FBCA	fbca	Flashing beacon control assembly
FBS	fbs	Flashing beacon with slip base
FO	fo	Fiber optic
G	G	Ground (Equipment Grounding Conductor)
GFCI	GFCI	Ground fault circuit interrupt
HAR	har	Highway advisory radio
HEX	hex	Hexagonal
HPS	hps	High pressure sodium
IISNS	iisns	Internally illuminated street name sign
ISL	isl	Induction sign lighting
LED	led	Light emitting diode
LMA	lma	Luminaire mast arm
LPS	lps	Low pressure sodium
LTG	ltg	Lighting
LUM	lum	Luminaire
MAT	mat	Mast arm mounting vehicle signal faces, top attachment
MAS	mas	Mast arm mounting vehicle signal faces, side attachment
MAS-4A MAS-4B MAS-4C	mas-4A mas-4B mas-4C	Mast arm mounting vehicle signal faces, side attachment - 4 signal section
MAS-5A MAS-5B	mas-5A mas-5B	Mast arm mounting vehicle signal faces, side attachment - 5 signal section
MC	mc	Mercury contactor
M/M	m/m	Multiple to multiple transformer
MT	mt	Conduit with pull wire or rope only
MTG	mtg	Mounting
	mv	Mercury vapor lighting fixture
N	N	Neutral (Grounded Conductor)
NC	NC	Normally closed
NO	NO	Normally open
PB	pb	Pull box
PEC	pec	Photoelectric control (Type Ⅰ, Ⅱ, Ⅲ, Ⅳ or Ⅴ as shown)
PED	ped	Pedestrian
PEU	peu	Photoelectric unit
PPB	ppb	Pedestrian push button
RL		Relocated equipment
RM	rm	Ramp metering
SB	sb	Slip base
SIC	sic	Signal interconnect cable
SIG	sig	Signal
SMA	sma	Signal mast arm
SNS	sns	Street name sign
SP	sp	Service point
TDC	tdc	Telephone demarcation cabinet
TMS	tms	Traffic monitoring station
TOS	tos	Traffic Operations System
VEH	veh	Vehicle
XFMR	xfmr	Transformer
COMM	comm	Communication
RWIS	rwis	Roadway weather information system

SOFFIT AND WALL MOUNTED LUMINAIRES

Pendant, 70 W HPS unless otherwise specified.

Flush, 70 W HPS unless otherwise specified.

Wall surface, 70 W HPS unless otherwise specified.

Existing soffit or wall luminaire to remain unmodified.

Existing soffit or wall luminaire to be modified as specified.

NOTE:

Arrow indicates "street side" of luminaire.

STATE OF CALIFORNIA
DEPARTMENT OF TRANSPORTATION

ELECTRICAL SYSTEMS (SYMBOLS AND ABBREVIATIONS)

NO SCALE

RSP ES-1A DATED OCTOBER 5, 2007 SUPERSEDES STANDARD PLAN ES-1A DATED MAY 1, 2006 - PAGE 400 OF THE STANDARD PLANS BOOK DATED MAY 2006.

REVISED STANDARD PLAN RSP ES-1A

2006 REVISED STANDARD PLAN RSP ES-1A

DIST	COUNTY	ROUTE	POST MILES TOTAL PROJECT	SHEET NO.	TOTAL SHEETS
03	Sac	99	0.1/12.0	68	73

REGISTERED ELECTRICAL ENGINEER

October 5, 2007
PLANS APPROVAL DATE

REGISTERED PROFESSIONAL ENGINEER Jeffery G. McRae No. E14512 Exp. 6-30-08 ELECTRICAL STATE OF CALIFORNIA

The State of California or its officers or agents shall not be responsible for the accuracy or completeness of electronic copies of this plan sheet.

To accompany plans dated 5-24-10

CONDUIT

PROPOSED	EXISTING	
		Lighting Conduit, unless otherwise indicated or noted
		Traffic signal conduit
C	c	Communication conduit
T	t	Telephone conduit
F	f	Fire alarm conduit
FO	fo	Fiber optic conduit
		Conduit termination (RSP ES-9A C)
R	r	Conduit riser in/on structure or service pole

SERVICE EQUIPMENT

PROPOSED	EXISTING	
OH	oh	Overhead lines
U	U	Wood pole "U" indicates utility owned
		Pole guy with anchor
		Utility transformer - ground mounted
III		Service equipment enclosure type
		Service equipment enclosure door indicates front of enclosure
T	t	Telephone demarcation cabinet

POLE-MOUNTED SERVICE DESIGNATION

Type of installation

TYPE H SERVICE - 28'-10" ← Pole height above grade

ILLUMINATED OVERHEAD SIGN

PROPOSED	EXISTING	
		Overhead sign - Single post
		Overhead sign - Two post
		Overhead sign - Mounted on structure
		Overhead sign with electrolier

SIGNAL EQUIPMENT

PROPOSED	EXISTING	
		Pedestrian signal face
		Pedestrian push button post
		Pedestrian barricade
		Vehicle signal face (with backplate, 3-Section: red, yellow and green)
		Vehicle signal face with angle visors
PV	PV	Modifications of basic symbols: "L" Indicates all non-arrow sections louvered "LG" Indicates louvered green section only "PV" indicates 12" programmed visibility sections "8" indicates all 8" sections (only when specified)
		Type 15TS and Vehicle signal face
		Vehicle signal face with red, yellow and green left arrow sections
		Vehicle signal face with red and yellow sections and up green arrow
		Vehicle signal face (5 Section) with red, yellow and green sections and yellow and green right arrows
		Type 1 Standard and attached vehicle signal faces
		Standard with signal mast arm only and attached vehicle signal faces and internally illuminated street name sign
		Type 33 Standard, Left-turn vehicle signal face and sign
		Standard with luminaire and signal mast arms and attached vehicle signal faces
		Cantilever flashing beacon Type 9 Frame, with a sign unless otherwise specified or indicated
		Type 15-FBS Standard with two vehicle signal face sections with lens, backplate and visor with a sign
R	Y	Flashing beacon. One vehicle signal face section with lens, backplate and visor. "R" indicates red indication, "Y" indicates yellow indication
		Controller assembly. Door indicates front of cabinet

SIGNAL EQUIPMENT Cont

PROPOSED	EXISTING	
		Guard post
		Type 1 Standard with "Meter On" sign
		Emergency Vehicle detector

NOTES:

1. All signal sections shall be 12" unless shown otherwise.
2. Signal heads shall be provided with backplates unless shown otherwise.
3. Signal indication shall be LED.

STATE OF CALIFORNIA
DEPARTMENT OF TRANSPORTATION

ELECTRICAL SYSTEMS (SYMBOLS AND ABBREVIATIONS)

NO SCALE

RSP ES-1B DATED OCTOBER 5, 2007 SUPERCEDES STANDARD PLAN ES-1B DATED MAY 1, 2006 - PAGE 401 OF THE STANDARD PLANS BOOK DATED MAY 2006.

REVISED STANDARD PLAN RSP ES-1B

2006 REVISED STANDARD PLAN RSP ES-1B

7-10-07

DIST	COUNTY	ROUTE	POST MILES TOTAL PROJECT	SHEET NO.	TOTAL SHEETS
03	Sac	99	0.1/12.0	69	73

REGISTERED ELECTRICAL ENGINEER

October 5, 2007
PLANS APPROVAL DATE

REGISTERED PROFESSIONAL ENGINEER
Jeffery G. McRae
No. E14512
Exp. 6-30-08
ELECTRICAL
STATE OF CALIFORNIA

The State of California or its officers or agents shall not be responsible for the accuracy or completeness of electronic copies of this plan sheet.

To accompany plans dated 5-24-10

EQUIPMENT IDENTIFICATION

ILLUMINATED SIGN IDENTIFICATION NUMBER:

Sign No. 12345 — Sign number - Place on post or structure

10 ISL SCI 1.0

- 1.0 — Transformer rating (kVA)
- SCI — Lighting control type
- ISL — Number and type of fixtures

Do NOT place on standard or structure

ELECTROLIER OR EQUIPMENT IDENTIFICATION NUMBER:

12345 - 15'-0"

- 15'-0" — Mast arm length, if shown. Do not place on standard or structure.
- 12345 — Equipment number - Place on standard or structure. Existing equipment numbers are shown in parenthesis

CONDUIT AND CONDUCTOR IDENTIFICATION:

1½"C, 2#10, 15#14, 2 DLC

- 2#10, 15#14, 2 DLC — Number and size of conductors and cables
- 1½"C — Size of conduit in inches

Ø1, Ø2, Ø2P, etc.	Traffic phase identification for signal faces, detectors and phase diagrams
1 2 3	Project note numbers
A B C	Equipment description, installation or item numbers
1 2 3	Conduit run numbers

SIGNAL AND LIGHTING STANDARD (TYPICAL DESIGNATION):

19A - 3 - 100

- 100 — Wind velocity = 100 mph
- 3 — Case 3 arm loading
- 19A — Standard type
- Standard Plan sheet number
- Detail number or letter

MISCELLANEOUS EQUIPMENT

PROPOSED	EXISTING	
CMS	cms	Changeable message sign
		Closed circuit television camera
		Highway advisory radio pole and antenna
EMS	ems	Extinguishable message sign
M V	m v	Detection device M = Microwave sensor V = Video image sensor

WIRING DIAGRAM LEGEND

P	Pole
CB	Circuit breaker
A	Ampere
V	Volt
M	Metered
UM	Unmetered
NB	Neutral bus
GB	Ground bus
G	Equipment grounding conductor
N	Grounded conductor (Neutral)

- External conductor
- Conductor or bus
- Tie point
- Contactor coil
- Contactor, Contact NO
- Terminal blocks
- Contactor, Contact NC
- Enclosure bond
- Grounding electrode
- Circuit breaker
- Receptacle

PULL BOXES

PROPOSED EXISTING

Pull box-No. 5 unless otherwise indicated or noted.

3 — 9A(21)

Pull box-Additional designations or descriptions

3	= No. 3½ pull box
5	= No. 5 pull box
6	= No. 6 pull box
7	= No. 7 (Ceiling pull box)
8	= No. 8 (Pendant soffit pull box)
9	= No. 9 pull box
9A	= No. 9A pull box

(C) = Communications pull box
(E) = Pull box with extension
(S) = Sprinkler control pull box
(21) = Anchor bolts and conduit for future installation of Type 21 Standard
(T) = Traffic pull box

VEHICLE DETECTORS

5 J 9 U

- U = Upper
- L = Lower
- Slot number in input file
- Input file (I or J)
- Phase

PROPOSED EXISTING

- Type A detector loop. Outline of sawcut shown.
- Type B detector loop. Outline of sawcut shown.
- Type C detector loop. Outline of sawcut shown.
- Type D detector loop. Outline of sawcut shown.
- Type E detector loop. Outline of sawcut shown.
- Type Q detector loop. Outline of sawcut shown.
- Magnetic detector
- Detector handhole (DH / dh)
- Microwave or video detection zone

STATE OF CALIFORNIA
DEPARTMENT OF TRANSPORTATION

ELECTRICAL SYSTEMS (SYMBOLS AND ABBREVIATIONS)

NO SCALE

RSP ES-1C DATED OCTOBER 5, 2007 SUPERCEDES STANDARD PLAN ES-1C DATED MAY 1, 2006 - PAGE 402 OF THE STANDARD PLANS BOOK DATED MAY 2006.

REVISED STANDARD PLAN RSP ES-1C

2006 REVISED STANDARD PLAN RSP ES-1C

7-10-07

DIST	COUNTY	ROUTE	POST MILES TOTAL PROJECT	SHEET NO.	TOTAL SHEETS
03	Sac	99	0.1/12.0	70	73

REGISTERED ELECTRICAL ENGINEER

October 5, 2007
PLANS APPROVAL DATE

REGISTERED PROFESSIONAL ENGINEER Jeffery G. McRae No. E14512 Exp. 6-30-08 ELECTRICAL STATE OF CALIFORNIA

The State of California or its officers or agents shall not be responsible for the accuracy or completeness of electronic copies of this plan sheet.

To accompany plans dated 5-24-10

2006 REVISED STANDARD PLAN RSP ES-5A

LOOP INSTALLATION PROCEDURE

1. Loops shall be centered in lanes.
2. Saw slots in pavement for loop conductors as shown in details.
3. Distance between side of loop and a lead-in saw cut from adjacent detectors shall be 2'-0" minimum. Distance between lead-in saw cuts shall be 6" minimum.
4. Bottom of saw slot shall be smooth with no sharp edges.
5. Slots shall be washed until clean, blown out and thoroughly dried before installing loop conductors.
6. Adjacent loops on the same sensor unit channel shall be wound in opposite directions.
7. Identify and tag loop circuit pairs in the pull box with loop number, start (S) and finish (F) of conductor. Identify and tag lead-in-cable with sensor number and phase.
8. Install loop conductor in slot using a 3/16" to 1/4" thick wood paddle. Hold loop conductors with wood paddles (at the bottom of the sawed slot) during sealant placement.
9. No more than 2 twisted pairs shall be installed in one sawed slot.
10. Allow additional 5'-0" of slack length of conductor for the lead-in run to pull box.
11. The additional length of each conductor for each loop shall be twisted together into a pair (6 turns per 3'-4" minimum) before being placed in the slot and conduit leading to pull box.
12. Test each loop circuit for continuity, circuit resistance and insulation resistance at the pull box before filling slots.
13. Fill slots as shown in details.
14. Splice loop conductors to lead-in-cable. Splices shall be soldered.
15. End of lead-in-cable and Type 2 loop conductor shall be waterproofed prior to installing in conduit to prevent moisture from entering the cable.
16. Lead-in-cable shall not be spliced between the pull box and the controller cabinet terminals.
17. Test each loop circuit for continuity, circuit resistance and insulation resistance at the controller cabinet location.
18. Where loop conductors are not to be spliced to a lead-in-cable, the ends of the conductors shall be taped and waterproofed with electrical insulating coating.

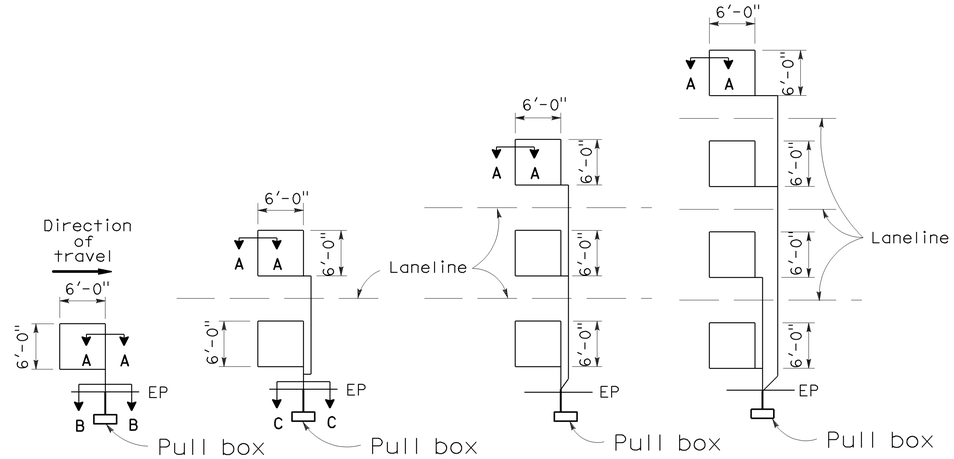

TYPE 1A INSTALLATION | TYPE 2A INSTALLATION | TYPE 3A INSTALLATION | TYPE 4A INSTALLATION

SAWCUT DETAILS

(Type A loop detector configurations illustrated)

1. 1A thru 4A = 1 Type A loop configuration in each lane.
2. 1B thru 4B = 1 Type B loop configuration in each lane.
3. 1C = 1 Type C loop configuration entering lanes as required.
4. 1D thru 4D = 1 Type D loop configuration in each lane.
5. 1E thru 4E = 1 Type E loop configuration in each lane.
6. 1Q thru 4Q = 1 Type Q loop configuration in each lane.
   (Use Type A, B, C, D, E or Q loop detector configurations only when specified or shown on plans)

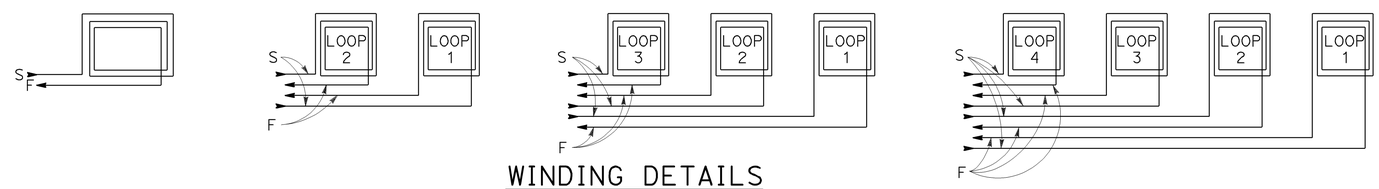

WINDING DETAILS

See Notes 6 and 7

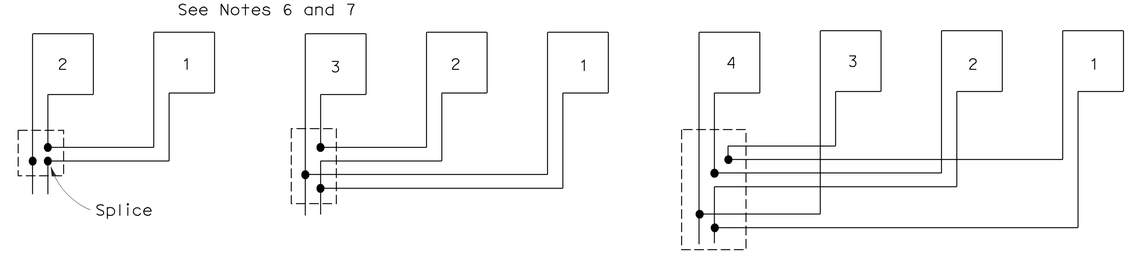

TYPICAL LOOP CONNECTIONS

(Dashed lines represent the pull box)

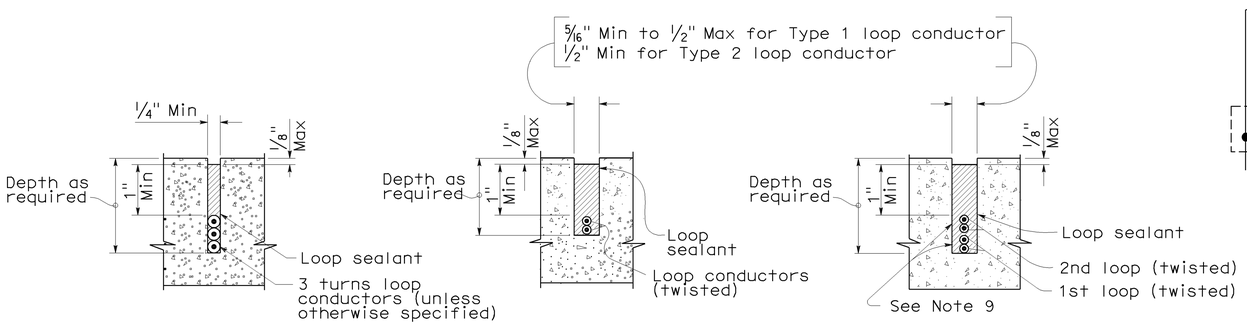

SECTION A-A | SECTION B-B | SECTION C-C

SLOT DETAILS - TYPE 1 AND TYPE 2 LOOP CONDUCTOR

STATE OF CALIFORNIA
DEPARTMENT OF TRANSPORTATION

ELECTRICAL SYSTEMS (DETECTORS)

NO SCALE

RSP ES-5A DATED OCTOBER 5, 2007 SUPERCEDES STANDARD PLAN ES-5A
DATED MAY 1, 2006 - PAGE 423 OF THE STANDARD PLANS BOOK DATED MAY 2006.

REVISED STANDARD PLAN RSP ES-5A

8-17-07

DIST	COUNTY	ROUTE	POST MILES TOTAL PROJECT	SHEET No	TOTAL SHEETS
03	Sac	99	0.1/12.0	71	73

REGISTERED CIVIL ENGINEER 5-17-10 DATE

5-24-10
PLANS APPROVAL DATE

REGISTERED PROFESSIONAL ENGINEER LEWIS L SHEN No. 56921 Exp. 6-30-11 CIVIL STATE OF CALIFORNIA

The State of California or its officers or agents shall not be responsible for the accuracy or completeness of electronic copies of this plan sheet.

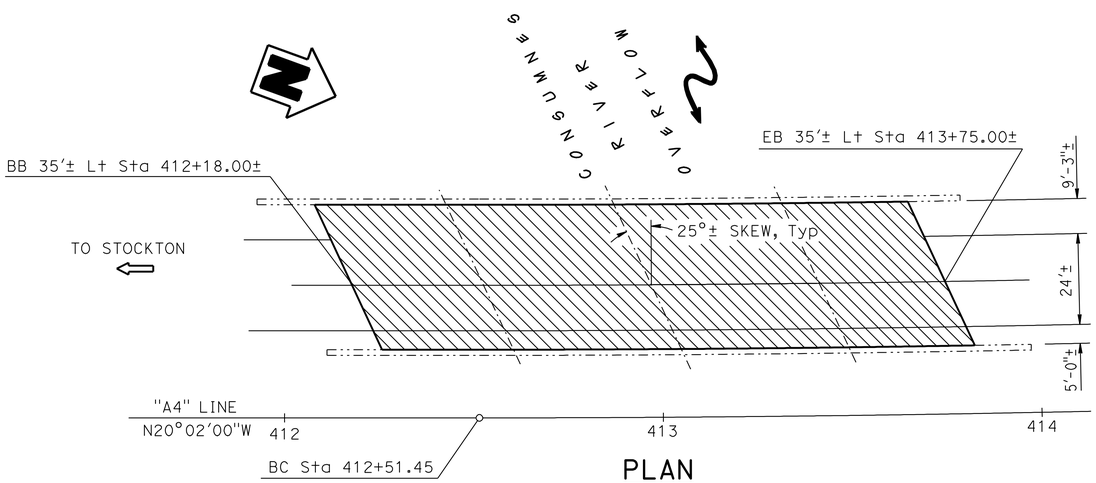

PLAN
1" = 20'

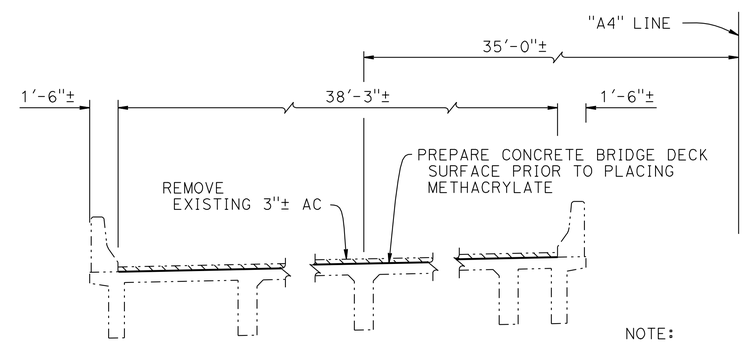

TYPICAL SECTION
1/4" = 1'-0"

NOTE:
For details not shown, see "MISCELLANEOUS DETAILS" sheet

CONSUMNES RIVER OVERFLOW BRIDGE
Br. No. 24-0022L, Rte 99, PM 7.5

QUANTITIES

REMOVE ASPHALT CONCRETE SURFACING	6,032	SQFT
REMOVE UNSOUND CONCRETE	3	CF
CLEAN BRIDGE DECK	6,032	SQFT
RAPID SETTING CONCRETE (PATCH)	3	CF
TREAT BRIDGE DECK	6,032	SQFT
FURNISH BRIDGE DECK TREATMENT MATERIAL	81	GAL

LEGEND:

- Indicates Existing 3"± AC to be removed. Methacrylate Bridge Deck
- Indicates Existing Structure Approach to be removed
- Indicates Existing Structure
- (1) - New Structure Approach Slab Type R(D30)
- Indicates location of Joint Seal replacement

NOTE:
For "GENERAL NOTES", see "MISCELLANEOUS DETAILS" sheet

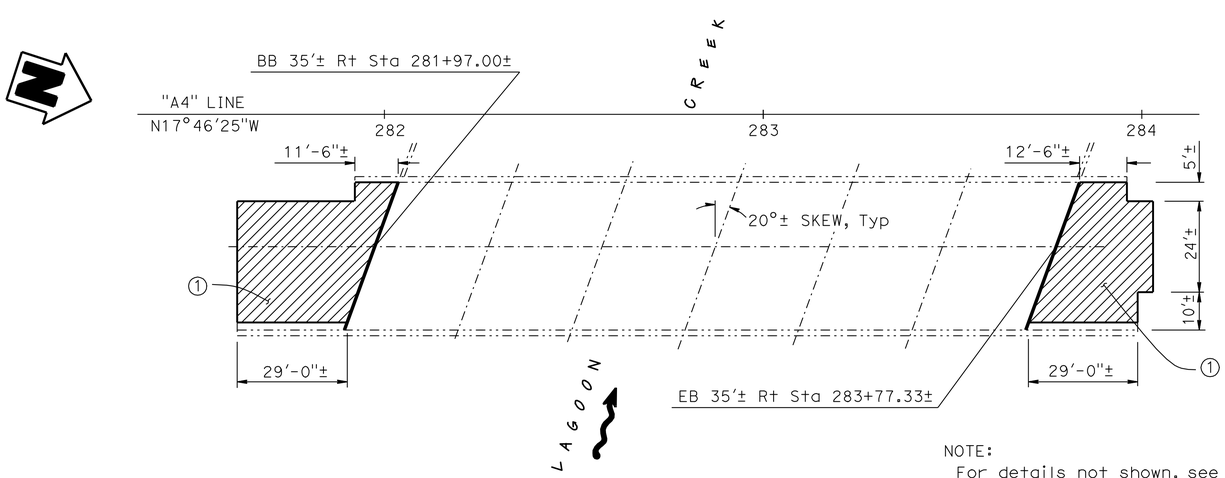

NOTE:
For details not shown, see "MISCELLANEOUS DETAILS" sheet

PLAN
1" = 20'

LAGOON CREEK BRIDGE
Br. No. 24-0045R, Rte 99, PM 4.98

QUANTITIES

AGGREGATE BASE (APPROACH SLAB)	9	CY
STRUCTURAL CONCRETE, APPROACH SLAB (TYPE R)	90	CY
JOINT SEAL (MR 1")	43	LF
JOINT SEAL (MR 1½")	43	LF

INDEX TO PLANS

Sheet No.	Title
1	GENERAL PLAN
2	MISCELLANEOUS DETAILS
3	STRUCTURE APPROACH TYPE R(30D)

STANDARD PLANS DATED MAY 2006

A10A	ACRONYMS AND ABBREVIATIONS (A-L)
A10B	ACRONYMS AND ABBREVIATIONS (M-Z)
A10C	SYMBOLS (SHEET 1 OF 2)
A10D	SYMBOLS (SHEET 2 OF 2)
RSP B6-21	JOINT SEALS (MAXIMUM MOVEMENT RATING = 2")

STANDARD PLAN SHEET NO.
DETAIL NO.

NOTE:
THE CONTRACTOR SHALL VERIFY ALL CONTROLLING FIELD DIMENSIONS BEFORE ORDERING OR FABRICATING ANY MATERIAL.

Joseph E Downing
DESIGN ENGINEER

	BY	CHECKED			
DESIGN	Lewis L Shen	Joey M Aquino III	LOAD FACTOR DESIGN		
DETAILS	Nancy C Gwynn	Joey M Aquino III	LAYOUT	Lewis L Shen	Joey M Aquino III
QUANTITIES	Lewis L Shen	Joey M Aquino III	SPECIFICATIONS	Iwa Huang	PLANS AND SPECS COMPARED Iwa Huang

ORIGINAL SCALE IN INCHES FOR REDUCED PLANS 0 1 2 3

STATE OF CALIFORNIA
DEPARTMENT OF TRANSPORTATION

DIVISION OF ENGINEERING SERVICES
STRUCTURE DESIGN
DESIGN BRANCH 3

CU 03252
EA 1E6701

BRIDGE NO. as noted
POST MILE as noted

DISREGARD PRINTS BEARING EARLIER REVISION DATES 2-4-10 5-6-10

REVISION DATES

SHEET 1 OF 3

BRIDGE DECK & APPROACH SLAB REHAB
ROUTE 99 BRIDGES
GENERAL PLAN

DIST	COUNTY	ROUTE	POST MILES TOTAL PROJECT	SHEET No	TOTAL SHEETS
03	Sac	99	0.1/12.0	72	73

REGISTERED CIVIL ENGINEER 5-17-10 DATE

5-24-10
PLANS APPROVAL DATE

REGISTERED PROFESSIONAL ENGINEER LEWIS L SHEN No. 56921 Exp. 6-30-11 CIVIL STATE OF CALIFORNIA

The State of California or its officers or agents shall not be responsible for the accuracy or completeness of electronic copies of this plan sheet.

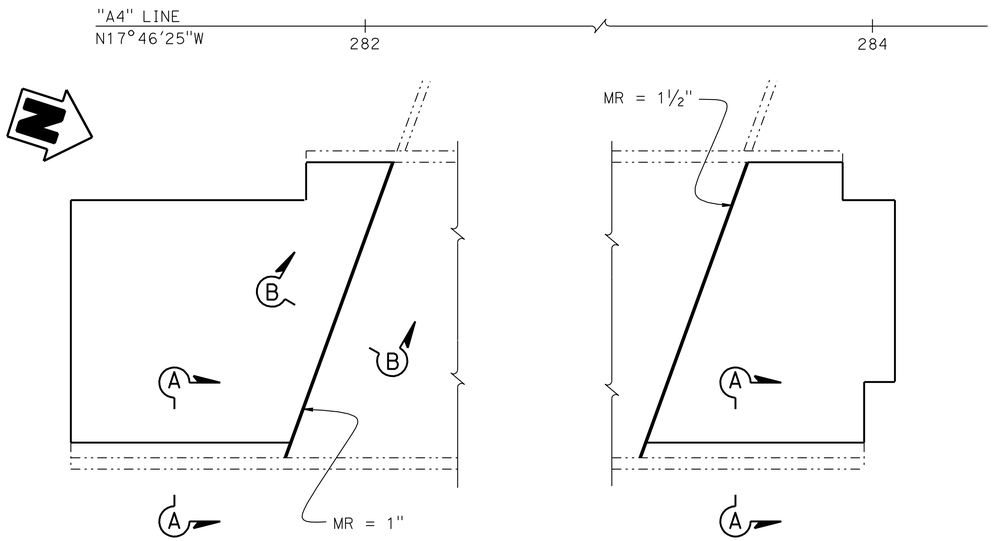

PART PLAN

1" = 20'

LAGOON CREEK BRIDGE

Br. No. 24-0045R, Rte 99, PM 4.98

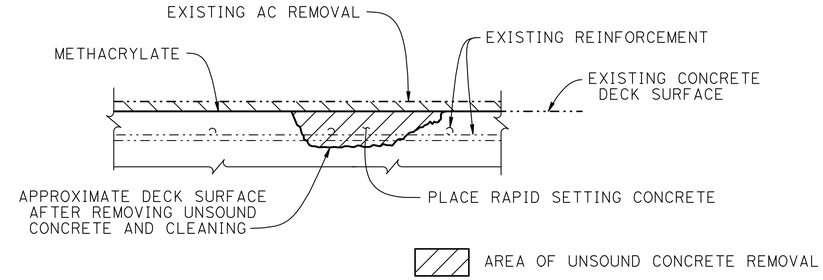

DECK REPAIR DETAIL

No Scale

LOCATIONS TO BE DETERMINED BY THE ENGINEER. REINFORCEMENT MAY BE ENCOUNTERED DURING DECK CONCRETE REMOVAL

BRIDGE DECK REPAIR TABLE

TOTAL DECK AREA ft^2	APPROXIMATE AREA DAMAGED (%)	APPROXIMATE DEPTH (in)	REMOVE UNSOUND CONCRETE ft^3	RAPID SETTING CONCRETE PATCH ft^3
6,032	1	½	3.0	3.0

CONSUMNES RIVER OVERFLOW BRIDGE

Br. No. 24-0022L, Rte 99, PM 7.5

GENERAL NOTES
LOAD FACTOR DESIGN

REINFORCED CONCRETE:

fy = 60,000 psi
f'c = 3,600 psi

NOTE:
For details not shown, see "GENERAL PLAN"

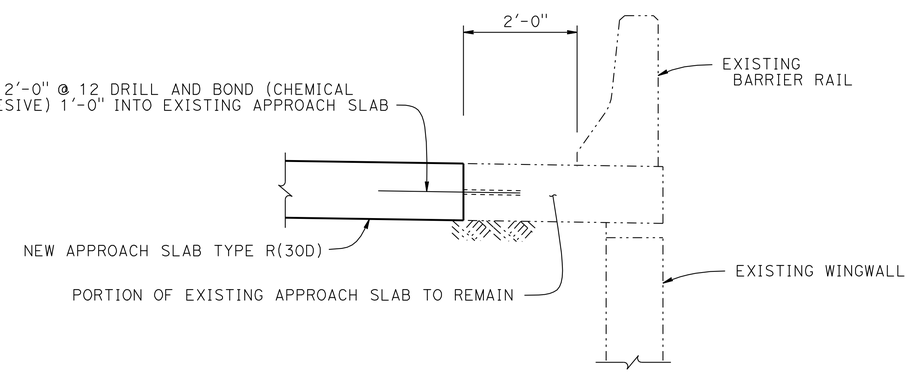

SECTION A - A

¾" = 1'-0"

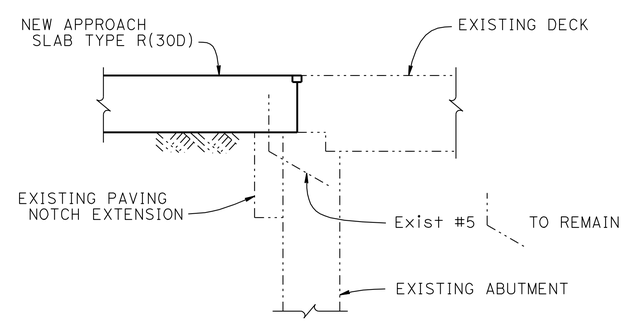

NOTE:
Abutment 1 shown, Abutment 7 similar

SECTION B - B

¾" = 1'-0"

NOTE:
THE CONTRACTOR SHALL VERIFY ALL CONTROLLING FIELD DIMENSIONS BEFORE ORDERING OR FABRICATING ANY MATERIAL.

	BY	CHECKED
DESIGN	Lewis L Shen	Joey M Aquino III
DETAILS	Nancy C Gwynn	Joey M Aquino III
QUANTITIES	Lewis L Shen	Joey M Aquino III

STATE OF CALIFORNIA
DEPARTMENT OF TRANSPORTATION

DIVISION OF ENGINEERING SERVICES
STRUCTURE DESIGN
DESIGN BRANCH 3

BRIDGE NO. as noted
POST MILE as noted

BRIDGE DECK & APPROACH SLAB REHAB
ROUTE 99 BRIDGES
MISCELLANEOUS DETAILS

STRUCTURES DESIGN DETAIL SHEET (ENGLISH) (REV. 10/25/05)

ORIGINAL SCALE IN INCHES FOR REDUCED PLANS 0 1 2 3

CU 03252
EA 1E6701

DISREGARD PRINTS BEARING EARLIER REVISION DATES

REVISION DATES: 3-18-10 3-18-10 4-15-10

SHEET 2 OF 3

FILE => 03-1e6701-b-miscdet.dgn

USERNAME => s130875 DATE PLOTTED => 19-MAY-2010 TIME PLOTTED => 11:18

DIST.	COUNTY	ROUTE	MILE POST TOTAL PROJECT	SHEET NO.	TOTAL SHEETS
03	Sac	99	0.1/12.0	73	73

REGISTERED ENGINEER - CIVIL 5-17-10

5-24-10
PLANS APPROVAL DATE

REGISTERED PROFESSIONAL ENGINEER LEWIS L SHEN No. 56921 Exp. 6-30-11 CIVIL STATE OF CALIFORNIA

The State of California or its officers or agents shall not be responsible for the accuracy or completeness of electronic copies of this plan sheet.

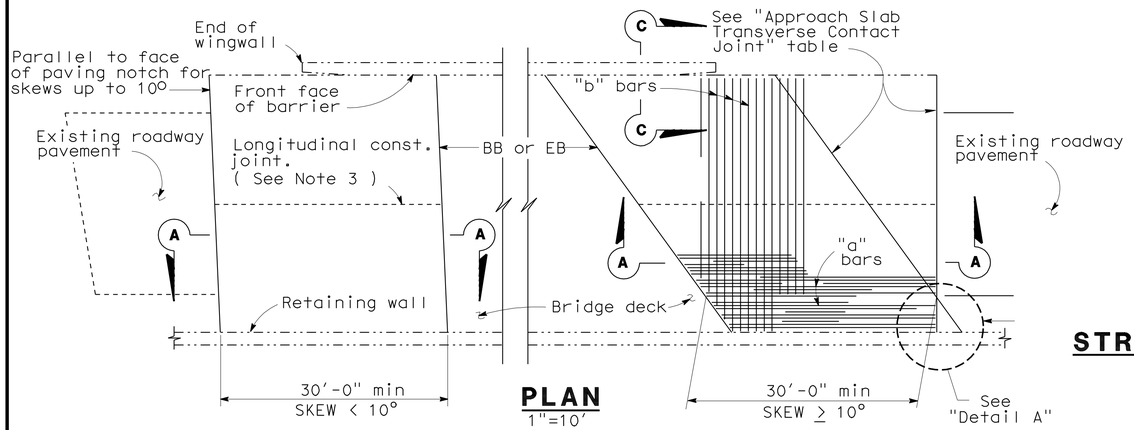

PLAN
1"=10'

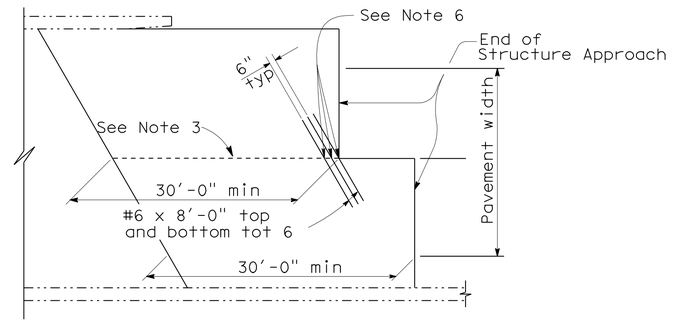

STRUCTURE APPROACH - END STAGGER DETAIL
No Scale

APPROACH SLAB TRANSVERSE CONTACT JOINT		
APPROACH SKEW	WITH AC ROADWAY PAVEMENT	WITH PCC ROADWAY PAVEMENT
< 10°	Parallel to face of paving notch	Parallel to face of paving notch
10° - 45°	Parallel to face of P N use (Detail A)	Stagger lines 24' to 36' apart
> 45°	Parallel to face of P N use (Detail A)	Stagger at each lane line

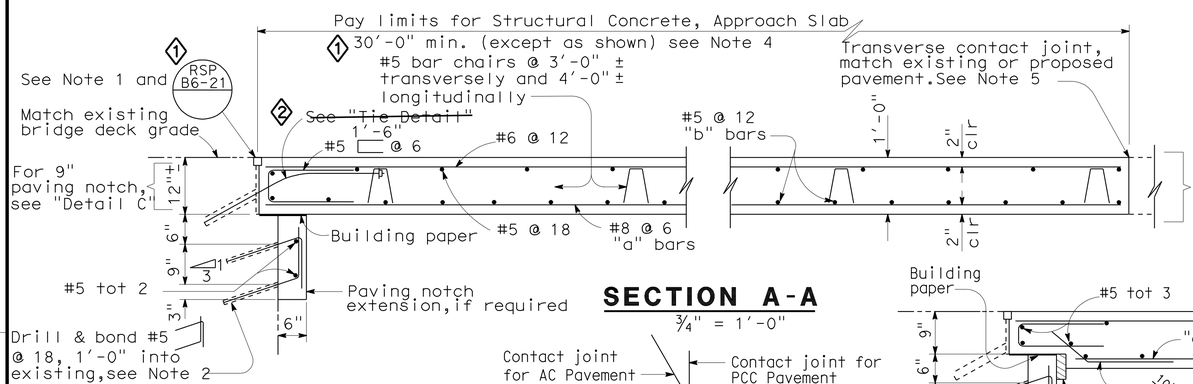

SECTION A-A
¾" = 1'-0"

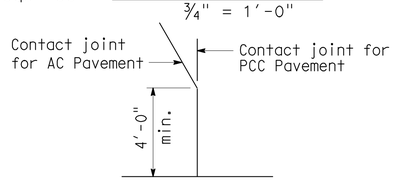

DETAIL A
No Scale

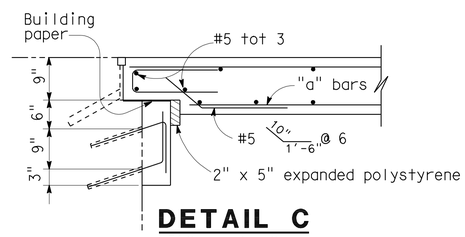

DETAIL C
¾" = 1'-0"

NOTE: For details not shown, see "Section A-A".

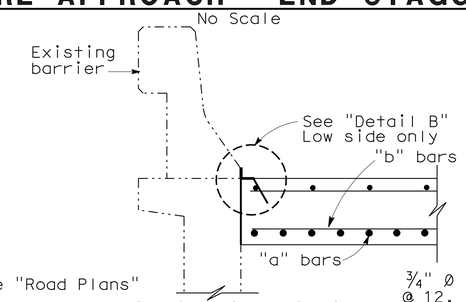

SECTION C-C
¾" = 1'-0"

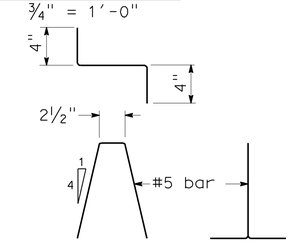

BAR CHAIR DETAIL
1½" = 1'-0"

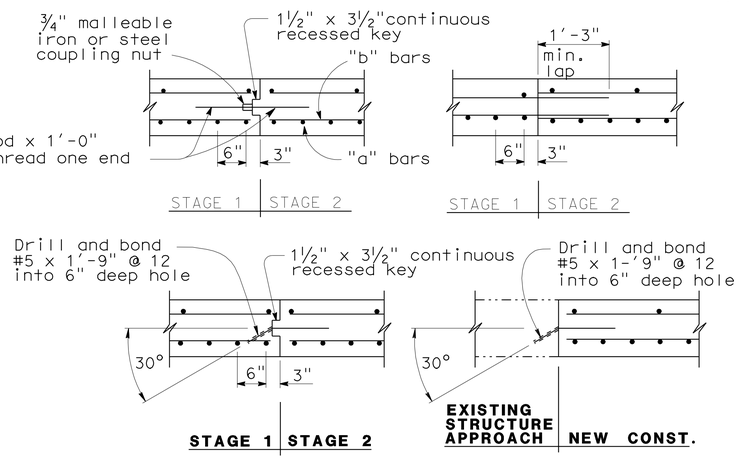

LONGITUDINAL CONSTRUCTION JOINT ALTERNATIVES
¾" = 1'-0"

NOTES:

1. For details not shown or noted, see Structure Plans. Adjust bar reinforcement to clear a sawcut for sealed joint, when required.
2. Space to avoid existing prestress anchorages and main reinforcement.
3. Longitudinal construction joints, when permitted by the Engineer, shall be located on lane lines.
4. Transverse contact joint shall be a minimum of 5'-0" from an existing or constructed weakened plane joint.
5. For transverse contact joint with new PCC paving, refer to Standard Plan P10.
6. Couplers are required for stage construction.
7. End angle or plate at beginning of barrier transition, end of wingwall or end of structure approach as applicable.

SPECIAL DETAIL

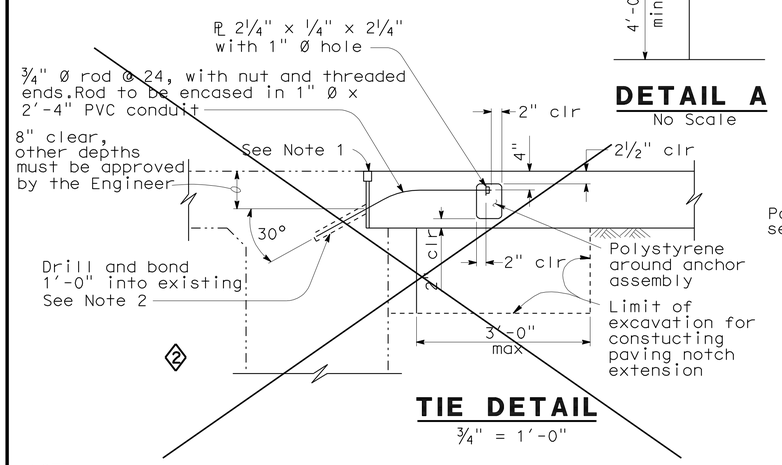

TIE DETAIL
¾" = 1'-0"

NOTE:
THE CONTRACTOR SHALL VERIFY ALL CONTROLLING FIELD DIMENSIONS BEFORE ORDERING OR FABRICATING ANY MATERIAL.

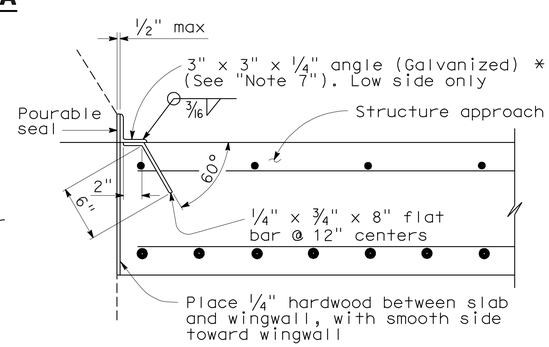

*(TO BE USED WITH TYPE 25 OR TYPE 27 CONCRETE BARRIER)

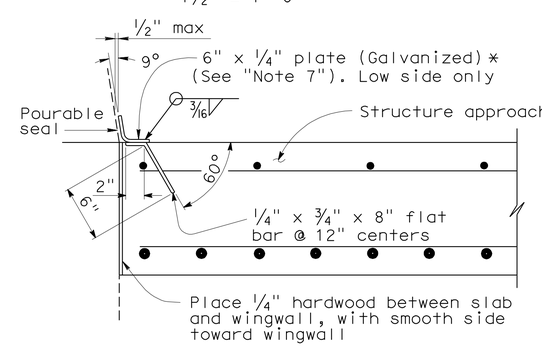

*(TO BE USED WITH TYPE 732 OR TYPE 736 CONCRETE BARRIER)

DETAIL B
1½" = 1'-0"

REVISED STANDARD DRAWING

RELEASE DATE 3/14/05	DESIGN	BY M.TRAFFALIS	CHECKED E.THORKILDSEN	RELEASED BY
FILE NO. xs3-140e	DETAILS	BY R.YEE	CHECKED E.THORKILDSEN	
	SUBMITTED	BY M.HA	DRAWING DATE Revised	OFFICE CHIEF

1 Note revised
2 Detail not used

STATE OF CALIFORNIA
DEPARTMENT OF TRANSPORTATION

DIVISION OF ENGINEERING SERVICES 3

BRIDGE NO. as noted
MILE POST as noted

BRIDGE DECK & APPROACH SLAB REHAB
ROUTE 99 BRIDGES
STRUCTURE APPROACH TYPE R(30D)

DS OSD 2147A (ENGLISH) (REV. X/XX/XX)

ORIGINAL SCALE IN INCHES FOR REDUCED PLANS 0 1 2 3

CU 03252
EA 1E6701

DISREGARD PRINTS BEARING EARLIER REVISION DATES 2-24-10

REVISION DATES (PRELIMINARY STAGE ONLY)

SHEET 3 OF 3

USERNAME => s130875

03-1e6701-c-appslb01.dgn

DATE PLOTTED => 19-MAY-2010 TIME PLOTTED => 11:18