SARRA-NH-P050(125)E

Dist	COUNTY	ROUTE	POST MILES TOTAL PROJECT	SHEET No.	TOTAL SHEETS
03	ED	50	66.7/67.8	1	71

STATE OF CALIFORNIA

DEPARTMENT OF TRANSPORTATION

PROJECT PLANS FOR CONSTRUCTION ON

STATE HIGHWAY

IN EL DORADO COUNTY
NEAR MEYERS
FROM 0.2 MILE EAST
TO 1.3 MILES EAST OF ECHO SUMMIT

TO BE SUPPLEMENTED BY STANDARD PLANS DATED MAY 2006

INDEX OF PLANS

SHEET No.	DESCRIPTION
1	TITLE AND LOCATION MAP
2-3	TYPICAL CROSS SECTIONS
4-7	LAYOUTS
8-10	CONSTRUCTION DETAILS
11-31	DRAINAGE PLANS, PROFILES, DETAILS AND QUANTITIES
32	CONSTRUCTION AREA SIGNS
33	TRAFFIC HANDLING PLAN
34-39	MOTORIST INFORMATION PLANS AND QUANTITIES
40	SUMMARY OF QUANTITIES
41-42	ELECTRICAL PLANS
43-58	REVISED AND NEW STANDARD PLANS

STRUCTURE PLANS

59-71	ECHO SUMMIT BARRIER RAIL (REPLACE)

THE STANDARD PLANS LIST APPLICABLE TO THIS CONTRACT IS INCLUDED IN THE NOTICE TO BIDDERS AND SPECIAL PROVISIONS BOOK.

LOCATION MAP

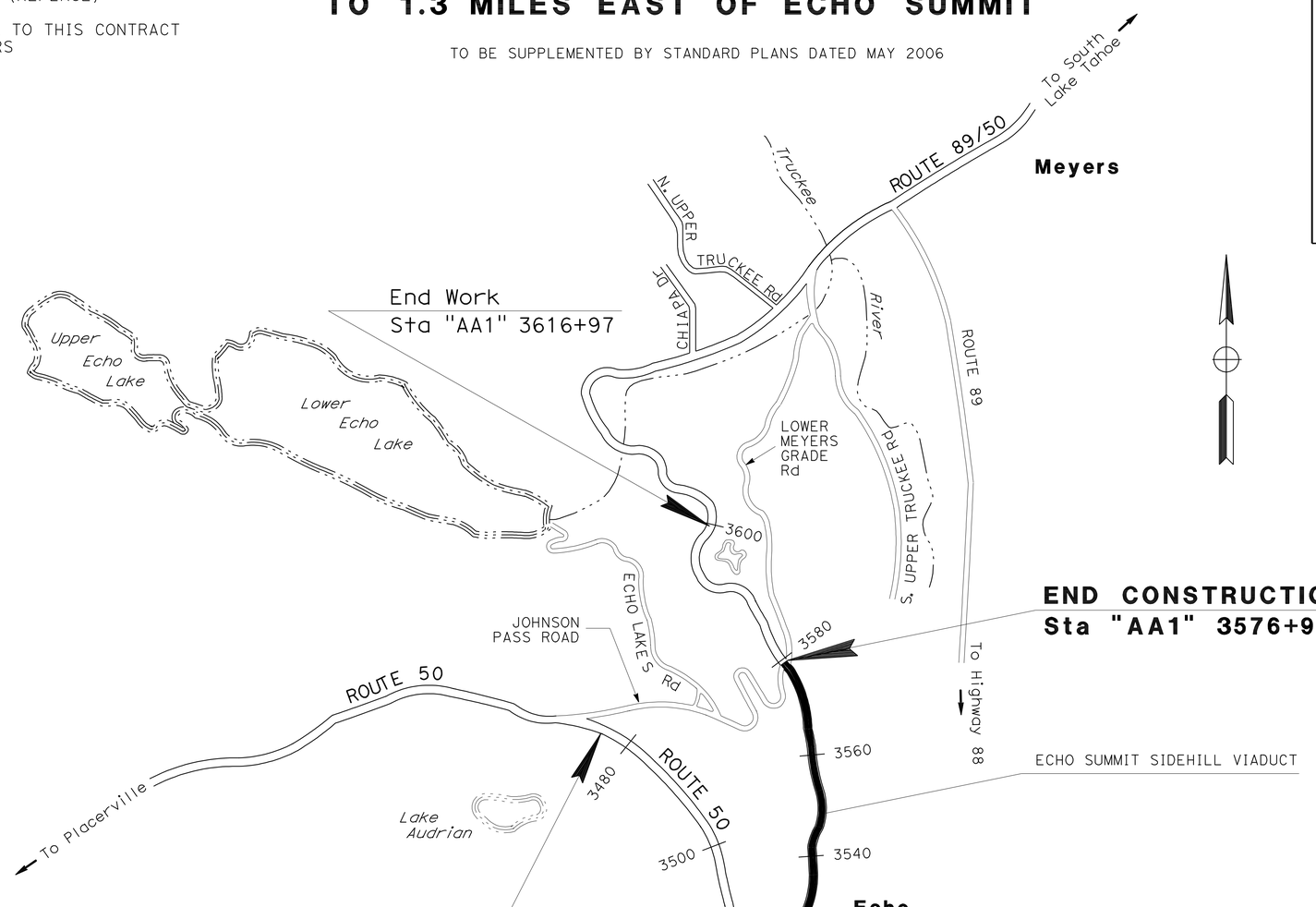

NO SCALE

THE CONTRACTOR SHALL POSSESS THE CLASS (OR CLASSES) OF LICENSE AS SPECIFIED IN THE "NOTICE TO BIDDERS."

John D. Welch 3-29-10
PROJECT ENGINEER DATE
REGISTERED CIVIL ENGINEER

July 26, 2010
PLANS APPROVAL DATE

REGISTERED PROFESSIONAL ENGINEER JOHN D. WELCH No. 58303 Exp. 6/30/10 CIVIL STATE OF CALIFORNIA

THE STATE OF CALIFORNIA OR ITS OFFICERS OR AGENTS SHALL NOT BE RESPONSIBLE FOR THE ACCURACY OR COMPLETENESS OF SCANNED COPIES OF THIS PLAN SHEET.

PROJECT MANAGER MIKE COOK
DESIGN ENGINEER MASTRI ALVANDI

CONTRACT No.	03-1E14U4
PROJECT ID:	0300000251

LAST REVISION 00-00-00
DATE PLOTTED => 22-SEP-2010
TIME PLOTTED => 05:55

Dist	COUNTY	ROUTE	POST MILES TOTAL PROJECT	SHEET No.	TOTAL SHEETS
03	ED	50	66.7/67.8	2	71

John D. Welch 3-29-10
REGISTERED CIVIL ENGINEER DATE

7-26-10
PLANS APPROVAL DATE

REGISTERED PROFESSIONAL ENGINEER JOHN D. WELCH No. 58303 Exp. 6/30/10 CIVIL STATE OF CALIFORNIA

THE STATE OF CALIFORNIA OR ITS OFFICERS OR AGENTS SHALL NOT BE RESPONSIBLE FOR THE ACCURACY OR COMPLETENESS OF ELECTRONIC COPIES OF THIS PLAN SHEET.

DESIGN DESIGNATION (ROUTE 50, PM 66.6/67.8)

V = 55 MPH
2011 ADT = 9,290
2021 ADT = 10,500
DHV (2021) = 1,700
D = 65%
T = 3.0 %
$T.I._{10}$ = 8.5

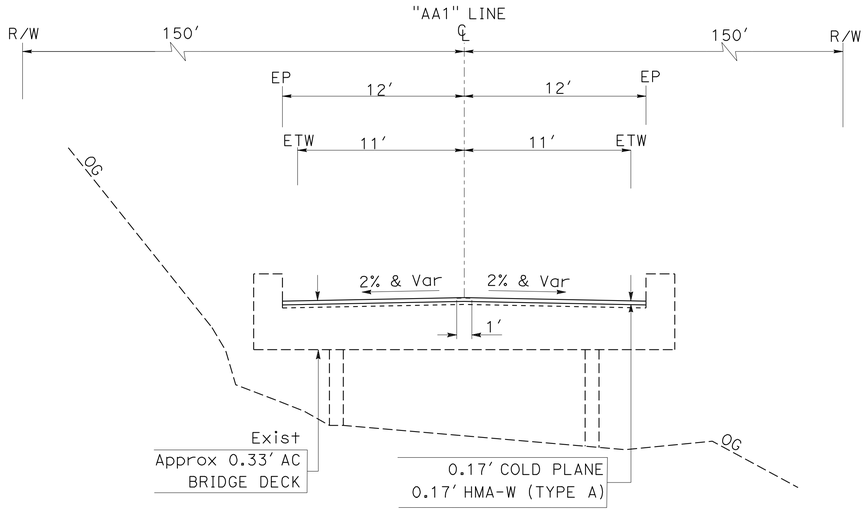

ROUTE 50 VIADUCT

"AA1" 3553+87.8 TO 3555+13.2 Lt/Rt

NOTES:

1. DIMENSIONS OF THE PAVEMENT STRUCTURES (STRUCTURAL SECTIONS) ARE SUBJECT TO TOLERANCES SPECIFIED IN THE STANDARD SPECIFICATIONS.
2. SUPERELEVATION AS SHOWN OR AS DIRECTED BY THE ENGINEER.
3. FOR DIMENSIONS OF THE BARRIER RAIL AND BARRIER RAIL SLAB, SEE STRUCTURES DETAILS.

LEGEND

PMS = PLANT MIX SURFACING
SC = SAW CUT
HMA-W = HOT MIX ASPHALT WARM

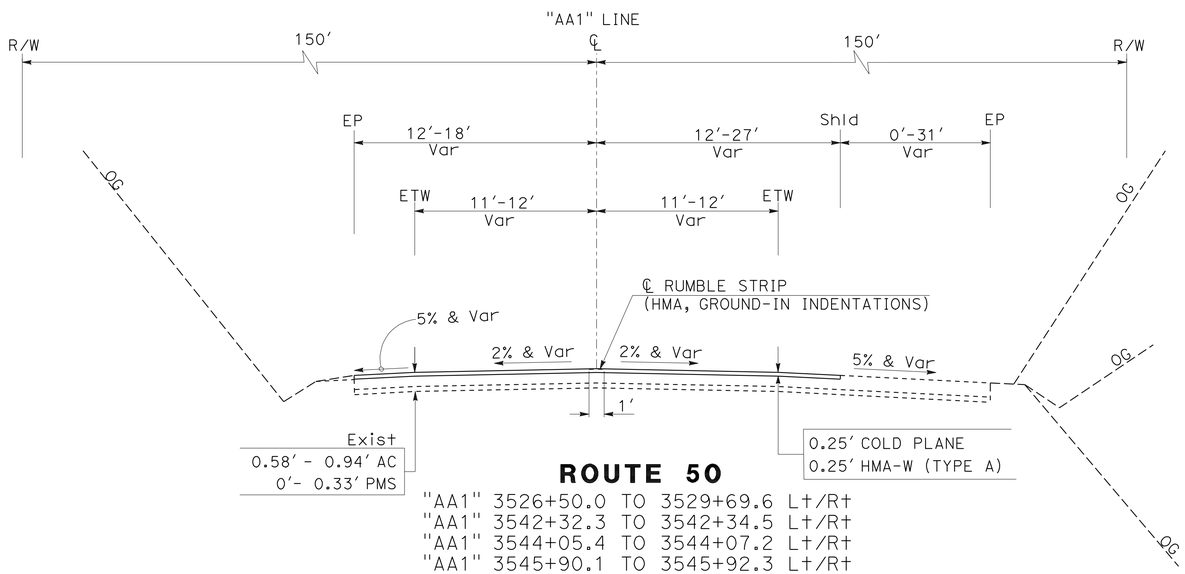

ROUTE 50

"AA1" 3526+50.0 TO 3529+69.6 Lt/Rt
"AA1" 3542+32.3 TO 3542+34.5 Lt/Rt
"AA1" 3544+05.4 TO 3544+07.2 Lt/Rt
"AA1" 3545+90.1 TO 3545+92.3 Lt/Rt
"AA1" 3548+96.9 TO 3549+01.2 Lt/Rt
"AA1" 3550+12.1 TO 3550+13.3 Lt/Rt
"AA1" 3552+85.3 TO 3552+86.2 Lt/Rt
"AA1" 3553+61.4 TO 3553+87.8 Lt/Rt
"AA1" 3555+13.2 TO 3555+61.1 Lt/Rt
"AA1" 3556+73.4 TO 3556+75.1 Lt/Rt
"AA1" 3558+74.6 TO 3558+79.6 Lt/Rt
"AA1" 3563+20.3 TO 3563+21.5 Lt/Rt
"AA1" 3565+34.9 TO 3565+38.5 Lt/Rt
"AA1" 3567+03.4 TO 3567+06.2 Lt/Rt
"AA1" 3567+80.6 TO 3567+82.0 Lt/Rt
"AA1" 3568+45.5 TO 3568+46.1 Lt/Rt
"AA1" 3569+14.2 TO 3569+16.0 Lt/Rt
"AA1" 3573+46.3 TO 3576+97.0 Lt/Rt

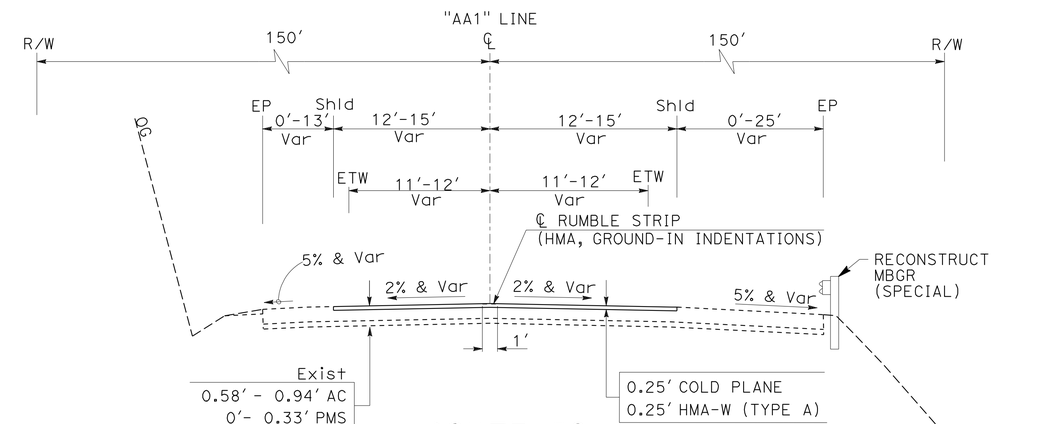

ROUTE 50

"AA1" 3529+69.6 TO 3542+32.3 Lt/Rt
"AA1" 3544+07.2 TO 3545+90.1 Lt/Rt
"AA1" 3549+01.2 TO 3550+12.1 Lt/Rt
"AA1" 3552+86.2 TO 3553+61.4 Lt/Rt
"AA1" 3555+61.1 TO 3556+73.4 Lt/Rt
"AA1" 3558+79.6 TO 3563+20.3 Lt/Rt
"AA1" 3565+38.5 TO 3567+03.4 Lt/Rt
"AA1" 3567+82.0 TO 3568+45.5 Lt/Rt
"AA1" 3569+16.0 TO 3573+46.3 Lt/Rt

TYPICAL CROSS SECTION

NO SCALE

X-1

CALCULATED-DESIGNED BY	CHARLES WOOTEN	REVISED BY	CHARLES WOOTEN
CHECKED BY	3-26-10	DATE REVISED	JOHN WELCH

FUNCTIONAL SUPERVISOR: MASTRI ALVANDI

STATE OF CALIFORNIA - DEPARTMENT OF TRANSPORTATION
Caltrans **DESIGN**

LAST REVISION 03-26-10
DATE PLOTTED => 26-JUL-2010
TIME PLOTTED => 13:41

Dist	COUNTY	ROUTE	POST MILES TOTAL PROJECT	SHEET No.	TOTAL SHEETS
03	ED	50	66.7/67.8	3	71

John D. Welch 3-29-10
REGISTERED CIVIL ENGINEER DATE

7-26-10
PLANS APPROVAL DATE

REGISTERED PROFESSIONAL ENGINEER
JOHN D. WELCH
No. 58303
Exp. 6/30/10
CIVIL
STATE OF CALIFORNIA

THE STATE OF CALIFORNIA OR ITS OFFICERS OR AGENTS SHALL NOT BE RESPONSIBLE FOR THE ACCURACY OR COMPLETENESS OF ELECTRONIC COPIES OF THIS PLAN SHEET.

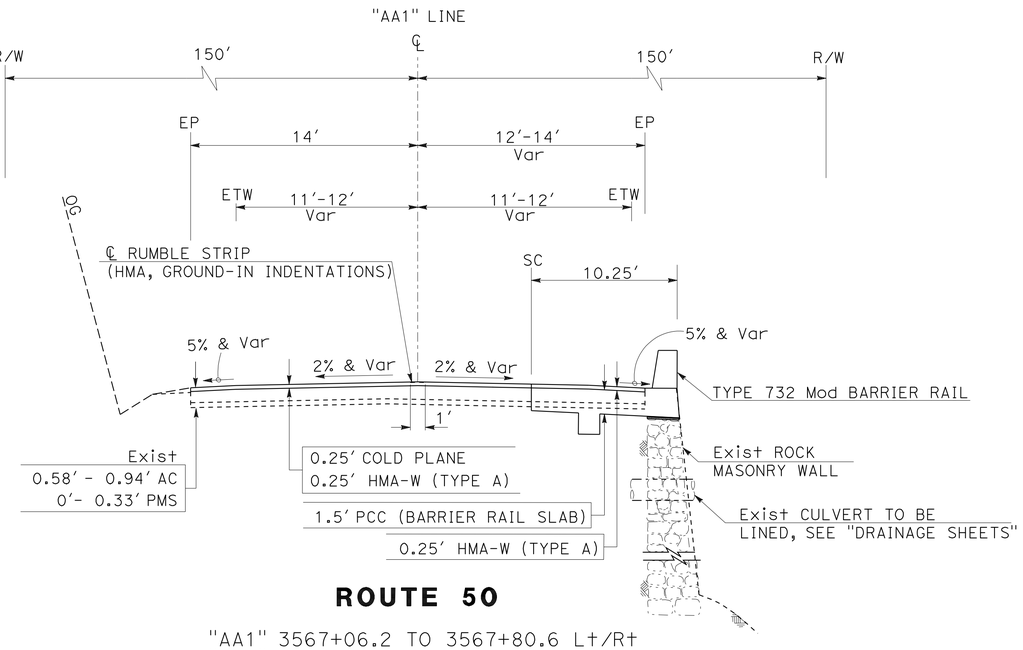

ROUTE 50

"AA1" 3567+06.2 TO 3567+80.6 Lt/Rt
"AA1" 3568+46.1 TO 3569+14.2 Lt/Rt

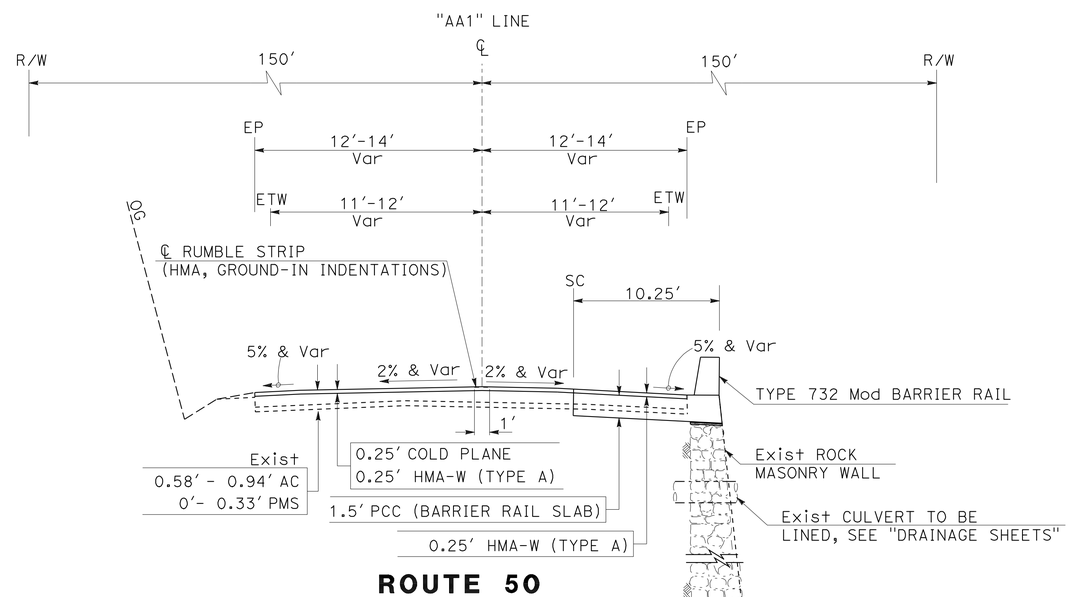

ROUTE 50

"AA1" 3542+34.5 TO 3544+05.4 Lt/Rt
"AA1" 3545+92.3 TO 3548+96.9 Lt/Rt
"AA1" 3550+13.3 TO 3552+85.3 Lt/Rt
"AA1" 3556+75.1 TO 3558+74.6 Lt/Rt
"AA1" 3563+21.5 TO 3565+34.9 Lt/Rt

TYPICAL CROSS SECTION

NO SCALE

X-2

STATE OF CALIFORNIA - DEPARTMENT OF TRANSPORTATION
Caltrans
DESIGN

FUNCTIONAL SUPERVISOR: MASTRI ALVANDI
CALCULATED-DESIGNED BY: CHARLES WOOTEN
CHECKED BY: JOHN WELCH
REVISED BY: CHARLES WOOTEN
DATE REVISED: 3-26-10

LAST REVISION: 03-26-10
DATE PLOTTED => 26-JUL-2010
TIME PLOTTED => 13:42

Dist	COUNTY	ROUTE	POST MILES TOTAL PROJECT	SHEET No.	TOTAL SHEETS
03	ED	50	66.7/67.8	4	71

REGISTERED CIVIL ENGINEER 3-29-10 DATE

7-26-10
PLANS APPROVAL DATE

REGISTERED PROFESSIONAL ENGINEER JOHN D. WELCH No. 58303 Exp. 6/30/10 CIVIL STATE OF CALIFORNIA

THE STATE OF CALIFORNIA OR ITS OFFICERS OR AGENTS SHALL NOT BE RESPONSIBLE FOR THE ACCURACY OR COMPLETENESS OF ELECTRONIC COPIES OF THIS PLAN SHEET.

NOTES:

1. FOR COMPLETE RIGHT OF WAY ACCESS DATA, SEE RIGHT OF WAY RECORD MAPS AT DISTRICT OFFICE.
2. TEMPORARY FENCE/ENVIRONMENTALLY SENSITIVE AREA LOCATION TO BE DETERMINED BY ENGINEER.
3. NOT ALL SERVICE LINES OR FACILITIES OUTSIDE THE STATE RIGHT OF WAY ARE SHOWN.

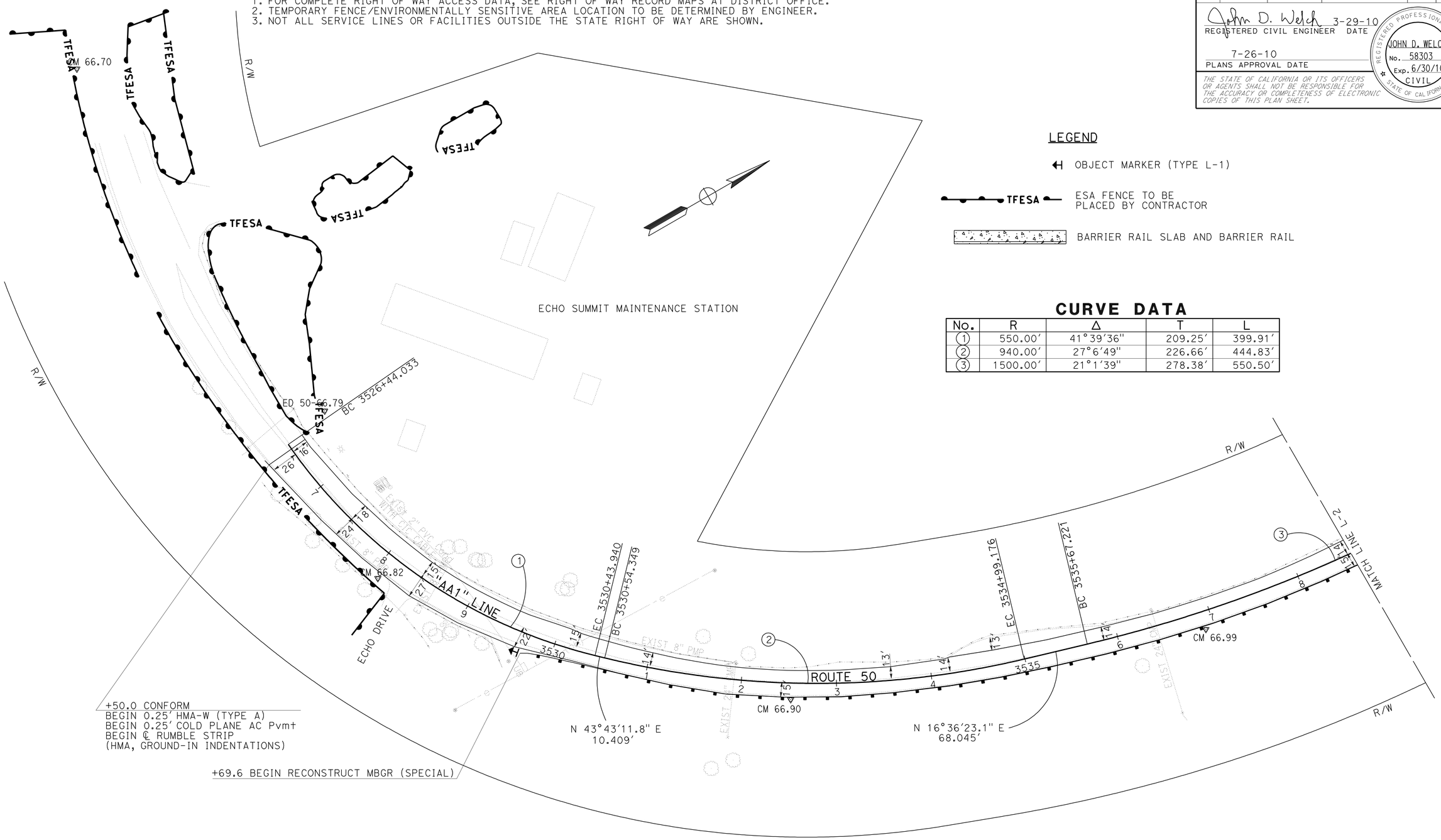

LEGEND

OBJECT MARKER (TYPE L-1)

TFESA — ESA FENCE TO BE PLACED BY CONTRACTOR

BARRIER RAIL SLAB AND BARRIER RAIL

CURVE DATA

No.	R	Δ	T	L
1	550.00'	41°39'36"	209.25'	399.91'
2	940.00'	27°6'49"	226.66'	444.83'
3	1500.00'	21°1'39"	278.38'	550.50'

LAYOUT

SCALE: 1" = 50'

L-1

STATE OF CALIFORNIA - DEPARTMENT OF TRANSPORTATION

Caltrans **DESIGN**

FUNCTIONAL SUPERVISOR: MASTRI ALVANDI

CALCULATED-DESIGNED BY: CHARLES WOOTEN

CHECKED BY: JOHN WELCH

REVISED BY: CHARLES WOOTEN

DATE REVISED: 3-26-10

LAST REVISION 03-26-10

DATE PLOTTED => 26-JUL-2010
TIME PLOTTED => 13:42

Dist	COUNTY	ROUTE	POST MILES TOTAL PROJECT	SHEET No.	TOTAL SHEETS
03	ED	50	66.7/67.8	5	71

REGISTERED CIVIL ENGINEER DATE 3-29-10

PLANS APPROVAL DATE 7-26-10

REGISTERED PROFESSIONAL ENGINEER JOHN D. WELCH No. 58303 Exp. 6/30/10 CIVIL STATE OF CALIFORNIA

THE STATE OF CALIFORNIA OR ITS OFFICERS OR AGENTS SHALL NOT BE RESPONSIBLE FOR THE ACCURACY OR COMPLETENESS OF ELECTRONIC COPIES OF THIS PLAN SHEET.

NOTE:

1. FOR COMPLETE RIGHT OF WAY ACCESS DATA, SEE RIGHT OF WAY RECORD MAPS AT DISTRICT OFFICE.

CURVE DATA

No.	R	Δ	T	L
3	1500.00′	21°1′39"	278.38′	550.50′
4	430.00′	33°26′44"	129.19′	251.01′
5	535.00′	36°42′16"	177.48′	342.73′

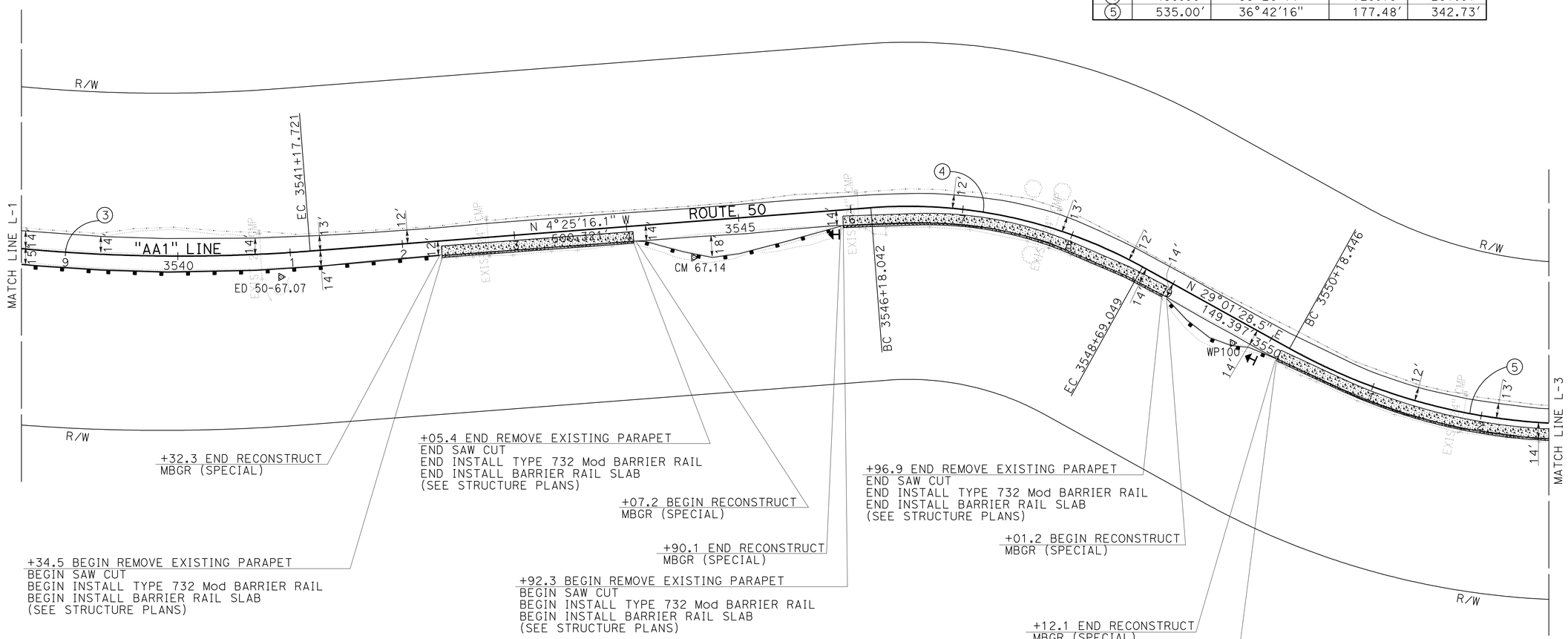

LAYOUT

SCALE: 1" = 50′

L-2

CALCULATED-DESIGNED BY	CHARLES WOOTEN	REVISED BY	CHARLES WOOTEN
CHECKED BY	JOHN WELCH	DATE REVISED	3-26-10

FUNCTIONAL SUPERVISOR: MASTRI ALVANDI

STATE OF CALIFORNIA - DEPARTMENT OF TRANSPORTATION

Caltrans **DESIGN**

LAST REVISION 03-26-10 | DATE PLOTTED => 26-JUL-2010 | TIME PLOTTED => 13:42

Dist	COUNTY	ROUTE	POST MILES TOTAL PROJECT	SHEET No.	TOTAL SHEETS
03	ED	50	66.7/67.8	6	71

John D. Welch 3-29-10
REGISTERED CIVIL ENGINEER DATE

7-26-10
PLANS APPROVAL DATE

REGISTERED PROFESSIONAL ENGINEER
JOHN D. WELCH
No. 58303
Exp. 6/30/10
CIVIL
STATE OF CALIFORNIA

THE STATE OF CALIFORNIA OR ITS OFFICERS OR AGENTS SHALL NOT BE RESPONSIBLE FOR THE ACCURACY OR COMPLETENESS OF ELECTRONIC COPIES OF THIS PLAN SHEET.

NOTE:

1. FOR COMPLETE RIGHT OF WAY ACCESS DATA, SEE RIGHT OF WAY RECORD MAPS AT DISTRICT OFFICE.

CURVE DATA

No.	R	Δ	T	L
5	535.00′	36°42′16"	177.48′	342.73′
6	450.00′	23°12′41"	92.42′	182.30′
7	300.00′	38°53′40"	105.92′	203.65′
8	435.00′	29°24′02"	114.12′	223.22′

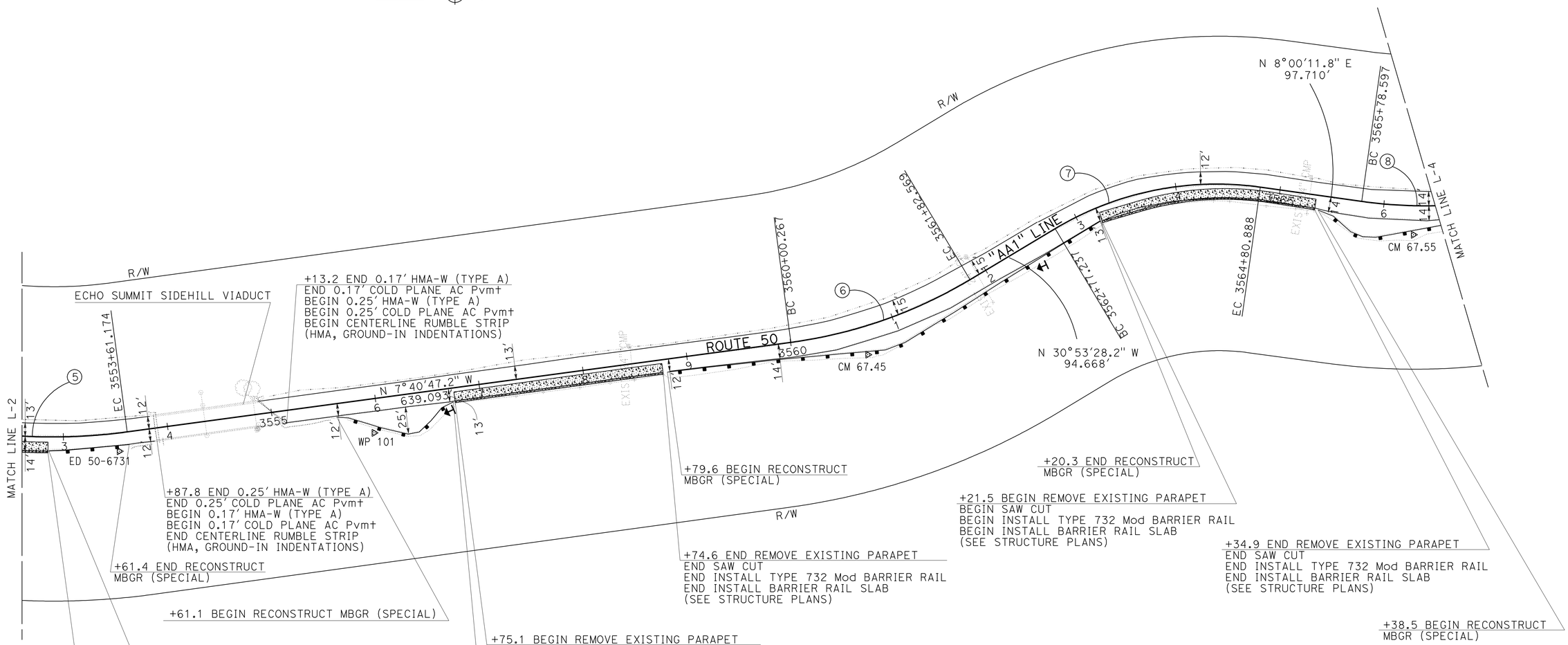

LAYOUT
SCALE: 1" = 50′
L-3

STATE OF CALIFORNIA - DEPARTMENT OF TRANSPORTATION
Caltrans **DESIGN**

FUNCTIONAL SUPERVISOR: MASTRI ALVANDI
CALCULATED-DESIGNED BY: CHARLES WOOTEN
CHECKED BY: JOHN WELCH
REVISED BY: CHARLES WOOTEN
DATE REVISED: 3-26-10

LAST REVISION 03-26-10 | DATE PLOTTED => 26-JUL-2010 | TIME PLOTTED => 13:42

Dist	COUNTY	ROUTE	POST MILES TOTAL PROJECT	SHEET No.	TOTAL SHEETS
03	ED	50	66.7/67.8	7	71

John D. Welch 3-29-10
REGISTERED CIVIL ENGINEER DATE

7-26-10
PLANS APPROVAL DATE

REGISTERED PROFESSIONAL ENGINEER
JOHN D. WELCH
No. 58303
Exp. 6/30/10
CIVIL
STATE OF CALIFORNIA

THE STATE OF CALIFORNIA OR ITS OFFICERS OR AGENTS SHALL NOT BE RESPONSIBLE FOR THE ACCURACY OR COMPLETENESS OF ELECTRONIC COPIES OF THIS PLAN SHEET.

NOTES:

1. FOR COMPLETE RIGHT OF WAY ACCESS DATA, SEE RIGHT OF WAY RECORD MAPS AT DISTRICT OFFICE.
2. REFER TO STANDARD PLAN A77I2

CURVE DATA

No.	R	Δ	T	L
8	435.00′	29°24′02″	114.12′	223.22′
9	600.00′	27°40′51″	147.82′	289.87′
10	385.00′	59°36′13″	220.51′	400.51′

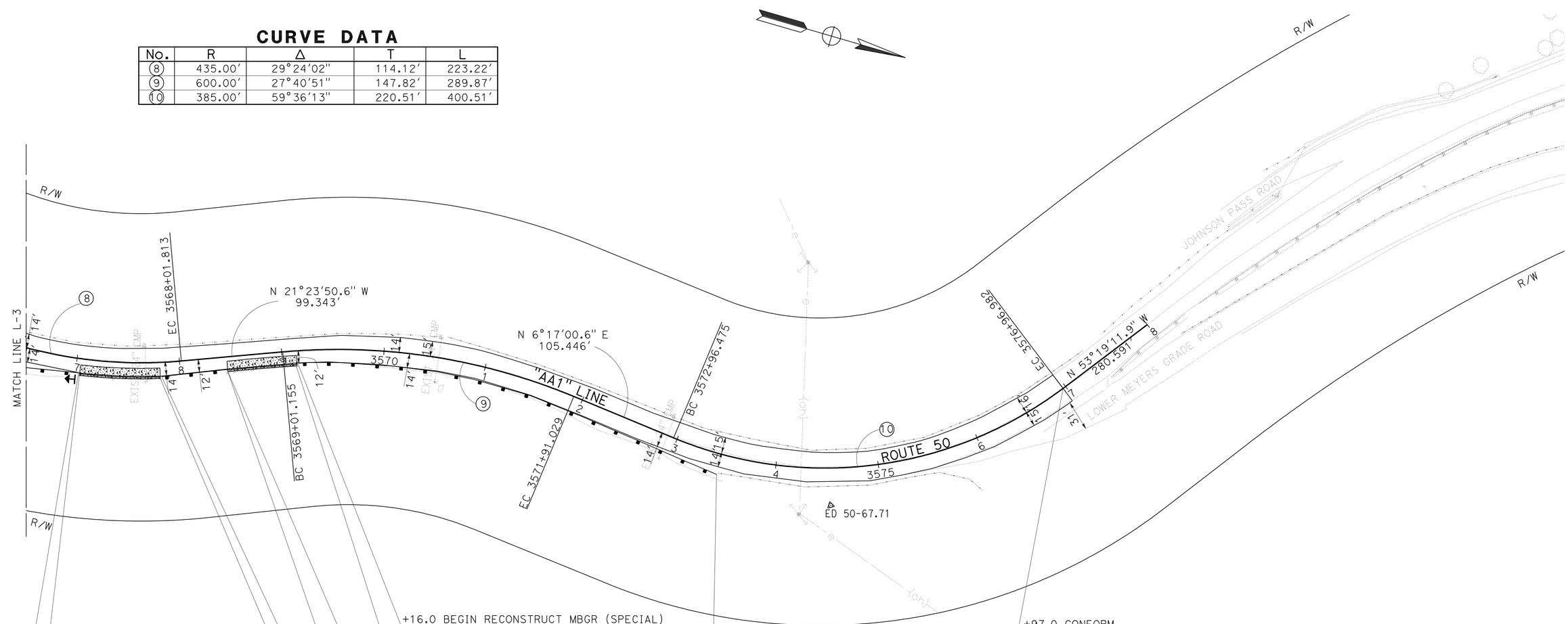

+16.0 BEGIN RECONSTRUCT MBGR (SPECIAL)

+14.2 END REMOVE EXISTING PARAPET
END SAW CUT
END INSTALL TYPE 732 Mod BARRIER RAIL
END INSTALL BARRIER RAIL SLAB
(SEE STRUCTURE PLANS)

+97.0 CONFORM
END 0.25′ HMA-W (TYPE A)
END 0.25′ COLD PLANE AC Pvmt
END ℄ RUMBLE STRIP
(HMA, GROUND-IN INDENTATION)

+06.2 BEGIN REMOVE EXISTING PARAPET
BEGIN SAW CUT
BEGIN INSTALL TYPE 732 Mod BARRIER RAIL
BEGIN INSTALL BARRIER RAIL SLAB
(SEE STRUCTURE PLANS)

+46.1 BEGIN REMOVE EXISTING PARAPET
BEGIN SAW CUT
BEGIN INSTALL TYPE 732 Mod BARRIER RAIL
BEGIN INSTALL BARRIER RAIL SLAB
(SEE STRUCTURE PLANS)

+03.4 END RECONSTRUCT
MBGR (SPECIAL)

+45.5 END RECONSTRUCT
MBGR (SPECIAL)

+46.3 END RECONSTRUCT MBGR (SPECIAL)
MBGR BURIED POST END ANCHOR
(SEE NOTE 2)

+80.6 END REMOVE EXISTING PARAPET
END SAW CUT
END INSTALL TYPE 732 Mod BARRIER RAIL
END INSTALL BARRIER RAIL SLAB
(SEE STRUCTURE PLANS)

+82.0 BEGIN RECONSTRUCT
MBGR (SPECIAL)

LAYOUT
SCALE: 1″ = 50′

L-4

CALCULATED-DESIGNED BY	CHECKED BY	REVISED BY	DATE REVISED
CHARLES WOOTEN	JOHN WELCH	CHARLES WOOTEN	3-26-10

FUNCTIONAL SUPERVISOR: MASTRI ALVANDI

STATE OF CALIFORNIA - DEPARTMENT OF TRANSPORTATION
Caltrans
DESIGN

LAST REVISION 03-26-10 | DATE PLOTTED => 26-JUL-2010 | TIME PLOTTED => 13:40

Dist	COUNTY	ROUTE	POST MILES TOTAL PROJECT	SHEET No.	TOTAL SHEETS
03	ED	50	66.7/67.8	8	71

REGISTERED CIVIL ENGINEER 7-12-10 DATE

7-26-10
PLANS APPROVAL DATE

REGISTERED PROFESSIONAL ENGINEER JOHN D. WELCH No. 58303 Exp. 6/30/12 CIVIL STATE OF CALIFORNIA

THE STATE OF CALIFORNIA OR ITS OFFICERS OR AGENTS SHALL NOT BE RESPONSIBLE FOR THE ACCURACY OR COMPLETENESS OF ELECTRONIC COPIES OF THIS PLAN SHEET.

NOTE:
CENTERLINE RUMBLE STRIP MUST BE CONSTRUCTED PRIOR TO INSTALLING FINAL TRAFFIC STRIPES.

LEGEND:

- CENTERLINE RUMBLE STRIP (HMA, GROUND-IN INDENTATIONS)
- 4" YELLOW TRAFFIC STRIPE
- HMA-W (TYPE A)

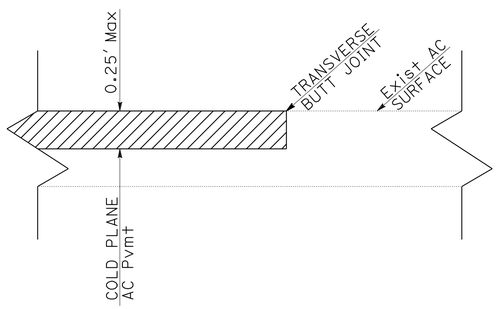

AC CONFORM DETAIL
BEGINNING AND END OF OVERLAY

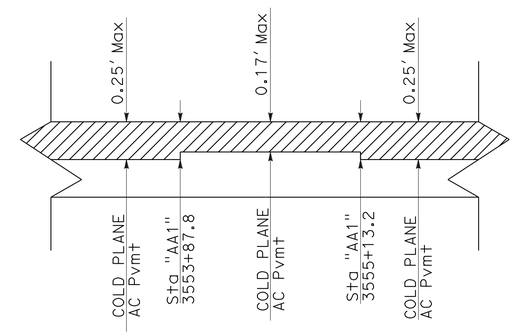

AC DETAIL AT VIADUCT
OVERLAY AT VIADUCT

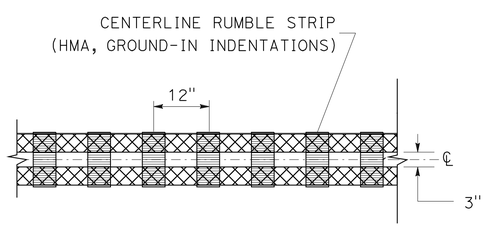

DETAIL 21 WITH CENTERLINE RUMBLE STRIP

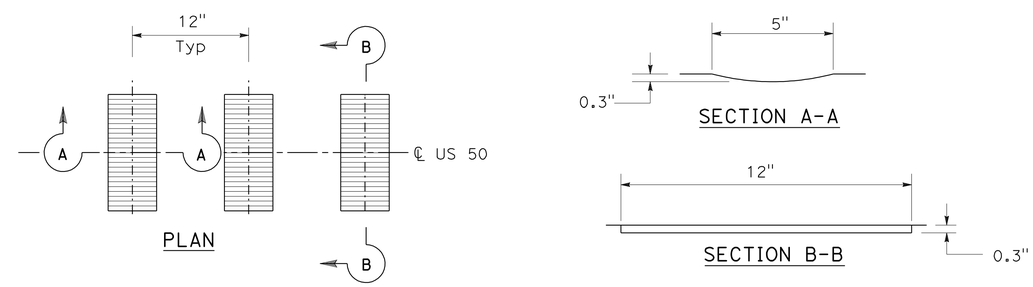

CENTERLINE RUMBLE STRIP
(HMA, GROUND-IN INDENTATIONS)

CONSTRUCTION DETAILS
NO SCALE

C-1

STATE OF CALIFORNIA - DEPARTMENT OF TRANSPORTATION
Caltrans
DESIGN

FUNCTIONAL SUPERVISOR: MASTRI ALVANDI
CALCULATED-DESIGNED BY: CHARLES WOOTEN
CHECKED BY: JOHN WELCH
REVISED BY: CHARLES WOOTEN
DATE REVISED: 3-26-10

LAST REVISION 03-26-10
DATE PLOTTED => 27-JUL-2010
TIME PLOTTED => 06:00

Dist	COUNTY	ROUTE	POST MILES TOTAL PROJECT	SHEET No.	TOTAL SHEETS
03	ED	50	66.7/67.8	9	71

John D. Welch 7-12-10
REGISTERED CIVIL ENGINEER DATE

7-26-10
PLANS APPROVAL DATE

REGISTERED PROFESSIONAL ENGINEER
JOHN D. WELCH
No. 58303
Exp. 6/30/12
CIVIL
STATE OF CALIFORNIA

THE STATE OF CALIFORNIA OR ITS OFFICERS OR AGENTS SHALL NOT BE RESPONSIBLE FOR THE ACCURACY OR COMPLETENESS OF ELECTRONIC COPIES OF THIS PLAN SHEET.

NOTES:

1. ALL NEW METAL ELEMENTS MUST BE ACID ETCHED ON EXPOSED SURFACES.
2. FOR HARDWARE DETAILS NOT SHOWN SEE STANDARD PLANS A77B1.
3. END SECTION WILL BE USED AT WALL DEPARTURES AND AT THE APPROACH END OF THE VIADUCT AT S†a 3553+61.4/PM 67.3.
4. ALIGN ENDS OF NEW CONCRETE BARRIER RAIL EXISTING MBGR.
5. SURFACE OF BARRIER RAIL UNDER PLATE 'B' AND METAL BOX SPACER SHALL BE FLAT FOR A FLUSH CONNECTION.

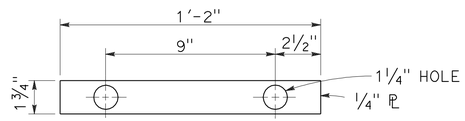

PLATE 'A'

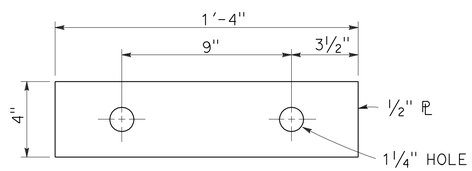

PLATE 'B'

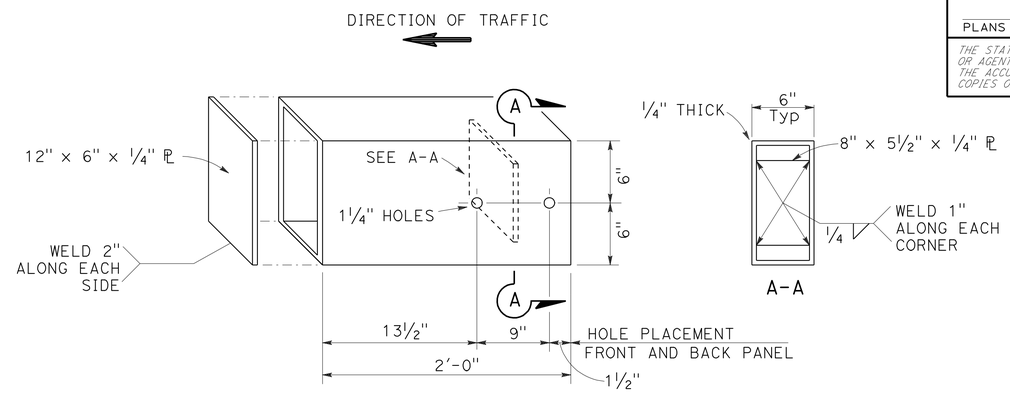

METAL BOX SPACER

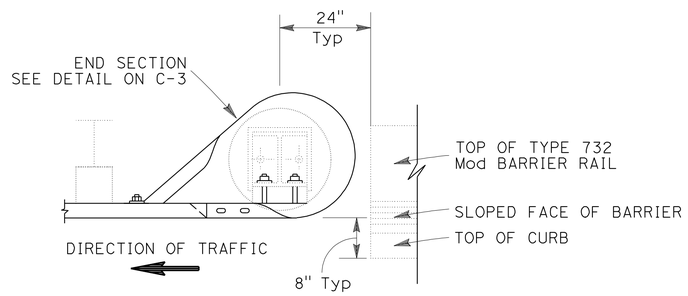

PLAN VIEW
SEE NOTES 3 AND 4

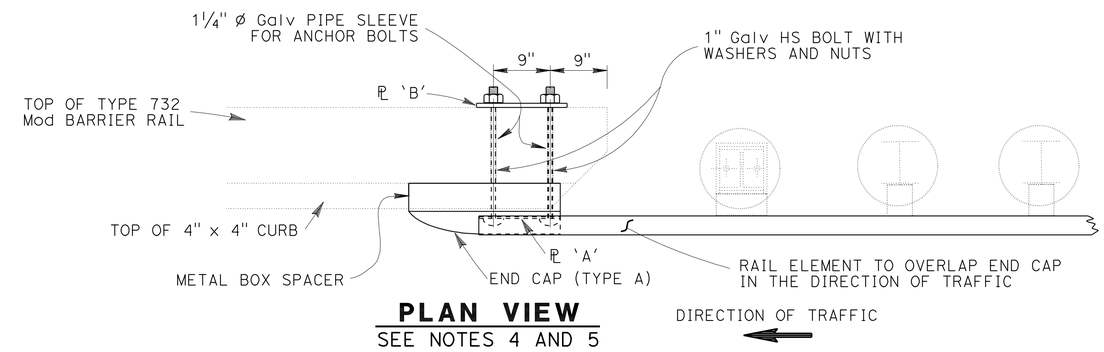

PLAN VIEW
SEE NOTES 4 AND 5

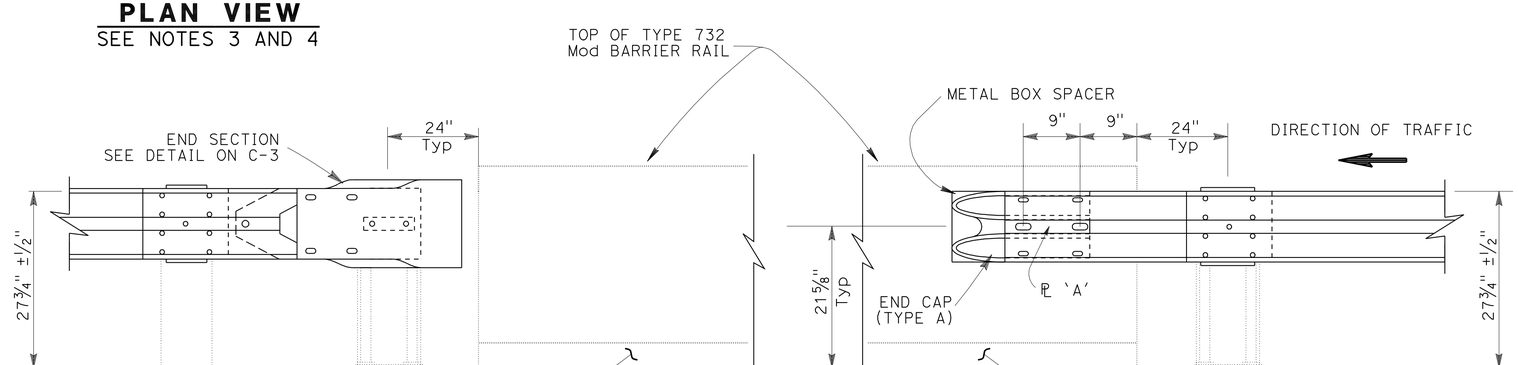

ELEVATION

CONSTRUCTION DETAILS

NO SCALE

C-2

CHARLES WOOTEN | 3-26-10 | REVISED BY | DATE REVISED
CHARLES WOOTEN | JOHN WELCH | CALCULATED-DESIGNED BY | CHECKED BY
FUNCTIONAL SUPERVISOR | MASTRI ALVANDI
STATE OF CALIFORNIA - DEPARTMENT OF TRANSPORTATION
Caltrans DESIGN

LAST REVISION 03-26-10 | DATE PLOTTED => 27-JUL-2010 | TIME PLOTTED => 06:11

Dist	COUNTY	ROUTE	POST MILES TOTAL PROJECT	SHEET No.	TOTAL SHEETS
03	ED	50	66.7/67.8	10	71

REGISTERED CIVIL ENGINEER 3-29-10 DATE

7-26-10
PLANS APPROVAL DATE

REGISTERED PROFESSIONAL ENGINEER JOHN D. WELCH No. 58303 Exp. 6/30/10 CIVIL STATE OF CALIFORNIA

THE STATE OF CALIFORNIA OR ITS OFFICERS OR AGENTS SHALL NOT BE RESPONSIBLE FOR THE ACCURACY OR COMPLETENESS OF ELECTRONIC COPIES OF THIS PLAN SHEET.

NOTES:

1. FOR DETAILS NOT SHOWN SEE STANDARD PLANS A77A2 AND A77C2.
2. ALL NEW METAL RAIL ELEMENTS MUST BE ACID ETCHED ON EXPOSED SURFACES.

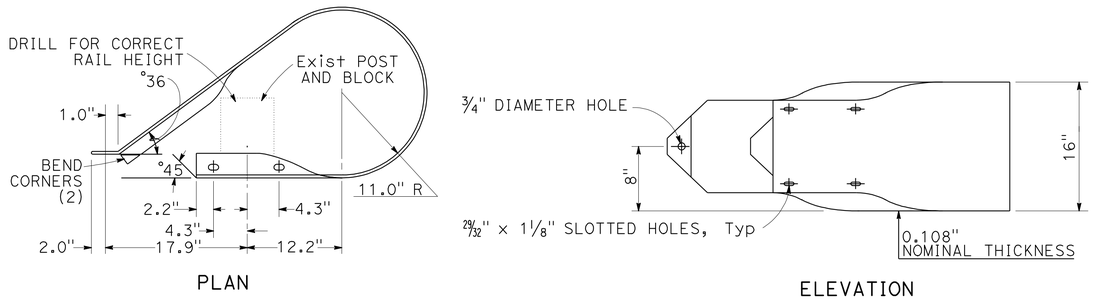

END SECTION

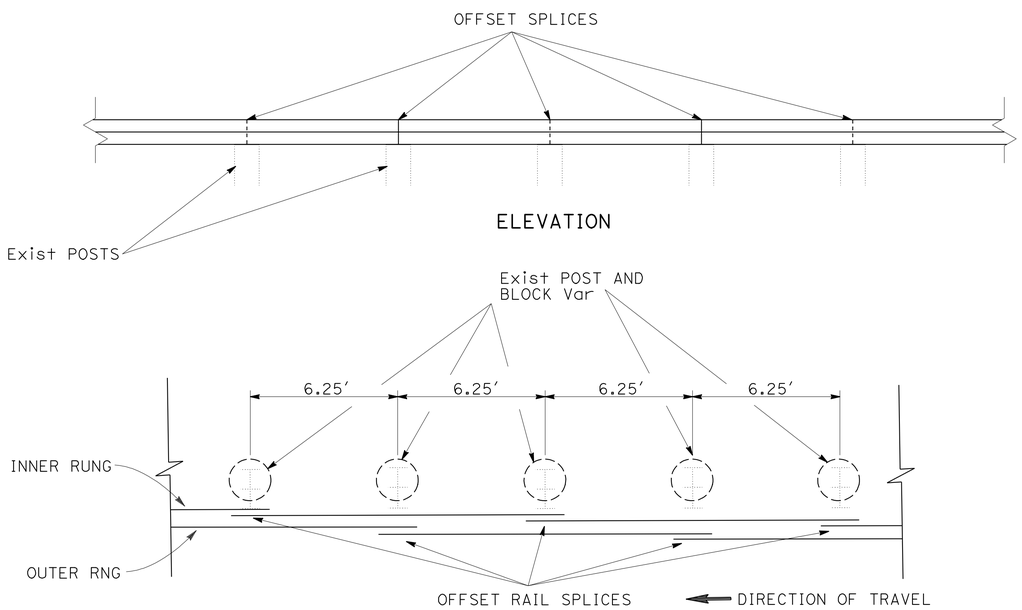

SPLICE DETAIL FOR STIFFENED RAIL

ALL OVERLAPS ARE IN THE DIRECTION OF TRAVEL

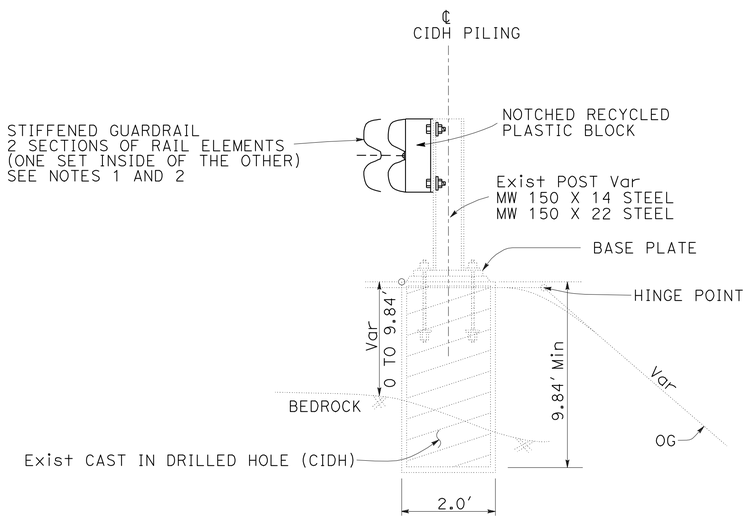

RECONSTRUCT METAL BEAM GUARD RAILING (SPECIAL)

CONSTRUCTION DETAILS

NO SCALE

C-3

STATE OF CALIFORNIA - DEPARTMENT OF TRANSPORTATION
Caltrans DESIGN

FUNCTIONAL SUPERVISOR: MASTRI ALVANDI
CALCULATED-DESIGNED BY: CHARLES WOOTEN
CHECKED BY: JOHN WELCH
REVISED BY: CHARLES WOOTEN
DATE REVISED: 3-26-10

LAST REVISION 03-26-10 | DATE PLOTTED => 27-JUL-2010 | TIME PLOTTED => 06:18

Dist	COUNTY	ROUTE	POST MILES TOTAL PROJECT	SHEET No.	TOTAL SHEETS
03	ED	50	66.7/67.8	11	71

John D. Welch 3-29-10
REGISTERED CIVIL ENGINEER DATE

7-26-10
PLANS APPROVAL DATE

REGISTERED PROFESSIONAL ENGINEER
JOHN D. WELCH
No. 58303
Exp. 6/30/10
CIVIL
STATE OF CALIFORNIA

THE STATE OF CALIFORNIA OR ITS OFFICERS OR AGENTS SHALL NOT BE RESPONSIBLE FOR THE ACCURACY OR COMPLETENESS OF ELECTRONIC COPIES OF THIS PLAN SHEET.

NOTES:

1. ALL NEW CORRUGATED STEEL PIPE THAT WILL HAVE AN EXPOSED SURFACE, MUST RECEIVE ACID ETCH SURFACE TREATMENT.
2. SEE STANDARD PLAN D102 FOR PPP UNDERDRAIN DETAIL.
3. AT EXTEND CULVERT LOCATIONS, USE STANDARD PLAN D97A, D97C, OR D97D TO COUPLE CSP.
4. AT SPECIFIED LOCATIONS, A PORTION OF THE CULVERT MAY REQUIRE REMOVAL PRIOR TO EXTENDING.
5. WHERE REMOVE CULVERT WORK IS PROPOSED AT EXISTING ROCK WALLS, CULVERT SHALL BE REMOVED TO WITHIN 4" OF EXISTING ROCK WALL.
6. FOR COMPLETE RIGHT OF WAY ACCESS DATA, SEE RIGHT OF WAY RECORD MAPS AT DISTRICT OFFICE.

ABBREVIATIONS:

PMP PERFORATED METAL PIPE
RFS RIGHT FORWARD SKEW
RBS RIGHT BACKWARD SKEW

LEGEND:

- (X) DRAINAGE SYSTEM No.
- (a) REMOVE INLET
- (b) TYPE G1 (Mod) DI
- (c) ALTERNATIVE PIPE LINER
- (d) 24" CSP (0.109" THICK)
- (e) REMOVE CULVERT

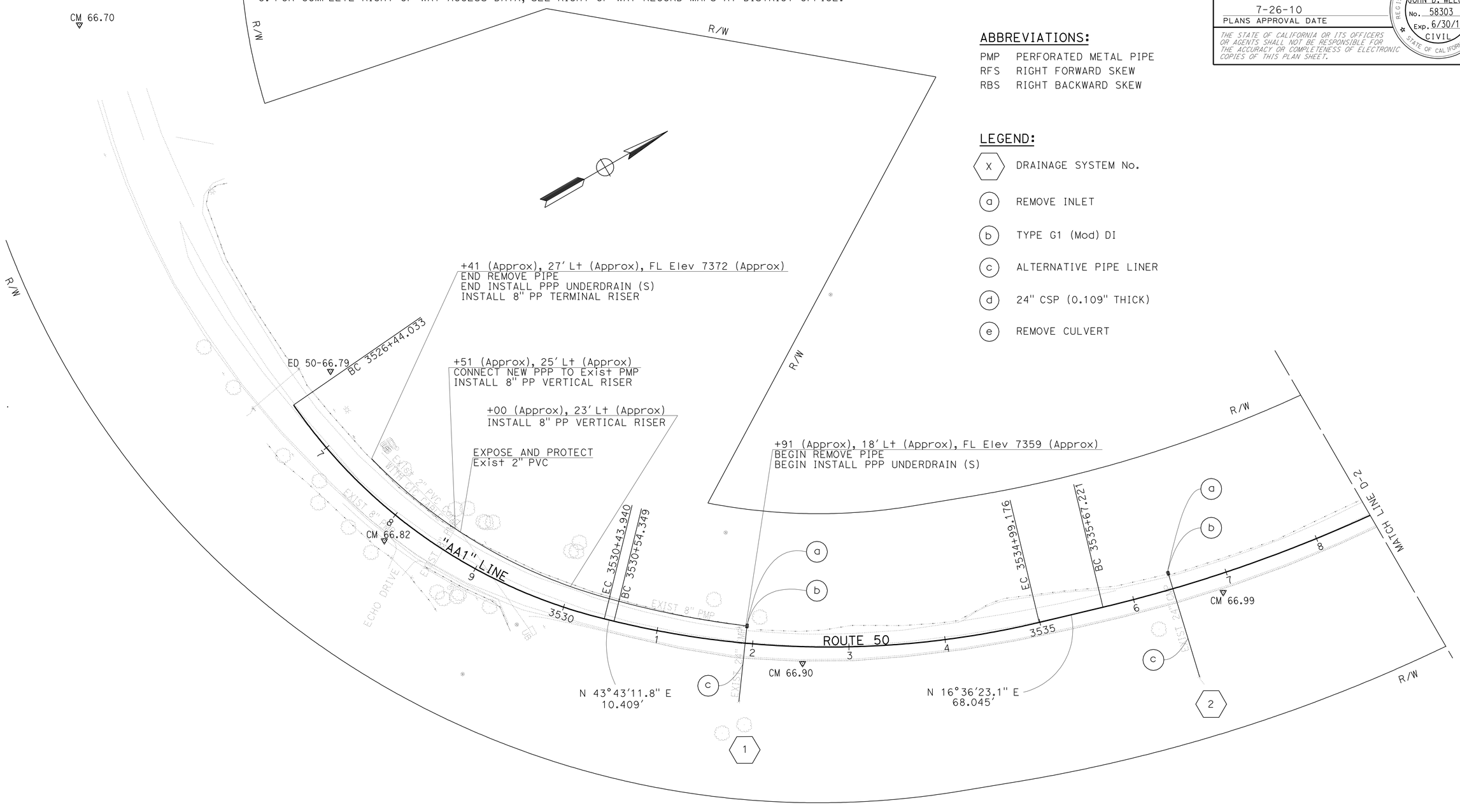

THIS PLAN ACCURATE FOR DRAINAGE WORK ONLY

DRAINAGE PLAN

SCALE: 1" = 50'

D-1

STATE OF CALIFORNIA - DEPARTMENT OF TRANSPORTATION
Caltrans DESIGN

FUNCTIONAL SUPERVISOR: MASTRI ALVANDI
CALCULATED-DESIGNED BY: CHARLES WOOTEN
CHECKED BY: JOHN WELCH
REVISED BY: CHARLES WOOTEN
DATE REVISED: 3-26-10

LAST REVISION 03-26-10 | DATE PLOTTED => 26-JUL-2010 | TIME PLOTTED => 13:53

Dist	COUNTY	ROUTE	POST MILES TOTAL PROJECT	SHEET No.	TOTAL SHEETS
03	ED	50	66.7/67.8	12	71

John D. Welch 3-29-10
REGISTERED CIVIL ENGINEER DATE

7-26-10
PLANS APPROVAL DATE

REGISTERED PROFESSIONAL ENGINEER
JOHN D. WELCH
No. 58303
Exp. 6/30/10
CIVIL
STATE OF CALIFORNIA

THE STATE OF CALIFORNIA OR ITS OFFICERS OR AGENTS SHALL NOT BE RESPONSIBLE FOR THE ACCURACY OR COMPLETENESS OF ELECTRONIC COPIES OF THIS PLAN SHEET.

NOTE:

FOR COMPLETE RIGHT OF WAY ACCESS DATA, SEE RIGHT OF WAY RECORD MAPS AT DISTRICT OFFICE.

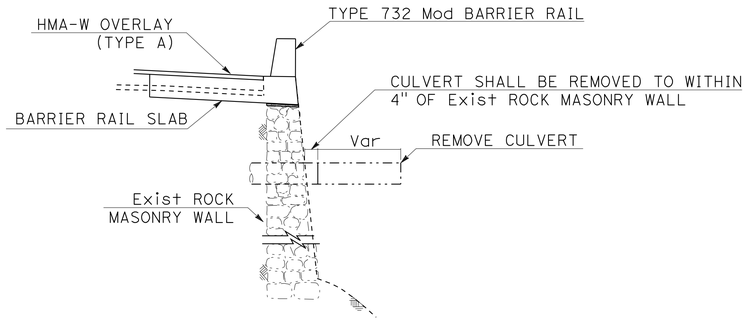

REMOVE CULVERT DETAIL

AT WALL LOCATIONS ONLY

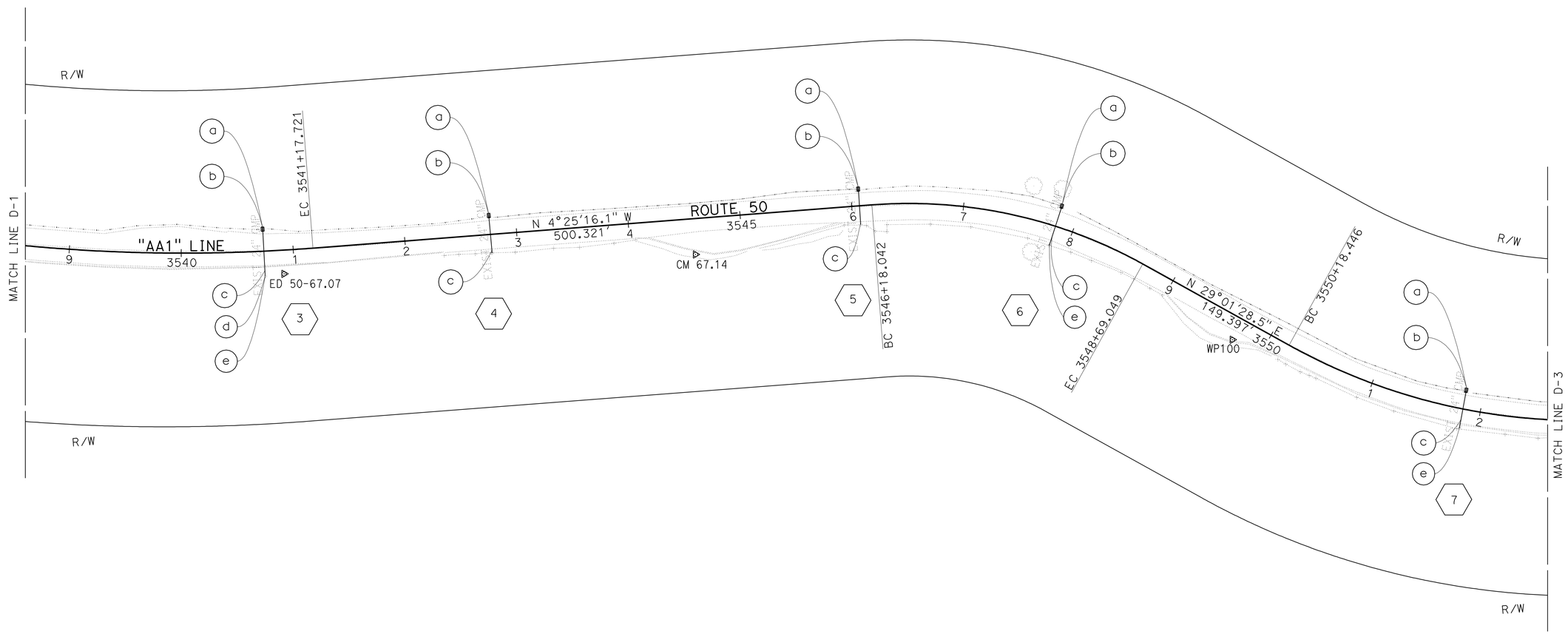

THIS PLAN ACCURATE FOR DRAINAGE WORK ONLY

DRAINAGE PLAN

SCALE: 1" = 50'

D-2

REVISED BY	CHARLES WOOTEN
DATE REVISED	3-26-10
CALCULATED-DESIGNED BY	CHARLES WOOTEN
CHECKED BY	JOHN WELCH
FUNCTIONAL SUPERVISOR	MASTRI ALVANDI

STATE OF CALIFORNIA - DEPARTMENT OF TRANSPORTATION
Caltrans **DESIGN**

LAST REVISION 03-26-10 | DATE PLOTTED => 27-JUL-2010 | TIME PLOTTED => 10:57

Dist	COUNTY	ROUTE	POST MILES TOTAL PROJECT	SHEET No.	TOTAL SHEETS
03	ED	50	66.7/67.8	13	71

John D. Welch 3-29-10
REGISTERED CIVIL ENGINEER DATE

7-26-10
PLANS APPROVAL DATE

REGISTERED PROFESSIONAL ENGINEER
JOHN D. WELCH
No. 58303
Exp. 6/30/10
CIVIL
STATE OF CALIFORNIA

THE STATE OF CALIFORNIA OR ITS OFFICERS OR AGENTS SHALL NOT BE RESPONSIBLE FOR THE ACCURACY OR COMPLETENESS OF ELECTRONIC COPIES OF THIS PLAN SHEET.

NOTE:
FOR COMPLETE RIGHT OF WAY ACESS DATA, SEE RIGHT OF WAY RECORD MAPS AT DISTRICT OFFICE.

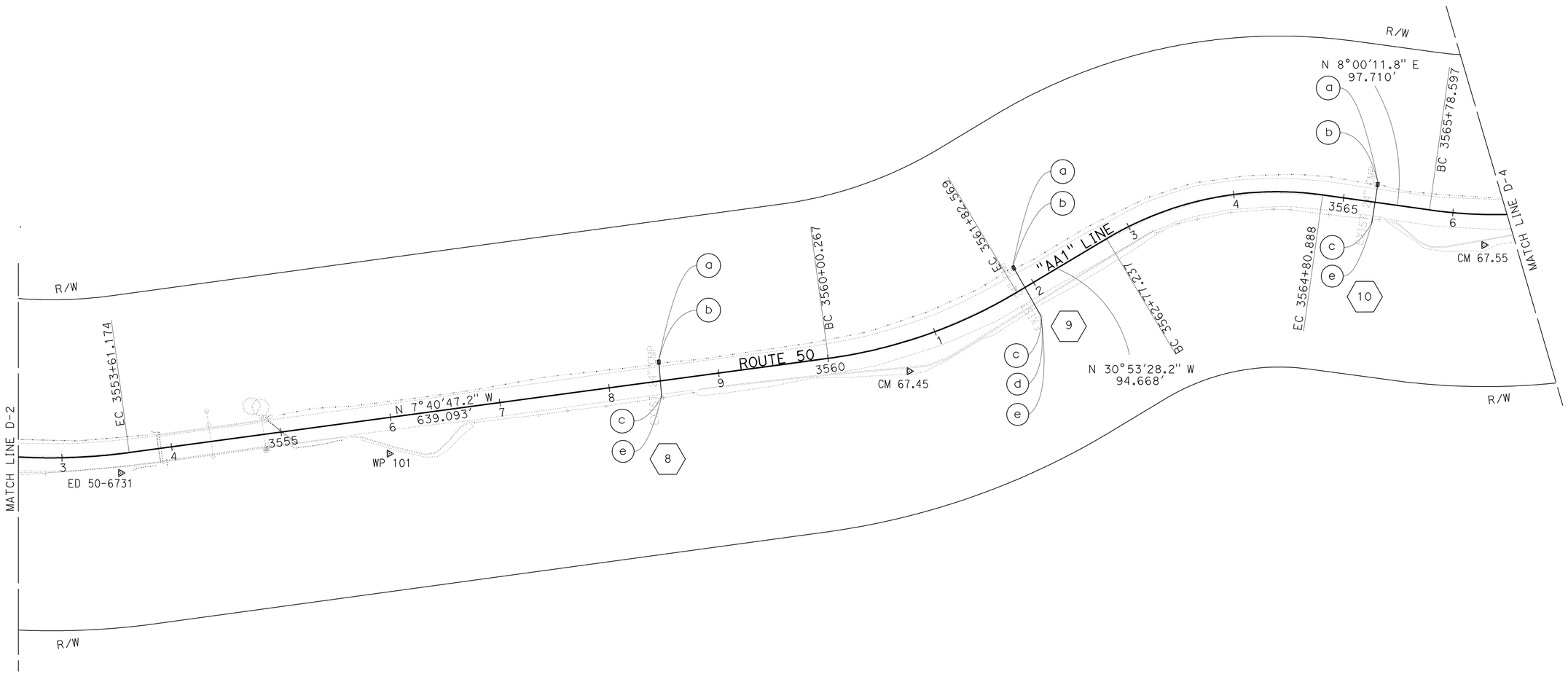

THIS PLAN ACCURATE FOR DRAINAGE WORK ONLY

DRAINAGE PLAN

SCALE: 1" = 50'

D-3

STATE OF CALIFORNIA - DEPARTMENT OF TRANSPORTATION
Caltrans
DESIGN

FUNCTIONAL SUPERVISOR: MASTRI ALVANDI
CALCULATED-DESIGNED BY: CHARLES WOOTEN
CHECKED BY: JOHN WELCH
REVISED BY: CHARLES WOOTEN
DATE REVISED: 3-26-10

LAST REVISION 03-26-10
DATE PLOTTED => 26-JUL-2010
TIME PLOTTED => 13:41

Dist	COUNTY	ROUTE	POST MILES TOTAL PROJECT	SHEET No.	TOTAL SHEETS
03	ED	50	66.7/67.8	14	71

John D. Welch 3-29-10
REGISTERED CIVIL ENGINEER DATE

7-26-10
PLANS APPROVAL DATE

REGISTERED PROFESSIONAL ENGINEER
JOHN D. WELCH
No. 58303
Exp. 6/30/10
CIVIL
STATE OF CALIFORNIA

THE STATE OF CALIFORNIA OR ITS OFFICERS OR AGENTS SHALL NOT BE RESPONSIBLE FOR THE ACCURACY OR COMPLETENESS OF ELECTRONIC COPIES OF THIS PLAN SHEET.

NOTE:
FOR COMPLETE RIGHT OF WAY ACESS DATA, SEE RIGHT OF WAY RECORD MAPS AT DISTRICT OFFICE.

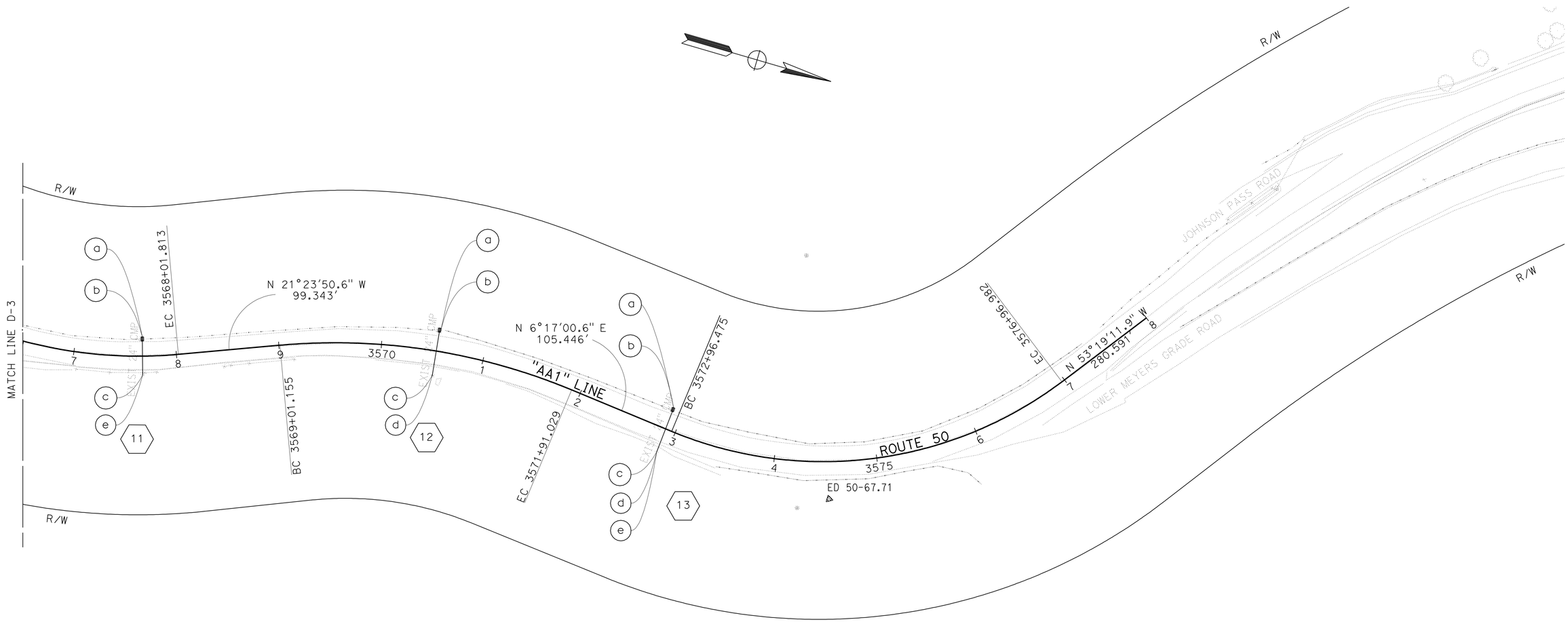

THIS PLAN ACCURATE FOR DRAINAGE WORK ONLY

DRAINAGE PLAN

SACLE: 1" = 50'

D-4

CHARLES WOOTEN	REVISED BY
3-26-10	DATE REVISED
CHARLES WOOTEN	CALCULATED-DESIGNED BY
JOHN WELCH	CHECKED BY
FUNCTIONAL SUPERVISOR	
MASTRI ALVANDI	

STATE OF CALIFORNIA - DEPARTMENT OF TRANSPORTATION
Caltrans **DESIGN**

LAST REVISION 03-26-10 | DATE PLOTTED => 26-JUL-2010 | TIME PLOTTED => 13:41

Dist	COUNTY	ROUTE	POST MILES TOTAL PROJECT	SHEET No.	TOTAL SHEETS
03	ED	50	66.7/67.8	15	71

REGISTERED CIVIL ENGINEER DATE 7-12-10

PLANS APPROVAL DATE 7-26-10

REGISTERED PROFESSIONAL ENGINEER JOHN D. WELCH No. 58303 Exp. 6/30/12 CIVIL STATE OF CALIFORNIA

THE STATE OF CALIFORNIA OR ITS OFFICERS OR AGENTS SHALL NOT BE RESPONSIBLE FOR THE ACCURACY OR COMPLETENESS OF ELECTRONIC COPIES OF THIS PLAN SHEET.

NOTES:

1. SEE DD-1 FOR SIDE INLET GRATE.
2. NEW GRATE ELEVATION SHALL MATCH EXISTING GRATE ELEVATIONS.

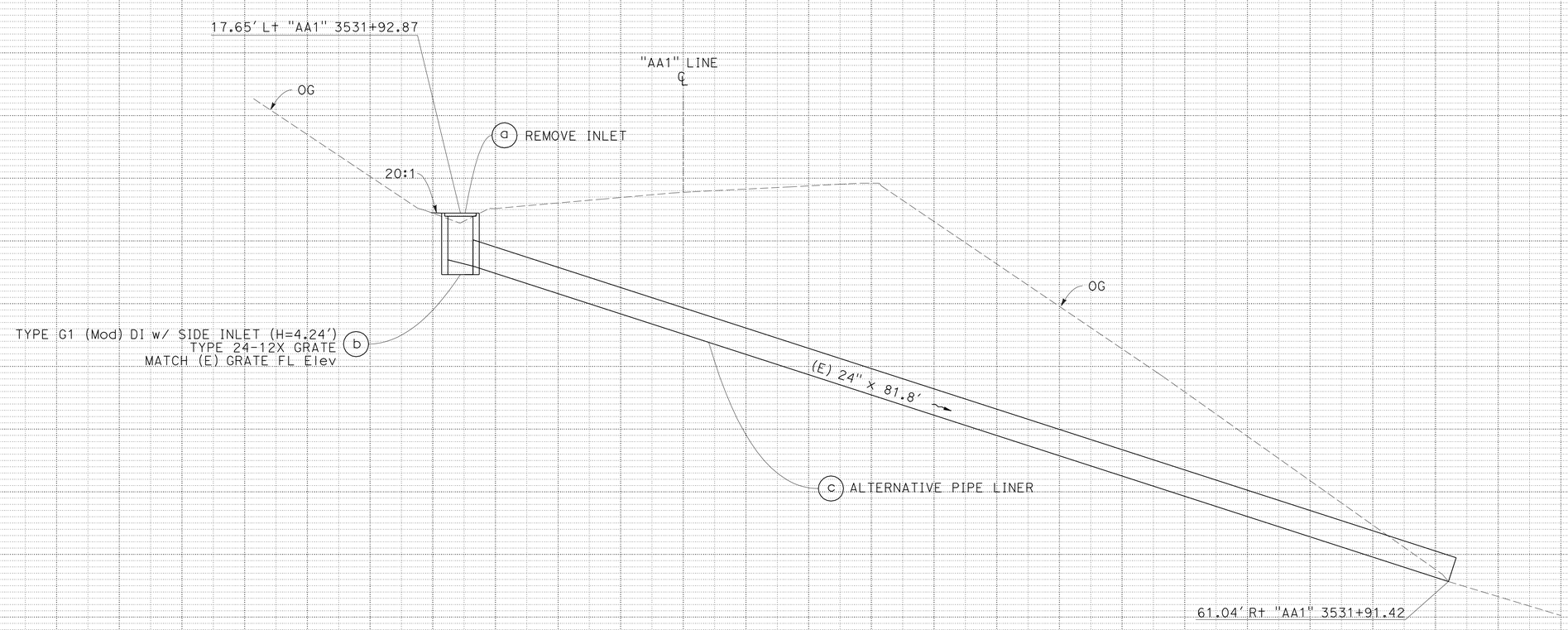

DRAINAGE SYSTEM No. 1

"AA1" 3531+92.23
Skew = 0°45'43.2" (RBS)

DRAINAGE PROFILE

NO SCALE

DP-1

STATE OF CALIFORNIA - DEPARTMENT OF TRANSPORTATION

Caltrans **DESIGN**

FUNCTIONAL SUPERVISOR: MASTRI ALVANDI

CALCULATED-DESIGNED BY: CHARLES WOOTEN

CHECKED BY: JOHN WELCH

REVISED BY: CHARLES WOOTEN

DATE REVISED: 3-26-10

LAST REVISION 03-26-10 | DATE PLOTTED => 26-JUL-2010 | TIME PLOTTED => 13:41

Dist	COUNTY	ROUTE	POST MILES TOTAL PROJECT	SHEET No.	TOTAL SHEETS
03	ED	50	66.7/67.8	16	71

John D. Welch 7-12-10
REGISTERED CIVIL ENGINEER DATE

7-26-10
PLANS APPROVAL DATE

REGISTERED PROFESSIONAL ENGINEER
JOHN D. WELCH
No. 58303
Exp. 6/30/12
CIVIL
STATE OF CALIFORNIA

THE STATE OF CALIFORNIA OR ITS OFFICERS OR AGENTS SHALL NOT BE RESPONSIBLE FOR THE ACCURACY OR COMPLETENESS OF ELECTRONIC COPIES OF THIS PLAN SHEET.

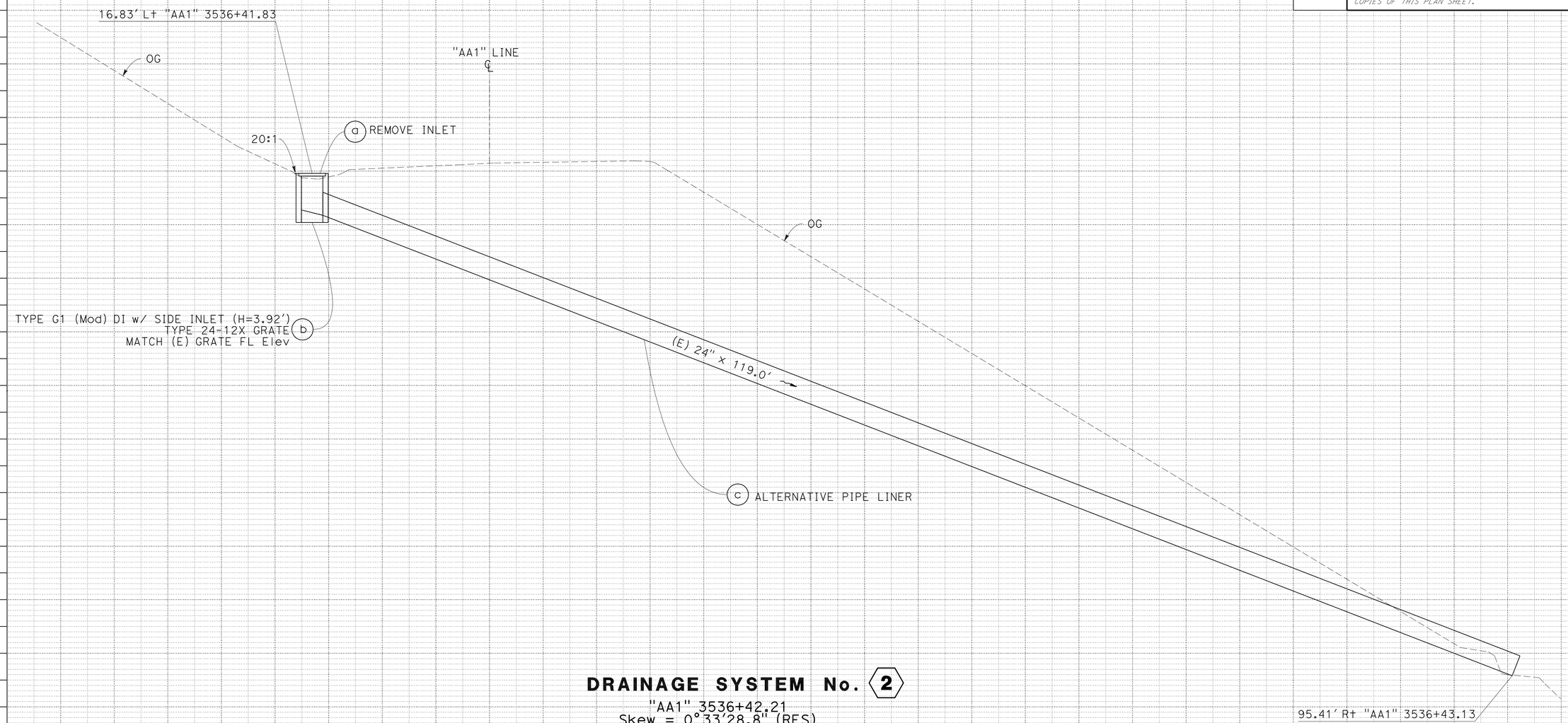

DRAINAGE SYSTEM No. 2
"AA1" 3536+42.21
Skew = 0°33'28.8" (RFS)

DRAINAGE PROFILE

NO SCALE

DP-2

CHARLES WOOTEN	3-26-10
REVISED BY	DATE REVISED
CHARLES WOOTEN	JOHN WELCH
CALCULATED-DESIGNED BY	CHECKED BY
FUNCTIONAL SUPERVISOR	MASTRI ALVANDI

STATE OF CALIFORNIA - DEPARTMENT OF TRANSPORTATION
Caltrans **DESIGN**

LAST REVISION 03-26-10
DATE PLOTTED => 26-JUL-2010
TIME PLOTTED => 13:41

Dist	COUNTY	ROUTE	POST MILES TOTAL PROJECT	SHEET No.	TOTAL SHEETS
03	ED	50	66.7/67.8	17	71

REGISTERED CIVIL ENGINEER DATE 7-12-10

PLANS APPROVAL DATE 7-26-10

REGISTERED PROFESSIONAL ENGINEER JOHN D. WELCH No. 58303 Exp. 6/30/12 CIVIL STATE OF CALIFORNIA

THE STATE OF CALIFORNIA OR ITS OFFICERS OR AGENTS SHALL NOT BE RESPONSIBLE FOR THE ACCURACY OR COMPLETENESS OF ELECTRONIC COPIES OF THIS PLAN SHEET.

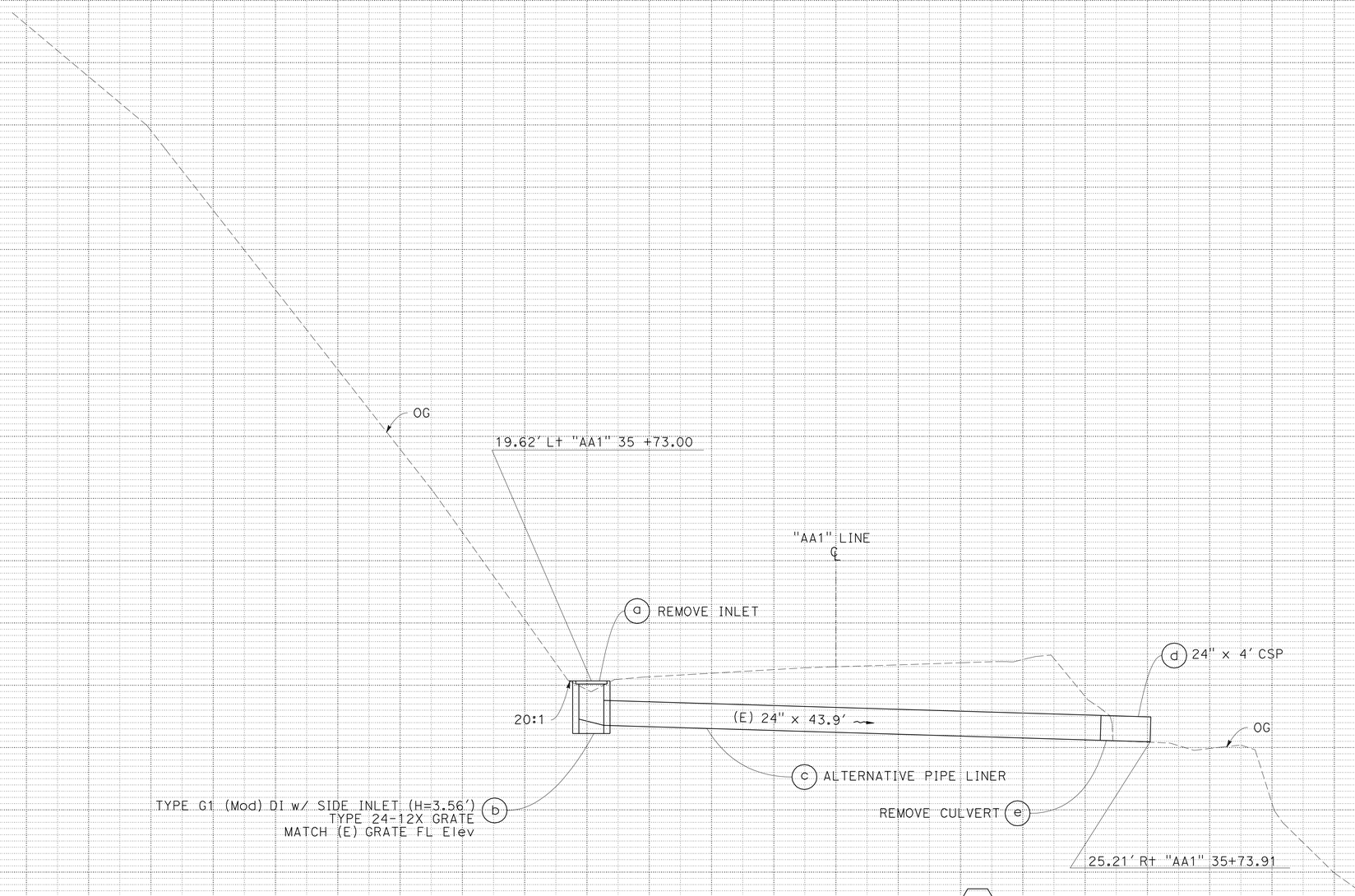

DRAINAGE SYSTEM No. 3

"AA1" 3540+73.81
Skew = 0°14'06.0" (RFS)

DRAINAGE PROFILE

NO SCALE

DP-3

CHARLES WOOTEN	3-26-10
REVISED BY	DATE REVISED
CHARLES WOOTEN	JOHN WELCH
CALCULATED-DESIGNED BY	CHECKED BY
FUNCTIONAL SUPERVISOR	MASTRI ALVANDI

STATE OF CALIFORNIA - DEPARTMENT OF TRANSPORTATION

Caltrans **DESIGN**

LAST REVISION 03-26-10 | DATE PLOTTED => 26-JUL-2010 | TIME PLOTTED => 13:12

Dist	COUNTY	ROUTE	POST MILES TOTAL PROJECT	SHEET No.	TOTAL SHEETS
03	ED	50	66.7/67.8	18	71

John D. Welch 7-12-10
REGISTERED CIVIL ENGINEER DATE

7-26-10
PLANS APPROVAL DATE

REGISTERED PROFESSIONAL ENGINEER
JOHN D. WELCH
No. 58303
Exp. 6/30/12
CIVIL
STATE OF CALIFORNIA

THE STATE OF CALIFORNIA OR ITS OFFICERS OR AGENTS SHALL NOT BE RESPONSIBLE FOR THE ACCURACY OR COMPLETENESS OF ELECTRONIC COPIES OF THIS PLAN SHEET.

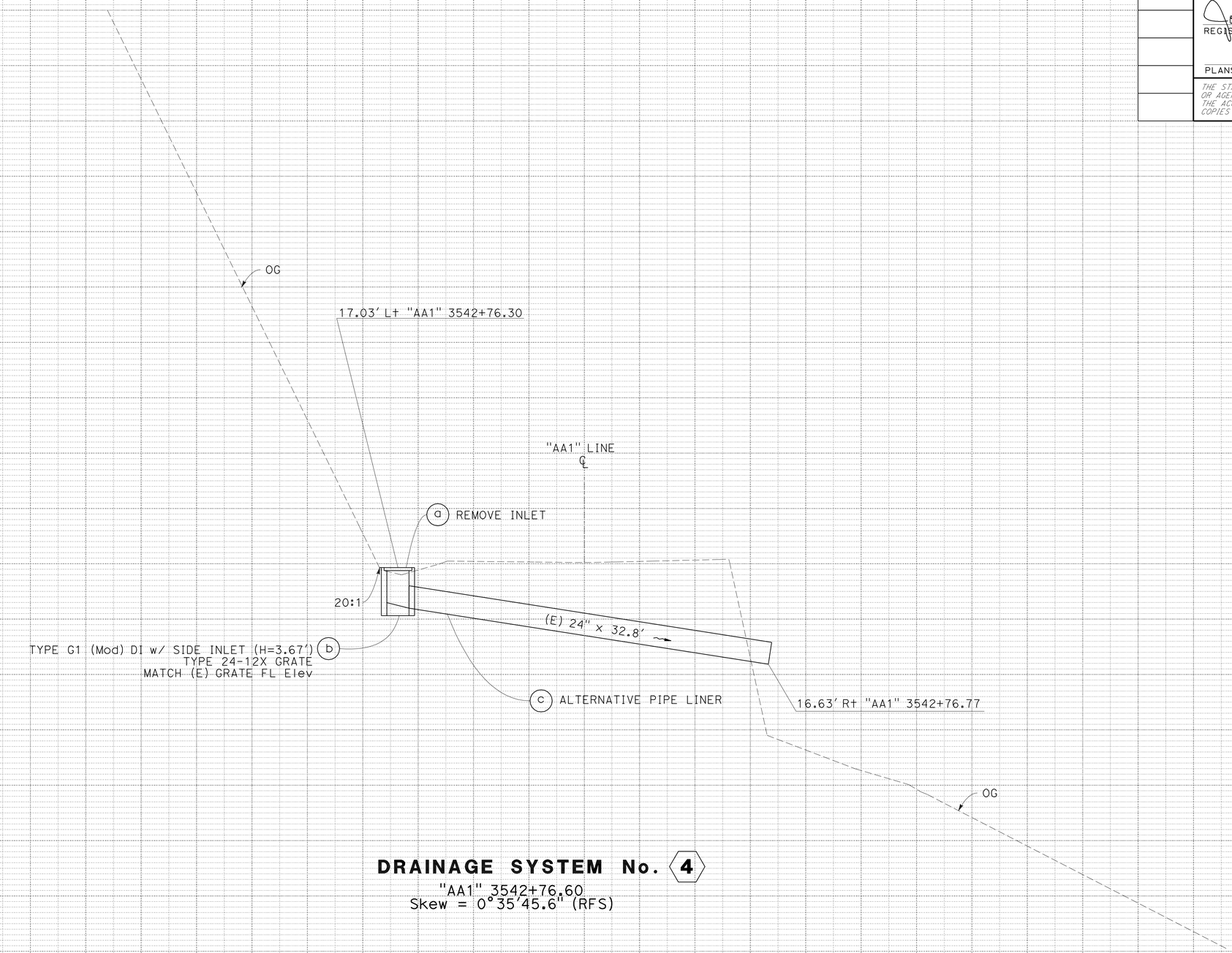

DRAINAGE SYSTEM No. 4

"AA1" 3542+76.60
Skew = 0°35'45.6" (RFS)

DRAINAGE PROFILE

NO SCALE

DP-4

STATE OF CALIFORNIA - DEPARTMENT OF TRANSPORTATION
Caltrans **DESIGN**

FUNCTIONAL SUPERVISOR: MASTRI ALVANDI
CALCULATED-DESIGNED BY: CHARLES WOOTEN
CHECKED BY: JOHN WELCH
REVISED BY: CHARLES WOOTEN
DATE REVISED: 3-26-10

LAST REVISION 03-26-10
DATE PLOTTED => 26-JUL-2010
TIME PLOTTED => 13:16

Dist	COUNTY	ROUTE	POST MILES TOTAL PROJECT	SHEET No.	TOTAL SHEETS
03	ED	50	66.7/67.8	19	71

John D. Welch 7-12-10
REGISTERED CIVIL ENGINEER DATE

7-26-10
PLANS APPROVAL DATE

REGISTERED PROFESSIONAL ENGINEER
JOHN D. WELCH
No. 58303
Exp. 6/30/12
CIVIL
STATE OF CALIFORNIA

THE STATE OF CALIFORNIA OR ITS OFFICERS OR AGENTS SHALL NOT BE RESPONSIBLE FOR THE ACCURACY OR COMPLETENESS OF ELECTRONIC COPIES OF THIS PLAN SHEET.

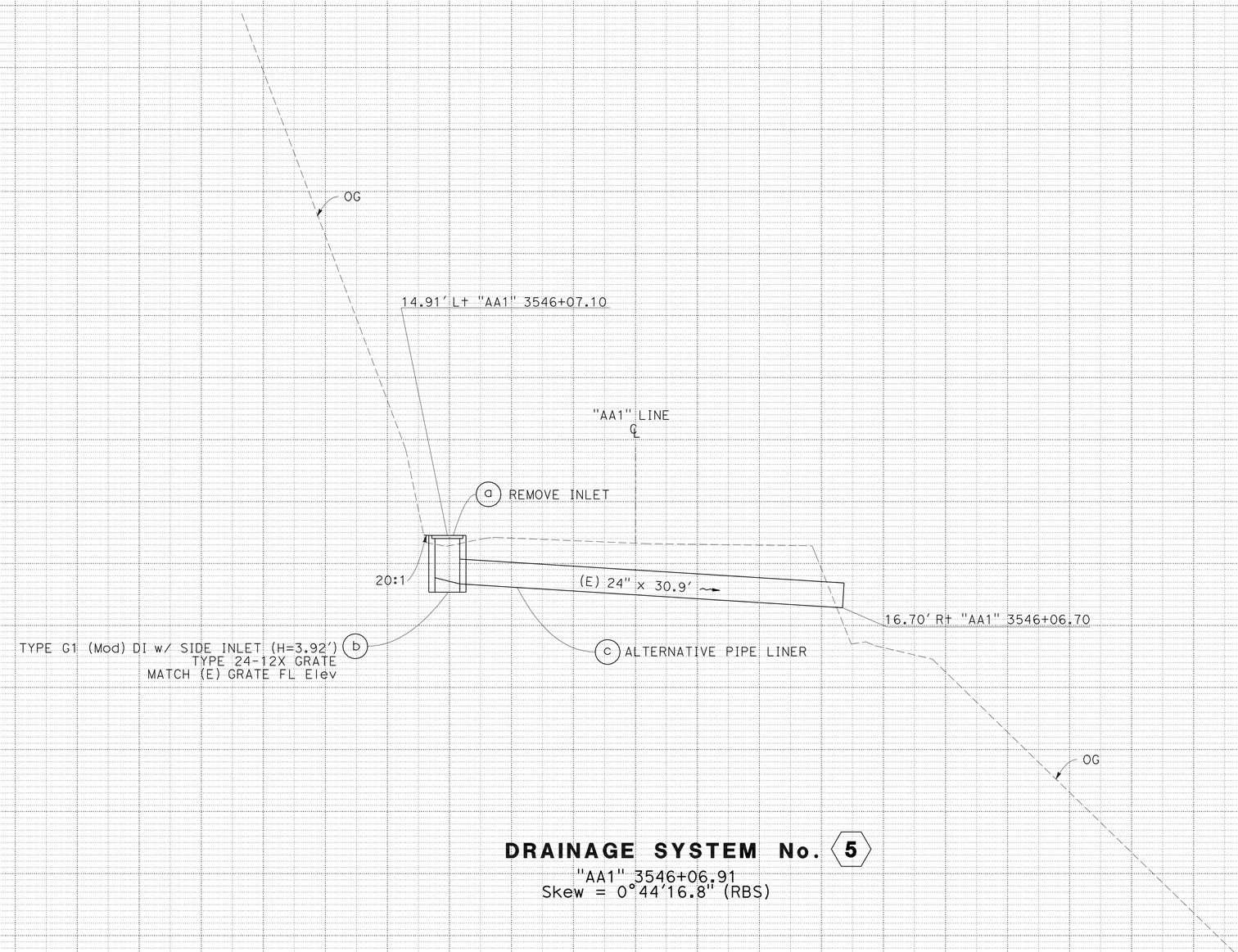

DRAINAGE SYSTEM No. 5

"AA1" 3546+06.91
Skew = 0°44'16.8" (RBS)

DRAINAGE PROFILE

NO SCALE

DP-5

CHARLES WOOTEN	3-26-10
REVISED BY	DATE REVISED
CHARLES WOOTEN	JOHN WELCH
CALCULATED-DESIGNED BY	CHECKED BY
FUNCTIONAL SUPERVISOR	MASTRI ALVANDI

STATE OF CALIFORNIA - DEPARTMENT OF TRANSPORTATION
Caltrans
DESIGN

LAST REVISION 03-26-10
DATE PLOTTED => 26-JUL-2010
TIME PLOTTED => 13:12

Dist	COUNTY	ROUTE	POST MILES TOTAL PROJECT	SHEET No.	TOTAL SHEETS
03	ED	50	66.7/67.8	20	71

John D. Welch 7-12-10
REGISTERED CIVIL ENGINEER DATE

7-26-10
PLANS APPROVAL DATE

REGISTERED PROFESSIONAL ENGINEER
JOHN D. WELCH
No. 58303
Exp. 6/30/12
CIVIL
STATE OF CALIFORNIA

THE STATE OF CALIFORNIA OR ITS OFFICERS OR AGENTS SHALL NOT BE RESPONSIBLE FOR THE ACCURACY OR COMPLETENESS OF ELECTRONIC COPIES OF THIS PLAN SHEET.

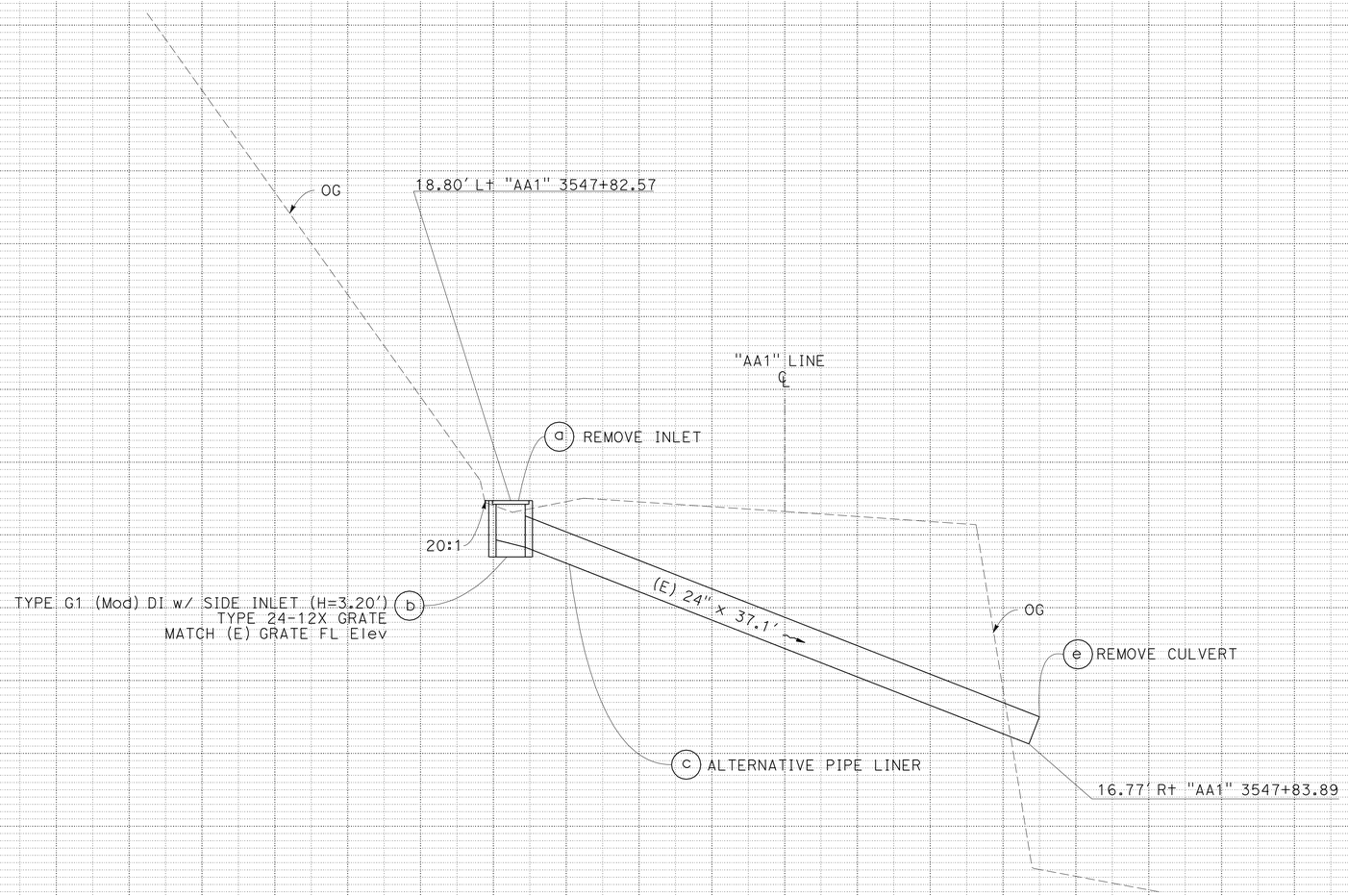

DRAINAGE SYSTEM No. 6

"AA1" 3547+83.97
Skew = 0°16'48.0" (RBS)

DRAINAGE PROFILE

NO SCALE

DP-6

CALCULATED-DESIGNED BY	CHARLES WOOTEN
CHECKED BY	JOHN WELCH
REVISED BY	CHARLES WOOTEN
DATE REVISED	3-26-10
FUNCTIONAL SUPERVISOR	MASTRI ALVANDI

STATE OF CALIFORNIA - DEPARTMENT OF TRANSPORTATION
Caltrans
DESIGN

LAST REVISION 03-26-10 | DATE PLOTTED => 26-JUL-2010 | TIME PLOTTED => 13:12

Dist	COUNTY	ROUTE	POST MILES TOTAL PROJECT	SHEET No.	TOTAL SHEETS
03	ED	50	66.7/67.8	21	71

John D. Welch 7-12-10
REGISTERED CIVIL ENGINEER DATE

7-26-10
PLANS APPROVAL DATE

REGISTERED PROFESSIONAL ENGINEER
JOHN D. WELCH
No. 58303
Exp. 6/30/12
CIVIL
STATE OF CALIFORNIA

THE STATE OF CALIFORNIA OR ITS OFFICERS OR AGENTS SHALL NOT BE RESPONSIBLE FOR THE ACCURACY OR COMPLETENESS OF ELECTRONIC COPIES OF THIS PLAN SHEET.

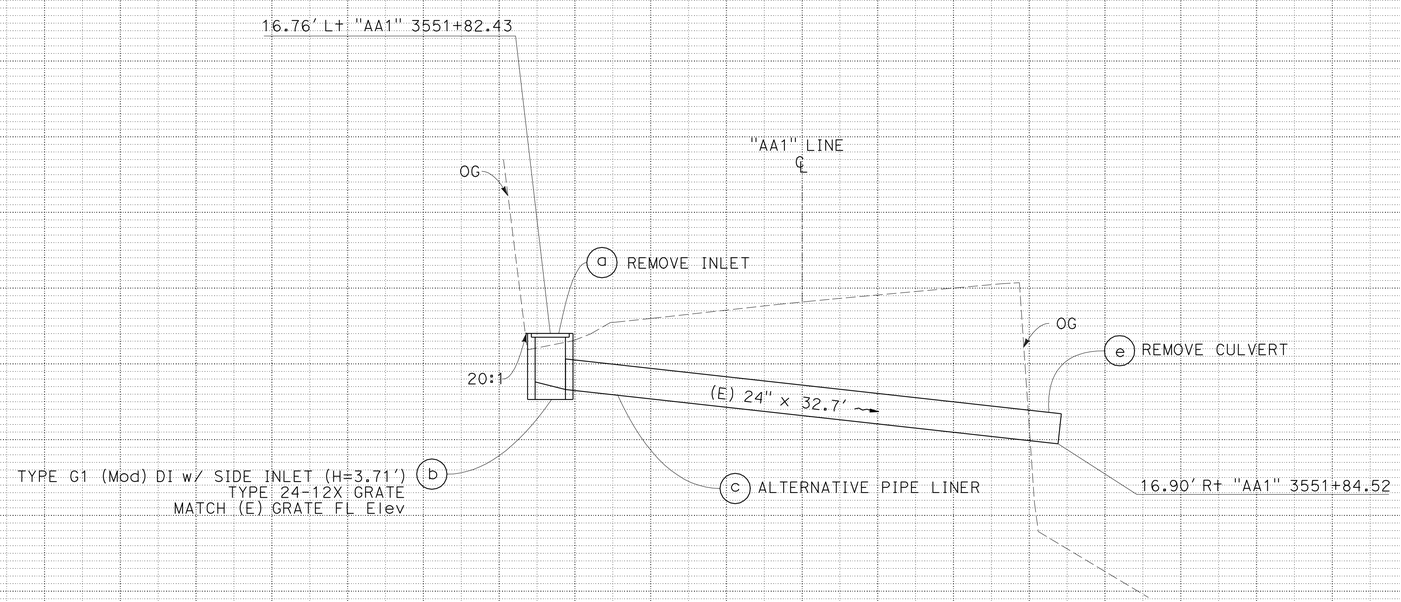

DRAINAGE SYSTEM No. 7

"AA1" 3551+84.29
Skew = 0°46'33.6" (RFS)

DRAINAGE PROFILE

NO SCALE

DP-7

STATE OF CALIFORNIA - DEPARTMENT OF TRANSPORTATION
Caltrans **DESIGN**

FUNCTIONAL SUPERVISOR: MASTRI ALVANDI

CALCULATED-DESIGNED BY: CHARLES WOOTEN
CHECKED BY: JOHN WELCH

REVISED BY: CHARLES WOOTEN
DATE REVISED: 3-26-10

LAST REVISION 03-26-10 | DATE PLOTTED => 26-JUL-2010 | TIME PLOTTED => 13:12

Dist	COUNTY	ROUTE	POST MILES TOTAL PROJECT	SHEET No.	TOTAL SHEETS
03	ED	50	66.7/67.8	22	71

John D. Welch 7-12-10
REGISTERED CIVIL ENGINEER DATE

7-26-10
PLANS APPROVAL DATE

REGISTERED PROFESSIONAL ENGINEER
JOHN D. WELCH
No. 58303
Exp. 6/30/12
CIVIL
STATE OF CALIFORNIA

THE STATE OF CALIFORNIA OR ITS OFFICERS OR AGENTS SHALL NOT BE RESPONSIBLE FOR THE ACCURACY OR COMPLETENESS OF ELECTRONIC COPIES OF THIS PLAN SHEET.

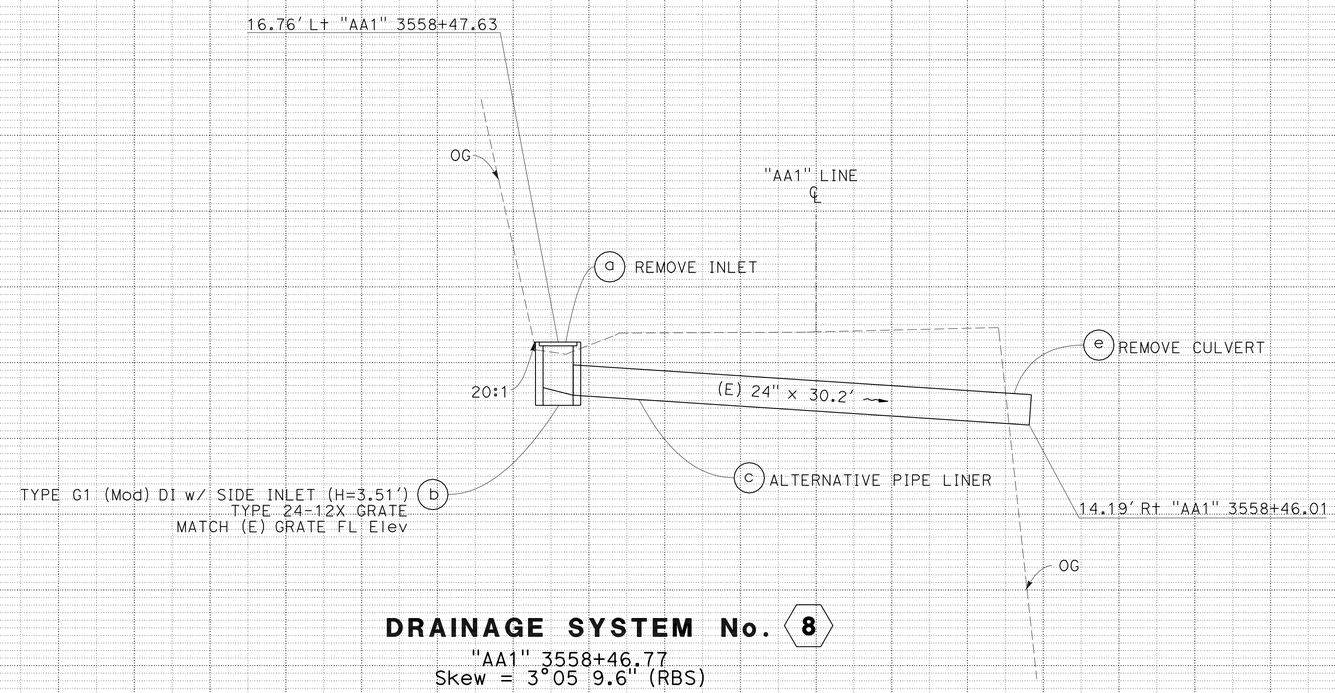

DRAINAGE SYSTEM No. 8

"AA1" 3558+46.77
Skew = 3°05 9.6" (RBS)

DRAINAGE PROFILE

NO SCALE

DP-8

CHARLES WOOTEN	3-26-10
REVISED BY	DATE REVISED
CHARLES WOOTEN	JOHN WELCH
CALCULATED-DESIGNED BY	CHECKED BY
FUNCTIONAL SUPERVISOR	MASTRI ALVANDI

STATE OF CALIFORNIA - DEPARTMENT OF TRANSPORTATION
Caltrans
DESIGN

LAST REVISION 03-26-10
DATE PLOTTED => 26-JUL-2010
TIME PLOTTED => 13:40

Dist	COUNTY	ROUTE	POST MILES TOTAL PROJECT	SHEET No.	TOTAL SHEETS
03	ED	50	66.7/67.8	23	71

John D. Welch 7-12-10
REGISTERED CIVIL ENGINEER DATE

7-26-10
PLANS APPROVAL DATE

REGISTERED PROFESSIONAL ENGINEER
JOHN D. WELCH
No. 58303
Exp. 6/30/12
CIVIL
STATE OF CALIFORNIA

THE STATE OF CALIFORNIA OR ITS OFFICERS OR AGENTS SHALL NOT BE RESPONSIBLE FOR THE ACCURACY OR COMPLETENESS OF ELECTRONIC COPIES OF THIS PLAN SHEET.

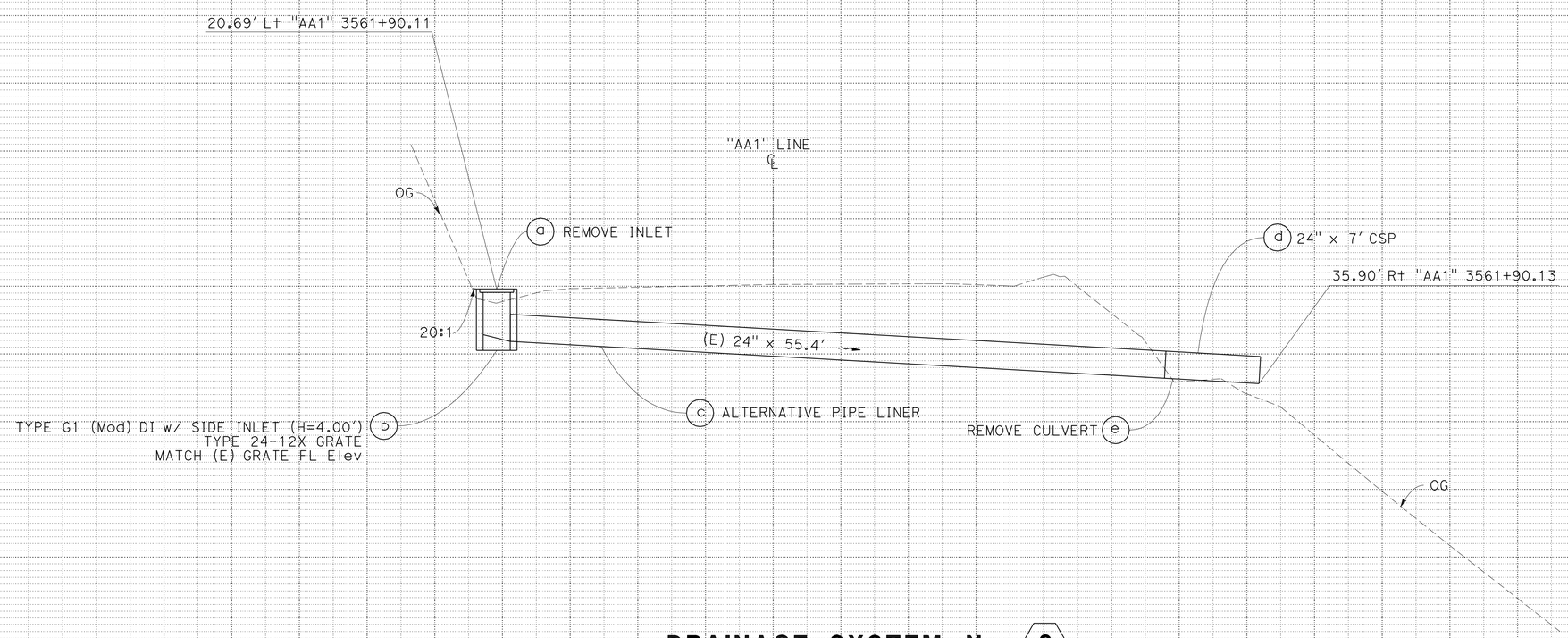

DRAINAGE SYSTEM No. 9

"AA1" 3561+91.02
Skew = 1°24'36.0" (RBS)

DRAINAGE PROFILE

NO SCALE

DP-9

CHARLES WOOTEN	3-26-10
REVISED BY	DATE REVISED
CHARLES WOOTEN	JOHN WELCH
CALCULATED-DESIGNED BY	CHECKED BY
FUNCTIONAL SUPERVISOR	MASTRI ALVANDI

STATE OF CALIFORNIA - DEPARTMENT OF TRANSPORTATION
Caltrans **DESIGN**

LAST REVISION 03-26-10
DATE PLOTTED => 26-JUL-2010
TIME PLOTTED => 13:40

Dist	COUNTY	ROUTE	POST MILES TOTAL PROJECT	SHEET No.	TOTAL SHEETS
03	ED	50	66.7/67.8	24	71

John D. Welch 7-12-10
REGISTERED CIVIL ENGINEER DATE

7-26-10
PLANS APPROVAL DATE

REGISTERED PROFESSIONAL ENGINEER
JOHN D. WELCH
No. 58303
Exp. 6/30/12
CIVIL
STATE OF CALIFORNIA

THE STATE OF CALIFORNIA OR ITS OFFICERS OR AGENTS SHALL NOT BE RESPONSIBLE FOR THE ACCURACY OR COMPLETENESS OF ELECTRONIC COPIES OF THIS PLAN SHEET.

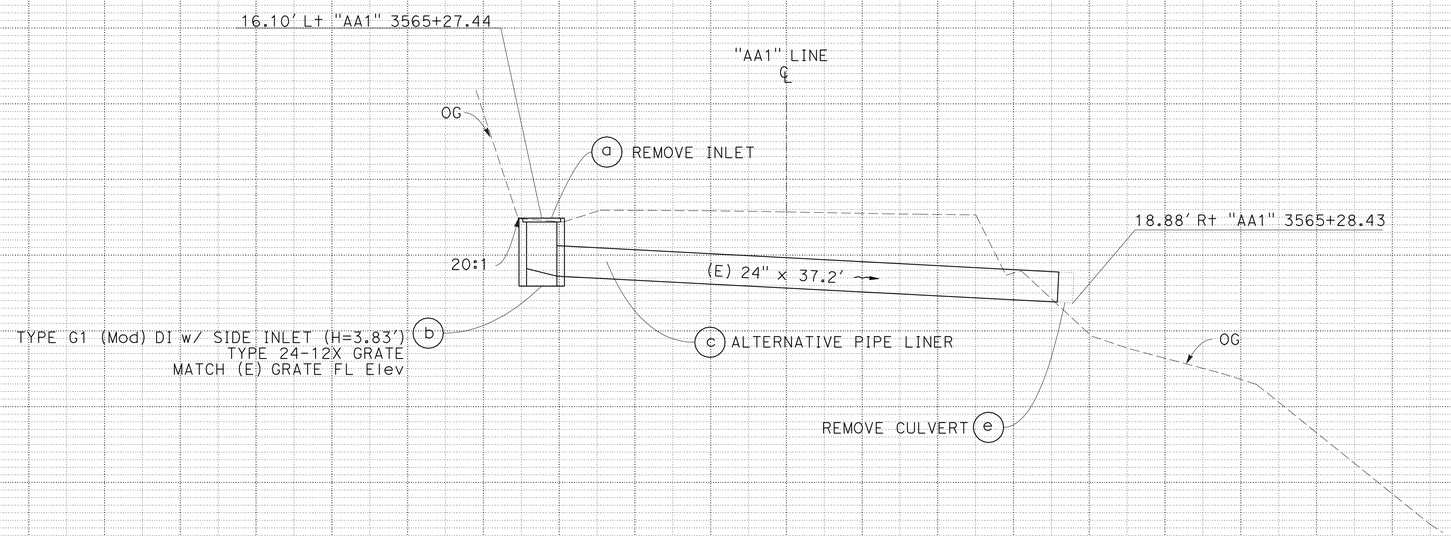

DRAINAGE SYSTEM No. 10

"AA1" 3565+28.73
Skew = 0°54'25.2" (RBS)

DRAINAGE PROFILE

NO SCALE

DP-10

STATE OF CALIFORNIA - DEPARTMENT OF TRANSPORTATION
Caltrans **DESIGN**

FUNCTIONAL SUPERVISOR: MASTRI ALVANDI
CALCULATED-DESIGNED BY: CHARLES WOOTEN
CHECKED BY: JOHN WELCH
REVISED BY: CHARLES WOOTEN
DATE REVISED: 3-26-10

LAST REVISION DATE PLOTTED => 26-JUL-2010
03-26-10 TIME PLOTTED => 13:40

Dist	COUNTY	ROUTE	POST MILES TOTAL PROJECT	SHEET No.	TOTAL SHEETS
03	ED	50	66.7/67.8	25	71

John D. Welch 7-12-10
REGISTERED CIVIL ENGINEER DATE

7-26-10
PLANS APPROVAL DATE

REGISTERED PROFESSIONAL ENGINEER
JOHN D. WELCH
No. 58303
Exp. 6/30/12
CIVIL
STATE OF CALIFORNIA

THE STATE OF CALIFORNIA OR ITS OFFICERS OR AGENTS SHALL NOT BE RESPONSIBLE FOR THE ACCURACY OR COMPLETENESS OF ELECTRONIC COPIES OF THIS PLAN SHEET.

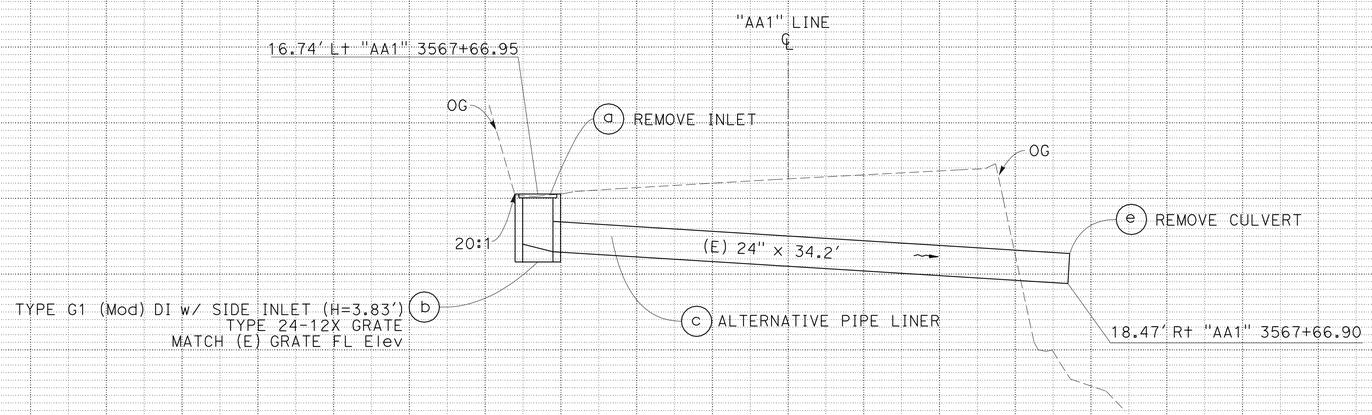

DRAINAGE SYSTEM No. 11

"AA1" 3567+66.92
Skew = 0°04'15.6" (RBS)

DRAINAGE PROFILE

NO SCALE

DP-11

REVISED BY	DATE REVISED
CHARLES WOOTEN	3-26-10

CALCULATED-DESIGNED BY	CHECKED BY
CHARLES WOOTEN	JOHN WELCH

FUNCTIONAL SUPERVISOR: MASTRI ALVANDI

STATE OF CALIFORNIA - DEPARTMENT OF TRANSPORTATION
Caltrans
DESIGN

LAST REVISION 03-26-10
DATE PLOTTED => 26-JUL-2010
TIME PLOTTED => 13:40

Dist	COUNTY	ROUTE	POST MILES TOTAL PROJECT	SHEET No.	TOTAL SHEETS
03	ED	50	66.7/67.8	26	71

REGISTERED CIVIL ENGINEER DATE 7-12-10

7-26-10
PLANS APPROVAL DATE

REGISTERED PROFESSIONAL ENGINEER
JOHN D. WELCH
No. 58303
Exp. 6/30/12
CIVIL
STATE OF CALIFORNIA

THE STATE OF CALIFORNIA OR ITS OFFICERS OR AGENTS SHALL NOT BE RESPONSIBLE FOR THE ACCURACY OR COMPLETENESS OF ELECTRONIC COPIES OF THIS PLAN SHEET.

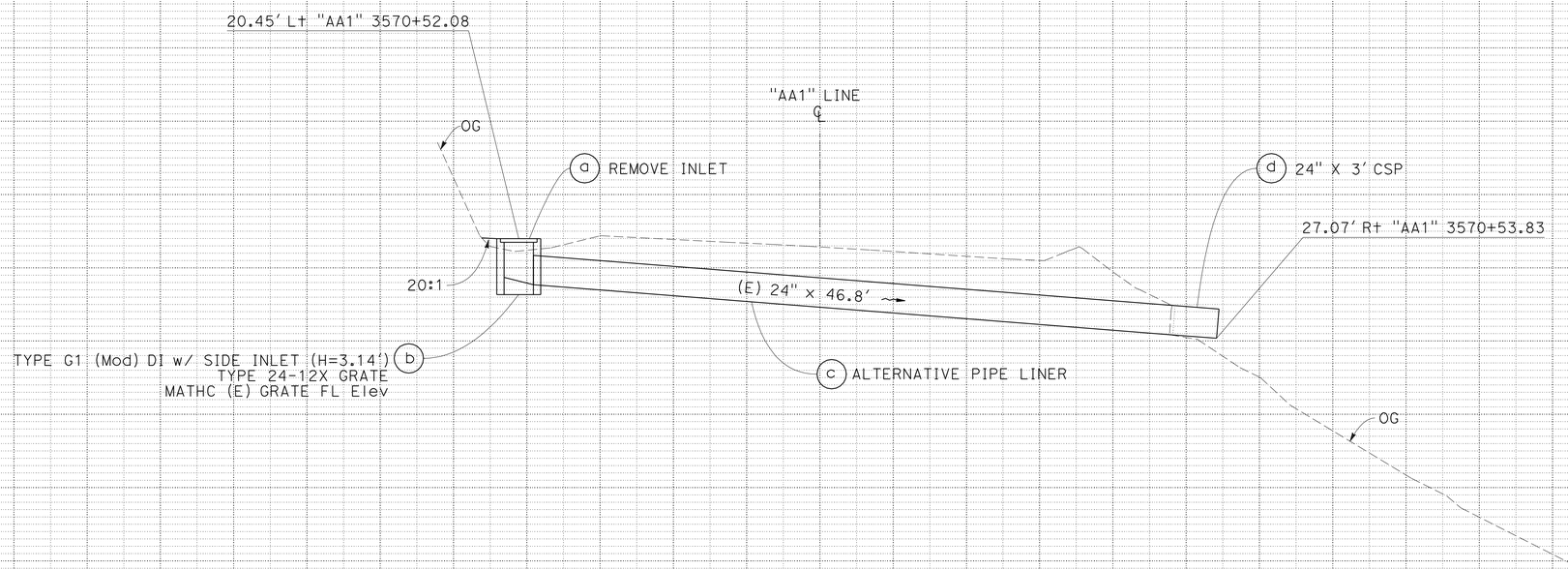

DRAINAGE SYSTEM No. 12

"AA1" 3570+53.71
Skew = 0°16'08.4" (RFS)

DRAINAGE PROFILE

NO SCALE

DP-12

STATE OF CALIFORNIA - DEPARTMENT OF TRANSPORTATION
Caltrans **DESIGN**

FUNCTIONAL SUPERVISOR: MASTRI ALVANDI
CALCULATED-DESIGNED BY: CHARLES WOOTEN
CHECKED BY: JOHN WELCH
REVISED BY: CHARLES WOOTEN
DATE REVISED: 3-26-10

LAST REVISION 03-26-10 | DATE PLOTTED => 26-JUL-2010 | TIME PLOTTED => 13:40

Dist	COUNTY	ROUTE	POST MILES TOTAL PROJECT	SHEET No.	TOTAL SHEETS
03	ED	50	66.7/67.8	27	71

John D. Welch 7-12-10
REGISTERED CIVIL ENGINEER DATE

7-26-10
PLANS APPROVAL DATE

REGISTERED PROFESSIONAL ENGINEER
JOHN D. WELCH
No. 58303
Exp. 6/30/12
CIVIL
STATE OF CALIFORNIA

THE STATE OF CALIFORNIA OR ITS OFFICERS OR AGENTS SHALL NOT BE RESPONSIBLE FOR THE ACCURACY OR COMPLETENESS OF ELECTRONIC COPIES OF THIS PLAN SHEET.

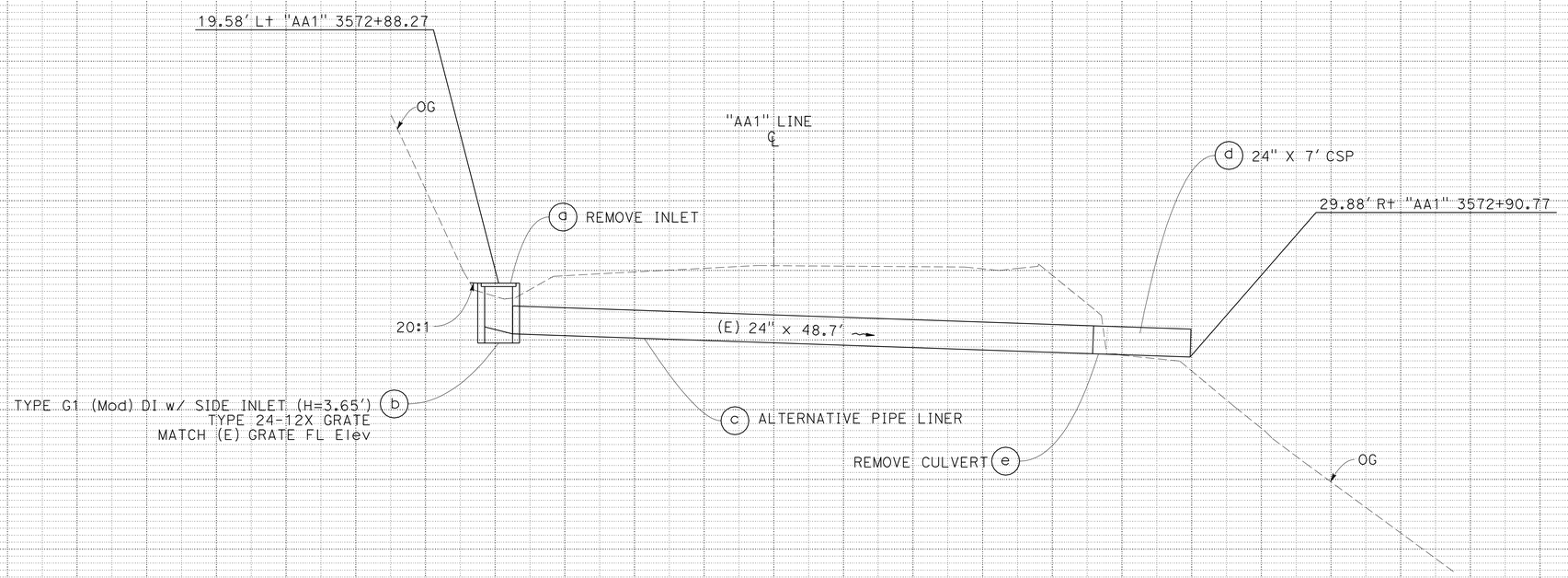

DRAINAGE SYSTEM No. 13

"AA1" 3572+90 0
Skew = 1°27'54.0" (RFS)

DRAINAGE PROFILE

NO SCALE

DP-13

STATE OF CALIFORNIA - DEPARTMENT OF TRANSPORTATION
Caltrans
DESIGN

FUNCTIONAL SUPERVISOR: MASTRI ALVANDI

CALCULATED-DESIGNED BY: JOHN WELCH
CHECKED BY:

REVISED BY: CHARLES WOOTEN
DATE REVISED: 3-26-10

CHARLES WOOTEN

LAST REVISION 03-26-10
DATE PLOTTED => 26-JUL-2010
TIME PLOTTED => 13:40

Dist	COUNTY	ROUTE	POST MILES TOTAL PROJECT	SHEET No.	TOTAL SHEETS
03	ED	50	66.7/67.8	28	71

REGISTERED CIVIL ENGINEER DATE

7-26-10
PLANS APPROVAL DATE

REGISTERED PROFESSIONAL ENGINEER JAMES PHILIPP No. 59614 Exp. 12/31/11 CIVIL STATE OF CALIFORNIA

THE STATE OF CALIFORNIA OR ITS OFFICERS OR AGENTS SHALL NOT BE RESPONSIBLE FOR THE ACCURACY OR COMPLETENESS OF ELECTRONIC COPIES OF THIS PLAN SHEET.

NOTES:

1. FOR DETAILS NOT SHOWN, SEE STANDARD PLANS D73.
2. WALLS AND BOTTOM OF SIDE INLET SHALL BE REINFORCED WITH #5 BARS @ 9" CENTERS (BOTH WAYS) PLACED 1½" CLEAR TO INSIDE OF BOX.
3. DRILL AND BOND DOWELS (#5 BARS) @ 6" CENTERS TO ATTACH SIDE INLET TO G1 DI. USE 12" DOWELS ON SIDE WALLS AND BOTTOM, 6" DOWELS ELSEWHERE.
4. FOR DETAILS ON DOWELS NOT SHOWN, SEE STANDARD Specs Sec 51-1.13.
5. FOR GRATE, USE 3" OD STEEL PIPE (0.500 IN THICK) CONFORMING TO: ASTM A 513 TYPE 5, (TOTAL GRATE WEIGHT 117 LBS.)
6. FOR FRAME, USE 4" X 3" X ¼" STRUCTURAL STEEL ANGLE CONFORMING TO: ASTM A 36, (TOTAL FRAME WEIGHT 58 LBS.)

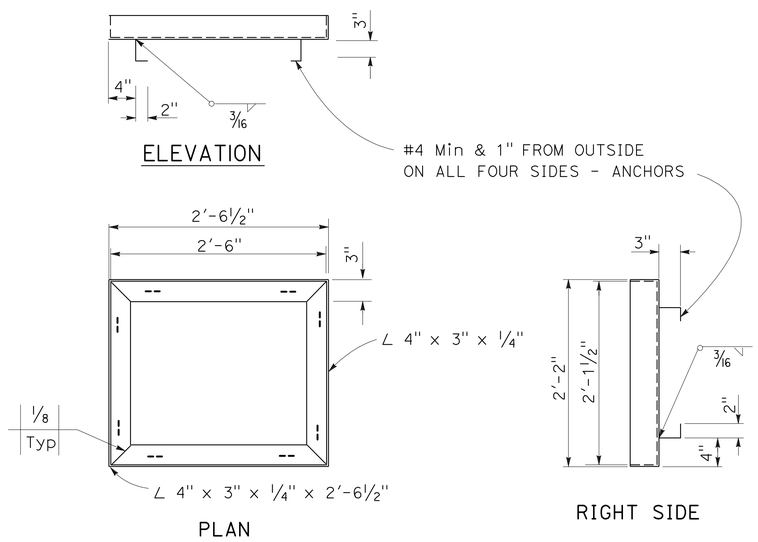

SIDE INLET FRAME

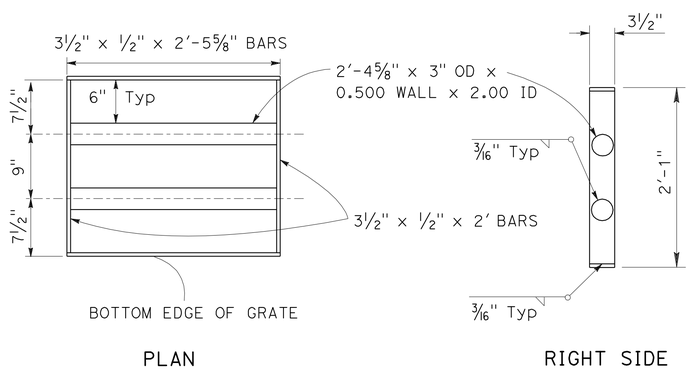

SIDE INLET GRATE

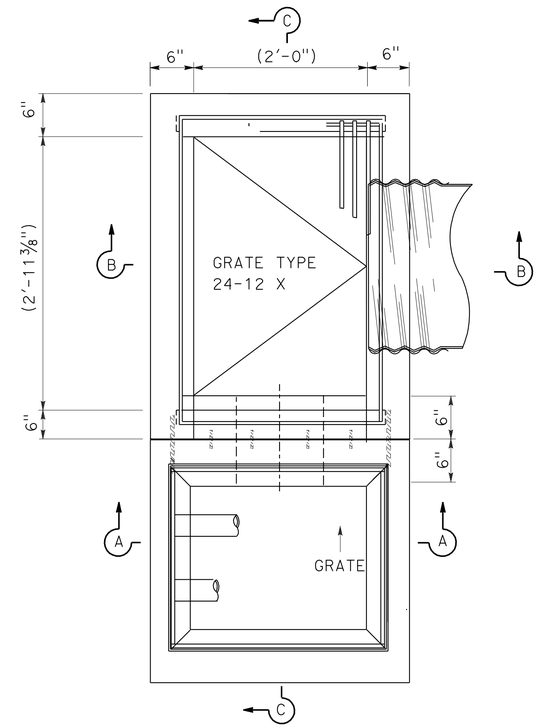

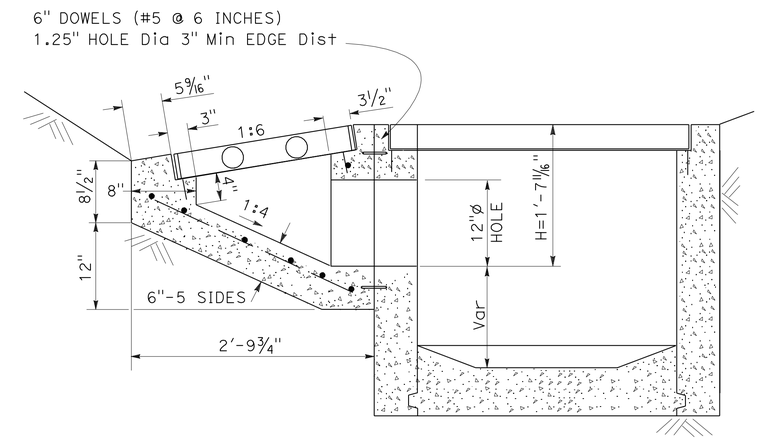

SECTION C-C

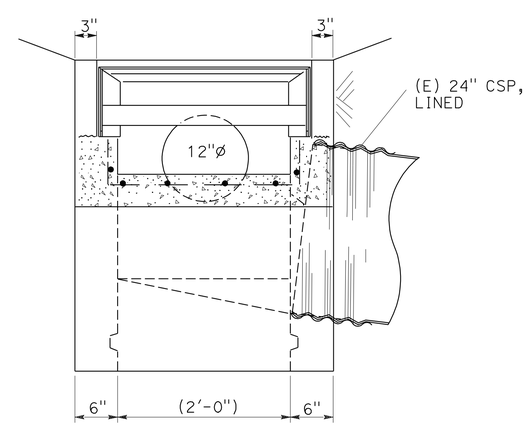

SECTION A-A

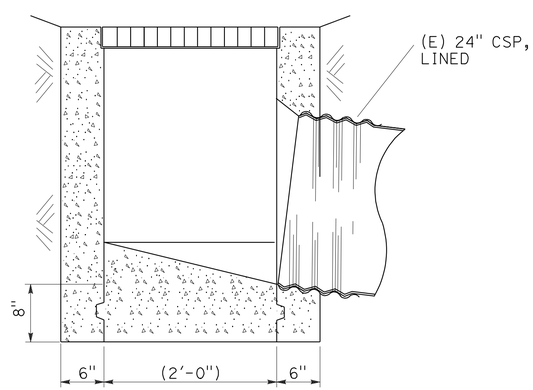

SECTION B-B

MODIFIED G1 DI WITH SIDE INLET

DRAINAGE DETAILS

NO SCALE

DD-1

STATE OF CALIFORNIA - DEPARTMENT OF TRANSPORTATION
Caltrans
PROJECT DEVELOPMENT
HYDRAULICS

FUNCTIONAL SUPERVISOR: DENNIS R. JAGODA
CALCULATED-DESIGNED BY: JAMES M. PHILIPP
CHECKED BY: GURDEEP BHATTAL
REVISED BY
DATE REVISED

LAST REVISION 03-23-10
DATE PLOTTED => 26-JUL-2010
TIME PLOTTED => 13:47

Dist	COUNTY	ROUTE	POST MILES TOTAL PROJECT	SHEET No.	TOTAL SHEETS
03	ED	50	66.7/67.8	29	71

James M. Philipp 7-12-10
REGISTERED CIVIL ENGINEER DATE

7-26-10
PLANS APPROVAL DATE

REGISTERED PROFESSIONAL ENGINEER JAMES PHILIPP No. 59614 Exp. 12/31/11 CIVIL STATE OF CALIFORNIA

THE STATE OF CALIFORNIA OR ITS OFFICERS OR AGENTS SHALL NOT BE RESPONSIBLE FOR THE ACCURACY OR COMPLETENESS OF ELECTRONIC COPIES OF THIS PLAN SHEET.

NOTES:
1. FOR METAL POST DETAILS NOT SHOWN SEE Std PLAN A73B.
2. FOR UNDERDRAIN DETAILS NOT SHOWN SEE Std PLAN D102.
3. QUANTITIES FOR MARKER DETAILS AND REPAIR CULVERT DETAIL CAN BE FOUND ON DQ-2.

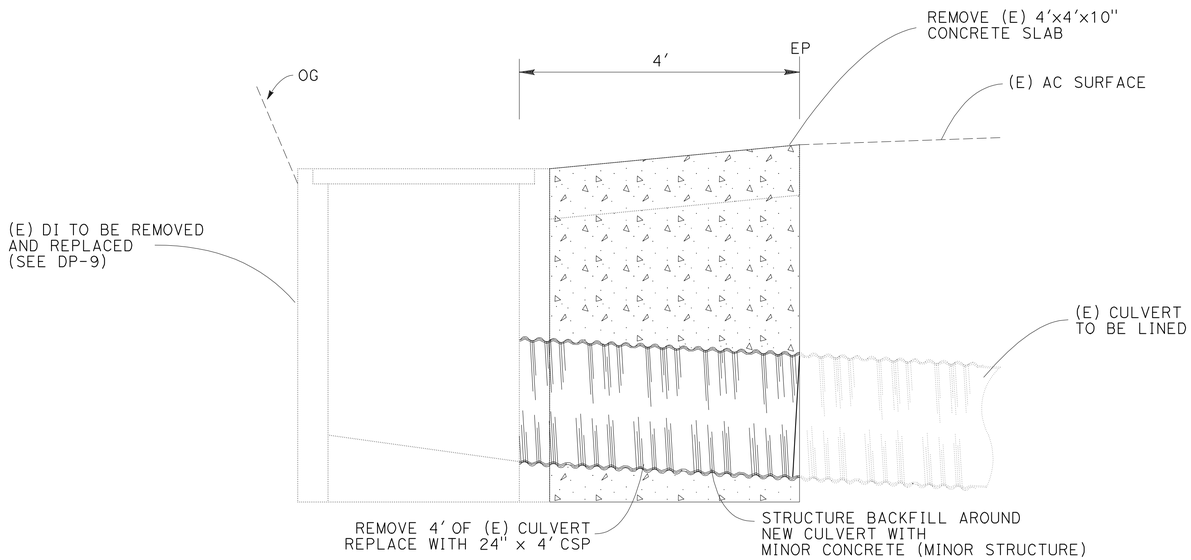

ELEVATION

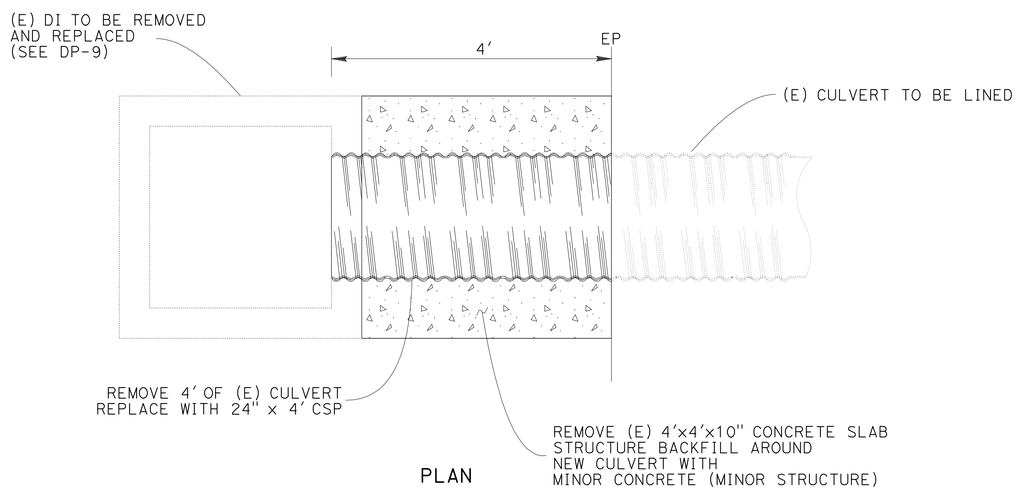

PLAN

REPAIR CULVERT DETAIL

DRAINAGE SYSTEM No. 9

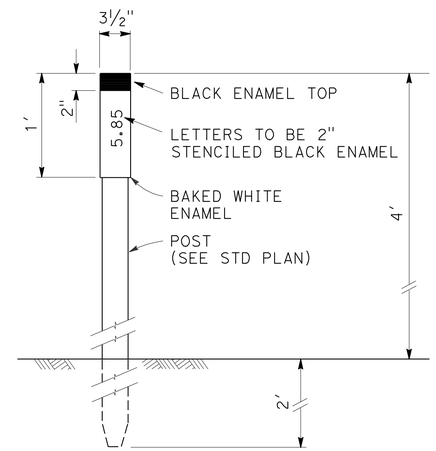

MARKER (CULVERT)

MARKER LOCATION TO BE DETERMINED BY ENGINEER IN THE FIELD

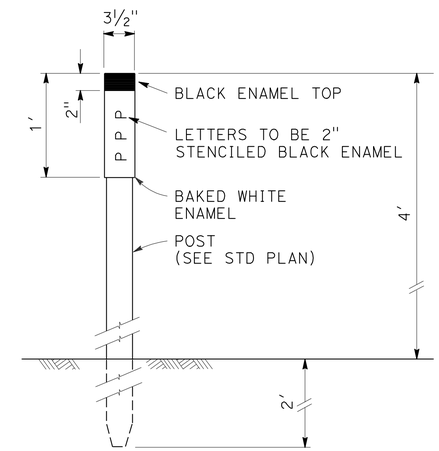

UNDERDRAIN MARKER

MARKER LOCATION TO BE DETERMINED BY ENGINEER IN THE FIELD

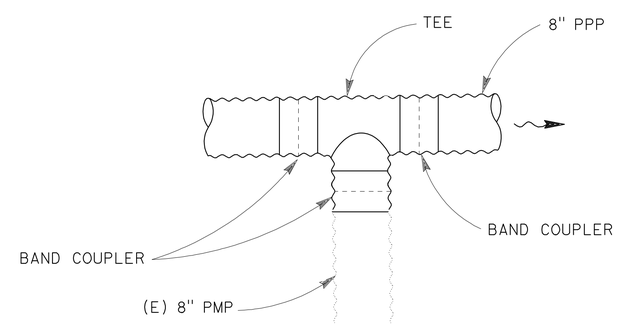

CONNECTING (E) 8" PMP TO NEW 8" PPP

"AA1" LINE STA 3528+51 (Approx), 25' Lt (Approx)

DRAINAGE DETAILS

NO SCALE

DD-2

STATE OF CALIFORNIA - DEPARTMENT OF TRANSPORTATION
Caltrans
PROJECT DEVELOPMENT HYDRAULICS

FUNCTIONAL SUPERVISOR: DENNIS R. JAGODA
CALCULATED-DESIGNED BY: JAMES M. PHILIPP
CHECKED BY: GURDEEP BHATTAL
REVISED BY / DATE REVISED

LAST REVISION 03-23-10
DATE PLOTTED => 26-JUL-2010
TIME PLOTTED => 13:40

Dist	COUNTY	ROUTE	POST MILES TOTAL PROJECT	SHEET No.	TOTAL SHEETS
03	ED	50	66.7/67.8	30	71

REGISTERED CIVIL ENGINEER 7-12-10 DATE

7-26-10
PLANS APPROVAL DATE

REGISTERED PROFESSIONAL ENGINEER JOHN D. WELCH No. 58303 Exp. 6/30/12 CIVIL STATE OF CALIFORNIA

THE STATE OF CALIFORNIA OR ITS OFFICERS OR AGENTS SHALL NOT BE RESPONSIBLE FOR THE ACCURACY OR COMPLETENESS OF ELECTRONIC COPIES OF THIS PLAN SHEET.

DRAINAGE QUANTITIES

DRAINAGE PLAN SHEET No.	DRAINAGE SYSTEM No. ⬡	DRAINAGE UNIT ○	REMOVE INLET	DRAINAGE INLET: HEIGHT OF INLET (N)	DRAINAGE INLET: FRAME & GRATE (TYPE 24-12X) (N)	DRAINAGE INLET: FRAME & GRATE (SIDE INLET) (N)	DRAINAGE INLET: MINOR CONCRETE (MINOR STRUCTURE) (F)	DRAINAGE INLET: MISCELLANEOUS IRON AND STEEL (F)	DRAINAGE INLET: 12" #5 REBAR DOWEL (N)	DRAINAGE INLET: 6" #5 REBAR DOWEL (N)	24" ALTERNATIVE PIPE LINER	24" CSP (0.109" THICK)	REMOVE CULVERT	DESCRIPTION	STATION	DRAINAGE PLAN SHEET No.	DRAINAGE SYSTEM No. ⬡	DRAINAGE UNIT ○
			EA	LF	EA	LB	CY	LB	EA	EA	LF	LF	LF					
D-1	1	a	1												"AA1" 3531+92.23	D-1	1	a
		b		4.24	1	175	1.55	557	8	16				TYPE G1 (MOD) INLET				b
		c									81.8							c
D-1	2	a	1												"AA1" 3536+42.21	D-1	2	a
		b		3.92	1	175	1.48	557	8	16				TYPE G1 (MOD) INLET				b
		c									119.0							c
D-2	3	a	1												"AA1" 3540+73.81	D-2	3	a
		b		3.56	1	175	1.40	557	8	16				TYPE G1 (MOD) INLET				b
		c									43.9							c
		d										4.0		EXTEND CULVERT				d
		e											1.0	REMOVE BEFORE EXTENDING				e
D-2	4	a	1												"AA1" 3542+76.60	D-2	4	a
		b		3.67	1	175	1.43	557	8	16				TYPE G1 (MOD) INLET				b
		c									32.8							c
D-2	5	a	1												"AA1" 3546+06.91	D-2	5	a
		b		3.92	1	175	1.48	557	8	16				TYPE G1 (MOD) INLET				b
		c									30.9							c
D-2	6	a	1												"AA1" 3547+83.97	D-2	6	a
		b		3.20	1	175	1.32	557	8	16				TYPE G1 (MOD) INLET				b
		c									37.1							c
		e											2.5	4" BEYOND (E) ROCK WALL				e
D-2	7	a	1												"AA1" 3551+84.29	D-2	7	a
		b		3.71	1	175	1.44	557	8	16				TYPE G1 (MOD) INLET				b
		c									32.7							c
		e											2.5	4" BEYOND (E) ROCK WALL				e
D-3	8	a	1												"AA1" 3558+46.77	D-3	8	a
		b		3.51	1	175	1.39	557	8	16				TYPE G1 (MOD) INLET				b
		c									30.2							c
		e											3.0	4" BEYOND (E) ROCK WALL				e
D-3	9	a	1												"AA1" 3561+91.02	D-3	9	a
		b		4.00	1	175	1.50	557	8	16				TYPE G1 (MOD) INLET				b
		c									55.4							c
		d										7.0		EXTEND CULVERT				d
		e											1.0	REMOVE BEFORE EXTENDING				e
D-3	10	a	1												"AA1" 3565+28.73	D-3	10	a
		b		3.83	1	175	1.46	557	8	16				TYPE G1 (MOD) INLET				b
		c									37.2							c
		e											1.0	REMOVE 1' OF Culv OUTLET				e
D-4	11	a	1												"AA1" 3567+66.92	D-4	11	a
		b		3.83	1	175	1.46	557	8	16				TYPE G1 (MOD) INLET				b
		c									34.2							c
		e											1.5	4" BEYOND (E) ROCK WALL				e
D-4	12	a	1												"AA1" 3570+53.71	D-4	12	a
		b		3.14	1	175	1.31	557	8	16				TYPE G1 (MOD) INLET				b
		c									46.8							c
		d										3.0		EXTEND CULVERT				d
D-4	13	a	1												"AA1" 3572+90.00	D-4	13	a
		b		3.65	1	175	1.42	557	8	16				TYPE G1 (MOD) INLET				b
		c									48.7							c
		d										7.0		EXTEND CULVERT				d
		e											1.0	REMOVE BEFORE EXTENDING				e
TOTAL			13		13	2275	18.64*	7241	104	208	630.7	21.0*	13.5*					

* - FOR ADDITIONAL QUANTITIES, SEE DQ-2.

ABBREVIATIONS:

(N) - NON-PAY ITEM. FOR INFORMATION ONLY
(F) - FINAL PAY ITEM
(S) - SMOOTH INTERIOR
(SDR) - STANDARD DIMENSION RATIO

NOTE:

1. HDPE REQUIRED TO HAVE A NOMINAL OD OF 21.6" AND A MINIMUM SDR OF 26.

DRAINAGE QUANTITIES

LOCATION	REMOVE PIPE	PLASTIC PIPE UNDERDRAIN SYSTEM: FILTER FABRIC (N)	PERMEABLE BACKFILL MATERIAL (N)	8" PERFORATED PLASTIC PIPE UNDERDRAIN: 8" PP TERMINAL RISER	8" PP VERTICAL RISER	8" PERFORATED PLASTIC (S) PIPE UNDERDRAIN	STRUCTURAL BACKFILL (N)	EXCAVATION (N)	WELDED METAL COVER (N)
STATION (Apporx)	LF	SQFT	CY	LF	LF	LF	CY	CY	EA
"AA1" 3527+41 to 3531+91	450	4890	97	4	8	450	14	111	3
TOTAL	450	-	-	462			-	-	-

ALTERNATIVE PIPE LINER ALTERNATIVES

1) HIGH DENSITY POLYETHYLENE SLIP-LINING (HDPE)
2) CURED-IN-PLACE-PIPE (CIPP)

DRAINAGE QUANTITIES

DQ-1

REVISED BY	CHARLES WOOTEN
DATE REVISED	3-26-10
CALCULATED-DESIGNED BY	CHARLES WOOTEN
CHECKED BY	JOHN WELCH
FUNCTIONAL SUPERVISOR	MASTRI ALVANDI

STATE OF CALIFORNIA - DEPARTMENT OF TRANSPORTATION
Caltrans DESIGN

LAST REVISION 03-26-10 | DATE PLOTTED => 27-JUL-2010 | TIME PLOTTED => 06:26

Dist	COUNTY	ROUTE	POST MILES TOTAL PROJECT	SHEET No.	TOTAL SHEETS
03	ED	50	66.7/67.8	31	71

John D. Welch 7-12-10
REGISTERED CIVIL ENGINEER DATE

7-26-10
PLANS APPROVAL DATE

REGISTERED PROFESSIONAL ENGINEER
JOHN D. WELCH
No. 58303
Exp. 6/30/12
CIVIL
STATE OF CALIFORNIA

THE STATE OF CALIFORNIA OR ITS OFFICERS OR AGENTS SHALL NOT BE RESPONSIBLE FOR THE ACCURACY OR COMPLETENESS OF ELECTRONIC COPIES OF THIS PLAN SHEET.

CULVERT MARKERS

DRAINAGE SYSTEM No.	LOCATION		POSTMILE	MARKER (CULVERT)
				EA
1	L+	"AA1" 3531+92.87	66.89	1
2	L+	"AA1" 3536+41.83	66.98	1
3	L+	"AA1" 3540+73.00	67.06	1
4	L+	"AA1" 3542+76.30	67.10	1
5	L+	"AA1" 3546+05.62	67.16	1
6	L+	"AA1" 3547+82.57	67.19	1
7	L+	"AA1" 3551+82.43	67.27	1
8	L+	"AA1" 3558+46.36	67.40	1
9	L+	"AA1" 3561+90.11	67.46	1
10	L+	"AA1" 3565+27.44	67.52	1
11	L+	"AA1" 3567+65.38	67.57	1
12	L+	"AA1" 3570+52.08	67.623	1
13	L+	"AA1" 3572+88.27	67.67	1
			TOTAL	13

UNDERDRAIN MARKERS

LOCATION		POSTMILE	UNDERDRAIN MARKER
			EA
L+	"AA1" 3527+41.00	66.81	1
L+	"AA1" 3528+51.00	66.83	1
L+	"AA1" 3530+00.00	66.86	1
		TOTAL	3

REPAIR CULVERT QUANTITIES

LOCATION		POSTMILE	REMOVE CULVERT	24" CSP (0.109" THICK)	MINOR CONCRETE (MINOR STRUCTURE)
			LF	LF	CY
L+	"AA1" 3561+91.02	67.46	4	4	2
		TOTAL	4*	4*	2*

* - FOR ADDITIONAL QUANTITIES, SEE DQ-1.

DRAINAGE QUANTITIES

DQ-2

STATE OF CALIFORNIA - DEPARTMENT OF TRANSPORTATION
Caltrans DESIGN

FUNCTIONAL SUPERVISOR: MASTRI ALVANDI
CALCULATED-DESIGNED BY: CHARLES WOOTEN
CHECKED BY: JOHN WELCH
REVISED BY: CHARLES WOOTEN
DATE REVISED: 3-26-10

LAST REVISION 03-26-10
DATE PLOTTED => 26-JUL-2010
TIME PLOTTED => 13:40

Dist	COUNTY	ROUTE	POST MILES TOTAL PROJECT	SHEET No.	TOTAL SHEETS
03	ED	50	66.7/67.8	32	71

John D. Welch 3-29-10
REGISTERED CIVIL ENGINEER DATE

7-26-10
PLANS APPROVAL DATE

REGISTERED PROFESSIONAL ENGINEER
JOHN D. WELCH
No. 58303
Exp. 6/30/10
CIVIL
STATE OF CALIFORNIA

THE STATE OF CALIFORNIA OR ITS OFFICERS OR AGENTS SHALL NOT BE RESPONSIBLE FOR THE ACCURACY OR COMPLETENESS OF ELECTRONIC COPIES OF THIS PLAN SHEET.

NOTES:
1. ADDITIONAL CONSTRUCTION AREA SIGNS SHOWN ON TH, MI AND MIQ PLAN SHEETS.
2. SIGN LOCATIONS SHOWN ARE APPROXIMATE.
3. EXACT SIGN LOCATIONS TO BE DETERMINED BY THE ENGINEER.

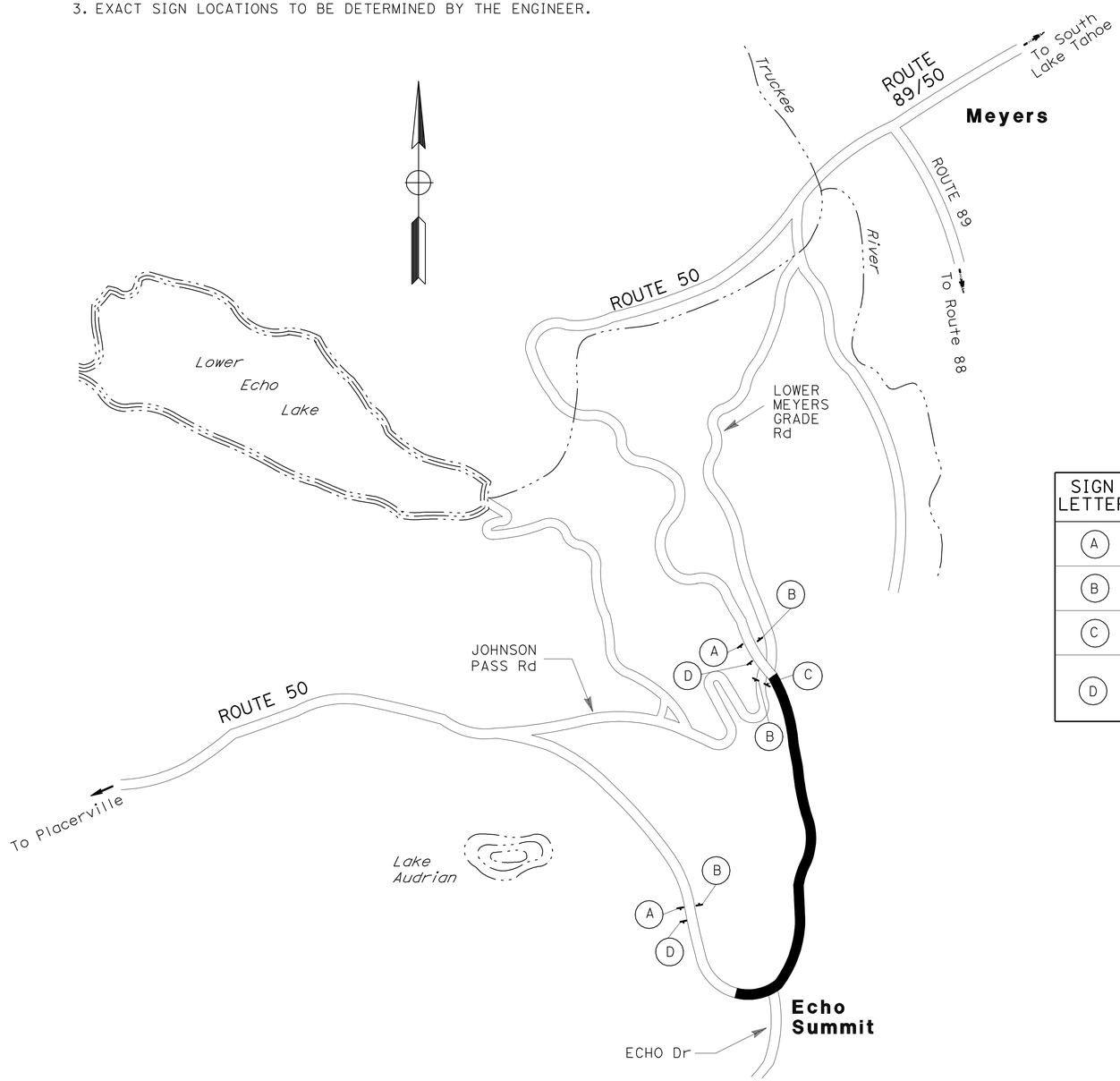

LEGEND

(XX) CONSTRUCTION AREA SIGN LETTER

SIGN - SINGLE POST

SIGN - TWO POST

STATIONARY MOUNTED CONSTRUCTION AREA SIGNS

SIGN LETTER	SIGN CODE FEDERAL	SIGN CODE CALIFORNIA	PANEL SIZE	SIGN MESSAGE	NUMBER OF POST AND SIZE	NUMBER OF SIGNS
A	W20-1	C23	48" x 48"	ROAD WORK AHEAD	1-6" x 6"	2
B	G20-2	C14	36" x 18"	END ROAD WORK	1-4" x 4"	3
C	W20-1	C23	36" x 36"	ROAD WORK AHEAD	1-4" x 6"	1
D		C40(MOD)	48" x 36"	TRAFFIC FINES DOUBLED IN WORK ZONES	1-4" x 6"	2

D C40(Mod)<CA>

TRAFFIC FINES
DOUBLED IN
WORK ZONES

4" D SERIES LETTERS

48"X36"

Retroreflective white background with black legend and border.

THIS PLAN ACCURATE FOR CONSTRUCTION AREA SIGN WORK ONLY

CONSTRUCTION AREA SIGNS

NO SCALE

CS-1

STATE OF CALIFORNIA - DEPARTMENT OF TRANSPORTATION
Caltrans DESIGN

FUNCTIONAL SUPERVISOR: MASTRI ALVANDI
CALCULATED-DESIGNED BY: CHARLES WOOTEN
CHECKED BY: JOHN WELCH
REVISED BY: CHARLES WOOTEN
DATE REVISED: 3-26-10

LAST REVISION 03-26-10 | DATE PLOTTED => 26-JUL-2010 | TIME PLOTTED => 12:54

Dist	COUNTY	ROUTE	POST MILES TOTAL PROJECT	SHEET No.	TOTAL SHEETS
03	ED	50	66.7/67.8	33	71

John D. Welch 3-29-10
REGISTERED CIVIL ENGINEER DATE

7-26-10
PLANS APPROVAL DATE

REGISTERED PROFESSIONAL ENGINEER
JOHN WELCH
No. 58303
Exp. 6/30/10
CIVIL
STATE OF CALIFORNIA

THE STATE OF CALIFORNIA OR ITS OFFICERS OR AGENTS SHALL NOT BE RESPONSIBLE FOR THE ACCURACY OR COMPLETENESS OF ELECTRONIC COPIES OF THIS PLAN SHEET.

NOTES:
1. BARRICADE LOCATIONS SHOWN ARE APPROXIMATE.
2. EXACT BARRICADE LOCATIONS TO BE DETERMINED BY THE ENGINEER.

LEGEND

‡ TYPE III BARRICADE

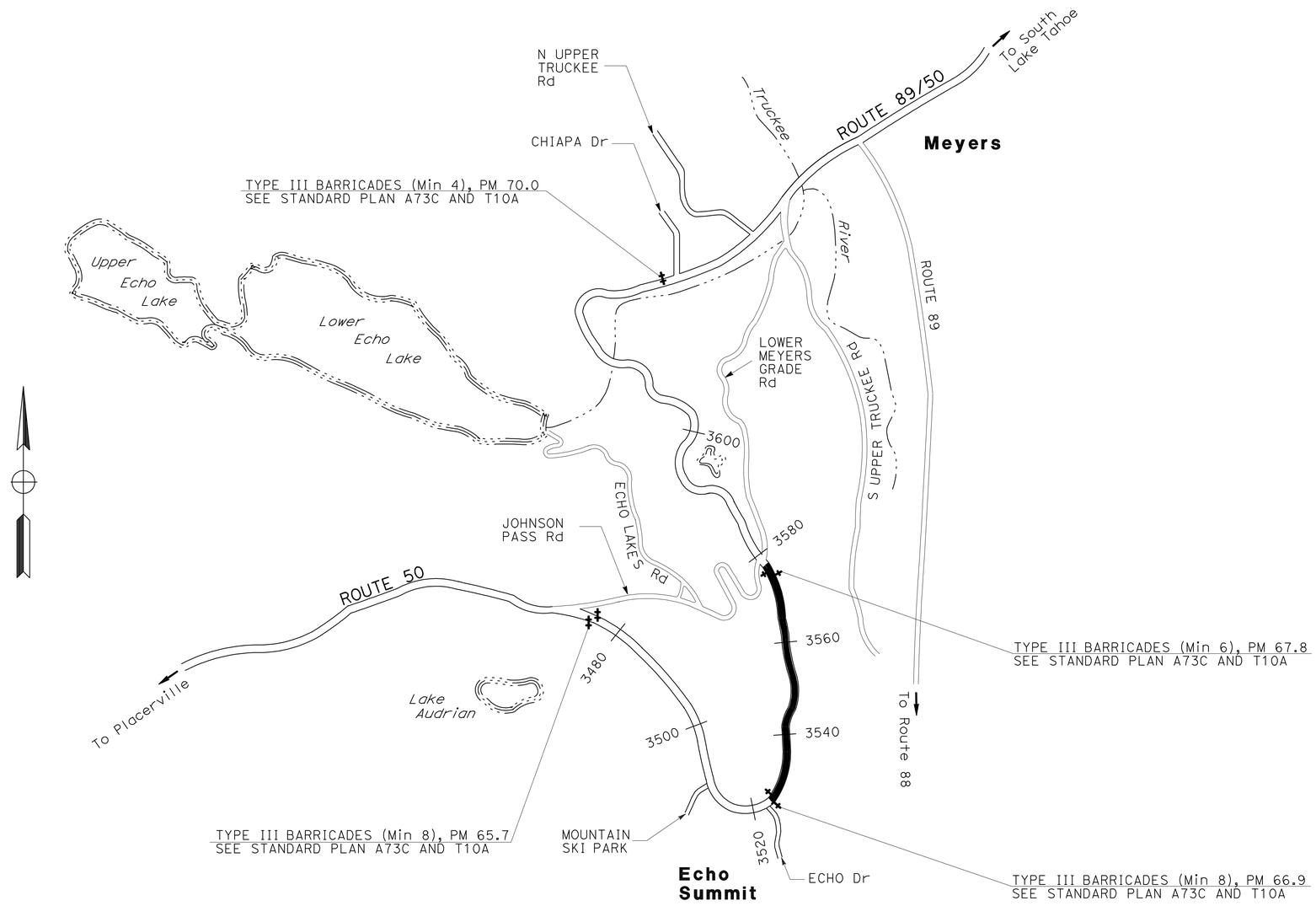

THIS PLAN ACCURATE FOR TRAFFIC HANDLING ONLY

TRAFFIC HANDLING
NO SCALE

TH-1

REVISED BY	DATE REVISED
CALCULATED-DESIGNED BY	CHECKED BY
FUNCTIONAL SUPERVISOR	

STATE OF CALIFORNIA - DEPARTMENT OF TRANSPORTATION
Caltrans

LAST REVISION 00-00-00 | DATE PLOTTED => TIME PLOTTED =>

Dist	COUNTY	ROUTE	POST MILES TOTAL PROJECT	SHEET No.	TOTAL SHEETS
03	ED	50	66.7/67.8	34	71

John D. Welch 3-29-10
REGISTERED CIVIL ENGINEER DATE

7-26-10
PLANS APPROVAL DATE

REGISTERED PROFESSIONAL ENGINEER
JOHN D. WELCH
No. 58303
Exp. 6/30/10
CIVIL
STATE OF CALIFORNIA

THE STATE OF CALIFORNIA OR ITS OFFICERS OR AGENTS SHALL NOT BE RESPONSIBLE FOR THE ACCURACY OR COMPLETENESS OF ELECTRONIC COPIES OF THIS PLAN SHEET.

NOTES:
1. SIGN LOCATIONS SHOWN ARE APPROXIMATE.
2. EXACT SIGN LOCATIONS TO BE DETERMINED BY THE ENGINEER.
3. ADDITIONAL SIGNS SHOWN ON CONSTRUCTION AREA SIGNS PLAN SHEET.

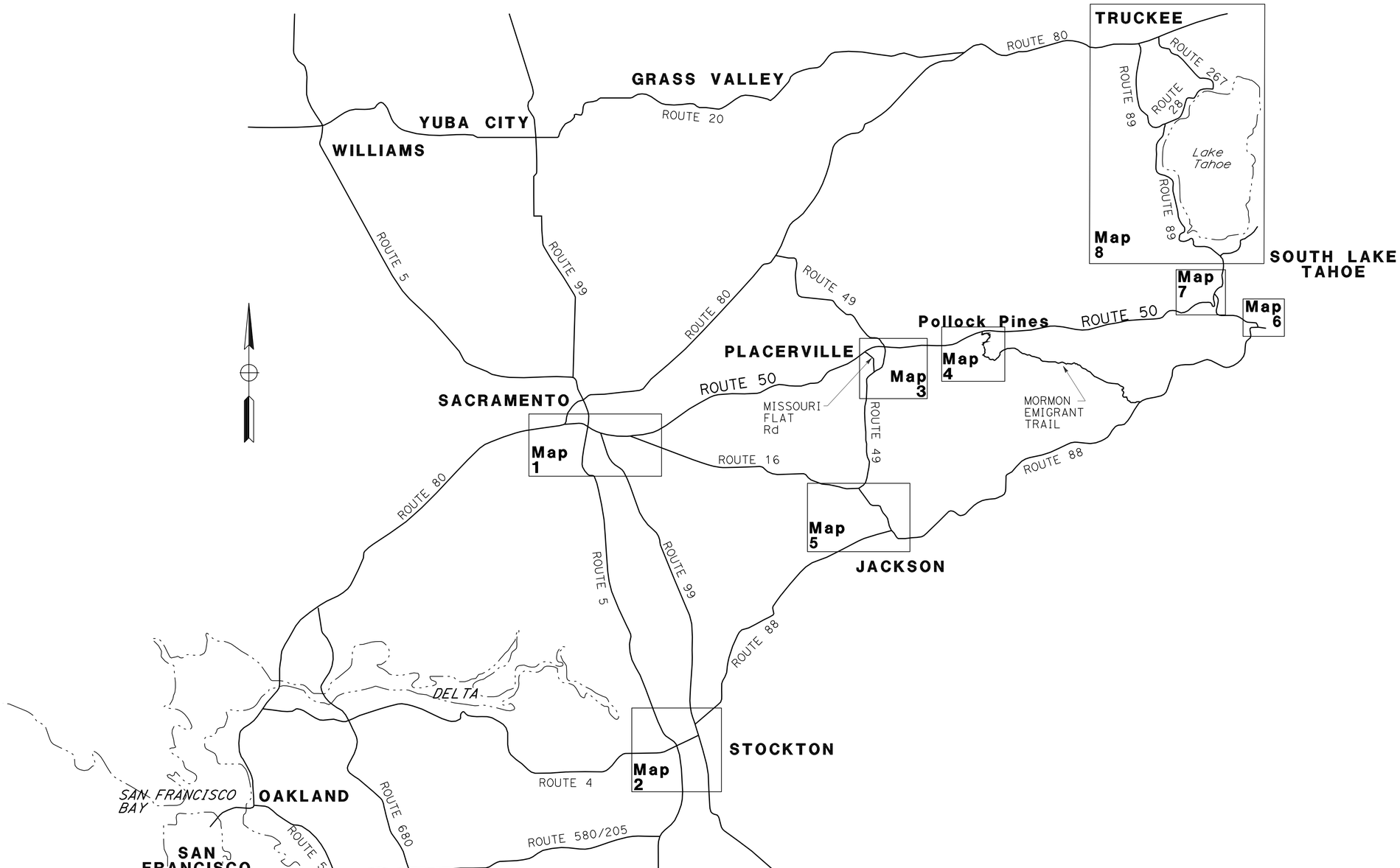

THIS PLAN ACCURATE FOR MOTORIST INFORMATION PLANS ONLY

MOTORIST INFORMATION PLAN

NO SCALE

MI-1

CHARLES WOOTEN	3-26-10
REVISED BY	DATE REVISED
CHARLES WOOTEN	JOHN WELCH
CALCULATED-DESIGNED BY	CHECKED BY
FUNCTIONAL SUPERVISOR	MASTRI ALVANDI

STATE OF CALIFORNIA - DEPARTMENT OF TRANSPORTATION
Caltrans
DESIGN

LAST REVISION 03-26-10
DATE PLOTTED => 26-JUL-2010
TIME PLOTTED => 12:54

Dist	COUNTY	ROUTE	POST MILES TOTAL PROJECT	SHEET No.	TOTAL SHEETS
03	ED	50	66.7/67.8	35	71

John D. Welch 3-29-10
REGISTERED CIVIL ENGINEER DATE

7-26-10
PLANS APPROVAL DATE

REGISTERED PROFESSIONAL ENGINEER
JOHN D. WELCH
No. 58303
Exp. 6/30/10
CIVIL
STATE OF CALIFORNIA

THE STATE OF CALIFORNIA OR ITS OFFICERS OR AGENTS SHALL NOT BE RESPONSIBLE FOR THE ACCURACY OR COMPLETENESS OF ELECTRONIC COPIES OF THIS PLAN SHEET.

LEGEND

- (X) DETOUR SIGN LETTER
- SIGN - SINGLE POST
- SIGN - TWO POST
- PORTABLE FLASHING BEACON
- BARRICADE
- PORTABLE C.M.S

MAP 1
SACRAMENTO

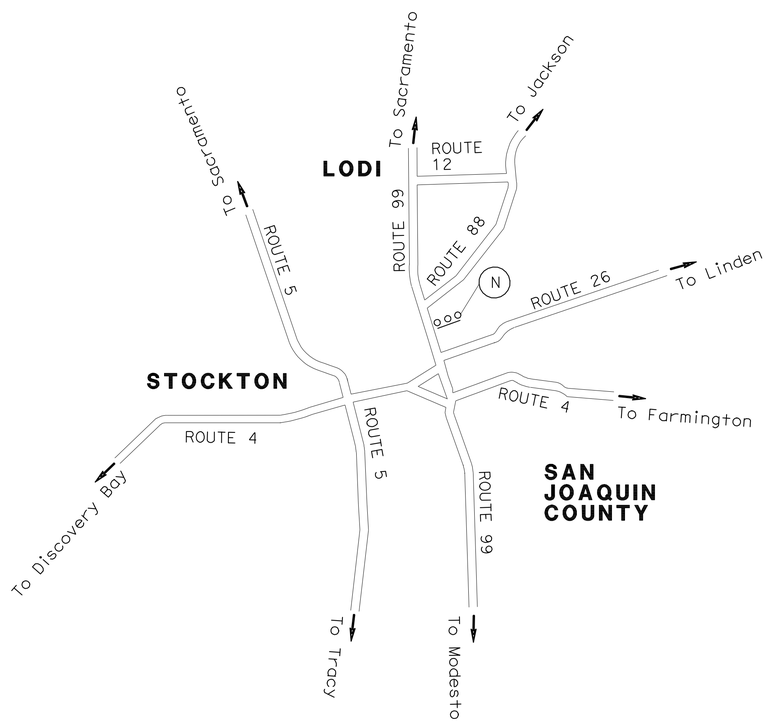

MAP 2
STOCKTON

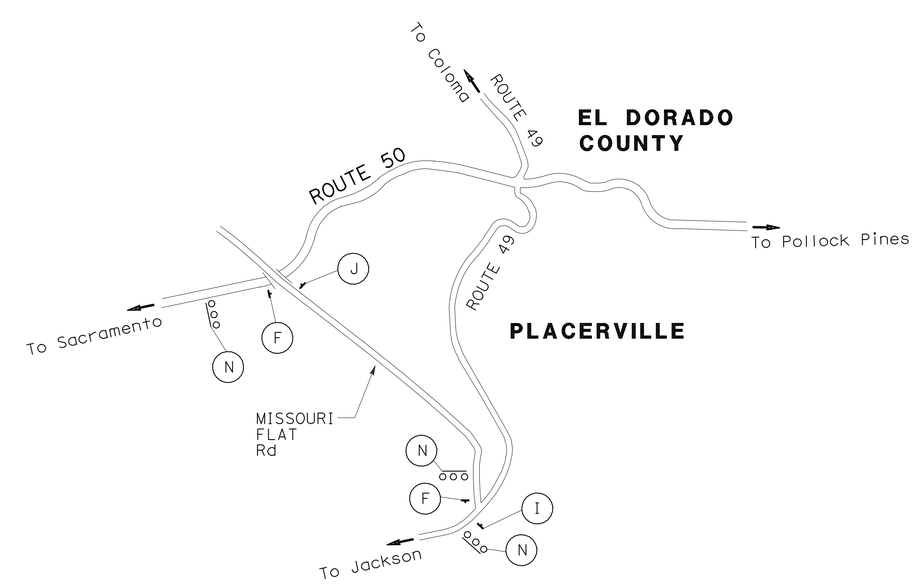

MAP 3
PLACERVILLE

THIS PLAN ACCURATE FOR MOTORIST INFORMATION PLANS ONLY

MOTORIST INFORMATION PLAN
NO SCALE

MI-2

STATE OF CALIFORNIA - DEPARTMENT OF TRANSPORTATION	FUNCTIONAL SUPERVISOR	CALCULATED-DESIGNED BY	REVISED BY
Caltrans DESIGN	MASTRI ALVANDI	CHECKED BY	DATE REVISED
		CHARLES WOOTEN	CHARLES WOOTEN
		JOHN WELCH	3-26-10

LAST REVISION 03-26-10 | DATE PLOTTED => 26-JUL-2010 | TIME PLOTTED => 12:54

Dist	COUNTY	ROUTE	POST MILES TOTAL PROJECT	SHEET No.	TOTAL SHEETS
03	ED	50	66.7/67.8	36	71

John D. Welch 3-29-10
REGISTERED CIVIL ENGINEER DATE

7-26-10
PLANS APPROVAL DATE

REGISTERED PROFESSIONAL ENGINEER
JOHN D. WELCH
No. 58303
Exp. 6/30/10
CIVIL
STATE OF CALIFORNIA

THE STATE OF CALIFORNIA OR ITS OFFICERS OR AGENTS SHALL NOT BE RESPONSIBLE FOR THE ACCURACY OR COMPLETENESS OF ELECTRONIC COPIES OF THIS PLAN SHEET.

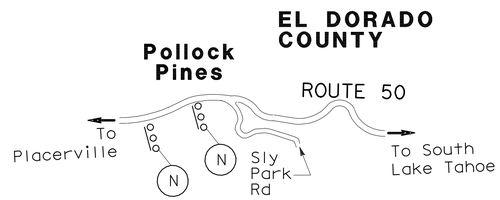

MAP 4
POLLOCK PINES AREA

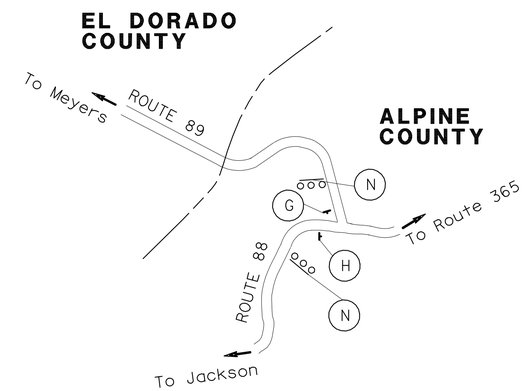

MAP 6
ROUTE 88/89 JUNCTION

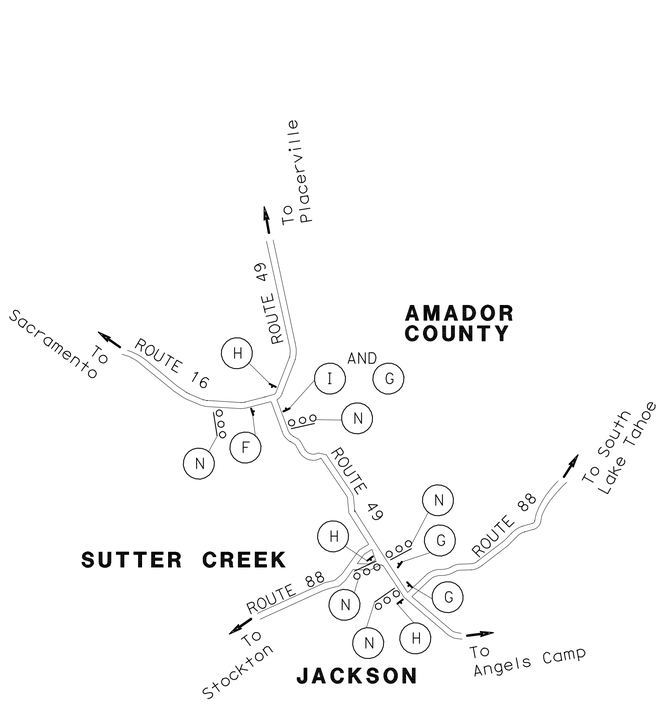

MAP 5
AMADOR COUNTY

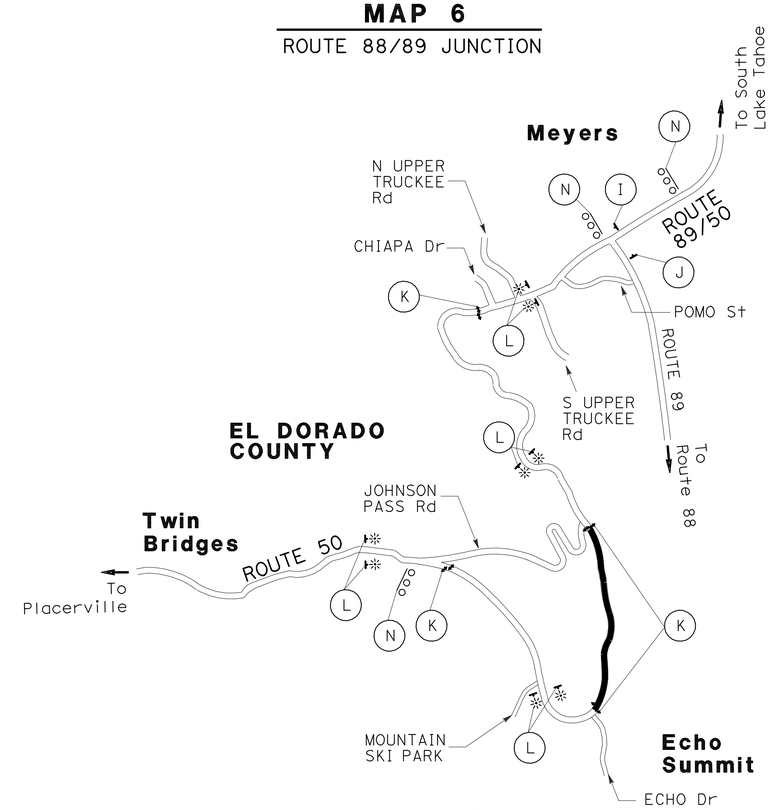

MAP 7
ECHO SUMMIT

THIS PLAN ACCURATE FOR MOTORIST INFORMATION PLANS ONLY

MOTORIST INFORMATION PLAN
NO SCALE

MI-3

CALCULATED-DESIGNED BY	CHECKED BY	REVISED BY	DATE REVISED	FUNCTIONAL SUPERVISOR
CHARLES WOOTEN	JOHN WELCH	CHARLES WOOTEN	3-26-10	MASTRI ALVANDI

STATE OF CALIFORNIA - DEPARTMENT OF TRANSPORTATION
Caltrans DESIGN

LAST REVISION 03-26-10 | DATE PLOTTED => 26-JUL-2010 | TIME PLOTTED => 12:54

Dist	COUNTY	ROUTE	POST MILES TOTAL PROJECT	SHEET No.	TOTAL SHEETS
03	ED	50	66.7/67.8	37	71

John D. Welch 3-29-10
REGISTERED CIVIL ENGINEER DATE

7-26-10
PLANS APPROVAL DATE

REGISTERED PROFESSIONAL ENGINEER
JOHN D. WELCH
No. 58303
Exp. 6/30/10
CIVIL
STATE OF CALIFORNIA

THE STATE OF CALIFORNIA OR ITS OFFICERS OR AGENTS SHALL NOT BE RESPONSIBLE FOR THE ACCURACY OR COMPLETENESS OF ELECTRONIC COPIES OF THIS PLAN SHEET.

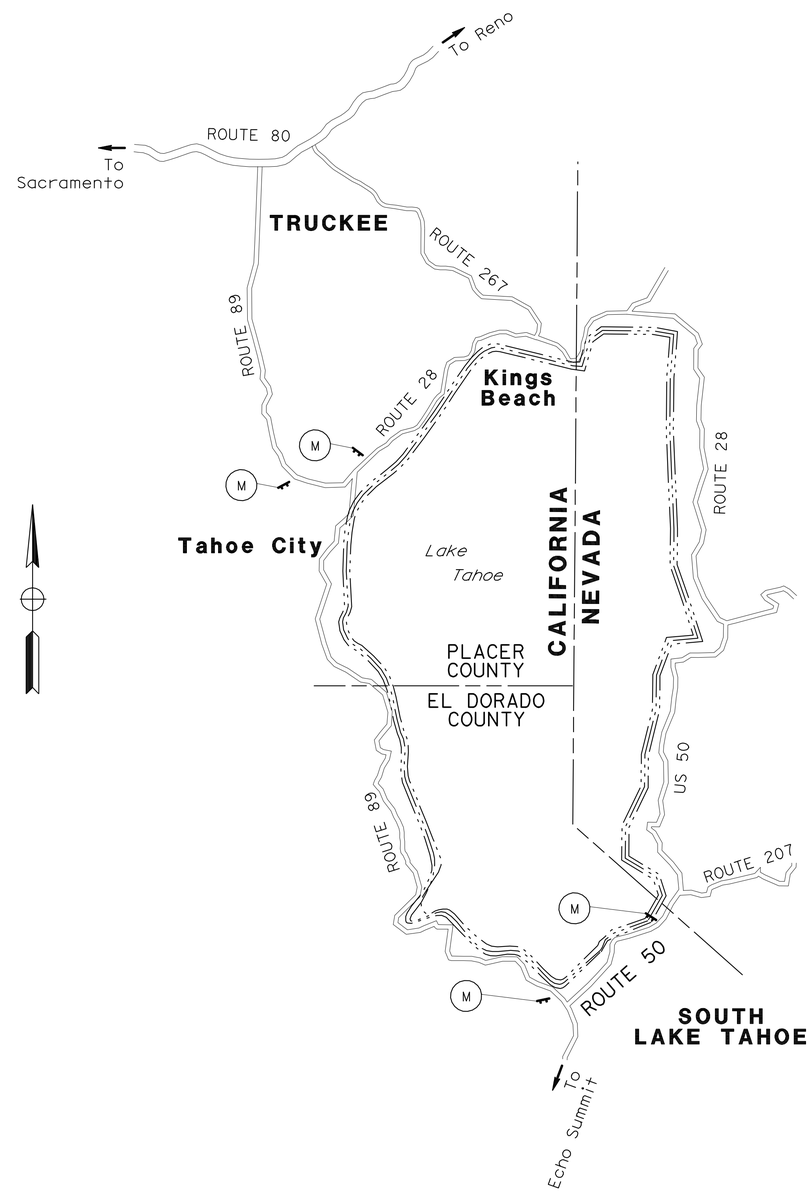

MAP 8
LAKE TAHOE

THIS PLAN ACCURATE FOR MOTORIST INFORMATION PLANS ONLY

MOTORIST INFORMATION PLAN

NO SCALE

MI-4

CHARLES WOOTEN	REVISED BY
3-26-10	DATE REVISED
CHARLES WOOTEN	CALCULATED-DESIGNED BY
JOHN WELCH	CHECKED BY
MASTRI ALVANDI	FUNCTIONAL SUPERVISOR

STATE OF CALIFORNIA - DEPARTMENT OF TRANSPORTATION
Caltrans **DESIGN**

LAST REVISION 03-26-10 | DATE PLOTTED => 26-JUL-2010 | TIME PLOTTED => 12:55

Dist	COUNTY	ROUTE	POST MILES TOTAL PROJECT	SHEET No.	TOTAL SHEETS
03	ED	50	66.7/67.8	38	71

John D. Welch 3-29-10
REGISTERED CIVIL ENGINEER DATE

7-26-10
PLANS APPROVAL DATE

REGISTERED PROFESSIONAL ENGINEER JOHN D. WELCH No. 58303 Exp. 6/30/10 CIVIL STATE OF CALIFORNIA

THE STATE OF CALIFORNIA OR ITS OFFICERS OR AGENTS SHALL NOT BE RESPONSIBLE FOR THE ACCURACY OR COMPLETENESS OF ELECTRONIC COPIES OF THIS PLAN SHEET.

NOTES:
1. SIGN LOCATIONS SHOWN ARE APPROXIMATE.
2. EXACT SIGN LOCATIONS TO BE DETERMINED BY THE ENGINEER.

SIGN LOCATIONS

COUNTY	DISTRICT	ROUTE	POSTMILE	DIRECTION OF TRAFFIC	SIGN LETTER	TYPE
ED	3	50	R15.00	FEBT	N	PORTABLE CMS
ED	3	50	R31.00	FEBT	N	PORTABLE CMS
ED	3	50	R31.00	FEBT	N	PORTABLE CMS
ED	3	50	R65.50	FEBT	N	PORTABLE CMS
ED	3	50	79.82	FWBT	M	DOUBLE POST SIGN
ED	3	89	8.60	FSBT	M	DOUBLE POST SIGN
PLA	3	28	1.24	FWBT	M	DOUBLE POST SIGN
PLA	3	89	8.77	FSBT	M	DOUBLE POST SIGN
SJ	10	99	19.70	FNBT	N	PORTABLE CMS

SIGN LOCATIONS

COUNTY	DISTRICT	ROUTE	POSTMILE	DIRECTION OF TRAFFIC	SIGN LETTER	TYPE
Yol	3	80	R9.50	FEBT	N	PORTABLE CMS
Sac	3	50	R2.60	FEBT	N	PORTABLE CMS
Sac	3	50	R3.60	FEBT	N	PORTABLE CMS
Sac	3	16	1.75	FEBT	F	SINGLE POST SIGN
Sac	3	16	1.94	FEBT	H	SINGLE POST SIGN
Sac	3	16	2.5	FEBT	F	SINGLE POST SIGN
Sac	3	16	11.41	FEBT	E	SINGLE POST SIGN
Sac	3	16	19.44	FEBT	E	SINGLE POST SIGN
Ama	10	16	8.80	FEBT	E	SINGLE POST SIGN
Ama	10	16	9.20	FEBT	F	SINGLE POST SIGN
Ama	10	16	9.30	FEBT	N	PORTABLE CMS
ED	3	50	14.75	FEBT	F	SINGLE POST SIGN
ED	3	MF/49	--	FSBT	N	PORTABLE CMS
ED	3	MF/49	--	FSBT	F	SINGLE POST SIGN
Ama	10	49	14.8	FSBT	H	SINGLE POST SIGN
Ama	10	49	10.54	FSBT	E	SINGLE POST SIGN
Ama	10	49	7.02	FSBT	E	SINGLE POST SIGN
Ama	10	49	6.05	FSBT	H	SINGLE POST SIGN
Ama	10	49	5.90	FSBT	N	PORTABLE CMS
Ama	10	49	4.10	FSBT	N	PORTABLE CMS
Ama	10	49	4.03	FSBT	H	SINGLE POST SIGN
Ama	10	88	26.00	FEBT	E	SINGLE POST SIGN
Ama	10	88	38.12	FEBT	E	SINGLE POST SIGN
Ama	10	88	47.90	FEBT	E	SINGLE POST SIGN
Ama	10	88	59.00	FEBT	E	SINGLE POST SIGN
Ama	10	88	71.40	FEBT	E	SINGLE POST SIGN
Alp	10	88	13.32	FEBT	H	SINGLE POST SIGN
Alp	10	88	13.40	FEBT	N	PORTABLE CMS
ED	3	89	8.5	FNBT	J	SINGLE POST SIGN
ED	3	50	70.80	FWBT	N	PORTABLE CMS
ED	3	50	70.60	FWBT	N	PORTABLE CMS
ED	3	50	70.64	FWBT	I	SINGLE POST SIGN
Alp	10	89	21.35	FSBT	G	SINGLE POST SIGN
Alp	10	89	21.30	FSBT	N	PORTABLE CMS
Ama	10	88	71.40	FWBT	E	SINGLE POST SIGN
Ama	10	88	58.90	FWBT	E	SINGLE POST SIGN
Ama	10	88	47.83	FWBT	E	SINGLE POST SIGN
Ama	10	88	38.80	FWBT	E	SINGLE POST SIGN
Ama	10	88	27.15	FWBT	E	SINGLE POST SIGN
Ama	10	88	14.36	FWBT	G	SINGLE POST SIGN
Ama	10	49	5.70	FNBT	G	SINGLE POST SIGN
Ama	10	49	5.80	FNBT	N	PORTABLE CMS
Ama	10	49	6.85	FNBT	E	SINGLE POST SIGN
Ama	10	49	14.57	FNBT	I & G	SINGLE POST SIGN
Ama	10	49	14.70	FNBT	N	PORTABLE CMS
ED	3	49	11.13	FNBT	I	SINGLE POST SIGN
ED	3	49	11.20	FNBT	N	PORTABLE CMS
ED	3	MF/50	--	FNBT	J	SINGLE POST SIGN
Ama	10	16	9.14	FWBT	E	SINGLE POST SIGN
Sac	3	16	19.41	FWBT	E	SINGLE POST SIGN
Sac	3	16	12.46	FWBT	E	SINGLE POST SIGN
Sac	3	16	11.54	FWBT	E	SINGLE POST SIGN
Sac	3	16	2.59	FWBT	I	SINGLE POST SIGN
Sac	3	16	1.98	FWBT	G	SINGLE POST SIGN
Sac	3	16	1.85	FWBT	J	SINGLE POST SIGN

THIS PLAN ACCURATE FOR MOTORIST INFORMATION PLANS ONLY

MOTORIST INFORMATION PLAN
NO SCALE

MI-5

REVISED BY	DATE REVISED
CHARLES WOOTEN	3-26-10

CALCULATED-DESIGNED BY	CHECKED BY
CHARLES WOOTEN	JOHN WELCH

FUNCTIONAL SUPERVISOR: MASTRI ALVANDI

STATE OF CALIFORNIA - DEPARTMENT OF TRANSPORTATION
Caltrans DESIGN

LAST REVISION 03-26-10 | DATE PLOTTED => 26-JUL-2010 | TIME PLOTTED => 13:00

Dist	COUNTY	ROUTE	POST MILES TOTAL PROJECT	SHEET No.	TOTAL SHEETS
03	ED	50	66.7/67.8	39	71

John D. Welch 3-29-10
REGISTERED CIVIL ENGINEER DATE

7-26-10
PLANS APPROVAL DATE

REGISTERED PROFESSIONAL ENGINEER
JOHN D. WELCH
No. 58303
Exp. 6/30/10
CIVIL
STATE OF CALIFORNIA

THE STATE OF CALIFORNIA OR ITS OFFICERS OR AGENTS SHALL NOT BE RESPONSIBLE FOR THE ACCURACY OR COMPLETENESS OF ELECTRONIC COPIES OF THIS PLAN SHEET.

DETOUR SIGNS (ADDITIONAL STATIONARY MOUNTED CONSTRUCTION AREA SIGNS)

SIGN LETTER	SIGN CODE FEDERAL	SIGN CODE CALIFORNIA	PANEL SIZE	SIGN MESSAGE	No. OF POST PER SIGN AND SIZE	No. OF SIGNS	NOTE
E		G26-2 (50)	24" x 24"	US 50	1-4" x 6"	20	
		SC3	36" x 12"	DETOUR & STRAIGHT ARROW			
F		G26-2 (50)	24" x 24"	US 50	1-4" x 6"	5	
	M3-2	G49	24" x 12"	EAST			
	M6-1(R)	G34	21" x 15"	RIGHT ARROW SYMBOL			
	M4-8	C5A	24" x 12"	DETOUR			
G		G26-2 (50)	24" x 24"	US 50	1-4" x 6"	5	
	M3-4	G50	24" x 12"	WEST			
	M6-1(R)	G34	21" x 15"	RIGHT ARROW SYMBOL			
	M4-8	C5A	24" x 12"	DETOUR			
H		G26-2 (50)	24" x 24"	US 50	1-4" x 6"	5	
	M3-2	G49	24" x 12"	EAST			
	M6-1(L)	G34	21" x 15"	LEFT ARROW SYMBOL			
	M4-8	C5A	24" x 12"	DETOUR			
I		G26-2 (50)	24" x 24"	US 50	1-4" x 6"	4	
	M3-4	G50	24" x 12"	WEST			
	M6-1(L)	G34	21" x 15"	LEFT ARROW SYMBOL			
	M4-8	C5A	24" x 12"	DETOUR			
J	M4-8a	C7	24" x 18"	END DETOUR	1-4" x 4"	3	
K	R11-2	C2	48" x 30"	ROAD CLOSED	TYPE III BARRICADE	8	
L	W20-3	C19	48" x 48"	ROAD CLOSED AHEAD	1-4" x 6"	8	
				PORTABLE FLASHING BEACON		8	
M			114" x 54"	"SEE DETAIL"	2-6" x 8"	4	
N	CHANGABLE MESSAGE SIGN		VARIOUS		PORTABLE	19	

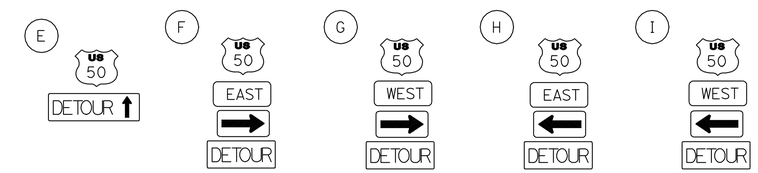

E, F, G, H, I - All shields, directional plates and arrows are retro reflective white background with black legend and border.

K R11-2

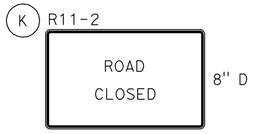

One R11-2 per lane mounted on Type II Barriicade. Retroreflective white background with black legend and border.

L W20-3

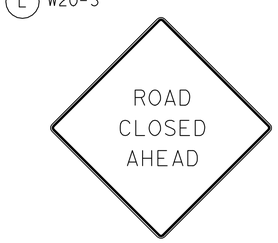

M

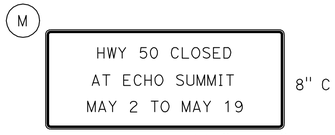

Orange background with black legend and border.

MOTORIST INFORMATION QUANTITIES

NO SCALE

MIQ-1

CHARLES WOOTEN	3-26-10
REVISED BY	DATE REVISED
CHARLES WOOTEN	JOHN WELCH
CALCULATED-DESIGNED BY	CHECKED BY
FUNCTIONAL SUPERVISOR	MASTRI ALVANDI

STATE OF CALIFORNIA - DEPARTMENT OF TRANSPORTATION
Caltrans
DESIGN

LAST REVISION 03-26-10 | DATE PLOTTED => 26-JUL-2010 | TIME PLOTTED => 13:00

Dist	COUNTY	ROUTE	POST MILES TOTAL PROJECT	SHEET No.	TOTAL SHEETS
03	ED	50	66.7/67.8	40	71

John D. Welch 7-12-10
REGISTERED CIVIL ENGINEER DATE

7-26-10
PLANS APPROVAL DATE

REGISTERED PROFESSIONAL ENGINEER
JOHN D. WELCH
No. 58303
Exp. 6/30/12
CIVIL
STATE OF CALIFORNIA

THE STATE OF CALIFORNIA OR ITS OFFICERS OR AGENTS SHALL NOT BE RESPONSIBLE FOR THE ACCURACY OR COMPLETENESS OF ELECTRONIC COPIES OF THIS PLAN SHEET.

(N) - NOT A SEPARATE PAY ITEM, FOR INFORMATION ONLY.

METAL BEAM GUARD RAILING

LOCATION		RECONSTRUCT METAL BEAM GUARD RAILING (SPECIAL)	END CAP	END SECTION
STATION ALONG "AA1"	SIDE	LF	EA	EA
3529+69.6 TO 3542+32.3	R†	1277.8	1	1
3544+07.2 TO 3545+90.1	R†	187.6	1	1
3549+01.2 TO 3550+12.1	R†	114.1	1	1
3552+86.2 TO 3553+61.4	R†	77.0	0	2
3555+61.1 TO 3556+73.4	R†	125.1	1	1
3558+79.6 TO 3563+20.3	R†	448.9	1	1
3565+38.5 TO 3566+03.4	R†	177.7	1	1
3567+82.0 TO 3568+45.5	R†	64.1	1	1
3569+16.0 TO 3573+46.3	R†	426.3	0	1
	TOTAL	2898.6	7	10

COLD PLANE AC PAVEMENT

STATION ALONG "AA1"	SIDE	(SQYD)	REMARKS
3526+50.0 TO 3553+87.8	R†/L†	9025.0	0.25 FEET Max
3553+87.8 TO 3555+13.2	R†/L†	335.0	0.17 FEET Max (VIADUCT)
3555+13.2 TO 3576+97.0	R†/L†	6800.0	0.25 FEET Max
	TOTAL	16,160.0	

PAVEMENT DELINEATION QUANTITIES

STATION ALONG "AA1"	4" TWO-COMPONENT PAINT TRAFFIC STRIPE	
	DETAIL No.	
	21	27B
	(LF)	(LF)
3526+50.0 TO 3527+47.3	390	195
3527+47.3 TO 3576+97.0	9900	9900
SUBTOTAL	10,289	10,094
TOTAL	20,383	

ROADWAY QUANTITIES

LOCATION		HMA-W (TYPE A)	CENTERLINE RUMBLE STRIP (HMA, GROUND-IN INDENTATIONS)	TACK COAT	DELINEATOR (CLASS 2)*	OBJECT MARKER (TYPE L-1)
STATION ALONG "AA1"	SIDE	TON	STA	TON	EA	EA
3526+50.0 TO 3576+97.0	L†/R†	2710.0	50.47	4.0	50	6
	TOTAL	2710.0	50.47	4.0	50	6

* REPLACE DELINEATORS AS EXISTING OR AS IDENTIFIED BY ENGINEER.

TEMPORARY WATER POLLUTION CONTROL QUANTITIES

LOCATION		TEMPORARY DRAINAGE INLET PROTECTION
STATION ALONG "AA1"	SIDE	EA
3531+92.2	L†	1
3536+42.2	L†	1
3540+73.8	L†	1
3542+76.6	L†	1
3546+06.9	L†	1
3547+84.0	L†	1
3551+84.3	L†	1
3558+46.8	L†	1
3561+91.0	L†	1
3565+28.7	L†	1
3567+66.9	L†	1
3570+53.7	L†	1
3572+90.0	L†	1
	TOTAL	13

FENCE

LOCATION		Temp FENCE (TYPE ESA)
STATION	SIDE	LF
NO STATION, SEE SHEET L-1	R†	820.0
NO STATION, SEE SHEET L-1	L†	410.0
NO STATION, SEE SHEET L-1	L†	270.0
NO STATION, SEE SHEET L-1	L†	185.0
NO STATION, SEE SHEET L-1	L†	570.0
	TOTAL	2255.0

BARRICADE

LOCATION	TYPE III BARRICADE	
	FURNISH (EA)	INSTALL
ROUTE 50, PM 65.7	8	8
ROUTE 50, PM 66.9	8	8
ROUTE 50, PM 67.8	6	6
ROUTE 50, PM 70.0	4	4
TOTAL	26	26

SUMMARY OF QUANTITIES

Q-1

CALCULATED-DESIGNED BY	CHECKED BY	REVISED BY	DATE REVISED	FUNCTIONAL SUPERVISOR
CHARLES WOOTEN	JOHN WELCH	CHARLES WOOTEN	3-26-10	MASTRI ALVANDI

STATE OF CALIFORNIA - DEPARTMENT OF TRANSPORTATION
Caltrans DESIGN

LAST REVISION 03-26-10 | DATE PLOTTED => 27-JUL-2010 | TIME PLOTTED => 10:57

Dist	COUNTY	ROUTE	POST MILES TOTAL PROJECT	SHEET No.	TOTAL SHEETS
03	ED	50	66.7/67.8	41	71

H. Golban 3-29-10
REGISTERED ELECTRICAL ENGINEER DATE

7-26-10
PLANS APPROVAL DATE

REGISTERED PROFESSIONAL ENGINEER
HABIB GOLBAN
No. E17928
Exp. 09-30-10
ELECT.
STATE OF CALIFORNIA

THE STATE OF CALIFORNIA OR ITS OFFICERS OR AGENTS SHALL NOT BE RESPONSIBLE FOR THE ACCURACY OR COMPLETENESS OF ELECTRONIC COPIES OF THIS PLAN SHEET.

NOTE:

FOR ACCURATE RIGHT OF WAY ACCESS DATA, CONTACT RIGHT OF WAY ENGINEERING AT THE DISTRICT OFFICE.

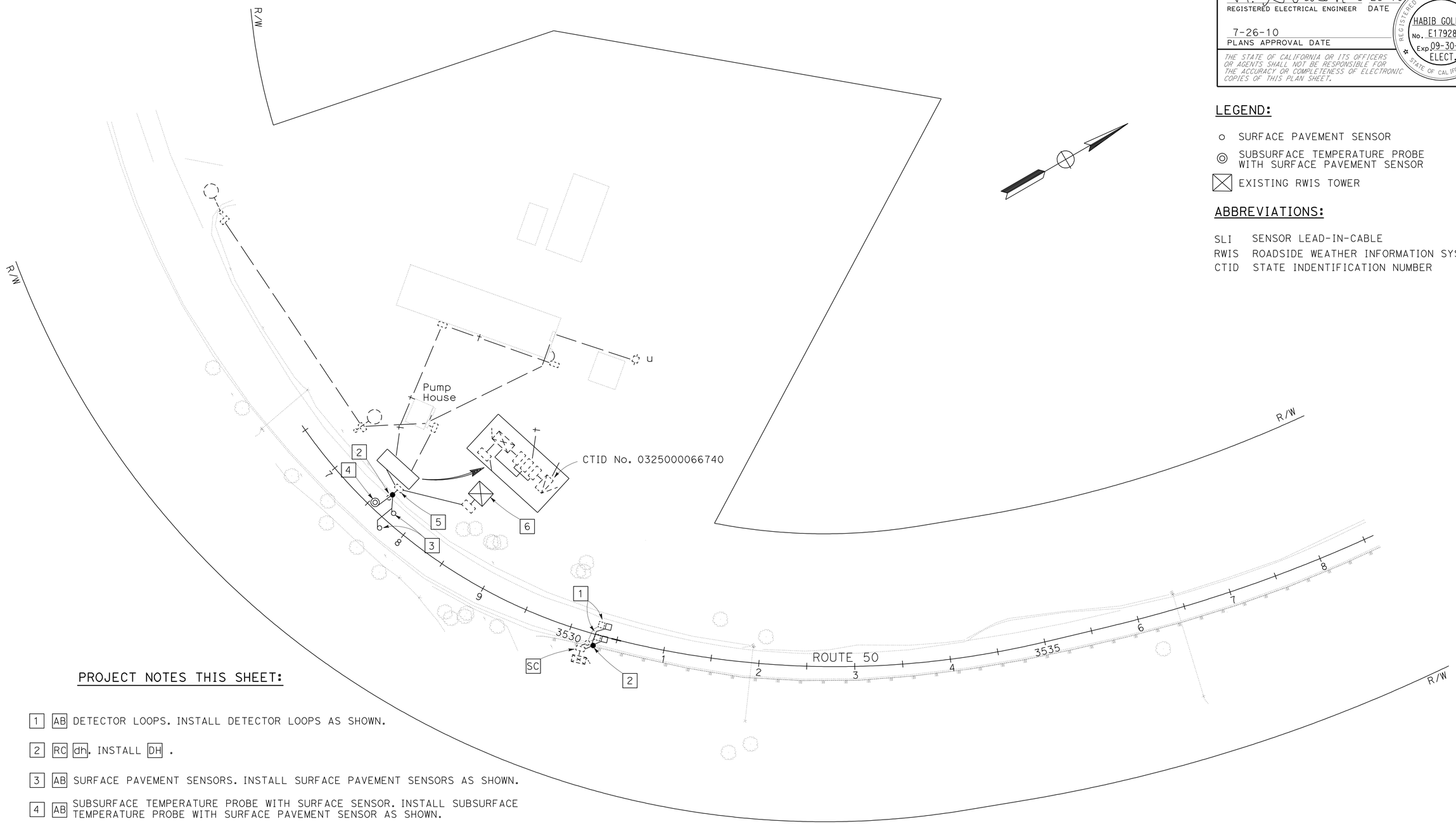

LEGEND:

- ○ SURFACE PAVEMENT SENSOR
- ◎ SUBSURFACE TEMPERATURE PROBE WITH SURFACE PAVEMENT SENSOR
- ⊠ EXISTING RWIS TOWER

ABBREVIATIONS:

SLI SENSOR LEAD-IN-CABLE
RWIS ROADSIDE WEATHER INFORMATION SYSTEM
CTID STATE INDENTIFICATION NUMBER

PROJECT NOTES THIS SHEET:

1. AB DETECTOR LOOPS. INSTALL DETECTOR LOOPS AS SHOWN.
2. RC dh. INSTALL DH .
3. AB SURFACE PAVEMENT SENSORS. INSTALL SURFACE PAVEMENT SENSORS AS SHOWN.
4. AB SUBSURFACE TEMPERATURE PROBE WITH SURFACE SENSOR. INSTALL SUBSURFACE TEMPERATURE PROBE WITH SURFACE PAVEMENT SENSOR AS SHOWN.
5. SPLICE SENSOR CABLE TO Exist SLI IN PULL BOX.
6. RS ALL EXISTING RWIS EQUIPMENT ON EXISTING TOWER BEFORE INSTALLING NEW RWIS EQUIPMENT.

MODIFY ROADSIDE WEATHER INFORMATION SYSTEM
MODIFY TRAFFIC MONITORING STATION (COUNT)

SCALE: 1" = 50'

THIS PLAN IS ACCURATE FOR ELECTRICAL WORK ONLY.

E-1

STATE OF CALIFORNIA - DEPARTMENT OF TRANSPORTATION
Caltrans
OFFICE OF ELECTRICAL DESIGN
SACRAMENTO

FUNCTIONAL SUPERVISOR: NELSON LEE
CALCULATED-DESIGNED BY: HERNAN ROMERO
CHECKED BY: HABIB GOLBAN
REVISED BY
DATE REVISED

LAST REVISION 12-05-09
DATE PLOTTED => 27-JUL-2010
TIME PLOTTED => 13:29

Dist	COUNTY	ROUTE	POST MILES TOTAL PROJECT	SHEET No.	TOTAL SHEETS
03	ED	50	66.7/67.8	42	71

H. Golban 3-29-10
REGISTERED ELECTRICAL ENGINEER DATE

7-26-10
PLANS APPROVAL DATE

REGISTERED PROFESSIONAL ENGINEER HABIB GOLBAN No. E17928 Exp 09-30-10 ELECT. STATE OF CALIFORNIA

THE STATE OF CALIFORNIA OR ITS OFFICERS OR AGENTS SHALL NOT BE RESPONSIBLE FOR THE ACCURACY OR COMPLETENESS OF ELECTRONIC COPIES OF THIS PLAN SHEET.

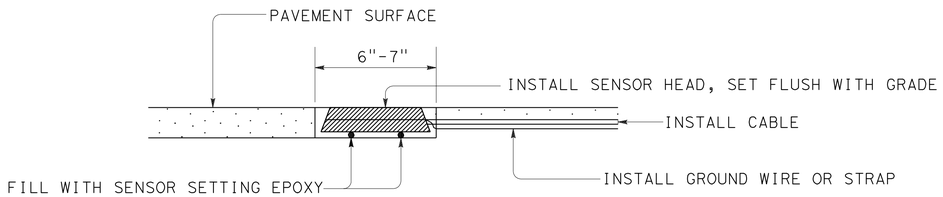

SECTION A-A

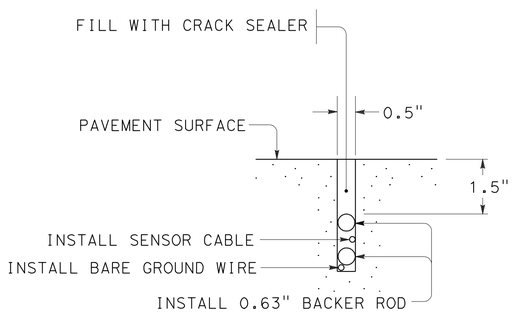

SECTION B-B
(SAW SLOT)

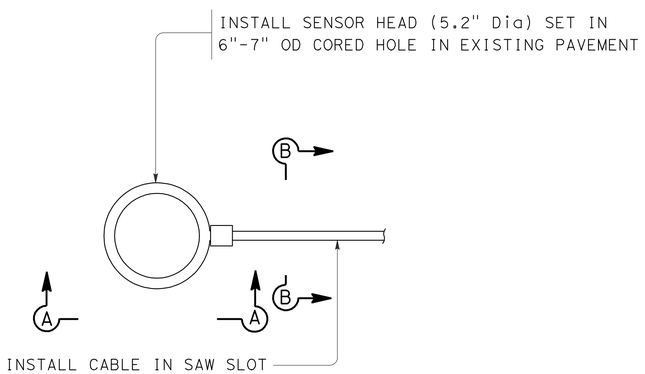

SENSOR HEAD

SENSOR INSTALLATION
IN ROADWAY PAVING

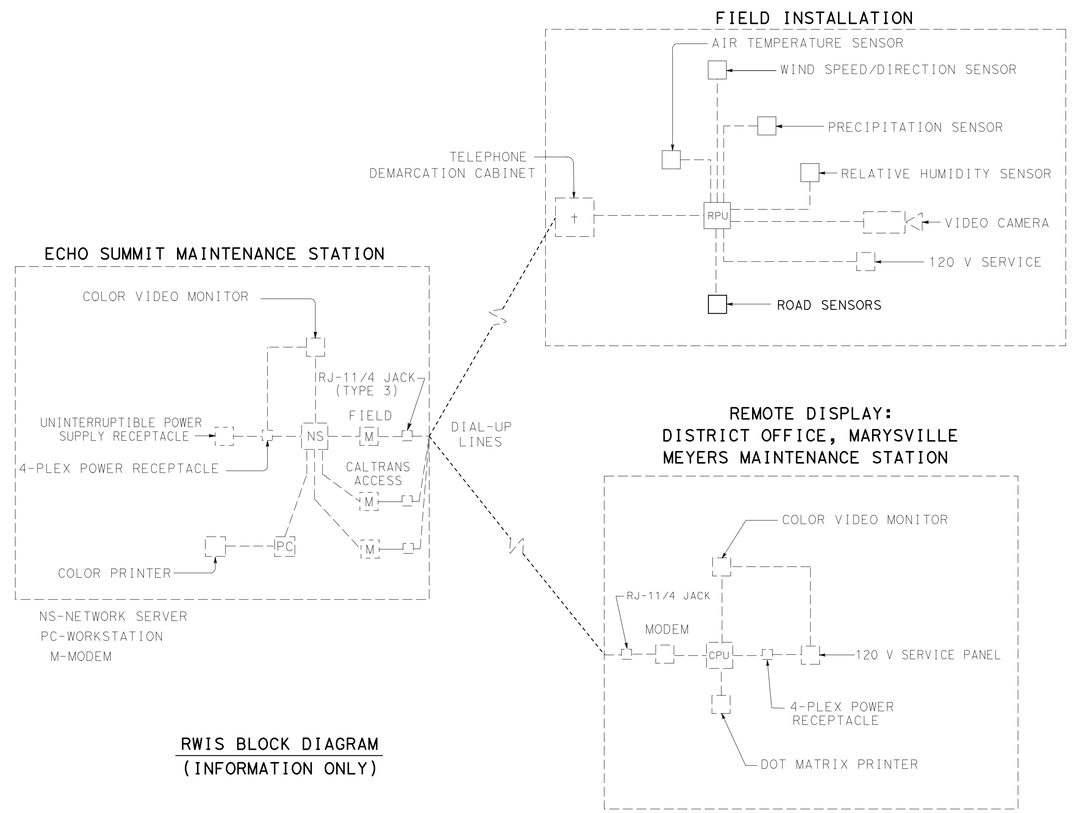

RWIS BLOCK DIAGRAM
(INFORMATION ONLY)

ROADSIDE WEATHER INFORMATION SYSTEM (DETAILS)

NO SCALE

E-2

THIS PLAN IS ACCURATE FOR ELECTRICAL WORK ONLY.

STATE OF CALIFORNIA - DEPARTMENT OF TRANSPORTATION
Caltrans
OFFICE OF ELECTRICAL DESIGN
SACRAMENTO

FUNCTIONAL SUPERVISOR: NELSON LEE
CALCULATED-DESIGNED BY: HERNAN ROMERO
CHECKED BY: HABIB GOLBAN
REVISED BY
DATE REVISED

LAST REVISION 12-05-09
DATE PLOTTED => 27-JUL-2010
TIME PLOTTED => 10:40

DIST	COUNTY	ROUTE	POST MILES TOTAL PROJECT	SHEET NO.	TOTAL SHEETS
03	ED	50	66.7/67.8	43	71

Robert B Schott
LICENSED LANDSCAPE ARCHITECT

April 3, 2009
PLANS APPROVAL DATE

The State of California or its officers or agents shall not be responsible for the accuracy or completeness of electronic copies of this plan sheet.

LICENSED LANDSCAPE ARCHITECT — Robert B. Schott 3025 — Signature — 11-30-10 Renewal Date — 2-25-09 Date — STATE OF CALIFORNIA

To accompany plans dated 7-26-10

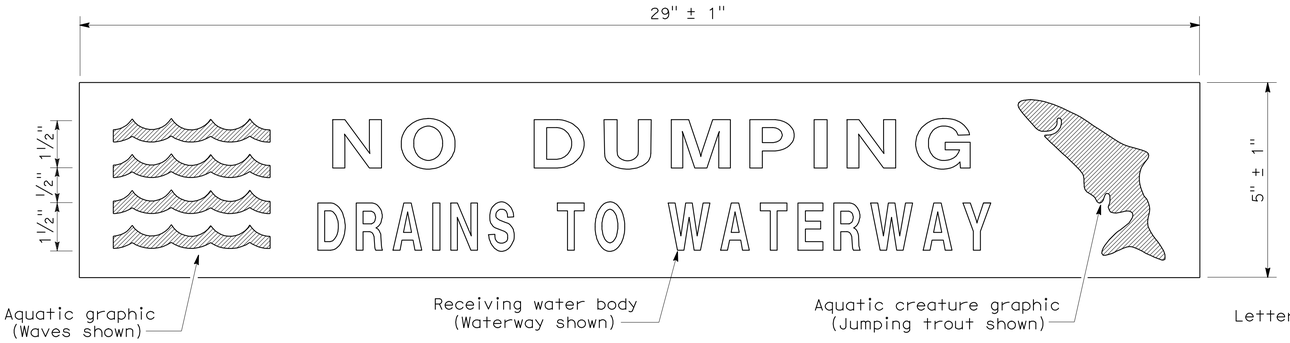

PLAN
DRAINAGE INLET MARKER
(PREFABRICATED THERMOPLASTIC)

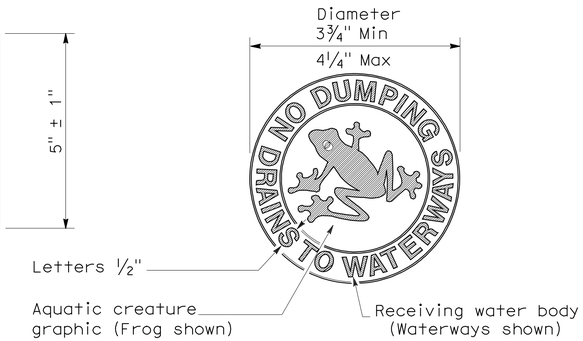

PLAN
DRAINAGE INLET MARKER
(MEDALLION)

PLAN
DRAINAGE INLET MARKER
(STAMPED CONCRETE IMPRINT)

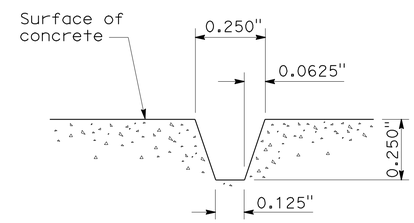

SECTION A-A
STAMPED CONCRETE
IMPRINT DETAIL

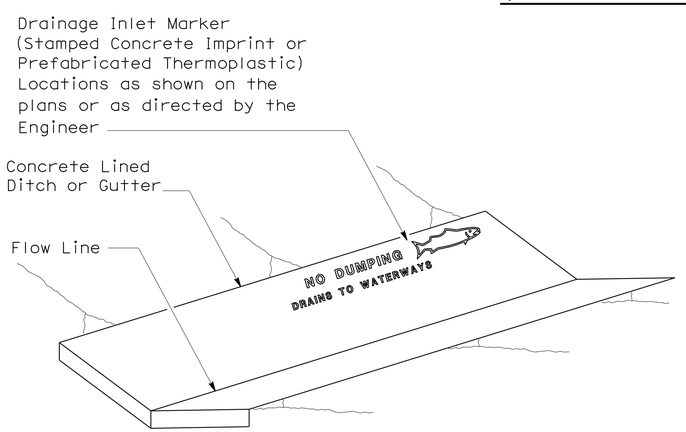

PERSPECTIVE
DRAINAGE INLET MARKER ON
CONCRETE LINED DITCH

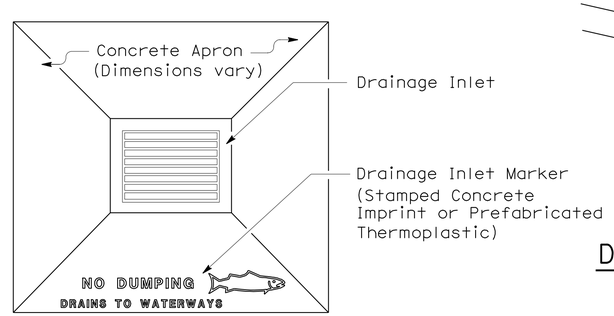

PLAN
DRAINAGE INLET MARKER ON
DRAINAGE INLET APRON

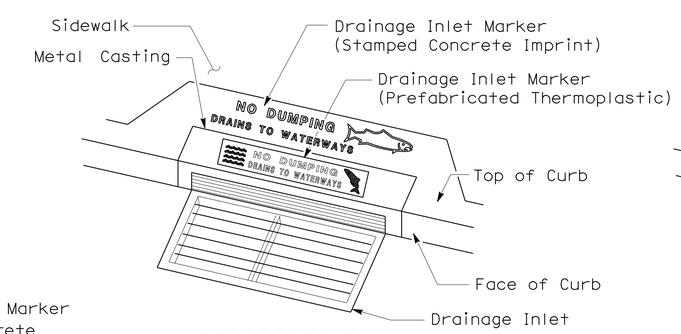

PERSPECTIVE
DRAINAGE INLET MARKER ON
DRAINAGE INLET

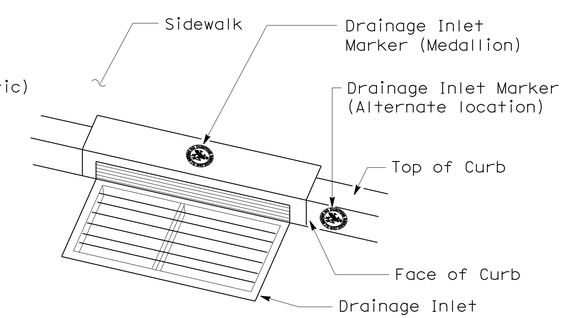

PERSPECTIVE
DRAINAGE INLET MARKER (MEDALLION)
ON DRAINAGE INLET

STATE OF CALIFORNIA
DEPARTMENT OF TRANSPORTATION

DRAINAGE INLET MARKERS

NO SCALE

NSP D71 DATED APRIL 3, 2009 SUPPLEMENTS
THE STANDARD PLANS BOOK DATED MAY 2006.

NEW STANDARD PLAN NSP D71

2006 NEW STANDARD PLAN NSP D71

7-24-08

DIST	COUNTY	ROUTE	POST MILES TOTAL PROJECT	SHEET NO.	TOTAL SHEETS
03	ED	50	66.7/67.8	44	71

Raymond Don Tsztoo
REGISTERED CIVIL ENGINEER

January 18, 2008
PLANS APPROVAL DATE

REGISTERED PROFESSIONAL ENGINEER
Raymond Don Tsztoo
No. C37332
Exp. 6-30-08
CIVIL
STATE OF CALIFORNIA

The State of California or its officers or agents shall not be responsible for the accuracy or completeness of electronic copies of this plan sheet.

To accompany plans dated 7-26-10

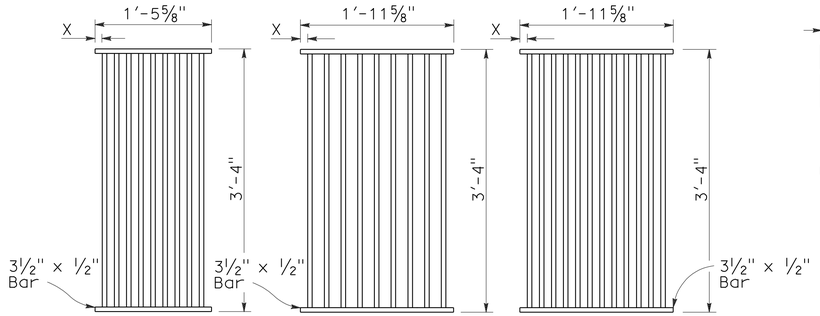

TYPE 18-9

1⅜" Clear spacing. Use within the roadbed on highways where bicycles and pedestrians are excluded.

TYPE 24-9

2" Clear spacing. Use in locations off the roadbed on all types of highways.

TYPE 24-12

1⅜" Clear spacing. Use within the roadbed on highways where bicycles and pedestrians are excluded.

RECTANGULAR GRATE DETAILS

(See table below)

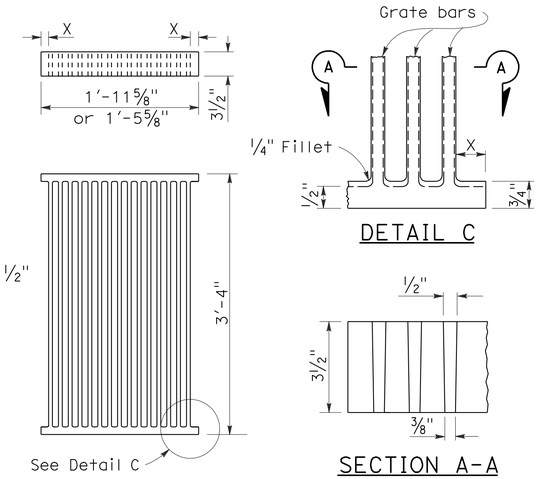

DETAIL C

SECTION A-A

ALTERNATIVE CAST NODULAR IRON GRATE OR CAST STEEL GRATE

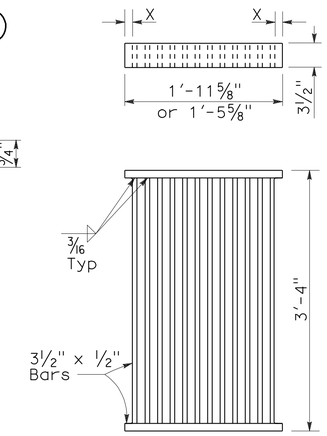

ALTERNATIVE WELDED GRATE

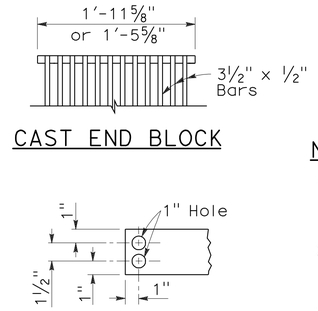

CAST END BLOCK

END OF BAR

NOTES:

1. Grate type numbers refer to approximate width of grate in inches and number of bars, respectively.
2. Contractor has the option of using cast nodular iron, cast steel, welded, bolted, or cast end block grate.
3. See Special Provisions for requirements pertaining to galvanizing or asphalt dipping of grates and frames.
4. Rounded top of bars optional on all grates.
5. Pipe inlets with a grate shall be placed so that bars parallel direction of principle surface flow.
6. Full penetration butt welds may be substituted for the fillet welds on all anchors.
7. Standard square, hexagon, round or equivalent headed anchors may be substituted for the right angle hooks on the anchors shown on this plan.
8. Grate and frame weights are based on welded grates (weights of face angles, steps, protection bars, etc. are not included).

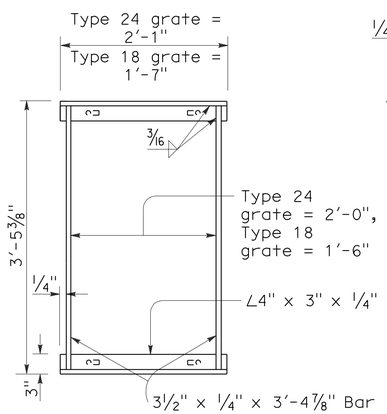

TYPICAL FRAME

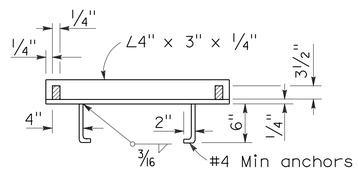

CROSS SECTION

(Thru frame)

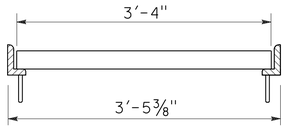

LONGITUDINAL SECTION

(Thru frame and grate)

RECTANGULAR FRAME DETAILS

(For all rectangular grates)

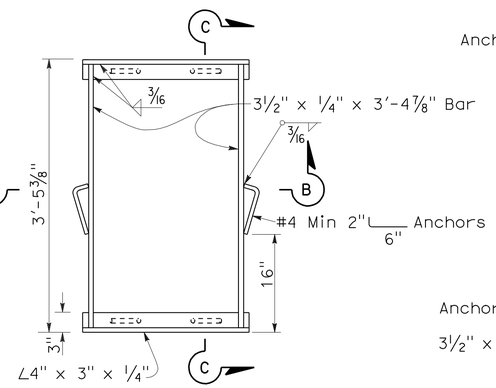

TYPICAL FRAME

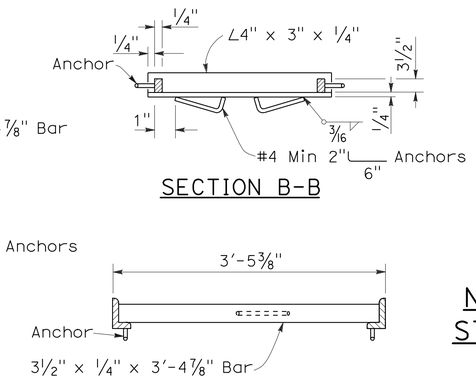

SECTION B-B

SECTION C-C

ALTERNATIVE ANCHOR FOR RECTANGULAR FRAME

(For details not shown, See Rectangular Frame Details)

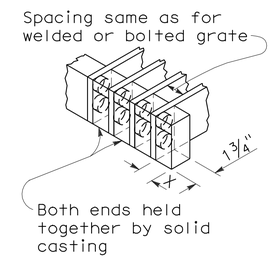

ALTERNATIVE CAST NODULAR IRON OR CAST STEEL END BLOCK GRATE

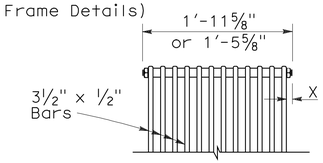

BOLTED END BLOCK

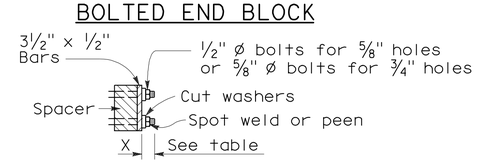

BOLTING DETAIL

ALTERNATIVE BOLTED GRATE

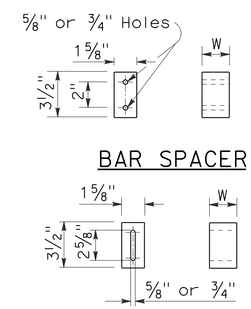

BAR SPACER

ALTERNATIVE SPACER

W = 1⅜" or 2"

GRATE BAR SPACING TABLE

TYPE	No. OF BARS	CLEAR BAR SPACING	X
18-9	9	1⅜"	1 1/16"
24-9	9	2"	1 9/16"
24-12	12	1⅜"	1¼"

INLET TYPE	COVER TYPE	WEIGHT LB
OS	PLATE	174
OL-7	PLATE	170
OL-10	PLATE	170
OL-14	PLATE	170
OL-21	PLATE	170
OCP	PLATE	112
OCPI	PLATE	112
OCPI	REDWOOD	42
OMP	PLATE	177
OMPI	PLATE	177

INLET TYPE	GRATE TYPE	No. OF GRATES	WEIGHT LB
GDO	24-12	2	634
GOL-7	24-12	1	326
GOL-10	24-12	1	326
GO,G1,G2,G3,G4 (TYPE 24)	24-9	1	263
	24-12	1	326
G4 (TYPE 18),G5,G6	18-9	1	249
GT1	18-9	2	498
GT2	18-9	2	498
GT3	24-12	2	652
GT4	24-12	2	652
TRASH RACK			22

BASIS FOR MISC IRON & STEEL FINAL PAY WEIGHTS FOR DRAINAGE INLETS

(See General Notes, No 8)

STATE OF CALIFORNIA
DEPARTMENT OF TRANSPORTATION

GRATE DETAILS

NO SCALE

RSP D77A DATED JANUARY 18, 2008 SUPERSEDES STANDARD PLAN D77A
DATED MAY 1, 2006 - PAGE 155 OF THE STANDARD PLANS BOOK DATED MAY 2006.

REVISED STANDARD PLAN RSP D77A

2006 REVISED STANDARD PLAN RSP D77A

12-14-07

DIST	COUNTY	ROUTE	POST MILES TOTAL PROJECT	SHEET NO.	TOTAL SHEETS
03	ED	50	66.7/67.8	45	71

Raymond Don Tsztoo
REGISTERED CIVIL ENGINEER

June 6, 2008
PLANS APPROVAL DATE

REGISTERED PROFESSIONAL ENGINEER
Raymond Don Tsztoo
No. C37332
Exp. 6-30-08
CIVIL
STATE OF CALIFORNIA

The State of California or its officers or agents shall not be responsible for the accuracy or completeness of electronic copies of this plan sheet.

To accompany plans dated 7-26-10

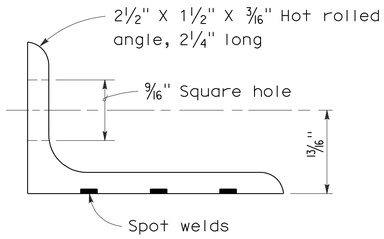

ANGLE

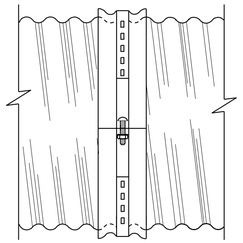

SIDE VIEW
ANGLE

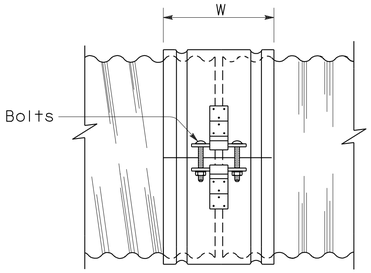

SIDE VIEW
SINGLE BAR AND STRAP

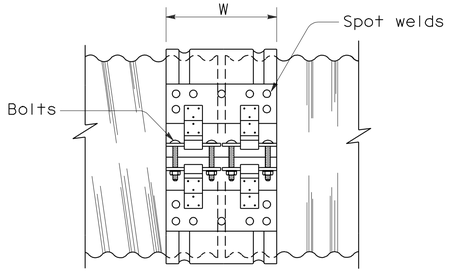

SIDE VIEW
DOUBLE BAR AND STRAP

NOTES:

1. All ferrous metal coupling band connection hardware shall be galvanized or electroplated in accordance with the Standard Specifications.
2. Dimensions and thicknesses shown are minimum.
3. Spot welds shall develop minimum required strength of strap.
4. Fillet welds of equivalent strength may be substituted for spot welds or rivets.
5. Dimension depends upon whether end condition is lips up or lips down.

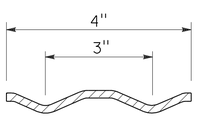

SECTION

H-4 HUGGER BAND

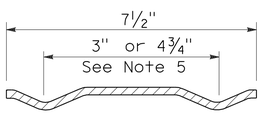

SECTION

H-7 HUGGER BAND

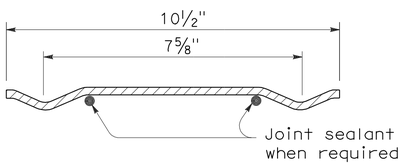

SECTION

H-10 HUGGER BAND

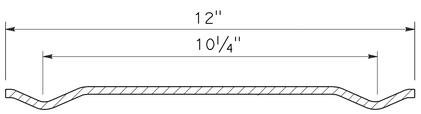

SECTION

H-12 HUGGER BAND

HUGGER COUPLING BANDS

STATE OF CALIFORNIA
DEPARTMENT OF TRANSPORTATION

CORRUGATED METAL PIPE COUPLING DETAILS No. 4 HUGGER COUPLING BANDS

NO SCALE

RSP D97D DATED JUNE 6, 2008 SUPERSEDES STANDARD PLAN D97D
DATED MAY 1, 2006 - PAGE 186 OF THE STANDARD PLANS BOOK DATED MAY 2006.

REVISED STANDARD PLAN RSP D97D

2006 REVISED STANDARD PLAN RSP D97D

3-24-08

DIST	COUNTY	ROUTE	POST MILES TOTAL PROJECT	SHEET NO.	TOTAL SHEETS
03	ED	50	66.7/67.8	46	71

Randell D. Hiatt
REGISTERED CIVIL ENGINEER

June 6, 2008
PLANS APPROVAL DATE

REGISTERED PROFESSIONAL ENGINEER
Randell D. Hiatt
No. C50200
Exp. 6-30-09
CIVIL
STATE OF CALIFORNIA

The State of California or its officers or agents shall not be responsible for the accuracy or completeness of electronic copies of this plan sheet.

To accompany plans dated 7-26-10

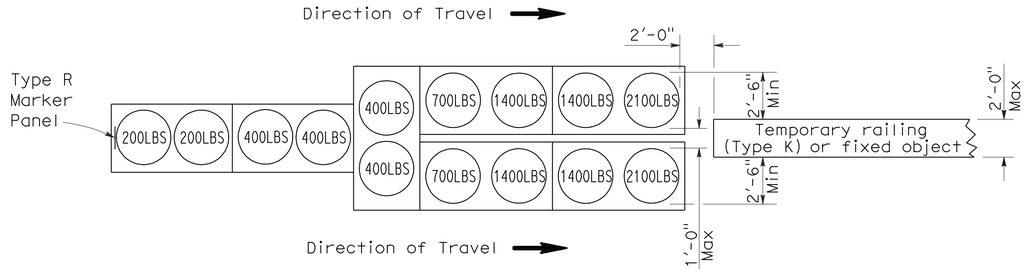

ARRAY 'TU14'

Approach speed 45 mph or more

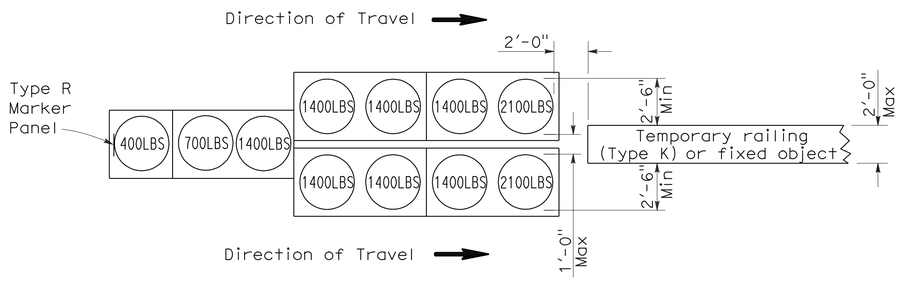

ARRAY 'TU11'

Approach speed less than 45 mph

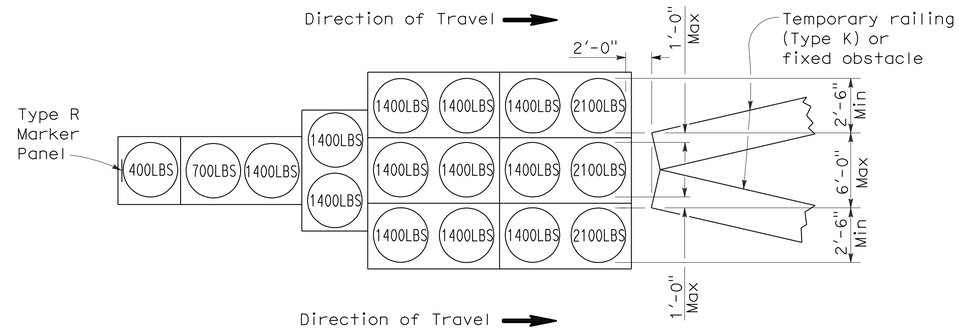

ARRAY 'TU17'

Approach speed less than 45 mph

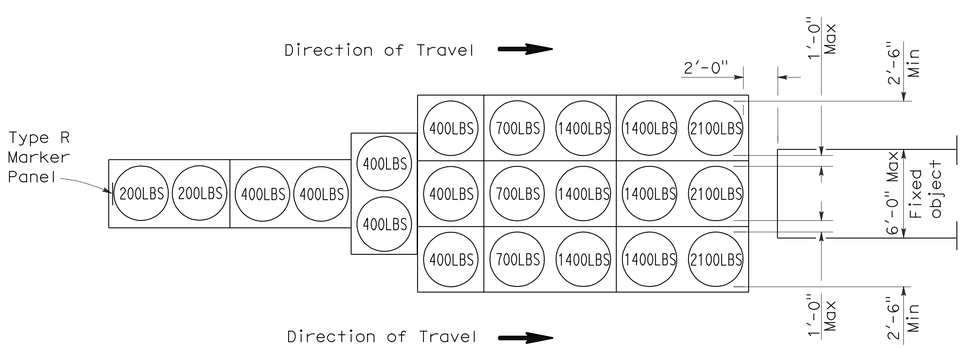

ARRAY 'TU21'

Approach speed 45 mph or more

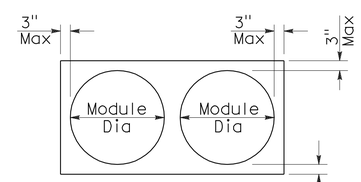

PLAN

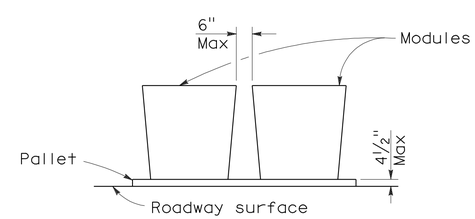

ELEVATION

CRASH CUSHION PALLET DETAIL

See Note 7

NOTES:

1. (XXX) Indicates sand filled module location and weight of sand in pounds for each module. Module spacing is based on the greater diameter of the module.
2. All sand weights are nominal.
3. Temporary crash cushion arrays shall not encroach on the traveled way.
4. Place the top of Type R marker panel 1" below the module lid.
5. Refer to Standard Plan A73B for marker details.
6. Approach speeds indicated conform to NCHRP 350 Report criteria.
7. Use of pallets is optional.

STATE OF CALIFORNIA
DEPARTMENT OF TRANSPORTATION

TEMPORARY CRASH CUSHION, SAND FILLED (UNIDIRECTIONAL)

NO SCALE

RSP T1A DATED JUNE 6, 2008 SUPERSEDES STANDARD PLAN T1A
DATED MAY 1, 2006 - PAGE 211 OF THE STANDARD PLANS BOOK DATED MAY 2006.

REVISED STANDARD PLAN RSP T1A

2006 REVISED STANDARD PLAN RSP T1A

5-15-08

DIST	COUNTY	ROUTE	POST MILES TOTAL PROJECT	SHEET NO.	TOTAL SHEETS
03	ED	50	66.7/67.8	47	71

Randell D. Hiatt
REGISTERED CIVIL ENGINEER

June 6, 2008
PLANS APPROVAL DATE

REGISTERED PROFESSIONAL ENGINEER
Randell D. Hiatt
No. C50200
Exp. 6-30-09
CIVIL
STATE OF CALIFORNIA

The State of California or its officers or agents shall not be responsible for the accuracy or completeness of electronic copies of this plan sheet.

To accompany plans dated 7-26-10

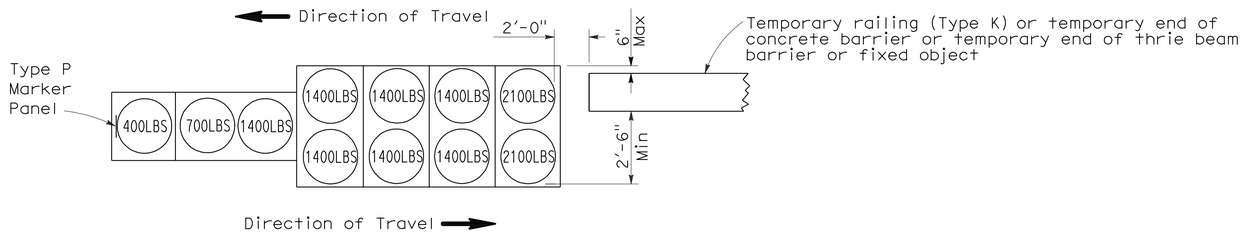

ARRAY 'TB11'

Approach speed less than 45 mph

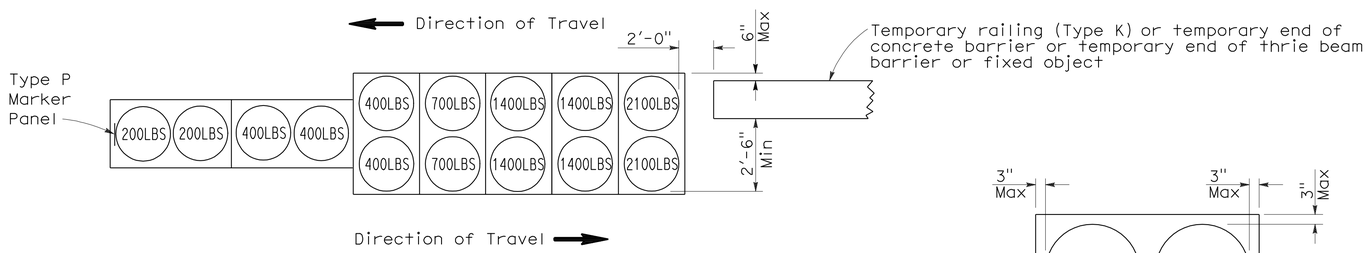

ARRAY 'TB14'

Approach speed 45 mph or more

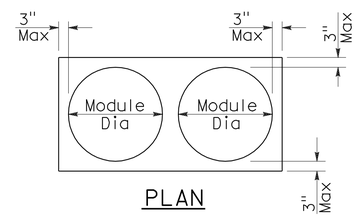

PLAN

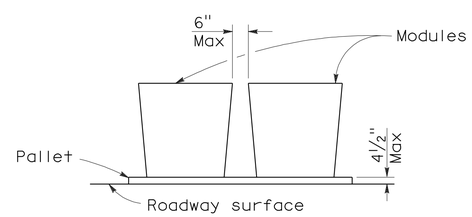

ELEVATION

CRASH CUSHION PALLET DETAIL

See Note 7

NOTES:

1. (XXX) Indicates sand filled module location and weight of sand in pounds for each module. Module spacing is based on the greater diameter of the module.
2. All sand weights are nominal.
3. Temporary crash cushion arrays shall not encroach on the traveled way.
4. Place the Type P marker panel so that the bottom of the panel rests upon the pallet.
5. Refer to Standard Plan A73B for marker details.
6. Approach speeds indicated conform to NCHRP 350 Report criteria.
7. Use of pallets is optional.

STATE OF CALIFORNIA
DEPARTMENT OF TRANSPORTATION

TEMPORARY CRASH CUSHION, SAND FILLED (BIDIRECTIONAL)

NO SCALE

RSP T1B DATED JUNE 6, 2008 SUPERSEDES STANDARD PLAN T1B
DATED MAY 1, 2006 - PAGE 212 OF THE STANDARD PLANS BOOK DATED MAY 2006.

REVISED STANDARD PLAN RSP T1B

2006 REVISED STANDARD PLAN RSP T1B

DIST	COUNTY	ROUTE	POST MILES TOTAL PROJECT	SHEET NO.	TOTAL SHEETS
03	ED	50	66.7/67.8	48	71

Randell D. Hiatt
REGISTERED CIVIL ENGINEER

June 6, 2008
PLANS APPROVAL DATE

REGISTERED PROFESSIONAL ENGINEER
Randell D. Hiatt
No. C50200
Exp. 6-30-09
CIVIL
STATE OF CALIFORNIA

The State of California or its officers or agents shall not be responsible for the accuracy or completeness of electronic copies of this plan sheet.

To accompany plans dated 7-26-10

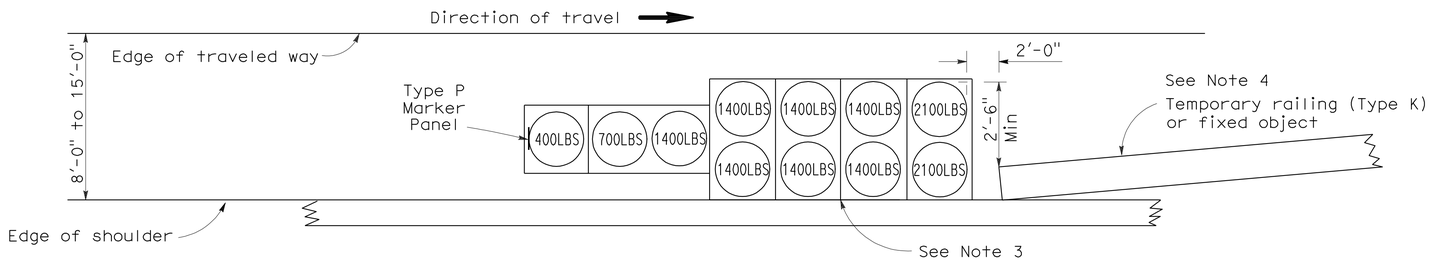

ARRAY 'TS11'

Approach speed less than 45 mph
See Note 9

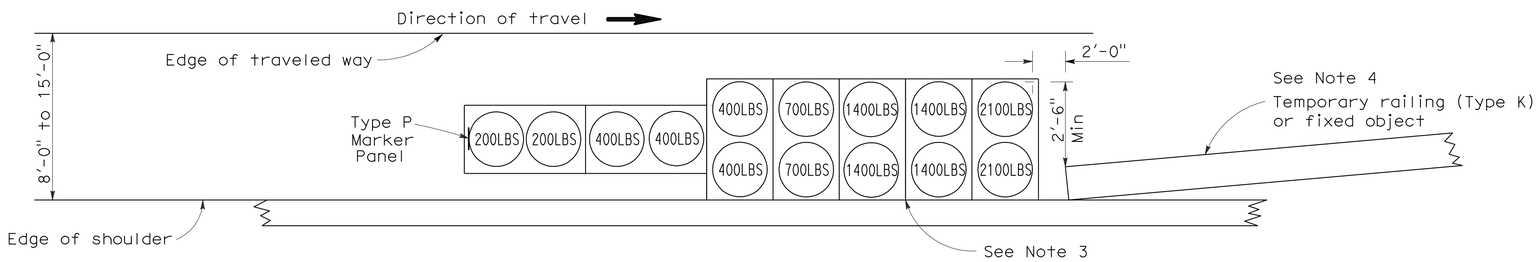

ARRAY 'TS14'

Approach speed 45 mph or more
See Note 9

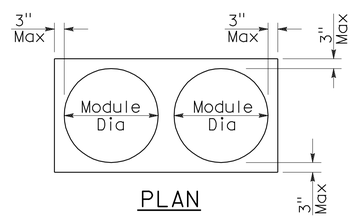

PLAN

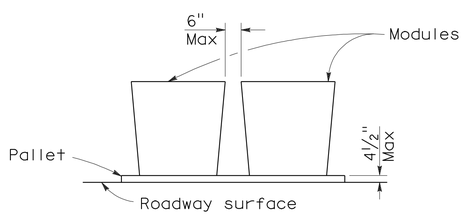

ELEVATION

CRASH CUSHION PALLET DETAIL

See Note 11

NOTES:

1. (XXX) Indicates sand filled module location and weight of sand in pounds for each module. Module spacing is based on the greater diameter of the module.
2. All sand weights are nominal.
3. The temporary crash cushion arrays shown on this plan shall be used only in locations where there will be traffic on one side of the temporary crash cushion array.
4. If the fixed object or approach end of the temporary railing is less than 15'-0" from the edge of traveled way, a temporary crash cushion is required in a construction or work zone.
5. Temporary crash cushion arrays shall not encroach on the traveled way.
6. Arrays for median shoulders shall conform to details shown on this plan for outside shoulders.
7. Place the Type P marker panel so that the bottom of the panel rests upon the pallet and faces traffic.
8. Refer to Standard Plan A73B for marker details.
9. For shoulder widths less than 8'-0", appropriate approved crash cushion protection, other than sand filled modules, shall be provided at fixed objects and at approach ends of temporary railing. The specific type of crash cushion shall be as shown on the project plans or as specified in the Special Provisions, or if not shown on the project plans or specified in the Special Provisions, shall be as approved by the Engineer.
10. Approach speeds indicated conform to NCHRP 350 Report criteria.
11. Use of pallets is optional.

STATE OF CALIFORNIA
DEPARTMENT OF TRANSPORTATION

TEMPORARY CRASH CUSHION, SAND FILLED (SHOULDER INSTALLATIONS)

NO SCALE

RSP T2 DATED JUNE 6, 2008 SUPERSEDES STANDARD PLAN T2
DATED MAY 1, 2006 - PAGE 213 OF THE STANDARD PLANS BOOK DATED MAY 2006.

REVISED STANDARD PLAN RSP T2

2006 REVISED STANDARD PLAN RSP T2

5-15-08

DIST	COUNTY	ROUTE	POST MILES TOTAL PROJECT	SHEET NO.	TOTAL SHEETS
03	ED	50	66.7/67.8	49	71

REGISTERED CIVIL ENGINEER

November 17, 2006
PLANS APPROVAL DATE

REGISTERED PROFESSIONAL ENGINEER — Greg W. Edwards — No. C36386 — Exp. 6-30-08 — CIVIL — STATE OF CALIFORNIA

The State of California or its officers or agents shall not be responsible for the accuracy or completeness of electronic copies of this plan sheet.

To accompany plans dated 7-26-10

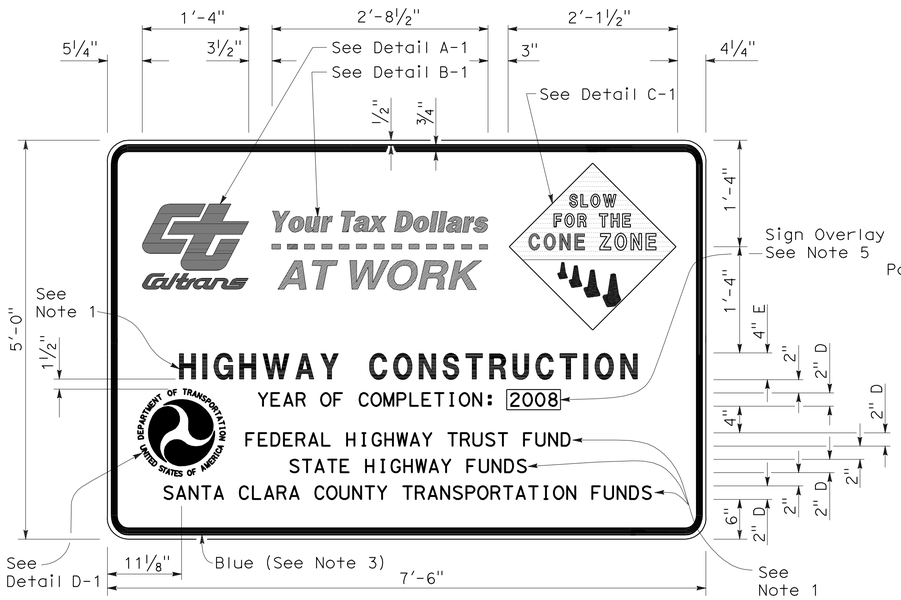

TYPE 1

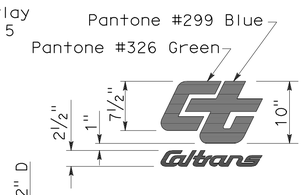

DETAIL A-1

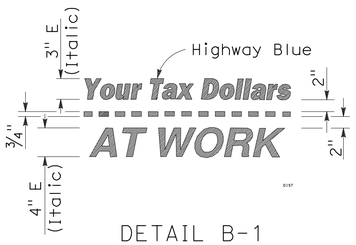

DETAIL B-1
(See Note 3)

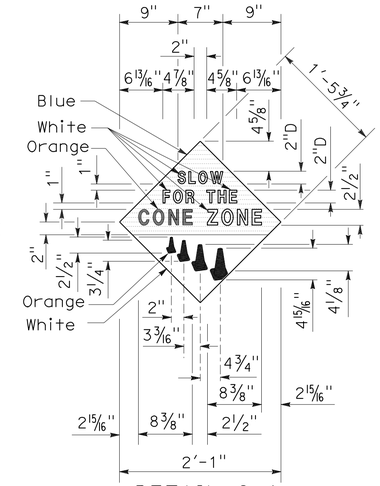

DETAIL C-1
(See Note 4)

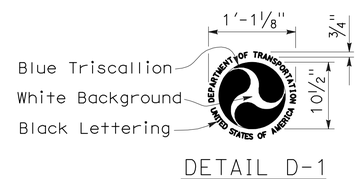

DETAIL D-1
(See Note 6)

NOTES:

1. The sign messages shown for type of project and fund types are examples only. See the Special Provisions for the applicable type of project and fund type messages to be used.
2. Except as otherwise shown, the legend of sign shall be black on a white background (non-reflective).
3. The border of the signs and details "B-1" and "B-2" shall be blue (non-reflective).
4. The diamond in details "C-1" and "C-2" shall be blue for the background of message, " SLOW FOR THE CONE ZONE", and white background for the orange cones. The color and type of font for the "SLOW FOR THE CONE ZONE" message shall be: "SLOW" white D; "FOR THE" white D; "CONE" orange Arial font; "ZONE" white Arial font.
5. Year of completion of project construction shown on the overlay is an example only. See the Special Provisions.
6. Use when the Project involves Federal Highway Trust Fund.

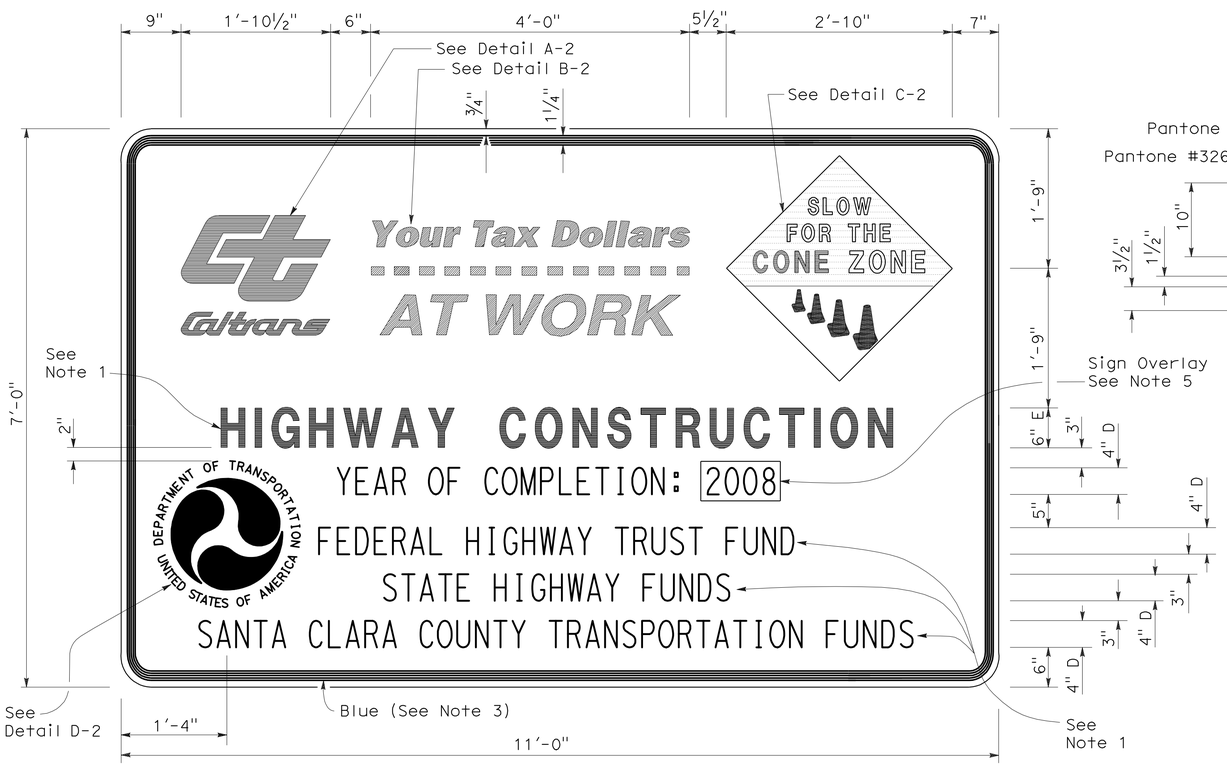

TYPE 2

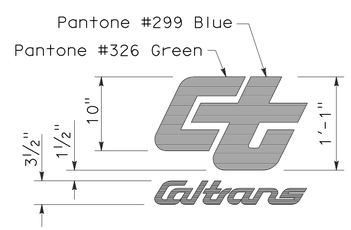

DETAIL A-2

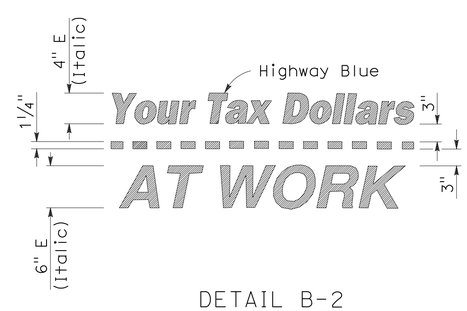

DETAIL B-2
(See Note 3)

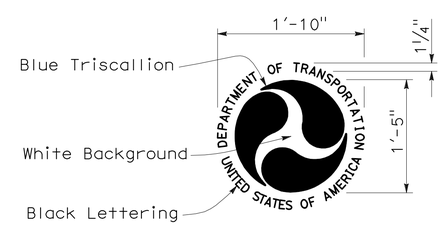

DETAIL D-2
(See Note 6)

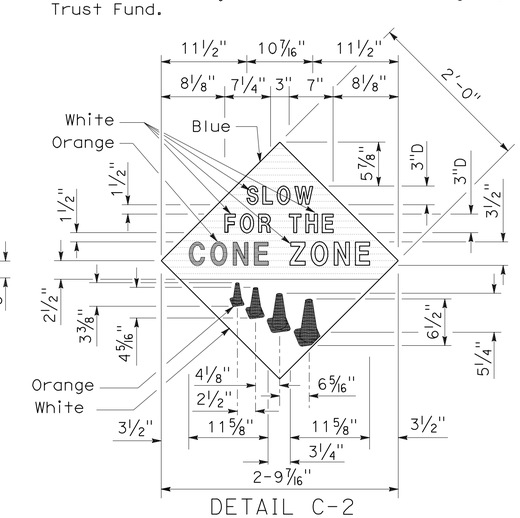

DETAIL C-2
(See Note 4)

STATE OF CALIFORNIA
DEPARTMENT OF TRANSPORTATION

CONSTRUCTION PROJECT FUNDING IDENTIFICATION SIGNS

NO SCALE

RSP T7 DATED NOVEMBER 17, 2006 SUPERSEDES STANDARD PLAN T7
DATED MAY 1, 2006 - PAGE 217 OF THE STANDARD PLANS BOOK DATED MAY 2006.

REVISED STANDARD PLAN RSP T7

2006 REVISED STANDARD PLAN RSP T7

9-7-06

DIST	COUNTY	ROUTE	POST MILES TOTAL PROJECT	SHEET NO.	TOTAL SHEETS
03	ED	50	66.7/67.8	50	71

Robert B Schott
LICENSED LANDSCAPE ARCHITECT

August 15, 2008
PLANS Approval DATE

LICENSED LANDSCAPE ARCHITECT
Robert B. Schott 3025
Robert B Schott
Signature
11-04-08
Renewal Date
08-11-08
Date
STATE OF CALIFORNIA

The State of California or its officers or agents shall not be responsible for the accuracy or completeness of electronic copies of this plan sheet.

To accompany plans dated 7-26-10

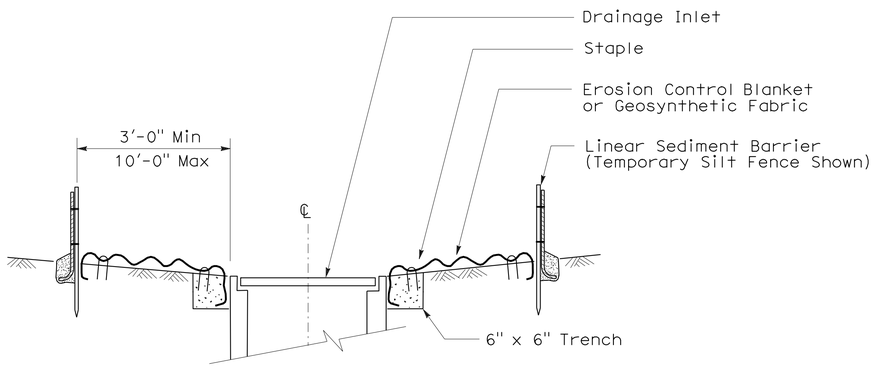

SECTION A-A

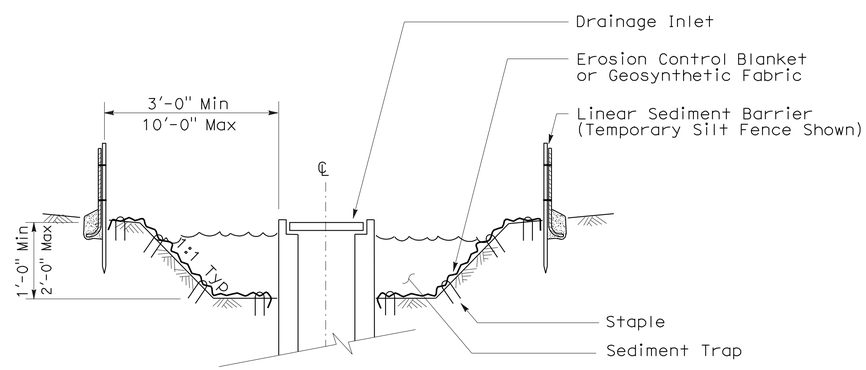

SECTION B-B

NOTES:

1. See Standard Plan T51 for Temporary Silt Fence.
2. Dimensions may vary to fit field conditions.

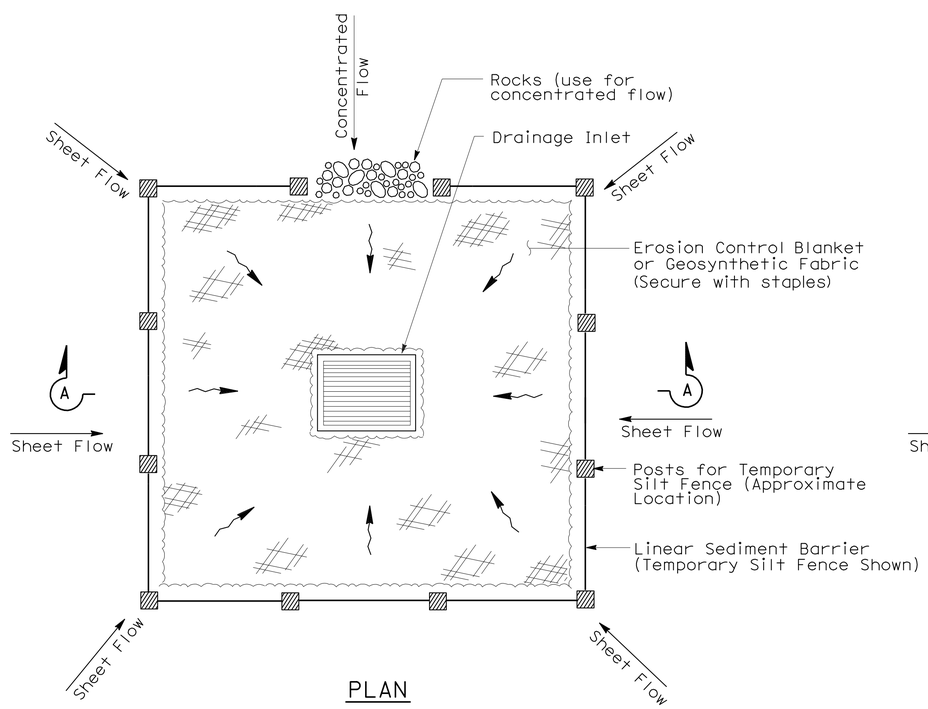

PLAN

TEMPORARY DRAINAGE
INLET PROTECTION (TYPE 1)

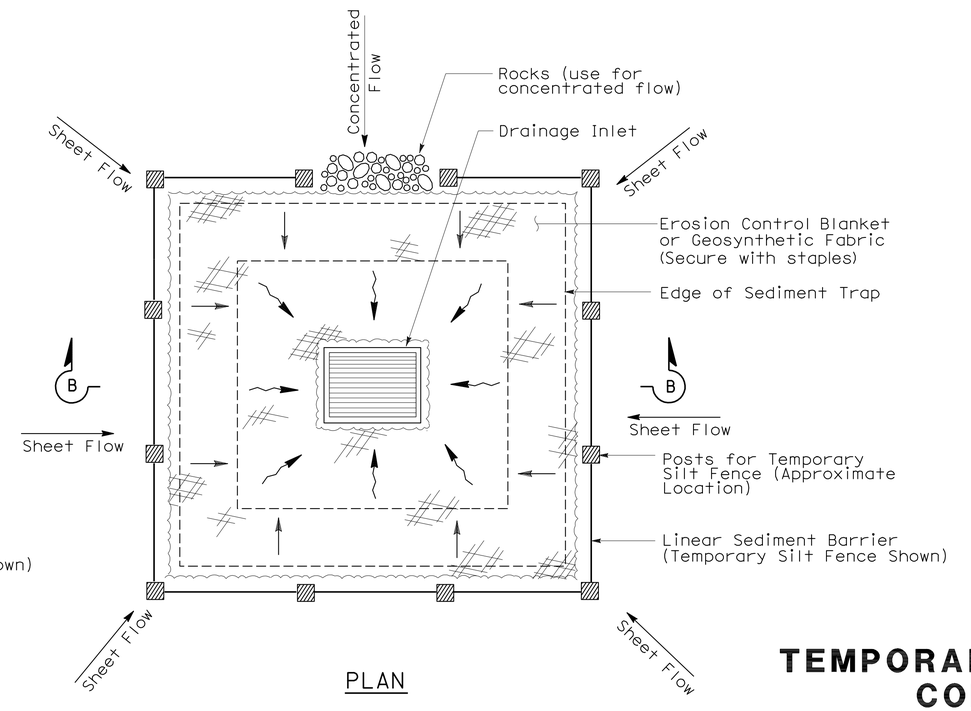

PLAN

TEMPORARY DRAINAGE
INLET PROTECTION (TYPE 2)
(EXCAVATED SEDIMENT TRAP)

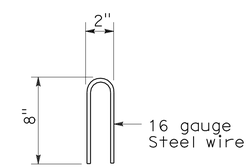

STAPLE DETAIL

STATE OF CALIFORNIA
DEPARTMENT OF TRANSPORTATION

TEMPORARY WATER POLLUTION CONTROL DETAILS (TEMPORARY DRAINAGE INLET PROTECTION)

NO SCALE

NSP T61 DATED AUGUST 15, 2008 SUPPLEMENTS
THE STANDARD PLANS BOOK DATED MAY 2006.

NEW STANDARD PLAN NSP T61

2006 NEW STANDARD PLAN NSP T61

7-11-08

DIST	COUNTY	ROUTE	POST MILES TOTAL PROJECT	SHEET NO.	TOTAL SHEETS
03	ED	50	66.7/67.8	51	71

LICENSED LANDSCAPE ARCHITECT

August 15, 2008
PLANS APPROVAL DATE

The State of California or its officers or agents shall not be responsible for the accuracy or completeness of electronic copies of this plan sheet.

LICENSED LANDSCAPE ARCHITECT — Robert B. Schott — Signature — 11-04-08 Renewal Date — 08-11-08 Date — STATE OF CALIFORNIA

To accompany plans dated 7-26-10

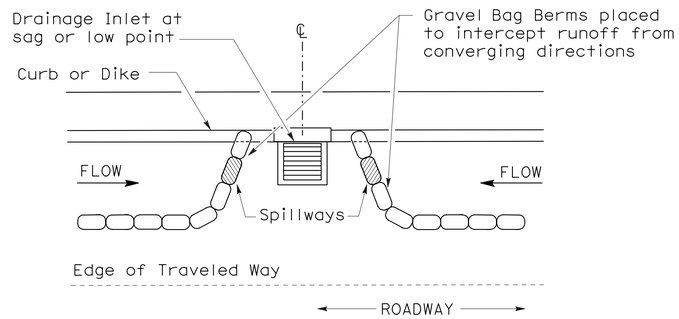

PLAN

CONFIGURATION FOR SAG POINT INLET (GRAVEL BAG BERM)

GRAVEL BAG BERM (TYPE 3A) SPACING TABLE

SLOPE OF ROADWAY (PERCENT)	1 to 3.9	4 to 5.9	6 to 7.9	8 to 10	10+
INTERVAL BETWEEN BERM	100′	75′	50′	25′	12′

For slope of less than 1%, install barriers only if erosion/sediment is prevalent

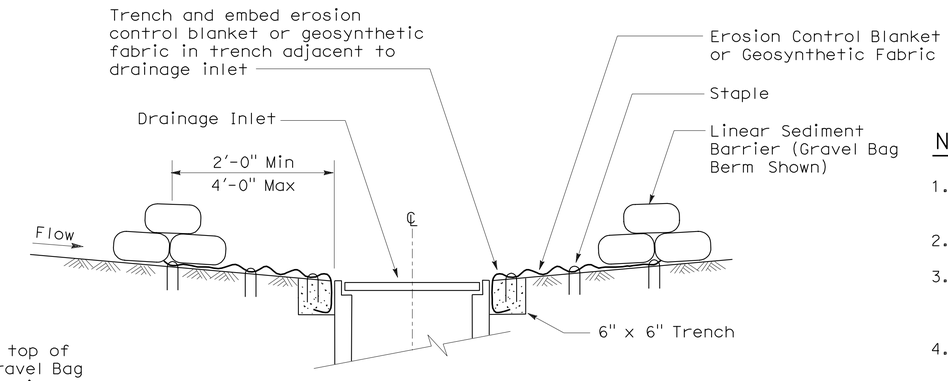

SECTION A-A

NOTES:

1. Place safety cones adjacent to drainage inlet protection.
2. Dimensions may vary to fit field conditions.
3. Install a minimum of 3 gravel bag berms upstream of each drainage inlet to be protected.
4. Position erosion control blanket or geosynthetic fabric at edge of concrete apron and secure in trench.
5. Erosion control blanket or geosynthetic fabric is not required if the area adjacent to the drainage inlet is vegetated or paved.

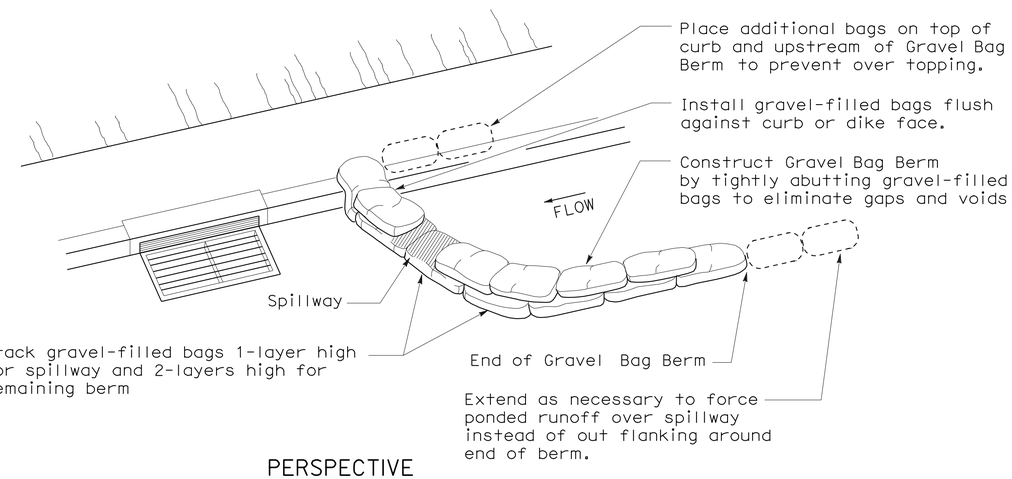

PERSPECTIVE

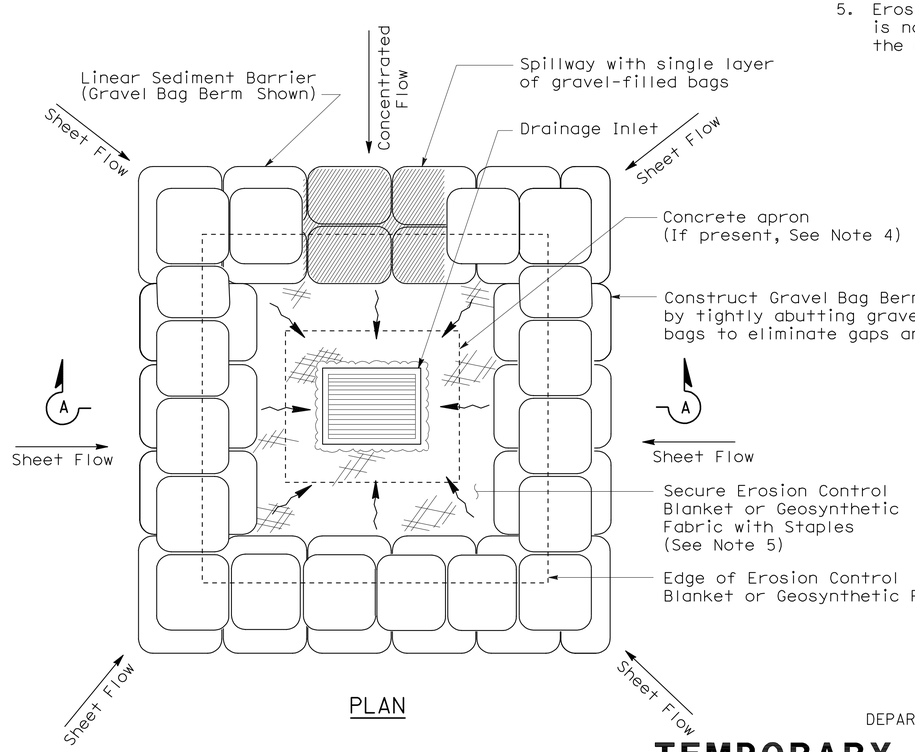

PLAN

TEMPORARY DRAINAGE INLET PROTECTION (TYPE 3B)

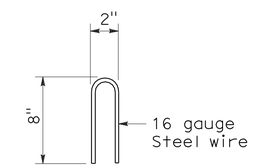

STAPLE DETAIL

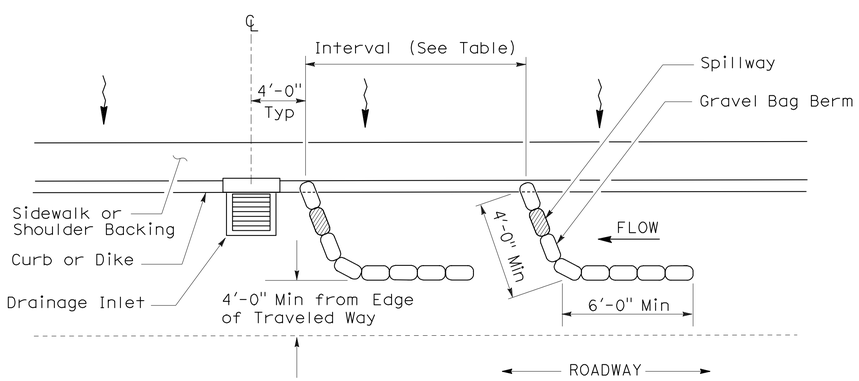

PLAN

TEMPORARY DRAINAGE INLET PROTECTION (TYPE 3A) (GRAVEL BAG BERM)

STATE OF CALIFORNIA
DEPARTMENT OF TRANSPORTATION

TEMPORARY WATER POLLUTION CONTROL DETAILS (TEMPORARY DRAINAGE INLET PROTECTION)

NO SCALE

NSP T62 DATED AUGUST 15, 2008 SUPPLEMENTS THE STANDARD PLANS BOOK DATED MAY 2006.

NEW STANDARD PLAN NSP T62

2006 NEW STANDARD PLAN NSP T62

7-11-08

DIST	COUNTY	ROUTE	POST MILES TOTAL PROJECT	SHEET NO.	TOTAL SHEETS
03	ED	50	66.7/67.8	52	71

LICENSED LANDSCAPE ARCHITECT

August 15, 2008
PLANS APPROVAL DATE

The State of California or its officers or agents shall not be responsible for the accuracy or completeness of electronic copies of this plan sheet.

LICENSED LANDSCAPE ARCHITECT Robert B. Schott 3025 Signature 11-04-08 Renewal Date 08-11-08 Date STATE OF CALIFORNIA

To accompany plans dated 7-26-10

FLEXIBLE SEDIMENT BARRIER SPACING TABLE

SLOPE OF ROADWAY (PERCENT)	0 to 0.9	1 to 1.9	2 to 2.9	3 to 4	5+
INTERVAL BETWEEN BARRIERS	50′	35′	30′	25′	20′
ANGLE FROM FACE OF CURB	70°	70°	70°	45°	45°
SUGGESTED BARRIER LENGTH	6′	6′	6′	6′	6′

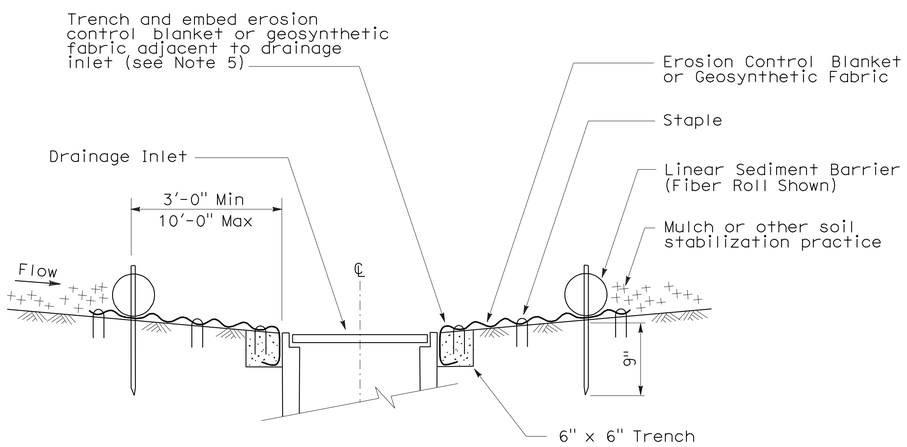

SECTION A-A

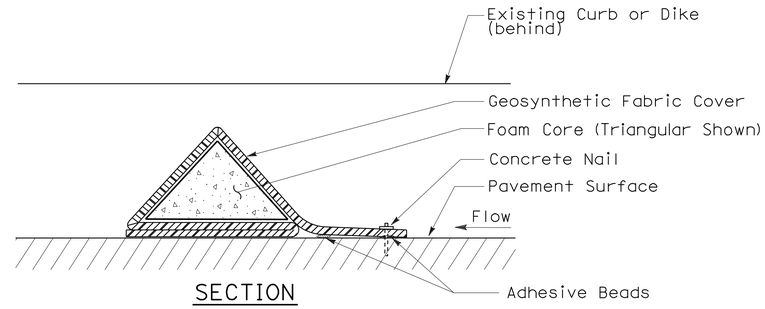

SECTION

FLEXIBLE SEDIMENT BARRIER DETAIL (FOAM BARRIER SHOWN)

NOTES:

1. See Standard Plan T51 for Temporary Silt Fence.
2. Dimensions may vary to fit field conditions.
3. Install a minimum of 3 flexible sediment barriers upstream of each drainage inlet to be protected.
4. Position erosion control blanket or geosynthetic fabric at edge of concrete apron and secure in trench.
5. Erosion control blanket or geosynthetic fabric is not required if the area adjacent to the drainage inlet is vegetated.

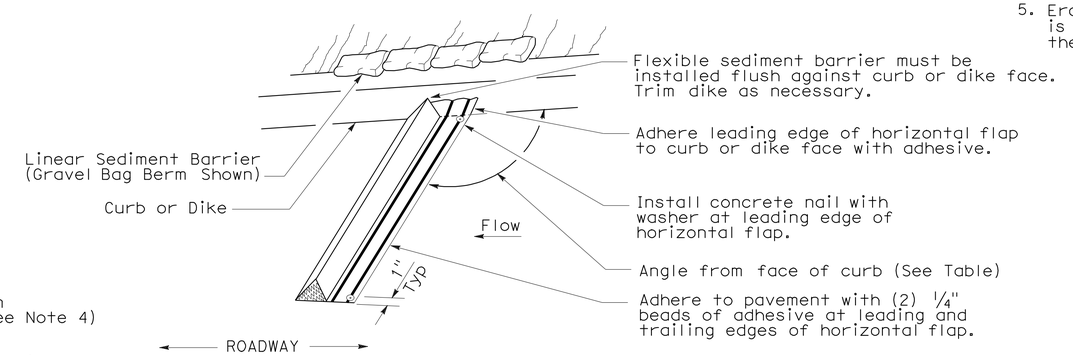

PERSPECTIVE

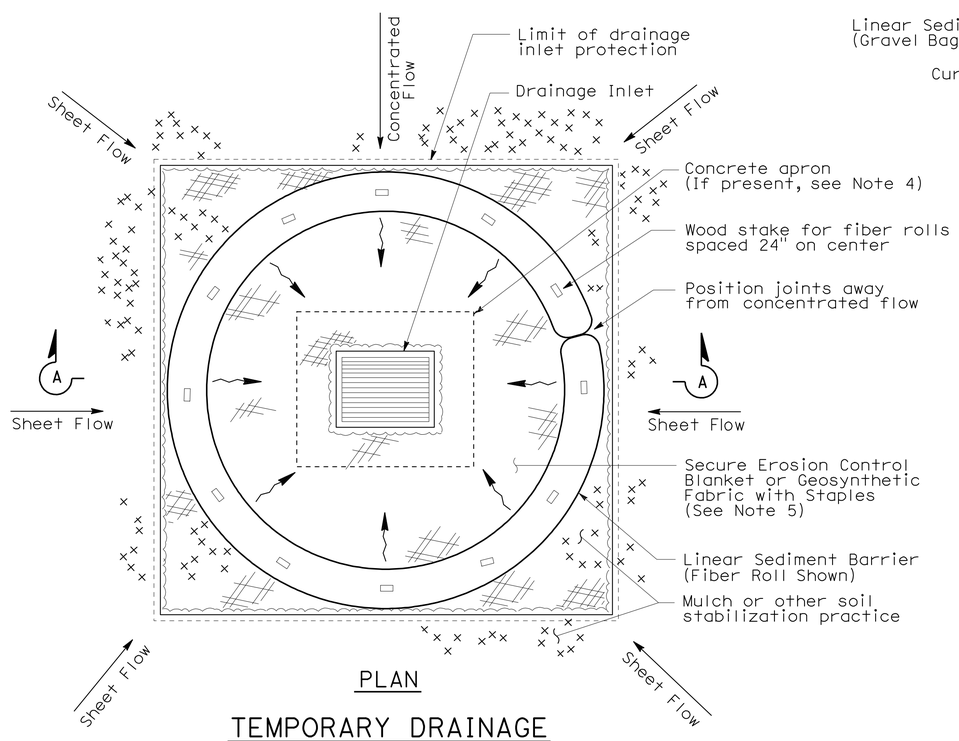

PLAN

TEMPORARY DRAINAGE INLET PROTECTION (TYPE 4A)

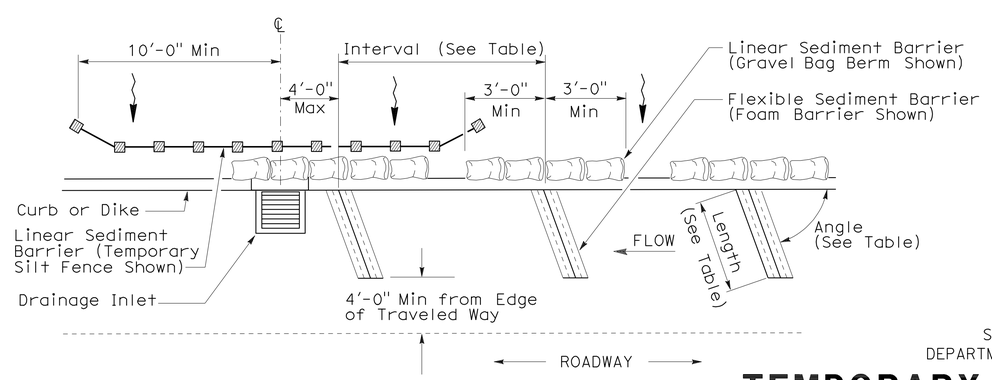

PLAN

TEMPORARY DRAINAGE INLET PROTECTION (TYPE 4B) FLEXIBLE SEDIMENT BARRIER

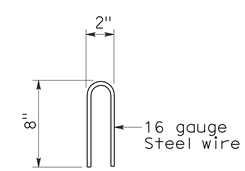

STAPLE DETAIL

STATE OF CALIFORNIA
DEPARTMENT OF TRANSPORTATION

TEMPORARY WATER POLLUTION CONTROL DETAILS (TEMPORARY DRAINAGE INLET PROTECTION)

NO SCALE

NSP T63 DATED AUGUST 15, 2008 SUPPLEMENTS THE STANDARD PLANS BOOK DATED MAY 2006.

NEW STANDARD PLAN NSP T63

2006 NEW STANDARD PLAN NSP T63

7-11-08

DIST	COUNTY	ROUTE	POST MILES TOTAL PROJECT	SHEET NO.	TOTAL SHEETS
03	ED	50	66.7/67.8	53	71

LICENSED LANDSCAPE ARCHITECT

August 15, 2008
PLANS APPROVAL DATE

LICENSED LANDSCAPE ARCHITECT
Robert B. Schott 3625
Signature
11-04-08
Renewal Date
08-11-08
Date
STATE OF CALIFORNIA

The State of California or its officers or agents shall not be responsible for the accuracy or completeness of electronic copies of this plan sheet.

To accompany plans dated 7-26-10

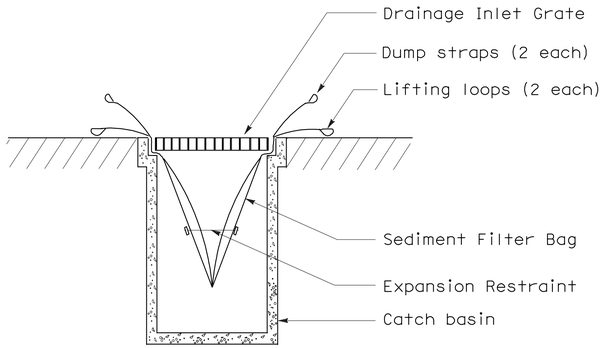

SECTION B-B

SEDIMENT FILTER BAG DETAIL

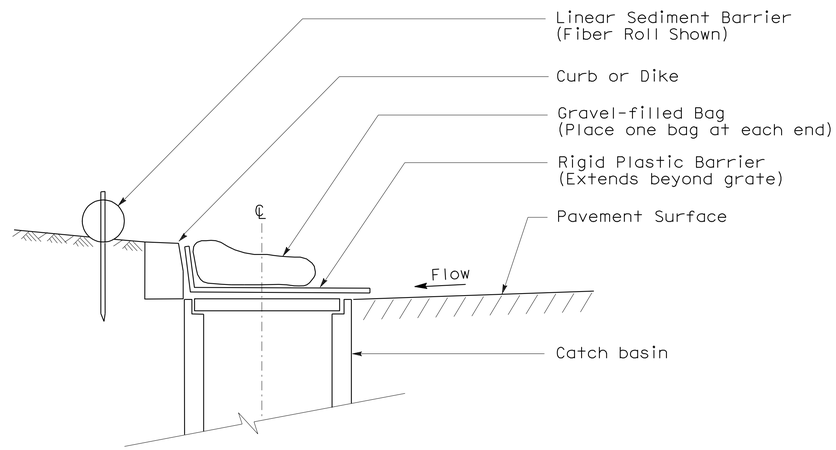

SECTION

TEMPORARY DRAINAGE INLET PROTECTION (TYPE 6A) (CATCH BASIN WITH GRATE)

NOTES:

1. See Standard Plan T51 for Temporary Silt Fence.
2. Dimensions may vary to fit field conditions.

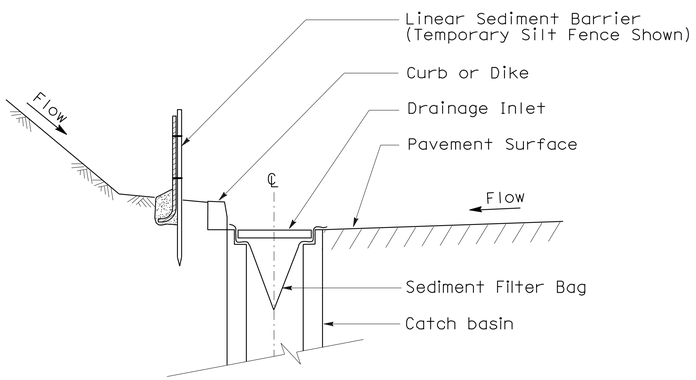

SECTION A-A

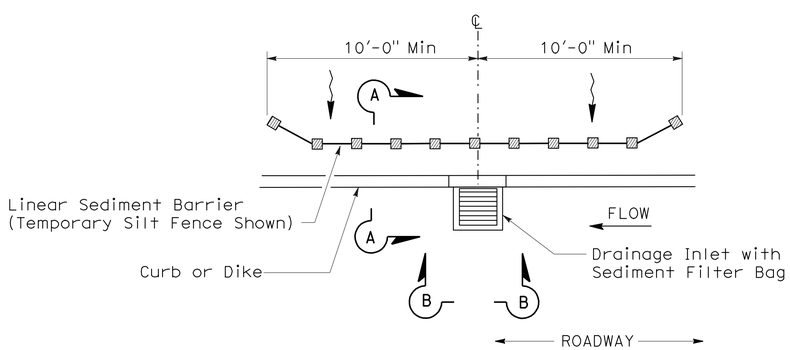

PLAN

TEMPORARY DRAINAGE INLET PROTECTION (TYPE 5) (SEDIMENT FILTER BAG)

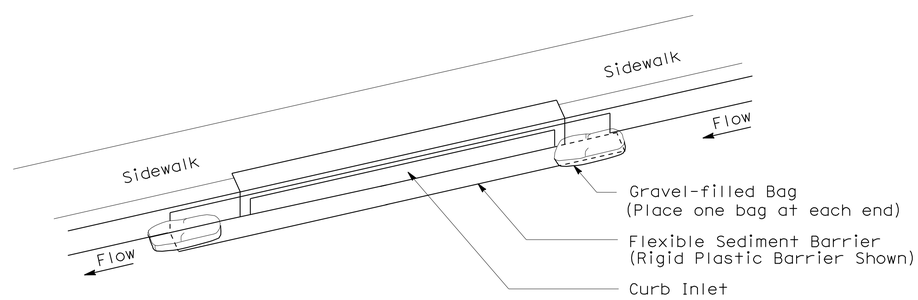

PERSPECTIVE

TEMPORARY DRAINAGE INLET PROTECTION (TYPE 6B) (CURB INLET WITHOUT GRATE)

STATE OF CALIFORNIA
DEPARTMENT OF TRANSPORTATION

TEMPORARY WATER POLLUTION CONTROL DETAILS (TEMPORARY DRAINAGE INLET PROTECTION)

NO SCALE

NSP T64 DATED AUGUST 15, 2008 SUPPLEMENTS THE STANDARD PLANS BOOK DATED MAY 2006.

NEW STANDARD PLAN NSP T64

2006 NEW STANDARD PLAN NSP T64

7-11-08

DIST	COUNTY	ROUTE	POST MILES TOTAL PROJECT	SHEET NO.	TOTAL SHEETS
03	ED	50	66.7/67.8	54	71

LICENSED LANDSCAPE ARCHITECT

April 3, 2009
PLANS APPROVAL DATE

LICENSED LANDSCAPE ARCHITECT
Robert B. Schott 3025
Signature
11-30-10
Renewal Date
2-25-09
Date
STATE OF CALIFORNIA

The State of California or its officers or agents shall not be responsible for the accuracy or completeness of electronic copies of this plan sheet.

To accompany plans dated 7-26-10

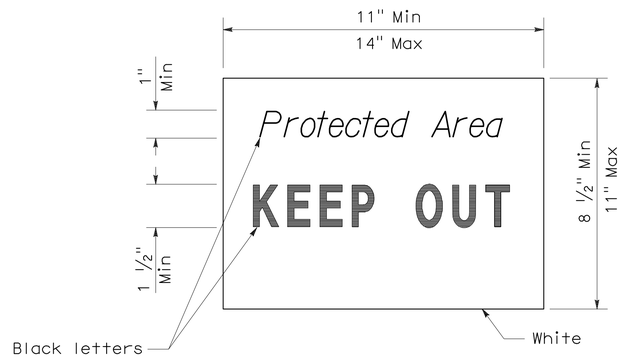

SIGN DETAIL

NOTE:

1. Temporary silt fence and temporary straw bale barrier shown for reference purposes only.

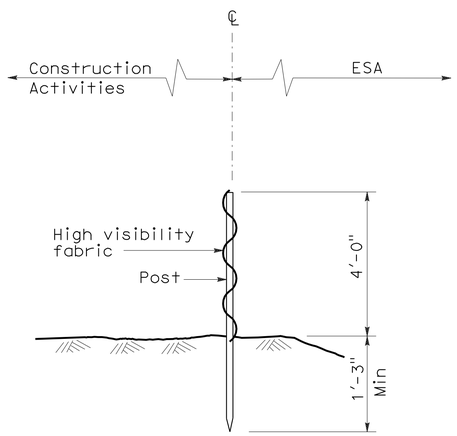

SECTION
TEMPORARY FENCE (TYPE ESA)

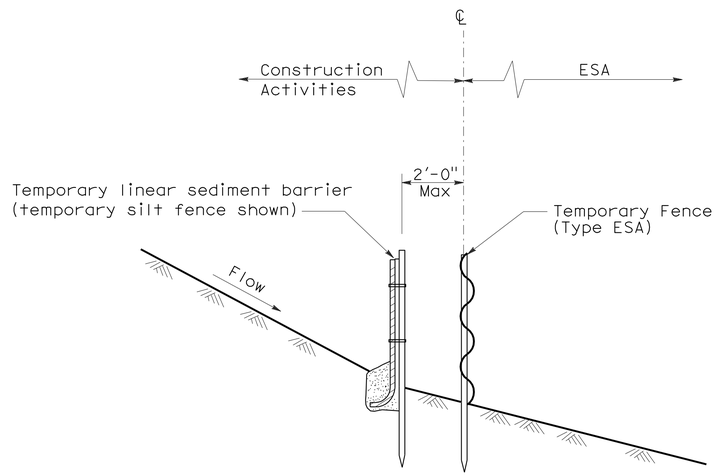

SECTION
PLACEMENT DETAIL
FOR TEMPORARY LINEAR SEDIMENT BARRIER
USED WITH TEMPORARY
FENCE (TYPE ESA)
(See Note 1)

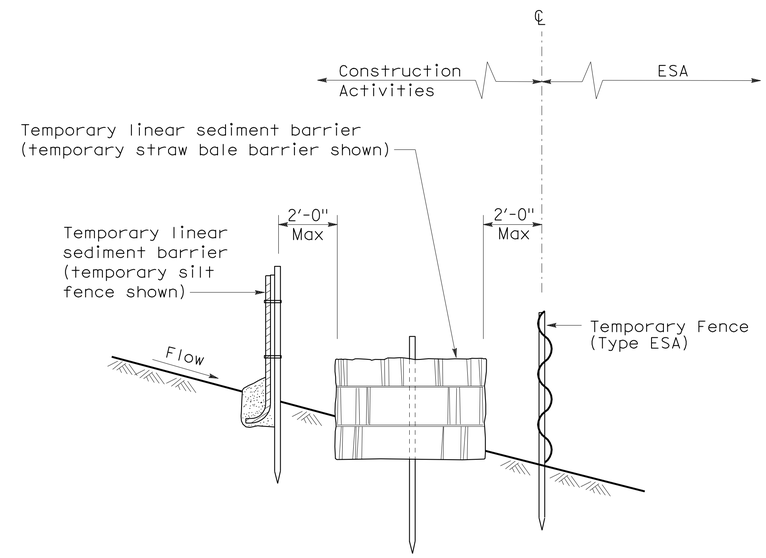

SECTION
PLACEMENT DETAIL
FOR TEMPORARY SILT FENCE
AND TEMPORARY STRAW BALE BARRIER
USED WITH TEMPORARY FENCE (TYPE ESA)
(See Note 1)

STATE OF CALIFORNIA
DEPARTMENT OF TRANSPORTATION

TEMPORARY WATER POLLUTION CONTROL DETAILS [TEMPORARY FENCE (TYPE ESA)]

NO SCALE

NSP T65 DATED APRIL 3, 2009 SUPPLEMENTS
THE STANDARD PLANS BOOK DATED MAY 2006.

NEW STANDARD PLAN NSP T65

2006 NEW STANDARD PLAN NSP T65

DIST	COUNTY	ROUTE	POST MILES TOTAL PROJECT	SHEET NO.	TOTAL SHEETS
03	ED	50	66.7/67.8	55	71

REGISTERED ELECTRICAL ENGINEER

October 5, 2007
PLANS APPROVAL DATE

REGISTERED PROFESSIONAL ENGINEER
Jeffery G. McRae
No. E14512
Exp. 6-30-08
ELECTRICAL
STATE OF CALIFORNIA

The State of California or its officers or agents shall not be responsible for the accuracy or completeness of electronic copies of this plan sheet.

To accompany plans dated 7-26-10

ELECTROLIERS

STANDARD TYPES
15, 15D
15 STRUCTURE
21, 21D STRUCTURE
30
31
32
35
36-20A

High mast light pole

Double Arm lighting standard

Existing electrolier

Electrolier foundation (Future installation)

NOTES:

1. Luminaires shall be 310 W HPS when installed on Type 21, 21D, 30, 31, 32, 35 and 36-20A Standards, unless otherwise specified. Luminaires shall be 200 W HPS when installed on other type standards or poles, unless otherwise specified.
2. Luminaires shall be the cutoff type, ANSI Type Ⅲ medium cutoff lighting distribution, unless otherwise specified.
3. Variations noted adjacent to symbol on project plans.

Electrolier (see project notes or project plans)

Luminaire on wood pole

STANDARD NOTES:

- AB — Abandon. If applied to conduit, remove conductors.
- BC — Install pull box in existing conduit run.
- BP — Pedestrian barricade, type as indicated on plan.
- CB — Install conduit into existing pull box.
- CC — Connect new and existing conduit. Remove existing conductors and install conductors as indicated.
- CF — Conduit to remain for future use. Remove conductors. Install pull wire or rope.
- DH — Detector handhole.
- FA — Foundation to be abandoned.
- IS — Install sign on signal mast arm.
- NS — No slip base on standard.
- PEC — Photoelectric control.
- PEU — Photoelectric unit.
- RC — Equipment or material to be removed and become the property of the Contractor.
- RE — Remove electrolier, fuses and ballast. Tape ends of conductors.
- RL — Relocate equipment.
- RR — Remove and reuse equipment.
- RS — Remove and salvage equipment.
- SC — Splice new to existing conductors.
- SD — Service disconnect.
- SF — Standard to remain for future use. Remove luminaire, pole conductors, fuses and ballast.
- TSP — Telephone service point.

ABBREVIATIONS AND EQUIPMENT DESIGNATIONS

PROPOSED	EXISTING	
BBS	bbs	Battery backup system
BC	bc	Bolt circle
C	C	Conduit
CCTV	cctv	Closed circuit television
CKT	ckt	Circuit
CMS	cms	Changeable message sign
DLC	dlc	Loop detector lead-in cable
EMS	ems	Extinguishable message sign
EVC	evc	Emergency vehicle cable
EVD	evd	Emergency vehicle detector
FB	fb	Flashing beacon
FBCA	fbca	Flashing beacon control assembly
FBS	fbs	Flashing beacon with slip base
FO	fo	Fiber optic
G	G	Ground (Equipment Grounding Conductor)
GFCI	GFCI	Ground fault circuit interrupt
HAR	har	Highway advisory radio
HEX	hex	Hexagonal
HPS	hps	High pressure sodium
IISNS	iisns	Internally illuminated street name sign
ISL	isl	Induction sign lighting
LED	led	Light emitting diode
LMA	lma	Luminaire mast arm
LPS	lps	Low pressure sodium
LTG	ltg	Lighting
LUM	lum	Luminaire
MAT	mat	Mast arm mounting vehicle signal faces, top attachment
MAS	mas	Mast arm mounting vehicle signal faces, side attachment
MAS-4A	mas-4A	Mast arm mounting vehicle signal faces, side attachment - 4 signal section
MAS-4B	mas-4B	
MAS-4C	mas-4C	
MAS-5A	mas-5A	Mast arm mounting vehicle signal faces, side attachment - 5 signal section
MAS-5B	mas-5B	
MC	mc	Mercury contactor
M/M	m/m	Multiple to multiple transformer
MT	mt	Conduit with pull wire or rope only
MTG	mtg	Mounting
	mv	Mercury vapor lighting fixture
N	N	Neutral (Grounded Conductor)
NC	NC	Normally closed
NO	NO	Normally open
PB	pb	Pull box
PEC	pec	Photoelectric control (Type Ⅰ, Ⅱ, Ⅲ, Ⅳ or Ⅴ as shown)
PED	ped	Pedestrian
PEU	peu	Photoelectric unit
PPB	ppb	Pedestrian push button
RL		Relocated equipment
RM	rm	Ramp metering
SB	sb	Slip base
SIC	sic	Signal interconnect cable
SIG	sig	Signal
SMA	sma	Signal mast arm
SNS	sns	Street name sign
SP	sp	Service point
TDC	tdc	Telephone demarcation cabinet
TMS	tms	Traffic monitoring station
TOS	tos	Traffic Operations System
VEH	veh	Vehicle
XFMR	xfmr	Transformer
COMM	comm	Communication
RWIS	rwis	Roadway weather information system

SOFFIT AND WALL MOUNTED LUMINAIRES

Pendant, 70 W HPS unless otherwise specified.

Flush, 70 W HPS unless otherwise specified.

Wall surface, 70 W HPS unless otherwise specified.

Existing soffit or wall luminaire to remain unmodified.

Existing soffit or wall luminaire to be modified as specified.

NOTE:

Arrow indicates "street side" of luminaire.

STATE OF CALIFORNIA
DEPARTMENT OF TRANSPORTATION

ELECTRICAL SYSTEMS (SYMBOLS AND ABBREVIATIONS)

NO SCALE

RSP ES-1A DATED OCTOBER 5, 2007 SUPERSEDES STANDARD PLAN ES-1A
DATED MAY 1, 2006 - PAGE 400 OF THE STANDARD PLANS BOOK DATED MAY 2006.

REVISED STANDARD PLAN RSP ES-1A

2006 REVISED STANDARD PLAN RSP ES-1A

DIST	COUNTY	ROUTE	POST MILES TOTAL PROJECT	SHEET NO.	TOTAL SHEETS
03	ED	50	66.7/67.8	56	71

REGISTERED ELECTRICAL ENGINEER

October 5, 2007
PLANS APPROVAL DATE

REGISTERED PROFESSIONAL ENGINEER Jeffery G. McRae No. E14512 Exp. 6-30-08 ELECTRICAL STATE OF CALIFORNIA

The State of California or its officers or agents shall not be responsible for the accuracy or completeness of electronic copies of this plan sheet.

To accompany plans dated 7-26-10

CONDUIT

PROPOSED	EXISTING	
		Lighting Conduit, unless otherwise indicated or noted
		Traffic signal conduit
C	c	Communication conduit
T	t	Telephone conduit
F	f	Fire alarm conduit
FO	fo	Fiber optic conduit
		Conduit termination (RSP ES-9A C)
R	r	Conduit riser in/on structure or service pole

SERVICE EQUIPMENT

PROPOSED	EXISTING	
OH	oh	Overhead lines
U	U	Wood pole "U" indicates utility owned
		Pole guy with anchor
		Utility transformer - ground mounted
III		Service equipment enclosure type
		Service equipment enclosure door indicates front of enclosure
T	t	Telephone demarcation cabinet

POLE-MOUNTED SERVICE DESIGNATION

Type of installation

TYPE H SERVICE - 28'-10" ← Pole height above grade

ILLUMINATED OVERHEAD SIGN

PROPOSED	EXISTING	
		Overhead sign - Single post
		Overhead sign - Two post
		Overhead sign - Mounted on structure
		Overhead sign with electrolier

SIGNAL EQUIPMENT

PROPOSED	EXISTING	
		Pedestrian signal face
		Pedestrian push button post
		Pedestrian barricade
		Vehicle signal face (with backplate, 3-Section: red, yellow and green)
		Vehicle signal face with angle visors
PV	PV	Modifications of basic symbols: "L" indicates all non-arrow sections louvered "LG" indicates louvered green section only "PV" indicates 12" programmed visibility sections "8" indicates all 8" sections (only when specified)
		Type 15TS and Vehicle signal face
		Vehicle signal face with red, yellow and green left arrow sections
		Vehicle signal face with red and yellow sections and up green arrow
		Vehicle signal face (5 Section) with red, yellow and green sections and yellow and green right arrows
		Type 1 Standard and attached vehicle signal faces
		Standard with signal mast arm only and attached vehicle signal faces and internally illuminated street name sign
		Type 33 Standard, Left-turn vehicle signal face and sign
		Standard with luminaire and signal mast arms and attached vehicle signal faces
		Cantilever flashing beacon Type 9 Frame, with a sign unless otherwise specified or indicated
		Type 15-FBS Standard with two vehicle signal face sections with lens, backplate and visor with a sign
R	Y	Flashing beacon. One vehicle signal face section with lens, backplate and visor. "R" indicates red indication, "Y" indicates yellow indication
		Controller assembly. Door indicates front of cabinet

SIGNAL EQUIPMENT Cont

PROPOSED	EXISTING	
		Guard post
		Type 1 Standard with "Meter On" sign
		Emergency Vehicle detector

NOTES:

1. All signal sections shall be 12" unless shown otherwise.
2. Signal heads shall be provided with backplates unless shown otherwise.
3. Signal indication shall be LED.

STATE OF CALIFORNIA
DEPARTMENT OF TRANSPORTATION

ELECTRICAL SYSTEMS (SYMBOLS AND ABBREVIATIONS)

NO SCALE

RSP ES-1B DATED OCTOBER 5, 2007 SUPERCEDES STANDARD PLAN ES-1B DATED MAY 1, 2006 - PAGE 401 OF THE STANDARD PLANS BOOK DATED MAY 2006.

REVISED STANDARD PLAN RSP ES-1B

2006 REVISED STANDARD PLAN RSP ES-1B

DIST	COUNTY	ROUTE	POST MILES TOTAL PROJECT	SHEET NO.	TOTAL SHEETS
03	ED	50	66.7/67.8	57	71

REGISTERED ELECTRICAL ENGINEER

October 5, 2007
PLANS APPROVAL DATE

REGISTERED PROFESSIONAL ENGINEER
Jeffery G. McRae
No. E14512
Exp. 6-30-08
ELECTRICAL
STATE OF CALIFORNIA

The State of California or its officers or agents shall not be responsible for the accuracy or completeness of electronic copies of this plan sheet.

To accompany plans dated 7-26-10

EQUIPMENT IDENTIFICATION

ILLUMINATED SIGN IDENTIFICATION NUMBER:

Sign No. 12345 — Sign number - Place on post or structure

10 ISL SCI 1.0

- 1.0 — Transformer rating (kVA)
- SCI — Lighting control type
- ISL — Number and type of fixtures

Do NOT place on standard or structure

ELECTROLIER OR EQUIPMENT IDENTIFICATION NUMBER:

12345 - 15'-0"

- 15'-0" — Mast arm length, if shown. Do not place on standard or structure.
- 12345 — Equipment number - Place on standard or structure. Existing equipment numbers are shown in parenthesis

CONDUIT AND CONDUCTOR IDENTIFICATION:

1½"C, 2#10, 15#14, 2 DLC

- 2#10, 15#14, 2 DLC — Number and size of conductors and cables
- 1½"C — Size of conduit in inches

Ø1, Ø2, Ø2P, etc.	Traffic phase identification for signal faces, detectors and phase diagrams
1 2 3	Project note numbers
A B C	Equipment description, installation or item numbers
1 2 3	Conduit run numbers

SIGNAL AND LIGHTING STANDARD (TYPICAL DESIGNATION):

19A - 3 - 100

- 100 — Wind velocity = 100 mph
- 3 — Case 3 arm loading
- 19A — Standard type
- Standard Plan sheet number
- Detail number or letter

MISCELLANEOUS EQUIPMENT

PROPOSED	EXISTING	
CMS	cms	Changeable message sign
		Closed circuit television camera
		Highway advisory radio pole and antenna
EMS	ems	Extinguishable message sign
M V	m v	Detection device M = Microwave sensor V = Video image sensor

WIRING DIAGRAM LEGEND

P	Pole
CB	Circuit breaker
A	Ampere
V	Volt
M	Metered
UM	Unmetered
NB	Neutral bus
GB	Ground bus
G	Equipment grounding conductor
N	Grounded conductor (Neutral)

- External conductor
- Conductor or bus
- Tie point
- Contactor coil
- Contactor, Contact NO
- Terminal blocks
- Contactor, Contact NC
- Enclosure bond
- Grounding electrode
- Circuit breaker
- Receptacle

PULL BOXES

PROPOSED EXISTING

Pull box-No. 5 unless otherwise indicated or noted.

3 — 9A(21)

Pull box-Additional designations or descriptions

3	= No. 3½ pull box
5	= No. 5 pull box
6	= No. 6 pull box
7	= No. 7 (Ceiling pull box)
8	= No. 8 (Pendant soffit pull box)
9	= No. 9 pull box
9A	= No. 9A pull box

(C)	= Communications pull box
(E)	= Pull box with extension
(S)	= Sprinkler control pull box
(21)	= Anchor bolts and conduit for future installation of Type 21 Standard
(T)	= Traffic pull box

VEHICLE DETECTORS

5 J 9 U

- U = Upper
- L = Lower
- Slot number in input file
- Input file (I or J)
- Phase

PROPOSED EXISTING

	Type A detector loop. Outline of sawcut shown.
	Type B detector loop. Outline of sawcut shown.
	Type C detector loop. Outline of sawcut shown.
	Type D detector loop. Outline of sawcut shown.
	Type E detector loop. Outline of sawcut shown.
	Type Q detector loop. Outline of sawcut shown.
	Magnetic detector
DH / dh	Detector handhole
	Microwave or video detection zone

STATE OF CALIFORNIA
DEPARTMENT OF TRANSPORTATION

ELECTRICAL SYSTEMS (SYMBOLS AND ABBREVIATIONS)

NO SCALE

RSP ES-1C DATED OCTOBER 5, 2007 SUPERCEDES STANDARD PLAN ES-1C DATED MAY 1, 2006 - PAGE 402 OF THE STANDARD PLANS BOOK DATED MAY 2006.

REVISED STANDARD PLAN RSP ES-1C

2006 REVISED STANDARD PLAN RSP ES-1C

DIST	COUNTY	ROUTE	POST MILES TOTAL PROJECT	SHEET NO.	TOTAL SHEETS
03	ED	50	66.7/67.8	58	71

REGISTERED ELECTRICAL ENGINEER

October 5, 2007
PLANS APPROVAL DATE

REGISTERED PROFESSIONAL ENGINEER Jeffery G. McRae No. E14512 Exp. 6-30-08 ELECTRICAL STATE OF CALIFORNIA

The State of California or its officers or agents shall not be responsible for the accuracy or completeness of electronic copies of this plan sheet.

To accompany plans dated 7-26-10

LOOP INSTALLATION PROCEDURE

1. Loops shall be centered in lanes.
2. Saw slots in pavement for loop conductors as shown in details.
3. Distance between side of loop and a lead-in saw cut from adjacent detectors shall be 2'-0" minimum. Distance between lead-in saw cuts shall be 6" minimum.
4. Bottom of saw slot shall be smooth with no sharp edges.
5. Slots shall be washed until clean, blown out and thoroughly dried before installing loop conductors.
6. Adjacent loops on the same sensor unit channel shall be wound in opposite directions.
7. Identify and tag loop circuit pairs in the pull box with loop number, start (S) and finish (F) of conductor. Identify and tag lead-in-cable with sensor number and phase.
8. Install loop conductor in slot using a 3/16" to 1/4" thick wood paddle. Hold loop conductors with wood paddles (at the bottom of the sawed slot) during sealant placement.
9. No more than 2 twisted pairs shall be installed in one sawed slot.
10. Allow additional 5'-0" of slack length of conductor for the lead-in run to pull box.
11. The additional length of each conductor for each loop shall be twisted together into a pair (6 turns per 3'-4" minimum) before being placed in the slot and conduit leading to pull box.
12. Test each loop circuit for continuity, circuit resistance and insulation resistance at the pull box before filling slots.
13. Fill slots as shown in details.
14. Splice loop conductors to lead-in-cable. Splices shall be soldered.
15. End of lead-in-cable and Type 2 loop conductor shall be waterproofed prior to installing in conduit to prevent moisture from entering the cable.
16. Lead-in-cable shall not be spliced between the pull box and the controller cabinet terminals.
17. Test each loop circuit for continuity, circuit resistance and insulation resistance at the controller cabinet location.
18. Where loop conductors are not to be spliced to a lead-in-cable, the ends of the conductors shall be taped and waterproofed with electrical insulating coating.

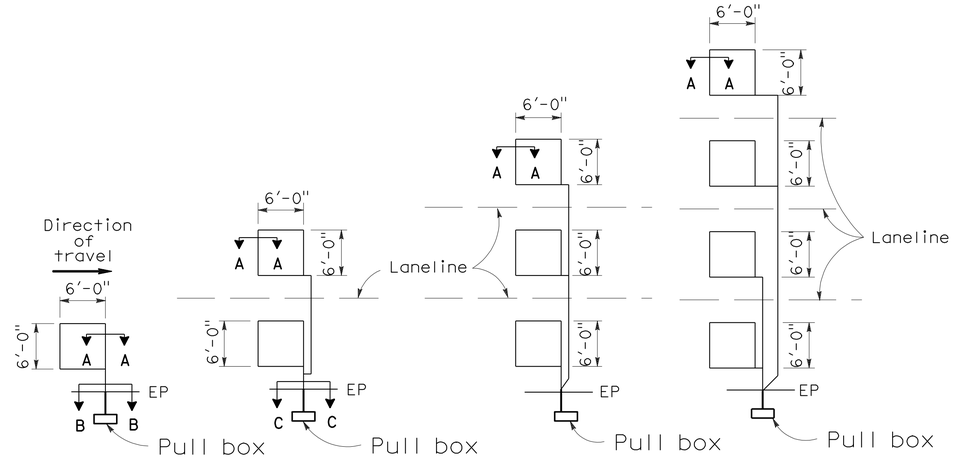

TYPE 1A INSTALLATION | TYPE 2A INSTALLATION | TYPE 3A INSTALLATION | TYPE 4A INSTALLATION

SAWCUT DETAILS

(Type A loop detector configurations illustrated)

1. 1A thru 4A = 1 Type A loop configuration in each lane.
2. 1B thru 4B = 1 Type B loop configuration in each lane.
3. 1C = 1 Type C loop configuration entering lanes as required.
4. 1D thru 4D = 1 Type D loop configuration in each lane.
5. 1E thru 4E = 1 Type E loop configuration in each lane.
6. 1Q thru 4Q = 1 Type Q loop configuration in each lane. (Use Type A, B, C, D, E or Q loop detector configurations only when specified or shown on plans)

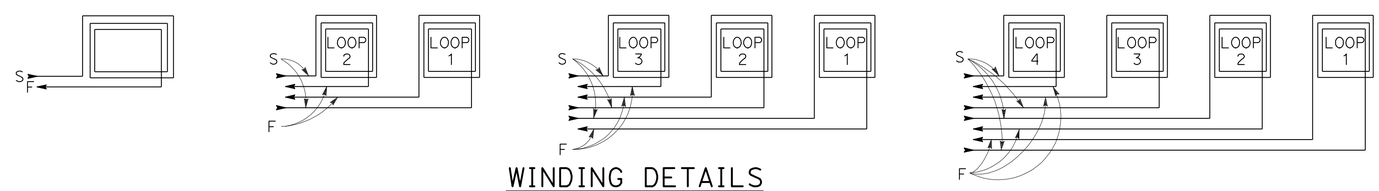

WINDING DETAILS

See Notes 6 and 7

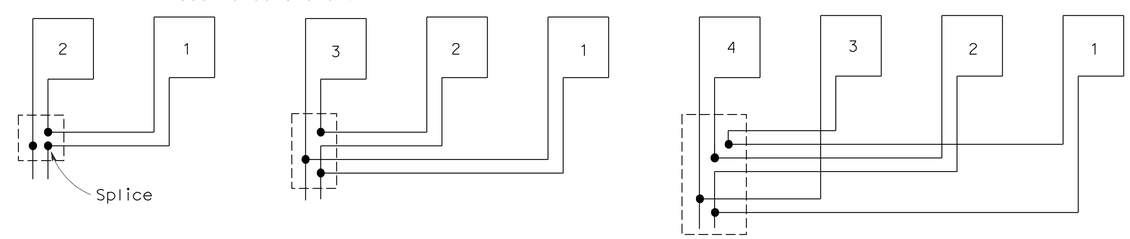

TYPICAL LOOP CONNECTIONS

(Dashed lines represent the pull box)

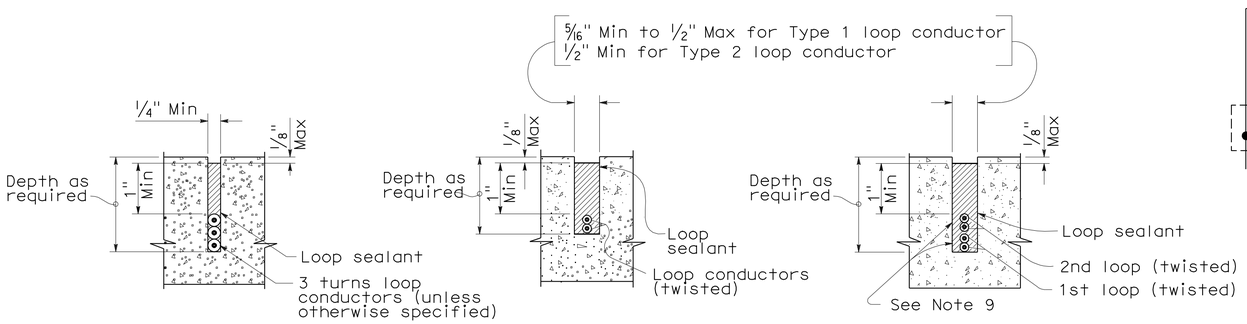

SECTION A-A | SECTION B-B | SECTION C-C

SLOT DETAILS - TYPE 1 AND TYPE 2 LOOP CONDUCTOR

STATE OF CALIFORNIA
DEPARTMENT OF TRANSPORTATION

ELECTRICAL SYSTEMS (DETECTORS)

NO SCALE

RSP ES-5A DATED OCTOBER 5, 2007 SUPERCEDES STANDARD PLAN ES-5A DATED MAY 1, 2006 - PAGE 423 OF THE STANDARD PLANS BOOK DATED MAY 2006.

REVISED STANDARD PLAN RSP ES-5A

2006 REVISED STANDARD PLAN RSP ES-5A

8-17-07

DIST	COUNTY	ROUTE	POST MILES TOTAL PROJECT	SHEET No	TOTAL SHEETS
03	ED	50	66.7/67.8	59	71

REGISTERED CIVIL ENGINEER 6-25-10 DATE

7-26-10
PLANS APPROVAL DATE

REGISTERED PROFESSIONAL ENGINEER G. Slocum No. 44950 Exp. 3-31-12 CIVIL STATE OF CALIFORNIA

The State of California or its officers or agents shall not be responsible for the accuracy or completeness of electronic copies of this plan sheet.

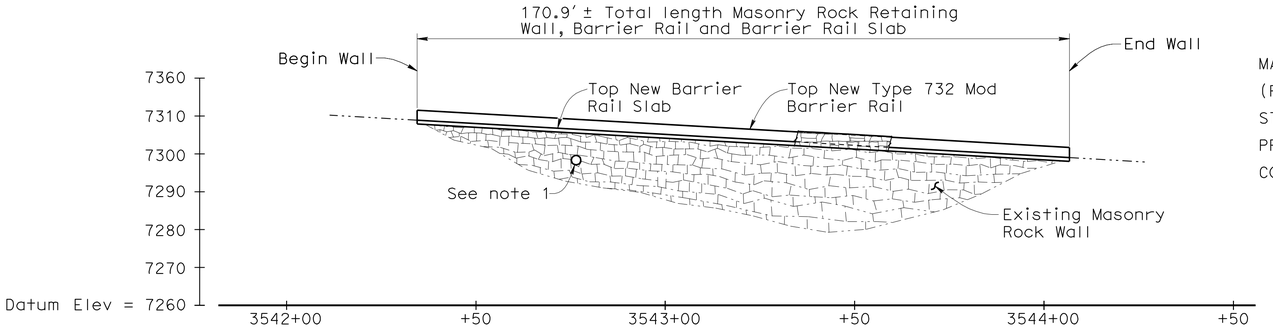

DEVELOPED ELEVATION

SCALE: 1" = 20′

QUANTITIES

MASONRY ROCK RETAINING WALL REMOVAL (PORTION) LOCATION A	LUMP	SUM
STRUCTURAL CONCRETE, BARRIER SLAB	104	CY
PREPARE AND PAINT CONCRETE	1,330	SQFT
CONCRETE BARRIER (TYPE 732 MODIFIED)	171	LF

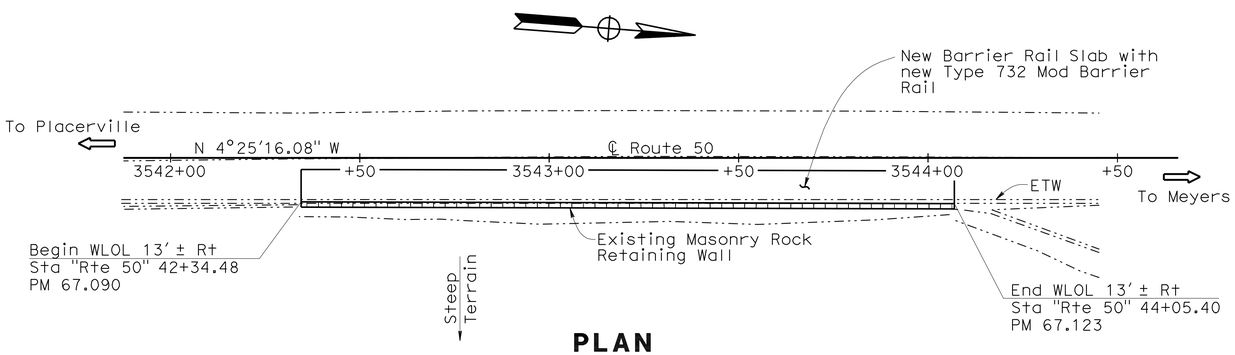

PLAN

SCALE: 1" = 20′

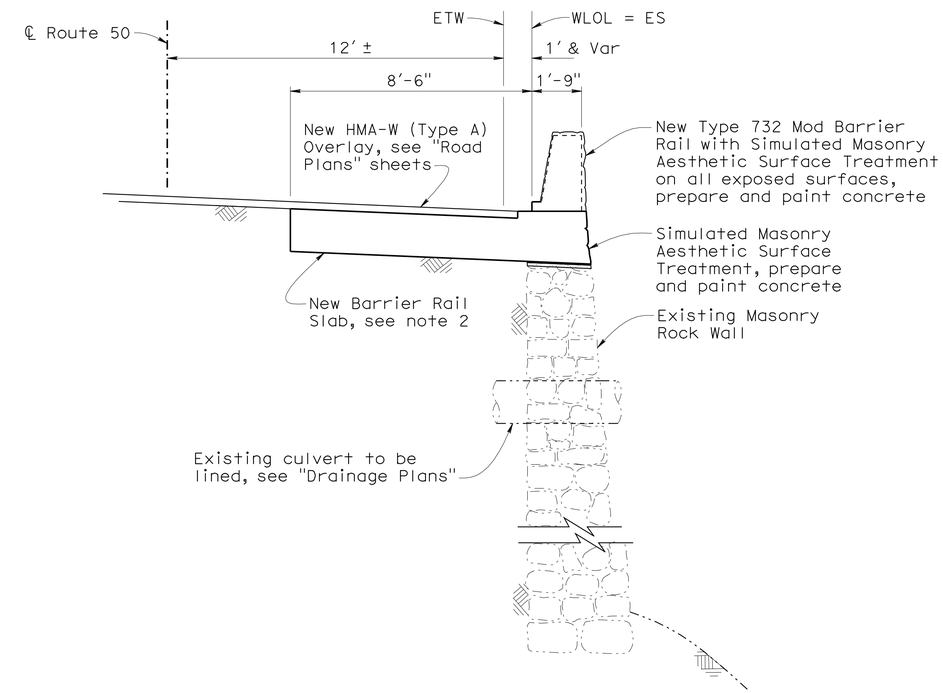

TYPICAL SECTION

SCALE: 3/8" = 1′-0"

INDEX TO PLANS

Sheet No.	Title
1	WALL No. 1 GENERAL PLAN
2	WALL No. 2 GENERAL PLAN
3	WALL No. 3 GENERAL PLAN
4	WALL No. 4 GENERAL PLAN
5	WALL No. 5 GENERAL PLAN
6	WALL No. 6 AND 7 GENERAL PLAN
7	WALL No. 1 THRU 7 DETAILS
8	AESTHETIC TREATMENT DETAILS No. 1
9	AESTHETIC TREATMENT DETAILS No. 2
10	AESTHETIC TREATMENT DETAILS No. 3
11	AESTHETIC TREATMENT DETAILS No. 4
12	AESTHETIC TREATMENT DETAILS No. 5
13	AESTHETIC TREATMENT DETAILS No. 6

STANDARD PLANS DATED MAY 2006

A10A	ACRONYMS AND ABBREVIATIONS (A-L)
A10B	ACRONYMS AND ABBREVIATIONS (M-Z)
A10C	SYMBOLS
A10D	SYMBOLS
B11-55	CONCRETE BARRIER TYPE 732

STANDARD PLAN SHEET No.

DETAIL No.

Notes:

1. Culverts to be lined, see "Drainage Plans".
2. For New Barrier Rail Slab, see "Details".
3. For General Notes, see "Details" sheet.
4. For combination of Aesthetic treatment formliners for wall, see "Architectural Treatment Details No. 6" sheet.

Legend:

——— Indicates new structure

—··—··— Indicates existing structure

NOTE:
THE CONTRACTOR SHALL VERIFY ALL CONTROLLING FIELD DIMENSIONS BEFORE ORDERING OR FABRICATING ANY MATERIAL.

ECHO SUMMIT BARRIER RAIL (REPLACE)

WALL NO. 1

GENERAL PLAN

DESIGN ENGINEER

	BY	CHECKED			
DESIGN	G. Slocum/N. Nguyen	G. Slocum/N. Nguyen	LOAD & RESISTANCE FACTOR DESIGN	LIVE LOADING: HL93	
DETAILS	C. Figuerres	N. Nguyen	LAYOUT	G. Slocum	N. Nguyen
QUANTITIES	G. Slocum	N. Nguyen	SPECIFICATIONS	K. Meier	PLANS AND SPECS COMPARED

STATE OF CALIFORNIA DEPARTMENT OF TRANSPORTATION

DIVISION OF ENGINEERING SERVICES STRUCTURE DESIGN DESIGN BRANCH 2

BRIDGE NO. Ret Wall

POST MILE Varies

CU 03
EA 1E14U1

ORIGINAL SCALE IN INCHES FOR REDUCED PLANS 0 1 2 3

DISREGARD PRINTS BEARING EARLIER REVISION DATES

REVISION DATES: 3-4-08 5-02-08 5-14-08 8-22-08 3-09-09 11-16-09 12-09-09 2-23-10 2-26-10 3-10-10

SHEET 1 OF 13

STRUCTURES DESIGN GENERAL PLAN SHEET (ENGLISH) (REV.07-24-06)

FILE => agp_wall01.dgn

USERNAME => ttmikes1 DATE PLOTTED => 01-SEP-2010 TIME PLOTTED => 12:54

DIST	COUNTY	ROUTE	POST MILES TOTAL PROJECT	SHEET No	TOTAL SHEETS
03	ED	50	66.7/67.8	60	71

REGISTERED CIVIL ENGINEER 6-25-10 DATE

7-26-10
PLANS APPROVAL DATE

REGISTERED PROFESSIONAL ENGINEER G. Slocum No. 44950 Exp. 3-31-12 CIVIL STATE OF CALIFORNIA

The State of California or its officers or agents shall not be responsible for the accuracy or completeness of electronic copies of this plan sheet.

Notes:

1. Culverts to be lined, see "Drainage Plans".
2. For New Barrier Rail Slab, see "Details".
3. For General Notes, see "Details" sheet.
4. For combination of Aesthetic treatment formliners for wall, see "Architectural Treatment Details No. 6" sheet.

Legend:

——— Indicates new structure

—·—·— Indicates existing structure

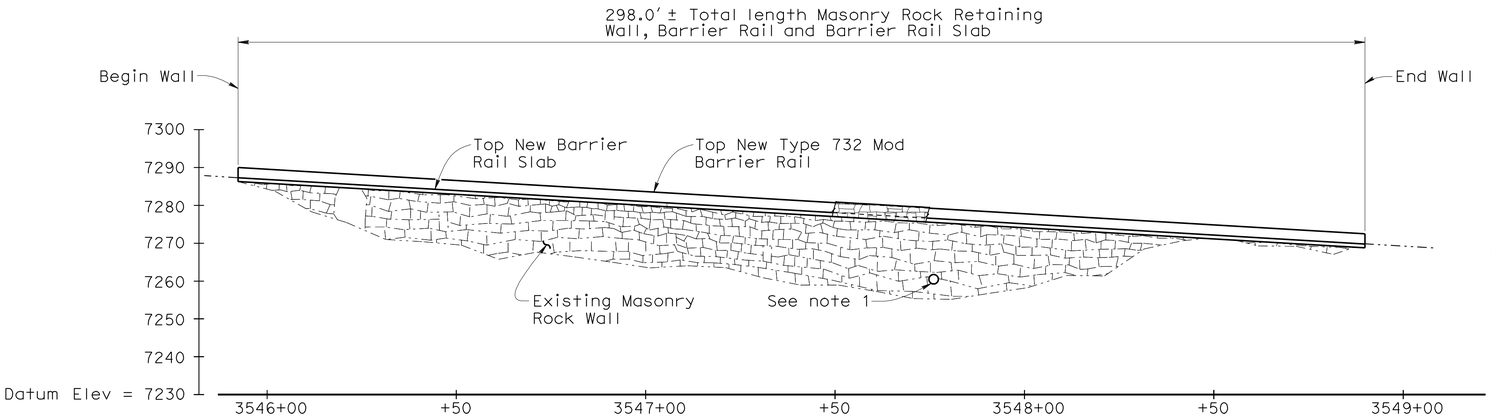

DEVELOPED ELEVATION

SCALE: 1" = 20′

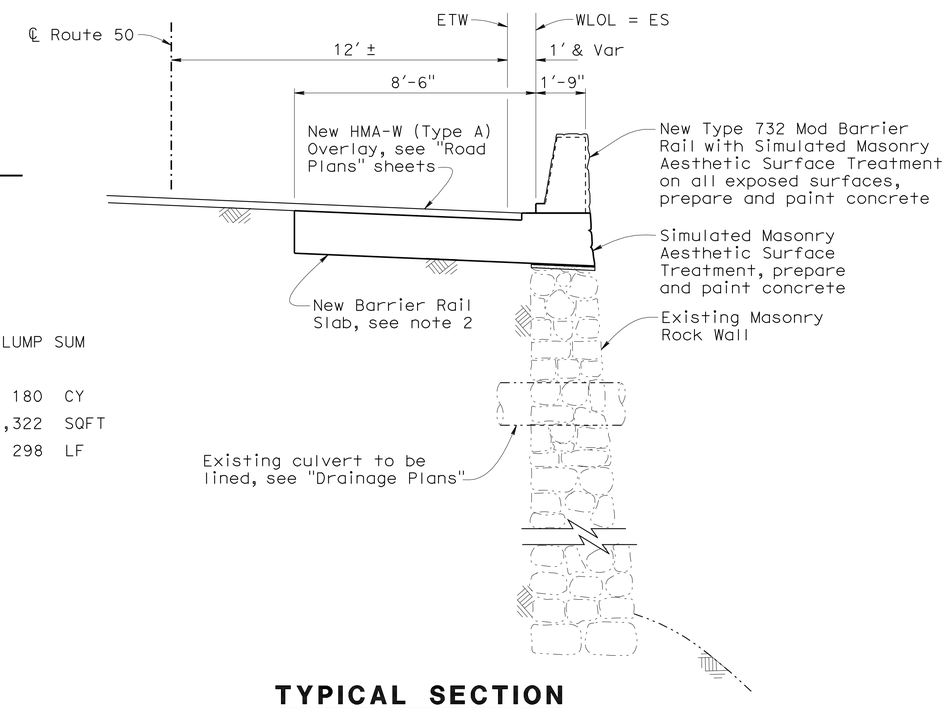

TYPICAL SECTION

SCALE: 3/8" = 1′-0"

QUANTITIES

MASONRY ROCK RETAINING WALL REMOVAL (PORTION) LOCATION 2	LUMP SUM	
STRUCTURAL CONCRETE, BARRIER SLAB	180	CY
PREPARE AND PAINT CONCRETE	2,322	SQFT
CONCRETE BARRIER (TYPE 732 MODIFIED)	298	LF

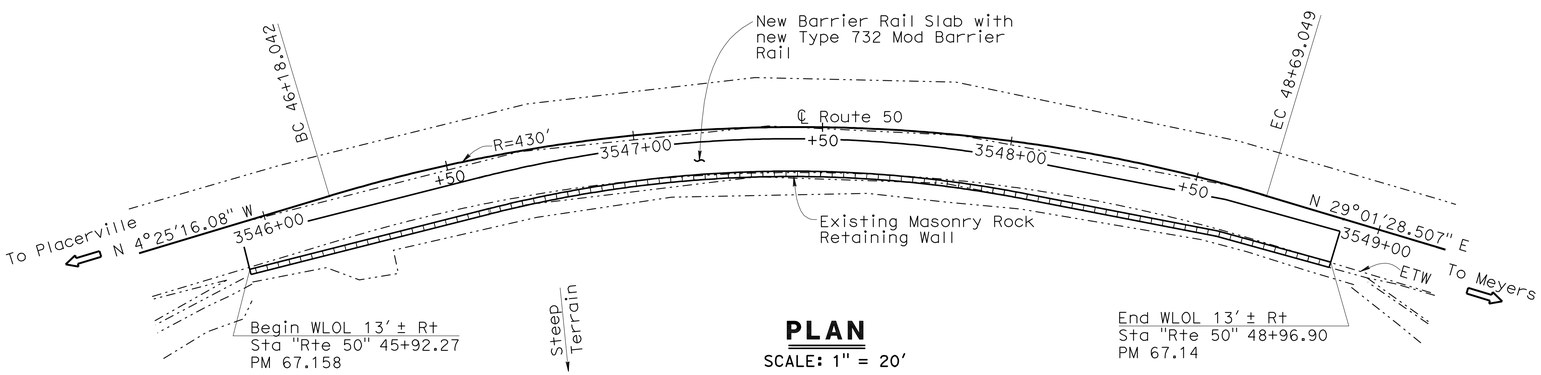

PLAN

SCALE: 1" = 20′

STANDARD PLANS DATED MAY 2006

A10A	ACRONYMS AND ABBREVIATIONS (A-L)
A10B	ACRONYMS AND ABBREVIATIONS (M-Z)
A10C	SYMBOLS
A10D	SYMBOLS
B11-55	CONCRETE BARRIER TYPE 732

STANDARD PLAN SHEET No.

DETAIL No.

NOTE:
THE CONTRACTOR SHALL VERIFY ALL CONTROLLING FIELD DIMENSIONS BEFORE ORDERING OR FABRICATING ANY MATERIAL.

ECHO SUMMIT BARRIER RAIL (REPLACE)

WALL NO. 2

GENERAL PLAN

DESIGN ENGINEER

	BY	CHECKED
DESIGN	G. Slocum/N. Nguyen	G. Slocum/N. Nguyen
DETAILS	C. Figuerres	N. Nguyen
QUANTITIES	G. Slocum	N. Nguyen

LOAD & RESISTANCE FACTOR DESIGN — LIVE LOADING: HL93

LAYOUT: G. Slocum — CHECKED: N. Nguyen

SPECIFICATIONS: K. Meier — PLANS AND SPECS COMPARED

STATE OF CALIFORNIA DEPARTMENT OF TRANSPORTATION

DIVISION OF ENGINEERING SERVICES STRUCTURE DESIGN DESIGN BRANCH 2

BRIDGE NO. Ret Wall

POST MILE Varies

ORIGINAL SCALE IN INCHES FOR REDUCED PLANS 0 1 2 3

CU 03
EA 1E14U1

DISREGARD PRINTS BEARING EARLIER REVISION DATES

REVISION DATES: 3-4-08 5-02-08 8-22-08 5-08-09 11-16-09 12-08-09 2-23-10 2-26-10 3-10-10

SHEET 2 OF 13

STRUCTURES DESIGN GENERAL PLAN SHEET (ENGLISH) (REV.07-24-06)

FILE => agp_wall02.dgn

USERNAME => ttmirkes1 DATE PLOTTED => 01-SEP-2010 TIME PLOTTED => 12:54

DIST	COUNTY	ROUTE	POST MILES TOTAL PROJECT	SHEET No	TOTAL SHEETS
03	ED	50	66.7/67.8	61	71

REGISTERED CIVIL ENGINEER 6-25-10 DATE

7-26-10
PLANS APPROVAL DATE

REGISTERED PROFESSIONAL ENGINEER G. Slocum No. 44950 Exp. 3-31-12 CIVIL STATE OF CALIFORNIA

The State of California or its officers or agents shall not be responsible for the accuracy or completeness of electronic copies of this plan sheet.

Notes:

1. Culverts to be lined, see "Drainage Plans".
2. For New Barrier Rail Slab, see "Details".
3. For General Notes, see "Details" sheet.
4. For combination of Aesthetic treatment formliners for wall, see "Architectural Treatment Details No. 6" sheet.

Legend:

——— Indicates new structure

·····– Indicates existing structure

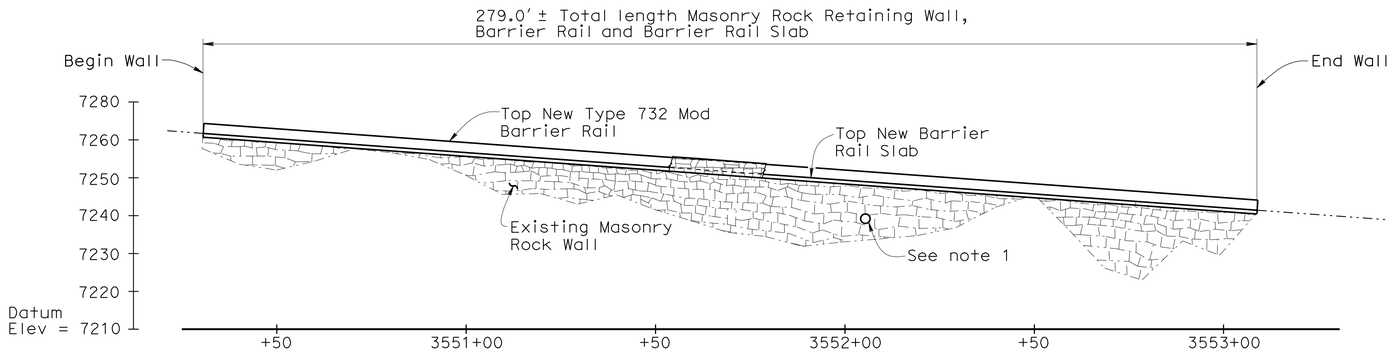

DEVELOPED ELEVATION

SCALE: 1" = 20′

QUANTITIES

MASONRY ROCK RETAINING WALL REMOVAL (PORTION) LOCATION 3	LUMP SUM	
STRUCTURAL CONCRETE, BARRIER SLAB	169	CY
PREPARE AND PAINT CONCRETE	2,175	SQFT
CONCRETE BARRIER (TYPE 732 MODIFIED)	279	LF

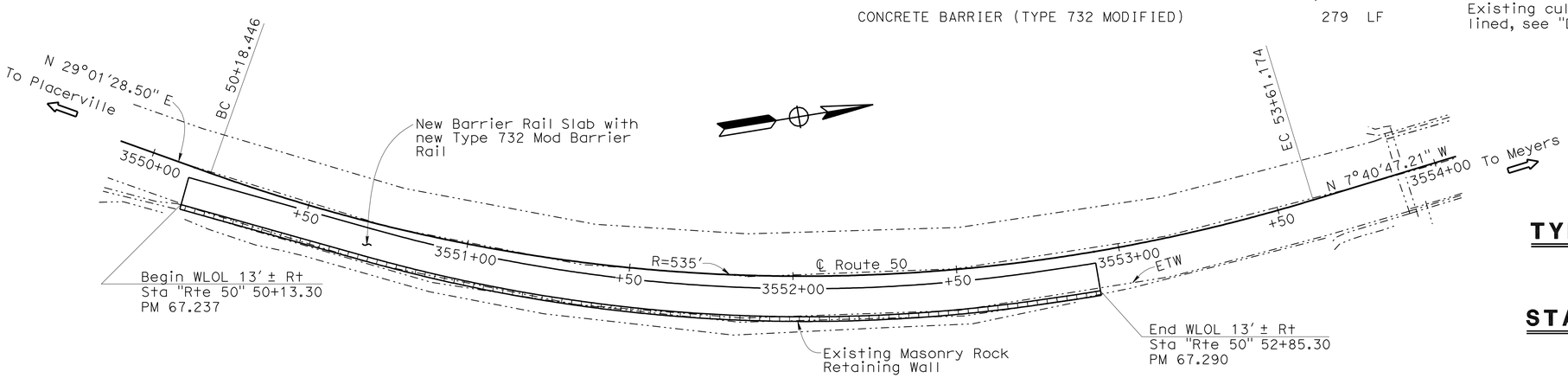

PLAN

SCALE: 1" = 20′

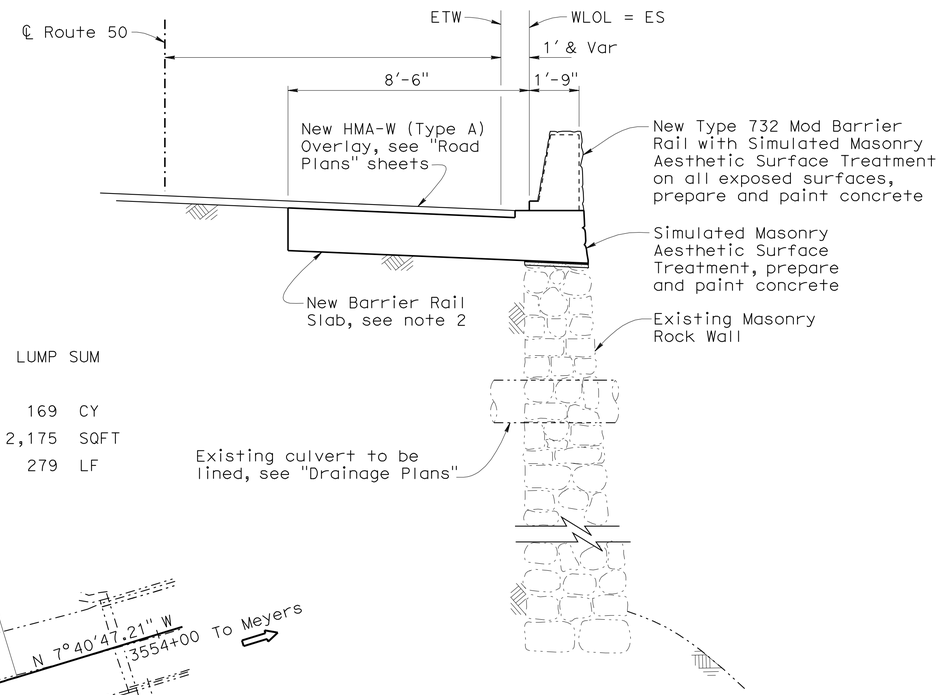

TYPICAL SECTION

SCALE: 3/8" = 1′-0"

STANDARD PLANS DATED MAY 2006

A10A	ACRONYMS AND ABBREVIATIONS (A-L)
A10B	ACRONYMS AND ABBREVIATIONS (M-Z)
A10C	SYMBOLS
A10D	SYMBOLS
B11-55	CONCRETE BARRIER TYPE 732

STANDARD PLAN SHEET No.

DETAIL No.

NOTE:
THE CONTRACTOR SHALL VERIFY ALL CONTROLLING FIELD DIMENSIONS BEFORE ORDERING OR FABRICATING ANY MATERIAL.

DESIGN ENGINEER

	BY	CHECKED
DESIGN	G. Slocum/N. Nguyen	G. Slocum/N. Nguyen
DETAILS	C. Figuerres	N. Nguyen
QUANTITIES	G. Slocum	N. Nguyen

LOAD & RESISTANCE FACTOR DESIGN — LIVE LOADING: HL93

	BY	CHECKED
LAYOUT	G. Slocum	N. Nguyen
SPECIFICATIONS	K. Meier	PLANS AND SPECS COMPARED

STATE OF CALIFORNIA
DEPARTMENT OF TRANSPORTATION

DIVISION OF ENGINEERING SERVICES
STRUCTURE DESIGN
DESIGN BRANCH 2

BRIDGE NO. Ret Wall
POST MILE Varies

ECHO SUMMIT BARRIER RAIL (REPLACE)
WALL NO. 3
GENERAL PLAN

ORIGINAL SCALE IN INCHES FOR REDUCED PLANS 0 1 2 3

CU 03
EA 1E14U1

DISREGARD PRINTS BEARING EARLIER REVISION DATES

REVISION DATES: 4-4-08, 5-01-08, 8-22-08, 3-09-09, 11-16-09, 12-04-09, 2-23-10, 2-26-10, 3-10-10

SHEET 3 OF 13

STRUCTURES DESIGN GENERAL PLAN SHEET (ENGLISH) (REV.07-24-06)

FILE => agp_wall03.dgn

USERNAME => trmikest DATE PLOTTED => 01-SEP-2010 TIME PLOTTED => 12:54

DIST	COUNTY	ROUTE	POST MILES TOTAL PROJECT	SHEET No	TOTAL SHEETS
03	ED	50	66.7/67.8	62	71

REGISTERED CIVIL ENGINEER 6-25-10 DATE

7-26-10
PLANS APPROVAL DATE

REGISTERED PROFESSIONAL ENGINEER G. Slocum No. 44950 Exp. 3-31-12 CIVIL STATE OF CALIFORNIA

The State of California or its officers or agents shall not be responsible for the accuracy or completeness of electronic copies of this plan sheet.

Notes:

1. Culverts to be lined, see "Drainage Plans".
2. For New Barrier Rail Slab, see "Details".
3. For General Notes, see "Details" sheet.
4. For combination of Aesthetic treatment formliners for wall, see "Architectural Treatment Details No. 6" sheet.

Legend:

——— Indicates new structure

—·—·— Indicates existing structure

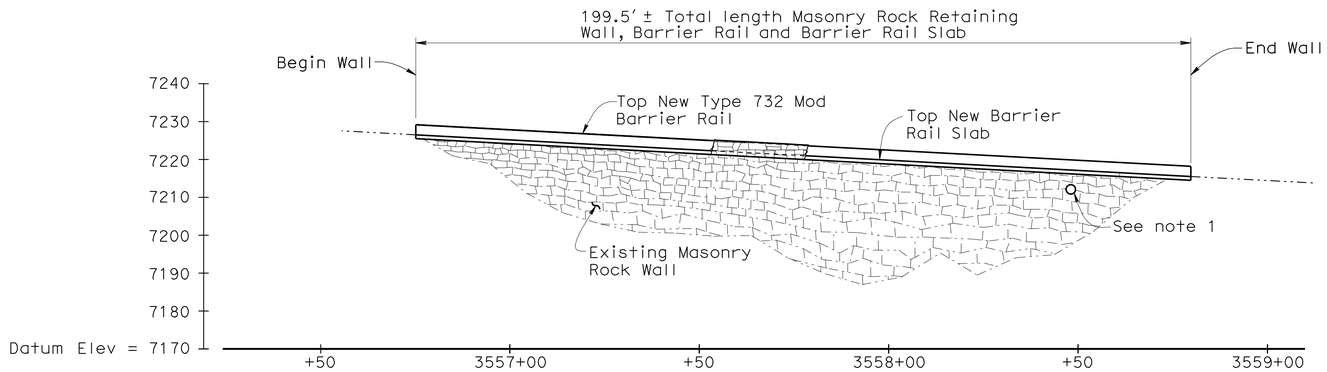

DEVELOPED ELEVATION

SCALE: 1" = 20′

QUANTITIES

MASONRY ROCK RETAINING WALL REMOVAL (PORTION) LOCATION 4	LUMP SUM	
STRUCTURAL CONCRETE, BARRIER SLAB	121	CY
PREPARE AND PAINT CONCRETE	1,556	SQFT
CONCRETE BARRIER (TYPE 732 MODIFIED)	200	LF

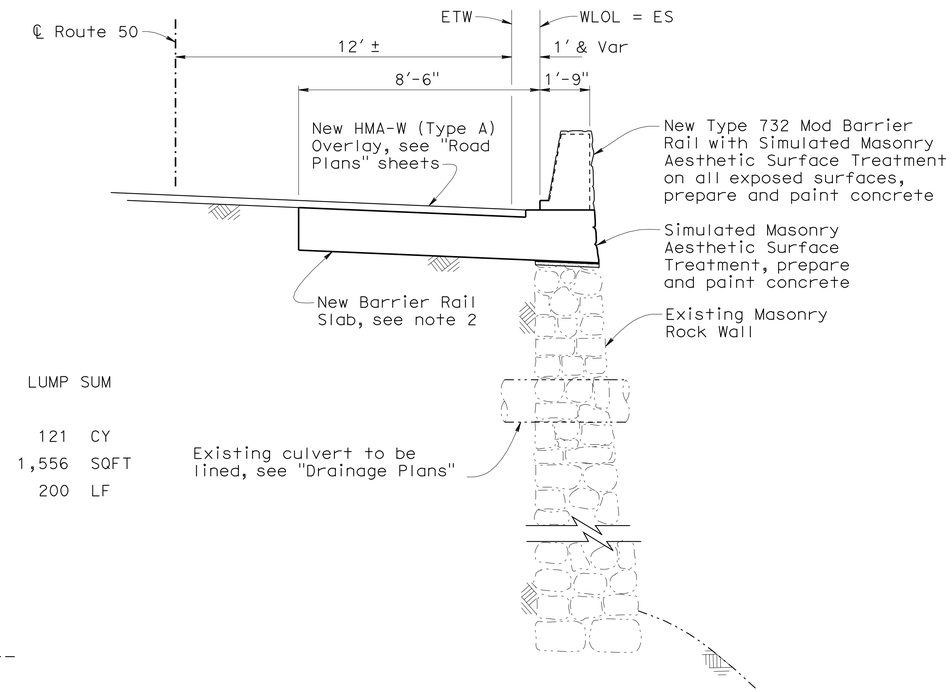

TYPICAL SECTION

3/8" = 1′-0"

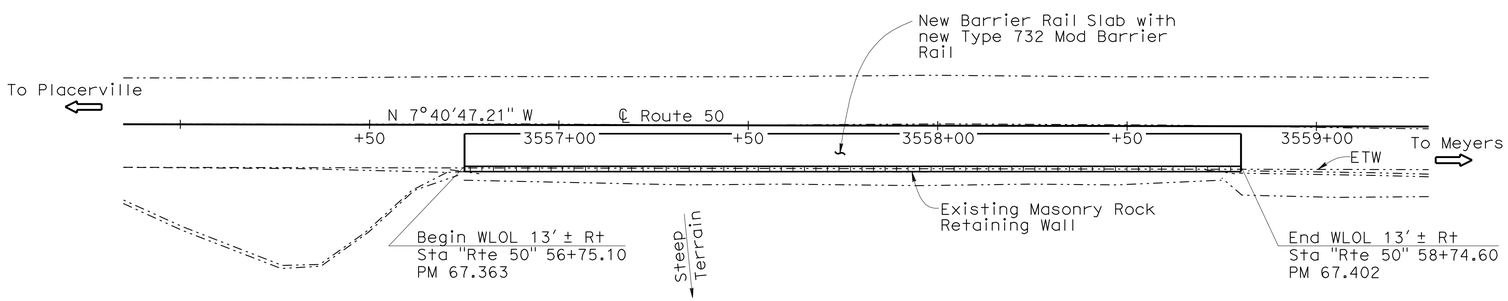

PLAN

SCALE: 1" = 20′

STANDARD PLANS DATED MAY 2006

A10A	ACRONYMS AND ABBREVIATIONS (A-L)
A10B	ACRONYMS AND ABBREVIATIONS (M-Z)
A10C	SYMBOLS
A10D	SYMBOLS
B11-55	CONCRETE BARRIER TYPE 732

STANDARD PLAN SHEET No.

DETAIL No.

NOTE:
THE CONTRACTOR SHALL VERIFY ALL CONTROLLING FIELD DIMENSIONS BEFORE ORDERING OR FABRICATING ANY MATERIAL.

ECHO SUMMIT BARRIER RAIL (REPLACE)

WALL NO. 4

GENERAL PLAN

DESIGN ENGINEER

	BY	CHECKED			
DESIGN	G. Slocum/N. Nguyen	G. Slocum/N. Nguyen	LOAD & RESISTANCE FACTOR DESIGN	LIVE LOADING: HL93	
DETAILS	C. Figuerres	N. Nguyen	LAYOUT	G. Slocum	N. Nguyen
QUANTITIES	G. Slocum	N. Nguyen	SPECIFICATIONS	K. Meier	PLANS AND SPECS COMPARED

STATE OF CALIFORNIA
DEPARTMENT OF TRANSPORTATION

DIVISION OF ENGINEERING SERVICES
STRUCTURE DESIGN
DESIGN BRANCH 2

BRIDGE NO. Ret Wall
POST MILE Varies

ORIGINAL SCALE IN INCHES FOR REDUCED PLANS 0 1 2 3

CU 03
EA 1E14U1

DISREGARD PRINTS BEARING EARLIER REVISION DATES

REVISION DATES: 4-4-08, 5-01-08, 8-22-08, 3-09-09, 11-16-09, 12-09-09, 2-23-10, 2-25-10

SHEET 4 OF 13

STRUCTURES DESIGN GENERAL PLAN SHEET (ENGLISH) (REV.07-24-06)

FILE => agp_wall04.dgn

USERNAME => trmikes1 DATE PLOTTED => 01-SEP-2010 TIME PLOTTED => 12:54

DIST	COUNTY	ROUTE	POST MILES TOTAL PROJECT	SHEET No	TOTAL SHEETS
03	ED	50	66.7/67.8	63	71

REGISTERED CIVIL ENGINEER 6-25-10 DATE

7-26-10
PLANS APPROVAL DATE

The State of California or its officers or agents shall not be responsible for the accuracy or completeness of electronic copies of this plan sheet.

REGISTERED PROFESSIONAL ENGINEER G. Slocum No. 44950 Exp. 3-31-12 CIVIL STATE OF CALIFORNIA

Notes:
1. Culverts to be lined, see "Drainage Plans".
2. For New Barrier Rail Slab, see "Details".
3. For General Notes, see "Details" sheet.
4. For combination of Aesthetic treatment formliners for wall, see "Architectural Treatment Details No. 6" sheet.

Legend:
——— Indicates new structure
···—··— Indicates existing structure

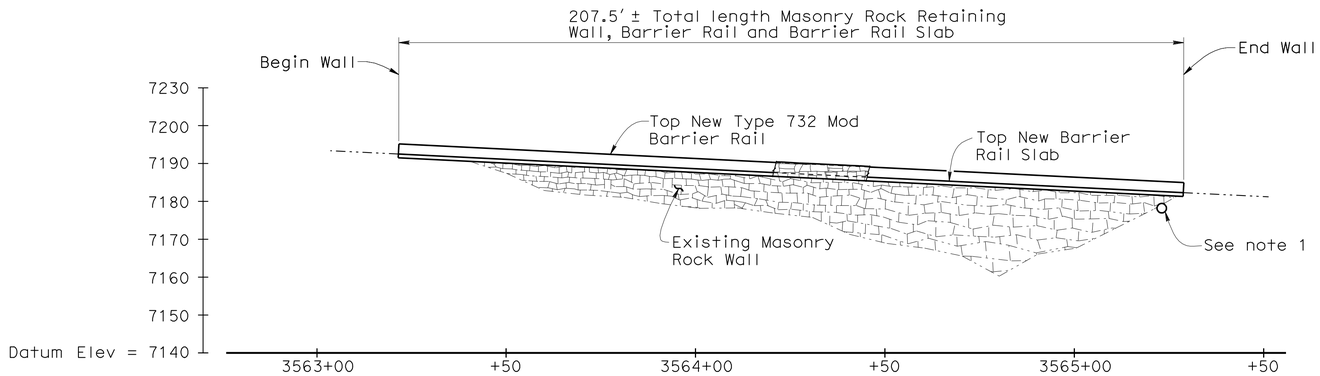

DEVELOPED ELEVATION
SCALE: 1" = 20′

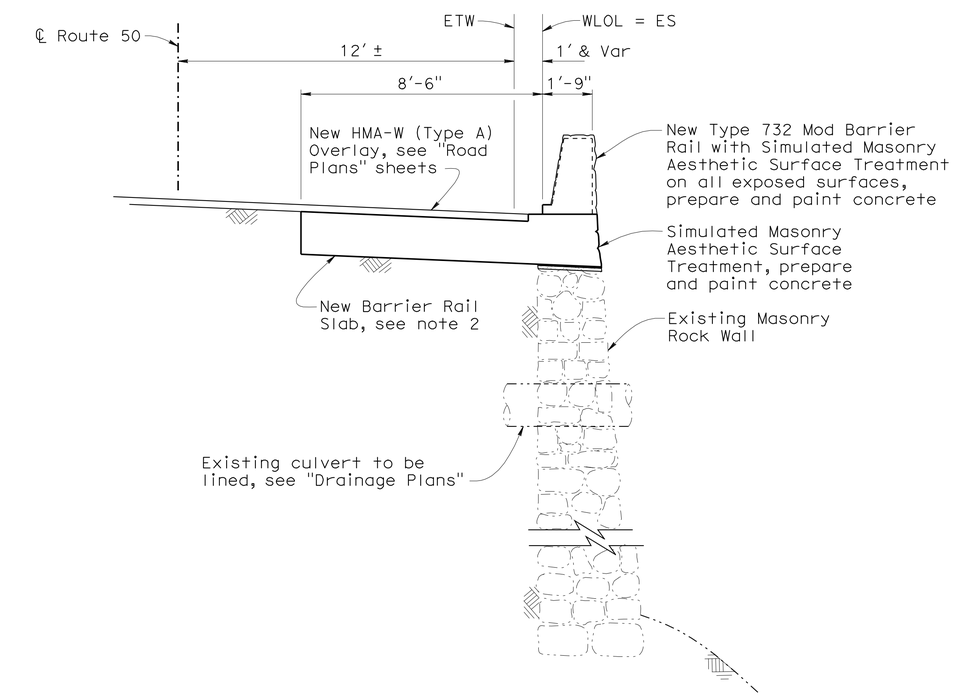

TYPICAL SECTION
SCALE: 3/8" = 1′-0"

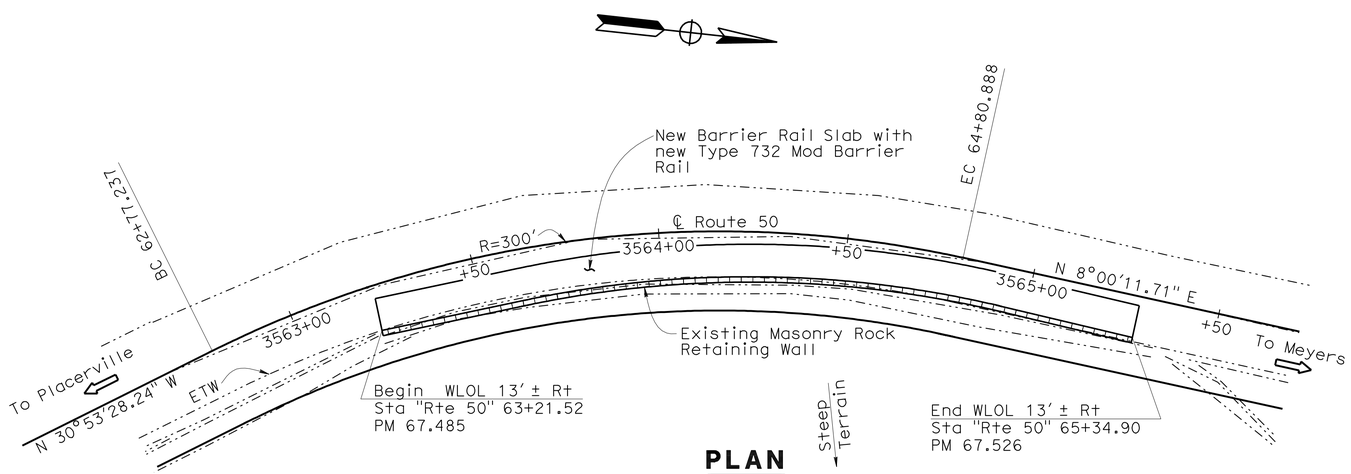

PLAN
SCALE: 1" = 20′

STANDARD PLANS DATED MAY 2006

A10A	ACRONYMS AND ABBREVIATIONS (A-L)
A10B	ACRONYMS AND ABBREVIATIONS (M-Z)
A10C	SYMBOLS
A10D	SYMBOLS
B11-55	CONCRETE BARRIER TYPE 732

STANDARD PLAN SHEET No.
DETAIL No.

QUANTITIES

MASONRY ROCK RETAINING WALL REMOVAL (PORTION) LOCATION 5	LUMP	SUM
STRUCTURAL CONCRETE, BARRIER SLAB	126	CY
PREPARE AND PAINT CONCRETE	1,618	SQFT
CONCRETE BARRIER (TYPE 732 MODIFIED)	208	LF

NOTE:
THE CONTRACTOR SHALL VERIFY ALL CONTROLLING FIELD DIMENSIONS BEFORE ORDERING OR FABRICATING ANY MATERIAL.

ECHO SUMMIT BARRIER RAIL (REPLACE)
WALL NO. 5
GENERAL PLAN

DESIGN ENGINEER

	BY	CHECKED			
DESIGN	G. Slocum/N. Nguyen	G. Slocum/N. Nguyen	LOAD & RESISTANCE FACTOR DESIGN	LIVE LOADING: HL93	
DETAILS	C. Figuerres	N. Nguyen	LAYOUT	G. Slocum	N. Nguyen
QUANTITIES	G. Slocum	N. Nguyen	SPECIFICATIONS	K. Meier	PLANS AND SPECS COMPARED

ORIGINAL SCALE IN INCHES FOR REDUCED PLANS 0 1 2 3

STATE OF CALIFORNIA DEPARTMENT OF TRANSPORTATION

DIVISION OF ENGINEERING SERVICES STRUCTURE DESIGN DESIGN BRANCH 2

CU 03
EA 1E14U1

BRIDGE NO. Ret Wall
POST MILE Varies

DISREGARD PRINTS BEARING EARLIER REVISION DATES

REVISION DATES: 6-29-10 | 5-16-08 | 8-27-08 | 3-09-09 | 11-16-09 | 12-08-09 | 2-24-10 | 2-26-10 | 3-10-10

SHEET 5 OF 13

USERNAME => trmikesl DATE PLOTTED => 01-SEP-2010 TIME PLOTTED => 12:55

STRUCTURES DESIGN GENERAL PLAN SHEET (ENGLISH) (REV.07-24-06)

FILE => agp_wall05.dgn

DIST	COUNTY	ROUTE	POST MILES TOTAL PROJECT	SHEET No	TOTAL SHEETS
03	ED	50	66.7/67.8	64	71

REGISTERED CIVIL ENGINEER 6-25-10 DATE

7-26-10
PLANS APPROVAL DATE

REGISTERED PROFESSIONAL ENGINEER G. Slocum No. 44950 Exp. 3-31-12 CIVIL STATE OF CALIFORNIA

The State of California or its officers or agents shall not be responsible for the accuracy or completeness of electronic copies of this plan sheet.

Notes:

1. Culverts to be lined, see "Drainage Plans".
2. For New Barrier Rail Slab, see "Details".
3. For General Notes, see "Details" sheet.
4. For combination of Aesthetic treatment formliners for wall, see "Architectural Treatment Details No. 6" sheet.

Legend:

——— Indicates new structure

—·—·— Indicates existing structure

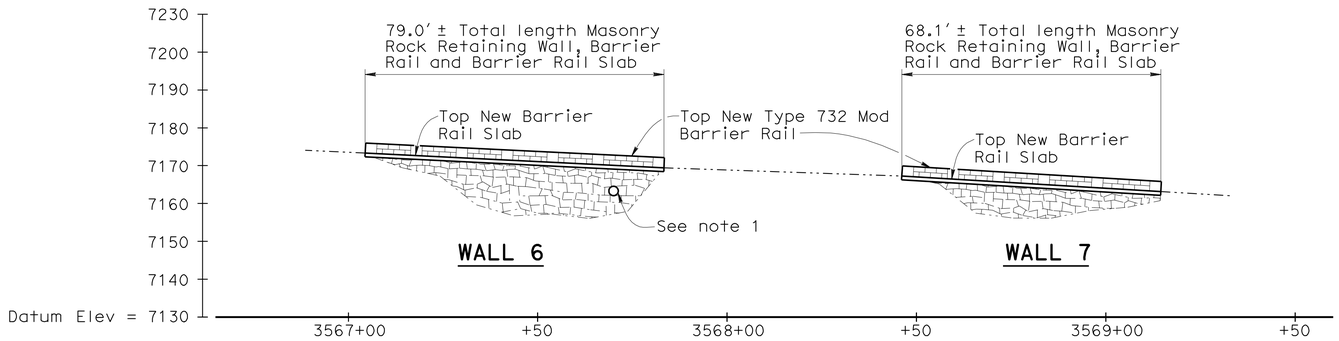

DEVELOPED ELEVATION

SCALE: 1" = 20′

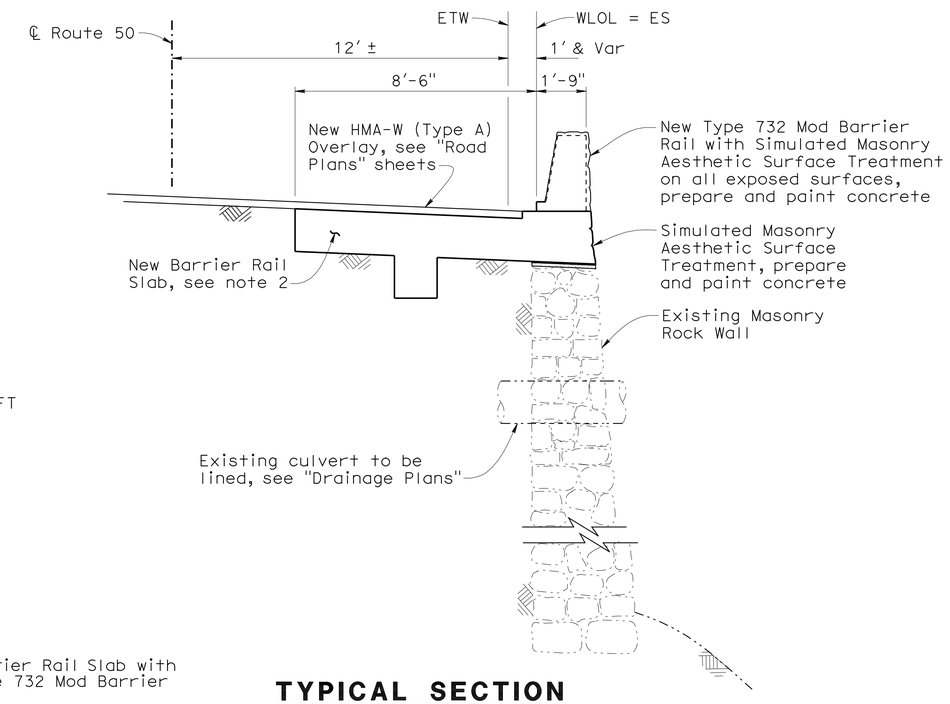

TYPICAL SECTION

SCALE: 3/8" = 1′-0"

WALL No. 6

QUANTITIES		
MASONRY ROCK RETAINING WALL REMOVAL (PORTION) LOCATION 6	LUMP	SUM
STRUCTURAL CONCRETE, BARRIER SLAB	55	CY
PREPARE AND PAINT CONCRETE	619	SQFT
CONCRETE BARRIER (TYPE 732 MODIFIED)	79	LF

WALL No. 7

QUANTITIES		
MASONRY ROCK RETAINING WALL REMOVAL (PORTION) LOCATION 7	LUMP	SUM
STRUCTURAL CONCRETE, BARRIER SLAB	48	CY
PREPARE AND PAINT CONCRETE	534	SQFT
CONCRETE BARRIER (TYPE 732 MODIFIED)	68	LF

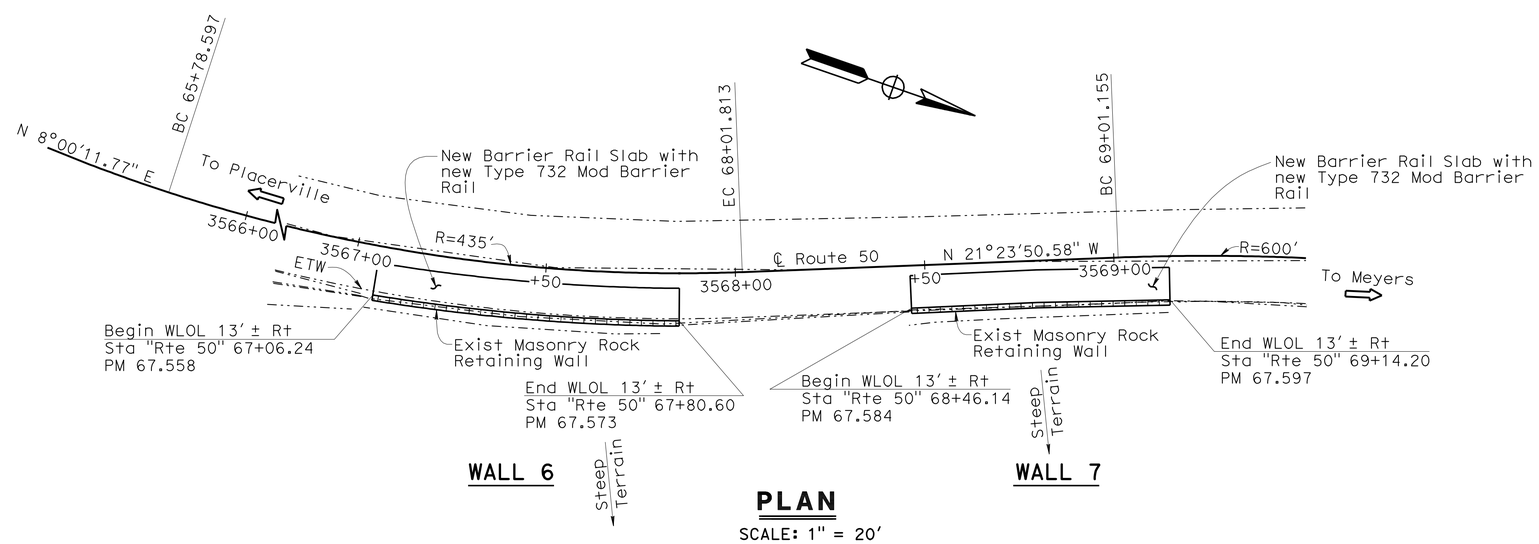

PLAN

SCALE: 1" = 20′

STANDARD PLANS DATED MAY 2006

A10A	ACRONYMS AND ABBREVIATIONS (A-L)
A10B	ACRONYMS AND ABBREVIATIONS (M-Z)
A10C	SYMBOLS
A10D	SYMBOLS
B11-55	CONCRETE BARRIER TYPE 732

STANDARD PLAN SHEET No.

DETAIL No.

NOTE:
THE CONTRACTOR SHALL VERIFY ALL CONTROLLING FIELD DIMENSIONS BEFORE ORDERING OR FABRICATING ANY MATERIAL.

ECHO SUMMIT BARRIER RAIL (REPLACE)

WALL NO. 6 & 7

GENERAL PLAN

DESIGN ENGINEER

	BY	CHECKED			
DESIGN	G. Slocum/N. Nguyen	G. Slocum/N. Nguyen	LOAD & RESISTANCE FACTOR DESIGN	LIVE LOADING: HL93	
DETAILS	C. Figuerres	N. Nguyen	LAYOUT	G. Slocum	N. Nguyen
QUANTITIES	G. Slocum	N. Nguyen	SPECIFICATIONS	K. Meier	PLANS AND SPECS COMPARED

ORIGINAL SCALE IN INCHES FOR REDUCED PLANS 0 1 2 3

STATE OF CALIFORNIA DEPARTMENT OF TRANSPORTATION

DIVISION OF ENGINEERING SERVICES STRUCTURE DESIGN DESIGN BRANCH 2

BRIDGE NO. Ret Wall
POST MILE Varies

CU 03
EA 1E14U1

DISREGARD PRINTS BEARING EARLIER REVISION DATES

REVISION DATES: 4-30-08 5-02-08 5-16-08 3-09-09 11-16-09 12-09-09 2-24-10 2-26-10 3-30-10 6-29-10

SHEET 6 OF 13

STRUCTURES DESIGN GENERAL PLAN SHEET (ENGLISH) (REV.07-24-06)

FILE => agp_wall06_07.dgn

USERNAME => trmikes1 DATE PLOTTED => 01-SEP-2010 TIME PLOTTED => 12:55

DIST	COUNTY	ROUTE	POST MILES TOTAL PROJECT	SHEET No	TOTAL SHEETS
03	ED	50	66.7/67.8	65	71

REGISTERED CIVIL ENGINEER 6-25-10 DATE

7-26-10
PLANS APPROVAL DATE

REGISTERED PROFESSIONAL ENGINEER G. Slocum No. 44950 Exp. 3-31-12 CIVIL STATE OF CALIFORNIA

The State of California or its officers or agents shall not be responsible for the accuracy or completeness of electronic copies of this plan sheet.

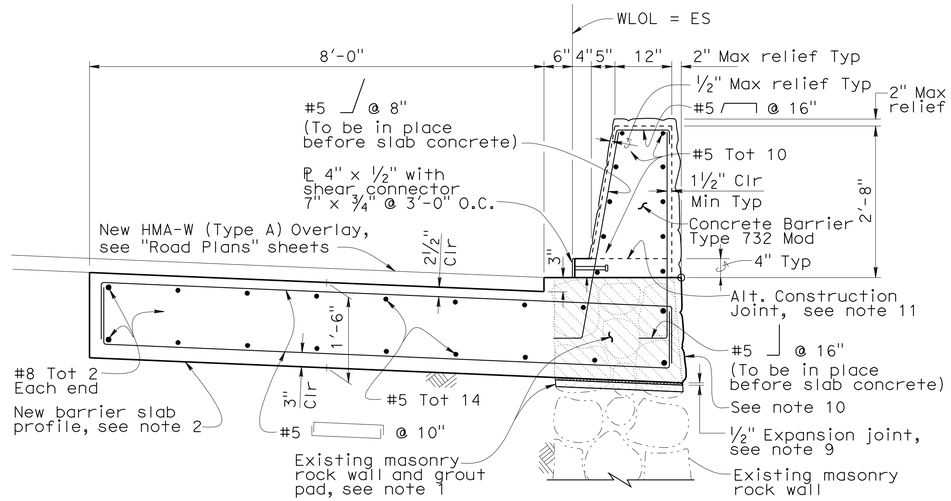

BARRIER SLAB (WALLS NO. 1 THRU NO. 5)

DETAIL A

¾" = 1'-0"

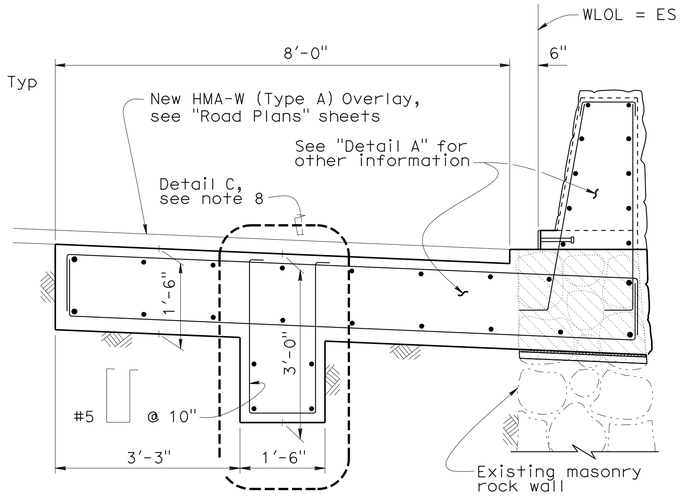

BARRIER SLAB (WALL NO. 6 & WALL NO. 7)

DETAIL B

¾" = 1'-0"

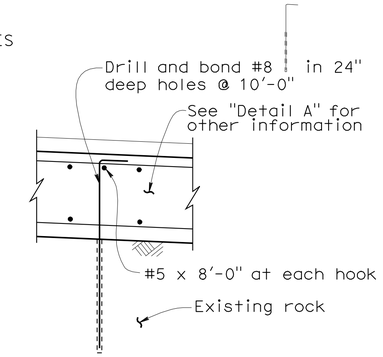

KEY ALTERNATIVE

DETAIL C

¾" = 1'-0"
See note 8

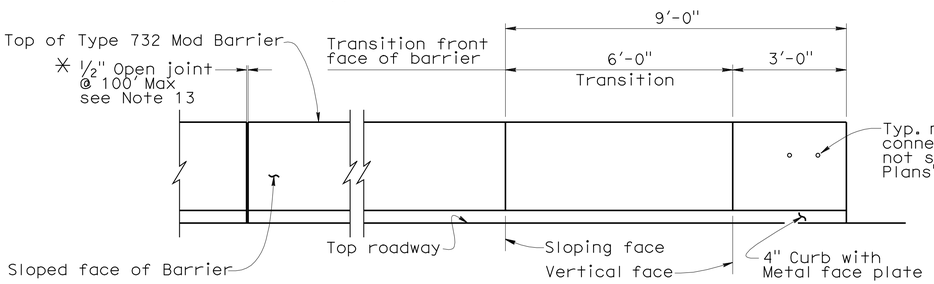

BARRIER ELEVATION

½" = 1'-0"

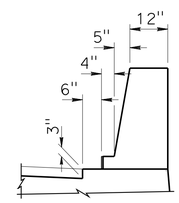

SECTION D-D⁎⁎

½" = 1'-0"
See note 12

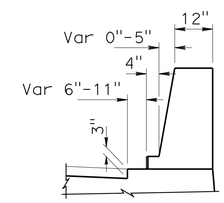

SECTION E-E⁎⁎

½" = 1'-0"
See note 12

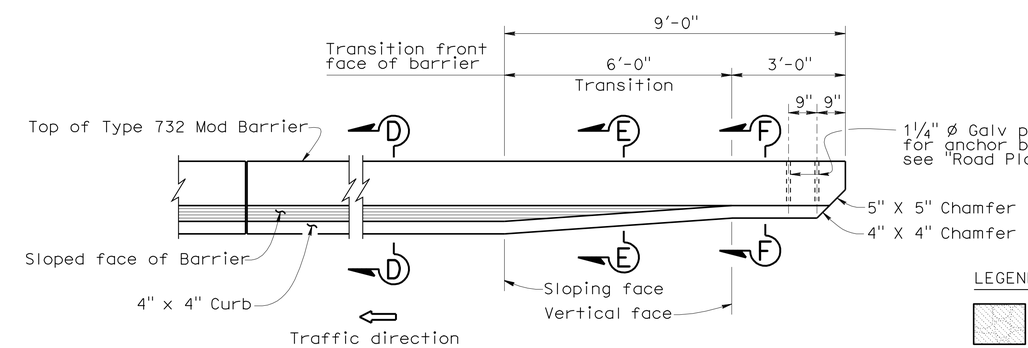

BARRIER PLAN

½" = 1'-0"

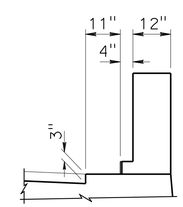

SECTION F-F⁎⁎

½" = 1'-0"
See note 12

NOTE:
THE CONTRACTOR SHALL VERIFY ALL CONTROLLING FIELD DIMENSIONS BEFORE ORDERING OR FABRICATING ANY MATERIAL.

LEGEND:

Portion of existing masonry rock wall to be removed.

⁎ Place #5 @ 8", 2 sets each side of joint

⁎⁎ All dimensions show true shape of Barrier Type 732 Mod. not including aesthetic relief.

GENERAL NOTES

Design: AASHTO LRFD Bridge Design Specification, 3rd Edition with interim through 2006 and Caltrans Amendments V.3.06.01

Live Loading HL93
Concrete fy = 60 Ksi
f'c = 3600 psi

NOTES:

1. Existing masonry rock barrier rail and wall to be removed to an elevation 2" below bottom of new barrier slab. The top of the remaining wall to be leveled with a smooth grout pad not to exceed 4" in thickness. Removal of large rocks and replacement with smaller ones may be required to achieve this.
2. Barrier rail slab to be poured parallel to new roadway in transverse direction and follow ES profile in longitudinal direction. Slab at ES to be flush with final pavement surface.
3. All exposed concrete surfaces of barrier rail to receive simulated masonry architectural treatment to match pattern, texture and color of the existing masonry rock barrier rail. see "Architectural Treatment Details" sheet.
4. All simulated rock patterns to be tooled at top of barrier with grout lines matching formed joints on face of barrier to create a continuous appearance of rock formations.
5. Maximum ½" relief on traffic side of barrier, Maximum 2" relief on top of barrier and maximum 2" relief back side of barrier.
6. All reinforcement to be post-fabricated epoxy coated steel reinforcing bars.
7. Minimum rebar clearances do not include relief due to aesthetic treatment.
8. Where intact rock makes excavation for key infeasible, "Detail C, Key Alternative" may be used in place of key with approval of Engineer.
9. ½" Expansion joint material to be placed between grout pad and bottom of new barrier rail slab.
10. Exposed face of barrier rail slab to receive architectural treatment.
11. Only one construction joint permitted between barrier rail and barrier rail slab.
12. For other details and information of Concrete Barrier Type 732 Mod not shown, see B11-55
13. Expansion joint location to be placed at beginning or ending of barrier segment.

ECHO SUMMIT BARRIER RAIL (REPLACE)

WALL NO. 1 THRU 7

DETAILS

	BY	CHECKED
DESIGN	G. Slocum/N. Nguyen	G. Slocum/N. Nguyen
DETAILS	C. Figuerres	N. Nguyen
QUANTITIES	G. Slocum	N. Nguyen

STATE OF CALIFORNIA
DEPARTMENT OF TRANSPORTATION

DIVISION OF ENGINEERING SERVICES
STRUCTURE DESIGN
DESIGN BRANCH 2

BRIDGE NO. Ret Wall
POST MILE Varies

CU 03
EA 1E14U1

STRUCTURES DESIGN DETAIL SHEET (ENGLISH) (REV. 10/25/05)

ORIGINAL SCALE IN INCHES FOR REDUCED PLANS 0 1 2 3

DISREGARD PRINTS BEARING EARLIER REVISION DATES

REVISION DATES: 2-25-10 3-19-10 6-29-10 8-25-10 3-09-09 10-08-09 11-16-09 12-09-09 2-23-10

SHEET 7 OF 13

FILE => bdet01.dgn

USERNAME => trmikes! DATE PLOTTED => 01-SEP-2010 TIME PLOTTED => 12:55

DIST	COUNTY	ROUTE	POST MILES TOTAL PROJECT	SHEET No	TOTAL SHEETS
03	ED	50	66.7/67.8	66	71

LICENSED ARCHITECT — DATE 6-25-10

7-26-10
PLANS APPROVAL DATE

The State of California or its officers or agents shall not be responsible for the accuracy or completeness of electronic copies of this plan sheet.

LICENSED ARCHITECT — H. Javier Chavez — 14073 — 03-31-11 Renewal Date — STATE OF CALIFORNIA

NOTE:
THE CONTRACTOR SHALL VERIFY ALL CONTROLLING FIELD DIMENSIONS BEFORE ORDERING OR FABRICATING ANY MATERIAL.

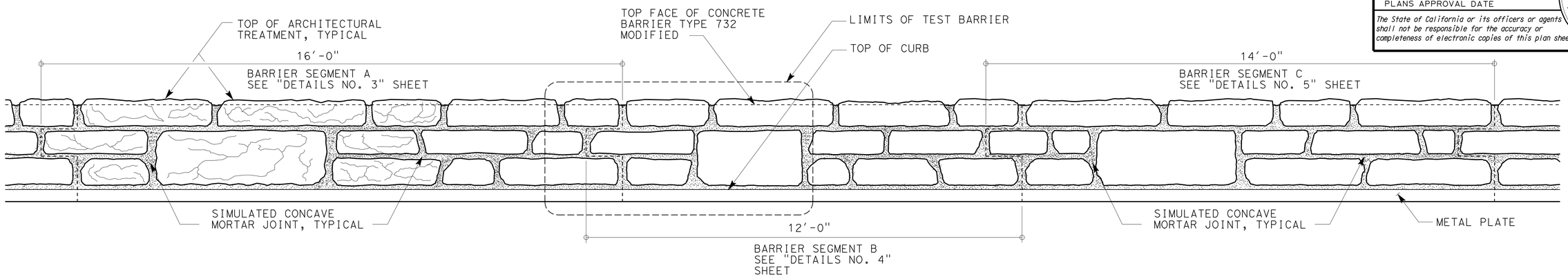

MIRROR ELEVATION - FRONT FACE OF BARRIER

NO SCALE

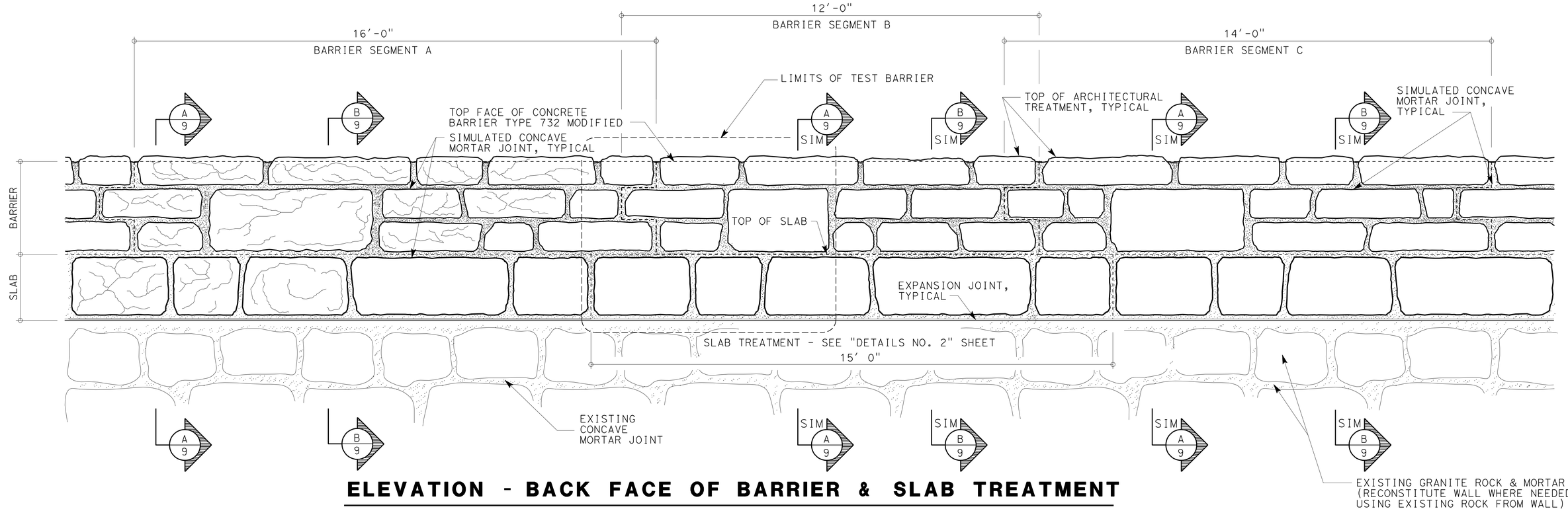

ELEVATION - BACK FACE OF BARRIER & SLAB TREATMENT

NO SCALE

	BY	CHECKED
DESIGN	I. Tasabia	N. Nguyen
DETAILS	C. Figuerres\J. Yang	N. Nguyen
QUANTITIES	G. Slocum	N. Nguyen

STATE OF CALIFORNIA
DEPARTMENT OF TRANSPORTATION

DIVISION OF ENGINEERING SERVICES
STRUCTURE DESIGN
DESIGN BRANCH 2

BRIDGE NO. Ret Wall
POST MILE Varies

ECHO SUMMIT BARRIER RAIL (REPLACE)
ARCHITECTURAL TREATMENT
DETAILS NO. 1

STRUCTURES DESIGN DETAIL SHEET (ENGLISH) (REV. 10/25/05)

ORIGINAL SCALE IN INCHES FOR REDUCED PLANS 0 1 2 3

CU 03
EA 1E14U1

DISREGARD PRINTS BEARING EARLIER REVISION DATES

REVISION DATES: 06-11-10 08-24-10

SHEET 8 OF 13

FILE => carcdt01.dgn

USERNAME => trmikest DATE PLOTTED => 01-SEP-2010 TIME PLOTTED => 12:55

DIST	COUNTY	ROUTE	POST MILES TOTAL PROJECT	SHEET No	TOTAL SHEETS
03	ED	50	66.7/67.8	67	71

LICENSED ARCHITECT — DATE 6-25-10

7-26-10
PLANS APPROVAL DATE

LICENSED ARCHITECT — H. Javier Chavez — 14073 — 03-31-11 Renewal Date — STATE OF CALIFORNIA

The State of California or its officers or agents shall not be responsible for the accuracy or completeness of electronic copies of this plan sheet.

NOTE:
THE CONTRACTOR SHALL VERIFY ALL CONTROLLING FIELD DIMENSIONS BEFORE ORDERING OR FABRICATING ANY MATERIAL.

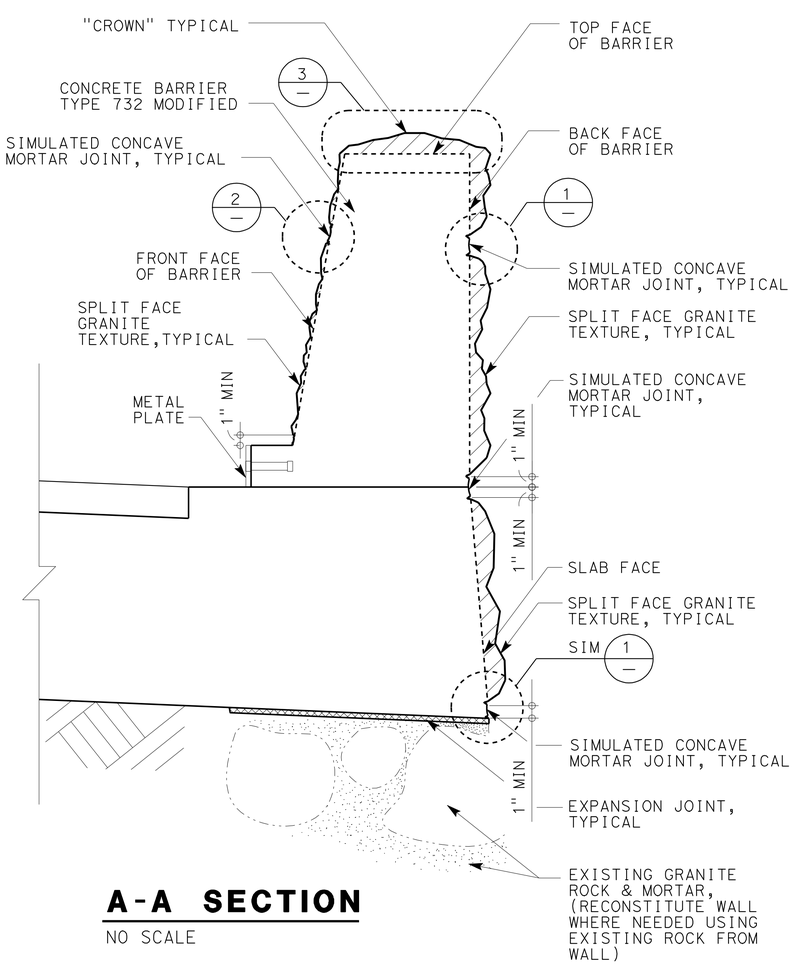

A-A SECTION

NO SCALE

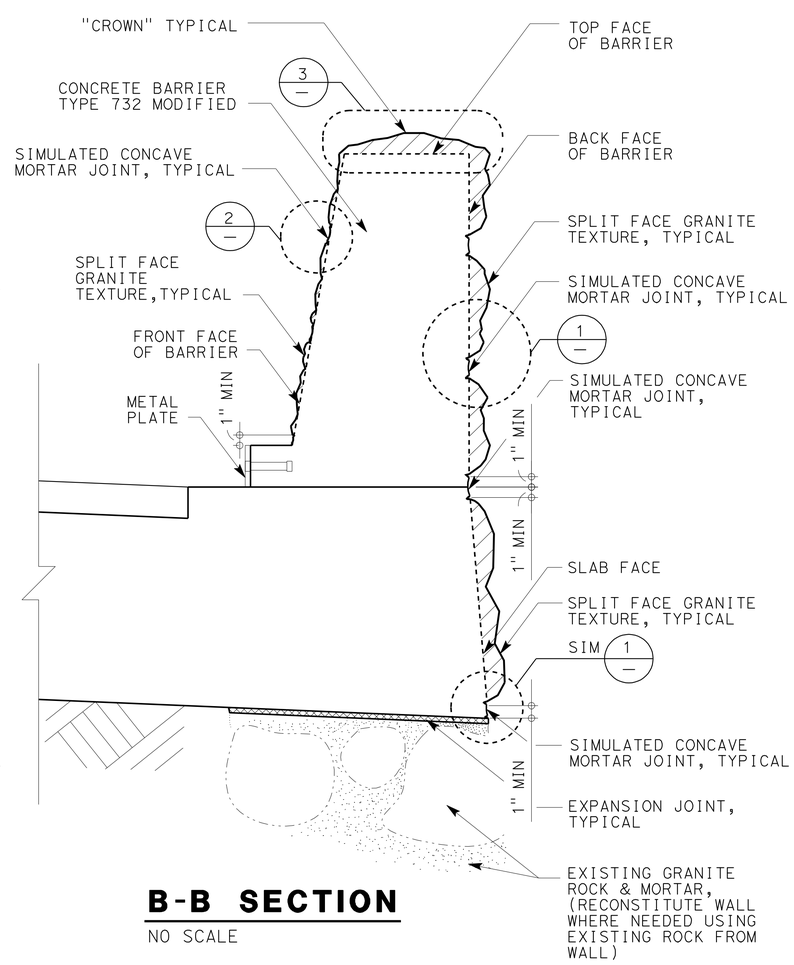

B-B SECTION

NO SCALE

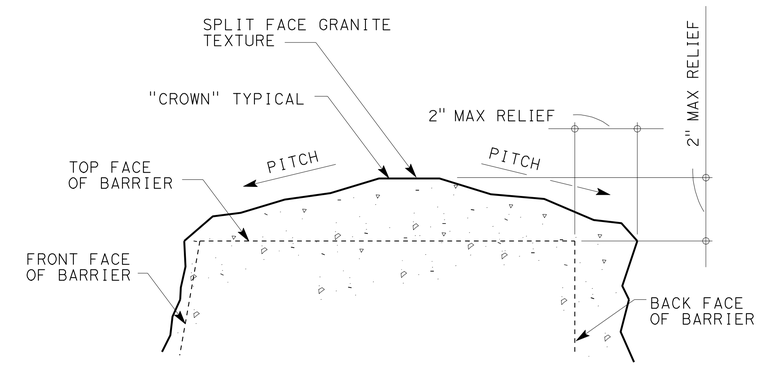

3 DETAIL

NO SCALE

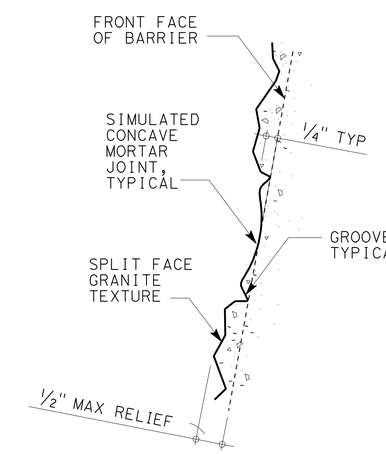

2 DETAIL

NO SCALE

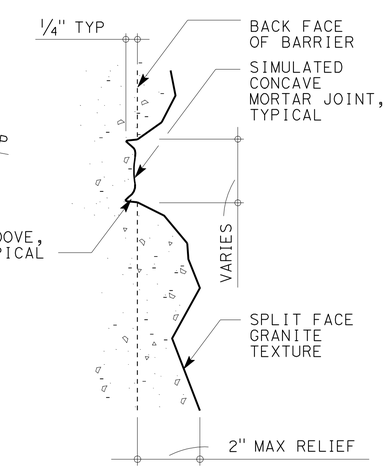

1 DETAIL

NO SCALE

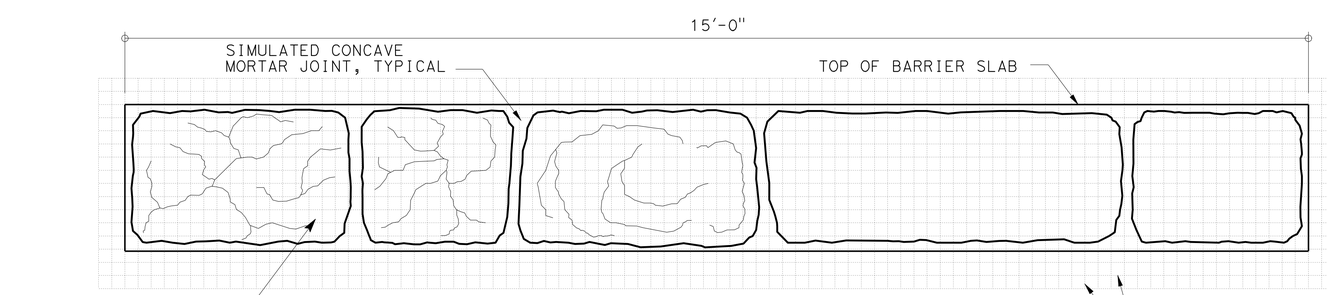

ELEVATION - SLAB TREATMENT

NO SCALE

DESIGN	BY I. Tasabia	CHECKED N. Nguyen	
DETAILS	BY C. Figuerres	CHECKED N. Nguyen	
QUANTITIES	BY G. Slocum	CHECKED N. Nguyen	

STATE OF CALIFORNIA
DEPARTMENT OF TRANSPORTATION

DIVISION OF ENGINEERING SERVICES
STRUCTURE DESIGN
DESIGN BRANCH 2

BRIDGE NO. Ret Wall
POST MILE Varies

ECHO SUMMIT BARRIER RAIL (REPLACE)
ARCHITECTURAL TREATMENT
DETAILS NO. 2

STRUCTURES DESIGN DETAIL SHEET (ENGLISH) (REV. 10/25/05)

ORIGINAL SCALE IN INCHES FOR REDUCED PLANS 0 1 2 3

CU 03
EA 1E14U1

DISREGARD PRINTS BEARING EARLIER REVISION DATES 06-23-10 8-25-10

REVISION DATES

SHEET 9 OF 13

FILE => carcdt02.dgn

USERNAME => trmikest DATE PLOTTED => 01-SEP-2010 TIME PLOTTED => 12:56

DIST	COUNTY	ROUTE	POST MILES TOTAL PROJECT	SHEET No	TOTAL SHEETS
03	ED	50	66.7/67.8	68	71

REGISTERED CIVIL ENGINEER 6-25-10 DATE

7-26-10
PLANS APPROVAL DATE

LICENSED ARCHITECT
H. Javier Chavez
14073
03-31-11
RENEWAL DATE
STATE OF CALIFORNIA

The State of California or its officers or agents shall not be responsible for the accuracy or completeness of electronic copies of this plan sheet.

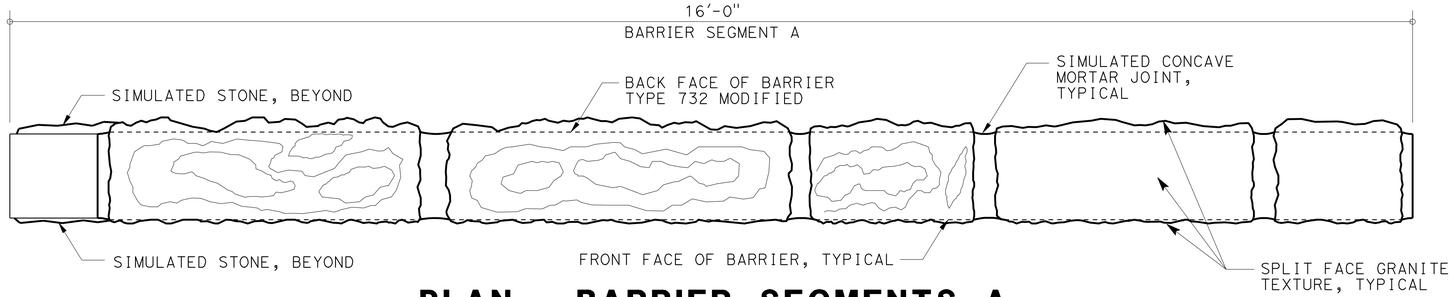

PLAN - BARRIER SEGMENTS A

NO SCALE

NOTE:
THE CONTRACTOR SHALL VERIFY ALL CONTROLLING FIELD DIMENSIONS BEFORE ORDERING OR FABRICATING ANY MATERIAL.

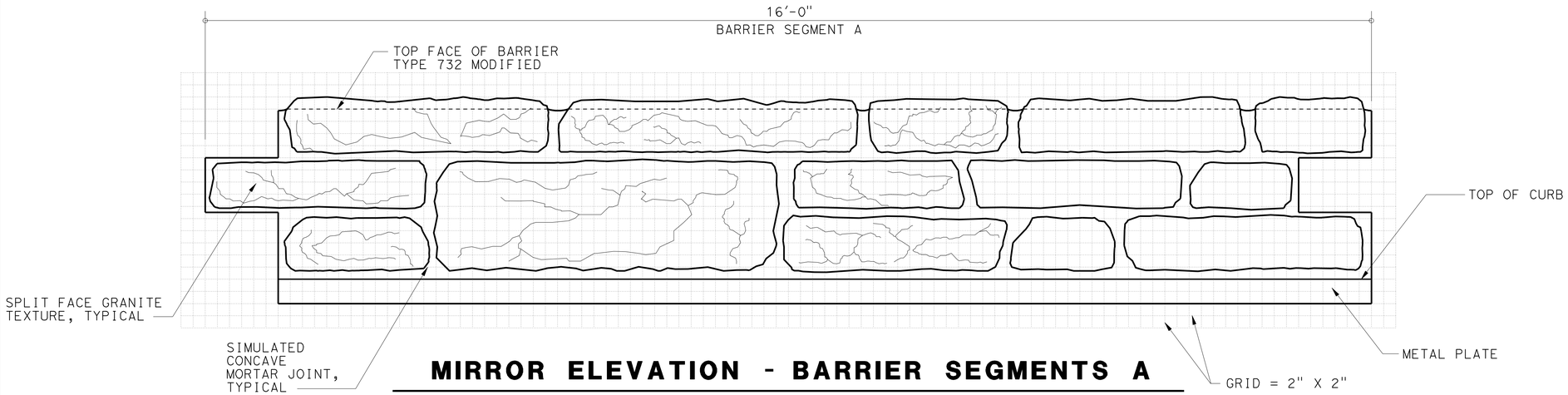

MIRROR ELEVATION - BARRIER SEGMENTS A

NO SCALE

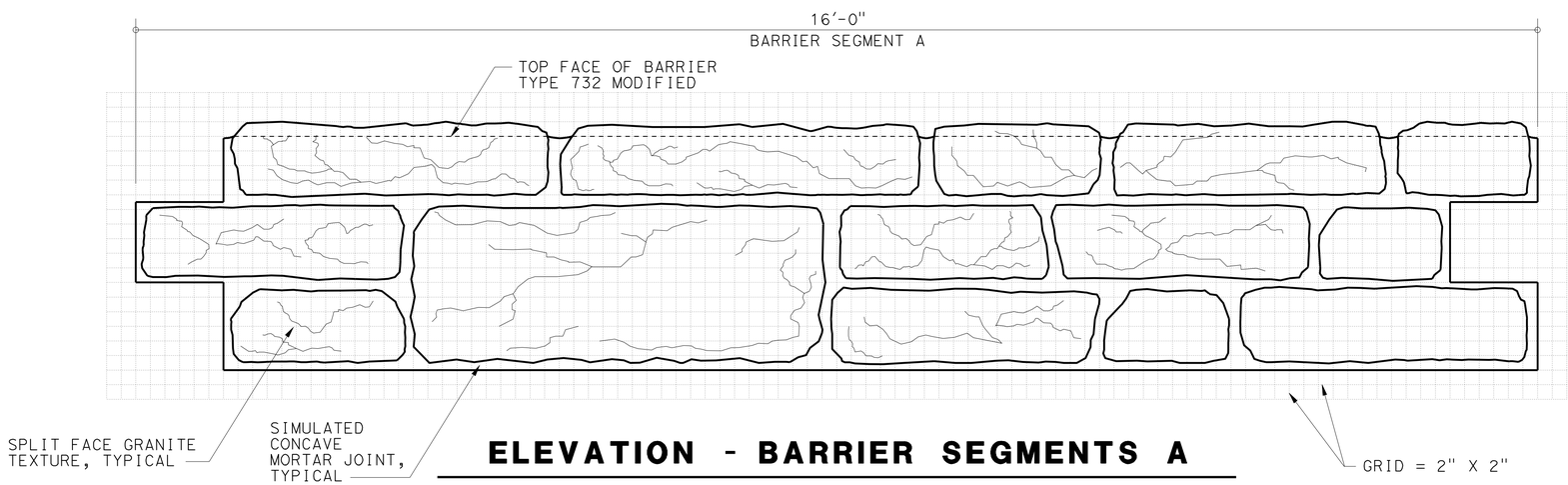

ELEVATION - BARRIER SEGMENTS A

NO SCALE

	BY	CHECKED
DESIGN	I. Tasabia	N. Nguyen
DETAILS	C. Figuerres\J. Yang	N. Nguyen
QUANTITIES	G. Slocum	N. Nguyen

STATE OF CALIFORNIA
DEPARTMENT OF TRANSPORTATION

DIVISION OF ENGINEERING SERVICES
STRUCTURE DESIGN
DESIGN BRANCH 2

BRIDGE NO. Ret Wall
POST MILE Varies

ECHO SUMMIT BARRIER RAIL (REPLACE)
ARCHITECTURAL TREATMENT
DETAILS NO. 3

STRUCTURES DESIGN DETAIL SHEET (ENGLISH) (REV. 10/25/05)

ORIGINAL SCALE IN INCHES FOR REDUCED PLANS 0 1 2 3

CU 03
EA 1E14U1

DISREGARD PRINTS BEARING EARLIER REVISION DATES

REVISION DATES: 3-4-08, 3-22-10, 8-25-10, 3-09-09, 11-16-09, 12-04-09, 2-23-10, 2-26-10, 3-18-10

SHEET 10 OF 13

FILE => carcdt03.dgn

USERNAME => trmikest DATE PLOTTED => 01-SEP-2010 TIME PLOTTED => 12:56

DIST	COUNTY	ROUTE	POST MILES TOTAL PROJECT	SHEET No	TOTAL SHEETS
03	ED	50	66.7/67.8	69	71

REGISTERED CIVIL ENGINEER 6-25-10 DATE

7-26-10
PLANS APPROVAL DATE

The State of California or its officers or agents shall not be responsible for the accuracy or completeness of electronic copies of this plan sheet.

LICENSED ARCHITECT
H. Javier Chavez
14073
03-31-11
RENEWAL DATE
STATE OF CALIFORNIA

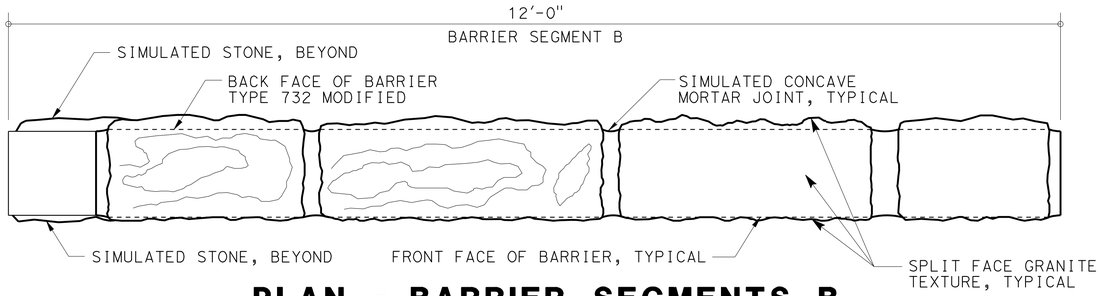

PLAN - BARRIER SEGMENTS B

NO SCALE

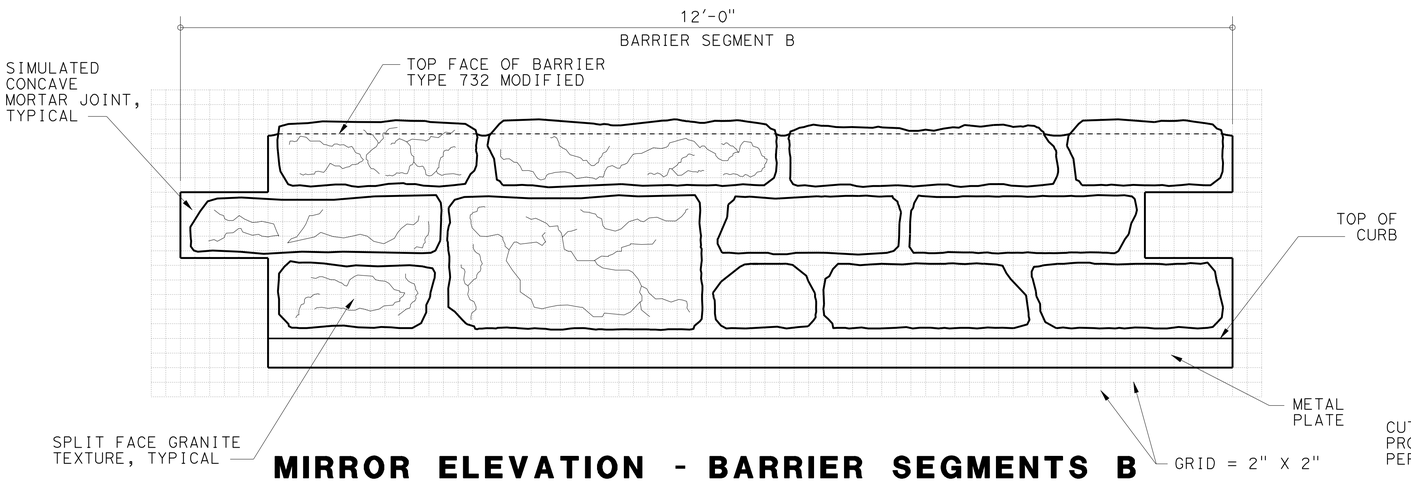

MIRROR ELEVATION - BARRIER SEGMENTS B

NO SCALE

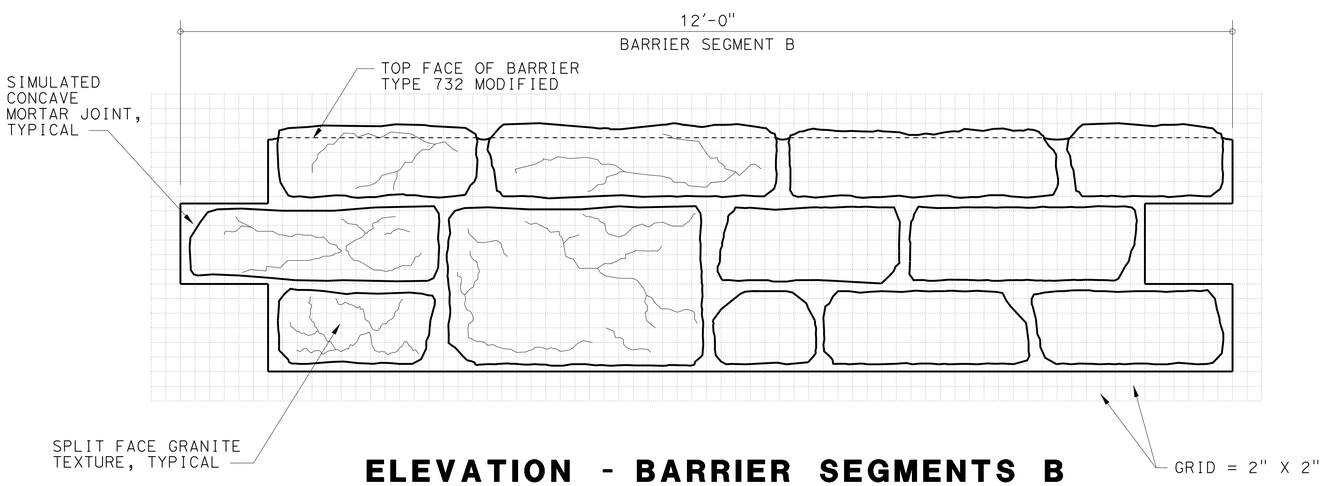

ELEVATION - BARRIER SEGMENTS B

NO SCALE

NOTE:
THE CONTRACTOR SHALL VERIFY ALL CONTROLLING FIELD DIMENSIONS BEFORE ORDERING OR FABRICATING ANY MATERIAL.

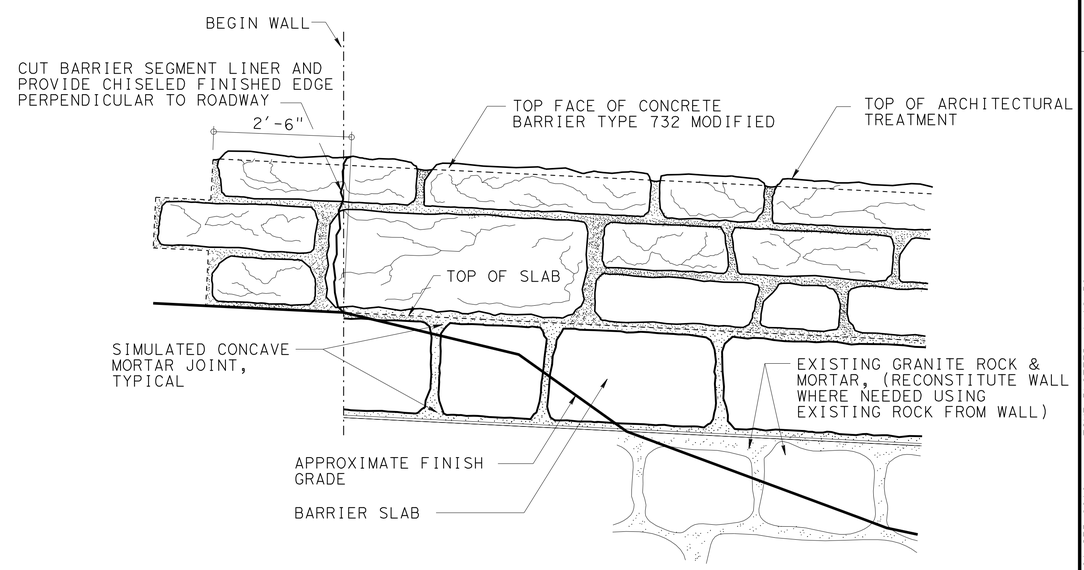

4 **DETAIL**
NO SCALE

DESIGN	BY I. Tasabia	CHECKED N. Nguyen	
DETAILS	BY C. Figuerres\J. Yang	CHECKED N. Nguyen	
QUANTITIES	BY G. Slocum	CHECKED N. Nguyen	

STATE OF CALIFORNIA
DEPARTMENT OF TRANSPORTATION

DIVISION OF ENGINEERING SERVICES
STRUCTURE DESIGN
DESIGN BRANCH 2

BRIDGE NO. Ret Wall
POST MILE Varies

ECHO SUMMIT BARRIER RAIL (REPLACE)
ARCHITECTURAL TREATMENT
DETAILS NO. 4

STRUCTURES DESIGN DETAIL SHEET (ENGLISH) (REV. 10/25/05)

ORIGINAL SCALE IN INCHES FOR REDUCED PLANS 0 1 2 3

CU 03
EA 1E14U1

DISREGARD PRINTS BEARING EARLIER REVISION DATES

REVISION DATES: 06-14-10 8-25-10

SHEET 11 OF 13

FILE => carcdt04.dgn

USERNAME => trmikest DATE PLOTTED => 01-SEP-2010 TIME PLOTTED => 12:56

DIST	COUNTY	ROUTE	POST MILES TOTAL PROJECT	SHEET No	TOTAL SHEETS
03	ED	50	66.7/67.8	70	71

REGISTERED CIVIL ENGINEER 6-25-10 DATE

7-26-10
PLANS APPROVAL DATE

LICENSED ARCHITECT H. Javier Chavez 14073 03-31-11 RENEWAL DATE STATE OF CALIFORNIA

The State of California or its officers or agents shall not be responsible for the accuracy or completeness of electronic copies of this plan sheet.

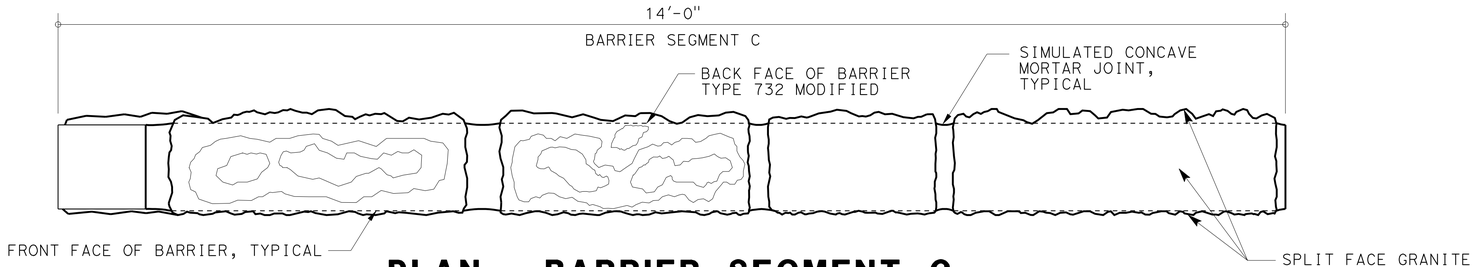

PLAN - BARRIER SEGMENT C

NO SCALE

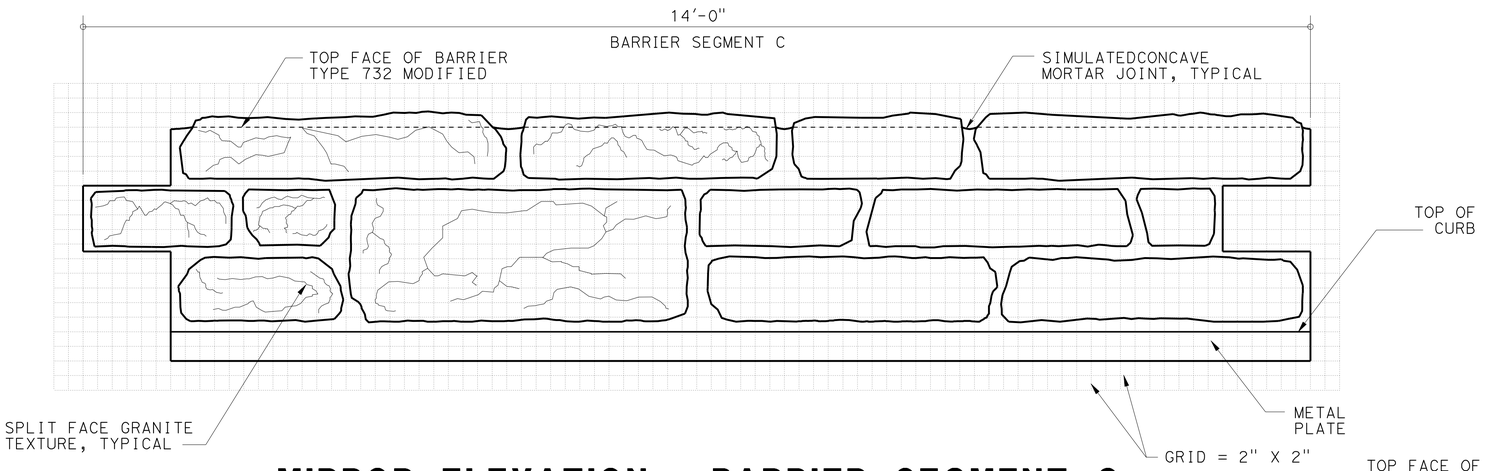

MIRROR ELEVATION - BARRIER SEGMENT C

NO SCALE

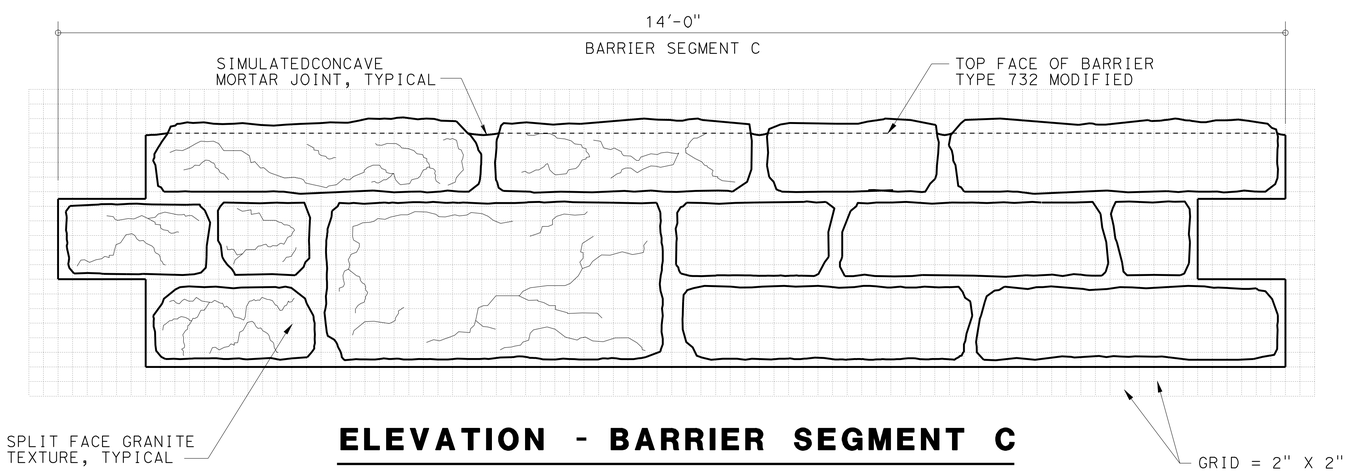

ELEVATION - BARRIER SEGMENT C

NO SCALE

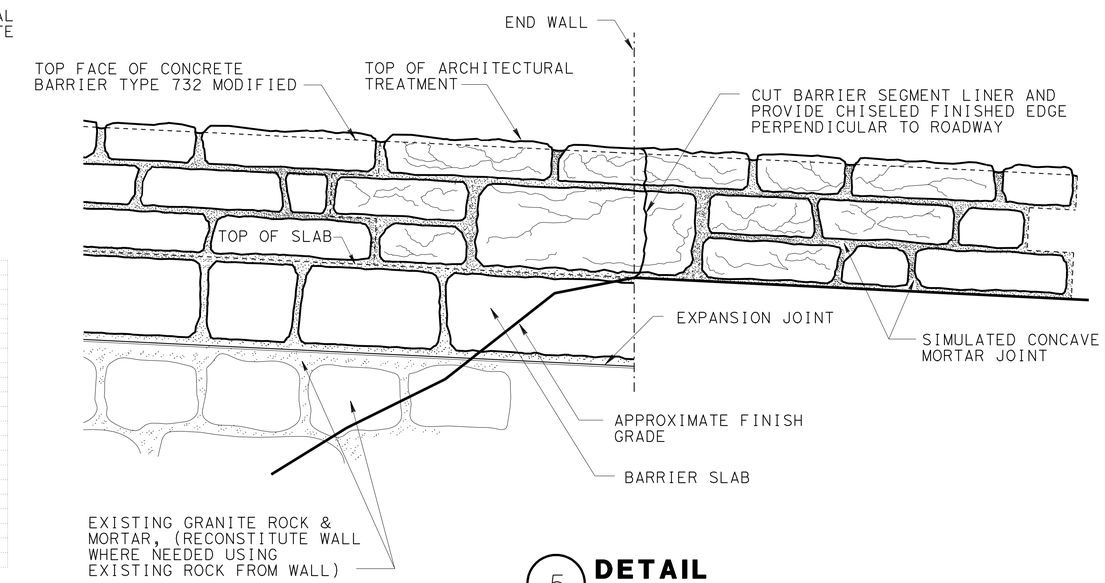

5 **DETAIL**
NO SCALE

NOTE:
THE CONTRACTOR SHALL VERIFY ALL CONTROLLING FIELD DIMENSIONS BEFORE ORDERING OR FABRICATING ANY MATERIAL.

	BY	CHECKED
DESIGN	I. Tasabia	N. Nguyen
DETAILS	C. Figuerres\J. Yang	N. Nguyen
QUANTITIES	G. Slocum	N. Nguyen

STATE OF CALIFORNIA
DEPARTMENT OF TRANSPORTATION

DIVISION OF ENGINEERING SERVICES
STRUCTURE DESIGN
DESIGN BRANCH 2

BRIDGE NO. Ret Wall
POST MILE Varies

ECHO SUMMIT BARRIER RAIL (REPLACE)
ARCHITECTURAL TREATMENT
DETAILS NO. 5

STRUCTURES DESIGN DETAIL SHEET (ENGLISH) (REV. 10/25/05)

ORIGINAL SCALE IN INCHES FOR REDUCED PLANS 0 1 2 3

CU 03
EA 1E14U1

DISREGARD PRINTS BEARING EARLIER REVISION DATES

REVISION DATES: 3-4-08 3-22-10 8-25-10 3-09-09 11-16-09 12-09-09 2-23-10 2-26-10 3-10-10

SHEET 12 OF 13

FILE => carcdt05.dgn

USERNAME => trmikes1 DATE PLOTTED => 01-SEP-2010 TIME PLOTTED => 12:56

DIST	COUNTY	ROUTE	POST MILES TOTAL PROJECT	SHEET No	TOTAL SHEETS
03	ED	50	66.7/67.8	71	71

LICENSED ARCHITECT — DATE 6-25-10

7-26-10
PLANS APPROVAL DATE

LICENSED ARCHITECT H. Javier Chavez 14073 03-31-11 Renewal Date STATE OF CALIFORNIA

The State of California or its officers or agents shall not be responsible for the accuracy or completeness of electronic copies of this plan sheet.

NOTE:
THE CONTRACTOR SHALL VERIFY ALL CONTROLLING FIELD DIMENSIONS BEFORE ORDERING OR FABRICATING ANY MATERIAL.

BARRIER SEGMENT A = A
BARRIER SEGMENT B = B
BARRIER SEGMENT C = C

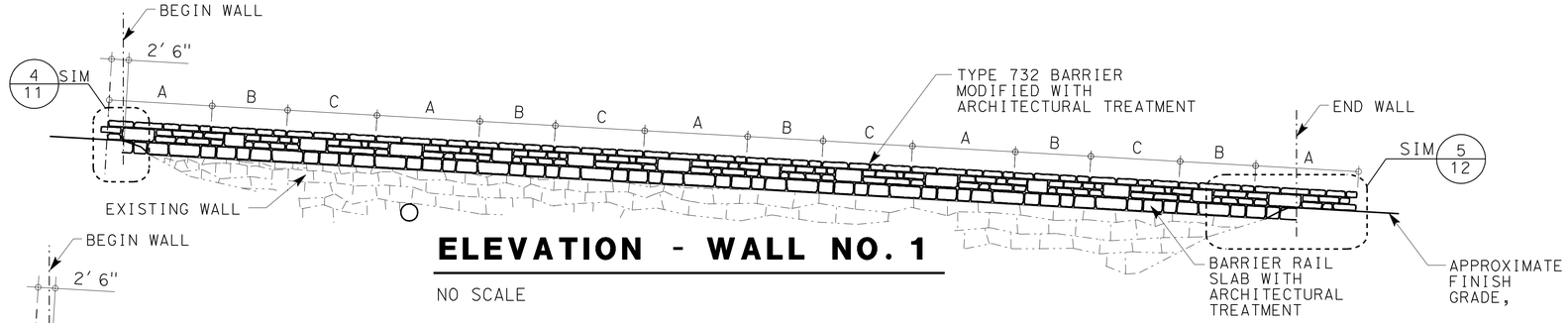

ELEVATION - WALL NO. 1

NO SCALE

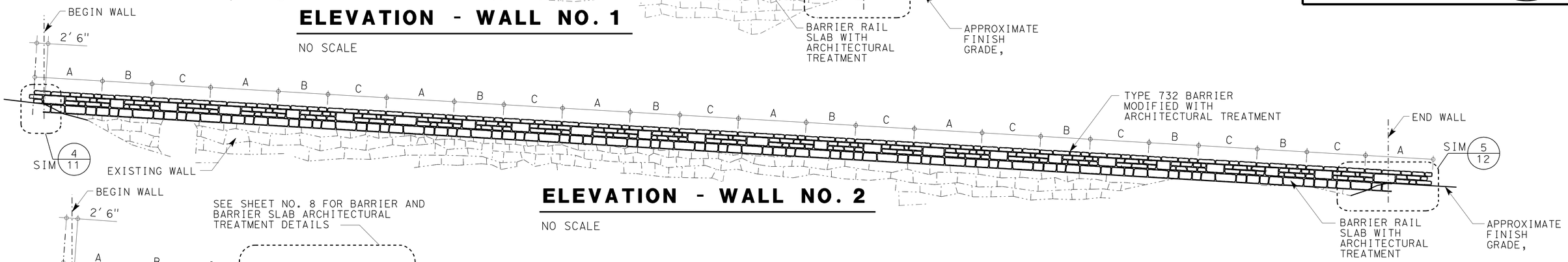

ELEVATION - WALL NO. 2

NO SCALE

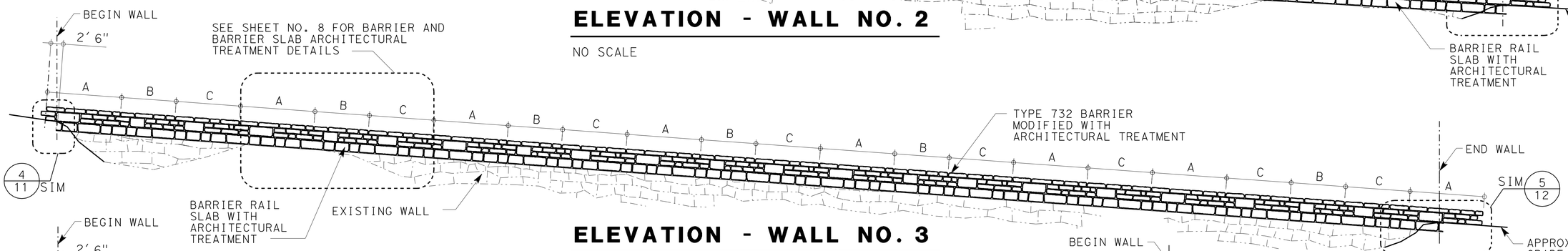

ELEVATION - WALL NO. 3

NO SCALE

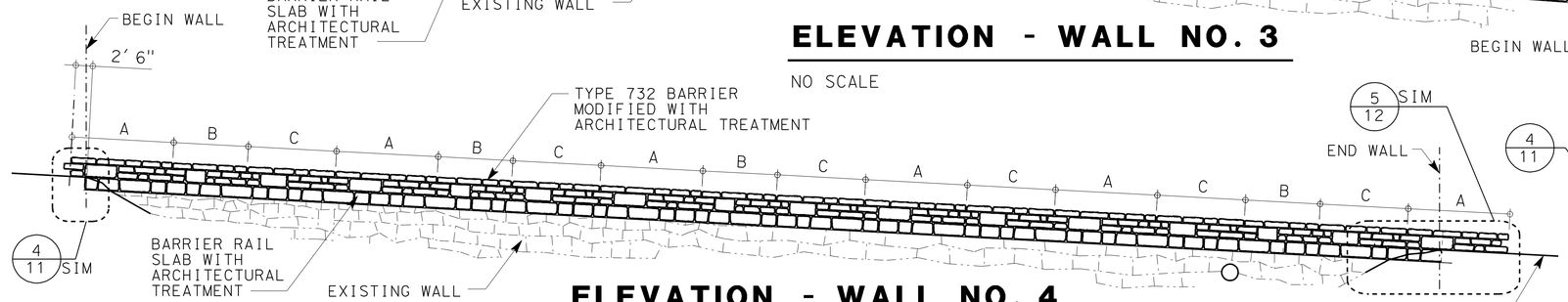

ELEVATION - WALL NO. 4

NO SCALE

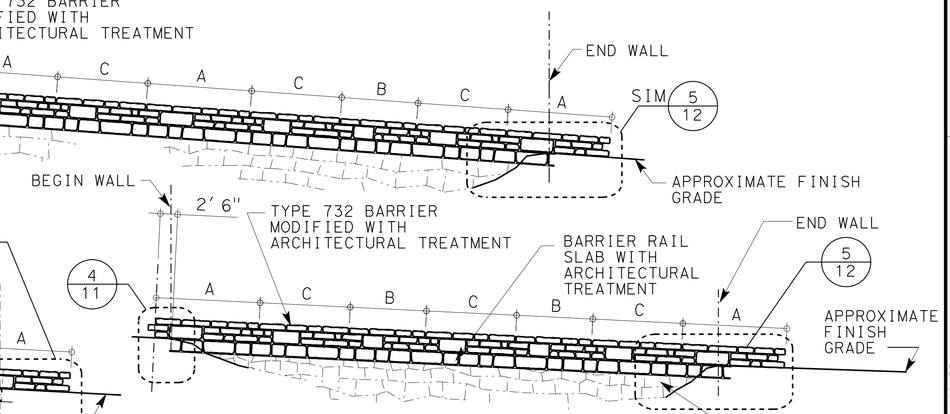

ELEVATION - WALL NO. 6

NO SCALE

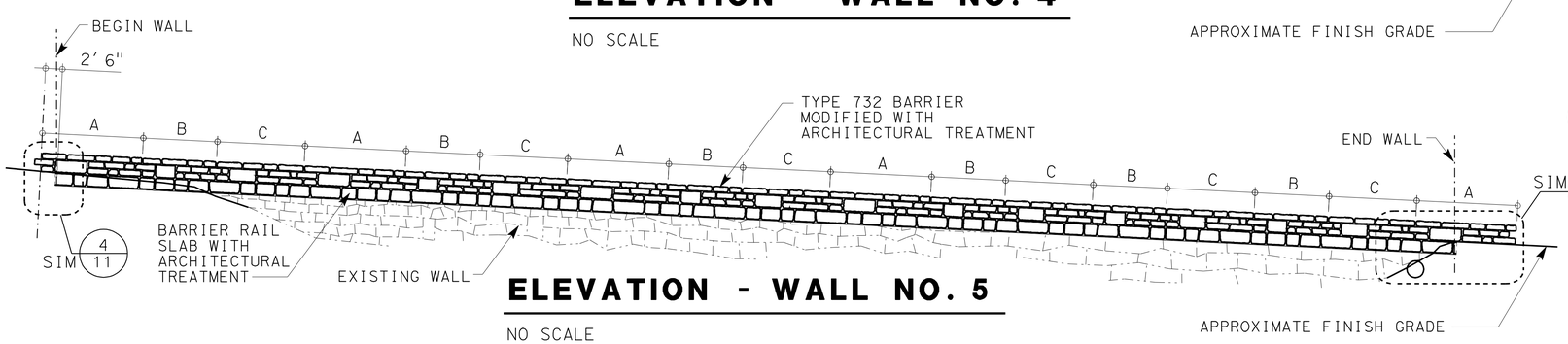

ELEVATION - WALL NO. 5

NO SCALE

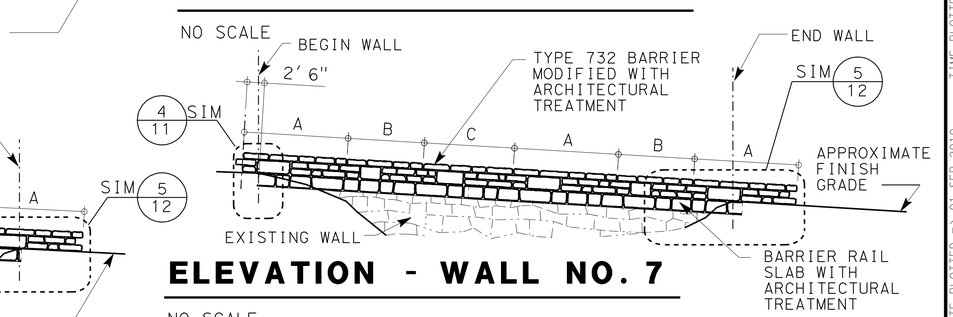

ELEVATION - WALL NO. 7

NO SCALE

DESIGN	BY I. Tasabia	CHECKED N. Nguyen	
DETAILS	BY C. Figuerres/J. Yang	CHECKED N. Nguyen	
QUANTITIES	BY G. Slocum	CHECKED N. Nguyen	

STATE OF CALIFORNIA
DEPARTMENT OF TRANSPORTATION

DIVISION OF ENGINEERING SERVICES
STRUCTURE DESIGN
DESIGN BRANCH 2

BRIDGE NO. Ret Wall
POST MILE Varies

ECHO SUMMIT BARRIER RAIL (REPLACE)
ARCHITECTURAL TREATMENT
DETAILS NO. 6

STRUCTURES DESIGN DETAIL SHEET (ENGLISH) (REV. 10/25/05)

ORIGINAL SCALE IN INCHES FOR REDUCED PLANS 0 1 2 3

CU 03
EA 1E14U1

DISREGARD PRINTS BEARING EARLIER REVISION DATES

REVISION DATES: 3-4-08, 3-22-10, 8-24-10, 3-08-09, 11-16-09, 12-09-09, 2-23-10, 2-28-10, 3-10-10

SHEET 13 OF 13

FILE => carcdt06.dgn

USERNAME => tfmikes1 DATE PLOTTED => 01-SEP-2010 TIME PLOTTED => 12:57