DIST	COUNTY	ROUTE	POST MILES TOTAL PROJECT	SHEET No	TOTAL SHEETS
03	Sac	50	R0.6/17.4	201	233

REGISTERED CIVIL ENGINEER 8-05-09 DATE

1-4-10
PLANS APPROVAL DATE

REGISTERED PROFESSIONAL ENGINEER Jiffay Lee No. 63599 Exp. 9-30-10 CIVIL STATE OF CALIFORNIA

The State of California or its officers or agents shall not be responsible for the accuracy or completeness of electronic copies of this plan sheet.

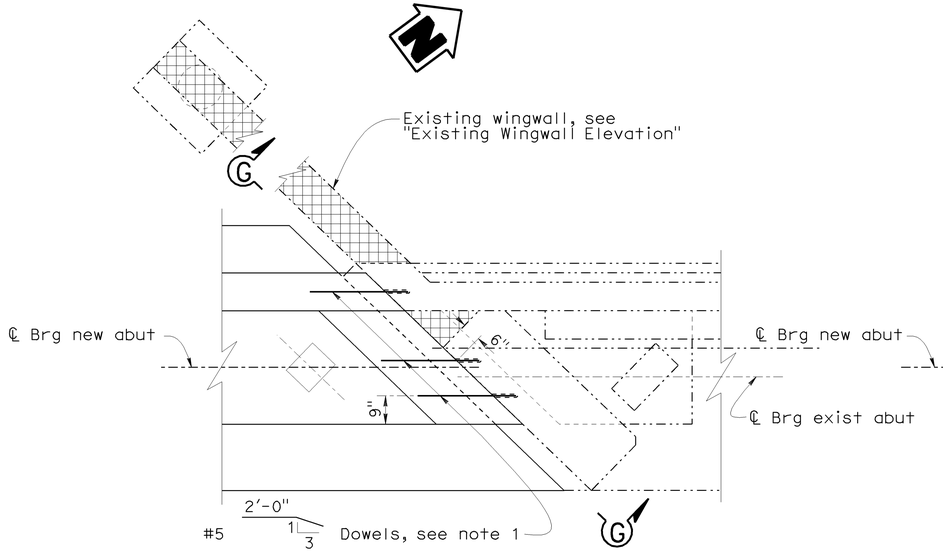

ABUTMENT 1 PARTIAL PLAN

DETAIL 1

½" = 1'-0"

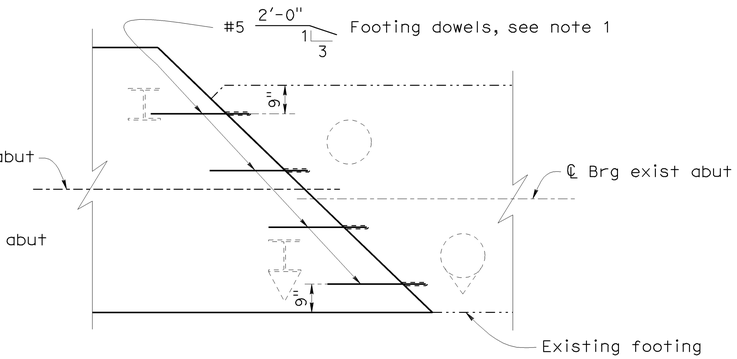

SECTION H-H

½" = 1'-0"

Notes:

1. All dowels shown to be drill and bond in 1⅛" ø x 8" deep holes.

Legend:

-·-·-·- Indicates existing structure

Indicates bridge removal (Portion)

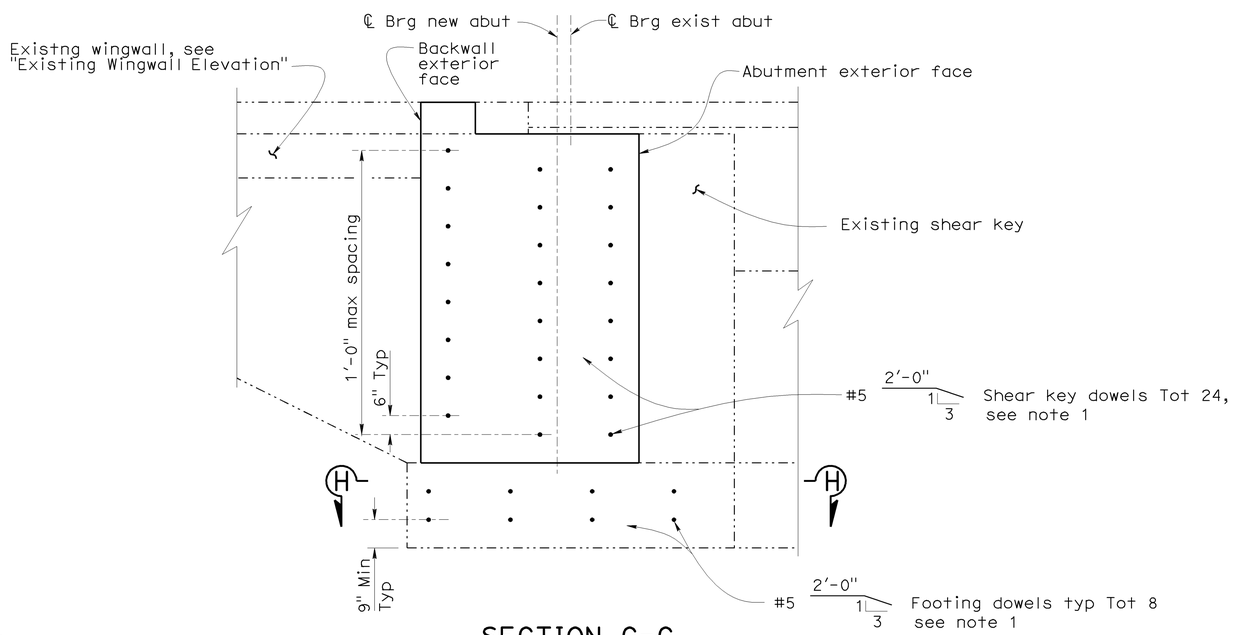

SECTION G-G

½" = 1'-0"

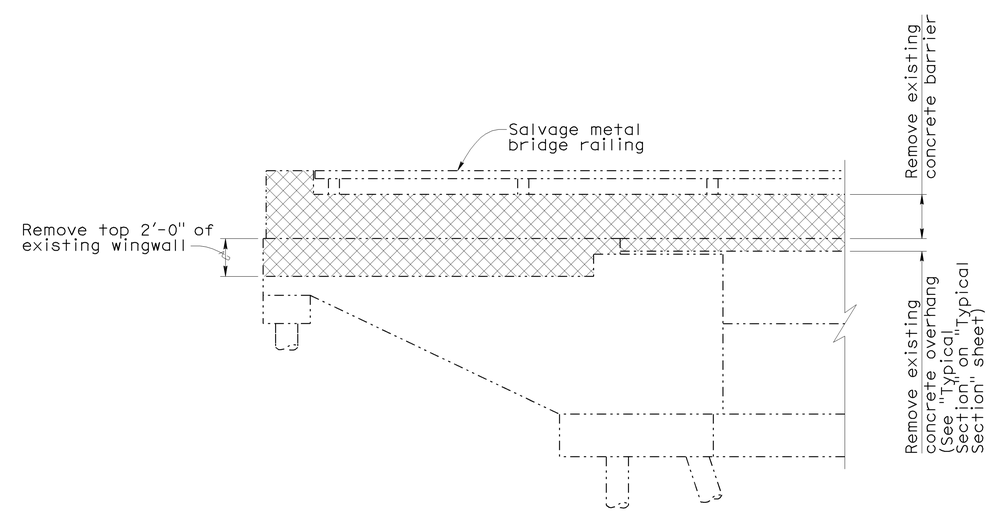

EXISTING WINGWALL ELEVATION

No Scale

NOTE:
THE CONTRACTOR SHALL VERIFY ALL CONTROLLING FIELD DIMENSIONS BEFORE ORDERING OR FABRICATING ANY MATERIAL.

	BY	CHECKED
DESIGN	J. Lee	G. Slocum
DETAILS	C. Figuerres	G. Slocum
QUANTITIES	J. Lynch	G. Zuniga

STATE OF CALIFORNIA
DEPARTMENT OF TRANSPORTATION

DIVISION OF ENGINEERING SERVICES
STRUCTURE DESIGN
DESIGN BRANCH 2

BRIDGE NO. 24-0120R
POST MILE 17.01

NATOMA OVERHEAD (WIDEN)
ABUTMENT DETAILS NO. 4

STRUCTURES DESIGN DETAIL SHEET (ENGLISH) (REV. 10/25/05)

ORIGINAL SCALE IN INCHES FOR REDUCED PLANS 0 1 2 3

CU 03
EA 1C12U4

DISREGARD PRINTS BEARING EARLIER REVISION DATES

REVISION DATES: 4-28-09 4-30-09 5-05-09 5-08-09

SHEET 9 OF 22

FILE => 24-0120r-h-adet04.dgn

USERNAME => ttpierce DATE PLOTTED => 05-JAN-2010 TIME PLOTTED => 10:58

DIST	COUNTY	ROUTE	POST MILES TOTAL PROJECT	SHEET No	TOTAL SHEETS
03	Sac	50	R0.6/17.4	202	233

REGISTERED CIVIL ENGINEER 8-05-09 DATE

1-4-10
PLANS APPROVAL DATE

REGISTERED PROFESSIONAL ENGINEER Jiffay Lee No. 63599 Exp. 9-30-10 CIVIL STATE OF CALIFORNIA

The State of California or its officers or agents shall not be responsible for the accuracy or completeness of electronic copies of this plan sheet.

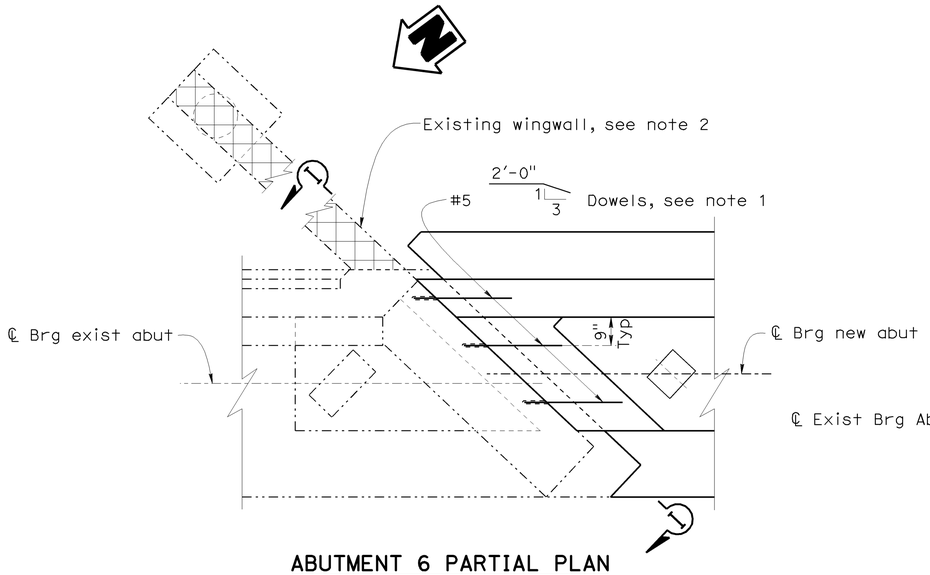

ABUTMENT 6 PARTIAL PLAN

DETAIL 1

½" = 1'-0"

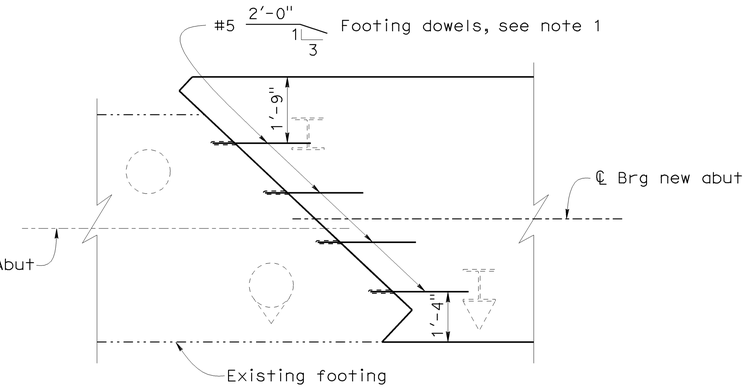

SECTION J-J

½" = 1'-0"

Notes:

1. All dowels shown to be drill and bond in 1⅛" ø x 8" deep holes.
2. For Existing Wingwall Elevation, see "Abutment Detail No. 4" sheet.

Legend:

-·-·-·- Indicates existing structure

Indicates bridge removal (Portion)

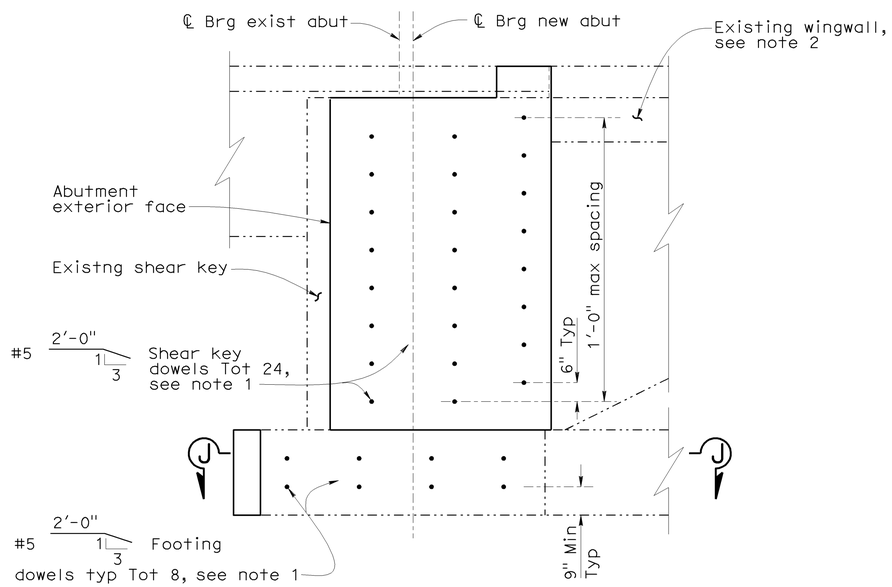

SECTION I-I

½" = 1'-0"

NOTE:
THE CONTRACTOR SHALL VERIFY ALL CONTROLLING FIELD DIMENSIONS BEFORE ORDERING OR FABRICATING ANY MATERIAL.

	BY	CHECKED
DESIGN	J. Lee	G. Slocum
DETAILS	C. Figuerres	G. Slocum
QUANTITIES	J. Lynch	G. Zuniga

STATE OF CALIFORNIA
DEPARTMENT OF TRANSPORTATION

DIVISION OF ENGINEERING SERVICES
STRUCTURE DESIGN
DESIGN BRANCH 2

BRIDGE NO. 24-0120R
POST MILE 17.01

NATOMA OVERHEAD (WIDEN)
ABUTMENT DETAILS NO. 5

STRUCTURES DESIGN DETAIL SHEET (ENGLISH) (REV. 10/25/05)

ORIGINAL SCALE IN INCHES FOR REDUCED PLANS 0 1 2 3

CU 03
EA 1C12U4

DISREGARD PRINTS BEARING EARLIER REVISION DATES

REVISION DATES: 4-23-09 4-28-09 5-08-09 6-03-09

SHEET 10 OF 22

FILE => 24-0120r-h-adet05.dgn

USERNAME => trpierce DATE PLOTTED => 05-JAN-2010 TIME PLOTTED => 10:59

DIST	COUNTY	ROUTE	POST MILES TOTAL PROJECT	SHEET No	TOTAL SHEETS
03	Sac	50	R0.6/17.4	203	233

REGISTERED CIVIL ENGINEER 8-05-09 DATE

1-4-10
PLANS APPROVAL DATE

REGISTERED PROFESSIONAL ENGINEER Jiffay Lee No. 63599 Exp. 9-30-10 CIVIL STATE OF CALIFORNIA

The State of California or its officers or agents shall not be responsible for the accuracy or completeness of electronic copies of this plan sheet.

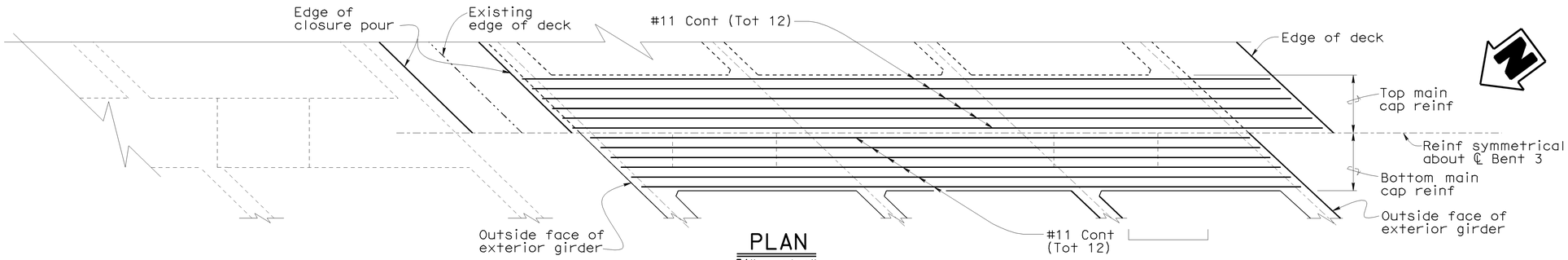

PLAN

3/8" = 1'-0"

See note 1

Note:

1. Bent 3 shown, Bents 2, 4 and 5 similar except as noted.
2. For Section L-L and M-M, see "Bent Details No. 2" sheet.

Legend:

-·-·-·- Indicates existing structure.

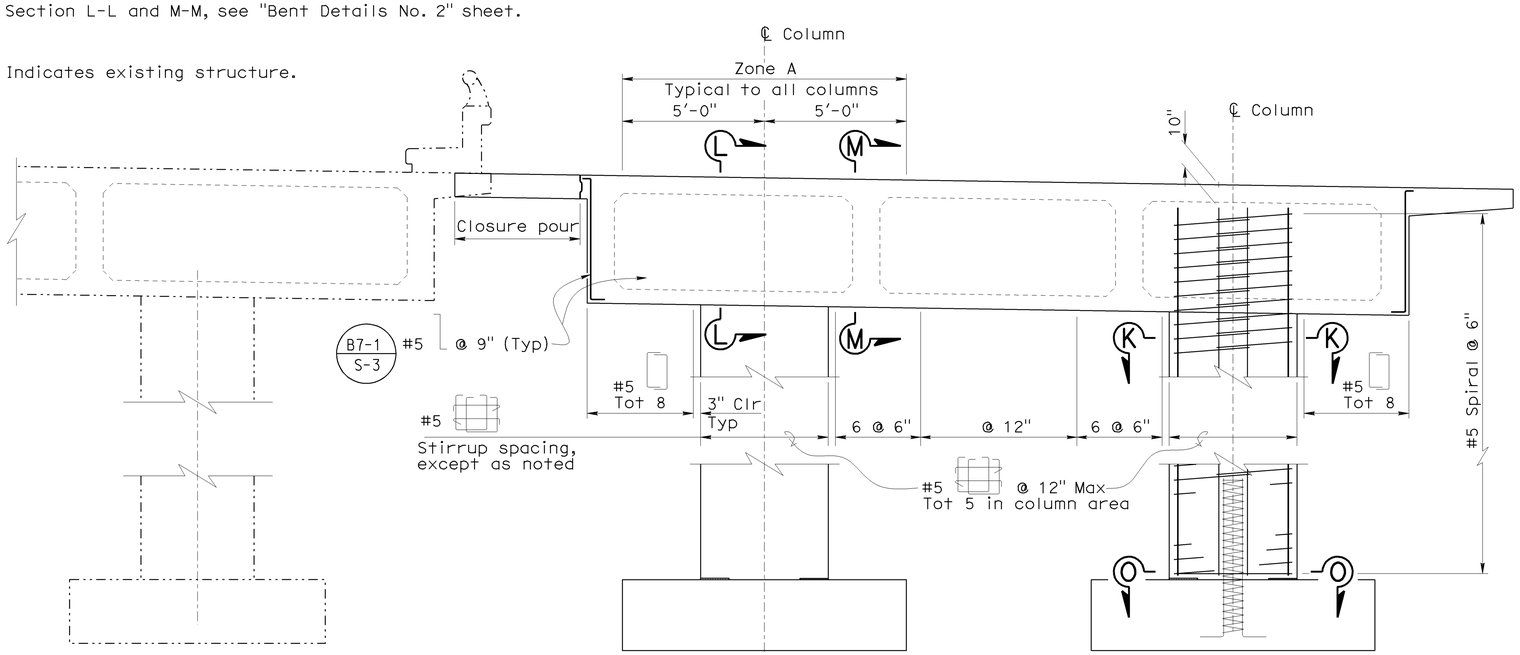

ELEVATION

3/8" = 1'-0"

See note 1

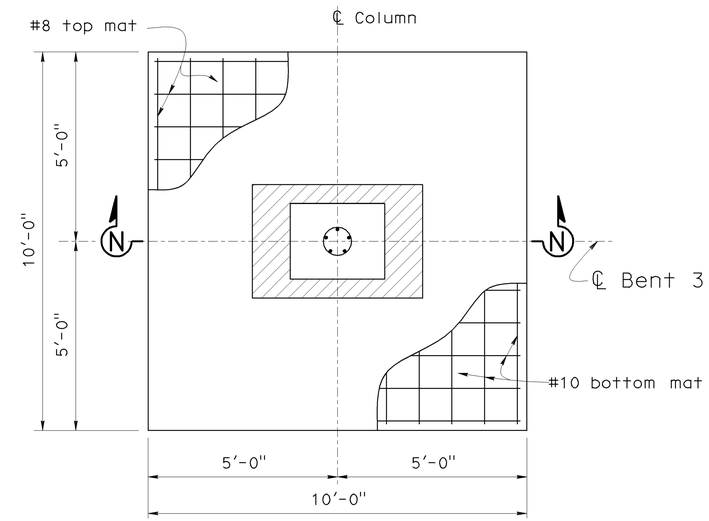

FOOTING PLAN

1/2" = 1'-0"

See note 1

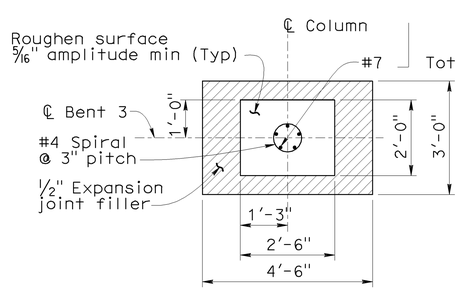

SECTION O-O

1/2" = 1'-0"

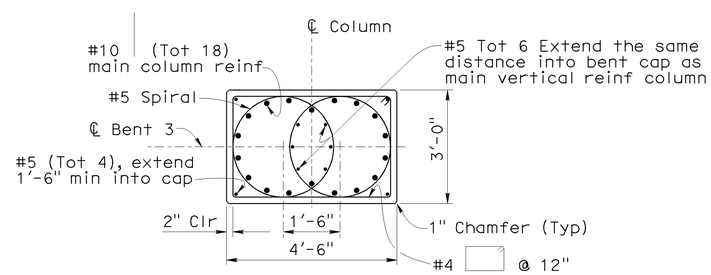

SECTION K-K

1/2" = 1'-0"

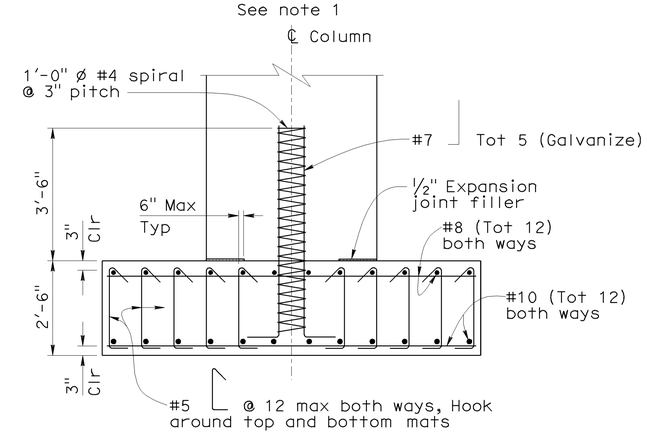

SECTION N-N

1/2" = 1'-0"

NOTE:
THE CONTRACTOR SHALL VERIFY ALL CONTROLLING FIELD DIMENSIONS BEFORE ORDERING OR FABRICATING ANY MATERIAL.

	BY	CHECKED
DESIGN	J. Lee	G. Slocum
DETAILS	C. Figuerres	G. Slocum
QUANTITIES	J. Lynch	G. Zuniga

STATE OF CALIFORNIA
DEPARTMENT OF TRANSPORTATION

DIVISION OF ENGINEERING SERVICES
STRUCTURE DESIGN
DESIGN BRANCH 2

BRIDGE NO. 24-0120R
POST MILE 17.01

NATOMA OVERHEAD (WIDEN)

BENT DETAILS NO. 1

STRUCTURES DESIGN DETAIL SHEET (ENGLISH) (REV. 10/25/05)

ORIGINAL SCALE IN INCHES FOR REDUCED PLANS 0 1 2 3

CU 03
EA 1C12U4

DISREGARD PRINTS BEARING EARLIER REVISION DATES

REVISION DATES: 2-25-09 4-28-09 4-30-09 5-11-09 6-03-09

SHEET 11 OF 22

FILE => 24-0120r-j-bentdet01.dgn

USERNAME => tripierce DATE PLOTTED => 05-JAN-2010 TIME PLOTTED => 10:59

DIST	COUNTY	ROUTE	POST MILES TOTAL PROJECT	SHEET No	TOTAL SHEETS
03	Sac	50	R0.6/17.4	204	233

REGISTERED CIVIL ENGINEER 8-05-09 DATE

1-4-10
PLANS APPROVAL DATE

REGISTERED PROFESSIONAL ENGINEER Jiffay Lee No. 63599 Exp. 9-30-10 CIVIL STATE OF CALIFORNIA

The State of California or its officers or agents shall not be responsible for the accuracy or completeness of electronic copies of this plan sheet.

Note:
1. For details not shown or noted, see "Section M-M".
2. Main cap reinf not shown for clarity.
3. Detail typical at bents.
4. At columns, bent cap ties may be lap sliced

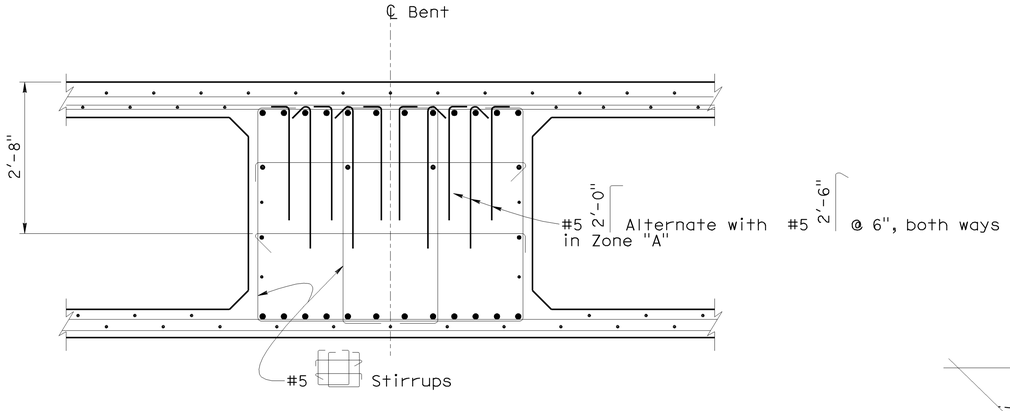

SECTION L-L
¾" = 1'-0"
See note 1

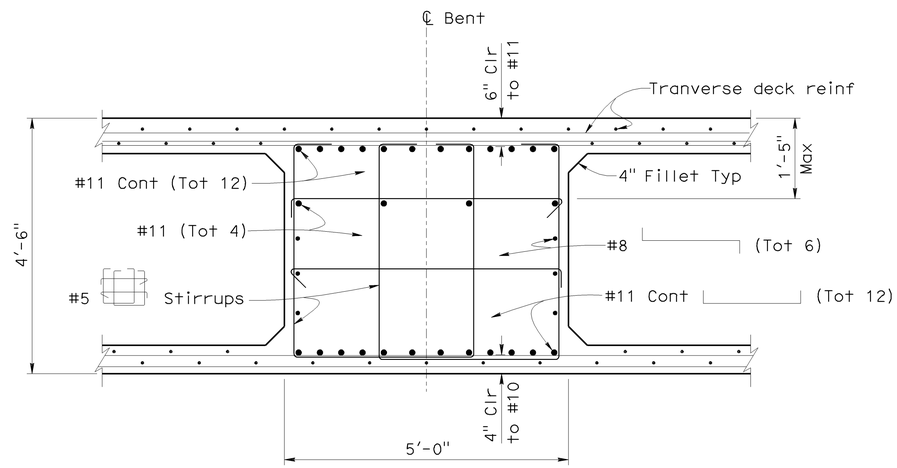

SECTION M-M
¾" = 1'-0"

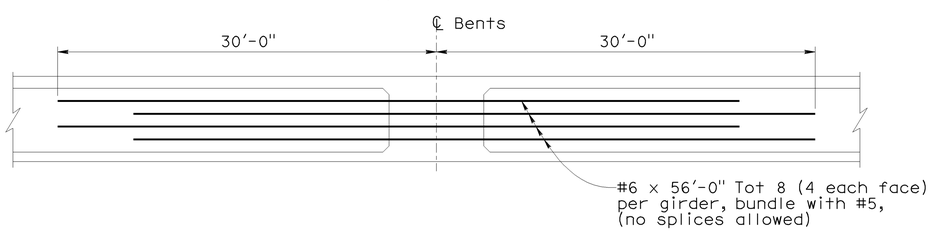

ADDITIONAL GIRDER REINFORCEMENT (TYP.)
No Scale

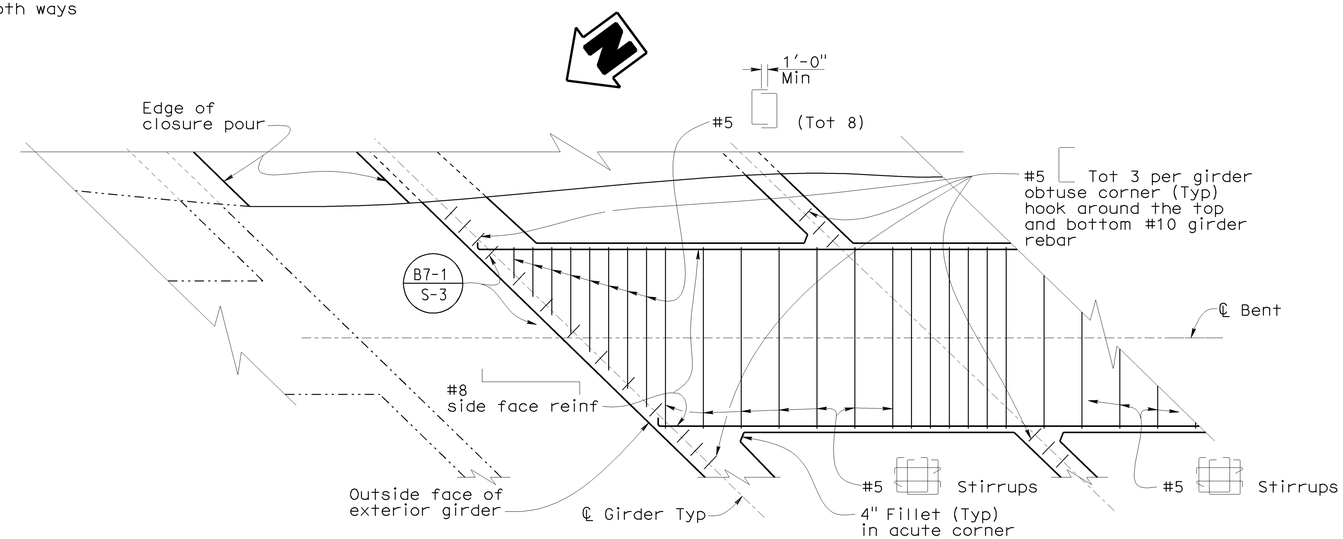

PARTIAL PLAN (TYP)
½" = 1'-0"
See note 2

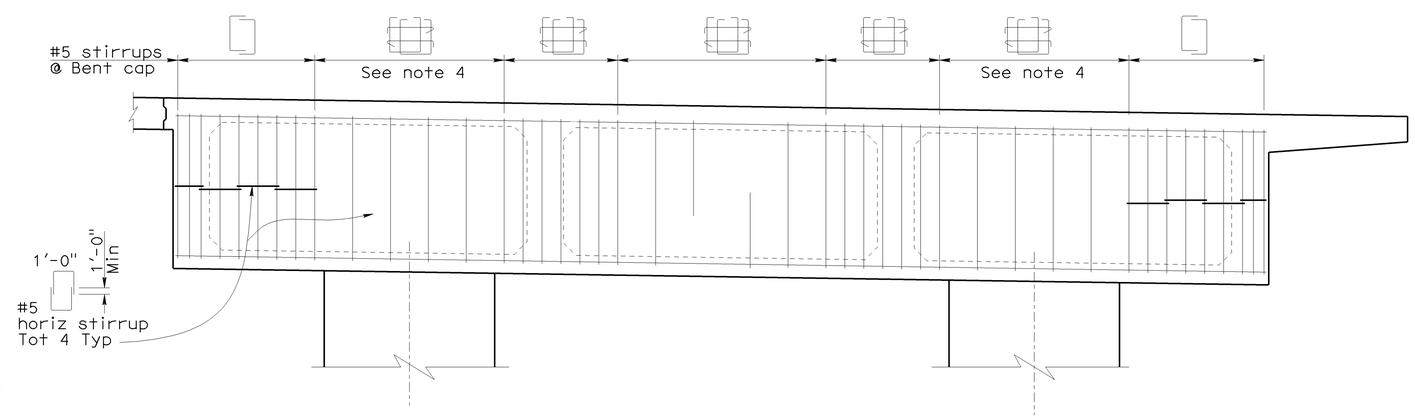

HORIZONTAL STIRRUP DETAIL
½" = 1'-0"
See note 3

NOTE:
THE CONTRACTOR SHALL VERIFY ALL CONTROLLING FIELD DIMENSIONS BEFORE ORDERING OR FABRICATING ANY MATERIAL.

	BY	CHECKED
DESIGN	J. Lee	G. Slocum
DETAILS	C. Figuerres	G. Slocum
QUANTITIES	J. Lynch	G. Zuniga

STATE OF CALIFORNIA
DEPARTMENT OF TRANSPORTATION

DIVISION OF ENGINEERING SERVICES
STRUCTURE DESIGN
DESIGN BRANCH 2

BRIDGE NO. 24-0120R
POST MILE 17.01

NATOMA OVERHEAD (WIDEN)
BENT DETAILS NO. 2

STRUCTURES DESIGN DETAIL SHEET (ENGLISH) (REV. 10/25/05)

ORIGINAL SCALE IN INCHES FOR REDUCED PLANS 0 1 2 3

CU 03
EA 1C12U4

DISREGARD PRINTS BEARING EARLIER REVISION DATES

REVISION DATES: 2-25-09 4-28-09 4-30-09 5-18-09 6-03-09

SHEET 12 OF 22

FILE => 24-0120r-j-bentdet02.dgn

USERNAME => trpierce DATE PLOTTED => 05-JAN-2010 TIME PLOTTED => 10:59

DIST	COUNTY	ROUTE	POST MILES TOTAL PROJECT	SHEET No	TOTAL SHEETS
03	Sac	50	R0.6/17.4	205	233

REGISTERED CIVIL ENGINEER 8-05-09 DATE

1-4-10
PLANS APPROVAL DATE

REGISTERED PROFESSIONAL ENGINEER Jiffay Lee No. 63599 Exp. 9-30-10 CIVIL STATE OF CALIFORNIA

The State of California or its officers or agents shall not be responsible for the accuracy or completeness of electronic copies of this plan sheet.

FALSEWORK RELEASE

Legend:

Limits of bridge removal

Indicates existing structure

Alternative 1:

Falsework shall be released as soon as permitted by the specifications. Closure pour shall not be placed sooner than 60 days after the falsework has been released.

Alternative 2:

Falsework shall not be released less than 28 days after the last concrete has been placed. Closure pour shall not be placed sooner than 14 days after the falsework has been released.

When Falsework Release Alternative 2 is used, camber values are 0.75 times those shown.

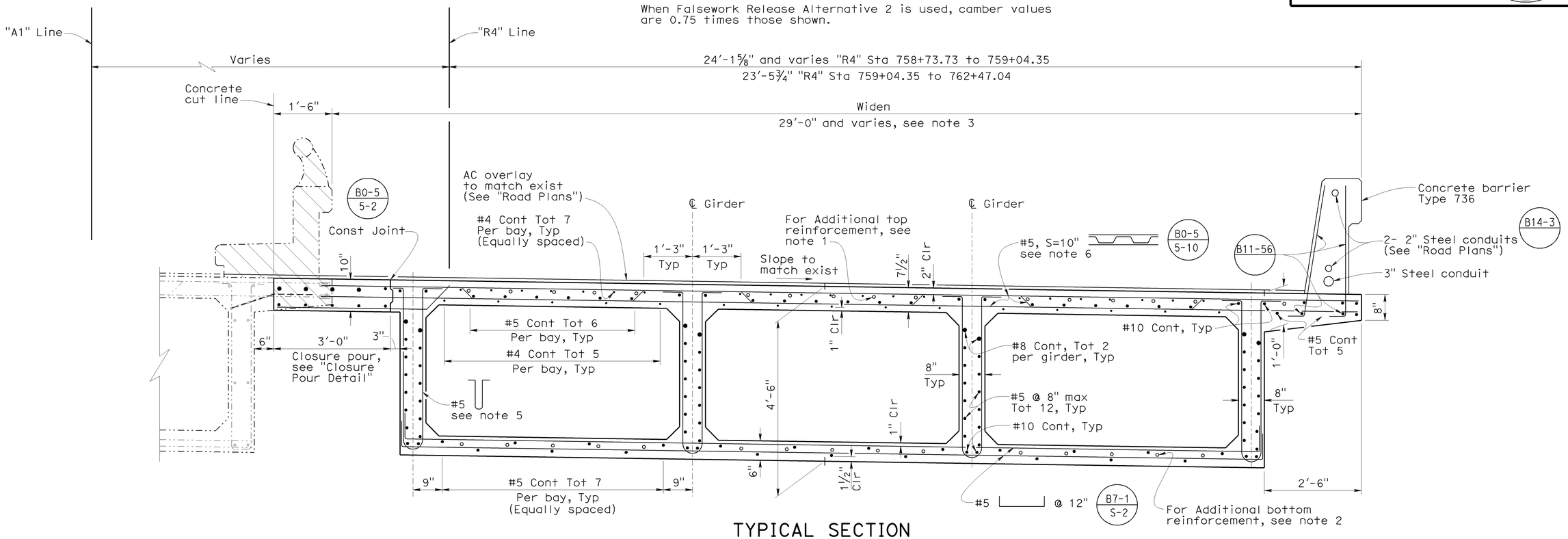

TYPICAL SECTION

¾" = 1'-0"

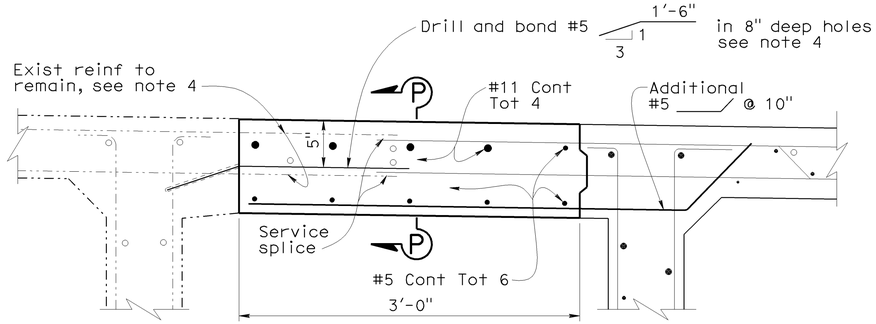

CLOSURE POUR DETAIL

1½" = 1'-0"

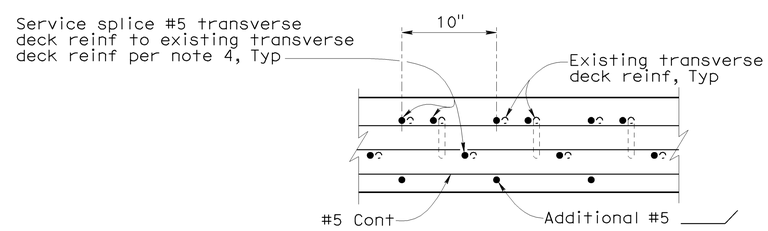

SERVICE SPLICE BAR LAYOUT

SECTION P-P

1½" = 1'-0"

Notes:

1. For Top Reinforcement, see "Girder Reinforcement Top" sheet.
2. For Bottom Reinforcement, see "Girder Reinforcement Bottom" sheet.
3. See "Girder layout" sheet.
4. Existing deck reinforcement that is to be service spliced to new deck reinforcement shall be protected during and after overhang demolition.
5. Lapped stirrups shall not be used indicated in B0-5 5-5
6. #5 bars. Place normal to and space along "A1" Line. Bars to be cut to fit and service spliced with every existing #5 except as shown on "Service Splice Bar Layout" detail.

NOTE:
THE CONTRACTOR SHALL VERIFY ALL CONTROLLING FIELD DIMENSIONS BEFORE ORDERING OR FABRICATING ANY MATERIAL.

	BY	CHECKED
DESIGN	J. Lee	G. Slocum
DETAILS	C. Figuerres	G. Slocum
QUANTITIES	J. Lynch	G. Zuniga

STATE OF CALIFORNIA DEPARTMENT OF TRANSPORTATION

DIVISION OF ENGINEERING SERVICES STRUCTURE DESIGN DESIGN BRANCH 2

BRIDGE NO. 24-0120R
POST MILE 17.01

NATOMA OVERHEAD (WIDEN)

TYPICAL SECTION

STRUCTURES DESIGN DETAIL SHEET (ENGLISH) (REV. 10/25/05)

ORIGINAL SCALE IN INCHES FOR REDUCED PLANS 0 1 2 3

CU 03
EA 1C12U4

DISREGARD PRINTS BEARING EARLIER REVISION DATES

REVISION DATES: 1-30-09 4-28-09 4-30-09 5-08-09 5-15-09 6-03-09 7-28-09 8-03-09

SHEET 13 OF 22

FILE => 24-0120r-m-ts.dgn

USERNAME => trpierce DATE PLOTTED => 05-JAN-2010 TIME PLOTTED => 10:59

DIST	COUNTY	ROUTE	POST MILES TOTAL PROJECT	SHEET No	TOTAL SHEETS
03	Sac	50	R0.6/17.4	206	233

REGISTERED CIVIL ENGINEER 8-05-09 DATE

1-4-10
PLANS APPROVAL DATE

REGISTERED PROFESSIONAL ENGINEER Jiffay Lee No. 63599 Exp. 9-30-10 CIVIL STATE OF CALIFORNIA

The State of California or its officers or agents shall not be responsible for the accuracy or completeness of electronic copies of this plan sheet.

Legend:

Indicates girder stem width, symmetrical about ℄ Bents typical at bents.

Note:

1. Place acute corner transverse deck reinf from edge of deck to back of end diaphragm.
2. Extend "top bar" per B0-5/5-10 1'-6" into end diaphragm. Stop remaining transverse reinforcement 3" from face of diaphragm.
3. #5 bars. Place normal to and space along "A1" Line. Bars to be cut to fit and service spliced with every existing #5 except as shown on "Typical Section" sheet "Service Splice Bar Layout" detail.
4. For Deck Corner Reinforcement Detail, see "Girder Details" sheet.
5. Exterior girders to be flared, as noted B7-1/S-3

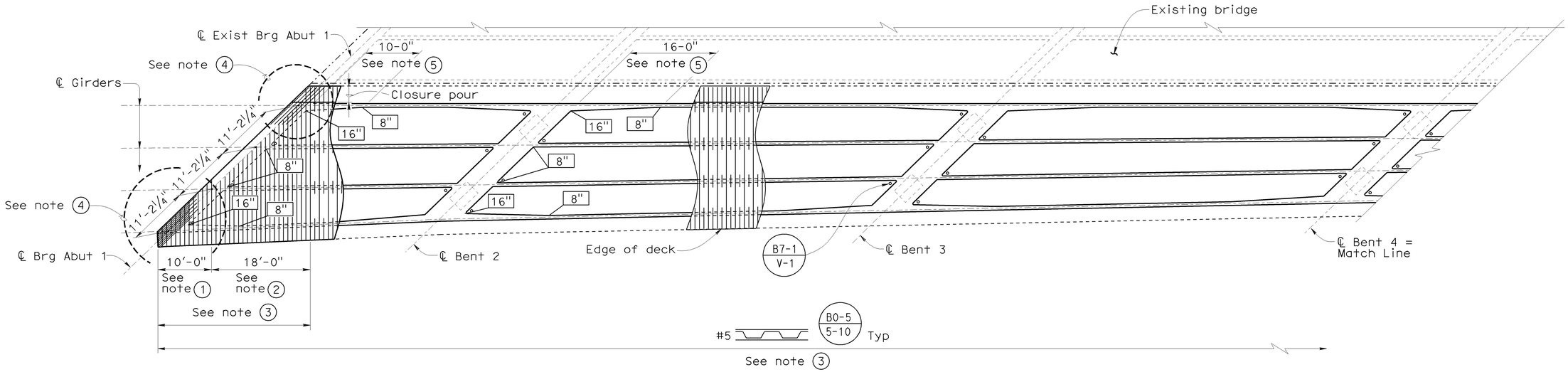

PLAN B7-1
1" = 10'

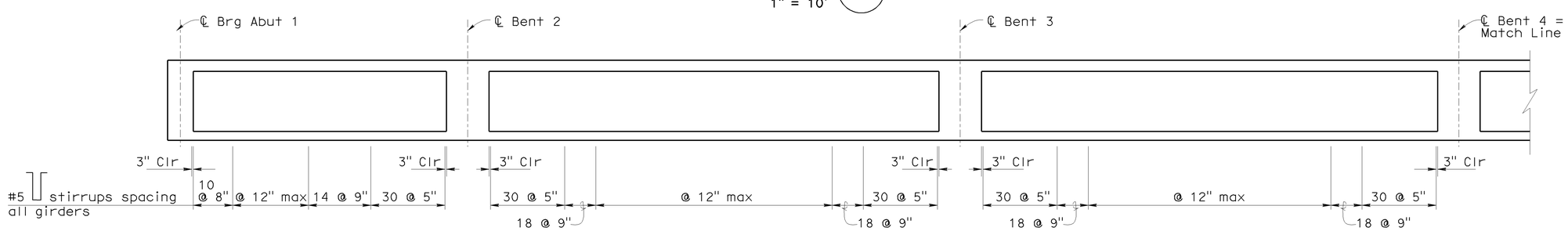

LONGITUDINAL SECTION
No Scale

NOTE:
THE CONTRACTOR SHALL VERIFY ALL CONTROLLING FIELD DIMENSIONS BEFORE ORDERING OR FABRICATING ANY MATERIAL.

	BY	CHECKED
DESIGN	J. Lee	G. Slocum
DETAILS	C. Figuerres	G. Slocum
QUANTITIES	J. Lynch	G. Zuniga

STATE OF CALIFORNIA
DEPARTMENT OF TRANSPORTATION

DIVISION OF ENGINEERING SERVICES
STRUCTURE DESIGN
DESIGN BRANCH 2

BRIDGE NO. 24-0120R
POST MILE 17.01

NATOMA OVERHEAD (WIDEN)
GIRDER LAYOUT NO. 1

STRUCTURES DESIGN DETAIL SHEET (ENGLISH) (REV. 10/25/05)

ORIGINAL SCALE IN INCHES FOR REDUCED PLANS 0 1 2 3

CU 03
EA 1C12U4

DISREGARD PRINTS BEARING EARLIER REVISION DATES

REVISION DATES: 2-08-09 4-14-09 5-04-09 5-08-09 5-14-09 6-04-09

SHEET 14 OF 22

FILE => 24-0120r-n-glo01.dgn

USERNAME => trpierce DATE PLOTTED => 05-JAN-2010 TIME PLOTTED => 10:59

DIST	COUNTY	ROUTE	POST MILES TOTAL PROJECT	SHEET No	TOTAL SHEETS
03	Sac	50	R0.6/17.4	207	233

REGISTERED CIVIL ENGINEER 8-05-09 DATE

1-4-10
PLANS APPROVAL DATE

The State of California or its officers or agents shall not be responsible for the accuracy or completeness of electronic copies of this plan sheet.

REGISTERED PROFESSIONAL ENGINEER Jiffay Lee No. 63599 Exp. 9-30-10 CIVIL STATE OF CALIFORNIA

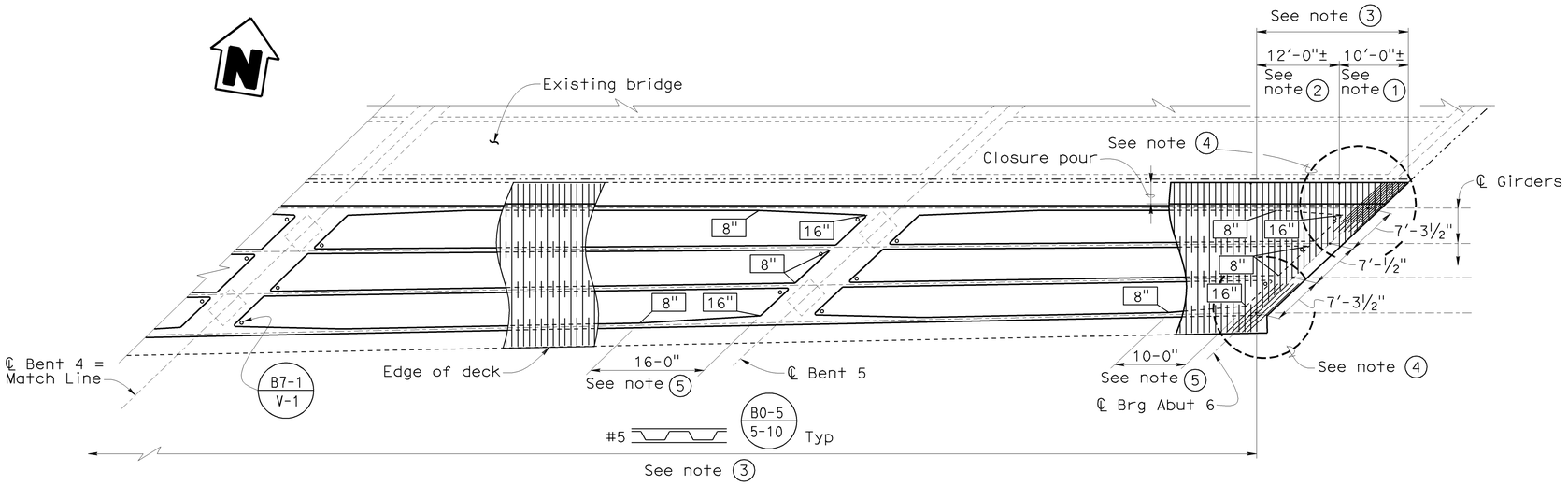

PLAN
B7-1
1" = 10'

Note:

1. Place acute corner transverse deck reinf from edge of deck to back of end diaphragm.
2. Extend "top bar" per B0-5 / 5-10 1'-6" into end diaphragm. Stop remaining transverse reinforcement 3" from face of diaphragm.
3. #5 bars. Place normal to and space along "A1" Line. Bars to be cut to fit and service spliced with every existing #5 except as shown on "Typical Section" sheet "Service Splice Bar Layout" detail.
4. For Deck Corner Reinforcement Detail, see "Girder Details" sheet.
5. Exterior girders to be flared, as noted B7-1 / S-3
6. Camber does not include allowable for falsework settlement.

Legend:

Indicates girder stem width, symmetrical about ℄ Bents typical at bents.

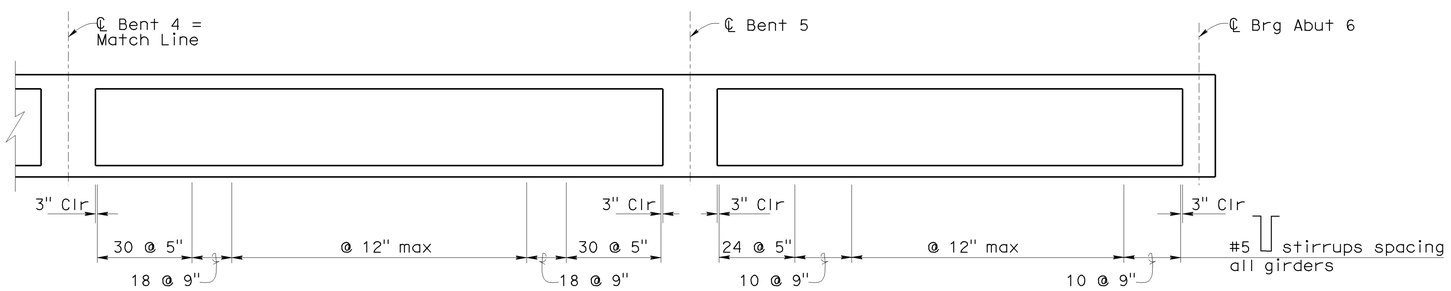

LONGITUDINAL SECTION
No Scale

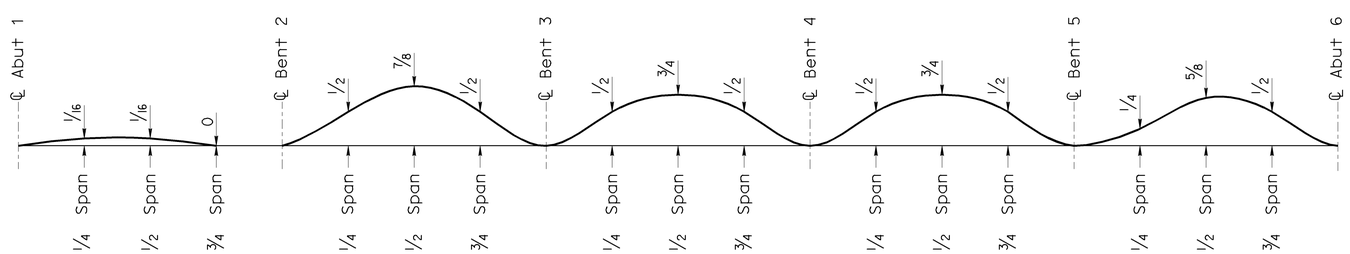

CAMBER DIAGRAM
No Scale
See note 6

NOTE:
THE CONTRACTOR SHALL VERIFY ALL CONTROLLING FIELD DIMENSIONS BEFORE ORDERING OR FABRICATING ANY MATERIAL.

	BY	CHECKED
DESIGN	J. Lee	G. Slocum
DETAILS	C. Figuerres	G. Slocum
QUANTITIES	J. Lynch	G. Zuniga

STATE OF CALIFORNIA
DEPARTMENT OF TRANSPORTATION

DIVISION OF ENGINEERING SERVICES
STRUCTURE DESIGN
DESIGN BRANCH 2

BRIDGE NO. 24-0120R
POST MILE 17.01

NATOMA OVERHEAD (WIDEN)
GIRDER LAYOUT NO. 2

STRUCTURES DESIGN DETAIL SHEET (ENGLISH) (REV. 10/25/05)

ORIGINAL SCALE IN INCHES FOR REDUCED PLANS 0 1 2 3

CU 03
EA 1C12U4

DISREGARD PRINTS BEARING EARLIER REVISION DATES

REVISION DATES: 2-08-09 5-04-09 5-06-09

SHEET 15 OF 22

FILE => 24-0120r-n-glo02.dgn

USERNAME => trpierce DATE PLOTTED => 05-JAN-2010 TIME PLOTTED => 10:59

DIST	COUNTY	ROUTE	POST MILES TOTAL PROJECT	SHEET No	TOTAL SHEETS
03	Sac	50	R0.6/17.4	208	233

REGISTERED CIVIL ENGINEER 8-05-09 DATE

1-4-10
PLANS APPROVAL DATE

REGISTERED PROFESSIONAL ENGINEER Jiffay Lee No. 63599 Exp. 9-30-10 CIVIL STATE OF CALIFORNIA

The State of California or its officers or agents shall not be responsible for the accuracy or completeness of electronic copies of this plan sheet.

Note:

1. Place acute corner transverse deck reinf from edge of deck to back of end diaphragm.
2. Extend "top bar" per B0-5 / 5-10 1'-6" into end diaphragm. Stop remaining transverse reinforcement 3" from face of diaphragm. (Only top bars shown)
3. #5 bars. Place normal to and space along "A1" Line. Bars to be cut to fit and service spliced with every existing #5 except as shown on "Typical Secion" sheet "Service Splice Bar Layout" detail.
4. #5 bars. Place normal to and space along "A1" Line. (Only top bars shown) Top and bottom bars extend to back of end diaphragm.

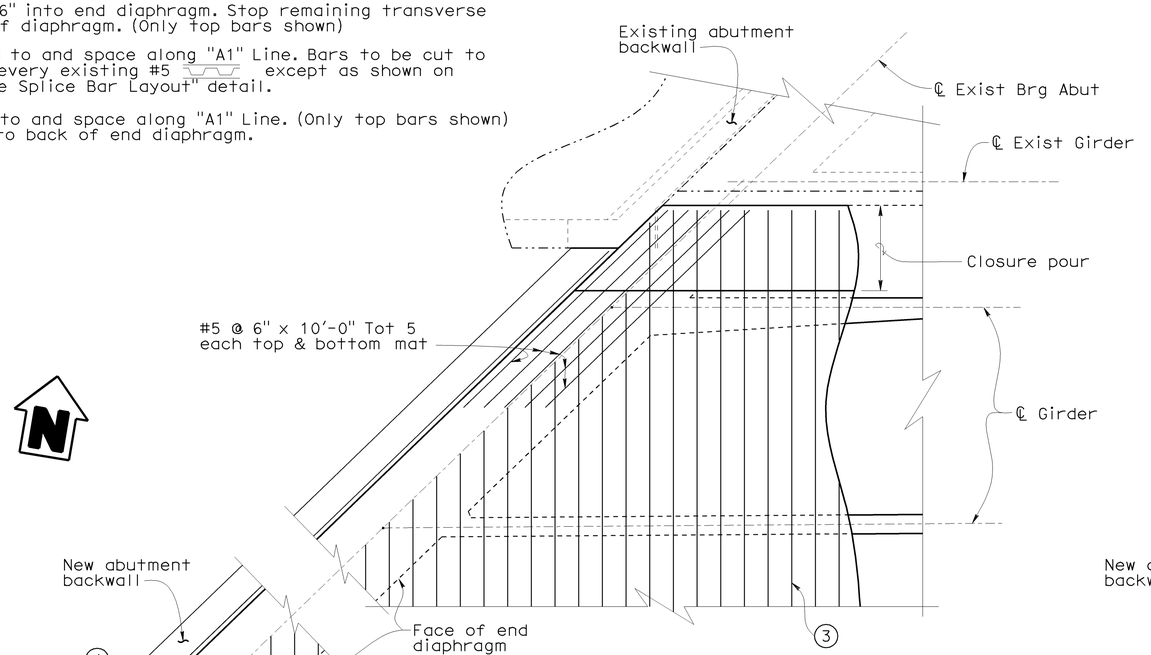

OBTUSE CORNERS (TYP)

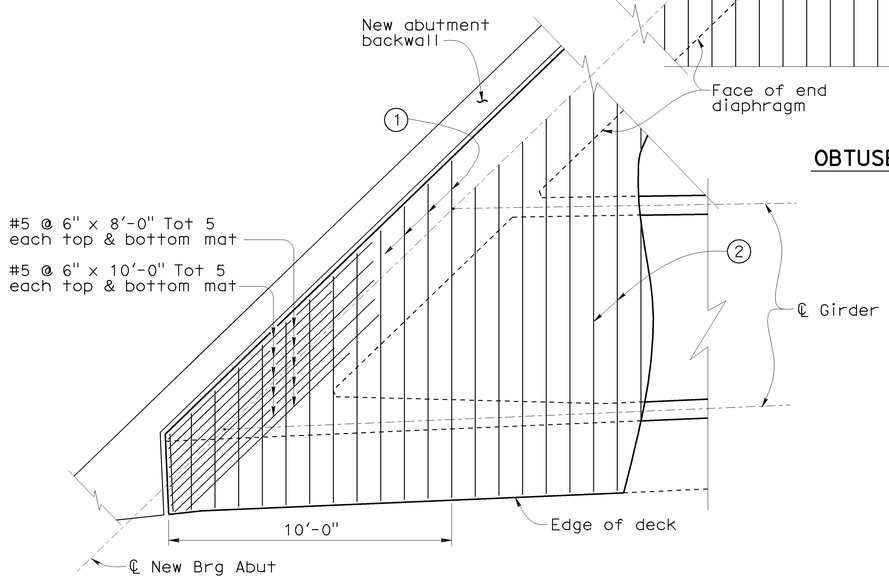

ACUTE CORNERS (TYP)

DECK CORNER REINFORCEMENT DETAIL

3/8" = 1'-0"

Abutment 1 shown, Abutment 6 similar

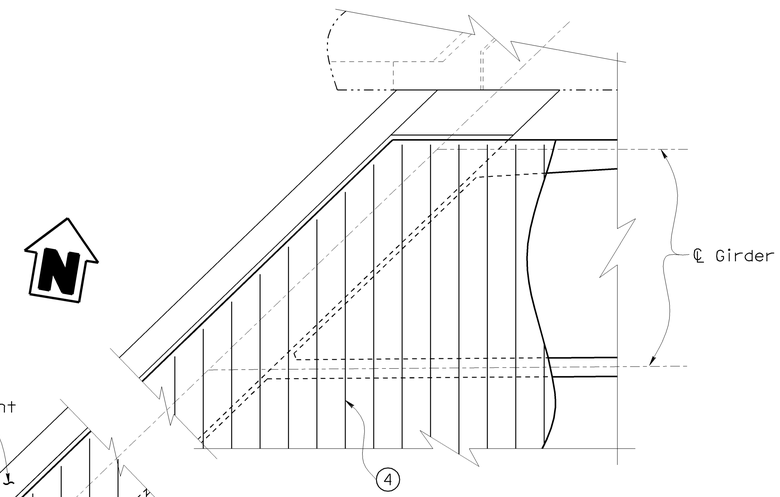

OBTUSE CORNERS (TYP)

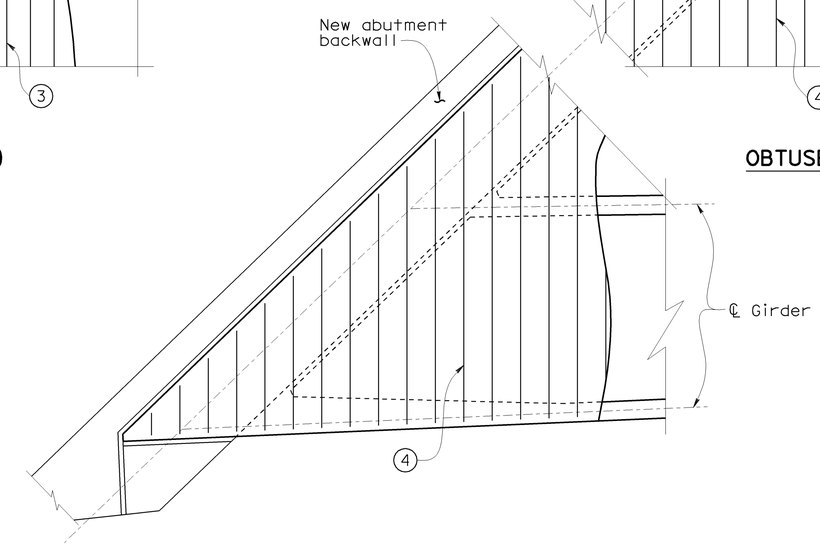

ACUTE CORNERS (TYP)

SOFFIT CORNER REINFORCEMENT DETAIL

3/8" = 1'-0"

Abutment 1 shown, Abutment 6 similar

NOTE:
THE CONTRACTOR SHALL VERIFY ALL CONTROLLING FIELD DIMENSIONS BEFORE ORDERING OR FABRICATING ANY MATERIAL.

INCOMPLETE PLAN FOR DESIGN STUDY PRINTED
DATE: 05-JAN-2010
Office of Structure Design
STATE OF CALIFORNIA

	BY	CHECKED
DESIGN	J. Lee	G. Slocum
DETAILS	C. Figuerres	G. Slocum
QUANTITIES	J. Lynch	G. Zuniga

STATE OF CALIFORNIA
DEPARTMENT OF TRANSPORTATION

DIVISION OF ENGINEERING SERVICES
STRUCTURE DESIGN
DESIGN BRANCH 2

BRIDGE NO. 24-0120R
POST MILE 17.01

NATOMA OVERHEAD (WIDEN)
GIRDER DETAILS

STRUCTURES DESIGN DETAIL SHEET (ENGLISH) (REV. 10/25/05)

ORIGINAL SCALE IN INCHES FOR REDUCED PLANS 0 1 2 3

CU 03
EA 1C12U4

DISREGARD PRINTS BEARING EARLIER REVISION DATES

REVISION DATES: 2-09-09 5-11-09 6-03-09

SHEET 16 OF 22

FILE => 24-0120r-o-gdet01.dgn

USERNAME => trpierce DATE PLOTTED => 05-JAN-2010 TIME PLOTTED => 10:59

DIST	COUNTY	ROUTE	POST MILES TOTAL PROJECT	SHEET No	TOTAL SHEETS
03	Sac	50	R0.6/17.4	209	233

REGISTERED CIVIL ENGINEER 8-05-09 DATE

1-4-10
PLANS APPROVAL DATE

REGISTERED PROFESSIONAL ENGINEER Jiffay Lee No. 63599 Exp. 9-30-10 CIVIL STATE OF CALIFORNIA

The State of California or its officers or agents shall not be responsible for the accuracy or completeness of electronic copies of this plan sheet.

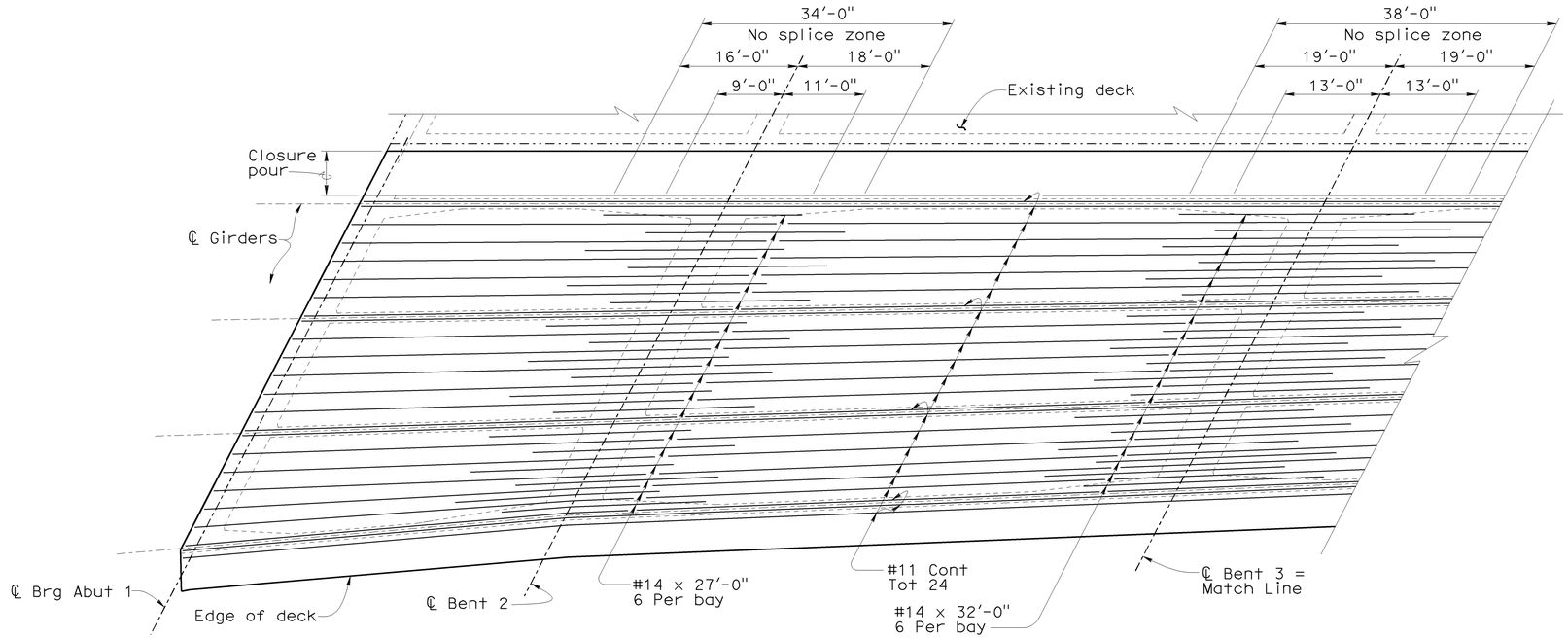

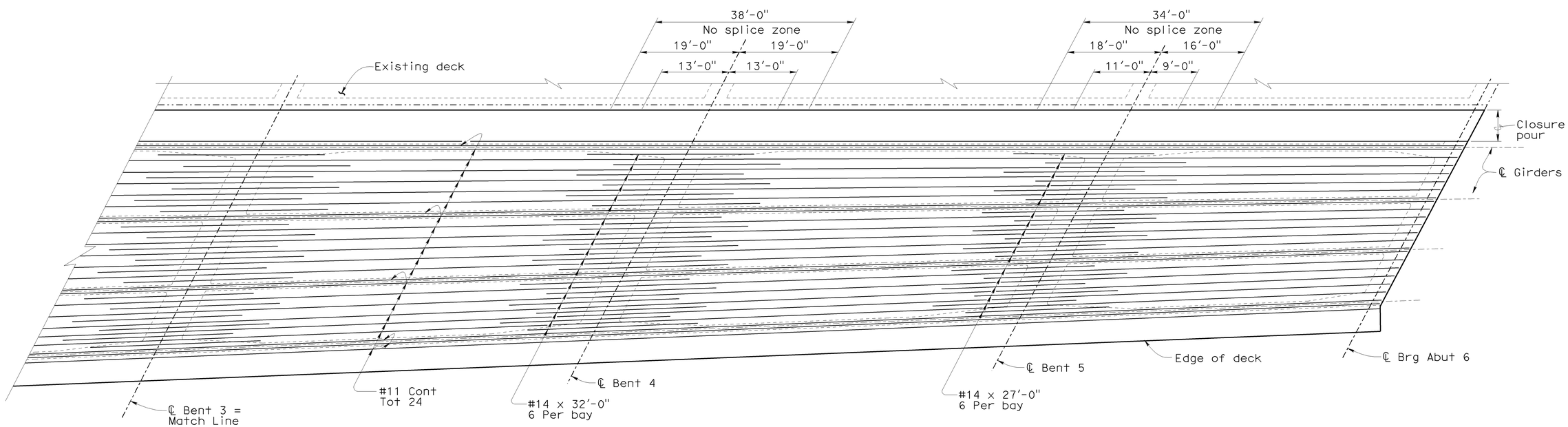

TOP REINFORCEMENT

No Scale

NOTE:
THE CONTRACTOR SHALL VERIFY ALL CONTROLLING FIELD DIMENSIONS BEFORE ORDERING OR FABRICATING ANY MATERIAL.

	BY	CHECKED
DESIGN	J. Lee	G. Slocum
DETAILS	C. Figuerres	G. Slocum
QUANTITIES	J. Lynch	G. Zuniga

STATE OF CALIFORNIA
DEPARTMENT OF TRANSPORTATION

DIVISION OF ENGINEERING SERVICES
STRUCTURE DESIGN
DESIGN BRANCH 2

BRIDGE NO. 24-0120R
POST MILE 17.01

NATOMA OVERHEAD (WIDEN)
GIRDER REINFORCEMENT TOP

STRUCTURES DESIGN DETAIL SHEET (ENGLISH) (REV. 10/25/05)

ORIGINAL SCALE IN INCHES FOR REDUCED PLANS 0 1 2 3

CU 03
EA 1C12U4

DISREGARD PRINTS BEARING EARLIER REVISION DATES

REVISION DATES: 2-26-09 4-28-09 5-04-09 5-12-09

SHEET 17 OF 22

FILE => 24-0120r-q-greinf01.dgn

USERNAME => trpierce DATE PLOTTED => 05-JAN-2010 TIME PLOTTED => 10:59

DIST	COUNTY	ROUTE	POST MILES TOTAL PROJECT	SHEET No	TOTAL SHEETS
03	Sac	50	R0.6/17.4	210	233

REGISTERED CIVIL ENGINEER 8-05-09 DATE

1-4-10
PLANS APPROVAL DATE

REGISTERED PROFESSIONAL ENGINEER
Jiffay Lee
No. 63599
Exp. 9-30-10
CIVIL
STATE OF CALIFORNIA

The State of California or its officers or agents shall not be responsible for the accuracy or completeness of electronic copies of this plan sheet.

Note:

1. Typical to Span 2, Span 3 and Span 4.

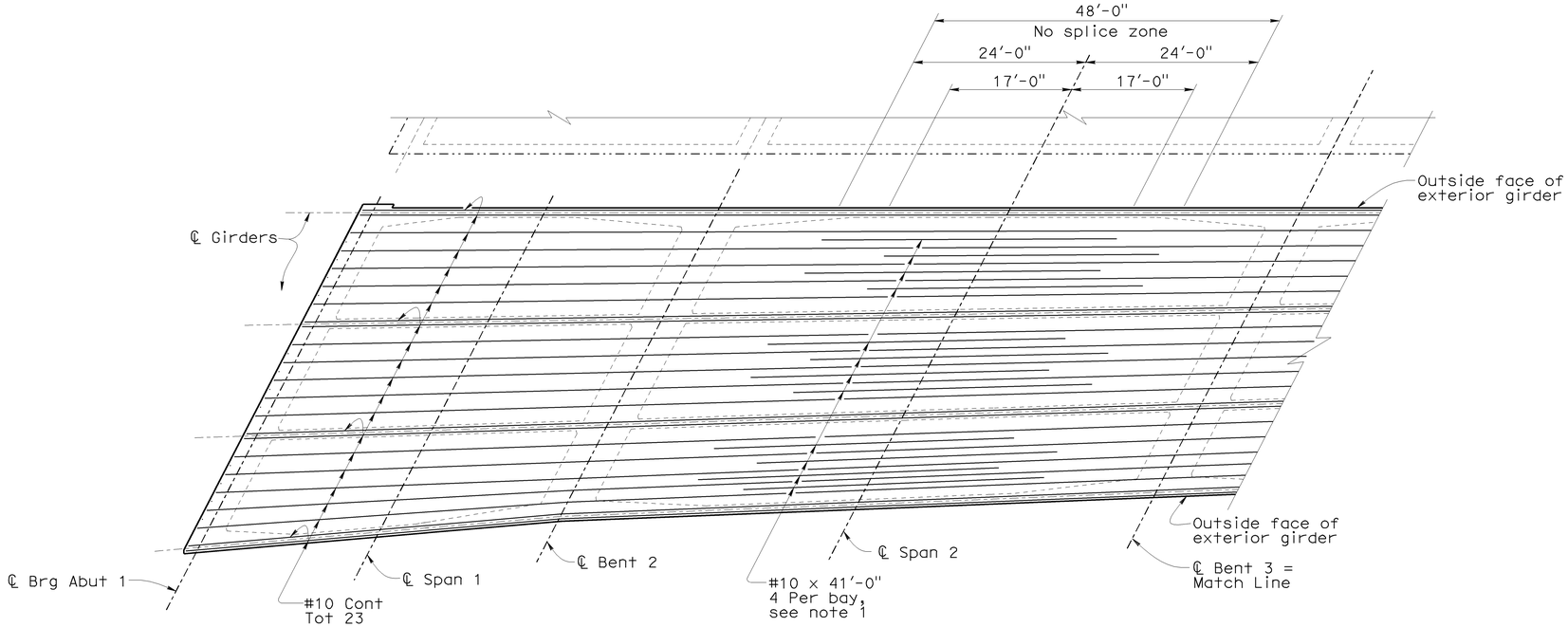

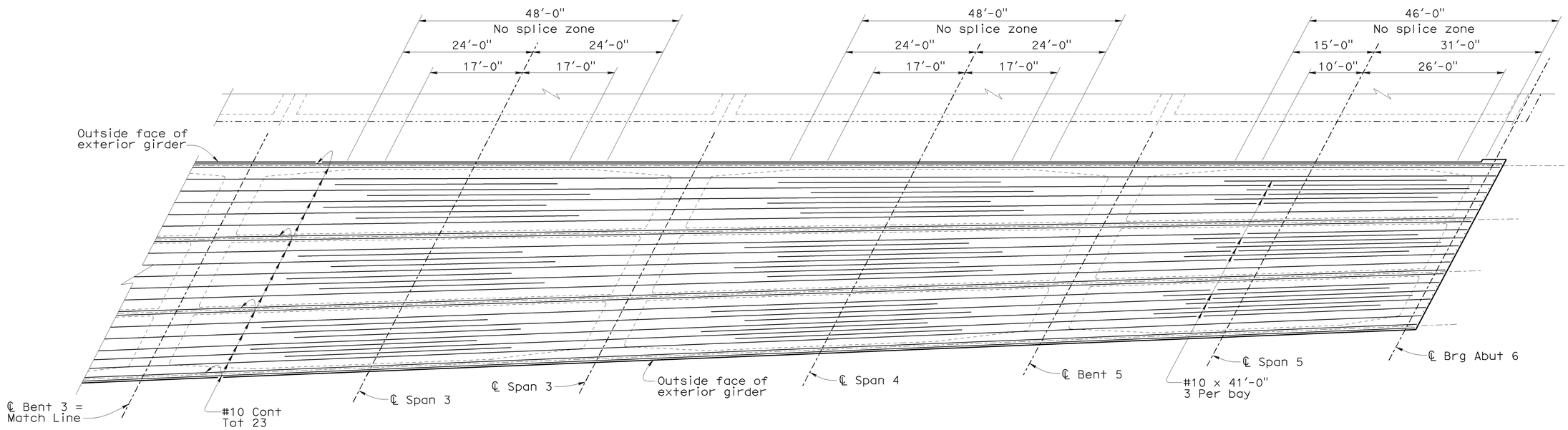

BOTTOM REINFORCEMENT

No Scale

NOTE:
THE CONTRACTOR SHALL VERIFY ALL CONTROLLING FIELD DIMENSIONS BEFORE ORDERING OR FABRICATING ANY MATERIAL.

	BY	CHECKED
DESIGN	J. Lee	G. Slocum
DETAILS	C. Figuerres	G. Slocum
QUANTITIES	J. Lynch	G. Zuniga

STATE OF CALIFORNIA
DEPARTMENT OF TRANSPORTATION

DIVISION OF ENGINEERING SERVICES
STRUCTURE DESIGN
DESIGN BRANCH 2

BRIDGE NO. 24-0120R
POST MILE 17.01

NATOMA OVERHEAD (WIDEN)
GIRDER REINFORCEMENT BOTTOM

STRUCTURES DESIGN DETAIL SHEET (ENGLISH) (REV. 10/25/05)

ORIGINAL SCALE IN INCHES FOR REDUCED PLANS 0 1 2 3

CU 03
EA 1C12U4

DISREGARD PRINTS BEARING EARLIER REVISION DATES

REVISION DATES: 2-08-09 4-28-09 5-04-09 5-12-09

SHEET 18 OF 22

FILE => 24-0120r-q-greinf02.dgn

USERNAME => trpierce DATE PLOTTED => 05-JAN-2010 TIME PLOTTED => 10:59

DIST	COUNTY	ROUTE	POST MILES TOTAL PROJECT	SHEET No	TOTAL SHEETS
03	Sac	50	R0.6/17.4	211	233

REGISTERED CIVIL ENGINEER 8-05-09 DATE

1-4-10
PLANS APPROVAL DATE

REGISTERED PROFESSIONAL ENGINEER Jiffay Lee No. 63599 Exp. 9-30-10 CIVIL STATE OF CALIFORNIA

The State of California or its officers or agents shall not be responsible for the accuracy or completeness of electronic copies of this plan sheet.

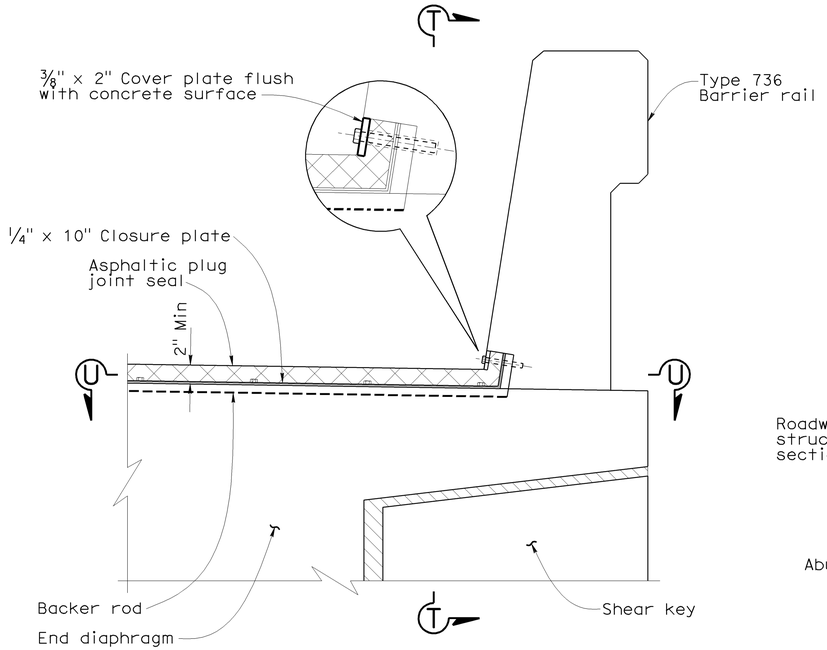

TYPICAL SECTION ASPHALTIC PLUG JOINT SEAL

1½" = 1'-0"

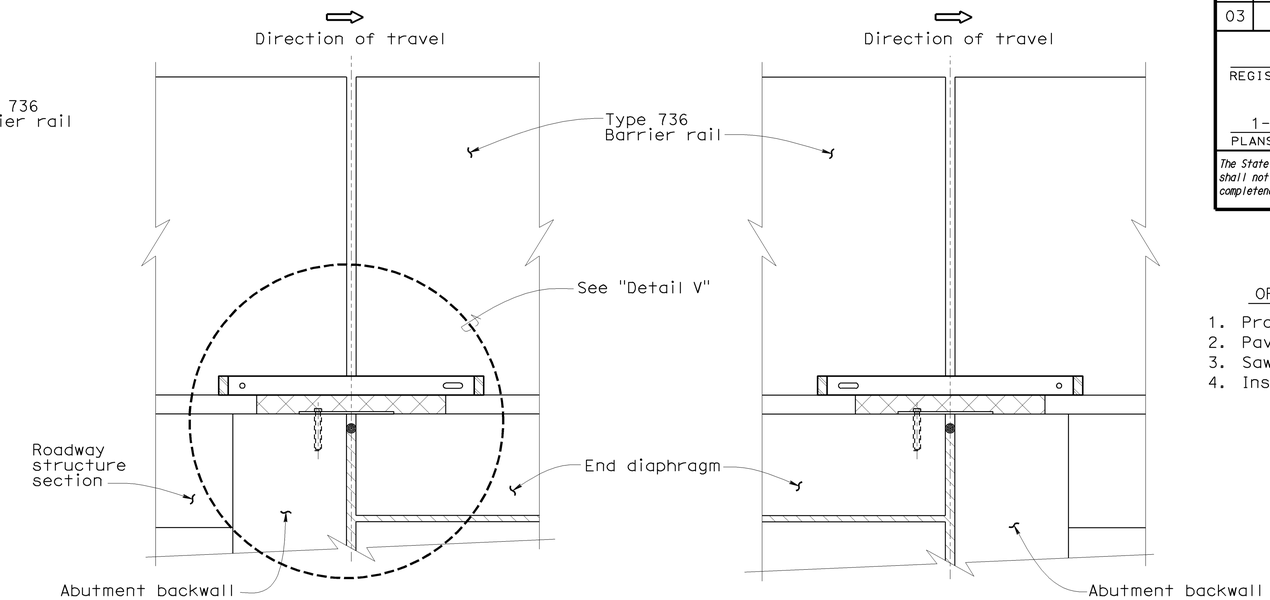

APPROACH END

DEPARTURE END

See Approach End for typical detail notes

ELEVATION T-T

1½" = 1'-0"

ORDER OF WORK

1. Protect open joint.
2. Pave bridge.
3. Sawcut AC.
4. Install asphaltic plug joint seal.

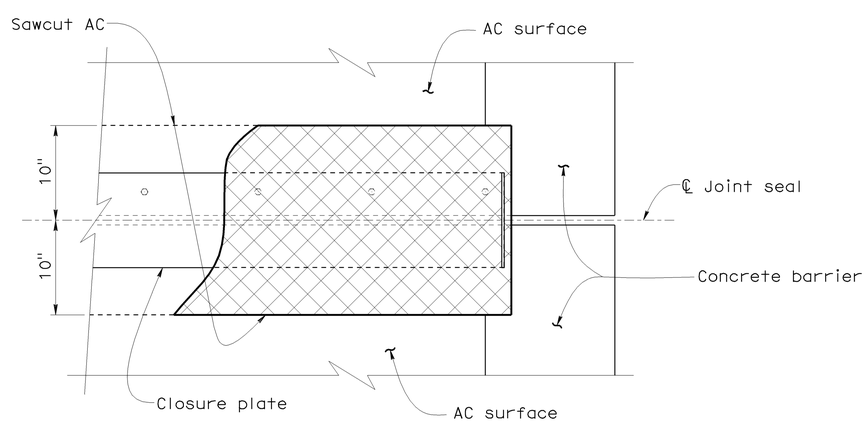

SECTION U-U

1½" = 1'-0"

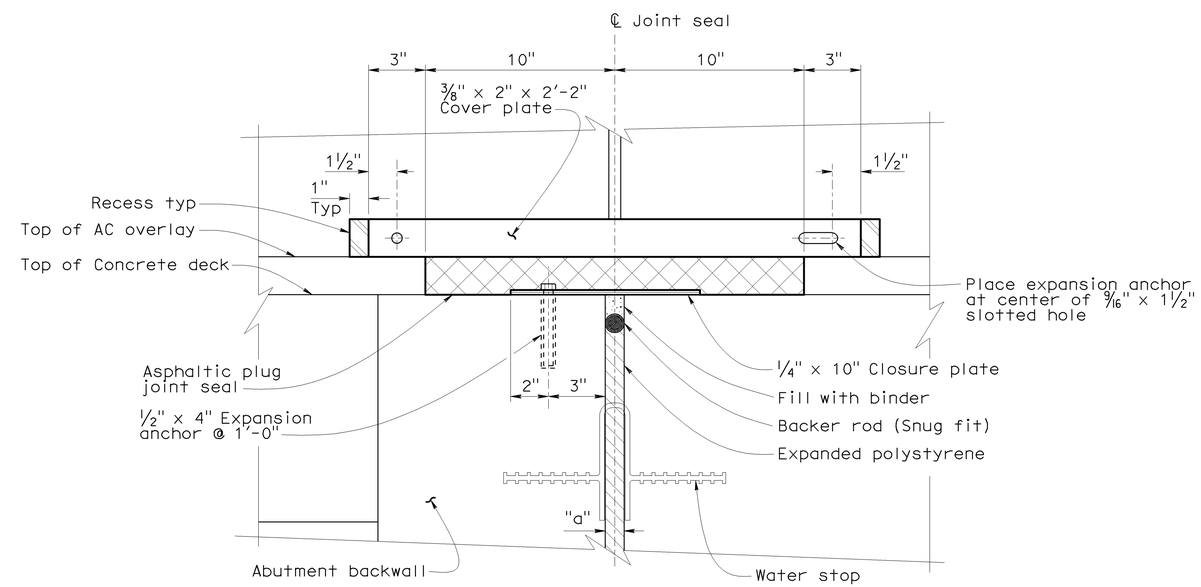

DETAIL V

3" = 1'-0"

NOTE:
THE CONTRACTOR SHALL VERIFY ALL CONTROLLING FIELD DIMENSIONS BEFORE ORDERING OR FABRICATING ANY MATERIAL.

	BY	CHECKED
DESIGN	J. Lee	G. Slocum
DETAILS	C. Figuerres	G. Slocum
QUANTITIES	J. Lynch	G. Zuniga

STATE OF CALIFORNIA
DEPARTMENT OF TRANSPORTATION

DIVISION OF ENGINEERING SERVICES
STRUCTURE DESIGN
DESIGN BRANCH 2

BRIDGE NO. 24-0120R
POST MILE 17.01

NATOMA OVERHEAD (WIDEN)
ASPHALTIC PLUG JOINT SEAL DETAILS

STRUCTURES DESIGN DETAIL SHEET (ENGLISH) (REV. 10/25/05)

ORIGINAL SCALE IN INCHES FOR REDUCED PLANS 0 1 2 3

CU 03
EA 1C12U4

DISREGARD PRINTS BEARING EARLIER REVISION DATES

REVISION DATES 5-20-09

SHEET 19 OF 22

FILE => 24-0120r-r-jntdet01.dgn

USERNAME => trpierce DATE PLOTTED => 05-JAN-2010 TIME PLOTTED => 10:59

DIST	COUNTY	ROUTE	POST MILES TOTAL PROJECT	SHEET No	TOTAL SHEETS
03	Sac	50	R0.6/17.4	212	233

REGISTERED CIVIL ENGINEER 8-05-09 DATE

1-4-10
PLANS APPROVAL DATE

REGISTERED PROFESSIONAL ENGINEER Jiffay Lee No. 63599 Exp. 9-30-10 CIVIL STATE OF CALIFORNIA

The State of California or its officers or agents shall not be responsible for the accuracy or completeness of electronic copies of this plan sheet.

Note:

B7-6

1. All deck drains are Type D-1 and all piping is NPS 6 steel pipe.
2. Deck drain piping to be supported at 10' maximum spacing, see " Drainage Pipe Support Details"

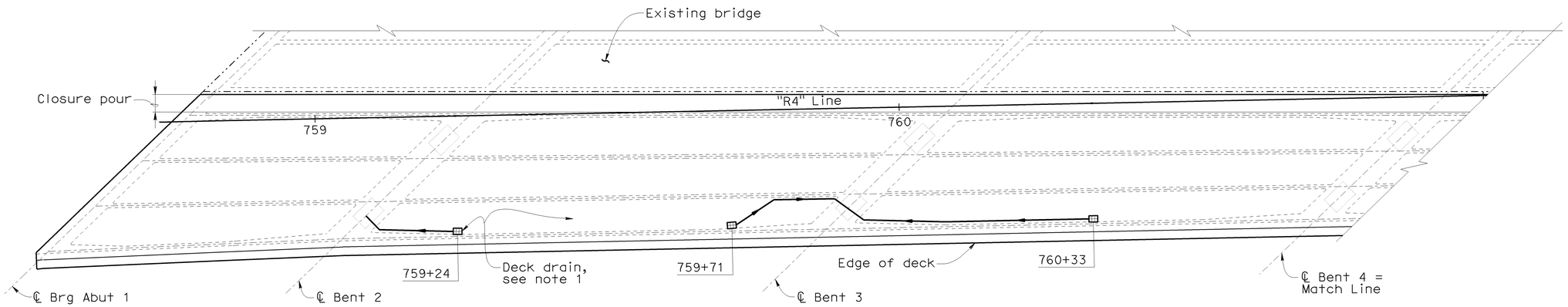

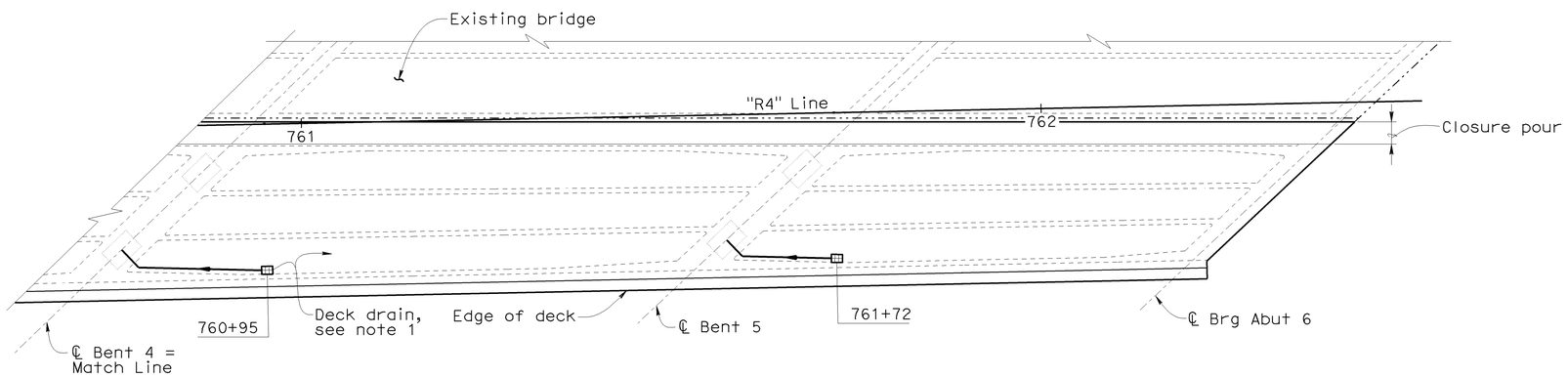

PLAN
1" = 10'

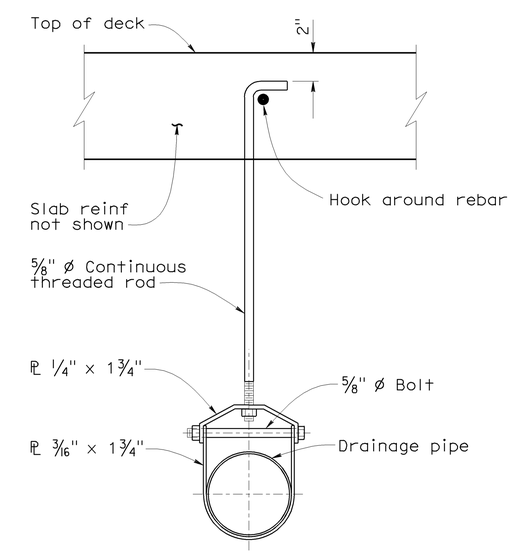

DRAINAGE PIPE SUPPORT DETAIL
No Scale

NOTE:
THE CONTRACTOR SHALL VERIFY ALL CONTROLLING FIELD DIMENSIONS BEFORE ORDERING OR FABRICATING ANY MATERIAL.

	BY	CHECKED
DESIGN	J. Lee	G. Slocum
DETAILS	C. Figuerres	G. Slocum
QUANTITIES	J. Lynch	G. Zuniga

STATE OF CALIFORNIA
DEPARTMENT OF TRANSPORTATION

DIVISION OF ENGINEERING SERVICES
STRUCTURE DESIGN
DESIGN BRANCH 2

BRIDGE NO. 24-0120R
POST MILE 17.01

NATOMA OVERHEAD (WIDEN)
DECK DRAIN DETAILS

STRUCTURES DESIGN DETAIL SHEET (ENGLISH) (REV. 10/25/05)

ORIGINAL SCALE IN INCHES FOR REDUCED PLANS 0 1 2 3

CU 03
EA 1C12U4

DISREGARD PRINTS BEARING EARLIER REVISION DATES 5-06-09 6-03-09

REVISION DATES

SHEET 20 OF 22

FILE => 24-0120r-s-ddl.dgn

USERNAME => trpierce DATE PLOTTED => 05-JAN-2010 TIME PLOTTED => 10:59

DIST.	COUNTY	ROUTE	KILOMETER POST TOTAL PROJECT	SHEET NO.	TOTAL SHEETS
03	Sac,ED	50	19.4/37.2, 0.0/1.2	582	603

Caltrans Metric

CERTIFIED ENGINEERING GEOLOGIST

11-13-00
PLANS APPROVAL DATE

REGISTERED GEOLOGIST Reid Buell No. 1481 Exp. 4-30-01 CERTIFIED ENGINEERING GEOLOGIST STATE OF CALIFORNIA

The State of California or its officers or agents shall not be responsible for the accuracy or completeness of electronic copies of this plan sheet.

Caltrans now has a web site! To get to the web site, go to: http://www.dot.ca.gov

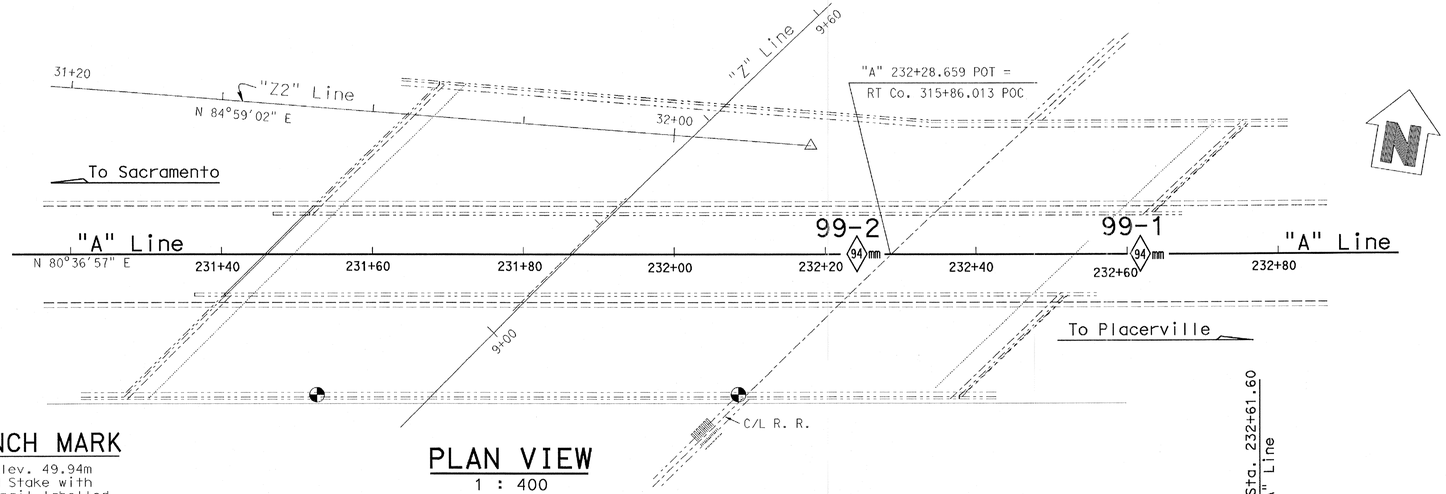

PLAN VIEW
1 : 400

BENCH MARK
BM Elev. 49.94m
Found Stake with
Pike nail labelled
RPSS -"2" 9+40.

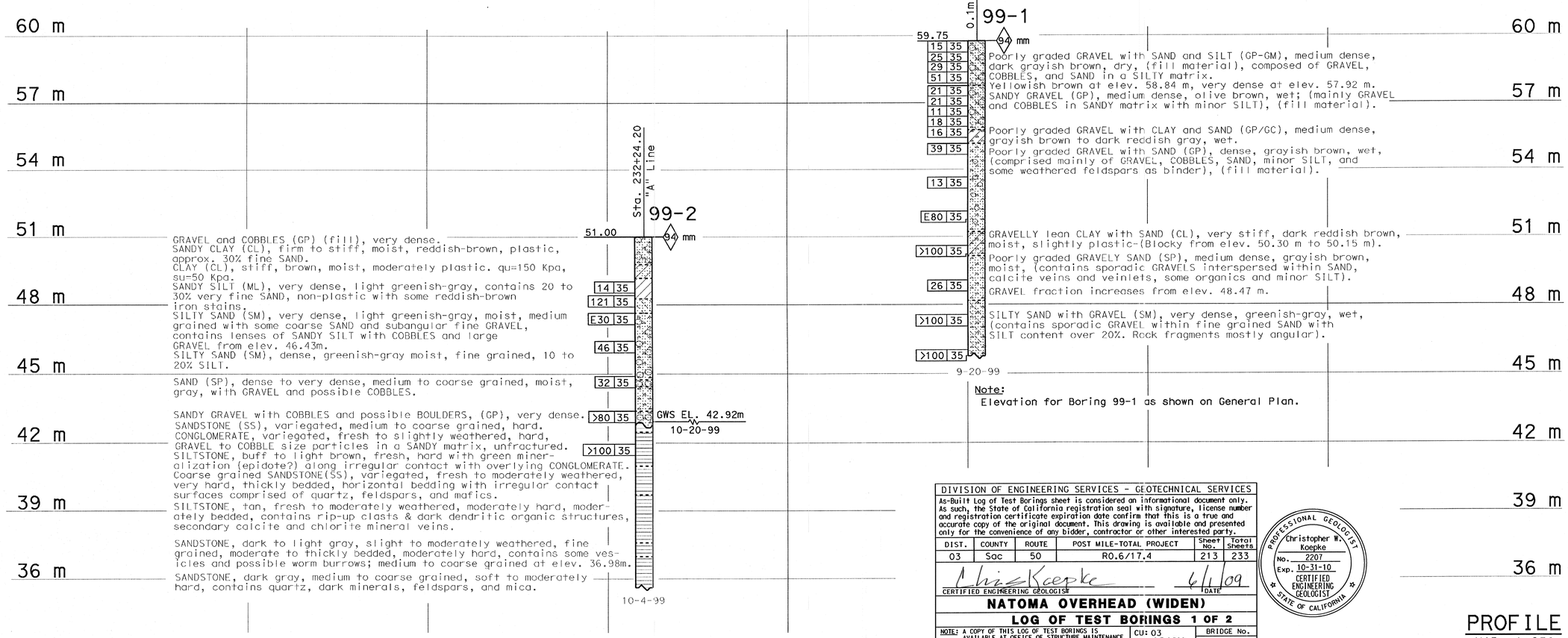

Note:
Elevation for Boring 99-1 as shown on General Plan.

NOTES:

1. Unconfined compressive strength (qu) determined in the field by "Pocket penetrometer". Units are shown in kPa.
2. Su = shear strength determined in the field using "Torvane".

DIVISION OF ENGINEERING SERVICES - GEOTECHNICAL SERVICES

As-Built Log of Test Borings sheet is considered an informational document only. As such, the State of California registration seal with signature, license number and registration certificate expiration date confirm that this is a true and accurate copy of the original document. This drawing is available and presented only for the convenience of any bidder, contractor or other interested party.

DIST.	COUNTY	ROUTE	POST MILE-TOTAL PROJECT	Sheet No.	Total Sheets
03	Sac	50	R0.6/17.4	213	233

Christopher W. Koepke
CERTIFIED ENGINEERING GEOLOGIST — DATE 6/1/09

PROFESSIONAL GEOLOGIST Christopher W. Koepke No. 2207 Exp. 10-31-10 CERTIFIED ENGINEERING GEOLOGIST STATE OF CALIFORNIA

NATOMA OVERHEAD (WIDEN)

LOG OF TEST BORINGS 1 OF 2

NOTE: A COPY OF THIS LOG OF TEST BORINGS IS AVAILABLE AT OFFICE OF STRUCTURE MAINTENANCE AND INVESTIGATIONS, SACRAMENTO, CALIFORNIA

CU: 03
EA: 1C12U

BRIDGE No. 24-0120R
Sheet 21 of 22

To accompany plans dated 1-4-10

PROFILE
HOR. 1:250
VER. 1:100

NO AS BUILT CORRECTIONS

CORRECTIONS TRANSFERED BY: SAM
FIELD CORRECTIONS BY: Scott A. Mawhinney
TRANSFER DATE: 05-02-2003
FIELD CORRECTION DATE: 05-02-2003
CONTRACT NO: 03-4416U4

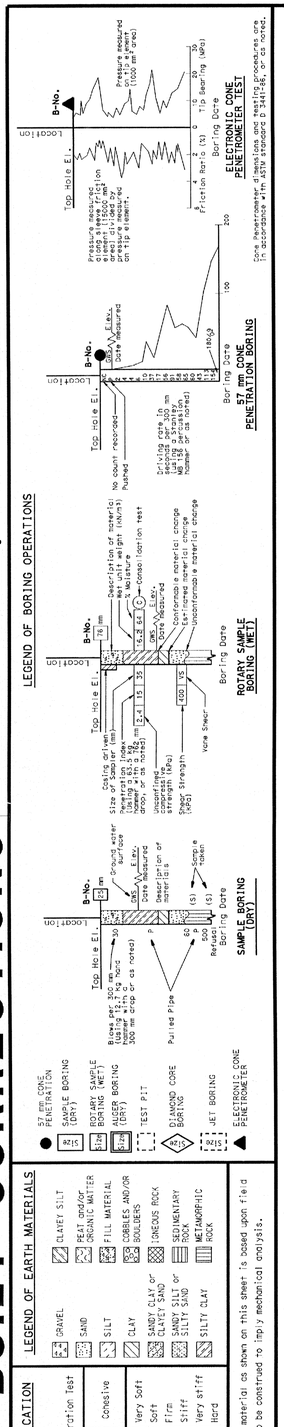

ENGINEERING SERVICE CENTER	STRUCTURE FOUNDATIONS
DRAWN BY	P. Phommachit 12/99
CHECKED BY	A. Barrie and J. Thorne 2/00

FIELD INVESTIGATION BY: A. Barrie & M. Rogers

STATE OF CALIFORNIA DEPARTMENT OF TRANSPORTATION

DIVISION OF STRUCTURES STRUCTURE DESIGN 4

BRIDGE NO. 24-0120R/L
KILOMETER POST 27.375

NATOMA OVERHEAD (WIDEN)

LOG OF TEST BORINGS 1 OF 2

CU 03
EA 4416U1

DISREGARD PRINTS BEARING EARLIER REVISION DATES

REVISION DATES (PRELIMINARY STAGE ONLY): 2-9-00, 2-14-00, 2-24-00, 5-1-00

SHEET 29 OF 30

OSF GEOLOGIST LOG OF TEST BORINGS SHEET (METRIC) (REV. 1-29-99)

ORIGINAL SCALE IN MILLIMETERS FOR REDUCED PLANS 0 10 20 30 40 50 60 70 80 90 100

FILENAME => 24-0120r-t-ltb01.tif

TIME PLOTTED => 17:10
DATE PLOTTED => 19-MAY-2004
USERNAME => jthorne

DIST	COUNTY	ROUTE	SECTION	SHEET No.	TOTAL SHEETS
III	Sac	11	B		

BRIDGE ENGINEER — CIVIL ENGINEER — LICENSE 5555

DATE APPROVED

FED. ROAD DIV. No.	STATE	PROJ. No.	FISCAL YEAR	SHEET No.	TOTAL SHEETS
7	CAL.				

Design Pile Loading: 45 Tons
Pile Type: Union Metal (Fluted)
Diameter: Tip = 8" Butt = 15"
Total Number Piles: 61
Lineal Ft. Piles; "As Built": 1553
Lineal Ft. Piles: called for on plans: 1600
Hammer: Vulcan 65C (modified)

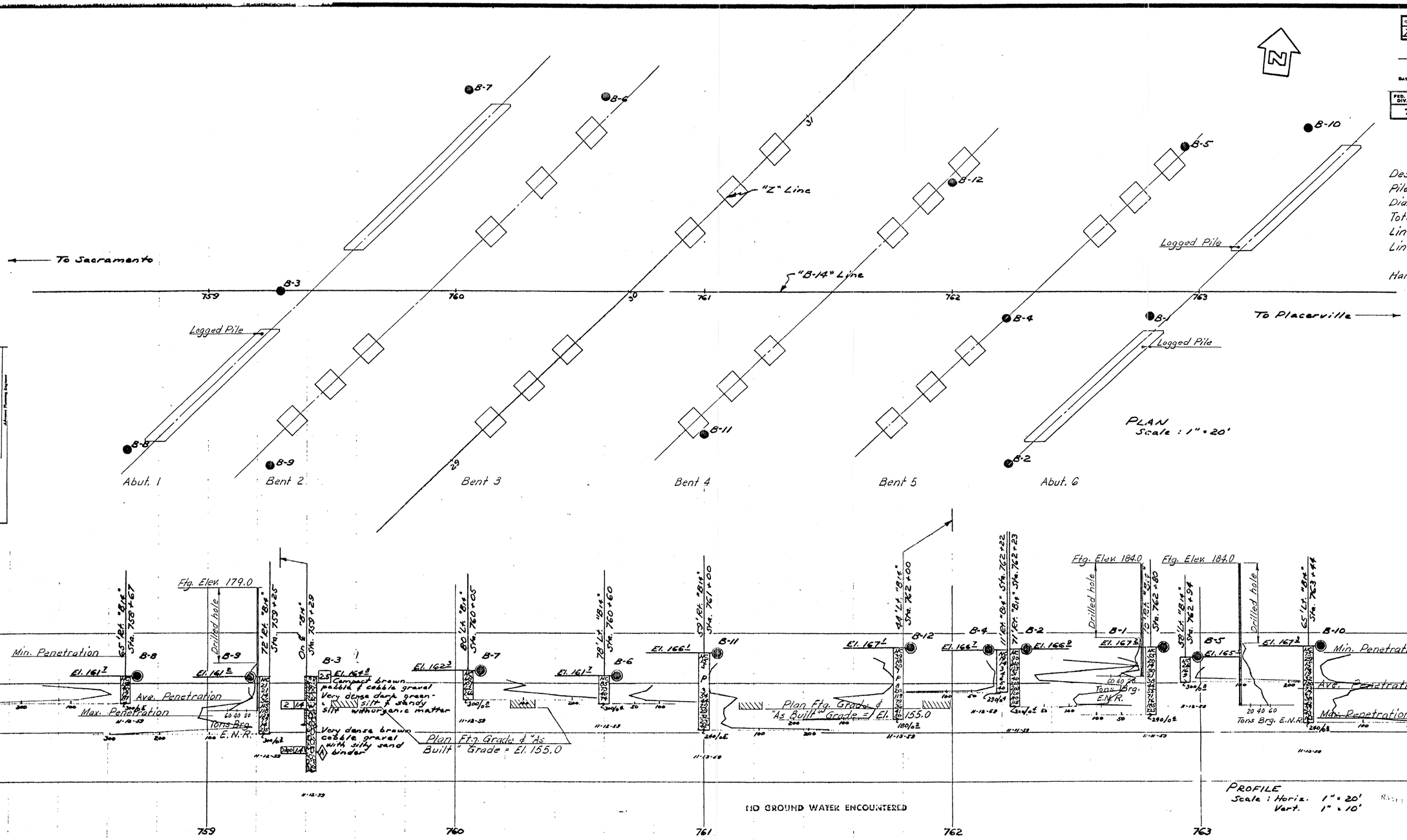

FIELD STUDY	T. Nelson	11-59
DRAWN	M. Hearst	11-59
CHECKED	J. Pell	12-59

Approved & recommended by — Engineering Geologist — Advance Planning Engineer

CLASSIFICATION OF MATERIAL BASED ON STANDARD GRADE SIZE LIMITS

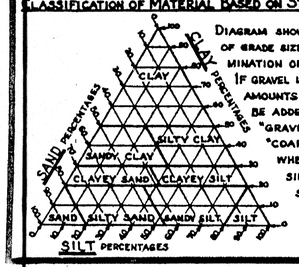

DIAGRAM SHOWING THE BASIS FOR ESTIMATES OF GRADE SIZE DISTRIBUTION USED IN DETERMINATION OF CLASS NAMES.
IF GRAVEL IS PRESENT IN APPRECIABLE AMOUNTS THE TERM "GRAVELLY" MAY BE ADDED TO THE CLASS NAME, VIZ. "GRAVELLY SAND." THE TERMS "COARSE", "MEDIUM" AND "FINE" WHEN USED TO DESCRIBE SAND, SILT AND GRAVEL REFER TO STANDARD GRADE SIZE LIMITS.

LEGEND OF EARTH MATERIALS

- GRAVEL
- SAND
- SILT
- CLAY
- SANDY CLAY OR CLAYEY SAND
- SANDY SILT OR SILTY SAND
- SILTY CLAY OR CLAYEY SILT
- PEAT AND/OR ORGANIC MATTER
- FILL MATERIAL
- IGNEOUS ROCK
- SEDIMENTARY ROCK
- METAMORPHIC ROCK

LEGEND OF

- PLAN OF ANY BORING
- PENETROMETER
- 2¼" CONE PENETROMETER
- SAMPLER BORING (DRY)
- ROTARY BORING (WET)
- AUGER BORING (DRY)
- JET BORING
- CORE BORING
- TEST PIT

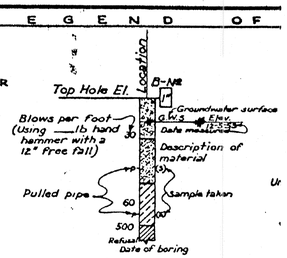

1" SOIL TUBE

DIVISION OF ENGINEERING SERVICES - GEOTECHNICAL SERVICES

As-Built Log of Test Borings sheet is considered an informational document only. As such, the State of California registration seal with signature, license number and registration certificate expiration date confirm that this is a true and accurate copy of the original document. This drawing is available and presented only for the convenience of any bidder, contractor or other interested party.

DIST.	COUNTY	ROUTE	POST MILE-TOTAL PROJECT	Sheet No.	Total Sheets
03	Sac	50	R0.6/17.4	214	233

Christopher W. Koepke — 6/1/09
CERTIFIED ENGINEERING GEOLOGIST — DATE

PROFESSIONAL GEOLOGIST — Christopher W. Koepke — No. 2207 — Exp. 10-31-10 — CERTIFIED ENGINEERING GEOLOGIST — STATE OF CALIFORNIA

NATOMA OVERHEAD (WIDEN)

LOG OF TEST BORINGS 2 OF 2

NOTE: A COPY OF THIS LOG OF TEST BORINGS IS AVAILABLE AT OFFICE OF STRUCTURE MAINTENANCE AND INVESTIGATIONS, SACRAMENTO, CALIFORNIA

CU: 03
EA: 1C12U

BRIDGE No.	
24-0120R	
Sheet	of
22	22

To accompany plans dated 1-4-10

NOTES

[redacted]

Classification of earth material as shown on this sheet is based upon field inspection and is not to be construed to imply mechanical analysis.

STATE OF CALIFORNIA
DEPARTMENT OF PUBLIC WORKS
DIVISION OF HIGHWAYS

NATOMA OVERHEAD

LOG OF TEST BORINGS

SCALE	BRIDGE	FILE	DRAWING	SHEET	OF
As Noted	24-120 R/L			30	30

FILENAME => 24-0120r-t-ltb02.tif

PR-6591-5

DIST	COUNTY	ROUTE	POST MILES TOTAL PROJECT	SHEET No	TOTAL SHEETS
03	Sac	50	R0.6/17.4	215	233

REGISTERED CIVIL ENGINEER — DATE 8-6-09

1-4-10
PLANS APPROVAL DATE

REGISTERED PROFESSIONAL ENGINEER — Ali Asnaashari — No. 36092 — Exp. 6-30-10 — CIVIL — STATE OF CALIFORNIA

The State of California or its officers or agents shall not be responsible for the accuracy or completeness of electronic copies of this plan sheet.

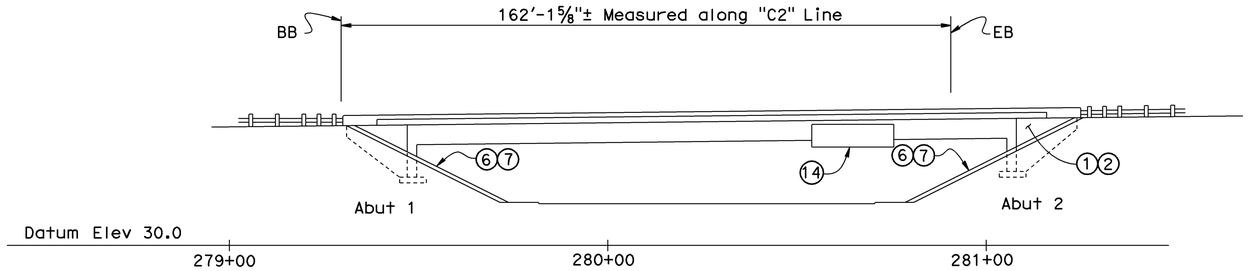

ELEVATION

1" = 20'

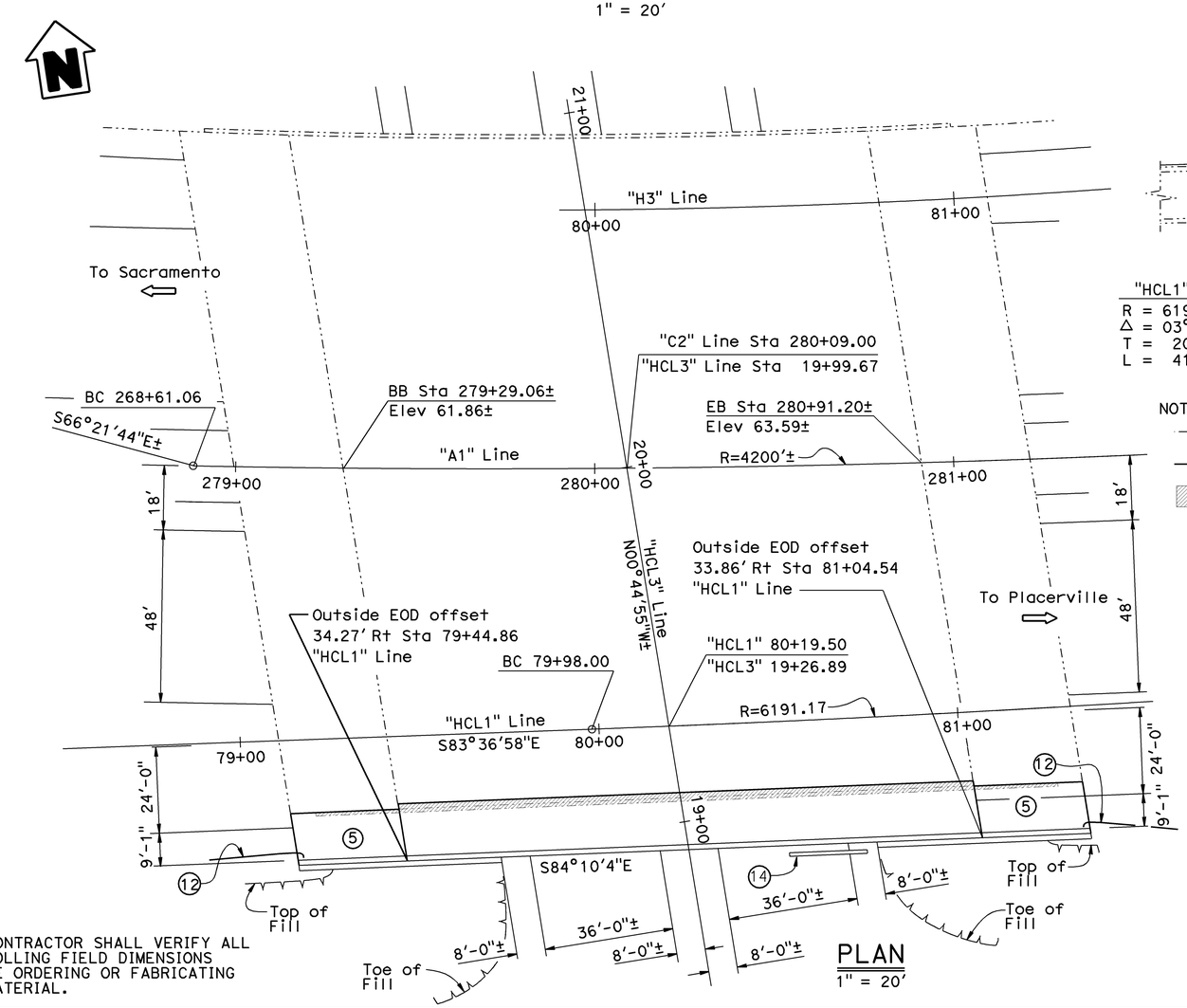

PLAN

1" = 20'

NOTE:
THE CONTRACTOR SHALL VERIFY ALL CONTROLLING FIELD DIMENSIONS BEFORE ORDERING OR FABRICATING ANY MATERIAL.

"HCL1" Line	"C2" Line
R = 6191.17'	R = 4200'
Δ = 03°50'12"	Δ = 40°03'14"
T = 207.37'	T = 1530.91'
L = 414.58'	L = 2936.10'

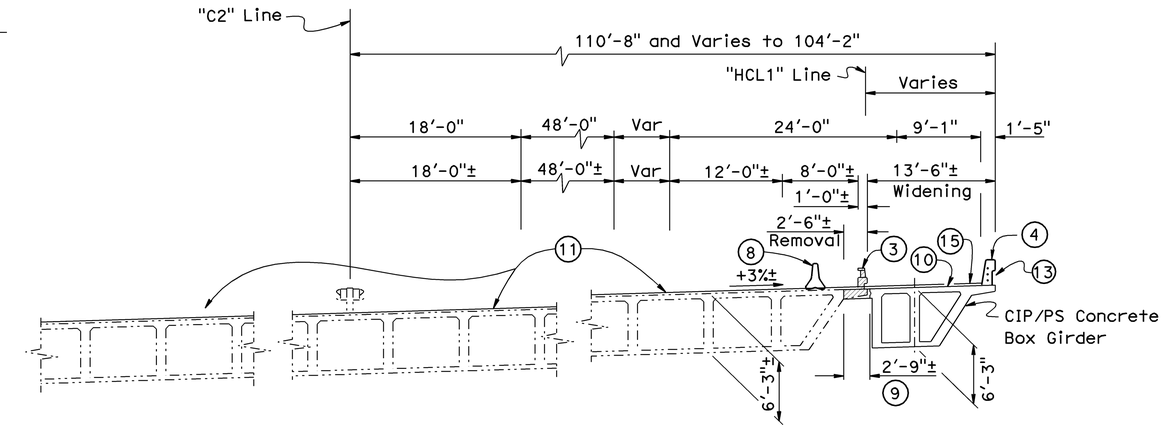

TYPICAL SECTION

⅛" = 1'-0"

NOTES:

- Indicates Existing Structure
- Indicates New Structure
- Indicates Concrete Removal

1. Paint "65TH STREET UC"
2. Paint "Br No. 24-0318"
3. Existing Concrete Barrier Type 9 to be removed, salvage metal rail
4. Concrete Barrier Type 732
5. New Structure Approach Type N(30D)
6. Existing Slope Paving
7. New Slope Paving
8. Temporary Railing (Type K), see "ROAD PLANS"
9. Closure Pour
10. Match existing grade
11. Remove existing chip seal and replace it with Methacrylate seal
12. MBGR, see "ROAD PLANS"
13. Three 2" ø Electrical Conduit, See "ROAD PLANS"
14. Remove and replace bridge mounted sign, See "ROAD PLANS"
15. Methacrylate Seal

For "GENERAL NOTES" and "INDEX TO PLANS", see "INDEX TO PLANS" sheet

QUANTITIES

REMOVE CHIP SEAL CONTRAST TREATMENT	30,430	SQFT
CLEAN BRIDGE DECK	35,400	SQFT
BRIDGE REMOVAL (PORTION), LOCATION A	LUMP	SUM
STRUCTURE EXCAVATION (BRIDGE)	133	CY
STRUCTURE BACKFILL (BRIDGE)	87	CY
PRESTRESSING CAST-IN-PLACE CONCRETE	LUMP	SUM
STRUCTURAL CONCRETE, BRIDGE FOOTING	14	CY
STRUCTURAL CONCRETE, BRIDGE	251	CY
STRUCTURAL CONCRETE, APPROACH SLAB (TYPE N)	15	CY
DRILL AND BOND DOWEL	27	LF
JOINT SEAL (MR 1")	33	LF
BAR REINFORCING STEEL (BRIDGE)	63,612	LB
TREAT BRIDGE DECK	35,400	SQFT
FURNISH BRIDGE DECK TREATMENT MATERIAL	391	GAL
SLOPE PAVING (CONCRETE)	5	CY
CONCRETE BARRIER (TYPE 732)	210	LF

Joseph E Downing
DESIGN ENGINEER

	BY	CHECKED
DESIGN	Quang H Nguyen	Sharon Yen
DETAILS	Janie Chlubna	Sharon Yen
QUANTITIES	Mufeed Khalaf	Ashraf Ahmed

LOAD & RESISTANCE FACTOR DESIGN — LIVE LOADING: HL93 W/"LOW-BOY"; PERMIT DESIGN VEHICLE

	BY	CHECKED
LAYOUT	Quang H Nguyen	Sharon Yen
SPECIFICATIONS	Dave Klein	PLANS AND SPECS COMPARED Dave Klein

ORIGINAL SCALE IN INCHES FOR REDUCED PLANS 0 1 2 3

STATE OF CALIFORNIA
DEPARTMENT OF TRANSPORTATION

DIVISION OF ENGINEERING SERVICES
STRUCTURE DESIGN
DESIGN BRANCH 3

CU 03263
EA 1C12U1

BRIDGE NO. 24-0318
POST MILE 2.61

65TH STREET UNDERCROSSING (WIDEN)
GENERAL PLAN

DISREGARD PRINTS BEARING EARLIER REVISION DATES

REVISION DATES: 4-30-09 | 6-12-09 | 8-5-09 | 2-25-09 | 3-3-09 | 3-4-09 | 3-5-09 | 4-9-09 | 4-28-09

SHEET 1 OF 19

STRUCTURES DESIGN GENERAL PLAN SHEET (ENGLISH) (REV.07-24-06)

FILE => 24-0318-a-gp.dgn

USERNAME => rtimrikes1 DATE PLOTTED => 07-JAN-2010 TIME PLOTTED => 09:46

DIST	COUNTY	ROUTE	POST MILES TOTAL PROJECT	SHEET No	TOTAL SHEETS
03	Sac	50	R0.6/17.4	216	233

REGISTERED CIVIL ENGINEER 8-6-09 DATE

1-4-10
PLANS APPROVAL DATE

REGISTERED PROFESSIONAL ENGINEER Ali Asnaashari No. 36092 Exp. 6-30-10 CIVIL STATE OF CALIFORNIA

The State of California or its officers or agents shall not be responsible for the accuracy or completeness of electronic copies of this plan sheet.

SPREAD FOOTING DATA TABLE

Support Location	Working Stress Design (WSD)	
	Service Permissible Gross Contact Stress (ksf)	**Strength** Allowable Gross Bearing Capacity (ksf)
Abut 1	4.0	5.25
Abut 2	4.0	5.25

Structural Concrete, Bridge

Structural Concrete, Bridge Footing

Structural Concrete, Bridge (5,000 psi at 28 days)

CONCRETE STRENGTH AND TYPE LIMITS

No Scale

GENERAL NOTES
LOAD AND RESISTANCE FACTOR DESIGN

DESIGN:

AASHTO LRFD Bridge Design Specifications, 3rd edition with the 2005 Interims and the California Amendments v4.06.01;

SEISMIC DESIGN:

Caltrans Seismic Design Criteria (SDC), Version 1.4 dated JUNE 2006

DEAD LOAD:

Includes 35 psf for future wearing surface.

LIVE LOADING:

HL93 and permit design load.

CONCRETE:

fy = 60 ksi
f'c = 3.6 ksi (except as shown on "CONCRETE STRENGTH AND TYPE LIMITS)
n = 8
See "PRESTRESSING NOTES" on "GIRDER REINFORCEMENT" sheet

NOTE:
THE CONTRACTOR SHALL VERIFY ALL CONTROLLING FIELD DIMENSIONS BEFORE ORDERING OR FABRICATING ANY MATERIAL.

INDEX TO PLANS

SHEET NO.	TITLE
1	GENERAL PLAN
2	INDEX TO PLANS
3	FOUNDATION PLAN
4	ABUTMENT LAYOUT
5	ABUTMENT DETAILS NO. 1
6	ABUTMENT DETAILS NO. 2
7	TYPICAL SECTION
8	GIRDER LAYOUT
9	GIRDER REINFORCEMENT
10	EXISTING BRIDGE CONCRETE REMOVAL
11	DECK TREATMENT LIMITS
12	MISCELLANEOUS SLOPE PAVING NO. 1
13	MISCELLANEOUS SLOPE PAVING NO. 2
14	STRUCTURE APPROACH TYPE N(30D)
15	STRUCTURE APPROACH DRAINAGE DETAILS
16	LOG OF TEST BORINGS 1 OF 4
17	LOG OF TEST BORINGS 2 OF 4
18	LOG OF TEST BORINGS 3 OF 4
19	LOG OF TEST BORINGS 4 OF 4

STANDARD PLANS DATED MAY 2006

	A10A	ACRONYMS AND ABBREVIATIONS (SHEET 1 OF 2)
	A10B	ACRONYMS AND ABBREVIATIONS (SHEET 2 OF 2)
	A10C	SYMBOLS (SHEET 1 OF 2)
	A10D	SYMBOLS (SHEET 2 OF 2)
	A62C	LIMITS OF PAYMENT FOR EXCAVATION AND BACKFILL BRIDGE
	B0-1	BRIDGE DETAILS
	B0-5	BRIDGE DETAILS
RSP	B6-21	JOINT SEALS (MAXIMUM MOVEMENT RATING = 2")
	B7-1	BOX GIRDER DETAILS
	B8-5	CAST-IN-PLACE PRESTRESSED GIRDER DETAILS
	B11-55	CONCRETE BARRIER TYPE 732
	B14-3	COMMUNICATION AND SPRINKLER CONTROL CONDUITS (CONDUIT LESS THAN 4")

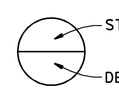

STANDARD PLAN SHEET NO.

DETAIL NO.

DESIGN	BY Quang Nguyen	CHECKED Sharon Yen	
DETAILS	BY Janie Chlubna	CHECKED Sharon Yen	
QUANTITIES	BY Mufeed Khalaf	CHECKED Ashraf Ahmed	

STATE OF CALIFORNIA
DEPARTMENT OF TRANSPORTATION

DIVISION OF ENGINEERING SERVICES
STRUCTURE DESIGN
DESIGN BRANCH 3

BRIDGE NO. 24-0318
POST MILE 2.61

65TH STREET UNDERCROSSING (WIDEN)
INDEX TO PLANS

STRUCTURES DESIGN DETAIL SHEET (ENGLISH) (REV. 10/25/05)

ORIGINAL SCALE IN INCHES FOR REDUCED PLANS 0 1 2 3

CU 03263
EA 1C12U1

DISREGARD PRINTS BEARING EARLIER REVISION DATES

REVISION DATES: 2-3-09 2-25-09 4-9-09 4-28-09 8-5-09

SHEET 2 OF 19

FILE => 24-0318-b-index.dgn

USERNAME => frestrk DATE PLOTTED => 05-JAN-2010 TIME PLOTTED => 12:33

DIST	COUNTY	ROUTE	POST MILES TOTAL PROJECT	SHEET No	TOTAL SHEETS
03	Sac	50	R0.6/17.4	217	233

REGISTERED CIVIL ENGINEER — DATE 8-6-09

1-4-10
PLANS APPROVAL DATE

REGISTERED PROFESSIONAL ENGINEER — Ali Asnaashari — No. 36092 — Exp. 6-30-10 — CIVIL — STATE OF CALIFORNIA

The State of California or its officers or agents shall not be responsible for the accuracy or completeness of electronic copies of this plan sheet.

CURVE DATA

No.	R	Δ	T	L
(A)	4200.00	40°03'14"	1530.91	2936.10
(B)	150.00	276°22'04"	134.19	723.53
(C)	6191.17	3°50'12"	207.37	414.58
(D)	100.00	90°10'20"	100.30	157.38

Soffit Elevations
Br # 24-0318
1 - 58.15
2 - 58.64
3 - 59.58

Bridge Location # 24-0318 (Calculated)
1 - 92.60 Lt. ℄ Rte.50, Sta.279+13.28, Elev. Not Calc.
2 - 93.67 Lt. ℄ Rte.50, Sta.279+45.56, Elev.=64.50 ±
3 - 94.17 Rt. ℄ Rte.50, Sta.279+45.56, Elev.=64.50 ±
4 - 88.95 Rt. ℄ Rte.50, Sta.281+02.02, Elev.=66.10 ±

SURVEY CONTROL

SUHV243181 (Not Shown On Plan)
Fnd Chiseled "X" in Conc. SW
551.50 FT Rt.℄ Rte 50
Sta. 280+38.00
N 1,962,304.99
E 6,725,263.80
Elev. = 36.15

SUH243183 (Not Shown On Plan)
Fnd Set PK Nail in AC
316.11 FT Rt.℄ Rte 50
Sta. 279+79.69
N 1,962,547.03
E 6,725,232.78
Elev. = 37.00

NOTE:
THE CONTRACTOR SHALL VERIFY ALL CONTROLLING FIELD DIMENSIONS BEFORE ORDERING OR FABRICATING ANY MATERIAL.

NOTE:
Indicates Bottom of Footing Elevation
Utility Lines Are Per District Utility Plan

PRELIMINARY INVESTIGATION SECTION

SCALE	VERT.DATUM NGVD29	PHOTOGRAMMETRY AS OF: X			
1"=20'	HORZ.DATUM NAD83 (92)	SURVEYED	BY District	CHECKED	BY C.Fassett 03/2009
ALIGNMENT TIES Dist.Traverse Sheet		DRAFTED	BY J.Martinez 03/2009	CHECKED	BY S.Sou 03/2009

	BY	CHECKED
DESIGN	Quang H Nguyen	Sharon Yen
DETAILS	Janie Chlubna	Sharon Yen
QUANTITIES	Mufeed Khalaf	Ashraf Ahmed

STATE OF CALIFORNIA
DEPARTMENT OF TRANSPORTATION

DIVISION OF ENGINEERING SERVICES
STRUCTURE DESIGN
DESIGN BRANCH 3

BRIDGE NO. 24-0318
POST MILE 2.61

65TH STREET UNDERCROSSING (WIDEN)
FOUNDATION PLAN

STRUCTURES FOUNDATION PLAN SHEET (ENGLISH) (REV. 10/25/05)

ORIGINAL SCALE IN INCHES FOR REDUCED PLANS 0 1 2 3

CU 03263
EA 1C12U1

DISREGARD PRINTS BEARING EARLIER REVISION DATES

REVISION DATES: 3-4-09 3-5-09 8-5-09

SHEET 3 OF 19

FILE => 24-0318-c-fp101.dgn

USERNAME => ttrstrk DATE PLOTTED => 05-JAN-2010 TIME PLOTTED => 12:39

DIST	COUNTY	ROUTE	POST MILES TOTAL PROJECT	SHEET No	TOTAL SHEETS
03	Sac	50	R0.6/17.4	218	233

REGISTERED CIVIL ENGINEER 8-6-09 DATE

1-4-10
PLANS APPROVAL DATE

REGISTERED PROFESSIONAL ENGINEER Ali Asnaashari No. 36092 Exp. 6-30-10 CIVIL STATE OF CALIFORNIA

The State of California or its officers or agents shall not be responsible for the accuracy or completeness of electronic copies of this plan sheet.

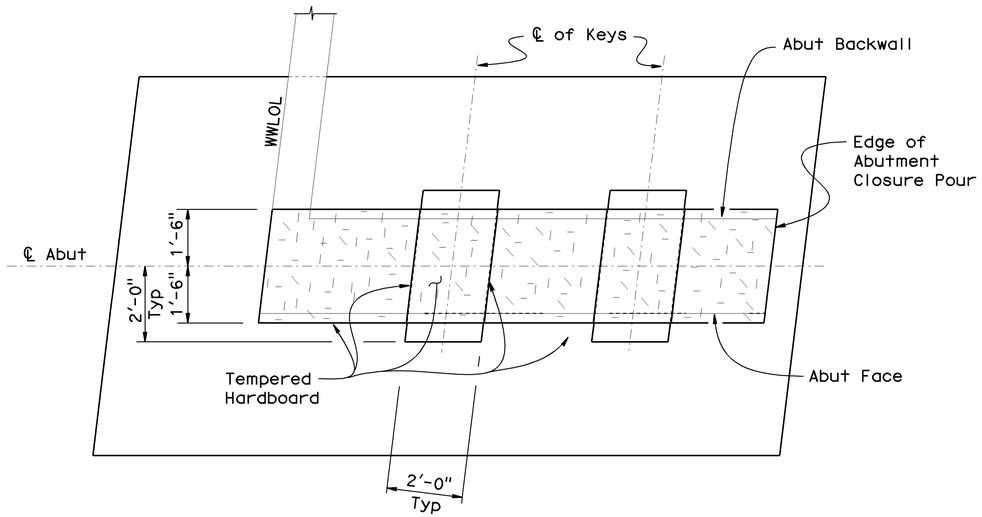

Indicates Tempered Hardboard

SECTION X-X
½" = 1'-0"

NOTE:
For "SECTION A-A" and "SECTION B-B", see "ABUTMENT DETAILS NO. 1" sheet

For "SECTION C-C", see "ABUTMENT DETAILS NO. 2" sheet

Indicates Concrete Removal, see "EXISTING BRIDGE CONCRETE REMOVAL" sheet for details

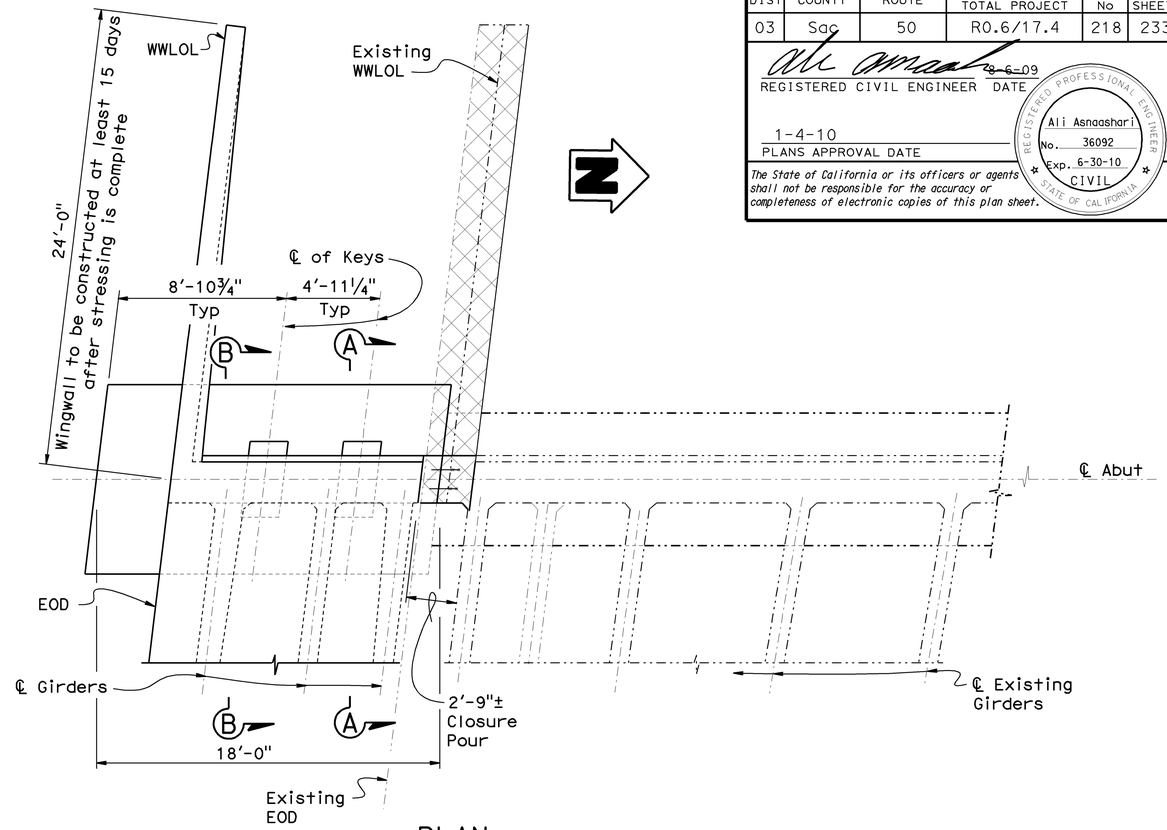

PLAN
¼" = 1'-0"

NOTE:
Abutment 1 shown
Abutment 2 similar

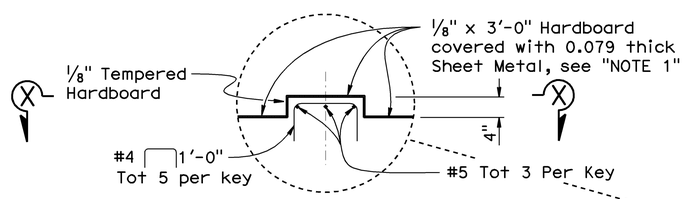

NOTE 1:
Coat top of Hardboard with silicone grease prior to placing Sheet Metal

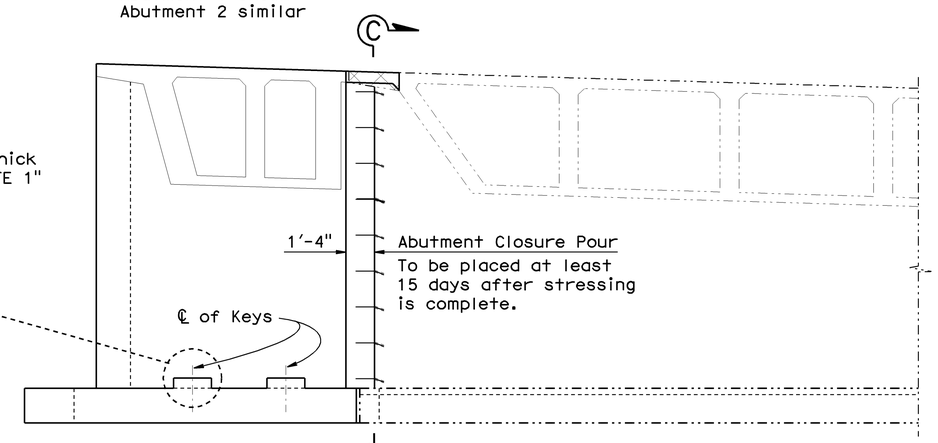

ELEVATION
¼" = 1'-0"

NOTE:
THE CONTRACTOR SHALL VERIFY ALL CONTROLLING FIELD DIMENSIONS BEFORE ORDERING OR FABRICATING ANY MATERIAL.

	BY	CHECKED
DESIGN	Quang Nguyen	Sharon Yen
DETAILS	Janie Chlubna	Sharon Yen
QUANTITIES	Mufeed Khalaf	Ashraf Ahmed

STATE OF CALIFORNIA
DEPARTMENT OF TRANSPORTATION

DIVISION OF ENGINEERING SERVICES
STRUCTURE DESIGN
DESIGN BRANCH 3

BRIDGE NO. 24-0318
POST MILE 2.61

65TH STREET UNDERCROSSING (WIDEN)
ABUTMENT LAYOUT

STRUCTURES DESIGN DETAIL SHEET (ENGLISH) (REV. 10/25/05)

ORIGINAL SCALE IN INCHES FOR REDUCED PLANS 0 1 2 3

CU 03263
EA 1C12U1

DISREGARD PRINTS BEARING EARLIER REVISION DATES

REVISION DATES: 2-9-09 2-25-09 3-3-09 3-4-09 4-28-09 8-5-09

SHEET 4 OF 19

FILE => 24-0318-d-abut-lo.dgn

USERNAME => trestrk DATE PLOTTED => 05-JAN-2010 TIME PLOTTED => 12:33

DIST	COUNTY	ROUTE	POST MILES TOTAL PROJECT	SHEET No	TOTAL SHEETS
03	Sac	50	R0.6/17.4	219	233

REGISTERED CIVIL ENGINEER — DATE 8-6-09

1-4-10
PLANS APPROVAL DATE

REGISTERED PROFESSIONAL ENGINEER — Ali Asnaashari — No. 36092 — Exp. 6-30-10 — CIVIL — STATE OF CALIFORNIA

The State of California or its officers or agents shall not be responsible for the accuracy or completeness of electronic copies of this plan sheet.

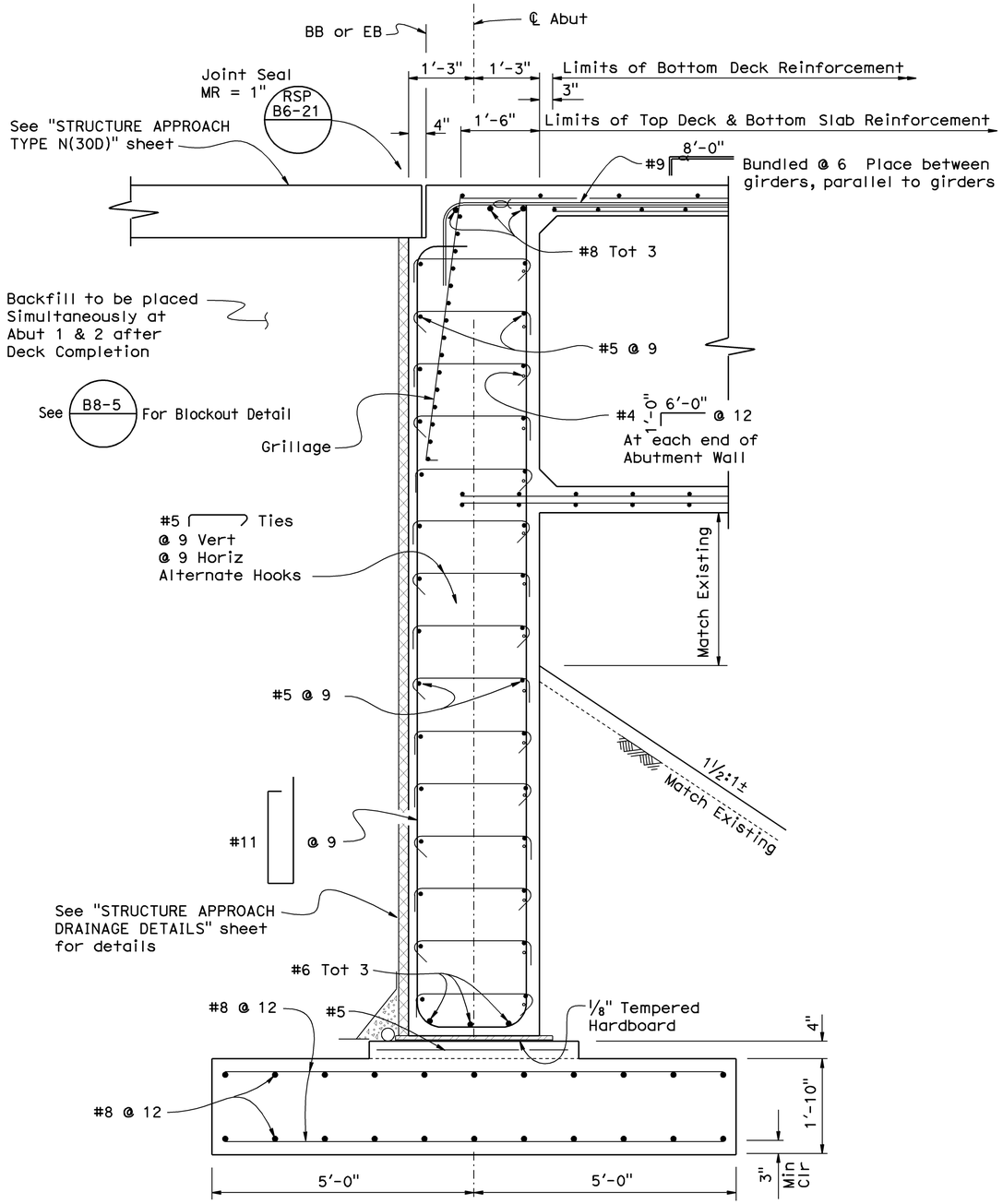

SECTION A-A

¾" = 1'-0"

NOTE:
THE CONTRACTOR SHALL VERIFY ALL CONTROLLING FIELD DIMENSIONS BEFORE ORDERING OR FABRICATING ANY MATERIAL.

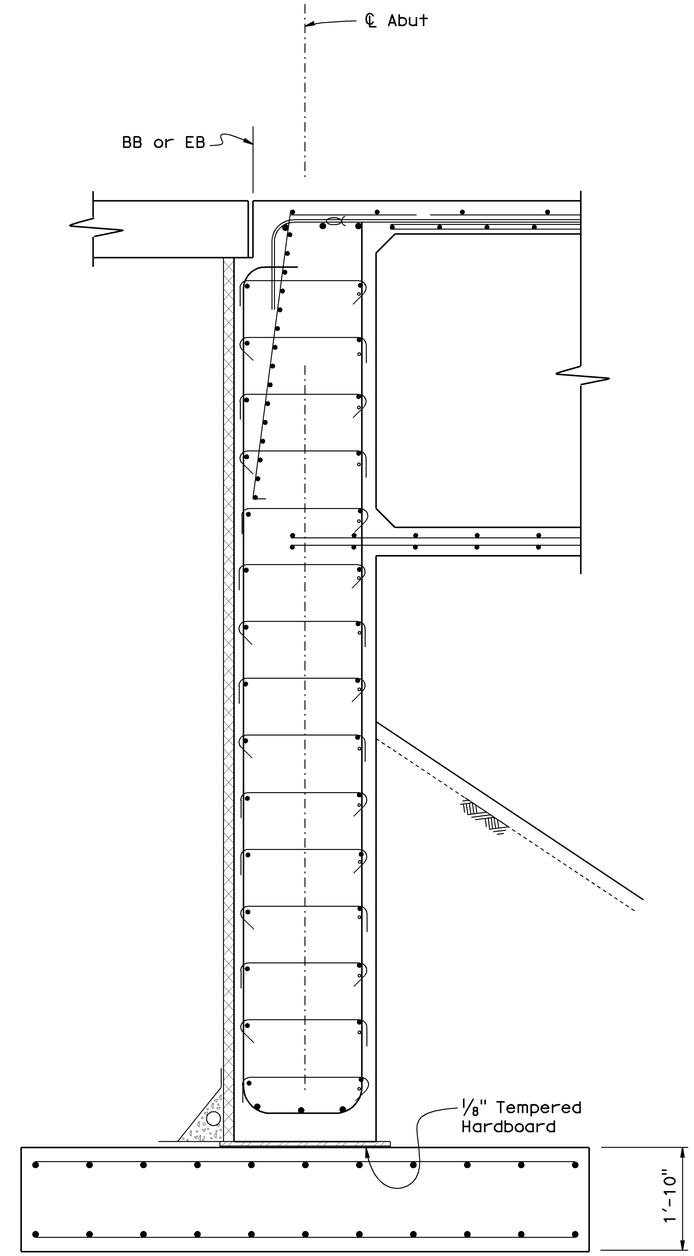

NOTE:
For details not shown see "SECTION A-A"

SECTION B-B

¾" = 1'-0"

NOTE:
For location of "SECTION A-A" and "SECTION B-B", see "ABUTMENT LAYOUT" sheet

DESIGN	BY Quang Nguyen	CHECKED Sharon Yen	
DETAILS	BY Janie Chlubna	CHECKED Sharon Yen	
QUANTITIES	BY Mufeed Khalaf	CHECKED Ashraf Ahmed	

STATE OF CALIFORNIA
DEPARTMENT OF TRANSPORTATION

DIVISION OF ENGINEERING SERVICES
STRUCTURE DESIGN
DESIGN BRANCH 3

BRIDGE NO. 24-0318
POST MILE 2.61

65TH STREET UNDERCROSSING (WIDEN)
ABUTMENT DETAILS NO. 1

STRUCTURES DESIGN DETAIL SHEET (ENGLISH) (REV. 10/25/05)

ORIGINAL SCALE IN INCHES FOR REDUCED PLANS 0 1 2 3

CU 03263
EA 1C12U1

DISREGARD PRINTS BEARING EARLIER REVISION DATES

REVISION DATES: 2-19-09 | 2-25-09 | 2-26-09 | 4-28-09 | 4-30-09 | 6-12-09 | 8-6-09

SHEET 5 OF 19

FILE => 24-0318-e-abut-01.dgn

USERNAME => trstrk DATE PLOTTED => 05-JAN-2010 TIME PLOTTED => 12:40

DIST	COUNTY	ROUTE	POST MILES TOTAL PROJECT	SHEET No	TOTAL SHEETS
03	Sac	50	R0.6/17.4	220	233

REGISTERED CIVIL ENGINEER 8-6-09 DATE

1-4-10
PLANS APPROVAL DATE

REGISTERED PROFESSIONAL ENGINEER Ali Asnaashari No. 36092 Exp. 6-30-10 CIVIL STATE OF CALIFORNIA

The State of California or its officers or agents shall not be responsible for the accuracy or completeness of electronic copies of this plan sheet.

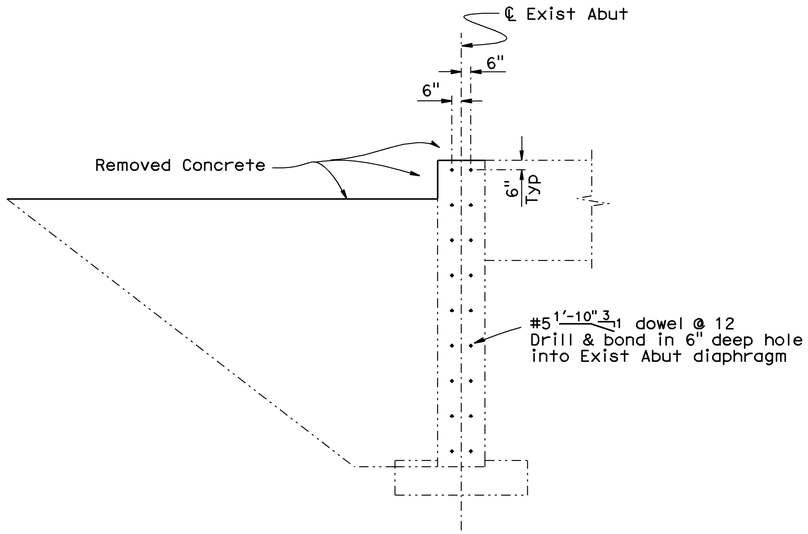

SECTION C-C

1/4"=1'-0"

NOTE:

For location of "SECTION C-C", see "ABUTMENT LAYOUT" sheet

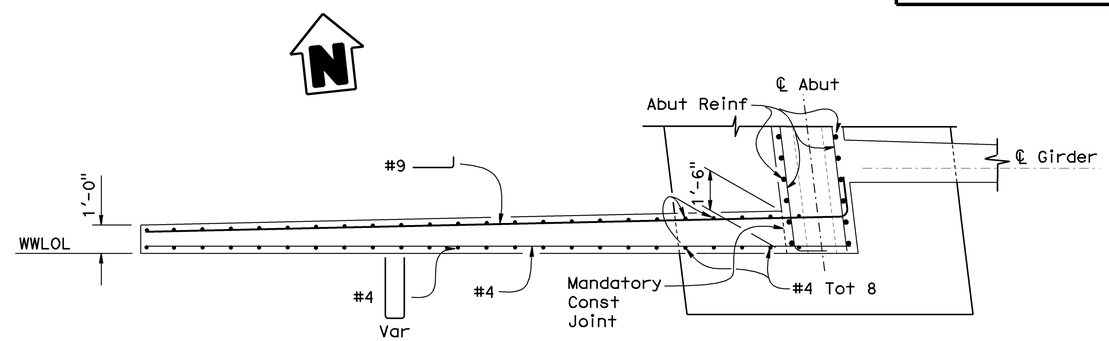

SECTION E-E

3/8" = 1'-0"

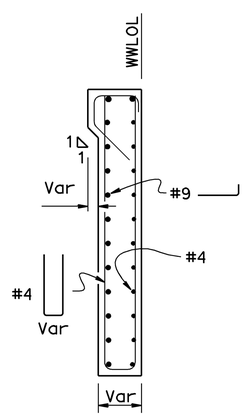

SECTION D-D

1/2" = 1'-0"

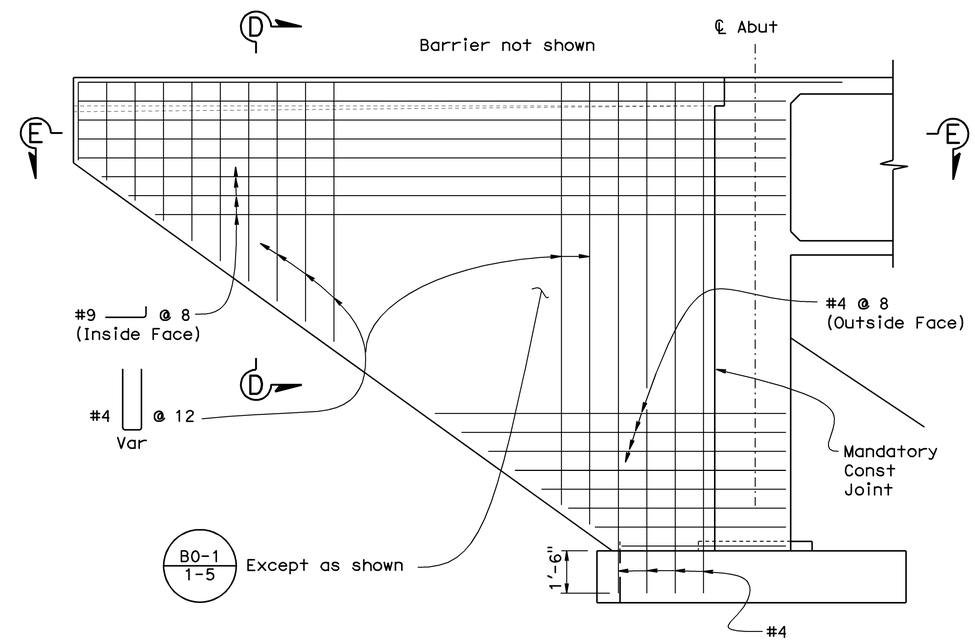

WINGWALL ELEVATION

3/8" = 1'-0"

NOTE:
THE CONTRACTOR SHALL VERIFY ALL CONTROLLING FIELD DIMENSIONS BEFORE ORDERING OR FABRICATING ANY MATERIAL.

DESIGN	BY Quang Nguyen	CHECKED Sharon Yen	
DETAILS	BY Janie Chlubna	CHECKED Sharon Yen	
QUANTITIES	BY Mufeed Khalaf	CHECKED Ashraf Ahmed	

STATE OF CALIFORNIA
DEPARTMENT OF TRANSPORTATION

DIVISION OF ENGINEERING SERVICES
STRUCTURE DESIGN
DESIGN BRANCH 3

BRIDGE NO. 24-0318
POST MILE 2.61

65TH STREET UNDERCROSSING (WIDEN)
ABUTMENT DETAILS NO. 2

STRUCTURES DESIGN DETAIL SHEET (ENGLISH) (REV. 10/25/05)

ORIGINAL SCALE IN INCHES FOR REDUCED PLANS 0 1 2 3

CU 03263
EA 1C12U1

DISREGARD PRINTS BEARING EARLIER REVISION DATES

REVISION DATES: 2-19-09 2-25-09 2-26-09 4-28-09 4-30-09 6-12-09 8-6-09

SHEET 6 OF 19

FILE => 24-0318-e-abut-02.dgn

USERNAME => trsstrk DATE PLOTTED => 05-JAN-2010 TIME PLOTTED => 12:40

DIST	COUNTY	ROUTE	POST MILES TOTAL PROJECT	SHEET No	TOTAL SHEETS
03	Sac	50	R0.6/17.4	221	233

REGISTERED CIVIL ENGINEER 8-6-09 DATE

1-4-10
PLANS APPROVAL DATE

REGISTERED PROFESSIONAL ENGINEER Ali Asnaashari No. 36092 Exp. 6-30-10 CIVIL STATE OF CALIFORNIA

The State of California or its officers or agents shall not be responsible for the accuracy or completeness of electronic copies of this plan sheet.

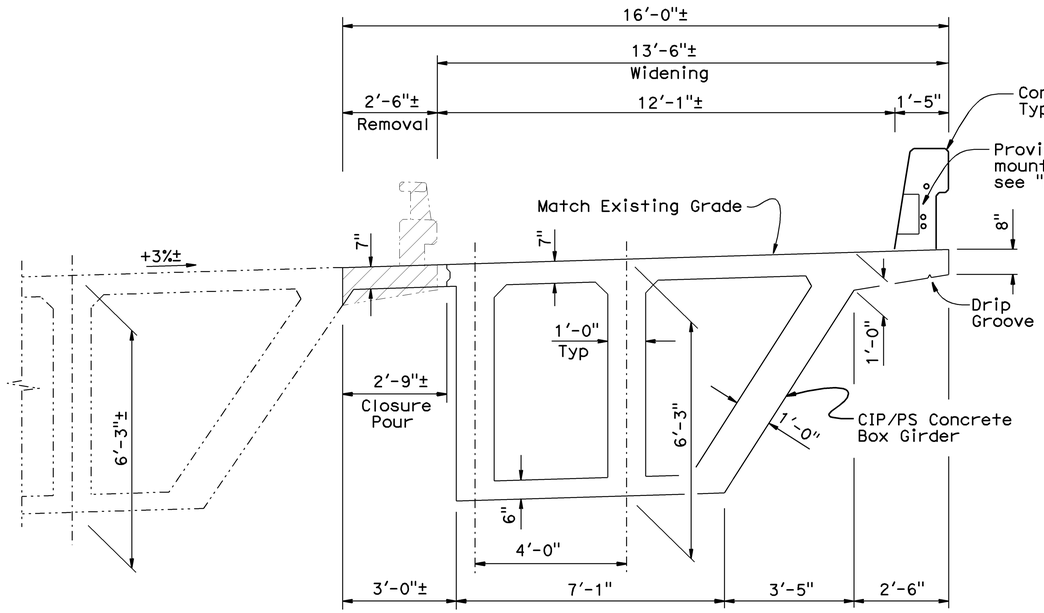

TYPICAL SECTION

½" = 1'-0"

FALSEWORK RELEASE

Alternative 1:

Falsework shall be released as soon as permitted by the specifications. Closure pour shall not be placed sooner than 60 days after the falsework had been released.

Alternative 2:

Falsework shall not be released less than 28 days after the last concrete has been placed. Closure pour shall not be placed sooner than 14 days after the falsework has been released.

When Falsework Release Alternative 2 is used, camber values are 0.75 times those shown.

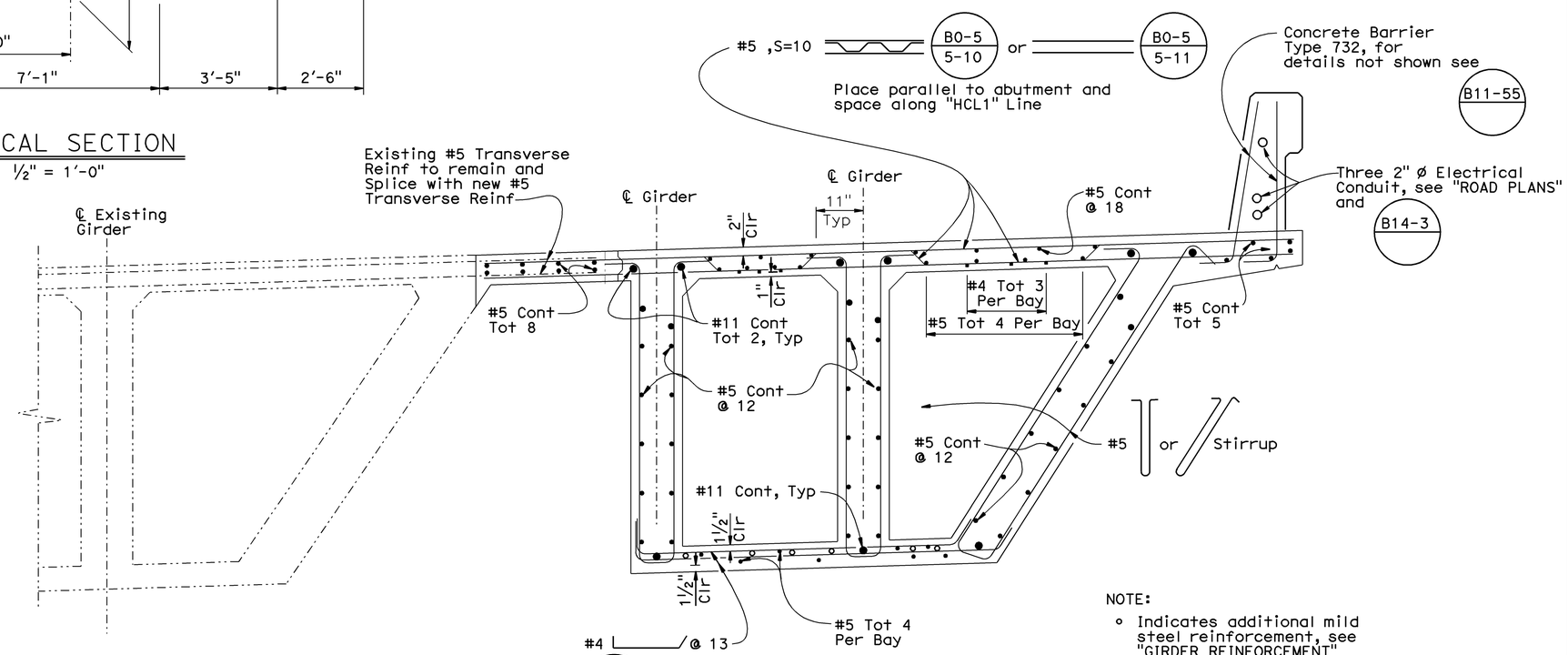

NOTE:
- Indicates additional mild steel reinforcement, see "GIRDER REINFORCEMENT" sheet

PART TYPICAL SECTION

¾" = 1'-0"

B7-1 / B-1

NOTE:
THE CONTRACTOR SHALL VERIFY ALL CONTROLLING FIELD DIMENSIONS BEFORE ORDERING OR FABRICATING ANY MATERIAL.

	BY	CHECKED
DESIGN	Quang Nguyen	Sharon Yen
DETAILS	Janie Chlubna	Sharon Yen
QUANTITIES	Mufeed Khalaf	Ashraf Ahmed

STATE OF CALIFORNIA
DEPARTMENT OF TRANSPORTATION

DIVISION OF ENGINEERING SERVICES
STRUCTURE DESIGN
DESIGN BRANCH 3

BRIDGE NO. 24-0318
POST MILE 2.61

65TH STREET UNDERCROSSING (WIDEN)
TYPICAL SECTION

STRUCTURES DESIGN DETAIL SHEET (ENGLISH) (REV. 10/25/05)

ORIGINAL SCALE IN INCHES FOR REDUCED PLANS 0 1 2 3

CU 03263
EA 1C12U1

DISREGARD PRINTS BEARING EARLIER REVISION DATES

REVISION DATES: 2-4-09 2-25-09 4-9-09 4-28-09 8-6-09

SHEET 7 OF 19

FILE => 24-0318-e-typ.dgn

USERNAME => frrstrk DATE PLOTTED => 05-JAN-2010 TIME PLOTTED => 12:40

DIST	COUNTY	ROUTE	POST MILES TOTAL PROJECT	SHEET No	TOTAL SHEETS
03	Sac	50	R0.6/17.4	222	233

REGISTERED CIVIL ENGINEER 8-6-09 DATE

1-4-10
PLANS APPROVAL DATE

REGISTERED PROFESSIONAL ENGINEER
Ali Asnaashari
No. 36092
Exp. 6-30-10
CIVIL
STATE OF CALIFORNIA

The State of California or its officers or agents shall not be responsible for the accuracy or completeness of electronic copies of this plan sheet.

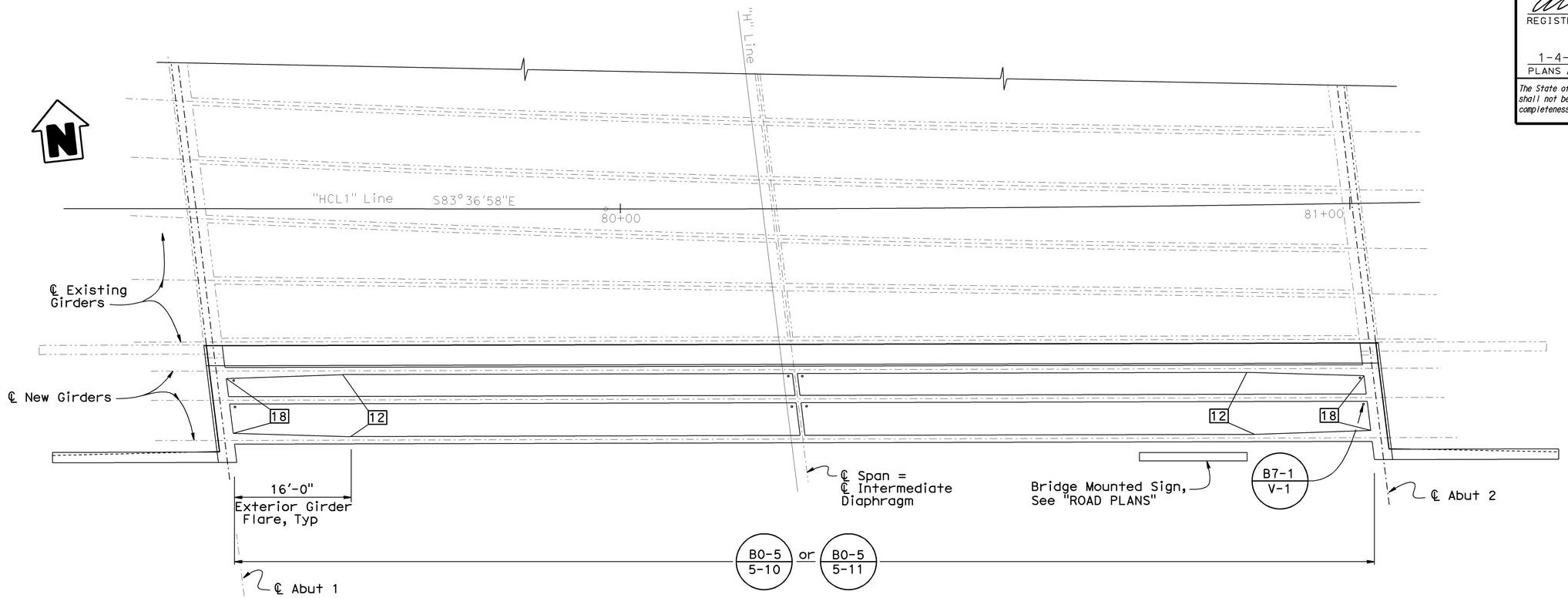

GIRDER LAYOUT

1/8" = 1'-0"

NOTES:

Indicates Girder Widths in inches

For "CAMBER DIAGRAM" and "PRESTRESSING NOTES", see "GIRDER DETAILS" sheet

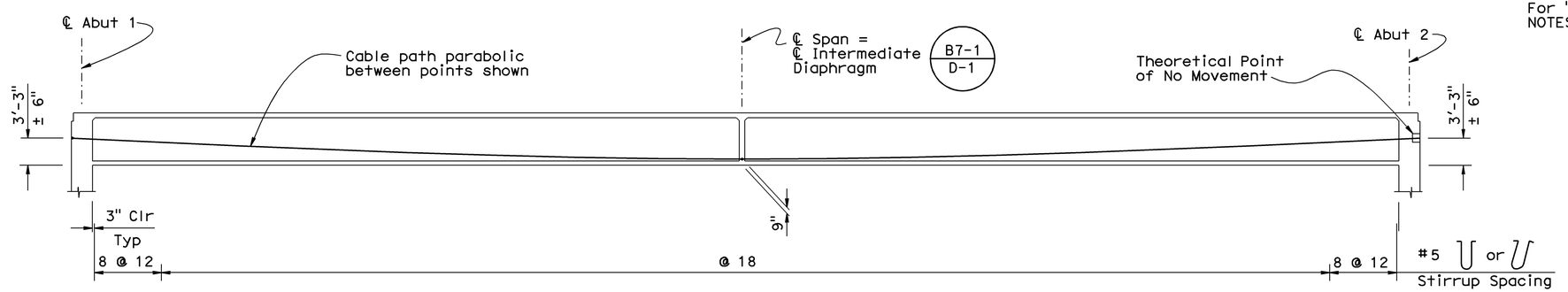

LONGITUDINAL SECTION

1/8" = 1'-0"

NOTE:
THE CONTRACTOR SHALL VERIFY ALL CONTROLLING FIELD DIMENSIONS BEFORE ORDERING OR FABRICATING ANY MATERIAL.

	BY	CHECKED
DESIGN	Quang Nguyen	Sharon Yen
DETAILS	Janie Chlubna	Sharon Yen
QUANTITIES	Mufeed Khalaf	Ashraf Ahmed

STATE OF CALIFORNIA
DEPARTMENT OF TRANSPORTATION

DIVISION OF ENGINEERING SERVICES
STRUCTURE DESIGN
DESIGN BRANCH 3

BRIDGE NO. 24-0318
POST MILE 2.61

65TH STREET UNDERCROSSING (WIDEN)
GIRDER LAYOUT

STRUCTURES DESIGN DETAIL SHEET (ENGLISH) (REV. 10/25/05)

ORIGINAL SCALE IN INCHES FOR REDUCED PLANS 0 1 2 3

CU 03263
EA 1C12U1

DISREGARD PRINTS BEARING EARLIER REVISION DATES

REVISION DATES: 2-4-09 2-25-09 4-28-09 8-6-09

SHEET 8 OF 19

FILE => 24-0318-g-gl-01.dgn

USERNAME => trstrk DATE PLOTTED => 05-JAN-2010 TIME PLOTTED => 12:40

DIST	COUNTY	ROUTE	POST MILES TOTAL PROJECT	SHEET No	TOTAL SHEETS
03	Sac	50	R0.6/17.4	223	233

REGISTERED CIVIL ENGINEER 8-6-09 DATE

1-4-10
PLANS APPROVAL DATE

REGISTERED PROFESSIONAL ENGINEER
Ali Asnaashari
No. 36092
Exp. 6-30-10
CIVIL
STATE OF CALIFORNIA

The State of California or its officers or agents shall not be responsible for the accuracy or completeness of electronic copies of this plan sheet.

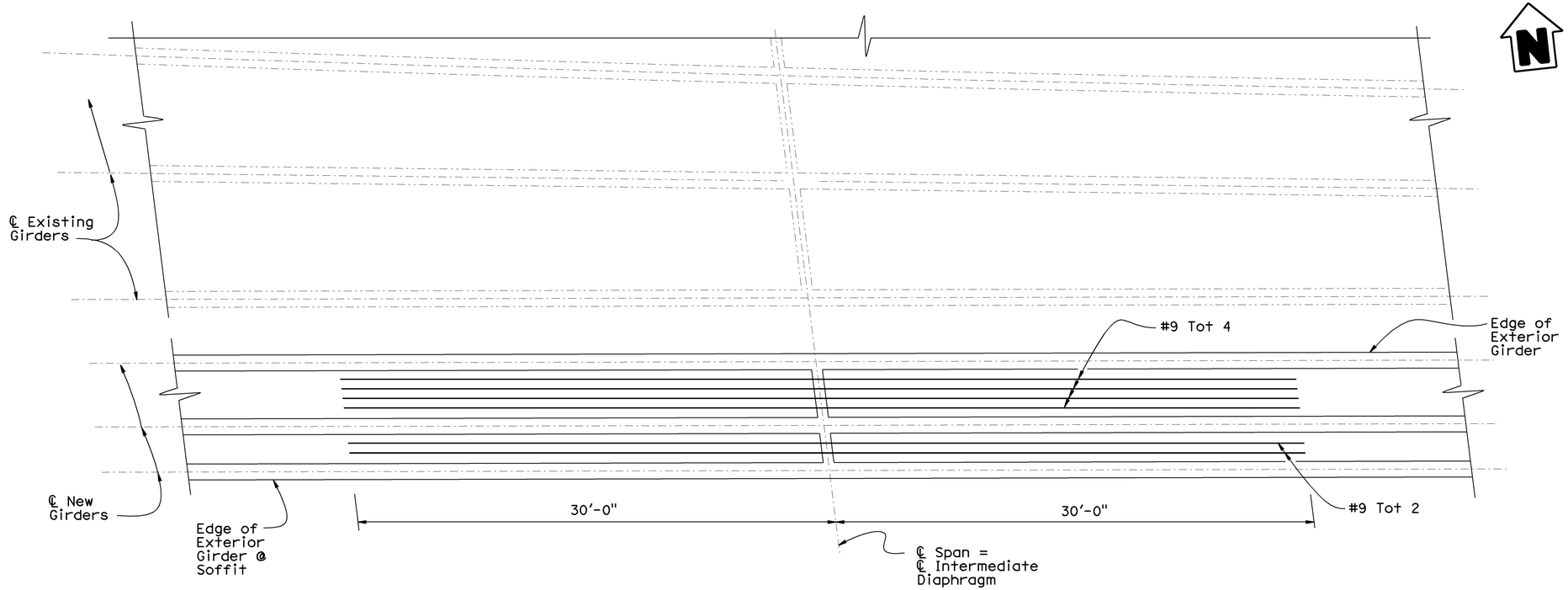

BOTTOM SLAB REINFORCEMENT

1/4" = 1'-0"

NOTES:

All bars are #9
All bars shall be evenly spaced within limits
No Splice Allowed

PRESTRESSING NOTES

270 KSI Low Relaxation Strand:

P_{jack} = 6165 kips

Anchor Set = 3/8 in

Total Number of Girders = 3

Distribution of prestress force (Pjack) between girders shall not exceed the ratio of 3:2. Maximum final force variation between girders shall not exceed 725 kips.

Concrete: f'_c = 5000 psi @ 28 days

f'_{ci} = 3500 psi @ time of stressing

Contractor shall submit elongation calculations based on initial stress at

⊠ = 0.950 times jacking stress.

One end stressing shall be performed from Abutment 1

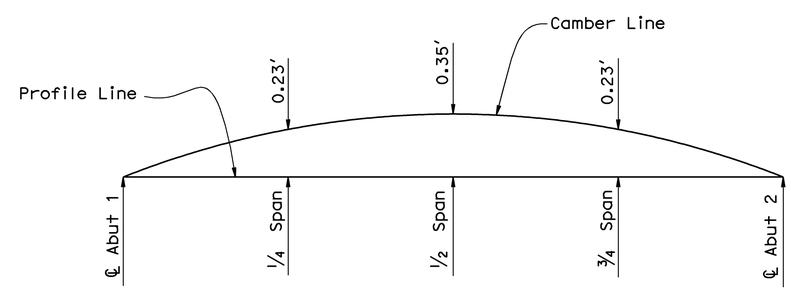

CAMBER DIAGRAM

Does not include allowance for falsework settlement

NOTE:
THE CONTRACTOR SHALL VERIFY ALL CONTROLLING FIELD DIMENSIONS BEFORE ORDERING OR FABRICATING ANY MATERIAL.

	BY	CHECKED
DESIGN	Quang Nguyen	Sharon Yen
DETAILS	Janie Chlubna	Sharon Yen
QUANTITIES	Mufeed Khalaf	Ashraf Ahmed

STATE OF CALIFORNIA
DEPARTMENT OF TRANSPORTATION

DIVISION OF ENGINEERING SERVICES
STRUCTURE DESIGN
DESIGN BRANCH 3

BRIDGE NO. 24-0318
POST MILE 2.61

65TH STREET UNDERCROSSING (WIDEN)
GIRDER REINFORCEMENT

STRUCTURES DESIGN DETAIL SHEET (ENGLISH) (REV. 10/25/05)

ORIGINAL SCALE IN INCHES FOR REDUCED PLANS 0 1 2 3

CU 03263
EA 1C12U1

DISREGARD PRINTS BEARING EARLIER REVISION DATES

REVISION DATES: 2-9-09 2-25-09

SHEET 9 OF 19

FILE => 24-0318-g-gl-02.dgn

USERNAME => trsthk DATE PLOTTED => 05-JAN-2010 TIME PLOTTED => 12:40

DIST	COUNTY	ROUTE	POST MILES TOTAL PROJECT	SHEET No	TOTAL SHEETS
03	Sac	50	R0.6/17.4	224	233

REGISTERED CIVIL ENGINEER 8-6-09 DATE

1-4-10
PLANS APPROVAL DATE

REGISTERED PROFESSIONAL ENGINEER
Ali Asnaashari
No. 36092
Exp. 6-30-10
CIVIL
STATE OF CALIFORNIA

The State of California or its officers or agents shall not be responsible for the accuracy or completeness of electronic copies of this plan sheet.

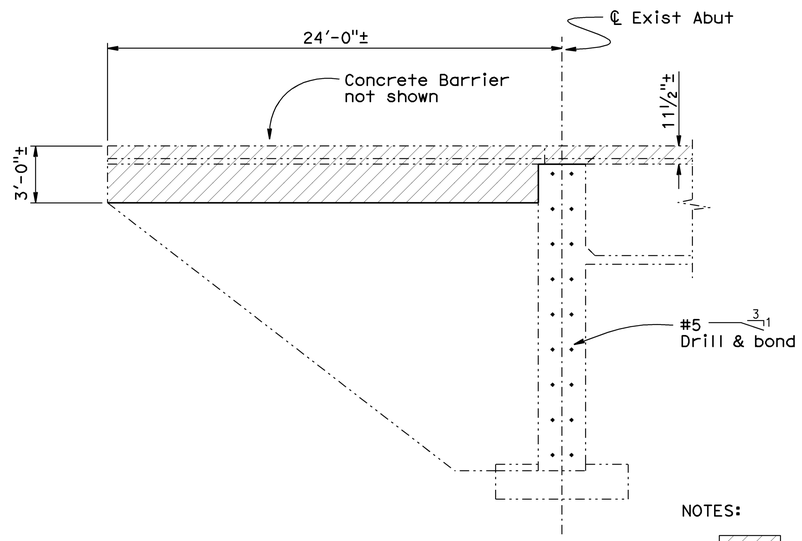

SECTION D-D
¼"=1'-0"

NOTES:

- Indicates concrete removal

For Drill & Bond details, see "ABUTMENT LAYOUT" sheet

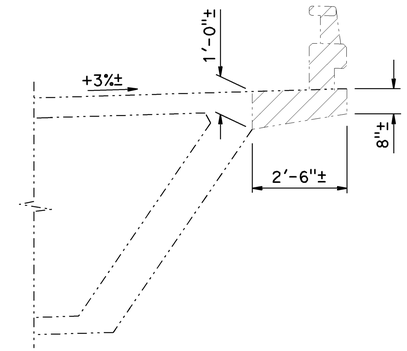

SECTION E-E
½"=1'-0"

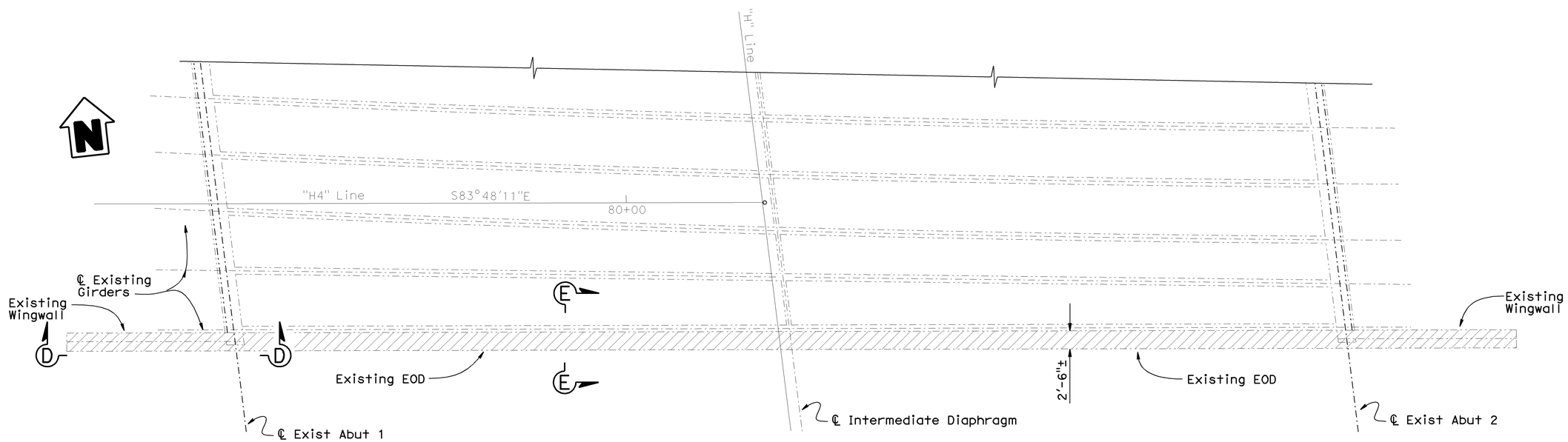

NOTE:
THE CONTRACTOR SHALL VERIFY ALL CONTROLLING FIELD DIMENSIONS BEFORE ORDERING OR FABRICATING ANY MATERIAL.

PLAN
⅛"=1'-0"

	BY	CHECKED
DESIGN	Quang Nguyen	Sharon Yen
DETAILS	Janie Chlubna	Sharon Yen
QUANTITIES	Mufeed Khalaf	Ashraf Ahmed

STATE OF CALIFORNIA
DEPARTMENT OF TRANSPORTATION

DIVISION OF ENGINEERING SERVICES
STRUCTURE DESIGN
DESIGN BRANCH 3

BRIDGE NO. 24-0318
POST MILE 2.61

65TH STREET UNDERCROSSING (WIDEN)
EXISTING BRIDGE CONCRETE REMOVAL

STRUCTURES DESIGN DETAIL SHEET (ENGLISH) (REV. 10/25/05)

ORIGINAL SCALE IN INCHES FOR REDUCED PLANS 0 1 2 3

CU 03263
EA 1C12U1

DISREGARD PRINTS BEARING EARLIER REVISION DATES

REVISION DATES: 2-4-09 2-23-09 2-25-09 4-28-09 8-6-09

SHEET 10 OF 19

FILE => 24-0318-h-removal.dgn

USERNAME => trstrk DATE PLOTTED => 05-JAN-2010 TIME PLOTTED => 12:40

DIST	COUNTY	ROUTE	POST MILES TOTAL PROJECT	SHEET No	TOTAL SHEETS
03	Sac	50	R0.6/17.4	225	233

REGISTERED CIVIL ENGINEER 8-6-09 DATE

1-4-10
PLANS APPROVAL DATE

REGISTERED PROFESSIONAL ENGINEER
Ali Asnaashari
No. 36092
Exp. 6-30-10
CIVIL
STATE OF CALIFORNIA

The State of California or its officers or agents shall not be responsible for the accuracy or completeness of electronic copies of this plan sheet.

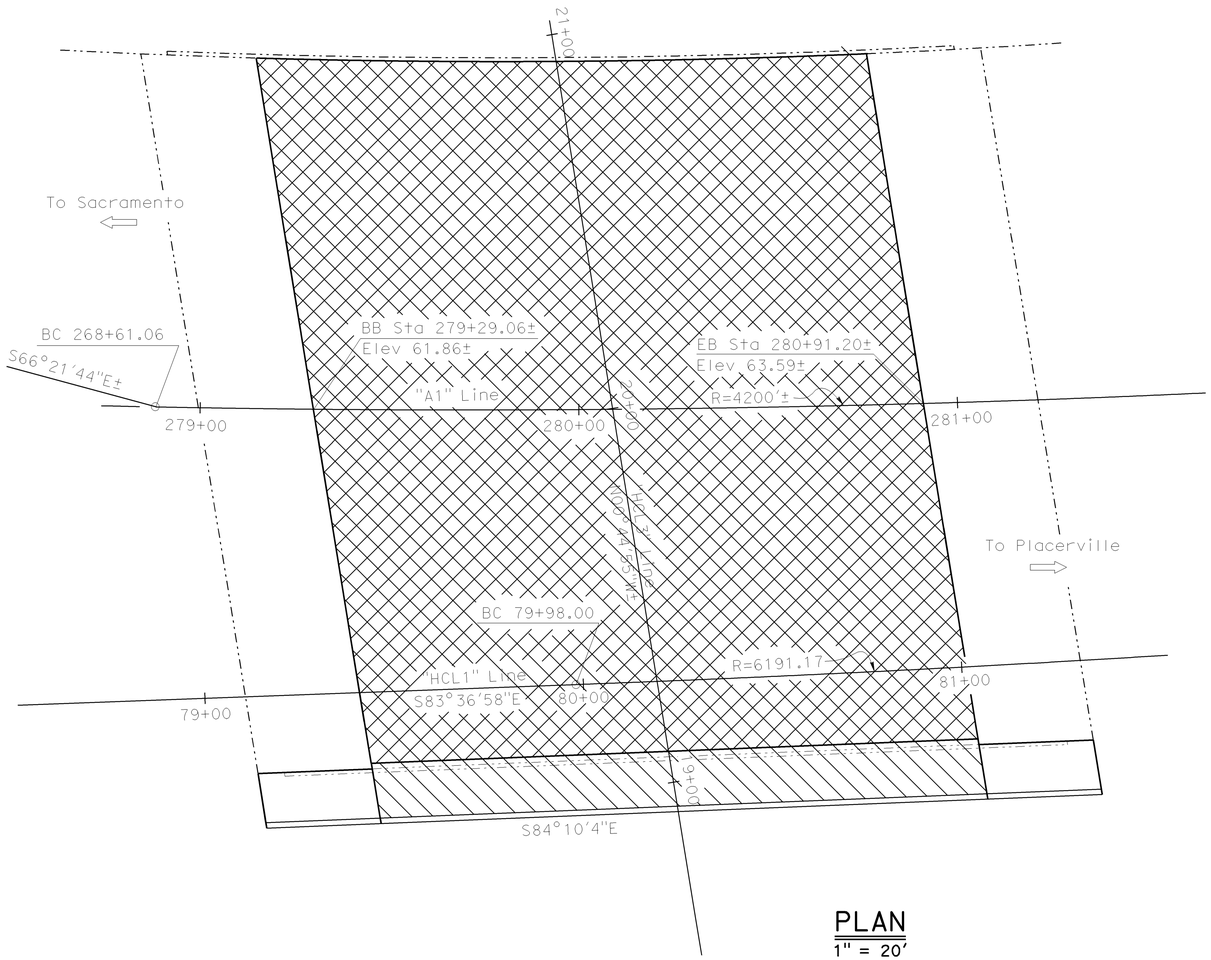

PLAN
1" = 20'

NOTES:

Indicates Existing Structure

Indicates New Structure

Indicates Chip & Seal Limits of removal on existing bridge

Indicates Limits of Treat Bridge Deck with Methacrylate Seal (both existing and widening)

NOTE:
THE CONTRACTOR SHALL VERIFY ALL CONTROLLING FIELD DIMENSIONS BEFORE ORDERING OR FABRICATING ANY MATERIAL.

	BY	CHECKED
DESIGN	Quang Nguyen	Sharon Yen
DETAILS	Janie Chlubna	Sharon Yen
QUANTITIES	Mufeed khalaf	Ashraf Ahmed

STATE OF CALIFORNIA
DEPARTMENT OF TRANSPORTATION

DIVISION OF ENGINEERING SERVICES
STRUCTURE DESIGN
DESIGN BRANCH 3

BRIDGE NO. 24-0318
POST MILE 2.61

65TH STREET UNDERCROSSING (WIDEN)
DECK TREATMENT LIMITS

STRUCTURES DESIGN DETAIL SHEET (ENGLISH) (REV. 10/25/05)

ORIGINAL SCALE IN INCHES FOR REDUCED PLANS 0 1 2 3

CU 03263
EA 1C12U1

DISREGARD PRINTS BEARING EARLIER REVISION DATES

REVISION DATES: 4-29-09 6-12-09 8-6-09

SHEET 11 OF 19

FILE => 24-0318-k-chipseal.dgn

USERNAME => trsttk DATE PLOTTED => 05-JAN-2010 TIME PLOTTED => 12:40

DIST	COUNTY	ROUTE	POST MILES TOTAL PROJECT	SHEET No	TOTAL SHEETS
03	Sac	50	R0.6/17.4	226	233

REGISTERED CIVIL ENGINEER — DATE 8-6-09

1-4-10
PLANS APPROVAL DATE

REGISTERED PROFESSIONAL ENGINEER — Ali Asnaashari — No. 36092 — Exp. 6-30-10 — CIVIL — STATE OF CALIFORNIA

The State of California or its officers or agents shall not be responsible for the accuracy or completeness of electronic copies of this plan sheet.

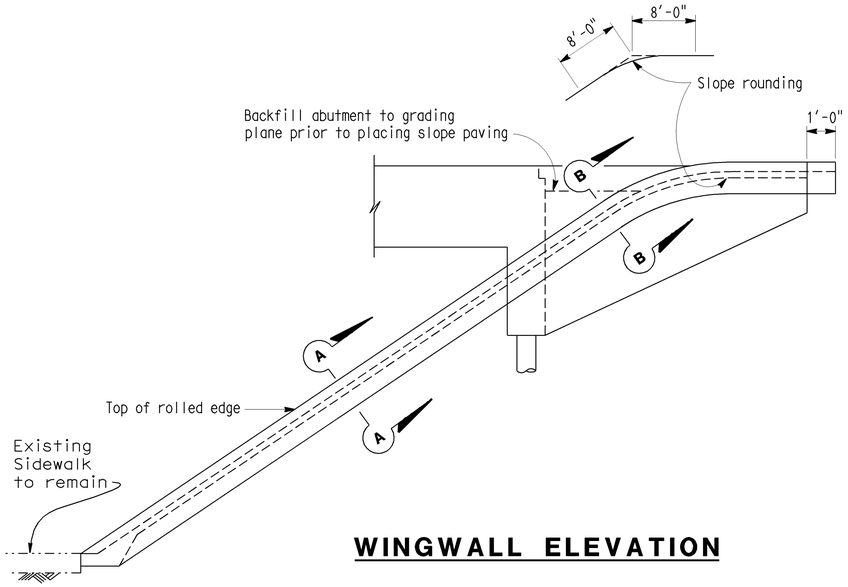

WINGWALL ELEVATION

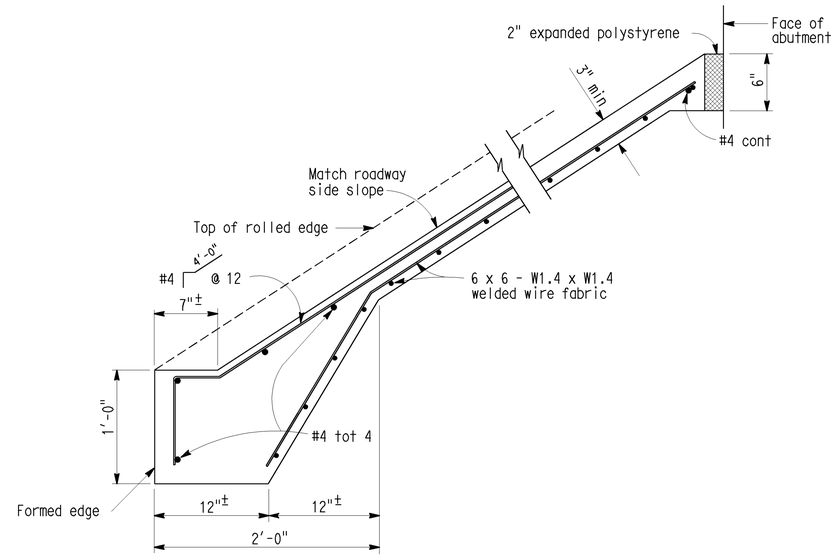

TYPICAL SECTION - CONCRETE PAVING

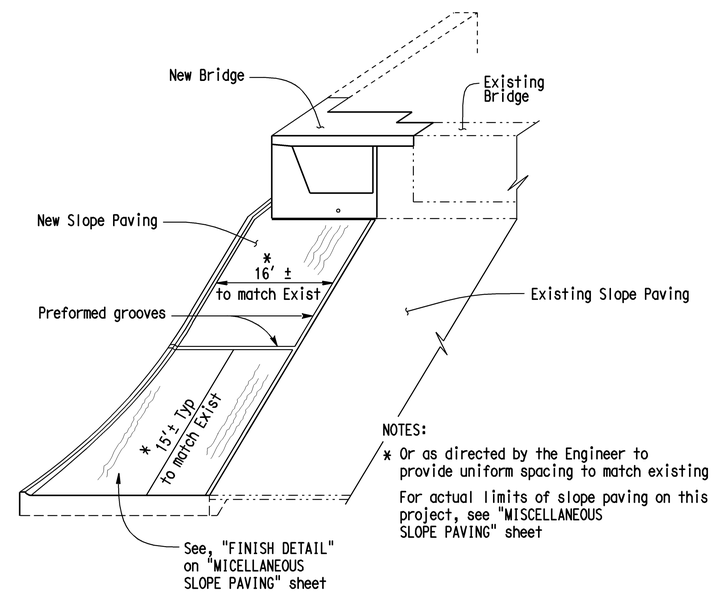

NOTES:

* Or as directed by the Engineer to provide uniform spacing to match existing

For actual limits of slope paving on this project, see "MISCELLANEOUS SLOPE PAVING" sheet

PICTORIAL VIEW OF TYPICAL INSTALLATION

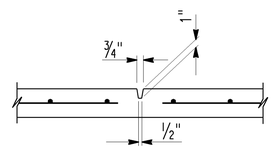

PREFORMED GROOVE

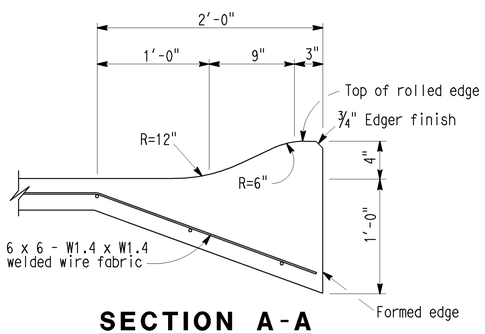

SECTION A-A

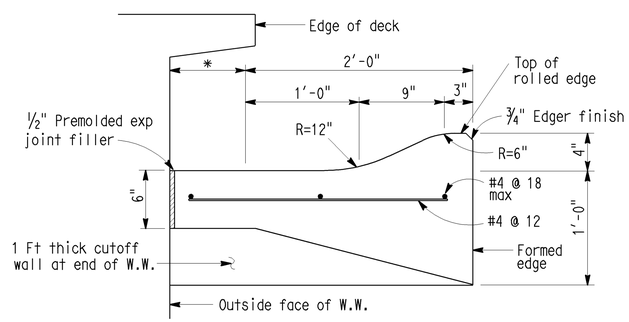

SECTION B-B

* This dimension becomes zero when edge of deck is at outside face of W.W.

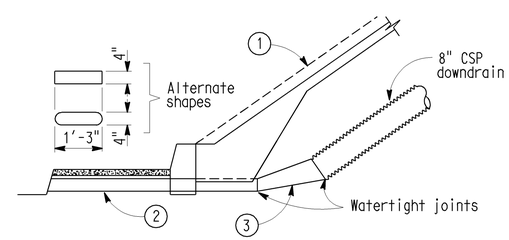

TYPICAL - WITH SIDEWALK

DRAINAGE DETAILS

Note: Drainage details are only applicable when is indicated on detail sheets.

B0-3 / 3-5

1. Top of rolled edge
2. Conduit: 0.064" galv corrugated steel or 0.109" smooth galv steel
3. Taper: { 0.064" galv corrugated steel or 0.109" smooth galv steel
4. 8" perforated steel pipe (0.064" thick) underdrain behind abutment. Connect to downdrain as shown on limits of Slope Paving & Drainage layout.

	BY	CHECKED
DESIGN	Quang H Nguyen	Sharon Yen
DETAILS	Janie Chlubna	Sharon Yen
QUANTITIES	Mufeed Khalaf	Ashraf Ahmed

STATE OF CALIFORNIA
DEPARTMENT OF TRANSPORTATION

DIVISION OF ENGINEERING SERVICES
STRUCTURE DESIGN
DESIGN BRANCH 3

BRIDGE NO. 24-0318
POST MILE 2.61

65TH STREET UNDERCROSSING (WIDEN)
MISCELLANEOUS SLOPE PAVING NO. 1

STRUCTURES DESIGN DETAIL SHEET (ENGLISH) (REV. 10/25/05)

ORIGINAL SCALE IN INCHES FOR REDUCED PLANS 0 1 2 3

CU 03263
EA 1C12U1

DISREGARD PRINTS BEARING EARLIER REVISION DATES 4-30-09 8-6-09

REVISION DATES

SHEET 12 OF 19

FILE => 24-0318-k-slope-01.dgn

USERNAME => trsitrk DATE PLOTTED => 05-JAN-2010 TIME PLOTTED => 12:40

DIST	COUNTY	ROUTE	POST MILES TOTAL PROJECT	SHEET No	TOTAL SHEETS
03	Sac	50	R0.6/17.4	227	233

REGISTERED CIVIL ENGINEER 8-6-09 DATE

1-4-10
PLANS APPROVAL DATE

REGISTERED PROFESSIONAL ENGINEER
Ali Asnaashari
No. 36092
Exp. 6-30-10
CIVIL
STATE OF CALIFORNIA

The State of California or its officers or agents shall not be responsible for the accuracy or completeness of electronic copies of this plan sheet.

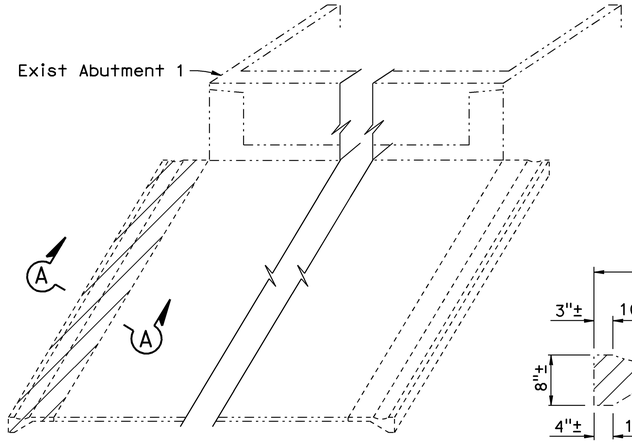

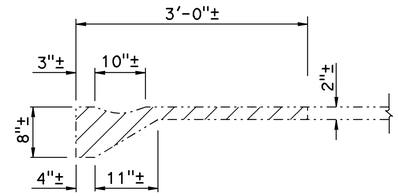

SECTION A-A
1" = 1'-0"

NOTES:
- Indicates concrete removal
Abutment 1 shown, Abutment 2 similar

PICTORIAL VIEW OF SLOPE PAVING REMOVAL
No Scale

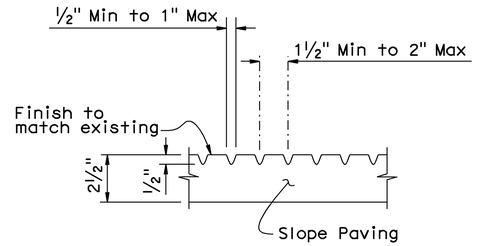

FINISH DETAILS
No Scale

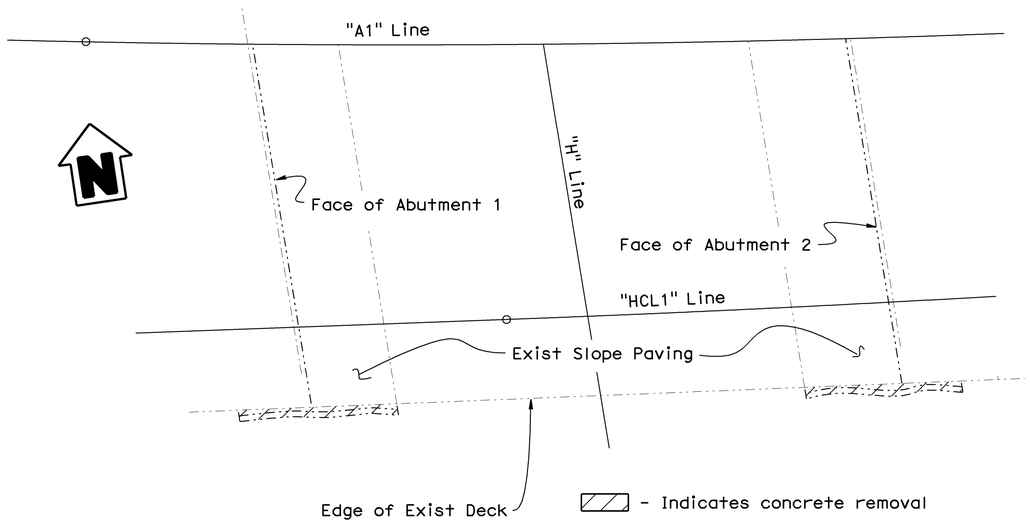

PART PLAN - EXISTING SLOPE PAVING REMOVAL
No Scale

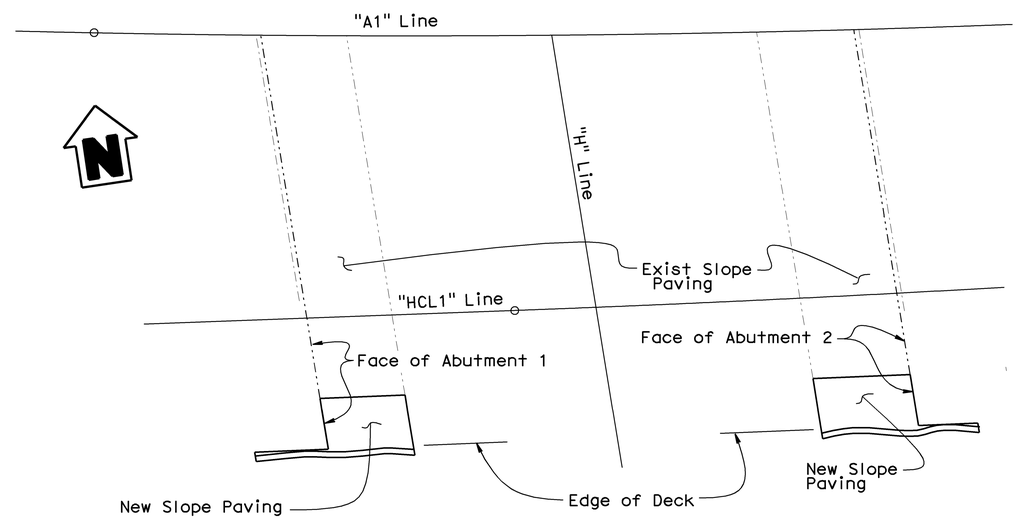

PART PLAN - NEW SLOPE PAVING
No Scale

NOTE:
THE CONTRACTOR SHALL VERIFY ALL CONTROLLING FIELD DIMENSIONS BEFORE ORDERING OR FABRICATING ANY MATERIAL.

NOTES:
For details not shown, see "SLOPE PAVING DETAILS NO. 1" sheet

	BY	CHECKED
DESIGN	Quang H Nguyen	Sharon Yen
DETAILS	Janie Chlubna	Sharon Yen
QUANTITIES	Mufeed Khalaf	Ashraf Ahmed

STATE OF CALIFORNIA
DEPARTMENT OF TRANSPORTATION

DIVISION OF ENGINEERING SERVICES
STRUCTURE DESIGN
DESIGN BRANCH 3

BRIDGE NO. 24-0318
POST MILE 2.61

65TH STREET UNDERCROSING (WIDEN)
MISCELLANEOUS SLOPE PAVING NO. 2

STRUCTURES DESIGN DETAIL SHEET (ENGLISH) (REV. 10/25/05)

ORIGINAL SCALE IN INCHES FOR REDUCED PLANS 0 1 2 3

CU 03263
EA 1C12U1

DISREGARD PRINTS BEARING EARLIER REVISION DATES

REVISION DATES: 2-24-09 2-25-09 2-26-09 4-30-09

SHEET 13 OF 19

FILE => 24-0318-k-slope-02.dgn

USERNAME => trstrk DATE PLOTTED => 05-JAN-2010 TIME PLOTTED => 12:40

DIST.	COUNTY	ROUTE	POST MILES TOTAL PROJECT	SHEET NO.	TOTAL SHEETS
03	Sac	50	R0.6/17.4	228	233

REGISTERED ENGINEER - CIVIL 8-6-09

1-4-10
PLANS APPROVAL DATE

REGISTERED PROFESSIONAL ENGINEER Ali Asnaashari No. 36092 Exp. 6-30-10 CIVIL STATE OF CALIFORNIA

The State of California or its officers or agents shall not be responsible for the accuracy or completeness of electronic copies of this plan sheet.

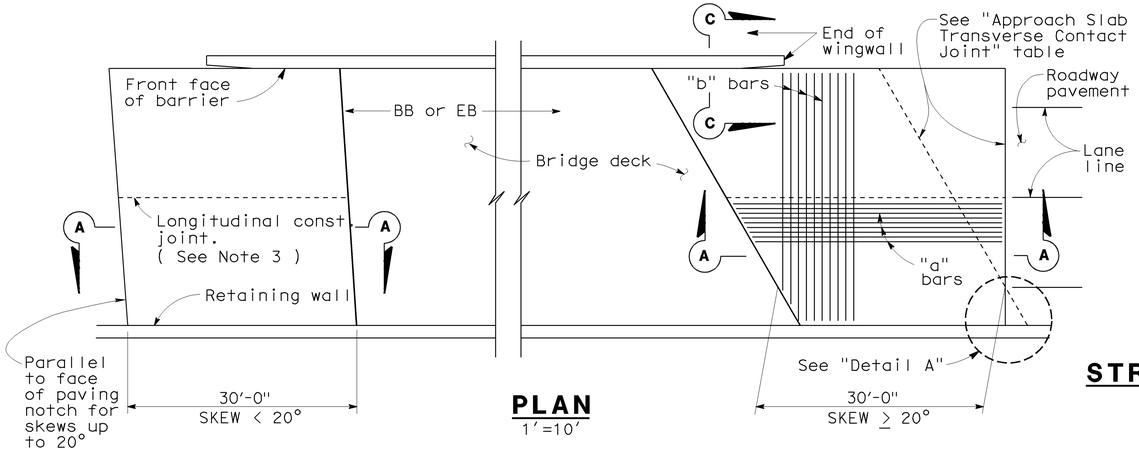

PLAN
1'=10'

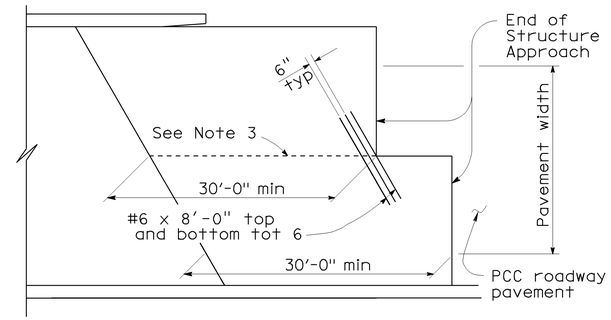

STRUCTURE APPROACH - END STAGGER DETAIL
No Scale

APPROACH SLAB TRANSVERSE CONTACT JOINT		
APPROACH SKEW	WITH AC ROADWAY PAVEMENT	WITH PCC ROADWAY PAVEMENT
< 20°	Parallel to face of paving notch	Parallel to face of paving notch
20°- 45°	Parallel to face of P N use (Detail A)	Stagger lines 24' to 36' apart
> 45°	Parallel to face of P N use (Detail A)	Stagger at each lane line

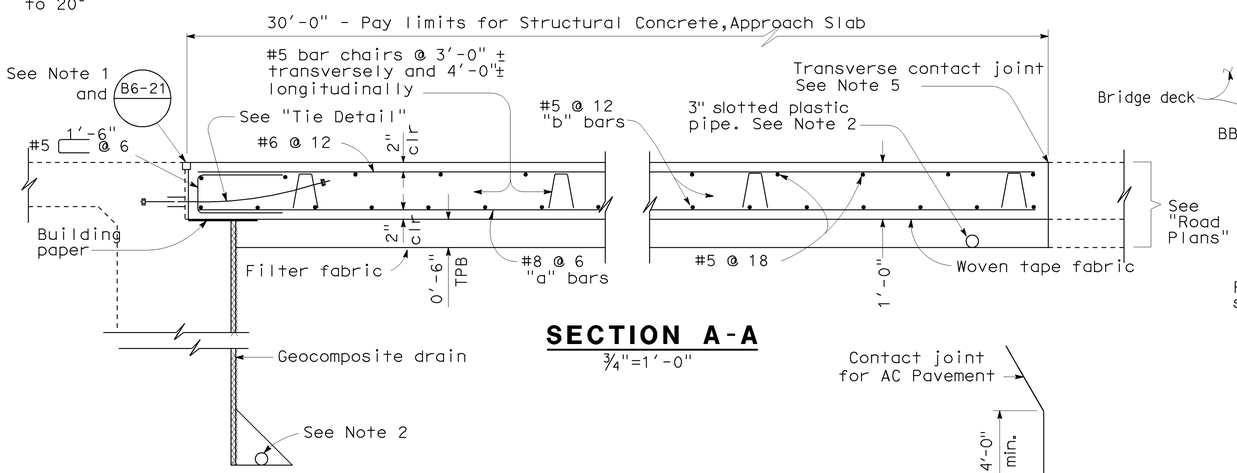

SECTION A-A
¾"=1'-0"

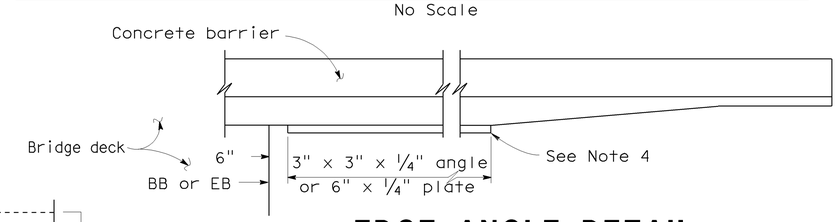

EDGE ANGLE DETAIL
½"=1'-0"

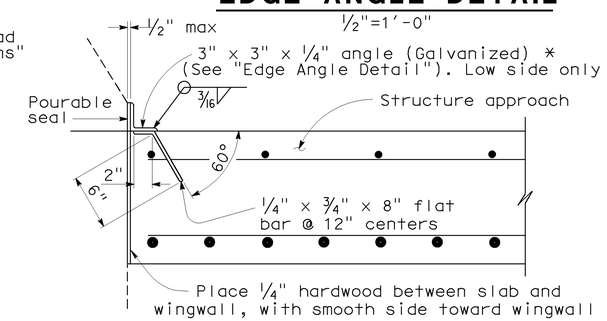

*(TO BE USED WITH TYPE 25 OR TYPE 27 CONCRETE BARRIER)

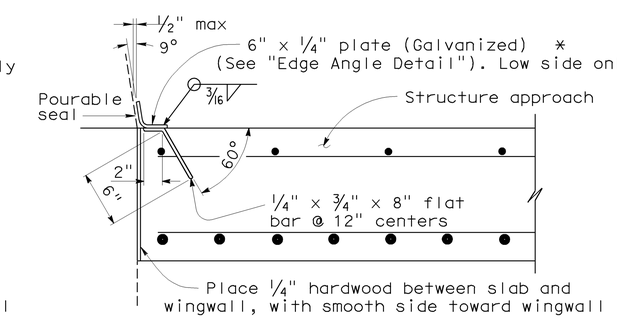

*(TO BE USED WITH TYPE 732 OR TYPE 736 CONCRETE BARRIER)

DETAIL B
1½"=1'-0"

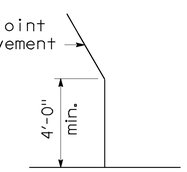

DETAIL A
No Scale

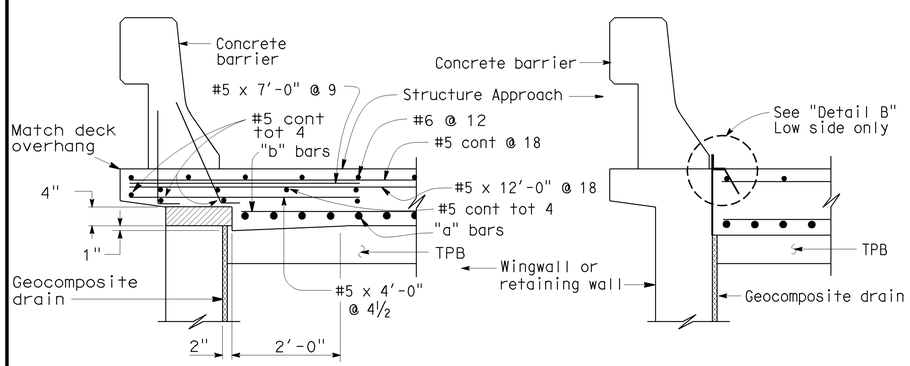

TYPE E-1 TYPE E-2

SECTION C-C
¾"=1'-0"

(Type E-1 to be used,unless otherwise shown on plans)

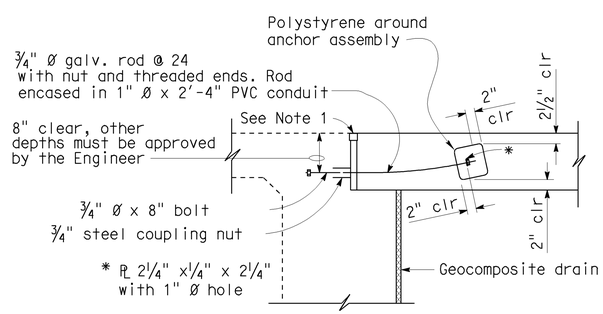

TIE DETAIL
¾"=1'-0"

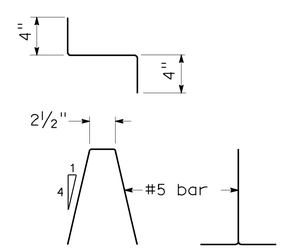

BAR CHAIR DETAIL
1½"=1'-0"

NOTES:

1. For details not noted or shown,see Structure Plans.
2. For drainage details,see "Structure Approach Drainage Details" sheet.
3. Longitudinal construction joints,when permitted by the Engineer,shall be located on lane lines.
4. End angle or plate at beginning of barrier transition, end of wingwall or end of structure approach, as applicable.
5. For transverse contact joint with new PCC paving, refer to Standard Plan P10.
6. At the contractor's option,approach slab transverse reinforcement may be placed parallel to paving notch. Spacing of transverse reinforcement is measured along ℄ roadway.

Polystyrene to be removed.

STANDARD DRAWING

FILE NO. xs3-180e

APPROVED BY M. Ha (RESPONSIBLE TECHNICAL SPECIALIST) — APPROVAL DATE 8-12-08

RELEASED BY O. Alcantara (RESPONSIBLE OFFICE CHIEF) — RELEASE DATE 8-12-08

STATE OF CALIFORNIA DEPARTMENT OF TRANSPORTATION

DIVISION OF ENGINEERING SERVICES

BRIDGE NO. 24-0318 | POST MILE 2.61

65TH STREET UNDERCROSSING (WIDEN)
STRUCTURE APPROACH TYPE N(30D)

DS OSD 2147A (ENGLISH STANDARD DRAWING "XS" BORDER REV. 01/11/08)

ORIGINAL SCALE IN INCHES FOR REDUCED PLANS 0 1 2 3

CU 03263
EA 1C12U1

DISREGARD PRINTS BEARING EARLIER REVISION DATES 2-25-09

REVISION DATES (PRELIMINARY STAGE ONLY)

SHEET 14 OF 19

USERNAME => trstrk

24-0318-k-xs-n30d.dgn

DATE PLOTTED => 05-JAN-2010 TIME PLOTTED => 12:40

DIST.	COUNTY	ROUTE	MILE POST TOTAL PROJECT	SHEET NO.	TOTAL SHEETS
03	Sac	50	R0.6/17.4	229	233

REGISTERED ENGINEER - CIVIL 8-6-09

1-4-10
PLANS APPROVAL DATE

REGISTERED PROFESSIONAL ENGINEER Ali Asnaashari No. 36092 Exp. 6-30-10 CIVIL STATE OF CALIFORNIA

The State of California or its officers or agents shall not be responsible for the accuracy or completeness of electronic copies of this plan sheet.

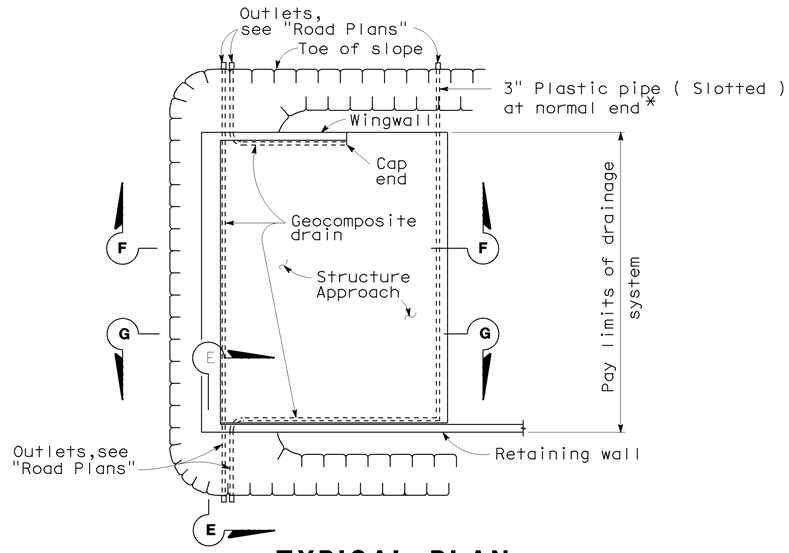

TYPICAL PLAN

1"=10'

*For pipe layout at staggered end,see "Detail B".

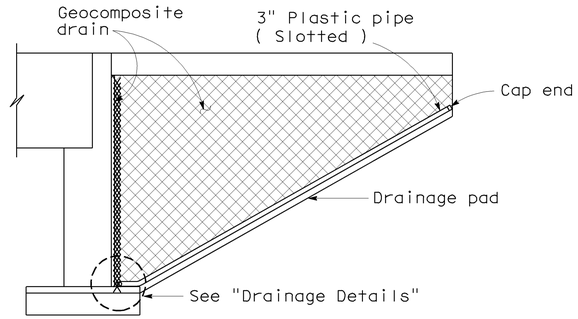

CANTILEVER WINGWALL SECTION F-F

1/4"=1'-0"

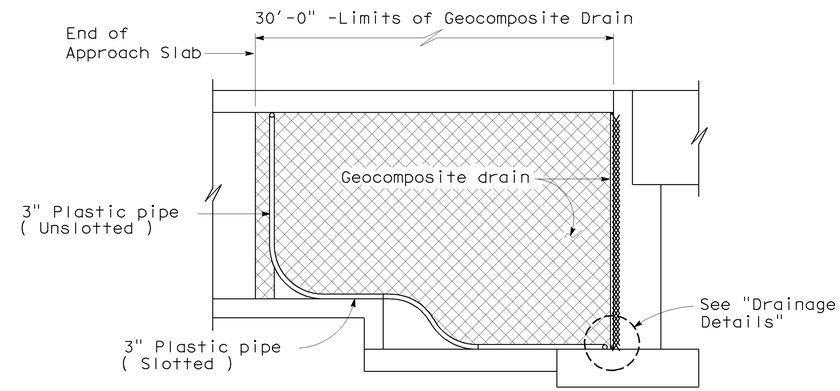

RETAINING WALL WINGWALL SECTION G-G

1/4"=1'-0"

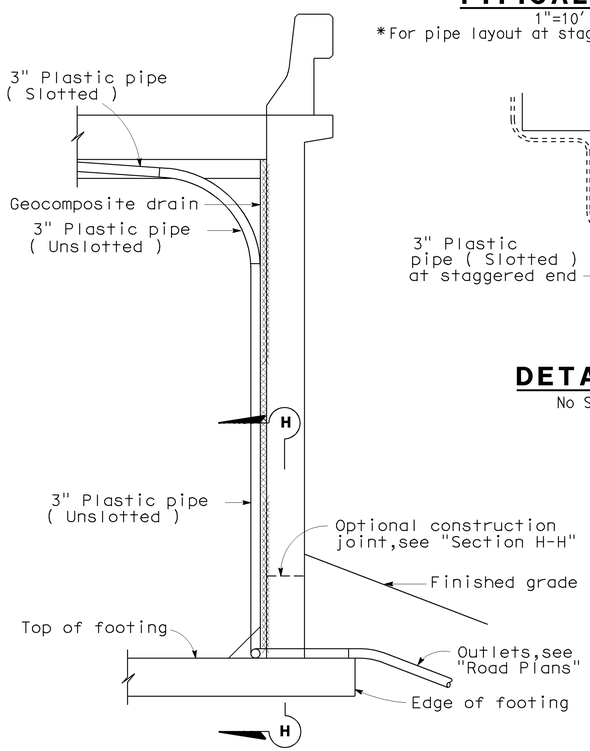

SECTION E-E

1/2"=1'-0"

NOTE: Bends and junctions in 3" plastic pipe are 30" radius min.

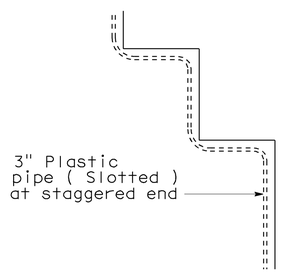

DETAIL B

No Scale

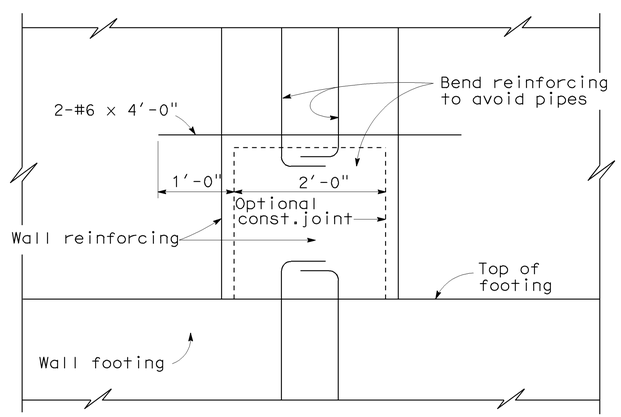

SECTION H-H

1"=1'-0"

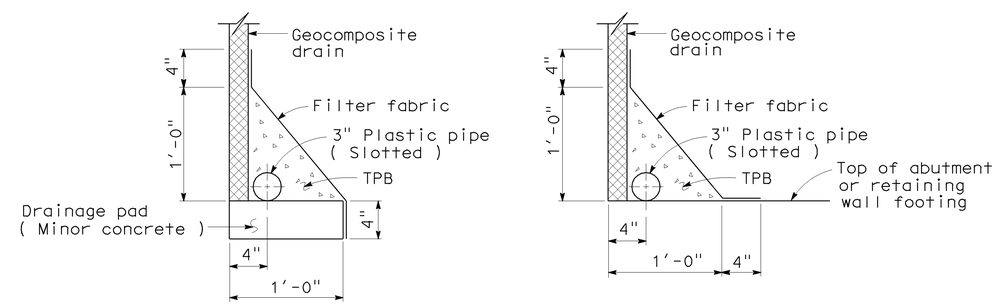

WITHOUT FOOTING WITH FOOTING

DRAINAGE DETAILS

1 1/2"=1'-0"

NOTE:
THE CONTRACTOR SHALL VERIFY ALL CONTROLLING FIELD DIMENSIONS BEFORE ORDERING OR FABRICATING ANY MATERIAL.

STANDARD DRAWING

RELEASE DATE 4/23/98	DESIGN BY M.TRAFFALIS	CHECKED E.THORKILDSEN	RELEASED BY
	DETAILS BY R.YEE	CHECKED E.THORKILDSEN	
FILE NO. xs3-110e	SUBMITTED BY M.HA	DRAWING DATE 4/98	OFFICE CHIEF

STATE OF CALIFORNIA DEPARTMENT OF TRANSPORTATION

DIVISION OF ENGINEERING SERVICES

BRIDGE NO. 24-0318
MILE POST 2.61

65TH STREET UNDERCROSSING (WIDEN)
STRUCTURE APPROACH DRAINAGE DETAILS

DS OSD 2147A (ENGLISH) (REV. X/XX/XX)

ORIGINAL SCALE IN INCHES FOR REDUCED PLANS 0 1 2 3

CU 03263
EA 1C12U1

DISREGARD PRINTS BEARING EARLIER REVISION DATES 2-24-09

REVISION DATES (PRELIMINARY STAGE ONLY)

SHEET 15 OF 19

USERNAME => trstrk

24-0318-11-xs-drainage.dgn

DATE PLOTTED => 05-JAN-2010 TIME PLOTTED => 12:40

DIST	COUNTY	ROUTE	POST MILES TOTAL PROJECT	SHEET No	TOTAL SHEETS
03	Sac	50	R0.6/17.4	230	233

CERTIFIED ENGINEERING GEOLOGIST — DATE 7-28-09

1-4-10
PLANS APPROVAL DATE

REGISTERED PROFESSIONAL GEOLOGIST — Luis M Paredes-mejia — No. 2329 — Exp. 1-31-10 — CERTIFIED ENGINEERING GEOLOGIST — STATE OF CALIFORNIA

The State of California or its officers or agents shall not be responsible for the accuracy or completeness of electronic copies of this plan sheet.

This LOTB sheet was prepared in accordance with the Caltrans Soil & Rock Logging, Classification, & Presentation Manual (June 2007).

BENCH MARK

DATUM

SUHV243181

Fnd Chiseled "X" in Conc. SW
551.50′ Rt. ℄ Rte 50
Sta. 280+38.00
N 1,962,304.99
E 6,725,263.80
Elev. = 36.15

SUH243183

Fnd Set PK Nail in AC
316.11′ Rt ℄ Rte 50
Sta. 279+79.69
N 1,962,547.03
E 6,725,232.78
Elev. = 37.00

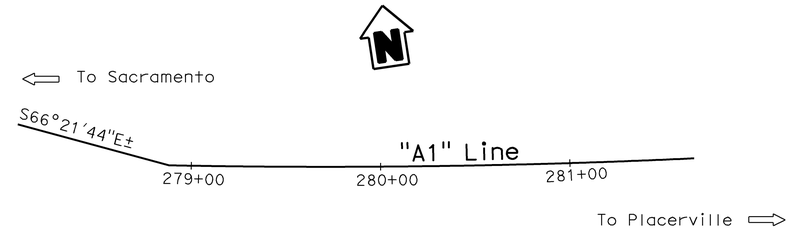

R-09-001
3.7

PLAN
1" = 40′

Notes:

1. Boring was advanced using a self-casing 3.7" wireline drill system.
2. Standard Penetration Tests utilized a CME automatic hammer from drill rig CME 75.
3. Piezometer installed to maximum depth explored.

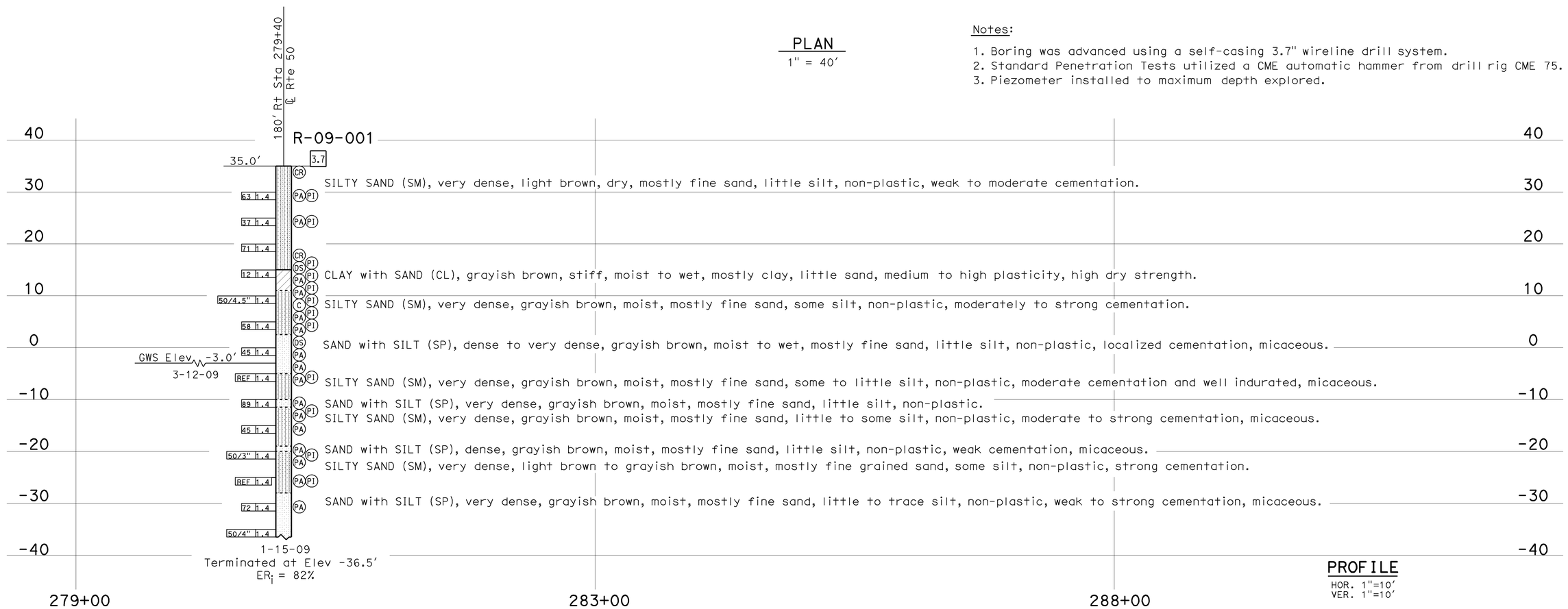

PROFILE
HOR. 1"=10′
VER. 1"=10′

ENGINEERING SERVICES	GEOTECHNICAL SERVICES	STATE OF CALIFORNIA DEPARTMENT OF TRANSPORTATION	DIVISION OF ENGINEERING SERVICES STRUCTURE DESIGN DESIGN BRANCH 3	BRIDGE NO. 24-0318 / POST MILES 2.61	65TH STREET UNDERCROSSING (WIDEN) LOG OF TEST BORINGS 1 OF 4
FUNCTIONAL SUPERVISOR NAME: D. Brittsan	DRAWN BY: F. Nguyen 5/09 / CHECKED BY: M. Kiesse	FIELD INVESTIGATION BY: Luis Paredes-Mejia	CU 03263 EA 1C12U1	DISREGARD PRINTS BEARING EARLIER REVISION DATES	SHEET 16 OF 19

OGS CIVIL LOG OF TEST BORINGS SHEET

ORIGINAL SCALE IN INCHES FOR REDUCED PLANS 0 1 2 3

REVISION DATES: 06-22-09 07-22-09

FILE => 24-0318-ltb-1of4.dgn

USERNAME => ttrstrk DATE PLOTTED => 05-JAN-2010 TIME PLOTTED => 12:40

DIST	COUNTY	ROUTE	POST MILES TOTAL PROJECT	SHEET No	TOTAL SHEETS
03	Sac	50	R0.6/17.4	231	233

CERTIFIED ENGINEERING GEOLOGIST — DATE 7-28-09

1-4-10
PLANS APPROVAL DATE

REGISTERED PROFESSIONAL GEOLOGIST — Luis M Paredes-mejia — No. 2329 — Exp. 1-31-10 — CERTIFIED ENGINEERING GEOLOGIST — STATE OF CALIFORNIA

The State of California or its officers or agents shall not be responsible for the accuracy or completeness of electronic copies of this plan sheet.

REFERENCE: CALTRANS SOIL & ROCK LOGGING, CLASSIFICATION, AND PRESENTATION MANUAL (JUNE 2007)

CEMENTATION

Description	Criteria
Weak	Crumbles or breaks with handling or little finger pressure.
Moderate	Crumbles or breaks with considerable finger pressure.
Strong	Will not crumble or break with finger pressure.

CONSISTENCY OF COHESIVE SOILS

Description	Unconfined Compressive Strength (tsf)	Pocket Penetrometer Measurement (tsf)	Torvane Measurement (tsf)	Field Approximation
Very Soft	< 0.25	< 0.25	< 0.12	Easily penetrated several inches by fist
Soft	0.25 to 0.50	0.25 to 0.50	0.12 to 0.25	Easily penetrated several inches by thumb
Medium Stiff	0.50 to 1.0	0.50 to 1.0	0.25 to 0.50	Penetrated several inches by thumb with moderate effort
Stiff	1 to 2	1 to 2	0.50 to 1.0	Readily indented by thumb but penetrated only with great effort
Very Stiff	2 to 4	2 to 4	1.0 to 2.0	Readily indented by thumbnail
Hard	> 4.0	> 4.0	> 2.0	Indented by thumbnail with difficulty

BOREHOLE IDENTIFICATION

Symbol	Hole Type	Description
Size	A	Auger Boring
Size	R P	Rotary drilled boring Rotary percussion boring (air)
Size	R	Rotary drilled diamond core
Size	HD HA	Hand driven (1-inch soil tube) Hand Auger
●	D	Dynamic Cone Penetration Boring
▲	CPT	Cone Penetration Test (ASTM D 5778-95)
⬚	O	Other

Note: Size in inches.

PLASTICITY OF FINE-GRAINED SOILS

Description	Criteria
Nonplastic	A 1/8-inch thread cannot be rolled at any water content.
Low	The thread can barely be rolled and the lump cannot be formed when drier than the plastic limit.
Medium	The thread is easy to roll and not much time is required to reach the plastic limit. The thread cannot be rerolled after reaching the plastic limit. The lump crumbles when drier than the plastic limit.
High	It takes considerable time rolling and kneading to reach the plastic limit. The thread can be rerolled several times after reaching the plastic limit. The lump can be formed without crumbling when drier than the plastic limit.

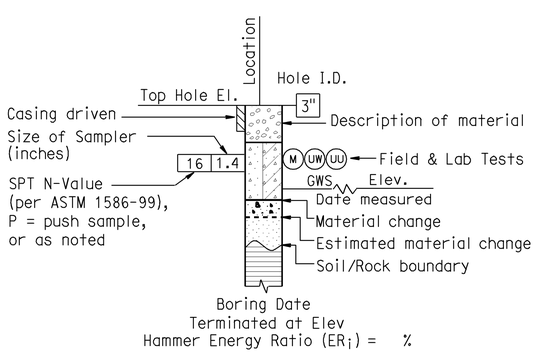

ROTARY BORING

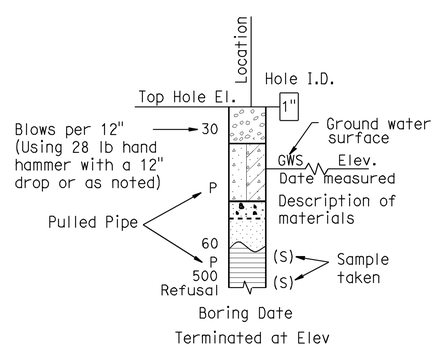

HAND BORING

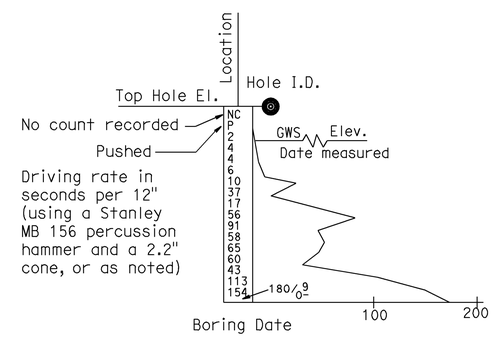

DYNAMIC CONE PENETRATION BORING

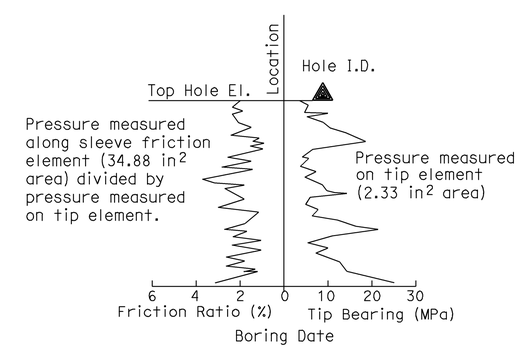

CONE PENETRATION TEST (CPT) SOUNDING

ENGINEERING SERVICES	GEOTECHNICAL SERVICES	STATE OF CALIFORNIA DEPARTMENT OF TRANSPORTATION	DIVISION OF ENGINEERING SERVICES STRUCTURE DESIGN DESIGN BRANCH 3	BRIDGE NO. 24-0318 / POST MILE 2.61	65TH STREET UNDERCROSSING (WIDEN) LOG OF TEST BORINGS 2 OF 4
	PREPARED BY: F. Nguyen 5/09				

GS LOTB SOIL LEGEND

ORIGINAL SCALE IN INCHES FOR REDUCED PLANS 0 1 2 3

CU 03263
EA 1C12U1

DISREGARD PRINTS BEARING EARLIER REVISION DATES

REVISION DATES

SHEET 17 OF 19

FILE => 24-0318-1tb-2of4.dgn

USERNAME => ttrstrk DATE PLOTTED => 05-JAN-2010 TIME PLOTTED => 12:40

DIST	COUNTY	ROUTE	POST MILES TOTAL PROJECT	SHEET No	TOTAL SHEETS
03	Sac	50	R0.6/17.4	232	233

CERTIFIED ENGINEERING GEOLOGIST — DATE 7-28-09

1-4-10
PLANS APPROVAL DATE

REGISTERED PROFESSIONAL GEOLOGIST — Luis M. Paredes-mejia — No. 2329 — Exp. 1-31-10 — CERTIFIED ENGINEERING GEOLOGIST — STATE OF CALIFORNIA

The State of California or its officers or agents shall not be responsible for the accuracy or completeness of electronic copies of this plan sheet.

REFERENCE: CALTRANS SOIL & ROCK LOGGING, CLASSIFICATION, AND PRESENTATION MANUAL (JUNE 2007)

GROUP SYMBOLS AND NAMES

Graphic/Symbol	Group Names
GW	Well-graded GRAVEL Well-graded GRAVEL with SAND
GP	Poorly graded GRAVEL Poorly graded GRAVEL with SAND
GW-GM	Well-graded GRAVEL with SILT Well-graded GRAVEL with SILT and SAND
GW-GC	Well-graded GRAVEL with CLAY (or SILTY CLAY) Well-graded GRAVEL with CLAY and SAND (or SILTY CLAY and SAND)
GP-GM	Poorly graded GRAVEL with SILT Poorly graded GRAVEL with SILT and SAND
GP-GC	Poorly graded GRAVEL with CLAY (or SILTY CLAY) Poorly graded GRAVEL with CLAY and SAND (or SILTY CLAY and SAND)
GM	SILTY GRAVEL SILTY GRAVEL with SAND
GC	CLAYEY GRAVEL CLAYEY GRAVEL with SAND
GC-GM	SILTY, CLAYEY GRAVEL SILTY, CLAYEY GRAVEL with SAND
SW	Well-graded SAND Well-graded SAND with GRAVEL
SP	Poorly graded SAND Poorly graded SAND with GRAVEL
SW-SM	Well-graded SAND with SILT Well-graded SAND with SILT and GRAVEL
SW-SC	Well-graded SAND with CLAY (or SILTY CLAY) Well-graded SAND with CLAY and GRAVEL (or SILTY CLAY and GRAVEL)
SP-SM	Poorly graded SAND with SILT Poorly graded SAND with SILT and GRAVEL
SP-SC	Poorly graded SAND with CLAY (or SILTY CLAY) Poorly graded SAND with CLAY and GRAVEL (or SILTY CLAY and GRAVEL)
SM	SILTY SAND SILTY SAND with GRAVEL
SC	CLAYEY SAND CLAYEY SAND with GRAVEL
SC-SM	SILTY, CLAYEY SAND SILTY, CLAYEY SAND with GRAVEL
PT	PEAT
	COBBLES COBBLES and BOULDERS BOULDERS

Graphic/Symbol	Group Names
CL	Lean CLAY Lean CLAY with SAND Lean CLAY with GRAVEL SANDY lean CLAY SANDY lean CLAY with GRAVEL GRAVELLY lean CLAY GRAVELLY lean CLAY with SAND
CL-ML	SILTY CLAY SILTY CLAY with SAND SILTY CLAY with GRAVEL SANDY SILTY CLAY SANDY SILTY CLAY with GRAVEL GRAVELLY SILTY CLAY GRAVELLY SILTY CLAY with SAND
ML	SILT SILT with SAND SILT with GRAVEL SANDY SILT SANDY SILT with GRAVEL GRAVELLY SILT GRAVELLY SILT with SAND
OL	ORGANIC lean CLAY ORGANIC lean CLAY with SAND ORGANIC lean CLAY with GRAVEL SANDY ORGANIC lean CLAY SANDY ORGANIC lean CLAY with GRAVEL GRAVELLY ORGANIC lean CLAY GRAVELLY ORGANIC lean CLAY with SAND
OL	ORGANIC SILT ORGANIC SILT with SAND ORGANIC SILT with GRAVEL SANDY ORGANIC SILT SANDY ORGANIC SILT with GRAVEL GRAVELLY ORGANIC SILT GRAVELLY ORGANIC SILT with SAND
CH	Fat CLAY Fat CLAY with SAND Fat CLAY with GRAVEL SANDY fat CLAY SANDY fat CLAY with GRAVEL GRAVELLY fat CLAY GRAVELLY fat CLAY with SAND
MH	Elastic SILT Elastic SILT with SAND Elastic SILT with GRAVEL SANDY elastic SILT SANDY elastic SILT with GRAVEL GRAVELLY elastic SILT GRAVELLY elastic SILT with SAND
OH	ORGANIC fat CLAY ORGANIC fat CLAY with SAND ORGANIC fat CLAY with GRAVEL SANDY ORGANIC fat CLAY SANDY ORGANIC fat CLAY with GRAVEL GRAVELLY ORGANIC fat CLAY GRAVELLY ORGANIC fat CLAY with SAND
OH	ORGANIC elastic SILT ORGANIC elastic SILT with SAND ORGANIC elastic SILT with GRAVEL SANDY ORGANIC elastic SILT SANDY ORGANIC elastic SILT with GRAVEL GRAVELLY ORGANIC elastic SILT GRAVELLY ORGANIC elastic SILT with SAND
OL/OH	ORGANIC SOIL ORGANIC SOIL with SAND ORGANIC SOIL with GRAVEL SANDY ORGANIC SOIL SANDY ORGANIC SOIL with GRAVEL GRAVELLY ORGANIC SOIL GRAVELLY ORGANIC SOIL with SAND

FIELD AND LABORATORY TESTING

- (C) Consolidation (ASTM D 2435)
- (CL) Collapse Potential (ASTM D 5333)
- (CP) Compaction Curve (CTM 216)
- (CR) Corrosivity Testing (CTM 643, CTM 422, CTM 417)
- (CU) Consolidated Undrained Triaxial (ASTM D 4767)
- (DS) Direct Shear (ASTM D 3080)
- (EI) Expansion Index (ASTM D 4829)
- (M) Moisture Content (ASTM D 2216)
- (OC) Organic Content-% (ASTM D 2974)
- (P) Permeability (CTM 220)
- (PA) Particle Size Analysis (ASTM D 422)
- (PI) Plasticity Index (AASHTO T 90) Liquid Limit (AASHTO T 89)
- (PL) Point Load Index (ASTM D 5731)
- (PM) Pressure Meter
- (PP) Pocket Penetrometer
- (R) R-Value (CTM 301)
- (SE) Sand Equivalent (CTM 217)
- (SG) Specific Gravity (AASHTO T 100)
- (SL) Shrinkage Limit (ASTM D 427)
- (SW) Swell Potential (ASTM D 4546)
- (TV) Pocket Torvane
- (UC) Unconfined Compression-Soil (ASTM D 2166) Unconfined Compression-Rock (ASTM D 2938)
- (UU) Unconsolidated Undrained Triaxial (ASTM D 2850)
- (UW) Unit Weight (ASTM D 4767)
- (VS) Vane Shear (AASHTO T 223)

APPARENT DENSITY OF COHESIONLESS SOILS

Description	SPT N_{60} (Blows / 12 inches)
Very loose	0 - 4
Loose	5 - 10
Medium Dense	11 - 30
Dense	31 - 50
Very Dense	> 50

MOISTURE

Description	Criteria
Dry	Absence of moisture, dusty, dry to the touch
Moist	Damp but no visible water
Wet	Visible free water, usually soil is below water table

PERCENT OR PROPORTION OF SOILS

Description	Criteria
Trace	Particles are present but estimated to be less than 5%
Few	5 to 10%
Little	15 to 25%
Some	30 to 45%
Mostly	50 to 100%

PARTICLE SIZE

Description		Size
Boulder		> 12"
Cobble		3" to 12"
Gravel	Coarse	3/4" to 3"
	Fine	No. 4 to 3/4"
Sand	Coarse	No. 10 to No. 4
	Medium	No. 40 to No. 10
	Fine	No. 200 to No. 40

ENGINEERING SERVICES

GEOTECHNICAL SERVICES
PREPARED BY: F. Nguyen 5/09

STATE OF CALIFORNIA DEPARTMENT OF TRANSPORTATION

DIVISION OF ENGINEERING SERVICES STRUCTURE DESIGN
DESIGN BRANCH 3

BRIDGE NO. 24-0318
POST MILE 2.61

65TH STREET UNDERCROSSING (WIDEN)
LOG OF TEST BORINGS 3 OF 4

GS LOTB SOIL LEGEND

ORIGINAL SCALE IN INCHES FOR REDUCED PLANS 0 1 2 3

CU 03263
EA 1C12U1

DISREGARD PRINTS BEARING EARLIER REVISION DATES

REVISION DATES

SHEET 18 OF 19

FILE => 24-0318-ltb-3of4.dgn

USERNAME => trstrk DATE PLOTTED => 05-JAN-2010 TIME PLOTTED => 12:41

DIST.	COUNTY	ROUTE	POST MILES—TOTAL PROJECT	SHEET NO.	TOTAL SHEETS
03	Sac	50	R0.0/R8.9	243	273

DIVISION ECHELON SUPERVISOR — REGISTERED CIVIL ENGINEER NO. 8844

DATE APPROVED December 1 1969

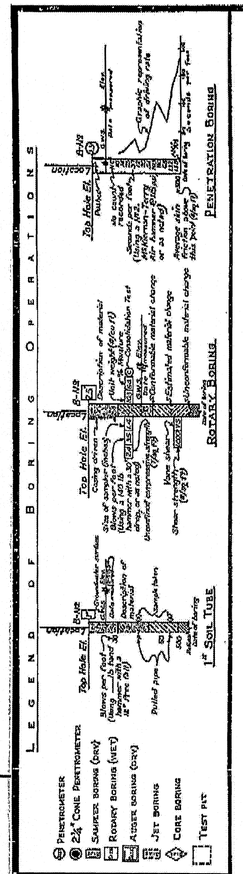

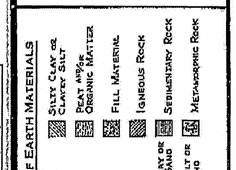

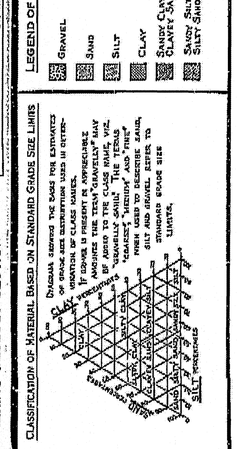

NOTE: Classification of earth material as shown on this sheet is based upon field inspection and is not to be construed to imply mechanical analysis.

CHECKED — Approval Recommended

BRIDGE DEPARTMENT
ENGINEERING GEOLOGY SECTION

Bench Mark
TBM #38 Elev. 39.32
Bolt on fire hydrant on
Northwest corner of 65th St.
and 2nd Ave.

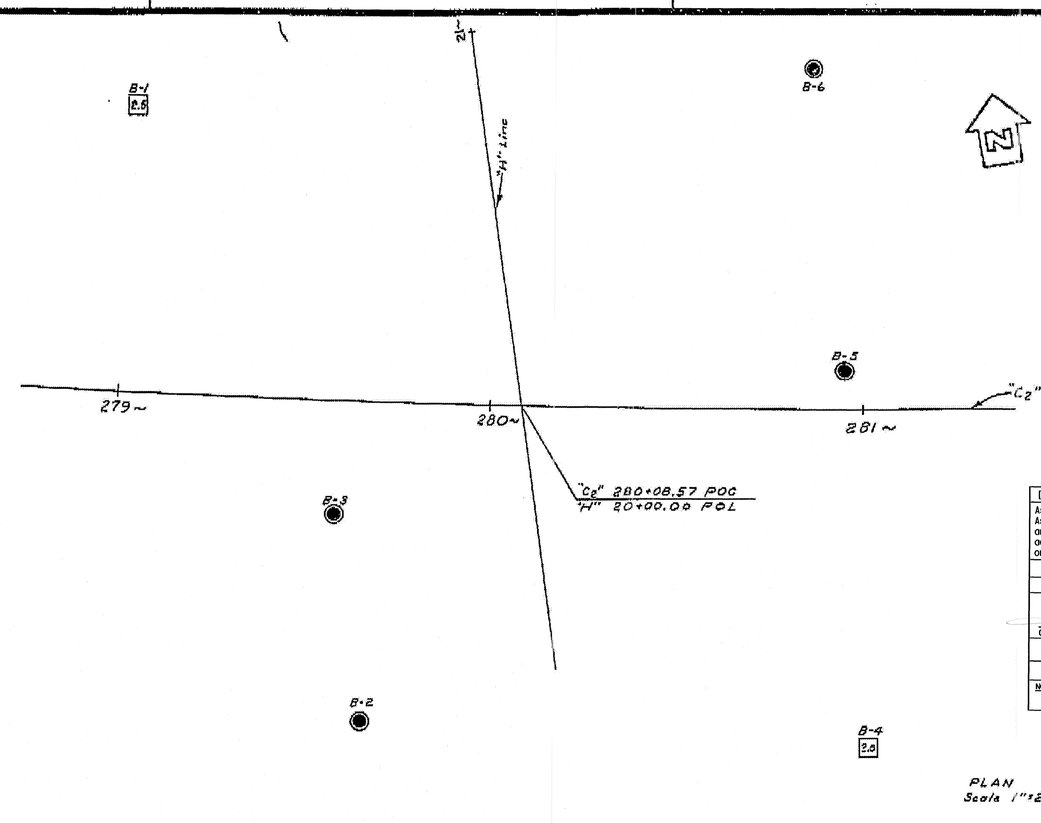

PLAN
Scale 1"=20'

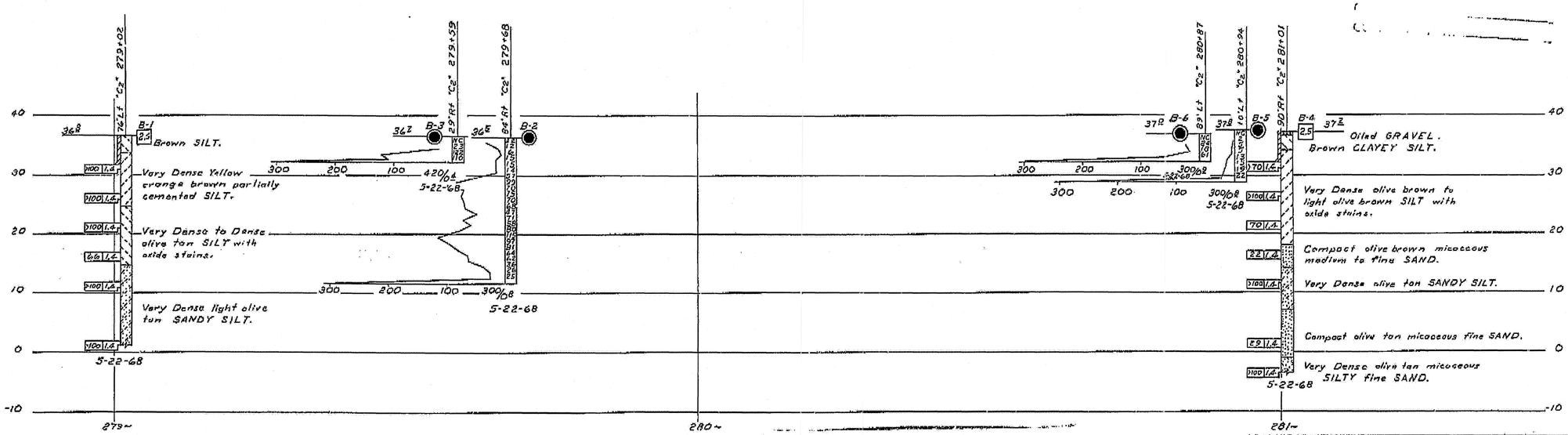

NO GROUND WATER ENCOUNTERED
DURING THIS INVESTIGATION BY
BRIDGE DEPT. GEOLOGY SECTION
DATE May 1968

PROFILE
Scale Vert 1"=10'
Horiz 1"=10'

DIVISION OF ENGINEERING SERVICES - GEOTECHNICAL SERVICES

As-Built Log of Test Borings sheet is considered an informational document only. As such, the State of California registration seal with signature, license number and registration certificate expiration date confirm that this is a true and accurate copy of the original document. This drawing is available and presented only for the convenience of any bidder, contractor or other interested party.

DIST.	COUNTY	ROUTE	POST MILE-TOTAL PROJECT	Sheet No.	Total Sheets
03	Sac	50	R0.6/17.4	233	233

CERTIFIED ENGINEERING GEOLOGIST — DATE 7/21/09

PROFESSIONAL GEOLOGIST — Luis Paredes-Mejia — No. 7189 — Exp. 1-31-10 — CERTIFIED ENGINEERING GEOLOGIST — STATE OF CALIFORNIA

65TH STREET UNDERCROSSING (WIDEN)

LOG OF TEST BORINGS 4 OF 4

NOTE: A COPY OF THIS LOG OF TEST BORINGS IS AVAILABLE AT OFFICE OF STRUCTURE MAINTENANCE AND INVESTIGATIONS, SACRAMENTO, CALIFORNIA

CU: 03
EA: 1C1201

BRIDGE No. 24-0318

Sheet 19 of 19

To accompany plans dated 1-4-10

AS BUILT PLANS
Contract No. 03-100844
Date Completed 11-23-71
Document No. 30001584

STATE OF CALIFORNIA
TRANSPORTATION AGENCY
DEPARTMENT OF PUBLIC WORKS
DIVISION OF HIGHWAYS

65TH STREET UNDERCROSSING

LOG OF TEST BORINGS

BRIDGE NO.	POST MILE	DRAWING NO.	SHEET	OF
24-318 R/L		24318-8	8	8

WO 100641
CU 03204

PR-24318-2
Disregard prints bearing earlier revision dates

REVISION DATES (PRELIMINARY STAGE ONLY) 4/9/68

FILENAME => 24-0318-ltb-4of4.tif