For Earthwork Development Only

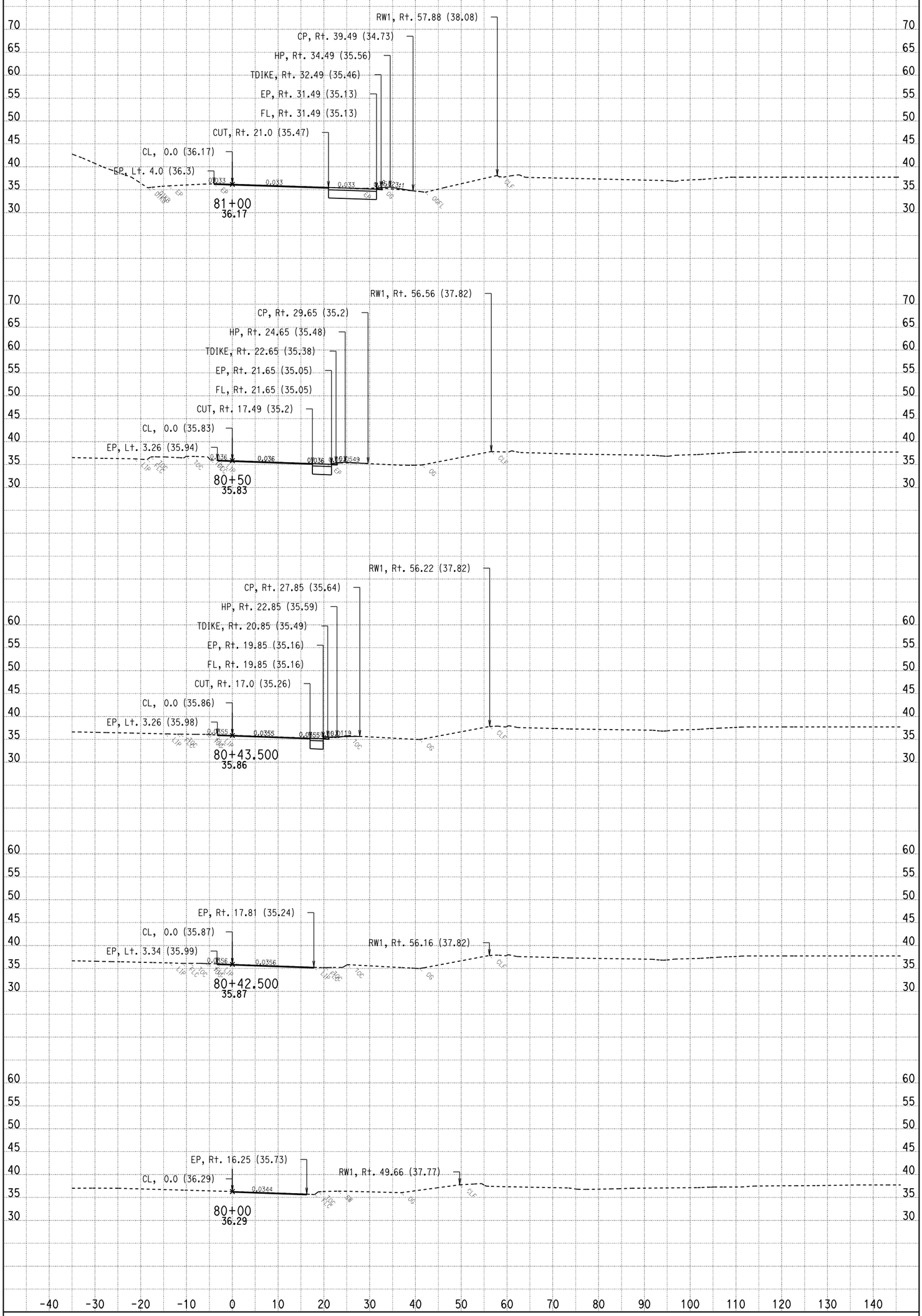

DATE: 9/13/2010

SCALE: 1" = 10' Horiz.
1" = 10' Vert.

All Dimensions Are Feet

HCL2
CROSS SECTIONS

SHEET 1 OF 13

For Earthwork Development Only

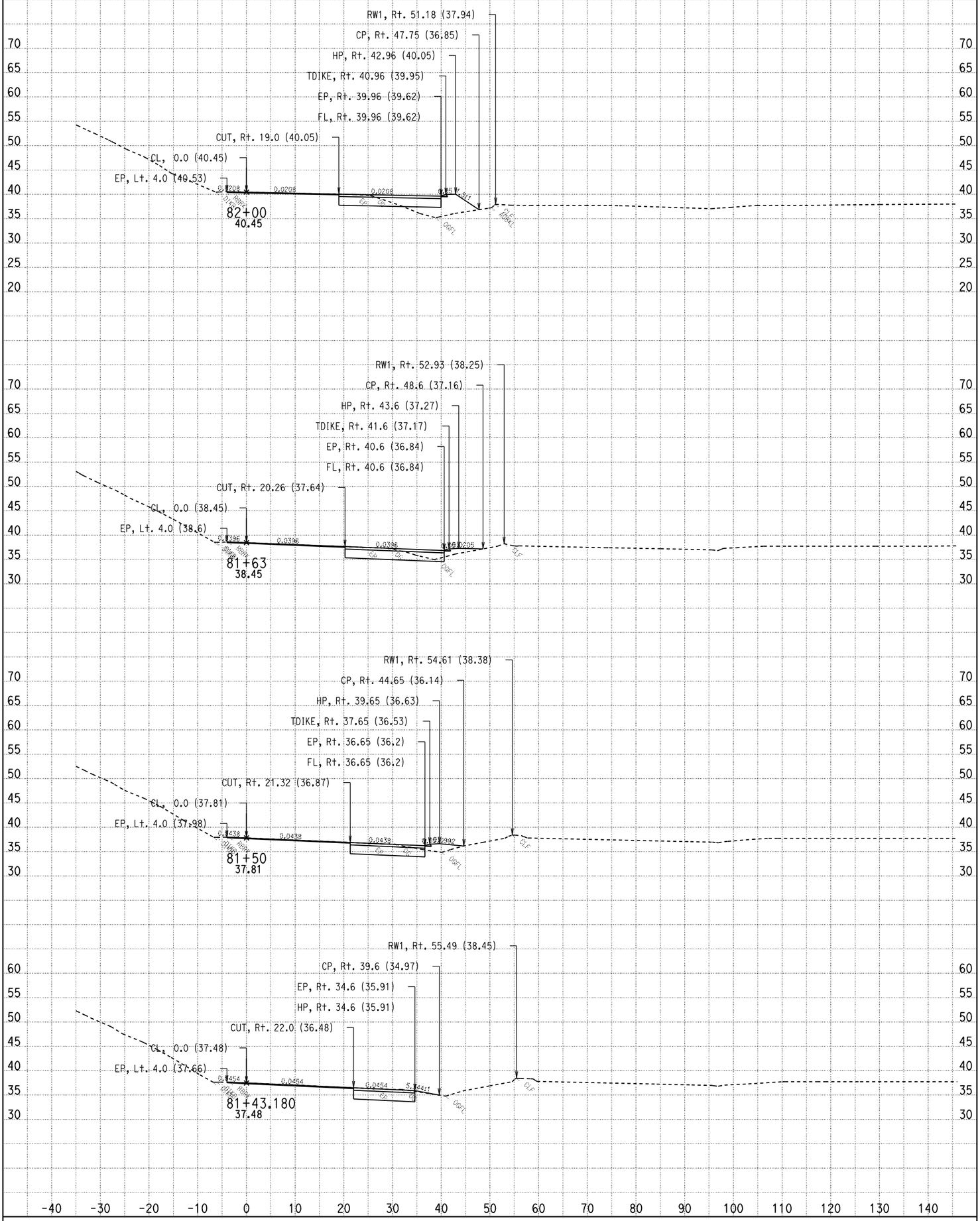

DATE: 9/13/2010

SCALE: 1" = 10' Horiz.
1" = 10' Vert.

All Dimensions Are Feet

HCL2
CROSS SECTIONS

SHEET 2 OF 13

For Earthwork Development Only

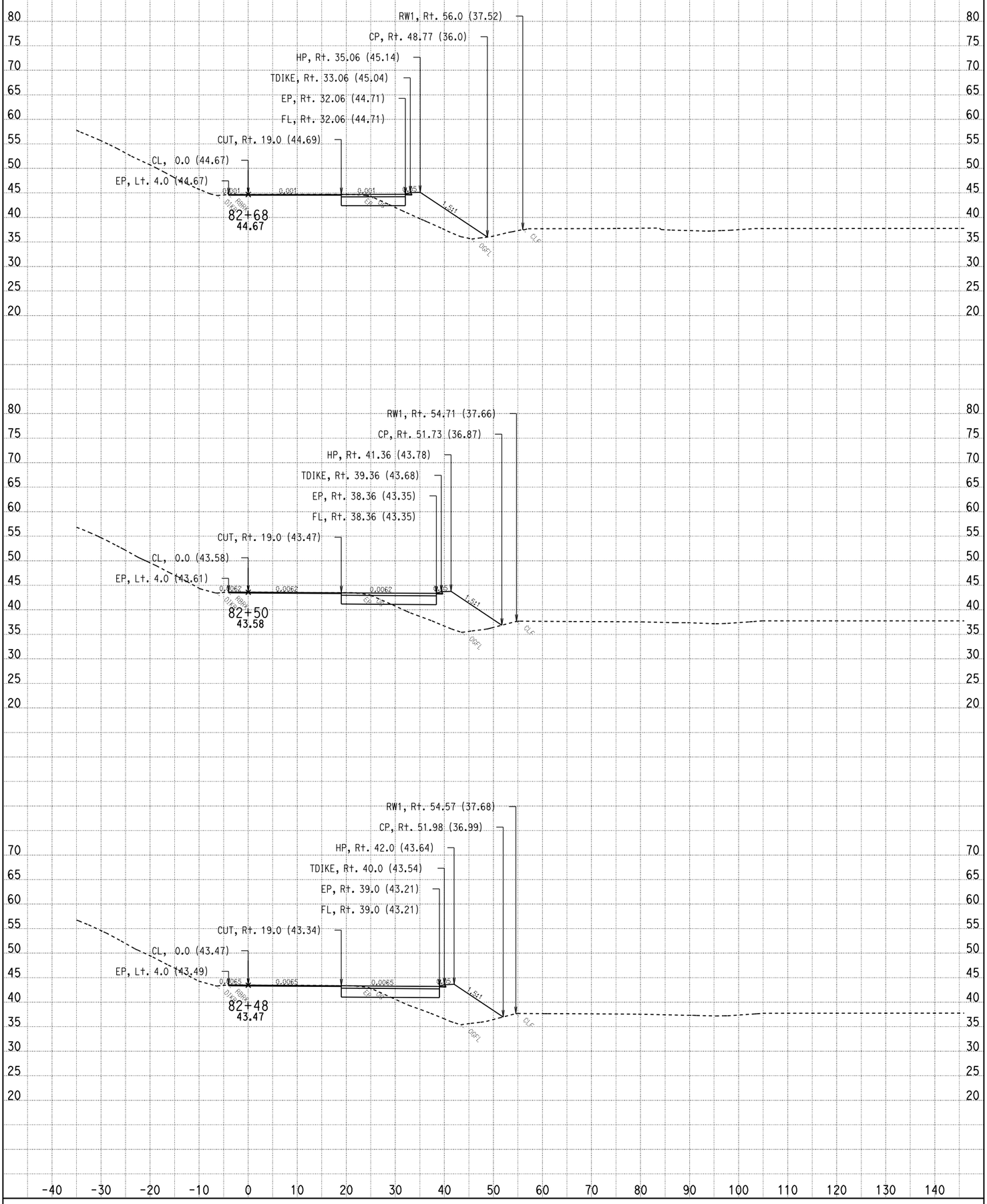

DATE: 9/13/2010

SCALE: 1" = 10' Horiz.
1" = 10' Vert.

All Dimensions Are Feet

HCL2
CROSS SECTIONS

SHEET 3 OF 13

For Earthwork Development Only

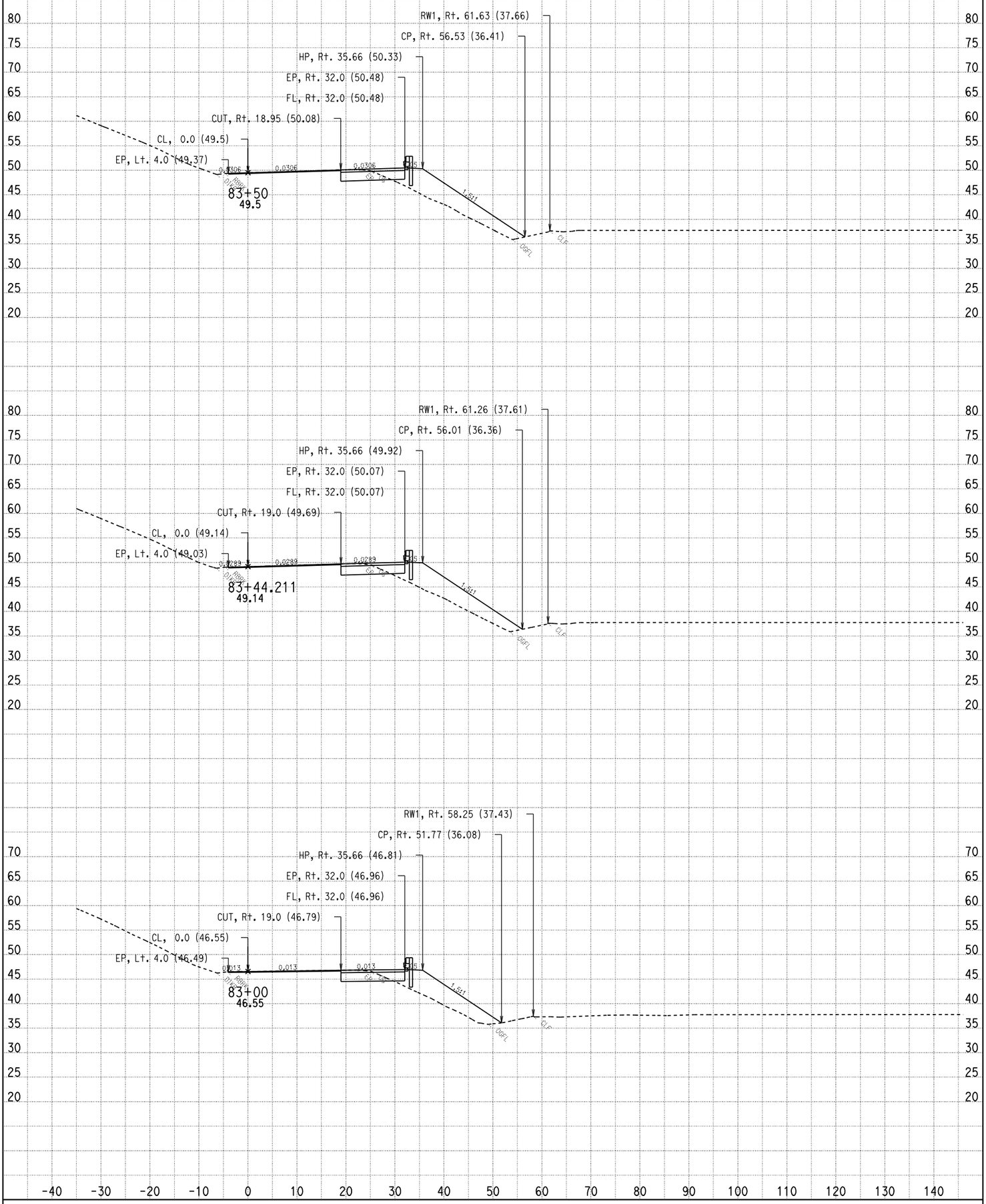

DATE: 9/13/2010

SCALE: 1" = 10' Horiz.
1" = 10' Vert.

All Dimensions Are Feet

HCL2
CROSS SECTIONS

SHEET 4 OF 13

For Earthwork Development Only

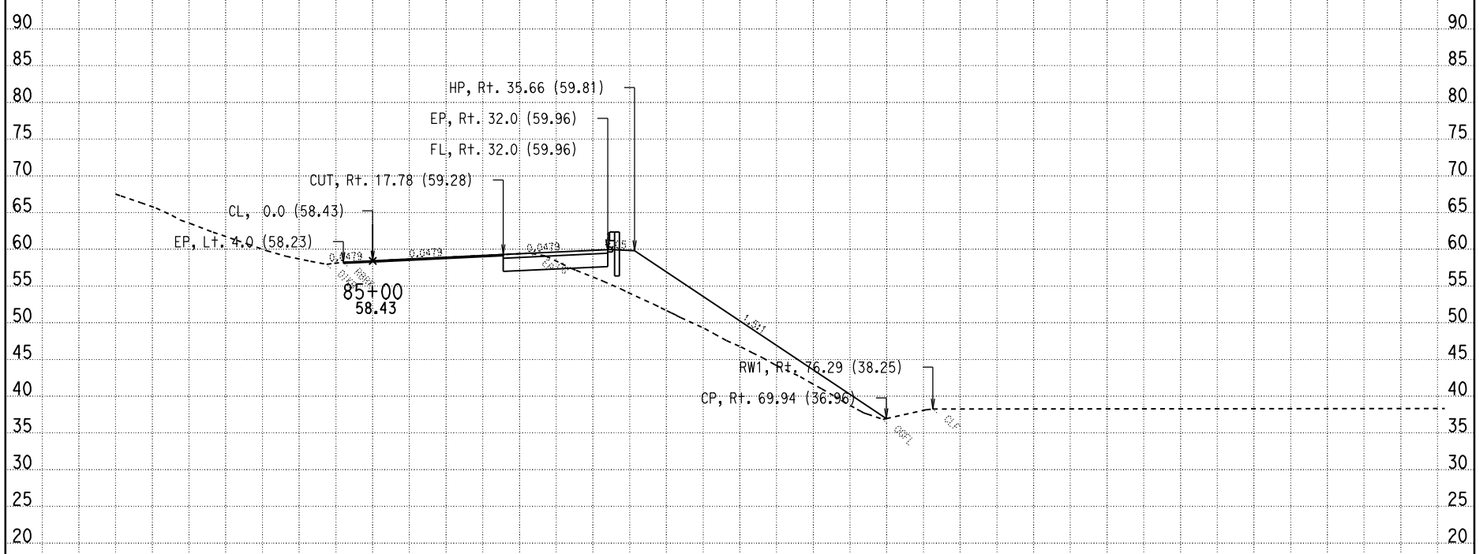

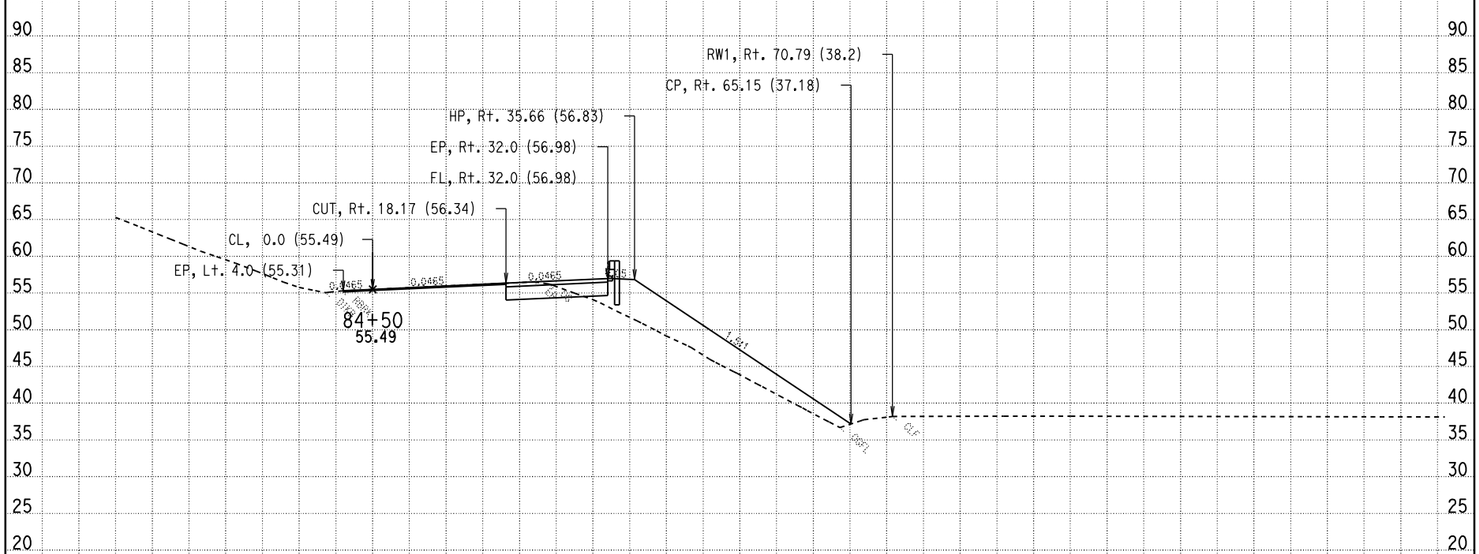

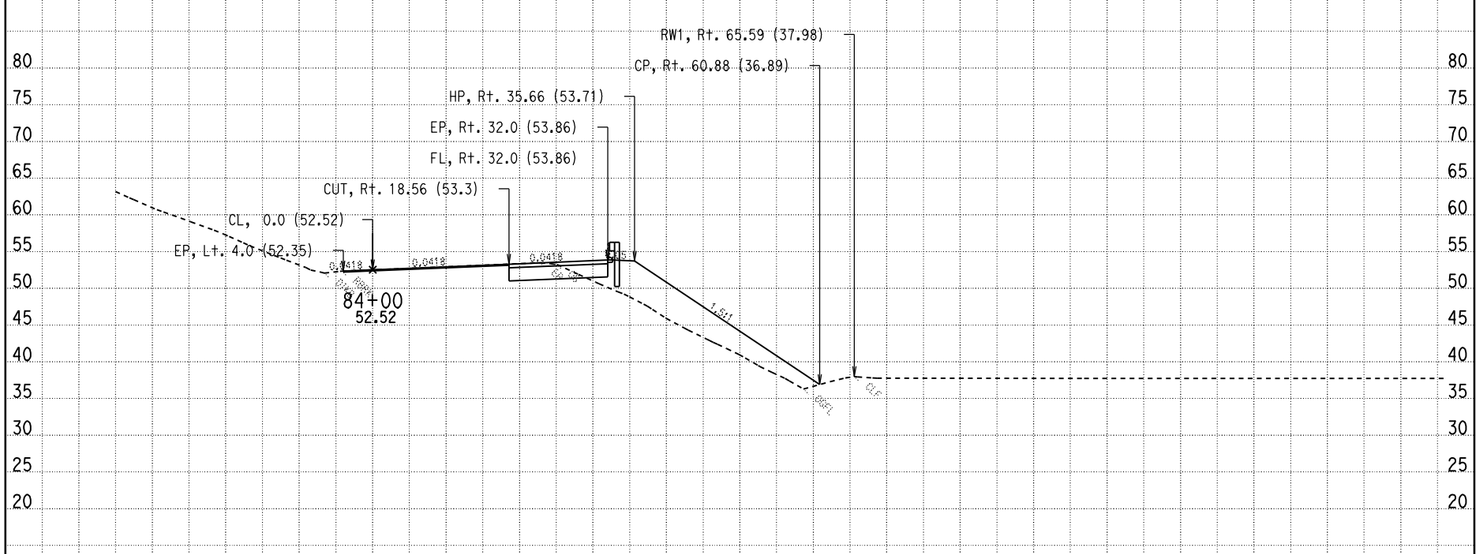

DATE: 9/13/2010

SCALE: 1" = 10' Horiz.
1" = 10' Vert.

All Dimensions Are Feet

HCL2
CROSS SECTIONS

SHEET 5 OF 13

For Earthwork Development Only

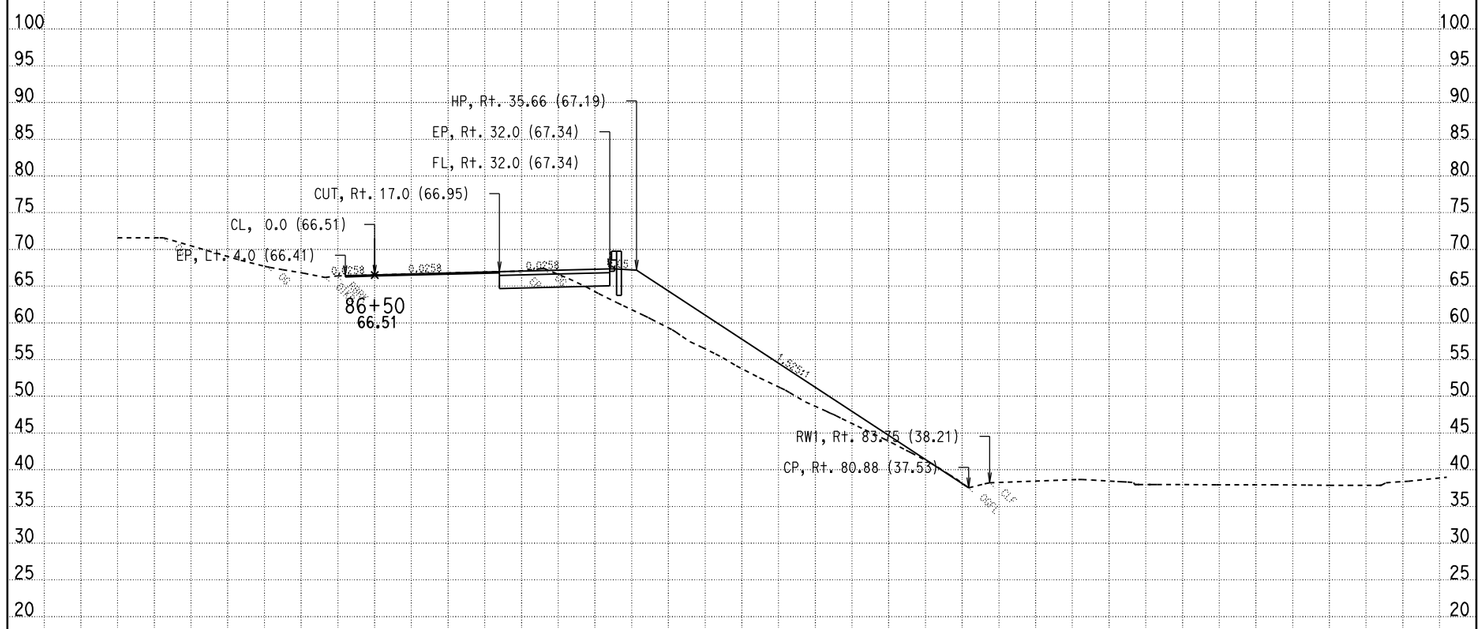

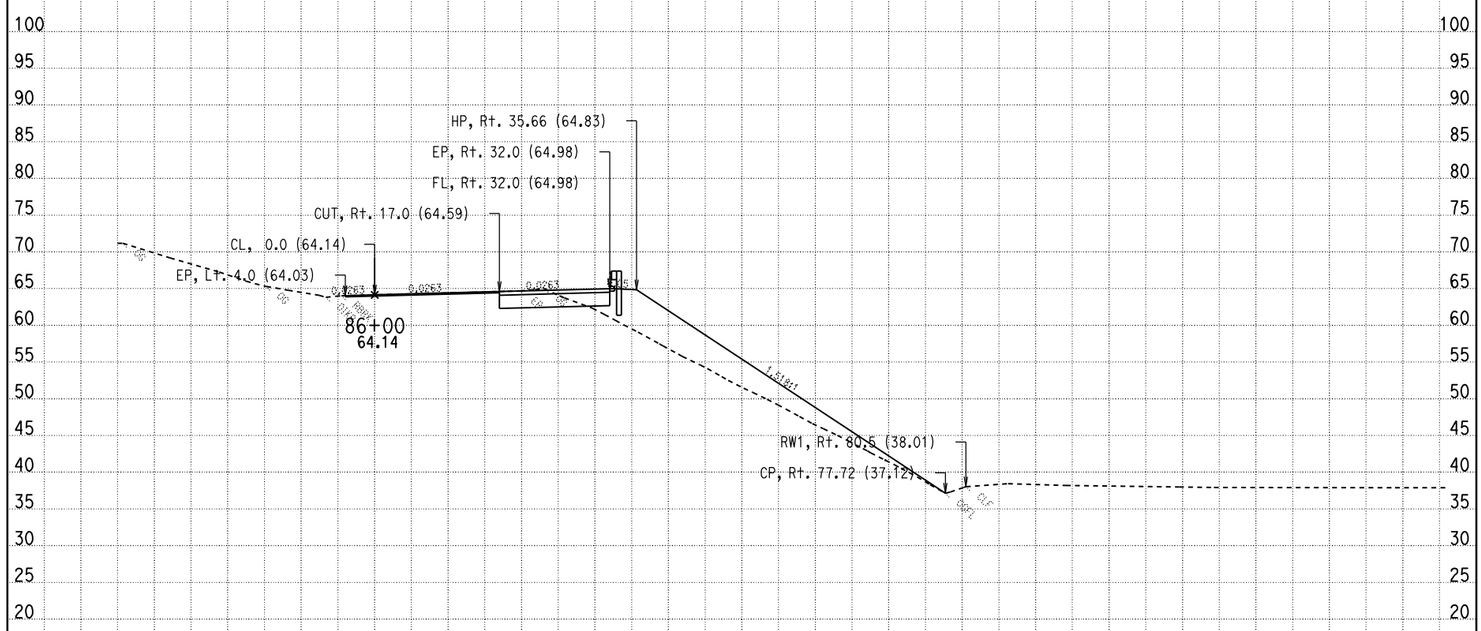

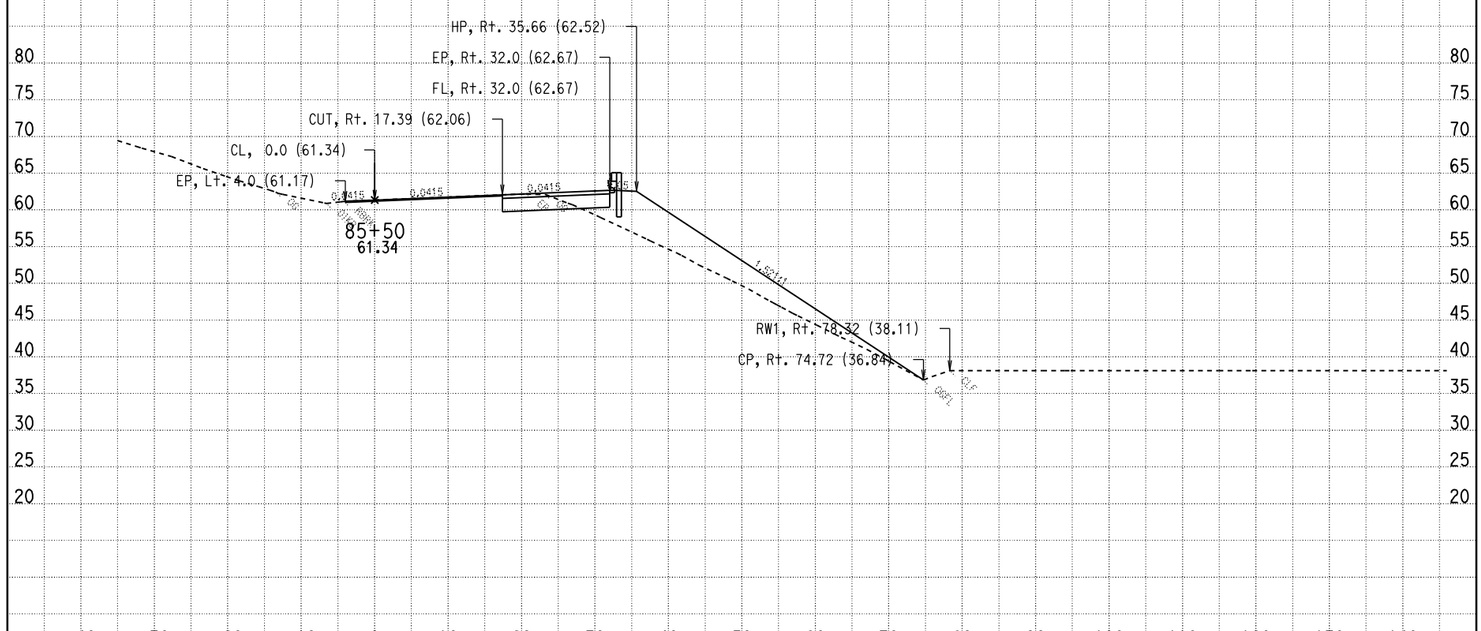

DATE: 9/13/2010

SCALE: 1" = 10' Horiz.
1" = 10' Vert.

All Dimensions Are Feet

HCL2
CROSS SECTIONS

SHEET 6 OF 13

For Earthwork Development Only

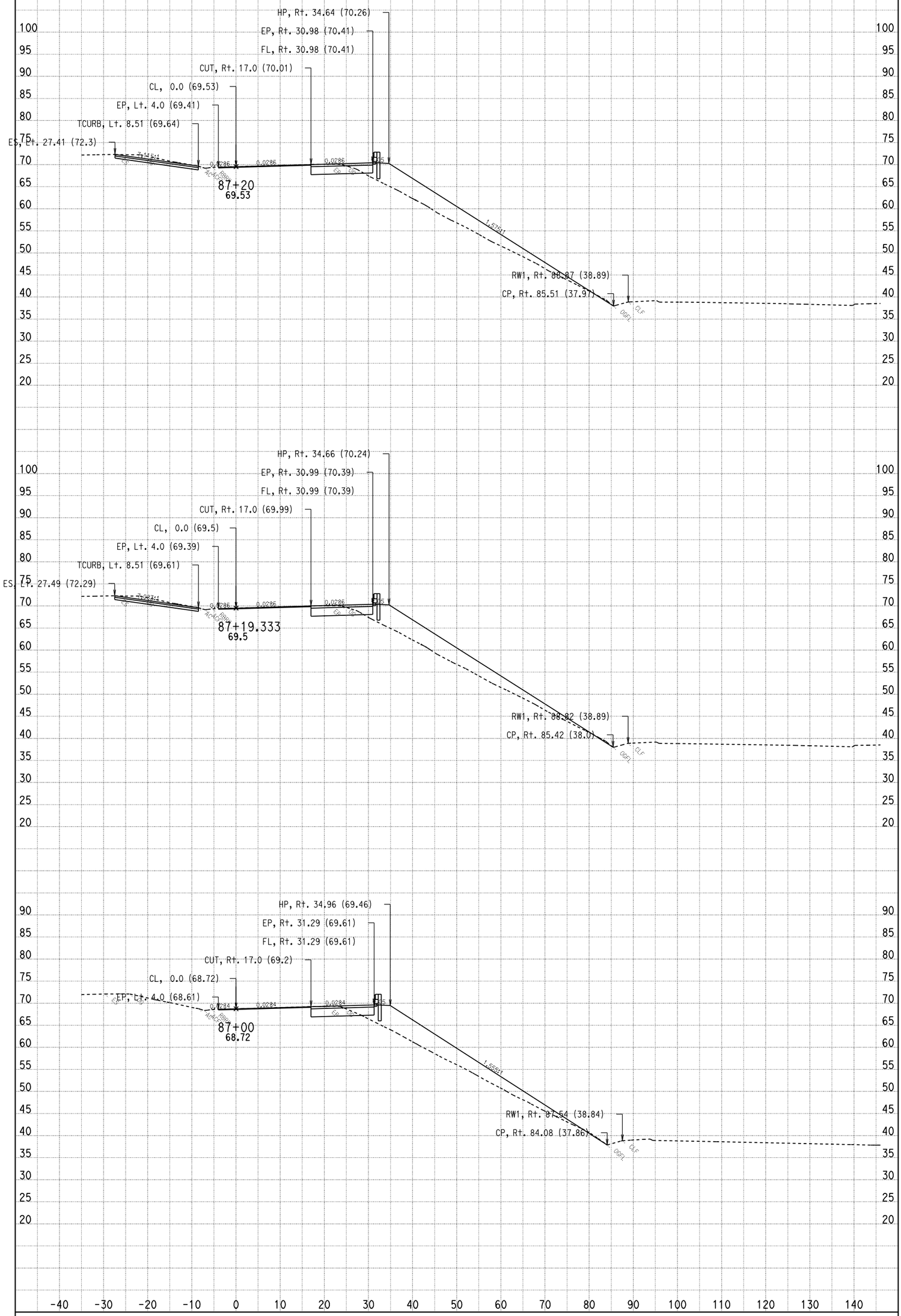

DATE: 9/13/2010

SCALE: 1" = 10' Horiz.
1" = 10' Vert.

All Dimensions Are Feet

HCL2
CROSS SECTIONS

SHEET 7 OF 13

For Earthwork Development Only

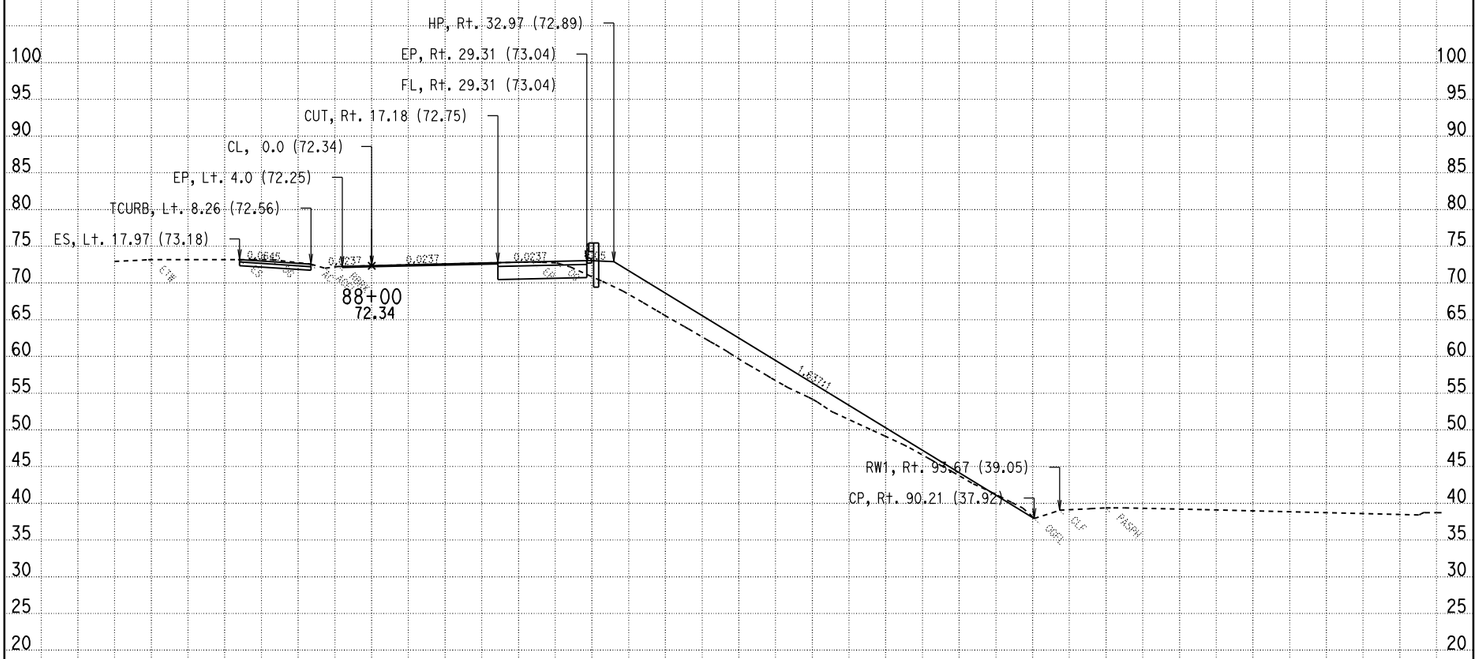
HP, Rt. 32.97 (72.89)
EP, Rt. 29.31 (73.04)
FL, Rt. 29.31 (73.04)
CUT, Rt. 17.18 (72.75)
CL, 0.0 (72.34)
EP, Lt. 4.0 (72.25)
TCURB, Lt. 8.26 (72.56)
ES, Lt. 17.97 (73.18)
0.0645
0.0237
0.0237
0.0237

For Earthwork Development Only

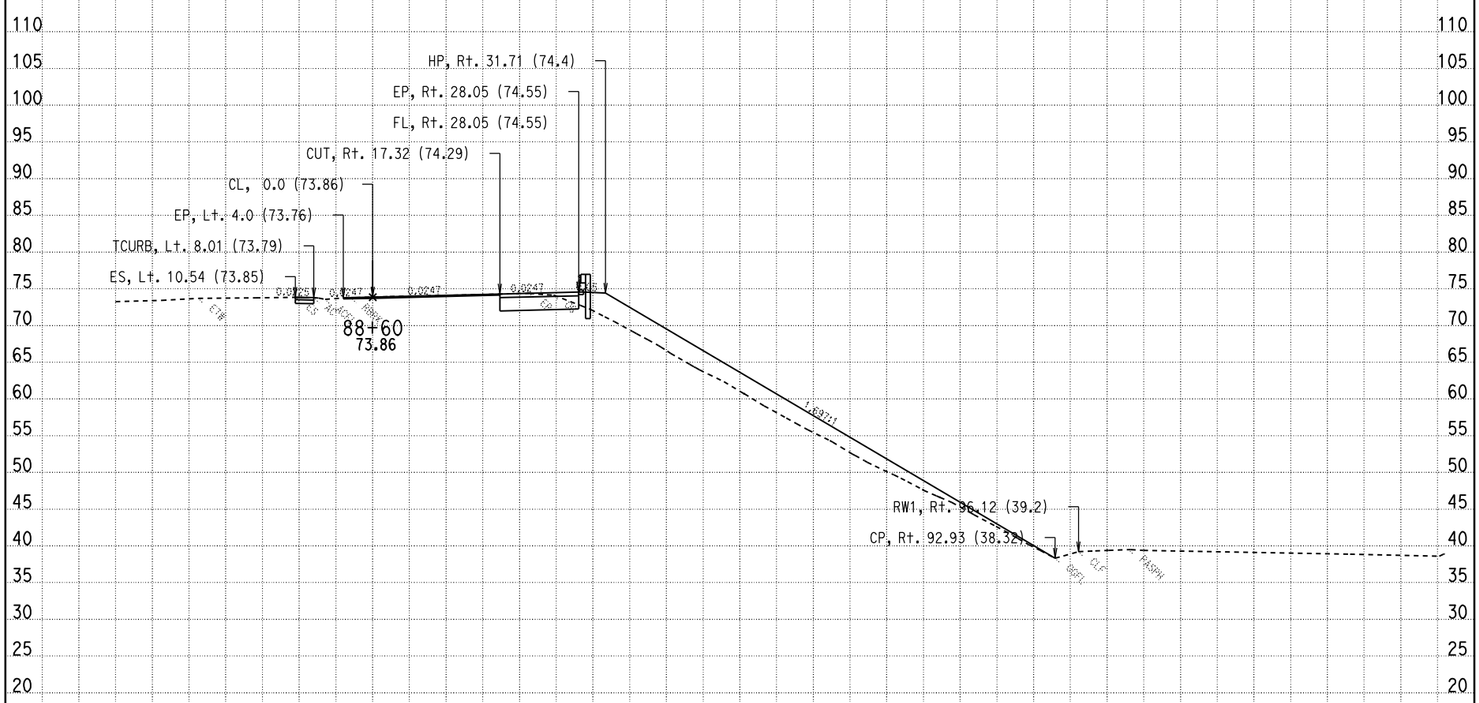

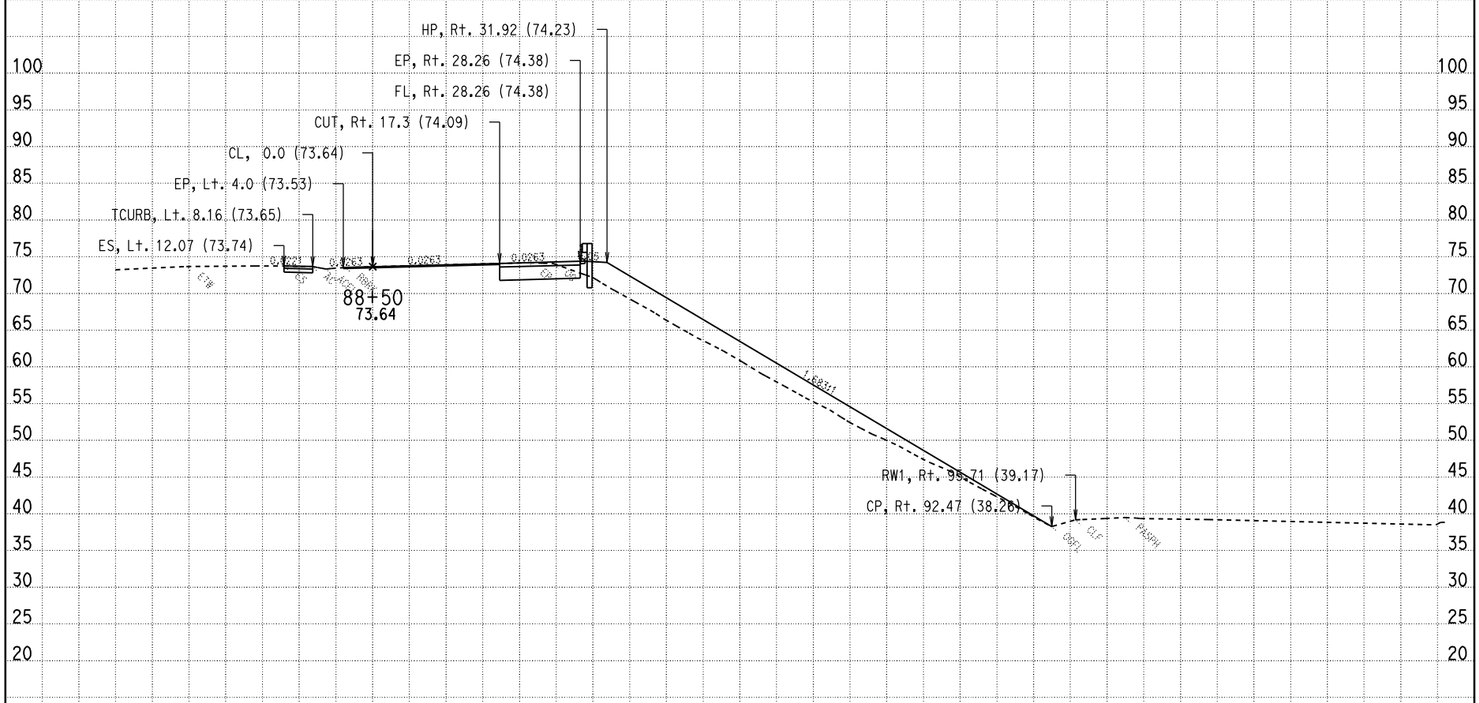

DATE: 9/13/2010

SCALE: 1" = 10' Horiz.
1" = 10' Vert.

All Dimensions Are Feet

HCL2
CROSS SECTIONS

SHEET 9 OF 13

For Earthwork Development Only

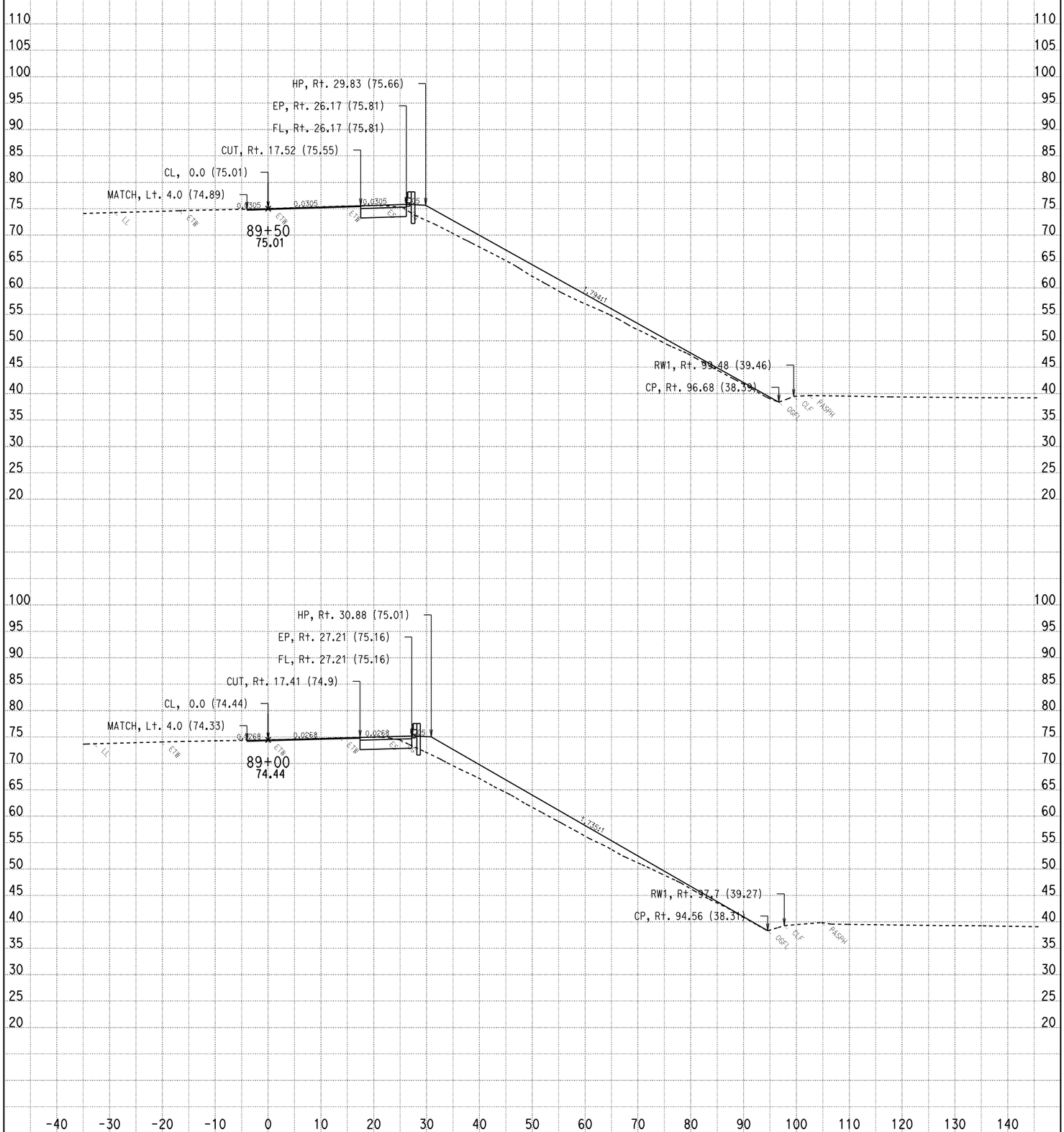

DATE: 9/13/2010

SCALE: 1" = 10' Horiz.
1" = 10' Vert.

All Dimensions Are Feet

HCL2
CROSS SECTIONS

SHEET 10 OF 13

For Earthwork Development Only

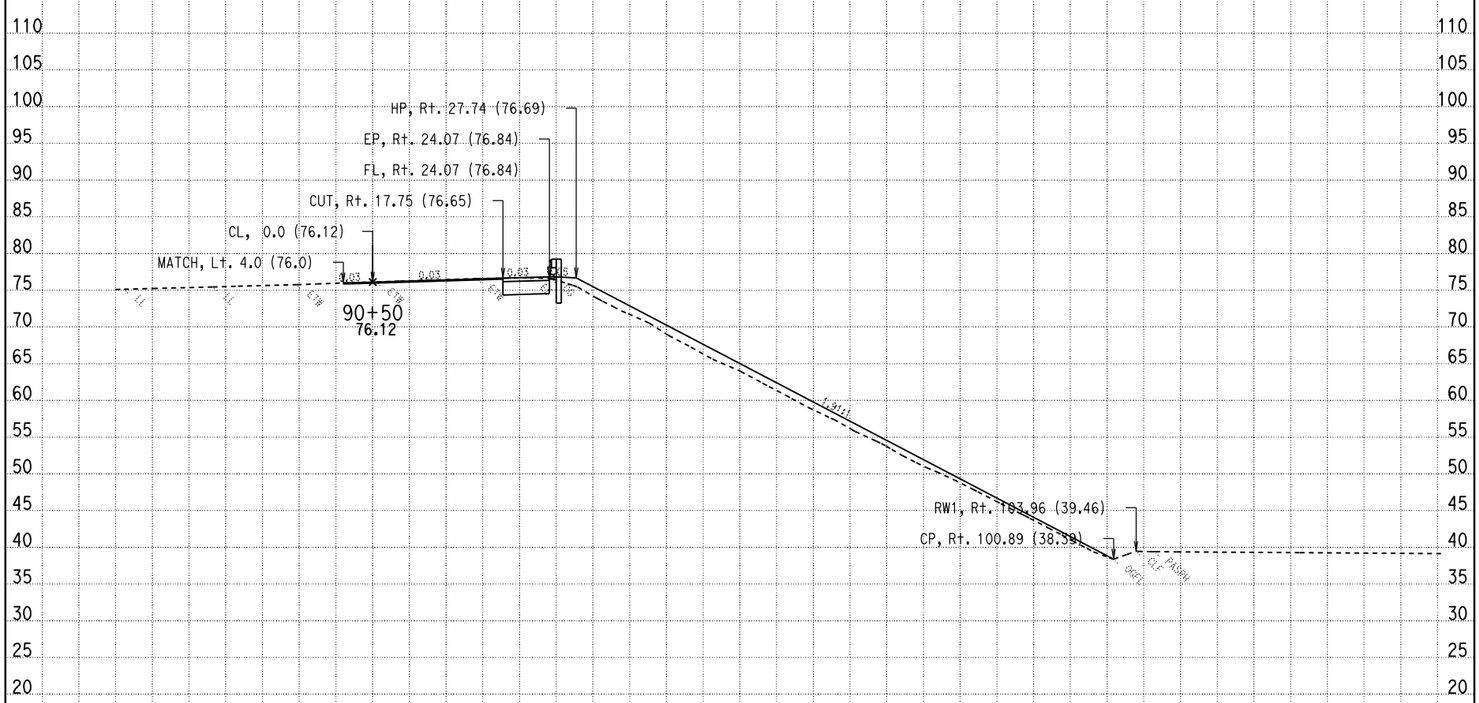

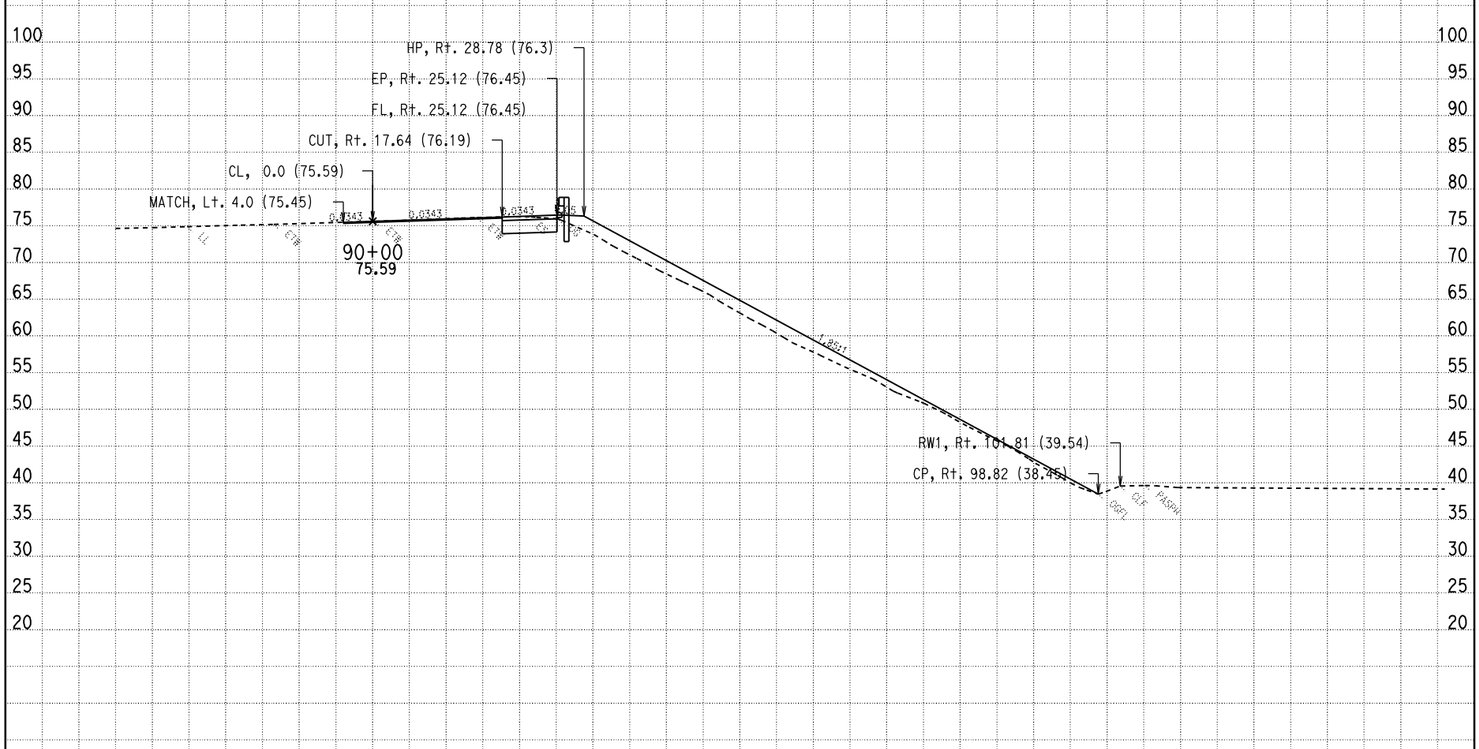

DATE: 9/13/2010

SCALE: 1" = 10' Horiz.
1" = 10' Vert.

All Dimensions Are Feet

HCL2
CROSS SECTIONS

SHEET 11 OF 13

For Earthwork Development Only

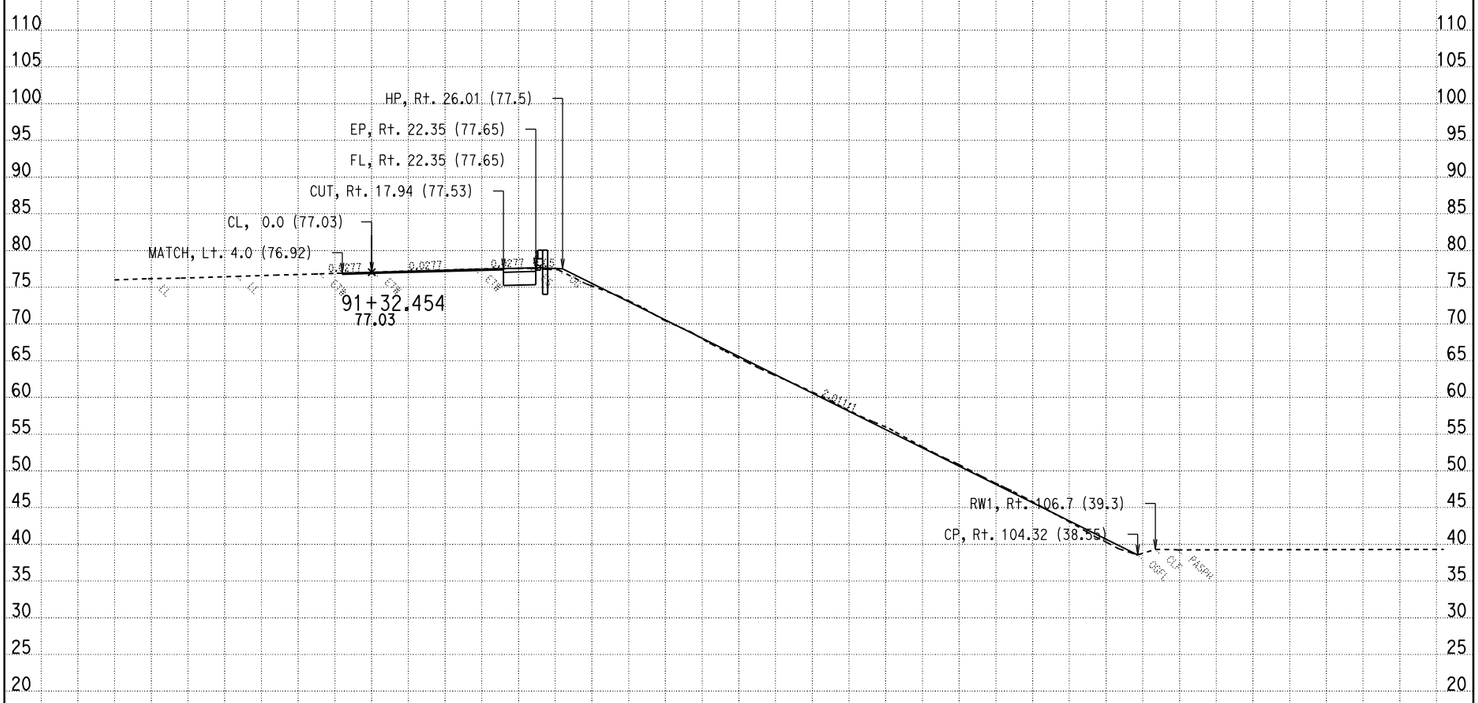

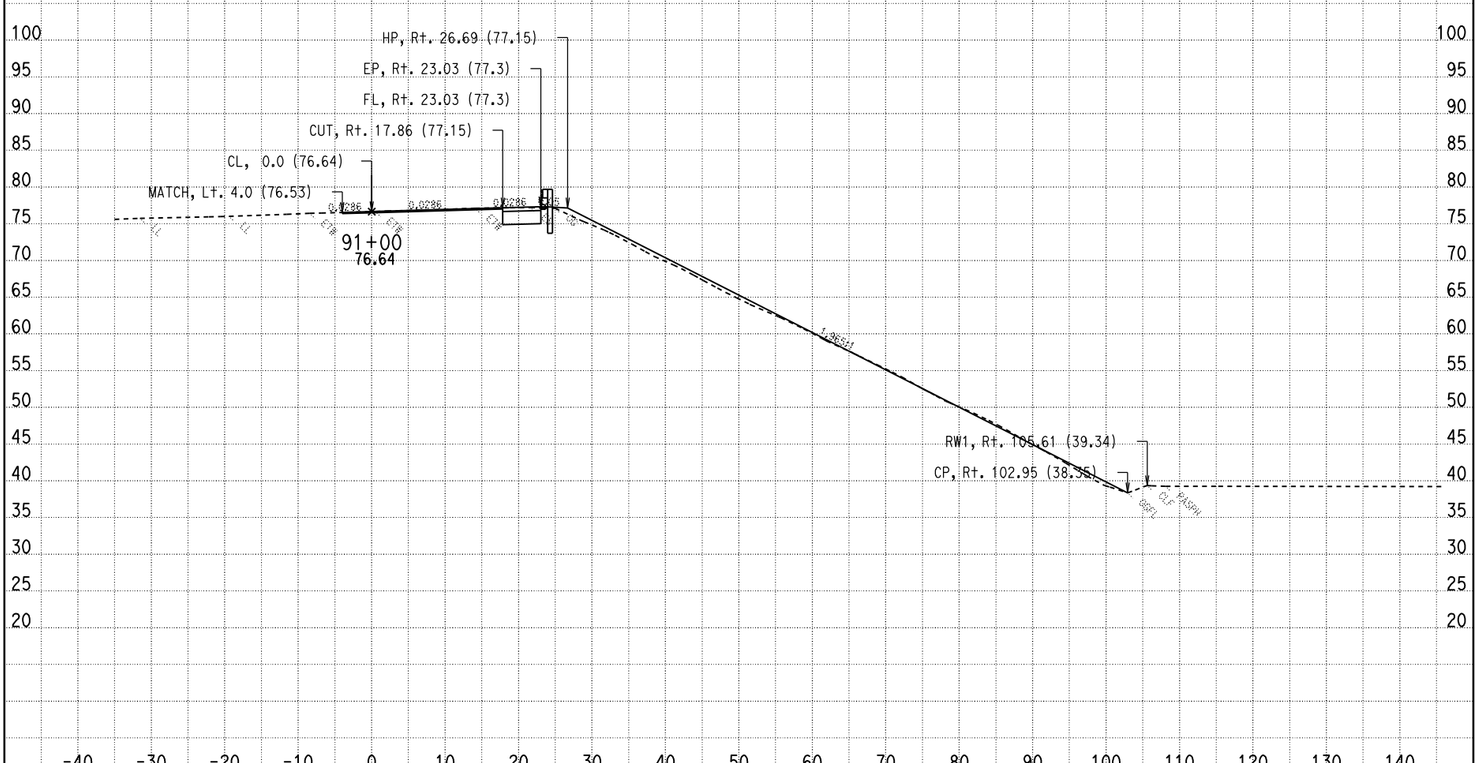

DATE: 9/13/2010

SCALE: 1" = 10' Horiz.
1" = 10' Vert.

All Dimensions Are Feet

HCL2
CROSS SECTIONS

SHEET 12 OF 13

For Earthwork Development Only

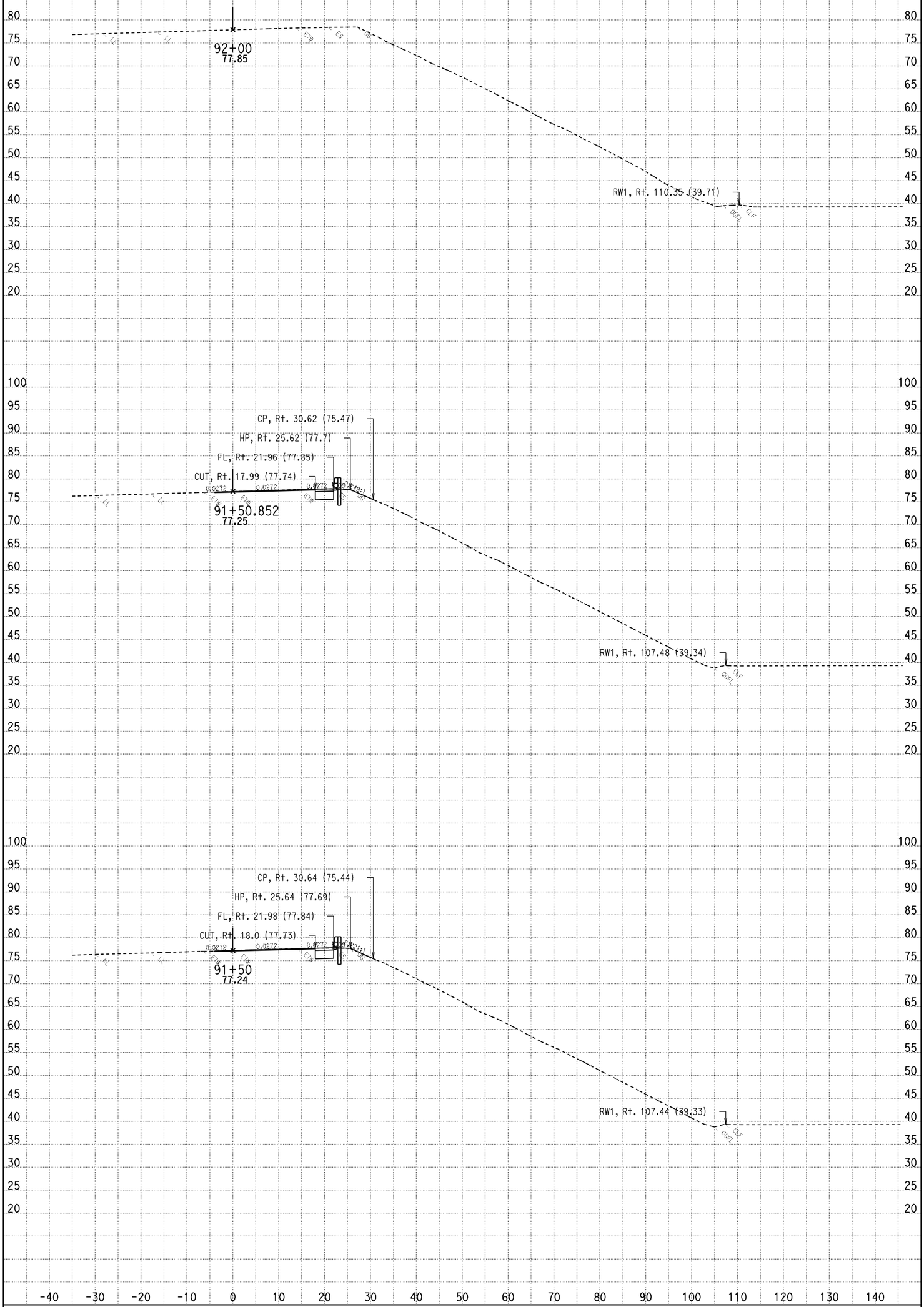

DATE: 9/13/2010

SCALE: 1" = 10' Horiz.
1" = 10' Vert.

All Dimensions Are Feet

HCL2
CROSS SECTIONS

SHEET 13 OF 13