Dist	COUNTY	ROUTE	POST MILES TOTAL PROJECT	SHEET No.	TOTAL SHEETS
03	ED	89	18.0/24.9	201	243

REGISTERED CIVIL ENGINEER 03-13-12 DATE

12-17-12
PLANS APPROVAL DATE

REGISTERED PROFESSIONAL ENGINEER Jeffrey S Jewett No. 49233 Exp. 9-30-14 CIVIL STATE OF CALIFORNIA

THE STATE OF CALIFORNIA OR ITS OFFICERS OR AGENTS SHALL NOT BE RESPONSIBLE FOR THE ACCURACY OR COMPLETENESS OF SCANNED COPIES OF THIS PLAN SHEET.

LEGEND

	LIMIT OF STRIPING PATTERN	S	"STOP" PAVEMENT MARKING
	CHANGE IN STRIPING PATTERN	Sht-No.	ROADSIDE SIGN NUMBER
No./R	PAVEMENT DELINEATION DETAIL NUMBER R=RECESSED	<CA>	CALIFORNIA SIGN CODE
LL/R	LIMIT LINE R=RECESSED		SIGN - SINGLE POST
	DELINEATOR (CLASS 2)		SIGN - TWO POST
s=	DELINEATOR SPACING	■	REMOVE ROADSIDE SIGN
L	OBJECT MARKER (TYPE L-1)	▲	RESET ROADSIDE SIGN
H P	HIGHWAY POST MARKER		LOCAL ROAD NAME SIGN
		RNS	ROAD NAME SIGN

NOTES:

1. ALL LANES SHALL BE 12′ WIDE. IF PAVEMENT WIDTHS DO NOT PROVIDE 12′, LANES SHALL BE STRIPED AS WIDE AS POSSIBLE.
2. ALL EXISTING SIGNS NOT SHOWN FOR REMOVAL OR RESETTING SHALL REMAIN IN PLACE.
3. ALL SIGN CODES SHOWN ARE FEDERAL SIGN CODES UNLESS OTHERWISE DESIGNATED AS CALIFORNIA SIGN CODES.
4. ALL DELINEATORS (CLASS 2) SHALL BE TYPE E UNLESS OTHERWISE SHOWN.

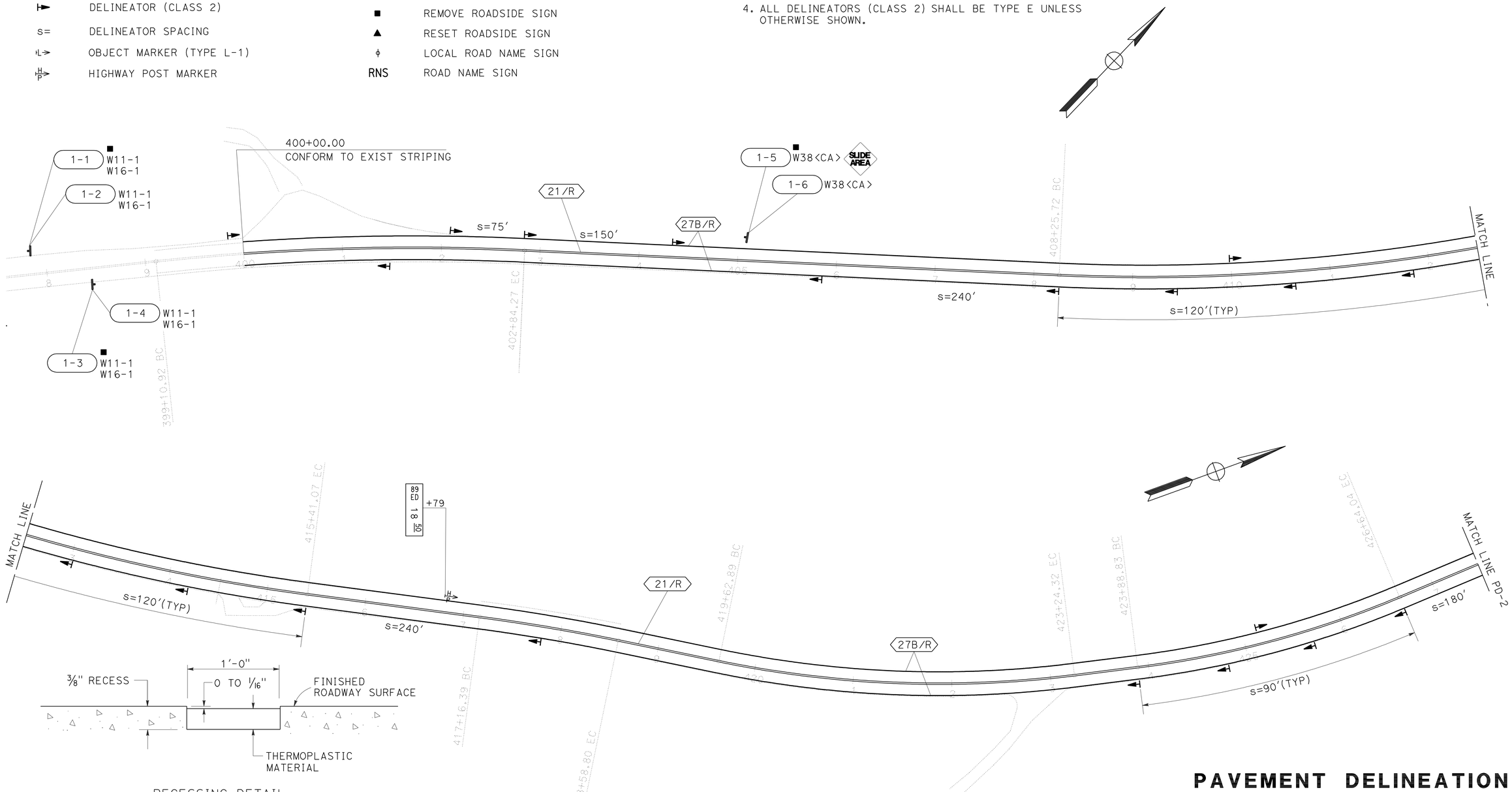

RECESSING DETAIL FOR LIMIT LINE

NO SCALE

PAVEMENT DELINEATION AND SIGN PLAN

SCALE: 1" = 50′

PD-1

APPROVED FOR PAVEMENT DELINEATION AND SIGN WORK ONLY

STATE OF CALIFORNIA - DEPARTMENT OF TRANSPORTATION
Caltrans
TRAFFIC

FUNCTIONAL SUPERVISOR: SERGIO ACEVES
CALCULATED-DESIGNED BY: JEFF JEWETT
CHECKED BY: JACK KEMMERLY
REVISED BY / DATE REVISED

LAST REVISION 3-8-12
DATE PLOTTED => 13-DEC-2012
TIME PLOTTED => 13:28

Dist	COUNTY	ROUTE	POST MILES TOTAL PROJECT	SHEET No.	TOTAL SHEETS
03	ED	89	18.0/24.9	202	243

REGISTERED CIVIL ENGINEER 03-13-12 DATE

12-17-12
PLANS APPROVAL DATE

REGISTERED PROFESSIONAL ENGINEER Jeffrey S Jewett No. 49233 Exp. 9-30-14 CIVIL STATE OF CALIFORNIA

THE STATE OF CALIFORNIA OR ITS OFFICERS OR AGENTS SHALL NOT BE RESPONSIBLE FOR THE ACCURACY OR COMPLETENESS OF SCANNED COPIES OF THIS PLAN SHEET.

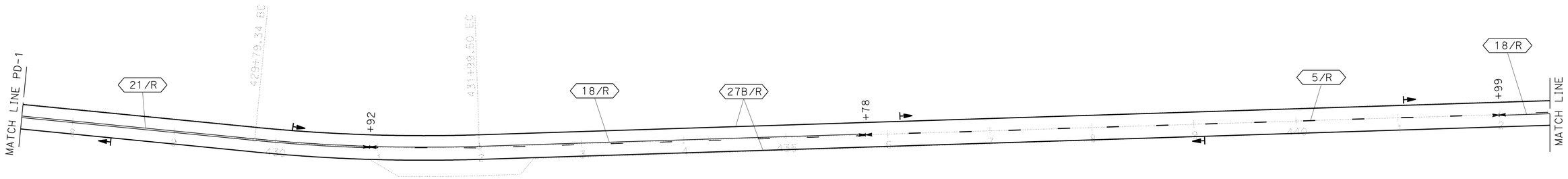

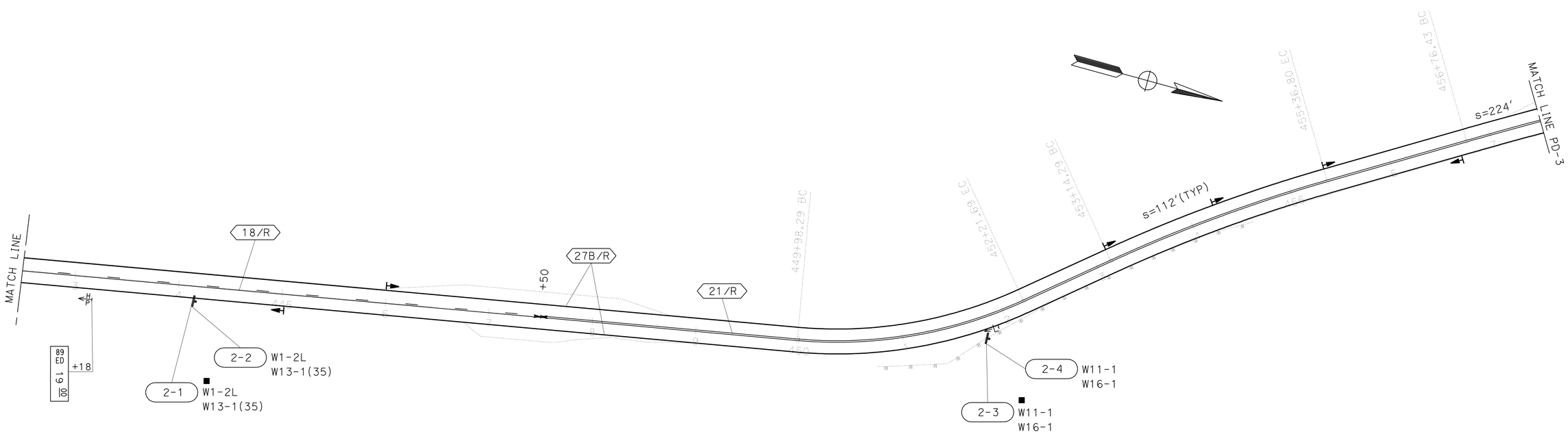

PAVEMENT DELINEATION AND SIGN PLAN

SCALE: 1" = 50'

PD-2

APPROVED FOR PAVEMENT DELINEATION AND SIGN WORK ONLY

STATE OF CALIFORNIA - DEPARTMENT OF TRANSPORTATION
Caltrans®
TRAFFIC

FUNCTIONAL SUPERVISOR: SERGIO ACEVES
CALCULATED-DESIGNED BY: JEFF JEWETT
CHECKED BY: JACK KEMMERLY
REVISED BY
DATE REVISED

LAST REVISION 11-29-11
DATE PLOTTED => 13-DEC-2012
TIME PLOTTED => 13:28

Dist	COUNTY	ROUTE	POST MILES TOTAL PROJECT	SHEET No.	TOTAL SHEETS
03	ED	89	18.0/24.9	203	243

REGISTERED CIVIL ENGINEER 03-13-12 DATE

12-17-12
PLANS APPROVAL DATE

REGISTERED PROFESSIONAL ENGINEER Jeffrey S Jewett No. 49233 Exp. 9-30-14 CIVIL STATE OF CALIFORNIA

THE STATE OF CALIFORNIA OR ITS OFFICERS OR AGENTS SHALL NOT BE RESPONSIBLE FOR THE ACCURACY OR COMPLETENESS OF SCANNED COPIES OF THIS PLAN SHEET.

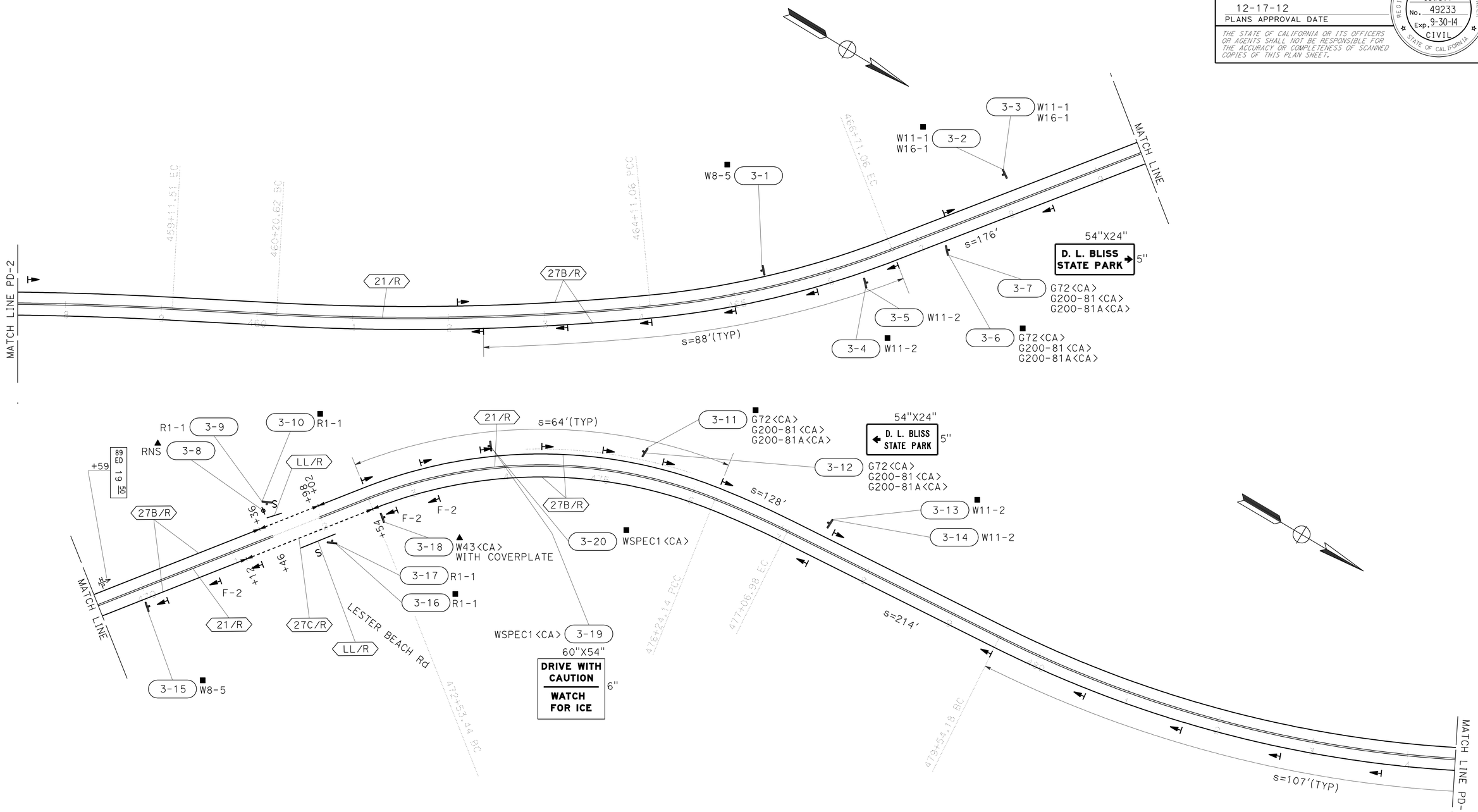

PAVEMENT DELINEATION AND SIGN PLAN

SCALE: 1" = 50'

PD-3

APPROVED FOR PAVEMENT DELINEATION AND SIGN WORK ONLY

STATE OF CALIFORNIA - DEPARTMENT OF TRANSPORTATION

Caltrans

TRAFFIC

FUNCTIONAL SUPERVISOR: SERGIO ACEVES

CALCULATED-DESIGNED BY: JEFF JEWETT

CHECKED BY: JACK KEMMERLY

REVISED BY

DATE REVISED

LAST REVISION 11-28-11

DATE PLOTTED => 13-DEC-2012

TIME PLOTTED => 13:28

Dist	COUNTY	ROUTE	POST MILES TOTAL PROJECT	SHEET No.	TOTAL SHEETS
03	ED	89	18.0/24.9	204	243

REGISTERED CIVIL ENGINEER 03-13-12 DATE

12-17-12
PLANS APPROVAL DATE

REGISTERED PROFESSIONAL ENGINEER Jeffrey S Jewett No. 49233 Exp. 9-30-14 CIVIL STATE OF CALIFORNIA

THE STATE OF CALIFORNIA OR ITS OFFICERS OR AGENTS SHALL NOT BE RESPONSIBLE FOR THE ACCURACY OR COMPLETENESS OF SCANNED COPIES OF THIS PLAN SHEET.

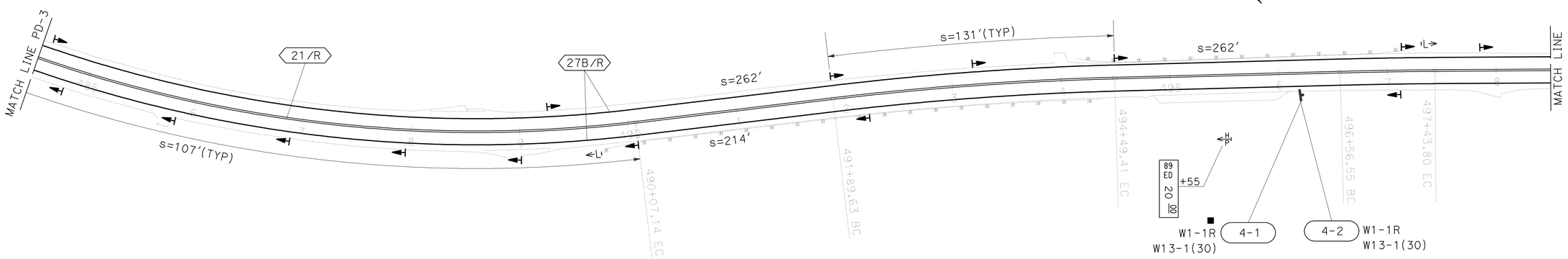

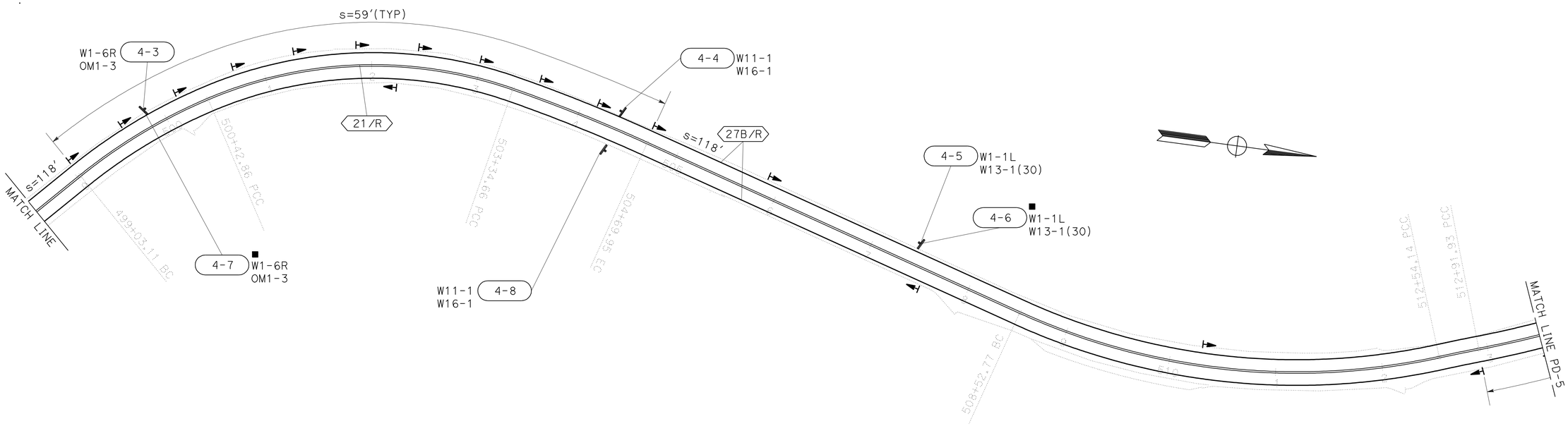

PAVEMENT DELINEATION AND SIGN PLAN

SCALE: 1" = 50'

PD-4

APPROVED FOR PAVEMENT DELINEATION AND SIGN WORK ONLY

STATE OF CALIFORNIA - DEPARTMENT OF TRANSPORTATION
Caltrans
TRAFFIC

FUNCTIONAL SUPERVISOR: SERGIO ACEVES
CALCULATED-DESIGNED BY: JEFF JEWETT
CHECKED BY: JACK KEMMERLY
REVISED BY
DATE REVISED

LAST REVISION 11-29-11
DATE PLOTTED => 13-DEC-2012
TIME PLOTTED => 13:28

Dist	COUNTY	ROUTE	POST MILES TOTAL PROJECT	SHEET No.	TOTAL SHEETS
03	ED	89	18.0/24.9	205	243

REGISTERED CIVIL ENGINEER 03-13-12 DATE

12-17-12
PLANS APPROVAL DATE

REGISTERED PROFESSIONAL ENGINEER Jeffrey S. Jewett No. 49233 Exp. 9-30-14 CIVIL STATE OF CALIFORNIA

THE STATE OF CALIFORNIA OR ITS OFFICERS OR AGENTS SHALL NOT BE RESPONSIBLE FOR THE ACCURACY OR COMPLETENESS OF SCANNED COPIES OF THIS PLAN SHEET.

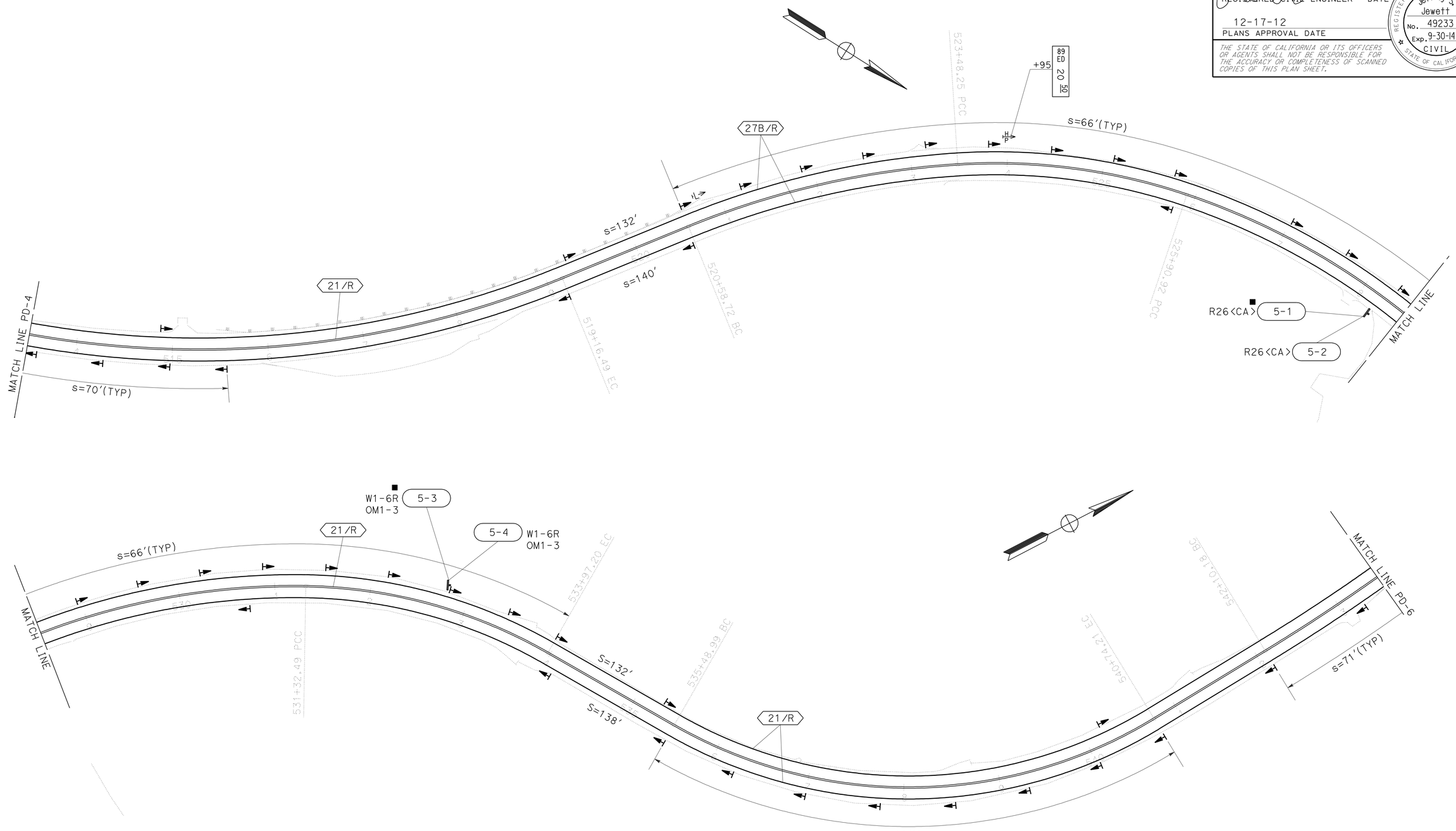

PAVEMENT DELINEATION AND SIGN PLAN

SCALE: 1" = 50'

PD-5

APPROVED FOR PAVEMENT DELINEATION AND SIGN WORK ONLY

STATE OF CALIFORNIA - DEPARTMENT OF TRANSPORTATION

Caltrans®

TRAFFIC

FUNCTIONAL SUPERVISOR: SERGIO ACEVES

CALCULATED-DESIGNED BY: JEFF JEWETT

CHECKED BY: JACK KEMMERLY

REVISED BY

DATE REVISED

LAST REVISION 11-28-11

DATE PLOTTED => 13-DEC-2012
TIME PLOTTED => 13:28

Dist	COUNTY	ROUTE	POST MILES TOTAL PROJECT	SHEET No.	TOTAL SHEETS
03	ED	89	18.0/24.9	206	243

REGISTERED CIVIL ENGINEER 03-13-12 DATE

12-17-12
PLANS APPROVAL DATE

REGISTERED PROFESSIONAL ENGINEER Jeffrey S Jewett No. 49233 Exp. 9-30-14 CIVIL STATE OF CALIFORNIA

THE STATE OF CALIFORNIA OR ITS OFFICERS OR AGENTS SHALL NOT BE RESPONSIBLE FOR THE ACCURACY OR COMPLETENESS OF SCANNED COPIES OF THIS PLAN SHEET.

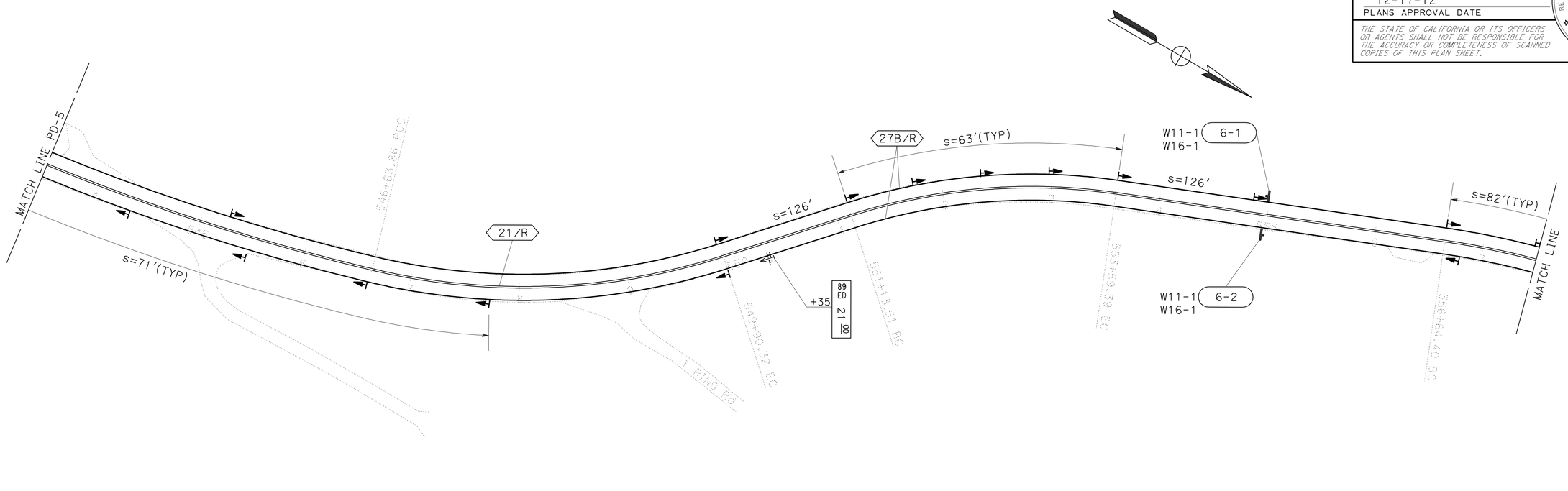

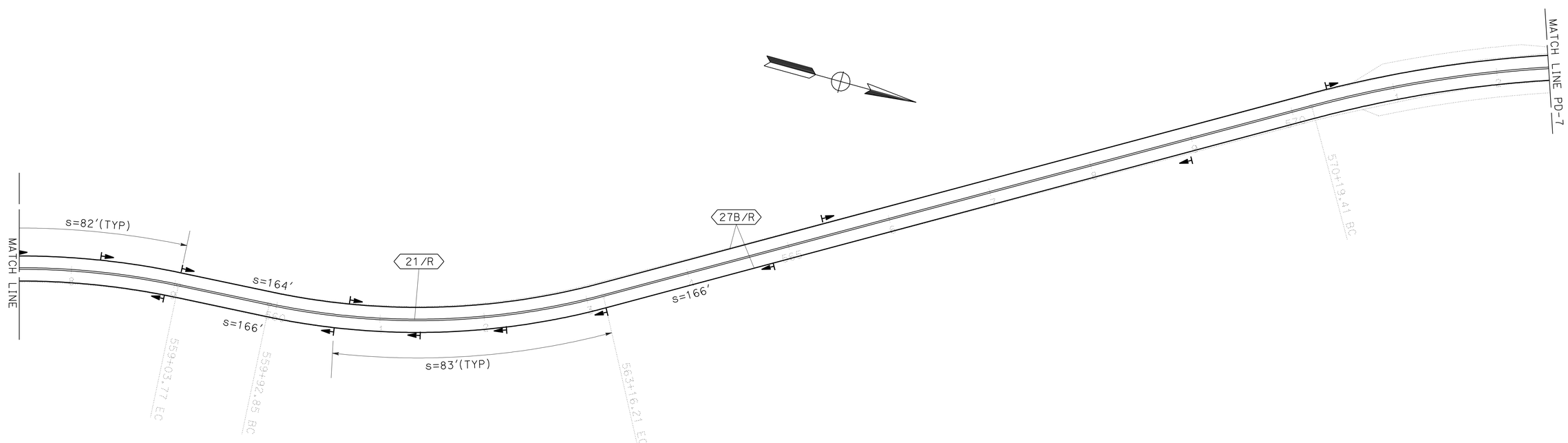

PAVEMENT DELINEATION AND SIGN PLAN

SCALE: 1" = 50'

PD-6

APPROVED FOR PAVEMENT DELINEATION AND SIGN WORK ONLY

STATE OF CALIFORNIA - DEPARTMENT OF TRANSPORTATION

Caltrans

TRAFFIC

FUNCTIONAL SUPERVISOR: SERGIO ACEVES

CALCULATED-DESIGNED BY: JEFF JEWETT

CHECKED BY: JACK KEMMERLY

REVISED BY

DATE REVISED

LAST REVISION 11-29-11

DATE PLOTTED => 13-DEC-2012
TIME PLOTTED => 13:28

Dist	COUNTY	ROUTE	POST MILES TOTAL PROJECT	SHEET No.	TOTAL SHEETS
03	ED	89	18.0/24.9	207	243

REGISTERED CIVIL ENGINEER 03-13-12 DATE

12-17-12
PLANS APPROVAL DATE

REGISTERED PROFESSIONAL ENGINEER Jeffrey S. Jewett No. 49233 Exp. 9-30-14 CIVIL STATE OF CALIFORNIA

THE STATE OF CALIFORNIA OR ITS OFFICERS OR AGENTS SHALL NOT BE RESPONSIBLE FOR THE ACCURACY OR COMPLETENESS OF SCANNED COPIES OF THIS PLAN SHEET.

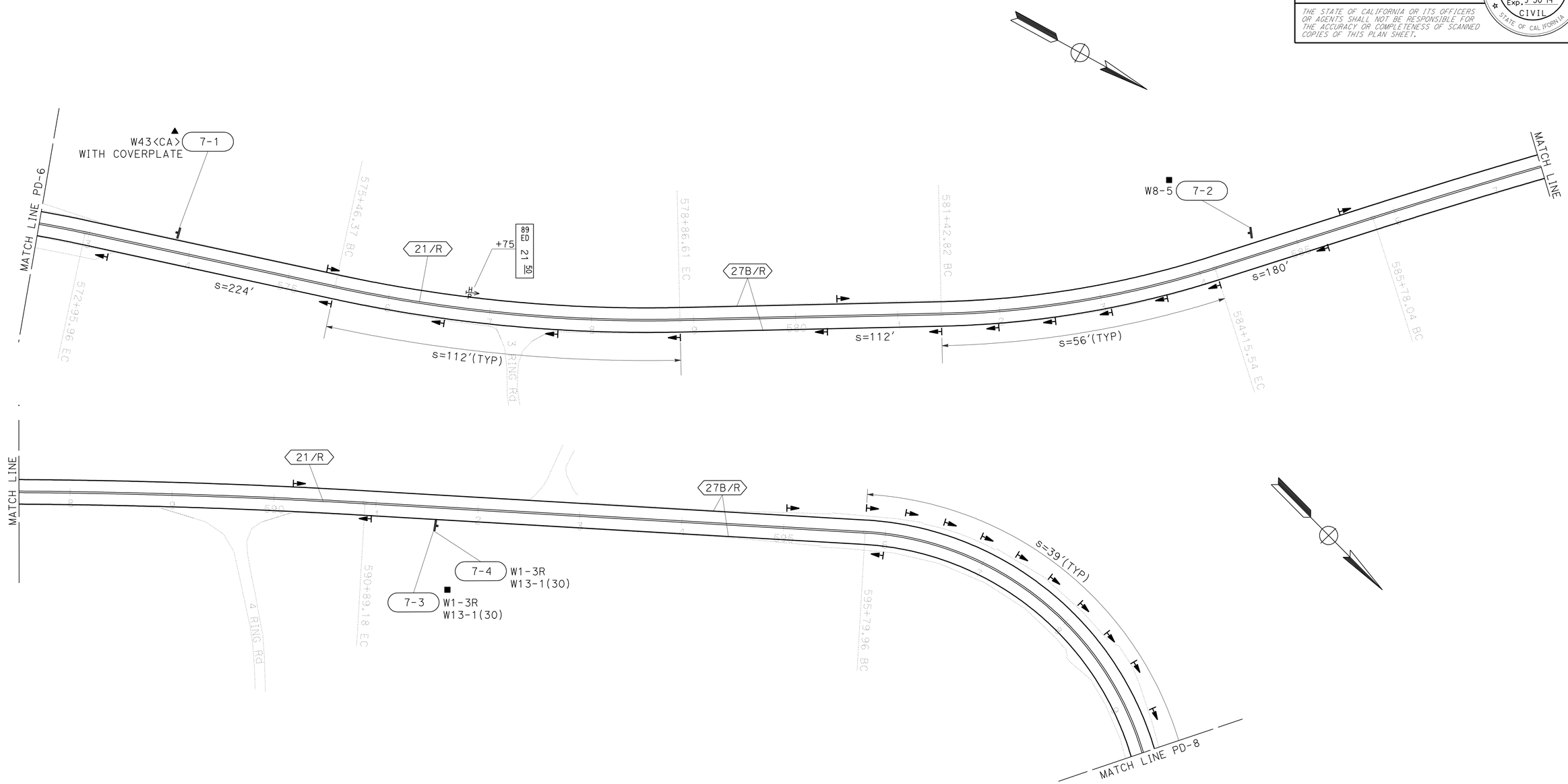

PAVEMENT DELINEATION AND SIGN PLAN

SCALE: 1" = 50'

PD-7

APPROVED FOR PAVEMENT DELINEATION AND SIGN WORK ONLY

STATE OF CALIFORNIA - DEPARTMENT OF TRANSPORTATION

Caltrans

TRAFFIC

FUNCTIONAL SUPERVISOR: SERGIO ACEVES

CALCULATED-DESIGNED BY: JEFF JEWETT

CHECKED BY: JACK KEMMERLY

REVISED BY | DATE REVISED

LAST REVISION 11-29-11 | DATE PLOTTED => 13-DEC-2012 | TIME PLOTTED => 13:28

Dist	COUNTY	ROUTE	POST MILES TOTAL PROJECT	SHEET No.	TOTAL SHEETS
03	ED	89	18.0/24.9	208	243

REGISTERED CIVIL ENGINEER 03-13-12 DATE

12-17-12
PLANS APPROVAL DATE

REGISTERED PROFESSIONAL ENGINEER Jeffrey S Jewett No. 49233 Exp. 9-30-14 CIVIL STATE OF CALIFORNIA

THE STATE OF CALIFORNIA OR ITS OFFICERS OR AGENTS SHALL NOT BE RESPONSIBLE FOR THE ACCURACY OR COMPLETENESS OF SCANNED COPIES OF THIS PLAN SHEET.

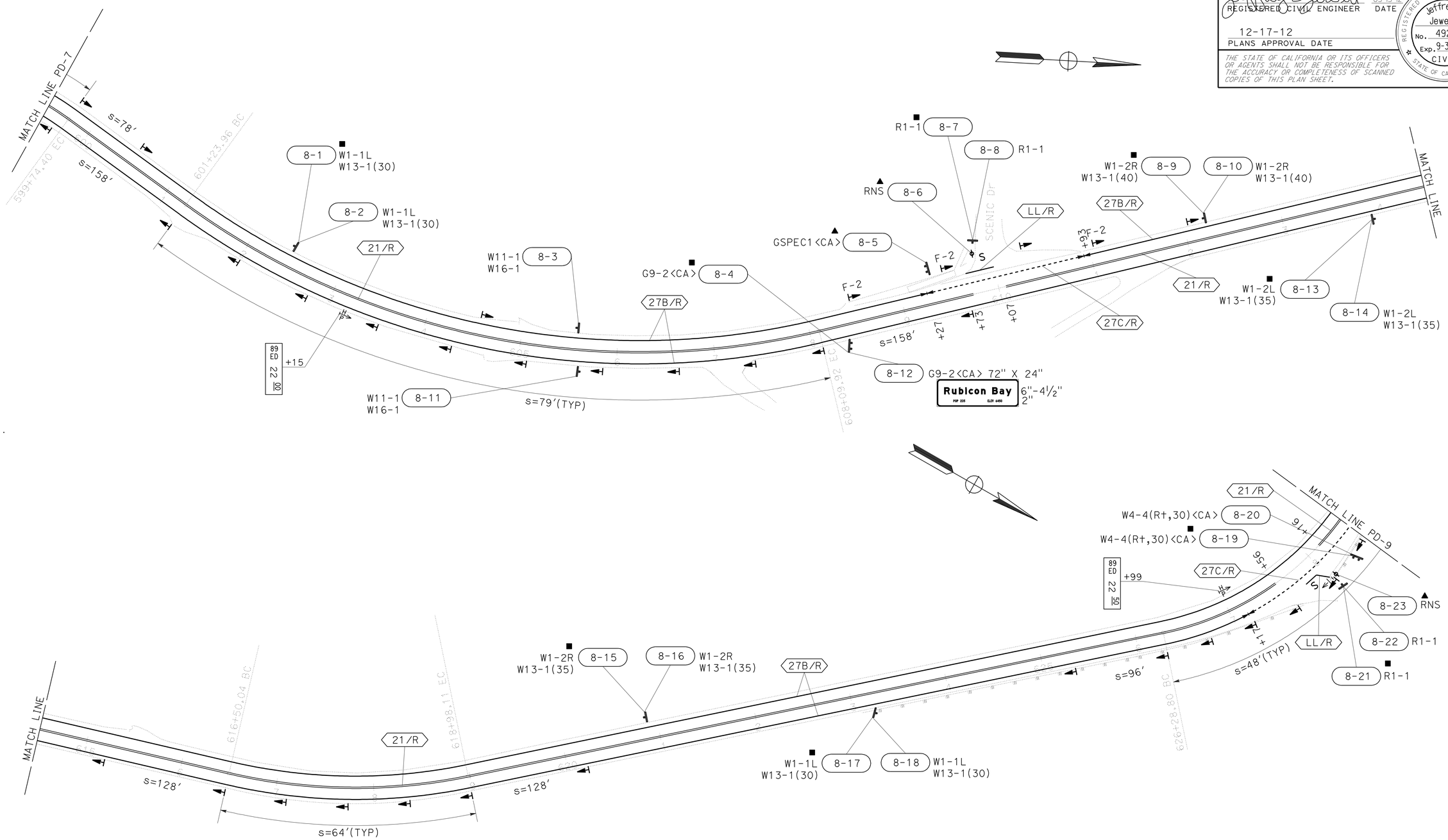

PAVEMENT DELINEATION AND SIGN PLAN

SCALE: 1" = 50'

PD-8

APPROVED FOR PAVEMENT DELINEATION AND SIGN WORK ONLY

STATE OF CALIFORNIA - DEPARTMENT OF TRANSPORTATION

TRAFFIC

Caltrans

FUNCTIONAL SUPERVISOR: SERGIO ACEVES

CALCULATED-DESIGNED BY: JEFF JEWETT

CHECKED BY: JACK KEMMERLY

REVISED BY / DATE REVISED

LAST REVISION 12-21-11 | DATE PLOTTED => 13-DEC-2012 | TIME PLOTTED => 13:28

Dist	COUNTY	ROUTE	POST MILES TOTAL PROJECT	SHEET No.	TOTAL SHEETS
03	ED	89	18.0/24.9	209	243

REGISTERED CIVIL ENGINEER 03-13-12 DATE

12-17-12
PLANS APPROVAL DATE

REGISTERED PROFESSIONAL ENGINEER Jeffrey S Jewett No. 49233 Exp. 9-30-14 CIVIL STATE OF CALIFORNIA

THE STATE OF CALIFORNIA OR ITS OFFICERS OR AGENTS SHALL NOT BE RESPONSIBLE FOR THE ACCURACY OR COMPLETENESS OF SCANNED COPIES OF THIS PLAN SHEET.

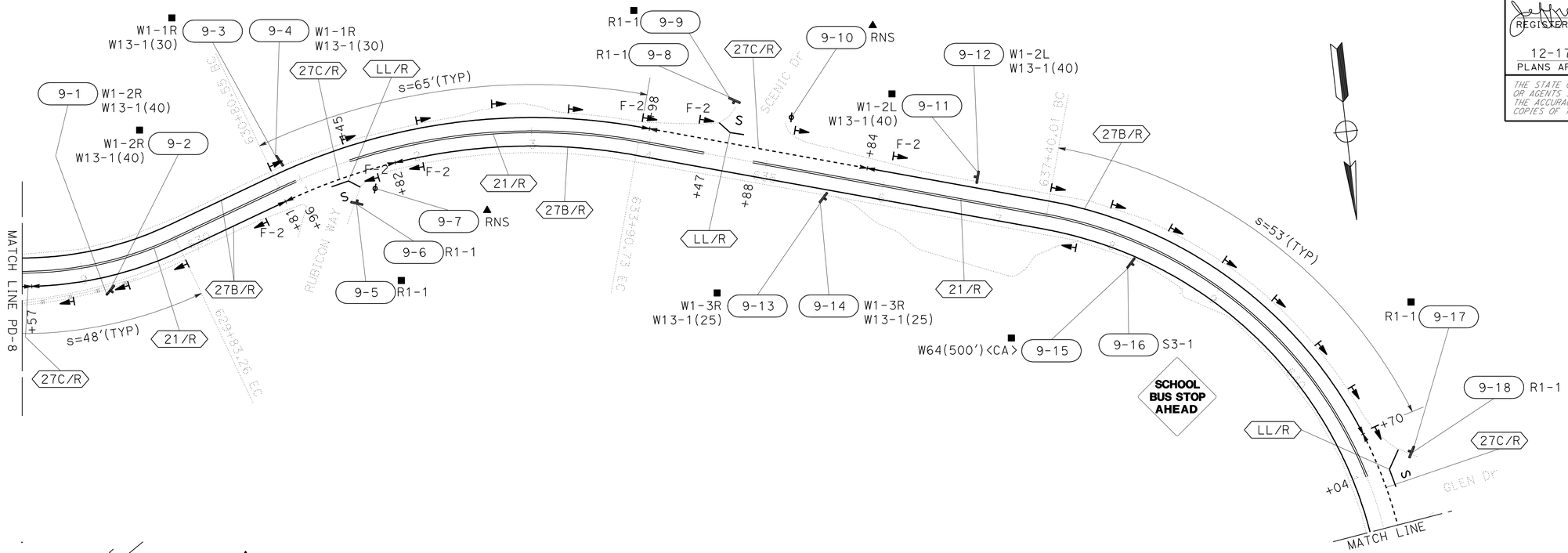

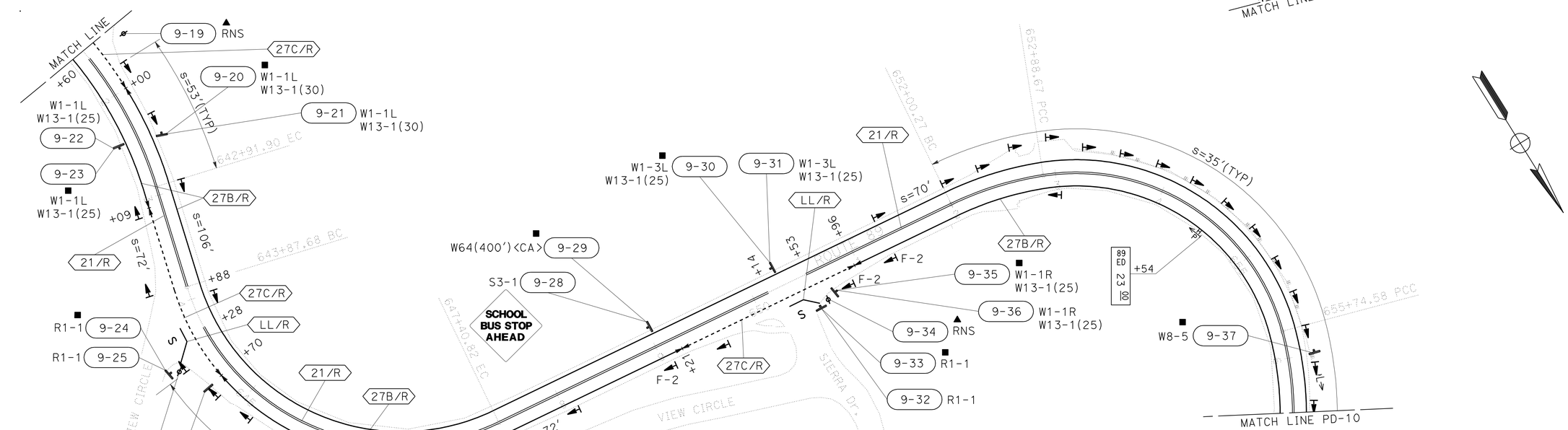

PAVEMENT DELINEATION AND SIGN PLAN

SCALE: 1" = 50'

PD-9

APPROVED FOR PAVEMENT DELINEATION AND SIGN WORK ONLY

STATE OF CALIFORNIA - DEPARTMENT OF TRANSPORTATION

Caltrans

TRAFFIC

FUNCTIONAL SUPERVISOR: SERGIO ACEVES

CALCULATED-DESIGNED BY: JEFF JEWETT

CHECKED BY: JACK KEMMERLY

REVISED BY / DATE REVISED

LAST REVISION 12-21-11 | DATE PLOTTED => 13-DEC-2012 | TIME PLOTTED => 13:29

Dist	COUNTY	ROUTE	POST MILES TOTAL PROJECT	SHEET No.	TOTAL SHEETS
03	ED	89	18.0/24.9	210	243

REGISTERED CIVIL ENGINEER 03-13-12 DATE

12-17-12
PLANS APPROVAL DATE

REGISTERED PROFESSIONAL ENGINEER Jeffrey S Jewett No. 49233 Exp. 9-30-14 CIVIL STATE OF CALIFORNIA

THE STATE OF CALIFORNIA OR ITS OFFICERS OR AGENTS SHALL NOT BE RESPONSIBLE FOR THE ACCURACY OR COMPLETENESS OF SCANNED COPIES OF THIS PLAN SHEET.

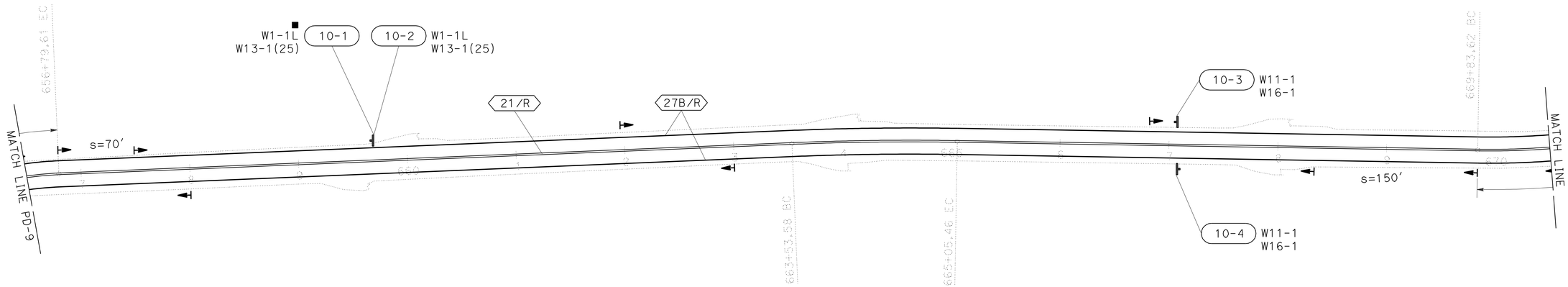

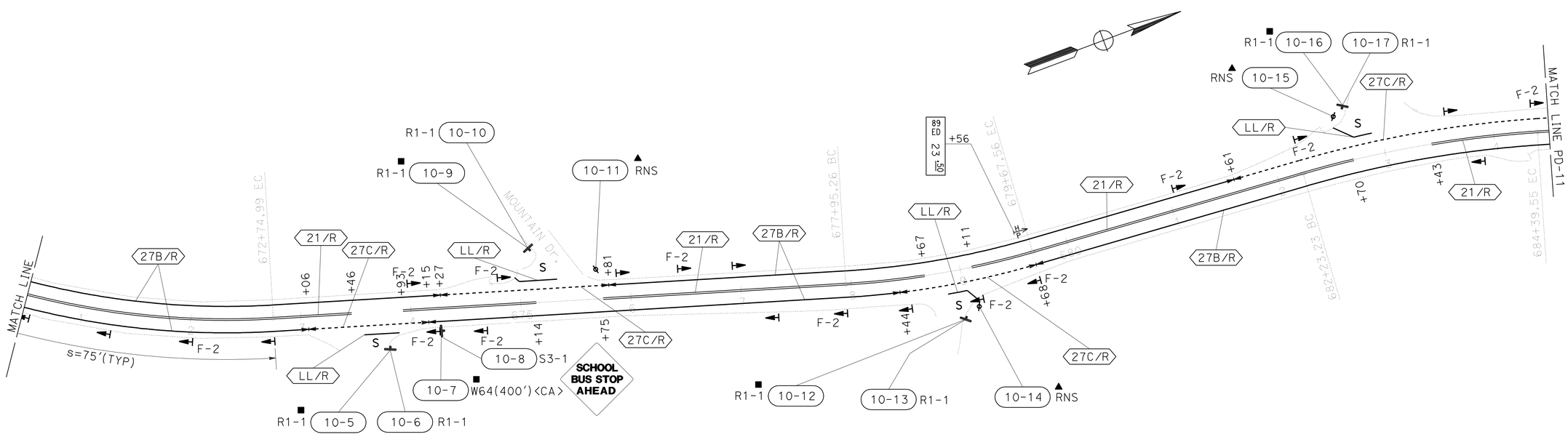

PAVEMENT DELINEATION AND SIGN PLAN

SCALE: 1" = 50′

PD-10

APPROVED FOR PAVEMENT DELINEATION AND SIGN WORK ONLY

STATE OF CALIFORNIA - DEPARTMENT OF TRANSPORTATION
Caltrans
TRAFFIC

FUNCTIONAL SUPERVISOR: SERGIO ACEVES
CALCULATED-DESIGNED BY: JEFF JEWETT
CHECKED BY: JACK KEMMERLY
REVISED BY
DATE REVISED

LAST REVISION 12-21-11
DATE PLOTTED => 13-DEC-2012
TIME PLOTTED => 13:28

Dist	COUNTY	ROUTE	POST MILES TOTAL PROJECT	SHEET No.	TOTAL SHEETS
03	ED	89	18.0/24.9	211	243

REGISTERED CIVIL ENGINEER 03-13-12 DATE

12-17-12
PLANS APPROVAL DATE

REGISTERED PROFESSIONAL ENGINEER Jeffrey S Jewett No. 49233 Exp. 9-30-14 CIVIL STATE OF CALIFORNIA

THE STATE OF CALIFORNIA OR ITS OFFICERS OR AGENTS SHALL NOT BE RESPONSIBLE FOR THE ACCURACY OR COMPLETENESS OF SCANNED COPIES OF THIS PLAN SHEET.

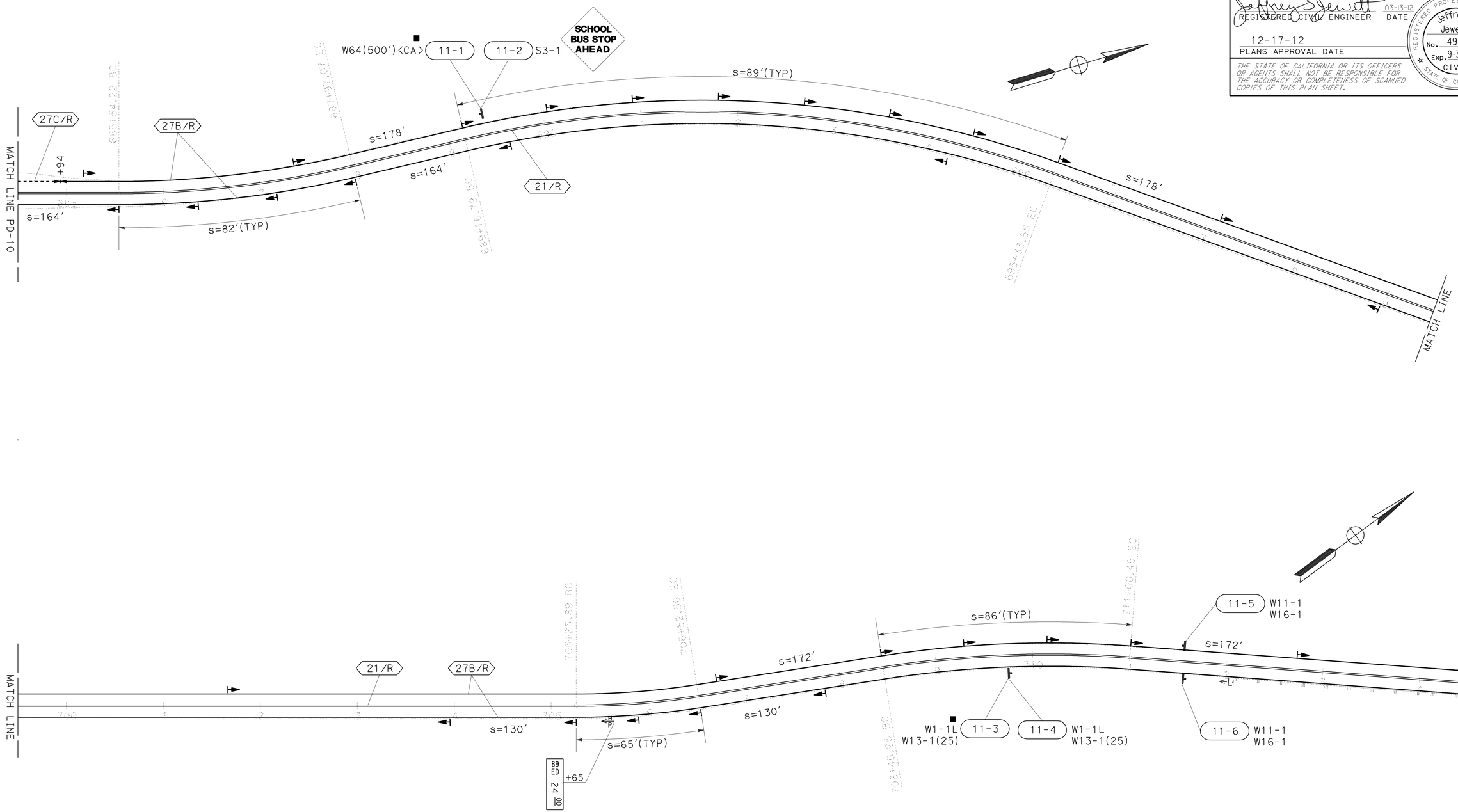

PAVEMENT DELINEATION AND SIGN PLAN

SCALE: 1" = 50'

PD-11

APPROVED FOR PAVEMENT DELINEATION AND SIGN WORK ONLY

STATE OF CALIFORNIA - DEPARTMENT OF TRANSPORTATION

Caltrans®

TRAFFIC

FUNCTIONAL SUPERVISOR: SERGIO ACEVES

CALCULATED-DESIGNED BY: JEFF JEWETT

CHECKED BY: JACK KEMMERLY

REVISED BY | DATE REVISED

LAST REVISION 11-29-11

DATE PLOTTED => 13-DEC-2012
TIME PLOTTED => 13:28

Dist	COUNTY	ROUTE	POST MILES TOTAL PROJECT	SHEET No.	TOTAL SHEETS
03	ED	89	18.0/24.9	212	243

REGISTERED CIVIL ENGINEER 03-13-12 DATE

12-17-12
PLANS APPROVAL DATE

REGISTERED PROFESSIONAL ENGINEER Jeffrey S Jewett No. 49233 Exp. 9-30-14 CIVIL STATE OF CALIFORNIA

THE STATE OF CALIFORNIA OR ITS OFFICERS OR AGENTS SHALL NOT BE RESPONSIBLE FOR THE ACCURACY OR COMPLETENESS OF SCANNED COPIES OF THIS PLAN SHEET.

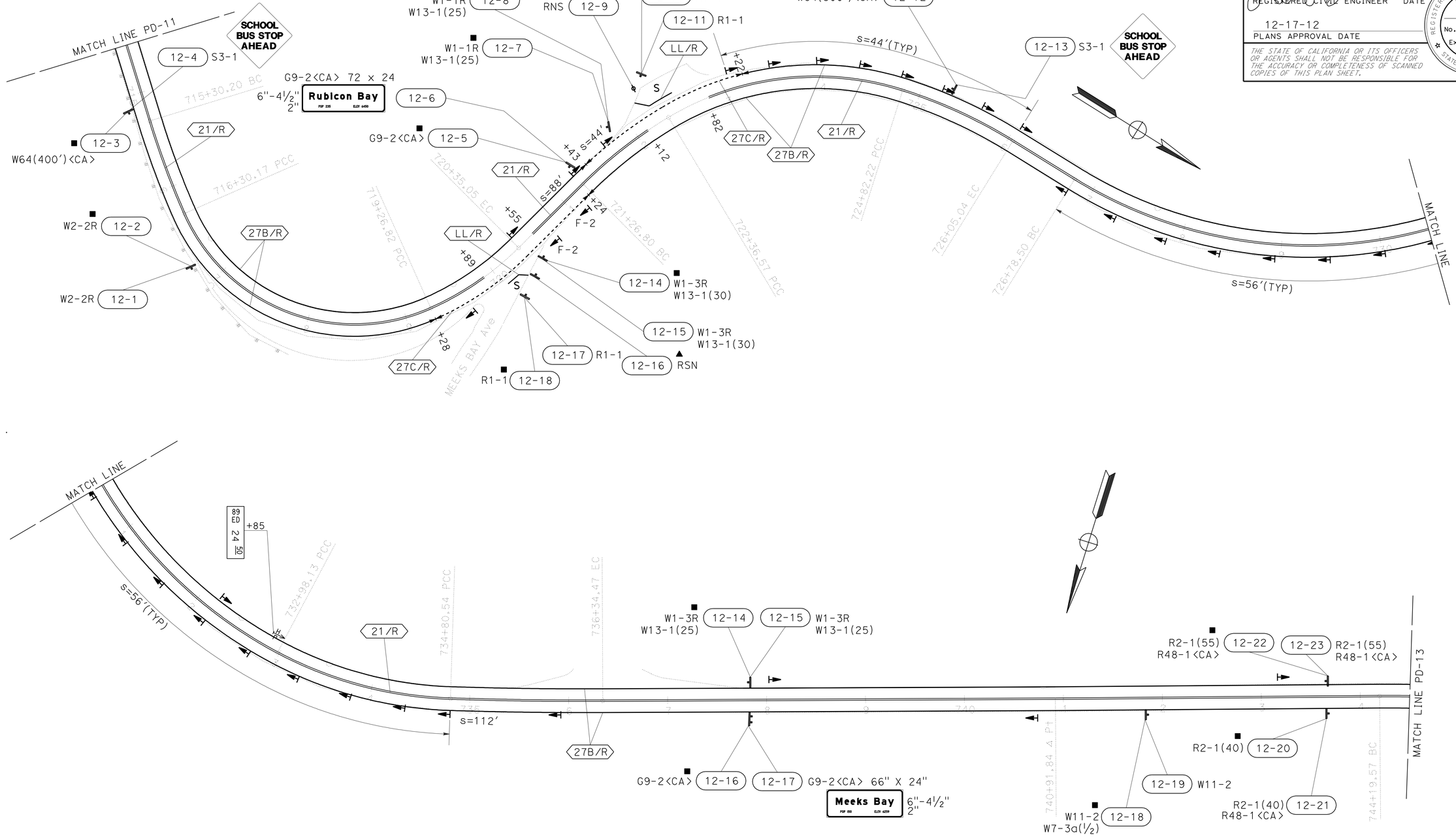

PAVEMENT DELINEATION AND SIGN PLAN

SCALE: 1" = 50'

PD-12

APPROVED FOR PAVEMENT DELINEATION AND SIGN WORK ONLY

STATE OF CALIFORNIA - DEPARTMENT OF TRANSPORTATION

Caltrans

TRAFFIC

FUNCTIONAL SUPERVISOR: SERGIO ACEVES

CALCULATED-DESIGNED BY: JEFF JEWETT

CHECKED BY: JACK KEMMERLY

REVISED BY | DATE REVISED

LAST REVISION | DATE PLOTTED => 13-DEC-2012 | TIME PLOTTED => 13:44

12-21-11

BORDER LAST REVISED 7/2/2010

USERNAME => s114926
DGN FILE => 0300000225na012.dgn

RELATIVE BORDER SCALE IS IN INCHES 0 1 2 3

UNIT 0390

PROJECT NUMBER & PHASE 03000002251

Dist	COUNTY	ROUTE	POST MILES TOTAL PROJECT	SHEET No.	TOTAL SHEETS
03	ED	89	18.0/24.9	213	243

REGISTERED CIVIL ENGINEER 03-13-12 DATE

12-17-12
PLANS APPROVAL DATE

REGISTERED PROFESSIONAL ENGINEER Jeffrey S Jewett No. 49233 Exp. 9-30-14 CIVIL STATE OF CALIFORNIA

THE STATE OF CALIFORNIA OR ITS OFFICERS OR AGENTS SHALL NOT BE RESPONSIBLE FOR THE ACCURACY OR COMPLETENESS OF SCANNED COPIES OF THIS PLAN SHEET.

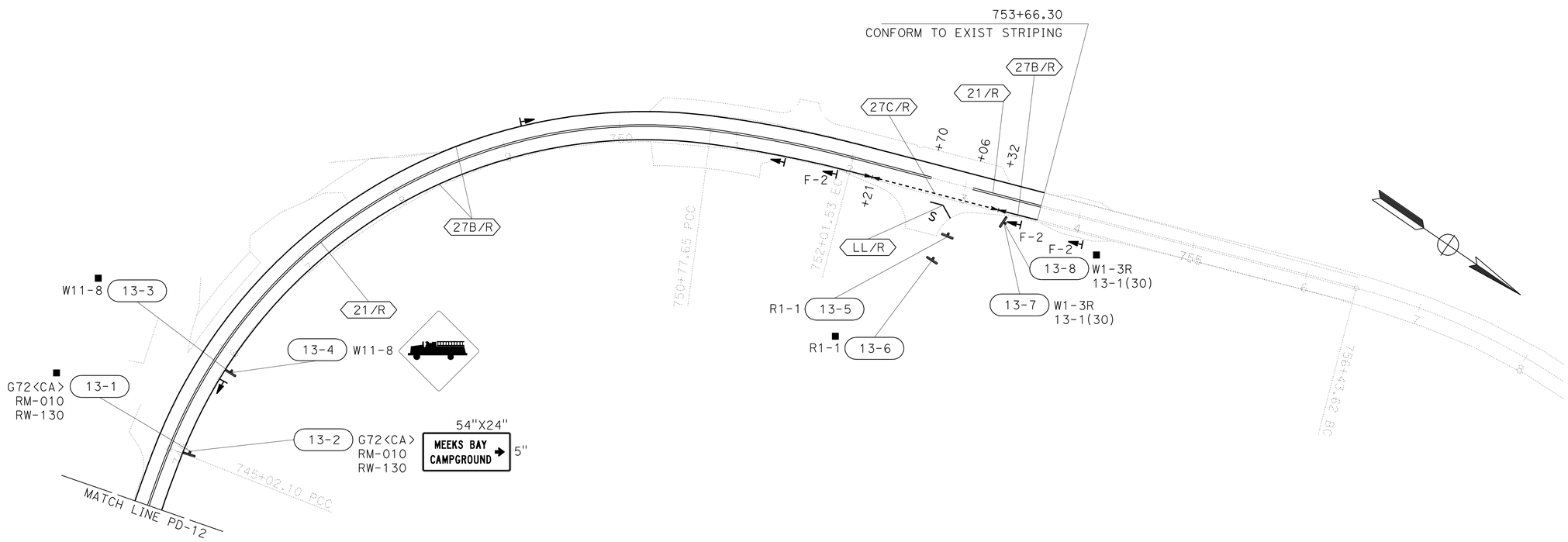

PAVEMENT DELINEATION AND SIGN PLAN

SCALE: 1" = 50'

PD-13

APPROVED FOR PAVEMENT DELINEATION AND SIGN WORK ONLY

STATE OF CALIFORNIA - DEPARTMENT OF TRANSPORTATION
Caltrans
TRAFFIC

FUNCTIONAL SUPERVISOR: SERGIO ACEVES
CALCULATED-DESIGNED BY: JEFF JEWETT
CHECKED BY: JACK KEMMERLY
REVISED BY
DATE REVISED

LAST REVISION: 12-21-11
DATE PLOTTED => 13-DEC-2012
TIME PLOTTED => 13:28

Dist	COUNTY	ROUTE	POST MILES TOTAL PROJECT	SHEET No.	TOTAL SHEETS
03	ED	89	18.0/24.9	214	243

REGISTERED CIVIL ENGINEER 03-13-12 DATE

12-17-12
PLANS APPROVAL DATE

REGISTERED PROFESSIONAL ENGINEER Jeffrey S Jewett No. 49233 Exp. 9-30-14 CIVIL STATE OF CALIFORNIA

THE STATE OF CALIFORNIA OR ITS OFFICERS OR AGENTS SHALL NOT BE RESPONSIBLE FOR THE ACCURACY OR COMPLETENESS OF SCANNED COPIES OF THIS PLAN SHEET.

PAVEMENT DELINEATION QUANTITIES

SHEET NUMBER	LOCATION/STATION	4" THERMOPLASTIC TRAFFIC STRIPE (RECESSED, BROKEN 36-12)		4" THERMOPLASTIC TRAFFIC STRIPE (RECESSED, BROKEN 12-3)	4" THERMOPLASTIC TRAFFIC STRIPE (RECESSED)			THERMOPLASTIC PAVEMENT MARKING (RECESSED)	TWO COMPONENT PAINT PAVEMENT MARKING	OBJECT MARKER	DELINEATOR (CLASS 2)		HIGHWAY POST MARKER	REMARKS
		DETAIL 5	DETAIL 18	DETAIL 27C	DETAIL 18	DETAIL 21	DETAIL 27B	LIMIT LINE	STOP	TYPE L-1	TYPE E	TYPE F		
		LF	LF	LF	LF	LF	LF	SQFT	SQFT	EA			EA	
PD-1											20		1	
PD-1 - PD-2	"A2" 400+00 TO 430+92					6,184	6,184							
PD-2	"A2" 430+92 TO 435+78		486		486		972							
PD-2	"A2" 435+78 TO 441+99	621					1,242							
PD-2	"A2" 441+99 TO 447+50		551		551		1,102							
PD-2										1	20		1	
PD-2 - PD-3	"A2" 447+50 TO 471+12					4,724	4,724							
PD-3											26	3	1	
PD-3	"A2" 471+12 TO 471+36			24		48	24							
PD-3	"A2" 471+36 TO 471+46			20		20								
PD-3	"A2" 471+46 TO 471+98			104				16	22					
PD-3	"A2" 471+98 TO 472+02			8		8								
PD-3	"A2" 472+02 TO 472+54			52		104	52							
PD-3 - PD-8	"A2" 472+54 TO 609+27					27,346	27,346							
PD-4										2	26		1	
PD-5										1	44		1	
PD-6											28		1	
PD-7											30		1	
PD-8											30	3	1	
PD-8	"A2" 609+27 TO 609+73			46		92	46							
PD-8	"A2" 609+73 TO 610+07			34			34	30	22					
PD-8	"A2" 610+07 TO 610+93			86		172	86							
PD-8	"A2" 610+93 TO 627+17					3,248	3,248							
PD-8	"A2" 627+17 TO 627+56			39		78	39							
PD-8	"A2" 627+56 TO 628+16			60			60	28	22					
PD-8 - PD-9	"A2" 628+16 TO 628+57			41		82	41							
PD-9										1	53	9	1	
PD-9	"A2" 628+57 TO 630+81					448	448							
PD-9	"A2" 630+81 TO 630+96			15		30	15							
PD-9	"A2" 630+96 TO 631+45			49			49	26	22					
PD-9	"A2" 631+45 TO 631+82			37		74	37							
PD-9	"A2" 631+82 TO 633+98					432	432							
PD-9	"A2" 633+98 TO 634+47			49		98	49							
SUB-TOTAL		621	1,037	664	1,037	43,188	46,230	100	88	5	277	15	9	

NOTE: ALL DELINEATORS SHALL INCLUDE A SNOW POLE BRACKET AS SHOWN IN STANDARD PLAN A73B.

STATE OF CALIFORNIA - DEPARTMENT OF TRANSPORTATION
Caltrans
TRAFFIC

FUNCTIONAL SUPERVISOR: SERGIO ACEVES
CALCULATED-DESIGNED BY: JEFF JEWETT
CHECKED BY: X
REVISED BY
DATE REVISED

PAVEMENT DELINEATION QUANTITIES
PDQ-1

LAST REVISION 03-12-12
DATE PLOTTED => 13-DEC-2012
TIME PLOTTED => 13:28

Dist	COUNTY	ROUTE	POST MILES TOTAL PROJECT	SHEET No.	TOTAL SHEETS
03	ED	89	18.0/24.9	215	243

REGISTERED CIVIL ENGINEER 03-13-12 DATE

12-17-12
PLANS APPROVAL DATE

REGISTERED PROFESSIONAL ENGINEER Jeffrey S. Jewett No. 49233 Exp. 9-30-14 CIVIL STATE OF CALIFORNIA

THE STATE OF CALIFORNIA OR ITS OFFICERS OR AGENTS SHALL NOT BE RESPONSIBLE FOR THE ACCURACY OR COMPLETENESS OF SCANNED COPIES OF THIS PLAN SHEET.

PAVEMENT DELINEATION QUANTITIES

SHEET NUMBER	LOCATION/STATION	4" THERMOPLASTIC TRAFFIC STRIPE (RECESSED, BROKEN 36-12)		4" THERMOPLASTIC TRAFFIC STRIPE (RECESSED, BROKEN 12-3)	4" THERMOPLASTIC TRAFFIC STRIPE (RECESSED)			THERMOPLASTIC PAVEMENT MARKING (RECESSED)	TWO COMPONENT PAINT PAVEMENT MARKING	OBJECT MARKER	DELINEATOR (CLASS 2)		HIGHWAY POST MARKER	REMARKS
		DETAIL 5	DETAIL 18	DETAIL 27C	DETAIL 18	DETAIL 21	DETAIL 27B	LIMIT LINE	STOP	TYPE L-1	TYPE E	TYPE F		
		LF	LF	LF	LF	LF	LF	SQFT	SQFT	EA	EA	EA	EA	
PD-9	"A2" 634+47 TO 634+88			41			41	24	22					
PD-9	"A2" 634+88 TO 635+84			96		192	96							
PD-9	"A2" 635+84 TO 640+70					972	972							
PD-9	"A2" 640+70 TO 641+04			34		68	34							
PD-9	"A2" 641+04 TO 641+60			56			56	34	22					
PD-9	"A2" 641+60 TO 642+00			40		80	40							
PD-9	"A2" 642+00 TO 643+09					218	218							
PD-9	"A2" 643+09 TO 643+88			79		158	79							
PD-9	"A2" 643+88 TO 644+28			40			40	35	22					
PD-9	"A2" 644+28 TO 644+70			42		84	42							
PD-9	"A2" 644+70 TO 649+21					902	902							
PD-9	"A2" 649+21 TO 650+14			93		186	93							
PD-9	"A2" 650+14 TO 650+53			39			39	30	22					
PD-9	"A2" 650+53 TO 650+96			43		86	43							
PD-9 - PD-10	"A2" 650+96 TO 673+06					4,420	4,420							
PD-10											17	12	1	
PD-10	"A2" 673+06 TO 673+46			40		80	40							
PD-10	"A2" 673+46 TO 673+93			47			47	32	22					
PD-10	"A2" 673+93 TO 674+15			22		44	22							
PD-10	"A2" 674+15 TO 674+27					24	24							
PD-10	"A2" 674+27 TO 675+14			87		174	87							
PD-10	"A2" 675+14 TO 675+75			61			61							
PD-10	"A2" 675+75 TO 675+81			6		12	6							
PD-10	"A2" 675+81 TO 678+44					526	526							
PD-10	"A2" 678+44 TO 678+67			23		46	23							
PD-10	"A2" 678+67 TO 679+11			44			44	30	22					
PD-10	"A2" 679+11 TO 679+68			57		114	57							
PD-10	"A2" 679+68 TO 681+61					386	386							
PD-10	"A2" 681+61 TO 682+70			109		218	109							
PD-10	"A2" 682+70 TO 683+43			73			73	36	22					
PD-10 - PD-11	"A2" 683+43 TO 684+94			151		302	151							
PD-11										1	30		1	
PD-11 - PD-12	"A2" 684+94 TO 719+28					6,868	6,868							
PD-12											33	2	1	
PD-12	"A2" 719+28 TO 719+89			61		122	61							
SUB-TOTAL		0	0	1,384	0	16,282	15,700	221	154	1	80	14	3	

REVISED BY | DATE REVISED

JEFF JEWETT | X

CALCULATED-DESIGNED BY | CHECKED BY

FUNCTIONAL SUPERVISOR: SERGIO ACEVES

STATE OF CALIFORNIA - DEPARTMENT OF TRANSPORTATION

Caltrans

TRAFFIC

PAVEMENT DELINEATION QUANTITIES
PDQ-2

LAST REVISION 03-12-12 | DATE PLOTTED => 13-DEC-2012 | TIME PLOTTED => 13:28

Dist	COUNTY	ROUTE	POST MILES TOTAL PROJECT	SHEET No.	TOTAL SHEETS
03	ED	89	18.0/24.9	216	243

REGISTERED CIVIL ENGINEER 03-13-12 DATE

12-17-12
PLANS APPROVAL DATE

REGISTERED PROFESSIONAL ENGINEER Jeffrey S Jewett No. 49233 Exp. 9-30-14 CIVIL STATE OF CALIFORNIA

THE STATE OF CALIFORNIA OR ITS OFFICERS OR AGENTS SHALL NOT BE RESPONSIBLE FOR THE ACCURACY OR COMPLETENESS OF SCANNED COPIES OF THIS PLAN SHEET.

PAVEMENT DELINEATION QUANTITIES

SHEET NUMBER	LOCATION/STATION	4" THERMOPLASTIC TRAFFIC STRIPE (RECESSED, BROKEN 36-12)		4" THERMOPLASTIC TRAFFIC STRIPE (RECESSED, BROKEN 12-3)	4" THERMOPLASTIC TRAFFIC STRIPE (RECESSED)			THERMOPLASTIC PAVEMENT MARKING (RECESSED)	TWO COMPONENT PAINT PAVEMENT MARKING	OBJECT MARKER	DELINEATOR (CLASS 2)		HIGHWAY POST MARKER	REMARKS
		DETAIL 5	DETAIL 18	DETAIL 27C	DETAIL 18	DETAIL 21	DETAIL 27B	LIMIT LINE	STOP	TYPE L-1	TYPE E	TYPE F		
		LF	LF	LF	LF	LF	LF	SQFT	SQFT	EA	EA	EA	EA	
PD-12	"A2" 719+89 TO 720+55			66			66	24	22					
PD-12	"A2" 720+55 TO 721+24			69		138	69							
PD-12	"A2" 721+24 TO 721+43					38	38							
PD-12	"A2" 721+43 TO 722+12			69		138	69							
PD-12	"A2" 722+12 TO 722+82			70			70	40	22					
PD-12	"A2" 722+82 TO 723+22			40		80	40							
PD-12 - PD-13	"A2" 723+22 TO 752+21					5,798	5,798							
PD-13	"A2" 752+21 TO 752+70			49		98	49							
PD-13	"A2" 752+70 TO 753+06			36			36	24	22					
PD-13	"A2" 753+06 TO 753+32			26		52	26							
PD-13	"A2" 753+32 TO 753+66					68	68							
PD-13											4	2		
SUB-TOTAL		0	0	425	0	6,410	6,329	88	66	0	4	2	0	
SUB-TOTAL FROM SHEET PDQ-1		621	1,037	664	1,037	43,188	46,230	100	88	5	277	15	9	
SUB-TOTAL FROM SHEET PDQ-2		0	0	1,384	0	16,282	15,700	221	154	1	80	14	3	
TOTAL		1,658		2,473	135,176			409	308	6	392		12	

PAVEMENT DELINEATION QUANTITIES

PDQ-3

STATE OF CALIFORNIA - DEPARTMENT OF TRANSPORTATION
Caltrans
TRAFFIC

FUNCTIONAL SUPERVISOR: SERGIO ACEVES
CALCULATED-DESIGNED BY: JEFF JEWETT
CHECKED BY: X
REVISED BY
DATE REVISED

LAST REVISION 03-13-12 | DATE PLOTTED => 13-DEC-2012 | TIME PLOTTED => 13:28

Dist	COUNTY	ROUTE	POST MILES TOTAL PROJECT	SHEET No.	TOTAL SHEETS
03	ED	89	18.0/24.9	217	243

REGISTERED CIVIL ENGINEER 03-13-12 DATE

12-17-12
PLANS APPROVAL DATE

REGISTERED PROFESSIONAL ENGINEER Jeffrey S Jewett No. 49233 Exp. 9-30-14 CIVIL STATE OF CALIFORNIA

THE STATE OF CALIFORNIA OR ITS OFFICERS OR AGENTS SHALL NOT BE RESPONSIBLE FOR THE ACCURACY OR COMPLETENESS OF SCANNED COPIES OF THIS PLAN SHEET.

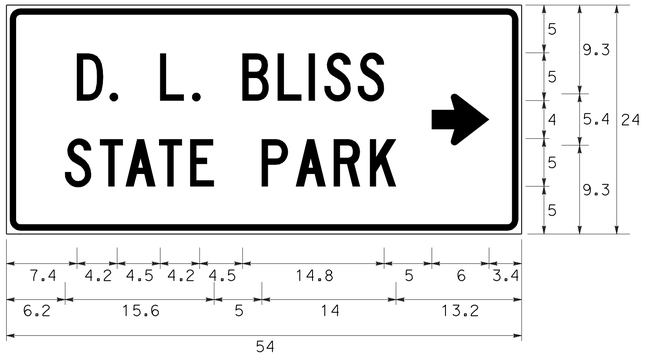

G72<CA>;
1.5" RADIUS, 0.6" BORDER, 0.4" INDENT, WHITE ON BROWN;
[D. L. BLISS] C 90} SPACING; [STATE PARK] C;
STANDARD ARROW CUSTOM 6.0" X 5.4" 0°

3-7

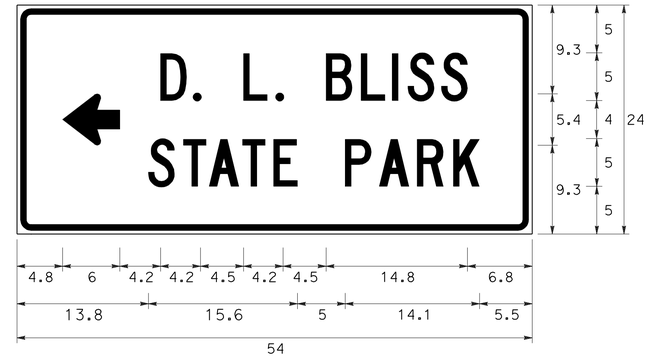

G72<CA>
1.5" RADIUS, 0.6" BORDER, 0.4" INDENT, WHITE ON BROWN;
STANDARD ARROW CUSTOM 6.0" X 5.4" 180°;
[D. L. BLISS] C 90} SPACING; [STATE PARK] C

3-18

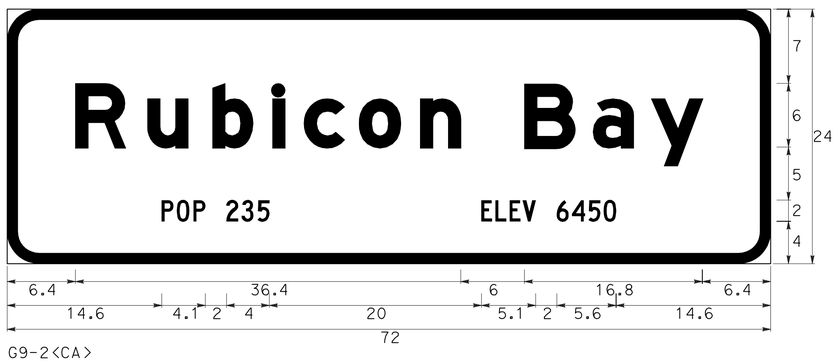

G9-2<CA>
3.0" RADIUS, 1.0" BORDER, WHITE ON GREEN;
[RUBICON BAY] E MOD; [POP 235] C; [ELEV 6450] C

8-4 12-6

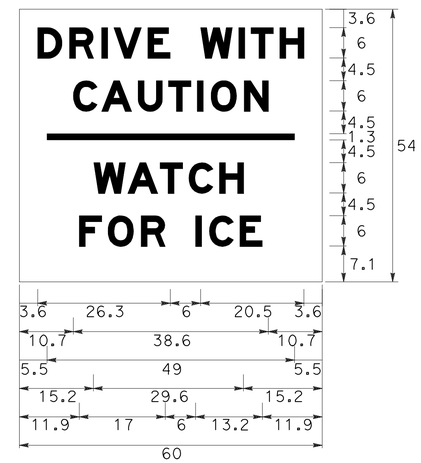

WSPEC1<CA>
NO BORDER, BLACK ON YELLOW;
[DRIVE WITH] E MOD;
[CAUTION] E MOD;
[WATCH] E MOD; [FOR ICE] E MOD

3-12

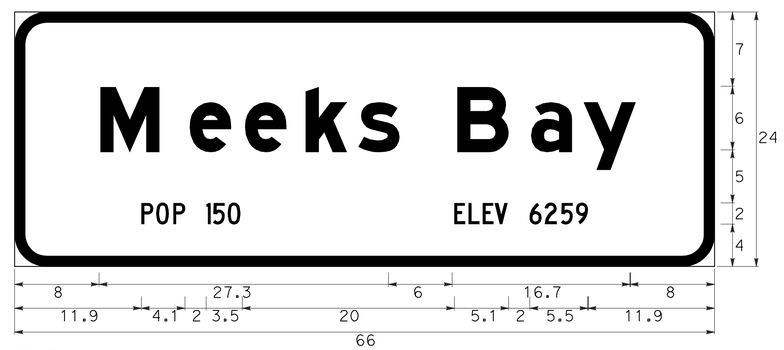

G9-2<CA>
3.0" RADIUS, 1.0" BORDER, WHITE ON GREEN;
[MEEKS BAY] E MOD; [POP 150] C; [ELEV 6259] C

12-17

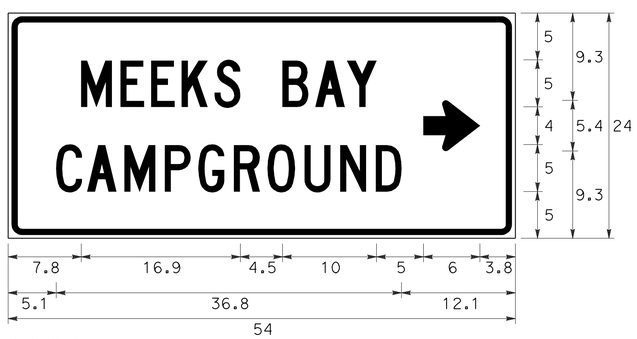

G72<CA>
1.5" RADIUS, 0.6" BORDER, 0.4" INDENT, WHITE ON BROWN;
[MEEKS BAY] C 90} SPACING; [CAMPGROUND] C;
STANDARD ARROW CUSTOM 6.0" X 5.4" 0°

13-2

NOTE: ALL SIGN PANEL DIMENSIONS ARE IN INCHES.

SIGN DETAILS

NO SCALE

SD-1

STATE OF CALIFORNIA - DEPARTMENT OF TRANSPORTATION
Caltrans
TRAFFIC

FUNCTIONAL SUPERVISOR: SERGIO ACEVES
CALCULATED-DESIGNED BY: JEFF JEWETT
CHECKED BY: JOHN KEBER
REVISED BY
DATE REVISED

LAST REVISION 12-20-11
DATE PLOTTED => 13-DEC-2012
TIME PLOTTED => 13:28

Dist	COUNTY	ROUTE	POST MILES TOTAL PROJECT	SHEET No.	TOTAL SHEETS
03	ED	89	18.0/24.9	218	243

REGISTERED CIVIL ENGINEER 03-13-12 DATE

12-17-12
PLANS APPROVAL DATE

REGISTERED PROFESSIONAL ENGINEER Jeffrey S Jewett No. 49233 Exp. 9-30-12 CIVIL STATE OF CALIFORNIA

THE STATE OF CALIFORNIA OR ITS OFFICERS OR AGENTS SHALL NOT BE RESPONSIBLE FOR THE ACCURACY OR COMPLETENESS OF SCANNED COPIES OF THIS PLAN SHEET.

NOTES:

1. THE SIGN POST SHALL HAVE 7/16" DIAMETER PERFORATIONS 1" ON CENTER ON ALL FOUR SIDES FOR THE FULL LENGTH.
2. USE TWO DRIVE RIVETS TO FASTEN ASSEMBLED SIGN AND SIGN POST INTO ANCHOR SLEEVE. INSTALL DRIVE RIVETS INTO THE SIDES FACING TRAFFIC.
3. ALL METAL SIGN POSTS AND ANCHOR SLEEVES SHALL BE GALVANIZED.
4. ALL ANCHOR SLEEVES SHALL BE EMBEDDED IN PCC.
5. BALANCED SINGLE POST INSTALLATIONS OF SINGLE SHEET ALUMINUM PANEL SIGNS REQUIRE BACK BRACES WHEN 2'-10" OR MORE IN LENGTH.
6. WOOD BLOCK SPACERS ARE NOT REQUIRED FOR SIGNS MOUNTED ON METAL POSTS.
7. ATTACH RECTANGULAR SIGN PANEL TO SIGN POST WITH BOLTS AT TOP AND BOTTOM. CENTER MAY BE ATTACHED WITH EITHER BOLT OR 3/8" DRIVE RIVET.
8. ATTACH DIAMOND SIGN PANEL TO SIGN POST WITH BOLT AT CENTER. TOP AND BOTTOM MAY BE ATTACHED WITH EITHER BOLTS OR 3/8" DRIVE RIVETS.
9. FOR DETAILS NOT SHOWN, SEE STANDARD PLANS RS1 AND RS2.

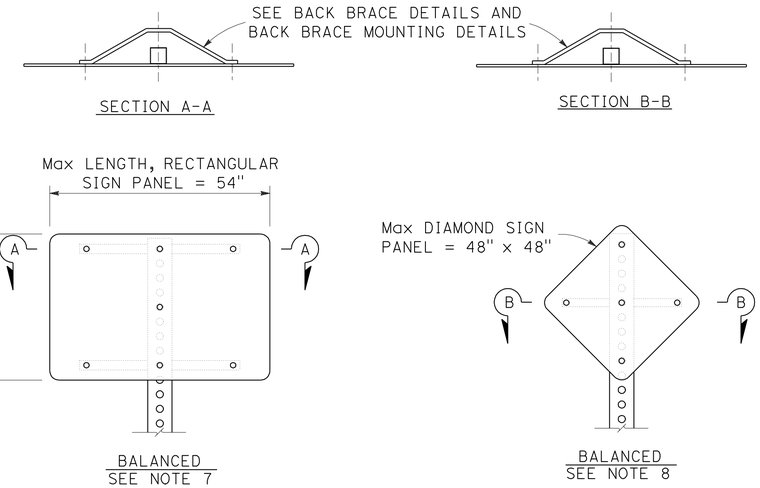

SINGLE POST INSTALLATION

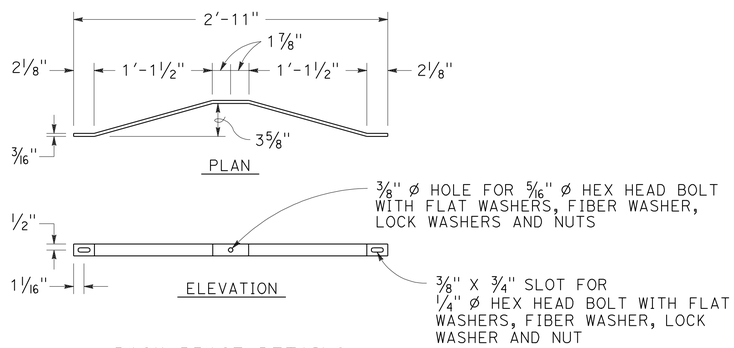

BACK BRACE DETAILS
SEE NOTE 5

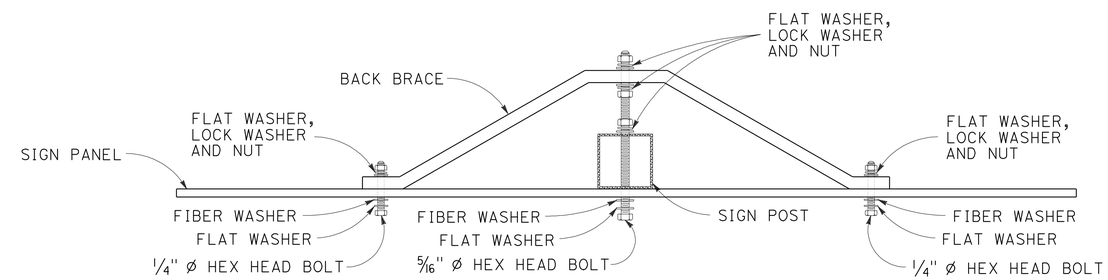

BACK BRACE MOUNTING DETAIL
SEE NOTES 6, 7 AND 8

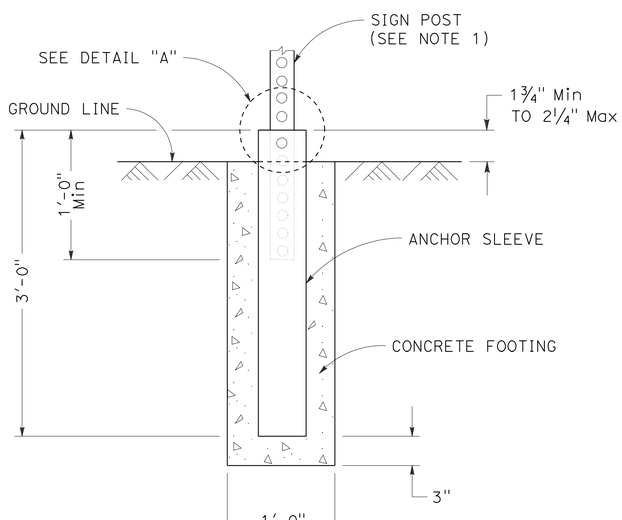

ANCHOR SLEEVE DETAIL

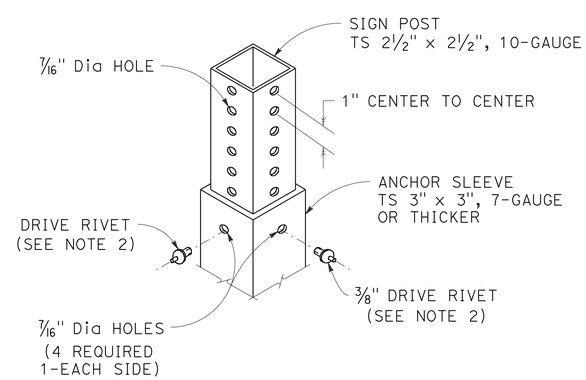

DETAIL "A"

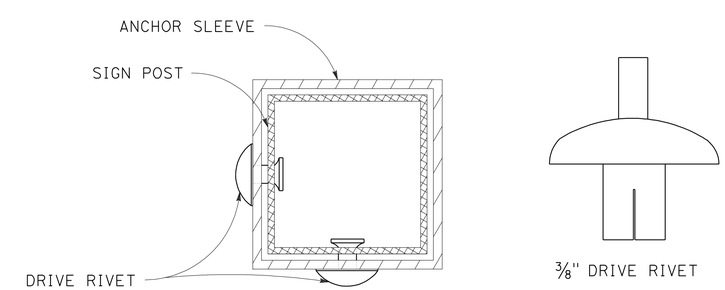

FASTENER DETAILS

SIGN DETAILS

NO SCALE

SD-2

APPROVED FOR SIGN WORK ONLY

STATE OF CALIFORNIA - DEPARTMENT OF TRANSPORTATION
Caltrans
TRAFFIC

FUNCTIONAL SUPERVISOR: SERGIO ACEVES
CALCULATED-DESIGNED BY: JEFF JEWETT
CHECKED BY: JACK KEMMERLY
REVISED BY
DATE REVISED

LAST REVISION 03-13-12
DATE PLOTTED => 13-DEC-2012
TIME PLOTTED => 13:28

Dist	COUNTY	ROUTE	POST MILES TOTAL PROJECT	SHEET No.	TOTAL SHEETS
03	ED	89	18.0/24.9	219	243

REGISTERED CIVIL ENGINEER 03-13-12 DATE

12-17-12
PLANS APPROVAL DATE

REGISTERED PROFESSIONAL ENGINEER Jeffrey S Jewett No. 49233 Exp. 9-30-14 CIVIL STATE OF CALIFORNIA

THE STATE OF CALIFORNIA OR ITS OFFICERS OR AGENTS SHALL NOT BE RESPONSIBLE FOR THE ACCURACY OR COMPLETENESS OF SCANNED COPIES OF THIS PLAN SHEET.

ROADSIDE SIGN QUANTITIES

SIGN NUMBER (SHT-NO.)	SIGN CODE FEDERAL	SIGN CODE CALIFORNIA	PANEL SIZE INCHES	"C" DIM IN FEET	POST SIZE AND LENGTH 4"x6"	POST SIZE AND LENGTH METAL POST 2½"x2½"	ROADSIDE SIGN ONE POST EA	ROADSIDE SIGN TWO POST EA	REMOVE ROADSIDE SIGN EA	RESET ROADSIDE SIGN EA	REMARKS
1-1	W11-1 W16-1								1		
1-2	W11-1 W16-1		36 x 36 24 x 30	4		12′	1				
1-3	W11-1 W16-1								1		
1-4	W11-1 W16-1		36 x 36 24 x 30	4		12′	1				
1-5		W38							1		
1-6		W38	30 x 30	5		10′	1				
2-1	W1-2L W13-1(35)								1		
2-2	W1-2L W13-1(35)		36 x 36 30 x 30	4		10′	1				
2-3	W11-1 W16-1								1		
2-4	W11-1 W16-1		36 x 36 24 x 30	4		12′	1				
3-1	W8-5								1		
3-2	W11-1 W16-1								1		
3-3	W11-1 W16-1		36 x 36 24 x 30	4		12′	1				
3-4	W11-2								1		
3-5	W11-2		36 x 36	5		10′	1				
3-6		G72 G200-81 G200-81A							1		
3-7		G72 G200-81 G200-81A	54 x 24 24 x 24 24 x 12	4		12′	1				
3-8		RNS								1	ROAD NAME SIGN
3-9	R1-1		30	5		10′	1				
3-10	R1-1								1		
3-11		G72 G200-81 G200-81A							1		
3-12		G72 G200-81 G200-81A	54 x 24 24 x 24 24 x 12	4		12′	1				
3-13	W11-2								1		
3-14	W11-2		36 x 36	5		10′	1				
3-15	W8-5								1		
3-16	R1-1								1		
3-17	R1-1		30	5		10′	1				
3-18		W43								1	WITH COVERPLATE
3-19		WSPEC1	60 x 54	5	14′			1			
3-20		WSPEC1							1		
4-1	W1-1R W13-1(30)								1		
4-2	W1-1R W13-1(30)		36 x 36 30 x 30	4		10′	1				
4-3	W1-6R OM1-3		48 x 24 18 x 18	4		10′	1				
4-4	W11-1 W16-1		36 x 36 24 x 30	4		12′	1				
4-5	W1-1L W13-1(30)		36 x 36 30 x 30	4		10′	1				
4-6	W1-1L W13-1(30)								1		
4-7	W1-6R OM1-3								1		
4-8	W11-1 W16-1		36 x 36 24 x 30	4		12′	1				
SHEET TOTAL							17	1	18	2	————

NOTES:

1. EXACT LOCATION AND POSITION OF ROADSIDE SIGNS TO BE DETERMINED BY THE ENGINEER.
2. POST LENGTHS GIVEN ARE APPROXIMATE.
3. "C" DIM = VERTICAL CLEARANCE EP TO BOTTOM OF SIGN PANEL.
4. FOR ADDITIONAL METAL POST INSTALLATION INFORMATION, SEE SHEET SD-2.
5. FOR PANEL LEGEND LAYOUT, SEE SHEET SD-1.
6. RNS = ROAD NAME SIGN.

REVISED BY | DATE REVISED
JEFF JEWETT | JOHN KEBER
CALCULATED-DESIGNED BY | CHECKED BY
FUNCTIONAL SUPERVISOR: SERGIO ACEVES
STATE OF CALIFORNIA - DEPARTMENT OF TRANSPORTATION
Caltrans
TRAFFIC

SIGN QUANTITIES
SQ-1

LAST REVISION 12-20-11 | DATE PLOTTED => 13-DEC-2012 | TIME PLOTTED => 13:42

Dist	COUNTY	ROUTE	POST MILES TOTAL PROJECT	SHEET No.	TOTAL SHEETS
03	ED	89	18.0/24.9	220	243

REGISTERED CIVIL ENGINEER 03-13-12 DATE

12-17-12
PLANS APPROVAL DATE

REGISTERED PROFESSIONAL ENGINEER Jeffrey S. Jewett No. 49233 Exp. 9-30-14 CIVIL STATE OF CALIFORNIA

THE STATE OF CALIFORNIA OR ITS OFFICERS OR AGENTS SHALL NOT BE RESPONSIBLE FOR THE ACCURACY OR COMPLETENESS OF SCANNED COPIES OF THIS PLAN SHEET.

ROADSIDE SIGN QUANTITIES

SIGN NUMBER (SHT-NO.)	SIGN CODE FEDERAL	SIGN CODE CALIFORNIA	PANEL SIZE INCHES	"C" DIM IN FEET	POST SIZE AND LENGTH 4"x6"	POST SIZE AND LENGTH METAL POST 2½"x2½"	ROADSIDE SIGN ONE POST EA	ROADSIDE SIGN TWO POST EA	REMOVE ROADSIDE SIGN EA	RESET ROADSIDE SIGN EA	REMARKS
5-1		R26							1		
5-2		R26	12 x 18	5		10′	1				
5-3	W1-6R OM1-3								1		
5-4	W1-6R OM1-3		48 x 24 18 x 18	4		10′	1				
6-1	W11-1 W16-1		36 X 36 24 X 30	4		12′	1				
6-2	W11-1 W16-1		36 X 36 24 X 30	4		12′	1				
7-1		W43								1	WITH COVERPLATE
7-2	W8-5								1		
7-3	W1-3R W13-1(30)								1		
7-4	W1-3R W13-1(30)		36 x 36 30 X 30	4		10′	1				
8-1	W1-1L W13-1(30)								1		
8-2	W1-1L W13-1(30)		36 x 36 30 X 30	4		10′	1				
8-3	W11-1 W16-1		36 X 36 24 X 30	4		12′	1				
8-4		G9-2							1		
8-5		GSPEC1								1	
8-6		RNS								1	ROAD NAME SIGN
8-7	R1-1								1		
8-8	R1-1		30	5		10′	1				
8-9	W1-2R W13-1(40)								1		
8-10	W1-2R W13-1(40)		36 x 36 30 X 30	4		10′	1				
8-11	W11-1 W16-1		36 x 36 24 X 30	4		12′	1				
8-12		G9-2	72 x 24	5	12′			1			
8-13	W1-2L W13-1(35)								1		
8-14	W1-2L W13-1(35)		36 x 36 30 X 30	4		10′	1				
8-15	W1-2R W13-1(35)								1		
8-16	W1-2R W13-1(35)		36 x 36 30 X 30	4		10′	1				
8-17	W1-1L W13-1(30)								1		
8-18	W1-1L W13-1(30)		36 x 36 30 X 30	4		10′	1				
8-19		W4-4(R†,30)							1		
8-20		W4-4(R†,30)	60 x 60	5	16′			1			SQUARE SHAPE
8-21	R1-1								1		
8-22	R1-1		30	5		10′	1				
8-23		RNS								1	ROAD NAME SIGN
9-1	W1-2R W13-1(40)		36 x 36 30 X 30	4		10′	1				
9-2	W1-2R W13-1(40)								1		
9-3	W1-1R W13-1(30)								1		
9-4	W1-1R W13-1(30)		36 x 36 30 X 30	4		10′	1				
9-5	R1-1								1		
9-6	R1-1		30	5		10′	1				
9-7		RNS								1	ROAD NAME SIGN
SHEET TOTAL							17	2	16	5	

STATE OF CALIFORNIA - DEPARTMENT OF TRANSPORTATION
Caltrans
TRAFFIC

FUNCTIONAL SUPERVISOR: SERGIO ACEVES
CALCULATED-DESIGNED BY: JEFF JEWETT
CHECKED BY: JOHN KEBER
REVISED BY
DATE REVISED

SIGN QUANTITIES
SQ-2

LAST REVISION 12-20-11
DATE PLOTTED => 13-DEC-2012
TIME PLOTTED => 13:42

Dist	COUNTY	ROUTE	POST MILES TOTAL PROJECT	SHEET No.	TOTAL SHEETS
03	ED	89	18.0/24.9	221	243

REGISTERED CIVIL ENGINEER 03-13-12 DATE

12-17-12
PLANS APPROVAL DATE

REGISTERED PROFESSIONAL ENGINEER Jeffrey S. Jewett No. 49233 Exp. 9-30-14 CIVIL STATE OF CALIFORNIA

THE STATE OF CALIFORNIA OR ITS OFFICERS OR AGENTS SHALL NOT BE RESPONSIBLE FOR THE ACCURACY OR COMPLETENESS OF SCANNED COPIES OF THIS PLAN SHEET.

ROADSIDE SIGN QUANTITIES

SIGN NUMBER (SHT-NO.)	SIGN CODE		PANEL SIZE	"C" DIM IN FEET	POST SIZE AND LENGTH		ROADSIDE SIGN ONE POST	ROADSIDE SIGN TWO POST	REMOVE ROADSIDE SIGN	RESET ROADSIDE SIGN	REMARKS
					4"x6"	METAL POST					
	FEDERAL	CALIFORNIA	INCHES			2½"x2½"	EA	EA	EA	EA	
9-8	R1-1		30	5		10′	1				
9-9	R1-1								1		
9-10		RNS								1	ROAD NAME SIGN
9-11	W1-2L W13-1(40)								1		
9-12	W1-2L W13-1(40)		36 x 36 30 X 30	4		1′	1				
9-13	W1-3R W13-1(25)								1		
9-14	W1-3R W13-1(25)		36 x 36 30 X 30	4		10′	1				
9-15		W64(500′)							1		
9-16	S3-1		36 x 36	5		10′	1				
9-17	R1-1								1		
9-18	R1-1		30	5		10′	1				
9-19		RNS								1	ROAD NAME SIGN
9-20	W1-1L W13-1(30)								1		
9-21	W1-1L W13-1(30)		36 x 36 30 X 30	4		10′	1				
9-22	W1-1L W13-1(25)		36 x 36 30 X 30	4		10′	1				
9-23	W1-1L W13-1(25)								1		
9-24	R1-1								1		
9-25	R1-1		30	5		10′	1				
9-26		RNS								1	ROAD NAME SIGN
9-27	W8-5								1		
9-28	S3-1		36 x 36	5		10′	1				
9-29		W64(400′)							1		
9-30	W1-3L W13-1(25)								1		
9-31	W1-3L W13-1(25)		36 x 36 30 X 30	4		10′	1				
9-32	R1-1		30	5		10′	1				
9-33	R1-1								1		
9-34		RNS								1	ROAD NAME SIGN
9-35	W1-1R W13-1(25)								1		
9-36	W1-1R W13-1(25)		36 x 36 30 X 30	4		10′	1				
9-37	W8-5								1		
10-1	W1-1L W13-1(25)								1		
10-2	W1-1L W13-1(25)		36 x 36 30 X 30	4		10′	1				
10-3	W11-1 W16-1		36 x 36 24 X 30	4		12′	1				
10-4	W11-1 W16-1		36 x 36 24 X 30	4		12′	1				
10-5	R1-1								1		
10-6	R1-1		30	5		10′	1				
10-7		W64(400′)							1		
10-8	S3-1		36 x 36	5		10′	1				
10-9	R1-1								1		
10-10	R1-1		30	5		10′	1				
SHEET TOTAL							18	0	18	4	————

SIGN QUANTITIES

SQ-3

STATE OF CALIFORNIA - DEPARTMENT OF TRANSPORTATION
Caltrans
TRAFFIC

FUNCTIONAL SUPERVISOR: SERGIO ACEVES
CALCULATED-DESIGNED BY: JEFF JEWETT
CHECKED BY: JOHN KEBER
REVISED BY
DATE REVISED

LAST REVISION 12-20-11
DATE PLOTTED => 13-DEC-2012
TIME PLOTTED => 13:42

Dist	COUNTY	ROUTE	POST MILES TOTAL PROJECT	SHEET No.	TOTAL SHEETS
03	ED	89	18.0/24.9	222	243

REGISTERED CIVIL ENGINEER 03-13-12 DATE

12-17-12
PLANS APPROVAL DATE

REGISTERED PROFESSIONAL ENGINEER Jeffrey S Jewett No. 49233 Exp. 9-30-14 CIVIL STATE OF CALIFORNIA

THE STATE OF CALIFORNIA OR ITS OFFICERS OR AGENTS SHALL NOT BE RESPONSIBLE FOR THE ACCURACY OR COMPLETENESS OF SCANNED COPIES OF THIS PLAN SHEET.

ROADSIDE SIGN QUANTITIES

SIGN NUMBER (SHT-NO.)	SIGN CODE		PANEL SIZE	"C" DIM IN FEET	POST SIZE AND LENGTH		ROADSIDE SIGN ONE POST	ROADSIDE SIGN TWO POST	REMOVE ROADSIDE SIGN	RESET ROADSIDE SIGN	REMARKS
					4"x6"	METAL POST 2½"x2½"					
	FEDERAL	CALIFORNIA	INCHES				EA	EA	EA	EA	
10-11		RNS								1	ROAD NAME SIGN
10-12	R1-1								1		
10-13	R1-1		30	5		10	1				
10-14		RNS								1	ROAD NAME SIGN
10-15		RNS								1	ROAD NAME SIGN
10-16	R1-1								1		
10-17	R1-1		30	5		10′	1				
11-1		W64(500′)							1		
11-2	S3-1		36 x 36	5		10′	1				
11-3	W1-1L W13-1(25)								1		
11-4	W1-1L W13-1(25)		36 x 36 30 X 30	4		10′	1				
11-5	W11-1 W16-1		36 x 36 24 X 30	4		12′	1				
11-6	W11-1 W16-1		36 x 36 24 X 30	4		12′	1				
12-1	W2-2R		36 x 36	5		10′	1				
12-2	W2-2R								1		
12-3		W64(400′)							1		
12-4	S3-1		36 x 36	5		10′	1				
12-5		G9-2							1		
12-6		G9-2	72 x 24	5	12′			1			
12-7	W1-1R W13-1(25)								1		
12-8	W1-1R W13-1(25)		36 x 36 24 x 24	4		10′	1				
12-9		RNS								1	ROAD NAME SIGN
12-10	R1-1								1		
12-11	R1-1		30	5		10′	1				
12-12		W64(500′)							1		
12-13	S3-1		36 x 36	5		10′	1				
12-14	W1-3R W13-1(25)								1		
12-15	W1-3R W13-1(25)		36 x 36 30 X 30	4		10′	1				
12-16		G9-2							1		
12-17		G9-2	66 x 24	5	12′			1			
12-18	W11-2 W7-3a(½)								1		
12-19	W11-2		36 x 36	5		10′	1				
12-20	R2-1(40)								1		
12-21	R2-1(40) R48-1		36 x 48 36 x 18	4		12′	1				
12-22	R2-1(55)	R48-1							1		
12-23	R2-1(55)	R48-1	36 x 48 36 X 18	4		12′	1				
SHEET TOTAL							15	2	15	4	———

STATE OF CALIFORNIA - DEPARTMENT OF TRANSPORTATION
Caltrans
TRAFFIC

FUNCTIONAL SUPERVISOR: SERGIO ACEVES
CALCULATED-DESIGNED BY: JEFF JEWETT
CHECKED BY: JOHN KEBER
REVISED BY
DATE REVISED

SIGN QUANTITIES
SQ-4

LAST REVISION 12-20-11
DATE PLOTTED => 13-DEC-2012
TIME PLOTTED => 13:42

Dist	COUNTY	ROUTE	POST MILES TOTAL PROJECT	SHEET No.	TOTAL SHEETS
03	ED	89	18.0/24.9	223	243

REGISTERED CIVIL ENGINEER 03-13-12 DATE

12-17-12
PLANS APPROVAL DATE

REGISTERED PROFESSIONAL ENGINEER Jeffrey S Jewett No. 49233 Exp. 9-30-14 CIVIL STATE OF CALIFORNIA

THE STATE OF CALIFORNIA OR ITS OFFICERS OR AGENTS SHALL NOT BE RESPONSIBLE FOR THE ACCURACY OR COMPLETENESS OF SCANNED COPIES OF THIS PLAN SHEET.

ROADSIDE SIGN QUANTITIES

SIGN NUMBER (SHT-NO.)	SIGN CODE FEDERAL	SIGN CODE CALIFORNIA	PANEL SIZE INCHES	"C" DIM IN FEET	POST SIZE AND LENGTH 6"x6"	POST SIZE AND LENGTH METAL POST 2½"x2½"	ROADSIDE SIGN ONE POST EA	ROADSIDE SIGN TWO POST EA	REMOVE ROADSIDE SIGN EA	RESET ROADSIDE SIGN EA	REMARKS
13-1	RM-010 RM-130	G72							1		
13-2	RM-010 RM-130	G72	54 x 24 24 x 24 24 x 24	4		12′	1				
13-3	W11-8								1		
13-4	W11-8		36 x 36	5		10′	1				
13-5	R1-1		30	5		10′	1				
13-6	R1-1								1		
13-7	W1-3R W13-1(30)		36 x 36 30 X 30	4		10′	1				
13-8	W1-3R W13-1(30)								1		
TOTAL THIS SHEET							4	0	4	0	
TOTAL SHEET SQ-1							17	1	18	2	
TOTAL SHEET SQ-2							17	2	16	5	
TOTAL SHEET SQ-3							18	0	18	4	
TOTAL SHEET SQ-4							15	2	15	4	
TOTAL							71	5	71	15	————

STATE OF CALIFORNIA - DEPARTMENT OF TRANSPORTATION
Caltrans
TRAFFIC

FUNCTIONAL SUPERVISOR: SERGIO ACEVES
CALCULATED-DESIGNED BY: JEFF JEWETT
CHECKED BY: JOHN KEBER
REVISED BY
DATE REVISED

LAST REVISION 12-20-11
DATE PLOTTED => 13-DEC-2012
TIME PLOTTED => 13:42

SIGN QUANTITIES
SQ-5

Dist	COUNTY	ROUTE	POST MILES TOTAL PROJECT	SHEET No.	TOTAL SHEETS
03	ED	89	18.0/24.9	224	243

REGISTERED CIVIL ENGINEER 03-13-12 DATE

12-17-12
PLANS APPROVAL DATE

REGISTERED PROFESSIONAL ENGINEER Jeffrey S Jewett No. 49233 Exp. 9-30-14 CIVIL STATE OF CALIFORNIA

THE STATE OF CALIFORNIA OR ITS OFFICERS OR AGENTS SHALL NOT BE RESPONSIBLE FOR THE ACCURACY OR COMPLETENESS OF SCANNED COPIES OF THIS PLAN SHEET.

ROADSIDE SIGN PANEL QUANTITIES

SIGN CODE		SIGN MESSAGE/DESCRIPTION	PANEL SIZE L x D	PANEL AREA	NUMBER OF PANELS	BACKGROUND		LEGEND		PROTECTIVE OVERLAY	FURNISH SINGLE SHEET ALUMINUM SIGN		
						SHEETING COLOR	RETROREFLECTIVE ASTM TYPE	SHEETING COLOR	RETROREFLECTIVE ASTM TYPE	PREMIUM	UNFRAMED		FRAMED
											0.063"	0.080"	0.063"
FEDERAL	CALIFORNIA		INCHES	SQFT							SQFT	SQFT	SQFT
	G200-81	WILDLIFE VIEWING (SYMBOL)	24 x 24	4.00	2	BROWN	III	WHITE	III	X	8.00		
	G200-81A	WILDLIFE VIEWING	24 x 12	2.00	2	BROWN	III	WHITE	III	X	4.00		
	G72	D.L. BLISS STATE PARK ~ RT ARROW	54 x 24	9.00	1	BROWN	III	WHITE	III	X		9.00	
	G72	LT ARROW ~ D.L. BLISS STATE PARK	54 x 24	9.00	1	BROWN	III	WHITE	III	X		9.00	
	G72	MEEKS BAY CAMPGROUND ~ RT ARROW	54 x 24	9.00	1	BROWN	III	WHITE	III	X		9.00	
	G9-2	RUBICON BAY~UNICORPORATED COMMUNITY	72 x 24	12.00	2	GREEN	III	WHITE	III	X			24.00
	G9-2	MEEKS BAY~INICORPORATED COMMUNITY	66 x 24	11.00	1	GREEN	III	WHITE	III	X			11.00
OM1-3		OBJECT MARKER	18 x 18	2.25	2	YELLOW	III			X	4.50		
R1-1		STOP	30	5.18	15	RED	IX	WHITE	IX	X	77.70		
R2-1(40)		SPEED LIMIT 40 MPH	36 x 48	12.00	1	WHITE	III	BLACK		X		12.00	
R2-1(55)		SPEED LIMIT 55 MPH	36 x 48	12.00	1	WHITE	III	BLACK		X		12.00	
	R26	NO PARKING ANY TIME	12 x 18	1.50	1	WHITE	III	RED	III	X	1.50		
	R48-1	RADAR ENFORCED	24 x 30	5.00	2	WHITE	III	BLACK		X	10.00		
RM-010		CAMPING (TENT)	24 x 24	4.00	1	BROWN	III	WHITE	III	X	4.00		
RM-130		PICNIC SHELTER	24 x 24	4.00	1	BROWN	III	WHITE	III	X	4.00		
S3-1		SCHOOL BUS STOP AHEAD	36 x 36	9.00	6	FYG	III	BLACK		X	54.00		
W11-1		BICYCLE TRAFFIC	36 x 36	9.00	14	FYG	III	BLACK		X	126.00		
W11-2		PEDESTRIAN TRAFFIC	36 x 36	9.00	3	FYG	III	BLACK		X	27.00		
W11-8		EMERGENCY VEHICLE	36 x 36	9.00	1	YELLOW	III	BLACK		X	9.00		
	W4-4(R†,30)	RIGHT TURN ~ 30	60 x 60	25.00	1	YELLOW	III	BLACK		X			25.00
W1-1L		LEFT TURN	36 x 36	9.00	7	YELLOW	III	BLACK		X	63.00		
W1-1R		RIGHT TURN	36 x 36	9.00	4	YELLOW	III	BLACK		X	36.00		
W1-2L		LEFT CURVE	36 x 36	9.00	3	YELLOW	III	BLACK		X	27.00		
W1-2R		RIGHT CURVE	36 x 36	9.00	3	YELLOW	III	BLACK		X	27.00		
W13-1(25)		ADVISORY SPEED ~ 25	24 x 24	4.00	8	YELLOW	III	BLACK		X	32.00		
W13-1(30)		ADVISORY SPEED ~ 30	24 x 24	4.00	8	YELLOW	III	BLACK		X	32.00		
W13-1(35)		ADVISORY SPEED ~ 35	24 x 24	4.00	3	YELLOW	III	BLACK		X	12.00		
W13-1(40)		ADVISORY SPEED ~ 40	24 x 24	4.00	3	YELLOW	III	BLACK		X	12.00		
W1-3L		REVERSE TURN LEFT	36 x 36	9.00	1	YELLOW	III	BLACK		X	9.00		
W1-3R		REVERSE TURN RIGHT	36 x 36	9.00	4	YELLOW	III	BLACK		X	36.00		
W16-1		SHARE THE ROAD	24 x 30	9.00	14	FYG	III	BLACK		X	126.00		
W1-6R		ONE DIRECTION LARGE ARROW ~ RIGHT	48 x 24	8.00	2	YELLOW	IX	BLACK		X		16.00	
W2-2R		SIDE ROAD ~ RIGHT	36 x 36	9.00	1	YELLOW	III	BLACK		X	9.00		
	W38	SLIDE AREA	30 x 30	6.25	1	YELLOW	III	BLACK		X	6.25		
WSPEC1		DRIVE WITH CAUTION ~ WATCH FOR ICE	60 x 54	9.00	1	YELLOW	III	BLACK		X	9.00		
TOTAL											765.95	67.00	60.00

NOTES:

1. W4-4(R†,30)<CA> PANEL SHALL BE SQUARE SHAPE.
2. FYG = FLUORESCENT YELLOW GREEN

L = LENGTH OF PANEL
D = DEPTH OF PANEL

SIGN QUANTITIES

NO SCALE **SQ-6**

STATE OF CALIFORNIA - DEPARTMENT OF TRANSPORTATION
Caltrans
TRAFFIC

FUNCTIONAL SUPERVISOR: SERGIO ACEVES
CALCULATED-DESIGNED BY: JEFF JEWETT
CHECKED BY: JOHN KEBER
REVISED BY
DATE REVISED

LAST REVISION 03-13-12
DATE PLOTTED => 13-DEC-2012
TIME PLOTTED => 13:42

Dist	COUNTY	ROUTE	POST MILES TOTAL PROJECT	SHEET No.	TOTAL SHEETS
03	ED	89	18.0/24.9	225	243

REGISTERED CIVIL ENGINEER 9/29/12 DATE

12-17-12
PLANS APPROVAL DATE

REGISTERED PROFESSIONAL ENGINEER DAVID C WATKINS No. 65734 Exp. 9/30/13 CIVIL STATE OF CALIFORNIA

THE STATE OF CALIFORNIA OR ITS OFFICERS OR AGENTS SHALL NOT BE RESPONSIBLE FOR THE ACCURACY OR COMPLETENESS OF SCANNED COPIES OF THIS PLAN SHEET.

ROADWAY QUANTITIES SUMMARY TABLE

L+/R+	LOCATION/ STATION LIMITS "A" LINE	HOT MIX ASPHALT (TYPE A)	CLASS 2 AB (CY)	ROADWAY EXCAVATION	(N) EMBANKMENT	DESCRIPTION
		TON	CY	CY	CY	
	MAINLINE					
L+/R+	400+00 TO 409+50	466.9	0.0	0.0	0.0	L-1
L+/R+	409+50 TO 425+00	1146.4	467.9	466.4	174.4	L-2/3
L+/R+	425+00 TO 439+00	698.0	140.5	203.3	321.8	L-3/4
L+/R+	439+00 TO 453+00	736.5	182.3	220.0	70.0	L-4/5
L+/R+	453+00 TO 465+50	658.7	157.2	242.2	12.9	L-5
L+/R+	465+50 TO 479+50	821.2	109.9	335.0	73.6	L-6
L+/R+	479+50 TO 494+00	884.9	142.0	367.4	122.7	L-7/8
L+/R+	494+00 TO 507+50	742.9	117.5	294.0	94.8	L-8
L+/R+	507+50 TO 521+00	927.5	174.8	353.9	318.6	L-9
L+/R+	521+00 TO 535+50	826.6	113.8	315.7	390.7	L-9/10
L+/R+	535+50 TO 549+50	719.9	59.1	203.4	142.9	L-11
L+/R+	549+50 TO 563+50	559.1	6.1	9.1	1.7	L-12
L+/R+	563+50 TO 578+50	955.6	342.4	500.1	489.4	L-13/14
L+/R+	578+50 TO 591+50	531.5	0.0	0.0	0.0	L-14
L+/R+	591+50 TO 605+50	737.2	64.0	161.8	91.6	L-15
L+/R+	605+50 TO 619+50	771.0	28.2	149.6	49.9	L-16
L+/R+	619+50 TO 633+50	821.6	90.1	271.7	7.1	L-17
L+/R+	633+50 TO 647+50	929.8	77.5	247.3	51.0	L-18
L+/R+	647+50 TO 661+50	847.0	124.6	398.0	87.0	L-19
L+/R+	661+50 TO 675+50	874.7	132.1	378.6	50.8	L-20
L+/R+	675+50 TO 689+50	809.3	74.3	233.0	47.6	L-21
L+/R+	689+50 TO 703+50	530.6	0.0	14.9	1.5	L-22
L+/R+	703+50 TO 716+50	500.2	0.0	0.0	0.0	L-23
L+/R+	716+50 TO 732+50	956.9	200.6	424.1	181.6	L-23/24/25
L+/R+	732+50 TO 745+50	543.3	0.0	11.0	8.1	L-25
L+/R+	745+50 TO 753+89	504.4	59.8	119.7	68.4	L-26
	SUBTOTAL	19,501.8	2,864.8	5,920.1	2,858.1	INCLUDES ALL ROAD CONNECTIONS
	CONCRETE CURB					
L+/R+	SEE SHEET Q-2		1,284.8			SEE SHEET Q-2
	SUBTOTAL		1,284.8			
	CONCRETE VALLEY GUTTER					
L+	SEE THIS SHEET		9.4			SEE THIS SHEET
	SUBTOTAL		9.4			
	SETTLING BASINS					SEE SHEET DD-25 FOR
L+/R+	SEE SHEET DQ-13			959.9	82.2	DETAILS
	SUBTOTAL			959.9	82.2	
	RECONSTRUCT SETTLING BASINS					SEE SHEET DD-24 FOR
L+/R+	SEE SHEET DQ-13			101.3		DETAILS
	SUBTOTAL			101.3		
	TOTAL	19,501.8	4,159.0	6,981.3	2,940.3	

(N) - NOT A SEPERATE PAY ITEM, FOR INFORMATION ONLY.
FOR EXACT LIMITS/LOCATION OF ROAD CONNECTIONS, SEE LAYOUTS AND CONSTRUCTION DETAILS SHEETS .

CONCRETE VALLEY GUTTER

L+/R+	STATION LIMITS "A" LINE	LENGTH (N)	MINOR CONCRETE (Misc Const+)	CI 2 AB (CY)	BAR REINFORCING STEEL (N)
		LF	CY	CY	WEIGHT (LB)
L+	722+03.9 TO 722+85.0	85.0	12.6	9.4	475.95
	TOTAL	85.0	12.6**	9.4*	475.95

(N) NOT A SEPARATE PAY ITEM, FOR INFORMATION ONLY

* CI 2 AB QUANTITY INCLUDED IN THE ROADWAY QUANTITIES SUMMARY TABLE (SEE SHEET Q-1).

** MINOR CONCRETE (Misc Const+) INCLUDED IN DRAINAGE QUANTITIES SUMMARY SHEET DQ-15.

TACK COAT

L+/R+	STATION LIMITS "A" LINE	AREA (N)	TONS	DESCRIPTION
		SQYD		
L+/R+	400+00.0 TO 753+66.3	119,658.8	34.9	MAINLINE (INCLUDING ROAD CONNECTIONS)
L+/R+	400+00.0 TO 753+66.3	2,662.2	1.1	SAWCUT AREAS ADJACENT TO CURBS
L+/R+	400+00.0 TO 753+66.3	5,846.8	2.4	PAVEMENT WIDENINGS
	TOTAL	128,167.8	38.4	

(N) NOT A SEPARATE PAY ITEM

ADJUST MANHOLE TO GRADE

STATION LIMITS "A" LINE	OFFSET	SIDE	LAYOUT SHEET No.	QUANTITY (EA)
447+43.8	19.9′	R+	L-4	1
460+81.1	24.2′	R+	L-5	1
TOTAL				2

SUMMARY OF QUANTITIES
Q-1

REVISED BY | DATE REVISED
DAVID WATKINS | STEVE HERYFORD
CALCULATED-DESIGNED BY | CHECKED BY
FUNCTIONAL SUPERVISOR | FERMIN BARRIGA
STATE OF CALIFORNIA - DEPARTMENT OF TRANSPORTATION
Caltrans® DIVISION OF ENGINEERING

LAST REVISION 09-29-12 | DATE PLOTTED => 13-DEC-2012 | TIME PLOTTED => 13:42

Dist	COUNTY	ROUTE	POST MILES TOTAL PROJECT	SHEET No.	TOTAL SHEETS
03	ED	89	18.0/24.9	226	243

REGISTERED CIVIL ENGINEER 9/29/12 DATE

12-17-12
PLANS APPROVAL DATE

REGISTERED PROFESSIONAL ENGINEER DAVID C WATKINS No. 65734 Exp. 9/30/13 CIVIL STATE OF CALIFORNIA

THE STATE OF CALIFORNIA OR ITS OFFICERS OR AGENTS SHALL NOT BE RESPONSIBLE FOR THE ACCURACY OR COMPLETENESS OF SCANNED COPIES OF THIS PLAN SHEET.

CONCRETE CURB

L+/R+	STATION LIMITS "A" LINE			LENGTH (N) F+	TYPE	MINOR CONCRETE (CURB) (CY) CY	CI 2 AB (CY)* CY
L+	433+39.0	TO	435+90.0	251	D-4	10.2	13.9
R+	434+00.0	TO	435+95.5	196	D-4	8.0	10.9
L+	437+47.8	TO	438+02.1	54	D-4	2.2	3.0
R+	437+80.4	TO	438+45.6	65	D-4	2.7	3.6
R+	468+77.0	TO	471+04.9	228	D-4	9.3	12.7
L+	469+03.8	TO	471+56.1	259	D-4	10.6	14.4
R+	471+29.2	TO	471+46.9	28	D-4	1.1	1.6
L+	471+77.3	TO	474+03.8	239	D-4	9.7	13.3
R+	471+95.7	TO	472+07.3	21	D-4	0.9	1.2
R+	472+34.2	TO	475+50.1	316	D-4	12.9	17.5
L+	474+15.6	TO	476+24.1	209	D-4	8.5	11.6
R+	475+60.6	TO	480+37.2	477	D-4	19.5	26.5
L+	476+24.1	TO	477+25.0	101	B1-4	2.2	1.9
L+	477+25.0	TO	477+75.2	50	D-4	2.0	2.8
L+	477+99.6	TO	478+09.7	15	D-4	0.6	0.8
L+	478+19.7	TO	483+93.7	576	D-4	23.5	32.0
R+	480+61.2	TO	480+79.3	27	D-4	1.1	1.5
R+	480+93.3	TO	485+37.2	457	D-4	18.7	25.4
L+	483+93.7	TO	490+42.8	650	B1-4	14.2	12.5
R+	485+61.2	TO	485+68.3	13	D-4	0.5	0.7
R+	485+82.5	TO	489+31.7	363	D-4	14.8	20.2
L+	490+42.8	TO	493+93.2	350	D-4	14.3	19.5
L+	494+06.8	TO	494+14.1	13	D-4	0.5	0.7
L+	497+28.1	TO	511+82.4	1454	D-4	59.4	80.8
R+	498+04.0	TO	505+53.1	736	D-4	30.1	40.9
R+	510+53.9	TO	512+16.8	170	B1-4	3.7	3.3
L+	512+06.4	TO	514+70.2	264	D-4	10.8	14.7
R+	512+18.2	TO	516+29.7	412	D-4	16.8	22.9
L+	514+94.9	TO	515+02.8	20	D-4	0.8	1.1
L+	515+17.5	TO	515+43.9	38	D-4	1.6	2.1
L+	521+15.5	TO	522+96.7	186	B1-4	4.1	3.6
R+	522+00.0	TO	522+86.4	86	D-4	3.5	4.8
R+	523+11.2	TO	523+22.0	11	D-4	0.4	0.6
L+	523+19.8	TO	525+94.3	282	D-4	11.5	15.7
R+	523+32.9	TO	527+55.1	422	D-4	17.2	23.5
R+	527+80.0	TO	527+90.5	16	D-4	0.7	0.9
R+	528+00.9	TO	528+37.3	46	D-4	1.9	2.5
R+	528+68.2	TO	537+04.8	855	D-4	34.9	47.5
L+	529+73.2	TO	532+95.0	327	B1-4	7.1	6.3
L+	532+95.0	TO	537+05.1	410	D-4	16.7	22.8
R+	537+04.8	TO	542+35.0	530	B1-4	11.6	10.2
L+	537+05.1	TO	538+34.9	140	B1-4	3.1	2.7
L+	538+34.9	TO	541+31.9	297	D-4	12.1	16.5
R+	542+35.0	TO	542+66.1	31	D-4	1.3	1.7
R+	542+90.2	TO	543+00.2	15	D-4	0.6	0.8
R+	543+09.8	TO	543+25.5	20	D-4	0.8	1.1
L+	551+04.7	TO	551+40.1	36	D-4	1.5	2.0
R+	551+37.6	TO	551+55.2	18	D-4	0.7	1.0
L+	570+79.2	TO	578+00.0	732	D-4	29.9	40.7
R+	571+29.3	TO	577+17.8	609	D-4	24.9	33.8
R+	577+35.5	TO	577+59.4	63	D-4	2.6	3.5
R+	595+36.8	TO	598+14.3	264	D-4	10.8	14.7
L+	595+46.8	TO	596+33.4	90	B1-4	2.0	1.7
L+	596+33.4	TO	601+05.2	495	D-4	20.2	27.5
L+	601+05.2	TO	606+99.7	595	B1-4	13.0	11.5
L+	606+99.7	TO	608+44.5	145	D-4	5.9	8.0
L+	609+08.6	TO	609+86.4	88	D-4	3.6	4.9
L+	610+90.5	TO	632+38.4	2130	D-4	87.0	118.3
L+	635+49.3	TO	638+26.8	282	D-4	11.5	15.7
R+	637+72.0	TO	643+36.1	585	D-4	23.9	32.5
L+	641+47.0	TO	647+00.0	548	D-4	22.4	30.5
R+	644+48.2	TO	644+94.2	84	D-4	3.4	4.7
R+	645+47.6	TO	650+13.7	497	D-4	20.3	27.6
SUBTOTAL (TABLE 1)				18,984		722.3	953.5

(N) NOT A SEPARATE PAY ITEM, FOR INFORMATION ONLY.

CONCRETE CURB

L+/R+	STATION LIMITS "A" LINE			LENGTH (N) F+	TYPE	MINOR CONCRETE (CURB) (CY) CY	CI 2 AB (CY)* CY
L+	647+00.0	TO	648+00.0	98	B1-4	2.1	1.9
L+	648+00.0	TO	652+37.9	438	D-4	17.9	24.3
R+	650+45.0	TO	668+42.8	1783	D-4	72.8	99.1
L+	652+69.3	TO	652+87.4	24	D-4	1.0	1.3
L+	655+86.7	TO	665+05.0	923	D-4	37.7	51.3
L+	665+05.0	TO	668+95.0	405	B1-4	8.8	7.8
L+	668+95.0	TO	674+99.2	609	D-4	24.9	33.8
L+	675+60.7	TO	678+80.0	319	D-4	13.0	17.7
L+	678+80.0	TO	680+94.9	215	B1-4	4.7	4.1
R+	678+93.4	TO	684+36.6	549	D-4	22.4	30.5
L+	680+94.9	TO	682+43.8	150	D-4	6.1	8.3
L+	682+66.0	TO	682+80.8	30	D-4	1.2	1.7
R+	720+35.0	TO	727+14.5	659	D-4	26.9	36.6
L+	752+57.7	TO	753+89.0	136	D-4	5.6	7.6
R+	752+96.4	TO	753+88.0	93	D-4	3.8	5.2
SUBTOTAL (TABLE 2)				6,431		249.0	331.3
SUBTOTAL (TABLE 1)				18,984		722.2	953.5
TOTAL				25,415		971.2	1,284.8

(N) NOT A SEPARATE PAY ITEM, FOR INFORMATION ONLY.

* CLASS 2 AB IS UNDER THE CURB (SEE TYPICAL X-1). QUANTITY INCLUDED IN THE ROADWAY QUANTITIES SUMMARY TABLE (SEE SHEET Q-1).

CRACK TREATMENT

LOCATION	LANE MILE
NB ROUTE 89	6.91
SB ROUTE 89	6.91
TOTAL	13.82

REMOVE AC DIKE

L+/R+	LOCATION/ STATION LIMITS "A" LINE			REMOVE AC DIKE
	MAINLINE			LF
R+	489+31.7	TO	494+81.7	550.0
R+	496+12.5	TO	498+04.0	191.5
R+	505+53.1	TO	508+69.7	316.6
R+	510+33.5	TO	510+53.9	20.4
R+	518+15.1	TO	522+00.0	384.9
L+	541+32.8	TO	541+64.4	31.6
R+	598+14.3	TO	606+93.4	879.1
L+	608+51.4	TO	609+08.6	57.2
L+	632+38.4	TO	634+67.3	238.9
L+	635+07.8	TO	635+49.3	51.5
R+	643+60.3	TO	644+24.1	83.0
R+	668+42.8	TO	673+35.7	512.0
R+	673+75.6	TO	678+72.8	523.8
L+	683+24.7	TO	685+00.5	187.0
R+	684+36.6	TO	685+08.4	71.8
	TOTAL			4099.3

NOTE: REMOVE AC DIKE AT ALL OTHER LOCATIONS (NOT SHOWN) WILL BE PAID UNDER ROADWAY EXCAVATION PAY ITEM.

SHOULDER BACKING

L+/R+	STATION LIMITS "A" LINE			LENGTH (N) F+	TONS
R+	400+00	TO	419+00	1900	206.6
L+	402+00	TO	416+00	1400	33.0
R+	423+15	TO	431+00	785	75.4
L+	425+00	TO	433+00	800	79.0
R+	432+40	TO	434+00	160	15.4
R+	436+00	TO	437+70	170	16.3
L+	436+00	TO	446+30	1030	56.9
R+	438+25	TO	446+75	850	81.7
R+	448+20	TO	450+25	205	19.7
R+	451+85	TO	459+90	805	77.3
L+	458+75	TO	469+00	1025	42.7
R+	462+00	TO	468+75	675	44.0
R+	489+45	TO	494+80	535	34.9
L+	494+10	TO	497+30	320	13.3
R+	496+10	TO	498+00	190	12.4
R+	505+55	TO	508+75	320	20.9
L+	515+45	TO	521+15	570	23.8
R+	518+40	TO	522+00	360	15.0
L+	526+00	TO	529+75	375	15.6
L+	541+30	TO	570+85	2955	115.2
R+	543+25	TO	556+10	1285	73.4
R+	556+55	TO	571+30	1475	84.2
L+	578+40	TO	595+10	1670	65.1
R+	577+75	TO	595+35	1760	100.5
R+	598+15	TO	635+75	3760	248.7
L+	608+45	TO	609+05	60	1.6
L+	610+20	TO	610+90	70	1.9
L+	638+30	TO	640+85	255	6.9
R+	644+95	TO	645+55	60	1.6
L+	653+20	TO	655+85	265	8.4
R+	668+45	TO	678+75	1030	37.3
L+	683+40	TO	685+50	210	7.8
L+	692+50	TO	722+00	2950	109.6
R+	684+35	TO	716+65	3230	163.9
R+	722+50	TO	723+36	85.8	4.6
L+	722+90	TO	726+50	360	13.4
R+	727+15	TO	745+47	1832	93.0
L+	732+50	TO	738+00	550	20.4
L+	744+50	TO	751+45	695	25.8
	TOTAL			37,033	2,067.5

(N) NOT A SEPARATE PAY ITEM, FOR INFORMATION ONLY.

SUMMARY OF QUANTITIES
Q-2

STATE OF CALIFORNIA - DEPARTMENT OF TRANSPORTATION
Caltrans DIVISION OF ENGINEERING

FUNCTIONAL SUPERVISOR: FERMIN BARRIGA
CALCULATED-DESIGNED BY: DAVID WATKINS
CHECKED BY: STEVE HERYFORD
REVISED BY / DATE REVISED

LAST REVISION 09-24-12 | DATE PLOTTED => 13-DEC-2012 | TIME PLOTTED => 13:42

Dist	COUNTY	ROUTE	POST MILES TOTAL PROJECT	SHEET No.	TOTAL SHEETS
03	ED	89	18.0/24.9	227	243

9/29/12
REGISTERED CIVIL ENGINEER DATE

12-17-12
PLANS APPROVAL DATE

REGISTERED PROFESSIONAL ENGINEER
DAVID C WATKINS
No. 65734
Exp. 9/30/13
CIVIL
STATE OF CALIFORNIA

THE STATE OF CALIFORNIA OR ITS OFFICERS OR AGENTS SHALL NOT BE RESPONSIBLE FOR THE ACCURACY OR COMPLETENESS OF SCANNED COPIES OF THIS PLAN SHEET.

ADJUST SEWER MANHOLE

STATION LIMITS "A" LINE	OFFSET	SIDE	SHEET	CASE	QUANTITY (EA)
606+92.77	16.56′	L†	L-16	B	1
606+95.03	20.19′	R†	L-16	B	1
609+84.30	14.62′	L†	L-16	A	1
613+64.44	13.68′	L†	L-16	B	1
616+87.94	11.57′	L†	L-16	B	1
621+36.09	12.49′	L†	L-17	B	1
625+16.61	14.32′	L†	L-17	B	1
630+49.78	15.94′	L†	L-17	B	1
635+03.22	24.87′	L†	L-18	A	1
641+36.85	27.35′	L†	L-18	A	1
645+50.00	10.29′	L†	L-18	B	1
649+16.03	12.51′	L†	L-19	B	1
653+13.71	15.31′	L†	L-19	A	1
657+13.58	15.31′	L†	L-19	B	1
661+50.80	19.13′	L†	L-20	B	1
666+00.81	15.19′	L†	L-20	B	1
670+51.00	13.97′	L†	L-20	B	1
675+41.28	12.26′	L†	L-20	A	1
679+15.99	23.61′	R†	L-21	B	1
679+17.09	14.78′	L†	L-21	B	1
680+33.14	17.14′	L†	L-21	B	1
683+07.89	24.17′	L†	L-21	A	1
688+98.70	15.44′	L†	L-21	A	1
692+99.24	13.42′	L†	L-22	A	1
695+95.44	12.54′	L†	L-22	A	1
697+04.64	12.94′	L†	L-22	A	1
702+08.96	14.97′	L†	L-22	A	1
707+09.40	13.23′	LT	L-23	A	1
709+28.71	13.57′	L†	L-23	A	1
710+55.38	13.62′	L†	L-23	A	1
712+32.53	13.30′	L†	L-23	A	1
716+66.28	11.61′	L†	L-23	A	1
717+02.19	19.67′	R†	L-23	A	1
719+16.72	23.36′	R†	L-24	A	1
719+56.00	11.44′	L†	L-24	A	1
722+44.94	27.56′	L†	L-24	A	1
727+67.90	10.63′	L†	L-24	A	1
728+11.71	36.63′	R†	L-24	A	1
729+58.49	16.80′	L†	L-24	A	1
732+48.37	11.60′	L†	L-25	A	1
733+51.19	11.35′	L†	L-25	A	1
736+37.27	21.32′	L†	L-25	A	1
740+79.68	13.23′	L†	L-25	A	1
745+06.56	15.86′	L†	L-25	A	1
748+11.52	21.01′	L†	L-26	A	1
752+53.91	25.23′	L†	L-26	A	1
752+69.20	31.69′	R†	L-26	A	1
TOTAL					47

TABLE 1
REPLACE AC SURFACING

L†/R†	STATION LIMITS "A" LINE			(N) AREA SQFT	VOLUME CY
L†/R†	448+90	TO	454+10	12633	93.6
L†/R†	477+26	TO	477+67	244	3.2
L†	534+74	TO	536+54	1070	13.9
L†	536+54	TO	539+23	2661	34.5
L†	539+23	TO	541+67	962	12.5
L†	541+55	TO	542+26	329	4.3
L†	543+38	TO	544+26	249	3.2
L†	544+61	TO	544+86	101	1.3
L†	545+45	TO	545+73	111	1.4
L†	548+22	TO	549+90	670	8.7
L†	550+46	TO	550+79	132	1.7
L†/R†	555+32	TO	556+22	360	4.7
L†	556+89	TO	557+44	221	2.9
L†	557+92	TO	559+55	652	8.5
R†	559+45	TO	560+34	357	4.6
L†	560+35	TO	562+17	726	9.4
L†	566+03	TO	569+63	1439	18.7
L†/R†	570+08	TO	570+17	199	2.6
R†	571+13	TO	571+94	965	12.5
L†/R†	572+10	TO	573+47	1094	14.2
L†/R†	575+03	TO	576+07	833	10.8
L†	575+98	TO	576+68	559	7.3
R†	576+44	TO	577+04	725	9.4
L†	576+59	TO	577+19	240	3.1
L†	576+89	TO	581+40	1798	23.3
L†/R†	577+99	TO	578+29	119	1.5
L†/R†	579+34	TO	579+78	176	2.3
L†/R†	586+25	TO	586+30	123	1.6
L†/R†	586+81	TO	586+86	127	1.7
R†	587+86	TO	588+95	449	5.8
L†	590+72	TO	591+99	511	6.6
R†	590+89	TO	594+24	1340	17.4
L†	593+24	TO	593+91	269	3.5
R†	595+95	TO	596+46	203	2.6
L†	597+67	TO	598+29	203	2.6
R†	599+74	TO	601+24	598	7.8
L†	601+17	TO	603+16	790	10.2
R†	603+61	TO	604+41	318	4.1
L†	604+48	TO	606+35	741	9.6
L†	607+65	TO	609+64	795	10.3
R†	608+10	TO	609+64	926	12.0
	SUBTOTAL (TABLE 1)			37018	409.9

(N) NOT A SEPARATE PAY ITEM, FOR INFORMATION ONLY.

TABLE 2
REPLACE AC SURFACING

L†/R†	STATION LIMITS "A" LINE			(N) AREA SQFT	VOLUME CY
R†	610+03	TO	610+84	323	4.2
R†	610+84	TO	616+50	2265	29.4
L†	614+21	TO	616+50	1376	17.8
L†	618+16	TO	619+41	497	6.4
L†	621+84	TO	623+45	1287	16.7
R†	621+84	TO	622+48	255	3.3
L†	623+45	TO	623+72	131	1.7
R†	622+48	TO	623+92	1155	15.0
R†	623+92	TO	625+76	736	9.5
L†	632+68	TO	633+91	497	6.4
R†	642+92	TO	645+14	908	11.8
L†/R†	645+45	TO	645+46	58	0.8
R†	649+99	TO	650+79	320	4.2
L†/R†	655+42	TO	655+44	61	0.8
L†	670+20	TO	671+00	316	4.1
R†	675+49	TO	675+97	190	2.5
R†	676+63	TO	677+53	359	4.7
R†	678+37	TO	678+78	165	2.1
L†	681+05	TO	681+70	391	5.1
R†	682+72	TO	685+02	1374	17.8
L†	683+97	TO	685+54	631	8.2
R†	685+54	TO	689+17	2189	28.4
L†	685+72	TO	689+17	1370	17.8
L†	689+17	TO	689+46	181	2.4
L†/R†	689+33	TO	696+40	4229	54.8
L†	689+46	TO	703+47	8429	109.3
L†	703+47	TO	717+45	5568	72.2
L†	717+45	TO	720+59	1201	15.6
L†	724+82	TO	727+73	1170	15.2
L†	727+73	TO	728+80	417	5.4
R†	728+85	TO	731+69	1159	15.0
L†	732+23	TO	733+55	518	6.7
L†	734+81	TO	736+42	656	8.5
L†	736+76	TO	738+46	1017	13.2
L†	742+58	TO	745+46	1160	15.0
L†	745+46	TO	747+11	1760	22.8
	SUBTOTAL (TABLE 2)			44319	574.8
	SUBTOTAL (TABLE 1)			37018	409.9
	TOTAL			81337	984.7

(N) NOT A SEPARATE PAY ITEM, FOR INFORMATION ONLY.

SUMMARY OF QUANTITIES
Q-3

STATE OF CALIFORNIA - DEPARTMENT OF TRANSPORTATION
Caltrans® DIVISION OF ENGINEERING
FUNCTIONAL SUPERVISOR: FERMIN BARRIGA
CALCULATED-DESIGNED BY: DAVID WATKINS
CHECKED BY: STEVE HERYFORD
REVISED BY
DATE REVISED

LAST REVISION 09-24-12
DATE PLOTTED => 19-DEC-2012
TIME PLOTTED => 06:12

Dist	COUNTY	ROUTE	POST MILES TOTAL PROJECT	SHEET No.	TOTAL SHEETS
03	ED	89	18.0/24.9	228	243

REGISTERED CIVIL ENGINEER 9/29/12 DATE

12-17-12
PLANS APPROVAL DATE

REGISTERED PROFESSIONAL ENGINEER DAVID C WATKINS No. 65734 Exp. 9/30/13 CIVIL STATE OF CALIFORNIA

THE STATE OF CALIFORNIA OR ITS OFFICERS OR AGENTS SHALL NOT BE RESPONSIBLE FOR THE ACCURACY OR COMPLETENESS OF SCANNED COPIES OF THIS PLAN SHEET.

NOTES:

1. MODIFIED LAYOUT 11H WITH END ANCHOR ASSEMBLY (TYPE SFT) ON UPSTREAM END IN PULLOUT. MBGR REQUIRES 7' POSTS EXCEPT AT Exist Conc POST SUPPORT (SEE C-6) WHERE 4 STEEL POSTS (W6X9) WILL BE REQUIRED.
2. USE TWO NESTED BEAMS BOLTED ONTO EXIST RET WALL PILASTERS. EXIST ANCHOR BOLTS AND STEEL BLOCKS MAY BE USED. STRENGTHENED SECTIONS AT EACH SIDE OF THE WALL ARE NEEDED. WEED CONTROL MAT (FIBER) NOT NEEDED WITHIN RET WALL LIMITS.
3. EXTEND MBGR SOUTH. SEE CONST DETAIL C-6 FOR LAGGING AND SLURRY DETAIL AT 8' STEEL POSTS FROM STA 624+29.5 TO 625+29.5. NO WEED CONTROL MAT (FIBER) REQUIRED FROM STA 624+29.5 TO 625+29.5.
4. FOR VEHICLE BARRIER (RSP) DETAILS SEE SHEET C-5.

METAL BEAM GUARD RAILING

SHEET	STATION LIMITS "A" LINE	L+/R+	REMOVE MBGR	MBGR (WOOD POST)	MBGR (7' WOOD POST)	MBGR (8' POST)	END ANCHOR ASSEMBLY (TYPE SFT)	ALTERNATIVE IN-LINE TERMINAL SYSTEM	ALTERNATIVE FLARED TERMINAL SYSTEM	(N) BURIED POST END ANCHOR	STRUCTURE ** EXCAVATION	STRUCTURE BACKFILL (SLURRY CEMENT)	GUARD RAILING LAYOUT (N)	COMMENTS
			LF	LF	LF	LF	EACH	EACH	EACH	EACH	CY	CY	TYPE	
L-4,5	451+35.7 TO 454+56.8	R+	325		275.0		1	1					*	* SEE NOTE 1
L-8	494+13.9 TO 497+25.1	L+	313	312.5			1			1			16C	SEE NOTE 2
L-9	515+46.4 TO 520+70.2	L+	519	481.5			1		1				16B	SEE NOTE 2
L-17	623+04.5 TO 627+65.3	R+	226	325.0		100	1	1			3.7	5.4	11A	SEE NOTE 3
L-17	628+03.1 TO 629+42.6	R+	152	112.5			1		1				11B	
L-19	653+17.6 TO 656+14.8	L+	326		237.5			1	1				11H	
L-23,24	712+10.0 TO 717+91.5	R+	613	537.5	25.0		1	1					11A	
		TOTAL	2,474	1,769.0	537.5	100	6	4	3	1	3.7	5.4		

(N) - NOT A SEPARATE PAY ITEM, FOR INFORMATION ONLY.
** - SEE DRAINAGE QUANTITIES SUMMARY SHEET DQ-15 FOR TOTAL QUANTITY.

ROCK SLOPE PROTECTION

SHEET	STATION LIMITS "A" LINE			LENGTH	RSP (No. 3,* METHOD B)	RSP (FACING,* METHOD B) (CY)	RSP (1/4 TON, METHOD B)	RSP (1/2 TON, METHOD A)	RSP FABRIC * (CLASS 8)	ROLLED EROSION CONTROL PRODUCT (NETTING)**
	BEGIN	END	L+/R+	LF	CY	CY	CY	CY	SQYD	SQFT
L-7	483+75	485+25	R+	150		44.5			123.2	
L-10,11	534+25	536+87.7	L+	263		101.1			261.7	
L-21	679+67.9	681+28.4	R+	161		43.5			123.5	
L-24	722+50	723+35.8	R+	86	9.9		132.5	10.3	47.8	1431
L-24	723+35.8	726+56.9	R+	321		62.6			197.2	
			TOTAL		9.9	251.7	132.5	10.3	753.4	1431

* - SEE DRAINAGE QUANTITIES SUMMARY SHEET DQ-15 FOR TOTAL QUANTITY.
** - SEE DRAINAGE QUANTITIES SHEET DQ-14 FOR TOTAL ROLLED EROSION CONTROL PRODUCT (NETTING) QUANTITY.

VEHICLE BARRIER ROCK SLOPE PROTECTION

SHEET	STATION LIMITS "A" LINE			LENGTH	RSP* (No. 3, METHOD B)	RSP FABRIC* (CLASS 8)
	BEGIN	END	L+/R+	LF	CY	SQYD
L-3	431+16.1	432+59.0	R+	142.9	33.1	112.3
L-4	446+48.2	448+42.4	L+	194.2	45.0	152.2
L-5	460+05.8	461+65.9	R+	160.1	37.1	125.7
L-8	495+04.5	495+96.1	R+	91.6	21.2	72.4
L-9	508+90.2	510+27.9	R+	137.7	31.9	108.2
L-9	516+61.2	518+06.6	R+	145.4	33.7	114.2
			TOTAL		202.0	685.0

* - SEE DRAINAGE QUANTITIES SUMMARY SHEET DQ-15 FOR TOTAL RSP FABRIC (CLASS 8) QUANTITY.

FENCE

SHEET	STATION LIMITS "A" LINE			REMOVE FENCE	FENCE (TYPE BW, METAL POST)	FENCE (SPLIT RAIL)
	BEGIN	END	L+/R+	LF	LF	LF
L-9	510+33.4	510+57.2	R+			24
L-13	567+30.0	568+30.0	R+	100	100	
L-26	751+63.6	752+54.9	R+			120
L-26	751+66.8	753+07.0	L+			150
			TOTAL	100	100	294

COLD PLANE AC PAVEMENT

L+/R+	STATION LIMITS "A" LINE	AREA SQYD	DESCRIPTION
L+/R+	400+00 TO 400+40	135.3	MAINLINE CONFORM
L+	400+23 TO 400+46	16.3	UPPER EMERALD BAY
R+	414+54 TO 415+30	89.5	LOWER EMERALD BAY
R+	422+59 TO 422+89	25.3	EMERALD BAY STATE
L+/R+	448+50 TO 448+90	108.6	MAINLINE CONFORM
L+/R+	454+10 TO 454+50	108.6	MAINLINE CONFORM
R+	471+43 TO 471+98	57.2	LESTER BEACH Rd
L+	471+55 TO 471+79	24.3	ROAD CONNECTION CONFORM
R+	528+31 TO 528+72	38.8	BLISS STATE
L+	543+61 TO 543+82	21.9	ROAD CONNECTION CONFORM
R+	545+02 TO 545+34	27.5	ROAD CONNECTION CONFORM
R+	548+75 TO 549+06	27.4	ONE RING Rd
R+	556+19 TO 556+48	27.8	TWO RING Rd
L+/R+	569+65 TO 570+05	111.4	MAINLINE CONFORM LOC 1
L+/R+	569+65 TO 570+05	111.4	MAINLINE CONFORM LOC 2
R+	577+16 TO 577+39	20.4	THREE RING Rd
R+	589+37 TO 589+83	37.7	FOUR RING Rd
L+	592+65 TO 592+89	22.0	ROAD CONNECTION CONFORM
R+	607+02 TO 607+36	29.5	ROAD CONNECTION CONFORM
L+	609+28 TO 610+45	120.8	SCENIC Dr #1
R+	611+09 TO 611+20	11.6	ROAD CONNECTION CONFORM
R+	627+55 TO 628+02	66.7	RUBICON Dr
R+	630+96 TO 631+52	112.0	FOREST
L+	634+28 TO 635+44	126.0	SCENIC Dr #2
R+	635+90 TO 637+58	164.4	PULLOUT
L+	640+87 TO 641+57	127.6	GLEN Dr
R+	643+89 TO 644+46	103.7	VIEW CIRCLE
R+	649+95 TO 650+75	93.7	SIERRA Dr
L+	652+82 TO 653+18	35.6	ROAD CONNECTION CONFORM
R+	673+33 TO 673+77	39.5	ROAD CONNECTION CONFORM
L+	674+88 TO 675+63	122.5	MOUNTAIN Dr
R+	678+65 TO 679+12	49.6	VICTORIA Dr
L+	682+70 TO 683+30	111.7	SILVERTIP Dr
R+	719+48 TO 720+57	187.7	ROAD CONNECTION CONFORM
L+	721+97 TO 722+94	162.4	VALLEY VIEW Dr
R+	727+86 TO 728+39	79.0	ROAD CONNECTION CONFORM
L+	735+71 TO 737+15	183.4	MEEKS BAY Ave
L+	745+94 TO 746+76	85.0	ROAD CONNECTION CONFORM
L+	747+17 TO 748+05	70.1	ROAD CONNECTION CONFORM
R+	750+27 TO 751+34	210.4	ROAD CONNECTION CONFORM
L+	751+45 TO 751+65	19.7	ROAD CONNECTION CONFORM
R+	752+53 TO 752+93	38.5	ROAD CONNECTION CONFORM
L+/R+	753+49 TO 753+89.1	111.7	MAINLINE CONFORM
	TOTAL	3474.2	

SUMMARY OF QUANTITIES
Q-4

STATE OF CALIFORNIA - DEPARTMENT OF TRANSPORTATION
Caltrans DIVISION OF ENGINEERING

FUNCTIONAL SUPERVISOR: FERMIN BARRIGA
CALCULATED-DESIGNED BY: DAVID WATKINS
CHECKED BY: STEVE HERYFORD
REVISED BY / DATE REVISED

LAST REVISION 10-01-12 | DATE PLOTTED => 13-DEC-2012 | TIME PLOTTED => 13:50

Dist	COUNTY	ROUTE	POST MILES TOTAL PROJECT	SHEET No.	TOTAL SHEETS
03	ED	89	18.0/24.9	229	243

REGISTERED CIVIL ENGINEER 9/29/12 DATE

12-17-12
PLANS APPROVAL DATE

REGISTERED PROFESSIONAL ENGINEER DAVID C WATKINS No. 65734 Exp. 9/30/13 CIVIL STATE OF CALIFORNIA

THE STATE OF CALIFORNIA OR ITS OFFICERS OR AGENTS SHALL NOT BE RESPONSIBLE FOR THE ACCURACY OR COMPLETENESS OF SCANNED COPIES OF THIS PLAN SHEET.

BRUSH BOX QUANTITY TABLE

LOCATION No.	BRUSH BOX TYPE	BRUSH BOX	BRUSH BOX MATERIALS (N) STAKE	(N) METAL POST	(N) BAILING WIRE	(N) BRUSH FILL
		LF	EA	EA	LF	CY
1	HEAD CUT	5	3	6	44	2.20
2	CROSS CHANNEL	6	8	--	27	0.75
3	CROSS CHANNEL	7	8	--	28	0.90
4	CROSS CHANNEL	8	10	--	34	1.00
5	CHANNEL BANK	22	18	--	82	2.85
6	CROSS CHANNEL	19	20	--	74	2.50
7	CROSS CHANNEL	6	10	--	32	0.75
8	CHANNEL BANK	29	24	--	107	3.75
TOTAL		102	101	6	428	14.70

(N) - NOT A SEPARATE PAY ITEM, FOR INFORMATION ONLY

LIVE WILLOW CUTTINGS QUANTITY TABLE

LOCATION	PLANT (GROUP W)
	EA
ROCK ENERGY DISSIPATOR	24
BRUSH BOX LOCATION 5	22
BRUSH BOX LOCATION 8	29
IN CHANNEL BANK	27
IN CHANNEL BOTTOM	38
TOTAL	140

TREATED WOOD WASTE

ITEM	TREATED WOOD WASTE
	LB
REMOVE MBGR	35,345
REMOVE ROADSIDE SIGN	3,900
TOTAL	39,245

Mod HMA OVERSIDE DRAIN

LAYOUT SHEET No.	DRAINAGE PROFILE SHEET No.	DRAINAGE SYSTEM No.	LOCATION STATION LIMITS "A" LINE	PLACE HMA (Misc AREA)	MINOR HMA*
				SQYD	TON
L-6	DP-6	14	FROM 473+72.73 TO 473+96.25 Lt	5.6	1.2
L-6	DP-7	15	FROM 475+14.27 TO 475+39.43 Rt	5.5	1.2
L-6	DP-8	16	FROM 477+75.23 TO 477+99.56 Lt	4.8	1.0
L-7	DP-9	17	FROM 480+37.21 TO 480+61.21 Rt	5.5	1.2
L-7	DP-11	19	FROM 485+37.22 TO 485+60.42 Rt	9.5	1.7
L-8	DP-14	22	FROM 493+61.08 TO 493+85.28 Lt	5.5	1.2
L-9	DP-17	29	FROM 511+82.36 TO 512+06.39 Lt	4.8	0.9
L-9	DP-18	30	FROM 514+70.17 TO 514+94.89 Lt	5.6	1.2
L-10	DP-19	33	FROM 522+86.38 TO 523+11.16 Rt	4.8	0.9
L-10	DP-19	33	FROM 522+96.74 TO 523+19.81 Lt	5.5	1.2
L-10	DP-20	35	FROM 525+94.31 TO 526+17.36 Lt	5.0	1.0
L-10	DP-20	35	FROM 527+55.11 TO 527+79.99 Rt	5.6	1.2
L-11	DP-23	40	FROM 542+66.10 TO 542+90.23 Rt	4.8	0.9
L-12	DP-24	41	FROM 551+00.00 TO 551+50.00 Rt	7.6	1.9
L-18	DP-35	55A	FROM 643+36.07 TO 643+60.31 Rt	5.6	1.2
L-21	DP-45	62	FROM 682+43.82 TO 682+66.00 Lt	4.9	0.9
L-22	DP-46	63	FROM 692+95.18 TO 693+24.62 Rt	7.3	1.3
L-23	DP-47	64	FROM 711+40.54 TO 711+72.33 Rt	10.1	1.8
L-26	DP-54	70	FROM 752+34.19 TO 752+57.73 Lt	7.8	1.9
			TOTAL	115.8	23.8

* - FOR ADDITIONAL MINOR HMA QUANTITY, SEE HMA DIKE TABLE THIS SHEET.

HMA DIKE

LAYOUT SHEET No.	DRAINAGE PROFILE SHEET No.	DRAINAGE SYSTEM No.	LOCATION STATION LIMITS "A" LINE	PLACE HMA DIKE TYPE C	TYPE E	MINOR HMA
				LF	LF	TON
L-6	DP-6	14	FROM 473+72.73 TO 473+96.25 Lt		10.0	0.5
L-6	DP-7	15	FROM 475+14.27 TO 475+39.43 Rt		10.0	0.5
L-6	DP-8	16	FROM 477+75.23 TO 477+99.56 Lt		10.0	0.5
L-7	DP-9	17	FROM 480+37.21 TO 480+61.21 Rt		10.0	0.5
L-7	DP-11	19	FROM 485+37.22 TO 485+60.42 Rt		10.0	0.5
L-8	DP-14	22	FROM 493+61.08 TO 493+85.28 Lt		10.0	0.5
L-9	DP-17	29	FROM 511+82.36 TO 512+06.39 Lt		10.0	0.5
L-9	DP-18	30	FROM 514+70.17 TO 514+94.89 Lt		10.0	0.5
L-10	DP-19	33	FROM 522+86.38 TO 523+11.16 Rt		10.0	0.5
L-10	DP-19	33	FROM 522+96.74 TO 523+19.81 Lt		10.0	0.5
L-10	DP-20	35	FROM 525+94.31 TO 526+17.36 Lt		10.0	0.5
L-10	DP-20	35	FROM 527+55.11 TO 527+79.99 Rt		10.0	0.5
L-11	DP-23	40	FROM 542+66.10 TO 542+90.23 Rt		10.0	0.5
L-12	DP-24	41	FROM 551+00.00 TO 551+50.00 Rt	39.9		0.8
L-18	DP-35	55A	FROM 643+36.07 TO 643+60.31 Rt		10.0	0.5
L-21	DP-45	62	FROM 682+43.82 TO 682+66.00 Lt		10.0	0.5
L-26	DP-54	70	FROM 752+34.19 TO 752+57.73 Lt		10.0	0.5
			SUBTOTAL	39.9	160.0	8.8
MINOR HMA FROM Mod HMA OVERSIDE DRAIN TABLE						23.8
			TOTAL	39.9	160.0	32.6

SUMMARY OF QUANTITIES
Q-5

STATE OF CALIFORNIA - DEPARTMENT OF TRANSPORTATION
Caltrans® DIVISION OF ENGINEERING
FUNCTIONAL SUPERVISOR: FERMIN BARRIGA
CALCULATED-DESIGNED BY: DAVID WATKINS
CHECKED BY: KATHY SUITS
REVISED BY / DATE REVISED

LAST REVISION 09-21-12
DATE PLOTTED => 13-DEC-2012
TIME PLOTTED => 13:50

Dist	COUNTY	ROUTE	POST MILES TOTAL PROJECT	SHEET No.	TOTAL SHEETS
03	ED	89	18.0/24.9	230	243

REGISTERED CIVIL ENGINEER 9/29/12 DATE

12-17-12
PLANS APPROVAL DATE

REGISTERED PROFESSIONAL ENGINEER DAVID C WATKINS No. 65734 Exp. 9/30/13 CIVIL STATE OF CALIFORNIA

THE STATE OF CALIFORNIA OR ITS OFFICERS OR AGENTS SHALL NOT BE RESPONSIBLE FOR THE ACCURACY OR COMPLETENESS OF SCANNED COPIES OF THIS PLAN SHEET.

ROCK STAIN QUANTITY TABLE 1

SHEET	DRAINAGE SYSTEM No.	STATION	LOCATION	ROCK STAIN SQFT	COMMENTS
EC-1	1	--	Rt	53	RED
EC-1	2	--	Lt/Rt	160	RED
EC-2	3	--	Rt	53	RED
EC-2	4	--	Rt	53	RED
EC-3	5	--	Rt	53	RED
EC-3	6	--	Rt	53	RED
EC-3	7	--	Lt/Rt	84	RED
EC-3	8	--	Rt	53	RED
EC-3		"A" 431+16 TO 432+20	Rt	372	VB
EC-3	9	--	Rt	357	RSP
EC-3	9A	--	Lt	326	RED
EC-4	9B	--	Rt	250	RED
EC-4		"A" 444+58 TO 444+85	Rt	300	RSP
EC-4		"A" 445+17 TO 445+44	Lt	300	RSP
EC-4		"A" 446+22 TO 446+49	Rt	300	RSP
EC-4		"A" 446+33 TO 448+43	Lt	776	VB
EC-4	11	--	Rt	72	RED
EC-4	12	--	Rt	72	RED
EC-5		"A" 460+06 TO 461+51	Rt	310	VB
EC-5		"A" 462+79 TO 463+00	Lt	240	RSP
EC-5		"A" 464+51 TO 465+16	Rt	1736	RSP
EC-6		"A" 472+43 TO 472+73	Rt	307	SB
EC-6	14	--	Rt	53	RED
EC-6		"A" 473+95 TO 474+55	Lt	783	SB
EC-6	15	--	Lt	53	RED
EC-6		"A" 475+32 TO 475+77	Rt	866	SB
EC-6		"A" 476+12 TO 477+36	Lt	1082	RSP
EC-6		"A" 477+97 TO 478+31	Lt	700	SB
EC-6	16	--	Rt	53	RED
EC-7		"A" 480+00 TO 483+89	Lt	5213	RSP
E7-7		"A" 480+45 TO 481+00	Rt	507	SB
EC-7		"A" 481+00 TO 483+06	Rt	2553	RSP
EC-7	18	--	Rt	632	SB
EC-7		"A" 483+74 TO 485+25	Rt	663	RSP
EC-7	19	--	Lt/Rt	158	RED
EC-7		"A" 485+71 TO 485+81	Rt	105	SB
EC-7		"A" 485+97 TO 491+54	Lt	6446	RSP
EC-7	20	--	Rt	685	SB/RED
EC-7		"A" 490+50 TO 490+25	Rt	1669	RSP
EC-7	21	--	Rt	123	RED
EC-8	22	--	Lt/Rt	726	SB/RED
EC-8		"A" 495+04 TO 495+96	Rt	338	VB
EC-8		"A" 497+28 TO 498+92	Lt	528	RSP
EC-8		"A" 498+14 TO 499+95	Rt	2296	RSP
EC-8		"A" 499+52 to 499+84	Lt	886	RSP
EC-8	24	--	Rt	154	RED
EC-8	25	--	Rt	60	RED
EC-8		"A" 501+37 TO 503+00	Rt	1264	RSP
EC-8		"A" 501+66 TO 502+64	Lt	687	RSP
EC-8	26	--	Rt	60	RED
EC-8		"A" 503+58 TO 506+50	Lt	2582	RSP
EC-8	27	--	Rt	60	RED
EC-9		"A" 507+80 TO 511+92	Lt	2398	RSP
EC-9		"A" 508+90 TO 510+28	Rt	532	RSP
EC-9	29	--	Lt/Rt	656	SB/RED
EC-9		"A" 512+27 TO 514+03	Lt	271	3 CD
EC-9	30	--	Rt/Lt	1502	SB/RED
EC-9		"A" 516+62 TO 518+07	Rt	551	VB
EC-9		"A" 520+89 TO 521+16	Lt	246	RSP
EC-9	32	--	Rt	250	RED
			SUBTOTAL	44,671	

ROCK STAIN QUANTITY TABLE 2

SHEET	DRAINAGE SYSTEM No.	STATION	LOCATION	ROCK STAIN SQFT	COMMENTS
EC-10		"A" 521+69 TO 523+23	Lt	1583	RSP
EC-10	33	--	Rt	1019	SB
EC-10	34	--	Rt	1017	SB
EC-10	36	--	Rt	1289	RSP
EC-10		"A" 534+25 TO 535+50	Lt	816	RSP
EC-11		"A" 535+50 TO 536+88	Lt	687	RSP
EC-11		"A" 541+58 TO 542+35	Lt	360	4 CD
EC-11		"A" 542+86 TO 543+26	Rt	1103	SB
EC-11		"A" 546+00 TO 548+03	Rt	540	5 CD
EC-12	41	--	Rt/Lt	418	SB
EC-12	42	--	Rt	30	RED
EC-12	43	--	Rt	30	RED
EC-13	44	--	Rt	30	RED
EC-13	45	--	Rt	72	RED
EC-13		"A" 570+26 TO 570+13	Lt	621	SB
EC-13		"A" 571+08 TO 571+52	Rt	409	SB
EC-13	46	--	Rt	84	RED
EC-13	47	--	Rt	167	RED
EC-13		"A" 577+42 TO 577+50	Rt	83	SB
EC-13		"A" 577+44 TO 577+50	Lt	36	SB
EC-14		"A" 577+50 TO 577+57	Rt	83	SB
EC-14		"A" 577+50 TO 577+45	Lt	242	SB
EC-14	48	--	Rt/Lt	53	RED
EC-15		"A" 595+03 TO 598+44	Lt	4869	RSP/2 CD
EC-15	49	--	Rt	616	RSP
EC-15		"A" 596+74 TO 596+93	Rt	416	RSP
EC-15		"A" 597+27 TO 598+76	Rt	976	RSP
EC-15		"A" 599+22 TO 605+50	Lt	12043	RSP
EC-15		"A" 601+08 TO 601+66	Rt	365	RSP
EC-15		"A" 604+26 TO 605+04	Rt	998	RSP/RED
EC-16		"A" 605+50 TO 608+45	Lt	3262	RSP
EC-16		"A" 610+90 TO 619+50	Lt	13511	RSP
EC-16	53	--	Rt	60	RED
EC-17		"A" 619+50 TO 630+43	Lt	15060	RSP
EC-17	54	--	Rt	252	RED
EC-17		"A" 632+33 TO 633+50	Lt	1243	RSP
EC-18		"A" 633+50 TO 634+56	Lt	937	RSP
EC-18		"A" 635+49 TO 637+87	Lt	4799	RSP
EC-18		"A" 638+68 TO 640+28	Rt	3844	RSP
EC-18	55A	--	Rt	360	2 CD
EC-18		"A" 645+48 TO 646+32	Rt	2489	RSP
EC-18		"A" 646+59 TO 647+50	Lt	1817	RSP
EC-19		"A" 647+50 TO 652+86	Lt	11899	RSP
EC-19	57	--	Rt	643	SB
EC-19	57A	--	Lt	268	SB
EC-19		"A" 656+40 TO 660+31	Lt	8428	RSP
EC-19		"A" 659+66 TO 660+22	Rt	775	RSP
EC-20		"A" 663+58 TO 664+22	Rt	435	RSP
EC-20		"A" 663+28 TO 668+54	Lt	5994	RSP
EC-20		"A" 667+60 TO 668+23	Rt	400	RSP
EC-20		"A" 670+39 TO 672+13	Lt	2290	RSP
EC-21		"A" 676+30 TO 682+77	Lt	13246	RSP
EC-21		"A" 679+68 TO 681+28	Rt	645	RSP
EC-21		"A" 683+28 TO 685+09	Lt	3916	RSP
EC-22	63	--	Rt	72	RED
EC-23	64	--	Rt	72	RED
EC-24	65	--	Rt	72	3 CD
EC-24		"A" 722+50 TO 726+50	Rt	2267	RSP
EC-25		"A" 735+49 TO 735+90	Lt	422	RSP
EC-25	68	--	Rt	111	RED
			SUBTOTAL TABLE 1	44,671	
			TOTAL	175,315	

ABBREVIATIONS:

RSP - ROCK SLOPE PROTECTION
RED - ROCK ENERGY DISSIPATOR
SB - SETTLING BASIN
VB - VEHICLE BARRIER
CD - CHECK DAM

SUMMARY OF QUANTITIES
Q-6

STATE OF CALIFORNIA - DEPARTMENT OF TRANSPORTATION
Caltrans DIVISION OF ENGINEERING

DAVID WATKINS — REVISED BY
FERMIN BARRIGA — DATE REVISED
CALCULATED-DESIGNED BY
CHECKED BY
FUNCTIONAL SUPERVISOR
FERMIN BARRIGA

LAST REVISION 09-21-12 | DATE PLOTTED => 13-DEC-2012 | TIME PLOTTED => 13:50

Dist	COUNTY	ROUTE	POST MILES TOTAL PROJECT	SHEET No.	TOTAL SHEETS
03	ED	89	18.0/24.9	231	243

Normanye
REGISTERED ELECTRICAL ENGINEER DATE

12-17-12
PLANS APPROVAL DATE

REGISTERED PROFESSIONAL ENGINEER
NORMAN S. YE
No. 16913
Exp. 6-30-13
ELECTRICAL
STATE OF CALIFORNIA

THE STATE OF CALIFORNIA OR ITS OFFICERS OR AGENTS SHALL NOT BE RESPONSIBLE FOR THE ACCURACY OR COMPLETENESS OF SCANNED COPIES OF THIS PLAN SHEET.

NOTE:

FOR ACCURATE RIGHT OF WAY DATA, CONTACT
RIGHT OF WAY ENGINEERING AT THE DISTRICT OFFICE.

MODIFY TRAFFIC MONITORING STATION (COUNT)

SHEET No.	(N) 1 1/2" CONDUIT	(N) No. 6(T)(E) PB	(N) AB TYPE A LOOP	(N) TYPE A LOOP	(N) RC EXISTING PULL BOX
	(FT)	(EA)	(EA)	(EA)	(EA)
E-1	10	1	2	4	1
TOTAL	10	1	2	4	1

(N) - NOT A SEPARATE PAY ITEM, FOR INFORMATION ONLY.

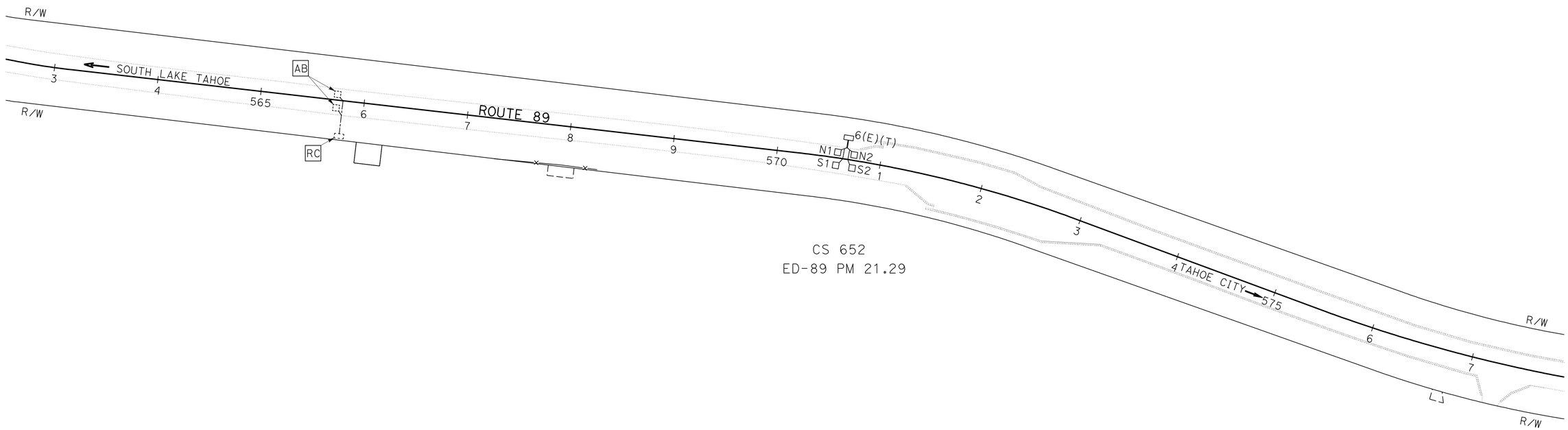

CS 652
ED-89 PM 21.29

MODIFY TRAFFIC MONITORING STATION (COUNT)

SCALE: 1" = 50'

E-1

APPROVED FOR ELECTRICAL WORK ONLY

STATE OF CALIFORNIA - DEPARTMENT OF TRANSPORTATION
Caltrans

FUNCTIONAL SUPERVISOR: NELSON LEE
CALCULATED-DESIGNED BY: OANH D. NGUYEN
CHECKED BY: NORMAN YE
REVISED BY
DATE REVISED

LAST REVISION 06-05-12
DATE PLOTTED => 13-DEC-2012
TIME PLOTTED => 13:50

Dist	COUNTY	ROUTE	POST MILES TOTAL PROJECT	SHEET No.	TOTAL SHEETS
03	ED	89	18.0/24.9	232	243

Normanye 11-7-12
REGISTERED ELECTRICAL ENGINEER DATE

12-17-12
PLANS APPROVAL DATE

REGISTERED PROFESSIONAL ENGINEER
NORMAN S. YE
No. 16913
Exp. 6-30-13
ELECTRICAL
STATE OF CALIFORNIA

THE STATE OF CALIFORNIA OR ITS OFFICERS OR AGENTS SHALL NOT BE RESPONSIBLE FOR THE ACCURACY OR COMPLETENESS OF SCANNED COPIES OF THIS PLAN SHEET.

MODIFY TRAFFIC MONITORING STATION (COUNT)

SHEET No.	(N) 1½" CONDUIT	(N) No. 6(T)(E) PB	(N) AB TYPE A LOOP	(N) TYPE A LOOP	(N) RC EXISTING PULL BOX
	(FT)	(EA)	(EA)	(EA)	(EA)
E-1	10	1	2	4	1
TOTAL	10	1	2	4	1

(N) - NOT A SEPARATE PAY ITEM, FOR INFORMATION ONLY.

APPROVED FOR ELECTRICAL WORK ONLY

ELECTRICAL QUANTITIES
E-2

STATE OF CALIFORNIA - DEPARTMENT OF TRANSPORTATION
Caltrans® ELECTRICAL DESIGN

FUNCTIONAL SUPERVISOR: NELSON LEE
CALCULATED-DESIGNED BY: OANH D. NGUYEN
CHECKED BY: NORMAN YE
REVISED BY
DATE REVISED

LAST REVISION 11-07-12
DATE PLOTTED => 13-DEC-2012
TIME PLOTTED => 13:50

Dist	COUNTY	ROUTE	POST MILES TOTAL PROJECT	SHEET No.	TOTAL SHEETS
03	ED	89	18.0/24.9	233	243

REGISTERED CIVIL ENGINEER 12-7-12 DATE

12-17-12
PLANS APPROVAL DATE

REGISTERED PROFESSIONAL ENGINEER Gurinderpal Bhullar No. C48815 Exp. 9-30-14 CIVIL STATE OF CALIFORNIA

THE STATE OF CALIFORNIA OR ITS OFFICERS OR AGENTS SHALL NOT BE RESPONSIBLE FOR THE ACCURACY OR COMPLETENESS OF SCANNED COPIES OF THIS PLAN SHEET.

NOTES:

Unless otherwise specified in the special provisions, all temporary warning signs shall have black legend on orange background.

California code are designated by (CA). Otherwise, Federal (MUTCD) codes are shown.

TYPICAL LANE CLOSURE WITH REVERSIBLE CONTROL

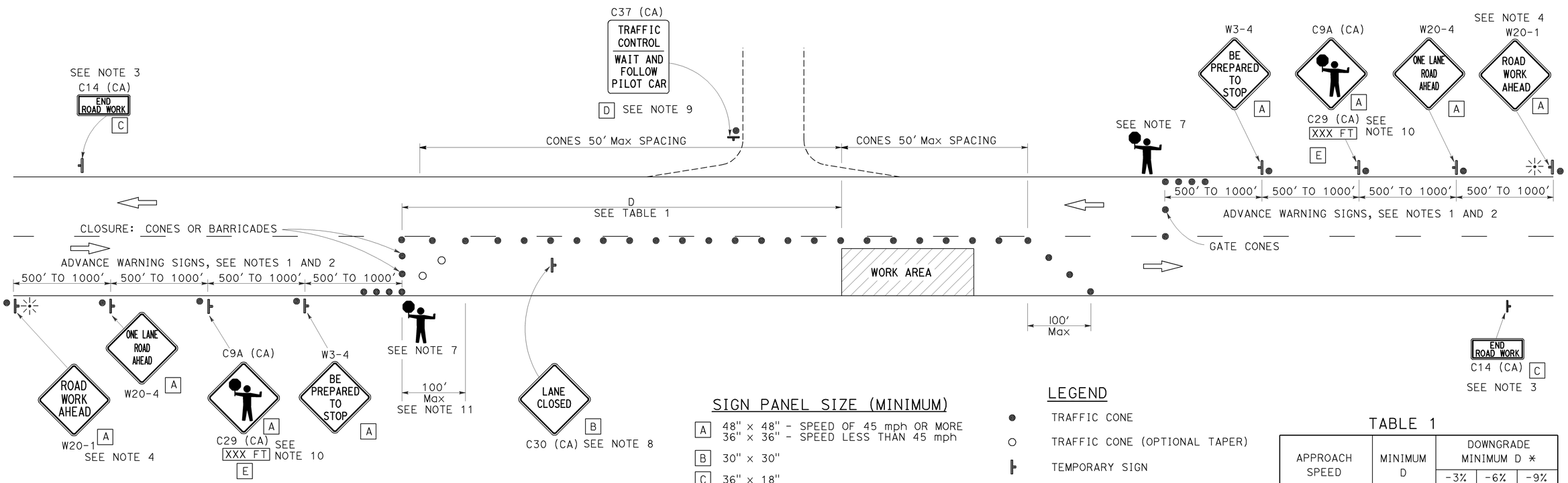

SIGN PANEL SIZE (MINIMUM)

- A — 48" x 48" - SPEED OF 45 mph OR MORE; 36" x 36" - SPEED LESS THAN 45 mph
- B — 30" x 30"
- C — 36" x 18"
- D — 36" x 42"
- E — 36" x 9"

LEGEND

- TRAFFIC CONE
- TRAFFIC CONE (OPTIONAL TAPER)
- TEMPORARY SIGN
- PORTABLE FLASHING BEACON
- FLAGGER

TABLE 1

APPROACH SPEED	MINIMUM D	DOWNGRADE MINIMUM D *		
		-3%	-6%	-9%
mph	ft	ft	ft	ft
25 AND BELOW	155	158	165	173
30	200	205	215	227
35	250	257	271	287
40	305	315	333	354
45	360	378	400	427
50	425	446	474	507
55	495	520	553	593
60	570	598	638	686
65	645	682	728	785

* USE ON SUSTAINED DOWNGRADE STEEPER THAN -3 PERCENT AND LONGER THAN 1 MILE.

NOTES:

1. Where approach speeds are low, advance warning signs may be placed at 300' spacing, and closer in urban areas.
2. Each advance warning sign in each direction of travel shall be equipped with at least two flags for daytime closure. Each flag shall be at least 16" x 16" in size and shall be orange or fluorescent red-orange in color. Flashing beacons shall be placed at the locations indicated for lane closure during hours of darkness.
3. A C14 (CA) "END ROAD WORK" sign, as appropriate, shall be placed at the end of the lane control unless the end of work area is obvious, or ends within a larger project's limits.
4. If the W20-1 sign would follow within 2000' of a stationary W20-1 or C11 (CA) "ROAD WORK NEXT _____MILES", use a W20-4 sign for the first advance warning sign.
5. All cones used for lane closures during the hours of darkness shall be fitted with retroreflective bands (or sleeves) as specified in the specifications.
6. Portable delineators, placed at one-half the spacing indicated for traffic cones, may be used instead of cones for daytime closures only.
7. Additional advance flaggers may be required. Flagger should stand in a conspicuous place, be visible to approaching traffic as well as approaching vehicles after the first vehicle has stopped. During the hours of darkness, the flagging-station and flagger shall be illuminated and clearly visible to approaching traffic. The illumination footprint of the lighting on the ground shall be at least 20' in diameter. Place a minimum of four cones at 50' intervals in advance of flagger station as shown.
8. Place C30 (CA) "LANE CLOSED" sign at 500' to 1000' intervals throughout extended work areas. They are optional if the work area is visible from the flagger station.
9. When a pilot car is used, place a C37 (CA) "TRAFFIC CONTROL-WAIT AND FOLLOW PILOT CAR" sign at all intersections within traffic control area. Signs shall be clean and visible at all times.
10. An optional C29 (CA) sign may be placed below the C9A (CA) sign.
11. Traffic cones or barricades may be placed on the optional taper as shown, barricades shall be Type I, II, or III.

STATE OF CALIFORNIA
DEPARTMENT OF TRANSPORTATION

TRAFFIC CONTROL SYSTEM FOR LANE CLOSURE ON TWO LANE CONVENTIONAL HIGHWAYS

NO SCALE

TCS-1

STATE OF CALIFORNIA - DEPARTMENT OF TRANSPORTATION
Caltrans

FUNCTIONAL SUPERVISOR | CALCULATED-DESIGNED BY | CHECKED BY | REVISED BY | DATE REVISED

LAST REVISION DATE PLOTTED => 10-DEC-2012
00-00-00 TIME PLOTTED => 09:45

Dist	COUNTY	ROUTE	POST MILES TOTAL PROJECT	SHEET No.	TOTAL SHEETS
03	ED	89	18.0/24.9	234	243

REGISTERED CIVIL ENGINEER 12-7-12 DATE

12-17-12
PLANS APPROVAL DATE

REGISTERED PROFESSIONAL ENGINEER Gurinderpal Bhullar No. C48815 Exp. 9-30-14 CIVIL STATE OF CALIFORNIA

THE STATE OF CALIFORNIA OR ITS OFFICERS OR AGENTS SHALL NOT BE RESPONSIBLE FOR THE ACCURACY OR COMPLETENESS OF SCANNED COPIES OF THIS PLAN SHEET.

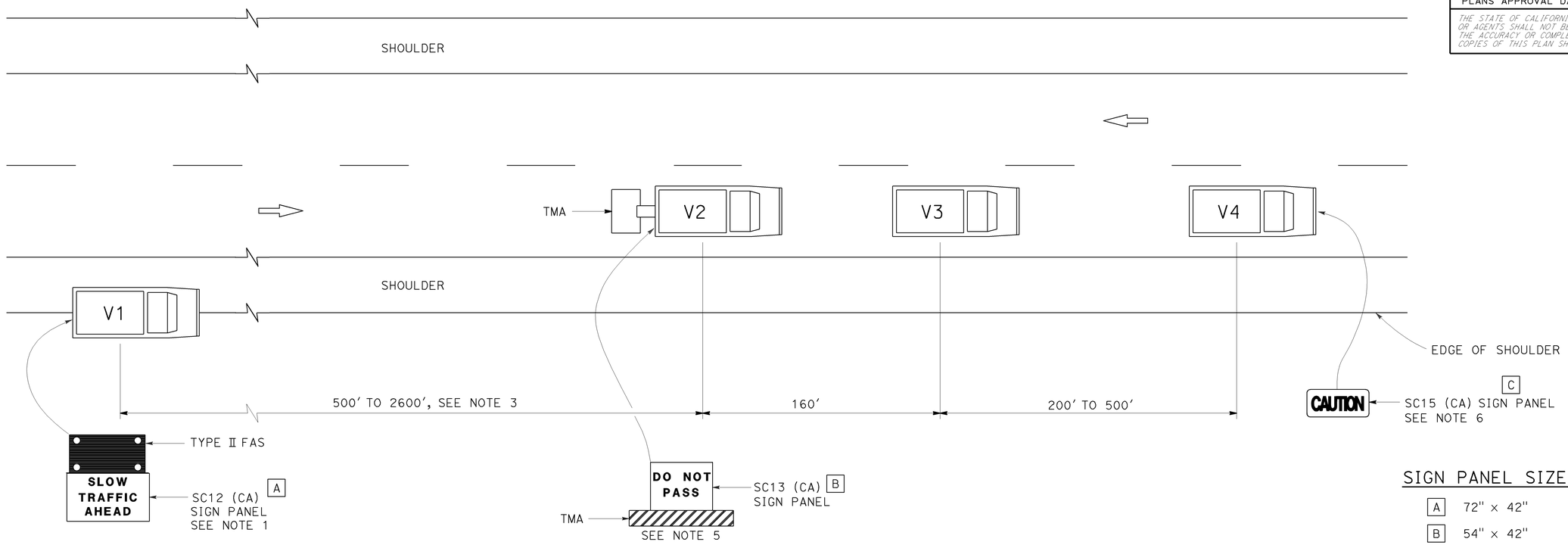

SIGN PANEL SIZE (Min)

A	72" × 42"
B	54" × 42"
C	54" × 24"

LEGEND

V1	SIGN VEHICLE
V2	SHADOW VEHICLE
V3	WORK/APPLICATION VEHICLE
V4	SIGN VEHICLE
TMA	TRUCK-MOUNTED ATTENUATOR
	FLASHING ARROW SIGN (FAS) IN FLASHING CAUTION MODE

NOTES:

1. Either a changeable message sign or a SC12 (CA) "SLOW TRAFFIC AHEAD" sign shall be mounted on the rear of sign vehicle V1. A Type II flashing arrow sign may be used with the SC12 (CA) sign panel.
2. Sign vehicle V1 should be positioned where highly visible when shoulders are not available.
3. If traffic queues develop, sign vehicle V1 should be positioned upstream from the end of queue.
4. Vehicle-mounted sign panels shall be Type III, IV VII, VIII or IX retroreflective sheeting, black on white, black on orange, or black on fluorescent orange, with 6" minimum series D letters per Caltrans sign specifications.
5. Gross Vehicle Weight of shadow vehicle shall be a minimum of 20,000 pounds and shall be equipped with a truck-mounted attenuator. The sign panel shown shall be mounted on the rear of shadow vehicle V2. The message "LANE CLOSED" may be used in place of the "DO NOT PASS" message.
6. The sign panel shown shall be mounted on the front of sign vehicle V4, facing opposing traffic.
7. All vehicles shall be equipped with flashing or rotating amber lights.
8. Sign vehicle V4 will not be required when the work and vehicles V2 and V3 are 2' or more from the centerline of the highway during the work or application operations.
9. All vehicles used for lane closures shall be equipped with two-way radios and the vehicle operators shall maintain communication during the work or application operation.
10. When multiple work vehicles are used in close proximity to each other, only one shadow vehicle is required and spacing between work vehicles shall be minimized in order to deter traffic from entering the closed lane.

STATE OF CALIFORNIA
DEPARTMENT OF TRANSPORTATION

TRAFFIC CONTROL SYSTEM FOR MOVING LANE CLOSURE ON TWO LANE HIGHWAYS

NO SCALE

TCS-2

STATE OF CALIFORNIA - DEPARTMENT OF TRANSPORTATION
Caltrans
FUNCTIONAL SUPERVISOR
CALCULATED-DESIGNED BY
CHECKED BY
REVISED BY
DATE REVISED

LAST REVISION 00-00-00 DATE PLOTTED => 10-DEC-2012 TIME PLOTTED => 09:45

Dist	COUNTY	ROUTE	POST MILES TOTAL PROJECT	SHEET No.	TOTAL SHEETS
03	ED	89	18.0/24.9	235	243

Roberta L. McLaughlin
REGISTERED CIVIL ENGINEER

July 20, 2012
PLANS APPROVAL DATE

REGISTERED PROFESSIONAL ENGINEER
Roberta L. McLaughlin
No. C40375
Exp. 3-31-13
CIVIL
STATE OF CALIFORNIA

THE STATE OF CALIFORNIA OR ITS OFFICERS OR AGENTS SHALL NOT BE RESPONSIBLE FOR THE ACCURACY OR COMPLETENESS OF SCANNED COPIES OF THIS PLAN SHEET.

TO ACCOMPANY PLANS DATED 12-17-12

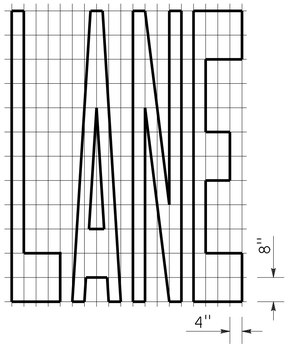

A=24 ft^2

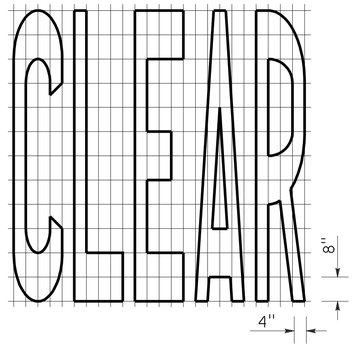

A=27 ft^2

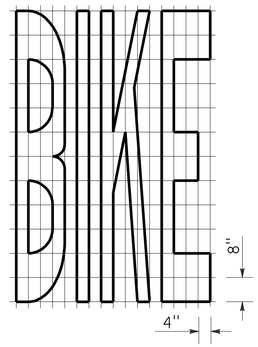

A=21 ft^2

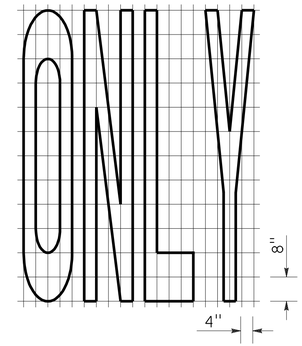

A=22 ft^2

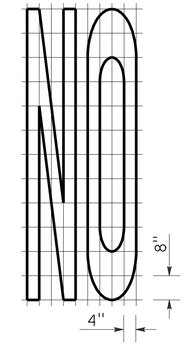

A=14 ft^2

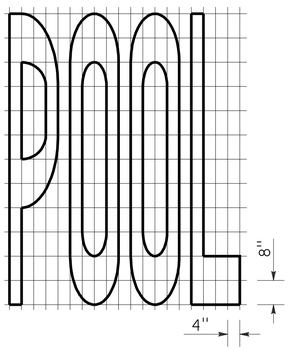

A=23 ft^2

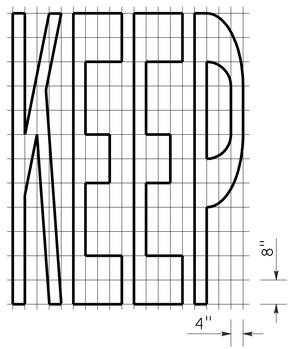

A=24 ft^2

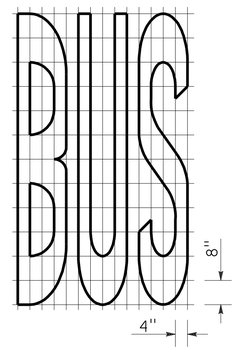

A=20 ft^2

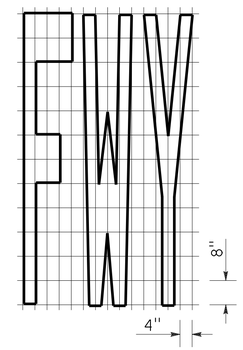

A=16 ft^2

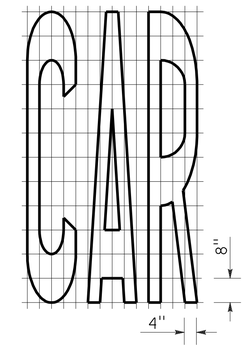

A=17 ft^2

WORD MARKINGS			
ITEM	ft^2	ITEM	ft^2
LANE	24	NO	14
POOL	23	BIKE	21
CAR	17	BUS	20
CLEAR	27	ONLY	22
KEEP	24	FWY	16

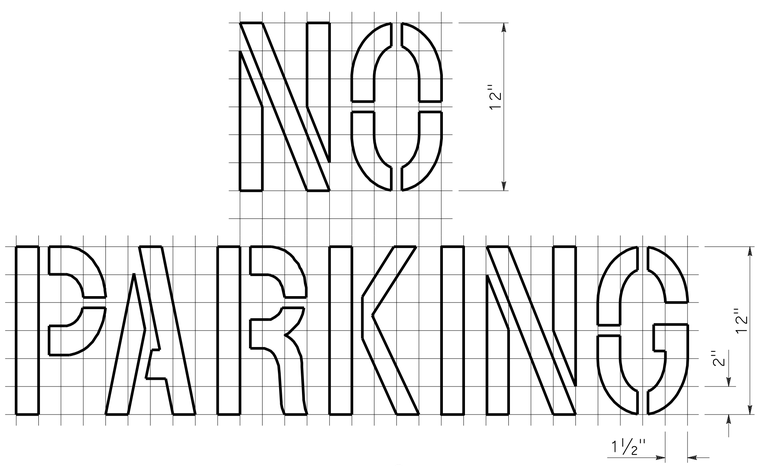

A=2 ft^2

See Notes 6 and 7

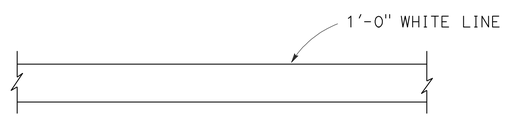

LIMIT LINE (STOP LINE)

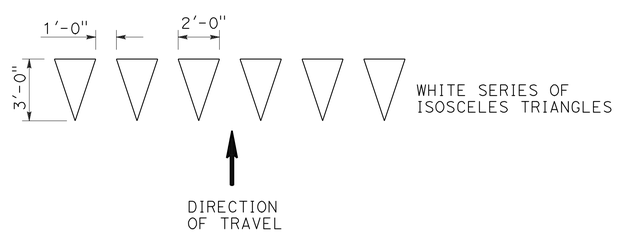

YIELD LINE

NOTES:

1. If a message consists of more than one word, it should read "UP", i.e., the first word should be nearest the driver.
2. The space between words should be at least four times the height of the characters for low speed roads, but not more than ten times the height of the characters. The space may be reduced appropriately where there is limited space because of local conditions.
3. Minor variations in dimensions may be accepted by the Engineer.
4. Portions of a letter, number or symbol may be separated by connecting segments not to exceed 2" in width.
5. The words "NO PARKING" pavement marking is to be used for parking facilities. For typical locations of markings, see Standard Plans A90A and A90B.
6. The words "NO PARKING", shall be painted in white letters no less than 1'-0" high on a contrasting background and located so that it is visible to traffic enforcement officials.

STATE OF CALIFORNIA
DEPARTMENT OF TRANSPORTATION

PAVEMENT MARKINGS WORDS, LIMIT AND YIELD LINES

NO SCALE

RSP A24E DATED JULY 20, 2012 SUPERSEDES STANDARD PLAN A24E
DATED MAY 20, 2011 - PAGE 17 OF THE STANDARD PLANS BOOK DATED 2010.

REVISED STANDARD PLAN RSP A24E

2010 REVISED STANDARD PLAN RSP A24E

6-12-12

Dist	COUNTY	ROUTE	POST MILES TOTAL PROJECT	SHEET No.	TOTAL SHEETS
03	ED	89	18.0/24.9	236	243

Raymond Don Tsztoo
REGISTERED CIVIL ENGINEER

October 19, 2012
PLANS APPROVAL DATE

REGISTERED PROFESSIONAL ENGINEER
Raymond Don Tsztoo
No. C37332
Exp. 6-30-14
CIVIL
STATE OF CALIFORNIA

THE STATE OF CALIFORNIA OR ITS OFFICERS OR AGENTS SHALL NOT BE RESPONSIBLE FOR THE ACCURACY OR COMPLETENESS OF SCANNED COPIES OF THIS PLAN SHEET.

TO ACCOMPANY PLANS DATED 12-17-12

2010 REVISED STANDARD PLAN RSP A86D

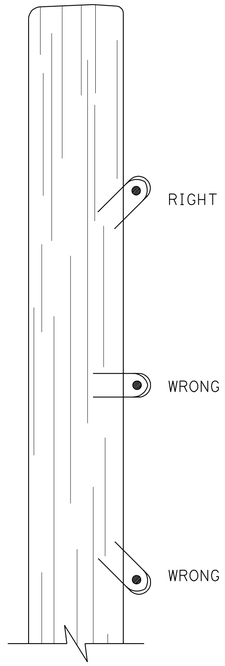

DRIVE STAPLES AT ANGLE

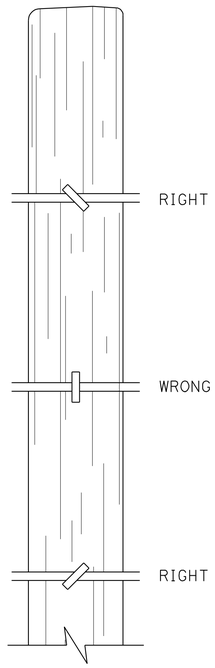

DO NOT DRIVE STAPLES PARALLEL TO SIDE OF POST

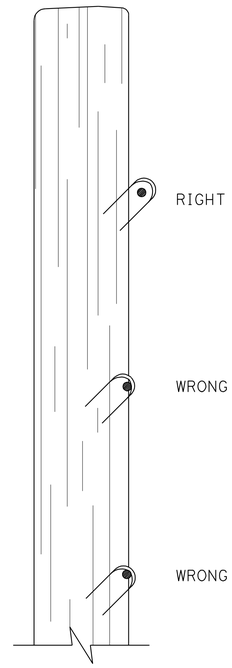

LEAVE WIRE LOOSE IN STAPLE

LINE POST STAPLING DETAILS

(Apply to rectangular/square and round posts)
Do not staple vertical wire in wire mesh.

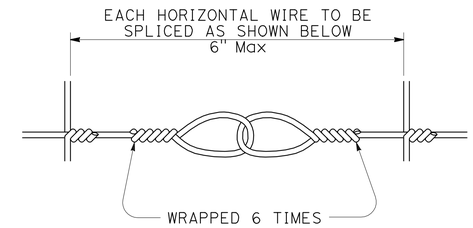

SPLICE DETAIL FOR BARBED WIRE/WIRE MESH FENCE

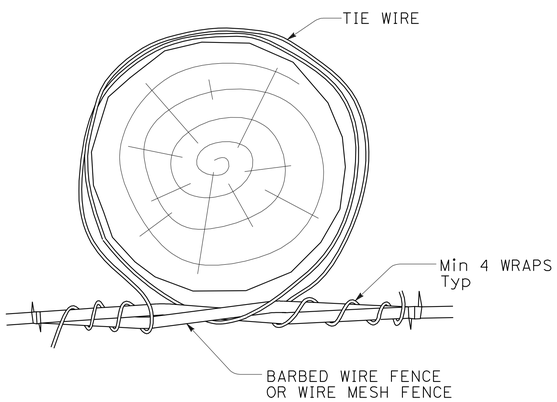

OPTION A

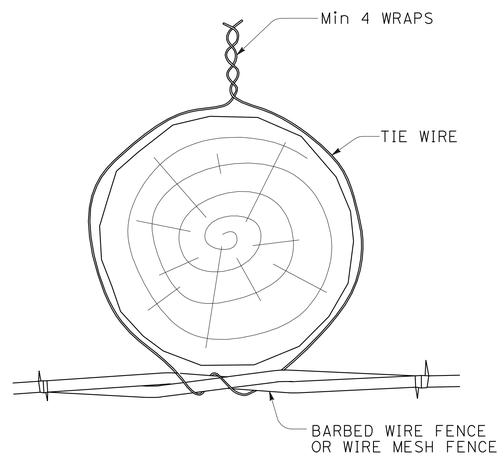

OPTION B

LINE POST WIRE TIE OPTION DETAILS

(Option details also apply to rectangular/square posts)

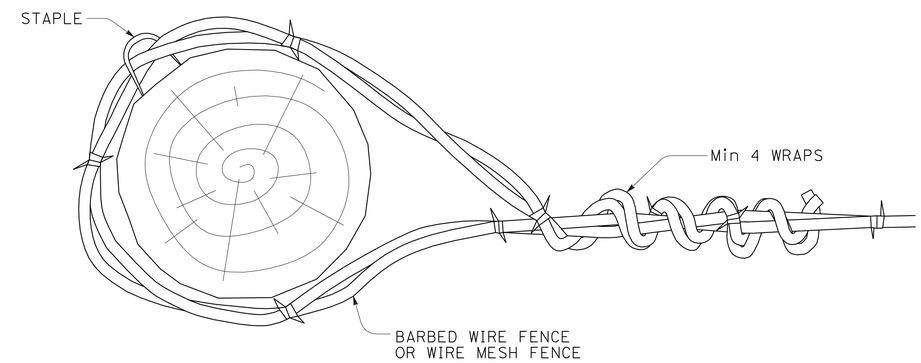

END, LATCH, PULL, AND CORNER POST DETAIL

(Also applies to rectangular/square posts)

STATE OF CALIFORNIA
DEPARTMENT OF TRANSPORTATION

BARBED WIRE AND WIRE MESH FENCE - MISCELLANEOUS DETAILS

NO SCALE

RSP A86D DATED OCTOBER 19, 2012 SUPPLEMENTS THE STANDARD PLANS BOOK DATED 2010.

REVISED STANDARD PLAN RSP A86D

10-9-12

DIST	COUNTY	ROUTE	POST MILES TOTAL PROJECT	SHEET No.	TOTAL SHEETS
03	ED	89	18.0/24.9	237	243

REGISTERED CIVIL ENGINEER

January 20, 2012
PLANS APPROVAL DATE

REGISTERED PROFESSIONAL ENGINEER Cornelis M. Hakim No. C55610 Exp. 12-31-12 CIVIL STATE OF CALIFORNIA

THE STATE OF CALIFORNIA OR ITS OFFICERS OR AGENTS SHALL NOT BE RESPONSIBLE FOR THE ACCURACY OR COMPLETENESS OF SCANNED COPIES OF THIS PLAN SHEET.

TO ACCOMPANY PLANS DATED 12-17-12

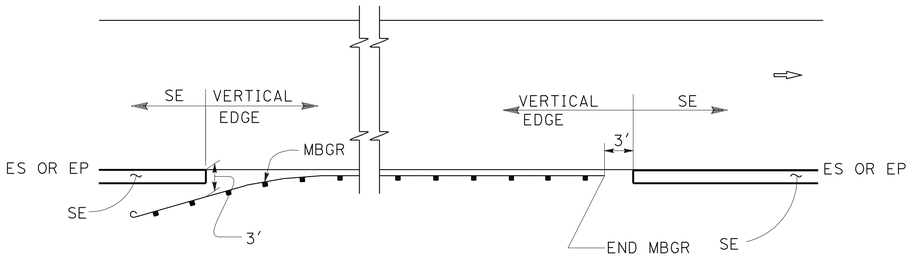

MBGR

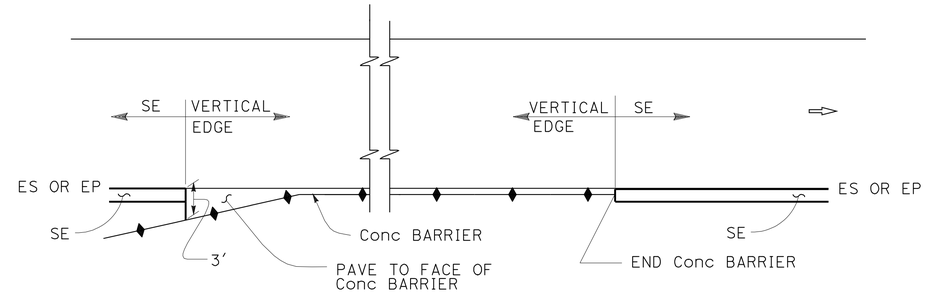

CONCRETE BARRIER

ABBREVIATIONS:

SE SAFETY EDGE

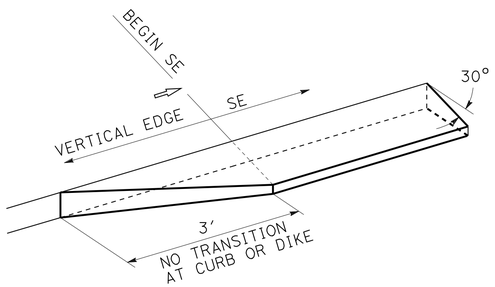

TRANSITION DETAIL FOR CONCRETE ONLY

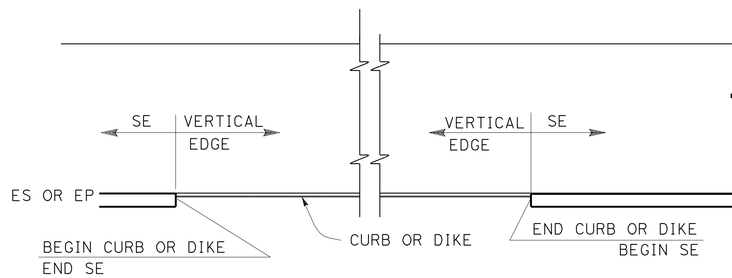

CURB OR DIKE

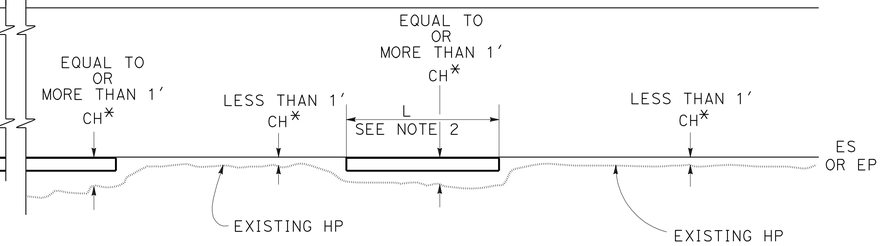

NARROW SIDE SLOPE

* CH = Distance from ES or EP to existing HP.

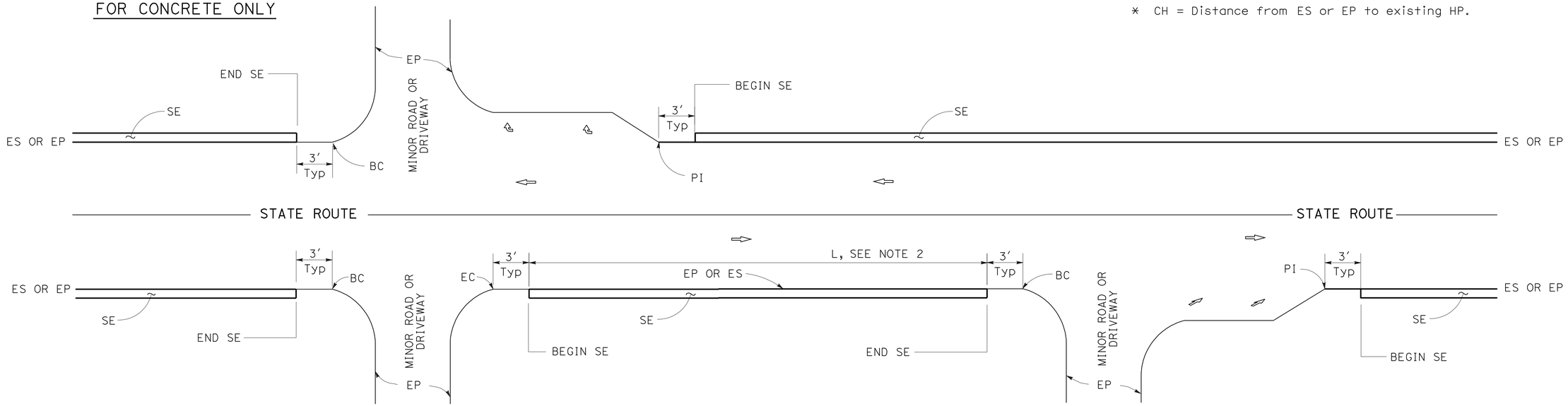

INTERSECTION

DRIVEWAY AND INTERSECTION

MINOR ROADWAY OR DRIVEWAY

NOTES:

1. For details not shown, see Revised Standard Plans RSP P75 and RSP P76.
2. Safety edge is optional when L is less than 30′.

STATE OF CALIFORNIA
DEPARTMENT OF TRANSPORTATION

PAVEMENT EDGE TREATMENTS

NO SCALE

RSP P74 DATED JANUARY 20, 2012 SUPPLEMENTS THE STANDARD PLANS BOOK DATED 2010.

REVISED STANDARD PLAN RSP P74

2010 REVISED STANDARD PLAN RSP P74

01-05-12

DIST	COUNTY	ROUTE	POST MILES TOTAL PROJECT	SHEET No.	TOTAL SHEETS
03	ED	89	18.0/24.9	238	243

REGISTERED CIVIL ENGINEER

January 20, 2012
PLANS APPROVAL DATE

REGISTERED PROFESSIONAL ENGINEER Cornelis M. Hakim No. C55610 Exp. 12-31-12 CIVIL STATE OF CALIFORNIA

THE STATE OF CALIFORNIA OR ITS OFFICERS OR AGENTS SHALL NOT BE RESPONSIBLE FOR THE ACCURACY OR COMPLETENESS OF SCANNED COPIES OF THIS PLAN SHEET.

TO ACCOMPANY PLANS DATED 12-17-12

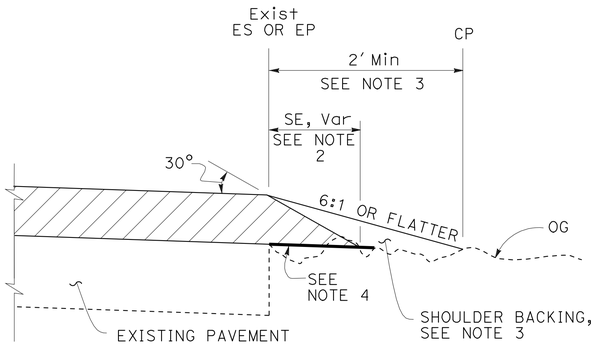

CASE A
Safety Edge

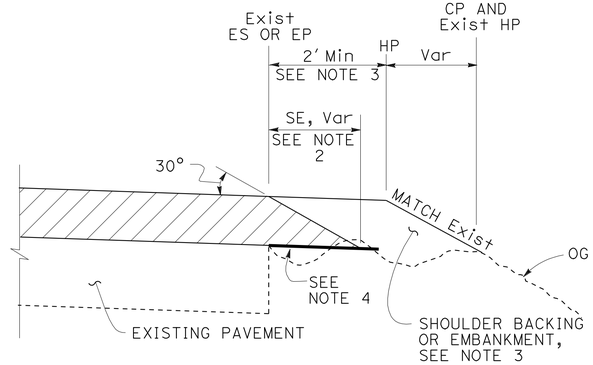

CASE B
Safety Edge

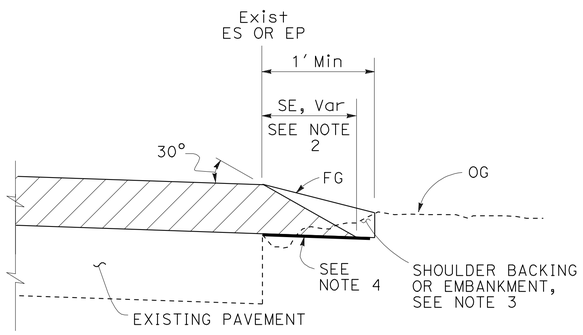

CASE C
Safety Edge

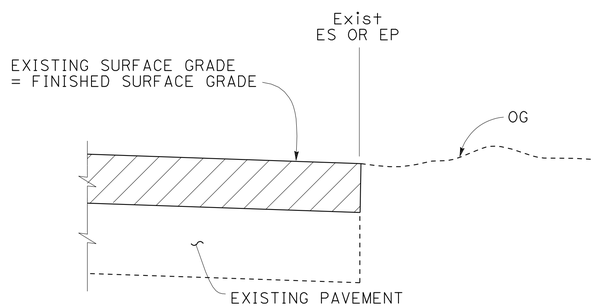

CASE D
Vertical Edge

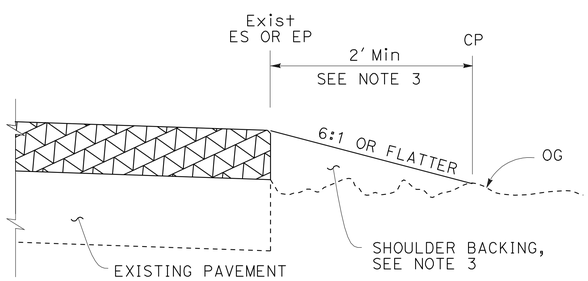

CASE E
Vertical Edge

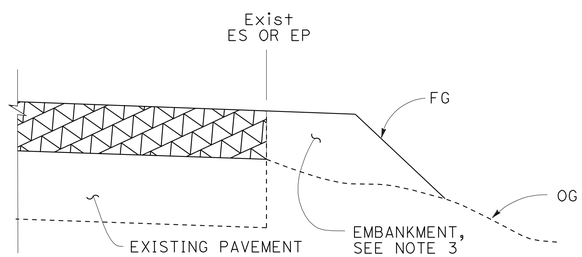

CASE F
Vertical Edge
* See Table A and Revised Std Plan RSP P74

LEGEND:

- HMA OVERLAY
- HMA OR CONCRETE OVERLAY
- CONCRETE OVERLAY

ABBREVIATIONS:

SE SAFETY EDGE
TT TOTAL THICKNESS OF SE

TABLE A
EDGE TREATMENT FOR VARIOUS OVERLAY THICKNESS AND CONDITIONS

	OVERLAY THICKNESS	
FIELD CONDITION	LESS THAN 0.15′	0.15′ OR MORE
Exist SLOPE 6:1 OR FLATTER	CASE E	CASE A
Exist SLOPE 3:1 TO 6:1	CASE E	CASE B
Exist SLOPE STEEPER THAN 3:1	CASE F	CASE F
CUT SECTION (REPLACE, COLD PLANE, MILL PAVEMENT)	CASE D	CASE C

ADDITIONAL HMA OR CONCRETE QUANTITIES FOR SE/SIDE/MILE

TYPICAL CROSS SECTION	TT	TOTAL ADDITIONAL MATERIAL FOR SE/SIDE/MILE		
		HMA (TON)	CONCRETE (CY)*	CONCRETE (CY)**
TT	0.15′	NA	NA	NA
	0.20′	13.7	NA	NA
	0.30′	30.9	NA	NA
	0.40′	54.9	NA	NA
	0.45′	69.4	NA	NA
TT 0.43′	0.50′	84.2	NA	NA
	0.60′	113.9	NA	NA
	0.70′	143.6	70.9	94.2
	0.80′	173.3	85.6	112.2
	0.90′	203.0	100.3	130.2
	1.00′	232.7	114.9	148.2
	1.10′	262.4	129.6	166.2
	1.20′	292.1	144.3	184.2

* For Detail "A"
** For Optional Detail "A"

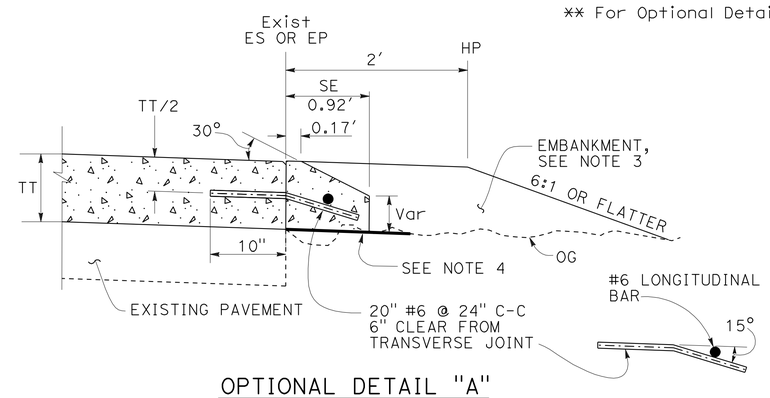

OPTIONAL DETAIL "A"
For concrete overlay
See Note 5

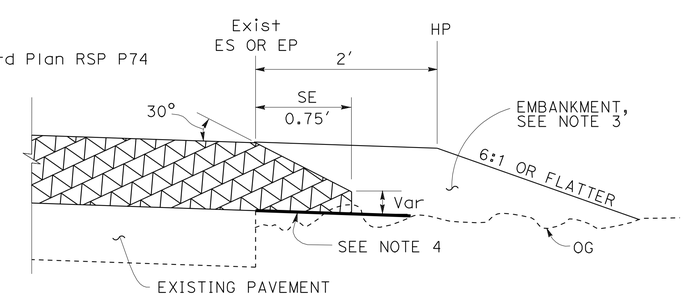

DETAIL "A"
For HMA overlay thickness more than 0.43′ or concrete overlay

NOTES:

1. For limits of safety edge and vertical edge treatments, see Revised Standard Plan RSP P74.
2. Details shown for HMA overlay thickness less than 0.43′. See Detail "A" for HMA overlay thickness more than 0.43′ or concrete overlay.
3. For locations and limits of shoulder backing or embankment see project plans.
4. Grade existing ground to place safety edge. 1′ minimum width
5. Safety edge transverse joint must match overlay transverse joint. End of #6 longitudinal bar must be 2" ±½" clear from transverse joint.
6. Safety edge is not needed in the area of MBGR, barrier, right turn lane and acceleration lane. See Revised Standard Plan RSP P74.

STATE OF CALIFORNIA
DEPARTMENT OF TRANSPORTATION

PAVEMENT EDGE TREATMENTS-OVERLAYS

NO SCALE

RSP P75 DATED JANUARY 20, 2012 SUPPLEMENTS THE STANDARD PLANS BOOK DATED 2010.

REVISED STANDARD PLAN RSP P75

2010 REVISED STANDARD PLAN RSP P75

DIST	COUNTY	ROUTE	POST MILES TOTAL PROJECT	SHEET No.	TOTAL SHEETS
03	ED	89	18.0/24.9	239	243

REGISTERED CIVIL ENGINEER

January 20, 2012
PLANS APPROVAL DATE

REGISTERED PROFESSIONAL ENGINEER
Cornelis M. Hakim
No. C55610
Exp. 12-31-12
CIVIL
STATE OF CALIFORNIA

THE STATE OF CALIFORNIA OR ITS OFFICERS OR AGENTS SHALL NOT BE RESPONSIBLE FOR THE ACCURACY OR COMPLETENESS OF SCANNED COPIES OF THIS PLAN SHEET.

TO ACCOMPANY PLANS DATED 12-17-12

LEGEND:

- HMA PAVEMENT
- HMA OR CONCRETE PAVEMENT
- CONCRETE PAVEMENT

ABBREVIATIONS:

SE SAFETY EDGE
TT TOTAL THICKNESS OF SE
HW HINGE WIDTH, DISTANCE FROM ES OR EP TO HP

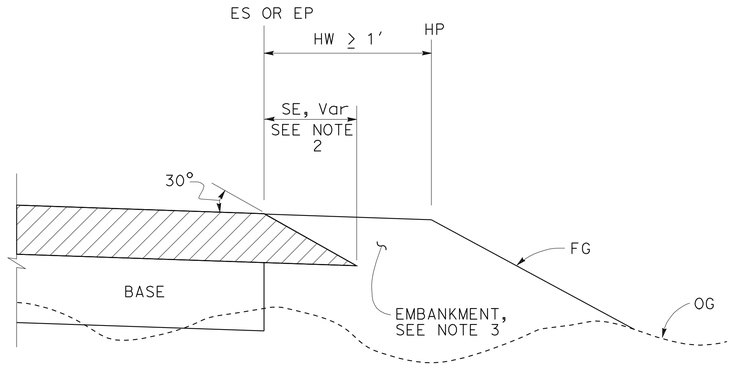

CASE K
Safety Edge - Fill Section, HW ≥ 1′

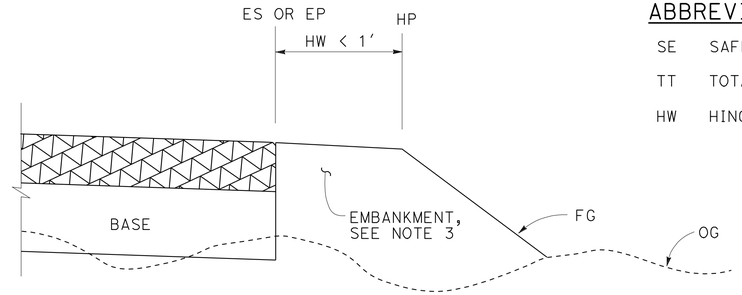

CASE L
Vertical Edge - Fill Section, HW < 1′

FILL SECTION

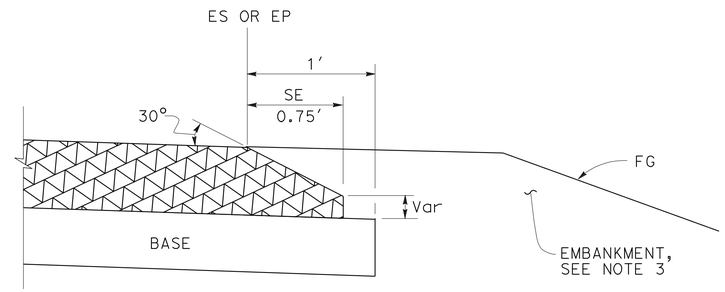

DETAIL "B"
For HMA pavement thickness more than 0.43′ or concrete pavement

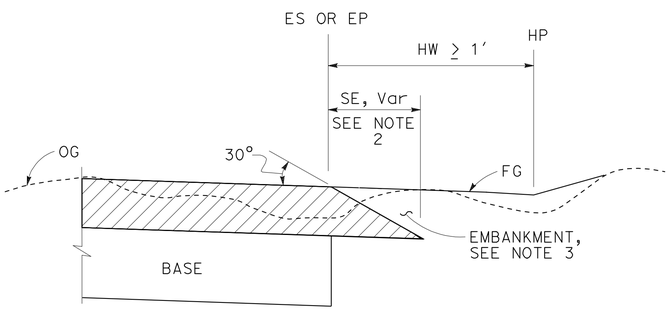

CASE M
Safety Edge - Cut Section, HW ≥ 1′

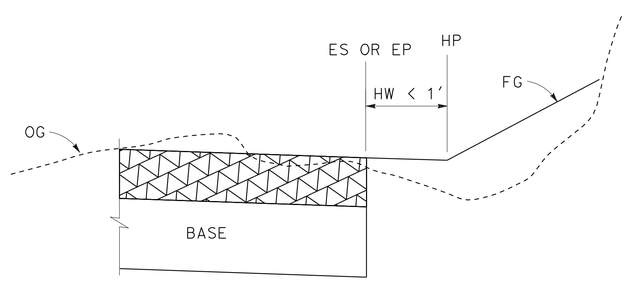

CASE N
Vertical Edge - Cut Section, HW < 1′

CUT SECTION

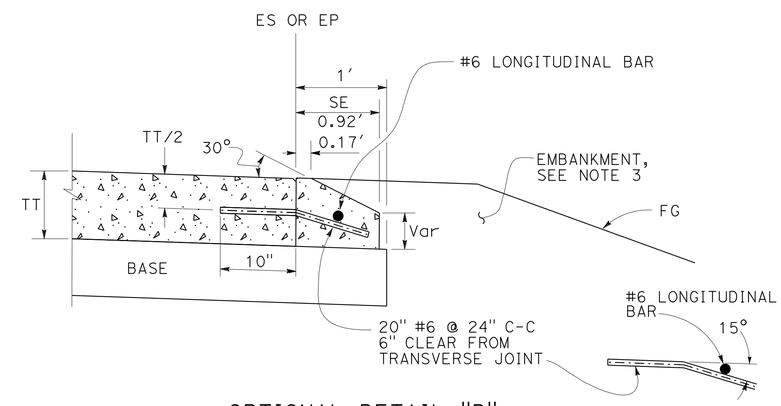

OPTIONAL DETAIL "B"
For concrete pavement
See Note 4

NOTES:

1. For limits of safety edge and vertical edge treatments, see Revised Standard Plan RSP P74
2. Details shown for HMA pavement thickness less than 0.43′. See Detail "B" for HMA pavement thickness more than 0.43′ or concrete pavement.
3. For locations and limits of embankment see project plans.
4. Safety edge transverse joint must match pavement transverse joint. End of #6 longitudinal bar must be 2" ±½" clear from transverse joint.
5. Safety edge is not needed in the area of MBGR, barrier, right turn lane and acceleration lane. See Revised Standard Plan RSP P74.

STATE OF CALIFORNIA
DEPARTMENT OF TRANSPORTATION

PAVEMENT EDGE TREATMENTS-NEW CONSTRUCTION

NO SCALE

RSP P76 DATED JANUARY 20, 2012 SUPPLEMENTS THE STANDARD PLANS BOOK DATED 2010.

REVISED STANDARD PLAN RSP P76

2010 REVISED STANDARD PLAN RSP P76

01-09-12

TO ACCOMPANY PLANS DATED 12-17-12

Dist	COUNTY	ROUTE	POST MILES TOTAL PROJECT	SHEET No.	TOTAL SHEETS
03	ED	89	18.0/24.9	240	243

REGISTERED CIVIL ENGINEER

October 19, 2012
PLANS APPROVAL DATE

REGISTERED PROFESSIONAL ENGINEER Glenn DeCou No. C34547 Exp. 9-30-13 CIVIL STATE OF CALIFORNIA

THE STATE OF CALIFORNIA OR ITS OFFICERS OR AGENTS SHALL NOT BE RESPONSIBLE FOR THE ACCURACY OR COMPLETENESS OF SCANNED COPIES OF THIS PLAN SHEET.

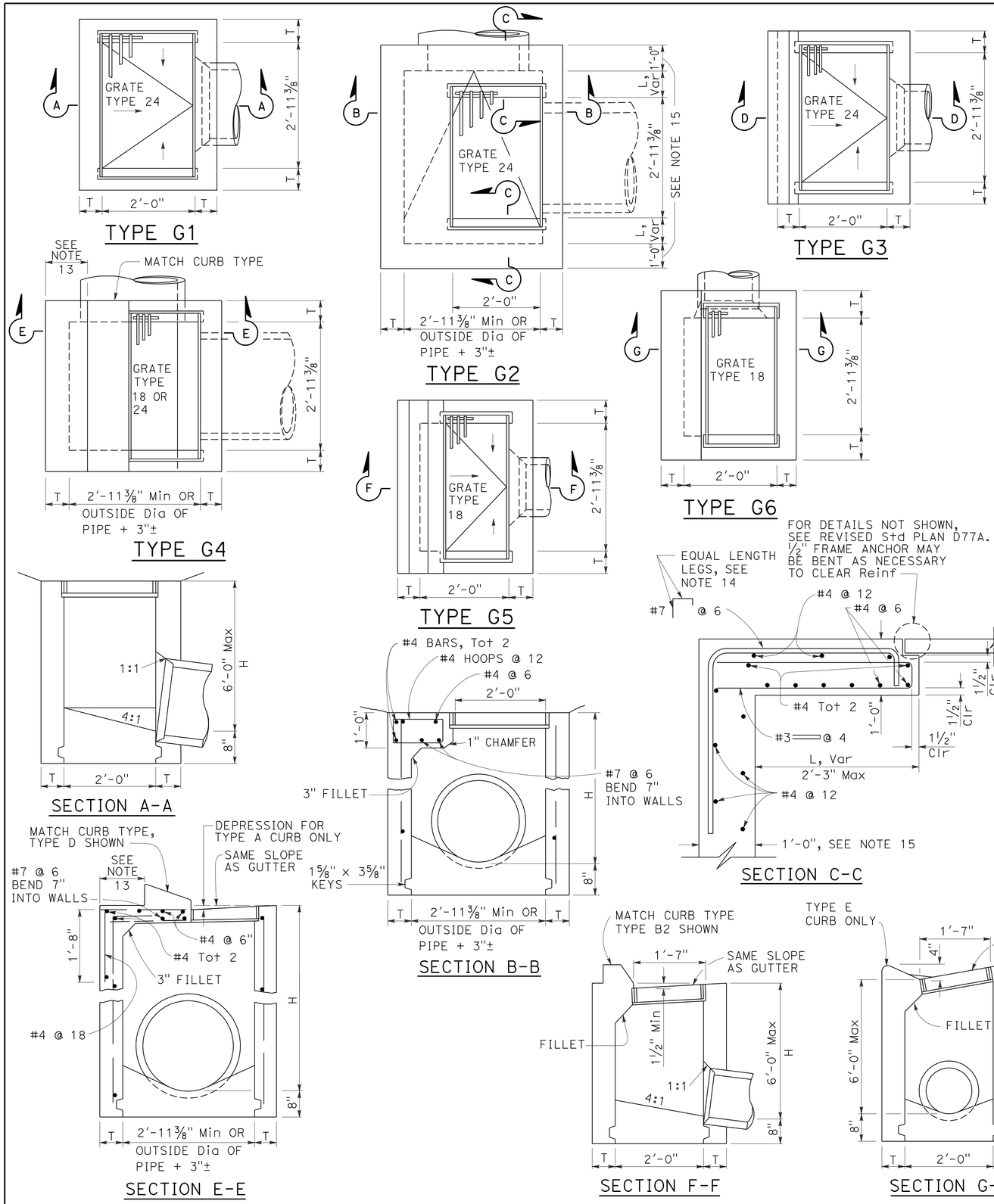

NOTES:

1. "H" is the difference in elevation between the outlet pipe flow line and the normal gutter grade line undepressed.
2. For "T" wall thickness, see Table A below.
3. Wall reinforcing not required when "H" is 8'-0" or less and the unsupported width or length is 7'-0" or less. Walls exceeding these limits shall be reinforced with #4 bars @ 1'-6" ± centers placed 1½" clear to inside of box unless otherwise shown.
4. Inlet bottom reinforcing not required. See Standard Plan D74C for alternative reinforced bottom and alternative half round bottom.
5. Steps-None required where "H" is less than 2'-6". Where "H" is 2'-6" or more, install steps with lowest rung 1'-0" above the floor and highest rung not more than 6" below top of inlet. The distance between steps shall not exceed 1'-0" and shall be uniform throughout the length of the wall. Place steps in the wall without an opening. Steps inserts may be substituted for the bar steps. Step inserts shall comply with State Industrial Safety requirements. See Standard Plan D74C for step details.
6. Details shown apply to both metal and concrete pipe.
7. Pipe(s) can be placed in any wall.
8. Curb section shall match adjacent curb.
9. Basin floors shall have wood trowel finish and a minimum slope of 12:3 from all directions toward outlet pipe.
10. Set inlet so that grate bars are parallel to direction of principal surface flow.
11. See Revised Standard Plans D77A and D77B for grate and frame details and weights of miscellaneous iron and steel.
12. See Standard Plan D78A for gutter depression details.
13. This dimenison will vary with different grates, curbs types, box width and wall thickness.
14. Bar may be rotated as necessary to clear opening. Where "L" is 6" or less, bar may be omitted.
15. Where "L" is 6" or less, wall thickness shall be as shown in Table A.
16. Cast-in-place inlets to be formed around all pipes/stubs intersecting the inlet, and concrete poured in one continuous operation. Precast inlets shall have mortared connections conforming to details for Type GCP Inlet shown on Standard Plan D75B. See Standard Specifications for mortar composition.

TABLE A

CONCRETE QUANTITIES				
TYPE	H=3'-0" TO 8'-0" (T=6")		H=8'-1" TO 20'-0" (T=8")	
	H=3'-0" (CY)	ADDITIONAL PCC PER FOOT (CY)	H=8'-1" (CY)	ADDITIONAL PCC PER FOOT (CY)
G-1	0.95	0.220	See Note A	SEE NOTE A
G-2*	1.31	0.255	3.50	0.357
G-3	1.03	0.220	See Note A	SEE NOTE A
G-4* (TYPE 24)	1.27	0.255	3.48	0.357
G-4* (TYPE 18)	1.30	0.255	3.50	0.357
G-5	1.02	0.220	SEE NOTE A	SEE NOTE A
G-6	1.04	0.220	SEE NOTE A	SEE NOTE A

TABLE BASED ON 8" FLOOR SLAB. NO DEDUCTIONS ARE TO BE MADE TO THESE QUANTITIES BECAUSE OF PIPE OPENINGS, DIFFERENT FLOOR ALTERNATIVES OR DIFFERENT CURB TYPES. * QUANTITIES FOR TYPE G-2 AND G-4 INLETS BASED ON THE MINIMUM INTERIOR DIMENSIONS.

NOTE A:

Maximum allowable height 6'-0".

STATE OF CALIFORNIA
DEPARTMENT OF TRANSPORTATION

DRAINAGE INLETS

NO SCALE

RSP D73 DATED OCTOBER 19, 2012 SUPERSEDES STANDARD PLAN D73 DATED MAY 20, 2011 - PAGE 156 OF THE STANDARD PLANS BOOK DATED 2010.

REVISED STANDARD PLAN RSP D73

2010 REVISED STANDARD PLAN RSP D73

7-19-12

Dist	COUNTY	ROUTE	POST MILES TOTAL PROJECT	SHEET No.	TOTAL SHEETS
03	ED	89	18.0/24.9	241	243

Raymond Don Tsztoo
REGISTERED CIVIL ENGINEER

July 20, 2012
PLANS APPROVAL DATE

REGISTERED PROFESSIONAL ENGINEER Raymond Don Tsztoo No. C37332 Exp. 6-30-14 CIVIL STATE OF CALIFORNIA

THE STATE OF CALIFORNIA OR ITS OFFICERS OR AGENTS SHALL NOT BE RESPONSIBLE FOR THE ACCURACY OR COMPLETENESS OF SCANNED COPIES OF THIS PLAN SHEET.

TO ACCOMPANY PLANS DATED 12-17-12

2010 REVISED STANDARD PLAN RSP D77B

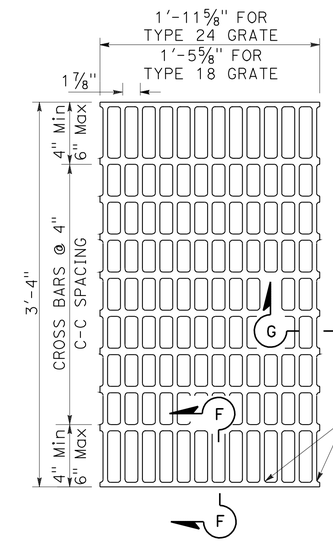

NOTES:

Bearing bars to be 3½" × ¼" bars on 1⅞" centers.

⅜"± ø Cross bars may be fillet welded, resistance welded or electroforged to bearing bars.

Weight of Type 24 grate = 141 LBS.

Weight of Type 18 grate = 107 LBS. (Type 24 grate shown).

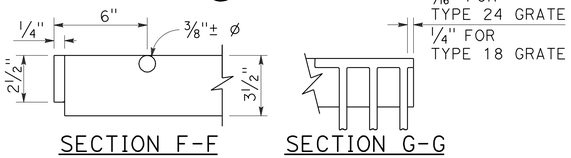

SECTION F-F SECTION G-G

TYPE 18-10 AND 24-13 GRATE

(Welded Steel)

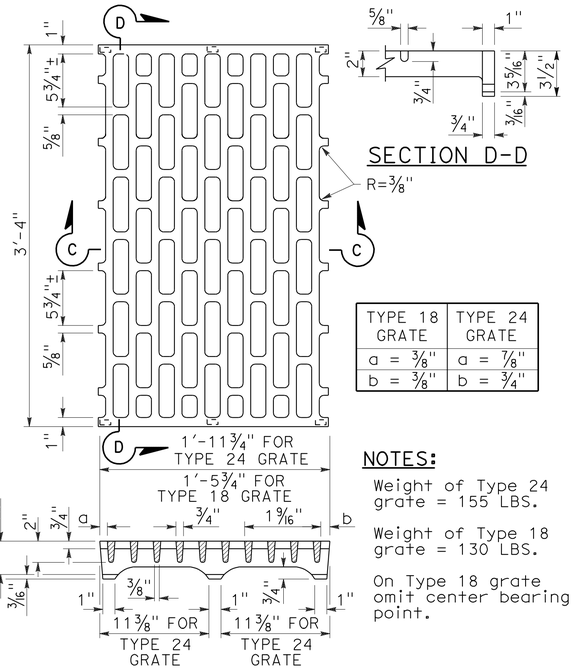

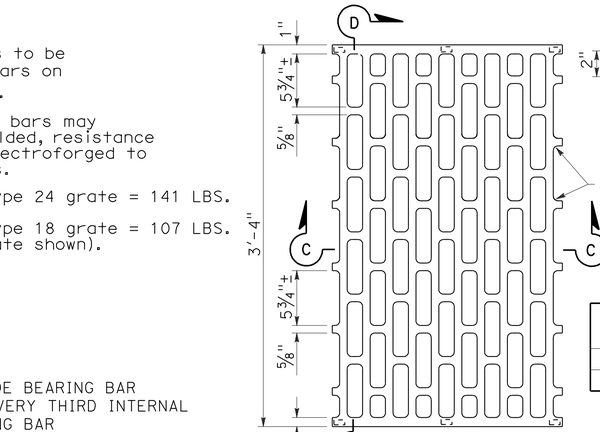

SECTION D-D

TYPE 18 GRATE	TYPE 24 GRATE
a = ⅜"	a = ⅞"
b = ⅜"	b = ¾"

NOTES:

Weight of Type 24 grate = 155 LBS.

Weight of Type 18 grate = 130 LBS.

On Type 18 grate omit center bearing point.

SECTION C-C

TYPE 18-8C AND 24-10C GRATE

(Cast ductile iron)

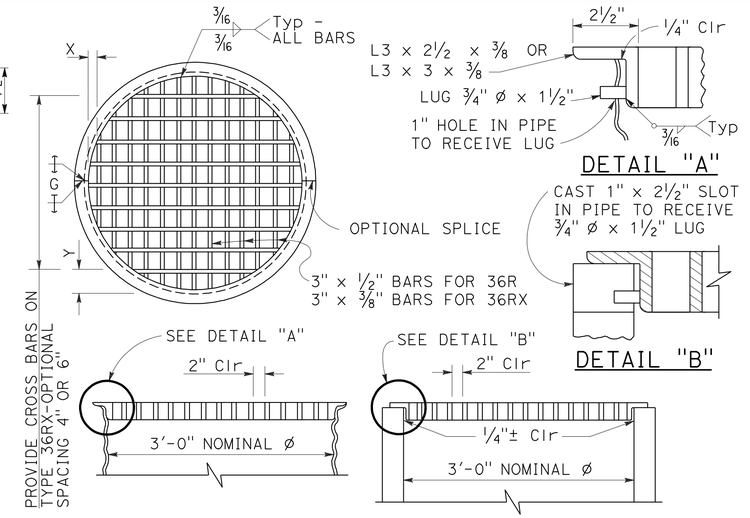

DETAIL "A"

DETAIL "B"

TYPE 36R AND 36RX GRATE DETAILS

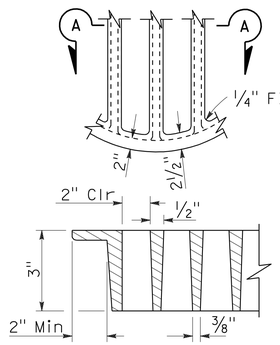

SECTION A-A

ALTERNATIVE CAST DUCTILE IRON GRATE OR CAST CARBON STEEL GRATE TYPE 36R AND 36RX

BASIS FOR Misc IRON AND STEEL FINAL PAY WEIGHTS FOR DRAINAGE INLETS

INLET TYPE	GRATE TYPE	No. OF GRATES	WEIGHT LB
GDO (SEE NOTE 4)	24-10C	2	391
	24-10S	2	456
	24-12X	2	473
	24-13	2	374
GO,GOL,G1,G2, G3,G4 (TYPE 24)	24-10C	1	202
	24-10S	1	229
	24-12X	1	239
	24-13	1	188
G4 (TYPE 18) G5,G6	18-8S	1	187
	18-9X	1	187
	18-10	1	149
GT1,GT2	18-8S	2	374
	18-9X	2	374
	18-10	2	298
GT3,GT4	24-10C	2	404
	24-10S	2	458
	24-12X	2	478
	24-13	2	376
ODI	36RX (Mod)	1	196
GMP,GCP,GCPI	36RX	1	215
ODI	36R (Mod)	1	220
GMP,GCP,GCPI	36R	1	236
TRASH RACK			22
GRATE CHAIN			3

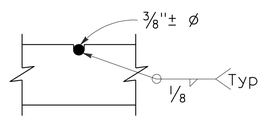

⅜"± ø Cross bars may be fillet welded, resistance welded or electroforged to bearing bars.

CROSS BAR DETAIL TYPE 36RX GRATE (WELDED STEEL)

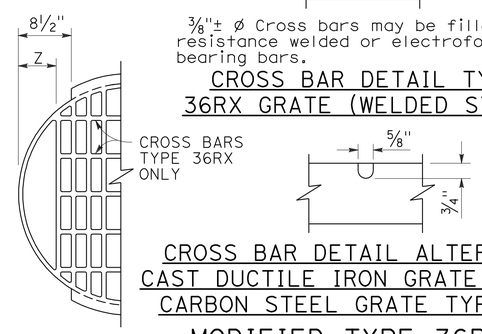

CROSS BAR DETAIL ALTERNATIVE CAST DUCTILE IRON GRATE OR CAST CARBON STEEL GRATE TYPE 36RX

MODIFIED TYPE 36R AND 36RX GRATE FOR ODI INLET

NOTES:

1. When alternative grates are allowed - Final pay based on alternative with the lesser weight.
2. Use frame shown on Standard Plan D74A, D74B or RSP D77A as appropriate.
3. When Type 24-10S, 24-12X or 24-13 grates are used with GDO Inlets, a ¼" × 3½" × 3'-4⅞" steel bar shall be welded across the center of inlet frame to separate the individual grates.
4. See Revised Standard Plan RSP D77A for connecting chain to welded grate and frame. When chain is required, do not use cast ductile iron grate.

GRATE BAR SPACING TABLE

TYPE	No. OF BARS	CLEAR BAR SPACING	X	Y 4" SPACING	Y 6" SPACING	Z
36R	13	2"	2⅛"	-	-	-
36RX (STEEL)	15	2"	9/16"	3¾"	5¾"	-
36RX (CAST)	13	2"	2⅛"	3¾"	5¾"	-
36R Mod	12	2"	2⅛"	-	-	5"
36RX Mod (STEEL)	13	2"	9/16"	3¾"	5¾"	5 11/16"
36RX Mod (CAST)	12	2"	2⅛"	3¾"	5¾"	5"

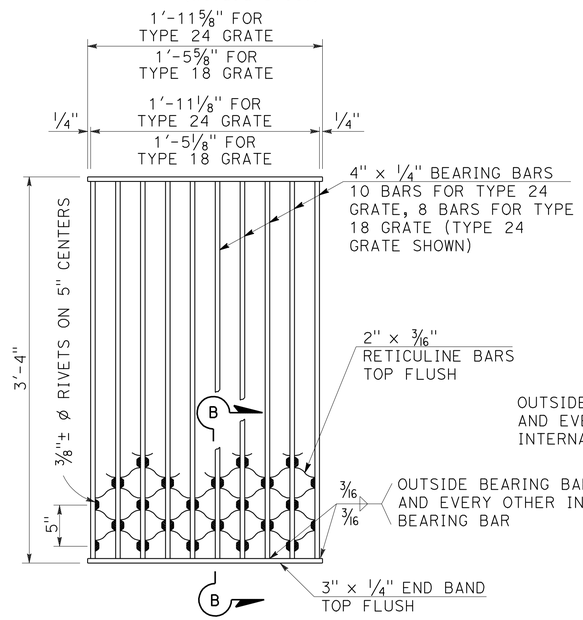

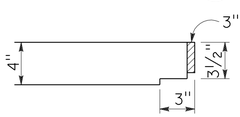

SECTION B-B

NOTES:

Weight of Type 24 grate = 182 LBS.
Weight of Type 18 grate = 145 LBS.

TYPE 18-8S AND 24-10S GRATE

(Welded Steel) Reticuline type

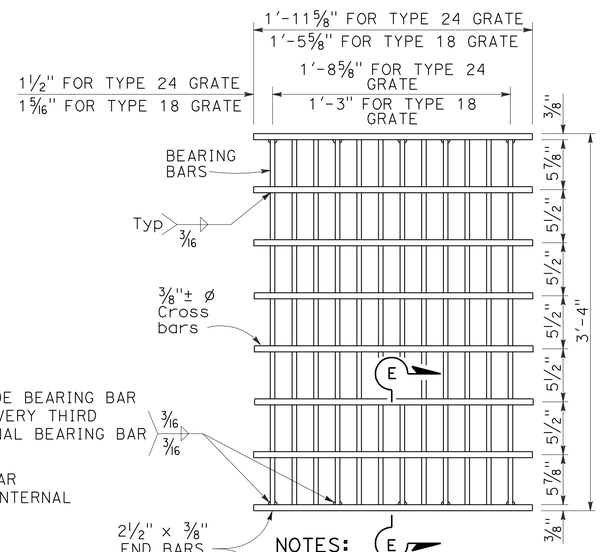

SECTION E-E

NOTES:

Bearing bars to be 3½" × ⅜" bars on 1⅞" centers.

12 Bars for Type 24 grate - 9 bars for Type 18 grates. (Type 24 grate shown).

Weight of Type 24 grate = 192 LBS.

Weight of Type 18 grate = 145 LBS.

⅜"± ø Cross bars may be fillet welded, resistance welded or electroforged to bearing bars.

TYPE 18-9X AND 24-12X GRATE

(Welded Steel)

STATE OF CALIFORNIA
DEPARTMENT OF TRANSPORTATION

BICYCLE TRAVERSABLE GRATE DETAILS

NO SCALE

RSP D77B DATED JULY 20, 2012 SUPERSEDES STANDARD PLAN D77B DATED MAY 20, 2011 - PAGE 165 OF THE STANDARD PLANS BOOK DATED 2010.

REVISED STANDARD PLAN RSP D77B

4-17-12

DIST	COUNTY	ROUTE	POST MILES TOTAL PROJECT	SHEET NO.	TOTAL SHEETS
03	ED	89	18.0/24.9	242	243

REGISTERED ELECTRICAL ENGINEER

January 20, 2012
PLANS APPROVAL DATE

REGISTERED PROFESSIONAL ENGINEER
Jeffery G. McRae
No. E14512
Exp. 6-30-12
ELECTRICAL
STATE OF CALIFORNIA

THE STATE OF CALIFORNIA OR ITS OFFICERS OR AGENTS SHALL NOT BE RESPONSIBLE FOR THE ACCURACY OR COMPLETENESS OF SCANNED COPIES OF THIS PLAN SHEET.

TO ACCOMPANY PLANS DATED 12-17-12

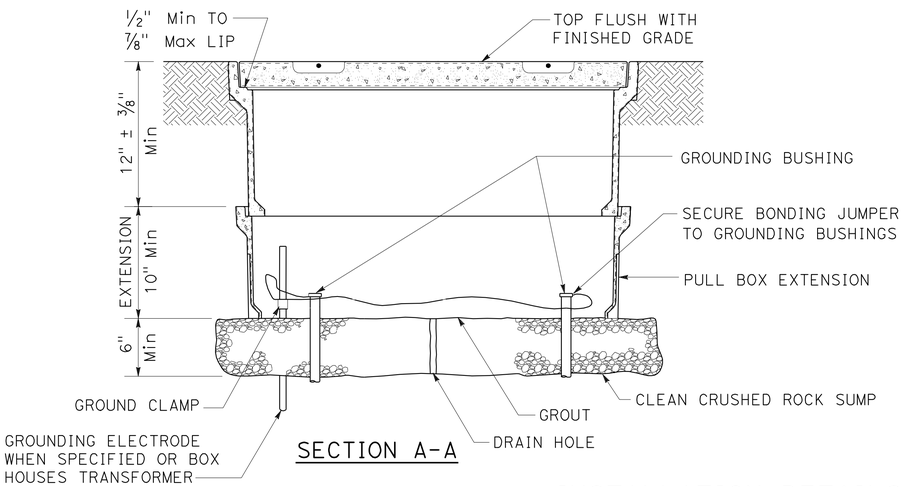

SECTION A-A

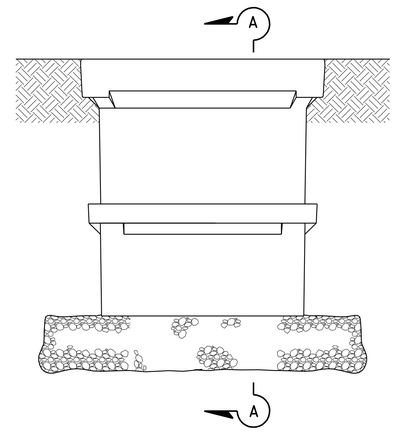

SIDE VIEW

INSTALLATION DETAILS

DETAIL A

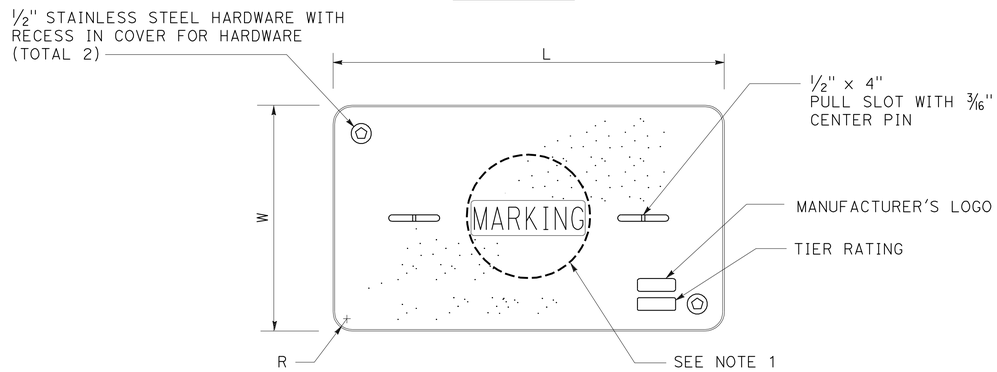

COVER TOP VIEW

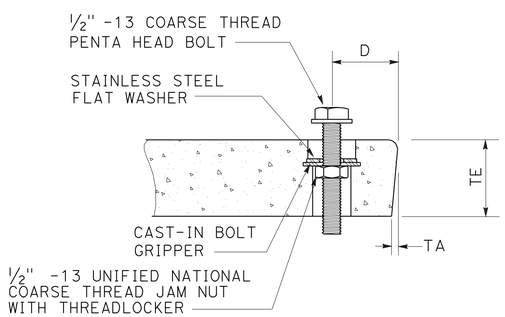

TYPICAL COVER CAPTIVE BOLT

OR SIMILAR

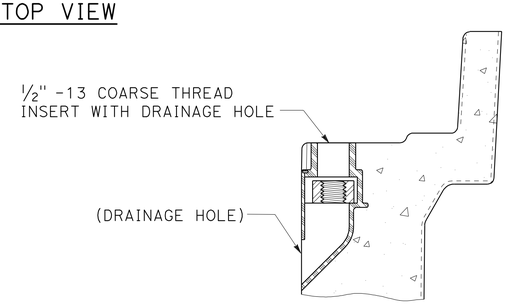

TYPICAL THREADED INSERT

OR SIMILAR

DIMENSION TABLE										
PULL BOX	PULL BOX			COVER						
	MINIMUM DEPTH BOX	MINIMUM DEPTH EXTENSION	MAXIMUM WEIGHT	L	W	R	TE	TA	D	MAXIMUM WEIGHT
No. 3 1/2	12"	N/A	40 lb	1' - 3 3/8"	10 1/8"	1 3/8"	2"	1/8"	1 3/4"	30 lb
No. 5	12"	10"	55 lb	1' - 11 1/4"	1' - 1 3/4"	1 3/8"	2"	1/8"	1 3/4"	60 lb
No. 6	12"	10"	70 lb	2' - 6 1/2"	1' - 5 1/2"	1 3/8"	2"	1/8"	2"	85 lb

NOTES ON PULL BOXES:

1. Pull box covers must be marked as follows: "SERVICE" Service circuits between service point and service disconnect; "SPRINKLER-CONTROL" sprinkler control circuits, 50 V or less; "CALTRANS" on all pull boxes, except pull boxes marked "SPRINKLER-CONTROL"; and "TELEPHONE" Telephone service;

   A) No. 3 1/2 pull box.
      1) "SIGNAL" - Traffic signal circuits with or without street or sign lighting circuits.
      2) "ST LIGHTING" - Street or sign lighting circuits where voltage is under 600 V.

   B) No. 5, 6, 9 or 9A pull box.
      1) "TRAFFIC SIGNAL" - Traffic signal circuits with or without street or sign lighting circuits.
      2) "STREET LIGHTING" - Street or sign lighting circuits where voltage is under 600 V.
      3) "STREET LIGHTING-HIGH VOLTAGE" - Street or sign lighting circuits where voltage is above 600 V.
      4) "IRRIGATION" - Circuits to irrigation controller 120 V or more.
      5) "RAMP METER" - Ramp meter circuits.
      6) "COUNT STATION" - Count or speed monitor circuits.
      7) "COMMUNICATIONS" - Communication circuits.
      8) "TOS COMMUNICATIONS" - TOS communication line.
      9) "TOS POWER" - TOS power.
      10) "TDC POWER" - Telephone demarcation cabinet power.
      11) "CCTV" - Closed circuit television circuits.
      12) "TMS" - Traffic monitoring station circuits.
      13) "CMS" - Changeable message sign circuits.
      14) "HAR" - Highway advisory radio circuits.

2. The nominal dimensions of the opening in which the cover sets must be the same as the cover dimensions (L and W) plus 1/8" or greater.

3. Covers and boxes must be interchangeable with California Standard. When interchanged with a standard, the top surfaces must be flush within 1/8". Top outside radius of covers and pull boxes must have a 1/8" radius.

4. Pull box extension may be another pull box as long as the bottom edge of the pull box can fit into the cover opening.

STATE OF CALIFORNIA
DEPARTMENT OF TRANSPORTATION

ELECTRICAL SYSTEMS (PULL BOX)

NO SCALE

RSP ES-8A DATED JANUARY 20, 2012 SUPPLEMENTS THE STANDARD PLANS BOOK DATED 2010.

REVISED STANDARD PLAN RSP ES-8A

2010 REVISED STANDARD PLAN RSP ES-8A

01-09-12

DIST	COUNTY	ROUTE	POST MILES TOTAL PROJECT	SHEET NO.	TOTAL SHEETS
03	ED	89	18.0/24.9	243	243

REGISTERED ELECTRICAL ENGINEER

January 20, 2012
PLANS APPROVAL DATE

REGISTERED PROFESSIONAL ENGINEER
Jeffery G. McRae
No. E14512
Exp. 6-30-12
ELECTRICAL
STATE OF CALIFORNIA

THE STATE OF CALIFORNIA OR ITS OFFICERS OR AGENTS SHALL NOT BE RESPONSIBLE FOR THE ACCURACY OR COMPLETENESS OF SCANNED COPIES OF THIS PLAN SHEET.

TO ACCOMPANY PLANS DATED 12-17-12

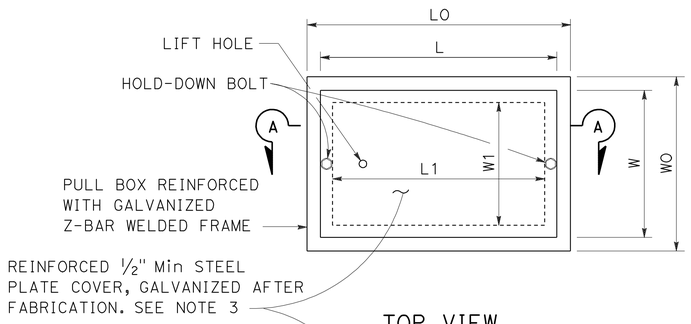

TOP VIEW

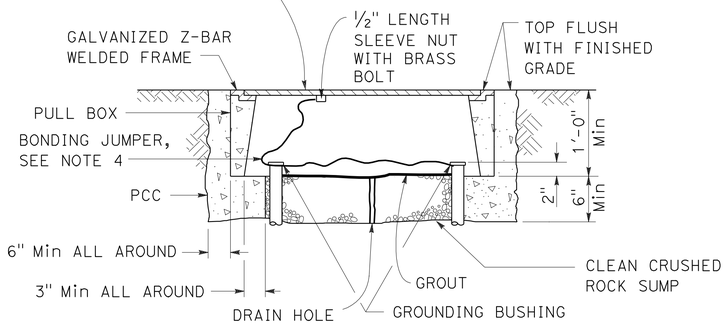

SECTION A-A

No. 3½(T), No. 5(T) AND No. 6(T) TRAFFIC PULL BOX

NOTES ON PULL BOXES:

1. Traffic pull box shall be provided with steel cover and special concrete footing. Steel cover shall have embossed non-skid pattern.
2. Steel reinforcing shall be as regularly used in the standard products of the respective manufacturer.
3. Pull box covers must be marked as follows: "SERVICE" Service circuits between service point and service disconnect; "SPRINKLER-CONTROL" Sprinkler control circuits, 50 V or less; "CALTRANS" On all pull boxes, except pull boxes marked "SPRINKLER-CONTROL"; and "TELEPHONE" Telephone service.
   A) No. 3½(T) pull box.
      1) "SIGNAL" - Traffic signal circuits with or without street or sign lighting circuits.
      2) "ST LIGHTING" - Street or sign lighting circuits where voltage is under 600 V.
   B) No. 5(T) or 6(T) pull box.
      1) "TRAFFIC SIGNAL" - Traffic signal circuits with or without street or sign lighting circuits.
      2) "STREET LIGHTING" - Street or sign lighting circuits where voltage is under 600 V.
      3) "STREET LIGHTING-HIGH VOLTAGE" - Street or sign lighting circuits where voltage is above 600 V.
      4) "IRRIGATION" - Circuits to irrigation controller 120 V or more.
      5) "RAMP METER" - Ramp meter circuits.
      6) "COUNT STATION" - Count or speed monitor circuits.
      7) "COMMUNICATION" - Communication circuits.
      8) "TOS COMMUNICATIONS" - TOS communications line.
      9) "TOS POWER" - TOS power.
      10) "TDC POWER" - Telephone demarcation cabinet power.
      11) "CCTV" - Closed circuit television circuits.
      12) "TMS" - Traffic monitoring station circuits.
      13) "CMS" - Changeable message sign circuits.
      14) "HAR" - Highway advisory radio circuits.
4. Bonding jumper for metal covers shall be 3' long, minimum.
5. The nominal dimensions of the opening in which the cover sets must be the same as the cover dimensions except the length and width dimensions shall be ⅛" greater.
6. Covers and boxes must be interchangeable with California standard male and female gages. When interchanged with a standard male or female gage, the top surfaces must be flush within ⅛".

DIMENSION TABLE

PULL BOX	BOX						COVER				
	MINIMUM * THICKNESS	MINIMUM DEPTH BOX AND EXTENSION	WO	LO	L1	W1	L **	W **	R	EDGE THICKNESS	EDGE TAPER
No. 3½(T)	1½"	1'-0"	1'-5"± 1"	1'-8⅞"±	1'-2½"±	10⅝"± 1"	1'-8"±	1'-1¾"±	0"	½"	NONE
No. 5(T)	1¾"	1'-0"	1'-11½"± 1"	2'-5½"±	1'-7"±	1'-1"± 1"	2'-3"±	1'-4"±	0"	½"	NONE
No. 6(T)	2"	1'-0"	2'-6"± 1"	2'-11½"±	1'-11½"±	1'-5"± 1"	2'-9"±	1'-8"±	0"	½"	NONE

* EXCLUDING CONDUIT WEB ** TOP DIMENSION

STATE OF CALIFORNIA
DEPARTMENT OF TRANSPORTATION

ELECTRICAL SYSTEMS (TRAFFIC RATED PULL BOX)

NO SCALE

RSP ES-8B DATED JANUARY 20, 2012 SUPPLEMENTS THE STANDARD PLANS BOOK DATED 2010.

REVISED STANDARD PLAN RSP ES-8B

2010 REVISED STANDARD PLAN RSP ES-8B