Dist	COUNTY	ROUTE	POST MILES TOTAL PROJECT	SHEET No.	TOTAL SHEETS
03	ED	89	8.6/13.8	1	231

STATE OF CALIFORNIA

DEPARTMENT OF TRANSPORTATION

ACSTP-P089(109)E

PROJECT PLANS FOR CONSTRUCTION ON STATE HIGHWAY

IN EL DORADO COUNTY IN AND NEAR SOUTH LAKE TAHOE FROM ROUTE 50 TO CASCADE ROAD

TO BE SUPPLEMENTED BY STANDARD PLANS DATED 2010

INDEX OF PLANS

SHEET No.	DESCRIPTION
1	TITLE AND LOCATION MAP
2-6	TYPICAL CROSS SECTIONS
7-27	LAYOUTS
28-52	CONSTRUCTION DETAILS
53-93	DRAINAGE PLANS, PROFILES, DETAILS AND QUANTITIES
94-106	UTILITY PLANS
107-109	CONSTRUCTION AREA SIGNS
110-111	STAGE CONSTRUCTION
112-127	PAVEMENT DELINEATION PLANS, DETAILS AND QUANTITIES
128-158	SIGN PLANS, DETAILS AND QUANTITIES
159-164	SUMMARY OF QUANTITIES
165-191	EROSION CONTROL LEGEND, PLANS, DETAILS AND QUANTITIES
192-197	ELECTRICAL PLANS
198	SPECIAL ELECTRICAL STRUCTURES
199-231	REVISED STANDARD PLANS

THE STANDARD PLANS LIST APPLICABLE TO THIS CONTRACT IS INCLUDED IN THE NOTICE TO BIDDERS AND SPECIAL PROVISIONS BOOK.

LOCATION MAP

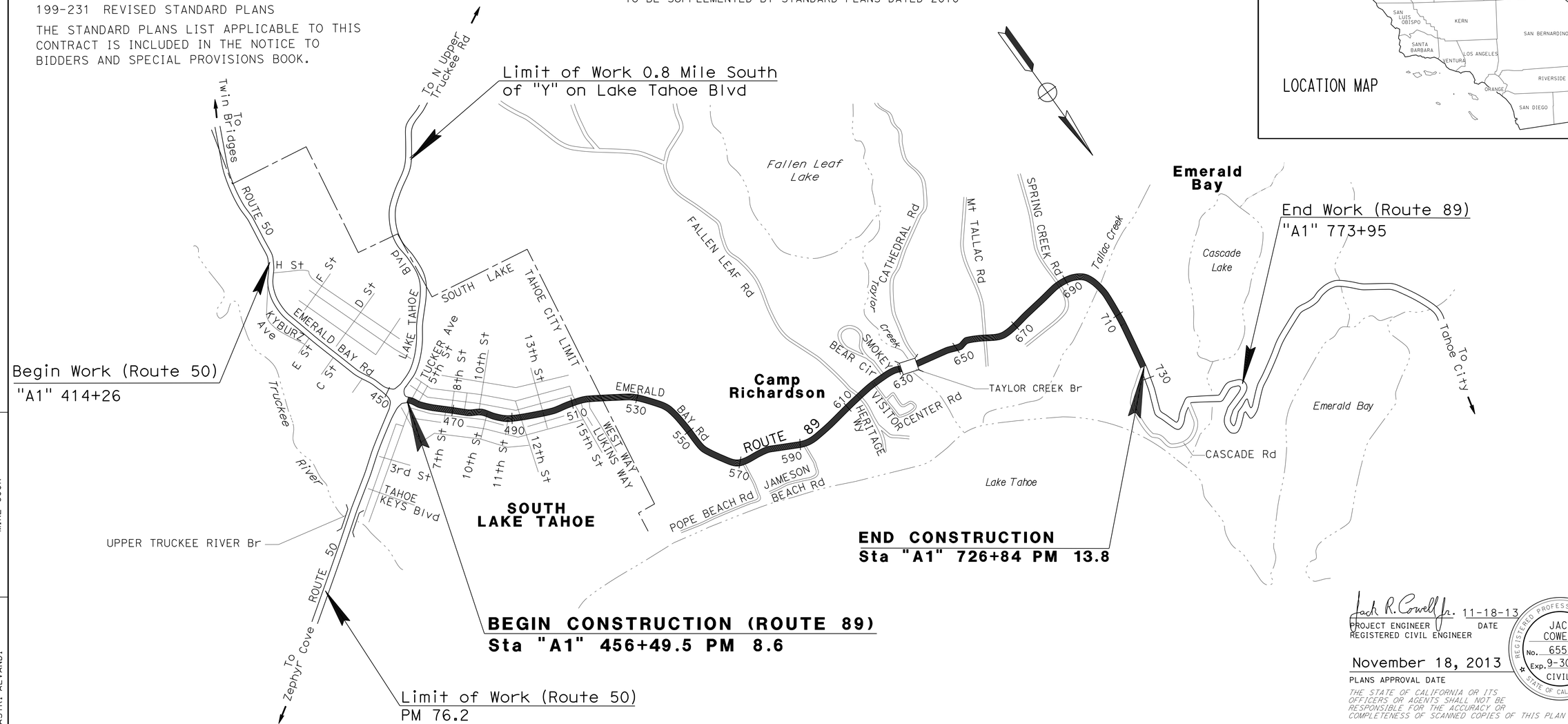

NO SCALE

THE CONTRACTOR SHALL POSSESS THE CLASS (OR CLASSES) OF LICENSE AS SPECIFIED IN THE "NOTICE TO BIDDERS."

Jack R. Cowell Jr. 11-18-13
PROJECT ENGINEER DATE
REGISTERED CIVIL ENGINEER

November 18, 2013
PLANS APPROVAL DATE

REGISTERED PROFESSIONAL ENGINEER — JACK COWELL — No. 65521 — Exp. 9-30-15 — CIVIL — STATE OF CALIFORNIA

THE STATE OF CALIFORNIA OR ITS OFFICERS OR AGENTS SHALL NOT BE RESPONSIBLE FOR THE ACCURACY OR COMPLETENESS OF SCANNED COPIES OF THIS PLAN SHEET.

CONTRACT No.	03-1A8424
PROJECT ID	0300000223

PROJECT MANAGER: MIKE COOK
DESIGN ENGINEER: MASTRI ALVANDI

LAST REVISION 00-00-00
DATE PLOTTED => 13-FEB-2014
TIME PLOTTED => 13:40

BORDER LAST REVISED 9/30/2012 | CALTRANS WEB SITE IS: HTTP//WWW.DOT.CA.GOV/ | RELATIVE BORDER SCALE IS IN INCHES 0 1 2 3 | USERNAME => s130875 | DGN FILE => 0300000223ab001.dgn | UNIT 0337 | PROJECT NUMBER & PHASE 03000002231

Dist	COUNTY	ROUTE	POST MILES TOTAL PROJECT	SHEET No.	TOTAL SHEETS
03	ED	89	8.6/13.8	2	231

Jack R. Cowell Jr. 11-18-13
REGISTERED CIVIL ENGINEER DATE

11-18-13
PLANS APPROVAL DATE

REGISTERED PROFESSIONAL ENGINEER — JACK COWELL — No. 65521 — Exp. 9-30-15 — CIVIL — STATE OF CALIFORNIA

THE STATE OF CALIFORNIA OR ITS OFFICERS OR AGENTS SHALL NOT BE RESPONSIBLE FOR THE ACCURACY OR COMPLETENESS OF SCANNED COPIES OF THIS PLAN SHEET.

ABBREVIATIONS:

C&G	CURB AND GUTTER
LL	LANE LINE
TWLTL	TWO-WAY LEFT-TURN LANE
SC	SAW CUT
SE	SAFETY EDGE

DESIGN DESIGNATION

ADT (2015)	17,700	D	60%
ADT (2035)	22,700	T	1.0%
DHV (2035)	3560	V	35 mph
ESAL	371,700	TI_{20}	8.0

PAVEMENT CLIMATE REGION: HIGH MOUNTAIN

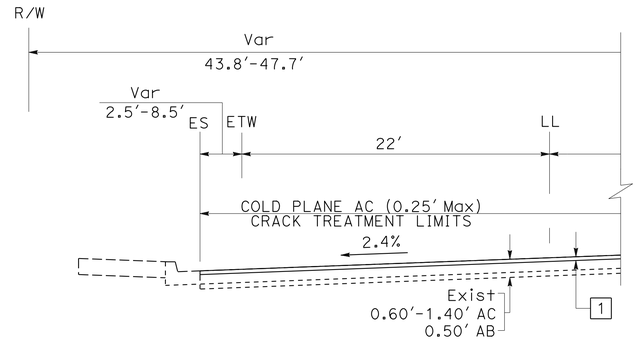

Sta 488+90 TO Sta 490+00

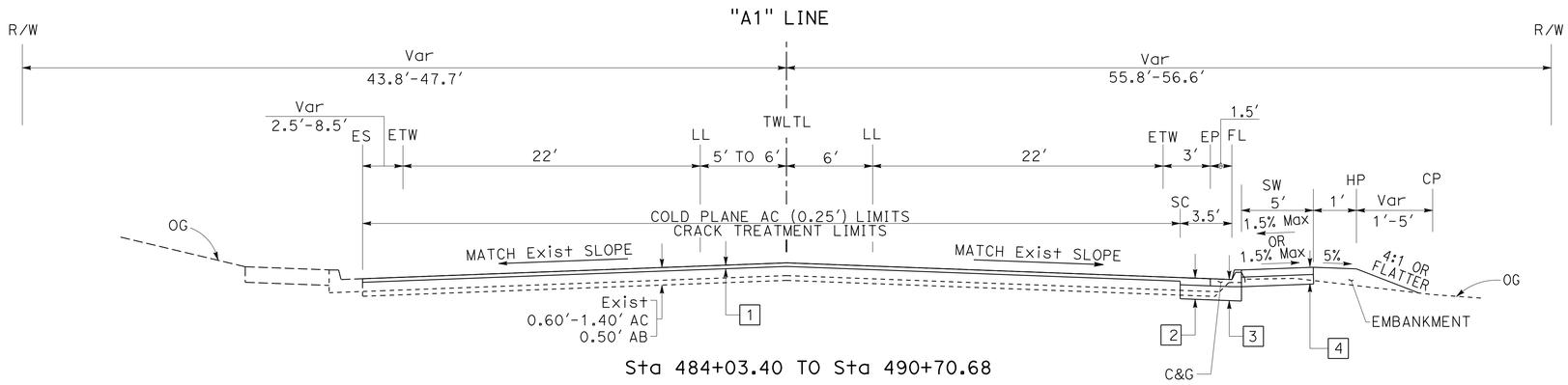

Sta 484+03.40 TO Sta 490+70.68

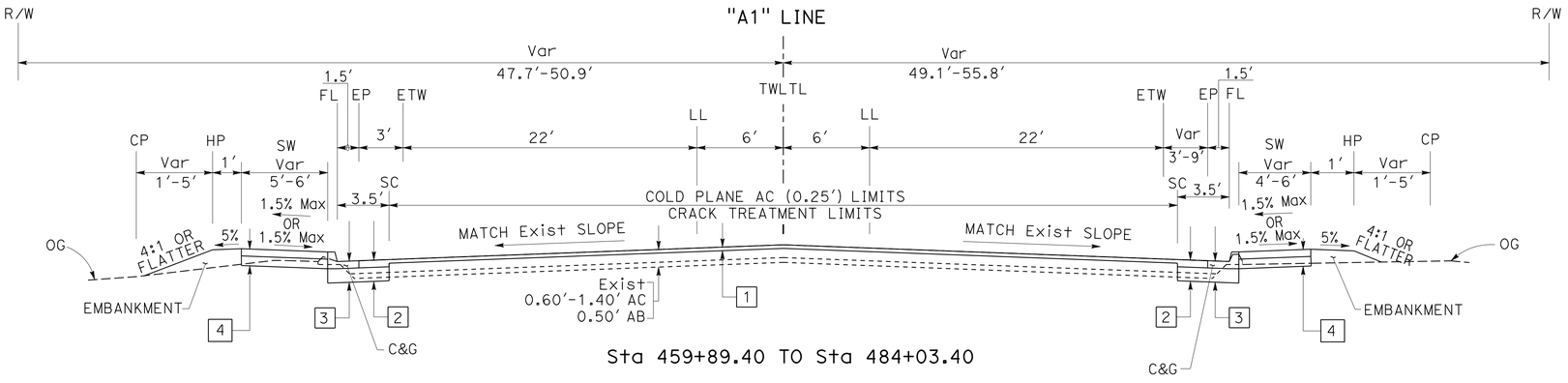

Sta 459+89.40 TO Sta 484+03.40

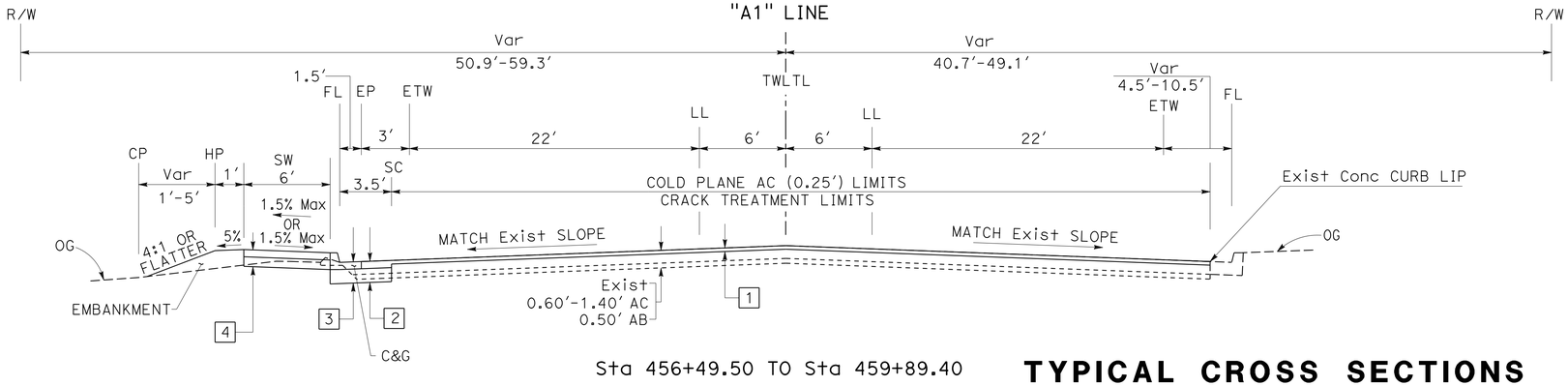

Sta 456+49.50 TO Sta 459+89.40

NOTES:

1. DIMENSIONS OF THE PAVEMENT STRUCTURES (STRUCTURAL SECTIONS) ARE SUBJECT TO TOLERANCES SPECIFIED IN THE STANDARD SPECIFICATIONS.
2. EXACT LOCATIONS AND TYPES OF CONCRETE CURB ARE SHOWN ON THE LAYOUTS AND IN THE SUMMARY OF QUANTITIES SHEETS.
3. EXACT LOCATIONS OF SIDEWALK ARE SHOWN ON THE LAYOUTS AND IN THE SUMMARY OF QUANTITIES SHEETS.
4. FOR EXACT LOCATION OR "REMOVE AC DIKE" AND "PLACE HMA DIKE" SEE QUANTITY SHEET.

STRUCTURAL SECTIONS:

1	0.25' HMA (TYPE A)
2	0.50' HMA (TYPE A) 1.00' CLASS 2 AB
3	PCC C&G - (SEE NOTE 2) 1.00' CLASS 2 AB
4	0.33' HMA (TYPE A) 0.50' CLASS 2 AB

TYPICAL CROSS SECTIONS

NO SCALE

ROUTE 89

X-1

REVISED BY | DATE REVISED
JACK COWELL | MASTRI ALVANDI
CALCULATED-DESIGNED BY | CHECKED BY
FUNCTIONAL SUPERVISOR: MASTRI ALVANDI
STATE OF CALIFORNIA - DEPARTMENT OF TRANSPORTATION
DESIGN

LAST REVISION DATE PLOTTED => 13-FEB-2014
02-04-13 TIME PLOTTED => 13:40

BORDER LAST REVISED 7/2/2010 | USERNAME => s130875 | DGN FILE => 0300000223ca001.dgn | RELATIVE BORDER SCALE IS IN INCHES 0 1 2 3 | UNIT 0337 | PROJECT NUMBER & PHASE 03000002231

Dist	COUNTY	ROUTE	POST MILES TOTAL PROJECT	SHEET No.	TOTAL SHEETS
03	ED	89	8.6/13.8	3	231

Jack R. Cowell Jr. 11-18-13
REGISTERED CIVIL ENGINEER DATE

11-18-13
PLANS APPROVAL DATE

REGISTERED PROFESSIONAL ENGINEER — JACK COWELL — No. 65521 — Exp. 9-30-15 — CIVIL — STATE OF CALIFORNIA

THE STATE OF CALIFORNIA OR ITS OFFICERS OR AGENTS SHALL NOT BE RESPONSIBLE FOR THE ACCURACY OR COMPLETENESS OF SCANNED COPIES OF THIS PLAN SHEET.

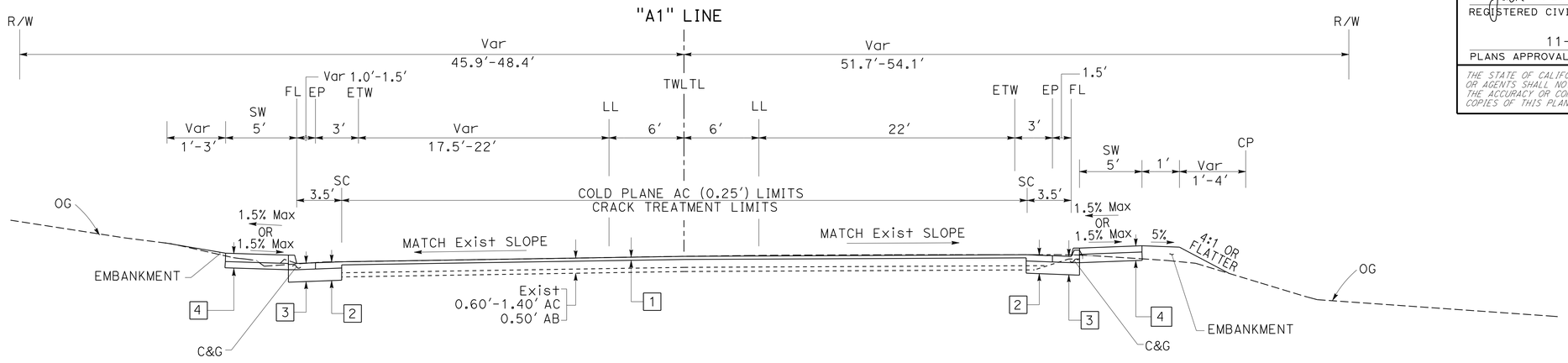

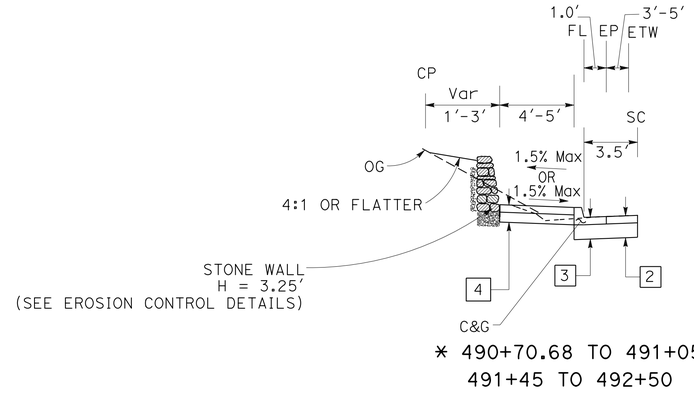

Sta 493+10 TO Sta 510+15

* 490+70.68 TO 491+05
491+45 TO 492+50

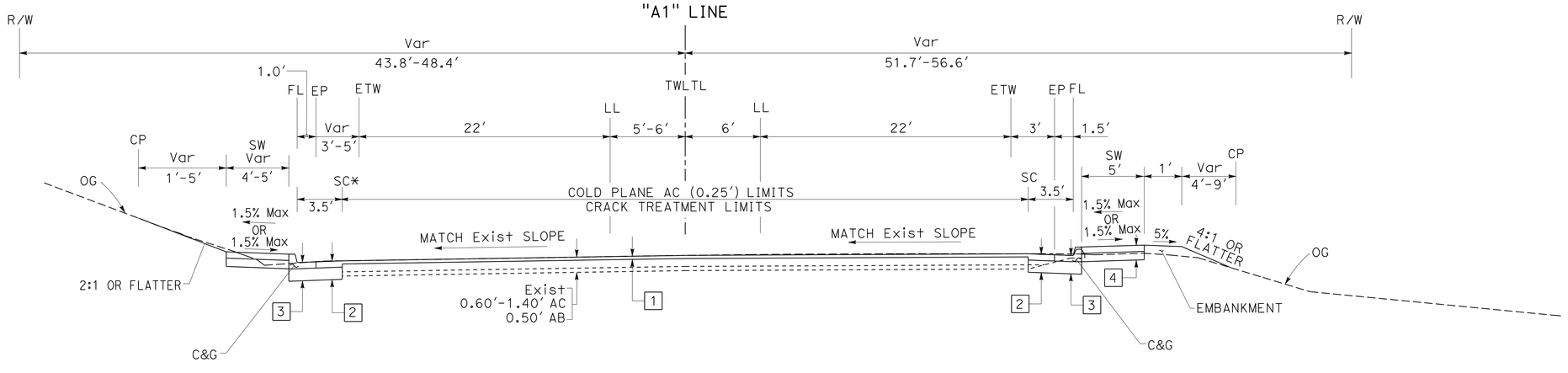

Sta 490+70.68 TO Sta 493+10

ROUTE 89

TYPICAL CROSS SECTIONS

NO SCALE

X-2

STATE OF CALIFORNIA - DEPARTMENT OF TRANSPORTATION — DESIGN

FUNCTIONAL SUPERVISOR: MASTRI ALVANDI

CALCULATED-DESIGNED BY: JACK COWELL
CHECKED BY: MASTRI ALVANDI
REVISED BY
DATE REVISED

LAST REVISION: DATE PLOTTED => 13-FEB-2014 | TIME PLOTTED => 13:40 | 02-04-13

BORDER LAST REVISED 7/2/2010

USERNAME => s130875
DGN FILE => 0300000223ca002.dgn

RELATIVE BORDER SCALE IS IN INCHES 0 1 2 3

UNIT 0337

PROJECT NUMBER & PHASE 03000002231

Dist	COUNTY	ROUTE	POST MILES TOTAL PROJECT	SHEET No.	TOTAL SHEETS
03	ED	89	8.6/13.8	4	231

Jack R. Cowell Jr. 11-18-13
REGISTERED CIVIL ENGINEER DATE

11-18-13
PLANS APPROVAL DATE

REGISTERED PROFESSIONAL ENGINEER
JACK COWELL
No. 65521
Exp. 9-30-15
CIVIL
STATE OF CALIFORNIA

THE STATE OF CALIFORNIA OR ITS OFFICERS OR AGENTS SHALL NOT BE RESPONSIBLE FOR THE ACCURACY OR COMPLETENESS OF SCANNED COPIES OF THIS PLAN SHEET.

"A1" LINE

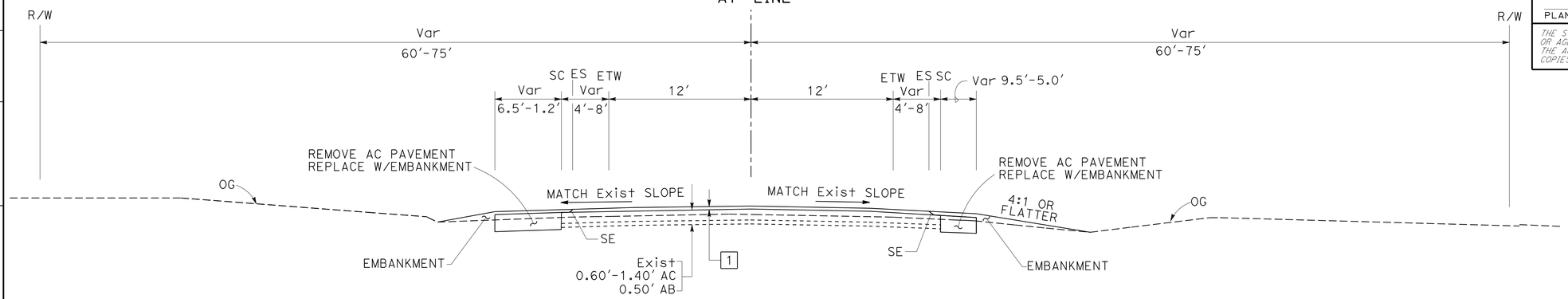

Sta 522+20 TO Sta 527+89.10

"A1" LINE

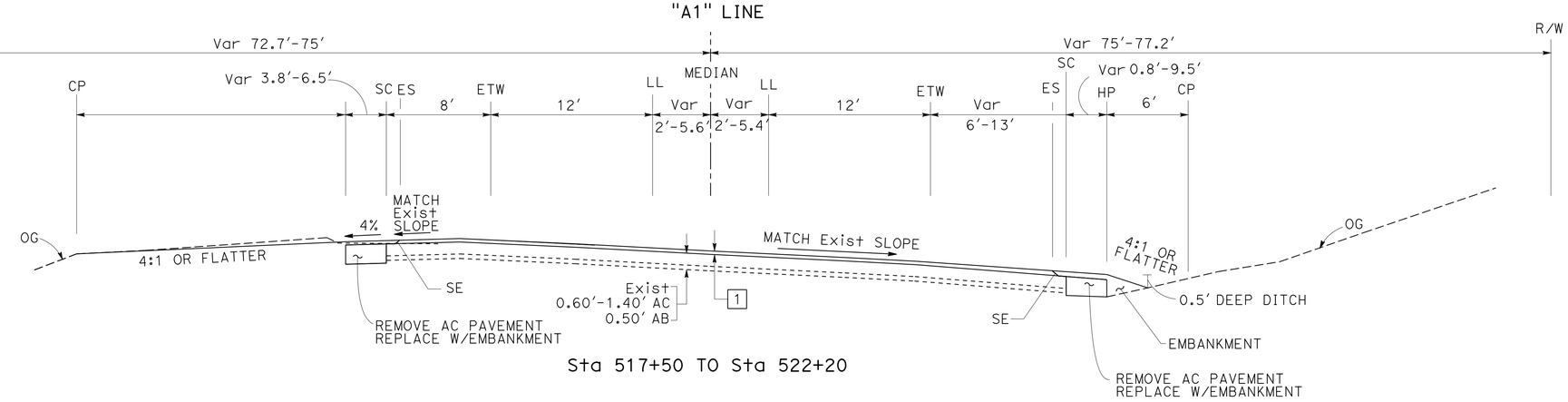

Sta 517+50 TO Sta 522+20

"A1" LINE

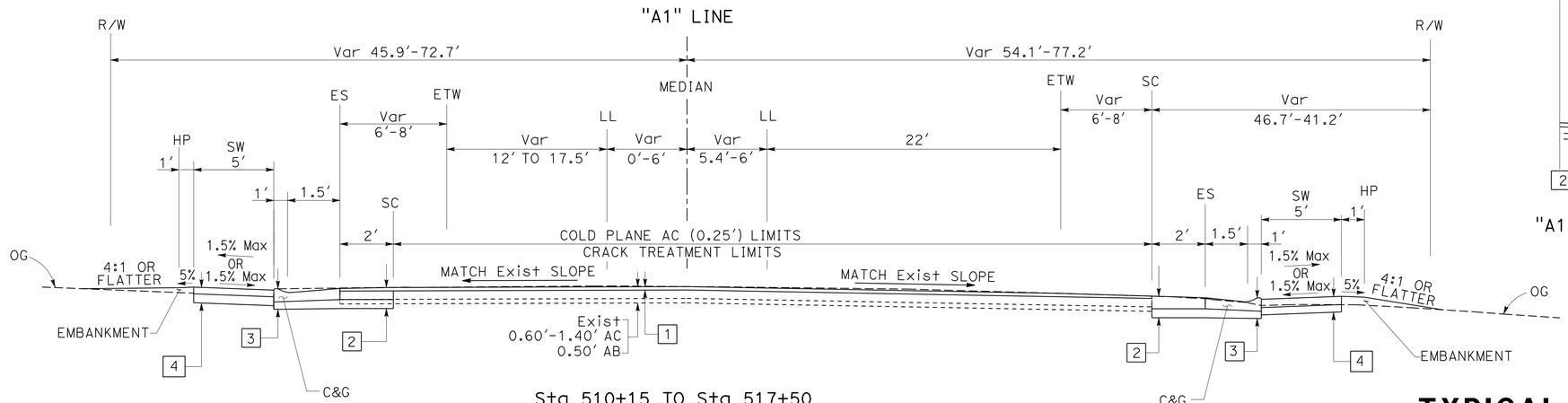

Sta 510+15 TO Sta 517+50

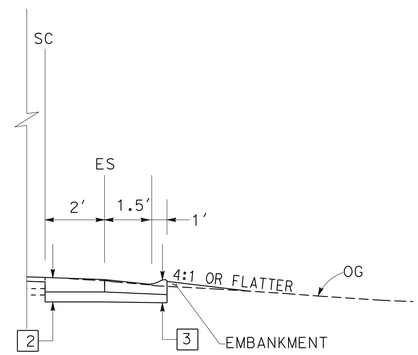

"A1" 514+20 TO 517+50

TYPICAL CROSS SECTIONS

NO SCALE

ROUTE 89

X-3

STATE OF CALIFORNIA - DEPARTMENT OF TRANSPORTATION
DESIGN
Caltrans

CALCULATED-DESIGNED BY: JACK COWELL
CHECKED BY: MASTRI ALVANDI
FUNCTIONAL SUPERVISOR: MASTRI ALVANDI
REVISED BY
DATE REVISED

LAST REVISION
DATE PLOTTED => 13-FEB-2014
TIME PLOTTED => 13:40
02-04-13

BORDER LAST REVISED 7/2/2010
USERNAME => s130875
DGN FILE => 0300000223ca003.dgn
RELATIVE BORDER SCALE IS IN INCHES 0 1 2 3
UNIT 0337
PROJECT NUMBER & PHASE 03000002231

Dist	COUNTY	ROUTE	POST MILES TOTAL PROJECT	SHEET No.	TOTAL SHEETS
03	ED	89	8.6/13.8	5	231

Jack R. Cowell Jr. 11-18-13
REGISTERED CIVIL ENGINEER DATE

11-18-13
PLANS APPROVAL DATE

REGISTERED PROFESSIONAL ENGINEER — JACK COWELL — No. 65521 — Exp. 9-30-15 — CIVIL — STATE OF CALIFORNIA

THE STATE OF CALIFORNIA OR ITS OFFICERS OR AGENTS SHALL NOT BE RESPONSIBLE FOR THE ACCURACY OR COMPLETENESS OF SCANNED COPIES OF THIS PLAN SHEET.

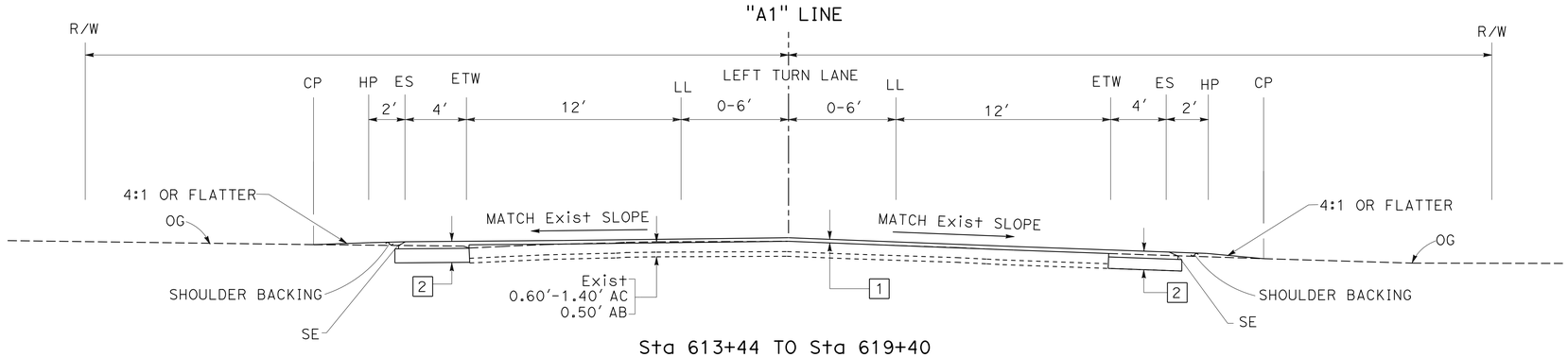

Sta 613+44 TO Sta 619+40

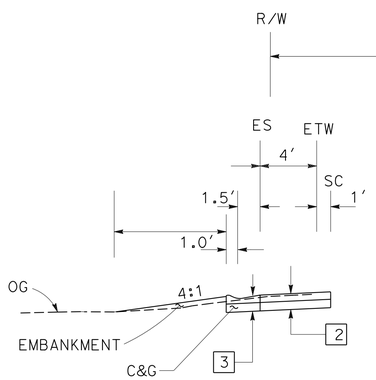

Sta 586+80 TO Sta 587+10

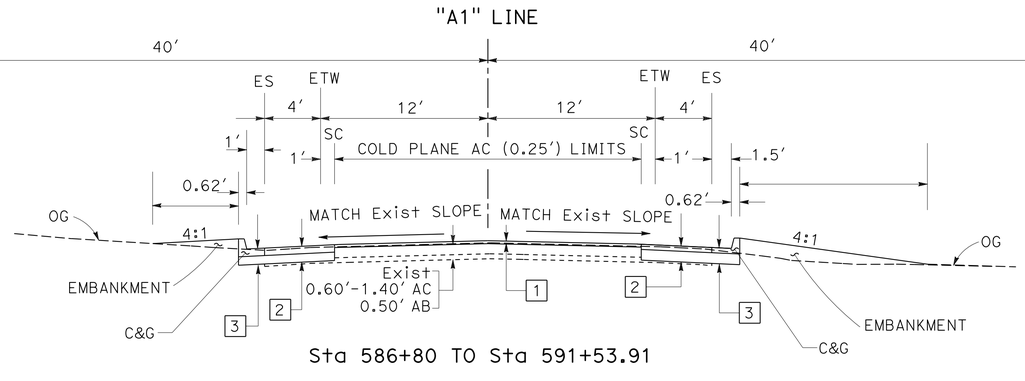

Sta 586+80 TO Sta 591+53.91

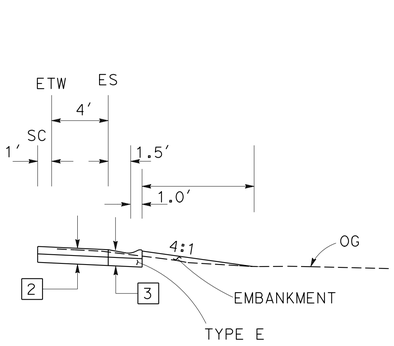

Sta 588+96.6 TO Sta 591+53.91
Sta 586+80 TO Sta 587+10

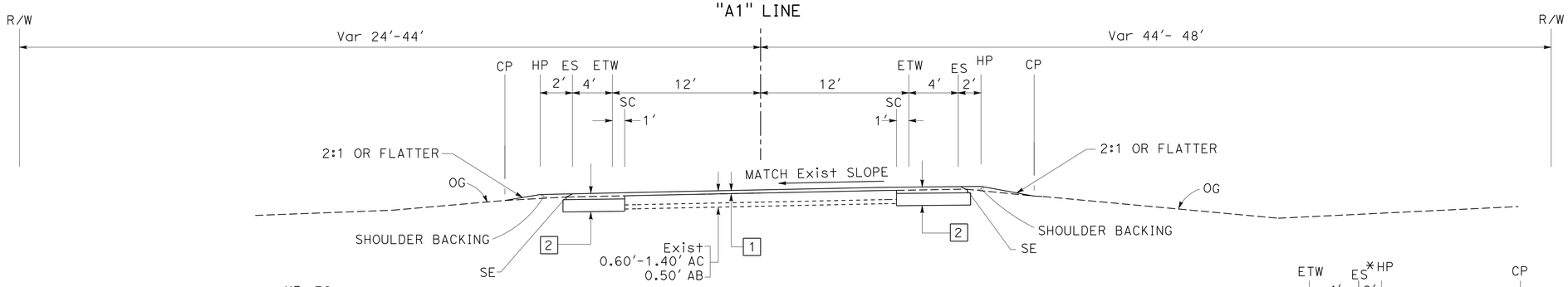

Sta 619+40 TO Sta 627+00
Sta 591+53.91 TO Sta 613+44
Sta 527+89.10 TO Sta 586+80

ROUTE 89

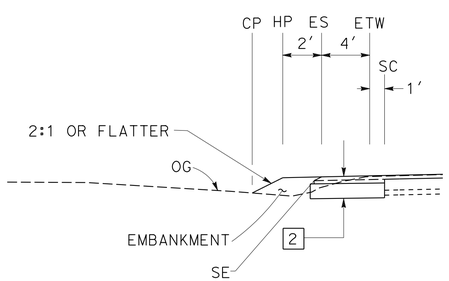

Sta 591+53.91 TO Sta 596+00
Sta 572+25 TO Sta 586+80

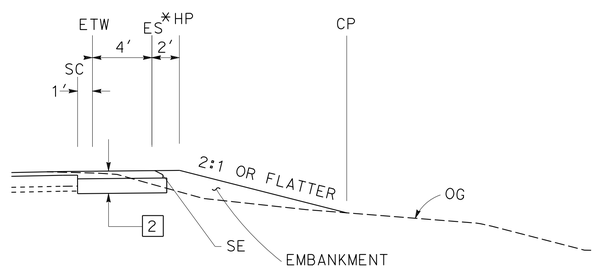

Sta 625+00 TO Sta 627+00
Sta 572+25 TO Sta 586+80
Sta 568+50 TO Sta 570+67
Sta 544+75 TO Sta 548+75

TYPICAL CROSS SECTIONS

NO SCALE

X-4

LAST REVISION 02-04-13 | DATE PLOTTED => 13-FEB-2014 | TIME PLOTTED => 13:40

STATE OF CALIFORNIA - DEPARTMENT OF TRANSPORTATION — DESIGN
FUNCTIONAL SUPERVISOR: MASTRI ALVANDI
CALCULATED-DESIGNED BY: JACK COWELL
CHECKED BY: MASTRI ALVANDI
REVISED BY | DATE REVISED

BORDER LAST REVISED 7/2/2010 | USERNAME => s130875 | DGN FILE => 0300000223ca004.dgn | RELATIVE BORDER SCALE IS IN INCHES 0 1 2 3 | UNIT 0337 | PROJECT NUMBER & PHASE 03000002231

Dist	COUNTY	ROUTE	POST MILES TOTAL PROJECT	SHEET No.	TOTAL SHEETS
03	ED	89	8.6/13.8	6	231

Jack R. Cowell Jr. 11-18-13
REGISTERED CIVIL ENGINEER DATE

11-18-13
PLANS APPROVAL DATE

REGISTERED PROFESSIONAL ENGINEER
JACK COWELL
No. 65521
Exp. 9-30-15
CIVIL
STATE OF CALIFORNIA

THE STATE OF CALIFORNIA OR ITS OFFICERS OR AGENTS SHALL NOT BE RESPONSIBLE FOR THE ACCURACY OR COMPLETENESS OF SCANNED COPIES OF THIS PLAN SHEET.

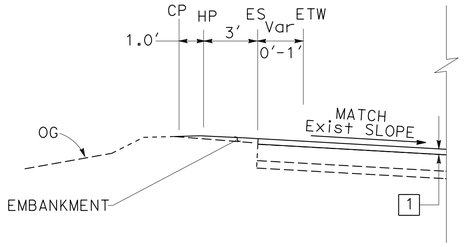

Sta 704+89 TO Sta 707+85

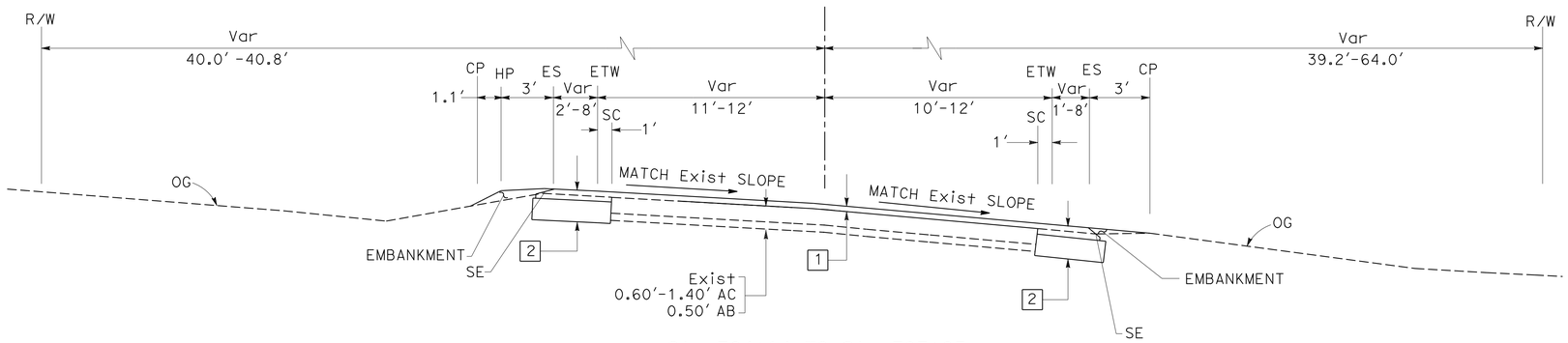

Sta 704+14 TO Sta 707+85

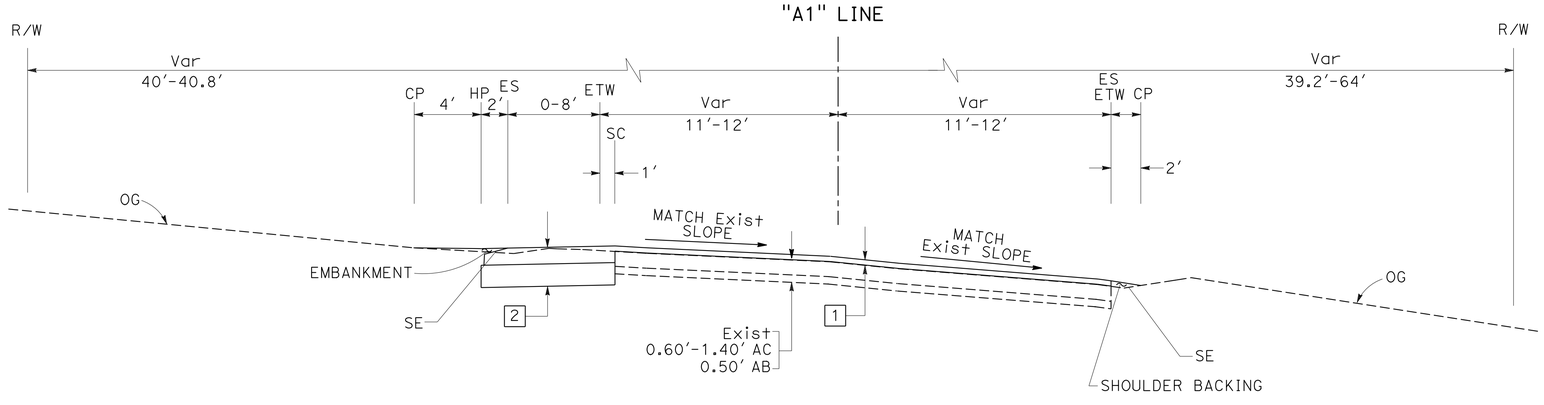

Sta 701+09 TO Sta 704+14

ROUTE 89

TYPICAL CROSS SECTIONS

NO SCALE

X-5

REVISED BY | DATE REVISED
JACK COWELL | MASTRI ALVANDI
CALCULATED-DESIGNED BY | CHECKED BY
FUNCTIONAL SUPERVISOR: MASTRI ALVANDI
STATE OF CALIFORNIA - DEPARTMENT OF TRANSPORTATION
DESIGN
Caltrans®

LAST REVISION 02-04-13 | DATE PLOTTED => 13-FEB-2014 | TIME PLOTTED => 13:40

BORDER LAST REVISED 7/2/2010 | USERNAME => s130875 | DGN FILE => 0300000223ca005.dgn | RELATIVE BORDER SCALE IS IN INCHES 0 1 2 3 | UNIT 0337 | PROJECT NUMBER & PHASE 03000002231

Dist	COUNTY	ROUTE	POST MILES TOTAL PROJECT	SHEET No.	TOTAL SHEETS
03	ED	89	8.6/13.8	7	231

Jack R. Cowell Jr. 11-18-13
REGISTERED CIVIL ENGINEER DATE

11-18-13
PLANS APPROVAL DATE

REGISTERED PROFESSIONAL ENGINEER — JACK COWELL — No. 65521 — Exp. 9-30-15 — CIVIL — STATE OF CALIFORNIA

THE STATE OF CALIFORNIA OR ITS OFFICERS OR AGENTS SHALL NOT BE RESPONSIBLE FOR THE ACCURACY OR COMPLETENESS OF SCANNED COPIES OF THIS PLAN SHEET.

NOTES:

1. FOR ACCURATE RIGHT OF WAY DATA, CONTACT RIGHT OF WAY ENGINEERING AT THE DISTRICT OFFICE.
2. FOR DETAILS OF Conc CURB TO Conc VALLEY GUTTER TRANSITIONS, SEE CONSTRUCTION DETAILS.
3. FOR DETAILS OF PUBLIC ROADWAY AND DRIVEWAY CONFORMS, SEE CONSTRUCTION DETAILS.
4. FOR LOCATIONS OF BEGIN AND END OF HMA AND PCC SIDEWALKS, SEE SUMMARY OF QUANTITIES SHEETS.
5. STATION OFFSETS AT DRIVEWAYS ARE TO THE FLOW LINE.
6. DW # R10 and DW # R32 HAVE BEEN OMITTED.
7. FOR ADDITIONAL INFORMATION FOR RETAINING WALL, SEE CONSTRUCTION DETAILS.
8. FOR LOCATIONS OF ENVIRONMENTALLY SENSITIVE AREAS, SEE DRAINAGE PLANS.
9. FOR HMA-A CONFORM TAPER DETAILS, SEE CONSTRUCTION DETAILS.

CURVE DATA

(1)	3770.00′	14°23′09"	475.79′	946.58′

ABBREVIATIONS:

DW	DRIVEWAY
DW(X)	DRIVEWAY NUMBER (Lt "A1"/Rt "A1")
C(X)	CURB RAMP NUMBER
CC	Conc CURB
CC (E)	Conc CURB (TYPE E, Mod)
CC (A2-8)	Conc CURB (TYPE A2-8, Mod)
CC (A2-6)	Conc CURB (TYPE A2-6, Mod)
CVG	Conc VALLEY GUTTER
CVG-A	Conc VALLEY GUTTER (CASE A)
CVG-B	Conc VALLEY GUTTER (CASE B)
CVG-C	Conc VALLEY GUTTER (CASE C)
CVG-D	Conc VALLEY GUTTER (CASE D)
CVG-E	Conc VALLEY GUTTER (CASE E)
PTE	PERMIT TO ENTER
RP	RADIUS POINT
MC	MIDDLE OF CURVE

LEGEND:

- TCE
- SAWCUT
- HMA-A CONFORM TAPER
- REMOVE AC Pavement
- SIDEWALK
- MVP, INTERSECTION WIDENING
- WIDENING
- REMOVE BASE AND SURFACING
- TFESA — TEMPORARY FENCE (TYPE ESA)
- HIGHWAY EASEMENT

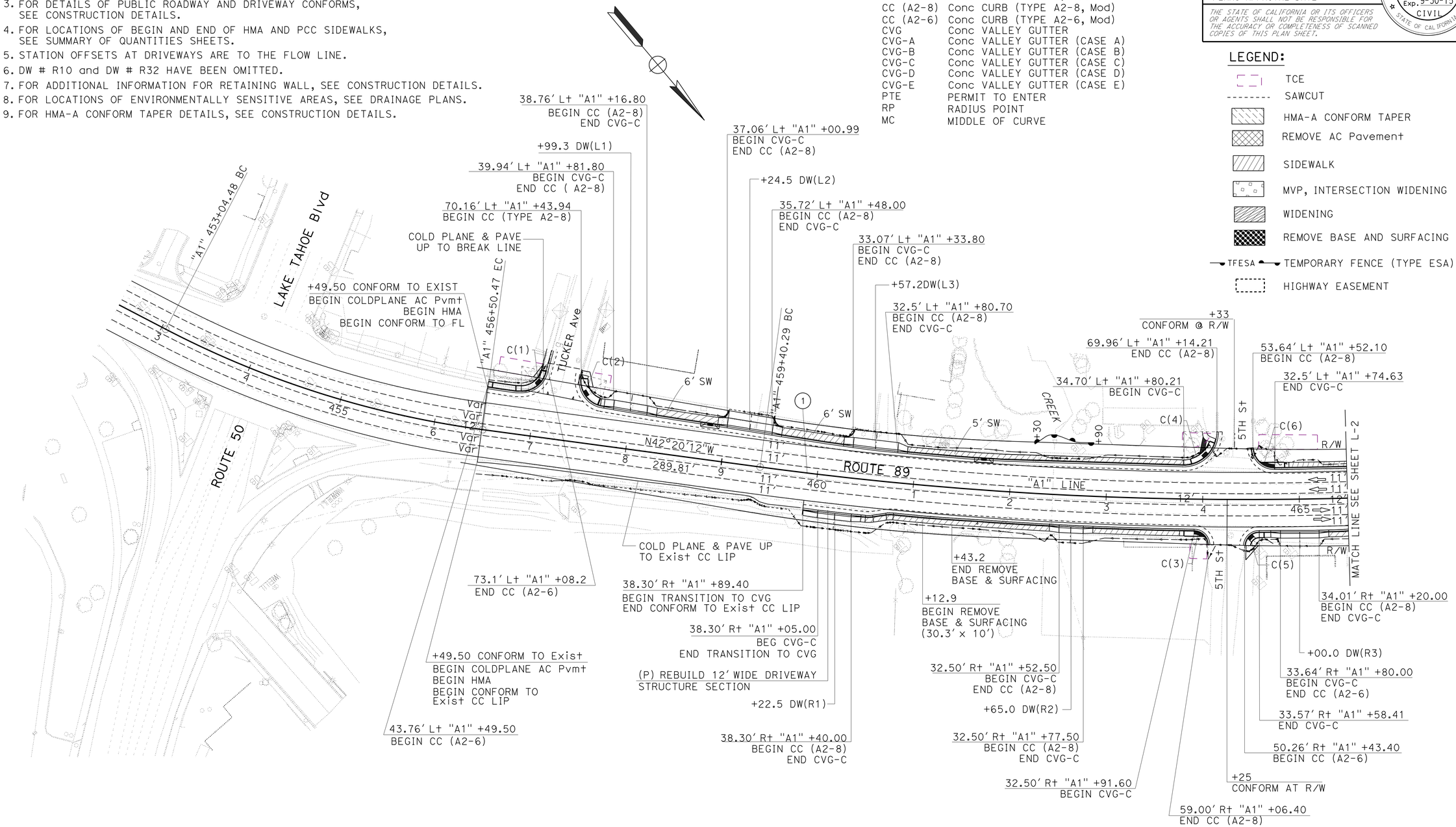

LAYOUT

SCALE: 1" = 50′

L-1

STATE OF CALIFORNIA - DEPARTMENT OF TRANSPORTATION
DESIGN
Caltrans®

FUNCTIONAL SUPERVISOR: MASTRI ALVANDI
CALCULATED-DESIGNED BY: JACK COWELL
CHECKED BY: MASTRI ALVANDI
REVISED BY | DATE REVISED

LAST REVISION | DATE PLOTTED => 13-FEB-2014 | 02-04-13 | TIME PLOTTED => 13:40

BORDER LAST REVISED 7/2/2010 | USERNAME => s130875 | DGN FILE => 0300000223ea001.dgn | RELATIVE BORDER SCALE IS IN INCHES 0 1 2 3 | UNIT 0337 | PROJECT NUMBER & PHASE 03000002231

NOTE:

FOR ACCURATE RIGHT OF WAY DATA, CONTACT RIGHT OF WAY ENGINEERING AT THE DISTRICT OFFICE.

Dist	COUNTY	ROUTE	POST MILES TOTAL PROJECT	SHEET No.	TOTAL SHEETS
03	ED	89	8.6/13.8	8	231

Jack R. Cowell Jr. 11-18-13
REGISTERED CIVIL ENGINEER DATE

11-18-13
PLANS APPROVAL DATE

REGISTERED PROFESSIONAL ENGINEER — JACK COWELL — No. 65521 — Exp. 9-30-15 — CIVIL — STATE OF CALIFORNIA

THE STATE OF CALIFORNIA OR ITS OFFICERS OR AGENTS SHALL NOT BE RESPONSIBLE FOR THE ACCURACY OR COMPLETENESS OF SCANNED COPIES OF THIS PLAN SHEET.

32.50' Lt "A1" +86.68
BEGIN CVG
END CC (A2-8)

32.50' Lt "A1" +96.20
BEGIN CC (A2-8)
END CVG

+86.9 DW(L5)

32.50' Lt "A1" +77.70
BEGIN CVG
END CC (A2-8)

32.50' Lt "A1" +05.30
BEGIN CC (A2-8)
END CVG

+96.5 DW(L4)

32.50' Lt "A1" +87.80
BEGIN CVG
END CC (A2-8)

39.30' Lt "A1" +88.63
END REMOVE SIDEWALK

32.50' Lt "A1" +88.80
BEGIN CC (A2-8)
END CVG
BEGIN REMOVE SIDEWALK

+76.3 DW(L7)

32.50' Lt "A1" +63.80
BEGIN CVG
END CC (A2-8)

+93.7
DW(L6)

32.50' Lt "A1" +00.70
BEGIN CC (A2-8)
END CVG

32.50' Lt "A1" +02.50
BEGIN CVG-E
END CC (A2-8)

+22.54 DW(L8)

32.50' Lt "A1" +42.54
BEGIN CC (E)
END CVG-E

32.50' Lt "A1" +02.63
BEGIN CC (A2-6)
END CC(E)

32.50' Lt "A1" +59.40
BEGIN CC (E)
END CVG-E

32.50' Lt "A1" +81.00
BEGIN CVG-E
END CC (E)

+46.9 DW(L11)

+89.0 DW(L9)

32.50' Lt "A1" +34.40
BEGIN CVG-E
END CC (E)

32.50' Lt "A1" +97.0
BEGIN CC (E)
END CVG-E

32.50' Lt "A1" +85.50
BEGIN CVG-E
END CC (E)

+95.0 DW(L10)

32.50' Lt "A1" +04.50
BEGIN CC (E)
END CVG-E

49.75' Lt "A1" +23.27
END CC (A2-6)

CONFORM @ R/W

48.72' Lt "A1" +52.94
BEGIN CC (A2-6)
BEGIN REMOVE Exist CC

32.5' Lt "A1" +87.58
BEGIN CC (E)
END CC (A2-6)

32.50' Lt "A1" +24.70
BEGIN CVG-D
END CC (E)

+37.2 DW(L12)

32.50' Lt "A1" +49.70
BEGIN CC (E)
END CVG-D

32.50' Lt "A1" +50.0
BEGIN CVG-D
END CC (E)

+37.5

8TH St

C(9)

C(10)

MATCH LINE SEE SHEET L-1

MATCH LINE SEE SHEET L-3

R/W

ROUTE 89

"A1" LINE

"A1" 468+86.87 EC

N56°43'22"W

961.99'

470

475

7TH St

C(7)

C(8)

+80

+24

5' SW

4.5' SW

4' SW

PTE

33.03' Rt "A1" +64.00
BEGIN CVG
END CC (A2-8)

+79.0
DW(R4)

32.92' Rt "A1" +94.00
BEGIN CC (A2-8)
END CVG

32.50' Rt "A1" +73.00
BEGIN CVG
END CC (A2-8)

+83 DW(R5)

32.50' Rt "A1" +93.00
BEGIN CC (A2-8)
END CVG

32.50' Rt "A1" +25.50
BEGIN CVG
END CC (A2-8)

+35.5 DW(R6)

32.50' Rt "A1" +45.50
BEGIN CC (A2-8)
END CVG

32.50' Rt "A1" +93.00
BEGIN CVG
END CC (A2-8)

+05.5 DW(R7)

32.50' Rt "A1" +18.00
BEGIN CC (A2-8)
END CVG

32.50' Rt "A1" +40.50
BEGIN CVG
END CC (A2-8)

+53.0 DW(R8)

32.50' Rt "A1" +65.50
BEGIN CC (A2-8)
END CVG

32.50' Rt "A1" +93.00
BEGIN CVG-E
END CC (A2-8)

+09.0 DW(R9)

32.50' Rt "A1" +25.00
BEGIN CC (E)
END CVG-E

32.50' Rt "A1" +72.94
BEGIN CC (E)
END CVG-E

+60.4 DW(R11)

32.50' Rt "A1" +47.94
BEGIN CVG-E
END CC (E)

32.50' Rt "A1" +28.16
BEGIN CVG-E
END CC (E)

+42.16 DW(R12)

32.50' Rt "A1" +56.16
BEGIN CC (A2-6)
END CVG-E

64.82' Rt "A1" +90.57
END CC (A2-6)

+04.04
CONFORM @ R/W

61.23' Rt "A1" +16.74
BEGIN CC (A2-6)

32.50' Rt "A1" +63.00
BEGIN CVG-C
END CC (A2-6)

+91.00 DW(R13)

32.50' Rt "A1" +19.0
BEGIN CC (A2-6)
END CVG-C

32.50' Rt "A1" +84.58
BEGIN TRANSITION TO 4' SIDEWALK

32.50' Rt "A1" +95.00
END TRANSITION TO 4' SIDEWALK
BEGIN 4' SIDEWALK

32.50' Rt "A1" +40.00
BEGIN CVG-B
END CC (A2-6)

+50.50 DW R14

32.50' Rt "A1" +65.00
BEGIN CC (A2-6)
END CVG-B

(SEE NOTE 7)
RETAINING WALL
(TYPE 1A)
CABLE RAILING

32.50' Rt "A1" +00.00
END 4' SIDEWALK
BEGIN TRANSITION TO 5' SIDEWALK

32.50' Rt "A1" +10.42
END TRANSITION TO 5' SIDEWALK
BEGIN 5' SIDEWALK

LAYOUT

SCALE: 1" = 50'

L-2

CALCULATED- DESIGNED BY
CHECKED BY
REVISED BY
DATE REVISED
JACK COWELL
MASTRI ALVANDI
FUNCTIONAL SUPERVISOR
MASTRI ALVANDI
STATE OF CALIFORNIA - DEPARTMENT OF TRANSPORTATION
DESIGN
Caltrans

LAST REVISION: 02-04-13
DATE PLOTTED => 13-FEB-2014
TIME PLOTTED => 13:41

BORDER LAST REVISED 7/2/2010
USERNAME => s130875
DGN FILE => 0300000223ea002.dgn
RELATIVE BORDER SCALE IS IN INCHES 0 1 2 3
UNIT 0337
PROJECT NUMBER & PHASE 03000002231

NOTE:

FOR ACCURATE RIGHT OF WAY DATA, CONTACT RIGHT OF WAY ENGINEERING AT THE DISTRICT OFFICE.

CURVE DATA

No. ⑪	R	Δ	T	L
2	1700.00′	10°58′35.96"	163.34′	325.68′
3	1000.00′	28°4′2.04"	249.95′	489.87′

Dist	COUNTY	ROUTE	POST MILES TOTAL PROJECT	SHEET No.	TOTAL SHEETS
03	ED	89	8.6/13.8	9	231

Jack R. Cowell Jr. 11-18-13
REGISTERED CIVIL ENGINEER DATE

11-18-13
PLANS APPROVAL DATE

REGISTERED PROFESSIONAL ENGINEER — JACK COWELL — No. 65521 — Exp. 9-30-15 — CIVIL — STATE OF CALIFORNIA

THE STATE OF CALIFORNIA OR ITS OFFICERS OR AGENTS SHALL NOT BE RESPONSIBLE FOR THE ACCURACY OR COMPLETENESS OF SCANNED COPIES OF THIS PLAN SHEET.

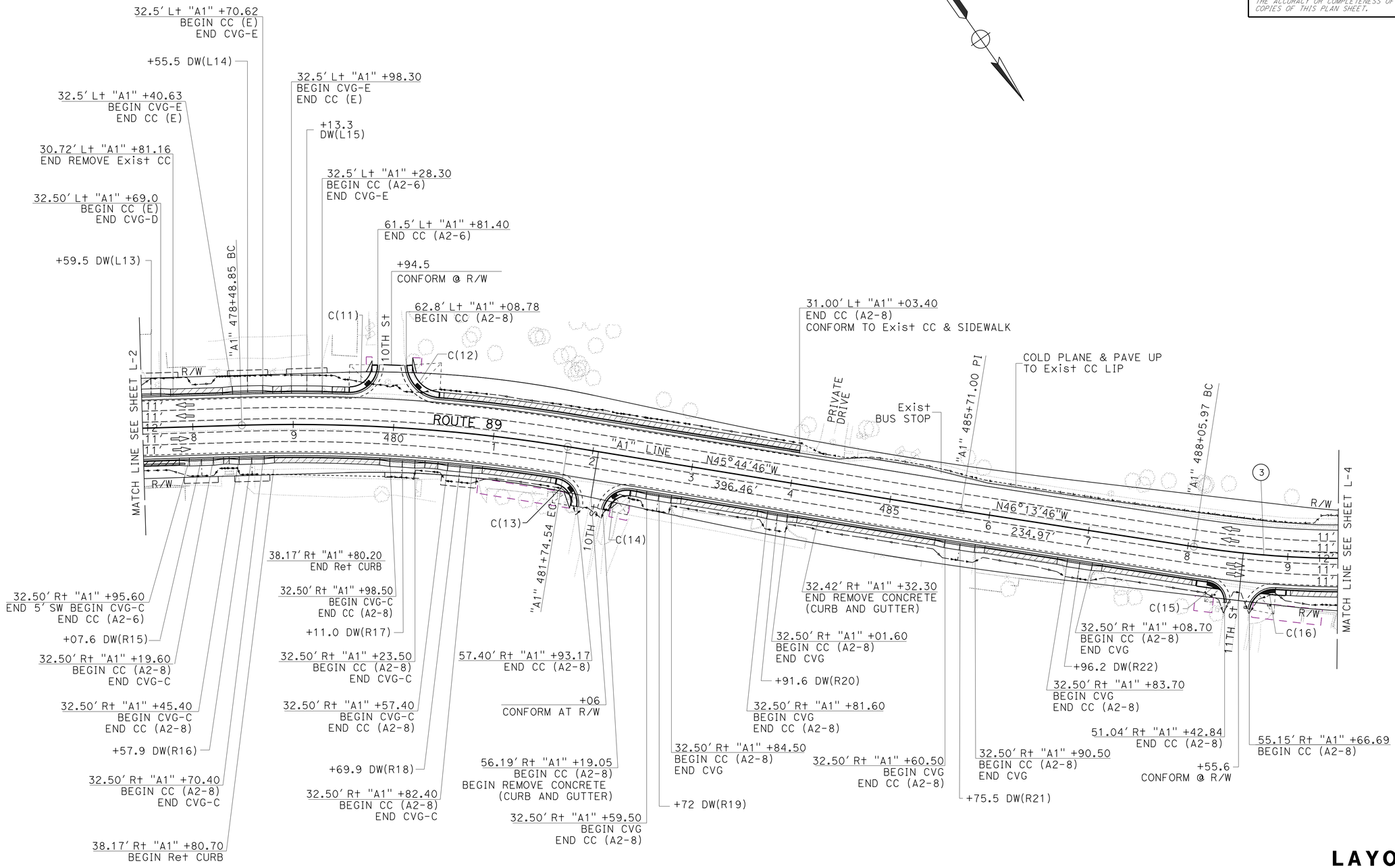

LAYOUT

SCALE: 1" = 50′

L-3

CALCULATED-DESIGNED BY
CHECKED BY
JACK COWELL
MASTRI ALVANDI
REVISED BY
DATE REVISED
FUNCTIONAL SUPERVISOR
MASTRI ALVANDI
STATE OF CALIFORNIA - DEPARTMENT OF TRANSPORTATION
DESIGN
Caltrans

LAST REVISION 02-04-13
DATE PLOTTED => 13-FEB-2014
TIME PLOTTED => 13:41

BORDER LAST REVISED 7/2/2010
USERNAME => s130875
DGN FILE => 0300000223ea003.dgn
RELATIVE BORDER SCALE IS IN INCHES 0 1 2 3
UNIT 0337
PROJECT NUMBER & PHASE 03000002231

Dist	COUNTY	ROUTE	POST MILES TOTAL PROJECT	SHEET No.	TOTAL SHEETS
03	ED	89	8.6/13.8	10	231

Jack R. Cowell Jr. 11-18-13
REGISTERED CIVIL ENGINEER DATE

11-18-13
PLANS APPROVAL DATE

JACK COWELL No. 65521 Exp. 9-30-15 CIVIL — REGISTERED PROFESSIONAL ENGINEER — STATE OF CALIFORNIA

THE STATE OF CALIFORNIA OR ITS OFFICERS OR AGENTS SHALL NOT BE RESPONSIBLE FOR THE ACCURACY OR COMPLETENESS OF SCANNED COPIES OF THIS PLAN SHEET.

NOTE:

FOR ACCURATE RIGHT OF WAY DATA, CONTACT RIGHT OF WAY ENGINEERING AT THE DISTRICT OFFICE.

CURVE DATA

No. Ⓗ	R	Δ	T	L
3	1000.00′	28°4′2.04"	249.95′	489.87′
4	3500.00′	2°28′50.71"	75.78′	151.54′

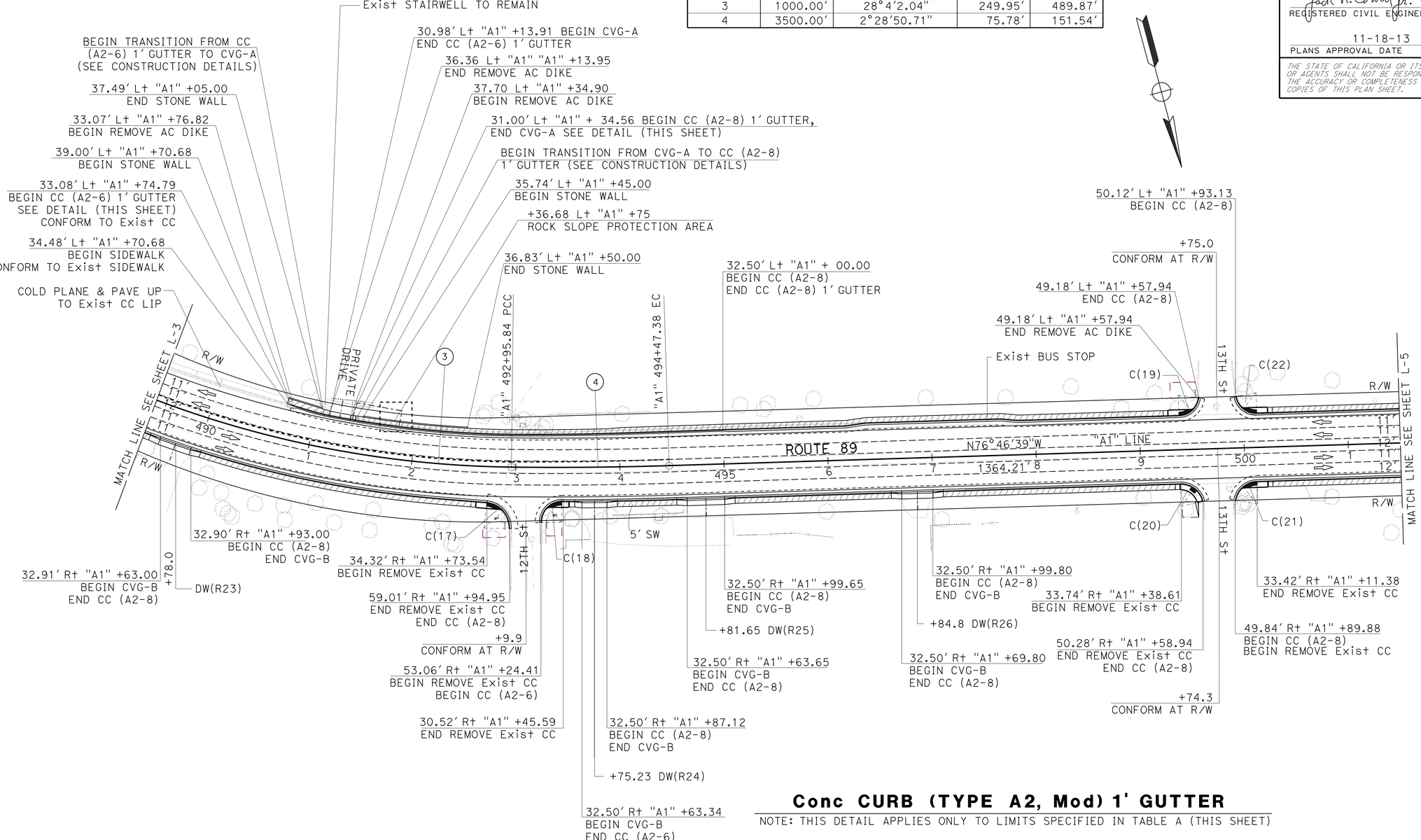

TABLE A

SHEET #	CURB WITH 1′ GUTTER	STATION TO STATION	DIMENSIONS			
			"H1"	"H2"	"W1"	"W2"
L-4	A2-6 1′ GUTTER	"A1" 490+29.61 TO 491+13.91 Lt	1′-0"	6"	1′-7 1/2"	1 1/2"
L-4	A2-8 1′ GUTTER	"A1" 491+34.56 TO 495+00.00 Lt	1′-2"	8"	1′-8"	2"
L-11	A2-6 1′ GUTTER	"A1" 587+09.00 TO 588+62.92 Rt	1′-0"	6"	1′-7 1/2"	1 1/2"
L-11	A2-6 1′ GUTTER	"A1" 587+12.00 TO 590+69.31 Lt	1′-0"	6"	1′-7 1/2"	1 1/2"

Conc CURB (TYPE A2, Mod) 1' GUTTER

NOTE: THIS DETAIL APPLIES ONLY TO LIMITS SPECIFIED IN TABLE A (THIS SHEET)

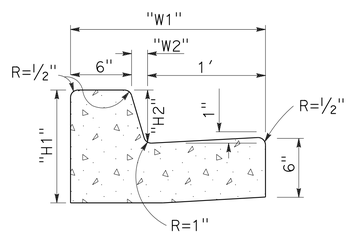

LAYOUT

SCALE: 1" = 50′

L-4

CALCULATED-DESIGNED BY: JACK COWELL
CHECKED BY: MASTRI ALVANDI
FUNCTIONAL SUPERVISOR: MASTRI ALVANDI
STATE OF CALIFORNIA - DEPARTMENT OF TRANSPORTATION — DESIGN

REVISED BY | DATE REVISED

LAST REVISION: DATE PLOTTED => 13-FEB-2014 TIME PLOTTED => 13:41
02-04-13

NOTE:

FOR ACCURATE RIGHT OF WAY DATA, CONTACT RIGHT OF WAY ENGINEERING AT THE DISTRICT OFFICE.

CURVE DATA

No. Ⓗ	R	Δ	T	L
5	5000.00′	3°8′45.33"	137.30′	274.53′

Dist	COUNTY	ROUTE	POST MILES TOTAL PROJECT	SHEET No.	TOTAL SHEETS
03	ED	89	8.6/13.8	11	231

Jack R. Cowell Jr. 11-18-13
REGISTERED CIVIL ENGINEER DATE

11-18-13
PLANS APPROVAL DATE

REGISTERED PROFESSIONAL ENGINEER — JACK COWELL — No. 65521 — Exp. 9-30-15 — CIVIL — STATE OF CALIFORNIA

THE STATE OF CALIFORNIA OR ITS OFFICERS OR AGENTS SHALL NOT BE RESPONSIBLE FOR THE ACCURACY OR COMPLETENESS OF SCANNED COPIES OF THIS PLAN SHEET.

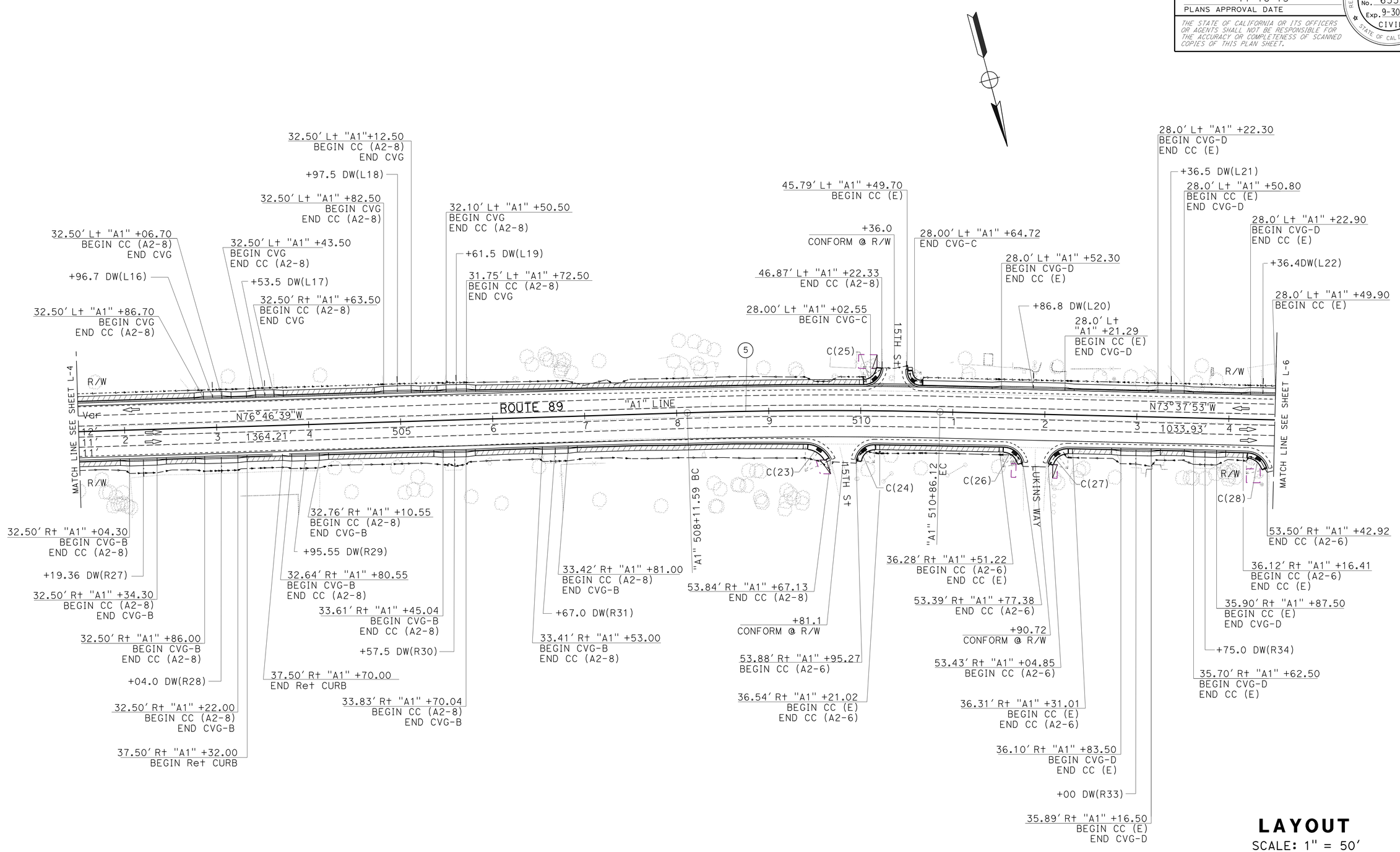

LAYOUT

SCALE: 1" = 50′

L-5

CALCULATED-DESIGNED BY
CHECKED BY
REVISED BY
DATE REVISED
JACK COWELL
MASTRI ALVANDI
FUNCTIONAL SUPERVISOR
MASTRI ALVANDI
STATE OF CALIFORNIA - DEPARTMENT OF TRANSPORTATION
DESIGN
Caltrans

LAST REVISION DATE PLOTTED => 13-FEB-2014
02-04-13 TIME PLOTTED => 13:41

BORDER LAST REVISED 7/2/2010 | USERNAME => s130875 | DGN FILE => 0300000223ea005.dgn | RELATIVE BORDER SCALE IS IN INCHES 0 1 2 3 | UNIT 0337 | PROJECT NUMBER & PHASE 03000002231

Dist	COUNTY	ROUTE	POST MILES TOTAL PROJECT	SHEET No.	TOTAL SHEETS
03	ED	89	8.6/13.8	12	231

Jack R. Cowell Jr. 11-18-13
REGISTERED CIVIL ENGINEER DATE

11-18-13
PLANS APPROVAL DATE

REGISTERED PROFESSIONAL ENGINEER — JACK COWELL — No. 65521 — Exp. 9-30-15 — CIVIL — STATE OF CALIFORNIA

THE STATE OF CALIFORNIA OR ITS OFFICERS OR AGENTS SHALL NOT BE RESPONSIBLE FOR THE ACCURACY OR COMPLETENESS OF SCANNED COPIES OF THIS PLAN SHEET.

NOTE:

FOR ACCURATE RIGHT OF WAY DATA, CONTACT RIGHT OF WAY ENGINEERING AT THE DISTRICT OFFICE.

CURVE DATA

No. ⑥	R	Δ	T	L
6	1200.00′	24°24′59.87"	259.63′	511.38′

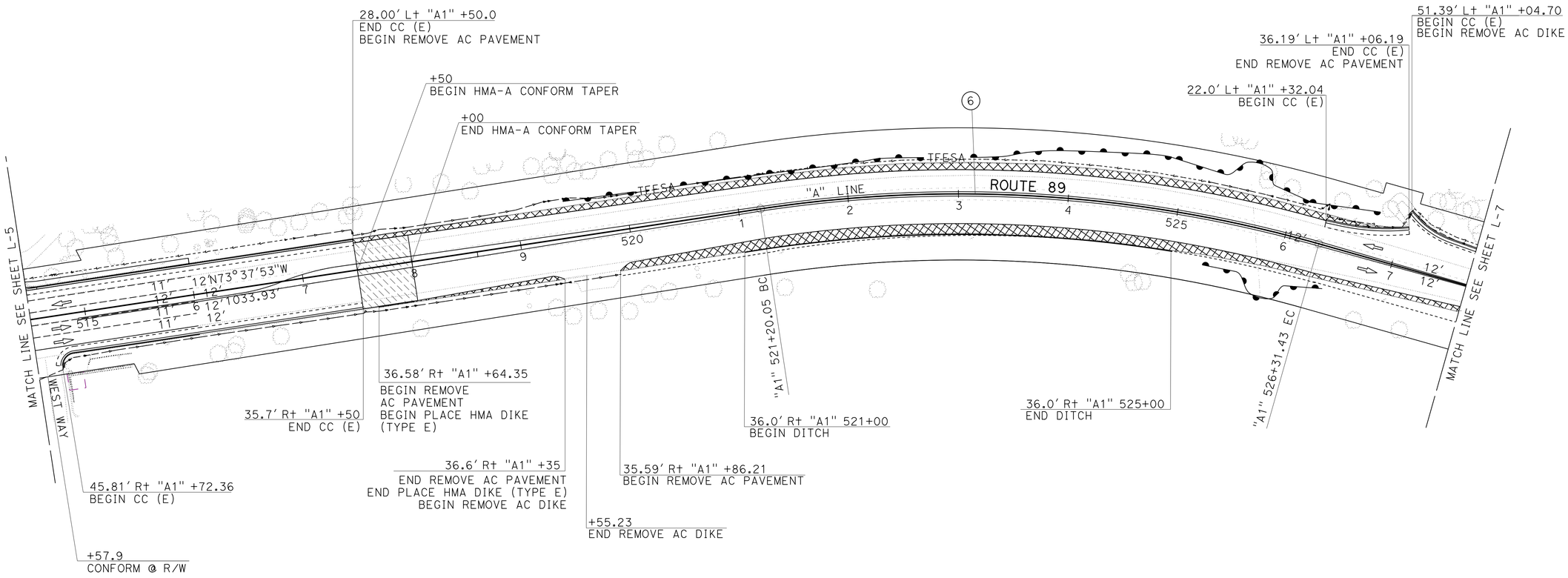

LAYOUT

SCALE: 1" = 50′

L-6

LAST REVISION 02-04-13 | DATE PLOTTED => 13-FEB-2014 | TIME PLOTTED => 13:41

REVISED BY	DATE REVISED

CALCULATED-DESIGNED BY: JACK COWELL
CHECKED BY: MASTRI ALVANDI
FUNCTIONAL SUPERVISOR: MASTRI ALVANDI

STATE OF CALIFORNIA - DEPARTMENT OF TRANSPORTATION
DESIGN
Caltrans

NOTE:

FOR ACCURATE RIGHT OF WAY DATA, CONTACT RIGHT OF WAY ENGINEERING AT THE DISTRICT OFFICE.

CURVE DATA

No. Ⓗ	R	Δ	T	L
7	8000.00′	1°45′40.81"	122.97′	245.93′
8	1450.00′	9°44′40.75"	123.60′	246.61′

Dist	COUNTY	ROUTE	POST MILES TOTAL PROJECT	SHEET No.	TOTAL SHEETS
03	ED	89	8.6/13.8	13	231

Jack R. Cowell Jr. 11-18-13
REGISTERED CIVIL ENGINEER DATE

11-18-13
PLANS APPROVAL DATE

REGISTERED PROFESSIONAL ENGINEER — JACK COWELL — No. 65521 — Exp. 9-30-15 — CIVIL — STATE OF CALIFORNIA

THE STATE OF CALIFORNIA OR ITS OFFICERS OR AGENTS SHALL NOT BE RESPONSIBLE FOR THE ACCURACY OR COMPLETENESS OF SCANNED COPIES OF THIS PLAN SHEET.

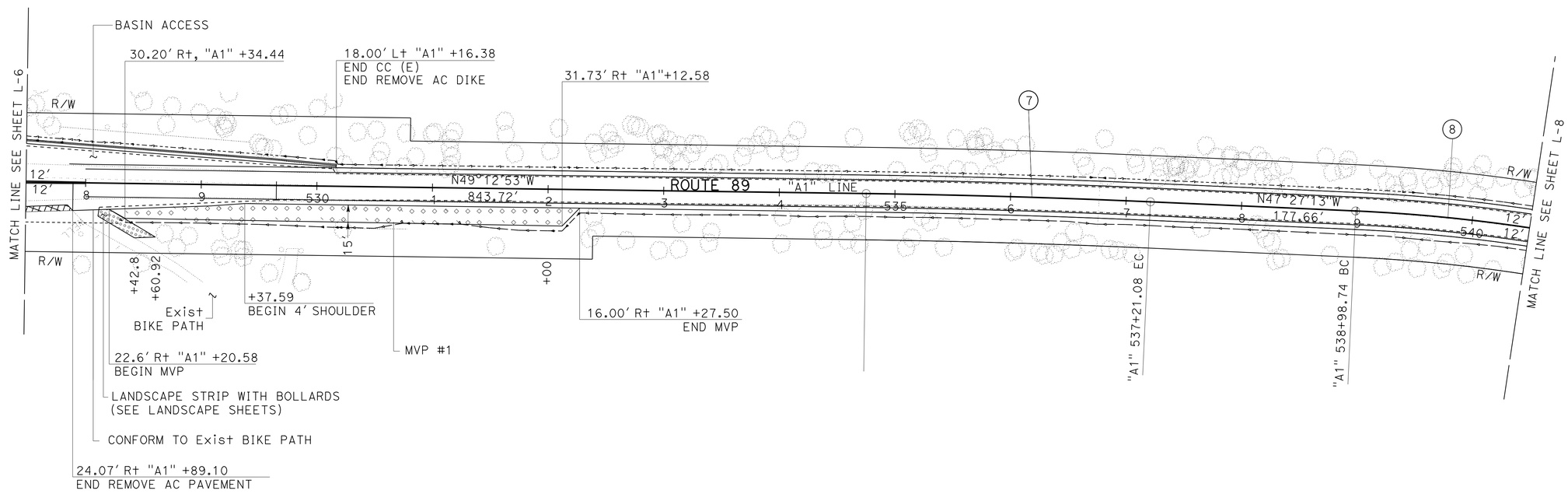

LAYOUT

SCALE: 1" = 50′

L-7

REVISED BY	DATE REVISED

CALCULATED-DESIGNED BY: JACK COWELL
CHECKED BY: MASTRI ALVANDI
FUNCTIONAL SUPERVISOR: MASTRI ALVANDI

STATE OF CALIFORNIA - DEPARTMENT OF TRANSPORTATION
Caltrans®
DESIGN

LAST REVISION: DATE PLOTTED => 13-FEB-2014
02-04-13 TIME PLOTTED => 13:41

BORDER LAST REVISED 7/2/2010

USERNAME => s130875
DGN FILE => 0300000223ea007.dgn

RELATIVE BORDER SCALE IS IN INCHES 0 1 2 3

UNIT 0337

PROJECT NUMBER & PHASE 03000002231

NOTE:

FOR ACCURATE RIGHT OF WAY DATA, CONTACT RIGHT OF WAY ENGINEERING AT THE DISTRICT OFFICE.

CURVE DATA

No. Ⓡ	R	Δ	T	L
8	1450.00′	9°44′40.75"	123.60′	246.61′
9	835.00′	31°4′29.00"	232.15′	452.87′
10	6000.00′	2°26′49.37"	128.15′	256.25′

Dist	COUNTY	ROUTE	POST MILES TOTAL PROJECT	SHEET No.	TOTAL SHEETS
03	ED	89	8.6/13.8	14	231

Jack R. Cowell Jr. 11-18-13
REGISTERED CIVIL ENGINEER DATE

11-18-13
PLANS APPROVAL DATE

REGISTERED PROFESSIONAL ENGINEER — JACK COWELL — No. 65521 — Exp. 9-30-15 — CIVIL — STATE OF CALIFORNIA

THE STATE OF CALIFORNIA OR ITS OFFICERS OR AGENTS SHALL NOT BE RESPONSIBLE FOR THE ACCURACY OR COMPLETENESS OF SCANNED COPIES OF THIS PLAN SHEET.

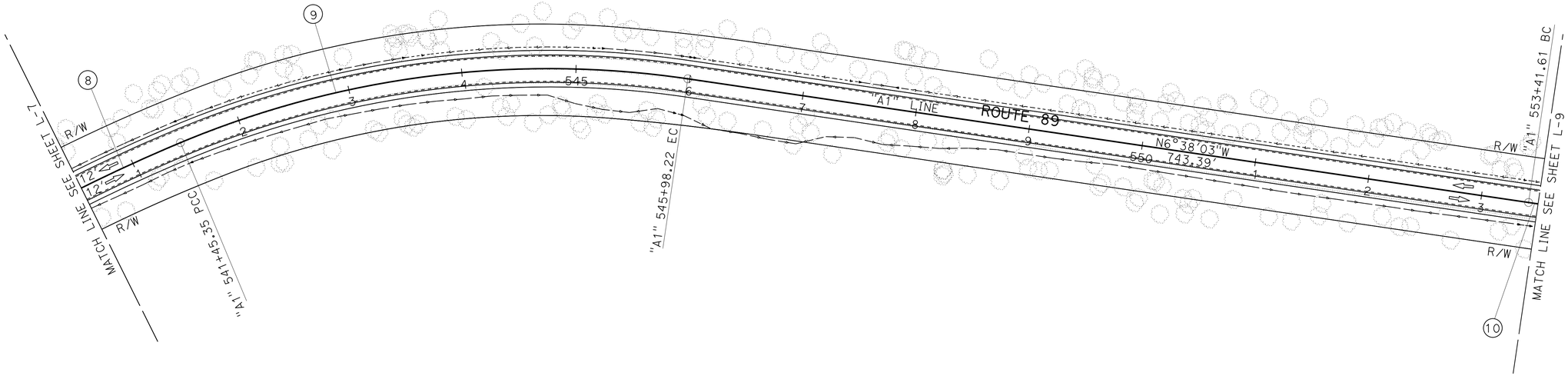

LAYOUT
SCALE: 1" = 50′

L-8

LAST REVISION | DATE PLOTTED => 13-FEB-2014
02-04-13 | TIME PLOTTED => 13:41

REVISED BY	DATE REVISED

CALCULATED-DESIGNED BY: JACK COWELL
CHECKED BY: MASTRI ALVANDI
FUNCTIONAL SUPERVISOR: MASTRI ALVANDI

STATE OF CALIFORNIA - DEPARTMENT OF TRANSPORTATION
Caltrans®
DESIGN

BORDER LAST REVISED 7/2/2010 | USERNAME => s130875 | DGN FILE => 0300000223ea008.dgn | RELATIVE BORDER SCALE IS IN INCHES 0 1 2 3 | UNIT 0337 | PROJECT NUMBER & PHASE 03000002231

Dist	COUNTY	ROUTE	POST MILES TOTAL PROJECT	SHEET No.	TOTAL SHEETS
03	ED	89	8.6/13.8	15	231

Jack R. Cowell Jr. 11-18-13
REGISTERED CIVIL ENGINEER DATE

11-18-13
PLANS APPROVAL DATE

REGISTERED PROFESSIONAL ENGINEER
JACK COWELL
No. 65521
Exp. 9-30-15
CIVIL
STATE OF CALIFORNIA

THE STATE OF CALIFORNIA OR ITS OFFICERS OR AGENTS SHALL NOT BE RESPONSIBLE FOR THE ACCURACY OR COMPLETENESS OF SCANNED COPIES OF THIS PLAN SHEET.

CURVE DATA

No. ⑪	R	Δ	T	L
10	6000.00′	2°26′49.37"	128.15′	256.25′
11	640.00′	37°6′2.47"	214.77′	414.42′

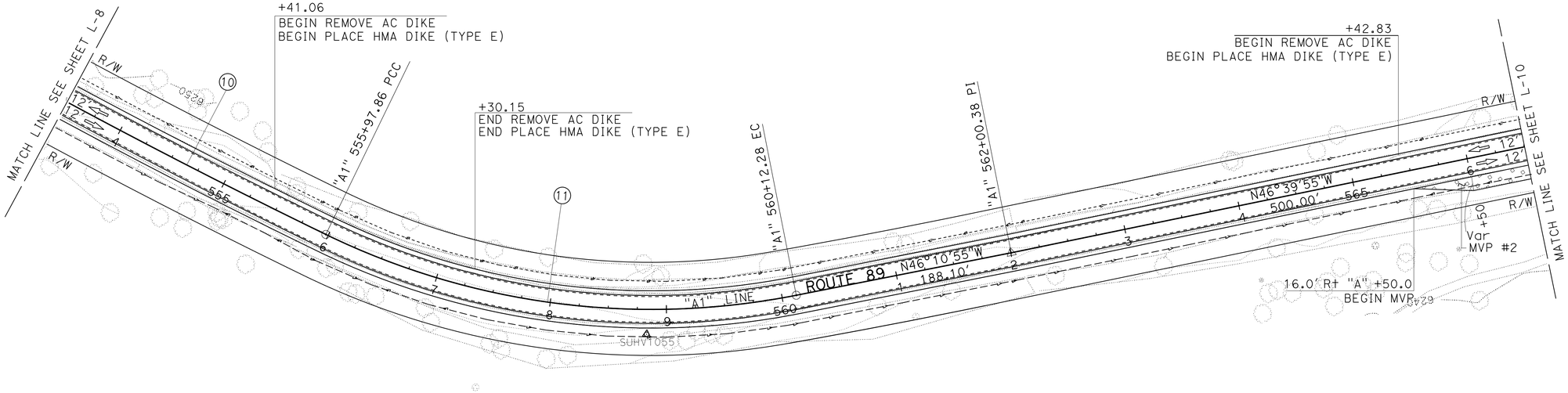

LAYOUT

SCALE: 1" = 50′

L-9

STATE OF CALIFORNIA - DEPARTMENT OF TRANSPORTATION
DESIGN
Caltrans
FUNCTIONAL SUPERVISOR: MASTRI ALVANDI
CALCULATED-DESIGNED BY: JACK COWELL
CHECKED BY: MASTRI ALVANDI
REVISED BY | DATE REVISED

LAST REVISION | DATE PLOTTED => 13-FEB-2014 | 02-04-13 | TIME PLOTTED => 13:41

BORDER LAST REVISED 7/2/2010 | USERNAME => s130875 | DGN FILE => 0300000223ea009.dgn | RELATIVE BORDER SCALE IS IN INCHES 0 1 2 3 | UNIT 0337 | PROJECT NUMBER & PHASE 03000002231

Dist	COUNTY	ROUTE	POST MILES TOTAL PROJECT	SHEET No.	TOTAL SHEETS
03	ED	89	8.6/13.8	16	231

Jack R. Cowell Jr. 11-18-13
REGISTERED CIVIL ENGINEER DATE

11-18-13
PLANS APPROVAL DATE

REGISTERED PROFESSIONAL ENGINEER
JACK COWELL
No. 65521
Exp. 9-30-15
CIVIL
STATE OF CALIFORNIA

THE STATE OF CALIFORNIA OR ITS OFFICERS OR AGENTS SHALL NOT BE RESPONSIBLE FOR THE ACCURACY OR COMPLETENESS OF SCANNED COPIES OF THIS PLAN SHEET.

NOTE:

FOR ACCURATE RIGHT OF WAY DATA, CONTACT RIGHT OF WAY ENGINEERING AT THE DISTRICT OFFICE.

CURVE DATA

No. ⑪	R	Δ	T	L
12	620.00′	32°7′38.26"	178.53′	347.65′
13	3200.00′	4°25′59.85"	123.86′	247.60′
14	5000.00′	2°8′27.01"	93.42′	186.82′
15	1800.00′	7°47′54.51"	122.69′	245.00′

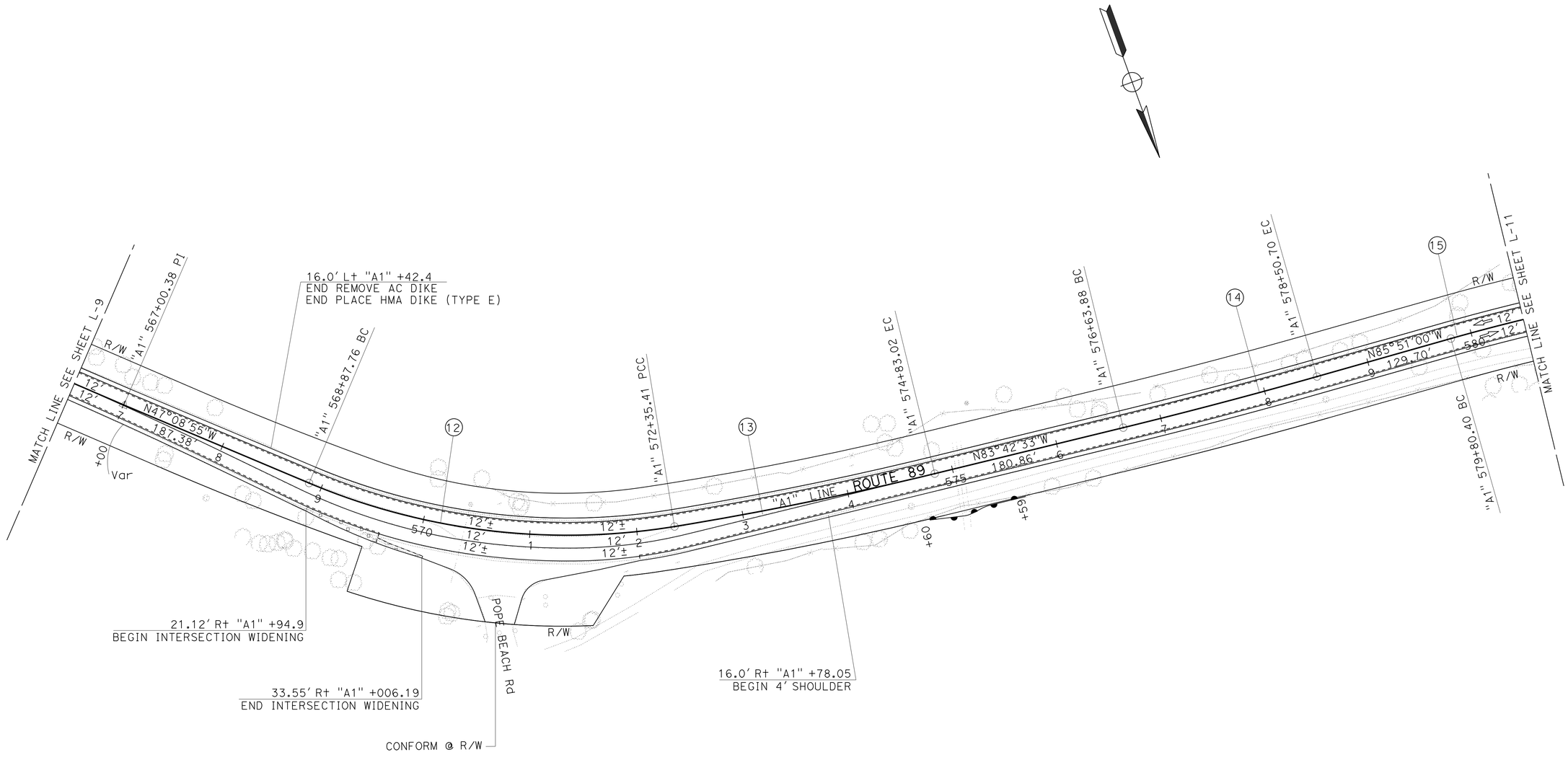

LAYOUT

SCALE: 1" = 50′

L-10

STATE OF CALIFORNIA - DEPARTMENT OF TRANSPORTATION
DESIGN

FUNCTIONAL SUPERVISOR: MASTRI ALVANDI

CALCULATED-DESIGNED BY: JACK COWELL
CHECKED BY: MASTRI ALVANDI
REVISED BY
DATE REVISED

LAST REVISION
DATE PLOTTED => 13-FEB-2014
02-04-13 TIME PLOTTED => 13:41

BORDER LAST REVISED 7/2/2010

USERNAME => s130875
DGN FILE => 0300000223ea010.dgn

RELATIVE BORDER SCALE IS IN INCHES 0 1 2 3

UNIT 0337

PROJECT NUMBER & PHASE 03000002231

Dist	COUNTY	ROUTE	POST MILES TOTAL PROJECT	SHEET No.	TOTAL SHEETS
03	ED	89	8.6/13.8	17	231

Jack R. Cowell Jr. 11-18-13
REGISTERED CIVIL ENGINEER DATE

11-18-13
PLANS APPROVAL DATE

REGISTERED PROFESSIONAL ENGINEER — JACK COWELL — No. 65521 — Exp. 9-30-15 — CIVIL — STATE OF CALIFORNIA

THE STATE OF CALIFORNIA OR ITS OFFICERS OR AGENTS SHALL NOT BE RESPONSIBLE FOR THE ACCURACY OR COMPLETENESS OF SCANNED COPIES OF THIS PLAN SHEET.

NOTES:

1. FOR ACCURATE RIGHT OF WAY DATA, CONTACT RIGHT OF WAY ENGINEERING AT THE DISTRICT OFFICE.
2. FOR DETAILS OF CC (A2-6) 1' GUTTER, SEE SHEET L-4.

CURVE DATA

No. Ⓡ	R	Δ	T	L
15	1800.00'	7°47'54.51"	122.69'	245.00'
16	1400.00'	13°54'13.76"	170.71'	339.73'
17	3000.00'	7°15'43.65"	190.38'	380.24'
18	760.00'	29°44'6.35"	201.76'	394.42'

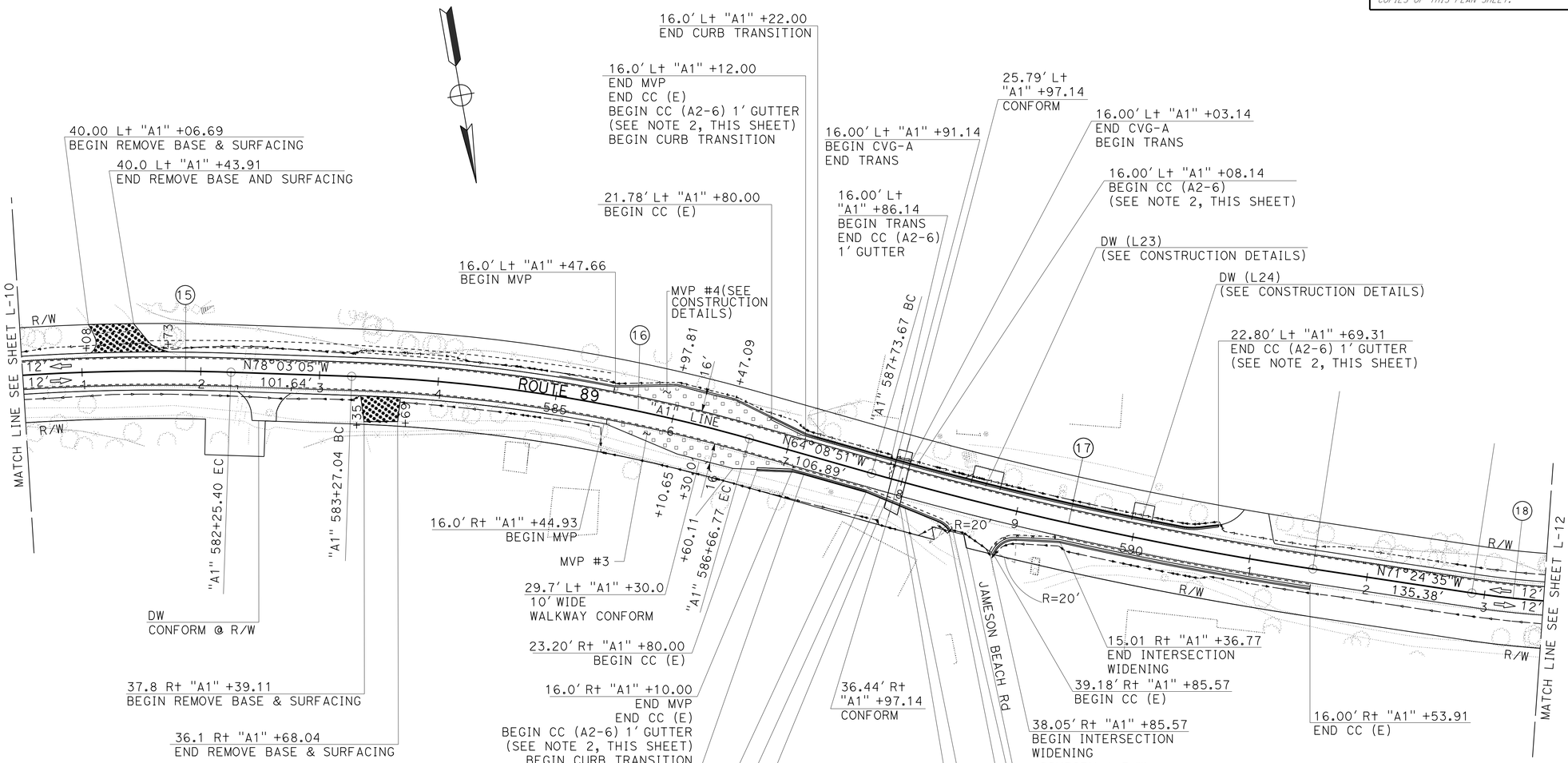

LAYOUT
SCALE: 1" = 50'

L-11

REVISED BY	DATE REVISED

CALCULATED-DESIGNED BY	CHECKED BY
JACK COWELL	MASTRI ALVANDI

FUNCTIONAL SUPERVISOR: MASTRI ALVANDI

STATE OF CALIFORNIA - DEPARTMENT OF TRANSPORTATION
Caltrans®
DESIGN

LAST REVISION: DATE PLOTTED => 13-FEB-2014
02-04-13 TIME PLOTTED => 13:41

BORDER LAST REVISED 7/2/2010 | USERNAME => s130875 | DGN FILE => 0300000223ea011.dgn | RELATIVE BORDER SCALE IS IN INCHES 0 1 2 3 | UNIT 0337 | PROJECT NUMBER & PHASE 03000002231

Dist	COUNTY	ROUTE	POST MILES TOTAL PROJECT	SHEET No.	TOTAL SHEETS
03	ED	89	8.6/13.8	18	231

Jack R. Cowell Jr. 11-18-13
REGISTERED CIVIL ENGINEER DATE

11-18-13
PLANS APPROVAL DATE

REGISTERED PROFESSIONAL ENGINEER
JACK COWELL
No. 65521
Exp. 9-30-15
CIVIL
STATE OF CALIFORNIA

THE STATE OF CALIFORNIA OR ITS OFFICERS OR AGENTS SHALL NOT BE RESPONSIBLE FOR THE ACCURACY OR COMPLETENESS OF SCANNED COPIES OF THIS PLAN SHEET.

NOTE:

FOR ACCURATE RIGHT OF WAY DATA, CONTACT RIGHT OF WAY ENGINEERING AT THE DISTRICT OFFICE.

CURVE DATA

No. ⑱	R	Δ	T	L
18	760.00′	29°44′6.35"	201.76′	394.42′

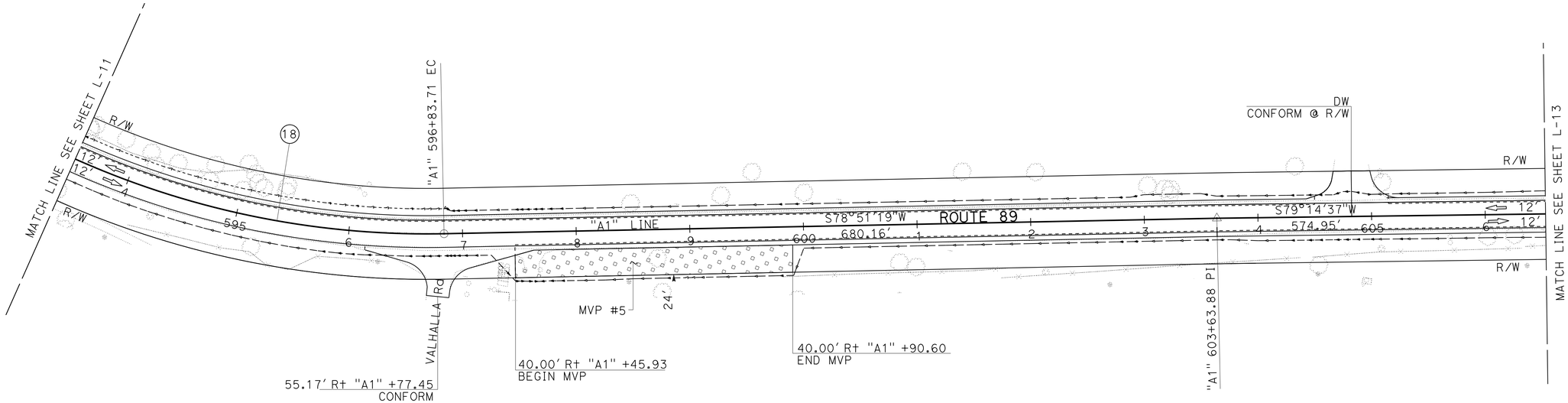

LAYOUT

SCALE: 1" = 50′

L-12

CALCULATED-DESIGNED BY: JACK COWELL
CHECKED BY: MASTRI ALVANDI
REVISED BY / DATE REVISED

FUNCTIONAL SUPERVISOR: MASTRI ALVANDI

STATE OF CALIFORNIA - DEPARTMENT OF TRANSPORTATION
Caltrans®
DESIGN

LAST REVISION: DATE PLOTTED => 13-FEB-2014, TIME PLOTTED => 13:41
02-04-13

BORDER LAST REVISED 7/2/2010 | USERNAME => s130875 | DGN FILE => 0300000223ea012.dgn | RELATIVE BORDER SCALE IS IN INCHES 0 1 2 3 | UNIT 0337 | PROJECT NUMBER & PHASE 03000002231

Dist	COUNTY	ROUTE	POST MILES TOTAL PROJECT	SHEET No.	TOTAL SHEETS
03	ED	89	8.6/13.8	19	231

Jack R. Cowell Jr. 11-18-13
REGISTERED CIVIL ENGINEER DATE

11-18-13
PLANS APPROVAL DATE

REGISTERED PROFESSIONAL ENGINEER
JACK COWELL
No. 65521
Exp. 9-30-15
CIVIL
STATE OF CALIFORNIA

THE STATE OF CALIFORNIA OR ITS OFFICERS OR AGENTS SHALL NOT BE RESPONSIBLE FOR THE ACCURACY OR COMPLETENESS OF SCANNED COPIES OF THIS PLAN SHEET.

NOTE:

FOR ACCURATE RIGHT OF WAY DATA, CONTACT RIGHT OF WAY ENGINEERING AT THE DISTRICT OFFICE.

CURVE DATA

No. ⑪	R	Δ	T	L
19	5000.00′	1°20′45.09"	58.73′	117.45′
20	10000.00′	1°1′38.84"	89.66′	179.33′
21	10000.00′	0°55′33"	80.79′	161.57′

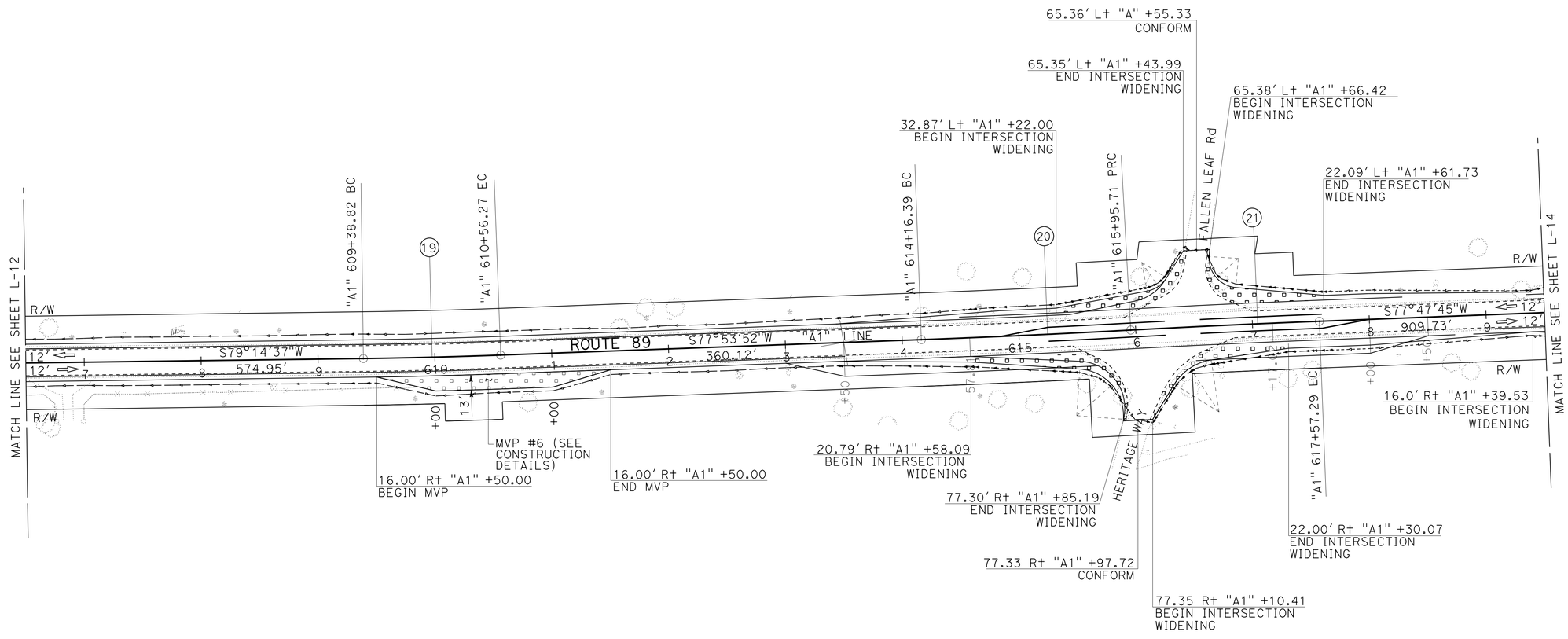

LAYOUT

SCALE: 1" = 50′

L-13

LAST REVISION 02-04-13 | DATE PLOTTED => 13-FEB-2014 | TIME PLOTTED => 13:41

STATE OF CALIFORNIA - DEPARTMENT OF TRANSPORTATION
DESIGN
FUNCTIONAL SUPERVISOR: MASTRI ALVANDI
CALCULATED-DESIGNED BY: JACK COWELL
CHECKED BY: MASTRI ALVANDI
REVISED BY | DATE REVISED

BORDER LAST REVISED 7/2/2010 | USERNAME => s130875 | DGN FILE => 0300000223ea013.dgn | RELATIVE BORDER SCALE IS IN INCHES 0 1 2 3 | UNIT 0337 | PROJECT NUMBER & PHASE 03000002231

Dist	COUNTY	ROUTE	POST MILES TOTAL PROJECT	SHEET No.	TOTAL SHEETS
03	ED	89	8.6/13.8	20	231

Jack R. Cowell Jr. 11-18-13
REGISTERED CIVIL ENGINEER DATE

11-18-13
PLANS APPROVAL DATE

REGISTERED PROFESSIONAL ENGINEER — JACK COWELL — No. 65521 — Exp. 9-30-15 — CIVIL — STATE OF CALIFORNIA

THE STATE OF CALIFORNIA OR ITS OFFICERS OR AGENTS SHALL NOT BE RESPONSIBLE FOR THE ACCURACY OR COMPLETENESS OF SCANNED COPIES OF THIS PLAN SHEET.

NOTE:

FOR ACCURATE RIGHT OF WAY DATA, CONTACT RIGHT OF WAY ENGINEERING AT THE DISTRICT OFFICE.

CURVE DATA

No. ⑪	R	Δ	T	L
22	530.00′	32°8′29.66"	152.68′	297.32′

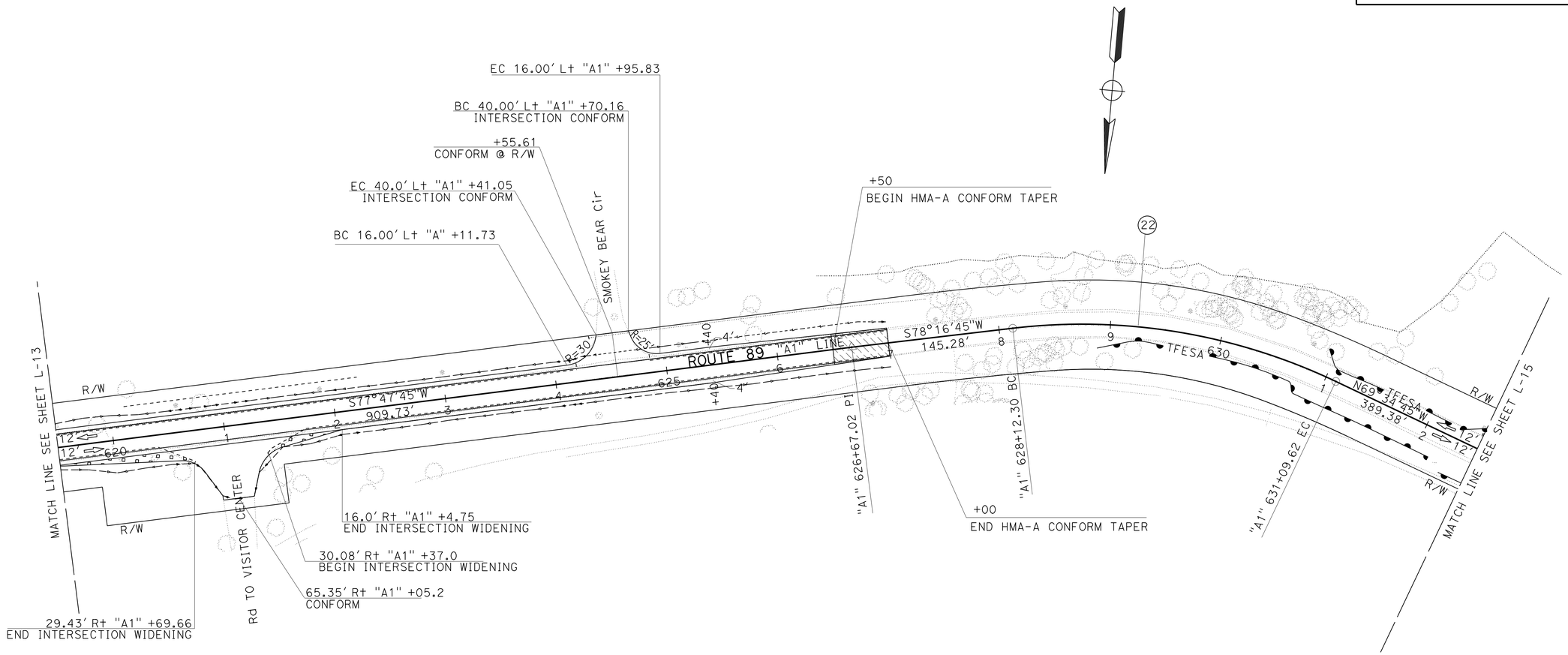

LAYOUT

SCALE: 1" = 50′

L-14

STATE OF CALIFORNIA - DEPARTMENT OF TRANSPORTATION
Caltrans® DESIGN

CALCULATED-DESIGNED BY: JACK COWELL
CHECKED BY: MASTRI ALVANDI
FUNCTIONAL SUPERVISOR: MASTRI ALVANDI
REVISED BY | DATE REVISED

LAST REVISION: DATE PLOTTED => 13-FEB-2014; TIME PLOTTED => 13:41
02-04-13

BORDER LAST REVISED 7/2/2010 | USERNAME => s130875 | DGN FILE => 0300000223ea014.dgn | RELATIVE BORDER SCALE IS IN INCHES 0 1 2 3 | UNIT 0337 | PROJECT NUMBER & PHASE 03000002231

NOTE:

FOR ACCURATE RIGHT OF WAY DATA, CONTACT RIGHT OF WAY ENGINEERING AT THE DISTRICT OFFICE.

CURVE DATA

No. ⑭	R	Δ	T	L
23	1020.00′	34°45′6.04"	319.18′	618.66′
24	610.00′	29°32′8.66"	160.80′	314.45′

Dist	COUNTY	ROUTE	POST MILES TOTAL PROJECT	SHEET No.	TOTAL SHEETS
03	ED	89	8.6/13.8	21	231

Jack R. Cowell Jr. 11-18-13
REGISTERED CIVIL ENGINEER DATE

11-18-13
PLANS APPROVAL DATE

REGISTERED PROFESSIONAL ENGINEER — JACK COWELL — No. 65521 — Exp. 9-30-15 — CIVIL — STATE OF CALIFORNIA

THE STATE OF CALIFORNIA OR ITS OFFICERS OR AGENTS SHALL NOT BE RESPONSIBLE FOR THE ACCURACY OR COMPLETENESS OF SCANNED COPIES OF THIS PLAN SHEET.

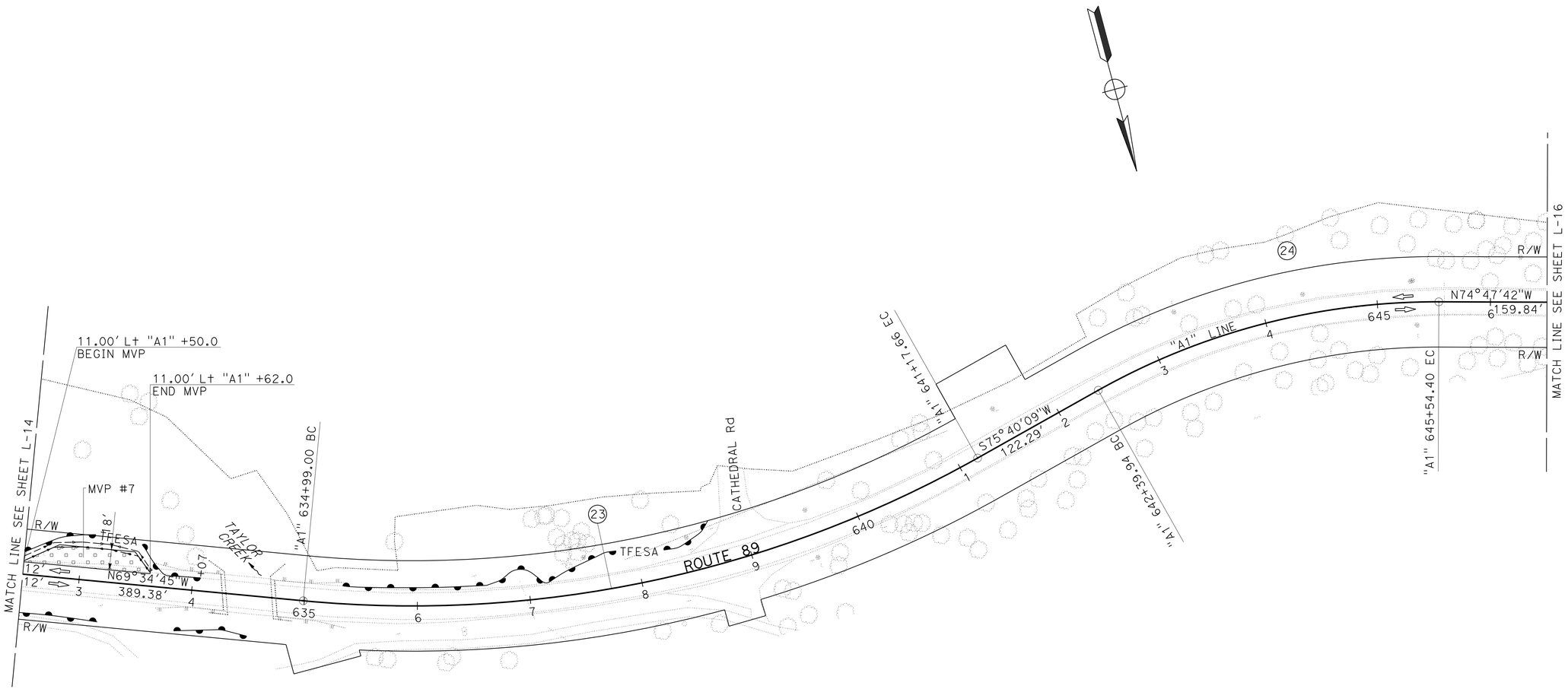

LAYOUT

SCALE: 1" = 50′

L-15

STATE OF CALIFORNIA - DEPARTMENT OF TRANSPORTATION
DESIGN

FUNCTIONAL SUPERVISOR: MASTRI ALVANDI

CALCULATED-DESIGNED BY: JACK COWELL
CHECKED BY: MASTRI ALVANDI

REVISED BY	DATE REVISED

LAST REVISION: 02-04-13
DATE PLOTTED => 13-FEB-2014
TIME PLOTTED => 13:41

BORDER LAST REVISED 7/2/2010

USERNAME => s130875
DGN FILE => 0300000223ea015.dgn

RELATIVE BORDER SCALE IS IN INCHES 0 1 2 3

UNIT 0337

PROJECT NUMBER & PHASE 03000002231

Dist	COUNTY	ROUTE	POST MILES TOTAL PROJECT	SHEET No.	TOTAL SHEETS
03	ED	89	8.6/13.8	22	231

Jack R. Cowell Jr. 11-18-13
REGISTERED CIVIL ENGINEER DATE

11-18-13
PLANS APPROVAL DATE

REGISTERED PROFESSIONAL ENGINEER
JACK COWELL
No. 65521
Exp. 9-30-15
CIVIL
STATE OF CALIFORNIA

THE STATE OF CALIFORNIA OR ITS OFFICERS OR AGENTS SHALL NOT BE RESPONSIBLE FOR THE ACCURACY OR COMPLETENESS OF SCANNED COPIES OF THIS PLAN SHEET.

NOTES:

1. FOR ACCURATE RIGHT OF WAY DATA, CONTACT RIGHT OF WAY ENGINEERING AT THE DISTRICT OFFICE.
2. INSTALL BOLLARDS TO BLOCK THE BIKE PATH. SEE LANDSCAPE SHEETS FOR DETAILS AND QUANTITIES.

CURVE DATA

No. ⑪	R	Δ	T	L
25	500.00′	25°26′43.04"	112.89′	222.05′
26	700.00′	12°46′8.42"	78.33′	156.00′
27	3300.00′	2°33′41.82"	73.78′	147.54′
28	2600.00′	3°35′26.21"	81.50′	162.94′
29	480.00′	26°47′45.52"	114.33′	224.49′

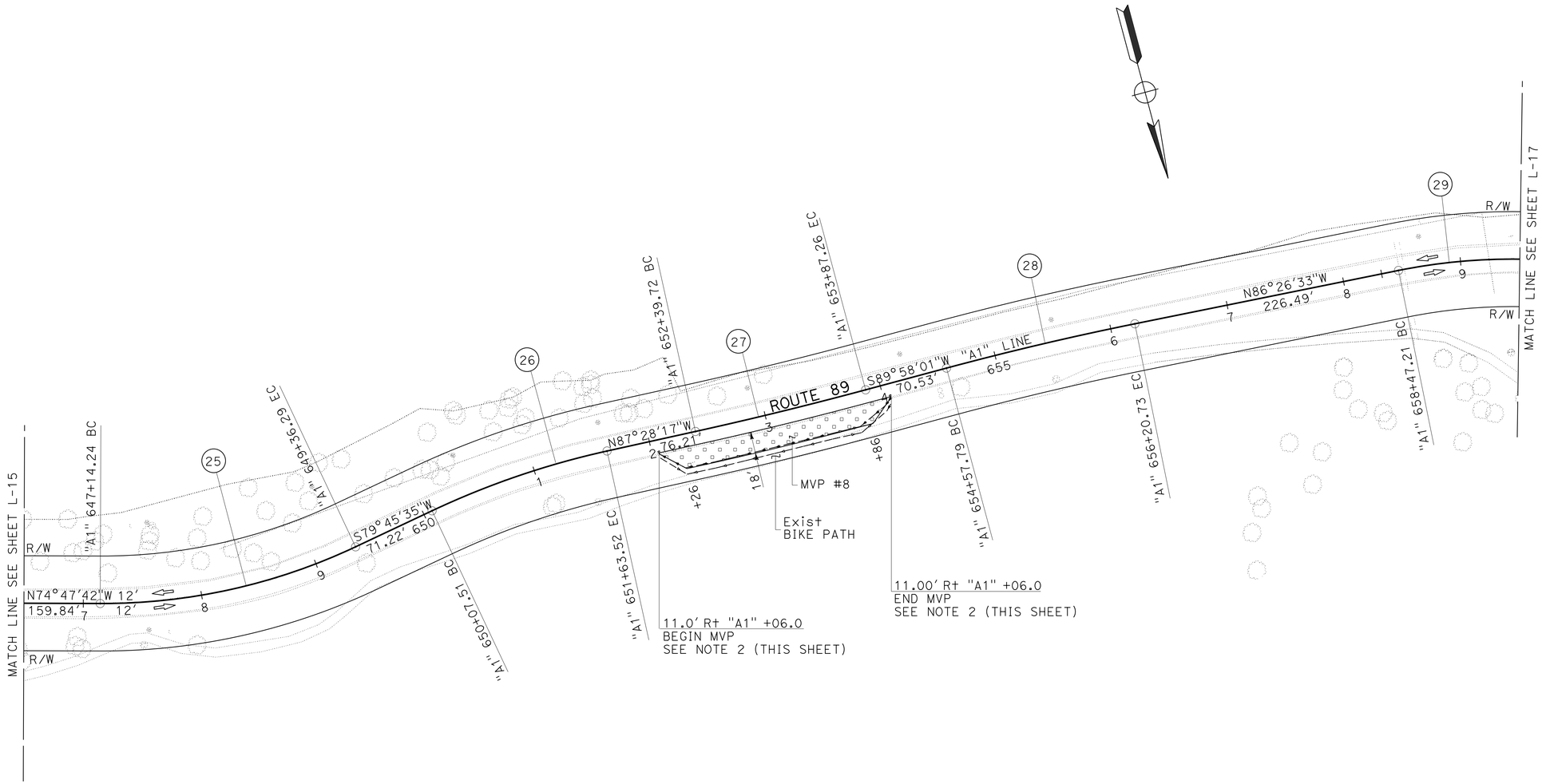

LAYOUT

SCALE: 1" = 50′

L-16

LAST REVISION 02-04-13 | DATE PLOTTED => 13-FEB-2014 | TIME PLOTTED => 13:41

CALCULATED-DESIGNED BY
CHECKED BY
JACK COWELL
MASTRI ALVANDI
REVISED BY
DATE REVISED
FUNCTIONAL SUPERVISOR
MASTRI ALVANDI
STATE OF CALIFORNIA - DEPARTMENT OF TRANSPORTATION
Caltrans®
DESIGN

BORDER LAST REVISED 7/2/2010 | USERNAME => s130875 | DGN FILE => 0300000223ea016.dgn | RELATIVE BORDER SCALE IS IN INCHES 0 1 2 3 | UNIT 0337 | PROJECT NUMBER & PHASE 03000002231

NOTE:

FOR ACCURATE RIGHT OF WAY DATA, CONTACT RIGHT OF WAY ENGINEERING AT THE DISTRICT OFFICE.

CURVE DATA

No. ⑪	R	Δ	T	L
29	480.00′	26°47′45.52"	114.33′	224.49′
30	1500.00′	5°12′16.58"	68.18′	136.26′
31	550.00′	13°24′2.13"	64.61′	128.64′
32	255.00′	66°8′31.60"	166.05′	294.37′
33	500.00′	13°37′48.91"	59.76′	118.95′
34	1300.00′	10°8′31.05"	115.36′	230.11′
35	580.00′	16°6′31.41"	82.07′	163.07′

Dist	COUNTY	ROUTE	POST MILES TOTAL PROJECT	SHEET No.	TOTAL SHEETS
03	ED	89	8.6/13.8	23	231

Jack R. Cowell Jr. 11-18-13
REGISTERED CIVIL ENGINEER DATE

11-18-13
PLANS APPROVAL DATE

REGISTERED PROFESSIONAL ENGINEER — JACK COWELL — No. 65521 — Exp. 9-30-15 — CIVIL — STATE OF CALIFORNIA

THE STATE OF CALIFORNIA OR ITS OFFICERS OR AGENTS SHALL NOT BE RESPONSIBLE FOR THE ACCURACY OR COMPLETENESS OF SCANNED COPIES OF THIS PLAN SHEET.

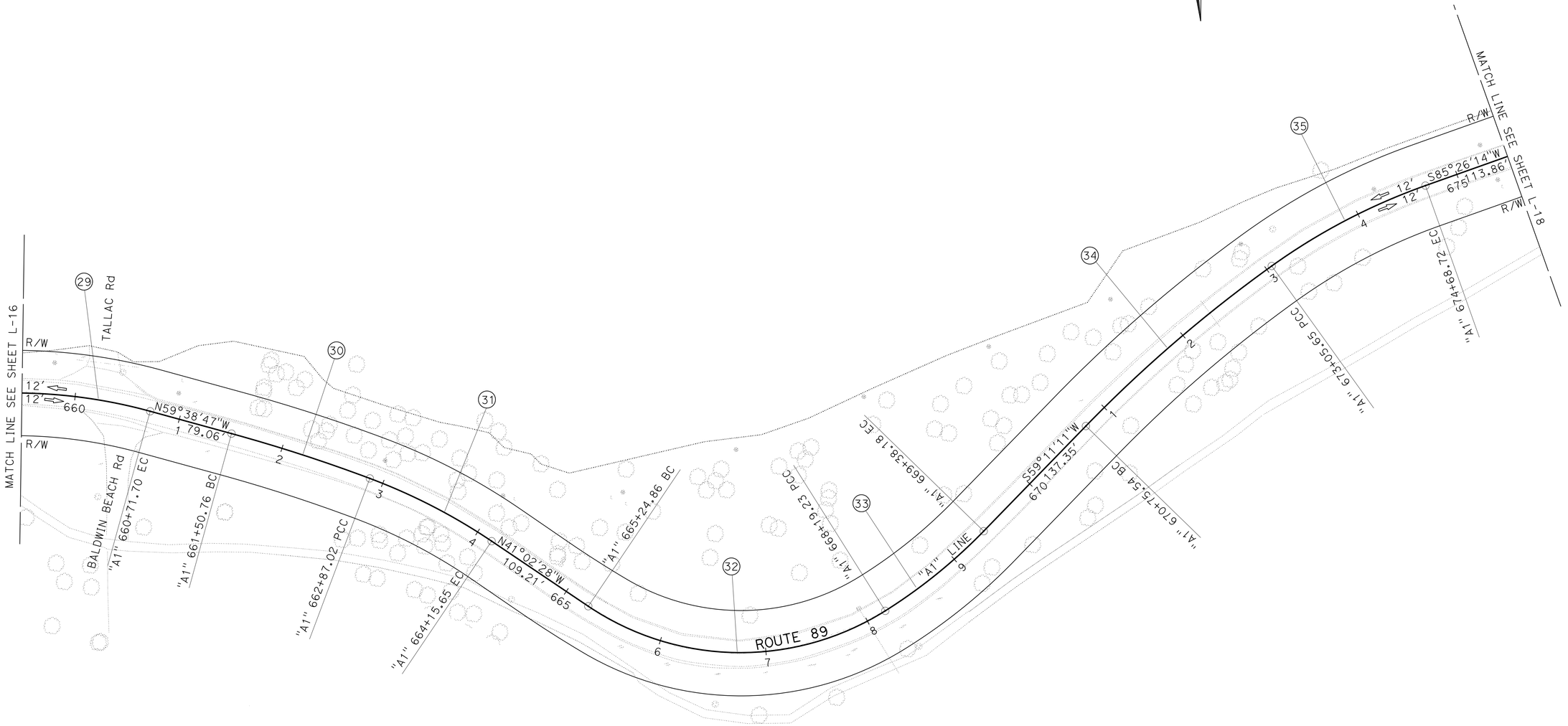

LAYOUT

SCALE: 1" = 50′

L-17

STATE OF CALIFORNIA - DEPARTMENT OF TRANSPORTATION
Caltrans®
DESIGN

FUNCTIONAL SUPERVISOR: MASTRI ALVANDI

CALCULATED-DESIGNED BY: JACK COWELL
CHECKED BY: MASTRI ALVANDI

REVISED BY	DATE REVISED

LAST REVISION — DATE PLOTTED => 13-FEB-2014 — TIME PLOTTED => 13:41
02-04-13

BORDER LAST REVISED 7/2/2010

USERNAME => s130875
DGN FILE => 0300000223ea017.dgn

RELATIVE BORDER SCALE IS IN INCHES 0 1 2 3

UNIT 0337

PROJECT NUMBER & PHASE 03000002231

NOTE:

FOR ACCURATE RIGHT OF WAY DATA, CONTACT RIGHT OF WAY ENGINEERING AT THE DISTRICT OFFICE.

CURVE DATA

No. ⑯	R	Δ	T	L
36	2000.00′	12°39′33.35"	221.85′	441.89′
37	10000.00′	1°13′15.60"	106.56′	213.10′
38	650.00′	16°54′27.59"	96.61′	191.81′

Dist	COUNTY	ROUTE	POST MILES TOTAL PROJECT	SHEET No.	TOTAL SHEETS
03	ED	89	8.6/13.8	24	231

Jack R. Cowell Jr. 11-18-13
REGISTERED CIVIL ENGINEER DATE

11-18-13
PLANS APPROVAL DATE

REGISTERED PROFESSIONAL ENGINEER — JACK COWELL — No. 65521 — Exp. 9-30-15 — CIVIL — STATE OF CALIFORNIA

THE STATE OF CALIFORNIA OR ITS OFFICERS OR AGENTS SHALL NOT BE RESPONSIBLE FOR THE ACCURACY OR COMPLETENESS OF SCANNED COPIES OF THIS PLAN SHEET.

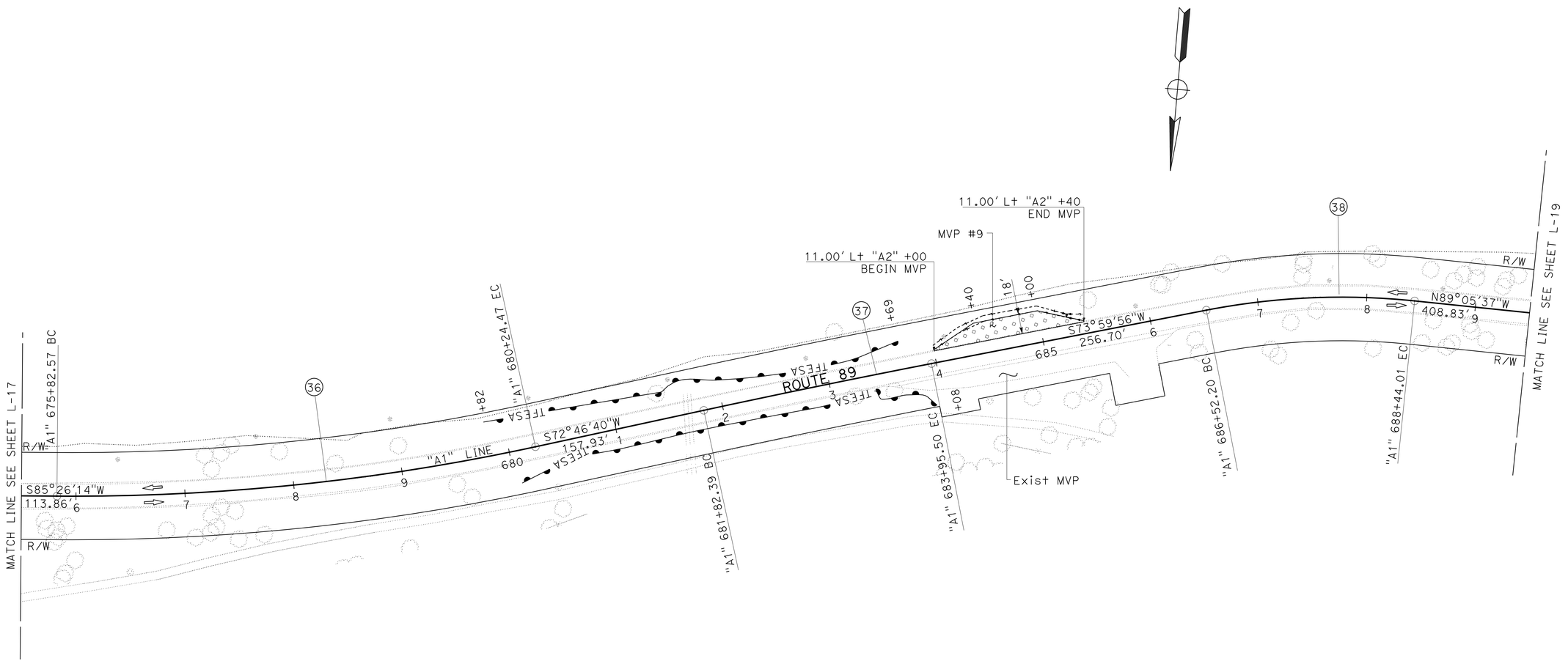

LAYOUT
SCALE: 1" = 50′

L-18

STATE OF CALIFORNIA - DEPARTMENT OF TRANSPORTATION
Caltrans®
DESIGN

FUNCTIONAL SUPERVISOR: MASTRI ALVANDI
CALCULATED-DESIGNED BY: JACK COWELL
CHECKED BY: MASTRI ALVANDI
REVISED BY | DATE REVISED

LAST REVISION: DATE PLOTTED => 13-FEB-2014; 02-04-13 | TIME PLOTTED => 13:41

BORDER LAST REVISED 7/2/2010 | USERNAME => s130875 | DGN FILE => 0300000223ea018.dgn | RELATIVE BORDER SCALE IS IN INCHES 0 1 2 3 | UNIT 0337 | PROJECT NUMBER & PHASE 03000002231

NOTE:

FOR ACCURATE RIGHT OF WAY DATA, CONTACT RIGHT OF WAY ENGINEERING AT THE DISTRICT OFFICE.

Dist	COUNTY	ROUTE	POST MILES TOTAL PROJECT	SHEET No.	TOTAL SHEETS
03	ED	89	8.6/13.8	25	231

Jack R. Cowell Jr. 11-18-13
REGISTERED CIVIL ENGINEER DATE

11-18-13
PLANS APPROVAL DATE

REGISTERED PROFESSIONAL ENGINEER — JACK COWELL — No. 65521 — Exp. 9-30-15 — CIVIL — STATE OF CALIFORNIA

THE STATE OF CALIFORNIA OR ITS OFFICERS OR AGENTS SHALL NOT BE RESPONSIBLE FOR THE ACCURACY OR COMPLETENESS OF SCANNED COPIES OF THIS PLAN SHEET.

CURVE DATA

No.	R	Δ	T	L
39	700.00′	12°5′58.76"	74.19′	147.83′
40	900.00′	7°37′51.23"	60.02′	119.87′
41	300.00′	35°16′50.78"	95.40′	184.73′
42	1500.00′	5°20′29.16"	69.97′	139.84′
43	320.00′	36°31′28.72"	105.60′	203.99′

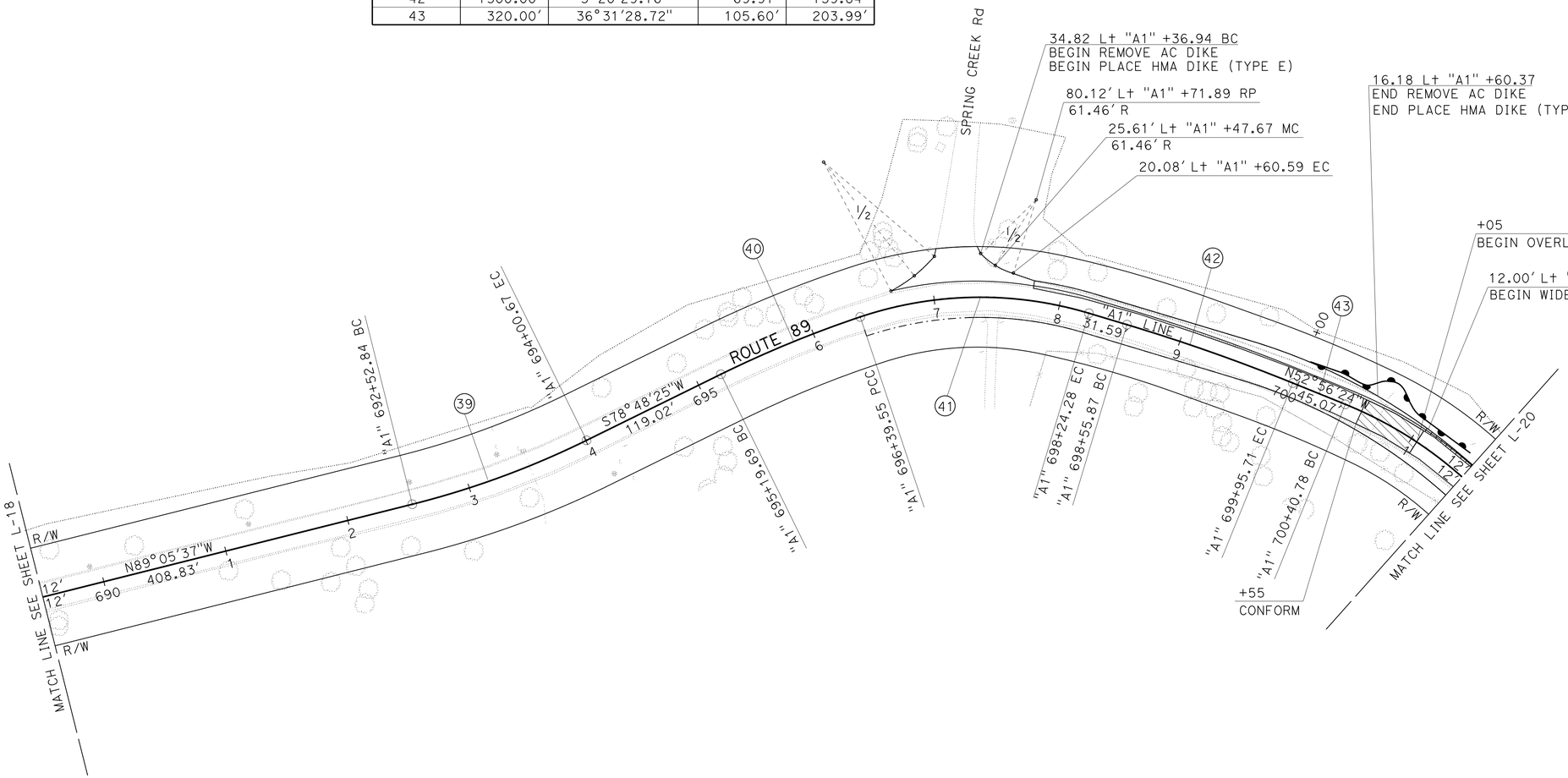

LAYOUT

SCALE: 1" = 50′

L-19

STATE OF CALIFORNIA - DEPARTMENT OF TRANSPORTATION
Caltrans®
DESIGN

FUNCTIONAL SUPERVISOR: MASTRI ALVANDI

CALCULATED-DESIGNED BY: JACK COWELL
CHECKED BY: MASTRI ALVANDI

REVISED BY | DATE REVISED

LAST REVISION | DATE PLOTTED => 13-FEB-2014 | TIME PLOTTED => 13:41
02-04-13

BORDER LAST REVISED 7/2/2010

USERNAME => s130875
DGN FILE => 0300000223ea019.dgn

RELATIVE BORDER SCALE IS IN INCHES 0 1 2 3

UNIT 0337

PROJECT NUMBER & PHASE 03000002231

Dist	COUNTY	ROUTE	POST MILES TOTAL PROJECT	SHEET No.	TOTAL SHEETS
03	ED	89	8.6/13.8	26	231

Jack R. Cowell Jr. 11-18-13
REGISTERED CIVIL ENGINEER DATE

11-18-13
PLANS APPROVAL DATE

REGISTERED PROFESSIONAL ENGINEER
JACK COWELL
No. 65521
Exp. 9-30-15
CIVIL
STATE OF CALIFORNIA

THE STATE OF CALIFORNIA OR ITS OFFICERS OR AGENTS SHALL NOT BE RESPONSIBLE FOR THE ACCURACY OR COMPLETENESS OF SCANNED COPIES OF THIS PLAN SHEET.

NOTE:

FOR ACCURATE RIGHT OF WAY DATA, CONTACT RIGHT OF WAY ENGINEERING AT THE DISTRICT OFFICE.

CURVE DATA

No. ⊕	R	Δ	T	L
43	320′	36°31′29"	105.60′	203.99′
44	770′	16°19′06"	110.40′	219.30′
45	10000′	00°37′13"	54.12′	108.24′
46	500′	23°06′10"	102.19′	201.61′
47	1600′	14°02′19"	197.00′	392.03′

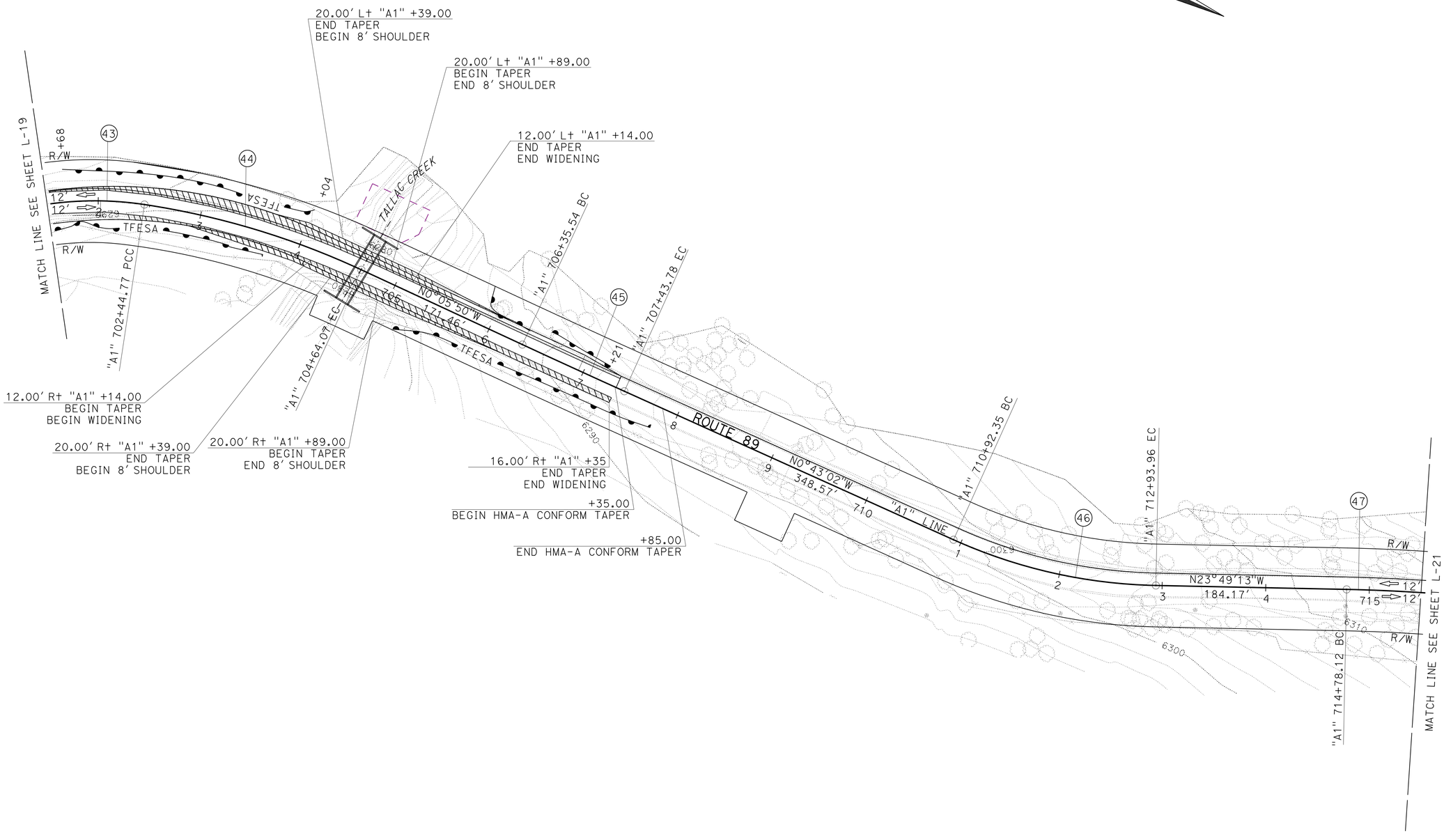

LAYOUT

SCALE: 1" = 50′

L-20

REVISED BY	DATE REVISED

CALCULATED-DESIGNED BY: JACK COWELL
CHECKED BY: MASTRI ALVANDI
FUNCTIONAL SUPERVISOR: MASTRI ALVANDI

STATE OF CALIFORNIA - DEPARTMENT OF TRANSPORTATION
DESIGN

LAST REVISION: DATE PLOTTED => 13-FEB-2014
02-04-13 TIME PLOTTED => 13:41

BORDER LAST REVISED 7/2/2010 | USERNAME => s130875 | DGN FILE => 0300000223ea020.dgn | RELATIVE BORDER SCALE IS IN INCHES 0 1 2 3 | UNIT 0337 | PROJECT NUMBER & PHASE 03000002231

Dist	COUNTY	ROUTE	POST MILES TOTAL PROJECT	SHEET No.	TOTAL SHEETS
03	ED	89	8.6/13.8	27	231

Jack R. Cowell Jr. 11-18-13
REGISTERED CIVIL ENGINEER DATE

11-18-13
PLANS APPROVAL DATE

REGISTERED PROFESSIONAL ENGINEER JACK COWELL No. 65521 Exp. 9-30-15 CIVIL STATE OF CALIFORNIA

THE STATE OF CALIFORNIA OR ITS OFFICERS OR AGENTS SHALL NOT BE RESPONSIBLE FOR THE ACCURACY OR COMPLETENESS OF SCANNED COPIES OF THIS PLAN SHEET.

NOTE:

FOR ACCURATE RIGHT OF WAY DATA, CONTACT RIGHT OF WAY ENGINEERING AT THE DISTRICT OFFICE.

CURVE DATA

No.	R	Δ	T	L
47	1600′	14°02′19"	197.00′	392.03′
48	900.00′	12°58′6.20"	102.29′	203.71′
49	800.00′	11°52′13.61"	83.17′	165.74′
50	2500.00′	3°53′14.28"	84.84′	169.62′

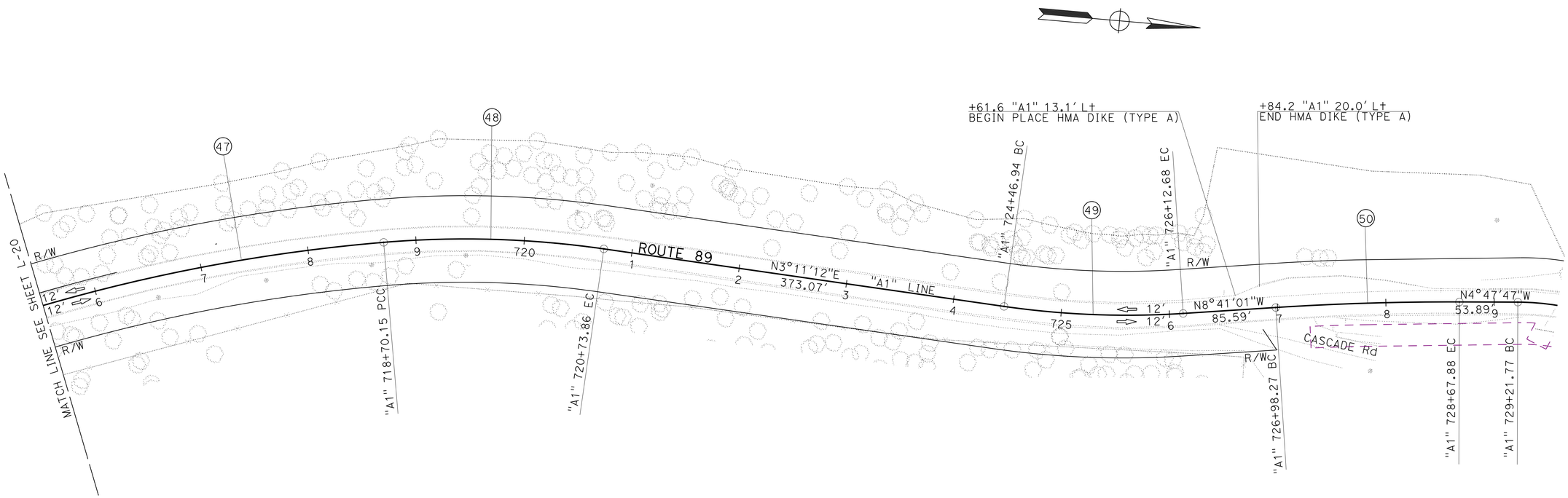

LAYOUT

SCALE: 1" = 50′

L-21

STATE OF CALIFORNIA - DEPARTMENT OF TRANSPORTATION
Caltrans
DESIGN

FUNCTIONAL SUPERVISOR: MASTRI ALVANDI
CALCULATED-DESIGNED BY: JACK COWELL
CHECKED BY: MASTRI ALVANDI
REVISED BY
DATE REVISED

LAST REVISION 02-04-13
DATE PLOTTED => 13-FEB-2014
TIME PLOTTED => 13:41

Dist	COUNTY	ROUTE	POST MILES TOTAL PROJECT	SHEET No.	TOTAL SHEETS
03	ED	89	8.6/13.8	28	231

Jack R. Cowell Jr. 11-18-13
REGISTERED CIVIL ENGINEER DATE

11-18-13
PLANS APPROVAL DATE

REGISTERED PROFESSIONAL ENGINEER — JACK COWELL — No. 65521 — Exp. 9-30-15 — CIVIL — STATE OF CALIFORNIA

THE STATE OF CALIFORNIA OR ITS OFFICERS OR AGENTS SHALL NOT BE RESPONSIBLE FOR THE ACCURACY OR COMPLETENESS OF SCANNED COPIES OF THIS PLAN SHEET.

NOTE:

1. FOR ACCURATE RIGHT OF WAY DATA, CONTACT RIGHT OF WAY ENGINEERING AT THE DISTRICT OFFICE.
2. FOR LOCATION & TYPE OF CONCRETE CURB, SEE LAYOUT SHEETS.
3. SEE CONSTRUCTION DETAIL CHARTS FOR DRIVEWAY & CURB RAMP LOCATIONS.
4. KEEP TOP OF CURB IN GUTTER TRANSITION ON SAME PLANE AS SIDEWALK UNTIL 3' FROM TYPE 2 VALLEY GUTTER.
5. EXACT CONFORM LOCATION TO BE DETERMINED BY THE ENGINEER.
6. PCC AT CONCRETE VALLEY GUTTERS AND CONCRETE CURBS TO BE PAID AS MINOR CONCRETE (CURB AND GUTTER).
7. PCC AT DRIVEWAYS TO BE PAID AS MINOR CONCRETE (DRIVEWAY).
8. SEE SHEET C-2 FOR ADDITIONAL Conc VALLEY GUTTER DETAIL CASES.

LEGEND:

- CURB RAMP DETECTABLE WARNING SURFACE SEE Std PLAN A88A
- GROOVED RAMP BOUNDARY SEE Std PLAN A88A
- CLASS 2 AGGREGATE BASE
- HMA (TYPE A)
- GUTTER OR SHOULDERS DIRECTION OF FLOW
- COLD PLANE AC Pvmt
- REMOVE BASE AND SURFACING
- HMA SIDEWALK

ABBREVIATIONS:

SC	SAW CUT
BW	BACK OF WALL
TOC	TOP OF CONCRETE
MC	MIDDLE CURVE
RP	RADIUS POINT
CVG	CONCRETE VALLEY GUTTER
C(X)	
DW(X)	DRIVEWAY NUMBER

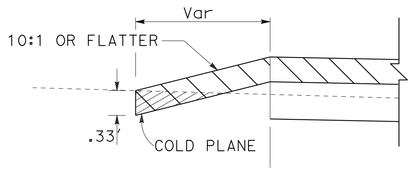

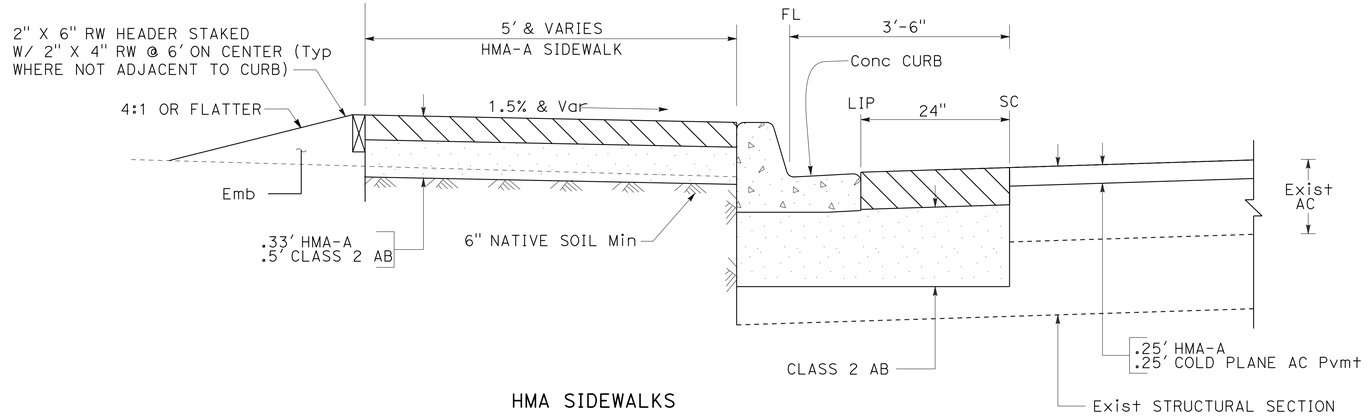

HMA SIDEWALKS

TABLE A

CURB TYPE	DIMENSIONS					
	"H1"	"H2"	"H3"	"W1"	"W2"	"W3"
A2-6 Mod	1'-0"	6"	1 "	2'-1½"	1 1/2"	1'-6"
A2-8 Mod	1'-2"	8"	1 1/2"	2'-2"	2"	1'-6"

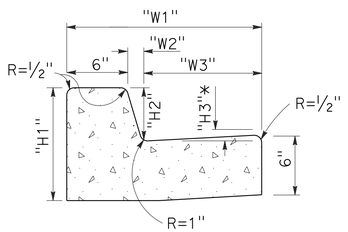

Conc CURB (TYPE A2-8, Mod)
Conc CURB (TYPE A2-6, Mod)

SEE TABLE A

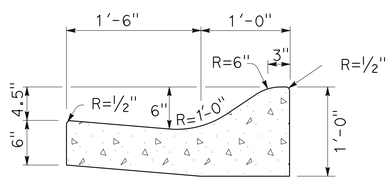

Conc CURB (TYPE E, Mod)

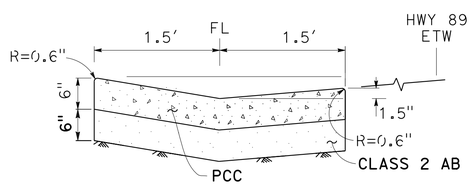

Conc VALLEY GUTTER (Typ)

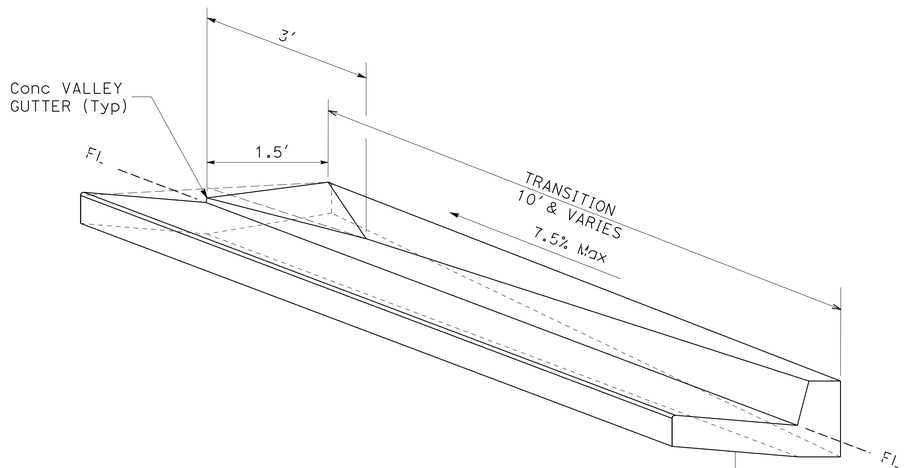

CURB TRANSITION
CC (TYPE A2-8, Mod) &
(TYPE A2-6, Mod) TO
Conc VALLEY GUTTER (Typ)

CONSTRUCTION DETAILS

NO SCALE

C-1

REVISED BY | DATE REVISED
JACK COWELL | MASTRI ALVANDI
CALCULATED-DESIGNED BY | CHECKED BY
FUNCTIONAL SUPERVISOR: MASTRI ALVANDI
STATE OF CALIFORNIA - DEPARTMENT OF TRANSPORTATION
DESIGN

LAST REVISION 02-04-13 | DATE PLOTTED => 13-FEB-2014 | TIME PLOTTED => 13:41

BORDER LAST REVISED 7/2/2010 | USERNAME => s130875 | DGN FILE => 0300000223ga001.dgn | RELATIVE BORDER SCALE IS IN INCHES 0 1 2 3 | UNIT 0337 | PROJECT NUMBER & PHASE 03000002231

Dist	COUNTY	ROUTE	POST MILES TOTAL PROJECT	SHEET No.	TOTAL SHEETS
03	ED	89	8.6/13.8	29	231

Jack R. Cowell Jr. 11-18-13
REGISTERED CIVIL ENGINEER DATE

11-18-13
PLANS APPROVAL DATE

REGISTERED PROFESSIONAL ENGINEER — JACK COWELL — No. 65521 — Exp. 9-30-15 — CIVIL — STATE OF CALIFORNIA

THE STATE OF CALIFORNIA OR ITS OFFICERS OR AGENTS SHALL NOT BE RESPONSIBLE FOR THE ACCURACY OR COMPLETENESS OF SCANNED COPIES OF THIS PLAN SHEET.

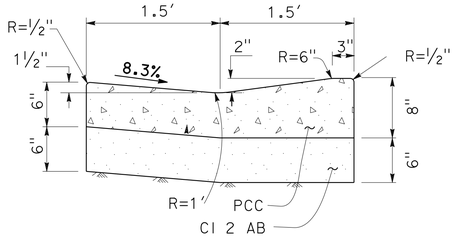

Conc VALLEY GUTTER (CASE D)

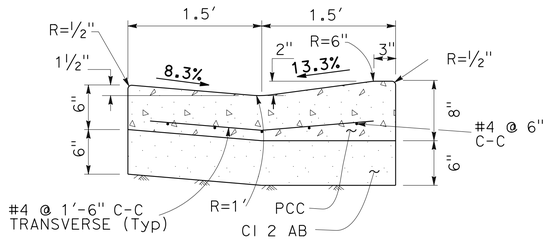

Conc VALLEY GUTTER (CASE E)
(WITH REINFORCEMENT)

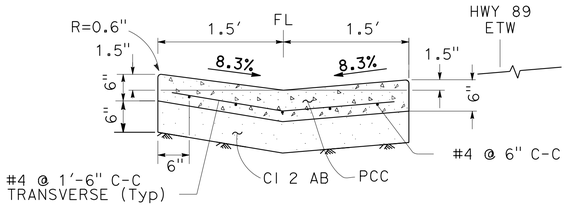

Conc VALLEY GUTTER (CASE C)
(WITH REINFORCEMENT)

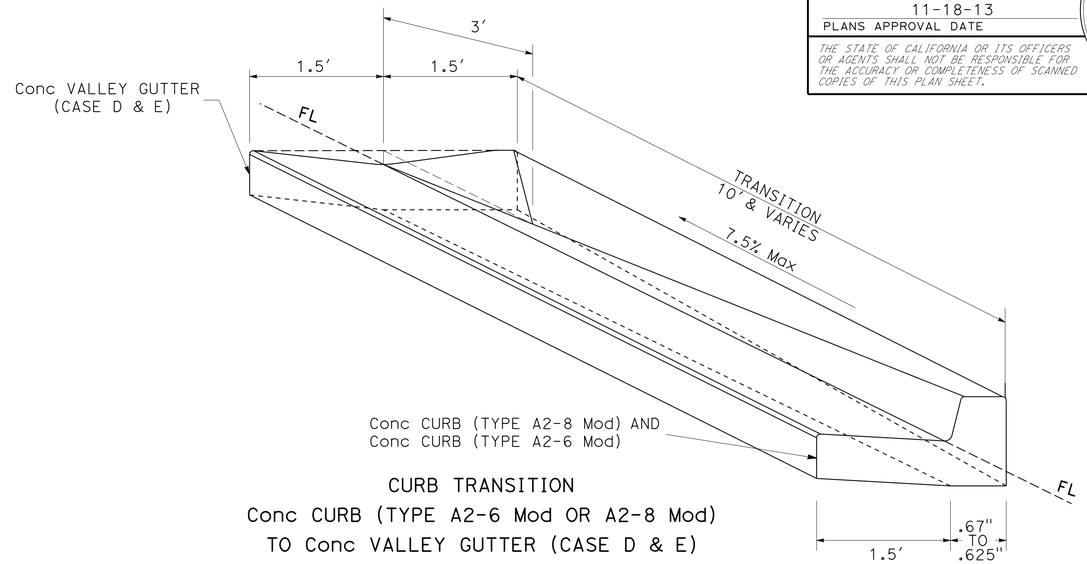

CURB TRANSITION
Conc CURB (TYPE A2-6 Mod OR A2-8 Mod)
TO Conc VALLEY GUTTER (CASE D & E)

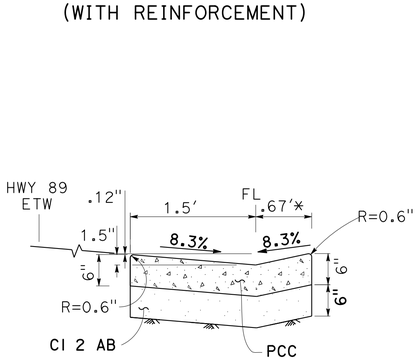

Conc VALLEY GUTTER (CASE B)
11TH TO 15TH ST DRIVEWAYS
AND DRIVEWAY R14- Rt SIDE
* .625' AT DRIVEWAY R14

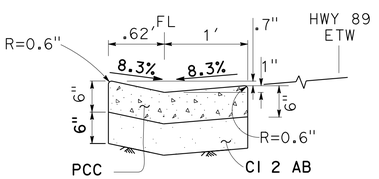

Conc VALLEY GUTTER (CASE A)
Sta "A1" 491+13.91 TO 491+34.56 - Lt SIDE

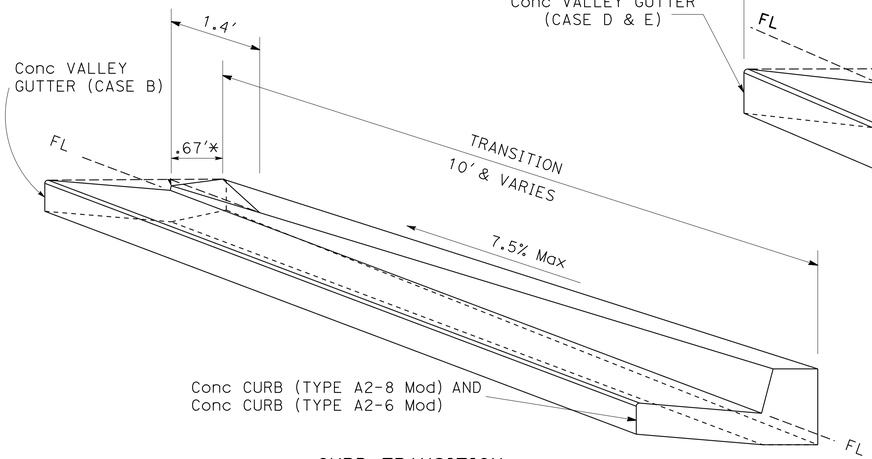

CURB TRANSITION
Conc CURB (TYPE A2-8, Mod) to
Conc VALLEY GUTTER (CASE B)
11TH TO 15TH ST DRIVEWAYS
AND DRIVEWAY R14- Rt SIDE
* .625 WHEN TRANSITIONING FROM A2-6 Mod CURB AT DRIVEWAY R14

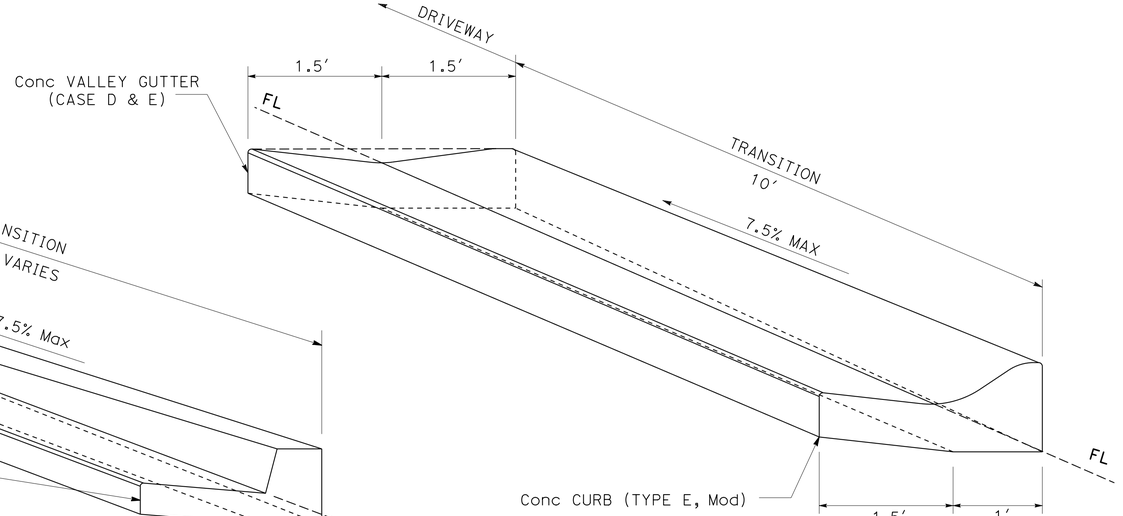

CURB TRANSITION
Conc CURB (TYPE E, Mod)
TO Conc VALLEY GUTTER (CASE-D)

Conc VALLEY GUTTERS AND TRANSITION DETAILS

CONSTRUCTION DETAILS

NO SCALE

C-2

REVISED BY | DATE REVISED
JACK COWELL | MASTRI ALVANDI
CALCULATED-DESIGNED BY | CHECKED BY
FUNCTIONAL SUPERVISOR: MASTRI ALVANDI
STATE OF CALIFORNIA - DEPARTMENT OF TRANSPORTATION
DESIGN

LAST REVISION 02-04-13 | DATE PLOTTED => 13-FEB-2014 | TIME PLOTTED => 13:41

NOTES: (THIS SHEET ONLY)

1. SEE VARIED GUTTER TRANSITION LENGTHS TABLE FOR VARIED LENGTHS OF TRANSITIONS.
2. LENGTH OF CONCRETE CURB (TYPE A2-8 MOD) AND (TYPE A2-6 MOD) INCLUDES THE TRANSITION DISTANCE.

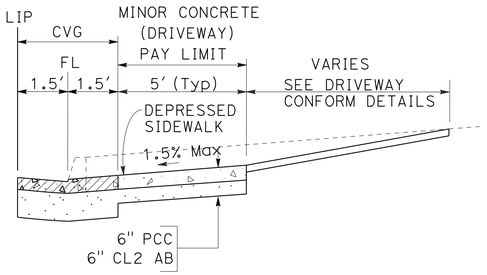

DRIVEWAY WITH DEPRESSED SIDEWALK

SECTION A-A

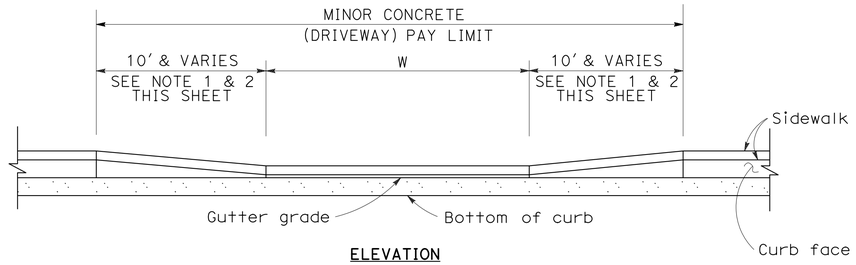

ELEVATION

DRIVEWAYS

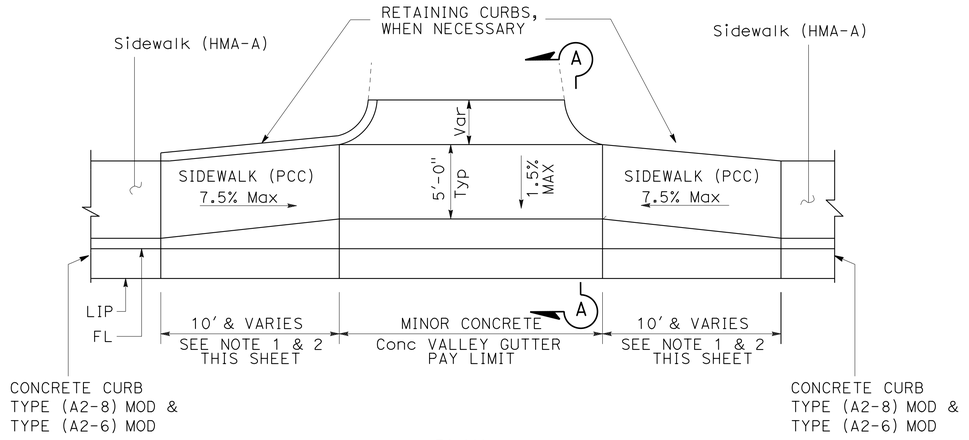

PLAN

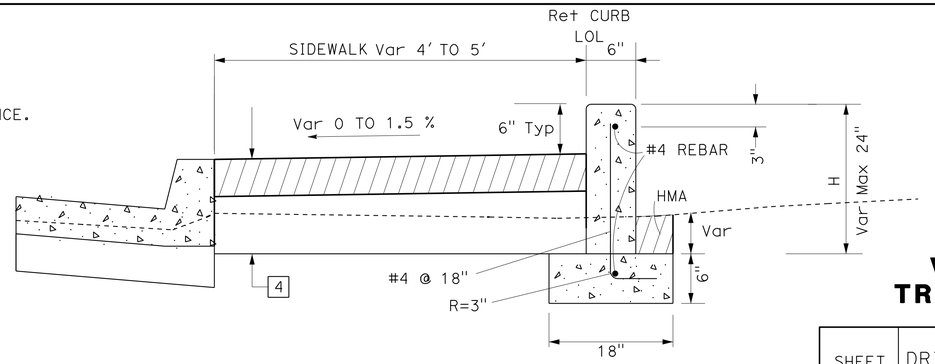

Ret CURB DETAIL

RETAINING CURB

STATION TO STATION	HEIGHT H (in.)
478+80.70 TO 479+35.00 (Rt)	24.0
479+35.00 TO 479+88.20 (Rt)	18.0
503+32.00 TO 503+70.00 (Rt)	24.0

Dist	COUNTY	ROUTE	POST MILES TOTAL PROJECT	SHEET No.	TOTAL SHEETS
03	ED	89	8.6/13.8	30	231

Jack R. Cowell Jr. 11-18-13
REGISTERED CIVIL ENGINEER DATE

11-18-13
PLANS APPROVAL DATE

JACK COWELL No. 65521 Exp. 9-30-15 CIVIL — REGISTERED PROFESSIONAL ENGINEER — STATE OF CALIFORNIA

THE STATE OF CALIFORNIA OR ITS OFFICERS OR AGENTS SHALL NOT BE RESPONSIBLE FOR THE ACCURACY OR COMPLETENESS OF SCANNED COPIES OF THIS PLAN SHEET.

VARIED GUTTER TRANSITION LENGTHS

SHEET NO.	DRIVEWAY NUMBER	TRANSITION LENGTH AT APPROACH	TRANSITION LENGTH AT DEPARTURE
		LF	LF
L1	R1	15.6	
L2	R7		9
L2	R8	9	
L2	R12		8.22
L2	R14	8	8
L4	R24	7	

Conc CURB (TYPE A2-6, Mod) AND
Conc CURB (TYPE A2-8, Mod)

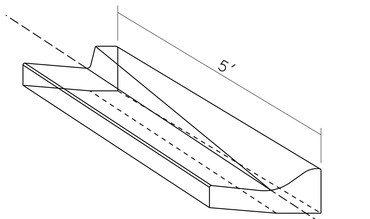

Conc CURB (TYPE E, Mod)

CURB TRANSITION FROM TYPE E, Mod
TO TYPE A2-6 Mod OR A2-8 Mod

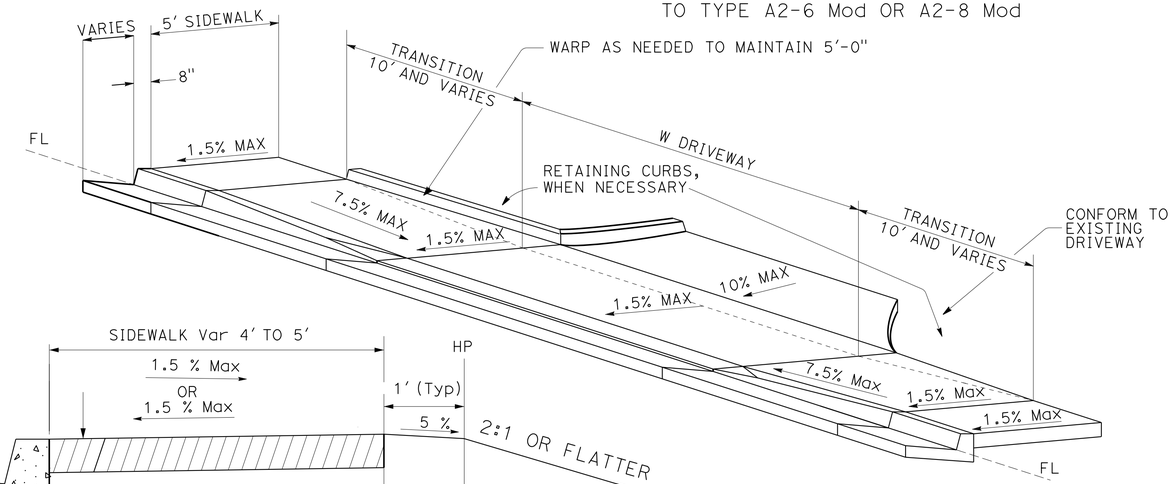

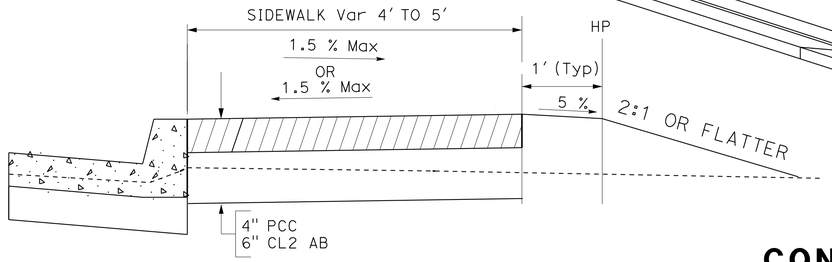

PCC SIDEWALK DETAIL

CONSTRUCTION DETAILS

NO SCALE

C-3

STATE OF CALIFORNIA - DEPARTMENT OF TRANSPORTATION
DESIGN
FUNCTIONAL SUPERVISOR: MASTRI ALVANDI
CALCULATED-DESIGNED BY: JACK COWELL
CHECKED BY: MASTRI ALVANDI
REVISED BY | DATE REVISED

LAST REVISION | DATE PLOTTED => 13-FEB-2014 | TIME PLOTTED => 13:41
02-04-13

Dist	COUNTY	ROUTE	POST MILES TOTAL PROJECT	SHEET No.	TOTAL SHEETS
03	ED	89	8.6/13.8	31	231

Jack R. Cowell Jr. 11-18-13
REGISTERED CIVIL ENGINEER DATE

11-18-13
PLANS APPROVAL DATE

REGISTERED PROFESSIONAL ENGINEER — JACK COWELL — No. 65521 — Exp. 9-30-15 — CIVIL — STATE OF CALIFORNIA

THE STATE OF CALIFORNIA OR ITS OFFICERS OR AGENTS SHALL NOT BE RESPONSIBLE FOR THE ACCURACY OR COMPLETENESS OF SCANNED COPIES OF THIS PLAN SHEET.

DRIVEWAY CONFORM TABLE

DRIVEWAY #	STATION	(L)*	W (LF)
R1	"A1" 460+22.50	4.7	35.0
R2	"A1" 462+65.00	7.1	25.0
R3	"A1" 465+00.00	8.2	40.0
R4	"A1" 465+79.00	9.9	30.0
R5	"A1" 467+83.00	11.5	20.0
R6	"A1" 468+35.50	11.3	20.0
R7	"A1" 469+05.50	11.0	25.0
R8	"A1" 469+53.00	11.0	25.0
R9	"A1" 470+09.00	11.0	32.0
R11	"A1" 471+60.44	11.0	25.0
R12	"A1" 472+42.16	11.1	28.0
R13	"A1" 473+91.00	11.1	56.0
R14	"A1" 475+50.50	12.2	25.0
R15	"A1" 478+07.60	11.2	24.0
R16	"A1" 478+57.90	11.2	25.0
R17	"A1" 480+11.00	5.6	25.0
R18	"A1" 480+69.90	4.2	24.5
R19	"A1" 482+72.00	10.4	25.0
R20	"A1" 483+91.60	15.3	20.0
R21	"A1" 485+75.50	16.1	30.3
R22	"A1" 486+96.20	13.1	25.0
R23	"A1" 489+78.00	14.0	31.0
R24	"A1" 493+75.23	10.8	24.0
R25	"A1" 494+81.65	10.3	36.0
R26	"A1" 496+84.80	10.7	30.0
R27	"A1" 502+19.36	11.8	30.0
R28	"A1" 503+04.00	12.0	36.0
R29	"A1" 503+95.56	12.0	30.0
R30	"A1" 505+57.50	11.3	25.0
R31	"A1" 506+67.00	11.8	28.0
R33	"A1" 513+00.00	11.4	33.0
R34	"A1" 513+75.00	11.6	25.0
L1	"A1" 457+99.30	9.4	35.0
L2	"A1" 459+24.50	7.2	48.0
L3	"A1" 460+57.20	8.4	46.5
L4	"A1" 465+96.50	10.6	18.0
L5	"A1" 466+86.90	10.0	18.4
L6	"A1" 467+93.70	10.0	14.0
L7	"A1" 469+76.30	10.4	25.0
L8	"A1" 471+22.54	10.4	40.3
L9	"A1" 471+89.00	10.4	16.3
L10	"A1" 472+95.00	10.9	19.0
L11	"A1" 474+46.90	10.3	25.0
L12	"A1" 476+37.20	10.8	25.0
L13	"A1" 477+59.50	10.7	19.0
L14	"A1" 478+55.50	10.7	30.0
L15	"A1" 479+13.30	12.4	30.6
L16	"A1" 502+96.70	10.0	20.0
L17	"A1" 503+53.50	9.9	20.0
L18	"A1" 504+97.50	9.6	30.0
L19	"A1" 505+61.50	10.0	22.0
L20	"A1" 511+86.80	11.3	69.0
L21	"A1" 513+36.50	11.5	28.5
L22	"A1" 514+36.40	11.6	27.0

SEE C-3 DRIVEWAY PAY LIMIT

* DRIVEWAY CONFORM NOT TO EXCEED 10% SLOPE, EXCEPT WHERE EXISTING CONDITIONS ARE STEEPER. THE 10% MAX SLOPE WILL PREVAIL ABOVE THE CONFORM LENGTH (L).

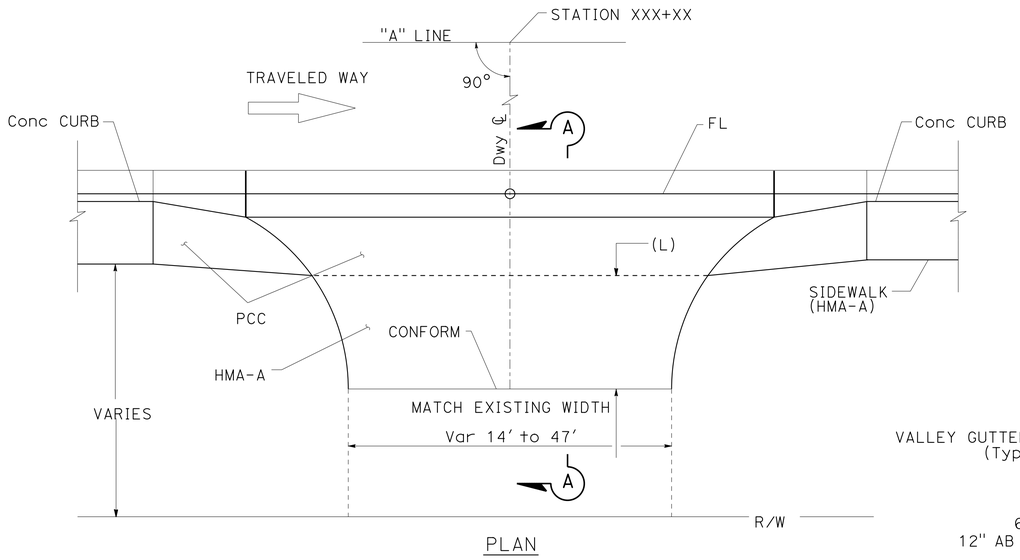

PLAN

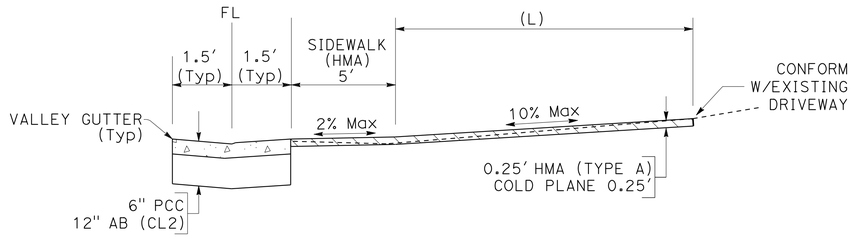

SECTION A-A

HMA-A CONFORM DETAIL (Typ)
PRIVATE ROADS AND DRIVEWAYS
NOTE: SEE 'DRIVEWAY CONFORM TABLE' FOR (L)

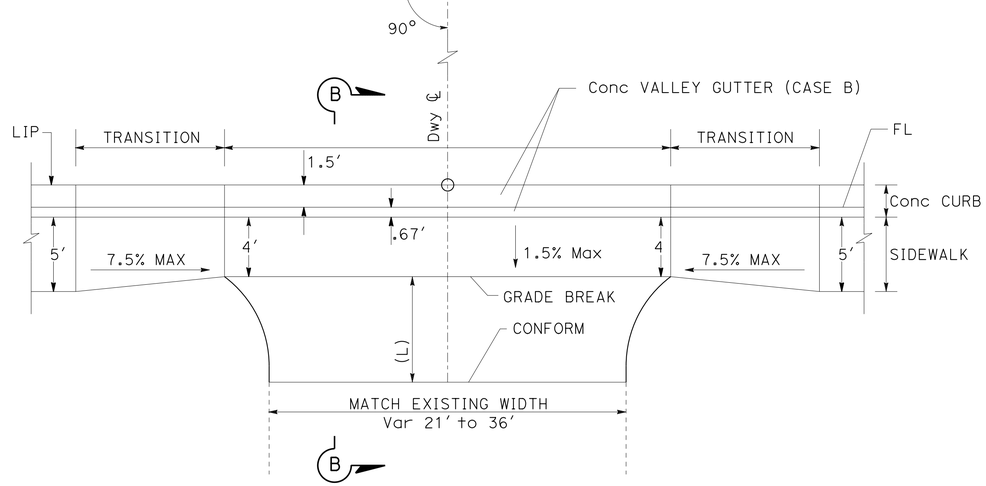

PLAN

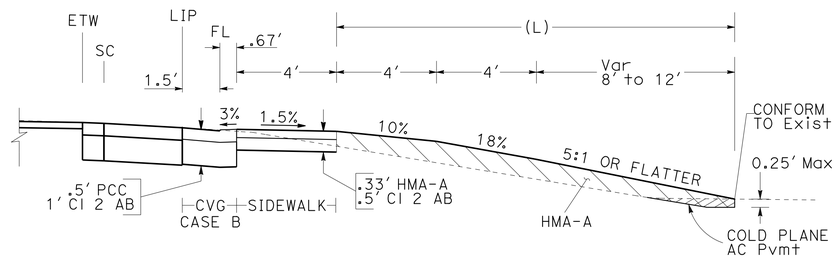

SECTION B-B

11TH ST to 15TH St Dwy CONFORMS - Rt SIDE
(Typ for Descending Dwys)

11TH St TO 15TH St DRIVEWAY CONFORM DETAIL
Rt SIDE

NOTE: SEE 'DRIVEWAY CONFORM TABLE' FOR (L)

DRIVEWAY CONFORMS

CONSTRUCTION DETAILS

NO SCALE

C-4

REVISED BY | DATE REVISED
JACK COWELL | MASTRI ALVANDI
CALCULATED-DESIGNED BY | CHECKED BY
FUNCTIONAL SUPERVISOR: MASTRI ALVANDI
STATE OF CALIFORNIA - DEPARTMENT OF TRANSPORTATION
DESIGN

LAST REVISION 02-04-13 | DATE PLOTTED => 13-FEB-2014 | TIME PLOTTED => 13:41

Dist	COUNTY	ROUTE	POST MILES TOTAL PROJECT	SHEET No.	TOTAL SHEETS
03	ED	89	8.6/13.8	32	231

Jack R. Cowell Jr. 11-18-13
REGISTERED CIVIL ENGINEER DATE

11-18-13
PLANS APPROVAL DATE

REGISTERED PROFESSIONAL ENGINEER
JACK COWELL
No. 65521
Exp. 9-30-15
CIVIL
STATE OF CALIFORNIA

THE STATE OF CALIFORNIA OR ITS OFFICERS OR AGENTS SHALL NOT BE RESPONSIBLE FOR THE ACCURACY OR COMPLETENESS OF SCANNED COPIES OF THIS PLAN SHEET.

NOTE:

1.FOR LOCATIONS OF REPLACE ASPHALT CONCRETE SURFACING SEE SUMMARY OF QUANITITIES

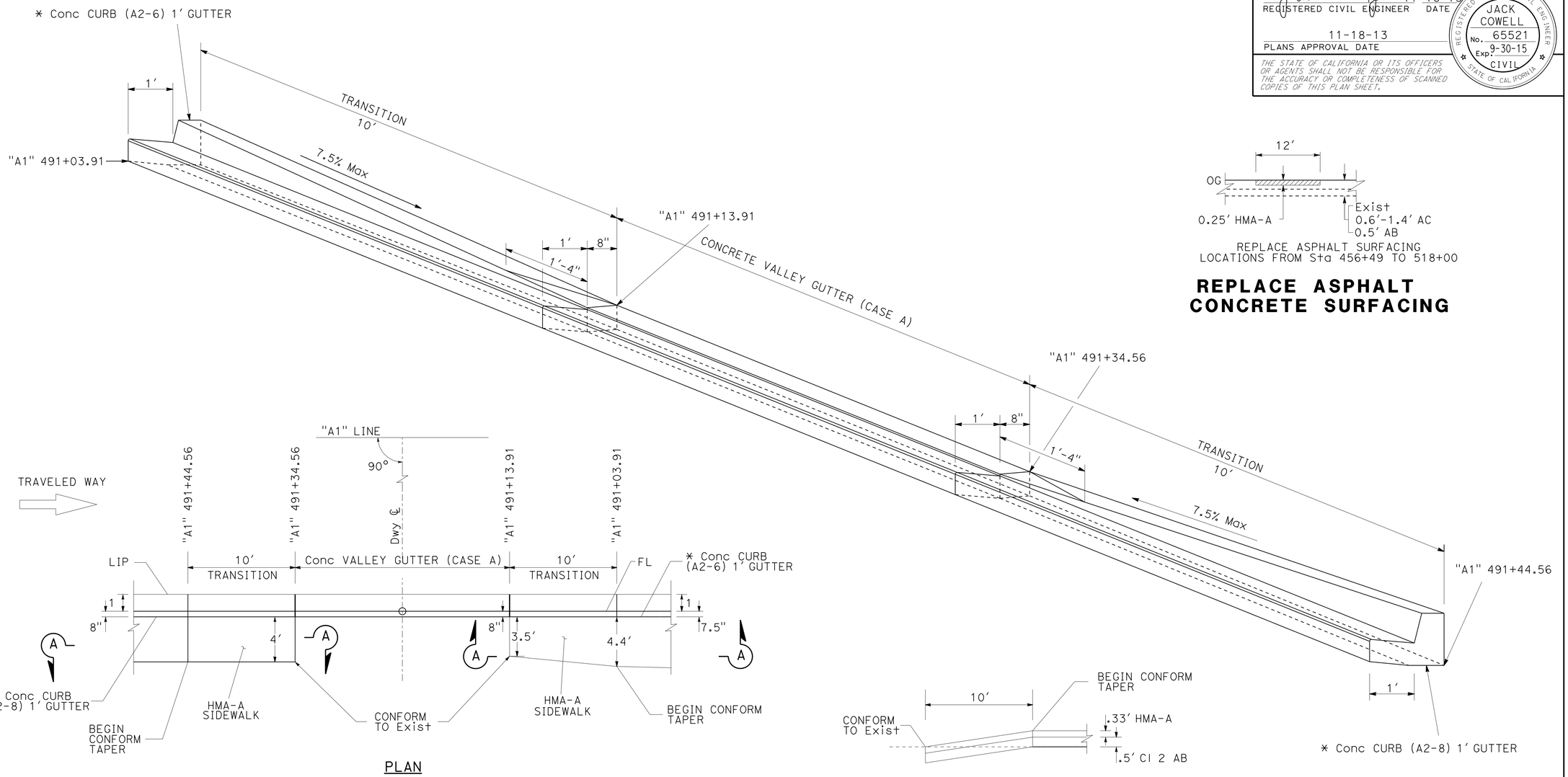

PLAN

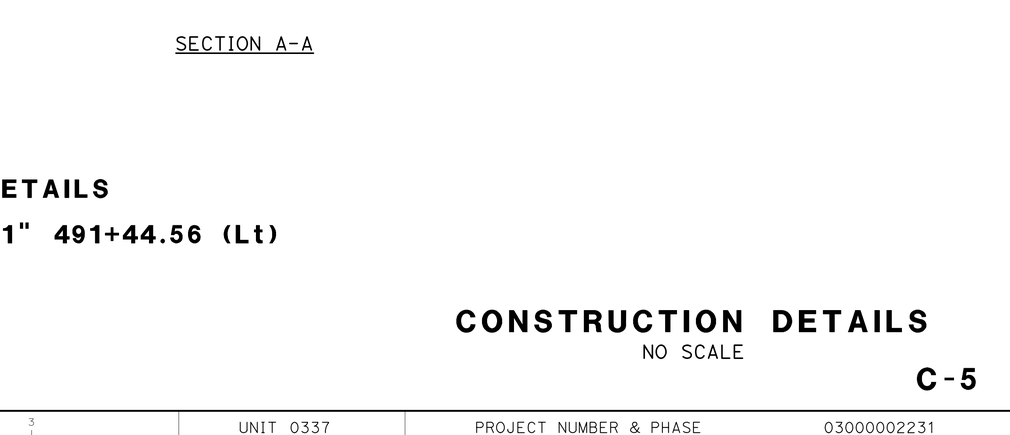

SECTION A-A

REPLACE ASPHALT SURFACING
LOCATIONS FROM Sta 456+49 TO 518+00

REPLACE ASPHALT CONCRETE SURFACING

* FOR DETAIL OF Conc CURB (A2-8) 1' GUTTER AND Conc CURB (A2-6) 1' GUTTER, SEE SHEET L-4

GUTTER TRANSITION DETAILS

STATION "A1" 491+03.91 TO "A1" 491+44.56 (Lt)

CONSTRUCTION DETAILS
NO SCALE

C-5

STATE OF CALIFORNIA - DEPARTMENT OF TRANSPORTATION
DESIGN
FUNCTIONAL SUPERVISOR: MASTRI ALVANDI
CALCULATED-DESIGNED BY: JACK COWELL
CHECKED BY: MASTRI ALVANDI
REVISED BY
DATE REVISED

LAST REVISION 02-04-13 | DATE PLOTTED => 13-FEB-2014 | TIME PLOTTED => 13:41

BORDER LAST REVISED 7/2/2010 | USERNAME => s130875 | DGN FILE => 0300000223ga005.dgn | RELATIVE BORDER SCALE IS IN INCHES 0 1 2 3 | UNIT 0337 | PROJECT NUMBER & PHASE 03000002231

Dist	COUNTY	ROUTE	POST MILES TOTAL PROJECT	SHEET No.	TOTAL SHEETS
03	ED	89	8.6/13.8	33	231

Jack R. Cowell Jr. 11-18-13
REGISTERED CIVIL ENGINEER DATE

11-18-13
PLANS APPROVAL DATE

REGISTERED PROFESSIONAL ENGINEER — JACK COWELL — No. 65521 — Exp. 9-30-15 — CIVIL — STATE OF CALIFORNIA

THE STATE OF CALIFORNIA OR ITS OFFICERS OR AGENTS SHALL NOT BE RESPONSIBLE FOR THE ACCURACY OR COMPLETENESS OF SCANNED COPIES OF THIS PLAN SHEET.

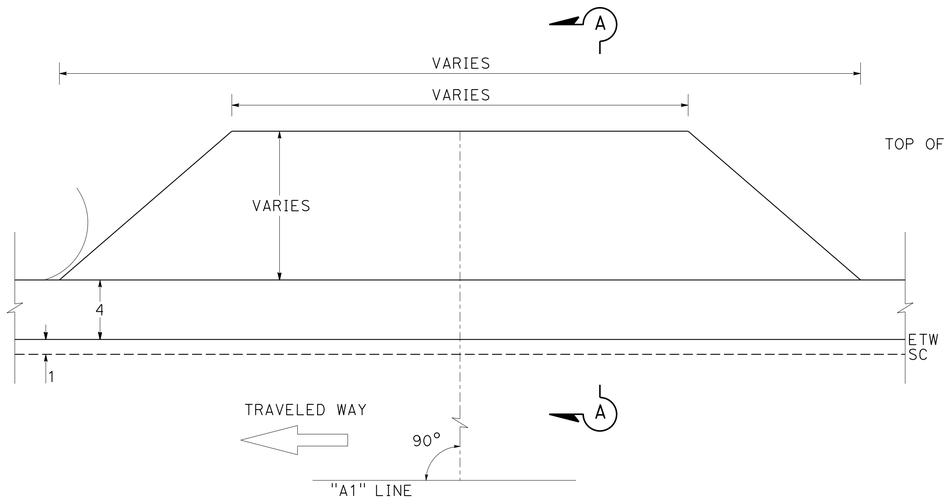

PLAN

MVP (Typ)

(MVP #1 TO MVP #9)*

SEE LAYOUT SHEETS FOR STATIONS LIMITS AND DIMENSIONS

*NOTE: FOR MVP'S IN AREAS WITHOUT 4' SHOULDER ABUT PULLOUT TO Exist EP.

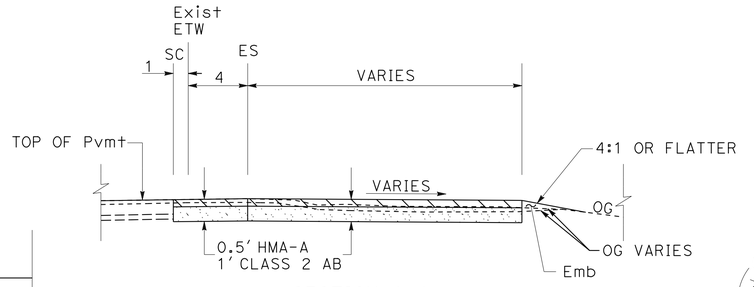

SECTION A-A

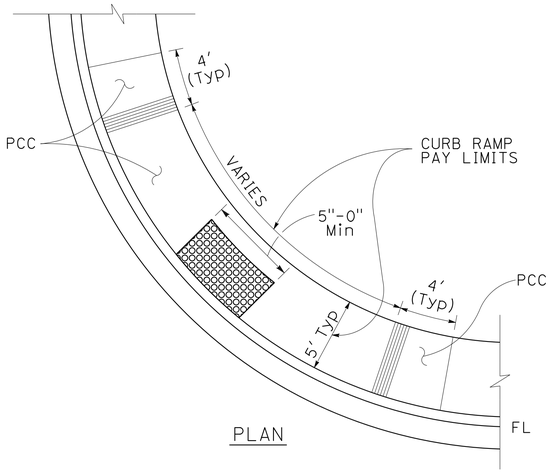

PLAN

CURB RAMP (TYPE A)

SEE LAYOUT SHEETS AND CONSTRUCTION DETAIL SHEETS FOR STATIONS LIMITS AND DIMENSIONS

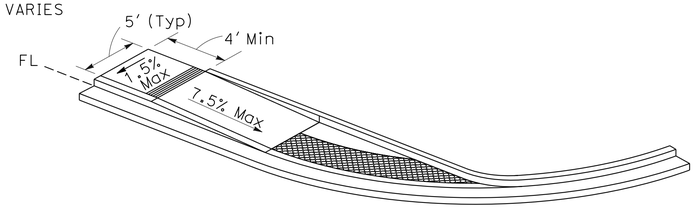

CURB RAMP (TYPE B)

SEE LAYOUT SHEETS AND CONSTRUCTION DETAIL SHEETS FOR STATIONS LIMITS AND DIMENSIONS

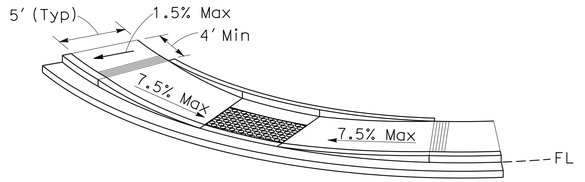

CURB RAMP (TYPE A)

SEE LAYOUT SHEETS AND CONSTRUCTION DETAIL SHEETS FOR STATIONS LIMITS AND DIMENSIONS

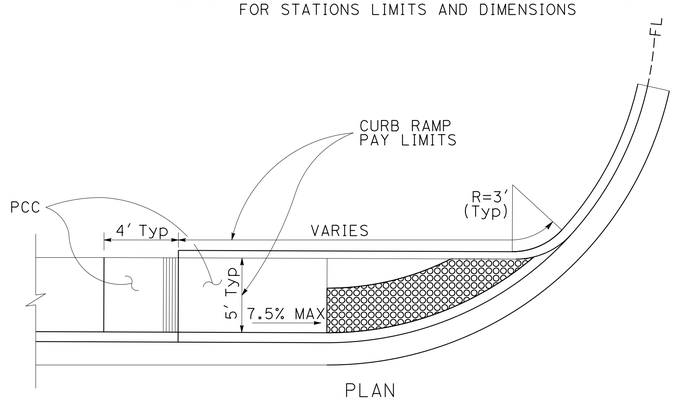

PLAN

CURB RAMP (TYPE B)

SEE LAYOUT SHEETS AND CONSTRUCTION DETAIL SHEETS FOR STATIONS LIMITS AND DIMENSIONS

NOTE: FOR ADDITIONAL INFORMATION SEE REVISED STANDARD PLAN RSP A884

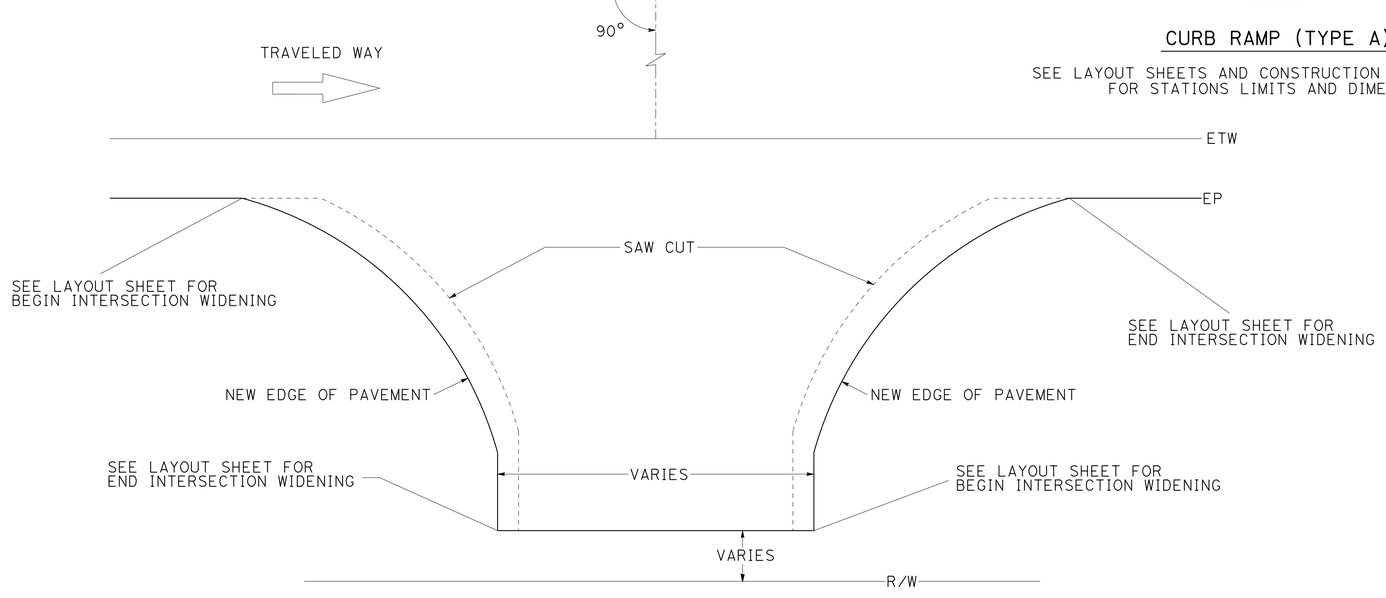

HMA-A CONFORM TAPER
AT PUBLIC ROADS AND DRIVEWAYS
(SHEETS L-10 TO L-14)

CONSTRUCTION DETAILS

NO SCALE

C-6

STATE OF CALIFORNIA - DEPARTMENT OF TRANSPORTATION
DESIGN
FUNCTIONAL SUPERVISOR: MASTRI ALVANDI
CALCULATED-DESIGNED BY: JACK COWELL
CHECKED BY: MASTRI ALVANDI
REVISED BY
DATE REVISED

LAST REVISION DATE PLOTTED => 13-FEB-2014
02-04-13 TIME PLOTTED => 13:41

BORDER LAST REVISED 7/2/2010 | USERNAME => s130875 | DGN FILE => 0300000223ga006.dgn | RELATIVE BORDER SCALE IS IN INCHES 0 1 2 3 | UNIT 0337 | PROJECT NUMBER & PHASE 03000002231

NOTES:

1. MINIMUM THICKNESS SHOULD MATCH THE THICKNESS OF THE TOP LIFT.

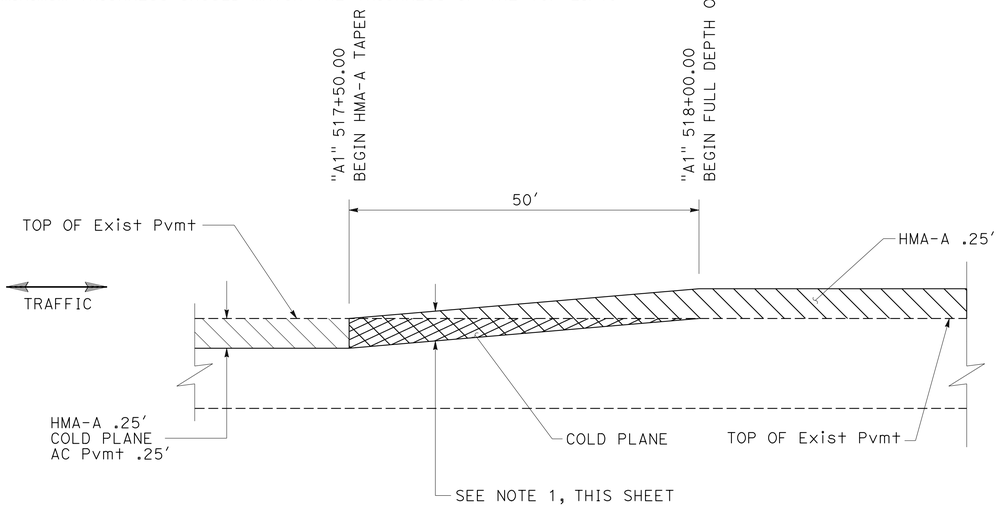

HMA-A CONFORM TAPER
(AT MAINLINE)

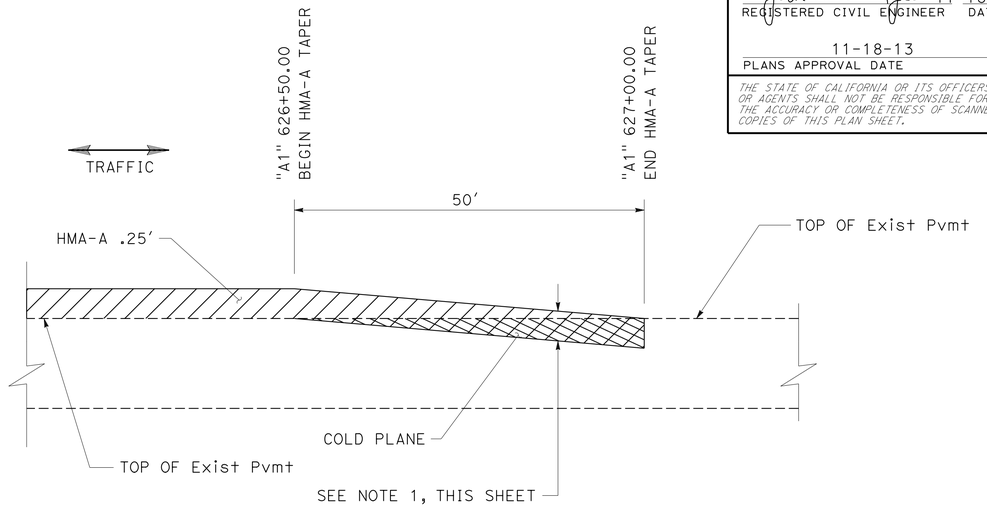

HMA-A CONFORM TAPER
(AT MAINLINE)

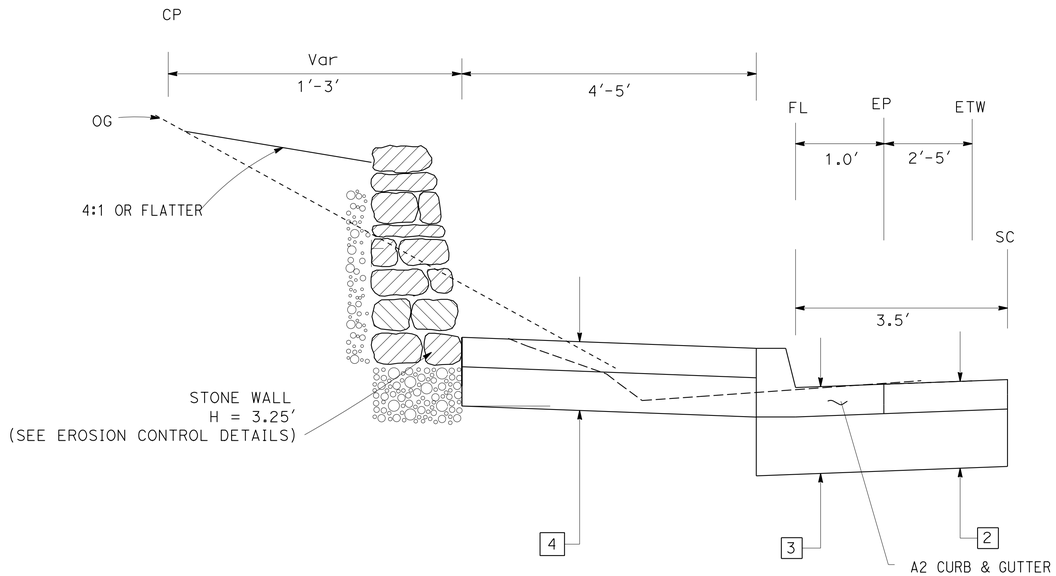

* Sta. 490+70.7 to 491+05.0
491+45.0 to 492+50.0

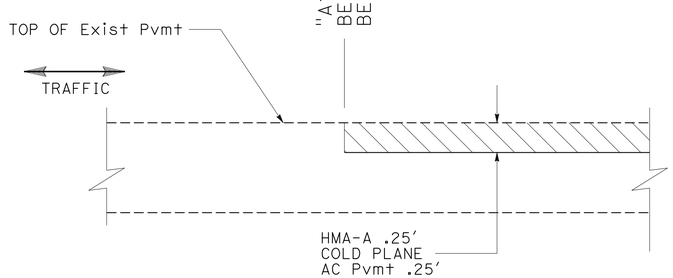

HMA-A COMFORM

CONSTRUCTION DETAILS

NO SCALE

C-7

Dist	COUNTY	ROUTE	POST MILES TOTAL PROJECT	SHEET No.	TOTAL SHEETS
03	ED	89	8.6/13.8	34	231

Jack R. Cowell Jr. 11-18-13
REGISTERED CIVIL ENGINEER DATE

11-18-13
PLANS APPROVAL DATE

THE STATE OF CALIFORNIA OR ITS OFFICERS OR AGENTS SHALL NOT BE RESPONSIBLE FOR THE ACCURACY OR COMPLETENESS OF SCANNED COPIES OF THIS PLAN SHEET.

REGISTERED PROFESSIONAL ENGINEER
JACK COWELL
No. 65521
Exp. 9-30-15
CIVIL
STATE OF CALIFORNIA

REVISED BY | DATE REVISED

CALCULATED-DESIGNED BY: JACK COWELL
CHECKED BY: MASTRI ALVANDI

FUNCTIONAL SUPERVISOR: MASTRI ALVANDI

STATE OF CALIFORNIA - DEPARTMENT OF TRANSPORTATION
Caltrans®
DESIGN

LAST REVISION | DATE PLOTTED => 13-FEB-2014
02-04-13 | TIME PLOTTED => 13:41

BORDER LAST REVISED 7/2/2010 | USERNAME => s130875 | DGN FILE => 0300000223ga007.dgn | RELATIVE BORDER SCALE IS IN INCHES 0 1 2 3 | UNIT 0337 | PROJECT NUMBER & PHASE 03000002231

Dist	COUNTY	ROUTE	POST MILES TOTAL PROJECT	SHEET No.	TOTAL SHEETS
03	ED	89	8.6/13.8	35	231

Jack R. Cowell Jr. 11-18-13
REGISTERED CIVIL ENGINEER DATE

11-18-13
PLANS APPROVAL DATE

REGISTERED PROFESSIONAL ENGINEER — JACK COWELL — No. 65521 — Exp. 9-30-15 — CIVIL — STATE OF CALIFORNIA

THE STATE OF CALIFORNIA OR ITS OFFICERS OR AGENTS SHALL NOT BE RESPONSIBLE FOR THE ACCURACY OR COMPLETENESS OF SCANNED COPIES OF THIS PLAN SHEET.

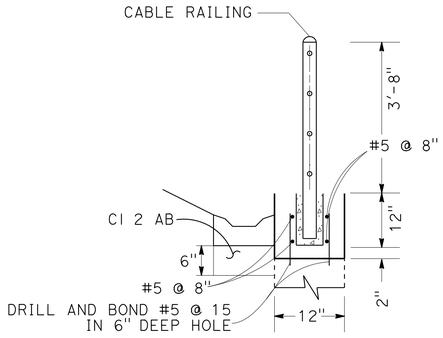

DETAIL A

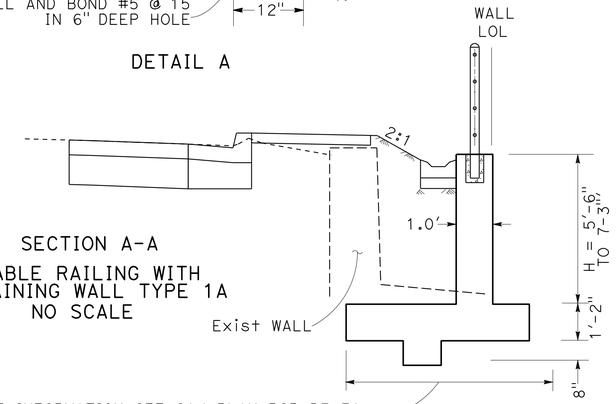

SECTION A-A
CABLE RAILING WITH RETAINING WALL TYPE 1A
NO SCALE

FOR MORE INFORMATION SEE Std PLAN RSP B3-3A (RETAINING WALL TYPE 1A)

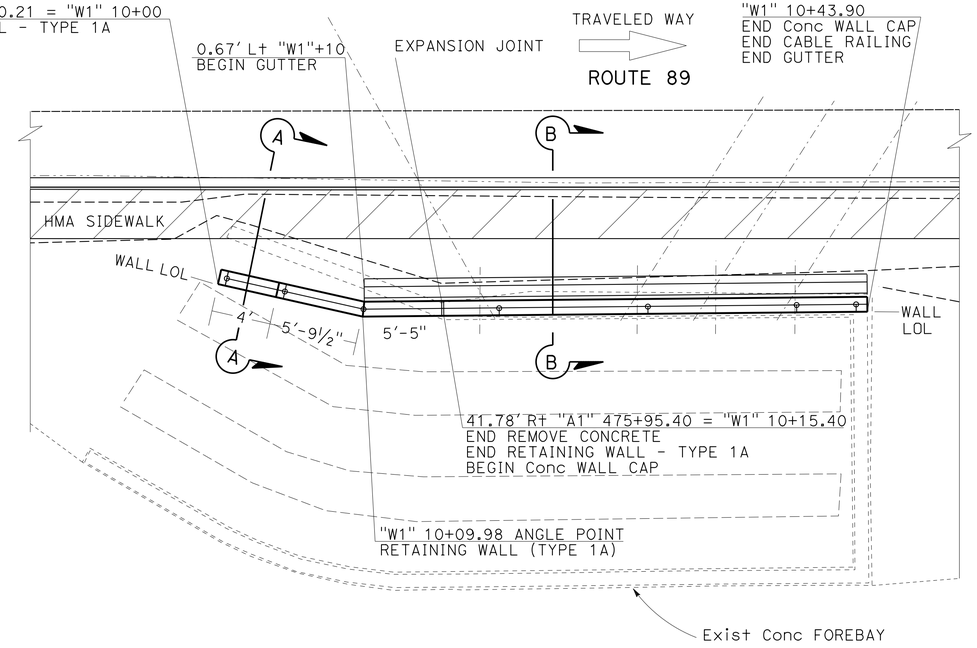

NOTE:
WALL LAYOUT LINE = FACE OF WALL

PLAN
SCALE: 1" = 10'

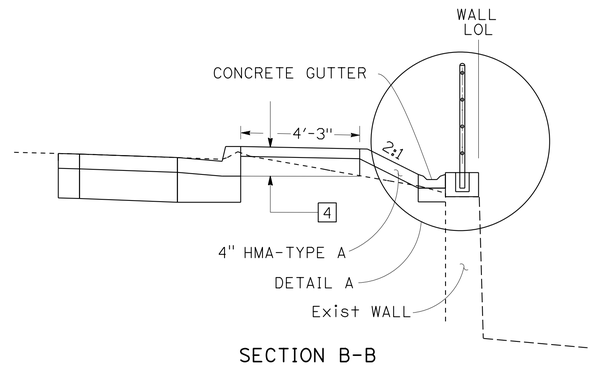

SECTION B-B
SIDEWALK, WALL GUTTER AND WALL CAP DETAIL
NO SCALE

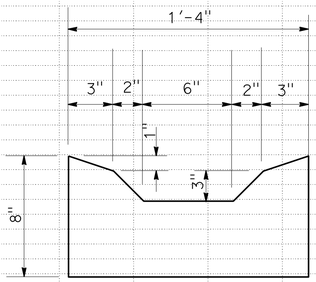

GUTTER DETAIL
NO SCALE

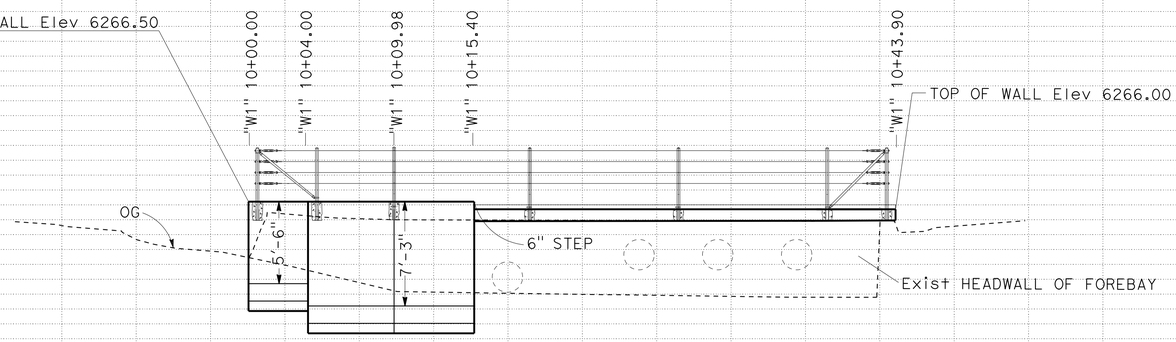

ELEVATION
475+80 TO 476+24 Rt
SCALE: Horiz 1"=10'
Vert 1"=10'

RETAINING WALL DETAIL AT FOREBAY

CONSTRUCTION DETAILS

SCALE AS SHOWN

C-8

STATE OF CALIFORNIA - DEPARTMENT OF TRANSPORTATION
DESIGN
FUNCTIONAL SUPERVISOR: MASTRI ALVANDI
CALCULATED-DESIGNED BY: JACK COWELL
CHECKED BY: MASTRI ALVANDI
REVISED BY | DATE REVISED

STATION | TOTAL
CY Exc | Emb

ALL DIMENSIONS ARE IN FEET
UNLESS OTHERWISE SHOWN

LAST REVISION 02-04-13 | DATE PLOTTED => 13-FEB-2014 | TIME PLOTTED => 13:41

BORDER LAST REVISED 7/2/2010 | USERNAME => s130875 | DGN FILE => 0300000223ga008.dgn | RELATIVE BORDER SCALE IS IN INCHES 0 1 2 3 | UNIT 0337 | PROJECT NUMBER & PHASE 03000002231

Dist	COUNTY	ROUTE	POST MILES TOTAL PROJECT	SHEET No.	TOTAL SHEETS
03	ED	89	8.6/13.8	36	231

Jack R. Cowell Jr. 11-18-13
REGISTERED CIVIL ENGINEER DATE

11-18-13
PLANS APPROVAL DATE

REGISTERED PROFESSIONAL ENGINEER
JACK COWELL
No. 65521
Exp. 9-30-15
CIVIL
STATE OF CALIFORNIA

THE STATE OF CALIFORNIA OR ITS OFFICERS OR AGENTS SHALL NOT BE RESPONSIBLE FOR THE ACCURACY OR COMPLETENESS OF SCANNED COPIES OF THIS PLAN SHEET.

CURVE DATA

No.	R	Δ	T	L
(1)	26.13′	78°8′24"	21.21′	35.64′
(2)	27.01′	90°7′18"	27.07′	42.49′

CURVE DATA

No.	R	Δ	T	L
(3)	15.00′	88°43′23"	14.67′	23.23′
(4)	35.00′	88°04′05"	33.84′	50.80′
(5)	15.00′	85°36′44"	13.89′	22.41′
(6)	22.63′	85°27′42"	20.90′	33.75′

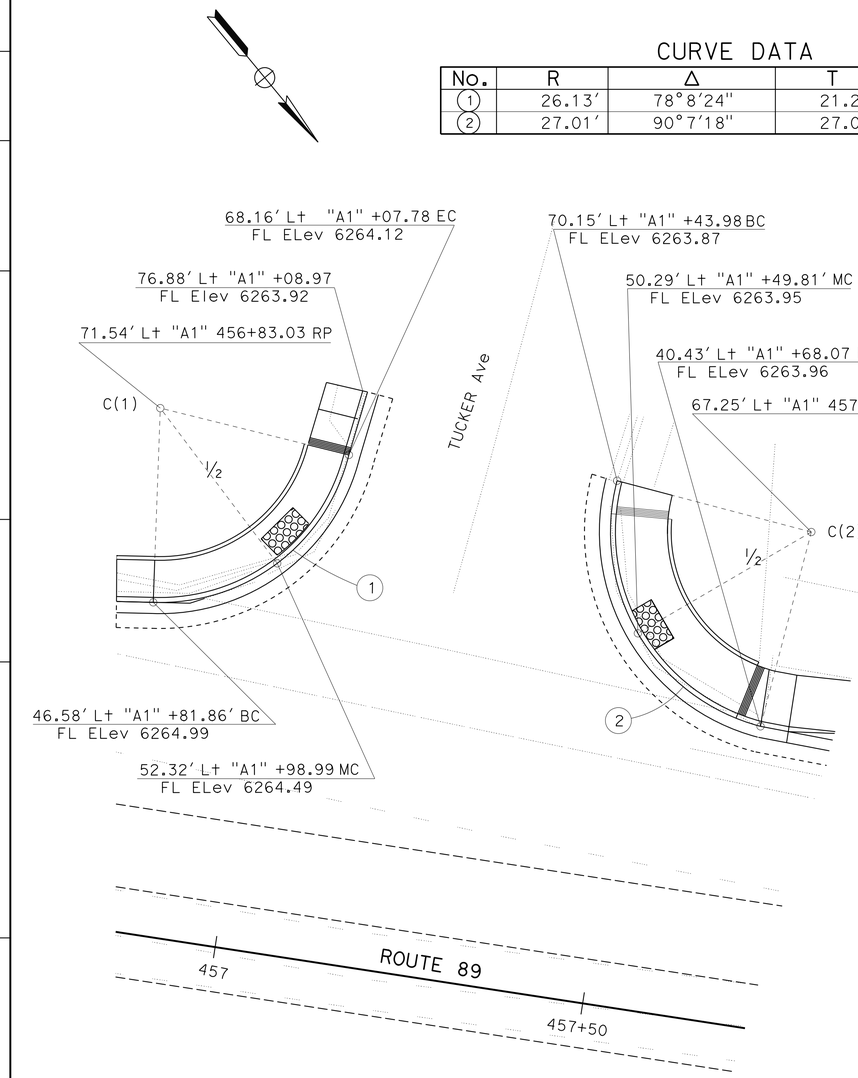

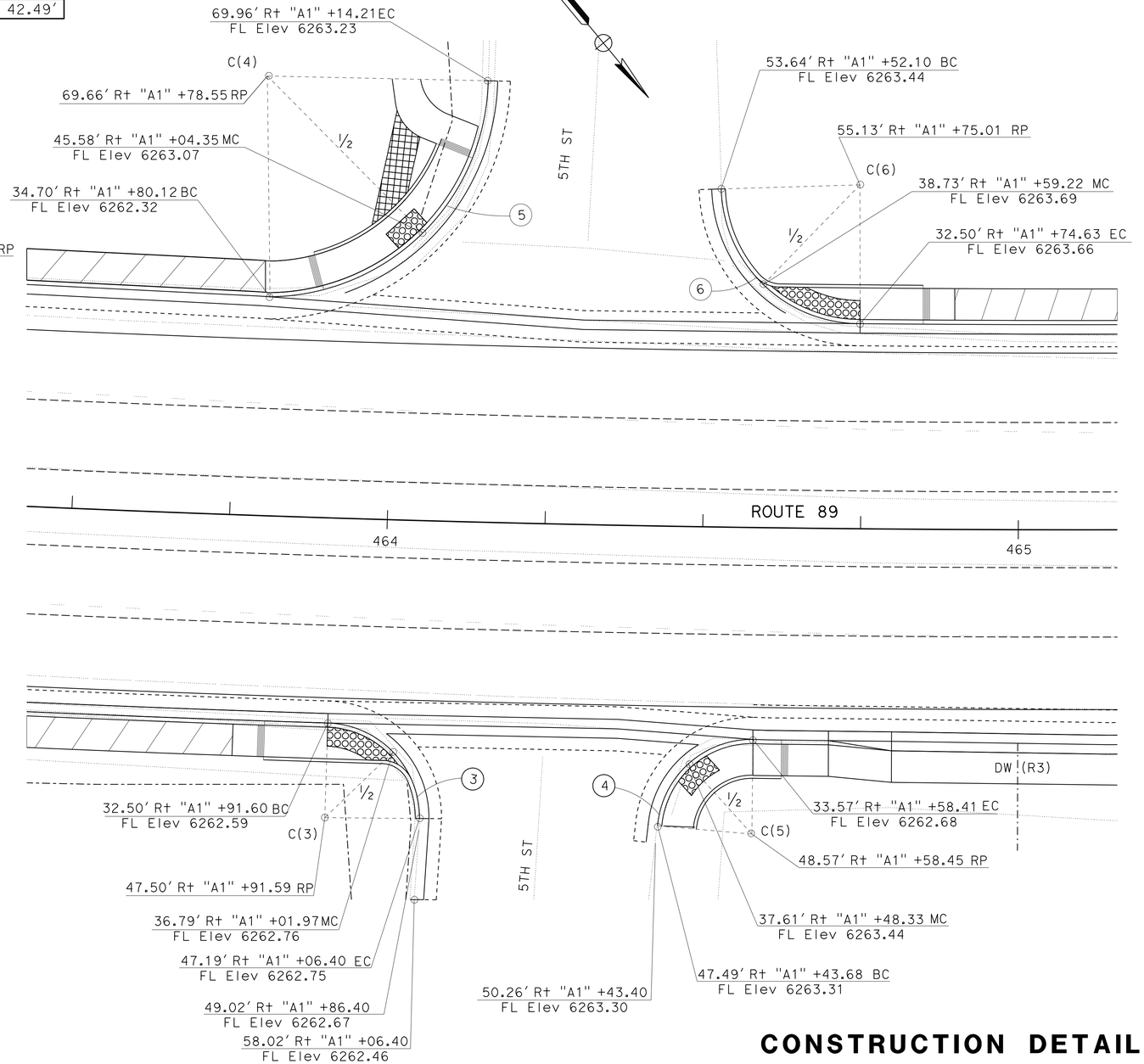

CONSTRUCTION DETAILS

SCALE: 1" = 10′

C-9

CALCULATED-DESIGNED BY: JACK COWELL
CHECKED BY: MASTRI ALVANDI
REVISED BY
DATE REVISED
FUNCTIONAL SUPERVISOR: MASTRI ALVANDI
STATE OF CALIFORNIA - DEPARTMENT OF TRANSPORTATION
DESIGN
Caltrans

LAST REVISION 02-04-13
DATE PLOTTED => 13-FEB-2014
TIME PLOTTED => 13:41

BORDER LAST REVISED 7/2/2010
USERNAME => s130875
DGN FILE => 0300000223ga009.dgn
RELATIVE BORDER SCALE IS IN INCHES 0 1 2 3
UNIT 0337
PROJECT NUMBER & PHASE 03000002231

Dist	COUNTY	ROUTE	POST MILES TOTAL PROJECT	SHEET No.	TOTAL SHEETS
03	ED	89	8.6/13.8	37	231

Jack R. Cowell Jr. 11-18-13
REGISTERED CIVIL ENGINEER DATE

11-18-13
PLANS APPROVAL DATE

REGISTERED PROFESSIONAL ENGINEER
JACK COWELL
No. 65521
Exp. 9-30-15
CIVIL
STATE OF CALIFORNIA

THE STATE OF CALIFORNIA OR ITS OFFICERS OR AGENTS SHALL NOT BE RESPONSIBLE FOR THE ACCURACY OR COMPLETENESS OF SCANNED COPIES OF THIS PLAN SHEET.

CURVE DATA

No.	R	Δ	T	L
(7)	32.15′	86°26′40"	30.21′	48.51′
(8)	30.00′	89°12′11"	29.59′	46.71′

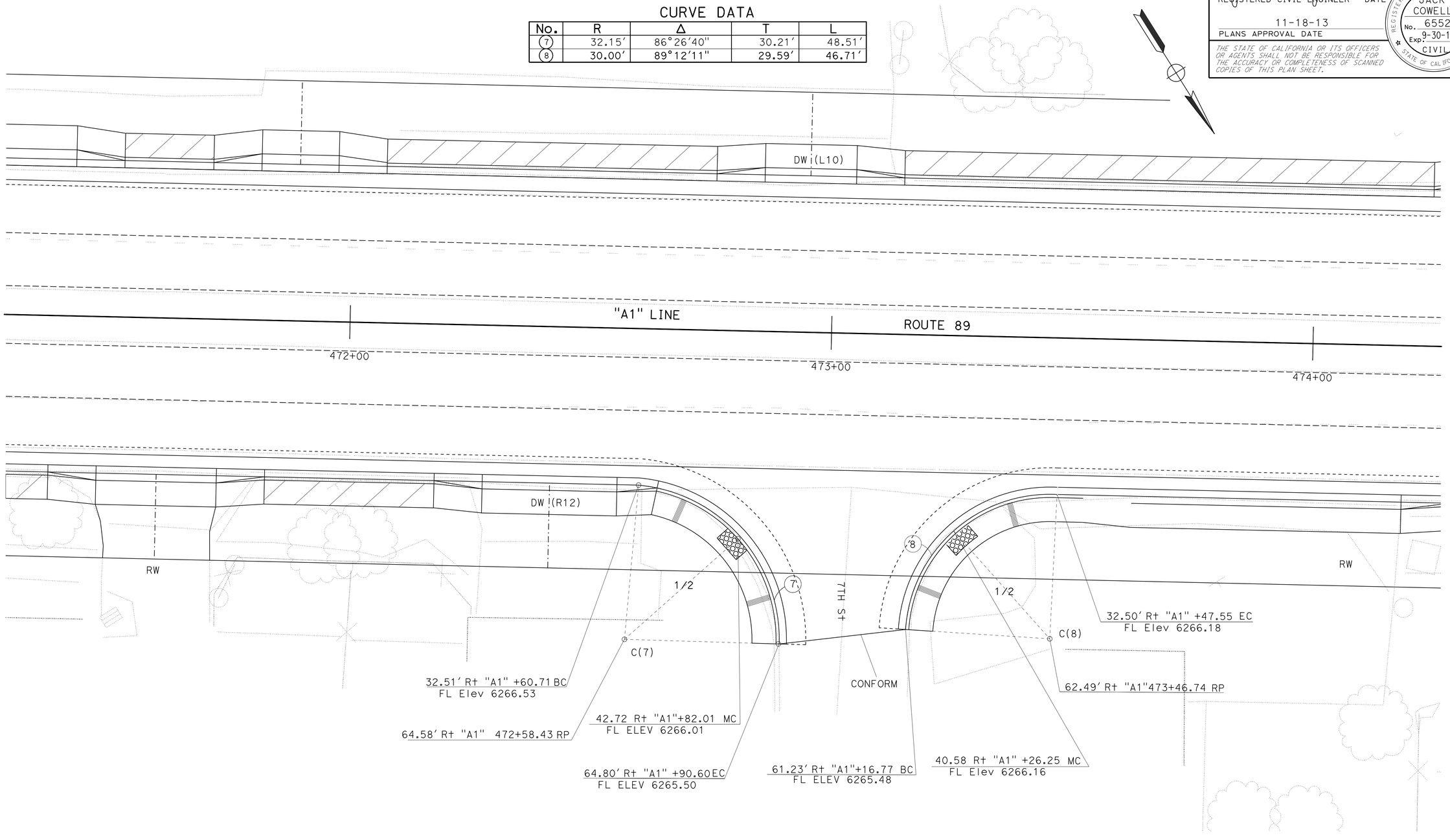

CONSTRUCTION DETAILS

NO SCALE

C-10

REVISED BY | DATE REVISED
CALCULATED-DESIGNED BY | CHECKED BY
JACK COWELL | MASTRI ALVANDI
FUNCTIONAL SUPERVISOR
MASTRI ALVANDI
STATE OF CALIFORNIA - DEPARTMENT OF TRANSPORTATION
DESIGN

LAST REVISION 02-04-13
DATE PLOTTED => 13-FEB-2014
TIME PLOTTED => 13:41

BORDER LAST REVISED 7/2/2010
USERNAME => s130875
DGN FILE => 0300000223ga010.dgn
RELATIVE BORDER SCALE IS IN INCHES 0 1 2 3
UNIT 0337
PROJECT NUMBER & PHASE 03000002231

NOTE:

FOR ACCURATE RIGHT OF WAY AND ACCESS DATA
CONTACT RIGHT OF WAY ENGINEERING AT THE DISTRICT OFFICE.

CURVE DATA

No.	R	Δ	T	L
(9)	20.00	71°22'55"	14.37	24.92
(10)	20.00	79°6'18"	16.52	27.61

Dist	COUNTY	ROUTE	POST MILES TOTAL PROJECT	SHEET No.	TOTAL SHEETS
03	ED	89	8.6/13.8	38	231

Jack R. Cowell Jr. 11-18-13
REGISTERED CIVIL ENGINEER DATE

11-18-13
PLANS APPROVAL DATE

REGISTERED PROFESSIONAL ENGINEER
JACK COWELL
No. 65521
Exp. 9-30-13
CIVIL
STATE OF CALIFORNIA

THE STATE OF CALIFORNIA OR ITS OFFICERS OR AGENTS SHALL NOT BE RESPONSIBLE FOR THE ACCURACY OR COMPLETENESS OF SCANNED COPIES OF THIS PLAN SHEET.

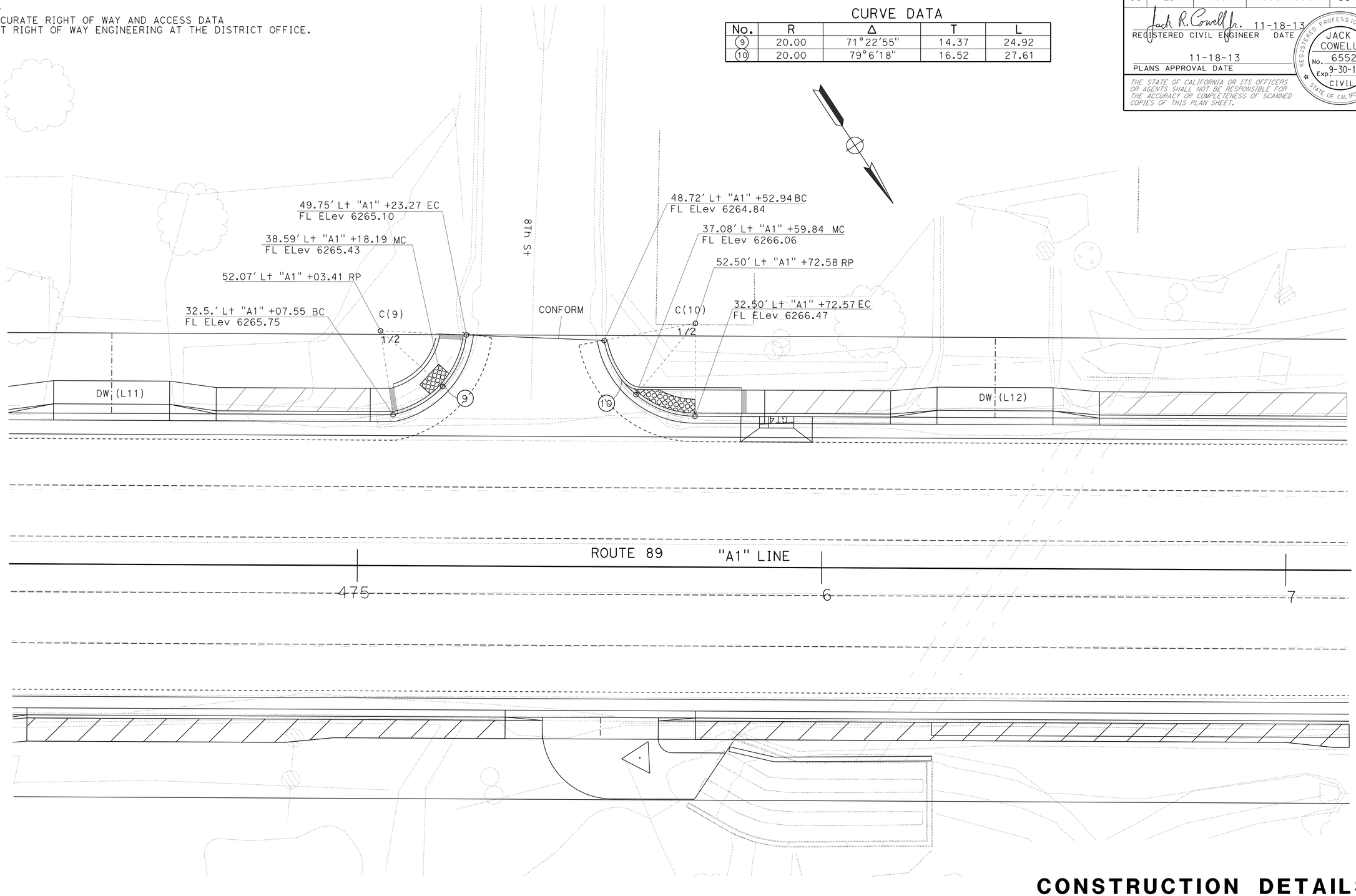

CONSTRUCTION DETAILS

SCALE: 1" = 10'

C-11

REVISED BY	DATE REVISED

CALCULATED-DESIGNED BY: JACK COWELL
CHECKED BY: MASTRI ALVANDI
FUNCTIONAL SUPERVISOR: MASTRI ALVANDI

STATE OF CALIFORNIA - DEPARTMENT OF TRANSPORTATION
Caltrans®

LAST REVISION: DATE PLOTTED => 13-FEB-2014
02-04-13 TIME PLOTTED => 13:41

BORDER LAST REVISED 7/2/2010

USERNAME => s130875
DGN FILE => 0300000223ga011.dgn

RELATIVE BORDER SCALE IS IN INCHES 0 1 2 3

UNIT 0337

PROJECT NUMBER & PHASE 03000002231

Dist	COUNTY	ROUTE	POST MILES TOTAL PROJECT	SHEET No.	TOTAL SHEETS
03	ED	89	8.6/13.8	39	231

Jack R. Cowell Jr. 11-18-13
REGISTERED CIVIL ENGINEER DATE

11-18-13
PLANS APPROVAL DATE

REGISTERED PROFESSIONAL ENGINEER
JACK COWELL
No. 65521
Exp. 9-30-15
CIVIL
STATE OF CALIFORNIA

THE STATE OF CALIFORNIA OR ITS OFFICERS OR AGENTS SHALL NOT BE RESPONSIBLE FOR THE ACCURACY OR COMPLETENESS OF SCANNED COPIES OF THIS PLAN SHEET.

CURVE DATA

No.	R	Δ	T	L
(11)	28.00′	91°44′59"	28.87′	44.84′
(12)	35.00′	83°47′46"	31.4′	51.19′
(13)	25.20′	89°43′20"	24.88′	39.15′
(14)	25.00′	87°0′09"	23.73′	37.96′

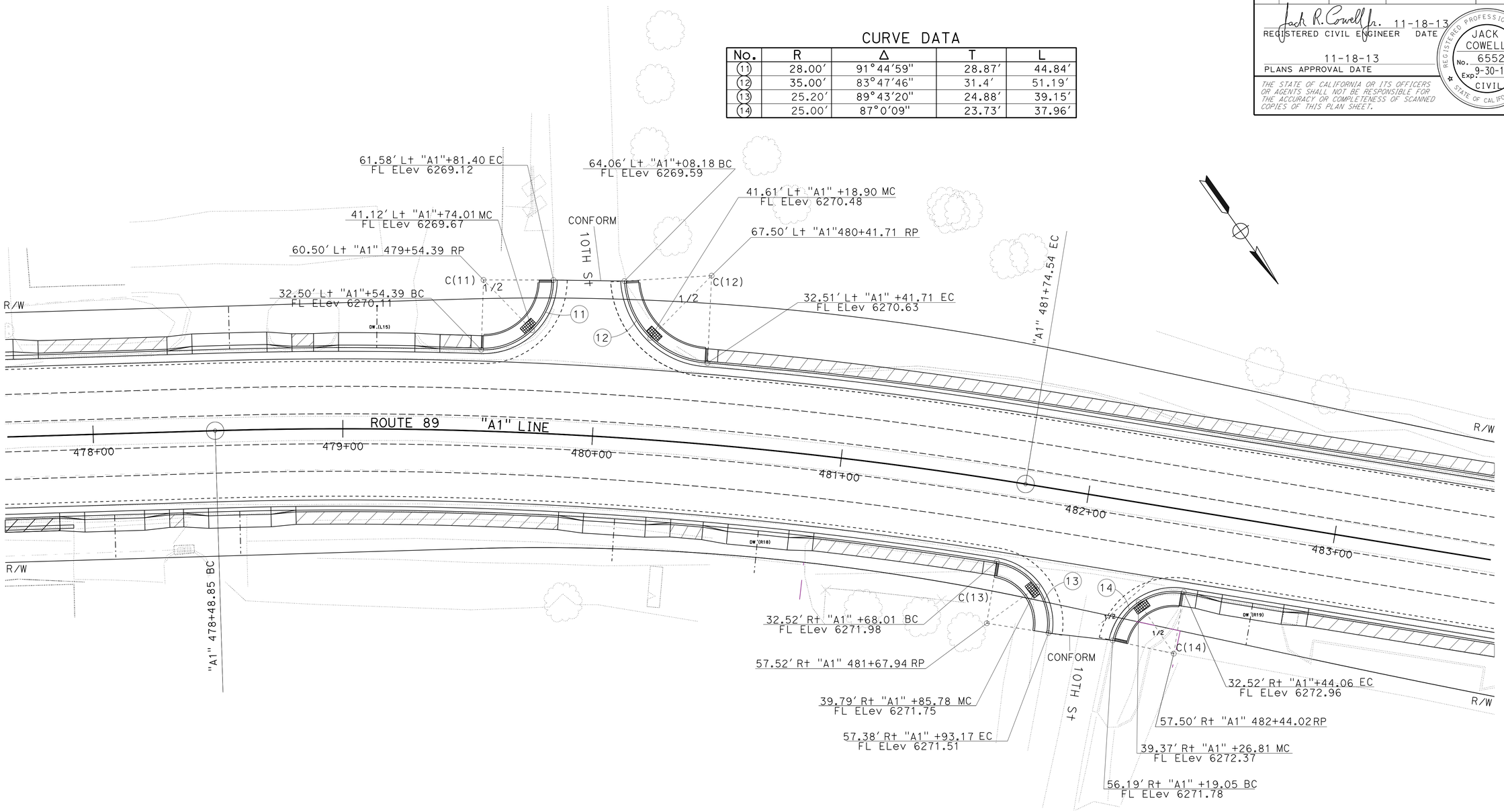

CONSTRUCTION DETAILS

SCALE: 1" = 20′

C-12

REVISED BY | DATE REVISED
JACK COWELL | MASTRI ALVANDI
CALCULATED-DESIGNED BY | CHECKED BY
FUNCTIONAL SUPERVISOR: MASTRI ALVANDI
STATE OF CALIFORNIA - DEPARTMENT OF TRANSPORTATION
Caltrans® DESIGN

DATE PLOTTED => 13-FEB-2014
TIME PLOTTED => 13:41
LAST REVISION 02-04-13

BORDER LAST REVISED 7/2/2010 | USERNAME => s130875 | DGN FILE => 0300000223ga012.dgn | RELATIVE BORDER SCALE IS IN INCHES 0 1 2 3 | UNIT 0337 | PROJECT NUMBER & PHASE 03000002231

Dist	COUNTY	ROUTE	POST MILES TOTAL PROJECT	SHEET No.	TOTAL SHEETS
03	ED	89	8.6/13.8	40	231

Jack R. Cowell Jr. 11-18-13
REGISTERED CIVIL ENGINEER DATE

11-18-13
PLANS APPROVAL DATE

REGISTERED PROFESSIONAL ENGINEER — JACK COWELL — No. 65521 — Exp. 9-30-15 — CIVIL — STATE OF CALIFORNIA

THE STATE OF CALIFORNIA OR ITS OFFICERS OR AGENTS SHALL NOT BE RESPONSIBLE FOR THE ACCURACY OR COMPLETENESS OF SCANNED COPIES OF THIS PLAN SHEET.

CURVE DATA

No.	R	Δ	T	L
(15)	20.00′	85°10′56"	18.39′	29.73′
(16)	25.00′	82°46′14"	22.03′	36.12′
(17)	25.00′	83°38′24"	22.37′	36.49′
(18)	20.00′	91°26′37"	20.51′	31.92′

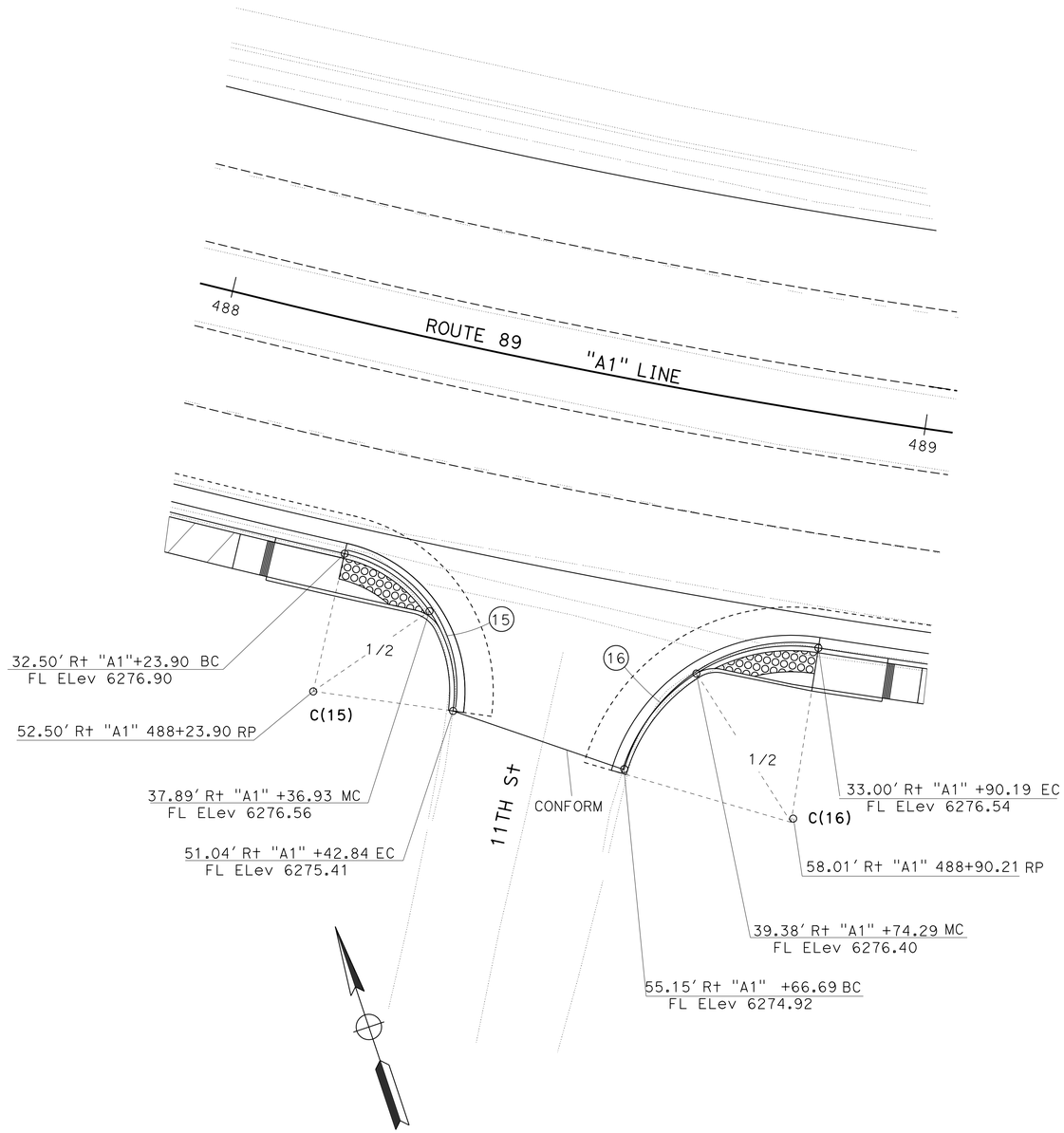

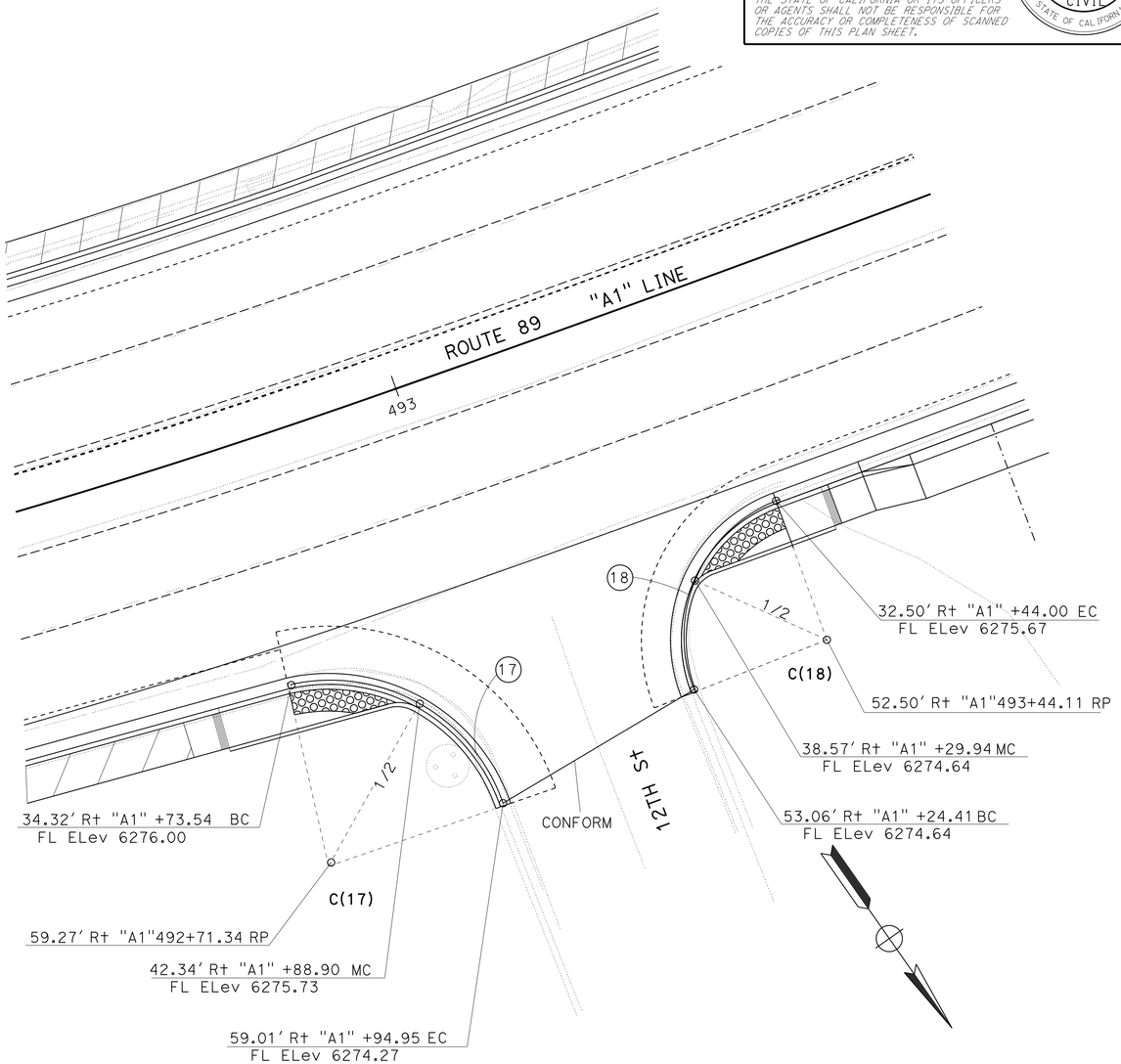

CONSTRUCTION DETAILS

NO SCALE

C-13

STATE OF CALIFORNIA - DEPARTMENT OF TRANSPORTATION
DESIGN
FUNCTIONAL SUPERVISOR: MASTRI ALVANDI
CALCULATED-DESIGNED BY: JACK COWELL
CHECKED BY: MASTRI ALVANDI
REVISED BY | DATE REVISED

LAST REVISION | DATE PLOTTED => 13-FEB-2014 | TIME PLOTTED => 13:41
02-04-13

BORDER LAST REVISED 7/2/2010 | USERNAME => s130875 | DGN FILE => 0300000223ga013.dgn | RELATIVE BORDER SCALE IS IN INCHES 0 1 2 3 | UNIT 0337 | PROJECT NUMBER & PHASE 03000002231

Dist	COUNTY	ROUTE	POST MILES TOTAL PROJECT	SHEET No.	TOTAL SHEETS
03	ED	89	8.6/13.8	41	231

Jack R. Cowell Jr. 11-18-13
REGISTERED CIVIL ENGINEER DATE

11-18-13
PLANS APPROVAL DATE

REGISTERED PROFESSIONAL ENGINEER
JACK COWELL
No. 65521
Exp. 9-30-15
CIVIL
STATE OF CALIFORNIA

THE STATE OF CALIFORNIA OR ITS OFFICERS OR AGENTS SHALL NOT BE RESPONSIBLE FOR THE ACCURACY OR COMPLETENESS OF SCANNED COPIES OF THIS PLAN SHEET.

CURVE DATA

No.	R	Δ	T	L
(19)	20.00′	80°28′01"	16.92′	28.09′
(20)	22.00′	77°35′43"	17.69′	29.79′
(21)	22.00′	77°45′51"	17.74′	29.86′
(22)	20.00′	83°09′13"	17.74′	29.03′

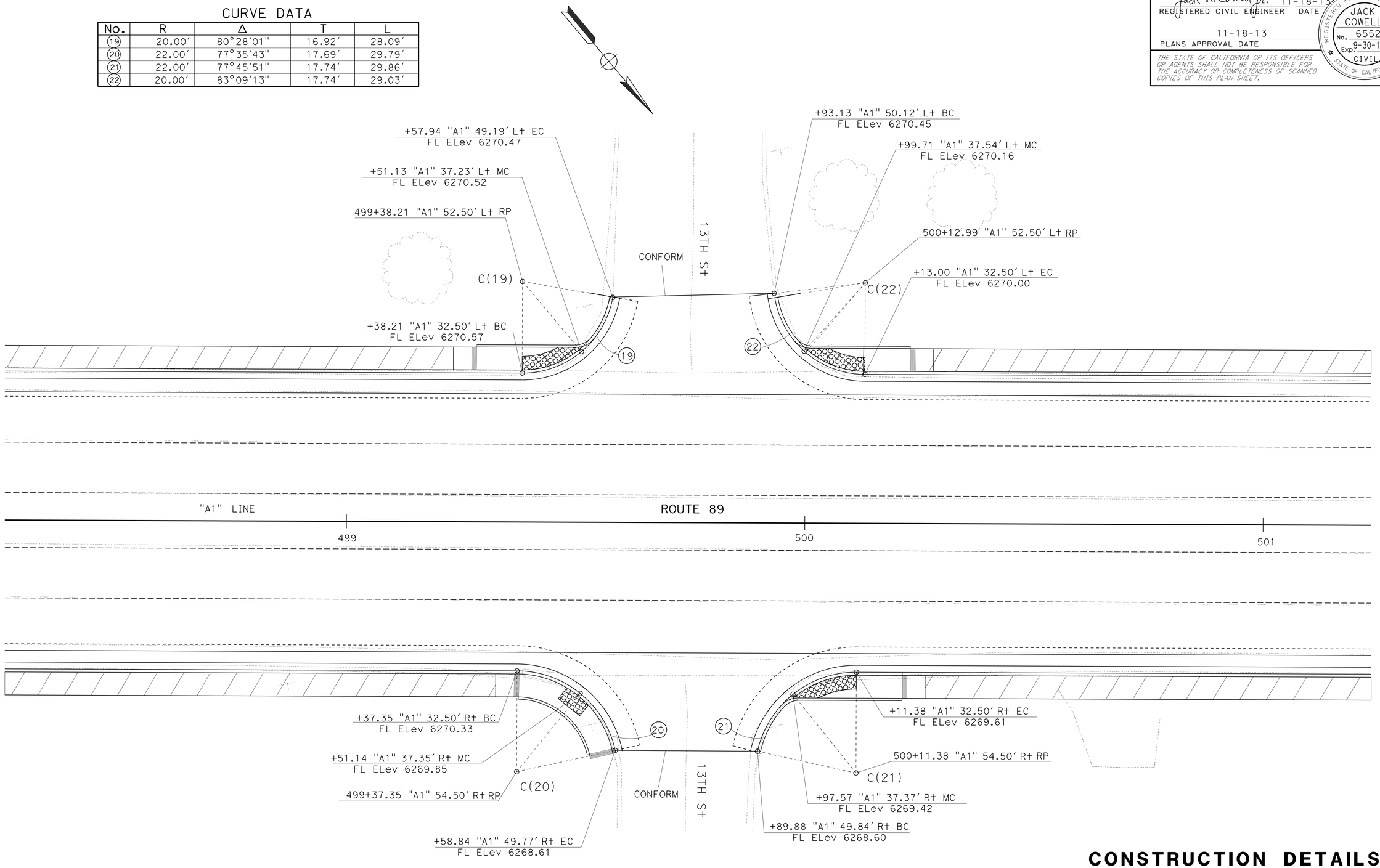

CONSTRUCTION DETAILS

NO SCALE

C-14

LAST REVISION
DATE PLOTTED => 13-FEB-2014
TIME PLOTTED => 13:41
02-04-13

REVISED BY | DATE REVISED

CALCULATED-DESIGNED BY: JACK COWELL
CHECKED BY: MASTRI ALVANDI
FUNCTIONAL SUPERVISOR: MASTRI ALVANDI

STATE OF CALIFORNIA - DEPARTMENT OF TRANSPORTATION
Caltrans®
DESIGN

BORDER LAST REVISED 7/2/2010

USERNAME => s130875
DGN FILE => 0300000223ga014.dgn

RELATIVE BORDER SCALE IS IN INCHES 0 1 2 3

UNIT 0337

PROJECT NUMBER & PHASE 03000002231

Dist	COUNTY	ROUTE	POST MILES TOTAL PROJECT	SHEET No.	TOTAL SHEETS
03	ED	89	8.6/13.8	42	231

Jack R. Cowell Jr. 11-18-13
REGISTERED CIVIL ENGINEER DATE

11-18-13
PLANS APPROVAL DATE

REGISTERED PROFESSIONAL ENGINEER — JACK COWELL — No. 65521 — Exp. 9-30-15 — CIVIL — STATE OF CALIFORNIA

THE STATE OF CALIFORNIA OR ITS OFFICERS OR AGENTS SHALL NOT BE RESPONSIBLE FOR THE ACCURACY OR COMPLETENESS OF SCANNED COPIES OF THIS PLAN SHEET.

CURVE DATA

No.	R	Δ	T	L
(23)	30.00′	65°39′46"	19.36′	34.38′
(24)	20.00′	81°59′36"	17.38′	28.62′
(25)	20.00′	86°38′05"	18.86′	30.24′
(26)	22.00′	77°14′03"	17.57′	29.66′
(27)	22.00′	77°7′47"	17.54′	29.62′
(29)	15.00′	85°00′42"	13.75′	22.26′

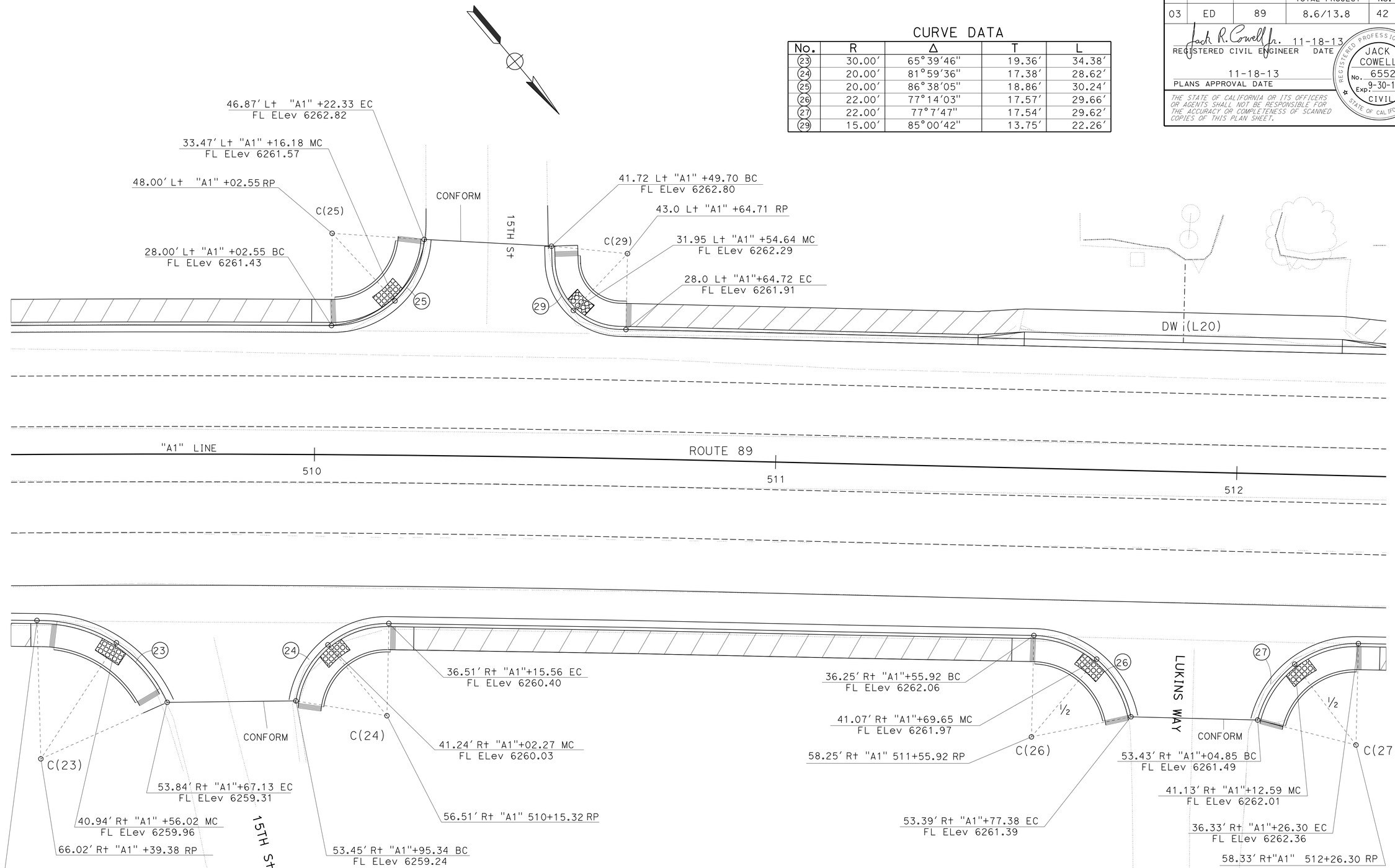

CONSTRUCTION DETAILS

NO SCALE

C-15

REVISED BY | DATE REVISED

CALCULATED-DESIGNED BY: JACK COWELL
CHECKED BY: MASTRI ALVANDI
FUNCTIONAL SUPERVISOR: MASTRI ALVANDI

STATE OF CALIFORNIA - DEPARTMENT OF TRANSPORTATION
Caltrans® DESIGN

LAST REVISION | DATE PLOTTED => 13-FEB-2014 | TIME PLOTTED => 13:41
02-04-13

BORDER LAST REVISED 7/2/2010 | USERNAME => s130875 | DGN FILE => 0300000223ga015.dgn | RELATIVE BORDER SCALE IS IN INCHES 0 1 2 3 | UNIT 0337 | PROJECT NUMBER & PHASE 03000002231

Dist	COUNTY	ROUTE	POST MILES TOTAL PROJECT	SHEET No.	TOTAL SHEETS
03	ED	89	8.6/13.8	43	231

Jack R. Cowell Jr. 11-18-13
REGISTERED CIVIL ENGINEER DATE

11-18-13
PLANS APPROVAL DATE

REGISTERED PROFESSIONAL ENGINEER — JACK COWELL — No. 65521 — Exp. 9-30-15 — CIVIL — STATE OF CALIFORNIA

THE STATE OF CALIFORNIA OR ITS OFFICERS OR AGENTS SHALL NOT BE RESPONSIBLE FOR THE ACCURACY OR COMPLETENESS OF SCANNED COPIES OF THIS PLAN SHEET.

FOR DETAILS OF CC (A2-6) 1' GUTTER, SEE SHEET L-4.

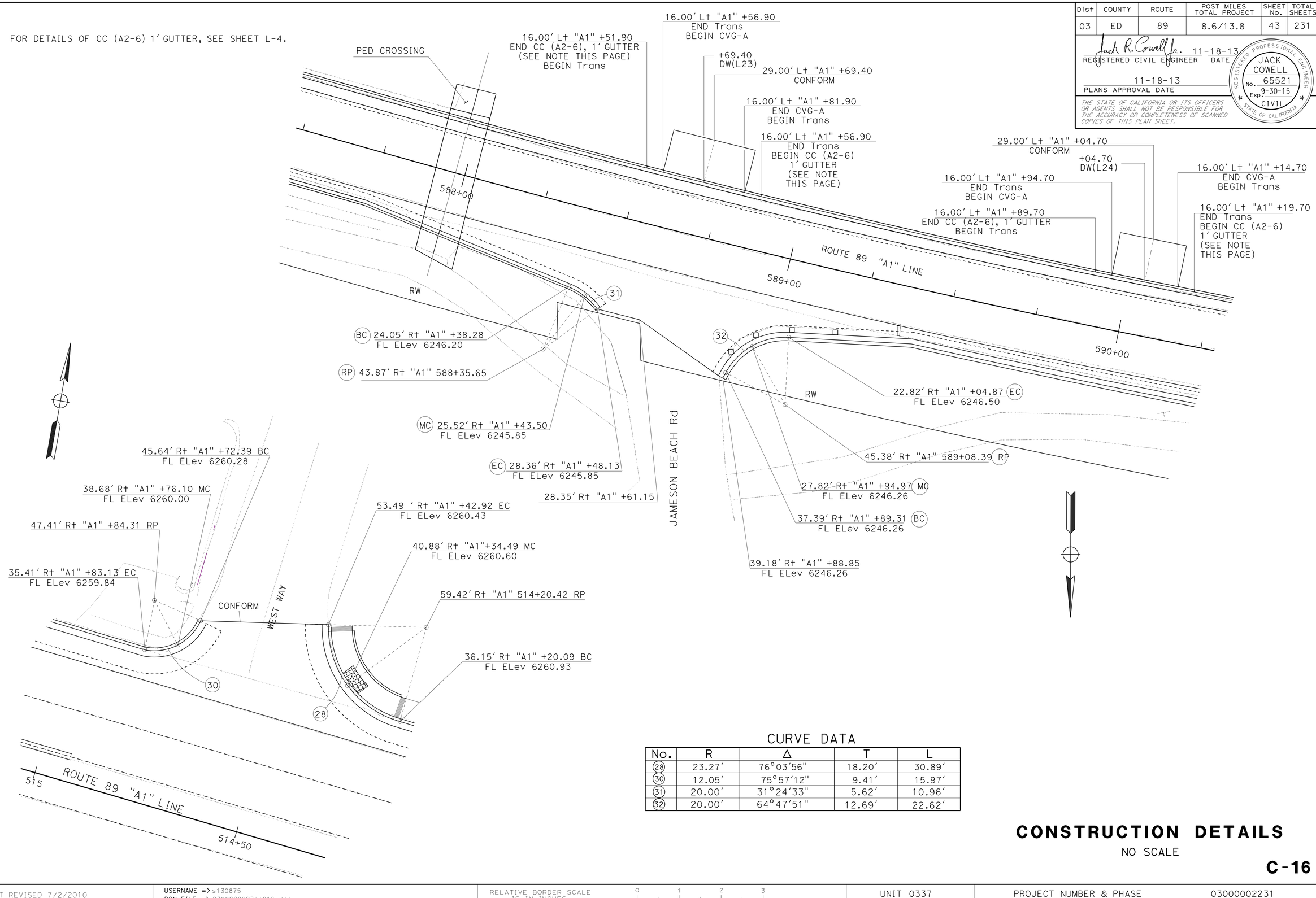

CURVE DATA

No.	R	Δ	T	L
28	23.27'	76°03'56"	18.20'	30.89'
30	12.05'	75°57'12"	9.41'	15.97'
31	20.00'	31°24'33"	5.62'	10.96'
32	20.00'	64°47'51"	12.69'	22.62'

CONSTRUCTION DETAILS

NO SCALE

C-16

STATE OF CALIFORNIA - DEPARTMENT OF TRANSPORTATION
DESIGN
FUNCTIONAL SUPERVISOR: MASTRI ALVANDI
CALCULATED-DESIGNED BY: JACK COWELL
CHECKED BY: MASTRI ALVANDI
REVISED BY
DATE REVISED

LAST REVISION DATE PLOTTED => 13-FEB-2014
02-04-13 TIME PLOTTED => 13:41

Dist	COUNTY	ROUTE	POST MILES TOTAL PROJECT	SHEET No.	TOTAL SHEETS
03	ED	89	8.6/13.8	44	231

Jack R. Cowell Jr. 11-18-13
REGISTERED CIVIL ENGINEER DATE

11-18-13
PLANS APPROVAL DATE

REGISTERED PROFESSIONAL ENGINEER — JACK COWELL — No. 65521 — Exp. 9-30-15 — CIVIL — STATE OF CALIFORNIA

THE STATE OF CALIFORNIA OR ITS OFFICERS OR AGENTS SHALL NOT BE RESPONSIBLE FOR THE ACCURACY OR COMPLETENESS OF SCANNED COPIES OF THIS PLAN SHEET.

NOTE:

FOR ACCURATE RIGHT OF WAY DATA, CONTACT RIGHT OF WAY ENGINEERING AT THE DISTRICT OFFICE.

CURVE DATA

No.	R	Δ	T	L
(1)	40.00′	90°42′14"	40.49′	63.32′
(2)	45.00′	49°47′36"	20.89′	39.11′
(3)	25.00′	47°32′24"	11.01′	20.74′
(4)	25.00′	88°36′16"	24.40′	38.66′

(THIS SHEET ONLY)

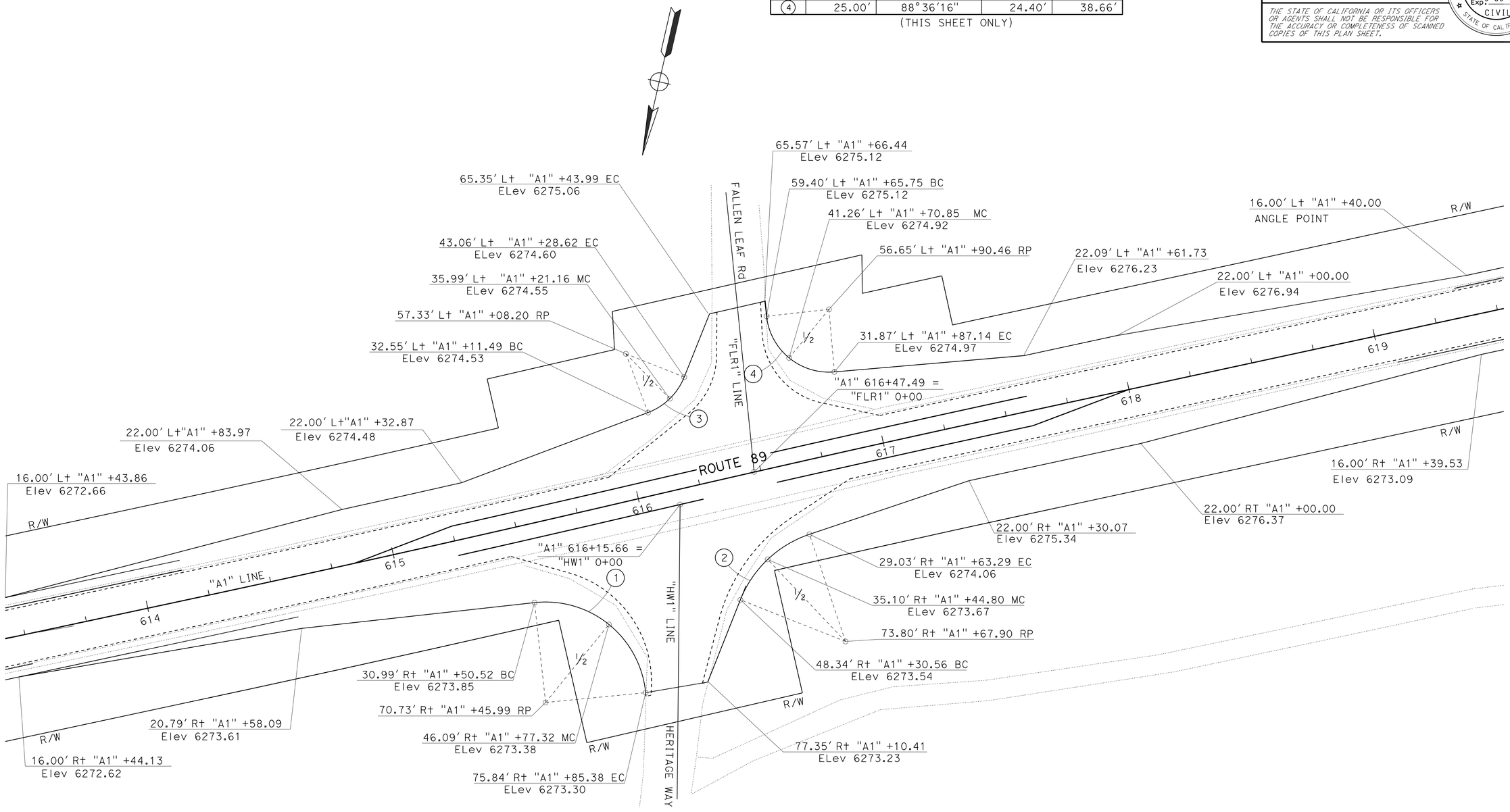

Sta 616+00 FALLEN LEAF RD/HERTIAGE WAY

CONSTRUCTION DETAILS

NO SCALE

C-17

LAST REVISION | DATE PLOTTED => 13-FEB-2014 | 07-16-13 | TIME PLOTTED => 13:42

REVISED BY	DATE REVISED

CALCULATED-DESIGNED BY: JACK COWELL
CHECKED BY: MASTRI ALVANDI
FUNCTIONAL SUPERVISOR: MASTRI ALVANDI

STATE OF CALIFORNIA - DEPARTMENT OF TRANSPORTATION
Caltrans

BORDER LAST REVISED 7/2/2010 | USERNAME => s130875 | DGN FILE => 0300000223ga017.dgn | RELATIVE BORDER SCALE IS IN INCHES 0 1 2 3 | UNIT 0337 | PROJECT NUMBER & PHASE 03000002231

Dist	COUNTY	ROUTE	POST MILES TOTAL PROJECT	SHEET No.	TOTAL SHEETS
03	ED	89	8.6/13.8	45	231

Jack R. Cowell Jr. 11-18-13
REGISTERED CIVIL ENGINEER DATE

11-18-13
PLANS APPROVAL DATE

REGISTERED PROFESSIONAL ENGINEER JACK COWELL No. 65521 Exp. 9-30-15 CIVIL STATE OF CALIFORNIA

THE STATE OF CALIFORNIA OR ITS OFFICERS OR AGENTS SHALL NOT BE RESPONSIBLE FOR THE ACCURACY OR COMPLETENESS OF SCANNED COPIES OF THIS PLAN SHEET.

CURVE DATA

No.	R	Δ	T	L
5	25.00′	55°42′11"	13.21′	24.31′
6	30.00′	62°09′23"	18.08′	32.54′

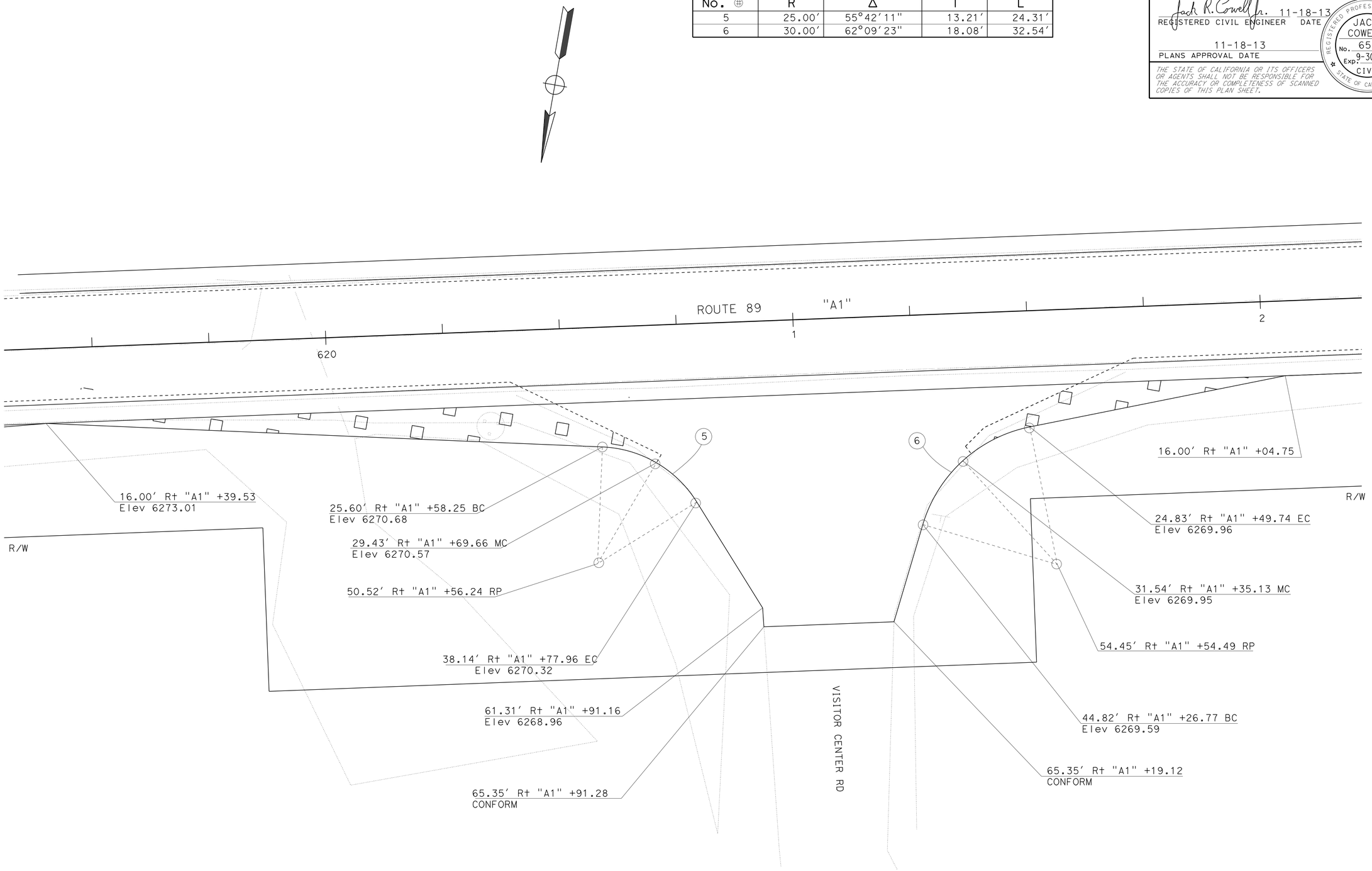

CONSTRUCTION DETAILS

SCALE: 1" = 10′

C-18

STATE OF CALIFORNIA - DEPARTMENT OF TRANSPORTATION
Caltrans
DESIGN

FUNCTIONAL SUPERVISOR: MASTRI ALVANDI
CALCULATED-DESIGNED BY: JACK COWELL
CHECKED BY: MASTRI ALVANDI
REVISED BY
DATE REVISED

LAST REVISION 02-04-13
DATE PLOTTED => 13-FEB-2014
TIME PLOTTED => 13:42

Dist	COUNTY	ROUTE	POST MILES TOTAL PROJECT	SHEET No.	TOTAL SHEETS
03	ED	89	8.6/13.8	46	231

Jack R. Cowell Jr. 11-18-13
REGISTERED CIVIL ENGINEER DATE

11-18-13
PLANS APPROVAL DATE

REGISTERED PROFESSIONAL ENGINEER
JACK COWELL
No. 65521
Exp. 9-30-15
CIVIL
STATE OF CALIFORNIA

THE STATE OF CALIFORNIA OR ITS OFFICERS OR AGENTS SHALL NOT BE RESPONSIBLE FOR THE ACCURACY OR COMPLETENESS OF SCANNED COPIES OF THIS PLAN SHEET.

CURVE DATA

No. ⊕	R	Δ	T	L
1	30.00′	77°48′58"	24.21′	40.74′
2	25.00′	73°36′20"	18.70′	32.12′

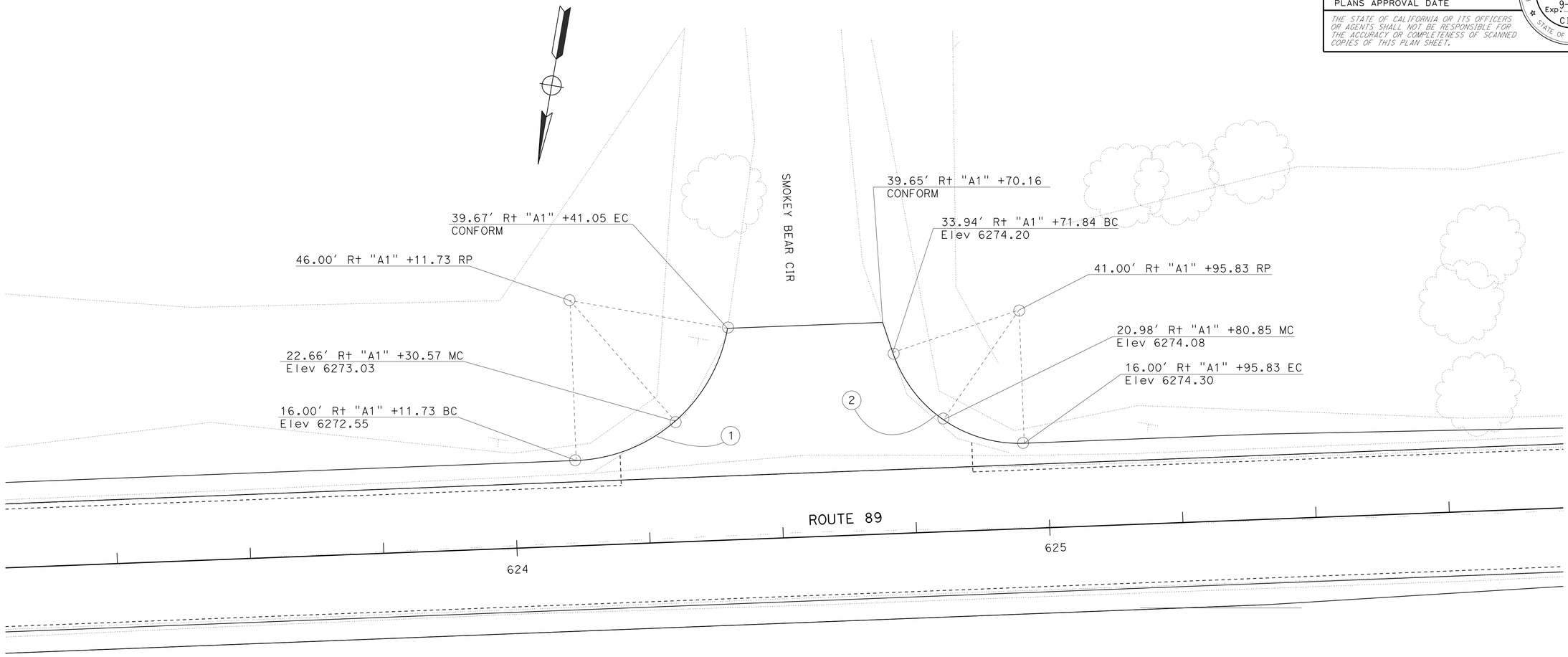

CONSTRUCTION DETAILS

SCALE: 1" = 10′

C-19

CALCULATED-DESIGNED BY
CHECKED BY
JACK COWELL
MASTRI ALVANDI
REVISED BY
DATE REVISED
FUNCTIONAL SUPERVISOR
MASTRI ALVANDI
STATE OF CALIFORNIA - DEPARTMENT OF TRANSPORTATION
Caltrans®
DESIGN

LAST REVISION 02-04-13
DATE PLOTTED => 13-FEB-2014
TIME PLOTTED => 13:42

BORDER LAST REVISED 7/2/2010
USERNAME => s130875
DGN FILE => 0300000223ga019.dgn
RELATIVE BORDER SCALE IS IN INCHES 0 1 2 3
UNIT 0337
PROJECT NUMBER & PHASE 03000002231

Dist	COUNTY	ROUTE	POST MILES TOTAL PROJECT	SHEET No.	TOTAL SHEETS
03	ED	89	8.6/13.8	47	231

Jack R. Cowell Jr. 11-18-13
REGISTERED CIVIL ENGINEER DATE

11-18-13
PLANS APPROVAL DATE

REGISTERED PROFESSIONAL ENGINEER
JACK COWELL
No. 65521
Exp. 9-30-15
CIVIL
STATE OF CALIFORNIA

THE STATE OF CALIFORNIA OR ITS OFFICERS OR AGENTS SHALL NOT BE RESPONSIBLE FOR THE ACCURACY OR COMPLETENESS OF SCANNED COPIES OF THIS PLAN SHEET.

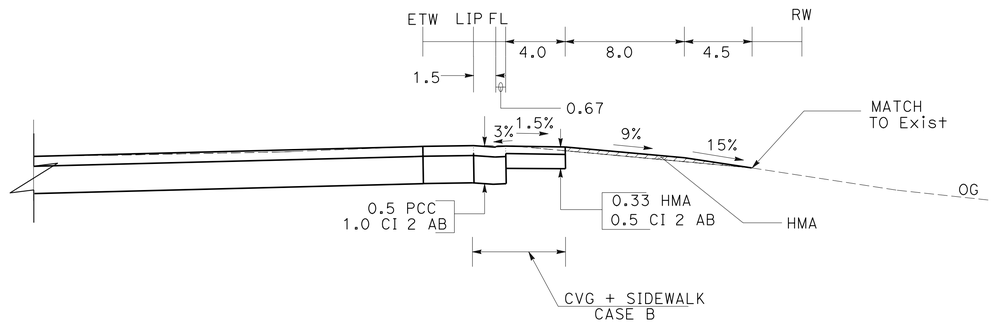

PROFILE
Dwy 23
"A1" 489+78

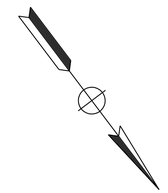

PLAN VIEW

Dwy 23
"A1" 489+78

CONSTRUCTION DETAILS
NO SCALE

C-20

STATE OF CALIFORNIA - DEPARTMENT OF TRANSPORTATION
DESIGN

JACK COWELL — CALCULATED-DESIGNED BY
MASTRI ALVANDI — CHECKED BY
MASTRI ALVANDI — FUNCTIONAL SUPERVISOR
REVISED BY — DATE REVISED

LAST REVISION
DATE PLOTTED => 13-FEB-2014
TIME PLOTTED => 13:42

BORDER LAST REVISED 7/2/2010
USERNAME => s130875
DGN FILE => 0300000223ga020.dgn
RELATIVE BORDER SCALE IS IN INCHES 0 1 2 3
UNIT 0337
PROJECT NUMBER & PHASE 03000002231

Dist	COUNTY	ROUTE	POST MILES TOTAL PROJECT	SHEET No.	TOTAL SHEETS
03	ED	89	8.6/13.8	48	231

Jack R. Cowell Jr. 11-18-13
REGISTERED CIVIL ENGINEER DATE

11-18-13
PLANS APPROVAL DATE

REGISTERED PROFESSIONAL ENGINEER
JACK COWELL
No. 65521
Exp. 9-30-15
CIVIL
STATE OF CALIFORNIA

THE STATE OF CALIFORNIA OR ITS OFFICERS OR AGENTS SHALL NOT BE RESPONSIBLE FOR THE ACCURACY OR COMPLETENESS OF SCANNED COPIES OF THIS PLAN SHEET.

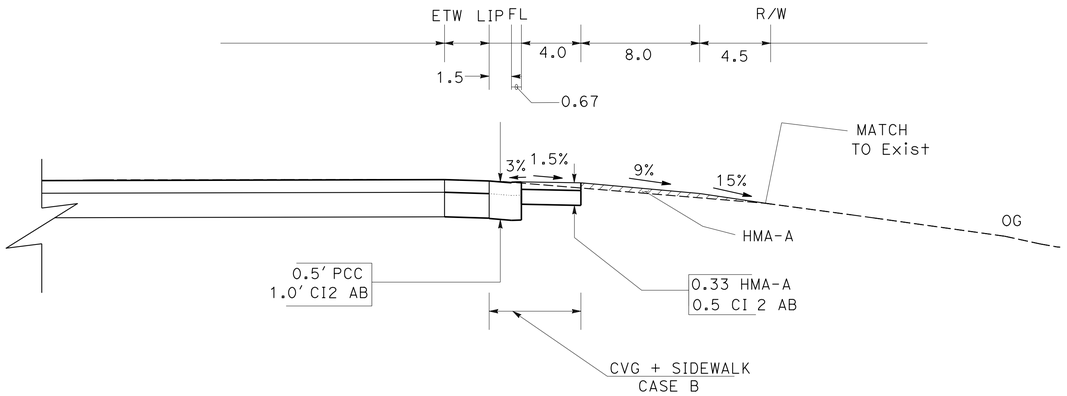

PROFILE
Dwy R24
"A1" 493+70.50

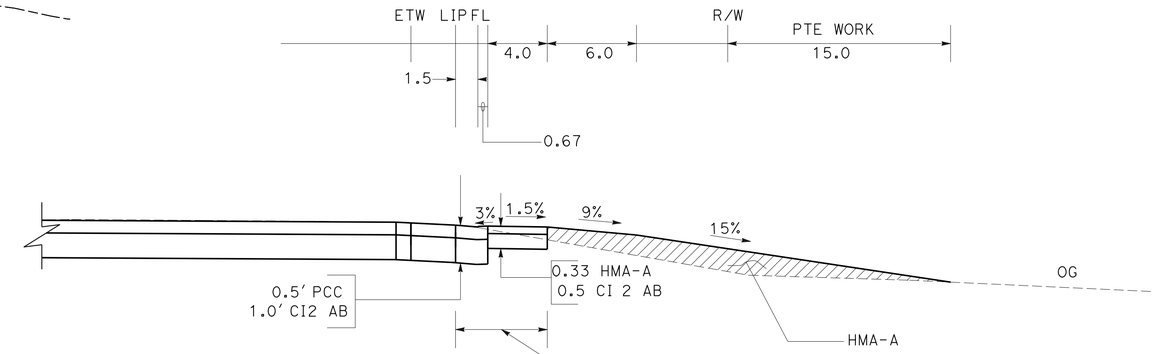

PROFILE
Dwy R25
"A1" 494+81.60

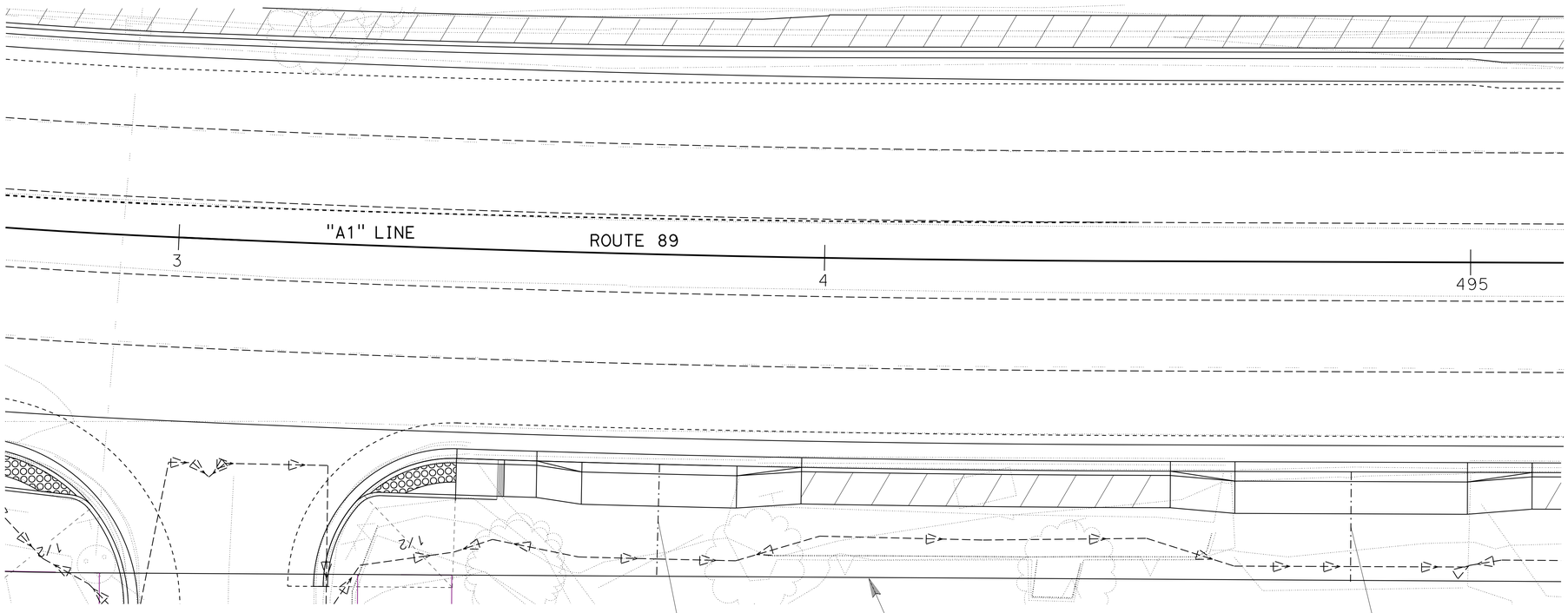

PLAN VIEW

ALL DIMENSIONS ARE IN FEET
UNLESS OTHERWISE SHOWN

CONSTRUCTION DETAILS
NO SCALE

C-21

REVISED BY | DATE REVISED
JACK COWELL | MASTRI ALVANDI
CALCULATED-DESIGNED BY | CHECKED BY
FUNCTIONAL SUPERVISOR: MASTRI ALVANDI

STATE OF CALIFORNIA - DEPARTMENT OF TRANSPORTATION
DESIGN

LAST REVISION | DATE PLOTTED => 13-FEB-2014
02-04-13 | TIME PLOTTED => 13:42

BORDER LAST REVISED 7/2/2010

USERNAME => s130875
DGN FILE => 0300000223ga021.dgn

RELATIVE BORDER SCALE IS IN INCHES 0 1 2 3

UNIT 0337

PROJECT NUMBER & PHASE 03000002231

Dist	COUNTY	ROUTE	POST MILES TOTAL PROJECT	SHEET No.	TOTAL SHEETS
03	ED	89	8.6/13.8	49	231

Jack R. Cowell Jr. 11-18-13
REGISTERED CIVIL ENGINEER DATE

11-18-13
PLANS APPROVAL DATE

REGISTERED PROFESSIONAL ENGINEER
JACK COWELL
No. 65521
Exp. 9-30-15
CIVIL
STATE OF CALIFORNIA

THE STATE OF CALIFORNIA OR ITS OFFICERS OR AGENTS SHALL NOT BE RESPONSIBLE FOR THE ACCURACY OR COMPLETENESS OF SCANNED COPIES OF THIS PLAN SHEET.

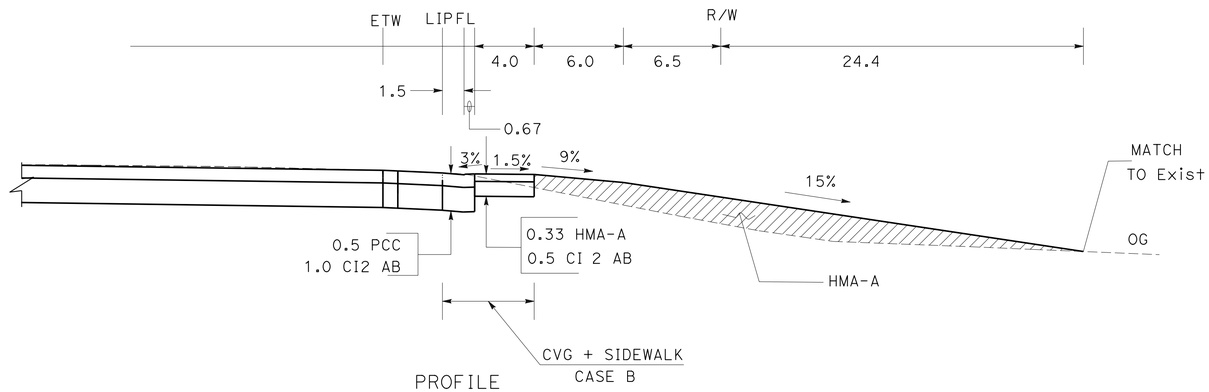

PROFILE
Dwy 26
"A1" 496+84.8

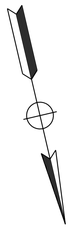

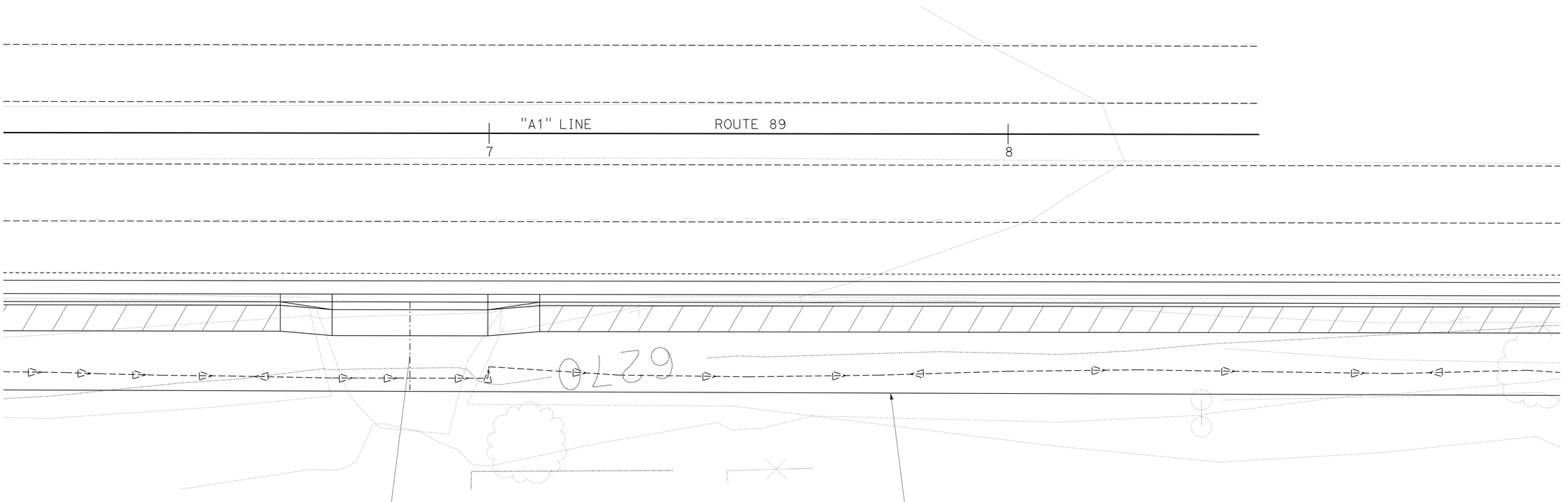

PLAN VIEW

ALL DIMENSIONS ARE IN FEET
UNLESS OTHERWISE SHOWN

CONSTRUCTION DETAILS
NO SCALE

C-22

REVISED BY	DATE REVISED

CALCULATED-DESIGNED BY: JACK COWELL
CHECKED BY: MASTRI ALVANDI
FUNCTIONAL SUPERVISOR: MASTRI ALVANDI

STATE OF CALIFORNIA - DEPARTMENT OF TRANSPORTATION
DESIGN

LAST REVISION DATE PLOTTED => 13-FEB-2014
02-04-13 TIME PLOTTED => 13:42

BORDER LAST REVISED 7/2/2010

USERNAME => s130875
DGN FILE => 0300000223ga022.dgn

RELATIVE BORDER SCALE IS IN INCHES 0 1 2 3

UNIT 0337

PROJECT NUMBER & PHASE 03000002231

Dist	COUNTY	ROUTE	POST MILES TOTAL PROJECT	SHEET No.	TOTAL SHEETS
03	ED	89	8.6/13.8	50	231

Jack R. Cowell Jr. 11-18-13
REGISTERED CIVIL ENGINEER DATE

11-18-13
PLANS APPROVAL DATE

REGISTERED PROFESSIONAL ENGINEER
JACK COWELL
No. 65521
Exp. 9-30-15
CIVIL
STATE OF CALIFORNIA

THE STATE OF CALIFORNIA OR ITS OFFICERS OR AGENTS SHALL NOT BE RESPONSIBLE FOR THE ACCURACY OR COMPLETENESS OF SCANNED COPIES OF THIS PLAN SHEET.

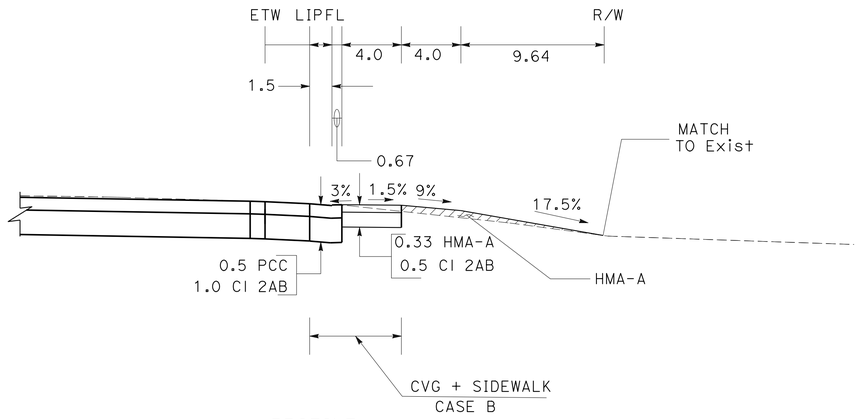

PROFILE
Dwy 27
"A1" 502+19.3

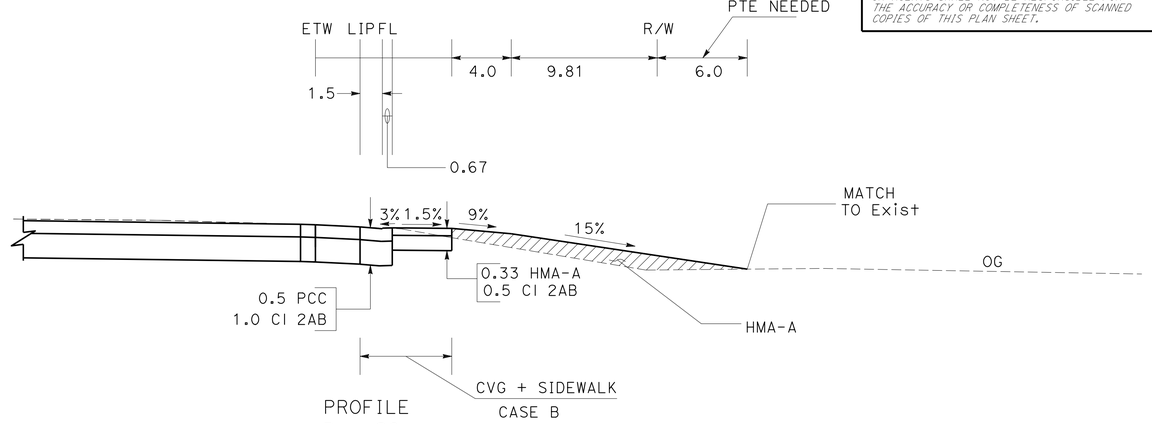

PROFILE
Dwy 28
"A1" 503+04

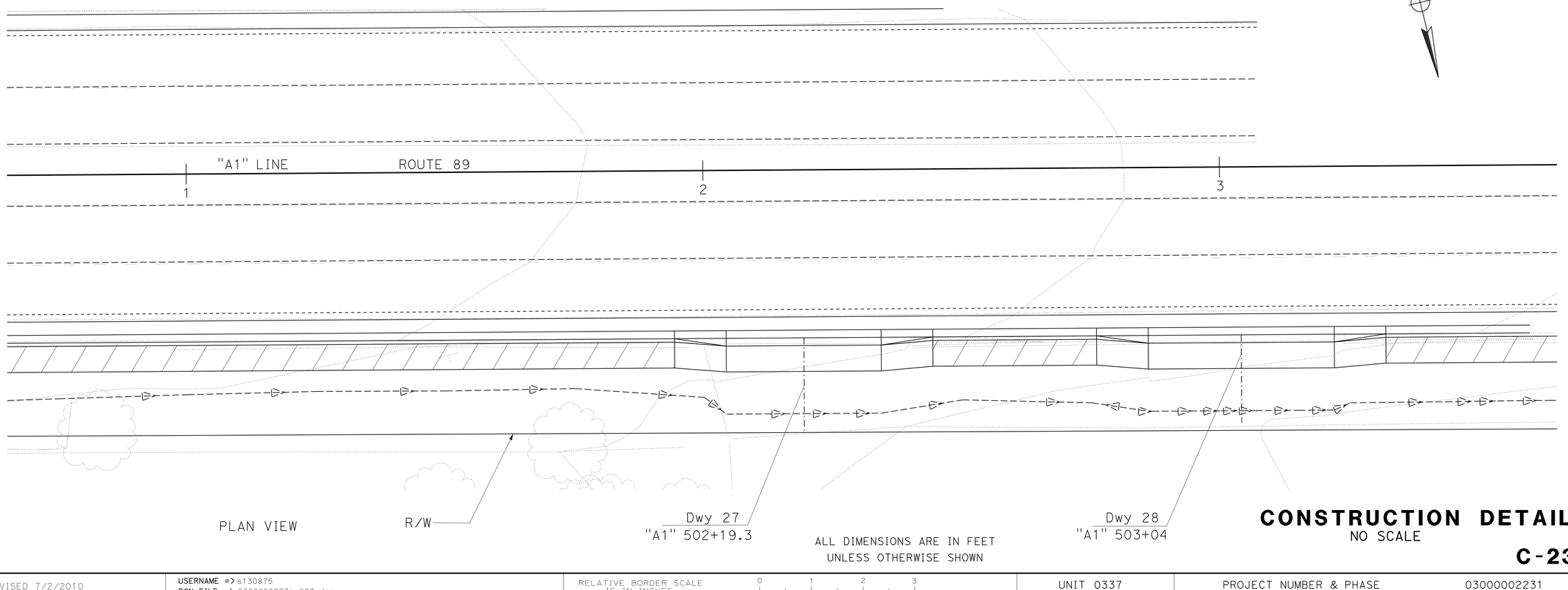

PLAN VIEW

ALL DIMENSIONS ARE IN FEET
UNLESS OTHERWISE SHOWN

CONSTRUCTION DETAILS
NO SCALE

C-23

STATE OF CALIFORNIA - DEPARTMENT OF TRANSPORTATION
DESIGN
FUNCTIONAL SUPERVISOR: MASTRI ALVANDI
CALCULATED-DESIGNED BY: JACK COWELL
CHECKED BY: MASTRI ALVANDI
REVISED BY
DATE REVISED

LAST REVISION DATE PLOTTED => 13-FEB-2014
TIME PLOTTED => 13:42

BORDER LAST REVISED 7/2/2010
USERNAME => s130875
DGN FILE => 0300000223ga023.dgn
RELATIVE BORDER SCALE IS IN INCHES 0 1 2 3
UNIT 0337
PROJECT NUMBER & PHASE 03000002231

Dist	COUNTY	ROUTE	POST MILES TOTAL PROJECT	SHEET No.	TOTAL SHEETS
03	ED	89	8.6/13.8	51	231

Jack R. Cowell Jr. 11-18-13
REGISTERED CIVIL ENGINEER DATE

11-18-13
PLANS APPROVAL DATE

REGISTERED PROFESSIONAL ENGINEER
JACK COWELL
No. 65521
Exp. 9-30-15
CIVIL
STATE OF CALIFORNIA

THE STATE OF CALIFORNIA OR ITS OFFICERS OR AGENTS SHALL NOT BE RESPONSIBLE FOR THE ACCURACY OR COMPLETENESS OF SCANNED COPIES OF THIS PLAN SHEET.

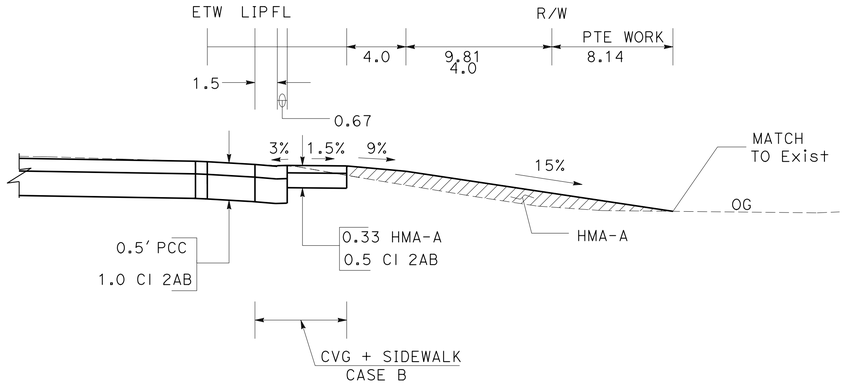

PROFILE
Dwy 29
"A1" 503+95.50

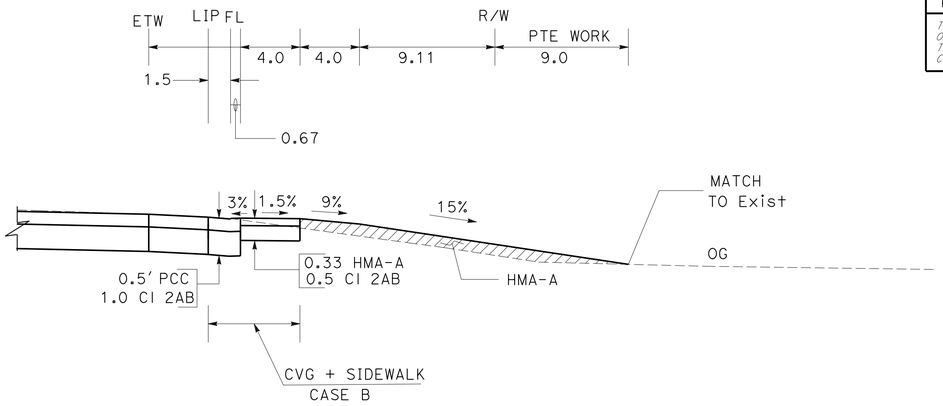

PROFILE
Dwy 30
"A1" 505+57.5

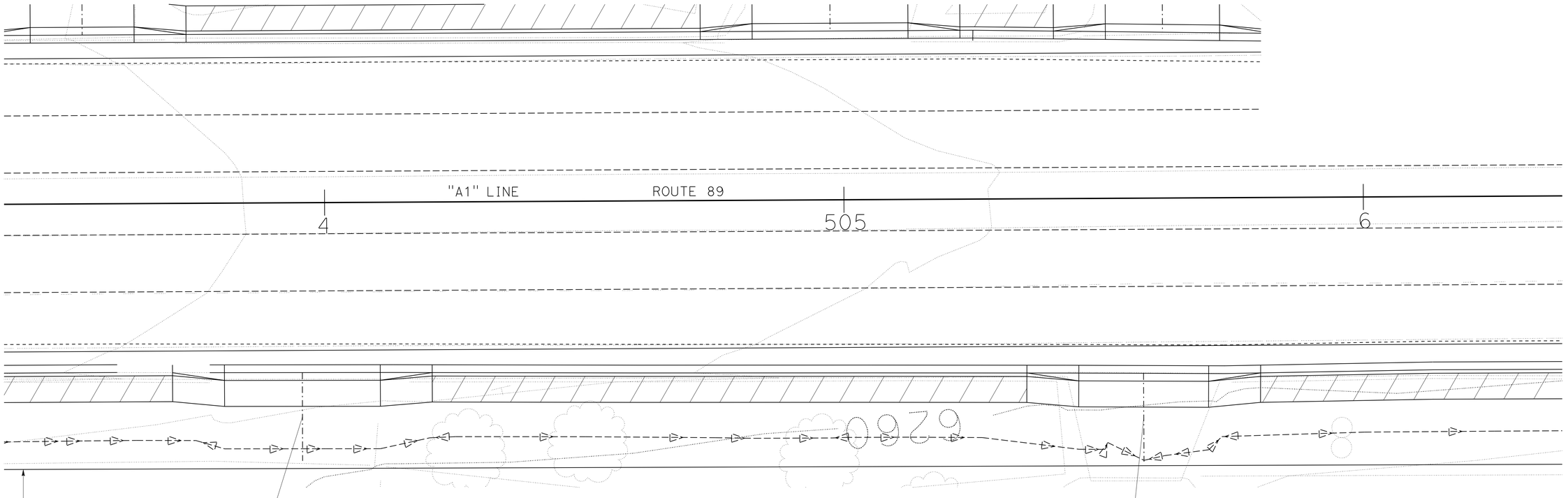

PLAN VIEW

ALL DIMENSIONS ARE IN FEET
UNLESS OTHERWISE SHOWN

CONSTRUCTION DETAILS
NO SCALE

C-24

STATE OF CALIFORNIA - DEPARTMENT OF TRANSPORTATION
DESIGN

CALCULATED-DESIGNED BY	CHECKED BY
JACK COWELL	MASTRI ALVANDI

FUNCTIONAL SUPERVISOR: MASTRI ALVANDI

REVISED BY	DATE REVISED

LAST REVISION
DATE PLOTTED => 13-FEB-2014
TIME PLOTTED => 13:42

BORDER LAST REVISED 7/2/2010

USERNAME => s130875
DGN FILE => 0300000223ga024.dgn

RELATIVE BORDER SCALE IS IN INCHES 0 1 2 3

UNIT 0337

PROJECT NUMBER & PHASE 03000002231

Dist	COUNTY	ROUTE	POST MILES TOTAL PROJECT	SHEET No.	TOTAL SHEETS
03	ED	89	8.6/13.8	52	231

Jack R. Cowell Jr. 11-18-13
REGISTERED CIVIL ENGINEER DATE

11-18-13
PLANS APPROVAL DATE

REGISTERED PROFESSIONAL ENGINEER
JACK COWELL
No. 65521
Exp. 9-30-15
CIVIL
STATE OF CALIFORNIA

THE STATE OF CALIFORNIA OR ITS OFFICERS OR AGENTS SHALL NOT BE RESPONSIBLE FOR THE ACCURACY OR COMPLETENESS OF SCANNED COPIES OF THIS PLAN SHEET.

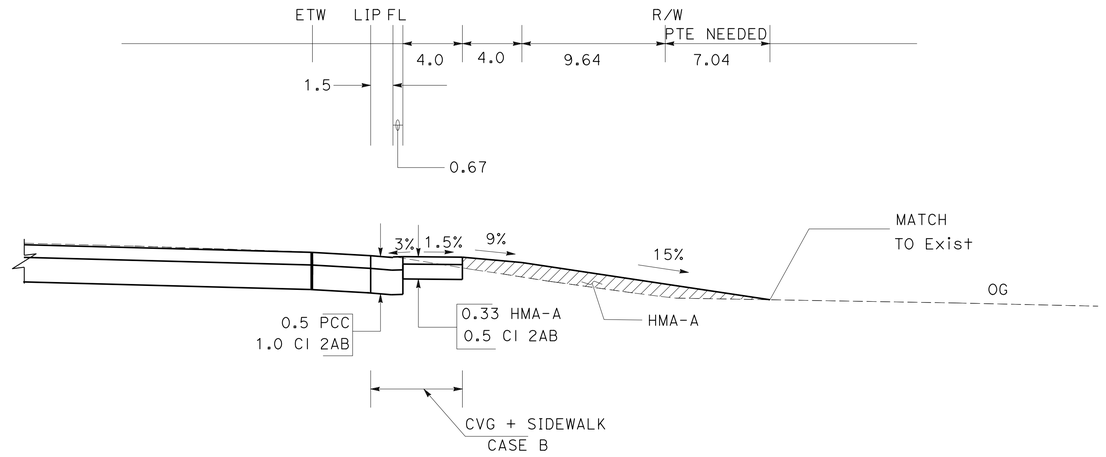

Profile
Dwy 31
"A1" 506+67.0

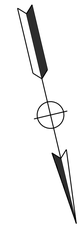

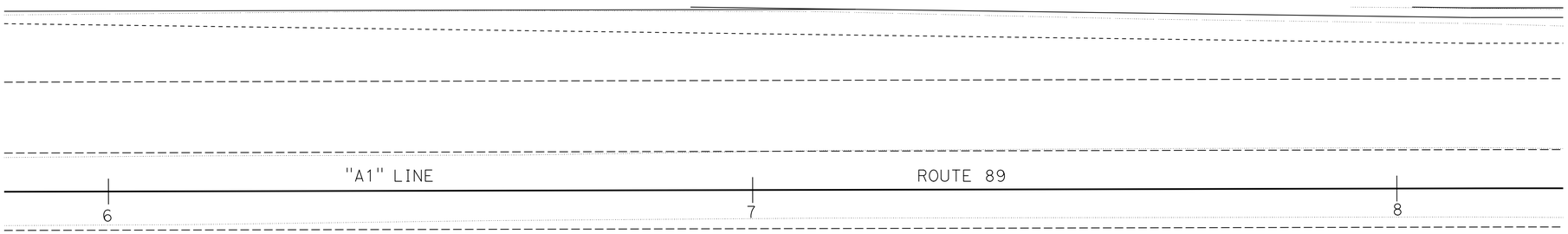

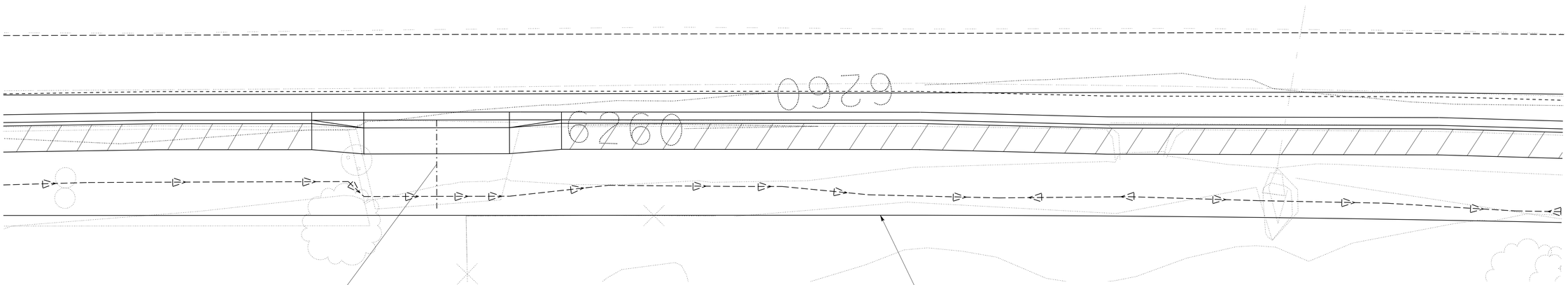

PLAN VIEW

ALL DIMENSIONS ARE IN FEET
UNLESS OTHERWISE SHOWN

CONSTRUCTION DETAILS

NO SCALE

C-25

STATE OF CALIFORNIA - DEPARTMENT OF TRANSPORTATION
DESIGN
FUNCTIONAL SUPERVISOR: MASTRI ALVANDI
CALCULATED-DESIGNED BY: JACK COWELL
CHECKED BY: MASTRI ALVANDI
REVISED BY
DATE REVISED

LAST REVISION
DATE PLOTTED => 13-FEB-2014
TIME PLOTTED => 13:42
02-04-13

BORDER LAST REVISED 7/2/2010
USERNAME => s130875
DGN FILE => 0300000223ga025.dgn
RELATIVE BORDER SCALE IS IN INCHES 0 1 2 3
UNIT 0337
PROJECT NUMBER & PHASE 03000002231

Dist	COUNTY	ROUTE	POST MILES TOTAL PROJECT	SHEET No.	TOTAL SHEETS
03	ED	89	8.6/13.8	53	231

REGISTERED CIVIL ENGINEER — 11-18-13 DATE

CHRIS ROCKEY No. C78030 Exp. 9-30-15 CIVIL — REGISTERED PROFESSIONAL ENGINEER — STATE OF CALIFORNIA

11-18-13
PLANS APPROVAL DATE

THE STATE OF CALIFORNIA OR ITS OFFICERS OR AGENTS SHALL NOT BE RESPONSIBLE FOR THE ACCURACY OR COMPLETENESS OF SCANNED COPIES OF THIS PLAN SHEET.

NOTE:

1. FOR ACCURATE RIGHT OF WAY DATA, CONTACT RIGHT OF WAY ENGINEERING AT THE DISTRICT OFFICE.

ABBREVIATIONS:

GD MINOR CONCRETE (GUTTER DEPRESSION) SEE STANDARD PLANS D78A, D78B AND D78C

UIG UNDERGROUND INFILTRATION GALLERY SEE DRAINAGE DETAILS

LEGEND

GUTTER DEPRESSION

ENVIRONMENTALLY SENSITIVE AREA

STREAM ENVIRONMENT ZONE (SEZ)

GRADE TO DRAIN

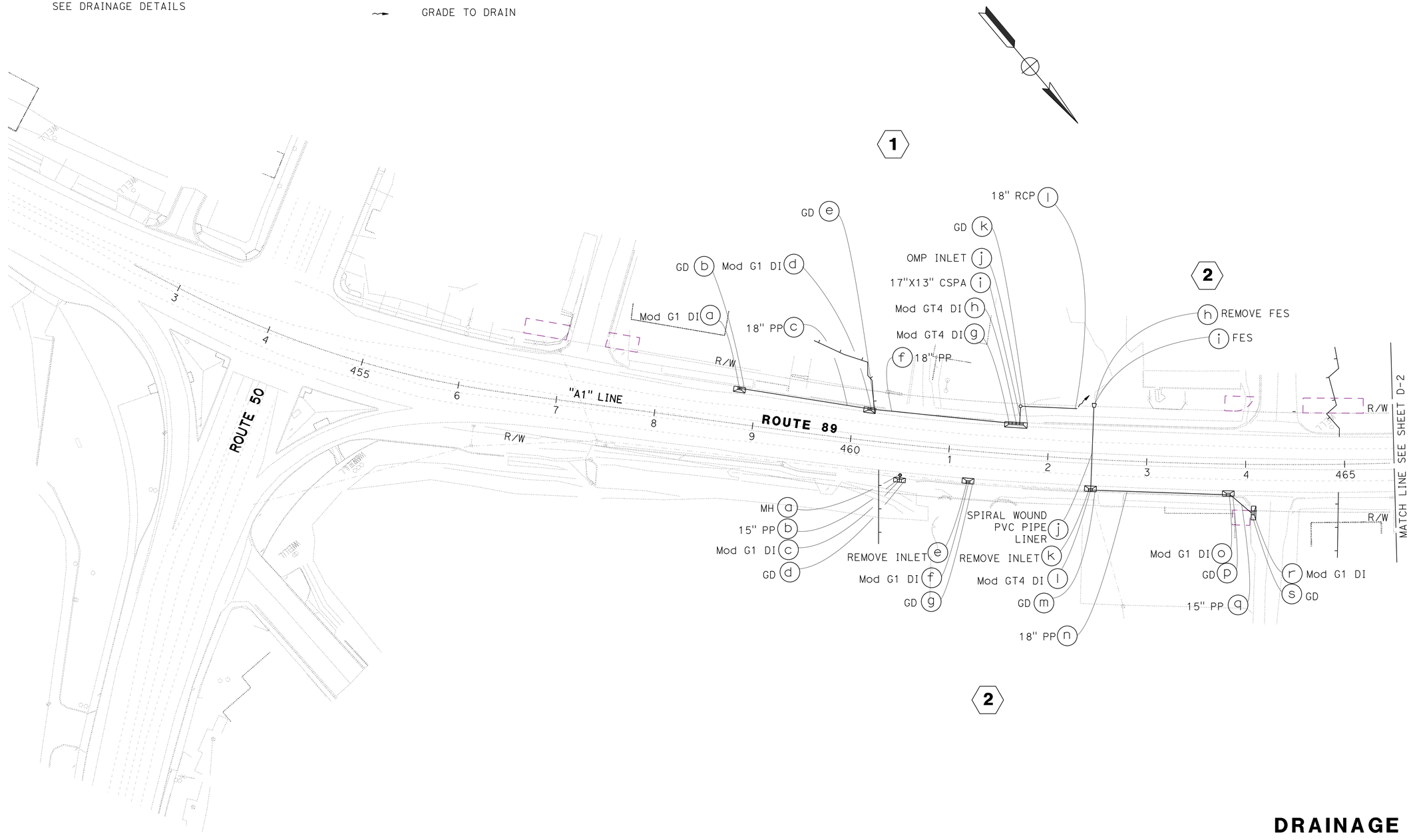

DRAINAGE PLAN

SCALE: 1" = 50'

D-1

LAST REVISION 02-04-13 | DATE PLOTTED => 13-FEB-2014 | TIME PLOTTED => 13:42

REVISED BY	DATE REVISED

CALCULATED-DESIGNED BY: JOHN HUDSON
CHECKED BY: ANDRA SPECK
FUNCTIONAL SUPERVISOR: DENNIS JAGODA

STATE OF CALIFORNIA - DEPARTMENT OF TRANSPORTATION
Caltrans®
HYDRAULICS

NOTE:

1. FOR ACCURATE RIGHT OF WAY DATA, CONTACT RIGHT OF WAY ENGINEERING AT THE DISTRICT OFFICE.

Dist	COUNTY	ROUTE	POST MILES TOTAL PROJECT	SHEET No.	TOTAL SHEETS
03	ED	89	8.6/13.8	54	231

REGISTERED CIVIL ENGINEER — 11-18-13 DATE

CHRIS ROCKEY No. C78030 Exp. 9-30-15 CIVIL — REGISTERED PROFESSIONAL ENGINEER — STATE OF CALIFORNIA

11-18-13
PLANS APPROVAL DATE

THE STATE OF CALIFORNIA OR ITS OFFICERS OR AGENTS SHALL NOT BE RESPONSIBLE FOR THE ACCURACY OR COMPLETENESS OF SCANNED COPIES OF THIS PLAN SHEET.

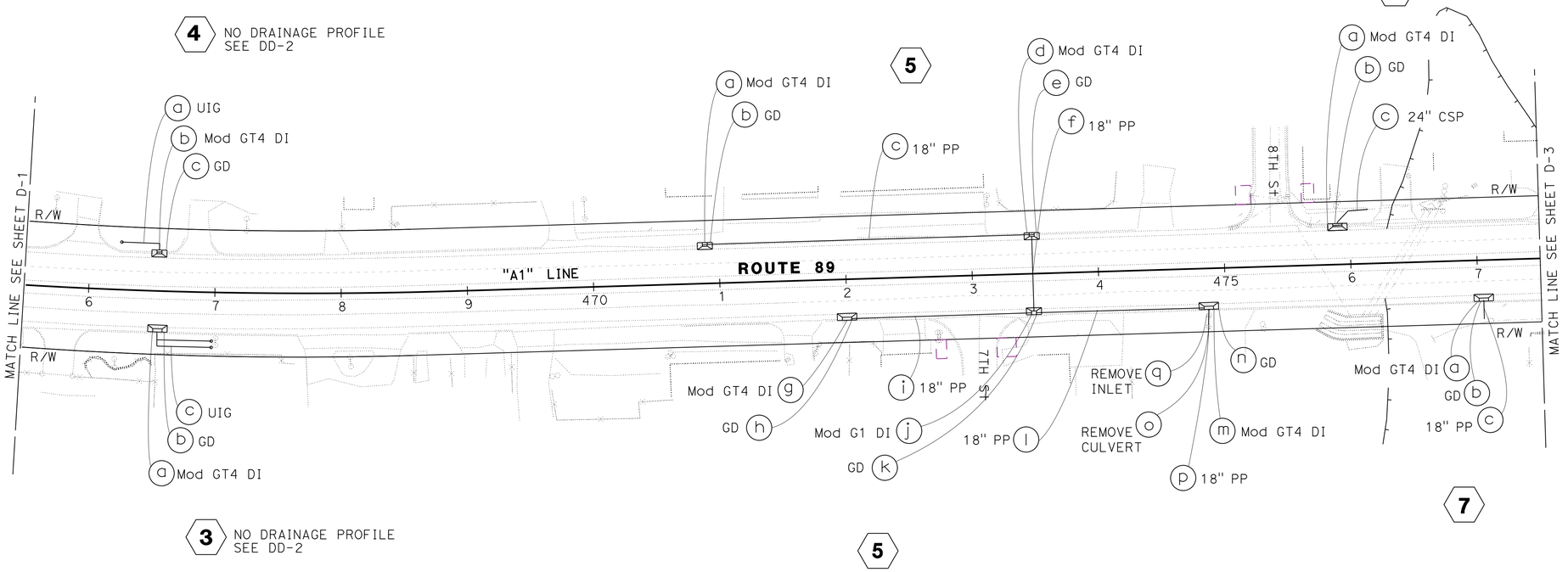

DRAINAGE PLAN

SCALE: 1" = 50'

D-2

STATE OF CALIFORNIA - DEPARTMENT OF TRANSPORTATION
Caltrans®
HYDRAULICS

FUNCTIONAL SUPERVISOR: DENNIS JAGODA

CALCULATED-DESIGNED BY: JOHN HUDSON
CHECKED BY: ANDRA SPECK

REVISED BY	DATE REVISED

LAST REVISION 02-04-13
DATE PLOTTED => 13-FEB-2014
TIME PLOTTED => 13:42

BORDER LAST REVISED 7/2/2010

USERNAME => s130875
DGN FILE => 0300000223ia002.dgn

RELATIVE BORDER SCALE IS IN INCHES 0 1 2 3

UNIT 0359

PROJECT NUMBER & PHASE 03000002231

Dist	COUNTY	ROUTE	POST MILES TOTAL PROJECT	SHEET No.	TOTAL SHEETS
03	ED	89	8.6/13.8	55	231

REGISTERED CIVIL ENGINEER — 11-18-13 DATE

CHRIS ROCKEY No. C78030 Exp. 9-30-15 CIVIL — REGISTERED PROFESSIONAL ENGINEER — STATE OF CALIFORNIA

11-18-13
PLANS APPROVAL DATE

THE STATE OF CALIFORNIA OR ITS OFFICERS OR AGENTS SHALL NOT BE RESPONSIBLE FOR THE ACCURACY OR COMPLETENESS OF SCANNED COPIES OF THIS PLAN SHEET.

NOTE:

1. FOR ACCURATE RIGHT OF WAY DATA, CONTACT RIGHT OF WAY ENGINEERING AT THE DISTRICT OFFICE.

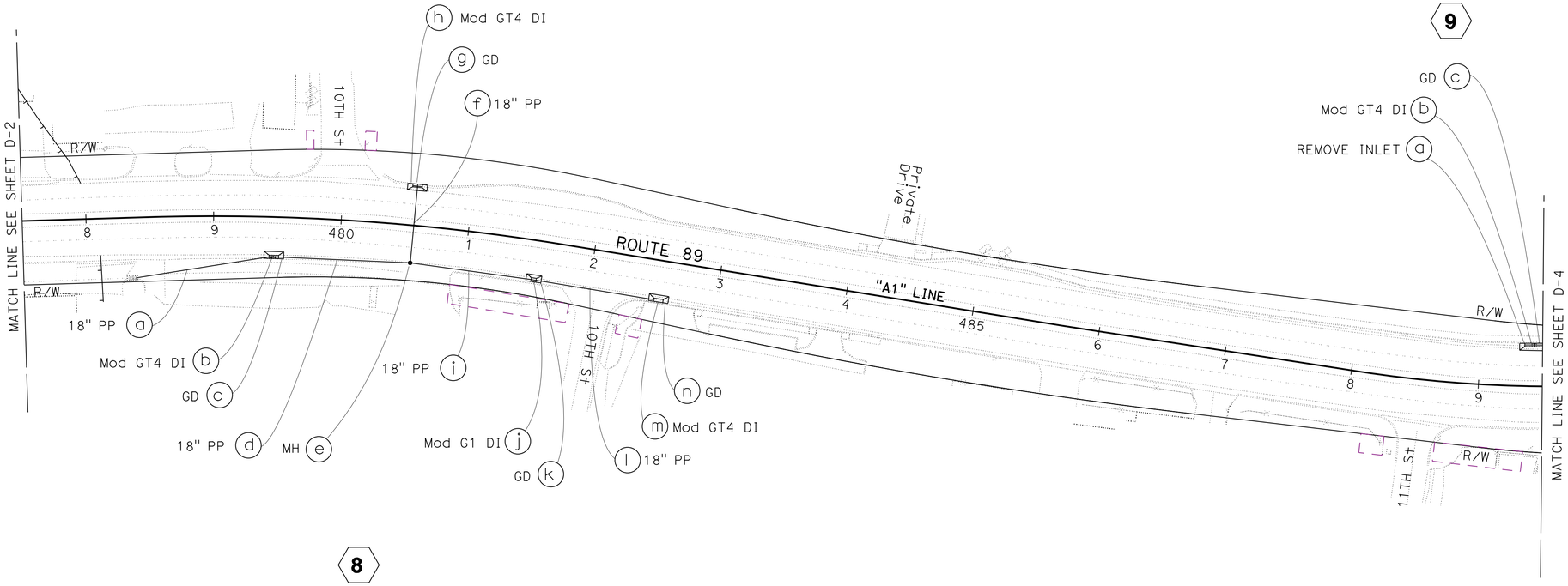

DRAINAGE PLAN

SCALE: 1" = 50'

D-3

STATE OF CALIFORNIA - DEPARTMENT OF TRANSPORTATION
Caltrans®
HYDRAULICS

FUNCTIONAL SUPERVISOR: DENNIS JAGODA

CALCULATED-DESIGNED BY: JOHN HUDSON
CHECKED BY: ANDRA SPECK

REVISED BY | DATE REVISED

LAST REVISION: 02-04-13
DATE PLOTTED => 13-FEB-2014
TIME PLOTTED => 13:42

NOTE:

1. FOR ACCURATE RIGHT OF WAY DATA, CONTACT RIGHT OF WAY ENGINEERING AT THE DISTRICT OFFICE.

Dist	COUNTY	ROUTE	POST MILES TOTAL PROJECT	SHEET No.	TOTAL SHEETS
03	ED	89	8.6/13.8	56	231

11-18-13
REGISTERED CIVIL ENGINEER DATE

CHRIS ROCKEY
No. C78030
Exp. 9-30-15
CIVIL
REGISTERED PROFESSIONAL ENGINEER
STATE OF CALIFORNIA

11-18-13
PLANS APPROVAL DATE

THE STATE OF CALIFORNIA OR ITS OFFICERS OR AGENTS SHALL NOT BE RESPONSIBLE FOR THE ACCURACY OR COMPLETENESS OF SCANNED COPIES OF THIS PLAN SHEET.

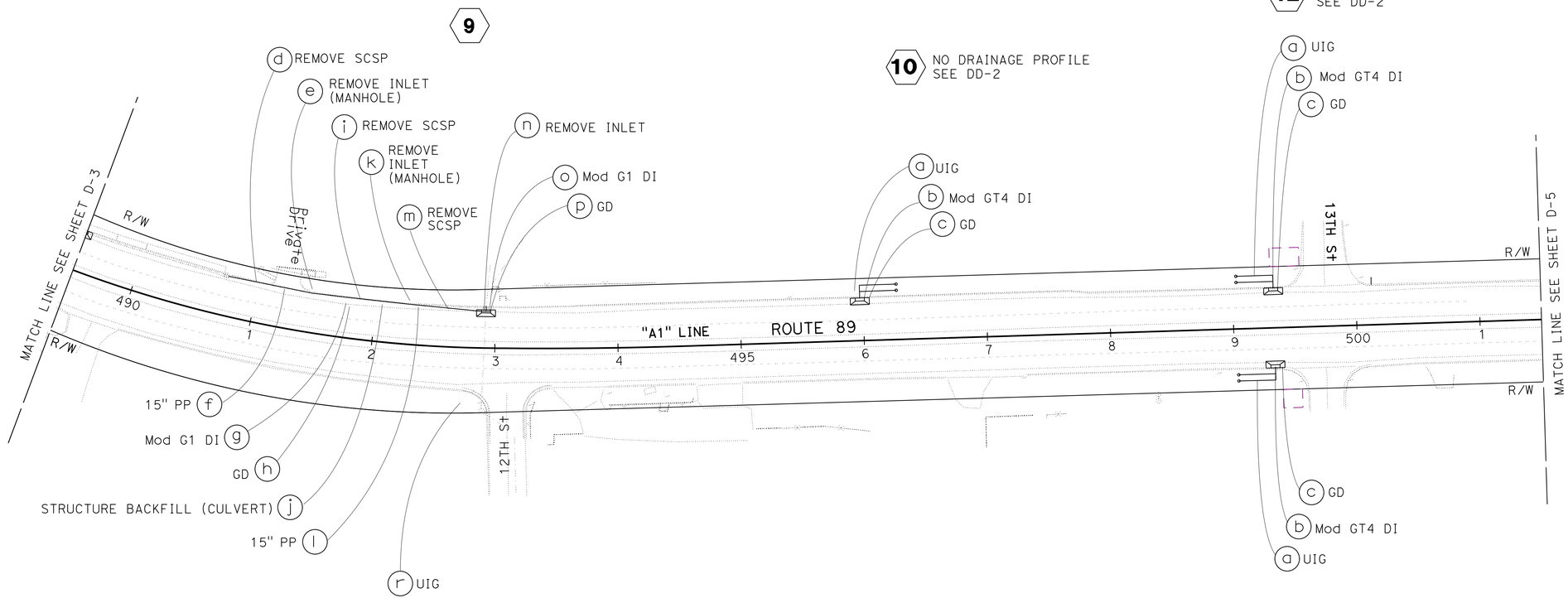

DRAINAGE PLAN

SCALE: 1" = 50'

D-4

LAST REVISION 02-04-13
DATE PLOTTED => 13-FEB-2014
TIME PLOTTED => 13:42

STATE OF CALIFORNIA - DEPARTMENT OF TRANSPORTATION
HYDRAULICS
FUNCTIONAL SUPERVISOR: DENNIS JAGODA
CALCULATED-DESIGNED BY: JOHN HUDSON
CHECKED BY: ANDRA SPECK
REVISED BY / DATE REVISED

BORDER LAST REVISED 7/2/2010
USERNAME => s130875
DGN FILE => 0300000223ia004.dgn
RELATIVE BORDER SCALE IS IN INCHES 0 1 2 3
UNIT 0359
PROJECT NUMBER & PHASE 03000002231

NOTE:

1. FOR ACCURATE RIGHT OF WAY DATA, CONTACT RIGHT OF WAY ENGINEERING AT THE DISTRICT OFFICE.

Dist	COUNTY	ROUTE	POST MILES TOTAL PROJECT	SHEET No.	TOTAL SHEETS
03	ED	89	8.6/13.8	57	231

11-18-13
REGISTERED CIVIL ENGINEER DATE

CHRIS ROCKEY
No. C78030
Exp. 9-30-15
CIVIL
REGISTERED PROFESSIONAL ENGINEER
STATE OF CALIFORNIA

11-18-13
PLANS APPROVAL DATE

THE STATE OF CALIFORNIA OR ITS OFFICERS OR AGENTS SHALL NOT BE RESPONSIBLE FOR THE ACCURACY OR COMPLETENESS OF SCANNED COPIES OF THIS PLAN SHEET.

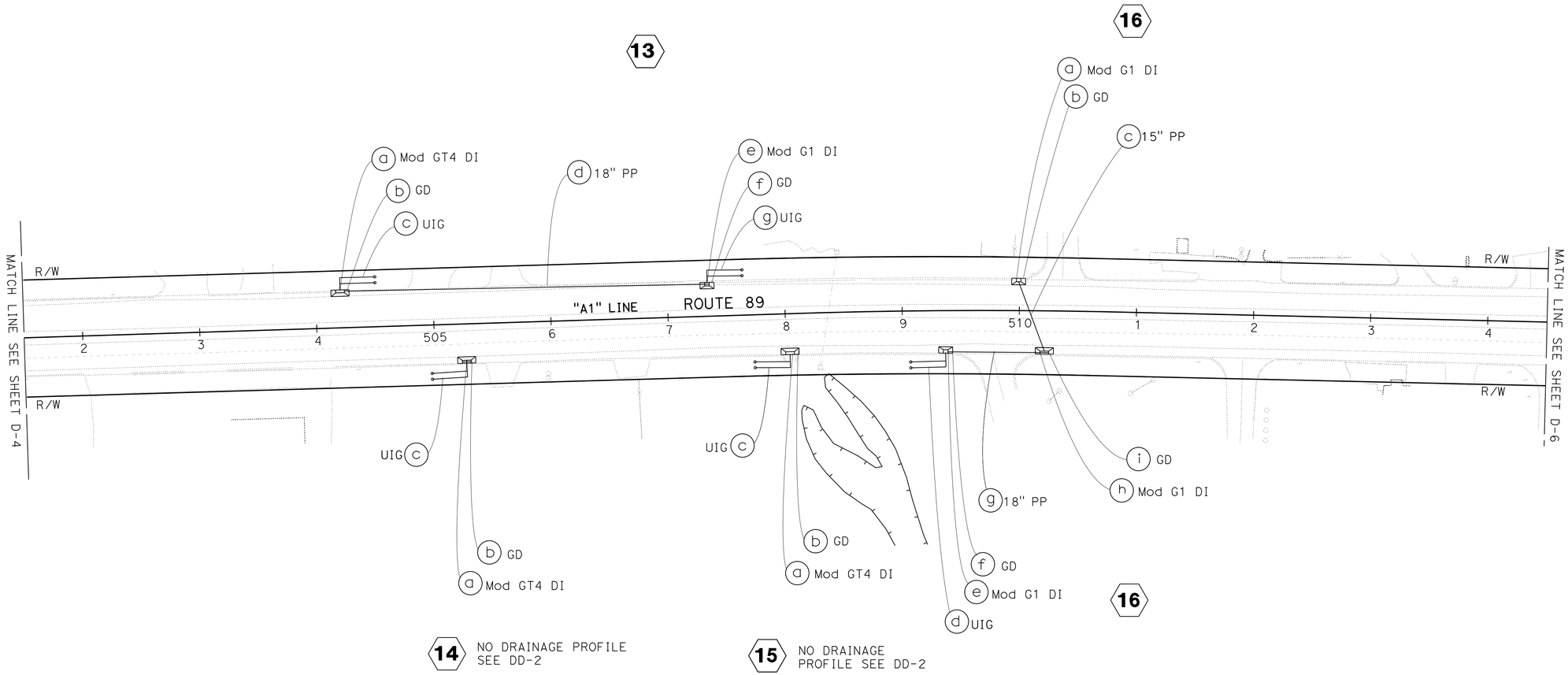

DRAINAGE PLAN

SCALE: 1" = 50'

D-5

CALCULATED-DESIGNED BY	JOHN HUDSON
CHECKED BY	ANDRA SPECK
FUNCTIONAL SUPERVISOR	DENNIS JAGODA
STATE OF CALIFORNIA - DEPARTMENT OF TRANSPORTATION	HYDRAULICS
Caltrans®	

REVISED BY	DATE REVISED

LAST REVISION 02-04-13 | DATE PLOTTED => 13-FEB-2014 TIME PLOTTED => 13:42

BORDER LAST REVISED 7/2/2010 | USERNAME => s130875 DGN FILE => 0300000223ia005.dgn | RELATIVE BORDER SCALE IS IN INCHES 0 1 2 3 | UNIT 0359 | PROJECT NUMBER & PHASE 03000002231

Dist	COUNTY	ROUTE	POST MILES TOTAL PROJECT	SHEET No.	TOTAL SHEETS
03	ED	89	8.6/13.8	58	231

REGISTERED CIVIL ENGINEER — 11-18-13 DATE

CHRIS ROCKEY No. C78030 Exp. 9-30-15 CIVIL — REGISTERED PROFESSIONAL ENGINEER — STATE OF CALIFORNIA

11-18-13
PLANS APPROVAL DATE

THE STATE OF CALIFORNIA OR ITS OFFICERS OR AGENTS SHALL NOT BE RESPONSIBLE FOR THE ACCURACY OR COMPLETENESS OF SCANNED COPIES OF THIS PLAN SHEET.

NOTE:

1. FOR ACCURATE RIGHT OF WAY DATA, CONTACT RIGHT OF WAY ENGINEERING AT THE DISTRICT OFFICE.

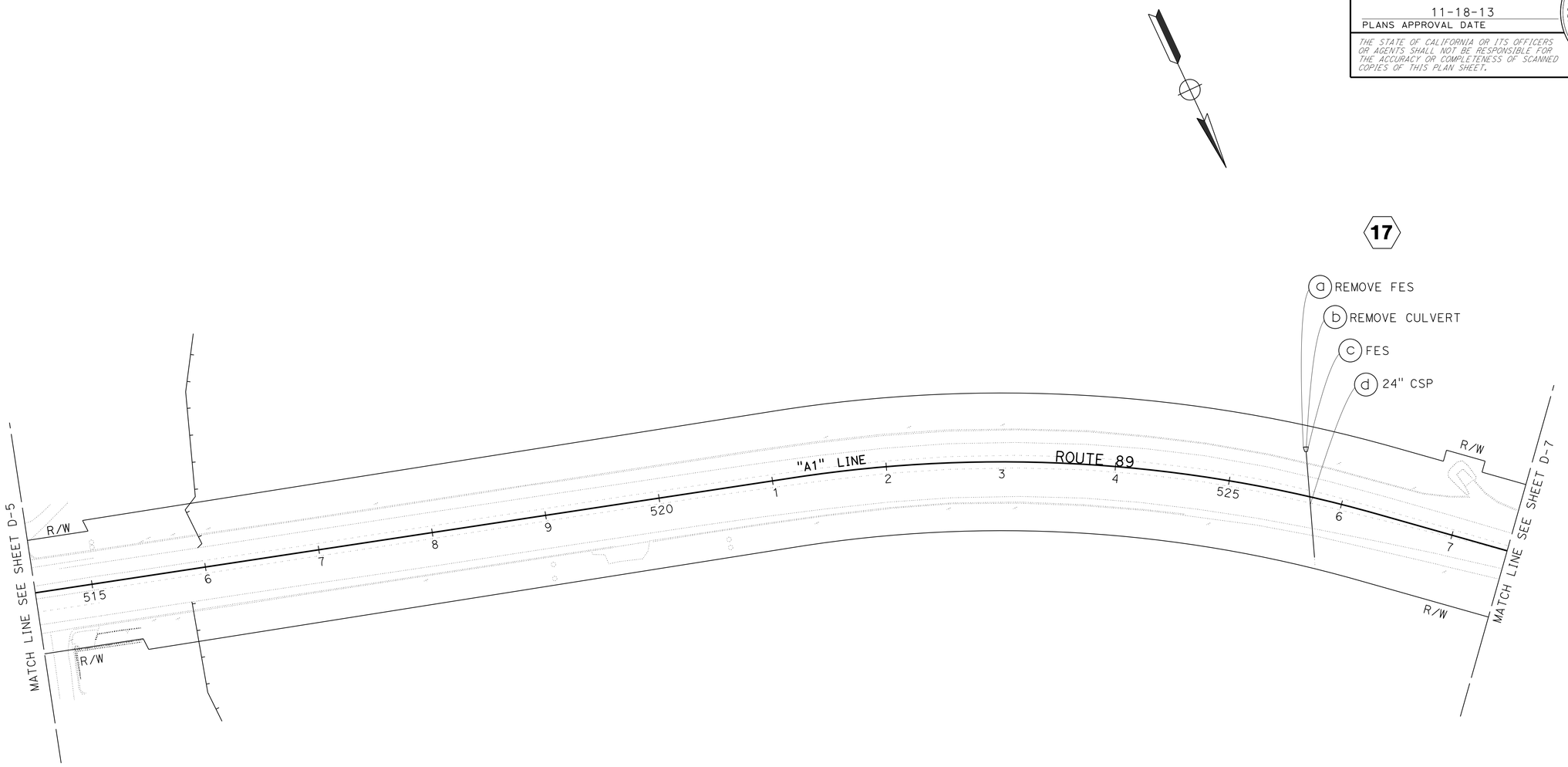

DRAINAGE PLAN

SCALE: 1" = 50'

D-6

CALCULATED-DESIGNED BY	CHECKED BY
JOHN HUDSON	ANDRA SPECK

FUNCTIONAL SUPERVISOR: DENNIS JAGODA

STATE OF CALIFORNIA - DEPARTMENT OF TRANSPORTATION
Caltrans®
HYDRAULICS

REVISED BY	DATE REVISED

LAST REVISION 02-04-13
DATE PLOTTED => 13-FEB-2014
TIME PLOTTED => 13:42

BORDER LAST REVISED 7/2/2010

USERNAME => s130875
DGN FILE => 0300000223ia006.dgn

RELATIVE BORDER SCALE IS IN INCHES 0 1 2 3

UNIT 0359

PROJECT NUMBER & PHASE 03000002231

Dist	COUNTY	ROUTE	POST MILES TOTAL PROJECT	SHEET No.	TOTAL SHEETS
03	ED	89	8.6/13.8	59	231

11-18-13
REGISTERED CIVIL ENGINEER DATE

CHRIS ROCKEY
No. C78030
Exp. 9-30-15
CIVIL
REGISTERED PROFESSIONAL ENGINEER
STATE OF CALIFORNIA

11-18-13
PLANS APPROVAL DATE

THE STATE OF CALIFORNIA OR ITS OFFICERS OR AGENTS SHALL NOT BE RESPONSIBLE FOR THE ACCURACY OR COMPLETENESS OF SCANNED COPIES OF THIS PLAN SHEET.

NOTE:

1. FOR ACCURATE RIGHT OF WAY DATA, CONTACT RIGHT OF WAY ENGINEERING AT THE DISTRICT OFFICE.

18 NO DRAINAGE PROFILE
SEE DD-4

19

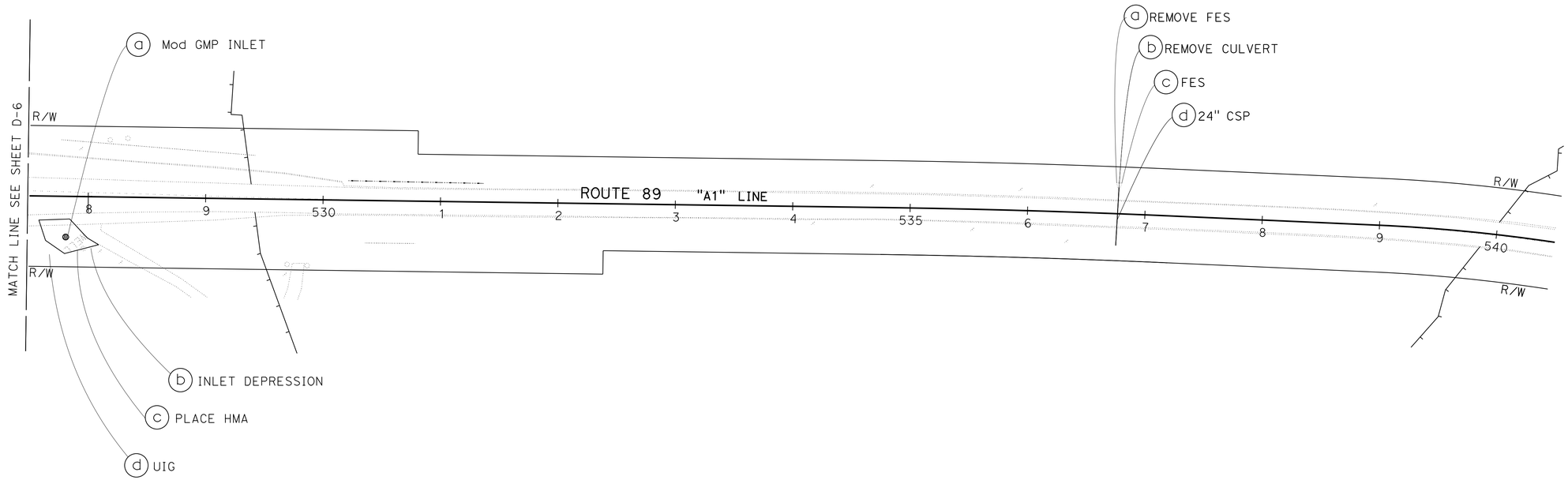

DRAINAGE PLAN

SCALE: 1" = 50'

D-7

STATE OF CALIFORNIA - DEPARTMENT OF TRANSPORTATION
Caltrans®
HYDRAULICS

FUNCTIONAL SUPERVISOR: DENNIS JAGODA
CALCULATED-DESIGNED BY: JOHN HUDSON
CHECKED BY: ANDRA SPECK

REVISED BY	DATE REVISED

LAST REVISION: DATE PLOTTED => 13-FEB-2014
02-04-13 TIME PLOTTED => 13:42

BORDER LAST REVISED 7/2/2010

USERNAME => s130875
DGN FILE => 0300000223ia007.dgn

RELATIVE BORDER SCALE IS IN INCHES 0 1 2 3

UNIT 0359

PROJECT NUMBER & PHASE 03000002231

NOTE:

1. FOR ACCURATE RIGHT OF WAY DATA, CONTACT RIGHT OF WAY ENGINEERING AT THE DISTRICT OFFICE.

Dist	COUNTY	ROUTE	POST MILES TOTAL PROJECT	SHEET No.	TOTAL SHEETS
03	ED	89	8.6/13.8	60	231

11-18-13
REGISTERED CIVIL ENGINEER DATE

CHRIS ROCKEY
REGISTERED PROFESSIONAL ENGINEER
No. C78030
Exp. 9-30-15
CIVIL
STATE OF CALIFORNIA

11-18-13
PLANS APPROVAL DATE

THE STATE OF CALIFORNIA OR ITS OFFICERS OR AGENTS SHALL NOT BE RESPONSIBLE FOR THE ACCURACY OR COMPLETENESS OF SCANNED COPIES OF THIS PLAN SHEET.

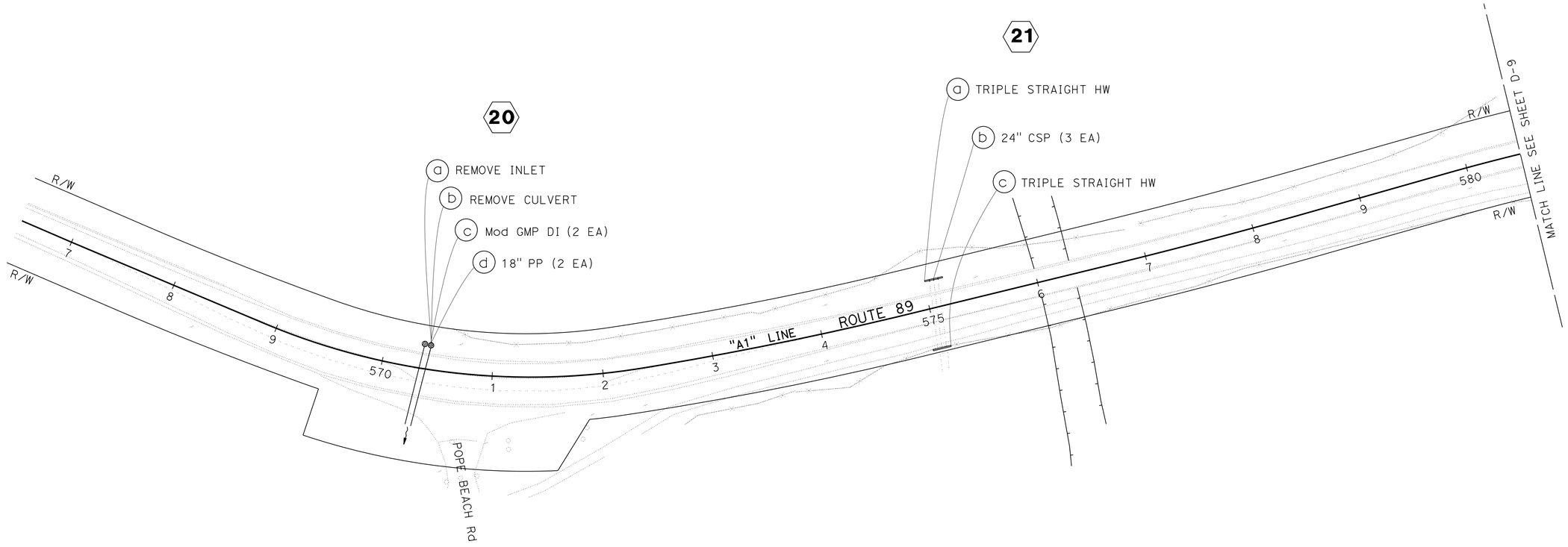

DRAINAGE PLAN

SCALE: 1" = 50'

D-8

REVISED BY | DATE REVISED
JOHN HUDSON | ANDRA SPECK
CALCULATED-DESIGNED BY | CHECKED BY
FUNCTIONAL SUPERVISOR: DENNIS JAGODA

STATE OF CALIFORNIA - DEPARTMENT OF TRANSPORTATION
Caltrans®
HYDRAULICS

LAST REVISION 02-04-13 | DATE PLOTTED => 13-FEB-2014 | TIME PLOTTED => 13:42

Dist	COUNTY	ROUTE	POST MILES TOTAL PROJECT	SHEET No.	TOTAL SHEETS
03	ED	89	8.6/13.8	61	231

REGISTERED CIVIL ENGINEER — 11-18-13 DATE

CHRIS ROCKEY No. C78030 Exp. 9-30-15 CIVIL — REGISTERED PROFESSIONAL ENGINEER — STATE OF CALIFORNIA

11-18-13
PLANS APPROVAL DATE

THE STATE OF CALIFORNIA OR ITS OFFICERS OR AGENTS SHALL NOT BE RESPONSIBLE FOR THE ACCURACY OR COMPLETENESS OF SCANNED COPIES OF THIS PLAN SHEET.

NOTE:

1. FOR ACCURATE RIGHT OF WAY DATA, CONTACT RIGHT OF WAY ENGINEERING AT THE DISTRICT OFFICE.

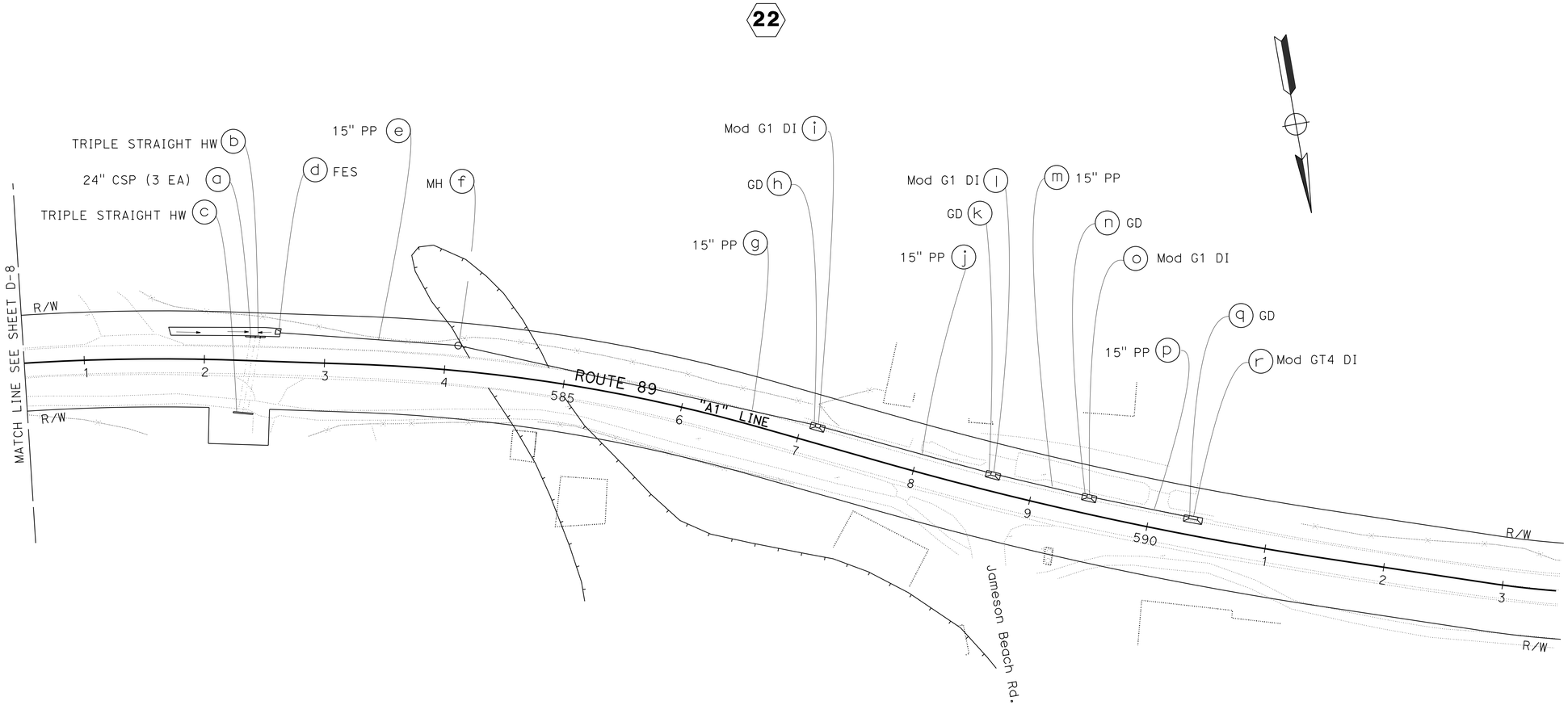

DRAINAGE PLAN

SCALE: 1" = 50'

D-9

STATE OF CALIFORNIA - DEPARTMENT OF TRANSPORTATION	FUNCTIONAL SUPERVISOR
Caltrans® HYDRAULICS	DENNIS JAGODA

CALCULATED-DESIGNED BY	CHECKED BY	REVISED BY	DATE REVISED
JOHN HUDSON	ANDRA SPECK		

LAST REVISION 02-04-13 | DATE PLOTTED => 13-FEB-2014 | TIME PLOTTED => 13:42

BORDER LAST REVISED 7/2/2010 | USERNAME => s130875 | DGN FILE => 0300000223ia009.dgn | RELATIVE BORDER SCALE IS IN INCHES 0 1 2 3 | UNIT 0359 | PROJECT NUMBER & PHASE 03000002231

NOTE:

1. FOR ACCURATE RIGHT OF WAY DATA, CONTACT RIGHT OF WAY ENGINEERING AT THE DISTRICT OFFICE.

Dist	COUNTY	ROUTE	POST MILES TOTAL PROJECT	SHEET No.	TOTAL SHEETS
03	ED	89	8.6/13.8	62	231

11-18-13
REGISTERED CIVIL ENGINEER DATE

11-18-13
PLANS APPROVAL DATE

REGISTERED PROFESSIONAL ENGINEER
CHRIS ROCKEY
No. C78030
Exp. 9-30-15
CIVIL
STATE OF CALIFORNIA

THE STATE OF CALIFORNIA OR ITS OFFICERS OR AGENTS SHALL NOT BE RESPONSIBLE FOR THE ACCURACY OR COMPLETENESS OF SCANNED COPIES OF THIS PLAN SHEET.

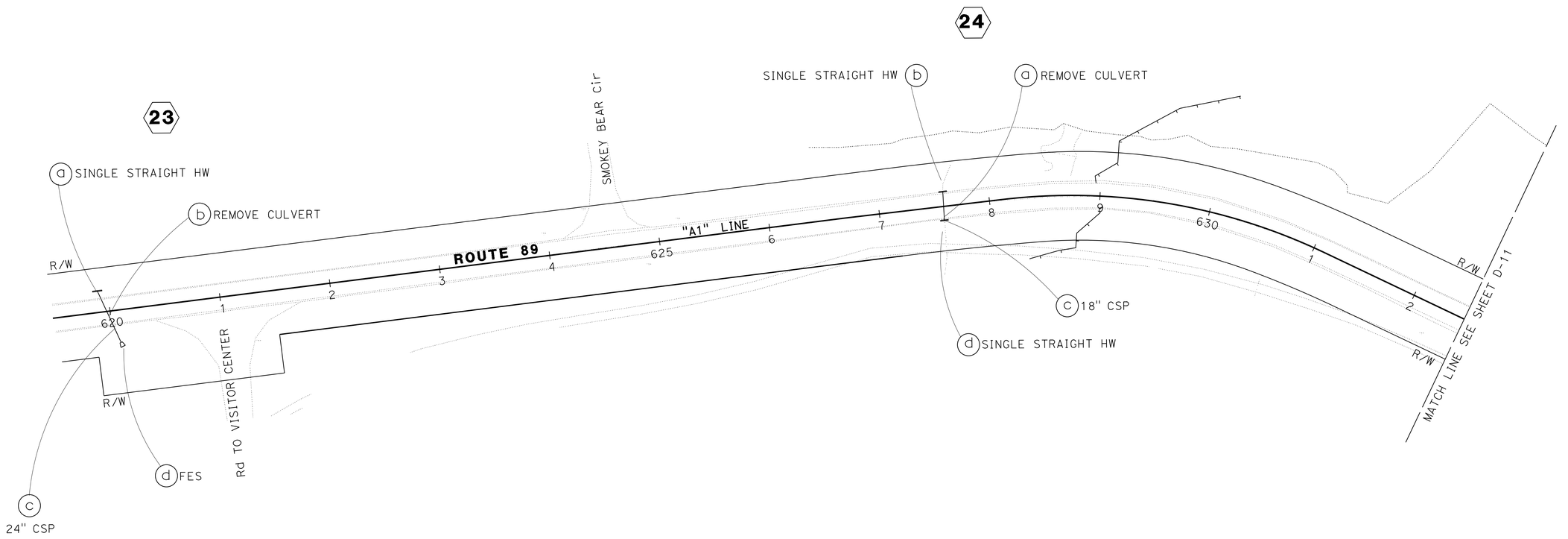

DRAINAGE PLAN

SCALE: 1" = 50'

D-10

STATE OF CALIFORNIA - DEPARTMENT OF TRANSPORTATION	
Caltrans® HYDRAULICS	
FUNCTIONAL SUPERVISOR	DENNIS JAGODA
CALCULATED-DESIGNED BY	JOHN HUDSON
CHECKED BY	ANDRA SPECK
REVISED BY	
DATE REVISED	

LAST REVISION 02-04-13 | DATE PLOTTED => 13-FEB-2014 | TIME PLOTTED => 13:42

BORDER LAST REVISED 7/2/2010 | USERNAME => s130875 | DGN FILE => 0300000223ia010.dgn | RELATIVE BORDER SCALE IS IN INCHES 0 1 2 3 | UNIT 0359 | PROJECT NUMBER & PHASE 03000002231

Dist	COUNTY	ROUTE	POST MILES TOTAL PROJECT	SHEET No.	TOTAL SHEETS
03	ED	89	8.6/13.8	63	231

REGISTERED CIVIL ENGINEER 11-18-13 DATE

11-18-13
PLANS APPROVAL DATE

REGISTERED PROFESSIONAL ENGINEER CHRIS ROCKEY No. C78030 Exp. 9-30-15 CIVIL STATE OF CALIFORNIA

THE STATE OF CALIFORNIA OR ITS OFFICERS OR AGENTS SHALL NOT BE RESPONSIBLE FOR THE ACCURACY OR COMPLETENESS OF SCANNED COPIES OF THIS PLAN SHEET.

NOTE:

1. FOR ACCURATE RIGHT OF WAY DATA, CONTACT RIGHT OF WAY ENGINEERING AT THE DISTRICT OFFICE.

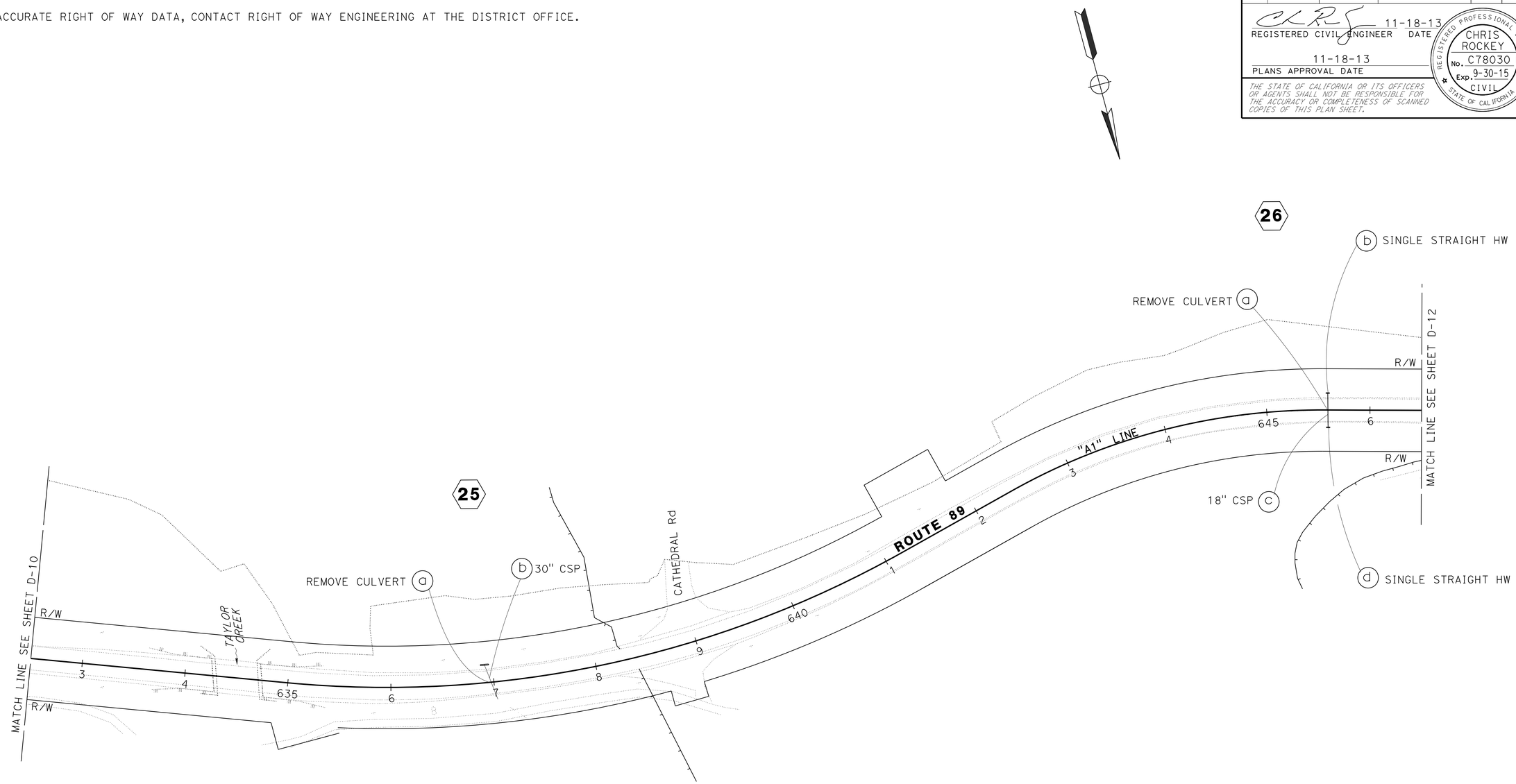

DRAINAGE PLAN

SCALE: 1" = 50'

D-11

STATE OF CALIFORNIA - DEPARTMENT OF TRANSPORTATION

Caltrans®

HYDRAULICS

FUNCTIONAL SUPERVISOR: DENNIS JAGODA

CALCULATED-DESIGNED BY: JOHN HUDSON

CHECKED BY: ANDRA SPECK

REVISED BY

DATE REVISED

LAST REVISION 02-04-13

DATE PLOTTED => 13-FEB-2014

TIME PLOTTED => 13:42

Dist	COUNTY	ROUTE	POST MILES TOTAL PROJECT	SHEET No.	TOTAL SHEETS
03	ED	89	8.6/13.8	64	231

11-18-13
REGISTERED CIVIL ENGINEER DATE

CHRIS ROCKEY
No. C78030
Exp. 9-30-15
CIVIL
REGISTERED PROFESSIONAL ENGINEER
STATE OF CALIFORNIA

11-18-13
PLANS APPROVAL DATE

THE STATE OF CALIFORNIA OR ITS OFFICERS OR AGENTS SHALL NOT BE RESPONSIBLE FOR THE ACCURACY OR COMPLETENESS OF SCANNED COPIES OF THIS PLAN SHEET.

NOTE:

1. FOR ACCURATE RIGHT OF WAY DATA, CONTACT RIGHT OF WAY ENGINEERING AT THE DISTRICT OFFICE.

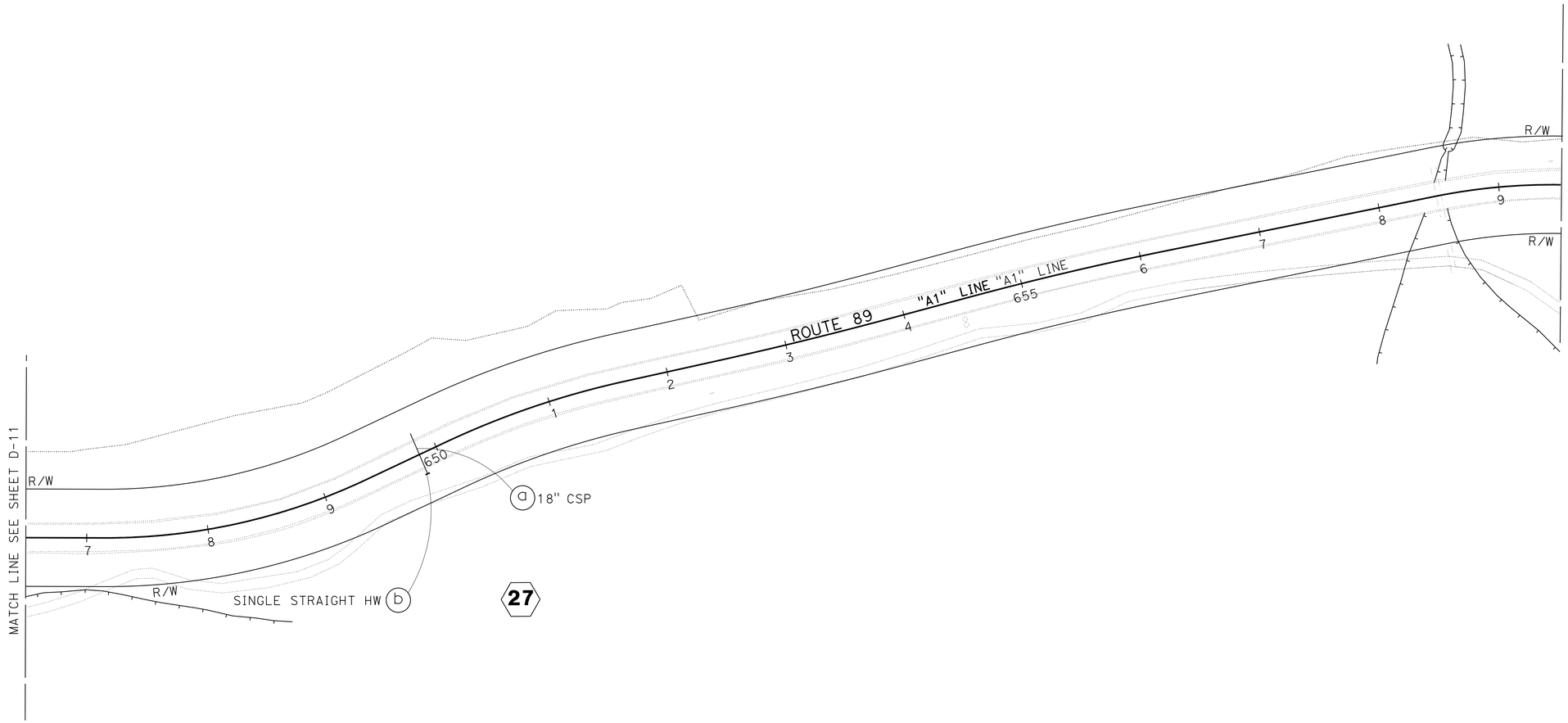

DRAINAGE PLAN

SCALE: 1" = 50'

D-12

CALCULATED-DESIGNED BY	CHECKED BY	REVISED BY	DATE REVISED
JOHN HUDSON	ANDRA SPECK		

FUNCTIONAL SUPERVISOR: DENNIS JAGODA

STATE OF CALIFORNIA - DEPARTMENT OF TRANSPORTATION
Caltrans®
HYDRAULICS

LAST REVISION 02-04-13
DATE PLOTTED => 13-FEB-2014
TIME PLOTTED => 13:42

BORDER LAST REVISED 7/2/2010

USERNAME => s130875
DGN FILE => 0300000223ia012.dgn

RELATIVE BORDER SCALE IS IN INCHES 0 1 2 3

UNIT 0359

PROJECT NUMBER & PHASE 03000002231

NOTE:

1. FOR ACCURATE RIGHT OF WAY DATA, CONTACT RIGHT OF WAY ENGINEERING AT THE DISTRICT OFFICE.

Dist	COUNTY	ROUTE	POST MILES TOTAL PROJECT	SHEET No.	TOTAL SHEETS
03	ED	89	8.6/13.8	65	231

REGISTERED CIVIL ENGINEER — 11-18-13 DATE

CHRIS ROCKEY No. C78030 Exp. 9-30-15 CIVIL — REGISTERED PROFESSIONAL ENGINEER — STATE OF CALIFORNIA

11-18-13
PLANS APPROVAL DATE

THE STATE OF CALIFORNIA OR ITS OFFICERS OR AGENTS SHALL NOT BE RESPONSIBLE FOR THE ACCURACY OR COMPLETENESS OF SCANNED COPIES OF THIS PLAN SHEET.

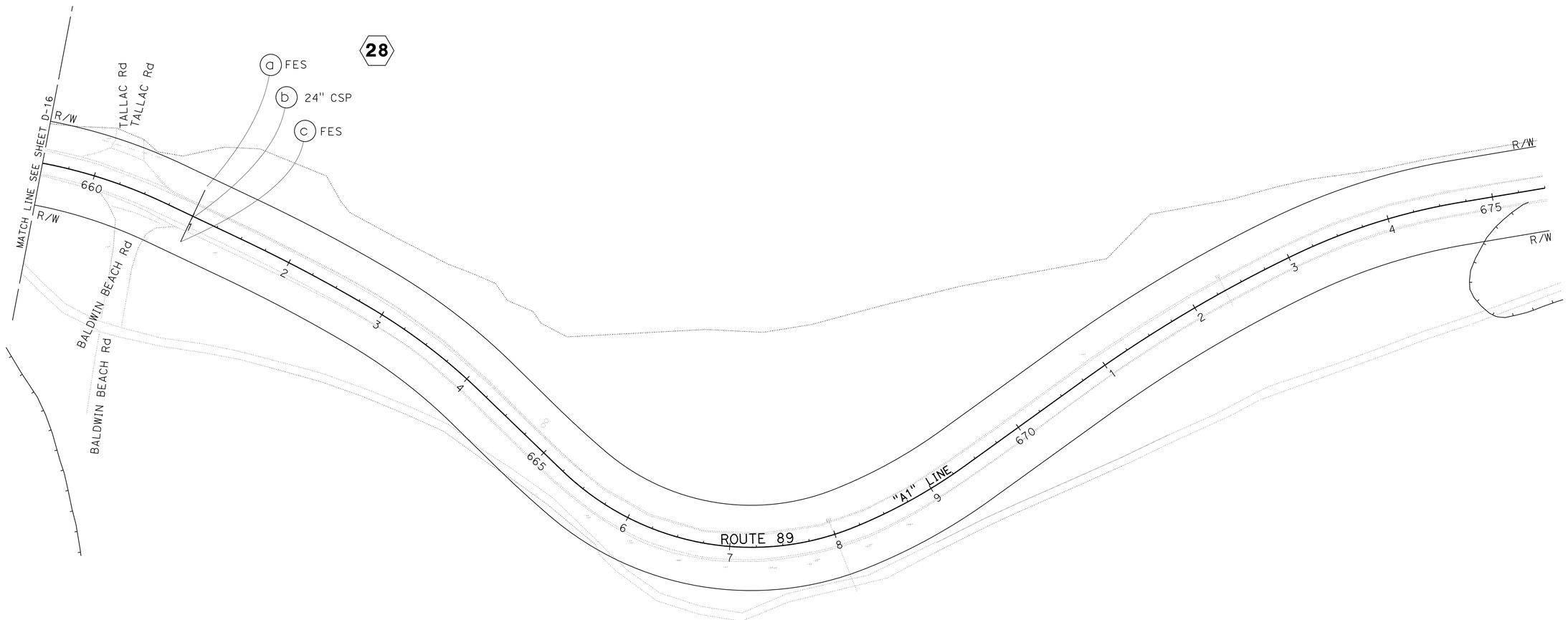

DRAINAGE PLAN

SCALE: 1" = 50'

D-13

CALCULATED-DESIGNED BY	JOHN HUDSON	REVISED BY	DATE REVISED
CHECKED BY	ANDRA SPECK		
FUNCTIONAL SUPERVISOR	DENNIS JAGODA		
STATE OF CALIFORNIA - DEPARTMENT OF TRANSPORTATION	HYDRAULICS		

LAST REVISION 02-04-13 | DATE PLOTTED => 13-FEB-2014 | TIME PLOTTED => 13:42

Dist	COUNTY	ROUTE	POST MILES TOTAL PROJECT	SHEET No.	TOTAL SHEETS
03	ED	89	8.6/13.8	66	231

REGISTERED CIVIL ENGINEER 11-18-13 DATE

11-18-13
PLANS APPROVAL DATE

REGISTERED PROFESSIONAL ENGINEER CHRIS ROCKEY No. C78030 Exp. 9-30-15 CIVIL STATE OF CALIFORNIA

THE STATE OF CALIFORNIA OR ITS OFFICERS OR AGENTS SHALL NOT BE RESPONSIBLE FOR THE ACCURACY OR COMPLETENESS OF SCANNED COPIES OF THIS PLAN SHEET.

NOTE:

1. FOR ACCURATE RIGHT OF WAY DATA, CONTACT RIGHT OF WAY ENGINEERING AT THE DISTRICT OFFICE.

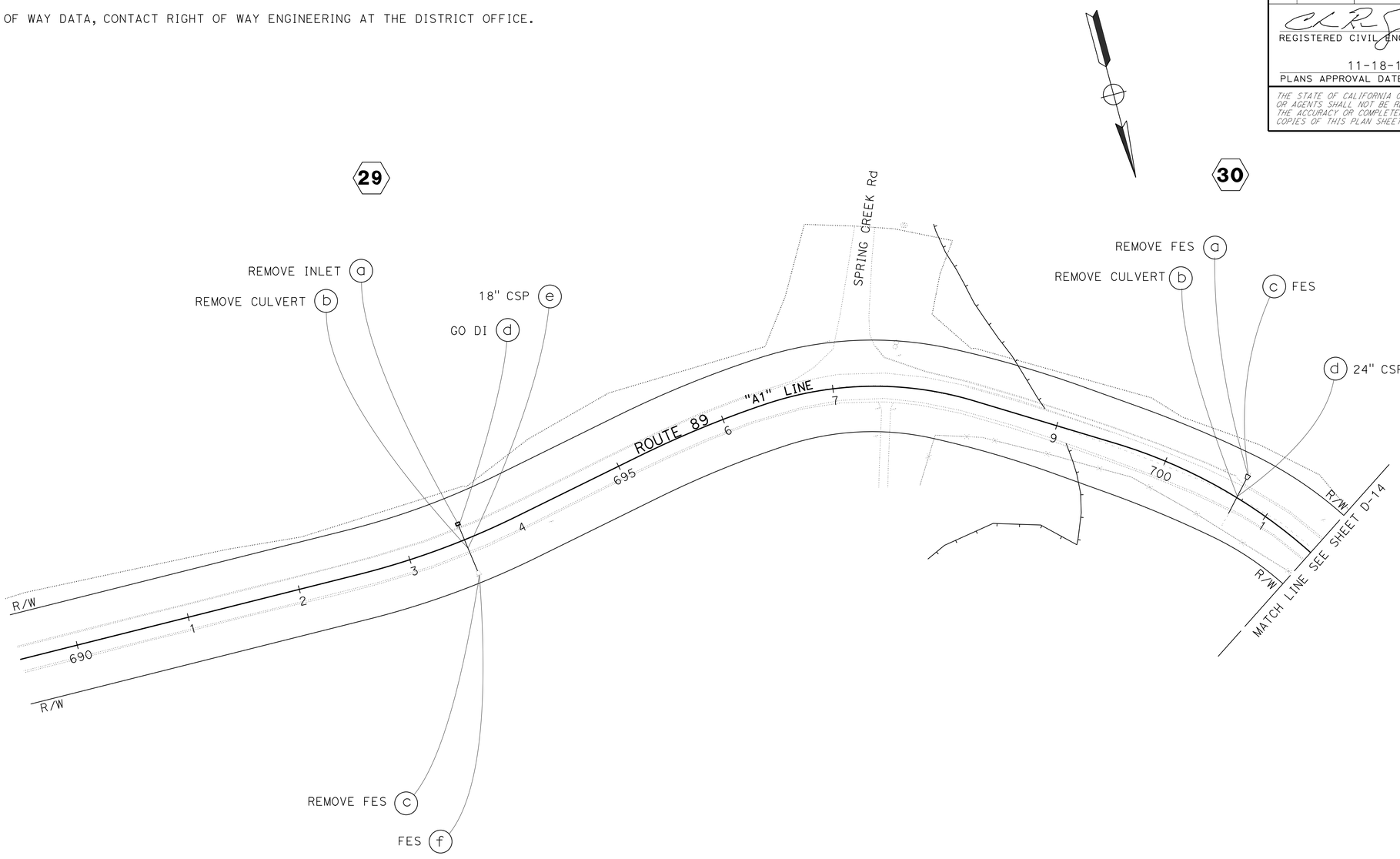

DRAINAGE PLAN

SCALE: 1" = 50'

D-14

STATE OF CALIFORNIA - DEPARTMENT OF TRANSPORTATION

Caltrans® HYDRAULICS

FUNCTIONAL SUPERVISOR: DENNIS JAGODA

CALCULATED-DESIGNED BY: JOHN HUDSON

CHECKED BY: ANDRA SPECK

REVISED BY

DATE REVISED

LAST REVISION 02-04-13

DATE PLOTTED => 13-FEB-2014
TIME PLOTTED => 13:42

NOTE:

1. FOR ACCURATE RIGHT OF WAY DATA, CONTACT RIGHT OF WAY ENGINEERING AT THE DISTRICT OFFICE.

Dist	COUNTY	ROUTE	POST MILES TOTAL PROJECT	SHEET No.	TOTAL SHEETS
03	ED	89	8.6/13.8	67	231

11-18-13
REGISTERED CIVIL ENGINEER DATE

CHRIS ROCKEY No. C78030 Exp. 9-30-15 CIVIL — REGISTERED PROFESSIONAL ENGINEER — STATE OF CALIFORNIA

11-18-13
PLANS APPROVAL DATE

THE STATE OF CALIFORNIA OR ITS OFFICERS OR AGENTS SHALL NOT BE RESPONSIBLE FOR THE ACCURACY OR COMPLETENESS OF SCANNED COPIES OF THIS PLAN SHEET.

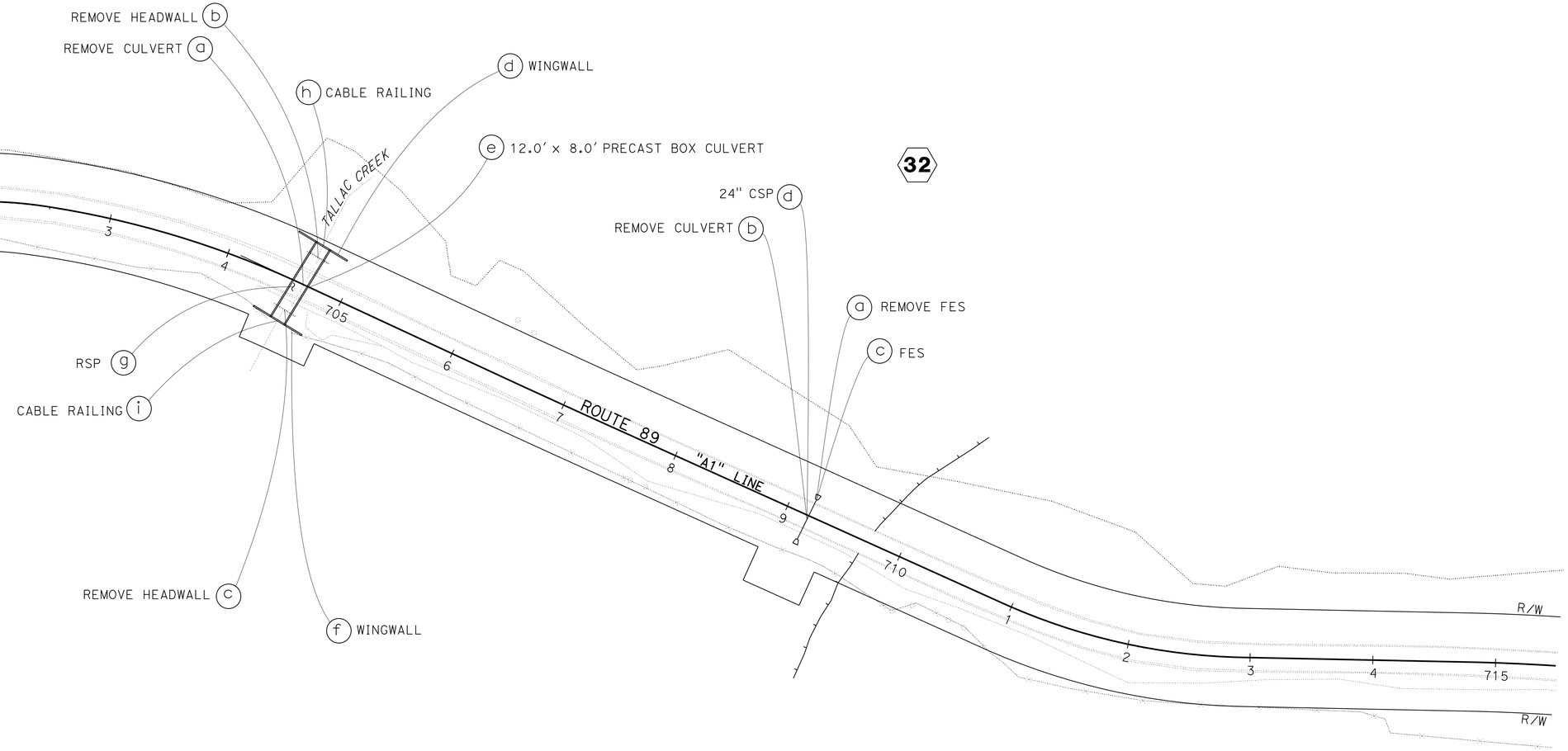

DRAINAGE PLAN

SCALE: 1" = 50′

D-15

LAST REVISION 02-04-13 | DATE PLOTTED => 13-FEB-2014 | TIME PLOTTED => 13:42

STATE OF CALIFORNIA - DEPARTMENT OF TRANSPORTATION
Caltrans®
HYDRAULICS

FUNCTIONAL SUPERVISOR: DENNIS JAGODA

CALCULATED-DESIGNED BY: JOHN HUDSON

CHECKED BY: ANDRA SPECK

REVISED BY | DATE REVISED

BORDER LAST REVISED 7/2/2010

USERNAME => s130875
DGN FILE => 0300000223ia015.dgn

RELATIVE BORDER SCALE IS IN INCHES 0 1 2 3

UNIT 0359

PROJECT NUMBER & PHASE 03000002231

Dist	COUNTY	ROUTE	POST MILES TOTAL PROJECT	SHEET No.	TOTAL SHEETS
03	ED	89	8.6/13.8	68	231

REGISTERED CIVIL ENGINEER — 11-18-13 DATE

CHRIS ROCKEY No. C78030 Exp. 9-30-15 CIVIL — REGISTERED PROFESSIONAL ENGINEER — STATE OF CALIFORNIA

11-18-13
PLANS APPROVAL DATE

THE STATE OF CALIFORNIA OR ITS OFFICERS OR AGENTS SHALL NOT BE RESPONSIBLE FOR THE ACCURACY OR COMPLETENESS OF SCANNED COPIES OF THIS PLAN SHEET.

NOTES:

1. CONTRACTOR SHALL VERIFY ALL EXISTING PIPES & STRUCTURES PRIOR TO CASTING DRAINAGE INLETS.
2. FOR GUTTER DEPRESSIONS SEE STANDARD PLANS, D78A, D78B, AND D78C.

LEGEND:

PH = POTHOLE
PL = PLATE

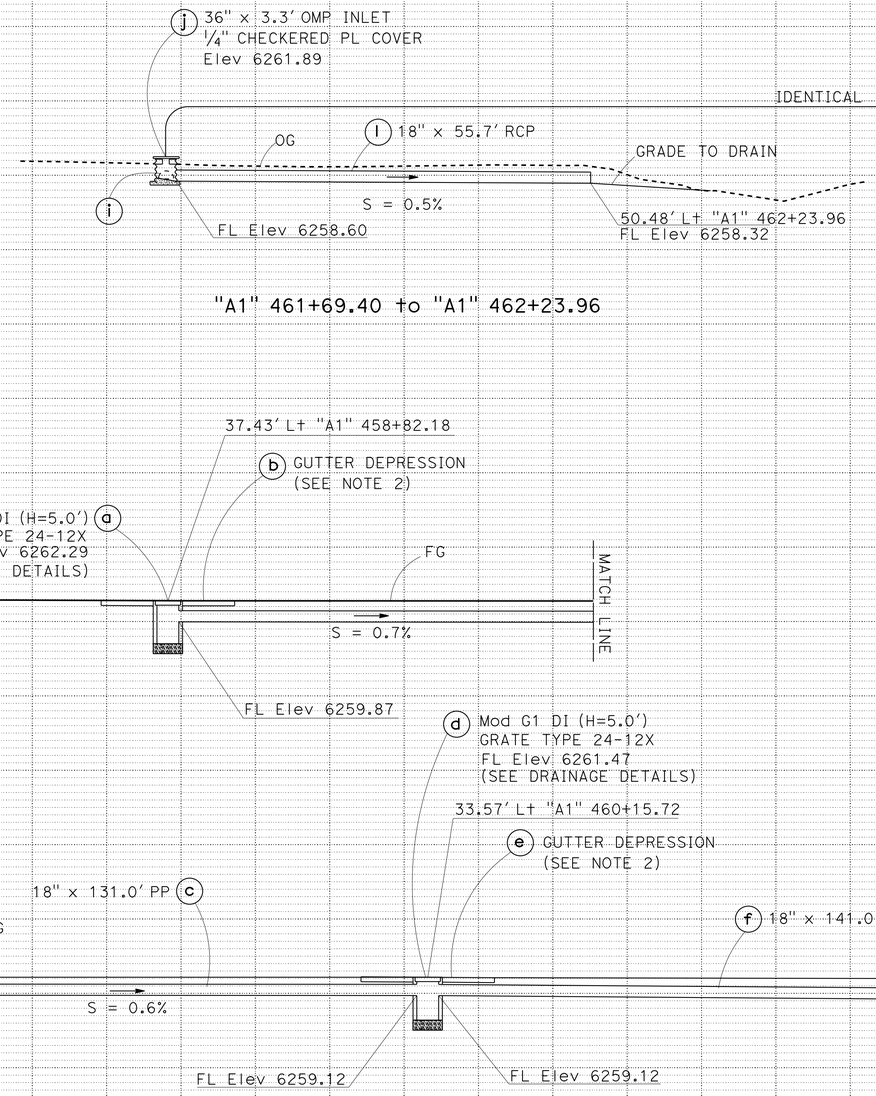

"A1" 461+69.40 to "A1" 462+23.96

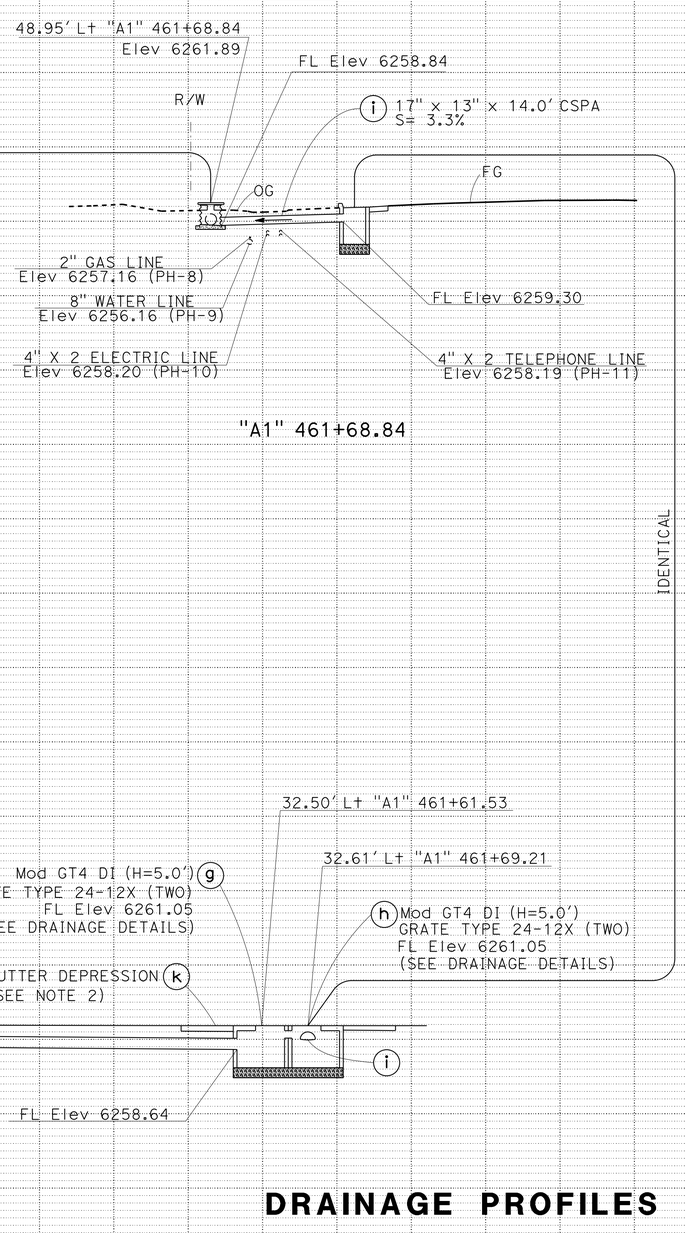

"A1" 461+68.84

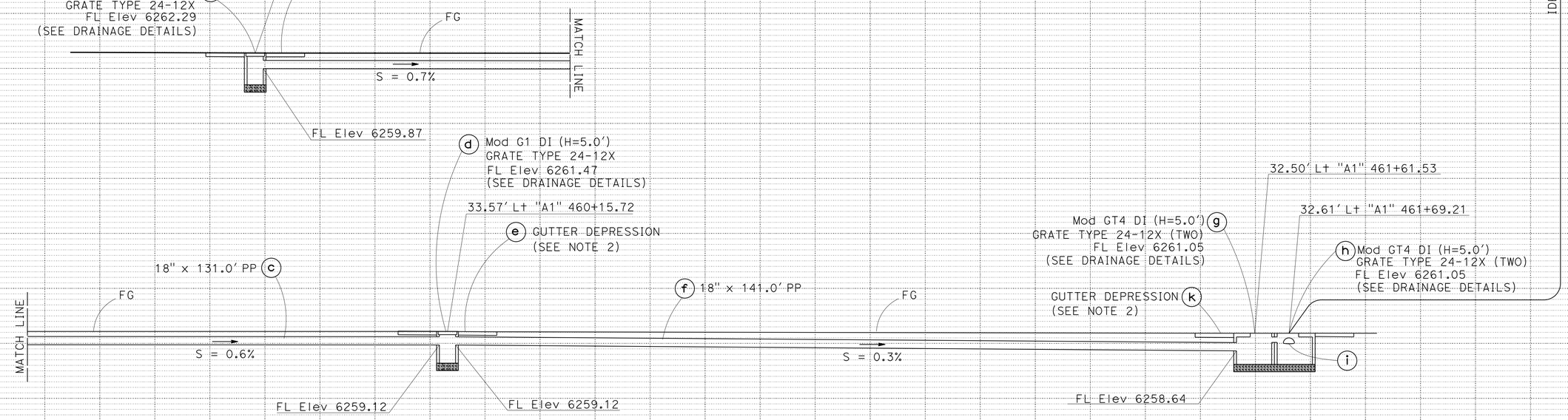

DRAINAGE SYSTEM No. 1

"A1" 458+82.18 to "A1" 462+40.13

DRAINAGE PROFILES

SCALE: Horiz 1" = 10'
Vert 1" = 10'

DP-1

REVISED BY | DATE REVISED
JOHN HUDSON | ANDRA SPECK
CALCULATED-DESIGNED BY | CHECKED BY
FUNCTIONAL SUPERVISOR: DENNIS JAGODA
STATE OF CALIFORNIA - DEPARTMENT OF TRANSPORTATION
Caltrans® HYDRAULICS

LAST REVISION 00-00-00 | DATE PLOTTED => 13-FEB-2014 | TIME PLOTTED => 13:42

Dist	COUNTY	ROUTE	POST MILES TOTAL PROJECT	SHEET No.	TOTAL SHEETS
03	ED	89	8.6/13.8	69	231

REGISTERED CIVIL ENGINEER — 11-18-13 DATE

CHRIS ROCKEY No. C78030 Exp. 9-30-15 CIVIL — REGISTERED PROFESSIONAL ENGINEER — STATE OF CALIFORNIA

11-18-13
PLANS APPROVAL DATE

THE STATE OF CALIFORNIA OR ITS OFFICERS OR AGENTS SHALL NOT BE RESPONSIBLE FOR THE ACCURACY OR COMPLETENESS OF SCANNED COPIES OF THIS PLAN SHEET.

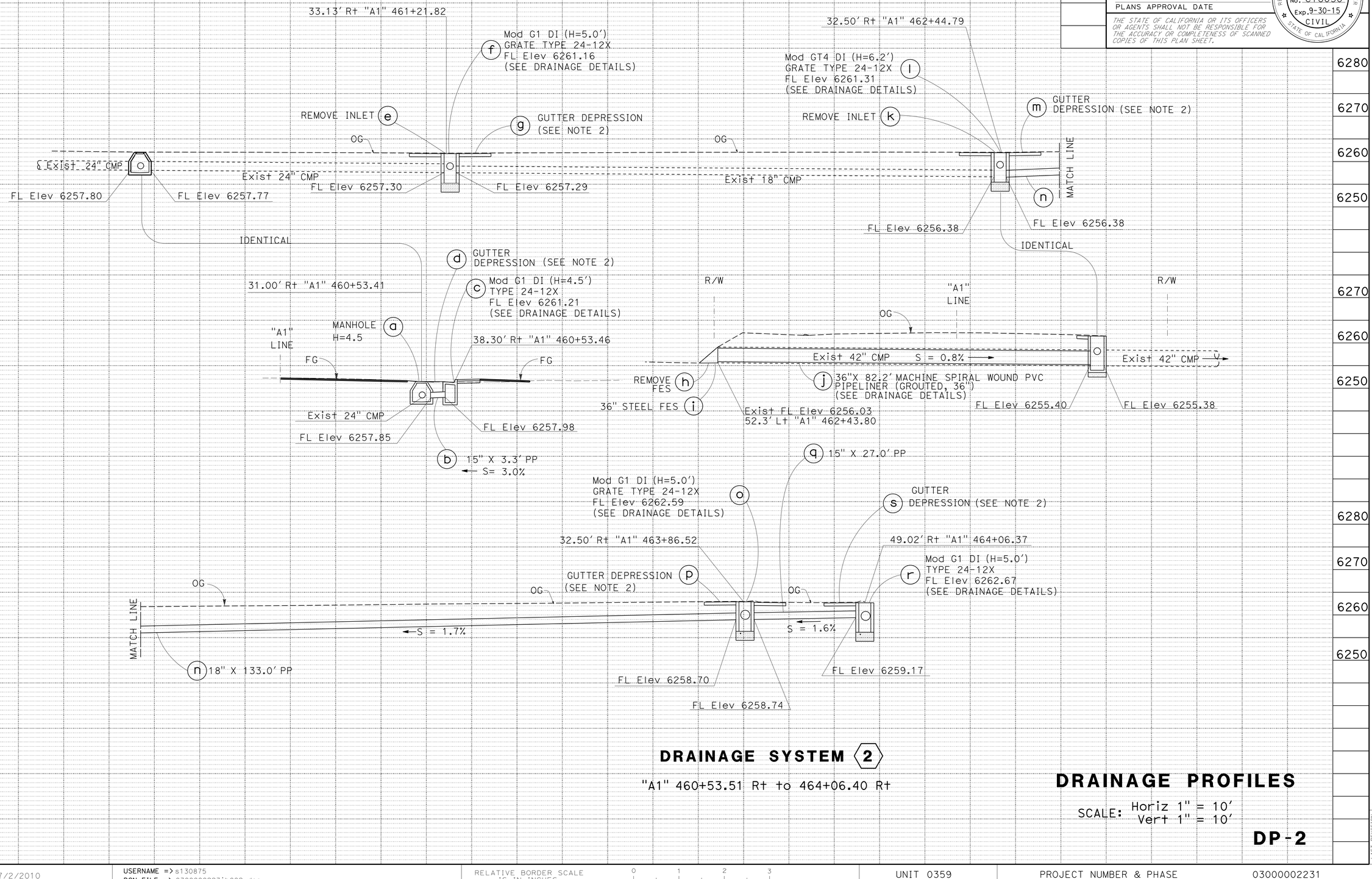

DRAINAGE SYSTEM (2)

"A1" 460+53.51 Rt to 464+06.40 Rt

DRAINAGE PROFILES

SCALE: Horiz 1" = 10'
Vert 1" = 10'

DP-2

STATE OF CALIFORNIA - DEPARTMENT OF TRANSPORTATION — Caltrans® HYDRAULICS

FUNCTIONAL SUPERVISOR: DENNIS JAGODA

CALCULATED-DESIGNED BY: ANDRA SPECK

CHECKED BY: JOHN HUDSON

REVISED BY | DATE REVISED

LAST REVISION | DATE PLOTTED => 13-FEB-2014 | 00-00-00 | TIME PLOTTED => 13:42

BORDER LAST REVISED 7/2/2010 | USERNAME => s130875 | DGN FILE => 0300000223ib002.dgn | RELATIVE BORDER SCALE IS IN INCHES 0 1 2 3 | UNIT 0359 | PROJECT NUMBER & PHASE 03000002231

Dist	COUNTY	ROUTE	POST MILES TOTAL PROJECT	SHEET No.	TOTAL SHEETS
03	ED	89	8.6/13.8	70	231

REGISTERED CIVIL ENGINEER — 11-18-13 DATE

CHRIS ROCKEY No. C78030 Exp. 9-30-15 CIVIL — REGISTERED PROFESSIONAL ENGINEER — STATE OF CALIFORNIA

11-18-13
PLANS APPROVAL DATE

THE STATE OF CALIFORNIA OR ITS OFFICERS OR AGENTS SHALL NOT BE RESPONSIBLE FOR THE ACCURACY OR COMPLETENESS OF SCANNED COPIES OF THIS PLAN SHEET.

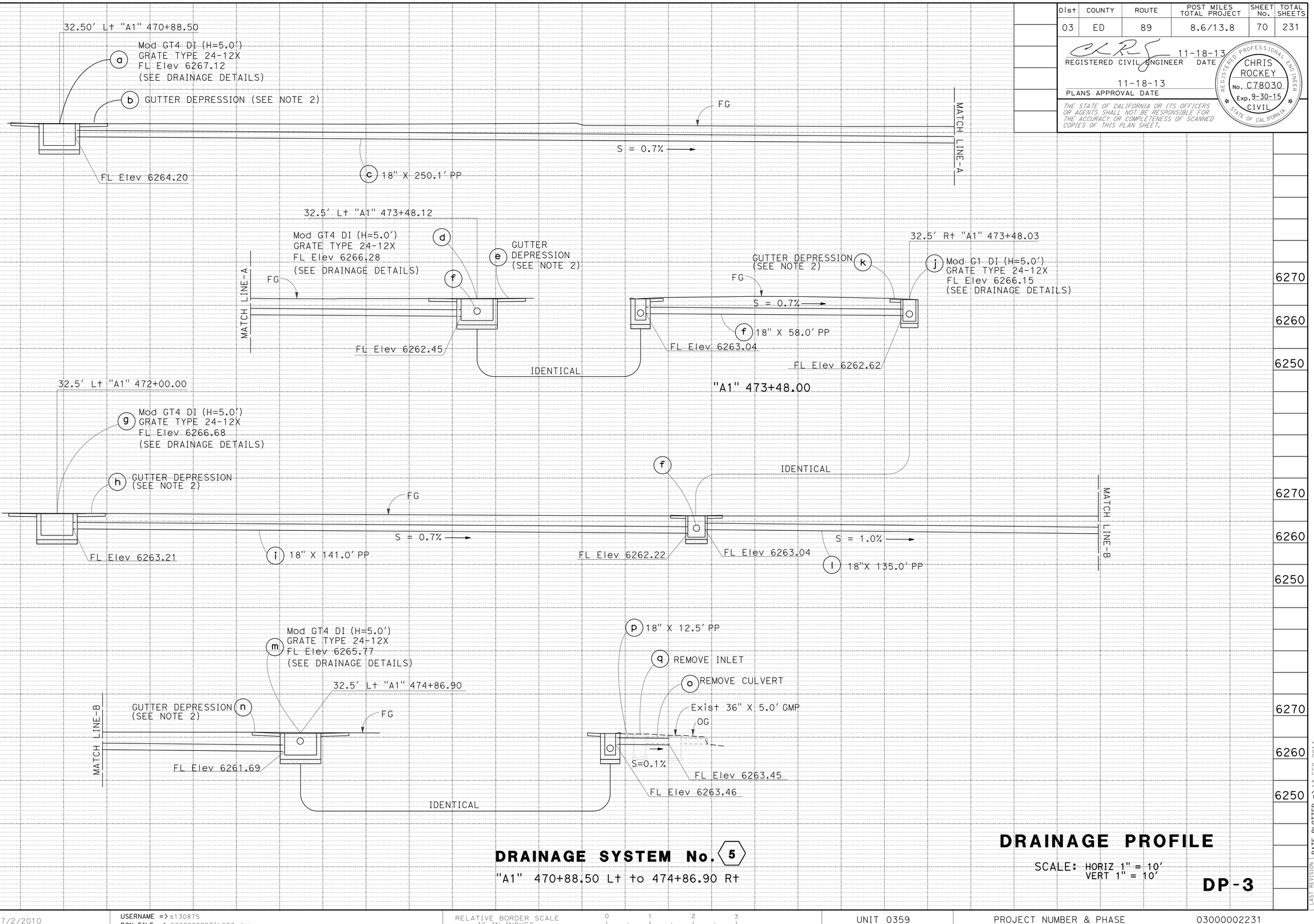

DRAINAGE SYSTEM No. 5

"A1" 470+88.50 Lt to 474+86.90 Rt

DRAINAGE PROFILE

SCALE: HORIZ 1" = 10'
VERT 1" = 10'

DP-3

JOHN HUDSON — ANDRA SPECK — REVISED BY — DATE REVISED

CALCULATED-DESIGNED BY — CHECKED BY

FUNCTIONAL SUPERVISOR — DENNIS JAGODA

STATE OF CALIFORNIA - DEPARTMENT OF TRANSPORTATION — HYDRAULICS — Caltrans®

LAST REVISION — DATE PLOTTED => 13-FEB-2014 — TIME PLOTTED => 13:42 — 00-00-00

BORDER LAST REVISED 7/2/2010 | USERNAME => s130875 | DGN FILE => 0300000223ib003.dgn | RELATIVE BORDER SCALE IS IN INCHES 0 1 2 3 | UNIT 0359 | PROJECT NUMBER & PHASE 03000002231

Dist	COUNTY	ROUTE	POST MILES TOTAL PROJECT	SHEET No.	TOTAL SHEETS
03	ED	89	8.6/13.8	71	231

11-18-13
REGISTERED CIVIL ENGINEER DATE

CHRIS ROCKEY No. C78030 Exp. 9-30-15 CIVIL — REGISTERED PROFESSIONAL ENGINEER — STATE OF CALIFORNIA

11-18-13
PLANS APPROVAL DATE

THE STATE OF CALIFORNIA OR ITS OFFICERS OR AGENTS SHALL NOT BE RESPONSIBLE FOR THE ACCURACY OR COMPLETENESS OF SCANNED COPIES OF THIS PLAN SHEET.

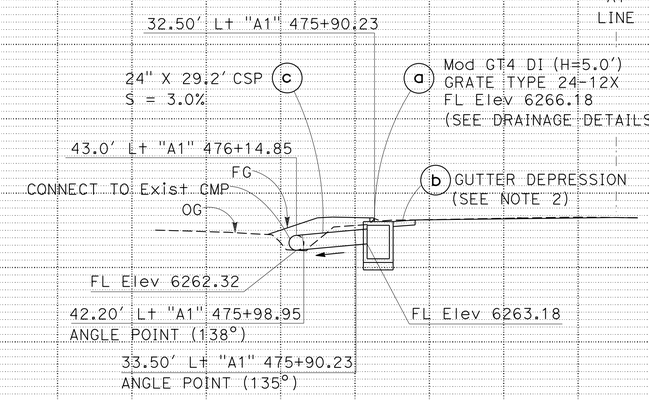

DRAINAGE SYSTEM No. 6

"A1" 475+90.23

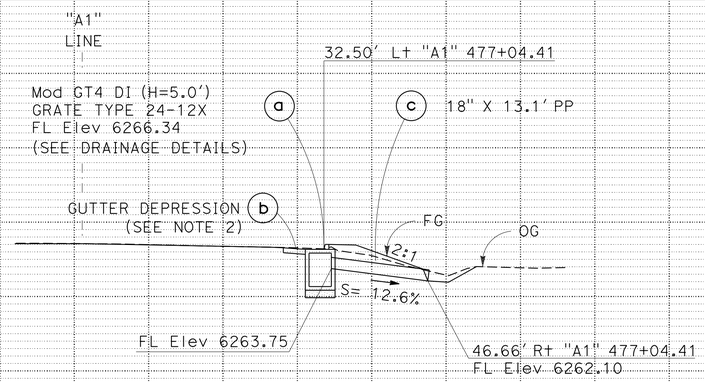

DRAINAGE SYSTEM No. 7

"A1" 477+04.43

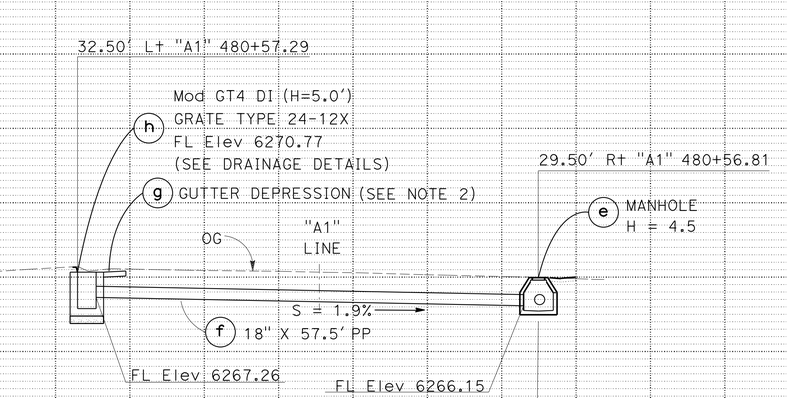

"A1" 480+57.29

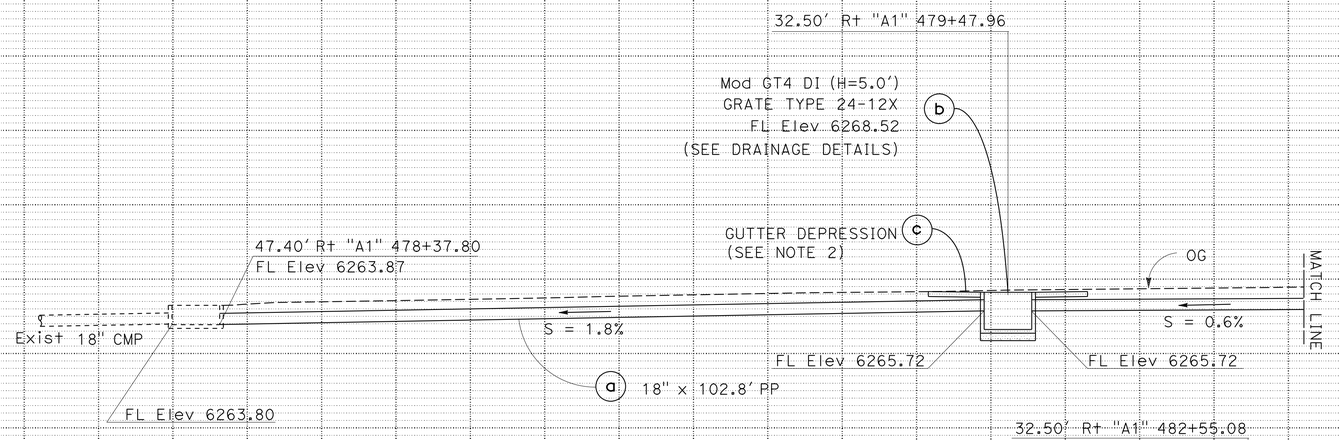

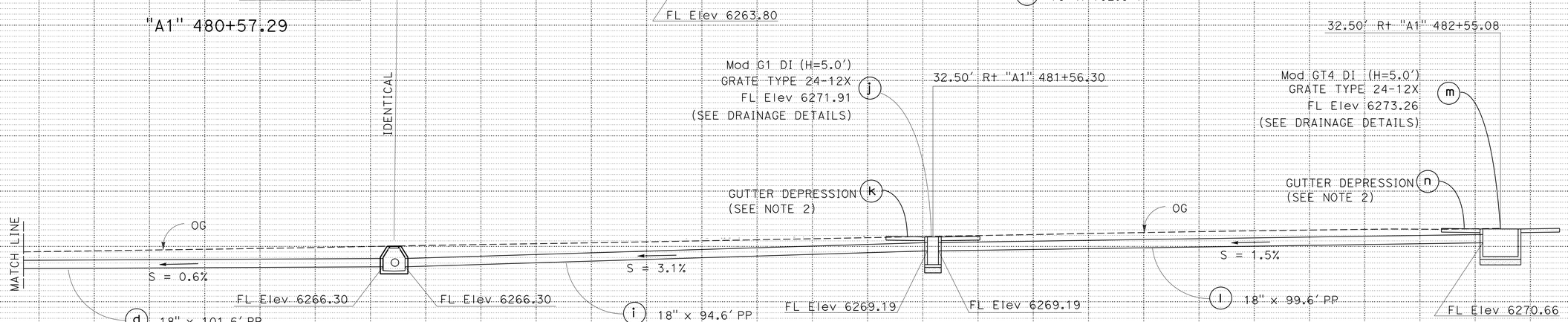

DRAINAGE SYSTEM No. 8

"A1" 478+37.80 TO 482+47.00

DRAINAGE PROFILE

SCALE: Horiz 1" = 10'
Vert 1" = 10'

DP-4

STATE OF CALIFORNIA - DEPARTMENT OF TRANSPORTATION
Caltrans® HYDRAULICS

FUNCTIONAL SUPERVISOR: DENNIS JAGODA

CALCULATED-DESIGNED BY: JOHN HUDSON
CHECKED BY: ANDRA SPECK

REVISED BY	DATE REVISED

LAST REVISION: DATE PLOTTED => 13-FEB-2014
00-00-00 TIME PLOTTED => 13:42

BORDER LAST REVISED 7/2/2010

USERNAME => s130875
DGN FILE => 0300000223ib004.dgn

RELATIVE BORDER SCALE IS IN INCHES 0 1 2 3

UNIT 0359

PROJECT NUMBER & PHASE 03000002231

Dist	COUNTY	ROUTE	POST MILES TOTAL PROJECT	SHEET No.	TOTAL SHEETS
03	ED	89	8.6/13.8	72	231

REGISTERED CIVIL ENGINEER — 11-18-13 DATE

CHRIS ROCKEY No. C78030 Exp. 9-30-15 CIVIL — REGISTERED PROFESSIONAL ENGINEER — STATE OF CALIFORNIA

11-18-13
PLANS APPROVAL DATE

THE STATE OF CALIFORNIA OR ITS OFFICERS OR AGENTS SHALL NOT BE RESPONSIBLE FOR THE ACCURACY OR COMPLETENESS OF SCANNED COPIES OF THIS PLAN SHEET.

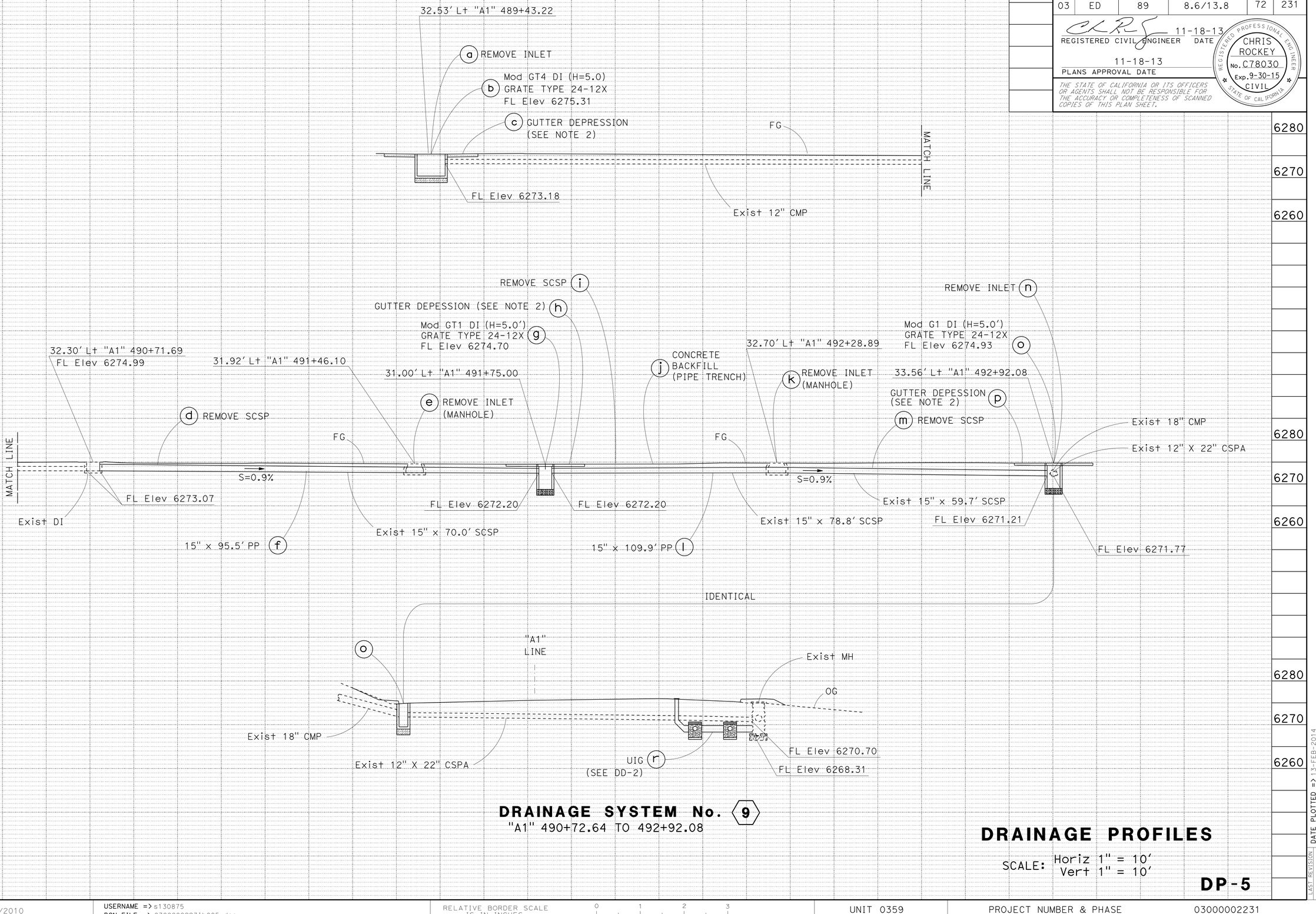

DRAINAGE SYSTEM No. 9

"A1" 490+72.64 TO 492+92.08

DRAINAGE PROFILES

SCALE: Horiz 1" = 10'
Vert 1" = 10'

DP-5

REVISED BY | DATE REVISED

JOHN HUDSON | ANDRA SPECK

CALCULATED-DESIGNED BY | CHECKED BY

FUNCTIONAL SUPERVISOR: DENNIS JAGODA

STATE OF CALIFORNIA - DEPARTMENT OF TRANSPORTATION
Caltrans® HYDRAULICS

LAST REVISION 00-00-00 | DATE PLOTTED => 13-FEB-2014 | TIME PLOTTED => 13:42

BORDER LAST REVISED 7/2/2010 | USERNAME => s130875 | DGN FILE => 03000002231b005.dgn | RELATIVE BORDER SCALE IS IN INCHES 0 1 2 3 | UNIT 0359 | PROJECT NUMBER & PHASE 03000002231

Dist	COUNTY	ROUTE	POST MILES TOTAL PROJECT	SHEET No.	TOTAL SHEETS
03	ED	89	8.6/13.8	73	231

REGISTERED CIVIL ENGINEER — 11-18-13 DATE

CHRIS ROCKEY No. C78030 Exp. 9-30-15 CIVIL — REGISTERED PROFESSIONAL ENGINEER — STATE OF CALIFORNIA

11-18-13
PLANS APPROVAL DATE

THE STATE OF CALIFORNIA OR ITS OFFICERS OR AGENTS SHALL NOT BE RESPONSIBLE FOR THE ACCURACY OR COMPLETENESS OF SCANNED COPIES OF THIS PLAN SHEET.

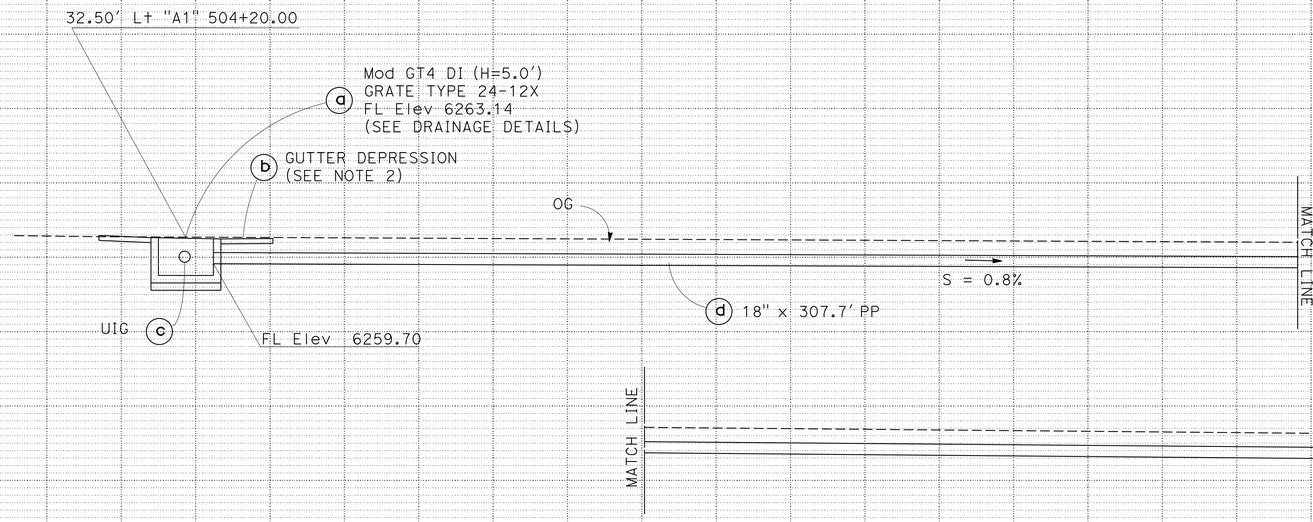

DRAINAGE SYSTEM No. 13

"A1" 504+19.99 TO 507+33.36

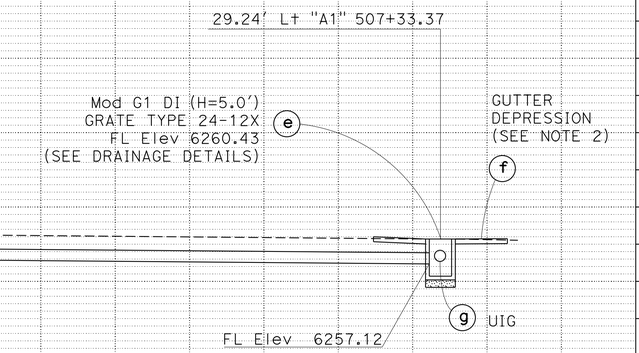

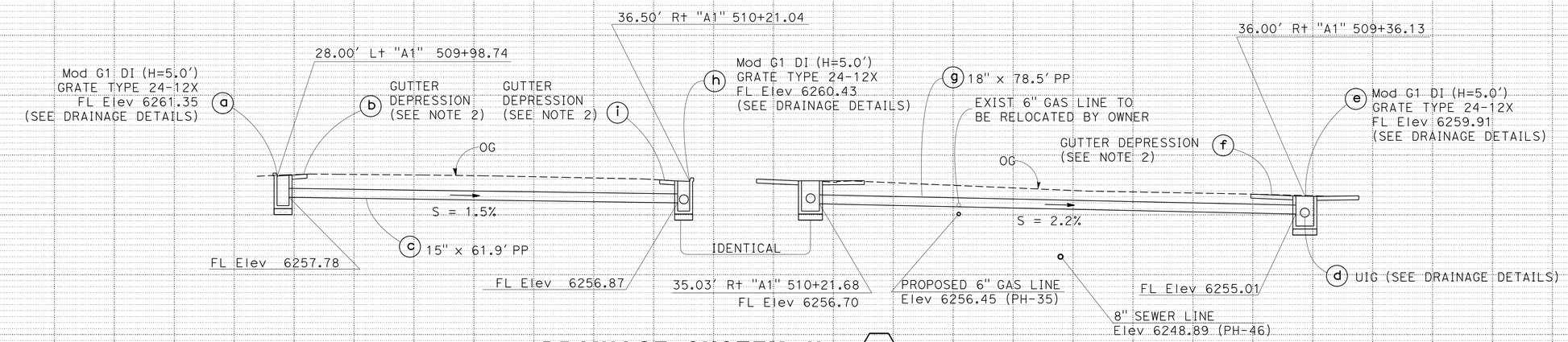

DRAINAGE SYSTEM No. 16

"A1" 509+96.00 to 510+19.00

DRAINAGE PROFILE

SCALE: HORIZ 1" = 10'
VERT 1" = 10'

DP-6

REVISED BY | DATE REVISED

CALCULATED-DESIGNED BY: JOHN HUDSON
CHECKED BY: ANDRA SPECK

FUNCTIONAL SUPERVISOR: DENNIS JAGODA

STATE OF CALIFORNIA - DEPARTMENT OF TRANSPORTATION
Caltrans®
HYDRAULICS

LAST REVISION: 00-00-00
DATE PLOTTED => 13-FEB-2014
TIME PLOTTED => 13:42

BORDER LAST REVISED 7/2/2010

USERNAME => s130875
DGN FILE => 0300000223ib006.dgn

RELATIVE BORDER SCALE IS IN INCHES 0 1 2 3

UNIT 0359

PROJECT NUMBER & PHASE 03000002231

Dist	COUNTY	ROUTE	POST MILES TOTAL PROJECT	SHEET No.	TOTAL SHEETS
03	ED	89	8.6/13.8	74	231

REGISTERED CIVIL ENGINEER — 11-18-13 DATE

CHRIS ROCKEY No. C78030 Exp. 9-30-15 CIVIL — REGISTERED PROFESSIONAL ENGINEER — STATE OF CALIFORNIA

11-18-13
PLANS APPROVAL DATE

THE STATE OF CALIFORNIA OR ITS OFFICERS OR AGENTS SHALL NOT BE RESPONSIBLE FOR THE ACCURACY OR COMPLETENESS OF SCANNED COPIES OF THIS PLAN SHEET.

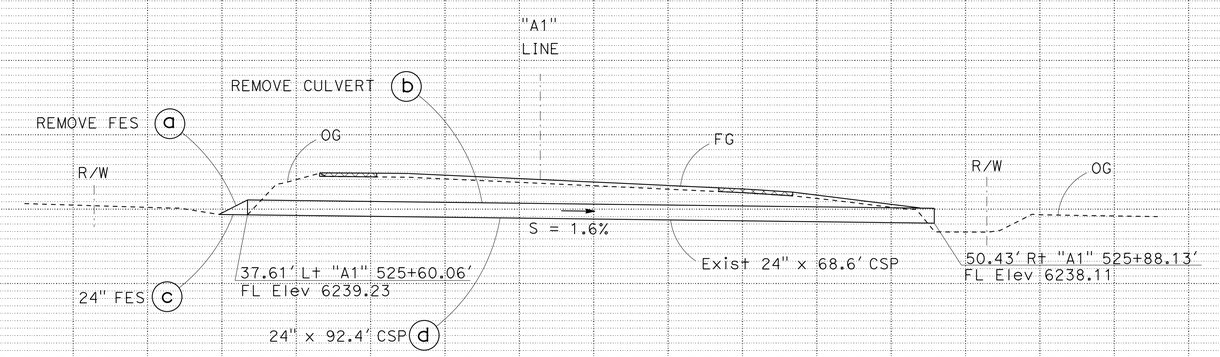

DRAINAGE SYSTEM No. 17

"A1" 525+71.52
SKEW: 16°

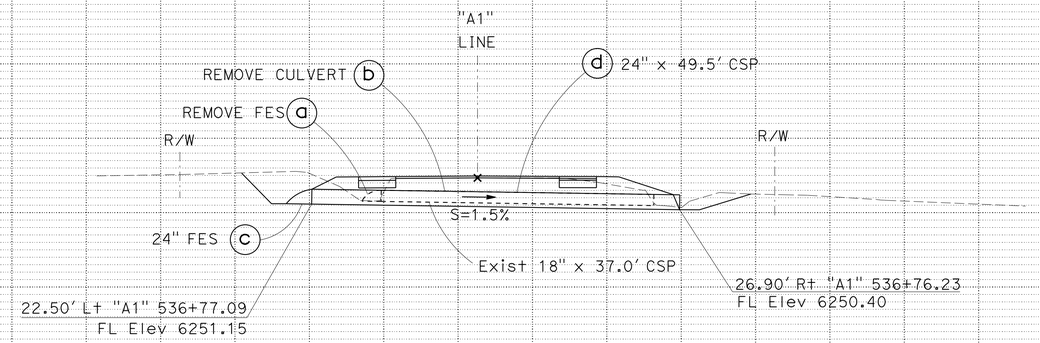

DRAINAGE SYSTEM No. 19

"A1" 536+76.67

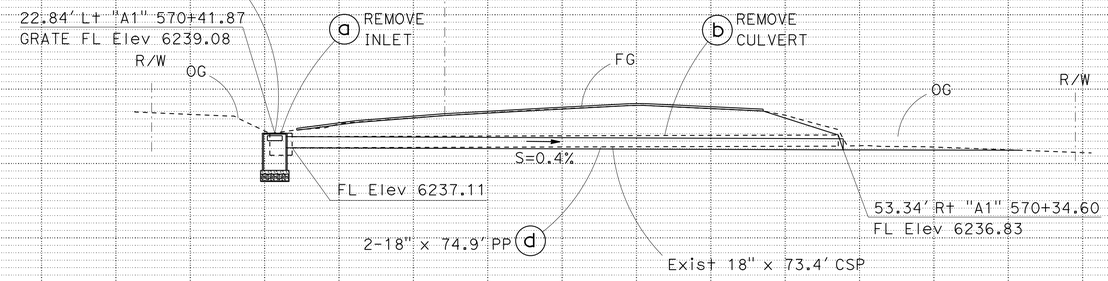

NOTE:
THE 2 CULVERTS ARE 4 FEET APART FROM CENTERLINE TO CENTERLINE.

DRAINAGE SYSTEM No. 20

"A1" 570+39.25
SKEW: 6°

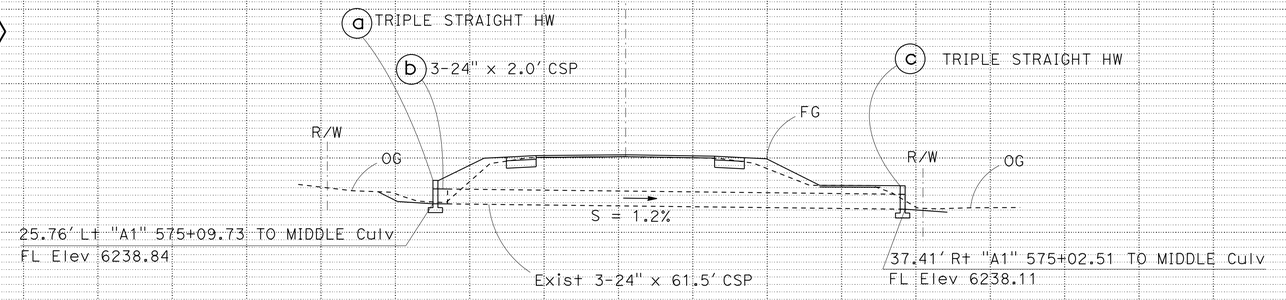

DRAINAGE SYSTEM No. 21

"A1" 575+06.69
SKEW: 6°

DRAINAGE PROFILES

SCALE: Horiz 1" = 10'
Vert 1" = 10'

DP-7

JOHN HUDSON — CALCULATED-DESIGNED BY
ANDRA SPECK — CHECKED BY
DENNIS JAGODA — FUNCTIONAL SUPERVISOR
REVISED BY — DATE REVISED
STATE OF CALIFORNIA - DEPARTMENT OF TRANSPORTATION
HYDRAULICS
Caltrans®

LAST REVISION 00-00-00 — DATE PLOTTED => 13-FEB-2014 — TIME PLOTTED => 13:42

Dist	COUNTY	ROUTE	POST MILES TOTAL PROJECT	SHEET No.	TOTAL SHEETS
03	ED	89	8.6/13.8	75	231

REGISTERED CIVIL ENGINEER — 11-18-13 DATE

CHRIS ROCKEY No. C78030 Exp. 9-30-15 CIVIL — REGISTERED PROFESSIONAL ENGINEER — STATE OF CALIFORNIA

11-18-13
PLANS APPROVAL DATE

THE STATE OF CALIFORNIA OR ITS OFFICERS OR AGENTS SHALL NOT BE RESPONSIBLE FOR THE ACCURACY OR COMPLETENESS OF SCANNED COPIES OF THIS PLAN SHEET.

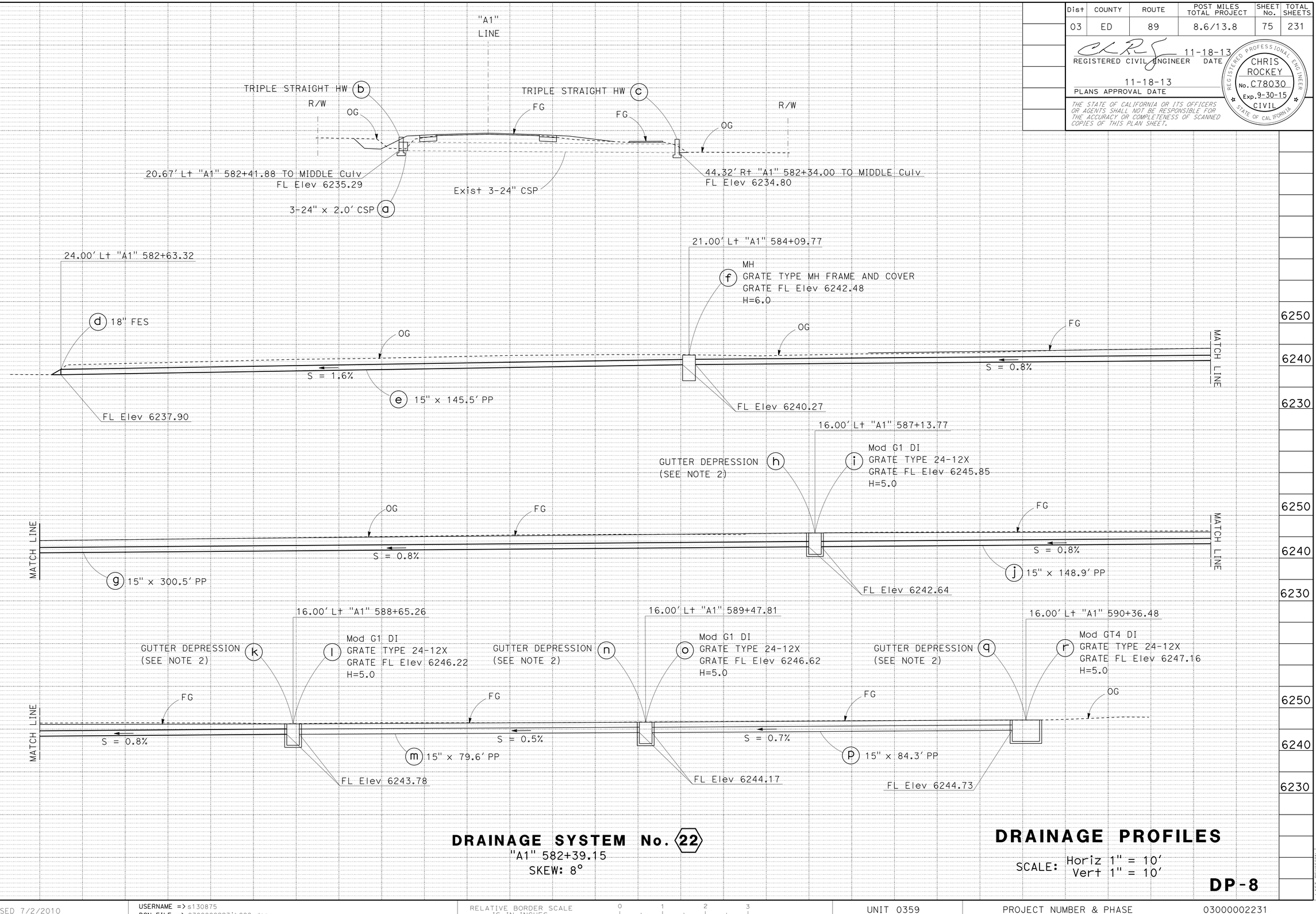

DRAINAGE SYSTEM No. 22

"A1" 582+39.15
SKEW: 8°

DRAINAGE PROFILES

SCALE: Horiz 1" = 10'
Vert 1" = 10'

DP-8

REVISED BY | DATE REVISED
JOHN HUDSON | ANDRA SPECK
CALCULATED-DESIGNED BY | CHECKED BY
FUNCTIONAL SUPERVISOR: DENNIS JAGODA

STATE OF CALIFORNIA - DEPARTMENT OF TRANSPORTATION
Caltrans® HYDRAULICS

LAST REVISION | DATE PLOTTED => 13-FEB-2014 | TIME PLOTTED => 13:42 | 00-00-00

Dist	COUNTY	ROUTE	POST MILES TOTAL PROJECT	SHEET No.	TOTAL SHEETS
03	ED	89	8.6/13.8	76	231

REGISTERED CIVIL ENGINEER — 11-18-13 DATE

CHRIS ROCKEY No. C78030 Exp. 9-30-15 CIVIL — REGISTERED PROFESSIONAL ENGINEER — STATE OF CALIFORNIA

11-18-13
PLANS APPROVAL DATE

THE STATE OF CALIFORNIA OR ITS OFFICERS OR AGENTS SHALL NOT BE RESPONSIBLE FOR THE ACCURACY OR COMPLETENESS OF SCANNED COPIES OF THIS PLAN SHEET.

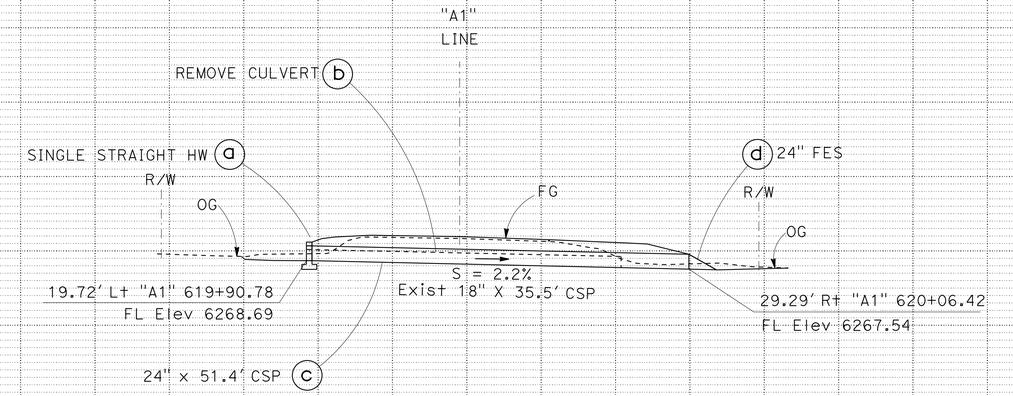

DRAINAGE SYSTEM No. 23

"A1" 619+97.22
SKEW: 18°

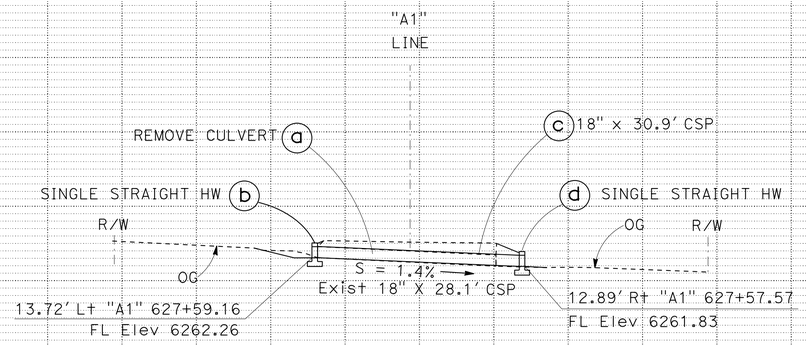

DRAINAGE SYSTEM No. 24

"A1" 627+58.47
SKEW: 7°

DRAINAGE PROFILES

SCALE: Horiz 1" = 10'
Vert 1" = 10'

DP-9

REVISED BY | DATE REVISED

CALCULATED-DESIGNED BY | CHECKED BY

JOHN HUDSON | ANDRA SPECK

FUNCTIONAL SUPERVISOR: DENNIS JAGODA

STATE OF CALIFORNIA - DEPARTMENT OF TRANSPORTATION
Caltrans®
HYDRAULICS

LAST REVISION 00-00-00 | DATE PLOTTED => 13-FEB-2014 | TIME PLOTTED => 13:42

Dist	COUNTY	ROUTE	POST MILES TOTAL PROJECT	SHEET No.	TOTAL SHEETS
03	ED	89	8.6/13.8	77	231

11-18-13
REGISTERED CIVIL ENGINEER DATE

CHRIS ROCKEY No. C78030 Exp. 9-30-15 CIVIL — REGISTERED PROFESSIONAL ENGINEER — STATE OF CALIFORNIA

11-18-13
PLANS APPROVAL DATE

THE STATE OF CALIFORNIA OR ITS OFFICERS OR AGENTS SHALL NOT BE RESPONSIBLE FOR THE ACCURACY OR COMPLETENESS OF SCANNED COPIES OF THIS PLAN SHEET.

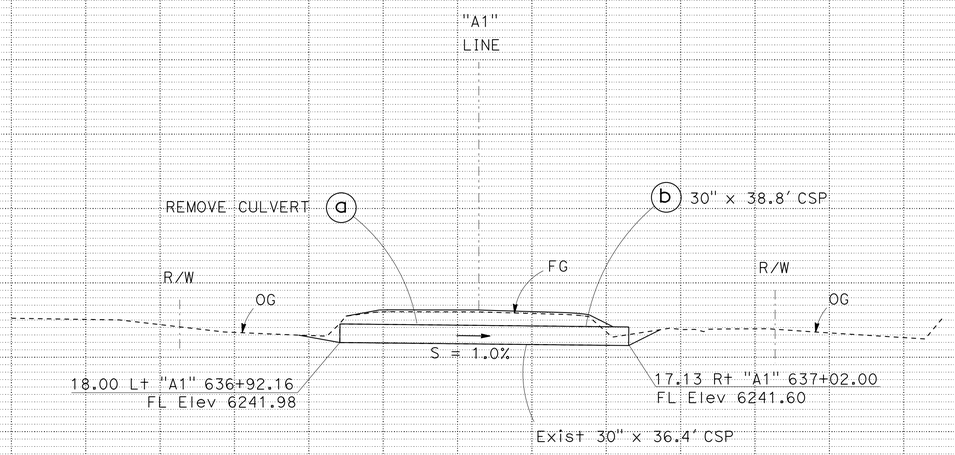

DRAINAGE SYSTEM No. 25

"A1" 636+97.33
SKEW: 16°

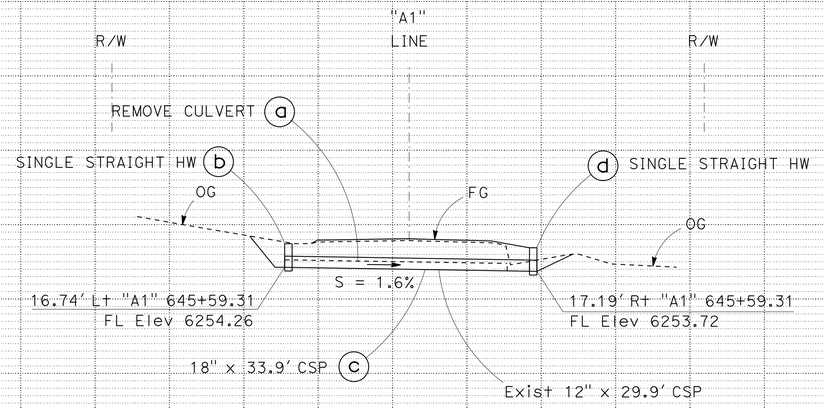

DRAINAGE SYSTEM No. 26

"A1" 645+59.31
SKEW: 90°

DRAINAGE PROFILES

SCALE: Horiz 1" = 10'
Vert 1" = 10'

DP-10

REVISED BY | DATE REVISED
JOHN HUDSON | ANDRA SPECK
CALCULATED-DESIGNED BY | CHECKED BY
FUNCTIONAL SUPERVISOR: DENNIS JAGODA

STATE OF CALIFORNIA - DEPARTMENT OF TRANSPORTATION
Caltrans®
HYDRAULICS

LAST REVISION 00-00-00 | DATE PLOTTED => 13-FEB-2014 | TIME PLOTTED => 13:42

Dist	COUNTY	ROUTE	POST MILES TOTAL PROJECT	SHEET No.	TOTAL SHEETS
03	ED	89	8.6/13.8	78	231

11-18-13
REGISTERED CIVIL ENGINEER DATE

CHRIS ROCKEY No. C78030 Exp. 9-30-15 CIVIL — REGISTERED PROFESSIONAL ENGINEER — STATE OF CALIFORNIA

11-18-13
PLANS APPROVAL DATE

THE STATE OF CALIFORNIA OR ITS OFFICERS OR AGENTS SHALL NOT BE RESPONSIBLE FOR THE ACCURACY OR COMPLETENESS OF SCANNED COPIES OF THIS PLAN SHEET.

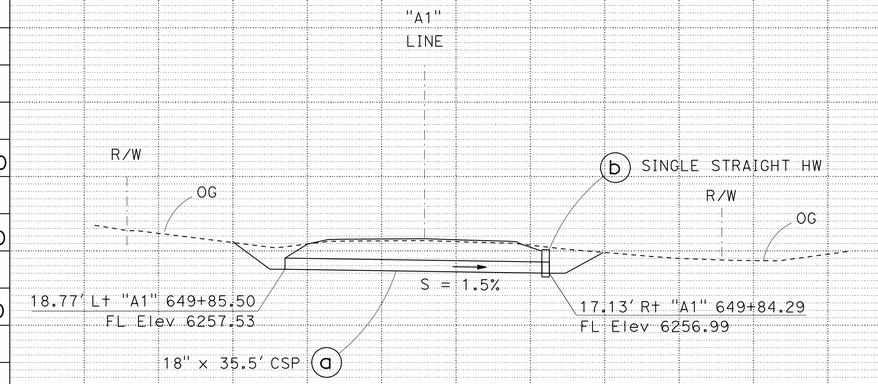

DRAINAGE SYSTEM No. 27

"A1" 649+84.86
SKEW: 2°

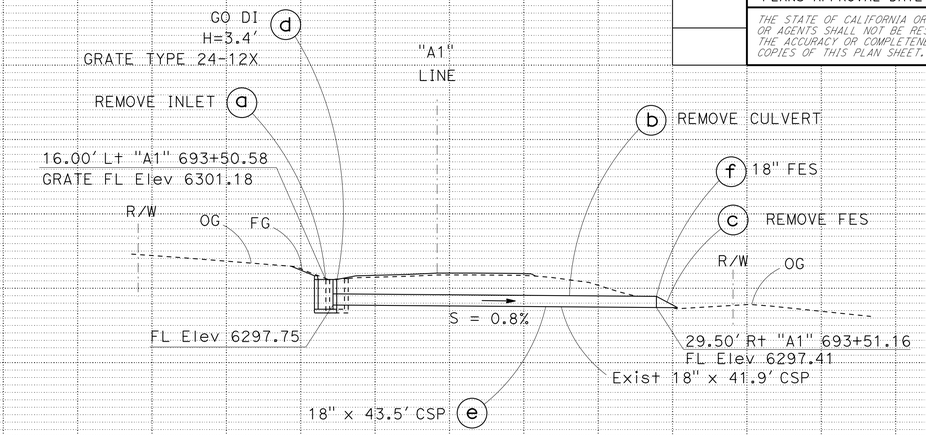

DRAINAGE SYSTEM No. 29

"A1" 693+50.82

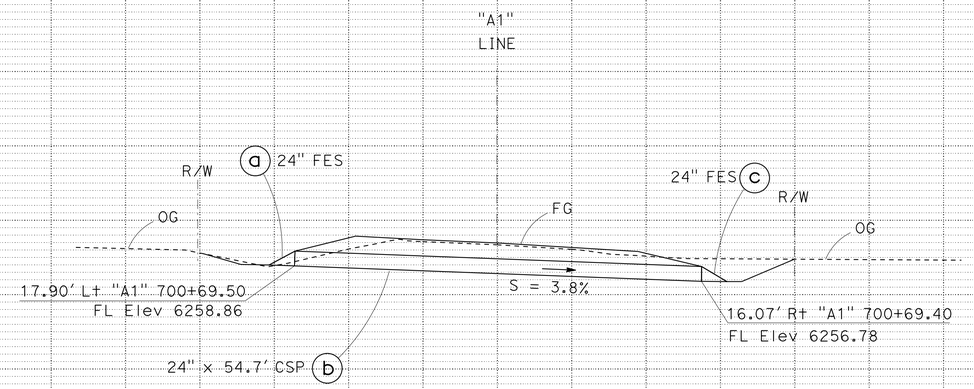

DRAINAGE SYSTEM No. 28

"A1" 661+00.00

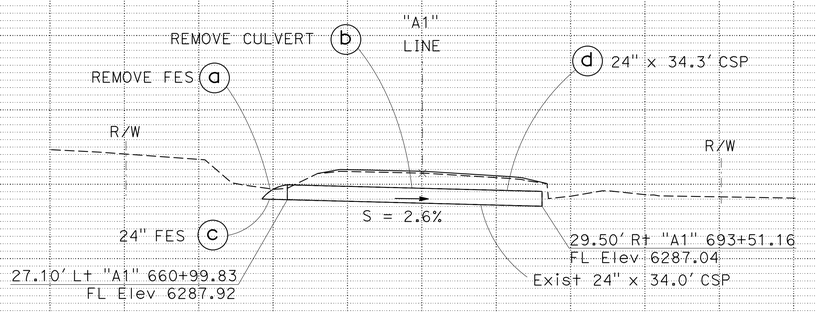

DRAINAGE SYSTEM No. 30

"A1" 700+69.995

DRAINAGE PROFILES

SCALE: Horiz 1" = 10'
Vert 1" = 10'

DP-11

STATE OF CALIFORNIA - DEPARTMENT OF TRANSPORTATION
Caltrans® HYDRAULICS
FUNCTIONAL SUPERVISOR: DENNIS JAGODA
CALCULATED-DESIGNED BY: JOHN HUDSON
CHECKED BY: ANDRA SPECK
REVISED BY / DATE REVISED

LAST REVISION 00-00-00 DATE PLOTTED => 13-FEB-2014 TIME PLOTTED => 13:42

BORDER LAST REVISED 7/2/2010
USERNAME => s130875
DGN FILE => 0300000223ib011.dgn
RELATIVE BORDER SCALE IS IN INCHES 0 1 2 3
UNIT 0359
PROJECT NUMBER & PHASE 03000002231

Dist	COUNTY	ROUTE	POST MILES TOTAL PROJECT	SHEET No.	TOTAL SHEETS
03	ED	89	8.6/13.8	79	231

11-18-13
REGISTERED CIVIL ENGINEER DATE

CHRIS ROCKEY No. C78030 Exp. 9-30-15 CIVIL — REGISTERED PROFESSIONAL ENGINEER — STATE OF CALIFORNIA

11-18-13
PLANS APPROVAL DATE

THE STATE OF CALIFORNIA OR ITS OFFICERS OR AGENTS SHALL NOT BE RESPONSIBLE FOR THE ACCURACY OR COMPLETENESS OF SCANNED COPIES OF THIS PLAN SHEET.

NOTE:
1. SEE Std PLAN D84 FOR "FOOTING" DIMENSIONS AND REINFORCEMENT
2. SEE Std PLAN RSP B3-5 FOR "FOOTING STEP" DIMENSIONS AND REINFORCEMENT
3. SEE Std PLAN D83A PRECAST REINFORCED CONCRETE BOX CULVERT DETAILS
4. SEE Std PLAN RSP B11-47 CABLE RAILING AND THE SUMMARY OF QUANTITIES CABLE RAILING TABLE.

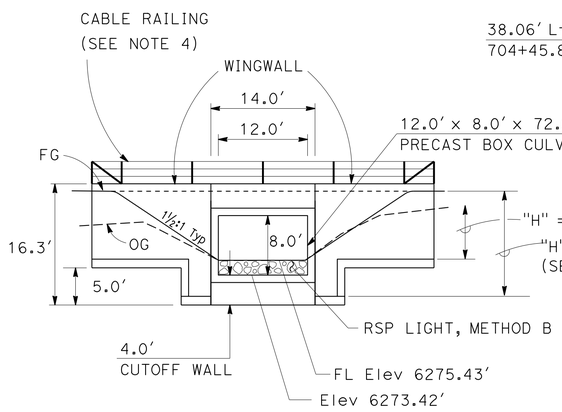

L† ELEVATION
(INLET)

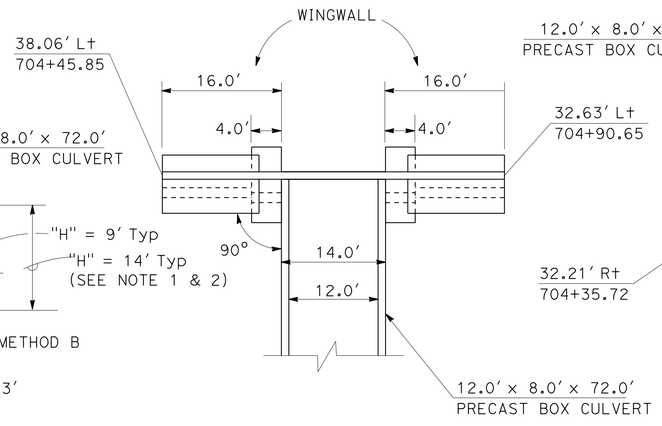

L† PARTIAL PLAN
(INLET)

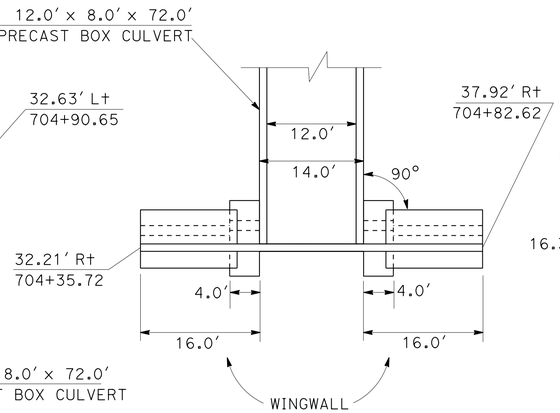

R† PARTIAL PLAN
(OUTLET)

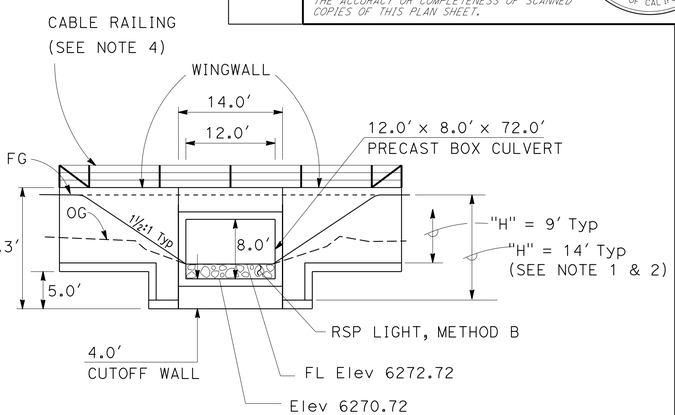

R† ELEVATION
(OUTLET)

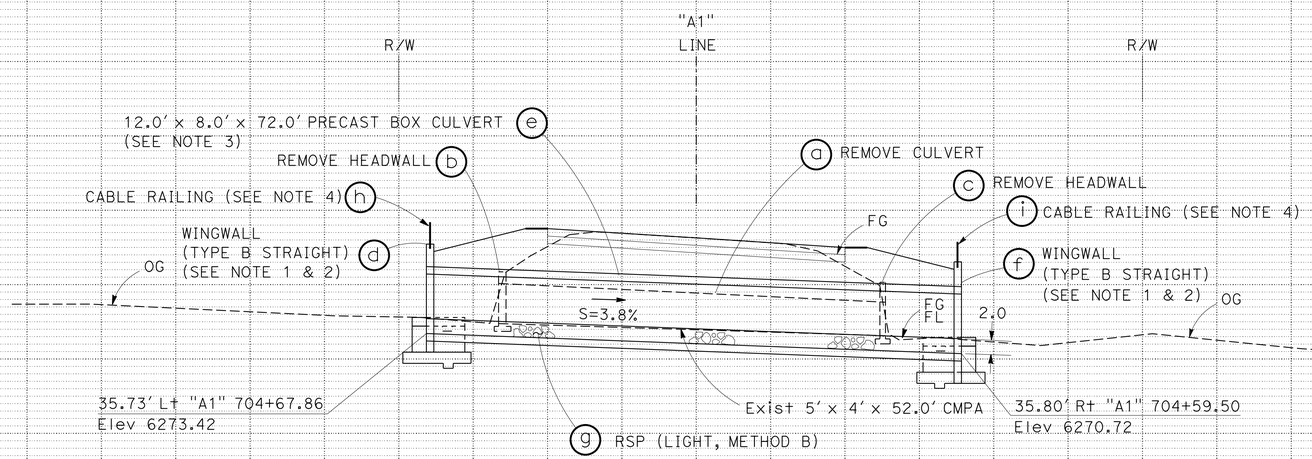

DRAINAGE SYSTEM No. 31

"A1" 704+64.33
SKEW: 6°30′

DRAINAGE PROFILES

SCALE: Horiz 1" = 10′
Vert 1" = 10′

DP-12

STATE OF CALIFORNIA - DEPARTMENT OF TRANSPORTATION
Caltrans®
HYDRAULICS

FUNCTIONAL SUPERVISOR: DENNIS JAGODA

CALCULATED-DESIGNED BY: JOHN HUDSON
CHECKED BY: ANDRA SPECK

REVISED BY | DATE REVISED

LAST REVISION | DATE PLOTTED => 13-FEB-2014
00-00-00 | TIME PLOTTED => 13:42

BORDER LAST REVISED 7/2/2010

USERNAME => s130875
DGN FILE => 0300000223ib012.dgn

RELATIVE BORDER SCALE IS IN INCHES 0 1 2 3

UNIT 0359

PROJECT NUMBER & PHASE 03000002231

Dist	COUNTY	ROUTE	POST MILES TOTAL PROJECT	SHEET No.	TOTAL SHEETS
03	ED	89	8.6/13.8	80	231

11-18-13
REGISTERED CIVIL ENGINEER DATE

CHRIS ROCKEY No. C78030 Exp. 9-30-15 CIVIL — REGISTERED PROFESSIONAL ENGINEER — STATE OF CALIFORNIA

11-18-13
PLANS APPROVAL DATE

THE STATE OF CALIFORNIA OR ITS OFFICERS OR AGENTS SHALL NOT BE RESPONSIBLE FOR THE ACCURACY OR COMPLETENESS OF SCANNED COPIES OF THIS PLAN SHEET.

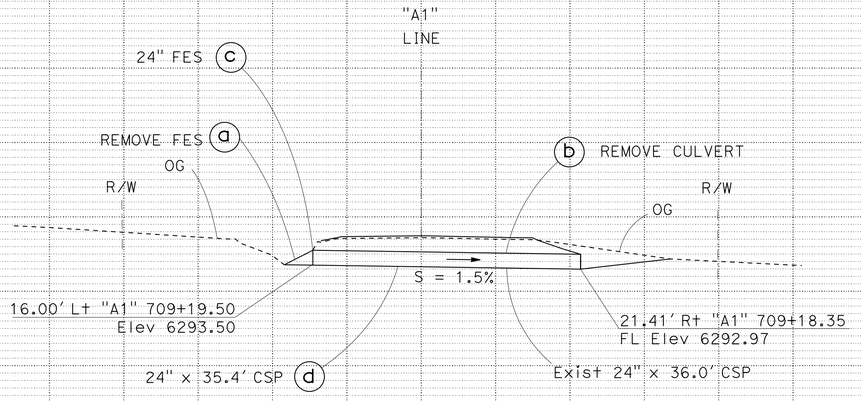

DRAINAGE SYSTEM No. 32

"A1" 709+19.01
SKEW: 2°

DRAINAGE PROFILES

SCALE: Horiz 1" = 10'
Vert 1" = 10'

DP-13

REVISED BY | DATE REVISED
JOHN HUDSON | ANDRA SPECK
CALCULATED-DESIGNED BY | CHECKED BY
FUNCTIONAL SUPERVISOR: DENNIS JAGODA

STATE OF CALIFORNIA - DEPARTMENT OF TRANSPORTATION
Caltrans®
HYDRAULICS

LAST REVISION 00-00-00 | DATE PLOTTED => 13-FEB-2014 | TIME PLOTTED => 13:42

BORDER LAST REVISED 7/2/2010 | USERNAME => s130875 | DGN FILE => 0300000223ib013.dgn | RELATIVE BORDER SCALE IS IN INCHES 0 1 2 3 | UNIT 0359 | PROJECT NUMBER & PHASE 03000002231

Dist	COUNTY	ROUTE	POST MILES TOTAL PROJECT	SHEET No.	TOTAL SHEETS
03	ED	89	8.6/13.8	81	231

REGISTERED CIVIL ENGINEER — 11-18-13 DATE

CHRIS ROCKEY No. C78030 Exp. 9-30-15 CIVIL — REGISTERED PROFESSIONAL ENGINEER — STATE OF CALIFORNIA

11-18-13
PLANS APPROVAL DATE

THE STATE OF CALIFORNIA OR ITS OFFICERS OR AGENTS SHALL NOT BE RESPONSIBLE FOR THE ACCURACY OR COMPLETENESS OF SCANNED COPIES OF THIS PLAN SHEET.

NOTES:

1. FOR DETAILS NOT SHOWN, SEE STD PLAN D74A & D74C

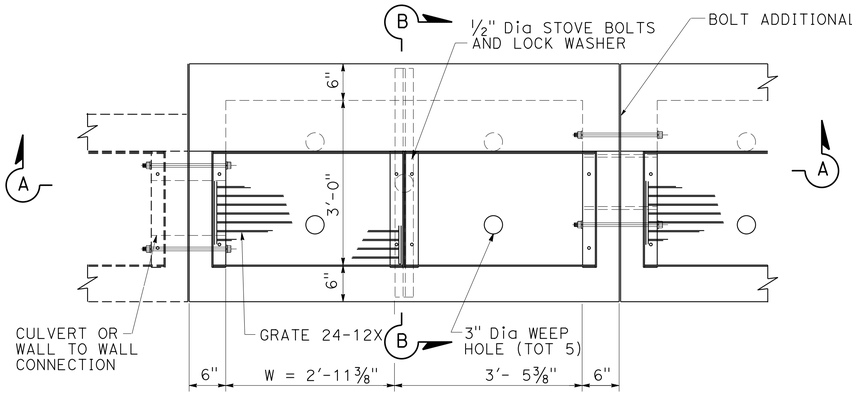

PLAN

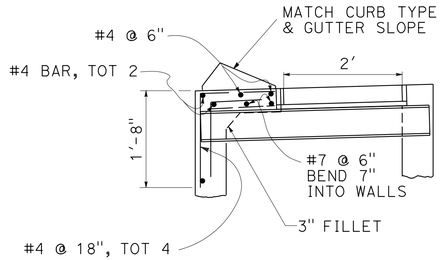

DETAIL C

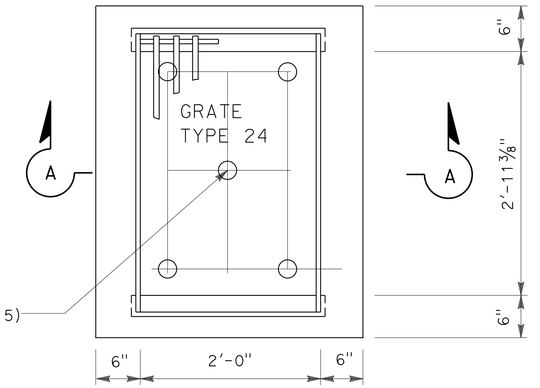

PLAN

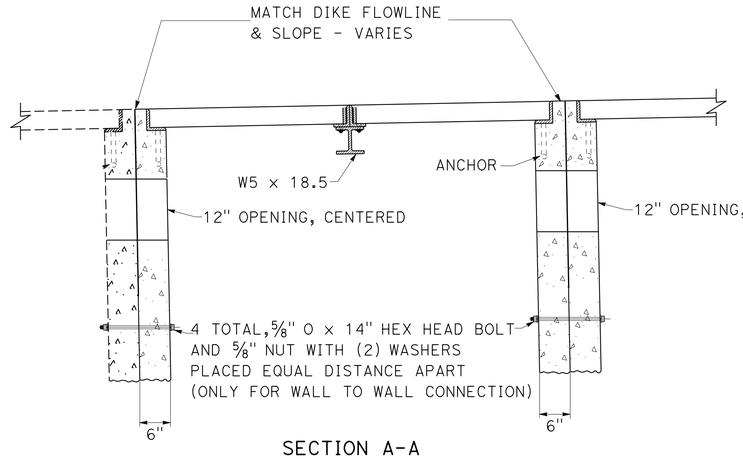

SECTION A-A

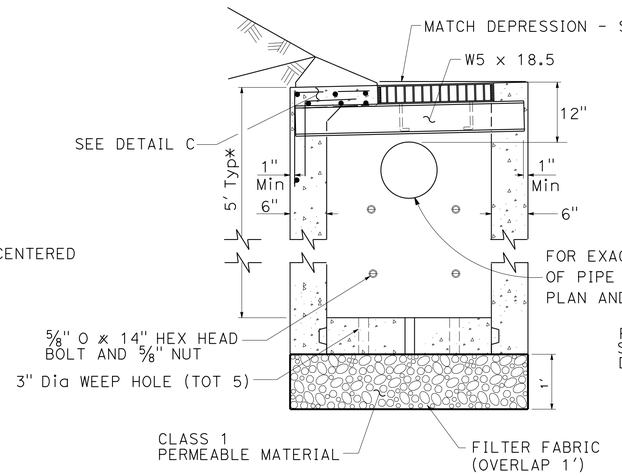

SECTION B-B

*FOR EXACT 'H' SEE DRAINAGE PROFILES AND QUANTITY SHEETS

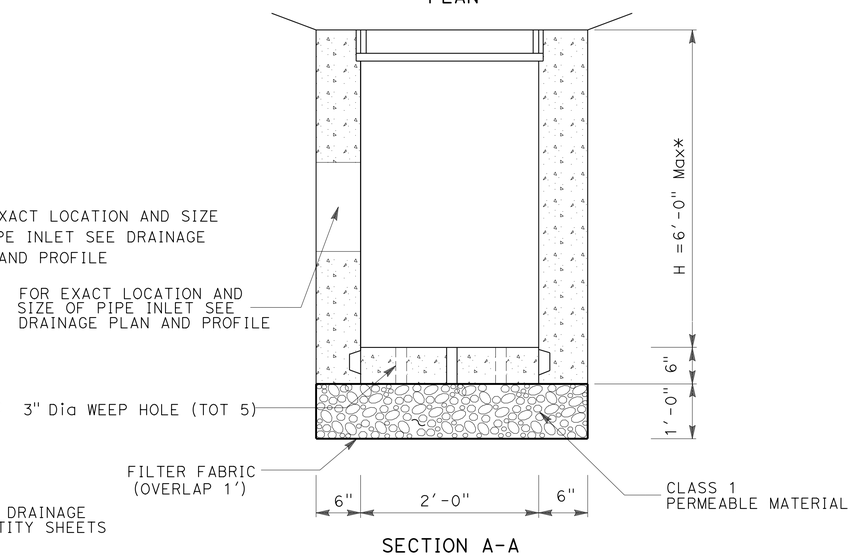

SECTION A-A

Mod GT4 DI

1 g h | 2 l | 3 a | 4 b | 5 a d g m | 6 a | 7 a | 8 b h m

9 b o | 10 b | 11 b | 12 b | 13 a | 14 a | 15 a | 22 r

Mod G1 DI

1 a d | 2 c f o r | 5 j | 8 j

13 e | 16 a e h | 22 i l o

DRAINAGE DETAILS

NO SCALE

DD-1

STATE OF CALIFORNIA - DEPARTMENT OF TRANSPORTATION — Caltrans®

CALCULATED-DESIGNED BY | CHECKED BY

FUNCTIONAL SUPERVISOR: DENNIS JAGODA

JOHN HUDSON | ANDRA SPECK

REVISED BY | DATE REVISED

LAST REVISION | DATE PLOTTED => 13-FEB-2014 | TIME PLOTTED => 13:42 | 02-04-13

Dist	COUNTY	ROUTE	POST MILES TOTAL PROJECT	SHEET No.	TOTAL SHEETS
03	ED	89	8.6/13.8	82	231

REGISTERED CIVIL ENGINEER — DATE 11-18-13

CHRIS ROCKEY No. C78030 Exp. 9-30-15 CIVIL — REGISTERED PROFESSIONAL ENGINEER — STATE OF CALIFORNIA

PLANS APPROVAL DATE 11-18-13

THE STATE OF CALIFORNIA OR ITS OFFICERS OR AGENTS SHALL NOT BE RESPONSIBLE FOR THE ACCURACY OR COMPLETENESS OF SCANNED COPIES OF THIS PLAN SHEET.

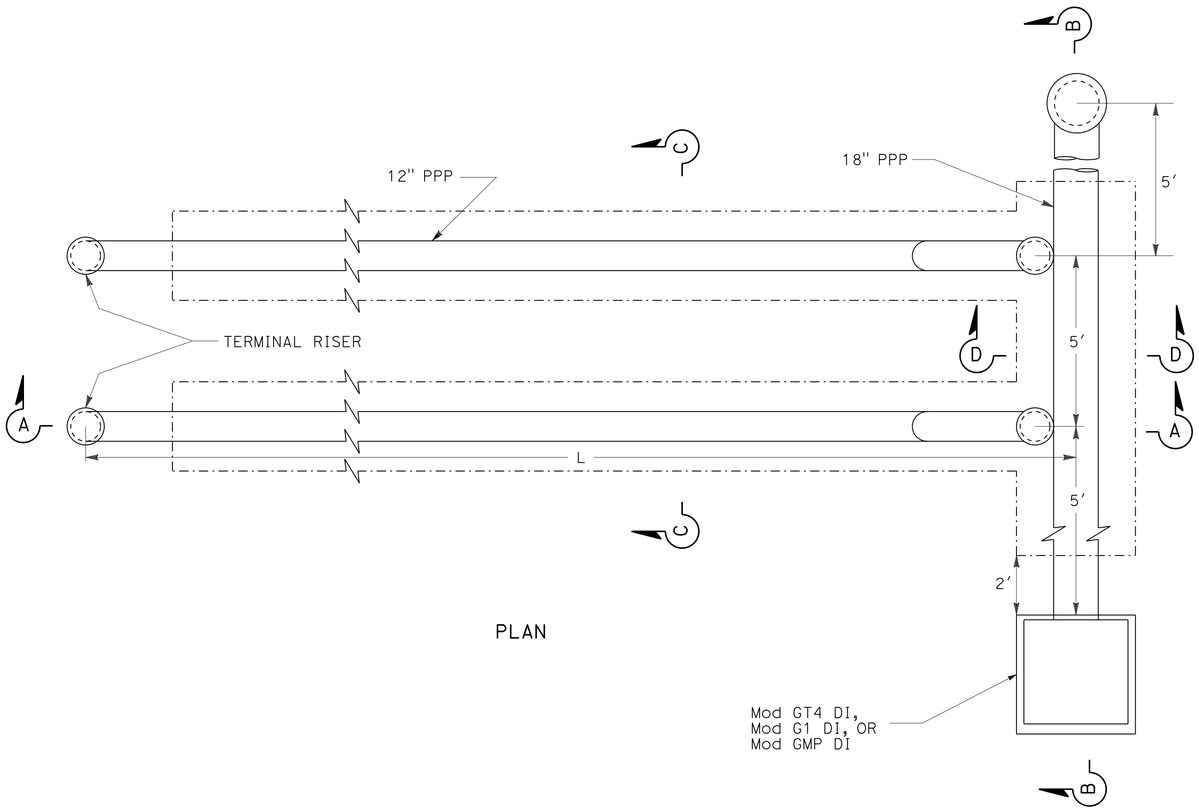

PLAN

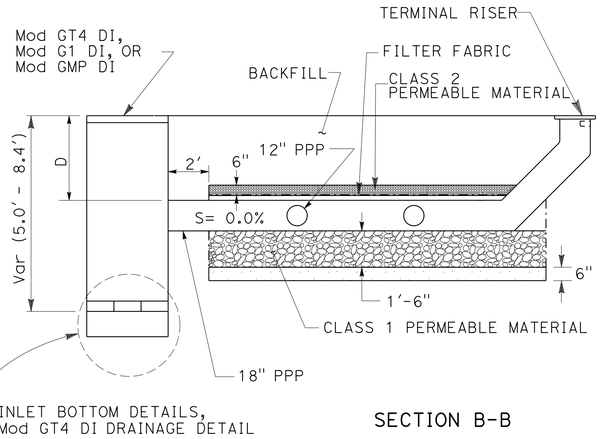

SECTION B-B

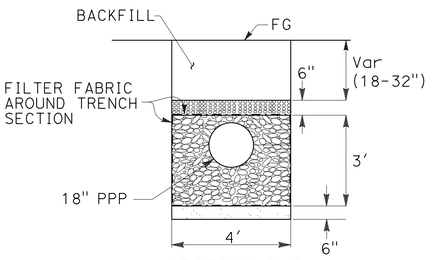

SECTION D-D

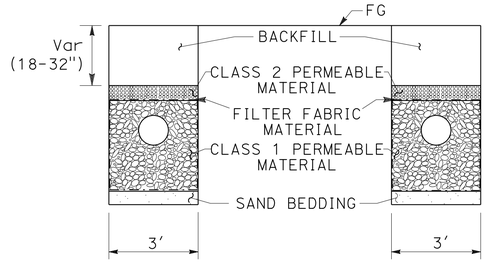

SECTION C-C

REMOVE INLET (MANHOLE)

EXISTING CLEANOUTS FOR SLOTTED DRAIN
(TO BE REMOVED)
STA 490+75 TO 492+50

9 e K

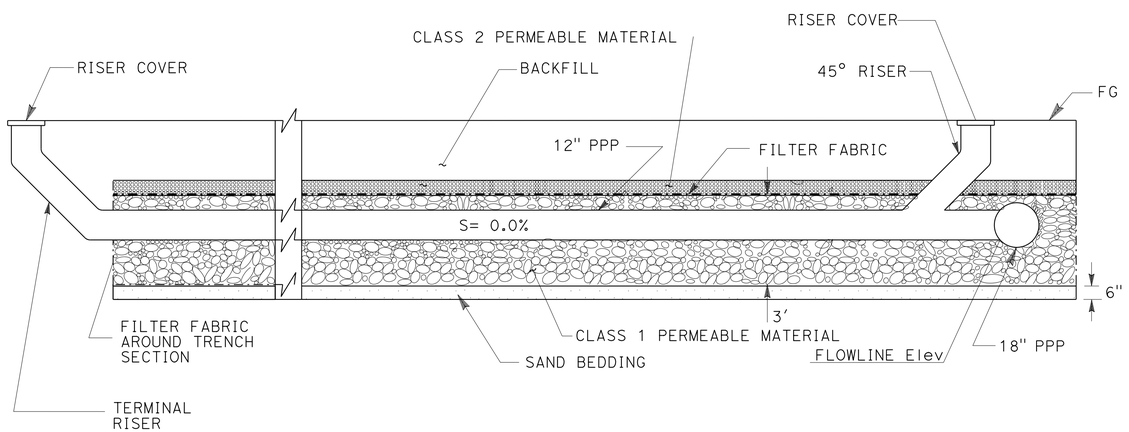

SECTION A-A

UNDERGROUND INFILTRATION GALLERY

DS No.	INLET STATION	C/L GRATE @ FLOWLINE	FLOWLINE GRATE Elev	No. OF LEGS	'D' (Ft)	LEG 'L' (Ft)
3c	466+55.39	32.51 Rt	6266.34	2	2.0	43
4a	466+55.10	32.50 Lt	6266.54	1	2.0	30
9r	492+89.91	51.18 Rt	*6275.20	2	6.9	30
10a	495+97.33	34.67 Lt	6273.21	1	2.0	60
11a	499+33.01	32.50 Rt	6270.45	2	4.5	30
12a	499+29.30	32.50 Lt	6270.46	2	2.0	30
13c	504+20.00	32.50 Lt	6263.12	2	2.0	30
13g	507+33.37	29.23 Lt	6261.34	2	2.0	30
14c	505+26.37	32.57 Rt	6260.07	2	2.7	30
15c	508+02.48	33.57 Rt	6260.07	2	4.6	30
16d	509+36.13	36.00 Rt	6259.75	2	4.5	30
18d	527+81.33	34.62 Rt	6242.50	2	2.0	30

*Elevation of sand trap lid

DRAINAGE DETAILS

NO SCALE

DD-2

LAST REVISION 02-04-13 — DATE PLOTTED => 13-FEB-2014 — TIME PLOTTED => 13:42

CALCULATED-DESIGNED BY — JOHN HUDSON
CHECKED — ANDRA SPECK
FUNCTIONAL SUPERVISOR — DENNIS JAGODA
REVISED BY — DATE REVISED
STATE OF CALIFORNIA - DEPARTMENT OF TRANSPORTATION — Caltrans®

BORDER LAST REVISED 7/2/2010 | USERNAME => s130875 | DGN FILE => 0300000223ic002.dgn | RELATIVE BORDER SCALE IS IN INCHES 0 1 2 3 | UNIT 0359 | PROJECT NUMBER & PHASE 03000002231

Dist	COUNTY	ROUTE	POST MILES TOTAL PROJECT	SHEET No.	TOTAL SHEETS
03	ED	89	8.6/13.8	83	231

REGISTERED CIVIL ENGINEER — 11-18-13 DATE

CHRIS ROCKEY No. C78030 Exp. 9-30-15 CIVIL — REGISTERED PROFESSIONAL ENGINEER — STATE OF CALIFORNIA

11-18-13
PLANS APPROVAL DATE

THE STATE OF CALIFORNIA OR ITS OFFICERS OR AGENTS SHALL NOT BE RESPONSIBLE FOR THE ACCURACY OR COMPLETENESS OF SCANNED COPIES OF THIS PLAN SHEET.

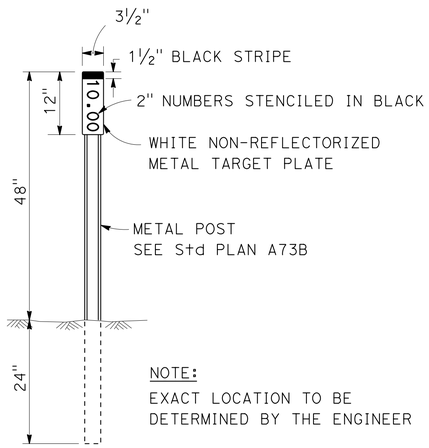

MARKER (CULVERT)

MARKER (CULVERT)

DRAINAGE SYSTEM	DRAINAGE ITEM	STATION	DIRECTION Rt/Lt	POST MILE NUMBER	QUANTITY
2	i	"A1" 462+47	Lt	8.64	1
5	f	"A1" 473+48	Lt	8.92	2
6	a	"A1" 475+90	Lt	8.97	1
Exist	-	"A1" 476+37	Lt	9.00	2
8	f	"A1" 480+54	Lt	9.06	1
9	k	"A1" 492+92	Lt	9.30	2
Exist	-	"A1" 508+34	Lt	9.60	2
16	c	"A1" 509+99	Lt	9.62	2
17	d	A1" 525+72	Lt	9.92	2
18	a	"A1" 527+81	Rt	9.96	1
19	d	"A1" 536+77	Lt	10.13	2
20	d	"A1" 570+42	Lt	10.78	2
21	b	"A1" 575+07	Lt	10.86	2
22	a	"A1" 582+38	Lt	11.00	2
23	e	"A1" 619+97	Lt	11.72	2
24	c	"A1" 627+58	Lt	11.87	2
25	b	"A1" 636+97	Lt	12.07	2
26	c	"A1" 645+59	Lt	12.25	2
27	a	"A1" 649+85	Lt	12.43	2
EXIST	-	"A1" 658+48	Lt	12.48	2
28	b	"A1" 661+00	Lt	12.52	2
Exist	-	"A1" 668+00	Lt	12.68	2
Exist	-	"A1" 672+32	Rt	12.77	1
Exist *	-	"A1" 681+67	Lt	12.94	2
29	e	"A1" 693+51	Lt	13.07	2
30	d	"A1" 700+69	Lt	13.21	2
31	e	"A1" 704+66	Lt	13.29	2
32	d	"A1" 709+19	Lt	13.37	2
				TOTAL	51

* EXISTING CULVERT NO DRAINAGE PLAN SHEET.

DRAINAGE INLET MARKER

DRAINAGE SYSTEM	DRAINAGE ITEM	QUANTITY
Exist	456+15	1
Exist	456+97	1
Exist	457+45	1
1	a	1
Exist	459+35	1
1	d	1
1	g	1
1	h	1
2	c	1
2	f	1
2	k	1
2	n	1
2	q	1
3	a	1
4	b	1
5	a	1
5	d	1
5	g	1
5	j	1
5	m	1
Exist	475+06	1
6	a	1
7	a	1
Exist	478+31	1
8	b	1
8	f	1
8	k	1
8	n	1
9	b	1
Exist	490+70	1
9	k	1
10	b	1
11	b	1
12	b	1
13	a	1
13	e	1
14	a	1
15	a	1
16	a	1
16	e	1
16	h	1
18	a	1
22	i	1
22	l	1
22	o	1
22	r	1
29	d	1
	TOTAL	47

SEE STANDARD PLAN D71, DRAINAGE INLET MARKERS. INLET MARKERS SHALL BE TYPE STAMPED CONCRETE IMPRINT FOR ALL NEW INLETS AND TYPE PREFABRICATED THERMOPLASTIC FOR EXISTING INLETS.

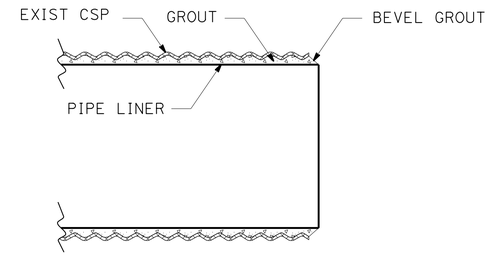

PIPE LINER

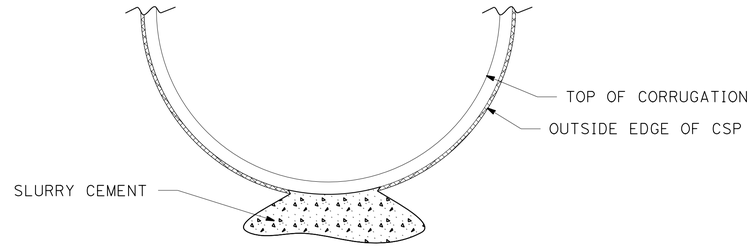

VOID REPAIR
AS DIRECTED BY THE ENGINEER.

MACHINE SPIRAL WOUND PVC PIPELINER (GROUTED, 36")

2 (j)

DRAINAGE DETAILS

NO SCALE

DD-3

REVISED BY	DATE REVISED
JOHN HUDSON	ANDRA SPECK

CALCULATED-DESIGNED BY
CHECKED BY
FUNCTIONAL SUPERVISOR: DENNIS JAGODA

STATE OF CALIFORNIA - DEPARTMENT OF TRANSPORTATION
Caltrans®

LAST REVISION 02-04-13
DATE PLOTTED => 13-FEB-2014
TIME PLOTTED => 13:43

Dist	COUNTY	ROUTE	POST MILES TOTAL PROJECT	SHEET No.	TOTAL SHEETS
03	ED	89	8.6/13.8	84	231

11-18-13
REGISTERED CIVIL ENGINEER DATE

CHRIS ROCKEY
No. C78030
Exp. 9-30-15
CIVIL
REGISTERED PROFESSIONAL ENGINEER
STATE OF CALIFORNIA

11-18-13
PLANS APPROVAL DATE

THE STATE OF CALIFORNIA OR ITS OFFICERS OR AGENTS SHALL NOT BE RESPONSIBLE FOR THE ACCURACY OR COMPLETENESS OF SCANNED COPIES OF THIS PLAN SHEET.

NOTES:

1. WIRE CLOTH MUST BE HOT-DIPPED GALVANIZED OR STAINLESS STEEL.

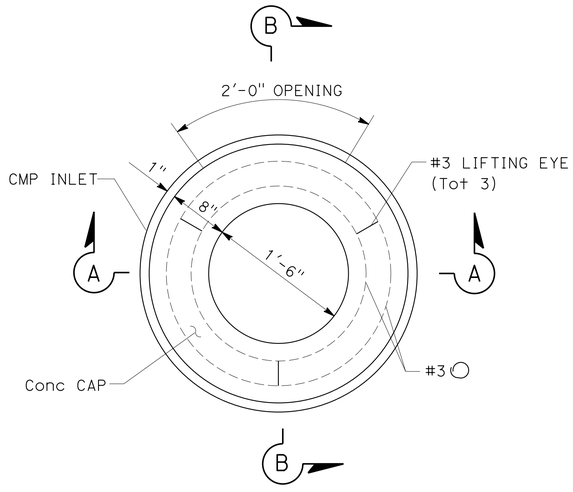

PLAN VIEW

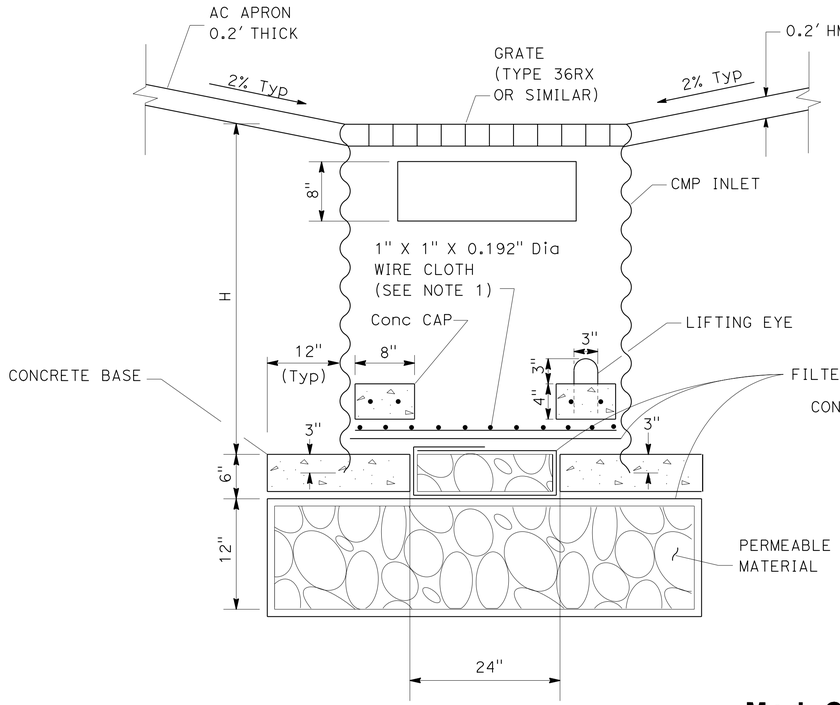

SECTION A-A

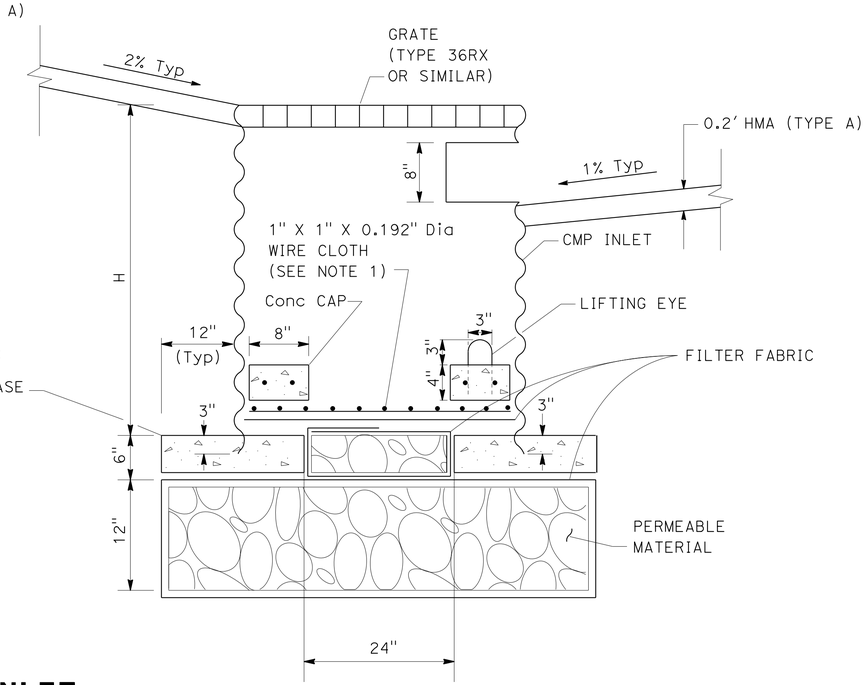

SECTION B-B

Mod GMP INLET

18 a 20 c *

* DOES NOT HAVE AN HMA APRON

DRAINAGE DETAILS

NO SCALE

DD-4

CALCULATED-DESIGNED BY: JOHN HUDSON
CHECKED BY: ANDRA SPECK
FUNCTIONAL SUPERVISOR: DENNIS JAGODA
REVISED BY | DATE REVISED

STATE OF CALIFORNIA - DEPARTMENT OF TRANSPORTATION
Caltrans

LAST REVISION | DATE PLOTTED => 13-FEB-2014 | TIME PLOTTED => 13:43
02-04-13

BORDER LAST REVISED 7/2/2010 | USERNAME => s130875 | DGN FILE => 0300000223ic004.dgn | RELATIVE BORDER SCALE IS IN INCHES 0 1 2 3 | UNIT 0359 | PROJECT NUMBER & PHASE 03000002231

Dist	COUNTY	ROUTE	POST MILES TOTAL PROJECT	SHEET No.	TOTAL SHEETS
03	ED	89	8.6/13.8	85	231

11-18-13
REGISTERED CIVIL ENGINEER DATE

CHRIS ROCKEY No. C78030 Exp. 9-30-15 CIVIL — REGISTERED PROFESSIONAL ENGINEER — STATE OF CALIFORNIA

11-18-13
PLANS APPROVAL DATE

THE STATE OF CALIFORNIA OR ITS OFFICERS OR AGENTS SHALL NOT BE RESPONSIBLE FOR THE ACCURACY OR COMPLETENESS OF SCANNED COPIES OF THIS PLAN SHEET.

NOTES:

1. ``H'' IS THE DIFFERENCE IN ELEVATION BETWEEN THE OUTLET PIPE FLOW LINE AND THE FINISHED GRADE AT THE CENTER OF THE COVER.
2. WALL REINFORCING NOT REQUIRED WHEN ``H'' IS 8.0′ OR LESS AND THE UNSUPPORTED WIDTH OR LENGTH IS 6.0′ OR LESS.
3. INLET BOTTOM REINFORCING NOT REQUIRED. SEE STANDARD PLAN D74C FOR ALTERNATIVE REINFORCED BOTTOM AND ALTERNATIVE HALF ROUND BOTTOM.
4. STEPS-NONE REQUIRED WHERE ``H'' IS LESS THAN 30". WHERE ``H'' IS 30" OR MORE, INSTALL STEPS WITH LOWEST RUNG 1.0′ ABOVE THE FLOOR AND HIGHEST RUNG NOT MORE THAN 6" BELOW TOP OF INLET. THE DISTANCE BETWEEN STEPS SHALL NOT EXCEED 1.0′ AND SHALL BE UNIFORM THROUGHOUT THE LENGTH OF THE WALL. PLACE STEPS IN THE WALL WITHOUT AN OPENING. STEP INSERTS MAY BE SUBSTITUTED FOR THE BAR STEPS. STEP INSERTS SHALL COMPLY WITH STATE INDUSTRIAL SAFETY REQUIREMENTS. SEE STANDARD PLAN D74C FOR STEP DETAILS.
5. JOINTS MAY BE EITHER KEYED OR TONGUE AND GROOVE.
6. RISER SECTIONS, CONES, AND ADJUSTING RINGS SHALL CONFORM TO ASTM DESIGNATION C-478M.
7. FRAME SHALL BE SECURED TO RISER OR FLAT SLAB TOP WITH CEMENT MORTAR.
8. BASIN FLOORS SHALL HAVE WOOD TROWEL FINISH AND A MINIMUM SLOPE OF 1:4 FROM ALL DIRECTIONS TOWARD OUTLET PIPE.
9. THERE SHALL BE A 6" MINIMUM CLEAR DISTANCE BETWEEN ALL PIPE OUTSIDE DIAMETERS AT THE MANHOLE UNLESS SPECIFICALLY APPROVED BY THE ENGINEER.
10. CAST-IN-PLACE MANHOLE WALLS MAY BE APPROVED BY THE ENGINEER. ALL CAST-IN-PLACE MANHOLES MUST BE FORMED IN A CIRCULAR SHAPE CONSISTENT WITH THE DIAMETER SPECIFIED ON THE PLANS AND REQUIRED TO FIT UPPER PRECAST SECTIONS. MINIMUM WALL THICKNESS SHALL BE 8". PRECAST RINGS SHALL BE SET WET OR REQUIRED KEY FORM SHALL BE INCLUDED IN THE FORM WORK TO ACCEPT THE PRECAST KEY. CONCRETE SHALL BE CONSOLIDATED BY A ACCEPTABLE METHOD TO ENSURE ALL VOIDS ARE REMOVED.
11. "T"=6" (H<8.0′), "T"=8" (H=8.0′ to H=20.0′)
12. PRECAST BANDS MAY BE USED WHEN "H" < 8.0′.
13. THE MANHOLE FRAME AND COVER SHALL BE MADE OF GRAY CAST IRON.
14. ALL PARTS OF THE MANHOLE FRAME AND COVER EXCEPT MACHINED SURFACES SHALL BE COATED WITH ASPHALTUM PAINT.
15. THE MANHOLE FRAME AND COVER SHALL BE TESTED FOR ACCURACY OF FIT AND SHALL BE MARKED IN SETS BEFORE DELIVERY. THE COVER SHALL FIT THE FRAME SNUGLY BUT NOT TIGHTLY.
16. THE MASS OF THE MANHOLE FRAME AND COVER SHALL NOT VARY MORE THAN 10 PERCENT FROM THE MASS OF PAYMENT.

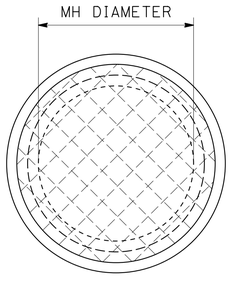

PLAN VIEW

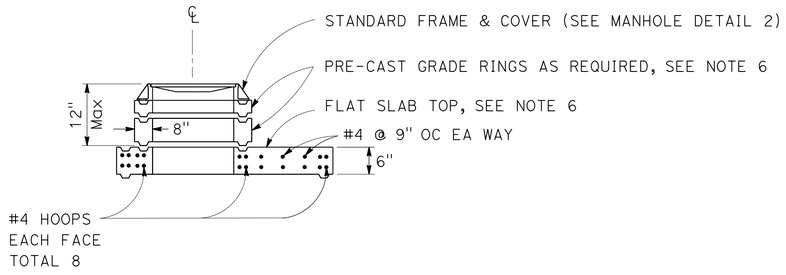

MANHOLE DETAIL 1

2 a 8 e 22 f

DRAINAGE DETAILS

NO SCALE

DD-5

LAST REVISION 02-04-13 | DATE PLOTTED => 13-FEB-2014 | TIME PLOTTED => 13:43

REVISED BY | DATE REVISED

JOHN HUDSON | ANDRA SPECK

CALCULATED-DESIGNED BY | CHECKED BY

FUNCTIONAL SUPERVISOR: DENNIS JAGODA

STATE OF CALIFORNIA - DEPARTMENT OF TRANSPORTATION

Caltrans®

BORDER LAST REVISED 7/2/2010

USERNAME => s130875
DGN FILE => 0300000223ic005.dgn

RELATIVE BORDER SCALE IS IN INCHES 0 1 2 3

UNIT 0359 | PROJECT NUMBER & PHASE 03000002231

Dist	COUNTY	ROUTE	POST MILES TOTAL PROJECT	SHEET No.	TOTAL SHEETS
03	ED	89	8.6/13.8	86	231

REGISTERED CIVIL ENGINEER — 11-18-13 DATE

11-18-13
PLANS APPROVAL DATE

CHRIS ROCKEY No. C78030 Exp. 9-30-15 CIVIL — REGISTERED PROFESSIONAL ENGINEER — STATE OF CALIFORNIA

THE STATE OF CALIFORNIA OR ITS OFFICERS OR AGENTS SHALL NOT BE RESPONSIBLE FOR THE ACCURACY OR COMPLETENESS OF SCANNED COPIES OF THIS PLAN SHEET.

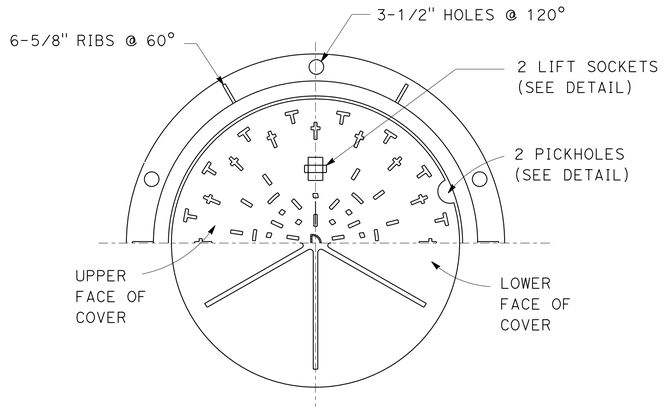

HALF PLAN OF MH FRAME AND COVER
(SEE ABOVE FOR DIMENSIONS OF LETTERS "D")

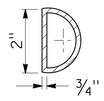

LETTER "D" AT CENTER OF COVER

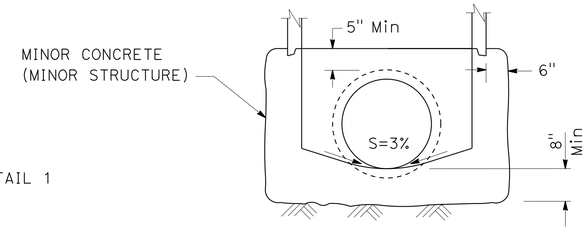

SECTION A-A
CAST-IN-PLACE BASE

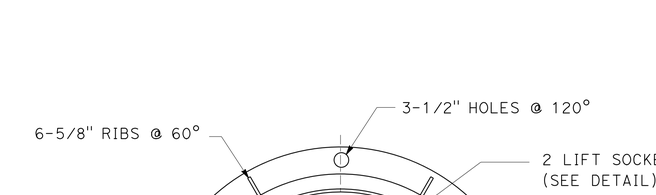

SECTION ON ℄ THROUGH FRAME

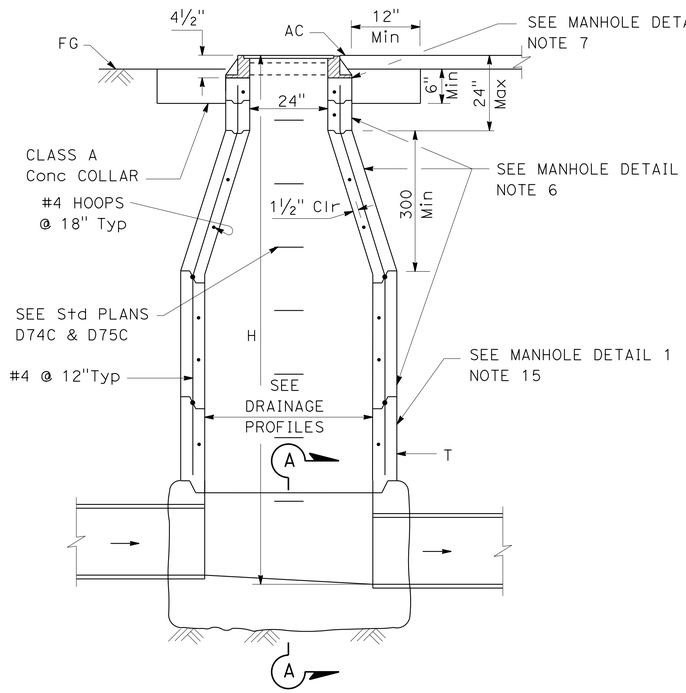

MANHOLE DETAIL 2

2 a 8 e 22 f

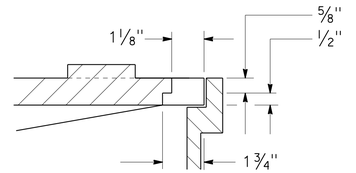

PICK HOLE DETAIL

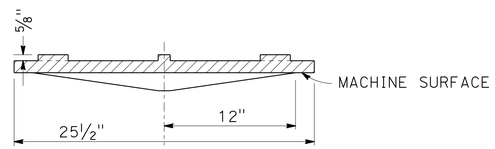

SECTION ON ℄ THROUGH COVER

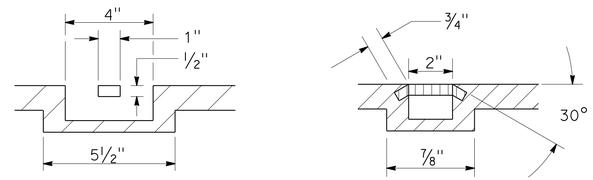

LIFT SOCKET DETAIL

DRAINAGE DETAILS

NO SCALE

DD-6

LAST REVISION 02-04-13
DATE PLOTTED => 13-FEB-2014
TIME PLOTTED => 13:43

STATE OF CALIFORNIA - DEPARTMENT OF TRANSPORTATION
Caltrans

FUNCTIONAL SUPERVISOR: DENNIS JAGODA
CALCULATED-DESIGNED BY: JOHN HUDSON
CHECKED BY: ANDRA SPECK
REVISED BY
DATE REVISED

BORDER LAST REVISED 7/2/2010

USERNAME => s130875
DGN FILE => 0300000223ic006.dgn

RELATIVE BORDER SCALE IS IN INCHES 0 1 2 3

UNIT 0359

PROJECT NUMBER & PHASE 03000002231

Dist	COUNTY	ROUTE	POST MILES TOTAL PROJECT	SHEET No.	TOTAL SHEETS
03	ED	89	8.6/13.8	87	231

REGISTERED CIVIL ENGINEER — DATE 11-18-13

CHRIS ROCKEY No. C78030 Exp. 9-30-15 CIVIL — REGISTERED PROFESSIONAL ENGINEER — STATE OF CALIFORNIA

11-18-13
PLANS APPROVAL DATE

THE STATE OF CALIFORNIA OR ITS OFFICERS OR AGENTS SHALL NOT BE RESPONSIBLE FOR THE ACCURACY OR COMPLETENESS OF SCANNED COPIES OF THIS PLAN SHEET.

DRAINAGE QUANTITIES

REMOVE CULVERT	(N) MAX HEIGHT OF COVER	REMOVE INLET	REMOVE FLARED END SECTION	REMOVE HEADWALL	24" PRECAST CONCRETE PIPE MANHOLE	REMOVE SLOTTED CORRUGATED STEEL PIPE	REMOVE MANHOLE	15" PLASTIC PIPE	18" PLASTIC PIPE	18" CORRUGATED STEEL PIPE (.109" THICK)	24" CORRUGATED STEEL PIPE (.109" THICK)	30" CORRUGATED STEEL PIPE (.109"THICK)	17"X13" CORRUGATED STEEL PIPE ARCH (.109" THICK)	18" REINFORCED CONCRETE PIPE	STRUCTURAL CONCRETE BOX CULVERT	STRUCTURAL CONCRETE WING WALL	MACHINE SPIRAL WOUND PVC PIPELINER (GROUTED, 36")	18" STEEL FLARED END SECTION	24" STEEL FLARED END SECTION	36" STEEL FLARED END SECTION	CLEANING, INSPECTING, AND PREPARING CULVERT	(N) HEIGHT OF INLET "H"	CABLE RAILING	MINOR CONCRETE (MINOR STRUCTURE)	MINOR CONCRETE (GUTTER DEPRESSION)	MISCELLANEOUS IRON AND STEEL	BAR REINFORCING STEEL (EPOXY COATED)	ROCK SLOPE PROTECTION (LIGHT, METHOD B)	CONCRETE BACKFILL (PIPE TRENCH)	36" CORRUGATED STEEL PIPE INLET (.109" THICK)	CLASS 1 PERMEABLE MATERIAL (BLANKET)	CLASS 2 PERMEABLE MATERIAL (BLANKET)	SAND BEDDING	(N) FILTER FABRIC (CLASS A)	12" PERFORATED PLASTIC PIPE	18" PERFORATED PLASTIC PIPE	DESCRIPTION	STATION	DRAINAGE SHEET No.	DRAINAGE SYSTEM No.	DRAINAGE UNIT
LF	LF	EA	EA	EA	LF	LF	EA	LF	LF	LF	LF	LF	LF	LF	CY	CY	LF	EA	EA	EA	LF	LF	LF	CY	CY	LB	LB	CY	CY	LF	CY	CY	CY	SQYD	LF	LF					
																						5.0		1.4		239					0.4			2.2			Mod G1 DI 24-12X	"A1" 458+82.18	D-1	1	a
																									1.5												GUTTER DEPRESSION				b
									131.0																												18" PP				c
																						5.0		1.4		239					0.4			2.2			Mod G1 DI 24-12X	"A1" 460+15.72			d
																									1.5												GUTTER DEPRESSION				e
									141.0																												18" PP				f
																						5.0		3.0		478					1.1			4.7			Mod GT4 DI 24-12X	"A1" 461+61.53			g
																						5.0		3.0		478					1.1			4.7			Mod GT4 DI 24-12X	"A1" 461+69.21			h
													14.0																								17"X13" CSPA				i
																								0.3		215				3.3							OMP INLET 1/4" CHECK PL CVR	"A1" 461+68.84			j
																									2.1												GUTTER DEPRESSION				k
	0.9													55.7																								18" RCP				l
					4.5																																		MH	"A1" 460+53.51	D-1	2	a
								3.3																														15" PP				b
																						4.5		1.3		239					0.4			2.2			Mod G1 DI 24-12X	"A1" 460+53.46			c
																									1.5												GUTTER DEPRESSION				d
		1																																			REMOVE INLET				e
																						5.0		1.4		239					0.4			2.2			Mod G1 DI 24-12X	"A1" 461+21.22			f
																									1.5												GUTTER DEPRESSION				g
			1																																		REMOVE FES				h
																				1																		FES				i
																		82.2			82.2																		SPIRAL WOUND PVC PIPE LINER				j
		1																																			REMOVE INLET				k
																						6.2		3.4		478					1.1			4.7			Mod G4 DI 24-12X	"A1" 462+44.79			l
																									1.7												GUTTER DEPRESSION				m
									133.0																												18" PP				n
																						5.0		1.4		239					0.4			2.2			Mod G1 DI 24-12X	"A1" 463+86.52			o
																									1.5												GUTTER DEPRESSION				p
								27.0																														15" PP				q
																						5.0		1.4		239					0.4			2.2			Mod G1 DI 24-12X	"A1" 464+06.37			r
																									1.5												GUTTER DEPRESSION				s
																						5.0		3.0		478					1.1			4.7			Mod GT4 DI 24-12X	"A1" 466+55.10	D-2	3	a
																									1.7												GUTTER DEPRESSION				b
																																	30.4	5.6	5.6	33.6	102.0	15.0	UIG	"A1" 466+55.10			c
																																	22.2	4.1	4.1	24.6	38.0	10.0	UIG	"A1" 466+55.10	D-2	4	a
																						5.0		3.0		478					1.1			4.7			Mod GT4 DI 24-12X	"A1" 466+55.10			b
		2	1		4.5			33.3	405.0				14.0	55.7				82.2			1	82.2			24.0	14.5	4039				3.3	60.5	9.7	9.7		140.0	25.0	SHEET TOTALS				

(N) NOT A SEPARATE PAY ITEM, FOR INFORMATION ONLY

DRAINAGE QUANTITIES

DQ-1

LAST REVISION — DATE PLOTTED => 13-FEB-2014 — TIME PLOTTED => 13:43 — 02-04-13

CALCULATED-DESIGNED BY —
CHECKED BY —
FUNCTIONAL SUPERVISOR: DENNIS JAGODA
REVISED BY —
DATE REVISED —
JOHN HUDSON
ANDRA SPECK

STATE OF CALIFORNIA - DEPARTMENT OF TRANSPORTATION — Caltrans®

BORDER LAST REVISED 7/2/2010

USERNAME => s130875
DGN FILE => 0300000223id001.dgn

RELATIVE BORDER SCALE IS IN INCHES 0 1 2 3

UNIT 0359

PROJECT NUMBER & PHASE 03000002231

Dist	COUNTY	ROUTE	POST MILES TOTAL PROJECT	SHEET No.	TOTAL SHEETS
03	ED	89	8.6/13.8	88	231

11-18-13
REGISTERED CIVIL ENGINEER DATE

CHRIS ROCKEY No. C78030 Exp. 9-30-15 CIVIL — REGISTERED PROFESSIONAL ENGINEER — STATE OF CALIFORNIA

11-18-13
PLANS APPROVAL DATE

THE STATE OF CALIFORNIA OR ITS OFFICERS OR AGENTS SHALL NOT BE RESPONSIBLE FOR THE ACCURACY OR COMPLETENESS OF SCANNED COPIES OF THIS PLAN SHEET.

DRAINAGE QUANTITIES

REMOVE CULVERT	(N) MAX HEIGHT OF COVER	REMOVE INLET	REMOVE FLARED END SECTION	REMOVE HEADWALL	24" PRECAST CONCRETE PIPE MANHOLE	REMOVE SLOTTED CORRUGATED STEEL PIPE	REMOVE MANHOLE	15" PLASTIC PIPE	18" PLASTIC PIPE	18" CORRUGATED STEEL PIPE (.109" THICK)	24" CORRUGATED STEEL PIPE (.109" THICK)	30" CORRUGATED STEEL PIPE (.109"THICK)	17"X13" CORRUGATED STEEL PIPE ARCH (.109" THICK)	18" REINFORCED CONCRETE PIPE	STRUCTURAL CONCRETE BOX CULVERT	STRUCTURAL CONCRETE WING WALL	MACHINE SPIRAL WOUND PVC PIPELINER (GROUTED, 36")	18" STEEL FLARED END SECTION	24" STEEL FLARED END SECTION	36" STEEL FLARED END SECTION	CLEANING, INSPECTING, AND PREPARING CULVERT	(N) HEIGHT OF INLET "H"	CABLE RAILING	MINOR CONCRETE (MINOR STRUCTURE)	MINOR CONCRETE (GUTTER DEPRESSION)	MISCELLANEOUS IRON AND STEEL	BAR REINFORCING STEEL (EPOXY COATED)	ROCK SLOPE PROTECTION (LIGHT, METHOD B)	CONCRETE BACKFILL (PIPE TRENCH)	36" CORRUGATED STEEL PIPE INLET (.109" THICK)	CLASS 1 PERMEABLE MATERIAL (BLANKET)	CLASS 2 PERMEABLE MATERIAL (BLANKET)	SAND BEDDING	(N) FILTER FABRIC (CLASS A)	12" PERFORATED PLASTIC PIPE	18" PERFORATED PLASTIC PIPE	DESCRIPTION	STATION	DRAINAGE SHEET No.	DRAINAGE SYSTEM No.	DRAINAGE UNIT
LF	LF	EA	EA	EA	LF	LF	EA	LF	LF	LF	LF	LF	LF	LF	CY	CY	LF	EA	EA	EA	LF	LF	LF	CY	CY	LB	LB	CY	CY	LF	CY	CY	CY	SQYD	LF	LF					
																									1.7												GUTTER DEPRESSION		D-2	4	c
																						5.0		3.0		478					1.1			4.7			Mod GT4 DI 24-12X	"A1" 470+88.50	D-2	5	a
																									1.7												GUTTER DEPRESSION				b
									250.1																												18" PP				c
																						5.0		3.0		478					1.1			4.7			Mod GT4 DI 24-12X	"A1" 473+48.12			d
																									1.7												GUTTER DEPRESSION				e
									58.0																												18" PP				f
																						5.0		3.0		478					1.1			4.7			Mod GT4 DI 24-12X	"A1" 472+00.00			g
																									1.7												GUTTER DEPRESSION				h
									141.0																												18" PP				i
																						5.0		1.4		239					0.4			2.2			Mod G1 DI 24-12X	"A1" 473+48.03			j
																									1.5												GUTTER DEPRESSION				k
									135.0																												18" PP				l
																						5.0		3.0		478					1.1			4.7			Mod GT4 DI 24-12X	"A1" 474+86.90			m
																									1.7												GUTTER DEPRESSION				n
4.8	2.0																																				REMOVE CULVERT				o
									12.5																												18" PP				p
		1																																			REMOVE INLET				q
																						5.0		3.0		478					1.1			4.7			Mod GT4 DI 24-12X	"A1" 475+90.23	D-2	6	a
																									1.7												GUTTER DEPRESSION				b
											29.2																										24" PP				c
																						5.0		3.0		478					1.1			4.7			Mod GT4 DI 24-12X	"A1" 477+04.41	D-2	7	a
																									1.7												GUTTER DEPRESSION				b
									13.1																												18" PP				c
									102.8																														18" PP		D-3	8	a
																						5.0		3.0		478					1.1			4.7			Mod GT4 DI 24-12X	"A1" 479+47.96			b
																									1.7												GUTTER DEPRESSION				c
									101.6																												18" PP				d
				4.5																																		MANHOLE	"A1" 480+56.81			e
									57.5																												18" PP				f
																									1.7												GUTTER DEPRESSION				g
																						5.0		3.0		478					1.1			4.7			Mod GT4 DI 24-12X	"A1" 480+57.29			h
									94.6																												18" PP				i
																						5.0		1.4		239					0.4			2.2			Mod G1 DI 24-12X	"A1" 481+56.30			j
																									1.5												GUTTER DEPRESSION				k
									99.6																												18" PP				l
4.8		1		4.5					1065.8		29.2													26.8	18.3	4302					9.6						SHEET TOTALS				

(N) NOT A SEPARATE PAY ITEM, FOR INFORMATION ONLY

DRAINAGE QUANTITIES DQ-2

LAST REVISION 02-04-13 | DATE PLOTTED => 13-FEB-2014 | TIME PLOTTED => 13:43

STATE OF CALIFORNIA - DEPARTMENT OF TRANSPORTATION — Caltrans®

FUNCTIONAL SUPERVISOR: DENNIS JAGODA

CALCULATED-DESIGNED BY: JOHN HUDSON | CHECKED BY: ANDRA SPECK | REVISED BY | DATE REVISED

BORDER LAST REVISED 7/2/2010 | USERNAME => s130875 | DGN FILE => 0300000223id002.dgn | RELATIVE BORDER SCALE IS IN INCHES 0 1 2 3 | UNIT 0359 | PROJECT NUMBER & PHASE 03000002231

Dist	COUNTY	ROUTE	POST MILES TOTAL PROJECT	SHEET No.	TOTAL SHEETS
03	ED	89	8.6/13.8	89	231

REGISTERED CIVIL ENGINEER — DATE 11-18-13

CHRIS ROCKEY No. C78030 Exp. 9-30-15 CIVIL — REGISTERED PROFESSIONAL ENGINEER — STATE OF CALIFORNIA

PLANS APPROVAL DATE 11-18-13

THE STATE OF CALIFORNIA OR ITS OFFICERS OR AGENTS SHALL NOT BE RESPONSIBLE FOR THE ACCURACY OR COMPLETENESS OF SCANNED COPIES OF THIS PLAN SHEET.

DRAINAGE QUANTITIES

REMOVE CULVERT	(N) MAX HEIGHT OF COVER	REMOVE INLET	REMOVE FLARED END SECTION	REMOVE HEADWALL	24" PRECAST CONCRETE PIPE MANHOLE	REMOVE SLOTTED CORRUGATED STEEL PIPE	REMOVE MANHOLE	15" PLASTIC PIPE	18" PLASTIC PIPE	18" CORRUGATED STEEL PIPE (.109" THICK)	24" CORRUGATED STEEL PIPE (.109" THICK)	30" CORRUGATED STEEL PIPE (.109"THICK)	17"X13" CORRUGATED STEEL PIPE ARCH (.109" THICK)	18" REINFORCED CONCRETE PIPE	STRUCTURAL CONCRETE BOX CULVERT	STRUCTURAL CONCRETE WING WALL	MACHINE SPIRAL WOUND PVC PIPELINER (GROUTED, 36")	18" STEEL FLARED END SECTION	24" STEEL FLARED END SECTION	36" STEEL FLARED END SECTION	CLEANING, INSPECTING, AND PREPARING CULVERT	(N) HEIGHT OF INLET "H"	CABLE RAILING	MINOR CONCRETE (MINOR STRUCTURE)	MINOR CONCRETE (GUTTER DEPRESSION)	MISCELLANEOUS IRON AND STEEL	BAR REINFORCING STEEL (EPOXY COATED)	ROCK SLOPE PROTECTION (LIGHT, METHOD B)	CONCRETE BACKFILL (PIPE TRENCH)	36" CORRUGATED STEEL PIPE INLET (.109" THICK)	CLASS 1 PERMEABLE MATERIAL (BLANKET)	CLASS 2 PERMEABLE MATERIAL (BLANKET)	SAND BEDDING	(N) FILTER FABRIC (CLASS A)	12" PERFORATED PLASTIC PIPE	18" PERFORATED PLASTIC PIPE	DESCRIPTION	STATION	DRAINAGE SHEET No.	DRAINAGE SYSTEM No.	DRAINAGE UNIT
LF	LF	EA	EA	EA	LF	LF	EA	LF	LF	LF	LF	LF	LF	LF	CY	CY	LF	EA	EA	EA	LF	LF	LF	CY	CY	LB	LB	CY	CY	LF	LB	CY	SQYD	LF	LF					
																						5.0		3.0		478					1.1			4.7			Mod GT4 DI 24-12X	"A1" 482+55.08	D-3	8	m
																									1.7											GUTTER DEPRESSION				n
		1																																		REMOVE INLET		D-3	9	a
																						5.0		3.0		478					1.1			4.7			Mod GT4 DI 24-12X	"A1" 489+43.22			b
																									1.7											GUTTER DEPRESSION				c
						70.0																															REMOVE SCSP		D-4		d
							1																														REMOVE INLET (MH)				e
								95.5																													15" PP				f
																						5.0		1.4		239					0.4			2.2			Mod G1 DI 24-12X	"A1" 491+75.00			g
																									1.5											GUTTER DEPRESSION				h
						78.8																															REMOVE SCSP				i
																														21.6							CONCRETE BACKFILL				j
							1																														REMOVE INLET (MH)				k
								109.9																													15" PP				l
						59.7																															REMOVE SCSP				m
	1																																				REMOVE INLET				n
																						5.0		1.4		239					0.4			2.2			Mod G1 DI 24-12X	"A1" 492+92.08			o
																									1.5											GUTTER DEPRESSION				p
																															22.2	4.1	4.1	24.6	76.0	15.0	UIG				r
																															22.2	4.1	4.1	24.6	76.0	10.0	UIG		D-4	10	a
																						5.0		3.0		478					1.1			4.7			Mod GT4 DI 24-12X	"A1" 495+97.33			b
																									1.7											GUTTER DEPRESSION				c
																															22.1	4.1	4.1	24.5	76.0	15.0	UIG		D-4	11	a
																						5.0		3.0		478					1.1			4.7			Mod GT4 DI 24-12X	"A1" 499+33.01			b
																									1.7											GUTTER DEPRESSION				c
																															22.0	4.1	4.1	24.4	76.0	15.0	UIG		D-4	12	a
																						5.0		3.0		478					1.1			4.7			Mod GT4 DI 24-12X	"A1" 499+29.30			b
																									1.7											GUTTER DEPRESSION				c
																						5.0		3.0		478					1.1			4.7			Mod GT4 DI 24-12X	"A1" 504+20.00	D-5	13	a
																									1.7											GUTTER DEPRESSION				b
																															22.0	4.1	4.1	24.4	76.0	15.0	UIG				c
									307.7																													18" PP				d
																						5.0		1.4		239					0.4			2.2			Mod G1 DI 24-12X	"A1" 507+33.37			e
																									1.5											GUTTER DEPRESSION				f
	2					208.5	2	205.4	307.7															22.2	14.7	3585			21.6		118.3	20.5	20.5		380.0	70.0	SHEET TOTALS				

(N) NOT A SEPARATE PAY ITEM, FOR INFORMATION ONLY

DRAINAGE QUANTITIES DQ-3

LAST REVISION DATE PLOTTED => 13-FEB-2014
02-04-13 TIME PLOTTED => 13:43

STATE OF CALIFORNIA - DEPARTMENT OF TRANSPORTATION
Caltrans

FUNCTIONAL SUPERVISOR: DENNIS JAGODA
CALCULATED-DESIGNED BY: JOHN HUDSON
CHECKED BY: ANDRA SPECK
REVISED BY | DATE REVISED

BORDER LAST REVISED 7/2/2010 | USERNAME => s130875 | DGN FILE => 0300000223id003.dgn | RELATIVE BORDER SCALE IS IN INCHES 0 1 2 3 | UNIT 0359 | PROJECT NUMBER & PHASE 03000002231

Dist	COUNTY	ROUTE	POST MILES TOTAL PROJECT	SHEET No.	TOTAL SHEETS
03	ED	89	8.6/13.8	90	231

REGISTERED CIVIL ENGINEER — DATE 11-18-13

CHRIS ROCKEY No. C78030 Exp. 9-30-15 CIVIL — REGISTERED PROFESSIONAL ENGINEER — STATE OF CALIFORNIA

11-18-13
PLANS APPROVAL DATE

THE STATE OF CALIFORNIA OR ITS OFFICERS OR AGENTS SHALL NOT BE RESPONSIBLE FOR THE ACCURACY OR COMPLETENESS OF SCANNED COPIES OF THIS PLAN SHEET.

DRAINAGE QUANTITIES

REMOVE CULVERT	(N) MAX HEIGHT OF COVER	REMOVE INLET	REMOVE FLARED END SECTION	REMOVE HEADWALL	24" PRECAST CONCRETE PIPE MANHOLE	REMOVE SLOTTED CORRUGATED STEEL PIPE	REMOVE MANHOLE	15" PLASTIC PIPE	18" PLASTIC PIPE	18" CORRUGATED STEEL PIPE (.109" THICK)	24" CORRUGATED STEEL PIPE (.109" THICK)	30" CORRUGATED STEEL PIPE (.109"THICK)	17"X13" CORRUGATED STEEL PIPE ARCH (.109" THICK)	18" REINFORCED CONCRETE PIPE	STRUCTURAL CONCRETE BOX CULVERT	STRUCTURAL CONCRETE WING WALL	MACHINE SPIRAL WOUND PVC PIPELINER (GROUTED, 36")	18" STEEL FLARED END SECTION	24" STEEL FLARED END SECTION	36" STEEL FLARED END SECTION	CLEANING, INSPECTING, AND PREPARING CULVERT	(N) HEIGHT OF INLET "H"	CABLE RAILING	MINOR CONCRETE (MINOR STRUCTURE)	MINOR CONCRETE (GUTTER DEPRESSION)	MISCELLANEOUS IRON AND STEEL	BAR REINFORCING STEEL (EPOXY COATED)	ROCK SLOPE PROTECTION (LIGHT, METHOD B)	CONCRETE BACKFILL (PIPE TRENCH)	36" CORRUGATED STEEL PIPE INLET (.109" THICK)	CLASS 1 PERMEABLE MATERIAL (BLANKET)	CLASS 2 PERMEABLE MATERIAL (BLANKET)	SAND BEDDING	(N) FILTER FABRIC (CLASS A)	12" PERFORATED PLASTIC PIPE	18" PERFORATED PLASTIC PIPE	DESCRIPTION	STATION	DRAINAGE SHEET No.	DRAINAGE SYSTEM No.	DRAINAGE UNIT
LF	LF	EA	EA	EA	LF	LF	EA	LF	LF	LF	LF	LF	LF	LF	CY	CY	LF	EA	EA	EA	LF	LF	LF	CY	CY	LB	LB	CY	CY	LF	CY	CY	CY	SQYD	LF	LF					
																															22.0	4.1	4.1	24.4	76.0	15.0	UIG	"A1" 507+33.37	D-5	13	g
																						5.0		3.0		478					1.1			4.7			Mod GT4 DI 24-12X	"A1" 505+26.30	D-5	14	a
																									1.7											GUTTER DEPRESSION				b
																															22.4	4.2	4.2	24.9	76.0	15.0	UIG				c
																						5.0		3.0		478					1.1			4.7			Mod GT4 DI 24-12X	"A1" 508+02.00	D-5	15	a
																									1.7											GUTTER DEPRESSION				b
																															22.4	4.2	4.2	24.9	76.0	15.0	UIG				c
																						5.0		1.4		239					0.4			2.2			Mod G1 DI 24-12X	"A1" 509+98.74	D-5	16	a
																									1.5											GUTTER DEPRESSION				b
								61.9																													15" PP				c
																															22.7	4.2	4.2	25.2	76.0	15.0	UIG				d
																						5.0		1.4		239					0.4			2.2			Mod G1 DI 24-12X	"A1" 509+36.13			e
																									1.5											GUTTER DEPRESSION				f
									78.5																											18" PP				g
																						5.0		1.4		239					0.4			2.2			Mod G1 DI 24-12X	"A1" 510+21.04			h
																									1.5											GUTTER DEPRESSION				i
			1																																	REMOVE FES		D-6	17	a
68.6	3.7																																				REMOVE CULVERT				b
																							1														24" FES				c
											92.4																											24" CSP				d
																						5.0		0.4		215				5.0	0.4			2.3			Mod GMP DI 36RX	"A1" 527+81.33	D-7	18	a
																																					* INLET DEPRESSION (AC)				b
																																					* PLACE HMA				c
																															22.0	4.1	4.1	24.4	76.0	15.0	UIG	"A1" 527+81.33			d
			1																																	REMOVE FES		D-7	19	a
37.0	2.2																																				REMOVE CULVERT				b
																							1														24" FES				c
											49.5																											24" CSP				d
			1																																		REMOVE INLET		D-8	20	a
73.4	4.3																																				REMOVE CULVERT				b
																						5.0		0.7		645				10.0	1.1			6.8			Mod GMP DI, 2 EA 36RX	"A1" 570+41.87			c
									149.8																											18" PP, 2 EA				d
179.0		1	2					61.9	228.3		141.9												2		11.3	7.9	2533			15.0	116.4	20.8	20.8		380.0	75.0	SHEET TOTALS				

(N) NOT A SEPARATE PAY ITEM, FOR INFORMATION ONLY
* SEE HMA QUANTITY TABLE.

DRAINAGE QUANTITIES DQ-4

REVISED BY | DATE REVISED
JOHN HUDSON | ANDRA SPECK
CALCULATED-DESIGNED BY | CHECKED BY
FUNCTIONAL SUPERVISOR: DENNIS JAGODA
STATE OF CALIFORNIA - DEPARTMENT OF TRANSPORTATION — Caltrans®

LAST REVISION 02-04-13 | DATE PLOTTED => 13-FEB-2014 | TIME PLOTTED => 13:43

BORDER LAST REVISED 7/2/2010 | USERNAME => s130875 | DGN FILE => 0300000223id004.dgn | RELATIVE BORDER SCALE IS IN INCHES 0 1 2 3 | UNIT 0359 | PROJECT NUMBER & PHASE 03000002231

Dist	COUNTY	ROUTE	POST MILES TOTAL PROJECT	SHEET No.	TOTAL SHEETS
03	ED	89	8.6/13.8	91	231

11-18-13
REGISTERED CIVIL ENGINEER DATE

11-18-13
PLANS APPROVAL DATE

REGISTERED PROFESSIONAL ENGINEER
CHRIS ROCKEY
No. C78030
Exp. 9-30-15
CIVIL
STATE OF CALIFORNIA

THE STATE OF CALIFORNIA OR ITS OFFICERS OR AGENTS SHALL NOT BE RESPONSIBLE FOR THE ACCURACY OR COMPLETENESS OF SCANNED COPIES OF THIS PLAN SHEET.

DRAINAGE QUANTITIES

REMOVE CULVERT	(N) MAX HEIGHT OF COVER	REMOVE INLET	REMOVE FLARED END SECTION	REMOVE HEADWALL	24" PRECAST CONCRETE PIPE MANHOLE	REMOVE SLOTTED CORRUGATED STEEL PIPE	REMOVE MANHOLE	15" PLASTIC PIPE	18" PLASTIC PIPE	18" CORRUGATED STEEL PIPE (.109" THICK)	24" CORRUGATED STEEL PIPE (.109" THICK)	30" CORRUGATED STEEL PIPE (.109"THICK)	17"X13" CORRUGATED STEEL PIPE ARCH (.109" THICK)	18" REINFORCED CONCRETE PIPE	STRUCTURAL CONCRETE BOX CULVERT	STRUCTURAL CONCRETE WING WALL	MACHINE SPIRAL WOUND PVC PIPELINER (GROUTED, 36")	18" STEEL FLARED END SECTION	24" STEEL FLARED END SECTION	36" STEEL FLARED END SECTION	CLEANING, INSPECTING, AND PREPARING CULVERT	(N) HEIGHT OF INLET "H"	CABLE RAILING	MINOR CONCRETE (MINOR STRUCTURE)	MINOR CONCRETE (GUTTER DEPRESSION)	MISCELLANEOUS IRON AND STEEL	BAR REINFORCING STEEL (EPOXY COATED)	ROCK SLOPE PROTECTION (LIGHT, METHOD B)	CONCRETE BACKFILL (PIPE TRENCH)	36" CORRUGATED STEEL PIPE INLET (.109" THICK)	CLASS 1 PERMEABLE MATERIAL (BLANKET)	CLASS 2 PERMEABLE MATERIAL (BLANKET)	SAND BEDDING	(N) FILTER FABRIC (CLASS A)	12" PERFORATED PLASTIC PIPE	18" PERFORATED PLASTIC PIPE	DESCRIPTION	STATION	DRAINAGE SHEET No.	DRAINAGE SYSTEM No.	DRAINAGE UNIT
LF	LF	EA	EA	EA	LF	LF	EA	LF	LF	LF	LF	LF	LF	LF	CY	CY	LF	EA	EA	EA	LF	LF	LF	CY	CY	LB	LB	CY	CY	LF	CY	CY	CY	SQYD	LF	LF					
																								2.3													TRIPLE STRAIGHT HEADWALL	"A1" 575+09.73	D-8	21	a
											6.0																										24" CSP, 3 EA				b
																								2.3													TRIPLE STRAIGHT HEADWALL	"A1" 575+02.51			c
											6.0																											24" CSP, 3 EA		D-9	22	a
																								2.3													TRIPLE STRAIGHT HEADWALL	"A1" 582+41.88			b
																								2.3													TRIPLE STRAIGHT HEADWALL	"A1" 582+34.00			c
																		1																			18" FES				d
								145.5																															15" PP				e
				6.0																			6.0															MANHOLE	"A1" 584+09.77			f
								300.5																													15" PP				g
																									1.5												GUTTER DEPRESSION				h
																							5.0	1.4		239						0.4			2.2			Mod G1 DI 24-12X	"A1" 587+13.77			i
								148.9																													15" PP				j
																									1.5												GUTTER DEPRESSION				k
																							5.0	1.4		239						0.4			2.2			Mod G1 DI 24-12X	"A1" 588+65.26			l
								79.6																													15" PP				m
																									1.5												GUTTER DEPRESSION				n
																							5.0	1.4		239						0.4			2.2			Mod G1 DI 24-12X	"A1" 589+47.81			o
								84.3																													15" PP				p
																									1.7												GUTTER DEPRESSION				q
																							5.0	3.0		478						1.1			4.7			Mod GT4 DI 24-12X	"A1" 590+36.48			r
																								1.2													SINGLE STRAIGHT HEADWALL		D-10	23	a
35.5	2.2																																				REMOVE CULVERT				b
											51.4																										24" CSP	"A1" 619+90.78			c
																																					24" FES				d
28.1	1.9																																				REMOVE CULVERT		D-10	24	a
																								0.9													SINGLE STRAIGHT HEADWALL	"A1" 627+59.16			b
										30.9																											18" CSP				c
																								0.9													SINGLE STRAIGHT HEADWALL	"A1" 627+57.57			d
36.4	2.1																																				REMOVE CULVERT		D-11	25	a
												38.8																									30" CSP				b
29.9	3.0																																				REMOVE CULVERT		D-11	26	a
																								0.9													SINGLE STRAIGHT HEADWALL	"A1" 645+59.31			b
										33.9																											18" CSP				c
129.9				6.0			758.8		64.8	63.4	38.8							1						20.3	6.2	1195						2.3					SHEET TOTALS				

(N) NOT A SEPARATE PAY ITEM, FOR INFORMATION ONLY

DRAINAGE QUANTITIES DQ-5

CALCULATED-DESIGNED BY: JOHN HUDSON
CHECKED BY: ANDRA SPECK
FUNCTIONAL SUPERVISOR: DENNIS JAGODA
REVISED BY
DATE REVISED

STATE OF CALIFORNIA - DEPARTMENT OF TRANSPORTATION
Caltrans

LAST REVISION 02-04-13
DATE PLOTTED => 13-FEB-2014
TIME PLOTTED => 13:43

Dist	COUNTY	ROUTE	POST MILES TOTAL PROJECT	SHEET No.	TOTAL SHEETS
03	ED	89	8.6/13.8	92	231

REGISTERED CIVIL ENGINEER — DATE 11-18-13

CHRIS ROCKEY No. C78030 Exp. 9-30-15 CIVIL — REGISTERED PROFESSIONAL ENGINEER — STATE OF CALIFORNIA

11-18-13
PLANS APPROVAL DATE

THE STATE OF CALIFORNIA OR ITS OFFICERS OR AGENTS SHALL NOT BE RESPONSIBLE FOR THE ACCURACY OR COMPLETENESS OF SCANNED COPIES OF THIS PLAN SHEET.

DRAINAGE QUANTITIES

REMOVE CULVERT	(N) MAX HEIGHT OF COVER	REMOVE INLET	REMOVE FLARED END SECTION	REMOVE HEADWALL	24" PRECAST CONCRETE PIPE MANHOLE	REMOVE SLOTTED CORRUGATED STEEL PIPE	REMOVE MANHOLE	15" PLASTIC PIPE	18" PLASTIC PIPE	18" CORRUGATED STEEL PIPE (.109" THICK)	24" CORRUGATED STEEL PIPE (.109" THICK)	30" CORRUGATED STEEL PIPE (.109"THICK)	17"X13" CORRUGATED STEEL PIPE ARCH (.109" THICK)	18" REINFORCED CONCRETE PIPE	STRUCTURAL CONCRETE BOX CULVERT	STRUCTURAL CONCRETE WING WALL	MACHINE SPIRAL WOUND PVC PIPELINER (GROUTED, 36")	18" STEEL FLARED END SECTION	24" STEEL FLARED END SECTION	36" STEEL FLARED END SECTION	CLEANING, INSPECTING, AND PREPARING CULVERT	(N) HEIGHT OF INLET "H"	CABLE RAILING	MINOR CONCRETE (MINOR STRUCTURE)	MINOR CONCRETE (GUTTER DEPRESSION)	MISCELLANEOUS IRON AND STEEL	BAR REINFORCING STEEL (EPOXY COATED)	ROCK SLOPE PROTECTION (LIGHT, METHOD B)	CONCRETE BACKFILL (PIPE TRENCH)	36" CORRUGATED STEEL PIPE INLET (.109" THICK)	CLASS 1 PERMEABLE MATERIAL (BLANKET)	CLASS 2 PERMEABLE MATERIAL (BLANKET)	SAND BEDDING	(N) FILTER FABRIC (CLASS A)	12" PERFORATED PLASTIC PIPE	18" PERFORATED PLASTIC PIPE	DESCRIPTION	STATION	DRAINAGE SHEET No.	DRAINAGE SYSTEM No.	DRAINAGE UNIT
LF	LF	EA	EA	EA	LF	LF	EA	LF	LF	LF	LF	LF	LF	LF	CY	CY	LF	EA	EA	EA	LF	LF	LF	CY	CY	LB	LB	CY	CY	LF	CY	CY	CY	SQYD	LF	LF					
																								0.9													SINGLE STRAIGHT HW	"A1" 645+59.31	D-11	26	d
										35.5																													18" CSP		D-12	27	a
																								0.9													SINGLE STRAIGHT HW	"A1" 649+84.29			b
																			1																		24" FES		D-13	28	a
											54.7																											24" CSP				b
																			1																		24" FES				c
		1																																			REMOVE INLET		D-14	29	a
41.9	2.6																																				REMOVE CULVERT				b
			1																																		REMOVE FES				c
																						3.4			1.3		239										GO DI, 24-12X	"A1" 693+50.58			d
										43.5																											18" CSP				e
																				1																		18" FES				f
			1																																		REMOVE FES		D-14	30	a
34.0	2.2																																				REMOVE CULVERT				b
																					1																24" FES				c
											34.3																											24" CSP				d
52.0	7.4																																					REMOVE CULVERT		D-15	31	a
				1																																	REMOVE HEADWALL				b
				1																																	REMOVE HEADWALL				c
																19.5																						WINGWALL				d
															122.4																							12'X8' BOX CULVERT				e
																19.5																						WINGWALL				f
																																		64					RSP (LIGHT, METHOD B)				g
																								46.0														CABLE RAILING				h
																								46.0														CABLE RAILING				i
			1																																		REMOVE FES		D-15	32	a
36.0	2.2																																				REMOVE CULVERT				b
																			1																		24" FES				c
											35.4																											24" CSP				d
163.9		1	3	2						79.0	124.4				122.4	39.0		1	3	1			92.0	3.1		239	17657	64									SHEET TOTALS				

(N) NOT A SEPARATE PAY ITEM, FOR INFORMATION ONLY

DRAINAGE QUANTITIES

DQ-6

CALCULATED-DESIGNED BY
CHECKED BY
JOHN HUDSON
ANDRA SPECK
REVISED BY
DATE REVISED
FUNCTIONAL SUPERVISOR
DENNIS JAGODA
STATE OF CALIFORNIA - DEPARTMENT OF TRANSPORTATION
Caltrans

LAST REVISION 02-04-13
DATE PLOTTED => 13-FEB-2014
TIME PLOTTED => 13:43

BORDER LAST REVISED 7/2/2010
USERNAME => s130875
DGN FILE => 0300000223id006.dgn
RELATIVE BORDER SCALE IS IN INCHES 0 1 2 3
UNIT 0359
PROJECT NUMBER & PHASE 03000002231

Dist	COUNTY	ROUTE	POST MILES TOTAL PROJECT	SHEET No.	TOTAL SHEETS
03	ED	89	8.6/13.8	93	231

11-18-13
REGISTERED CIVIL ENGINEER DATE

11-18-13
PLANS APPROVAL DATE

REGISTERED PROFESSIONAL ENGINEER
CHRIS ROCKEY
No. C78030
Exp. 9-30-15
CIVIL
STATE OF CALIFORNIA

THE STATE OF CALIFORNIA OR ITS OFFICERS OR AGENTS SHALL NOT BE RESPONSIBLE FOR THE ACCURACY OR COMPLETENESS OF SCANNED COPIES OF THIS PLAN SHEET.

DRAINAGE QUANTITIES

	REMOVE CULVERT	MAX HEIGHT OF COVER (N)	REMOVE INLET	REMOVE FLARED END SECTION	REMOVE HEADWALL	24" PRECAST CONCRETE PIPE MANHOLE	REMOVE SLOTTED CORRUGATED STEEL PIPE	REMOVE MANHOLE	15" PLASTIC PIPE	18" PLASTIC PIPE	18" CORRUGATED STEEL PIPE (.109" THICK)	24" CORRUGATED STEEL PIPE (.109" THICK)	30" CORRUGATED STEEL PIPE (.109"THICK)	17"X13" CORRUGATED STEEL PIPE ARCH (.109" THICK)	18" REINFORCED CONCRETE PIPE	STRUCTURAL CONCRETE BOX CULVERT	STRUCTURAL CONCRETE WING WALL	MACHINE SPIRAL WOUND PVC PIPELINER (GROUTED, 36")	18" STEEL FLARED END SECTION	24" STEEL FLARED END SECTION	36" STEEL FLARED END SECTION	CLEANING, INSPECTING, AND PREPARING CULVERT	HEIGHT OF INLET "H" (N)	CABLE RAILING *	MINOR CONCRETE (MINOR STRUCTURE) *	MINOR CONCRETE (GUTTER DEPRESSION)	MISCELLANEOUS IRON AND STEEL	BAR REINFORCING STEEL (EPOXY COATED)	ROCK SLOPE PROTECTION (LIGHT, METHOD B)	CONCRETE BACKFILL (PIPE TRENCH)	36" CORRUGATED STEEL PIPE INLET (.109" THICK)	CLASS 1 PERMEABLE MATERIAL (BLANKET)	CLASS 2 PERMEABLE MATERIAL (BLANKET)	SAND BEDDING	FILTER FABRIC (CLASS A) (N)	12" PERFORATED PLASTIC PIPE	18" PERFORATED PLASTIC PIPE
	LF	LF	EA	EA	EA	LF	LF	EA	LF	LF	LF	LF	LF	LF	LF	CY	CY	LF	EA	EA	EA	LF	LF	LF	CY	CY	LB	LB	CY	CY	LF	CY	CY	CY	SQYD	LF	LF
SHEET DQ-1			2	1		4.5			33.3	405.0				14.0	55.7			82.2			1	82.2			24.0	14.5	4039				3.3	60.5	9.7	9.7		140.0	25.0
SHEET DQ-2	4.8		1			4.5				1065.8		29.2													26.8	18.3	4302					9.6						
SHEET DQ-3			2				208.5	2	205.4	307.7															22.2	14.7	3585			21.6		118.3	20.5	20.5		380.0	70.0
SHEET DQ-4	179.0		1	2					61.9	228.3		141.9								2					11.3	7.9	2533				15.0	116.4	20.8	20.8		380.0	75.0
SHEET DQ-5	129.9					6.0			758.8		64.8	63.4	38.8						1						20.3	6.2	1195					2.3						
SHEET DQ-6	163.9		1	3	2						79.0	124.4				122.4	39.0		1	3	1			92.0	3.1		239	17657	64									
TOTAL:	477.6		7	6	2	15.0	208.5	2	1059.4	2006.8	143.8	358.9	38.8	14.0	55.7	122.4	39.0	82.2	2	5	2	82.2		92.0	107.7	61.6	15893	17657	64	21.6	18.3	307.1	51.0	50.8		900.0	170.0

(N) NOT A SEPARATE PAY ITEM, FOR INFORMATION ONLY

HMA QUANTITIES

⬡ DRAINAGE SYSTEM No.	◯ DRAINAGE UNIT	PLACE HOT MIX ASPHALT (MISCELLANEOUS AREA) SQYD	HOT MIX ASPHALT (TYPE A) TON
18	b		35.8
18	c	106.3	
*SUBTOTAL:		106.3	35.8

* FOR TOTALS SEE SUMMARY OF ROADWAY QUANTITIES.

DRAINAGE QUANTITIES

DQ-7

CALCULATED-DESIGNED BY: JOHN HUDSON
CHECKED BY: ANDRA SPECK
REVISED BY
DATE REVISED
FUNCTIONAL SUPERVISOR: DENNIS JAGODA
STATE OF CALIFORNIA - DEPARTMENT OF TRANSPORTATION
Caltrans

LAST REVISION 02-04-13
DATE PLOTTED => 13-FEB-2014
TIME PLOTTED => 13:43

BORDER LAST REVISED 7/2/2010
USERNAME => s130875
DGN FILE => 0300000223id007.dgn
RELATIVE BORDER SCALE IS IN INCHES 0 1 2 3
UNIT 0359
PROJECT NUMBER & PHASE 03000002231

Dist	COUNTY	ROUTE	POST MILES TOTAL PROJECT	SHEET No.	TOTAL SHEETS
03	ED	89	8.6/13.8	94	231

Jack R. Cowell Jr. 11-18-13
REGISTERED CIVIL ENGINEER DATE

11-18-13
PLANS APPROVAL DATE

JACK COWELL No. 65521 Exp. 9-30-15 CIVIL — REGISTERED PROFESSIONAL ENGINEER — STATE OF CALIFORNIA

THE STATE OF CALIFORNIA OR ITS OFFICERS OR AGENTS SHALL NOT BE RESPONSIBLE FOR THE ACCURACY OR COMPLETENESS OF SCANNED COPIES OF THIS PLAN SHEET.

NOTES:

1. ELEVATION SHOWN REFER TO THE TOP OF PIPE OR CONDUIT, UNLESS OTHERWISE STATED.
2. UTILITY OWNERSHIP ON THIS PROJECT ARE AS SHOWN ON LEGEND
3. JOINT TRENCH EXISTS WHERE ELEC. AND TEL ARE CALLED OUT ON THE SAME LEADER LINE.
4. AT&T TO CONFIRM THE TERMINAL POINT OF THE UNDERGROUND TEL LINE.

LEGEND:

SANITARY SEWER	SOUTH PACIFIC PUBLIC UTILITY DISTRICT (STPUD)
NATURAL GAS	SOUTH WEST GAS CORPORATION
WATER	SOUTH PACIFIC PUBLIC UTILITY DISTRICT (STPUD)
OVERHEAD ELECTRICITY	LIBERTY ENERGY
TELEPHONE OVERHEAD	AT&T
ELECTRICITY (Elect)	LIBERTY ENERGY
TELEPHONE (Tel)	AT&T
FIBER OPTICS	CHARTER COMMUNICATIONS
TELEVISION	CHARTER COMMUNICATIONS

LEGEND (CONTINUED):

- POTHOLE (PH) LOCATION
- ELECTRONIC DETECTION (ED) LOCATION
- LOCATION
- POLE RELOCATION
- DRAINAGE SYSTEM
- DCONFLICT POINT

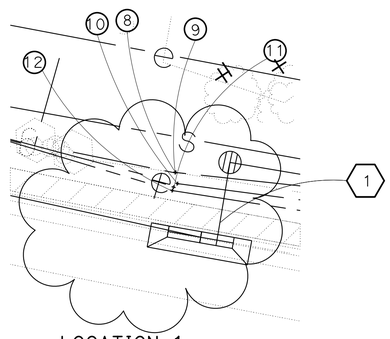

LOCATION 1

PROTECT IN PLACE
WATER, ELECTRIC, TELEPHONE & Gas

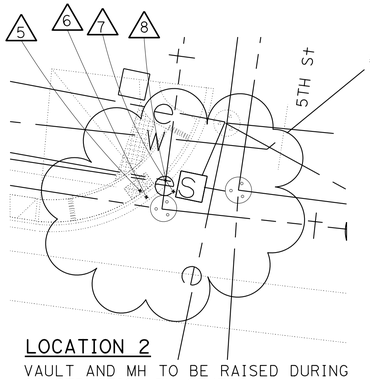

LOCATION 2

VAULT AND MH TO BE RAISED DURING CONSTRUCTION BY OTHERS

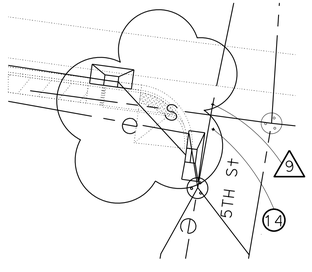

LOCATION 5

PROTECT IN PLACE ELECTRICAL MH AND ELECTRICAL LINE

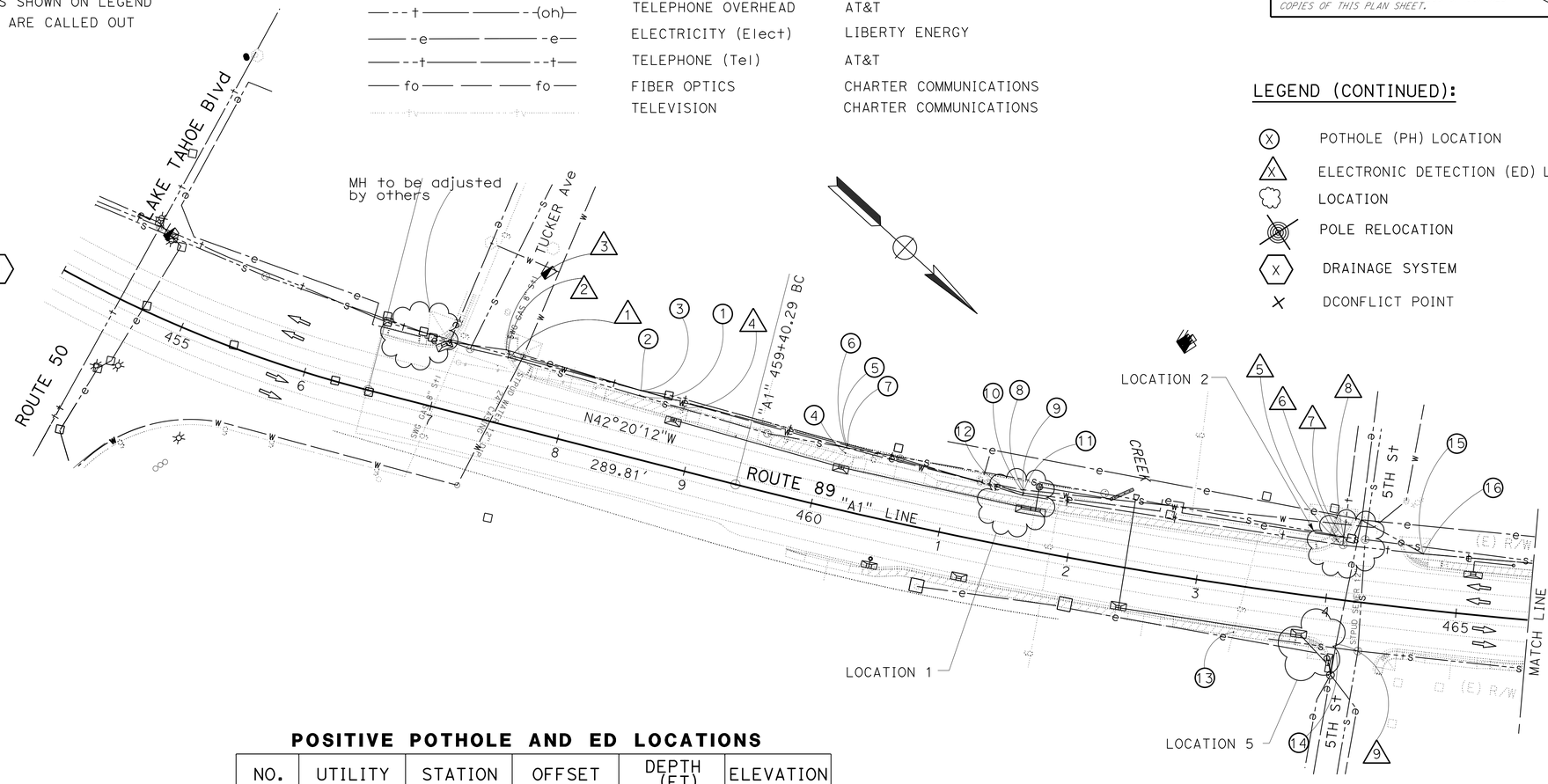

POSITIVE POTHOLE AND ED LOCATIONS

NO.	UTILITY	STATION	OFFSET	DEPTH (FT)	ELEVATION
ED-1	SEWER	457+49.32	50.94 Lt	9.17	6254.85
ED-2	WATER	457+47.00	55.16 Lt	4.75	6259.20
ED-3	ELECTRIC	457+45.15	56.08 Lt	4.92	6259.05
PH-1	GAS	458+52.41	47.76 Lt	3.42	6259.62
ED-1a	SEWER	458+73.48	56.60 Lt	7.20	6255.64
PH-2	ELECTRIC	458+52.43	51.53 Lt	2.83	6260.49
PH-3	WATER	458+52.44	51.55 Lt	4.25	6259.08
ED-4	TELEPHONE	458+52.43	51.53 Lt	2.58	6259.32
PH-4	Gas	460+16.71	43.26 Lt	4.00	6257.90
PH-5	ELECTRIC	460+17.09	49.12 Lt	3.25	6258.83
PH-6	WATER	460+16.70	47.45 Lt	4.17	6257.81
PH-7	TELEPHONE	460+17.07	50.16 Lt	3.17	6258.91
PH-8	GAS	461+57.10	44.47 Lt	3.58	6257.16
PH-9	WATER	461+57.10	44.47 Lt	3.92	6256.82
PH-10	ELECTRIC	461+58.01	42.10 Lt	2.83	6258.20
PH-11	TELEPHONE	461+57.19	40.35 Lt	2.83	6258.19
PH-12	TELEPHONE	461+57.32	41.16 Lt	3.50	6257.50

POSITIVE POTHOLE AND ED LOCATIONS

NO.	UTILITY	STATION	OFFSET	DEPTH (FT)	ELEVATION
PH-13	GAS	463+33.90	35.52 Rt	1.75	6260.01
ED-5	GAS	464+02.12	45.18 Lt	5.00	6258.36
ED-6	TELEPHONE	464+03.73	43.94 Lt	4.00	6259.03
ED-7	ELECTRIC	464+09.64	45.95 Lt	3.92	6258.58
ED-8	SEWER	464+07.52	48.21 Lt	9.75	6253.41
ED-9	ELECTRIC	464+13.08	40.84 Rt	3.33	6259.59
PH-14	ELECTRIC	464+12.08	33.87 Rt	2.92	6259.94
PH-15	TELEPHONE	464+70.27	42.38 Lt	2.75	6261.38
PH-16	ELECTRIC	464+70.27	42.38 Lt	3.92	6260.21

UTILITY PLAN

NO SCALE

APPROVED FOR UTILITY INFORMATION ONLY

U-1

REVISED BY | DATE REVISED
JACK COWELL | MASTRI ALVANDI
CALCULATED-DESIGNED BY | CHECKED BY
FUNCTIONAL SUPERVISOR: MASTRI ALVANDI
STATE OF CALIFORNIA - DEPARTMENT OF TRANSPORTATION
DESIGN

LAST REVISION DATE PLOTTED => 13-FEB-2014
TIME PLOTTED => 13:43
02-04-13

BORDER LAST REVISED 7/2/2010 | USERNAME => s130875 | DGN FILE => 0300000223ka001.dgn | RELATIVE BORDER SCALE IS IN INCHES 0 1 2 3 | UNIT 0337 | PROJECT NUMBER & PHASE 03000002231

Dist	COUNTY	ROUTE	POST MILES TOTAL PROJECT	SHEET No.	TOTAL SHEETS
03	ED	89	8.6/13.8	95	231

Jack R. Cowell Jr. 11-18-13
REGISTERED CIVIL ENGINEER DATE

11-18-13
PLANS APPROVAL DATE

REGISTERED PROFESSIONAL ENGINEER
JACK COWELL
No. 65521
Exp. 9-30-15
CIVIL
STATE OF CALIFORNIA

THE STATE OF CALIFORNIA OR ITS OFFICERS OR AGENTS SHALL NOT BE RESPONSIBLE FOR THE ACCURACY OR COMPLETENESS OF SCANNED COPIES OF THIS PLAN SHEET.

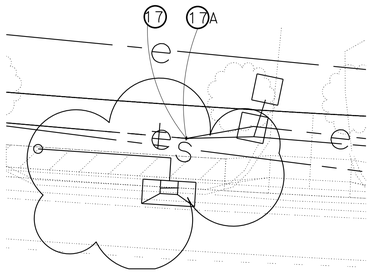

LOCATION 5A
PROTECT IN PLACE
ELECTRICAL AND TELEPHONE

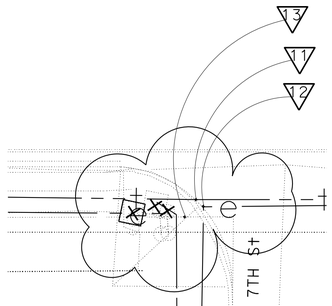

LOCATION 7
ADJUST VAULT FOR ELECTRICAL
DURING CONSTRUCTION, PROTECT
IN PLACE GAS & TELEPHONE MOVE
PRIOR TO CONSTRUCION (BY OTHERS)

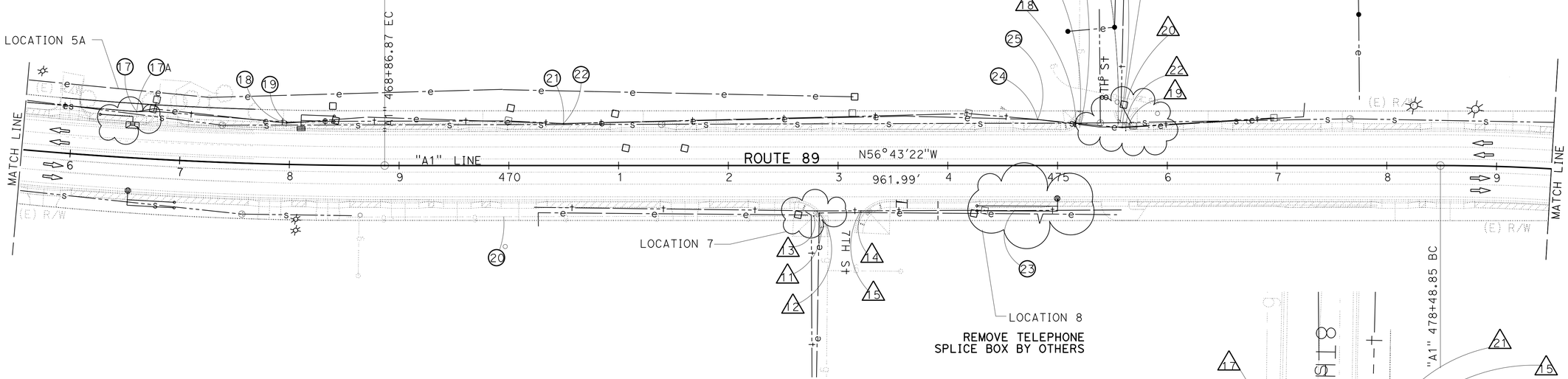

LOCATION 8
REMOVE TELEPHONE
SPLICE BOX BY OTHERS

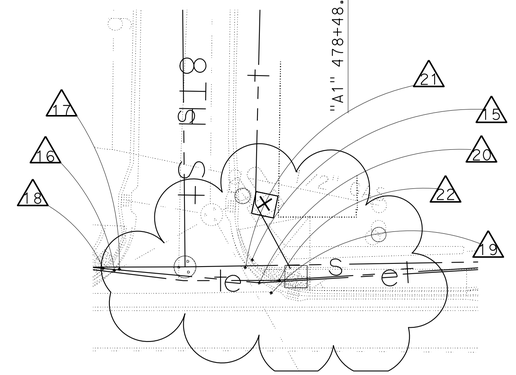

LOCATION 9
TELEPHONE VAULT TO BE
RELOCATED (BY OTHERS)
SEWER MH ADJUSTMENT BY OTHERS
DURING CONSTRUCTION
PROTECT IN PLACE ELECTRICAL

POSITIVE POTHOLE AND ED LOCATIONS

NO.	UTILITY	STATION	OFFSET	DEPTH (FT)	ELEVATION (TOP)
PH-17A	TELEPHONE	466+58.34	47.28 Lt	1.92	6264.868
PH-17	ELECTRIC	466+58.35	42.24 Lt	3.50	6263.285
PH-18	TELEPHONE	467+97.08	38.45 Lt	2.58	6264.835
PH-19	ELECTRIC	467+96.63	37.61 Lt	3.67	6263.732
PH-20	GAS	469+95.60	47.03 Rt	2.00	6264.92
PH-21	TELEPHONE	470+49.61	38.28 Lt	1.92	6265.52
PH-22	ELECTRIC	470+49.61	38.28 Lt	3.00	6264.437
ED-11	TV/Telecom	472+80.82	41.32	4.58	6261.483
ED-12	ELECTRIC	472+82.80	43.13 Rt	4.25	6261.757
ED-13	GAS	472+77.79	45.99 Rt	4.33	6261.922
ED-14	ELECTRIC	473+21.01	42.87 Rt	5.83	6260.185

POSITIVE POTHOLE AND ED LOCATIONS

NO.	UTILITY	STATION	OFFSET	DEPTH (FT)	ELEVATION (TOP)
ED-15	TELEPHONE	473+20.92	41.33 Rt	4.00	6262.051
PH-23	TELEPHONE	474+60.89	41.03 Lt	3.08	6262.737
PH-24	ELECTRIC	474+81.73	41.99 Lt	4.25	6261.871
PH-25	TELEPHONE	474+81.73	41.99 Lt	2.75	6263.371
ED-16	SEWER	475+19.94	37.84 Lt	8.67	6257.024
ED-17	TELEPHONE	475+21.33	38.25 Lt	3.25	6262.501
ED-18	ELECTRIC	475+16.95	38.40 Lt	4.92	6260.83
ED-19	TELEPHONE	475+64.25	35.19 Lt	3.42	6262.491
ED-20	TELEPHONE	475+58.93	34.54 Lt	3.25	6262.664
ED-21	SEWER	475+55.17	38.65 Lt	8.33	6257.323
ED-22	ELECTRIC	475+62.14	31.83 Lt	4.33	6261.829

UTILITY PLAN
NO SCALE

APPROVED FOR UTILITY INFORMATION ONLY

U-2

CALCULATED-DESIGNED BY: JACK COWELL
CHECKED BY: MASTRI ALVANDI
REVISED BY | DATE REVISED
FUNCTIONAL SUPERVISOR: MASTRI ALVANDI
STATE OF CALIFORNIA - DEPARTMENT OF TRANSPORTATION
DESIGN
Caltrans

LAST REVISION | DATE PLOTTED => 13-FEB-2014
02-04-13 | TIME PLOTTED => 13:43

BORDER LAST REVISED 7/2/2010
USERNAME => s130875
DGN FILE => 0300000223ka002.dgn
RELATIVE BORDER SCALE IS IN INCHES 0 1 2 3
UNIT 0337
PROJECT NUMBER & PHASE 03000002231

Dist	COUNTY	ROUTE	POST MILES TOTAL PROJECT	SHEET No.	TOTAL SHEETS
03	ED	89	8.6/13.8	96	231

Jack R. Cowell Jr. 11-18-13
REGISTERED CIVIL ENGINEER DATE

11-18-13
PLANS APPROVAL DATE

REGISTERED PROFESSIONAL ENGINEER
JACK COWELL
No. 65521
Exp. 9-30-15
CIVIL
STATE OF CALIFORNIA

THE STATE OF CALIFORNIA OR ITS OFFICERS OR AGENTS SHALL NOT BE RESPONSIBLE FOR THE ACCURACY OR COMPLETENESS OF SCANNED COPIES OF THIS PLAN SHEET.

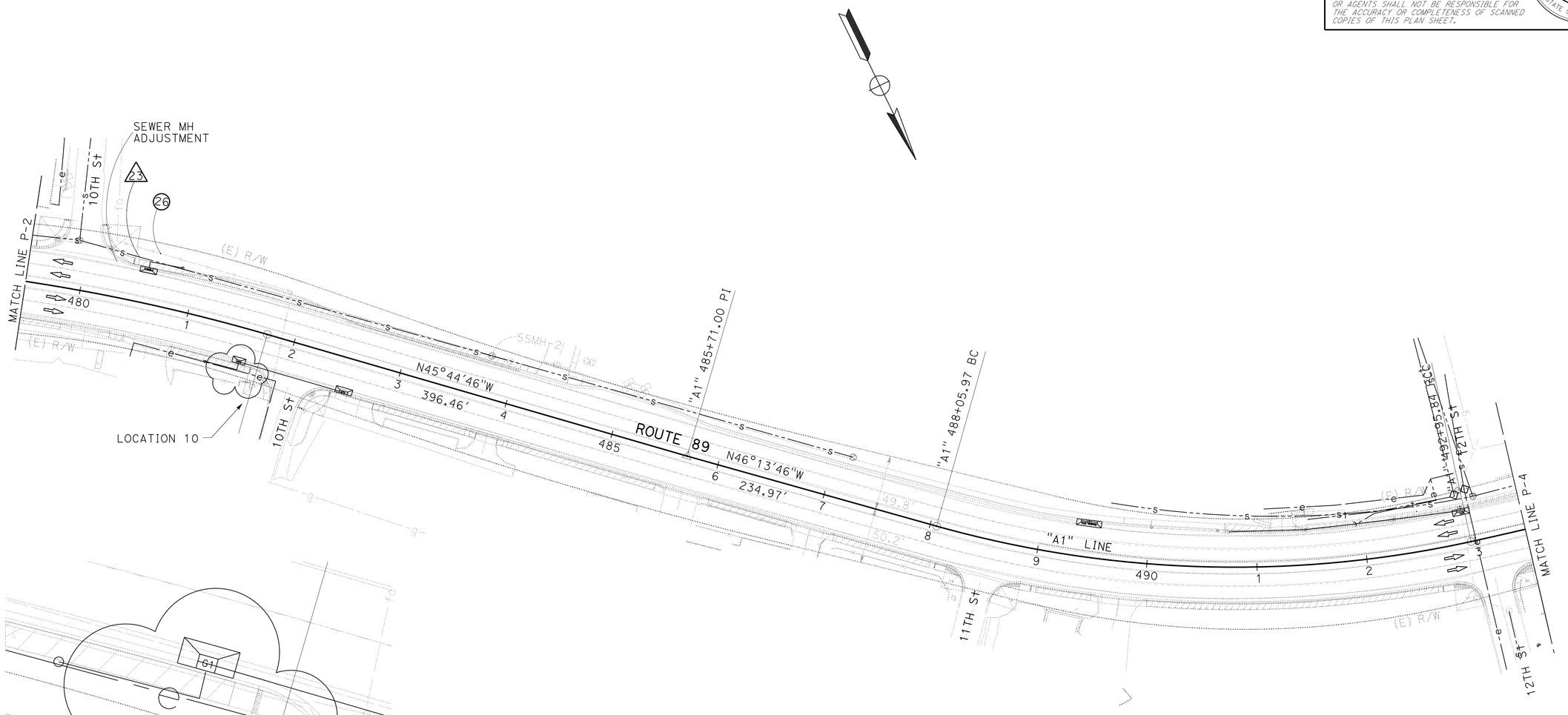

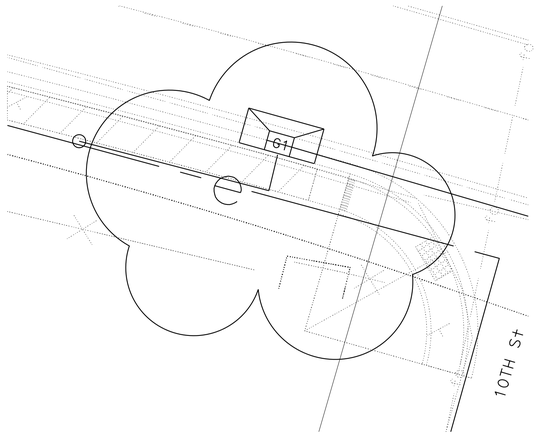

LOCATION 10

PROTECT IN PLACE ELECTRIC AND FIBER OPTIC RELOCATED BY OTHERS PRIOR TO CONSTRUCTION (UIG AND CULVERT TO BE INSTALLED)

POSITIVE POTHOLE AND ED LOCATIONS

NO.	UTILITY	STATION	OFFSET	DEPTH (FT)	ELEVATION
ED-23	SEWER	479+79.03	44.19 Lt	6.33	6263.445
PH-26	CABLE TV	480+64.33	47.12 Lt	1.58	6269.37

UTILITY PLAN

NO SCALE

U-3

APPROVED FOR UTILITY INFORMATION ONLY

STATE OF CALIFORNIA - DEPARTMENT OF TRANSPORTATION
DESIGN
FUNCTIONAL SUPERVISOR: MASTRI ALVANDI
CALCULATED-DESIGNED BY: JACK COWELL
CHECKED BY: MASTRI ALVANDI
REVISED BY
DATE REVISED

LAST REVISION
DATE PLOTTED => 13-FEB-2014
02-04-13 TIME PLOTTED => 13:43

BORDER LAST REVISED 7/2/2010
USERNAME => s130875
DGN FILE => 0300000223ka003.dgn
RELATIVE BORDER SCALE IS IN INCHES 0 1 2 3
UNIT 0337
PROJECT NUMBER & PHASE 03000002231

Dist	COUNTY	ROUTE	POST MILES TOTAL PROJECT	SHEET No.	TOTAL SHEETS
03	ED	89	8.6/13.8	97	231

Jack R. Cowell Jr. 11-18-13
REGISTERED CIVIL ENGINEER DATE

11-18-13
PLANS APPROVAL DATE

REGISTERED PROFESSIONAL ENGINEER
JACK COWELL
No. 65521
Exp. 9-30-15
CIVIL
STATE OF CALIFORNIA

THE STATE OF CALIFORNIA OR ITS OFFICERS OR AGENTS SHALL NOT BE RESPONSIBLE FOR THE ACCURACY OR COMPLETENESS OF SCANNED COPIES OF THIS PLAN SHEET.

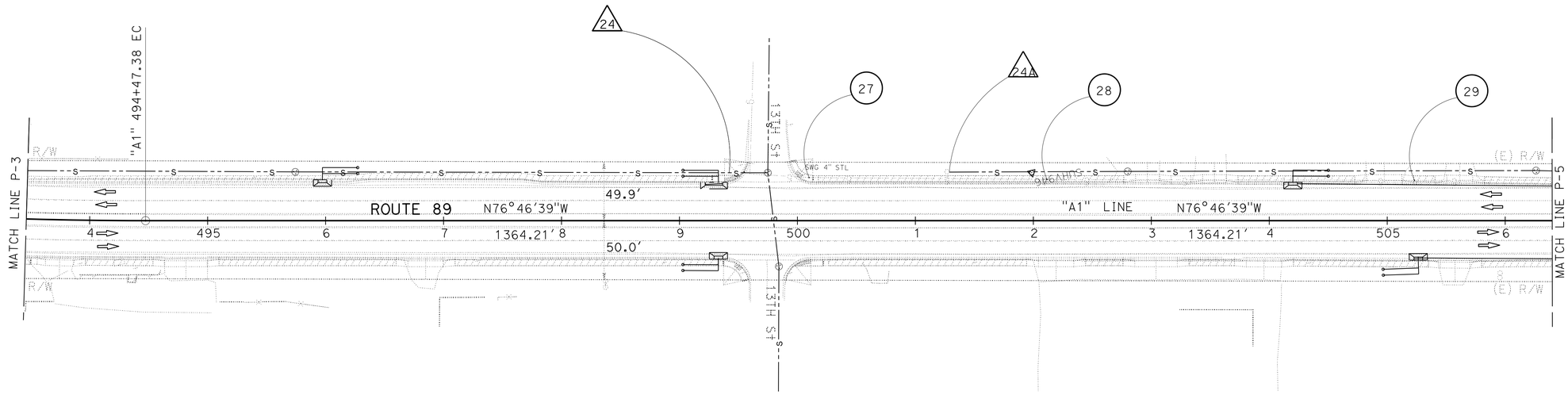

POSITIVE POTHOLE AND ED LOCATIONS

NO.	UTILITY	STATION	OFFSET	DEPTH (FT)	ELEVATION
ED-24	SEWER	499+55.01	41.32 Lt	9.92	6260.382
ED-24A	SEWER	501+28.77	41.17 Lt	5.00	6264.651
PH-27	GAS	500+09.89	36.54 Lt	3.25	6266.596
PH-28	GAS	502+11.68	34.99 Lt	3.67	6263.319
PH-29	GAS	505+23.13	34.18 Lt	3.08	6258.324

UTILITY PLAN

SCALE: 1" = 100'

APPROVED FOR UTILITY INFORMATION ONLY

U-4

CALCULATED-DESIGNED BY: JACK COWELL
CHECKED BY: MASTRI ALVANDI
FUNCTIONAL SUPERVISOR: MASTRI ALVANDI
REVISED BY | DATE REVISED

STATE OF CALIFORNIA - DEPARTMENT OF TRANSPORTATION
DESIGN

LAST REVISION 02-04-13 | DATE PLOTTED => 13-FEB-2014 | TIME PLOTTED => 13:43

BORDER LAST REVISED 7/2/2010 | USERNAME => s130875 | DGN FILE => 0300000223ka004.dgn | RELATIVE BORDER SCALE IS IN INCHES 0 1 2 3 | UNIT 0337 | PROJECT NUMBER & PHASE 03000002231

Dist	COUNTY	ROUTE	POST MILES TOTAL PROJECT	SHEET No.	TOTAL SHEETS
03	ED	89	8.6/13.8	98	231

Jack R. Cowell Jr. 11-18-13
REGISTERED CIVIL ENGINEER DATE

11-18-13
PLANS APPROVAL DATE

REGISTERED PROFESSIONAL ENGINEER — JACK COWELL — No. 65521 — Exp. 9-30-15 — CIVIL — STATE OF CALIFORNIA

THE STATE OF CALIFORNIA OR ITS OFFICERS OR AGENTS SHALL NOT BE RESPONSIBLE FOR THE ACCURACY OR COMPLETENESS OF SCANNED COPIES OF THIS PLAN SHEET.

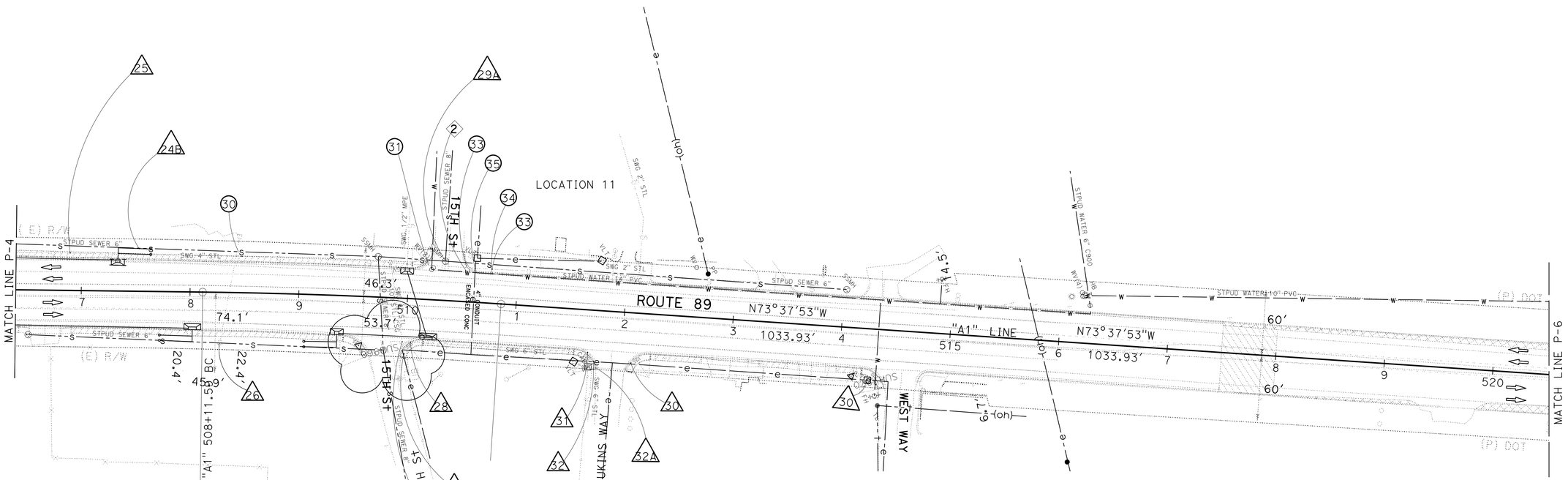

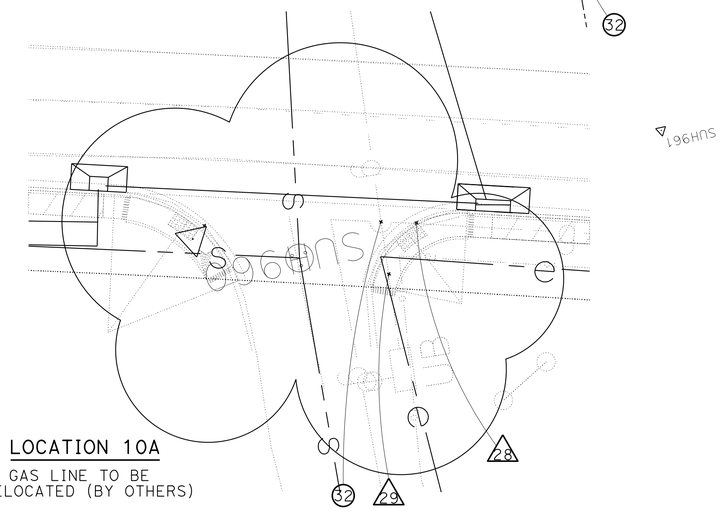

LOCATION 10A
6" GAS LINE TO BE RELOCATED (BY OTHERS)

POSITIVE POTHOLE AND ED LOCATIONS

NO.	UTILITY	STATION	OFFSET	DEPTH (FT)	ELEVATION
ED-24B	SEWER	508+04.39	38.36 L†	9.78	6250.372
ED-25	GAS	506+89.46	34.43 L†	3.00	6257.484
ED-26	SEWER	508+28.50	46.58 R†	7.50	6248.041
PH-30	GAS	508+47.21	33.37 L†	3.33	6257.077
PH-31	GAS	509+98.09	31.51 L†	3.50	6258.392
PH-32	GAS	510+76.00	31.33	3.00	6257.947
ED-28	GAS	509+97.11	39.95	4.00	6255.947
PH-33	GAS	509+97.11	39.95 L†	3.00	6256.947
ED-29	ELECTRIC	510+60.47	30.91	3.92	6258.027
PH-34	WATER	510+76.10	27.15 L†	3.00	6259.3

POSITIVE POTHOLE AND ED LOCATIONS

NO.	UTILITY	STATION	OFFSET	DEPTH (FT)	ELEVATION
ED-29B	WATER	510+18.85	27.11	3.50	6261.600
ED-29A	SEWER	510+56.79	35.81	10.83	6262.440
PH-35	ELECTRIC	510+60.47	30.91 L†	4.00	6257.977
ED-30	ELECTRIC	511+67.81	46.15 R†	4.00	6257.757
ED-31	GAS	511+68.56	39.08 R†	3.50	6261.967
ED-32	ELECTRIC	511+74.45	46.97 R†	3.92	6261.512
ED-32A	CABLE TV	511+74.93	52.77 R†	0.67	6261.287
ED-33	WATER	514+41.86	43.83 R†	3.00	6257.467
ED-34A	CABLE TV	514+36.70	48.87 R†	0.67	6259.785

UTILITY PLAN

SCALE: 1" = 100'

APPROVED FOR UTILITY INFORMATION ONLY

U-5

STATE OF CALIFORNIA - DEPARTMENT OF TRANSPORTATION — DESIGN
FUNCTIONAL SUPERVISOR: MASTRI ALVANDI
CALCULATED-DESIGNED BY: JACK COWELL
CHECKED BY: MASTRI ALVANDI
REVISED BY | DATE REVISED

LAST REVISION: DATE PLOTTED => 13-FEB-2014 | TIME PLOTTED => 13:43
02-04-13

BORDER LAST REVISED 7/2/2010 | USERNAME => s130875 | DGN FILE => 0300000223ka005.dgn | RELATIVE BORDER SCALE IS IN INCHES 0 1 2 3 | UNIT 0337 | PROJECT NUMBER & PHASE 03000002231

Dist	COUNTY	ROUTE	POST MILES TOTAL PROJECT	SHEET No.	TOTAL SHEETS
03	ED	89	8.6/13.8	99	231

Jack R. Cowell Jr. 11-18-13
REGISTERED CIVIL ENGINEER DATE

11-18-13
PLANS APPROVAL DATE

REGISTERED PROFESSIONAL ENGINEER
JACK COWELL
No. 65521
Exp. 9-30-15
CIVIL
STATE OF CALIFORNIA

THE STATE OF CALIFORNIA OR ITS OFFICERS OR AGENTS SHALL NOT BE RESPONSIBLE FOR THE ACCURACY OR COMPLETENESS OF SCANNED COPIES OF THIS PLAN SHEET.

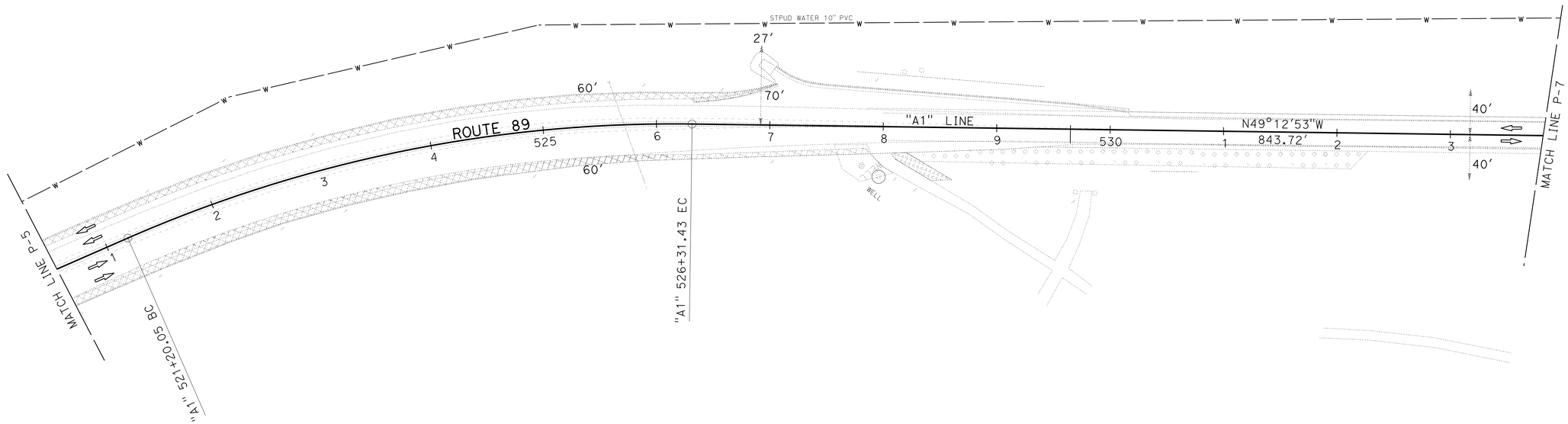

UTILITY PLAN

SCALE: 1" = 100'

U-6

APPROVED FOR UTILITY INFORMATION ONLY

LAST REVISION 02-04-13
DATE PLOTTED => 13-FEB-2014
TIME PLOTTED => 13:43

REVISED BY	DATE REVISED

CALCULATED-DESIGNED BY: JACK COWELL
CHECKED BY: MASTRI ALVANDI
FUNCTIONAL SUPERVISOR: MASTRI ALVANDI

STATE OF CALIFORNIA - DEPARTMENT OF TRANSPORTATION
Caltrans
DESIGN

BORDER LAST REVISED 7/2/2010

USERNAME => s130875
DGN FILE => 0300000223ka006.dgn

RELATIVE BORDER SCALE IS IN INCHES 0 1 2 3

UNIT 0337

PROJECT NUMBER & PHASE 03000002231

Dist	COUNTY	ROUTE	POST MILES TOTAL PROJECT	SHEET No.	TOTAL SHEETS
03	ED	89	8.6/13.8	100	231

Jack R. Cowell Jr. 11-18-13
REGISTERED CIVIL ENGINEER DATE

JACK COWELL No. 65521 Exp. 9-30-15 CIVIL — REGISTERED PROFESSIONAL ENGINEER — STATE OF CALIFORNIA

11-18-13
PLANS APPROVAL DATE

THE STATE OF CALIFORNIA OR ITS OFFICERS OR AGENTS SHALL NOT BE RESPONSIBLE FOR THE ACCURACY OR COMPLETENESS OF SCANNED COPIES OF THIS PLAN SHEET.

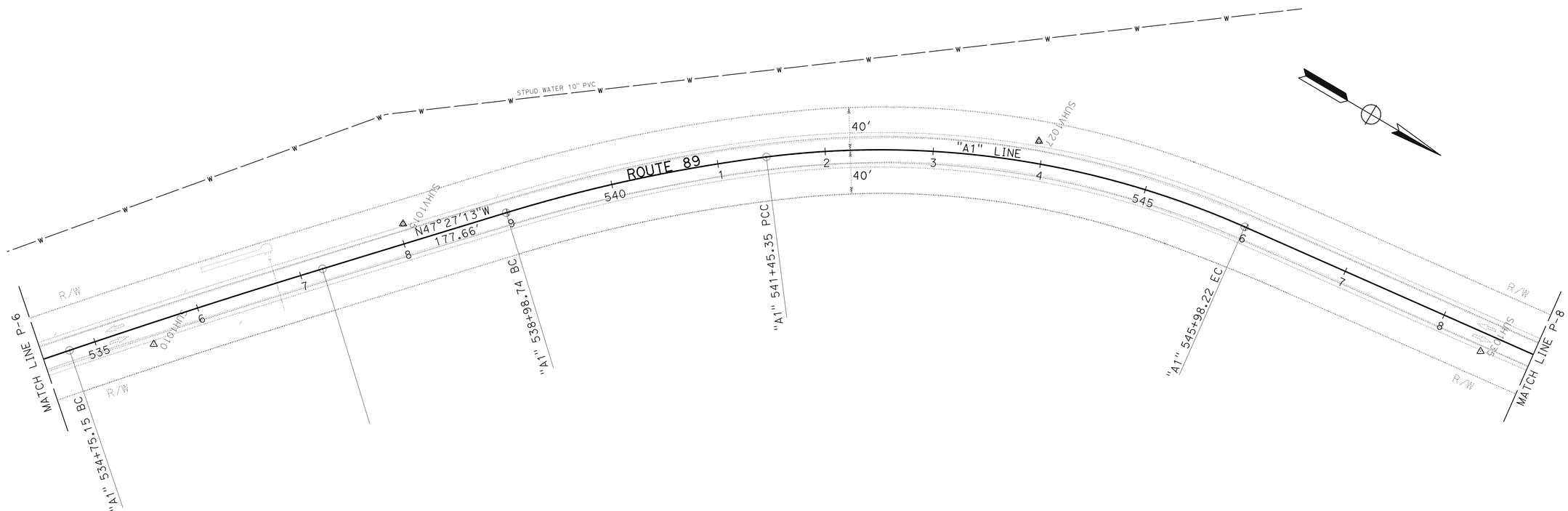

UTILITY PLAN

SCALE: 1" = 100'

APPROVED FOR UTILITY INFORMATION ONLY

U-7

LAST REVISION 02-04-13 | DATE PLOTTED => 13-FEB-2014 | TIME PLOTTED => 13:43

STATE OF CALIFORNIA - DEPARTMENT OF TRANSPORTATION
Caltrans® **DESIGN**

CALCULATED-DESIGNED BY: JACK COWELL
CHECKED BY: MASTRI ALVANDI
FUNCTIONAL SUPERVISOR: MASTRI ALVANDI

REVISED BY	DATE REVISED

Dist	COUNTY	ROUTE	POST MILES TOTAL PROJECT	SHEET No.	TOTAL SHEETS
03	ED	89	8.6/13.8	101	231

Jack R. Cowell Jr. 11-18-13
REGISTERED CIVIL ENGINEER DATE

11-18-13
PLANS APPROVAL DATE

REGISTERED PROFESSIONAL ENGINEER
JACK COWELL
No. 65521
Exp. 9-30-15
CIVIL
STATE OF CALIFORNIA

THE STATE OF CALIFORNIA OR ITS OFFICERS OR AGENTS SHALL NOT BE RESPONSIBLE FOR THE ACCURACY OR COMPLETENESS OF SCANNED COPIES OF THIS PLAN SHEET.

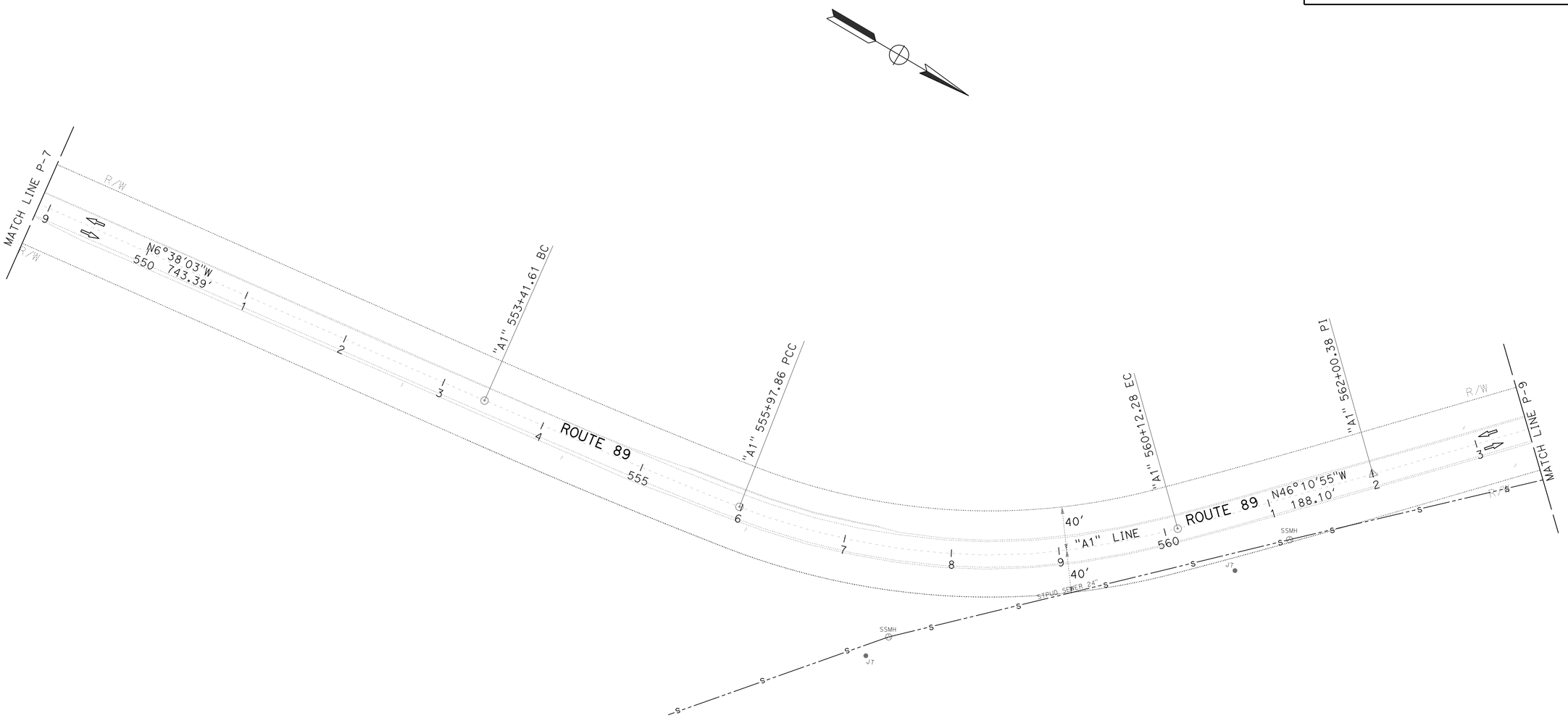

UTILITY PLAN

SCALE: 1" = 100'

U-8

APPROVED FOR UTILITY INFORMATION ONLY

CALCULATED- DESIGNED BY
CHECKED BY

REVISED BY
DATE REVISED

JACK COWELL
MASTRI ALVANDI

FUNCTIONAL SUPERVISOR
MASTRI ALVANDI

STATE OF CALIFORNIA - DEPARTMENT OF TRANSPORTATION
Caltrans®
DESIGN

LAST REVISION
DATE PLOTTED => 13-FEB-2014
TIME PLOTTED => 13:43
02-04-13

BORDER LAST REVISED 7/2/2010

USERNAME => s130875
DGN FILE => 0300000223ka008.dgn

RELATIVE BORDER SCALE IS IN INCHES 0 1 2 3

UNIT 0337

PROJECT NUMBER & PHASE 03000002231

Dist	COUNTY	ROUTE	POST MILES TOTAL PROJECT	SHEET No.	TOTAL SHEETS
03	ED	89	8.6/13.8	102	231

Jack R. Cowell Jr. 11-18-13
REGISTERED CIVIL ENGINEER DATE

11-18-13
PLANS APPROVAL DATE

REGISTERED PROFESSIONAL ENGINEER
JACK COWELL
No. 65521
Exp. 9-30-15
CIVIL
STATE OF CALIFORNIA

THE STATE OF CALIFORNIA OR ITS OFFICERS OR AGENTS SHALL NOT BE RESPONSIBLE FOR THE ACCURACY OR COMPLETENESS OF SCANNED COPIES OF THIS PLAN SHEET.

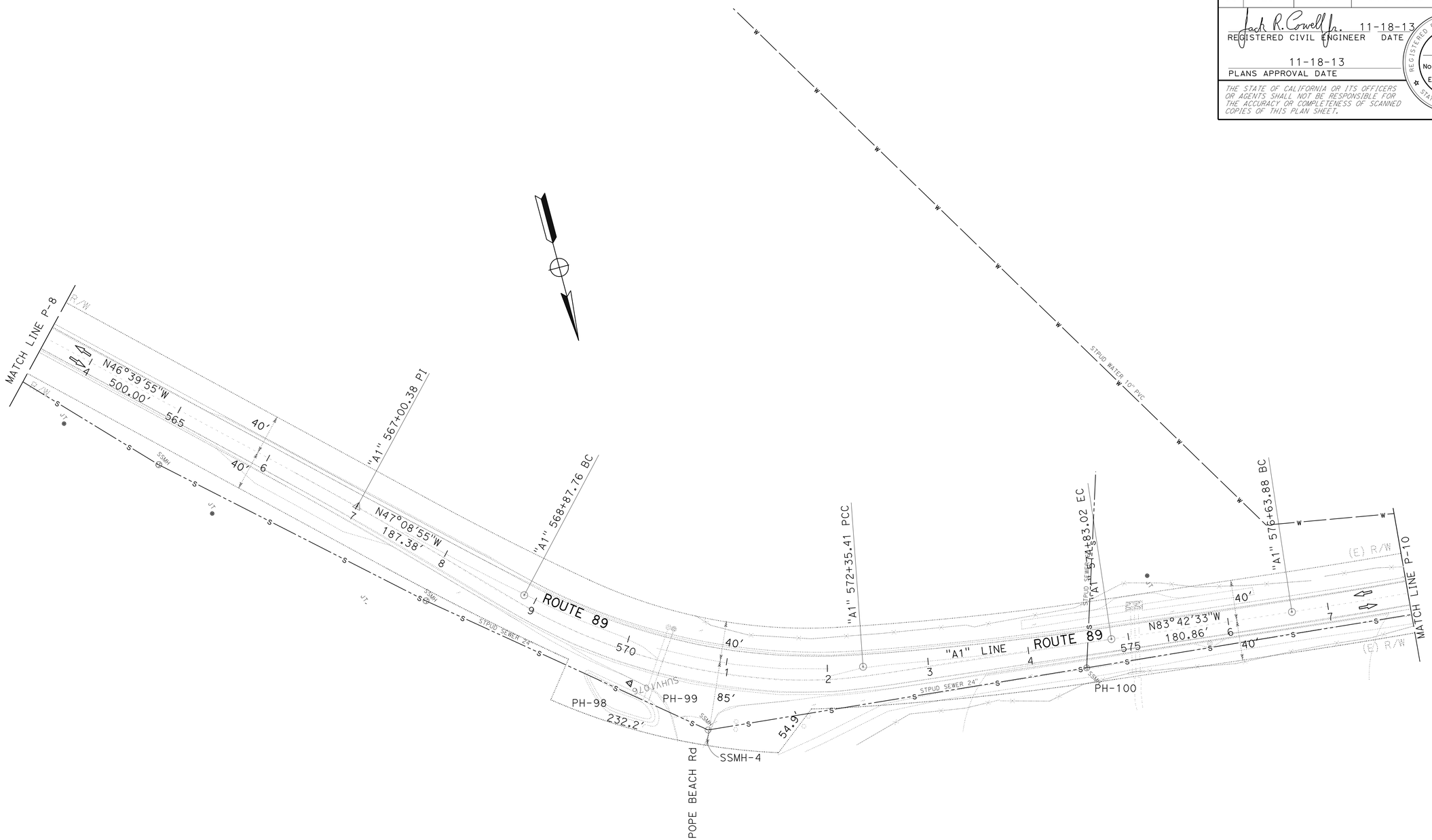

UTILITY PLAN

SCALE: 1" = 100'

APPROVED FOR UTILITY INFORMATION ONLY

U-9

STATE OF CALIFORNIA - DEPARTMENT OF TRANSPORTATION
Caltrans
DESIGN

FUNCTIONAL SUPERVISOR: MASTRI ALVANDI
CALCULATED-DESIGNED BY: JACK COWELL
CHECKED BY: MASTRI ALVANDI
REVISED BY
DATE REVISED

LAST REVISION 02-04-13
DATE PLOTTED => 13-FEB-2014
TIME PLOTTED => 13:43

Dist	COUNTY	ROUTE	POST MILES TOTAL PROJECT	SHEET No.	TOTAL SHEETS
03	ED	89	8.6/13.8	103	231

Jack R. Cowell Jr. 11-18-13
REGISTERED CIVIL ENGINEER DATE

11-18-13
PLANS APPROVAL DATE

JACK COWELL No. 65521 Exp. 9-30-15 CIVIL — REGISTERED PROFESSIONAL ENGINEER — STATE OF CALIFORNIA

THE STATE OF CALIFORNIA OR ITS OFFICERS OR AGENTS SHALL NOT BE RESPONSIBLE FOR THE ACCURACY OR COMPLETENESS OF SCANNED COPIES OF THIS PLAN SHEET.

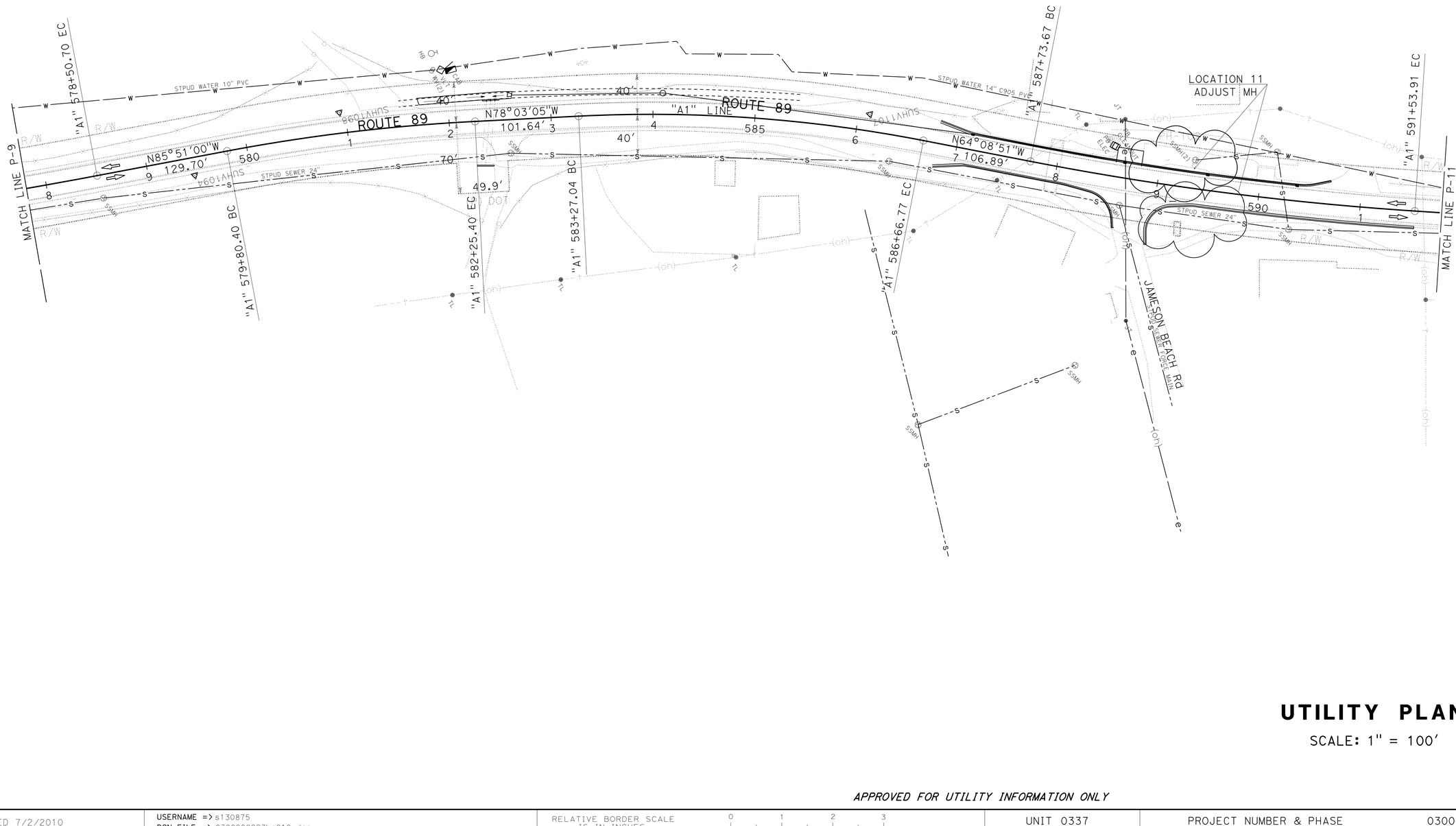

UTILITY PLAN

SCALE: 1" = 100'

U-10

APPROVED FOR UTILITY INFORMATION ONLY

STATE OF CALIFORNIA - DEPARTMENT OF TRANSPORTATION
DESIGN

REVISED BY	DATE REVISED

CALCULATED-DESIGNED BY
CHECKED BY
FUNCTIONAL SUPERVISOR
JACK COWELL
MASTRI ALVANDI
MASTRI ALVANDI

LAST REVISION 02-04-13
DATE PLOTTED => 13-FEB-2014
TIME PLOTTED => 13:43

BORDER LAST REVISED 7/2/2010
USERNAME => s130875
DGN FILE => 0300000223ka010.dgn
RELATIVE BORDER SCALE IS IN INCHES 0 1 2 3
UNIT 0337
PROJECT NUMBER & PHASE 03000002231

Dist	COUNTY	ROUTE	POST MILES TOTAL PROJECT	SHEET No.	TOTAL SHEETS
03	ED	89	8.6/13.8	104	231

Jack R. Cowell Jr. 11-18-13
REGISTERED CIVIL ENGINEER DATE

11-18-13
PLANS APPROVAL DATE

REGISTERED PROFESSIONAL ENGINEER
JACK COWELL
No. 65521
Exp. 9-30-15
CIVIL
STATE OF CALIFORNIA

THE STATE OF CALIFORNIA OR ITS OFFICERS OR AGENTS SHALL NOT BE RESPONSIBLE FOR THE ACCURACY OR COMPLETENESS OF SCANNED COPIES OF THIS PLAN SHEET.

POSITIVE POTHOLE AND ED LOCATIONS

No.	UTILITY	STATION	OFFSET	DEPTH (FT)	ELEVATION
PH-36	TELEPHONE	602+28.55	18.36 Lt	2.33	6257.358
PH-37	TELEPHONE	602+28.54	17.77 Lt	2.33	6257.426

UTILITY PLAN

SCALE: 1" = 100'

APPROVED FOR UTILITY INFORMATION ONLY

U-11

STATE OF CALIFORNIA - DEPARTMENT OF TRANSPORTATION
Caltrans®
DESIGN

FUNCTIONAL SUPERVISOR: MASTRI ALVANDI
CALCULATED-DESIGNED BY: JACK COWELL
CHECKED BY: MASTRI ALVANDI
REVISED BY
DATE REVISED

LAST REVISION 02-04-13
DATE PLOTTED => 13-FEB-2014
TIME PLOTTED => 13:43

Dist	COUNTY	ROUTE	POST MILES TOTAL PROJECT	SHEET No.	TOTAL SHEETS
03	ED	89	8.6/13.8	105	231

Jack R. Cowell Jr. 11-18-13
REGISTERED CIVIL ENGINEER DATE

11-18-13
PLANS APPROVAL DATE

REGISTERED PROFESSIONAL ENGINEER
JACK COWELL
No. 65521
Exp. 9-30-15
CIVIL
STATE OF CALIFORNIA

THE STATE OF CALIFORNIA OR ITS OFFICERS OR AGENTS SHALL NOT BE RESPONSIBLE FOR THE ACCURACY OR COMPLETENESS OF SCANNED COPIES OF THIS PLAN SHEET.

CONFLICT LOCATION 14
+01.6, 25.5' Lt
RELOCATE TEL POLE

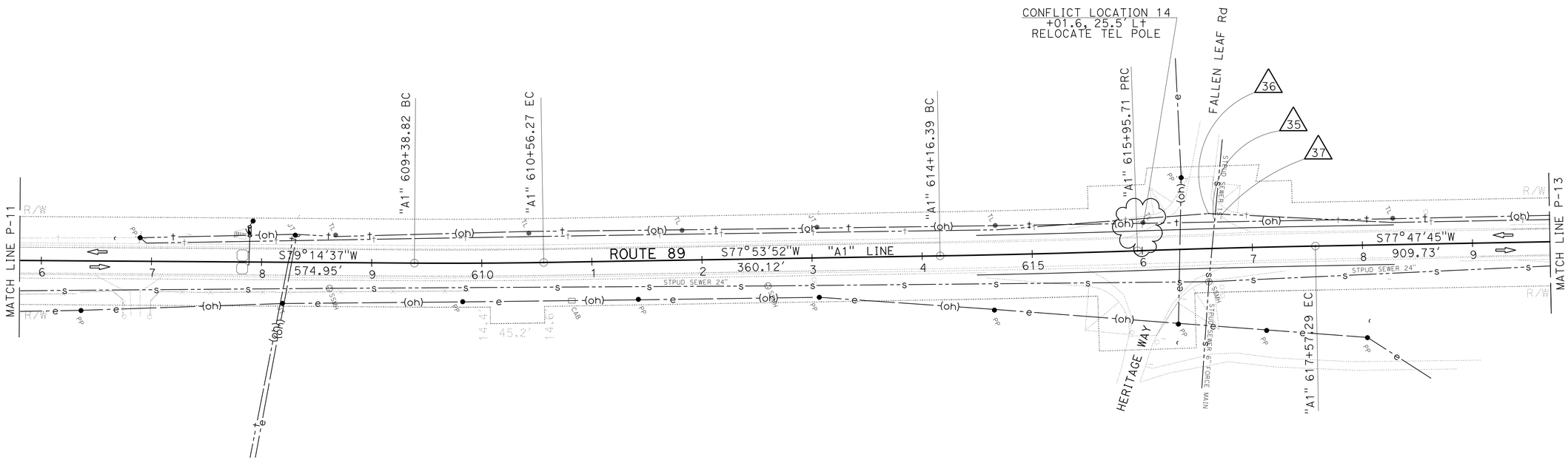

POLE CONFLICT AND RELOCATION

No.	UTILITY	STATION	OFFSET	DEPTH (FT)	ELEVATION
ED-35	TELEPHONE	616+65.40	31.09 Lt	10.83	6263.99
ED-36	TELEPHONE	616+61.08	31.85 Lt	4.00	6270.78
ED-37	TELEPHONE	616+73.26	30.79 Lt	4.00	6270.71

UTILITY PLAN

SCALE: 1" = 100'

U-12

APPROVED FOR UTILITY INFORMATION ONLY

CALCULATED-DESIGNED BY
CHECKED BY
JACK COWELL
MASTRI ALVANDI
REVISED BY
DATE REVISED
FUNCTIONAL SUPERVISOR
MASTRI ALVANDI
STATE OF CALIFORNIA - DEPARTMENT OF TRANSPORTATION
DESIGN

LAST REVISION 02-04-13
DATE PLOTTED => 13-FEB-2014
TIME PLOTTED => 13:43

BORDER LAST REVISED 7/2/2010
USERNAME => s130875
DGN FILE => 0300000223ka012.dgn
RELATIVE BORDER SCALE IS IN INCHES 0 1 2 3
UNIT 0337
PROJECT NUMBER & PHASE 03000002231

Dist	COUNTY	ROUTE	POST MILES TOTAL PROJECT	SHEET No.	TOTAL SHEETS
03	ED	89	8.6/13.8	106	231

Jack R. Cowell Jr. 11-18-13
REGISTERED CIVIL ENGINEER DATE

11-18-13
PLANS APPROVAL DATE

JACK COWELL No. 65521 Exp. 9-30-15 CIVIL — REGISTERED PROFESSIONAL ENGINEER — STATE OF CALIFORNIA

THE STATE OF CALIFORNIA OR ITS OFFICERS OR AGENTS SHALL NOT BE RESPONSIBLE FOR THE ACCURACY OR COMPLETENESS OF SCANNED COPIES OF THIS PLAN SHEET.

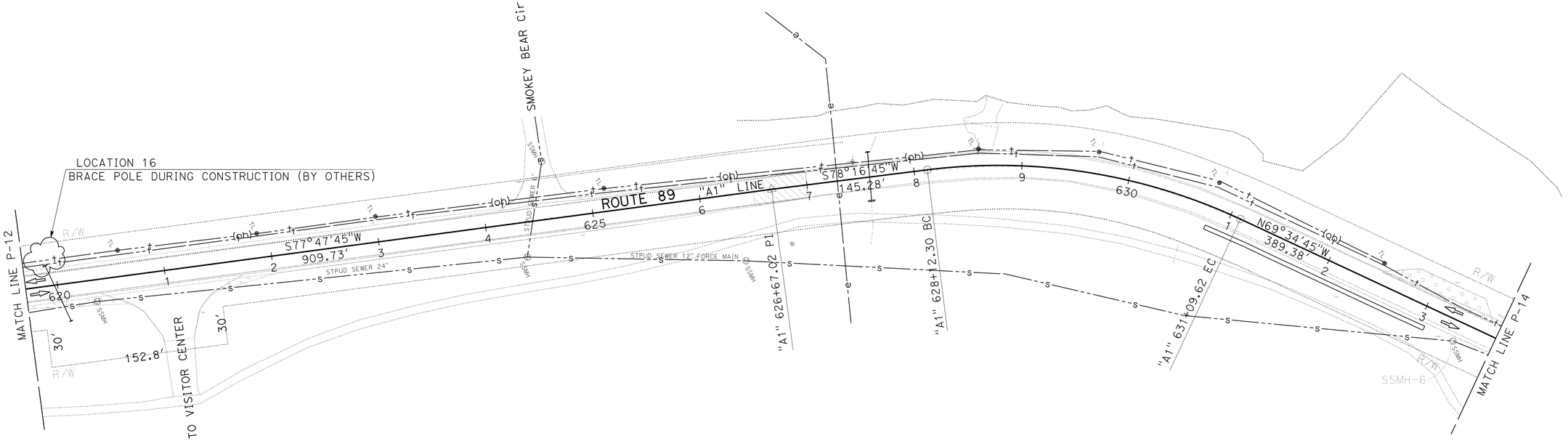

UTILITY PLAN

SCALE: 1" = 100'

APPROVED FOR UTILITY INFORMATION ONLY

U-13

LAST REVISION 02-04-13 | DATE PLOTTED => 13-FEB-2014 | TIME PLOTTED => 13:43

REVISED BY	DATE REVISED

CALCULATED-DESIGNED BY: JACK COWELL
CHECKED BY: MASTRI ALVANDI
FUNCTIONAL SUPERVISOR: MASTRI ALVANDI

STATE OF CALIFORNIA - DEPARTMENT OF TRANSPORTATION
Caltrans®
DESIGN

BORDER LAST REVISED 7/2/2010 | USERNAME => s130875 | DGN FILE => 0300000223ka013.dgn | RELATIVE BORDER SCALE IS IN INCHES 0 1 2 3 | UNIT 0337 | PROJECT NUMBER & PHASE 03000002231

Dist	COUNTY	ROUTE	POST MILES TOTAL PROJECT	SHEET No.	TOTAL SHEETS
03	ED	89	8.6/13.8	107	231

Kris M. Albers 11-18-13
REGISTERED CIVIL ENGINEER DATE

11-18-13
PLANS APPROVAL DATE

REGISTERED PROFESSIONAL ENGINEER
KRIS M. ALBERS
No. 49986
Exp. 6-30-15
CIVIL
STATE OF CALIFORNIA

THE STATE OF CALIFORNIA OR ITS OFFICERS OR AGENTS SHALL NOT BE RESPONSIBLE FOR THE ACCURACY OR COMPLETENESS OF SCANNED COPIES OF THIS PLAN SHEET.

STATIONARY MOUNTED CONSTRUCTION AREA SIGNS

SIGN LOCATION					SIGN CODE		PANEL SIZE	SIGN MESSAGE	NUMBER OF POST AND SIZE	NUMBER OF SIGNS
DESCRIPTION	FACING TRAFFIC									
	NB	SB	EB	WB	FEDERAL	CALIFORNIA				
ON ROUTE 50/89 140'± SOUTH OF THE LIMIT LINE AT INTERSECTION WITH LAKE TAHOE Blvd	1					CSP-1	60" x 42"	89 NORTH ROAD WORK NEXT 5 MILES	2 - 4" x 6"	1
ON ROUTE 50 250'± EAST OF THE LIMIT LINE AT INTERSECTION WITH ROUTE 89 NORTH				1		CSP-1	60" x 42"	89 NORTH ROAD WORK NEXT 5 MILES	2 - 4" x 6"	1
ON LAKE TAHOE Blvd 100'± WEST OF THE LIMIT LINE AT INTERSECTION WITH ROUTE 50/89			1			CSP-1	60" x 42"	89 NORTH ROAD WORK NEXT 5 MILES	2 - 4" x 6"	1
STATION "A1" 446+90	1					C40(Mod)	48" x 36"	TRAFFIC FINES DOUBLED IN WORK ZONES	1 - 4" x 6"	1
STATION "A1" 446+90		1			G20-2	C14	36" x 18"	END ROAD WORK	1 - 4" x 4"	1
STATION "A1" 713+00		1			G20-1[Spec](5)		60" x 30"	ROAD WORK NEXT 5 MILES	2 - 4" x 4"	1
STATION "A1" 711+00		1				C40(Mod)	48" x 36"	TRAFFIC FINES DOUBLED IN WORK ZONES	1 - 4" x 6"	1
STATION "A1" 711+00	1				G20-2	C14	36" x 18"	END ROAD WORK	1 - 4" x 4"	1
TUCKER AVENUE				1	G20-2	C14	36" x 18"	END ROAD WORK	1 - 4" x 4"	1
TUCKER AVENUE			1		W20-1	C23	36" x 36"	ROAD WORK AHEAD	1 - 4" x 6"	1
FIFTH STREET			1	1	W20-1	C23	36" x 36"	ROAD WORK AHEAD	1 - 4" x 6"	2
FIFTH STREET			1	1	G20-2	C14	36" x 18"	END ROAD WORK	1 - 4" x 4"	2
SEVENTH STREET				1	W20-1	C23	36" x 36"	ROAD WORK AHEAD	1 - 4" x 6"	1
SEVENTH STREET			1		G20-2	C14	36" x 18"	END ROAD WORK	1 - 4" x 4"	1
EIGHTH STREET			1		W20-1	C23	36" x 36"	ROAD WORK AHEAD	1 - 4" x 6"	1
EIGHTH STREET				1	G20-2	C14	36" x 18"	END ROAD WORK	1 - 4" x 4"	1
TENTH STREET			1	1	W20-1	C23	36" x 36"	ROAD WORK AHEAD	1 - 4" x 6"	2
TENTH STREET			1	1	G20-2	C14	36" x 18"	END ROAD WORK	1 - 4" x 4"	2
ELEVENTH STREET				1	W20-1	C23	36" x 36"	ROAD WORK AHEAD	1 - 4" x 6"	1
ELEVENTH STREET			1		G20-2	C14	36" x 18"	END ROAD WORK	1 - 4" x 4"	1
TWELFTH STREET				1	W20-1	C23	36" x 36"	ROAD WORK AHEAD	1 - 4" x 6"	1
TWELFTH STREET			1		G20-2	C14	36" x 18"	END ROAD WORK	1 - 4" x 4"	1
THIRTEENTH STREET			1	1	W20-1	C23	36" x 36"	ROAD WORK AHEAD	1 - 4" x 6"	2
THIRTEENTH STREET			1	1	G20-2	C14	36" x 18"	END ROAD WORK	1 - 4" x 4"	2
FIFTEENTH STREET			1	1	W20-1	C23	36" x 36"	ROAD WORK AHEAD	1 - 4" x 6"	2
FIFTEENTH STREET			1	1	G20-2	C14	36" x 18"	END ROAD WORK	1 - 4" x 4"	2
LUKINS WAY				1	W20-1	C23	36" x 36"	ROAD WORK AHEAD	1 - 4" x 6"	1
LUKINS WAY			1		G20-2	C14	36" x 18"	END ROAD WORK	1 - 4" x 4"	1
WEST WAY				1	W20-1	C23	36" x 36"	ROAD WORK AHEAD	1 - 4" x 6"	1
WEST WAY			1		G20-2	C14	36" x 18"	END ROAD WORK	1 - 4" x 4"	1
POPE BEACH ROAD				1	W20-1	C23	36" x 36"	ROAD WORK AHEAD	1 - 4" x 6"	1
POPE BEACH ROAD			1		G20-2	C14	36" x 18"	END ROAD WORK	1 - 4" x 4"	1

NOTE:

"A1" LINE STATION VALUES INDICATED ARE APPROXIMATE.
EXACT SIGN LOCATION TO BE DETERMINED BY THE ENGINEER.

APPROVED FOR CONSTRUCTION AREA SIGN WORK ONLY

CONSTRUCTION AREA SIGNS

CS-1

REVISED BY | DATE REVISED
JACK KEMMERLY | KRIS ALBERS
CALCULATED-DESIGNED BY | CHECKED BY
FUNCTIONAL SUPERVISOR: SERGIO ACEVES
STATE OF CALIFORNIA - DEPARTMENT OF TRANSPORTATION
Caltrans
TRAFFIC

LAST REVISION 9-13-13
DATE PLOTTED => 13-FEB-2014
TIME PLOTTED => 13:43

Dist	COUNTY	ROUTE	POST MILES TOTAL PROJECT	SHEET No.	TOTAL SHEETS
03	ED	89	8.6/13.8	108	231

Kris M. Albers 11-18-13
REGISTERED CIVIL ENGINEER DATE

11-18-13
PLANS APPROVAL DATE

REGISTERED PROFESSIONAL ENGINEER
KRIS M. ALBERS
No. 49986
Exp. 6-30-15
CIVIL
STATE OF CALIFORNIA

THE STATE OF CALIFORNIA OR ITS OFFICERS OR AGENTS SHALL NOT BE RESPONSIBLE FOR THE ACCURACY OR COMPLETENESS OF SCANNED COPIES OF THIS PLAN SHEET.

STATIONARY MOUNTED CONSTRUCTION AREA SIGNS (CONTINUED)

SIGN LOCATION					SIGN CODE		PANEL SIZE	SIGN MESSAGE	NUMBER OF POST AND SIZE	NUMBER OF SIGNS
DESCRIPTION	FACING TRAFFIC									
	NB	SB	EB	WB	FEDERAL	CALIFORNIA				
JAMESON BEACH ROAD				1	W20-1	C23	36" x 36"	ROAD WORK AHEAD	1 - 4" x 6"	1
JAMESON BEACH ROAD			1		G20-2	C14	36" x 18"	END ROAD WORK	1 - 4" x 4"	1
VALHALLA ROAD				1	W20-1	C23	36" x 36"	ROAD WORK AHEAD	1 - 4" x 6"	1
VALHALLA ROAD			1		G20-2	C14	36" x 18"	END ROAD WORK	1 - 4" x 4"	1
HERITAGE WAY				1	W20-1	C23	36" x 36"	ROAD WORK AHEAD	1 - 4" x 6"	1
HERITAGE WAY			1		G20-2	C14	36" x 18"	END ROAD WORK	1 - 4" x 4"	1
FALLEN LEAF ROAD			1		W20-1	C23	36" x 36"	ROAD WORK AHEAD	1 - 4" x 6"	1
FALLEN LEAF ROAD				1	G20-2	C14	36" x 18"	END ROAD WORK	1 - 4" x 4"	1
TAHOE VISITORS CENTER ROAD				1	W20-1	C23	36" x 36"	ROAD WORK AHEAD	1 - 4" x 6"	1
TAHOE VISITORS CENTER ROAD			1		G20-2	C14	36" x 18"	END ROAD WORK	1 - 4" x 4"	1
CATHEDRAL ROAD			1		W20-1	C23	36" x 36"	ROAD WORK AHEAD	1 - 4" x 6"	1
CATHEDRAL ROAD				1	G20-2	C14	36" x 18"	END ROAD WORK	1 - 4" x 4"	1
BALDWIN BEACH ROAD				1	W20-1	C23	36" x 36"	ROAD WORK AHEAD	1 - 4" x 6"	1
BALDWIN BEACH ROAD			1		G20-2	C14	36" x 18"	END ROAD WORK	1 - 4" x 4"	1
MT TALLAC ROAD			1		W20-1	C23	36" x 36"	ROAD WORK AHEAD	1 - 4" x 6"	1
MT TALLAC ROAD				1	G20-2	C14	36" x 18"	END ROAD WORK	1 - 4" x 4"	1
SPRING CREEK ROAD			1		W20-1	C23	36" x 36"	ROAD WORK AHEAD	1 - 4" x 6"	1
SPRING CREEK ROAD				1	G20-2	C14	36" x 18"	END ROAD WORK	1 - 4" x 4"	1

APPROVED FOR CONSTRUCTION AREA SIGN WORK ONLY

CONSTRUCTION AREA SIGNS

CS-2

REVISED BY | DATE REVISED
JACK KEMMERLY | KRIS ALBERS
CALCULATED-DESIGNED BY | CHECKED BY
FUNCTIONAL SUPERVISOR | SERGIO ACEVES
STATE OF CALIFORNIA - DEPARTMENT OF TRANSPORTATION | TRAFFIC

LAST REVISION 5-16-13 | DATE PLOTTED => 13-FEB-2014 | TIME PLOTTED => 13:43

BORDER LAST REVISED 7/2/2010 | USERNAME => s130875 | DGN FILE => 03000002231a002.dgn | RELATIVE BORDER SCALE IS IN INCHES 0 1 2 3 | UNIT 0390 | PROJECT NUMBER & PHASE 03000002231

Dist	COUNTY	ROUTE	POST MILES TOTAL PROJECT	SHEET No.	TOTAL SHEETS
03	ED	89	8.6/13.8	109	231

Kris M. Albers 11-18-13
REGISTERED CIVIL ENGINEER DATE

11-18-13
PLANS APPROVAL DATE

REGISTERED PROFESSIONAL ENGINEER
KRIS M. ALBERS
No. 49986
Exp. 6-30-15
CIVIL
STATE OF CALIFORNIA

THE STATE OF CALIFORNIA OR ITS OFFICERS OR AGENTS SHALL NOT BE RESPONSIBLE FOR THE ACCURACY OR COMPLETENESS OF SCANNED COPIES OF THIS PLAN SHEET.

CSP-1<CA>

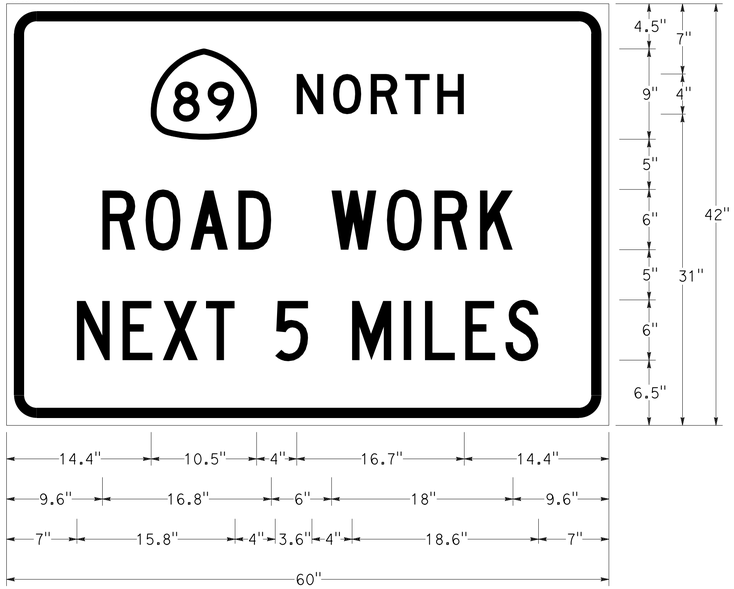

1" BORDER WITH 3" RADIUS and ¾" INDENT
ORANGE BACKGROUND WITH
BLACK LEGEND AND BORDER
G28-1(89)<CA>, "NORTH" D
"ROAD WORK" C
"NEXT 5 MILES" C

G20-1[Spec](5)

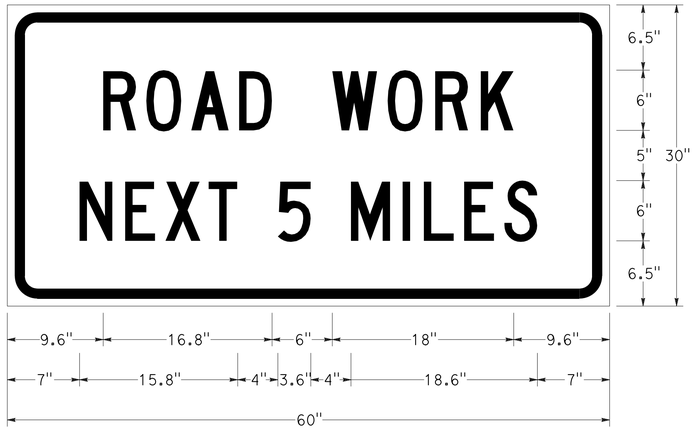

1" BORDER WITH 3" RADIUS and ¾" INDENT
ORANGE BACKGROUND WITH
BLACK LEGEND AND BORDER
"ROAD WORK" C
"NEXT 5 MILES" C

C40(Mod)<CA>

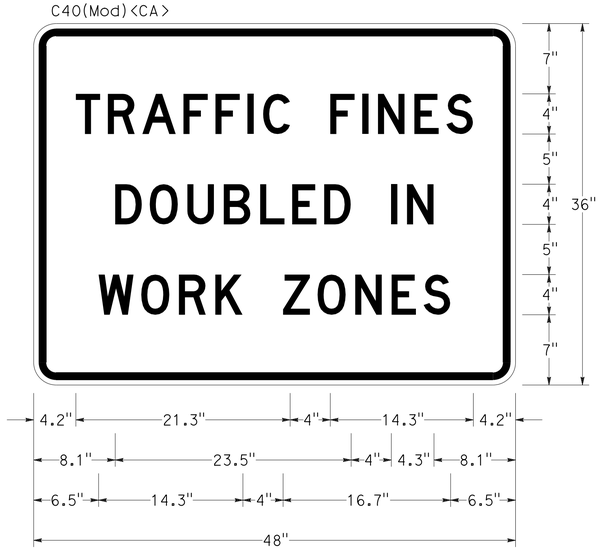

¾" BORDER WITH 2¼" RADIUS and ½" INDENT
RETROREFLECTIVE WHITE BACKGROUND
WITH BLACK LEGEND AND BORDER
"TRAFFIC FINES" D
"DOUBLED IN" D
"WORK ZONES" D

CONSTRUCTION AREA SIGNS

CS-3

REVISED BY | DATE REVISED
JACK KEMMERLY | KRIS ALBERS
CALCULATED-DESIGNED BY | CHECKED BY
FUNCTIONAL SUPERVISOR: SERGIO ACEVES
STATE OF CALIFORNIA - DEPARTMENT OF TRANSPORTATION
Caltrans®
TRAFFIC

LAST REVISION 9-13-13 | DATE PLOTTED => 13-FEB-2014 | TIME PLOTTED => 13:43

Dist	COUNTY	ROUTE	POST MILES TOTAL PROJECT	SHEET No.	TOTAL SHEETS
03	ED	89	8.6/13.8	110	231

Jack R. Cowell Jr. 11-18-13
REGISTERED CIVIL ENGINEER DATE

11-18-13
PLANS APPROVAL DATE

JACK COWELL No. 65521 Exp. 9-30-15 CIVIL — REGISTERED PROFESSIONAL ENGINEER — STATE OF CALIFORNIA

THE STATE OF CALIFORNIA OR ITS OFFICERS OR AGENTS SHALL NOT BE RESPONSIBLE FOR THE ACCURACY OR COMPLETENESS OF SCANNED COPIES OF THIS PLAN SHEET.

NOTE:

1. USE STANDARD PLAN T13 FOR TEMPORARY TRAFFIC CONTROL
2. TEMPORARY RAILING (TYPE K) TO BE PIN CONNECTED
3. EXACT PLACEMENT OF STAGE CONSTRUCTION ITEMS TO BE DETERMINED IN THE FIELD BY THE ENGINEER.
4. STAGE-1A TO BE COMPLETED BEFORE STAGE-1.

LEGEND:

- Temp WIDENING
- CONSTRUCT THIS PHASE
- CHANNELIZER (SURFACE MOUNTED) PER T13 STANDARD PLAN
- TYPE-III BARRICADES
- TEMPORARY CRASH CUSHION (TYPE-U-11)
- TRAFFIC FLOW

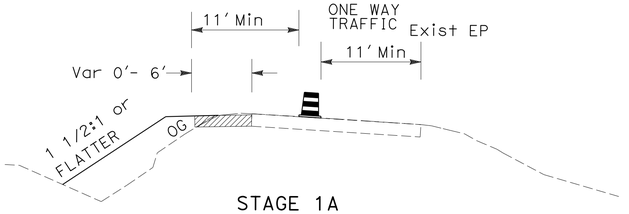

STAGE 1A
ONE WAY REVERSIBLE CONTROL

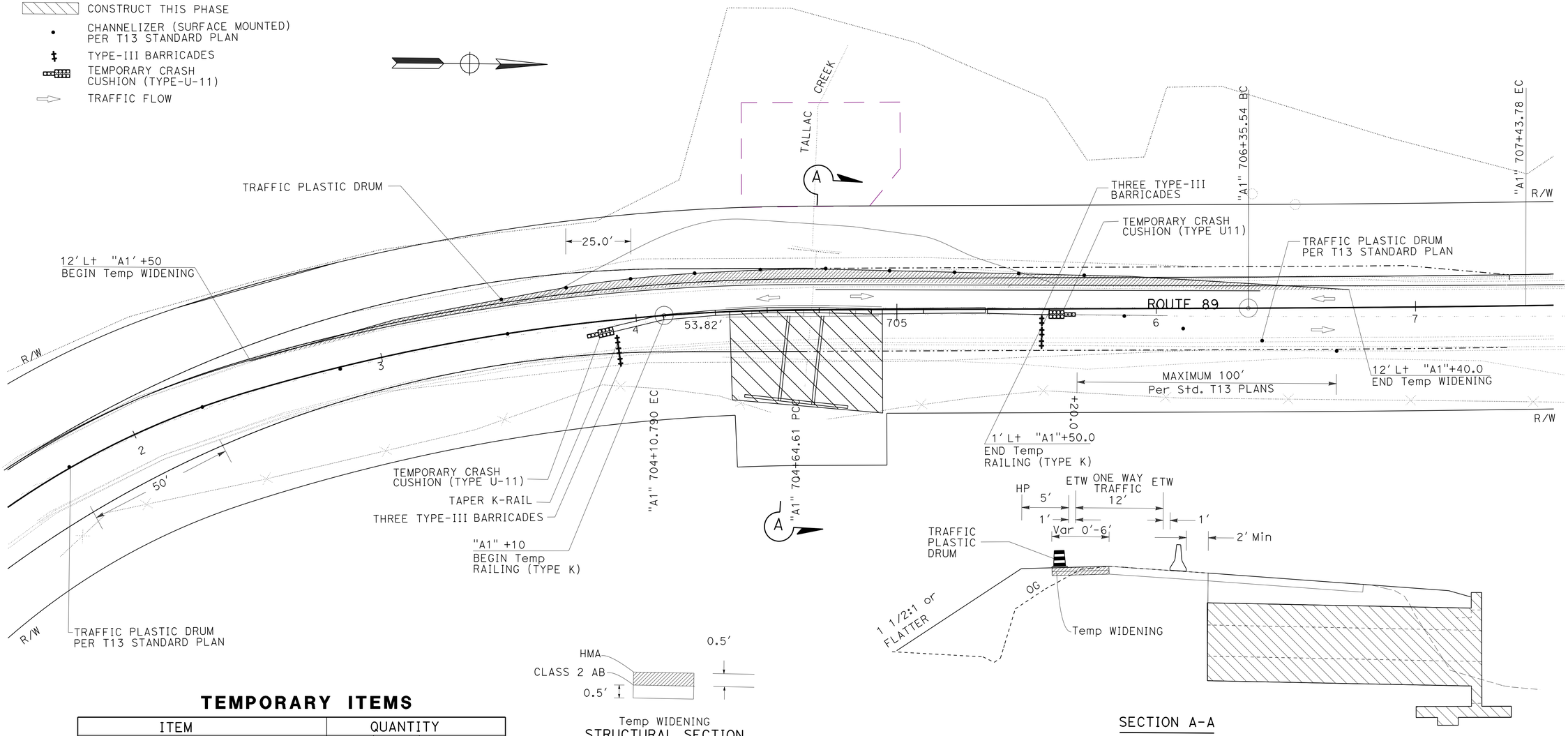

Temp WIDENING
STRUCTURAL SECTION

SECTION A-A

TEMPORARY ITEMS

ITEM	QUANTITY		
	SC-1	SC-2	TOTAL
HOT MIX ASPHALT (TYPE A)	68.7		68.7 TONS*
CLASS 2 AB	102.2		102.2 CY
TYPE III BARRICADES	6	——	6 EA
Temp RAILING (TYPE K)	160	——	160 FT
TRAFFIC PLASTIC DRUMS	20	20	20 EA
TEMPORARY CRASH CUSHION (TYPE U11)	2	2	2 EA

* FOR TOTAL QUANTITIES FOR HOT MIX ASPHALT (TYPE A) SEE Q-1.

STAGE CONSTRUCTION ONE WAY REVERSIBLE TRAFFIC CONTROL STAGE-1

NO SCALE

SC-1

REVISED BY | DATE REVISED
JACK COWELL | MASTRI ALVANDI
CALCULATED-DESIGNED BY | CHECKED BY
FUNCTIONAL SUPERVISOR: MASTRI ALVANDI
STATE OF CALIFORNIA - DEPARTMENT OF TRANSPORTATION
DESIGN
Caltrans

LAST REVISION 02-04-13 | DATE PLOTTED => 13-FEB-2014 | TIME PLOTTED => 13:43

BORDER LAST REVISED 7/2/2010 | USERNAME => s130875 | DGN FILE => 0300000223ma001.dgn | RELATIVE BORDER SCALE IS IN INCHES 0 1 2 3 | UNIT 0337 | PROJECT NUMBER & PHASE 03000002231

Dist	COUNTY	ROUTE	POST MILES TOTAL PROJECT	SHEET No.	TOTAL SHEETS
03	ED	89	8.6/13.8	111	231

Jack R. Cowell Jr. 11-18-13
REGISTERED CIVIL ENGINEER DATE

11-18-13
PLANS APPROVAL DATE

REGISTERED PROFESSIONAL ENGINEER
JACK COWELL
No. 65521
Exp. 9-30-15
CIVIL
STATE OF CALIFORNIA

THE STATE OF CALIFORNIA OR ITS OFFICERS OR AGENTS SHALL NOT BE RESPONSIBLE FOR THE ACCURACY OR COMPLETENESS OF SCANNED COPIES OF THIS PLAN SHEET.

NOTE:

1. USE STANDARD PLAN T13 FOR TEMPORARY TRAFFIC CONTROL
2. TEMPORARY RAILING (TYPE K) TO BE PIN CONNECTED
3. EXACT PLACEMENT OF STAGE CONSTRUCTION ITEMS TO BE DETERMINED IN THE FIELD BY THE ENGINEER.

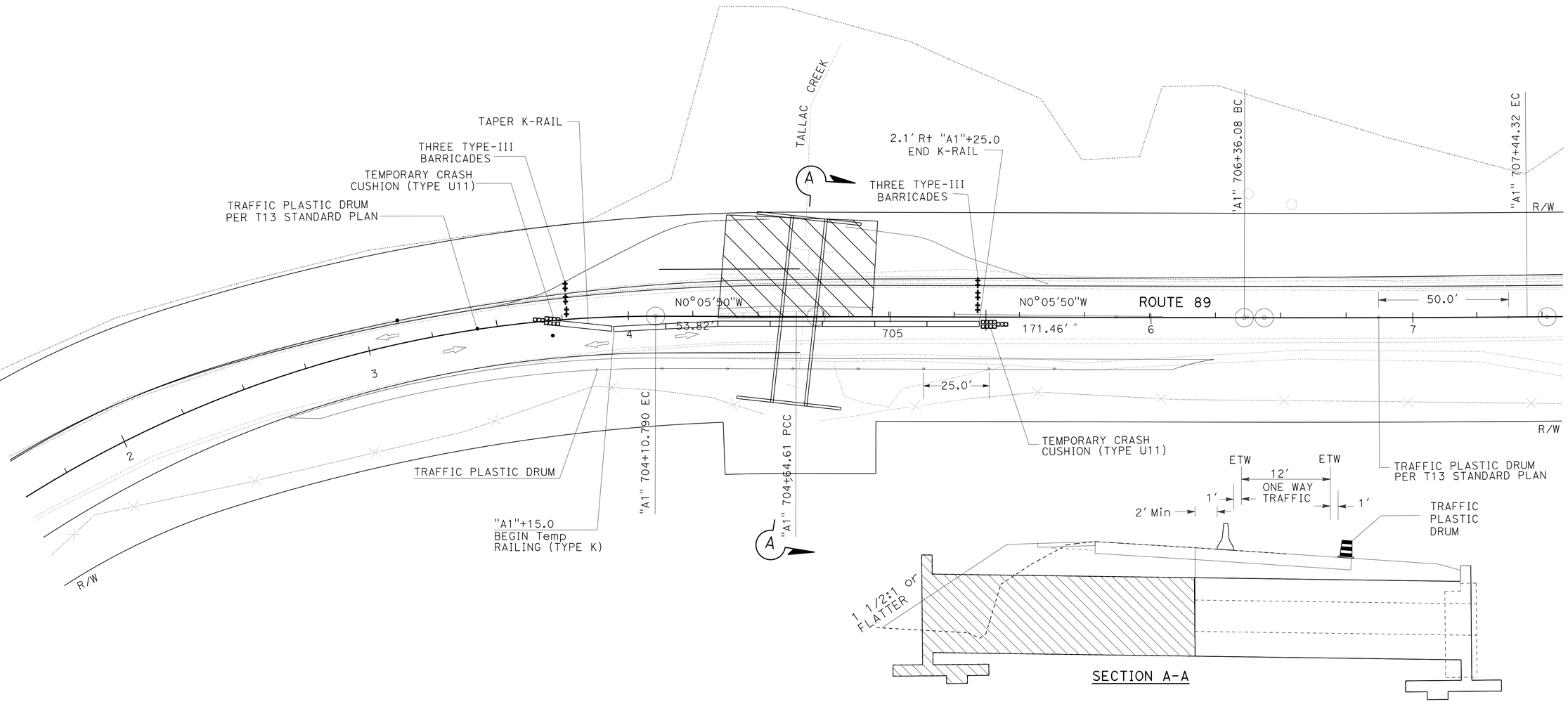

STAGE CONSTRUCTION
ONE WAY REVERSIBLE TRAFFIC CONTROL
STAGE-2

NO SCALE

SC-2

REVISED BY | DATE REVISED
JACK COWELL | MASTRI ALVANDI
CALCULATED-DESIGNED BY | CHECKED BY
FUNCTIONAL SUPERVISOR: MASTRI ALVANDI

STATE OF CALIFORNIA - DEPARTMENT OF TRANSPORTATION
Caltrans® DESIGN

LAST REVISION 02-04-13 | DATE PLOTTED => 13-FEB-2014 | TIME PLOTTED => 13:43

BORDER LAST REVISED 7/2/2010 | USERNAME => s130875 | DGN FILE => 0300000223ma002.dgn | RELATIVE BORDER SCALE IS IN INCHES 0 1 2 3 | UNIT 0337 | PROJECT NUMBER & PHASE 03000002231

Dist	COUNTY	ROUTE	POST MILES TOTAL PROJECT	SHEET No.	TOTAL SHEETS
03	ED	89	8.6/13.8	112	231

Kris M Albers 11-18-13
REGISTERED CIVIL ENGINEER DATE

11-18-13
PLANS APPROVAL DATE

KRIS M. ALBERS No. 49986 Exp. 6-30-15 CIVIL — REGISTERED PROFESSIONAL ENGINEER — STATE OF CALIFORNIA

THE STATE OF CALIFORNIA OR ITS OFFICERS OR AGENTS SHALL NOT BE RESPONSIBLE FOR THE ACCURACY OR COMPLETENESS OF SCANNED COPIES OF THIS PLAN SHEET.

NOTES:

1. ALL DELINEATORS (CLASS 2) SHALL BE TYPE E UNLESS OTHERWISE SHOWN.
2. ALL DELINEATORS (CLASS 2) SHALL BE PLACED ON 100′ CENTERS UNLESS OTHERWISE SHOWN.
3. TWLTL = TWO-WAY LEFT TURN LANE.
4. FOR ADDITIONAL MEDIAN STRIPING LAYOUT INFORMATION, SEE PAVEMENT DELINEATION DETAILS.

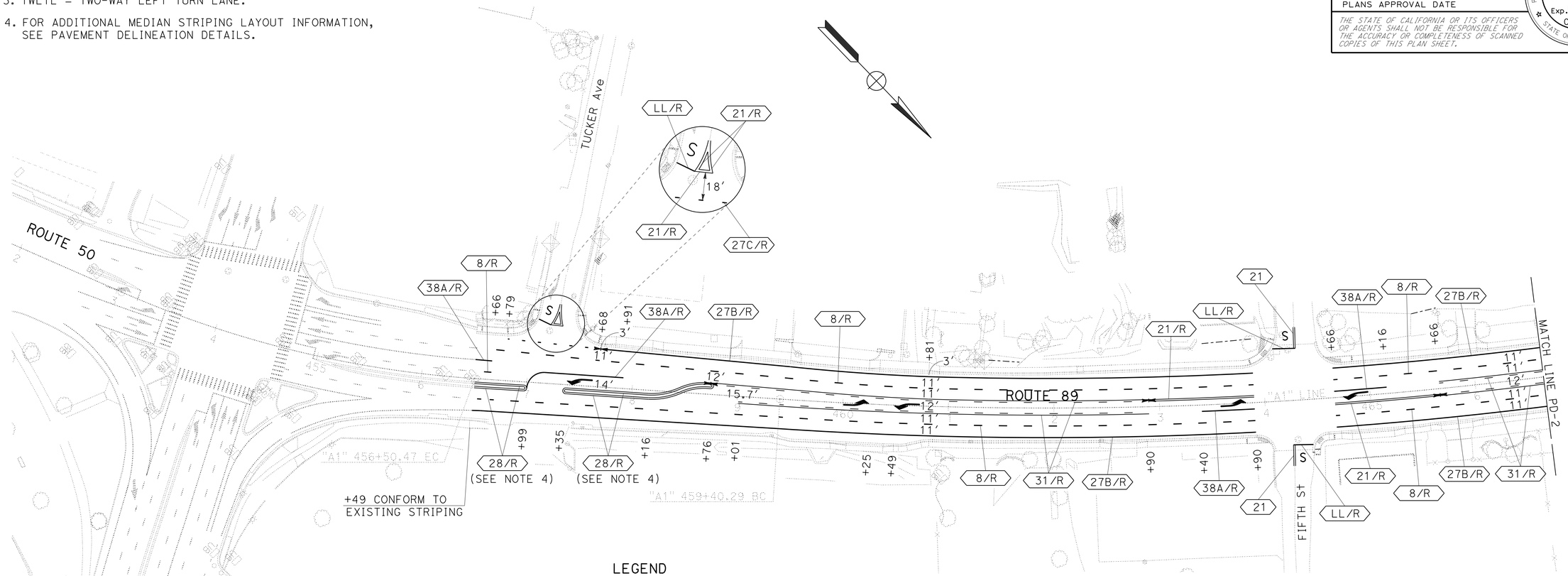

LEGEND

No.	PAVEMENT DELINEATION DETAIL NUMBER
No./R	PAVEMENT DELINEATION DETAIL NUMBER R = RECESSED THERMOPLASTIC TRAFFIC STRIPE
LL/R	LIMIT LINE R = RECESSED THERMOPLASTIC PAVEMENT MARKING
CCW/R	CONTINENTAL CROSSWALK R = RECESSED THERMOPLASTIC PAVEMENT MARKING
	CHANGE IN STRIPING PATTERN
S	"STOP" PAVEMENT MARKING
P	"PED" PAVEMENT MARKING
X	"XING" PAVEMENT MARKING
	TYPE III ARROW
	TYPE VI ARROW
	DELINEATOR (CLASS 2)
s=	DELINEATOR SPACING
	HIGHWAY POST MARKER

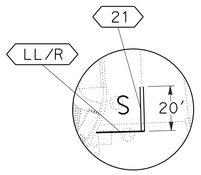

INTERSECTION DETAIL (Typ)
NOT TO SCALE

FIFTH STREET
SEVENTH STREET
EIGHTH STREET
TENTH STREET
ELEVENTH STREET
TWELFTH STREET
THIRTEENTH STREET
FIFTEENTH STREET
LUKINS WAY
WEST WAY

PAVEMENT DELINEATION PLAN

SCALE: 1"=50′

PD-1

APPROVED FOR PAVEMENT DELINEATION WORK ONLY

STATE OF CALIFORNIA - DEPARTMENT OF TRANSPORTATION
Caltrans® TRAFFIC

FUNCTIONAL SUPERVISOR: SERGIO ACEVES
CALCULATED-DESIGNED BY: JACK KEMMERLY
CHECKED BY: KRIS ALBERS
REVISED BY
DATE REVISED

LAST REVISION DATE PLOTTED => 13-FEB-2014
TIME PLOTTED => 13:43

Dist	COUNTY	ROUTE	POST MILES TOTAL PROJECT	SHEET No.	TOTAL SHEETS
03	ED	89	8.6/13.8	113	231

Kris M Albers 11-18-13
REGISTERED CIVIL ENGINEER DATE

11-18-13
PLANS APPROVAL DATE

REGISTERED PROFESSIONAL ENGINEER
KRIS M. ALBERS
No. 49986
Exp. 6-30-15
CIVIL
STATE OF CALIFORNIA

THE STATE OF CALIFORNIA OR ITS OFFICERS OR AGENTS SHALL NOT BE RESPONSIBLE FOR THE ACCURACY OR COMPLETENESS OF SCANNED COPIES OF THIS PLAN SHEET.

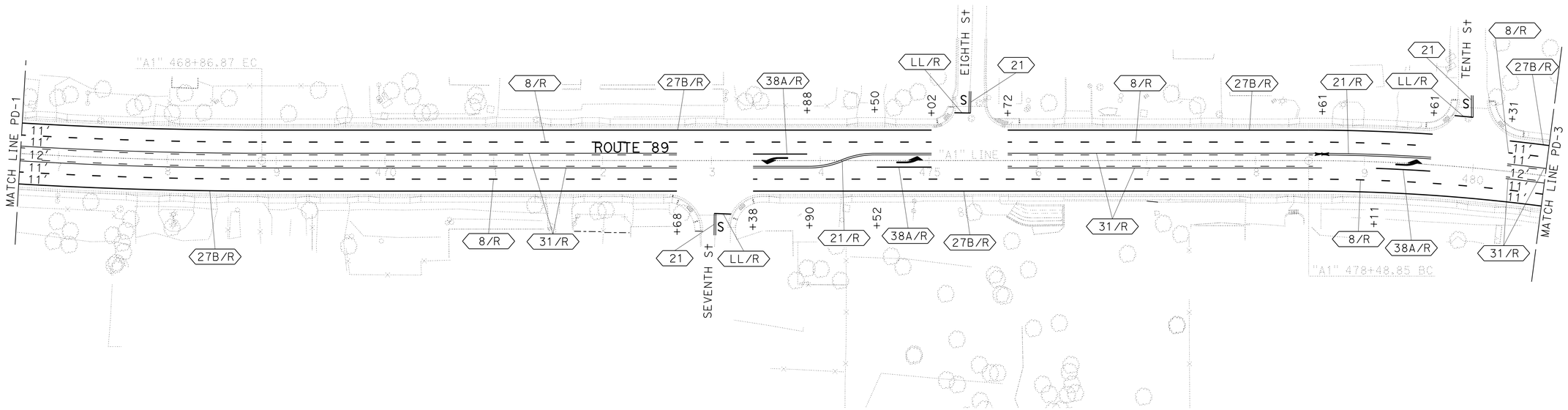

PAVEMENT DELINEATION PLAN

SCALE: 1"=50'

PD-2

APPROVED FOR PAVEMENT DELINEATION WORK ONLY

CALCULATED-DESIGNED BY: JACK KEMMERLY
CHECKED BY: KRIS ALBERS
REVISED BY
DATE REVISED
FUNCTIONAL SUPERVISOR: SERGIO ACEVES
STATE OF CALIFORNIA - DEPARTMENT OF TRANSPORTATION
Caltrans®
TRAFFIC

LAST REVISION 9-13-13
DATE PLOTTED => 13-FEB-2014
TIME PLOTTED => 13:43

Dist	COUNTY	ROUTE	POST MILES TOTAL PROJECT	SHEET No.	TOTAL SHEETS
03	ED	89	8.6/13.8	114	231

Kris M. Albers 11-18-13
REGISTERED CIVIL ENGINEER DATE

11-18-13
PLANS APPROVAL DATE

REGISTERED PROFESSIONAL ENGINEER
KRIS M. ALBERS
No. 49986
Exp. 6-30-15
CIVIL
STATE OF CALIFORNIA

THE STATE OF CALIFORNIA OR ITS OFFICERS OR AGENTS SHALL NOT BE RESPONSIBLE FOR THE ACCURACY OR COMPLETENESS OF SCANNED COPIES OF THIS PLAN SHEET.

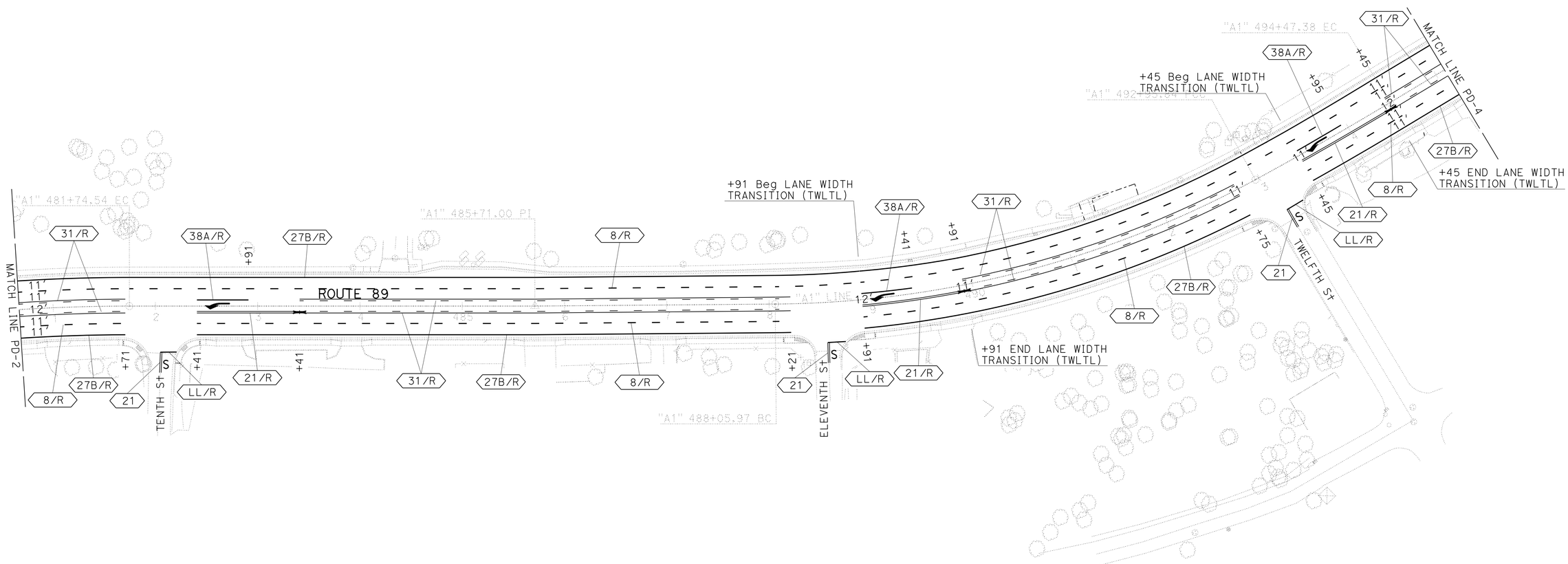

PAVEMENT DELINEATION PLAN

SCALE: 1"=50'

PD-3

APPROVED FOR PAVEMENT DELINEATION WORK ONLY

STATE OF CALIFORNIA - DEPARTMENT OF TRANSPORTATION
TRAFFIC

FUNCTIONAL SUPERVISOR: SERGIO ACEVES
CALCULATED-DESIGNED BY: JACK KEMMERLY
CHECKED BY: KRIS ALBERS

REVISED BY	DATE REVISED

LAST REVISION: DATE PLOTTED => 13-FEB-2014; TIME PLOTTED => 13:43

BORDER LAST REVISED 7/2/2010

USERNAME => s130875
DGN FILE => 0300000223na003.dgn

RELATIVE BORDER SCALE IS IN INCHES 0 1 2 3

UNIT 0390

PROJECT NUMBER & PHASE 03000002231

Dist	COUNTY	ROUTE	POST MILES TOTAL PROJECT	SHEET No.	TOTAL SHEETS
03	ED	89	8.6/13.8	115	231

Kris M. Albers 11-18-13
REGISTERED CIVIL ENGINEER DATE

11-18-13
PLANS APPROVAL DATE

REGISTERED PROFESSIONAL ENGINEER
KRIS M. ALBERS
No. 49986
Exp. 6-30-15
CIVIL
STATE OF CALIFORNIA

THE STATE OF CALIFORNIA OR ITS OFFICERS OR AGENTS SHALL NOT BE RESPONSIBLE FOR THE ACCURACY OR COMPLETENESS OF SCANNED COPIES OF THIS PLAN SHEET.

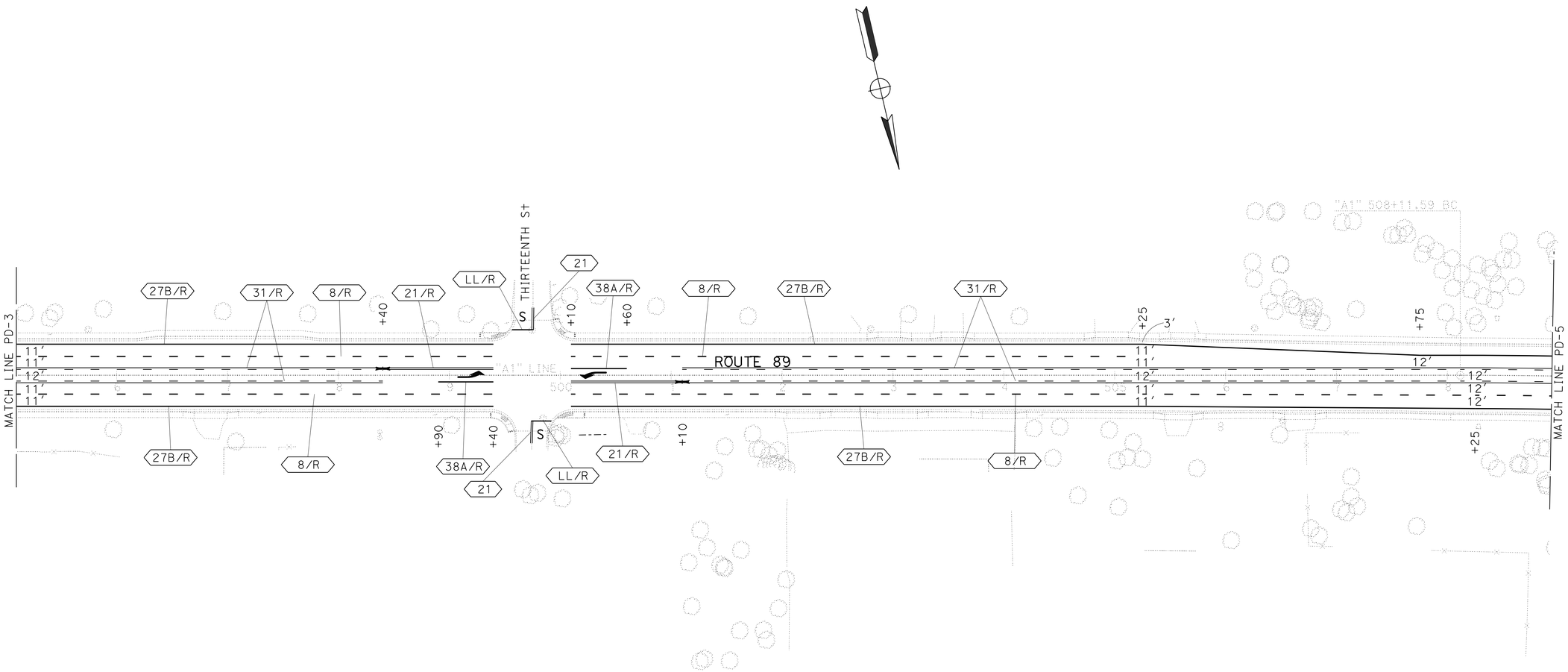

APPROVED FOR PAVEMENT DELINEATION WORK ONLY

PAVEMENT DELINEATION PLAN

SCALE: 1"=50'

PD-4

CALCULATED-DESIGNED BY	REVISED BY
JACK KEMMERLY	
CHECKED BY	DATE REVISED
KRIS ALBERS	

FUNCTIONAL SUPERVISOR
SERGIO ACEVES

STATE OF CALIFORNIA - DEPARTMENT OF TRANSPORTATION
Caltrans®
TRAFFIC

LAST REVISION
DATE PLOTTED => 13-FEB-2014
TIME PLOTTED => 13:43
9-13-13

Dist	COUNTY	ROUTE	POST MILES TOTAL PROJECT	SHEET No.	TOTAL SHEETS
03	ED	89	8.6/13.8	116	231

Kris M Albers 11-18-13
REGISTERED CIVIL ENGINEER DATE

11-18-13
PLANS APPROVAL DATE

REGISTERED PROFESSIONAL ENGINEER
KRIS M. ALBERS
No. 49986
Exp. 6-30-15
CIVIL
STATE OF CALIFORNIA

THE STATE OF CALIFORNIA OR ITS OFFICERS OR AGENTS SHALL NOT BE RESPONSIBLE FOR THE ACCURACY OR COMPLETENESS OF SCANNED COPIES OF THIS PLAN SHEET.

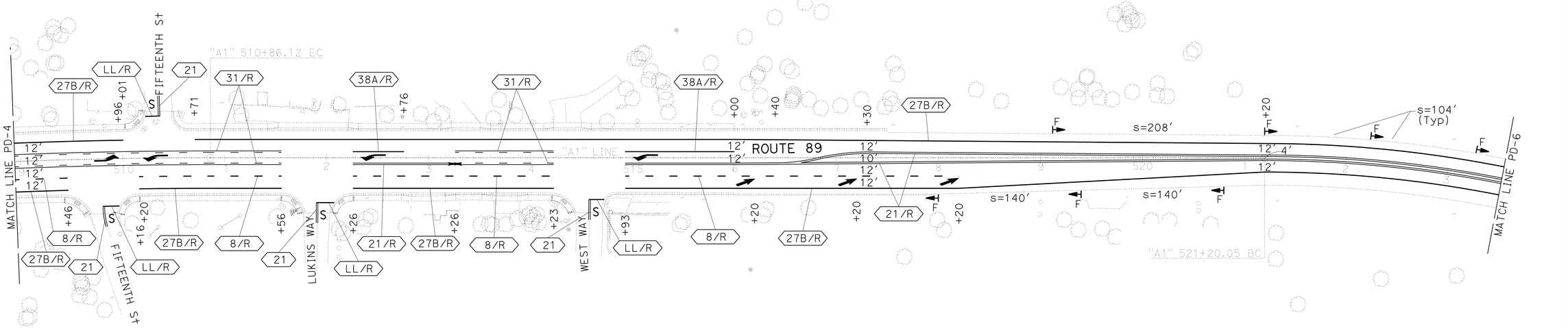

PAVEMENT DELINEATION PLAN

SCALE: 1"=50′

PD-5

APPROVED FOR PAVEMENT DELINEATION WORK ONLY

STATE OF CALIFORNIA - DEPARTMENT OF TRANSPORTATION
Caltrans®
TRAFFIC

FUNCTIONAL SUPERVISOR: SERGIO ACEVES

CALCULATED-DESIGNED BY: JACK KEMMERLY
CHECKED BY: KRIS ALBERS

REVISED BY	DATE REVISED

LAST REVISION: DATE PLOTTED => 13-FEB-2014; TIME PLOTTED => 13:43; 9-13-13

BORDER LAST REVISED 7/2/2010

USERNAME => s130875
DGN FILE => 0300000223na005.dgn

RELATIVE BORDER SCALE IS IN INCHES 0 1 2 3

UNIT 0390

PROJECT NUMBER & PHASE 03000002231

Dist	COUNTY	ROUTE	POST MILES TOTAL PROJECT	SHEET No.	TOTAL SHEETS
03	ED	89	8.6/13.8	117	231

Kris M Albers 11-18-13
REGISTERED CIVIL ENGINEER DATE

11-18-13
PLANS APPROVAL DATE

REGISTERED PROFESSIONAL ENGINEER
KRIS M. ALBERS
No. 49986
Exp. 6-30-15
CIVIL
STATE OF CALIFORNIA

THE STATE OF CALIFORNIA OR ITS OFFICERS OR AGENTS SHALL NOT BE RESPONSIBLE FOR THE ACCURACY OR COMPLETENESS OF SCANNED COPIES OF THIS PLAN SHEET.

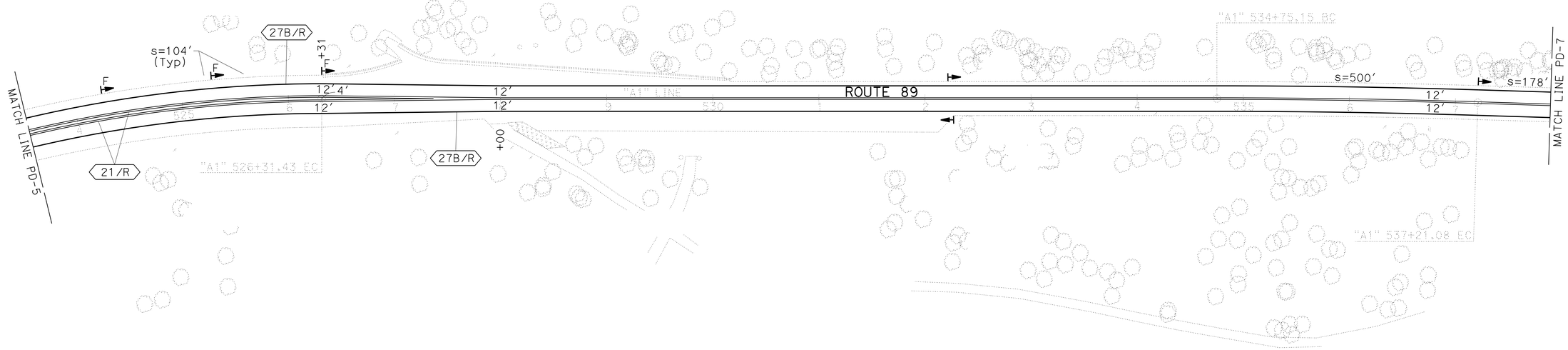

APPROVED FOR PAVEMENT DELINEATION WORK ONLY

PAVEMENT DELINEATION PLAN

SCALE: 1"=50'

PD-6

CALCULATED-DESIGNED BY	JACK KEMMERLY
CHECKED BY	KRIS ALBERS
FUNCTIONAL SUPERVISOR	SERGIO ACEVES
REVISED BY	
DATE REVISED	

STATE OF CALIFORNIA - DEPARTMENT OF TRANSPORTATION
Caltrans®
TRAFFIC

LAST REVISION DATE PLOTTED => 13-FEB-2014
10-16-13 TIME PLOTTED => 13:43

BORDER LAST REVISED 7/2/2010

USERNAME => s130875
DGN FILE => 0300000223na006.dgn

RELATIVE BORDER SCALE IS IN INCHES 0 1 2 3

UNIT 0390

PROJECT NUMBER & PHASE 03000002231

Dist	COUNTY	ROUTE	POST MILES TOTAL PROJECT	SHEET No.	TOTAL SHEETS
03	ED	89	8.6/13.8	118	231

Kris M. Albers 11-18-13
REGISTERED CIVIL ENGINEER DATE

11-18-13
PLANS APPROVAL DATE

REGISTERED PROFESSIONAL ENGINEER
KRIS M. ALBERS
No. 49986
Exp. 6-30-15
CIVIL
STATE OF CALIFORNIA

THE STATE OF CALIFORNIA OR ITS OFFICERS OR AGENTS SHALL NOT BE RESPONSIBLE FOR THE ACCURACY OR COMPLETENESS OF SCANNED COPIES OF THIS PLAN SHEET.

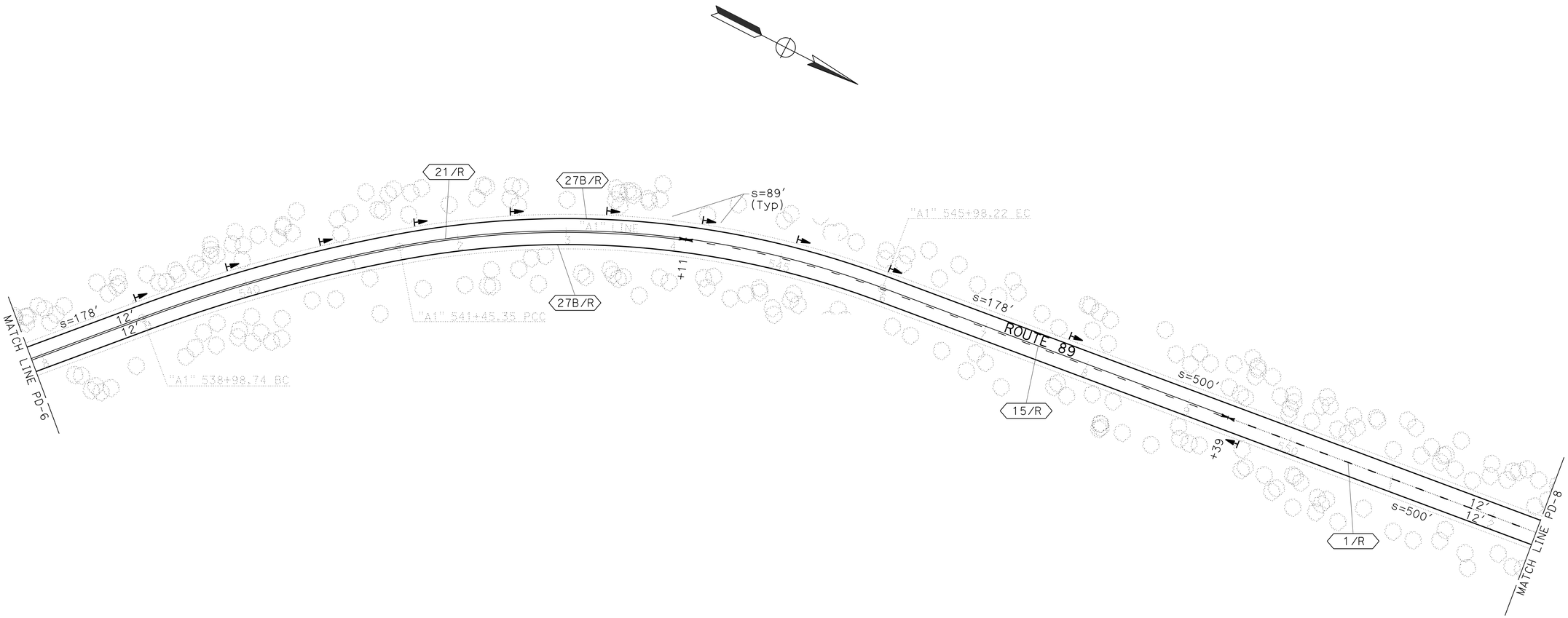

APPROVED FOR PAVEMENT DELINEATION WORK ONLY

PAVEMENT DELINEATION PLAN

SCALE: 1"=50'

PD-7

REVISED BY	DATE REVISED

CALCULATED-DESIGNED BY: JACK KEMMERLY
CHECKED BY: KRIS ALBERS
FUNCTIONAL SUPERVISOR: SERGIO ACEVES

STATE OF CALIFORNIA - DEPARTMENT OF TRANSPORTATION
Caltrans®
TRAFFIC

LAST REVISION 10-16-13
DATE PLOTTED => 13-FEB-2014
TIME PLOTTED => 13:43

Dist	COUNTY	ROUTE	POST MILES TOTAL PROJECT	SHEET No.	TOTAL SHEETS
03	ED	89	8.6/13.8	119	231

Kris M. Albers 11-18-13
REGISTERED CIVIL ENGINEER DATE

11-18-13
PLANS APPROVAL DATE

REGISTERED PROFESSIONAL ENGINEER
KRIS M. ALBERS
No. 49986
Exp. 6-30-15
CIVIL
STATE OF CALIFORNIA

THE STATE OF CALIFORNIA OR ITS OFFICERS OR AGENTS SHALL NOT BE RESPONSIBLE FOR THE ACCURACY OR COMPLETENESS OF SCANNED COPIES OF THIS PLAN SHEET.

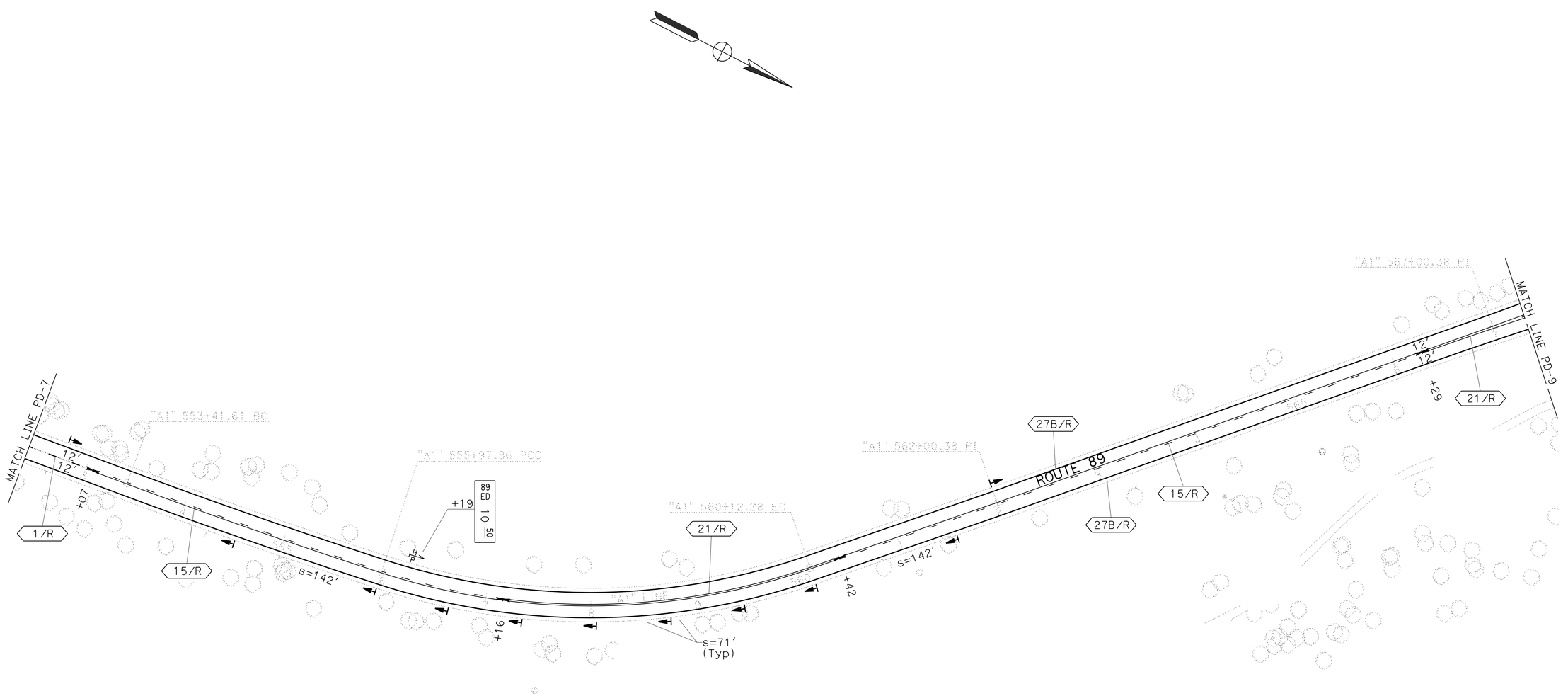

PAVEMENT DELINEATION PLAN

SCALE: 1"=50'

PD-8

APPROVED FOR PAVEMENT DELINEATION WORK ONLY

CALCULATED-DESIGNED BY
CHECKED BY

JACK KEMMERLY
KRIS ALBERS

REVISED BY
DATE REVISED

FUNCTIONAL SUPERVISOR
SERGIO ACEVES

STATE OF CALIFORNIA - DEPARTMENT OF TRANSPORTATION
Caltrans®
TRAFFIC

LAST REVISION
DATE PLOTTED => 13-FEB-2014
10-16-13 TIME PLOTTED => 13:44

BORDER LAST REVISED 7/2/2010

USERNAME => s130875
DGN FILE => 0300000223na008.dgn

RELATIVE BORDER SCALE IS IN INCHES 0 1 2 3

UNIT 0390

PROJECT NUMBER & PHASE 03000002231

Dist	COUNTY	ROUTE	POST MILES TOTAL PROJECT	SHEET No.	TOTAL SHEETS
03	ED	89	8.6/13.8	120	231

Kris M Albers 11-18-13
REGISTERED CIVIL ENGINEER DATE

11-18-13
PLANS APPROVAL DATE

REGISTERED PROFESSIONAL ENGINEER
KRIS M. ALBERS
No. 49986
Exp. 6-30-15
CIVIL
STATE OF CALIFORNIA

THE STATE OF CALIFORNIA OR ITS OFFICERS OR AGENTS SHALL NOT BE RESPONSIBLE FOR THE ACCURACY OR COMPLETENESS OF SCANNED COPIES OF THIS PLAN SHEET.

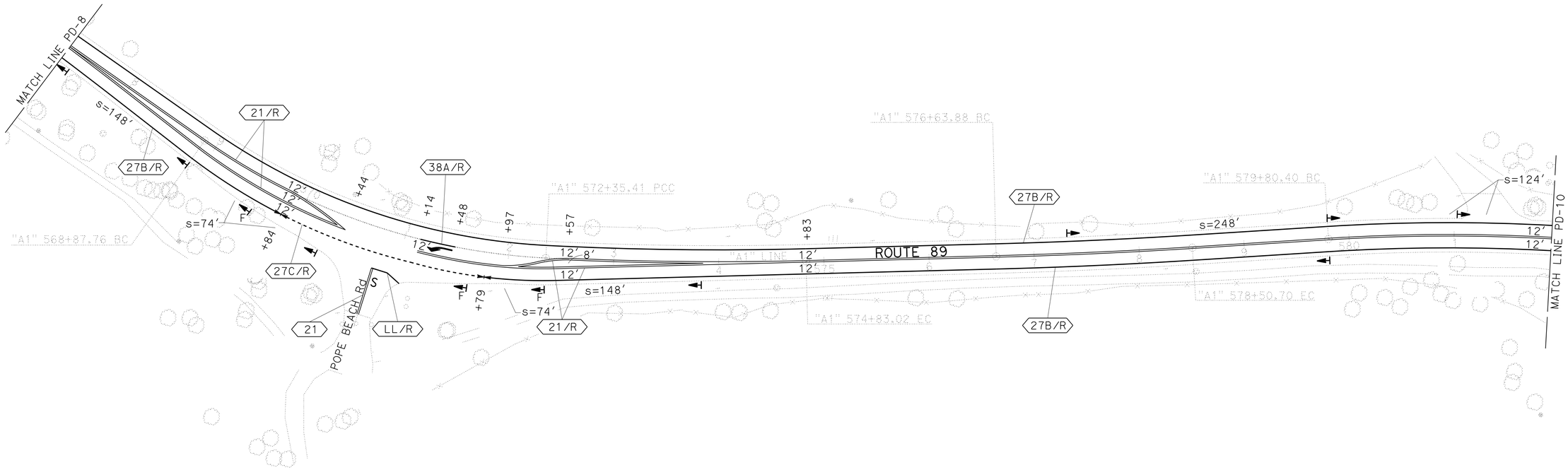

PAVEMENT DELINEATION PLAN

SCALE: 1"=50'

PD-9

APPROVED FOR PAVEMENT DELINEATION WORK ONLY

STATE OF CALIFORNIA - DEPARTMENT OF TRANSPORTATION
Caltrans®
TRAFFIC

FUNCTIONAL SUPERVISOR: SERGIO ACEVES

CALCULATED-DESIGNED BY: JACK KEMMERLY
CHECKED BY: KRIS ALBERS

REVISED BY	DATE REVISED

LAST REVISION
DATE PLOTTED => 13-FEB-2014
TIME PLOTTED => 13:44
10-23-13

Dist	COUNTY	ROUTE	POST MILES TOTAL PROJECT	SHEET No.	TOTAL SHEETS
03	ED	89	8.6/13.8	121	231

Kris M Albers 11-18-13
REGISTERED CIVIL ENGINEER DATE

11-18-13
PLANS APPROVAL DATE

REGISTERED PROFESSIONAL ENGINEER
KRIS M. ALBERS
No. 49986
Exp. 6-30-15
CIVIL
STATE OF CALIFORNIA

THE STATE OF CALIFORNIA OR ITS OFFICERS OR AGENTS SHALL NOT BE RESPONSIBLE FOR THE ACCURACY OR COMPLETENESS OF SCANNED COPIES OF THIS PLAN SHEET.

NOTE:

1. FOR ADDITIONAL CONTINENTAL CROSSWALK INFORMATION, SEE PAVEMENT DELINEATION DETAILS.

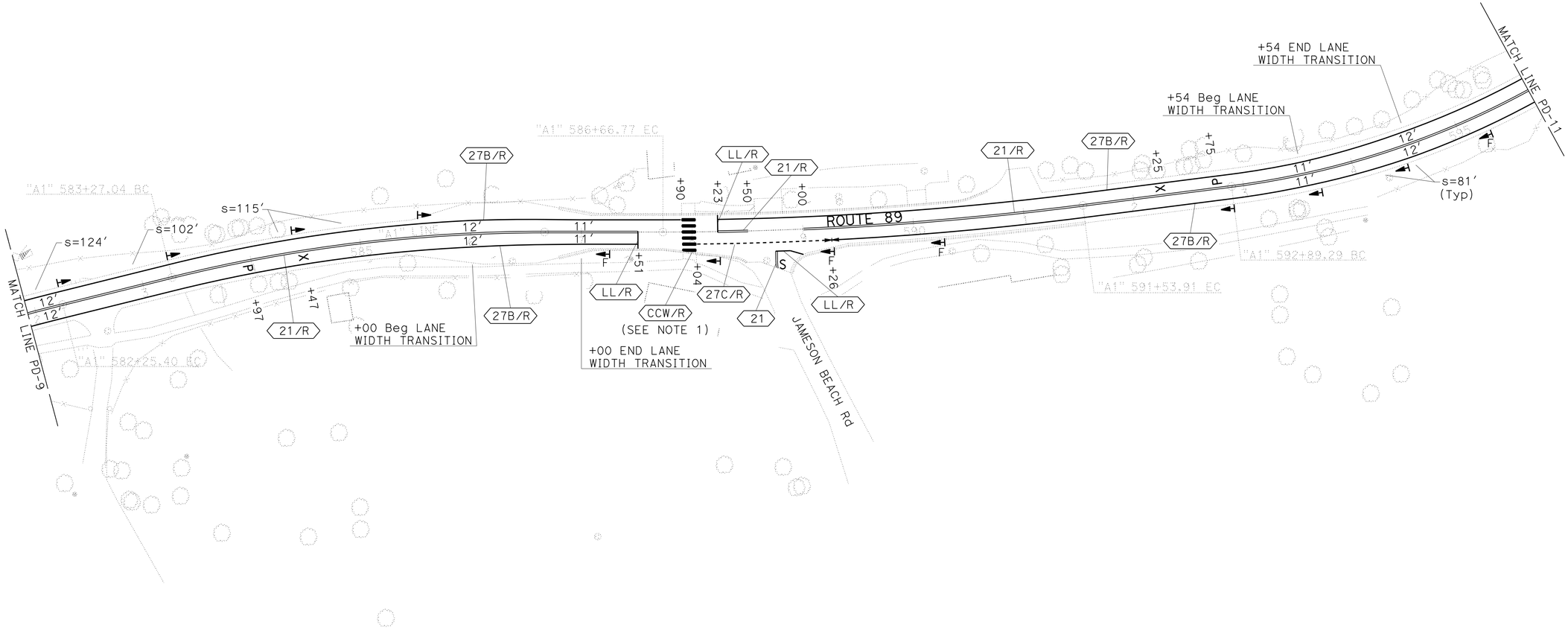

PAVEMENT DELINEATION PLAN

SCALE: 1"=50'

PD-10

APPROVED FOR PAVEMENT DELINEATION WORK ONLY

STATE OF CALIFORNIA - DEPARTMENT OF TRANSPORTATION
TRAFFIC

FUNCTIONAL SUPERVISOR: SERGIO ACEVES
CALCULATED-DESIGNED BY: JACK KEMMERLY
CHECKED BY: KRIS ALBERS
REVISED BY
DATE REVISED

LAST REVISION DATE PLOTTED => 13-FEB-2014
TIME PLOTTED => 13:44
10-23-13

BORDER LAST REVISED 7/2/2010

USERNAME => s130875
DGN FILE => 0300000223na010.dgn

RELATIVE BORDER SCALE IS IN INCHES 0 1 2 3

UNIT 0390

PROJECT NUMBER & PHASE 03000002231

Dist	COUNTY	ROUTE	POST MILES TOTAL PROJECT	SHEET No.	TOTAL SHEETS
03	ED	89	8.6/13.8	122	231

Kris M. Albers 11-18-13
REGISTERED CIVIL ENGINEER DATE

11-18-13
PLANS APPROVAL DATE

REGISTERED PROFESSIONAL ENGINEER
KRIS M. ALBERS
No. 49986
Exp. 6-30-15
CIVIL
STATE OF CALIFORNIA

THE STATE OF CALIFORNIA OR ITS OFFICERS OR AGENTS SHALL NOT BE RESPONSIBLE FOR THE ACCURACY OR COMPLETENESS OF SCANNED COPIES OF THIS PLAN SHEET.

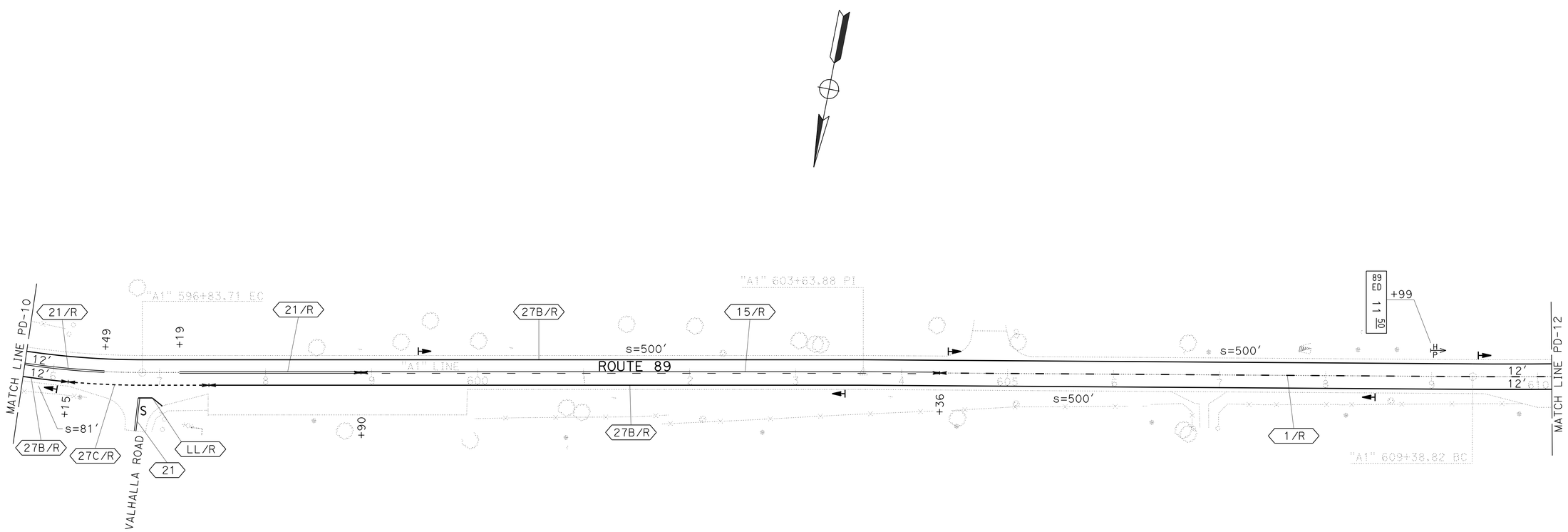

PAVEMENT DELINEATION PLAN

SCALE: 1"=50'

PD-11

APPROVED FOR PAVEMENT DELINEATION WORK ONLY

STATE OF CALIFORNIA - DEPARTMENT OF TRANSPORTATION
Caltrans
TRAFFIC

FUNCTIONAL SUPERVISOR: SERGIO ACEVES
CALCULATED-DESIGNED BY: JACK KEMMERLY
CHECKED BY: KRIS ALBERS
REVISED BY
DATE REVISED

LAST REVISION 10-23-13
DATE PLOTTED => 13-FEB-2014
TIME PLOTTED => 13:44

Dist	COUNTY	ROUTE	POST MILES TOTAL PROJECT	SHEET No.	TOTAL SHEETS
03	ED	89	8.6/13.8	123	231

Kris M. Albers 11-18-13
REGISTERED CIVIL ENGINEER DATE

11-18-13
PLANS APPROVAL DATE

REGISTERED PROFESSIONAL ENGINEER
KRIS M. ALBERS
No. 49986
Exp. 6-30-15
CIVIL
STATE OF CALIFORNIA

THE STATE OF CALIFORNIA OR ITS OFFICERS OR AGENTS SHALL NOT BE RESPONSIBLE FOR THE ACCURACY OR COMPLETENESS OF SCANNED COPIES OF THIS PLAN SHEET.

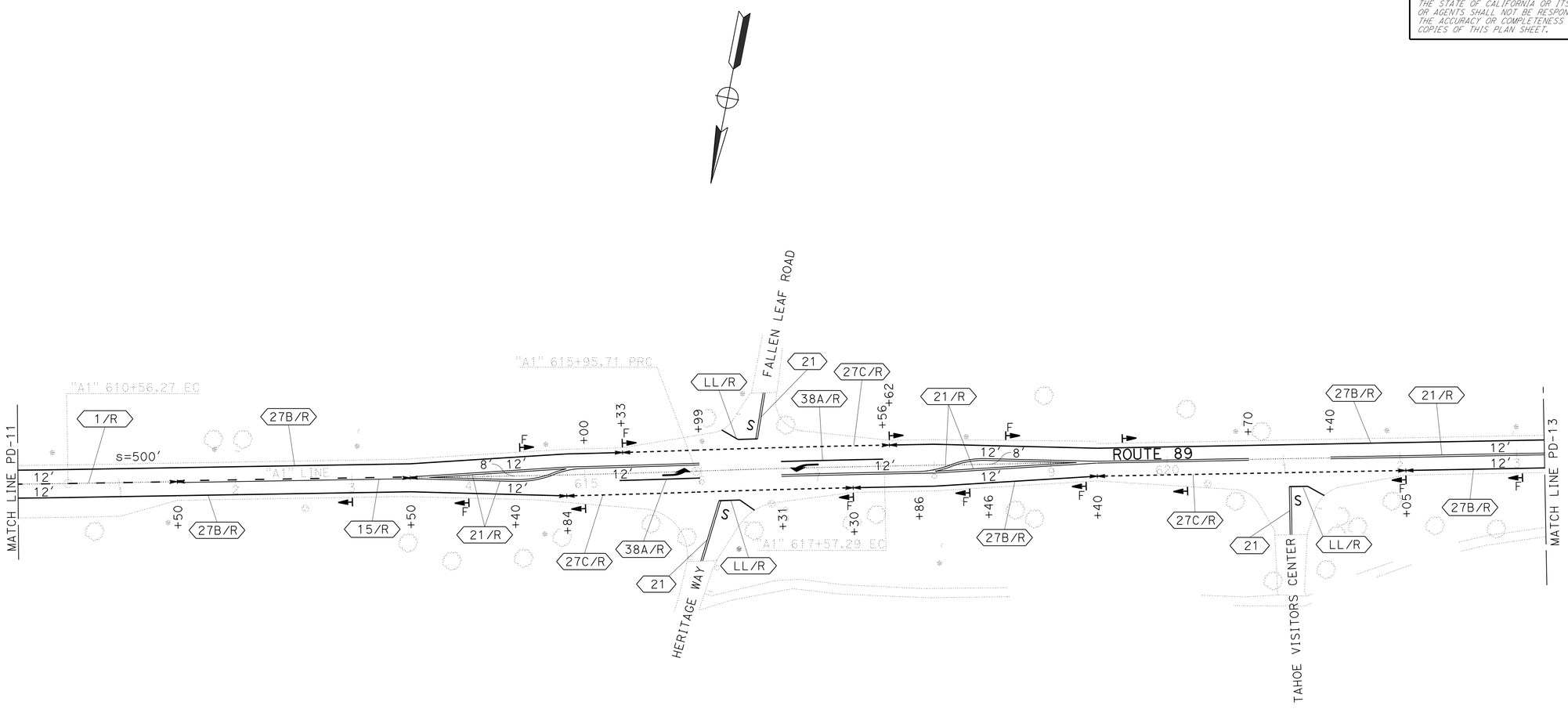

PAVEMENT DELINEATION PLAN

SCALE: 1"=50'

PD-12

APPROVED FOR PAVEMENT DELINEATION WORK ONLY

STATE OF CALIFORNIA - DEPARTMENT OF TRANSPORTATION
Caltrans®
TRAFFIC

FUNCTIONAL SUPERVISOR: SERGIO ACEVES

CALCULATED-DESIGNED BY: JACK KEMMERLY
CHECKED BY: KRIS ALBERS

REVISED BY	DATE REVISED

LAST REVISION
DATE PLOTTED => 13-FEB-2014
TIME PLOTTED => 13:44
10-23-13

BORDER LAST REVISED 7/2/2010

USERNAME => s130875
DGN FILE => 0300000223na012.dgn

RELATIVE BORDER SCALE IS IN INCHES 0 1 2 3

UNIT 0390

PROJECT NUMBER & PHASE 03000002231

Dist	COUNTY	ROUTE	POST MILES TOTAL PROJECT	SHEET No.	TOTAL SHEETS
03	ED	89	8.6/13.8	124	231

Kris M. Albers 11-18-13
REGISTERED CIVIL ENGINEER DATE

11-18-13
PLANS APPROVAL DATE

REGISTERED PROFESSIONAL ENGINEER
KRIS M. ALBERS
No. 49986
Exp. 6-30-15
CIVIL
STATE OF CALIFORNIA

THE STATE OF CALIFORNIA OR ITS OFFICERS OR AGENTS SHALL NOT BE RESPONSIBLE FOR THE ACCURACY OR COMPLETENESS OF SCANNED COPIES OF THIS PLAN SHEET.

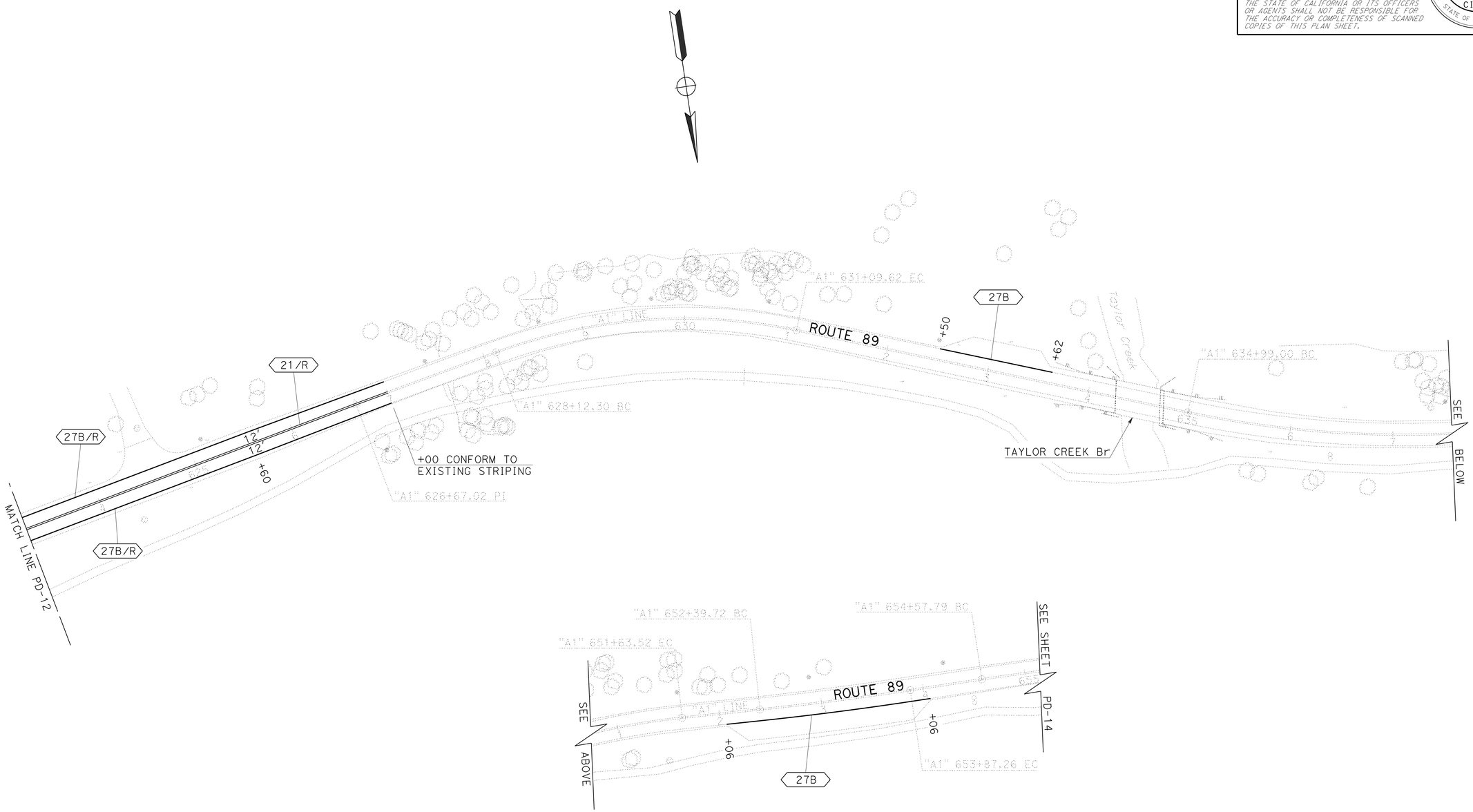

PAVEMENT DELINEATION PLAN

SCALE: 1"=50'

PD-13

APPROVED FOR PAVEMENT DELINEATION WORK ONLY

STATE OF CALIFORNIA - DEPARTMENT OF TRANSPORTATION
Caltrans
TRAFFIC

FUNCTIONAL SUPERVISOR: SERGIO ACEVES
CALCULATED-DESIGNED BY: JACK KEMMERLY
CHECKED BY: KRIS ALBERS
REVISED BY
DATE REVISED

LAST REVISION 9-19-13
DATE PLOTTED => 13-FEB-2014
TIME PLOTTED => 13:44

Dist	COUNTY	ROUTE	POST MILES TOTAL PROJECT	SHEET No.	TOTAL SHEETS
03	ED	89	8.6/13.8	125	231

Kris M. Albers 11-18-13
REGISTERED CIVIL ENGINEER DATE

11-18-13
PLANS APPROVAL DATE

REGISTERED PROFESSIONAL ENGINEER
KRIS M. ALBERS
No. 49986
Exp. 6-30-15
CIVIL
STATE OF CALIFORNIA

THE STATE OF CALIFORNIA OR ITS OFFICERS OR AGENTS SHALL NOT BE RESPONSIBLE FOR THE ACCURACY OR COMPLETENESS OF SCANNED COPIES OF THIS PLAN SHEET.

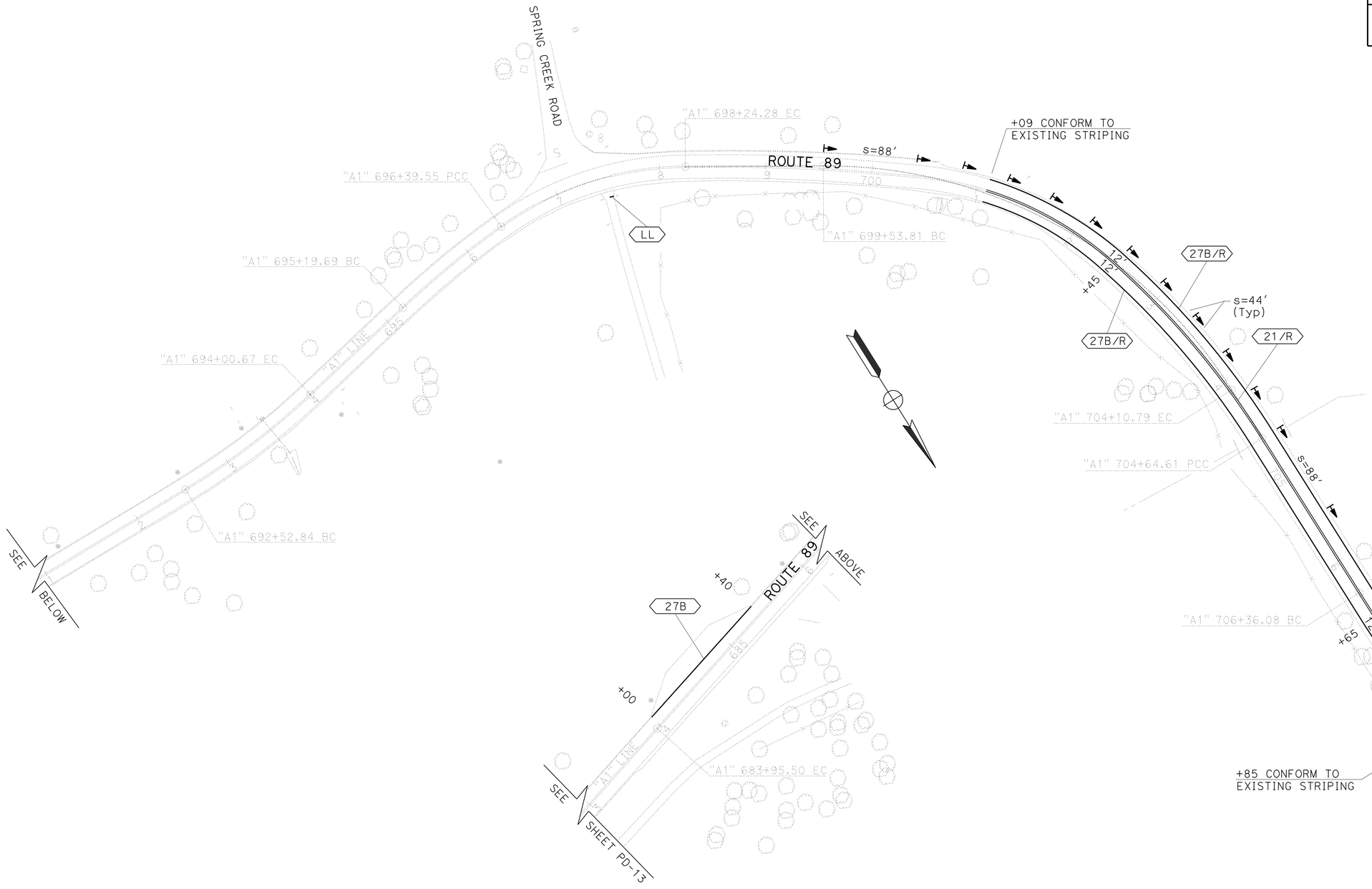

PAVEMENT DELINEATION PLAN

SCALE: 1"=50'

PD-14

APPROVED FOR PAVEMENT DELINEATION WORK ONLY

STATE OF CALIFORNIA - DEPARTMENT OF TRANSPORTATION	TRAFFIC
CALCULATED-DESIGNED BY	JACK KEMMERLY
CHECKED BY	KRIS ALBERS
FUNCTIONAL SUPERVISOR	SERGIO ACEVES
REVISED BY	
DATE REVISED	

LAST REVISION
DATE PLOTTED => 13-FEB-2014
TIME PLOTTED => 13:44
9-20-13

Dist	COUNTY	ROUTE	POST MILES TOTAL PROJECT	SHEET No.	TOTAL SHEETS
03	ED	89	8.6/13.8	126	231

Kris M. Albers 11-18-13
REGISTERED CIVIL ENGINEER DATE

11-18-13
PLANS APPROVAL DATE

REGISTERED PROFESSIONAL ENGINEER
KRIS M. ALBERS
No. 49986
Exp. 6-30-15
CIVIL
STATE OF CALIFORNIA

THE STATE OF CALIFORNIA OR ITS OFFICERS OR AGENTS SHALL NOT BE RESPONSIBLE FOR THE ACCURACY OR COMPLETENESS OF SCANNED COPIES OF THIS PLAN SHEET.

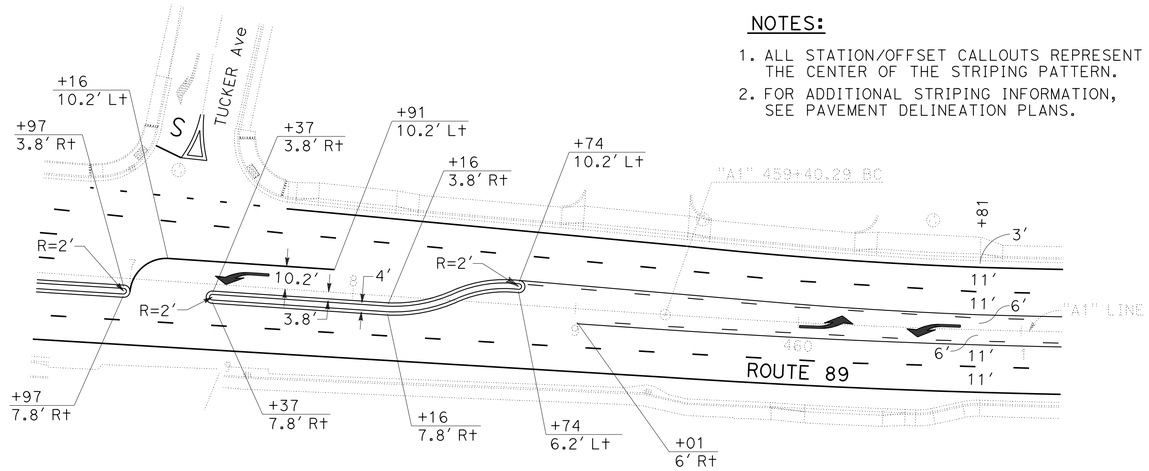

NOTES:

1. ALL STATION/OFFSET CALLOUTS REPRESENT THE CENTER OF THE STRIPING PATTERN.
2. FOR ADDITIONAL STRIPING INFORMATION, SEE PAVEMENT DELINEATION PLANS.

MEDIAN ISLAND STRIPING

Sta "A1"456+49 TO "A1"458+74

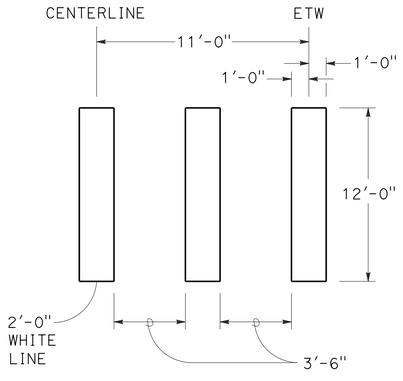

CONTINENTAL CROSSWALK DETAIL

JAMESON BEACH ROAD

NOTES:

1. CROSSWALK MARKINGS SHALL BE INSTALLED PARALLEL TO THE ROADWAY CENTERLINE.
2. EDGELINE STRIPING SHALL STOP 1′-0" FROM THE CROSSWALK (TYPICAL) AS SHOWN ON SHEET PD-10.

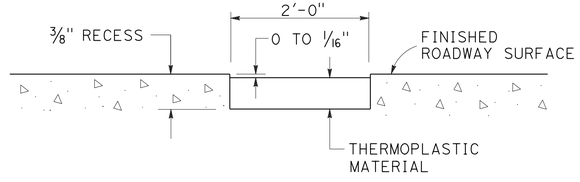

RECESSING DETAIL

(FOR CONTINENTAL CROSSWALK)

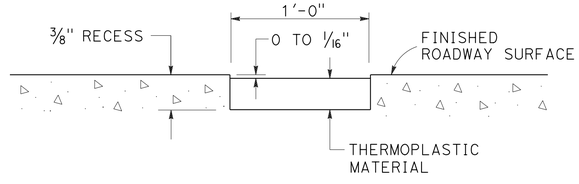

RECESSING DETAIL

(FOR LIMIT LINES)

PAVEMENT DELINEATION DETAILS

NO SCALE

PDD-1

LAST REVISION 10-31-13 | DATE PLOTTED => 13-FEB-2014 | TIME PLOTTED => 13:44

STATE OF CALIFORNIA - DEPARTMENT OF TRANSPORTATION
TRAFFIC
FUNCTIONAL SUPERVISOR: SERGIO ACEVES
CALCULATED-DESIGNED BY: JACK KEMMERLY
CHECKED BY: KRIS ALBERS
REVISED BY | DATE REVISED

BORDER LAST REVISED 7/2/2010 | USERNAME => s130875 | DGN FILE => 0300000223nb001.dgn | RELATIVE BORDER SCALE IS IN INCHES 0 1 2 3 | UNIT 0390 | PROJECT NUMBER & PHASE 03000002231

Dist	COUNTY	ROUTE	POST MILES TOTAL PROJECT	SHEET No.	TOTAL SHEETS
03	ED	89	8.6/13.8	127	231

Kris M. Albers 11-18-13
REGISTERED CIVIL ENGINEER DATE

11-18-13
PLANS APPROVAL DATE

REGISTERED PROFESSIONAL ENGINEER
KRIS M. ALBERS
No. 49986
Exp. 6-30-15
CIVIL
STATE OF CALIFORNIA

THE STATE OF CALIFORNIA OR ITS OFFICERS OR AGENTS SHALL NOT BE RESPONSIBLE FOR THE ACCURACY OR COMPLETENESS OF SCANNED COPIES OF THIS PLAN SHEET.

4" TWO-COMPONENT PAINT TRAFFIC STRIPE

DETAIL NUMBER	LINEAR FEET
21	1,076
27B	452
TOTAL	1,528

4" THERMOPLASTIC TRAFFIC STRIPE (RECESSED, BROKEN 12-3)

DETAIL NUMBER	LINEAR FEET
27C	1,278
TOTAL	1,278

4" THERMOPLASTIC TRAFFIC STRIPE (RECESSED)

DETAIL NUMBER	LINEAR FEET
15	2,270
21	20,844
27B	31,068
28	764
31	7,669
TOTAL	62,615

8" THERMOPLASTIC TRAFFIC STRIPE (RECESSED)

DETAIL NUMBER	LINEAR FEET
38A	991
TOTAL	991

THERMOPLASTIC PAVEMENT MARKING (RECESSED)

DESCRIPTION	NUMBER	SQUARE FEET
CONTINENTAL CROSSWALK	1	144
LIMIT LINE	24	473
TOTAL		617

4" THERMOPLASTIC TRAFFIC STRIPE (RECESSED, BROKEN 17-7)

DETAIL NUMBER	LINEAR FEET
1	1,082
8	10,142
15	2,270
TOTAL	13,494

4" THERMOPLASTIC TRAFFIC STRIPE (RECESSED, BROKEN 36-12)

DETAIL NUMBER	LINEAR FEET
31	7,669
TOTAL	7,669

TWO-COMPONENT PAINT PAVEMENT MARKING

DESCRIPTION	NUMBER	SQUARE FEET
"STOP"	21	462
"PED"	2	36
"XING"	2	42
TYPE III ARROW	20	840
TYPE VI ARROW	3	126
TOTAL		1,506

DELINEATOR - HIGHWAY POST MARKER

SHEET NUMBER	DELINEATOR (CLASS 2)		HIGHWAY POST MARKER
	TYPE E	TYPE F	
	(EACH)	(EACH)	(EACH)
PD-5		7	
PD-6	3	3	
PD-7	11		
PD-8	11		1
PD-9	8	3	
PD-10	8	4	
PD-11	6		1
PD-12	5	9	
PD-14	13		
SUBTOTAL	65	26	
TOTAL	91		2

PAVEMENT DELINEATION QUANTITIES

PDQ-1

REVISED BY	DATE REVISED

CALCULATED-DESIGNED BY: JACK KEMMERLY
CHECKED BY: KRIS ALBERS
FUNCTIONAL SUPERVISOR: SERGIO ACEVES

STATE OF CALIFORNIA - DEPARTMENT OF TRANSPORTATION
TRAFFIC

LAST REVISION | DATE PLOTTED => 13-FEB-2014
10-23-13 | TIME PLOTTED => 13:44

Dist	COUNTY	ROUTE	POST MILES TOTAL PROJECT	SHEET No.	TOTAL SHEETS
03	ED	89	8.6/13.8	128	231

Kris M. Albers 11-18-13
REGISTERED CIVIL ENGINEER DATE

11-18-13
PLANS APPROVAL DATE

KRIS M. ALBERS No. 49986 Exp. 6-30-15 CIVIL — REGISTERED PROFESSIONAL ENGINEER — STATE OF CALIFORNIA

THE STATE OF CALIFORNIA OR ITS OFFICERS OR AGENTS SHALL NOT BE RESPONSIBLE FOR THE ACCURACY OR COMPLETENESS OF SCANNED COPIES OF THIS PLAN SHEET.

NOTES:

1. ALL SIGN CODES SHOWN ARE FEDERAL SIGN CODES UNLESS OTHERWISE DESIGNATED AS CALIFORNIA SIGN CODES.
2. ALL SIGNS NOT SHOWN TO BE REMOVED OR RESET SHALL REMAIN IN PLACE.

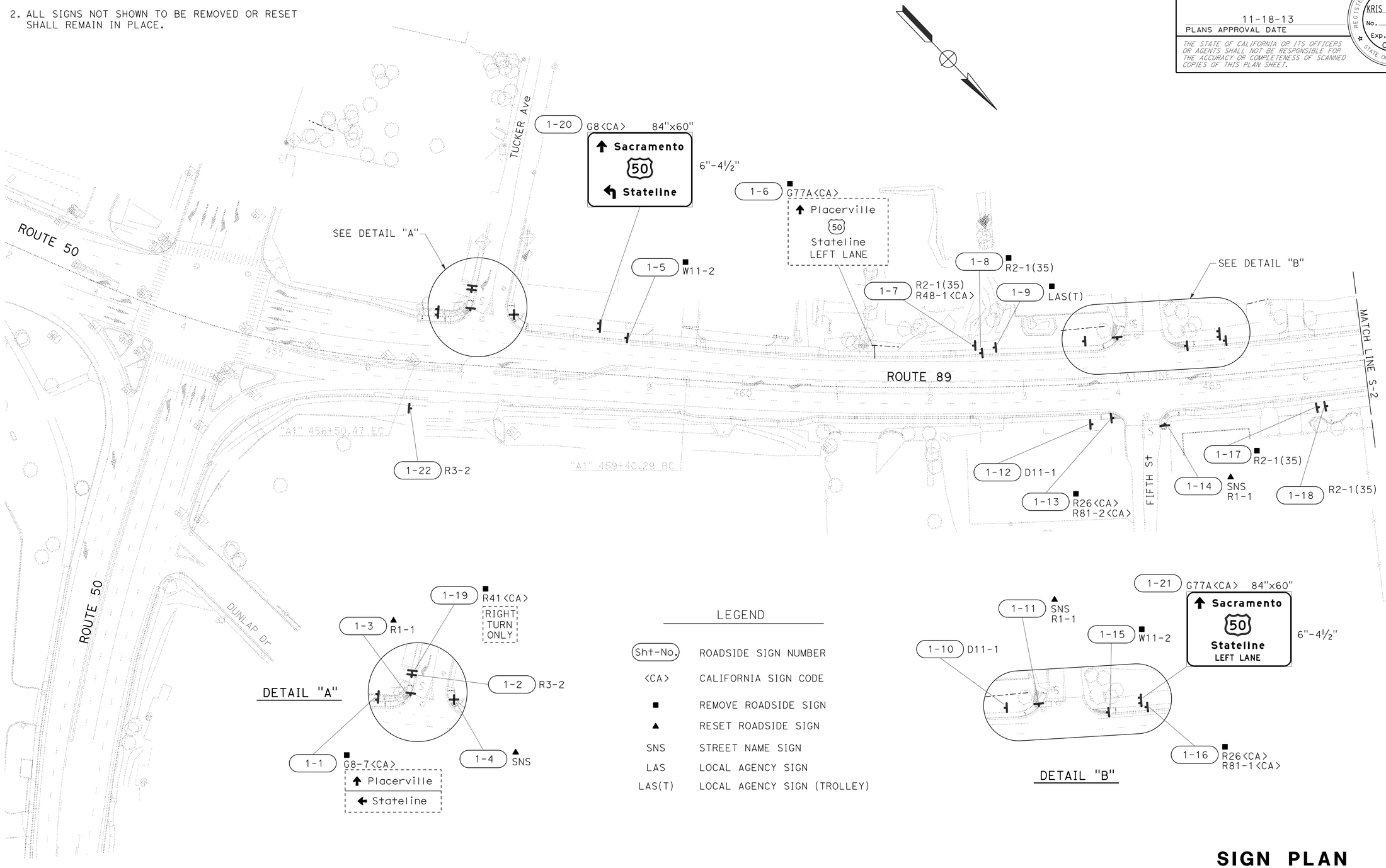

LEGEND

Sht-No.	ROADSIDE SIGN NUMBER
<CA>	CALIFORNIA SIGN CODE
■	REMOVE ROADSIDE SIGN
▲	RESET ROADSIDE SIGN
SNS	STREET NAME SIGN
LAS	LOCAL AGENCY SIGN
LAS(T)	LOCAL AGENCY SIGN (TROLLEY)

SIGN PLAN

SCALE: 1"=50'

S-1

APPROVED FOR SIGN WORK ONLY

STATE OF CALIFORNIA - DEPARTMENT OF TRANSPORTATION
Caltrans®
TRAFFIC

FUNCTIONAL SUPERVISOR: SERGIO ACEVES

REVISED BY	DATE REVISED
JACK KEMMERLY	

CALCULATED-DESIGNED BY: KRIS ALBERS
CHECKED BY:

LAST REVISION DATE PLOTTED => 13-FEB-2014
TIME PLOTTED => 13:44
10-21-13

BORDER LAST REVISED 7/2/2010

USERNAME => s130875
DGN FILE => 0300000223oa001.dgn

RELATIVE BORDER SCALE IS IN INCHES 0 1 2 3

UNIT 0390

PROJECT NUMBER & PHASE 03000002231

Dist	COUNTY	ROUTE	POST MILES TOTAL PROJECT	SHEET No.	TOTAL SHEETS
03	ED	89	8.6/13.8	129	231

Kris M Albers 11-18-13
REGISTERED CIVIL ENGINEER DATE

11-18-13
PLANS APPROVAL DATE

REGISTERED PROFESSIONAL ENGINEER
KRIS M. ALBERS
No. 49986
Exp. 6-30-15
CIVIL
STATE OF CALIFORNIA

THE STATE OF CALIFORNIA OR ITS OFFICERS OR AGENTS SHALL NOT BE RESPONSIBLE FOR THE ACCURACY OR COMPLETENESS OF SCANNED COPIES OF THIS PLAN SHEET.

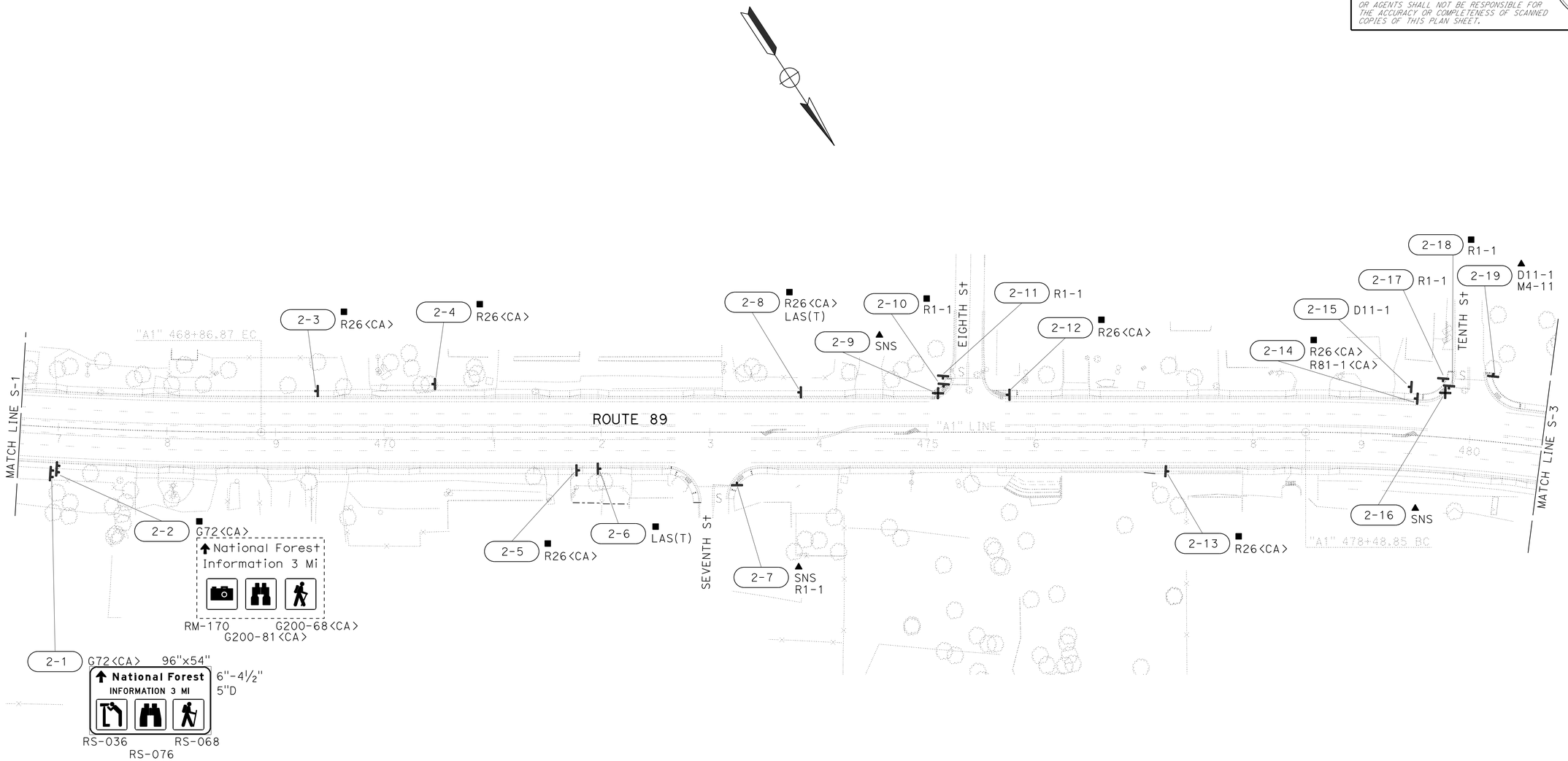

SIGN PLAN

SCALE: 1"=50'

S-2

APPROVED FOR SIGN WORK ONLY

STATE OF CALIFORNIA - DEPARTMENT OF TRANSPORTATION
TRAFFIC
Caltrans

FUNCTIONAL SUPERVISOR: SERGIO ACEVES

CALCULATED-DESIGNED BY	CHECKED BY	REVISED BY	DATE REVISED
JACK KEMMERLY	KRIS ALBERS		

LAST REVISION: DATE PLOTTED => 13-FEB-2014
9-25-13 TIME PLOTTED => 13:44

BORDER LAST REVISED 7/2/2010 | USERNAME => s130875 DGN FILE => 0300000223oa002.dgn | RELATIVE BORDER SCALE IS IN INCHES 0 1 2 3 | UNIT 0390 | PROJECT NUMBER & PHASE 03000002231

Dist	COUNTY	ROUTE	POST MILES TOTAL PROJECT	SHEET No.	TOTAL SHEETS
03	ED	89	8.6/13.8	130	231

Kris M. Albers 11-18-13
REGISTERED CIVIL ENGINEER DATE

11-18-13
PLANS APPROVAL DATE

REGISTERED PROFESSIONAL ENGINEER
KRIS M. ALBERS
No. 49986
Exp. 6-30-15
CIVIL
STATE OF CALIFORNIA

THE STATE OF CALIFORNIA OR ITS OFFICERS OR AGENTS SHALL NOT BE RESPONSIBLE FOR THE ACCURACY OR COMPLETENESS OF SCANNED COPIES OF THIS PLAN SHEET.

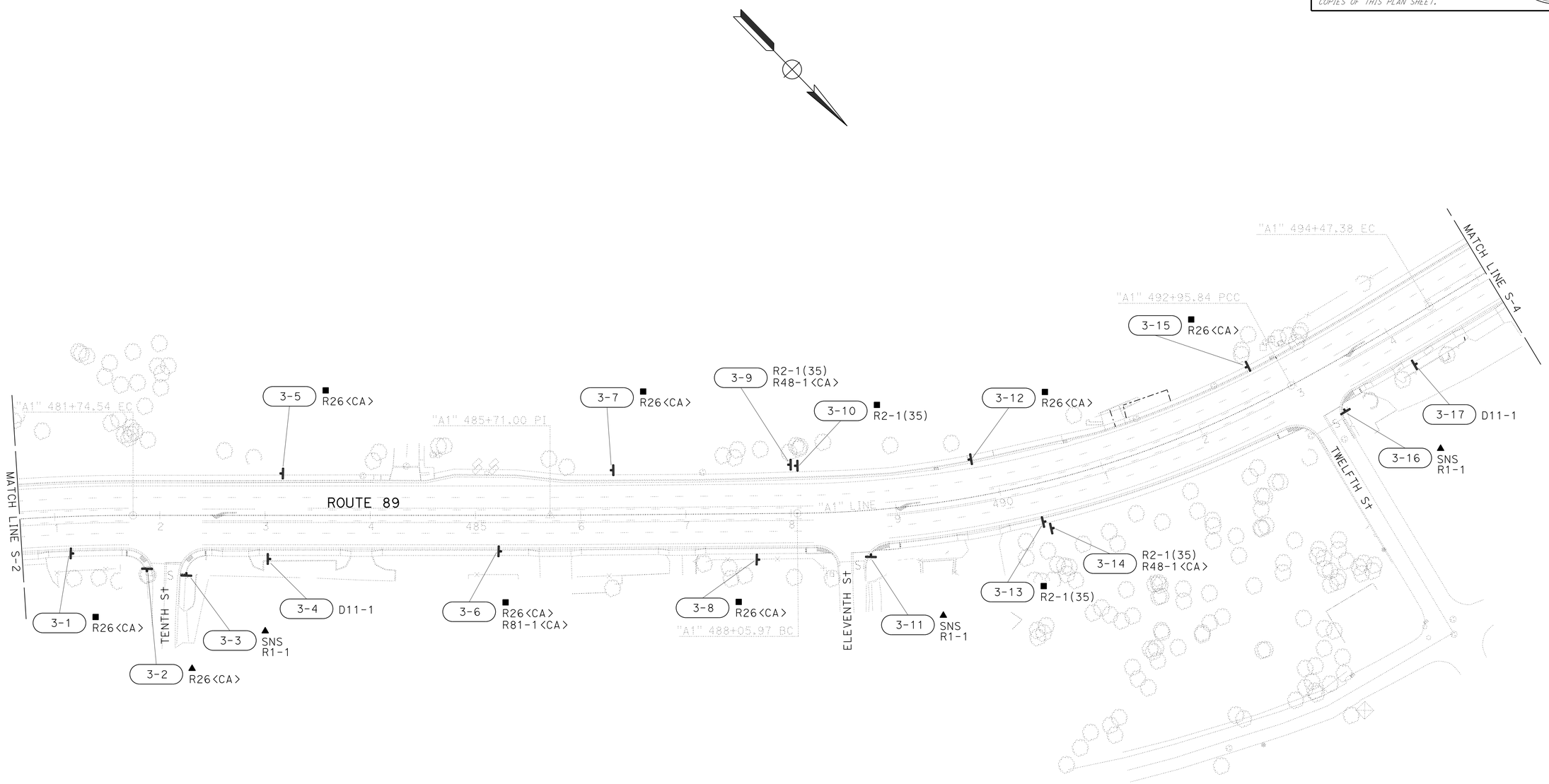

SIGN PLAN

SCALE: 1"=50'

S-3

APPROVED FOR SIGN WORK ONLY

STATE OF CALIFORNIA - DEPARTMENT OF TRANSPORTATION
Caltrans
TRAFFIC

FUNCTIONAL SUPERVISOR: SERGIO ACEVES
CALCULATED-DESIGNED BY: JACK KEMMERLY
CHECKED BY: KRIS ALBERS
REVISED BY
DATE REVISED

LAST REVISION 5-14-13
DATE PLOTTED => 13-FEB-2014
TIME PLOTTED => 13:44

Dist	COUNTY	ROUTE	POST MILES TOTAL PROJECT	SHEET No.	TOTAL SHEETS
03	ED	89	8.6/13.8	131	231

Kris M. Albers 11-18-13
REGISTERED CIVIL ENGINEER DATE

11-18-13
PLANS APPROVAL DATE

REGISTERED PROFESSIONAL ENGINEER
KRIS M. ALBERS
No. 49986
Exp. 6-30-15
CIVIL
STATE OF CALIFORNIA

THE STATE OF CALIFORNIA OR ITS OFFICERS OR AGENTS SHALL NOT BE RESPONSIBLE FOR THE ACCURACY OR COMPLETENESS OF SCANNED COPIES OF THIS PLAN SHEET.

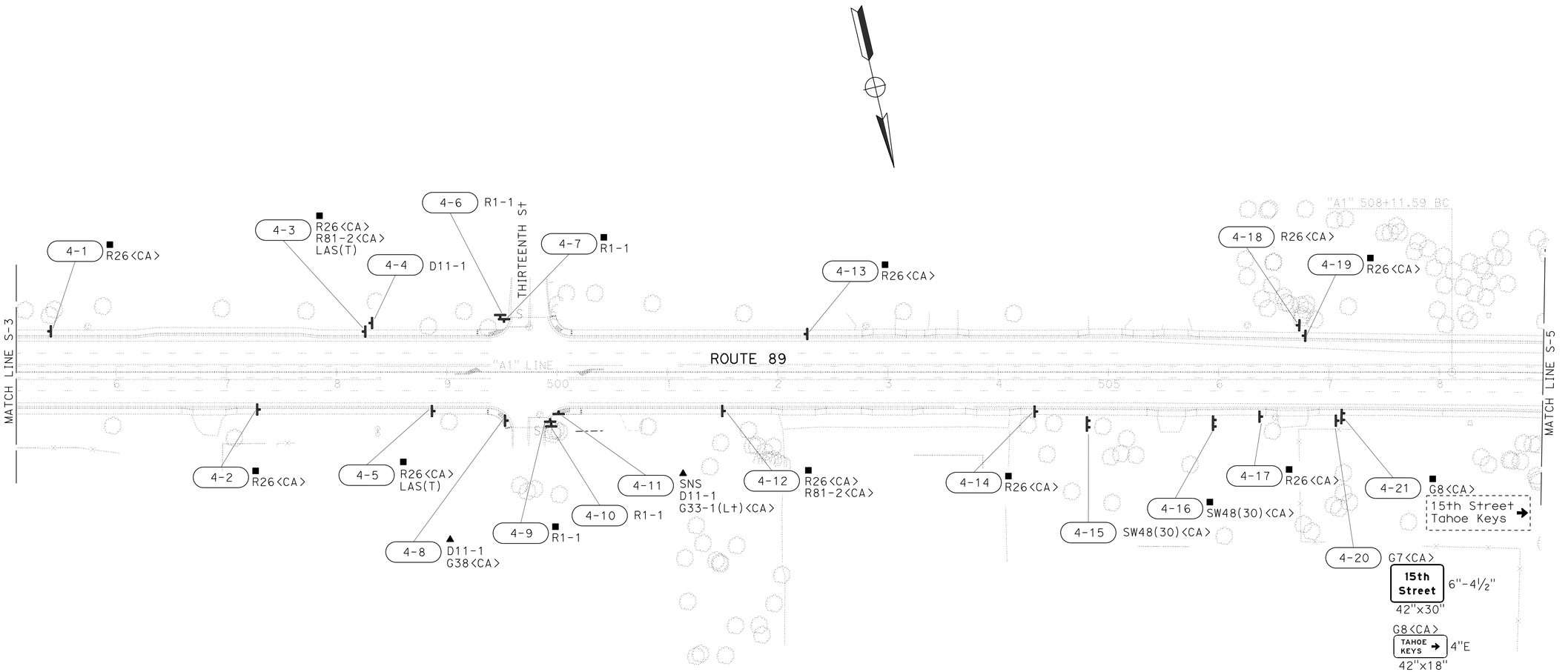

SIGN PLAN

SCALE: 1"=50'

S-4

APPROVED FOR SIGN WORK ONLY

CALCULATED-DESIGNED BY: JACK KEMMERLY
CHECKED BY: KRIS ALBERS
REVISED BY
DATE REVISED
FUNCTIONAL SUPERVISOR: SERGIO ACEVES
STATE OF CALIFORNIA - DEPARTMENT OF TRANSPORTATION
Caltrans®
TRAFFIC

LAST REVISION 5-14-13
DATE PLOTTED => 13-FEB-2014
TIME PLOTTED => 13:44

BORDER LAST REVISED 7/2/2010
USERNAME => s130875
DGN FILE => 0300000223oa004.dgn
RELATIVE BORDER SCALE IS IN INCHES 0 1 2 3
UNIT 0390
PROJECT NUMBER & PHASE 03000002231

Dist	COUNTY	ROUTE	POST MILES TOTAL PROJECT	SHEET No.	TOTAL SHEETS
03	ED	89	8.6/13.8	132	231

Kris M. Albers 11-18-13
REGISTERED CIVIL ENGINEER DATE

11-18-13
PLANS APPROVAL DATE

REGISTERED PROFESSIONAL ENGINEER
KRIS M. ALBERS
No. 49986
Exp. 6-30-15
CIVIL
STATE OF CALIFORNIA

THE STATE OF CALIFORNIA OR ITS OFFICERS OR AGENTS SHALL NOT BE RESPONSIBLE FOR THE ACCURACY OR COMPLETENESS OF SCANNED COPIES OF THIS PLAN SHEET.

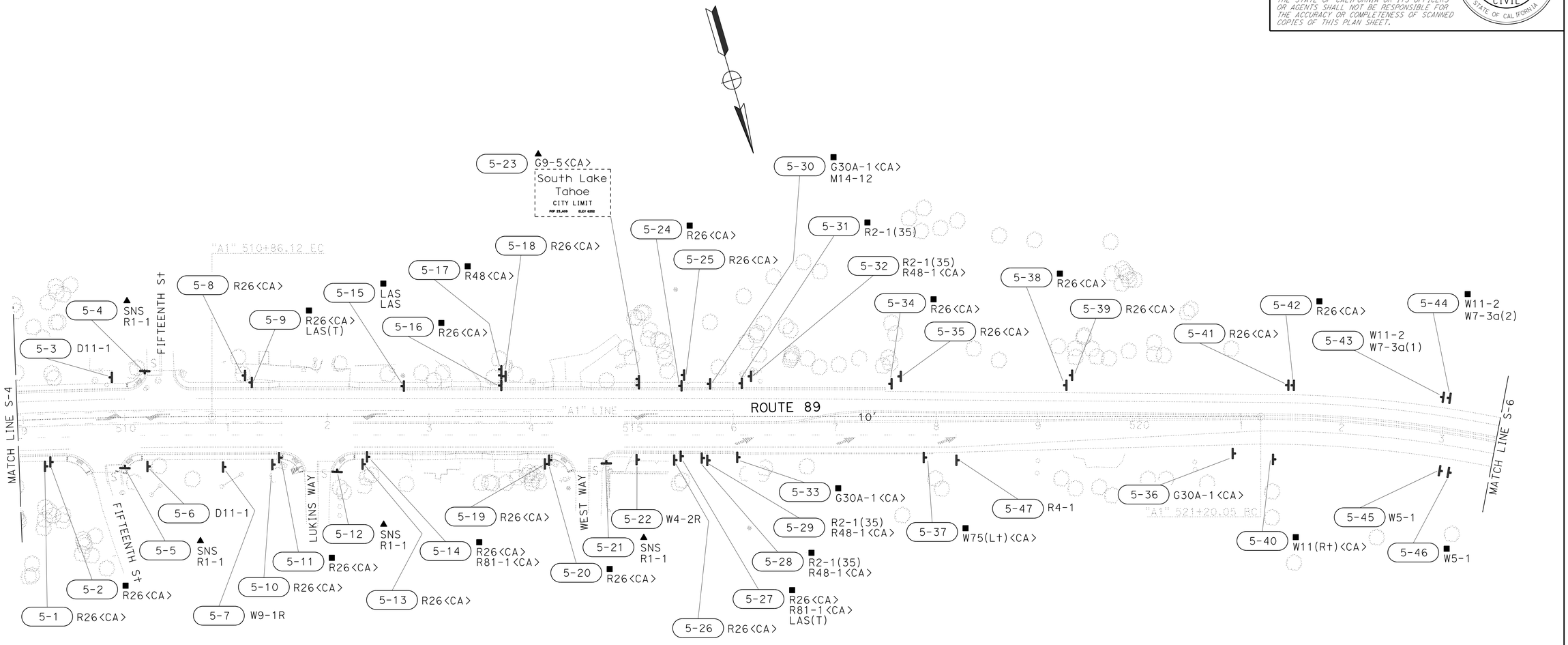

SIGN PLAN

SCALE: 1"=50'

S-5

APPROVED FOR SIGN WORK ONLY

STATE OF CALIFORNIA - DEPARTMENT OF TRANSPORTATION
Caltrans®
TRAFFIC

FUNCTIONAL SUPERVISOR: SERGIO ACEVES
CALCULATED-DESIGNED BY: JACK KEMMERLY
CHECKED BY: KRIS ALBERS
REVISED BY
DATE REVISED

LAST REVISION
DATE PLOTTED => 13-FEB-2014
TIME PLOTTED => 13:44
9-20-13

BORDER LAST REVISED 7/2/2010

USERNAME => s130875
DGN FILE => 0300000223oa005.dgn

RELATIVE BORDER SCALE IS IN INCHES 0 1 2 3

UNIT 0390

PROJECT NUMBER & PHASE 03000002231

Dist	COUNTY	ROUTE	POST MILES TOTAL PROJECT	SHEET No.	TOTAL SHEETS
03	ED	89	8.6/13.8	133	231

Kris M. Albers 11-18-13
REGISTERED CIVIL ENGINEER DATE

11-18-13
PLANS APPROVAL DATE

REGISTERED PROFESSIONAL ENGINEER
KRIS M. ALBERS
No. 49986
Exp. 6-30-15
CIVIL
STATE OF CALIFORNIA

THE STATE OF CALIFORNIA OR ITS OFFICERS OR AGENTS SHALL NOT BE RESPONSIBLE FOR THE ACCURACY OR COMPLETENESS OF SCANNED COPIES OF THIS PLAN SHEET.

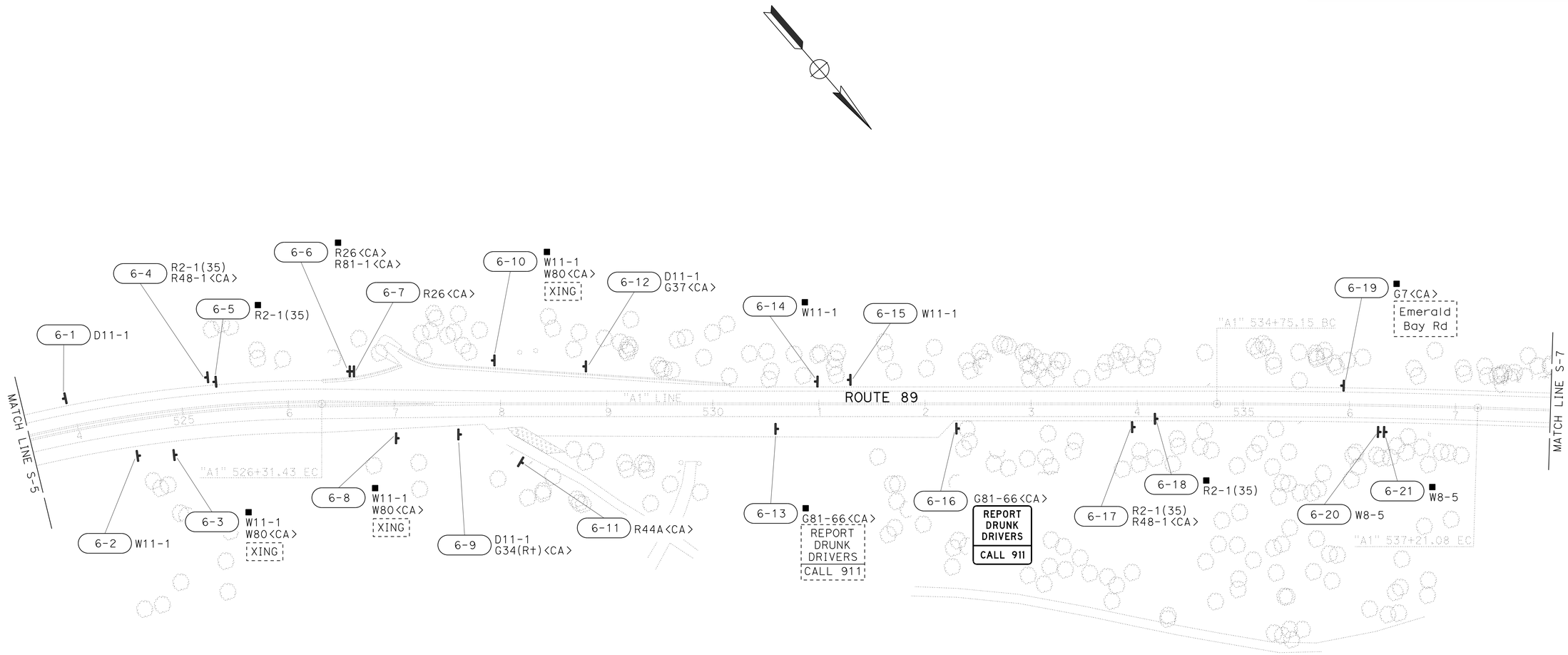

SIGN PLAN

SCALE: 1"=50'

S-6

APPROVED FOR SIGN WORK ONLY

JACK KEMMERLY — CALCULATED-DESIGNED BY
KRIS ALBERS — CHECKED BY
REVISED BY
DATE REVISED
SERGIO ACEVES — FUNCTIONAL SUPERVISOR
STATE OF CALIFORNIA - DEPARTMENT OF TRANSPORTATION
Caltrans®
TRAFFIC

LAST REVISION DATE PLOTTED => 13-FEB-2014
TIME PLOTTED => 13:44
10-23-13

BORDER LAST REVISED 7/2/2010
USERNAME => s130875
DGN FILE => 0300000223oa006.dgn
RELATIVE BORDER SCALE IS IN INCHES 0 1 2 3
UNIT 0390
PROJECT NUMBER & PHASE 03000002231

Dist	COUNTY	ROUTE	POST MILES TOTAL PROJECT	SHEET No.	TOTAL SHEETS
03	ED	89	8.6/13.8	134	231

Kris M. Albers 11-18-13
REGISTERED CIVIL ENGINEER DATE

11-18-13
PLANS APPROVAL DATE

REGISTERED PROFESSIONAL ENGINEER
KRIS M. ALBERS
No. 49986
Exp. 6-30-15
CIVIL
STATE OF CALIFORNIA

THE STATE OF CALIFORNIA OR ITS OFFICERS OR AGENTS SHALL NOT BE RESPONSIBLE FOR THE ACCURACY OR COMPLETENESS OF SCANNED COPIES OF THIS PLAN SHEET.

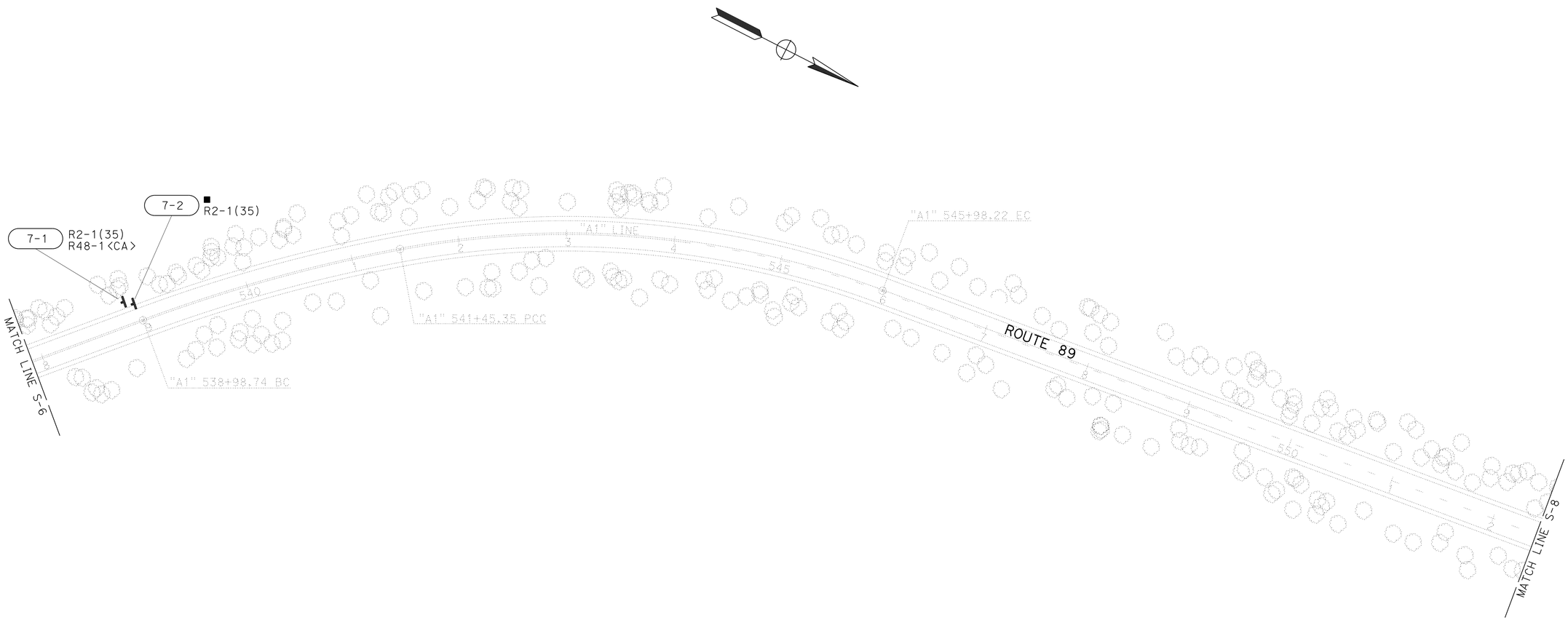

SIGN PLAN

SCALE: 1"=50'

S-7

APPROVED FOR SIGN WORK ONLY

STATE OF CALIFORNIA - DEPARTMENT OF TRANSPORTATION
Caltrans
TRAFFIC

FUNCTIONAL SUPERVISOR: SERGIO ACEVES
CALCULATED-DESIGNED BY: JACK KEMMERLY
CHECKED BY: KRIS ALBERS
REVISED BY
DATE REVISED

LAST REVISION 10-21-13
DATE PLOTTED => 13-FEB-2014
TIME PLOTTED => 13:44

Dist	COUNTY	ROUTE	POST MILES TOTAL PROJECT	SHEET No.	TOTAL SHEETS
03	ED	89	8.6/13.8	135	231

Kris M. Albers 11-18-13
REGISTERED CIVIL ENGINEER DATE

11-18-13
PLANS APPROVAL DATE

REGISTERED PROFESSIONAL ENGINEER
KRIS M. ALBERS
No. 49986
Exp. 6-30-15
CIVIL
STATE OF CALIFORNIA

THE STATE OF CALIFORNIA OR ITS OFFICERS OR AGENTS SHALL NOT BE RESPONSIBLE FOR THE ACCURACY OR COMPLETENESS OF SCANNED COPIES OF THIS PLAN SHEET.

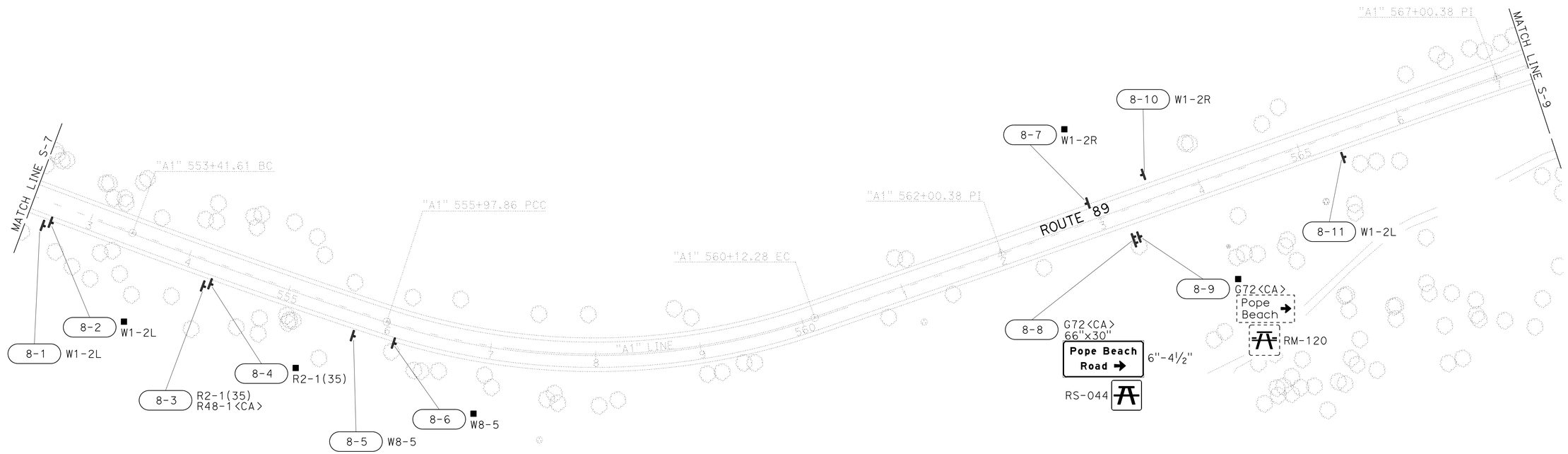

SIGN PLAN

SCALE: 1"=50'

S-8

APPROVED FOR SIGN WORK ONLY

STATE OF CALIFORNIA - DEPARTMENT OF TRANSPORTATION
Caltrans®
TRAFFIC
FUNCTIONAL SUPERVISOR: SERGIO ACEVES
CALCULATED-DESIGNED BY: JACK KEMMERLY
CHECKED BY: KRIS ALBERS
REVISED BY
DATE REVISED

LAST REVISION DATE PLOTTED => 13-FEB-2014
TIME PLOTTED => 13:44
10-21-13

BORDER LAST REVISED 7/2/2010
USERNAME => s130875
DGN FILE => 0300000223oa008.dgn
RELATIVE BORDER SCALE IS IN INCHES 0 1 2 3
UNIT 0390
PROJECT NUMBER & PHASE 03000002231

Dist	COUNTY	ROUTE	POST MILES TOTAL PROJECT	SHEET No.	TOTAL SHEETS
03	ED	89	8.6/13.8	136	231

Kris M Albers 11-18-13
REGISTERED CIVIL ENGINEER DATE

11-18-13
PLANS APPROVAL DATE

REGISTERED PROFESSIONAL ENGINEER
KRIS M. ALBERS
No. 49986
Exp. 6-30-15
CIVIL
STATE OF CALIFORNIA

THE STATE OF CALIFORNIA OR ITS OFFICERS OR AGENTS SHALL NOT BE RESPONSIBLE FOR THE ACCURACY OR COMPLETENESS OF SCANNED COPIES OF THIS PLAN SHEET.

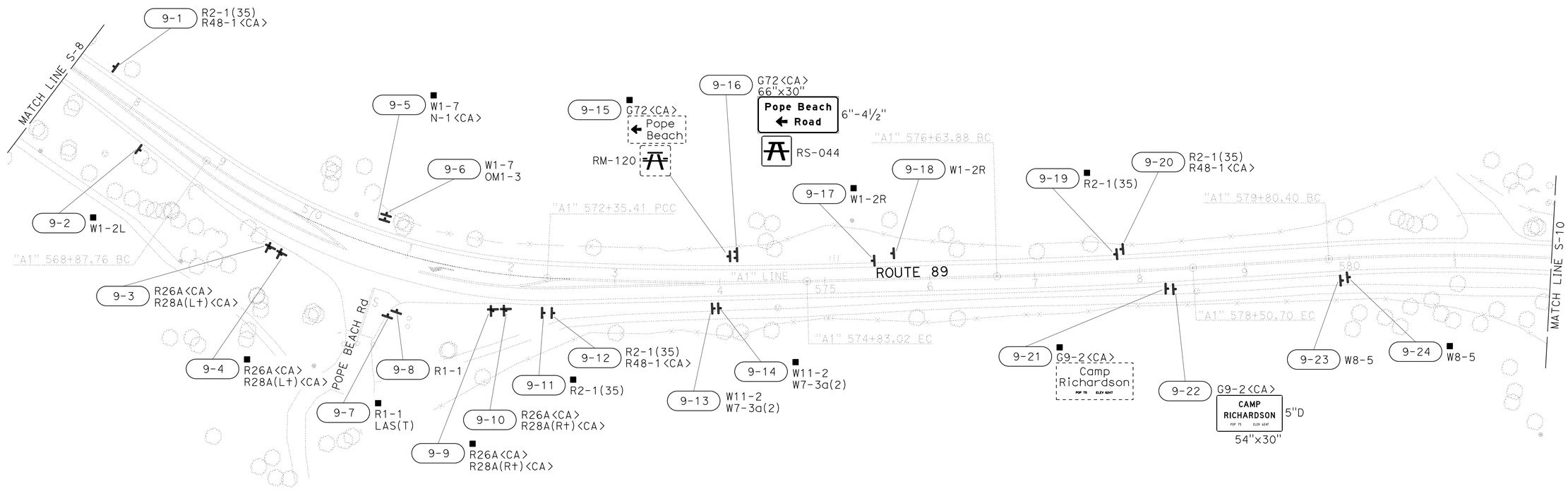

SIGN PLAN

SCALE: 1"=50'

S-9

APPROVED FOR SIGN WORK ONLY

CALCULATED-DESIGNED BY
JACK KEMMERLY

CHECKED BY
KRIS ALBERS

REVISED BY

DATE REVISED

FUNCTIONAL SUPERVISOR
SERGIO ACEVES

STATE OF CALIFORNIA - DEPARTMENT OF TRANSPORTATION
TRAFFIC
Caltrans®

LAST REVISION
DATE PLOTTED => 13-FEB-2014
10-21-13 TIME PLOTTED => 13:44

BORDER LAST REVISED 7/2/2010

USERNAME => s130875
DGN FILE => 0300000223oa009.dgn

RELATIVE BORDER SCALE IS IN INCHES 0 1 2 3

UNIT 0390

PROJECT NUMBER & PHASE 03000002231

NOTE:

1. SIGN PANELS SHALL BE FLUORESCENT YELLOW GREEN.

Dist	COUNTY	ROUTE	POST MILES TOTAL PROJECT	SHEET No.	TOTAL SHEETS
03	ED	89	8.6/13.8	137	231

Kris M. Albers 11-18-13
REGISTERED CIVIL ENGINEER DATE

11-18-13
PLANS APPROVAL DATE

REGISTERED PROFESSIONAL ENGINEER
KRIS M. ALBERS
No. 49986
Exp. 6-30-15
CIVIL
STATE OF CALIFORNIA

THE STATE OF CALIFORNIA OR ITS OFFICERS OR AGENTS SHALL NOT BE RESPONSIBLE FOR THE ACCURACY OR COMPLETENESS OF SCANNED COPIES OF THIS PLAN SHEET.

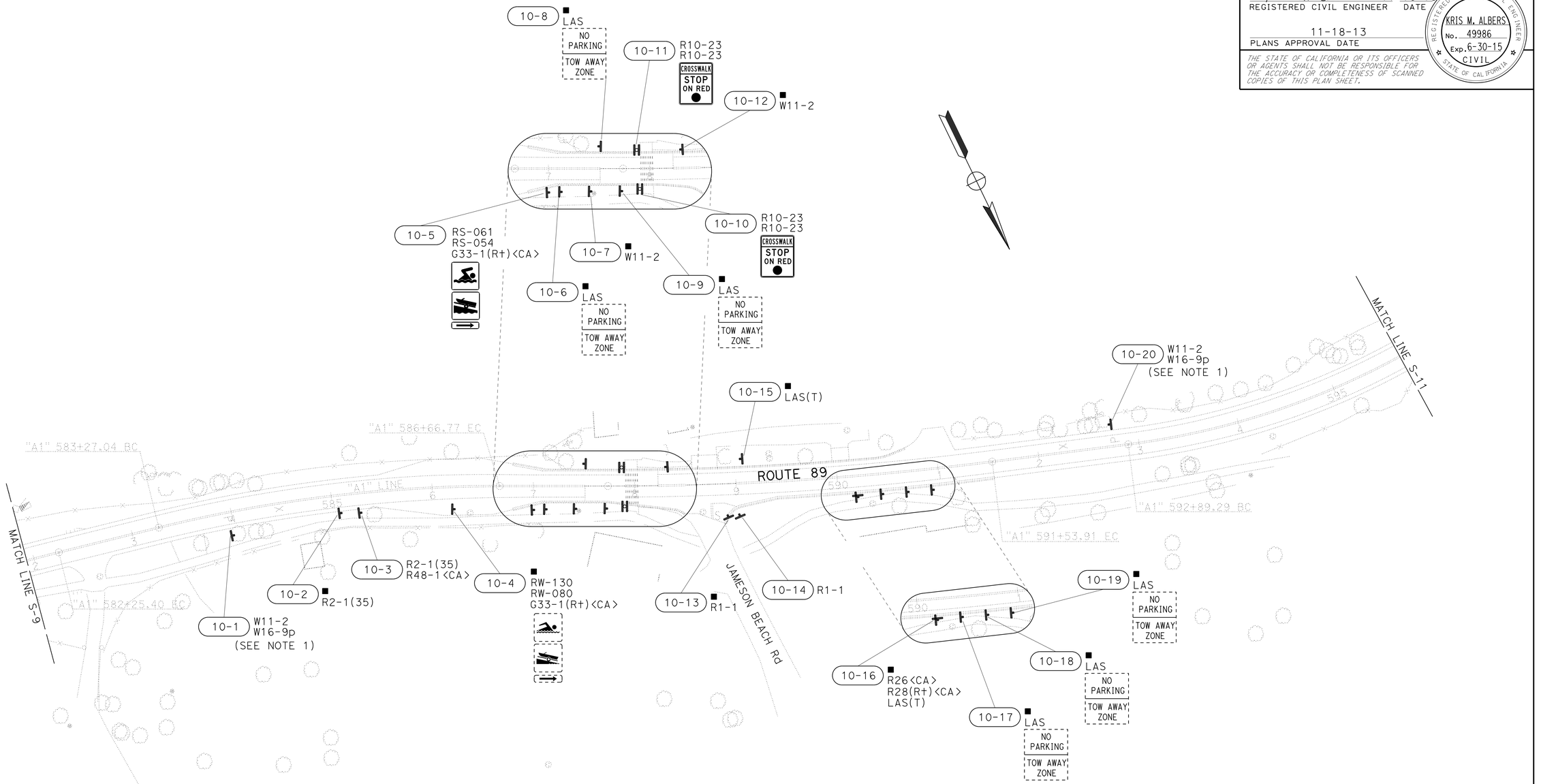

SIGN PLAN

SCALE: 1"=50'

S-10

APPROVED FOR SIGN WORK ONLY

STATE OF CALIFORNIA - DEPARTMENT OF TRANSPORTATION
Caltrans®
TRAFFIC

FUNCTIONAL SUPERVISOR: SERGIO ACEVES
CALCULATED-DESIGNED BY: JACK KEMMERLY
CHECKED BY: KRIS ALBERS
REVISED BY
DATE REVISED

LAST REVISION DATE PLOTTED => 13-FEB-2014
10-21-13 TIME PLOTTED => 13:44

BORDER LAST REVISED 7/2/2010
USERNAME => s130875
DGN FILE => 0300000223oa010.dgn
RELATIVE BORDER SCALE IS IN INCHES 0 1 2 3
UNIT 0390
PROJECT NUMBER & PHASE 03000002231

Dist	COUNTY	ROUTE	POST MILES TOTAL PROJECT	SHEET No.	TOTAL SHEETS
03	ED	89	8.6/13.8	138	231

Kris M. Albers 11-18-13
REGISTERED CIVIL ENGINEER DATE

11-18-13
PLANS APPROVAL DATE

REGISTERED PROFESSIONAL ENGINEER
KRIS M. ALBERS
No. 49986
Exp. 6-30-15
CIVIL
STATE OF CALIFORNIA

THE STATE OF CALIFORNIA OR ITS OFFICERS OR AGENTS SHALL NOT BE RESPONSIBLE FOR THE ACCURACY OR COMPLETENESS OF SCANNED COPIES OF THIS PLAN SHEET.

NOTES:

1. SIGN INSTALLATION HAS SOLAR POWERED FLASHING BEACON ATTACHED. FOR ADDITIONAL INFORMATION, SEE ELECTRICAL PLANS.
2. SIGN PANEL IS A HINGED SIGN PANEL SHOWN IN THE CLOSED POSITION.

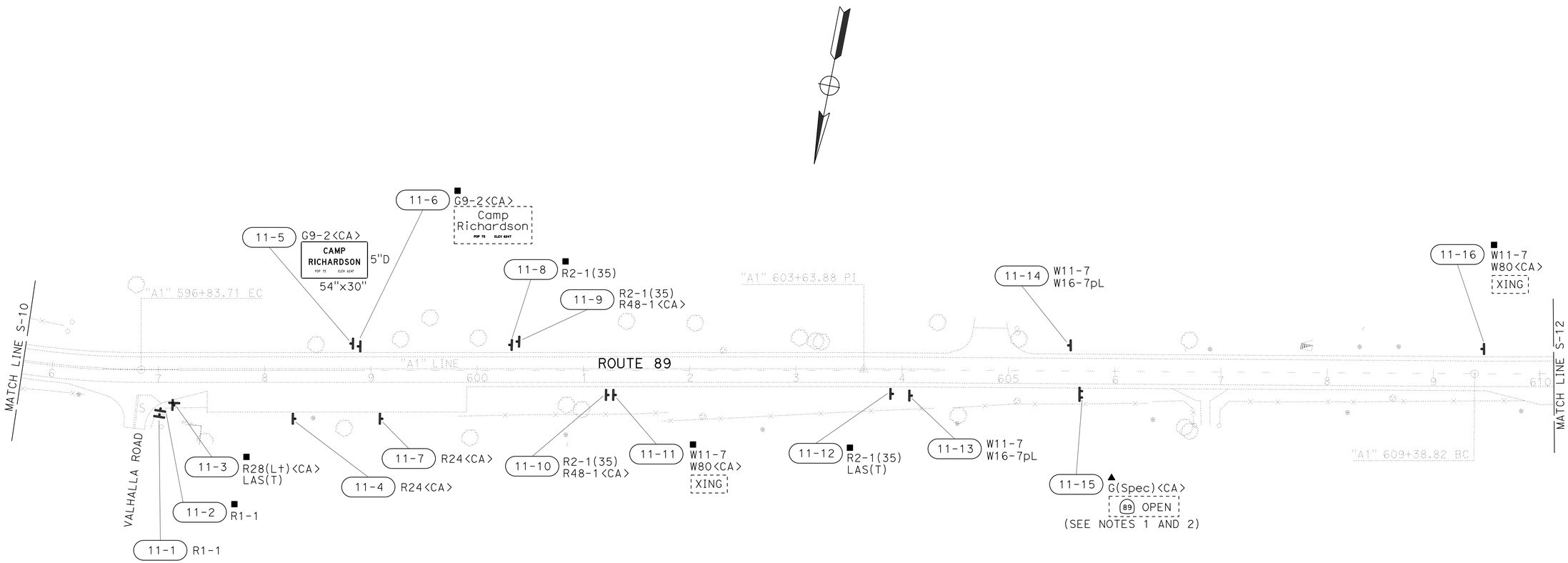

SIGN PLAN

SCALE: 1"=50'

S-11

APPROVED FOR SIGN WORK ONLY

LAST REVISION DATE PLOTTED => 13-FEB-2014
TIME PLOTTED => 13:44

CALCULATED-DESIGNED BY
CHECKED BY
REVISED BY
DATE REVISED
JACK KEMMERLY
KRIS ALBERS
FUNCTIONAL SUPERVISOR
SERGIO ACEVES
STATE OF CALIFORNIA - DEPARTMENT OF TRANSPORTATION
Caltrans®
TRAFFIC

BORDER LAST REVISED 7/2/2010 | USERNAME => s130875 DGN FILE => 0300000223oa011.dgn | RELATIVE BORDER SCALE IS IN INCHES 0 1 2 3 | UNIT 0390 | PROJECT NUMBER & PHASE 03000002231

Dist	COUNTY	ROUTE	POST MILES TOTAL PROJECT	SHEET No.	TOTAL SHEETS
03	ED	89	8.6/13.8	139	231

Kris M. Albers 11-18-13
REGISTERED CIVIL ENGINEER DATE

11-18-13
PLANS APPROVAL DATE

REGISTERED PROFESSIONAL ENGINEER
KRIS M. ALBERS
No. 49986
Exp. 6-30-15
CIVIL
STATE OF CALIFORNIA

THE STATE OF CALIFORNIA OR ITS OFFICERS OR AGENTS SHALL NOT BE RESPONSIBLE FOR THE ACCURACY OR COMPLETENESS OF SCANNED COPIES OF THIS PLAN SHEET.

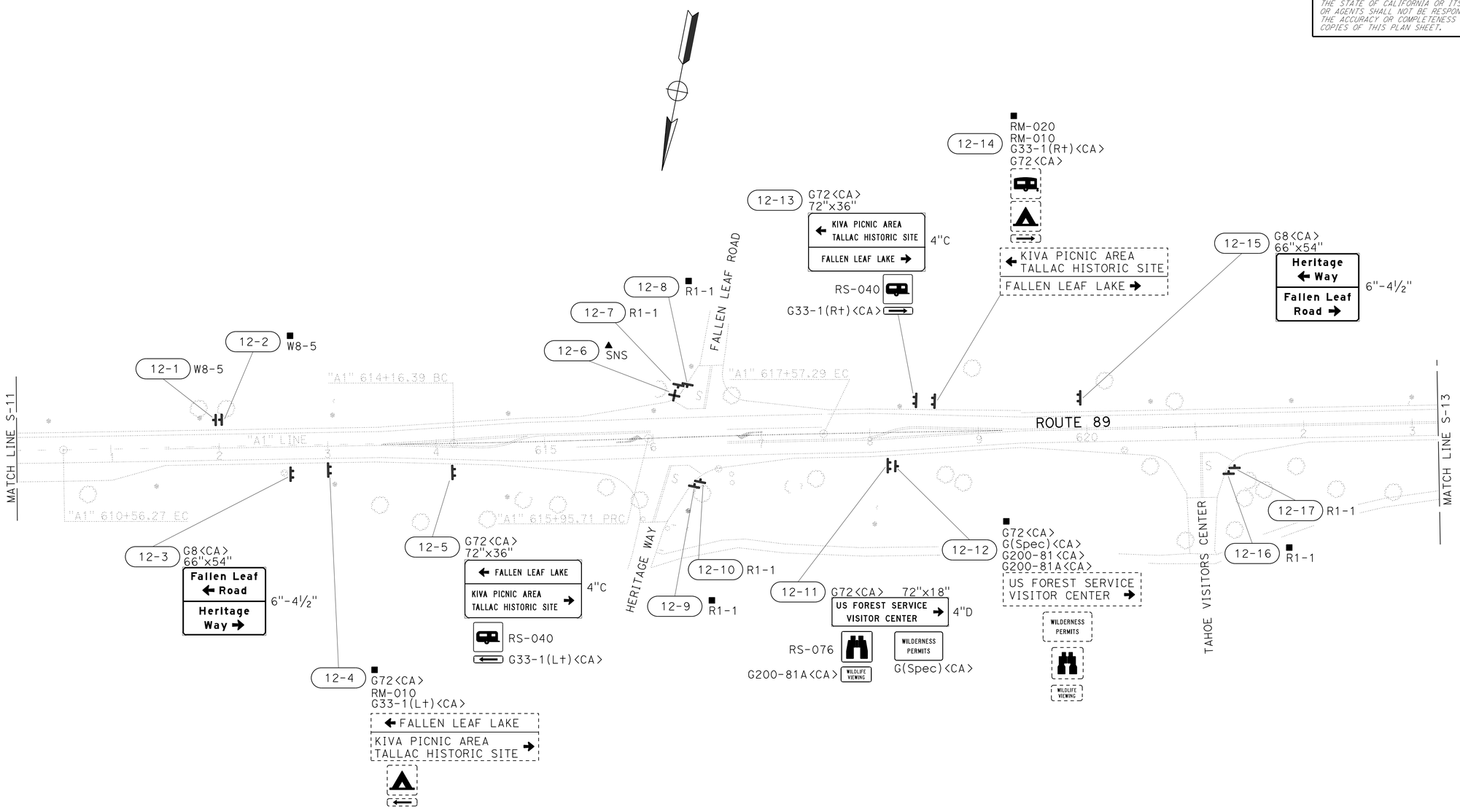

SIGN PLAN

SCALE: 1"=50'

S-12

APPROVED FOR SIGN WORK ONLY

CALCULATED-DESIGNED BY: JACK KEMMERLY
CHECKED BY: KRIS ALBERS
FUNCTIONAL SUPERVISOR: SERGIO ACEVES
STATE OF CALIFORNIA - DEPARTMENT OF TRANSPORTATION
Caltrans®
TRAFFIC

REVISED BY | DATE REVISED

LAST REVISION | DATE PLOTTED => 13-FEB-2014 | TIME PLOTTED => 13:44
10-21-13

BORDER LAST REVISED 7/2/2010
USERNAME => s130875
DGN FILE => 0300000223oa012.dgn
RELATIVE BORDER SCALE IS IN INCHES 0 1 2 3
UNIT 0390
PROJECT NUMBER & PHASE 03000002231

Dist	COUNTY	ROUTE	POST MILES TOTAL PROJECT	SHEET No.	TOTAL SHEETS
03	ED	89	8.6/13.8	140	231

Kris M Albers 11-18-13
REGISTERED CIVIL ENGINEER DATE

11-18-13
PLANS APPROVAL DATE

KRIS M. ALBERS No. 49986 Exp. 6-30-15 CIVIL — REGISTERED PROFESSIONAL ENGINEER — STATE OF CALIFORNIA

THE STATE OF CALIFORNIA OR ITS OFFICERS OR AGENTS SHALL NOT BE RESPONSIBLE FOR THE ACCURACY OR COMPLETENESS OF SCANNED COPIES OF THIS PLAN SHEET.

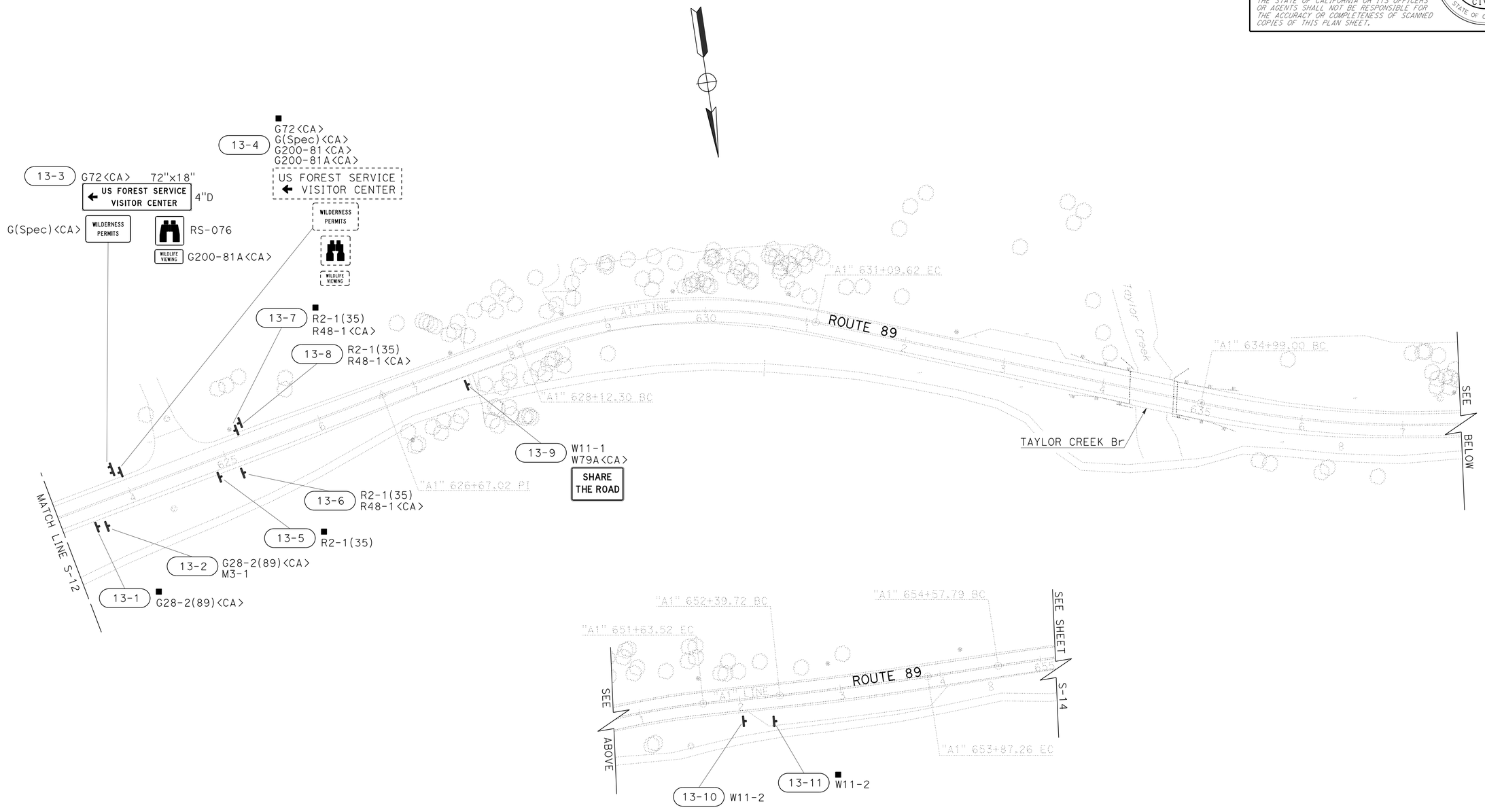

SIGN PLAN

SCALE: 1"=50'

S-13

APPROVED FOR SIGN WORK ONLY

STATE OF CALIFORNIA - DEPARTMENT OF TRANSPORTATION
Caltrans®
TRAFFIC

FUNCTIONAL SUPERVISOR: SERGIO ACEVES
CALCULATED-DESIGNED BY: JACK KEMMERLY
CHECKED BY: KRIS ALBERS
DRAWN BY
REVISED BY
DATE REVISED

LAST REVISION 9-26-13
DATE PLOTTED => 13-FEB-2014
TIME PLOTTED => 13:44

BORDER LAST REVISED 7/2/2010
USERNAME => s130875
DGN FILE => 0300000223oa013.dgn
RELATIVE BORDER SCALE IS IN INCHES 0 1 2 3
UNIT 0390
PROJECT NUMBER & PHASE 03000002231

Dist	COUNTY	ROUTE	POST MILES TOTAL PROJECT	SHEET No.	TOTAL SHEETS
03	ED	89	8.6/13.8	141	231

Kris M. Albers 11-18-13
REGISTERED CIVIL ENGINEER DATE

11-18-13
PLANS APPROVAL DATE

REGISTERED PROFESSIONAL ENGINEER
KRIS M. ALBERS
No. 49986
Exp. 6-30-15
CIVIL
STATE OF CALIFORNIA

THE STATE OF CALIFORNIA OR ITS OFFICERS OR AGENTS SHALL NOT BE RESPONSIBLE FOR THE ACCURACY OR COMPLETENESS OF SCANNED COPIES OF THIS PLAN SHEET.

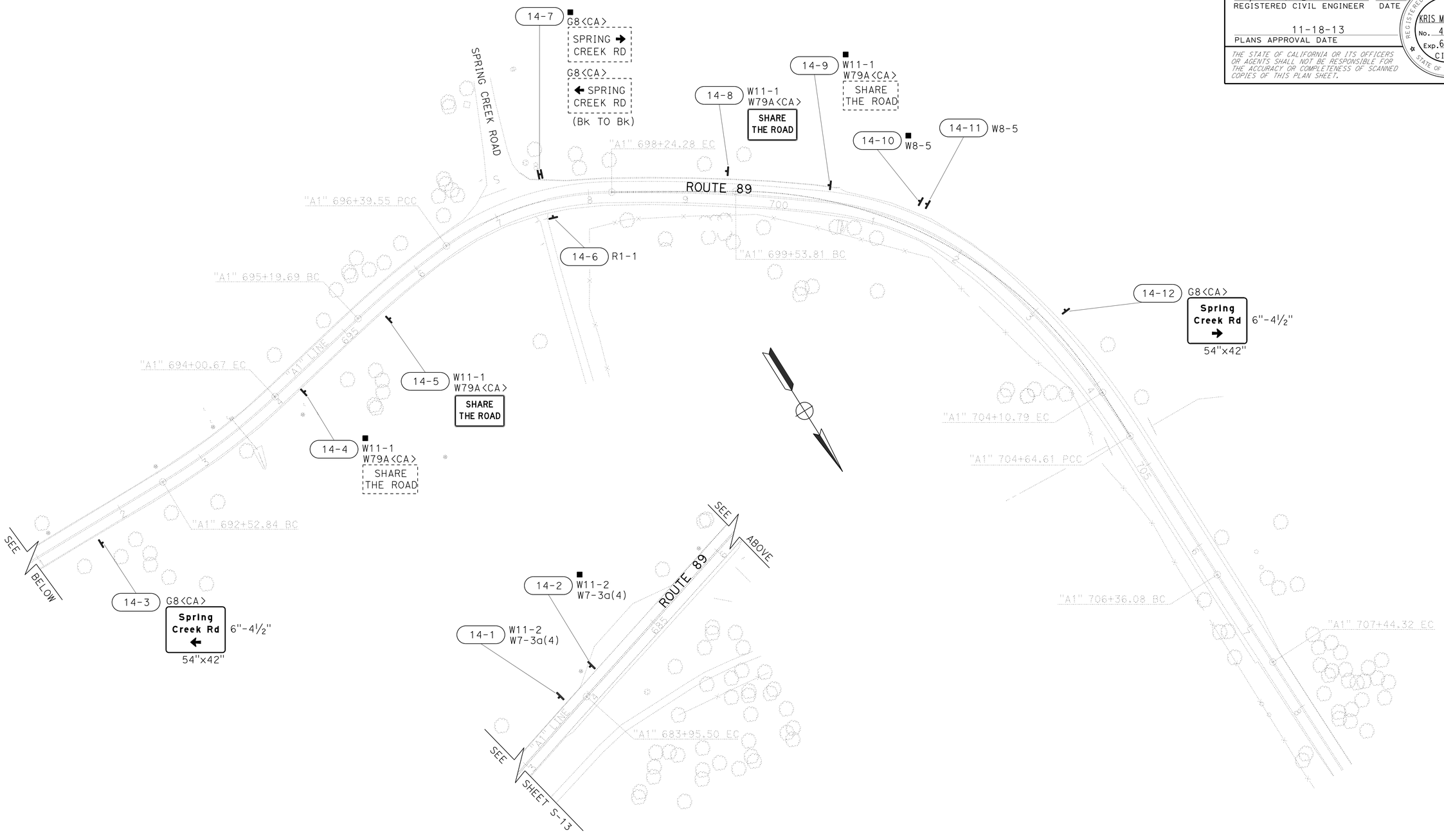

SIGN PLAN

SCALE: 1"=50'

S-14

APPROVED FOR SIGN WORK ONLY

STATE OF CALIFORNIA - DEPARTMENT OF TRANSPORTATION
Caltrans®
TRAFFIC

CALCULATED-DESIGNED BY	CHECKED BY	REVISED BY	DATE REVISED
JACK KEMMERLY	KRIS ALBERS		

FUNCTIONAL SUPERVISOR: SERGIO ACEVES

LAST REVISION 5-14-13 DATE PLOTTED => 13-FEB-2014 TIME PLOTTED => 13:44

BORDER LAST REVISED 7/2/2010 | USERNAME => s130875 DGN FILE => 0300000223oa014.dgn | RELATIVE BORDER SCALE IS IN INCHES 0 1 2 3 | UNIT 0390 | PROJECT NUMBER & PHASE 03000002231

Dist	COUNTY	ROUTE	POST MILES TOTAL PROJECT	SHEET No.	TOTAL SHEETS
03	ED	89	8.6/13.8	142	231

Kris M Albers 11-18-13
REGISTERED CIVIL ENGINEER DATE

11-18-13
PLANS APPROVAL DATE

REGISTERED PROFESSIONAL ENGINEER
KRIS M. ALBERS
No. 49986
Exp. 6-30-15
CIVIL
STATE OF CALIFORNIA

THE STATE OF CALIFORNIA OR ITS OFFICERS OR AGENTS SHALL NOT BE RESPONSIBLE FOR THE ACCURACY OR COMPLETENESS OF SCANNED COPIES OF THIS PLAN SHEET.

NOTES:

1. THE SIGN POST SHALL HAVE 7/16" DIAMETER PERFORATIONS 1" ON CENTER ON ALL FOUR SIDES FOR THE FULL LENGTH.
2. USE TWO DRIVE RIVETS TO FASTEN ASSEMBLED SIGN AND SIGN POST INTO ANCHOR SLEEVE. INSTALL DRIVE RIVETS INTO THE SIDES FACING TRAFFIC.
3. ALL METAL SIGN POSTS AND ANCHOR SLEEVES SHALL BE GALVANIZED.
4. ALL ANCHOR SLEEVES SHALL BE EMBEDDED IN PCC.
5. BALANCED SINGLE POST INSTALLATIONS OF SINGLE SHEET ALUMINUM PANEL SIGNS REQUIRE BACK BRACES WHEN 2'-10" OR MORE IN LENGTH.
6. WOOD BLOCK SPACERS ARE NOT REQUIRED FOR SIGNS MOUNTED ON METAL POSTS.
7. ATTACH RECTANGULAR SIGN PANEL TO SIGN POST WITH BOLTS AT TOP AND BOTTOM. CENTER MAY BE ATTACHED WITH EITHER BOLT OR 3/8" DRIVE RIVET.
8. ATTACH DIAMOND SIGN PANEL TO SIGN POST WITH BOLT AT CENTER. TOP AND BOTTOM MAY BE ATTACHED WITH EITHER BOLTS OR 3/8" DRIVE RIVETS.
9. FOR DETAILS NOT SHOWN, SEE STANDARD PLANS RS1 AND RS2.

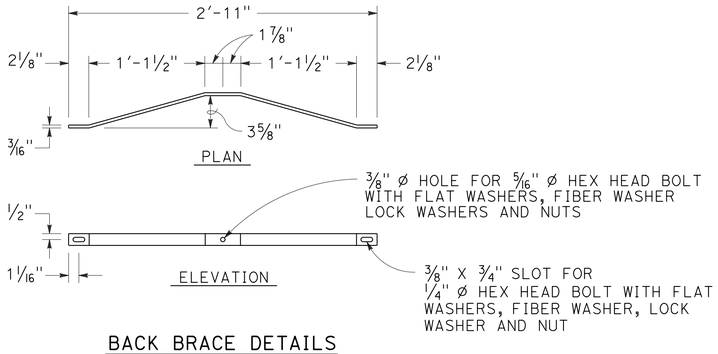

BACK BRACE DETAILS
SEE NOTE 5

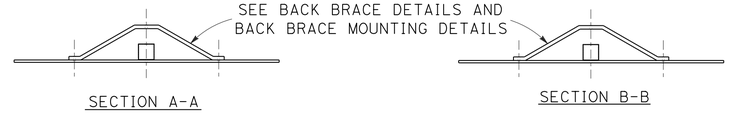

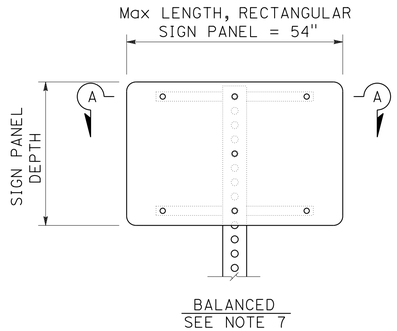

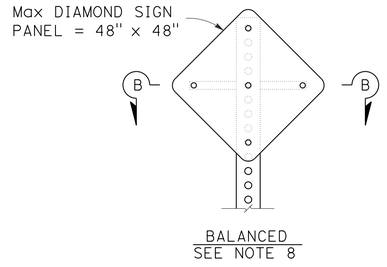

SINGLE POST INSTALLATION

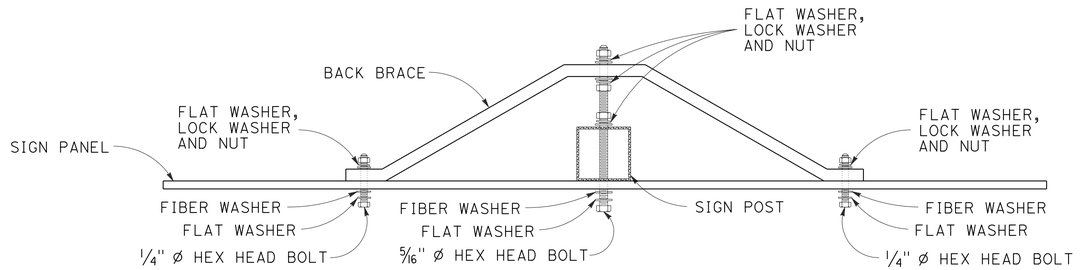

BACK BRACE MOUNTING DETAIL
SEE NOTES 6, 7 AND 8

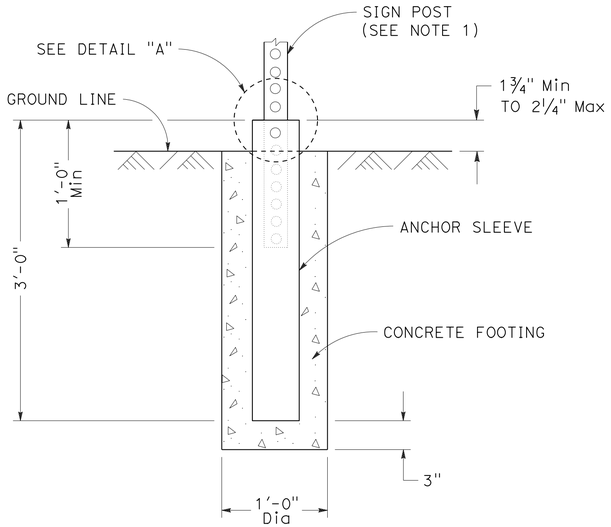

ANCHOR SLEEVE DETAIL

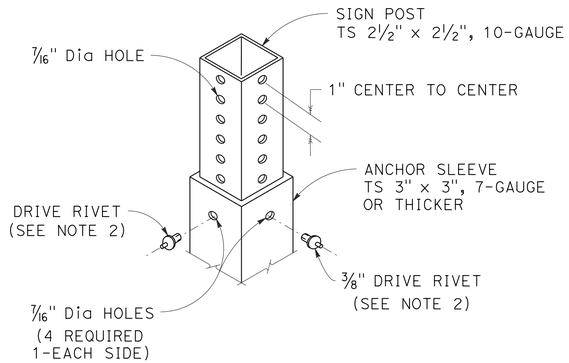

DETAIL "A"

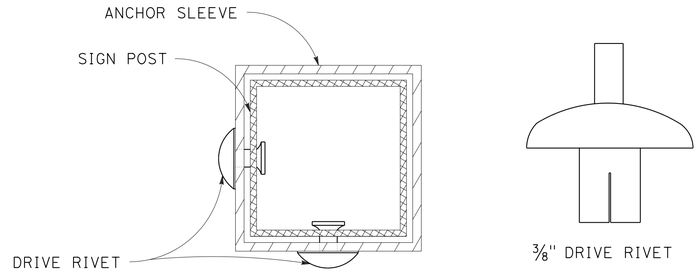

FASTENER DETAILS

SIGN DETAILS
NO SCALE

SD-1

STATE OF CALIFORNIA - DEPARTMENT OF TRANSPORTATION
TRAFFIC
FUNCTIONAL SUPERVISOR: SERGIO ACEVES
CALCULATED-DESIGNED BY: JACK KEMMERLY
CHECKED BY: KRIS ALBERS
REVISED BY
DATE REVISED

LAST REVISION 2-20-13
DATE PLOTTED => 13-FEB-2014
TIME PLOTTED => 13:44

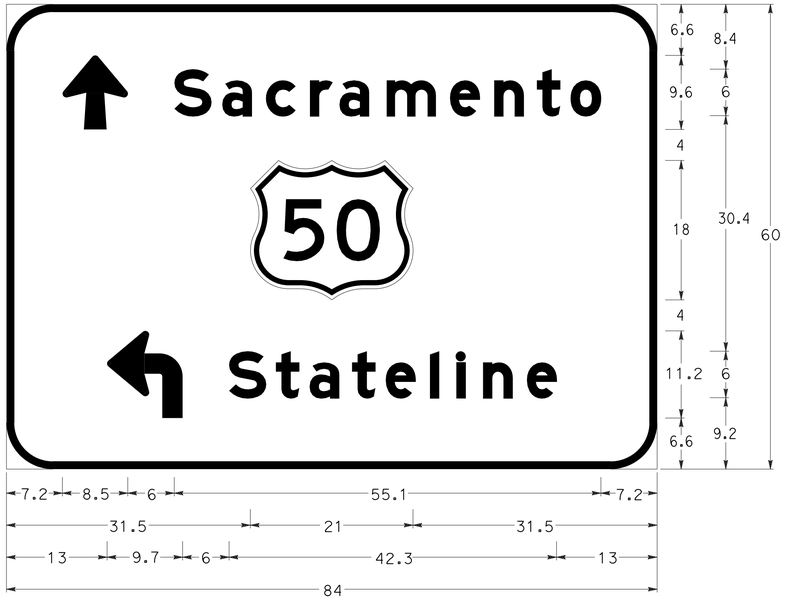

1" BORDER WITH 6" RADIUS
ARROW 6UC-1L - 9.6" 90°; "Sacramento" E Mod
G26-1<CA> SHIELD
90° ADVANCED TURN ARROW 6UC - 9.8" X 11.3"; "Stateline" E Mod

G8<CA>
1-20

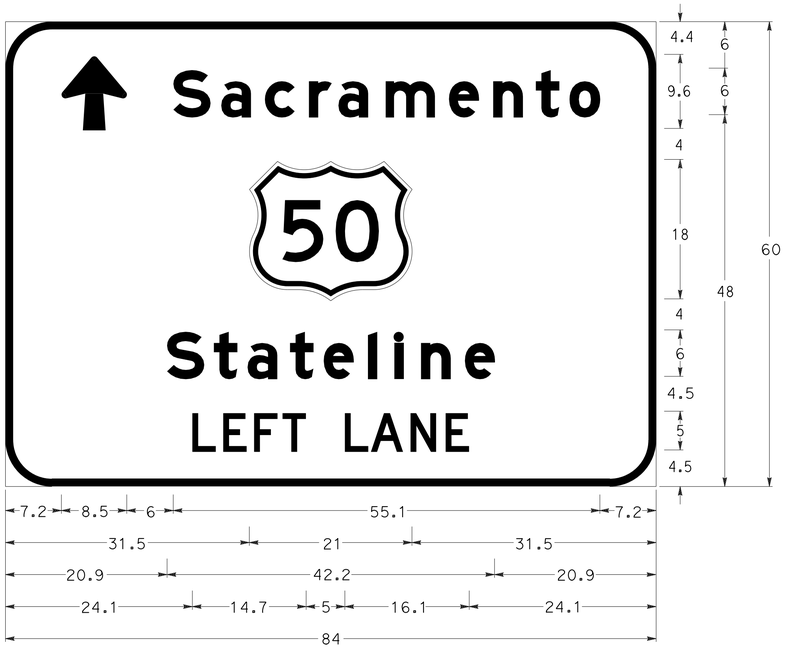

1" BORDER WITH 6" RADIUS
ARROW 6UC-1L - 9.6" 90°; "Sacramento" E Mod
G26-1<CA> SHIELD
"Stateline" E Mod
"LEFT LANE" D

G77A<CA>
1-21

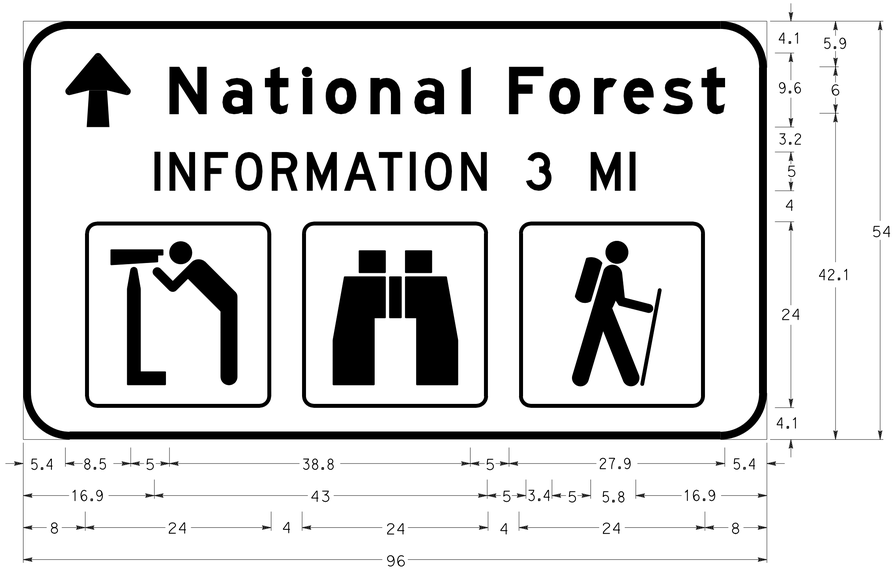

1" BORDER WITH 6" RADIUS
ARROW 6UC-1L - 9.6" 90°; "NATIONAL FOREST" E Mod
"INFORMATION 3 MI" D
RS-036; RS-076; RS-068

G72<CA>
2-1
(SEE NOTE 2)

Dist	COUNTY	ROUTE	POST MILES TOTAL PROJECT	SHEET No.	TOTAL SHEETS
03	ED	89	8.6/13.8	143	231

Kris M. Albers 11-18-13
REGISTERED CIVIL ENGINEER DATE

11-18-13
PLANS APPROVAL DATE

KRIS M. ALBERS No. 49986 Exp. 6-30-15 CIVIL — REGISTERED PROFESSIONAL ENGINEER — STATE OF CALIFORNIA

THE STATE OF CALIFORNIA OR ITS OFFICERS OR AGENTS SHALL NOT BE RESPONSIBLE FOR THE ACCURACY OR COMPLETENESS OF SCANNED COPIES OF THIS PLAN SHEET.

NOTE:

1. ALL SIGN PANEL DIMENSIONS ARE IN INCHES.
2. THE RS SERIES SIGN PANELS SHALL BE BROWN RETROREFLECTIVE SHEETING WITH WHITE RETROREFLECTIVE BORDER AND LEGEND.

SIGN DETAILS

SD-2

STATE OF CALIFORNIA - DEPARTMENT OF TRANSPORTATION
TRAFFIC
FUNCTIONAL SUPERVISOR: SERGIO ACEVES
CALCULATED-DESIGNED BY: JACK KEMMERLY
CHECKED BY: KRIS ALBERS
REVISED BY
DATE REVISED

LAST REVISION 10-3-13
DATE PLOTTED => 13-FEB-2014
TIME PLOTTED => 13:44

Dist	COUNTY	ROUTE	POST MILES TOTAL PROJECT	SHEET No.	TOTAL SHEETS
03	ED	89	8.6/13.8	144	231

Kris M Albers 11-18-13
REGISTERED CIVIL ENGINEER DATE

11-18-13
PLANS APPROVAL DATE

REGISTERED PROFESSIONAL ENGINEER
KRIS M. ALBERS
No. 49986
Exp. 6-30-15
CIVIL
STATE OF CALIFORNIA

THE STATE OF CALIFORNIA OR ITS OFFICERS OR AGENTS SHALL NOT BE RESPONSIBLE FOR THE ACCURACY OR COMPLETENESS OF SCANNED COPIES OF THIS PLAN SHEET.

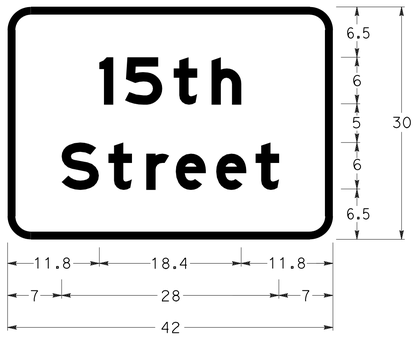

1" BORDER WITH 3" RADIUS
"15th" E Mod
"Street" E Mod

G7<CA>
4-20

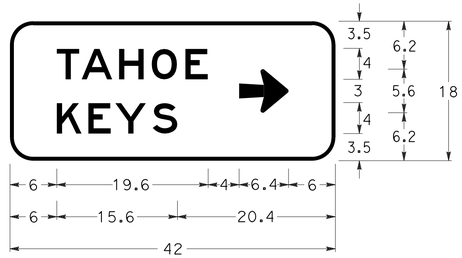

½" BORDER WITH 3" RADIUS
"TAHOE" E
"KEYS" E
ARROW - 4UC&CAP-1L - 6.4" 0°

G8<CA>
4-20

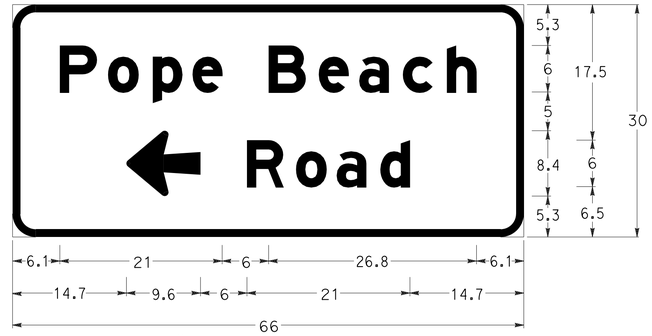

1" BORDER WITH 3" RADIUS
"Pope Beach" E Mod
ARROW 6UC-1L - 9.6" 180°; "Road" E Mod

G72<CA>
9-16

NOTE:

1. ALL SIGN PANEL DIMENSIONS ARE IN INCHES.

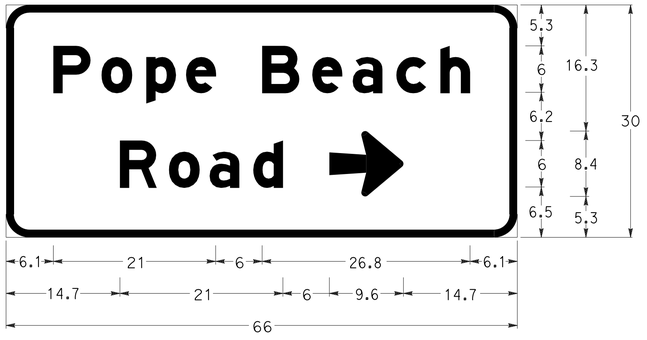

1" BORDER WITH 3" RADIUS
"Pope Beach" E Mod
"Road" E Mod; ARROW 6UC-1L - 9.6" 0°

G72<CA>
8-8

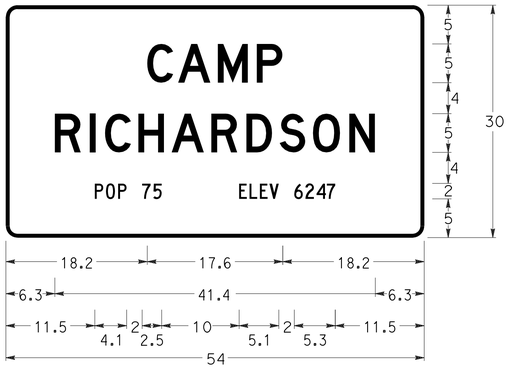

½" BORDER WITH 1½" RADIUS
"CAMP" D
"RICHARDSON" D
"POP 75" C; "ELEV 6247" C

G9-2<CA>
9-22 11-5

SIGN DETAILS

SD-3

REVISED BY | DATE REVISED
JACK KEMMERLY | KRIS ALBERS
CALCULATED-DESIGNED BY | CHECKED BY
FUNCTIONAL SUPERVISOR: SERGIO ACEVES
STATE OF CALIFORNIA - DEPARTMENT OF TRANSPORTATION
TRAFFIC
Caltrans®

LAST REVISION 10-21-13 | DATE PLOTTED => 13-FEB-2014 | TIME PLOTTED => 13:44

BORDER LAST REVISED 7/2/2010 | USERNAME => s130875 | DGN FILE => 0300000223ob003.dgn | RELATIVE BORDER SCALE IS IN INCHES 0 1 2 3 | UNIT 0390 | PROJECT NUMBER & PHASE 03000002231

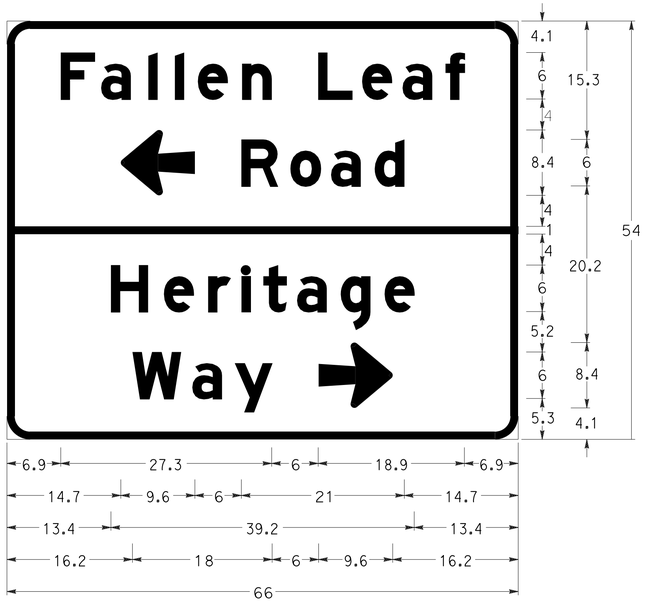

1" BORDER WITH 3" RADIUS
"Fallen Leaf" E Mod
ARROW 6UC-1L - 9.6" 180°; "Road" E Mod
"Heritage" E Mod
"Way" E Mod: ARROW 6UC-1L - 9.6" 0°

G8<CA>
12-3

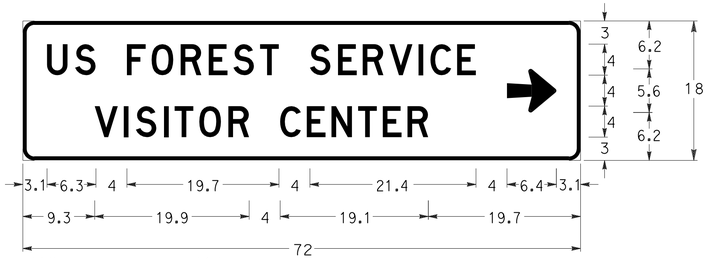

½" BORDER WITH 1½" RADIUS
"US FOREST SERVICE" D
"VISITOR CENTER" D
ARROW 4UC&CAP-1L - 6.4" 0°

G72<CA>
12-11

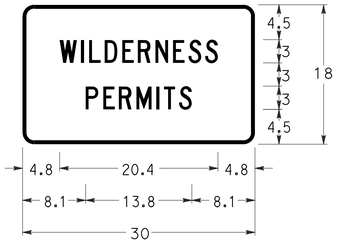

½" BORDER WITH 1½" RADIUS
"WILDERNESS" C
"PERMITS" C

G(Spec)<CA>
12-11 13-3

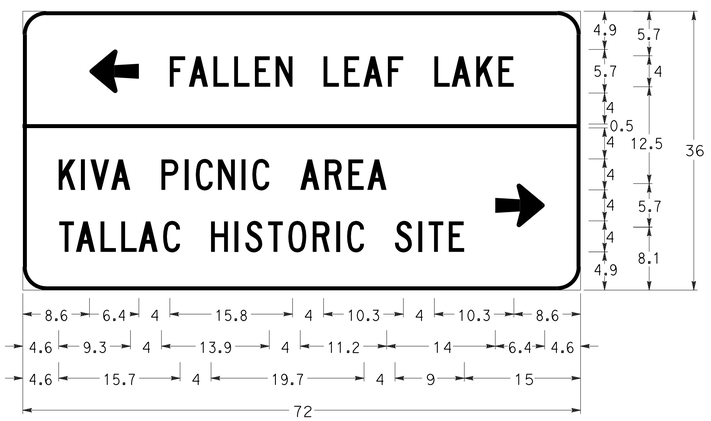

½" BORDER WITH 3" RADIUS
ARROW 4UC&CAP-1L - 6.4" 180°; "FALLEN LEAF LAKE" C
"KIVA PICNIC AREA" C
"TALLAC HISTORIC SITE" C
ARROW 4UC&CAP-1L - 6.4" 0°

G72<CA>
12-5

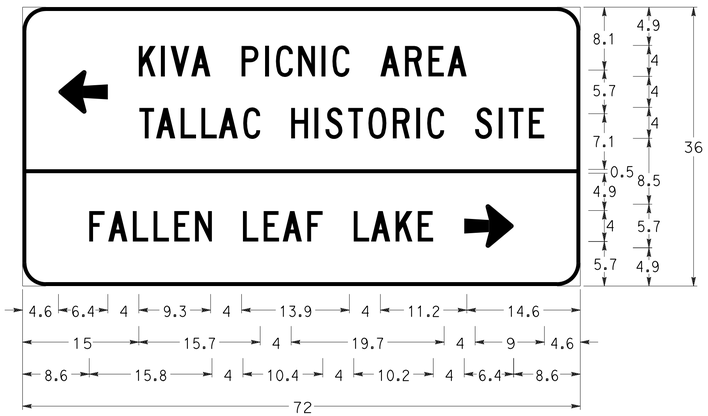

½" BORDER WITH 3" RADIUS
ARROW 4UC&CAP-1L - 6.4" 180°
"KIVA PICNIC AREA" C
"TALLAC HISTORIC SITE" C
"FALLEN LEAF LAKE" C; ARROW 4UC&CAP-1L - 6.4" 0°

G72<CA>
12-13

NOTE:

1. ALL SIGN PANEL DIMENSIONS ARE IN INCHES.

SIGN DETAILS

SD-4

Dist	COUNTY	ROUTE	POST MILES TOTAL PROJECT	SHEET No.	TOTAL SHEETS
03	ED	89	8.6/13.8	145	231

Kris M. Albers 11-18-13
REGISTERED CIVIL ENGINEER DATE

11-18-13
PLANS APPROVAL DATE

KRIS M. ALBERS No. 49986 Exp. 6-30-15 CIVIL — REGISTERED PROFESSIONAL ENGINEER — STATE OF CALIFORNIA

THE STATE OF CALIFORNIA OR ITS OFFICERS OR AGENTS SHALL NOT BE RESPONSIBLE FOR THE ACCURACY OR COMPLETENESS OF SCANNED COPIES OF THIS PLAN SHEET.

CALCULATED-DESIGNED BY: JACK KEMMERLY
CHECKED BY: KRIS ALBERS
REVISED BY
DATE REVISED
FUNCTIONAL SUPERVISOR: SERGIO ACEVES
STATE OF CALIFORNIA - DEPARTMENT OF TRANSPORTATION
TRAFFIC
Caltrans®

LAST REVISION 10-21-13
DATE PLOTTED => 13-FEB-2014
TIME PLOTTED => 13:44

BORDER LAST REVISED 7/2/2010
USERNAME => s130875
DGN FILE => 0300000223ob004.dgn
RELATIVE BORDER SCALE IS IN INCHES 0 1 2 3
UNIT 0390
PROJECT NUMBER & PHASE 03000002231

Dist	COUNTY	ROUTE	POST MILES TOTAL PROJECT	SHEET No.	TOTAL SHEETS
03	ED	89	8.6/13.8	146	231

Kris M. Albers 11-18-13
REGISTERED CIVIL ENGINEER DATE

11-18-13
PLANS APPROVAL DATE

REGISTERED PROFESSIONAL ENGINEER
KRIS M. ALBERS
No. 49986
Exp. 6-30-15
CIVIL
STATE OF CALIFORNIA

THE STATE OF CALIFORNIA OR ITS OFFICERS OR AGENTS SHALL NOT BE RESPONSIBLE FOR THE ACCURACY OR COMPLETENESS OF SCANNED COPIES OF THIS PLAN SHEET.

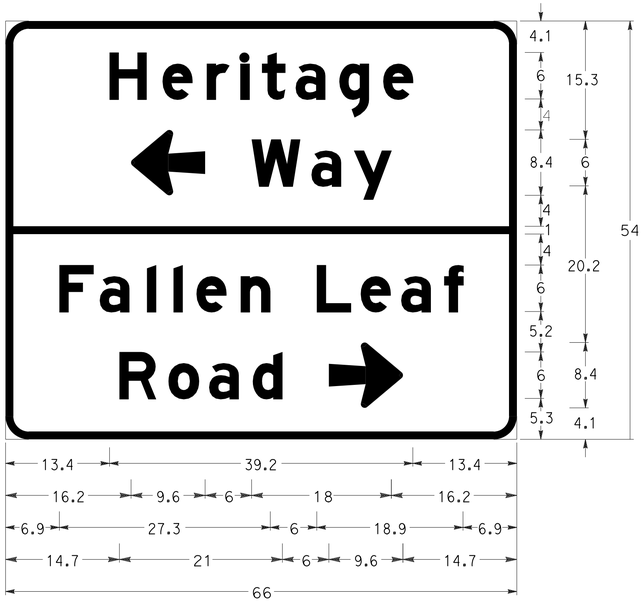

1" BORDER WITH 3" RADIUS
"Heritage" E Mod
ARROW 6UC-1L - 9.6" 180°; "Way" E Mod
"Fallen Leaf" E Mod
"Road" E Mod: ARROW 6UC-1L - 9.6" 0°

G8<CA>
12-15

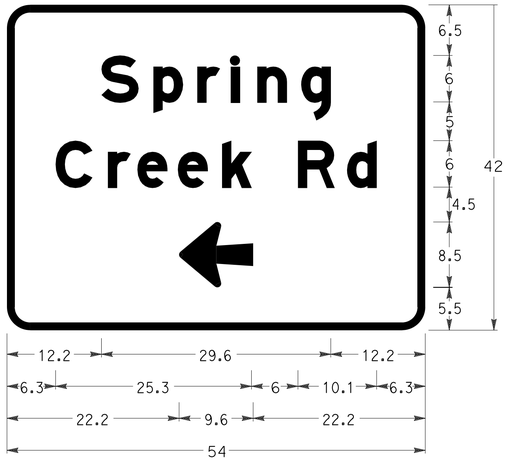

1" BORDER WITH 3" RADIUS
"Spring" E Mod
"Creek Rd" E Mod
ARROW 6UC-1L - 9.6" 180°

G8<CA>
14-3

NOTE:

1. ALL SIGN PANEL DIMENSIONS ARE IN INCHES.

½" BORDER WITH 1½" RADIUS
ARROW 4UC&CAP-1L - 6.4" 180°
"US FOREST SERVICE" D
"VISITOR CENTER" D

G72<CA>
13-3

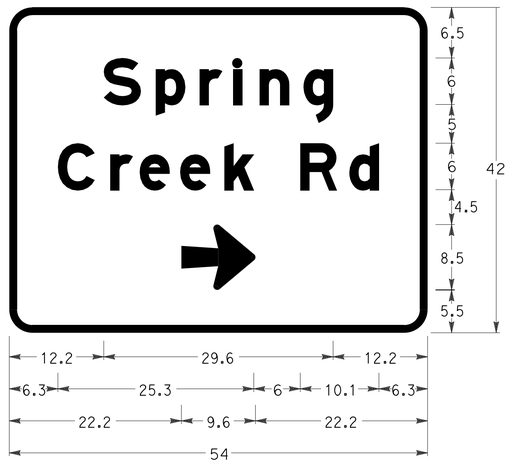

1" BORDER WITH 3" RADIUS
"Spring" E Mod
"Creek Rd" E Mod
ARROW 6UC-1L - 9.6" 0°

G8<CA>
14-12

SIGN DETAILS

SD-5

CALCULATED-DESIGNED BY: JACK KEMMERLY
CHECKED BY: KRIS ALBERS
REVISED BY
DATE REVISED
FUNCTIONAL SUPERVISOR: SERGIO ACEVES
STATE OF CALIFORNIA - DEPARTMENT OF TRANSPORTATION
TRAFFIC
Caltrans

LAST REVISION DATE PLOTTED => 13-FEB-2014
TIME PLOTTED => 13:44
10-21-13

BORDER LAST REVISED 7/2/2010
USERNAME => s130875
DGN FILE => 0300000223ob005.dgn
RELATIVE BORDER SCALE IS IN INCHES 0 1 2 3
UNIT 0390
PROJECT NUMBER & PHASE 03000002231

Dist	COUNTY	ROUTE	POST MILES TOTAL PROJECT	SHEET No.	TOTAL SHEETS
03	ED	89	8.6/13.8	147	231

Kris M. Albers 11-18-13
REGISTERED CIVIL ENGINEER DATE

11-18-13
PLANS APPROVAL DATE

REGISTERED PROFESSIONAL ENGINEER
KRIS M. ALBERS
No. 49986
Exp. 6-30-15
CIVIL
STATE OF CALIFORNIA

THE STATE OF CALIFORNIA OR ITS OFFICERS OR AGENTS SHALL NOT BE RESPONSIBLE FOR THE ACCURACY OR COMPLETENESS OF SCANNED COPIES OF THIS PLAN SHEET.

ROADSIDE SIGN QUANTITIES

SIGN NUMBER (Sht-No.)	SIGN CODE		PANEL SIZE (INCHES)	"C" DIM IN FEET	POST SIZE AND LENGTH				ROADSIDE SIGN		INSTALL SIGN (SSBM) (EACH)	REMOVE ROADSIDE SIGN (EACH)	RESET ROADSIDE SIGN (EACH)	REMARKS
					WOOD POST			METAL POST	ONE POST (EACH)	TWO POST (EACH)				
	FEDERAL	CALIFORNIA			4" X 4"	4" X 6"	6" X 6"	2½"X2½"						
1-1		G8-7										1		
1-2	R3-2		24 x 24	7				10′	1					
1-3	R1-1												1	
1-4		SNS											1	SEE NOTE 4
1-5	W11-2											1		
1-6		G77A										1		
1-7	R2-1(35)	R48-1	36 x 48 36 x 18	7				14′	1					
1-8	R2-1(35)											1		
1-9		LAS(T)										1		SEE NOTE 6
1-10	D11-1		24 x 18	7				10′	1					
1-11	R1-1	SNS											1	SEE NOTE 4
1-12	D11-1		24 x 18	7				10′	1					
1-13		R26 R81-2										1		
1-14	R1-1	SNS											1	SEE NOTE 4
1-15	W11-2											1		
1-16		R26 R81-1										1		
1-17	R2-1(35)											1		
1-18	R2-1(35)	R48-1	36 x 48 36 x 18	7				14′	1					
1-19		R41										1		
1-20		G8	84 x 60	7			18′			1				
1-21		G77A	84 x 60	7			18′			1				
1-22	R3-2		24 x 24	7				10′	1					
SHEET TOTAL									6	2	0	10	4	———

NOTES:

1. EXACT LOCATION AND POSITION OF ROADSIDE SIGNS TO BE DETERMINED BY THE ENGINEER.
2. POST LENGTHS GIVEN ARE APPROXIMATE.
3. "C" DIM = VERTICAL CLEARANCE EP TO BOTTOM OF SIGN PANEL.
4. SNS = STREET NAME SIGN.
5. LAS = LOCAL AGENCY SIGN.
6. LAS(T) = LOCAL AGENCY SIGN (TROLLEY).
7. SIGN PANEL TO BE MOUNTED ON DECORATIVE LIGHT POLE DIRECTLY ABOVE THE PEDESTRIAN HYBRID BEACON SIGNAL HEAD.
8. SIGN PANELS SHALL BE FLUORESCENT YELLOW GREEN.

SIGN QUANTITIES

SQ-1

REVISED BY | DATE REVISED
JACK KEMMERLY | KRIS ALBERS
CALCULATED-DESIGNED BY | CHECKED BY
FUNCTIONAL SUPERVISOR: SERGIO ACEVES
STATE OF CALIFORNIA - DEPARTMENT OF TRANSPORTATION
Caltrans®
TRAFFIC

LAST REVISION 10-21-13 | DATE PLOTTED => 13-FEB-2014 | TIME PLOTTED => 13:44

BORDER LAST REVISED 7/2/2010 | USERNAME => s130875 | DGN FILE => 0300000223oc001.dgn | RELATIVE BORDER SCALE IS IN INCHES 0 1 2 3 | UNIT 0390 | PROJECT NUMBER & PHASE 03000002231

Dist	COUNTY	ROUTE	POST MILES TOTAL PROJECT	SHEET No.	TOTAL SHEETS
03	ED	89	8.6/13.8	148	231

Kris M. Albers 11-18-13
REGISTERED CIVIL ENGINEER DATE

11-18-13
PLANS APPROVAL DATE

REGISTERED PROFESSIONAL ENGINEER
KRIS M. ALBERS
No. 49986
Exp. 6-30-15
CIVIL
STATE OF CALIFORNIA

THE STATE OF CALIFORNIA OR ITS OFFICERS OR AGENTS SHALL NOT BE RESPONSIBLE FOR THE ACCURACY OR COMPLETENESS OF SCANNED COPIES OF THIS PLAN SHEET.

ROADSIDE SIGN QUANTITIES (CONTINUED)

SIGN NUMBER (Sht-No.)	SIGN CODE		PANEL SIZE (INCHES)	"C" DIM IN FEET	POST SIZE AND LENGTH				ROADSIDE SIGN		INSTALL SIGN (SSBM) (EACH)	REMOVE ROADSIDE SIGN (EACH)	RESET ROADSIDE SIGN (EACH)	REMARKS
					WOOD POST			METAL POST	ONE POST (EACH)	TWO POST (EACH)				
	FEDERAL	CALIFORNIA			4" X 4"	4" X 6"	6" X 6"	2½"X2½"						
2-1		G72	96 x 54	7			18′			1				
2-2	RM-170	G72 G200-81 G200-68										1		
2-3		R26										1		
2-4		R26										1		
2-5		R26										1		
2-6		LAS(T)										1		SEE NOTE 6
2-7	R1-1	SNS											1	SEE NOTE 4
2-8		R26 LAS(T)										1		SEE NOTE 6
2-9		SNS											1	SEE NOTE 4
2-10	R1-1											1		
2-11	R1-1		30	7				12′	1					
2-12		R26										1		
2-13		R26										1		
2-14		R26 R81-1										1		
2-15	D11-1		24 x 18	7				10′	1					
2-16		SNS											1	SEE NOTE 4
2-17	R1-1		30	7				12′	1					
2-18	R1-1											1		
2-19	D11-1 M4-11												1	
3-1		R26										1		
3-2		R26											1	
3-3	R1-1	SNS											1	SEE NOTE 4
3-4	D11-1		24 x 18	7				10′	1					
3-5		R26										1		
3-6		R26 R81-1										1		
3-7		R26										1		
3-8		R26										1		
3-9	R2-1(35)	R48-1	36 x 48 36 x 18	7				14′	1					
3-10	R2-1(35)											1		
3-11	R1-1	SNS											1	SEE NOTE 4
3-12		R26										1		
3-13	R2-1(35)											1		
3-14	R2-1(35)	R48-1	36 x 48 36 x 18	7				14′	1					
SHEET TOTAL									6	1	0	19	7	———

REVISED BY | DATE REVISED
JACK KEMMERLY | KRIS ALBERS
CALCULATED-DESIGNED BY | CHECKED BY
FUNCTIONAL SUPERVISOR: SERGIO ACEVES
STATE OF CALIFORNIA - DEPARTMENT OF TRANSPORTATION
Caltrans®
TRAFFIC

SIGN QUANTITIES

SQ-2

LAST REVISION 10-21-13 | DATE PLOTTED => 13-FEB-2014 | TIME PLOTTED => 13:44

Dist	COUNTY	ROUTE	POST MILES TOTAL PROJECT	SHEET No.	TOTAL SHEETS
03	ED	89	8.6/13.8	149	231

Kris M. Albers 11-18-13
REGISTERED CIVIL ENGINEER DATE

11-18-13
PLANS APPROVAL DATE

REGISTERED PROFESSIONAL ENGINEER KRIS M. ALBERS No. 49986 Exp. 6-30-15 CIVIL STATE OF CALIFORNIA

THE STATE OF CALIFORNIA OR ITS OFFICERS OR AGENTS SHALL NOT BE RESPONSIBLE FOR THE ACCURACY OR COMPLETENESS OF SCANNED COPIES OF THIS PLAN SHEET.

ROADSIDE SIGN QUANTITIES (CONTINUED)

SIGN NUMBER (Sht-No.)	SIGN CODE FEDERAL	SIGN CODE CALIFORNIA	PANEL SIZE (INCHES)	"C" DIM IN FEET	POST SIZE AND LENGTH WOOD POST 4" X 4"	WOOD POST 4" X 6"	WOOD POST 6" X 6"	METAL POST 2½"X2½"	ROADSIDE SIGN ONE POST (EACH)	ROADSIDE SIGN TWO POST (EACH)	INSTALL SIGN (SSBM) (EACH)	REMOVE ROADSIDE SIGN (EACH)	RESET ROADSIDE SIGN (EACH)	REMARKS
3-15		R26										1		
3-16	R1-1	SNS											1	SEE NOTE 4
3-17	D11-1		24 x 18	7				10′	1					
4-1		R26										1		
4-2		R26										1		
4-3		R26 R81-2 LAS(T)										1		SEE NOTE 6
4-4	D11-1		24 x 18	7				10′	1					
4-5		R26 LAS(T)										1		SEE NOTE 6
4-6	R1-1		30	7				12′	1					
4-7	R1-1											1		
4-8	D11-1	G38											1	
4-9	R1-1											1		
4-10	R1-1		30	7				12′	1					
4-11	D11-1	SNS G33-1(Lt)											1	SEE NOTE 4
4-12		R26 R81-2										1		
4-13		R26										1		
4-14		R26										1		
4-15		SW48(30)	72 x 54	7		16′				1				
4-16		SW48(30)										1		
4-17		R26										1		
4-18		R26	12 x 18	7				10′	1					
4-19		R26										1		
4-20		G7 G8	42 x 30 42 x 18	7				12′	1					
4-21		G8										1		
5-1		R26	12 x 18	7				10′	1					
5-2		R26										1		
5-3	D11-1		24 x 18	7				10′	1					
5-4	R1-1	SNS											1	SEE NOTE 4
5-5	R1-1	SNS											1	SEE NOTE 4
5-6	D11-1		24 x 18	7				10′	1					
5-7	W9-1R		48 x 48	7				14′	1					
5-8		R26	12 x 18	7				10′	1					
5-9		R26 LAS(T)										1		SEE NOTE 6
5-10		R26	12 x 18	7				10′	1					
5-11		R26										1		
SHEET TOTAL									12	1	0	17	5	————

STATE OF CALIFORNIA - DEPARTMENT OF TRANSPORTATION
Caltrans®
TRAFFIC

FUNCTIONAL SUPERVISOR: SERGIO ACEVES
CALCULATED-DESIGNED BY: JACK KEMMERLY
CHECKED BY: KRIS ALBERS
REVISED BY
DATE REVISED

SIGN QUANTITIES

SQ-3

LAST REVISION 9-26-13
DATE PLOTTED => 13-FEB-2014
TIME PLOTTED => 13:44

Dist	COUNTY	ROUTE	POST MILES TOTAL PROJECT	SHEET No.	TOTAL SHEETS
03	ED	89	8.6/13.8	150	231

Kris M. Albers 11-18-13
REGISTERED CIVIL ENGINEER DATE

11-18-13
PLANS APPROVAL DATE

REGISTERED PROFESSIONAL ENGINEER
KRIS M. ALBERS
No. 49986
Exp. 6-30-15
CIVIL
STATE OF CALIFORNIA

THE STATE OF CALIFORNIA OR ITS OFFICERS OR AGENTS SHALL NOT BE RESPONSIBLE FOR THE ACCURACY OR COMPLETENESS OF SCANNED COPIES OF THIS PLAN SHEET.

ROADSIDE SIGN QUANTITIES (CONTINUED)

SIGN NUMBER (Sht-No.)	SIGN CODE FEDERAL	SIGN CODE CALIFORNIA	PANEL SIZE (INCHES)	"C" DIM IN FEET	POST SIZE AND LENGTH WOOD POST 4" X 4"	WOOD POST 4" X 6"	WOOD POST 6" X 6"	METAL POST 2½"X2½"	ROADSIDE SIGN ONE POST (EACH)	ROADSIDE SIGN TWO POST (EACH)	INSTALL SIGN (SSBM) (EACH)	REMOVE ROADSIDE SIGN (EACH)	RESET ROADSIDE SIGN (EACH)	REMARKS
5-12	R1-1	SNS											1	SEE NOTE 4
5-13		R26	12 x 18	7				10′	1					
5-14		R26 R81-1										1		
5-15		LAS LAS										1		SEE NOTE 5
5-16		R26										1		
5-17		R48										1		
5-18		R26	12 x 18	7				10′	1					
5-19		R26	12 x 18	7				10′	1					
5-20		R26										1		
5-21	R1-1	SNS											1	SEE NOTE 4
5-22	W4-2R		48 x 48	7				14′	1					
5-23		G9-5											1	
5-24		R26										1		
5-25		R26	12 x 18	7				10′	1					
5-26		R26	12 x 18	7				10′	1					
5-27		R26 R81-1 LAS(T)										1		SEE NOTE 6
5-28	R2-1(35)	R48-1										1		
5-29	R2-1(35)	R48-1	36 x 48 36 x 18	7				14′	1					
5-30	M14-12	G30A-1										1		
5-31	R2-1(35)											1		
5-32	R2-1(35)	R48-1	36 x 48 36 x 18	7				14′	1					
5-33		G30A-1										1		
5-34		R26										1		
5-35		R26	12 x 18	5				8′	1					
5-36		G30A-1	12 x 18	5				8′	1					
5-37		W75(L†)										1		
5-38		R26										1		
5-39		R26	12 x 18	5				8′	1					
5-40		W11(R†)										1		
5-41		R26	12 x 18	5				8′	1					
5-42		R26										1		
SHEET TOTAL									12	0	0	16	3	———

REVISED BY | DATE REVISED
JACK KEMMERLY | KRIS ALBERS
CALCULATED-DESIGNED BY | CHECKED BY
FUNCTIONAL SUPERVISOR | SERGIO ACEVES
STATE OF CALIFORNIA - DEPARTMENT OF TRANSPORTATION
Caltrans®
TRAFFIC

LAST REVISION 9-26-13 | DATE PLOTTED => 13-FEB-2014 | TIME PLOTTED => 13:44

SIGN QUANTITIES

SQ-4

Dist	COUNTY	ROUTE	POST MILES TOTAL PROJECT	SHEET No.	TOTAL SHEETS
03	ED	89	8.6/13.8	151	231

Kris M. Albers 11-18-13
REGISTERED CIVIL ENGINEER DATE

11-18-13
PLANS APPROVAL DATE

REGISTERED PROFESSIONAL ENGINEER
KRIS M. ALBERS
No. 49986
Exp. 6-30-15
CIVIL
STATE OF CALIFORNIA

THE STATE OF CALIFORNIA OR ITS OFFICERS OR AGENTS SHALL NOT BE RESPONSIBLE FOR THE ACCURACY OR COMPLETENESS OF SCANNED COPIES OF THIS PLAN SHEET.

ROADSIDE SIGN QUANTITIES (CONTINUED)

SIGN NUMBER (Sht-No.)	SIGN CODE FEDERAL	SIGN CODE CALIFORNIA	PANEL SIZE (INCHES)	"C" DIM IN FEET	POST SIZE AND LENGTH: WOOD POST 4" X 4"	WOOD POST 4" X 6"	WOOD POST 6" X 6"	METAL POST 2½"X2½"	ROADSIDE SIGN ONE POST (EACH)	ROADSIDE SIGN TWO POST (EACH)	INSTALL SIGN (SSBM) (EACH)	REMOVE ROADSIDE SIGN (EACH)	RESET ROADSIDE SIGN (EACH)	REMARKS
5-43	W11-2 W7-3a(1)		30 x 30 24 x 18	4				12′	1					
5-44	W11-2 W7-3a(2)											1		
5-45	W5-1		36 x 36	5				12′	1					
5-46	W5-1											1		
6-1	D11-1		24 x 18	5				8′	1					
6-2	W11-1		30 x 30	5				10′	1					
6-3	W11-1	W80										1		
6-4	R2-1(35)	R48-1	36 x 48 36 x 18	4				12′	1					
6-5	R2-1(35)											1		
6-6		R26 R81-1										1		
6-7		R26	12 x 18	5				8′	1					
6-8	W11-1	W80										1		
6-9	D11-1	G34(R†)	24 x 18 21 x 15	4				8′	1					
6-10	W11-1	W80										1		
6-11		R44A	12 x 24	5	12′				1					
6-12	D11-1	G37	24 x 18 21 x 15	4				8′	1					
6-13		G81-66										1		
6-14	W11-1											1		
6-15	W11-1		30 x 30	5				10′	1					
6-16		G81-66	48 x 48	5				10′	1					
6-17	R2-1(35)	R48-1	36 x 48 36 x 18	4				12′	1					
6-18	R2-1(35)											1		
6-19		G7										1		
6-20	W8-5		36 x 36	5				12′	1					
6-21	W8-5											1		
7-1	R2-1(35)	R48-1	36 x 48 36 x 18	4				12′	1					
7-2	R2-1(35)											1		
SHEET TOTAL									14	0	0	13	0	———

SIGN QUANTITIES

SQ-5

STATE OF CALIFORNIA - DEPARTMENT OF TRANSPORTATION
Caltrans®
TRAFFIC

FUNCTIONAL SUPERVISOR: SERGIO ACEVES
CALCULATED-DESIGNED BY
CHECKED BY
REVISED BY: JACK KEMMERLY
DATE REVISED: KRIS ALBERS

LAST REVISION
DATE PLOTTED => 13-FEB-2014
10-24-13 TIME PLOTTED => 13:44

Dist	COUNTY	ROUTE	POST MILES TOTAL PROJECT	SHEET No.	TOTAL SHEETS
03	ED	89	8.6/13.8	152	231

Kris M Albers 11-18-13
REGISTERED CIVIL ENGINEER DATE

11-18-13
PLANS APPROVAL DATE

REGISTERED PROFESSIONAL ENGINEER
KRIS M. ALBERS
No. 49986
Exp. 6-30-15
CIVIL
STATE OF CALIFORNIA

THE STATE OF CALIFORNIA OR ITS OFFICERS OR AGENTS SHALL NOT BE RESPONSIBLE FOR THE ACCURACY OR COMPLETENESS OF SCANNED COPIES OF THIS PLAN SHEET.

ROADSIDE SIGN QUANTITIES (CONTINUED)

SIGN NUMBER (Sht-No.)	SIGN CODE		PANEL SIZE (INCHES)	"C" DIM IN FEET	POST SIZE AND LENGTH				ROADSIDE SIGN		INSTALL SIGN (SSBM) (EACH)	REMOVE ROADSIDE SIGN (EACH)	RESET ROADSIDE SIGN (EACH)	REMARKS
					WOOD POST			METAL POST	ONE POST (EACH)	TWO POST (EACH)				
	FEDERAL	CALIFORNIA			4" X 4"	4" X 6"	6" X 6"	2½"X2½"						
8-1	W1-2L		36 x 36	5				12′	1					
8-2	W1-2L											1		
8-3	R2-1(35)	R48-1	36 x 48 36 x 18	4				12′	1					
8-4	R2-1(35)											1		
8-5	W8-5		36 x 36	5				12′	1					
8-6	W8-5											1		
8-7	W1-2R											1		
8-8	RS-044	G72	66 x 30 24 x 24	4		14′				1				
8-9	RM-120	G72										1		
8-10	W1-2R		36 x 36	5				12′	1					
8-11	W1-2L		36 x 36	5				12′	1					
9-1	R2-1(35)	R48-1	36 x 48 36 x 18	4				12′	1					
9-2	W1-2L											1		
9-3		R26A R28A(Lt)	24 x 30 24 x 30	4				10′	1					
9-4		R26A R28A(Lt)										1		
9-5	W1-7	N-1										1		
9-6	W1-7 OM1-3		48 x 24 18 x 18	4				10′	1					
9-7	R1-1	LAS(T)										1		SEE NOTE 6
9-8	R1-1		30	5				10′	1					
9-9		R26A R28A(Rt)										1		
9-10		R26A R28A(Rt)	24 x 30 24 x 30	4				10′	1					
9-11	R2-1(35)											1		
9-12	R2-1(35)	R48-1	36 x 48 36 x 18	4				12′	1					
9-13	W11-2 W7-3a(2)		30 x 30 24 x 18	4				12′	1					
9-14	W11-2 W7-3a(2)											1		
9-15	RM-120	G72										1		
SHEET TOTAL									12	1	0	13	0	———

REVISED BY | DATE REVISED
JACK KEMMERLY | KRIS ALBERS
CALCULATED-DESIGNED BY | CHECKED BY
FUNCTIONAL SUPERVISOR: SERGIO ACEVES
STATE OF CALIFORNIA - DEPARTMENT OF TRANSPORTATION
Caltrans®
TRAFFIC

SIGN QUANTITIES

SQ-6

LAST REVISION | DATE PLOTTED => 13-FEB-2014
10-21-13 | TIME PLOTTED => 13:45

Dist	COUNTY	ROUTE	POST MILES TOTAL PROJECT	SHEET No.	TOTAL SHEETS
03	ED	89	8.6/13.8	153	231

Kris M Albers 11-18-13
REGISTERED CIVIL ENGINEER DATE

11-18-13
PLANS APPROVAL DATE

REGISTERED PROFESSIONAL ENGINEER
KRIS M. ALBERS
No. 49986
Exp. 6-30-15
CIVIL
STATE OF CALIFORNIA

THE STATE OF CALIFORNIA OR ITS OFFICERS OR AGENTS SHALL NOT BE RESPONSIBLE FOR THE ACCURACY OR COMPLETENESS OF SCANNED COPIES OF THIS PLAN SHEET.

ROADSIDE SIGN QUANTITIES (CONTINUED)

SIGN NUMBER (Sht-No.)	SIGN CODE		PANEL SIZE (INCHES)	"C" DIM IN FEET	POST SIZE AND LENGTH				ROADSIDE SIGN		INSTALL SIGN (SSBM) (EACH)	REMOVE ROADSIDE SIGN (EACH)	RESET ROADSIDE SIGN (EACH)	REMARKS
					WOOD POST			METAL POST	ONE POST (EACH)	TWO POST (EACH)				
	FEDERAL	CALIFORNIA			4" X 4"	4" X 6"	6" X 6"	2½"X2½"						
9-16	RS-044	G72	66 x 30 24 x 24	4		14′				1				
9-17	W1-2R											1		
9-18	W1-2R		36 x 36	5				12′	1					
9-19	R2-1(35)											1		
9-20	R2-1(35)	R48-1	36 x 48 36 x 18	4				12′	1					
9-21		G9-2										1		
9-22		G9-2	54 x 30	5				10′	1					
9-23	W8-5		36 x 36	5				12′	1					
9-24	W8-5											1		
10-1	W11-2 W16-9p		30 x 30 24 x 12	4				10′	1					SEE NOTE 8
10-2	R2-1(35)											1		
10-3	R2-1(35)	R48-1	36 x 48 36 x 18	4				12′	1					
10-4	RW-130 RW-080	G33-1(R+)										1		
10-5	RS-061 RS-054	G33-1(R+)	24 x 24 24 x 24 24 x 6	4				10′	1					
10-6		LAS										1		SEE NOTE 5
10-7	W11-2											1		
10-8		LAS										1		SEE NOTE 5
10-9		LAS										1		SEE NOTE 5
10-10	R10-23 R10-23		24 x 30 24 x 30								1 1			SEE NOTE 7 SEE NOTE 7
10-11	R10-23 R10-23		24 x 30 24 x 30								1 1			SEE NOTE 7 SEE NOTE 7
10-12	W11-2											1		
10-13	R1-1											1		
10-14	R1-1		30	5				10′	1					
10-15		LAS(T)										1		SEE NOTE 6
10-16		R26 R28(R+) LAS(T)										1		SEE NOTE 6
10-17		LAS										1		SEE NOTE 5
10-18		LAS										1		SEE NOTE 5
10-19		LAS										1		SEE NOTE 5
SHEET TOTAL									8	1	4	17	0	———

REVISED BY | DATE REVISED
JACK KEMMERLY | KRIS ALBERS
CALCULATED-DESIGNED BY | CHECKED BY
FUNCTIONAL SUPERVISOR
SERGIO ACEVES

STATE OF CALIFORNIA - DEPARTMENT OF TRANSPORTATION
Caltrans®
TRAFFIC

LAST REVISION | DATE PLOTTED => 13-FEB-2014
10-21-13 | TIME PLOTTED => 13:45

SIGN QUANTITIES

SQ-7

Dist	COUNTY	ROUTE	POST MILES TOTAL PROJECT	SHEET No.	TOTAL SHEETS
03	ED	89	8.6/13.8	154	231

Kris M. Albers 11-18-13
REGISTERED CIVIL ENGINEER DATE

11-18-13
PLANS APPROVAL DATE

REGISTERED PROFESSIONAL ENGINEER
KRIS M. ALBERS
No. 49986
Exp. 6-30-15
CIVIL
STATE OF CALIFORNIA

THE STATE OF CALIFORNIA OR ITS OFFICERS OR AGENTS SHALL NOT BE RESPONSIBLE FOR THE ACCURACY OR COMPLETENESS OF SCANNED COPIES OF THIS PLAN SHEET.

ROADSIDE SIGN QUANTITIES (CONTINUED)

SIGN NUMBER (Sht-No.)	SIGN CODE		PANEL SIZE (INCHES)	"C" DIM IN FEET	POST SIZE AND LENGTH				ROADSIDE SIGN		INSTALL SIGN (SSBM) (EACH)	REMOVE ROADSIDE SIGN (EACH)	RESET ROADSIDE SIGN (EACH)	REMARKS
					WOOD POST			METAL POST	ONE POST (EACH)	TWO POST (EACH)				
	FEDERAL	CALIFORNIA			4" X 4"	4" X 6"	6" X 6"	2½"X2½"						
10-20	W11-2 W16-9p		30 x 30 24 x 12	4				10′	1					SEE NOTE 8
11-1	R1-1		30	5				10′	1					
11-2	R1-1											1		
11-3		R28(L+) LAS(T)										1		SEE NOTE 6
11-4		R24	12 x 18	5				8′	1					
11-5		G9-2	54 x 30	5				10′	1					
11-6		G9-2										1		
11-7		R24	12 x 18	5				8′	1					
11-8	R2-1(35)											1		
11-9	R2-1(35)	R48-1	36 x 48 36 x 18	4				12′	1					
11-10	R2-1(35)	R48-1	36 x 48 36 x 18	4				12′	1					
11-11	W11-7	W80										1		
11-12	R2-1(35)	LAS(T)										1		SEE NOTE 6
11-13	W11-7 W16-7pL		30 x 30 30 x 18	4				12′	1					
11-14	W11-7 W16-7pL		30 x 30 30 x 18	4				12′	1					
11-15		G(Spec)											1	
11-16	W11-7	W80										1		
12-1	W8-5		36 x 36	5				12′	1					
12-2	W8-5											1		
12-3		G8	66 x 54	5		14′				1				
12-4	RM-010	G72 G33-1(L+)										1		
12-5	RS-040	G72 G33-1(L+)	72 x 36 24 x 24 24 x 6	4		14′				1				
12-6		SNS											1	SEE NOTE 4
12-7	R1-1		30	5				10′	1					
12-8	R1-1											1		
SHEET TOTAL									11	2	0	10	2	———

STATE OF CALIFORNIA - DEPARTMENT OF TRANSPORTATION
TRAFFIC
FUNCTIONAL SUPERVISOR: SERGIO ACEVES
CALCULATED-DESIGNED BY: JACK KEMMERLY
CHECKED BY: KRIS ALBERS
REVISED BY | DATE REVISED

SIGN QUANTITIES

SQ-8

LAST REVISION | DATE PLOTTED => 13-FEB-2014
10-21-13 | TIME PLOTTED => 13:45

Dist	COUNTY	ROUTE	POST MILES TOTAL PROJECT	SHEET No.	TOTAL SHEETS
03	ED	89	8.6/13.8	155	231

Kris M. Albers 11-18-13
REGISTERED CIVIL ENGINEER DATE

11-18-13
PLANS APPROVAL DATE

REGISTERED PROFESSIONAL ENGINEER
KRIS M. ALBERS
No. 49986
Exp. 6-30-15
CIVIL
STATE OF CALIFORNIA

THE STATE OF CALIFORNIA OR ITS OFFICERS OR AGENTS SHALL NOT BE RESPONSIBLE FOR THE ACCURACY OR COMPLETENESS OF SCANNED COPIES OF THIS PLAN SHEET.

ROADSIDE SIGN QUANTITIES (CONTINUED)

SIGN NUMBER (Sht-No.)	SIGN CODE		PANEL SIZE (INCHES)	"C" DIM IN FEET	POST SIZE AND LENGTH				ROADSIDE SIGN		INSTALL SIGN (SSBM) (EACH)	REMOVE ROADSIDE SIGN (EACH)	RESET ROADSIDE SIGN (EACH)	REMARKS
					WOOD POST			METAL POST	ONE POST (EACH)	TWO POST (EACH)				
	FEDERAL	CALIFORNIA			4" X 4"	4" X 6"	6" X 6"	2½"X2½"						
12-9	R1-1											1		
12-10	R1-1		30	5				10′	1					
12-11	RS-076	G72 G200-81A G(Spec)	72 x 18 24 x 24 24 x 12 30 x 18	4		14′				1				
12-12		G72 G(Spec) G200-81 G200-81A										1		
12-13	RS-040	G72 G33-1(Rt)	72 x 36 24 x 24 24 x 6	4		14′				1				
12-14	RM-020 RM-010	G33-1(Rt) G72										1		
12-15		G8	66 x 54	5		14′				1				
12-16	R1-1											1		
12-17	R1-1		30	5				10′	1					
13-1		G28-2(89)										1		
13-2	M3-1	G28-2(89)	24 x 25 24 x 12	4				10′	1					
13-3	RS-076	G72 G(Spec) G200-81A	72 x 18 30 x 18 24 x 24 24 x 12	4		14′				1				
13-4		G72 G(Spec) G200-81 G200-81A										1		
13-5	R2-1(35)											1		
13-6	R2-1(35)	R48-1	36 x 48 36 x 18	4				12′	1					
13-7	R2-1(35)	R48-1										1		
13-8	R2-1(35)	R48-1	36 x 48 36 x 18	4				12′	1					
13-9	W11-1	W79A	30 x 30 30 x 24	4				12′	1					
13-10	W11-2		30 x 30	5				10′	1					
13-11	W11-2											1		
SHEET TOTAL									7	4	0	9	0	———

SIGN QUANTITIES

SQ-9

LAST REVISION 10-21-13
DATE PLOTTED => 13-FEB-2014
TIME PLOTTED => 13:45

STATE OF CALIFORNIA - DEPARTMENT OF TRANSPORTATION
Caltrans®
TRAFFIC

FUNCTIONAL SUPERVISOR: SERGIO ACEVES
CALCULATED-DESIGNED BY: JACK KEMMERLY
CHECKED BY: KRIS ALBERS
REVISED BY
DATE REVISED

Dist	COUNTY	ROUTE	POST MILES TOTAL PROJECT	SHEET No.	TOTAL SHEETS
03	ED	89	8.6/13.8	156	231

Kris M Albers 11-18-13
REGISTERED CIVIL ENGINEER DATE

11-18-13
PLANS APPROVAL DATE

KRIS M. ALBERS No. 49986 Exp. 6-30-15 CIVIL — REGISTERED PROFESSIONAL ENGINEER — STATE OF CALIFORNIA

THE STATE OF CALIFORNIA OR ITS OFFICERS OR AGENTS SHALL NOT BE RESPONSIBLE FOR THE ACCURACY OR COMPLETENESS OF SCANNED COPIES OF THIS PLAN SHEET.

ROADSIDE SIGN QUANTITIES (CONTINUED)

SIGN NUMBER (Sht-No.)	SIGN CODE FEDERAL	SIGN CODE CALIFORNIA	PANEL SIZE (INCHES)	"C" DIM IN FEET	POST SIZE AND LENGTH: WOOD POST 4" X 6"	WOOD POST 6" X 6"	METAL POST 2½"X2½"	ROADSIDE SIGN: ONE POST (EACH)	ROADSIDE SIGN: TWO POST (EACH)	INSTALL SIGN (SSBM) (EACH)	REMOVE ROADSIDE SIGN (EACH)	RESET ROADSIDE SIGN (EACH)	REMARKS
14-1	W11-2 W7-3a(4)		30 x 30 24 x 18	4			12′	1					
14-2	W11-2 W7-3a(4)										1		
14-3		G8	54 x 42	5			10′	1					
14-4	W11-1	W79A									1		
14-5	W11-1	W79A	30 x 30 30 x 24	4			12′	1					
14-6	R1-1		18	5			8′	1					
14-7		G8 G8									1		BACK TO BACK
14-8	W11-1	W79A	30 x 30 30 x 24	4			12′	1					
14-9	W11-1	W79A									1		
14-10	W8-5										1		
14-11	W8-5		36 x 36	5			12′	1					
14-12		G8	54 x 42	5			10′	1					
SUBTOTAL								7	0	0	5	0	———
SHEET TOTAL FROM SQ-1								6	2	0	10	4	———
SHEET TOTAL FROM SQ-2								6	1	0	19	7	———
SHEET TOTAL FROM SQ-3								12	1	0	17	5	———
SHEET TOTAL FROM SQ-4								12	0	0	16	3	———
SHEET TOTAL FROM SQ-5								14	0	0	13	0	———
SHEET TOTAL FROM SQ-6								12	1	0	13	0	———
SHEET TOTAL FROM SQ-7								8	1	4	17	0	———
SHEET TOTAL FROM SQ-8								11	2	0	10	2	———
SHEET TOTAL FROM SQ-9								7	4	0	9	0	———
TOTAL								95	12	4	129	21	———

REVISED BY | DATE REVISED
JACK KEMMERLY | KRIS ALBERS
CALCULATED-DESIGNED BY | CHECKED BY
FUNCTIONAL SUPERVISOR: SERGIO ACEVES
STATE OF CALIFORNIA - DEPARTMENT OF TRANSPORTATION
Caltrans®
TRAFFIC

SIGN QUANTITIES

SQ-10

LAST REVISION | DATE PLOTTED => 13-FEB-2014
10-24-13 | TIME PLOTTED => 13:45

BORDER LAST REVISED 7/2/2010 | USERNAME => s130875 | DGN FILE => 0300000223oc010.dgn | RELATIVE BORDER SCALE IS IN INCHES 0 1 2 3 | UNIT 0390 | PROJECT NUMBER & PHASE 03000002231

ROADSIDE SIGN PANEL QUANTITIES

Dist	COUNTY	ROUTE	POST MILES TOTAL PROJECT	SHEET No.	TOTAL SHEETS
03	ED	89	8.6/13.8	157	231

Kris M. Albers 11-18-13
REGISTERED CIVIL ENGINEER DATE

11-18-13
PLANS APPROVAL DATE

REGISTERED PROFESSIONAL ENGINEER — KRIS M. ALBERS No. 49986 Exp. 6-30-15 CIVIL — STATE OF CALIFORNIA

THE STATE OF CALIFORNIA OR ITS OFFICERS OR AGENTS SHALL NOT BE RESPONSIBLE FOR THE ACCURACY OR COMPLETENESS OF SCANNED COPIES OF THIS PLAN SHEET.

SIGN CODE		SIGN MESSAGE/DESCRIPTION	PANEL SIZE L x D	PANEL AREA	NUMBER OF PANELS	BACKGROUND		LEGEND		PROTECTIVE OVERLAY	FURNISH SINGLE SHEET ALUMINUM SIGN			
											UNFRAMED		FRAMED	
FEDERAL	CALIFORNIA					SHEETING COLOR	RETROREFLECTIVE ASTM TYPE	SHEETING COLOR	RETROREFLECTIVE ASTM TYPE	PREMIUM	0.063"	0.080"	0.063"	0.080"
			INCHES	SQFT							SQFT	SQFT	SQFT	SQFT
D11-1		BIKE ROUTE	24 x 18	3.00	11	GREEN	III	WHITE	III		33.00			
M3-1		NORTH	24 x 12	2.00	1	GREEN	III	WHITE	III		2.00			
OM1-3		YELLOW MARKER PANEL	18 x 18	2.25	1	YELLOW	III				2.25			
R1-1		STOP	18	1.86	1	RED	IX	WHITE	IX	X	1.86			
R1-1		STOP	30	5.18	10	RED	IX	WHITE	IX	X	51.80			
R2-1(35)		SPEED LIMIT 35	36 x 48	12.00	18	WHITE	III	BLACK			216.00			
R3-2		NO LEFT TURN (Symbol Sign)	24 x 24	4.00	2	WHITE	IX	BLACK		X	8.00			
								RED	IX					
R10-23		CROSSWALK STOP ON RED	24 x 30	5.00	4	WHITE	III	BLACK			20.00			
								RED	III					
RS-040		CAMPING-TRAILER (Symbol Sign)	24 x 24	4.00	2	BROWN	III	WHITE	III		8.00			
RS-044		PICNIC AREA (Symbol Sign)	24 x 24	4.00	2	BROWN	III	WHITE	III		8.00			
RS-054		RAMP-LAUNCH (Symbol Sign)	24 x 24	4.00	1	BROWN	III	WHITE	III		4.00			
RS-061		SWIMMING (Symbol Sign)	24 x 24	4.00	1	BROWN	III	WHITE	III		4.00			
RS-076		WILDLIFE VIEWING (Symbol Sign)	24 x 24	4.00	2	BROWN	III	WHITE	III		8.00			
W1-2L		CURVE (Symbol Sign)	36 x 36	9.00	2	YELLOW	III	BLACK			18.00			
W1-2R		CURVE (Symbol Sign)	36 x 36	9.00	2	YELLOW	III	BLACK			18.00			
W1-7		TWO-DIRECTION ARROW	48 x 24	8.00	1	YELLOW	IX	BLACK		X		8.00		
W4-2R		RIGHT LANE ENDS (Symbol Sign)	48 x 48	16.00	1	YELLOW	IX	BLACK		X		16.00		
W5-1		ROAD NARROWS	36 x 36	9.00	1	YELLOW	III	BLACK			9.00			
W7-3a(1)		NEXT 1 MILE	24 x 18	3.00	1	YELLOW	III	BLACK			3.00			
W7-3a(2)		NEXT 2 MILES	24 x 18	3.00	1	YELLOW	III	BLACK			3.00			
W7-3a(4)		NEXT 4 MILES	24 x 18	3.00	1	YELLOW	III	BLACK			3.00			
W8-5		SLIPPERY WHEN WET (Symbol Sign)	36 x 36	9.00	5	YELLOW	III	BLACK			45.00			
W9-1R		RIGHT LANE ENDS	48 x 48	16.00	1	YELLOW	III	BLACK				16.00		
W11-1		BICYCLE TRAFFIC (Symbol Sign)	30 x 30	6.25	5	YELLOW	III	BLACK			31.25			
W11-2		PEDESTRIAN TRAFFIC (Symbol Sign)	30 x 30	6.25	4	YELLOW	III	BLACK			25.00			
W11-2		PEDESTRIAN TRAFFIC (Symbol Sign)	30 x 30	6.25	2	FYG	IX	BLACK			12.50			
W11-7		EQUESTRIAN TRAFFIC (Symbol Sign)	30 x 30	6.25	2	YELLOW	III	BLACK			12.50			
W16-7pL		DIAGONAL ARROW (Symbol Sign)	30 x 18	3.75	2	YELLOW	III	BLACK			7.50			
W16-9p		AHEAD	24 x 12	2.00	2	FYG	IX	BLACK			4.00			
SHEET TOTAL											558.66	40.00	0	0

NOTES:

1. FYG = FLUORESCENT YELLOW-GREEN.
2. FOR ADDITIONAL SIGN MESSAGE/DESCRIPTION INFORMATION, SEE SIGN DETAILS.
3. USE RETROREFLECTIVE ASTM TYPE III SHEETING FOR THE BACKGROUND AND LEGEND. FOR COLOR INFORMATION, SEE CALIFORNIA SIGN SPECIFICATION.

L = LENGTH OF PANEL
D = DEPTH OF PANEL

SIGN QUANTITIES

SQ-11

REVISED BY | DATE REVISED
JACK KEMMERLY | KRIS ALBERS
CALCULATED-DESIGNED BY | CHECKED BY
FUNCTIONAL SUPERVISOR: SERGIO ACEVES

STATE OF CALIFORNIA - DEPARTMENT OF TRANSPORTATION
TRAFFIC
Caltrans®

LAST REVISION | DATE PLOTTED => 13-FEB-2014
10-24-13 | TIME PLOTTED => 13:45

Dist	COUNTY	ROUTE	POST MILES TOTAL PROJECT	SHEET No.	TOTAL SHEETS
03	ED	89	8.6/13.8	158	231

Kris M. Albers 11-18-13
REGISTERED CIVIL ENGINEER DATE

11-18-13
PLANS APPROVAL DATE

REGISTERED PROFESSIONAL ENGINEER
KRIS M. ALBERS
No. 49986
Exp. 6-30-15
CIVIL
STATE OF CALIFORNIA

THE STATE OF CALIFORNIA OR ITS OFFICERS OR AGENTS SHALL NOT BE RESPONSIBLE FOR THE ACCURACY OR COMPLETENESS OF SCANNED COPIES OF THIS PLAN SHEET.

ROADSIDE SIGN PANEL QUANTITIES (CONTINUED)

SIGN CODE		SIGN MESSAGE/DESCRIPTION	PANEL SIZE L x D	PANEL AREA	NUMBER OF PANELS	BACKGROUND		LEGEND		PROTECTIVE OVERLAY	FURNISH SINGLE SHEET ALUMINUM SIGN			
											UNFRAMED		FRAMED	
FEDERAL	CALIFORNIA		INCHES	SQFT		SHEETING COLOR	RETROREFLECTIVE ASTM TYPE	SHEETING COLOR	RETROREFLECTIVE ASTM TYPE	PREMIUM	0.063" SQFT	0.080" SQFT	0.063" SQFT	0.080" SQFT
	G(Spec)	SIGNS 12-11 AND 13-3	30 x 18	3.75	2	BROWN	III	WHITE	III		7.50			
	G7	SIGN 4-20	42 x 30	8.75	1	GREEN	III	WHITE	IX	X	8.75			
	G8	SIGN 1-20	84 x 60	35.00	1	GREEN	III	WHITE	IX	X				35.00
	G8	SIGN 4-20	42 x 18	5.25	1	GREEN	III	WHITE	IX	X	5.25			
	G8	SIGNS 12-3 AND 12-15	66 x 54	24.75	2	GREEN	III	WHITE	IX	X			49.50	
	G8	SIGNS 14-3 AND 14-12	54 x 42	15.75	2	GREEN	III	WHITE	IX	X		31.50		
	G9-2	SIGNS 9-22 AND 11-5	54 x 30	11.25	2	GREEN	III	WHITE	IX	X		22.50		
	G28-2(89)	STATE ROUTE MARKER	24 x 25	4.17	1	GREEN	III	WHITE	III		4.17			
	G30A-1	SCENIC ROUTE	12 x 18	1.50	1	SEE NOTE 3					1.50			
	G33-1(L+)	HORIZONTAL ARROW (Symbol Sign)	24 x 6	1.00	1	BROWN	III	WHITE	III		1.00			
	G33-1(R+)	HORIZONTAL ARROW (Symbol Sign)	24 x 6	1.00	2	BROWN	III	WHITE	III		2.00			
	G34(R+)	HORIZONTAL ARROW (Symbol Sign)	21 x 15	2.19	1	GREEN	III	WHITE	III		2.19			
	G37	HORIZONTAL/VERTICAL ARROW (Symbol Sign)	21 x 15	2.19	1	GREEN	III	WHITE	III		2.19			
	G72	SIGN 2-1	96 x 54	36.00	1	BROWN	III	WHITE	III	X				36.00
	G72	SIGNS 8-8 AND 9-16	66 x 30	13.75	2	BROWN	III	WHITE	III	X			27.50	
	G72	SIGNS 12-5 AND 12-13	72 x 36	18.00	2	BROWN	III	WHITE	III	X			36.00	
	G72	SIGNS 12-11 AND 13-3	72 x 18	9.00	2	BROWN	III	WHITE	III	X			18.00	
	G77A	SIGN 1-21	84 x 60	35.00	1	GREEN	III	WHITE	IX	X				35.00
	G81-66	REPORT DRUNK DRIVERS CALL 911	48 x 48	16.00	1	BLUE	III	WHITE	III			16.00		
	G200-81A	WILDLIFE VIEWING	24 x 12	2.00	2	BROWN	III	WHITE	III		4.00			
	R24	PARK PARALLEL	12 x 18	1.50	2	WHITE	III	BLACK			3.00			
	R26	NO PARKING ANY TIME	12 x 18	1.50	13	WHITE	III	RED	III		19.50			
	R26A	NO PARKING ANY TIME	24 x 30	5.00	2	WHITE	III	RED	III		10.00			
	R28A(L+)	NO PARKING ANY TIME (with Arrow)	24 x 30	5.00	1	WHITE	III	RED	III		5.00			
	R28A(R+)	NO PARKING ANY TIME (with Arrow)	24 x 30	5.00	1	WHITE	III	RED	III		5.00			
	R44A	Bike Path Exclusion Sign	12 x 24	2.00	1	WHITE	III	BLACK			2.00			
	R48-1	RADAR ENFORCED	36 x 18	4.50	18	WHITE	III	BLACK			81.00			
	SW48(30)	TRACTOR-SEMIS OVER 30 FEET KINGPIN TO REAR AXLE NOT ADVISED	72 x 54	27.00	1	YELLOW	III	BLACK					27.00	
	W79A	SHARE THE ROAD	30 x 24	5.00	3	YELLOW	III	BLACK			15.00			
SHEET TOTAL											179.05	70.00	158.00	106.00
SHEET TOTAL FROM SQ-11											558.66	40.00	0	0
TOTAL											737.71	110.00	158.00	106.00

REVISED BY | DATE REVISED
JACK KEMMERLY | KRIS ALBERS
CALCULATED-DESIGNED BY | CHECKED BY
FUNCTIONAL SUPERVISOR: SERGIO ACEVES
STATE OF CALIFORNIA - DEPARTMENT OF TRANSPORTATION
Caltrans®
TRAFFIC

SIGN QUANTITIES

SQ-12

LAST REVISION 10-24-13 | DATE PLOTTED => 13-FEB-2014 | TIME PLOTTED => 13:45

Dist	COUNTY	LOCATION CODE	POST MILES TOTAL PROJECT	SHEET No.	TOTAL SHEETS
03	ED	89	8.6/13.8	159	231

Jack R. Cowell Jr. 11-18-13
REGISTERED CIVIL ENGINEER DATE

11-18-13
PLANS APPROVAL DATE

REGISTERED PROFESSIONAL ENGINEER
JACK COWELL
No. 65521
Exp. 9-30-15
CIVIL
STATE OF CALIFORNIA

THE STATE OF CALIFORNIA OR ITS OFFICERS OR AGENTS SHALL NOT BE RESPONSIBLE FOR THE ACCURACY OR COMPLETENESS OF SCANNED COPIES OF THIS PLAN SHEET.

ROADWAY QUANTITIES

STATION/LOCATION	HOT MIX ASPHALT (TYPE A)	PLACE HOT MIX ASPHALT (Misc AREA)	TACK COAT	CLASS 2 AGGREGATE BASE	COLD PLANE ASPHALT CONCRETE PAVEMENT	SHOULDER BACKING	ROADWAY EXCAVATION	(N) EMBANKMENT	REMOVE AC PAVEMENT(SF)	REMOVE BASE AND SURFACING	REMOVE CONCRETE (CURB AND GUTTER)	PRE/POST CONSTRUCTION SURVEYS
	TON	SQYD	TON	CY	SQYD	TON	CY	CY	SQFT	CY	LF	EA
"A1" 456+49.50 TO 459+89.40	410.5		1.15		2,209.4		265.9	727.9				
"A1" 459+89.40 TO 484+03.40	3,011.1		7.99	357.6	13,947.1		2,383.0	8,729.7				
"A1" 484+03.40 TO 490+29.60	654.8		2.04		3,896.4		460.3	1,551.6				
"A1" 490+29.60 TO 493+10.00	337.4		0.89	41.5	1,557.8		266.3	284.5				
"A1" 493+10.00 TO 510+15.00	2,010.0		5.33	252.6	10,609.0		1,764.1	4,275.8				
"A1" 510+15.00 TO 517+50.00	709.9		2.39	108.9	4,165.0	479.7	581.6					
"A1" 517+50.00 TO 522+20.00	212.1		1.17				42.4	2,016.5				
"A1" 522+20.00 TO 527+89.00	379.0		1.04				194.8	1,850.5				
"A1" 527+89.00 TO 587+00.00	4,592.9		9.63	2,189.3		495.3	3,212.3	1,523.7				
"A1" 587+00.00 TO 591+53.91	483.9		1.00	242.2			512.3	1,413.7				
"A1" 591+53.91 TO 613+44.00	1,546.2		3.24	737.0		236.1	1,300.3	513.0				
"A1" 613+44.00 TO 619+40.00	573.4		1.34	176.6		71.5	660.9	188.7				
"A1" 619+40.00 TO 627+00.00	590.5		1.24	281.5		79.2	365.2	195.9				
"A1" 700+55.00 TO 701+05.00					133.0							
"A1" 701+09.00 TO 704+14.00	278.3		1.20	128.3			117.6	43.0				
"A1" 704+14.00 TO 704+39.00	54.6		0.02	27.9			14.8	46.4				
"A1" 704+39.00 TO 704+89.00	103.8		0.00	50.3			36.5	256.7				
"A1" 704+89.00 TO 707+85.00	107.6		0.03	52.4	155.0		44.3	143.3				
PAVED PULLOUTS												
"A1" 585+46.80 TO 587+10.60 Lt	59.7			84.5								
"A1" 632+50.00 TO 633+62.00 Lt	60.4			58.1								
"A1" 684+00.00 TO 685+40.00 Lt	68.1			72.6								
"A1" 528+20.58 TO 532+27.50 Rt	402.9			226.1								
"A1" 565+50.00 TO 567+50.00 Rt	66.7			103.7								
"A1" 585+45.60 TO 587+12.00 Rt	59.6			86.6								
"A1" 597+45.93 TO 599+90.60 Rt	215.4			126.9								
"A1" 609+50.00 TO 611+50.00 Rt	72.2			103.7								
"A1" 652+06.00 TO 654+06.00 Rt	121.1			103.7								
REMOVAL ITEMS												
"A1" 482+19.05 TO 484+32.3											220.0	
"A1" 461+12.9 TO 461+43.2 Rt										11.3		
"A1" 517+50 TO 526+95 Lt									6,240.0			
"A1" 517+50 TO 528+50 Rt									5,550.0			
"A1" 581+06.9 TO 581+44.8 Lt										40.0		
"A1" 583+39.11 TO 583+68.04 Rt										24.1		
CLASS 2AB ITEMS (FROM Sht Q-3)				1,364.2								
DRIVEWAY CONFORMS (FROM Sht Q-4)	33.6	1,796.7	0.03		1,632.3							54
HMA SIDEWALKS (FROM Sht Q-4)	837.8	3,811.2	0.498	635.5								
CURB RAMP Qtys (FROM Sht Q-5)				96.3								29
HMA FOR SAFETY EDGE(FROM Sht Q-6)	314.0											
CLASS 2AB ITEMS (FROM Sht Q-6)				1.1								
TEMPORARY ITEM (FROM Sht SC-1)	68.7			102.2								
HMA ITEMS FROM DQ-7	35.8	106.3										
HMA ITEMS FOR AC DIKE FROM Q-6	22.2											
SUB-TOTAL								23,760.9				
TOTALS	18,494.2	5,714.2	40.23	7,810.7	38,305.0	1,361.8	12,222.6		11,790.0	75.4	220.0	83

* SEE TYPICAL CROSS SECTION X-4 FOR EXACT LOCATIONS
(N) NOT A SEPARATE PAY ITEM, FOR INFORMATION ONLY

SUMMARY OF QUANTITIES

Q-1

REVISED BY | DATE REVISED
CALCULATED-DESIGNED BY: JACK COWELL
CHECKED BY: MASTRI ALVANDI
FUNCTIONAL SUPERVISOR: MASTRI ALVANDI
STATE OF CALIFORNIA - DEPARTMENT OF TRANSPORTATION
DESIGN
Caltrans

LAST REVISION | DATE PLOTTED => 13-FEB-2014 | TIME PLOTTED => 13:45
05-23-13

BORDER LAST REVISED 7/2/2010 | USERNAME => s130875 | DGN FILE => 0300000223pa001.dgn | RELATIVE BORDER SCALE IS IN INCHES 0 1 2 3 | UNIT 0337 | PROJECT NUMBER & PHASE 03000002231

CURB AND GUTTER QUANTITIES (TABLE 1)

DRIVEWAY NUMBER	STATION TO STATION		MINOR CONCRETE (CURB AND GUTTER) VALLEY GUTTER	MINOR CONCRETE (CURB AND GUTTER) TYPE (E Mod)	MINOR CONCRETE (CURB AND GUTTER) TYPE A2-8 (Mod)	MINOR CONCRETE (CURB AND GUTTER) TYPE A2-6 (Mod)	MINOR CONCRETE (DRIVEWAY)	CLASS 2 AGGREGATE BASE	MINOR CONCRETE*** (MINOR STRUCTRES)
			CY	CY	CY	CY	CY	CY	CY
	"A1" 459+89.40 TO 460+05.00	R+			0.9			1.5	
R1	"A1" 460+05.00 TO 460+40.00	R+	1.9				5.5	9.4	
	"A1" 460+40.00 TO 462+52.50	R+			11.7			17.4	
R2	"A1" 462+52.50 TO 462+77.50	R+	1.4				4.2	6.9	
	"A1" 462+77.50 TO 464+06.40	R+			7.5			11.2	
	"A1" 463+91.60 TO 464+58.88	R+	3.7					7.5	
	"A1" 464+43.40 TO 464+80.00	R+				1.6		3.9	
R3	"A1" 464+80.00 TO 465+20.00	R+	2.2				5.6	10.0	
	"A1" 465+20.00 TO 465+64.00	R+			2.4			3.9	
R4	"A1" 465+64.00 TO 465+94.00	R+	1.7				4.6	7.9	
	"A1" 465+94.00 TO 467+73.00	R+			9.8			14.7	
R5	"A1" 467+73.00 TO 467+93.00	R+	1.1				3.7	5.9	
	"A1" 467+93.00 TO 468+25.50	R+			1.8			2.9	
R6	"A1" 468+25.50 TO 468+45.50	R+	1.1				3.7	5.9	
	"A1" 468+45.50 TO 468+93.00	R+			2.6			4.1	
R7	"A1" 468+93.00 TO 469+18.00	R+	1.4				4.1	6.9	
	"A1" 469+18.00 TO 469+40.50	R+			1.2			2.1	
R8	"A1" 469+40.50 TO 469+65.50	R+	1.4				4.1	6.9	
	"A1" 469+65.50 TO 469+93.00	R+			1.5			2.5	
R9	"A1" 469+93.00 TO 470+25.00	R+	2.0				4.8	8.4	
	"A1" 470+25.00 TO 471+47.94	R+		7.1				11.6	
R11	"A1" 471+47.94 TO 471+72.94	R+	1.5				4.2	6.9	
	"A1" 471+72.94 TO 472+28.16	R+		3.2				5.3	
R12	"A1" 472+28.16 TO 472+56.16	R+	1.7				4.2	7.3	
	"A1" 472+56.16 TO 472+90.57	R+				2.7		4.4	
	"A1" 473+16.74 TO 473+63.00	R+				3.2		5.1	
R13	"A1" 473+63.00 TO 474+19.00	R+	3.1				7.0	13.3	
	"A1" 474+19.00 TO 475+40.00	R+				6.1		10.0	
R14	"A1" 475+40.00 TO 475+65.50	R+	1.0				2.3	6.2	
	"A1" 475+65.50 TO 477+95.60	R+				11.6		18.8	
R15	"A1" 477+95.60 TO 478+19.60	R+	1.3				4.1	6.7	
	"A1" 478+19.60 TO 478+45.23	R+			1.4			2.4	
R16	"A1" 478+45.23 TO 478+70.64	R+	1.4				4.2	7.0	
	"A1" 478+70.64 TO 479+98.26	R+			7.0			10.6	
	"A1" 478+80.70 TO 479+88.20	R+							6.5
R17	"A1" 479+98.26 TO 480+23.74	R+	1.4				4.2	7.0	
	"A1" 480+23.74 TO 480+57.40	R+			1.9			3.0	
R18	"A1" 480+57.40 TO 480+82.40	R+	1.4				4.2	6.9	
	"A1" 480+82.40 TO 481+93.17	R+			6.7			10.0	
	"A1" 482+19.05 TO 482+59.50	R+			2.9			4.4	
R19	"A1" 482+59.50 TO 482+84.50	R+	1.4				4.2	6.9	
	"A1" 482+84.50 TO 483+81.60	R+			5.3			8.1	
R20	"A1" 483+81.60 TO 484+01.75	R+	1.1				3.7	6.0	
	"A1" 484+01.75 TO 485+60.50	R+			8.7			13.1	
R21	"A1" 485+60.50 TO 485+90.50	R+	1.7				4.6	8.0	
	"A1" 485+90.50 TO 486+83.70	R+			5.1			7.8	
R22	"A1" 486+83.70 TO 487+08.70	R+	1.4				4.2	6.9	
	"A1" 487+08.70 TO 488+42.84	R+			7.9			11.8	
	"A1" 488+66.69 TO 489+63.00	R+			6.1			9.1	
R23	"A1" 489+63.00 TO 489+93.00	R+	1.2				4.6	7.1	
	"A1" 489+93.00 TO 492+94.95	R+			17.8			26.4	
	"A1" 493+24.41 TO 493+63.34	R+				2.6		4.3	
SUBTOTAL (TABLE 1)			37.5	10.3	110.2	27.8	96.0	402.3	6.5

Dist	COUNTY	LOCATION CODE	POST MILES TOTAL PROJECT	SHEET No.	TOTAL SHEETS
03	ED	89	8.6/13.8	160	231

Jack R. Cowell Jr. 11-18-13
REGISTERED CIVIL ENGINEER DATE

11-18-13
PLANS APPROVAL DATE

JACK COWELL No. 65521 Exp. 9-30-15 CIVIL — REGISTERED PROFESSIONAL ENGINEER — STATE OF CALIFORNIA

THE STATE OF CALIFORNIA OR ITS OFFICERS OR AGENTS SHALL NOT BE RESPONSIBLE FOR THE ACCURACY OR COMPLETENESS OF SCANNED COPIES OF THIS PLAN SHEET.

CURB AND GUTTER QUANTITIES (TABLE 2)

DRIVEWAY NUMBER	STATION TO STATION		MINOR CONCRETE (CURB AND GUTTER) VALLEY GUTTER	MINOR CONCRETE (CURB AND GUTTER) TYPE (E Mod)	MINOR CONCRETE (CURB AND GUTTER) TYPE A2-8 (Mod)	MINOR CONCRETE (CURB AND GUTTER) TYPE A2-6 (Mod)	MINOR CONCRETE (DRIVEWAY)	CLASS 2 AGGREGATE BASE	MINOR CONCRETE*** (MINOR STRUCTRES)
			CY	CY	CY	CY	CY	CY	
R24	"A1" 493+63.34 TO 493+87.12	R+	1.0				3.8	5.7	
	"A1" 493+87.12 TO 494+63.65	R+			4.2			6.5	
R25	"A1" 494+63.65 TO 494+99.65	R+	1.5				5.2	8.1	
	"A1" 494+99.65 TO 496+69.80	R+			9.3			14.0	
R26	"A1" 496+69.80 TO 496+99.80	R+	1.2				4.6	7.0	
	"A1" 496+99.80 TO 499+58.94	R+			14.6			21.7	
	"A1" 499+89.88 TO 502+04.30	R+			12.2			18.0	
R27	"A1" 502+04.30 TO 502+34.30	R+	1.2				4.6	7.0	
	"A1" 502+34.30 TO 502+86.00	R+			2.8			4.5	
R28	"A1" 502+86.00 TO 503+22.00	R+	1.5				5.2	8.1	
	"A1" 503+22.00 TO 503+80.50	R+			3.2			5.0	
	"A1" 503+32.00 TO 503+70.00								2.5
R29	"A1" 503+80.50 TO 504+10.50	R+	1.2				4.6	7.0	
	"A1" 504+10.50 TO 505+45.04	R+			7.4			11.1	
R30	"A1" 505+45.04 TO 505+70.04	R+	1.0				4.2	6.2	
	"A1" 505+70.04 TO 506+53.00	R+			4.5			7.0	
R31	"A1" 506+53.00 TO 506+81.00	R+	1.1				4.4	6.7	
	"A1" 506+81.00 TO 509+67.13	R+			15.9			23.6	
	"A1" 509+95.27 TO 510+21.02	R+				1.7		2.8	
	"A1" 510+21.02 TO 511+51.22	R+		7.4				12.1	
	"A1" 511+51.22 TO 511+77.38	R+				1.7		2.8	
	"A1" 512+04.85 TO 512+31.01	R+				1.7		2.8	
	"A1" 512+31.01 TO 512+83.50	R+		3.0				4.9	
R33	"A1" 512+83.50 TO 513+16.50	R+	1.8				4.9	8.6	
	"A1" 513+16.50 TO 513+62.50	R+		2.7				4.4	
R34	"A1" 513+62.50 TO 513+87.50	R+	1.4				4.2	6.9	
	"A1" 513+87.50 TO 514+16.41	R+		1.7				2.7	
	"A1" 514+16.41 TO 514+42.92	R+				1.7		2.8	
	"A1" 514+72.36 TO 517+50.00	R+		16.2				26.2	
	"A1" 586+80.00 TO 587+10.00	R+		1.7				2.8	
	"A1" 587+10.00 TO 588+48.07	R+				5.7		11.0	
	"A1" 588+85.57 TO 591+53.91	R+		15.3				27.0	
SUBTOTAL (TABLE 2)			12.9	48.00	74.1	12.5	45.7	285.0	2.5
SHEET TOTAL (TABLE 1 & 2)			333.3*				141.7*	687.3**	9.0

NOTES:

* FOR TOTAL QUANTITIES FOR MINOR CONCRETE (CURB AND GUTTER) AND MINOR CONCRETE (DRIVEWAY), SEE SHEET Q-3.

** FOR TOTAL QUANTITIES OF CLASS 2 AGGREGATE BASE, SEE ROADWAY Q+y ON SHEET Q-1.

*** SEE RETAINING CURB DETAIL IN CONSTRUCTION DETAILS.

SUMMARY OF QUANTITIES

Q-2

LAST REVISION 05-14-13 | DATE PLOTTED => 13-FEB-2014 | TIME PLOTTED => 13:45

CALCULATED-DESIGNED BY: JACK COWELL | CHECKED BY: MASTRI ALVANDI | REVISED BY | DATE REVISED

FUNCTIONAL SUPERVISOR: MASTRI ALVANDI

STATE OF CALIFORNIA - DEPARTMENT OF TRANSPORTATION — DESIGN — Caltrans®

Dist	COUNTY	LOCATION CODE	POST MILES TOTAL PROJECT	SHEET No.	TOTAL SHEETS
03	ED	89	8.6/13.8	161	231

Jack R. Cowell Jr. 11-18-13
REGISTERED CIVIL ENGINEER DATE

11-18-13
PLANS APPROVAL DATE

REGISTERED PROFESSIONAL ENGINEER — JACK COWELL — No. 65521 — Exp. 9-30-15 — CIVIL — STATE OF CALIFORNIA

THE STATE OF CALIFORNIA OR ITS OFFICERS OR AGENTS SHALL NOT BE RESPONSIBLE FOR THE ACCURACY OR COMPLETENESS OF SCANNED COPIES OF THIS PLAN SHEET.

CURB AND GUTTER QUANTITIES (TABLE 3)

DRIVEWAY NUMBER	STATION TO STATION		MINOR CONCRETE (CURB AND GUTTER) VALLEY GUTTER	MINOR CONCRETE (CURB AND GUTTER) TYPE (E Mod)	MINOR CONCRETE (CURB AND GUTTER) TYPE A2-8 (Mod)	MINOR CONCRETE (CURB AND GUTTER) TYPE A2-6	MINOR CONCRETE (DRIVEWAY)	CLASS 2 AGGREGATE BASE
			CY	CY	CY	CY	CY	CY
	"A1" 456+49.50 TO 456+78.70	Lt				1.7		2.3
	"A1" 457+43.93 TO 457+81.80	Lt			3.6			5.5
L1	"A1" 457+81.80 TO 458+16.80	Lt	1.9				7.1	11.0
	"A1" 458+16.80 TO 459+00.99	Lt			5.7			8.7
L2	"A1" 459+00.99 TO 459+48.00	Lt	2.6				9.1	14.3
	"A1" 459+48.00 TO 460+33.80	Lt			5.8			8.8
L3	"A1" 460+33.80 TO 460+80.70	Lt	2.6				9.0	14.2
	"A1" 460+80.70 TO 464+14.21	Lt			19.7			29.1
	"A1" 463+80.21 TO 464+74.42	Lt	5.2					10.5
	"A1" 464+52.09 TO 465+87.80	Lt			8.5			12.7
L4	"A1" 465+87.80 TO 466+05.30	Lt	1.0				3.5	5.4
	"A1" 466+05.30 TO 466+77.70	Lt			5.1			7.7
L5	"A1" 466+77.70 TO 466+96.20	Lt	1.0				3.6	5.6
	"A1" 466+96.20 TO 467+86.68	Lt			6.0			9.2
L6	"A1" 467+86.68 TO 468+00.70	Lt	0.8				3.2	4.7
	"A1" 468+00.70 TO 469+63.80	Lt			10.0			15.0
L7	"A1" 469+63.80 TO 469+88.80	Lt	1.4				4.2	6.9
	"A1" 469+88.80 TO 471+02.54	Lt			7.3			10.1
L8	"A1" 471+02.50 TO 471+42.50	Lt	2.4				5.6	10.0
	"A1" 471+42.50 TO 471+81.00	Lt		3.4				5.6
L9	"A1" 471+81.00 TO 471+97.00	Lt	1.0				3.3	5.1
	"A1" 471+97.00 TO 472+85.50	Lt		6.2				10.2
L10	"A1" 472+85.50 TO 473+04.50	Lt	1.2				3.6	5.7
	"A1" 473+04.50 TO 474+34.44	Lt		8.6				14.1
L11	"A1" 474+34.44 TO 474+59.40	Lt	1.5				4.2	6.9
	"A1" 474+59.40 TO 475+02.63	Lt		3.1				5.0
	"A1" 474+02.63 TO 475+23.27	Lt		1.5				2.4
	"A1" 475+52.94 TO 475+87.58	Lt		2.1				3.4
	"A1" 475+87.58 TO 476+24.70	Lt		2.7				4.5
L12	"A1" 476+24.70 TO 476+49.70	Lt	1.5				4.2	6.9
	"A1" 476+49.70 TO 477+50.00	Lt		6.9				11.3
L13	"A1" 477+50.00 TO 477+69.00	Lt	1.2				3.6	5.7
	"A1" 477+69.00 TO 478+40.63	Lt		5.3				8.7
L14	"A1" 478+40.63 TO 478+70.22	Lt	1.8				4.6	7.9
	"A1" 478+70.22 TO 478+98.30	Lt		2.8				4.6
L15	"A1" 478+98.30 TO 479+28.30	Lt	1.8				4.6	8.0
	"A1" 479+28.30 TO 479+81.40	Lt				4.1		5.7
	"A1" 480+08.78 TO 484+03.36	Lt			22.6			33.2
	"A1" 490+74.79 TO 491+13.91	Lt				3.4***		5.2
	"A1" 491+13.91 TO 491+34.56	Lt	1.2					1.9
	"A1" 491+34.56 TO 495+00.00	Lt			16.5***			22.6
SUBTOTAL (TABLE 3)			30.1	42.6	110.8	9.2	73.4	376.3

CURB AND GUTTER QUANTITIES (TABLE 4)

DRIVEWAY NUMBER	STATION TO STATION		MINOR CONCRETE (CURB AND GUTTER) VALLEY GUTTER	MINOR CONCRETE (CURB AND GUTTER) TYPE (E Mod)	MINOR CONCRETE (CURB AND GUTTER) TYPE A2-8 (Mod)	MINOR CONCRETE (CURB AND GUTTER) TYPE A2-6 (Mod)	MINOR CONCRETE (DRIVEWAY)	CLASS 2 AGGREGATE BASE
			CY	CY	CY	CY	CY	CY
	"A1" 495+00.00 TO 499+57.94	Lt			25.4			37.4
	"A1" 499+93.13 TO 502+86.70	Lt			17.1			25.3
L16	"A1" 502+86.70 TO 503+06.70	Lt	1.1				3.7	5.9
	"A1" 503+06.70 TO 503+43.50	Lt			3.1			4.9
L17	"A1" 503+43.50 TO 503+63.50	Lt	1.1				3.7	5.9
	"A1" 503+63.50 TO 504+82.50	Lt			7.6			11.5
L18	"A1" 504+82.50 TO 505+12.50	Lt	1.7				4.6	8.0
	"A1" 505+12.50 TO 505+50.50	Lt			3.2			5.0
L19	"A1" 505+50.50 TO 505+72.50	Lt	1.2				3.9	6.3
	"A1" 505+72.50 TO 510+22.33	Lt			25.7			37.9
	"A1" 510+49.70 TO 511+52.30	Lt		7.1				11.6
L20	"A1" 511+52.30 TO 512+21.29	Lt	4.2				8.2	15.9
	"A1" 512+21.29 TO 513+22.30	Lt		7.0				11.4
L21	"A1" 513+22.30 TO 513+50.80	Lt	1.7				4.5	7.7
	"A1" 513+50.80 TO 514+22.90	Lt		5.3				8.7
L22	"A1" 514+22.90 TO 514+49.90	Lt	1.7				4.4	7.4
	"A1" 514+49.90 TO 517+50.00	Lt		17.7				28.8
	"A1" 526+32.04 TO 527+06.19	Lt		4.4				7.1
	"A1" 527+04.70 TO 530+16.38	Lt		17.8				28.9
	"A1" 586+80.00 TO 587+12.00	Lt		1.8				3.0
	"A1" 587+12.00 TO 590+69.31	Lt				14.5		22.0
TOTAL (TABLE 4)			12.7	61.1	82.1	14.5	33.0	300.6
(Sht Q-2) TOTAL (TABLE 1)			37.5	10.3	110.2	27.8	96.0	402.3
(Sht Q-2) TOTAL (TABLE 2)			12.9	48.0	74.1	12.5	45.7	285.0
(Sht Q-3) TOTAL (TABLE 3)			30.1	42.6	110.8	9.2	73.4	376.36
SUBTOTAL (TABLE 4, 1, 2, & 3)			93.2	162.0	377.2	64.0	248.1	1361.28
SUB TOTAL			696.4				248.1	1364.2**
TOTAL			696.4				248.1	-

NOTE:

* FOR TOTAL QUANTITIES FOR MINOR CONCRETE (CURB AND GUTTER) AND MINOR CONCRETE (DRIVEWAY), SEE Sht Q-3 TABLE 4.

** FOR TOTAL QUANTITIES OF CLASS 2 AGGREGATE BASE, SEE ROADWAY Qtys ON Sht Q-1.

*** CONC CURB WITH 1 FOOT GUTTER. REFER TO DETAIL SHOWN ON Sht L-4.

SUMMARY OF QUANTITIES

Q-3

LAST REVISION 03-14-13 | DATE PLOTTED => 13-FEB-2014 | TIME PLOTTED => 13:45

CALCULATED-DESIGNED BY	CHECKED BY	REVISED BY	DATE REVISED
JACK COWELL	MASTRI ALVANDI		

FUNCTIONAL SUPERVISOR: MASTRI ALVANDI

STATE OF CALIFORNIA - DEPARTMENT OF TRANSPORTATION — DESIGN

Caltrans

BORDER LAST REVISED 7/2/2010

USERNAME => s130875
DGN FILE => 0300000223pa003.dgn

RELATIVE BORDER SCALE IS IN INCHES 0 1 2 3

UNIT 0337

PROJECT NUMBER & PHASE 03000002231

Dist	COUNTY	LOCATION CODE	POST MILES TOTAL PROJECT	SHEET No.	TOTAL SHEETS
03	ED	89	8.6/13.8	162	231

Jack R. Cowell Jr. 11-18-13
REGISTERED CIVIL ENGINEER DATE

11-18-13
PLANS APPROVAL DATE

REGISTERED PROFESSIONAL ENGINEER — JACK COWELL — No. 65521 — Exp. 9-30-15 — CIVIL — STATE OF CALIFORNIA

THE STATE OF CALIFORNIA OR ITS OFFICERS OR AGENTS SHALL NOT BE RESPONSIBLE FOR THE ACCURACY OR COMPLETENESS OF SCANNED COPIES OF THIS PLAN SHEET.

DRIVEWAY CONFORM TABLE

DRIVEWAY #	STATION	PLACE HOT MIX ASPHALT (Misc AREA)	HOT MIX ASPHALT (TYPE A)	TACK COAT	COLD PLANE	PRE/POST CONSTRUCTION SURVEYS
		SQYD	TON	TON	SQYD	EA
R1	"A1" 460+22.50	18.1	0.3	0.0003	18.3	1
R2	"A1" 462+65.00	19.6	0.4	0.0003	19.7	1
R3	"A1" 465+00.00	36.1	0.7	0.0006	36.4	1
R4	"A1" 465+79.00	32.7	0.6	0.0006	33.0	1
R5	"A1" 467+83.00	25.3	0.5	0.0004	22.2	1
R6	"A1" 468+35.50	25.0	0.5	0.0004	22.2	1
R7	"A1" 469+05.50	30.6	0.6	0.0005	27.8	1
R8	"A1" 469+53.00	30.6	0.6	0.0005	27.8	1
R9	"A1" 470+09.00	39.1	0.7	0.0007	35.6	1
R11	"A1" 471+60.50	30.6	0.6	0.0005	27.8	1
R12	"A1" 472+44.80	34.5	0.6	0.0006	31.1	1
R13	"A1" 473+86.90	69.1	1.3	0.0012	62.2	1
R14	"A1" 475+69.00	33.9	0.6	0.0006	27.8	1
R15	"A1" 478+07.60	29.9	0.6	0.0005	26.7	1
R16	"A1" 478+57.90	31.6	0.6	0.0005	27.8	1
R17	"A1" 480+11.00	15.9	0.3	0.0003	15.6	1
R18	"A1" 480+69.90	11.7	0.2	0.0002	11.4	1
R19	"A1" 482+72.00	28.9	0.5	0.0005	27.8	1
R20	"A1" 483+91.60	34.3	0.6	0.0006	22.2	1
R21	"A1" 485+75.50	53.7	1.0	0.0009	33.7	1
R22	"A1" 486+96.20	36.4	0.7	0.0006	27.8	1
R23	"A1" 489+78.00	46.7	0.9	0.0008	48.2	1
R24	"A1" 493+70.50	28.5	0.5	0.0005	26.7	1
R25	"A1" 494+81.60	41.2	0.8	0.0007	40.0	1
R26	"A1" 496+84.80	35.7	0.7	0.0006	33.3	1
R27	"A1" 502+19.30	39.3	0.7	0.0007	33.3	1
R28	"A1" 503+04.00	48.0	0.9	0.0008	40.0	1
R29	"A1" 503+95.50	40.0	0.7	0.0007	33.3	1
R30	"A1" 505+57.50	31.4	0.6	0.0005	27.8	1
R31	"A1" 506+67.00	36.7	0.7	0.0006	31.1	1
R33	"A1" 510+00.00	41.8	0.8	0.0007	36.7	1
R34	"A1" 513+75.00	32.2	0.6	0.0005	27.8	1
L1	"A1" 457+99.30	36.6	0.7	0.0006	36.6	1
L2	"A1" 459+24.50	37.7	0.7	0.0006	38.4	1
L3	"A1" 460+57.20	43.8	0.8	0.0007	43.4	1
L4	"A1" 465+96.50	20.6	0.4	0.0003	20.0	1
L5	"A1" 466+86.90	20.6	0.4	0.0003	20.4	1
L6	"A1" 467+93.70	15.6	0.3	0.0003	15.6	1
L7	"A1" 469+76.30	28.9	0.5	0.0005	27.8	1
L8	"A1" 471+22.50	46.2	0.9	0.0008	44.8	1
L9	"A1" 471+89.00	18.5	0.3	0.0003	18.1	1
L10	"A1" 472+95.00	23.0	0.4	0.0004	21.1	1
L11	"A1" 474+46.90	28.6	0.5	0.0005	27.8	1
L12	"A1" 476+37.20	30.0	0.6	0.0005	27.8	1
L13	"A1" 477+59.50	22.6	0.4	0.0004	21.1	1
L14	"A1" 478+55.50	35.2	0.7	0.0006	33.3	1
L15	"A1" 479+13.30	41.3	0.8	0.0007	34.0	1
L16	"A1" 502+96.70	22.2	0.4	0.0004	22.2	1
L17	"A1" 503+53.50	22.0	0.4	0.0004	22.0	1
L18	"A1" 504+97.50	32.0	0.6	0.0005	32.0	1
L19	"A1" 505+61.50	24.4	0.5	0.0004	24.4	1
L20	"A1" 511+86.80	86.6	1.6	0.0015	76.7	1
L21	"A1" 513+36.50	36.4	0.7	0.0006	31.7	1
L22	"A1" 514+36.40	34.8	0.6	0.0006	30.0	1
	SUB TOTAL	1796.7*	33.6*	0.03*	1632.3*	54*

*FOR TOTAL QUANITITIES SEE SHEET Q-1

HMA SIDEWALK (TABLE 1)

SIDE	STATION TO STATION	PLACE HOT MIX ASPHALT (Misc AREA)	HOT MIX ASPHALT (TYPE A)	TACK COAT	CLASS 2 AGGREGATE BASE
		SQYD	TON	TON	CY
R†	"A1" 460+49.55 TO 462+42.96	107.5	23.6	0.015	17.9
R†	"A1" 462+87.74 TO 463+76.15	49.1	10.8	0.007	8.2
R†	"A1" 465+29.82 TO 465+53.96	13.4	3.0	0.002	2.2
R†	"A1" 466+03.70 TO 467+63.37	88.7	19.5	0.012	14.8
R†	"A1" 468+03.20 TO 468+15.78	7.0	1.5	0.001	1.2
R†	"A1" 468+55.61 TO 468+83.00	15.2	3.3	0.002	2.5
R†	"A1" 469+27.00 TO 469+31.50	2.5	0.6	0.001	0.4
R†	"A1" 469+75.50 TO 469+83.00	4.2	0.9	0.001	0.7
R†	"A1" 470+35.00 TO 471+37.94	57.2	12.6	0.008	9.5
R†	"A1" 471+82.94 TO 472+18.16	19.6	4.3	0.003	3.3
R†	"A1" 474+29.00 TO 475+47.16	65.6	14.4	0.009	10.9
R†	"A1" 475+91.16 TO 477+85.60	108.0	23.7	0.015	18.0
R†	"A1" 478+29.60 TO 478+35.23	3.1	0.7	0.001	0.5
R†	"A1" 478+80.64 TO 479+88.26	59.8	13.1	0.008	10.0
R†	"A1" 480+33.74 TO 480+47.40	7.6	1.7	0.001	1.3
R†	"A1" 480+92.40 TO 481+63.13	39.3	8.6	0.005	6.6
R†	"A1" 482+94.50 TO 483+71.60	42.8	9.4	0.006	7.1
R†	"A1" 484+11.75 TO 485+50.50	77.1	16.9	0.011	12.9
R†	"A1" 486+00.50 TO 486+73.70	40.7	8.9	0.006	6.8
R†	"A1" 487+18.70 TO 488+04.70	47.8	10.5	0.007	8.0
R†	"A1" 489+03.00 TO 489+53.00	27.8	6.1	0.004	4.6
R†	"A1" 490+03.00 TO 492+58.84	142.1	31.2	0.020	23.7
R†	"A1" 493+95.12 TO 494+53.65	31.4	6.9	0.004	5.2
R†	"A1" 495+09.65 TO 496+59.80	83.4	18.3	0.012	13.9
R†	"A1" 497+09.80 TO 499+32.71	123.8	27.2	0.017	20.6
R†	"A1" 500+26.38 TO 501+94.30	93.3	20.5	0.013	15.6
R†	"A1" 502+44.30 TO 502+76.00	17.6	3.9	0.002	2.9
R†	"A1" 503+32.00 TO 503+70.50	21.4	4.7	0.003	3.6
R†	"A1" 504+20.50 TO 505+35.04	63.1	13.9	0.009	10.5
R†	"A1" 505+80.04 TO 506+43.00	35.0	7.7	0.005	5.8
R†	"A1" 506+91.00 TO 509+37.00	136.7	30.0	0.019	22.8
R†	"A1" 510+21.02 TO 511+51.22	72.3	15.9	0.010	12.1
R†	"A1" 512+31.01 TO 512+73.50	23.6	5.2	0.003	3.9
R†	"A1" 513+26.50 TO 513+52.50	14.4	3.2	0.002	2.4
R†	"A1" 513+97.50 TO 514+16.41	10.5	2.3	0.001	1.8
	SUBTOTAL (TABLE 1)	1,752.6	385.0	0.245	292.2

HMA SIDEWALK (TABLE 2)

SIDE	STATION TO STATION	PLACE HOT MIX ASPHALT (Misc AREA)	HOT MIX ASPHALT (TYPE A)	TACK COAT	CLASS 2 AGGREGATE BASE
		SQYD	TON	TON	CY
L†	"A1" 458+26.80 TO 458+90.99	49.9	11.0	0.007	8.3
L†	"A1" 459+58.00 TO 460+23.80	51.2	11.3	0.007	8.5
L†	"A1" 460+90.70 TO 463+79.40	160.4	35.3	0.022	26.7
L†	"A1" 464+89.68 TO 465+77.80	49.0	10.8	0.007	8.2
L†	"A1" 466+15.30 TO 466+67.70	29.1	6.4	0.004	4.9
L†	"A1" 467+06.20 TO 467+76.68	39.2	8.6	0.005	6.5
L†	"A1" 468+10.70 TO 469+53.80	79.5	17.5	0.011	13.3
L†	"A1" 469+99.80 TO 470+92.50	51.5	11.3	0.007	8.6
L†	"A1" 471+52.54 TO 471+71.00	10.3	2.3	0.001	1.7
L†	"A1" 472+07.00 TO 472+75.50	38.1	8.4	0.005	6.3
L†	"A1" 473+14.50 TO 474+24.44	61.1	13.4	0.008	10.2
L†	"A1" 474+69.40 TO 475+02.63	18.5	4.1	0.003	3.1
L†	"A1" 475+87.58 TO 476+14.70	15.1	3.3	0.002	2.5
L†	"A1" 476+59.70 TO 477+40.00	44.6	9.8	0.006	7.4
L†	"A1" 477+91.16 TO 478+30.63	21.9	4.8	0.003	3.7
L†	"A1" 478+80.22 TO 478+88.30	4.5	1.0	0.001	0.8
L†	"A1" 479+38.30 TO 479+50.27	6.7	1.5	0.001	1.1
L†	"A1" 480+47.34 TO 484+03.36	197.8	43.5	0.027	33.0
L†	"A1" 490+70.68 TO 491+13.91	24.0	5.3	0.003	4.0
L†	"A1" 491+34.56 TO 499+23.21	438.1	96.3	0.061	73.0
L†	"A1" 500+17.73 TO 502+76.70	143.9	31.6	0.020	24.0
L†	"A1" 503+16.70 TO 503+33.50	9.3	2.1	0.001	1.6
L†	"A1" 503+73.50 TO 504+72.50	55.0	12.1	0.008	9.2
L†	"A1" 505+22.50 TO 505+40.50	10.0	2.2	0.001	1.7
L†	"A1" 505+82.50 TO 509+98.27	231.0	50.8	0.032	38.5
L†	"A1" 510+77.78 TO 516+00.00	218.9	48.1		36.5
	SUBTOTAL (TABLE 2)	2058.6	452.8	0.253	343.3
	TOTAL (TABLE 1 & 2)	3811.2	837.8	0.498	635.5
	TOTAL	*	*	*	*

* FOR TOTAL QUANITITES SEE SHEET Q-1

SUMMARY OF QUANTITIES
Q-4

REVISED BY	DATE REVISED

CALCULATED-DESIGNED BY: JACK COWELL
CHECKED BY: MASTRI ALVANDI
FUNCTIONAL SUPERVISOR: MASTRI ALVANDI

STATE OF CALIFORNIA - DEPARTMENT OF TRANSPORTATION
Caltrans®
DESIGN

LAST REVISION: DATE PLOTTED => 13-FEB-2014
05-20-13 TIME PLOTTED => 13:45

BORDER LAST REVISED 7/2/2010 | USERNAME => s130875 | DGN FILE => 0300000223pa004.dgn | RELATIVE BORDER SCALE IS IN INCHES 0 1 2 3 | UNIT 0337 | PROJECT NUMBER & PHASE 03000002231

Dist	COUNTY	LOCATION CODE	POST MILES TOTAL PROJECT	SHEET No.	TOTAL SHEETS
03	ED	89	8.6/13.8	163	231

Jack R. Cowell Jr. 11-18-13
REGISTERED CIVIL ENGINEER DATE

11-18-13
PLANS APPROVAL DATE

REGISTERED PROFESSIONAL ENGINEER — JACK COWELL — No. 65521 — Exp. 9-30-15 — CIVIL — STATE OF CALIFORNIA

THE STATE OF CALIFORNIA OR ITS OFFICERS OR AGENTS SHALL NOT BE RESPONSIBLE FOR THE ACCURACY OR COMPLETENESS OF SCANNED COPIES OF THIS PLAN SHEET.

TREATED WOOD WASTE

	TREATED WOOD WASTE
	LB
TOTAL	5,600

REMOVE AC DIKE

SIDE	STATION TO STATION	REMOVE AC DIKE
		LF
Lt	"A1" 697+36.97 TO 700+60.37	335.4

CABLE RAILING

STATION TO STATION	CABLE RAILING
	LF
475+80.2 TO 476+23.9 (Rt)	44.0
704+45.9 TO 704+90.7 (Lt)	46.0
704+35.7 TO 704+82.6 (Rt)	46.0
TOTAL	136.0

CURB RAMP QUANTITIES

CURB RAMP NUMBER	MINOR CONCRETE (CURB RAMP)	CLASS 2 AGGREGATE BASE	DETECTABLE WARNING SURFACES	PRE/POST CONSTRUCTION SURVEYS
	CY	CY	SF	EA
C 1 (TYPE A)	3.4	4.6	20.0	1
C 2 (TYPE A)	3.7	5.1	20.0	1
C 3 (TYPE B)	1.8	2.3	20.0	1
C 4 (TYPE A)	2.9	3.9	20.0	1
C 5 (TYPE A)	2.7	3.6	20.0	1
C 6 (TYPE B)	1.9	2.5	20.0	1
C 7 (TYPE A)	2.5	3.4	20.0	1
C 8 (TYPE A)	2.6	3.4	20.0	1
C 9 (TYPE A)	2.1	2.9	20.0	1
C 10 (TYPE B)	1.9	2.4	20.0	1
C 11 (TYPE A)	3.5	4.7	20.0	1
C 12 (TYPE A)	4.1	5.4	20.0	1
C 13 (TYPE A)	3.3	4.3	20.0	1
C 14 (TYPE A)	3.0	4.1	20.0	1
C 15 (TYPE B)	1.9	2.4	20.0	1
C 16 (TYPE B)	1.9	2.5	20.0	1
C 17 (TYPE B)	1.9	2.4	20.0	1
C 18 (TYPE B)	1.6	2.1	20.0	1
C 19 (TYPE B)	1.9	2.4	20.0	1
C 20 (TYPE A)	2.5	3.4	20.0	1
C 21 (TYPE B)	1.9	2.5	20.0	1
C 22 (TYPE A)	1.8	2.4	20.0	1
C 23 (TYPE A)	2.5	3.4	20.0	1
C 24 (TYPE A)	2.5	3.4	20.0	1
C 25 (TYPE A)	2.6	3.5	20.0	1
C 26 (TYPE A)	2.5	3.4	20.0	1
C 27 (TYPE A)	2.5	3.4	20.0	1
C 28 (TYPE A)	2.4	3.3	20.0	1
C 29 (TYPE C)	2.2	3.0	20.0	1
TOTAL	71.9	96.3*	580.0	29*

* FOR TOTAL QUANTITIES SEE SHEET Q-1

TEMPORARY WATER POLLUTION CONTROL QUANTITIES

	STATION TO STATION	TEMPORARY FIBER ROLL	MOVE-IN/MOVE-OUT (TEMPORARY EROSION CONTROL)	TEMPORARY HYDRAULIC MULCH (BONDED FIBER MATRIX)	TEMPORARY COVER	TEMPORARY LARGE SEDIMENT BARRIER (TALLAC CREEK)	RAIN EVENT ACTION PLAN	STORMWATER SAMPLING AND ANALYSIS DAY	STORMWATER ANNUAL REPORT	TEMPORARY CHECK DAM	TEMPORARY GRAVEL BAG BERM	TEMPORARY DRAINAGE INLET PROTECTION	TEMPORARY CONSTRUCTION ENTRANCE
		LF	EA	SQYD	SQYD	LF	EA	EA	EA	LF	LF	EA	EA
	"A1" 542+00 TO 580+00 (Lt & Rt)	7600											
	"A1" 696+40 TO 707+50 (Lt & Rt)	2220											
TOTAL		9820	6	10,200	10,200	280	28	30	3	160	2,100	42	4

TEMPORARY FENCE

STATION TO STATION	TEMPORARY FENCE (TYPE ESA)
	LF
"A1" 462+30 TO 462+90 (Lt)	60.0
"A1" 475+50 TO 476+30 (Rt)	80.0
"A1" 574+60 TO 575+30 (Rt)	70.0
"A1" 628+90 TO 634+20(Rt)	530.0
"A1" 630+95 TO 634+00 (Lt)	405.0
"A1" 634+90 TO 638+90(Lt)	400.0
"A1" 680+00 TO 683+90 (Lt)	390.0
"A1"680+00 TO 684+00 (Rt)	400.0
"A1" 700+00 TO 703+80(Rt)	390.0
"A1" 700+00 TO 704+00(Lt)	400.0
"A1" 704+90 TO 707+20(Lt)	230.0
"A1" 704+95 TO 707+60(Rt)	265.0
TOTAL	3620.0

SUMMARY OF QUANTITIES

Q-5

CALCULATED-DESIGNED BY: JACK COWELL
CHECKED BY: MASTRI ALVANDI
REVISED BY / DATE REVISED
FUNCTIONAL SUPERVISOR: MASTRI ALVANDI
STATE OF CALIFORNIA - DEPARTMENT OF TRANSPORTATION — DESIGN — Caltrans®

LAST REVISION: DATE PLOTTED => 13-FEB-2014 TIME PLOTTED => 13:45
05-20-13

BORDER LAST REVISED 7/2/2010
USERNAME => s130875
DGN FILE => 0300000223pa005.dgn
RELATIVE BORDER SCALE IS IN INCHES 0 1 2 3
UNIT 0337
PROJECT NUMBER & PHASE 03000002231

Dist	COUNTY	LOCATION CODE	POST MILES TOTAL PROJECT	SHEET No.	TOTAL SHEETS
03	ED	89	8.6/13.8	164	231

Jack R. Cowell Jr. 11-18-13
REGISTERED CIVIL ENGINEER DATE

11-18-13
PLANS APPROVAL DATE

REGISTERED PROFESSIONAL ENGINEER — JACK COWELL — No. 65521 — Exp. 9-30-15 — CIVIL — STATE OF CALIFORNIA

THE STATE OF CALIFORNIA OR ITS OFFICERS OR AGENTS SHALL NOT BE RESPONSIBLE FOR THE ACCURACY OR COMPLETENESS OF SCANNED COPIES OF THIS PLAN SHEET.

NOTE: EXACT LOCATION AND DIMENSIONS TO BE DETERMINED BY ENGINEER IN THE FIELD (SEE CONSTRUCTION DETAIL).

REPLACE ASPHALT CONCRETE SURFACING

STATION/LOCATION/SIDE OF Hwy	LENGTH	WIDTH	DEPTH	REPLACE ASPHALT CONCRETE SURFACING
	LF	LF	LF	CY
"A1" 525+50 TO 526+00 Rt	100.0	12.0	0.25	11.11
"A1" 587+60 TO 588+10 Lt	50.0	12.0	0.25	5.56
"A1" 597+50 TO 600+00 Rt	250.0	12.0	0.25	27.78
"A1" 613+15 TO 613+65 Rt	50.0	12.0	0.25	5.56
TOTALS				56.38

RETAINING WALL QUANTITIES (8th St FOREBAY)

ITEM DESCRIPTION	STATION TO STATION	STRUCTURAL CONCRETE, RETAINING WALL	STRUCTURE EXCAVATION (RETAINING WALL)	STRUCTURE BACKFILL (RETAINING WALL)	BAR REINFORCEMENT STEEL (RETAINING WALL)	REMOVE RETAINING WALL (PORTION)
		CY	CY	CY	LB	CY
REMOVE RETAINING WALL	"A1" 475+81.2 TO 475+95.1					3.9
RETAINING WALL	"W1" 10+00 TO 10+15.40	9.43	10.0	10.0	638	
TOTAL		9.43	10.0	10.0	638	3.9

PLACE HOT MIX ASPHALT DIKE

SIDE	STATION TO STATION	PLACE HMA DIKE TYPE A	TYPE E	HMA-A
		LF	LF	TON
Lt	"A1" 555+41.06 TO 557+30.15		189.1	4.94
Lt	"A1" 565+42.83 TO 568+42.40		299.6	7.83
Lt	"A1" 697+36.97 TO 700+60.37		335.4	8.80
Lt	"A1" 726+61.6 TO 726+84.2	23.7		0.65
TOTAL			824.06	22.22

CRACK TREATMENT

POST MILE BEGIN	POST MILE END	DISTANCE (MILES)	NUMBER OF LANES	CRACK TREATMENT LANE MILE
8.6	9.9	1.3	5	6.5
9.9	10.0	0.1	3	0.3
10.0	13.8	3.8	2	7.6
TOTAL				14.4

MINOR CONCRETE (SIDEWALK)

SIDE	STATION TO STATION	MINOR CONCRETE (SIDEWALK)
		CY
Rt	"A1" 468+03.40 TO 468+16.40	0.79
Rt	"A1" 469+27.12 TO 469+31.62	0.28
Rt	"A1" 469+75.50 TO 469+83.00	0.46
Lt	"A1" 471+52.54 TO 471+71.00	1.14
Rt	"A1" 478+27.80 TO 478+33.40	0.34
Lt	"A1" 478+80.00 TO 478+88.76	0.54
Lt	"A1" 479+38.00 TO 479+50.40	0.76
Rt	"A1" 480+34.00 TO 480+47.00	0.79
Lt	"A1" 503+16.70 TO 503+33.50	1.03
Lt	"A1" 505+22.50 TO 505+40.50	1.10
	TOTAL	7.23

SAFETY EDGE

SHEET No.	STATION TO STATION	DIRECTION	(N) TOTAL THICKNESS OF SAFETY EDGE	(N) LENGTH SAFETY EDGE	HOT MIX ASPHALT (TYPE A)
			FT	LF	TON
L-6	"A1" 517+50 TO 522+20	NB & SB	0.25	470.0	3.74
L-6	"A1" 522+20 TO 527+89	NB & SB	0.25	569	4.53
L-7 TO L-11	"A1"527+89 TO 587+00	NB & SB	0.50	5911.0	186.99
L-12 TO L-13	"A1"593+53.91 TO 613+44	NB & SB	0.50	1990.09	62.96
L-13	"A1"613+44 TO 619+40	NB & SB	0.50	760.0	24.04
L-14	"A1"619+40 TO 627+00	NB & SB	0.50	596.0	18.85
L-19 TO L-20	"A1"701+09 TO 705+14	NB & SB	0.50	405	12.81
SUBTOTAL					314.00*

*FOR TOTALS SEE SHEET Q-1

MINOR CONCRETE (MINOR STRUCTURE)

ITEM DESCRIPTION	STATION TO STATION	MINOR CONCRETE (MINOR STRUCTURE)	BAR REINFORCEMENT STEEL (N)	CLASS 2 AB
		CY	LB	CY
WALL CAP	"A1" 475+95.4(Rt) TO 476+23.9(Rt)	1.23	120	
WALL GUTTER	"W1" 10+10 TO 10+43.9	1.3		1.1*
RETAINING CURB	SUBTOTAL FROM Q-2	6.48		
	SUBTOTAL FROM DQ-7	106.73	805	
	SUBTOTAL		925	
	TOTAL	115.73		

*FOR TOTALS SEE SHEET Q-1

SUMMARY OF QUANTITIES

Q-6

REVISED BY | DATE REVISED
JACK COWELL | MASTRI ALVANDI
CALCULATED-DESIGNED BY | CHECKED BY
FUNCTIONAL SUPERVISOR: MASTRI ALVANDI
STATE OF CALIFORNIA - DEPARTMENT OF TRANSPORTATION
DESIGN
Caltrans

LAST REVISION: 05-23-13 | DATE PLOTTED => 13-FEB-2014 | TIME PLOTTED => 13:45

BORDER LAST REVISED 7/2/2010 | USERNAME => s130875 | DGN FILE => 0300000223pa006.dgn | RELATIVE BORDER SCALE IS IN INCHES 0 1 2 3 | UNIT 0337 | PROJECT NUMBER & PHASE 03000002231

Dist	COUNTY	ROUTE	POST MILES TOTAL PROJECT	SHEET No.	TOTAL SHEETS
03	ED	89	8.6/13.8	165	231

LICENSED LANDSCAPE ARCHITECT

11-18-13
PLANS APPROVAL DATE

LICENSED LANDSCAPE ARCHITECT
JAMES G. WILLIAMSON
No. 5415
Signature
02-28-14
Renewal Date
11-18-13
Date
STATE OF CALIFORNIA

THE STATE OF CALIFORNIA OR ITS OFFICERS OR AGENTS SHALL NOT BE RESPONSIBLE FOR THE ACCURACY OR COMPLETENESS OF SCANNED COPIES OF THIS PLAN SHEET.

EROSION CONTROL (TYPE 1)

SEQUENCE	ITEM	MATERIAL		APPLICATION RATE
		DESCRIPTION	TYPE	
STEP 1	EROSION CONTROL (DRY SEED)	SEED	EC MIX	55 LBS/ACRE
STEP 2	STRAW	STRAW	PINE NEEDLES	2 INCH DEPTH

EROSION CONTROL (TYPE 2)

SEQUENCE	ITEM	MATERIAL			APPLICATION RATE
		DESCRIPTION	TYPE	FASTENER	
STEP 1	EROSION CONTROL (DRY SEED)	SEED	EC MIX	--	55 LBS/ACRE
STEP 2	ROLLED EROSION CONTROL PRODUCT (BLANKET)	BLANKET	B	8-GAUGE, 8-INCH STEEL STAPLE	PER MANUFACTURER'S RECOMMENDATIONS

EROSION CONTROL (TYPE 3)

SEQUENCE	ITEM	MATERIAL		APPLICATION RATE
		DESCRIPTION	TYPE	
STEP 1	COMPOST	COMPOST	MEDIUM	4 INCH DEPTH
STEP 2	INCORPORATE MATERIALS	COMPOST	--	12 INCH DEPTH
STEP 3	EROSION CONTROL (DRY SEED)	SEED	EC MIX	55 LBS/ACRE
STEP 4	STRAW	STRAW	PINE NEEDLES	2 INCH DEPTH

EROSION CONTROL (TYPE 4)

SEQUENCE	ITEM	MATERIAL			APPLICATION RATE
		DESCRIPTION	TYPE	FASTENER	
STEP 1	COMPOST	COMPOST	MEDIUM	--	4 INCH DEPTH
STEP 2	INCORPORATE MATERIALS	COMPOST	--	--	12 INCH DEPTH
STEP 3	EROSION CONTROL (DRY SEED)	SEED	EC MIX	--	55 LBS/ACRE
STEP 4	ROLLED EROSION CONTROL PRODUCT (BLANKET)	BLANKET	B	8-GAUGE, 8-INCH STEEL STAPLE	PER MANUFACTURER'S RECOMMENDATIONS

EROSION CONTROL (TYPE 5)

SEQUENCE	ITEM	MATERIAL		APPLICATION RATE	DAYS
		DESCRIPTION	TYPE		
STEP 1	CULTIVATION	CULTIVATION	--	--	--
	SOIL AMENDMENT	SOIL AMENDMENT	--	1" DEPTH	--
	ORGANIC FERTILIZER	FERTILIZER	ORGANIC	25 LBS/1000 SQFT	--
STEP 2	SOD	SOD	SOD MIX	--	--
STEP 3	PLANT ESTABLISHMENT WORK	SOD	2	--	45

EROSION CONTROL (TYPE 6)

SEQUENCE	ITEM	MATERIAL		APPLICATION RATE
		DESCRIPTION	TYPE	
STEP 1	WOOD MULCH	MULCH	WOOD CHIP	4 INCH DEPTH

EROSION CONTROL LEGEND

NO SCALE

ECL-1

J. WILLIAMSON — CALCULATED-DESIGNED BY
T.C. JOHNSON — CHECKED BY
REVISED BY — DATE REVISED
SENIOR LANDSCAPE ARCHITECT
T. CHRIS JOHNSON

STATE OF CALIFORNIA - DEPARTMENT OF TRANSPORTATION
Caltrans® LANDSCAPE ARCHITECTURE

LAST REVISION 11-12-13
DATE PLOTTED => 13-FEB-2014
TIME PLOTTED => 13:45

BORDER LAST REVISED 7/2/2010
USERNAME => s130875
DGN FILE => 0300000223tc001.dgn
RELATIVE BORDER SCALE IS IN INCHES 0 1 2 3
UNIT 0381
PROJECT NUMBER & PHASE 03000002231

Dist	COUNTY	ROUTE	POST MILES TOTAL PROJECT	SHEET No.	TOTAL SHEETS
03	ED	89	8.6/13.8	166	231

LICENSED LANDSCAPE ARCHITECT

11-18-13
PLANS APPROVAL DATE

LICENSED LANDSCAPE ARCHITECT
JAMES G. WILLIAMSON
No. 5415
Signature
02-28-14
Renewal Date
11-18-13
Date
STATE OF CALIFORNIA

THE STATE OF CALIFORNIA OR ITS OFFICERS OR AGENTS SHALL NOT BE RESPONSIBLE FOR THE ACCURACY OR COMPLETENESS OF SCANNED COPIES OF THIS PLAN SHEET.

EROSION CONTROL MIX

BOTANICAL NAME (COMMON NAME)	PERCENT GERMINATION (MINIMUM)	POUNDS PURE LIVE SEED PER ACRE (SLOPE MEASUREMENT)
ACHANTHERUM OCCIDENTALIS[1] (CALIFORNIA NEEDLEGRASS)	60	3
BROMUS MARGINATUS[1] (MOUNTAIN BROME)	70	10
DESCHAMPSIA CAESPITOSA[1] (HAIRGRASS)	65	6
ELYMUS ELYMOIDES[1] (SQUIRRELTAIL)	60	10
EROIGONUM UMBELLATUM[1] (SULPHUR BUCKWHEAT)	60	6
LOTUS PURSHIANUS[1] (PERSHINGS LOTUS)	60	6
LUPINUS ARGENTEUS[1] (SILVERY LUPINE)	55	6
PENSTEMON RYDBERGII[1] (PENSTEMON)	50	3
POTENTILLA GRACILIS[1] (SLENDER CINQUEFOIL)	50	3
RIBES CEREUM[1] (WAX CURRANT)	50	2
	TOTAL	55

[1] SEED PRODUCED IN NORTHERN SIERRA NEVADA RANGE ABOVE THE 2500 FOOT ELEVATION LEVEL.

SOD MIX

BOTANICAL NAME (COMMON NAME)	PERCENT OF MIX
FESTUCA ARUNDINACEA (TALL FESCUE)	90%
POA PRATENSIS (KENTUCKY BLUEGRASS)	10%

EROSION CONTROL LEGEND

NO SCALE

ECL-2

REVISED BY | DATE REVISED
J. WILLIAMSON | T.C. JOHNSON
CALCULATED-DESIGNED BY | CHECKED BY
SENIOR LANDSCAPE ARCHITECT | T. CHRIS JOHNSON
STATE OF CALIFORNIA - DEPARTMENT OF TRANSPORTATION
Caltrans® LANDSCAPE ARCHITECTURE

LAST REVISION 11-12-13
DATE PLOTTED => 13-FEB-2014
TIME PLOTTED => 13:45

Dist	COUNTY	ROUTE	POST MILES TOTAL PROJECT	SHEET No.	TOTAL SHEETS
03	ED	89	8.6/13.8	167	231

LICENSED LANDSCAPE ARCHITECT

11-18-13

PLANS APPROVAL DATE

LICENSED LANDSCAPE ARCHITECT
JAMES G. WILLIAMSON
No. 5415
Signature
02-28-14
Renewal Date
11-18-13
Date
STATE OF CALIFORNIA

THE STATE OF CALIFORNIA OR ITS OFFICERS OR AGENTS SHALL NOT BE RESPONSIBLE FOR THE ACCURACY OR COMPLETENESS OF SCANNED COPIES OF THIS PLAN SHEET.

LEGEND:

EROSION CONTROL (TYPE 1)
- EROSION CONTROL (DRY SEED)
- STRAW

EROSION CONTROL (TYPE 2)
- EROSION CONTROL (DRY SEED)
- RECP (BLANKET)

EROSION CONTROL (TYPE 3)
- COMPOST
- INCORPORATE MATERIALS
- EROSION CONTROL (DRY SEED)
- STRAW

EROSION CONTROL (TYPE 4)
- COMPOST
- INCORPORATE MATERIALS
- EROSION CONTROL (DRY SEED)
- RECP (BLANKET)

EROSION CONTROL (TYPE 5)
- CULTIVATION
- SOD
- PLANT ESTABLISHMENT WORK

EROSION CONTROL (TYPE 6)
-WOOD MULCH

WOODEN VEHICLE BARRIER

BOULDER VEHICLE BARRIER

FIBER ROLLS

EC SHEET NUMBER

EC AREA

NOTES:

1. FOR ACCURATE RIGHT OF WAY DATA, CONTACT RIGHT OF WAY ENGINEERING AT THE DISTRICT OFFICE.
2. INCORPORATE MATERIALS SHALL NOT TAKE PLACE WITHIN 10′ OF TREE TRUNKS.
3. INCORPORATE MATERIALS SHALL NOT TAKE PLACE WITHIN 2′ OF PAVEMENT OR BIKE PATH.
4. APPLY ALL EROSION CONTROL TO BACK OF CURB OR OR SIDEWALK UNLESS OTHERWISE SHOWN
5. APPLY ALL EROSION CONTROL TO 2′ OF PAVEMENT OR BIKE PATH UNLESS OTHERWISE SHOWN
6. APPLY ALL EROSION CONTROL TO LIMITS OF DISTURBANCE UNLESS OTHERWISE SHOWN

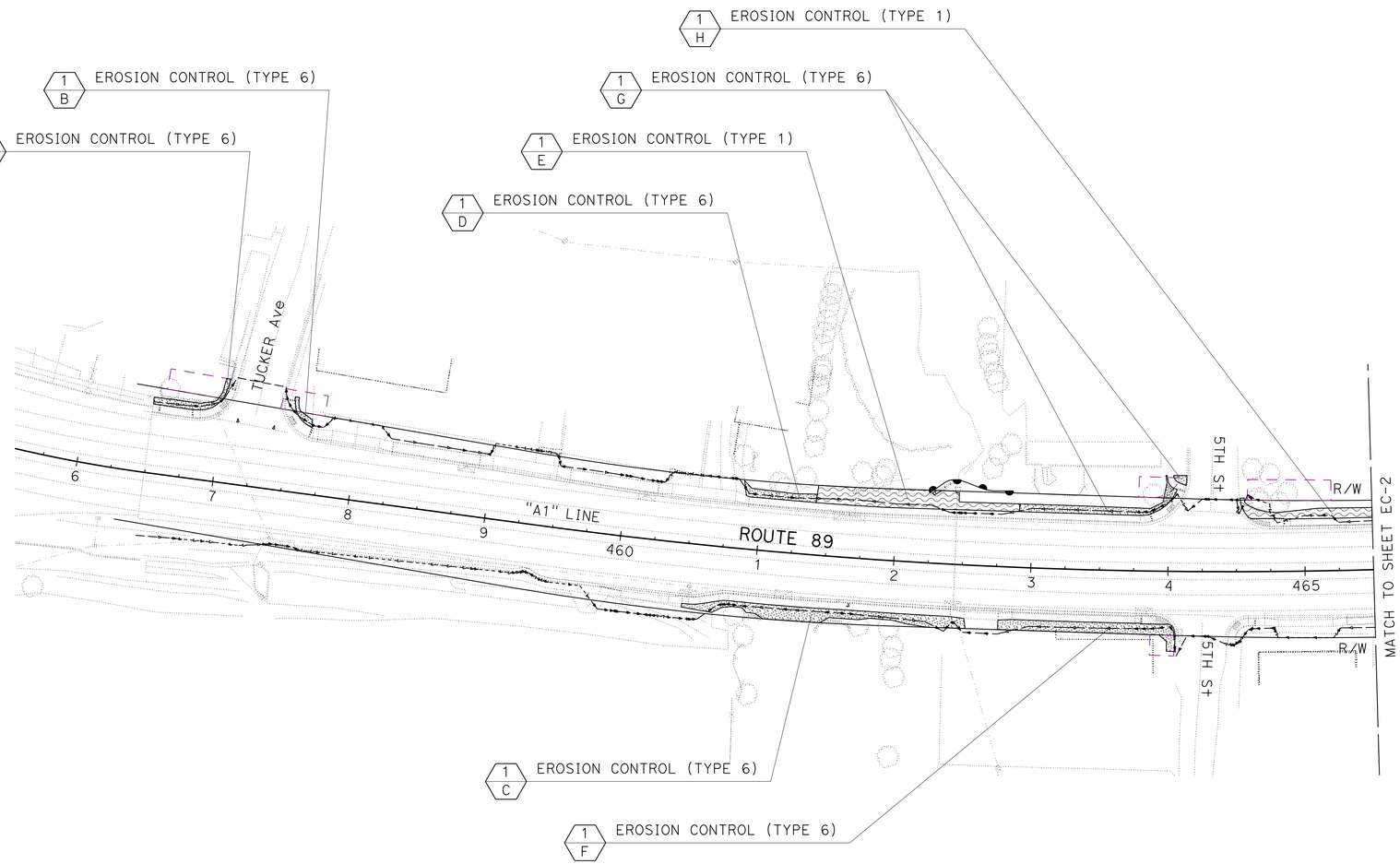

EROSION CONTROL PLAN

SCALE: 1" = 50′

APPROVED FOR EROSION CONTROL WORK ONLY

EC-1

STATE OF CALIFORNIA - DEPARTMENT OF TRANSPORTATION
LANDSCAPE ARCHITECTURE
SENIOR LANDSCAPE ARCHITECT: T. CHRIS JOHNSON
CALCULATED-DESIGNED BY: J. WILLIAMSON
CHECKED BY: T. C. JOHNSON
REVISED BY | DATE REVISED

LAST REVISION: 11-12-13
DATE PLOTTED => 13-FEB-2014
TIME PLOTTED => 13:45

BORDER LAST REVISED 7/2/2010 | USERNAME => s130875 | DGN FILE => 0300000223te001.dgn | RELATIVE BORDER SCALE IS IN INCHES 0 1 2 3 | UNIT 0381 | PROJECT NUMBER & PHASE 03000002231

Dist	COUNTY	ROUTE	POST MILES TOTAL PROJECT	SHEET No.	TOTAL SHEETS
03	ED	89	8.6/13.8	168	231

LICENSED LANDSCAPE ARCHITECT

11-18-13
PLANS APPROVAL DATE

LICENSED LANDSCAPE ARCHITECT
JAMES G. WILLIAMSON
No. 5415
Signature
02-28-14
Renewal Date
11-18-13
Date
STATE OF CALIFORNIA

THE STATE OF CALIFORNIA OR ITS OFFICERS OR AGENTS SHALL NOT BE RESPONSIBLE FOR THE ACCURACY OR COMPLETENESS OF SCANNED COPIES OF THIS PLAN SHEET.

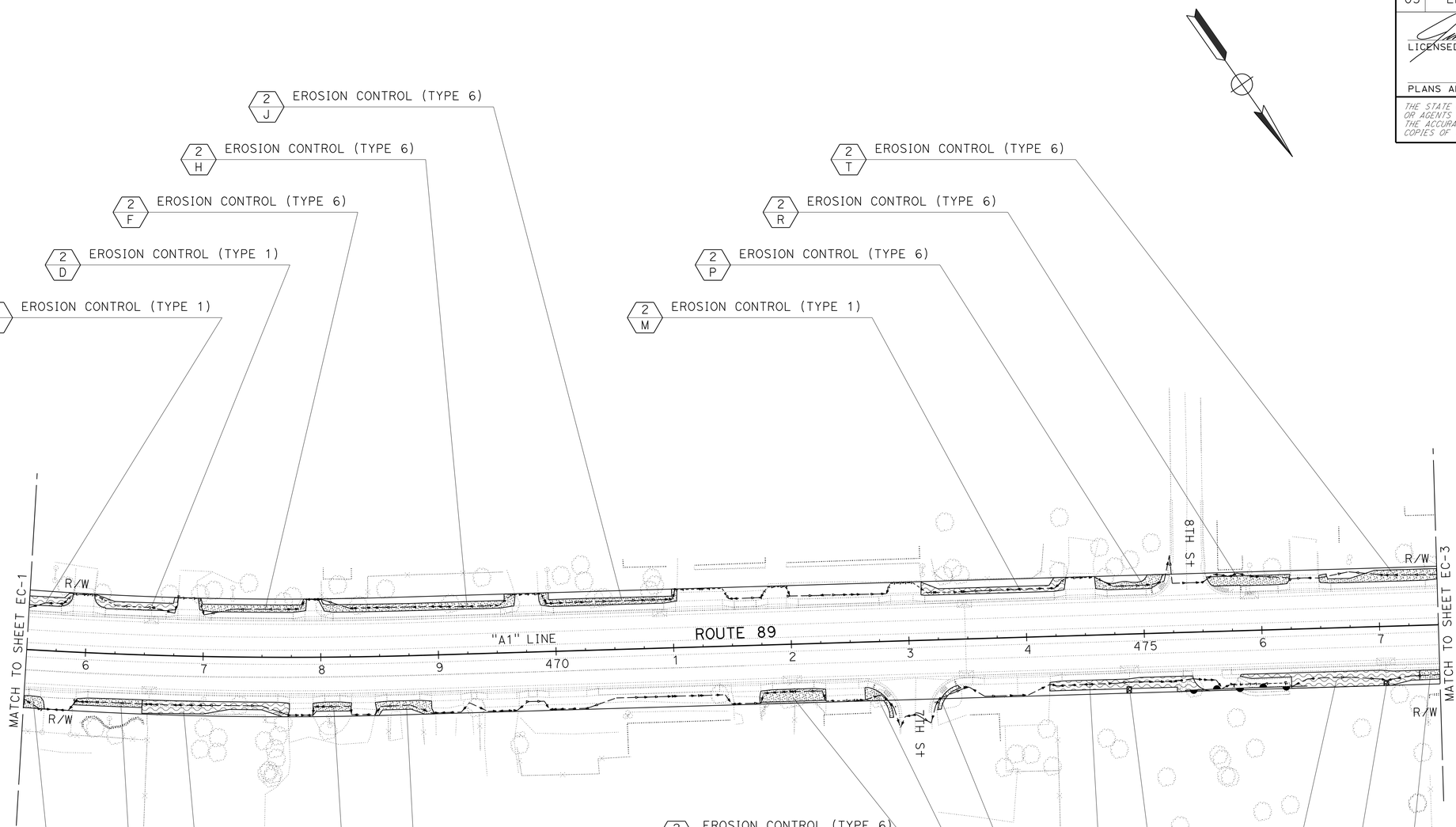

EROSION CONTROL PLAN

SCALE: 1" = 50'

EC-2

APPROVED FOR EROSION CONTROL WORK ONLY

STATE OF CALIFORNIA - DEPARTMENT OF TRANSPORTATION
LANDSCAPE ARCHITECTURE
SENIOR LANDSCAPE ARCHITECT: T. CHRIS JOHNSON
CALCULATED-DESIGNED BY: J. WILLIAMSON
CHECKED BY: T. C. JOHNSON
REVISED BY | DATE REVISED

LAST REVISION: DATE PLOTTED => 13-FEB-2014 TIME PLOTTED => 13:45

BORDER LAST REVISED 7/2/2010 | USERNAME => s130875 DGN FILE => 0300000223te002.dgn | RELATIVE BORDER SCALE IS IN INCHES 0 1 2 3 | UNIT 0381 | PROJECT NUMBER & PHASE 03000002231

Dist	COUNTY	ROUTE	POST MILES TOTAL PROJECT	SHEET No.	TOTAL SHEETS
03	ED	89	8.6/13.8	169	231

LICENSED LANDSCAPE ARCHITECT

11-18-13
PLANS APPROVAL DATE

LICENSED LANDSCAPE ARCHITECT
JAMES G. WILLIAMSON
No. 5415
Signature
02-28-14
Renewal Date
11-18-13
Date
STATE OF CALIFORNIA

THE STATE OF CALIFORNIA OR ITS OFFICERS OR AGENTS SHALL NOT BE RESPONSIBLE FOR THE ACCURACY OR COMPLETENESS OF SCANNED COPIES OF THIS PLAN SHEET.

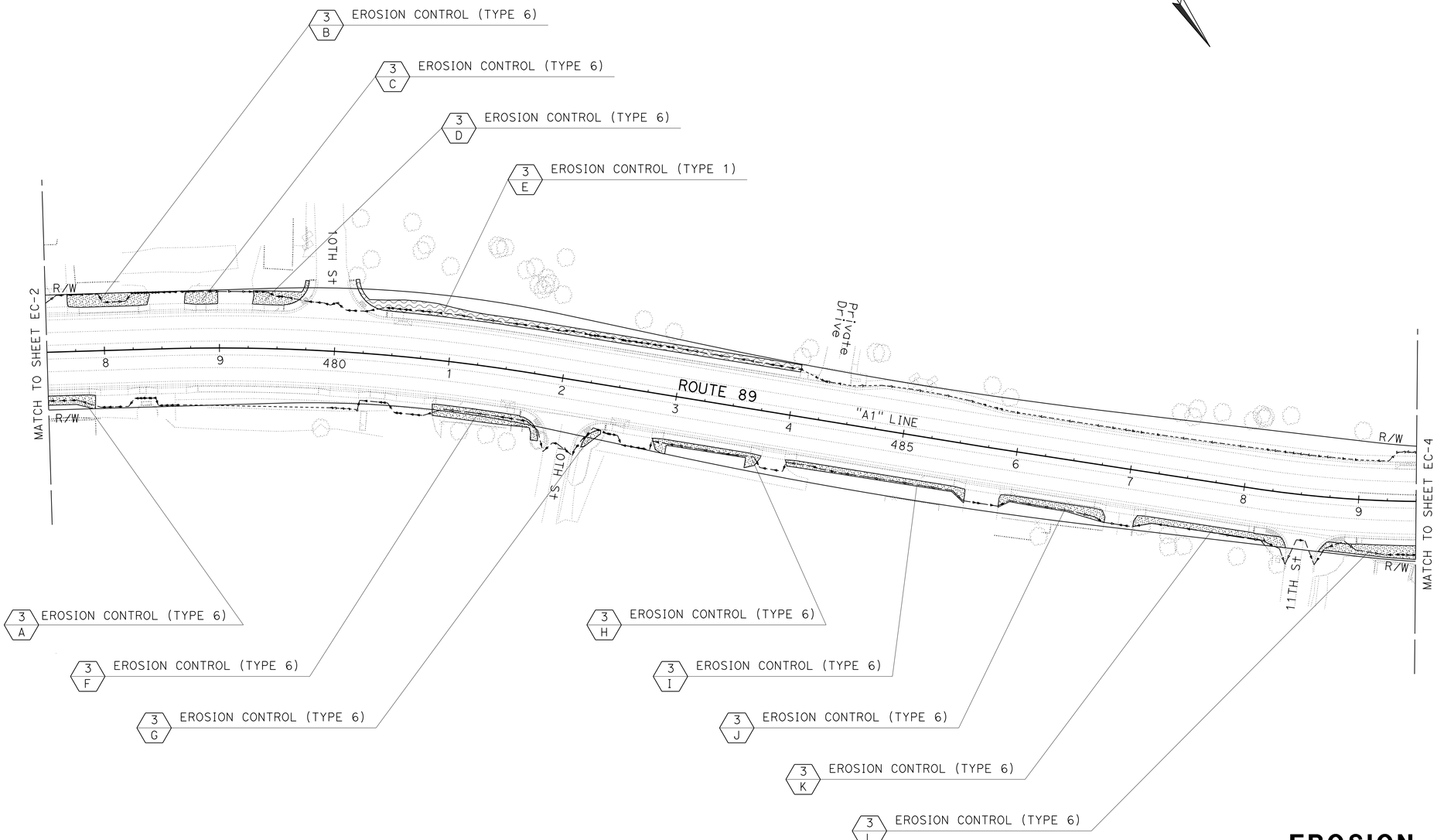

EROSION CONTROL PLAN

SCALE: 1" = 50'

APPROVED FOR EROSION CONTROL WORK ONLY

EC-3

STATE OF CALIFORNIA - DEPARTMENT OF TRANSPORTATION
LANDSCAPE ARCHITECTURE
SENIOR LANDSCAPE ARCHITECT: T. CHRIS JOHNSON
CALCULATED-DESIGNED BY: J. WILLIAMSON
CHECKED BY: T. C. JOHNSON
REVISED BY
DATE REVISED

LAST REVISION: DATE PLOTTED => 13-FEB-2014
TIME PLOTTED => 13:45

BORDER LAST REVISED 7/2/2010
USERNAME => s130875
DGN FILE => 0300000223te003.dgn
RELATIVE BORDER SCALE IS IN INCHES 0 1 2 3
UNIT 0381
PROJECT NUMBER & PHASE 03000002231

Dist	COUNTY	ROUTE	POST MILES TOTAL PROJECT	SHEET No.	TOTAL SHEETS
03	ED	89	8.6/13.8	170	231

LICENSED LANDSCAPE ARCHITECT

11-18-13
PLANS APPROVAL DATE

LICENSED LANDSCAPE ARCHITECT
JAMES G. WILLIAMSON
No. 5415
Signature
02-28-14
Renewal Date
11-18-13
Date
STATE OF CALIFORNIA

THE STATE OF CALIFORNIA OR ITS OFFICERS OR AGENTS SHALL NOT BE RESPONSIBLE FOR THE ACCURACY OR COMPLETENESS OF SCANNED COPIES OF THIS PLAN SHEET.

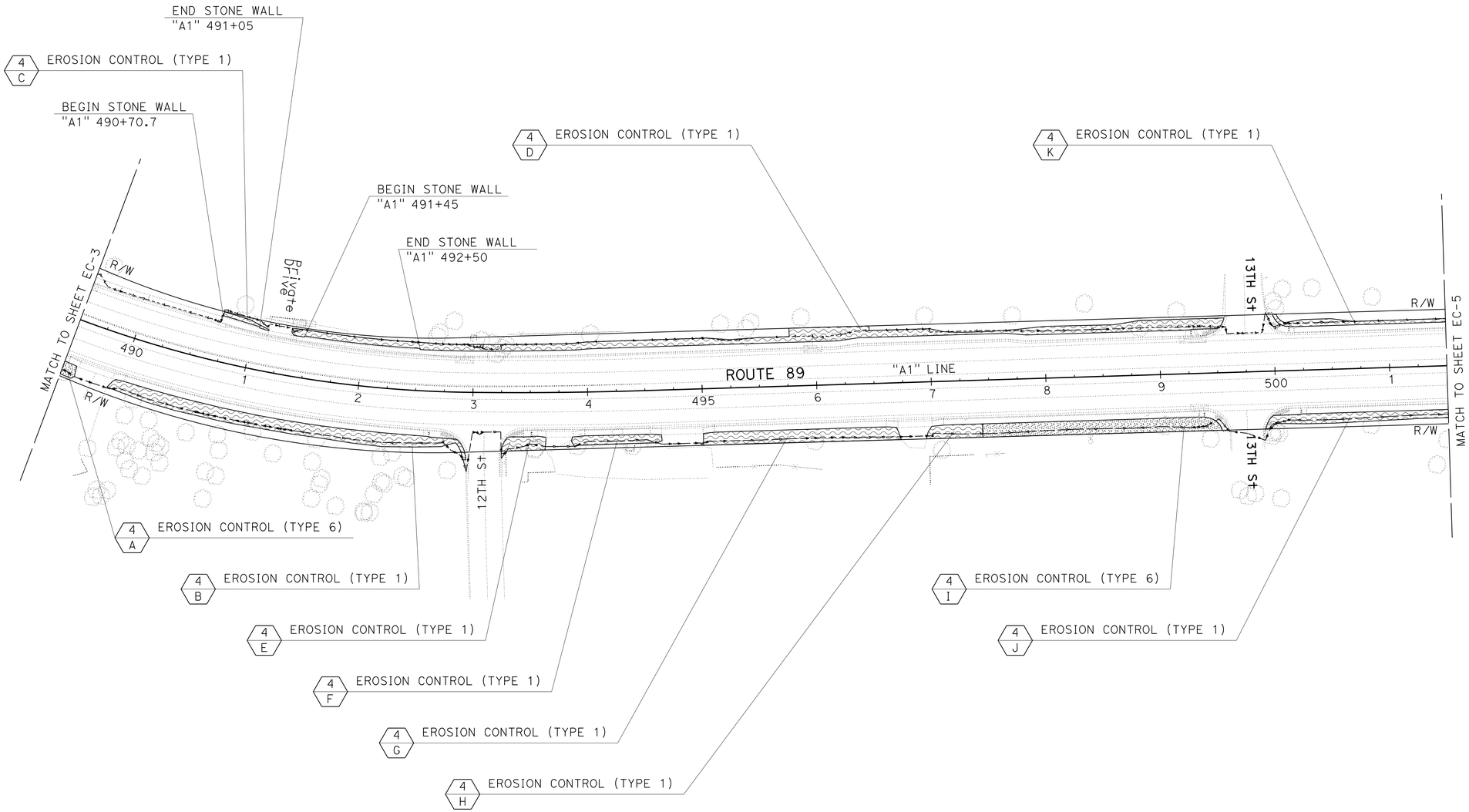

APPROVED FOR EROSION CONTROL WORK ONLY

EROSION CONTROL PLAN

SCALE: 1" = 50'

EC-4

LAST REVISION | DATE PLOTTED => 13-FEB-2014 | TIME PLOTTED => 13:45 | 11-12-13

STATE OF CALIFORNIA - DEPARTMENT OF TRANSPORTATION
Caltrans® LANDSCAPE ARCHITECTURE

SENIOR LANDSCAPE ARCHITECT: T. CHRIS JOHNSON

CALCULATED-DESIGNED BY: J. WILLIAMSON
CHECKED BY: T. C. JOHNSON

REVISED BY | DATE REVISED

BORDER LAST REVISED 7/2/2010

USERNAME => s130875
DGN FILE => 0300000223te004.dgn

RELATIVE BORDER SCALE IS IN INCHES 0 1 2 3

UNIT 0381

PROJECT NUMBER & PHASE 03000002231

Dist	COUNTY	ROUTE	POST MILES TOTAL PROJECT	SHEET No.	TOTAL SHEETS
03	ED	89	8.6/13.8	171	231

LICENSED LANDSCAPE ARCHITECT

11-18-13
PLANS APPROVAL DATE

LICENSED LANDSCAPE ARCHITECT
JAMES G. WILLIAMSON
No. 5415
Signature
02-28-14
Renewal Date
11-18-13
Date
STATE OF CALIFORNIA

THE STATE OF CALIFORNIA OR ITS OFFICERS OR AGENTS SHALL NOT BE RESPONSIBLE FOR THE ACCURACY OR COMPLETENESS OF SCANNED COPIES OF THIS PLAN SHEET.

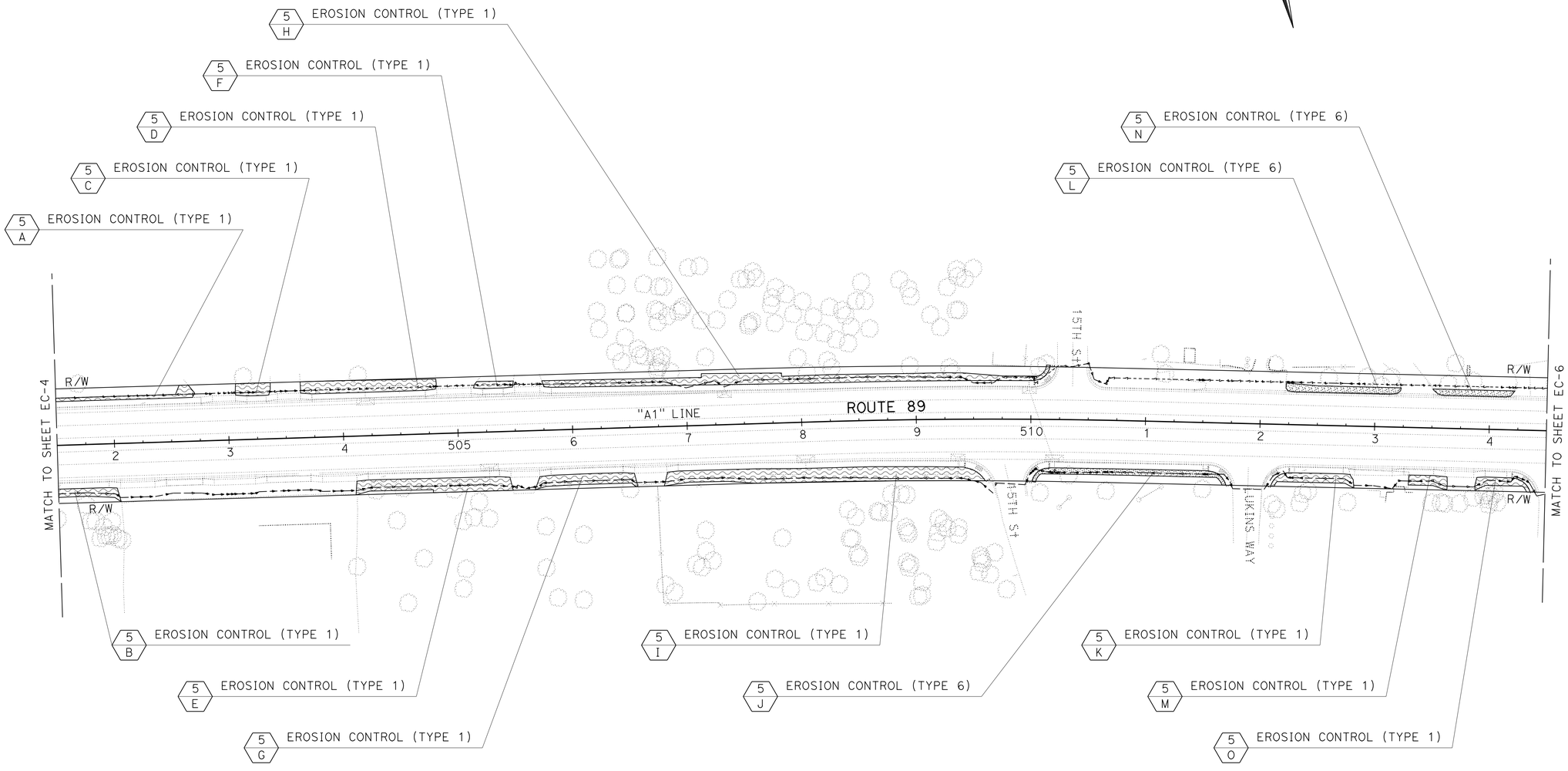

APPROVED FOR EROSION CONTROL WORK ONLY

EROSION CONTROL PLAN

SCALE: 1" = 50'

EC-5

LAST REVISION 11-12-13
DATE PLOTTED => 13-FEB-2014
TIME PLOTTED => 13:45

STATE OF CALIFORNIA - DEPARTMENT OF TRANSPORTATION
LANDSCAPE ARCHITECTURE

	REVISED BY	DATE REVISED
CALCULATED-DESIGNED BY	J. WILLIAMSON	
CHECKED BY	T. C. JOHNSON	
SENIOR LANDSCAPE ARCHITECT	T. CHRIS JOHNSON	

BORDER LAST REVISED 7/2/2010

USERNAME => s130875
DGN FILE => 0300000223te005.dgn

RELATIVE BORDER SCALE IS IN INCHES 0 1 2 3

UNIT 0381

PROJECT NUMBER & PHASE 03000002231

Dist	COUNTY	ROUTE	POST MILES TOTAL PROJECT	SHEET No.	TOTAL SHEETS
03	ED	89	8.6/13.8	172	231

LICENSED LANDSCAPE ARCHITECT

11-18-13
PLANS APPROVAL DATE

LICENSED LANDSCAPE ARCHITECT
JAMES G. WILLIAMSON
No. 5415
Signature
02-28-14
Renewal Date
11-18-13
Date
STATE OF CALIFORNIA

THE STATE OF CALIFORNIA OR ITS OFFICERS OR AGENTS SHALL NOT BE RESPONSIBLE FOR THE ACCURACY OR COMPLETENESS OF SCANNED COPIES OF THIS PLAN SHEET.

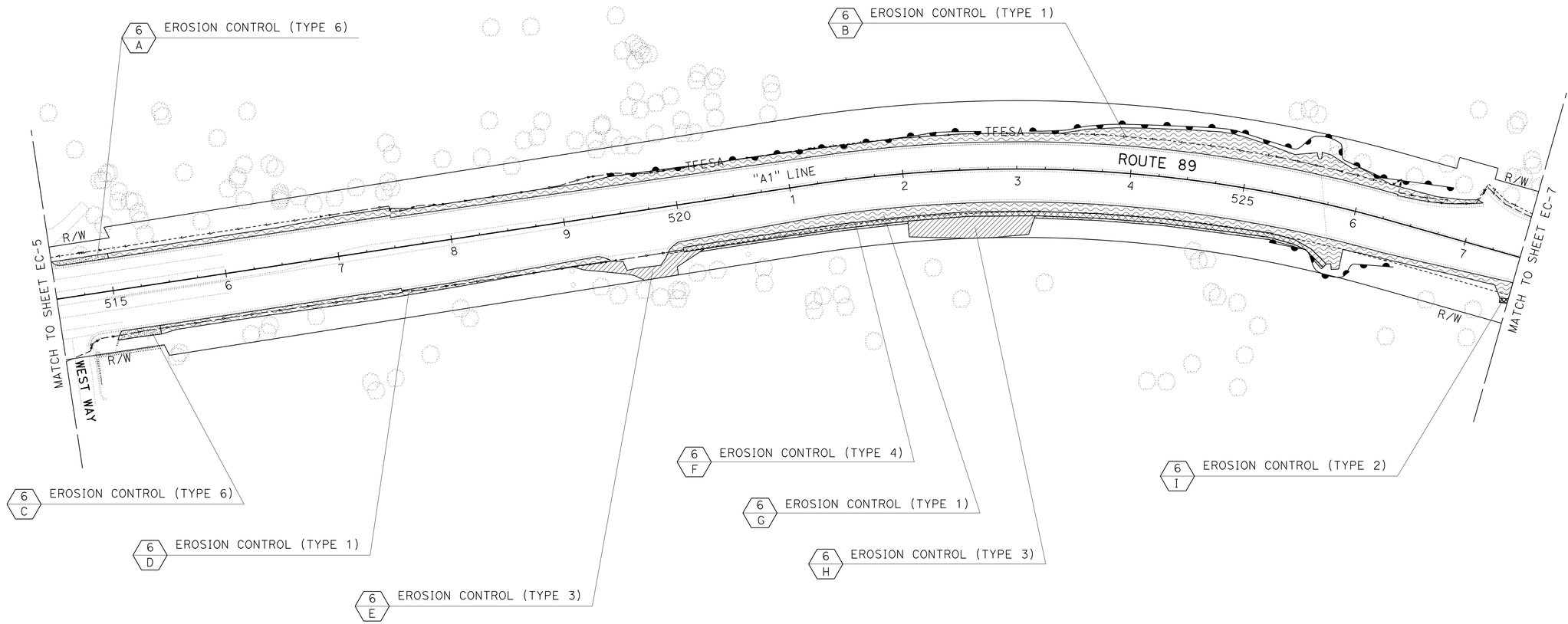

EROSION CONTROL PLAN

SCALE: 1" = 50'

APPROVED FOR EROSION CONTROL WORK ONLY

EC-6

CALCULATED-DESIGNED BY: J. WILLIAMSON
CHECKED BY: T. C. JOHNSON
REVISED BY
DATE REVISED

SENIOR LANDSCAPE ARCHITECT: T. CHRIS JOHNSON

STATE OF CALIFORNIA - DEPARTMENT OF TRANSPORTATION
Caltrans® LANDSCAPE ARCHITECTURE

LAST REVISION: 11-12-13
DATE PLOTTED => 13-FEB-2014
TIME PLOTTED => 13:45

BORDER LAST REVISED 7/2/2010
USERNAME => s130875
DGN FILE => 0300000223te006.dgn
RELATIVE BORDER SCALE IS IN INCHES 0 1 2 3
UNIT 0381
PROJECT NUMBER & PHASE 03000002231

Dist	COUNTY	ROUTE	POST MILES TOTAL PROJECT	SHEET No.	TOTAL SHEETS
03	ED	89	8.6/13.8	173	231

LICENSED LANDSCAPE ARCHITECT

11-18-13
PLANS APPROVAL DATE

THE STATE OF CALIFORNIA OR ITS OFFICERS OR AGENTS SHALL NOT BE RESPONSIBLE FOR THE ACCURACY OR COMPLETENESS OF SCANNED COPIES OF THIS PLAN SHEET.

LICENSED LANDSCAPE ARCHITECT
JAMES G. WILLIAMSON
No. 5415
Signature
02-28-14
Renewal Date
11-18-13
Date
STATE OF CALIFORNIA

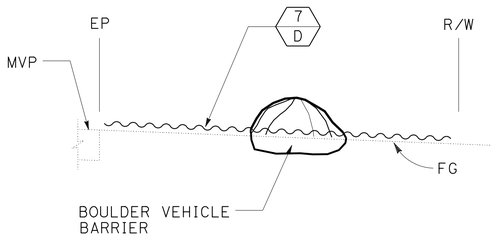

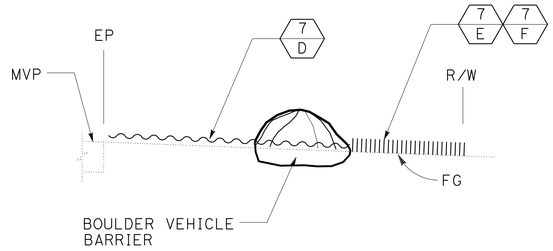

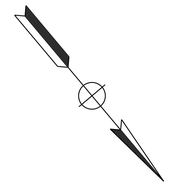

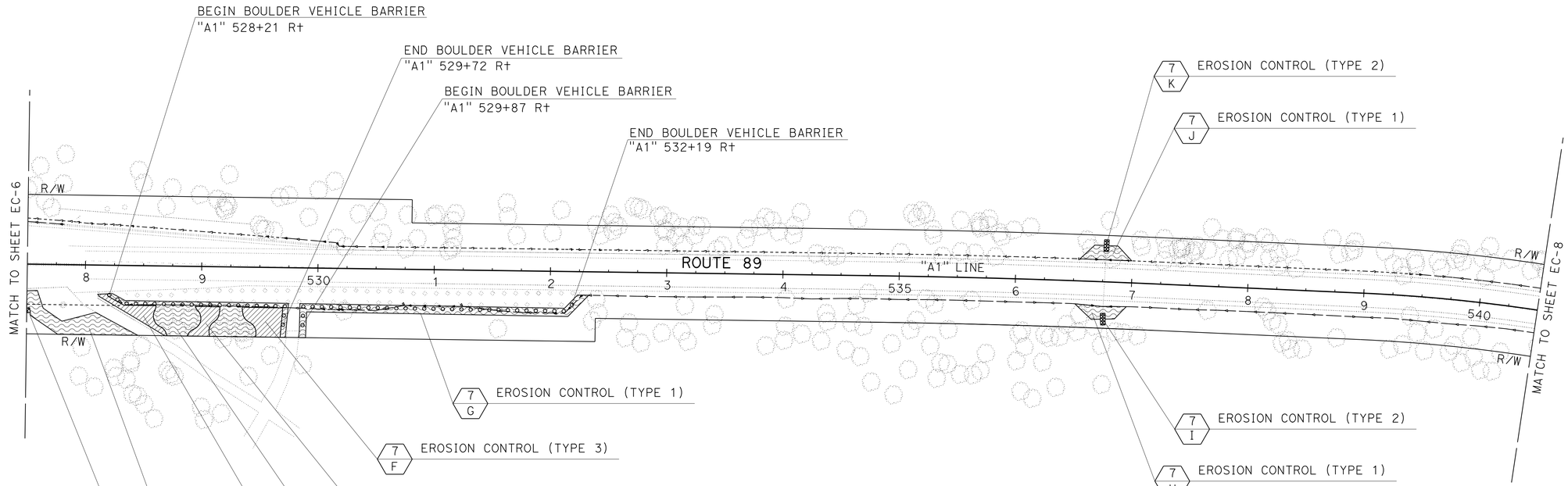

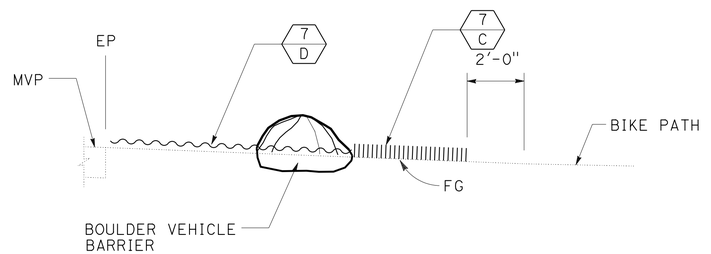

EROSION CONTROL PLAN

SCALE: 1" = 50'

EC-7

APPROVED FOR EROSION CONTROL WORK ONLY

CALCULATED-DESIGNED BY: J. WILLIAMSON
CHECKED BY: T. C. JOHNSON
REVISED BY
DATE REVISED

SENIOR LANDSCAPE ARCHITECT
T. CHRIS JOHNSON

STATE OF CALIFORNIA - DEPARTMENT OF TRANSPORTATION
Caltrans® LANDSCAPE ARCHITECTURE

LAST REVISION | DATE PLOTTED => 13-FEB-2014
11-12-13 | TIME PLOTTED => 13:45

BORDER LAST REVISED 7/2/2010

USERNAME => s130875
DGN FILE => 0300000223te007.dgn

RELATIVE BORDER SCALE IS IN INCHES 0 1 2 3

UNIT 0381

PROJECT NUMBER & PHASE 03000002231

Dist	COUNTY	ROUTE	POST MILES TOTAL PROJECT	SHEET No.	TOTAL SHEETS
03	ED	89	8.6/13.8	174	231

LICENSED LANDSCAPE ARCHITECT

11-18-13
PLANS APPROVAL DATE

LICENSED LANDSCAPE ARCHITECT
JAMES G. WILLIAMSON
No. 5415
Signature
02-28-14
Renewal Date
11-18-13
Date
STATE OF CALIFORNIA

THE STATE OF CALIFORNIA OR ITS OFFICERS OR AGENTS SHALL NOT BE RESPONSIBLE FOR THE ACCURACY OR COMPLETENESS OF SCANNED COPIES OF THIS PLAN SHEET.

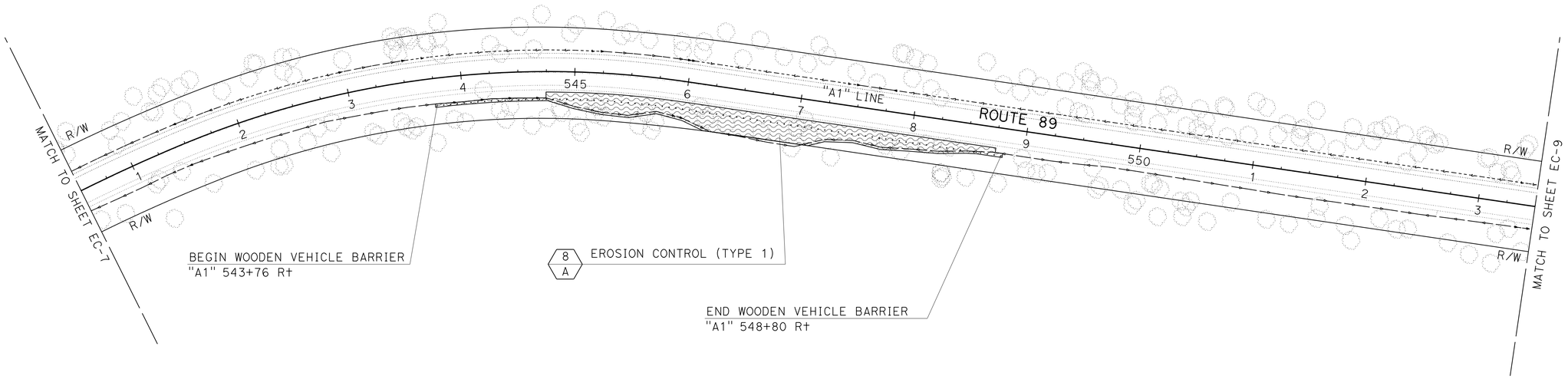

APPROVED FOR EROSION CONTROL WORK ONLY

EROSION CONTROL PLAN

SCALE: 1" = 50'

EC-8

LAST REVISION 11-12-13 | DATE PLOTTED => 13-FEB-2014 | TIME PLOTTED => 13:45

STATE OF CALIFORNIA - DEPARTMENT OF TRANSPORTATION
Caltrans® LANDSCAPE ARCHITECTURE

SENIOR LANDSCAPE ARCHITECT: T. CHRIS JOHNSON

CALCULATED-DESIGNED BY: J. WILLIAMSON
CHECKED BY: T. C. JOHNSON

REVISED BY | DATE REVISED

BORDER LAST REVISED 7/2/2010

USERNAME => s130875
DGN FILE => 0300000223te008.dgn

RELATIVE BORDER SCALE IS IN INCHES 0 1 2 3

UNIT 0381

PROJECT NUMBER & PHASE 03000002231

Dist	COUNTY	ROUTE	POST MILES TOTAL PROJECT	SHEET No.	TOTAL SHEETS
03	ED	89	8.6/13.8	175	231

LICENSED LANDSCAPE ARCHITECT

11-18-13
PLANS APPROVAL DATE

LICENSED LANDSCAPE ARCHITECT
JAMES G. WILLIAMSON
No. 5415
Signature
02-28-14
Renewal Date
11-18-13
Date
STATE OF CALIFORNIA

THE STATE OF CALIFORNIA OR ITS OFFICERS OR AGENTS SHALL NOT BE RESPONSIBLE FOR THE ACCURACY OR COMPLETENESS OF SCANNED COPIES OF THIS PLAN SHEET.

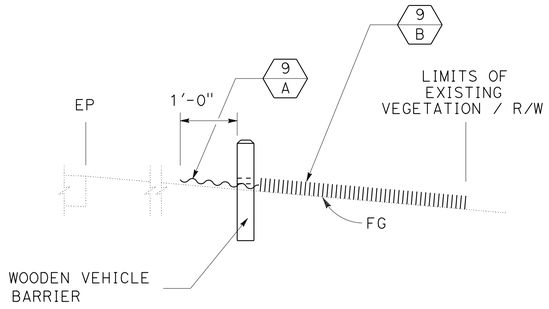

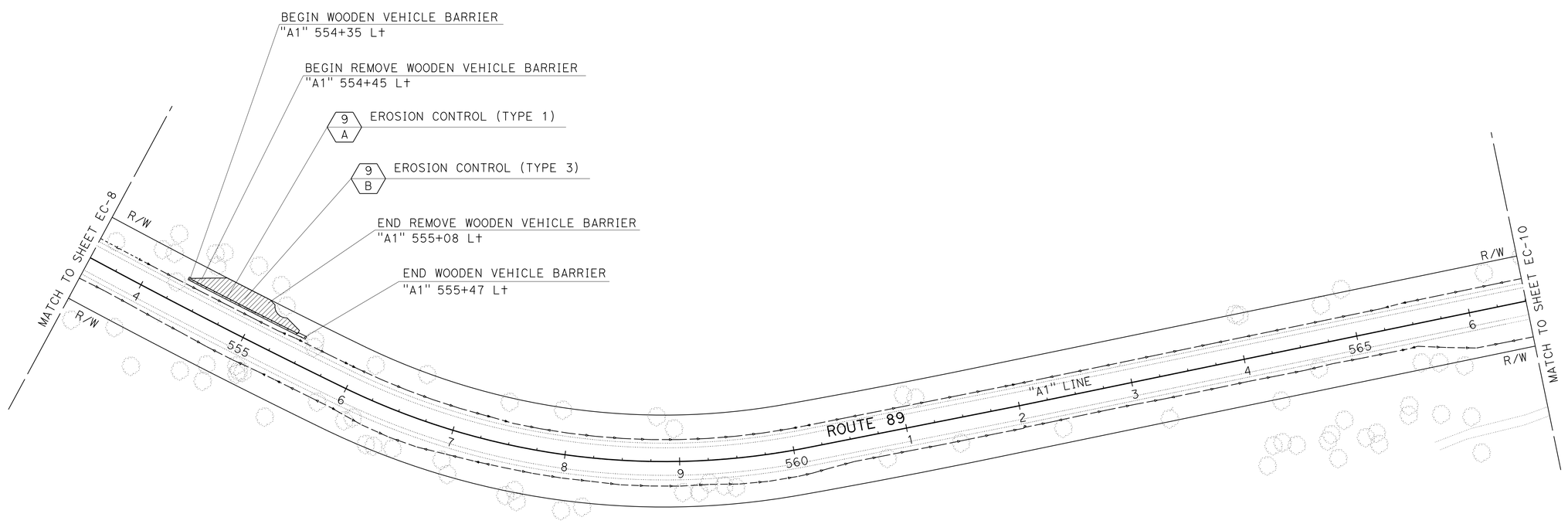

APPROVED FOR EROSION CONTROL WORK ONLY

EROSION CONTROL PLAN

SCALE: 1" = 50'

EC-9

STATE OF CALIFORNIA - DEPARTMENT OF TRANSPORTATION
Caltrans® LANDSCAPE ARCHITECTURE

SENIOR LANDSCAPE ARCHITECT: T. CHRIS JOHNSON

CALCULATED-DESIGNED BY: J. WILLIAMSON
CHECKED BY: T. C. JOHNSON

REVISED BY	DATE REVISED

LAST REVISION: DATE PLOTTED => 13-FEB-2014
11-12-13 TIME PLOTTED => 13:45

BORDER LAST REVISED 7/2/2010

USERNAME => s130875
DGN FILE => 0300000223te009.dgn

RELATIVE BORDER SCALE IS IN INCHES 0 1 2 3

UNIT 0381

PROJECT NUMBER & PHASE 03000002231

Dist	COUNTY	ROUTE	POST MILES TOTAL PROJECT	SHEET No.	TOTAL SHEETS
03	ED	89	8.6/13.8	176	231

LICENSED LANDSCAPE ARCHITECT

11-18-13
PLANS APPROVAL DATE

LICENSED LANDSCAPE ARCHITECT
JAMES G. WILLIAMSON
No. 5415
Signature
02-28-14
Renewal Date
11-18-13
Date
STATE OF CALIFORNIA

THE STATE OF CALIFORNIA OR ITS OFFICERS OR AGENTS SHALL NOT BE RESPONSIBLE FOR THE ACCURACY OR COMPLETENESS OF SCANNED COPIES OF THIS PLAN SHEET.

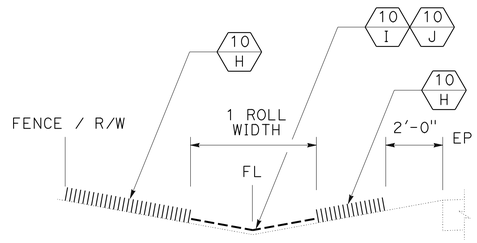

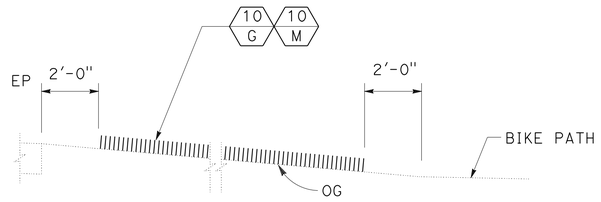

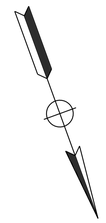

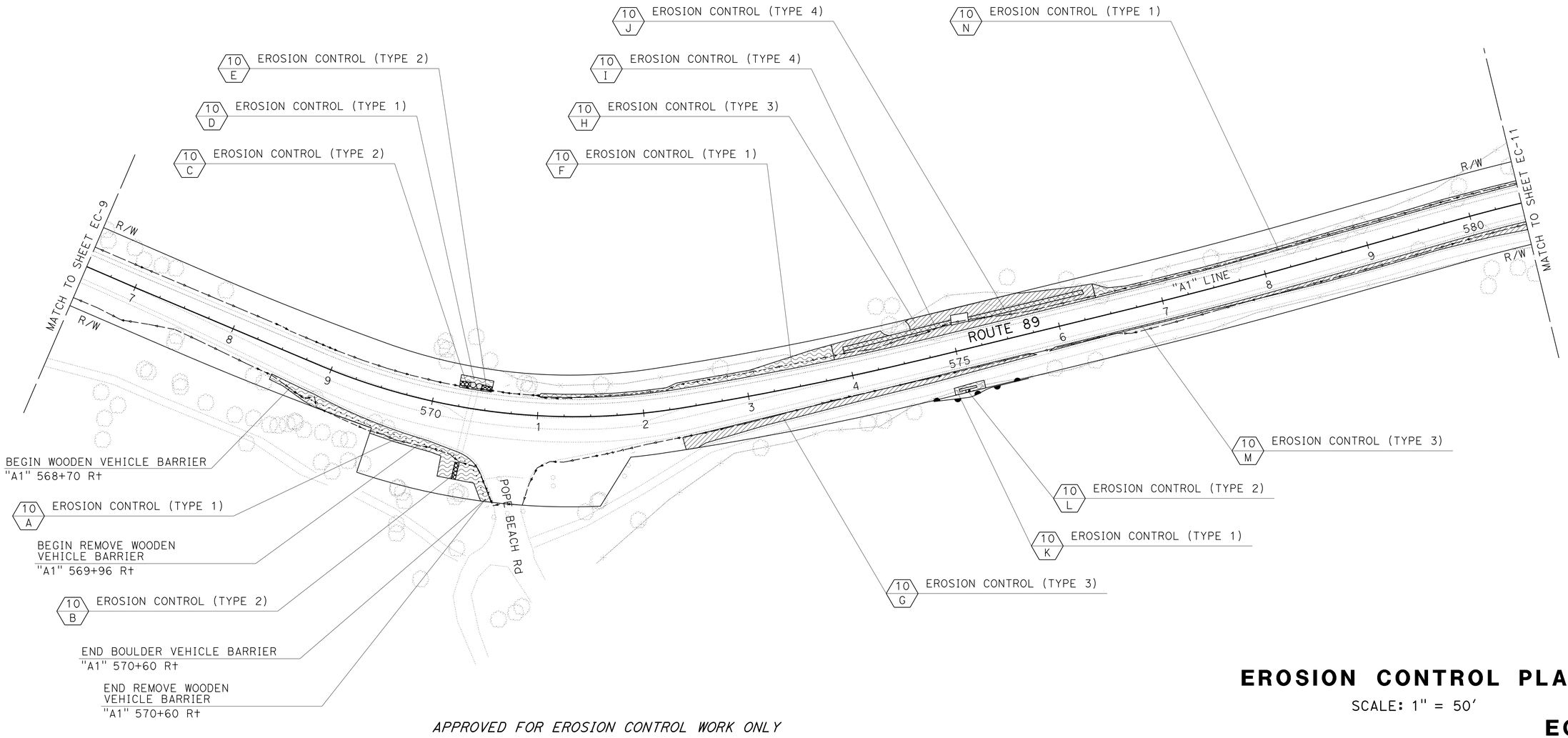

APPROVED FOR EROSION CONTROL WORK ONLY

EROSION CONTROL PLAN

SCALE: 1" = 50'

EC-10

REVISED BY	DATE REVISED

CALCULATED-DESIGNED BY: J. WILLIAMSON
CHECKED: T. C. JOHNSON
SENIOR LANDSCAPE ARCHITECT: T. CHRIS JOHNSON

STATE OF CALIFORNIA - DEPARTMENT OF TRANSPORTATION
Caltrans® LANDSCAPE ARCHITECTURE

LAST REVISION: 11-12-13
DATE PLOTTED => 13-FEB-2014
TIME PLOTTED => 13:45

BORDER LAST REVISED 7/2/2010
USERNAME => s130875
DGN FILE => 0300000223te010.dgn
RELATIVE BORDER SCALE IS IN INCHES 0 1 2 3
UNIT 0381
PROJECT NUMBER & PHASE 03000002231

Dist	COUNTY	ROUTE	POST MILES TOTAL PROJECT	SHEET No.	TOTAL SHEETS
03	ED	89	8.6/13.8	177	231

LICENSED LANDSCAPE ARCHITECT

11-18-13
PLANS APPROVAL DATE

LICENSED LANDSCAPE ARCHITECT
JAMES G. WILLIAMSON
No. 5415
Signature
02-28-14
Renewal Date
11-18-13
Date
STATE OF CALIFORNIA

THE STATE OF CALIFORNIA OR ITS OFFICERS OR AGENTS SHALL NOT BE RESPONSIBLE FOR THE ACCURACY OR COMPLETENESS OF SCANNED COPIES OF THIS PLAN SHEET.

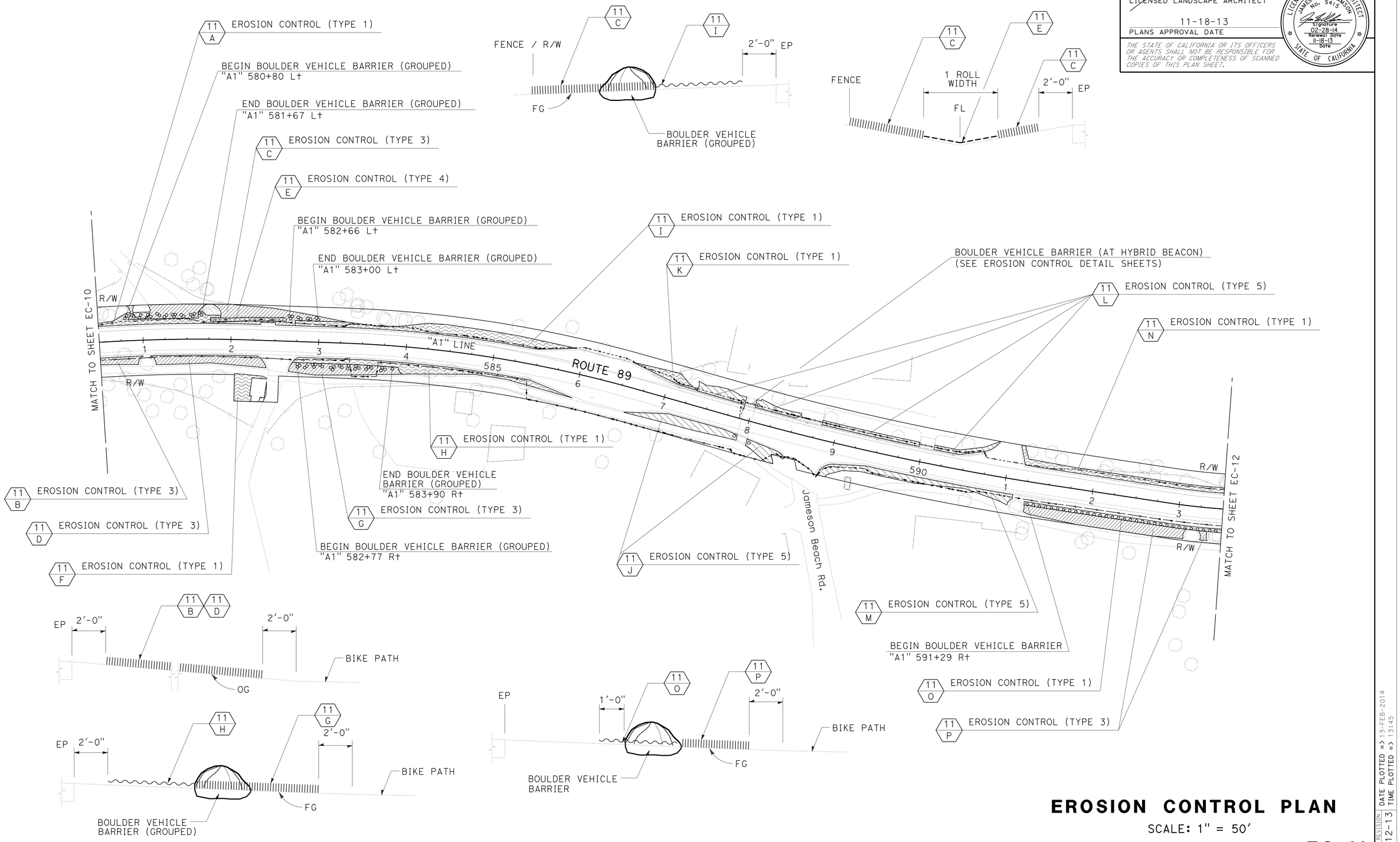

APPROVED FOR EROSION CONTROL WORK ONLY

EROSION CONTROL PLAN

SCALE: 1" = 50'

EC-11

LAST REVISION DATE PLOTTED => 13-FEB-2014
11-12-13 TIME PLOTTED => 13:45

STATE OF CALIFORNIA - DEPARTMENT OF TRANSPORTATION
LANDSCAPE ARCHITECTURE
SENIOR LANDSCAPE ARCHITECT
T. CHRIS JOHNSON
CALCULATED-DESIGNED BY
J. WILLIAMSON
CHECKED BY
T. C. JOHNSON
REVISED BY
DATE REVISED

BORDER LAST REVISED 7/2/2010

USERNAME => s130875
DGN FILE => 0300000223te011.dgn

RELATIVE BORDER SCALE IS IN INCHES 0 1 2 3

UNIT 0381

PROJECT NUMBER & PHASE 03000002231

Dist	COUNTY	ROUTE	POST MILES TOTAL PROJECT	SHEET No.	TOTAL SHEETS
03	ED	89	8.6/13.8	178	231

LICENSED LANDSCAPE ARCHITECT

11-18-13
PLANS APPROVAL DATE

LICENSED LANDSCAPE ARCHITECT
JAMES G. WILLIAMSON
No. 5415
Signature
02-28-14
Renewal Date
11-18-15
Date
STATE OF CALIFORNIA

THE STATE OF CALIFORNIA OR ITS OFFICERS OR AGENTS SHALL NOT BE RESPONSIBLE FOR THE ACCURACY OR COMPLETENESS OF SCANNED COPIES OF THIS PLAN SHEET.

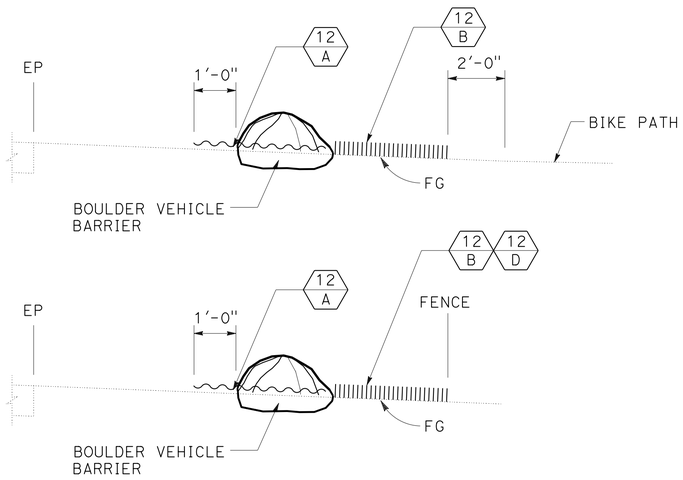

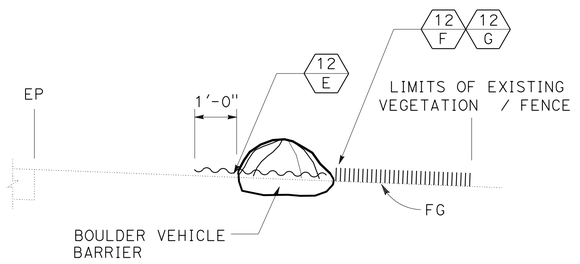

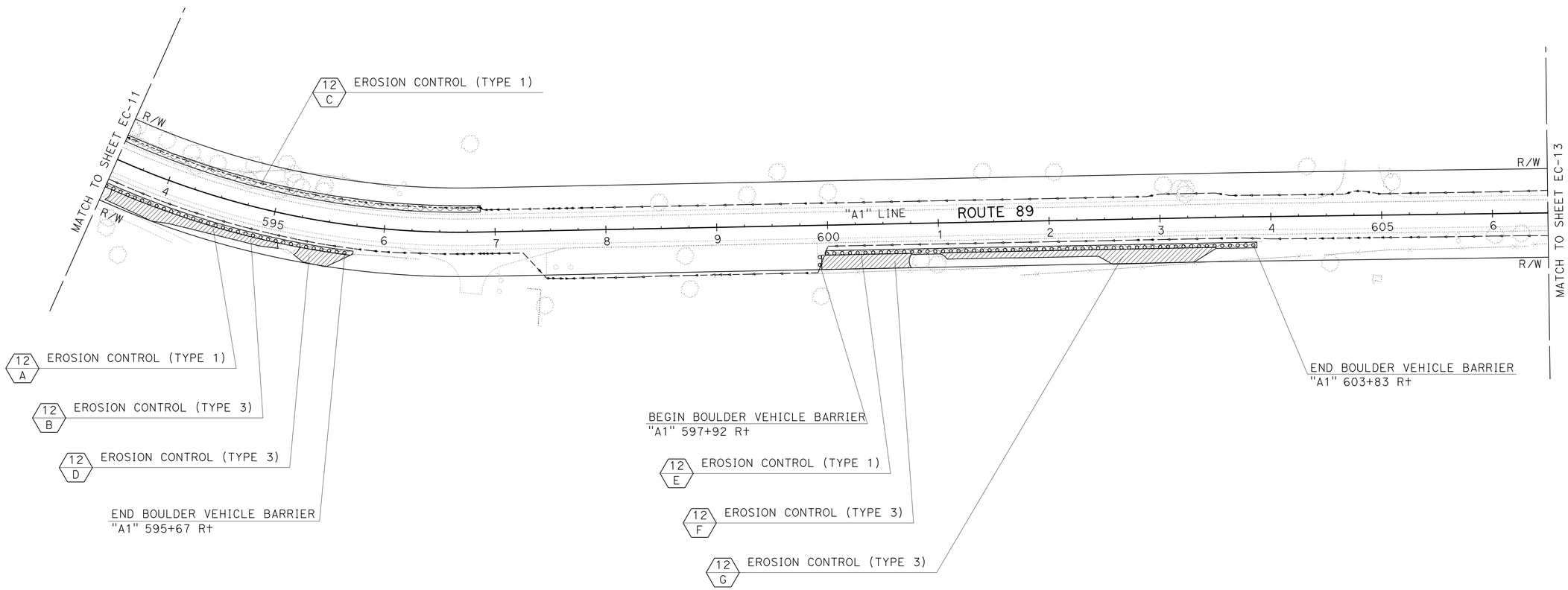

APPROVED FOR EROSION CONTROL WORK ONLY

EROSION CONTROL PLAN

SCALE: 1" = 50'

EC-12

LAST REVISION
DATE PLOTTED => 13-FEB-2014
TIME PLOTTED => 13:45
11-12-13

CALCULATED-DESIGNED BY: J. WILLIAMSON
CHECKED BY: T. C. JOHNSON
REVISED BY
DATE REVISED
SENIOR LANDSCAPE ARCHITECT: T. CHRIS JOHNSON

STATE OF CALIFORNIA - DEPARTMENT OF TRANSPORTATION
Caltrans® LANDSCAPE ARCHITECTURE

BORDER LAST REVISED 7/2/2010

USERNAME => s130875
DGN FILE => 0300000223te012.dgn

RELATIVE BORDER SCALE IS IN INCHES 0 1 2 3

UNIT 0381

PROJECT NUMBER & PHASE 03000002231

Dist	COUNTY	ROUTE	POST MILES TOTAL PROJECT	SHEET No.	TOTAL SHEETS
03	ED	89	8.6/13.8	179	231

LICENSED LANDSCAPE ARCHITECT

11-18-13
PLANS APPROVAL DATE

LICENSED LANDSCAPE ARCHITECT
JAMES G. WILLIAMSON No. 5415
Signature
02-28-14 Renewal Date
11-18-13 Date
STATE OF CALIFORNIA

THE STATE OF CALIFORNIA OR ITS OFFICERS OR AGENTS SHALL NOT BE RESPONSIBLE FOR THE ACCURACY OR COMPLETENESS OF SCANNED COPIES OF THIS PLAN SHEET.

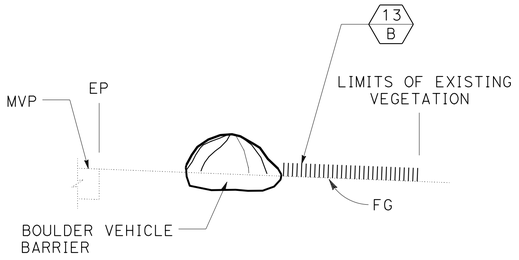

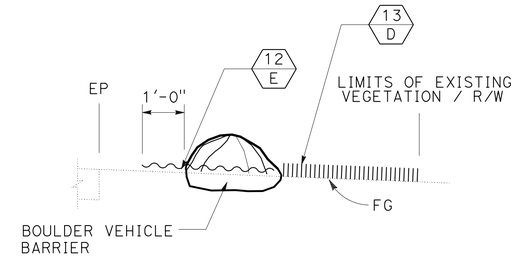

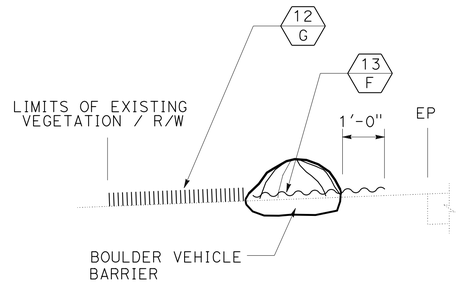

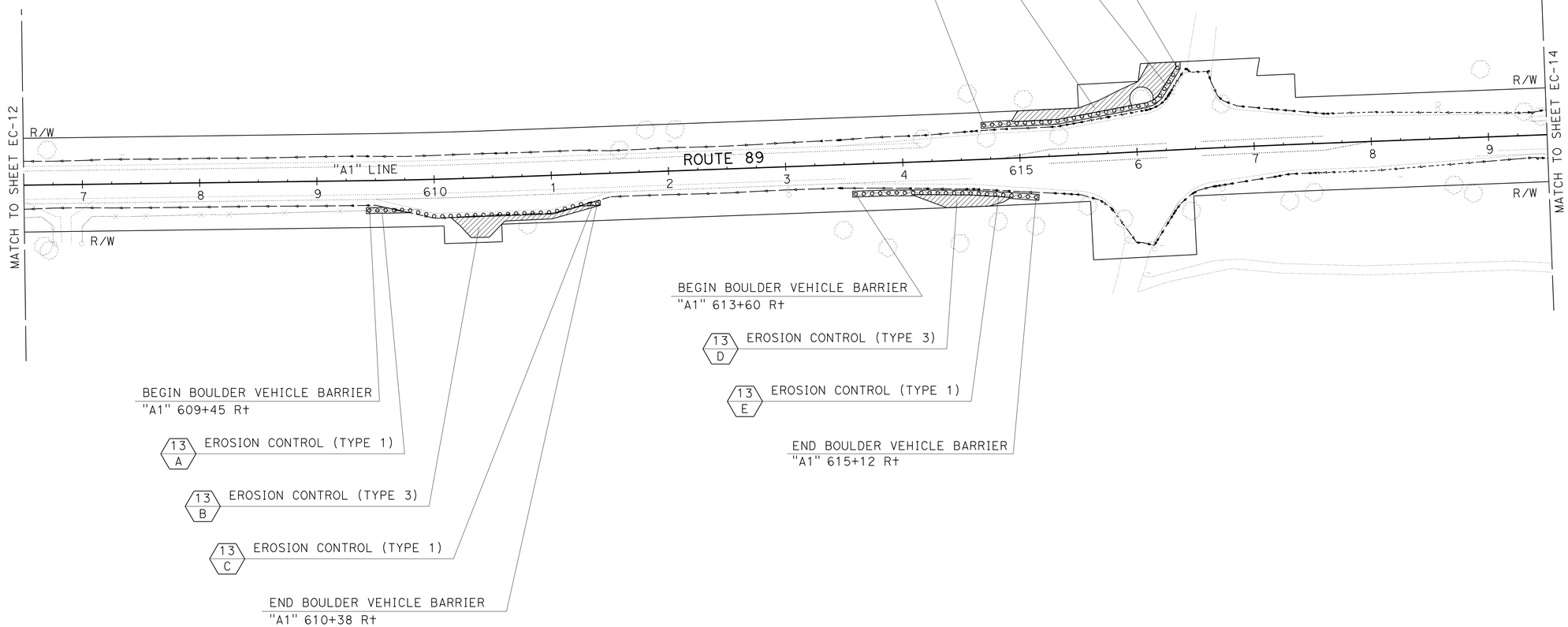

EROSION CONTROL PLAN

SCALE: 1" = 50'

APPROVED FOR EROSION CONTROL WORK ONLY

EC-13

	REVISED BY	DATE REVISED

CALCULATED-DESIGNED BY: J. WILLIAMSON
CHECKED BY: T. C. JOHNSON

SENIOR LANDSCAPE ARCHITECT: T. CHRIS JOHNSON

STATE OF CALIFORNIA - DEPARTMENT OF TRANSPORTATION
Caltrans® LANDSCAPE ARCHITECTURE

LAST REVISION: 11-12-13
DATE PLOTTED => 13-FEB-2014
TIME PLOTTED => 13:45

BORDER LAST REVISED 7/2/2010

USERNAME => s130875
DGN FILE => 0300000223te013.dgn

RELATIVE BORDER SCALE IS IN INCHES 0 1 2 3

UNIT 0381

PROJECT NUMBER & PHASE 03000002231

Dist	COUNTY	ROUTE	POST MILES TOTAL PROJECT	SHEET No.	TOTAL SHEETS
03	ED	89	8.6/13.8	180	231

LICENSED LANDSCAPE ARCHITECT

11-18-13
PLANS APPROVAL DATE

LICENSED LANDSCAPE ARCHITECT
JAMES G. WILLIAMSON
No. 5415
Signature
02-28-14
Renewal Date
11-18-13
Date
STATE OF CALIFORNIA

THE STATE OF CALIFORNIA OR ITS OFFICERS OR AGENTS SHALL NOT BE RESPONSIBLE FOR THE ACCURACY OR COMPLETENESS OF SCANNED COPIES OF THIS PLAN SHEET.

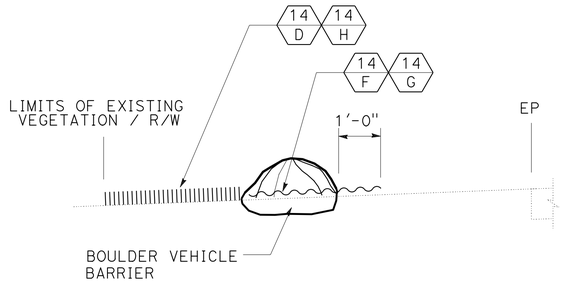

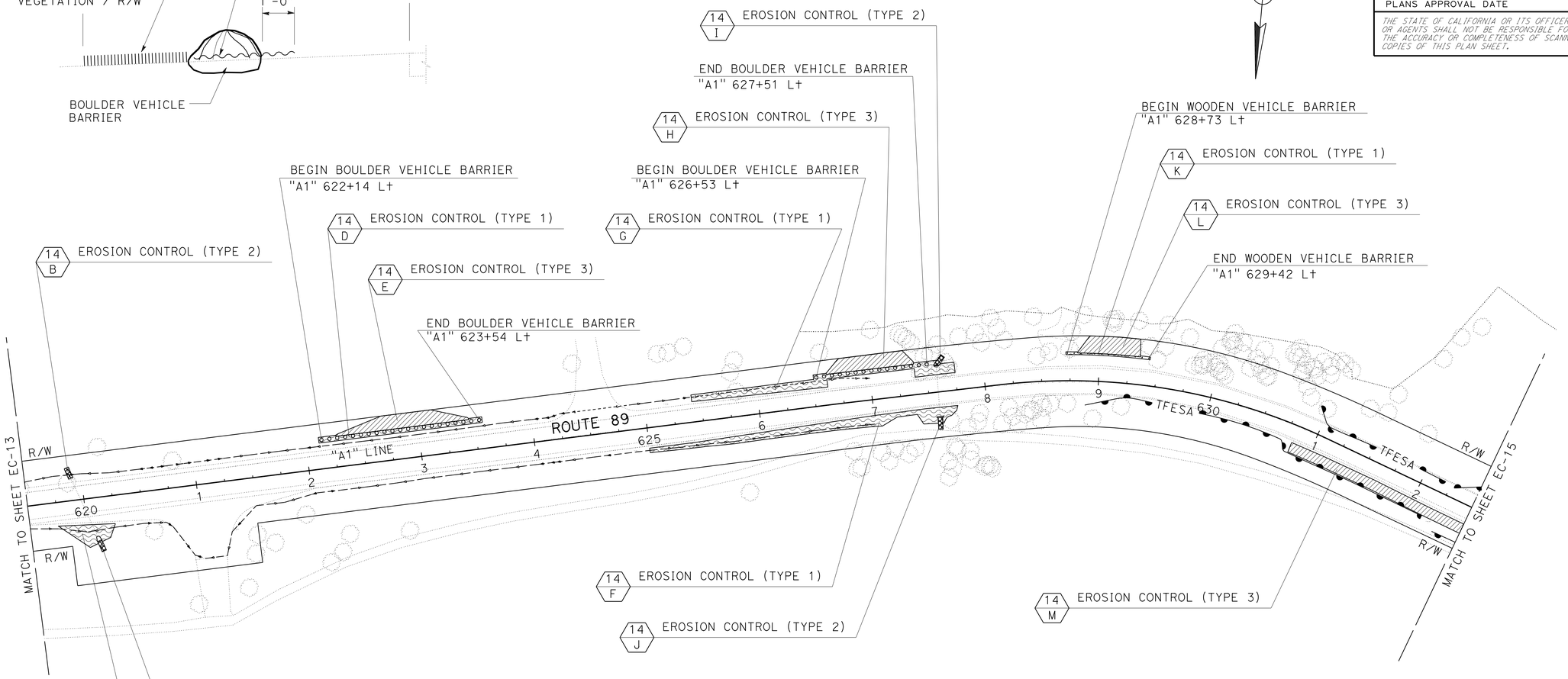

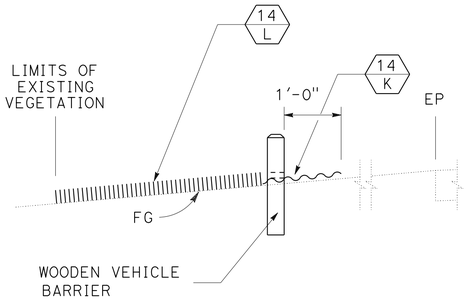

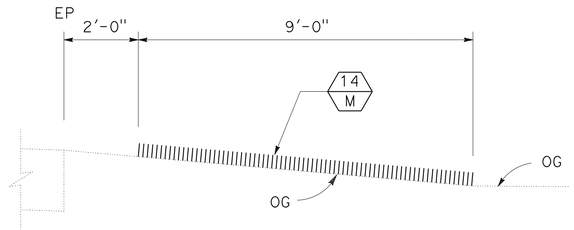

"A1" 630+80 to 632+50 Rt

EROSION CONTROL PLAN

SCALE: 1" = 50'

EC-14

APPROVED FOR EROSION CONTROL WORK ONLY

LAST REVISION 11-12-13 DATE PLOTTED => 13-FEB-2014 TIME PLOTTED => 13:45

STATE OF CALIFORNIA - DEPARTMENT OF TRANSPORTATION
Caltrans® LANDSCAPE ARCHITECTURE
SENIOR LANDSCAPE ARCHITECT T. CHRIS JOHNSON
CALCULATED-DESIGNED BY J. WILLIAMSON
CHECKED BY T. C. JOHNSON
REVISED BY
DATE REVISED

BORDER LAST REVISED 7/2/2010 | USERNAME => s130875 DGN FILE => 0300000223te014.dgn | RELATIVE BORDER SCALE IS IN INCHES 0 1 2 3 | UNIT 0381 | PROJECT NUMBER & PHASE 03000002231

Dist	COUNTY	ROUTE	POST MILES TOTAL PROJECT	SHEET No.	TOTAL SHEETS
03	ED	89	8.6/13.8	181	231

LICENSED LANDSCAPE ARCHITECT

11-18-13
PLANS APPROVAL DATE

LICENSED LANDSCAPE ARCHITECT
JAMES G. WILLIAMSON
No. 5415
Signature
02-28-14
Renewal Date
11-18-13
Date
STATE OF CALIFORNIA

THE STATE OF CALIFORNIA OR ITS OFFICERS OR AGENTS SHALL NOT BE RESPONSIBLE FOR THE ACCURACY OR COMPLETENESS OF SCANNED COPIES OF THIS PLAN SHEET.

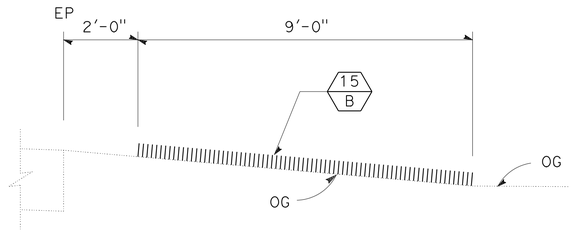

"A1" 632+50 to 633+50 Rt

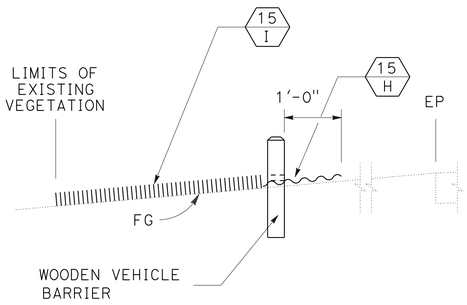

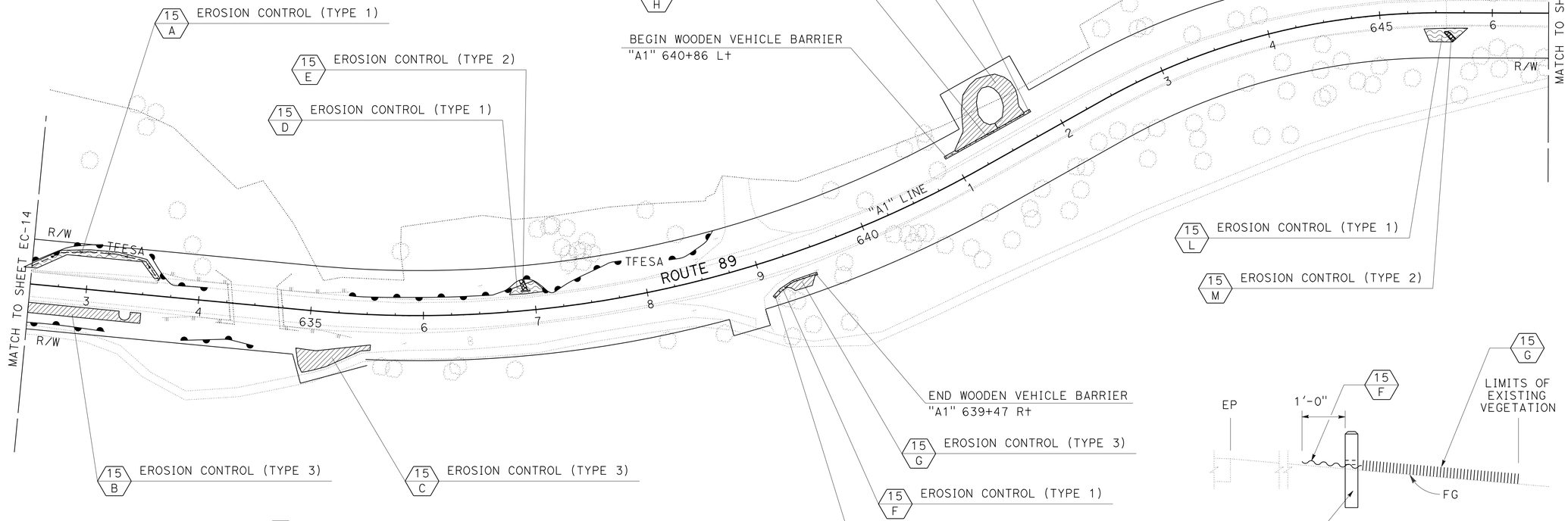

APPROVED FOR EROSION CONTROL WORK ONLY

EROSION CONTROL PLAN

SCALE: 1" = 50'

EC-15

LAST REVISION | DATE PLOTTED => 13-FEB-2014
11-12-13 | TIME PLOTTED => 13:45

STATE OF CALIFORNIA - DEPARTMENT OF TRANSPORTATION
LANDSCAPE ARCHITECTURE
SENIOR LANDSCAPE ARCHITECT
T. CHRIS JOHNSON
CHECKED BY
CALCULATED-DESIGNED BY
J. WILLIAMSON
T. C. JOHNSON
REVISED BY
DATE REVISED

BORDER LAST REVISED 7/2/2010

USERNAME => s130875
DGN FILE => 0300000223te015.dgn

RELATIVE BORDER SCALE IS IN INCHES 0 1 2 3

UNIT 0381

PROJECT NUMBER & PHASE 03000002231

Dist	COUNTY	ROUTE	POST MILES TOTAL PROJECT	SHEET No.	TOTAL SHEETS
03	ED	89	8.6/13.8	182	231

LICENSED LANDSCAPE ARCHITECT

11-18-13
PLANS APPROVAL DATE

LICENSED LANDSCAPE ARCHITECT
JAMES G. WILLIAMSON
No. 5415
Signature
02-28-14
Renewal Date
11-18-13
Date
STATE OF CALIFORNIA

THE STATE OF CALIFORNIA OR ITS OFFICERS OR AGENTS SHALL NOT BE RESPONSIBLE FOR THE ACCURACY OR COMPLETENESS OF SCANNED COPIES OF THIS PLAN SHEET.

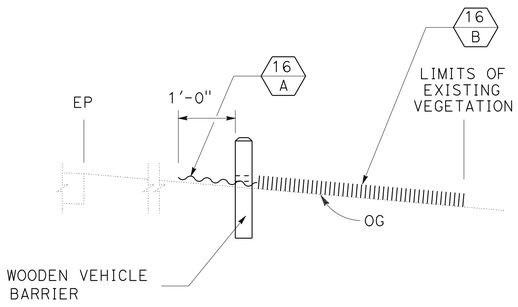

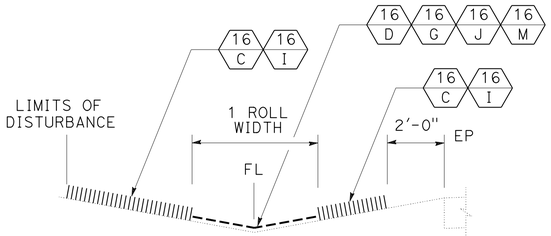

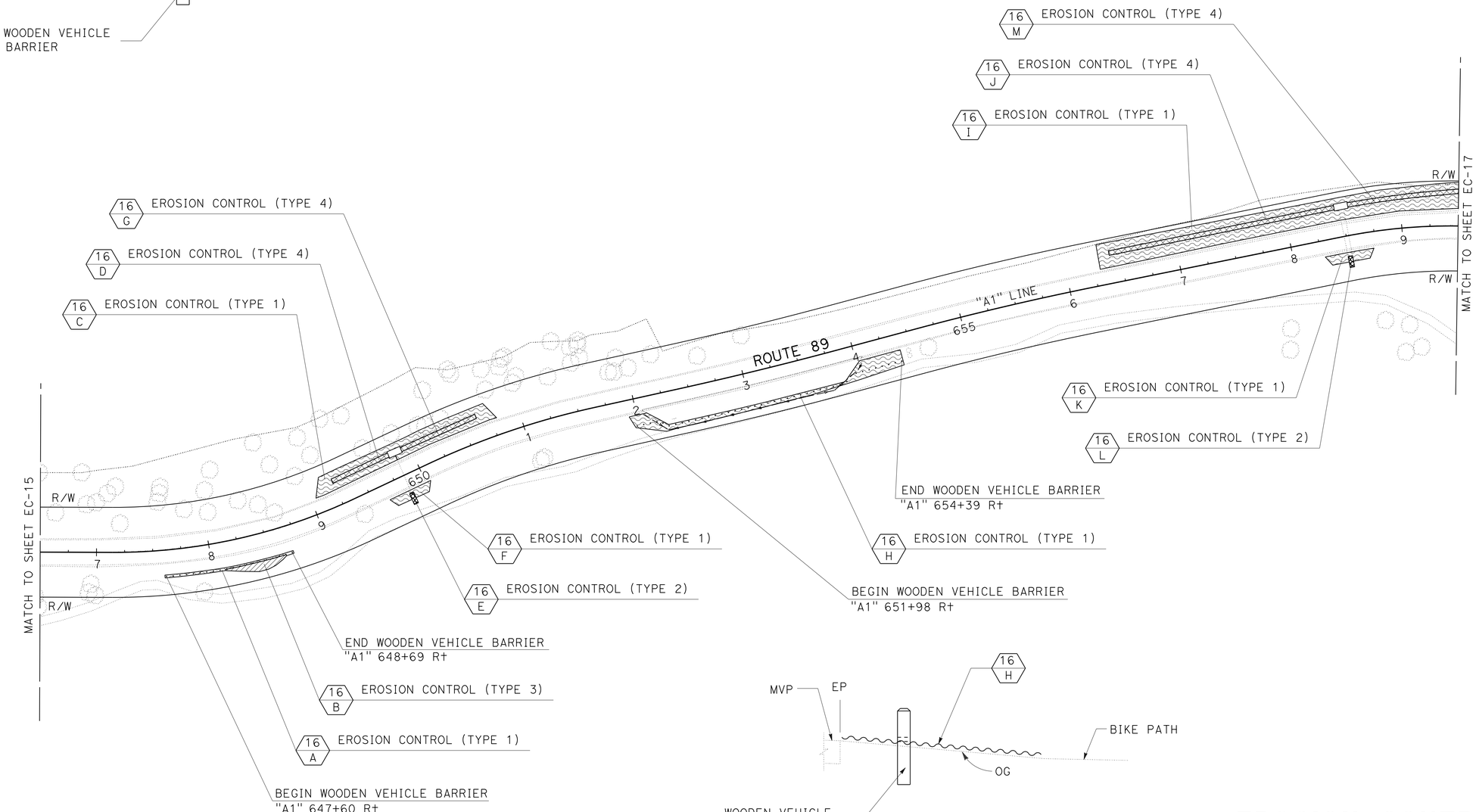

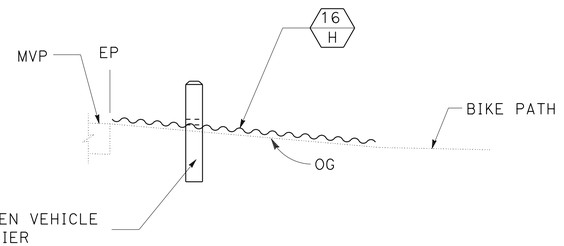

EROSION CONTROL PLAN

SCALE: 1" = 50'

APPROVED FOR EROSION CONTROL WORK ONLY

EC-16

LAST REVISION 11-12-13
DATE PLOTTED => 13-FEB-2014
TIME PLOTTED => 13:45

STATE OF CALIFORNIA - DEPARTMENT OF TRANSPORTATION
LANDSCAPE ARCHITECTURE

REVISED BY	DATE REVISED

CALCULATED-DESIGNED BY: J. WILLIAMSON
CHECKED BY: T. C. JOHNSON
SENIOR LANDSCAPE ARCHITECT: T. CHRIS JOHNSON

BORDER LAST REVISED 7/2/2010

USERNAME => s130875
DGN FILE => 0300000223te016.dgn

RELATIVE BORDER SCALE IS IN INCHES 0 1 2 3

UNIT 0381

PROJECT NUMBER & PHASE 03000002231

Dist	COUNTY	ROUTE	POST MILES TOTAL PROJECT	SHEET No.	TOTAL SHEETS
03	ED	89	8.6/13.8	183	231

LICENSED LANDSCAPE ARCHITECT

11-18-13
PLANS APPROVAL DATE

LICENSED LANDSCAPE ARCHITECT
JAMES G. WILLIAMSON
No. 5415
Signature
02-28-14
Renewal Date
11-18-13
Date
STATE OF CALIFORNIA

THE STATE OF CALIFORNIA OR ITS OFFICERS OR AGENTS SHALL NOT BE RESPONSIBLE FOR THE ACCURACY OR COMPLETENESS OF SCANNED COPIES OF THIS PLAN SHEET.

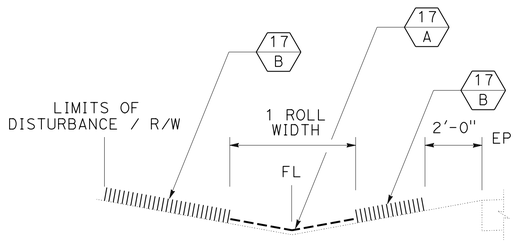

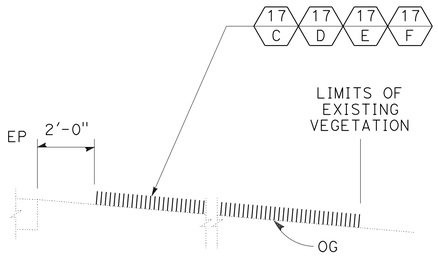

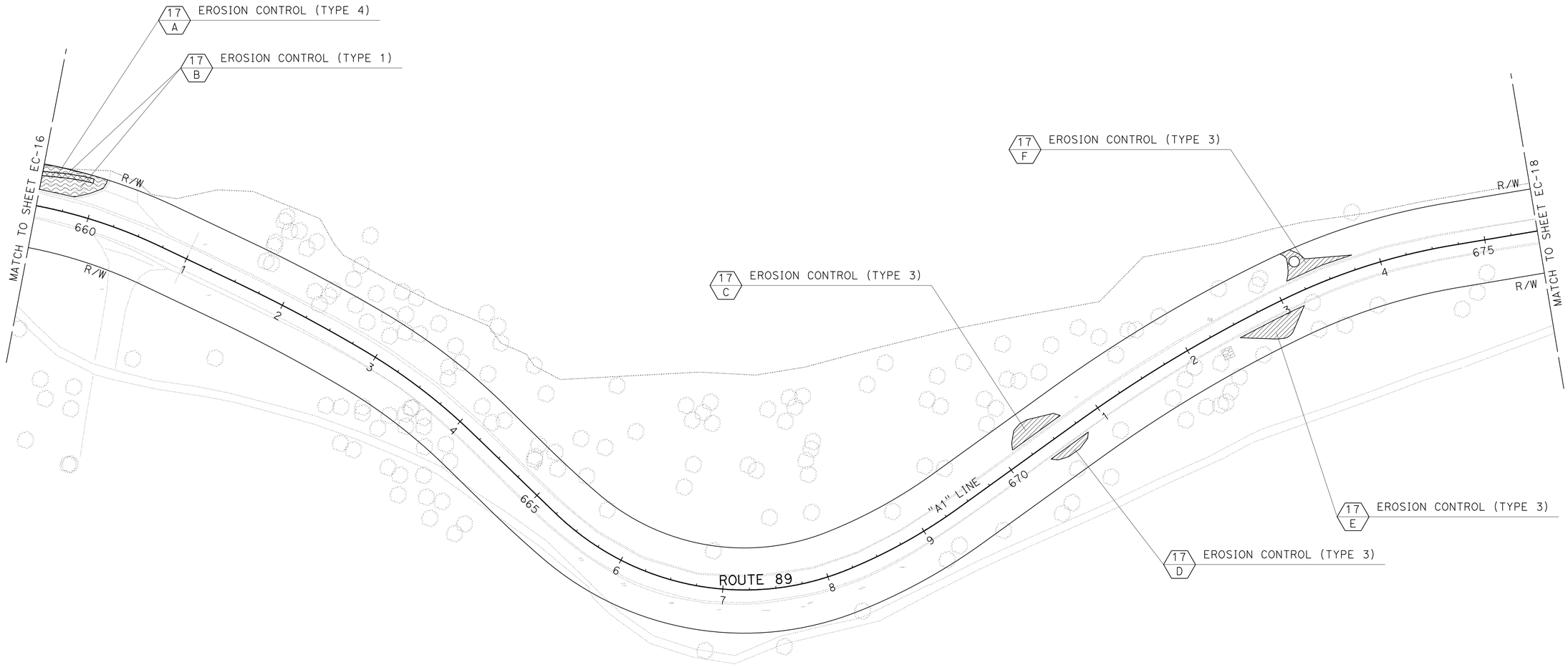

EROSION CONTROL PLAN

SCALE: 1" = 50'

EC-17

APPROVED FOR EROSION CONTROL WORK ONLY

STATE OF CALIFORNIA - DEPARTMENT OF TRANSPORTATION
Caltrans® LANDSCAPE ARCHITECTURE

SENIOR LANDSCAPE ARCHITECT: T. CHRIS JOHNSON

CALCULATED-DESIGNED BY: J. WILLIAMSON
CHECKED BY: T. C. JOHNSON

REVISED BY	DATE REVISED

LAST REVISION
DATE PLOTTED => 13-FEB-2014
TIME PLOTTED => 13:45
11-12-13

BORDER LAST REVISED 7/2/2010

USERNAME => s130875
DGN FILE => 0300000223te017.dgn

RELATIVE BORDER SCALE IS IN INCHES 0 1 2 3

UNIT 0381

PROJECT NUMBER & PHASE 03000002231

Dist	COUNTY	ROUTE	POST MILES TOTAL PROJECT	SHEET No.	TOTAL SHEETS
03	ED	89	8.6/13.8	184	231

LICENSED LANDSCAPE ARCHITECT

11-18-13
PLANS APPROVAL DATE

LICENSED LANDSCAPE ARCHITECT
JAMES G. WILLIAMSON
No. 5415
Signature
02-28-14
Renewal Date
11-18-13
Date
STATE OF CALIFORNIA

THE STATE OF CALIFORNIA OR ITS OFFICERS OR AGENTS SHALL NOT BE RESPONSIBLE FOR THE ACCURACY OR COMPLETENESS OF SCANNED COPIES OF THIS PLAN SHEET.

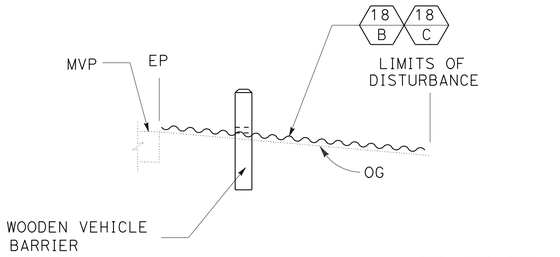

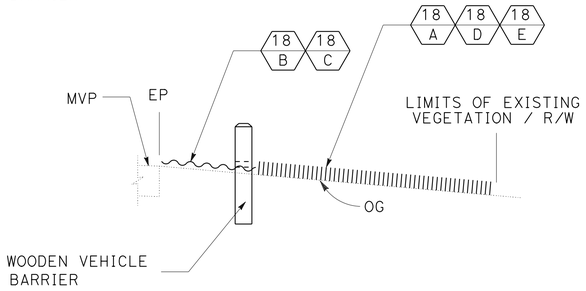

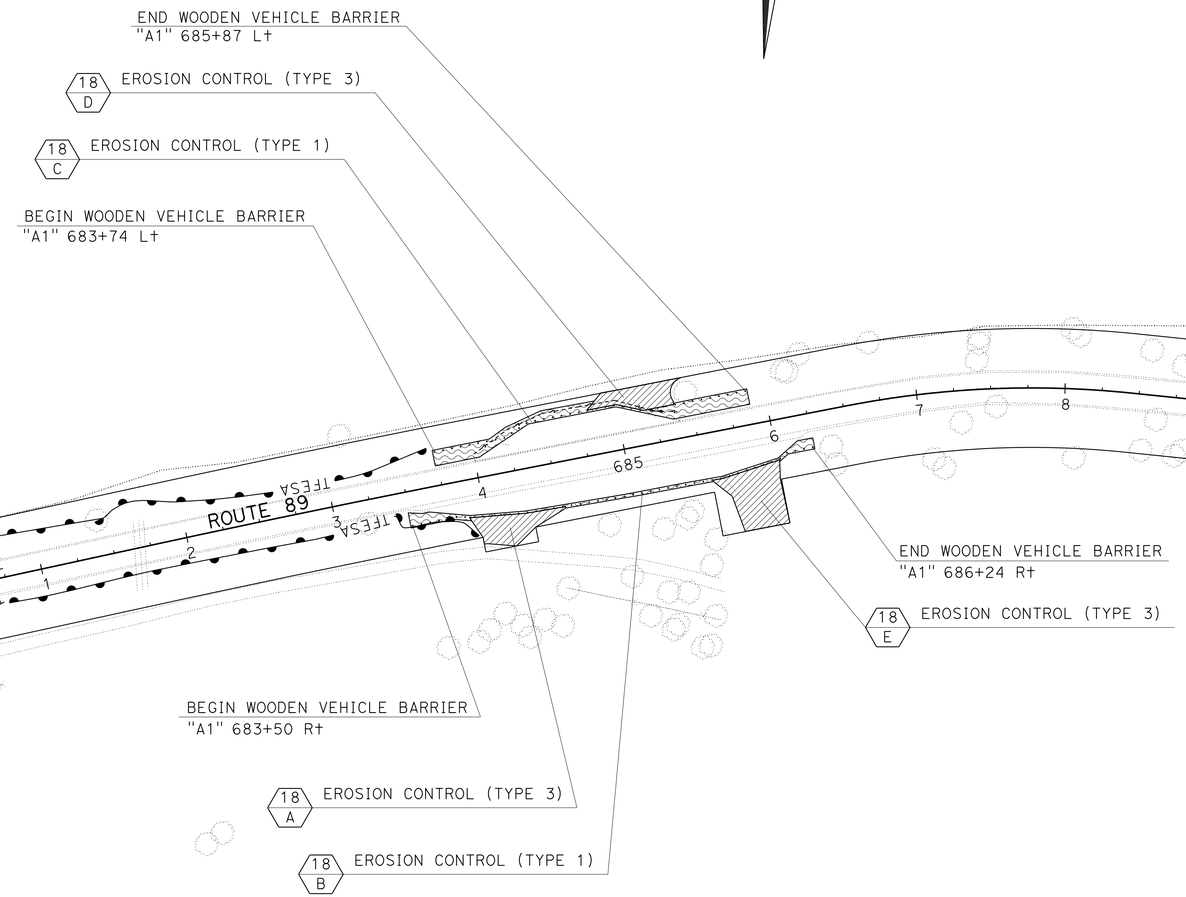

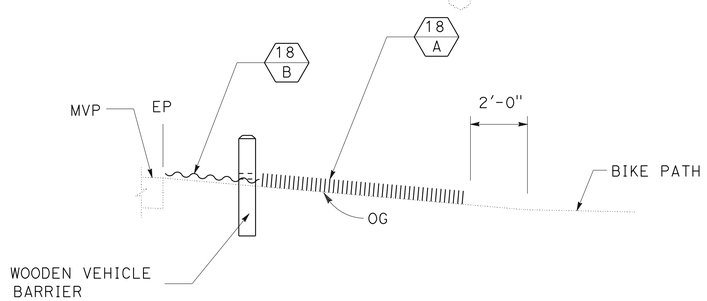

APPROVED FOR EROSION CONTROL WORK ONLY

EROSION CONTROL PLAN

SCALE: 1" = 50'

EC-18

LAST REVISION 11-12-13
DATE PLOTTED => 13-FEB-2014
TIME PLOTTED => 13:45

STATE OF CALIFORNIA - DEPARTMENT OF TRANSPORTATION
LANDSCAPE ARCHITECTURE

SENIOR LANDSCAPE ARCHITECT: T. CHRIS JOHNSON

CALCULATED-DESIGNED BY: J. WILLIAMSON
CHECKED BY: T. C. JOHNSON

REVISED BY | DATE REVISED

BORDER LAST REVISED 7/2/2010

USERNAME => s130875
DGN FILE => 0300000223te018.dgn

RELATIVE BORDER SCALE IS IN INCHES 0 1 2 3

UNIT 0381

PROJECT NUMBER & PHASE 03000002231

Dist	COUNTY	ROUTE	POST MILES TOTAL PROJECT	SHEET No.	TOTAL SHEETS
03	ED	89	8.6/13.8	185	231

LICENSED LANDSCAPE ARCHITECT

11-18-13
PLANS APPROVAL DATE

LICENSED LANDSCAPE ARCHITECT
JAMES G. WILLIAMSON
No. 5415
Signature
02-28-14
Renewal Date
11-18-13
Date
STATE OF CALIFORNIA

THE STATE OF CALIFORNIA OR ITS OFFICERS OR AGENTS SHALL NOT BE RESPONSIBLE FOR THE ACCURACY OR COMPLETENESS OF SCANNED COPIES OF THIS PLAN SHEET.

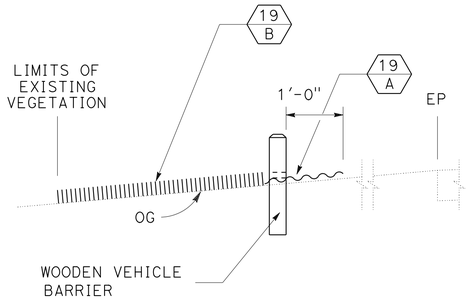

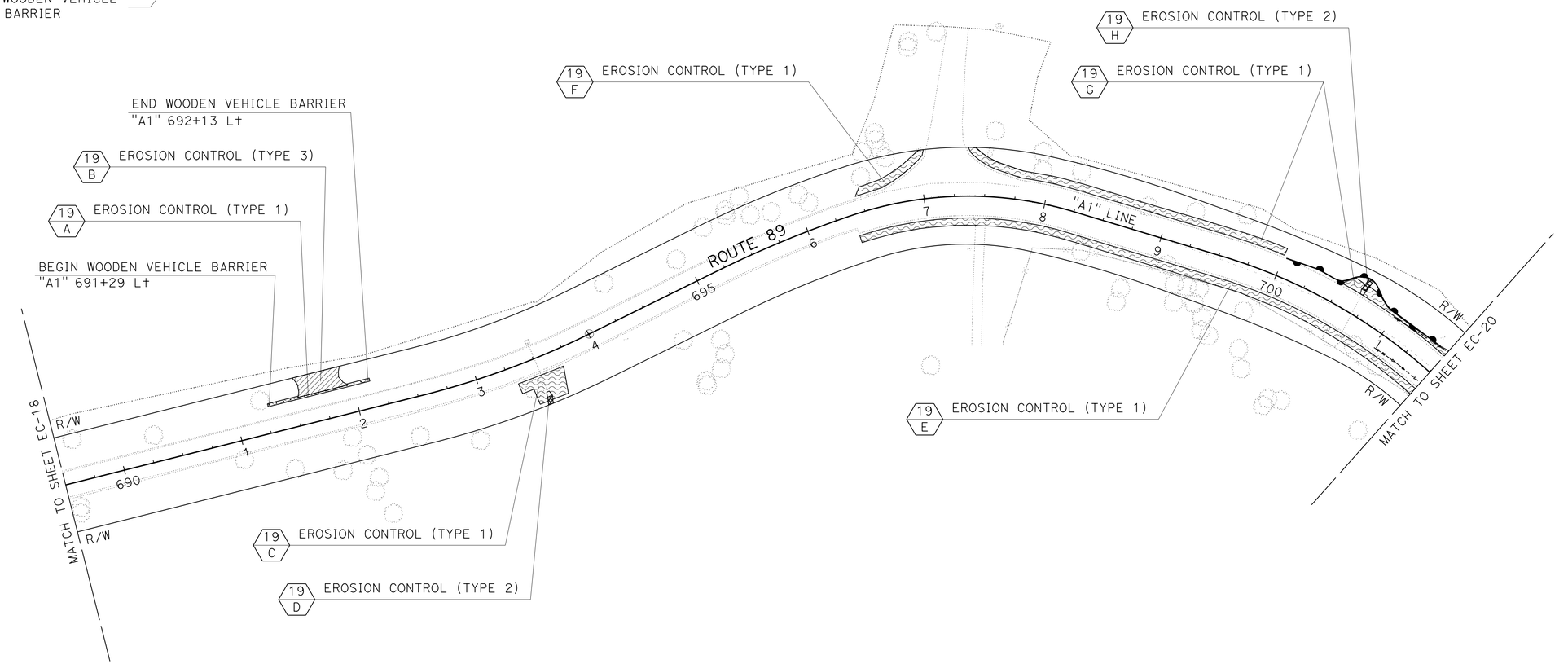

APPROVED FOR EROSION CONTROL WORK ONLY

EROSION CONTROL PLAN

SCALE: 1" = 50'

EC-19

STATE OF CALIFORNIA - DEPARTMENT OF TRANSPORTATION
LANDSCAPE ARCHITECTURE

SENIOR LANDSCAPE ARCHITECT: T. CHRIS JOHNSON

CALCULATED-DESIGNED BY: J. WILLIAMSON
CHECKED BY: T. C. JOHNSON

REVISED BY | DATE REVISED

LAST REVISION | DATE PLOTTED => 13-FEB-2014 | TIME PLOTTED => 13:45
11-12-13

BORDER LAST REVISED 7/2/2010

USERNAME => s130875
DGN FILE => 0300000223te019.dgn

RELATIVE BORDER SCALE IS IN INCHES 0 1 2 3

UNIT 0381

PROJECT NUMBER & PHASE 03000002231

Dist	COUNTY	ROUTE	POST MILES TOTAL PROJECT	SHEET No.	TOTAL SHEETS
03	ED	89	8.6/13.8	186	231

LICENSED LANDSCAPE ARCHITECT

11-18-13
PLANS APPROVAL DATE

LICENSED LANDSCAPE ARCHITECT
JAMES G. WILLIAMSON
No. 5415
Signature
02-28-14
Renewal Date
11-18-13
Date
STATE OF CALIFORNIA

THE STATE OF CALIFORNIA OR ITS OFFICERS OR AGENTS SHALL NOT BE RESPONSIBLE FOR THE ACCURACY OR COMPLETENESS OF SCANNED COPIES OF THIS PLAN SHEET.

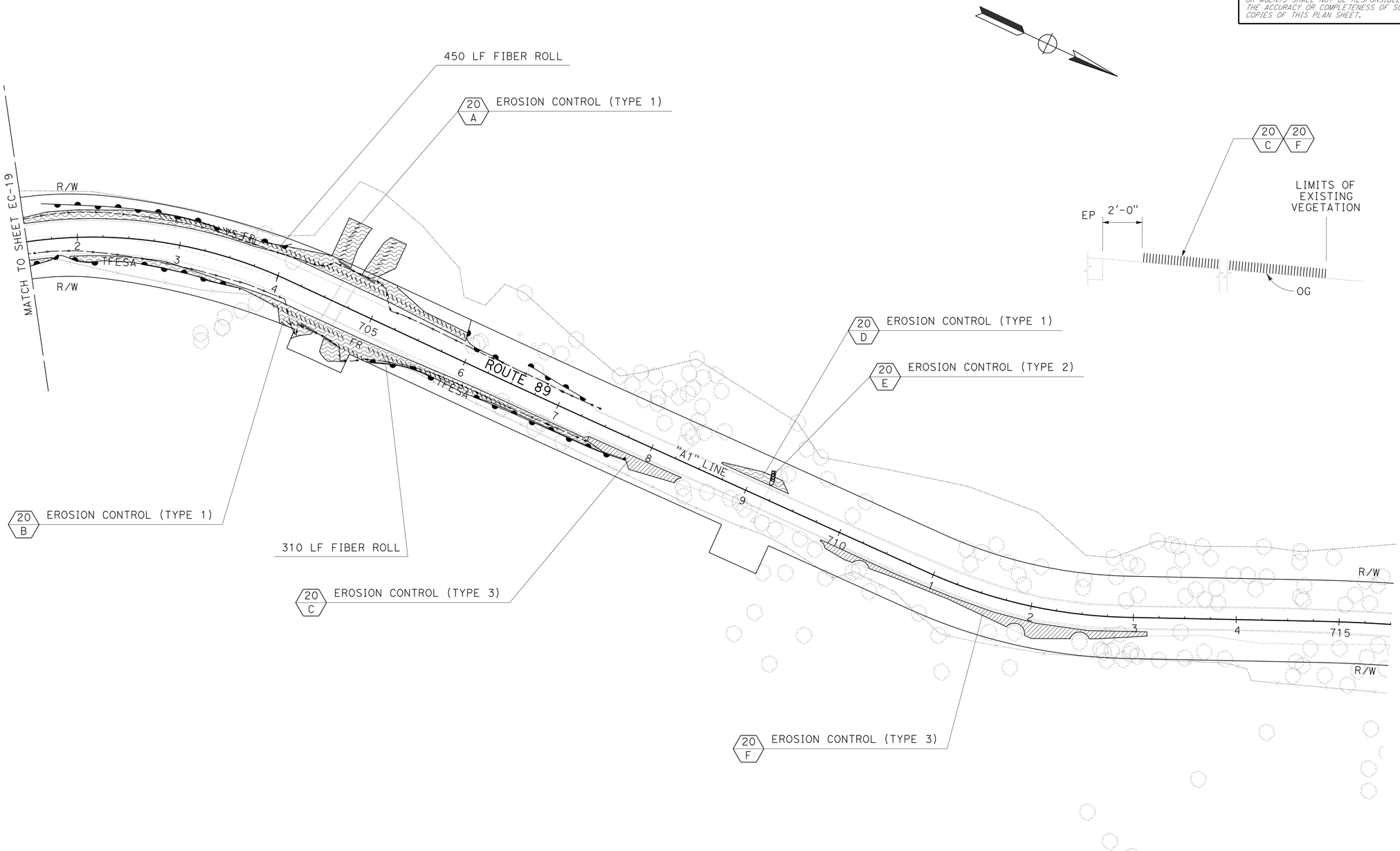

APPROVED FOR EROSION CONTROL WORK ONLY

EROSION CONTROL PLAN

SCALE: 1" = 50'

EC-20

REVISED BY | DATE REVISED
J. WILLIAMSON | T. C. JOHNSON
CALCULATED-DESIGNED BY | CHECKED BY
SENIOR LANDSCAPE ARCHITECT | T. CHRIS JOHNSON

STATE OF CALIFORNIA - DEPARTMENT OF TRANSPORTATION
Caltrans® LANDSCAPE ARCHITECTURE

LAST REVISION 11-12-13
DATE PLOTTED => 13-FEB-2014
TIME PLOTTED => 13:46

BORDER LAST REVISED 7/2/2010
USERNAME => s130875
DGN FILE => 0300000223te020.dgn
RELATIVE BORDER SCALE IS IN INCHES 0 1 2 3
UNIT 0381
PROJECT NUMBER & PHASE 03000002231

Dist	COUNTY	ROUTE	POST MILES TOTAL PROJECT	SHEET No.	TOTAL SHEETS
03	ED	89	8.6/13.8	187	231

LICENSED LANDSCAPE ARCHITECT

11-18-13
PLANS APPROVAL DATE

LICENSED LANDSCAPE ARCHITECT
JAMES G. WILLIAMSON
No. 5415
Signature
02-28-14
Renewal Date
11-18-13
Date
STATE OF CALIFORNIA

THE STATE OF CALIFORNIA OR ITS OFFICERS OR AGENTS SHALL NOT BE RESPONSIBLE FOR THE ACCURACY OR COMPLETENESS OF SCANNED COPIES OF THIS PLAN SHEET.

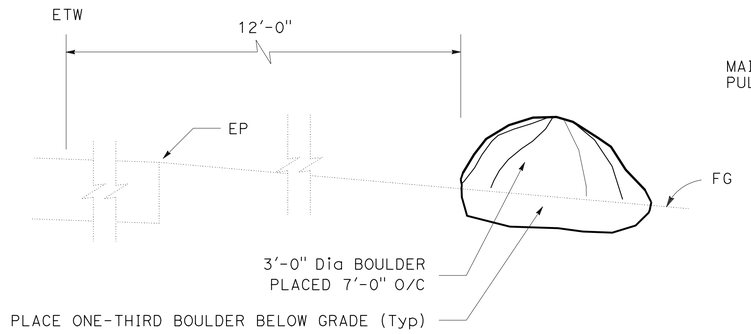

BOULDER VEHICLE BARRIER

TYPICAL DETAIL

SECTION

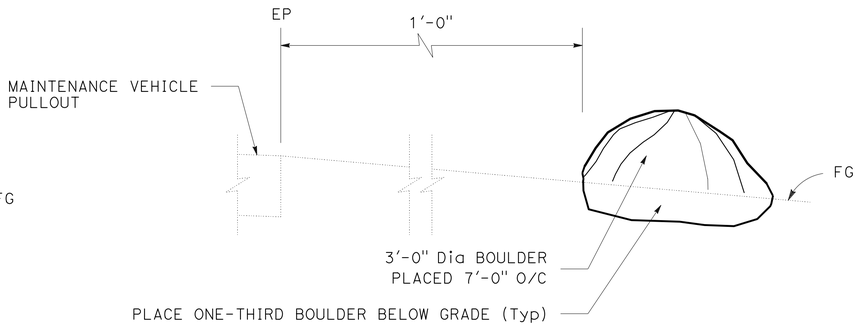

BOULDER VEHICLE BARRIER AT MAINTENANCE VEHICLE PULLOUT

"A1" 528+21 to 529+72 Rt
"A1" 529+87 to 532+19 Rt
"A1" 609+45 to 610+38 Rt

SECTION

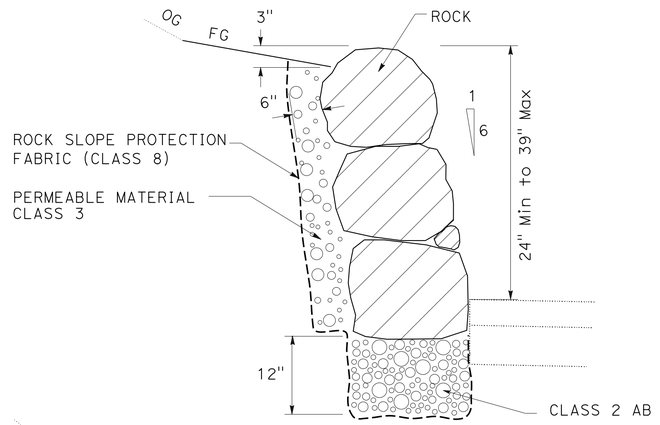

STONE WALL

SECTION

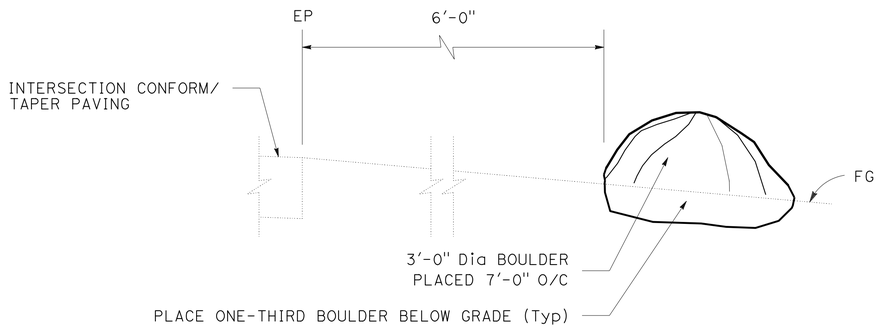

BOULDER VEHICLE BARRIER AT INTERSECTION

"A1" 613+60 to 615+12 Rt
"A1" 614+71 to 616+38 Lt

SECTION

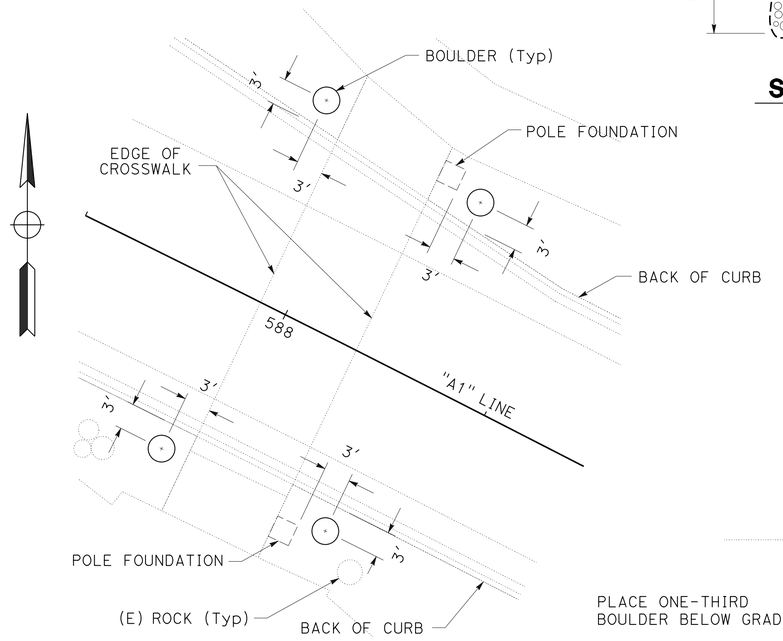

PLAN

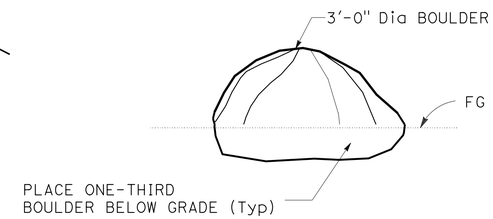

SECTION

BOULDER VEHICLE BARRIER (AT HYBRID BEACON)

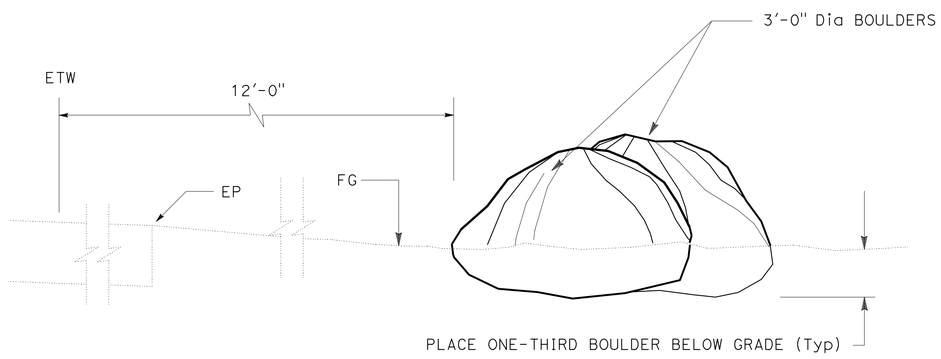

BOULDER VEHICLE BARRIER (GROUPED) (Typ)

"A1" 580+80 to 581+67 Lt "A1" 582+77 to 583+90 Rt
"A1" 582+66 to 583+00 Lt

SECTION

EROSION CONTROL DETAILS

NO SCALE

ECD-1

LAST REVISION: 11-12-13
DATE PLOTTED => 13-FEB-2014
TIME PLOTTED => 13:46

REVISED BY	DATE REVISED

CALCULATED-DESIGNED BY: J. WILLIAMSON
CHECKED BY: T. C. JOHNSON
SENIOR LANDSCAPE ARCHITECT: T. CHRIS JOHNSON

STATE OF CALIFORNIA - DEPARTMENT OF TRANSPORTATION
Caltrans® LANDSCAPE ARCHITECTURE

BORDER LAST REVISED 7/2/2010

USERNAME => s130875
DGN FILE => 0300000223tf001.dgn

RELATIVE BORDER SCALE IS IN INCHES 0 1 2 3

UNIT 0381

PROJECT NUMBER & PHASE 03000002231

Dist	COUNTY	ROUTE	POST MILES TOTAL PROJECT	SHEET No.	TOTAL SHEETS
03	ED	89	8.6/13.8	188	231

LICENSED LANDSCAPE ARCHITECT

11-18-13
PLANS APPROVAL DATE

LICENSED LANDSCAPE ARCHITECT
JAMES G. WILLIAMSON
No. 5415
Signature
02-28-14
Renewal Date
11-18-13
Date
STATE OF CALIFORNIA

THE STATE OF CALIFORNIA OR ITS OFFICERS OR AGENTS SHALL NOT BE RESPONSIBLE FOR THE ACCURACY OR COMPLETENESS OF SCANNED COPIES OF THIS PLAN SHEET.

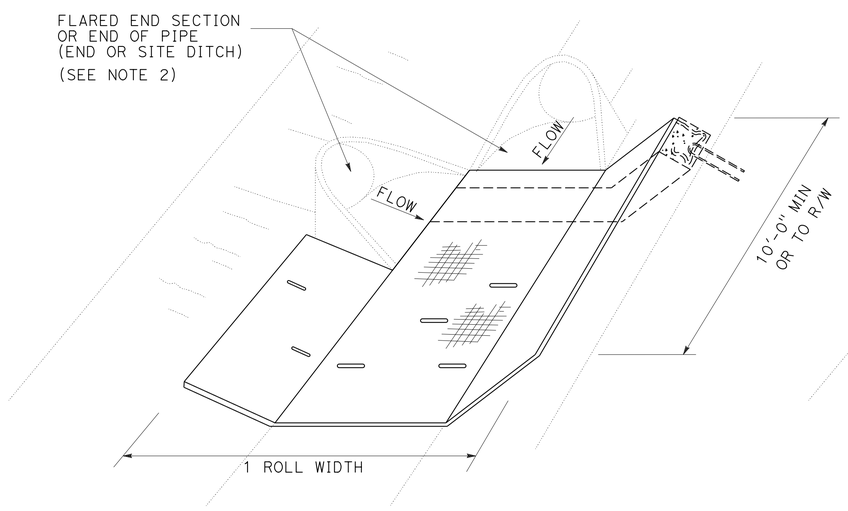

OUTLET LOCATIONS DETAIL

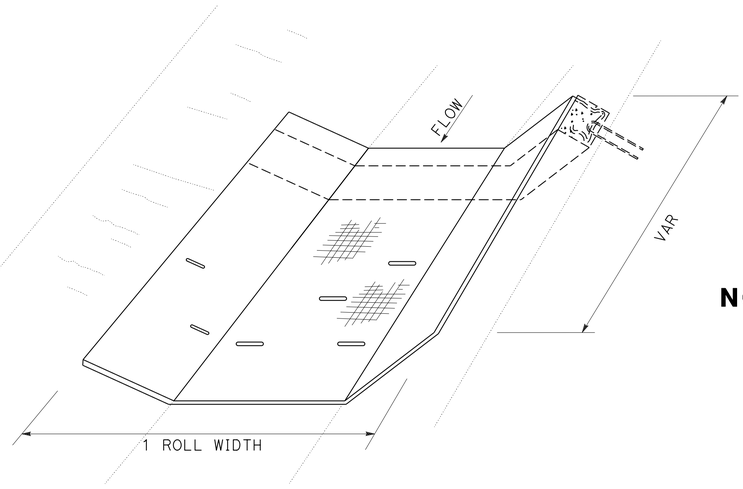

DITCH LOCATIONS DETAIL

NOTES:

1. FOR CLARITY, PERSPECTIVE VIEW DOES NOT SHOW ALL STAPLES.
2. NOTCH RECP (BLANKET) AROUND FLARED END SECTION OR END OF PIPE AT SIDE DITCH LOCATIONS.

RECP (BLANKET)

PERSPECTIVE

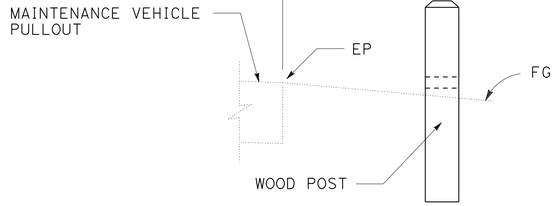

WOODEN VEHICLE BARRIER AT MAINTENANCE VEHICLE PULLOUT

"A1" 651+98 to 653+96 Rt "A1" 683+74 to 685+87 Lt
"A1" 683+50 to 686+24 Rt

SECTION

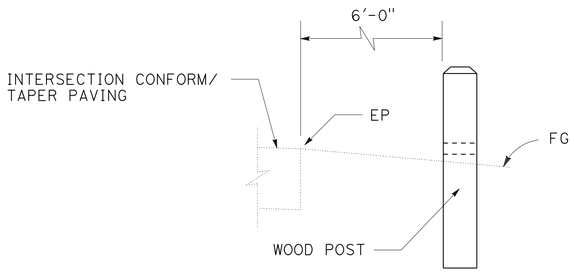

WOODEN VEHICLE BARRIER AT INTERSECTION

"A1" 568+70 to 570+60 Rt
"A1" 639+07 to 639+26 Rt

SECTION

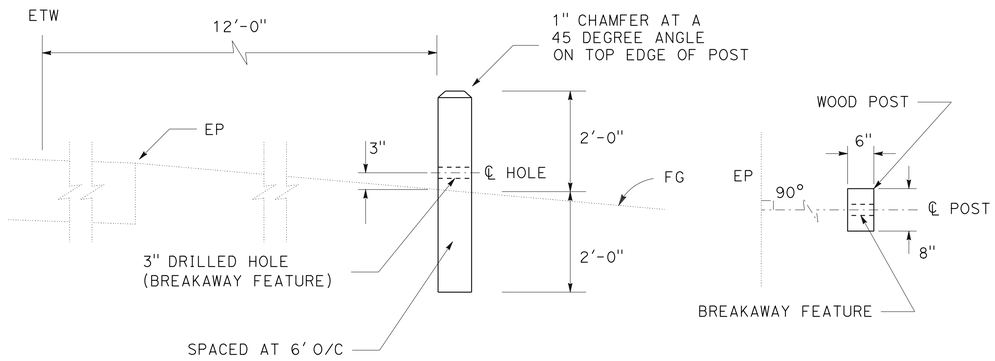

SECTION PLAN

WOODEN VEHICLE BARRIER

EROSION CONTROL DETAILS

NO SCALE

ECD-2

STATE OF CALIFORNIA - DEPARTMENT OF TRANSPORTATION
Caltrans® LANDSCAPE ARCHITECTURE

SENIOR LANDSCAPE ARCHITECT: T. CHRIS JOHNSON

CALCULATED-DESIGNED BY: J. WILLIAMSON
CHECKED BY: T. C. JOHNSON

REVISED BY	DATE REVISED

LAST REVISION: 11-12-13
DATE PLOTTED => 13-FEB-2014
TIME PLOTTED => 13:46

EROSION CONTROL QUANTITY TABLE 1

EROSION CONTROL								
SHEET	AREA	TYPE	COMPOST	INCORPORATE MATERIALS	ROLLED EROSION CONTROL PRODUCT (BLANKET)	EROSION CONTROL (DRY SEED)	STRAW	WOOD MULCH
			SQFT	SQFT	SQFT	SQFT	SQFT	SQFT
1	A	6	--	--	--	--	--	280
1	B	6	--	--	--	--	--	90
1	C	6	--	--	--	--	--	1,490
1	D	6	--	--	--	--	--	310
1	E	1	--	--	--	1,630	1,630	--
1	F	6	--	--	--	--	--	1,070
1	G	6	--	--	--	--	--	710
1	H	1	--	--	--	640	640	--
2	A	6	--	--	--	--	--	170
2	B	1	--	--	--	270	270	--
2	C	6	--	--	--	--	--	360
2	D	1	--	--	--	470	470	--
2	E	1	--	--	--	1,170	1,170	--
2	F	6	--	--	--	--	--	580
2	G	6	--	--	--	--	--	250
2	H	6	--	--	--	--	--	1,070
2	I	6	--	--	--	--	--	420
2	J	6	--	--	--	--	--	740
2	K	6	--	--	--	--	--	570
2	L	6	--	--	--	--	--	200
2	M	1	--	--	--	750	750	--
2	N	6	--	--	--	--	--	80
2	O	1	--	--	--	1,130	1,130	--
2	P	6	--	--	--	--	--	400
2	Q	2	--	--	20	20	--	--
2	R	6	--	--	--	--	--	550
2	S	1	--	--	--	1,470	1,470	--
2	T	6	--	--	--	--	--	760
2	U	2	--	--	10	10	--	--
2	V	6	--	--	--	--	--	140
3	A	6	--	--	--	--	--	360
3	B	6	--	--	--	--	--	810
3	C	6	--	--	--	--	--	330
3	D	6	--	--	--	--	--	500
3	E	1	--	--	--	2,830	2,830	--
3	F	6	--	--	--	--	--	920
3	G	6	--	--	--	--	--	100
3	H	6	--	--	--	--	--	570
3	I	6	--	--	--	--	--	870
3	J	6	--	--	--	--	--	670
3	K	6	--	--	--	--	--	780
3	L	6	--	--	--	--	--	770
4	A	6	--	--	--	--	--	140
4	B	1	--	--	--	3,360	3,360	--
4	C	1	--	--	--	120	120	--
4	D	1	--	--	--	5,180	5,180	--
4	E	1	--	--	--	450	450	--
4	F	1	--	--	--	600	600	--
4	G	1	--	--	--	1,910	1,910	--
4	H	1	--	--	--	540	540	--
4	I	6	--	--	--	2,430	2,430	--
4	J	1	--	--	--	1,250	1,250	--
4	K	1	--	--	--	590	590	--
SUBTOTAL TABLE 1			0	0	30	26,820	24,360	17,060

EROSION CONTROL QUANTITY TABLE 2

EROSION CONTROL								
SHEET	AREA	TYPE	COMPOST	INCORPORATE MATERIALS	ROLLED EROSION CONTROL PRODUCT (BLANKET)	EROSION CONTROL (DRY SEED)	STRAW	WOOD MULCH
			SQFT	SQFT	SQFT	SQFT	SQFT	SQFT
5	A	1	--	--	--	460	460	--
5	B	1	--	--	--	400	400	--
5	C	1	--	--	--	320	320	--
5	D	1	--	--	--	1,220	1,220	--
5	E	1	--	--	--	1,510	1,510	--
5	F	1	--	--	--	200	200	--
5	G	1	--	--	--	800	800	--
5	H	1	--	--	--	2,960	2,960	--
5	I	1	--	--	--	3,230	3,230	--
5	J	6	--	--	--	880	--	--
5	K	1	--	--	--	550	550	--
5	L	6	--	--	--	580	--	--
5	M	1	--	--	--	310	310	--
5	N	6	--	--	--	350	--	--
5	O	1	--	--	--	330	330	--
6	A	6	--	--	--	200	--	--
6	B	1	--	--	--	10,740	10,740	--
6	C	6	--	--	--	270	--	--
6	D	1	--	--	--	2,090	2,090	--
6	E	3	1,020	1,020	--	1,020	1,020	--
6	F	4	2,370	2,370	2,370	2,370	--	--
6	G	1	--	--	--	6,780	6,780	--
6	H	3	2,090	2,090	--	2,090	2,090	--
6	I	2	--	--	30	30	--	--
7	A	2	--	--	10	10	--	--
7	B	1	--	--	--	1,290	1,290	--
7	C	3	490	490	--	490	490	--
7	D	1	--	--	--	2,350	2,350	--
7	E	3	390	390	--	390	390	--
7	F	3	700	700	--	700	700	--
7	G	1	--	--	--	1,870	1,870	--
7	H	1	--	--	--	340	340	--
7	I	2	--	--	40	40	--	--
7	J	1	--	--	--	380	380	--
7	K	2	--	--	40	40	--	--
8	A	1	--	--	--	6,950	6,950	--
9	A	1	--	--	--	180	180	--
9	B	3	1,150	1,150	--	1,150	1,150	--
10	A	1	--	--	--	2,650	2,650	--
10	B	2	--	--	60	60	--	--
10	C	2	--	--	40	40	--	--
10	D	1	--	--	--	230	230	--
10	E	2	--	--	40	40	--	--
10	F	1	--	--	--	1,690	1,690	--
10	G	3	2,350	2,350	--	2,350	2,350	--
10	H	3	3,740	3,740	--	3,740	3,740	--
10	I	4	430	430	430	430	--	--
10	J	4	460	460	460	460	--	--
10	K	1	--	--	--	160	160	--
10	L	2	--	--	10	10	--	--
10	M	3	1,790	1,790	--	1,790	1,790	--
10	N	1	--	--	--	1,570	1,570	--
SUBTOTAL TABLE 2			16,980	16,980	3,530	71,090	65,280	0

Dist	COUNTY	ROUTE	POST MILES TOTAL PROJECT	SHEET No.	TOTAL SHEETS
03	ED	89	8.6/13.8	189	231

LICENSED LANDSCAPE ARCHITECT

11-18-13
PLANS APPROVAL DATE

LICENSED LANDSCAPE ARCHITECT
JAMES G. WILLIAMSON
No. 5415
Signature
02-28-14
Renewal Date
11-18-13
Date
STATE OF CALIFORNIA

THE STATE OF CALIFORNIA OR ITS OFFICERS OR AGENTS SHALL NOT BE RESPONSIBLE FOR THE ACCURACY OR COMPLETENESS OF SCANNED COPIES OF THIS PLAN SHEET.

REVISED BY | DATE REVISED

CALCULATED-DESIGNED BY: J. WILLIAMSON
CHECKED BY: T. C. JOHNSON

SENIOR LANDSCAPE ARCHITECT: T. CHRIS JOHNSON

STATE OF CALIFORNIA - DEPARTMENT OF TRANSPORTATION
Caltrans® LANDSCAPE ARCHITECTURE

EROSION CONTROL QUANTITIES

NO SCALE

ECQ-1

LAST REVISION | DATE PLOTTED => 13-FEB-2014
11-12-13 | TIME PLOTTED => 13:46

EROSION CONTROL QUANTITY TABLE 3

EROSION CONTROL								
SHEET	AREA	TYPE	COMPOST	INCORPORATE MATERIALS	ROLLED EROSION CONTROL PRODUCT (BLANKET)	EROSION CONTROL (DRY SEED)	STRAW	WOOD MULCH
			SQFT	SQFT	SQFT	SQFT	SQFT	SQFT
11	A	1	--	--	--	1,260	1,260	--
11	B	3	390	390	--	390	390	--
11	C	3	2,530	2,530	--	2,530	2,530	--
11	D	3	1,320	1,320	--	1,320	1,320	--
11	E	4	360	360	360	360	--	--
11	F	1	--	--	--	870	870	--
11	G	3	1,420	1,420	--	1,420	1,420	--
11	H	1	--	--	--	2,160	2,160	--
11	I	1	--	--	--	2,750	2,750	--
11	K	1	--	--	--	500	500	--
11	N	1	--	--	--	1,900	1,900	--
11	O	1	--	--	--	910	910	--
11	P	3	2,310	2,310	--	2,310	2,310	--
12	A	1	--	--	--	920	920	--
12	B	3	1,370	1,370	--	1,370	1,370	--
12	C	1	--	--	--	2,180	2,180	--
12	D	3	480	480	--	480	480	--
12	E	1	--	--	--	1,820	1,820	--
12	F	3	1,030	1,030	--	1,030	1,030	--
12	G	3	2,050	2,050	--	2,050	2,050	--
13	A	1	--	--	--	130	130	--
13	B	3	870	870	--	870	870	--
13	C	1	--	--	--	40	40	--
13	D	3	620	620	--	620	620	--
13	E	1	--	--	--	720	720	--
13	F	1	--	--	--	790	790	--
13	G	3	1,590	1,590	--	1,590	1,590	--
14	A	1	--	--	--	570	570	--
14	B	2	--	--	40	40	--	--
14	C	2	--	--	40	40	--	--
14	D	1	--	--	--	610	610	--
14	E	3	1,090	1,090	--	1,090	1,090	--
14	F	1	--	--	--	1,890	1,890	--
14	G	1	--	--	--	1,690	1,690	--
14	H	3	870	870	--	870	870	--
14	I	2	--	--	40	40	--	--
14	J	2	--	--	40	40	--	--
14	K	1	--	--	--	130	130	--
14	L	3	980	980	--	980	980	--
14	M	3	1,610	1,610	--	1,610	1,610	--
15	A	1	--	--	--	650	650	--
15	B	3	930	930	--	930	930	--
15	C	3	910	910	--	910	910	--
15	D	1	--	--	--	190	190	--
15	E	2	--	--	40	40	--	--
15	F	1	--	--	--	80	80	--
15	G	3	170	170	--	170	170	--
15	H	1	--	--	--	140	140	--
15	I	3	1,730	1,730	--	1,730	1,730	--
15	J	1	--	--	--	130	130	--
15	K	2	--	--	40	40	--	--
15	L	1	--	--	--	310	310	--
15	M	2	--	--	--	40	--	--
SUBTOTAL TABLE 3			24,630	24,630	640	48,250	47,610	0

EROSION CONTROL QUANTITY TABLE 4

EROSION CONTROL								
SHEET	AREA	TYPE	COMPOST	INCORPORATE MATERIALS	ROLLED EROSION CONTROL PRODUCT (BLANKET)	EROSION CONTROL (DRY SEED)	STRAW	WOOD MULCH
			SQFT	SQFT	SQFT	SQFT	SQFT	SQFT
16	A	1	--	--	--	240	240	--
16	B	3	300	300	--	300	300	--
16	C	1	--	--	--	2,250	2,250	--
16	D	4	220	220	220	220	--	--
16	E	2	--	--	40	40	--	--
16	F	1	--	--	--	260	260	--
16	G	4	290	290	290	290	--	--
16	H	1	--	--	--	1,910	1,910	--
16	I	1	--	--	--	5,770	5,770	--
16	J	4	820	820	820	820	--	--
16	K	1	--	--	--	310	310	--
16	L	2	--	--	40	40	--	--
16	M	4	400	400	400	400	--	--
17	A	4	200	200	200	200	--	--
17	B	1	--	--	--	1,250	1,250	--
17	C	3	690	690	--	690	690	--
17	D	3	260	260	--	260	260	--
17	E	3	860	860	--	860	860	--
17	F	3	620	620	--	620	620	--
18	A	3	930	930	--	930	930	--
18	B	1	--	--	--	1,010	1,010	--
18	C	1	--	--	--	1,780	1,780	--
18	D	3	830	830	--	830	830	--
18	E	3	1,620	1,620	--	1,620	1,620	--
19	A	1	--	--	--	170	170	--
19	B	3	620	620	--	620	620	--
19	C	1	--	--	--	870	870	--
19	D	2	--	--	30	30	--	--
19	E	1	--	--	--	3,100	3,100	--
19	F	1	--	--	--	410	410	--
19	G	1	--	--	--	2,400	2,400	--
19	H	2	--	--	40	40	--	--
20	A	1	--	--	--	6,400	6,400	--
20	B	1	--	--	--	5,100	5,100	--
20	C	3	830	830	--	830	830	--
20	D	1	--	--	--	420	420	--
20	E	2	--	--	40	40	--	--
20	F	3	2,110	2,110	--	2,110	2,110	--
SUBTOTAL TABLE 4			11,600	11,600	2,120	45,440	43,320	0
SUBTOTAL TABLE 1			0	0	30	26,820	24,360	17,060
SUBTOTAL TABLE 2			16,980	16,980	3,530	71,090	65,280	0
SUBTOTAL TABLE 3			24,630	24,630	640	48,250	47,610	0
TOTAL			53,210	53,210	6,320	191,600	180,570	17,060

Dist	COUNTY	ROUTE	POST MILES TOTAL PROJECT	SHEET No.	TOTAL SHEETS
03	ED	89	8.6/13.8	190	231

LICENSED LANDSCAPE ARCHITECT

11-18-13
PLANS APPROVAL DATE

LICENSED LANDSCAPE ARCHITECT
JAMES G. WILLIAMSON
No. 5415
Signature
02-28-14
Renewal Date
11-18-13
Date
STATE OF CALIFORNIA

THE STATE OF CALIFORNIA OR ITS OFFICERS OR AGENTS SHALL NOT BE RESPONSIBLE FOR THE ACCURACY OR COMPLETENESS OF SCANNED COPIES OF THIS PLAN SHEET.

REVISED BY | DATE REVISED

CALCULATED-DESIGNED BY: J. WILLIAMSON
CHECKED BY: T. C. JOHNSON

SENIOR LANDSCAPE ARCHITECT: T. CHRIS JOHNSON

STATE OF CALIFORNIA - DEPARTMENT OF TRANSPORTATION
Caltrans® LANDSCAPE ARCHITECTURE

EROSION CONTROL QUANTITIES

NO SCALE

ECQ-2

LAST REVISION 11-12-13 | DATE PLOTTED => 13-FEB-2014 | TIME PLOTTED => 13:46

Dist	COUNTY	ROUTE	POST MILES TOTAL PROJECT	SHEET No.	TOTAL SHEETS
03	ED	89	8.6/13.8	191	231

LICENSED LANDSCAPE ARCHITECT

11-18-13
PLANS APPROVAL DATE

LICENSED LANDSCAPE ARCHITECT
JAMES G. WILLIAMSON
No. 5415
Signature
02-28-14
Renewal Date
11-18-13
Date
STATE OF CALIFORNIA

THE STATE OF CALIFORNIA OR ITS OFFICERS OR AGENTS SHALL NOT BE RESPONSIBLE FOR THE ACCURACY OR COMPLETENESS OF SCANNED COPIES OF THIS PLAN SHEET.

FIBER ROLLS

STATION	LOCATION	FIBER ROLLS
		LF
"A1" 702+75 TO 705+90	Lt	450
"A1" 704+00 TO 706+50	Rt	310
TOTAL		760

ROCK STAIN

DRAINAGE STRUCTURE LOCATIONS DETERMINED BY THE ENGINEER	ROCK STAIN
	SQFT
	650

VEHICLE BARRIER

STATION	LOCATION	WOODEN VEHICLE BARRIER	BOULDER VEHICLE BARRIER	REMOVE WOODEN VEHICLE BARRIER
		EA	EA	EA
"A1" 528+21 to 529+72	Rt	--	22	--
"A1" 529+87 to 532+19	Rt	--	32	--
"A1" 543+76 to 548+80	Rt	84	--	--
"A1" 554+35 to 555+47	Lt	15	--	--
"A1" 554+45 to 555+08	Lt	--	--	9
"A1" 568+70 to 570+60	Rt	38	--	--
"A1" 569+96 to 570+60	Rt	--	--	16
"A1" 580+80 to 581+67	Lt	--	23	--
"A1" 582+66 to 583+00	Lt	--	9	--
"A1" 582+77 to 583+90	Rt	--	28	--
AT HYBRID BEACON	Lt/Rt	--	4	--
"A1" 591+29 to 595+67	Rt	--	65	--
"A1" 597+92 to 603+83	Rt	--	58	--
"A1" 609+45 to 610+38	Rt	--	29	--
"A1" 613+60 to 615+12	Rt	--	23	--
"A1" 614+71 to 616+38	Lt	--	27	--
"A1" 622+14 to 623+54	Lt	--	21	--
"A1" 626+53 to 627+51	Lt	--	15	--
"A1" 628+73 to 629+42	Lt	13	--	--
"A1" 639+07 to 639+47	Rt	8	--	--
"A1" 640+86 to 641+79	Lt	15	--	--
"A1" 647+60 to 648+69	Rt	20	--	--
"A1" 651+98 to 654+39	Rt	42	--	--
"A1" 683+50 to 686+24	Rt	47	--	--
"A1" 683+74 to 685+87	Lt	37	--	--
"A1" 691+29 to 692+13	Lt	15	--	--
TOTAL		334	356	25

EROSION CONTROL (TYPE 5)

EROSION CONTROL			CULTIVATION	SOIL AMENDMENT	ORGANIC FERTILIZER	SOD
SHEET	AREA	TYPE	SQYD	CY	LB	SQYD
11	J	5	170	0.5	4	170
11	L	5	210	0.6	3	210
11	M	5	170	0.5	4	170
TOTAL			550	1.7	11	550

STONE WALL

STATION	LOCATION	STONE WALL	(N) CLASS 2 AB	(N) PERMIABLE MATERIAL (CLASS 3)	(N) ROCK SLOPE PROTECTION FABRIC (CLASS 8)
		LF	CY	CY	SQYD
"A1" 490+70.68 TO 491+05	Lt	34.3	1.27	17.0	17.0
"A1" 491+45 TO 492+50	Lt	105.0	3.89	50.0	50.0
SUBTOTAL		--	5.16	67.0	67.0
TOTAL		139.3	--	--	--

(N) - NOT A SEPARATE PAY ITEM, FOR INFORMATION ONLY

EROSION CONTROL QUANTITIES

NO SCALE

ECQ-3

REVISED BY	DATE REVISED
J. WILLIAMSON	11-12-13

CALCULATED-DESIGNED BY: T. C. JOHNSON
CHECKED BY: T. CHRIS JOHNSON
SENIOR LANDSCAPE ARCHITECT

STATE OF CALIFORNIA - DEPARTMENT OF TRANSPORTATION
Caltrans® LANDSCAPE ARCHITECTURE

LAST REVISION | DATE PLOTTED => 13-FEB-2014 | TIME PLOTTED => 13:46

Dist	COUNTY	ROUTE	POST MILES TOTAL PROJECT	SHEET No.	TOTAL SHEETS
03	ED	89	8.6/13.8	192	231

H. Golban 11-18-13
REGISTERED ELECTRICAL ENGINEER DATE

11-18-13
PLANS APPROVAL DATE

REGISTERED PROFESSIONAL ENGINEER
HABIB GOLBAN
No. E17928
Exp. 09-30-14
ELECTRICAL
STATE OF CALIFORNIA

THE STATE OF CALIFORNIA OR ITS OFFICERS OR AGENTS SHALL NOT BE RESPONSIBLE FOR THE ACCURACY OR COMPLETENESS OF SCANNED COPIES OF THIS PLAN SHEET.

NOTE:

FOR ACCURATE RIGHT OF WAY DATA, CONTACT
RIGHT OF WAY ENGINEERING AT THE DISTRICT OFFICE.

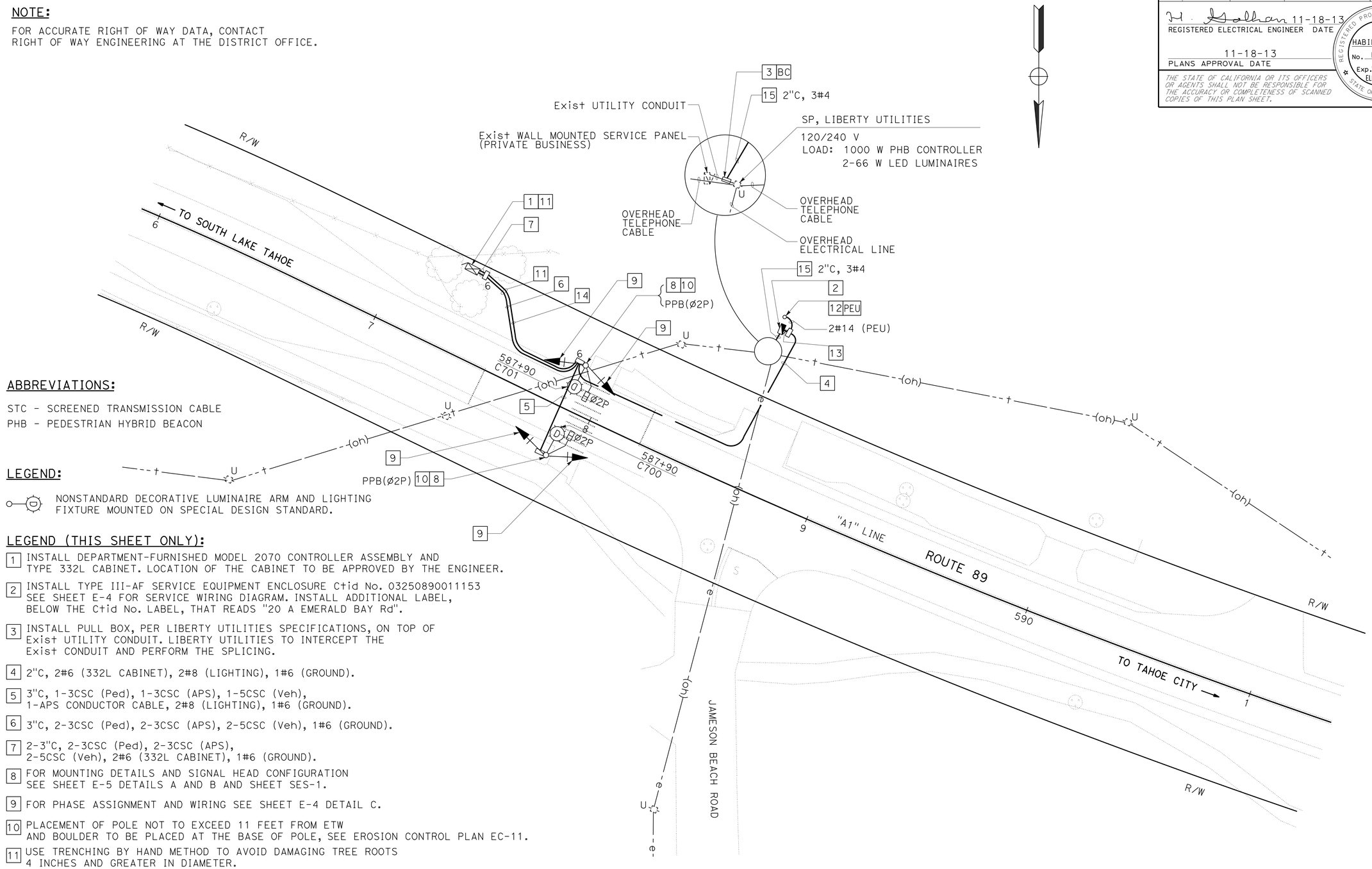

ABBREVIATIONS:

STC - SCREENED TRANSMISSION CABLE
PHB - PEDESTRIAN HYBRID BEACON

LEGEND:

NONSTANDARD DECORATIVE LUMINAIRE ARM AND LIGHTING FIXTURE MOUNTED ON SPECIAL DESIGN STANDARD.

LEGEND (THIS SHEET ONLY):

1. INSTALL DEPARTMENT-FURNISHED MODEL 2070 CONTROLLER ASSEMBLY AND TYPE 332L CABINET. LOCATION OF THE CABINET TO BE APPROVED BY THE ENGINEER.
2. INSTALL TYPE III-AF SERVICE EQUIPMENT ENCLOSURE Ctid No. 03250890011153 SEE SHEET E-4 FOR SERVICE WIRING DIAGRAM. INSTALL ADDITIONAL LABEL, BELOW THE Ctid No. LABEL, THAT READS "20 A EMERALD BAY Rd".
3. INSTALL PULL BOX, PER LIBERTY UTILITIES SPECIFICATIONS, ON TOP OF Exist UTILITY CONDUIT. LIBERTY UTILITIES TO INTERCEPT THE Exist CONDUIT AND PERFORM THE SPLICING.
4. 2"C, 2#6 (332L CABINET), 2#8 (LIGHTING), 1#6 (GROUND).
5. 3"C, 1-3CSC (Ped), 1-3CSC (APS), 1-5CSC (Veh), 1-APS CONDUCTOR CABLE, 2#8 (LIGHTING), 1#6 (GROUND).
6. 3"C, 2-3CSC (Ped), 2-3CSC (APS), 2-5CSC (Veh), 1#6 (GROUND).
7. 2-3"C, 2-3CSC (Ped), 2-3CSC (APS), 2-5CSC (Veh), 2#6 (332L CABINET), 1#6 (GROUND).
8. FOR MOUNTING DETAILS AND SIGNAL HEAD CONFIGURATION SEE SHEET E-5 DETAILS A AND B AND SHEET SES-1.
9. FOR PHASE ASSIGNMENT AND WIRING SEE SHEET E-4 DETAIL C.
10. PLACEMENT OF POLE NOT TO EXCEED 11 FEET FROM ETW AND BOULDER TO BE PLACED AT THE BASE OF POLE, SEE EROSION CONTROL PLAN EC-11.
11. USE TRENCHING BY HAND METHOD TO AVOID DAMAGING TREE ROOTS 4 INCHES AND GREATER IN DIAMETER.
12. INSTALL TYPE II PEU ON TYPE 1-B STANDARD (MAXIMUM 3' FROM SERVICE EQUIPMENT ENCLOSURE), SEE ES-7N FOR POLE TOP MOUNTING DETAILS.
13. 2"C, 2#6 (332L CABINET), 2#8 (LIGHTING), 2#14 (PEU), 1#6 (GROUND).
14. 2"C, 2#6 (332L CABINET), 1#6 (GROUND).
15. PER LIBERTY UTILITIES REQUIREMENTS.

APPROVED FOR ELECTRICAL WORK ONLY

PEDESTRIAN HYBRID BEACON AND LIGHTING

SCALE: 1" = 20'

E-1

REVISED BY	DATE REVISED

CALCULATED-DESIGNED BY: JAMIE KOJAK
CHECKED BY: HABIB GOLBAN
FUNCTIONAL SUPERVISOR: NELSON LEE

STATE OF CALIFORNIA - DEPARTMENT OF TRANSPORTATION
Caltrans®
ELECTRICAL DESIGN

LAST REVISION
DATE PLOTTED => 13-FEB-2014
TIME PLOTTED => 13:46
10-02-13

BORDER LAST REVISED 7/2/2010

USERNAME => s130875
DGN FILE => 0300000223ua001.dgn

RELATIVE BORDER SCALE IS IN INCHES 0 1 2 3

UNIT 0403

PROJECT NUMBER & PHASE 03000002231

Dist	COUNTY	ROUTE	POST MILES TOTAL PROJECT	SHEET No.	TOTAL SHEETS
03	ED	89	8.6/13.8	193	231

H. Golban 11-18-13
REGISTERED ELECTRICAL ENGINEER DATE

11-18-13
PLANS APPROVAL DATE

REGISTERED PROFESSIONAL ENGINEER
HABIB GOLBAN
No. E17928
Exp. 09-30-14
ELECTRICAL
STATE OF CALIFORNIA

THE STATE OF CALIFORNIA OR ITS OFFICERS OR AGENTS SHALL NOT BE RESPONSIBLE FOR THE ACCURACY OR COMPLETENESS OF SCANNED COPIES OF THIS PLAN SHEET.

NOTE:

FOR ACCURATE RIGHT OF WAY DATA, CONTACT
RIGHT OF WAY ENGINEERING AT THE DISTRICT OFFICE.

LEGEND (THIS SHEET ONLY):

1 RL TYPE M CABINET AND ALL ELECTRICAL EQUIPMENT, RC FOUNDATION.

2 Exist WOOD POLE AND SOLAR PANELS.

3 2"C, 2 DLC, 4 STC.

4 Exist PIEZOELECTRIC AXLE SENSOR.

5 INSTALL LOOPS AND PIEZOELECTRIC AXLE SENSORS PER MANUFACTURER'S RECOMMENDATIONS.

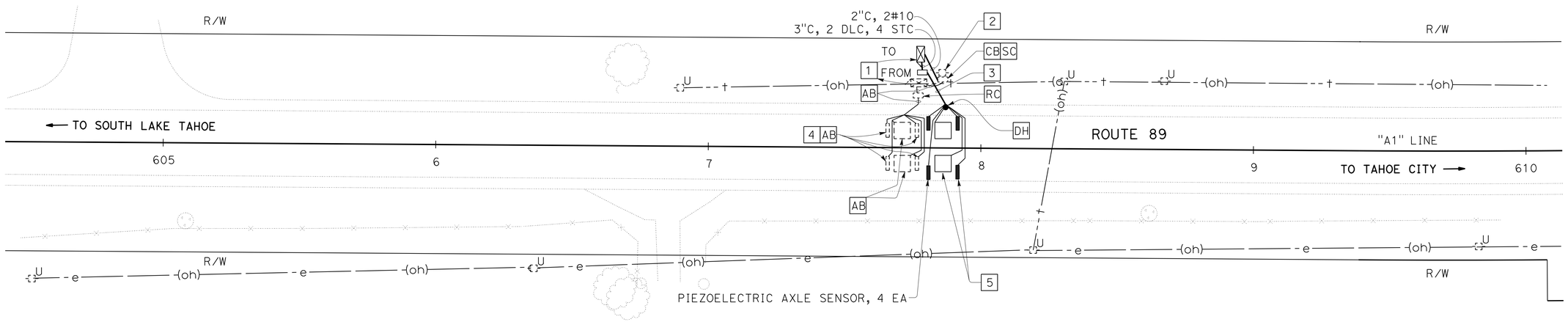

CENSUS STATION No. 654 (PM 11.55)

MODIFY TRAFFIC MONITORING STATION

SCALE: 1" = 20'

E-2

APPROVED FOR ELECTRICAL WORK ONLY

STATE OF CALIFORNIA - DEPARTMENT OF TRANSPORTATION
ELECTRICAL DESIGN

FUNCTIONAL SUPERVISOR: NELSON LEE

CALCULATED-DESIGNED BY: JAMIE KOJAK
CHECKED BY: HABIB GOLBAN

REVISED BY	DATE REVISED

LAST REVISION DATE PLOTTED => 13-FEB-2014
TIME PLOTTED => 13:46

BORDER LAST REVISED 7/2/2010

USERNAME => s130875
DGN FILE => 0300000223ua002.dgn

RELATIVE BORDER SCALE IS IN INCHES 0 1 2 3

UNIT 0403

PROJECT NUMBER & PHASE 03000002231

Dist	COUNTY	ROUTE	POST MILES TOTAL PROJECT	SHEET No.	TOTAL SHEETS
03	ED	89	8.6/13.8	194	231

H. Golban 11-18-13
REGISTERED ELECTRICAL ENGINEER DATE

11-18-13
PLANS APPROVAL DATE

REGISTERED PROFESSIONAL ENGINEER
HABIB GOLBAN
No. E17928
Exp. 09-30-14
ELECTRICAL
STATE OF CALIFORNIA

THE STATE OF CALIFORNIA OR ITS OFFICERS OR AGENTS SHALL NOT BE RESPONSIBLE FOR THE ACCURACY OR COMPLETENESS OF SCANNED COPIES OF THIS PLAN SHEET.

NOTE:

FOR ACCURATE RIGHT OF WAY DATA, CONTACT
RIGHT OF WAY ENGINEERING AT THE DISTRICT OFFICE.

LEGEND (THIS SHEET ONLY):

1 INSTALL TYPE III-A SERVICE EQUIPMENT ENCLOSURE Ctid No. 03250890011477
SEE SERVICE WIRING DIAGRAM SHEET E-4. INSTALL ADDITIONAL LABEL,
BELOW THE Ctid No. LABEL, THAT READS "3 EMERALD BAY Rd.".

2 Exist SOLAR POWERED FLASHING BEACON MOUNTED ON SIGN.
THE SIGN IS TO BE RESET (SEE SIGN PLANS FOR EXACT LOCATION).
RL SOLAR AND FLASHING BEACON EQUIPMENT.

3 PER LIBERTY UTILITIES REQUIREMENTS.

4 COIL ADDITIONAL 20 FEET SLACK OF 2#10 CONDUCTORS IN PULL BOX.

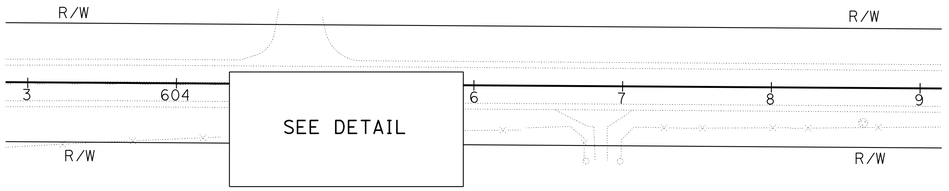

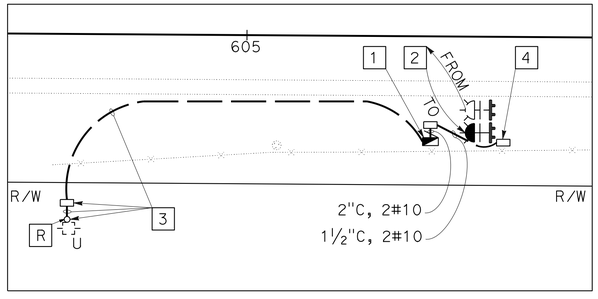

DETAIL
NO SCALE

APPROVED FOR ELECTRICAL WORK ONLY

MODIFY FLASHING BEACON

SCALE: 1" = 50'

E-3

CALCULATED-DESIGNED BY	CHECKED BY	REVISED BY	DATE REVISED
JAMIE KOJAK	HABIB GOLBAN		

FUNCTIONAL SUPERVISOR
NELSON LEE

STATE OF CALIFORNIA - DEPARTMENT OF TRANSPORTATION
Caltrans®
ELECTRICAL DESIGN

LAST REVISION | DATE PLOTTED => 13-FEB-2014
10-02-13 | TIME PLOTTED => 13:46

Dist	COUNTY	ROUTE	POST MILES TOTAL PROJECT	SHEET No.	TOTAL SHEETS
03	ED	89	8.6/13.8	195	231

H. Golban 11-18-13
REGISTERED ELECTRICAL ENGINEER DATE

11-18-13
PLANS APPROVAL DATE

REGISTERED PROFESSIONAL ENGINEER — HABIB GOLBAN No. E17928 Exp. 09-30-14 ELECTRICAL — STATE OF CALIFORNIA

THE STATE OF CALIFORNIA OR ITS OFFICERS OR AGENTS SHALL NOT BE RESPONSIBLE FOR THE ACCURACY OR COMPLETENESS OF SCANNED COPIES OF THIS PLAN SHEET.

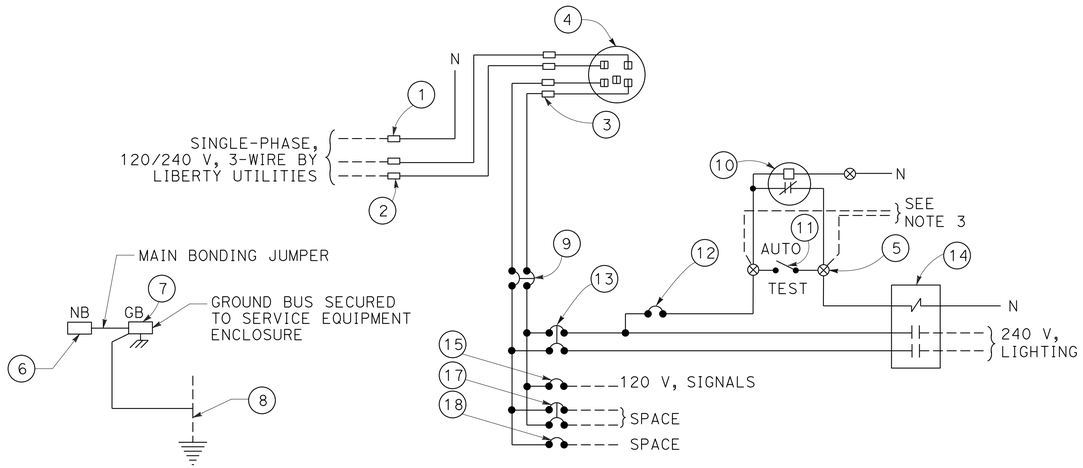

120/240 V SERVICE WIRING DIAGRAM
Ctid No. 03250890011153

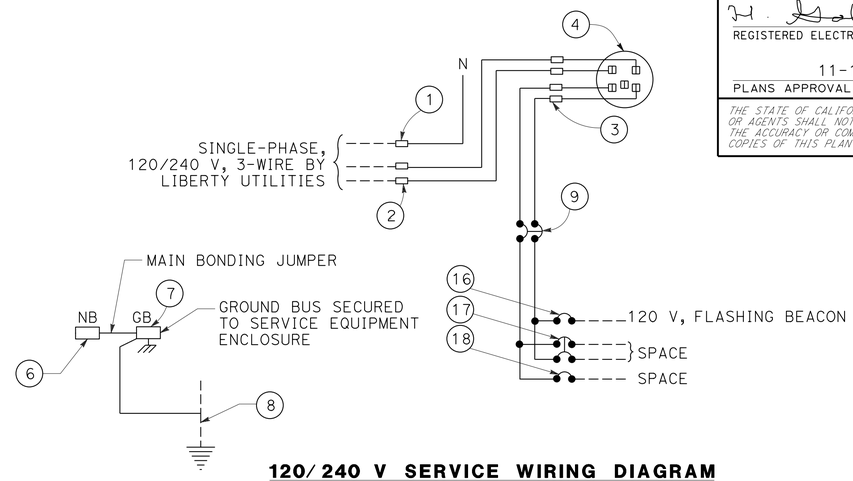

120/240 V SERVICE WIRING DIAGRAM
Ctid No. 03250890011477

NOTES:

1. Voltage ratings of service equipment shall conform to the service voltages indicated on the plans.
2. Unless otherwise indicated on the plans, service equipment items shall be provided for each service equipment enclosure as shown.
3. Connect to remote test switch mounted on lighting standard, sign post or structure when required.
4. Items (1) and (6) shall be isolated from the service equipment enclosure.
5. Meter sockets shall be 5 clip type.
6. The landing lug shall be suitable for multiple conductors.
7. Type II photoelectric control shall be used mounted on Type 1-B standard.

TYPE III-A SERVICE EQUIPMENT ENCLOSURE LEGEND (120/240 V)		
ITEM	COMPONENT	NAMEPLATE DESCRIPTION
(1)	NEUTRAL LUG	
(2)	LANDING LUG (NOTE 6)	
(3)	TEST BYPASS FACILITY	
(4)	METER SOCKET AND SUPPORT	
(5)	TERMINAL BLOCKS	
(6)	NEUTRAL BUS	
(7)	GROUND BUS	
(8)	GROUNDING ELECTRODE	
(9)	60 A, 240 V, 2P, CB	MAIN BREAKER
(10)	PHOTOELECTRIC UNIT (NOTE 7)	PEU
(11)	15 A, 1P, TEST SWITCH	LIGHTING TEST SWITCH
(12)	15 A, 120 V, 1P, CB	LIGHTING CONTROL
(13)	15 A, 240 V, 2P, CB	LIGHTING
(14)	30 A, 2P, NO CONTACTOR	LIGHTING
(15)	30 A, 120 V, 1P, CB	SIGNALS
(16)	15 A, 120 V, 1P, CB	FLASHING BEACON
(17)	20 A, 240 V, 2P, CB	SPARE
(18)	15 A, 120 V, 1P, CB	SPARE

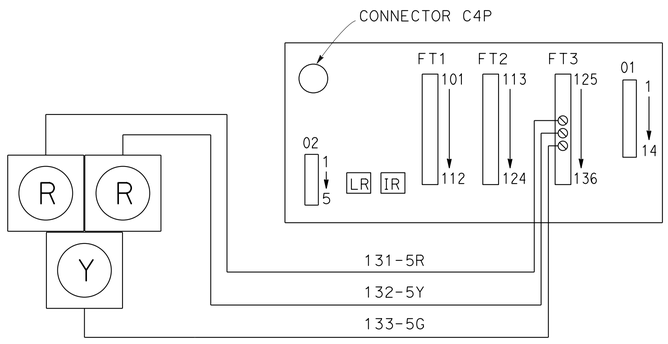

OUTPUT FILE
REAR VIEW
(BACK PANEL)

DETAIL C
(PHASE ASSIGNMENT AND WIRING)

ELECTRICAL DETAILS

NO SCALE

E-4

REVISED BY	DATE REVISED

CALCULATED-DESIGNED BY: JAMIE KOJAK
CHECKED BY: HABIB GOLBAN
FUNCTIONAL SUPERVISOR: NELSON LEE

STATE OF CALIFORNIA - DEPARTMENT OF TRANSPORTATION
Caltrans® ELECTRICAL DESIGN

LAST REVISION: DATE PLOTTED => 13-FEB-2014 TIME PLOTTED => 13:46
10-02-13

Dist	COUNTY	ROUTE	POST MILES TOTAL PROJECT	SHEET No.	TOTAL SHEETS
03	ED	89	8.6/13.8	196	231

H. Golban 11-18-13
REGISTERED ELECTRICAL ENGINEER DATE

11-18-13
PLANS APPROVAL DATE

REGISTERED PROFESSIONAL ENGINEER
HABIB GOLBAN
No. E17928
Exp. 09-30-14
STATE OF CALIFORNIA

THE STATE OF CALIFORNIA OR ITS OFFICERS OR AGENTS SHALL NOT BE RESPONSIBLE FOR THE ACCURACY OR COMPLETENESS OF SCANNED COPIES OF THIS PLAN SHEET.

NOTE:

FOR ALL ATTACHMENTS AND EQUIPMENT PLACEMENT HEIGHTS, AND ADDITIONAL DETAILS, SEE SHEET SES-1.

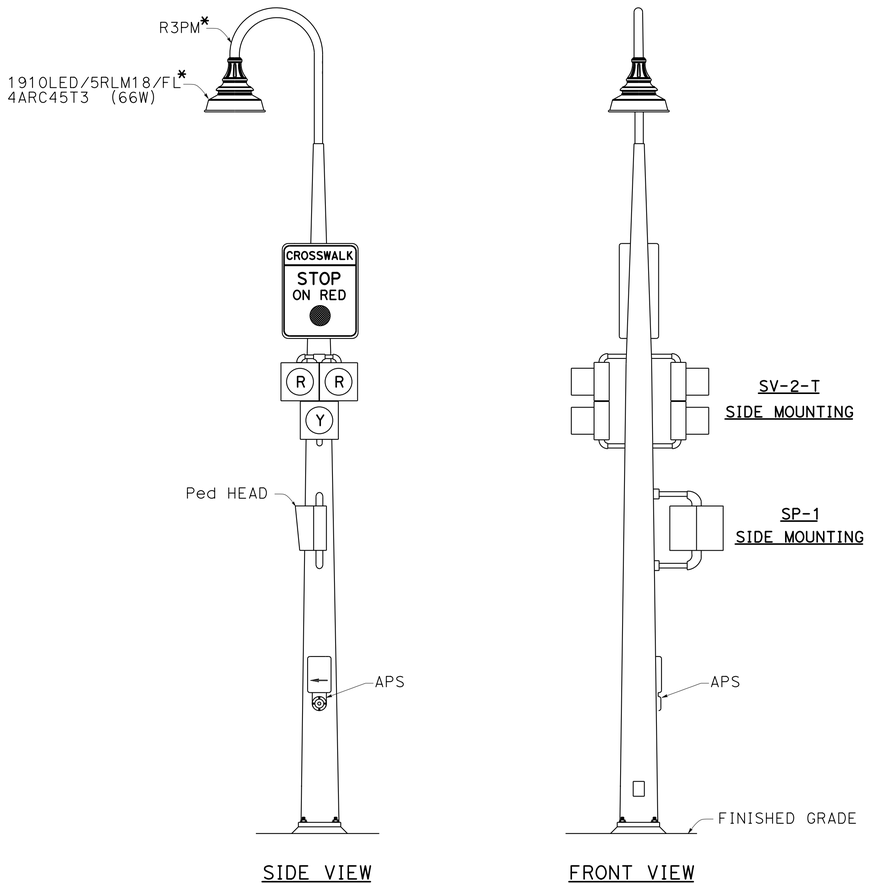

SIDE VIEW FRONT VIEW

MOUNTING DETAIL A
(LUMINAIRE C701)

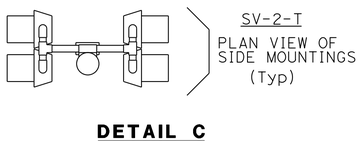

DETAIL C

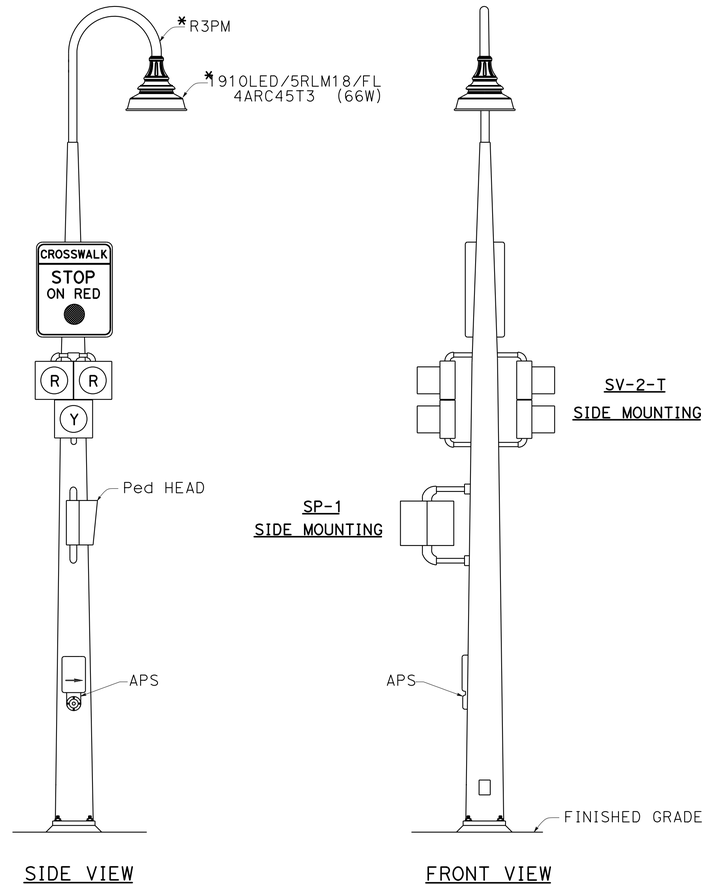

SIDE VIEW FRONT VIEW

MOUNTING DETAIL B
(LUMINAIRE C700)

* - STERNBERG LIGHTING

PEDESTRIAN HYBRID BEACON AND LIGHTING

NO SCALE

E-5

LAST REVISION 10-02-13 | DATE PLOTTED => 13-FEB-2014 | TIME PLOTTED => 13:46

CALCULATED-DESIGNED BY: JAMIE KOJAK
CHECKED BY: HABIB GOLBAN
FUNCTIONAL SUPERVISOR: NELSON LEE
REVISED BY | DATE REVISED

STATE OF CALIFORNIA - DEPARTMENT OF TRANSPORTATION
ELECTRICAL DESIGN

Dist	COUNTY	ROUTE	POST MILES TOTAL PROJECT	SHEET No.	TOTAL SHEETS
03	ED	89	8.6/13.8	197	231

H. Golban 11-18-13
REGISTERED ELECTRICAL ENGINEER DATE

11-18-13
PLANS APPROVAL DATE

REGISTERED PROFESSIONAL ENGINEER
HABIB GOLBAN
No. E17928
Exp. 09-30-14
STATE OF CALIFORNIA

THE STATE OF CALIFORNIA OR ITS OFFICERS OR AGENTS SHALL NOT BE RESPONSIBLE FOR THE ACCURACY OR COMPLETENESS OF SCANNED COPIES OF THIS PLAN SHEET.

PEDESTRIAN HYBRID BEACON AND LIGHTING

SHEET No.	(N) 332L CABINET AND FOUNDATION	(N) TYPE III SERVICE ENCLOSURE AND FOUNDATION	(N) No. 5 PULL BOX	(N) No. 6 PULL BOX	(N) 2" TYPE 3 CONDUIT	(N) 3" TYPE 3 CONDUIT	(N) 6 AWG CONDUCTOR	(N) 6 AWG CONDUCTOR (GROUND)	(N) 14 AWG CONDUCTOR	(N) STERNBERG LIGHTING			(N) PHB POLE *	(N) PEDETRIAN SIGNAL HEAD	(N) PEDETRIAN BUTTON ASSYMBLY	(N) 3-SECTION SIGNAL HEAD	(N) 3CSC CABLE	(N) 5CSC CABLE
										FIXTURE	ARM	LIGHT SOURCE						
										1910LED/5RLM18/FL	R3PM	4ARC45T3						
	EA	EA	EA	EA	LF	LF	LF	LF	LF	EA	EA	EA	EA	EA	EA	EA	LF	LF
E-1	1	1	3	2	150	140	950	310	40	2	2	2	2	2	2	4	500	360

PEDESTRIAN HYBRID BEACON AND LIGHTING (CONTINUED)

SHEET No.	(N) APS CONDUCTOR CABLE	(N) TYPE 1-B STANDARD	(N) TYPE II PEU
	LF	EA	EA
E-1	50	1	1

MODIFY TRAFFIC MONITORING STATION

SHEET No.	(N) RL Exist TYPE M CABINET AND ELECTRICAL EQUIPMENT	(N) INSTALL NEW CONDUIT IN Exist PULL BOX	(N) RC Exist PULL BOX	(N) 2" TYPE 3 CONDUIT	(N) 3" TYPE 3 CONDUIT	(N) TYPE A LOOP	(N) PIEZOELECTRIC AXLE SENSOR	(N) STC	(N) DLC	(N) 10 AWG CONDUCTOR	(N) DETECTOR HANDHOLE
	EA	EA	EA	LF	LF	EA	EA	LF	LF	LF	EA
E-2	1	1	1	25	5	2	4	140	40	30	1

MODIFY FLASHING BEACON

SHEET No.	(N) RL Exist ELECTRICAL EQUIPMENT ON SIGN	(N) TYPE III SERVICE EQUIPMENT ENCLOSURE AND FOUNDATION	(N) No. 5 PULL BOX	(N) 2" TYPE 3 CONDUIT	(N) 1½" TYPE 3 CONDUIT	(N) 4 AWG CONDUCTOR	(N) 10 AWG CONDUCTOR
	EA	EA	EA	LF	LF	LF	LF
E-3	1	1	3	140	25	525	100

(N) - NOT A SEPARATE PAY ITEM, FOR INFORMATION ONLY

* - SEE DECORATIVE LIGHTING POLE SHEET SES-1

ELECTRICAL QUANTITIES

E-6

REVISED BY | DATE REVISED

CALCULATED-DESIGNED BY: JAMIE KOJAK
CHECKED BY: HABIB GOLBAN
FUNCTIONAL SUPERVISOR: NELSON LEE

STATE OF CALIFORNIA - DEPARTMENT OF TRANSPORTATION
Caltrans®
ELECTRICAL DESIGN

LAST REVISION | DATE PLOTTED => 13-FEB-2014 | TIME PLOTTED => 13:46
10-02-13

BORDER LAST REVISED 7/2/2010 | USERNAME => s130875 | DGN FILE => 0300000223ua006.dgn | RELATIVE BORDER SCALE IS IN INCHES 0 1 2 3 | UNIT 0403 | PROJECT NUMBER & PHASE 03000002231

DIST	COUNTY	ROUTE	POST MILES TOTAL PROJECT	SHEET No	TOTAL SHEETS
03	ED	89	8.6/13.8	198	231

Eliseo Lopez 7-26-13
REGISTERED CIVIL ENGINEER DATE

ELISEO LOPEZ No. C72910 Exp 12/31/14 CIVIL — REGISTERED PROFESSIONAL ENGINEER — STATE OF CALIFORNIA

11-18-13
PLANS APPROVAL DATE

The State of California or its officers or agents shall not be responsible for the accuracy or completeness of electronic copies of this plan sheet.

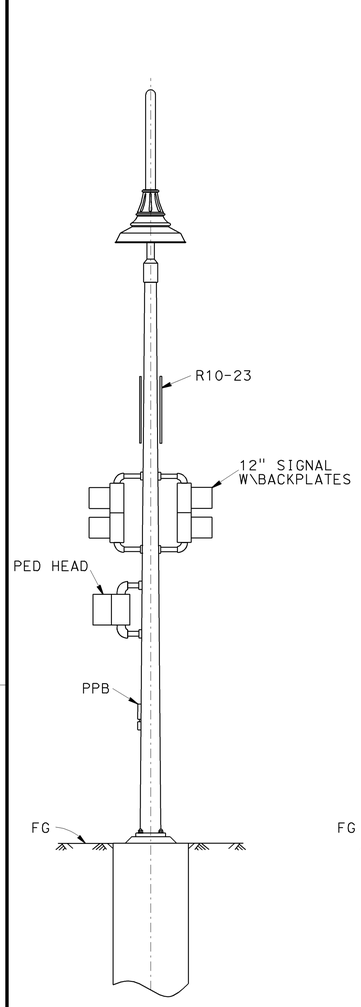

FRONT VIEW
POLE C700

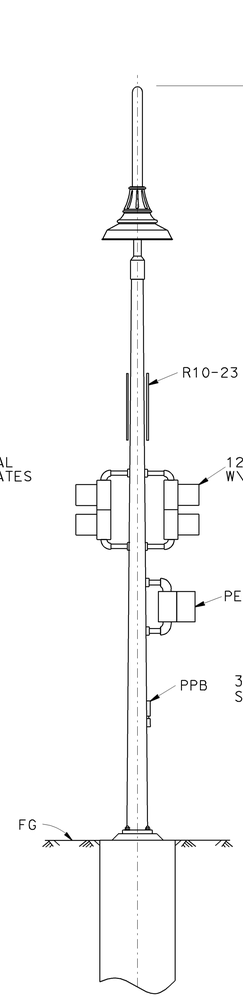

FRONT VIEW
POLE C701

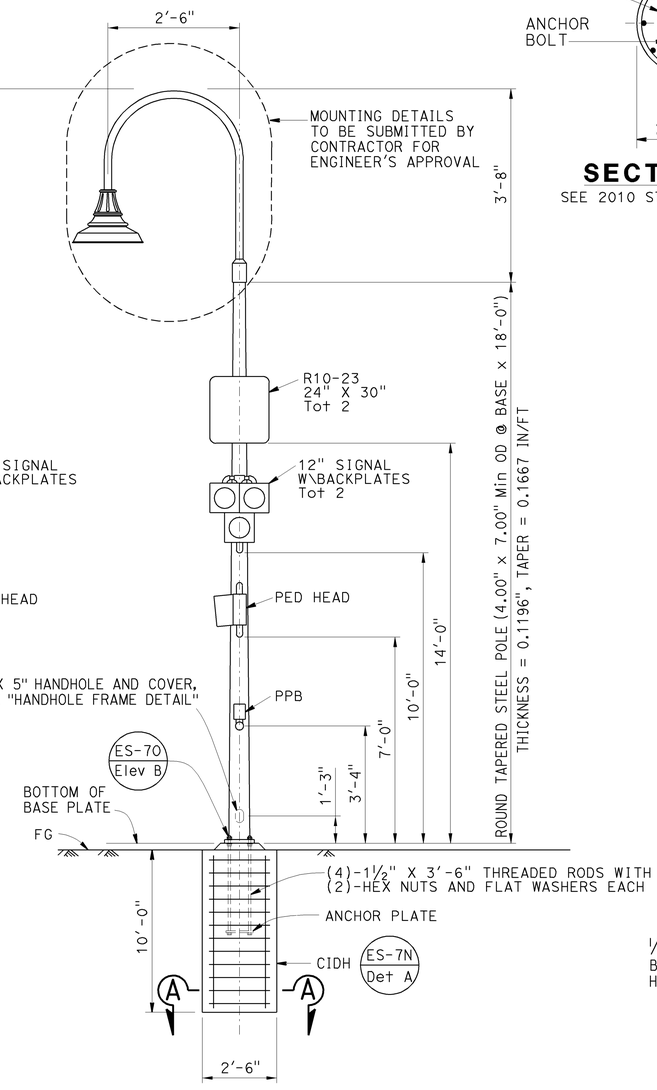

SIDE VIEW
POLE C700 & C701

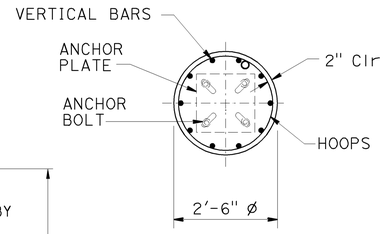

SECTION A-A
SEE 2010 STANDARD PLAN ES-7N

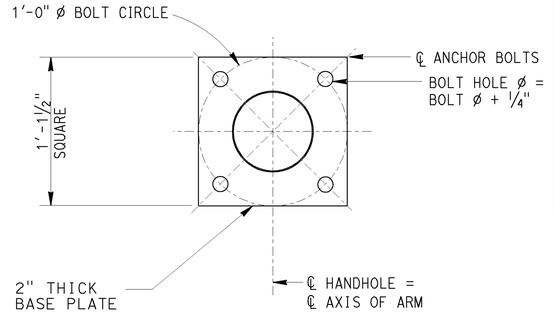

BASE PLATE

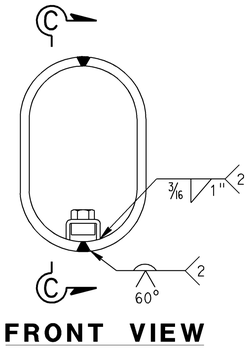

FRONT VIEW

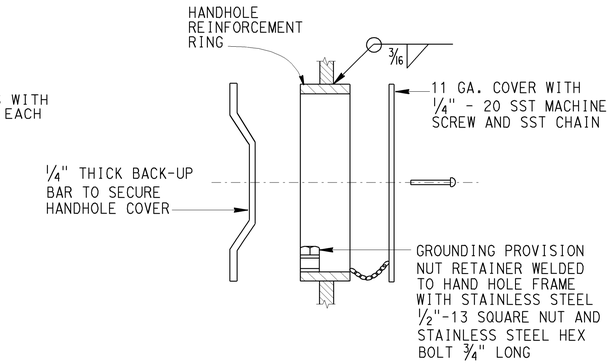

SECTION C-C
HAND HOLE FRAME DETAIL

GENERAL NOTES

SPECIFICATIONS

DESIGN : AASHTO Standard Specifications for structural supports for Highway Signs, Luminaires and Traffic Signals, Fifth Edition.

LOADING

Wind Loadings (3 sec gust) : 100 mph

UNIT STRESSES

Structural Steel : f_y = 55,000 psi (tapered steel tube and anchor boltas)
f_y = 50,000 psi (unless otherwise noted)
Reinforced Concrete : f'_c = 3,600 psi
f_y = 60,000 psi

NOTES:

1. For pole location see "Electrical Plans".
2. All steel shall be galvanized after fabrication.
3. During pole erection, the post shall be raked as necessary with the use of leveling nuts to provide a plumb pole axis.
4. Foundation design is based on AASHTO LTS-5 article 13.6 Broms' approximate procedure assuming a cohesionless material. The angle of internal friction used is 30 degrees and unit weight of soil used is 120 lbs/ft^2.
5. Pole Color shall be Federal Standard 595 Color No. 30045.
6. Decorative lamp shall not weigh more than 50 lbs and not have an effective pressure area greater than 2.5 ft^2.
7. All attachments, unless otherwise noted, shall be mounted to pole with stainless steel straps or other method without drilling holes in pole.
8. For details not shown, see "2010 Standard Plans".

NOTE:
THE CONTRACTOR SHALL VERIFY ALL CONTROLLING FIELD DIMENSIONS BEFORE ORDERING OR FABRICATING ANY MATERIAL.

Standard Plan sheet number
Detail number

NO SCALE

BRANCH CHIEF JEFF WOODY

	BY	CHECKED
DESIGN	A. GUTIERREZ	E. LOPEZ
DETAILS	T. NGUYEN	A. GUTIERREZ
QUANTITIES	BY	CHECKED

STATE OF CALIFORNIA
DEPARTMENT OF TRANSPORTATION

DIVISION OF ENGINEERING SERVICES
DESIGN AND TECHNICAL SERVICES
SPECIAL DESIGNS BRANCH A

BRIDGE NO. N/A
POST MILE 11.14

DECORATIVE LIGHTING POLE
POLE MOUNTING DETAILS

SES-1

(ENGLISH) SPECIAL DESIGNS BRANCH BORDER SHEET (REV. 7-1-09)

ORIGINAL SCALE IN INCHES FOR REDUCED PLANS 0 1 2 3

UNIT: 3619
PROJECT NUMBER & PHASE: 0300000223-1
CONTRACT NO.: 03-1A8421

DISREGARD PRINTS BEARING EARLIER REVISION DATES →

REVISION DATES				SHEET	OF
4/17/13	9/30/13	10/4/13	7/26/13		

FILE => 2013sd\03-1a8421_ses1.dgn

USERNAME => s1129055 DATE PLOTTED => 12-FEB-2014 TIME PLOTTED => 10:43

M

Maint	MAINTENANCE
Max	MAXIMUM
MB	METAL BEAM
MBB	METAL BEAM BARRIER
MBGR	METAL BEAM GUARD RAILING
Med	MEDIAN
MGS	MIDWEST GUARDRAIL SYSTEM
MH	MANHOLE
Min	MINIMUM
Misc	MISCELLANEOUS
Misc I & S	MISCELLANEOUS IRON AND STEEL
Mkr	MARKER
Mod	MODIFIED, MODIFY
Mon	MONUMENT
MP	METAL PLATE
MPGR	METAL PLATE GUARD RAILING
MR	MOVEMENT RATING
MSE	MECHANICALLY STABILIZED EMBANKMENT
Mt	MOUNTAIN, MOUNT
Mtl	MATERIAL
MVP	MAINTENANCE VEHICLE PULLOUT

N

N	NORTH
NB	NORTHBOUND
No.	NUMBER (MUST HAVE PERIOD)
Nos.	NUMBERS (MUST HAVE PERIOD)
NPS	NOMINAL PIPE SIZE
NS	NEAR SIDE
NSP	NEW STANDARD PLAN
NTS	NOT TO SCALE

O

Oblr	OBLITERATE
OC	OVERCROSSING
OD	OUTSIDE DIAMETER
OF	OUTSIDE FACE
OG	ORIGINAL GROUND
OGAC	OPEN GRADED ASPHALT CONCRETE
OGFC	OPEN GRADED FRICTION COURSE
OH	OVERHEAD
OHWM	ORDINARY HIGH WATER MARK
O-O	OUT TO OUT
Opp	OPPOSITE
OSD	OVERSIDE DRAIN

P

P	PAGE
PAP	PERFORATED ALUMINUM PIPE
PB	PULL BOX
PC	POINT OF CURVATURE, PRECAST
PCC	POINT OF COMPOUND CURVE, PORTLAND CEMENT CONCRETE
PCMS	PORTABLE CHANGEABLE MESSAGE SIGN
PCP	PERFORATED CONCRETE PIPE, PRESTRESSED CONCRETE PIPE
PCVC	POINT OF COMPOUND VERTICAL CURVE
PEC	PERMIT TO ENTER AND CONSTRUCT
Ped	PEDESTRIAN
Ped OC	PEDESTRIAN OVERCROSSING
Ped UC	PEDESTRIAN UNDERCROSSING
Perm Mtl	PERMEABLE MATERIAL

P continued

PG	PROFILE GRADE
PI	POINT OF INTERSECTION
PJP	PARTIAL JOINT PENETRATION
Pkwy	PARKWAY
℄,PL	PLATE
P/L	PROPERTY LINE
PM	POST MILE, TIME FROM NOON TO MIDNIGHT
PN	PAVING NOTCH
POC	POINT OF HORIZONTAL CURVE
POT	POINT OF TANGENT
POVC	POINT OF VERTICAL CURVE
PP	PIPE PILE, PLASTIC PIPE, POWER POLE
PPL	PREFORMED PERMEABLE LINER
PPP	PERFORATED PLASTIC PIPE
PRC	POINT OF REVERSE CURVE
PRF	PAVEMENT REINFORCING FABRIC
PRVC	POINT OF REVERSE VERTICAL CURVE
PS&E	PLANS, SPECIFICATIONS AND ESTIMATES
PS, P/S	PRESTRESSED
PSP	PERFORATED STEEL PIPE
PT	POINT OF TANGENCY
PVC	POLYVINYL CHLORIDE
Pvmt	PAVEMENT

Q

Qty	QUANTITY

R

R	RADIUS
R & D	REMOVE AND DISPOSE
R & S	REMOVE AND SALVAGE
R/C	RATE OF CHANGE
RCA	REINFORCED CONCRETE ARCH
RCB	REINFORCED CONCRETE BOX
RCP	REINFORCED CONCRETE PIPE
RCPA	REINFORCED CONCRETE PIPE ARCH
Rd	ROAD
Reinf	REINFORCED, REINFORCEMENT, REINFORCING
Rel	RELOCATE
Repl	REPLACEMENT
Ret	RETAINING
Rev	REVISED, REVISION
Rdwy	ROADWAY
RHMA	RUBBERIZED HOT MIX ASPHALT
Riv	RIVER
RM	ROAD-MIXED
RP	RADIUS POINT, REFERENCE POINT
RR	RAILROAD
RSP	ROCK SLOPE PROTECTION, REVISED STANDARD PLAN
Rt	RIGHT
Rte	ROUTE
RW	REDWOOD, RETAINING WALL
R/W	RIGHT OF WAY
Rwy	RAILWAY

S

S	SOUTH, SUPPLEMENT
SAE	STRUCTURE APPROACH EMBANKMENT
Salv	SALVAGE
SAPP	STRUCTURAL ALUMINUM PLATE PIPE
SB	SOUTHBOUND
SC	SAND CUSHION
SCSP	SLOTTED CORRUGATED STEEL PIPE
SD	STORM DRAIN
Sec	SECOND, SECTION
Sep	SEPARATION
SG	SUBGRADE
Shld	SHOULDER
Sht	SHEET
Sim	SIMILAR
℄	STATION LINE
SM	SELECTED MATERIAL
Spec	SPECIAL, SPECIFICATIONS
SPP	SLOTTED PLASTIC PIPE
SS	SLOPE STAKE
SSBM	STRAP AND SADDLE BRACKET METHOD
SSD	STRUCTURAL SECTION DRAIN
SSPA	STRUCTURAL STEEL PLATE ARCH
SSPP	STRUCTURAL STEEL PLATE PIPE
SSPPA	STRUCTURAL STEEL PLATE PIPE ARCH
SSRP	STEEL SPIRAL RIB PIPE
St	STREET
Sta	STATION
STBB	SINGLE THRIE BEAM BARRIER
Std	STANDARD
Str	STRUCTURE
Surf	SURFACING
SW	SIDEWALK, SOUND WALL
Swr	SEWER
Sym	SYMMETRICAL
S4S	SURFACE 4 SIDES

T

T	SEMI-TANGENT
Tan	TANGENT
TBB	THRIE BEAM BARRIER
Tbr	TIMBER
TC	TOP OF CURB
TCB	TRAFFIC CONTROL BOX
TCE	TEMPORARY CONSTRUCTION EASEMENT
Tel	TELEPHONE
Temp	TEMPORARY
TG	TOP OF GRADE
Tot	TOTAL
TP	TELEPHONE POLE
TPB	TREATED PERMEABLE BASE
TPM	TREATED PERMEABLE MATERIAL
Trans	TRANSITION

T continued

TS	TRANSVERSE, TRAFFIC SIGNAL, TUBULAR STEEL
Typ	TYPICAL

U

UC	UNDERCROSSING
UD	UNDERDRAIN
UG	UNDERGROUND
UON	UNLESS OTHERWISE NOTED
UP	UNDERPASS

V

V	VALVE, DESIGN SPEED
Var	VARIABLE, VARIES
VC	VERTICAL CURVE
VCP	VITRIFIED CLAY PIPE
Vert	VERTICAL
Via	VIADUCT
Vol	VOLUME

W

W	WEST, WIDTH
WB	WESTBOUND
WH	WEEP HOLE
WM	WIRE MESH
WS	WATER SURFACE
WSP	WELDED STEEL PIPE
Wt	WEIGHT
WV	WATER VALVE
WW	WINGWALL
WWLOL	WINGWALL LAYOUT LINE

X

X Sec	CROSS SECTION
Xing	CROSSING

Y

Yr	YEAR
Yrs	YEARS

Dist	COUNTY	ROUTE	POST MILES TOTAL PROJECT	SHEET No.	TOTAL SHEETS
03	ED	89	8.6/13.8	199	231

Grace M. Tsushima
REGISTERED CIVIL ENGINEER

July 19, 2013
PLANS APPROVAL DATE

REGISTERED PROFESSIONAL ENGINEER — Grace M. Tsushima — No. C49814 — Exp. 9-30-14 — CIVIL — STATE OF CALIFORNIA

THE STATE OF CALIFORNIA OR ITS OFFICERS OR AGENTS SHALL NOT BE RESPONSIBLE FOR THE ACCURACY OR COMPLETENESS OF SCANNED COPIES OF THIS PLAN SHEET.

TO ACCOMPANY PLANS DATED 11-18-13

UNIT OF MEASUREMENT SYMBOLS:

Some of the symbols used in the project plan quantity tables and in the Bid Item List are:

TABLE A

SYMBOL USED	DEFINITIONS
ACRE	ACRE
CF	CUBIC FOOT
CY	CUBIC YARD
EA	EACH
GAL	GALLON
LB	POUND
LF	LINEAR FOOT
SQFT	SQUARE FOOT
SQYD	SQUARE YARD
STA	100 FEET
TAB	TABLET
TON	2,000 POUNDS

Some of the symbols used in the plans other than in the project plan quantity tables are:

TABLE B

SYMBOL USED	DEFINITIONS
ksi	KIPS PER SQUARE INCH
ksf	KIPS PER SQUARE FOOT
psi	POUNDS PER SQUARE INCH
psf	POUNDS PER SQUARE FOOT
lb/ft^3, pcf	POUNDS PER CUBIC FOOT
tsf	TONS PER SQUARE FOOT
mph, MPH *	MILES PER HOUR
ø	NOMINAL DIAMETER
oz	OUNCE
lb	POUND
kip	1,000 POUNDS
cal	CALORIE
ft	FOOT OR FEET
gal	GALLON

* For use on a sign panel only

STATE OF CALIFORNIA
DEPARTMENT OF TRANSPORTATION

ABBREVIATIONS (SHEET 2 OF 2)

NO SCALE

RSP A10B DATED JULY 19, 2013 SUPERSEDES STANDARD PLAN A10B DATED MAY 20, 2011 - PAGE 2 OF THE STANDARD PLANS BOOK DATED 2010.

REVISED STANDARD PLAN RSP A10B

2010 REVISED STANDARD PLAN RSP A10B

6-7-13

Dist	COUNTY	ROUTE	POST MILES TOTAL PROJECT	SHEET No.	TOTAL SHEETS
03	ED	89	8.6/13.8	200	231

Roberta L. McLaughlin
REGISTERED CIVIL ENGINEER

April 20, 2012
PLANS APPROVAL DATE

REGISTERED PROFESSIONAL ENGINEER
Roberta L. McLaughlin
No. C40375
Exp. 3-31-13
CIVIL
STATE OF CALIFORNIA

THE STATE OF CALIFORNIA OR ITS OFFICERS OR AGENTS SHALL NOT BE RESPONSIBLE FOR THE ACCURACY OR COMPLETENESS OF SCANNED COPIES OF THIS PLAN SHEET.

TO ACCOMPANY PLANS DATED 11-18-13

2010 REVISED STANDARD PLAN RSP A24A

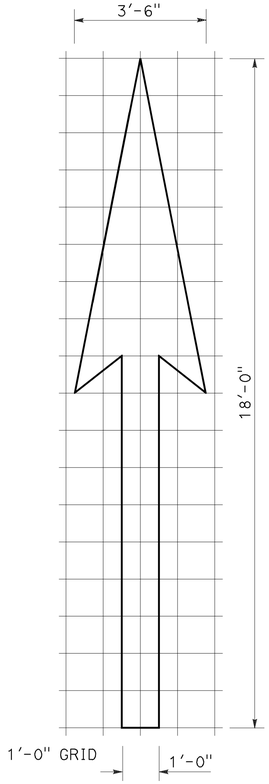

A=25 ft²

TYPE I 18'-0" ARROW

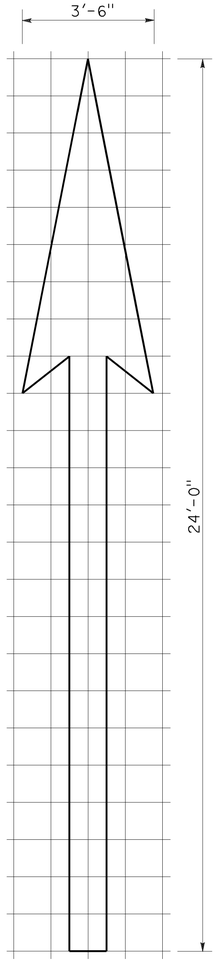

A=31 ft²

TYPE I 24'-0" ARROW

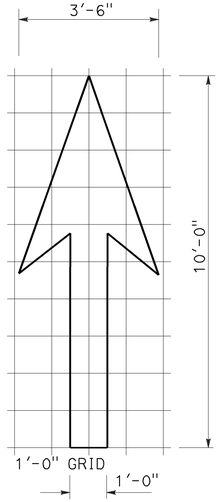

A=14 ft²

TYPE I 10'-0" ARROW

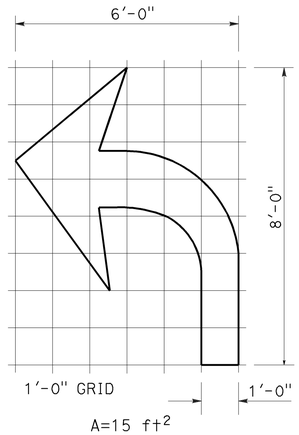

A=15 ft²

TYPE IV (L) ARROW

(For Type IV (R) arrow, use mirror image)

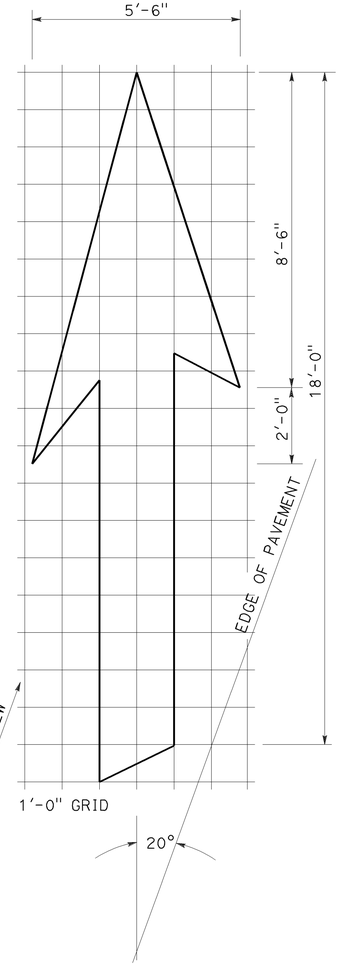

A=42 ft²

TYPE VI ARROW

Right lane drop arrow (For left lane, use mirror image)

A=3.5 ft²

BIKE LANE ARROW

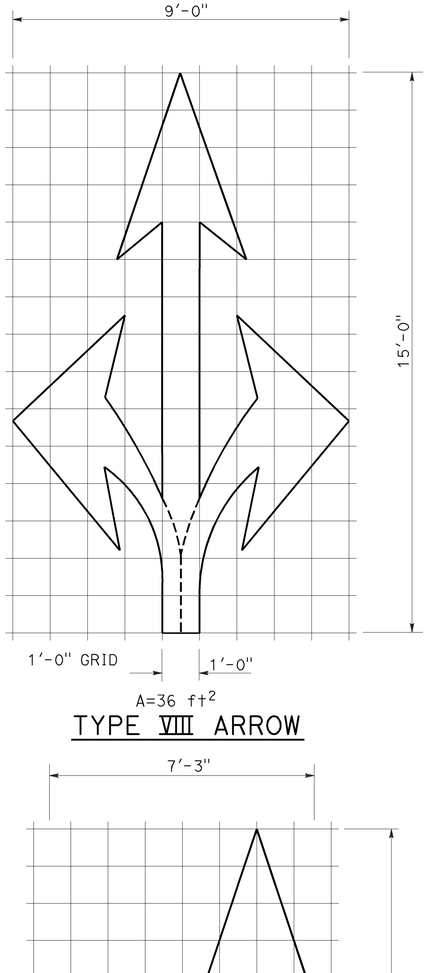

A=36 ft²

TYPE VIII ARROW

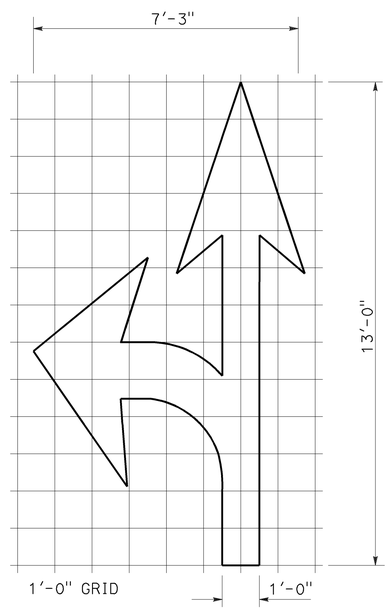

A=27 ft²

TYPE VII (L) ARROW

(For Type VII (R) arrow, use mirror image)

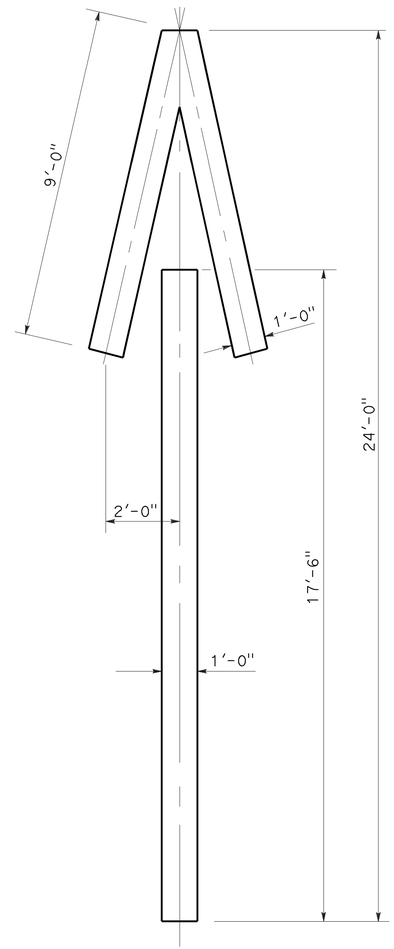

A=33 ft²

TYPE V ARROW

NOTE:
Minor variations in dimensions may be accepted by the Engineer.

STATE OF CALIFORNIA
DEPARTMENT OF TRANSPORTATION

PAVEMENT MARKINGS ARROWS

NO SCALE

RSP A24A DATED APRIL 20, 2012 SUPERSEDES STANDARD PLAN A24A DATED MAY 20, 2011 - PAGE 13 OF THE STANDARD PLANS BOOK DATED 2010.

REVISED STANDARD PLAN RSP A24A

3-14-12

Dist	COUNTY	ROUTE	POST MILES TOTAL PROJECT	SHEET No.	TOTAL SHEETS
03	ED	89	8.6/13.8	201	231

Roberta L. McLaughlin
REGISTERED CIVIL ENGINEER

July 20, 2012
PLANS APPROVAL DATE

REGISTERED PROFESSIONAL ENGINEER
Roberta L. McLaughlin
No. C40375
Exp. 3-31-13
CIVIL
STATE OF CALIFORNIA

THE STATE OF CALIFORNIA OR ITS OFFICERS OR AGENTS SHALL NOT BE RESPONSIBLE FOR THE ACCURACY OR COMPLETENESS OF SCANNED COPIES OF THIS PLAN SHEET.

TO ACCOMPANY PLANS DATED 11-18-13

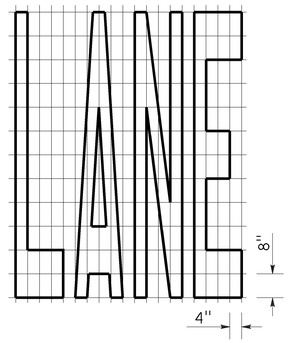

A=24 ft²

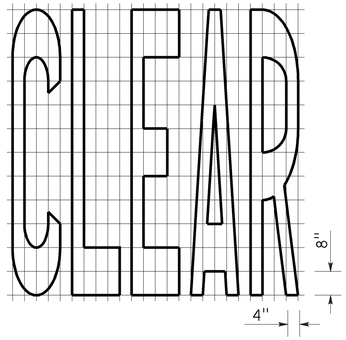

A=27 ft²

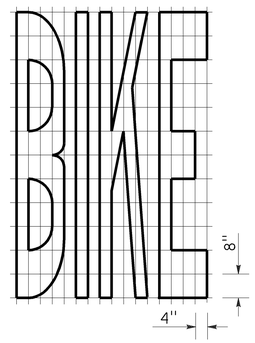

A=21 ft²

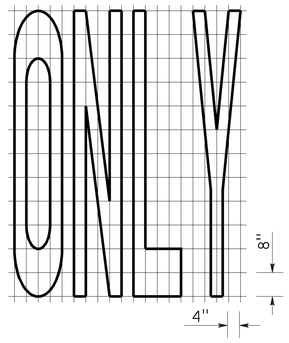

A=22 ft²

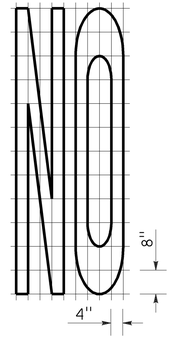

A=14 ft²

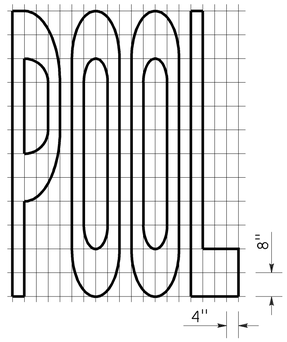

A=23 ft²

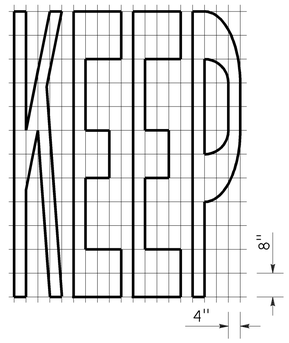

A=24 ft²

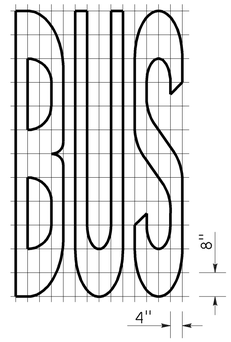

A=20 ft²

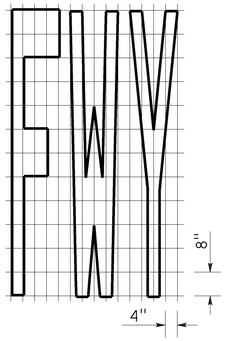

A=16 ft²

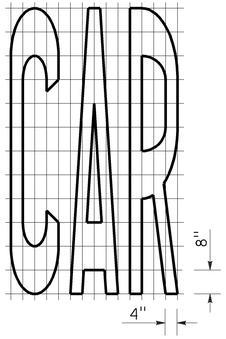

A=17 ft²

WORD MARKINGS			
ITEM	ft²	ITEM	ft²
LANE	24	NO	14
POOL	23	BIKE	21
CAR	17	BUS	20
CLEAR	27	ONLY	22
KEEP	24	FWY	16

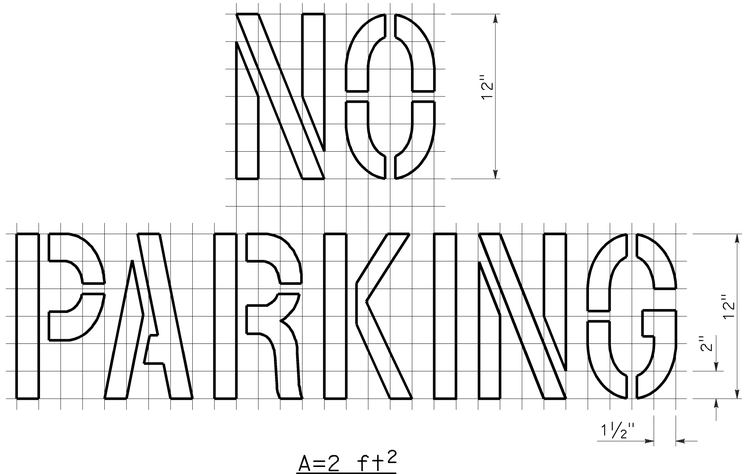

A=2 ft²
See Notes 6 and 7

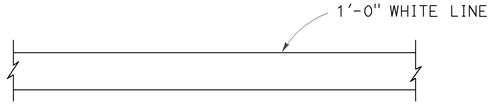

LIMIT LINE (STOP LINE)

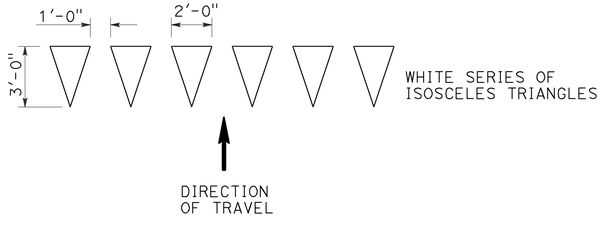

YIELD LINE

NOTES:

1. If a message consists of more than one word, it should read "UP", i.e., the first word should be nearest the driver.
2. The space between words should be at least four times the height of the characters for low speed roads, but not more than ten times the height of the characters. The space may be reduced appropriately where there is limited space because of local conditions.
3. Minor variations in dimensions may be accepted by the Engineer.
4. Portions of a letter, number or symbol may be separated by connecting segments not to exceed 2" in width.
5. The words "NO PARKING" pavement marking is to be used for parking facilities. For typical locations of markings, see Standard Plans A90A and A90B.
6. The words "NO PARKING", shall be painted in white letters no less than 1'-0" high on a contrasting background and located so that it is visible to traffic enforcement officials.

STATE OF CALIFORNIA
DEPARTMENT OF TRANSPORTATION

PAVEMENT MARKINGS
WORDS, LIMIT AND YIELD LINES

NO SCALE

RSP A24E DATED JULY 20, 2012 SUPERSEDES STANDARD PLAN A24E
DATED MAY 20, 2011 - PAGE 17 OF THE STANDARD PLANS BOOK DATED 2010.

REVISED STANDARD PLAN RSP A24E

2010 REVISED STANDARD PLAN RSP A24E

6-12-12

Dist	COUNTY	ROUTE	POST MILES TOTAL PROJECT	SHEET No.	TOTAL SHEETS
03	ED	89	8.6/13.8	202	231

REGISTERED CIVIL ENGINEER

July 19, 2013
PLANS APPROVAL DATE

Michael Janzen No. 44788 Exp. 03-31-14 CIVIL — REGISTERED PROFESSIONAL ENGINEER — STATE OF CALIFORNIA

THE STATE OF CALIFORNIA OR ITS OFFICERS OR AGENTS SHALL NOT BE RESPONSIBLE FOR THE ACCURACY OR COMPLETENESS OF SCANNED COPIES OF THIS PLAN SHEET.

TO ACCOMPANY PLANS DATED 11-18-13

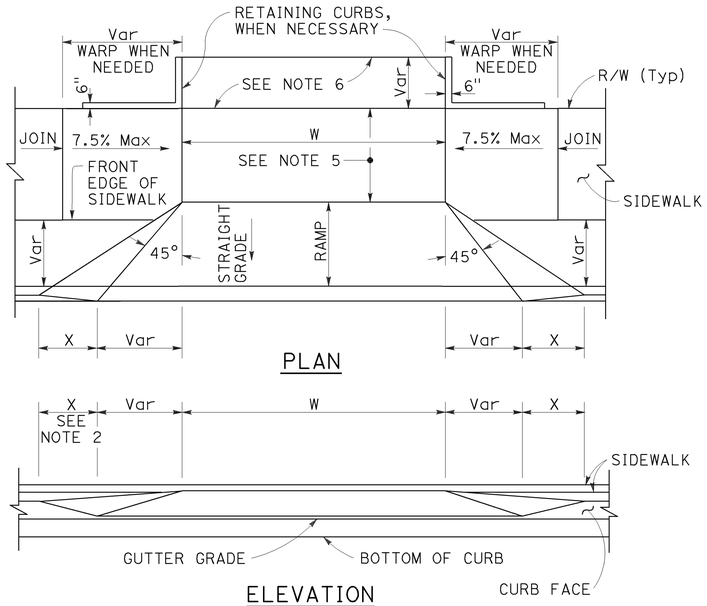

PLAN

ELEVATION

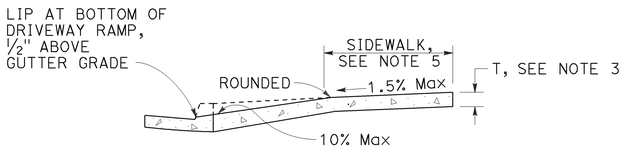

CASE A

Typical driveway, sidewalk not depressed

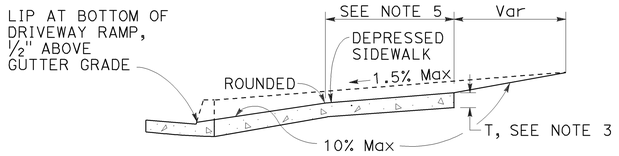

CASE B

Driveway with depressed sidewalk

SECTIONS

TABLE A

CURB TYPE	DIMENSIONS			
	"H1"	"H2"	"W1"	"W2"
A1-6	1′-2"	6"	7½"	1½"
A1-8	1′-4"	8"	8"	2"
A2-6	1′-0"	6"	2′-7½"	1½"
A2-8	1′-2"	8"	2′-8"	2"
A3-6	6"	5"	7¼"	1¼"
A3-8	8"	7"	7¾"	1¾"
B1-4	1′-0"	4"	7½"	2½"
B1-6	1′-2"	6"	9"	4"
B2-4	10"	4"	2′-7½"	2½"
B2-6	1′-0"	6"	2′-9"	4"
B3-4	4"	3"	7"	2"
B3-6	6"	5"	8½"	3½"
D-4	10"	4"	1′-6"	1′-1"
D-6	1′-0"	6"	2′-2"	1′-9"

CURB QUANTITIES

TYPE	CUBIC YARDS PER LINEAR FOOT
A1-6	0.02585
A1-8	0.03084
A2-6	0.05903
A2-8	0.06379
A3-6	0.01036
A3-8	0.01435
B1-4	0.02185
B1-6	0.02930
B2-4	0.05515
B2-6	0.06171
B3-4	0.00641
B3-6	0.01074
B4	0.05709
D-4	0.04083
D-6	0.06804
E	0.06661

DRIVEWAYS

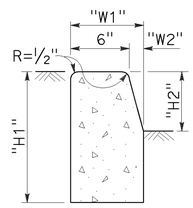

TYPE A1 CURBS

See Table A

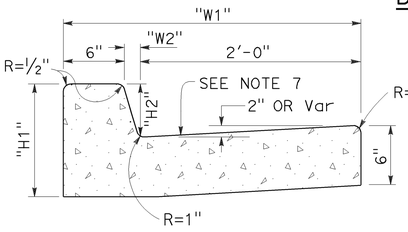

TYPE A2 CURBS

See Table A

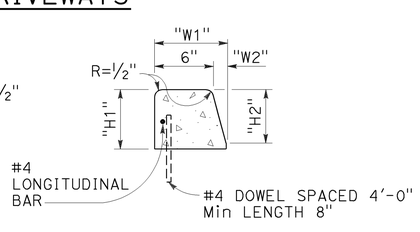

TYPE A3 CURBS

Superimposed on existing pavement
See Table A

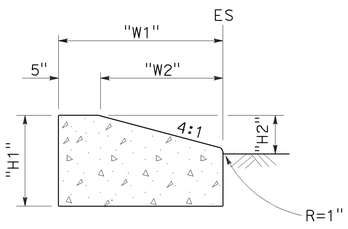

TYPE D CURBS

See Table A

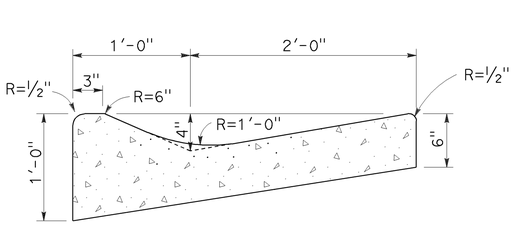

TYPE E CURB

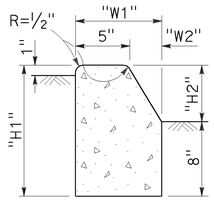

TYPE B1 CURBS

See Table A

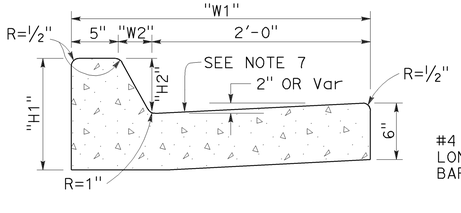

TYPE B2 CURBS

See Table A

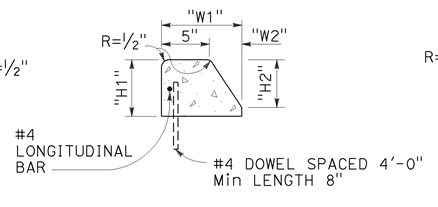

TYPE B3 CURBS

Superimposed on existing pavement
See Table A

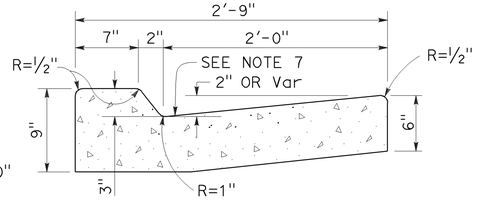

TYPE B4 CURBS

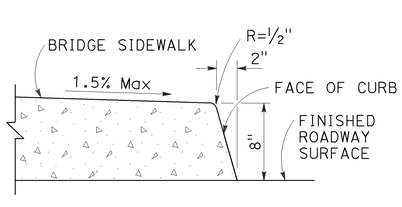

TYPE H CURB

On Bridges

CURBS

NOTES:

1. Case A driveway section typically applies.
2. X=3′-0" except for curb heights over 10" where 4:1 slopes shall be used on curb slope.
3. Sidewalk and ramp thickness "T" at driveway shall be 4" for residental and 6" for commercial.
4. Difference in slope of the driveway ramp and the slope of a line between the gutter and a point on the roadway 5′-0" from gutter line shall not exceed 15%. Reduce driveway ramp slope, not gutter slope, where required.
5. Minimum width of clear passageway for sidewalk shall be 4′-2".
6. Retaining curbs and acquisition of construction easement may be necessary for narrow sidewalks or curb heights in excess of 6".
7. Across the pedestrian route at curb ramp locations, the gutter pan slope shall not exceed 1" of depth for each 2′-0" of width.

STATE OF CALIFORNIA
DEPARTMENT OF TRANSPORTATION

CURBS AND DRIVEWAYS

NO SCALE

RSP A87A DATED JULY 19, 2013 SUPERSEDES STANDARD PLAN A87A
DATED MAY 20, 2011 - PAGE 119 OF THE STANDARD PLANS BOOK DATED 2010.

REVISED STANDARD PLAN RSP A87A

2010 REVISED STANDARD PLAN RSP A87A

7-8-13

Dist	COUNTY	ROUTE	POST MILES TOTAL PROJECT	SHEET No.	TOTAL SHEETS
03	ED	89	8.6/13.8	203	231

REGISTERED CIVIL ENGINEER

July 19, 2013
PLANS APPROVAL DATE

Michael Janzen
No. 44788
Exp. 03-31-14
CIVIL
REGISTERED PROFESSIONAL ENGINEER
STATE OF CALIFORNIA

THE STATE OF CALIFORNIA OR ITS OFFICERS OR AGENTS SHALL NOT BE RESPONSIBLE FOR THE ACCURACY OR COMPLETENESS OF SCANNED COPIES OF THIS PLAN SHEET.

TO ACCOMPANY PLANS DATED 11-18-13

2010 REVISED STANDARD PLAN RSP A87B

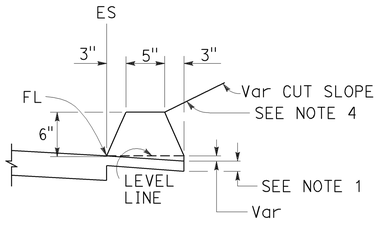

TYPE A
See Note 3

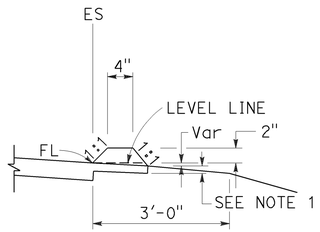

TYPE C

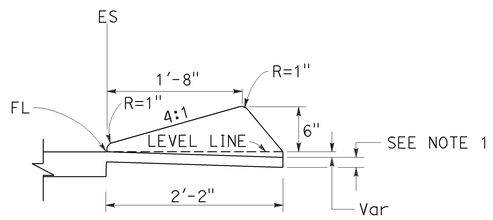

TYPE D

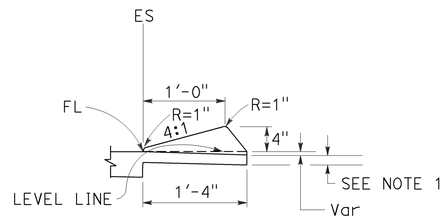

TYPE E

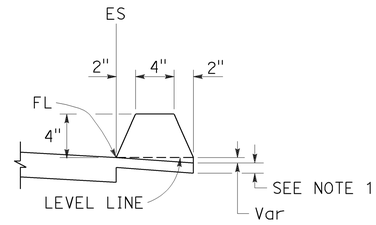

TYPE F
See Note 5

DIKES

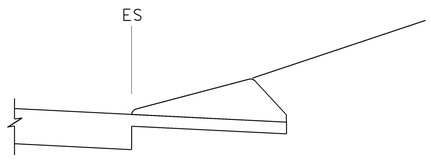

CASE C-1
Cut Slope

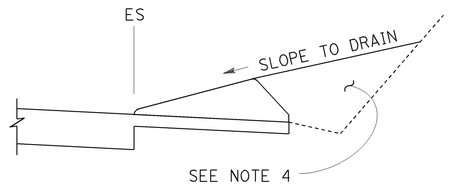

CASE C-2
Cut Slope

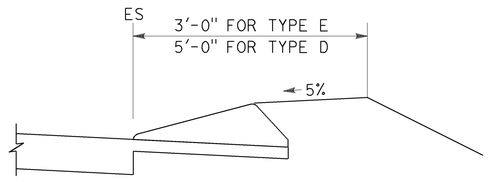

CASE F

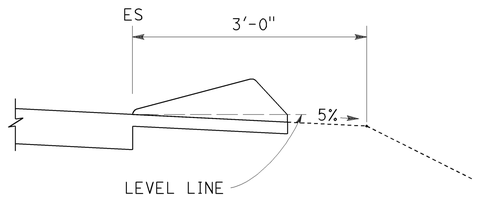

CASE R
See Note 2

TYPE D AND E BACKFILL DETAILS

NOTES:

1. For HMA shoulders only, extend top layer of HMA placed on the shoulder under dike with no joint at the ES. For projects with OGFC shoulders, do not extend OGFC under dike. See project plans for modified dike detail.
2. Case R applies to retrofit only projects where restrictive conditions do not provide enough width for Case F backfill.
3. Type A dike only to be used where restrictive slope conditions do not provide enough width to use Type D or Type E dike.
4. Fill and compact with excavated material to top of dike.
5. Use Type F dike, where dike is required with guard railing installations. See Revised Standard Plan RSP A77N4 for dike positioning details.

DIKE QUANTITIES

TYPE	CUBIC YARDS PER LINEAR FOOT
A	0.0135
C	0.0038
D	0.0293
E	0.0130
F	0.0066

Quantities based on 5% cross slope.

STATE OF CALIFORNIA
DEPARTMENT OF TRANSPORTATION

HOT MIX ASPHALT DIKES

NO SCALE

RSP A87B DATED JULY 19, 2013 SUPERSEDES STANDARD PLAN A87B
DATED MAY 20, 2011 - PAGE 120 OF THE STANDARD PLANS BOOK DATED 2010.

REVISED STANDARD PLAN RSP A87B

6-27-13

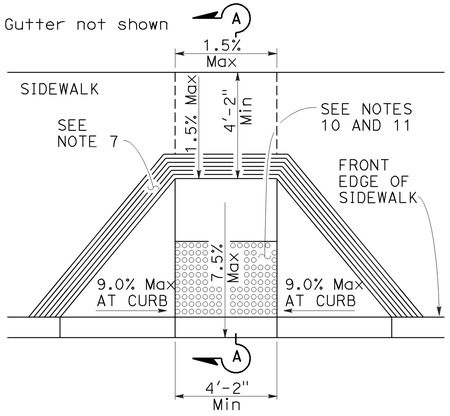

CASE A

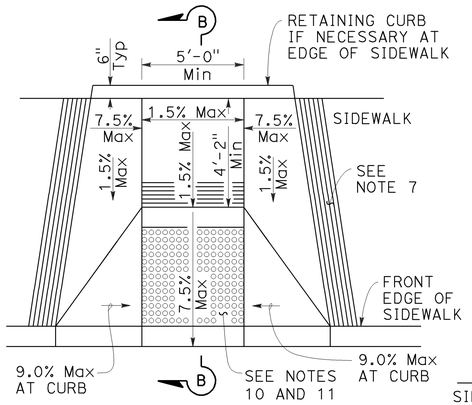

CASE B

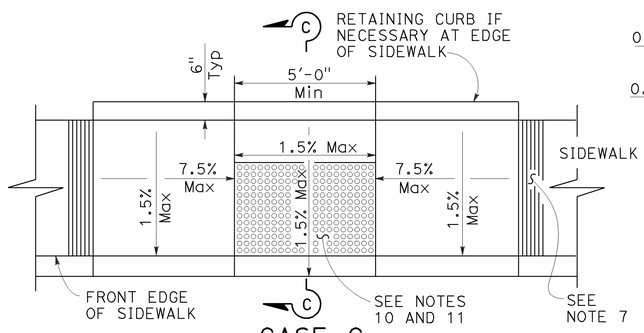

CASE C

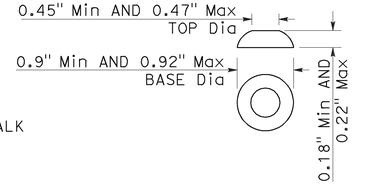

RAISED TRUNCATED DOME

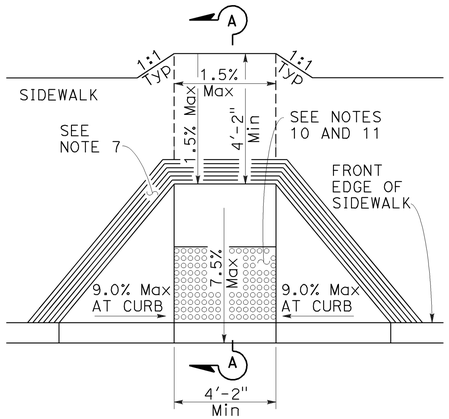

CASE D

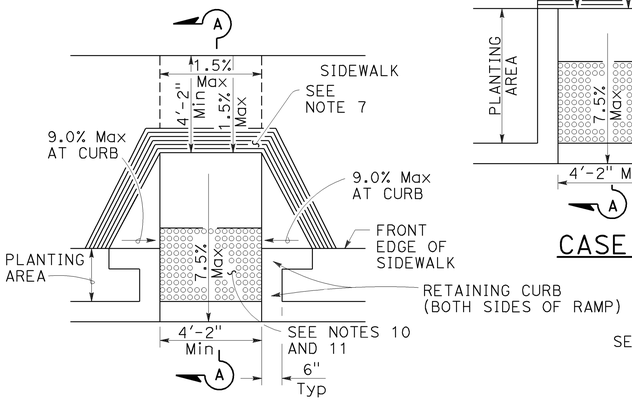

CASE E

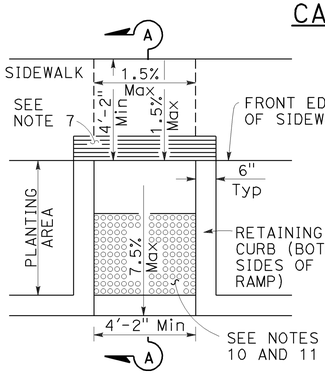

CASE F

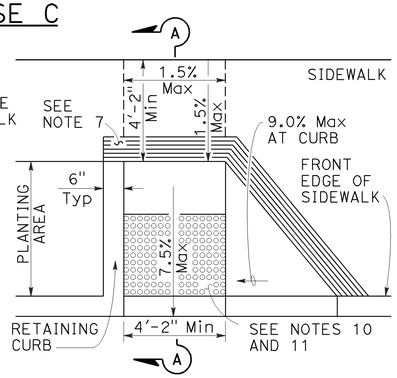

CASE G
See Note 4

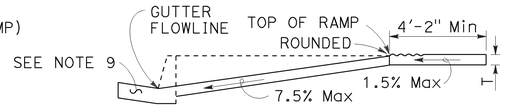

SECTION A-A

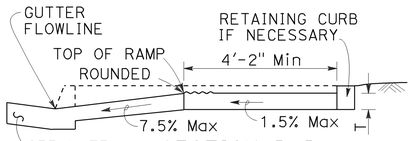

SECTION B-B

Depress entire sidewalk as required

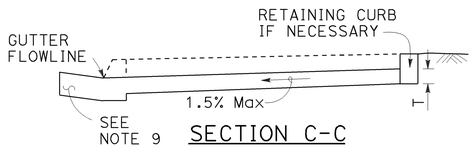

SECTION C-C

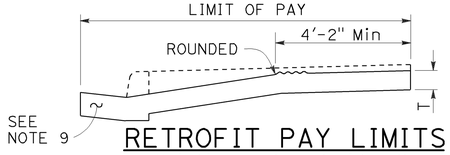

RETROFIT PAY LIMITS

Existing curb and sidewalk

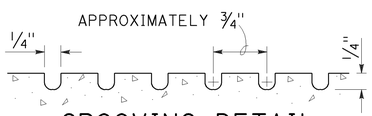

GROOVING DETAIL

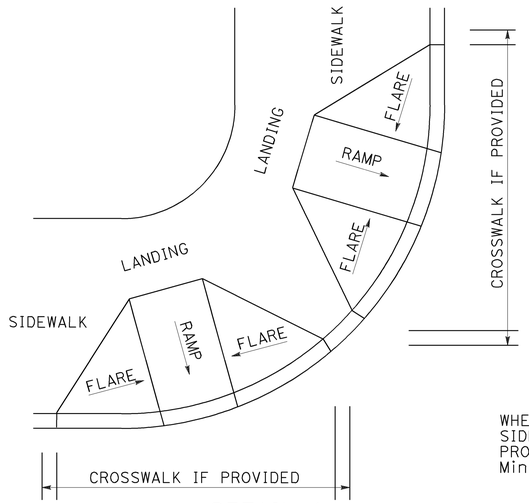

DETAIL A

TYPICAL TWO-RAMP CORNER INSTALLATION

See Note 1

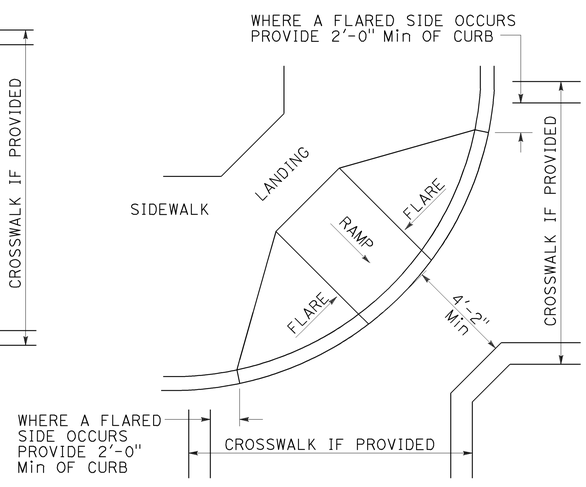

DETAIL B

TYPICAL ONE-RAMP CORNER INSTALLATION

See Notes 1 and 3

Dist	COUNTY	ROUTE	POST MILES TOTAL PROJECT	SHEET No.	TOTAL SHEETS
03	ED	89	8.6/13.8	204	231

REGISTERED CIVIL ENGINEER

Hector David Cordova No. C41957 Exp. 3-31-14 CIVIL — REGISTERED PROFESSIONAL ENGINEER — STATE OF CALIFORNIA

July 19, 2013

PLANS APPROVAL DATE

THE STATE OF CALIFORNIA OR ITS OFFICERS OR AGENTS SHALL NOT BE RESPONSIBLE FOR THE ACCURACY OR COMPLETENESS OF SCANNED COPIES OF THIS PLAN SHEET.

TO ACCOMPANY PLANS DATED 11-18-13

NOTES:

1. As site conditions dictate, Case A through Case G curb ramps may be used for corner installations similar to those shown in Detail A and Detail B. The case of curb ramps used in Detail A do not have to be the same. Case A through Case G curb ramps also may be used at mid block locations, as site conditions dictate.
2. If distance from curb to back of sidewalk is too short to accommodate ramp and 4'-2" platform (landing) as shown in Case A, the sidewalk may be depressed longitudinally as in Case B, or C or may be widened as in Case D.
3. When ramp is located in center of curb return, crosswalk configuration must be similar to that shown for Detail B.
4. As site conditions dictate, the retaining curb side and the flared side of the Case G ramp shall be constructed in reversed position.
5. If located on a curve, the sides of the ramp need not be parallel, but the minimum width of the ramp shall be 4'-2".
6. Side slope of ramp flares vary uniformly from a maximum of 9.0% at curb to conform with longitudinal sidewalk slope adjacent to top of the ramp, except in Case C and Case F.
7. The curb ramp shall be outlined, as shown, with a 1'-0" wide border with 1/4" grooves approximately 3/4" on center. See grooving detail.
8. Transitions from ramps and landing to walks, gutters or streets shall be flush (no lip) and free of abrupt changes.
9. Counter slopes of adjoining gutters and road surfaces immediately adjacent to and within 24 inches of the curb ramp shall not be steeper than 1:20 (5.0%). Gutter pan slope shall not exceed 1" of depth for each 2'-0" of width.
10. Curb ramps shall have a detectable warning surface that extends the full width and 3'-0" depth of the ramp. Detectable Warning Surfaces shall conform to the details on this plan and the requirements in the Standard Specifications.
11. The edge of the detectable warning surface nearest the street shall be between 6" and 8" from the gutter flowline.
12. Sidewalk and ramp thickness, "T", shall be 3½" minimum.
13. Utility pull boxes, manholes, vaults and all other utility facilities within the boundaries of the curb ramp will be relocated or adjusted to grade by the owner prior to, or in conjunction with, curb ramp construction.
14. Detectable warning surface may have to be cut to allow removal of utility covers while maintaining full detectable warning width and depth.

RAISED TRUNCATED DOME PATTERN (IN-LINE)

DETECTABLE WARNING SURFACE

See Note 10

STATE OF CALIFORNIA
DEPARTMENT OF TRANSPORTATION

CURB RAMP DETAILS

NO SCALE

RSP A88A DATED JULY 19, 2013 SUPERSEDES STANDARD PLAN A88A DATED MAY 20, 2011 - PAGE 121 OF THE STANDARD PLANS BOOK DATED 2010.

REVISED STANDARD PLAN RSP A88A

2010 REVISED STANDARD PLAN RSP A88A

7-8-13

Gutter not shown

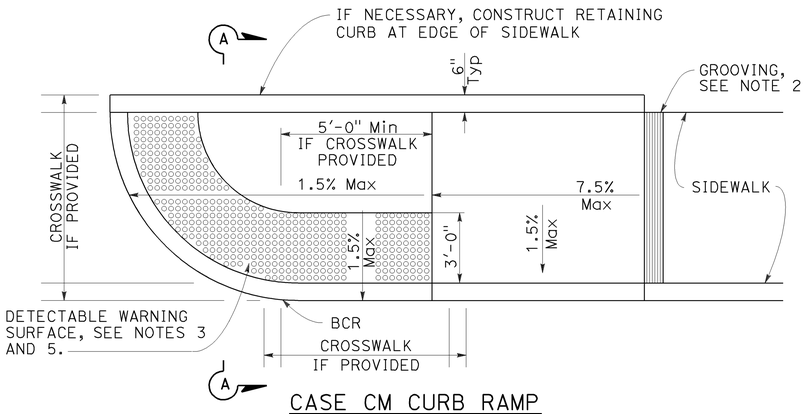

CASE CM CURB RAMP

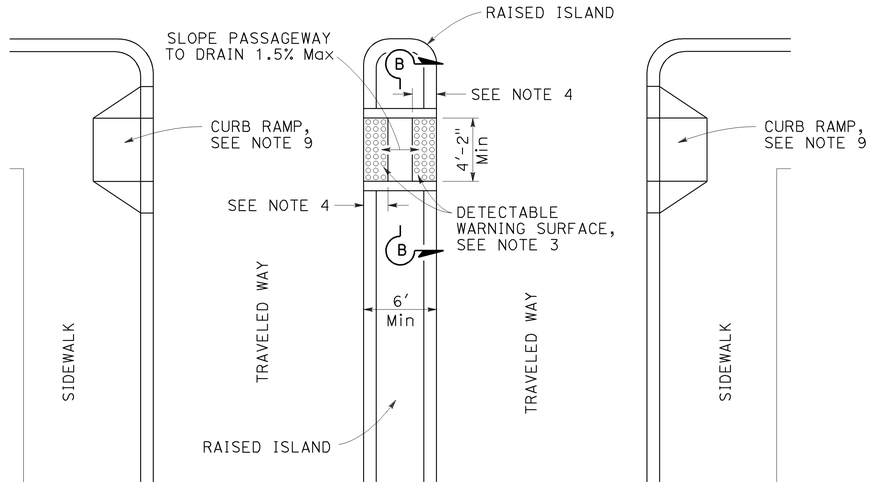

TYPE A PASSAGEWAY

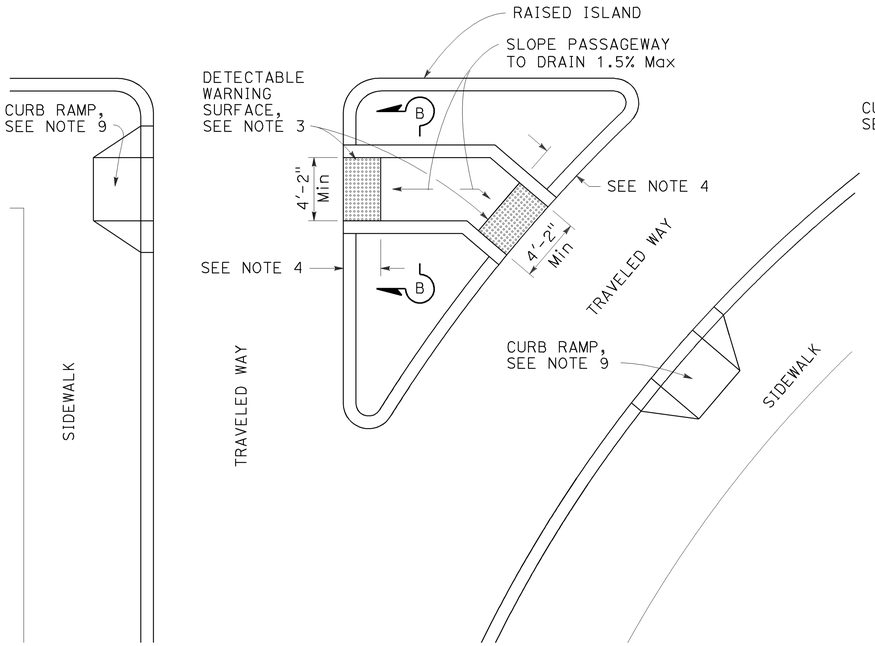

TYPE B PASSAGEWAY

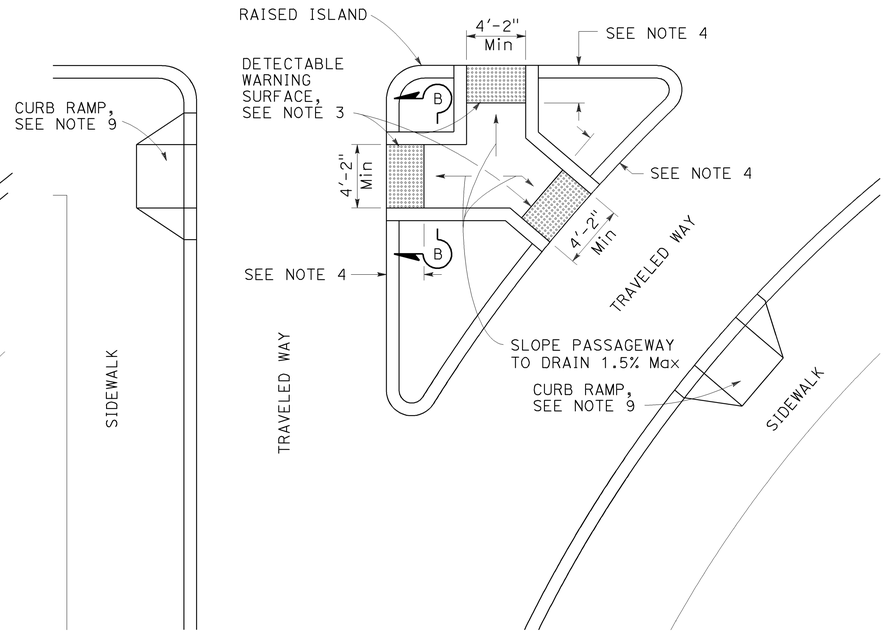

TYPE C PASSAGEWAY

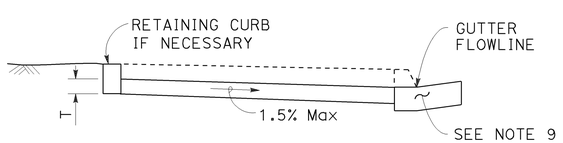

SECTION A-A

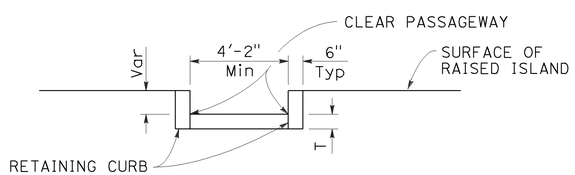

SECTION B-B

Dist	COUNTY	ROUTE	POST MILES TOTAL PROJECT	SHEET No.	TOTAL SHEETS
03	ED	89	8.6/13.8	205	231

REGISTERED CIVIL ENGINEER

July 19, 2013
PLANS APPROVAL DATE

REGISTERED PROFESSIONAL ENGINEER
Hector David Cordova
No. C41957
Exp. 3-31-14
CIVIL
STATE OF CALIFORNIA

THE STATE OF CALIFORNIA OR ITS OFFICERS OR AGENTS SHALL NOT BE RESPONSIBLE FOR THE ACCURACY OR COMPLETENESS OF SCANNED COPIES OF THIS PLAN SHEET.

TO ACCOMPANY PLANS DATED 11-18-13

NOTES:

1. Sidewalk, ramp and passageway thickness, "T", shall be 3½" minimum.
2. For details of grooving used with Case CM curb ramp, see Revised Standard Plan RSP A88A.
3. For details of detectable warning surfaces, see Revised Standard Plan RSP A88A.
4. Where an island passageway length is greater than or equal to 6'-0", but less than 8'-0", each detectable warning surface shall extend the full width and 2'-0" depth of the passageway length. Where an island passageway length is greater than or equal to 8'-0", each detectable warning surface shall extend the full width and 3'-0" depth of the passageway length.
5. For Case CM curb ramp, the edge of the detectable warning surface nearest the street shall be between 6" and 8" from the gutter flowline.
6. Transitions from ramps to walks, gutters or streets shall be flush (no lip) and free of abrupt changes.
7. Utility pull boxes, manholes, vaults and all other utility facilities within the boundaries of the curb ramp will be relocated or adjusted to grade by the owner prior to, or in conjunction with, curb ramp construction.
8. Detectable warning surface may have to be cut to allow removal of utility covers while maintaining full detectable warning width and depth.
9. For additional curb ramp details, see Revised Standard Plan RSP A88A.

STATE OF CALIFORNIA
DEPARTMENT OF TRANSPORTATION

CURB RAMP AND ISLAND PASSAGEWAY DETAILS

NO SCALE

RSP A88B DATED JULY 19, 2013 SUPERSEDES STANDARD PLAN A88B DATED MAY 20, 2011 - PAGE 122 OF THE STANDARD PLANS BOOK DATED 2010.

REVISED STANDARD PLAN RSP A88B

2010 REVISED STANDARD PLAN RSP A88B

6-25-13

DIST	COUNTY	ROUTE	POST MILES TOTAL PROJECT	SHEET No.	TOTAL SHEETS
03	ED	89	8.6/13.8	206	231

REGISTERED CIVIL ENGINEER

November 15, 2013
PLANS APPROVAL DATE

REGISTERED PROFESSIONAL ENGINEER
Cornelis M. Hakim
No. C55610
Exp. 12-31-14
CIVIL
STATE OF CALIFORNIA

THE STATE OF CALIFORNIA OR ITS OFFICERS OR AGENTS SHALL NOT BE RESPONSIBLE FOR THE ACCURACY OR COMPLETENESS OF SCANNED COPIES OF THIS PLAN SHEET.

TO ACCOMPANY PLANS DATED 11-18-13

ABBREVIATIONS:

SE SAFETY EDGE

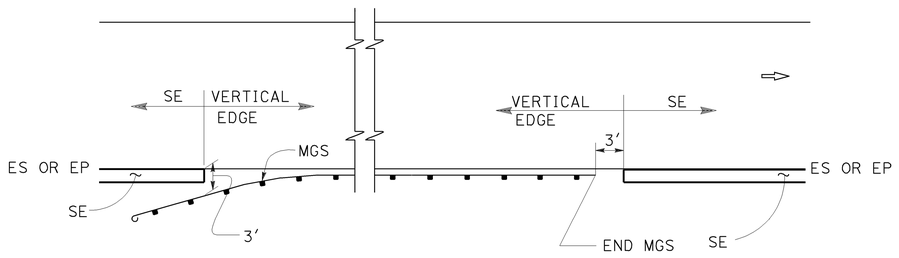

MGS

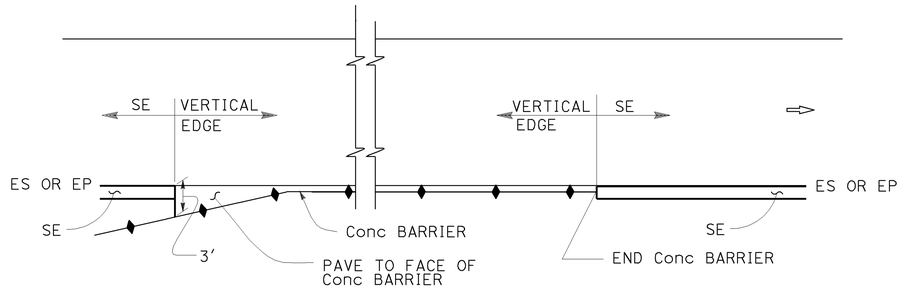

CONCRETE BARRIER

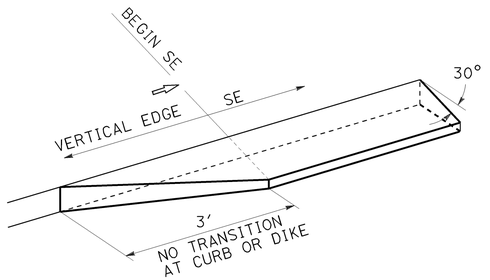

TRANSITION DETAIL
FOR CONCRETE ONLY

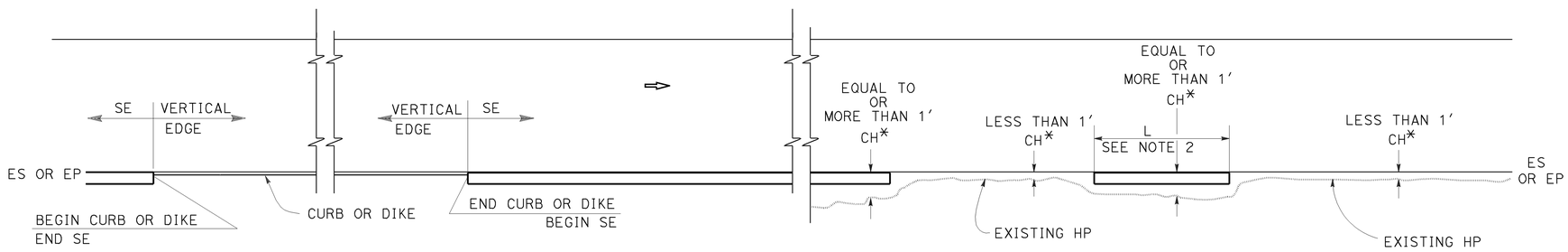

CURB OR DIKE

NARROW SIDE SLOPE

* CH = Distance from ES or EP to existing HP.

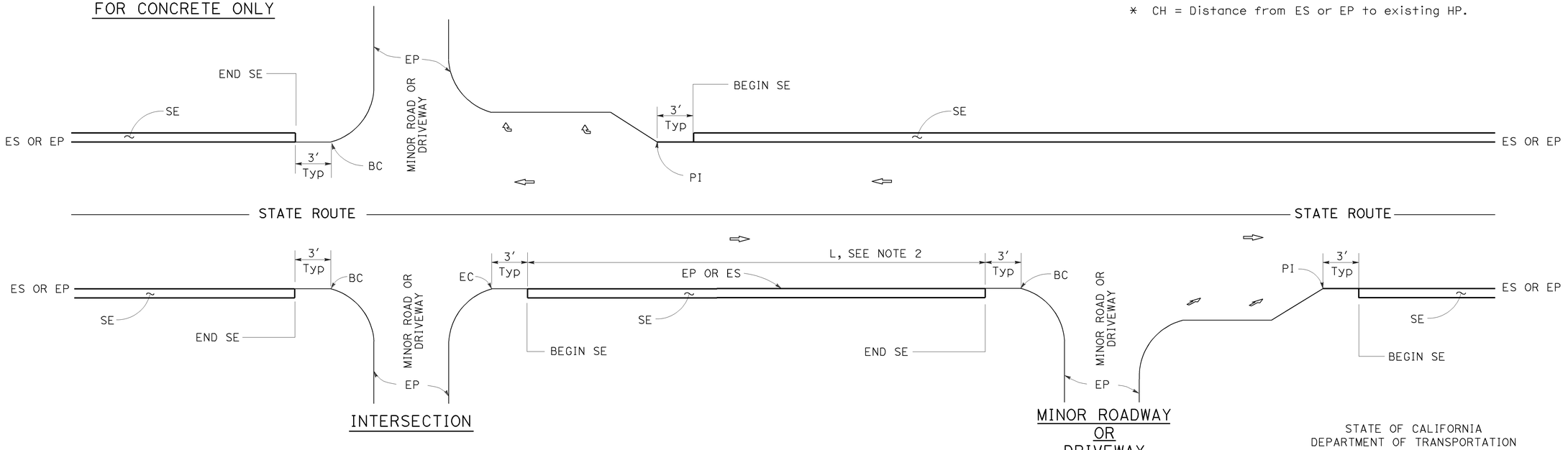

INTERSECTION

MINOR ROADWAY OR DRIVEWAY

DRIVEWAY AND INTERSECTION

NOTES:

1. For details not shown, see Revised Standard Plans RSP P75 and RSP P76.
2. Safety edge is optional when L is less than 30′.

STATE OF CALIFORNIA
DEPARTMENT OF TRANSPORTATION

PAVEMENT EDGE TREATMENTS

NO SCALE

RSP P74 DATED NOVEMBER 15, 2013 SUPERSEDES RSP P74 DATED JANUARY 20, 2012 THAT SUPPLEMENTS THE STANDARD PLANS BOOK DATED 2010.

REVISED STANDARD PLAN RSP P74

2010 REVISED STANDARD PLAN RSP P74

10-11-13

DIST	COUNTY	ROUTE	POST MILES TOTAL PROJECT	SHEET No.	TOTAL SHEETS
03	ED	89	8.6/13.8	207	231

REGISTERED CIVIL ENGINEER

November 15, 2013
PLANS APPROVAL DATE

Cornelis M. Hakim
No. C55610
Exp. 12-31-14
CIVIL
REGISTERED PROFESSIONAL ENGINEER
STATE OF CALIFORNIA

THE STATE OF CALIFORNIA OR ITS OFFICERS OR AGENTS SHALL NOT BE RESPONSIBLE FOR THE ACCURACY OR COMPLETENESS OF SCANNED COPIES OF THIS PLAN SHEET.

TO ACCOMPANY PLANS DATED 11-18-13

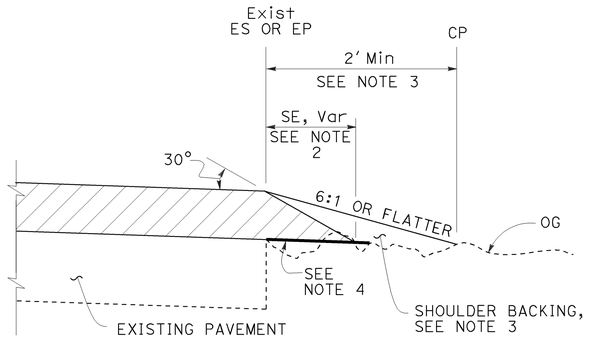

CASE A
Safety Edge

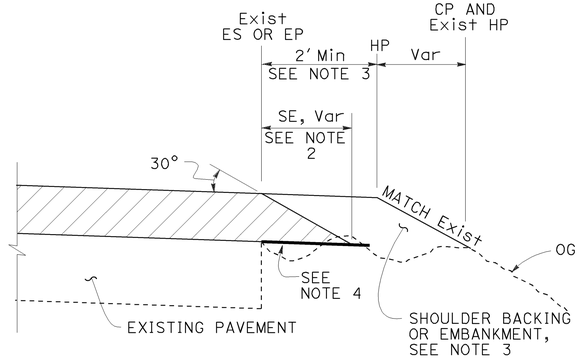

CASE B
Safety Edge

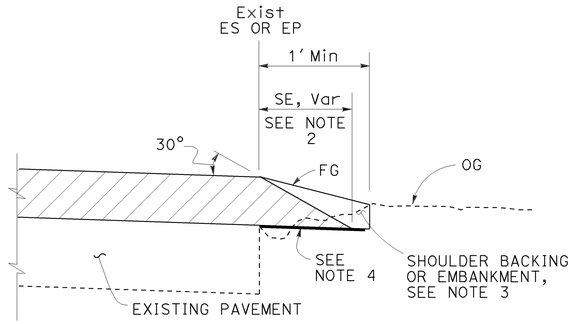

CASE C
Safety Edge

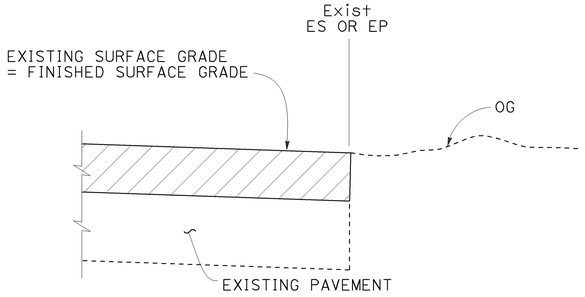

CASE D
Vertical Edge

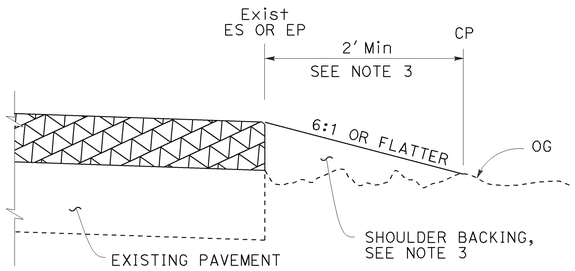

CASE E
Vertical Edge

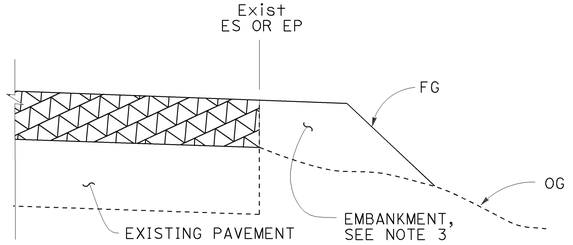

CASE F
Vertical Edge
* See Table A and Revised Std Plan RSP P74

LEGEND:

HMA OVERLAY

HMA OR CONCRETE OVERLAY

CONCRETE OVERLAY

ABBREVIATIONS:

SE SAFETY EDGE
TT TOTAL THICKNESS OF SE

TABLE A
EDGE TREATMENT FOR VARIOUS OVERLAY THICKNESS AND CONDITIONS

	OVERLAY THICKNESS	
FIELD CONDITION	LESS THAN 0.15'	0.15' OR MORE
Exist SLOPE 6:1 OR FLATTER	CASE E	CASE A
Exist SLOPE 3:1 TO 6:1	CASE E	CASE B
Exist SLOPE STEEPER THAN 3:1	CASE F	CASE F
CUT SECTION (REPLACE, COLD PLANE, MILL PAVEMENT)	CASE D	CASE C

ADDITIONAL HMA OR CONCRETE QUANTITIES FOR SE/SIDE/MILE

TYPICAL CROSS SECTION	TT	TOTAL ADDITIONAL MATERIAL FOR SE/SIDE/MILE		
		HMA (TON)	CONCRETE (CY)*	CONCRETE (CY)**
TT	0.15'	NA	NA	NA
	0.20'	13.7	NA	NA
	0.30'	30.9	NA	NA
	0.40'	54.9	NA	NA
	0.45'	69.4	NA	NA
TT, 0.43'	0.50'	84.2	NA	NA
	0.60'	113.9	NA	NA
	0.70'	143.6	70.9	94.2
	0.80'	173.3	85.6	112.2
	0.90'	203.0	100.3	130.2
	1.00'	232.7	114.9	148.2
	1.10'	262.4	129.6	166.2
	1.20'	292.1	144.3	184.2

* For Detail "A"
** For Optional Detail "A"

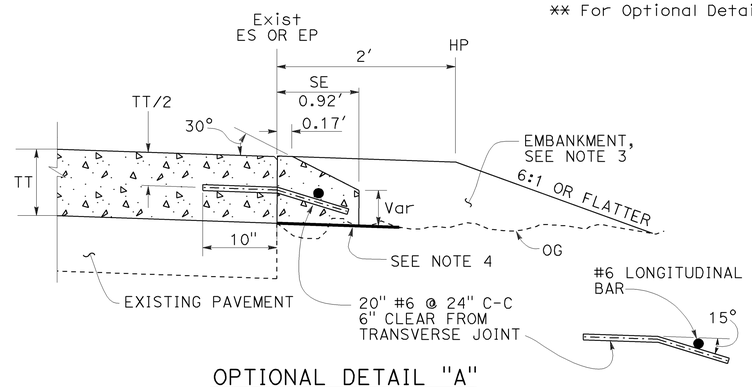

OPTIONAL DETAIL "A"
For concrete overlay
See Note 5

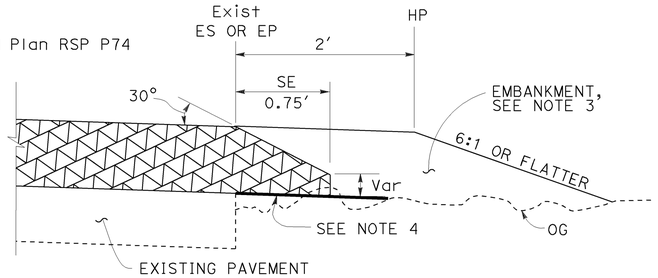

DETAIL "A"
For HMA overlay thickness more than 0.43' or concrete overlay

NOTES:

1. For limits of safety edge and vertical edge treatments, see Revised Standard Plan RSP P74.
2. Details shown for HMA overlay thickness less than 0.43'. See Detail "A" for HMA overlay thickness more than 0.43' or concrete overlay.
3. For locations and limits of shoulder backing or embankment see project plans.
4. Grade existing ground to place safety edge. 1' minimum width
5. Safety edge transverse joint must match overlay transverse joint. End of #6 longitudinal bar must be 2" ±½" clear from transverse joint.
6. Safety edge is not needed in the area of MGS, barrier, right turn lane and acceleration lane. See Revised Standard Plan RSP P74.

STATE OF CALIFORNIA
DEPARTMENT OF TRANSPORTATION

PAVEMENT EDGE TREATMENTS-OVERLAYS

NO SCALE

RSP P75 DATED NOVEMBER 15, 2013 SUPERSEDES RSP P75 DATED JANUARY 20, 2012 THAT SUPPLEMENTS THE STANDARD PLANS BOOK DATED 2010.

REVISED STANDARD PLAN RSP P75

2010 REVISED STANDARD PLAN RSP P75

10-4-13

DIST	COUNTY	ROUTE	POST MILES TOTAL PROJECT	SHEET No.	TOTAL SHEETS
03	ED	89	8.6/13.8	208	231

REGISTERED CIVIL ENGINEER

Cornelis M. Hakim
No. C55610
Exp. 12-31-14
CIVIL
REGISTERED PROFESSIONAL ENGINEER
STATE OF CALIFORNIA

November 15, 2013
PLANS APPROVAL DATE

THE STATE OF CALIFORNIA OR ITS OFFICERS OR AGENTS SHALL NOT BE RESPONSIBLE FOR THE ACCURACY OR COMPLETENESS OF SCANNED COPIES OF THIS PLAN SHEET.

TO ACCOMPANY PLANS DATED 11-18-13

LEGEND:

HMA PAVEMENT

HMA OR CONCRETE PAVEMENT

CONCRETE PAVEMENT

ABBREVIATIONS:

SE SAFETY EDGE

TT TOTAL THICKNESS OF SE

HW HINGE WIDTH, DISTANCE FROM ES OR EP TO HP

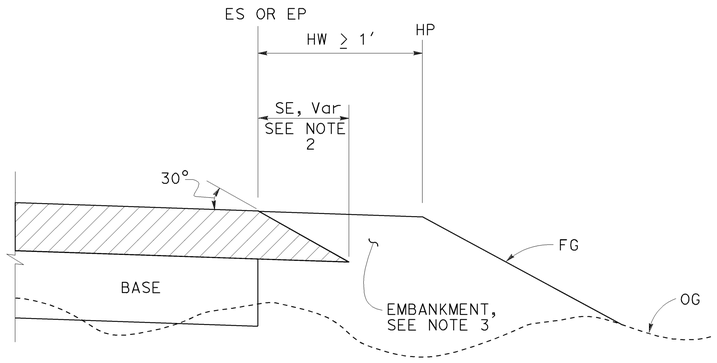

CASE K
Safety Edge - Fill Section, HW ≥ 1′

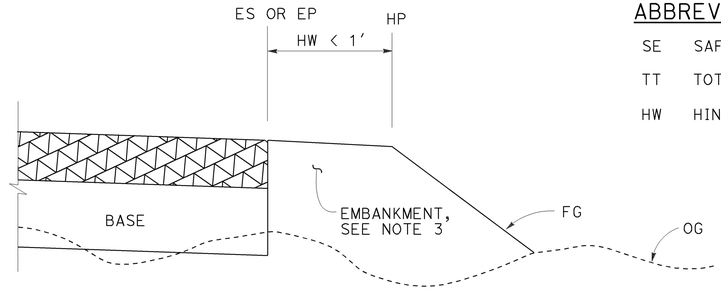

CASE L
Vertical Edge - Fill Section, HW < 1′

FILL SECTION

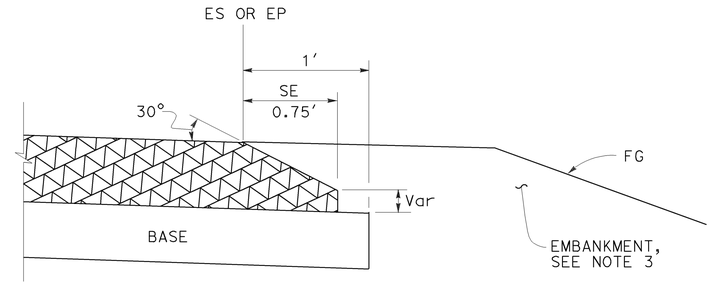

DETAIL "B"
For HMA pavement thickness more than 0.43′ or concrete pavement

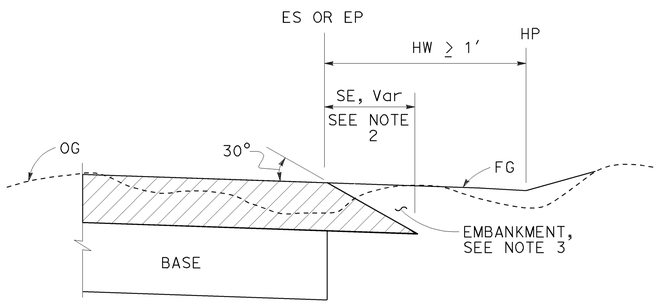

CASE M
Safety Edge - Cut Section, HW ≥ 1′

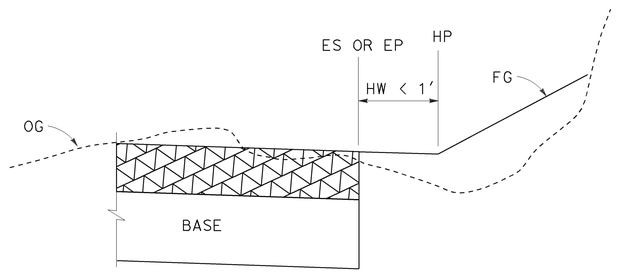

CASE N
Vertical Edge - Cut Section, HW < 1′

CUT SECTION

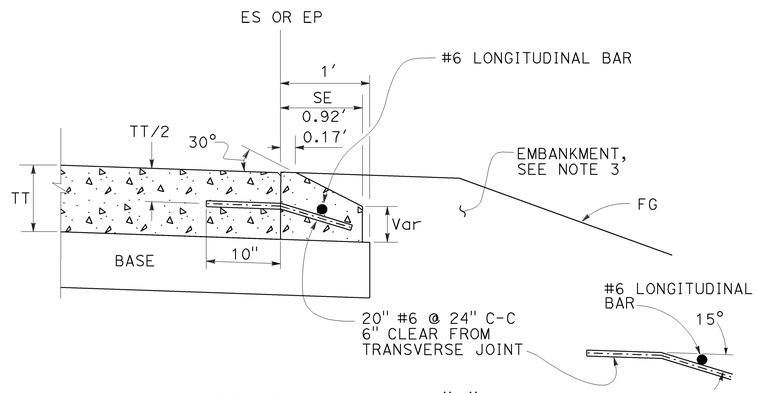

OPTIONAL DETAIL "B"
For concrete pavement
See Note 4

NOTES:

1. For limits of safety edge and vertical edge treatments, see Revised Standard Plan RSP P74
2. Details shown for HMA pavement thickness less than 0.43′. See Detail "B" for HMA pavement thickness more than 0.43′ or concrete pavement.
3. For locations and limits of embankment see project plans.
4. Safety edge transverse joint must match pavement transverse joint. End of #6 longitudinal bar must be 2" ±½" clear from transverse joint.
5. Safety edge is not needed in the area of MGS, barrier, right turn lane and acceleration lane. See Revised Standard Plan RSP P74.

STATE OF CALIFORNIA
DEPARTMENT OF TRANSPORTATION

PAVEMENT EDGE TREATMENTS- NEW CONSTRUCTION

NO SCALE

RSP P76 DATED NOVEMBER 15, 2013 SUPERSEDES RSP P76 DATED JANUARY 20, 2012 THAT SUPPLEMENTS THE STANDARD PLANS BOOK DATED 2010.

REVISED STANDARD PLAN RSP P76

2010 REVISED STANDARD PLAN RSP P76

10-4-13

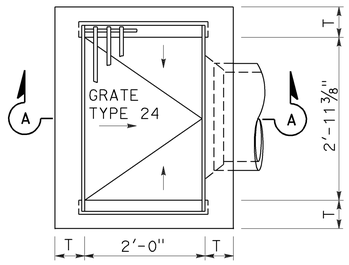

TYPE G1

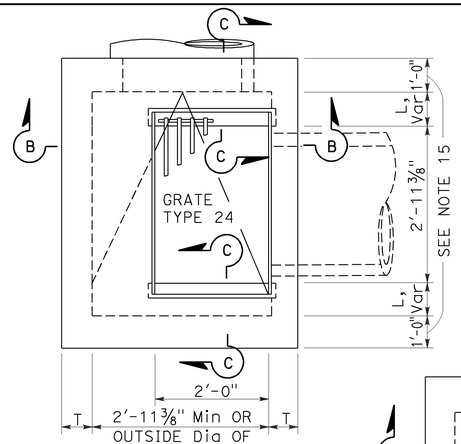

TYPE G2

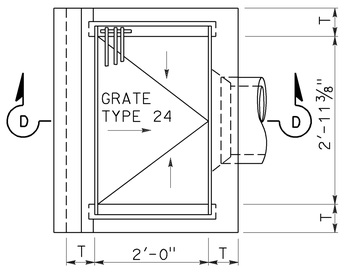

TYPE G3

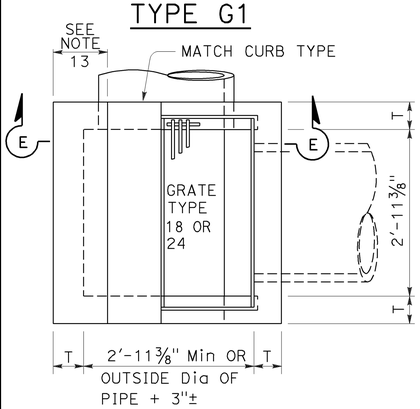

TYPE G4

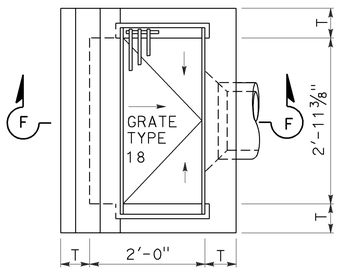

TYPE G5

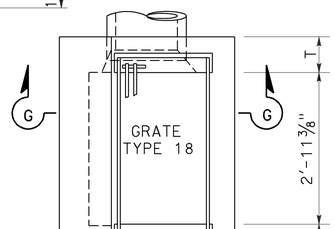

TYPE G6

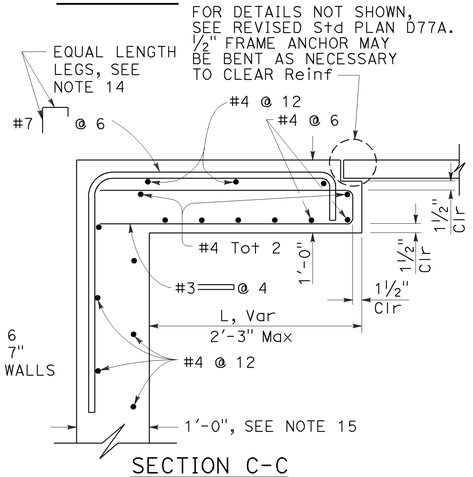

SECTION C-C

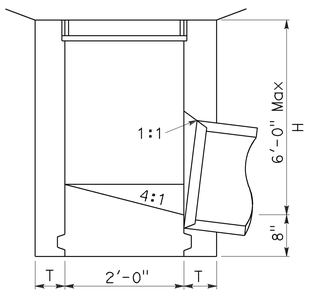

SECTION A-A

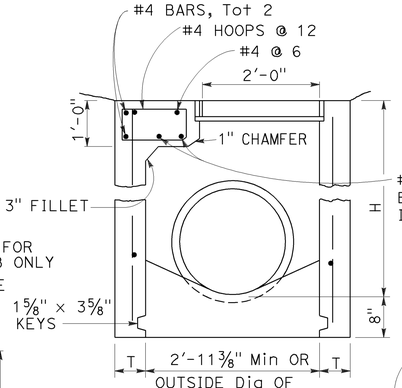

SECTION B-B

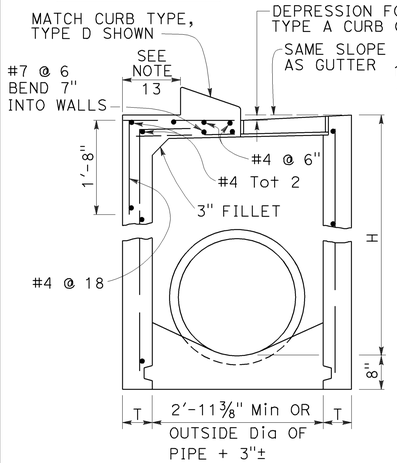

SECTION E-E

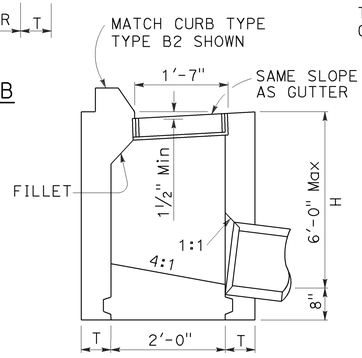

SECTION F-F

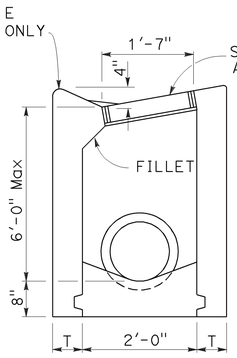

SECTION G-G

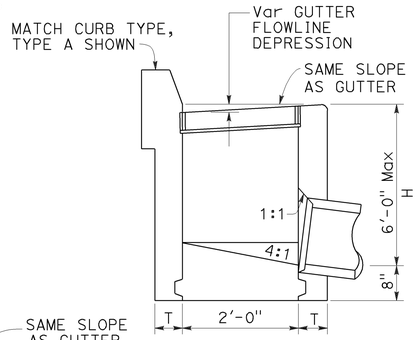

SECTION D-D

TO ACCOMPANY PLANS DATED 11-18-13

Dist	COUNTY	ROUTE	POST MILES TOTAL PROJECT	SHEET No.	TOTAL SHEETS
03	ED	89	8.6/13.8	209	231

Glenn DeCou
REGISTERED CIVIL ENGINEER

October 19, 2012
PLANS APPROVAL DATE

REGISTERED PROFESSIONAL ENGINEER
Glenn DeCou
No. C34547
Exp. 9-30-13
CIVIL
STATE OF CALIFORNIA

THE STATE OF CALIFORNIA OR ITS OFFICERS OR AGENTS SHALL NOT BE RESPONSIBLE FOR THE ACCURACY OR COMPLETENESS OF SCANNED COPIES OF THIS PLAN SHEET.

NOTES:

1. "H" is the difference in elevation between the outlet pipe flow line and the normal gutter grade line undepressed.
2. For "T" wall thickness, see Table A below.
3. Wall reinforcing not required when "H" is 8'-0" or less and the unsupported width or length is 7'-0" or less. Walls exceeding these limits shall be reinforced with #4 bars @ 1'-6" ± centers placed 1½" clear to inside of box unless otherwise shown.
4. Inlet bottom reinforcing not required. See Standard Plan D74C for alternative reinforced bottom and alternative half round bottom.
5. Steps-None required where "H" is less than 2'-6". Where "H" is 2'-6" or more, install steps with lowest rung 1'-0" above the floor and highest rung not more than 6" below top of inlet. The distance between steps shall not exceed 1'-0" and shall be uniform throughout the length of the wall. Place steps in the wall without an opening. Steps inserts may be substituted for the bar steps. Step inserts shall comply with State Industrial Safety requirements. See Standard Plan D74C for step details.
6. Details shown apply to both metal and concrete pipe.
7. Pipe(s) can be placed in any wall.
8. Curb section shall match adjacent curb.
9. Basin floors shall have wood trowel finish and a minimum slope of 12:3 from all directions toward outlet pipe.
10. Set inlet so that grate bars are parallel to direction of principal surface flow.
11. See Revised Standard Plans D77A and D77B for grate and frame details and weights of miscellaneous iron and steel.
12. See Standard Plan D78A for gutter depression details.
13. This dimenison will vary with different grates, curbs types, box width and wall thickness.
14. Bar may be rotated as necessary to clear opening. Where "L" is 6" or less, bar may be omitted.
15. Where "L" is 6" or less, wall thickness shall be as shown in Table A.
16. Cast-in-place inlets to be formed around all pipes/stubs intersecting the inlet, and concrete poured in one continuous operation. Precast inlets shall have mortared connections conforming to details for Type GCP Inlet shown on Standard Plan D75B. See Standard Specifications for mortar composition.

TABLE A

TYPE	CONCRETE QUANTITIES			
	H=3'-0" TO 8'-0" (T=6")		H=8'-1" TO 20'-0" (T=8")	
	H=3'-0" (CY)	ADDITIONAL PCC PER FOOT (CY)	H=8'-1" (CY)	ADDITIONAL PCC PER FOOT (CY)
G-1	0.95	0.220	See Note A	SEE NOTE A
G-2*	1.31	0.255	3.50	0.357
G-3	1.03	0.220	See Note A	SEE NOTE A
G-4* (TYPE 24)	1.27	0.255	3.48	0.357
G-4* (TYPE 18)	1.30	0.255	3.50	0.357
G-5	1.02	0.220	SEE NOTE A	SEE NOTE A
G-6	1.04	0.220	SEE NOTE A	SEE NOTE A

TABLE BASED ON 8" FLOOR SLAB. NO DEDUCTIONS ARE TO BE MADE TO THESE QUANTITIES BECAUSE OF PIPE OPENINGS, DIFFERENT FLOOR ALTERNATIVES OR DIFFERENT CURB TYPES. * QUANTITIES FOR TYPE G-2 AND G-4 INLETS BASED ON THE MINIMUM INTERIOR DIMENSIONS.

NOTE A:

Maximum allowable height 6'-0".

STATE OF CALIFORNIA
DEPARTMENT OF TRANSPORTATION

DRAINAGE INLETS

NO SCALE

RSP D73 DATED OCTOBER 19, 2012 SUPERSEDES STANDARD PLAN D73 DATED MAY 20, 2011 - PAGE 156 OF THE STANDARD PLANS BOOK DATED 2010.

REVISED STANDARD PLAN RSP D73

2010 REVISED STANDARD PLAN RSP D73

7-19-12

Dist	COUNTY	ROUTE	POST MILES TOTAL PROJECT	SHEET No.	TOTAL SHEETS
03	ED	89	8.6/13.8	210	231

Raymond Don Tsztoo
REGISTERED CIVIL ENGINEER

April 19, 2013
PLANS APPROVAL DATE

Raymond Don Tsztoo No. C37332 Exp. 6-30-14 CIVIL — REGISTERED PROFESSIONAL ENGINEER — STATE OF CALIFORNIA

THE STATE OF CALIFORNIA OR ITS OFFICERS OR AGENTS SHALL NOT BE RESPONSIBLE FOR THE ACCURACY OR COMPLETENESS OF SCANNED COPIES OF THIS PLAN SHEET.

TO ACCOMPANY PLANS DATED 11-18-13

2010 REVISED STANDARD RSP D77A

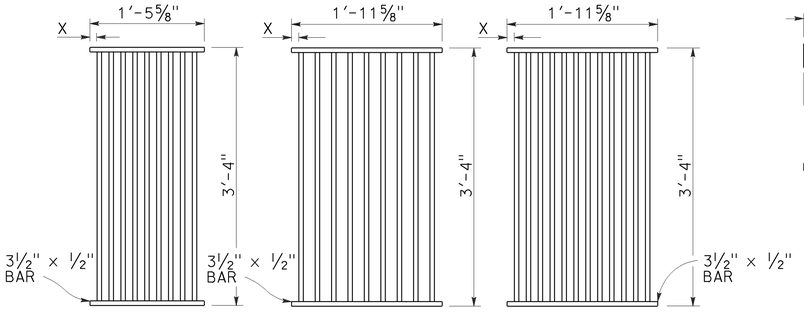

RECTANGULAR GRATE DETAILS

(See table below)

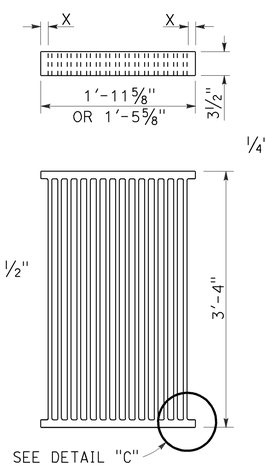

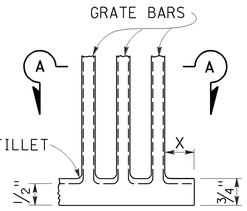

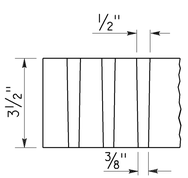

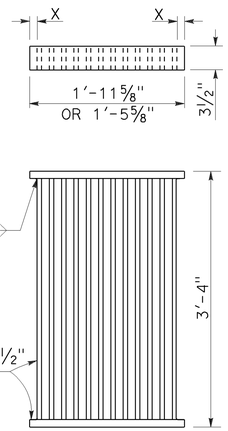

ALTERNATIVE CAST DUCTILE IRON GRATE OR CAST CARBON STEEL GRATE

ALTERNATIVE WELDED GRATE

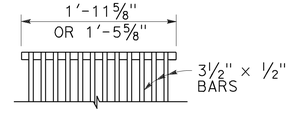

CAST END BLOCK

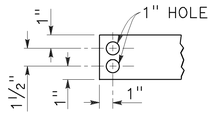

END OF BAR

NOTES:

1. Grate type numbers refer to approximate width of grate in inches and number of bars, respectively.
2. Contractor has the option of using cast ductile iron, cast carbon steel, welded, bolted, or cast end block grate.
3. Rounded top of bars optional on all grates.
4. Pipe inlets with a grate shall be placed so that bars parallel direction of principle surface flow.
5. Complete joint penetration butt welds may be substituted for the fillet welds on all anchors.
6. Standard square, hexagon, round or equivalent headed anchors may be substituted for the right angle hooks on the anchors shown on this plan.
7. Grate and frame weights are based on welded grates (weights of face angles, steps, protection bars, etc. are not included).
8. Connect chain to grate and frame only at locations shown on the plans. When chain is required, do not use cast ductile iron grates.

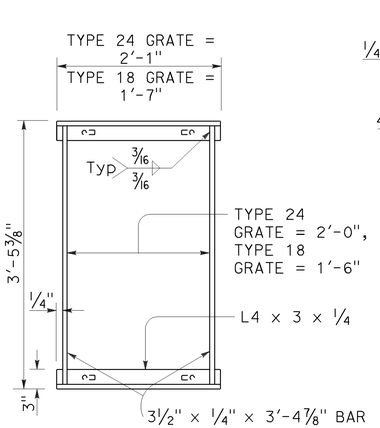

TYPICAL FRAME

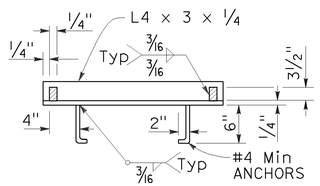

CROSS SECTION

(Thru frame)

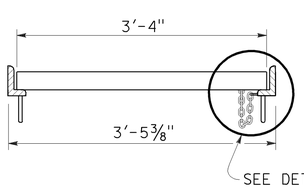

LONGITUDINAL SECTION

(Thru frame and grate)

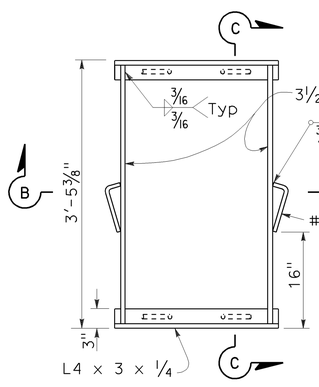

TYPICAL FRAME

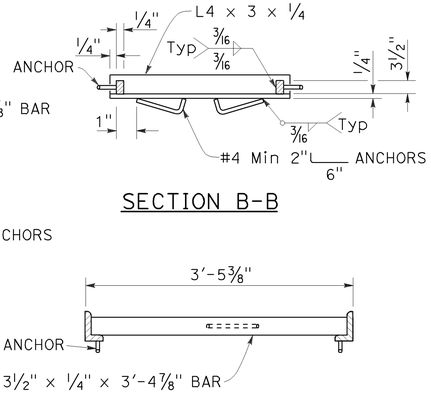

SECTION B-B

SECTION C-C

ALTERNATIVE CAST DUCTILE IRON OR CAST CARBON STEEL END BLOCK GRATE

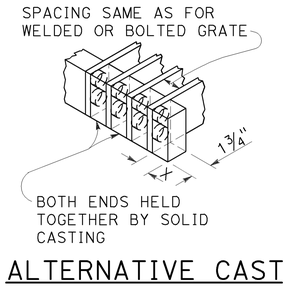

ALTERNATIVE CAST DUCTILE IRON OR CAST CARBON STEEL END BLOCK GRATE

ALTERNATIVE ANCHOR FOR RECTANGULAR FRAME

(For details not shown, See Rectangular Frame Details)

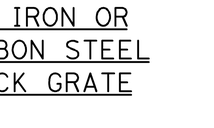

DETAIL "D"

(Steel grates only)

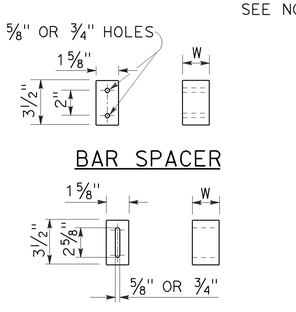

ALTERNATIVE SPACER

W = 1⅜" or 2"

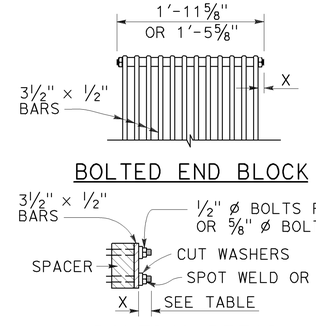

BOLTED END BLOCK

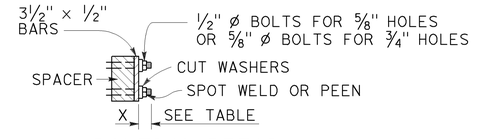

BOLTING DETAIL

ALTERNATIVE BOLTED GRATE

GRATE BAR SPACING TABLE

TYPE	No. OF BARS	CLEAR BAR SPACING	X
18-9	9	1⅜"	1 1/16"
24-9	9	2"	1 9/16"
24-12	12	1⅜"	1¼"

INLET TYPE	COVER TYPE	WEIGHT LB
OS	PLATE	174
OL-7	PLATE	170
OL-10	PLATE	170
OL-14	PLATE	170
OL-21	PLATE	170
OCP	PLATE	112
OCPI	PLATE	112
OCPI	REDWOOD	42
OMP	PLATE	177
OMPI	PLATE	177

INLET TYPE	GRATE TYPE	No. OF GRATES	WEIGHT LB
GDO	24-12	2	634
GOL-7	24-12	1	326
GOL-10	24-12	1	326
GO,G1,G2,G3,G4 (TYPE 24)	24-9	1	263
	24-12	1	326
G4 (TYPE 18),G5,G6	18-9	1	249
GT1	18-9	2	498
GT2	18-9	2	498
GT3	24-12	2	652
GT4	24-12	2	652
TRASH RACK			22
GRATE CHAIN			3

BASIS FOR Misc IRON & STEEL FINAL PAY WEIGHTS FOR DRAINAGE INLETS

(See Note 7)

RECTANGULAR FRAME DETAILS

(For all rectangular grates)

STATE OF CALIFORNIA
DEPARTMENT OF TRANSPORTATION

GRATE DETAILS No. 1

NO SCALE

RSP D77A DATED APRIL 19, 2013 SUPERSEDES RSP D77A DATED JULY 20, 2012 AND STANDARD PLAN D77A DATED MAY 20, 2011 - PAGE 164 OF THE STANDARD PLANS BOOK DATED 2010.

REVISED STANDARD PLAN RSP D77A

4-4-13

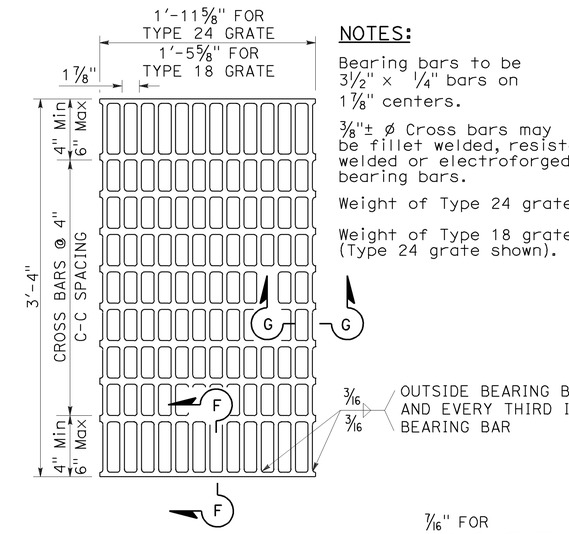

NOTES:

Bearing bars to be 3½" x ¼" bars on 1⅞" centers.

⅜"± ø Cross bars may be fillet welded, resistance welded or electroforged to bearing bars.

Weight of Type 24 grate = 141 LBS.

Weight of Type 18 grate = 107 LBS. (Type 24 grate shown).

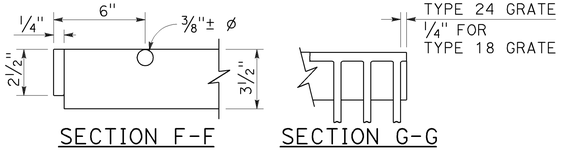

SECTION F-F SECTION G-G

TYPE 18-10 AND 24-13 GRATE

(Welded Steel)

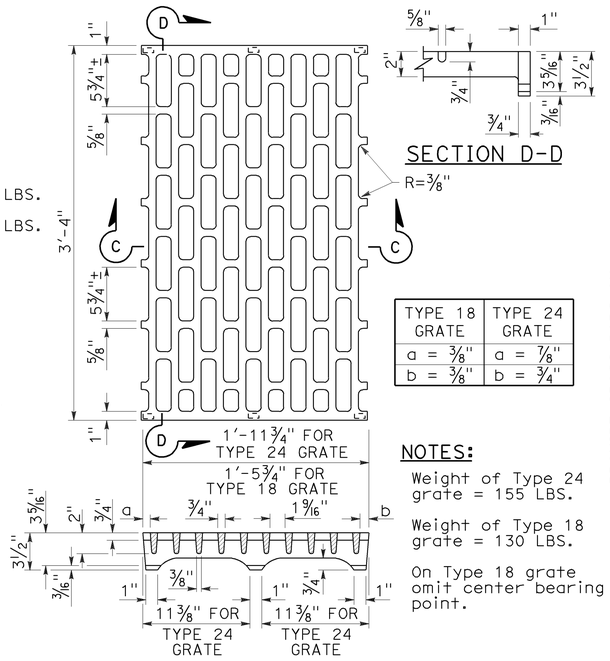

SECTION D-D

TYPE 18 GRATE	TYPE 24 GRATE
a = ⅜"	a = ⅞"
b = ⅜"	b = ¾"

NOTES:

Weight of Type 24 grate = 155 LBS.

Weight of Type 18 grate = 130 LBS.

On Type 18 grate omit center bearing point.

SECTION C-C

TYPE 18-8C AND 24-10C GRATE

(Cast ductile iron)

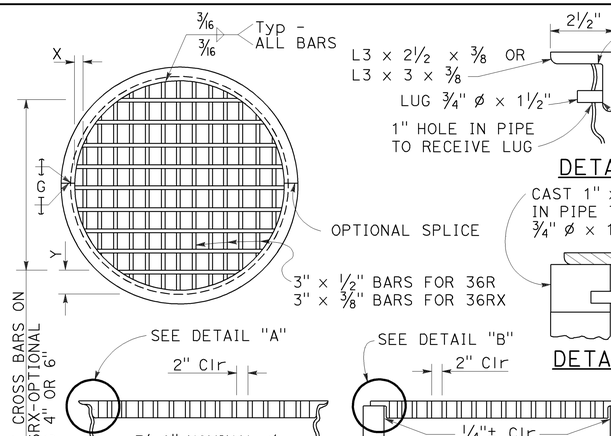

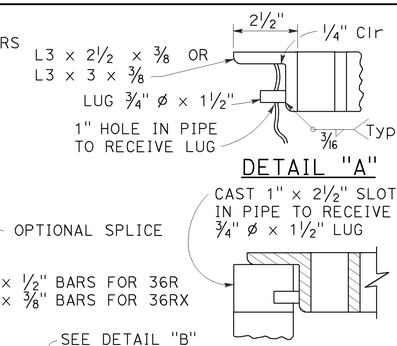

DETAIL "A"

DETAIL "B"

TYPE 36R AND 36RX GRATE DETAILS

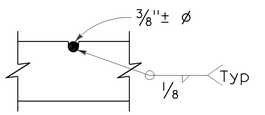

⅜"± ø Cross bars may be fillet welded, resistance welded or electroforged to bearing bars.

CROSS BAR DETAIL TYPE 36RX GRATE (WELDED STEEL)

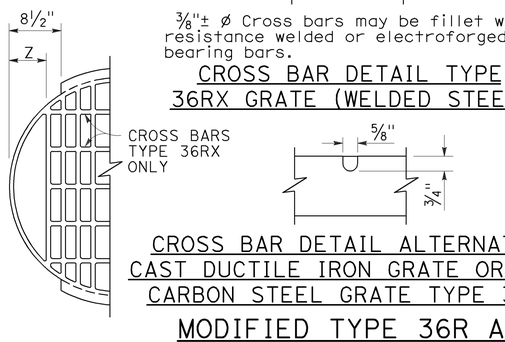

CROSS BAR DETAIL ALTERNATIVE CAST DUCTILE IRON GRATE OR CAST CARBON STEEL GRATE TYPE 36RX

MODIFIED TYPE 36R AND 36RX GRATE FOR ODI INLET

NOTES:

1. When alternative grates are allowed - Final pay based on alternative with the lesser weight.
2. Use frame shown on Standard Plan D74A, D74B or RSP D77A as appropriate.
3. When Type 24-10S, 24-12X or 24-13 grates are used with GDO Inlets, a ¼" x 3½" x 3'-4⅞" steel bar shall be welded across the center of inlet frame to separate the individual grates.
4. See Revised Standard Plan RSP D77A for connecting chain to welded grate and frame. When chain is required, do not use cast ductile iron grate.

GRATE BAR SPACING TABLE

TYPE	No. OF BARS	CLEAR BAR SPACING	X	Y		Z
				4" SPACING	6" SPACING	
36R	13	2"	2⅛"	-	-	-
36RX (STEEL)	15	2"	9⁄16"	3¾"	5¾"	-
36RX (CAST)	13	2"	2⅛"	3¾"	5¾"	-
36R Mod	12	2"	2⅛"	-	-	5"
36RX Mod (STEEL)	13	2"	9⁄16"	3¾"	5¾"	5 11⁄16"
36RX Mod (CAST)	12	2"	2⅛"	3¾"	5¾"	5"

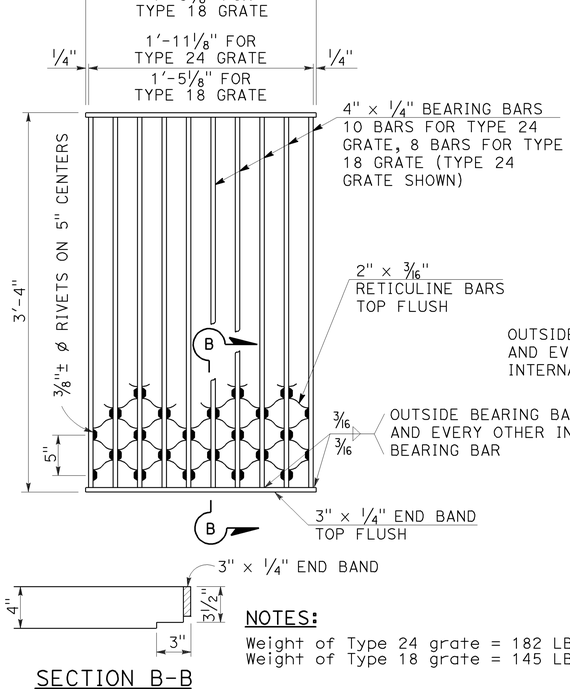

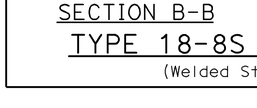

SECTION B-B

NOTES:

Weight of Type 24 grate = 182 LBS.
Weight of Type 18 grate = 145 LBS.

TYPE 18-8S AND 24-10S GRATE

(Welded Steel) Reticuline type

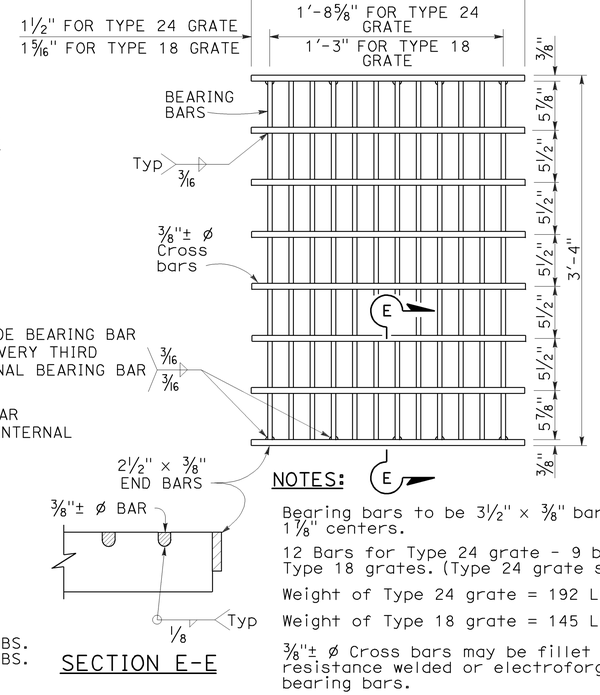

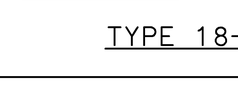

SECTION E-E

NOTES:

Bearing bars to be 3½" x ⅜" bars on 1⅛" centers.

12 Bars for Type 24 grate - 9 bars for Type 18 grates. (Type 24 grate shown).

Weight of Type 24 grate = 192 LBS.

Weight of Type 18 grate = 145 LBS.

⅜"± ø Cross bars may be fillet welded, resistance welded or electroforged to bearing bars.

TYPE 18-9X AND 24-12X GRATE

(Welded Steel)

Dist	COUNTY	ROUTE	POST MILES TOTAL PROJECT	SHEET No.	TOTAL SHEETS
03	ED	89	8.6/13.8	211	231

Raymond Don Tsztoo
REGISTERED CIVIL ENGINEER

April 19, 2013
PLANS APPROVAL DATE

Raymond Don Tsztoo No. C37332 Exp. 6-30-14 CIVIL — REGISTERED PROFESSIONAL ENGINEER — STATE OF CALIFORNIA

THE STATE OF CALIFORNIA OR ITS OFFICERS OR AGENTS SHALL NOT BE RESPONSIBLE FOR THE ACCURACY OR COMPLETENESS OF SCANNED COPIES OF THIS PLAN SHEET.

TO ACCOMPANY PLANS DATED 11-18-13

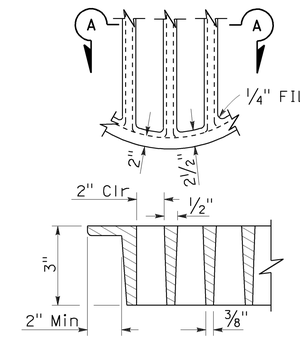

SECTION A-A

ALTERNATIVE CAST DUCTILE IRON GRATE OR CAST CARBON STEEL GRATE TYPE 36R AND 36RX

BASIS FOR Misc IRON AND STEEL FINAL PAY WEIGHTS FOR DRAINAGE INLETS

INLET TYPE	GRATE TYPE	No. OF GRATES	WEIGHT LB
GDO (SEE NOTE 4)	24-10C	2	391
	24-10S	2	456
	24-12X	2	473
	24-13	2	374
GO,GOL,G1,G2, G3,G4 (TYPE 24)	24-10C	1	202
	24-10S	1	229
	24-12X	1	239
	24-13	1	188
G4 (TYPE 18) G5,G6	18-8S	1	187
	18-9X	1	187
	18-10	1	149
GT1,GT2	18-8S	2	374
	18-9X	2	374
	18-10	2	298
GT3,GT4	24-10C	2	404
	24-10S	2	458
	24-12X	2	478
	24-13	2	376
ODI	36RX (Mod)	1	196
GMP,GCP,GCPI	36RX	1	215
ODI	36R (Mod)	1	220
GMP,GCP,GCPI	36R	1	236
TRASH RACK			22
GRATE CHAIN			3

STATE OF CALIFORNIA
DEPARTMENT OF TRANSPORTATION

GRATE DETAILS No. 2

NO SCALE

RSP D77B DATED APRIL 19, 2013 SUPERSEDES RSP D77B DATED JULY 20, 2012 AND STANDARD PLAN D77B DATED MAY 20, 2011 - PAGE 165 OF THE STANDARD PLANS BOOK DATED 2010.

REVISED STANDARD PLAN RSP D77B

2010 REVISED STANDARD PLAN RSP D77B

4-4-13

Dist	COUNTY	ROUTE	POST MILES TOTAL PROJECT	SHEET No.	TOTAL SHEETS
03	ED	89	8.6/13.8	212	231

Gregory A. Balzer
LICENSED LANDSCAPE ARCHITECT

July 19, 2013
PLANS APPROVAL DATE

THE STATE OF CALIFORNIA OR ITS OFFICERS OR AGENTS SHALL NOT BE RESPONSIBLE FOR THE ACCURACY OR COMPLETENESS OF SCANNED COPIES OF THIS PLAN SHEET.

LICENSED LANDSCAPE ARCHITECT — Gregory A. Balzer — 2516 — STATE OF CALIFORNIA
10 RENEWAL 2-28-15
REGISTRATION EXPIRES 7-19-13
Date

TO ACCOMPANY PLANS DATED 11-18-13

A

AB	AGGREGATE BASE
ABS	ACRYLONITRILE-BUTADIENE-STYRENE
AC	ASPHALT CONCRETE
ACC	ARMOR-CLAD CONDUCTORS
Adj	ADJACENT/ADJUSTABLE
AIC	AUXILIARY IRRIGATION CONTROLLER
Alt	ALTERNATIVE
AMEND	AMENDMENT
ARV	AIR RELEASE VALVE
AUTO	AUTOMATIC
AUX	AUXILIARY
AVB	ATMOSPHERIC VACUUM BREAKER

B

B&B	BALLED AND BURLAPPED
B/B	BRASS/BRONZE
B/B/PL	BRASS/BRONZE/PLASTIC
B/PL	BRASS/PLASTIC
BFM	BONDED FIBER MATRIX
Bit Ctd	BITUMINOUS COATED
BP	BOOSTER PUMP
BPA	BACKFLOW PREVENTER ASSEMBLY
BPE	BACKFLOW PREVENTER ENCLOSURE
BV	BALL VALVE

C

C	CONDUIT
CAP	CORRUGATED ALUMINUM PIPE
CARV	COMBINATION AIR RELEASE VALVE
CB	COUPLING BAND
CCA	CAM COUPLER ASSEMBLY
CEC	CONTROLLER ENCLOSURE CABINET
CHDPE	CORRUGATED HIGH DENSITY POLYETHYLENE
CL	CHAIN LINK
CNC	CONTROL AND NEUTRAL CONDUCTORS
Conc	CONCRETE
CP	COPPER PIPE
CS	COMPOST SOCK
CSP	CORRUGATED STEEL PIPE
CST	CENTER STRIP
CV	CHECK VALVE

D

Dia	DIAMETER
DIP	DUCTILE IRON PIPE
DIT	DRIP IRRIGATION TUBING
DG	DECOMPOSED GRANITE
DN	DIAMETER NOMINAL
DVA	DRIP VALVE ASSEMBLY

E

EC	EROSION CONTROL
ECTC	EROSION CONTROL TECHNOLOGY COUNCIL
Elect	ELECTRIC/ELECTRICAL
Elev	ELEVATION
ELL	ELBOW
ENCL	ENCLOSURE
EP	EDGE OF PAVEMENT
ES	EDGE OF SHOULDER
EST	END STRIP
ESTB	ESTABLISHMENT
ETW	EDGE OF TRAVELED WAY

F

F	FULL CIRCLE
F/P	FULL/PART CIRCLE
FCV	FLOW CONTROL VALVE
FERT	FERTILIZER
FG	FINISHED GRADE
FH	FLEXIBLE HOSE
FIPT	FEMALE IRON PIPE THREAD
FIS	FERTILIZER INJECTOR SYSTEM
FL	FLOW LINE
FR	FIBER ROLL
FS	FLOW SENSOR
FSC	FLOW SENSOR CABLE
FV	FLUSH VALVE

G

Galv	GALVANIZED
GARV	GARDEN VALVE
GARVA	GARDEN VALVE ASSEMBLY
GM	GRAVEL MULCH
GPH	GALLONS PER HOUR
GPM	GALLONS PER MINUTE
GSP	GALVANIZED STEEL PIPE
GV	GATE VALVE

H

H	HALF CIRCLE
HDPE	HIGH DENSITY POLYETHYLENE
HP	HORSEPOWER/HINGE POINT
HPL	HIGH PRESSURE LINE
Hwy	HIGHWAY

I

IC	IRRIGATION CONTROLLER
ICC	IRRIGATION CONTROLLER(S) IN CONTROLLER ENCLOSURE CABINET
ID	INSIDE DIAMETER
IFS	IRRIGATION FILTRATION SYSTEM
IPS	IRON PIPE SIZE
IPT	IRON PIPE THREAD
Irr	IRRIGATION

L

L	LENGTH

M

Max	MAXIMUM
MBGR	METAL BEAM GUARD RAILING
MCV	MANUAL CONTROL VALVE
MIC	MASTER IRRIGATION CONTROLLER
Min	MINIMUM
MIPT	MALE IRON PIPE THREAD
Misc	MISCELLANEOUS
Mtl	MATERIAL
MVP	MAINTENANCE VEHICLE PULLOUT

N

NCN	NO COMMON NAME
NL	NOZZLE LINE
No.	NUMBER
NPT	NATIONAL PIPE THREAD

O

O/C	ON CENTER
OD	OUTSIDE DIAMETER
OL	OVERLAP

P

P	PART CIRCLE
PB	PULL BOX
PCC	PORTLAND CEMENT CONCRETE
PE	POLYETHYLENE
Pkt	PACKET
PL	PLASTIC
PLS	PURE LIVE SEED
PLT	PLANT/PLANTING
PLT ESTB	PLANT ESTABLISHMENT
PM	POST MILE
PR	PRESSURE RATED
PRLV	PRESSURE RELIEF VALVE
PRV	PRESSURE REGULATING VALVE
PVC	POLYVINYL CHLORIDE
Pvmt	PAVEMENT

Q

Q	QUARTER CIRCLE
QCV	QUICK COUPLING VALVE

R

R	RADIUS
RCP	REINFORCED CONCRETE PIPE
RCV	REMOTE CONTROL VALVE
RCVM	REMOTE CONTROL VALVE (MASTER)
RCVMF	REMOTE CONTROL VALVE (MASTER) W/FLOW SENSOR
RCVP	REMOTE CONTROL VALVE W/PRESSURE REGULATOR
RCW	RECYCLED WATER
RECP	ROLLED EROSION CONTROL PRODUCT
REQ	REQUIRED
RICS	REMOTE IRRIGATION CONTROL SYSTEM
R/W	RIGHT OF WAY

S

S	SLIP
SCH	SCHEDULE
SF	STATE-FURNISHED
Shld	SHOULDER
Sq	SQUARE
SST	SIDE STRIP
Sta	STATION
Std	STANDARD
SW	SIDEWALK/SOUND WALL

T

T	THIRD CIRCLE/THREAD
TLS	TRUCK LOADING STANDPIPE
TQ	THREE QUARTER CIRCLE
TRM	TURF REINFORCEMENT MAT
TT	TWO-THIRDS CIRCLE
TWSA	TREE WELL SPRINKLER ASSEMBLY
Typ	TYPICAL

U

UG	UNDERGROUND

W

W	WIDTH
W/	WITH
WM	WATER METER
WS	WYE STRAINER
WSA	WYE STRAINER ASSEMBLY
WSP	WELDED STEEL PIPE
WWM	WELDED WIRE MESH

NOTE:
For additional abbreviations, see Standard Plans A10A and A10B.

STATE OF CALIFORNIA
DEPARTMENT OF TRANSPORTATION

LANDSCAPE AND EROSION CONTROL ABBREVIATIONS

NO SCALE

RSP H1 DATED JULY 19, 2013 SUPERSEDES STANDARD PLAN H1
DATED MAY 20, 2011 - PAGE 218 OF THE STANDARD PLANS BOOK DATED 2010.

REVISED STANDARD PLAN RSP H1

2010 REVISED STANDARD PLAN RSP H1

6-28-13

Dist	COUNTY	ROUTE	POST MILES TOTAL PROJECT	SHEET No.	TOTAL SHEETS
03	ED	89	8.6/13.8	213	231

REGISTERED CIVIL ENGINEER

April 19, 2013
PLANS APPROVAL DATE

REGISTERED PROFESSIONAL ENGINEER
Gurinderpa Bhullar
No. C48815
Exp. 9-30-14
CIVIL
STATE OF CALIFORNIA

THE STATE OF CALIFORNIA OR ITS OFFICERS OR AGENTS SHALL NOT BE RESPONSIBLE FOR THE ACCURACY OR COMPLETENESS OF SCANNED COPIES OF THIS PLAN SHEET.

TO ACCOMPANY PLANS DATED 11-18-13

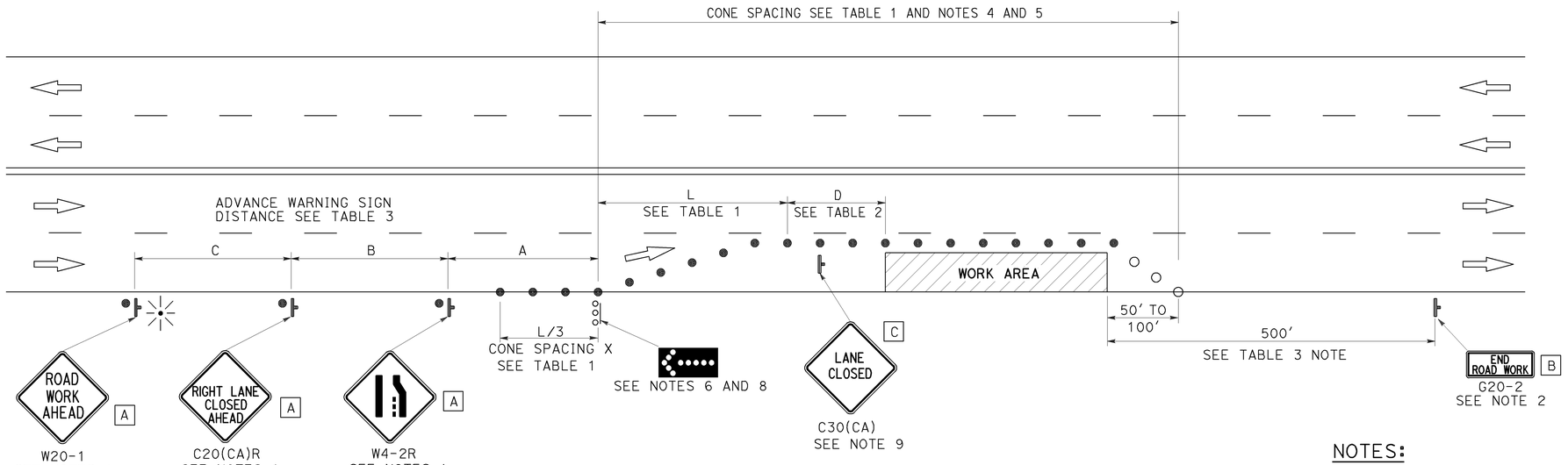

TYPICAL LANE CLOSURE

NOTES:

1. Each advance warning sign shall be equipped with at least two flags for daytime closure. Each flag shall be at least 16" x 16" in size and shall be orange or fluorescent red-orange in color. Flashing beacons shall be placed at the locations indicated for lane closure during hours of darkness.
2. A G20-2 "END ROAD WORK" sign, as appropriate, shall be placed at the end of the lane closure unless the end of work area is obvious, or ends within a larger project's limits.
3. If the W20-1 sign would follow within 2000' of a stationary W20-1 or G20-1 "ROAD WORK NEXT _____ MILES", use a C20(CA) sign for the first advance warning sign.
4. All cones used for lane closures during the hours of darkness shall be fitted with retroreflective bands (or sleeves) as specified in the specifications.
5. Portable delineators, placed at one-half the spacing indicated for traffic cones, may be used instead of cones for daytime closures only.
6. Flashing arrow sign shall be either Type I or Type II.
7. For approach speeds over 50 mph, use the "Traffic Control System for Lane Closure On Freeways And Expressways" plan for lane closure details and requirements.
8. A minimum 1500' of sight distance shall be provided where possible for vehicles approaching the first flashing arrow sign. Lane closures shall not begin at the top of crest vertical curve or on a horizontal curve.
9. Place a C30(CA) sign every 2000' throughout length of lane closure.
10. Median lane closures shall conform to the details as shown except that C20(CA)L and W4-2L signs shall be used.
11. At least one person shall be assigned to provide full time maintenance of traffic control devices for lane closure unless, otherwise directed by the Engineer.

NOTES:

See Revised Standard Plan RSP T9 for tables.

Use cone spacing X for taper segment, Y for tangent segment or Z for conflict situations, as approriate, per Table 1, unless X, Y, or Z cone spacing is shown on this sheet.

Unless otherwise specified in the special provisions, all temporary warning signs shall have black legend on fluorescent orange background.

California codes are designated by (CA). Otherwise, Federal (MUTCD) codes are shown.

LEGEND

- TRAFFIC CONE
- TRAFFIC CONE (OPTIONAL TAPER)
- TEMPORARY TRAFFIC CONTROL SIGN
- FLASHING ARROW SIGN (FAS)
- FAS SUPPORT OR TRAILER
- PORTABLE FLASHING BEACON

SIGN PANEL SIZE (Min)

A	48" x 48"
B	36" x 18"
C	30" x 30"

STATE OF CALIFORNIA
DEPARTMENT OF TRANSPORTATION

TRAFFIC CONTROL SYSTEM FOR LANE CLOSURE ON MULTILANE CONVENTIONAL HIGHWAYS

NO SCALE

RSP T11 DATED APRIL 19, 2013 SUPERSEDES STANDARD PLAN T11 DATED MAY 20, 2011 - PAGE 239 OF THE STANDARD PLANS BOOK DATED 2010.

REVISED STANDARD PLAN RSP T11

2010 REVISED STANDARD PLAN RSP T11

4-2-13

Dist	COUNTY	ROUTE	POST MILES TOTAL PROJECT	SHEET No.	TOTAL SHEETS
03	ED	89	8.6/13.8	214	231

REGISTERED CIVIL ENGINEER

April 19, 2013
PLANS APPROVAL DATE

REGISTERED PROFESSIONAL ENGINEER
Gurinderpa Bhullar
No. C48815
Exp. 9-30-14
CIVIL
STATE OF CALIFORNIA

THE STATE OF CALIFORNIA OR ITS OFFICERS OR AGENTS SHALL NOT BE RESPONSIBLE FOR THE ACCURACY OR COMPLETENESS OF SCANNED COPIES OF THIS PLAN SHEET.

TO ACCOMPANY PLANS DATED 11-18-13

LEGEND

- TRAFFIC CONE
- TEMPORARY TRAFFIC CONTROL SIGN
- FLASHING ARROW SIGN (FAS)
- FAS SUPPORT OR TRAILER
- PORTABLE FLASHING BEACON

SIGN PANEL SIZE (Min)

- A 48" × 48"
- B 24" × 24"
- C 36" × 18"

NOTES:

See Revised Standard Plan RSP T9 for tables.

Use cone spacing X for taper segment, Y for tangent segment or Z for conflict situations, as approriate, per Table 1, unless X, Y, or Z cone spacing is shown on this sheet.

Unless otherwise specified in the special provisions, all temporary warning signs shall have black legend on fluorescent orange background.

California codes are designated by (CA). Otherwise, Federal (MUTCD) codes are shown.

TYPICAL HALF ROAD CLOSURE

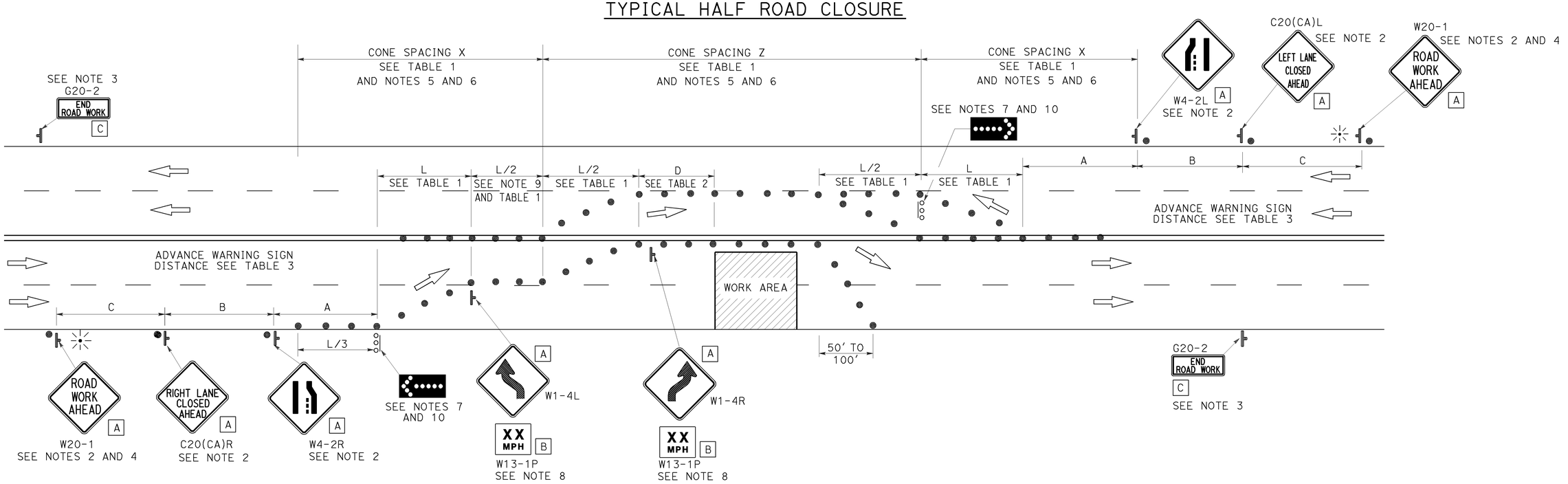

NOTES:

1. At least one person shall be assigned to provide full time maintenance of traffic control devices for lane closure unless, otherwise directed by the Engineer.
2. Each advance warning sign in each direction of travel shall be equipped with at least two flags for daytime closure. Each flag shall be at least 16" x 16" in size and shall be orange or fluorescent red-orange in color. Flashing beacons shall be placed at the locations indicated for lane closure during hours of darkness.
3. A G20-2 "END ROAD WORK" sign, as appropriate, shall be placed at the end of the lane closure unless the end of work area is obvious, or ends within a larger project's limits.
4. If the W20-1 sign would follow within 2000' of a stationary W20-1 or G20-1 "ROAD WORK NEXT _____ MILES", use a C20(CA) sign for the first advance warning sign.
5. All cones used for lane closures during the hours of darkness shall be fitted with retroreflective bands (or sleeves) as specified in the specifications.
6. Portable delineators, placed at one-half the spacing indicated for traffic cones, may be used instead of cones for daytime closures only.
7. Flashing arrow signs shall be either Type I or Type II.
8. Advisory speed will be determined by the Engineer. The W13-1P Plaque will not be required when advisory speed is more than the posted or maximum speed limit.
9. Unless otherwise specified in the special provisions, the tangent (L/2) shall be used.
10. A minimum 1500' of sight distance shall be provided where possible for vehicles approaching the first flashing arrow sign. Lane closures shall not begin at the top of crest vertical curve or on a horizontal curve.

STATE OF CALIFORNIA
DEPARTMENT OF TRANSPORTATION

TRAFFIC CONTROL SYSTEM FOR HALF ROAD CLOSURE ON MULTILANE CONVENTIONAL HIGHWAYS AND EXPRESSWAYS

NO SCALE

RSP T12 DATED APRIL 19, 2013 SUPERSEDES STANDARD PLAN T12
DATED MAY 20, 2011 - PAGE 240 OF THE STANDARD PLANS BOOK DATED 2010.

REVISED STANDARD PLAN RSP T12

2010 REVISED STANDARD PLAN RSP T12

4-2-13

Dist	COUNTY	ROUTE	POST MILES TOTAL PROJECT	SHEET No.	TOTAL SHEETS
03	ED	89	8.6/13.8	215	231

REGISTERED CIVIL ENGINEER

April 19, 2013
PLANS APPROVAL DATE

REGISTERED PROFESSIONAL ENGINEER
Gurinderpal Bhullar
No. C48815
Exp. 9-30-14
CIVIL
STATE OF CALIFORNIA

THE STATE OF CALIFORNIA OR ITS OFFICERS OR AGENTS SHALL NOT BE RESPONSIBLE FOR THE ACCURACY OR COMPLETENESS OF SCANNED COPIES OF THIS PLAN SHEET.

TO ACCOMPANY PLANS DATED 11-18-13

2010 REVISED STANDARD PLAN RSP T13

NOTES:

See Revised Standard Plan RSP T9 for tables.

Use cone spacing X for taper segment, Y for tangent segment or Z for conflict situations, as approriate, per Table 1, unless X, Y, or Z cone spacing is shown on this sheet.

Unless otherwise specified in the special provisions, all temporary warning signs shall have black legend on fluorescent orange background.

California codes are designated by (CA). Otherwise, Federal (MUTCD) codes are shown.

TYPICAL LANE CLOSURE WITH REVERSIBLE CONTROL

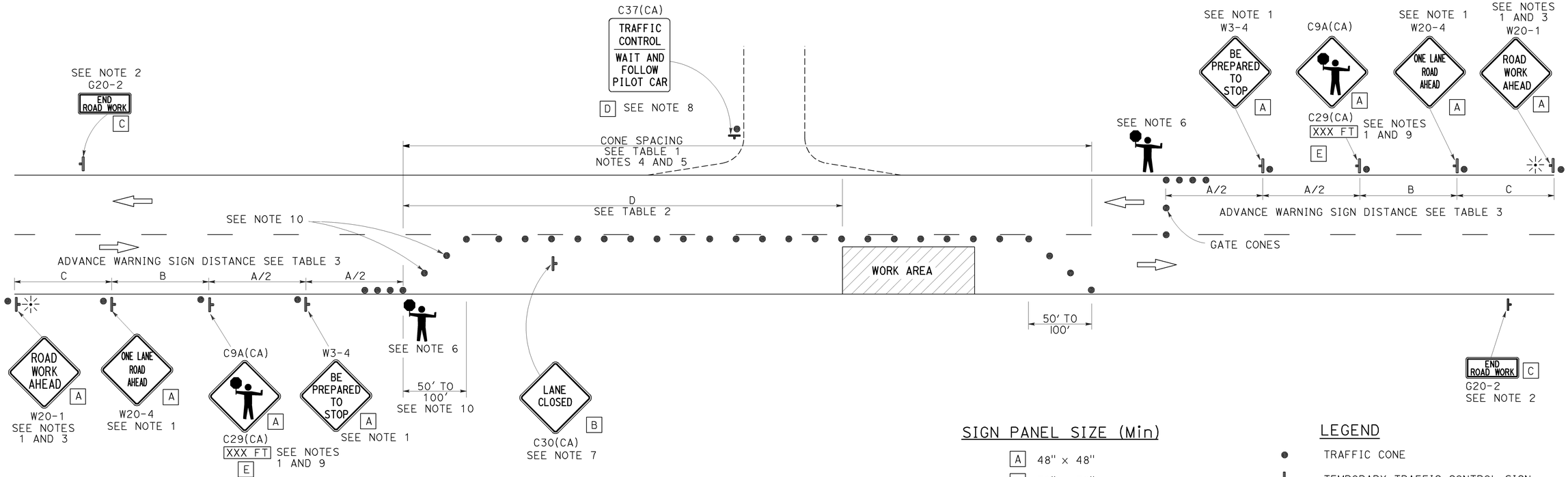

SIGN PANEL SIZE (Min)

A	48" × 48"
B	30" × 30"
C	36" × 18"
D	36" × 42"
E	20" × 7"

LEGEND

- TRAFFIC CONE
- TEMPORARY TRAFFIC CONTROL SIGN
- PORTABLE FLASHING BEACON
- FLAGGER

NOTES:

1. Each advance warning sign in each direction of travel shall be equipped with at least two flags for daytime closure. Each flag shall be at least 16" x 16" in size and shall be orange or fluorescent red-orange in color. Flashing beacons shall be placed at the locations indicated for lane closure during hours of darkness.
2. A G20-2 "END ROAD WORK" sign, as appropriate, shall be placed at the end of the lane control unless the end of work area is obvious, or ends within a larger project's limits.
3. If the W20-1 sign would follow within 2000' of a stationary W20-1 or G20-1 "ROAD WORK NEXT _____ MILES", use a W20-4 sign for the first advance warning sign.
4. All cones used for lane closures during the hours of darkness shall be fitted with retroreflective bands (or sleeves) as specified in the specifications.
5. Portable delineators, placed at one-half the spacing indicated for traffic cones, may be used instead of cones for daytime closures only.
6. Additional advance flaggers may be required. Flagger should stand in a conspicuous place, be visible to approaching traffic as well as approaching vehicles after the first vehicle has stopped. During the hours of darkness, the flagging-station and flagger shall be illuminated and clearly visible to approaching traffic. The illumination footprint of the lighting on the ground shall be at least 20' in diameter. Place a minimum of four cones at 50' intervals in advance of flagger station as shown.
7. Place C30(CA) "LANE CLOSED" sign at 500' to 1000' intervals throughout extended work areas. They are optional if the work area is visible from the flagger station.
8. When a pilot car is used, place a C37(CA) "TRAFFIC CONTROL-WAIT AND FOLLOW PILOT CAR" sign with black legend on white background at all intersections, driveways and alleys without a flagger within traffic control area. Signs shall be clean and visible at all times. Where traffic can not be effectively self-regulated, at least one flagger shall be used at each intersection within traffic control area.
9. An optional C29(CA) sign may be placed below the C9A(CA) sign.
10. Either traffic cones or barricades shall be placed on the taper. Barricades shall be Type I, II, or III.

STATE OF CALIFORNIA
DEPARTMENT OF TRANSPORTATION

TRAFFIC CONTROL SYSTEM FOR LANE CLOSURE ON TWO LANE CONVENTIONAL HIGHWAYS

NO SCALE

RSP T13 DATED APRIL 19, 2013 SUPERSEDES STANDARD PLAN T13 DATED MAY 20, 2011 - PAGE 241 OF THE STANDARD PLANS BOOK DATED 2010.

REVISED STANDARD PLAN RSP T13

4-2-13

Dist	COUNTY	ROUTE	POST MILES TOTAL PROJECT	SHEET No.	TOTAL SHEETS
03	ED	89	8.6/13.8	216	231

REGISTERED CIVIL ENGINEER

April 19, 2013
PLANS APPROVAL DATE

REGISTERED PROFESSIONAL ENGINEER
Gurinderpa Bhullar
No. C48815
Exp. 9-30-14
CIVIL
STATE OF CALIFORNIA

THE STATE OF CALIFORNIA OR ITS OFFICERS OR AGENTS SHALL NOT BE RESPONSIBLE FOR THE ACCURACY OR COMPLETENESS OF SCANNED COPIES OF THIS PLAN SHEET.

TO ACCOMPANY PLANS DATED 11-18-13

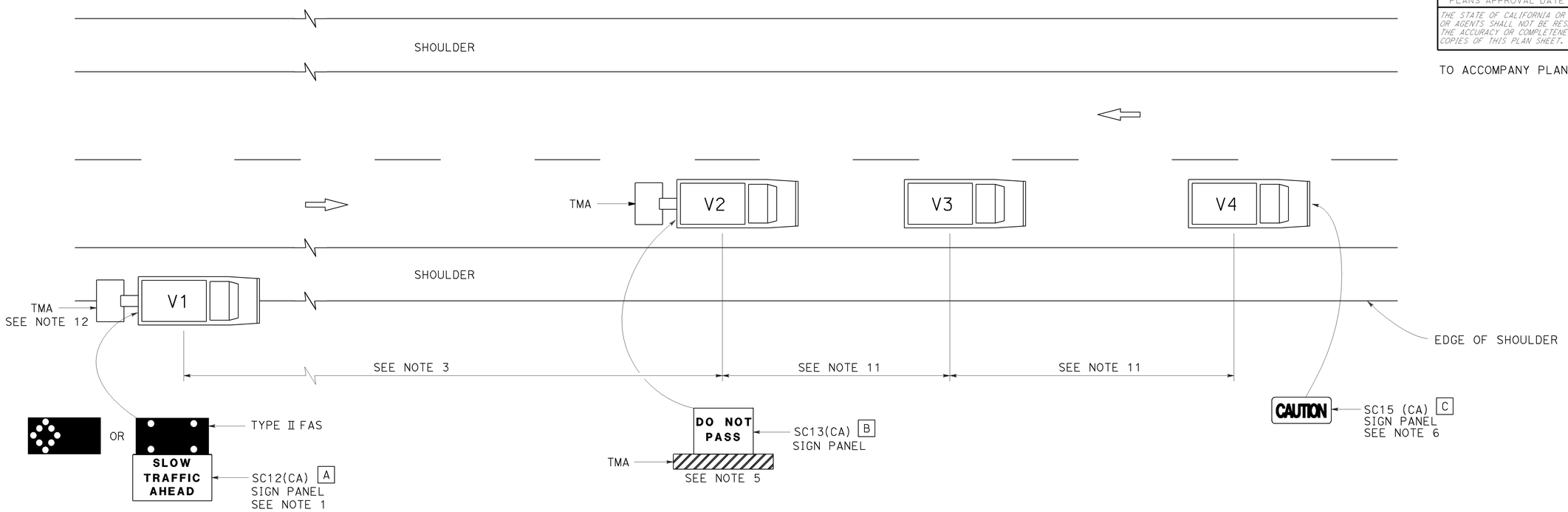

NOTES:

1. Either a changeable message sign or a SC12(CA) "SLOW TRAFFIC AHEAD" sign shall be mounted on the rear of sign vehicle V1. The changeable message sign shall be sequenced to show the "CAUTION" message first, follow by the "SLOW TRAFFIC AHEAD" message. A Type II flashing arrow sign may be used with the SC12(CA) sign panel.
2. Sign vehicle V1 should be positioned where highly visible when shoulders are not available.
3. If traffic queues develop, sign vehicle V1 should be positioned upstream from the end of queue.
4. Vehicle-mounted sign panels shall have Type III or above retroreflective sheeting, black on white, or black on fluorescent orange, with 6" minimum series D letters per Caltrans sign specifications.
5. Shadow vehicle shall be equipped with a truck-mounted attenuator. The sign panel shown shall be mounted on the rear of shadow vehicle V2. The message "LANE CLOSED" may be used in place of the "DO NOT PASS" message.
6. The sign panel shown shall be mounted on the front of sign vehicle V4, facing opposing traffic.
7. All vehicles shall be equipped with flashing or rotating amber lights.
8. Sign vehicle V4 will not be required when the work and vehicles V2 and V3 are 2′ or more from the centerline of the highway during the work or application operations.
9. All vehicles used for lane closures shall be equipped with two-way radios and the vehicle operators shall maintain communication during the work or application operation.
10. This plan shall not be used where workers would be on foot in the work area. Use a stationary type lane closure (Revised Standard Plan T13) for this condition.
11. Minimize spacing between vehicles V2 and V3 and vehicles V3 and V4 to deter road users from driving in between them.
12. If sign vehicle V1 encroaches into the traffic lane due to insufficient shoulder width, sign vehicle V1 shall be equipped with a truck-mounted attenuator. Sign vehicle V1 shall stay as close to the edge of shoulder as practicable.

LEGEND

V1	SIGN VEHICLE
V2	SHADOW VEHICLE
V3	WORK/APPLICATION VEHICLE
V4	SIGN VEHICLE
TMA	TRUCK-MOUNTED ATTENUATOR
	FLASHING ARROW SIGN (FAS) IN FLASHING CAUTION MODE
	FLASHING ARROW SIGN (FAS) IN ALTERNATING DIAMOND CAUTION

SIGN PANEL SIZE (Min)

A	72" x 42"
B	54" x 42"
C	54" x 24"

STATE OF CALIFORNIA
DEPARTMENT OF TRANSPORTATION

TRAFFIC CONTROL SYSTEM FOR MOVING LANE CLOSURE ON TWO LANE HIGHWAYS

NO SCALE

RSP T17 DATED APRIL 19, 2013 SUPERSEDES STANDARD PLAN T17
DATED MAY 20, 2011 - PAGE 245 OF THE STANDARD PLANS BOOK DATED 2010.

REVISED STANDARD PLAN RSP T17

2010 REVISED STANDARD PLAN RSP T17

12-18-12

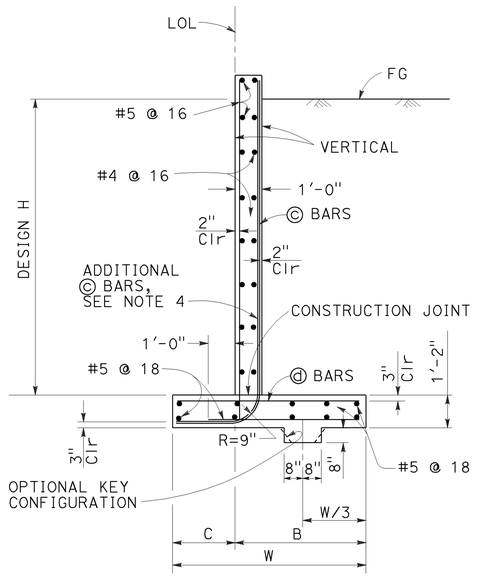

SPREAD FOOTING SECTION

Place concrete in toe against undisturbed material, except as permitted by the Engineer.

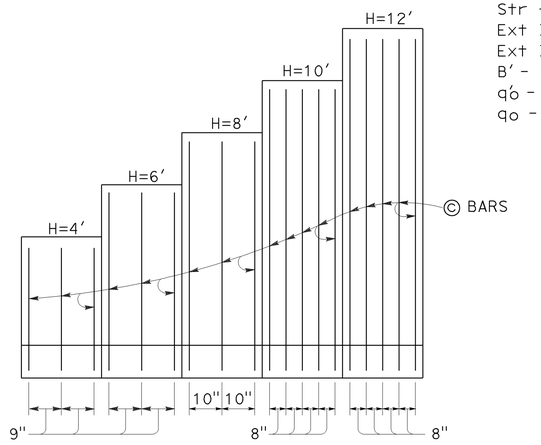

ELEVATION

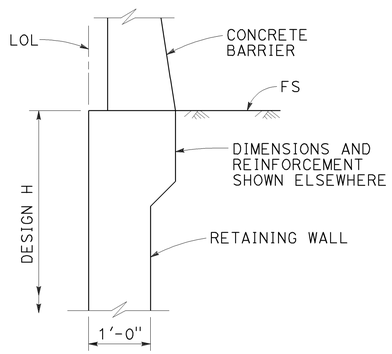

STEM HAUNCH DETAIL

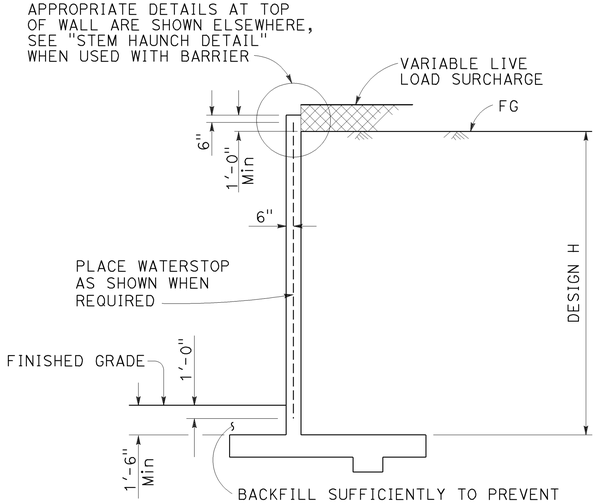

DESIGN SECTION

TABLE OF REINFORCING STEEL, DIMENSIONS AND DATA					
DESIGN H	4′	6′	8′	10′	12′
W	7′-0"	7′-0"	7′-3"	7′-5"	8′-2"
C	2′-3"	2′-3"	2′-3"	2′-5"	2′-7"
B	4′-9"	4′-9"	5′-0"	5′-0"	5′-7"
© BARS	#6 @ 9	#6 @ 9	#7 @ 10	#7 @ 8	#7 @ 8
ⓓ BARS	#5 @ 9	#5 @ 9	#6 @ 10	#7 @ 8	#7 @ 8
Ser: B′, q'_o	6.7, 0.8	6.7, 1.0	6.3, 1.3	5.8, 1.6	6.2, 1.9
Str: B′, q_o	6.6, 1.6	5.2, 1.7	3.7, 2.2	2.8, 3.3	3.0, 3.9
Ext I: B′, q_o	5.6, 0.9	4.8, 1.4	4.1, 2.0	3.1, 3.2	2.7, 4.5
Ext II: B′, q_o	2.8, 1.9	2.7, 2.5	2.8, 3.0	2.6, 3.7	3.4, 3.6

SYMBOLS:

Ser - service limit state I
Str - strength limit state I
Ext I - extreme event limit state I
Ext II - extreme event limit state II
B′ - effective footing width (ft)
q'_o - net bearing stress (ksf), OG assumed to be FG at toe
q_o - gross uniform bearing stress (ksf)

Dist	COUNTY	ROUTE	POST MILES TOTAL PROJECT	SHEET No.	TOTAL SHEETS
03	ED	89	8.6/13.8	217	231

Gary Wang
REGISTERED CIVIL ENGINEER

April 20, 2012
PLANS APPROVAL DATE

REGISTERED PROFESSIONAL ENGINEER — Gary Wang — No. C58298 — Exp. 6-30-12 — CIVIL — STATE OF CALIFORNIA

THE STATE OF CALIFORNIA OR ITS OFFICERS OR AGENTS SHALL NOT BE RESPONSIBLE FOR THE ACCURACY OR COMPLETENESS OF SCANNED COPIES OF THIS PLAN SHEET.

TO ACCOMPANY PLANS DATED 11-18-13

DESIGN CONDITIONS:

Design H may be exceeded by 6" before going to the next size.
Special footing design is required where foundation material is incapable of supporting bearing stress listed in the table.

DESIGN NOTES:

DESIGN: AASHTO LRFD Bridge Design Specifications, 4th Edition with California Amendments

LS: Varied surcharge on level ground surface

DC: Stem Architectural Treatment of thickness up to 6" of concrete (75 psf) considered

CT: 54 kip transverse force applied at He = 32", distributed over 10 feet at the top of wall and 1 : 1 distribution down and outward. Distribution below footing taken no less than 40′.

SEISMIC: k_h = 0.2
k_v = 0.0

SOIL: ø = 34°
γ = 120 pcf

REINFORCED CONCRETE: f′c = 3,600 psi
fy = 60,000 psi

LOAD COMBINATIONS AND LIMIT STATES:

Service I	Q = 1.00DC+1.00EV+1.00EH+1.00LS
Strength I	Q = αDC+øEV+ηEH+1.75LS
Extreme I	Q = 1.00DC+1.00EV+1.00EH+1.00EQD+1.00EQE
Extreme II	Q = 1.00DC+1.00EV+1.00EH+1.00CT

Where:

Q:	Force Effects
α:	1.25 or 0.90, Whichever Controls Design
ø:	1.35 or 1.00, Whichever Controls Design
η:	1.50 or 0.90, Whichever Controls Design
DC:	Dead Load of Structure Components
EH:	Horizontal Earth Fill Pressure
EV:	Vertical Earth Pressure from Earth Fill Weight
LS:	Live Load Surcharge
EQE:	Seismic Earth Pressure
EQD:	Soil and Structural and Nonstructural Components Inertia
CT:	Vehicular Collision Force

NOTES:

1. For details not shown and drainage notes see RSP B3-5
2. For wall stem joint details see B0-3 / 3-3 and B0-3 / 3-4
3. At © bars:
   H ≤ 6′, no splices are allowed within 1′-8" above the top of footing.
   H > 6′, no splices are allowed within H/4 above the top of footing.
4. Provide #6 @ 8" © bars in addition to tabulated © bars over a distance of 8′-0" measured from all expansion joints, begin wall and end wall location.

STATE OF CALIFORNIA
DEPARTMENT OF TRANSPORTATION

RETAINING WALL TYPE 1A (CASE 1)

NO SCALE

RSP B3-3A DATED APRIL 20, 2012 SUPPLEMENTS THE STANDARD PLANS BOOK DATED 2010.

REVISED STANDARD PLAN RSP B3-3A

2010 REVISED STANDARD PLAN RSP B3-3A

2-22-12

Dist	COUNTY	ROUTE	POST MILES TOTAL PROJECT	SHEET No.	TOTAL SHEETS
03	ED	89	8.6/13.8	218	231

Gary Wang
REGISTERED CIVIL ENGINEER

April 20, 2012
PLANS APPROVAL DATE

REGISTERED PROFESSIONAL ENGINEER
Gary Wang
No. C58298
Exp. 6-30-12
CIVIL
STATE OF CALIFORNIA

THE STATE OF CALIFORNIA OR ITS OFFICERS OR AGENTS SHALL NOT BE RESPONSIBLE FOR THE ACCURACY OR COMPLETENESS OF SCANNED COPIES OF THIS PLAN SHEET.

TO ACCOMPANY PLANS DATED 11-18-13

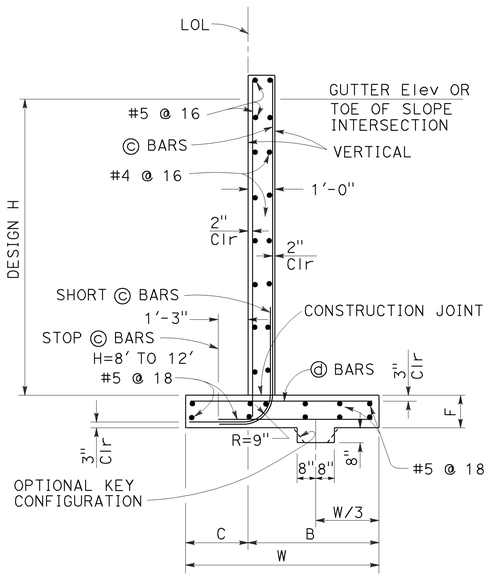

SPREAD FOOTING SECTION

Place concrete in toe against undisturbed material, except as permitted by the Engineer.

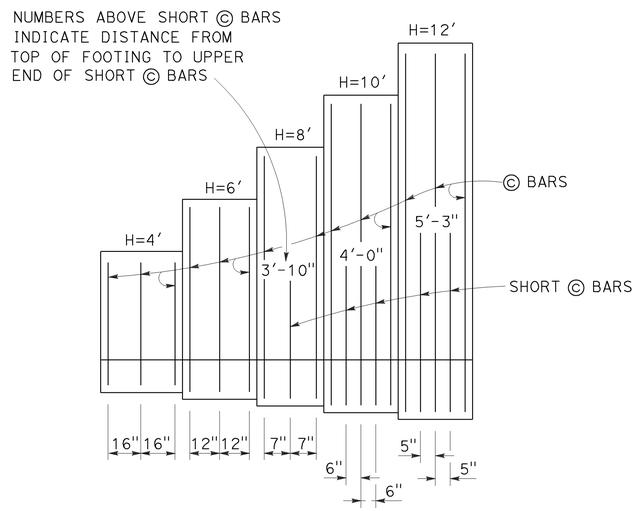

ELEVATION

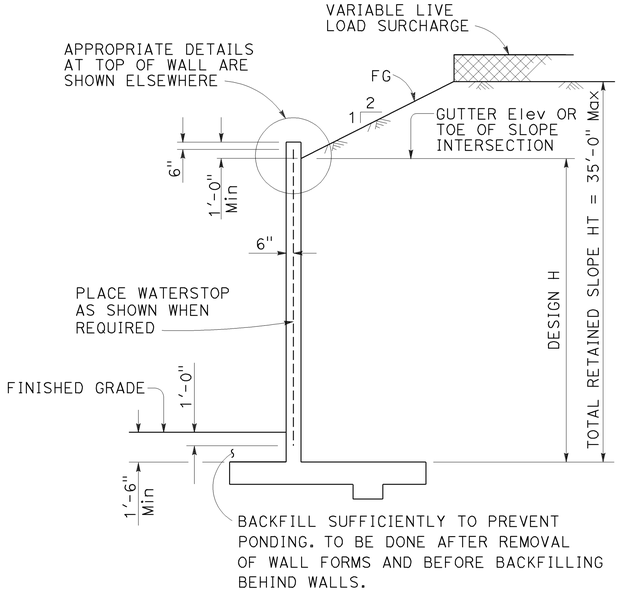

DESIGN SECTION

SYMBOLS:

Ser - service limit state I
Str - strength limit state I
Ext - extreme event limit state I
B' - effective footing width (ft)
q'_o - net bearing stress (ksf), OG assumed to be FG at toe
q_o - gross uniform bearing stress (ksf)

TABLE OF REINFORCING STEEL, DIMENSIONS AND DATA					
DESIGN H	4'	6'	8'	10'	12'
W	5'-10"	7'-7"	9'-0"	11'-0"	12'-5"
C	2'-4"	2'-7"	3'-0"	3'-6"	4'-0"
B	3'-6"	5'-0"	6'-0"	7'-6"	8'-5"
F	1'-4"	1'-7"	1'-7"	1'-9"	1'-9"
© BARS	#5 @ 16	#5 @ 12	#5 @ 7	#6 @ 6	#7 @ 5
ⓓ BARS	#5 @ 16	#5 @ 12	#5 @ 7	#6 @ 6	#7 @ 5
Ser: B', q'_o	4.0, 0.8	5.6, 1.0	8.8, 1.1	10.6, 1.3	12.0, 1.6
Str: B', q_o	1.9, 2.0	3.5, 2.1	4.5, 2.3	6.5, 2.3	7.7, 2.5
Ext: B', q_o	2.8, 2.3	3.3, 3.3	3.9, 3.9	5.3, 4.1	5.9, 4.5

DESIGN CONDITIONS:

Design H may be exceeded by 6" before going to the next size. Special footing design is required where foundation material is incapable of supporting bearing stress listed in the table.

DESIGN NOTES:

DESIGN: AASHTO LRFD Bridge Design Specifications, 4th Edition with California Amendments

LS: Varied surcharge on level ground surface

DC: Stem Architectural Treatment of thickness up to 6" of concrete (75 psf) considered

SEISMIC: $k_h = 0.2$, $k_v = 0.0$

SOIL: $\phi = 34°$, $\gamma = 120$ pcf

REINFORCED CONCRETE: f'c = 3,600 psi, fy = 60,000 psi

LOAD COMBINATIONS AND LIMIT STATES:

Service I	Q = 1.00DC+1.00EV+1.00EH+1.00LS
Strength I	Q = αDC+βEV+ηEH+1.75LS
Extreme I	Q = 1.00DC+1.00EV+1.00EH+1.00EQD+1.00EQE

Where:

Q:	Force Effects
α:	1.25 or 0.90, Whichever Controls Design
β:	1.35 or 1.00, Whichever Controls Design
η:	1.50 or 0.90, Whichever Controls Design
DC:	Dead Load of Structure Components
EH:	Horizontal Earth Fill Pressure
EV:	Vertical Earth Pressure from Earth Fill Weight
LS:	Live Load Surcharge
EQE:	Seismic Earth Pressure
EQD:	Soil and Structural and Nonstructural Components Inertia

NOTES:

1. For details not shown and drainage notes see RSP B3-5
2. For wall stem joint details see B0-3 3-3 and B0-3 3-4
3. At © and short © bars:
   H ≤ 6', no splices are allowed within 1'-8" above the top of footing.
   H > 6', no splices are allowed within H/4 above the top of footing.

STATE OF CALIFORNIA
DEPARTMENT OF TRANSPORTATION

RETAINING WALL TYPE 1A (CASE 2)

NO SCALE

RSP B3-3B DATED APRIL 20, 2012 SUPPLEMENTS THE STANDARD PLANS BOOK DATED 2010.

REVISED STANDARD PLAN RSP B3-3B

2010 REVISED STANDARD PLAN RSP B3-3B

2-22-12

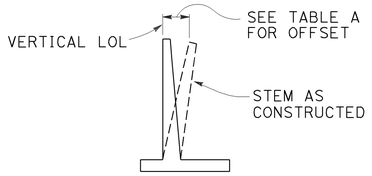

APPROXIMATE WALL OFFSET VALUES

Values for offseting forms to be determined by the Engineer.

TABLE A

H	OFFSET
4′-12′	H/200
14′-16′	H/160
18′-20′	H/140
22′-24′	H/130
26′-36′	2½"

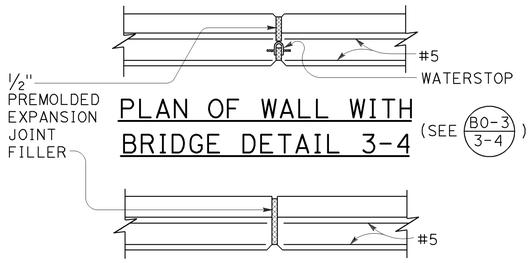

PLAN OF WALL WITH BRIDGE DETAIL 3-4 (SEE B0-3 3-4)

PLAN OF WALL WITH EXPANSION JOINT ONLY

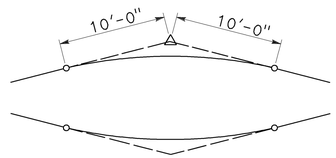

20′-0" VC AT TOP OF WALL SLOPE CHANGE

Where shown on the plans

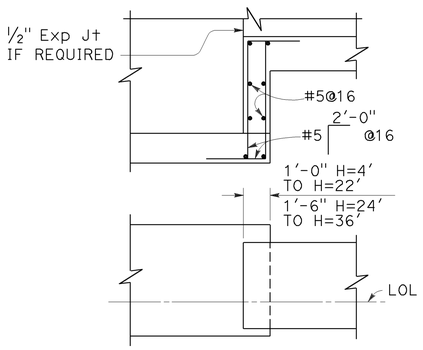

FOOTING STEP

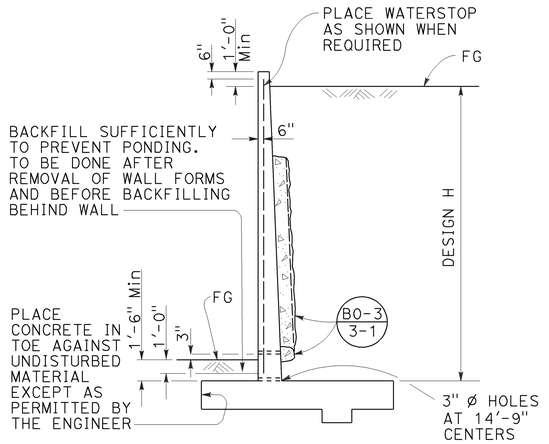

DESIGN AND DRAINAGE

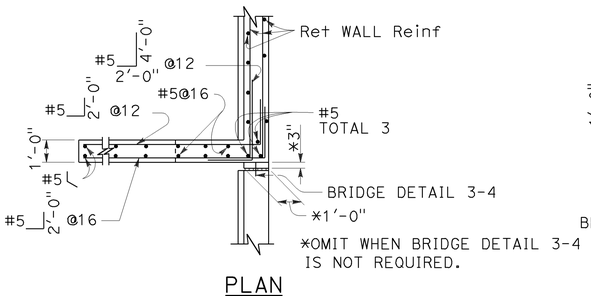

PLAN

(For return wall Type "A")

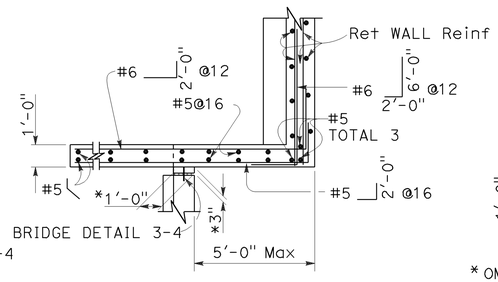

PLAN

(For return wall Type "B")

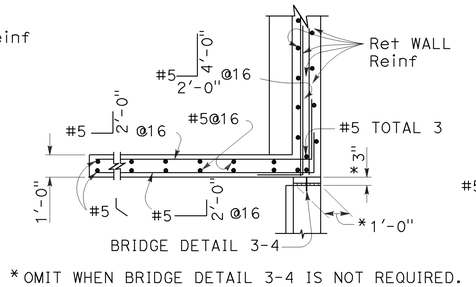

* OMIT WHEN BRIDGE DETAIL 3-4 IS NOT REQUIRED.

PLAN

(For return wall Type "C")

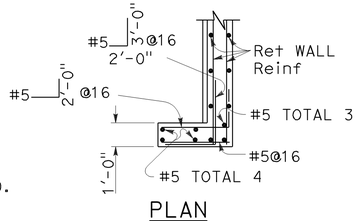

PLAN

(For return wall Type "D")

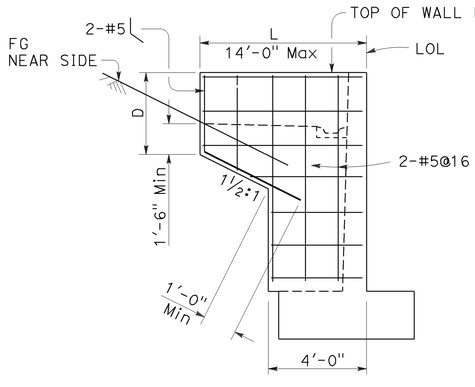

ELEVATION

RETURN WALL TYPE "A"

Use where H=8′ or less

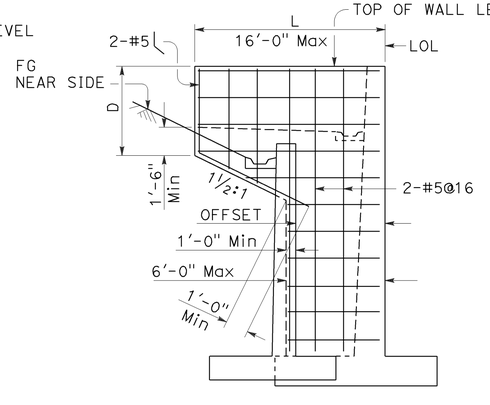

ELEVATION

RETURN WALL TYPE "B"

Use where H=10′ or more on offset walls

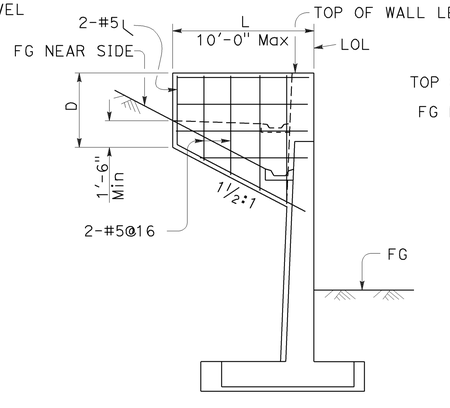

ELEVATION

RETURN WALL TYPE "C"

Use where H=10′ or more on straight walls

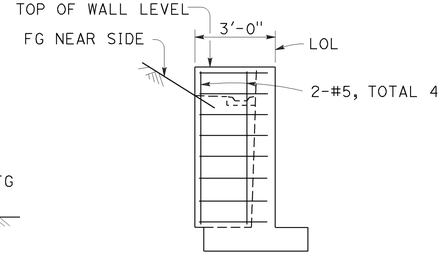

ELEVATION

RETURN WALL TYPE "D"

Use where H=6′ or less

Dist	COUNTY	ROUTE	POST MILES TOTAL PROJECT	SHEET No.	TOTAL SHEETS
03	ED	89	8.6/13.8	219	231

Gary Wang
REGISTERED CIVIL ENGINEER

April 20, 2012
PLANS APPROVAL DATE

REGISTERED PROFESSIONAL ENGINEER — Gary Wang No. C58298 Exp. 6-30-12 CIVIL — STATE OF CALIFORNIA

THE STATE OF CALIFORNIA OR ITS OFFICERS OR AGENTS SHALL NOT BE RESPONSIBLE FOR THE ACCURACY OR COMPLETENESS OF SCANNED COPIES OF THIS PLAN SHEET.

TO ACCOMPANY PLANS DATED 11-18-13

DESIGN CONDITIONS:

Design "H" may be exceeded by 6" before going to the next size. Special footing design is required where foundation material is incapable of supporting bearing stress listed in table

Return wall not required unless shown elsewhere

DESIGN NOTES:

DESIGN: AASHTO LRFD Bridge Design Specifications, 4th edition with California Amendments

LIVE LOAD: Surcharge on level ground surface

SOIL: ø = 34°
γ = 120 pcf

REINFORCED CONCRETE: fy = 60,000 psi
fc′ = 3,600 psi

STATE OF CALIFORNIA
DEPARTMENT OF TRANSPORTATION

RETAINING WALL DETAILS No. 1

NO SCALE

RSP B3-5 DATED APRIL 20, 2012 SUPERSEDES STANDARD PLAN B3-5 DATED MAY 20, 2011 - PAGE 277 OF THE STANDARD PLANS BOOK DATED 2010.

REVISED STANDARD PLAN RSP B3-5

2010 REVISED STANDARD PLAN RSP B3-5

2-22-12

Dist	COUNTY	ROUTE	POST MILES TOTAL PROJECT	SHEET No.	TOTAL SHEETS
03	ED	89	8.6/13.8	220	231

REGISTERED CIVIL ENGINEER

October 21, 2011
PLANS APPROVAL DATE

REGISTERED PROFESSIONAL ENGINEER — Tillat Satter — No. C42892 — Exp. 3-31-12 — CIVIL — STATE OF CALIFORNIA

THE STATE OF CALIFORNIA OR ITS OFFICERS OR AGENTS SHALL NOT BE RESPONSIBLE FOR THE ACCURACY OR COMPLETENESS OF SCANNED COPIES OF THIS PLAN SHEET.

TO ACCOMPANY PLANS DATED 11-18-13

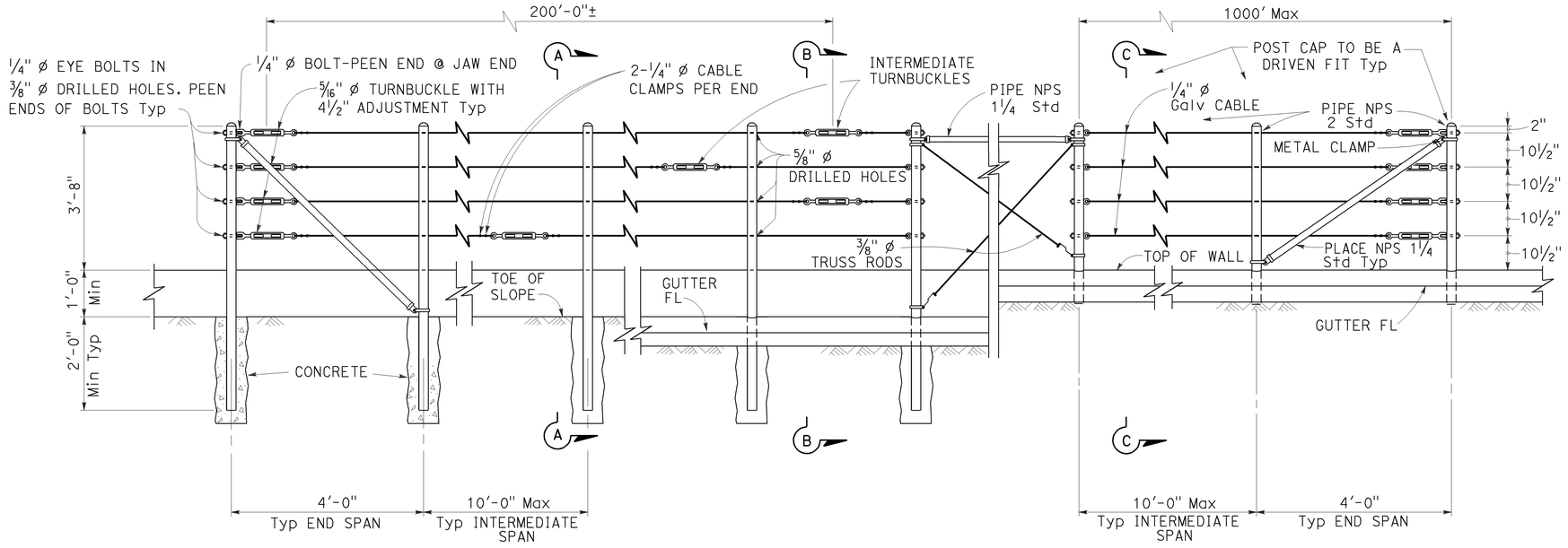

EXISTING WALL (WITHOUT GUTTER)
Existing

RETAINING WALL (WITH GUTTER)
Existing

RETAINING WALL (WITH GUTTER)
New construction

ELEVATION

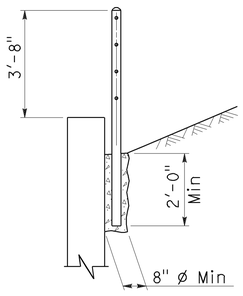

SECTION A-A
Existing

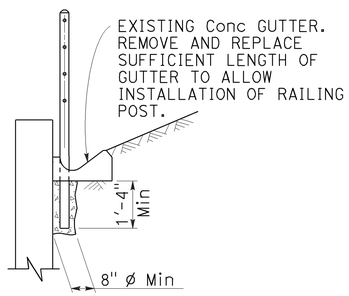

SECTION B-B
Existing

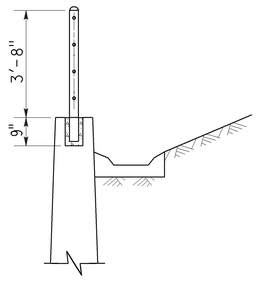

SECTION C-C
New construction

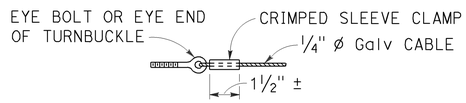

ALTERNATIVE CABLE CONNECTION

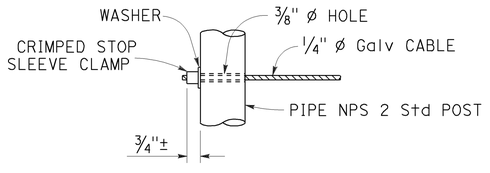

ALTERNATIVE DEAD END ANCHORAGE

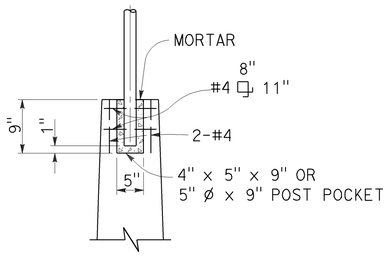

POST POCKET

NOTES:

1. Maximum distance between turnbuckles shall be 200'-0"±.
2. Intermediate turnbuckles to be placed in adjacent spans.
3. Cable shall not be spliced between intermediate turnbuckles and end posts.
4. Posts to be vertical.
5. Alignment of holes in posts may vary to conform to slope of top of retaining wall.
6. The Contractor shall verify all dependent dimensions in the field before ordering or fabricating any material.
7. Line posts shall be braced horizontally and trussed diagonally in both directions at intervals not to exceed 1000'.
8. Post pockets to be centered in top of wall.
9. Typical end spans, braced in both directions, shall be constructed at changes in line where the angle of deflection is 15° or more.
10. Provide thimbles at all cable loops.

STATE OF CALIFORNIA
DEPARTMENT OF TRANSPORTATION

CABLE RAILING

NO SCALE

RSP B11-47 DATED OCTOBER 21, 2011 SUPERSEDES STANDARD PLAN B11-47 DATED MAY 20, 2011 - PAGE 293 OF THE STANDARD PLANS BOOK DATED 2010.

REVISED STANDARD PLAN RSP B11-47

2010 REVISED STANDARD PLAN RSP B11-47

9-14-11

Dist	COUNTY	ROUTE	POST MILES TOTAL PROJECT	SHEET No.	TOTAL SHEETS
03	ED	89	8.6/13.8	221	231

Theresa Gabriel
REGISTERED ELECTRICAL ENGINEER

Theresa Aziz Gabriel No. E15129 Exp. 6-30-14 ELECTRICAL — REGISTERED PROFESSIONAL ENGINEER — STATE OF CALIFORNIA

July 19, 2013
PLANS APPROVAL DATE

THE STATE OF CALIFORNIA OR ITS OFFICERS OR AGENTS SHALL NOT BE RESPONSIBLE FOR THE ACCURACY OR COMPLETENESS OF SCANNED COPIES OF THIS PLAN SHEET.

TO ACCOMPANY PLANS DATED 11-18-13

LEGEND:

AB	ABANDON. IF APPLIED TO CONDUIT, REMOVE CONDUCTORS
BC	INSTALL PULL BOX IN EXISTING CONDUIT RUN
BP	PEDESTRIAN BARRICADE, TYPE AS INDICATED ON PLAN
CB	INSTALL CONDUIT INTO EXISTING PULL BOX
CC	CONNECT NEW AND EXISTING CONDUIT. REMOVE EXISTING CONDUCTORS AND INSTALL CONDUCTORS AS INDICATED
CF	CONDUIT TO REMAIN FOR FUTURE USE. REMOVE CONDUCTORS. INSTALL PULL TAPE
DH	DETECTOR HANDHOLE
FA	FOUNDATION TO BE ABANDONED
IS	INSTALL SIGN ON SIGNAL MAST ARM
NS	NO SLIP BASE ON STANDARD
PEC	PHOTOELECTRIC CONTROL
PEU	PHOTOELECTRIC UNIT
RC	EQUIPMENT OR MATERIAL TO BE REMOVED AND BECOME THE PROPERTY OF THE CONTRACTOR
RE	REMOVE ELECTROLIER, FUSES AND BALLAST. TAPE ENDS OF CONDUCTORS
RL	RELOCATE EQUIPMENT
RR	REMOVE AND REUSE EQUIPMENT
RS	REMOVE AND SALVAGE EQUIPMENT
SC	SPLICE NEW TO EXISTING CONDUCTORS
SD	SERVICE DISCONNECT
TSP	TELEPHONE SERVICE POINT

ABBREVIATIONS

APS	ACCESSIBLE PEDESTRIAN SIGNAL
BBS	BATTERY BACKUP SYSTEM
BC	BOLT CIRCLE
BPB	BICYCLE PUSH BUTTON
C	CONDUIT
CB	CIRCUIT BREAKER
CCTV	CLOSED CIRCUIT TELEVISION
Ckt	CIRCUIT
CMS	CHANGEABLE MESSAGE SIGN
Ctid	CALTRANS IDENTIFICATION
Comm	COMMUNICATION
DLC	LOOP DETECTOR LEAD-IN CABLE
EMS	EXTINGUISHABLE MESSAGE SIGN
EVUC	EMERGENCY VEHICLE UNIT CABLE
EVUD	EMERGENCY VEHICLE UNIT DETECTOR
FB	FLASHING BEACON
FBCA	FLASHING BEACON CONTROL ASSEMBLY
FBS	FLASHING BEACON WITH SLIP BASE
FO	FIBER OPTIC
G	EQUIPMENT GROUNDING CONDUCTOR
GB	GROUND BUS
GFCI	GROUND FAULT CIRCUIT INTERRUPTER
HAR	HIGHWAY ADVISORY RADIO
Hex	HEXAGONAL
HPS	HIGH PRESSURE SODIUM
IISNS	INTERNALLY ILLUMINATED STREET NAME SIGN
ISL	INDUCTION SIGN LIGHTING
LED	LIGHT EMITTING DIODE
LMA	LUMINAIRE MAST ARM
LPS	LOW PRESSURE SODIUM
Ltg	LIGHTING
Lum	LUMINAIRE
M	METERED
MAT	MAST ARM MOUNTING TOP ATTACHMENT
MAS	MAST ARM MOUNTING SIDE ATTACHMENT
M/M	MULTIPLE TO MULTIPLE TRANSFORMER
Mtg	MOUNTING
MV	MERCURY VAPOR LIGHTING FIXTURE
MVDS	MICROWAVE VEHICLE DETECTION SYSTEM
N	NEUTRAL (GROUNDED CONDUCTOR)
NB	NEUTRAL BUS
NC	NORMALLY CLOSE
NO	NORMALLY OPEN
P	CIRCUIT BREAKER'S POLE
PB	PULL BOX
PBA	PUSH BUTTON ASSEMBLY
PEC	PHOTOELECTRIC CONTROL
Ped	PEDESTRIAN
PEU	PHOTOELECTRIC UNIT
PT	CONDUIT WITH PULL TAPE
RE	RELOCATED EQUIPMENT
RM	RAMP METERING
RWIS	ROADSIDE WEATHER INFORMATION SYSTEM
SB	SLIP BASE
SIC	SIGNAL INTERCONNECT CABLE
Sig	SIGNAL
SMA	SIGNAL MAST ARM
SNS	STREET NAME SIGN
SP	SERVICE POINT
TDC	TELEPHONE DEMARCATION CABINET
TMS	TRAFFIC MONITORING STATION
TOS	TRAFFIC OPERATIONS SYSTEM
Veh	VEHICLE
VIVDS	VIDEO IMAGE VEHICLE DETECTION SYSTEM
WIM	WEIGH-IN-MOTION
Xfmr	TRANSFORMER

SOFFIT AND WALL MOUNTED LUMINAIRES

- PENDANT, 70 W HPS UNLESS OTHERWISE SPECIFIED
- FLUSH, 70 W HPS UNLESS OTHERWISE SPECIFIED
- WALL SURFACE, 70 W HPS UNLESS OTHERWISE SPECIFIED
- EXISTING SOFFIT OR WALL LUMINAIRE TO REMAIN UNMODIFIED
- (M) EXISTING SOFFIT OR WALL LUMINAIRE TO BE MODIFIED AS SPECIFIED

NOTE:
Arrow indicates "street side" of luminaire.

COMMONLY USED SYMBOLS FOR UNITED STATES CUSTOMARY UNITS OF MEASUREMENT:

SYMBOL USED	DEFINITIONS
Ω	OHMS
min	MINUTE
s	SECOND
bps	BITS PER SECOND
Bps	BYTES PER SECOND
A	AMPERE
V	VOLT
$V_{(dc)}$	VOLT (DIRECT CURRENT)
$V_{(ac)}$	VOLT (ALTERNATING CURRENT)
FC	FOOT - CANDLE
W	WATTS
VA	VOLT-AMPERE
M	MEGA
k	KILO
m	MILLI
μ	MICRO
P	PICO
Hz	HERTZ

MISCELLANEOUS ELECTROLIERS

NEW	EXISTING	
		LUMINAIRE ON WOOD POLE
		NON-STANDARD ELECTROLIER (SEE PROJECT NOTES OR PROJECT PLANS)
C	C	CITY ELECTROLIER
EF	EF	ELECTROLIER FOUNDATION (FUTURE INSTALLATION)

STANDARD ELECTROLIER

NEW	EXISTING	STANDARD TYPE
		15
		15D
S	S	15 STRUCTURE
S S	S S	15D STRUCTURE
		21
		21D
		21 STRUCTURE
		21D STRUCTURE
		30
		31
		32

NOTES:

1. HPS luminaires shall be 310 W HPS when installed on Type 21, 21D, 30, 31 and 32 Standards, unless otherwise specified. HPS luminaires shall be 200 W when installed on other type standards or poles, unless otherwise specified.
2. LED luminaires shall be 235 W when installed on Type 21, 21D, 30, 31 and 32 Standards, unless otherwise specified. LED luminaires shall be 165 W when installed on other type standards or poles, unless otherwise specified.
3. Luminaires shall be the cutoff type, ANSI Type III medium cutoff lighting distribution, unless otherwise specified.

STATE OF CALIFORNIA
DEPARTMENT OF TRANSPORTATION

ELECTRICAL SYSTEMS (LEGEND AND ABBREVIATIONS)

NO SCALE

RSP ES-1A DATED JULY 19, 2013 SUPERSEDES STANDARD PLAN ES-1A DATED MAY 20, 2011 - PAGE 425 OF THE STANDARD PLANS BOOK DATED 2010.

REVISED STANDARD PLAN RSP ES-1A

2010 REVISED STANDARD PLAN RSP ES-1A

7-15-13

Dist	COUNTY	ROUTE	POST MILES TOTAL PROJECT	SHEET No.	TOTAL SHEETS
03	ED	89	8.6/13.8	222	231

Theresa Gabriel
REGISTERED ELECTRICAL ENGINEER

Theresa Aziz Gabriel No. E15129 Exp. 6-30-14 ELECTRICAL — REGISTERED PROFESSIONAL ENGINEER — STATE OF CALIFORNIA

July 19, 2013
PLANS APPROVAL DATE

THE STATE OF CALIFORNIA OR ITS OFFICERS OR AGENTS SHALL NOT BE RESPONSIBLE FOR THE ACCURACY OR COMPLETENESS OF SCANNED COPIES OF THIS PLAN SHEET.

TO ACCOMPANY PLANS DATED 11-18-13

CONDUIT

NEW	EXISTING	
		LIGHTING CONDUIT, UNLESS OTHERWISE INDICATED OR NOTED
		TRAFFIC SIGNAL CONDUIT
C	c	COMMUNICATION CONDUIT
T	t	TELEPHONE CONDUIT
F	f	FIRE ALARM CONDUIT
FO	fo	FIBER OPTIC CONDUIT
		CONDUIT TERMINATION
R	r	CONDUIT RISER ATTACHED TO THE STRUCTURE OR SERVICE POLE

SERVICE EQUIPMENT

NEW	EXISTING	
OH	oh	OVERHEAD LINES
U	U	WOOD POLE, "U" INDICATES UTILITY OWNED
		POLE GUY WITH ANCHOR
		UTILITY TRANSFORMER - GROUND MOUNTED
III	III	SERVICE EQUIPMENT ENCLOSURE TYPE. DOOR INDICATES FRONT OF ENCLOSURE
T	t	TELEPHONE DEMARCATION CABINET

POLE-MOUNTED SERVICE DESIGNATION

TYPE H SERVICE, 28'-10" — TYPE OF INSTALLATION AND POLE HEIGHT ABOVE GRADE

FLASHING BEACON

NEW	EXISTING	
R	R	FLASHING BEACON (ONE VEHICLE SIGNAL HEAD WITH BACKPLATE AND VISOR) "R" INDICATES RED INDICATION, "Y" INDICATES YELLOW INDICATION
Y Y	Y Y	FLASHING BEACON WITH TYPE 15-FBS STANDARD AND A SIGN.
R R	R R	FLASHING BEACON WITH TYPES 9, 9A OR 9B SIGN UNLESS OTHERWISE SPECIFIED OR INDICATED

SIGNAL EQUIPMENT

NEW	EXISTING	
C	C	PEDESTRIAN SIGNAL HEAD "C" INDICATES COUNTDOWN PEDESTRIAN HEAD
		PUSH BUTTON ASSEMBLY POST
		PEDESTRIAN BARRICADE
		VEHICLE SIGNAL HEAD (WITH BACKPLATE AND 3-SECTIONS: RED, YELLOW AND GREEN)
		VEHICLE SIGNAL HEAD WITH ANGLE VISOR
PV	PV	MODIFICATIONS OF BASIC SYMBOL: "L" INDICATES ALL NON-ARROW SECTIONS LOUVERED "LG" INDICATES LOUVERED GREEN SECTION ONLY "PV" INDICATES ALL 12" SECTIONS PROGRAMMED VISIBILITY "8" INDICATES ALL 8" SECTIONS (ONLY WHEN SPECIFIED)
		VEHICLE SIGNAL HEAD CONSISTING OF RED, YELLOW AND GREEN LEFT ARROW SECTIONS
		VEHICLE SIGNAL HEAD CONSISTING OF RED AND YELLOW SECTIONS WITH AN UP GREEN ARROW SECTION
		VEHICLE SIGNAL HEAD (5 SECTION) CONSISTING OF RED, YELLOW AND GREEN SECTIONS WITH YELLOW AND GREEN RIGHT ARROW SECTIONS
		TYPE 15TS STANDARD WITH VEHICLE SIGNAL HEAD AND LUMINAIRE
		TYPE 21TS STANDARD WITH VEHICLE SIGNAL HEAD AND LUMINAIRE
		STANDARD WITH LUMINAIRE AND SIGNAL MAST ARMS AND ATTACHED VEHICLE SIGNAL HEADS
		TYPE 1 STANDARD WITH ATTACHED VEHICLE SIGNAL HEADS
		STANDARD WITH A SIGNAL MAST ARM, ATTACHED VEHICLE SIGNAL HEADS AND INTERNALLY ILLUMINATED STREET NAME SIGN
		CONTROLLER ASSEMBLY. DOOR INDICATES FRONT OF CABINET

SIGNAL EQUIPMENT Cont

NEW	EXISTING	
		GUARD POST
		TYPE 1 STANDARD WITH RAMP METERING SIGN
		OPTICAL DETECTOR FOR THE EMERGENCY VEHICLE DETECTION SYSTEM

NOTES:

1. All signal sections shall be 12" unless shown otherwise.
2. Signal heads shall be provided with backplates unless shown otherwise.

ILLUMINATED OVERHEAD SIGN

NEW	EXISTING	
		SINGLE POST, SINGLE ILLUMINATED SIGN, BALANCED BUTTERFLY
		SINGLE POST, DOUBLE ILLUMINATED SIGN, BALANCED BUTTERFLY
		SINGLE POST, SINGLE ILLUMINATED SIGN, FULL CANTILEVER
		DOUBLE POST, SINGLE ILLUMINATED SIGN
		SINGLE ILLUMINATED SIGN MOUNTED ON STRUCTURE
		DOUBLE POST, SINGLE ILLUMINATED SIGN WITH ELECTROLIER

STATE OF CALIFORNIA
DEPARTMENT OF TRANSPORTATION

ELECTRICAL SYSTEMS (LEGEND AND ABBREVIATIONS)

NO SCALE

RSP ES-1B DATED JULY 19, 2013 SUPERSEDES STANDARD PLAN ES-1B DATED MAY 20, 2011 - PAGE 426 OF THE STANDARD PLANS BOOK DATED 2010.

REVISED STANDARD PLAN RSP ES-1B

2010 REVISED STANDARD PLAN RSP ES-1B

7-15-13

Dist	COUNTY	ROUTE	POST MILES TOTAL PROJECT	SHEET No.	TOTAL SHEETS
03	ED	89	8.6/13.8	223	231

Theresa Gabriel
REGISTERED ELECTRICAL ENGINEER

July 19, 2013
PLANS APPROVAL DATE

REGISTERED PROFESSIONAL ENGINEER
Theresa Aziz Gabriel
No. E15129
Exp. 6-30-14
ELECTRICAL
STATE OF CALIFORNIA

THE STATE OF CALIFORNIA OR ITS OFFICERS OR AGENTS SHALL NOT BE RESPONSIBLE FOR THE ACCURACY OR COMPLETENESS OF SCANNED COPIES OF THIS PLAN SHEET.

TO ACCOMPANY PLANS DATED 11-18-13

EQUIPMENT IDENTIFICATION

ILLUMINATED SIGN IDENTIFICATION NUMBER:

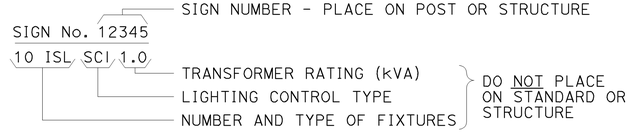

ELECTROLIER OR EQUIPMENT IDENTIFICATION NUMBER:

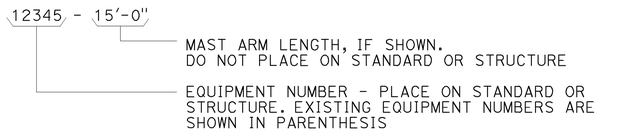

CONDUIT AND CONDUCTOR IDENTIFICATION:

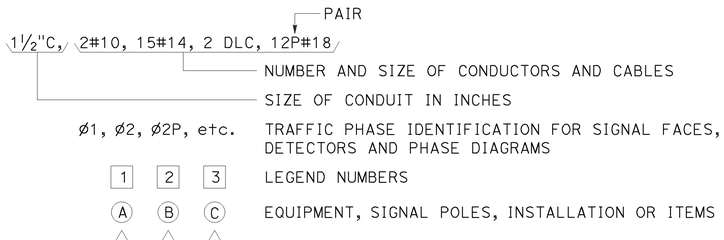

SIGNAL AND LIGHTING STANDARD (TYPICAL DESIGNATION):

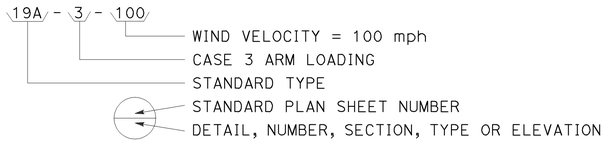

MISCELLANEOUS EQUIPMENT

NEW	EXISTING	
CMS	cms	CHANGEABLE MESSAGE SIGN
		CLOSED CIRCUIT TELEVISION CAMERA
		HIGHWAY ADVISORY RADIO POLE AND ANTENNA
EMS	ems	EXTINGUISHABLE MESSAGE SIGN
M V	m v	DETECTION DEVICE M = MICROWAVE SENSOR V = VIDEO IMAGE SENSOR

WIRING DIAGRAM LEGEND

	EXTERNAL CONDUCTOR
	CONDUCTOR OR BUS
	TIE POINT
	CONTACTOR COIL
	CONTACTOR, NO CONTACT
	TERMINAL BLOCKS
	CONTACTOR, NC CONTACT
	ENCLOSURE BOND
	GROUNDING ELECTRODE
	CIRCUIT BREAKER
R	RECEPTACLE

PULL BOXES

NEW	EXISTING	
		PULL BOX, No. 5 UNLESS OTHERWISE INDICATED OR NOTED
3	9A(21)	PULL BOX, ADDITIONAL DESIGNATIONS OR DESCRIPTIONS

3 No. 3½ PULL BOX
5 No. 5 PULL BOX
6 No. 6 PULL BOX
7 No. 7 (CEILING PULL BOX)
8 No. 8 (PENDANT SOFFIT PULL BOX)
9 No. 9 PULL BOX
9A No. 9A PULL BOX

(C) COMMUNICATIONS PULL BOX
(E) PULL BOX WITH EXTENSION
(S) SPRINKLER CONTROL PULL BOX
(21) ANCHOR BOLTS AND CONDUIT FOR FUTURE INSTALLATION OF TYPE 21 STANDARD
(T) TRAFFIC PULL BOX

VEHICLE DETECTORS

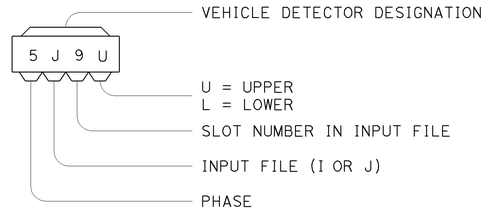

NEW	EXISTING	
		TYPE A DETECTOR LOOP. OUTLINE OF SAWCUT SHOWN
		TYPE B DETECTOR LOOP. OUTLINE OF SAWCUT SHOWN
		TYPE C DETECTOR LOOP. OUTLINE OF SAWCUT SHOWN
		TYPE D DETECTOR LOOP. OUTLINE OF SAWCUT SHOWN
		TYPE E DETECTOR LOOP. OUTLINE OF SAWCUT SHOWN
		TYPE Q DETECTOR LOOP. OUTLINE OF SAWCUT SHOWN
		MAGNETIC DETECTOR
DH	dh	DETECTOR HANDHOLE
		MICROWAVE OR VIDEO DETECTION ZONE

STATE OF CALIFORNIA
DEPARTMENT OF TRANSPORTATION

ELECTRICAL SYSTEMS (LEGEND AND ABBREVIATIONS)

NO SCALE

RSP ES-1C DATED JULY 19, 2013 SUPERSEDES STANDARD PLAN ES-1C DATED MAY 20, 2011 - PAGE 427 OF THE STANDARD PLANS BOOK DATED 2010.

REVISED STANDARD PLAN RSP ES-1C

2010 REVISED STANDARD PLAN RSP ES-1C

7-11-13

Dist	COUNTY	ROUTE	POST MILES TOTAL PROJECT	SHEET No.	TOTAL SHEETS
03	ED	89	8.6/13.8	224	231

Theresa Gabriel
REGISTERED ELECTRICAL ENGINEER

Theresa Aziz Gabriel
No. E15129
Exp. 6-30-14
ELECTRICAL
REGISTERED PROFESSIONAL ENGINEER
STATE OF CALIFORNIA

July 19, 2013
PLANS APPROVAL DATE

THE STATE OF CALIFORNIA OR ITS OFFICERS OR AGENTS SHALL NOT BE RESPONSIBLE FOR THE ACCURACY OR COMPLETENESS OF SCANNED COPIES OF THIS PLAN SHEET.

TO ACCOMPANY PLANS DATED 11-18-13

2010 REVISED STANDARD PLAN RSP ES-4A

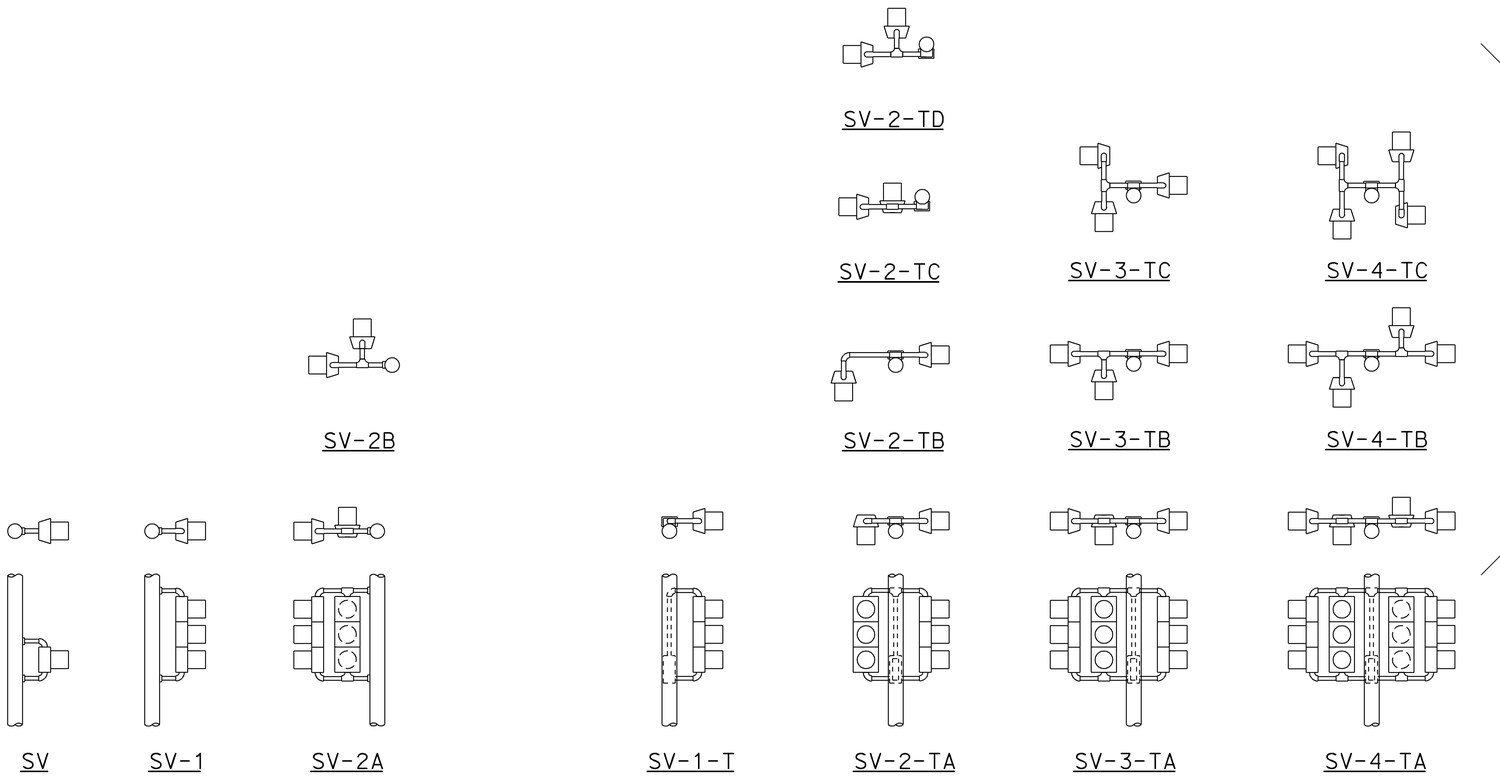

SIDE MOUNTINGS

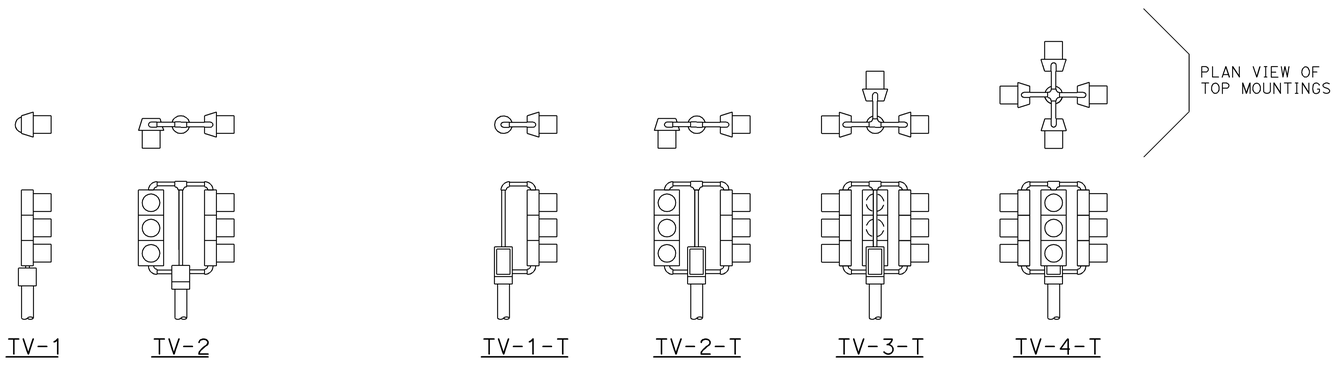

TOP MOUNTINGS

ABBREVIATIONS:

SV	SIDE MOUNTED VEHICLE SIGNALS
T	TERMINAL COMPARTMENT
TV	TOP MOUNTED VEHICLE SIGNALS
1, 2, 3, 4	NUMBER OF SIGNAL FACES (3 - SECTION, UNLESS OTHERWISE INDICATED)
A, B, C, D	CONFIGURATION OF SIGNALS

NOTES:

1. Mountings shall be oriented to provide maximum horizontal clearance to adjacent roadway.
2. Bracket arms shall be long enough to permit proper alignment of signals and backplate installation.
3. See Standard Plans ES-4D and ES-4E for attachment fitting details.

STATE OF CALIFORNIA
DEPARTMENT OF TRANSPORTATION

ELECTRICAL SYSTEMS (VEHICULAR SIGNAL HEADS AND MOUNTINGS)

NO SCALE

RSP ES-4A DATED JULY 19, 2013 SUPERSEDES STANDARD PLAN ES-4A
DATED MAY 20, 2011 - PAGE 443 OF THE STANDARD PLANS BOOK DATED 2010.

REVISED STANDARD PLAN RSP ES-4A

7-9-13

Dist	COUNTY	ROUTE	POST MILES TOTAL PROJECT	SHEET No.	TOTAL SHEETS
03	ED	89	8.6/13.8	225	231

Theresa Gabriel
REGISTERED ELECTRICAL ENGINEER

July 19, 2013
PLANS APPROVAL DATE

REGISTERED PROFESSIONAL ENGINEER
Theresa Aziz Gabriel
No. E15129
Exp. 6-30-14
ELECTRICAL
STATE OF CALIFORNIA

THE STATE OF CALIFORNIA OR ITS OFFICERS OR AGENTS SHALL NOT BE RESPONSIBLE FOR THE ACCURACY OR COMPLETENESS OF SCANNED COPIES OF THIS PLAN SHEET.

TO ACCOMPANY PLANS DATED 11-18-13

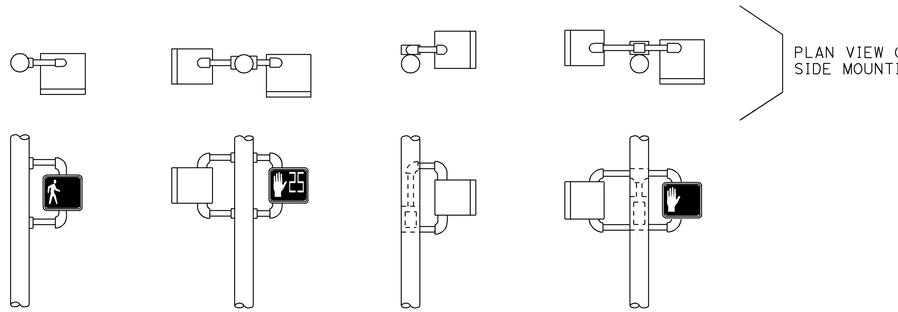

SIDE MOUNTINGS

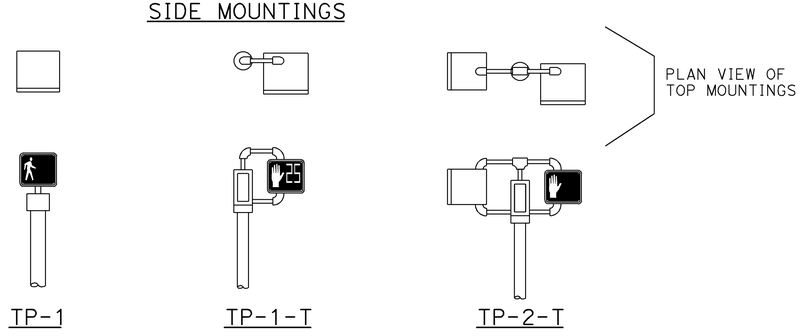

TOP MOUNTINGS

PEDESTRIAN SIGNALS AND MOUNTINGS

DETAIL A

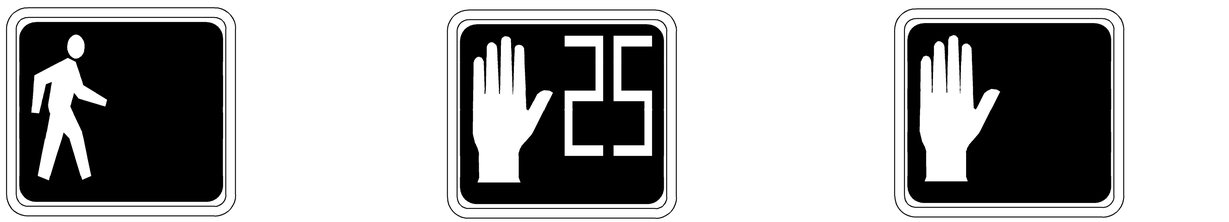

PERSON WALKING INTERVAL FLASHING UPRAISED HAND INTERVAL STEADY UPRAISED HAND INTERVAL

PEDESTRIAN SIGNAL MODULE WITH COUNTDOWN

DETAIL B

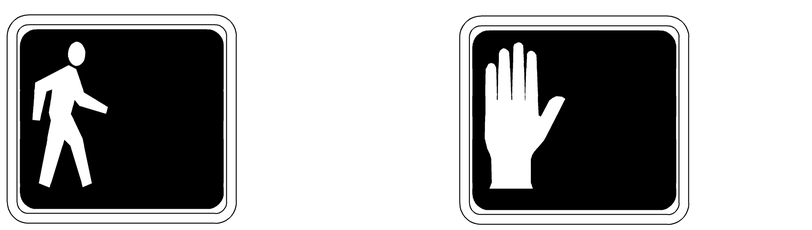

PERSON WALKING INTERVAL STEADY UPRAISED HAND INTERVAL

PEDESTRIAN SIGNAL MODULE WITHOUT COUNTDOWN

DETAIL C

NOTES:

1. Mounting shall be oriented to provide maximum horizontal clearance to adjacent roadway.
2. Bracket arms shall be long enough to permit proper alignment of signals.
3. See Standard Plan ES-4D for attachment fittings details.

ABBREVIATIONS:

1, 2	NUMBER OF SIGNAL FACES
SP	SIDE MOUNTED PEDESTRIAN SIGNAL
T	TERMINAL COMPARTMENT
TP	TOP MOUNTED PEDESTRIAN SIGNAL

RAMP METERING SIGN

DETAIL D

STATE OF CALIFORNIA
DEPARTMENT OF TRANSPORTATION

ELECTRICAL SYSTEMS (PEDESTRIAN SIGNAL AND RAMP METERING SIGN)

NO SCALE

RSP ES-4B DATED JULY 19, 2013 SUPERSEDES STANDARD PLAN ES-4B DATED MAY 20, 2011 - PAGE 444 OF THE STANDARD PLANS BOOK DATED 2010.

REVISED STANDARD PLAN RSP ES-4B

2010 REVISED STANDARD PLAN RSP ES-4B

7-9-13

Dist	COUNTY	ROUTE	POST MILES TOTAL PROJECT	SHEET No.	TOTAL SHEETS
03	ED	89	8.6/13.8	226	231

Theresa Gabriel
REGISTERED ELECTRICAL ENGINEER

Theresa Aziz Gabriel
No. E15129
Exp. 6-30-14
ELECTRICAL
REGISTERED PROFESSIONAL ENGINEER
STATE OF CALIFORNIA

July 19, 2013
PLANS APPROVAL DATE

THE STATE OF CALIFORNIA OR ITS OFFICERS OR AGENTS SHALL NOT BE RESPONSIBLE FOR THE ACCURACY OR COMPLETENESS OF SCANNED COPIES OF THIS PLAN SHEET.

TO ACCOMPANY PLANS DATED 11-18-13

VISORS

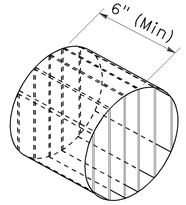

ISOMETRIC VIEW

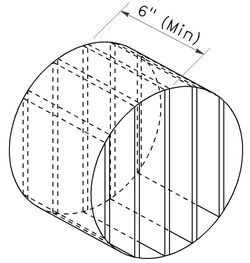

ISOMETRIC VIEW

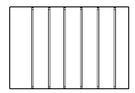

SECTION A-A

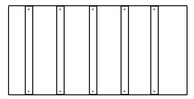

SECTION B-B

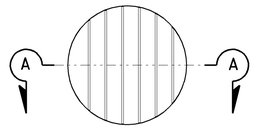

8" DIAMETER FRONT VIEW

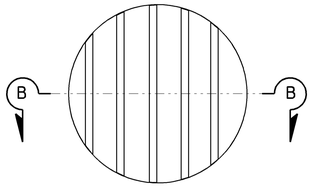

12" DIAMETER FRONT VIEW

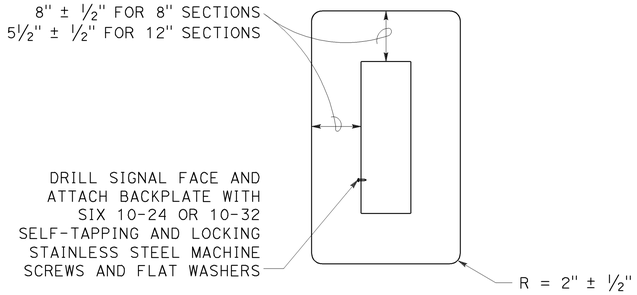

8" AND 12" SECTIONS

BACKPLATE

1/16" minimum thickness
3001-14 aluminum or plastic
when specified

DIRECTIONAL LOUVER

Directional louvers shall be oriented as directed by the Engineer and secured in place with one plated brass machine screw and nut.

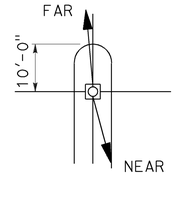

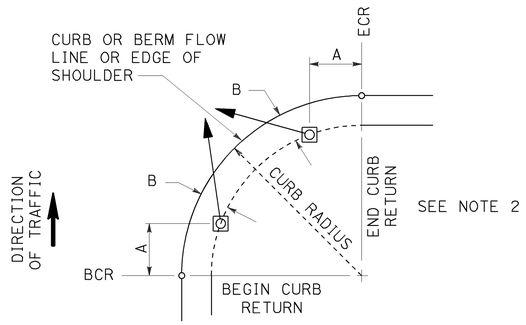

NOTES:

1. Typical signal pole placement unless dimensioned on plans.
2. For A and B dimensions, see Pole Schedule, or as directed by the Engineer.

SIGNAL STANDARD PLACEMENT DIMENSIONS AND EQUIPMENT LOCATIONS

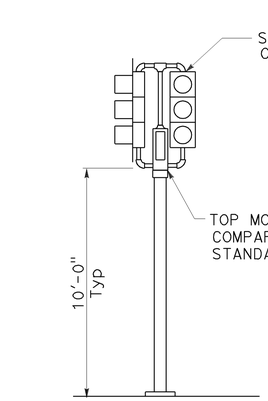

TOP MOUNTED SIGNALS (TV)

Type 1-A, 1-B, 1-C and 1-D standard as indicated on the plans

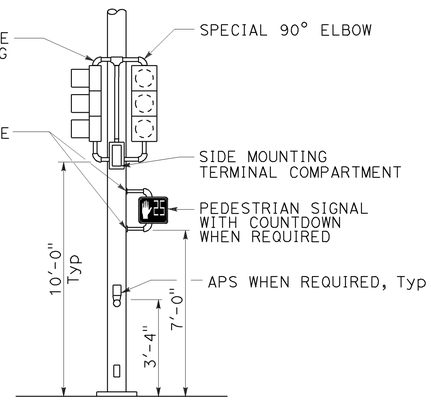

SIDE MOUNTED SIGNALS (SV AND SP)

Normally used on standards with luminaire or signal mast arm

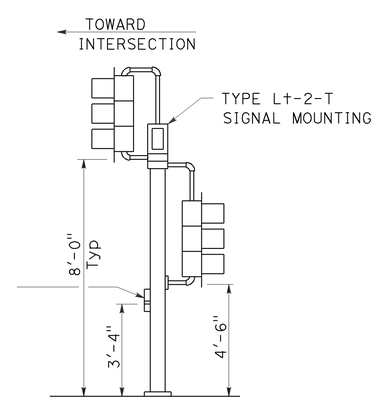

LEFT TURN LANE SIGNAL

Type 1-A, 1-B, 1-C and 1-D standard as indicated on plans

TYPICAL SIGNAL INSTALLATIONS

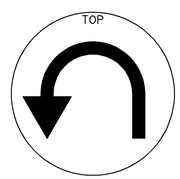

U-TURN

BICYCLE

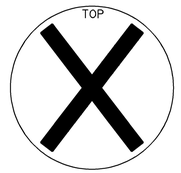

LANE CONTROL

LANE CONTROL

SIGNAL FACES

STATE OF CALIFORNIA
DEPARTMENT OF TRANSPORTATION

ELECTRICAL SYSTEMS (VEHICULAR SIGNAL HEADS AND MOUNTINGS)

NO SCALE

RSP ES-4C DATED JULY 19, 2013 SUPERSEDES STANDARD PLAN ES-04C
DATED MAY 20, 2011 - PAGE 445 OF THE STANDARD PLANS BOOK DATED 2010.

REVISED STANDARD PLAN RSP ES-4C

2010 REVISED STANDARD PLAN RSP ES-4C

7-10-13

Dist	COUNTY	ROUTE	POST MILES TOTAL PROJECT	SHEET No.	TOTAL SHEETS
03	ED	89	8.6/13.8	227	231

Theresa Gabriel
REGISTERED ELECTRICAL ENGINEER

Theresa Aziz Gabriel
No. E15129
Exp. 6-30-14
ELECTRICAL
REGISTERED PROFESSIONAL ENGINEER
STATE OF CALIFORNIA

July 19, 2013
PLANS APPROVAL DATE

THE STATE OF CALIFORNIA OR ITS OFFICERS OR AGENTS SHALL NOT BE RESPONSIBLE FOR THE ACCURACY OR COMPLETENESS OF SCANNED COPIES OF THIS PLAN SHEET.

TO ACCOMPANY PLANS DATED 11-18-13

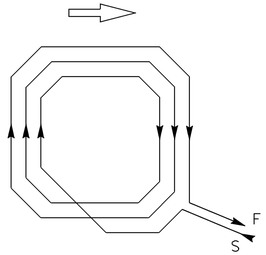

WINDING DETAIL

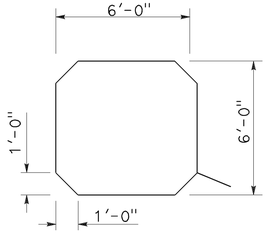

SAWCUT DETAIL

TYPE A LOOP DETECTOR CONFIGURATION

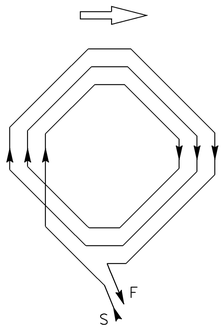

WINDING DETAIL

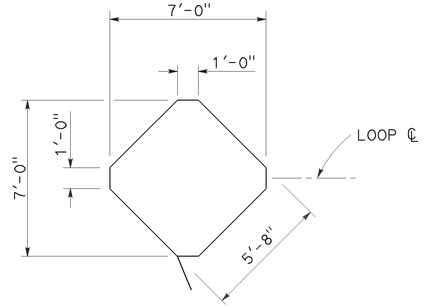

SAWCUT DETAIL

TYPE B LOOP DETECTOR CONFIGURATION

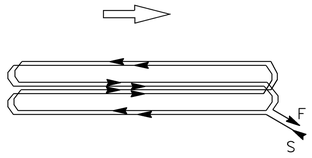

WINDING DETAIL

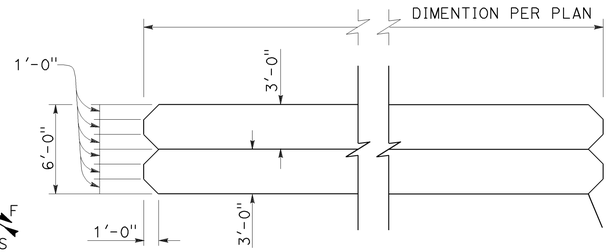

SAWCUT DETAIL

TYPE C LOOP DETECTOR CONFIGURATION

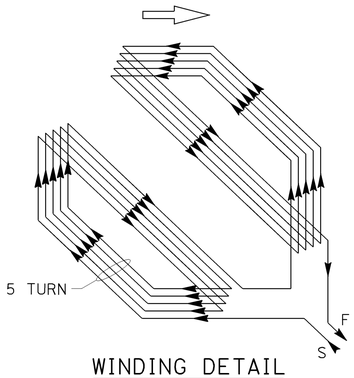

WINDING DETAIL

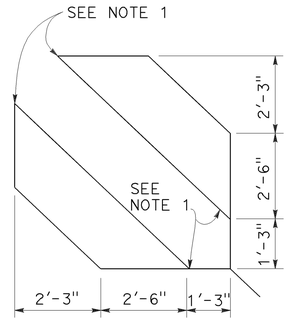

SAWCUT DETAIL

TYPE D LOOP DETECTOR CONFIGURATION

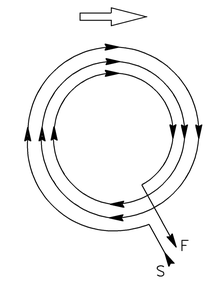

WINDING DETAIL

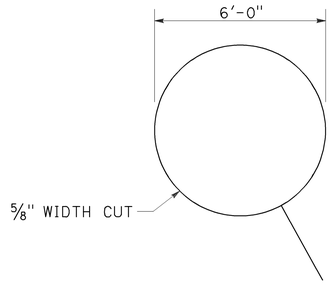

SAWCUT DETAIL

TYPE E LOOP DETECTOR CONFIGURATION

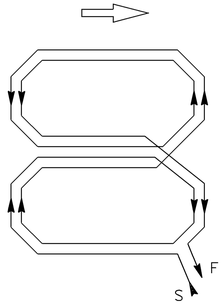

WINDING DETAIL

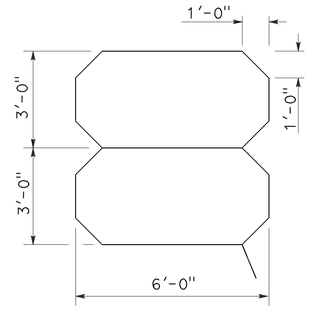

SAWCUT DETAIL

TYPE Q LOOP DETECTOR CONFIGURATION

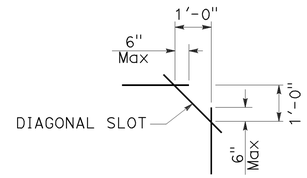

PLAN VIEW OF DIAGONAL SLOT AT CORNERS

NOTES:

1. Round corners of acute angle sawcuts to prevent damage to conductors.
2. Typical distance separating loops from edge to edge is 10' for Type A, B, D and E installation in single lane.

STATE OF CALIFORNIA
DEPARTMENT OF TRANSPORTATION

ELECTRICAL SYSTEMS (DETECTORS)

NO SCALE

RSP ES-5B DATED JULY 19, 2013 SUPERSEDES STANDARD PLAN ES-5B
DATED MAY 20, 2011 - PAGE 449 OF THE STANDARD PLANS BOOK DATED 2010.

REVISED STANDARD PLAN RSP ES-5B

2010 REVISED STANDARD PLAN RSP ES-5B

7-9-13

Dist	COUNTY	ROUTE	POST MILES TOTAL PROJECT	SHEET No.	TOTAL SHEETS
03	ED	89	8.6/13.8	228	231

Theresa Gabriel
REGISTERED ELECTRICAL ENGINEER

July 19, 2013
PLANS APPROVAL DATE

REGISTERED PROFESSIONAL ENGINEER
Theresa Aziz Gabriel
No. E15129
Exp. 6-30-14
ELECTRICAL
STATE OF CALIFORNIA

THE STATE OF CALIFORNIA OR ITS OFFICERS OR AGENTS SHALL NOT BE RESPONSIBLE FOR THE ACCURACY OR COMPLETENESS OF SCANNED COPIES OF THIS PLAN SHEET.

TO ACCOMPANY PLANS DATED 11-18-13

2010 REVISED STANDARD PLAN RSP ES-5C

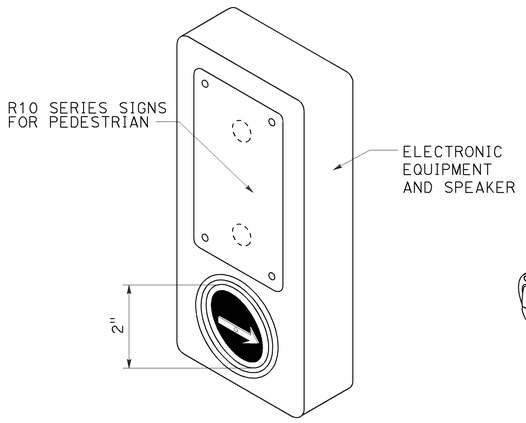

ACCESSIBLE PEDESTRIAN SIGNAL

DETAIL A
(See note 1 to 4)

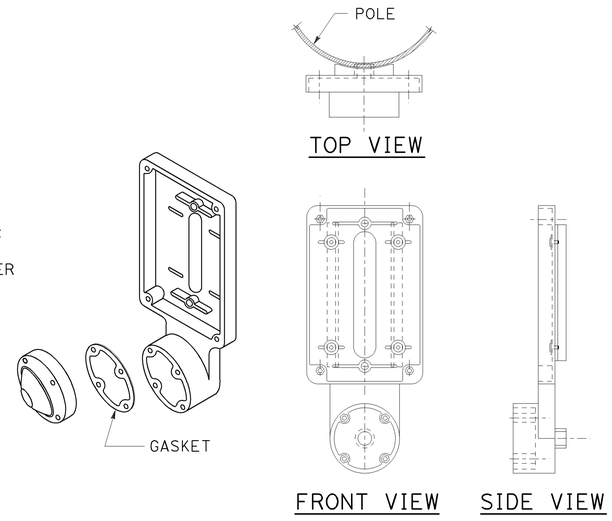

TOP VIEW

FRONT VIEW SIDE VIEW

TYPE B PUSH BUTTON ASSEMBLY

DETAIL B
(See note 1 to 4)

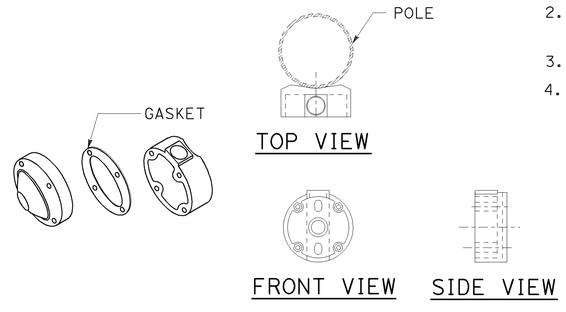

TOP VIEW

FRONT VIEW SIDE VIEW

TYPE C PUSH BUTTON ASSEMBLY

DETAIL C
(See note 1 to 4)

NOTES:

1. Back casting shape to fit curvature of pole.
2. Provide cover fitting for top of post, when PBA is mounted on push button assembly post.
3. Install push button on crosswalk side of standard.
4. Use R10 series regulatory signs and plaques for pedestrian and bicycle facilities.

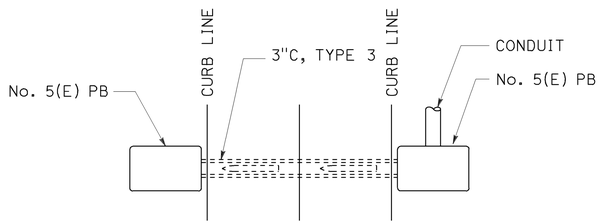

PLAN

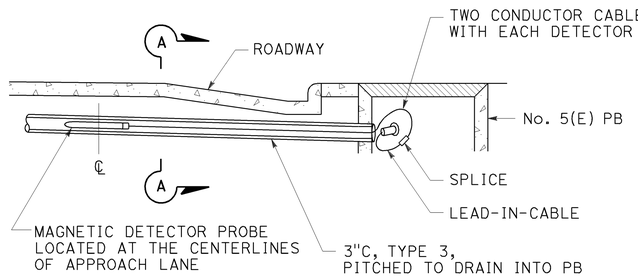

ELEVATION

MAGNETIC VEHICLE DETECTOR INSTALLATION DETAILS

DETAIL D

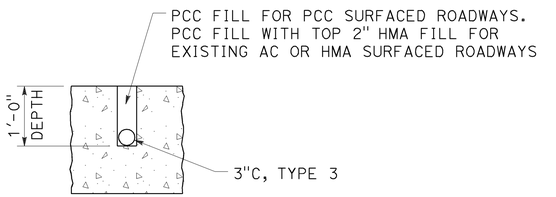

SECTION A-A

STATE OF CALIFORNIA
DEPARTMENT OF TRANSPORTATION

ELECTRICAL SYSTEMS (ACCESSIBLE PEDESTRIAN SIGNAL, PUSH BUTTON ASSEMBLIES AND MAGNETIC VEHICLE DETECTOR)

NO SCALE

RSP ES-5C DATED JULY 19, 2013 SUPERSEDES STANDARD PLAN ES-5C
DATED MAY 20, 2011 - PAGE 450 OF THE STANDARD PLANS BOOK DATED 2010.

REVISED STANDARD PLAN RSP ES-5C

7-9-13

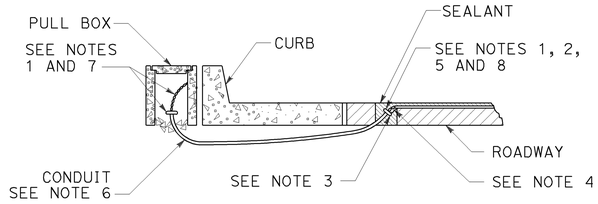

TYPE A

CURB TERMINATION DETAIL

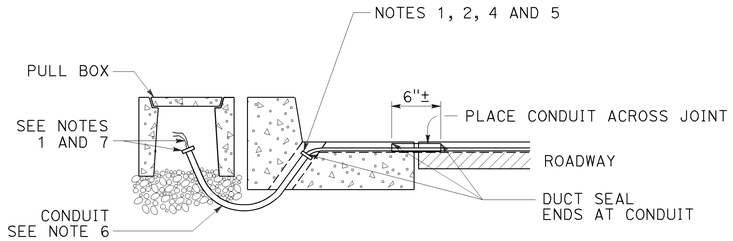

CROSS SECTION

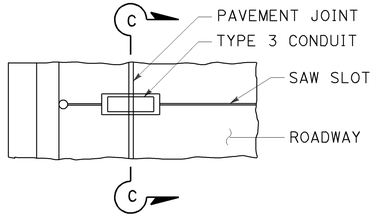

PLAN VIEW

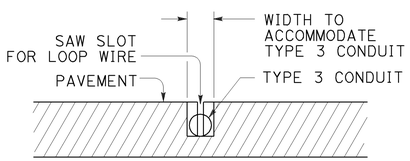

SECTION C-C

TYPE B

CURB TERMINATION DETAIL

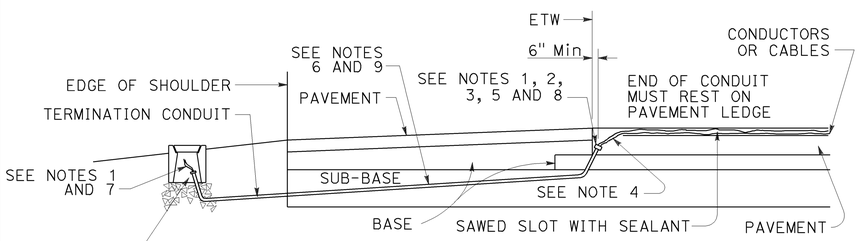

CROSS SECTION

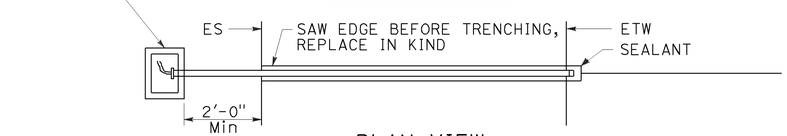

PLAN VIEW

SHOULDER TERMINATION DETAILS

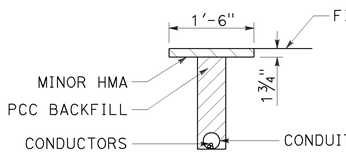

"T" TRENCH DETAIL T

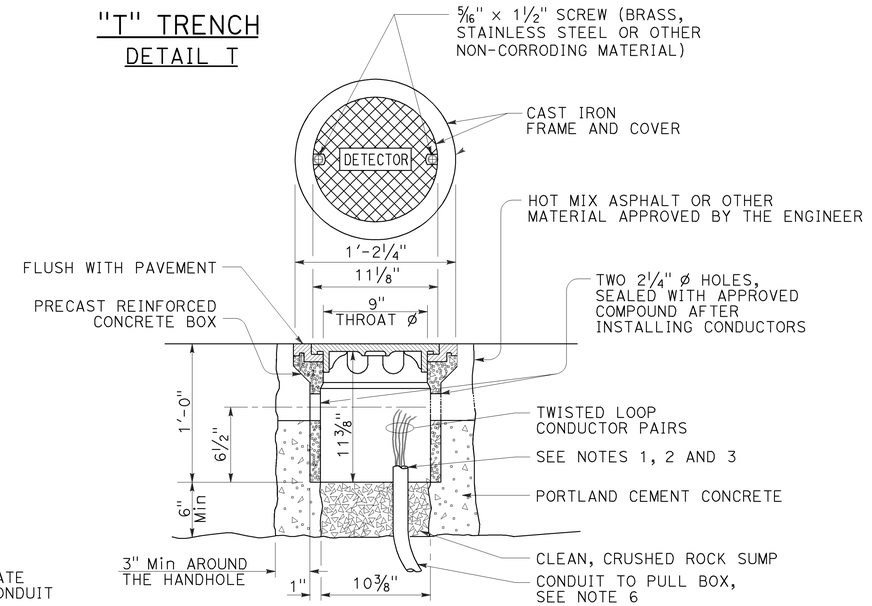

DETECTOR HANDHOLE DETAIL

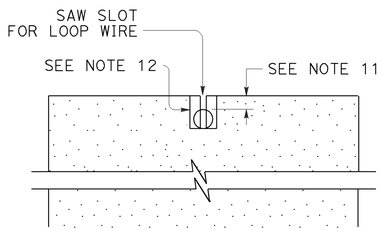

SECTION A-A

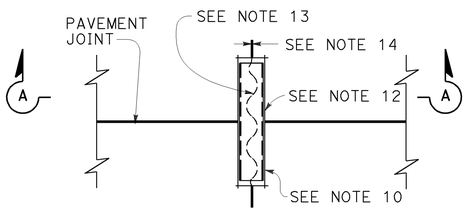

PLAN VIEW

TYPICAL LOOP LEAD-IN DETAIL AT PAVEMENT JOINT

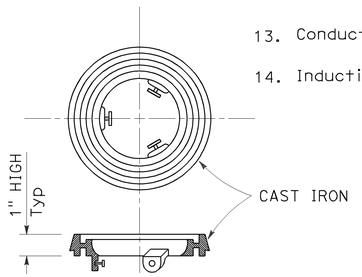

LOCKING GRADE RING

Dist	COUNTY	ROUTE	POST MILES TOTAL PROJECT	SHEET No.	TOTAL SHEETS
03	ED	89	8.6/13.8	229	231

Theresa Gabriel
REGISTERED ELECTRICAL ENGINEER

Theresa Aziz Gabriel No. E15129 Exp. 6-30-14 ELECTRICAL — REGISTERED PROFESSIONAL ENGINEER — STATE OF CALIFORNIA

July 19, 2013
PLANS APPROVAL DATE

THE STATE OF CALIFORNIA OR ITS OFFICERS OR AGENTS SHALL NOT BE RESPONSIBLE FOR THE ACCURACY OR COMPLETENESS OF SCANNED COPIES OF THIS PLAN SHEET.

TO ACCOMPANY PLANS DATED 11-18-13

NOTES:

1. Bushing shall be used at end of conduit.
2. Tape detector conductors or cables 3" each side of bushings.
3. Install duct seal compound to each end of termination conduit before installing sealant.
4. Round all sharp edges where detector conductors or cables have to pass.
5. End of conduit shall be 3⅛" below roadway surface.
6.

Conduit size	Loop conductors
1"C minimum	1 to 2 pairs
1½"C minimum	3 to 4 pairs
2"C minimum	5 or more pairs

7. Splice detector conductors or cables to detector lead-in-cable.
8. Location of detector handhole when shown on plans.
9. When the shoulder and traveled way are paved with the same material and there is no joint between them, the conduit shall extend only 2'-0" into the shoulder pavement.
10. ¾"C, Type 3 conduit 6" long minimum, plug both ends with duct compound to keep out sealant.
11. ½" Minimum between top of conduit and pavement surface.
12. Sawcut shall not exceed 1" in width and ⅛" longer than conduit to be installed.
13. Conductors with ½" minimum slack inside conduit.
14. Inductive loop detector saw slot.

STATE OF CALIFORNIA
DEPARTMENT OF TRANSPORTATION

ELECTRICAL SYSTEMS (CURB TERMINATION AND HANDHOLE)

NO SCALE

RSP ES-5D DATED JULY 19, 2013 SUPERSEDES STANDARD PLAN ES-5D DATED MAY 20, 2011 - PAGE 451 OF THE STANDARD PLANS BOOK DATED 2010.

REVISED STANDARD PLAN RSP ES-5D

2010 REVISED STANDARD PLAN RSP ES-5D

7-9-13

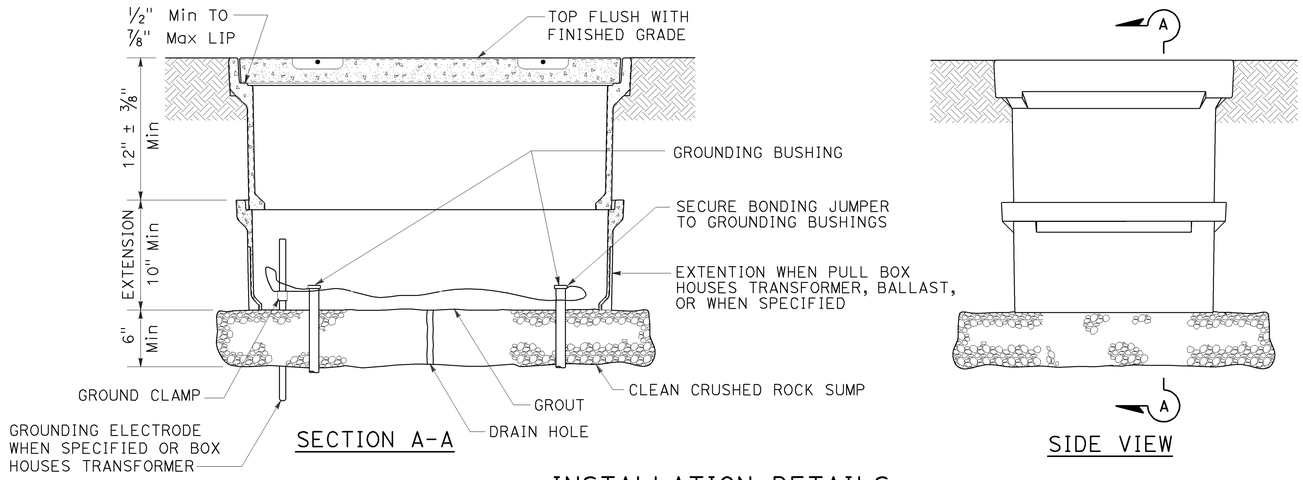

SECTION A-A

SIDE VIEW

INSTALLATION DETAILS

DETAIL A

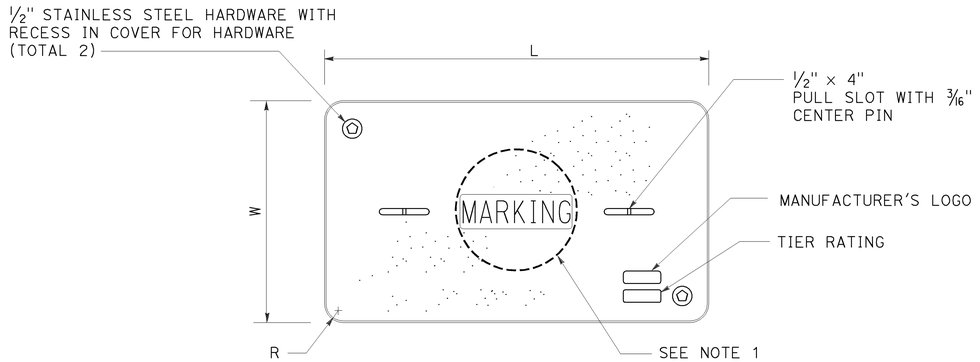

COVER TOP VIEW

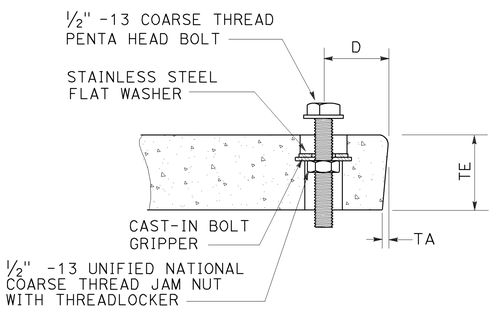

TYPICAL COVER CAPTIVE BOLT

OR SIMILAR

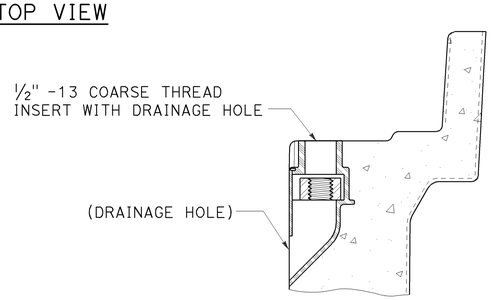

TYPICAL THREADED INSERT

OR SIMILAR

DIMENSION TABLE

PULL BOX	PULL BOX			COVER						
	MINIMUM DEPTH BOX	MINIMUM DEPTH EXTENSION	MAXIMUM WEIGHT	L	W	R	TE	TA	D	MAXIMUM WEIGHT
No. 3½	12"	N/A	40 lb	1' - 3⅜"	10⅛"	1⅜"	2"	⅛"	1¾"	30 lb
No. 5	12"	10"	55 lb	1' - 11¼"	1' - 1¾"	1⅜"	2"	⅛"	1¾"	60 lb
No. 6	12"	10"	70 lb	2' - 6½"	1' - 5½"	1⅜"	2"	⅛"	2"	85 lb

DIST	COUNTY	ROUTE	POST MILES TOTAL PROJECT	SHEET NO.	TOTAL SHEETS
03	ED	89	8.6/13.8	230	231

Theresa Gabriel
REGISTERED ELECTRICAL ENGINEER

REGISTERED PROFESSIONAL ENGINEER
Theresa Aziz Gabriel
No. E15129
Exp. 6-30-14
ELECTRICAL
STATE OF CALIFORNIA

July 19, 2013
PLANS APPROVAL DATE

THE STATE OF CALIFORNIA OR ITS OFFICERS OR AGENTS SHALL NOT BE RESPONSIBLE FOR THE ACCURACY OR COMPLETENESS OF SCANNED COPIES OF THIS PLAN SHEET.

TO ACCOMPANY PLANS DATED 11-18-13

NOTES:

1. Pull box covers shall be marked as follows: "SERVICE" Service circuits between service point and service disconnect; "SPRINKLER-CONTROL" sprinkler control circuits, 50 V or less; "CALTRANS" on all pull boxes, except pull boxes marked "SPRINKLER-CONTROL"; and "TELEPHONE" Telephone service;
   - A) No. 3½ pull box.
     1) "SIGNAL" - Traffic signal circuits with or without lighting or sign lighting circuits.
     2) "LIGHTING" - Lighting or sign lighting circuits where voltage is under 600 V.
   - B) No. 5, 6, 9 or 9A pull box.
     1) "TRAFFIC SIGNAL" - Traffic signal circuits with or without lighting or sign lighting circuits.
     2) "LIGHTING" - Lighting or sign lighting circuits where voltage is under 600 V.
     3) "LIGHTING-HIGH VOLTAGE" - Lighting or sign lighting circuits where voltage is above 600 V.
     4) "IRRIGATION" - Circuits to irrigation controller 120 V or more.
     5) "RAMP METER" - Ramp meter circuits.
     6) "COUNT STATION" - Count or speed monitor circuits.
     7) "COMMUNICATIONS" - Communication circuits.
     8) "TOS COMMUNICATIONS" - TOS communication line.
     9) "TOS POWER" - TOS power.
     10) "TDC POWER" - Telephone demarcation cabinet power.
     11) "CCTV" - Closed circuit television circuits.
     12) "TMS" - Traffic monitoring station circuits.
     13) "CMS" - Changeable message sign circuits.
     14) "HAR" - Highway advisory radio circuits.
     15) "BOOSTER PUMP" - Booster pump circuit.
2. The nominal dimensions of the opening in which the cover sets shall be the same as the cover dimensions except the length and width dimensions shall be ⅛" greater.
3. Covers and boxes shall be interchangeable with California standard male and female gages. When interchanged with a standard male or female gage, the top surfaces shall be flush within ⅛". Top outside radius of covers and pull boxes shall have a ⅛" radius.
4. Pull box extension may be another pull box as long as the bottom edge of the pull box can fit into the cover opening.
5. All dimensions for the cover for non-traffic pull box are nominal values.

STATE OF CALIFORNIA
DEPARTMENT OF TRANSPORTATION

ELECTRICAL SYSTEMS (NON-TRAFFIC PULL BOX)

NO SCALE

RSP ES-8A DATED JULY 19, 2013 SUPERSEDES RSP ES-8A DATED JANUARY 20, 2012 THAT SUPPLEMENTS THE STANDARD PLANS BOOK DATED 2010.

REVISED STANDARD PLAN RSP ES-8A

2010 REVISED STANDARD PLAN RSP ES-8A

7-15-13

Dist	COUNTY	ROUTE	POST MILES TOTAL PROJECT	SHEET No.	TOTAL SHEETS
03	ED	89	8.6/13.8	231	231

REGISTERED CIVIL ENGINEER

July 19, 2013
PLANS APPROVAL DATE

REGISTERED PROFESSIONAL ENGINEER
Stanley P. Johnson
No. C57793
Exp. 3-31-14
CIVIL
STATE OF CALIFORNIA

THE STATE OF CALIFORNIA OR ITS OFFICERS OR AGENTS SHALL NOT BE RESPONSIBLE FOR THE ACCURACY OR COMPLETENESS OF SCANNED COPIES OF THIS PLAN SHEET.

TO ACCOMPANY PLANS DATED 11-18-13

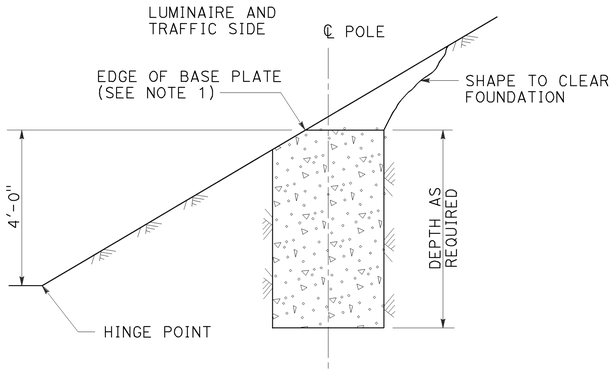

CUT SLOPES
STEEPER THAN 4:1,
LESS THAN 2:1
DETAIL A-1
See Note 2 and 3

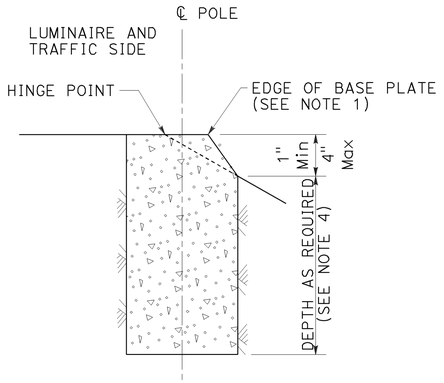

FILL SLOPES
STEEPER THAN 4:1,
LESS THAN 2:1
DETAIL A-2
See Note 2 and 3

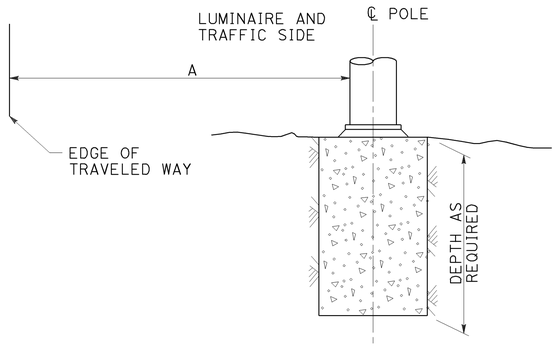

FLAT SECTIONS, CUT OR FILL SLOPES
4:1 OR FLATTER
DETAIL A-3
See Note 2

STANDARD TYPE	SETBACK (DIMENSION A)
32	30'-0" (Min)
31	20'-0" (Min)
15, 15D, 15-SB, 21, 21D, 30	ARM LENGTH (Min)

FOUNDATIONS ADJACENT TO ALL ROADWAYS EXCEPT IN SIDEWALK, MEDIAN AND ISLAND AREAS
DETAIL A

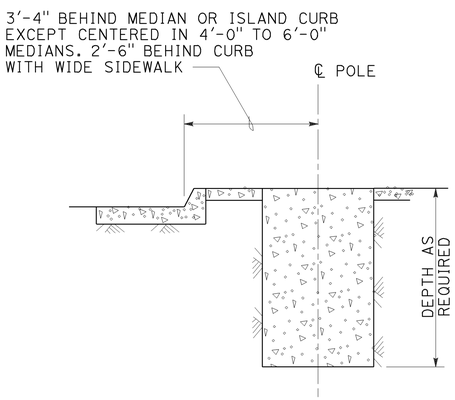

MEDIAN, ISLAND
OR WIDE SIDEWALK
DETAIL B-1
7' Wide and wider

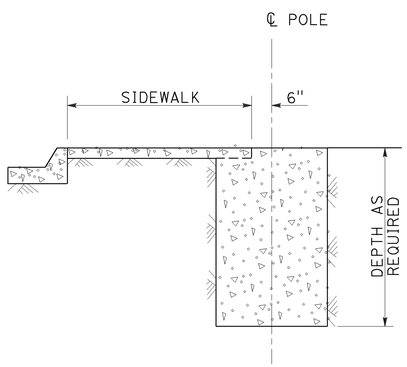

NARROW SIDEWALK
DETAIL B-2
Less than 7' wide

FOUNDATIONS IN SIDEWALK, MEDIAN AND ISLAND AREAS
DETAIL B

NOTES:

1. Where a portion of the foundation is above grade, the top edges shall have a 1" chamfer.
2. Slopes shall be horizontal to vertical ratio (Horizontal : Vertical).
3. Horizontal setbacks on cut and fill slopes steeper than 4:1 shall not exceed the distance shown for flat sections.
4. CIDH embedment depth shall be increased beyond standard depths by the diameter of the CIDH.

STATE OF CALIFORNIA
DEPARTMENT OF TRANSPORTATION

ELECTRICAL SYSTEMS (FOUNDATION INSTALLATIONS)

NO SCALE

RSP ES-11 DATED JULY 19, 2013 SUPERSEDES STANDARD PLAN ES-11
DATED MAY 20, 2011 - PAGE 488 OF THE STANDARD PLANS BOOK DATED 2010.

REVISED STANDARD PLAN RSP ES-11

2010 REVISED STANDARD PLAN RSP ES-11

7-9-13