Dist	COUNTY	ROUTE	POST MILES TOTAL PROJECT	SHEET No.	TOTAL SHEETS
03	ED	50	78.9/79.5	24A	78

Fereidoon Nejabat 2-28-12
REGISTERED CIVIL ENGINEER DATE

11-7-11
PLANS APPROVAL DATE

REGISTERED PROFESSIONAL ENGINEER
FRED NEJABAT
No. C65423
Exp. 9-30-13
CIVIL
STATE OF CALIFORNIA

THE STATE OF CALIFORNIA OR ITS OFFICERS OR AGENTS SHALL NOT BE RESPONSIBLE FOR THE ACCURACY OR COMPLETENESS OF SCANNED COPIES OF THIS PLAN SHEET.

2

NOTE:

ALL MISCELLANEOUS IRON AND STEEL, INCLUDING FRAME AND GRATE, I-BEAM AND FACE ANGLE, SHALL BE GALVANIZED. SEE "GALVANIZING" OF THE STANDARD SPECIFICATIONS.

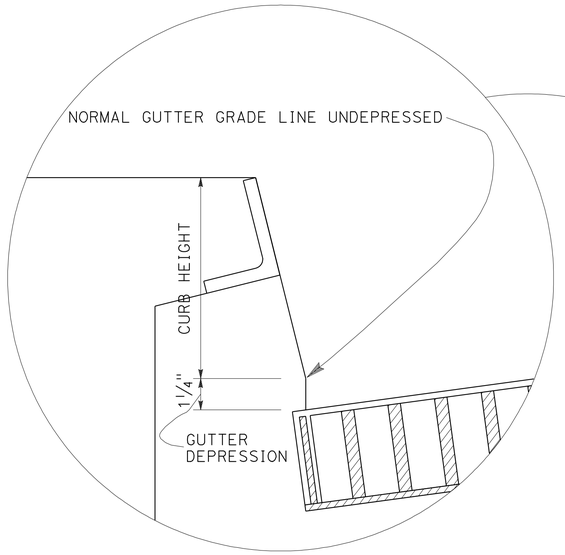

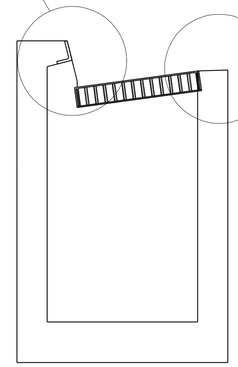

SECTION A-A

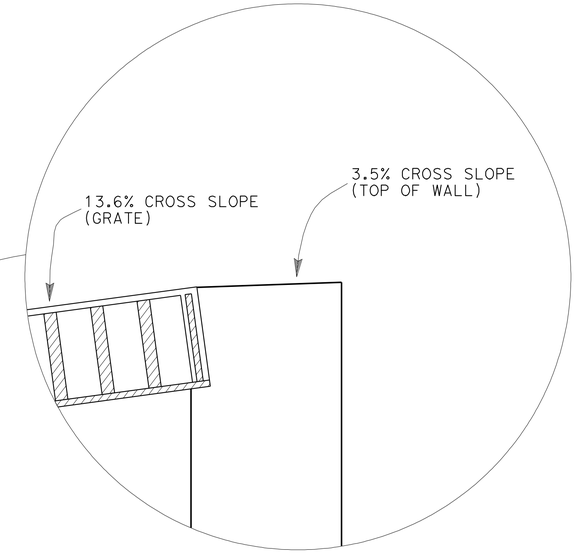

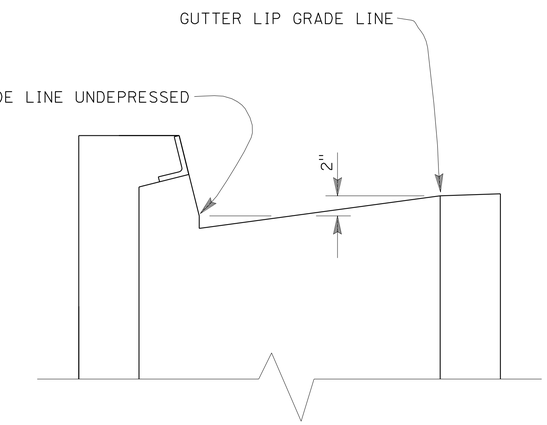

(GRATE NOT SHOWN FOR CLARITY)

SECTION B-B

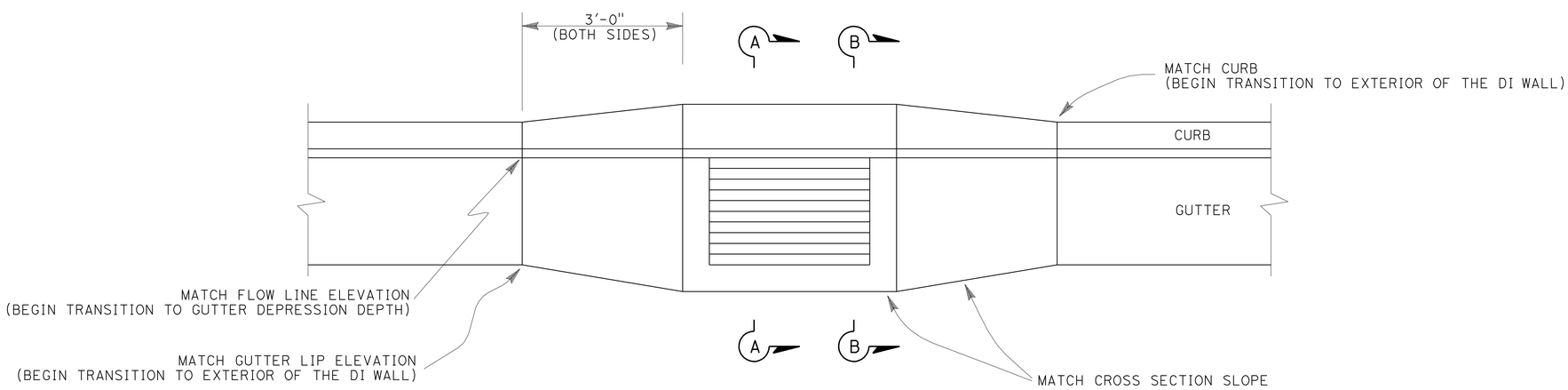

PLAN

MODIFIED GO DRAINAGE INLET GUTTER DEPRESSION DETAILS

DRAINAGE DETAILS

NO SCALE

DD-7

2 **ADDED PER ADDENDUM No. 2 DATED MARCH 6, 2012**

STATE OF CALIFORNIA - DEPARTMENT OF TRANSPORTATION
Caltrans
OFFICE OF PROJECT MANAGEMENT B
NORTH REGION
TEAM TAHOE BRANCH 3

FUNCTIONAL SUPERVISOR: TAREK TABSHOURI

CALCULATED-DESIGNED BY: F. NEJABAT
CHECKED BY: F. NEJABAT
REVISED BY
DATE REVISED

LAST REVISION 00-00-00
DATE PLOTTED => 05-MAR-2012
TIME PLOTTED => 15:22

Dist	COUNTY	ROUTE	POST MILES TOTAL PROJECT	SHEET No.	TOTAL SHEETS
03	ED	50	78.9/79.5	24B	78

Fereidoon Nejabat 2-28-12
REGISTERED CIVIL ENGINEER DATE

11-7-11
PLANS APPROVAL DATE

REGISTERED PROFESSIONAL ENGINEER
FRED NEJABAT
No. C65423
Exp. 9-30-13
CIVIL
STATE OF CALIFORNIA

THE STATE OF CALIFORNIA OR ITS OFFICERS OR AGENTS SHALL NOT BE RESPONSIBLE FOR THE ACCURACY OR COMPLETENESS OF SCANNED COPIES OF THIS PLAN SHEET.

2

NOTE:

ALL MISCELLANEOUS IRON AND STEEL, INCLUDING FRAME AND GRATE, I-BEAM AND FACE ANGLE, SHALL BE GALVANIZED. SEE "GALVANIZING" OF THE STANDARD SPECIFICATIONS.

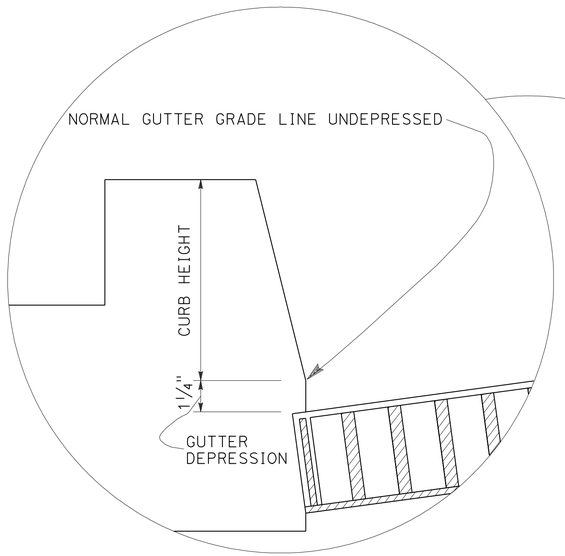

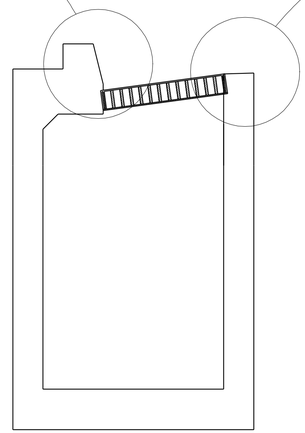

SECTION A-A

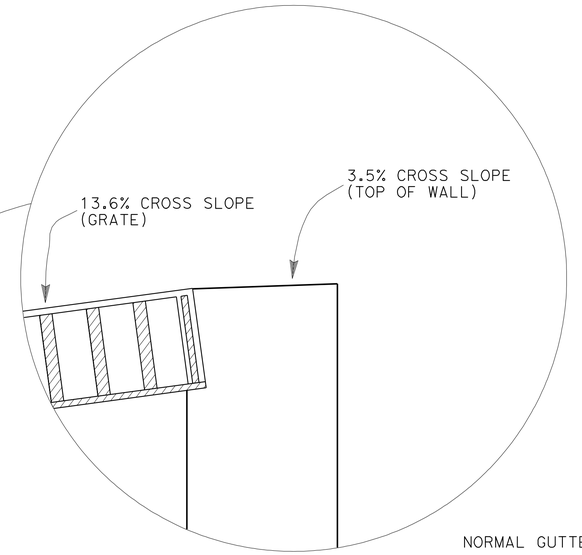

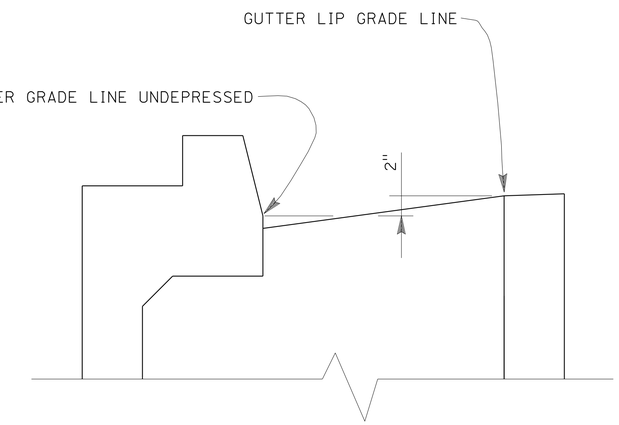

(GRATE NOT SHOWN FOR CLARITY)

SECTION B-B

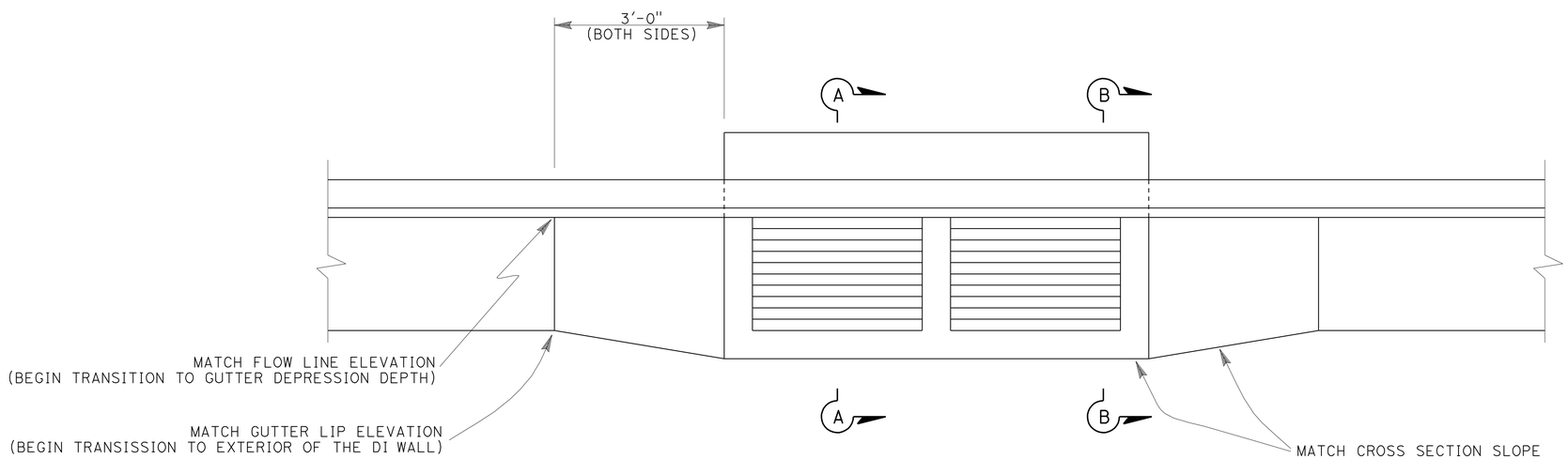

PLAN

MODIFIED GT4-ST DRAINAGE INLET GUTTER DEPRESSION DETAILS

2 ADDED PER ADDENDUM No. 2 DATED MARCH 6, 2012

DRAINAGE DETAILS

NO SCALE

DD-8

STATE OF CALIFORNIA - DEPARTMENT OF TRANSPORTATION
Caltrans
OFFICE OF PROJECT MANAGEMENT B
NORTH REGION
TEAM TAHOE BRANCH 3

FUNCTIONAL SUPERVISOR: TAREK TABSHOURI

CALCULATED-DESIGNED BY: F. NEJABAT
CHECKED BY: F. NEJABAT
REVISED BY
DATE REVISED

LAST REVISION 00-00-00
DATE PLOTTED => 05-MAR-2012
TIME PLOTTED => 15:22

Dist	COUNTY	ROUTE	POST MILES TOTAL PROJECT	SHEET No.	TOTAL SHEETS
03	ED	50	78.9/79.5	24C	78

REGISTERED CIVIL ENGINEER DATE 2-28-12

PLANS APPROVAL DATE 11-7-11

REGISTERED PROFESSIONAL ENGINEER FRED NEJABAT No. C65423 Exp. 9-30-13 CIVIL STATE OF CALIFORNIA

THE STATE OF CALIFORNIA OR ITS OFFICERS OR AGENTS SHALL NOT BE RESPONSIBLE FOR THE ACCURACY OR COMPLETENESS OF SCANNED COPIES OF THIS PLAN SHEET.

2

NOTE:

ALL MISCELLANEOUS IRON AND STEEL, INCLUDING FRAME AND GRATE, I-BEAM AND FACE ANGLE, SHALL BE GALVANIZED. SEE "GALVANIZING" OF THE STANDARD SPECIFICATIONS.

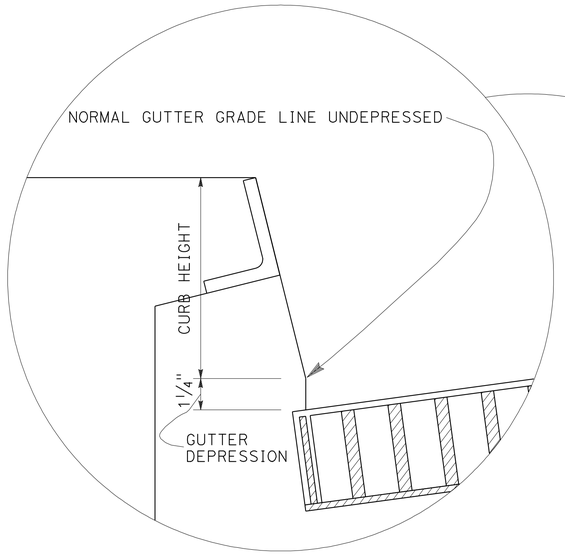

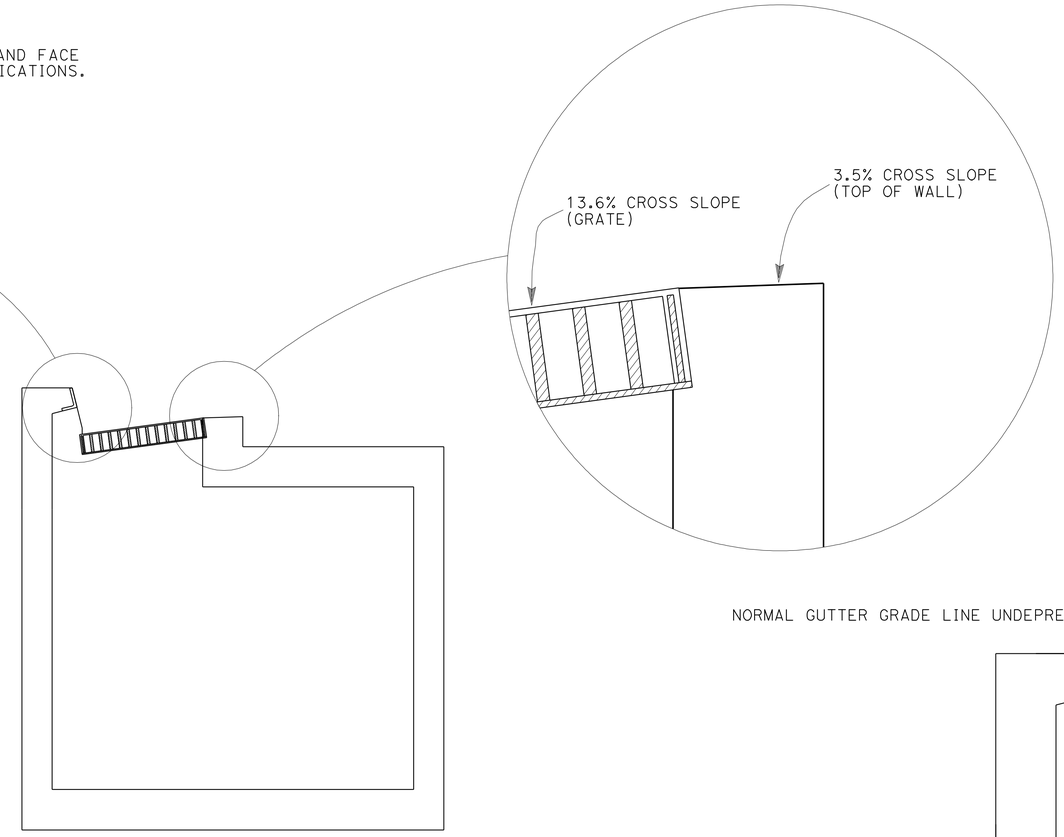

SECTION A-A

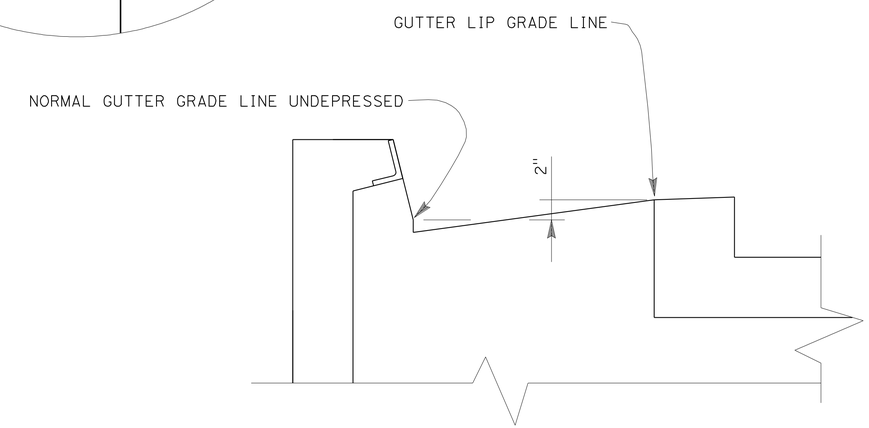

(GRATE NOT SHOWN FOR CLARITY)

SECTION B-B

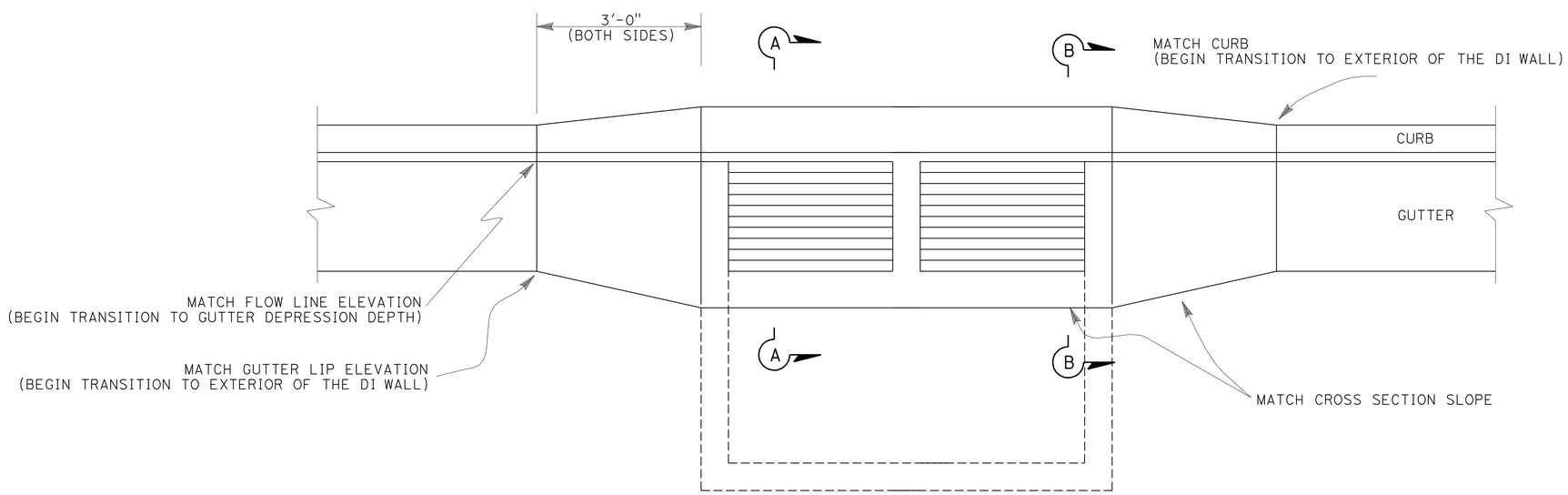

PLAN

2 ADDED PER ADDENDUM No. 2 DATED MARCH 6, 2012

MODIFIED GO-MH DRAINAGE INLET GUTTER DEPRESSION DETAILS

DRAINAGE DETAILS

NO SCALE

DD-9

STATE OF CALIFORNIA - DEPARTMENT OF TRANSPORTATION

Caltrans

OFFICE OF PROJECT MANAGEMENT B
NORTH REGION
TEAM TAHOE BRANCH 3

FUNCTIONAL SUPERVISOR: TAREK TABHSOURI

CALCULATED-DESIGNED BY: F. NEJABAT

CHECKED BY: F. NEJABAT

REVISED BY

DATE REVISED

LAST REVISION DATE PLOTTED => 05-MAR-2012
TIME PLOTTED => 15:19

00-00-00

Dist	COUNTY	ROUTE	POST MILES TOTAL PROJECT	SHEET No.	TOTAL SHEETS
03	ED	50	78.9/79.5	25	78

M Anand 6-23-11
REGISTERED CIVIL ENGINEER DATE

11-7-11
PLANS APPROVAL DATE

REGISTERED PROFESSIONAL ENGINEER
A. MAGANTI
No. C74128
Exp. 6-30-13
CIVIL
STATE OF CALIFORNIA

THE STATE OF CALIFORNIA OR ITS OFFICERS OR AGENTS SHALL NOT BE RESPONSIBLE FOR THE ACCURACY OR COMPLETENESS OF SCANNED COPIES OF THIS PLAN SHEET.

DRAINAGE ITEMS

DRAINAGE SYSTEM No.	DRAINAGE PLAN SHEET No.	DRAINAGE UNIT	ABANDON CULVERT	REMOVE CULVERT	REMOVE MANHOLE	REMOVE INLET	REMOVE JUNCTION BOX	15" PP	24" RCP	12" WSP	18" RCP	CONCRETE (BACKFILL)	INLET TYPE Mod GO DI (N)	INLET TYPE Mod GO-MH DI (N)	INLET TYPE Mod GT4 DI (SAND TRAP) (N)	MANHOLE FRAME AND COVER (N)	MODIFY EXISTING RCB	HEIGHT OF INLET OR MH "H" (N)	MINOR CONCRETE (MINOR STRUCTURE)	LADDER (N)	MISCELLANEOUS IRON & STEEL	FRAME & GRATE TYPE 18-9X (N)	FRAME & GRATE TYPE 24-12X (N)	DRAINAGE INLET MARKER	MAXIMUM COVER (N)	DESCRIPTION	STATION	DRAINAGE SYSTEM No.	DRAINAGE PLAN SHEET No.	DRAINAGE UNIT
			EA	LF	EA	EA	EA	LF	LF	LF	LF	CY	EA	EA	EA	LB	EA	LF	CY	EA	LB	EA	EA	EA	LF					
1	D-1	za				1																				REMOVE DI		1	D-1	za
		zb		26																						REMOVE CULVERT				zb
		zc					1																			REMOVE Jct BOX				zc
		zd		52																						REMOVE CULVERT				zd
		ze							67			33.5														24" x 67' RCP				ze
		zf		16																						REMOVE CULVERT				zf
		zg						3.0				1.0														15" x 3' PP				zg
		a											1					2.5	1.2	1	239		1	1	N/A	TYPE Mod GO DI	199+57			a
		b									21.0	7.1														18" x 21' RCP				b
		c												1		400		6.0	2.0	1	~~239~~ 374	~~1~~ 2		1	N/A	TYPE Mod GO-MH DI	199+85			c
		d									134.0	45.0														18" x 134' RCP				d
		e											1					3.3	1.3	1	239		1	1	N/A	TYPE Mod GO DI	201+25			e
	D-2	f				1																				REMOVE DI			D-2	f
		g	1																							Abn CULVERT				g
		h									192.0	64.5														18" x 192' RCP				h
		i											1					3.7	1.4	1	239		1	1	N/A	TYPE Mod GO DI	203+00			i
		j									158.0	53.1														18" x 158' RCP				j
		k											1					3.2	1.3	1	239		1	1	N/A	TYPE Mod GO DI	204+60			k
		l									24.0	8.1														18" x 24' RCP				l
		m													1			3.0	2.2	1	478		2	1	N/A	TYPE Mod GT4	204+86			m
		n								114.0		25.9														12" x 114' WSP				n
		o								114.0		25.9														12" x 114' WSP				o
		p															1									MODIFY EXISTING RCB				p
		q													1			3.1	2.2	1	478		2	1	N/A	TYPE Mod GT4	206+04			q
		r									23.0	7.7														18" x 23' RCP				r
SUBTOTAL			1	94		2	1	3.0	67	228.0	552.0	271.8	4	1	2	400	1	24.3	11.6	7	~~2151~~ 2286	~~1~~ 2	8	7		SUBTOTAL				

(N) NOT A SEPARATE PAY ITEM, FOR INFORMATION ONLY.

2

2 REVISED PER ADDENDUM No. 2 DATED MARCH 6, 2012

DRAINAGE QUANTITIES

DQ-1

STATE OF CALIFORNIA - DEPARTMENT OF TRANSPORTATION
Caltrans
NORTH REGION
DIVISION OF ENGINEERING
BRANCH M4

FUNCTIONAL SUPERVISOR: TAREK TABSHOURI

CALCULATED-DESIGNED BY: ANAND MAGANTI
CHECKED BY: TAREK TABSHOURI
REVISED BY
DATE REVISED

LAST REVISION 06-15-11
DATE PLOTTED => 05-MAR-2012
TIME PLOTTED => 15:19

Dist	COUNTY	ROUTE	POST MILES TOTAL PROJECT	SHEET No.	TOTAL SHEETS
03	ED	50	78.9/79.5	26	78

M Anand 6-23-11
REGISTERED CIVIL ENGINEER DATE

11-7-11
PLANS APPROVAL DATE

REGISTERED PROFESSIONAL ENGINEER A. MAGANTI No. C74128 Exp. 6-30-13 CIVIL STATE OF CALIFORNIA

THE STATE OF CALIFORNIA OR ITS OFFICERS OR AGENTS SHALL NOT BE RESPONSIBLE FOR THE ACCURACY OR COMPLETENESS OF SCANNED COPIES OF THIS PLAN SHEET.

DRAINAGE ITEMS

DRAINAGE SYSTEM No.	DRAINAGE PLAN SHEET No.	DRAINAGE UNIT	ABANDON CULVERT	REMOVE CULVERT	REMOVE MANHOLE	REMOVE INLET	REMOVE JUNCTION BOX	15" PP	24" RCP	12" WSP	18" RCP	CONCRETE (BACKFILL)	INLET TYPE Mod GO DI (N)	INLET TYPE Mod GO-MH DI (N)	INLET TYPE Mod GT4 DI (SAND TRAP) (N)	MANHOLE FRAME AND COVER (N)	MODIFY EXISTING RCB	HEIGHT OF INLET OR MH "H" (N)	MINOR CONCRETE (MINOR STRUCTURE)	LADDER (N)	MISCELLANEOUS IRON & STEEL	FRAME & GRATE TYPE 18-9X (N)	FRAME & GRATE TYPE 24-12X (N)	DRAINAGE INLET MARKER	MAXIMUM COVER (N)	DESCRIPTION	STATION	DRAINAGE SYSTEM No.	DRAINAGE PLAN SHEET No.	DRAINAGE UNIT
			EA	LF	EA	EA	EA	LF	LF	LF	LF	CY	EA	EA	EA	LB	EA	LF	CY	EA	LB	EA	EA	EA	LF					
2	D-1	za				1																				REMOVE DI		2	D-1	za
		zb		26																						REMOVE CULVERT				zb
		zc						3				1.0														15" x 3' PP				zc
		a											1					2.0	1.2	1	239		1	1	N/A	TYPE Mod GO DI	199+59			a
		b									21.0	7.1														18" x 21' RCP				b
		c												1		400		6.1	2.5	1	~~239~~ 374	~~1~~ 2		1	N/A	TYPE Mod GO-MH DI	199+85			c
		d									179.0	60.1														18" x 179' RCP				d
	D-2	e				1																				REMOVE DI			D-2	e
		f											1					3.7	1.4	1	239		1	1	N/A	TYPE Mod GO DI	201+70			f
		g		7																						REMOVE CULVERT				g
		h			1																					REMOVE MH				h
		i		167																						REMOVE CULVERT				i
		j									167.0	56.1														18" x 167' RCP				j
		k													1			6.0	3.3	1	478		2	1	N/A	TYPE Mod GT4 DI	203+40			k
		l				1																				REMOVE DI				l
		m		124									1													REMOVE CULVERT				m
		n									124.0	41.7														18" x 124' RCP				n
		o											1					2.4	1.2	1	239		1	1	N/A	TYPE Mod GO DI	204+70			o
		p				1																				REMOVE DI				p
		q							76.0			34.7														24" x 76' PP				q
		r		27																						REMOVE CULVERT				r
SUBTOTAL				351	1	4		3	76.0		491.0	200.7	4	1	1	400		20.2	9.6	5	~~1434~~ 1569	~~1~~ 2	5	5		SUBTOTAL				

(N) NOT A SEPARATE PAY ITEM, FOR INFORMATION ONLY.

2

2 REVISED PER ADDENDUM No. 2 DATED MARCH 6, 2012

DRAINAGE QUANTITIES

DQ-2

STATE OF CALIFORNIA - DEPARTMENT OF TRANSPORTATION
Caltrans
NORTH REGION
DIVISION OF ENGINEERING
BRANCH M4

FUNCTIONAL SUPERVISOR: TAREK TABSHOURI

CALCULATED-DESIGNED BY: ANAND MAGANTI
CHECKED BY: TAREK TABSHOURI

REVISED BY
DATE REVISED

LAST REVISION 06-15-11
DATE PLOTTED => 05-MAR-2012
TIME PLOTTED => 15:19

Dist	COUNTY	ROUTE	POST MILES TOTAL PROJECT	SHEET No.	TOTAL SHEETS
03	ED	50	78.9/79.5	29	78

M Anand 6-23-11
REGISTERED CIVIL ENGINEER DATE

11-7-11
PLANS APPROVAL DATE

REGISTERED PROFESSIONAL ENGINEER
A. MAGANTI
No. C74128
Exp. 6-30-13
CIVIL
STATE OF CALIFORNIA

THE STATE OF CALIFORNIA OR ITS OFFICERS OR AGENTS SHALL NOT BE RESPONSIBLE FOR THE ACCURACY OR COMPLETENESS OF SCANNED COPIES OF THIS PLAN SHEET.

DRAINAGE ITEMS

	ABANDON CULVERT	REMOVE CULVERT	REMOVE MANHOLE	REMOVE INLET	REMOVE JUNCTION BOX	15" PP	24" RCP	12" WSP	18" RCP	CONCRETE (BACKFILL)	INLET TYPE (N) Mod GO DI	INLET TYPE (N) Mod GO-ST DI	INLET TYPE (N) Mod GT4 DI (SAND TRAP)	(N) MANHOLE FRAME AND COVER	MODIFY EXISTING RCB	(N) HEIGHT OF INLET OR MH "H"	MINOR CONCRETE (MINOR STRUCTURE)	(N) LADDER	MISCELLANEOUS IRON & STEEL	(N) FRAME & GRATE TYPE 18-9X	(N) FRAME & GRATE TYPE 24-12X	DRAINAGE INLET MARKER	(N) MAXIMUM COVER
	EA	LF	EA	EA	EA	LF	LF	LF	LF	CY	EA	EA	EA	LB	EA	LF	CY	EA	LB	EA	EA	EA	LF
SHEET DQ-1 TOTAL	1	94		2	1	3	67	228	552	271.8	4	1	2	400	1	24.3	11.6	7	2,286 ~~2,151~~	+2	8	7	
SHEET DQ-2 TOTAL		351	1	4		3	76		491	200.7	4	1	1	400		20.2	9.6	5	1,569 ~~1,434~~	+2	5	5	
SHEET DQ-3 TOTAL	1	998	1	11					1,171	394	8		4			47	23	12	3,824		16	12	
SHEET DQ-4 TOTAL		463	1	5					1,157	389	6		3			36	18	9	2,868		12	9	
TOTAL	2	1906	3	22	1	6	143	228	3,371	1,256	22	2	10	800	1	127.5	62.2	33	~~10,277~~ 10,547	~~2~~ 4	41	33	

(N) NOT A SEPARATE PAY ITEM, FOR INFORMATION ONLY.

2

2 REVISED PER ADDENDUM No. 2 DATED MARCH 6, 2012

DRAINAGE QUANTITIES

DQ-5

STATE OF CALIFORNIA - DEPARTMENT OF TRANSPORTATION
Caltrans
NORTH REGION
DIVISION OF ENGINEERING
BRANCH M4

FUNCTIONAL SUPERVISOR: TAREK TABSHOURI
CALCULATED-DESIGNED BY: ANAND MAGANTI
CHECKED BY: TAREK TABSHOURI
REVISED BY
DATE REVISED

LAST REVISION 06-15-11
DATE PLOTTED => 05-MAR-2012
TIME PLOTTED => 15:20