ACNH-P050(129)

Dist	COUNTY	ROUTE	POST MILES TOTAL PROJECT	SHEET No.	TOTAL SHEETS
03	ED	50	73.7/75.4	1	119

STATE OF CALIFORNIA
DEPARTMENT OF TRANSPORTATION

PROJECT PLANS FOR CONSTRUCTION ON
STATE HIGHWAY

IN EL DORADO COUNTY
IN AND NEAR SOUTH LAKE TAHOE
FROM 0.1 MILE SOUTH OF AIRPORT ROAD
TO ROUTE 50/89 SEPARATION

TO BE SUPPLEMENTED BY STANDARD PLANS DATED MAY 2006

INDEX OF PLANS

SHEET No.	DESCRIPTION
1	TITLE AND LOCATION MAP
2-8	TYPICAL CROSS SECTIONS
9-15	LAYOUTS
16-31	CONSTRUCTION DETAILS
32-41	EROSION CONTROL PLANS, DETAILS AND QUANTITIES
42-66	DRAINAGE PLANS, PROFILES, DETAILS AND QUANTITIES
67-73	UTILITY PLANS
74	CONSTRUCTION AREA SIGNS
75-84	PAVEMENT DELINEATION PLANS, DETAILS AND QUANTITIES
85-93	SIGN DETAILS AND QUANTITIES
94-97	SUMMARY OF QUANTITIES
98-119	REVISED AND NEW STANDARD PLANS

THE STANDARD PLANS LIST APPLICABLE TO THIS CONTRACT IS INCLUDED IN THE NOTICE TO BIDDERS AND SPECIAL PROVISIONS BOOK.

LOCATION MAP

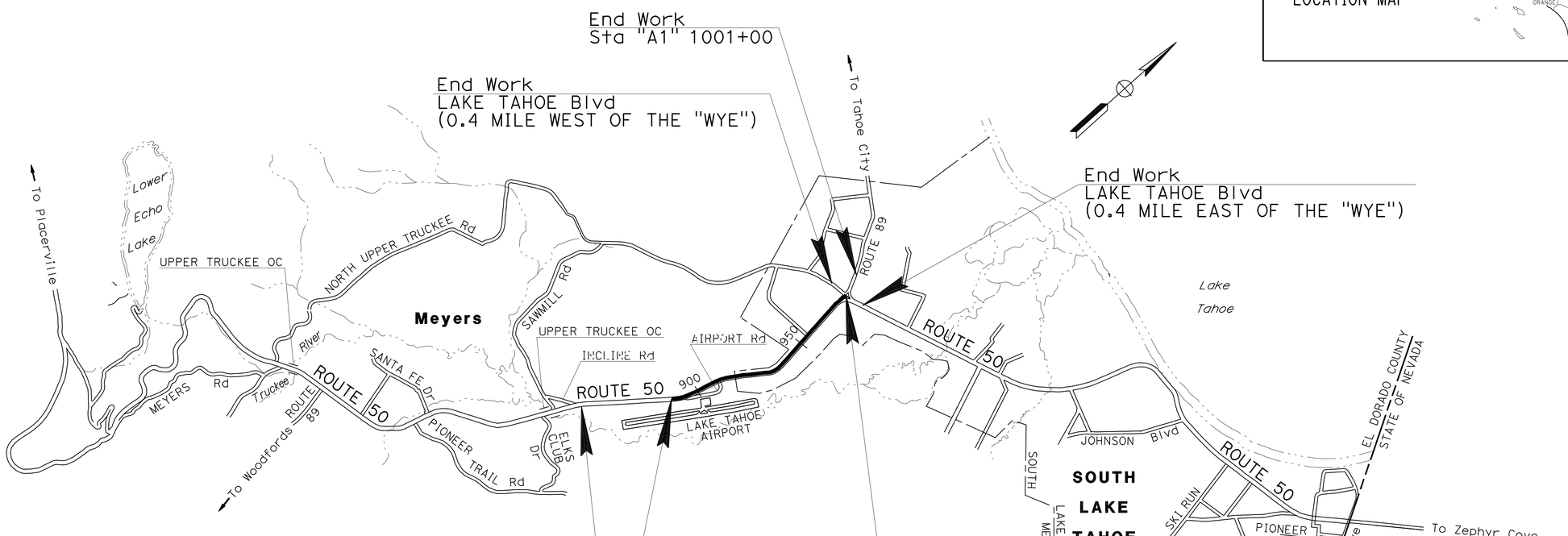

Begin Work
Sta "A1" 849+00

BEGIN CONSTRUCTION
Sta "A1" 890+00 PM 73.7

END CONSTRUCTION
Sta "A1" 979+70 PM 75.4

NO SCALE

Jack R. Cowell Jr. 4-26-12
PROJECT ENGINEER DATE
REGISTERED CIVIL ENGINEER

July 30, 2012
PLANS APPROVAL DATE

REGISTERED PROFESSIONAL ENGINEER
JACK COWELL
No. 65521
Exp. 9-30-13
CIVIL
STATE OF CALIFORNIA

THE STATE OF CALIFORNIA OR ITS OFFICERS OR AGENTS SHALL NOT BE RESPONSIBLE FOR THE ACCURACY OR COMPLETENESS OF SCANNED COPIES OF THIS PLAN SHEET.

PROJECT MANAGER: MIKE COOK
DESIGN ENGINEER: MASTRI ALVANDI

THE CONTRACTOR SHALL POSSESS THE CLASS (OR CLASSES) OF LICENSE AS SPECIFIED IN THE "NOTICE TO BIDDERS."

CONTRACT No.	03-1A7324
PROJECT ID	0300000214

LAST REVISION 04-14-12
DATE PLOTTED => 19-SEP-2012
TIME PLOTTED => 06:01

Dist	COUNTY	ROUTE	POST MILES TOTAL PROJECT	SHEET No.	TOTAL SHEETS
03	ED	50	73.7/75.4	2	119

Jack R. Cowell Jr. 4-26-12
REGISTERED CIVIL ENGINEER DATE

7-30-12
PLANS APPROVAL DATE

REGISTERED PROFESSIONAL ENGINEER JACK COWELL No. 65521 Exp. 9-30-13 CIVIL STATE OF CALIFORNIA

THE STATE OF CALIFORNIA OR ITS OFFICERS OR AGENTS SHALL NOT BE RESPONSIBLE FOR THE ACCURACY OR COMPLETENESS OF SCANNED COPIES OF THIS PLAN SHEET.

NOTES:

1. DIMENSIONS OF THE PAVEMENT STRUCTURES (STRUCTURAL SECTIONS) ARE SUBJECT TO TOLERANCES SPECIFIED IN THE STANDARD SPECIFICATIONS.
2. FOR CONFORM LOCATIONS, SEE LAYOUT SHEETS.
3. FOR EXACT C&G, SIDEWALK AND DRIVEWAY LOCATIONS, SEE SUMMARY OF QUANTITIES SHEETS.
4. FOR EXACT LOCATION OF REMOVE AC DIKE, SEE SUMMARY OF QUANTITIES SHEET.
5. SUPERELEVATION AS SHOWN OR AS DIRECTED BY THE ENGINEER.
6. FOR EXACT LOCATIONS OF NEW HMA DIKE, SEE LAYOUT SHEETS.
7. FOR EXACT LOCATIONS OF [5], [11] OR [12], SEE CONSTRUCTION DETAIL SHEETS.

ABBREVIATIONS:

SC - SAWCUT
C&G - CURB AND GUTTER
TWLTL - TWO WAY LEFT TURN LANE
CP - CATCH POINT

ROUTE 50 DESIGN DESIGNATION

ADT (2012) = 21,000 D = 55%
ADT (2032) = 26,800 T = 3.0%
DHV (2032) = 3,380 V = 55 MPH
ESAL = 3,137,675 TL_{20} = 10.0

STRUCTURAL SECTION

[1] OVERLAY 0.25' HMA (TYPE A)

[2] 0.50' HMA (TYPE A)
1.00' CLASS 2 AB

[3] PCC C&G - (TYPE D Mod)
1.00' CLASS 2 AB

[4] PCC C&G - (TYPE A2-6 Mod)
1.00' CLASS 2 AB

[5] VALLEY GUTTER
0.50' PCC
1.00' CLASS 2 AB

[6] 0.25' HMA (TYPE A)
0.25' COLD PLANE AC PAVEMENT

[7] SIDEWALK
0.25' HMA (TYPE A)
0.50' CLASS 2 AB

[8] PCC C&G - (TYPE A2-8)
1.00' CLASS 2 AB

[9] HMA DIKE (TYPE E)
0.25' HMA - (TYPE A)

[10] PCC C&G - (TYPE A2-8 Mod)
1.00' CLASS 2 AB

[11] PCC DRIVEWAY
0.50' PCC
0.50' CLASS 2 AB

[12] OVERLAY 0.15' HMA (TYPE A)

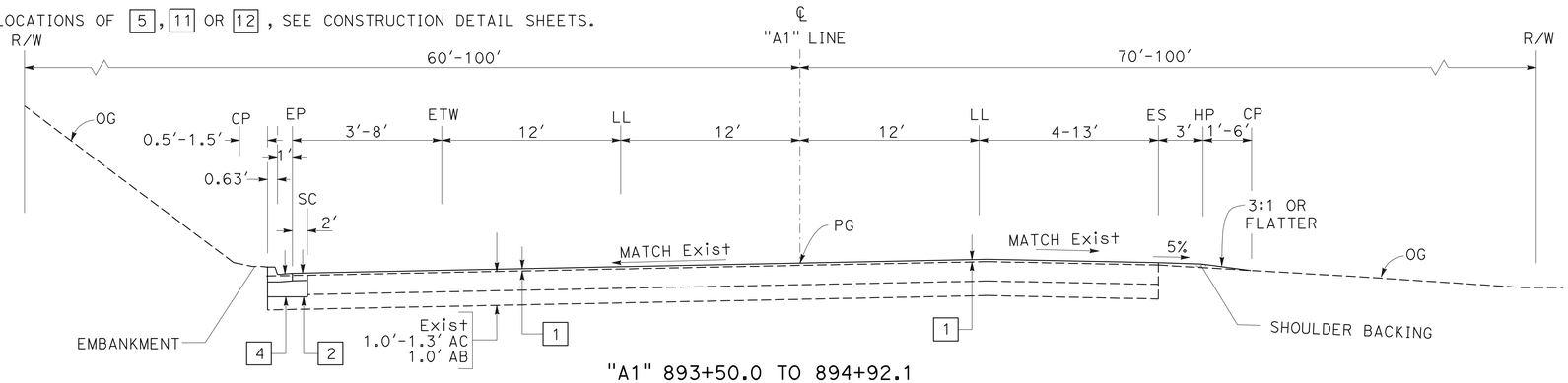

"A1" 893+50.0 TO 894+92.1

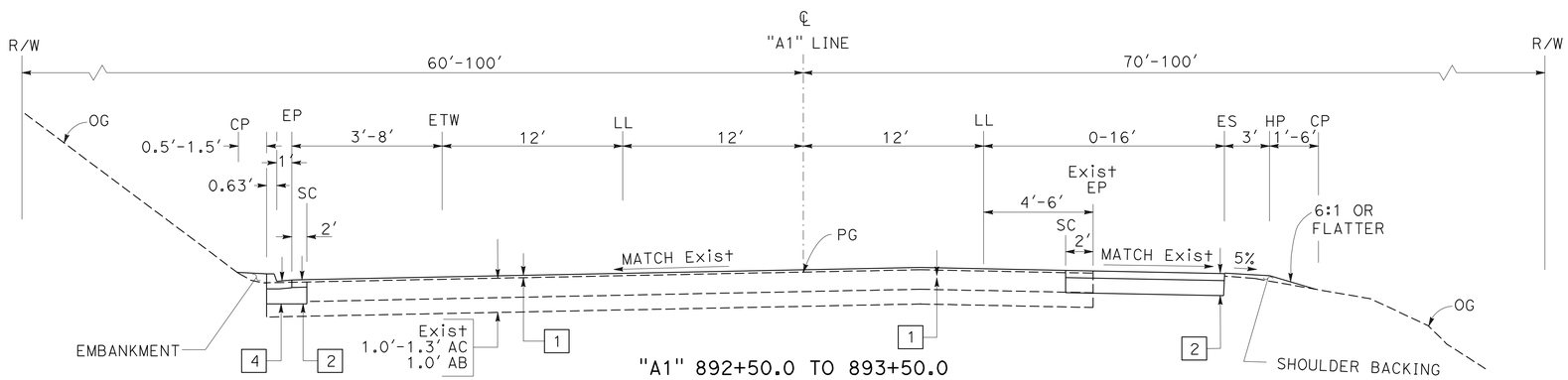

"A1" 892+50.0 TO 893+50.0

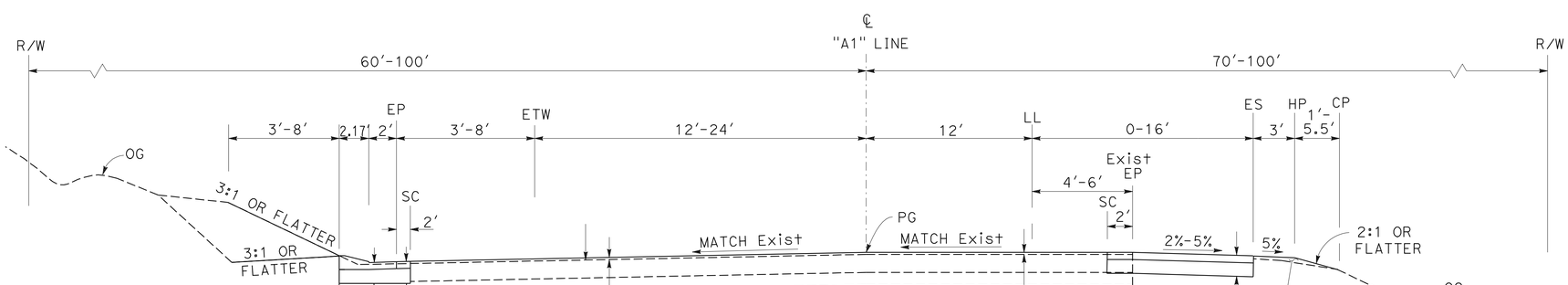

"A1" 890+00.7 TO 892+50.0

ROUTE 50

TYPICAL CROSS SECTIONS

NO SCALE

X-1

STATE OF CALIFORNIA - DEPARTMENT OF TRANSPORTATION
NORTH REGION
DIVISION OF ENGINEERING
DESIGN BRANCH M8

Caltrans

FUNCTIONAL SUPERVISOR: MASTRI ALVANDI
CALCULATED-DESIGNED BY: JACK COWELL
CHECKED BY: MASTRI ALVANDI
REVISED BY
DATE REVISED

LAST REVISION 04-23-12
DATE PLOTTED => 30-AUG-2012
TIME PLOTTED => 09:08

Dist	COUNTY	ROUTE	POST MILES TOTAL PROJECT	SHEET No.	TOTAL SHEETS
03	ED	50	73.7/75.4	3	119

REGISTERED CIVIL ENGINEER 4-26-12 DATE

7-30-12
PLANS APPROVAL DATE

REGISTERED PROFESSIONAL ENGINEER JACK COWELL No. 65521 Exp. 9-30-13 CIVIL STATE OF CALIFORNIA

THE STATE OF CALIFORNIA OR ITS OFFICERS OR AGENTS SHALL NOT BE RESPONSIBLE FOR THE ACCURACY OR COMPLETENESS OF SCANNED COPIES OF THIS PLAN SHEET.

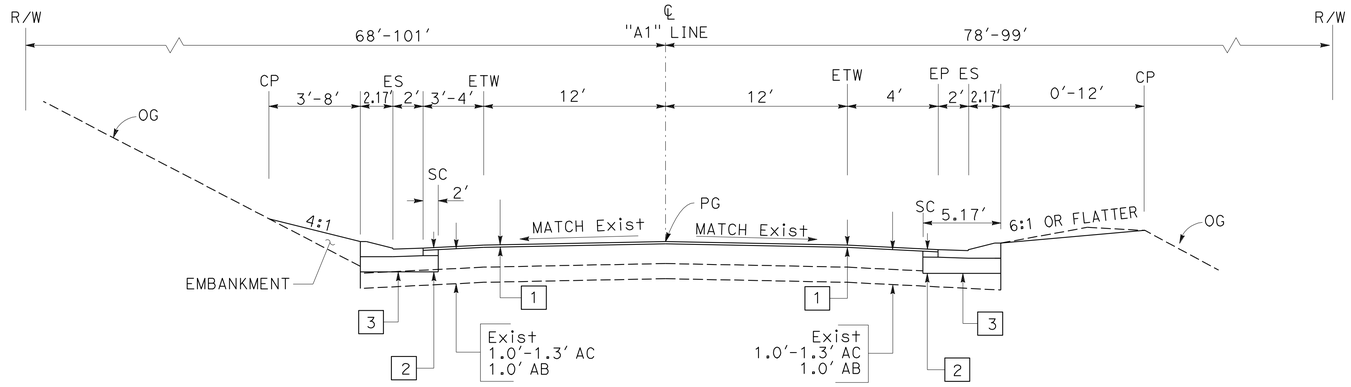

"A1" 904+02.1 TO 907+00.0

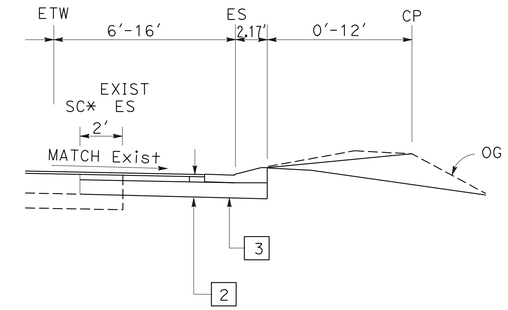

* "A1" 903+65.10 TO 904+72.36

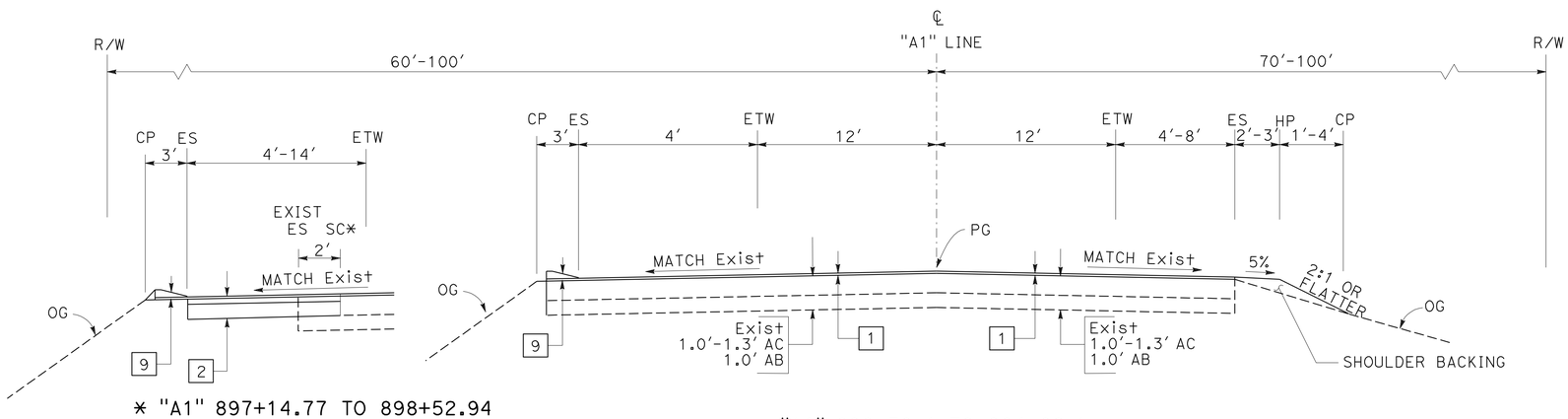

* "A1" 897+14.77 TO 898+52.94
* "A1" 902+66.02 TO 904+11.81

"A1" 898+30.4 TO 904+02.1

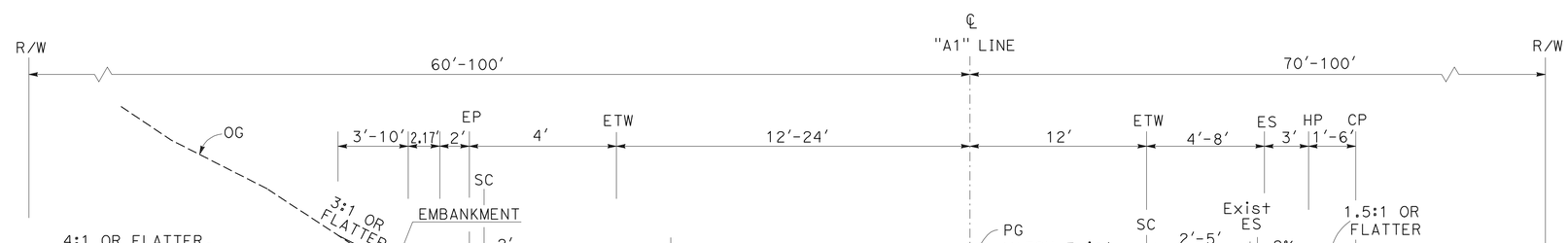

"A1" 894+92.1 TO 898+30.4

ROUTE 50

TYPICAL CROSS SECTIONS

NO SCALE

X-2

STATE OF CALIFORNIA - DEPARTMENT OF TRANSPORTATION
Caltrans®
NORTH REGION
DIVISION OF ENGINEERING
DESIGN BRANCH M8

FUNCTIONAL SUPERVISOR: MASTRI ALVANDI
CALCULATED-DESIGNED BY: JACK COWELL
CHECKED BY: MASTRI ALVANDI
REVISED BY
DATE REVISED

LAST REVISION 04-23-12
DATE PLOTTED => 30-AUG-2012
TIME PLOTTED => 09:08

Dist	COUNTY	ROUTE	POST MILES TOTAL PROJECT	SHEET No.	TOTAL SHEETS
03	ED	50	73.7/75.4	4	119

REGISTERED CIVIL ENGINEER 4-26-12 DATE

7-30-12
PLANS APPROVAL DATE

REGISTERED PROFESSIONAL ENGINEER JACK COWELL No. 65521 Exp. 9-30-13 CIVIL STATE OF CALIFORNIA

THE STATE OF CALIFORNIA OR ITS OFFICERS OR AGENTS SHALL NOT BE RESPONSIBLE FOR THE ACCURACY OR COMPLETENESS OF SCANNED COPIES OF THIS PLAN SHEET.

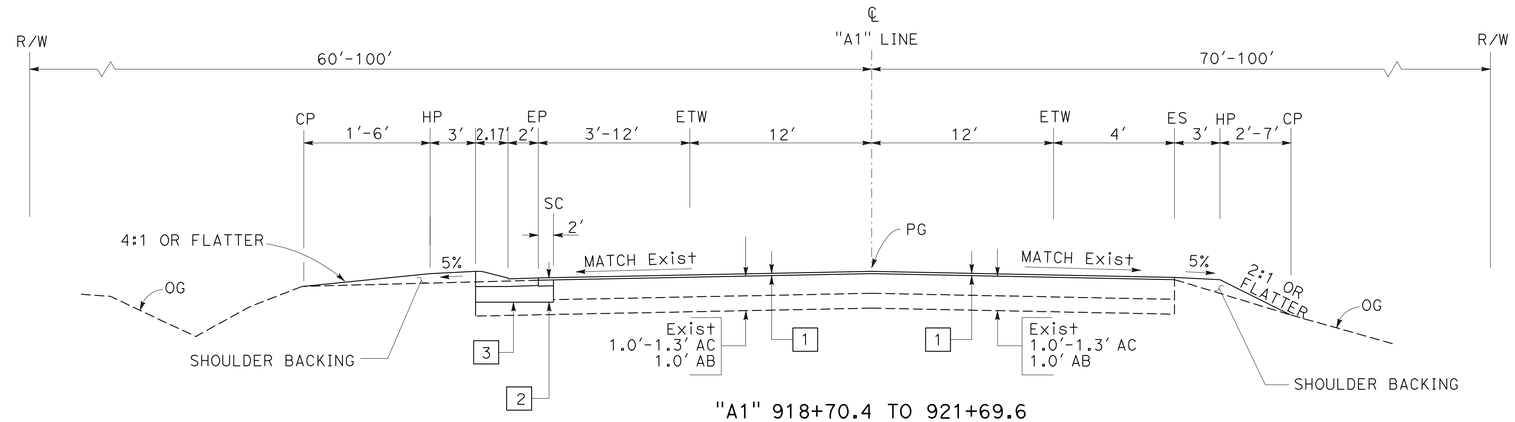

"A1" 918+70.4 TO 921+69.6

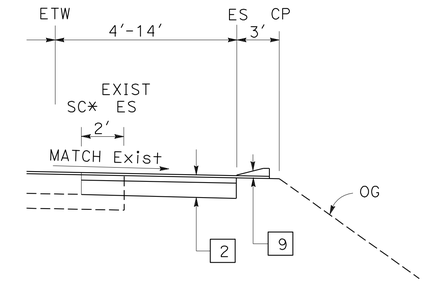

* "A1" *921+35.79 TO 922+26.90

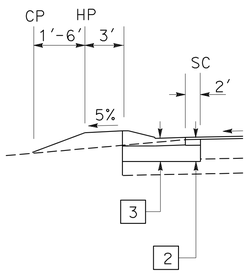

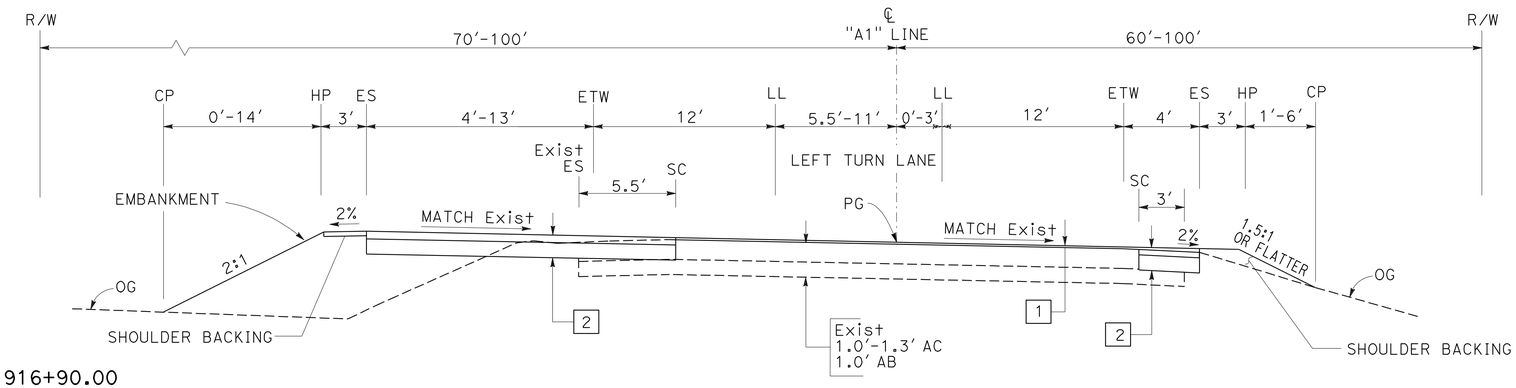

* "A1" 915+76.96 TO 916+90.00
"A1" 917+20.70 TO 917+63.50
"A1" 918+03.57 TO 918+70.40

"A1" 912+25.0 TO 918+70.4

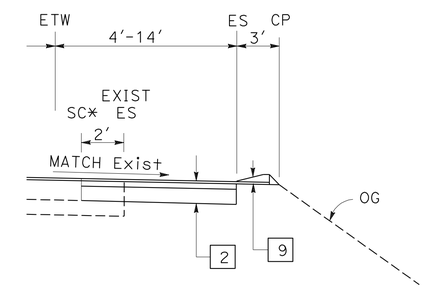

* "A1" *917+98.47 TO 918+88.73

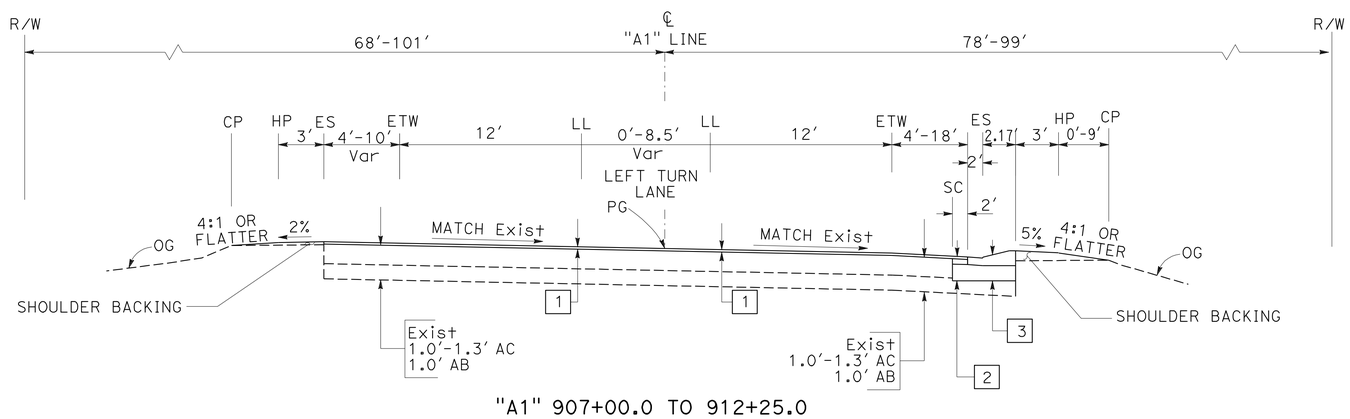

"A1" 907+00.0 TO 912+25.0

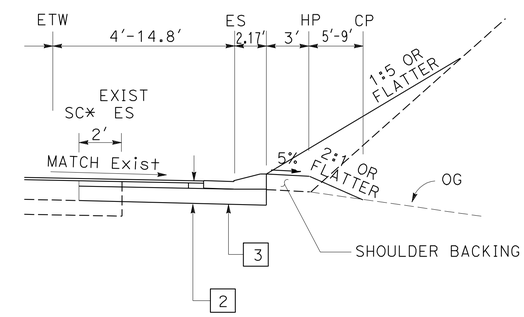

* "A1" *910+76.79 TO 912+08.18

TYPICAL CROSS SECTIONS

NO SCALE

ROUTE 50

X-3

STATE OF CALIFORNIA - DEPARTMENT OF TRANSPORTATION
NORTH REGION
DIVISION OF ENGINEERING
DESIGN BRANCH M8

FUNCTIONAL SUPERVISOR: MASTRI ALVANDI
CALCULATED-DESIGNED BY: JACK COWELL
CHECKED BY: MASTRI ALVANDI
REVISED BY / DATE REVISED

LAST REVISION 04-23-12
DATE PLOTTED => 30-AUG-2012
TIME PLOTTED => 09:08

Dist	COUNTY	ROUTE	POST MILES TOTAL PROJECT	SHEET No.	TOTAL SHEETS
03	ED	50	73.7/75.4	5	119

REGISTERED CIVIL ENGINEER 4-26-12 DATE

7-30-12
PLANS APPROVAL DATE

REGISTERED PROFESSIONAL ENGINEER JACK COWELL No. 65521 Exp. 9-30-13 CIVIL STATE OF CALIFORNIA

THE STATE OF CALIFORNIA OR ITS OFFICERS OR AGENTS SHALL NOT BE RESPONSIBLE FOR THE ACCURACY OR COMPLETENESS OF SCANNED COPIES OF THIS PLAN SHEET.

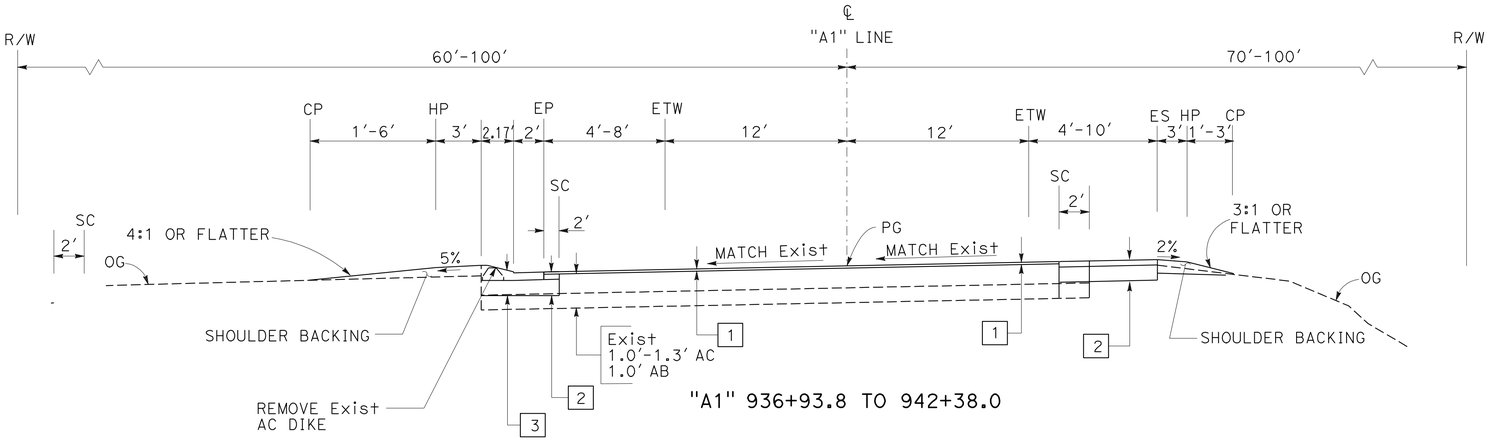

"A1" 936+93.8 TO 942+38.0

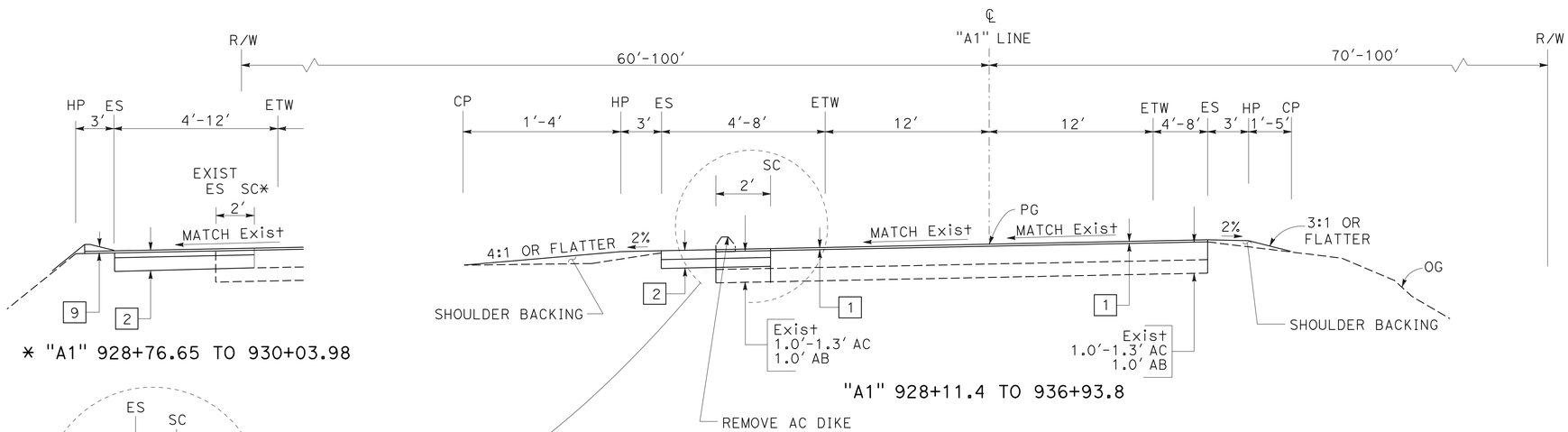

* "A1" 928+76.65 TO 930+03.98

"A1" 928+11.4 TO 936+93.8

"A1" 934+08.59 TO 936+93.8

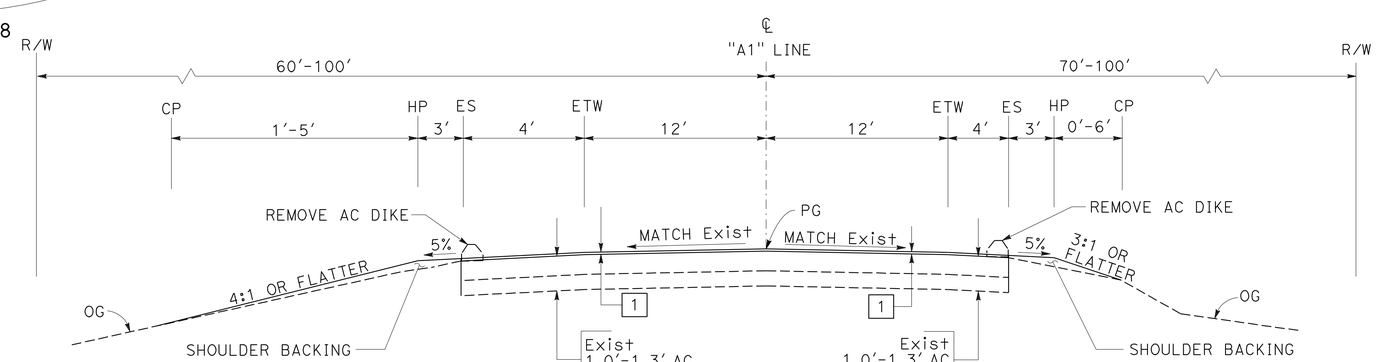

"A1" 921+69.6 TO 928+11.4

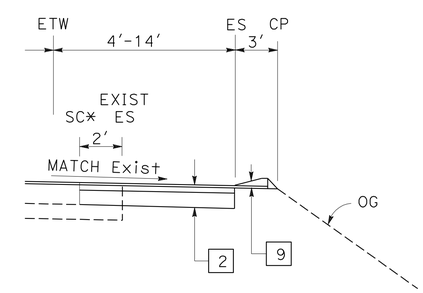

* "A1" *921+38.92 TO 922+21.24

TYPICAL CROSS SECTIONS

NO SCALE

ROUTE 50

X-4

STATE OF CALIFORNIA - DEPARTMENT OF TRANSPORTATION
NORTH REGION
DIVISION OF ENGINEERING
DESIGN BRANCH M8

Caltrans

FUNCTIONAL SUPERVISOR: MASTRI ALVANDI

CALCULATED-DESIGNED BY: JACK COWELL
CHECKED BY: MASTRI ALVANDI

REVISED BY / DATE REVISED

LAST REVISION 04-23-12 | DATE PLOTTED => 30-AUG-2012 | TIME PLOTTED => 09:08

Dist	COUNTY	ROUTE	POST MILES TOTAL PROJECT	SHEET No.	TOTAL SHEETS
03	ED	50	73.7/75.4	6	119

REGISTERED CIVIL ENGINEER 4-26-12 DATE

7-30-12
PLANS APPROVAL DATE

REGISTERED PROFESSIONAL ENGINEER JACK COWELL No. 65521 Exp. 9-30-13 CIVIL STATE OF CALIFORNIA

THE STATE OF CALIFORNIA OR ITS OFFICERS OR AGENTS SHALL NOT BE RESPONSIBLE FOR THE ACCURACY OR COMPLETENESS OF SCANNED COPIES OF THIS PLAN SHEET.

NOTE:

* — [X] REPRESENTS [5] OR [11]

SEE DRIVEWAY CONSTRUCTION DETAIL SHEET(S) FOR EXACT LOCATIONS.

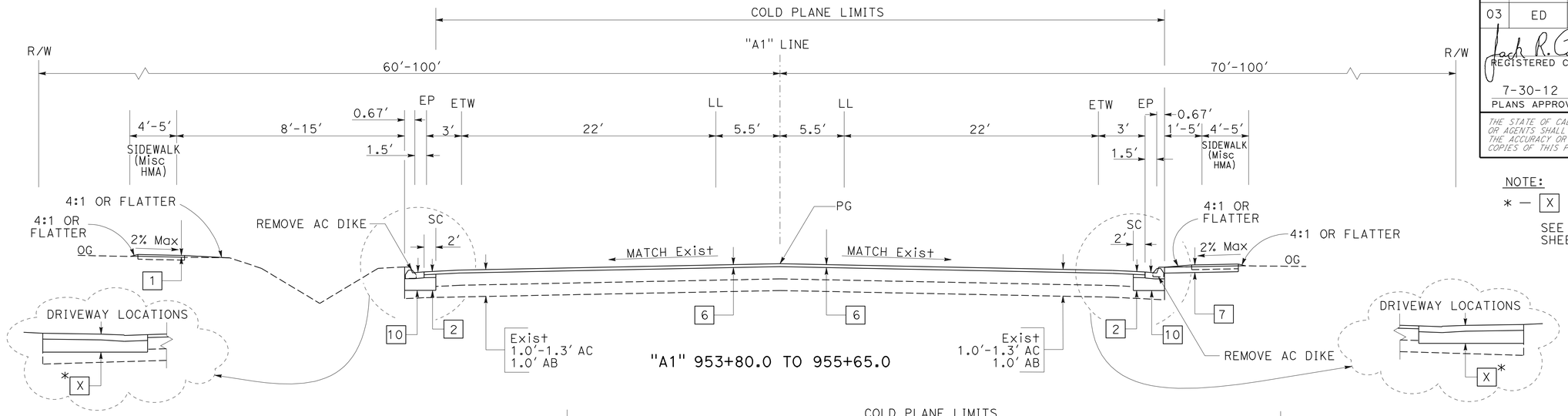

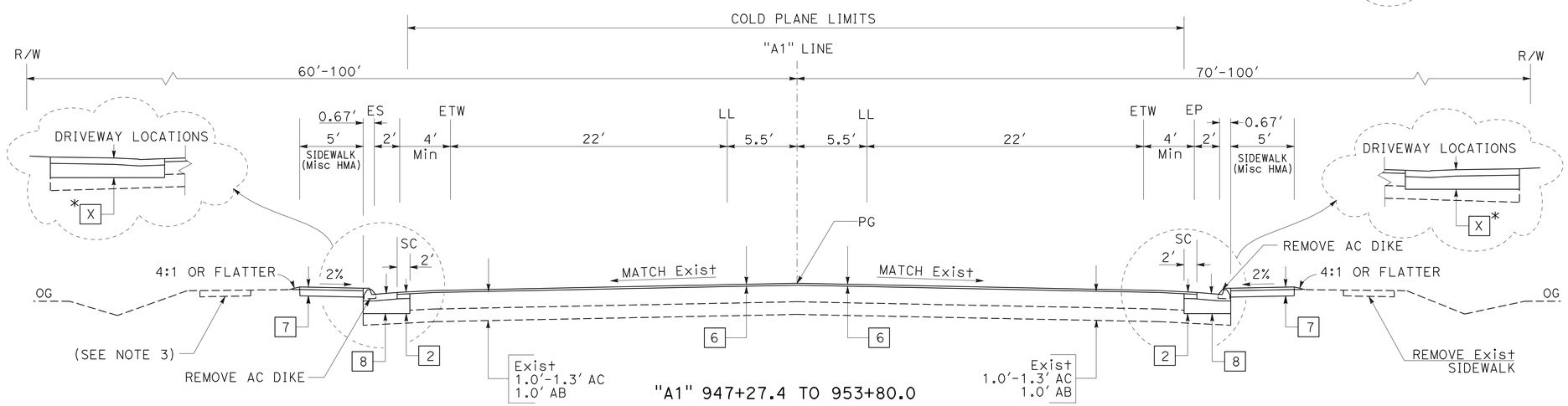

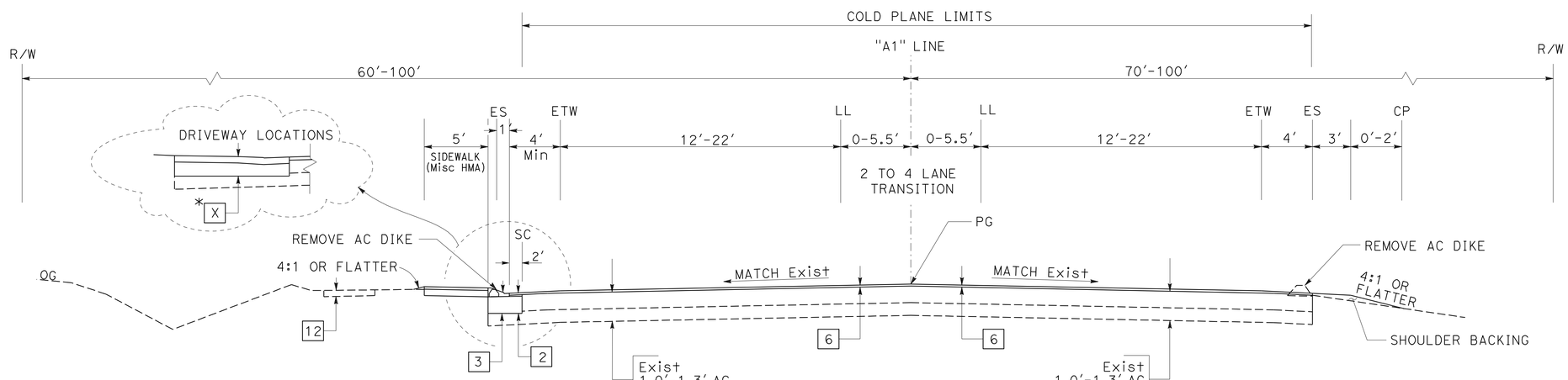

TYPICAL CROSS SECTIONS

NO SCALE

ROUTE 50

X-5

STATE OF CALIFORNIA - DEPARTMENT OF TRANSPORTATION
NORTH REGION
DIVISION OF ENGINEERING
DESIGN BRANCH M8

Caltrans

FUNCTIONAL SUPERVISOR: MASTRI ALVANDI
CALCULATED-DESIGNED BY: JACK COWELL
CHECKED BY: MASTRI ALVANDI
REVISED BY / DATE REVISED

LAST REVISION 04-23-12
DATE PLOTTED => 30-AUG-2012
TIME PLOTTED => 09:08

Dist	COUNTY	ROUTE	POST MILES TOTAL PROJECT	SHEET No.	TOTAL SHEETS
03	ED	50	73.7/75.4	7	119

REGISTERED CIVIL ENGINEER 4-26-12 DATE

7-30-12
PLANS APPROVAL DATE

REGISTERED PROFESSIONAL ENGINEER JACK COWELL No. 65521 Exp. 9-30-13 CIVIL STATE OF CALIFORNIA

THE STATE OF CALIFORNIA OR ITS OFFICERS OR AGENTS SHALL NOT BE RESPONSIBLE FOR THE ACCURACY OR COMPLETENESS OF SCANNED COPIES OF THIS PLAN SHEET.

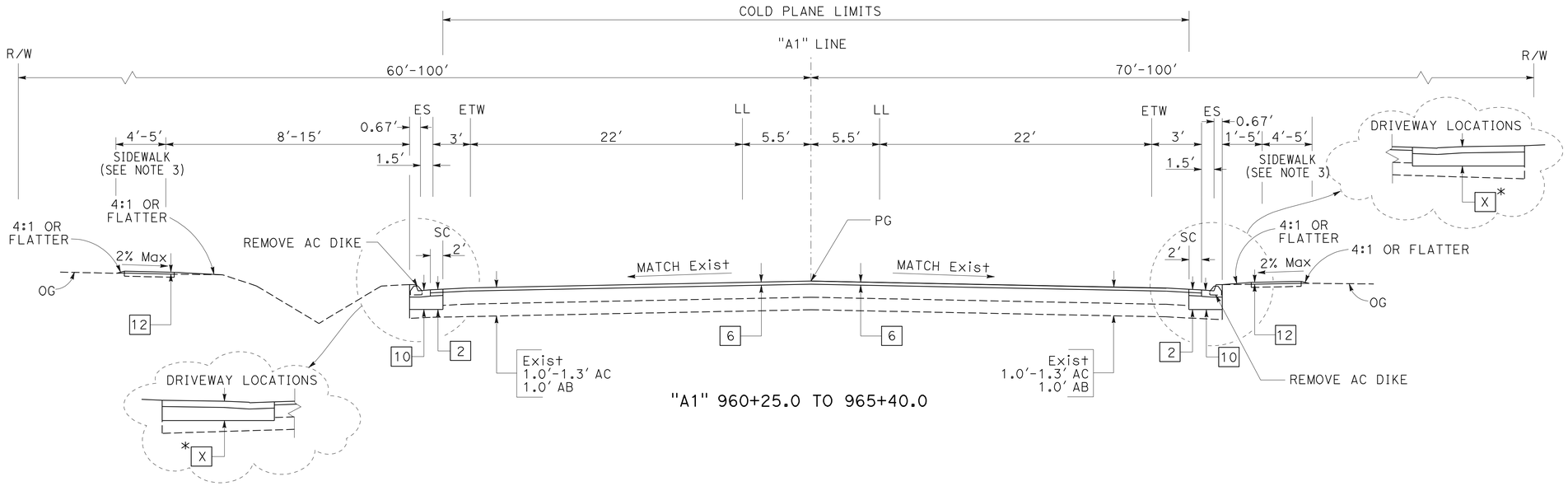

"A1" 960+25.0 TO 965+40.0

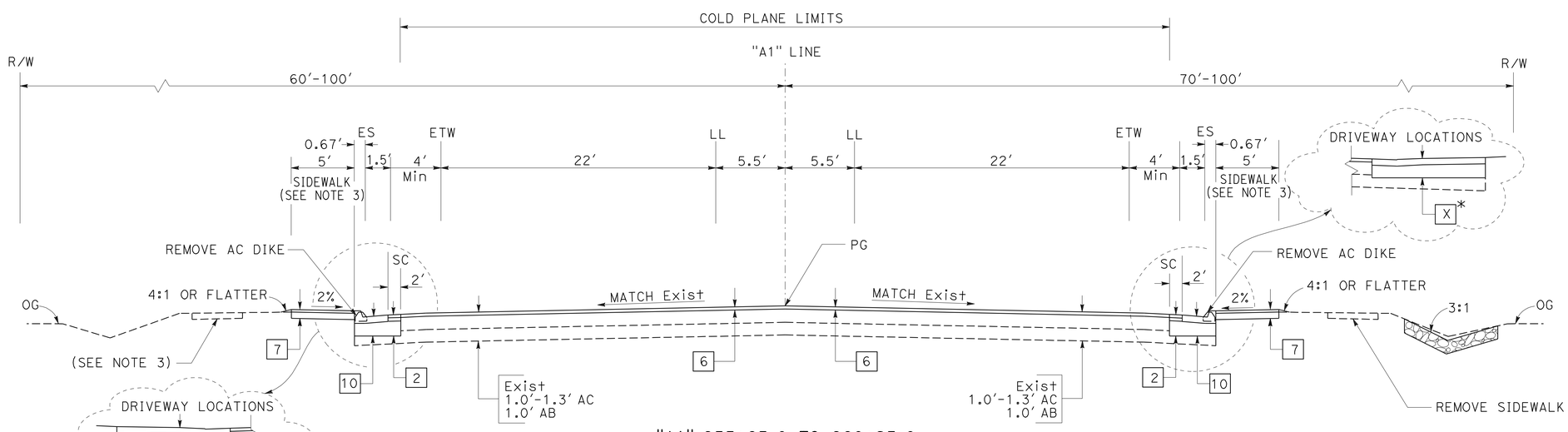

"A1" 955+65.0 TO 960+25.0

ROUTE 50

TYPICAL CROSS SECTIONS

NO SCALE

X-6

STATE OF CALIFORNIA - DEPARTMENT OF TRANSPORTATION
Caltrans®
NORTH REGION
DIVISION OF ENGINEERING
DESIGN BRANCH M8

FUNCTIONAL SUPERVISOR: MASTRI ALVANDI

CALCULATED-DESIGNED BY: JACK COWELL
CHECKED BY: MASTRI ALVANDI

REVISED BY | DATE REVISED

LAST REVISION 04-23-12
DATE PLOTTED => 30-AUG-2012
TIME PLOTTED => 09:08

Dist	COUNTY	ROUTE	POST MILES TOTAL PROJECT	SHEET No.	TOTAL SHEETS
03	ED	50	73.7/75.4	8	119

Jack R. Cowell Jr. 4-26-12
REGISTERED CIVIL ENGINEER DATE

7-30-12
PLANS APPROVAL DATE

REGISTERED PROFESSIONAL ENGINEER
JACK COWELL
No. 65521
Exp. 9-30-13
CIVIL
STATE OF CALIFORNIA

THE STATE OF CALIFORNIA OR ITS OFFICERS OR AGENTS SHALL NOT BE RESPONSIBLE FOR THE ACCURACY OR COMPLETENESS OF SCANNED COPIES OF THIS PLAN SHEET.

NOTE:

** — SEE DRIVEWAY CONSTRUCTION DETAIL SHEET(S) FOR EXACT LOCATIONS.

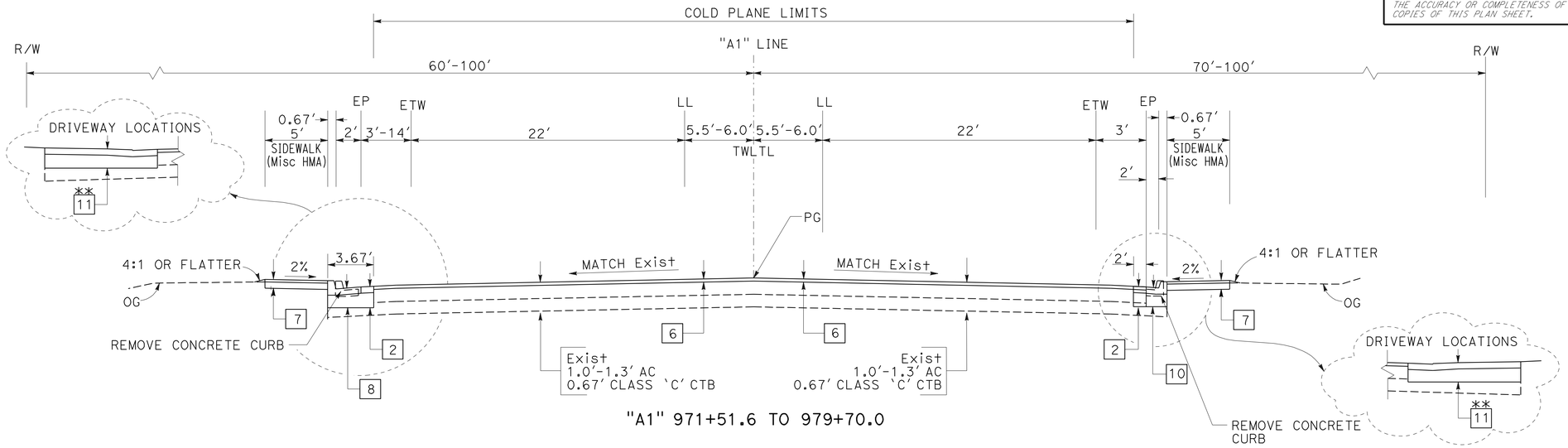

"A1" 971+51.6 TO 979+70.0

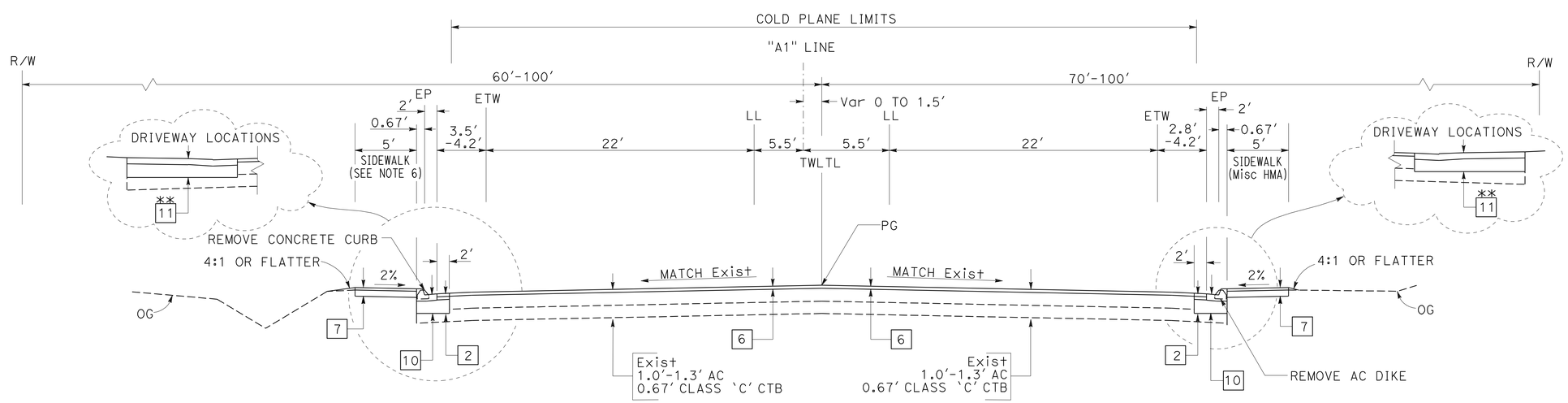

"A1" 965+40.0 TO 971+51.6

ROUTE 50

TYPICAL CROSS SECTIONS

NO SCALE

X-7

REVISED BY	DATE REVISED
JACK COWELL	MASTRI ALVANDI
CALCULATED-DESIGNED BY	CHECKED BY
FUNCTIONAL SUPERVISOR	MASTRI ALVANDI

STATE OF CALIFORNIA - DEPARTMENT OF TRANSPORTATION
Caltrans
NORTH REGION
DIVISION OF ENGINEERING
DESIGN BRANCH M8

LAST REVISION 04-23-12
DATE PLOTTED => 30-AUG-2012
TIME PLOTTED => 09:08

Dist	COUNTY	ROUTE	POST MILES TOTAL PROJECT	SHEET No.	TOTAL SHEETS
03	ED	50	73.7/75.4	9	119

REGISTERED CIVIL ENGINEER 4-26-12 DATE

7-30-12
PLANS APPROVAL DATE

REGISTERED PROFESSIONAL ENGINEER JACK COWELL No. 65521 Exp. 9-30-13 CIVIL STATE OF CALIFORNIA

THE STATE OF CALIFORNIA OR ITS OFFICERS OR AGENTS SHALL NOT BE RESPONSIBLE FOR THE ACCURACY OR COMPLETENESS OF SCANNED COPIES OF THIS PLAN SHEET.

NOTES:

1. FOR ACCURATE RIGHT OF WAY DATA, CONTACT RIGHT OF WAY ENGINEERING AT THE DISTRICT OFFICE.
2. FOR CURB (TYPE A2 Mod) AND GUTTER DETAILS SEE CONSTRUCTION DETAILS
3. FOR CURB (TYPE D Mod) AND GUTTER DETAILS SEE CONSTRUCTION DETAILS
4. TREES TO BE REMOVED IN DESIGNATED AREAS AND WILL BE PAID FOR AS PART OF CLEARING AND GRUBBING

LEGEND:

- RIGHT OF WAY EASEMENT (TCE)
- REMOVE BASE AND SURFACING
- PLACE HOT MIX ASPHALT (MISCELLANEOUS AREA)
- CONSTRUCT SIDEWALK (HMA)
- WIDENING
- SPLIT RAIL FENCE

ABBREVIATIONS:

TCE TEMPORARY CONSTRUCTION EASEMENT
MVP MAINTENANCE VEHICLE PARKING

CURVE DATA

No.	R	Δ	T	L
1	1400.00′	19°57′30″	246.33′	487.67′
2	8500.00′	2°07′45″	157.96′	315.88′

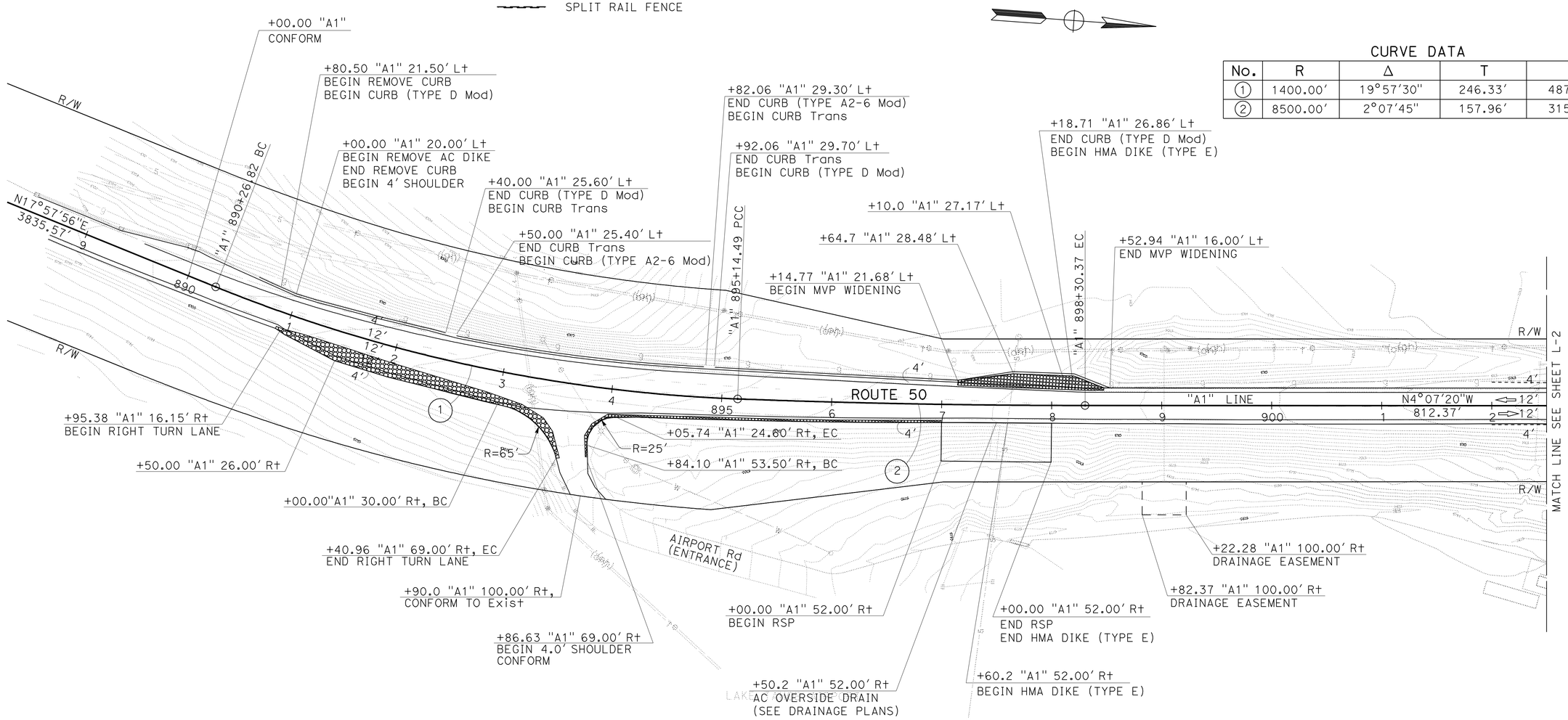

LAYOUT

SCALE: 1" = 50′

L-1

STATE OF CALIFORNIA - DEPARTMENT OF TRANSPORTATION
NORTH REGION
DIVISION OF ENGINEERING
DESIGN BRANCH M8

Caltrans

FUNCTIONAL SUPERVISOR: MASTRI ALVANDI
CALCULATED-DESIGNED BY: JACK COWELL
CHECKED BY: MASTRI ALVANDI
REVISED BY / DATE REVISED

LAST REVISION 04-23-12
DATE PLOTTED => 30-AUG-2012
TIME PLOTTED => 09:09

Dist	COUNTY	ROUTE	POST MILES TOTAL PROJECT	SHEET No.	TOTAL SHEETS
03	ED	50	73.7/75.4	10	119

REGISTERED CIVIL ENGINEER 4-26-12 DATE

7-30-12
PLANS APPROVAL DATE

REGISTERED PROFESSIONAL ENGINEER JACK COWELL No. 65521 Exp. 9-30-13 CIVIL STATE OF CALIFORNIA

THE STATE OF CALIFORNIA OR ITS OFFICERS OR AGENTS SHALL NOT BE RESPONSIBLE FOR THE ACCURACY OR COMPLETENESS OF SCANNED COPIES OF THIS PLAN SHEET.

NOTE:

FOR ACCURATE RIGHT OF WAY DATA, CONTACT RIGHT OF WAY ENGINEERING AT THE DISTRICT OFFICE.

CURVE DATA

No.	R	Δ	T	L
3	10000.00′	2°01′12″	176.29′	352.55′
4	2700.00′	18°34′16″	441.44′	875.14′

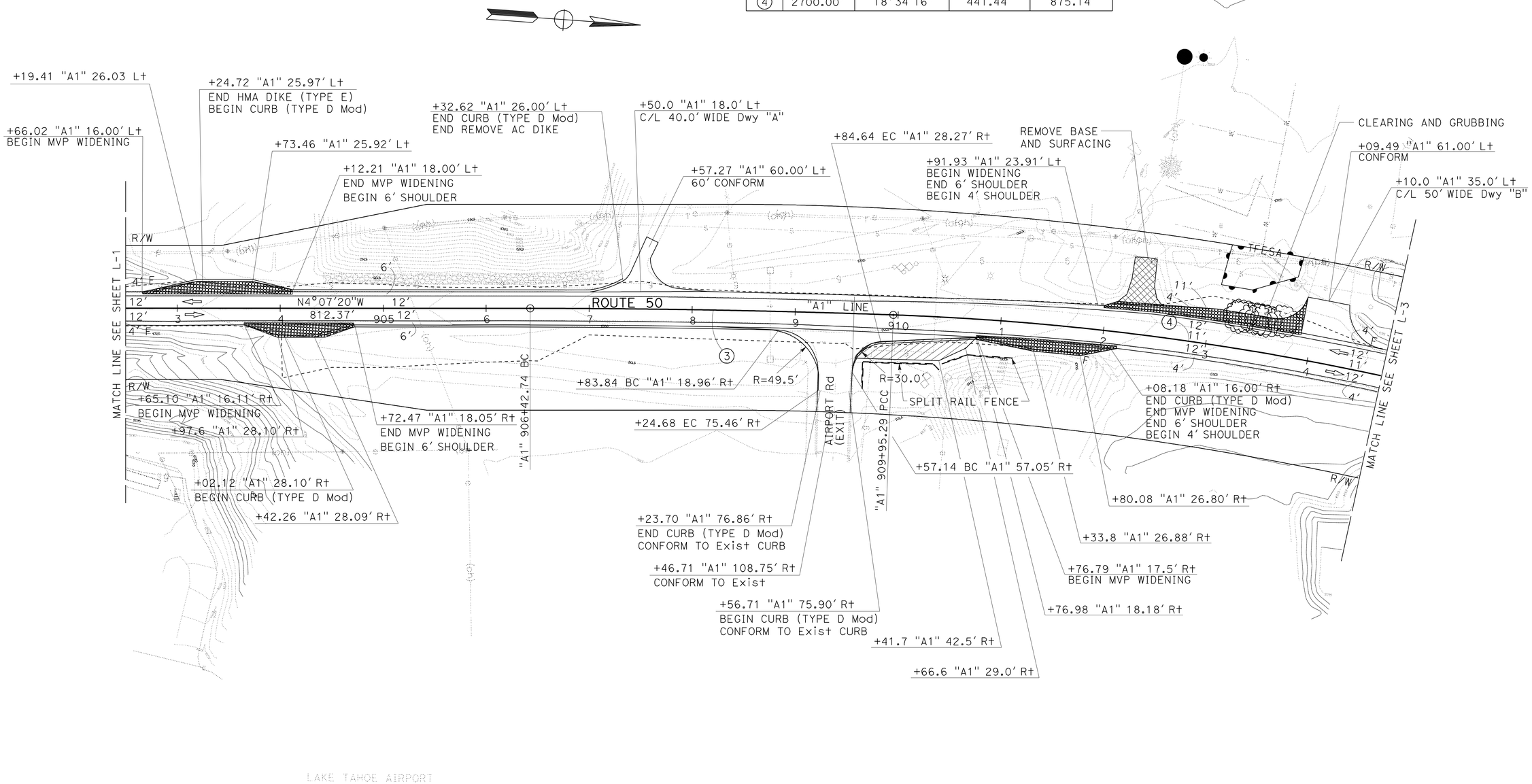

LAYOUT
SCALE: 1″ = 50′

L-2

REVISED BY	DATE REVISED

CALCULATED-DESIGNED BY	CHECKED BY
JACK COWELL	MASTRI ALVANDI

FUNCTIONAL SUPERVISOR: MASTRI ALVANDI

STATE OF CALIFORNIA - DEPARTMENT OF TRANSPORTATION
Caltrans
NORTH REGION
DIVISION OF ENGINEERING
DESIGN BRANCH M8

LAST REVISION 04-23-12
DATE PLOTTED => 30-AUG-2012
TIME PLOTTED => 09:09

Dist	COUNTY	ROUTE	POST MILES TOTAL PROJECT	SHEET No.	TOTAL SHEETS
03	ED	50	73.7/75.4	11	119

Jack R. Cowell Jr. 4-26-12
REGISTERED CIVIL ENGINEER DATE

7-30-12
PLANS APPROVAL DATE

REGISTERED PROFESSIONAL ENGINEER
JACK COWELL
No. 65521
Exp. 9-30-13
CIVIL
STATE OF CALIFORNIA

THE STATE OF CALIFORNIA OR ITS OFFICERS OR AGENTS SHALL NOT BE RESPONSIBLE FOR THE ACCURACY OR COMPLETENESS OF SCANNED COPIES OF THIS PLAN SHEET.

NOTE:

FOR ACCURATE RIGHT OF WAY DATA, CONTACT RIGHT OF WAY ENGINEERING AT THE DISTRICT OFFICE.

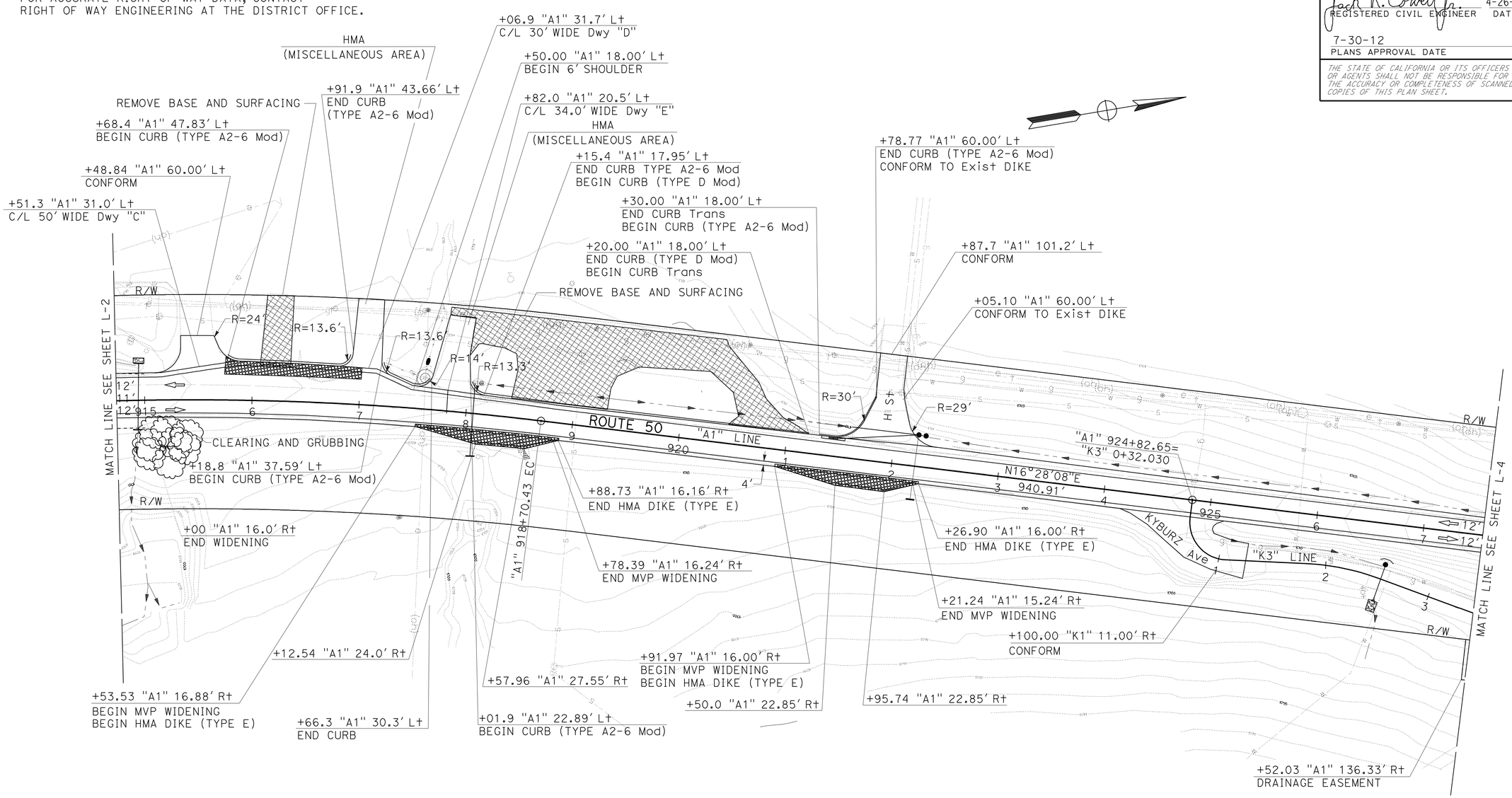

LAYOUT

SCALE: 1" = 50'

L-3

STATE OF CALIFORNIA - DEPARTMENT OF TRANSPORTATION
Caltrans
NORTH REGION
DIVISION OF ENGINEERING
DESIGN BRANCH M8

FUNCTIONAL SUPERVISOR: MASTRI ALVANDI
CALCULATED-DESIGNED BY: JACK COWELL
CHECKED BY: MASTRI ALVANDI
REVISED BY
DATE REVISED

LAST REVISION 04-23-12
DATE PLOTTED => 30-AUG-2012
TIME PLOTTED => 09:09

Dist	COUNTY	ROUTE	POST MILES TOTAL PROJECT	SHEET No.	TOTAL SHEETS
03	ED	50	73.7/75.4	12	119

Jack R. Cowell Jr. 4-26-12
REGISTERED CIVIL ENGINEER DATE

7-30-12
PLANS APPROVAL DATE

REGISTERED PROFESSIONAL ENGINEER
JACK COWELL
No. 65521
Exp. 9-30-13
CIVIL
STATE OF CALIFORNIA

THE STATE OF CALIFORNIA OR ITS OFFICERS OR AGENTS SHALL NOT BE RESPONSIBLE FOR THE ACCURACY OR COMPLETENESS OF SCANNED COPIES OF THIS PLAN SHEET.

NOTE:

FOR ACCURATE RIGHT OF WAY DATA, CONTACT
RIGHT OF WAY ENGINEERING AT THE DISTRICT OFFICE.

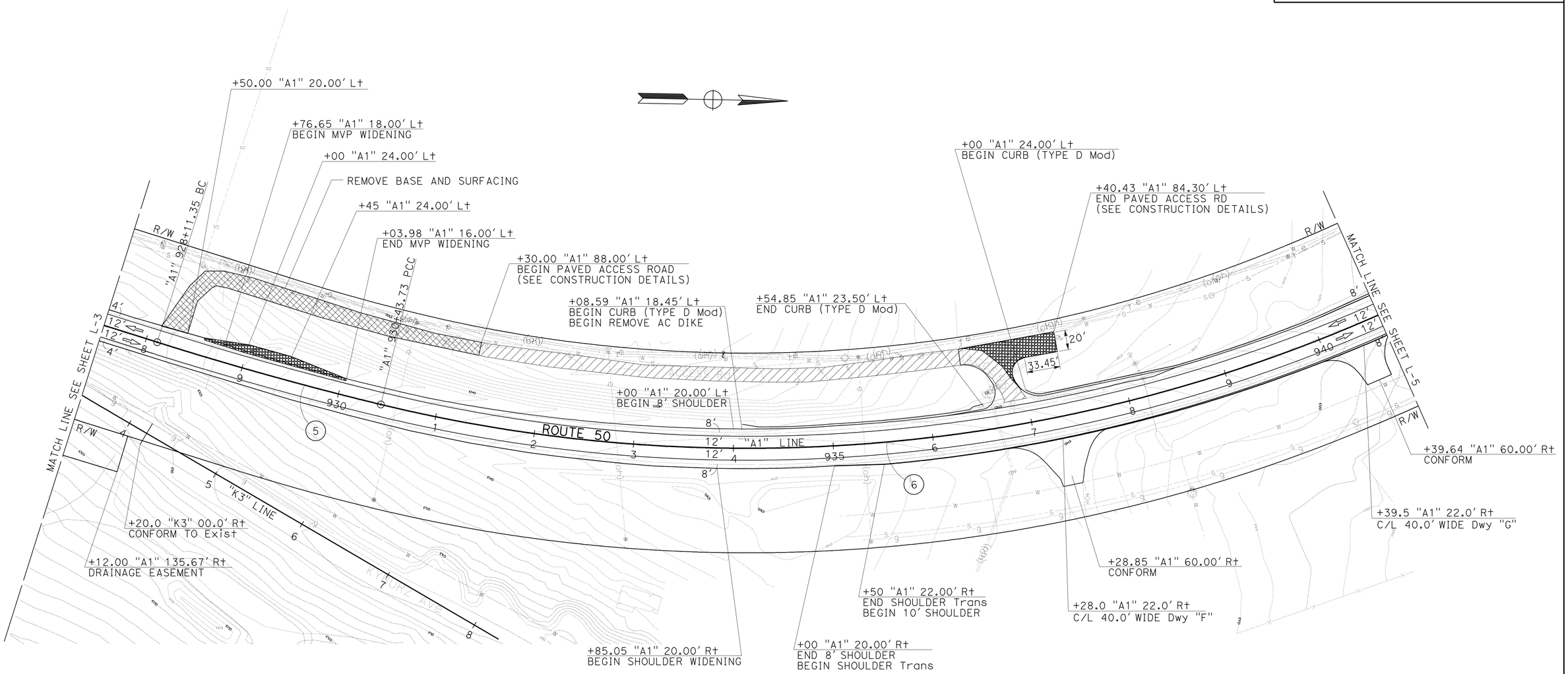

CURVE DATA

No.	R	Δ	T	L
5	3400.00'	3°54'58"	116.24'	232.39'
6	1560.00'	40°04'29"	568.95'	1091.12'

LAYOUT
SCALE: 1" = 50'

L-4

STATE OF CALIFORNIA - DEPARTMENT OF TRANSPORTATION
Caltrans
NORTH REGION
DIVISION OF ENGINEERING
DESIGN BRANCH M8

FUNCTIONAL SUPERVISOR: MASTRI ALVANDI
CALCULATED-DESIGNED BY: JACK COWELL
CHECKED BY: MASTRI ALVANDI
REVISED BY
DATE REVISED

LAST REVISION 04-23-12
DATE PLOTTED => 30-AUG-2012
TIME PLOTTED => 09:09

Dist	COUNTY	ROUTE	POST MILES TOTAL PROJECT	SHEET No.	TOTAL SHEETS
03	ED	50	73.7/75.4	13	119

Jack R. Cowell Jr. 4-26-12
REGISTERED CIVIL ENGINEER DATE

7-30-12
PLANS APPROVAL DATE

REGISTERED PROFESSIONAL ENGINEER
JACK COWELL
No. 65521
Exp. 9-30-13
CIVIL
STATE OF CALIFORNIA

THE STATE OF CALIFORNIA OR ITS OFFICERS OR AGENTS SHALL NOT BE RESPONSIBLE FOR THE ACCURACY OR COMPLETENESS OF SCANNED COPIES OF THIS PLAN SHEET.

NOTE:

FOR ACCURATE RIGHT OF WAY DATA, CONTACT RIGHT OF WAY ENGINEERING AT THE DISTRICT OFFICE.

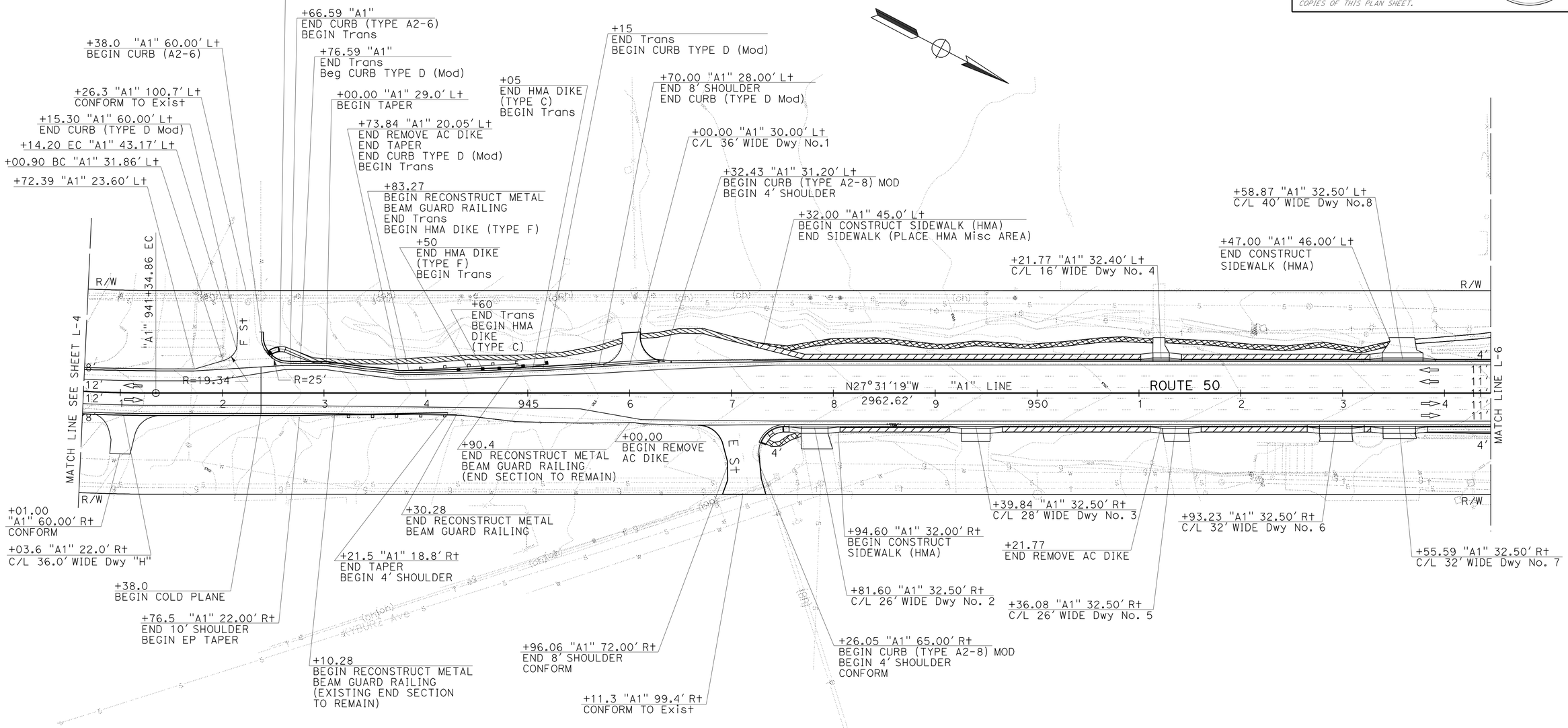

LAYOUT

SCALE: 1" = 50'

L-5

REVISED BY	DATE REVISED
JACK COWELL	MASTRI ALVANDI
CALCULATED-DESIGNED BY	CHECKED BY
FUNCTIONAL SUPERVISOR	MASTRI ALVANDI

STATE OF CALIFORNIA - DEPARTMENT OF TRANSPORTATION
NORTH REGION
DIVISION OF ENGINEERING
DESIGN BRANCH M8
Caltrans

LAST REVISION 04-23-12 | DATE PLOTTED => 30-AUG-2012 | TIME PLOTTED => 09:09

Dist	COUNTY	ROUTE	POST MILES TOTAL PROJECT	SHEET No.	TOTAL SHEETS
03	ED	50	73.7/75.4	14	119

REGISTERED CIVIL ENGINEER — DATE 4-26-12

7-30-12
PLANS APPROVAL DATE

REGISTERED PROFESSIONAL ENGINEER — JACK COWELL No. 65521 Exp. 9-30-13 CIVIL — STATE OF CALIFORNIA

THE STATE OF CALIFORNIA OR ITS OFFICERS OR AGENTS SHALL NOT BE RESPONSIBLE FOR THE ACCURACY OR COMPLETENESS OF SCANNED COPIES OF THIS PLAN SHEET.

NOTES:

1. FOR ACCURATE RIGHT OF WAY DATA, CONTACT RIGHT OF WAY ENGINEERING AT THE DISTRICT OFFICE.
2. RELOCATE APPROXIMATELY 12 LANDSCAPE ROCKS TO ADJACENT FUTURE MULCHED AREAS WHERE IMPACTED BY SIDEWALK INSTALLATION "A1" 954+68 TO 956+56 R+.

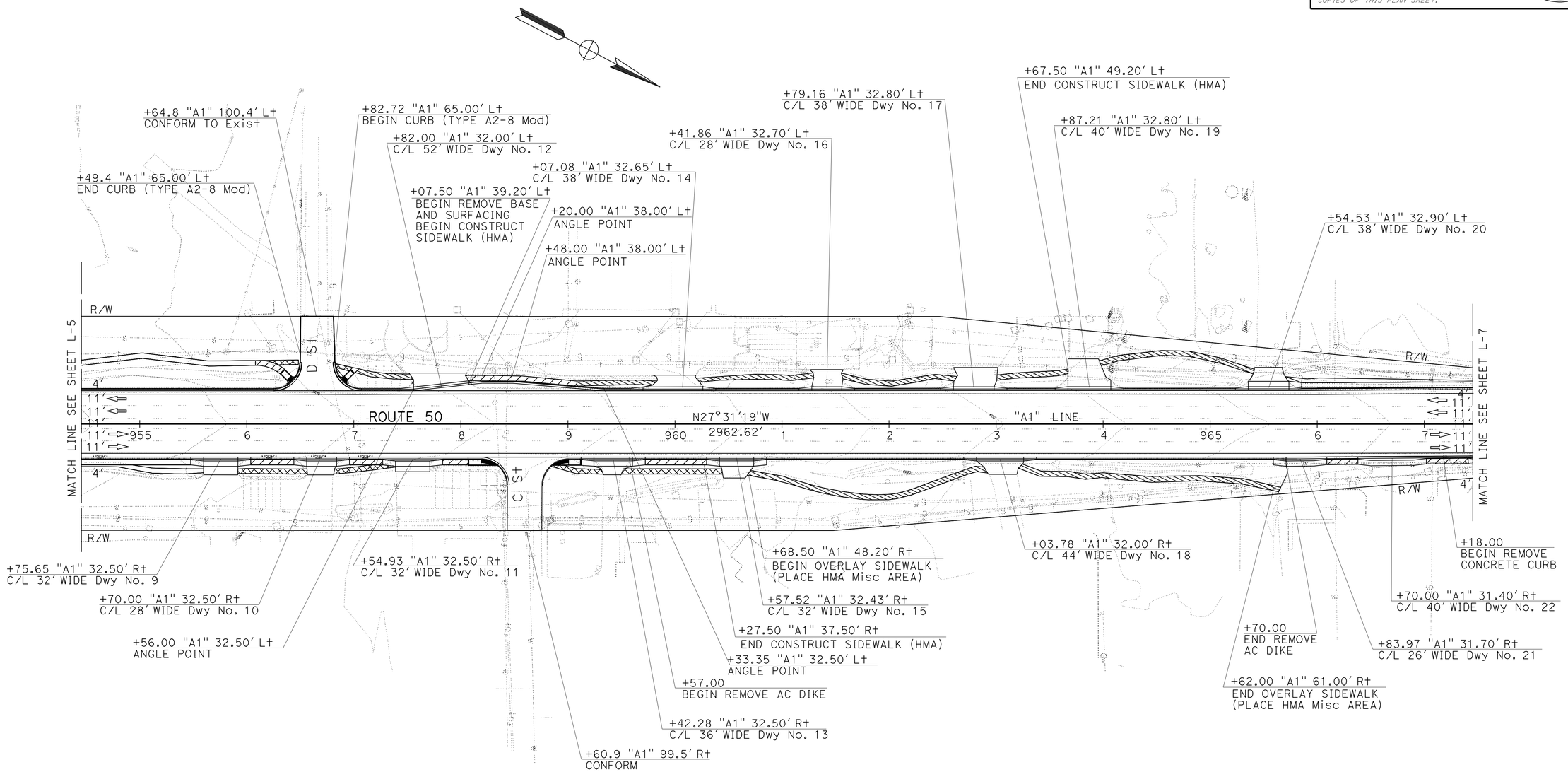

LAYOUT

SCALE: 1" = 50'

L-6

STATE OF CALIFORNIA - DEPARTMENT OF TRANSPORTATION
Caltrans
NORTH REGION
DIVISION OF ENGINEERING
DESIGN BRANCH M8

FUNCTIONAL SUPERVISOR: MASTRI ALVANDI
CALCULATED-DESIGNED BY: JACK COWELL
CHECKED BY: MASTRI ALVANDI
REVISED BY
DATE REVISED

LAST REVISION 04-23-12
DATE PLOTTED => 01-OCT-2012
TIME PLOTTED => 11:54

Dist	COUNTY	ROUTE	POST MILES TOTAL PROJECT	SHEET No.	TOTAL SHEETS
03	ED	50	73.7/75.4	15	119

REGISTERED CIVIL ENGINEER 4-26-12 DATE

7-30-12
PLANS APPROVAL DATE

REGISTERED PROFESSIONAL ENGINEER JACK COWELL No. 65521 Exp. 9-30-13 CIVIL STATE OF CALIFORNIA

THE STATE OF CALIFORNIA OR ITS OFFICERS OR AGENTS SHALL NOT BE RESPONSIBLE FOR THE ACCURACY OR COMPLETENESS OF SCANNED COPIES OF THIS PLAN SHEET.

NOTES:

1. FOR ACCURATE RIGHT OF WAY DATA, CONTACT RIGHT OF WAY ENGINEERING AT THE DISTRICT OFFICE.
2. CAP AND REPAIR EXISTING IRRIGATION WHERE IMPACTED BY SIDEWALK AND CURB INSTALLATION "A1" STA 971+58 TO 974+73 Rt.

CURVE DATA

No.	R	Δ	T	L
7	2500.00′	5°00′32"	109.35′	218.56′

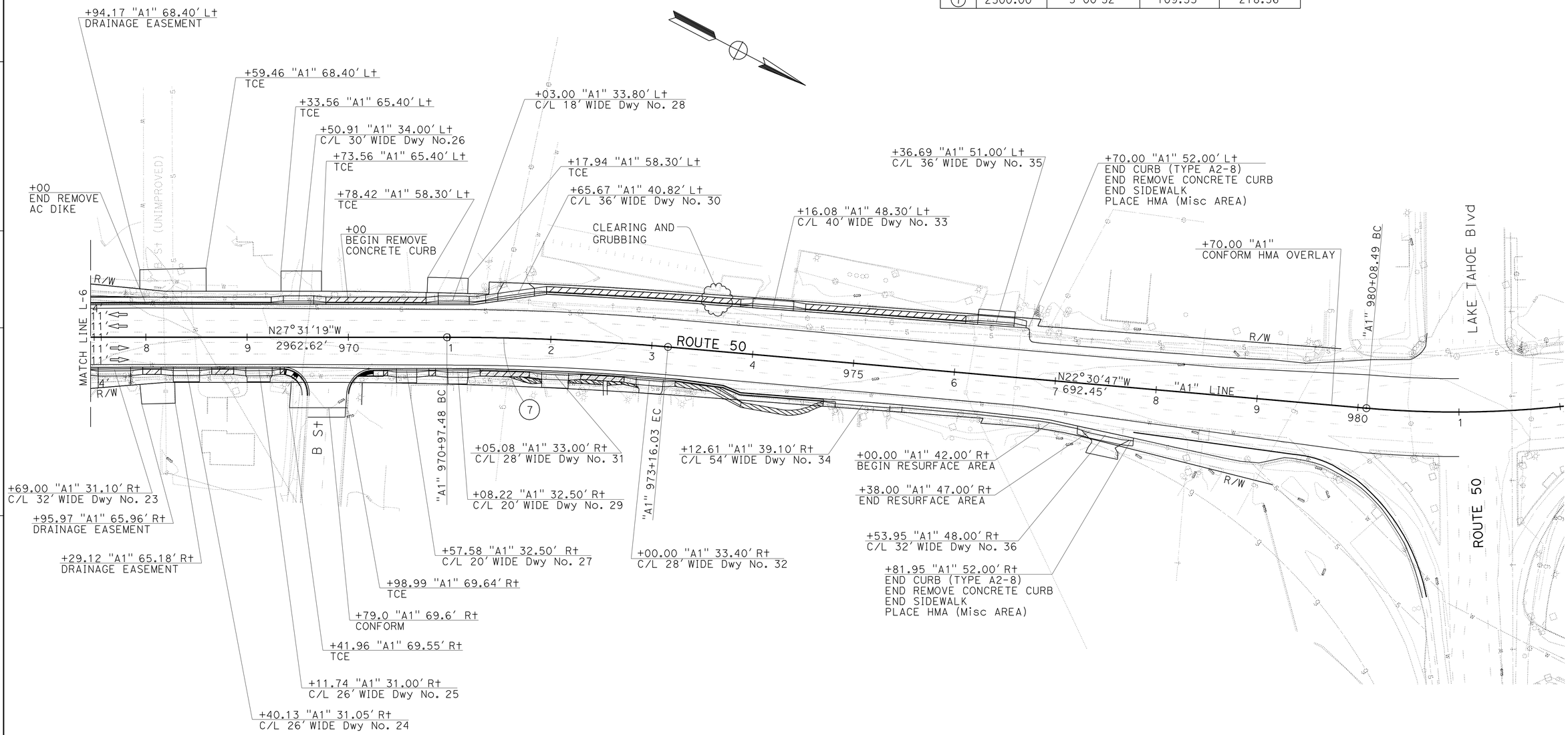

LAYOUT

SCALE: 1" = 50′

L-7

STATE OF CALIFORNIA - DEPARTMENT OF TRANSPORTATION
Caltrans
NORTH REGION
DIVISION OF ENGINEERING
DESIGN BRANCH M8

FUNCTIONAL SUPERVISOR: MASTRI ALVANDI
CALCULATED-DESIGNED BY: JACK COWELL
CHECKED BY: MASTRI ALVANDI
REVISED BY
DATE REVISED

LAST REVISION 04-23-12
DATE PLOTTED => 30-AUG-2012
TIME PLOTTED => 09:09

Dist	COUNTY	ROUTE	POST MILES TOTAL PROJECT	SHEET No.	TOTAL SHEETS
03	ED	50	73.7/75.4	16	119

REGISTERED CIVIL ENGINEER 4-26-12 DATE

7-30-12
PLANS APPROVAL DATE

REGISTERED PROFESSIONAL ENGINEER JACK COWELL No. 65521 Exp. 9-30-13 CIVIL STATE OF CALIFORNIA

THE STATE OF CALIFORNIA OR ITS OFFICERS OR AGENTS SHALL NOT BE RESPONSIBLE FOR THE ACCURACY OR COMPLETENESS OF SCANNED COPIES OF THIS PLAN SHEET.

NOTES:

1. FOR INFORMATION NOT SHOWN, SEE LAYOUTS AND STANDARD PLANS.
2. FOR CONCRETE CURB TYPE, SEE LAYOUT SHEETS.
3. SEE CONSTRUCTION DETAIL CHARTS FOR DRIVEWAY & CURB RAMP LOCATIONS.
4. KEEP TOP OF CURB IN GUTTER TRANSITION ON SAME PLANE AS SIDEWALK UNTIL 3′ FROM TYPE 2 VALLEY GUTTER.
5. EXACT CONFORM LOCATION TO BE DETERMINED BY THE ENGINEER.

LEGEND:

- CURB RAMP DETECTABLE WARNING SURFACE SEE Std PLAN RSP A88A
- GROOVED RAMP BOUNDARY SEE Std PLAN RSP A88A
- DIRECTION OF SIDEWALK OR CURB RAMP SLOPE
- CLASS 2 AGGREGATE BASE
- HMA (TYPE A)
- MINOR CONCRETE (Misc CONSTRUCTION)
- CH — CURB HEIGHT
- SC — SAW CUT
- GUTTER OR SHOULDERS DIRECTION OF FLOW

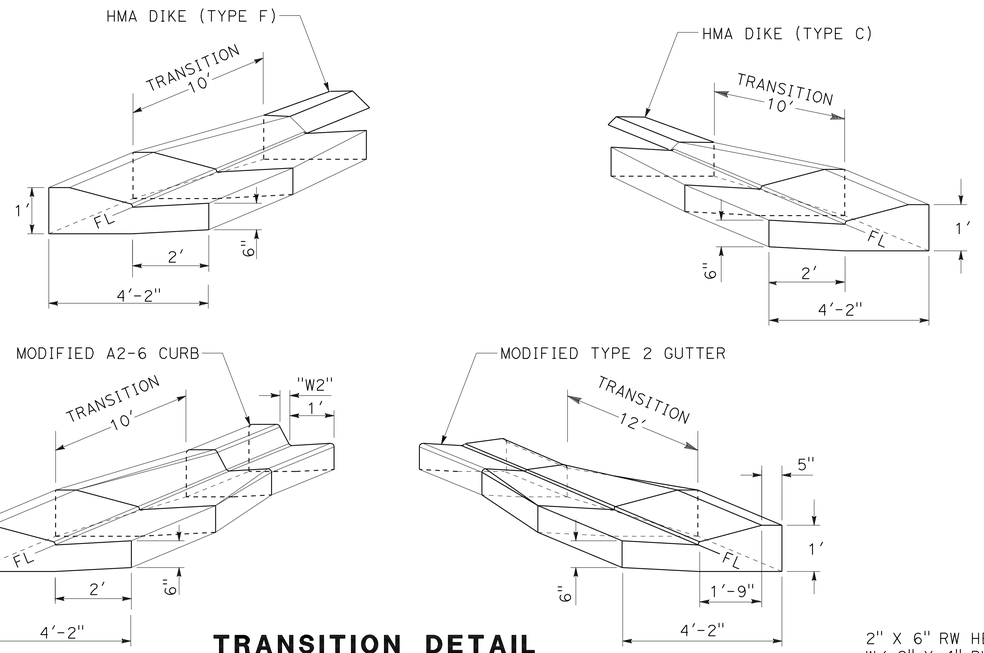

TRANSITION DETAIL
MODIFIED TYPE D CURB

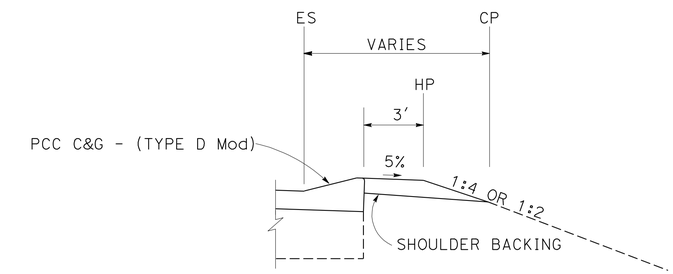

MODIFIED TYPE D CURB BACKING DETAIL

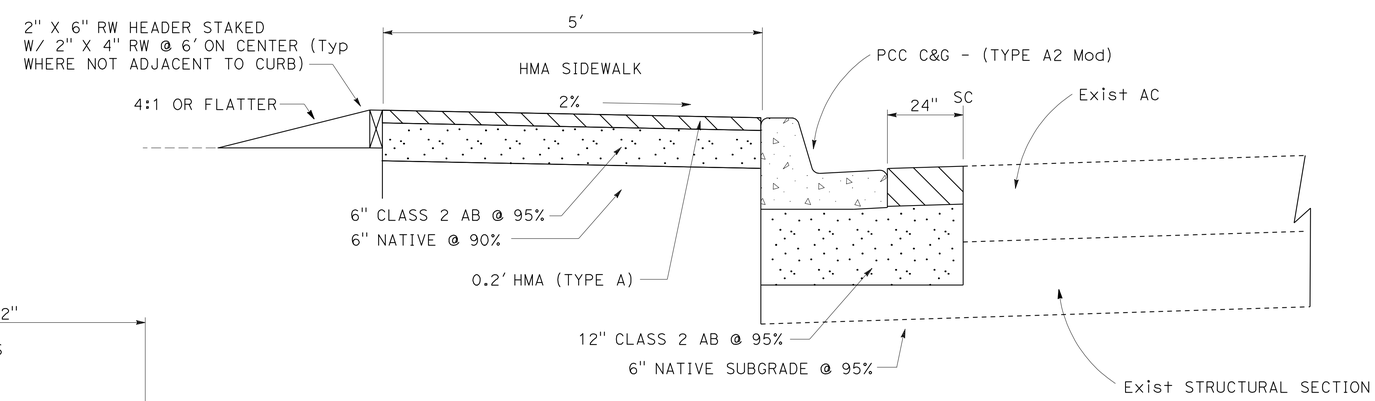

HMA SIDEWALKS

TABLE A

CURB TYPE	DIMENSIONS					
	"H1"	"H2"	"H3"	"W1"	"W2"	"W3"
A2-6 Mod	1′-0"	6"	1 "	1′-7 1/2"	1 1/2"	1′-0"
A2-8 Mod	1′-2"	8"	1 1/2"	2′-2"	2"	1′-6"

* NOTE: FOR A2-8 CURBS SEE Std PLANS

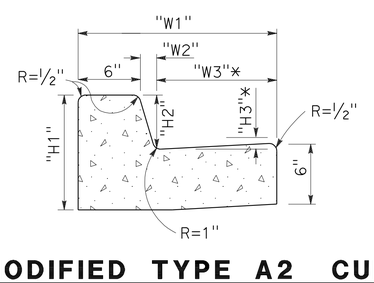

MODIFIED TYPE A2 CURBS
SEE TABLE A

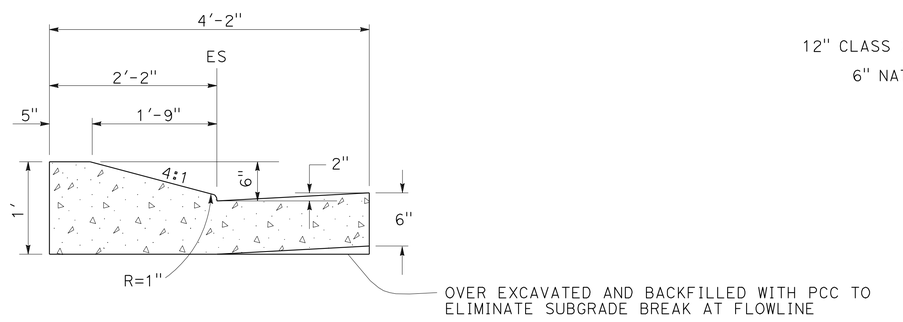

MODIFIED TYPE D CURBS

CONSTRUCTION DETAILS
NO SCALE

C-1

STATE OF CALIFORNIA - DEPARTMENT OF TRANSPORTATION
NORTH REGION
DIVISION OF ENGINEERING
DESIGN BRANCH M8

FUNCTIONAL SUPERVISOR: MASTRI ALVANDI
CALCULATED-DESIGNED BY: JACK COWELL
CHECKED BY: MASTRI ALVANDI
REVISED BY / DATE REVISED

LAST REVISION 04-23-12
DATE PLOTTED => 30-AUG-2012
TIME PLOTTED => 09:09

Dist	COUNTY	ROUTE	POST MILES TOTAL PROJECT	SHEET No.	TOTAL SHEETS
03	ED	50	73.7/75.4	17	119

REGISTERED CIVIL ENGINEER 4-26-12 DATE

7-30-12
PLANS APPROVAL DATE

REGISTERED PROFESSIONAL ENGINEER JACK COWELL No. 65521 Exp. 9-30-13 CIVIL STATE OF CALIFORNIA

THE STATE OF CALIFORNIA OR ITS OFFICERS OR AGENTS SHALL NOT BE RESPONSIBLE FOR THE ACCURACY OR COMPLETENESS OF SCANNED COPIES OF THIS PLAN SHEET.

NOTE:

1. FOR CONCRETE CURB TYPE, SEE LAYOUT SHEETS.

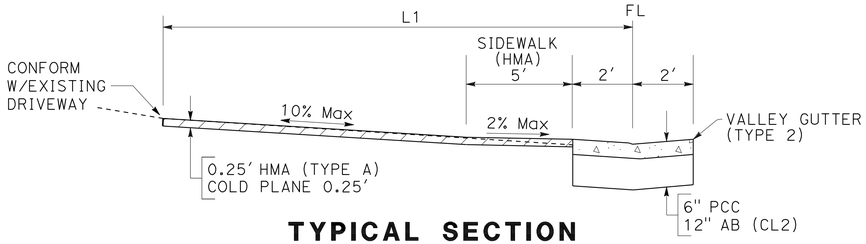

TYPICAL SECTION
CASE C, TYPE 2

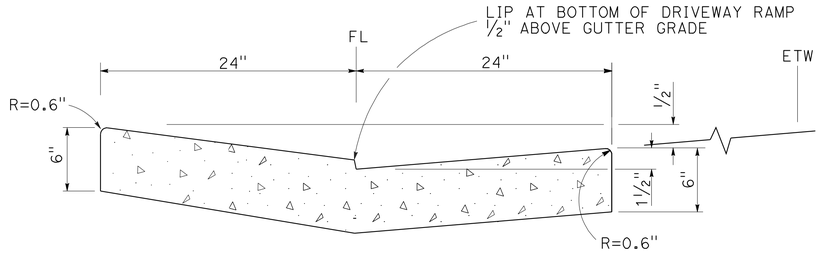

Typ VALLEY GUTTER AT DRIVEWAYS (TYPE 2-PCC)
CASE A, B AND C

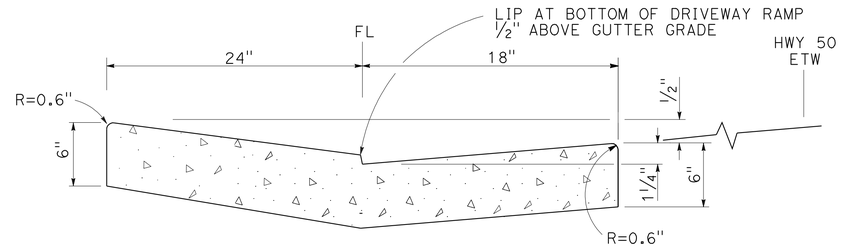

Typ VALLEY GUTTER AT DRIVEWAYS (TYPE 2 MODIFIED)
CASE A, B AND C

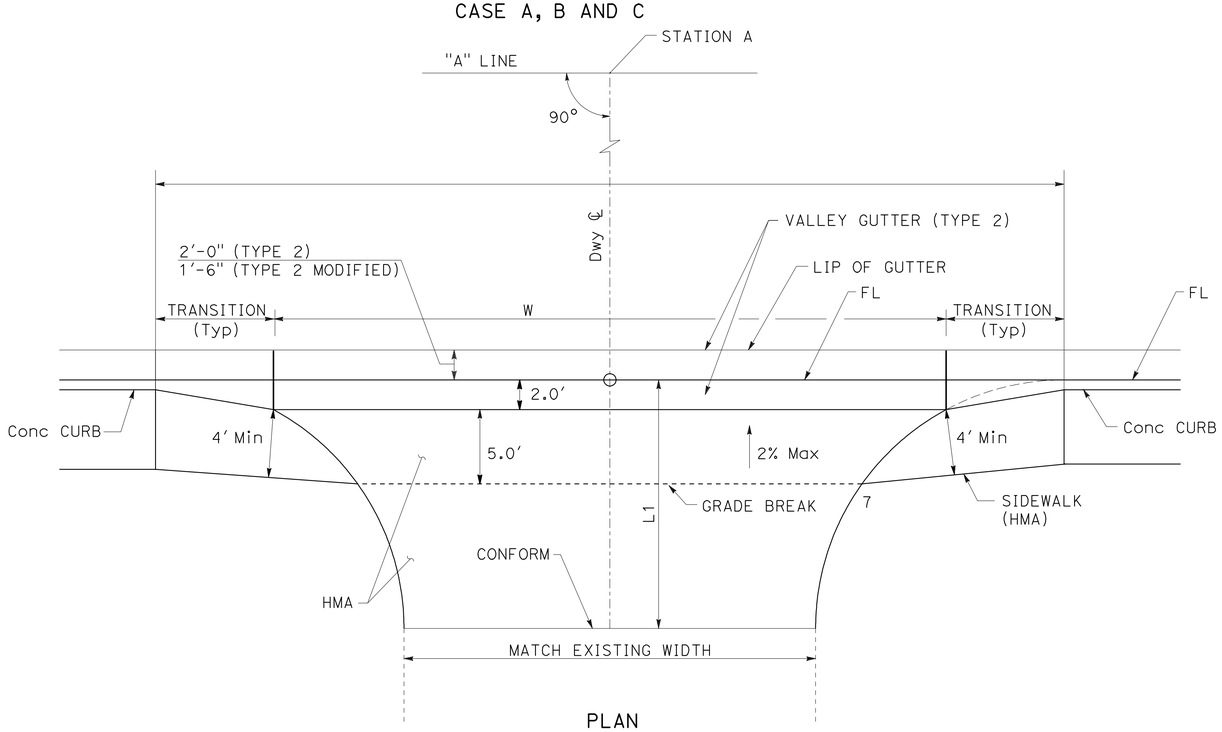

DRIVEWAY TRANSITION
CASE C (HMA SIDEWALK)

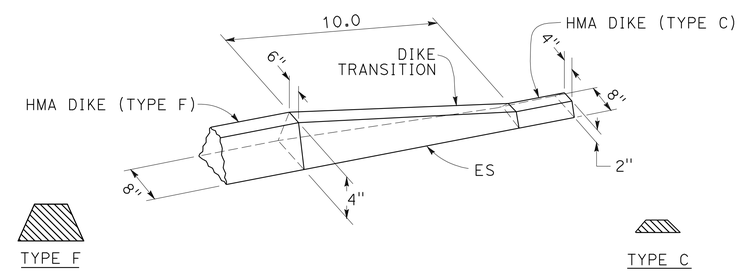

HMA DIKE (TYPE F) TO HMA DIKE (TYPE C)

CONSTRUCTION DETAILS
NO SCALE

C-2

STATE OF CALIFORNIA - DEPARTMENT OF TRANSPORTATION
NORTH REGION
DIVISION OF ENGINEERING
DESIGN BRANCH M8

FUNCTIONAL SUPERVISOR: MASTRI ALVANDI
CALCULATED-DESIGNED BY: JACK COWELL
CHECKED BY: MASTRI ALVANDI
REVISED BY
DATE REVISED

LAST REVISION 04-23-12
DATE PLOTTED => 01-OCT-2012
TIME PLOTTED => 06:07

Dist	COUNTY	ROUTE	POST MILES TOTAL PROJECT	SHEET No.	TOTAL SHEETS
03	ED	50	73.7/75.4	18	119

REGISTERED CIVIL ENGINEER 4-26-12 DATE

7-30-12
PLANS APPROVAL DATE

REGISTERED PROFESSIONAL ENGINEER JACK COWELL No. 65521 Exp. 9-30-13 CIVIL STATE OF CALIFORNIA

THE STATE OF CALIFORNIA OR ITS OFFICERS OR AGENTS SHALL NOT BE RESPONSIBLE FOR THE ACCURACY OR COMPLETENESS OF SCANNED COPIES OF THIS PLAN SHEET.

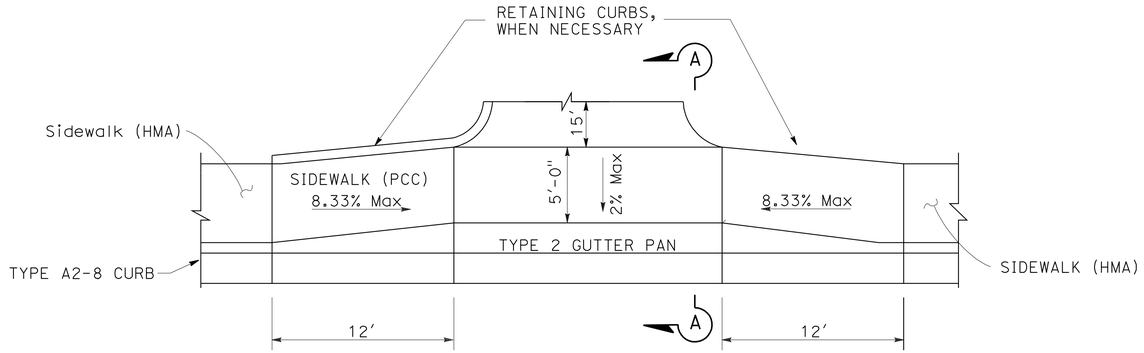

PLAN

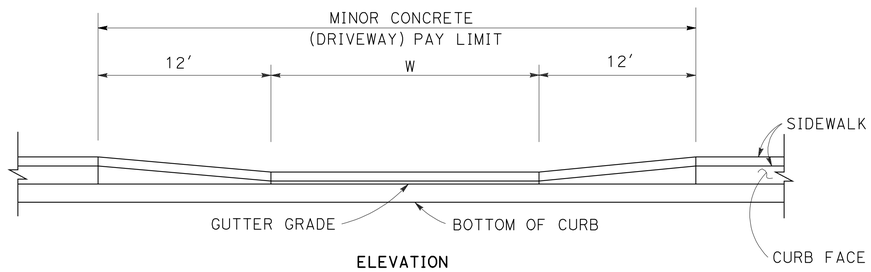

ELEVATION

DRIVEWAYS
CASE B (MODIFIED)

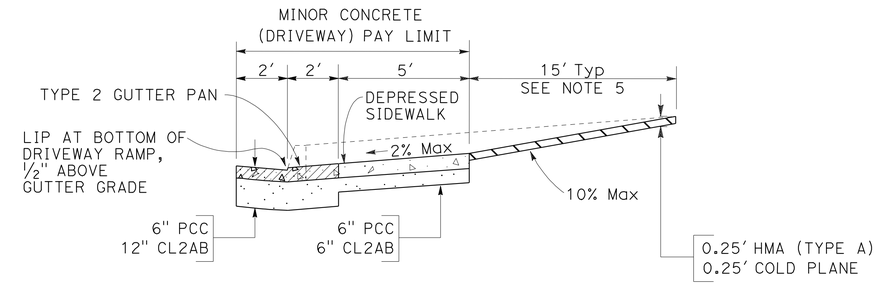

CASE B (MOD)
DRIVEWAY WITH DEPRESSED SIDEWALK

SECTION A-A

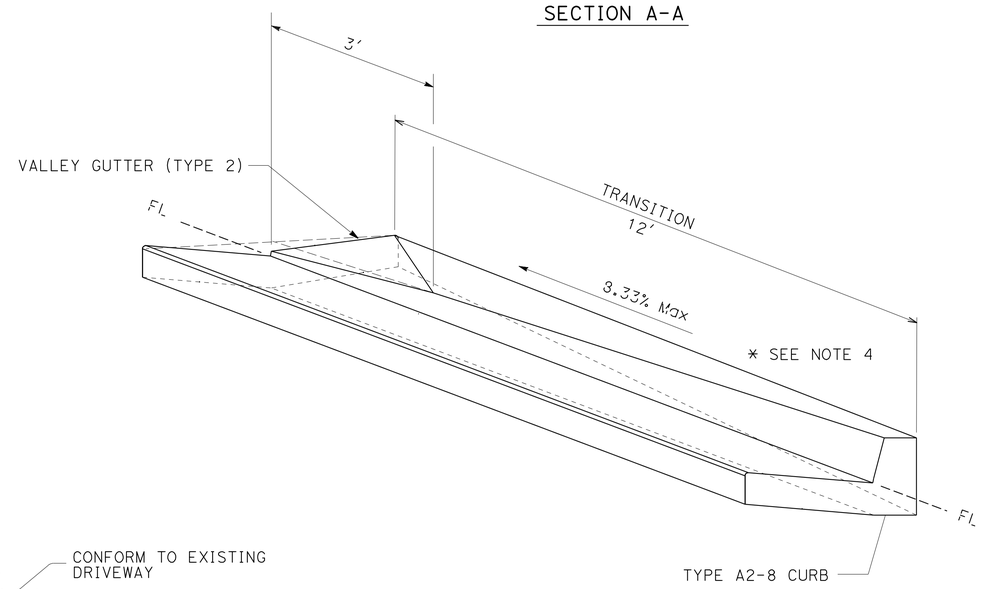

TYPE A2-8 CURB TO
VALLEY GUTTER (TYPE 2 or TYPE 2 MODIFIED) TRANSITION
CASE B (MODIFIED), CASE C (HMA SIDEWALK)

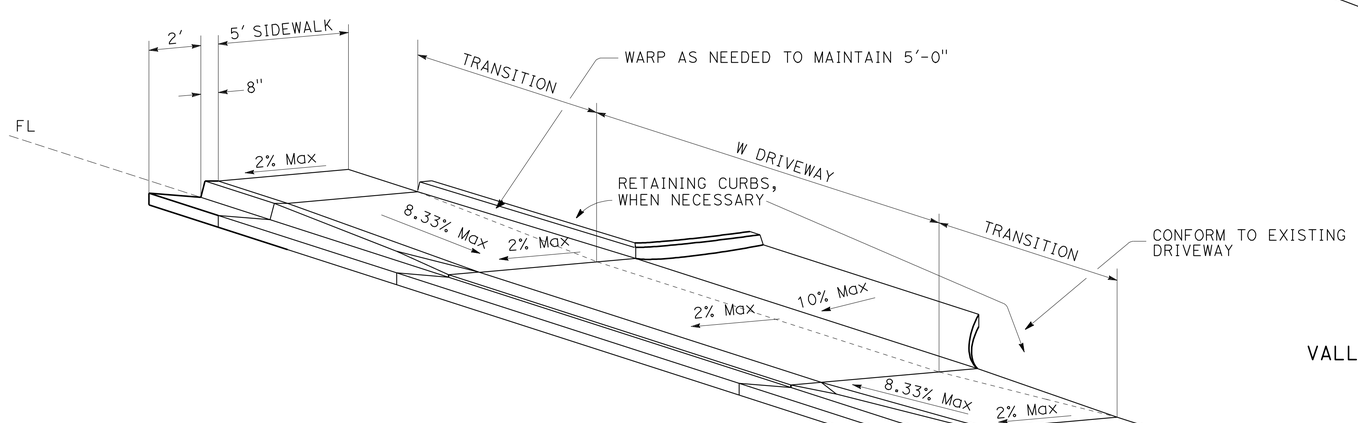

CONSTRUCTION DETAILS

NO SCALE

C-3

STATE OF CALIFORNIA - DEPARTMENT OF TRANSPORTATION
NORTH REGION
DIVISION OF ENGINEERING
DESIGN BRANCH M8

Caltrans

FUNCTIONAL SUPERVISOR: MASTRI ALVANDI
CALCULATED-DESIGNED BY: JACK COWELL
CHECKED BY: MASTRI ALVANDI
REVISED BY
DATE REVISED

LAST REVISION 04-23-12
DATE PLOTTED => 30-AUG-2012
TIME PLOTTED => 09:10

Dist	COUNTY	ROUTE	POST MILES TOTAL PROJECT	SHEET No.	TOTAL SHEETS
03	ED	50	73.7/75.4	19	119

REGISTERED CIVIL ENGINEER 4-26-12 DATE

7-30-12
PLANS APPROVAL DATE

REGISTERED PROFESSIONAL ENGINEER
JACK COWELL
No. 65521
Exp. 9-30-13
CIVIL
STATE OF CALIFORNIA

THE STATE OF CALIFORNIA OR ITS OFFICERS OR AGENTS SHALL NOT BE RESPONSIBLE FOR THE ACCURACY OR COMPLETENESS OF SCANNED COPIES OF THIS PLAN SHEET.

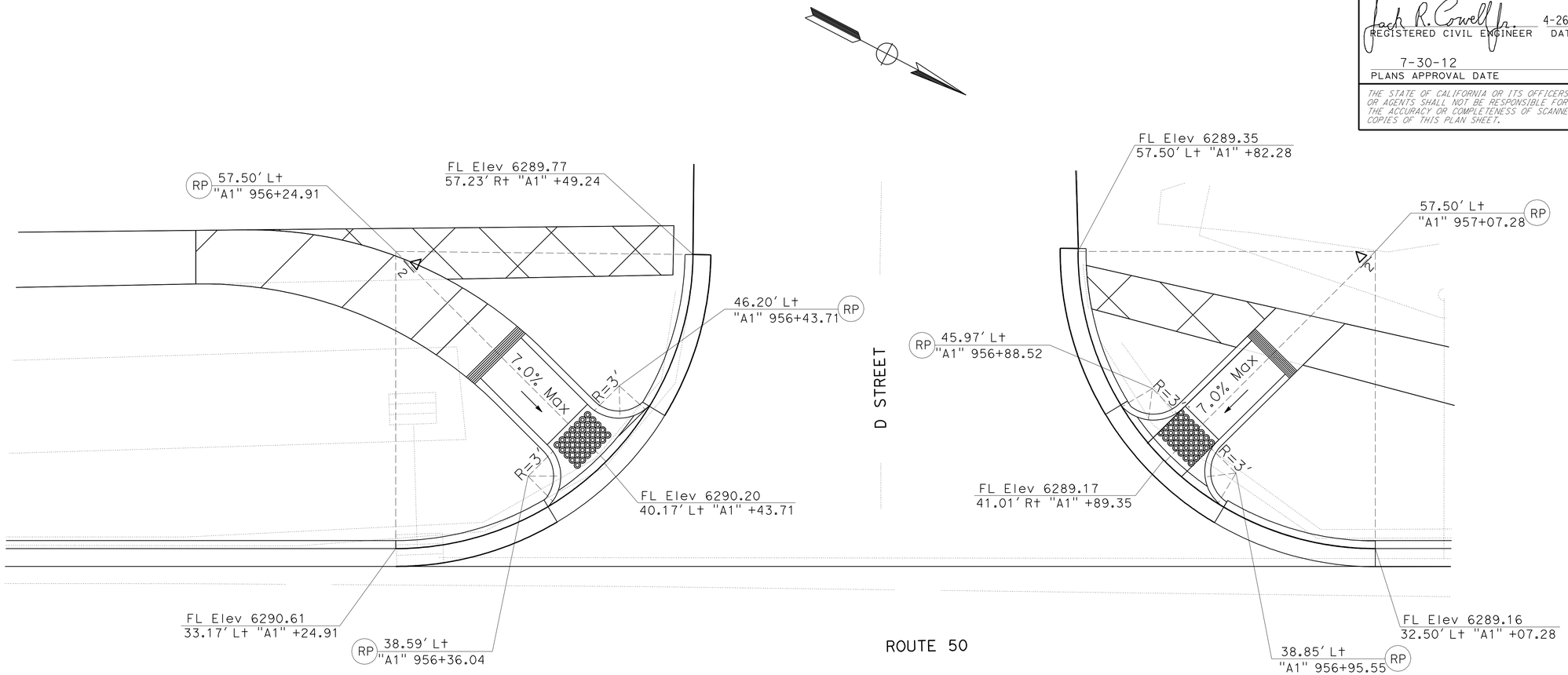

CURVE DATA

No.	R	Δ	T	L
3	25.00'	89°23'00"	24.73'	39.00'

CURVE DATA

No.	R	Δ	T	L
4	25.00'	90°0'00"	25.00'	39.27'

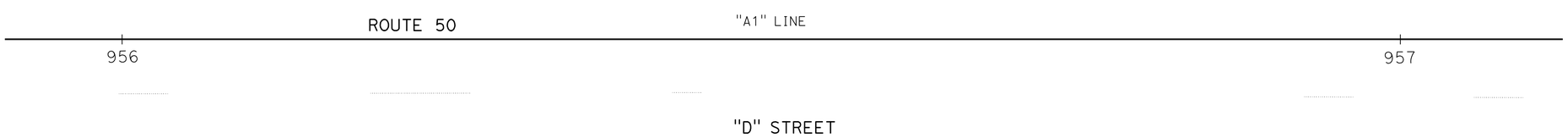

CONSTRUCTION DETAILS

NO SCALE

C-4

STATE OF CALIFORNIA - DEPARTMENT OF TRANSPORTATION
NORTH REGION
DIVISION OF ENGINEERING
DESIGN BRANCH M8

Caltrans

FUNCTIONAL SUPERVISOR: MASTRI ALVANDI

CALCULATED-DESIGNED BY: JACK COWELL
CHECKED BY: MASTRI ALVANDI

REVISED BY | DATE REVISED

LAST REVISION 04-23-12
DATE PLOTTED => 30-AUG-2012
TIME PLOTTED => 09:10

Dist	COUNTY	ROUTE	POST MILES TOTAL PROJECT	SHEET No.	TOTAL SHEETS
03	ED	50	73.7/75.4	20	119

Jack R. Cowell Jr. 4-26-12
REGISTERED CIVIL ENGINEER DATE

7-30-12
PLANS APPROVAL DATE

REGISTERED PROFESSIONAL ENGINEER
JACK COWELL
No. 65521
Exp. 9-30-13
CIVIL
STATE OF CALIFORNIA

THE STATE OF CALIFORNIA OR ITS OFFICERS OR AGENTS SHALL NOT BE RESPONSIBLE FOR THE ACCURACY OR COMPLETENESS OF SCANNED COPIES OF THIS PLAN SHEET.

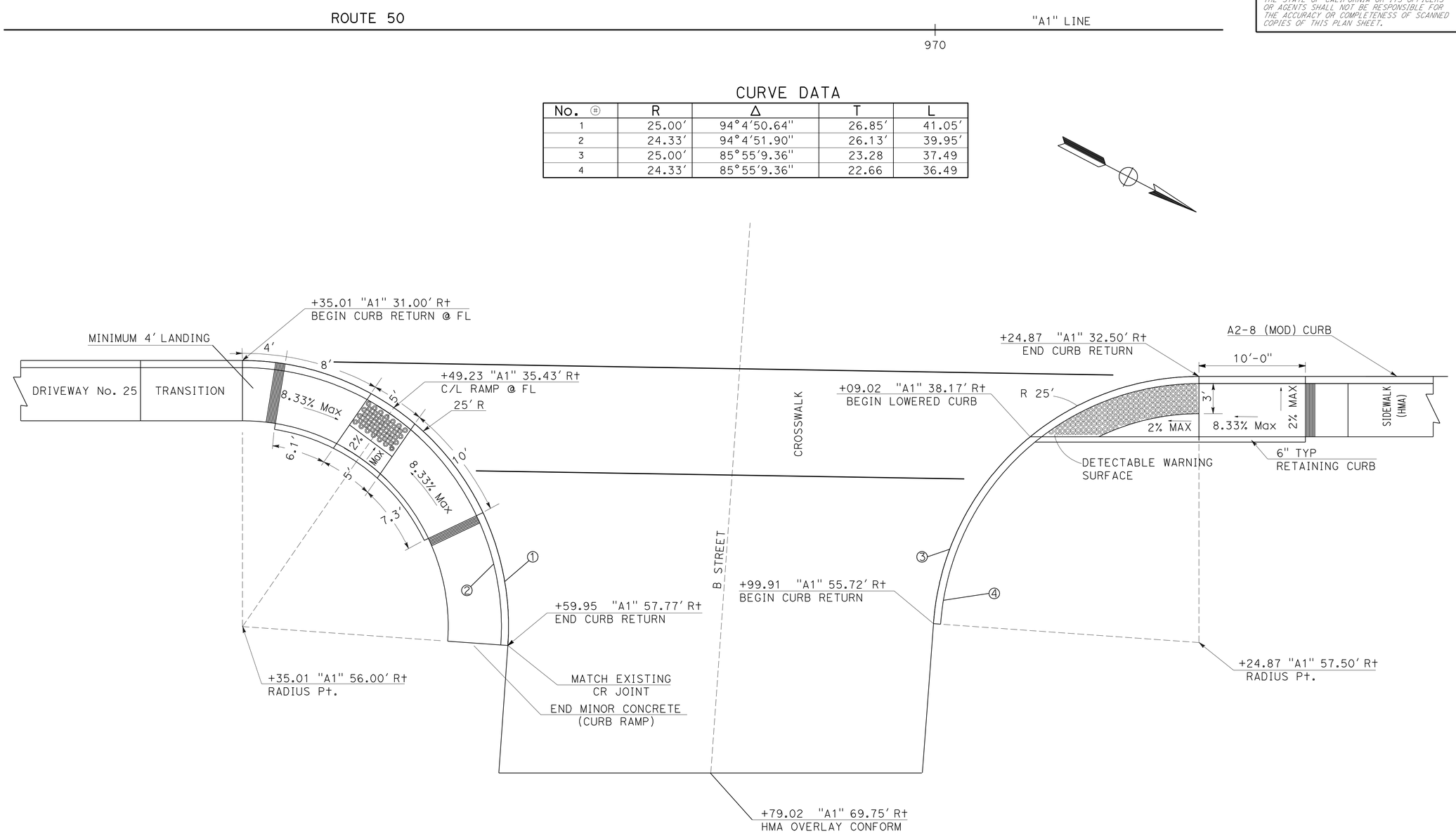

CURVE DATA

No. ⊕	R	Δ	T	L
1	25.00'	94°4'50.64"	26.85'	41.05'
2	24.33'	94°4'51.90"	26.13'	39.95'
3	25.00'	85°55'9.36"	23.28	37.49
4	24.33'	85°55'9.36"	22.66	36.49

"B" STREET CURB RAMPS

CONSTRUCTION DETAILS

NO SCALE

C-5

REVISED BY | DATE REVISED
JACK COWELL | MASTRI ALVANDI
CALCULATED-DESIGNED BY | CHECKED BY
FUNCTIONAL SUPERVISOR: MASTRI ALVANDI

STATE OF CALIFORNIA - DEPARTMENT OF TRANSPORTATION
Caltrans
NORTH REGION
DIVISION OF ENGINEERING
DESIGN BRANCH M8

LAST REVISION 04-23-12 | DATE PLOTTED => 30-AUG-2012 | TIME PLOTTED => 09:10

Dist	COUNTY	ROUTE	POST MILES TOTAL PROJECT	SHEET No.	TOTAL SHEETS
03	ED	50	73.7/75.4	21	119

Jack R. Cowell Jr. 4-26-12
REGISTERED CIVIL ENGINEER DATE

7-30-12
PLANS APPROVAL DATE

REGISTERED PROFESSIONAL ENGINEER
JACK COWELL
No. 65521
Exp. 9-30-13
CIVIL
STATE OF CALIFORNIA

THE STATE OF CALIFORNIA OR ITS OFFICERS OR AGENTS SHALL NOT BE RESPONSIBLE FOR THE ACCURACY OR COMPLETENESS OF SCANNED COPIES OF THIS PLAN SHEET.

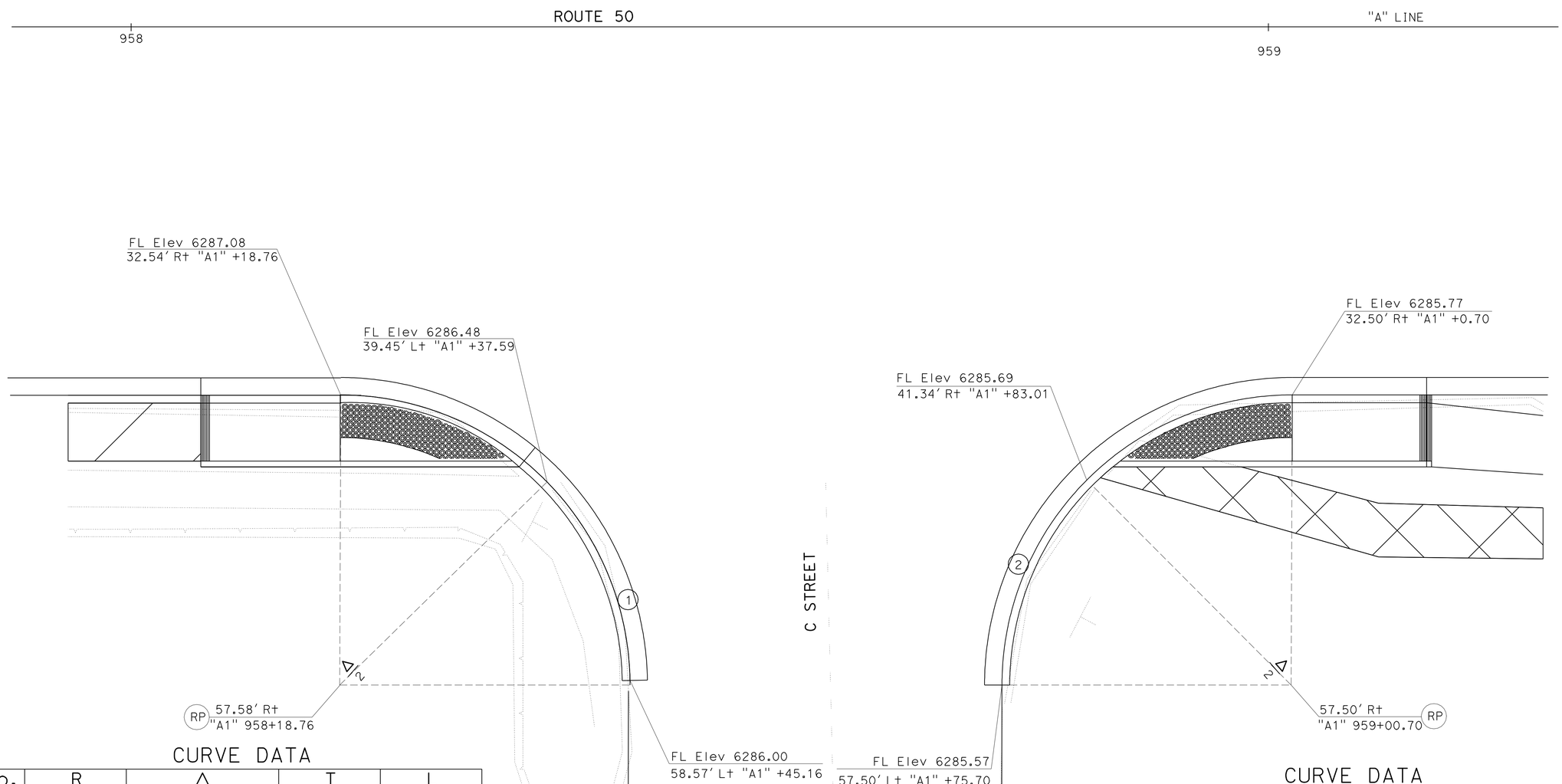

CURVE DATA

No.	R	Δ	T	L
1	25.00	90°0'00"	25.00	39.27

CURVE DATA

No.	R	Δ	T	L
2	25.00	90°0'00"	25.00	39.27

CONSTRUCTION DETAILS

NO SCALE

C-6

STATE OF CALIFORNIA - DEPARTMENT OF TRANSPORTATION
NORTH REGION
DIVISION OF ENGINEERING
DESIGN BRANCH M8

FUNCTIONAL SUPERVISOR: MASTRI ALVANDI
CALCULATED-DESIGNED BY: JACK COWELL
CHECKED BY: MASTRI ALVANDI
REVISED BY
DATE REVISED

LAST REVISION 04-23-12
DATE PLOTTED => 30-AUG-2012
TIME PLOTTED => 09:10

Dist	COUNTY	ROUTE	POST MILES TOTAL PROJECT	SHEET No.	TOTAL SHEETS
03	ED	50	73.7/75.4	22	119

REGISTERED CIVIL ENGINEER 4-26-12 DATE

7-30-12
PLANS APPROVAL DATE

REGISTERED PROFESSIONAL ENGINEER JACK COWELL No. 65521 Exp. 9-30-13 CIVIL STATE OF CALIFORNIA

THE STATE OF CALIFORNIA OR ITS OFFICERS OR AGENTS SHALL NOT BE RESPONSIBLE FOR THE ACCURACY OR COMPLETENESS OF SCANNED COPIES OF THIS PLAN SHEET.

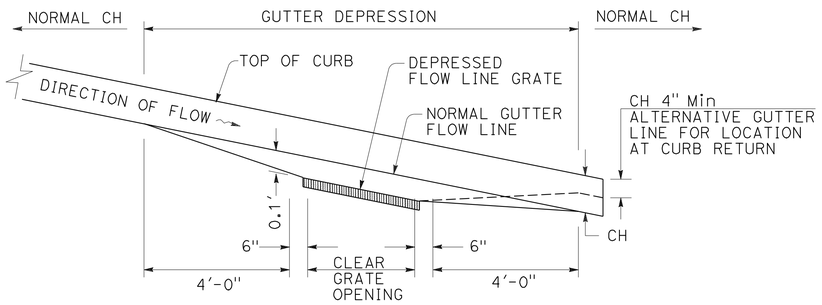

PROFILE

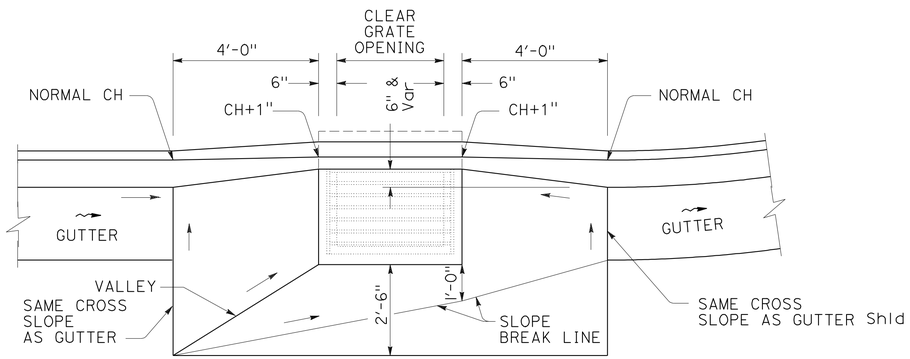

PLAN

INLETS ON GRADE

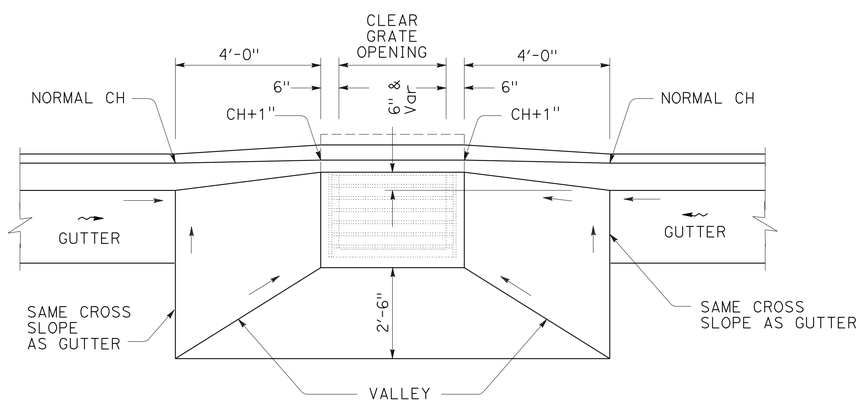

PLAN

DI Conc APRONS

NOTE: GUTTER DEPRESSIONS SHALL BE 8" THICK.
INLETS IN GRADE SAG

LEGEND

CH CURB HEIGHT

→ STRAIGHT GRADE, DOWN GRADE SLOPE

⇝ GUTTER OR SHOULDERS DIRECTION OF FLOW

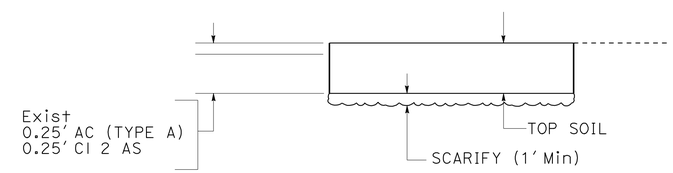

REMOVE BASE AND SURFACING DETAIL

CONSTRUCTION DETAILS

C-7

STATE OF CALIFORNIA - DEPARTMENT OF TRANSPORTATION
NORTH REGION
DIVISION OF ENGINEERING
DESIGN BRANCH M8

FUNCTIONAL SUPERVISOR: MASTRI ALVANDI
CALCULATED-DESIGNED BY: JACK COWELL
CHECKED BY: MASTRI ALVANDI
REVISED BY
DATE REVISED

LAST REVISION 04-23-12
DATE PLOTTED => 14-SEP-2012
TIME PLOTTED => 10:11

Dist	COUNTY	ROUTE	POST MILES TOTAL PROJECT	SHEET No.	TOTAL SHEETS
03	ED	50	73.7/75.4	23	119

REGISTERED CIVIL ENGINEER 4-26-12 DATE

7-30-12
PLANS APPROVAL DATE

REGISTERED PROFESSIONAL ENGINEER JACK COWELL No. 65521 Exp. 9-30-13 CIVIL STATE OF CALIFORNIA

THE STATE OF CALIFORNIA OR ITS OFFICERS OR AGENTS SHALL NOT BE RESPONSIBLE FOR THE ACCURACY OR COMPLETENESS OF SCANNED COPIES OF THIS PLAN SHEET.

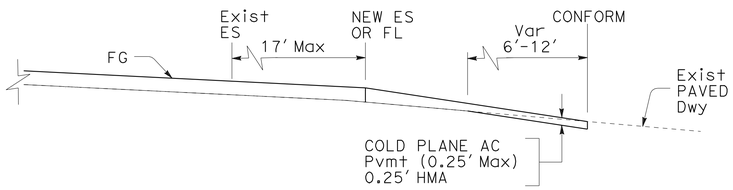

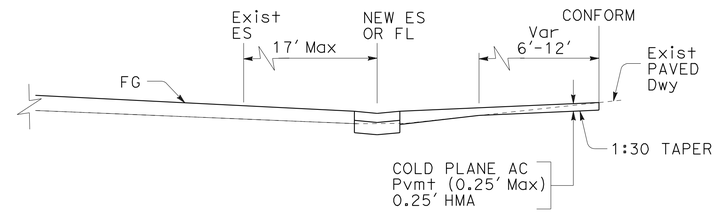

OVERLAY TAPER DETAILS

ASPHALT CONCRETE DRIVEWAYS

PAVED Dwy

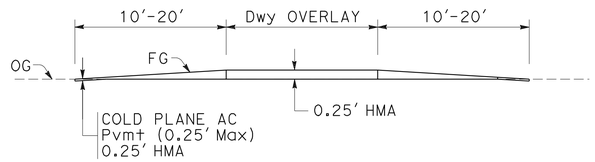

SECTION C-C

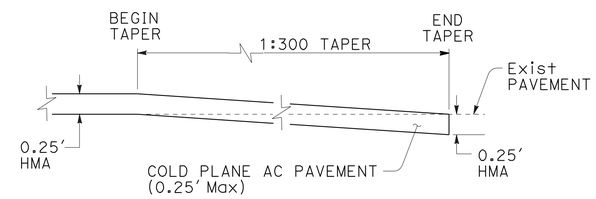

OVERLAY TAPER

STREETS AND HIGHWAYS

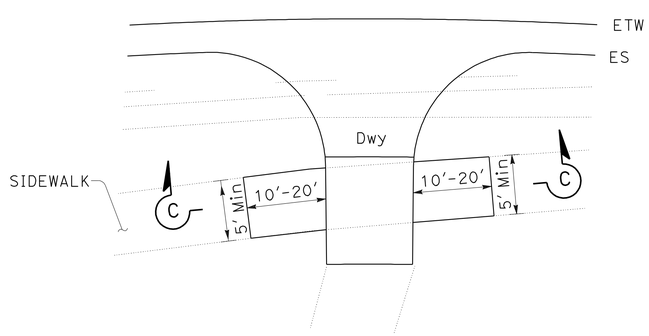

PLAN

MULTI-PURPOSE TRAIL TRANSITIONS

CONSTRUCTION DETAILS

NO SCALE

C-8

STATE OF CALIFORNIA - DEPARTMENT OF TRANSPORTATION
Caltrans
NORTH REGION
DIVISION OF ENGINEERING
DESIGN BRANCH M8

FUNCTIONAL SUPERVISOR: MASTRI ALVANDI

CALCULATED-DESIGNED BY: JACK COWELL
CHECKED BY: MASTRI ALVANDI

REVISED BY | DATE REVISED

LAST REVISION 04-23-12 | DATE PLOTTED => 30-AUG-2012 | TIME PLOTTED => 09:10

Dist	COUNTY	ROUTE	POST MILES TOTAL PROJECT	SHEET No.	TOTAL SHEETS
03	ED	50	73.7/75.4	24	119

Jack R. Cowell Jr. 4-26-12
REGISTERED CIVIL ENGINEER DATE

7-30-12
PLANS APPROVAL DATE

REGISTERED PROFESSIONAL ENGINEER
JACK COWELL
No. 65521
Exp. 9-30-13
CIVIL
STATE OF CALIFORNIA

THE STATE OF CALIFORNIA OR ITS OFFICERS OR AGENTS SHALL NOT BE RESPONSIBLE FOR THE ACCURACY OR COMPLETENESS OF SCANNED COPIES OF THIS PLAN SHEET.

DRIVEWAY TYPE

DRWY LOC	LINE	C/L STATION	F/L OFFSET	SIDEWALK TYPE	GUTTER TYPE	WIDTH "W"	DRIVEWAY CONFORM	LENGTH "L1"
#1	A1	946+00.00	30.00′L+	CASE C / HMA	TYPE 2 (MOD)	36′	COLDPLANE/HMA	30′
#2	A1	947+81.60	32.50′R+	CASE B (MOD)	TYPE 2 (MOD)	26′	COLDPLANE/HMA	22′
#3	A1	949+39.84	32.50 R+	CASE B (MOD)	TYPE 2 (MOD)	28′	COLDPLANE/HMA	15′
#4	A1	951+21.77	32.40′L+	CASE B (MOD)	TYPE 2 (MOD)	16′	COLDPLANE/HMA	22′
#5	A1	951+36.08	32.50′R+	CASE B (MOD)	TYPE 2 (MOD)	26′	COLDPLANE/HMA	15′
#6	A1	952+93.23	32.50′R+	CASE B (MOD)	TYPE 2 (MOD)	32′	COLDPLANE/HMA	15′
#7	A1	953+55.59	32.50′R+	CASE B (MOD)	TYPE 2 (MOD)	32′	COLDPLANE/HMA	12′
#8	A1	953+58.87	32.50′L+	CASE B (MOD)	TYPE 2 (MOD)	40′	COLDPLANE/HMA	22′
#9	A1	955+75.65	32.50′R+	CASE B (MOD)	TYPE 2 (MOD)	32′	COLDPLANE/HMA	15′
#10	A1	956+70.00	32.50′R+	CASE B (MOD)	TYPE 2 (MOD)	28′	COLDPLANE/HMA	15′
#11	A1	957+54.93	32.50′R+	CASE B (MOD)	TYPE 2 (MOD)	32′	COLDPLANE/HMA	12′
#12	A1	957+82.00	32.45′L+	CASE C / HMA	TYPE 2 (MOD)	52′	COLDPLANE/HMA	15′
#13	A1	959+42.28	32.50′R+	CASE B (MOD)	TYPE 2 (MOD)	36′	COLDPLANE/HMA	15′
#14	A1	960+07.08	32.65′L+	CASE C / HMA	TYPE 2 (MOD)	38′	COLDPLANE/HMA	13′
#15	A1	960+57.52	32.43′R+	CASE B (MOD)	TYPE 2 (MOD)	32′	COLDPLANE/HMA	15′
#16	A1	961+41.86	32.70′L+	CASE C / HMA	TYPE 2 (MOD)	28′	COLDPLANE/HMA	18′
#17	A1	962+79.16	32.80′L+	CASE C / HMA	TYPE 2 (MOD)	38′	COLDPLANE/HMA	18′
#18	A1	963+03.78	32.00′R+	CASE C / HMA	TYPE 2 (MOD)	44′	COLDPLANE/HMA	16′
#19	A1	963+87.21	32.80′L+	CASE C / HMA	TYPE 2 (MOD)	40′	COLDPLANE/HMA	28′
#20	A1	965+54.53	32.90′L+	CASE B (MOD)	TYPE 2 (MOD)	38′	COLDPLANE/HMA	20′
#21	A1	965+83.97	31.70′R+	CASE B (MOD)	TYPE 2 (MOD)	26′	COLDPLANE/HMA	30′
#22	A1	966+70.00	31.40′R+	CASE B (MOD)	TYPE 2 (MOD)	40′	COLDPLANE/HMA	30′
#23	A1	967+69.00	31.10′R+	CASE B (MOD)	TYPE 2 (MOD)	32′	COLDPLANE/HMA	15′
#24	A1	968+40.13	31.05′R+	CASE B (MOD)	TYPE 2 (MOD)	26′	COLDPLANE/HMA	13′
#25	A1	969+11.74	31.00′R+	CASE B (MOD)	TYPE 2 (MOD)	26′	COLDPLANE/HMA	13′
#26	A1	969+50.91	34.00′L+	CASE B (MOD)	TYPE 2 (MOD)	30′	COLDPLANE/HMA	11′
#27	A1	970+57.58	32.50′R+	CASE B (MOD)	TYPE 2 (MOD)	20′	COLDPLANE/HMA	14′
#28	A1	971+03.00	33.80′L+	CASE B (MOD)	TYPE 2 (MOD)	18′	COLDPLANE/HMA	15′
#29	A1	971+08.22	32.50′R+	CASE B (MOD)	TYPE 2 (MOD)	20′	COLDPLANE/HMA	15′
#30	A1	971+65.67	40.82′L+	CASE B (MOD)	TYPE 2 (MOD)	36′	COLDPLANE/HMA	10′
#31	A1	972+05.08	33.00′R+	CASE B (MOD)	TYPE 2 (MOD)	28′	COLDPLANE/HMA	15′
#32	A1	973+00.00	33.40′R+	CASE B (MOD)	TYPE 2 (MOD)	28′	COLDPLANE/HMA	15′
#33	A1	974+16.08	48.30′L+	CASE B (MOD)	TYPE 2-PCC	40′	COLDPLANE/HMA	15′
#34	A1	975+12.61	39.10′R+	CASE B (MOD)	TYPE 2-PCC	54′	COLDPLANE/HMA	15′
#35	A1	976+36.69	51.00′L+	CASE B (MOD)	TYPE 2-PCC	36′	COLDPLANE/HMA	15′
#36	A1	977+53.95	48.00′R+	CASE B (MOD)	TYPE 2-PCC	32′	COLDPLANE/HMA	15′

CONSTRUCTION DETAILS
NO SCALE

C-9

REVISED BY | DATE REVISED
JACK COWELL | MASTRI ALVANDI
CALCULATED-DESIGNED BY | CHECKED BY
FUNCTIONAL SUPERVISOR: MASTRI ALVANDI

STATE OF CALIFORNIA - DEPARTMENT OF TRANSPORTATION
Caltrans
NORTH REGION
DIVISION OF ENGINEERING
DESIGN BRANCH M8

LAST REVISION 04-23-12 | DATE PLOTTED => 01-OCT-2012 | TIME PLOTTED => 06:07

Dist	COUNTY	ROUTE	POST MILES TOTAL PROJECT	SHEET No.	TOTAL SHEETS
03	ED	50	73.7/75.4	25	119

REGISTERED CIVIL ENGINEER 4-26-12 DATE

7-30-12
PLANS APPROVAL DATE

REGISTERED PROFESSIONAL ENGINEER
JACK COWELL
No. 65521
Exp. 9-30-13
CIVIL
STATE OF CALIFORNIA

THE STATE OF CALIFORNIA OR ITS OFFICERS OR AGENTS SHALL NOT BE RESPONSIBLE FOR THE ACCURACY OR COMPLETENESS OF SCANNED COPIES OF THIS PLAN SHEET.

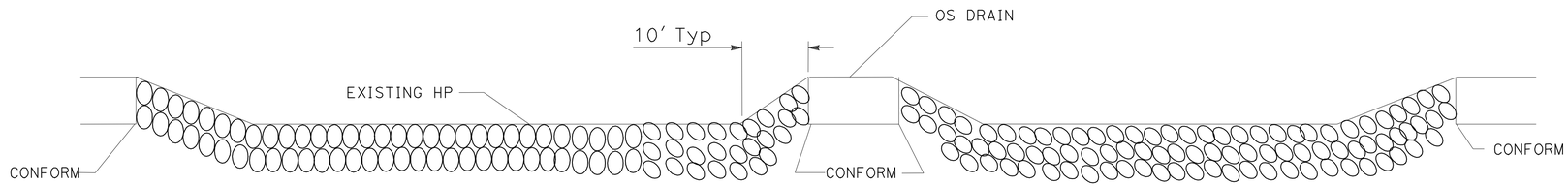

PLAN

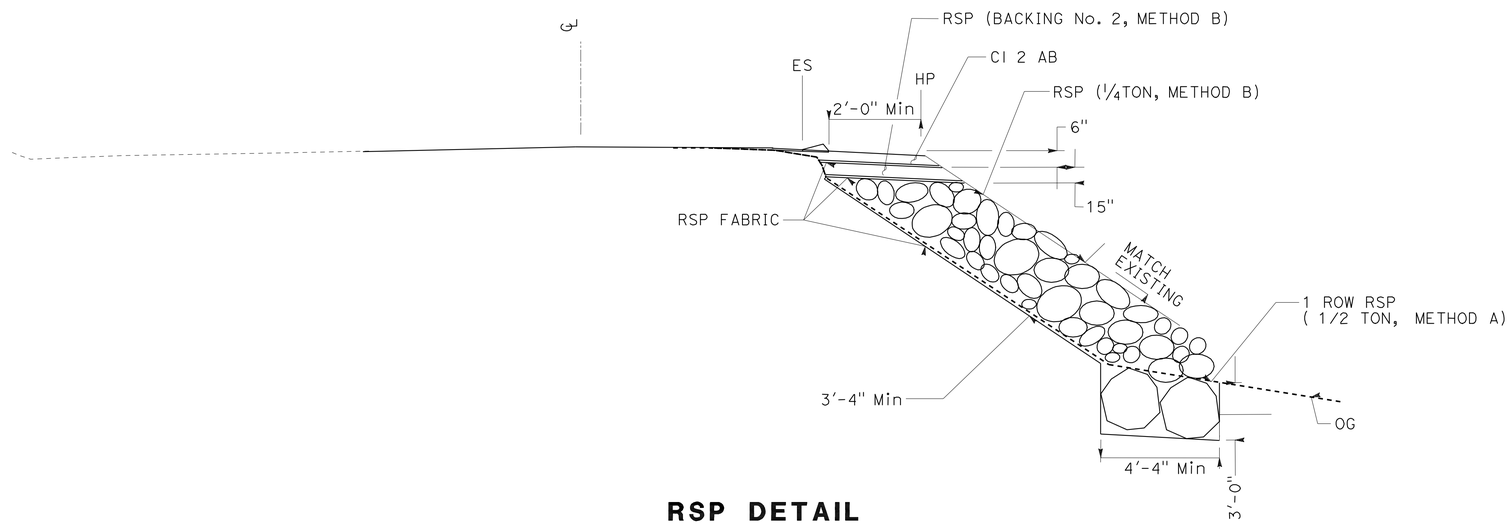

RSP DETAIL
SLOPE REINFORCEMENT
Sta 897+00 TO 898+00

CONSTRUCTION DETAILS

NO SCALE

C-10

STATE OF CALIFORNIA - DEPARTMENT OF TRANSPORTATION
Caltrans
NORTH REGION
DIVISION OF ENGINEERING
DESIGN BRANCH M8

FUNCTIONAL SUPERVISOR: MASTRI ALVANDI
CALCULATED-DESIGNED BY: JACK COWELL
CHECKED BY: MASTRI ALVANDI
REVISED BY
DATE REVISED

LAST REVISION 04-23-12 | DATE PLOTTED => 30-AUG-2012 | TIME PLOTTED => 10:39

Dist	COUNTY	ROUTE	POST MILES TOTAL PROJECT	SHEET No.	TOTAL SHEETS
03	ED	50	73.7/75.4	26	119

REGISTERED CIVIL ENGINEER 4-26-12 DATE

7-30-12
PLANS APPROVAL DATE

REGISTERED PROFESSIONAL ENGINEER JACK COWELL No. 65521 Exp. 9-30-13 CIVIL STATE OF CALIFORNIA

THE STATE OF CALIFORNIA OR ITS OFFICERS OR AGENTS SHALL NOT BE RESPONSIBLE FOR THE ACCURACY OR COMPLETENESS OF SCANNED COPIES OF THIS PLAN SHEET.

LEGEND:

- REMOVE BASE AND SURFACING
- ACCESS ROAD PAVING LIMITS
- 13 — 0.15′-0.40′ HMA (TYPE A) OVERLAY
- 14 — 0.40′ HMA (TYPE A) 0.50′ AB

CURVE DATA

No.	R	Δ	T	L
1	25.00′	68°51′11"	17.13′	30.04′
2	15.00′	112°51′05"	22.60′	29.54′
3	15.00′	110°25′32"	21.59′	28.91′
4	30.00′	64°15′14"	18.84′	33.64′

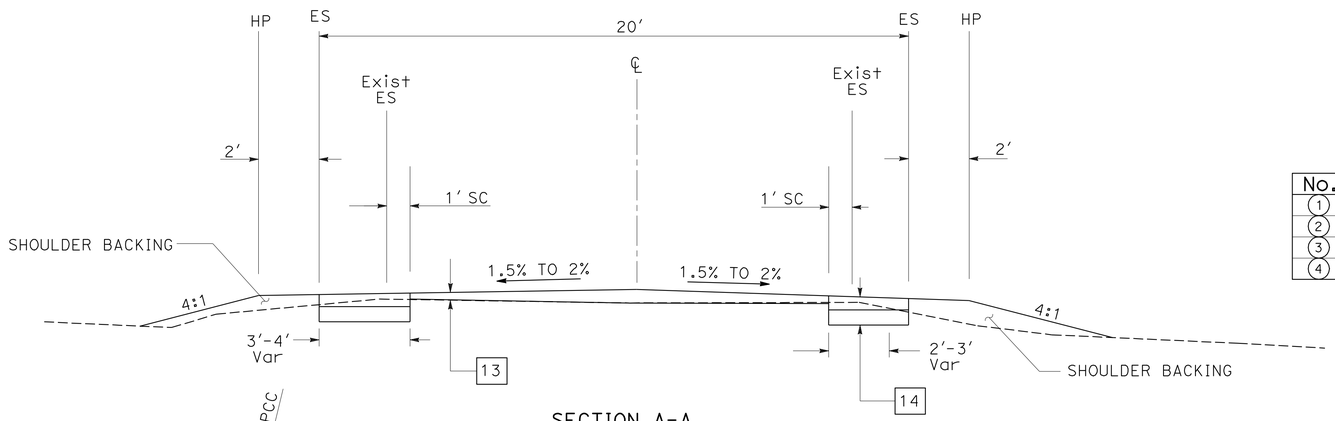

SECTION A-A

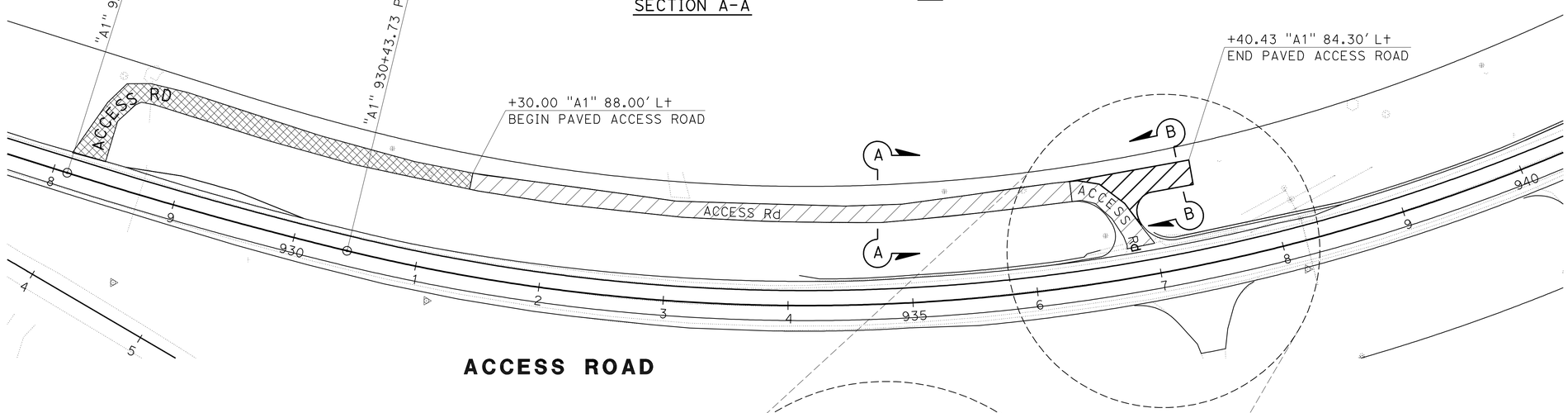

ACCESS ROAD

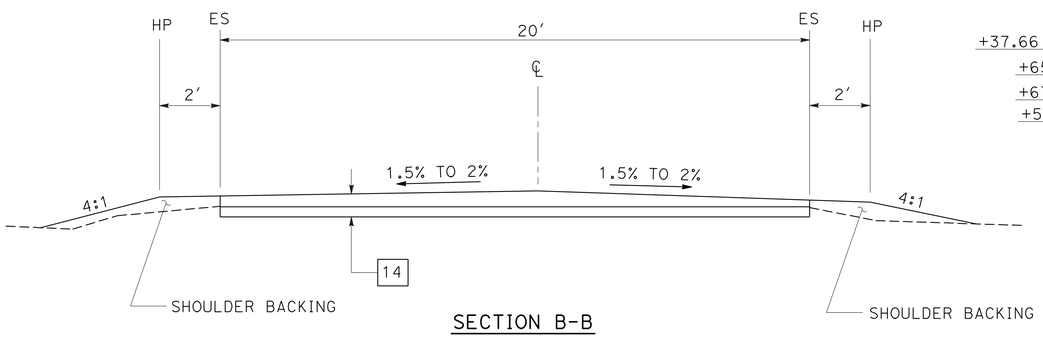

SECTION B-B

HAMMER HEAD EXTENSION

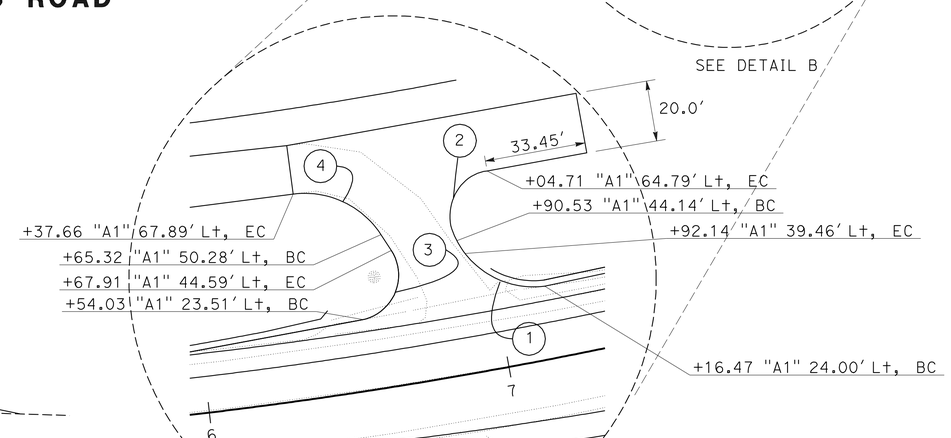

DETAIL B

CONSTRUCTION DETAILS

NO SCALE

C-11

STATE OF CALIFORNIA - DEPARTMENT OF TRANSPORTATION
Caltrans
NORTH REGION
DIVISION OF ENGINEERING
DESIGN BRANCH M8

FUNCTIONAL SUPERVISOR: MASTRI ALVANDI
CALCULATED-DESIGNED BY: JACK COWELL
CHECKED BY: MASTRI ALVANDI
REVISED BY
DATE REVISED

LAST REVISION DATE PLOTTED => 30-AUG-2012
TIME PLOTTED => 09:11
04-23-12

Dist	COUNTY	ROUTE	POST MILES TOTAL PROJECT	SHEET No.	TOTAL SHEETS
03	ED	50	73.7/75.4	27	119

REGISTERED CIVIL ENGINEER 4-26-12 DATE

7-30-12
PLANS APPROVAL DATE

REGISTERED PROFESSIONAL ENGINEER
JACK COWELL
No. 65521
Exp. 9-30-13
CIVIL
STATE OF CALIFORNIA

THE STATE OF CALIFORNIA OR ITS OFFICERS OR AGENTS SHALL NOT BE RESPONSIBLE FOR THE ACCURACY OR COMPLETENESS OF SCANNED COPIES OF THIS PLAN SHEET.

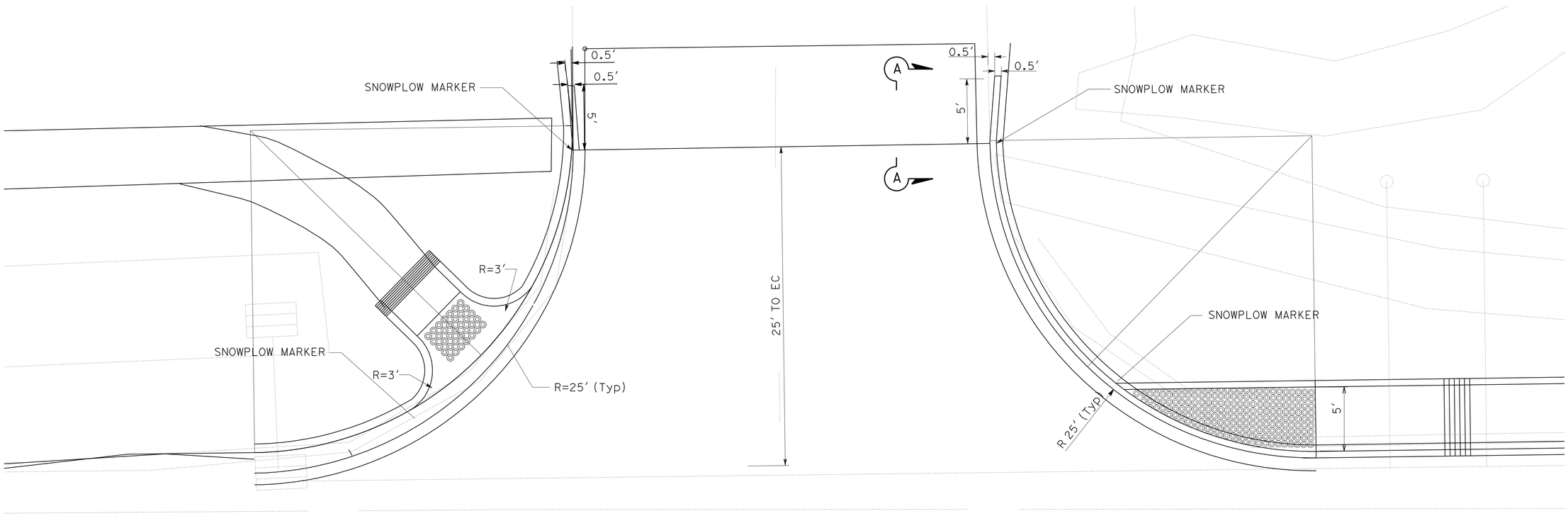

TYPICAL CURB RETURN TAPERS AT LOCAL STREETS

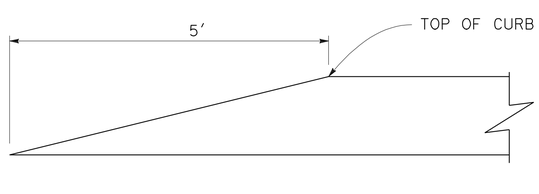

SECTION A-A

CONSTRUCTION DETAILS

NO SCALE

C-12

REVISED BY | DATE REVISED

JACK COWELL | MASTRI ALVANDI

CALCULATED-DESIGNED BY | CHECKED BY

FUNCTIONAL SUPERVISOR | MASTRI ALVANDI

STATE OF CALIFORNIA - DEPARTMENT OF TRANSPORTATION
NORTH REGION
DIVISION OF ENGINEERING
DESIGN BRANCH M8

LAST REVISION 04-23-12 | DATE PLOTTED => 30-AUG-2012 | TIME PLOTTED => 09:11

Dist	COUNTY	ROUTE	POST MILES TOTAL PROJECT	SHEET No.	TOTAL SHEETS
03	ED	50	73.7/75.4	28	119

LICENSED LANDSCAPE ARCHITECT

7-30-12
PLANS APPROVAL DATE

LICENSED LANDSCAPE ARCHITECT
JAMES G. WILLIAMSON
No. 5415
Signature
02-28-14
Renewal Date
04-26-12
Date
STATE OF CALIFORNIA

THE STATE OF CALIFORNIA OR ITS OFFICERS OR AGENTS SHALL NOT BE RESPONSIBLE FOR THE ACCURACY OR COMPLETENESS OF SCANNED COPIES OF THIS PLAN SHEET.

NOTE:

FOR ACCURATE RIGHT OF WAY DATA, CONTACT RIGHT OF WAY ENGINEERING AT THE DISTRICT OFFICE.

SEE SHEET C-14 FOR ADDITIONAL GRADING INFORMATION

NO GRADING WITHIN 10 FEET OF EXISTING MANHOLE.

LEGEND:

APPROXIMATE LIMITS OF GRADING

BOULDER (SEE SHEET C-14 FOR LOCATION TABLE)

CENTERLINE OF PROPOSED SWALE

BOULDER LOCATION AND GRADING

CONSTRUCTION DETAILS

SCALE: 1" = 20'

C-13

STATE OF CALIFORNIA - DEPARTMENT OF TRANSPORTATION
Caltrans® LANDSCAPE ARCHITECTURE

SENIOR LANDSCAPE ARCHITECT: T. CHRIS JOHNSON

CALCULATED-DESIGNED BY: J. WILLIAMSON
CHECKED BY: J. WILLIAMSON

REVISED BY
DATE REVISED

LAST REVISION 00-00-00
DATE PLOTTED => 30-AUG-2012
TIME PLOTTED => 09:11

Dist	COUNTY	ROUTE	POST MILES TOTAL PROJECT	SHEET No.	TOTAL SHEETS
03	ED	50	73.7/75.4	29	119

LICENSED LANDSCAPE ARCHITECT

7-30-12
PLANS APPROVAL DATE

LICENSED LANDSCAPE ARCHITECT JAMES G. WILLIAMSON No. 5415 Signature 02-28-14 Renewal Date 04-26-12 Date STATE OF CALIFORNIA

THE STATE OF CALIFORNIA OR ITS OFFICERS OR AGENTS SHALL NOT BE RESPONSIBLE FOR THE ACCURACY OR COMPLETENESS OF SCANNED COPIES OF THIS PLAN SHEET.

NOTE:

1. ALL MEASUREMENTS IN THE BOULDER LOCATION TABLE ARE TO THE CENTER OF THE BOULDER

CONTOUR GRADING INFORMATION TABLE

"A1" LINE STATION	LOCATION (Lt)	ELEVATION
916+00	44.00′	6318
	52.25′	6320
	63.50′	6321
	74.75′	6320
	83.50′	6318
916+50	37.00′	6316
	45.00′	6318
	49.25′	6318.75
	53.75′	6318
	62.25′	6316
916+71	37.00′	6316
	45.00′	6318
	57.00′	6319
	71.00′	6318
	79.00′	6316
917+36	57.25′	6316
	71.00′	6318
	82.75′	6318
	88.75′	6316
918+25	27.25′	6312
	29.75′	6311.49
	31.50′	6312
	69.25′	6314
918+50	30.25′	6312
	31.25′	6311.74
	32.25′	6312
	40.25′	6314
	48.25′	6316
	54.50′	6317.25
	61.00′	6316
918+75	29.00′	6311.99
	37.00′	6314
	45.00′	6316
	56.50′	6316
	64.50′	6314

CONTOUR GRADING INFORMATION TABLE CONT.

"A1" LINE STATION	LOCATION (Lt)	ELEVATION
919+00	27.50′	6312.12
	34.50′	6314
	42.50′	6316
	43.50′	6316.5
	48.25′	6316
	56.25′	6314
919+27	44.75′	6314
	55.00′	6316
	71.00′	6317.75
	82.00′	6316
919+50	50.00′	6314
	58.75′	6316
	63.50′	6316.75
	68.50′	6316
919+75	46.50′	6314
	56.00′	6316
	64.00′	6316
920+00	40.75′	6314
	55.25′	6316
	64.00′	6317.25
	72.75′	6316
920+25	47.50′	6314
	58.25′	6316
	78.75′	6316
920+50	51.00′	6314
	59.25′	6316
	72.25′	6317.5
920+75	37.50′	6314
	49.00′	6316
921+00	30.75′	6314
	41.25′	6316
921+25	30.75′	6314
921+50	32.75′	6314

BOULDER LOCATION TABLE

BOULDER NUMBER	"A1" LINE STATION	LOCATION (Lt)
1	915+78	60.75
2	915+83	58.50
3	915+86	45.75
4	915+88	51.50
5	915+08	46.75
6	916+18	47.25
7	916+19	56.75
8	916+23	50.25
9	916+24	60.00
10	916+25	44.50
11	916+51	44.75
12	916+72	48.25
13	916+76	55.50
14	916+80	58.50
15	916+80	50.50
16	917+30	64.50
17	917+34	73.25
18	917+38	77.00
19	917+42	73.00
20	917+47	79.50
21	918+38	57.25
22	918+48	59.00
23	918+50	44.00
24	918+55	48.25
25	918+56	43.50
26	918+87	44.50
27	918+88	38.75
28	918+93	45.00
29	919+15	40.00
30	919+18	43.50
31	919+23	41.75
32	919+31	54.25
33	919+37	52.50
34	9198+70	40.00
35	919+77	35.50
36	919+82	38.25
37	919+91	35.50
38	920+06	35.75
39	920+12	38.25
40	920+22	40.75
41	920+25	36.75
42	920+31	40.00

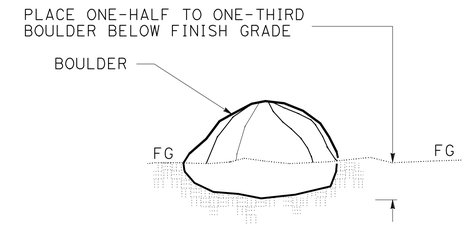

BOULDER
SECTION

CONSTRUCTION DETAILS

C-14

REVISED BY | DATE REVISED
J. WILLIAMSON | J. WILLIAMSON
CALCULATED-DESIGNED BY | CHECKED BY
SENIOR LANDSCAPE ARCHITECT
T. CHRIS JOHNSON
STATE OF CALIFORNIA - DEPARTMENT OF TRANSPORTATION
Caltrans LANDSCAPE ARCHITECTURE

LAST REVISION 04-19-12 | DATE PLOTTED => 30-AUG-2012 | TIME PLOTTED => 09:11

Dist	COUNTY	ROUTE	POST MILES TOTAL PROJECT	SHEET No.	TOTAL SHEETS
03	ED	50	73.7/75.4	30	119

LICENSED LANDSCAPE ARCHITECT

7-30-12
PLANS APPROVAL DATE

LICENSED LANDSCAPE ARCHITECT
JAMES G. WILLIAMSON
No. 5415
Signature
02-28-14
Renewal Date
04-26-12
Date
STATE OF CALIFORNIA

THE STATE OF CALIFORNIA OR ITS OFFICERS OR AGENTS SHALL NOT BE RESPONSIBLE FOR THE ACCURACY OR COMPLETENESS OF SCANNED COPIES OF THIS PLAN SHEET.

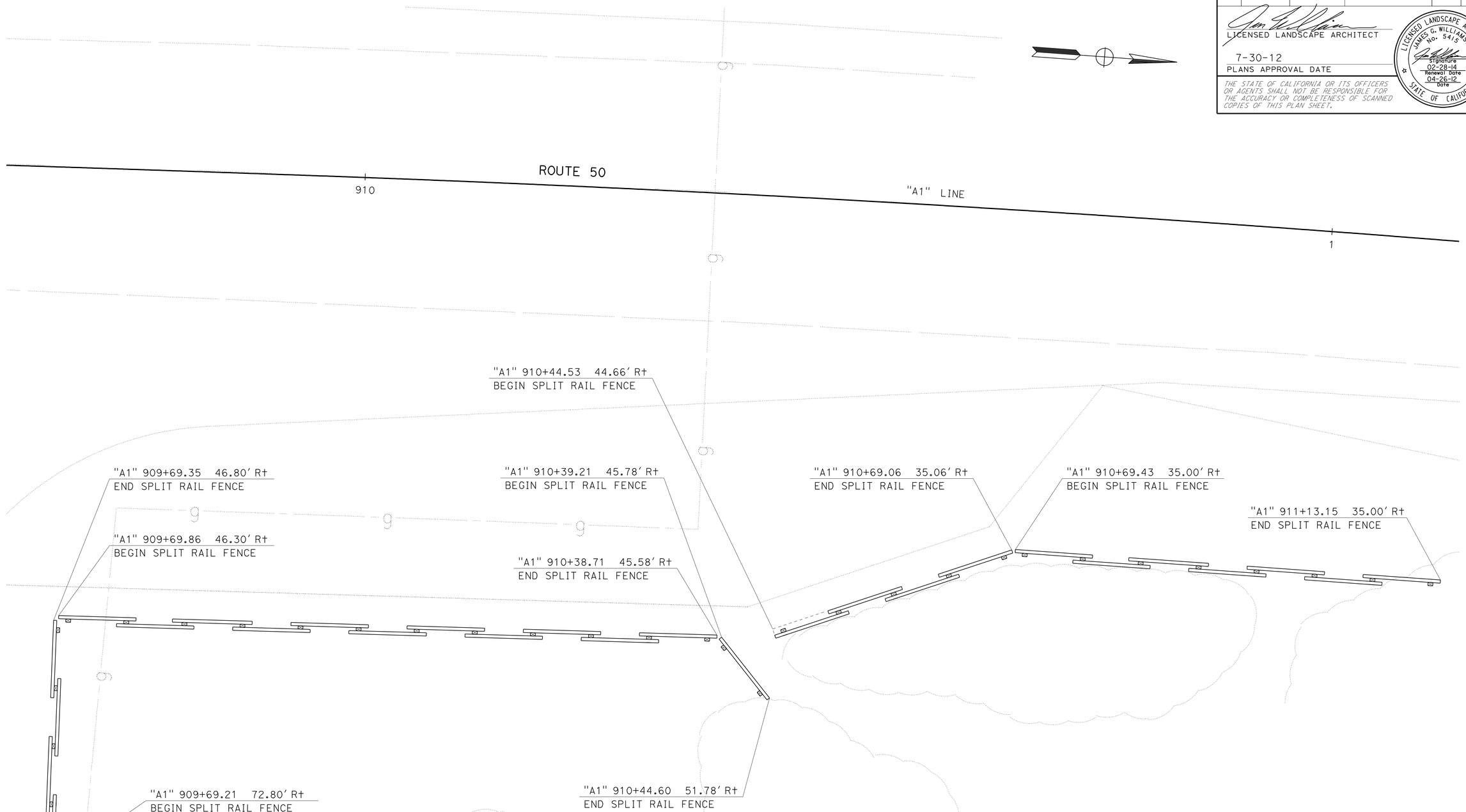

SPLIT RAIL FENCE LAYOUT

CONSTRUCTION DETAILS

SCALE: 1" = 10'

C-15

STATE OF CALIFORNIA - DEPARTMENT OF TRANSPORTATION
Caltrans® LANDSCAPE ARCHITECTURE

SENIOR LANDSCAPE ARCHITECT: T. CHRIS JOHNSON

CALCULATED-DESIGNED BY: J. WILLIAMSON
CHECKED BY: J. WILLIAMSON

REVISED BY
DATE REVISED

LAST REVISION 04-16-12
DATE PLOTTED => 30-AUG-2012
TIME PLOTTED => 09:11

Dist	COUNTY	ROUTE	POST MILES TOTAL PROJECT	SHEET No.	TOTAL SHEETS
03	ED	50	73.7/75.4	31	119

LICENSED LANDSCAPE ARCHITECT

7-30-12
PLANS APPROVAL DATE

LICENSED LANDSCAPE ARCHITECT JAMES G. WILLIAMSON No. 5415 STATE OF CALIFORNIA
Signature
02-28-14
Renewal Date
04-26-12
Date

THE STATE OF CALIFORNIA OR ITS OFFICERS OR AGENTS SHALL NOT BE RESPONSIBLE FOR THE ACCURACY OR COMPLETENESS OF SCANNED COPIES OF THIS PLAN SHEET.

NOTE:

1. AT LOCATIONS WHERE POST IS WITHIN 20′ OF ETW, DRILL 1½" HOLES THROUGH CENTER OF POST. ORIENT HOLE AXIS PERPENDICULAR TO ETW.

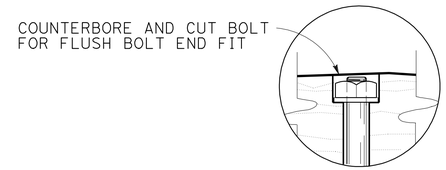

DETAIL A

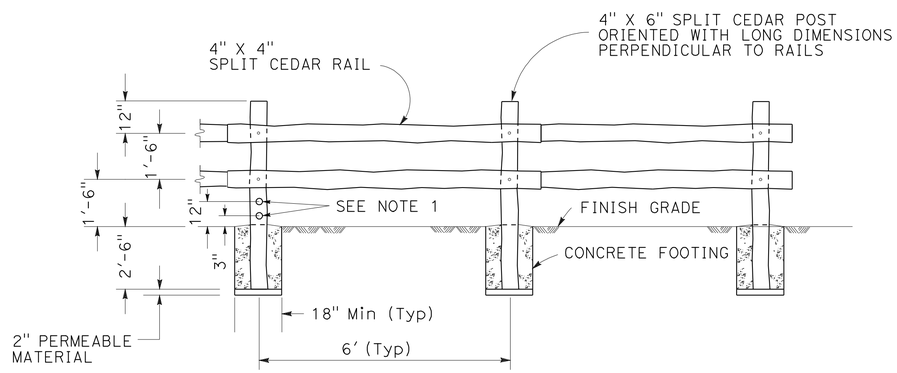

SPLIT RAIL FENCE

ELEVATION

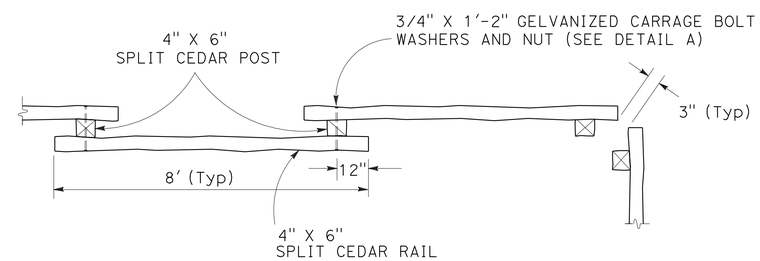

SPLIT RAIL FENCE

PLAN

CONSTRUCTION DETAILS

NO SCALE

C-16

STATE OF CALIFORNIA - DEPARTMENT OF TRANSPORTATION
Caltrans® LANDSCAPE ARCHITECTURE

SENIOR LANDSCAPE ARCHITECT: T. CHRIS JOHNSON

CALCULATED-DESIGNED BY: J. WILLIAMSON
CHECKED BY: J. WILLIAMSON
REVISED BY
DATE REVISED

LAST REVISION 04-19-12
DATE PLOTTED => 30-AUG-2012
TIME PLOTTED => 09:11

Dist	COUNTY	ROUTE	POST MILES TOTAL PROJECT	SHEET No.	TOTAL SHEETS
03	ED	50	73.7/75.4	32	119

LICENSED LANDSCAPE ARCHITECT

7-30-12
PLANS APPROVAL DATE

LICENSED LANDSCAPE ARCHITECT
JAMES G. WILLIAMSON
No. 5415
Signature
02-28-14
Renewal Date
04-26-12
Date
STATE OF CALIFORNIA

THE STATE OF CALIFORNIA OR ITS OFFICERS OR AGENTS SHALL NOT BE RESPONSIBLE FOR THE ACCURACY OR COMPLETENESS OF SCANNED COPIES OF THIS PLAN SHEET.

NOTES:

1. FOR COMPLETE RIGHT OF WAY AND ACCURATE ACCESS DATA, SEE RIGHT OF WAY RECORD MAPS AT DISTRICT OFFICE
2. SEE EROSION CONTROL QUANTITY SHEET (ECQ-1) FOR LOCATION QUANTITIES.

LEGEND:

EROSION CONTROL (TYPE 1)
- EROSION CONTROL (COMPOST BLANKET)

EROSION CONTROL (TYPE 2)
- COMPOST (INCORPORATE)
- EROSION CONTROL (HYDROSEED)

EROSION CONTROL (TYPE 3)
- EROSION CONTROL (COMPOST BLANKET)
- ROLLED EROSION CONTROL PRODUCT (NETTING)

EROSION CONTROL (TYPE 4)
- MULCH (4" DEPTH)

X / X — EROSION CONTROL SHEET / LOCATION

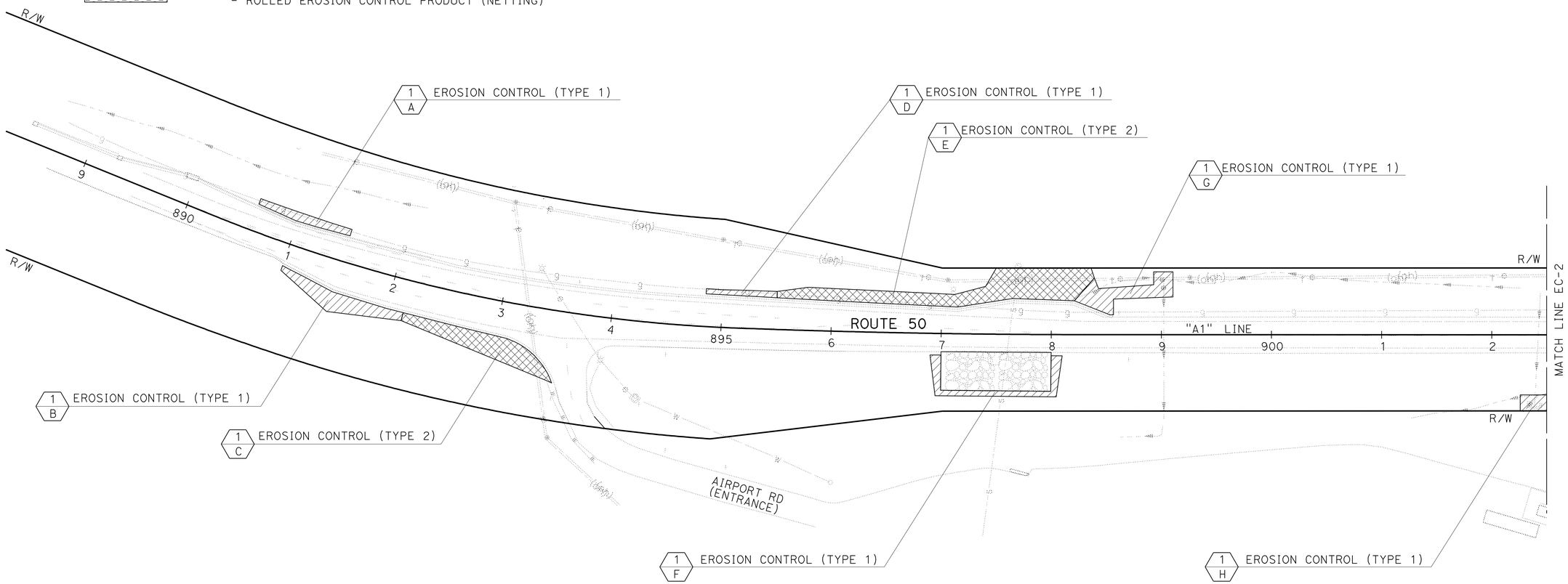

EROSION CONTROL PLAN

SCALE: 1" = 50'

EC-1

APPROVED FOR EROSION CONTROL WORK ONLY

STATE OF CALIFORNIA - DEPARTMENT OF TRANSPORTATION
Caltrans® LANDSCAPE ARCHITECTURE
SENIOR LANDSCAPE ARCHITECT: T. CHRIS JOHNSON
CALCULATED-DESIGNED BY: J. WILLIAMSON
CHECKED BY
REVISED BY
DATE REVISED

LAST REVISION 04-11-12
DATE PLOTTED => 30-AUG-2012
TIME PLOTTED => 09:11

Dist	COUNTY	ROUTE	POST MILES TOTAL PROJECT	SHEET No.	TOTAL SHEETS
03	ED	50	73.7/75.4	33	119

LICENSED LANDSCAPE ARCHITECT

7-30-12
PLANS APPROVAL DATE

LICENSED LANDSCAPE ARCHITECT JAMES G. WILLIAMSON No. 5415 Signature 02-28-14 Renewal Date 04-26-12 Date STATE OF CALIFORNIA

THE STATE OF CALIFORNIA OR ITS OFFICERS OR AGENTS SHALL NOT BE RESPONSIBLE FOR THE ACCURACY OR COMPLETENESS OF SCANNED COPIES OF THIS PLAN SHEET.

NOTE:

FOR ACCURATE RIGHT OF WAY DATA, CONTACT RIGHT OF WAY ENGINEERING AT THE DISTRICT OFFICE.

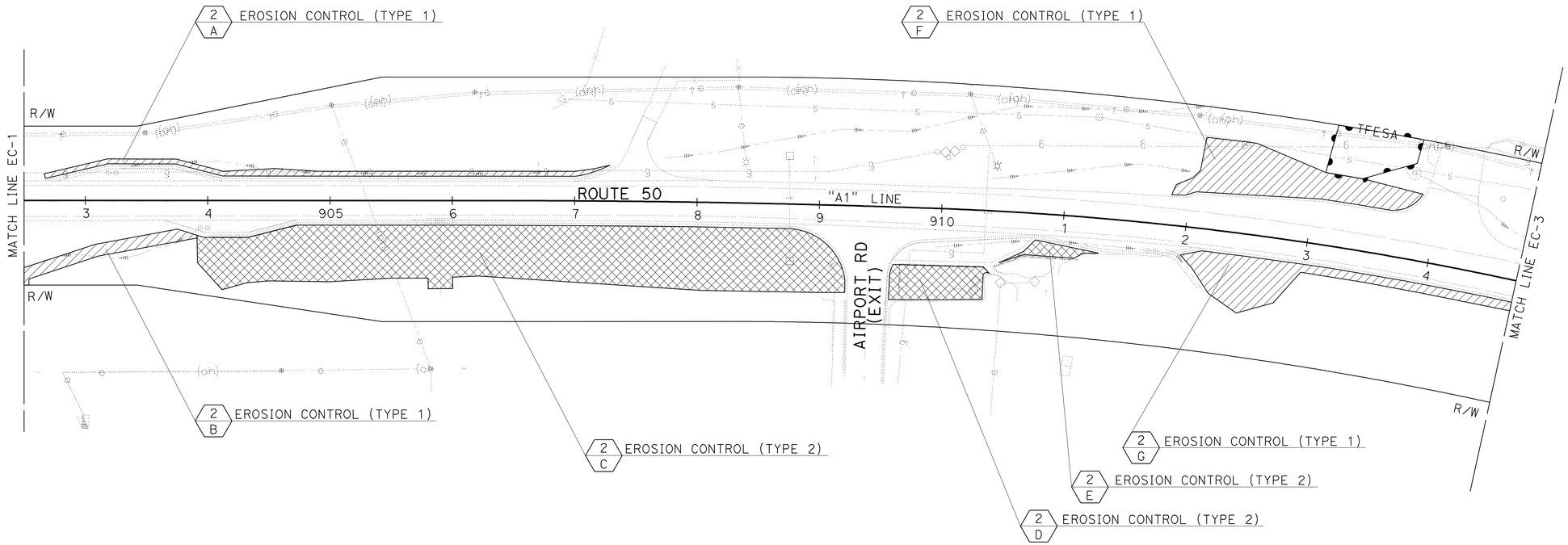

EROSION CONTROL PLAN

SCALE: 1" = 50'

EC-2

APPROVED FOR EROSION CONTROL WORK ONLY

STATE OF CALIFORNIA - DEPARTMENT OF TRANSPORTATION
Caltrans® LANDSCAPE ARCHITECTURE

SENIOR LANDSCAPE ARCHITECT: T. CHRIS JOHNSON

CALCULATED-DESIGNED BY: J. WILLIAMSON
CHECKED BY

REVISED BY
DATE REVISED

LAST REVISION 04-11-12
DATE PLOTTED => 30-AUG-2012
TIME PLOTTED => 09:11

Dist	COUNTY	ROUTE	POST MILES TOTAL PROJECT	SHEET No.	TOTAL SHEETS
03	ED	50	73.7/75.4	34	119

LICENSED LANDSCAPE ARCHITECT

7-30-12
PLANS APPROVAL DATE

LICENSED LANDSCAPE ARCHITECT
JAMES G. WILLIAMSON
No. 5415
Signature
02-28-14
Renewal Date
04-26-12
Date
STATE OF CALIFORNIA

THE STATE OF CALIFORNIA OR ITS OFFICERS OR AGENTS SHALL NOT BE RESPONSIBLE FOR THE ACCURACY OR COMPLETENESS OF SCANNED COPIES OF THIS PLAN SHEET.

NOTE:

FOR ACCURATE RIGHT OF WAY DATA, CONTACT
RIGHT OF WAY ENGINEERING AT THE DISTRICT OFFICE.

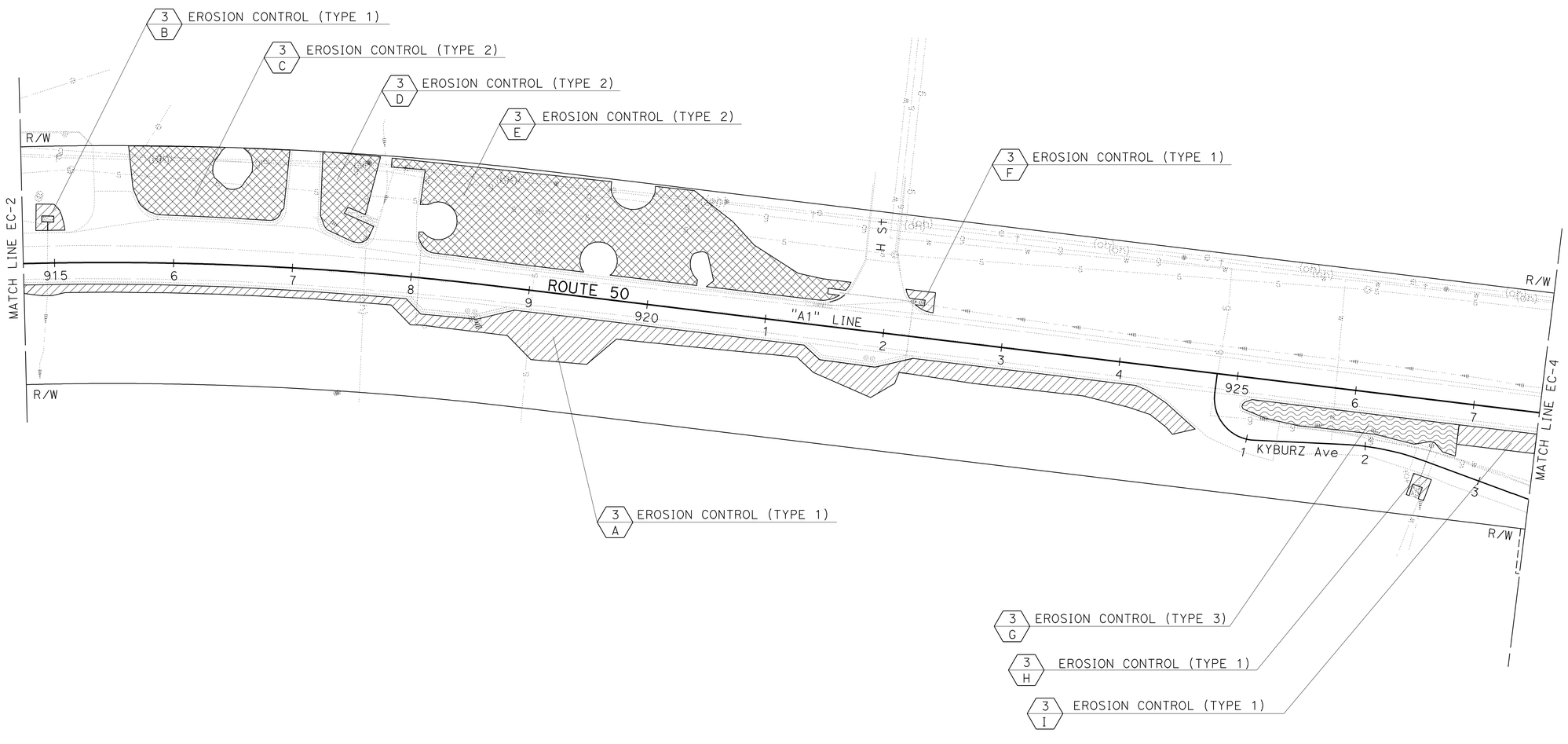

APPROVED FOR EROSION CONTROL WORK ONLY

EROSION CONTROL PLAN

SCALE: 1" = 50'

EC-3

STATE OF CALIFORNIA - DEPARTMENT OF TRANSPORTATION
Caltrans® LANDSCAPE ARCHITECTURE

SENIOR LANDSCAPE ARCHITECT: T. CHRIS JOHNSON

CALCULATED-DESIGNED BY: J. WILLIAMSON
CHECKED BY

REVISED BY
DATE REVISED

LAST REVISION 04-11-12
DATE PLOTTED => 30-AUG-2012
TIME PLOTTED => 09:11

Dist	COUNTY	ROUTE	POST MILES TOTAL PROJECT	SHEET No.	TOTAL SHEETS
03	ED	50	73.7/75.4	35	119

LICENSED LANDSCAPE ARCHITECT

7-30-12
PLANS APPROVAL DATE

LICENSED LANDSCAPE ARCHITECT JAMES G. WILLIAMSON No. 5415 Signature 02-28-14 Renewal Date 04-26-12 Date STATE OF CALIFORNIA

THE STATE OF CALIFORNIA OR ITS OFFICERS OR AGENTS SHALL NOT BE RESPONSIBLE FOR THE ACCURACY OR COMPLETENESS OF SCANNED COPIES OF THIS PLAN SHEET.

NOTE:

FOR ACCURATE RIGHT OF WAY DATA, CONTACT RIGHT OF WAY ENGINEERING AT THE DISTRICT OFFICE.

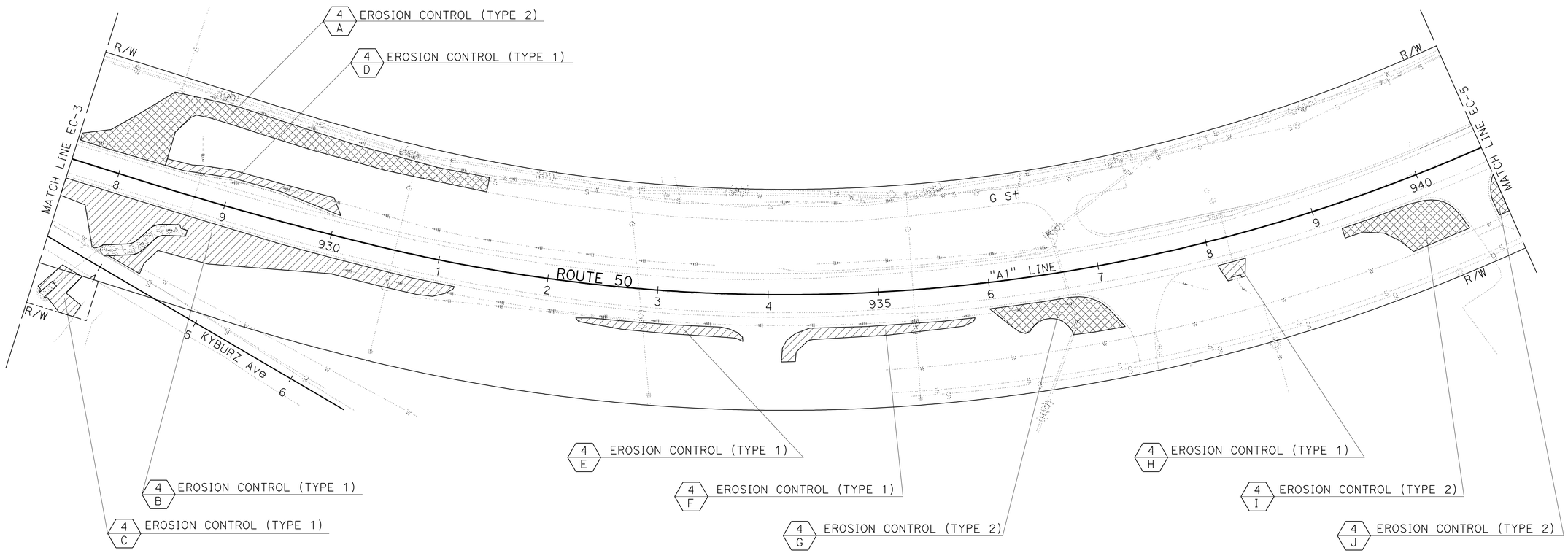

APPROVED FOR EROSION CONTROL WORK ONLY

EROSION CONTROL PLAN

SCALE: 1" = 50'

EC-4

STATE OF CALIFORNIA - DEPARTMENT OF TRANSPORTATION
Caltrans® LANDSCAPE ARCHITECTURE

SENIOR LANDSCAPE ARCHITECT: T. CHRIS JOHNSON

CALCULATED-DESIGNED BY: J. WILLIAMSON

CHECKED BY

REVISED BY

DATE REVISED

LAST REVISION 04-11-12

DATE PLOTTED => 30-AUG-2012
TIME PLOTTED => 09:11

Dist	COUNTY	ROUTE	POST MILES TOTAL PROJECT	SHEET No.	TOTAL SHEETS
03	ED	50	73.7/75.4	36	119

LICENSED LANDSCAPE ARCHITECT

7-30-12
PLANS APPROVAL DATE

LICENSED LANDSCAPE ARCHITECT
JAMES G. WILLIAMSON
No. 5415
Signature
02-28-14
Renewal Date
04-26-12
Date
STATE OF CALIFORNIA

THE STATE OF CALIFORNIA OR ITS OFFICERS OR AGENTS SHALL NOT BE RESPONSIBLE FOR THE ACCURACY OR COMPLETENESS OF SCANNED COPIES OF THIS PLAN SHEET.

NOTES:

FOR COMPLETE RIGHT OF WAY AND ACCURATE ACCESS DATA, SEE RIGHT OF WAY RECORD MAPS AT DISTRICT OFFICE

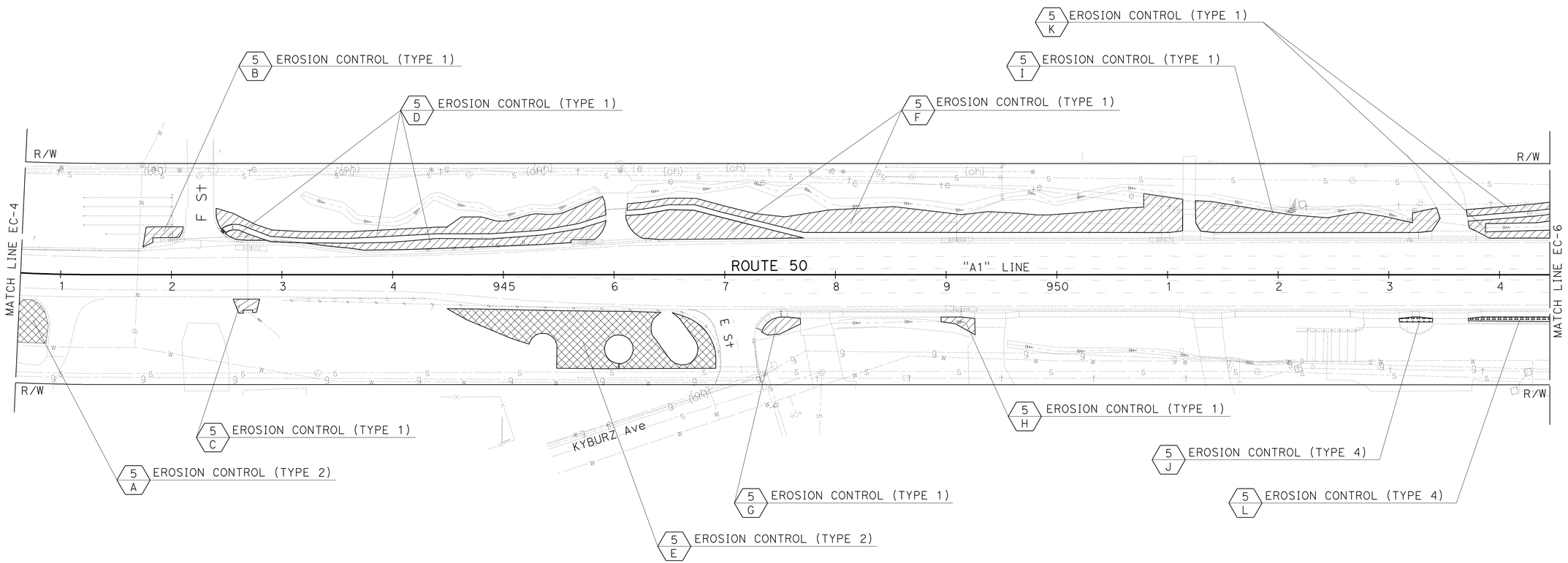

APPROVED FOR EROSION CONTROL WORK ONLY

EROSION CONTROL PLAN

SCALE: 1" = 50'

EC-5

STATE OF CALIFORNIA - DEPARTMENT OF TRANSPORTATION
Caltrans® LANDSCAPE ARCHITECTURE

SENIOR LANDSCAPE ARCHITECT: T. CHRIS JOHNSON

CALCULATED-DESIGNED BY: J. WILLIAMSON
CHECKED BY

REVISED BY
DATE REVISED

LAST REVISION 04-11-12
DATE PLOTTED => 30-AUG-2012
TIME PLOTTED => 09:12

Dist	COUNTY	ROUTE	POST MILES TOTAL PROJECT	SHEET No.	TOTAL SHEETS
03	ED	50	73.7/75.4	37	119

LICENSED LANDSCAPE ARCHITECT

7-30-12
PLANS APPROVAL DATE

LICENSED LANDSCAPE ARCHITECT JAMES G. WILLIAMSON No. 5415 Signature 02-28-14 Renewal Date 04-26-12 Date STATE OF CALIFORNIA

THE STATE OF CALIFORNIA OR ITS OFFICERS OR AGENTS SHALL NOT BE RESPONSIBLE FOR THE ACCURACY OR COMPLETENESS OF SCANNED COPIES OF THIS PLAN SHEET.

NOTES:

FOR COMPLETE RIGHT OF WAY AND ACCURATE ACCESS DATA, SEE RIGHT OF WAY RECORD MAPS AT DISTRICT OFFICE

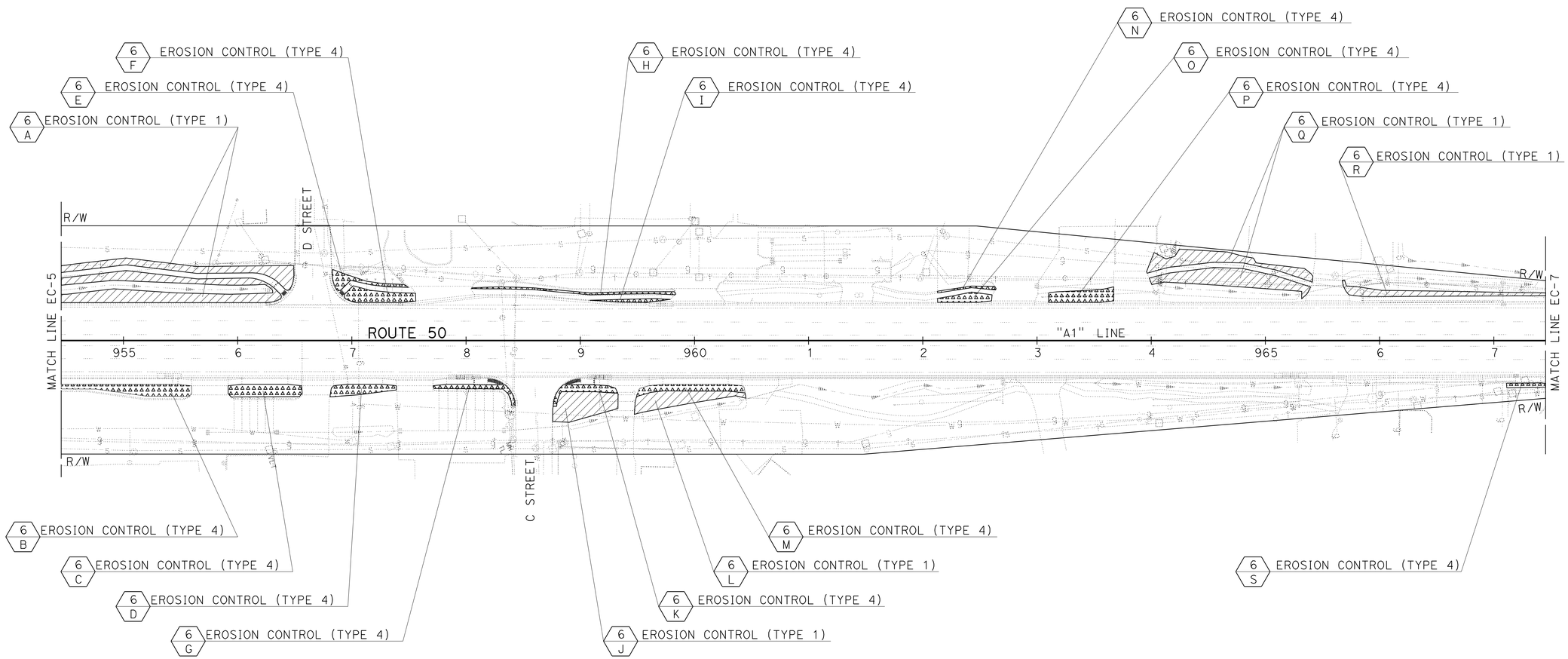

EROSION CONTROL PLAN

SCALE: 1" = 50'

EC-6

APPROVED FOR EROSION CONTROL WORK ONLY

STATE OF CALIFORNIA - DEPARTMENT OF TRANSPORTATION
Caltrans® LANDSCAPE ARCHITECTURE

SENIOR LANDSCAPE ARCHITECT: T. CHRIS JOHNSON
CALCULATED-DESIGNED BY: J. WILLIAMSON
CHECKED BY
REVISED BY
DATE REVISED

LAST REVISION 00-00-00
DATE PLOTTED => 30-AUG-2012
TIME PLOTTED => 09:12

Dist	COUNTY	ROUTE	POST MILES TOTAL PROJECT	SHEET No.	TOTAL SHEETS
03	ED	50	73.7/75.4	38	119

LICENSED LANDSCAPE ARCHITECT

7-30-12
PLANS APPROVAL DATE

LICENSED LANDSCAPE ARCHITECT JAMES G. WILLIAMSON No. 5415 Signature 02-28-14 Renewal Date 04-26-12 Date STATE OF CALIFORNIA

THE STATE OF CALIFORNIA OR ITS OFFICERS OR AGENTS SHALL NOT BE RESPONSIBLE FOR THE ACCURACY OR COMPLETENESS OF SCANNED COPIES OF THIS PLAN SHEET.

NOTES:

FOR COMPLETE RIGHT OF WAY AND ACCURATE ACCESS DATA, SEE RIGHT OF WAY RECORD MAPS AT DISTRICT OFFICE

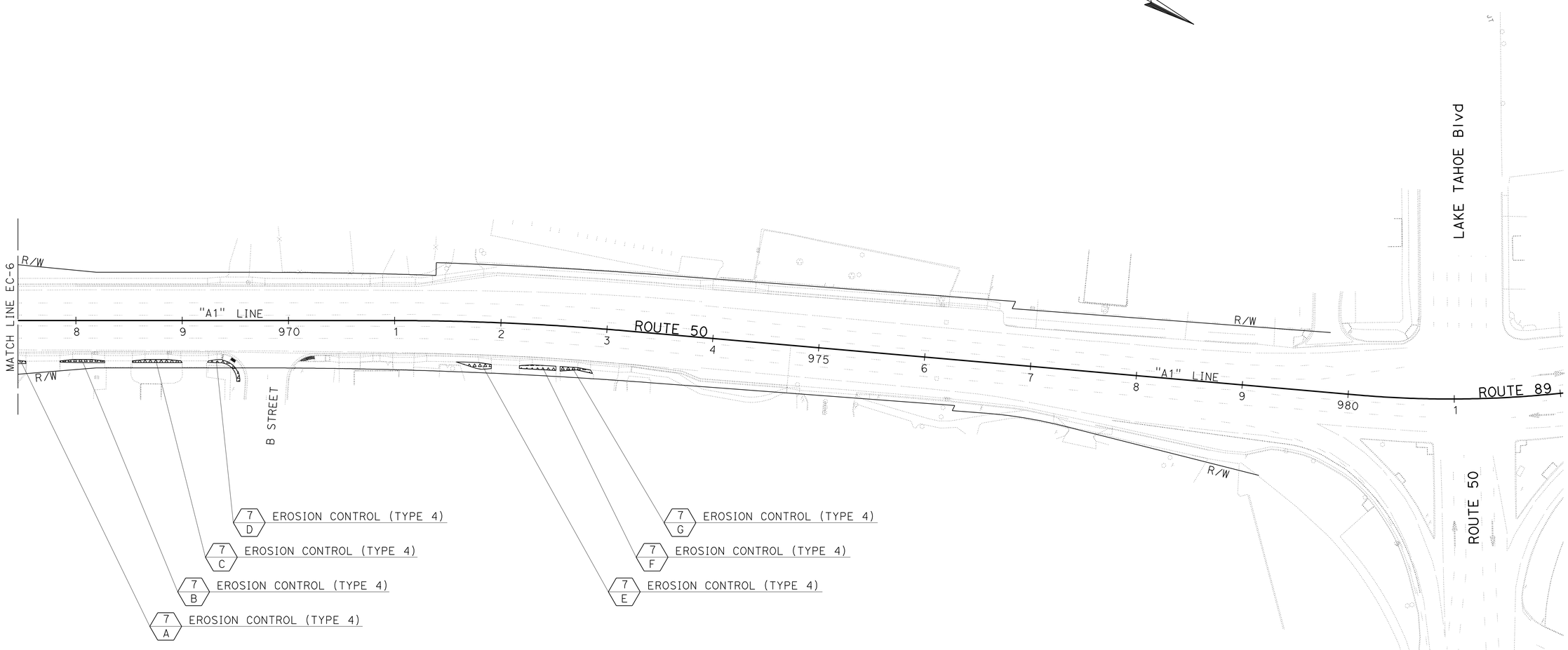

APPROVED FOR EROSION CONTROL WORK ONLY

EROSION CONTROL PLAN

SCALE: 1" = 50'

EC-7

STATE OF CALIFORNIA - DEPARTMENT OF TRANSPORTATION
Caltrans LANDSCAPE ARCHITECTURE

SENIOR LANDSCAPE ARCHITECT: T. CHRIS JOHNSON

CALCULATED-DESIGNED BY: J. WILLIAMSON
CHECKED BY

REVISED BY
DATE REVISED

LAST REVISION 04-18-12
DATE PLOTTED => 30-AUG-2012
TIME PLOTTED => 09:12

Dist	COUNTY	ROUTE	POST MILES TOTAL PROJECT	SHEET No.	TOTAL SHEETS
03	ED	50	73.7/75.4	39	119

LICENSED LANDSCAPE ARCHITECT

7-30-12
PLANS APPROVAL DATE

LICENSED LANDSCAPE ARCHITECT
JAMES G. WILLIAMSON
No. 5415
Signature
02-28-14
Renewal Date
04-26-12
Date
STATE OF CALIFORNIA

THE STATE OF CALIFORNIA OR ITS OFFICERS OR AGENTS SHALL NOT BE RESPONSIBLE FOR THE ACCURACY OR COMPLETENESS OF SCANNED COPIES OF THIS PLAN SHEET.

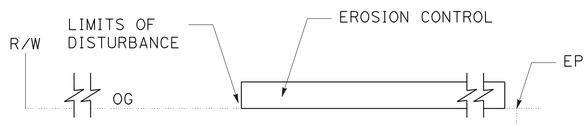

SECTION

EROSION CONROL PLACEMENT OUTER LIMITS

LOCATION

890+61 to 891+50 Lt
891+00 to 892+15 Rt
894+84 to 895+50 Lt
896+90 to 898+10 Rt
898+21 to 899+10 Lt
902+25 to 907+00 Rt
902+66 to 907+28 Lt
911+86 to 913+86 Lt
912+00 to 913+00 Rt
914+85 to 915+09 Lt
918+00 to 919+00 Rt
921+50 to 922+50 Rt
928+38 to 930+04 Lt
928+50 to 930+00 Rt
938+05 to 938+31 Rt
941+75 to 956+50 Lt
942+55 to 942+80 Rt
947+33 to 949+26 Rt
965+67 to 967+45 Lt

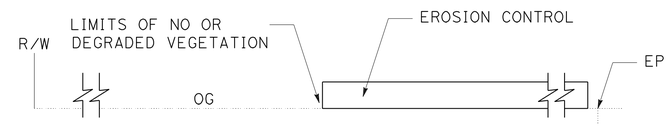

SECTION

EROSION CONROL PLACEMENT OUTER LIMITS

LOCATION

892+15 to 893+54 Rt
895+50 to 898+39 Lt
907+00 to 909+23 Rt
909+58 to 911+30 Rt
913+00 to 918+00 Rt
919+00 to 921+50 Rt
922+50 to 924+70 Rt
915+62 to 920+82 Lt
920+82 to 921+68 Lt
922+14 to 922+40 Lt
925+05 to 928+50 Rt
927+58 to 928+38 Lt
930+00 to 931+18 Rt
932+30 to 937+14 Rt
939+21 to 940+90 Rt
944+50 to 946+92 Rt
963+96 to 965+42 Lt

APPROVED FOR EROSION CONTROL WORK ONLY

EROSION CONTROL DETAILS

NO SCALE

ECD-1

STATE OF CALIFORNIA - DEPARTMENT OF TRANSPORTATION
Caltrans LANDSCAPE ARCHITECTURE

SENIOR LANDSCAPE ARCHITECT: T. CHRIS JOHNSON

CALCULATED-DESIGNED BY: J. WILLIAMSON
CHECKED BY

REVISED BY
DATE REVISED

LAST REVISION 04-19-12
DATE PLOTTED => 30-AUG-2012
TIME PLOTTED => 09:12

Dist	COUNTY	ROUTE	POST MILES TOTAL PROJECT	SHEET No.	TOTAL SHEETS
03	ED	50	73.7/75.4	40	119

LICENSED LANDSCAPE ARCHITECT

7-30-12
PLANS APPROVAL DATE

LICENSED LANDSCAPE ARCHITECT JAMES G. WILLIAMSON No. 5415 Signature 02-28-14 Renewal Date 04-26-12 Date STATE OF CALIFORNIA

THE STATE OF CALIFORNIA OR ITS OFFICERS OR AGENTS SHALL NOT BE RESPONSIBLE FOR THE ACCURACY OR COMPLETENESS OF SCANNED COPIES OF THIS PLAN SHEET.

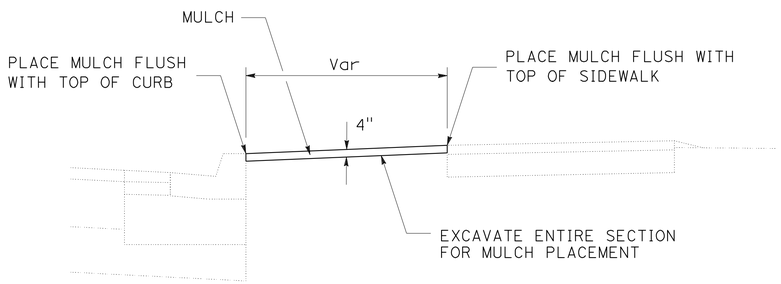

SECTION

MULCH PLACEMENT

LOCATION

6 I

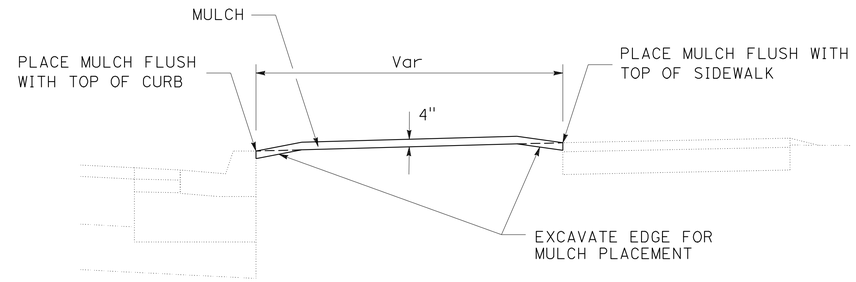

SECTION

MULCH PLACEMENT

LOCATION

6 F, 6 O, 6 P

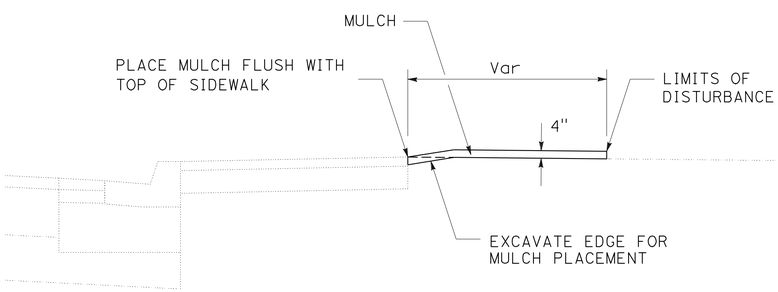

SECTION

MULCH PLACEMENT

LOCATION

5 J, 5 L, 6 B, 6 C, 6 D, 6 E, 6 G, 6 H, 6 N, 6 S, 7 A, 7 B, 7 C, 7 D, 7 E, 7 F, 7 G

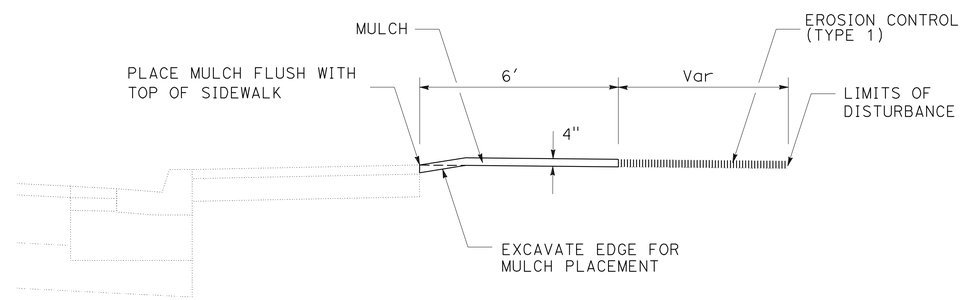

SECTION

MULCH PLACEMENT

LOCATION

6 K, 6 M

APPROVED FOR EROSION CONTROL WORK ONLY

EROSION CONTROL DETAILS

NO SCALE

ECD-2

STATE OF CALIFORNIA - DEPARTMENT OF TRANSPORTATION
Caltrans® LANDSCAPE ARCHITECTURE

SENIOR LANDSCAPE ARCHITECT: T. CHRIS JOHNSON

CALCULATED-DESIGNED BY: J. WILLIAMSON

CHECKED BY

REVISED BY

DATE REVISED

LAST REVISION 04-19-12

DATE PLOTTED => 30-AUG-2012
TIME PLOTTED => 09:12

Dist	COUNTY	ROUTE	POST MILES TOTAL PROJECT	SHEET No.	TOTAL SHEETS
03	ED	50	73.7/75.4	41	119

LICENSED LANDSCAPE ARCHITECT

7-30-12
PLANS APPROVAL DATE

LICENSED LANDSCAPE ARCHITECT JAMES G. WILLIAMSON No. 5415 Signature 02-28-14 Renewal Date 04-26-12 Date STATE OF CALIFORNIA

THE STATE OF CALIFORNIA OR ITS OFFICERS OR AGENTS SHALL NOT BE RESPONSIBLE FOR THE ACCURACY OR COMPLETENESS OF SCANNED COPIES OF THIS PLAN SHEET.

EROSION CONTROL QUANTITIES (TABLE 1)

SHEET	AREA	(N) EROSION CONTROL TYPE	EROSION CONTROL (HYDROSEED) SQFT	ROLLED EROSION CONTROL PRODUCT (NETTING) SQFT	MULCH (4" DEPTH) CY	COMPOST (INCORPORATE) SQYD	EROSION CONTROL (COMPOST BLANKET) CY	(N) COMPOST CY	EROSION CONTROL (HYDROSEED) MATERIALS (N) SEED Lbs	(N) FIBER Lbs	(N) ORGANIC FERTILIZER Lbs	(N) STRAW TON
EC-1	A	1	--	--	--	--	4	3.9	0.8	--	--	--
	B	1	--	--	--	--	9	9.2	1.9	--	--	--
	C	2	2,202	--	--	245	--	27.2	2.8	30	61	0.10
	D	1	--	--	--	--	2	2.0	0.4	--	--	--
	E	2	4,683	--	--	520	--	57.8	5.9	65	129	0.22
	F	1	--	--	--	--	7	7.2	1.5	--	--	--
	G	1	--	--	--	--	9	9.3	1.9	--	--	--
	H	1	--	--	--	--	2	2.2	0.5	--	--	--
EC-2	A	1	--	--	--	--	12	11.7	2.4	--	--	--
	B	1	--	--	--	--	10	9.6	2.0	--	--	--
	C	2	24,022	--	--	2,669	--	296.6	30.3	331	662	1.10
	D	2	2,126	--	--	236	--	26.2	2.7	29	59	0.10
	E	2	490	--	--	54	--	6.0	0.6	7	13	0.02
	F	1	--	--	--	--	35	34.9	7.2	--	--	--
	G	1	--	--	--	--	29	29.1	6.0	--	--	--
EC-3	A	1	--	--	--	--	93	93.2	19.1	--	--	--
	B	1	--	--	--	--	3	2.6	0.5	--	--	--
	C	2	6,748	--	--	750	--	83.3	8.5	93	186	0.31
	D	2	2,923	--	--	325	--	36.1	3.7	40	81	0.13
	E	2	20,946	--	--	2,327	--	258.6	26.4	289	577	0.96
	F	1	--	--	--	--	2	1.6	0.3	--	--	--
	G	3	--	3,467	--	--	21	21.3	4.4	--	--	--
	H	1	--	--	--	--	1	1.3	0.3	--	--	--
	I	1	--	--	--	--	7	7.4	1.5	--	--	--
EC-4	A	2	7,759	--	--	862	--	95.8	9.8	107	214	0.36
	B	1	--	--	--	--	64	63.6	13.1	--	--	--
	C	1	--	--	--	--	6	5.7	1.2	--	--	--
	D	1	--	--	--	--	8	7.8	1.6	--	--	--
	E	1	--	--	--	--	8	7.6	1.6	--	--	--
	F	1	--	--	--	--	11	11.3	2.3	--	--	--
	G	2	2,447	--	--	272	--	30.2	3.1	34	67	0.11
	H	1	--	--	--	--	2	2.1	0.4	--	--	--
	I	2	2,768	--	--	308	--	34.2	3.5	38	76	0.13
	J	2	281	--	--	31	--	3.5	0.4	4	8	0.01
SUBTOTAL TABLE 1			77,395	3,467	0.0	8,599	345					

(N) - NOT A SEPARATE PAY ITEM, FOR INFORMATION ONLY

EROSION CONTROL QUANTITIES (TABLE 2)

SHEET	AREA	(N) EROSION CONTROL TYPE	EROSION CONTROL (HYDROSEED) SQFT	ROLLED EROSION CONTROL PRODUCT (NETTING) SQFT	MULCH (4" DEPTH) CY	COMPOST (INCORPORATE) SQYD	EROSION CONTROL (COMPOST BLANKET) CY	(N) COMPOST CY	EROSION CONTROL (HYDROSEED) MATERIALS (N) SEED Lbs	(N) FIBER Lbs	(N) ORGANIC FERTILIZER Lbs	(N) STRAW TON
EC-5	A	2	932	--	--	104	--	11.5	1.2	13	26	0.04
	B	1	--	--	--	--	2	2.3	0.5	--	--	--
	C	1	--	--	--	--	1	1.4	0.3	--	--	--
	D	1	--	--	--	--	34	33.8	6.9	--	--	--
	E	2	6,978	--	--	775	--	86.1	8.8	96	192	0.32
	F	1	--	--	--	--	67	67.3	13.8	--	--	--
	G	1	--	--	--	--	2	2.4	0.5	--	--	--
	H	1	--	--	--	--	2	1.6	0.3	--	--	--
	I	1	--	--	--	--	25	24.6	5.1	--	--	--
	J	4	--	--	1.5	--	--	--	--	--	--	--
	K	1	--	--	--	--	8	7.8	1.6	--	--	--
	L	4	--	--	3.3	--	--	--	--	--	--	--
EC-6	A	1	--	--	--	--	27	26.7	5.5	--	--	--
	B	4	--	--	13.9	--	--	--	--	--	--	--
	C	4	--	--	8.4	--	--	--	--	--	--	--
	D	4	--	--	5.6	--	--	--	--	--	--	--
	E	4	--	--	3.9	--	--	--	--	--	--	--
	F	4	--	--	7.5	--	--	--	--	--	--	--
	G	4	--	--	3.6	--	--	--	--	--	--	--
	H	4	--	--	3.8	--	--	--	--	--	--	--
	I	4	--	--	1.7	--	--	--	--	--	--	--
	J	1	--	--	--	--	7	7.3	1.5	--	--	--
	K	4	--	--	4.0	--	--	--	--	--	--	--
	L	1	--	--	--	--	6	6.3	1.3	--	--	--
	M	4	--	--	6.7	--	--	--	--	--	--	--
	N	4	--	--	1.1	--	--	--	--	--	--	--
	O	4	--	--	3.8	--	--	--	--	--	--	--
	P	4	--	--	7.1	--	--	--	--	--	--	--
	Q	1	--	--	--	--	18	17.7	3.6	--	--	--
	R	1	--	--	--	--	5	4.9	1.0	--	--	--
	S	4	--	--	1.6	--	--	--	--	--	--	--
EC-7	A	4	--	--	0.2	--	--	--	--	--	--	--
	B	4	--	--	1.3	--	--	--	--	--	--	--
	C	4	--	--	1.4	--	--	--	--	--	--	--
	D	4	--	--	1.3	--	--	--	--	--	--	--
	E	4	--	--	1.6	--	--	--	--	--	--	--
	F	4	--	--	1.6	--	--	--	--	--	--	--
	G	4	--	--	1.0	--	--	--	--	--	--	--
SUBTOTAL TABLE 2			7,910	0	85.9	879	204					
SUBTOTAL TABLE 1			77,395	3,467	0.0	8,599	345					
TOTAL			85,305	3,467	85.9	9,478	549					

(N) - NOT A SEPARATE PAY ITEM, FOR INFORMATION ONLY

EROSION CONTROL QUANTITIES
ECQ-1

STATE OF CALIFORNIA - DEPARTMENT OF TRANSPORTATION
Caltrans® LANDSCAPE ARCHITECTURE
SENIOR LANDSCAPE ARCHITECT T. CHRIS JOHNSON
CALCULATED-DESIGNED BY J. WILLIAMSON
CHECKED BY
REVISED BY
DATE REVISED

LAST REVISION 04-17-12
DATE PLOTTED => 30-AUG-2012
TIME PLOTTED => 09:12

Dist	COUNTY	ROUTE	POST MILES TOTAL PROJECT	SHEET No.	TOTAL SHEETS
03	ED	50	73.7/75.4	42	119

REGISTERED CIVIL ENGINEER 4-26-12 DATE

7-30-12
PLANS APPROVAL DATE

REGISTERED PROFESSIONAL ENGINEER JACK COWELL No. 65521 Exp. 9-30-13 CIVIL STATE OF CALIFORNIA

THE STATE OF CALIFORNIA OR ITS OFFICERS OR AGENTS SHALL NOT BE RESPONSIBLE FOR THE ACCURACY OR COMPLETENESS OF SCANNED COPIES OF THIS PLAN SHEET.

NOTE:

FOR ACCURATE RIGHT OF WAY DATA, CONTACT RIGHT OF WAY ENGINEERING AT THE DISTRICT OFFICE.

ABBREVIATIONS:

DE	DRAINAGE EASEMENT
IS	INFILTRATION SYSTEM
OSD	OVERSIDE DRAIN
RCD	ROCK CHECK DAMS
RED	ROCK ENERGY DISSIPATOR
RIP	ROCK INLET PROTECTION
RLD	ROCK LINED DITCH
ST	SAND TRAP
TST	TRACTION SAND TRAP
PP	PLASTIC PIPE

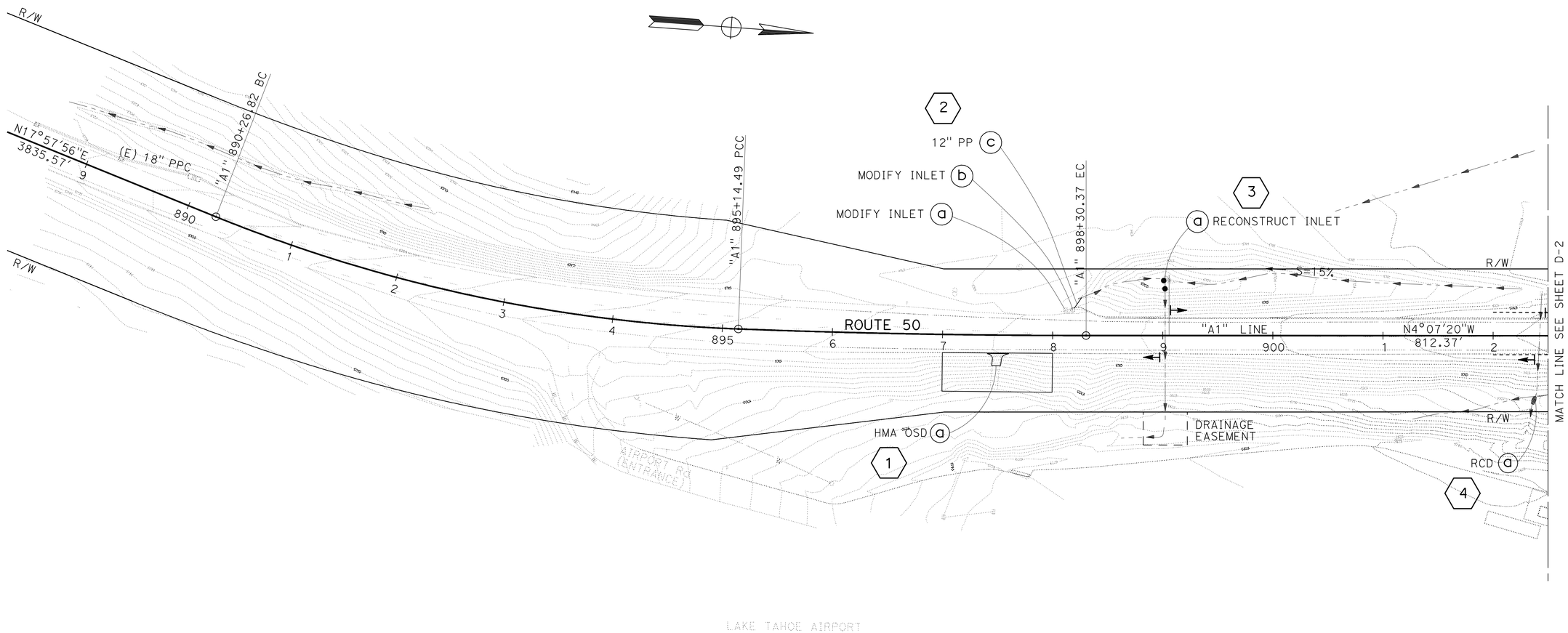

DRAINAGE PLAN

SCALE: 1" = 50'

D-1

APPROVED FOR DRAINAGE WORK ONLY

STATE OF CALIFORNIA - DEPARTMENT OF TRANSPORTATION
NORTH REGION
DIVISION OF ENGINEERING
DESIGN BRANCH M8

Caltrans

FUNCTIONAL SUPERVISOR: MASTRI ALVANDI

CALCULATED-DESIGNED BY: JACK COWELL
CHECKED BY: MASTRI ALVANDI

REVISED BY
DATE REVISED

LAST REVISION 04-23-12
DATE PLOTTED => 04-SEP-2012
TIME PLOTTED => 07:24

Dist	COUNTY	ROUTE	POST MILES TOTAL PROJECT	SHEET No.	TOTAL SHEETS
03	ED	50	73.7/75.4	43	119

REGISTERED CIVIL ENGINEER 4-26-12 DATE

7-30-12
PLANS APPROVAL DATE

REGISTERED PROFESSIONAL ENGINEER JACK COWELL No. 65521 Exp. 9-30-13 CIVIL STATE OF CALIFORNIA

THE STATE OF CALIFORNIA OR ITS OFFICERS OR AGENTS SHALL NOT BE RESPONSIBLE FOR THE ACCURACY OR COMPLETENESS OF SCANNED COPIES OF THIS PLAN SHEET.

NOTE:

FOR ACCURATE RIGHT OF WAY DATA, CONTACT RIGHT OF WAY ENGINEERING AT THE DISTRICT OFFICE.

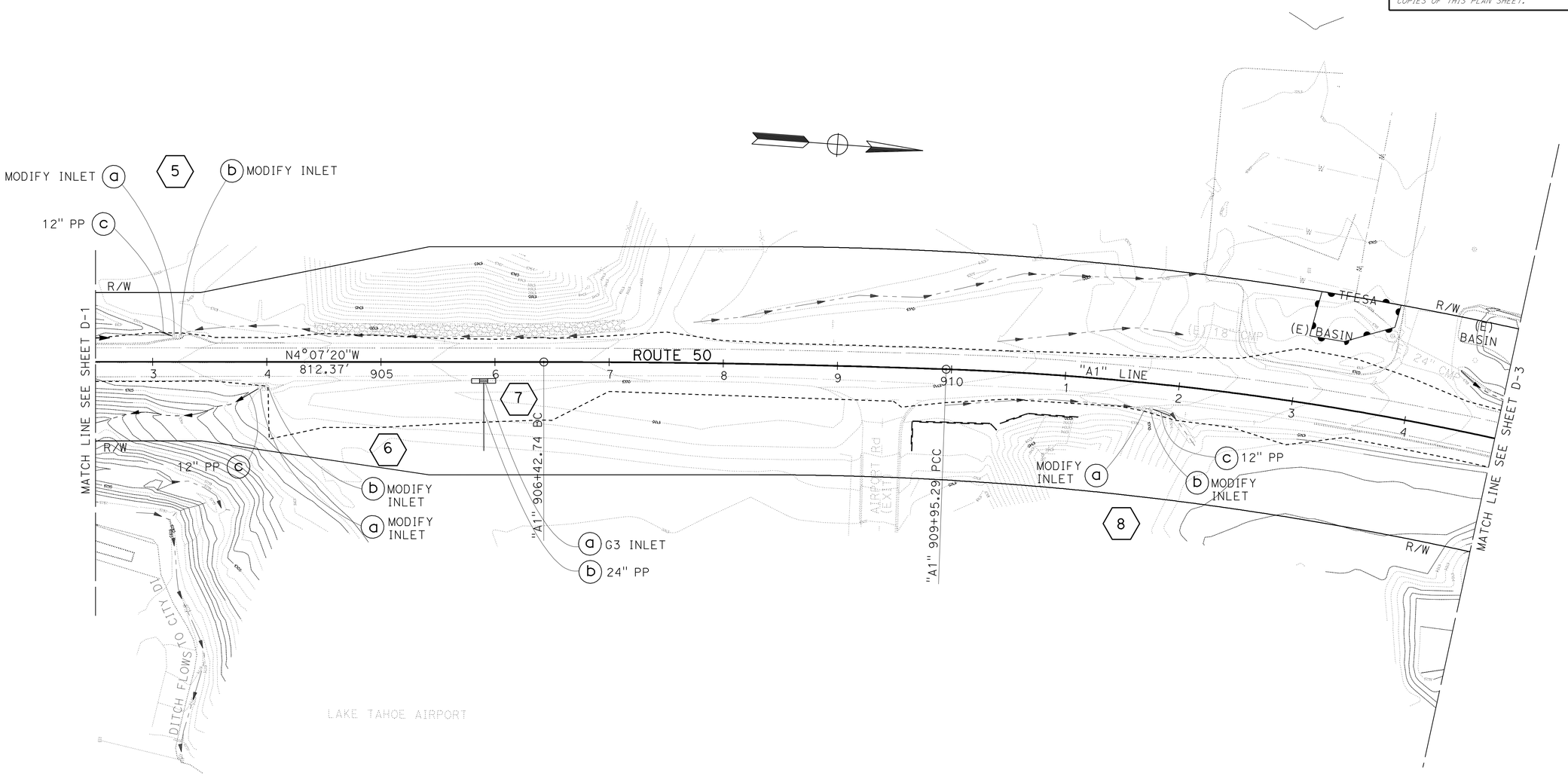

APPROVED FOR DRAINAGE WORK ONLY

DRAINAGE PLAN

SCALE: 1" = 50'

D-2

STATE OF CALIFORNIA - DEPARTMENT OF TRANSPORTATION
Caltrans
NORTH REGION
DIVISION OF ENGINEERING
DESIGN BRANCH M8

FUNCTIONAL SUPERVISOR: MASTRI ALVANDI
CALCULATED-DESIGNED BY: JACK COWELL
CHECKED BY: MASTRI ALVANDI
REVISED BY
DATE REVISED

LAST REVISION 04-23-12
DATE PLOTTED => 04-SEP-2012
TIME PLOTTED => 07:24

Dist	COUNTY	ROUTE	POST MILES TOTAL PROJECT	SHEET No.	TOTAL SHEETS
03	ED	50	73.7/75.4	44	119

REGISTERED CIVIL ENGINEER 4-26-12 DATE

7-30-12
PLANS APPROVAL DATE

REGISTERED PROFESSIONAL ENGINEER JACK COWELL No. 65521 Exp. 9-30-13 CIVIL STATE OF CALIFORNIA

THE STATE OF CALIFORNIA OR ITS OFFICERS OR AGENTS SHALL NOT BE RESPONSIBLE FOR THE ACCURACY OR COMPLETENESS OF SCANNED COPIES OF THIS PLAN SHEET.

NOTE:

FOR ACCURATE RIGHT OF WAY DATA, CONTACT RIGHT OF WAY ENGINEERING AT THE DISTRICT OFFICE.

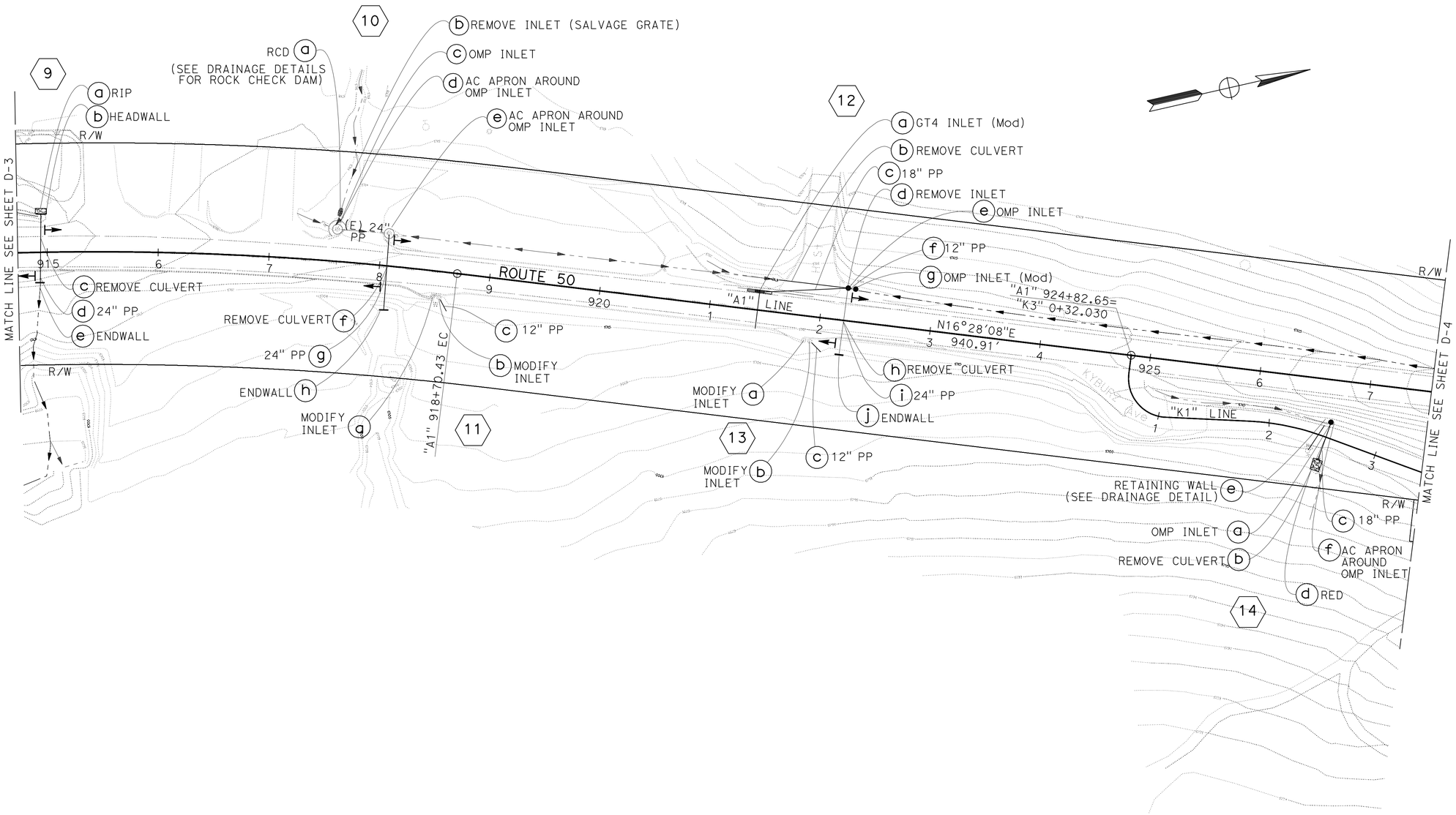

APPROVED FOR DRAINAGE WORK ONLY

DRAINAGE PLAN

SCALE: 1" = 50'

D-3

STATE OF CALIFORNIA - DEPARTMENT OF TRANSPORTATION
Caltrans
NORTH REGION
DIVISION OF ENGINEERING
DESIGN BRANCH M8

FUNCTIONAL SUPERVISOR: MASTRI ALVANDI
CALCULATED-DESIGNED BY: JACK COWELL
CHECKED BY: MASTRI ALVANDI
REVISED BY
DATE REVISED

LAST REVISION 04-23-12
DATE PLOTTED => 04-SEP-2012
TIME PLOTTED => 07:24

Dist	COUNTY	ROUTE	POST MILES TOTAL PROJECT	SHEET No.	TOTAL SHEETS
03	ED	50	73.7/75.4	45	119

REGISTERED CIVIL ENGINEER 4-26-12 DATE

7-30-12
PLANS APPROVAL DATE

REGISTERED PROFESSIONAL ENGINEER
JACK COWELL
No. 65521
Exp. 9-30-13
CIVIL
STATE OF CALIFORNIA

THE STATE OF CALIFORNIA OR ITS OFFICERS OR AGENTS SHALL NOT BE RESPONSIBLE FOR THE ACCURACY OR COMPLETENESS OF SCANNED COPIES OF THIS PLAN SHEET.

NOTE:

FOR ACCURATE RIGHT OF WAY DATA, CONTACT RIGHT OF WAY ENGINEERING AT THE DISTRICT OFFICE.

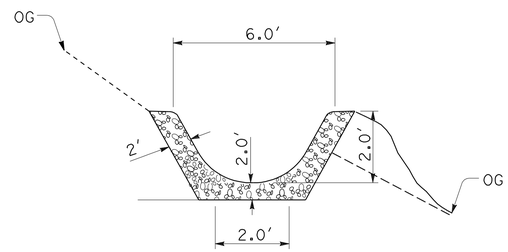

ROCK LINED DITCH

SECTION A-A

NO SCALE

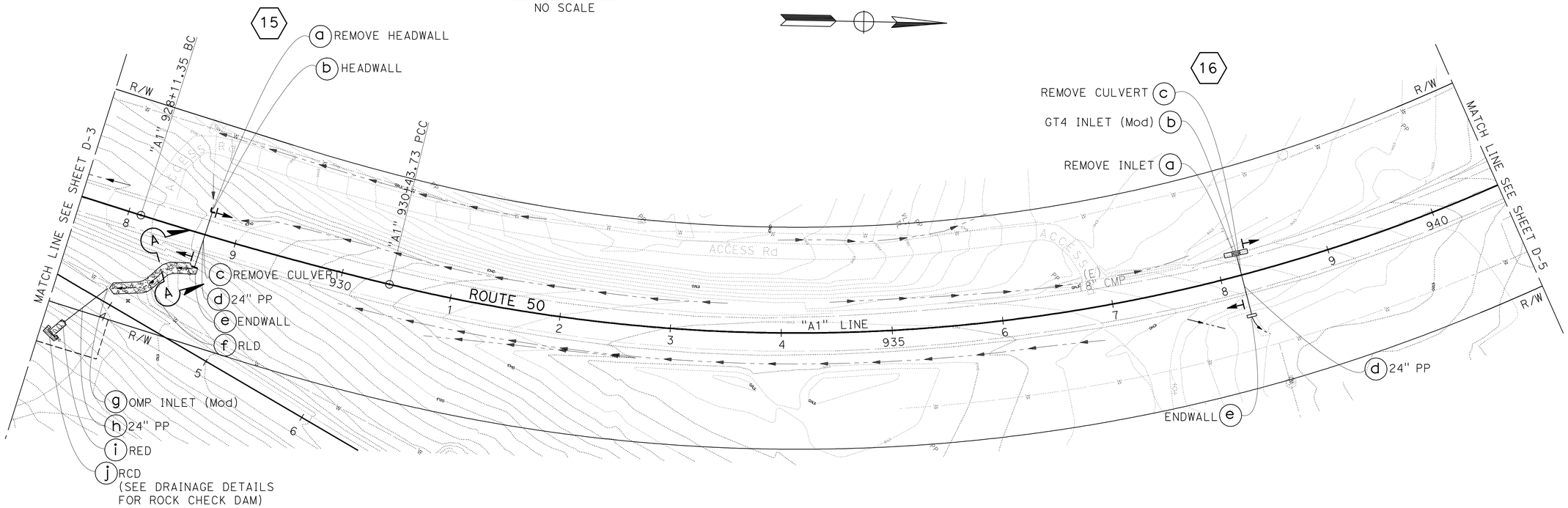

DRAINAGE PLAN

SCALE: 1" = 50'

D-4

APPROVED FOR DRAINAGE WORK ONLY

STATE OF CALIFORNIA - DEPARTMENT OF TRANSPORTATION
Caltrans
NORTH REGION
DIVISION OF ENGINEERING
DESIGN BRANCH M8

FUNCTIONAL SUPERVISOR: MASTRI ALVANDI
CALCULATED-DESIGNED BY: JACK COWELL
CHECKED BY: MASTRI ALVANDI
REVISED BY
DATE REVISED

LAST REVISION 04-23-12 | DATE PLOTTED => 30-AUG-2012 | TIME PLOTTED => 09:12

Dist	COUNTY	ROUTE	POST MILES TOTAL PROJECT	SHEET No.	TOTAL SHEETS
03	ED	50	73.7/75.4	46	119

REGISTERED CIVIL ENGINEER 4-26-12 DATE

7-30-12
PLANS APPROVAL DATE

REGISTERED PROFESSIONAL ENGINEER JACK COWELL No. 65521 Exp. 9-30-13 CIVIL STATE OF CALIFORNIA

THE STATE OF CALIFORNIA OR ITS OFFICERS OR AGENTS SHALL NOT BE RESPONSIBLE FOR THE ACCURACY OR COMPLETENESS OF SCANNED COPIES OF THIS PLAN SHEET.

NOTE:

FOR ACCURATE RIGHT OF WAY DATA, CONTACT
RIGHT OF WAY ENGINEERING AT THE DISTRICT OFFICE.

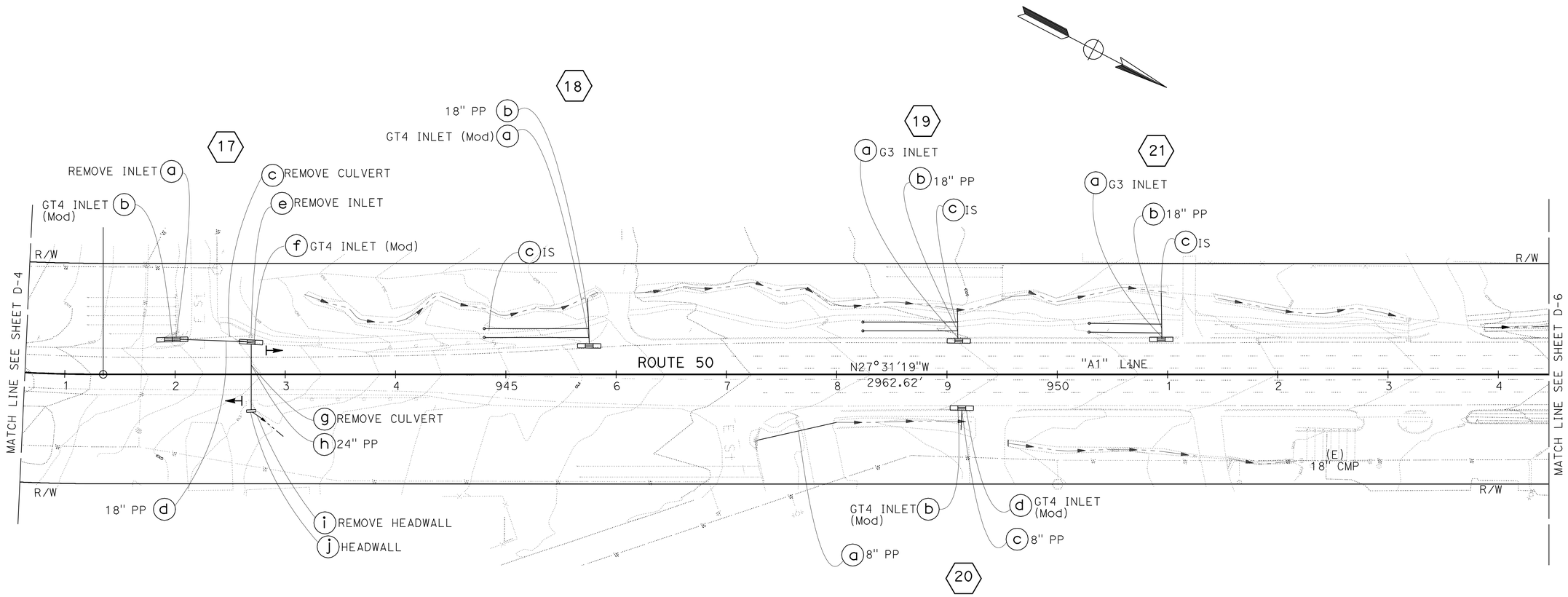

DRAINAGE PLAN

SCALE: 1" = 50'

D-5

APPROVED FOR DRAINAGE WORK ONLY

REVISED BY | DATE REVISED

CALCULATED-DESIGNED BY: JACK COWELL | CHECKED BY: MASTRI ALVANDI

FUNCTIONAL SUPERVISOR: MASTRI ALVANDI

STATE OF CALIFORNIA - DEPARTMENT OF TRANSPORTATION
NORTH REGION
DIVISION OF ENGINEERING
DESIGN BRANCH M8

LAST REVISION 04-23-12 | DATE PLOTTED => 30-AUG-2012 | TIME PLOTTED => 09:13

Dist	COUNTY	ROUTE	POST MILES TOTAL PROJECT	SHEET No.	TOTAL SHEETS
03	ED	50	73.7/75.4	47	119

REGISTERED CIVIL ENGINEER 4-26-12 DATE

7-30-12
PLANS APPROVAL DATE

REGISTERED PROFESSIONAL ENGINEER
JACK COWELL
No. 65521
Exp. 9-30-13
CIVIL
STATE OF CALIFORNIA

THE STATE OF CALIFORNIA OR ITS OFFICERS OR AGENTS SHALL NOT BE RESPONSIBLE FOR THE ACCURACY OR COMPLETENESS OF SCANNED COPIES OF THIS PLAN SHEET.

NOTE:

FOR ACCURATE RIGHT OF WAY DATA, CONTACT RIGHT OF WAY ENGINEERING AT THE DISTRICT OFFICE.

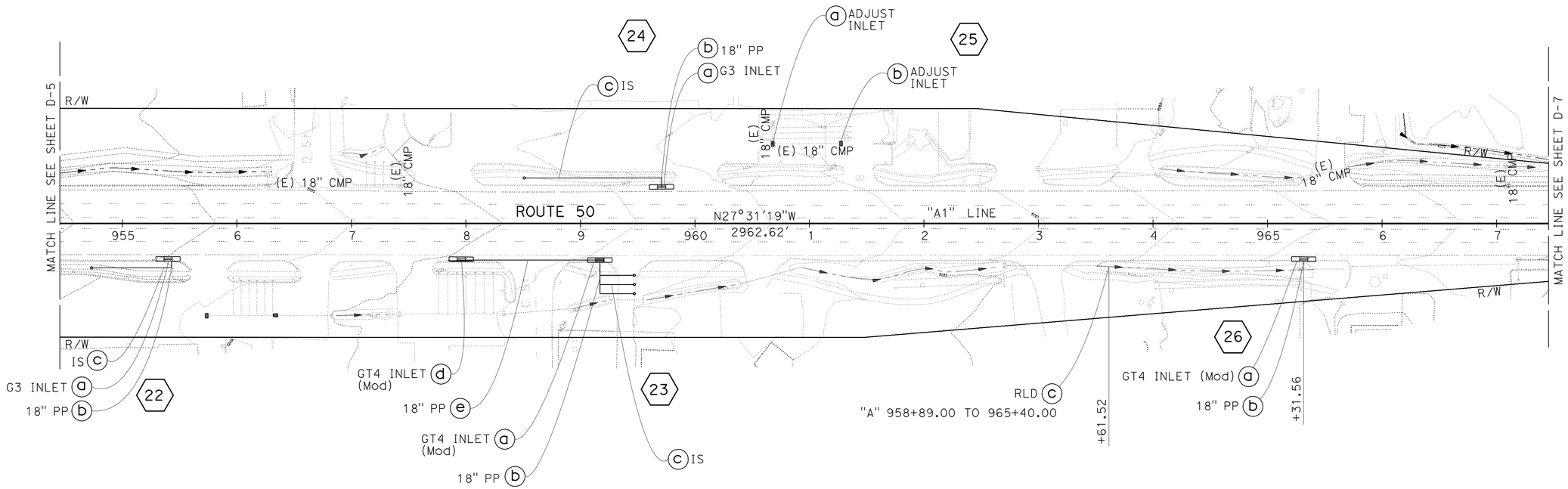

APPROVED FOR DRAINAGE WORK ONLY

DRAINAGE PLAN

SCALE: 1" = 50'

D-6

STATE OF CALIFORNIA - DEPARTMENT OF TRANSPORTATION
NORTH REGION
DIVISION OF ENGINEERING
DESIGN BRANCH M8

Caltrans

FUNCTIONAL SUPERVISOR: MASTRI ALVANDI
CALCULATED-DESIGNED BY: JACK COWELL
CHECKED BY: MASTRI ALVANDI
REVISED BY
DATE REVISED

LAST REVISION 04-23-12
DATE PLOTTED => 30-AUG-2012
TIME PLOTTED => 09:13

Dist	COUNTY	ROUTE	POST MILES TOTAL PROJECT	SHEET No.	TOTAL SHEETS
03	ED	50	73.7/75.4	48	119

REGISTERED CIVIL ENGINEER 4-26-12 DATE

7-30-12
PLANS APPROVAL DATE

REGISTERED PROFESSIONAL ENGINEER JACK COWELL No. 65521 Exp. 9-30-13 CIVIL STATE OF CALIFORNIA

THE STATE OF CALIFORNIA OR ITS OFFICERS OR AGENTS SHALL NOT BE RESPONSIBLE FOR THE ACCURACY OR COMPLETENESS OF SCANNED COPIES OF THIS PLAN SHEET.

NOTE:

FOR ACCURATE RIGHT OF WAY DATA, CONTACT RIGHT OF WAY ENGINEERING AT THE DISTRICT OFFICE.

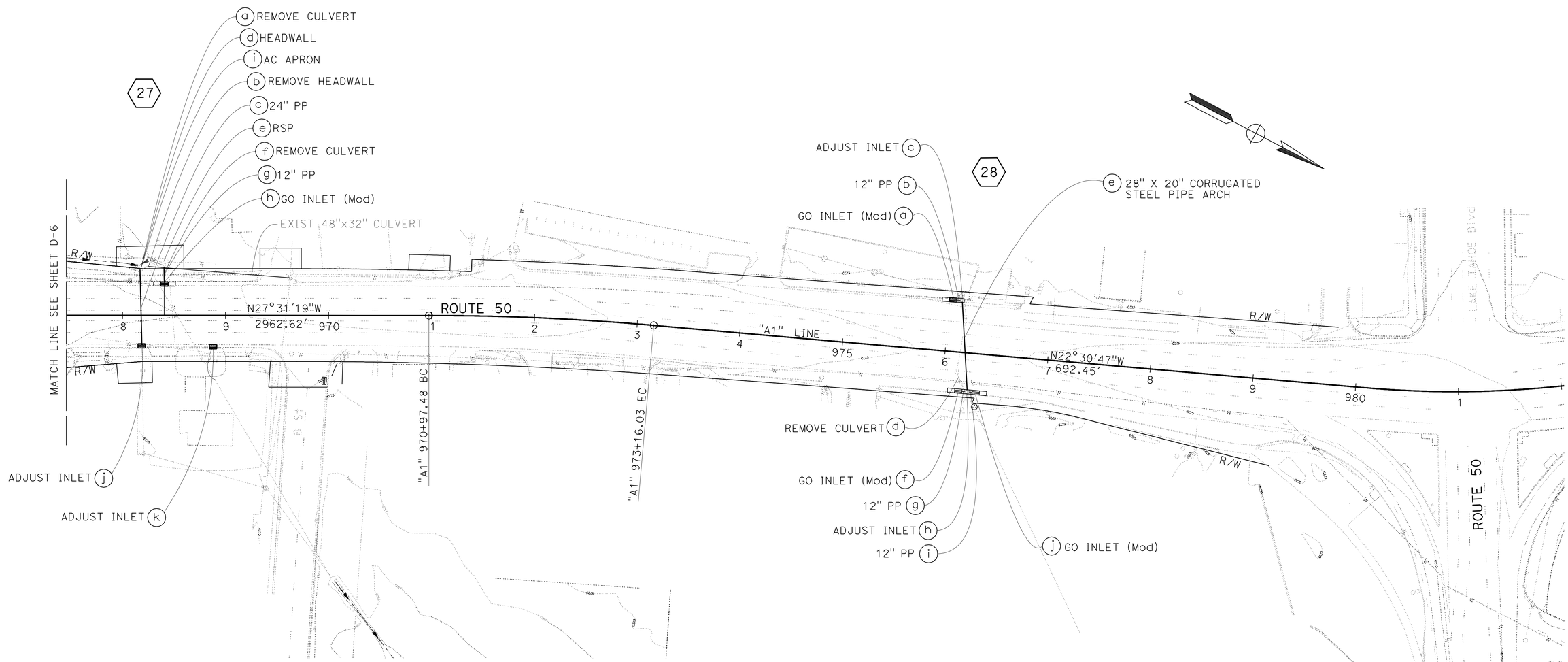

DRAINAGE PLAN

SCALE: 1" = 50'

D-7

APPROVED FOR DRAINAGE WORK ONLY

STATE OF CALIFORNIA - DEPARTMENT OF TRANSPORTATION
Caltrans
NORTH REGION
DIVISION OF ENGINEERING
DESIGN BRANCH M8

FUNCTIONAL SUPERVISOR: MASTRI ALVANDI

CALCULATED-DESIGNED BY: JACK COWELL
CHECKED BY: MASTRI ALVANDI

REVISED BY
DATE REVISED

LAST REVISION 04-23-12
DATE PLOTTED => 30-AUG-2012
TIME PLOTTED => 09:13

Dist	COUNTY	ROUTE	POST MILES TOTAL PROJECT	SHEET No.	TOTAL SHEETS
03	ED	50	73.7/75.4	49	119

REGISTERED CIVIL ENGINEER 4-26-12 DATE

7-30-12
PLANS APPROVAL DATE

REGISTERED PROFESSIONAL ENGINEER JACK COWELL No. 65521 Exp. 9-30-13 CIVIL STATE OF CALIFORNIA

THE STATE OF CALIFORNIA OR ITS OFFICERS OR AGENTS SHALL NOT BE RESPONSIBLE FOR THE ACCURACY OR COMPLETENESS OF SCANNED COPIES OF THIS PLAN SHEET.

NOTES:

1. MODIFY DI AND ADJUST GRATES FOR EXISTING SYSTEMS CONNECTED TO INFILTRATION GALLERIES.
2. FOR EXISTING INFILTRATION GALLERIES, LOCATE CLEANOUTS FOR INSPECTION AND ADJUST TO GRADE.
3. SEE DD-1 FOR SIDE INLET GRATE.
4. POTHOLE FOR EXACT LOCATION.

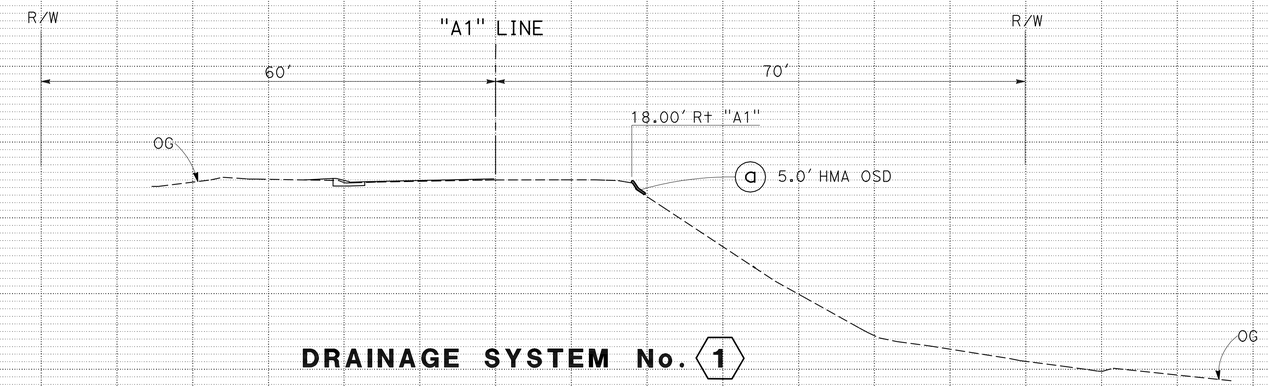

DRAINAGE SYSTEM No. 1

"A1" 897+50.02

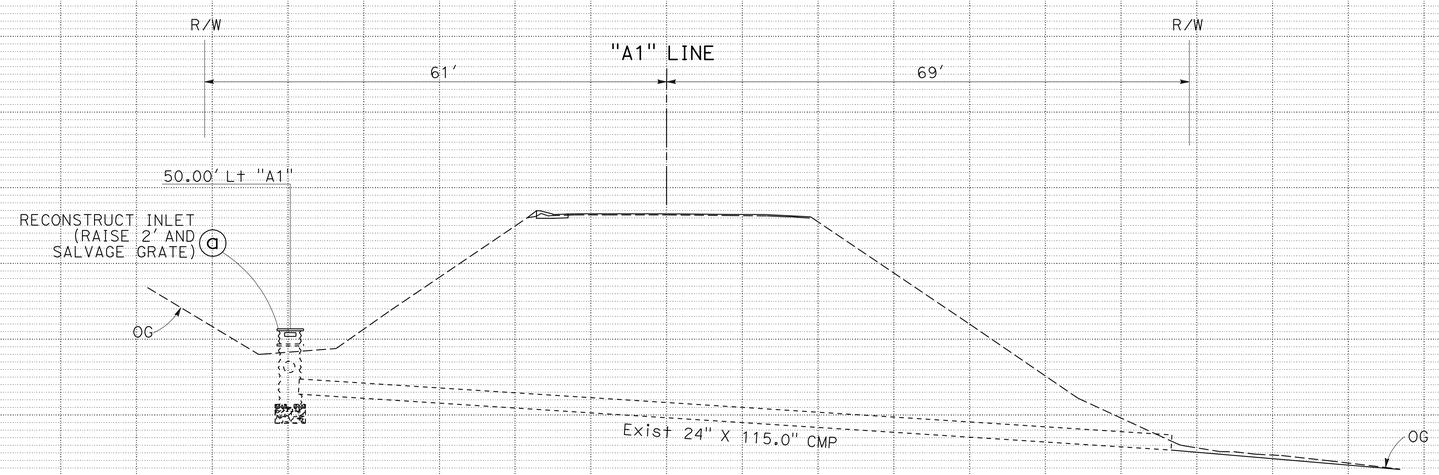

DRAINAGE SYSTEM No. 3

"A1" 899+02.21

DRAINAGE PROFILES

SCALE: Horiz 1" = 10'
Vert 1" = 10'

DP-1

STATE OF CALIFORNIA - DEPARTMENT OF TRANSPORTATION
NORTH REGION
DIVISION OF ENGINEERING
DESIGN BRANCH M8

FUNCTIONAL SUPERVISOR: MASTRI ALVANDI
CALCULATED-DESIGNED BY: JACK COWELL
CHECKED BY: MASTRI ALVANDI
REVISED BY
DATE REVISED

LAST REVISION 04-23-12 | DATE PLOTTED => 30-AUG-2012 | TIME PLOTTED => 09:13

Dist	COUNTY	ROUTE	POST MILES TOTAL PROJECT	SHEET No.	TOTAL SHEETS
03	ED	50	73.7/75.4	50	119

REGISTERED CIVIL ENGINEER 4-26-12 DATE

7-30-12
PLANS APPROVAL DATE

REGISTERED PROFESSIONAL ENGINEER JACK COWELL No. 65521 Exp. 9-30-13 CIVIL STATE OF CALIFORNIA

THE STATE OF CALIFORNIA OR ITS OFFICERS OR AGENTS SHALL NOT BE RESPONSIBLE FOR THE ACCURACY OR COMPLETENESS OF SCANNED COPIES OF THIS PLAN SHEET.

NOTES:

1. SEE DD-1 FOR SIDE INLET GRATE.

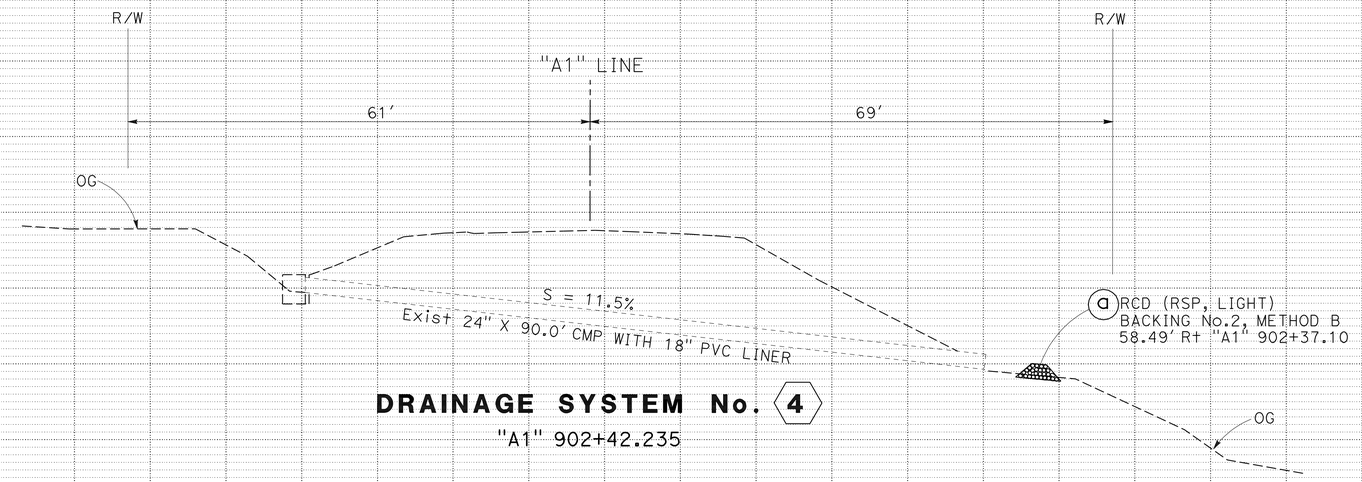

DRAINAGE SYSTEM No. 4

"A1" 902+42.235

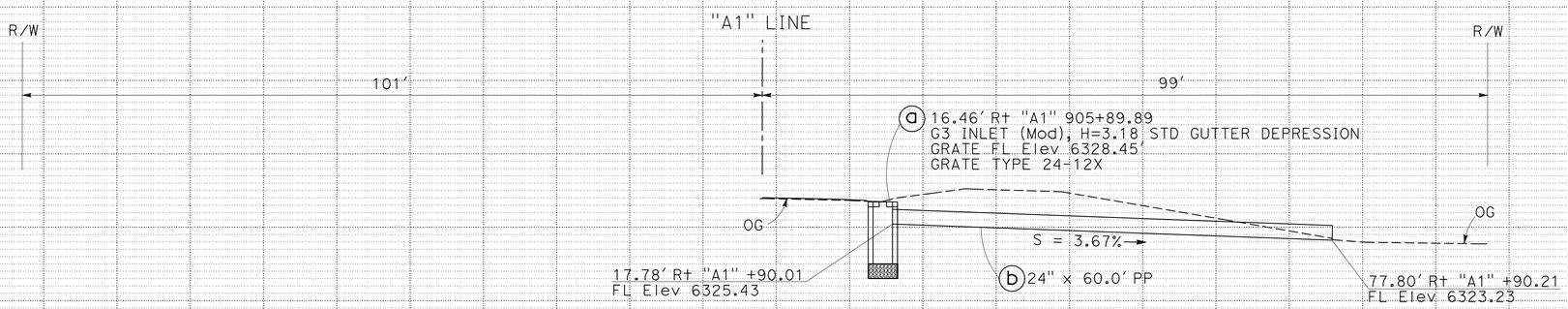

DRAINAGE SYSTEM No. 7

"A1" 905+90.01

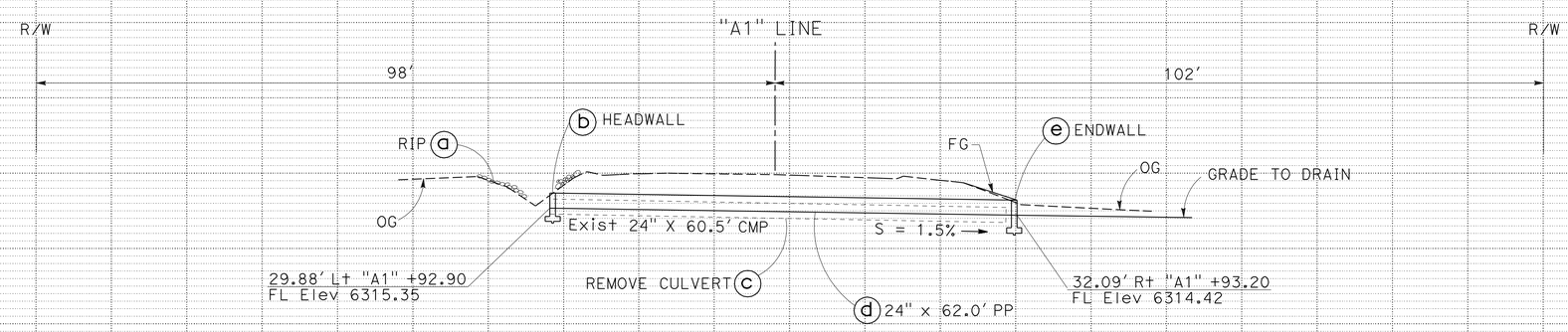

DRAINAGE SYSTEM No. 9

"A1" 914+93.03

DRAINAGE PROFILES

SCALE: Horiz 1" = 10'
Vert 1" = 10'

DP-2

STATE OF CALIFORNIA - DEPARTMENT OF TRANSPORTATION
Caltrans
NORTH REGION
DIVISION OF ENGINEERING
DESIGN BRANCH M8

FUNCTIONAL SUPERVISOR: MASTRI ALVANDI
CALCULATED-DESIGNED BY: JACK COWELL
CHECKED BY: MASTRI ALVANDI
REVISED BY
DATE REVISED

LAST REVISION 04-23-12 | DATE PLOTTED => 30-AUG-2012 | TIME PLOTTED => 10:20

Dist	COUNTY	ROUTE	POST MILES TOTAL PROJECT	SHEET No.	TOTAL SHEETS
03	ED	50	73.7/75.4	51	119

REGISTERED CIVIL ENGINEER 4-26-12 DATE

7-30-12
PLANS APPROVAL DATE

REGISTERED PROFESSIONAL ENGINEER JACK COWELL No. 65521 Exp. 9-30-13 CIVIL STATE OF CALIFORNIA

THE STATE OF CALIFORNIA OR ITS OFFICERS OR AGENTS SHALL NOT BE RESPONSIBLE FOR THE ACCURACY OR COMPLETENESS OF SCANNED COPIES OF THIS PLAN SHEET.

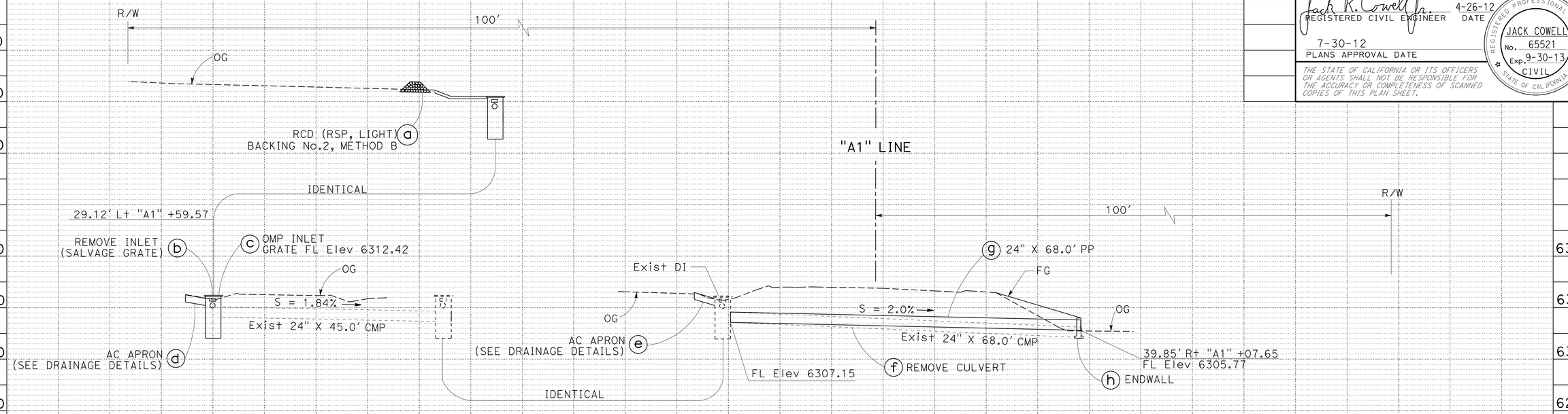

DRAINAGE SYSTEM No. 10
"A1" 918+06.64

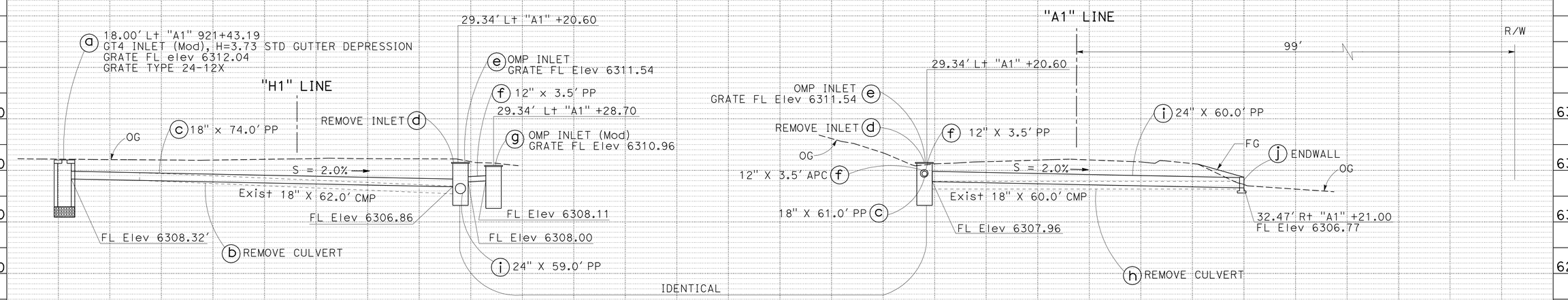

DRAINAGE SYSTEM No. 12
"A1" 922+21.48

DRAINAGE PROFILES
SCALE: Horiz 1" = 10'
Vert 1" = 10'

DP-3

REVISED BY | DATE REVISED
JACK COWELL | MASTRI ALVANDI
CALCULATED-DESIGNED BY | CHECKED BY
FUNCTIONAL SUPERVISOR | MASTRI ALVANDI

STATE OF CALIFORNIA - DEPARTMENT OF TRANSPORTATION
NORTH REGION
DIVISION OF ENGINEERING
DESIGN BRANCH M8
Caltrans

LAST REVISION 04-23-12 | DATE PLOTTED => 04-SEP-2012 | TIME PLOTTED => 07:28

Dist	COUNTY	ROUTE	POST MILES TOTAL PROJECT	SHEET No.	TOTAL SHEETS
03	ED	50	73.7/75.4	52	119

REGISTERED CIVIL ENGINEER 4-26-12 DATE

7-30-12
PLANS APPROVAL DATE

REGISTERED PROFESSIONAL ENGINEER JACK COWELL No. 65521 Exp. 9-30-13 CIVIL STATE OF CALIFORNIA

THE STATE OF CALIFORNIA OR ITS OFFICERS OR AGENTS SHALL NOT BE RESPONSIBLE FOR THE ACCURACY OR COMPLETENESS OF SCANNED COPIES OF THIS PLAN SHEET.

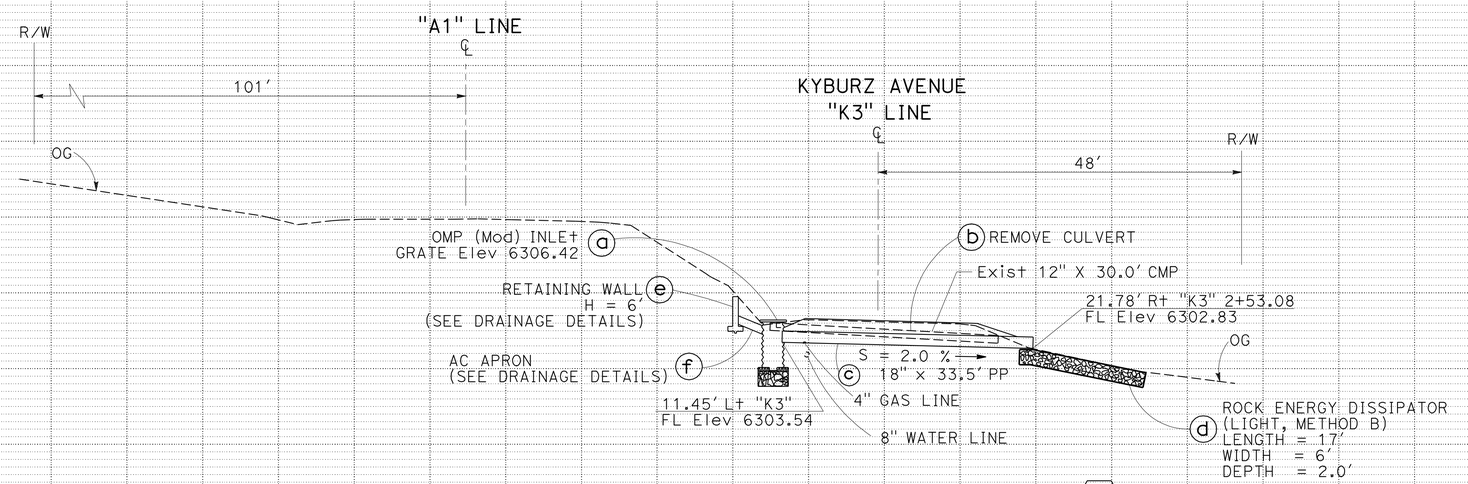

DRAINAGE SYSTEM No. 14

"K3" 2+52.95 ("A1" 926+77.55)

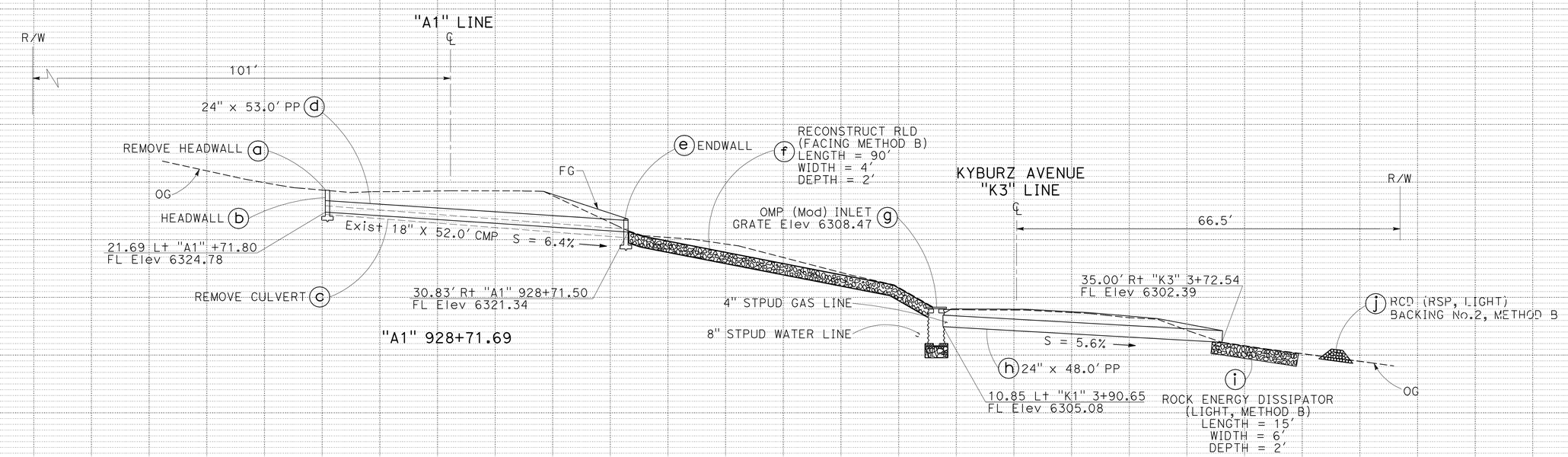

DRAINAGE SYSTEM No. 15

"K3" 3+85.75 ("A1" 927+81.31)

DRAINAGE PROFILES

SCALE: Horiz 1" = 10'
Vert 1" = 10'

DP-4

REVISED BY | DATE REVISED

JACK COWELL | MASTRI ALVANDI

CALCULATED-DESIGNED BY | CHECKED BY

FUNCTIONAL SUPERVISOR: MASTRI ALVANDI

STATE OF CALIFORNIA - DEPARTMENT OF TRANSPORTATION
NORTH REGION
DIVISION OF ENGINEERING
DESIGN BRANCH M8

LAST REVISION | DATE PLOTTED => 30-AUG-2012 | 04-23-12 | TIME PLOTTED => 10:20

Dist	COUNTY	ROUTE	POST MILES TOTAL PROJECT	SHEET No.	TOTAL SHEETS
03	ED	50	73.7/75.4	53	119

Jack R. Cowell Jr. 4-26-12
REGISTERED CIVIL ENGINEER DATE

7-30-12
PLANS APPROVAL DATE

REGISTERED PROFESSIONAL ENGINEER
JACK COWELL
No. 65521
Exp. 9-30-13
CIVIL
STATE OF CALIFORNIA

THE STATE OF CALIFORNIA OR ITS OFFICERS OR AGENTS SHALL NOT BE RESPONSIBLE FOR THE ACCURACY OR COMPLETENESS OF SCANNED COPIES OF THIS PLAN SHEET.

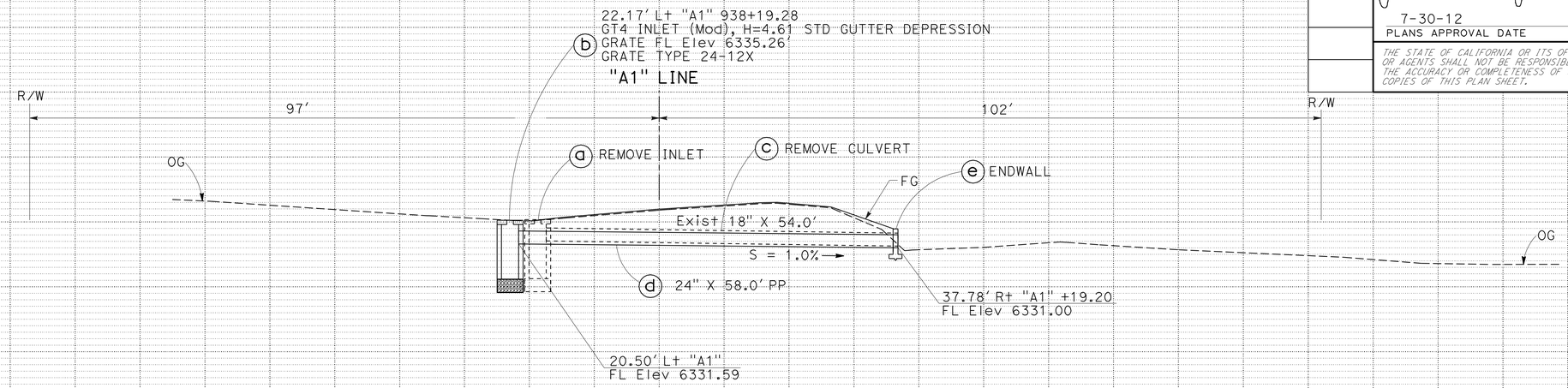

DRAINAGE SYSTEM No. 16

"A1" 938+19.22

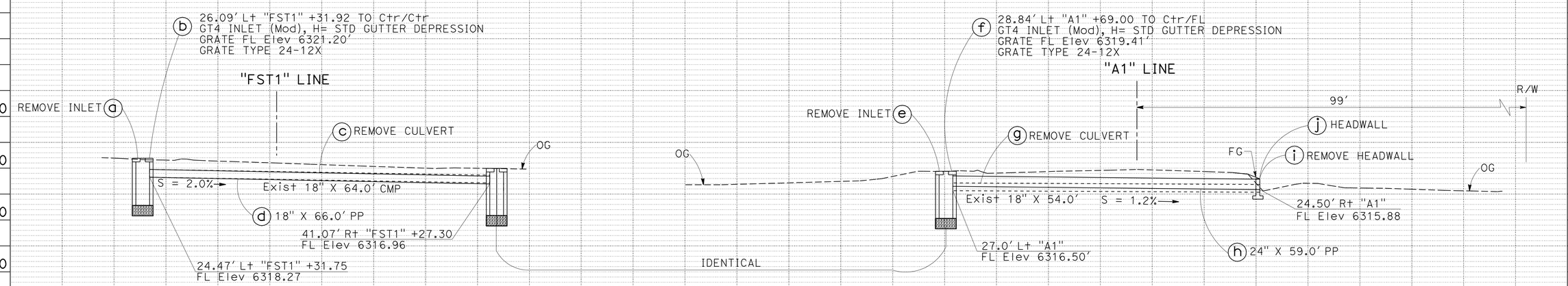

DRAINAGE SYSTEM No. 17

"A1" 942+69.05

DRAINAGE PROFILES

SCALE: Horiz 1" = 10'
Vert 1" = 10'

DP-5

STATE OF CALIFORNIA - DEPARTMENT OF TRANSPORTATION
NORTH REGION
DIVISION OF ENGINEERING
DESIGN BRANCH M8

Caltrans

FUNCTIONAL SUPERVISOR: MASTRI ALVANDI
CALCULATED-DESIGNED BY: JACK COWELL
CHECKED BY: MASTRI ALVANDI
REVISED BY / DATE REVISED

LAST REVISION 04-23-12
DATE PLOTTED => 14-SEP-2012
TIME PLOTTED => 11:09

Dist	COUNTY	ROUTE	POST MILES TOTAL PROJECT	SHEET No.	TOTAL SHEETS
03	ED	50	73.7/75.4	54	119

REGISTERED CIVIL ENGINEER 4-26-12 DATE

7-30-12
PLANS APPROVAL DATE

REGISTERED PROFESSIONAL ENGINEER JACK COWELL No. 65521 Exp. 9-30-13 CIVIL STATE OF CALIFORNIA

THE STATE OF CALIFORNIA OR ITS OFFICERS OR AGENTS SHALL NOT BE RESPONSIBLE FOR THE ACCURACY OR COMPLETENESS OF SCANNED COPIES OF THIS PLAN SHEET.

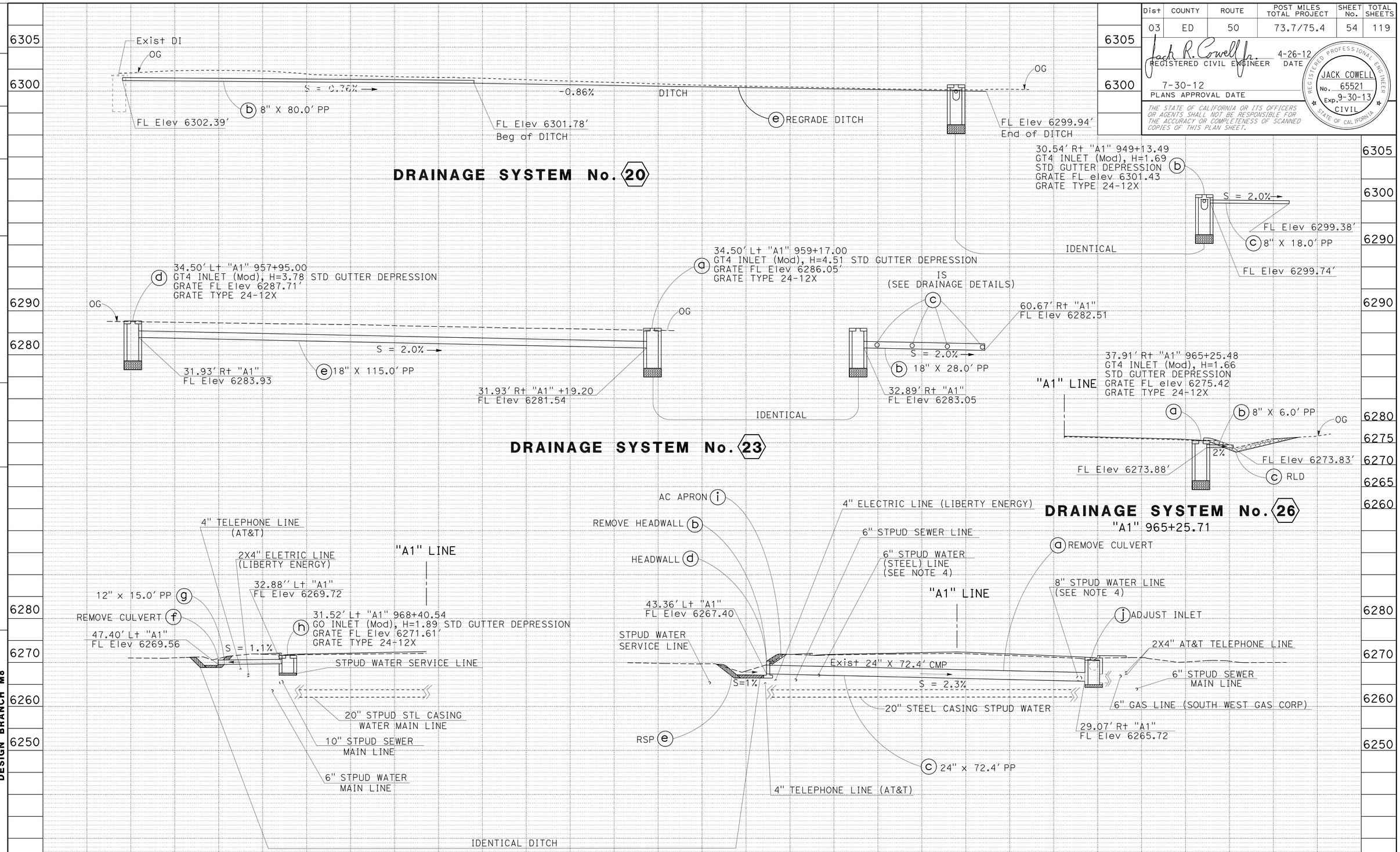

DRAINAGE PROFILES

SCALE: Horiz 1" = 10'
Vert 1" = 10'

DP-6

STATE OF CALIFORNIA - DEPARTMENT OF TRANSPORTATION
Caltrans
NORTH REGION
DIVISION OF ENGINEERING
DESIGN BRANCH M8

FUNCTIONAL SUPERVISOR: MASTRI ALVANDI
CALCULATED-DESIGNED BY: JACK COWELL
CHECKED BY: MASTRI ALVANDI
REVISED BY
DATE REVISED

LAST REVISION 04-23-12
DATE PLOTTED => 30-AUG-2012
TIME PLOTTED => 10:20

Dist	COUNTY	ROUTE	POST MILES TOTAL PROJECT	SHEET No.	TOTAL SHEETS
03	ED	50	73.7/75.4	55	119

REGISTERED CIVIL ENGINEER 4-26-12 DATE

7-30-12
PLANS APPROVAL DATE

REGISTERED PROFESSIONAL ENGINEER JACK COWELL No. 65521 Exp. 9-30-13 CIVIL STATE OF CALIFORNIA

THE STATE OF CALIFORNIA OR ITS OFFICERS OR AGENTS SHALL NOT BE RESPONSIBLE FOR THE ACCURACY OR COMPLETENESS OF SCANNED COPIES OF THIS PLAN SHEET.

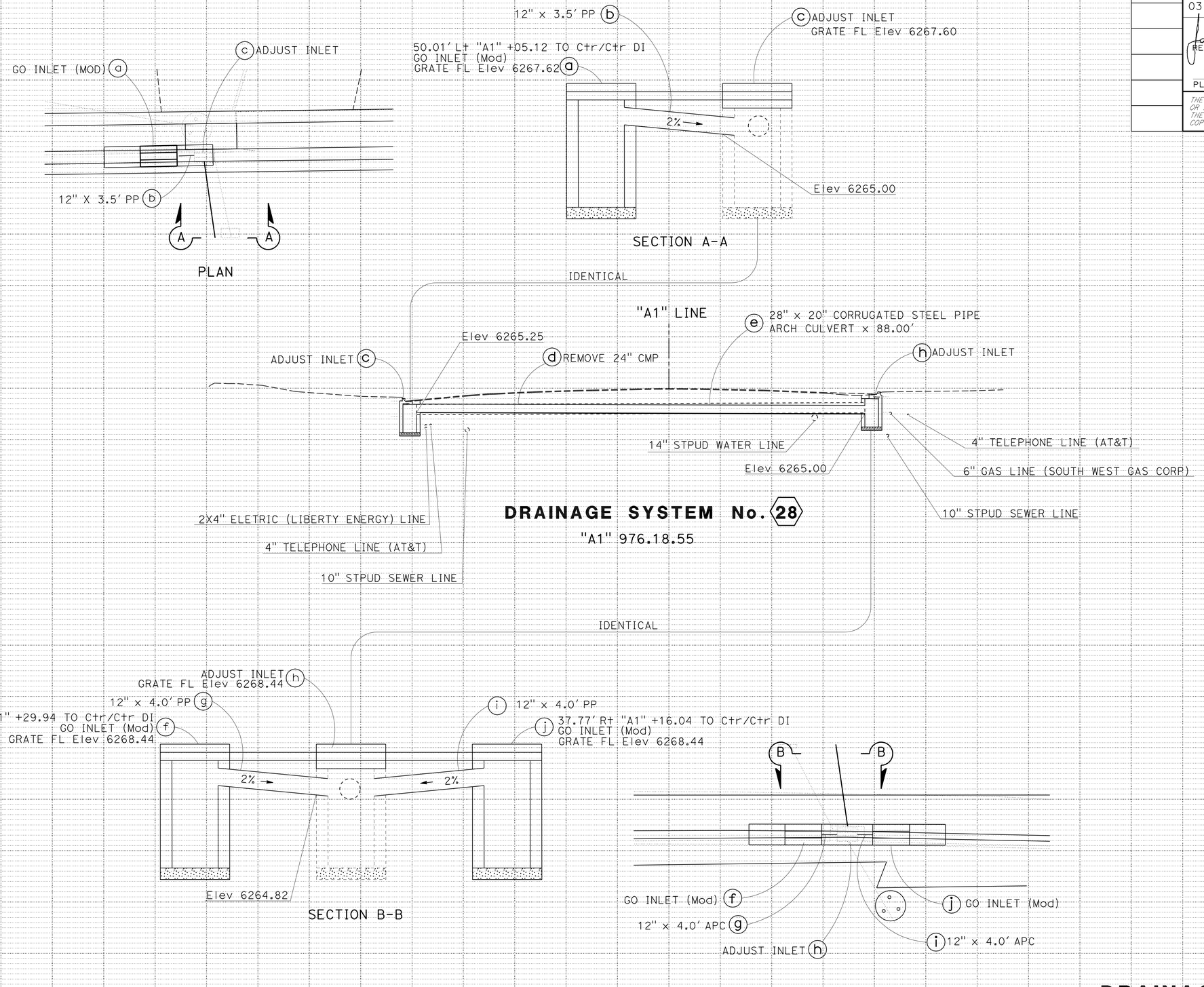

DRAINAGE PROFILES

SCALE: Horiz 1" = 10'
Vert 1" = 10'

DP-7

REVISED BY | DATE REVISED

JACK COWELL | MASTRI ALVANDI

CALCULATED-DESIGNED BY | CHECKED BY

FUNCTIONAL SUPERVISOR: MASTRI ALVANDI

STATE OF CALIFORNIA - DEPARTMENT OF TRANSPORTATION
NORTH REGION
DIVISION OF ENGINEERING
DESIGN BRANCH M8
Caltrans

LAST REVISION 04-23-12 | DATE PLOTTED => 30-AUG-2012 | TIME PLOTTED => 10:20

Dist	COUNTY	ROUTE	POST MILES TOTAL PROJECT	SHEET No.	TOTAL SHEETS
03	ED	50	73.7/75.4	56	119

REGISTERED CIVIL ENGINEER 4-26-12 DATE

7-30-12
PLANS APPROVAL DATE

REGISTERED PROFESSIONAL ENGINEER JACK COWELL No. 65521 Exp. 9-30-13 CIVIL STATE OF CALIFORNIA

THE STATE OF CALIFORNIA OR ITS OFFICERS OR AGENTS SHALL NOT BE RESPONSIBLE FOR THE ACCURACY OR COMPLETENESS OF SCANNED COPIES OF THIS PLAN SHEET.

NOTES:

1. FOR DETAILS NOT SHOWN, SEE STD PLAN D74A & D74C
2. SEE PROJECT PLAN SHEET C-7 FOR CONCRETE APRON DETAILS

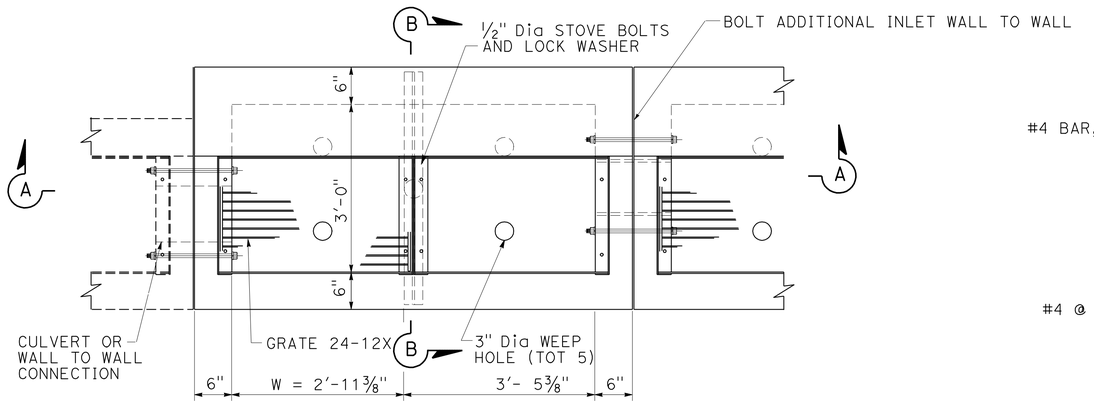

PLAN

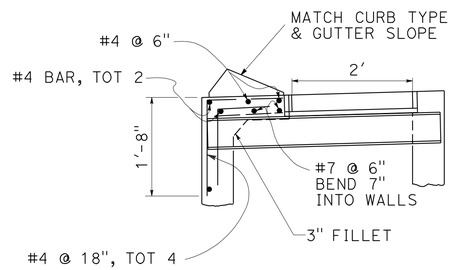

DETAIL C

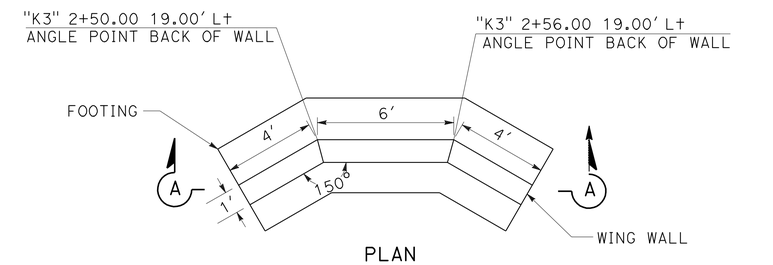

PLAN

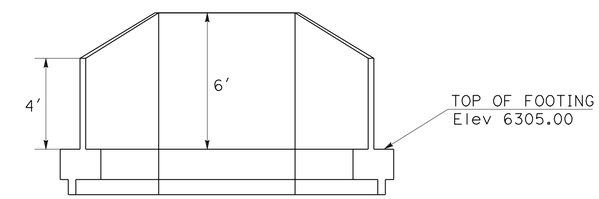

SECTION A-A

FOR DETAILS SEE STD PLANS B3-3

RETAINING WALL
(TYPE 1A WITH WING WALL)

14 e

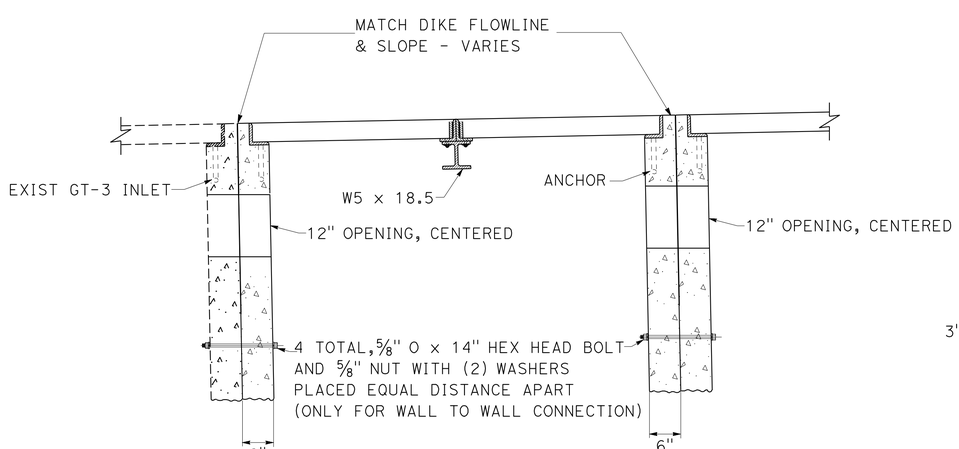

SECTION A-A

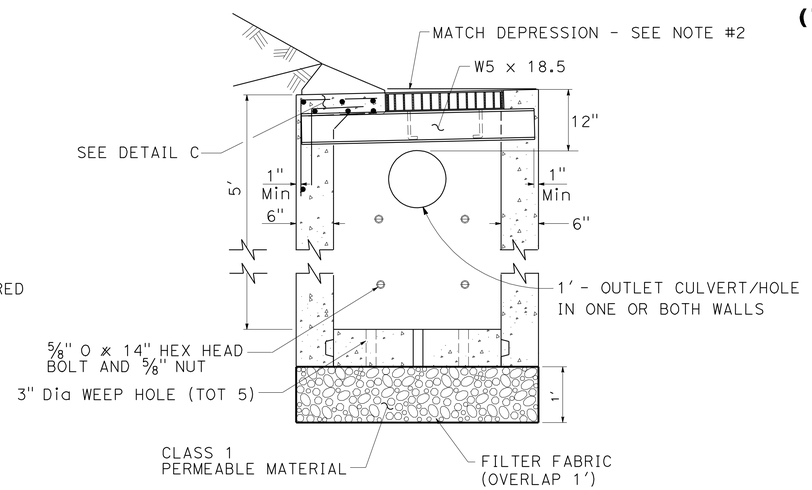

SECTION B-B

TYPE GT4 INLET (Mod) W/ SAND TRAP

DRAINAGE SYSTEM No.

12 a 16 b 17 b f 18 a 20 b 23 a d 26 a

DRAINAGE DETAILS

NO SCALE

DD-1

STATE OF CALIFORNIA - DEPARTMENT OF TRANSPORTATION
NORTH REGION
DIVISION OF ENGINEERING
DESIGN BRANCH M8

FUNCTIONAL SUPERVISOR: MASTRI ALVANDI
CALCULATED-DESIGNED BY: JACK COWELL
CHECKED BY: MASTRI ALVANDI
REVISED BY
DATE REVISED

LAST REVISION 04-23-12
DATE PLOTTED => 14-SEP-2012
TIME PLOTTED => 10:11

Dist	COUNTY	ROUTE	POST MILES TOTAL PROJECT	SHEET No.	TOTAL SHEETS
03	ED	50	73.7/75.4	57	119

REGISTERED CIVIL ENGINEER 4-26-12 DATE

7-30-12
PLANS APPROVAL DATE

REGISTERED PROFESSIONAL ENGINEER JACK COWELL No. 65521 Exp. 9-30-13 CIVIL STATE OF CALIFORNIA

THE STATE OF CALIFORNIA OR ITS OFFICERS OR AGENTS SHALL NOT BE RESPONSIBLE FOR THE ACCURACY OR COMPLETENESS OF SCANNED COPIES OF THIS PLAN SHEET.

NOTE:

1. SEE DRAINAGE PROFILES FOR FLOWLINE ELEVATIONS, PIPE SLOPE AND INLET INFORMATION.
2. WEEP HOLE SHALL HAVE A LIFTING ROD AND WIRE MESH SCREEN. SEE SAND TRAP (TYPE PI) FOR DETAILS.

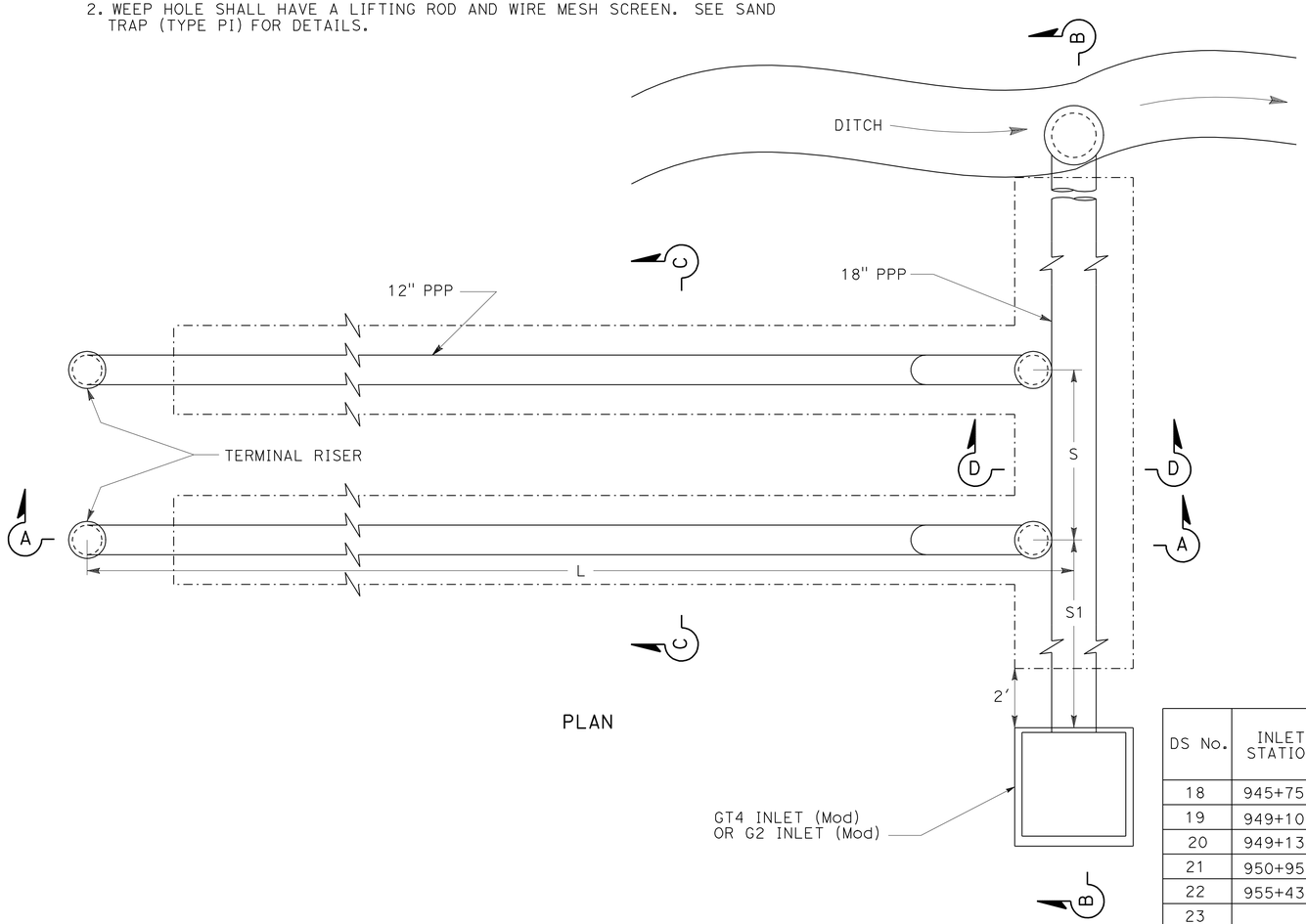

PLAN

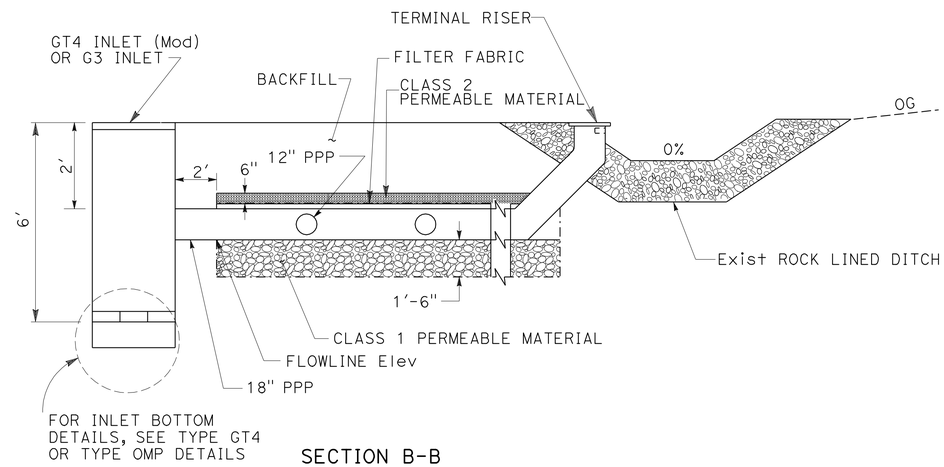

SECTION B-B

DS No.	INLET STATION	C/L GRATE @ FLOWLINE	FLOWLINE GRATE Elev	INLET TO DITCH (Ft)	No. OF LEGS	LEG 'L' (Ft)	INLET TO PIPE 'S1' (Ft)	SPACING 'S' (Ft)	NOTES
18	945+75	28.00' Lt	6309.21	35	2	95	2	8	
19	949+10	32.50' Lt	6301.94	22	2	86	6	8	
20	949+13.5	32.50' Rt		14	0				
21	950+95	32.50' Lt	6299.28	38	2	66	4	8	
22	955+43	32.50' Rt	6292.27		1	70	6	0	
23					3	30	3	8	(SEE DS No. 23 PROFILE)
24	959+71	32.60' Lt	6284.95		1	120	6	0	

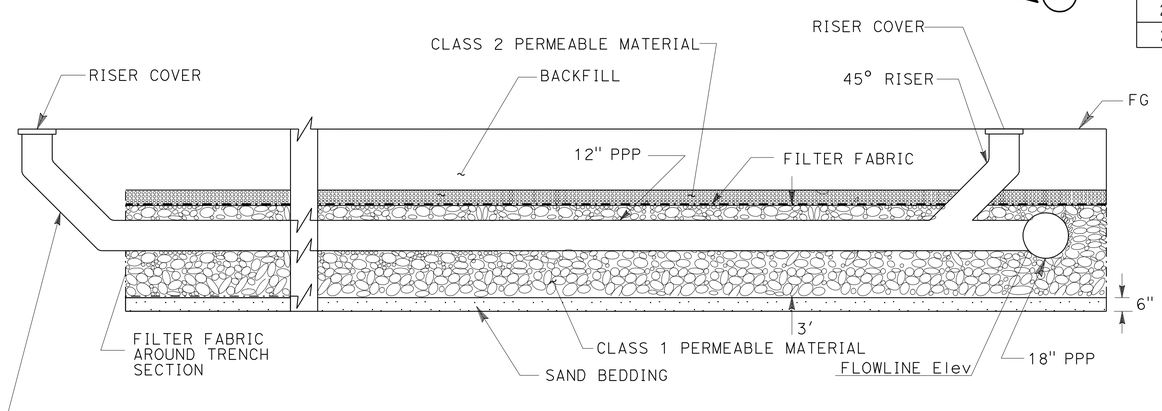

SECTION A-A

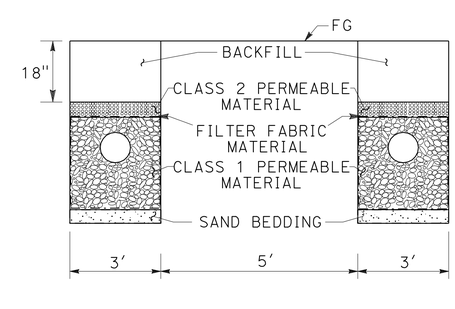

SECTION C-C

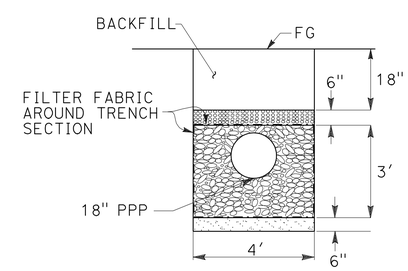

SECTION D-D

INFILTRATION GALLERY

DRAINAGE DETAILS

NO SCALE

DD-2

STATE OF CALIFORNIA - DEPARTMENT OF TRANSPORTATION
Caltrans
NORTH REGION
DIVISION OF ENGINEERING
DESIGN BRANCH M8

FUNCTIONAL SUPERVISOR: MASTRI ALVANDI
CALCULATED-DESIGNED BY: JACK COWELL
CHECKED BY: MASTRI ALVANDI
REVISED BY
DATE REVISED

LAST REVISION 04-23-12
DATE PLOTTED => 04-SEP-2012
TIME PLOTTED => 07:24

Dist	COUNTY	ROUTE	POST MILES TOTAL PROJECT	SHEET No.	TOTAL SHEETS
03	ED	50	73.7/75.4	58	119

REGISTERED CIVIL ENGINEER 4-26-12 DATE

7-30-12
PLANS APPROVAL DATE

REGISTERED PROFESSIONAL ENGINEER JACK COWELL No. 65521 Exp. 9-30-13 CIVIL STATE OF CALIFORNIA

THE STATE OF CALIFORNIA OR ITS OFFICERS OR AGENTS SHALL NOT BE RESPONSIBLE FOR THE ACCURACY OR COMPLETENESS OF SCANNED COPIES OF THIS PLAN SHEET.

NOTES:

TOP OF ROCK TO BE FLUSH WITH GROUND. DO NOT EXPOSE RSP FABRIC ABOVE GRADE
D = DIAMETER, L = LENGTH

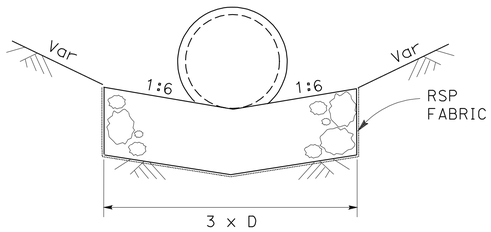

SECTION B-B

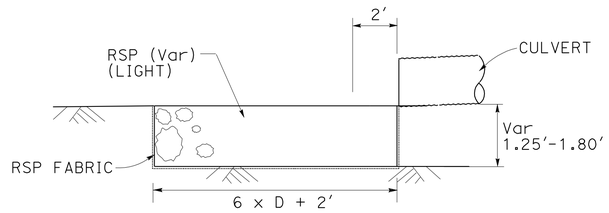

SECTION A-A

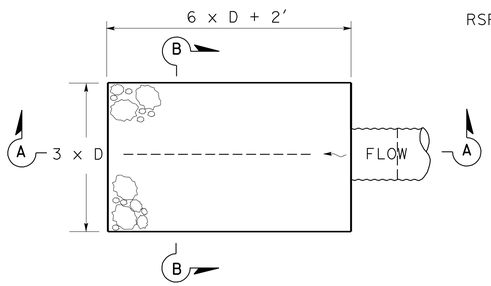

PLAN

ROCK ENERGY DISSIPATOR (RSP) WITH OR WITHOUT FES DETAIL

DRAINAGE SYSTEM No. 8 d 9 i

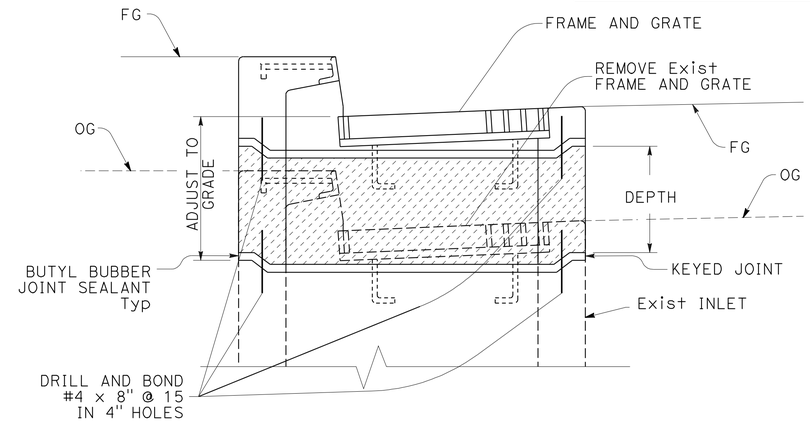

ADJUST INLET (TYPE GO)

DRAINAGE SYSTEM No. 27 j 28 c h

MINIMUM HEIGHT OF AN INLET EXTENSION FRAME IS 1-3/4". DEPENDING ON HOW EXTENSIVELY DEPRESSED OR AN EXISTING INLET MAY BE, AN EXTENSION OF 2", 2-1/2", OR 3" HIGH MAY BE REQUIRED TO ENABLE THE TOP ELEVATION OF THE HEAD TO BE SET FLUSH WITH THE FINISHED GRADE.

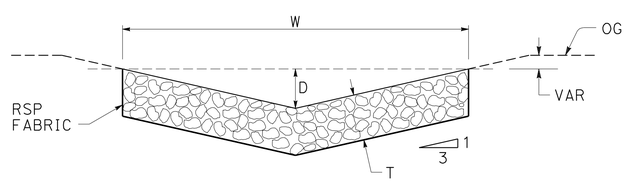

ROCK LINED DITCH (TYPE 1)

DRAINAGE SYSTEM No. 26 c

LOCATION		W	D	T	RSP TYPE
STATION	Loc	FT	FT	FT	
"A1" 958+89 TO 965+40	Rt	7.8	1.3	1.5	LIGHT

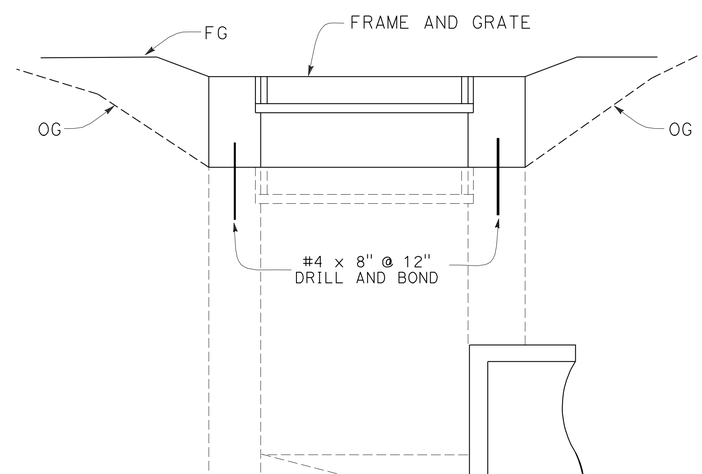

ADJUST INLET (TYPE G1)

DRAINAGE SYSTEM No. 25 a b

DRAINAGE DETAILS

NO SCALE

DD-3

STATE OF CALIFORNIA - DEPARTMENT OF TRANSPORTATION
Caltrans
NORTH REGION
DIVISION OF ENGINEERING
DESIGN BRANCH M8

FUNCTIONAL SUPERVISOR: MASTRI ALVANDI
CALCULATED-DESIGNED BY: JACK COWELL
CHECKED BY: MASTRI ALVANDI
REVISED BY
DATE REVISED

LAST REVISION 04-23-12
DATE PLOTTED => 30-AUG-2012
TIME PLOTTED => 10:21

Dist	COUNTY	ROUTE	POST MILES TOTAL PROJECT	SHEET No.	TOTAL SHEETS
03	ED	50	73.7/75.4	59	119

REGISTERED CIVIL ENGINEER 4-26-12 DATE

7-30-12
PLANS APPROVAL DATE

REGISTERED PROFESSIONAL ENGINEER JACK COWELL No. 65521 Exp. 9-30-13 CIVIL STATE OF CALIFORNIA

THE STATE OF CALIFORNIA OR ITS OFFICERS OR AGENTS SHALL NOT BE RESPONSIBLE FOR THE ACCURACY OR COMPLETENESS OF SCANNED COPIES OF THIS PLAN SHEET.

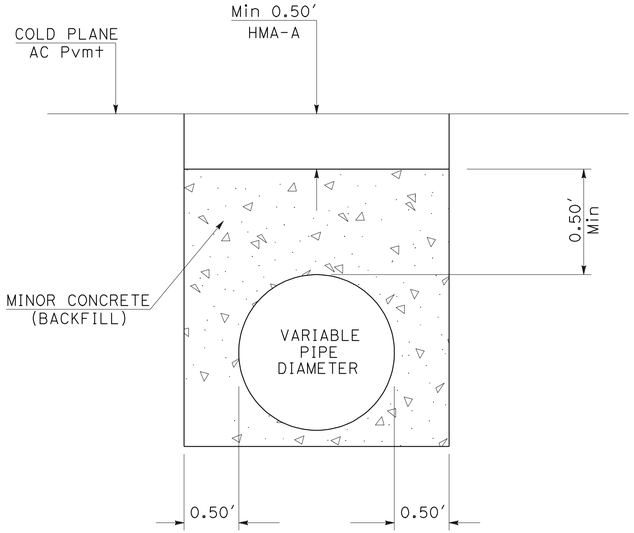

MINOR CONCRETE (BACKFILL)

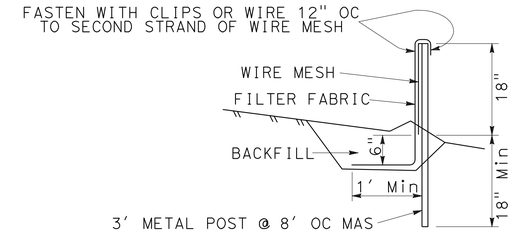

TEMPORARY EROSION CONTROL FENCE

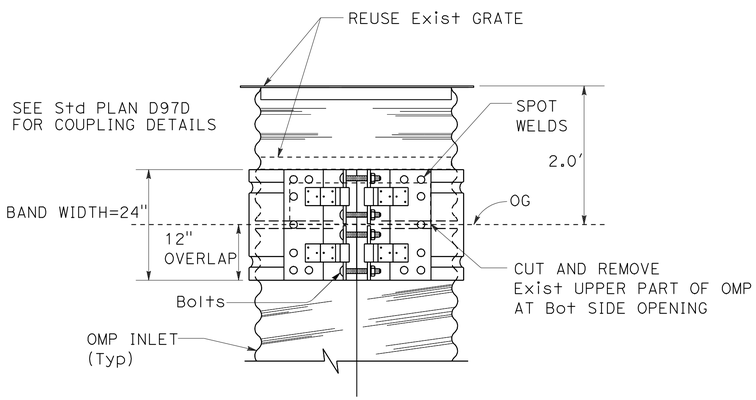

RECONSRUCT INLET
(PIPE INLET)

DRAINAGE SYSTEM No. 3 a

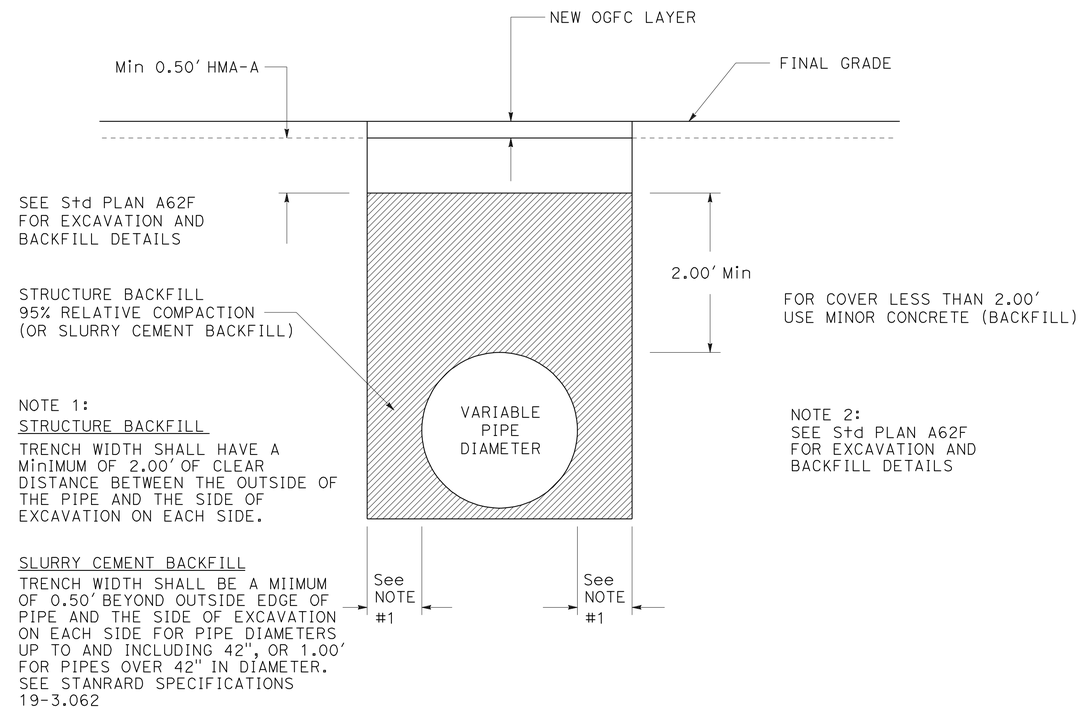

NOTE 1:
STRUCTURE BACKFILL
TRENCH WIDTH SHALL HAVE A MINIMUM OF 2.00' OF CLEAR DISTANCE BETWEEN THE OUTSIDE OF THE PIPE AND THE SIDE OF EXCAVATION ON EACH SIDE.

SLURRY CEMENT BACKFILL
TRENCH WIDTH SHALL BE A MIIMUM OF 0.50' BEYOND OUTSIDE EDGE OF PIPE AND THE SIDE OF EXCAVATION ON EACH SIDE FOR PIPE DIAMETERS UP TO AND INCLUDING 42", OR 1.00' FOR PIPES OVER 42" IN DIAMETER. SEE STANRARD SPECIFICATIONS 19-3.062

NOTE 2:
SEE Std PLAN A62F
FOR EXCAVATION AND
BACKFILL DETAILS

STRUCTURE BACKFILL OR SLURRY CEMENT BACKFILL

DRAINAGE DETAILS
NO SCALE

DD-4

STATE OF CALIFORNIA - DEPARTMENT OF TRANSPORTATION
NORTH REGION
DIVISION OF ENGINEERING
DESIGN BRANCH M8

Caltrans

FUNCTIONAL SUPERVISOR: MASTRI ALVANDI
CALCULATED-DESIGNED BY: JACK COWELL
CHECKED BY: MASTRI ALVANDI
REVISED BY
DATE REVISED

LAST REVISION 04-23-12
DATE PLOTTED => 30-AUG-2012
TIME PLOTTED => 10:21

Dist	COUNTY	ROUTE	POST MILES TOTAL PROJECT	SHEET No.	TOTAL SHEETS
03	ED	50	73.7/75.4	60	119

REGISTERED CIVIL ENGINEER 4-26-12 DATE

7-30-12
PLANS APPROVAL DATE

REGISTERED PROFESSIONAL ENGINEER JACK COWELL No. 65521 Exp. 9-30-13 CIVIL STATE OF CALIFORNIA

THE STATE OF CALIFORNIA OR ITS OFFICERS OR AGENTS SHALL NOT BE RESPONSIBLE FOR THE ACCURACY OR COMPLETENESS OF SCANNED COPIES OF THIS PLAN SHEET.

NOTES:

1. FOR DETAILS NOT SHOWN, SEE STD PLANS.
2. CONTRACTOR TO VERIFY EXACT DIMENSIONS IN THE FIELD.
3. CONTRACTOR TO REMOVE ALL SAND AND DEBRIS FROM SAND TRAP.
4. ON MVP AREAS WITH TYPE D CURB, GRADE OF GUTTER PAN TO SLOPE TOWARD PCC CAP AT CENTER OF SAND TRAP PAIR (SEE DRAWING BELOW).

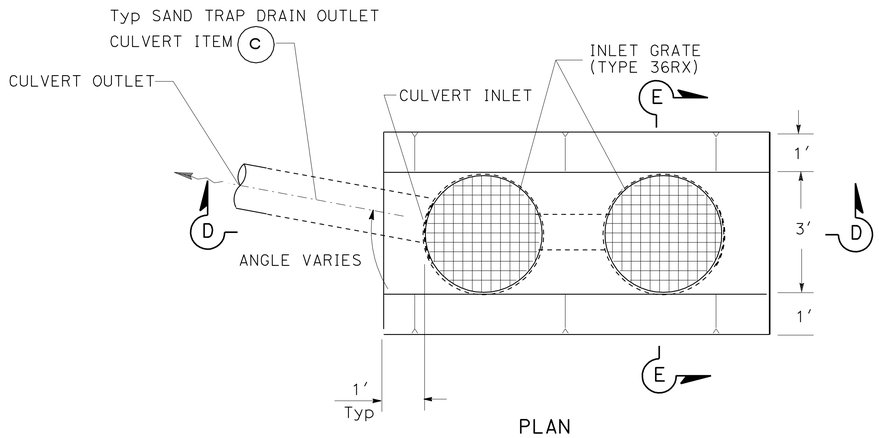

PLAN

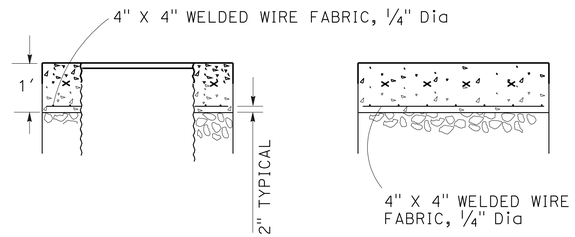

PCC CAP DETAIL

TRACTION SAND TRAP LOCATIONS

DRAINAGE SYSTEM No.	DRAINAGE UNIT No.	STATION	"A1" OFFSET	Lt/Rt	GRATE/FL Elev
2	a	898+12.0	23.4'	Lt	6314.12
2	b	898+18.0	23.3'	Lt	6314.19
5	a	903+19.0	22.7'	Lt	6323.42
5	b	903+25.1	22.6'	Lt	6323.41
6	a	903+94.0	22.1'	Rt	6324.29
6	b	904+00.0	22.2'	Rt	6324.29
8	a	911+71.3	22.9'	Rt	6326.36
8	b	911+77.4	22.4'	Rt	6326.27
11	a	918+50.4	23.2'	Rt	6312.41
11	b	918+56.5	23.4'	Rt	6312.37
13	a	921+87.8	22.2'	Rt	6311.47
13	b	921+93.4	22.2'	Rt	6311.49

SAND TRAP DRAIN OUTLET CULVERT (12" PP)

ATTACH TO			CULVERT INLET		CULVERT OUTLET	
DRAINAGE SYSTEM No.	DRAINAGE UNIT No.	CULVERT LENGTH	"A1" STATION	OFFSET	"A1" STATION	OFFSET
2	b	12.0'	898+19.4	24.6' Lt	898+26.3	34.2' Lt
5	a	12.0'	903+16.7	22.8' Lt	903+05.6	26.4' Lt
6	a	18.0'	903+92.6	23.4' Rt	903+69.7	32.6' Rt
8	b	16.5'	911+79.6	26.7' Rt	911+95.5	26.6' Rt
11	b	12.0'	918+57.3	25.0' Rt	918+63.9	34.9' Rt
13	b	12.0'	921+95.0	23.3' Rt	922+04.5	30.8' Rt

DRAINAGE SYSTEM No.

2 c 5 c 6 c 8 c 11 c 13 c

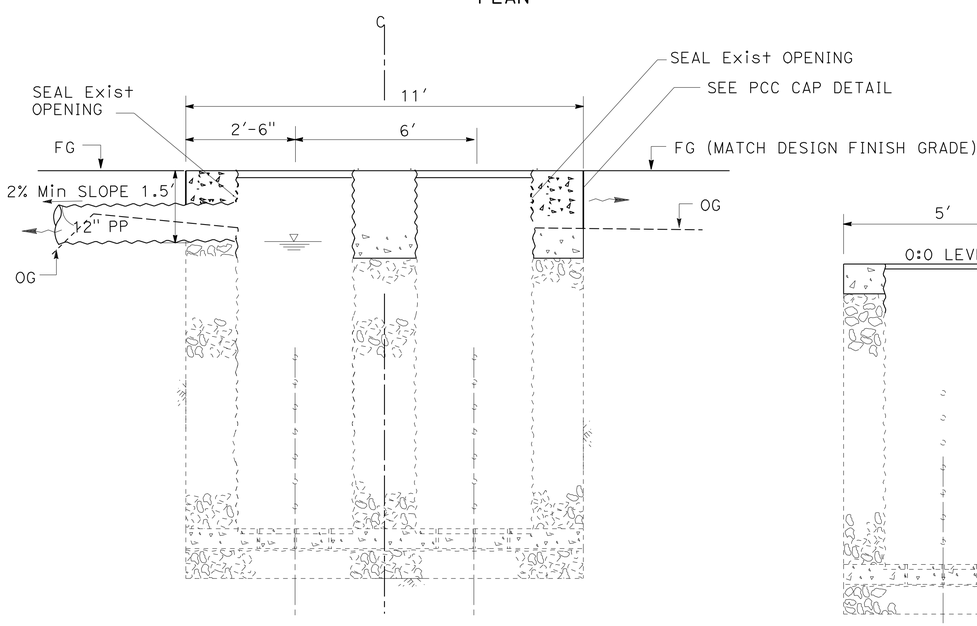

SECTION D-D

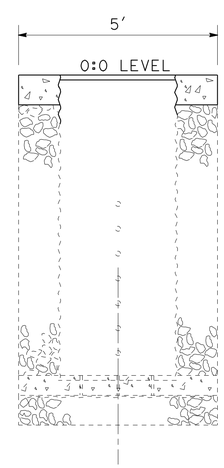

SECTION E-E

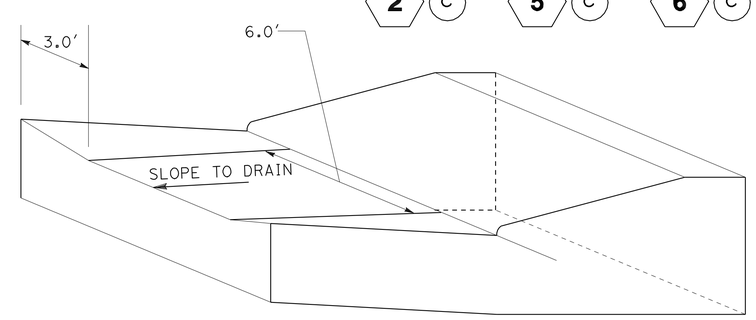

TYPE D CURB DETAIL ADJACENT TO CENTER PAIR OF SAND TRAPS

MODIFY INLET

DRAINAGE SYSTEM No.

2 a b 5 a b 6 a b 8 a b 11 a b 13 a b

DRAINAGE DETAILS

NO SCALE

DD-5

STATE OF CALIFORNIA - DEPARTMENT OF TRANSPORTATION
NORTH REGION
DIVISION OF ENGINEERING
DESIGN BRANCH M8

Caltrans

CALCULATED-DESIGNED BY JACK COWELL
CHECKED BY MASTRI ALVANDI
FUNCTIONAL SUPERVISOR MASTRI ALVANDI
REVISED BY
DATE REVISED

LAST REVISION 04-23-12
DATE PLOTTED => 11-SEP-2012
TIME PLOTTED => 09:20

Dist	COUNTY	ROUTE	POST MILES TOTAL PROJECT	SHEET No.	TOTAL SHEETS
03	ED	50	73.7/75.4	61	119

REGISTERED CIVIL ENGINEER 4-26-12 DATE

7-30-12
PLANS APPROVAL DATE

REGISTERED PROFESSIONAL ENGINEER JACK COWELL No. 65521 Exp. 9-30-13 CIVIL STATE OF CALIFORNIA

THE STATE OF CALIFORNIA OR ITS OFFICERS OR AGENTS SHALL NOT BE RESPONSIBLE FOR THE ACCURACY OR COMPLETENESS OF SCANNED COPIES OF THIS PLAN SHEET.

NOTES:

1) FOR DETAILS NOT SHOWN, SEE STD PLAN D74B, D74C & D75A (INCLUDING REFERENCES TO NOTES)
2) SEE PROJECT PLAN SHEET C-7 FOR CONCRETE APRON DETAILS

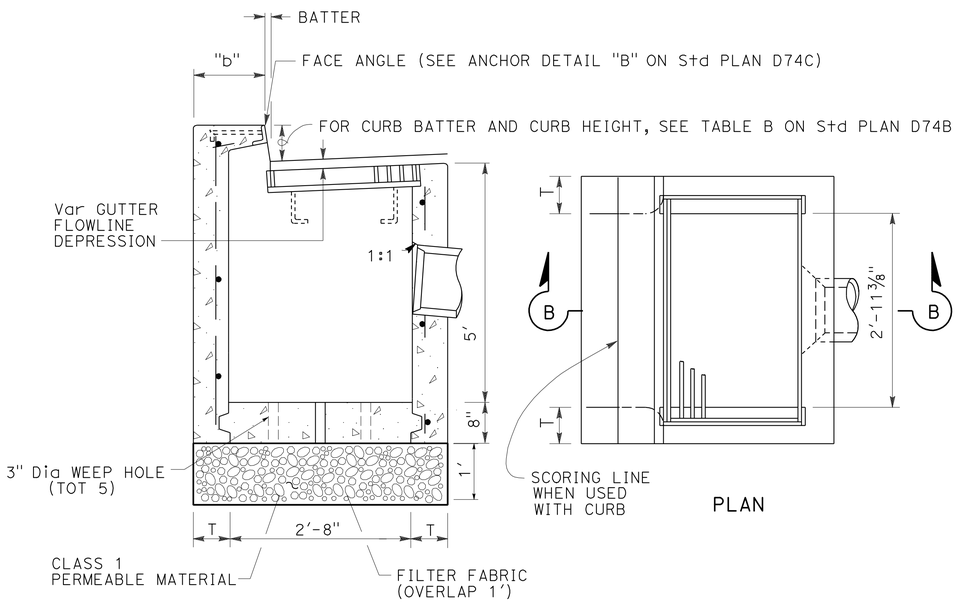

TYPE GO INLET (Mod) W/ SAND TRAP

DRAINAGE SYSTEM No. 27 h 28 a f j

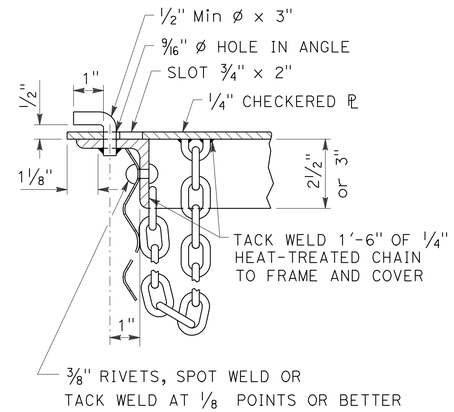

DETAIL "C"

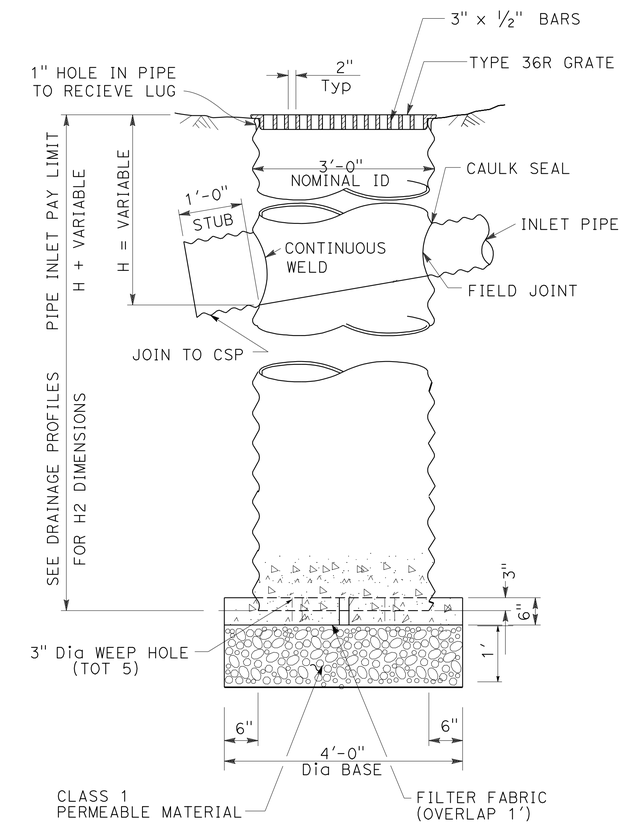

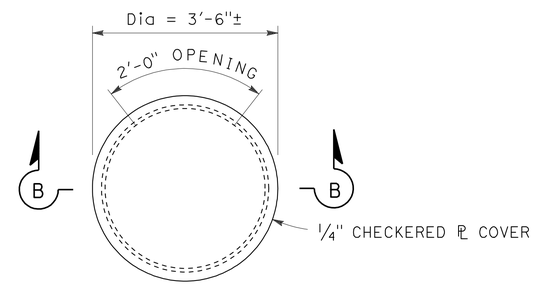

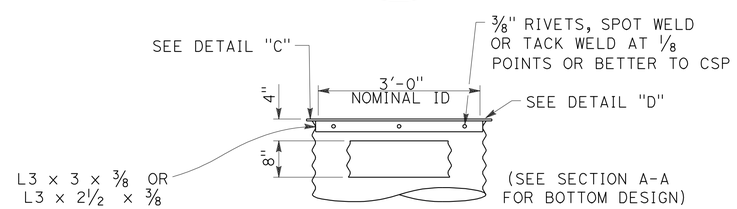

TYPE OMP (Mod) W/ SAND TRAP

STEEL PIPE INLET WITH SIDE OPENING AND STEEL COVER

DRAINAGE SYSTEM No. 12 e g 14 a 15 g

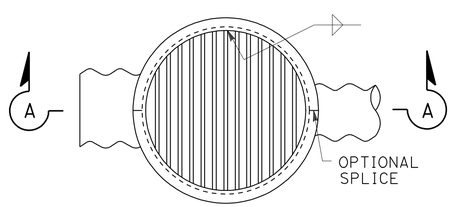

TYPE GMP (Mod) W/ SAND TRAP

STEEL PIPE INLET WITH GRATE

DRAINAGE DETAILS

NO SCALE

DD-6

STATE OF CALIFORNIA - DEPARTMENT OF TRANSPORTATION
NORTH REGION
DIVISION OF ENGINEERING
DESIGN BRANCH M8

REVISED BY	DATE REVISED
JACK COWELL	MASTRI ALVANDI
CALCULATED-DESIGNED BY	CHECKED BY
FUNCTIONAL SUPERVISOR	MASTRI ALVANDI

LAST REVISION 04-23-12 DATE PLOTTED => 30-AUG-2012 TIME PLOTTED => 10:22

Dist	COUNTY	ROUTE	POST MILES TOTAL PROJECT	SHEET No.	TOTAL SHEETS
03	ED	50	73.7/75.4	62	119

REGISTERED CIVIL ENGINEER 4-26-12 DATE

7-30-12
PLANS APPROVAL DATE

REGISTERED PROFESSIONAL ENGINEER JACK COWELL No. 65521 Exp. 9-30-13 CIVIL STATE OF CALIFORNIA

THE STATE OF CALIFORNIA OR ITS OFFICERS OR AGENTS SHALL NOT BE RESPONSIBLE FOR THE ACCURACY OR COMPLETENESS OF SCANNED COPIES OF THIS PLAN SHEET.

NOTES:

1. FOR DETAILS NOT SHOWN, SEE STD PLAN D74A & D74C.
2. SEE CONSTRUCTION DETAILS C-7 FOR CONCRETE APRON DETAILS.

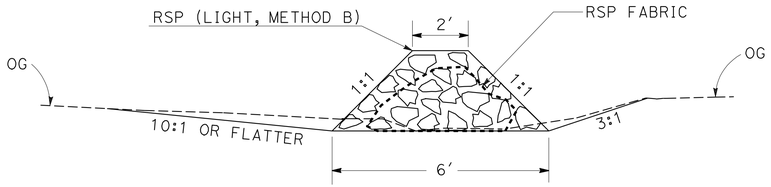

TYPICAL SECTION

ROCK CHECK DAM

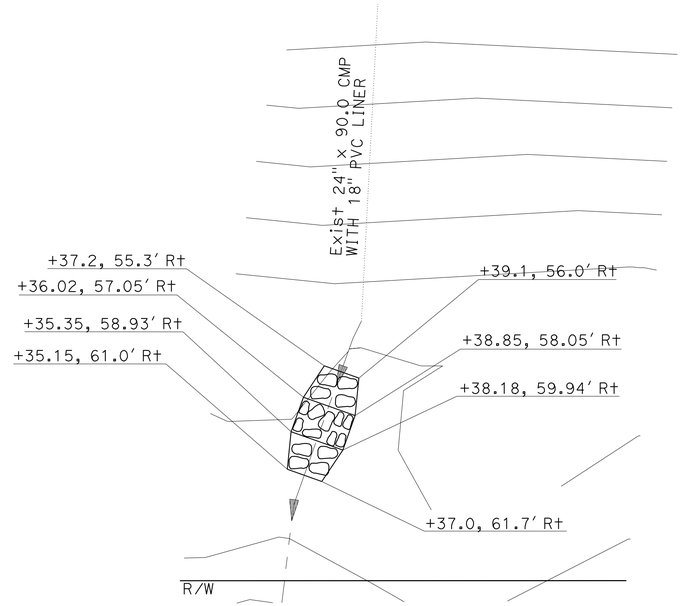

DRAINAGE SYSTEM No. 4 a

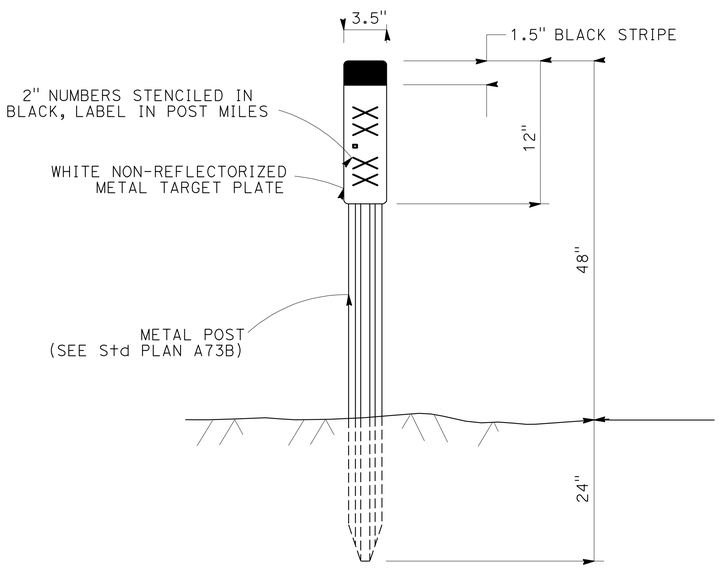

MARKER (CULVERT)

DRAINAGE SYSTEM No.	PM	EA
3	73.87	2
4	73.94	2
9	74.17	2
10	74.23	2
12	74.30	2
15	74.43	2
16	74.61	2
17	74.70	2
TOTAL		16

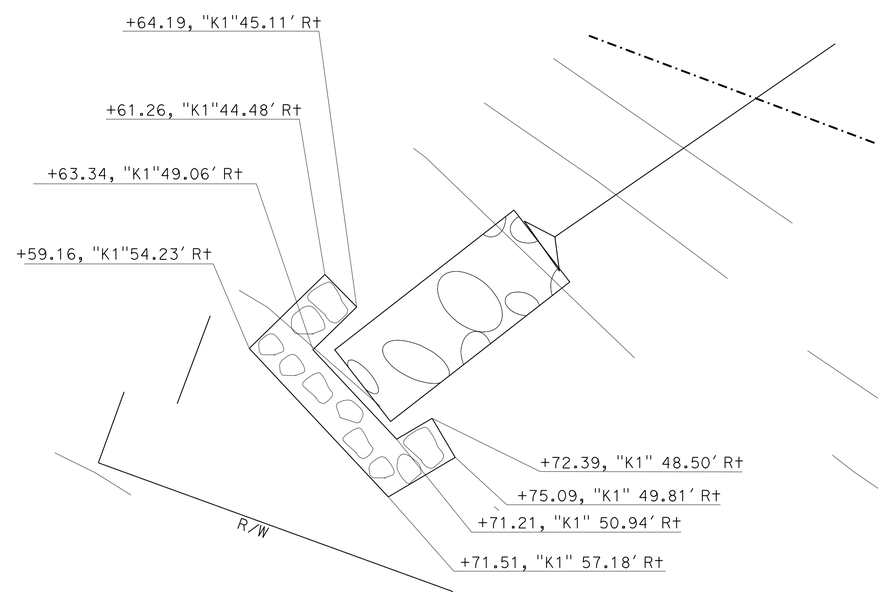

DRAINAGE SYSTEM No. 15 j

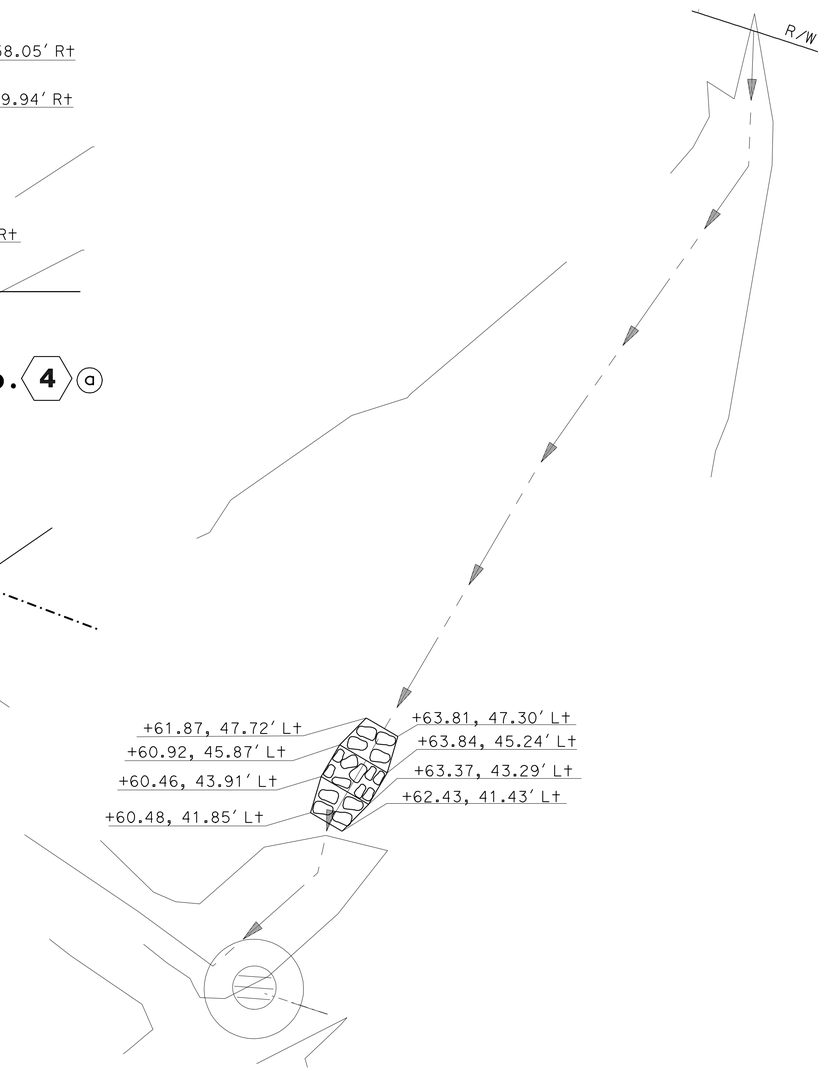

DRAINAGE SYSTEM No. 10 a

DRAINAGE DETAILS

NO SCALE

DD-7

STATE OF CALIFORNIA - DEPARTMENT OF TRANSPORTATION
Caltrans
NORTH REGION
DIVISION OF ENGINEERING
DESIGN BRANCH M8

FUNCTIONAL SUPERVISOR: MASTRI ALVANDI
CALCULATED-DESIGNED BY: JACK COWELL
CHECKED BY: MASTRI ALVANDI
REVISED BY
DATE REVISED

LAST REVISION 04-23-12
DATE PLOTTED => 30-AUG-2012
TIME PLOTTED => 10:22

Dist	COUNTY	ROUTE	POST MILES TOTAL PROJECT	SHEET No.	TOTAL SHEETS
03	ED	50	73.7/75.4	63	119

REGISTERED CIVIL ENGINEER 4-26-12 DATE

7-30-12
PLANS APPROVAL DATE

REGISTERED PROFESSIONAL ENGINEER JACK COWELL No. 65521 Exp. 9-30-13 CIVIL STATE OF CALIFORNIA

THE STATE OF CALIFORNIA OR ITS OFFICERS OR AGENTS SHALL NOT BE RESPONSIBLE FOR THE ACCURACY OR COMPLETENESS OF SCANNED COPIES OF THIS PLAN SHEET.

DRAINAGE QUANTITIES

DRAINAGE PROFILE SHEET No.	DRAINAGE SYSTEM No. ⬡	DRAINAGE UNIT No. ◯	REMOVE CULVERT (LF)	REMOVE HEADWALL (EA)	REMOVE INLET (EA)	PLACE HOT MIX ASPHALT (MISCELLANEOUS AREA) (SQYD)	HOT MIX ASPHALT (TYPE A) (TON)	8" PLASTIC PIPE (LF)	12" PLASTIC PIPE (LF)	18" PLASTIC PIPE (LF)	24" PLASTIC PIPE (LF)	RECONSTRUCT INLET (EA)	ADJUST INLET (EA)	MODIFY INLET (EA)	(N) HEIGHT OF INLET "H" (LF)	(N) FRAME AND GRATE (EA)	MINOR CONCRETE (MINOR STRUCTURE) (CY)	MINOR CONCRETE (MISCELLANEOUS CONSTRUCTION) (CY)	MISCELLANEOUS IRON AND STEEL (LB)	(N) BAR REINFORCING STEEL (LB)	RSP (LIGHT, METHOD B) (CY)	RSP (FACING, METHOD B) (CY)	ROCK SLOPE PROTECTION FABRIC (SQYD)	36" CORRUGATED STEEL PIPE INLET (.109" THICK) (LF)	28"X20" CORRUGATED STEEL PIPE ARCH (.109" THICK) (LF)	CLASS 1 PERMEABLE MATERIAL (CY)	CLASS 2 PERMEABLE MATERIAL (CY)	SAND BEDDING (CY)	FILTER FABRIC (SQYD)	12" PERFORATED PLASTIC PIPE (LF)	18" PERFORATED PLASTIC PIPE (LF)	DESCRIPTION	STATION	DRAINAGE SYSTEM No. ⬡	DRAINAGE UNIT ◯
DP-1	1	a				3	1.4																									OVERSIDE DRAIN		1	a
	2	a												1		36RX		0.74	215													MODIFY INLET	898+12.0	2	a
		b												1		36RX		0.74	215													MODIFY INLET	898+18.1		b
		c							12																										c
	3	a										1																						3	a
DP-2	4	a																			0.8		6.2									ROCK CHECK DAM		4	a
	5	a												1		36RX		0.74	215													MODIFY INLET	903+19.1	5	a
		b												1		36RX		0.74	215													MODIFY INLET	903+25.3		b
		c							12																										c
	6	a												1		36RX		0.74	215													MODIFY INLET	903+94.1	6	a
		b												1		36RX		0.74	215													MODIFY INLET	904+00.0		b
		c							18																										c
	7	a													6.18	24-12X	2.12	1.36	239							2.40			11.25			G3 INLET, GUTTER DEPRESSION		7	a
		b									60																								b
	8	a												1		36RX		0.74	215													MODIFY INLET	911+70.8	8	a
		b												1		36RX		0.74	215													MODIFY INLET	911+76.9		b
		c							16.5																										c
	9	a																			2.3		13.0									ROCK INLET PROTECTION		9	a
		b															1.2			75												HEADWALL			b
		c	61																													REMOVE 24" CMP			c
		d									62																								d
		e															1.2			75												ENDWALL			e
DP-3	10	a																			0.8		6.2									ROCK CHECK DAM		10	a
		b			1																											REMOVE INLET, SALVAGE GRATE			b
		c																						6								OMP INLET			c
		d				3	0.4																									AC APRON AROUND INLET			d
		e				3	0.4																									AC APRON AROUND INLET			e
		f	68																													REMOVE 24" CMP			f
		g									68																								g
		h															1.2			75												ENDWALL			h
	11	a												1		36RX		0.74	215													MODIFY INLET	918+50.0	11	a
		b												1		36RX		0.74	215													MODIFY INLET	918+56.2		b
		c							12																										c
SHEET TOTAL			129		1	9	2.2		70.5		190	1		10			5.72	8.76	2389	225	3.9		25.4	6		2.40			11.25						

(N) NOT A SEPARATE PAY ITEM, FOR INFORMATION ONLY

DRAINAGE QUANTITIES

DQ-1

STATE OF CALIFORNIA - DEPARTMENT OF TRANSPORTATION
Caltrans
NORTH REGION
DIVISION OF ENGINEERING
DESIGN BRANCH M8

FUNCTIONAL SUPERVISOR: MASTRI ALVANDI
CALCULATED-DESIGNED BY: JACK COWELL
CHECKED BY: MASTRI ALVANDI
REVISED BY
DATE REVISED

LAST REVISION 04-23-12
DATE PLOTTED => 04-SEP-2012
TIME PLOTTED => 07:25

Dist	COUNTY	ROUTE	POST MILES TOTAL PROJECT	SHEET No.	TOTAL SHEETS
03	ED	50	73.7/75.4	64	119

REGISTERED CIVIL ENGINEER 4-26-12 DATE

7-30-12
PLANS APPROVAL DATE

REGISTERED PROFESSIONAL ENGINEER JACK COWELL No. 65521 Exp. 9-30-13 CIVIL STATE OF CALIFORNIA

THE STATE OF CALIFORNIA OR ITS OFFICERS OR AGENTS SHALL NOT BE RESPONSIBLE FOR THE ACCURACY OR COMPLETENESS OF SCANNED COPIES OF THIS PLAN SHEET.

DRAINAGE QUANTITIES

DRAINAGE PROFILE SHEET No.	DRAINAGE SYSTEM No. ⬡	DRAINAGE UNIT No. ◯	REMOVE CULVERT (LF)	REMOVE HEADWALL (EA)	REMOVE INLET (EA)	PLACE HOT MIX ASPHALT (MISCELLANEOUS AREA) (SQYD)	HOT MIX ASPHALT (TYPE A) (TON)	8" PLASTIC PIPE (LF)	12" PLASTIC PIPE (LF)	18" PLASTIC PIPE (LF)	24" PLASTIC PIPE (LF)	RECONSTRUCT INLET (EA)	ADJUST INLET (EA)	MODIFY INLET (EA)	(N) HEIGHT OF INLET "H" (LF)	(N) FRAME AND GRATE (EA)	MINOR CONCRETE (MINOR STRUCTURE) (CY)	MINOR CONCRETE (MISCELLANEOUS CONSTRUCTION) (CY)	MISCELLANEOUS IRON AND STEEL (LB)	(N) BAR REINFORCING STEEL (LB)	RSP (LIGHT, METHOD B) (CY)	RSP (FACING, METHOD B) (CY)	ROCK SLOPE PROTECTION FABRIC (SQYD)	36" CORRUGATED STEEL PIPE INLET (.109" THICK) (LF)	28"X20" CORRUGATED STEEL PIPE ARCH (.109" THICK) (LF)	CLASS 1 PERMEABLE MATERIAL (CY)	CLASS 2 PERMEABLE MATERIAL (CY)	SAND BEDDING (CY)	FILTER FABRIC (SQYD)	12" PERFORATED PLASTIC PIPE (LF)	18" PERFORATED PLASTIC PIPE (LF)	DESCRIPTION	STATION	DRAINAGE SYSTEM No. ⬡	DRAINAGE UNIT ◯
	12	a													6.73	24-12X	3.62	1.67	478							3.38			14.89			GT4 INLET(MOD), GUTTER DEPRESSION		12	a
		b	62																													REMOVE 18" CMP			b
		c								74																									c
		d			1																														d
		e														36RX		0.74	215										11.11			OMP INLET			e
		f							3.5																										f
		g														36RX		0.74	215										11.11			OMP INLET			g
		h	59																													REMOVE 18" CMP			h
		i									60																								i
		j															1.2			75												ENDWALL			j
	13	a												1		36RX		0.74	215													MODIFY INLET	921+87.9	13	a
		b												1		36RX		0.74	215													MODIFY INLET	921+93.5		b
		c							12																										c
DP-4	14	a														36RX		0.74	215					6		2.37			11.11			OMP INLET (MOD)		14	a
		b	30																													REMOVE 12" CMP			b
		c								33																									c
		d																			7.6		22									ROCK ENERGY DISSIPATOR			d
		e															6.5			180												RETAINING WALL, H=6′			e
		f				3	0.4																									AC APRON AROUND INLET			f
	15	a		1																														15	a
		b															1.2			75												HEADWALL			b
		c	52																													REMOVE 18" CMP			c
		d									53																								d
		e															1.2			75												ENDWALL			e
		f																				26.7	125									RECONSTRUCT ROCK LINED DITCH			f
		g														36RX		0.74	215					6		2.37			11.11			OMP INLET (MOD)			g
		h									48																								h
		i																			6.7		19									ROCK ENERGY DISSIPATOR			i
		j																			5.8		13.3									ROCK CHECK DAM			j
DP-5	16	a			1																													16	a
		b													7.61	24-12X	3.95	1.27	478							3.38			14.89			GT4 INLET(MOD), GUTTER DEPRESSION			b
		c	54																													REMOVE 18" CMP			c
		d									58																								d
		e															1.2			75												ENDWALL			e
SHEET TOTAL			257	1	2	3	0.4		15.5	107	219			2			18.87	7.38	2246	480	20.1	26.7	179.3	12		11.50			74.22						

(N) NOT A SEPARATE PAY ITEM, FOR INFORMATION ONLY

STATE OF CALIFORNIA - DEPARTMENT OF TRANSPORTATION
NORTH REGION
DIVISION OF ENGINEERING
DESIGN BRANCH M8

Caltrans

FUNCTIONAL SUPERVISOR: MASTRI ALVANDI
CALCULATED-DESIGNED BY: JACK COWELL
CHECKED BY: MASTRI ALVANDI
REVISED BY
DATE REVISED

LAST REVISION 04-23-12 | DATE PLOTTED => 04-SEP-2012 | TIME PLOTTED => 07:25

Dist	COUNTY	ROUTE	POST MILES TOTAL PROJECT	SHEET No.	TOTAL SHEETS
03	ED	50	73.7/75.4	65	119

REGISTERED CIVIL ENGINEER 4-26-12 DATE

7-30-12
PLANS APPROVAL DATE

REGISTERED PROFESSIONAL ENGINEER JACK COWELL No. 65521 Exp. 9-30-13 CIVIL STATE OF CALIFORNIA

THE STATE OF CALIFORNIA OR ITS OFFICERS OR AGENTS SHALL NOT BE RESPONSIBLE FOR THE ACCURACY OR COMPLETENESS OF SCANNED COPIES OF THIS PLAN SHEET.

DRAINAGE QUANTITIES

DRAINAGE PROFILE SHEET No.	DRAINAGE SYSTEM No. ⬡	DRAINAGE UNIT No. ◯	REMOVE CULVERT (LF)	REMOVE HEADWALL (EA)	REMOVE INLET (EA)	PLACE HOT MIX ASPHALT (MISCELLANEOUS AREA) (SQYD)	HOT MIX ASPHALT (TYPE A) (TON)	8" PLASTIC PIPE (LF)	12" PLASTIC PIPE (LF)	18" PLASTIC PIPE (LF)	24" PLASTIC PIPE (LF)	RECONSTRUCT INLET (EA)	ADJUST INLET (EA)	MODIFY INLET (EA)	(N) HEIGHT OF INLET "H" (LF)	(N) FRAME AND GRATE (EA)	MINOR CONCRETE (MINOR STRUCTURE) (CY)	MINOR CONCRETE (MISCELLANEOUS CONSTRUCTION) (CY)	MISCELLANEOUS IRON AND STEEL (LB)	(N) BAR REINFORCING STEEL (LB)	RSP (LIGHT, METHOD B) (CY)	RSP (FACING, METHOD B) (CY)	ROCK SLOPE PROTECTION FABRIC (SQYD)	36" CORRUGATED STEEL PIPE INLET (.109" THICK) (LF)	28"X20" CORRUGATED STEEL PIPE ARCH (.109" THICK) (LF)	CLASS 1 PERMEABLE MATERIAL (CY)	CLASS 2 PERMEABLE MATERIAL (CY)	SAND BEDDING (CY)	FILTER FABRIC (SQYD)	12" PERFORATED PLASTIC PIPE (LF)	18" PERFORATED PLASTIC PIPE (LF)	DESCRIPTION	STATION	DRAINAGE SYSTEM No. ⬡	DRAINAGE UNIT ◯
	17	a			1																													17	a
		b													5.93	24-12X	3.31	1.67	478							3.38			14.89			GT4 INLET(MOD), GUTTER DEPRESSION			b
		c	66																													REMOVE 18" CMP			c
		d								66																									d
		e			1																														e
		f													7.14	24-12X	3.77	1.67	478										14.89			GT4 INLET(MOD), GUTTER DEPRESSION			f
		g	54																													REMOVE 18" CMP			g
		h									59																								h
		i		1																															i
		j															1.2			75												HEADWALL			j
D-5	18	a													5.00	24-12X	2.95	1.27	478							3.38			14.89			GT4 INLET(MOD), GUTTER DEPRESSION		18	a
		b								35																									b
		c																								71.08	13.15	13.15	78.89	190	35	INFILTRATION SYSTEM			c
	19	a													5.00	24-12X	1.82	1.36	239							2.07			10.00			G3 INLET, GUTTER DEPRESSION		19	a
		b								22																									b
		c																								60.67	11.19	11.19	67.11	172	22	INFILTRATION SYSTEM			c
	20	a						80																										20	a
		b													5.00	24-12X	2.95	1.27	478							3.38			14.89			GT4 INLET(MOD), GUTTER DEPRESSION			b
		c						18																											c
		d																								5.31	1.04	1.04	6.22		14	INFILTRATION SYSTEM			d
	21	a													5.00	24-12X	1.82	1.36	239							2.07			10.00			G3 INLET, GUTTER DEPRESSION		21	a
		b								38																									b
		c																								54.57	10.15	10.15	60.89	132	38	INFILTRATION SYSTEM			c
	22	a													5.00	24-12x	1.82	1.36	239							2.07			10.00			G3 INLET, GUTTER DEPRESSION		22	a
		b								6																									b
		c																								23.19	4.26	4.26	25.56	70	5	INFILTRATION SYSTEM			c
	23	a													5.00	24-12x	2.95	1.27	478							3.38			14.89			GT4 INLET(MOD), GUTTER DEPRESSION		23	a
		b								28																									b
		c																								37.62	7.00	7.00	42.00	90	27	INFILTRATION SYSTEM			c
		d													5.00	24-12x	2.95	1.27	478							3.38			10.78			GT4 INLET(MOD), GUTTER DEPRESSION			d
		e								66																									e
SHEET TOTAL			120	1	2			98		261	59						25.54	12.50	3585	75						275.55	46.79	46.79	395.90	654	141				

(N) NOT A SEPARATE PAY ITEM, FOR INFORMATION ONLY

DRAINAGE QUANTITIES

DQ-3

STATE OF CALIFORNIA - DEPARTMENT OF TRANSPORTATION
Caltrans
NORTH REGION
DIVISION OF ENGINEERING
DESIGN BRANCH M8

FUNCTIONAL SUPERVISOR: MASTRI ALVANDI
CALCULATED-DESIGNED BY: JACK COWELL
CHECKED BY: MASTRI ALVANDI
REVISED BY
DATE REVISED

LAST REVISION 04-23-12 | DATE PLOTTED => 30-AUG-2012 | TIME PLOTTED => 10:22

Dist	COUNTY	ROUTE	POST MILES TOTAL PROJECT	SHEET No.	TOTAL SHEETS
03	ED	50	73.7/75.4	66	119

REGISTERED CIVIL ENGINEER 4-26-12 DATE

7-30-12
PLANS APPROVAL DATE

REGISTERED PROFESSIONAL ENGINEER JACK COWELL No. 65521 Exp. 9-30-13 CIVIL STATE OF CALIFORNIA

THE STATE OF CALIFORNIA OR ITS OFFICERS OR AGENTS SHALL NOT BE RESPONSIBLE FOR THE ACCURACY OR COMPLETENESS OF SCANNED COPIES OF THIS PLAN SHEET.

MINOR CONCRETE (BACKFILL)

DRAINAGE SYSTEM No.	CY
27	20.0
28	20.0
TOTAL	40.0

MARKERS (CULVERT)

FOR EXACT LOCATIONS SEE DRAINAGE PLANS	EA
	16

DRAINAGE QUANTITIES

DRAINAGE PROFILE SHEET No.	DRAINAGE SYSTEM No.	DRAINAGE UNIT No.	REMOVE CULVERT LF	REMOVE HEADWALL EA	REMOVE INLET EA	PLACE HOT MIX ASPHALT (MISCELLANEOUS AREA) SQYD	HOT MIX ASPHALT (TYPE A) TON	8" PLASTIC PIPE LF	12" PLASTIC PIPE LF	18" PLASTIC PIPE LF	24" PLASTIC PIPE LF	RECONSTRUCT INLET EA	ADJUST INLET EA	MODIFY INLET EA	(N) HEIGHT OF INLET "H" LF	(N) FRAME AND GRATE EA	MINOR CONCRETE (MINOR STRUCTURE) CY	MINOR CONCRETE (MISCELLANEOUS CONSTRUCTION) CY	MISCELLANEOUS IRON AND STEEL LB	(N) BAR REINFORCING STEEL LB	RSP (LIGHT, METHOD B) CY	RSP (FACING, METHOD B) CY	ROCK SLOPE PROTECTION FABRIC SQYD	36" CORRUGATED STEEL PIPE INLET (.109" THICK) LF	28"X20" CORRUGATED STEEL PIPE ARCH (.109" THICK) LF	CLASS 1 PERMEABLE MATERIAL CY	CLASS 2 PERMEABLE MATERIAL CY	SAND BEDDING CY	FILTER FABRIC SQYD	12" PERFORATED PLASTIC PIPE LF	18" PERFORATED PLASTIC PIPE LF	DESCRIPTION	STATION	DRAINAGE SYSTEM No.	DRAINAGE UNIT
	24	a													5.00	24-12x	1.82	1.36	239							2.07			10.00			G3 INLET, GUTTER DEPRESSION		24	a
		b								6																								24	b
		c																								38.79	7.11	7.11	42.67	120	6	INFILTRATION SYSTEM			c
	25	a											1																			ADJUST INLET		25	a
		b											1																			ADJUST INLET			b
	26	a													5.00	24-12x	2.95	1.27	478							3.38			14.89			GT4 INLET(Mod), GUTTER DEPRESSION		26	a
		b						6																											b
																																ROCK LINED DITCH	963+61.52 TO 965+31.56		c
DP-6	27	a	73																													REMOVE 24" CMP		27	a
		b		1																															b
		c									73																								c
		d															1.2			75												HEADWALL			d
		e																				27	62.0												e
		f	15																													REMOVE 12" CMP			f
		g							15																										g
		h													4.89	24-12x	1.70	1.14	239							2.28			10.78			GO INLET(Mod), GUTTER DEPRESSION			h
		i				3	0.4																									AC APRON			i
		j											1																			ADJUST INLET			j
		k											1																			ADJUST INLET			k
DP-7	28	a													5.34	24-12x	1.81	1.54	239							2.28			10.78			GO INLET(Mod), GUTTER DEPRESSION		28	a
		b							4																										b
		c											1																			ADJUST INLET			c
		d	86																													REMOVE 24" CMP			d
		e																							88										e
		f													6.43	24-12x	2.08	1.54	239							2.28			10.78			GO INLET(Mod), GUTTER DEPRESSION			f
		g							4																										g
		h											1																			ADJUST INLET			h
		i							4																										i
		j													6.43	24-12X	2.08	1.54	239							2.28			10.78			GO INLET(Mod), GUTTER DEPRESSION			j
DQ-1 TOTAL			129		1	9	2.2		70.5		190	1		10			5.72	8.76	2389	225	3.9		25.4	6		2.4			11.25						
DQ-2 TOTAL			257	1	2	3	0.4		15.5	107	219			2			18.87	7.38	2246	480	20.1	26.7	179.3	12		11.50			74.22						
DQ-3 TOTAL			120	1	2			98		261	59						25.54	12.50	3585	75						275.55	46.79	46.79	395.90	654	141				
DQ-4 TOTAL			174	1		3	0.4	6	27	6	73		6				13.64	8.39	1673	75		27	62		88	53.36	7.11	7.11	110.68	120	6				
SUB-TOTAL						15*	3*																266.7*												
TOTAL			680	3	5			104	113	374	541	1	6	12			63.77	37.03	9893	855	24.0	53.7		18	88	342.81	53.90	53.90	592.05	774	147				

*SEE SUMMARY OF QUANTITIES SHEETS FOR PROJECT TOTALS
(N) NOT A SEPARATE PAY ITEM, FOR INFORMATION ONLY

DRAINAGE QUANTITIES DQ-4

STATE OF CALIFORNIA - DEPARTMENT OF TRANSPORTATION
NORTH REGION
DIVISION OF ENGINEERING
DESIGN BRANCH M8

Caltrans

JACK COWELL — MASTRI ALVANDI — REVISED BY — DATE REVISED
CALCULATED-DESIGNED BY — CHECKED BY
FUNCTIONAL SUPERVISOR — MASTRI ALVANDI

LAST REVISION 04-23-12 | DATE PLOTTED => 04-SEP-2012 | TIME PLOTTED => 07:25

Dist	COUNTY	ROUTE	POST MILES TOTAL PROJECT	SHEET No.	TOTAL SHEETS
03	ED	50	73.7/75.4	67	119

REGISTERED CIVIL ENGINEER 4-26-12 DATE

7-30-12
PLANS APPROVAL DATE

REGISTERED PROFESSIONAL ENGINEER JACK COWELL No. 65521 Exp. 9-30-13 CIVIL STATE OF CALIFORNIA

THE STATE OF CALIFORNIA OR ITS OFFICERS OR AGENTS SHALL NOT BE RESPONSIBLE FOR THE ACCURACY OR COMPLETENESS OF SCANNED COPIES OF THIS PLAN SHEET.

NOTES:

1. FOR COMPLETE RIGHT OF WAY DATA, CONTACT RIGHT OF WAY ENGINEERING AT THE DISTRICT OFFICE.
2. ELEVATION SHOWN REFER TO THE TOP OF PIPE OR CONDUIT, UNLESS OTHERWISE STATED.
3. UTILITY OWNERSHIP ON THIS PROJECT ARE AS SHOWN BELOW:

SANITARY SEWER	—--s——--——--s—	SOUTH PACIFIC PUBLIC UTILITY DISTRICT (STPUD)
NATURAL GAS	—-g——-——-g—	SOUTHWEST GAS CORPORATION
WATER	—w————w—	SOUTH PACIFIC PUBLIC UTILITY DISTRICT (STPUD)
OVERHEAD ELECTRICITY	—-e——-(oh)—	LIBERTY ENERGY
TELEPHONE OVERHEAD	—--t——--(oh)—	AT&T
ELECTRICITY (Elect)	—-e——-e—	LIBERTY ENERGY
TELEPHONE (Tel)	—--t——--t—	AT&T
FIBER OPTICS	—fo——fo—	CHARTER COMMUNICATIONS

LEGEND:

- (X) POTHOLE (PH) LOCATION
- (X) ELECTRONIC DETECTION (ED) LOCATION
- CONFLICT LOCATION
- (No.) DRAINAGE SYSTEM No.

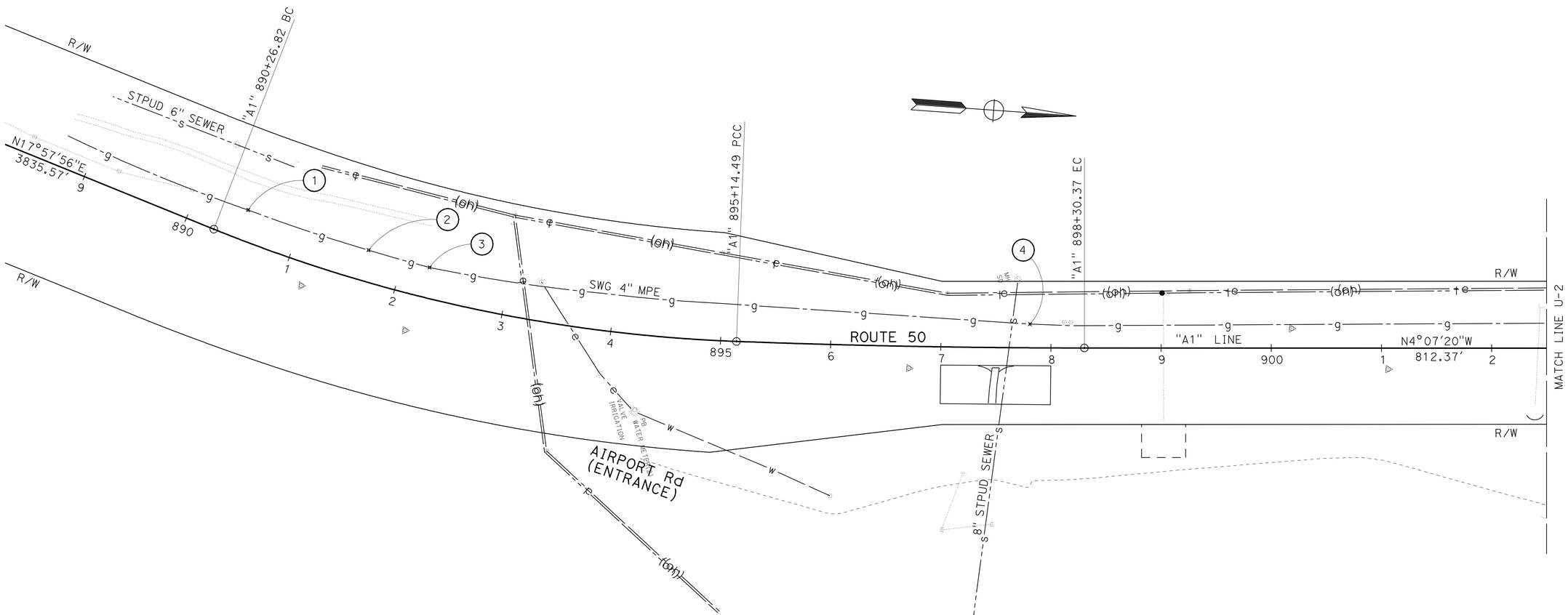

POSITIVE POTHOLE AND ED LOCATIONS

(X)	(X)	UTILITY	STATION	OFFSET	ELEVATION
1		GAS	"A1" 890+49.58	27.66 Lt	6301.12
2		GAS	"A1" 891+65.78	28.29 Lt	6304.57
3		GAS	"A1" 892+25.99	27.61 Lt	6305.22
4		GAS	"A1" 897+80.88	21.53 Lt	6314.28

LAKE TAHOE AIRPORT

EXISTING UTILITY PLAN

SCALE: 1" = 50'

U-1

APPROVED FOR UTILITY WORK ONLY

STATE OF CALIFORNIA - DEPARTMENT OF TRANSPORTATION
NORTH REGION
DIVISION OF ENGINEERING
DESIGN BRANCH M8

FUNCTIONAL SUPERVISOR: MASTRI ALVANDI
CALCULATED-DESIGNED BY: JACK COWELL
CHECKED BY: MASTRI ALVANDI
REVISED BY / DATE REVISED

LAST REVISION 04-23-12
DATE PLOTTED => 30-AUG-2012
TIME PLOTTED => 10:22

Dist	COUNTY	ROUTE	POST MILES TOTAL PROJECT	SHEET No.	TOTAL SHEETS
03	ED	50	73.7/75.4	68	119

Jack R. Cowell Jr. 4-26-12
REGISTERED CIVIL ENGINEER DATE

7-30-12
PLANS APPROVAL DATE

REGISTERED PROFESSIONAL ENGINEER
JACK COWELL
No. 65521
Exp. 9-30-13
CIVIL
STATE OF CALIFORNIA

THE STATE OF CALIFORNIA OR ITS OFFICERS OR AGENTS SHALL NOT BE RESPONSIBLE FOR THE ACCURACY OR COMPLETENESS OF SCANNED COPIES OF THIS PLAN SHEET.

NOTE:

FOR ACCURATE RIGHT OF WAY DATA, CONTACT RIGHT OF WAY ENGINEERING AT THE DISTRICT OFFICE.

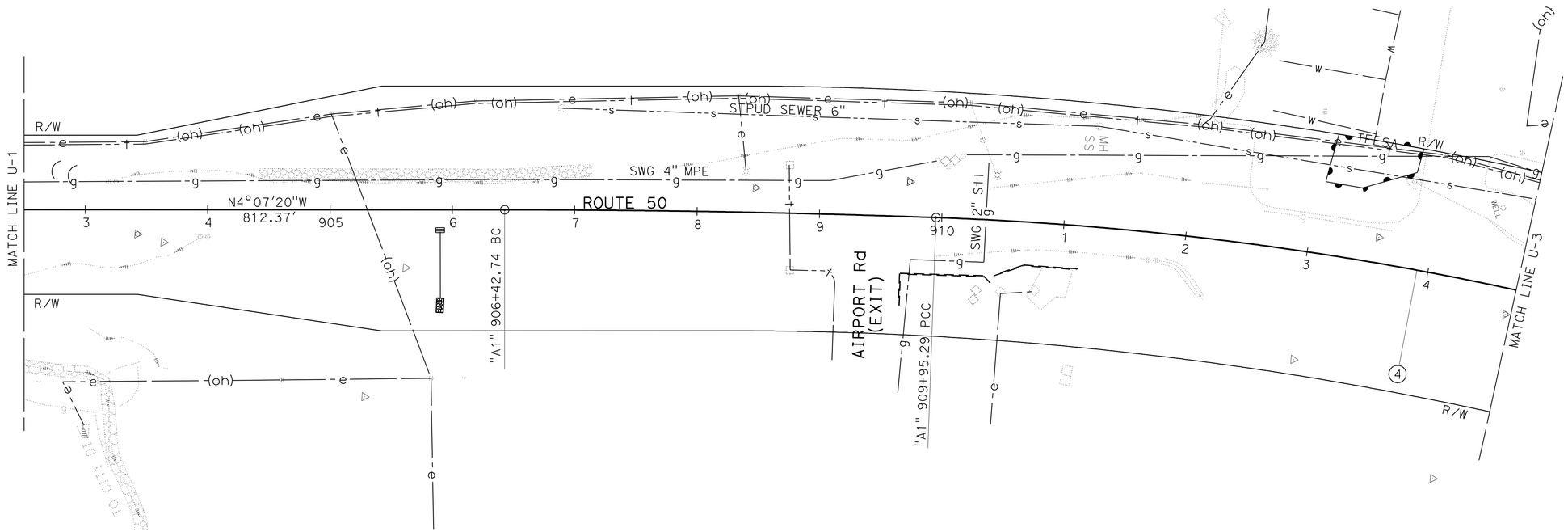

EXISTING UTILITY PLAN

SCALE: 1" = 50'

U-2

APPROVED FOR UTILITY WORK ONLY

STATE OF CALIFORNIA - DEPARTMENT OF TRANSPORTATION
Caltrans
NORTH REGION
DIVISION OF ENGINEERING
DESIGN BRANCH M8

FUNCTIONAL SUPERVISOR: MASTRI ALVANDI

CALCULATED-DESIGNED BY: JACK COWELL
CHECKED BY: MASTRI ALVANDI

REVISED BY
DATE REVISED

LAST REVISION 04-23-12
DATE PLOTTED => 30-AUG-2012
TIME PLOTTED => 10:22

Dist	COUNTY	ROUTE	POST MILES TOTAL PROJECT	SHEET No.	TOTAL SHEETS
03	ED	50	73.7/75.4	69	119

REGISTERED CIVIL ENGINEER 4-26-12 DATE

7-30-12
PLANS APPROVAL DATE

REGISTERED PROFESSIONAL ENGINEER JACK COWELL No. 65521 Exp. 9-30-13 CIVIL STATE OF CALIFORNIA

THE STATE OF CALIFORNIA OR ITS OFFICERS OR AGENTS SHALL NOT BE RESPONSIBLE FOR THE ACCURACY OR COMPLETENESS OF SCANNED COPIES OF THIS PLAN SHEET.

NOTE:

FOR ACCURATE RIGHT OF WAY DATA, CONTACT RIGHT OF WAY ENGINEERING AT THE DISTRICT OFFICE.

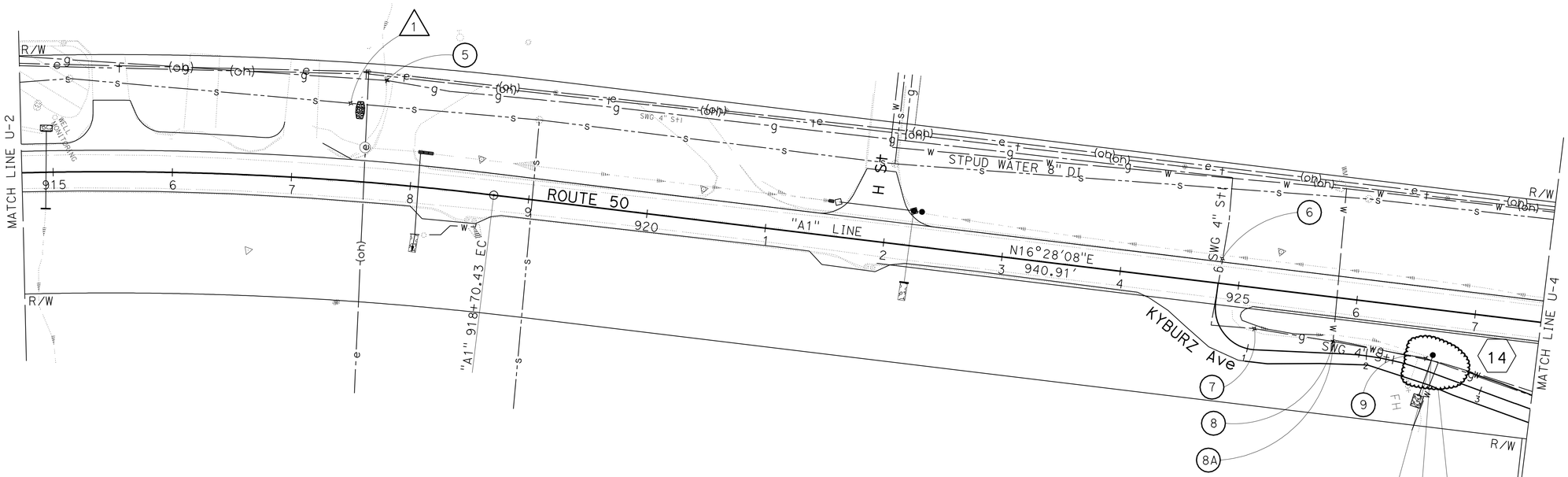

4" GAS LINE IN CONFLICT WITH PROPOSED STORM DRAIN SYSTEM

8" WATER LINE IN CONFLICT WITH PROPOSED STORM DRAIN SYSTEM

CONFLICT LOCATION #1
SEE PROFILE SHEET DP-4,
DRAINAGE SYSTEM 14

POSITIVE POTHOLE AND ED LOCATIONS

(X)	△X	UTILITY	STATION	OFFSET	ELEVATION
	1	SEWER	"A1" 917+53.38	65.05 L+	6314.00
5		GAS	"A1" 917+73.10	86.51 L+	6313.68
6		GAS	"A1" 924+83.73	20.88 L+	6313.91
7		GAS	"A1" 925+17.47	34.25 R+	6309.92
8		WATER	"A1" 925+84.37	37.06 R+	6306.92
8A		GAS	"A1" 925+84.37	37.06 R+	6306.92
9		GAS	"A1" 926+63.42	41.75 R+	6306.28

EXISTING UTILITY PLAN

SCALE: 1" = 50'

U-3

APPROVED FOR UTILITY WORK ONLY

STATE OF CALIFORNIA - DEPARTMENT OF TRANSPORTATION
NORTH REGION
DIVISION OF ENGINEERING
DESIGN BRANCH M8

FUNCTIONAL SUPERVISOR: MASTRI ALVANDI
CALCULATED-DESIGNED BY: JACK COWELL
CHECKED BY: MASTRI ALVANDI
REVISED BY
DATE REVISED

LAST REVISION 04-23-12
DATE PLOTTED => 30-AUG-2012
TIME PLOTTED => 10:23

Dist	COUNTY	ROUTE	POST MILES TOTAL PROJECT	SHEET No.	TOTAL SHEETS
03	ED	50	73.7/75.4	70	119

REGISTERED CIVIL ENGINEER 4-26-12 DATE

7-30-12
PLANS APPROVAL DATE

REGISTERED PROFESSIONAL ENGINEER
JACK COWELL
No. 65521
Exp. 9-30-13
CIVIL
STATE OF CALIFORNIA

THE STATE OF CALIFORNIA OR ITS OFFICERS OR AGENTS SHALL NOT BE RESPONSIBLE FOR THE ACCURACY OR COMPLETENESS OF SCANNED COPIES OF THIS PLAN SHEET.

NOTE:

FOR ACCURATE RIGHT OF WAY DATA, CONTACT RIGHT OF WAY ENGINEERING AT THE DISTRICT OFFICE.

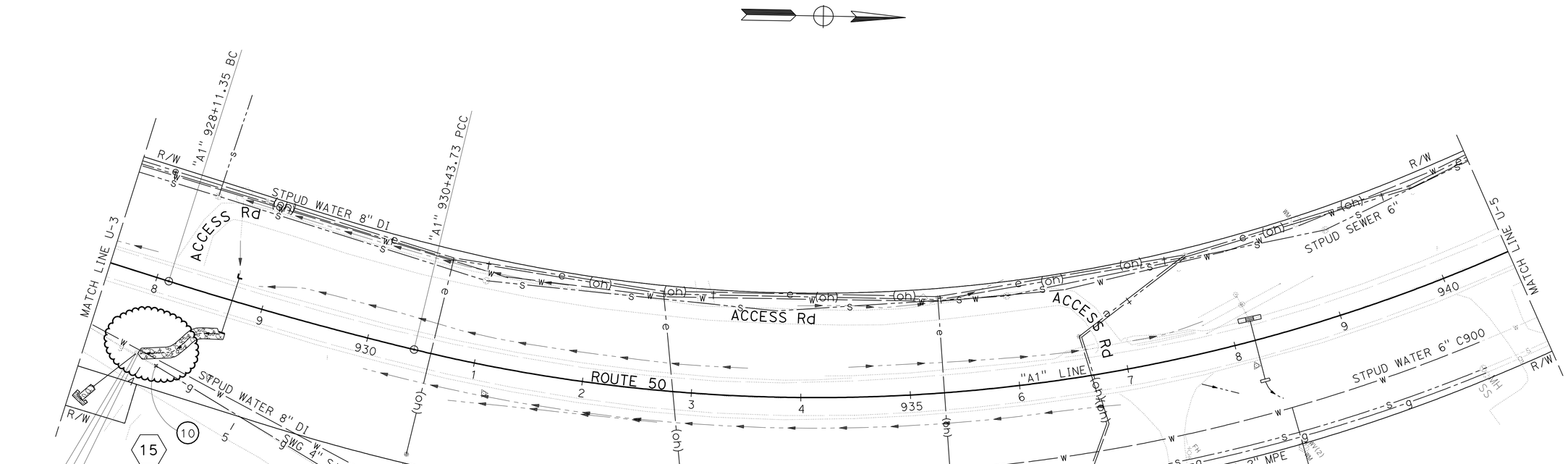

POSITIVE POTHOLE LOCATION

(X)	(X)	UTILITY	STATION	OFFSET	ELEVATION
10		GAS	"A1" 928+23.22	77.11 Rt	6308.25

EXISTING UTILITY PLAN

SCALE: 1" = 50'

U-4

APPROVED FOR UTILITY WORK ONLY

STATE OF CALIFORNIA - DEPARTMENT OF TRANSPORTATION
NORTH REGION
DIVISION OF ENGINEERING
DESIGN BRANCH M8

Caltrans

FUNCTIONAL SUPERVISOR: MASTRI ALVANDI

CALCULATED-DESIGNED BY: JACK COWELL
CHECKED BY: MASTRI ALVANDI

REVISED BY
DATE REVISED

LAST REVISION 04-23-12
DATE PLOTTED => 30-AUG-2012
TIME PLOTTED => 10:23

Dist	COUNTY	ROUTE	POST MILES TOTAL PROJECT	SHEET No.	TOTAL SHEETS
03	ED	50	73.7/75.4	71	119

REGISTERED CIVIL ENGINEER 4-26-12 DATE

7-30-12
PLANS APPROVAL DATE

REGISTERED PROFESSIONAL ENGINEER JACK COWELL No. 65521 Exp. 9-30-13 CIVIL STATE OF CALIFORNIA

THE STATE OF CALIFORNIA OR ITS OFFICERS OR AGENTS SHALL NOT BE RESPONSIBLE FOR THE ACCURACY OR COMPLETENESS OF SCANNED COPIES OF THIS PLAN SHEET.

NOTE:

FOR ACCURATE RIGHT OF WAY DATA, CONTACT RIGHT OF WAY ENGINEERING AT THE DISTRICT OFFICE.

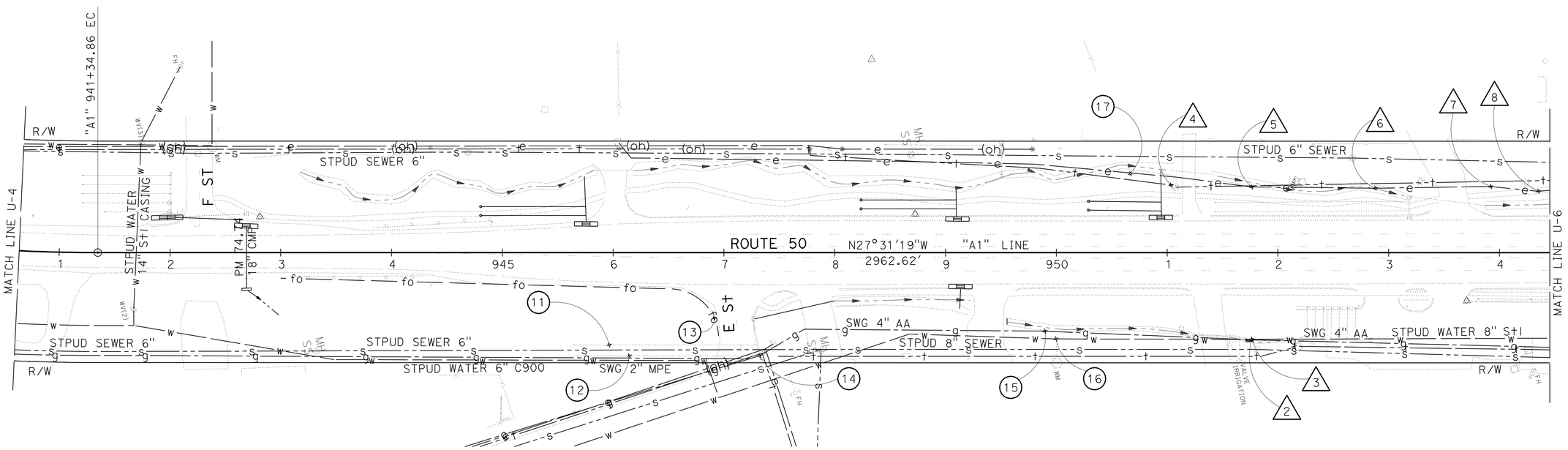

POSITIVE POTHOLE LOCATION

(X)	△X	UTILITY	STATION	OFFSET	ELEVATION
11		UIG SYSTEM	"A1" 946+14.67	93.06 R†	6306.369
12		UIG SYSTEM	"A1" 945+96.44	83.2 R†	6306.432
13		FIBER OPTICS	"A1" 946+91.231	58.95 R†	6304.57
14		GAS	"A1" 947+32.18	92.96 R†	6304.47
15		GAS	"A1" 949+89.74	70.87 R†	6299.40
16		WATER	"A1" 950+03.16	77.84 R†	6300.08
17		ELECTRIC	"A1" 950+67.06	71.87 L†	6297.46
	2	WATER	"A1" 951+76.52	78.24 R†	6296.44
	3	GAS	"A1" 951+77.12	78.67 R†	6296.36
	4	TELEPHONE	"A1" 951+03.58	60.93 L†	6297.81
	5	ELECTRIC	"A1" 951+76.59	59.29 L†	6296.48
	6	ELECTRIC	"A1" 952+88.06	58.15 L†	6294.54
	7	ELECTRIC	"A1" 953+92.32	59.68 L†	6294.22
	8	ELECTRIC	"A1" 954+35.28	55.38 L†	6293.65

APPROVED FOR UTILITY WORK ONLY

EXISTING UTILITY PLAN

SCALE: 1" = 50'

U-5

STATE OF CALIFORNIA - DEPARTMENT OF TRANSPORTATION
Caltrans
NORTH REGION
DIVISION OF ENGINEERING
DESIGN BRANCH M8

FUNCTIONAL SUPERVISOR: MASTRI ALVANDI
CALCULATED-DESIGNED BY: JACK COWELL
CHECKED BY: MASTRI ALVANDI
REVISED BY
DATE REVISED

LAST REVISION 04-23-12
DATE PLOTTED => 30-AUG-2012
TIME PLOTTED => 10:23

Dist	COUNTY	ROUTE	POST MILES TOTAL PROJECT	SHEET No.	TOTAL SHEETS
03	ED	50	73.7/75.4	72	119

Jack R. Cowell Jr. 4-26-12
REGISTERED CIVIL ENGINEER DATE

7-30-12
PLANS APPROVAL DATE

REGISTERED PROFESSIONAL ENGINEER
JACK COWELL
No. 65521
Exp. 9-30-13
CIVIL
STATE OF CALIFORNIA

THE STATE OF CALIFORNIA OR ITS OFFICERS OR AGENTS SHALL NOT BE RESPONSIBLE FOR THE ACCURACY OR COMPLETENESS OF SCANNED COPIES OF THIS PLAN SHEET.

NOTE:

FOR ACCURATE RIGHT OF WAY DATA, CONTACT RIGHT OF WAY ENGINEERING AT THE DISTRICT OFFICE.

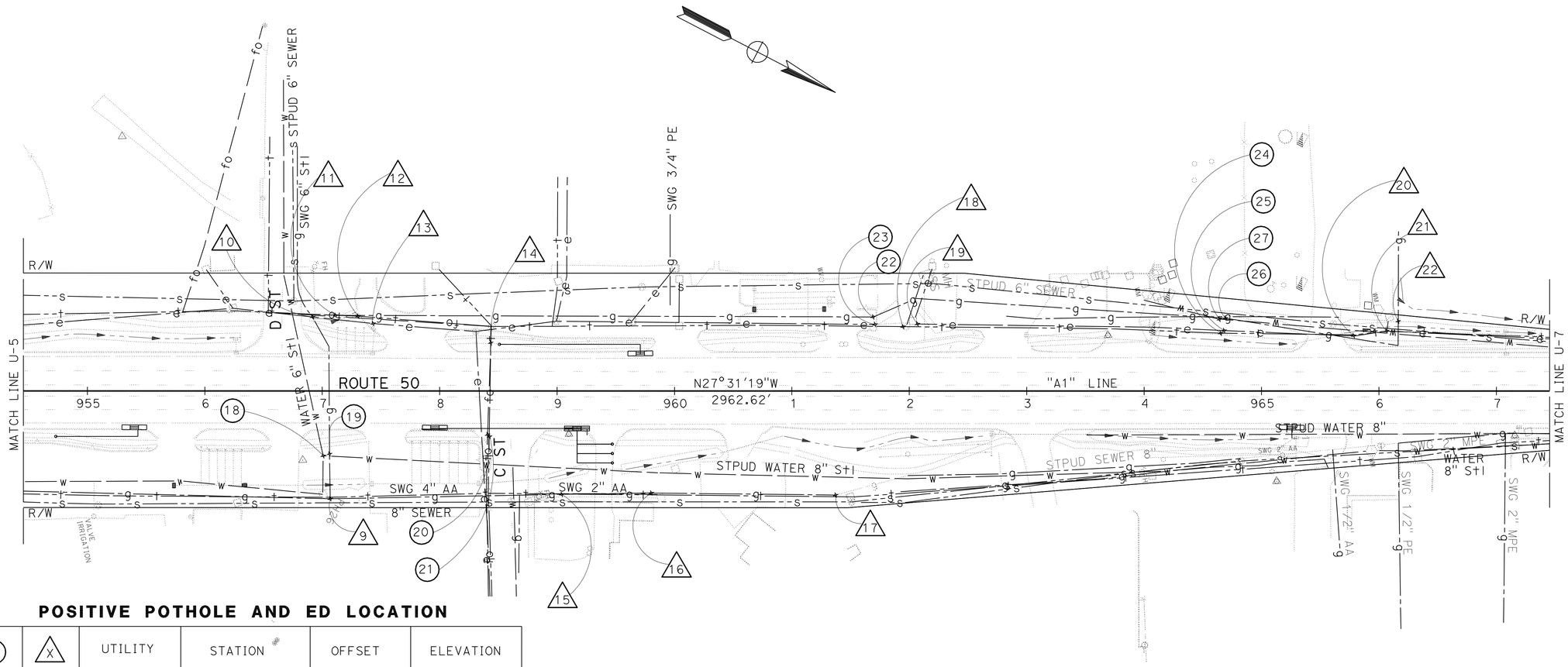

POSITIVE POTHOLE AND ED LOCATION

(X)	△X	UTILITY	STATION *	OFFSET	ELEVATION
18		WATER	"A1" 957+00.82	55.25 Rt	6288.20
19		GAS	"A1" 957+06.18	53.67 Rt	6288.45
	9	GAS	"A1" 957+06.86	91.92 Rt	6288.12
	10	GAS	"A1" 956+91.99	63.04 Lt	6289.38
	11	TELECOM	"A1" 957+11.45	64.41 Lt	6289.11
	12	GAS	"A1" 957+30.56	63.72 Lt	6288.53
	13	GAS	"A1" 957+43.34	57.49 Lt	6287.77
20		TELE//ELECT	"A1" 958+40.87	37.23 Rt	6284.20
21		WATER	"A1" 958+42.51	38.77 Rt	6284.11
	14	TELE/ELEC	"A1" 958+43.56	41.09 Lt	6287.55
	15	GAS	"A1" 959+04.04	88.06 Rt	6284.70
	16	GAS	"A1" 959+80.28	86.91 Rt	6283.96
	17	GAS	"A1" 961+37.30	88.70 Rt	6281.56
22		GAS	"A1" 961+69.30	63.09 Lt	6280.97
23		ELECTRIC	"A1" 961+70.79	56.68 Lt	6280.97

POSITIVE POTHOLE AND ED LOCATION

(X)	△X	UTILITY	STATION	OFFSET	ELEVATION
	18	TELEPHONE	"A1" 961+94.63	54.85 Lt	6280.65
	19	ELECTRIC	"A1" 962+06.94	57.07 Lt	6280.17
24		ELECTRIC	"A1" 964+68.12	51.49 Lt	6275.99
25		TELEPHONE	"A1" 964+65.26	49.29 Lt	6275.99
26		GAS	"A1" 964+69.29	61.95 Lt	6275.96
27		WATER	"A1" 964+64.12	61.13 Lt	6276.07
	20	ELECTRIC	"A1" 965+78.48	47.20 Lt	6274.00
	21	TELEPHONE	"A1" 966+06.44	51.11 Lt	6273.36
	22	GAS	"A1" 966+16.41	59.44 Lt	6273.45

EXISTING UTILITY PLAN

SCALE: 1" = 50'

U-6

APPROVED FOR UTILITY WORK ONLY

REVISED BY | DATE REVISED
JACK COWELL | MASTRI ALVANDI
CALCULATED-DESIGNED BY | CHECKED BY
FUNCTIONAL SUPERVISOR | MASTRI ALVANDI
STATE OF CALIFORNIA - DEPARTMENT OF TRANSPORTATION
NORTH REGION
DIVISION OF ENGINEERING
DESIGN BRANCH M8
Caltrans

LAST REVISION 04-23-12 | DATE PLOTTED => 30-AUG-2012 | TIME PLOTTED => 10:23

Dist	COUNTY	ROUTE	POST MILES TOTAL PROJECT	SHEET No.	TOTAL SHEETS
03	ED	50	73.7/75.4	73	119

REGISTERED CIVIL ENGINEER 4-26-12 DATE

7-30-12
PLANS APPROVAL DATE

REGISTERED PROFESSIONAL ENGINEER JACK COWELL No. 65521 Exp. 9-30-13 CIVIL STATE OF CALIFORNIA

THE STATE OF CALIFORNIA OR ITS OFFICERS OR AGENTS SHALL NOT BE RESPONSIBLE FOR THE ACCURACY OR COMPLETENESS OF SCANNED COPIES OF THIS PLAN SHEET.

NOTE:

FOR ACCURATE RIGHT OF WAY DATA, CONTACT RIGHT OF WAY ENGINEERING AT THE DISTRICT OFFICE.

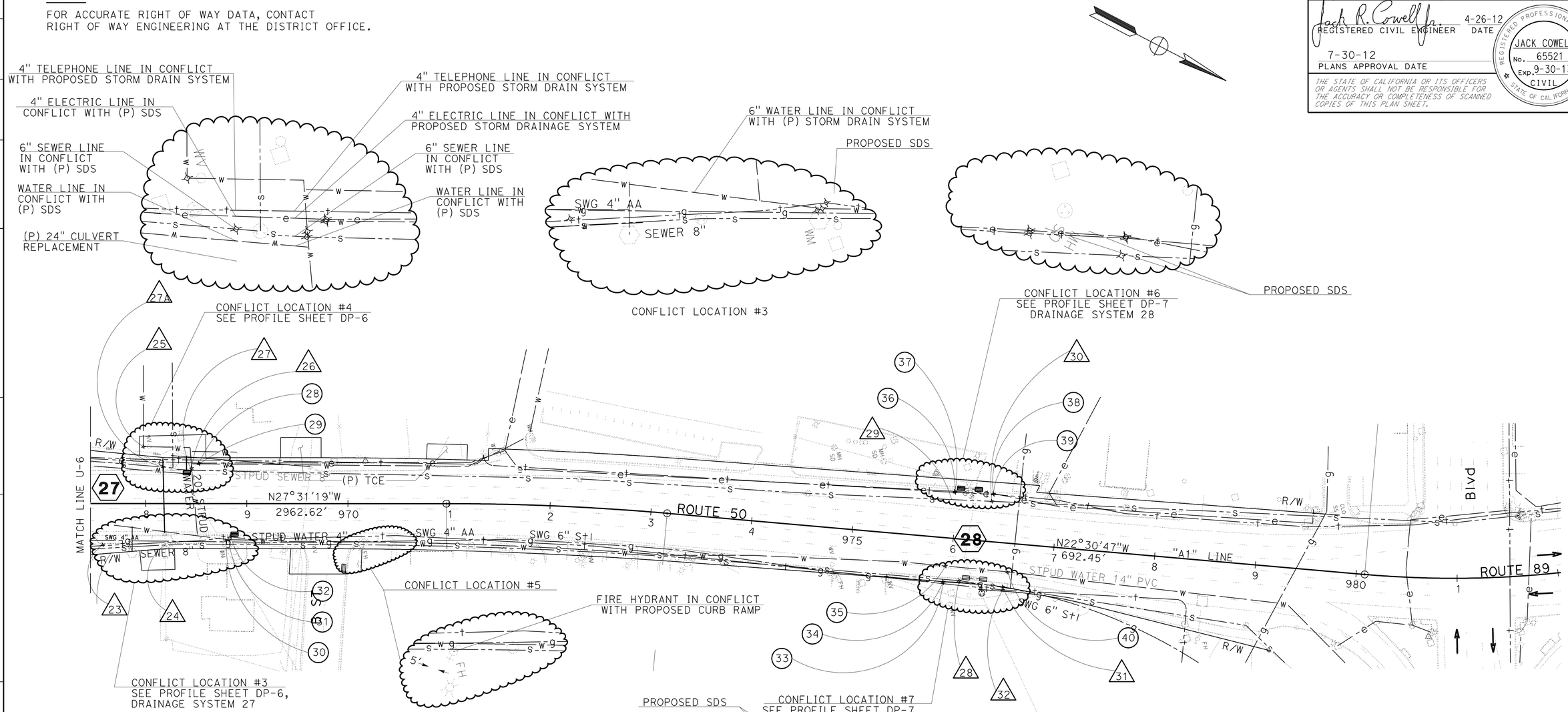

POSITIVE POTHOLE AND ED LOCATION

(X)	△X	UTILITY	STATION	OFFSET	ELEVATION
	23	TELEPHONE	"A1" 967+57.59	40.73 Rt	6272.15
	24	SEWER	"A1" 967+87.42	40.85 Rt	6272.22
	25	WATER	"A1" 967+97.94	56.33 Lt	6269.80
	26	WATER	"A1" 968+45.49	35.10 Lt	6271.79
	27A	SEWER	"A1" 968+17.27	36.16 Lt	6271.91
	27	SEWER	"A1" 968+45.28	33.02 Lt	6271.51
28		ELECTRIC	"A1" 968+52.85	40.05 Lt	6271.59
29		WATER	"A1" 968+52.92	39.29 Lt	6272.05
30		TELEPHONE	"A1" 968+84.17	32.78 Rt	6271.20
31		WATER	"A1" 968+82.11	35.73 Rt	6271.26
32		WATER	"A1" 968+79.62	36.77 Rt	6271.30
33		TELEPHONE	"A1" 975+93.69	44.68 Rt	6269.36
34		GAS	"A1" 975+93.91	43.49 Rt	6269.33
35		WATER	"A1" 975+94.75	27.91 Rt	6269.02

POSITIVE POTHOLE AND ED LOCATION

(X)	△X	UTILITY	STATION	OFFSET	ELEVATION
	28	SEWER	"A1" 976+09.70	41.11 Rt	6269.17
	29	SEWER	"A1" 975+95.23	38.07 Lt	6268.66
36		TELEPHONE	"A1" 975+97.82	45.37 Lt	6268.14
37		ELECTRIC	"A1" 975+97.81	46.54 Lt	6268.03
	30	SEWER	"A1" 976+35.03	38.07 Lt	6268.58
38		TELEPHONE	"A1" 976+35.89	46.81 Lt	6267.95
39		ELECTRIC	"A1" 976+35.87	47.36 Lt	6267.92
	31	GAS	"A1" 976+53.08	43.49 Rt	6269.39
	32	TELEPHONE	"A1" 976+53.10	46.65 Rt	6269.41
40		WATER	"A1" 976+56.29	28.64 Rt	6268.95

EXISTING UTILITY PLAN

SCALE: 1" = 50'

U-7

APPROVED FOR UTILITY WORK ONLY

STATE OF CALIFORNIA - DEPARTMENT OF TRANSPORTATION
NORTH REGION
DIVISION OF ENGINEERING
DESIGN BRANCH M8

Caltrans

FUNCTIONAL SUPERVISOR: MASTRI ALVANDI
CALCULATED-DESIGNED BY: JACK COWELL
CHECKED BY: MASTRI ALVANDI
REVISED BY
DATE REVISED

LAST REVISION 04-23-12
DATE PLOTTED => 30-AUG-2012
TIME PLOTTED => 10:23

Dist	COUNTY	ROUTE	POST MILES TOTAL PROJECT	SHEET No.	TOTAL SHEETS
03	ED	50	73.7/75.4	74	119

REGISTERED CIVIL ENGINEER 4-26-12 DATE

7-30-12
PLANS APPROVAL DATE

REGISTERED PROFESSIONAL ENGINEER Jeffrey S. Jewett No. 49233 Exp. 9-30-12 CIVIL STATE OF CALIFORNIA

THE STATE OF CALIFORNIA OR ITS OFFICERS OR AGENTS SHALL NOT BE RESPONSIBLE FOR THE ACCURACY OR COMPLETENESS OF SCANNED COPIES OF THIS PLAN SHEET.

STATIONARY MOUNTED CONSTRUCTION AREA SIGNS

SIGN LETTER	SIGN CODE FEDERAL	SIGN CODE CALIFORNIA	PANEL SIZE	SIGN MESSAGE	NUMBER OF POST AND SIZE	NUMBER OF SIGNS
A	G20-1[Spec](2)		60" x 30"	ROAD WORK NEXT 2 MILES	2 - 4" x 4"	3
B		C40(Mod)	72" x 42"	TRAFFIC FINES DOUBLED IN WORK ZONES	2 - 4" x 6"	3
C	W20-1	C23	48" x 48"	ROAD WORK AHEAD	1 - 6" x 6"	11
D	G20-2	C14	48" x 24"	END ROAD WORK	1 - 4" x 6"	4

NOTE:

1. EXACT SIGN LOCATION TO BE DETERMINED BY THE ENGINEER.

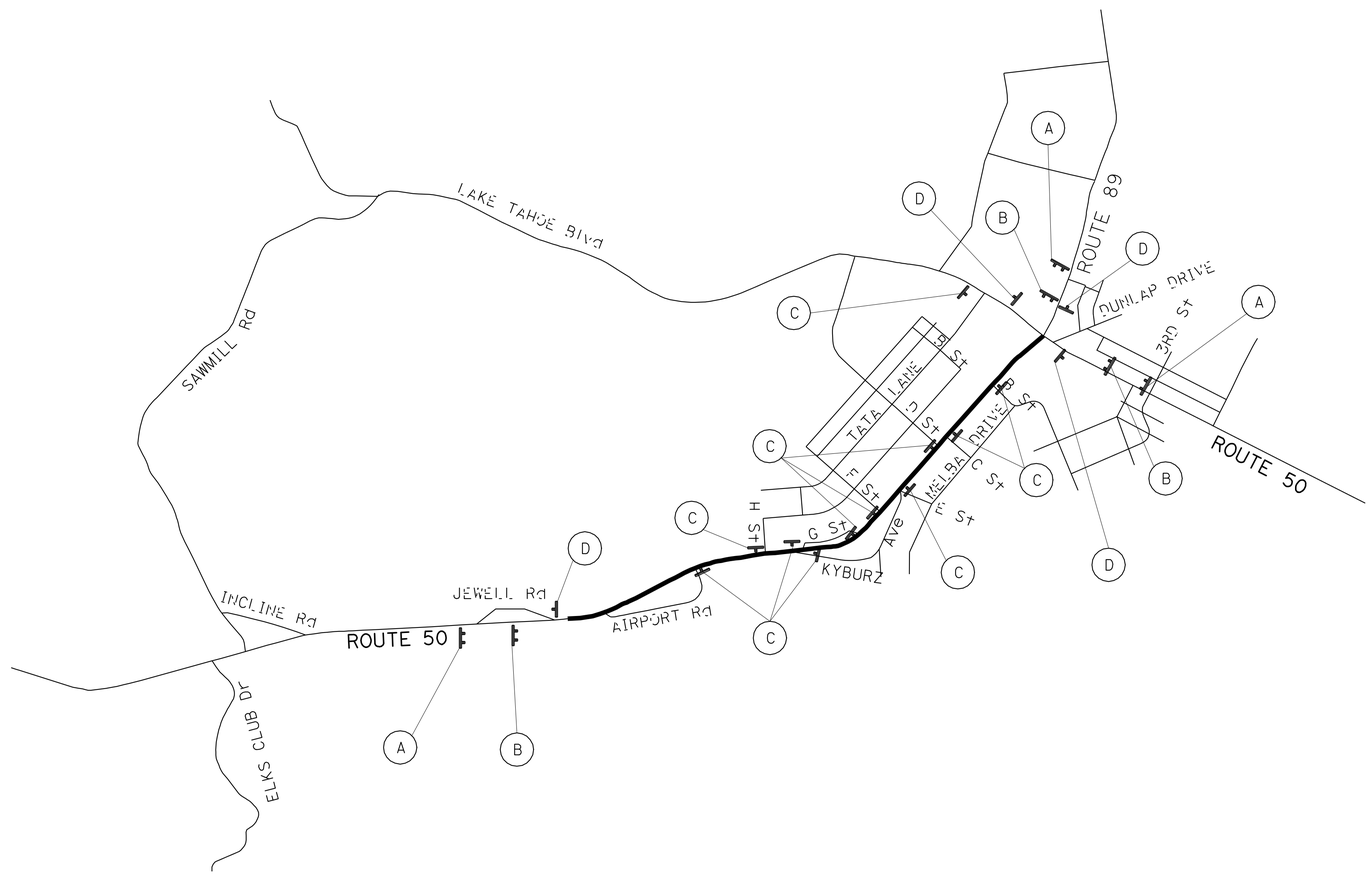

SIGN DETAILS

(A) G20-1[Spec](2)

ROAD WORK
NEXT 2 MILES

6" C SERIES LETTERS

60"X30"

ORANGE BACKGROUND WITH BLACK LEGEND AND BORDER.

(B) C40(Mod)<CA>

TRAFFIC FINES
DOUBLED IN
WORK ZONES

6" D SERIES LETTERS

72"X42"

WHITE BACKGROUND WITH BLACK LEGEND AND BORDER.

CONSTRUCTION AREA SIGNS

NO SCALE

CS-1

APPROVED FOR CONSTRUCTION AREA SIGN WORK ONLY

STATE OF CALIFORNIA - DEPARTMENT OF TRANSPORTATION

TRAFFIC

Caltrans

FUNCTIONAL SUPERVISOR: SERGIO ACEVES

CALCULATED-DESIGNED BY: JEFF JEWETT

CHECKED BY: X

REVISED BY

DATE REVISED

LAST REVISION 04-09-12

DATE PLOTTED => 30-AUG-2012

TIME PLOTTED => 10:23

Dist	COUNTY	ROUTE	POST MILES TOTAL PROJECT	SHEET No.	TOTAL SHEETS
03	ED	50	73.7/75.4	75	119

REGISTERED CIVIL ENGINEER 4-26-12 DATE

7-30-12
PLANS APPROVAL DATE

REGISTERED PROFESSIONAL ENGINEER Jeffrey S. Jewett No. 49233 Exp. 9-30-12 CIVIL STATE OF CALIFORNIA

THE STATE OF CALIFORNIA OR ITS OFFICERS OR AGENTS SHALL NOT BE RESPONSIBLE FOR THE ACCURACY OR COMPLETENESS OF SCANNED COPIES OF THIS PLAN SHEET.

LEGEND

	LIMIT OF STRIPING PATTERN
	CHANGE IN STRIPING PATTERN
NO./R	PAVEMENT DELINEATION DETAIL NUMBER R = RECESSED
LL/R	LIMIT LINE R = RECESSED
XW/R	CROSSWALK R = RECESSED
DIAG	12" YELLOW DIAGONAL (RECESSED)
E	DELINEATOR (TYPE E)
F	DELINEATOR (TYPE F)
S=	DELINEATOR SPACING
L	OBJECT MARKER (TYPE L-1)
	TYPE III ARROW
	TYPE VI ARROW
	TYPE I (10'-0")ARROW
S	"STOP" PAVEMENT MARKING
B	"BIKE" PAVEMENT MARKING
L	"LANE" PAVEMENT MARKING
	BIKE LANE ARROW
Sht-No.	ROADSIDE SIGN NUMBER
<CA>	CALIFORNIA SIGN CODE
	SIGN - SINGLE POST
	SIGN - TWO POST
	SIGN - SSBM
	REMOVE ROADSIDE SIGN
	RESET ROADSIDE SIGN
RNS	ROAD NAME SIGN
H P	HIGHWAY POST MARKER

NOTES:

1. ALL LANES SHALL BE 12' WIDE UNLESS OTHERWISE SHOWN.
2. ALL EXISTING SIGNS NOT SHOWN FOR REMOVAL OR RESETTING SHALL REMAIN IN PLACE.
3. ALL SIGN CODES SHOWN ARE FEDERAL SIGN CODES UNLESS OTHERWISE DESIGNATED AS CALIFORNIA SIGN CODES.

RSPEC1<CA> = **TOW-AWAY**

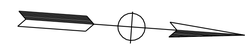

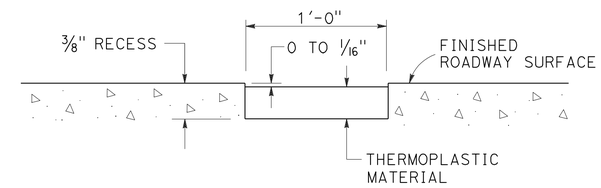

RECESSING DETAIL
FOR LIMIT LINE, CROSSWALK AND DIAGONAL
NO SCALE

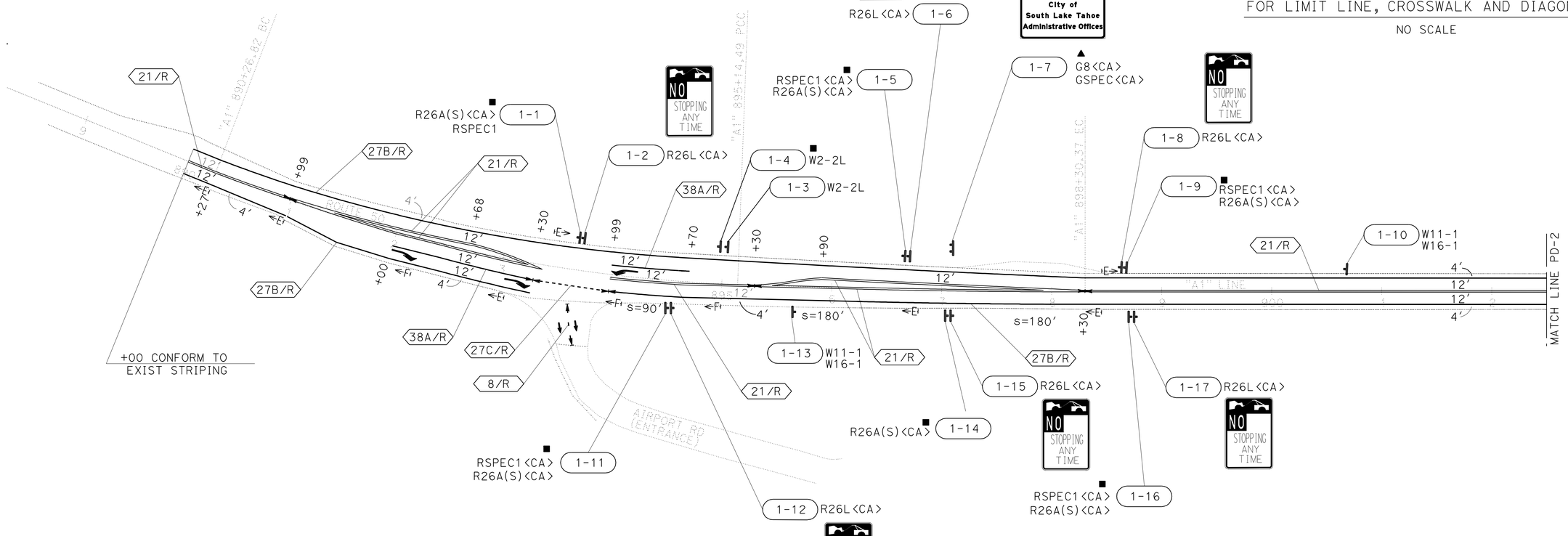

PAVEMENT DELINEATION AND SIGN PLAN

SCALE: 1" = 50'

PD-1

APPROVED FOR PAVEMENT DELINEATION AND SIGN WORK ONLY

STATE OF CALIFORNIA - DEPARTMENT OF TRANSPORTATION
Caltrans
TRAFFIC

FUNCTIONAL SUPERVISOR: SERGIO ACEVES
CALCULATED-DESIGNED BY: JEFF JEWETT
CHECKED BY: JOHN KEBER
REVISED BY / DATE REVISED

LAST REVISION 04-09-12
DATE PLOTTED => 30-AUG-2012
TIME PLOTTED => 10:23

Dist	COUNTY	ROUTE	POST MILES TOTAL PROJECT	SHEET No.	TOTAL SHEETS
03	ED	50	73.7/75.4	76	119

REGISTERED CIVIL ENGINEER 4-26-12 DATE

7-30-12
PLANS APPROVAL DATE

REGISTERED PROFESSIONAL ENGINEER Jeffrey S. Jewett No. 49233 Exp. 9-30-12 CIVIL STATE OF CALIFORNIA

THE STATE OF CALIFORNIA OR ITS OFFICERS OR AGENTS SHALL NOT BE RESPONSIBLE FOR THE ACCURACY OR COMPLETENESS OF SCANNED COPIES OF THIS PLAN SHEET.

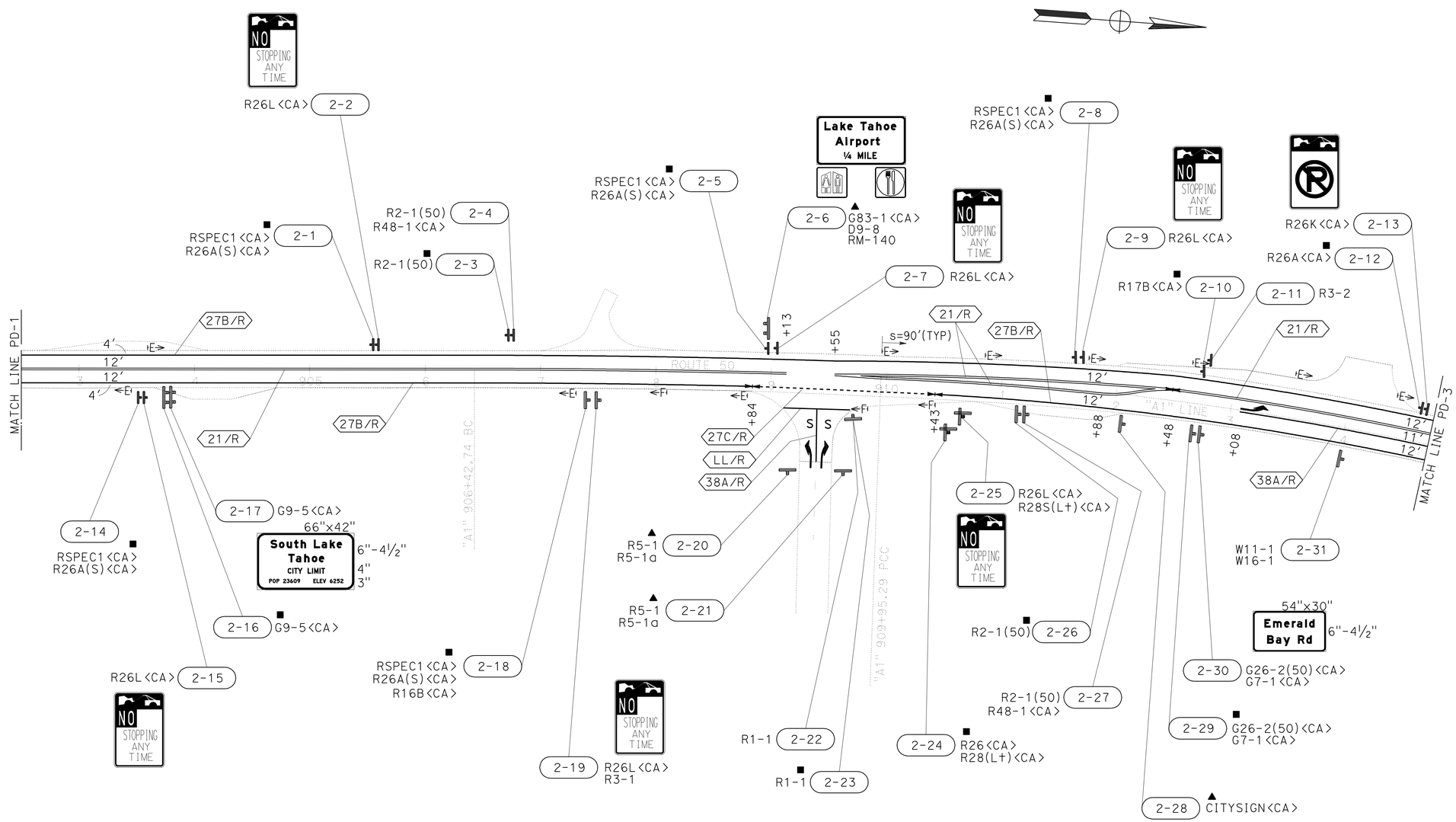

PAVEMENT DELINEATION AND SIGN PLAN

SCALE: 1" = 50′

PD-2

APPROVED FOR PAVEMENT DELINEATION AND SIGN WORK ONLY

REVISED BY | DATE REVISED
JEFF JEWETT | JOHN KEBER
CALCULATED-DESIGNED BY | CHECKED BY
FUNCTIONAL SUPERVISOR | SERGIO ACEVES
STATE OF CALIFORNIA - DEPARTMENT OF TRANSPORTATION
Caltrans
TRAFFIC

LAST REVISION 04-09-12 | DATE PLOTTED => 30-AUG-2012 TIME PLOTTED => 10:24

Dist	COUNTY	ROUTE	POST MILES TOTAL PROJECT	SHEET No.	TOTAL SHEETS
03	ED	50	73.7/75.4	77	119

REGISTERED CIVIL ENGINEER 4-26-12 DATE

7-30-12
PLANS APPROVAL DATE

REGISTERED PROFESSIONAL ENGINEER Jeffrey S. Jewett No. 49233 Exp. 9-30-12 CIVIL STATE OF CALIFORNIA

THE STATE OF CALIFORNIA OR ITS OFFICERS OR AGENTS SHALL NOT BE RESPONSIBLE FOR THE ACCURACY OR COMPLETENESS OF SCANNED COPIES OF THIS PLAN SHEET.

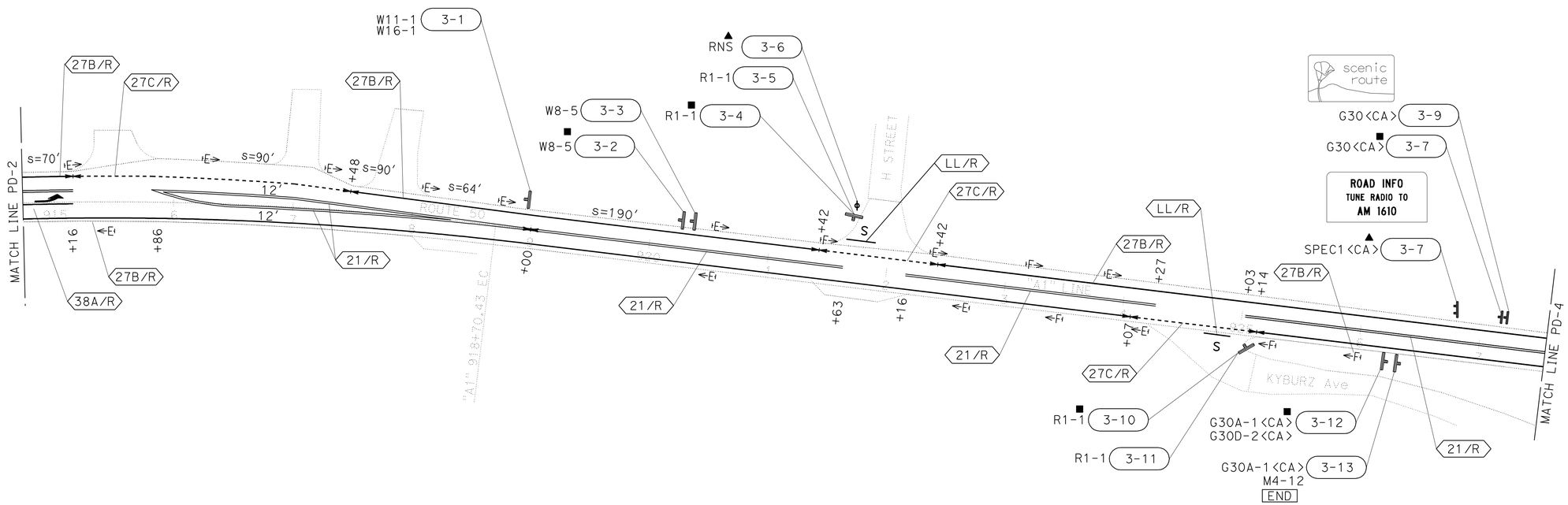

PAVEMENT DELINEATION AND SIGN PLAN

SCALE: 1" = 50′

PD-3

APPROVED FOR PAVEMENT DELINEATION AND SIGN WORK ONLY

STATE OF CALIFORNIA - DEPARTMENT OF TRANSPORTATION
Caltrans
TRAFFIC

FUNCTIONAL SUPERVISOR: SERGIO ACEVES
CALCULATED-DESIGNED BY: JEFF JEWETT
CHECKED BY: JOHN KEBER
REVISED BY
DATE REVISED

LAST REVISION 04-09-12
DATE PLOTTED => 30-AUG-2012
TIME PLOTTED => 10:24

Dist	COUNTY	ROUTE	POST MILES TOTAL PROJECT	SHEET No.	TOTAL SHEETS
03	ED	50	73.7/75.4	78	119

REGISTERED CIVIL ENGINEER 4-26-12 DATE

7-30-12
PLANS APPROVAL DATE

REGISTERED PROFESSIONAL ENGINEER Jeffrey S. Jewett No. 49233 Exp. 9-30-12 CIVIL STATE OF CALIFORNIA

THE STATE OF CALIFORNIA OR ITS OFFICERS OR AGENTS SHALL NOT BE RESPONSIBLE FOR THE ACCURACY OR COMPLETENESS OF SCANNED COPIES OF THIS PLAN SHEET.

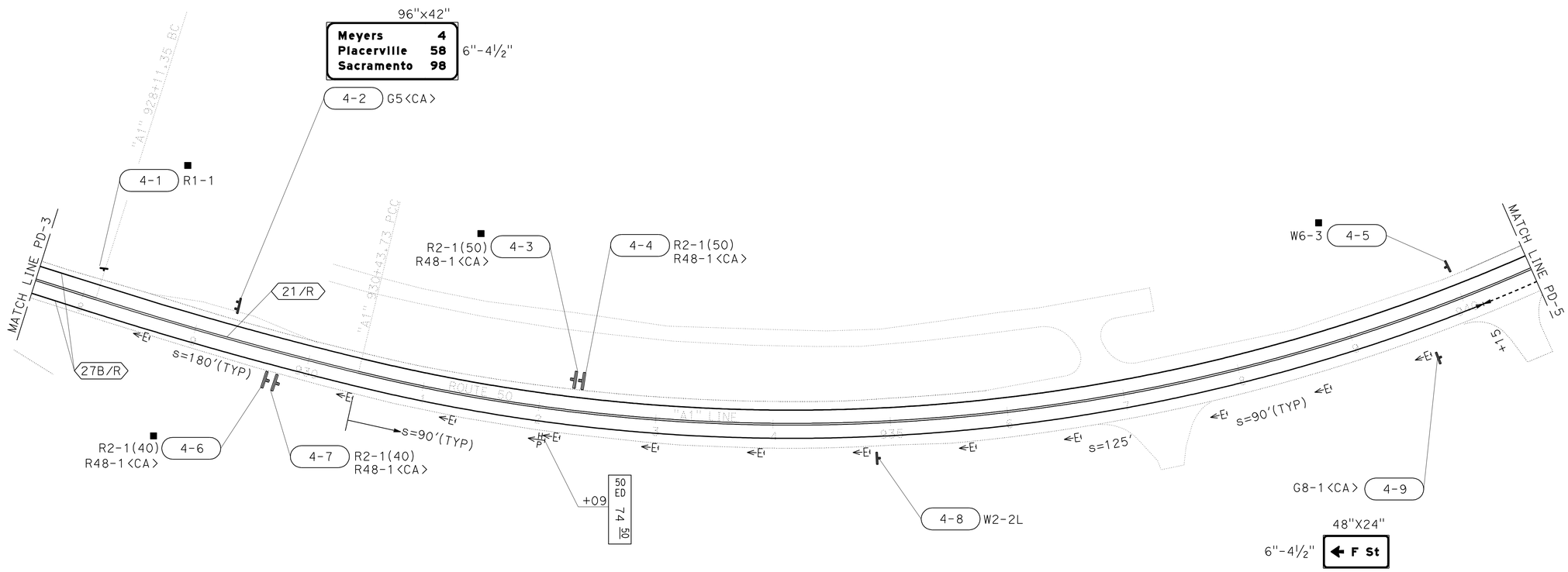

PAVEMENT DELINEATION AND SIGN PLAN

SCALE: 1" = 50'

PD-4

APPROVED FOR PAVEMENT DELINEATION AND SIGN WORK ONLY

STATE OF CALIFORNIA - DEPARTMENT OF TRANSPORTATION

Caltrans®

TRAFFIC

FUNCTIONAL SUPERVISOR: SERGIO ACEVES

CALCULATED-DESIGNED BY: JEFF JEWETT

CHECKED BY: JOHN KEBER

REVISED BY

DATE REVISED

LAST REVISION 04-09-12

DATE PLOTTED => 30-AUG-2012

TIME PLOTTED => 10:24

Dist	COUNTY	ROUTE	POST MILES TOTAL PROJECT	SHEET No.	TOTAL SHEETS
03	ED	50	73.7/75.4	79	119

REGISTERED CIVIL ENGINEER 4-26-12 DATE

7-30-12
PLANS APPROVAL DATE

REGISTERED PROFESSIONAL ENGINEER Jeffrey S. Jewett No. 49233 Exp. 9-30-12 CIVIL STATE OF CALIFORNIA

THE STATE OF CALIFORNIA OR ITS OFFICERS OR AGENTS SHALL NOT BE RESPONSIBLE FOR THE ACCURACY OR COMPLETENESS OF SCANNED COPIES OF THIS PLAN SHEET.

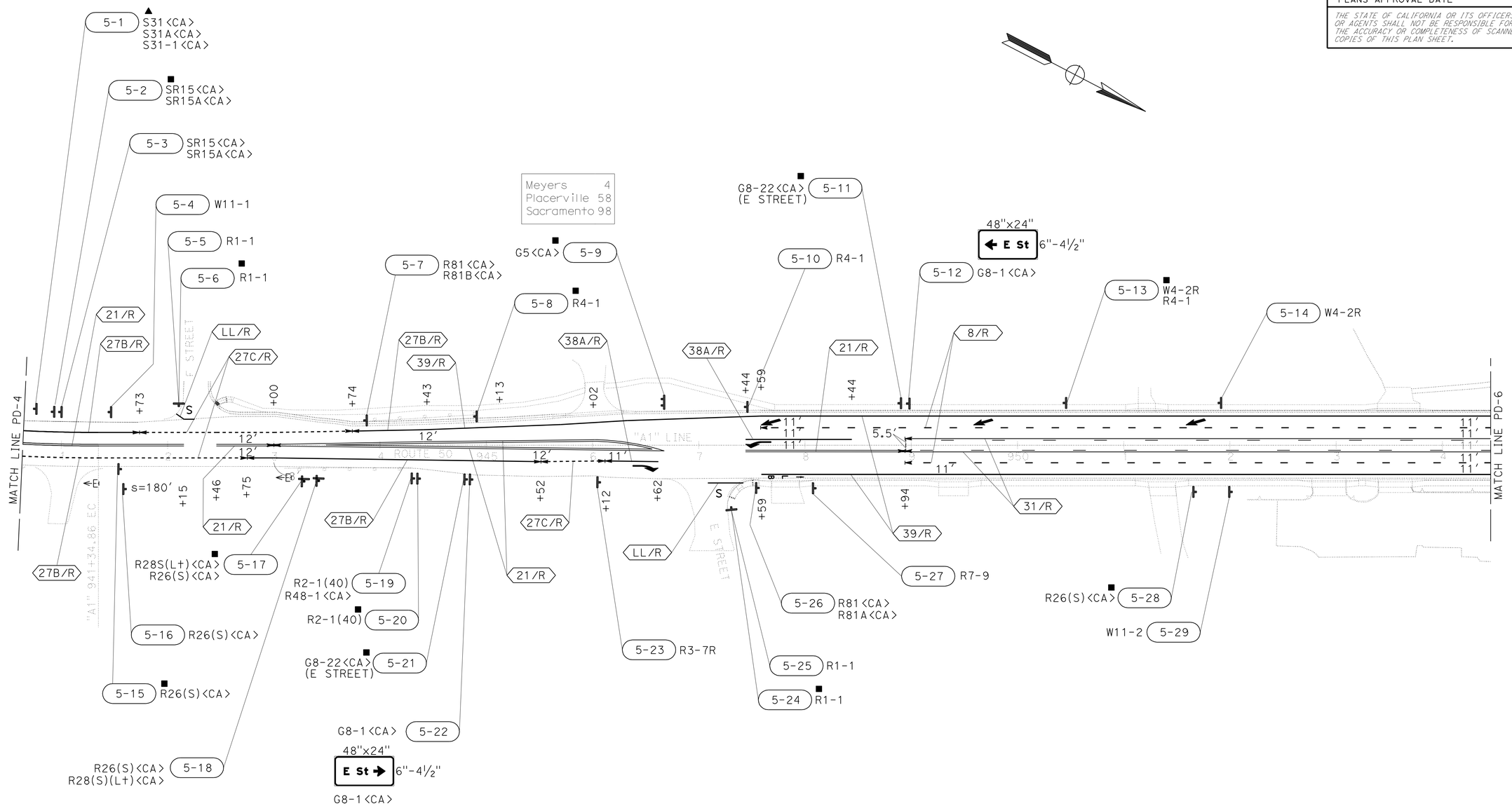

PAVEMENT DELINEATION AND SIGN PLAN

SCALE: 1" = 50'

PD-5

APPROVED FOR PAVEMENT DELINEATION AND SIGN WORK ONLY

STATE OF CALIFORNIA - DEPARTMENT OF TRANSPORTATION
Caltrans
TRAFFIC

FUNCTIONAL SUPERVISOR: SERGIO ACEVES
CALCULATED-DESIGNED BY: JEFF JEWETT
CHECKED BY: JOHN KEBER
REVISED BY
DATE REVISED

LAST REVISION 04-09-12
DATE PLOTTED => 30-AUG-2012
TIME PLOTTED => 10:24

Dist	COUNTY	ROUTE	POST MILES TOTAL PROJECT	SHEET No.	TOTAL SHEETS
03	ED	50	73.7/75.4	80	119

REGISTERED CIVIL ENGINEER 4-26-12 DATE

7-30-12
PLANS APPROVAL DATE

REGISTERED PROFESSIONAL ENGINEER Jeffrey S. Jewett No. 49233 Exp. 9-30-12 CIVIL STATE OF CALIFORNIA

THE STATE OF CALIFORNIA OR ITS OFFICERS OR AGENTS SHALL NOT BE RESPONSIBLE FOR THE ACCURACY OR COMPLETENESS OF SCANNED COPIES OF THIS PLAN SHEET.

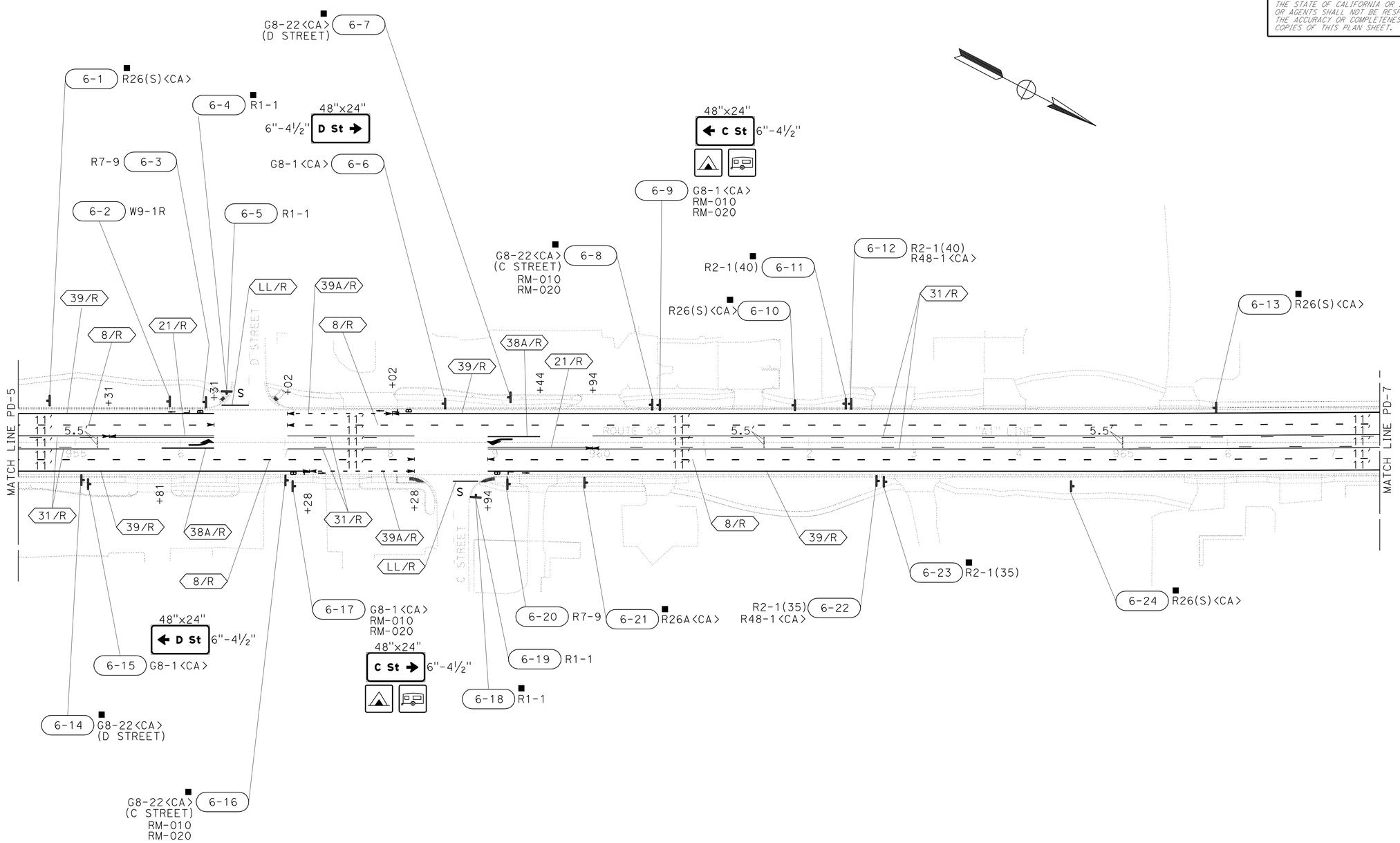

PAVEMENT DELINEATION AND SIGN PLAN

SCALE: 1" = 50'

PD-6

APPROVED FOR PAVEMENT DELINEATION AND SIGN WORK ONLY

STATE OF CALIFORNIA - DEPARTMENT OF TRANSPORTATION
Caltrans
TRAFFIC

FUNCTIONAL SUPERVISOR: SERGIO ACEVES
CALCULATED-DESIGNED BY: JEFF JEWETT
CHECKED BY: JOHN KEBER
REVISED BY
DATE REVISED

LAST REVISION 04-09-12
DATE PLOTTED => 30-AUG-2012
TIME PLOTTED => 10:24

Dist	COUNTY	ROUTE	POST MILES TOTAL PROJECT	SHEET No.	TOTAL SHEETS
03	ED	50	73.7/75.4	81	119

REGISTERED CIVIL ENGINEER 4-26-12 DATE

7-30-12
PLANS APPROVAL DATE

REGISTERED PROFESSIONAL ENGINEER Jeffrey S. Jewett No. 49233 Exp. 9-30-12 CIVIL STATE OF CALIFORNIA

THE STATE OF CALIFORNIA OR ITS OFFICERS OR AGENTS SHALL NOT BE RESPONSIBLE FOR THE ACCURACY OR COMPLETENESS OF SCANNED COPIES OF THIS PLAN SHEET.

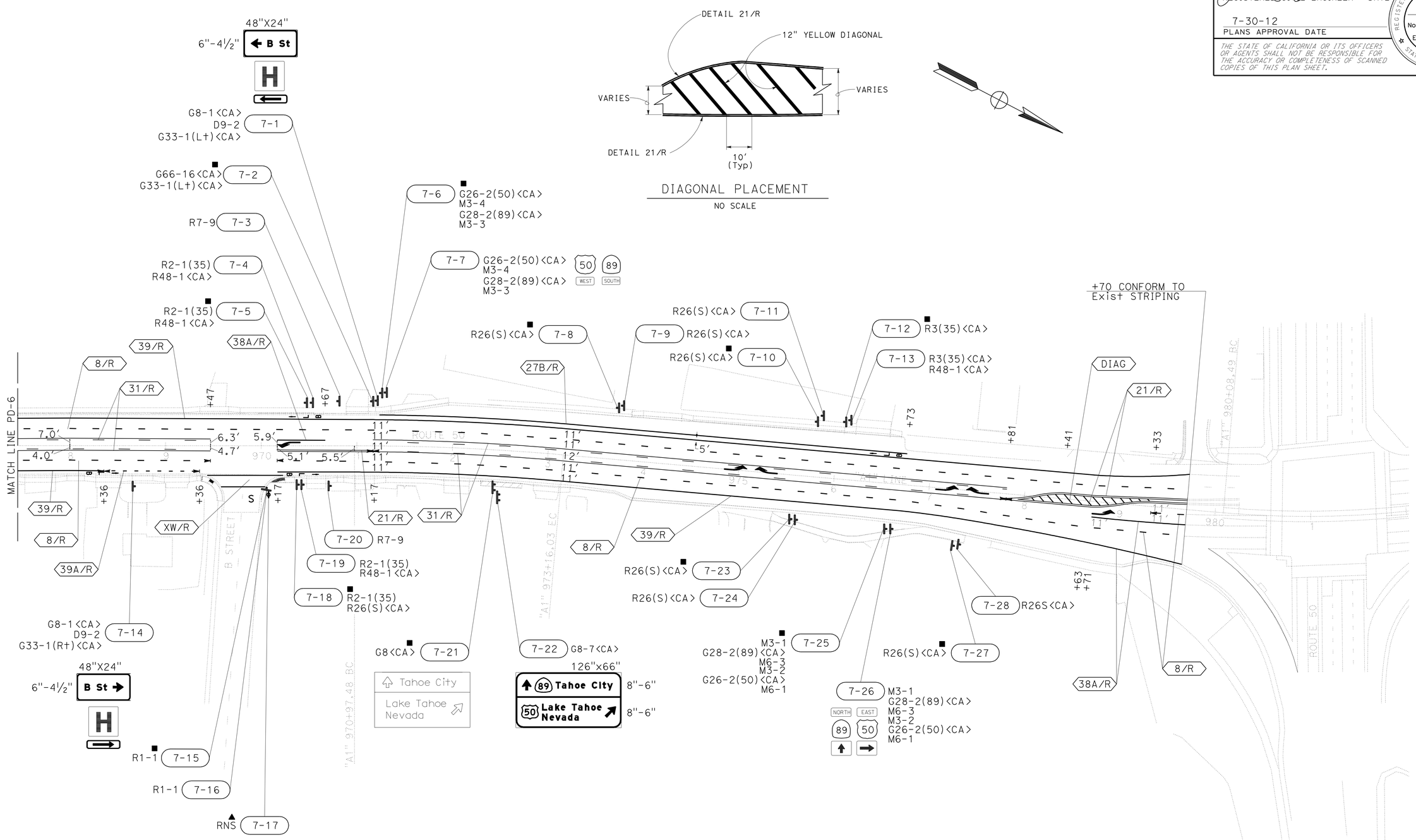

PAVEMENT DELINEATION AND SIGN PLAN

SCALE: 1" = 50'

PD-7

APPROVED FOR PAVEMENT DELINEATION AND SIGN WORK ONLY

STATE OF CALIFORNIA - DEPARTMENT OF TRANSPORTATION
Caltrans
TRAFFIC

FUNCTIONAL SUPERVISOR: SERGIO ACEVES
CALCULATED-DESIGNED BY: JEFF JEWETT
CHECKED BY: JOHN KEBER
REVISED BY
DATE REVISED

LAST REVISION 04-09-12
DATE PLOTTED => 30-AUG-2012
TIME PLOTTED => 10:24

Dist	COUNTY	ROUTE	POST MILES TOTAL PROJECT	SHEET No.	TOTAL SHEETS
03	ED	50	73.7/75.4	82	119

REGISTERED CIVIL ENGINEER 4-26-12 DATE

7-30-12
PLANS APPROVAL DATE

REGISTERED PROFESSIONAL ENGINEER Jeffrey S. Jewett No. 49233 Exp. 9-30-12 CIVIL STATE OF CALIFORNIA

THE STATE OF CALIFORNIA OR ITS OFFICERS OR AGENTS SHALL NOT BE RESPONSIBLE FOR THE ACCURACY OR COMPLETENESS OF SCANNED COPIES OF THIS PLAN SHEET.

PAVEMENT DELINEATION QUANTITIES

SHEET NUMBER	LOCATION/STATION	4" THERMOPLASTIC TRAFFIC STRIPE (RECESSED, BROKEN 17-7)	4" THERMOPLASTIC TRAFFIC STRIPE (RECESSED, BROKEN 36-12)	4" THERMOPLASTIC TRAFFIC STRIPE (RECESSED, BROKEN 12-3)	4" THERMOPLASTIC TRAFFIC STRIPE (RECESSED)			6" THERMOPLASTIC TRAFFIC STRIPE (RECESSED)	6" THERMOPLASTIC TRAFFIC STRIPE (RECESSED, BROKEN 8-4)	8" THERMOPLASTIC TRAFFIC STRIPE (RECESSED)	THERMOPLASTIC PAVEMENT MARKING (RECESSED)			TWO-COMPONENT PAINT PAVEMENT MARKING	DELINEATOR (CLASS 2)		HIGHWAY POST MARKER	REMARKS
		DETAIL 8	DETAIL 31	DETAIL 27C	DETAIL 21	DETAIL 27B	DETAIL 31	DETAIL 39	DETAIL 39A	DETAIL 38A	LIMIT LINE	XW	12" YELLOW DIAGONAL		TYPE E	TYPE F		
		LF	LF	LF	LF	LF	LF	LF	LF	LF	SQFT	SQFT	SQFT	SQFT	EA	EA	EA	
PD-1															7	3		
PD-1	"A1" 890+00 TO 890+99				198	198												
PD-1	"A1" 890+99 TO 892+00				404	202												
PD-1	"A1" 892+00 TO 893+30				520	260				130				84				TYPE III ARROW
PD-1	"A1" 893+30 TO 893+99			69		69												
PD-1	AIRPORT Rd (ENTRANCE)	38												28				TYPE I (10') ARROW
PD-1	"A1" 893+99 TO 894+70				142	142				71				42				TYPE III ARROW
PD-1	"A1" 894+70 TO 895+30				120	120												
PD-1	"A1" 895+30 TO 898+30				1,200	600												
PD-1 - PD-2	"A1" 898+30 TO 908+84				2,108	2,108												
PD-2															10	3		
PD-2	"A1" 908+84 TO 909+13			29	58	29												
PD-2	"A1" 909+13 TO 909+55			42		42												
PD-2	AIRPORT Rd (EXIT)									46	58			44				"STOP"
PD-2	AIRPORT Rd (EXIT)													84				TYPE III ARROW
PD-2	"A1" 909+55 TO 910+43			88	352	88												
PD-2	"A1" 910+43 TO 912+48				820	410												
PD-2	"A1" 912+48 TO 913+08				120	120												
PD-2 - PD-3	"A1" 913+08 TO 915+16				416	416				208				84				TYPE III ARROW
PD-3															12	5		
PD-3	"A1" 915+16 TO 915+86			70		70												
PD-3	"A1" 915+86 TO 917+48			162	648	162												
PD-3	"A1" 917+48 to 919+00				608	304												
PD-3	"A1" 919+00 TO 921+42				484	484												
PD-3	"A1" 921+42 TO 921+63			21	42	21												
PD-3	"A1" 921+63 TO 922+16			53		53					25			22				"STOP"
PD-3	"A1" 922+16 TO 922+42			26	52	26												
PD-3	"A1" 922+42 TO 924+07				330	330												
PD-3	"A1" 924+07 TO 924+27			20	40	20												
PD-3	"A1" 924+27 TO 925+03			76		76					23			22				"STOP"
PD-3	"A1" 925+03 TO 925+14			11	22	11												
PD-3 - PD-4	"A1" 925+14 TO 940+15				3,002	3,002												
PD-4															12		1	
PD-4 - PD-5	"A1" 940+15 TO 941+73			158	316	158												
PD-5															2			
SUBTOTAL THIS SHEET		38	0	825	12,002	9,251	0	0	0	455	106	0	0	410	43	11	1	

JEFF JEWETT — REVISED BY
JEFF JEWETT — DATE REVISED
CALCULATED-DESIGNED BY
CHECKED BY
FUNCTIONAL SUPERVISOR
SERGIO ACEVES

STATE OF CALIFORNIA - DEPARTMENT OF TRANSPORTATION
Caltrans
TRAFFIC

PAVEMENT DELINEATION QUANTITIES

PDQ-1

LAST REVISION 04-09-12
DATE PLOTTED => 30-AUG-2012
TIME PLOTTED => 10:24

Dist	COUNTY	ROUTE	POST MILES TOTAL PROJECT	SHEET No.	TOTAL SHEETS
03	ED	50	73.7/75.4	83	119

REGISTERED CIVIL ENGINEER 4-26-12 DATE

7-30-12
PLANS APPROVAL DATE

REGISTERED PROFESSIONAL ENGINEER Jeffrey S. Jewett No. 49233 Exp. 9-30-12 CIVIL STATE OF CALIFORNIA

THE STATE OF CALIFORNIA OR ITS OFFICERS OR AGENTS SHALL NOT BE RESPONSIBLE FOR THE ACCURACY OR COMPLETENESS OF SCANNED COPIES OF THIS PLAN SHEET.

PAVEMENT DELINEATION QUANTITIES (CONTINUED)

SHEET NUMBER	LOCATION/STATION	4" THERMOPLASTIC TRAFFIC STRIPE (RECESSED, BROKEN 17-7)	4" THERMOPLASTIC TRAFFIC STRIPE (RECESSED, BROKEN 36-12)	4" THERMOPLASTIC TRAFFIC STRIPE (RECESSED, BROKEN 12-3)	4" THERMOPLASTIC TRAFFIC STRIPE (RECESSED)			6" THERMOPLASTIC TRAFFIC STRIPE (RECESSED)	6" THERMOPLASTIC TRAFFIC STRIPE (RECESSED, BROKEN 8-4)	8" THERMOPLASTIC TRAFFIC STRIPE (RECESSED)	THERMOPLASTIC PAVEMENT MARKING (RECESSED)			TWO-COMPONENT PAINT PAVEMENT MARKING	DELINEATOR (CLASS 2)		HIGHWAY POST MARKER	REMARKS
		DETAIL 8	DETAIL 31	DETAIL 27C	DETAIL 21	DETAIL 27B	DETAIL 31	DETAIL 39	DETAIL 39A	DETAIL 38A	LIMIT LINE	XW	12" YELLOW DIAGONAL		TYPE E	TYPE F		
		LF	LF	LF	LF	LF	LF	LF	LF	LF	SQFT	SQFT	SQFT	SQFT	EA	EA	EA	
PD-5	"A1" 941+73 TO 942+15			84	84													
PD-5	"A1" 942+15 TO 942+46			62							20			22				"STOP"
PD-5	"A1" 942+46 TO 942+75			58	58													
PD-5	"A1" 942+75 TO 943+00			25	50	25				39								
PD-5	"A1" 943+00 TO 943+74			74	296	74												
PD-5	"A1" 943+74 TO 945+52				712	178		178										
PD-5	"A1" 945+52 TO 946+12			60	240			60										
PD-5	"A1" 946+12 TO 946+62				200			50		50				42				TYPE III ARROW
PD-5	"A1" 946+62 TO 947+44							82			43			22				"STOP"
PD-5	"A1" 947+44 TO 947+59			15	30			15		15				42				TYPE III ARROW
PD-5	"A1" 947+59 TO 948+44	85			170			170		85				42				TYPE VI ARROW
PD-5	"A1" 947+68													21				"BIKE"
PD-5	"A1" 947+81													24				"LANE"
PD-5	"A1" 947+95													7				BIKE LANE ARROW
PD-5	"A1" 948+44 TO 948+94	50			100			100										
PD-5 - PD-6	"A1" 948+94 TO 955+31	1,274	1,274				1,274	1,274						84				TYPE VI ARROW
PD-6	"A1" 955+31 TO 955+81	100			100			100										
PD-6	"A1" 955+81 TO 956+31	100			100					50				42				TYPE III ARROW
PD-6	"A1" 955+92													7				BIKE LANE ARROW
PD-6	"A1" 956+07													24				"LANE"
PD-6	"A1" 956+19													21				"BIKE"
PD-6	"A1" 956+31 TO 957+02	71						71			32			22				"STOP"
PD-6	"A1" 957+02 TO 957+28	52	52				52	26	26									
PD-6	"A1" 959+08													21				"BIKE"
PD-6	"A1" 959+21													24				"LANE"
PD-6	"A1" 959+36													7				BIKE LANE ARROW
PD-6	"A1" 957+28 TO 958+02	148	148				148		148									
PD-6	"A1" 958+02 TO 958+28	52	52				52	26	26									
PD-6	"A1" 957+91													7				BIKE LANE ARROW
PD-6	"A1" 958+06													24				"LANE"
PD-6	"A1" 958+18													21				"BIKE"
PD-6	"A1" 958+28 TO 958+94	66						66			24			22				"STOP"
SUBTOTAL THIS SHEET		1,998	1,526	378	2,140	277	1,526	2,218	200	239	119	0	0	548	0	0	0	

XW = CROSSWALK

PAVEMENT DELINEATION QUANTITIES

PDQ-2

REVISED BY | DATE REVISED
JEFF JEWETT | JEFF JEWETT
CALCULATED-DESIGNED BY | CHECKED BY
FUNCTIONAL SUPERVISOR
SERGIO ACEVES
STATE OF CALIFORNIA - DEPARTMENT OF TRANSPORTATION
Caltrans
TRAFFIC

LAST REVISION 04-09-12 | DATE PLOTTED => 30-AUG-2012 | TIME PLOTTED => 10:24

Dist	COUNTY	ROUTE	POST MILES TOTAL PROJECT	SHEET No.	TOTAL SHEETS
03	ED	50	73.7/75.4	84	119

REGISTERED CIVIL ENGINEER 4-26-12 DATE

7-30-12
PLANS APPROVAL DATE

REGISTERED PROFESSIONAL ENGINEER Jeffrey S. Jewett No. 49233 Exp. 9-30-12 CIVIL STATE OF CALIFORNIA

THE STATE OF CALIFORNIA OR ITS OFFICERS OR AGENTS SHALL NOT BE RESPONSIBLE FOR THE ACCURACY OR COMPLETENESS OF SCANNED COPIES OF THIS PLAN SHEET.

PAVEMENT DELINEATION QUANTITIES (CONTINUED)

SHEET NUMBER	LOCATION/STATION	4" THERMOPLASTIC TRAFFIC STRIPE (RECESSED, BROKEN 17-7)	4" THERMOPLASTIC TRAFFIC STRIPE (RECESSED, BROKEN 36-12)	4" THERMOPLASTIC TRAFFIC STRIPE (RECESSED, BROKEN 12-3)	4" THERMOPLASTIC TRAFFIC STRIPE (RECESSED)			6" THERMOPLASTIC TRAFFIC STRIPE (RECESSED)	6" THERMOPLASTIC TRAFFIC STRIPE (RECESSED, BROKEN 8-4)	8" THERMOPLASTIC TRAFFIC STRIPE (RECESSED)	THERMOPLASTIC PAVEMENT MARKING (RECESSED)			TWO-COMPONENT PAINT PAVEMENT MARKING	DELINEATOR (CLASS 2)		HIGHWAY POST MARKER	REMARKS
		DETAIL 8	DETAIL 31	DETAIL 27C	DETAIL 21	DETAIL 27B	DETAIL 31	DETAIL 39	DETAIL 39A	DETAIL 38A	LIMIT LINE	XW	12" YELLOW DIAGONAL		TYPE E	TYPE F		
		LF	LF	LF	LF	LF	LF	LF	LF	LF	SQFT	SQFT	SQFT	SQFT	EA	EA	EA	
PD-6	"A1" 958+94 TO 959+44	100			100			100		50				42				TYPE III ARROW
PD-6	"A1" 958+03													21				"BIKE"
PD-6	"A1" 959+16													24				"LANE"
PD-6	"A1" 959+30													7				BIKE LANE ARROW
PD-6	"A1" 959+44 TO 959+94	100			100			100										
PD-6 - PD-7	"A1" 959+94 TO 968+36	1,684	1,684				1,684	1,684										
PD-7	"A1" 968+20													21				"BIKE"
PD-7	"A1" 968+32													24				"LANE"
PD-7	"A1" 968+47													7				BIKE LANE ARROW
PD-7	"A1" 968+36 TO 969+36	200	200				200	100	100									
PD-7	"A1" 969+36 TO 969+47	22	22				22	11										
PD-7	"A1" 969+47 TO 970+17	70						70				136		22				"STOP"
PD-7	"A1" 970+17 TO 970+67	100			100			100		50				42				TYPE III ARROW
PD-7	"A1" 970+29													21				"BIKE"
PD-7	"A1" 970+32													7				BIKE LANE ARROW
PD-7	"A1" 970+43													24				"LANE"
PD-7	"A1" 970+47													24				"LANE"
PD-7	"A1" 970+57													7				BIKE LANE ARROW
PD-7	"A1" 970+60													21				"BIKE"
PD-7	"A1" 970+67 TO 971+17	100			100	50		100										
PD-7	"A1" 971+17 TO 976+73	1,112	1,112			556	1,112	1,112						84				TYPE III ARROW
PD-7	"A1" 976+38													7				BIKE LANE ARROW
PD-7	"A1" 976+53													24				"LANE"
PD-7	"A1" 976+66													21				"BIKE"
PD-7	"A1" 976+73 TO 977+81	216	216				216	216						84				TYPE III ARROW
PD-7	"A1" 977+81 TO 978+63	164			328			164					75					
PD-7	"A1" 978+63 TO 978+71	16			32			16		16								
PD-7	"A1" 978+71TO 979+33	148			396			148		148			61	42				TYPE III ARROW
PD-7	"A1" 979+33 TO 979+70	111			148			74		74								
SUBTOTAL THIS SHEET		4,143	3,234	0	1,304	606	3,234	3,995	100	338	0	136	136	576	0	0	0	
SUBTOTAL SHEET PDQ-1		38	0	825	12,002	9,521	0	0	0	455	106	0	0	410	43	11	1	
SUBTOTAL SHEET PDQ -2		1,998	1,526	378	2,140	277	1,526	2,218	200	239	119	0	0	548	0	0	0	
TOTAL		6,179	4,760	1,203	30,610			6,213	300	1,032	497			1,534	54		1	

XW = CROSSWALK

PAVEMENT DELINEATION QUANTITIES

PDQ-3

REVISED BY | DATE REVISED
JEFF JEWETT | JEFF JEWETT
CALCULATED-DESIGNED BY | CHECKED BY
FUNCTIONAL SUPERVISOR: SERGIO ACEVES
STATE OF CALIFORNIA - DEPARTMENT OF TRANSPORTATION
Caltrans
TRAFFIC

LAST REVISION 04-09-12 | DATE PLOTTED => 30-AUG-2012 | TIME PLOTTED => 10:24

Dist	COUNTY	ROUTE	POST MILES TOTAL PROJECT	SHEET No.	TOTAL SHEETS
03	ED	50	73.7/75.4	85	119

REGISTERED CIVIL ENGINEER 4-26-12 DATE

7-30-12
PLANS APPROVAL DATE

REGISTERED PROFESSIONAL ENGINEER Jeffrey S. Jewett No. 49233 Exp. 9-30-12 CIVIL STATE OF CALIFORNIA

THE STATE OF CALIFORNIA OR ITS OFFICERS OR AGENTS SHALL NOT BE RESPONSIBLE FOR THE ACCURACY OR COMPLETENESS OF SCANNED COPIES OF THIS PLAN SHEET.

NOTES:

1. THE SIGN POST SHALL HAVE 7/16" DIAMETER PERFORATIONS 1" ON CENTER ON ALL FOUR SIDES FOR THE FULL LENGTH.
2. USE TWO DRIVE RIVETS TO FASTEN ASSEMBLED SIGN AND SIGN POST INTO ANCHOR SLEEVE. INSTALL DRIVE RIVETS INTO THE SIDES FACING TRAFFIC.
3. ALL METAL SIGN POSTS AND ANCHOR SLEEVES SHALL BE GALVANIZED.
4. ALL ANCHOR SLEEVES SHALL BE EMBEDDED IN PCC.
5. BALANCED SINGLE POST INSTALLATIONS OF SINGLE SHEET ALUMINUM PANEL SIGNS REQUIRE BACK BRACES WHEN 2'-10" OR MORE IN LENGTH.
6. WOOD BLOCK SPACERS ARE NOT REQUIRED FOR SIGNS MOUNTED ON METAL POSTS.
7. ATTACH RECTANGULAR SIGN PANEL TO SIGN POST WITH BOLTS AT TOP AND BOTTOM. CENTER MAY BE ATTACHED WITH EITHER BOLT OR 3/8" DRIVE RIVET.
8. ATTACH DIAMOND SIGN PANEL TO SIGN POST WITH BOLT AT CENTER. TOP AND BOTTOM MAY BE ATTACHED WITH EITHER BOLTS OR 3/8" DRIVE RIVETS.
9. FOR DETAILS NOT SHOWN, SEE STANDARD PLANS RS1 AND RS2.

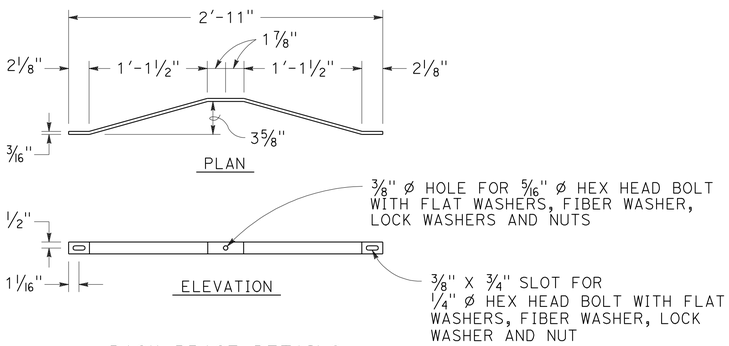

BACK BRACE DETAILS
SEE NOTE 5

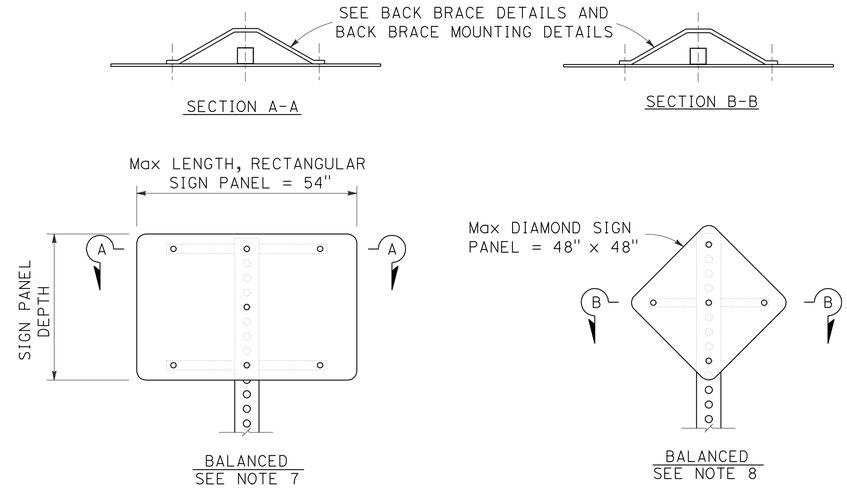

SINGLE POST INSTALLATION

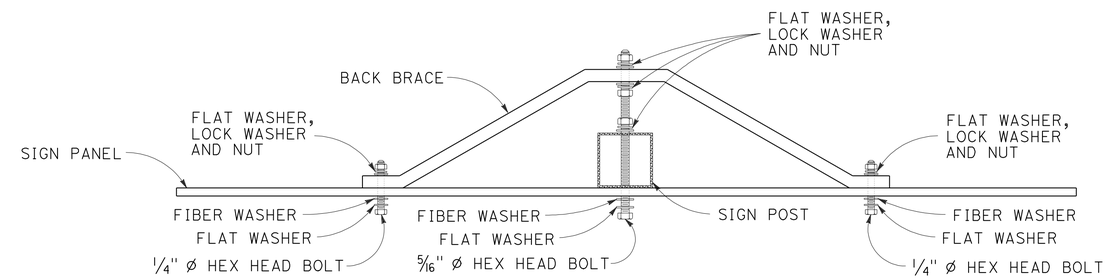

BACK BRACE MOUNTING DETAIL
SEE NOTES 6, 7 AND 8

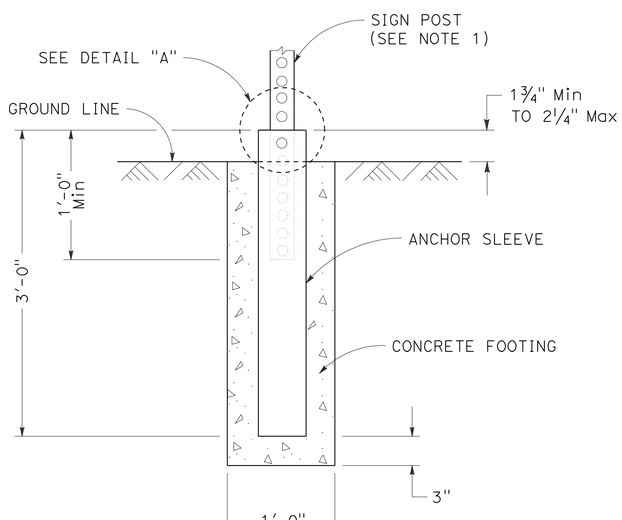

ANCHOR SLEEVE DETAIL

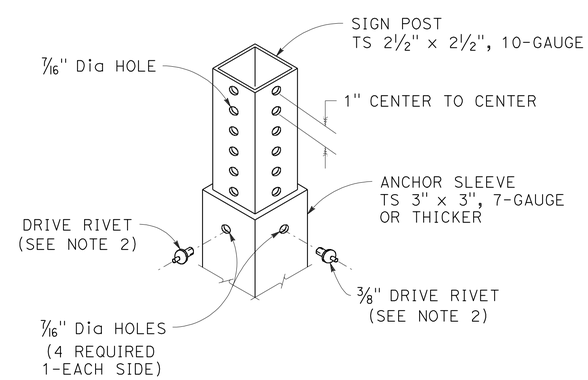

DETAIL "A"

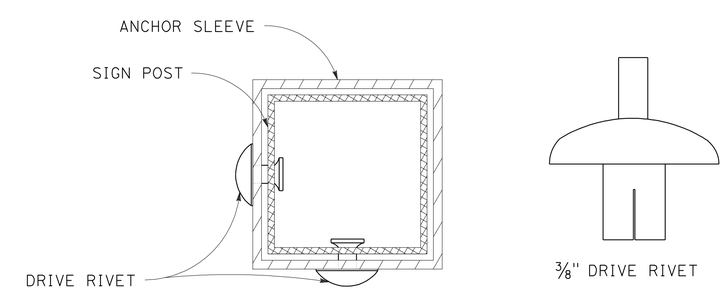

FASTENER DETAILS

SIGN DETAILS

NO SCALE

SD-1

APPROVED FOR SIGN WORK ONLY

STATE OF CALIFORNIA - DEPARTMENT OF TRANSPORTATION
Caltrans
TRAFFIC

FUNCTIONAL SUPERVISOR: SERGIO ACEVES
CALCULATED-DESIGNED BY: JEFF JEWETT
CHECKED BY: JACK KEMMERLY
REVISED BY
DATE REVISED

LAST REVISION 04-09-12
DATE PLOTTED => 30-AUG-2012
TIME PLOTTED => 10:24

Dist	COUNTY	ROUTE	POST MILES TOTAL PROJECT	SHEET No.	TOTAL SHEETS
03	ED	50	73.7/75.4	86	119

REGISTERED CIVIL ENGINEER 4-26-12 DATE

7-30-12
PLANS APPROVAL DATE

REGISTERED PROFESSIONAL ENGINEER Jeffrey S. Jewett No. 49233 Exp. 9-30-12 CIVIL STATE OF CALIFORNIA

THE STATE OF CALIFORNIA OR ITS OFFICERS OR AGENTS SHALL NOT BE RESPONSIBLE FOR THE ACCURACY OR COMPLETENESS OF SCANNED COPIES OF THIS PLAN SHEET.

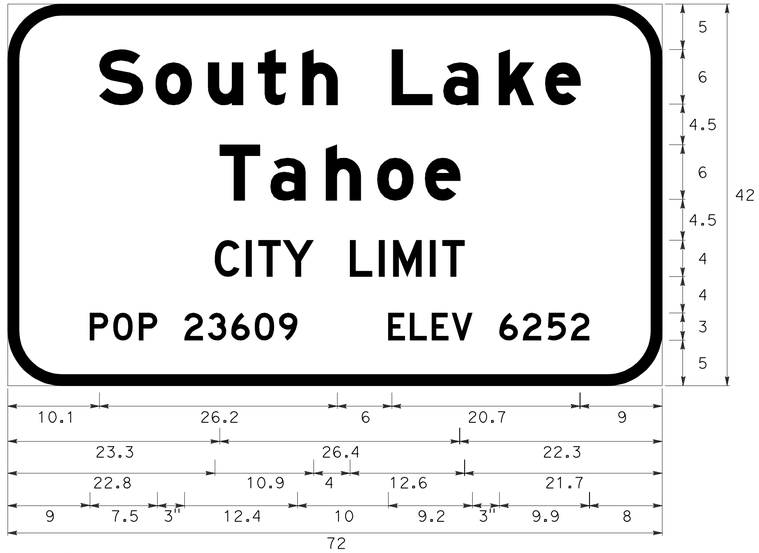

G9-5<CA>
6.0" RADIUS, 1.3" BORDER, WHITE ON GREEN;
[South Lake] E MOD; [Tahoe] E MOD; [CITY LIMIT] D; [POP 23609] D;
[ELEV 6252] D

2-17

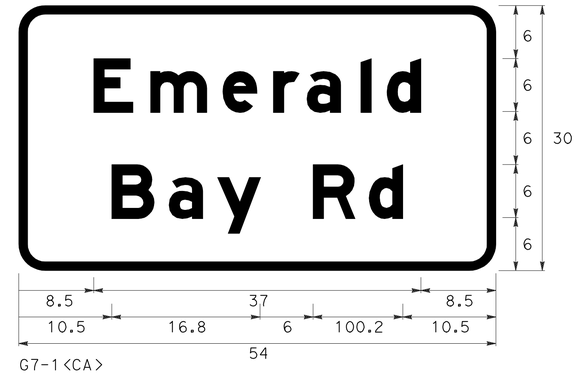

G7-1<CA>
3.0" RADIUS, 1.0" BORDER, WHITE ON GREEN;
[Emerald] E MOD; [Bay Rd] E MOD

2-30

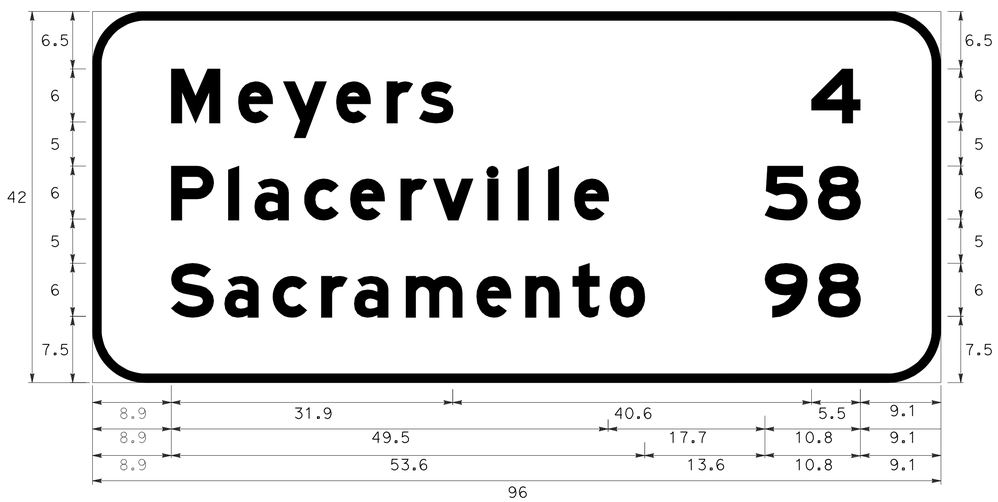

G-5<CA>
6.0" RADIUS, 1.0" BORDER, WHITE ON GREEN;
[MEYERS] E MOD; [PLACERVILLE] E MOD; [SACRAMENTO] E MOD 90% SPACING;
[4] E MOD; [58] E MOD; [98] E MOD;

4-2

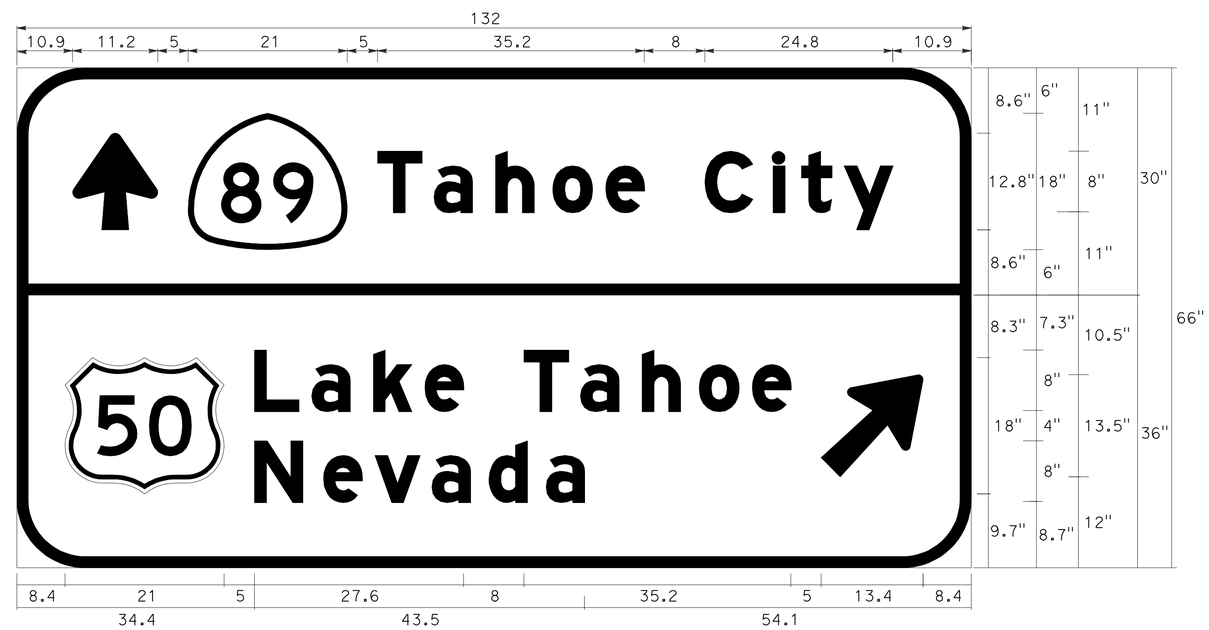

G8-7<CA>
9.0" RADIUS, 1.5" BORDER, WHITE ON GREEN;
ARROW - 12.8" 90°; [Tahoe City] E MOD;
[Lake Tahoe] E MOD; [Nevada] E MOD; Arrow - 17.0" 45°

7-20

ALL DIMENSIONS ARE INCHES UNLESS SHOWN OTHERWISE.
APPROVED FOR SIGN WORK ONLY

SIGN DETAIL

NO SCALE

SD-2

STATE OF CALIFORNIA - DEPARTMENT OF TRANSPORTATION
TRAFFIC
Caltrans

FUNCTIONAL SUPERVISOR: SERGIO ACEVES
CALCULATED-DESIGNED BY: JEFF JEWETT
CHECKED BY: JOHN KEBER
REVISED BY / DATE REVISED

LAST REVISION 04-09-12 | DATE PLOTTED => 30-AUG-2012 | TIME PLOTTED => 10:25

Dist	COUNTY	ROUTE	POST MILES TOTAL PROJECT	SHEET No.	TOTAL SHEETS
03	ED	50	73.7/75.4	87	119

REGISTERED CIVIL ENGINEER 4-26-12 DATE

7-30-12
PLANS APPROVAL DATE

REGISTERED PROFESSIONAL ENGINEER Jeffrey S. Jewett No. 49233 Exp. 9-30-12 CIVIL STATE OF CALIFORNIA

THE STATE OF CALIFORNIA OR ITS OFFICERS OR AGENTS SHALL NOT BE RESPONSIBLE FOR THE ACCURACY OR COMPLETENESS OF SCANNED COPIES OF THIS PLAN SHEET.

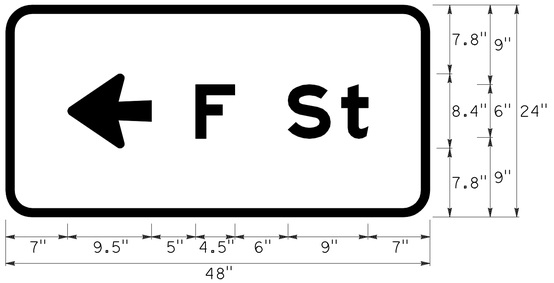

G8-1<CA>
3.0" RADIUS, 1.0" BORDER, WHITE ON GREEN;
ARROW - 9.5" 180°; [F St] E MOD

4-9

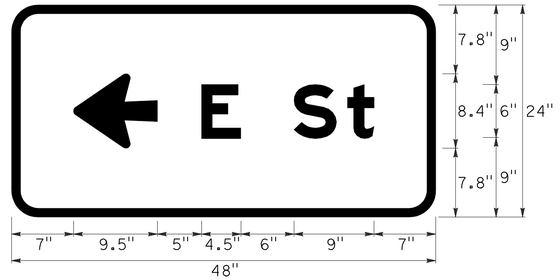

G8-1<CA>
3.0" RADIUS, 1.0" BORDER, WHITE ON GREEN;
ARROW - 9.5" 180°; [E St] E MOD

5-10

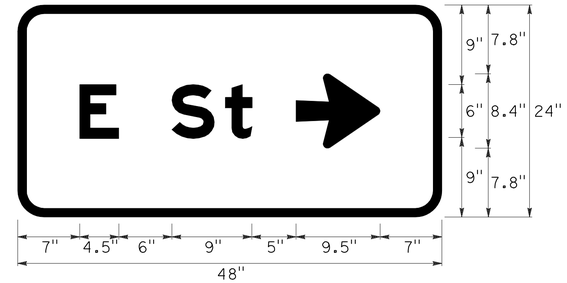

G8-1<CA>
3.0" RADIUS, 1.0" BORDER, WHITE ON GREEN;
[E St] E MOD; ARROW- 9.5" 0°

5-21

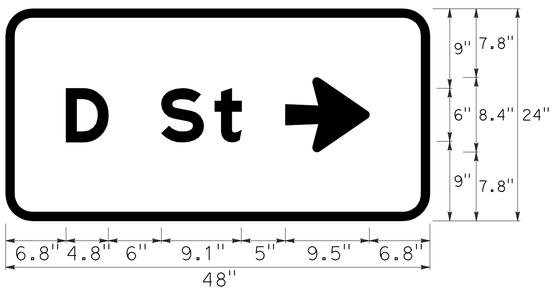

G8-1<CA>
3.0" RADIUS, 1.0" BORDER, WHITE ON GREEN;
[D St] E MOD; ARROW- 9.5" 0°

6-5

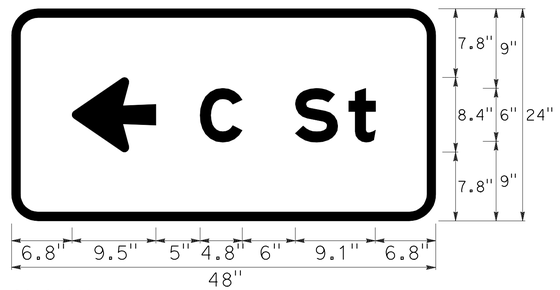

G8-1<CA>
3.0" RADIUS, 1.0" BORDER, WHITE ON GREEN;
ARROW - 9.5" 180°; [C St] E MOD

6-8

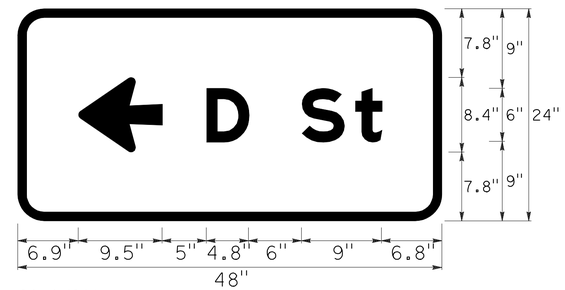

G8-1<CA>
3.0" RADIUS, 1.0" BORDER, WHITE ON GREEN;
ARROW - 9.5" 180°; [D St] E MOD

6-14

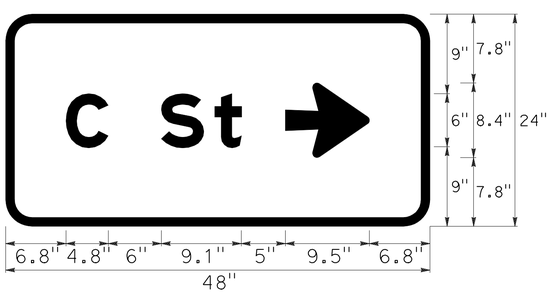

G8-1<CA>
3.0" RADIUS, 1.0" BORDER, WHITE ON GREEN;
[C St] E MOD; ARROW- 9.5" 0°

6-16

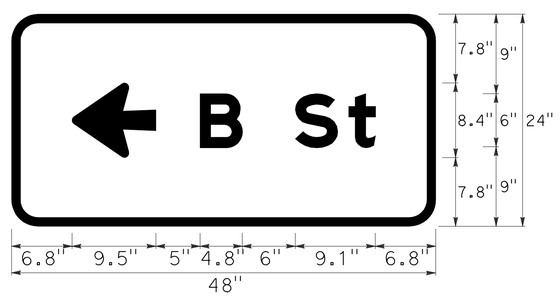

G8-1<CA>
3.0" RADIUS, 1.0" BORDER, WHITE ON GREEN;
ARROW - 9.5" 180°; [B St] E MOD

7-1

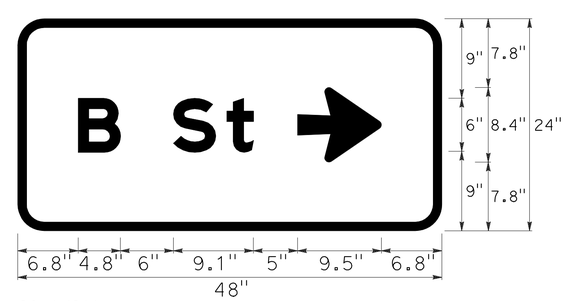

G8-1<CA>
3.0" RADIUS, 1.0" BORDER, WHITE ON GREEN;
[B St] E MOD; ARROW- 9.5" 0°

7-13

SIGN DETAIL

NO SCALE

SD-3

APPROVED FOR SIGN WORK ONLY

STATE OF CALIFORNIA - DEPARTMENT OF TRANSPORTATION
Caltrans®
TRAFFIC

FUNCTIONAL SUPERVISOR: SERGIO ACEVES
CALCULATED-DESIGNED BY: JEFF JEWETT
CHECKED BY: JOHN KEBER
REVISED BY
DATE REVISED

LAST REVISION 04-09-12 | DATE PLOTTED => 30-AUG-2012 | TIME PLOTTED => 10:25

Dist	COUNTY	ROUTE	POST MILES TOTAL PROJECT	SHEET No.	TOTAL SHEETS
03	ED	50	73.7/75.4	88	119

REGISTERED CIVIL ENGINEER 4-26-12 DATE

7-30-12
PLANS APPROVAL DATE

REGISTERED PROFESSIONAL ENGINEER Jeffrey S. Jewett No. 49233 Exp. 9-30-12 CIVIL STATE OF CALIFORNIA

THE STATE OF CALIFORNIA OR ITS OFFICERS OR AGENTS SHALL NOT BE RESPONSIBLE FOR THE ACCURACY OR COMPLETENESS OF SCANNED COPIES OF THIS PLAN SHEET.

ROADSIDE SIGN QUANTITIES

SIGN NUMBER (SHT-NO.)	SIGN CODE FEDERAL	SIGN CODE CALIFORNIA	PANEL SIZE INCHES	"C" DIM IN FEET	POST SIZE AND LENGTH 4"x6"	6"x6"	6"x8"	METAL POST 2½" X 2½"	ROADSIDE SIGN ONE POST EA	TWO POST EA	REMOVE ROADSIDE SIGN EA	RESET ROADSIDE SIGN EA	REMARKS
1-1		R26A<S) RSPEC1									1		
1-2		R26L	12 X 18	5				8′	1				
1-3	W2-2L		36 X 36	5				10′	1				
1-4	W2-2L										1		
1-5		RSPEC1 R26A(S)									1		
1-6		R26L	12 X 18	5				8′	1				
1-7		G8<CA> GSPEC<CA>										1	
1-8		R26L	12 X 18	5				8′	1				
1-9		RSPEC1 R26A(S)									1		
1-10	W11-1 W16-1		36 X 36 24 X 30	4				10	1				
1-11		RSPEC1 R26A(S)									1		
1-12		R26L	12 X 18	5				8′	1				
1-13	W11-1 W16-1		36 X 36 24 X 30	4				10	1				
1-14		R26A(S)									1		
1-15		R26L	12 X 18	5				8′	1				
1-16		RSPEC1 R26A(S)									1		
1-17		R26L	12 X 18	5				8′	1				
2-1		RSPEC1 R26A(S)									1		
2-2		R26L	12 X 18	5				8′	1				
2-3	R2-1(50)										1		
2-4	R2-1(50)	R48-1	36 X 48 36 X 18	4				12′	1				
2-5		RSPEC1 R26A(S)									1		
2-6	D9-8 RM-140	G83-1										1	
2-7		R26L	12 X 18	5				8′	1				
2-8		RSPEC1 R26A(S)									1		
2-9		R26L	12 X 18	5				8′	1				
2-10		R17B									1		
2-11	R3-2		24 X 24	5				10′	1				
2-12		R26A									1		
2-13		R26K	12 X 18	5				8′	1				
2-14		RSPEC1 R26A(S)									1		
2-15		R26L	12 X 18	5				8′	1				
2-16		G9-5									1		
2-17		G9-5	66 X 42	5	14′					1			
2-18		RSPEC1 R26A(S) R16B									1		
2-19	R3-1	R26L	12 X 18 24 X 24	4				10′	1				
2-20	R5-1 R5-1a											1	
2-21	R5-1 R5-1a											1	
2-22	R1-1		30	5				10′	1				
2-23	R1-1										1		
2-24		R26 R28(Lt)									1		
2-25		R26L R28S(Lt)	12 X 18 12 X 18	5				10′	1				
2-26	R2-1(50)										1		
SHEET TOTAL									19	1	19	4	

NOTES:

1. EXACT LOCATION AND POSITION OF ROADSIDE SIGNS TO BE DETERMINED BY THE ENGINEER.
2. POST LENGTHS GIVEN ARE APPROXIMATE.
3. "C" DIM = VERTICAL CLEARANCE EP TO BOTTOM OF SIGN PANEL.

SIGN QUANTITIES

SQ-1

STATE OF CALIFORNIA - DEPARTMENT OF TRANSPORTATION
Caltrans
TRAFFIC

FUNCTIONAL SUPERVISOR: SERGIO ACEVES
CALCULATED-DESIGNED BY: JEFF JEWETT
CHECKED BY: JOHN KEBER
REVISED BY
DATE REVISED

LAST REVISION 04-09-12
DATE PLOTTED => 30-AUG-2012
TIME PLOTTED => 10:25

Dist	COUNTY	ROUTE	POST MILES TOTAL PROJECT	SHEET No.	TOTAL SHEETS
03	ED	50	73.7/75.4	89	119

REGISTERED CIVIL ENGINEER 4-26-12 DATE

7-30-12
PLANS APPROVAL DATE

REGISTERED PROFESSIONAL ENGINEER Jeffrey S. Jewett No. 49233 Exp. 9-30-12 CIVIL STATE OF CALIFORNIA

THE STATE OF CALIFORNIA OR ITS OFFICERS OR AGENTS SHALL NOT BE RESPONSIBLE FOR THE ACCURACY OR COMPLETENESS OF SCANNED COPIES OF THIS PLAN SHEET.

ROADSIDE SIGN QUANTITIES (CONTINUED)

SIGN NUMBER (SHT-NO.)	SIGN CODE FEDERAL	SIGN CODE CALIFORNIA	PANEL SIZE INCHES	"C" DIM IN FEET	POST SIZE AND LENGTH 4"x6"	6"x6"	6"x8"	METAL POST 2½" X 2½"	ROADSIDE SIGN ONE POST EA	TWO POST EA	REMOVE ROADSIDE SIGN EA	RESET ROADSIDE SIGN EA	REMARKS
2-27	R2-1(50)	R48-1	36 X 48 36 X 18	4				12′	1				
2-28		CITYSIGN										1	
2-29		G26-2(50) G7-1									1		
2-30		G26-2(50) G7-1	30 X 30 54 X 30	4		16′			1				
2-31	W11-1 W16-1		36 X 36 24 X 30	4				10′	1				
3-1	W11-1 W16-1		36 X 36 24 X 30	4				10′	1				
3-2	W8-5										1		
3-3	W8-5		36 X 36	5				10′	1				
3-4	R1-1										1		
3-5	R1-1		30	5				10′	1				
3-6		RNS										1	ROAD NAME SIGN
3-7		SPEC1										1	
3-8		G30									1		
3-9		G30	48 X 26	5				8′	1				
3-10	R1-1										1		
3-11	R1-1		30	5				10′	1				
3-12		G30A-1 G30D-2									1		
3-13	M4-12	G30A-1	12 X 18 12 X 4	4				8′	1				
4-1	R1-1										1		
4-2		G5	102 X 54	5		16′				1			
4-3	R2-1(50)	R48-1									1		
4-4	R2-1(50)	R48-1	36 X 48 36 X 18	5				12′	1				
4-5	W6-3										1		
4-6	R2-1(40)	R48-1									1		
4-7	R2-1(40)	R48-1	36 X 48 36 X 18	4				12′	1				
4-8	W2-2L		36 X 36	5				10′	1				
4-9		G8-1	48 X 24	5				8′	1				F St
5-1		S31 S31A S31-1										1	
5-2		SR15 SR15A									1		
5-3		SR15 SR15A	18 X 24 18 X 18	4				10′	1				
5-4	W11-1 W16-1		36 X 36 24 X 30	4				10′	1				
5-5	R1-1										1		
5-6	R1-1		30	5				10′	1				
5-7		R81<CA> R81B<CA>	24 X 18 8 X 5	5				8′	1				
5-8	R4-1										1		
5-9		G5									1		
5-10	R4-1		36 X 48	7				12′	1				
5-11		G8-22									1		
5-12		G8-1	48 X 24	7				10′	1				E St
5-13	W4-2R R4-1										1		
5-14	W4-2R		36 X 36	7				12′	1				
5-15		R26(S)									1		
5-16		R26(S)	12 X 18	7				10′	1				
5-17		R28S(Lt) R26(S)									1		
SHEET TOTAL									21	1	18	4	

SIGN QUANTITIES

SQ-2

STATE OF CALIFORNIA - DEPARTMENT OF TRANSPORTATION
Caltrans
TRAFFIC

FUNCTIONAL SUPERVISOR: SERGIO ACEVES
CALCULATED-DESIGNED BY: JEFF JEWETT
CHECKED BY: JOHN KEBER
REVISED BY
DATE REVISED

LAST REVISION 04-09-12 | DATE PLOTTED => 30-AUG-2012 | TIME PLOTTED => 10:25

Dist	COUNTY	ROUTE	POST MILES TOTAL PROJECT	SHEET No.	TOTAL SHEETS
03	ED	50	73.7/75.4	90	119

REGISTERED CIVIL ENGINEER 4-26-12 DATE

7-30-12
PLANS APPROVAL DATE

REGISTERED PROFESSIONAL ENGINEER Jeffrey S. Jewett No. 49233 Exp. 9-30-12 CIVIL STATE OF CALIFORNIA

THE STATE OF CALIFORNIA OR ITS OFFICERS OR AGENTS SHALL NOT BE RESPONSIBLE FOR THE ACCURACY OR COMPLETENESS OF SCANNED COPIES OF THIS PLAN SHEET.

ROADSIDE SIGN QUANTITIES (CONTINUED)

SIGN NUMBER (SHT-No.)	SIGN CODE FEDERAL	SIGN CODE CALIFORNIA	PANEL SIZE INCHES	"C" DIM IN FEET	POST SIZE AND LENGTH 4"x6"	6"x6"	6"x8"	METAL POST 2½" X 2½"	ROADSIDE SIGN ONE POST EA	ROADSIDE SIGN TWO POST EA	REMOVE ROADSIDE SIGN EA	RESET ROADSIDE SIGN EA	REMARKS
5-18		R26(S) R28(S)(L+)	12 X 18 12 X 18	5				10′	1				
5-19	R2-1(40)	R48-1	36 X 48 36 X 18	5				12′	1				
5-20	R2-1(40)										1		
5-21		G8-22									1		
5-22		G8-1	48 X 24	7				10′	1				E S+
5-23	R3-7R		30 X 30	7				12′	1				
5-24	R1-1										1		
5-25	R1-1		30	5				10′	1				
5-26		R81 R81-A	24 X 18 12 X 5	5				8′	1				
5-27	R7-9		12 X 18	7				10′	1				
5-28		R26(S)									1		
5-29	W11-2		36 X 36	7				12′	1				
6-1		R26(S)									1		
6-2	W9-1R		36 X 36	7				12′	1		1		
6-3	R7-9		12 X 18	7				10′	1				
6-4	R1-1										1		
6-5	R1-1		30	7				12′	1				
6-6		G8-1	48 X 24	7				10′	1				D S+
6-7		G8-22									1		
6-8	RM-010 RM-020	G8-22									1		
6-9	RM-010 RM-020	G8-1	48 X 24 24 X 24 24 X 24	5				10′	1				C S+
6-10		R26(S)									1		
6-11	R2-1(40)										1		
6-12	R2-1(40)	R48-1	36 X 48 36 X 18	5				12′	1				
6-13		R26(S)									1		
6-14		G8-22									1		
6-15		G8-1	48 X 24	7				10′	1				D S+
6-16		G8-22									1		
6-17	RM-010 RM-020	G8-1	48 X 24 24 X 24 24 X 24	5				10′	1				C S+
6-18	R1-1										1		
6-19	R1-1		30	7				12′	1				
6-20	R7-9		12 X 18	7				10′	1				
6-21		R26A									1		
6-22	R2-1(35)	R48-1	36 X 48 36 X 18	5				12′	1				
6-23	R2-1(35)										1		
6-24		R26(S)									1		
7-1	D9-2	G8-1 G33-1(L+)	48 X 24 30 X 30 24 X 6	5				12′	1				B S+
7-2		G66-16 G33-1(L+)									1		
7-3	R7-9		12 X 18	7				10′	1				
7-4	R2-1(35)	R48-1	36 X 48 36 X 18	5				12′	1				
7-5	R2-1(35)	R48-1									1		
7-6	M3-4 M3-3	G26-2(50) G28-2(89)									1		
7-7	M3-4 M3-3	G26-2(50) G28-2(89)	30 X 30 30 X 15 30 X 31 30 X 15	5		16′			1				
								SHEET TOTAL	23	0	21	0	

SIGN QUANTITIES

SQ-3

STATE OF CALIFORNIA - DEPARTMENT OF TRANSPORTATION
TRAFFIC
Caltrans

FUNCTIONAL SUPERVISOR: SERGIO ACEVES
CALCULATED-DESIGNED BY: JEFF JEWETT
CHECKED BY: JOHN KEBER
REVISED BY
DATE REVISED

LAST REVISION 04-09-12
DATE PLOTTED => 30-AUG-2012
TIME PLOTTED => 10:25

Dist	COUNTY	ROUTE	POST MILES TOTAL PROJECT	SHEET No.	TOTAL SHEETS
03	ED	50	73.7/75.4	91	119

REGISTERED CIVIL ENGINEER 4-26-12 DATE

7-30-12
PLANS APPROVAL DATE

REGISTERED PROFESSIONAL ENGINEER Jeffrey S. Jewett No. 49233 Exp. 9-30-12 CIVIL STATE OF CALIFORNIA

THE STATE OF CALIFORNIA OR ITS OFFICERS OR AGENTS SHALL NOT BE RESPONSIBLE FOR THE ACCURACY OR COMPLETENESS OF SCANNED COPIES OF THIS PLAN SHEET.

ROADSIDE SIGN QUANTITIES (CONTINUED)

SIGN NUMBER (SHT-No.)	SIGN CODE		PANEL SIZE	"C" DIM IN FEET	POST SIZE AND LENGTH				ROADSIDE SIGN		REMOVE ROADSIDE SIGN	RESET ROADSIDE SIGN	REMARKS
	FEDERAL	CALIFORNIA	INCHES		4"x6"	6"x6"	6"x8"	METAL POST 2½" X 2½"	ONE POST EA	TWO POST EA	EA	EA	
7-8		R26(S)									1		
7-9		R26(S)	12 X 18	7				10′	1				
7-10		R26(S)									1		
7-11		R26(S)	12 X 18	7				10′	1				
7-12		R3(35)									1		
7-13		R3(35) R48-1	36 X 45 36 X 18	7				12′	1				
7-14	D9-2	G8-1 G33-1(R†)	48 X 24 30 X 30 24 X 6	5				12′	1				B S†
7-15	R1-1										1		
7-16	R1-1		30	7				12′	1				
7-17		RNS										1	ROAD NAME SIGN
7-18	R2-1(35)	R26(S)									1		
7-19	R2-1(35)	R48-1	36 X 48 36 X 18	5				12′	1				
7-20	R7-9		12 X 18	7				10′	1				
7-21		G8									1		
7-22		G8-7	114 X 66	7			18′			1			
7-23		R26(S)									1		
7-24		R26(S)	12 X 18	7				10′	1				
7-25	M3-1 M6-3 M3-2 M6-1	G28-2(89) G26-2(50)									1		
7-26	M3-1 M6-3 M3-2 M6-1	G28-2(89) G26-2(50)	30 X 15 30 X 31¼ 21 X 15 30 X 15 30 X 30 21 X 15	5	18′				1				
7-27		R26(S)									1		
7-28		R26(S)	12 X 18	7				10′	1				
SHEET TOTAL									10	1	9	1	
TOTAL FROM SHEET SQ-1									19	1	19	4	
TOTAL FROM SHEET SQ-2									21	1	18	4	
TOTAL FROM SHEET SQ-3									23	0	21	0	
TOTAL									73	3	67	9	

SIGN QUANTITIES

SQ-4

REVISED BY | DATE REVISED
JEFF JEWETT | JOHN KEBER
CALCULATED-DESIGNED BY | CHECKED BY
FUNCTIONAL SUPERVISOR
SERGIO ACEVES
STATE OF CALIFORNIA - DEPARTMENT OF TRANSPORTATION
Caltrans
TRAFFIC

LAST REVISION 04-09-12 | DATE PLOTTED => 30-AUG-2012 | TIME PLOTTED => 10:25

Dist	COUNTY	ROUTE	POST MILES TOTAL PROJECT	SHEET No.	TOTAL SHEETS
03	ED	50	73.7/75.4	92	119

REGISTERED CIVIL ENGINEER 4-26-12 DATE

7-30-12
PLANS APPROVAL DATE

REGISTERED PROFESSIONAL ENGINEER Jeffrey S. Jewett No. 49233 Exp. 9-30-12 CIVIL STATE OF CALIFORNIA

THE STATE OF CALIFORNIA OR ITS OFFICERS OR AGENTS SHALL NOT BE RESPONSIBLE FOR THE ACCURACY OR COMPLETENESS OF SCANNED COPIES OF THIS PLAN SHEET.

ROADSIDE SIGN PANEL QUANTITIES

SIGN CODE		SIGN MESSAGE/DESCRIPTION	PANEL SIZE L x D	PANEL AREA	NUMBER OF PANELS	BACKGROUND		LEGEND		PROTECTIVE OVERLAY	FURNISH SINGLE SHEET ALUMINUM SIGN			
											UNFRAMED		FRAMED	
						SHEETING COLOR	RETROREFLECTIVE ASTM TYPE	SHEETING COLOR	RETROREFLECTIVE ASTM TYPE	PREMIUM	0.063"	0.080"	0.063"	0.080"
FEDERAL	CALIFORNIA		INCHES	SQFT							SQFT	SQFT	SQFT	SQFT
D9-2		HOSPITAL	30 X 30	6.25	2	BLUE	III	WHITE	III	X	12.50			
	G26-2(50)	U S 50 (ROUTE MARKER)	30 X 30	6.25	3	WHITE	III	BLACK		X	18.75			
	G28-2(89)	CALIFORNIA 89 (ROUTE MARKER)	30 X 31 1/4	6.51	2	GREEN	III	WHITE	III	X	13.02			
	G30	SCENIC ROUTE	48 X 26	8.67	1	SEE NOTE 1	III	WHITE	III	X		8.67		
	G30D-2	END	12 X 8	0.67	1	BLUE	III	WHITE	III	X	0.67			
	G30A-1	SCENIC ROUTE	12 X 18	1.50	1	SEE NOTE 1	III	WHITE	III	X	1.50			
	G33-1Lt	DIRECTIONAL ARROW	24 X 6	1.00	1	BLUE	III	WHITE	III	X	1.00			
	G33-1Rt	DIRECTIONAL ARROW	24 X 6	1.00	2	BLUE	III	WHITE	III	X	2.00			
	G5	DISTANCE	102 X 54	38.25	1	GREEN	III	WHITE	III	X				38.25
	G7-1	EMERALD BAY Rd	54 X 30	11.25	1	GREEN	IV	WHITE	III	X		11.25		
	G8-1	LEFT ARROW ~ F St	48 X 24	8.00	1	GREEN	IV	WHITE	III	X	8.00			
	G8-1	LEFT ARROW ~ E St	48 X 24	8.00	1	GREEN	IV	WHITE	III	X	8.00			
	G8-1	E St ~ RIGHT ARROW	48 X 24	8.00	1	GREEN	IV	WHITE	III	X	8.00			
	G8-1	D St ~ RIGHT ARROW	48 X 24	8.00	1	GREEN	IV	WHITE	III	X	8.00			
	G8-1	LEFT ARROW ~ C St	48 X 24	8.00	1	GREEN	IV	WHITE	III	X	8.00			
	G8-1	LEFT ARROW ~ D St	48 X 24	8.00	1	GREEN	IV	WHITE	III	X	8.00			
	G8-1	C St ~ RIGHT ARROW	48 X 24	8.00	1	GREEN	IV	WHITE	III	X	8.00			
	G8-1	LEFT ARROW ~ B St	48 X 24	8.00	1	GREEN	IV	WHITE	III	X	8.00			
	G8-1	B St ~ RIGHT ARROW	48 X 24	8.00	1	GREEN	IV	WHITE	III	X	8.00			
	G8-7	UP ARROW ~ G28-1(89) ~ Tahoe City G26-1(50) ~ Lake Tahoe ~ 45° ARROW ~ Nevada	114 X 66	52.25	1	GREEN	IV	WHITE	III	X				52.25
	G9-5	South Lake Tahoe ~ CITY LIMIT POP 23609 ~ ELEV 6252	66 X 42	19.25	1	GREEN	III	WHITE	III	X			19.25	
M3-1		NORTH	30 X 15	3.13	1	WHITE	III	BLACK		X	3.13			
M3-2R		EAST	30 X 15	3.13	1	WHITE	III	BLACK		X	3.13			
M3-3		SOUTH	30 X 15	3.13	1	WHITE	III	BLACK		X	3.13			
M3-4		WEST	30 X 15	3.13	1	WHITE	III	BLACK		X	3.13			
M4-12		END	4 X 12	0.33	1	GREEN	III	WHITE		X	0.33			
M6-1		RIGHT DIRECTIONAL ARROW	21 X 15	2.19	1	WHITE	III	BLACK		X	2.19			
M6-3		UP DIRECTIONAL ARROW	21 X 15	2.19	1	WHITE	III	BLACK		X	2.19			
R1-1		STOP	30	5.18	8	RED	VII	WHITE	III	X	41.44			
R2-1(35)		SPEED LIMIT 35	36 X 48	12.00	3	WHITE	III	BLACK		X	36.00			
R2-1(40)		SPEED LIMIT 40	36 X 48	12.00	3	WHITE	III	BLACK		X	36.00			
SHEET TOTAL											252.11	19.92	19.25	90.50

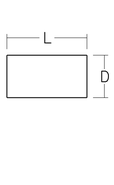

L = LENGTH OF PANEL
D = DEPTH OF PANEL

NOTES:
POPPY - #706 TRANSPARENT ORANGE
STEM - #708 GREEN
SKY - #710 BLUE
MOUNTAINS - #710 BLUE

SIGN QUANTITIES

SQ-5

STATE OF CALIFORNIA - DEPARTMENT OF TRANSPORTATION
TRAFFIC
Caltrans
FUNCTIONAL SUPERVISOR: SERGIO ACEVES
CALCULATED-DESIGNED BY: JEFF JEWETT
CHECKED BY: JOHN KEBER
REVISED BY
DATE REVISED

LAST REVISION 04-09-12
DATE PLOTTED => 30-AUG-2012
TIME PLOTTED => 10:25

Dist	COUNTY	ROUTE	POST MILES TOTAL PROJECT	SHEET No.	TOTAL SHEETS
03	ED	50	73.7/75.4	93	119

REGISTERED CIVIL ENGINEER 4-26-12 DATE

7-30-12
PLANS APPROVAL DATE

REGISTERED PROFESSIONAL ENGINEER Jeffrey S. Jewett No. 49233 Exp. 9-30-12 CIVIL STATE OF CALIFORNIA

THE STATE OF CALIFORNIA OR ITS OFFICERS OR AGENTS SHALL NOT BE RESPONSIBLE FOR THE ACCURACY OR COMPLETENESS OF SCANNED COPIES OF THIS PLAN SHEET.

ROADSIDE SIGN PANEL QUANTITIES (CONTINUED)

SIGN CODE		SIGN MESSAGE/DESCRIPTION	PANEL SIZE L x D	PANEL AREA	NUMBER OF PANELS	BACKGROUND		LEGEND		PROTECTIVE OVERLAY	FURNISH SINGLE SHEET ALUMINUM SIGN			
											UNFRAMED		FRAMED	
						SHEETING COLOR	RETROREFLECTIVE ASTM TYPE	SHEETING COLOR	RETROREFLECTIVE ASTM TYPE	PREMIUM	0.063"	0.080"	0.063"	0.080"
FEDERAL	CALIFORNIA		INCHES	SQFT							SQFT	SQFT	SQFT	SQFT
R2-1(50)		SPEED LIMT 50	36 X 48	12.00	3	WHITE	III	BLACK		X	36.00			
	R26K	TOW AWAY NO PARKING	12 X 18	1.50	1	WHITE	III	BLACK RED	 III	X	1.50			
	R26L	TOW AWAY NO STOPPING ANY TIME	12 X 18	1.50	11	WHITE	III	RED	III	X	16.50			
	R26(S)	NO STOPPING ANY TIME	12 X 18	1.50	5	WHITE	III	RED	III	X	7.50			
	R28(S)(L†)	NO STOPPING ANY TIME WITH ARROW	12 X 18	1.50	2	WHITE	III	RED	III	X	3.00			
	R3(35)	END SPEED LIMIT 35	36 X 45	11.25	1	WHITE	III	BLACK		X	11.25			
R3-1		RIGHT TURN PROHIBITION	36 X 36	9.00	1	WHITE	III	BLACK RED	 III	X	9.00			
R3-2		LEFT TURN PROHIBITION	36 X 36	9.00	1	WHITE	III	BLACK RED	 III	X	9.00			
R3-7R		RIGHT LANE MUST TURN RIGHT	30 X 30	6.25	1	WHITE	III	BLACK		X	6.25			
R4-1		DO NOT PASS	36 X 48	12.00	1	WHITE	III	BLACK		X	12.00			
	R48-1	RADAR ENFORCED	36 X 18	4.50	3	WHITE	III	BLACK		X	13.50			
R7-9		NO PARKING ~ BIKE LANE	12 X 18	1.50	5	WHITE	III	RED	III	X	7.50			
	R81	BIKE LANE	24 X 18	3.00	2	WHITE	III	BLACK		X	6.00			
	R81A	BEGIN	12 X 5	0.42	1	WHITE	III	BLACK		X	0.42			
	R81B	END	8 X 5	0.28	1	WHITE	III	BLACK		X	0.28			
RM-010		CAMPING (TENT) SYMBOL	24 X 24	4.00	2	WHITE	III	BROWN	III	X	8.00			
RM-020		CAMPING (TRAILER) SYMBOL	24 X 24	4.00	2	WHITE	III	BROWN	III	X	8.00			
	SR15	SEAT BELT SYMBOL	18 X 24	3.00	1	WHITE	III	BLACK		X	3.00			
	SR15A	SAFETY BELT LAW ENFORCED	18 X 18	2.25	1	WHITE	III	BLACK		X	2.25			
W11-1		BICYCLE TRAFFIC SYMBOL	36 X 36	9.00	5	FYG	III	BLACK		X	9.00			
W11-2		PEDESTRAIN TRAFFIC SYMBOL	36 X 36	9.00	1	YELLOW	III	BLACK		X	9.00			
W2-2L		LEFT SIDE ROAD	36 X 36	9.00	2	YELLOW	III	BLACK		X	18.00			
W4-2R		RIGHT LANE ENDS	36 X 36	9.00	1	YELLOW	III	BLACK		X	9.00			
W8-5		SLIPPERY WHEN WET SYMBOL	36 X 36	9.00	1	YELLOW	III	BLACK		X	9.00			
W9-1R		RIGHT LANE ENDS	36 X 36	9.00	1	YELLOW	III	BLACK		X	9.00			
W16-1		SHARE THE ROAD	24 X 30	5.00	5	FYG	III	BLACK		X	25.00			
SHEET TOTAL											248.95	0	0	0
SHEET TOTAL FROM SQ-5											252.11	19.92	19.25	90.50
TOTAL											501.06	19.92	19.25	90.50

FYG = FLUORESCENT YELLOW GREEN

SIGN QUANTITIES

SQ-6

STATE OF CALIFORNIA - DEPARTMENT OF TRANSPORTATION
TRAFFIC
Caltrans

FUNCTIONAL SUPERVISOR: SERGIO ACEVES
CALCULATED-DESIGNED BY: JEFF JEWETT
CHECKED BY: JOHN KEBER
REVISED BY
DATE REVISED

LAST REVISION 04-09-12
DATE PLOTTED => 30-AUG-2012
TIME PLOTTED => 10:25

Dist	COUNTY	ROUTE	POST MILES TOTAL PROJECT	SHEET No.	TOTAL SHEETS
03	ED	50	73.7/75.4	94	119

REGISTERED CIVIL ENGINEER 4-26-12 DATE

7-30-12
PLANS APPROVAL DATE

REGISTERED PROFESSIONAL ENGINEER JACK COWELL No. 65521 Exp. 9-30-13 CIVIL STATE OF CALIFORNIA

THE STATE OF CALIFORNIA OR ITS OFFICERS OR AGENTS SHALL NOT BE RESPONSIBLE FOR THE ACCURACY OR COMPLETENESS OF SCANNED COPIES OF THIS PLAN SHEET.

ROADWAY QUANTITIES

STATION/LOCATION	HOT MIX ASPHALT (TYPE A)	PLACE HOT MIX ASPHALT (Misc AREA)	TACK COAT	CLASS 2 AGGREGATE BASE	COLD PLANE ASPHALT CONCRETE PAVEMENT	SHOULDER BACKING	ROADWAY EXCAVATION	(N) EMBANKMENT	RECONSTRUCT METAL BEAM GUARD RAILING	IMPORTED BORROW
	TON	SQYD	TON	CY	SQYD	TON	CY	CY	LF	CY
"A1" 890+00.70 TO 892+50.00 EB/WB	233.5		0.15	65.93		36.28	86.01	25.7		
"A1" 892+50.00 TO 893+50.00 EB/WB	157.1		0.07	23.66		19.17	48.38	16.1		
"A1" 893+50.00 TO 894+92.10 EB/WB	130.9		0.10			27.24		38.4		
"A1" 894+92.10 TO 898+30.40 EB/WB	247.5		0.18			64.84		263.7		
"A1" 898+30.40 TO 904+02.10 EB/WB	349.3		0.26			109.58		99.0		
"A1" 904+02.10 TO 907+00.00 EB/WB	179.5		0.13			79.44	289.55	2.6		
"A1" 907+00.00 TO 912+25.00 EB/WB	385.9		0.26	30.30		113.75	51.64	71.6		
"A1" 912+25.00 TO 918+70.40 EB/WB	777.8		0.39	247.71		91.41	378.72	1114.5		
"A1" 918+70.40 TO 921+69.60 EB/WB	187.1		0.14			57.35		695.5		
"A1" 921+69.60 TO 928+11.40 EB/WB	412.7		0.31			90.92		87.3		659.9
"A1" 928+11.40 TO 936+93.80 EB/WB	673.9		0.46	48.05		125.01	106.95	211.7		
"A1" 936+93.80 TO 942+38.00 EB/WB	502.1		0.51	91.10	57.37	104.30	206.26	16.1		
"A1" 942+38.00 TO 946+46.70 EB/WB	491.8		0.57	29.76	2734.29	23.84	68.75	28.4	175.0	
"A1" 946+46.70 TO 953+80.00 EB/WB	758.6		0.94		4495.11			7.4		
"A1" 953+80.00 TO 955+65.00 EB/WB	215.1		0.27		1274.44			1.9		
"A1" 955+65.00 TO 960+25.00 EB/WB	535.2		0.66		3171.68			5.8		
"A1" 960+25.00 TO 965+40.00 EB/WB	601.4		0.74		3563.85			43.2		
"A1" 965+40.00 TO 971+51.60 EB/WB	717.6		0.89		4252.64			45.1		
"A1" 971+51.60 TO 979+70.00 EB/WB	1290.3		1.59		7646.03			47.2		
MVP's										
"A1" 897+14.77 TO 898+52.94 L+	35.9			56.45			79.17			
"A1" 902+66.02 TO 904+11.81 L+	35.3			56.30			78.86			
"A1" 903+65.10 TO 904+72.36 R+	26.7			43.47			60.73			
"A1" 910+76.79 TO 912+08.18 R+	27.3			47.44			65.79			
"A1" 917+53.53 TO 918+78.39 R+	22.3			35.51			49.74			
"A1" 920+91.97 TO 922+21.24 R+	21.3			34.51			48.24			
"A1" 928+76.65 TO 930+03.98 L+	25.7			48.53			66.74			
DRIVEWAY CONFORMS	924.3	3043.0	0.63		3043.04					
HMA SIDEWALKS (FROM SHEET Q-4)	285.8	2329.5	0.16	222.5			311.90			
ROADWAY CONFORM					378.20					
ACCESS ROAD	346.9		0.26	104.20						
AIRPORT ENTRANCE	94.9		0.07							
AIRPORT EXIT	124.4		0.09							
"H" STREET	61.8		0.04							
KYBURZ AVE	351.4		0.24							
"F" STREET	70.1		0.05							
"E" STREET	87.5		0.06							
"D" STREET	82.2		0.06							
"C" STREET	80.3		0.06							
"B" STREET	59.1		0.04							
REPLACE "REMOVE BASE & SURFACING"								524.8		
SIDEWALK CONFORMS					188.70					
PLACE HMA DIKE (FROM SHEET Q-4)	21.8									
TOTAL FROM SHEET Q-3				2017.73			2461.76			
TOTAL FROM SHEET DQ-4	3.0	15.0								
SELECT MATERIAL REPLACING AC								1119.9		
GRADING FACTOR ADJUSTMENT								671.7		
TOTAL	11,635.3	5387.5	10.38	3203.15	30,805.35	943.13	4459.19	5137.6	175.0	659.9

REMOVE BASE AND SURFACING

LOCATION	REMOVE BASE AND SURFACING	
	REMOVE SIDEWALK	REMOVE Misc AREA
	CY	CY
"A1" 912+05.76 TO 912+56.44 L+		22.07
"A1" 916+07.13 TO 916+35.49 L+		30.30
"A1" 917+80.59 TO 921+20.00 L+		266.46
"A1" 928+10.62 TO 931+30.00 L+		101.35
"A1" 947+26.27 TO 951+13.79 L+	32.51	
"A1" 947+34.13 TO 947+68.36 R+	3.10	
"A1" 951+25.55 TO 953+46.69 L+	19.75	
"A1" 953+80.33 TO 955+59.65 R+	8.54	
"A1" 955+91.65 TO 956+56.15 R+	5.54	
"A1" 956+12.37 TO 956+48.31 L+	1.92	
"A1" 956+81.21 TO 957+38.93 R+	4.36	
"A1" 956+82.97 TO 956+98.91 L+	1.00	
"A1" 958+84.18 TO 959+33.40 R+	3.55	
"A1" 959+49.90 TO 960+44.53 R+	8.37	
"A1" 965+69.96 TO 968+00.27 L+	10.04	
"A1" 971+57.97 TO 971+91.08 R+	2.14	
"A1" 972+19.08 TO 972+88.08 R+	3.74	
SUB-TOTAL	104.56	420.18
TOTAL	524.74*	

NOTES:

(N) NOT A SEPARATE PAY ITEM, FOR INFORMATION ONLY.

* QUANTITY INCLUDED IN ROADWAY QUANTITIES SUMMARY AS EMBANKMENT QUANTITY ALSO

SUMMARY OF QUANTITIES

Q-1

REVISED BY | DATE REVISED

JACK COWELL | MASTRI ALVANDI

CALCULATED-DESIGNED BY | CHECKED BY

FUNCTIONAL SUPERVISOR: MASTRI ALVANDI

STATE OF CALIFORNIA - DEPARTMENT OF TRANSPORTATION
Caltrans
NORTH REGION
DIVISION OF ENGINEERING
DESIGN BRANCH M8

LAST REVISION 04-23-12 | DATE PLOTTED => 30-AUG-2012 | TIME PLOTTED => 10:25

Dist	COUNTY	ROUTE	POST MILES TOTAL PROJECT	SHEET No.	TOTAL SHEETS
03	ED	50	73.7/75.4	95	119

REGISTERED CIVIL ENGINEER 4-26-12 DATE

7-30-12
PLANS APPROVAL DATE

REGISTERED PROFESSIONAL ENGINEER JACK COWELL No. 65521 Exp. 9-30-13 CIVIL STATE OF CALIFORNIA

THE STATE OF CALIFORNIA OR ITS OFFICERS OR AGENTS SHALL NOT BE RESPONSIBLE FOR THE ACCURACY OR COMPLETENESS OF SCANNED COPIES OF THIS PLAN SHEET.

CURB AND GUTTER QUANTITIES

STATION/LOCATION		MINOR CONCRETE (CURB AND GUTTER) TYPE D - (MOD)	TYPE A2-6 (MOD)	TYPE A2-8 (MOD)	TYPE A2-8	VALLEY GUTTER	MINOR CONCRETE (DRIVEWAY)	MINOR CONCRETE (CURB RAMP)	CLASS 2 AGGREGATE BASE	ROADWAY EXCAVATION
		CY	CY	CY	CY	CY	CY	CY	CY	CY
"A1" 904+02.10 TO 912+08.23	R†	66.08							196.31	227.97
"E" STREET	R†							2.92	2.92	5.84
"A1" 947+27.37 TO 947+56.60	R†			1.59					4.51	5.59
DRIVEWAY No. 2	R†						7.81		14.08	17.98
"A1" 948+06.60 TO 949+13.84	R†			5.85					16.55	20.52
DRIVEWAY No. 3	R†						8.12		14.67	18.73
"A1" 949+65.84 TO 951+11.08	R†			7.92					22.42	27.79
DRIVEWAY No. 5	R†						7.81		14.08	17.98
"A1" 951+61.08 TO 952+65.23	R†			5.68					16.07	19.93
DRIVEWAY No. 6	R†						8.76		15.85	20.23
"A1" 953+21.23 TO 953+27.59	R†			0.35					0.98	1.22
DRIVEWAY No. 7	R†						8.76		15.85	20.23
"A1" 953+83.59 TO 955+47.65	R†			8.95					25.32	31.40
DRIVEWAY No. 9	R†						8.76		15.85	20.23
"A1" 956+03.65 TO 956+44.00	R†			2.20					6.23	7.72
DRIVEWAY No. 10	R†						8.12		14.67	18.73
"A1" 956+96.00 TO 957+26.93	R†			1.69					4.77	5.92
DRIVEWAY No. 11	R†						8.76		15.85	20.23
"A1" 957+82.93 TO 958+41.88	R†			3.21					9.10	11.28
"C" STREET	R†							6.36	6.36	12.72
"A1" 958+76.74 TO 959+12.28	R†			1.94					5.49	6.80
DRIVEWAY No. 13	R†						9.40		17.04	21.74
"A1" 959+72.28 TO 960+29.52	R†			3.12					8.83	10.95
DRIVEWAY No. 15	R†						8.76		15.85	20.23
"A1" 960+85.52 TO 962+69.78	R†			10.05					28.44	35.26
DRIVEWAY No. 18	R†					4.37			13.11	15.30
"A1" 963+37.78 TO 965+58.97	R†			12.06					34.14	42.33
DRIVEWAY No. 21	R†						7.81		14.08	17.98
"A1" 966+08.97 TO 966+38.00	R†			1.58					4.48	5.56
DRIVEWAY No. 22	R†						10.03		18.23	23.24
"A1" 967+02.00 TO 967+41.00	R†			2.13					6.02	7.46
DRIVEWAY No. 23	R†						8.76		15.85	20.23
"A1" 967+97.00 TO 968+15.13	R†			0.99					2.80	3.47
DRIVEWAY No. 24	R†						7.81		14.08	17.98
"A1" 968+65.13 TO 968+86.74	R†			1.18					3.34	4.14
DRIVEWAY No. 25	R†						7.81		14.08	17.98
"A1" 969+36.74 TO 969+62.24	R†			1.39					3.94	4.88
"B" STREET	R†							6.10	6.10	12.20
"A1" 969+97.10 TO 970+35.58	R†				2.45				6.65	8.08
DRIVEWAY No. 27	R†						7.26		12.30	15.93
"A1" 970+79.58 TO 970+86.22	R†				0.42				1.15	1.39
DRIVEWAY No. 29	R†						7.26		12.30	15.93
"A1" 971+30.22 TO 971+79.08	R†				3.12				8.45	10.26
DRIVEWAY No. 31	R†						8.61		14.67	18.73
"A1" 972+31.08 TO 972+74.00	R†				2.74				7.42	9.01
DRIVEWAY No. 32	R†						8.61		14.67	18.73
"A1" 973+26.00 TO 974+73.61	R†				9.42				25.51	30.98
DRIVEWAY No. 34	R†					5.76			16.60	19.47
"A1" 975+51.61 TO 977+25.95	R†				11.12				30.13	36.59
DRIVEWAY No. 36	R†						9.28		16.45	21.09
SUBTOTAL		66.08		71.88	29.27	10.13	168.30	15.38	824.64	1026.16
SHEET TOTAL				177.36*			168.30*	15.38*	824.64*	1026.16*

NOTE:
* FOR TOTAL QUANTITIES SEE SHEET Q-3

ROCK SLOPE PROTECTION FABRIC

LOCATION	SQYD
"A1" 897+00 TO 898+00 R†	490.0
FROM SHEET DQ-4	266.7
TOTAL	756.7

BOULDER PLACEMENT

LOCATION	(N) EA
"A1" 915+78.0 TO 920+31.0 L†	42

(N) - NOT A SEPARATE PAY ITEM, FOR INFORMATION ONLY

ADJUST VALVE BOX FRAME AND COVER TO GRADE

SHEET No.	LOCATION	EA
	37.20' R† "A1" 969+64.15	1
	36.32' R† "A1" 974+83.01	1
	TOTAL	2

ROCK STAIN

LOCATION	SQFT
"A1" 897+00 TO 898+00 R†	4765.0
TOTAL	4765.0

ROCK SLOPE PROTECTION (1/2 T, METHOD A)

LOCATION	CY
"A1" 897+00 TO 898+00 R†	48.0
TOTAL	48.0

ROCK SLOPE PROTECTION (1/4 T, METHOD B)

LOCATION	CY
"A1" 897+00 TO 898+00 R†	245.0
TOTAL	245.0

ROCK SLOPE PROTECTION (No. 2, METHOD B)

LOCATION	CY
"A1" 897+00 TO 898+00 R†	19.5
TOTAL	19.5

SUMMARY OF QUANTITIES

Q-2

STATE OF CALIFORNIA - DEPARTMENT OF TRANSPORTATION
Caltrans
NORTH REGION
DIVISION OF ENGINEERING
DESIGN BRANCH M8

FUNCTIONAL SUPERVISOR: MASTRI ALVANDI
CALCULATED-DESIGNED BY: JACK COWELL
CHECKED BY: MASTRI ALVANDI
REVISED BY
DATE REVISED

LAST REVISION 04-23-12
DATE PLOTTED => 30-AUG-2012
TIME PLOTTED => 10:25

Dist	COUNTY	ROUTE	POST MILES TOTAL PROJECT	SHEET No.	TOTAL SHEETS
03	ED	50	73.7/75.4	96	119

REGISTERED CIVIL ENGINEER 4-26-12 DATE

7-30-12
PLANS APPROVAL DATE

REGISTERED PROFESSIONAL ENGINEER JACK COWELL No. 65521 Exp. 9-30-13 CIVIL STATE OF CALIFORNIA

THE STATE OF CALIFORNIA OR ITS OFFICERS OR AGENTS SHALL NOT BE RESPONSIBLE FOR THE ACCURACY OR COMPLETENESS OF SCANNED COPIES OF THIS PLAN SHEET.

CURB AND GUTTER QUANTITIES

STATION/LOCATION		MINOR CONCRETE (CURB AND GUTTER) TYPE D - (MOD)	TYPE A2-6 (MOD)	TYPE A2-8 (MOD)	TYPE A2-8	VALLEY GUTTER	MINOR CONCRETE (DRIVEWAY)	MINOR CONCRETE (CURB RAMP)	CLASS 2 AGGREGATE BASE	ROADWAY EXCAVATION
		CY	CY	CY	CY	CY	CY	CY	CY	CY
"A1" 890+80.50 TO 892+45.00	L+	14.24							37.77	43.87
"A1" 892+45.00 TO 894+87.06	L+		9.81						32.50	41.46
"A1" 894+87.06 TO 898+18.71	L+	28.71							76.16	88.44
"A1" 903+28.19 TO 907+32.62	L+	31.52							93.64	108.75
"A1" 915+69.40 TO 918+15.40	L+		14.85						48.64	56.50
"A1" 918+15.40 TO 921+25.00	L+	27.52							77.22	89.66
"A1" 921+25.00 TO 921+78.77	L+		2.68						7.22	9.21
"A1" 934+08.59 TO 936+54.85	L+	21.31							56.55	65.67
"A1" 937+00.00 TO 942+15.30	L+	39.83							118.33	137.41
"F" STREET	L+							1.78	1.78	3.56
"A1" 942+38.38 TO 945+75.00	L+	29.19							77.44	89.94
DRIVEWAY No. 1	L+					5.03			15.15	17.67
"A1" 946+30.00 TO 951+01.77	L+			25.73					72.81	90.28
DRIVEWAY No. 4	L+						6.22		11.11	14.22
"A1" 951+41.77 TO 953+26.87	L+			10.09					28.57	35.42
DRIVEWAY No. 8	L+						10.03		18.23	23.24
"A1" 953+90.87 TO 956+50.00	L+			14.13					39.99	49.59
"D" STREET	L+							3.56	3.56	7.12
"A1" 956+82.22 TO 957+44.00	L+			3.37					9.53	11.82
DRIVEWAY No. 12	L+					5.03			14.74	17.19
"A1" 958+20.00 TO 959+76.08	L+			8.51					24.09	29.87
DRIVEWAY No. 14	L+					3.97			17.63	19.62
"A1" 960+38.08 TO 961+15.86	L+			4.24					12.00	14.88
DRIVEWAY No. 16	L+					3.31			9.85	11.51
"A1" 961+67.86 TO 962+48.16	L+			4.38					12.39	15.37
DRIVEWAY No. 17	L+						9.71		11.89	13.88
"A1" 963+10.15 TO 963+55.21	L+			2.46					6.95	8.62
DRIVEWAY No. 19	L+					4.11			12.20	14.35
"A1" 964+19.21 TO 965+23.53	L+			5.69					16.10	19.96
DRIVEWAY No. 20	L+					3.97			17.63	22.49
"A1" 965+85.53 TO 969+23.91	L+			18.45					52.22	64.75
DRIVEWAY No. 26	L+						8.44		15.26	19.48
"A1" 969+77.91 TO 970+82.00	L+			5.68					16.06	19.92
DRIVEWAY No. 28	L+						6.92		11.71	15.17
"A1" 971+24.00 TO 971+35.67	L+				0.74				2.02	2.45
DRIVEWAY No. 30	L+						9.95		17.04	22.02
"A1" 971+95.67 TO 973+84.08	L+				12.02				32.57	39.55
DRIVEWAY No. 33	L+						10.62		19.41	24.72
"A1" 974+48.08 TO 976+06.69	L+				10.12				27.42	33.29
DRIVEWAY No. 35	L+						9.95		17.71	22.68
SUB-TOTAL		192.32	27.34	102.73	22.88	25.42	71.84	5.34	1193.09	1435.60
SHEET TOTAL				370.69			71.84	5.34	1193.09	1435.60
FROM SHEET Q-2				177.36			168.30	15.38	824.64	1026.16
TOTAL				548.05			240.14	20.72	2017.73*	2461.76*

NOTE:
* FOR TOTAL QUANTITIES SEE ROADWAY QUANTITIES TABLE

TEMPORARY FENCE

STATION	TEMPORARY FENCE (TYPE ESA)
	LF
"A1" 913+06.63 TO 913+81.90	210.0
TOTAL	210.0

SPLIT RAIL FENCE QUANTITY

STATION	LOCATION	SPLIT RAIL FENCE
		LF
"A1" 909+66.64 TO 909+66.80	R+	26
"A1" 909+67.31 TO 910+36.13	R+	68
"A1" 910+36.60 TO 910+42.49	R+	8
"A1" 910+44.53 TO 910+69.06	R+	26
"A1" 910+69.43 TO 911+13.15	R+	44
TOTAL		172

SUMMARY OF QUANTITIES

Q-3

STATE OF CALIFORNIA - DEPARTMENT OF TRANSPORTATION
Caltrans
NORTH REGION
DIVISION OF ENGINEERING
DESIGN BRANCH M8

FUNCTIONAL SUPERVISOR: MASTRI ALVANDI
CALCULATED-DESIGNED BY: JACK COWELL
CHECKED BY: MASTRI ALVANDI
REVISED BY
DATE REVISED

LAST REVISION 04-23-12
DATE PLOTTED => 30-AUG-2012
TIME PLOTTED => 10:26

Dist	COUNTY	ROUTE	POST MILES TOTAL PROJECT	SHEET No.	TOTAL SHEETS
03	ED	50	73.7/75.4	97	119

REGISTERED CIVIL ENGINEER 4-26-12 DATE

7-30-12
PLANS APPROVAL DATE

REGISTERED PROFESSIONAL ENGINEER JACK COWELL No. 65521 Exp. 9-30-13 CIVIL STATE OF CALIFORNIA

THE STATE OF CALIFORNIA OR ITS OFFICERS OR AGENTS SHALL NOT BE RESPONSIBLE FOR THE ACCURACY OR COMPLETENESS OF SCANNED COPIES OF THIS PLAN SHEET.

TEMPORARY CONSTRUCTION ENTRANCE

LOCATION	EA
ROUTE 50	2
TOTAL	2

PLACE HOT MIX ASPHALT DIKE

STATION/LOCATION	TYPE C	TYPE E	TYPE F	HOT MIX ASPHALT (TYPE A)
	LF	LF	LF	TON
"A1" 898+18.71 to 903+24.72 Lt		506.0		13.3
"A1" 917+53.53 to 918+88.70 Rt		137.7		3.6
"A1" 920+91.97 to 922+26.90 Rt		137.9		3.6
"A1" 943+83.27 to 944+50.00 Lt			66.7	0.9
"A1" 944+50.00 to 945+05.00 Lt	55.0			0.4
SHEET TOTAL	55.0	781.6	66.7	21.8*
TOTAL	55.0	781.6	66.7	

SIDEWALK QUANTITIES

STATION/LOCATION	HOT MIX ASPHALT (TYPE A)	PLACE HOT MIX ASPHALT (Misc AREA)	CLASS 2 AGGREGATE BASE	TACK COAT	ROADWAY EXCAVATION
	TON	SQYD	CY	TON	CY
"A1" 942+56.50 to 945+94.42 Lt	17.5	173.0		0.02	
"A1" 946+11.51 to 947+24.92 Lt	6.2	60.9		0.01	
"A1" 947+24.92 to 951+01.77 Lt	28.2	209.0	34.8		48.8
"A1" 951+41.77 to 953+26.87 Lt	13.9	102.8	17.1		24.0
"A1" 953+71.63 to 956+08.10 Lt	12.8	126.9		0.02	
"A1" 956+08.10 to 956+35.13 Lt	1.9	14.0	2.3		3.3
"A1" 957+01.18 to 957+55.76 Lt	3.6	27.0		0.01	
"A1" 958+04.11 to 959+08.40 Lt	7.5	55.6	9.3		13.0
"A1" 959+08.40 to 959+83.04 Lt	4.7	35.1		0.01	
"A1" 960+19.82 to 961+29.59 Lt	5.2	51.5		0.01	
"A1" 961+55.33 to 962+63.60 Lt	5.5	54.7		0.01	
"A1" 963+00.90 to 963+67.21 Lt	3.7	36.2		0.01	
"A1" 963+96.37 to 965+41.36 Lt	7.9	77.8		0.01	
"A1" 965+85.53 to 969+23.91 Lt	25.4	188.0	31.3		43.9
"A1" 969+77.91 to 970+82.00 Lt	7.8	57.8	9.6		13.5
"A1" 971+95.67 to 973.84.08 Lt	14.1	104.7	17.4		24.4
"A1" 974+48.08 to 976+06.69 Lt	11.9	88.1	14.7		20.6
SHEET TOTAL	177.8	1463.1	136.5	0.11	191.5

REMOVE ASPHALT CONCRETE DIKE, PORTLAND CEMENT CURB

LOCATION	REMOVE ASPHALT CONCRETE DIKE	REMOVE CONCRETE CURB
	LF	LF
"A1" 890+80.50 TO 891+00.00 Lt		19.5
"A1" 891+00.00 TO 907+32.62 Lt	1634.0	
"A1" 934+08.59 TO 943+80.0 Lt	971.4	
"A1" 946+00.0 TO 968+00 Lt	2200.0	
"A1" 946+00.0 TO 951+21.77 Rt	521.8	
"A1" 959+57.00 TO 965+70.00 Rt	613.0	
"A1" 967+10.0 TO 979+70.0 Rt		1260.0
"A1" 968+00 TO 979+70.0 Lt		1170.0
TOTAL	5940.2	2449.5

TEMPORARY COVER

LOCATION	SQYD
ROUTE 50	1060
TOTAL	1060

TEMPORARY FIBER ROLL

LOCATION	LF
ROUTE 50	5800
TOTAL	5800

TEMPORARY SILT FENCE

LOCATION	LF
ROUTE 50	5200
TOTAL	5200

TEMPORARY DRAINAGE INLET PROTECTION

LOCATION	EA
ROUTE 50	30
TOTAL	30

TEMPORARY HYDRAULIC MULCH

LOCATION	SQYD
ROUTE 50	3700
TOTAL	3700

TEMPORARY CHECK DAM

LOCATION	LF
ROUTE 50	12
TOTAL	12

SIDEWALK QUANTITIES

STATION/LOCATION	HOT MIX ASPHALT (TYPE A)	PLACE HOT MIX ASPHALT (Misc AREA)	CLASS 2 AGGREGATE BASE	TACK COAT	ROADWAY EXCAVATION
	TON	SQYD	CY	TON	CY
"A1" 948+06.60 to 949+13.84 Rt	8.0	59.6	9.9		13.9
"A1" 949+65.84 to 951+11.08 Rt	10.9	80.7	13.4		18.8
"A1" 951+61.08 to 952+65.23 Rt	7.8	57.9	9.6		13.5
"A1" 953+21.23 to 953+27.59 Rt	0.5	3.5	0.6		0.8
"A1" 953+83.59 to 955+47.65 Rt	12.3	91.1	15.2		21.3
"A1" 956+03.65 to 956+44.00 Rt	3.0	22.4	3.7		5.2
"A1" 956+96.00 to 957+26.93 Rt	2.3	17.2	2.9		4.0
"A1" 957+82.93 to 958+41.88 Rt	4.4	32.8	5.5		7.6
"A1" 959+72.28 to 960+29.52 Rt	4.3	31.8	5.3		7.4
"A1" 960+67.56 to 962+92.16 Rt	12.8	126.8		0.02	
"A1" 963+21.24 to 965+65.85 Rt	13.7	135.6		0.02	
"A1" 966+08.97 to 966+38.00 Rt	2.2	16.1	2.7		3.8
"A1" 967+02.00 to 967+41.00 Rt	2.9	21.7	3.6		5.1
"A1" 967+97.00 to 968+15.13 Rt	1.4	10.1	1.7		2.4
"A1" 968+65.13 to 968+86.74 Rt	1.6	12.0	2.0		2.8
"A1" 969+32.74 to 969+36.74 Rt	0.3	2.2	0.4		0.5
"A1" 970+34.87 to 970+38.87 Rt	0.3	2.2	0.4		0.5
"A1" 970+79.58 to 970+86.22 Rt	0.5	3.7	0.6		0.9
"A1" 971+30.22 to 971+79.08 Rt	3.7	27.1	4.5		6.3
"A1" 972+31.08 to 972+74.00 Rt	3.2	23.8	4.0		5.6
"A1" 973+26.00 to 974+73.54 Rt	11.9	88.1		0.01	
SHEET TOTAL	108.0	866.4	86.0	0.05	120.4
TRANSFERRED TOTAL	177.8	1463.1	136.5	0.11	191.5
TOTAL	285.8*	2329.5*	222.5*	0.16*	311.9*

* FOR TOTAL QUANTITY, SEE ROADWAY QUANTITIES

SUMMARY OF QUANTITIES

Q-4

REVISED BY | DATE REVISED
JACK COWELL | MASTRI ALVANDI
CALCULATED-DESIGNED BY | CHECKED BY
FUNCTIONAL SUPERVISOR: MASTRI ALVANDI

STATE OF CALIFORNIA - DEPARTMENT OF TRANSPORTATION
Caltrans
NORTH REGION
DIVISION OF ENGINEERING
DESIGN BRANCH M8

LAST REVISION 04-23-12 | DATE PLOTTED => 30-AUG-2012 | TIME PLOTTED => 10:26

DIST	COUNTY	ROUTE	POST MILES TOTAL PROJECT	SHEET NO.	TOTAL SHEETS
03	ED	50	73.7/75.4	98	119

Roberta L. McLaughlin
REGISTERED CIVIL ENGINEER

April 20, 2012
PLANS APPROVAL DATE

REGISTERED PROFESSIONAL ENGINEER
Roberta L. McLaughlin
No. C40375
Exp. 3-31-13
CIVIL
STATE OF CALIFORNIA

The State of California or its officers or agents shall not be responsible for the accuracy or completeness of electronic copies of this plan sheet.

To accompany plans dated 7-30-12

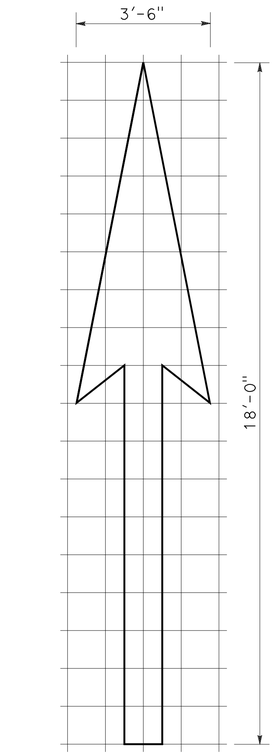

A=25 sq ft

TYPE I 18'-0" ARROW

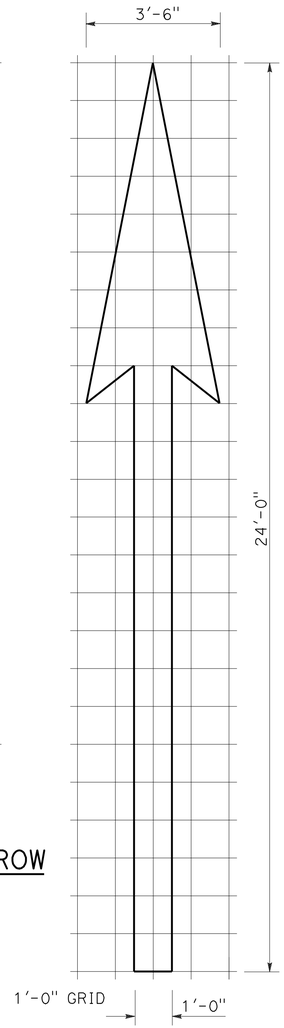

A=31 sq ft

TYPE I 24'-0" ARROW

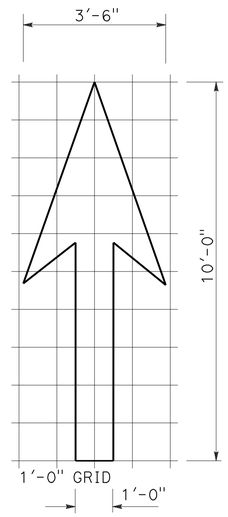

A=14 sq ft

TYPE I 10'-0" ARROW

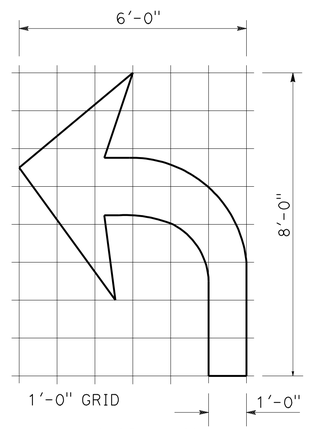

A=15 sq ft

TYPE IV (L) ARROW

(FOR TYPE IV (R) ARROW, USE MIRROR IMAGE)

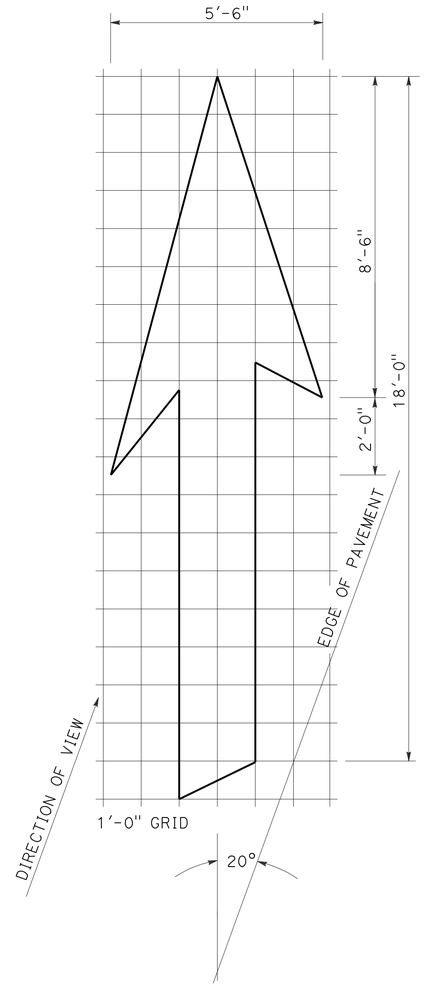

A=42 sq ft

TYPE VI ARROW

RIGHT LANE DROP ARROW (FOR LEFT LANE, USE MIRROR IMAGE)

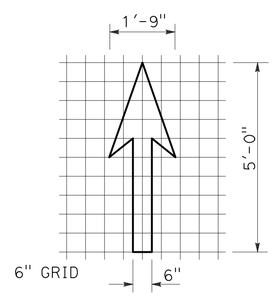

A=3.5 sq ft

BIKE LANE ARROW

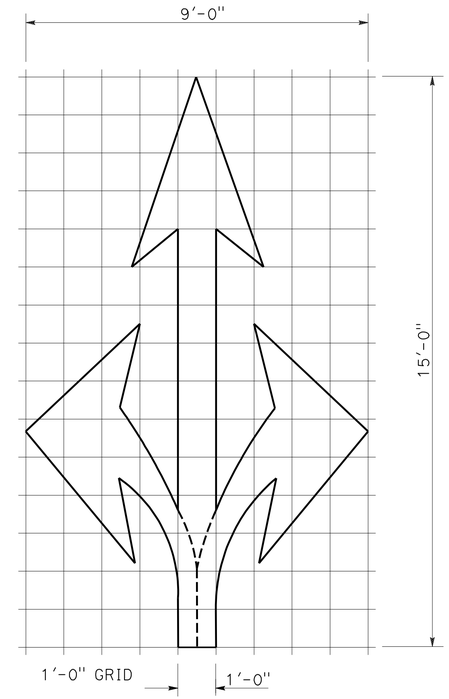

A=36 sq ft

TYPE VIII ARROW

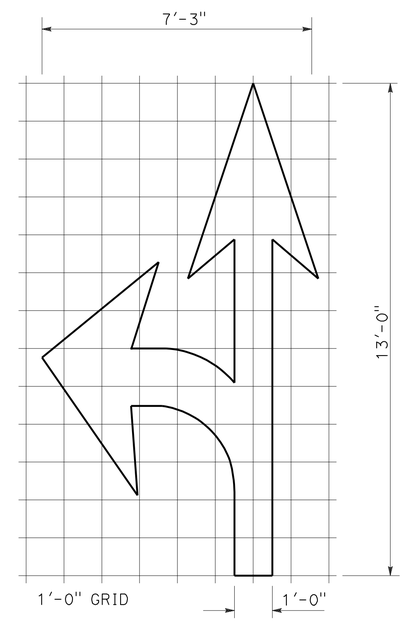

A=27 sq ft

TYPE VII (L) ARROW

(FOR TYPE VII (R) ARROW, USE MIRROR IMAGE)

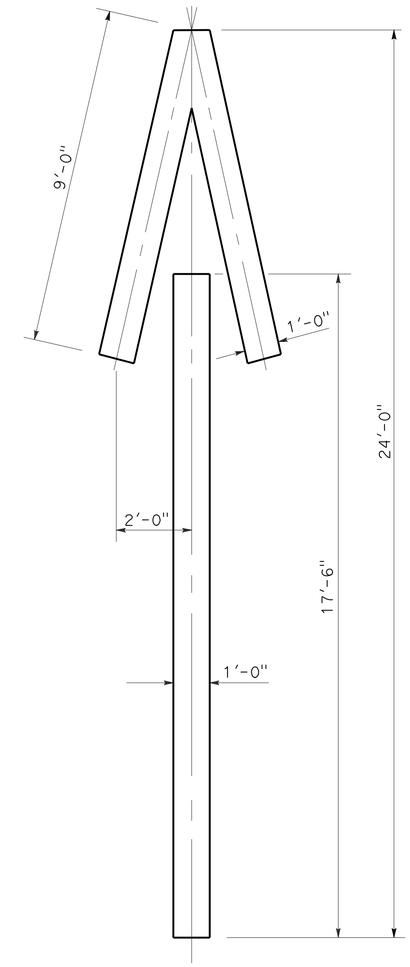

A=33 sq ft

TYPE V ARROW

NOTE:

MINOR VARIATIONS IN DIMENSIONS MAY BE ACCEPTED BY THE ENGINEER.

STATE OF CALIFORNIA
DEPARTMENT OF TRANSPORTATION

PAVEMENT MARKINGS ARROWS

NO SCALE

RSP A24A DATED APRIL 20, 2012 SUPERSEDES STANDARD PLAN A24A DATED MAY 1, 2006 - PAGE 9 OF THE STANDARD PLANS BOOK DATED MAY 2006.

REVISED STANDARD PLAN RSP A24A

2006 REVISED STANDARD PLAN RSP A24A

3-14-12

Dist	COUNTY	ROUTE	POST MILES TOTAL PROJECT	SHEET No.	TOTAL SHEETS
03	ED	50	73.7/75.4	99	119

Randell D. Hiatt
REGISTERED CIVIL ENGINEER

May 20, 2011
PLANS APPROVAL DATE

REGISTERED PROFESSIONAL ENGINEER
Randell D. Hiatt
No. C50200
Exp. 6-30-11
CIVIL
STATE OF CALIFORNIA

The State of California or its officers or agents shall not be responsible for the accuracy or completeness of electronic copies of this plan sheet.

To accompany plans dated 7-30-12

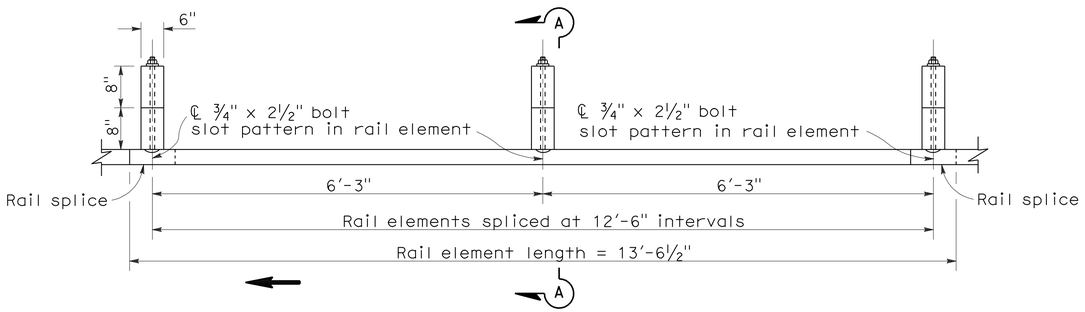

PLAN

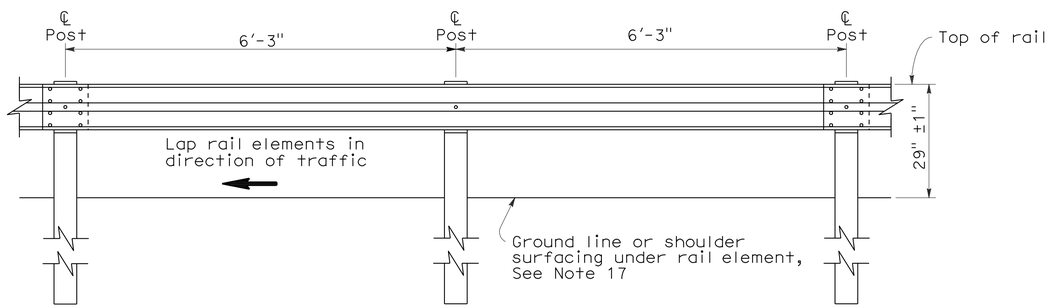

ELEVATION

METAL BEAM GUARD RAILING WITH WOOD POST AND BLOCKS

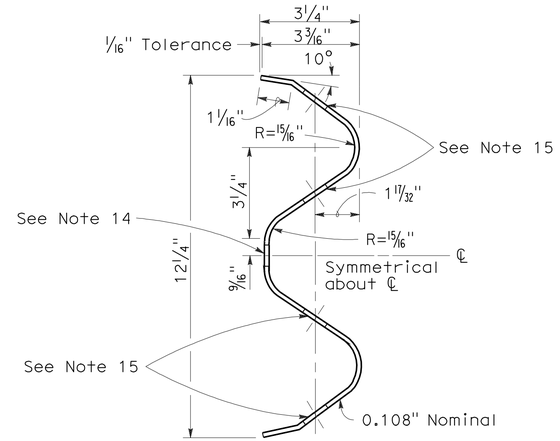

SECTION THRU RAIL ELEMENT

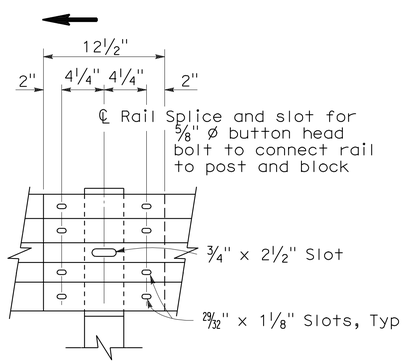

ELEVATION

RAIL ELEMENT SPLICE DETAIL

a) Connect the over lapped end of the rail elements with ⅝" ø x 1⅜" button head oval shoulder splice bolts inserted into the 29⁄32" x 1⅛" slots and bolted together with ⅝" ø recessed hex nuts. Recess of hex nut points toward rail element. A total of 8 bolts and nuts are to be used at each rail splice connection.

b) The ends of the rail elements are to be overlapped in the direction of traffic (see details).

c) Where end cap is to be attached to the end of a rail element, a total of 4 of the above described splice bolts and nuts are to be used.

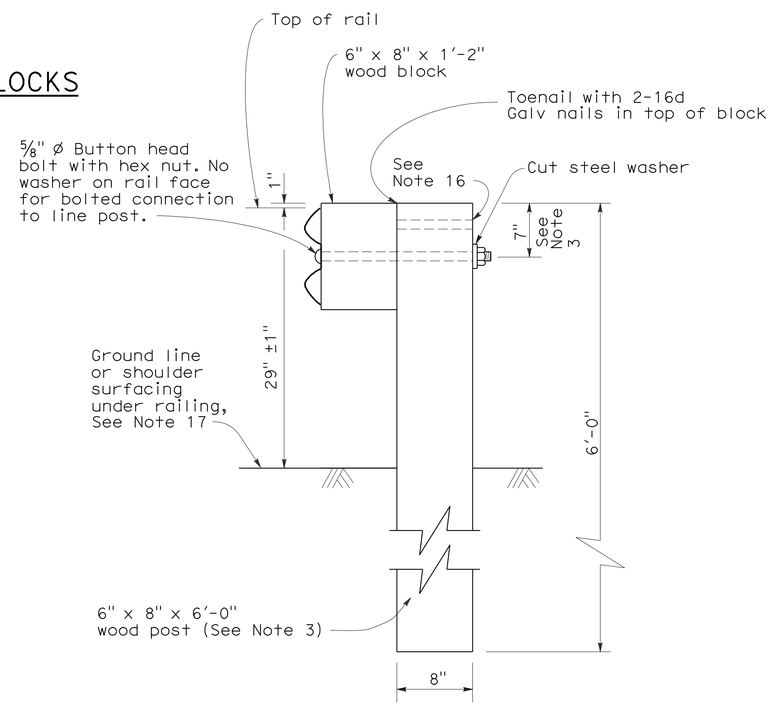

SECTION A-A

TYPICAL WOOD LINE POST INSTALLATION

See Note 4

NOTES:

1. For details of steel post installations, see Standard Plan A77A2.
2. For details of standard hardware used to construct guard railing, see Standard Plan A77B1.
3. For details of wood posts and wood blocks used to construct guard railing, see Standard Plan A77C1.
4. For additional installation details, see Standard Plan A77C3.
5. Guard railing post spacing to be 6'-3" center to center, except as otherwise noted.
6. For guard railing typical layouts, see the A77E, A77F and A77G Series of Standard Plans.
7. For terminal system end treatment details, see the A77L Series of Standard Plans. To connect railing to terminal system end treatment, transition the top of railing height at a ratio of 120:1 to terminal system end treatment height plus one 12'-6" standard railing section at the transitioned height for a horizontal connection to the end treatment.
8. For guard railing end anchor details, see Standard Plans A77H1 and A77I2.
9. For details of guard railing transition to bridge railing, see Standard Plan A77J4.
10. For additional details of guard railing connection to bridge railings, see Standard Plans A77J1, A77J2 and A77K1.
11. For guard railing connection details to abutments and walls, see Standard Plan A77J3.
12. Direction of adjacent traffic indicated by ➡.
13. For typical guard railing delineation and dike positioning details, see Standard Plan A77C4.
14. Slotted hole for bolted connection of rail element to block and post. See "Section Thru Rail Element".
15. Slotted holes for splice bolts to overlap ends of rail element. See "Section Thru Rail Element".
16. Additional hole in uppermost portion of line post is for potential future adjustments of railing height. See Standard Plan A77C1.
17. Install posts in soil.

STATE OF CALIFORNIA
DEPARTMENT OF TRANSPORTATION

METAL BEAM GUARD RAILING STANDARD RAILING SECTION (WOOD POST WITH WOOD BLOCK)

NO SCALE

RSP A77A1 DATED MAY 20, 2011 SUPERSEDES STANDARD PLAN A77A1 DATED MAY 1, 2006 - PAGE 41 OF THE STANDARD PLANS BOOK DATED MAY 2006.

REVISED STANDARD PLAN RSP A77A1

2006 REVISED STANDARD PLAN RSP A77A1

3-10-11

To accompany plans dated 7-30-12

Dist	COUNTY	ROUTE	POST MILES TOTAL PROJECT	SHEET No.	TOTAL SHEETS
03	ED	50	73.7/75.4	100	119

Randell D. Hiatt
REGISTERED CIVIL ENGINEER

May 20, 2011
PLANS APPROVAL DATE

REGISTERED PROFESSIONAL ENGINEER
Randell D. Hiatt
No. C50200
Exp. 6-30-11
CIVIL
STATE OF CALIFORNIA

The State of California or its officers or agents shall not be responsible for the accuracy or completeness of electronic copies of this plan sheet.

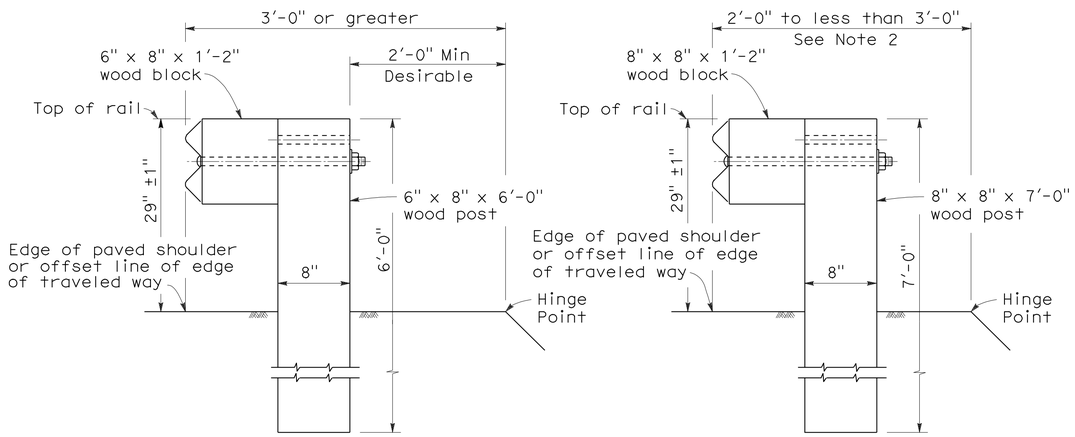

DETAIL A
TYPICAL ROADWAY INSTALLATION
See Note 1

DETAIL B
NARROW ROADWAY INSTALLATION
See Note 1

POST EMBEDMENT

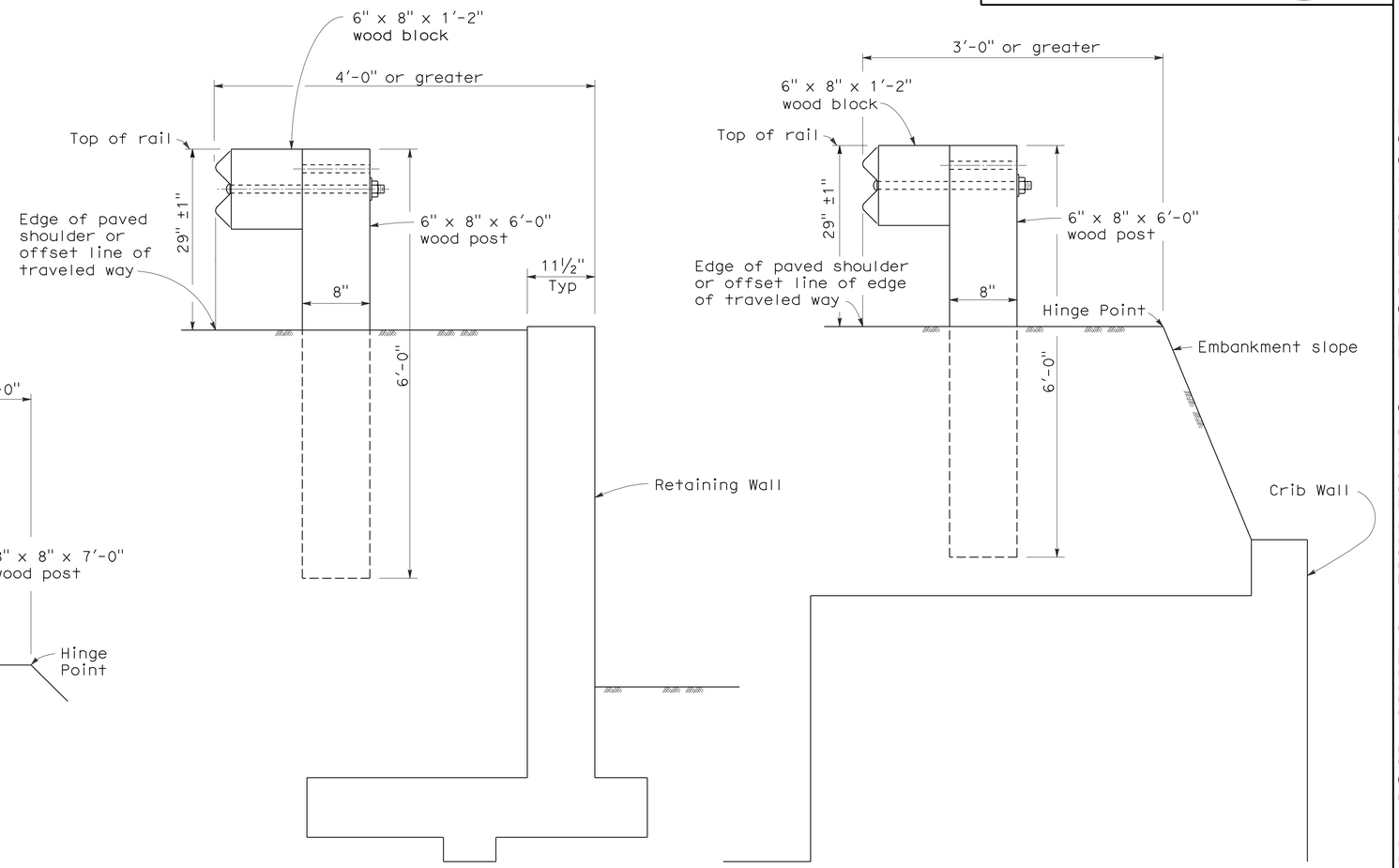

DETAIL C

DETAIL D

INSTALLATION AT EARTH RETAINING WALLS

NOTES:

1. These installation details also applicable to steel line post installations. For Detail A, C, and D, where steel line post installations are constructed, W6 x 9 steel post, 6'-0" in length, with 6" x 8" x 1'-2" notched wood blocks or notched recycled plastic blocks are to be used in place of the size of wood post and wood block shown. For Detail B, where steel line post installations are constructed, W6 x 9 steel post, 7'-0" in length, with 6" x 8" x 1'-2" notched wood blocks or notched recycled plastic blocks are to be used in place of the size of wood post and wood block shown. For additional installation details, see Standard Plans A77A1 and A77A2.
2. Where the distance between the face of the rail and the hinge point is less than 2'-0", see the Project Plans for special details.
3. For dike positioning with guard railing installations, see Standard Plan A77C4.

STATE OF CALIFORNIA
DEPARTMENT OF TRANSPORTATION

METAL BEAM GUARD RAILING TYPICAL LINE POST EMBEDMENT AND HINGE POINT OFFSET DETAILS

NO SCALE

RSP A77C3 DATED MAY 20, 2011 SUPERSEDES STANDARD PLAN A77C3
DATED MAY 1, 2006 - PAGE 46 OF THE STANDARD PLANS BOOK DATED MAY 2006.

REVISED STANDARD PLAN RSP A77C3

2006 REVISED STANDARD PLAN RSP A77C3

3-10-11

Dist	COUNTY	ROUTE	POST MILES TOTAL PROJECT	SHEET No.	TOTAL SHEETS
03	ED	50	73.7/75.4	101	119

Randell D. Hiatt
REGISTERED CIVIL ENGINEER

May 20, 2011
PLANS APPROVAL DATE

REGISTERED PROFESSIONAL ENGINEER
Randell D. Hiatt
No. C50200
Exp. 6-30-11
CIVIL
STATE OF CALIFORNIA

The State of California or its officers or agents shall not be responsible for the accuracy or completeness of electronic copies of this plan sheet.

To accompany plans dated 7-30-12

NOTES:

1. When necessary to place dike in front of face of guard railing, only Type C dike may be used. For dike details, see Standard Plan A87B.
2. For standard railing post embedment, see Standard Plans A77C3.
3. Guard railing delineation to be used where shown on the Project Plans.
4. When dike or curb is placed under guard railing, the maximum height of the dike or curb shall be 4". Mountable dike should not be used. For dike and curb details, see Standard Plans A87A and A87B.
5. For details of typical distance between the face of rail and hinge point, see Standard Plan A77C3.
6. For steel line posts, use ¼ - 20 self-tapping screws in 0.22" diameter holes or ¼" bolts in 9/32" diameter holes.

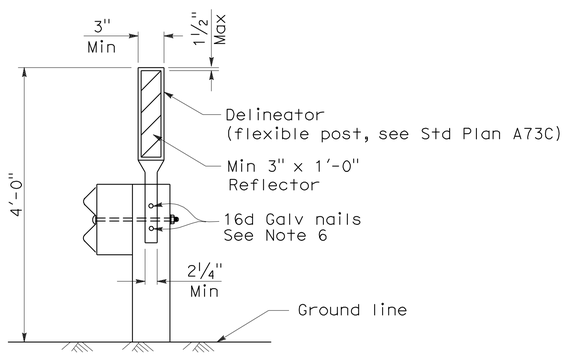

GUARD RAILING DELINEATION

See Note 3

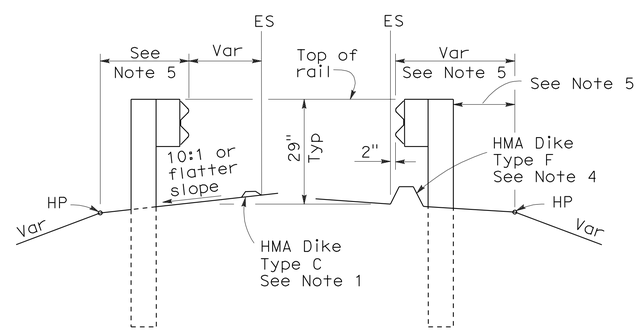

DIKE POSITIONING

See Note 1

STATE OF CALIFORNIA
DEPARTMENT OF TRANSPORTATION

METAL BEAM GUARD RAILING TYPICAL RAILING DELINEATION AND DIKE POSITIONING DETAILS

NO SCALE

RSP A77C4 DATED MAY 20, 2011 SUPERSEDES RSP A77C4 DATED JUNE 6, 2008 AND STANDARD PLAN A77C4 DATED MAY 1, 2006 - PAGE 47 OF THE STANDARD PLANS BOOK DATED MAY 2006.

REVISED STANDARD PLAN RSP A77C4

2006 REVISED STANDARD PLAN RSP A77C4

3-10-11

DIST	COUNTY	ROUTE	POST MILES TOTAL PROJECT	SHEET NO.	TOTAL SHEETS
03	ED	50	73.7/75.4	102	119

Randell D. Hiatt
REGISTERED CIVIL ENGINEER

June 6, 2008
PLANS APPROVAL DATE

REGISTERED PROFESSIONAL ENGINEER
Randell D. Hiatt
No. C50200
Exp. 6-30-09
CIVIL
STATE OF CALIFORNIA

The State of California or its officers or agents shall not be responsible for the accuracy or completeness of electronic copies of this plan sheet.

To accompany plans dated 7-30-12

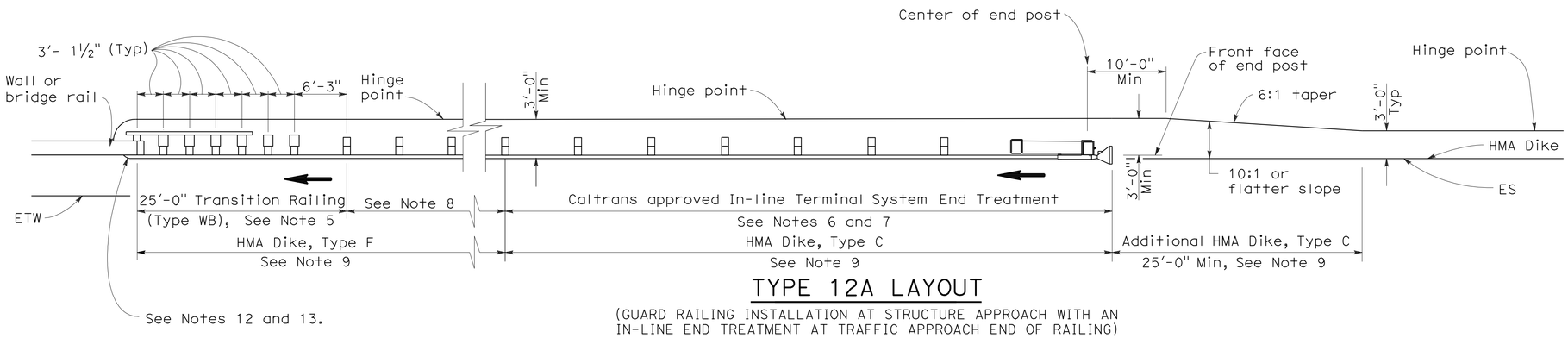

TYPE 12A LAYOUT

(GUARD RAILING INSTALLATION AT STRUCTURE APPROACH WITH AN IN-LINE END TREATMENT AT TRAFFIC APPROACH END OF RAILING)
See Notes 10

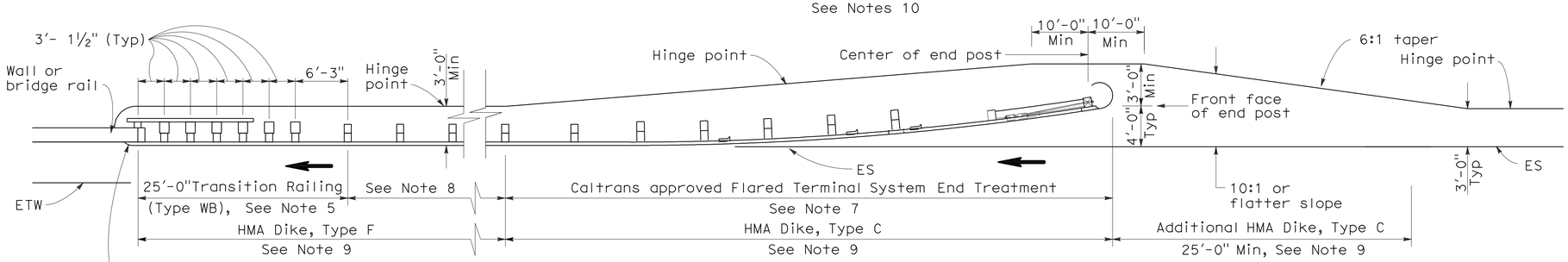

TYPE 12B LAYOUT

(GUARD RAILING INSTALLATION AT STRUCTURE APPROACH WITH A FLARED END TREATMENT AT TRAFFIC APPROACH END OF RAILING)
See Notes 10

NOTES:

1. Line post, blocks and hardware to be used are shown on Standard Plans A77A1, A77A2, A77B1, A77C1 and A77C2.
2. Guard rail post spacing to be 6'-3" center to center, except as otherwise noted.
3. Except as noted, line posts are 6" x 8" x 6'-0" wood with 6" x 8" x 1'-2" wood blocks. W6 x 9 steel posts, 6'-0" in length, with 6" x 8" x 1'-2" notched wood blocks or plastic blocks may be used for 6" x 8" x 6'-0" wood posts with 6" x 8" x 1'-2" wood blocks where applicable and when specified.
4. Direction of adjacent traffic indicated by ➡.
5. For Transition Railing (Type WB) details for Types 12A and 12B Layouts, see Standard Plan A77J4.
6. In-line Terminal System End Treatments are used where site conditions will not accommodate a flared end treatment.
7. The type of terminal system end treatment to be used will be shown on the Project Plans.
8. Dependent on site conditions (embankment height, side slopes, or other fixed objects), it may be advisable to construct additional guard railing (a length equal to multiples of 12'-6" with 6'-3" post spacing) between the transition railing and end treatment.
9. Where placement of dike is required with guard railing installations, see Revised Standard Plan RSP A77C4 for dike positioning details.
10. Type 12A or Type 12B Layouts are typically used:
    a. To the right of approaching traffic, at the end of a structure, on two-lane conventional highway where the roadbed width across the structure is less than 40 feet.
    b. To the left of approaching traffic, at the end of a structure, on two-lane conventional highway where the roadbed width across the structure is less than 40 feet.
    c. To the right of approaching traffic at the end of each structure on multilane freeways or expressways with separate adjacent or parallel bridges.
    d. To the right of approaching traffic at the end of the structure on multilane freeways or expressways with decked median on the bridge.
11. See Revised Standard Plan RSP A77F3 for typical layout used left of approaching traffic at the ends of each structure on multilane freeways or expressways with separate adjacent or parallel bridges.
12. For additional details of typical connections to bridge rail, see Connection Detail AA on Revised Standard Plans RSP A77J1 and RSP A77J2 and Connection Detail FF on Standard Plans A77K1 and A77K2.
13. For additional details of a typical connection to walls or abutments, see Standard Plan A77J3.

STATE OF CALIFORNIA
DEPARTMENT OF TRANSPORTATION

METAL BEAM GUARD RAILING TYPICAL LAYOUTS FOR STRUCTURE APPROACH

NO SCALE

RSP A77F1 DATED JUNE 6, 2008 SUPERSEDES STANDARD PLAN A77F1
DATED MAY 1, 2006 - PAGE 54 OF THE STANDARD PLANS BOOK DATED MAY 2006.

REVISED STANDARD PLAN RSP A77F1

2006 REVISED STANDARD PLAN RSP A77F1

12-10-07

Dist	COUNTY	ROUTE	POST MILES TOTAL PROJECT	SHEET No.	TOTAL SHEETS
03	ED	50	73.7/75.4	103	119

Randell D. Hiatt
REGISTERED CIVIL ENGINEER

May 20, 2011
PLANS APPROVAL DATE

REGISTERED PROFESSIONAL ENGINEER
Randell D. Hiatt
No. C50200
Exp. 6-30-11
CIVIL
STATE OF CALIFORNIA

The State of California or its officers or agents shall not be responsible for the accuracy or completeness of electronic copies of this plan sheet.

To accompany plans dated 7-30-12

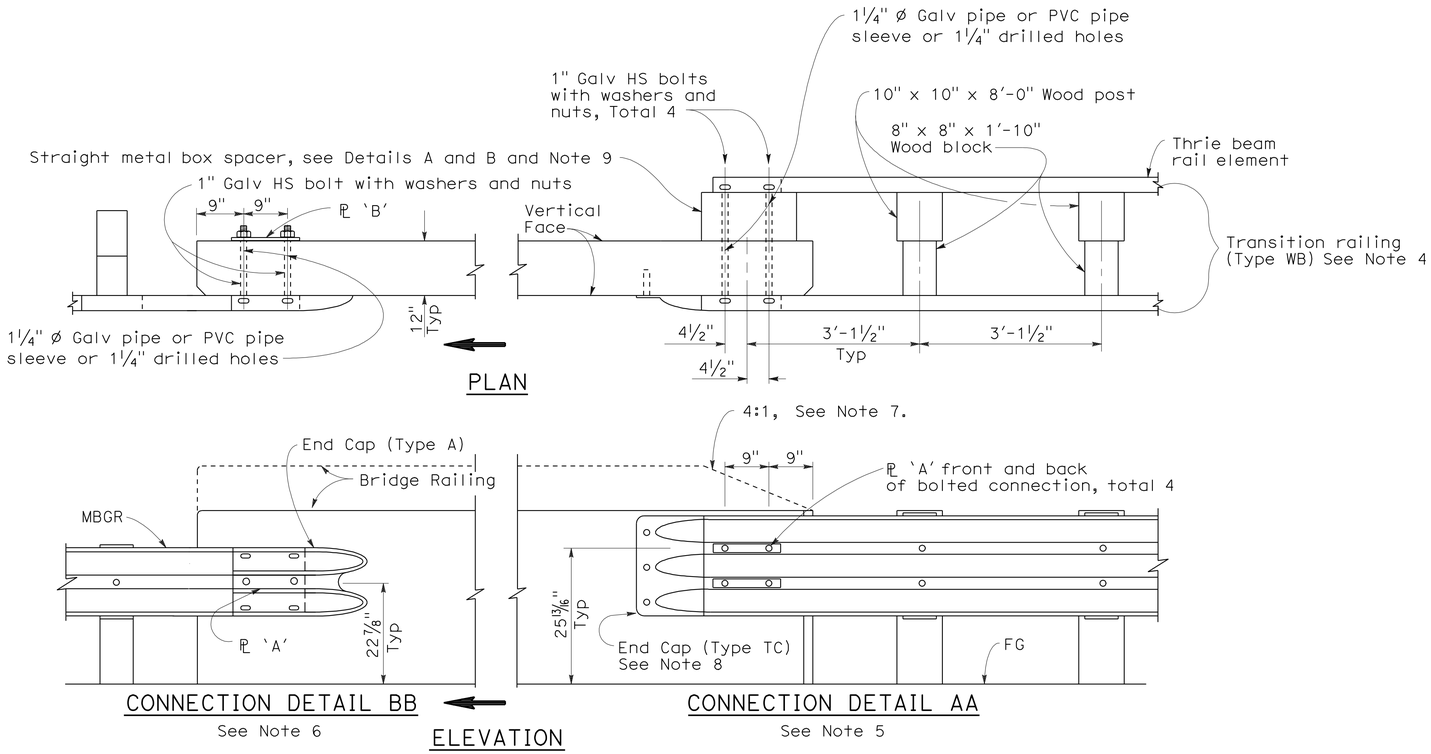

GUARD RAILING CONNECTION TO BRIDGE RAILING WITHOUT SIDEWALK

NOTES:

1. See Revised Standard Plan RSP A77J2 for additional connection details to bridges without sidewalks.
2. Additional details of posts, blocks and hardware are shown on Standard Plan A77B1, A77C1 and A77C2.
3. Direction of adjacent traffic indicated by ➡.
4. For additional details of Transition Railing (Type WB), see Standard Plan A77J4. Transition Railing (Type WB) transitions the 12 gage w-beam standard railing section of guard railing to a heavier gage nested thrie beam railing section which is connected to the concrete bridge railing.
5. For typical use of Connection Detail AA, see Layout Types 12A and 12B on Revised Standard Plan RSP A77F1, Layout Types 12C and 12D on Standard Plan A77F2, and Layout Type 12E on Revised Standard Plan RSP A77F3.
6. For typical use of Connection Detail BB, see Layout Type 12D (structure departure railing connection) on Standard Plan A77F2 and Layout Type 12DD on Standard Plan A77F5.
7. Where the height of the bridge railing exceeds the height of the thrie beam railing by more than 1" at Connection Detail AA, taper the top of the end of the bridge railing at 4:1 to match the top elevation of the thrie beam rail.
8. For details of End Cap (Type TC), see Standard Plan A77J4.
9. See Standard Plan A77J4 for additional details regarding depth dimension for straight metal box spacer.

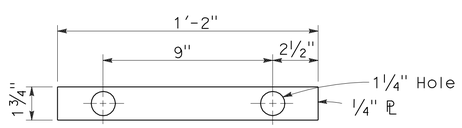

PLATE 'A'

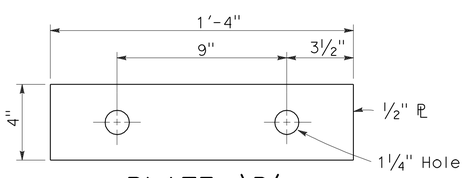

PLATE 'B'
(For backside of connection BB)

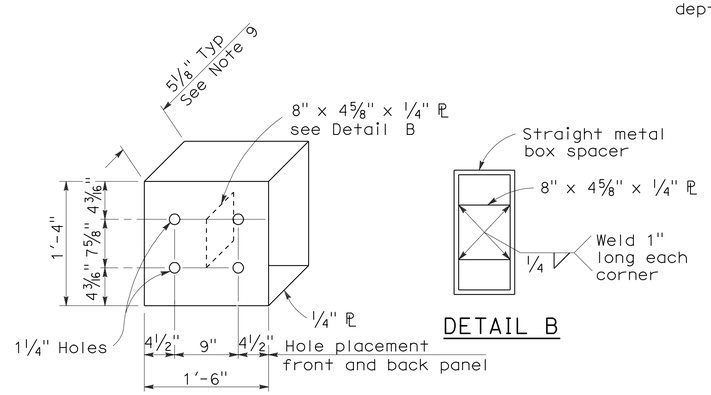

DETAIL A

DETAIL B

STRAIGHT METAL BOX SPACER

STATE OF CALIFORNIA
DEPARTMENT OF TRANSPORTATION

METAL BEAM GUARD RAILING CONNECTIONS TO BRIDGE RAILINGS WITHOUT SIDEWALKS DETAILS No.1

NO SCALE

RSP A77J1 DATED MAY 20, 2011 SUPERSEDES RSP A77J1 DATED JUNE 6, 2008 AND STANDARD PLAN A77J1 DATED MAY 1, 2006 - PAGE 72 OF THE STANDARD PLANS BOOK DATED MAY 2006.

REVISED STANDARD PLAN RSP A77J1

2006 REVISED STANDARD PLAN RSP A77J1

3-10-11

Dist	COUNTY	ROUTE	POST MILES TOTAL PROJECT	SHEET No.	TOTAL SHEETS
03	ED	50	73.7/75.4	104	119

Randell D. Hiatt
REGISTERED CIVIL ENGINEER

May 20, 2011
PLANS APPROVAL DATE

REGISTERED PROFESSIONAL ENGINEER Randell D. Hiatt No. C50200 Exp. 6-30-11 CIVIL STATE OF CALIFORNIA

The State of California or its officers or agents shall not be responsible for the accuracy or completeness of electronic copies of this plan sheet.

To accompany plans dated 7-30-12

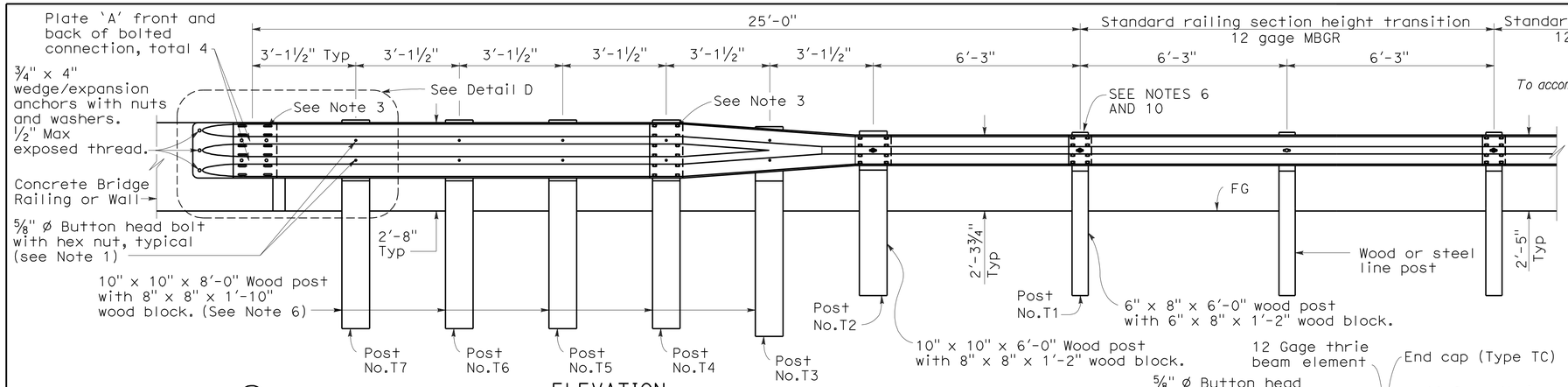

ELEVATION

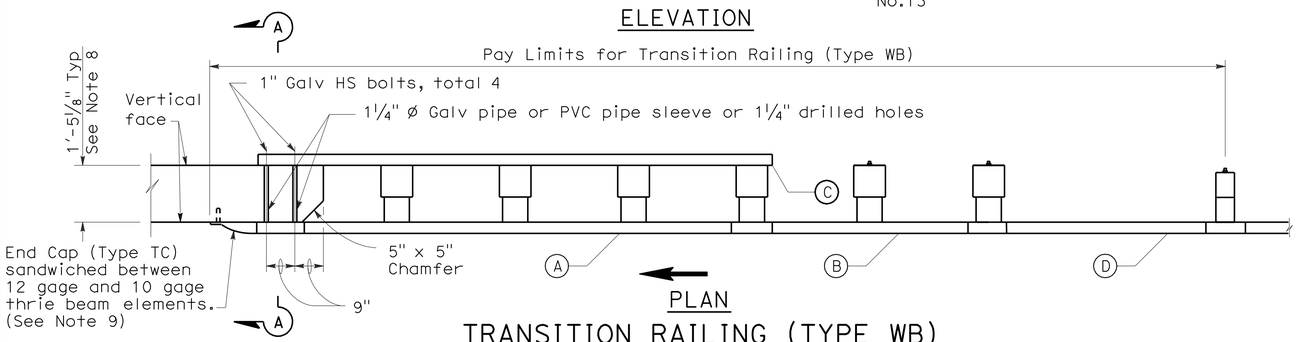

PLAN

TRANSITION RAILING (TYPE WB)

(No Blockout Attachment)

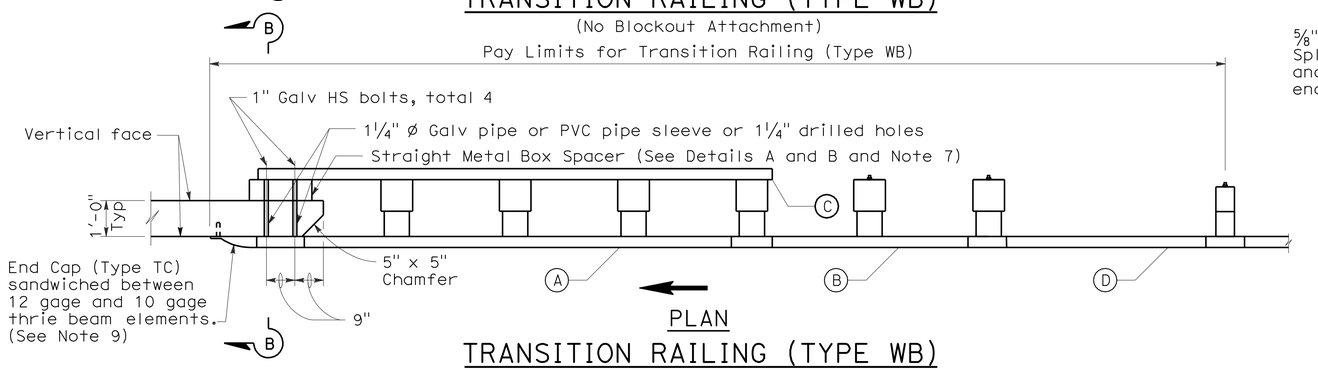

PLAN

TRANSITION RAILING (TYPE WB)

(Blockout Attachment)

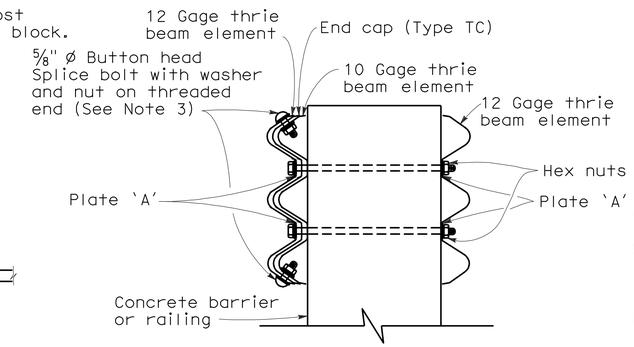

SECTION A-A

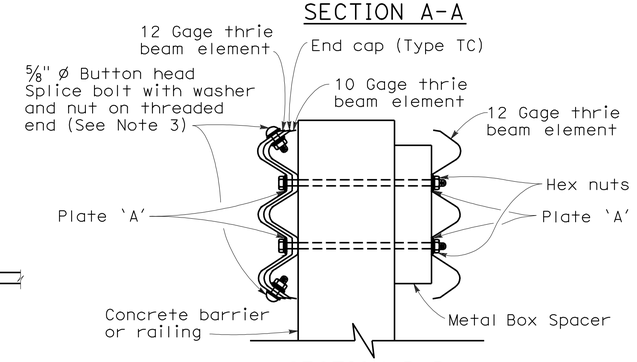

SECTION B-B

NOTES:

1. Use ⅝" ø Button head bolts and hex nuts for connections to posts. No washer on rail face for bolted connections to post.
2. The nested rail elements, end cap, and 'W' beam to thrie beam element may be spliced together prior to bolting the elements to the wood post and concrete barrier or railing.
3. Exterior splice bolt holes for rail element splices at Post No. T4 and the connection to the concrete barrier or railing shall be the standard 29/32" x 1⅛" slot size. Interior splice bolt holes at these locations may be increased up to 1¼" ø. Only the top 2 and the bottom 2 splice bolts with washers and nuts are required for rail splices at Post No. T4 and the connection to the concrete barrier or railing.
4. Direction of adjacent traffic indicated by ➡.
5. The top elevation of Posts No. T2 through No. T7 shall not project more than 1" above the top elevation of the rail element.
6. Typically, the railing connected to Transition Railing (Type WB) will be either standard railing section of metal beam guard railing with height transition ratio of 120:1 or an approved Caltrans end treatment attached to Post No. T1.
7. The depth of the metal box spacer varies from the 5⅛" to 1½" and is dependent on the width of the concrete railing or wall. The combined dimension for the depth of the metal box spacer plus the width of railing or wall is typically 17⅛". Where the space between the backside of the concrete railing or wall and the rear thrie beam element is less than 1½", metal plates similar to Plate 'A' are to be used as spacers.
8. Where the width of the concrete railing or wall is greater than 17⅛", wood blocks are to be used to fill the space created between the backside of Posts No. T4 through No. T7 and the rear thrie beam element. These wood blocks shall be 8" in width and 1'-2" in length. The dimension between the front thrie beam element and the rear thrie beam element is to match the width of the concrete railing or wall.
9. End cap may be installed over 12 gage and 10 gage thrie beam elements where transition railing is installed on the departure end of bridge railing.
10. Conform standard railing section height to 2'-3¾" at Post No. T1 using height transition ratio of 120:1.

LEGEND

(A) Nested thrie beam elements (one 12 gage element nested over one 10 gage element).

(B) One 10 gage "W" beam to thrie beam element.

(C) One 12 gage thrie beam element.

(D) One 10 gage "W" beam rail element (7'-3½" length)

10 gage = 0.135" thick

12 gage = 0.108" thick

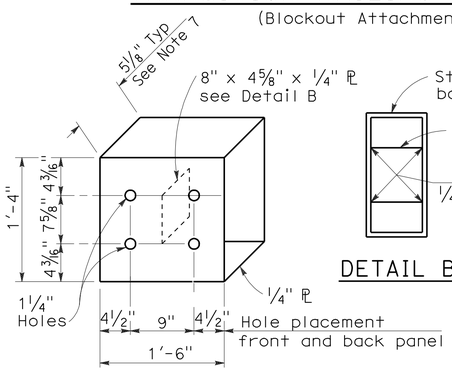

DETAIL A

STRAIGHT METAL BOX SPACER

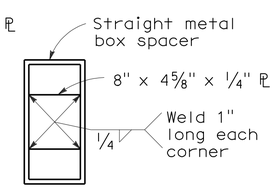

DETAIL B

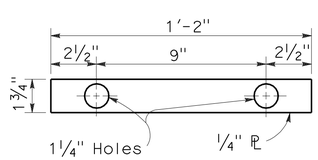

DETAIL C

PLATE 'A'

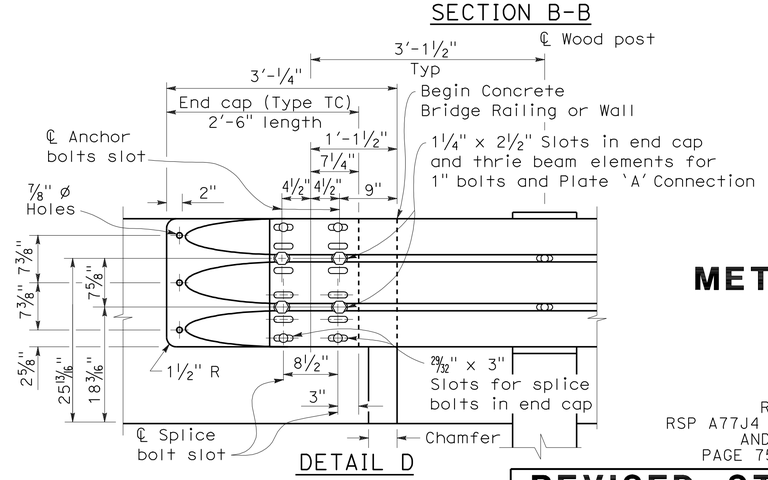

DETAIL D

STATE OF CALIFORNIA
DEPARTMENT OF TRANSPORTATION

METAL BEAM GUARD RAILING TRANSITION RAILING (TYPE WB)

NO SCALE

RSP A77J4 DATED MAY 20, 2011 SUPERSEDES
RSP A77J4 DATED JUNE 5, 2009, RSP A77J4 DATED JUNE 6, 2008
AND STANDARD PLAN A77J4 DATED MAY 1, 2006 -
PAGE 75 OF THE STANDARD PLANS BOOK DATED MAY 2006.

REVISED STANDARD PLAN RSP A77J4

2006 REVISED STANDARD PLAN RSP A77J4

5-14-09

DIST	COUNTY	ROUTE	POST MILES TOTAL PROJECT	SHEET NO.	TOTAL SHEETS
03	ED	50	73.7/75.4	105	119

REGISTERED CIVIL ENGINEER

September 1, 2006
PLANS APPROVAL DATE

REGISTERED PROFESSIONAL ENGINEER
Hector David Cordova
No. C41957
Exp. 3-31-08
CIVIL
STATE OF CALIFORNIA

The State of California or its officers or agents shall not be responsible for the accuracy or completeness of electronic copies of this plan sheet.

To accompany plans dated 7-30-12

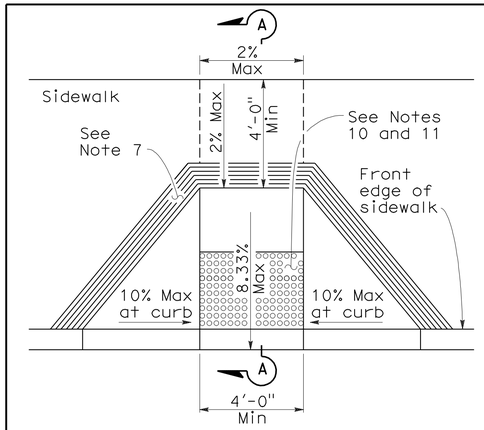

CASE A

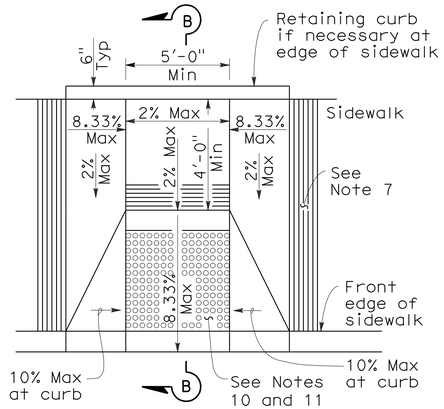

CASE B

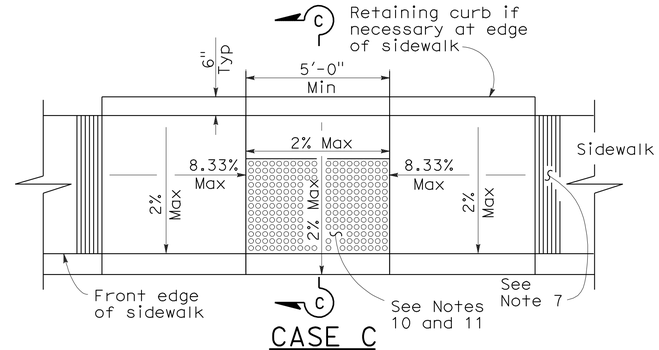

CASE C

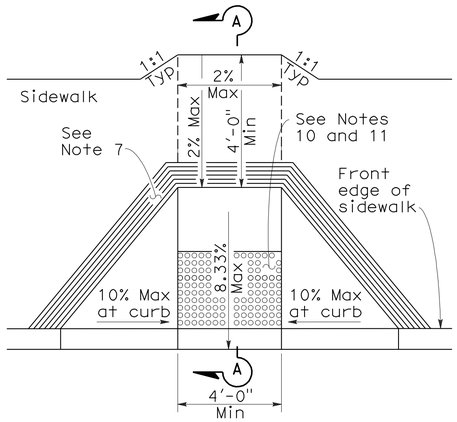

CASE D

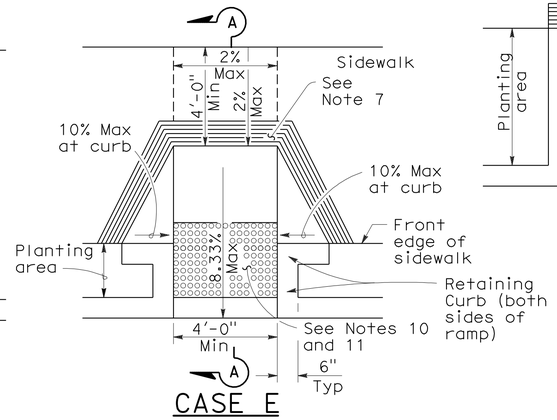

CASE E

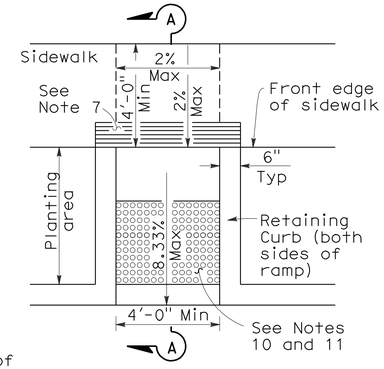

CASE F

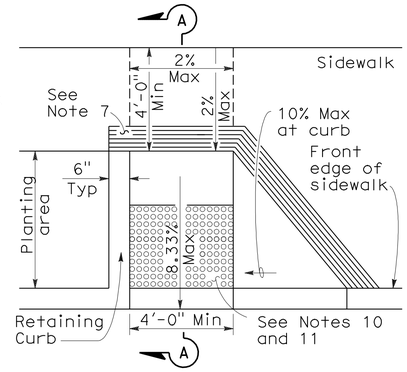

CASE G
See Note 4

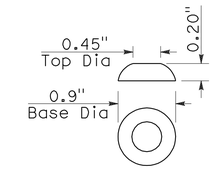

RAISED TRUNCATED DOME

SECTION A-A

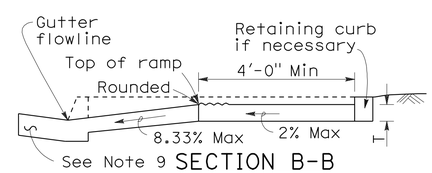

SECTION B-B
Depress entire sidewalk as required

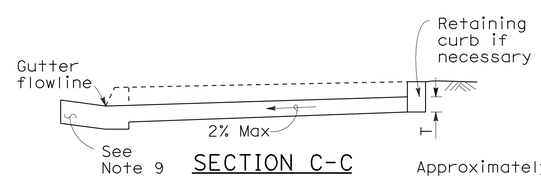

SECTION C-C

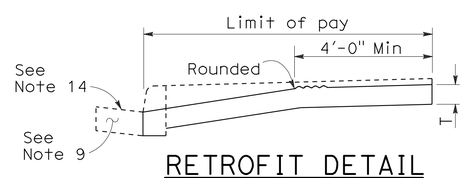

RETROFIT DETAIL
Existing curb and sidewalk

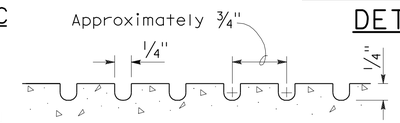

GROOVING DETAIL

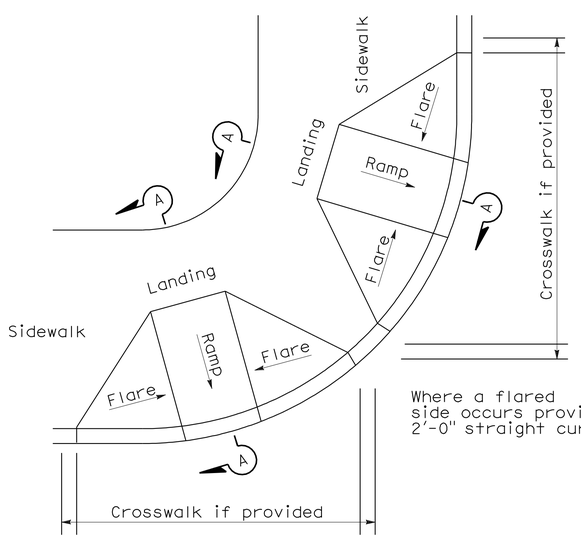

DETAIL A
TYPICAL TWO-RAMP CORNER INSTALLATION
See Note 1

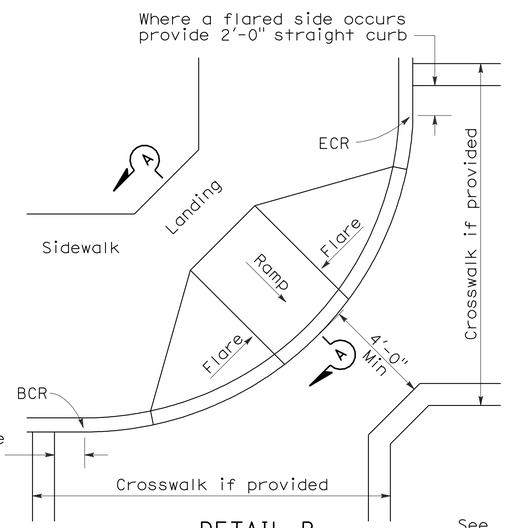

DETAIL B
TYPICAL ONE-RAMP CORNER INSTALLATION
See Notes 1 and 3

NOTES:

1. As site conditions dictate, Case A through Case G curb ramps may be used for corner installations similar to those shown in Detail A and Detail B. The case of curb ramps used in Detail A do not have to be the same. Case A through Case G curb ramps also may be used at mid block locations, as site conditions dictate.
2. If distance from curb to back of sidewalk is too short to accommodate ramp and 4'-0" platform (landing) as shown in Case A, the sidewalk may be depressed longitudinally as in Case B, or C or may be widened as in Case D.
3. When ramp is located in center of curb return, crosswalk configuration must be similar to that shown for Detail B.
4. As site conditions dictate, the retaining curb side and the flared side of the Case G ramp shall be constructed in reversed position.
5. If located on a curve, the sides of the ramp need not be parallel, but the minimum width of the ramp shall be 4'-0".
6. Side slope of ramp flares vary uniformly from a maximum of 10% at curb to conform with longitudinal sidewalk slope adjacent to top of the ramp, except in Case C and Case F.
7. The curb ramp shall be outlined, as shown, with a 1'-0" wide border with 1/4" grooves approximately 3/4" on center. See grooving detail.
8. Transitions from ramps and landing to walks, gutters or streets shall be flush and free of abrupt changes.
9. Maximum slopes of adjoining gutters, the road surface immediately adjacent to the curb ramp or accessible route shall not exceed 5 percent within 4'-0" of the top and bottom of the curb ramp.
10. Curb ramps shall have a detectable warning surface that extends the full width and 3'-0" depth of the ramp. Detectable Warning Surfaces shall conform to the details on this plan and the requirements in the Special Provisions.
11. The edge of the detectable warning surface nearest the street shall be between 6" and 8" from the gutter flowline.
12. Sidewalk and ramp thickness, "T", shall be 3 1/2" minimum.
13. Utility pull boxes, manholes, vaults and all other utility facilities within the boundaries of the curb ramp will be relocated or adjusted to grade by the owner prior to, or in conjunction with, curb ramp construction.
14. For retrofit conditions, removal and replacement of curb apron will be at the Contractor's option, unless otherwise shown on project plans.

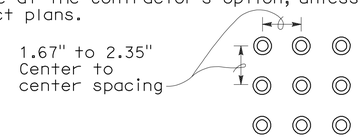

RAISED TRUNCATED DOME PATTERN (IN-LINE)
DETECTABLE WARNING SURFACE
See Note 10

STATE OF CALIFORNIA
DEPARTMENT OF TRANSPORTATION

CURB RAMP DETAILS

NO SCALE

RSP A88A DATED SEPTEMBER 1, 2006 SUPERSEDES STANDARD PLAN A88A DATED MAY 1, 2006 - PAGE 115 OF THE STANDARD PLANS BOOK DATED MAY 2006.

REVISED STANDARD PLAN RSP A88A

2006 REVISED STANDARD PLAN RSP A88A

8-3-06

DIST	COUNTY	ROUTE	POST MILES TOTAL PROJECT	SHEET NO.	TOTAL SHEETS
03	ED	50	73.7/75.4	106	119

REGISTERED CIVIL ENGINEER

June 15, 2007
PLANS APPROVAL DATE

REGISTERED PROFESSIONAL ENGINEER Glenn DeCou No. C34547 Exp. 9-30-07 CIVIL STATE OF CALIFORNIA

The State of California or its officers or agents shall not be responsible for the accuracy or completeness of electronic copies of this plan sheet.

To accompany plans dated 7-30-12

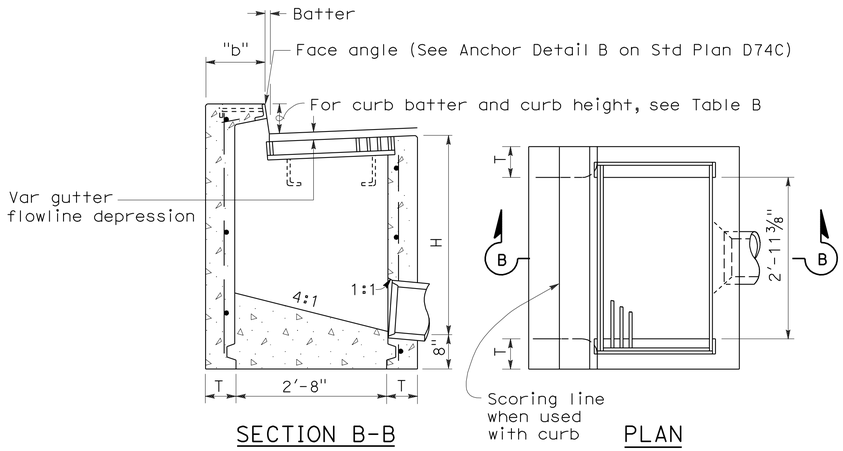

SECTION B-B PLAN

TYPE GO

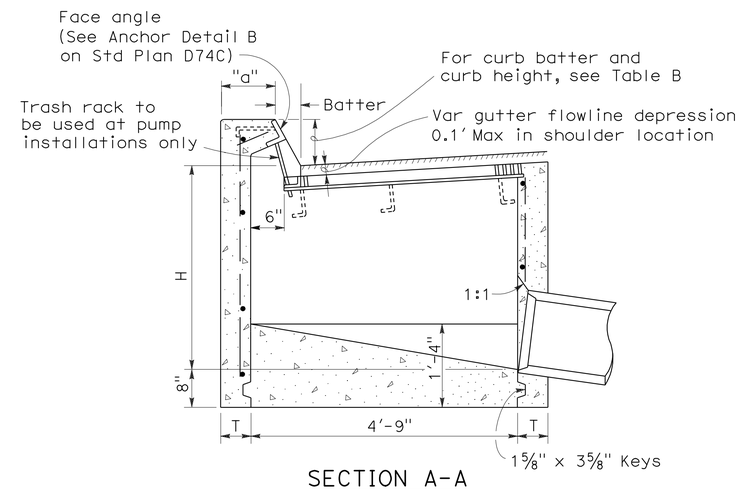

SECTION A-A

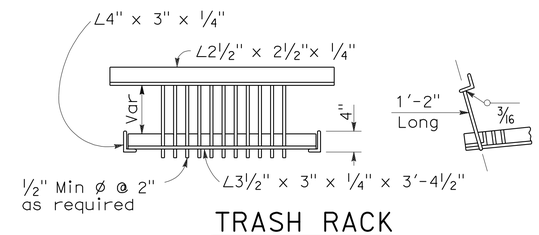

TRASH RACK

(For use with pump installation)

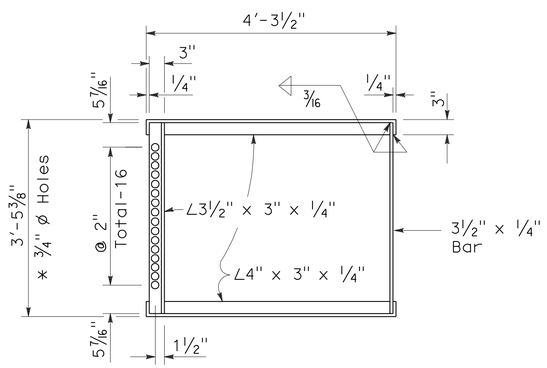

* 3/4" ø Holes required only with trash rack

GRATE FRAME FOR TYPE GDO INLET

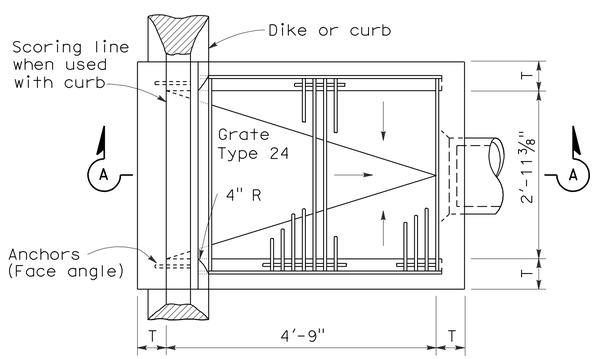

PLAN

TYPE GDO

TABLE A

CONCRETE QUANTITIES				
	H=3'-0" TO 8'-0" (T=6")		H=8'-1" TO 20'-0" (T=8")	
TYPE	H=3'-0" (CY)	ADDITIONAL PCC PER FOOT (CY)	H=8'-1" (CY)	ADDITIONAL PCC PER FOOT (CY)
GO	1.24	0.245	3.39	0.346
GDO	1.62	0.322	4.36	0.446

Table based on 8" floor slab, no deduction for pipe openings, and curb type giving highest quantity of concrete. No deductions or adjustments are to be made to these quantities because of pipe openings, different floor alternatives or different curb type.

TABLE B

CURB TYPE	NORMAL CURB HEIGHT	CURB BATTER	"a" DIMENSION	"b" DIMENSION
A1-6	6"	1 1/2"	T+7 1/2"	T+6 1/2"
A1-8	8"	2"	T+7"	T+6"
B1-6	6"	4"	T+5"	T+4"
Type A Dike	6"	3"	T+6"	T+5"

NOTES:

1. "H" is the difference in elevation between the outlet pipe flow line and the normal gutter grade line undepressed.
2. For "T" wall thickness, see Table A below.
3. Wall reinforcing not required when "H" is 8'-0" or less and the unsupported width or length is 7'-0" or less. Walls exceeding these limits shall be reinforced with #4 @ 18"± centers placed 1 1/2" clear to inside of box unless otherwise shown.
4. Inlet bottom reinforcing not required. See Standard Plan D74C for alternative reinforced bottom.
5. Steps - None required where "H" is less than 2'-6" Where "H" is 2'-6" or more, install steps with lowest rung 1'-0" above the floor and highest rung not more than 6" below top of inlet. The distance between steps shall not exceed 1'-0" and shall be uniform throughout the length of the wall. Place steps in the wall without an opening. Step inserts may be substituted for the bar steps. Step Inserts shall comply with State Industrial Safety requirements. See Standard Plan D74C for step details.
6. When shown on the project plans, place a 3/4" plain round protection bar horizontally across the length of the opening and bend back 4" into the inlet wall on each side.
7. Pipe(s) can be placed in any wall.
8. Curb section shall match adjacent curb.
9. Basin floors shall have wood trowel finish and shall slope toward the outlet pipe as shown.
10. Galvanizing - See Standard Specifications or Special Provisions.
11. See Standard Plan D77A and D77B for grate and frame details and weights of miscellaneous iron and Steel.
12. See Standard Plan D78A for gutter depression details.
13. Full penetration butt welds may be substituted for the fillet welds on all anchors.
14. Standard square, hexagon, round or equivalent headed anchors may be substituted for the right angle hooks on the anchors shown on this plan.
15. Cast-in-place or precast alternative is optional with contractor. See Standard Specifications.
16. Cast-in-place inlets to be formed around all pipes/stubs intersecing the inlet and concrete poured in one continuous operation. Precast inlets shall have mortared pipe connections conforming to details for Type GCP inlets on Standard Plan D75B. See Standard Specifications for mortar composition.

STATE OF CALIFORNIA
DEPARTMENT OF TRANSPORTATION

DRAINAGE INLETS

NO SCALE

RSP D74B DATED JUNE 15, 2007 SUPERSEDES STANDARD PLAN D74B DATED MAY 1, 2006 - PAGE 150 OF THE STANDARD PLANS BOOK DATED MAY 2006.

REVISED STANDARD PLAN RSP D74B

2006 REVISED STANDARD PLAN RSP D74B

4-16-07

DIST	COUNTY	ROUTE	POST MILES TOTAL PROJECT	SHEET NO.	TOTAL SHEETS
03	ED	50	73.7/75.4	107	119

Raymond Don Tsztoo
REGISTERED CIVIL ENGINEER

July 20, 2012
PLANS APPROVAL DATE

REGISTERED PROFESSIONAL ENGINEER Raymond Don Tsztoo No. C37332 Exp. 6-30-14 CIVIL STATE OF CALIFORNIA

The State of California or its officers or agents shall not be responsible for the accuracy or completeness of electronic copies of this plan sheet.

To accompany plans dated 7-30-12

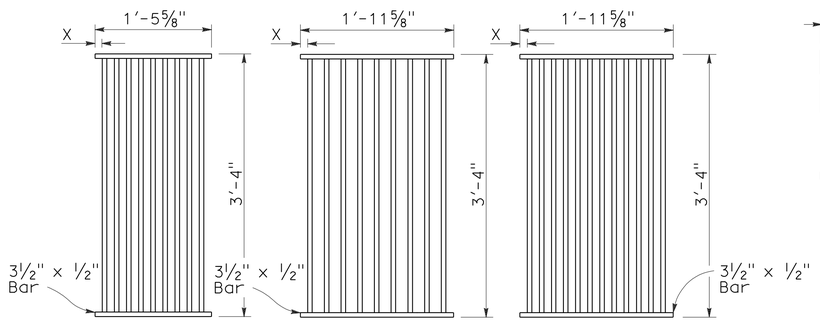

TYPE 18-9

1⅜" Clear spacing. Use within the roadbed on highways where bicycles and pedestrians are excluded.

TYPE 24-9

2" Clear spacing. Use in locations off the roadbed on all types of highways.

TYPE 24-12

1⅜" Clear spacing. Use within the roadbed on highways where bicycles and pedestrians are excluded.

RECTANGULAR GRATE DETAILS

(See table below)

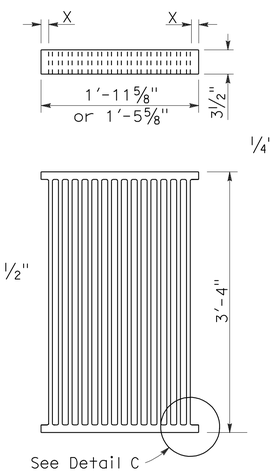

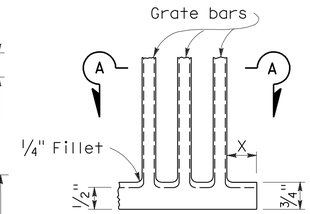

DETAIL C

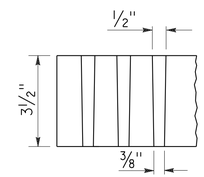

SECTION A-A

ALTERNATIVE CAST DUCTILE IRON GRATE OR CAST CARBON STEEL GRATE

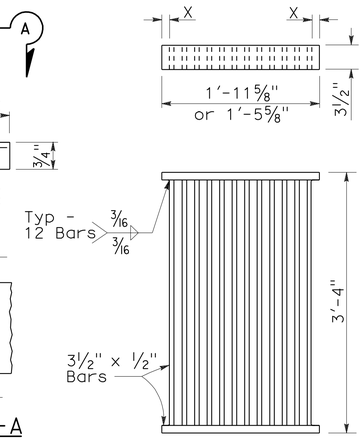

ALTERNATIVE WELDED GRATE

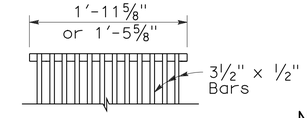

CAST END BLOCK

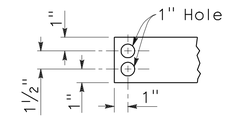

END OF BAR

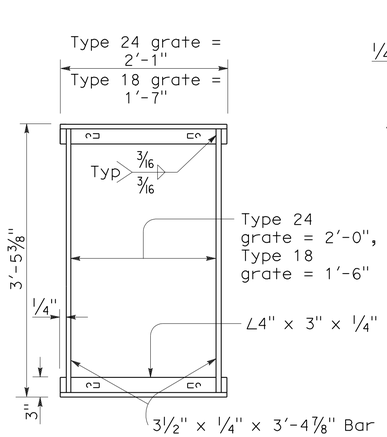

TYPICAL FRAME

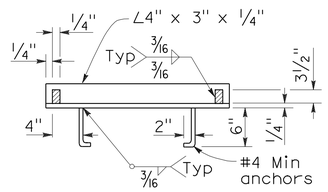

CROSS SECTION

(Thru frame)

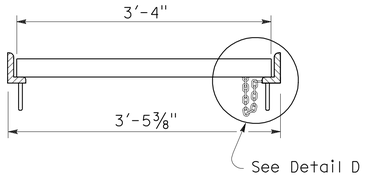

LONGITUDINAL SECTION

(Thru frame and grate)

RECTANGULAR FRAME DETAILS

(For all rectangular grates)

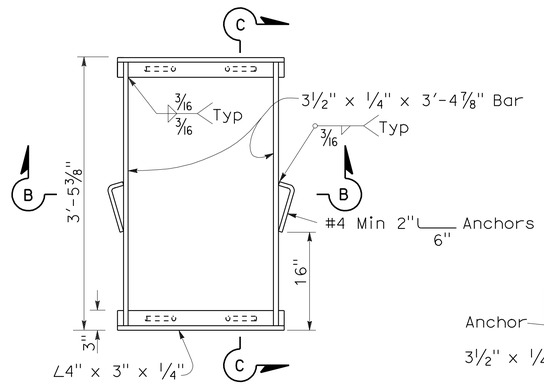

TYPICAL FRAME

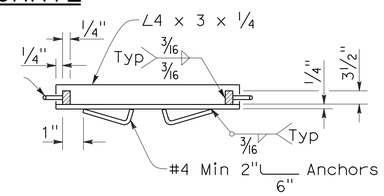

SECTION B-B

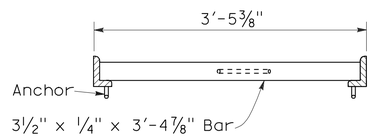

SECTION C-C

ALTERNATIVE ANCHOR FOR RECTANGULAR FRAME

(For details not shown, See Rectangular Frame Details)

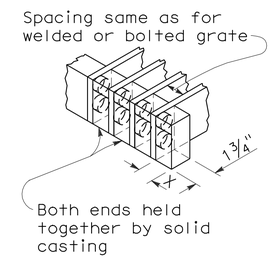

ALTERNATIVE CAST DUCTILE IRON OR CAST CARBON STEEL END BLOCK GRATE

NOTES:

1. Grate type numbers refer to approximate width of grate in inches and number of bars, respectively.
2. Contractor has the option of using cast ductile iron, cast carbon steel, welded, bolted, or cast end block grate.
3. See Special Provisions for requirements pertaining to galvanizing or asphalt dipping of grates and frames.
4. Rounded top of bars optional on all grates.
5. Pipe inlets with a grate shall be placed so that bars parallel direction of principle surface flow.
6. Complete joint penetration butt welds may be substituted for the fillet welds on all anchors.
7. Standard square, hexagon, round or equivalent headed anchors may be substituted for the right angle hooks on the anchors shown on this plan.
8. Grate and frame weights are based on welded grates (weights of face angles, steps, protection bars, etc. are not included).
9. Connect chain to grate and frame only at locations shown on the plans. When chain is required, do not use cast ductile iron grates.

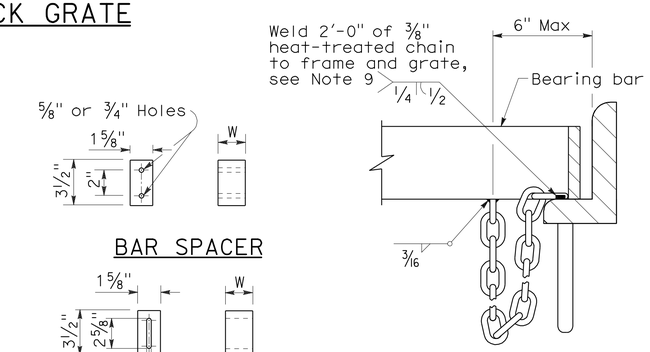

BAR SPACER

ALTERNATIVE SPACER

W = 1⅜" or 2"

DETAIL D

(Steel grates only)

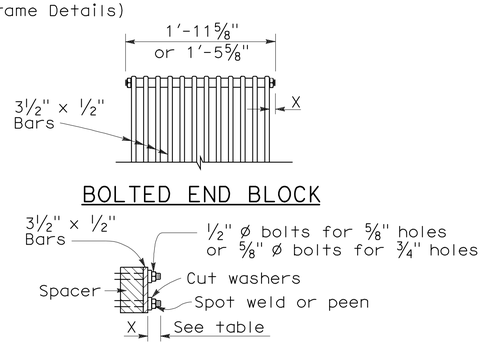

BOLTED END BLOCK

BOLTING DETAIL

ALTERNATIVE BOLTED GRATE

GRATE BAR SPACING TABLE

TYPE	No. OF BARS	CLEAR BAR SPACING	X
18-9	9	1⅜"	1 1/16"
24-9	9	2"	1 9/16"
24-12	12	1⅜"	1¼"

INLET TYPE	COVER TYPE	WEIGHT LB
OS	PLATE	174
OL-7	PLATE	170
OL-10	PLATE	170
OL-14	PLATE	170
OL-21	PLATE	170
OCP	PLATE	112
OCPI	PLATE	112
OCPI	REDWOOD	42
OMP	PLATE	177
OMPI	PLATE	177

INLET TYPE	GRATE TYPE	No. OF GRATES	WEIGHT LB
GDO	24-12	2	634
GOL-7	24-12	1	326
GOL-10	24-12	1	326
GO,G1,G2,G3,G4 (TYPE 24)	24-9	1	263
	24-12	1	326
G4 (TYPE 18),G5,G6	18-9	1	249
GT1	18-9	2	498
GT2	18-9	2	498
GT3	24-12	2	652
GT4	24-12	2	652
TRASH RACK			22
GRATE CHAIN			3

BASIS FOR Misc IRON & STEEL FINAL PAY WEIGHTS FOR DRAINAGE INLETS

(See Note 8)

STATE OF CALIFORNIA
DEPARTMENT OF TRANSPORTATION

GRATE DETAILS

NO SCALE

RSP D77A DATED JULY 20, 2012 SUPERSEDES RSP D77A DATED JANUARY 18, 2008 AND STANDARD PLAN D77A DATED MAY 1, 2006 - PAGE 155 OF THE STANDARD PLANS BOOK DATED MAY 2006.

REVISED STANDARD PLAN RSP D77A

2006 REVISED STANDARD PLAN RSP D77A

6-13-12

DIST	COUNTY	ROUTE	POST MILES TOTAL PROJECT	SHEET NO.	TOTAL SHEETS
03	ED	50	73.7/75.4	108	119

LICENSED LANDSCAPE ARCHITECT

June 5, 2009
PLANS APPROVAL DATE

The State of California or its officers or agents shall not be responsible for the accuracy or completeness of electronic copies of this plan sheet.

LICENSED LANDSCAPE ARCHITECT — Gregory A. Balzer 2572 — 6-9-09 Signature — 2-28-11 Renewal Date — 5-14-09 Date — STATE OF CALIFORNIA

To accompany plans dated 7-30-12

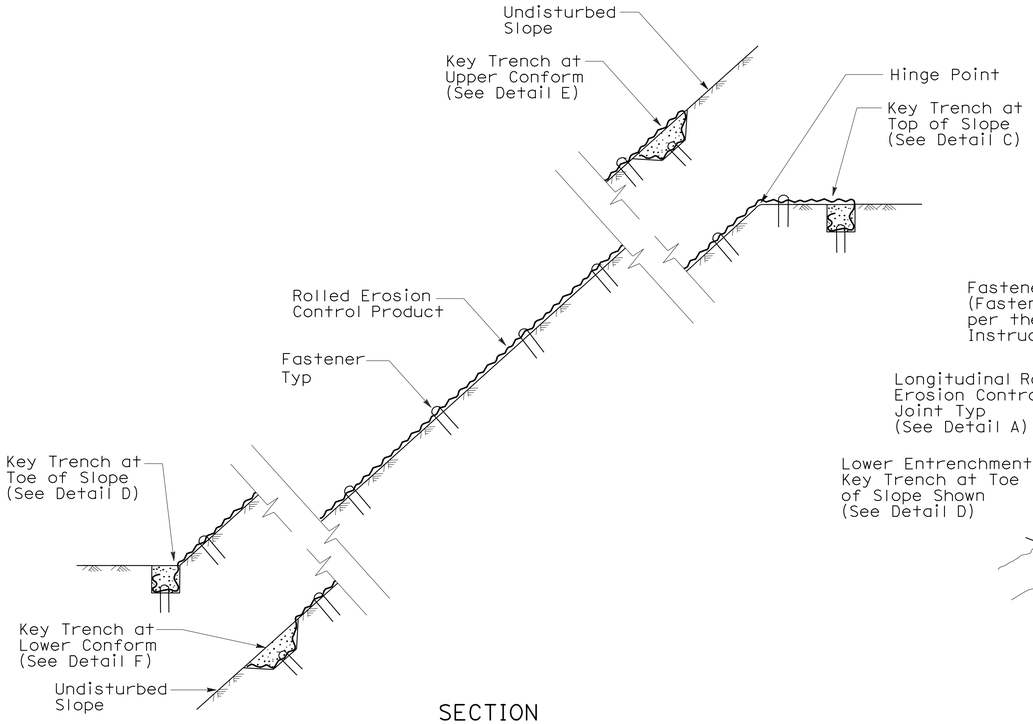

SECTION

ROLLED EROSION CONTROL PRODUCT ON SLOPE WITH VARIOUS KEY ENTRENCHMENTS

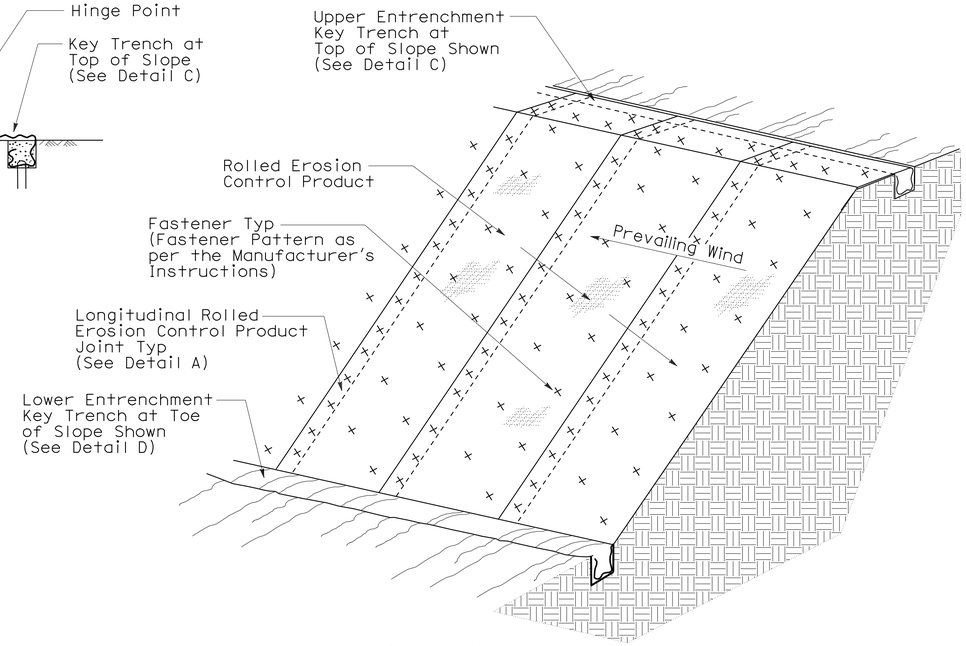

ISOMETRIC

ROLLED EROSION CONTROL PRODUCT ON SLOPE

NOTE:

1. Fiber Roll/Compost Sock shown for reference purposes only.
2. If transverse rolled erosion control product joints are required on slopes, see Detail B.

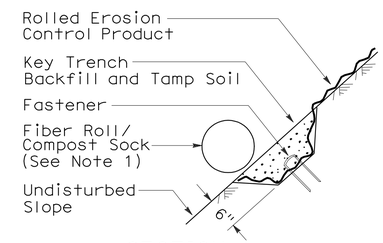

SECTION

DETAIL F
KEY TRENCH AT LOWER CONFORM

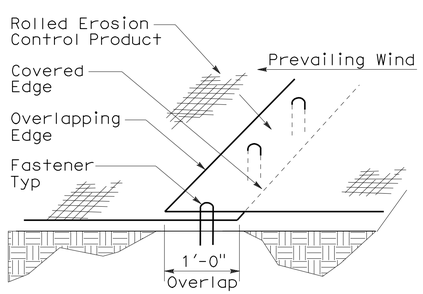

PERSPECTIVE

DETAIL A
LONGITUDINAL ROLLED EROSION CONTROL PRODUCT JOINT

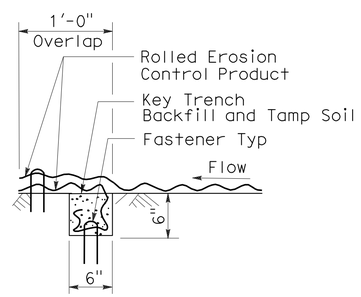

SECTION

DETAIL B
TRANSVERSE ROLLED EROSION CONTROL PRODUCT JOINT

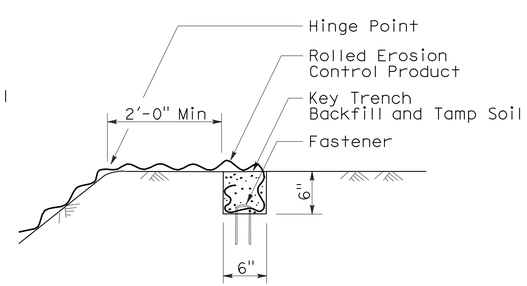

SECTION

DETAIL C
KEY TRENCH AT TOP OF SLOPE

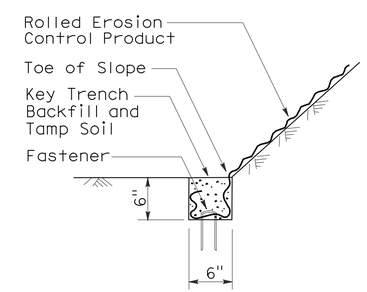

SECTION

DETAIL D
KEY TRENCH AT TOE OF SLOPE

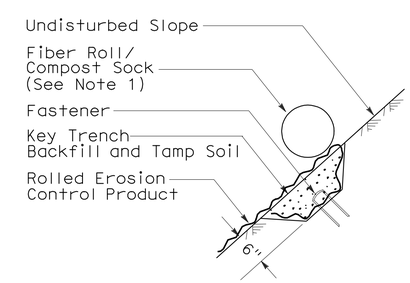

SECTION

DETAIL E
KEY TRENCH AT UPPER CONFORM

STATE OF CALIFORNIA
DEPARTMENT OF TRANSPORTATION

ROLLED EROSION CONTROL PRODUCT

NO SCALE

NSP H53 DATED JUNE 5, 2009 SUPPLEMENTS
THE STANDARD PLANS BOOK DATED MAY 2006.

NEW STANDARD PLAN NSP H53

2006 NEW STANDARD PLAN NSP H53

DIST	COUNTY	ROUTE	POST MILES TOTAL PROJECT	SHEET NO.	TOTAL SHEETS
03	ED	50	73.7/75.4	109	119

Randell D. Hiatt
REGISTERED CIVIL ENGINEER

June 6, 2008
PLANS APPROVAL DATE

REGISTERED PROFESSIONAL ENGINEER
Randell D. Hiatt
No. C50200
Exp. 6-30-09
CIVIL
STATE OF CALIFORNIA

The State of California or its officers or agents shall not be responsible for the accuracy or completeness of electronic copies of this plan sheet.

To accompany plans dated 7-30-12

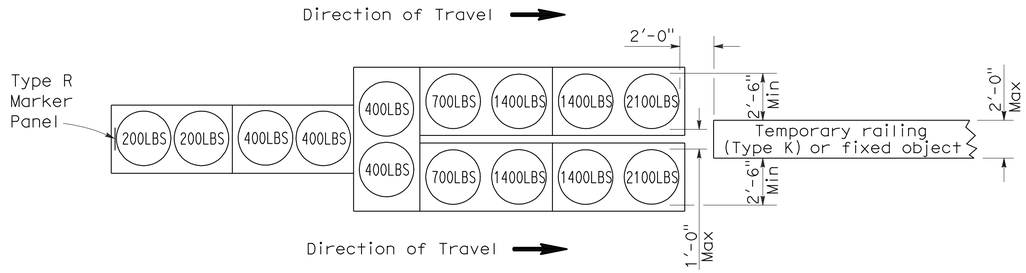

ARRAY 'TU14'

Approach speed 45 mph or more

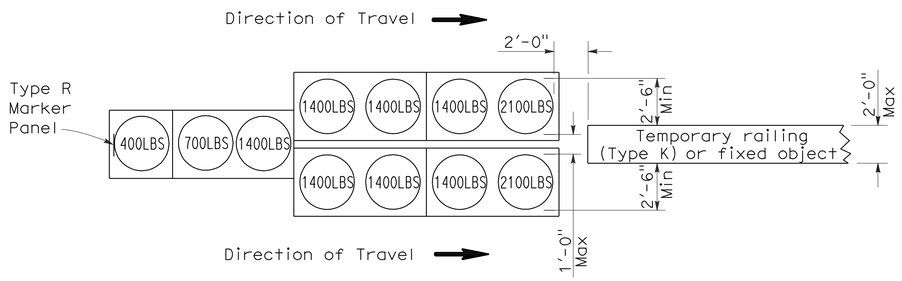

ARRAY 'TU11'

Approach speed less than 45 mph

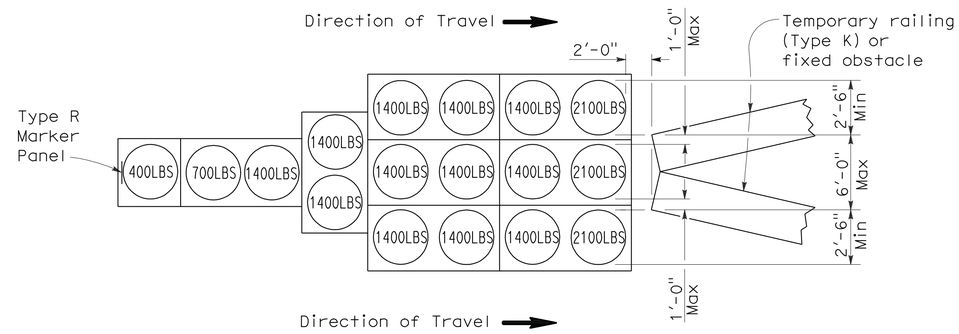

ARRAY 'TU17'

Approach speed less than 45 mph

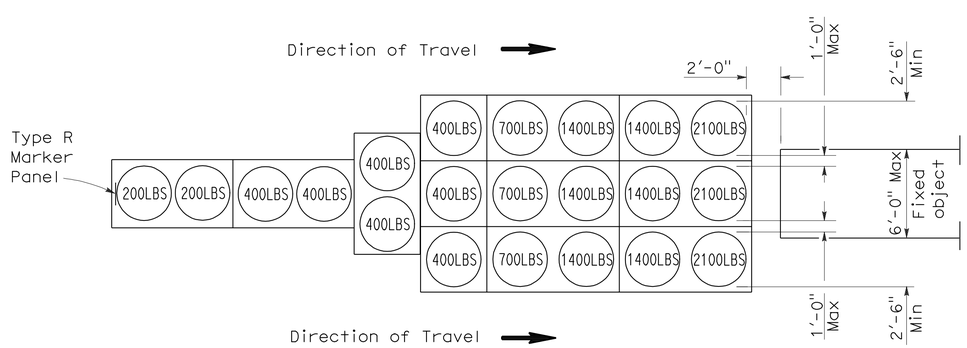

ARRAY 'TU21'

Approach speed 45 mph or more

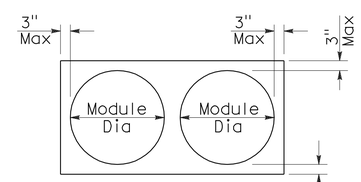

PLAN

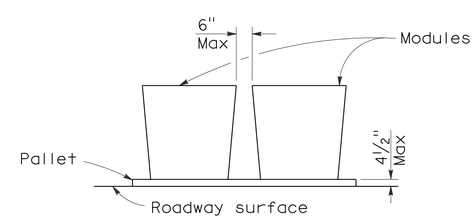

ELEVATION

CRASH CUSHION PALLET DETAIL

See Note 7

NOTES:

1. (XXX) Indicates sand filled module location and weight of sand in pounds for each module. Module spacing is based on the greater diameter of the module.
2. All sand weights are nominal.
3. Temporary crash cushion arrays shall not encroach on the traveled way.
4. Place the top of Type R marker panel 1" below the module lid.
5. Refer to Standard Plan A73B for marker details.
6. Approach speeds indicated conform to NCHRP 350 Report criteria.
7. Use of pallets is optional.

STATE OF CALIFORNIA
DEPARTMENT OF TRANSPORTATION

TEMPORARY CRASH CUSHION, SAND FILLED (UNIDIRECTIONAL)

NO SCALE

RSP T1A DATED JUNE 6, 2008 SUPERSEDES STANDARD PLAN T1A
DATED MAY 1, 2006 - PAGE 211 OF THE STANDARD PLANS BOOK DATED MAY 2006.

REVISED STANDARD PLAN RSP T1A

2006 REVISED STANDARD PLAN RSP T1A

5-15-08

DIST	COUNTY	ROUTE	POST MILES TOTAL PROJECT	SHEET NO.	TOTAL SHEETS
03	ED	50	73.7/75.4	110	119

Randell D. Hiatt
REGISTERED CIVIL ENGINEER

June 6, 2008
PLANS APPROVAL DATE

REGISTERED PROFESSIONAL ENGINEER
Randell D. Hiatt
No. C50200
Exp. 6-30-09
CIVIL
STATE OF CALIFORNIA

The State of California or its officers or agents shall not be responsible for the accuracy or completeness of electronic copies of this plan sheet.

To accompany plans dated 7-30-12

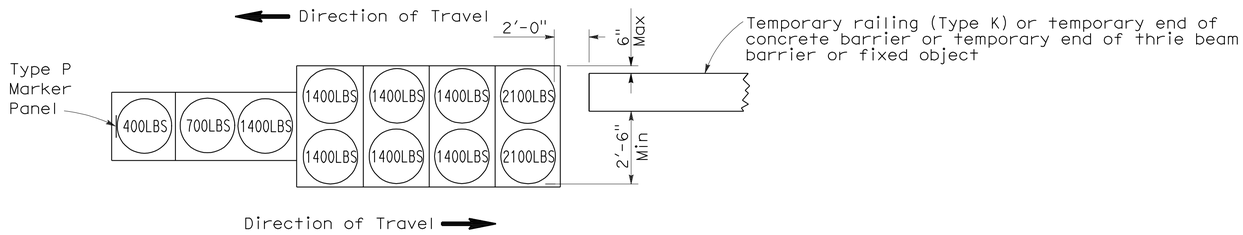

ARRAY 'TB11'

Approach speed less than 45 mph

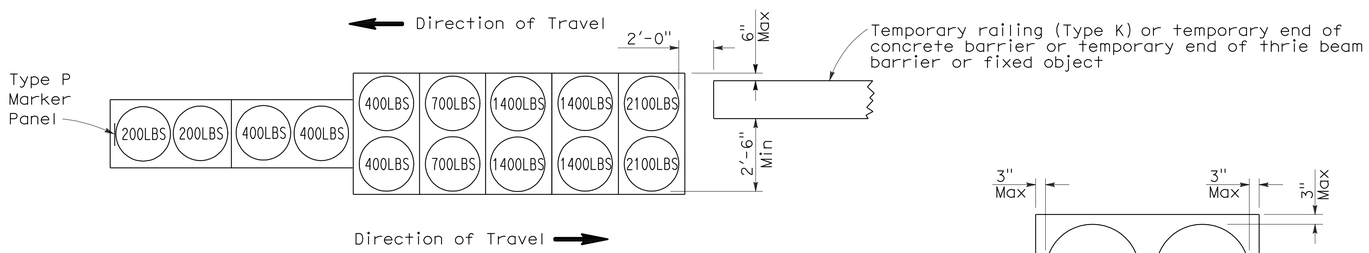

ARRAY 'TB14'

Approach speed 45 mph or more

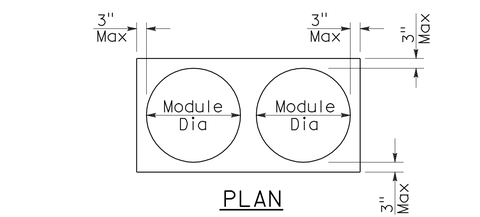

PLAN

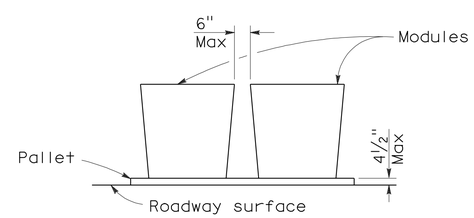

ELEVATION

CRASH CUSHION PALLET DETAIL

See Note 7

NOTES:

1. (XXX) Indicates sand filled module location and weight of sand in pounds for each module. Module spacing is based on the greater diameter of the module.
2. All sand weights are nominal.
3. Temporary crash cushion arrays shall not encroach on the traveled way.
4. Place the Type P marker panel so that the bottom of the panel rests upon the pallet.
5. Refer to Standard Plan A73B for marker details.
6. Approach speeds indicated conform to NCHRP 350 Report criteria.
7. Use of pallets is optional.

STATE OF CALIFORNIA
DEPARTMENT OF TRANSPORTATION

TEMPORARY CRASH CUSHION, SAND FILLED (BIDIRECTIONAL)

NO SCALE

RSP T1B DATED JUNE 6, 2008 SUPERSEDES STANDARD PLAN T1B
DATED MAY 1, 2006 - PAGE 212 OF THE STANDARD PLANS BOOK DATED MAY 2006.

REVISED STANDARD PLAN RSP T1B

2006 REVISED STANDARD PLAN RSP T1B

DIST	COUNTY	ROUTE	POST MILES TOTAL PROJECT	SHEET NO.	TOTAL SHEETS
03	ED	50	73.7/75.4	111	119

Randell D. Hiatt
REGISTERED CIVIL ENGINEER

June 6, 2008
PLANS APPROVAL DATE

REGISTERED PROFESSIONAL ENGINEER
Randell D. Hiatt
No. C50200
Exp. 6-30-09
CIVIL
STATE OF CALIFORNIA

The State of California or its officers or agents shall not be responsible for the accuracy or completeness of electronic copies of this plan sheet.

To accompany plans dated 7-30-12

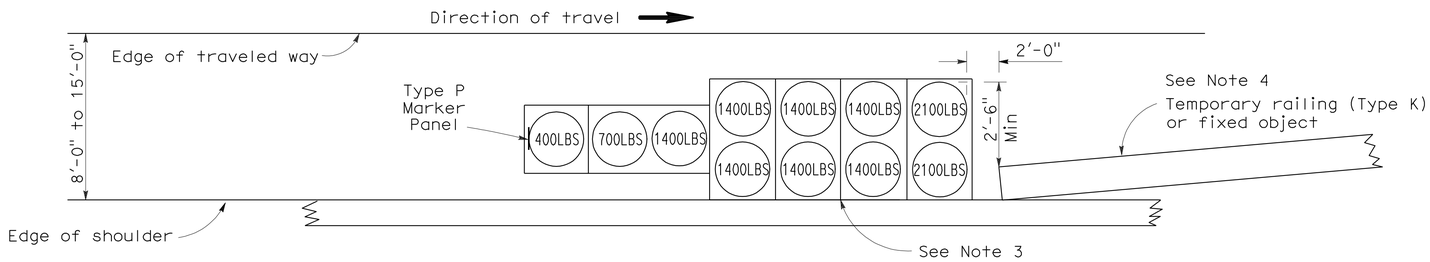

ARRAY 'TS11'

Approach speed less than 45 mph
See Note 9

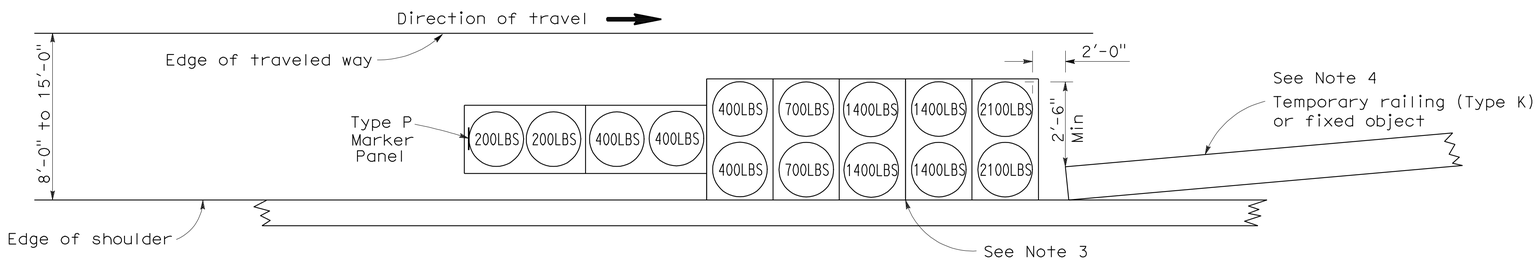

ARRAY 'TS14'

Approach speed 45 mph or more
See Note 9

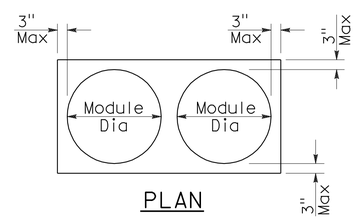

PLAN

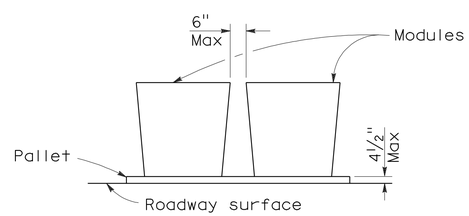

ELEVATION

CRASH CUSHION PALLET DETAIL

See Note 11

NOTES:

1. (XXX) Indicates sand filled module location and weight of sand in pounds for each module. Module spacing is based on the greater diameter of the module.
2. All sand weights are nominal.
3. The temporary crash cushion arrays shown on this plan shall be used only in locations where there will be traffic on one side of the temporary crash cushion array.
4. If the fixed object or approach end of the temporary railing is less than 15'-0" from the edge of traveled way, a temporary crash cushion is required in a construction or work zone.
5. Temporary crash cushion arrays shall not encroach on the traveled way.
6. Arrays for median shoulders shall conform to details shown on this plan for outside shoulders.
7. Place the Type P marker panel so that the bottom of the panel rests upon the pallet and faces traffic.
8. Refer to Standard Plan A73B for marker details.
9. For shoulder widths less than 8'-0", appropriate approved crash cushion protection, other than sand filled modules, shall be provided at fixed objects and at approach ends of temporary railing. The specific type of crash cushion shall be as shown on the project plans or as specified in the Special Provisions, or if not shown on the project plans or specified in the Special Provisions, shall be as approved by the Engineer.
10. Approach speeds indicated conform to NCHRP 350 Report criteria.
11. Use of pallets is optional.

STATE OF CALIFORNIA
DEPARTMENT OF TRANSPORTATION

TEMPORARY CRASH CUSHION, SAND FILLED (SHOULDER INSTALLATIONS)

NO SCALE

RSP T2 DATED JUNE 6, 2008 SUPERSEDES STANDARD PLAN T2
DATED MAY 1, 2006 - PAGE 213 OF THE STANDARD PLANS BOOK DATED MAY 2006.

REVISED STANDARD PLAN RSP T2

2006 REVISED STANDARD PLAN RSP T2

5-15-08

Dist	COUNTY	ROUTE	POST MILES TOTAL PROJECT	SHEET No.	TOTAL SHEETS
03	ED	50	73.7/75.4	112	119

Randell D. Hiatt
REGISTERED CIVIL ENGINEER

May 20, 2011
PLANS APPROVAL DATE

REGISTERED PROFESSIONAL ENGINEER
Randell D. Hiatt
No. C50200
Exp. 6-30-11
CIVIL
STATE OF CALIFORNIA

The State of California or its officers or agents shall not be responsible for the accuracy or completeness of electronic copies of this plan sheet.

To accompany plans dated 7-30-12

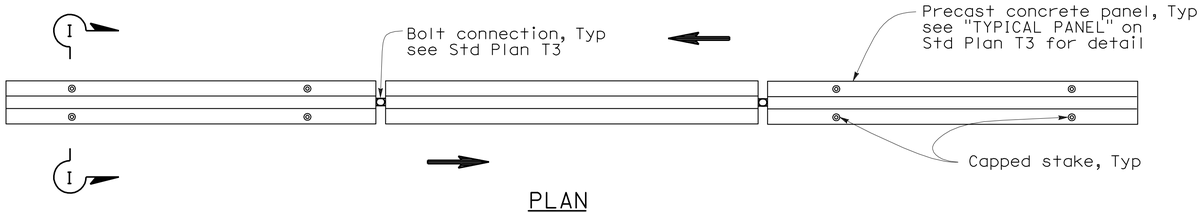

PLAN

RAILING STAKING CONFIGURATION FOR TWO-WAY TRAFFIC

See Note 1

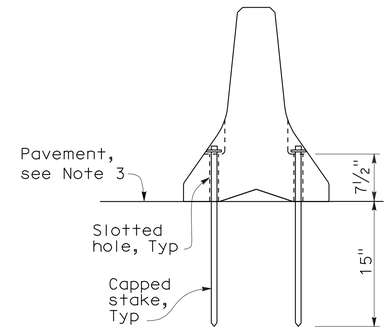

SECTION I-I

NOTES:

1. Where Type K Temporary Railing is placed as a temporary or long term barrier in two-way traffic on highways with less than 24" from the edge of traveled way, use four capped stakes per every other panel with end panels staked.
2. Where Type K Temporary Railing is placed 3" to 24" from the edge of an excavation on highways, use two capped stakes per panel along the traffic side.
3. Staked Type K Temporary Railing must be supported by at least 4" thick concrete, hot mix asphalt or existing asphalt concrete pavement.
4. The minimum yield strength for the washer must be 60,000 psi.
5. Direction of adjacent traffic indicated by ⟹.

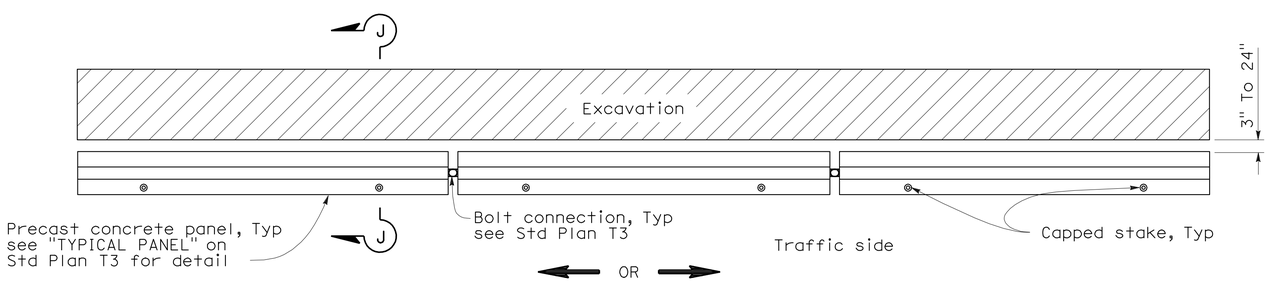

PLAN

RAILING STAKING CONFIGURATION ADJACENT TO AN EXCAVATION

See Note 2

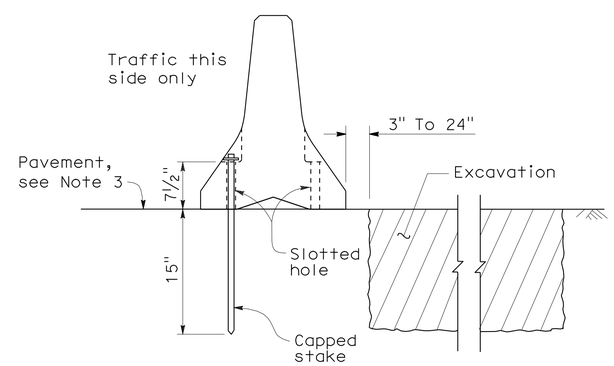

SECTION J-J

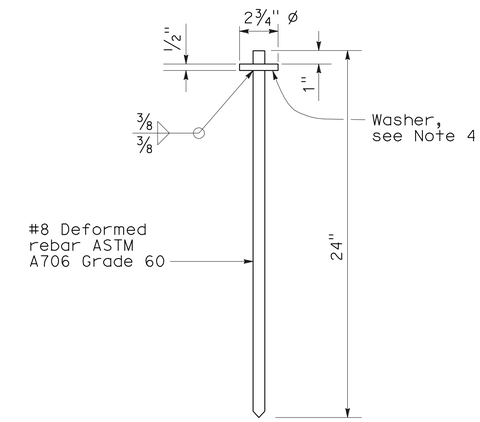

CAPPED STAKE DETAIL

STATE OF CALIFORNIA
DEPARTMENT OF TRANSPORTATION

TEMPORARY RAILING (TYPE K)

NO SCALE

NSP T3A DATED MAY 20, 2011 SUPPLEMENTS
THE STANDARD PLANS BOOK DATED MAY 2006.

NEW STANDARD PLAN NSP T3A

2006 NEW STANDARD PLAN NSP T3A

DIST	COUNTY	ROUTE	POST MILES TOTAL PROJECT	SHEET NO.	TOTAL SHEETS
03	ED	50	73.7/75.4	113	119

REGISTERED CIVIL ENGINEER

November 17, 2006
PLANS APPROVAL DATE

REGISTERED PROFESSIONAL ENGINEER
Greg W. Edwards
No. C36386
Exp. 6-30-08
CIVIL
STATE OF CALIFORNIA

The State of California or its officers or agents shall not be responsible for the accuracy or completeness of electronic copies of this plan sheet.

To accompany plans dated 7-30-12

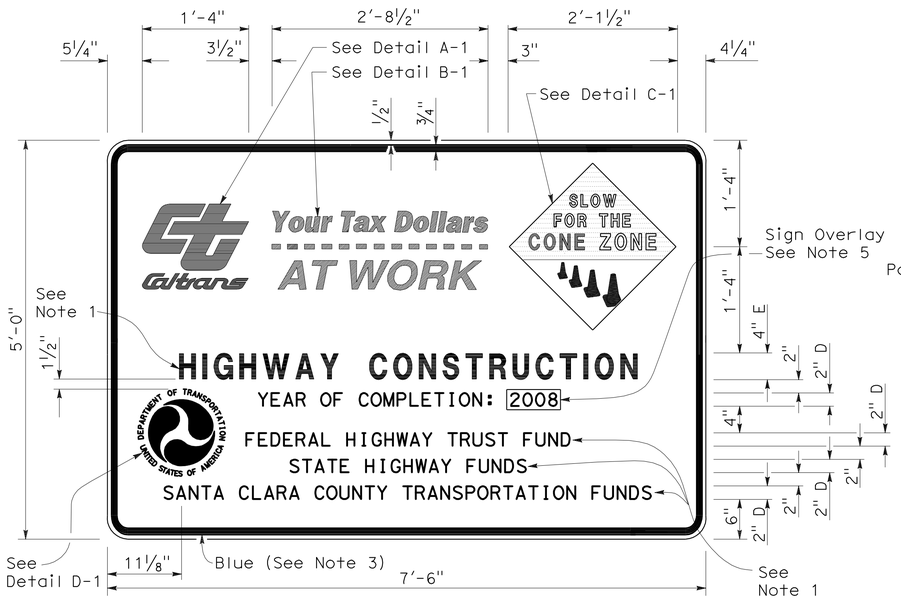

TYPE 1

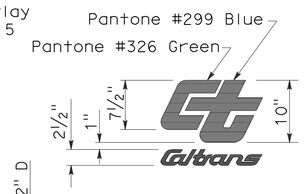

DETAIL A-1

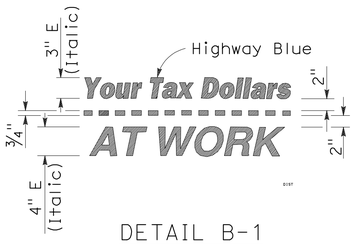

DETAIL B-1
(See Note 3)

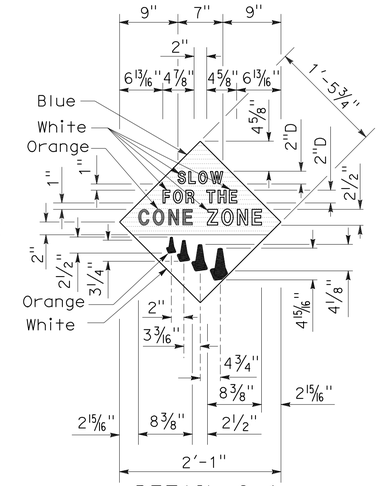

DETAIL C-1
(See Note 4)

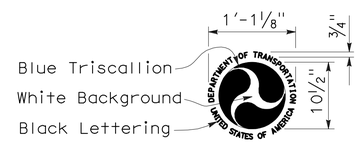

DETAIL D-1
(See Note 6)

NOTES:

1. The sign messages shown for type of project and fund types are examples only. See the Special Provisions for the applicable type of project and fund type messages to be used.
2. Except as otherwise shown, the legend of sign shall be black on a white background (non-reflective).
3. The border of the signs and details "B-1" and "B-2" shall be blue (non-reflective).
4. The diamond in details "C-1" and "C-2" shall be blue for the background of message, " SLOW FOR THE CONE ZONE", and white background for the orange cones. The color and type of font for the "SLOW FOR THE CONE ZONE" message shall be: "SLOW" white D; "FOR THE" white D; "CONE" orange Arial font; "ZONE" white Arial font.
5. Year of completion of project construction shown on the overlay is an example only. See the Special Provisions.
6. Use when the Project involves Federal Highway Trust Fund.

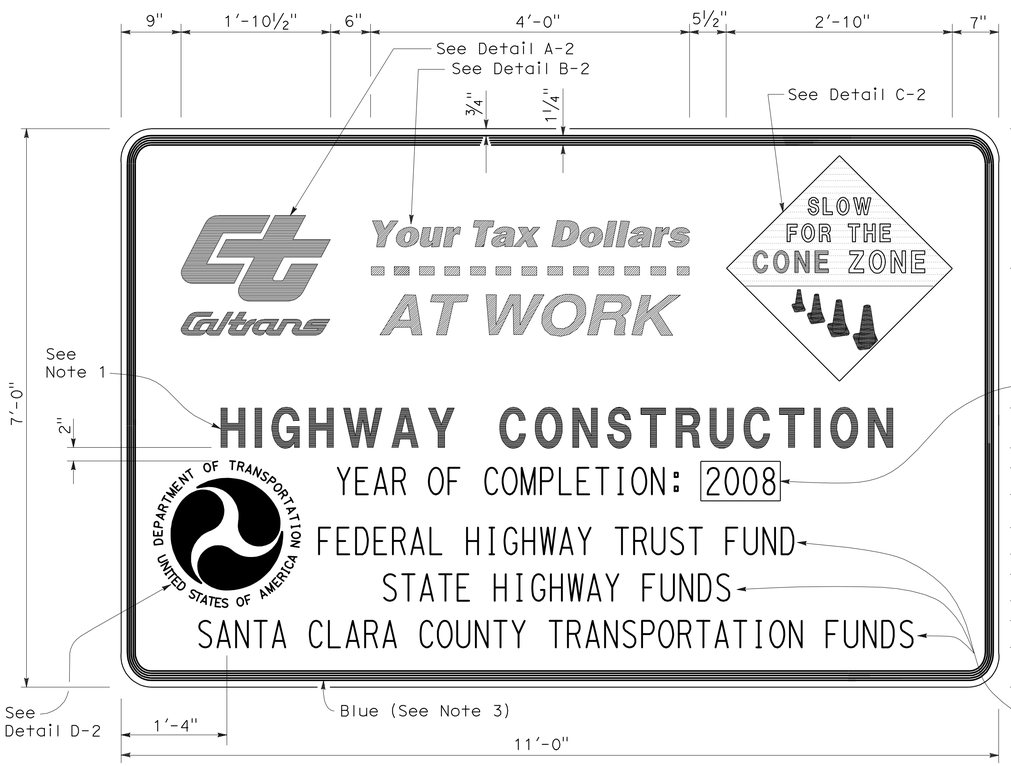

TYPE 2

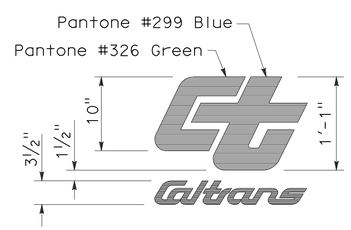

DETAIL A-2

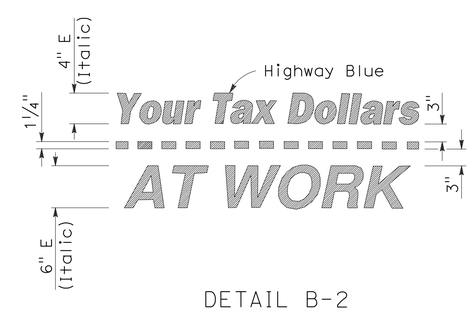

DETAIL B-2
(See Note 3)

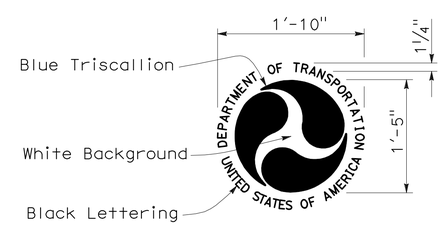

DETAIL D-2
(See Note 6)

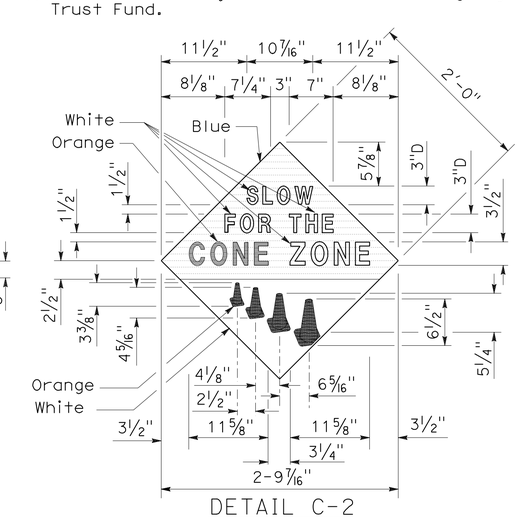

DETAIL C-2
(See Note 4)

STATE OF CALIFORNIA
DEPARTMENT OF TRANSPORTATION

CONSTRUCTION PROJECT FUNDING IDENTIFICATION SIGNS

NO SCALE

RSP T7 DATED NOVEMBER 17, 2006 SUPERSEDES STANDARD PLAN T7
DATED MAY 1, 2006 - PAGE 217 OF THE STANDARD PLANS BOOK DATED MAY 2006.

REVISED STANDARD PLAN RSP T7

2006 REVISED STANDARD PLAN RSP T7

9-7-06

DIST	COUNTY	ROUTE	POST MILES TOTAL PROJECT	SHEET NO.	TOTAL SHEETS
03	ED	50	73.7/75.4	114	119

LICENSED LANDSCAPE ARCHITECT

April 3, 2009
PLANS APPROVAL DATE

The State of California or its officers or agents shall not be responsible for the accuracy or completeness of electronic copies of this plan sheet.

LICENSED LANDSCAPE ARCHITECT — ROBERT B. SCHOTT — 3035 — Signature — 11-30-10 Renewal Date — 2-25-09 Date — STATE OF CALIFORNIA

To accompany plans dated 7-30-12

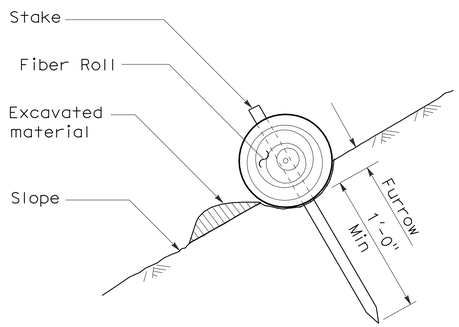

SECTION

TEMPORARY FIBER ROLL (TYPE 1)

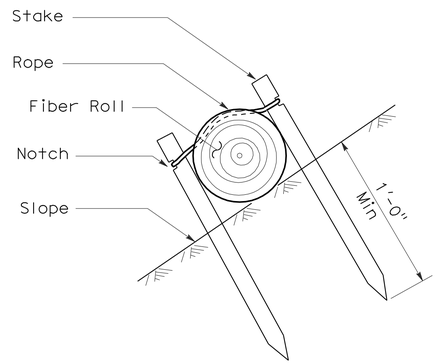

SECTION

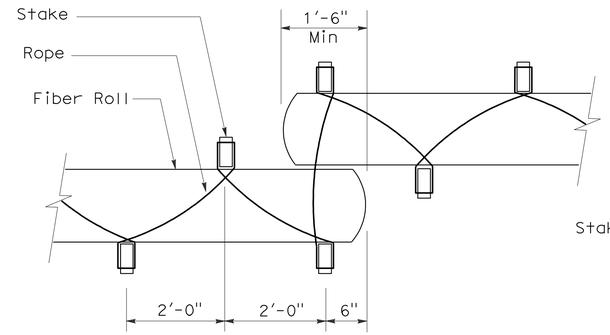

PLAN

TEMPORARY FIBER ROLL (TYPE 2)

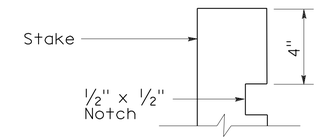

ELEVATION

STAKE NOTCH DETAIL

NOTES:

1. Temporary fiber roll spacing varies depending upon slope inclination.
2. Installations shown in the perspectives are for slope inclination of 10:1 and steeper.

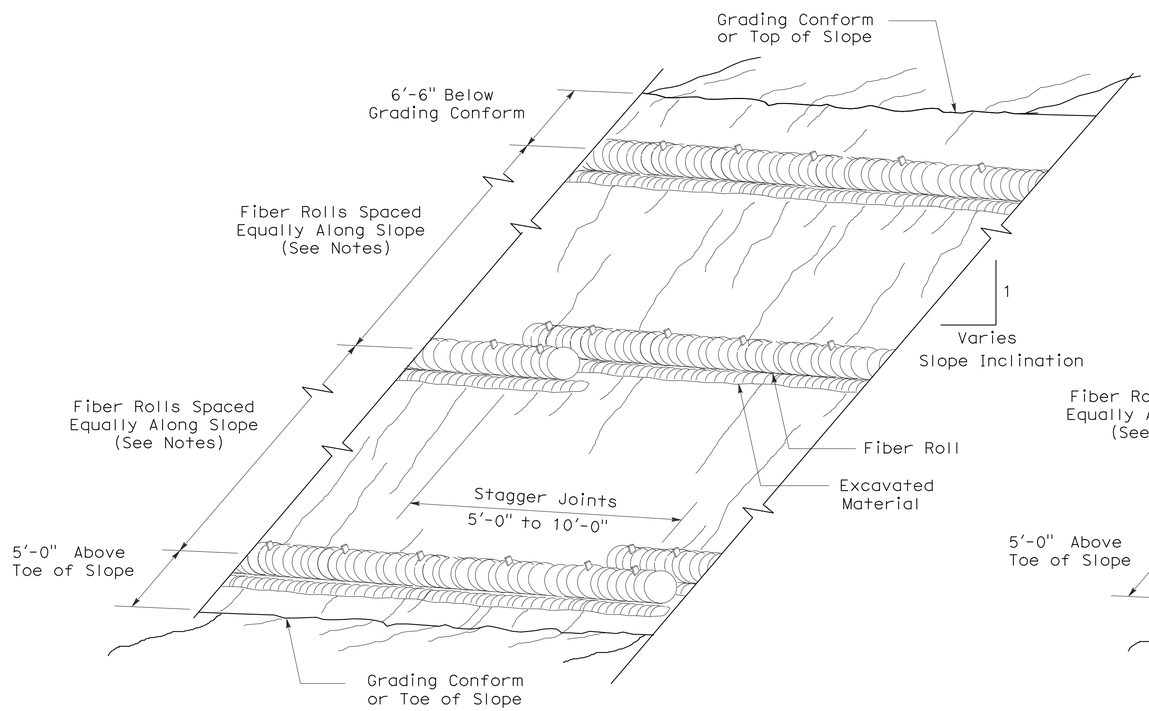

PERSPECTIVE

TEMPORARY FIBER ROLL (TYPE 1)

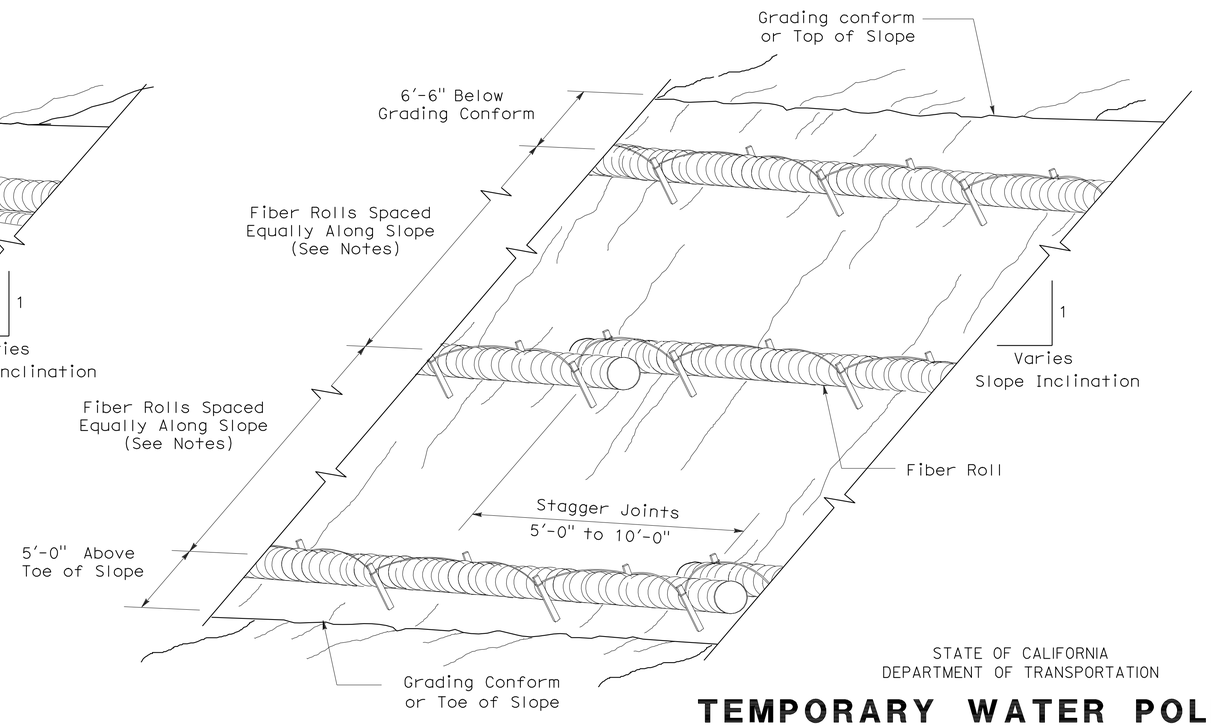

PERSPECTIVE

TEMPORARY FIBER ROLL (TYPE 2)

STATE OF CALIFORNIA
DEPARTMENT OF TRANSPORTATION

TEMPORARY WATER POLLUTION CONTROL DETAILS (TEMPORARY FIBER ROLL)

NO SCALE

RSP T56 DATED APRIL 3, 2009 SUPERSEDES STANDARD PLAN T56
DATED MAY 1, 2006 - PAGE 232 OF THE STANDARD PLANS BOOK DATED MAY 2006.

REVISED STANDARD PLAN RSP T56

2006 REVISED STANDARD PLAN RSP T56

2-23-09

DIST	COUNTY	ROUTE	POST MILES TOTAL PROJECT	SHEET NO.	TOTAL SHEETS
03	ED	50	73.7/75.4	115	119

LICENSED LANDSCAPE ARCHITECT

August 15, 2008
PLANS Approval DATE

The State of California or its officers or agents shall not be responsible for the accuracy or completeness of electronic copies of this plan sheet.

LICENSED LANDSCAPE ARCHITECT — Robert B. Schott — Signature 11-04-08 Renewal Date — 08-11-08 Date — STATE OF CALIFORNIA

To accompany plans dated 7-30-12

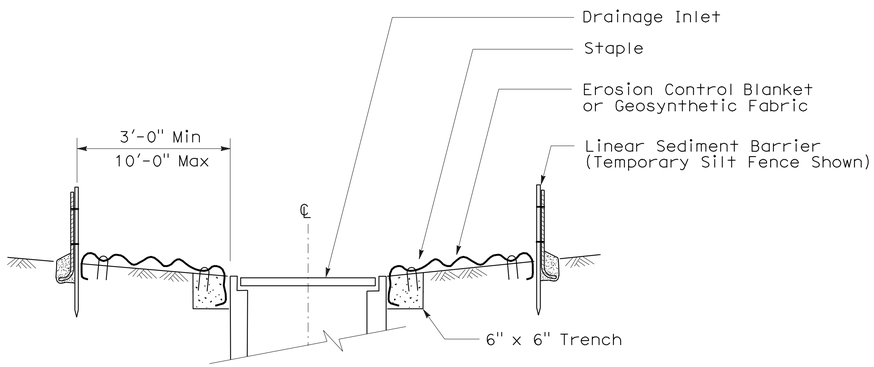

SECTION A-A

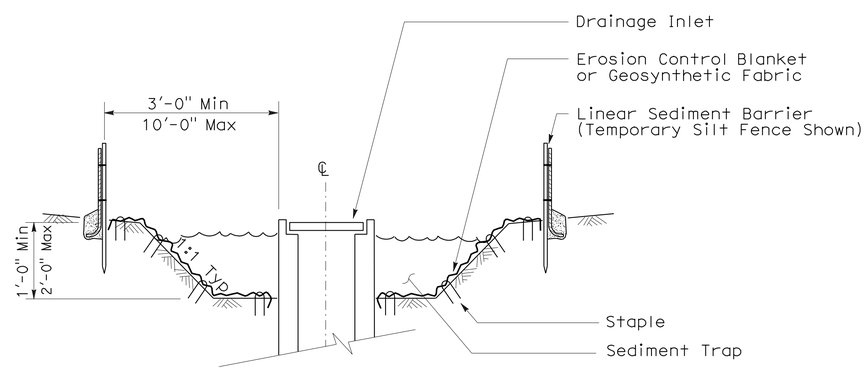

SECTION B-B

NOTES:

1. See Standard Plan T51 for Temporary Silt Fence.
2. Dimensions may vary to fit field conditions.

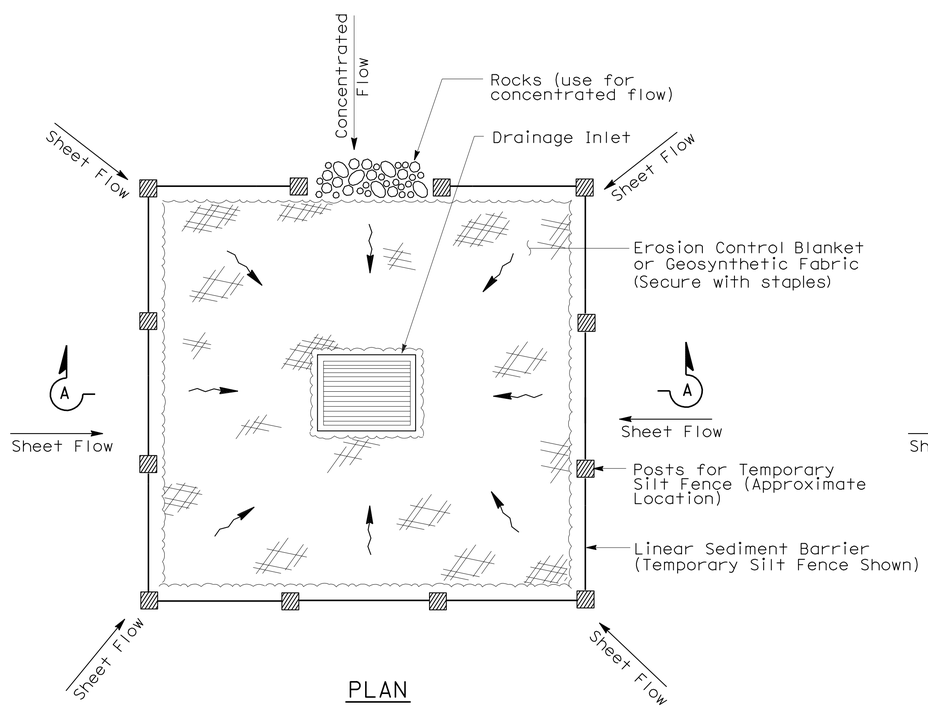

PLAN

TEMPORARY DRAINAGE INLET PROTECTION (TYPE 1)

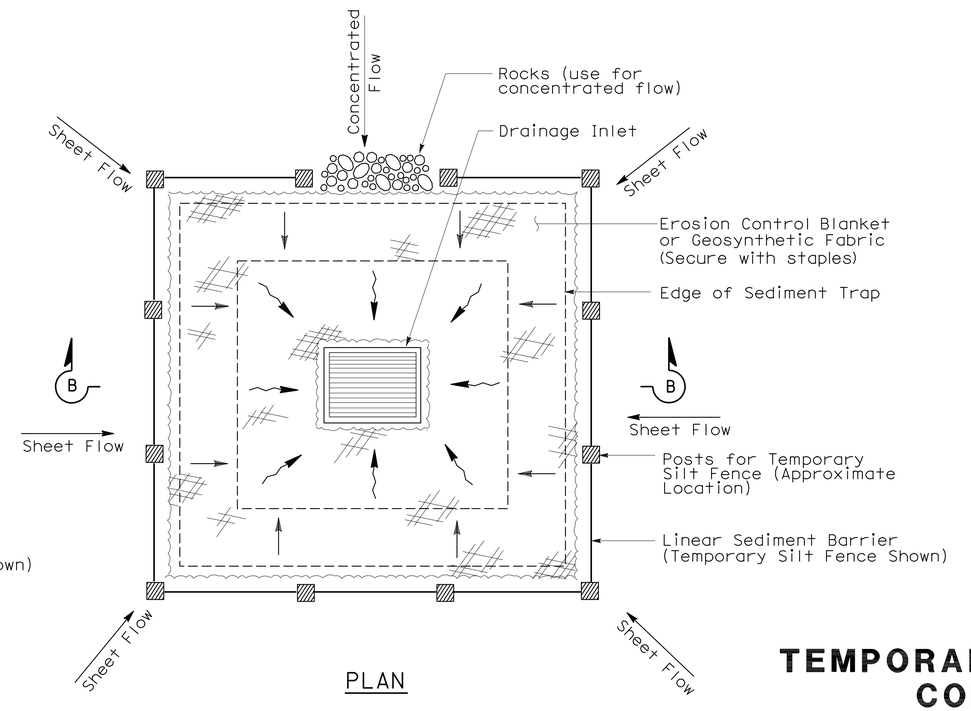

PLAN

TEMPORARY DRAINAGE INLET PROTECTION (TYPE 2) (EXCAVATED SEDIMENT TRAP)

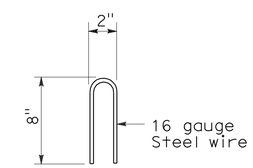

STAPLE DETAIL

STATE OF CALIFORNIA
DEPARTMENT OF TRANSPORTATION

TEMPORARY WATER POLLUTION CONTROL DETAILS (TEMPORARY DRAINAGE INLET PROTECTION)

NO SCALE

NSP T61 DATED AUGUST 15, 2008 SUPPLEMENTS THE STANDARD PLANS BOOK DATED MAY 2006.

NEW STANDARD PLAN NSP T61

2006 NEW STANDARD PLAN NSP T61

7-11-08

DIST	COUNTY	ROUTE	POST MILES TOTAL PROJECT	SHEET NO.	TOTAL SHEETS
03	ED	50	73.7/75.4	116	119

LICENSED LANDSCAPE ARCHITECT

August 15, 2008
PLANS APPROVAL DATE

The State of California or its officers or agents shall not be responsible for the accuracy or completeness of electronic copies of this plan sheet.

LICENSED LANDSCAPE ARCHITECT — Robert B. Schott — Signature — 11-04-08 Renewal Date — 08-11-08 Date — STATE OF CALIFORNIA

To accompany plans dated 7-30-12

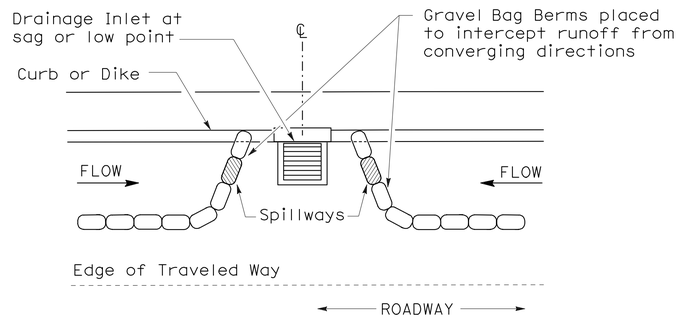

PLAN

CONFIGURATION FOR SAG POINT INLET (GRAVEL BAG BERM)

GRAVEL BAG BERM (TYPE 3A) SPACING TABLE

SLOPE OF ROADWAY (PERCENT)	1 to 3.9	4 to 5.9	6 to 7.9	8 to 10	10+
INTERVAL BETWEEN BERM	100′	75′	50′	25′	12′

For slope of less than 1%, install barriers only if erosion/sediment is prevalent

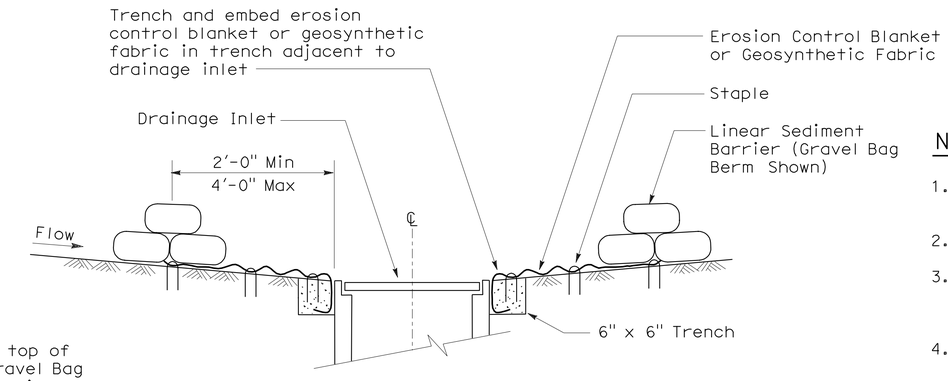

SECTION A-A

NOTES:

1. Place safety cones adjacent to drainage inlet protection.
2. Dimensions may vary to fit field conditions.
3. Install a minimum of 3 gravel bag berms upstream of each drainage inlet to be protected.
4. Position erosion control blanket or geosynthetic fabric at edge of concrete apron and secure in trench.
5. Erosion control blanket or geosynthetic fabric is not required if the area adjacent to the drainage inlet is vegetated or paved.

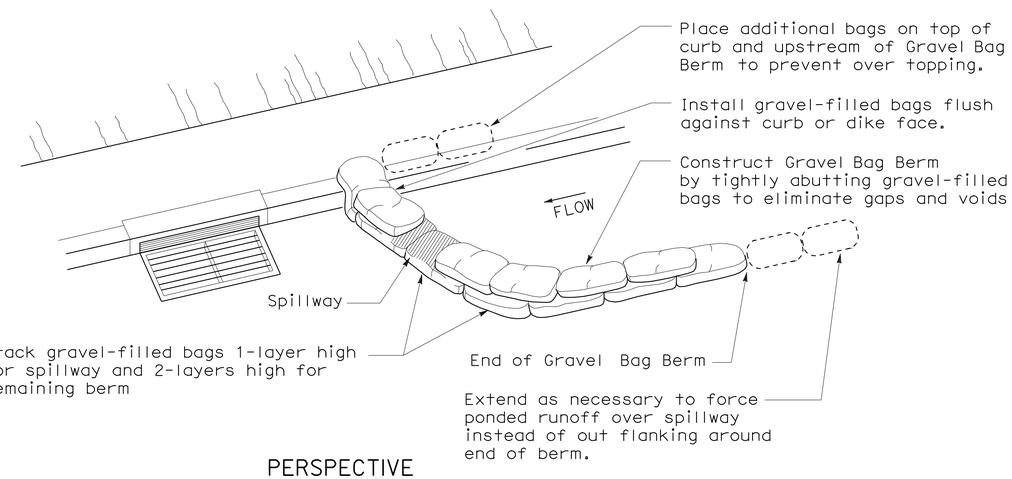

PERSPECTIVE

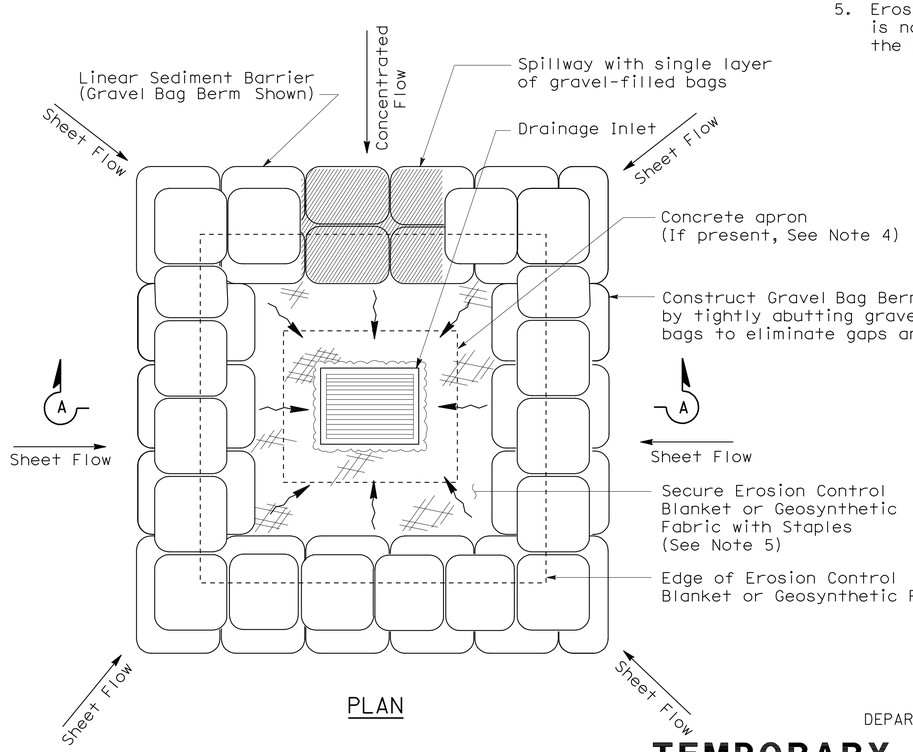

PLAN

TEMPORARY DRAINAGE INLET PROTECTION (TYPE 3B)

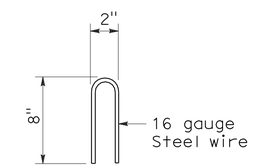

STAPLE DETAIL

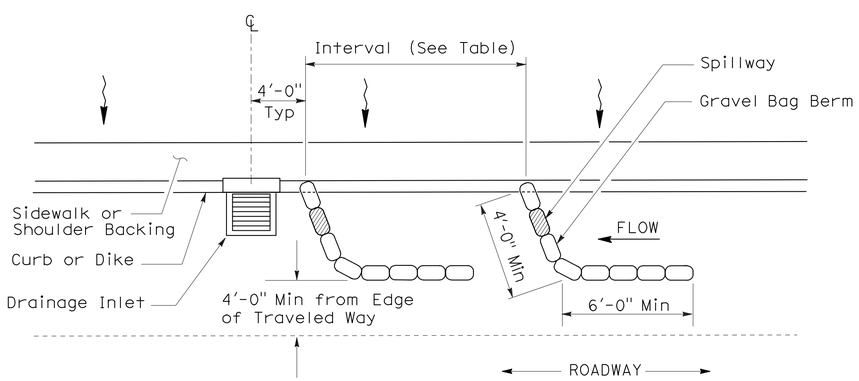

PLAN

TEMPORARY DRAINAGE INLET PROTECTION (TYPE 3A) (GRAVEL BAG BERM)

STATE OF CALIFORNIA
DEPARTMENT OF TRANSPORTATION

TEMPORARY WATER POLLUTION CONTROL DETAILS (TEMPORARY DRAINAGE INLET PROTECTION)

NO SCALE

NSP T62 DATED AUGUST 15, 2008 SUPPLEMENTS THE STANDARD PLANS BOOK DATED MAY 2006.

NEW STANDARD PLAN NSP T62

2006 NEW STANDARD PLAN NSP T62

7-11-08

DIST	COUNTY	ROUTE	POST MILES TOTAL PROJECT	SHEET NO.	TOTAL SHEETS
03	ED	50	73.7/75.4	117	119

LICENSED LANDSCAPE ARCHITECT

August 15, 2008
PLANS APPROVAL DATE

The State of California or its officers or agents shall not be responsible for the accuracy or completeness of electronic copies of this plan sheet.

LICENSED LANDSCAPE ARCHITECT Robert B. Schott 3025 Signature 11-04-08 Renewal Date 08-11-08 Date STATE OF CALIFORNIA

To accompany plans dated 7-30-12

FLEXIBLE SEDIMENT BARRIER SPACING TABLE

SLOPE OF ROADWAY (PERCENT)	0 to 0.9	1 to 1.9	2 to 2.9	3 to 4	5+
INTERVAL BETWEEN BARRIERS	50′	35′	30′	25′	20′
ANGLE FROM FACE OF CURB	70°	70°	70°	45°	45°
SUGGESTED BARRIER LENGTH	6′	6′	6′	6′	6′

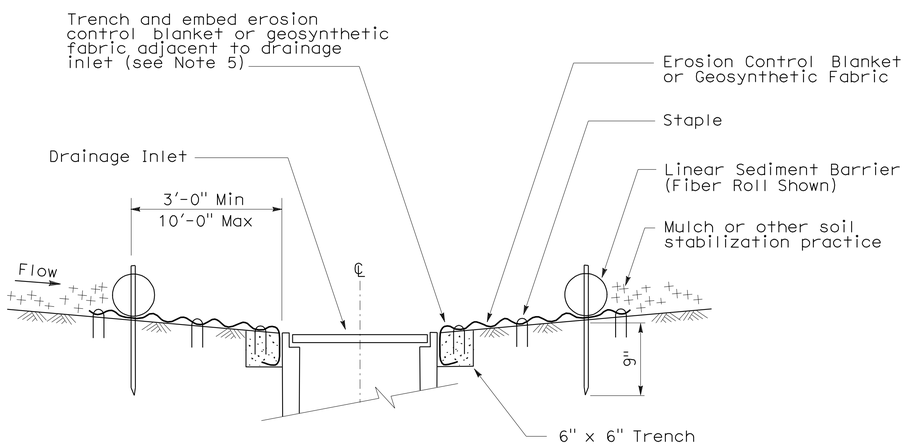

SECTION A-A

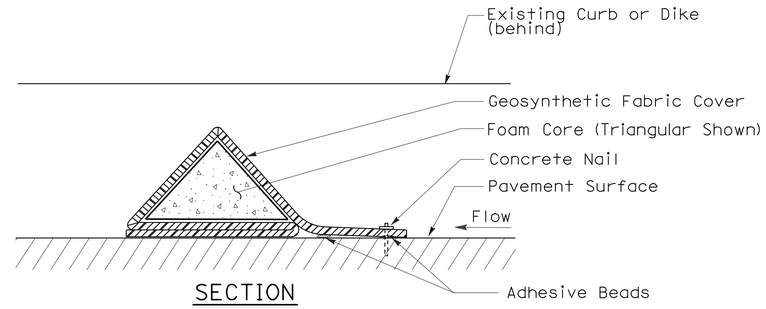

SECTION

FLEXIBLE SEDIMENT BARRIER DETAIL (FOAM BARRIER SHOWN)

NOTES:

1. See Standard Plan T51 for Temporary Silt Fence.
2. Dimensions may vary to fit field conditions.
3. Install a minimum of 3 flexible sediment barriers upstream of each drainage inlet to be protected.
4. Position erosion control blanket or geosynthetic fabric at edge of concrete apron and secure in trench.
5. Erosion control blanket or geosynthetic fabric is not required if the area adjacent to the drainage inlet is vegetated.

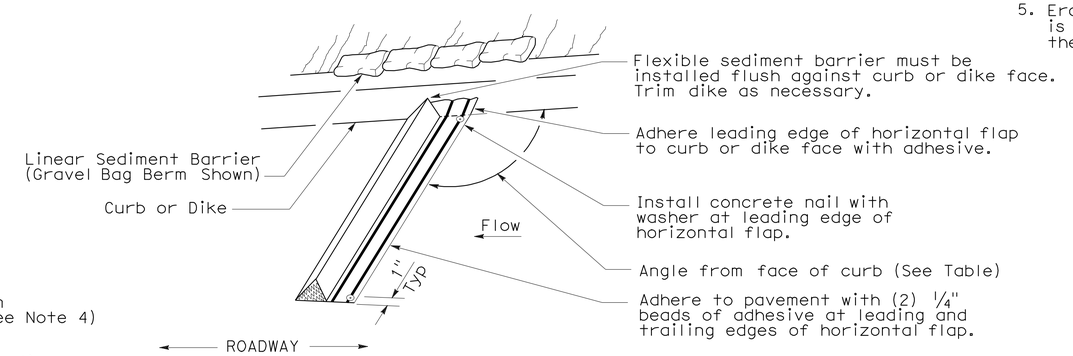

PERSPECTIVE

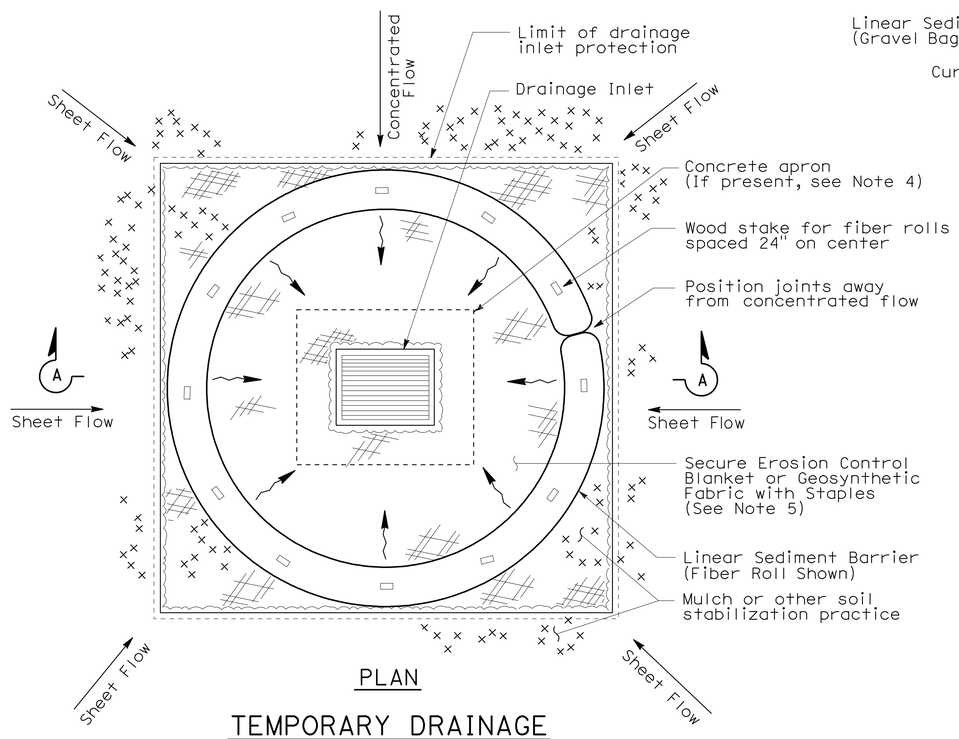

PLAN

TEMPORARY DRAINAGE INLET PROTECTION (TYPE 4A)

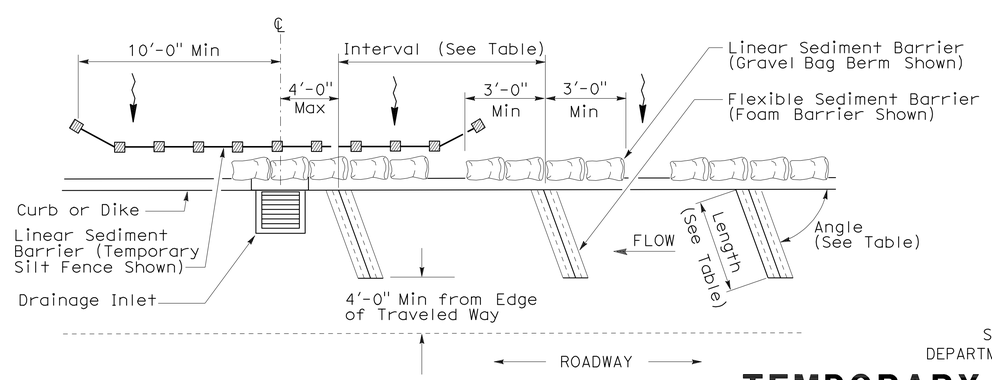

PLAN

TEMPORARY DRAINAGE INLET PROTECTION (TYPE 4B) FLEXIBLE SEDIMENT BARRIER

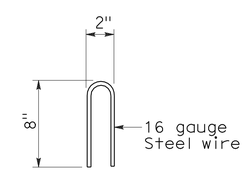

STAPLE DETAIL

STATE OF CALIFORNIA
DEPARTMENT OF TRANSPORTATION

TEMPORARY WATER POLLUTION CONTROL DETAILS (TEMPORARY DRAINAGE INLET PROTECTION)

NO SCALE

NSP T63 DATED AUGUST 15, 2008 SUPPLEMENTS THE STANDARD PLANS BOOK DATED MAY 2006.

NEW STANDARD PLAN NSP T63

2006 NEW STANDARD PLAN NSP T63

7-11-08

DIST	COUNTY	ROUTE	POST MILES TOTAL PROJECT	SHEET NO.	TOTAL SHEETS
03	ED	50	73.7/75.4	118	119

LICENSED LANDSCAPE ARCHITECT

August 15, 2008
PLANS APPROVAL DATE

LICENSED LANDSCAPE ARCHITECT
Robert B. Schott 3025
Signature
11-04-08
Renewal Date
08-11-08
Date
STATE OF CALIFORNIA

The State of California or its officers or agents shall not be responsible for the accuracy or completeness of electronic copies of this plan sheet.

To accompany plans dated 7-30-12

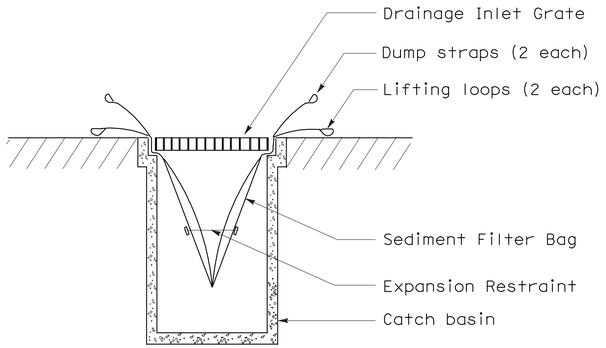

SECTION B-B

SEDIMENT FILTER BAG DETAIL

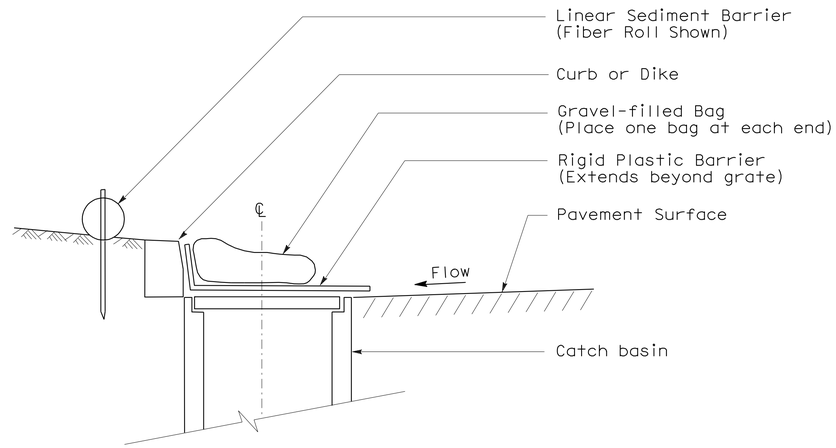

SECTION

TEMPORARY DRAINAGE INLET PROTECTION (TYPE 6A) (CATCH BASIN WITH GRATE)

NOTES:

1. See Standard Plan T51 for Temporary Silt Fence.
2. Dimensions may vary to fit field conditions.

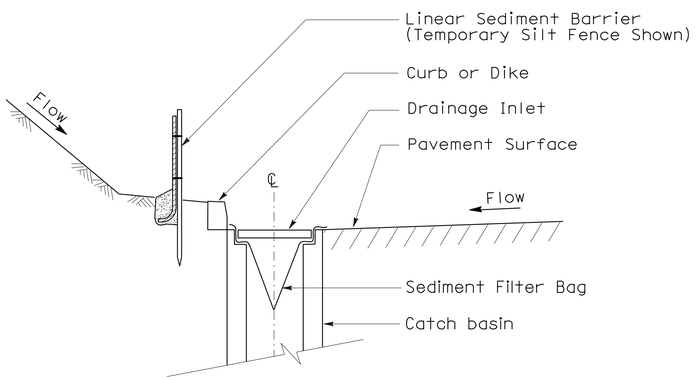

SECTION A-A

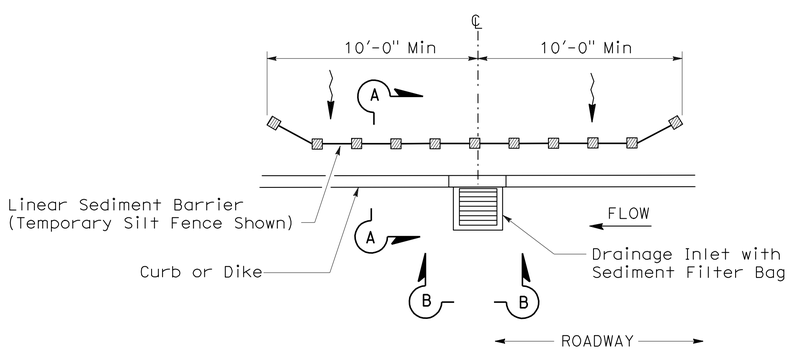

PLAN

TEMPORARY DRAINAGE INLET PROTECTION (TYPE 5) (SEDIMENT FILTER BAG)

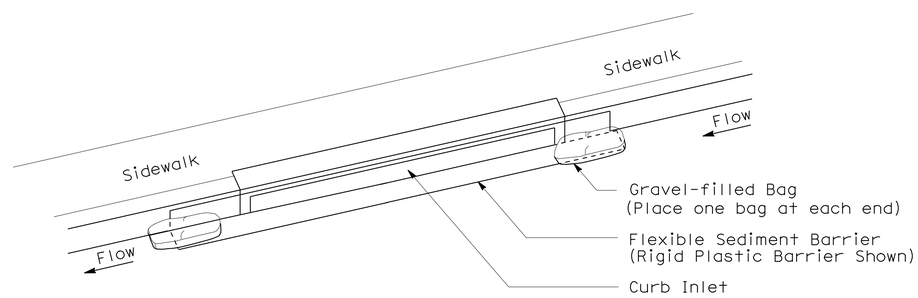

PERSPECTIVE

TEMPORARY DRAINAGE INLET PROTECTION (TYPE 6B) (CURB INLET WITHOUT GRATE)

STATE OF CALIFORNIA
DEPARTMENT OF TRANSPORTATION

TEMPORARY WATER POLLUTION CONTROL DETAILS (TEMPORARY DRAINAGE INLET PROTECTION)

NO SCALE

NSP T64 DATED AUGUST 15, 2008 SUPPLEMENTS
THE STANDARD PLANS BOOK DATED MAY 2006.

NEW STANDARD PLAN NSP T64

2006 NEW STANDARD PLAN NSP T64

DIST	COUNTY	ROUTE	POST MILES TOTAL PROJECT	SHEET NO.	TOTAL SHEETS
03	ED	50	73.7/75.4	119	119

LICENSED LANDSCAPE ARCHITECT

April 3, 2009
PLANS APPROVAL DATE

The State of California or its officers or agents shall not be responsible for the accuracy or completeness of electronic copies of this plan sheet.

LICENSED LANDSCAPE ARCHITECT — Robert B. Schott — Signature — 11-30-10 Renewal Date — 2-25-09 Date — STATE OF CALIFORNIA

To accompany plans dated 7-30-12

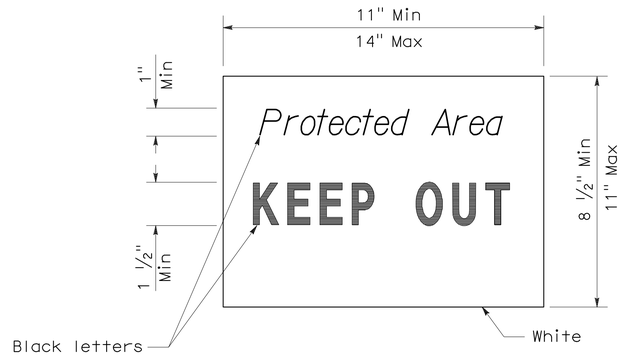

SIGN DETAIL

NOTE:

1. Temporary silt fence and temporary straw bale barrier shown for reference purposes only.

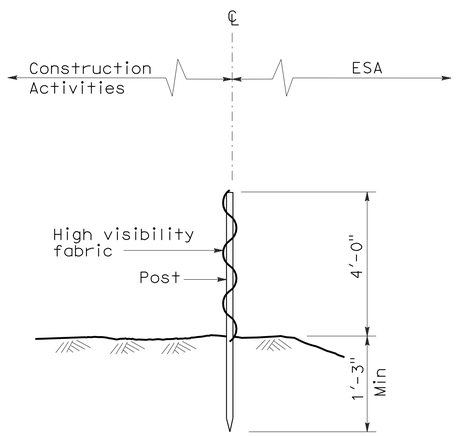

SECTION
TEMPORARY FENCE (TYPE ESA)

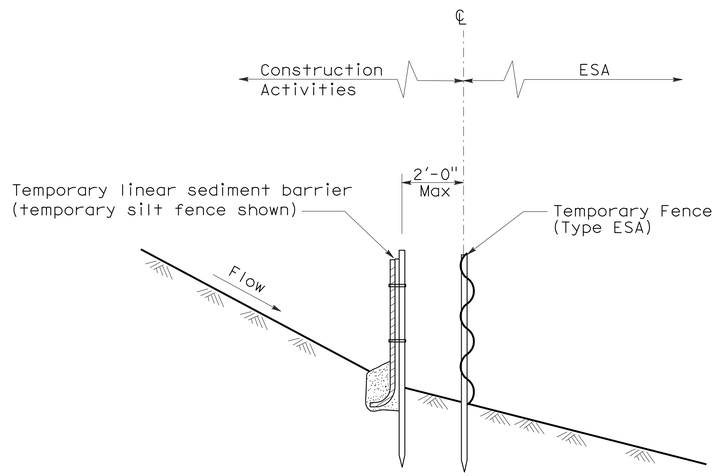

SECTION
PLACEMENT DETAIL
FOR TEMPORARY LINEAR SEDIMENT BARRIER
USED WITH TEMPORARY
FENCE (TYPE ESA)
(See Note 1)

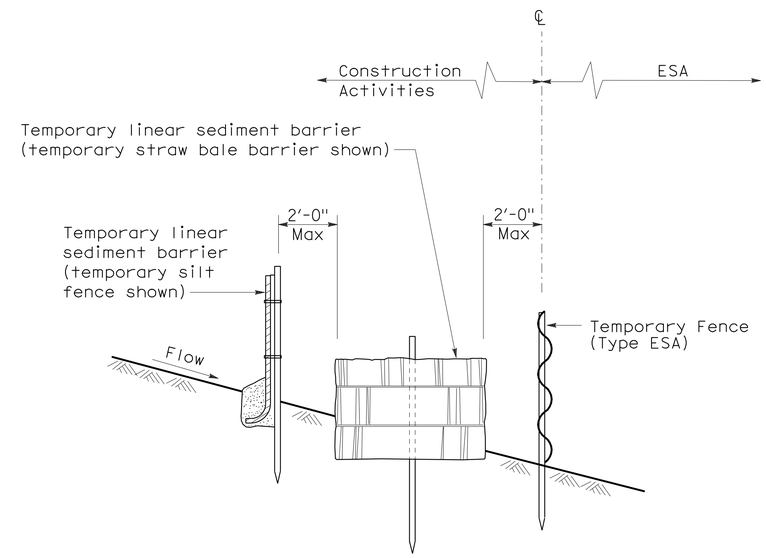

SECTION
PLACEMENT DETAIL
FOR TEMPORARY SILT FENCE
AND TEMPORARY STRAW BALE BARRIER
USED WITH TEMPORARY FENCE (TYPE ESA)
(See Note 1)

STATE OF CALIFORNIA
DEPARTMENT OF TRANSPORTATION

TEMPORARY WATER POLLUTION CONTROL DETAILS [TEMPORARY FENCE (TYPE ESA)]

NO SCALE

NSP T65 DATED APRIL 3, 2009 SUPPLEMENTS
THE STANDARD PLANS BOOK DATED MAY 2006.

NEW STANDARD PLAN NSP T65

2006 NEW STANDARD PLAN NSP T65