Dist	COUNTY	ROUTE	POST MILES TOTAL PROJECT	SHEET No.	TOTAL SHEETS
03	ED	50	R28.8 / 39.6	1	31

NH-P050(124)E

STATE OF CALIFORNIA
DEPARTMENT OF TRANSPORTATION

PROJECT PLANS FOR CONSTRUCTION ON
STATE HIGHWAY
IN EL DORADO COUNTY
FROM SAWMILL UNDERCROSSING
TO SOUTH FORK AMERICAN RIVER BRIDGE

TO BE SUPPLEMENTED BY STANDARD PLANS DATED MAY 2006

INDEX OF PLANS

SHEET No.	DESCRIPTION
1	TITLE AND LOCATION MAP
2-4	TYPICAL CROSS SECTIONS
5-6	CONSTRUCTION DETAILS
7	CONSTRUCTION AREA SIGNS
8-9	PAVEMENT DELINEATION DETAILS AND QUANTITIES
10-11	SUMMARY OF QUANTITIES
12	ELECTRICAL PLAN
13-31	NEW AND REVISED STANDARD PLANS

THE STANDARD PLANS LIST APPLICABLE TO THIS CONTRACT IS INCLUDED IN THE NOTICE TO BIDDERS AND SPECIAL PROVISIONS BOOK.

LOCATION MAP

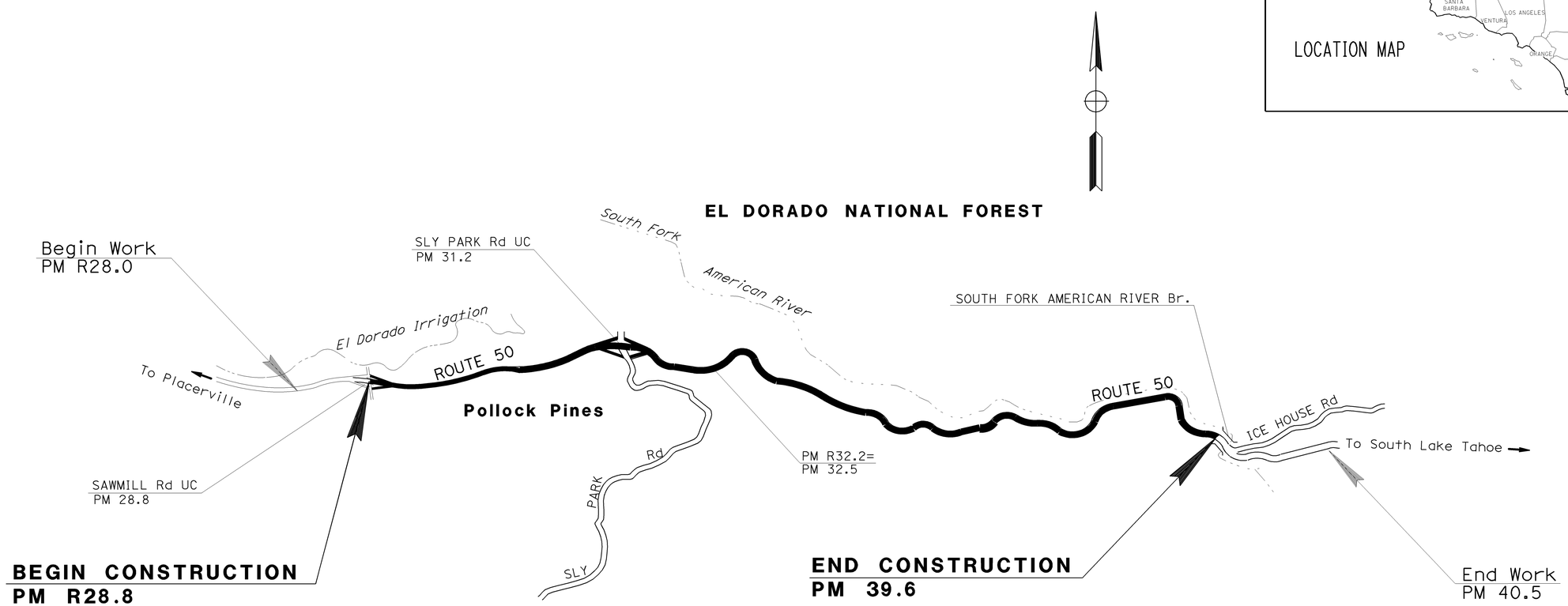

NO SCALE

PROJECT MANAGER: CLARK PERI

DESIGN ENGINEER: MASTRI ALVANDI

THE CONTRACTOR SHALL POSSESS THE CLASS (OR CLASSES) OF LICENSE AS SPECIFIED IN THE "NOTICE TO BIDDERS."

PROJECT ENGINEER REGISTERED CIVIL ENGINEER — DATE 7-22-10

REGISTERED PROFESSIONAL ENGINEER — RYAN KOHAGURA — No. C58535 — Exp. 12-31-10 — CIVIL — STATE OF CALIFORNIA

July 26, 2010
PLANS APPROVAL DATE

THE STATE OF CALIFORNIA OR ITS OFFICERS OR AGENTS SHALL NOT BE RESPONSIBLE FOR THE ACCURACY OR COMPLETENESS OF SCANNED COPIES OF THIS PLAN SHEET.

CONTRACT No.	03-1A6804
PROJECT ID	0300020020

LAST REVISION 07-22-10 — DATE PLOTTED => 10-AUG-2010 — TIME PLOTTED => 10:39

Dist	COUNTY	ROUTE	POST MILES TOTAL PROJECT	SHEET No.	TOTAL SHEETS
03	ED	50	R28.8 / 39.6	2	31

REGISTERED CIVIL ENGINEER 7-22-10 DATE

7-26-10
PLANS APPROVAL DATE

REGISTERED PROFESSIONAL ENGINEER RYAN KOHAGURA No. C58535 Exp. 12-31-10 CIVIL STATE OF CALIFORNIA

THE STATE OF CALIFORNIA OR ITS OFFICERS OR AGENTS SHALL NOT BE RESPONSIBLE FOR THE ACCURACY OR COMPLETENESS OF SCANNED COPIES OF THIS PLAN SHEET.

NOTES:

1. DIMENSIONS OF THE PAVEMENT (STRUCTURAL SECTIONS) ARE SUBJECT TO TOLERANCES SPECIFIED IN THE STANDARD SPECIFICATIONS.
2. EXISTING UTILITY FACILITIES ARE NOT SHOWN ON THE PLANS. EXISTING UTILITY FACILITIES HAVE NOT BEEN POSITIVELY IDENTIFIED.
3. RAMP DETAIL ON SHEET C-2.

LEGEND
W - WARM

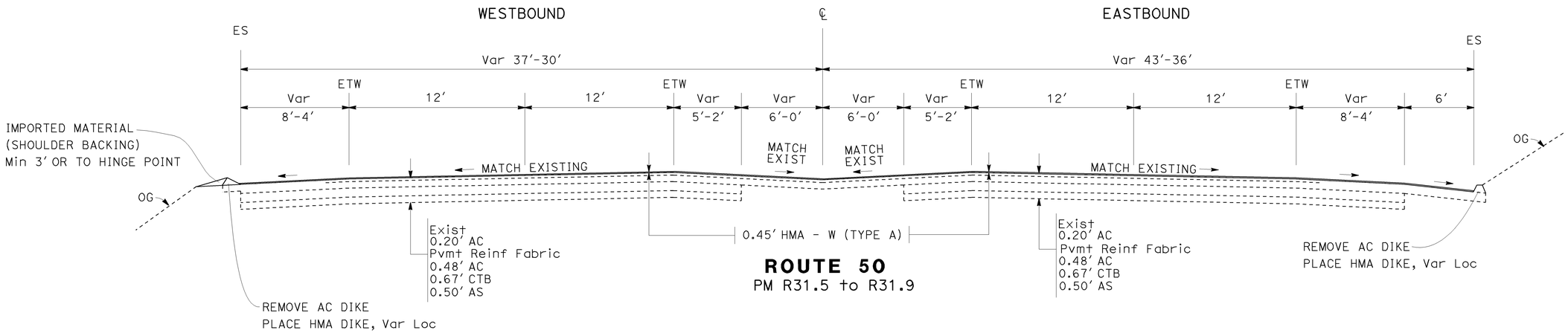

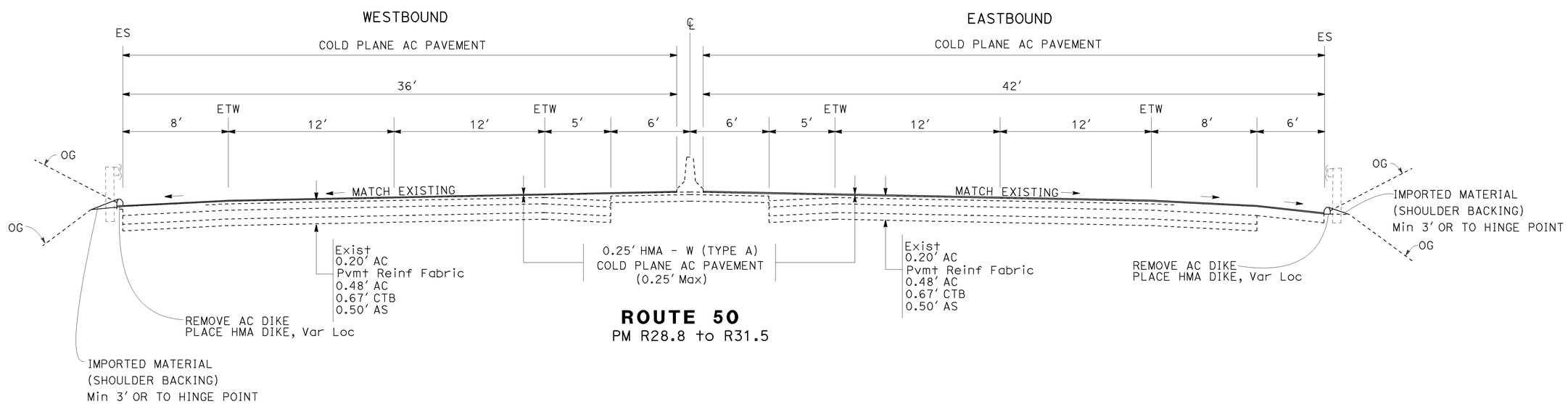

TYPICAL CROSS SECTIONS

NO SCALE

X-1

STATE OF CALIFORNIA - DEPARTMENT OF TRANSPORTATION
Caltrans PROJECT DEVELOPMENT

FUNCTIONAL SUPERVISOR: MASTRI ALVANDI
CALCULATED-DESIGNED BY: MASTRI ALVANDI
CHECKED BY: RYAN KOHAGURA
REVISED BY / DATE REVISED

LAST REVISION 07-22-10 | DATE PLOTTED => 10-AUG-2010 | TIME PLOTTED => 10:12

Dist	COUNTY	ROUTE	POST MILES TOTAL PROJECT	SHEET No.	TOTAL SHEETS
03	ED	50	R28.8 / 39.6	3	31

REGISTERED CIVIL ENGINEER 7-22-10 DATE

7-26-10
PLANS APPROVAL DATE

REGISTERED PROFESSIONAL ENGINEER RYAN KOHAGURA No. C58535 Exp. 12-31-10 CIVIL STATE OF CALIFORNIA

THE STATE OF CALIFORNIA OR ITS OFFICERS OR AGENTS SHALL NOT BE RESPONSIBLE FOR THE ACCURACY OR COMPLETENESS OF SCANNED COPIES OF THIS PLAN SHEET.

NOTES:

1. DIMENSIONS OF THE PAVEMENT (STRUCTURAL SECTIONS) ARE SUBJECT TO TOLERANCES SPECIFIED IN THE STANDARD SPECIFICATIONS.
2. EXISTING UTILITY FACILITIES ARE NOT SHOWN ON THE PLANS. EXISTING UTILITY FACILITIES HAVE NOT BEEN POSITIVELY IDENTIFIED.
3. RAMP DETAIL ON SHEET C-2.

LEGEND

W - WARM

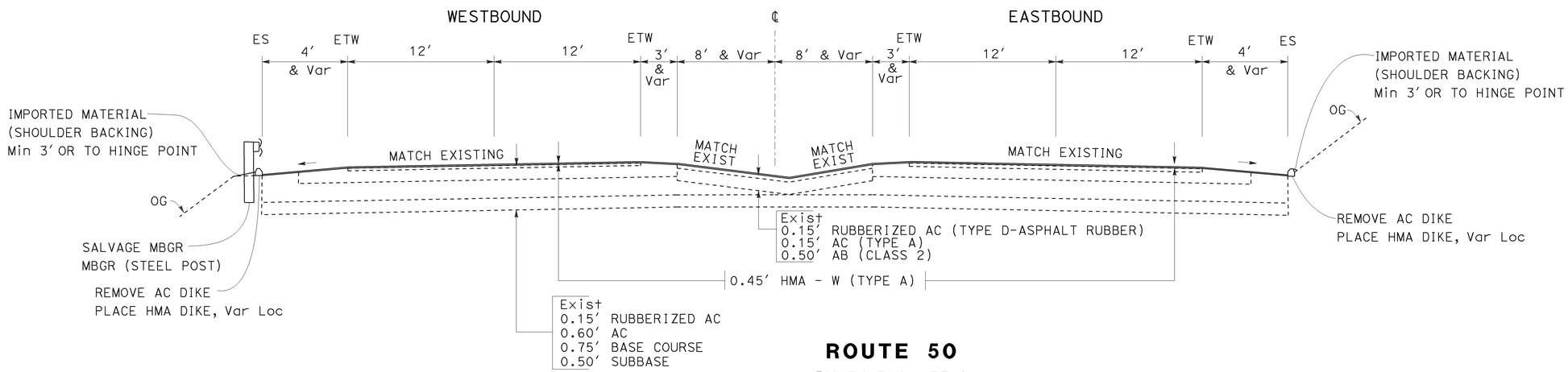

ROUTE 50

PM 34.3 to 35.1
PM 35.3 to 35.4
PM 35.5 to 35.6
PM 35.7 to 35.9

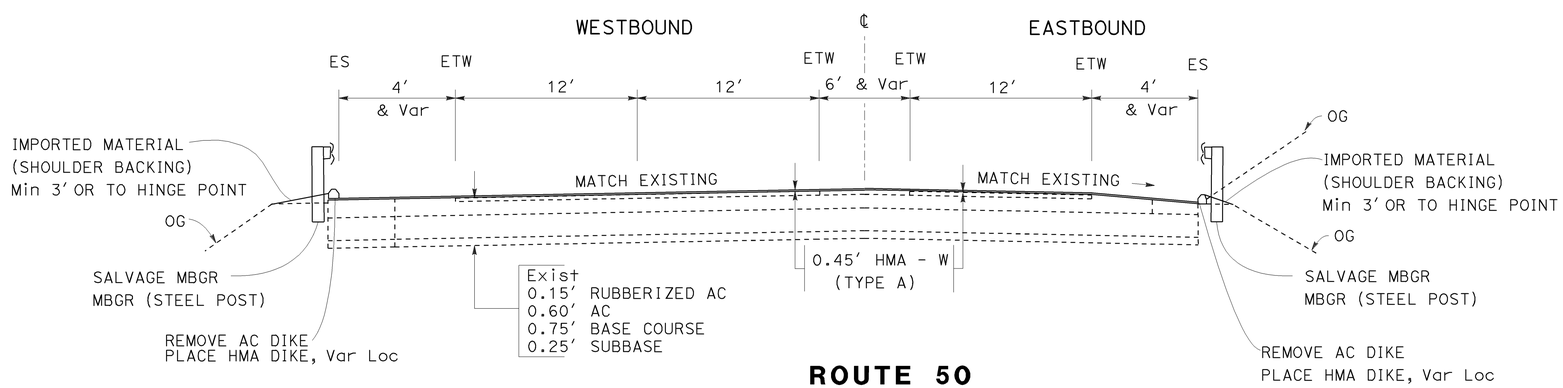

ROUTE 50

PM R31.9 to 34.0
PM 39.5 to 39.6

TYPICAL CROSS SECTIONS

NO SCALE

X-2

REVISED BY | DATE REVISED
MASTRI ALVANDI | RYAN KOHAGURA
CALCULATED-DESIGNED BY | CHECKED BY
FUNCTIONAL SUPERVISOR | MASTRI ALVANDI

STATE OF CALIFORNIA - DEPARTMENT OF TRANSPORTATION
Caltrans PROJECT DEVELOPMENT

LAST REVISION 07-22-10 | DATE PLOTTED => 10-AUG-2010 | TIME PLOTTED => 10:12

Dist	COUNTY	ROUTE	POST MILES TOTAL PROJECT	SHEET No.	TOTAL SHEETS
03	ED	50	R28.8 / 39.6	4	31

REGISTERED CIVIL ENGINEER 7-22-10 DATE

7-26-10
PLANS APPROVAL DATE

REGISTERED PROFESSIONAL ENGINEER RYAN KOHAGURA No. C58535 Exp. 12-31-10 CIVIL STATE OF CALIFORNIA

THE STATE OF CALIFORNIA OR ITS OFFICERS OR AGENTS SHALL NOT BE RESPONSIBLE FOR THE ACCURACY OR COMPLETENESS OF SCANNED COPIES OF THIS PLAN SHEET.

NOTES:

1. DIMENSIONS OF THE PAVEMENT (STRUCTURAL SECTIONS) ARE SUBJECT TO TOLERANCES SPECIFIED IN THE STANDARD SPECIFICATIONS.
2. EXISTING UTILITY FACILITIES ARE NOT SHOWN ON THE PLANS. EXISTING UTILITY FACILITIES HAVE NOT BEEN POSITIVELY IDENTIFIED.
3. RAMP DETAIL ON SHEET C-2.

LEGEND

W - WARM

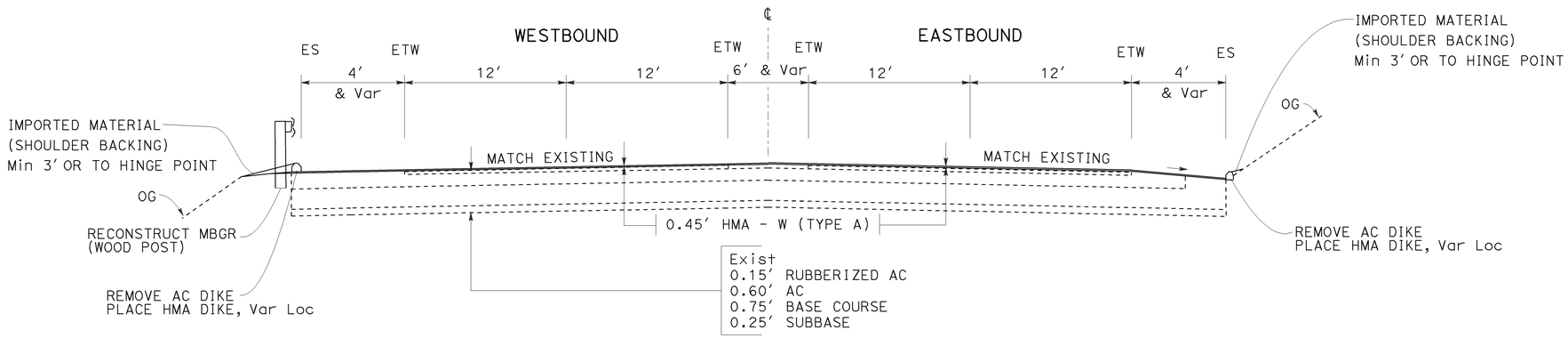

ROUTE 50

PM 38.5 to 39.5

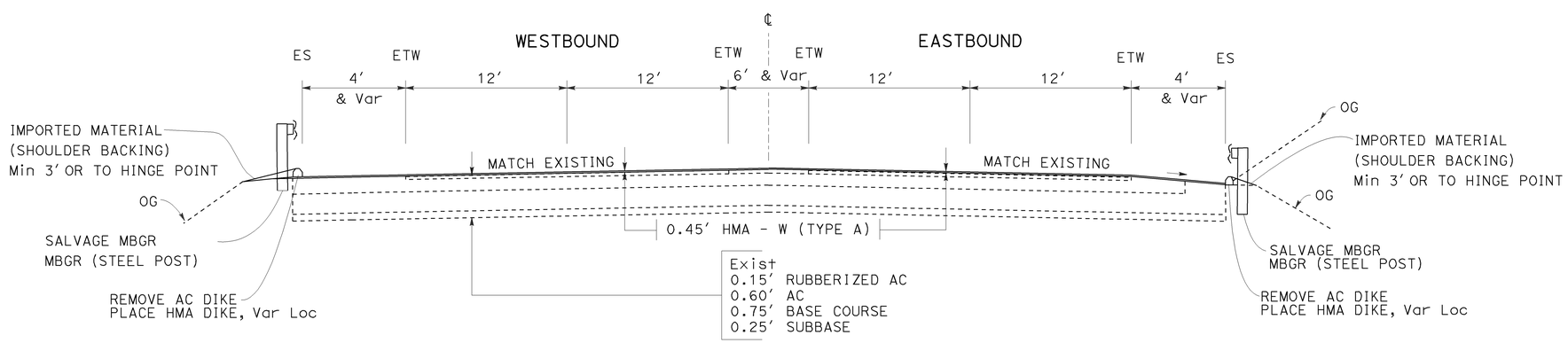

ROUTE 50

PM 34.0 to 34.3
PM 35.1 to 35.3
PM 35.4 to 35.5
PM 35.6 to 35.7
PM 35.9 to 38.5

TYPICAL CROSS SECTIONS

NO SCALE

X-3

REVISED BY | DATE REVISED
MASTRI ALVANDI | RYAN KOHAGURA
CALCULATED-DESIGNED BY | CHECKED BY
FUNCTIONAL SUPERVISOR: MASTRI ALVANDI

STATE OF CALIFORNIA - DEPARTMENT OF TRANSPORTATION
Caltrans PROJECT DEVELOPMENT

LAST REVISION 07-22-10 | DATE PLOTTED => 10-AUG-2010 | TIME PLOTTED => 10:12

Dist	COUNTY	ROUTE	POST MILES TOTAL PROJECT	SHEET No.	TOTAL SHEETS
03	ED	50	R28.8 / 39.6	5	31

REGISTERED CIVIL ENGINEER 7-22-10 DATE

7-26-10
PLANS APPROVAL DATE

REGISTERED PROFESSIONAL ENGINEER RYAN KOHAGURA No. C58535 Exp. 12-31-10 CIVIL STATE OF CALIFORNIA

THE STATE OF CALIFORNIA OR ITS OFFICERS OR AGENTS SHALL NOT BE RESPONSIBLE FOR THE ACCURACY OR COMPLETENESS OF SCANNED COPIES OF THIS PLAN SHEET.

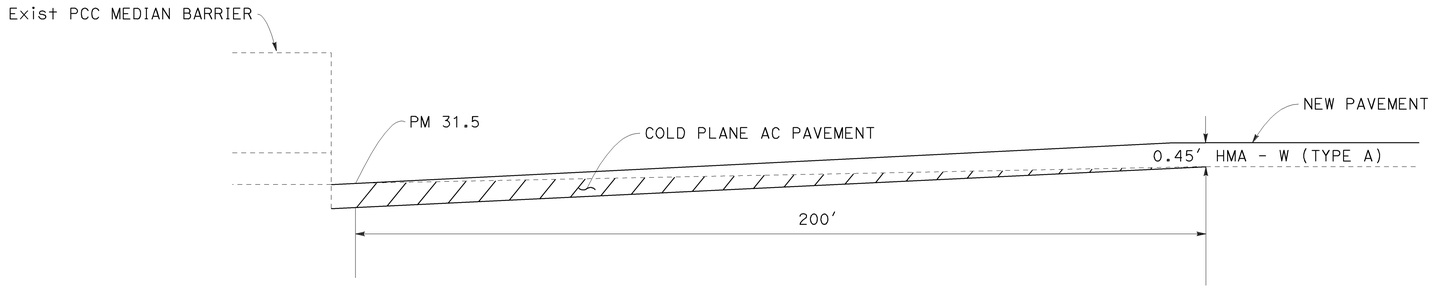

COLD PLANE ASPHALT PAVEMENT

PM 31.5

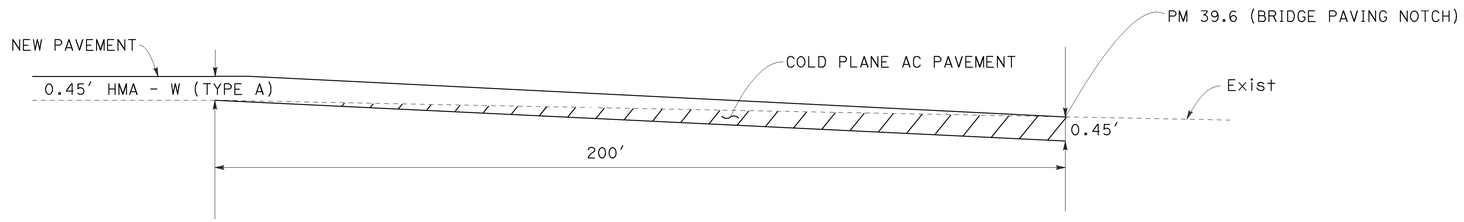

COLD PLANE ASPHALT PAVEMENT

PM 39.6

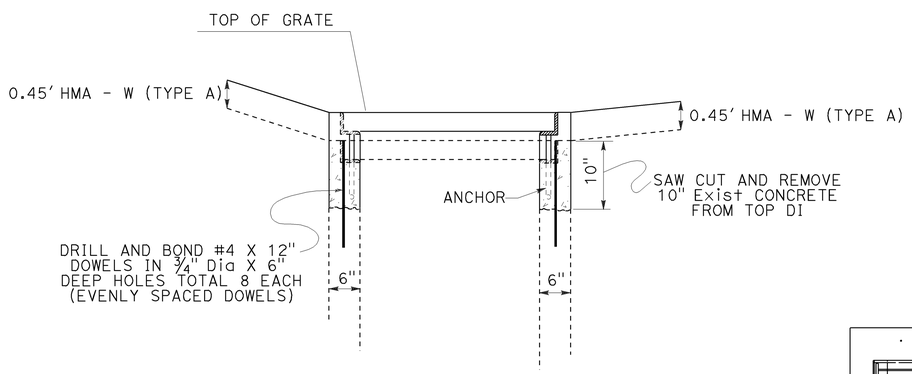

SECTION A-A

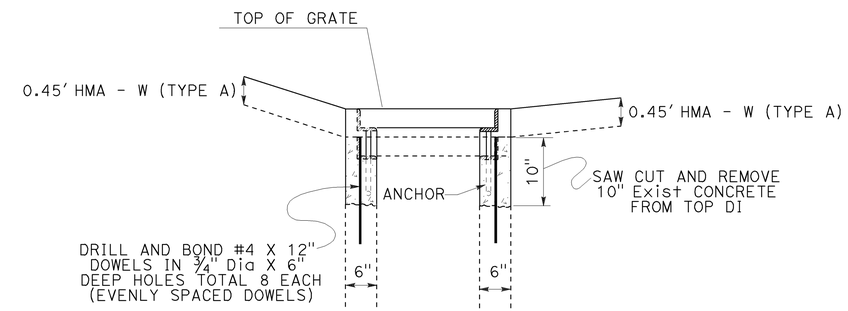

SECTION B-B

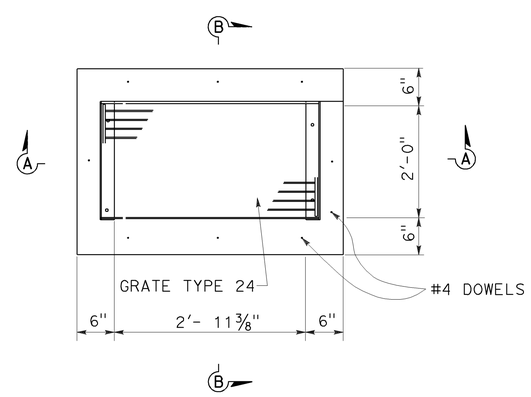

PLAN

ADJUST INLET

CONSTRUCTION DETAILS

NO SCALE

C-1

STATE OF CALIFORNIA - DEPARTMENT OF TRANSPORTATION
Caltrans PROJECT DEVELOPMENT

FUNCTIONAL SUPERVISOR: MASTRI ALVANDI
CALCULATED-DESIGNED BY: MASTRI ALVANDI
CHECKED BY: RYAN KOHAGURA
REVISED BY
DATE REVISED

LAST REVISION 07-22-10
DATE PLOTTED => 10-AUG-2010
TIME PLOTTED => 10:12

Dist	COUNTY	ROUTE	POST MILES TOTAL PROJECT	SHEET No.	TOTAL SHEETS
03	ED	50	R28.8 / 39.6	6	31

REGISTERED CIVIL ENGINEER 7-22-10 DATE

7-26-10
PLANS APPROVAL DATE

REGISTERED PROFESSIONAL ENGINEER RYAN KOHAGURA No. C58535 Exp. 12-31-10 CIVIL STATE OF CALIFORNIA

THE STATE OF CALIFORNIA OR ITS OFFICERS OR AGENTS SHALL NOT BE RESPONSIBLE FOR THE ACCURACY OR COMPLETENESS OF SCANNED COPIES OF THIS PLAN SHEET.

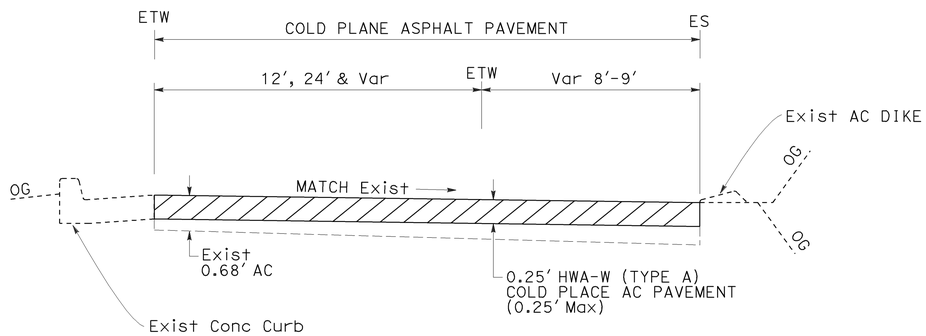

A - A

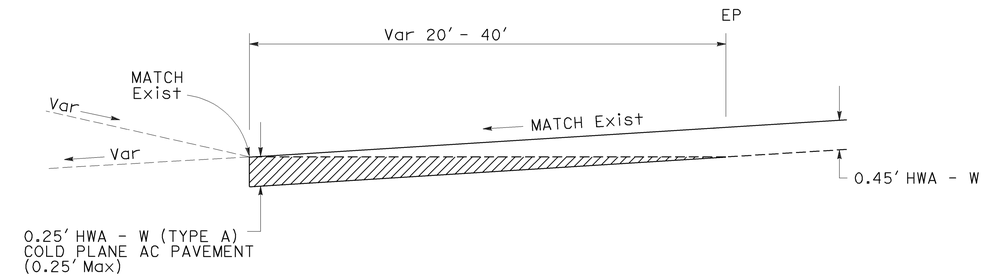

B - B

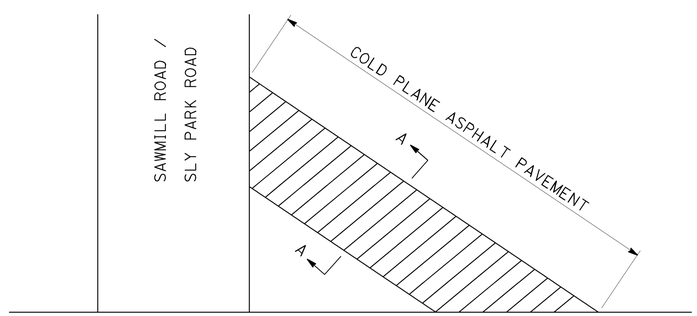

ROUTE 50 - RAMPS

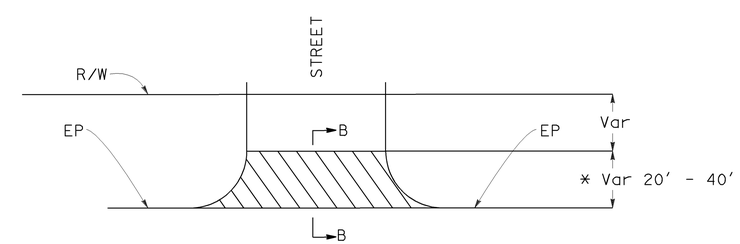

ROUTE 50 - STREET

* EXACT LIMITS TO BE DETERMINED IN THE FIELD BY THE ENGINEER.

CONSTRUCTION DETAILS

NO SCALE

C-2

STATE OF CALIFORNIA - DEPARTMENT OF TRANSPORTATION
Caltrans PROJECT DEVELOPMENT

FUNCTIONAL SUPERVISOR: MASTRI ALVANDI
CALCULATED-DESIGNED BY: MASTRI ALVANDI
CHECKED BY: RYAN KOHAGURA
REVISED BY
DATE REVISED

LAST REVISION 07-22-10
DATE PLOTTED => 10-AUG-2010
TIME PLOTTED => 10:12

Dist	COUNTY	ROUTE	POST MILES TOTAL PROJECT	SHEET No.	TOTAL SHEETS
03	ED	50	R28.8 / 39.6	7	31

REGISTERED CIVIL ENGINEER 7-22-10 DATE

7-26-10
PLANS APPROVAL DATE

REGISTERED PROFESSIONAL ENGINEER RYAN KOHAGURA No. C58535 Exp. 12-31-10 CIVIL STATE OF CALIFORNIA

THE STATE OF CALIFORNIA OR ITS OFFICERS OR AGENTS SHALL NOT BE RESPONSIBLE FOR THE ACCURACY OR COMPLETENESS OF SCANNED COPIES OF THIS PLAN SHEET.

NOTES:

1. EXACT SIGN LOCATIONS TO BE DETERMINED BY THE ENGINEER.
2. EXISTING UTILITY FACILITIES HAVE NOT BEEN PLOTTED ON THESE PLANS.
3. FOR COMPLETE RIGHT OF WAY AND ACCURATE ACCESS DATA, SEE RIGHT OF WAY RECORD MAPS AT DISTRICT OFFICE.

LEGEND

- SIGN - SINGLE POST
- SIGN - DOUBLE POST

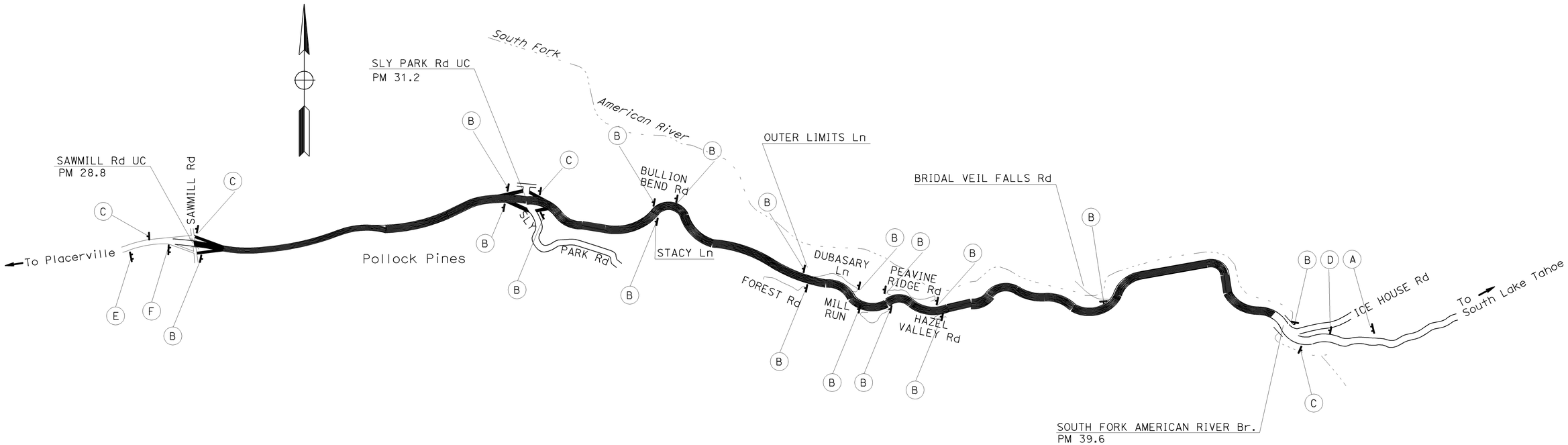

SIGN DETAILS

(A) G20-1[Spec](12)

ROAD WORK
NEXT 12 MILES

6" C SERIES LETTERS

60"X30"

RETROREFLECTIVE ORANGE BACKGROUND WITH BLACK LEGEND AND BORDER.

(D) C40(Mod)<CA>

TRAFFIC FINES
DOUBLED IN
WORK ZONES

4" D SERIES LETTERS

48"X36"

RETROREFLECTIVE WHITE BACKGROUND WITH BLACK LEGEND AND BORDER.

(E) G20-1[Spec](12)

ROAD WORK
NEXT 12 MILES

8" C SERIES LETTERS

84"X42"

RETROREFLECTIVE ORANGE BACKGROUND WITH BLACK LEGEND AND BORDER.

(F) C40(Mod)<CA>

TRAFFIC FINES
DOUBLED IN
WORK ZONES

8" D SERIES LETTERS

96"X60"

RETROREFLECTIVE WHITE BACKGROUND WITH BLACK LEGEND AND BORDER.

STATIONARY MOUNTED CONSTRUCTION AREA SIGNS

SIGN LETTER	SIGN CODE FEDERAL	SIGN CODE CALIFORNIA	PANEL SIZE	SIGN MESSAGE	NUMBER OF POST AND SIZE	NUMBER OF SIGNS
A	G20-1[Spec] (12)		60" x 30"	ROAD WORK NEXT 12 MILES	2 - 4" x 6"	1
B	W20-1	C23	36" x 36"	ROAD WORK AHEAD	1 - 6" x 6"	17
C		C14	48" x 24"	END ROAD WORK	1 - 4" x 6"	4
D		C40(MOD)	48" x 36"	TRAFFIC FINES DOUBLED IN WORK ZONES	1 - 4" x 6"	1
E	G20-1[SPEC] (12)		84" x 42"	ROAD WORK NEXT 12 MILES	2 - 4" x 6"	1
F		C40(MOD)	96" x 60"	TRAFFIC FINES DOUBLED IN WORK ZONES	2 - 6" x 6"	1

THIS PLAN ACCURATE FOR CONSTRUCTION AREA SIGN WORK ONLY.

CONSTRUCTION AREA SIGNS

NO SCALE

CS-1

REVISED BY | DATE REVISED
MASTRI ALVANDI | RYAN KOHAGURA
CALCULATED-DESIGNED BY | CHECKED BY
FUNCTIONAL SUPERVISOR
MASTRI ALVANDI

STATE OF CALIFORNIA - DEPARTMENT OF TRANSPORTATION
Caltrans PROJECT DEVELOPMENT

LAST REVISION 07-22-10 | DATE PLOTTED => 10-AUG-2010 | TIME PLOTTED => 10:12

Dist	COUNTY	ROUTE	POST MILES TOTAL PROJECT	SHEET No.	TOTAL SHEETS
03	ED	50	R28.8 / 39.6	8	31

REGISTERED CIVIL ENGINEER 7-22-10 DATE

7-26-10
PLANS APPROVAL DATE

REGISTERED PROFESSIONAL ENGINEER RYAN KOHAGURA No. C58535 Exp. 12-31-10 CIVIL STATE OF CALIFORNIA

THE STATE OF CALIFORNIA OR ITS OFFICERS OR AGENTS SHALL NOT BE RESPONSIBLE FOR THE ACCURACY OR COMPLETENESS OF SCANNED COPIES OF THIS PLAN SHEET.

NOTES:

1. MEDIAN RUMBLE STRIP SHALL BE CONSTRUCTED PRIOR TO INSTALLING FINAL TRAFFIC STRIPES.
2. FOR STRIPING DETAIL INFORMATION NOT SHOWN, SEE STANDARD PLANS.

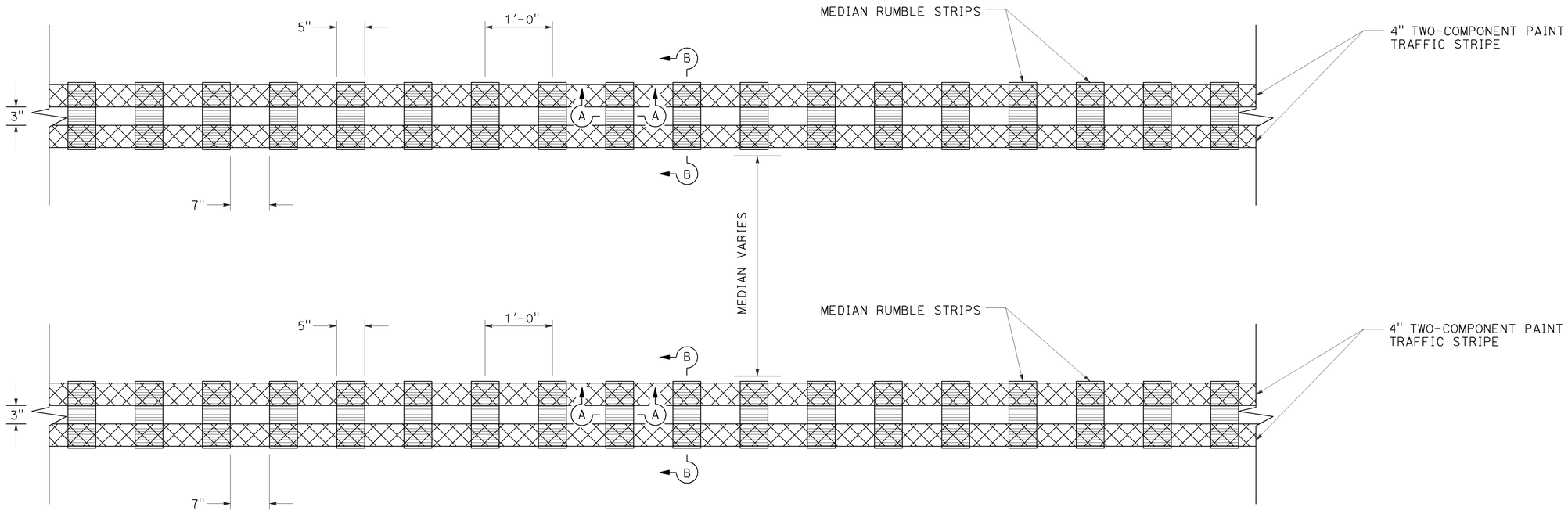

DETAIL 21 WITH MEDIAN RUMBLE STRIPS

(TYPICAL)

* PM 28.8 - 39.6

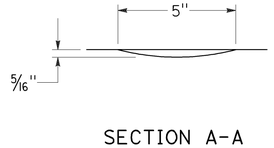

SECTION A-A

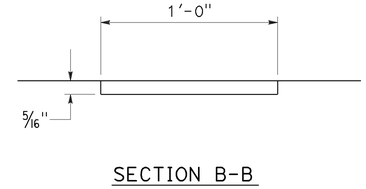

SECTION B-B

* LOCATION VARIES.
PLACEMENT RELATIVE TO ETW WILL BE DETERMINED IN THE FIELD BY THE ENGINEER.

PAVEMENT DELINEATION DETAILS

NO SCALE

PDD-1

STATE OF CALIFORNIA - DEPARTMENT OF TRANSPORTATION
Caltrans PROJECT DEVELOPMENT

FUNCTIONAL SUPERVISOR: MASTRI ALVANDI
CALCULATED-DESIGNED BY: MASTRI ALVANDI
CHECKED BY: RYAN KOHAGURA
REVISED BY
DATE REVISED

LAST REVISION 07-22-10
DATE PLOTTED => 10-AUG-2010
TIME PLOTTED => 10:39

Dist	COUNTY	ROUTE	POST MILES TOTAL PROJECT	SHEET No.	TOTAL SHEETS
03	ED	50	R28.8 / 39.6	9	31

REGISTERED CIVIL ENGINEER 7-22-10 DATE

7-26-10
PLANS APPROVAL DATE

REGISTERED PROFESSIONAL ENGINEER RYAN KOHAGURA No. C58535 Exp. 12-31-10 CIVIL STATE OF CALIFORNIA

THE STATE OF CALIFORNIA OR ITS OFFICERS OR AGENTS SHALL NOT BE RESPONSIBLE FOR THE ACCURACY OR COMPLETENESS OF SCANNED COPIES OF THIS PLAN SHEET.

TWO-COMPONENT PAINT PAVEMENT MARKING

DESCRIPTION	SQFT
AHEAD	124
TYPE I (24) ARROW	168
TYPE III (L) ARROW	1,050
TYPE III (R) ARROW	378
TYPE V ARROW	1,683
TYPE VI ARROW	210
STOP	748
LIMIT LINE	300
TOTAL	4,661

4" THERMOPLASTIC TRAFFIC STRIPE (RECESSED)

DETAIL NUMBER	LF
21	300
24	51,450
27B	119,463
31	3,603
TOTAL	174,816

4" THERMOPLASTIC TRAFFIC STRIPE (RECESSED, BROKEN 12 - 3)

DETAIL NUMBER	LF
27C	3,603
TOTAL	3,603

4" THERMOPLASTIC TRAFFIC STRIPE (RECESSED, BROKEN 36 - 12)

DETAIL NUMBER	LF
11	97,382
TOTAL	97,382

8" THERMOPLASTIC TRAFFIC STRIPE (RECESSED)

DETAIL NUMBER	LF
36	1,840
36A	1,160
38A	4,985
TOTAL	7,985

4" TWO-COMPONENT PAINT TRAFFIC STRIPE

DETAIL NUMBER	LF
21	235,842
TOTAL	235,842

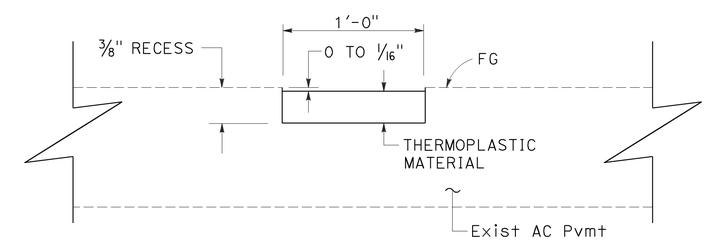

RECESSING DETAIL
(FOR LIMIT LINES)
NO SCALE

12" THERMOPLASTIC PAVEMENT MARKING (RECESSED)

DESCRIPTION	SQFT
LIMIT LINE	413
TOTAL	413

PAVEMENT DELINEATION DETAILS AND QUANTITIES

PDQ-1

REVISED BY | DATE REVISED
MASTRI ALVANDI | RYAN KOHAGURA
CALCULATED-DESIGNED BY | CHECKED BY
FUNCTIONAL SUPERVISOR | MASTRI ALVANDI
STATE OF CALIFORNIA - DEPARTMENT OF TRANSPORTATION
Caltrans PROJECT DEVELOPMENT

LAST REVISION 07-22-10 | DATE PLOTTED => 10-AUG-2010 | TIME PLOTTED => 10:12

Dist	COUNTY	ROUTE	POST MILES TOTAL PROJECT	SHEET No.	TOTAL SHEETS
03	ED	50	R28.8 / 39.6	10	31

REGISTERED CIVIL ENGINEER 7-22-10 DATE

7-26-10
PLANS APPROVAL DATE

REGISTERED PROFESSIONAL ENGINEER RYAN KOHAGURA No. C58535 Exp. 12-31-10 CIVIL STATE OF CALIFORNIA

THE STATE OF CALIFORNIA OR ITS OFFICERS OR AGENTS SHALL NOT BE RESPONSIBLE FOR THE ACCURACY OR COMPLETENESS OF SCANNED COPIES OF THIS PLAN SHEET.

ROADWAY QUANTITIES

LOCATION	HMA-W (TYPE A) TON	TACK COAT TON
MAIN LINE OVERLAY		
PM 28.80 TO 39.60 R†/L†	111,132.7	810.0
DRIVEWAY CONFORM		
PM 32.63 TO 32.64 R†	95.2	0.6
PM 32.54 TO 32.57 L†	148.5	0.9
PM 32.76 TO 32.79 L†	89.3	0.6
PM 32.91 TO 32.91 L†	26.0	0.2
PM 33.34 TO 33.37 L†	113.6	0.7
PM 33.52 TO 33.53 L†	25.6	0.2
PM 37.18 TO 37.20 L†	107.5	0.7
PM 37.78 TO 37.82 L†	292.0	1.8
PM 38.64 TO 38.67 L†	188.9	1.2
PM 38.74 TO 38.75 L†	50.4	0.3
INTERSECTION		
PM 34.37 TO 34.40 R†/L†	685.2	4.3
PM 34.91 TO 34.94 R†/L†	733.8	4.6
PM 35.19 TO 35.22 R†/L†	603.5	3.8
PM 35.63 TO 35.66 R†/L†	844.8	5.3
RIGHT TURN LANE		
PM 35.22 TO 35.23 R†	27.4	0.2
PM 34.34 TO 34.37 L†	105.6	0.7
PM 35.66 TO 35.69 L†	61.2	0.4
PM 37.12 TO 37.18 L†	190.8	1.2
PM 37.20 TO 37.27 L†	180.2	1.1
MAINTENANCE VEHICLE TURNOUT		
PM 33.47 TO 33.50 R†	149.6	0.9
PM 33.68 TO 33.71 R†	54.1	0.3
PM 33.80 TO 33.81 R†	14.8	0.1
PM 35.15 TO 35.18 R†	57.7	0.4
PM 35.40 TO 35.41 R†	15.8	0.1
PM 36.94 TO 36.94 R†	9.3	0.1
PM 37.13 TO 37.14 R†	7.6	0.0
PM 37.18 TO 37.21 R†	79.3	0.5
PM 37.84 TO 37.85 R†	61.8	0.4
PM 33.70 TO 33.74 L†	65.4	0.4
PASSENGER VEHICLE TURNOUT		
PM 36.49 TO 36.51 R†	27.8	0.1
PM 36.71 TO 36.78 R†	459.5	1.0
PM 38.03 TO 38.08 R†	123.6	0.8
PM 38.17 TO 38.23 R†	236.9	1.5
PM 38.79 TO 38.91 R†	335.6	2.1
PM 39.39 TO 39.44 R†	106.6	0.7
PM 33.03 TO 33.04 L†	18.3	0.1
PM 33.54 TO 33.57 L†	57.7	0.4
PM 33.89 TO 33.91 L†	26.7	0.2
PM 36.33 TO 36.40 L†	706.4	4.4
PM 36.61 TO 36.67 L†	302.2	1.9
PM 37.57 TO 37.59 L†	35.0	0.2
PM 39.14 TO 39.35 L†	459.9	2.9
PM 39.48 TO 39.58 L†	838.9	5.3
SUBTOTAL	119,952.7	863.6

LOCATION	HMA-W (TYPE A) TON	TACK COAT TON
STREET CONFORM		
UNKNOWN/GATED R†	35.4	0.2
SUNSET Dr L†	35.4	0.2
FRONTIER Rd L†	35.4	0.2
TWIN MOUNTAIN Rd R†	35.4	0.2
STACY Ln R†	35.4	0.2
FRESHPOND R†	35.4	0.2
FRONTAGE Rd L†	35.4	0.2
FOREST Rd L†	35.4	0.2
MILL RUN L†	35.4	0.2
MILL RUN R†	35.4	0.2
HAZEL VALLEY Rd L†	35.4	0.2
HAZEL VALLEY Rd R†	35.4	0.2
BRIDAL VEIL PICNIC L†	35.4	0.2
RAMPS		
SAWMILL (EAST) L†	960.0	6.0
SAWMILL (EAST) R†	928.1	5.8
SLY PARK (WEST) L†	896.1	5.6
SLY PARK (WEST) R†	861.8	5.4
SLY PARK (EAST) L†	1,395.0	8.8
SLY PARK (EAST) R†	1,619.3	10.2
SUBTOTAL	127,073.2	44.4
DIKE (FROM Q-2 SHEET)	2,128.3	
TOTAL	129,201.5	908

IMPORTED MATERIAL (SHOULDER BACKING)

LOCATION	(N) CY	TON
PM 28.8 TO 39.6 EASTBOUND	1,425.6	5,987.5
PM 28.8 TO 39.6 WESTBOUND	3,168.0	2,694.4
TOTAL	4,593.6	8,681.9

(N) - NOT A PAY ITEM, FOR INFORMATION ONLY.

COLD PLANE AC PAVEMENT

(0.25′ MAXIMUM) LOCATION	SQYD
PM 28.8 TO PM 31.5	123,552.0
STREET	
UNKNOWN/GATED R†	111.1
SUNSET Dr L†	111.1
FRONTIER Rd L†	111.1
TWIN MOUNTAIN Rd R†	111.1
STACY Ln R†	111.1
FRESHPOND R†	111.1
FRONTAGE Rd L†	111.1
FOREST Rd L†	111.1
MILL RUN L†	111.1
MILL RUN R†	111.1
HAZEL VALLEY Rd L†	111.1
HAZEL VALLEY Rd R†	111.1
BRIDAL VEIL PICNIC L†	111.1
RAMPS	
EASTBOUND	
ON RAMP SAWMILL (EAST)	2,909.9
OFF RAMP SLY PARK (WEST)	2,702.1
ON RAMP SLY PARK (EAST)	5,077.1
WESTBOUND	
OFF RAMP SAWMILL (EAST)	3,010.1
ON RAMP SLY PARK (WEST)	2,809.7
OFF RAMP SLY PARK (EAST)	4,373.9
SUBTOTAL	145,879.7

(0.45′ MAXIMUM) LOCATION	SQYD
PM 31.5	2,044.4
PM 39.6	1,377.8
SUBTOTAL	3,422.2
TOTAL	149,301.9

METAL BEAM GUARD RAILING

LOCATION	MBGR (STEEL POST) LF	SALVAGE MBGR LF
32.20 PM TO 32.25 PM R†	264.0	264.0
33.67 PM TO 33.70 PM R†	158.4	158.4
35.41 PM TO 35.47 PM R†	316.8	316.8
37.24 PM TO 37.29 PM R†	264.0	264.0
39.54 PM TO 39.55 PM R†	52.8	52.8
32.58 PM TO 32.72 PM L†	739.2	739.2
32.87 PM TO 32.98 PM L†	580.8	580.8
33.30 PM TO 33.39 PM L†	475.2	475.2
33.41 PM TO 33.47 PM L†	316.8	316.8
33.57 PM TO 33.61 PM L†	211.2	211.2
33.64 PM TO 33.67 PM L†	158.4	158.4
33.87 PM TO 33.96 PM L†	475.2	475.2
34.66 PM TO 34.75 PM L†	475.2	475.2
35.14 PM TO 35.22 PM L†	422.4	422.4
36.23 PM TO 36.29 PM L†	316.8	316.8
36.37 PM TO 37.06 PM L†	3,643.2	3,643.2
37.55 PM TO 37.67 PM L†	633.6	633.6
37.78 PM TO 37.85 PM L†	369.6	369.6
TOTAL	9,873.6	*9,873.6

* THERE ARE 16 ANCHOR ASSEMBLY THAT WILL NEED TO BE REMOVED.

LOCATION VARIES	TEMPORARY DRAINAGE INLET PROTECTION EA	TEMPORARY FENCE (TYPE ESA) LF
TOTAL	60	300

ADJUST INLET

LOCATION	EA
PM 34.30	1
PM 34.33	1
PM 34.54	1
PM 34.69	1
PM 34.77	1
PM 34.88	1
PM 34.91	1
PM 35.06	1
PM 35.10	1
PM 35.15	1
PM 35.39	1
PM 35.47	1
PM 35.78	1
PM 35.87	1
TOTAL	14

SUMMARY OF QUANTITIES

Q-1

REVISED BY | DATE REVISED
MASTRI ALVANDI | RYAN KOHAGURA
CALCULATED-DESIGNED BY | CHECKED BY
FUNCTIONAL SUPERVISOR: MASTRI ALVANDI

STATE OF CALIFORNIA - DEPARTMENT OF TRANSPORTATION
Caltrans PROJECT DEVELOPMENT

LAST REVISION 07-22-10 | DATE PLOTTED => 10-AUG-2010 | TIME PLOTTED => 10:12

Dist	COUNTY	ROUTE	POST MILES TOTAL PROJECT	SHEET No.	TOTAL SHEETS
03	ED	50	R28.8 / 39.6	11	31

REGISTERED CIVIL ENGINEER 7-22-10 DATE

7-26-10
PLANS APPROVAL DATE

REGISTERED PROFESSIONAL ENGINEER RYAN KOHAGURA No. C58535 Exp. 12-31-10 CIVIL STATE OF CALIFORNIA

THE STATE OF CALIFORNIA OR ITS OFFICERS OR AGENTS SHALL NOT BE RESPONSIBLE FOR THE ACCURACY OR COMPLETENESS OF SCANNED COPIES OF THIS PLAN SHEET.

DIKE

LOCATION (Approx POST MILE)	REMOVE AC DIKE	PLACE HMA DIKE (TYPE A)	(TYPE C)	(TYPE E)	(TYPE F)	* HMA (N)
	LF	LF	LF	LF	LF	TON
PM 28.80 TO 34.00 L+	15,946.0	9,927.0		6,019.0		425.3
PM 28.80 TO 34.00 R+	23,179.0	14,784.0		8,395.0		618.6
PM 32.58 TO 32.72 L+	739.2		100.0		639.2	9.2
PM 32.87 TO 32.98 L+	580.8		100.0		480.8	7.1
PM 33.30 TO 33.39 L+	475.2		100.0		375.2	5.7
PM 33.41 TO 33.47 L+	316.8		100.0		216.8	3.6
PM 33.57 TO 33.61 L+	211.2		100.0		111.2	2.2
PM 33.64 TO 33.67 L+	158.4		100.0		58.4	1.5
PM 33.67 TO 33.70 R+	158.4		100.0		58.4	1.5
PM 33.87 TO 33.96 L+	475.2		100.0		375.2	5.7
PM 34.00 TO 34.01 L+	31.0	31.0				0.8
PM 34.01 TO 34.14 L+	665.0	611.0	54.0			16.9
PM 34.16 TO 34.30 L+	700.0			700.0		18.2
PM 34.30 TO 34.40 L+	530.0	530.0				14.3
PM 34.44 TO 34.61 L+	865.0			865.0		22.5
PM 34.00 TO 34.14 R+	726.0	726.0				19.6
PM 34.41 TO 34.46 R+	270.0	270.0				7.3
PM 34.61 TO 34.71 L+	540.0	540.0				14.6
PM 34.59 TO 34.77 R+	945.0	945.0				25.6
PM 34.66 TO 34.75 L+	475.2		100.0		375.2	5.7
PM 34.79 TO 34.95 L+	825.0		27.5	797.5		21.0
PM 34.97 TO 35.09 L+	635.0	635.0				17.2
PM 35.09 TO 35.19 L+	553.0			553.0		14.4
PM 35.14 TO 35.22 L+	422.4		100.0		322.40	5.0
PM 35.27 TO 35.42 L+	795.0	721.0	74.0			20.1
PM 35.41 TO 35.47 R+	316.8		100.0		216.8	3.6
PM 34.83 TO 34.85 R+	135.0	135.0				3.7
PM 34.85 TO 34.89 R+	205.0	205.0				5.5
PM 34.96 TO 35.05 R+	475.0	475.0				12.8
PM 35.14 TO 35.23 R+	428.0	428.0				11.6
PM 35.42 TO 35.58 L+	830.0			830.0		21.6
PM 35.72 TO 35.89 L+	939.0	434.0		505.0		25.0
PM 35.23 TO 35.46 R+	1,175.0	1,138.0	37.0			31.0
PM 35.52 TO 35.66 R+	695.0	695.0				18.8
PM 35.75 TO 35.81 R+	340.0	340.0				9.2
PM 35.94 TO 36.30 L+	2,236.8		100.0	1,920.0	216.8	53.6
PM 35.81 TO 35.96 R+	760.0	760.0				20.6
PM 36.05 TO 36.17 R+	645.0	645.0				17.4
PM 36.20 TO 36.22 R+	115.0			115.0		3.0
PM 36.24 TO 36.35 R+	625.0	625.0				16.9
PM 36.52 TO 36.56 L+	180.0	180.0				4.9
PM 36.56 TO 36.59 L+	165.0	165.0				4.5
PM 36.36 TO 36.37 R+	20.0	20.0				0.5
PM 36.70 TO 36.84 L+	760.0	760.0				20.6
PM 37.02 TO 37.21 L+	1,005.0	482.5	62.5	460.0		25.5
PM 36.81 TO 36.97 R+	855.0	855.0				23.1
PM 37.06 TO 37.28 R+	1,185.0	1,185.0				32.1
PM 37.29 TO 37.38 L+	485.0			485.0		12.6
PM 36.23 TO 36.29 L+	316.8				316.8	4.2
PM 36.37 TO 37.06 L+	3,643.2		100.0		3,543.2	47.6
PM 37.24 TO 37.29 R+	264.0		100.0		164.0	2.9
PM 37.39 TO 37.43 L+	235.0	235.0				6.4
PM 37.43 TO 37.51 L+	425.0			425.0		11.1
PM 37.55 TO 37.67 L+	633.6		100.0		533.6	7.8
PM 37.56 TO 37.60 L+	202.0			202.0		5.3
PM 37.60 TO 37.67 L+	385.0	280.0		105.0		10.3
PM 37.38 TO 37.45 R+	325.0			325.0		8.5
SUBTOTAL	72,223.0	39,762.5	1,755.0	22,701.5	8,004.0	* 1,786.0

RECONSTRUCT METAL BEAM GUARD RAILING (WOOD POST)

LOCATION	LF
38.51 PM TO 38.61 PM L+	528.0
38.72 PM TO 38.80 PM L+	422.4
39.30 PM TO 39.46 PM L+	844.8
TOTAL	1,795.2

MEDIAN RUMBLE STRIP

LOCATION	STA
PM 32.0 TO 39.6	803.0
TOTAL	803.0

RUMBLE STRIP

LOCATION	DETAILS	STA
PM 28.80 TO 32.00	A40B	676.0
TOTAL		676.0

DIKE

LOCATION (Approx POST MILE)	REMOVE AC DIKE	PLACE HMA DIKE (TYPE A)	(TYPE C)	(TYPE E)	(TYPE F)	* HMA (N)
	LF	LF	LF	LF	LF	TON
PM 37.45 TO 37.49 R+	205.0	205.0				5.5
PM 37.49 TO 37.55 R+	295.0	295.0				8.0
PM 37.55 TO 37.59 R+	180.0	180.0				4.9
PM 37.59 TO 37.67 R+	405.0	405.0				11.0
PM 37.73 TO 37.80 L+	335.0	277.5	57.5			7.9
PM 37.70 TO 37.84 R+	760.0	760.0				20.5
PM 37.78 TO 37.85 L+	369.6		100.0	269.6		4.3
PM 37.92 TO 38.31 L+	2,055.0	80.0		1,975.0		53.6
PM 38.33 TO 38.50 L+	882.0	150.0		732.0		23.1
PM 37.88 TO 37.97 R+	440.0	440.0				11.9
PM 37.97 TO 38.03 R+	330.0			330.0		8.6
PM 38.04 TO 38.05 R+	90.0			90.0		2.3
PM 38.29 TO 38.36 R+	365.0	365.0				9.9
PM 38.37 TO 38.42 R+	305.0	305.0				8.2
PM 38.43 TO 38.47 R+	200.0	200.0				5.4
PM 38.47 TO 38.78 R+	1,635.0	1,635.0				44.1
PM 38.51 TO 38.61 L+	528.0		100.0		428.0	6.4
PM 38.70 TO 38.76 L+	285.0	285.0				7.7
PM 38.72 TO 38.80 L+	422.4		100.0		322.4	5.0
PM 38.84 TO 39.21 L+	1,942.5		25.0	1,917.5		50.1
PM 38.78 TO 38.81 R+	145.0	145.0				3.9
PM 38.93 TO 38.99 R+	315.0	315.0				8.5
PM 39.00 TO 39.08 R+	395.0	395.0				10.7
PM 39.08 TO 39.15 R+	345.0	345.0				9.3
PM 39.30 TO 39.46 L+	844.8		100.0		744.8	10.6
PM 39.54 TO 39.55 R+	52.8		52.8			0.4
SUBTOTAL	14,127.1	6,782.5	535.3	5,044.5	1,764.8	342.3
TOTAL	86,350.0	46,545.0	2,291.0	27,746.0	9,769.0	* 2,128.3

* Q+y ACCOUNTED FOR IN HMA-W (TYPE A).
(N) - NOT A PAY ITEM, FOR INFORMATION ONLY.

	OBJECT MARKER (TYPE L-1)	MILEPOST MARKER	DELINEATOR (CLASS 2)
	EA	EA	EA
TOTAL	25	23	1,303

SUMMARY OF QUANTITIES

Q-2

STATE OF CALIFORNIA - DEPARTMENT OF TRANSPORTATION
Caltrans PROJECT DEVELOPMENT

FUNCTIONAL SUPERVISOR: MASTRI ALVANDI
CALCULATED-DESIGNED BY: MASTRI ALVANDI
CHECKED BY: RYAN KOHAGURA
REVISED BY
DATE REVISED

LAST REVISION 07-22-10
DATE PLOTTED => 10-AUG-2010
TIME PLOTTED => 10:12

Dist	COUNTY	ROUTE	POST MILES TOTAL PROJECT	SHEET No.	TOTAL SHEETS
03	ED	50	R28.8 / 39.6	12	31

Normanye 7-22-10
REGISTERED CIVIL ENGINEER DATE

7-26-10
PLANS APPROVAL DATE

REGISTERED PROFESSIONAL ENGINEER NORMAN YE No. E-16913 Exp. 6-30-11 ELECTRICAL STATE OF CALIFORNIA

THE STATE OF CALIFORNIA OR ITS OFFICERS OR AGENTS SHALL NOT BE RESPONSIBLE FOR THE ACCURACY OR COMPLETENESS OF SCANNED COPIES OF THIS PLAN SHEET.

PROJECT NOTES (THIS SHEET ONLY):

1. EXIST TYPE R CONTROLLER CABINET
2. EXIST TYPE III-AF SERVICE EQUIPMENT ENCLOSURE CTID No. 03025050R031301
3. 2#8, 2 dlc, ADD 2 DLC
4. 4 dlc, ADD 4 DLC
5. RC 2 LOOP WIRE CONDUCTORS, INSTALL 4 LOOP WIRE CONDUCTORS
6. PLACE LOOP BEFORE PAVING.

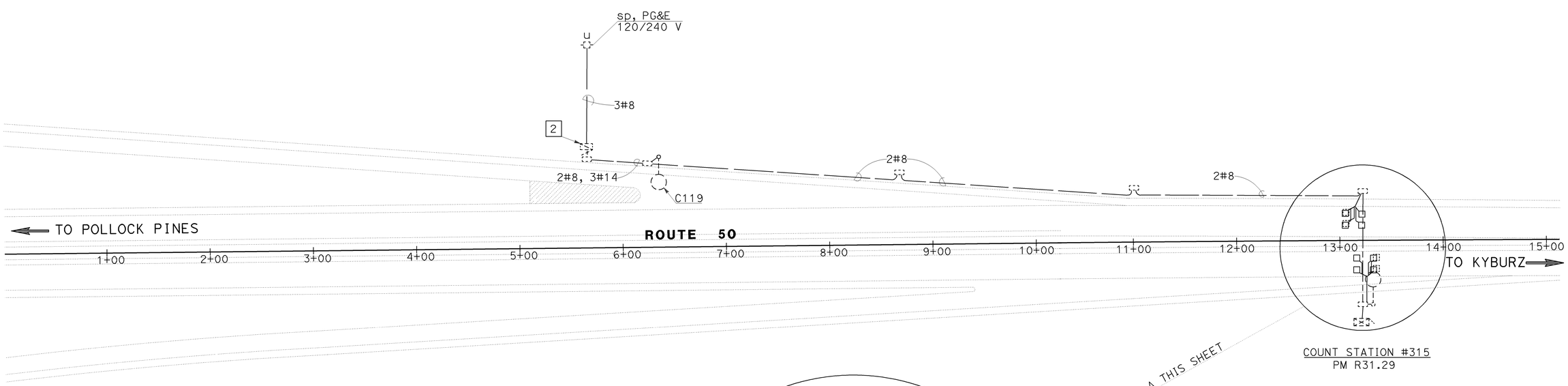

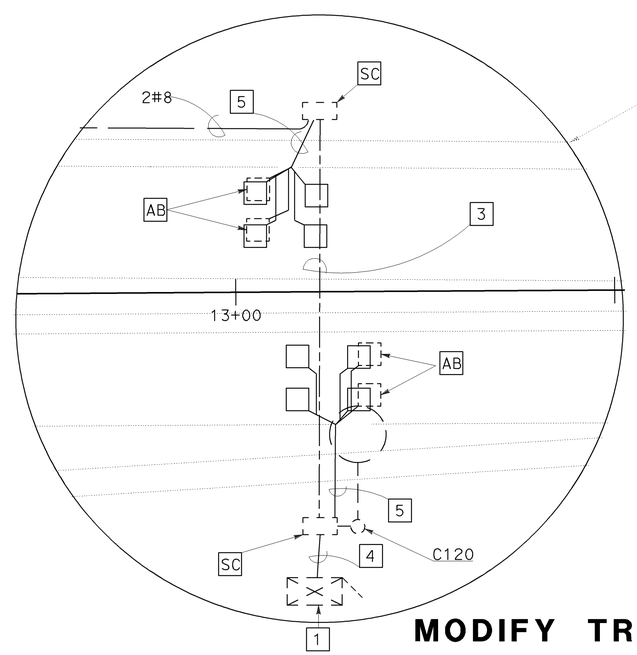

DETAIL A
NO SCALE

MODIFY TRAFFIC MONITORING STATION (COUNT)

SCALE 1"= 50'

THIS PLAN IS ACCURATE FOR ELECTRICAL WORK ONLY

E-1

STATE OF CALIFORNIA - DEPARTMENT OF TRANSPORTATION
Caltrans
OFFICE OF ELECTRICAL DESIGN SACRAMENTO

FUNCTIONAL SUPERVISOR: NELSON LEE
CALCULATED-DESIGNED BY: OANH D. NGUYEN
CHECKED BY: NORMAN YE
REVISED BY: 5-12-10
DATE REVISED: 5-12-10

LAST REVISION 07-22-10
DATE PLOTTED => 10-AUG-2010
TIME PLOTTED => 10:12

DIST	COUNTY	ROUTE	POST MILES TOTAL PROJECT	SHEET NO.	TOTAL SHEETS
03	ED	50	R28.8 / 39.6	13	31

LICENSED LANDSCAPE ARCHITECT

August 15, 2008
PLANS Approval DATE

The State of California or its officers or agents shall not be responsible for the accuracy or completeness of electronic copies of this plan sheet.

LICENSED LANDSCAPE ARCHITECT
Robert B. Schott 3635
Signature
11-04-08
Renewal Date
08-11-08
Date
STATE OF CALIFORNIA

To accompany plans dated July 26, 2010

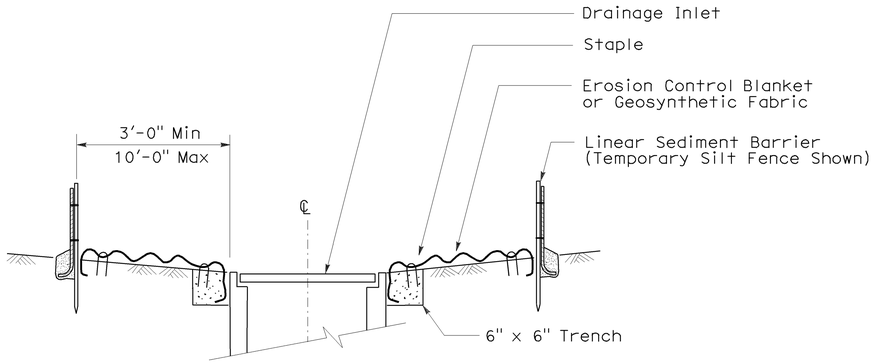

SECTION A-A

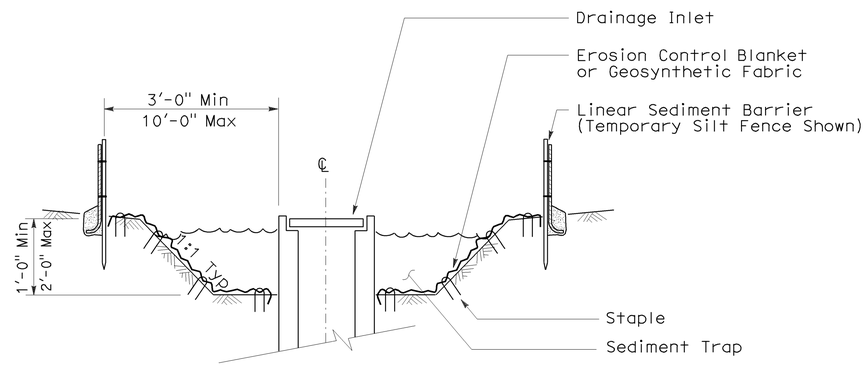

SECTION B-B

NOTES:

1. See Standard Plan T51 for Temporary Silt Fence.
2. Dimensions may vary to fit field conditions.

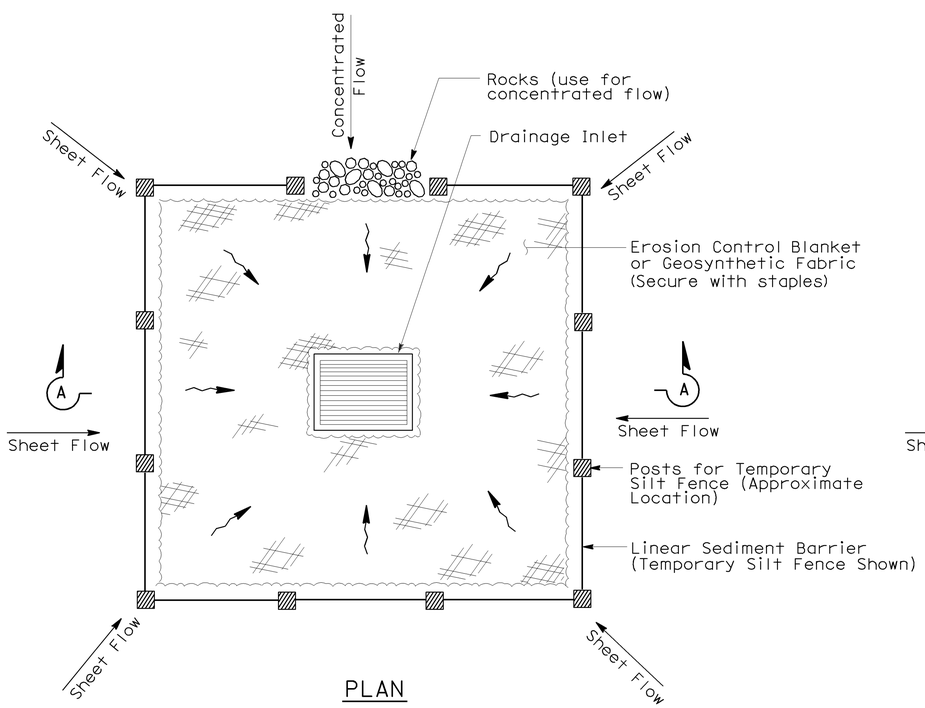

PLAN

TEMPORARY DRAINAGE
INLET PROTECTION (TYPE 1)

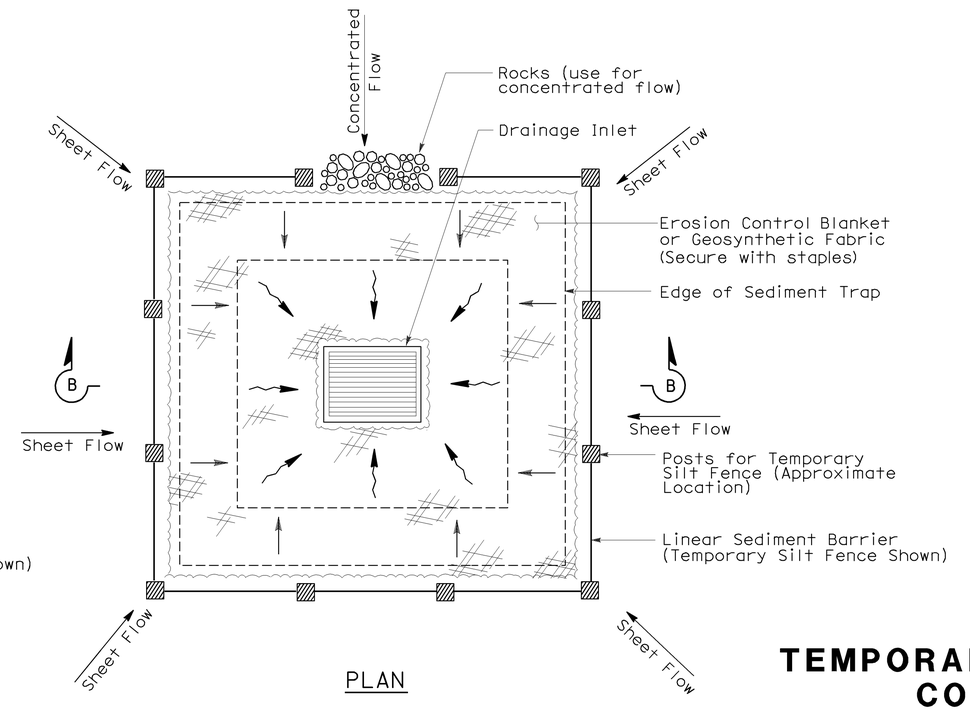

PLAN

TEMPORARY DRAINAGE
INLET PROTECTION (TYPE 2)
(EXCAVATED SEDIMENT TRAP)

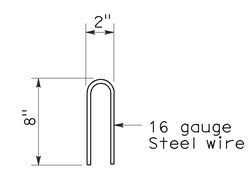

STAPLE DETAIL

STATE OF CALIFORNIA
DEPARTMENT OF TRANSPORTATION

TEMPORARY WATER POLLUTION CONTROL DETAILS (TEMPORARY DRAINAGE INLET PROTECTION)

NO SCALE

Nsp t61 dated august 15, 2008 supplements the standard plans book dated may 2006.

NEW STANDARD PLAN NSP T61

2006 NEW STANDARD PLAN NSP T61

7-11-08

DIST	COUNTY	ROUTE	POST MILES TOTAL PROJECT	SHEET NO.	TOTAL SHEETS
03	ED	50	R28.8 / 39.6	14	31

LICENSED LANDSCAPE ARCHITECT

August 15, 2008
PLANS APPROVAL DATE

The State of California or its officers or agents shall not be responsible for the accuracy or completeness of electronic copies of this plan sheet.

LICENSED LANDSCAPE ARCHITECT — Robert B. Schott — Signature — 11-04-08 Renewal Date — 08-11-08 Date — STATE OF CALIFORNIA

To accompany plans dated July 26, 2010

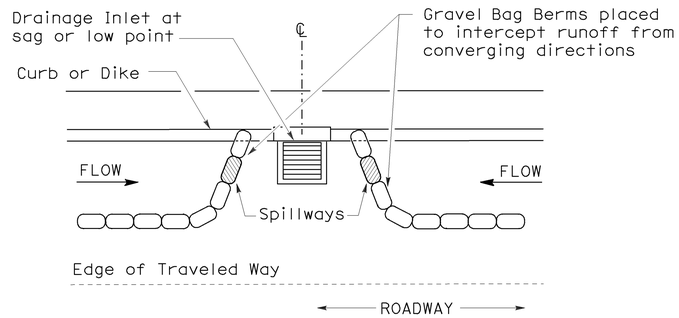

PLAN

CONFIGURATION FOR SAG POINT INLET (GRAVEL BAG BERM)

GRAVEL BAG BERM (TYPE 3A) SPACING TABLE

SLOPE OF ROADWAY (PERCENT)	1 to 3.9	4 to 5.9	6 to 7.9	8 to 10	10+
INTERVAL BETWEEN BERM	100′	75′	50′	25′	12′

For slope of less than 1%, install barriers only if erosion/sediment is prevalent

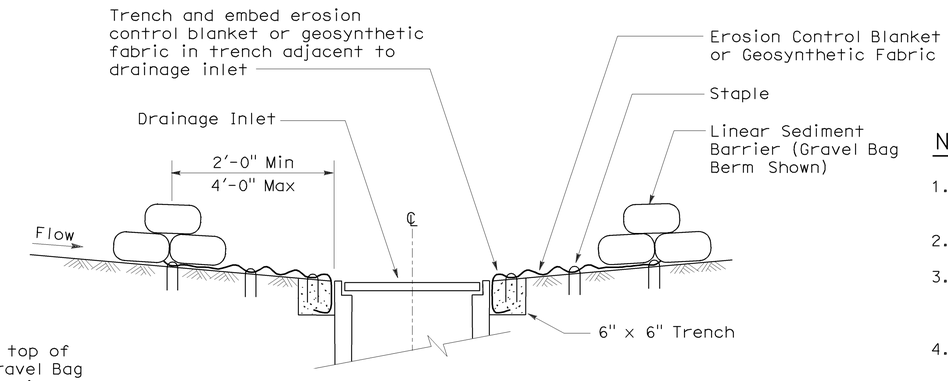

SECTION A-A

NOTES:

1. Place safety cones adjacent to drainage inlet protection.
2. Dimensions may vary to fit field conditions.
3. Install a minimum of 3 gravel bag berms upstream of each drainage inlet to be protected.
4. Position erosion control blanket or geosynthetic fabric at edge of concrete apron and secure in trench.
5. Erosion control blanket or geosynthetic fabric is not required if the area adjacent to the drainage inlet is vegetated or paved.

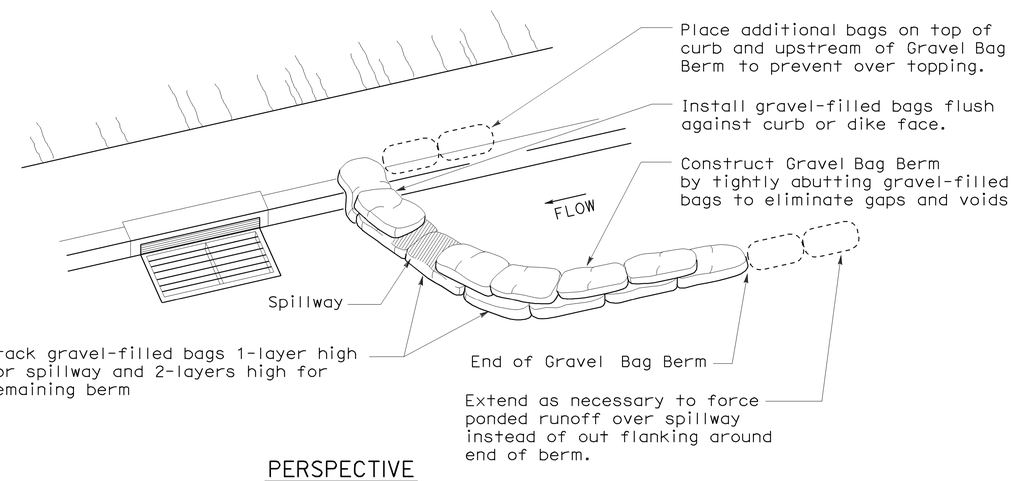

PERSPECTIVE

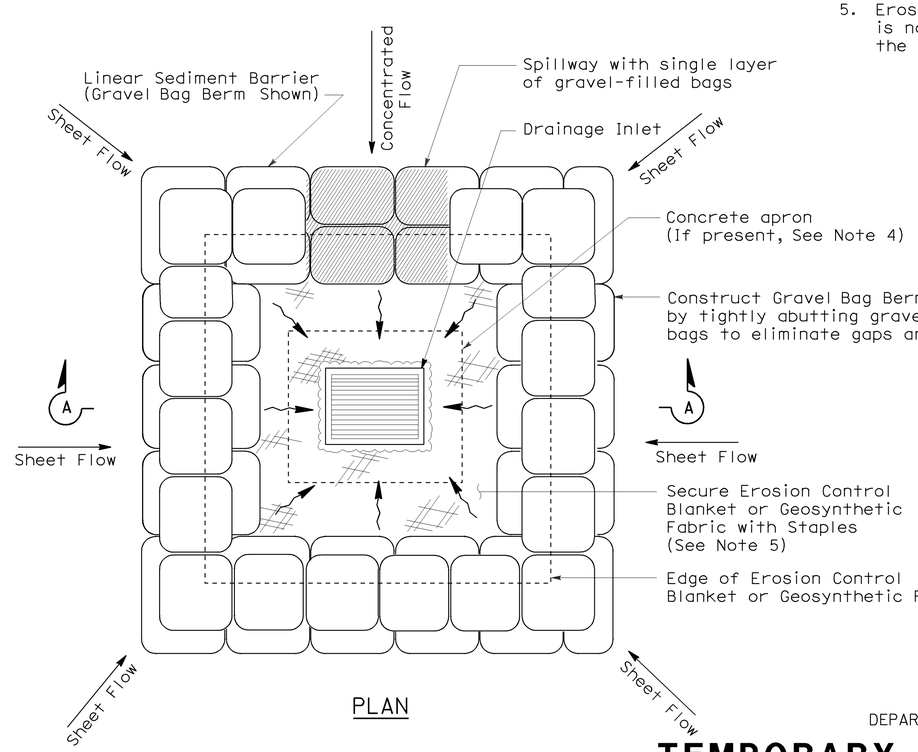

PLAN

TEMPORARY DRAINAGE INLET PROTECTION (TYPE 3B)

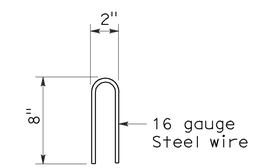

STAPLE DETAIL

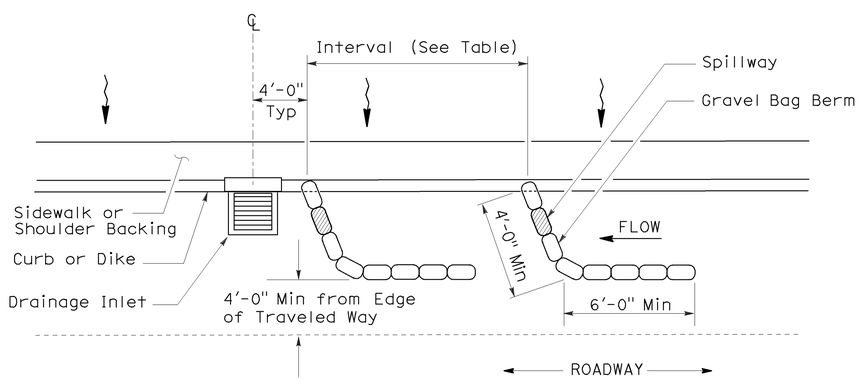

PLAN

TEMPORARY DRAINAGE INLET PROTECTION (TYPE 3A) (GRAVEL BAG BERM)

STATE OF CALIFORNIA
DEPARTMENT OF TRANSPORTATION

TEMPORARY WATER POLLUTION CONTROL DETAILS (TEMPORARY DRAINAGE INLET PROTECTION)

NO SCALE

NSP T62 DATED AUGUST 15, 2008 SUPPLEMENTS THE STANDARD PLANS BOOK DATED MAY 2006.

NEW STANDARD PLAN NSP T62

2006 NEW STANDARD PLAN NSP T62

7-11-08

DIST	COUNTY	ROUTE	POST MILES TOTAL PROJECT	SHEET NO.	TOTAL SHEETS
03	ED	50	R28.8 / 39.6	15	31

LICENSED LANDSCAPE ARCHITECT

August 15, 2008
PLANS APPROVAL DATE

LICENSED LANDSCAPE ARCHITECT — Robert B. Schott — 3635 — Signature — 11-04-08 Renewal Date — 08-11-08 Date — STATE OF CALIFORNIA

The State of California or its officers or agents shall not be responsible for the accuracy or completeness of electronic copies of this plan sheet.

To accompany plans dated July 26, 2010

FLEXIBLE SEDIMENT BARRIER SPACING TABLE

SLOPE OF ROADWAY (PERCENT)	0 to 0.9	1 to 1.9	2 to 2.9	3 to 4	5+
INTERVAL BETWEEN BARRIERS	50′	35′	30′	25′	20′
ANGLE FROM FACE OF CURB	70°	70°	70°	45°	45°
SUGGESTED BARRIER LENGTH	6′	6′	6′	6′	6′

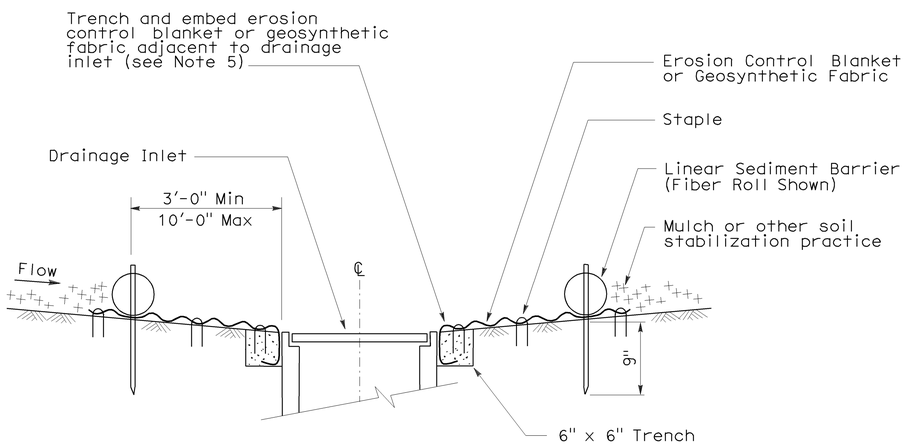

SECTION A-A

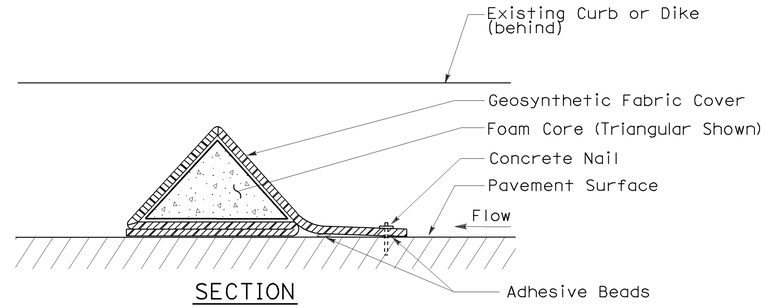

SECTION

FLEXIBLE SEDIMENT BARRIER DETAIL (FOAM BARRIER SHOWN)

NOTES:

1. See Standard Plan T51 for Temporary Silt Fence.
2. Dimensions may vary to fit field conditions.
3. Install a minimum of 3 flexible sediment barriers upstream of each drainage inlet to be protected.
4. Position erosion control blanket or geosynthetic fabric at edge of concrete apron and secure in trench.
5. Erosion control blanket or geosynthetic fabric is not required if the area adjacent to the drainage inlet is vegetated.

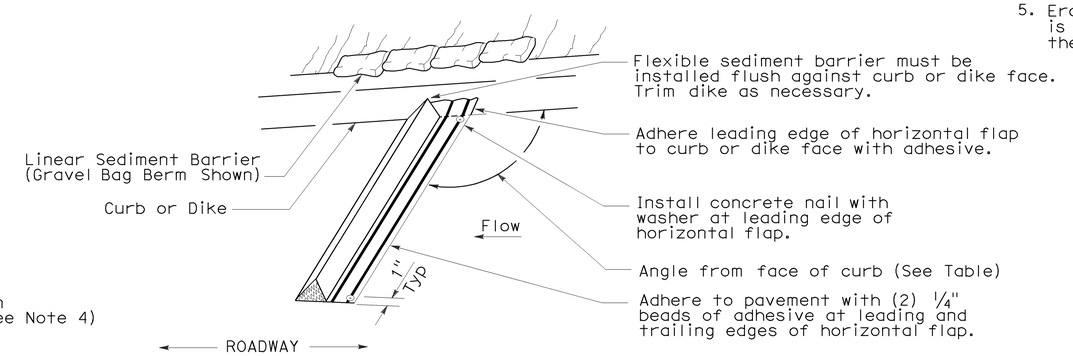

PERSPECTIVE

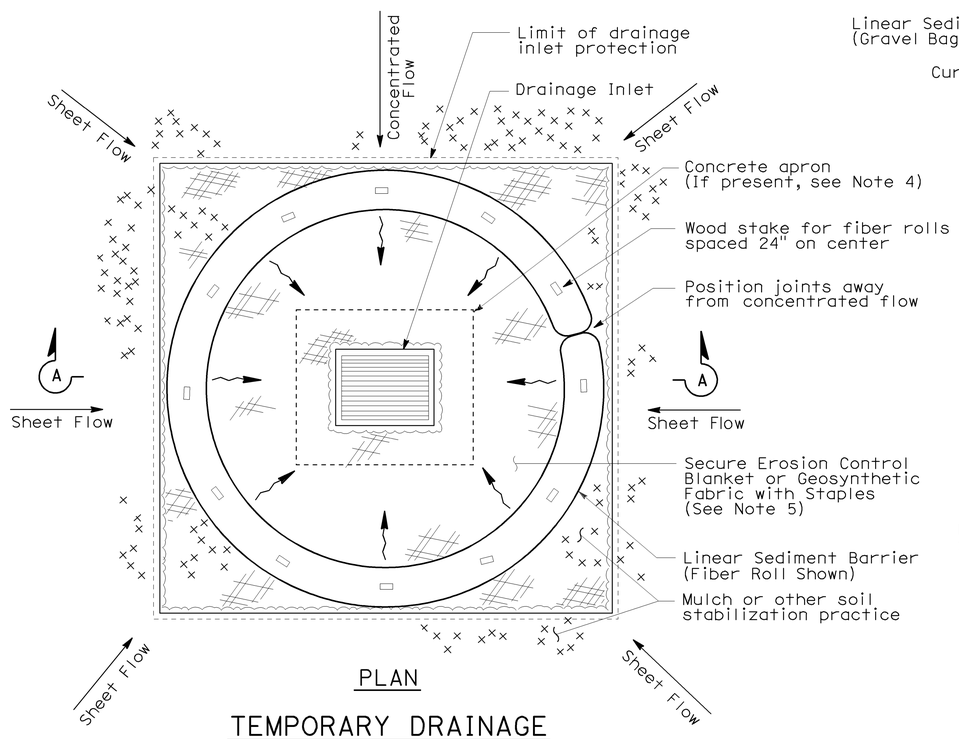

PLAN

TEMPORARY DRAINAGE INLET PROTECTION (TYPE 4A)

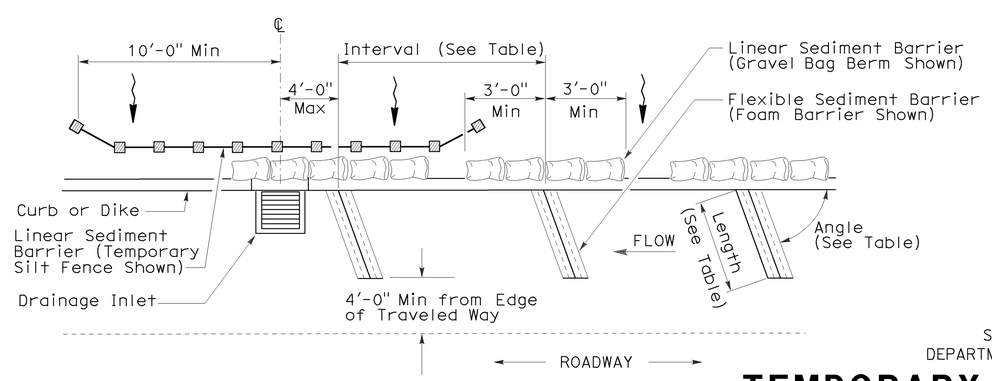

PLAN

TEMPORARY DRAINAGE INLET PROTECTION (TYPE 4B) FLEXIBLE SEDIMENT BARRIER

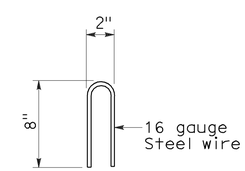

STAPLE DETAIL

STATE OF CALIFORNIA
DEPARTMENT OF TRANSPORTATION

TEMPORARY WATER POLLUTION CONTROL DETAILS (TEMPORARY DRAINAGE INLET PROTECTION)

NO SCALE

NSP T63 DATED AUGUST 15, 2008 SUPPLEMENTS THE STANDARD PLANS BOOK DATED MAY 2006.

NEW STANDARD PLAN NSP T63

2006 NEW STANDARD PLAN NSP T63

7-11-08

DIST	COUNTY	ROUTE	POST MILES TOTAL PROJECT	SHEET NO.	TOTAL SHEETS
03	ED	50	R28.8 / 39.6	16	31

LICENSED LANDSCAPE ARCHITECT

August 15, 2008
PLANS APPROVAL DATE

LICENSED LANDSCAPE ARCHITECT
Robert B. Schott 3635
Signature
11-04-08
Renewal Date
08-11-08
Date
STATE OF CALIFORNIA

The State of California or its officers or agents shall not be responsible for the accuracy or completeness of electronic copies of this plan sheet.

To accompany plans dated July 26, 2010

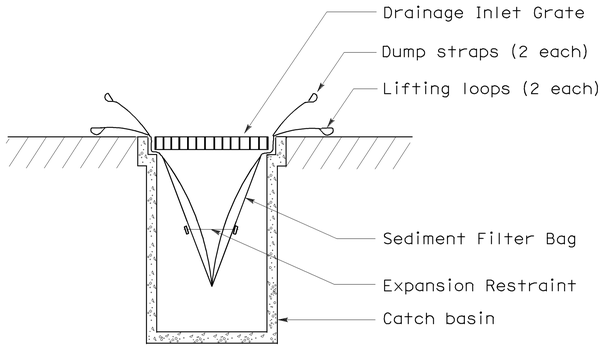

SECTION B-B

SEDIMENT FILTER BAG DETAIL

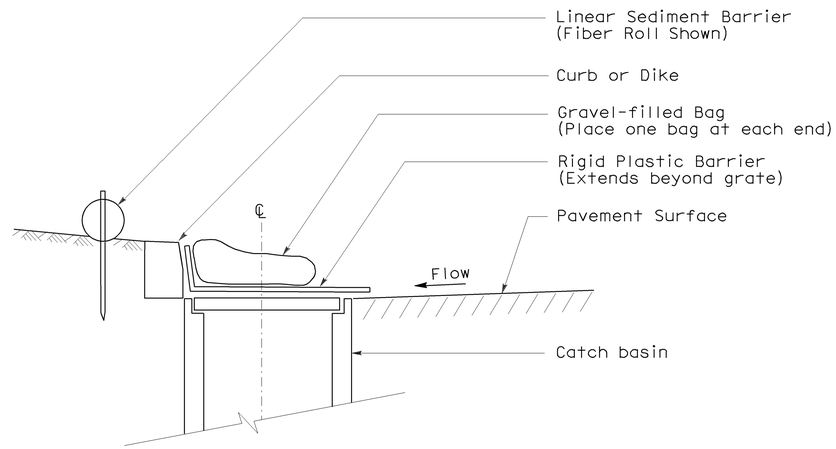

SECTION

TEMPORARY DRAINAGE INLET PROTECTION (TYPE 6A) (CATCH BASIN WITH GRATE)

NOTES:

1. See Standard Plan T51 for Temporary Silt Fence.
2. Dimensions may vary to fit field conditions.

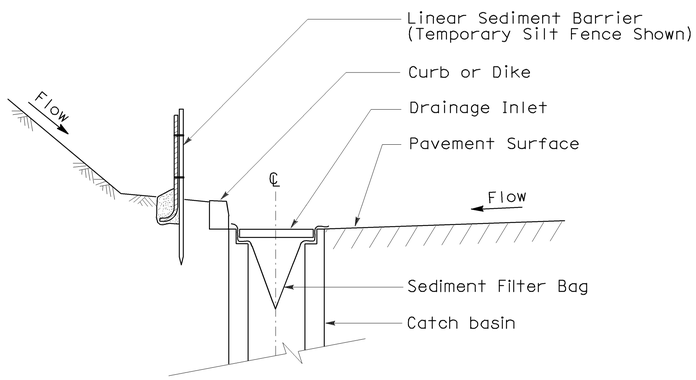

SECTION A-A

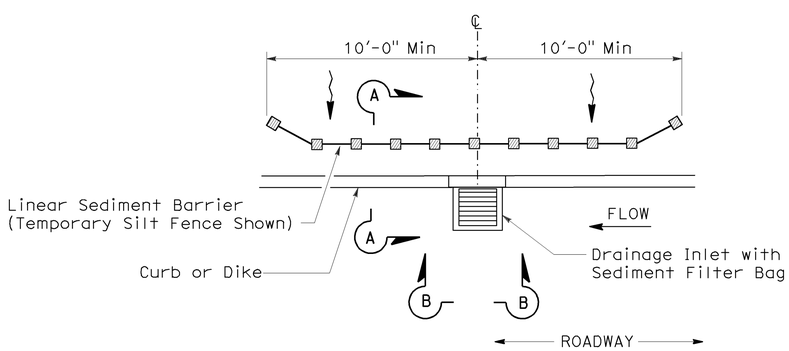

PLAN

TEMPORARY DRAINAGE INLET PROTECTION (TYPE 5) (SEDIMENT FILTER BAG)

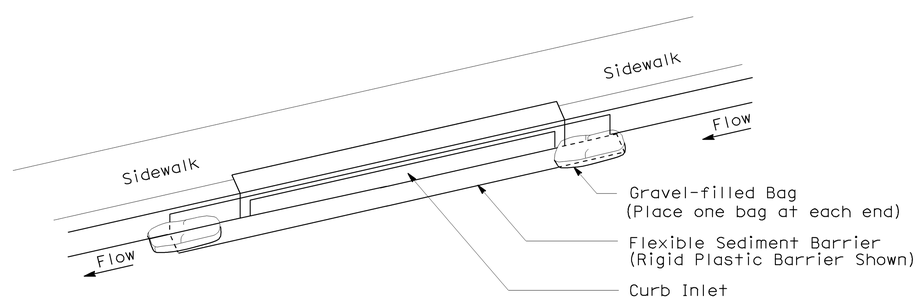

PERSPECTIVE

TEMPORARY DRAINAGE INLET PROTECTION (TYPE 6B) (CURB INLET WITHOUT GRATE)

STATE OF CALIFORNIA
DEPARTMENT OF TRANSPORTATION

TEMPORARY WATER POLLUTION CONTROL DETAILS (TEMPORARY DRAINAGE INLET PROTECTION)

NO SCALE

NSP T64 DATED AUGUST 15, 2008 SUPPLEMENTS
THE STANDARD PLANS BOOK DATED MAY 2006.

NEW STANDARD PLAN NSP T64

2006 NEW STANDARD PLAN NSP T64

7-11-08

DIST	COUNTY	ROUTE	POST MILES TOTAL PROJECT	SHEET NO.	TOTAL SHEETS
03	ED	50	R28.8 / 39.6	17	31

LICENSED LANDSCAPE ARCHITECT

April 3, 2009
PLANS APPROVAL DATE

The State of California or its officers or agents shall not be responsible for the accuracy or completeness of electronic copies of this plan sheet.

LICENSED LANDSCAPE ARCHITECT Robert B. Schott 3625 Signature 11-30-10 Renewal Date 2-25-09 Date STATE OF CALIFORNIA

To accompany plans dated July 26, 2010

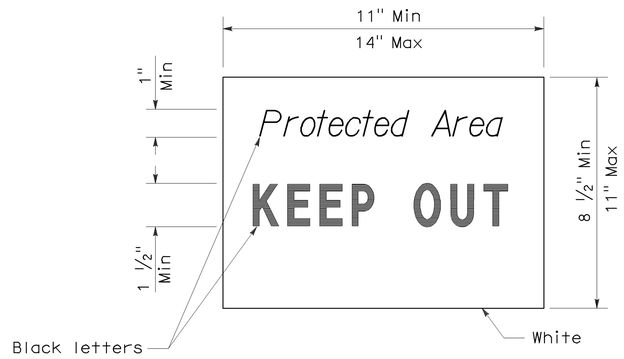

SIGN DETAIL

NOTE:

1. Temporary silt fence and temporary straw bale barrier shown for reference purposes only.

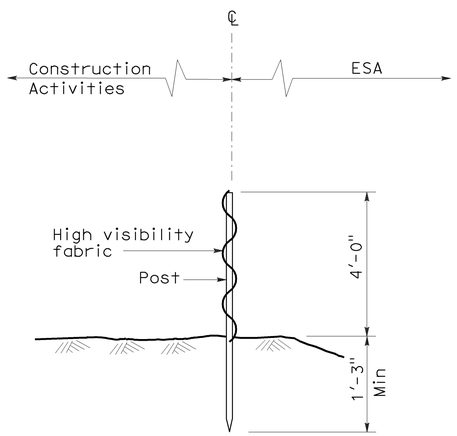

SECTION
TEMPORARY FENCE (TYPE ESA)

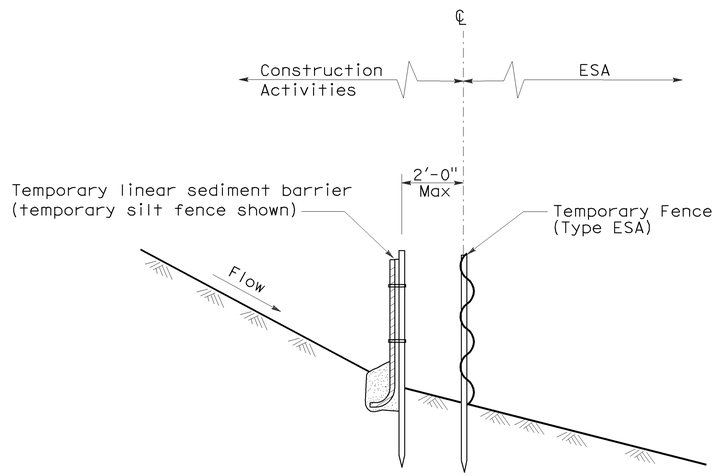

SECTION
PLACEMENT DETAIL
FOR TEMPORARY LINEAR SEDIMENT BARRIER
USED WITH TEMPORARY
FENCE (TYPE ESA)
(See Note 1)

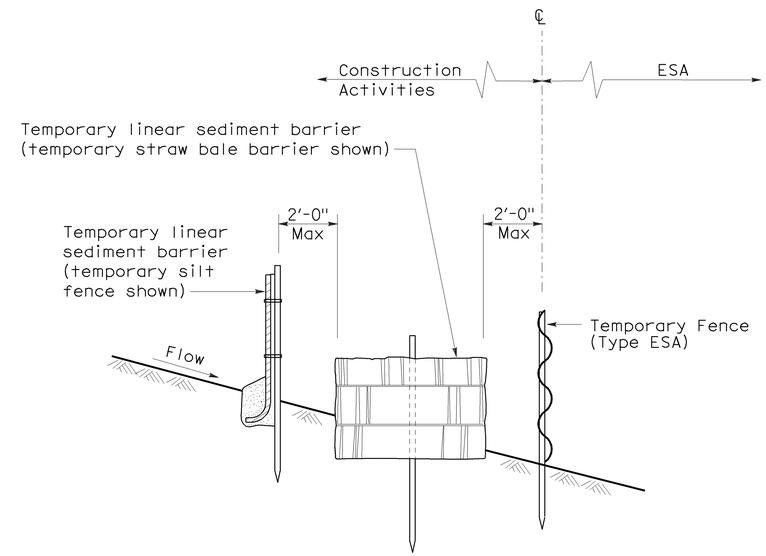

SECTION
PLACEMENT DETAIL
FOR TEMPORARY SILT FENCE
AND TEMPORARY STRAW BALE BARRIER
USED WITH TEMPORARY FENCE (TYPE ESA)
(See Note 1)

STATE OF CALIFORNIA
DEPARTMENT OF TRANSPORTATION

TEMPORARY WATER POLLUTION CONTROL DETAILS [TEMPORARY FENCE (TYPE ESA)]

NO SCALE

NSP T65 DATED APRIL 3, 2009 SUPPLEMENTS
THE STANDARD PLANS BOOK DATED MAY 2006.

NEW STANDARD PLAN NSP T65

2006 NEW STANDARD PLAN NSP T65

DIST	COUNTY	ROUTE	POST MILES TOTAL PROJECT	SHEET NO.	TOTAL SHEETS
03	ED	50	R28.8 / 39.6	18	31

Randell D. Hiatt
REGISTERED CIVIL ENGINEER

June 6, 2008
PLANS APPROVAL DATE

REGISTERED PROFESSIONAL ENGINEER
Randell D. Hiatt
No. C50200
Exp. 6-30-09
CIVIL
STATE OF CALIFORNIA

The State of California or its officers or agents shall not be responsible for the accuracy or completeness of electronic copies of this plan sheet.

To accompany plans dated July 26, 2010

NOTES:

1. When necessary to place dike in front of face of guard railing, only Type C dike may be used. For dike details, see Standard Plan A87B.
2. For standard railing post embedment, see Standard Plans A77C3.
3. Guard railing delineation to be used where shown on the Project Plans.
4. When dike or curb is placed under guard railing, the maximum height of the dike or curb shall be 4". Mountable dike should not be used. For dike and curb details, see Revised Standard Plans RSP A87A and Standard Plan A87B.
5. For details of typical distance between the face of rail and hinge point, see Standard Plan A77C3.

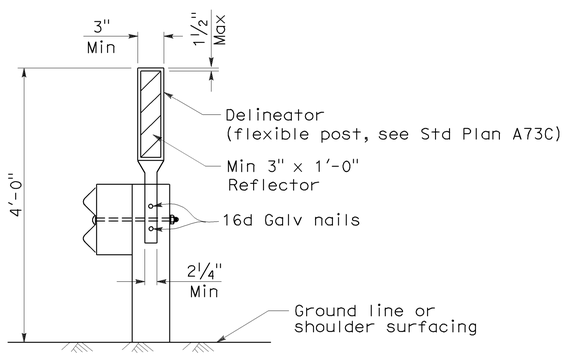

GUARD RAILING DELINEATION

See Note 3

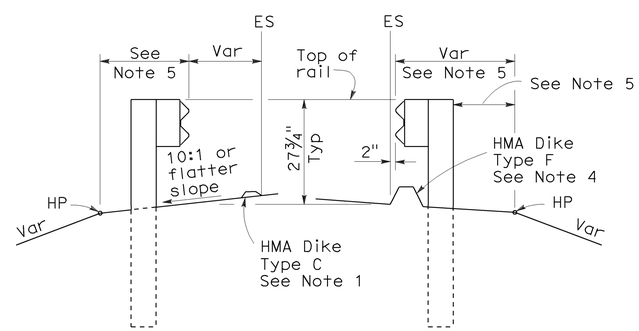

DIKE POSITIONING

See Note 1

STATE OF CALIFORNIA
DEPARTMENT OF TRANSPORTATION

METAL BEAM GUARD RAILING TYPICAL RAILING DELINEATION AND DIKE POSITIONING DETAILS

NO SCALE

RSP A77C4 DATED JUNE 6, 2008 SUPERSEDES STANDARD PLAN A77C4
DATED MAY 1, 2006 - PAGE 47 OF THE STANDARD PLANS BOOK DATED MAY 2006.

REVISED STANDARD PLAN RSP A77C4

2006 REVISED STANDARD PLAN RSP A77C4

12-10-07

DIST	COUNTY	ROUTE	POST MILES TOTAL PROJECT	SHEET NO.	TOTAL SHEETS
03	ED	50	R28.8 / 39.6	19	31

Randell D. Hiatt
REGISTERED CIVIL ENGINEER

June 6, 2008
PLANS APPROVAL DATE

REGISTERED PROFESSIONAL ENGINEER Randell D. Hiatt No. C50200 Exp. 6-30-09 CIVIL STATE OF CALIFORNIA

The State of California or its officers or agents shall not be responsible for the accuracy or completeness of electronic copies of this plan sheet.

To accompany plans dated July 26, 2010

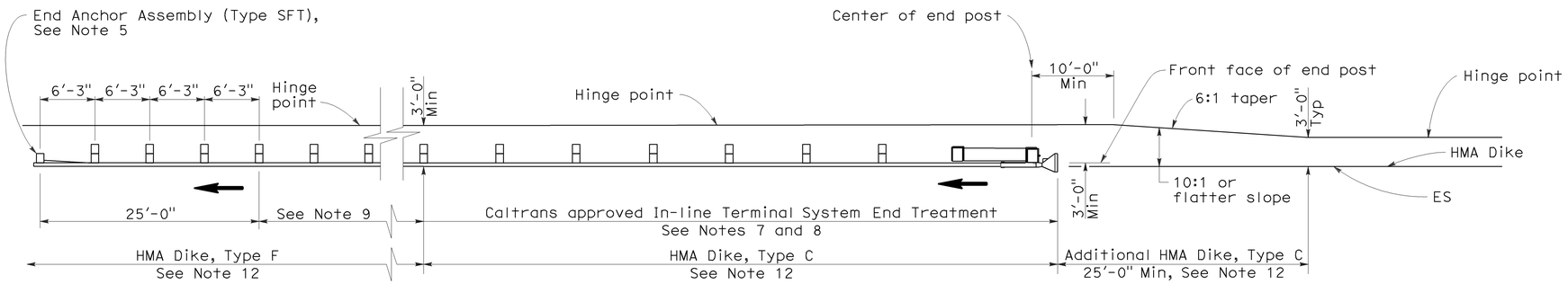

TYPE 11A LAYOUT

(EMBANKMENT GUARD INSTALLATION WITH IN-LINE END TREATMENT AT TRAFFIC APPROACH END OF RAILING)
See Note 6

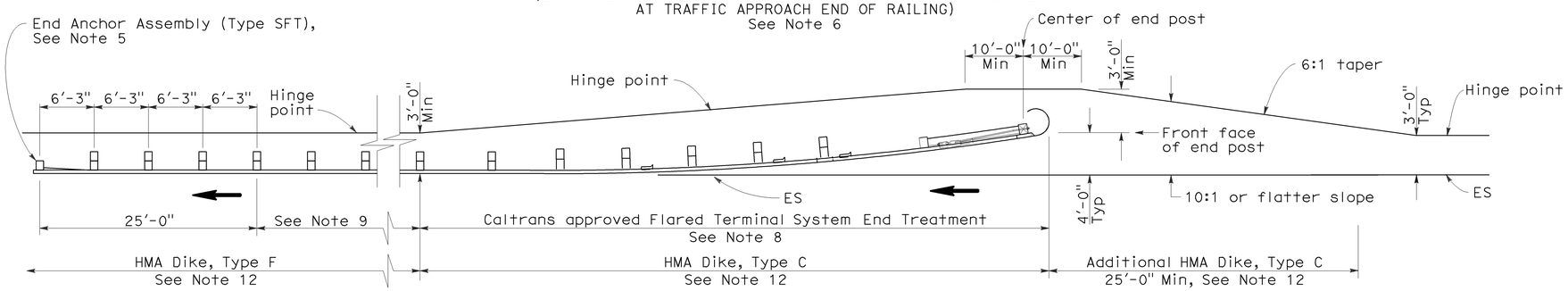

TYPE 11B LAYOUT

(EMBANKMENT GUARD RAILING INSTALLATION WITH FLARED END TREATMENT AT TRAFFIC APPROACH END OF RAILING)
See Note 6

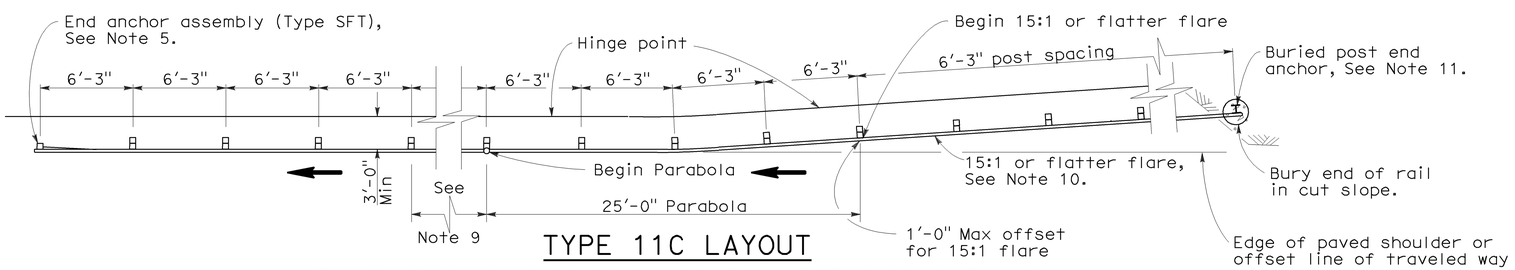

TYPE 11C LAYOUT

(EMBANKMENT GUARD RAILING INSTALLATION WITH BURIED END ANCHOR TREATMENT AT TRAFFIC APPROACH END OF RAILING)
See Notes 6 and 12

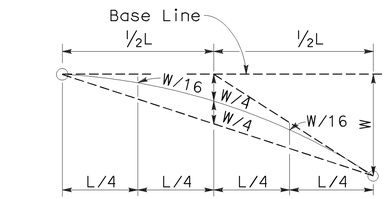

TYPICAL PARABOLIC LAYOUT

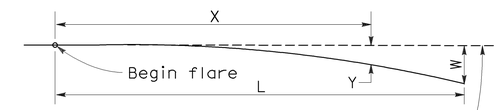

Base Line (Edge of paved shoulder or offset line of edge of traveled way)

$$Y = \frac{WX^2}{L^2}$$

Y = Offset from base line
W = Maximum offset
X = Distance along base line
L = Length of flare

PARABOLIC FLARE OFFSETS

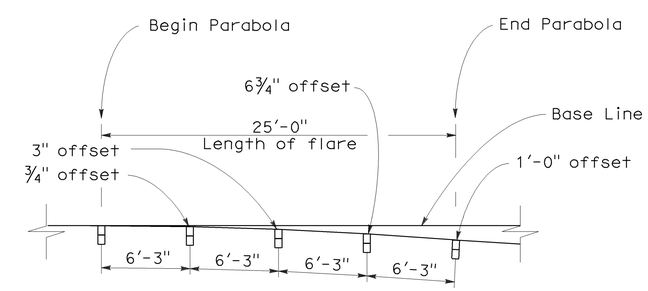

TYPICAL FLARE OFFSETS FOR 1 FOOT MAX END OFFSET

NOTES:

1. Line post, blocks and hardware to be used are shown on Standard Plans A77A1, A77A2, A77B1, A77C1, and A77C2.
2. Guard rail post spacing to be 6'-3" center to center, except as otherwise noted.
3. Except as noted, line posts are 6" x 8" x 6'-0" wood with 6" x 8" x 1'-2" wood blocks. W6 x 9 steel posts, 6'-0" in length, with 6" x 8" x 1'-2" notched wood blocks or recycled plastic blocks may be used for 6" x 8" x 6'-0" wood post with 6" x 8" x 1'-2" wood blocks where applicable and when specified.
4. Direction of adjacent traffic indicated by ➡.
5. For End Anchor Assembly (Type SFT) details, see Standard Plan A77H1.
6. Layout Types 11A, 11B or 11C are typically used where guard railing is recommended to shield embankment slopes and a crashworthy end treatment is required for only one direction of traffic.
7. In-line Terminal System End Treatments are used where site conditions will not accommodate a flared end treatment.
8. The type of terminal system end treatment to be used will be shown on the Project Plans.
9. Dependent on site conditions (embankment height and side slope), construction of additional guard railing (length equal to multiples of 12'-6" with 6'-3" post spacing) may be advisable.
10. The 15:1 or flatter flare used with buried end anchors is based on the edge of the paved shoulder or offset line of edge of the traveled way. The length of guard railing within the 15:1 or flatter flare is based on site conditions and should be a length equal to multiples of 12'-6".
11. For details of the buried post end anchor used with Type 11C Layout, see Standard Plan A77I2.
12. Where placement of dike is required with guard railing installations, see Revised Standard Plan RSP A77C4 for dike positioning details.

STATE OF CALIFORNIA
DEPARTMENT OF TRANSPORTATION

METAL BEAM GUARD RAILING TYPICAL LAYOUTS FOR EMBANKMENTS

NO SCALE

RSP A77E1 DATED JUNE 6, 2008 SUPERSEDES STANDARD PLAN A77E1 DATED MAY 1, 2006 - PAGE 48 OF THE STANDARD PLANS BOOK DATED MAY 2006.

REVISED STANDARD PLAN RSP A77E1

2006 REVISED STANDARD PLAN RSP A77E1

12-10-07

DIST	COUNTY	ROUTE	POST MILES TOTAL PROJECT	SHEET NO.	TOTAL SHEETS
03	ED	50	R28.8 / 39.6	20	31

Randell D. Hiatt
REGISTERED CIVIL ENGINEER

June 6, 2008
PLANS APPROVAL DATE

REGISTERED PROFESSIONAL ENGINEER
Randell D. Hiatt
No. C50200
Exp. 6-30-09
CIVIL
STATE OF CALIFORNIA

The State of California or its officers or agents shall not be responsible for the accuracy or completeness of electronic copies of this plan sheet.

To accompany plans dated July 26, 2010

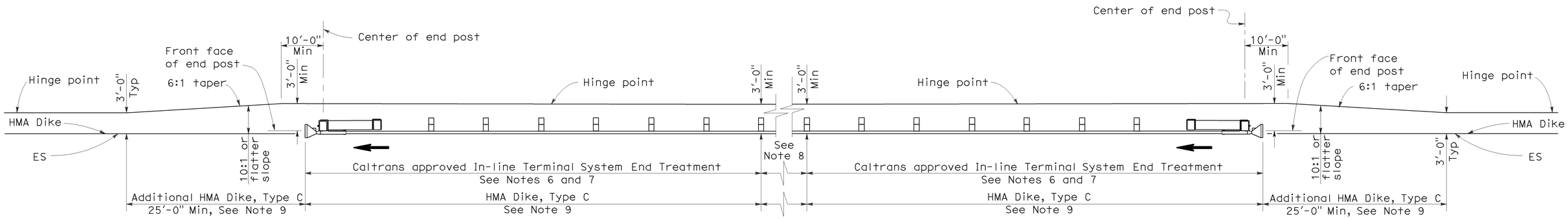

TYPE 11D LAYOUT

(EMBANKMENT GUARD RAILING INSTALLATION WITH IN-LINE END TREATMENT AT EACH END OF RAILING)
See Note 5

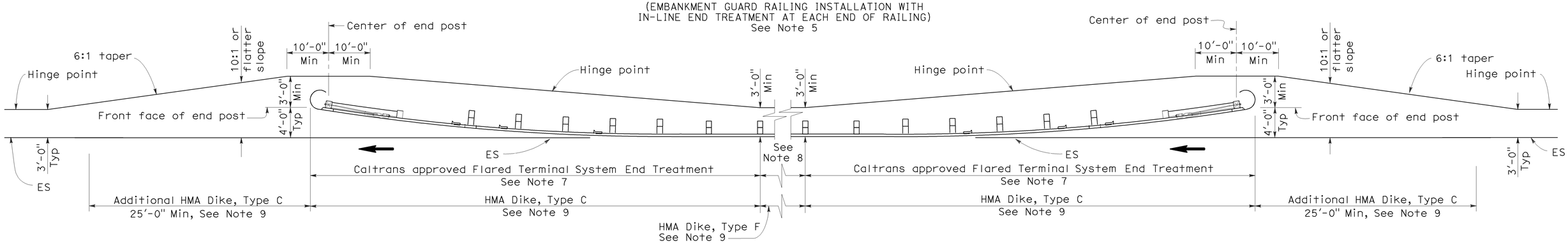

TYPE 11E LAYOUT

(EMBANKMENT GUARD RAILING INSTALLATION WITH FLARED END TREATMENT AT EACH END OF RAILING)
See Note 5

NOTES:

1. Line post, blocks and hardware to be used are shown on Standard Plans A77A1, A77A2, A77B1, A77C1 and A77C2.
2. Guard rail post spacing to be 6'-3" center to center, except as otherwise noted.
3. Except as noted, line posts are 6" x 8" x 6'-0" wood with 6" x 8" x 1'-2" wood blocks. W6 x 9 steel posts, 6'-0" in length, with 6" x 8" x 1'-2" notched wood blocks or plastic blocks may be used for 6" x 8" x 6'-0" wood post with 6" x 8" x 1'-2" wood blocks where applicable and when specified.
4. Direction of adjacent traffic indicated by ⟶.
5. Layout Types 11D through 11L, shown on the A77E Series of Revised Standard Plans, are typically used where guard railing is recommended to shield embankment slopes and a crashworthy end treatment is required for both directions of traffic.
6. In-line Terminal System End Treatments are used where site conditions will not accommodate a flared end treatment.
7. The type of terminal system end treatment to be used will be shown on the Project Plans.
8. Dependent on site conditions (embankment height and side slope), construction of additional guard railing (length equal to multiples of 12'-6" with 6'-3" post spacing) may be advisable.
9. Where placement of dike is required with guard railing installations, see Revised Standard Plan RSP A77C4 for dike positioning details.

STATE OF CALIFORNIA
DEPARTMENT OF TRANSPORTATION

METAL BEAM GUARD RAILING TYPICAL LAYOUTS FOR EMBANKMENTS

NO SCALE

RSP A77E2 DATED JUNE 6, 2008 SUPERSEDES STANDARD PLAN A77E2
DATED MAY 1, 2006 - PAGE 49 OF THE STANDARD PLANS BOOK DATED MAY 2006.

REVISED STANDARD PLAN RSP A77E2

2006 REVISED STANDARD PLAN RSP A77E2

12-10-07

DIST	COUNTY	ROUTE	POST MILES TOTAL PROJECT	SHEET NO.	TOTAL SHEETS
03	ED	50	R28.8 / 39.6	21	31

Randell D. Hiatt
REGISTERED CIVIL ENGINEER

June 6, 2008
PLANS APPROVAL DATE

REGISTERED PROFESSIONAL ENGINEER
Randell D. Hiatt
No. C50200
Exp. 6-30-09
CIVIL
STATE OF CALIFORNIA

The State of California or its officers or agents shall not be responsible for the accuracy or completeness of electronic copies of this plan sheet.

To accompany plans dated July 26, 2010

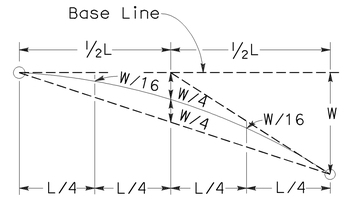

TYPICAL PARABOLIC LAYOUT

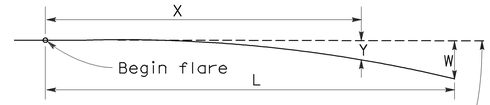

Base Line (Edge of paved shoulder or offset line of edge of traveled way)

$$Y = \frac{WX^2}{L^2}$$

Y = Offset from base line
W = Maximum offset
X = Distance along base line
L = Length of flare

PARABOLIC FLARE OFFSETS

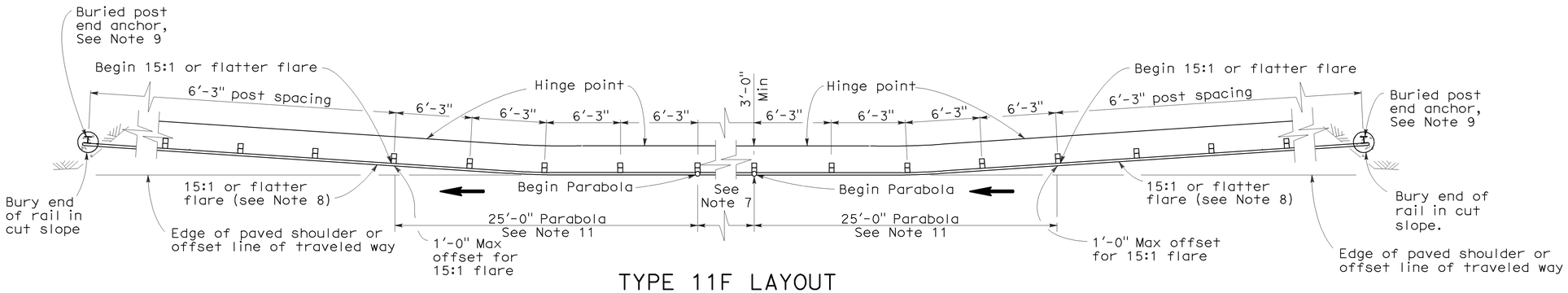

TYPE 11F LAYOUT

(EMBANKMENT GUARD RAILING INSTALLATION WITH A BURIED END ANCHOR TREATMENT AT EACH END OF RAILING)
See Notes 5 and 10

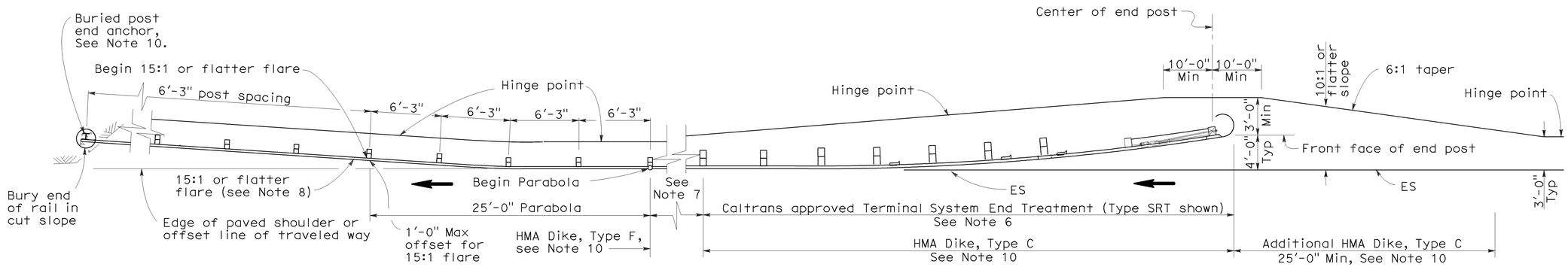

TYPE 11G LAYOUT

(EMBANKMENT GUARD RAILING INSTALLATION WITH FLARED END TREATMENT AND A BURIED END ANCHOR TREATMENT AT THE ENDS OF RAILING)
See Notes 5 and 10

NOTES:

1. Line post, blocks and hardware to be used are shown on Standard Plans A77A1, A77A2, A77B1, A77C1 and A77C2.
2. Guard rail post spacing to be 6'-3" center to center, except as otherwise noted.
3. Except as noted, line posts are 6" x 8" x 6'-0" wood with 6" x 8" x 1'-2" wood blocks. W6 x 9 steel posts, 6'-0" in length, with 6" x 8" x 1'-2" notched wood blocks or plastic blocks may be used for 6" x 8" x 6'-0" wood post with 6" x 8" x 1'-2" wood blocks where applicable and when specified.
4. Direction of adjacent traffic indicated by ⟶.
5. Layout Types 11D through 11L, shown on the A77E Series of Revised Standard Plans, are typically used where guard railing is recommended to shield embankment slopes and a crashworthy end treatment is required for both directions of traffic.
6. The type of terminal system end treatment to be used will be shown on the Project Plans.
7. Dependent on site conditions (embankment height and side slope), construction of additional guard railing (length equal to multiples of 12'-6" with 6'-3" post spacing) may be advisable.
8. The 15:1 or flatter flare used with buried end anchors is based on the edge of the paved shoulder or offset line of edge of the traveled way. The length of guard railing within the 15:1 or flatter flare is based on site conditions and should be a length equal to multiples of 12'-6".
9. For details of the buried post end anchor used with Type 11F and 11G Layouts, see Standard Plan A77I2.
10. Where placement of dike is required with guard railing installations, see Revised Standard Plan RSP A77C4 for dike positioning details.
11. For typical flare offsets for 25'-0" length parabola with maximum offset of 1'-0", see Revised Standard Plan RSP A77E1.

STATE OF CALIFORNIA
DEPARTMENT OF TRANSPORTATION

METAL BEAM GUARD RAILING TYPICAL LAYOUTS FOR EMBANKMENTS

NO SCALE

RSP A77E3 DATED JUNE 6, 2008 SUPERSEDES STANDARD PLAN A77E3 DATED MAY 1, 2006 - PAGE 50 OF THE STANDARD PLANS BOOK DATED MAY 2006.

REVISED STANDARD PLAN RSP A77E3

2006 REVISED STANDARD PLAN RSP A77E3

12-10-07

DIST	COUNTY	ROUTE	POST MILES TOTAL PROJECT	SHEET NO.	TOTAL SHEETS
03	ED	50	R28.8 / 39.6	22	31

Randell D. Hiatt
REGISTERED CIVIL ENGINEER

June 6, 2008
PLANS APPROVAL DATE

REGISTERED PROFESSIONAL ENGINEER
Randell D. Hiatt
No. C50200
Exp. 6-30-09
CIVIL
STATE OF CALIFORNIA

The State of California or its officers or agents shall not be responsible for the accuracy or completeness of electronic copies of this plan sheet.

To accompany plans dated July 26, 2010

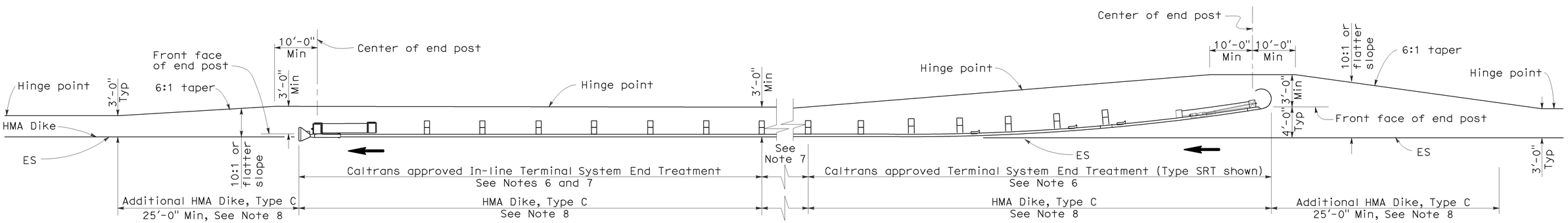

TYPE 11H LAYOUT

(EMBANKMENT GUARD RAILING INSTALLATION WITH FLARED END TREATMENT
AND AN IN-LINE TREATMENT AT THE ENDS OF RAILING)
See Notes 5 and 8

NOTES:

1. Line post, blocks and hardware to be used are shown on Standard Plans A77A1, A77A2, A77B1, A77C1 and A77C2.
2. Guard rail post spacing to be 6'-3" center to center, except as otherwise noted.
3. Except as noted, line posts are 6" x 8" x 6'-0" wood with 6" x 8" x 1'-2" wood blocks. W6 x 9 steel posts, 6'-0" in length, with 6" x 8" x 1'-2" notched wood blocks or plastic blocks may be used for 6" x 8" x 6'-0" wood post with 6" x 8" x 1'-2" wood blocks where applicable and when specified.
4. Direction of adjacent traffic indicated by ⟶.
5. Layout Types 11D through 11L, shown on the A77E Series of Revised Standard Plans, are typically used where guard railing is recommended to shield embankment slopes and a crashworthy end treatment is required for both directions of traffic.
6. The type of terminal system end treatment to be used will be shown on the Project Plans.
7. Dependent on site conditions (embankment height and side slope), construction of additional guard railing (length equal to multiples of 12'-6" with 6'-3" post spacing) may be advisable.
8. Where placement of dike is required with guard railing installations, see Revised Standard Plan RSP A77C4 for dike positioning details.

STATE OF CALIFORNIA
DEPARTMENT OF TRANSPORTATION

METAL BEAM GUARD RAILING TYPICAL LAYOUTS FOR EMBANKMENTS

NO SCALE

RSP A77E4 DATED JUNE 6, 2008 SUPERSEDES STANDARD PLAN A77E4
DATED MAY 1, 2006 - PAGE 51 OF THE STANDARD PLANS BOOK DATED MAY 2006.

REVISED STANDARD PLAN RSP A77E4

2006 REVISED STANDARD PLAN RSP A77E4

12-10-07

DIST	COUNTY	ROUTE	POST MILES TOTAL PROJECT	SHEET NO.	TOTAL SHEETS
03	ED	50	R28.8 / 39.6	23	31

Randell D. Hiatt
REGISTERED CIVIL ENGINEER

June 6, 2008
PLANS APPROVAL DATE

REGISTERED PROFESSIONAL ENGINEER
Randell D. Hiatt
No. C50200
Exp. 6-30-09
CIVIL
STATE OF CALIFORNIA

The State of California or its officers or agents shall not be responsible for the accuracy or completeness of electronic copies of this plan sheet.

To accompany plans dated July 26, 2010

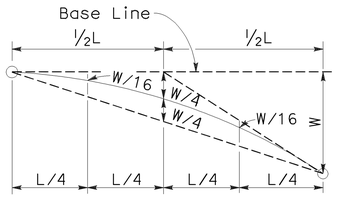

TYPICAL PARABOLIC LAYOUT

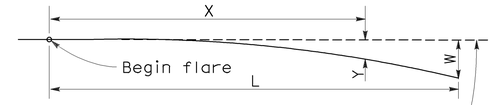

Base Line (Edge of paved shoulder or offset line of edge of traveled way)

$$Y = \frac{WX^2}{L^2}$$

Y = Offset from base line
W = Maximum offset
X = Distance along base line
L = Length of flare

PARABOLIC FLARE OFFSETS

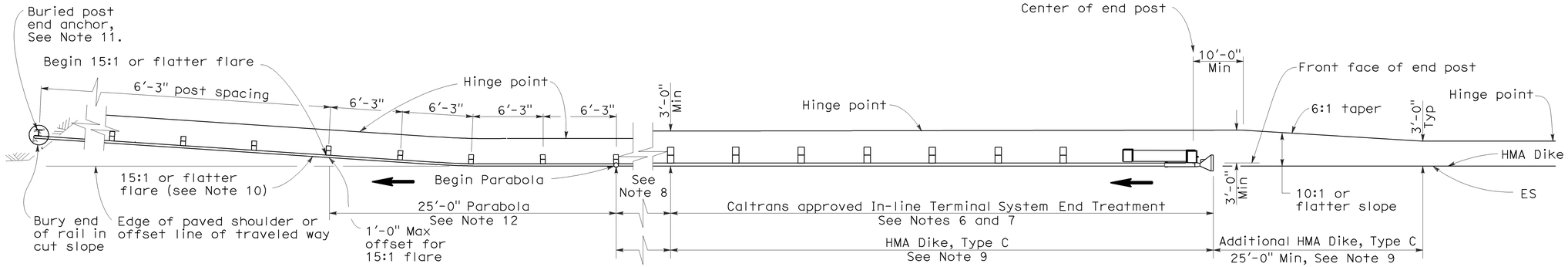

TYPE 11I LAYOUT

(EMBANKMENT GUARD RAILING INSTALLATION WITH IN-LINE END TREATMENT AND A BURIED END ANCHOR TREATMENT AT THE ENDS OF RAILING)
See Note 5

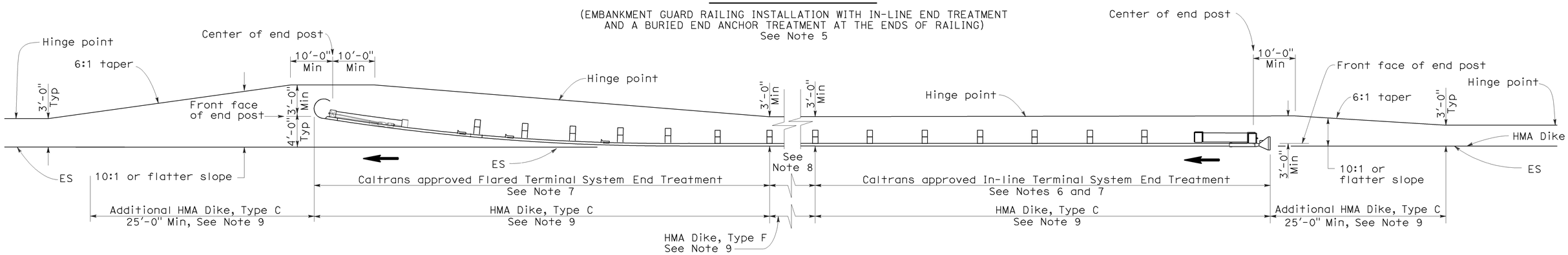

TYPE 11J LAYOUT

(EMBANKMENT GUARD RAILING INSTALLATION WITH IN-LINE END TREATMENT AND FLARED END TREATMENT AT THE ENDS OF RAILING)
See Note 5

NOTES:

1. Line post, blocks and hardware to be used are shown on Standard Plans A77A1, A77A2, A77B1, A77C1 and A77C2.
2. Guard rail post spacing to be 6'-3" center to center, except as otherwise noted.
3. Except as noted, line posts are 6" x 8" x 6'-0" wood with 6" x 8" x 1'-2" wood blocks. W6 x 9 steel posts, 6'-0" in length, with 6" x 8" x 1'-2" notched wood blocks or plastic blocks may be used for 6" x 8" x 6'-0" wood post with 6" x 8" x 1'-2" wood blocks where applicable and when specified.
4. Direction of adjacent traffic indicated by ⟶.
5. Layout Types 11D through 11L, shown on the A77E Series of Revised Standard Plans, are typically used where guard railing is recommended to shield embamkment slopes and a crashworthy end treatment is required for both directions of traffic.
6. In-line Terminal System End Treatments are used where site conditions will not accommodate a flared end treatment.
7. The type of terminal system end treatment to be used will be shown on the Project Plans.
8. Dependent on site conditions (embankment height and side slope), construction of additional guard railing (length equal to multiples of 12'-6" with 6'-3" post spacing) may be advisable.
9. Where placement of dike is required with guard railing installations, see Revised Standard Plan RSP A77C4 for dike positioning details.
10. The 15:1 or flatter flare used with buried end anchors is based on the edge of the paved shoulder or offset line of edge of the traveled way. The length of guard railing within the 15:1 or flatter flare is based on site conditions and should be a length equal to multiples of 12'-6".
11. For details of the buried post end anchor used with Type 11I Layout, see Standard Plan A77I2.
12. For typical flare offsets for 25'-0" length parabola with maximum offset of 1'-0", see Revised Standard Plan RSP A77E1.

STATE OF CALIFORNIA
DEPARTMENT OF TRANSPORTATION

METAL BEAM GUARD RAILING TYPICAL LAYOUTS FOR EMBANKMENTS

NO SCALE

RSP A77E5 DATED JUNE 6, 2008 SUPERSEDES STANDARD PLAN A77E5 DATED MAY 1, 2006 - PAGE 52 OF THE STANDARD PLANS BOOK DATED MAY 2006.

REVISED STANDARD PLAN RSP A77E5

2006 REVISED STANDARD PLAN RSP A77E5

12-10-07

DIST	COUNTY	ROUTE	POST MILES TOTAL PROJECT	SHEET NO.	TOTAL SHEETS
03	ED	50	R28.8 / 39.6	24	31

Randell D. Hiatt
REGISTERED CIVIL ENGINEER

June 6, 2008
PLANS APPROVAL DATE

REGISTERED PROFESSIONAL ENGINEER
Randell D. Hiatt
No. C50200
Exp. 6-30-09
CIVIL
STATE OF CALIFORNIA

The State of California or its officers or agents shall not be responsible for the accuracy or completeness of electronic copies of this plan sheet.

To accompany plans dated July 26, 2010

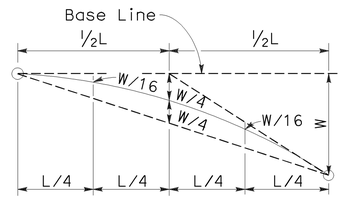

TYPICAL PARABOLIC LAYOUT

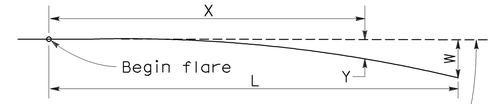

Base Line (Edge of paved shoulder or offset line of edge of traveled way)

$$Y = \frac{WX^2}{L^2}$$

Y = Offset from base line
W = Maximum offset
X = Distance along base line
L = Length of flare

PARABOLIC FLARE OFFSETS

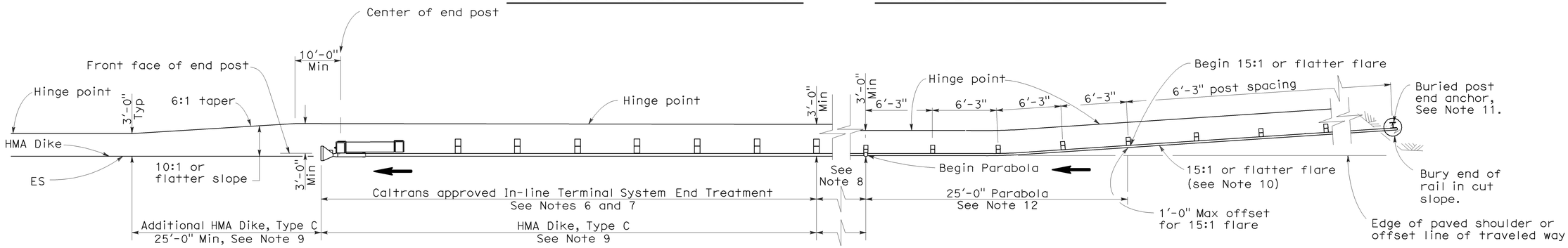

TYPE 11K LAYOUT

(EMBANKMENT GUARD RAILING INSTALLATION WITH A BURIED END ANCHOR TREATMENT AND AN IN-LINE END TREATMENT AT THE ENDS OF RAILING)
See Note 5

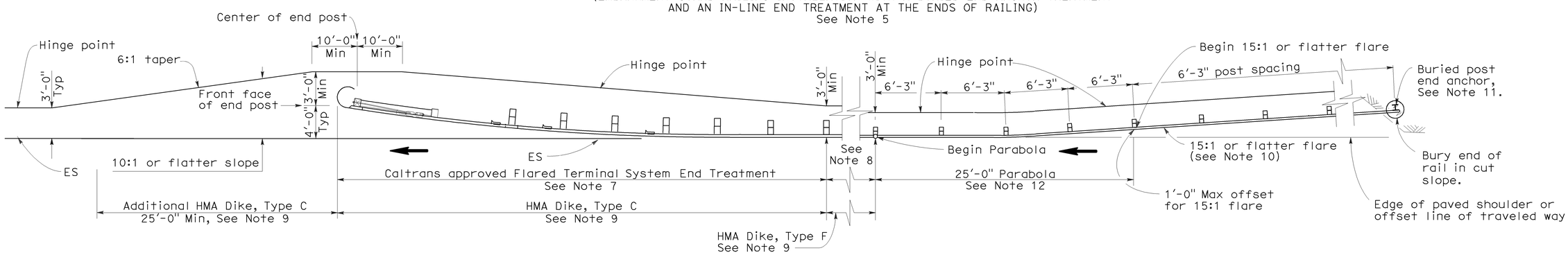

TYPE 11L LAYOUT

(EMBANKMENT GUARD RAILING INSTALLATION WITH A BURIED END ANCHOR TREATMENT AND A FLARED END TREATMENT AT THE ENDS OF RAILING)
See Note 5

NOTES:

1. Line post, blocks and hardware to be used are shown on Standard Plans A77A1, A77A2, A77B1, A77C1 and A77C2.
2. Guard rail post spacing to be 6'-3" center to center, except as otherwise noted.
3. Except as noted, line posts are 6" x 8" x 6'-0" wood with 6" x 8" x 1'-2" wood blocks. W6 x 9 steel posts, 6'-0" in length, with 6" x 8" x 1'-2" notched wood blocks or plastic blocks may be used for 6" x 8" x 6'-0" wood post with 6" x 8" x 1'-2" wood blocks where applicable and when specified.
4. Direction of adjacent traffic indicated by ⟶.
5. Layout Types 11D through 11L, shown on the A77E Series of Revised Standard Plans, are typically used where guard railing is recommended to shield embamkment slopes and a crashworthy end treatment is required for both directions of traffic.
6. In-line Terminal System End Treatments are used where site conditions will not accommodate a flared end treatment.
7. The type of terminal system end treatment to be used will be shown on the Project Plans.
8. Dependent on site conditions (embankment height and side slope), construction of additional guard railing (length equal to multiples of 12'-6" with 6'-3" post spacing) may be advisable.
9. Where placement of dike is required with guard railing installations, see Revised Standard Plan RSP A77C4 for dike positioning details.
10. The 15:1 or flatter flare used with buried end anchors is based on the edge of the paved shoulder or offset line of edge of the traveled way. The length of guard railing within the 15:1 or flatter flare is based on site conditions and should be a length equal to multiples of 12'-6".
11. For details of the buried post end anchor used with Type 11K and 11L Layouts, see Standard Plan A77I2.
12. For typical flare offsets for 25'-0" length parabola with maximum offset of 1'-0", see Revised Standard Plan RSP A77E1.

STATE OF CALIFORNIA
DEPARTMENT OF TRANSPORTATION

METAL BEAM GUARD RAILING TYPICAL LAYOUTS FOR EMBANKMENTS

NO SCALE

RSP A77E6 DATED JUNE 6, 2008 SUPERSEDES STANDARD PLAN A77E6
DATED MAY 1, 2006 - PAGE 53 OF THE STANDARD PLANS BOOK DATED MAY 2006.

REVISED STANDARD PLAN RSP A77E6

2006 REVISED STANDARD PLAN RSP A77E6

12-10-07

DIST	COUNTY	ROUTE	POST MILES TOTAL PROJECT	SHEET NO.	TOTAL SHEETS
03	ED	50	R28.8 / 39.6	25	31

REGISTERED ELECTRICAL ENGINEER

October 5, 2007
PLANS APPROVAL DATE

REGISTERED PROFESSIONAL ENGINEER Jeffery G. McRae No. E14512 Exp. 6-30-08 ELECTRICAL STATE OF CALIFORNIA

The State of California or its officers or agents shall not be responsible for the accuracy or completeness of electronic copies of this plan sheet.

To accompany plans dated July 26, 2010

ELECTROLIERS

STANDARD TYPES
15, 15D
15 STRUCTURE
21, 21D STRUCTURE
30
31
32
35
36-20A

High mast light pole

Double Arm lighting standard

Existing electrolier

Electrolier foundation (Future installation)

NOTES:

1. Luminaires shall be 310 W HPS when installed on Type 21, 21D, 30, 31, 32, 35 and 36-20A Standards, unless otherwise specified. Luminaires shall be 200 W HPS when installed on other type standards or poles, unless otherwise specified.
2. Luminaires shall be the cutoff type, ANSI Type Ⅲ medium cutoff lighting distribution, unless otherwise specified.
3. Variations noted adjacent to symbol on project plans.

Electrolier (see project notes or project plans)

Luminaire on wood pole

STANDARD NOTES:

- AB — Abandon. If applied to conduit, remove conductors.
- BC — Install pull box in existing conduit run.
- BP — Pedestrian barricade, type as indicated on plan.
- CB — Install conduit into existing pull box.
- CC — Connect new and existing conduit. Remove existing conductors and install conductors as indicated.
- CF — Conduit to remain for future use. Remove conductors. Install pull wire or rope.
- DH — Detector handhole.
- FA — Foundation to be abandoned.
- IS — Install sign on signal mast arm.
- NS — No slip base on standard.
- PEC — Photoelectric control.
- PEU — Photoelectric unit.
- RC — Equipment or material to be removed and become the property of the Contractor.
- RE — Remove electrolier, fuses and ballast. Tape ends of conductors.
- RL — Relocate equipment.
- RR — Remove and reuse equipment.
- RS — Remove and salvage equipment.
- SC — Splice new to existing conductors.
- SD — Service disconnect.
- SF — Standard to remain for future use. Remove luminaire, pole conductors, fuses and ballast.
- TSP — Telephone service point.

ABBREVIATIONS AND EQUIPMENT DESIGNATIONS

PROPOSED	EXISTING	
BBS	bbs	Battery backup system
BC	bc	Bolt circle
C	C	Conduit
CCTV	cctv	Closed circuit television
CKT	ckt	Circuit
CMS	cms	Changeable message sign
DLC	dlc	Loop detector lead-in cable
EMS	ems	Extinguishable message sign
EVC	evc	Emergency vehicle cable
EVD	evd	Emergency vehicle detector
FB	fb	Flashing beacon
FBCA	fbca	Flashing beacon control assembly
FBS	fbs	Flashing beacon with slip base
FO	fo	Fiber optic
G	G	Ground (Equipment Grounding Conductor)
GFCI	GFCI	Ground fault circuit interrupt
HAR	har	Highway advisory radio
HEX	hex	Hexagonal
HPS	hps	High pressure sodium
IISNS	iisns	Internally illuminated street name sign
ISL	isl	Induction sign lighting
LED	led	Light emitting diode
LMA	lma	Luminaire mast arm
LPS	lps	Low pressure sodium
LTG	ltg	Lighting
LUM	lum	Luminaire
MAT	mat	Mast arm mounting vehicle signal faces, top attachment
MAS	mas	Mast arm mounting vehicle signal faces, side attachment
MAS-4A	mas-4A	Mast arm mounting vehicle signal faces, side attachment - 4 signal section
MAS-4B	mas-4B	
MAS-4C	mas-4C	
MAS-5A	mas-5A	Mast arm mounting vehicle signal faces, side attachment - 5 signal section
MAS-5B	mas-5B	
MC	mc	Mercury contactor
M/M	m/m	Multiple to multiple transformer
MT	mt	Conduit with pull wire or rope only
MTG	mtg	Mounting
	mv	Mercury vapor lighting fixture
N	N	Neutral (Grounded Conductor)
NC	NC	Normally closed
NO	NO	Normally open
PB	pb	Pull box
PEC	pec	Photoelectric control (Type Ⅰ, Ⅱ, Ⅲ, Ⅳ or Ⅴ as shown)
PED	ped	Pedestrian
PEU	peu	Photoelectric unit
PPB	ppb	Pedestrian push button
RL		Relocated equipment
RM	rm	Ramp metering
SB	sb	Slip base
SIC	sic	Signal interconnect cable
SIG	sig	Signal
SMA	sma	Signal mast arm
SNS	sns	Street name sign
SP	sp	Service point
TDC	tdc	Telephone demarcation cabinet
TMS	tms	Traffic monitoring station
TOS	tos	Traffic Operations System
VEH	veh	Vehicle
XFMR	xfmr	Transformer
COMM	comm	Communication
RWIS	rwis	Roadway weather information system

SOFFIT AND WALL MOUNTED LUMINAIRES

Pendant, 70 W HPS unless otherwise specified.

Flush, 70 W HPS unless otherwise specified.

Wall surface, 70 W HPS unless otherwise specified.

Existing soffit or wall luminaire to remain unmodified.

Existing soffit or wall luminaire to be modified as specified.

NOTE:

Arrow indicates "street side" of luminaire.

STATE OF CALIFORNIA
DEPARTMENT OF TRANSPORTATION

ELECTRICAL SYSTEMS (SYMBOLS AND ABBREVIATIONS)

NO SCALE

RSP ES-1A DATED OCTOBER 5, 2007 SUPERSEDES STANDARD PLAN ES-1A DATED MAY 1, 2006 - PAGE 400 OF THE STANDARD PLANS BOOK DATED MAY 2006.

REVISED STANDARD PLAN RSP ES-1A

2006 REVISED STANDARD PLAN RSP ES-1A

DIST	COUNTY	ROUTE	POST MILES TOTAL PROJECT	SHEET NO.	TOTAL SHEETS
03	ED	50	R28.8 / 39.6	26	31

REGISTERED ELECTRICAL ENGINEER

October 5, 2007
PLANS APPROVAL DATE

REGISTERED PROFESSIONAL ENGINEER Jeffery G. McRae No. E14512 Exp. 6-30-08 ELECTRICAL STATE OF CALIFORNIA

The State of California or its officers or agents shall not be responsible for the accuracy or completeness of electronic copies of this plan sheet.

To accompany plans dated July 26, 2010

CONDUIT

PROPOSED	EXISTING	
		Lighting Conduit, unless otherwise indicated or noted
		Traffic signal conduit
C	c	Communication conduit
T	t	Telephone conduit
F	f	Fire alarm conduit
FO	fo	Fiber optic conduit
		Conduit termination (RSP ES-9A C)
R	r	Conduit riser in/on structure or service pole

SERVICE EQUIPMENT

PROPOSED	EXISTING	
OH	oh	Overhead lines
U	U	Wood pole "U" indicates utility owned
		Pole guy with anchor
		Utility transformer - ground mounted
III		Service equipment enclosure type
		Service equipment enclosure door indicates front of enclosure
T	t	Telephone demarcation cabinet

POLE-MOUNTED SERVICE DESIGNATION

Type of installation

TYPE H SERVICE - 28'-10" ← Pole height above grade

ILLUMINATED OVERHEAD SIGN

PROPOSED	EXISTING	
		Overhead sign - Single post
		Overhead sign - Two post
		Overhead sign - Mounted on structure
		Overhead sign with electrolier

SIGNAL EQUIPMENT

PROPOSED	EXISTING	
		Pedestrian signal face
		Pedestrian push button post
		Pedestrian barricade
		Vehicle signal face (with backplate, 3-Section: red, yellow and green)
		Vehicle signal face with angle visors
PV	PV	Modifications of basic symbols: "L" Indicates all non-arrow sections louvered "LG" indicates louvered green section only "PV" indicates 12" programmed visibility sections "8" indicates all 8" sections (only when specified)
		Type 15TS and Vehicle signal face
		Vehicle signal face with red, yellow and green left arrow sections
		Vehicle signal face with red and yellow sections and up green arrow
		Vehicle signal face (5 Section) with red, yellow and green sections and yellow and green right arrows
		Type 1 Standard and attached vehicle signal faces
		Standard with signal mast arm only and attached vehicle signal faces and internally illuminated street name sign
		Type 33 Standard, Left-turn vehicle signal face and sign
		Standard with luminaire and signal mast arms and attached vehicle signal faces
		Cantilever flashing beacon Type 9 Frame, with a sign unless otherwise specified or indicated
		Type 15-FBS Standard with two vehicle signal face sections with lens, backplate and visor with a sign
R	Y	Flashing beacon. One vehicle signal face section with lens, backplate and visor. "R" indicates red indication, "Y" indicates yellow indication
		Controller assembly. Door indicates front of cabinet

SIGNAL EQUIPMENT Cont

PROPOSED	EXISTING	
		Guard post
		Type 1 Standard with "Meter On" sign
		Emergency Vehicle detector

NOTES:

1. All signal sections shall be 12" unless shown otherwise.
2. Signal heads shall be provided with backplates unless shown otherwise.
3. Signal indication shall be LED.

STATE OF CALIFORNIA
DEPARTMENT OF TRANSPORTATION

ELECTRICAL SYSTEMS (SYMBOLS AND ABBREVIATIONS)

NO SCALE

RSP ES-1B DATED OCTOBER 5, 2007 SUPERCEDES STANDARD PLAN ES-1B DATED MAY 1, 2006 - PAGE 401 OF THE STANDARD PLANS BOOK DATED MAY 2006.

REVISED STANDARD PLAN RSP ES-1B

2006 REVISED STANDARD PLAN RSP ES-1B

7-10-07

DIST	COUNTY	ROUTE	POST MILES TOTAL PROJECT	SHEET NO.	TOTAL SHEETS
03	ED	50	R28.8 / 39.6	27	31

REGISTERED ELECTRICAL ENGINEER

October 5, 2007
PLANS APPROVAL DATE

REGISTERED PROFESSIONAL ENGINEER Jeffery G. McRae No. E14512 Exp. 6-30-08 ELECTRICAL STATE OF CALIFORNIA

The State of California or its officers or agents shall not be responsible for the accuracy or completeness of electronic copies of this plan sheet.

To accompany plans dated July 26, 2010

EQUIPMENT IDENTIFICATION

ILLUMINATED SIGN IDENTIFICATION NUMBER:

Sign No. 12345 — Sign number - Place on post or structure

10 ISL SCI 1.0

- 1.0 — Transformer rating (kVA)
- SCI — Lighting control type
- ISL — Number and type of fixtures

Do NOT place on standard or structure

ELECTROLIER OR EQUIPMENT IDENTIFICATION NUMBER:

12345 - 15'-0"

- 15'-0" — Mast arm length, if shown. Do not place on standard or structure.
- 12345 — Equipment number - Place on standard or structure. Existing equipment numbers are shown in parenthesis

CONDUIT AND CONDUCTOR IDENTIFICATION:

1½"C, 2#10, 15#14, 2 DLC

- 2#10, 15#14, 2 DLC — Number and size of conductors and cables
- 1½"C — Size of conduit in inches

Ø1, Ø2, Ø2P, etc.	Traffic phase identification for signal faces, detectors and phase diagrams
1 2 3	Project note numbers
A B C	Equipment description, installation or item numbers
1 2 3	Conduit run numbers

SIGNAL AND LIGHTING STANDARD (TYPICAL DESIGNATION):

19A - 3 - 100

- 100 — Wind velocity = 100 mph
- 3 — Case 3 arm loading
- 19A — Standard type
- Standard Plan sheet number
- Detail number or letter

MISCELLANEOUS EQUIPMENT

PROPOSED	EXISTING	
CMS	cms	Changeable message sign
		Closed circuit television camera
		Highway advisory radio pole and antenna
EMS	ems	Extinguishable message sign
M V	m v	Detection device M = Microwave sensor V = Video image sensor

WIRING DIAGRAM LEGEND

P	Pole
CB	Circuit breaker
A	Ampere
V	Volt
M	Metered
UM	Unmetered
NB	Neutral bus
GB	Ground bus
G	Equipment grounding conductor
N	Grounded conductor (Neutral)

- External conductor
- Conductor or bus
- Tie point
- Contactor coil
- Contactor, Contact NO
- Terminal blocks
- Contactor, Contact NC
- Enclosure bond
- Grounding electrode
- Circuit breaker
- Receptacle

PULL BOXES

PROPOSED EXISTING

Pull box-No. 5 unless otherwise indicated or noted.

3 — 9A(21)

Pull box-Additional designations or descriptions

3	= No. 3½ pull box
5	= No. 5 pull box
6	= No. 6 pull box
7	= No. 7 (Ceiling pull box)
8	= No. 8 (Pendant soffit pull box)
9	= No. 9 pull box
9A	= No. 9A pull box

(C) = Communications pull box
(E) = Pull box with extension
(S) = Sprinkler control pull box
(21) = Anchor bolts and conduit for future installation of Type 21 Standard
(T) = Traffic pull box

VEHICLE DETECTORS

5 J 9 U

- U = Upper, L = Lower
- Slot number in input file
- Input file (I or J)
- Phase

PROPOSED EXISTING

- Type A detector loop. Outline of sawcut shown.
- Type B detector loop. Outline of sawcut shown.
- Type C detector loop. Outline of sawcut shown.
- Type D detector loop. Outline of sawcut shown.
- Type E detector loop. Outline of sawcut shown.
- Type Q detector loop. Outline of sawcut shown.
- Magnetic detector
- DH / dh — Detector handhole
- Microwave or video detection zone

STATE OF CALIFORNIA
DEPARTMENT OF TRANSPORTATION

ELECTRICAL SYSTEMS (SYMBOLS AND ABBREVIATIONS)

NO SCALE

RSP ES-1C DATED OCTOBER 5, 2007 SUPERCEDES STANDARD PLAN ES-1C DATED MAY 1, 2006 - PAGE 402 OF THE STANDARD PLANS BOOK DATED MAY 2006.

REVISED STANDARD PLAN RSP ES-1C

2006 REVISED STANDARD PLAN RSP ES-1C

7-10-07

DIST	COUNTY	ROUTE	POST MILES TOTAL PROJECT	SHEET NO.	TOTAL SHEETS
03	ED	50	R28.8 / 39.6	28	31

REGISTERED ELECTRICAL ENGINEER

October 5, 2007
PLANS APPROVAL DATE

REGISTERED PROFESSIONAL ENGINEER Jeffery G. McRae No. E14512 Exp. 6-30-08 ELECTRICAL STATE OF CALIFORNIA

The State of California or its officers or agents shall not be responsible for the accuracy or completeness of electronic copies of this plan sheet.

To accompany plans dated July 26, 2010

LOOP INSTALLATION PROCEDURE

1. Loops shall be centered in lanes.
2. Saw slots in pavement for loop conductors as shown in details.
3. Distance between side of loop and a lead-in saw cut from adjacent detectors shall be 2'-0" minimum. Distance between lead-in saw cuts shall be 6" minimum.
4. Bottom of saw slot shall be smooth with no sharp edges.
5. Slots shall be washed until clean, blown out and thoroughly dried before installing loop conductors.
6. Adjacent loops on the same sensor unit channel shall be wound in opposite directions.
7. Identify and tag loop circuit pairs in the pull box with loop number, start (S) and finish (F) of conductor. Identify and tag lead-in-cable with sensor number and phase.
8. Install loop conductor in slot using a 3/16" to 1/4" thick wood paddle. Hold loop conductors with wood paddles (at the bottom of the sawed slot) during sealant placement.
9. No more than 2 twisted pairs shall be installed in one sawed slot.
10. Allow additional 5'-0" of slack length of conductor for the lead-in run to pull box.
11. The additional length of each conductor for each loop shall be twisted together into a pair (6 turns per 3'-4" minimum) before being placed in the slot and conduit leading to pull box.
12. Test each loop circuit for continuity, circuit resistance and insulation resistance at the pull box before filling slots.
13. Fill slots as shown in details.
14. Splice loop conductors to lead-in-cable. Splices shall be soldered.
15. End of lead-in-cable and Type 2 loop conductor shall be waterproofed prior to installing in conduit to prevent moisture from entering the cable.
16. Lead-in-cable shall not be spliced between the pull box and the controller cabinet terminals.
17. Test each loop circuit for continuity, circuit resistance and insulation resistance at the controller cabinet location.
18. Where loop conductors are not to be spliced to a lead-in-cable, the ends of the conductors shall be taped and waterproofed with electrical insulating coating.

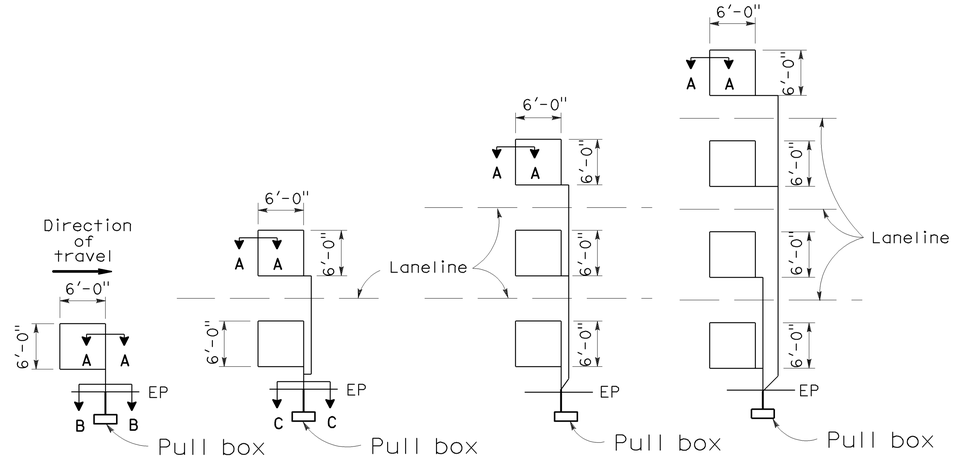

TYPE 1A INSTALLATION | TYPE 2A INSTALLATION | TYPE 3A INSTALLATION | TYPE 4A INSTALLATION

SAWCUT DETAILS

(Type A loop detector configurations illustrated)

1. 1A thru 4A = 1 Type A loop configuration in each lane.
2. 1B thru 4B = 1 Type B loop configuration in each lane.
3. 1C = 1 Type C loop configuration entering lanes as required.
4. 1D thru 4D = 1 Type D loop configuration in each lane.
5. 1E thru 4E = 1 Type E loop configuration in each lane.
6. 1Q thru 4Q = 1 Type Q loop configuration in each lane. (Use Type A, B, C, D, E or Q loop detector configurations only when specified or shown on plans)

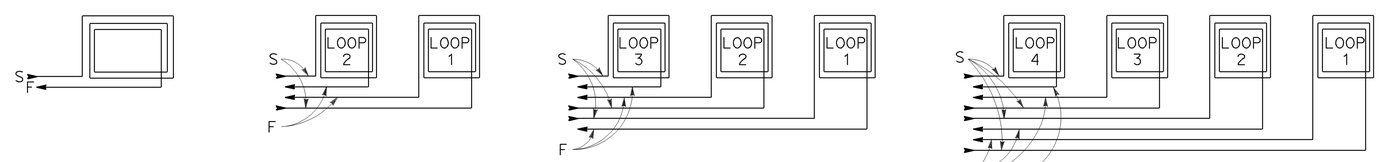

WINDING DETAILS

See Notes 6 and 7

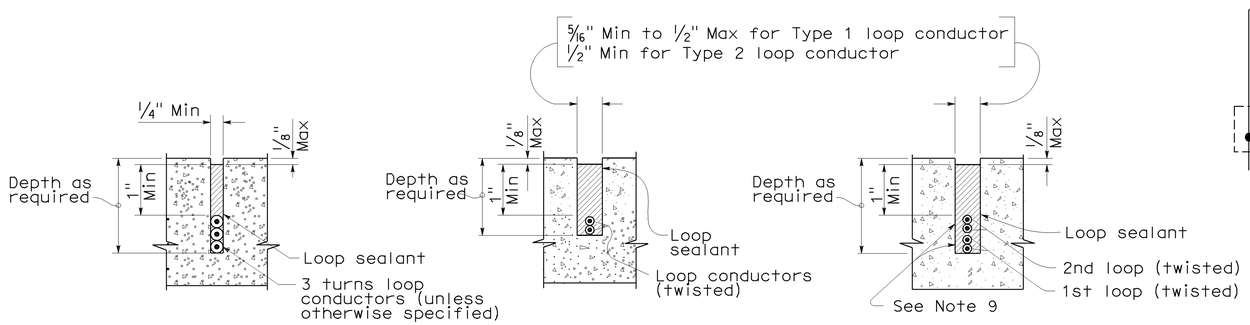

SECTION A-A | SECTION B-B | SECTION C-C

SLOT DETAILS - TYPE 1 AND TYPE 2 LOOP CONDUCTOR

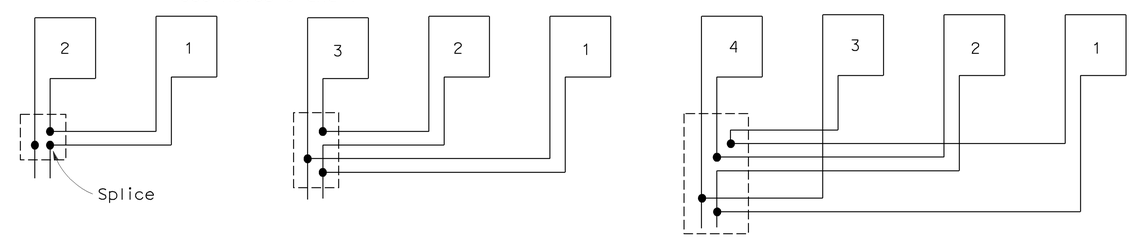

TYPICAL LOOP CONNECTIONS

(Dashed lines represent the pull box)

STATE OF CALIFORNIA
DEPARTMENT OF TRANSPORTATION

ELECTRICAL SYSTEMS (DETECTORS)

NO SCALE

RSP ES-5A DATED OCTOBER 5, 2007 SUPERCEDES STANDARD PLAN ES-5A DATED MAY 1, 2006 - PAGE 423 OF THE STANDARD PLANS BOOK DATED MAY 2006.

REVISED STANDARD PLAN RSP ES-5A

2006 REVISED STANDARD PLAN RSP ES-5A

8-17-07

DIST	COUNTY	ROUTE	POST MILES TOTAL PROJECT	SHEET NO.	TOTAL SHEETS
03	ED	50	R28.8 / 39.6	29	31

Randell D. Hiatt
REGISTERED CIVIL ENGINEER

June 6, 2008
PLANS APPROVAL DATE

REGISTERED PROFESSIONAL ENGINEER
Randell D. Hiatt
No. C50200
Exp. 6-30-09
CIVIL
STATE OF CALIFORNIA

The State of California or its officers or agents shall not be responsible for the accuracy or completeness of electronic copies of this plan sheet.

To accompany plans dated July 26, 2010

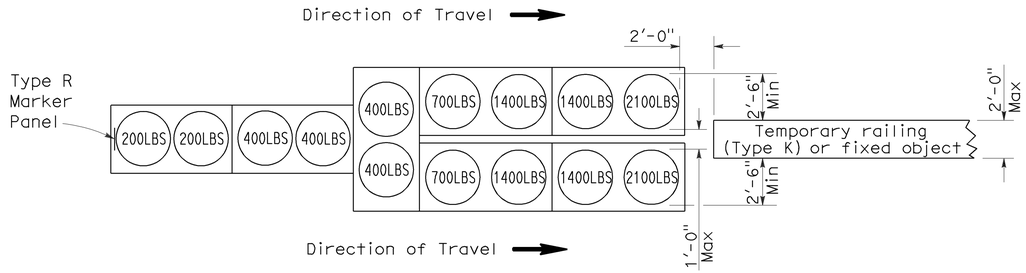

ARRAY 'TU14'

Approach speed 45 mph or more

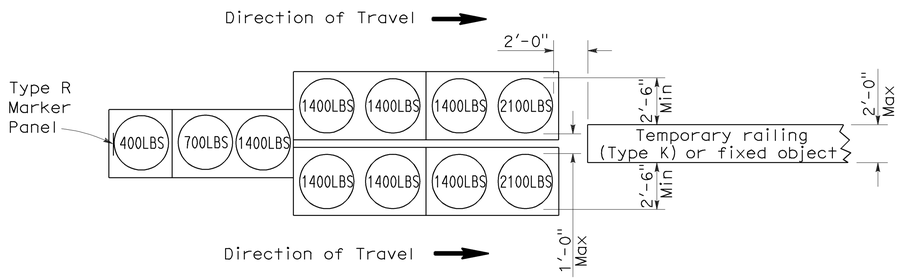

ARRAY 'TU11'

Approach speed less than 45 mph

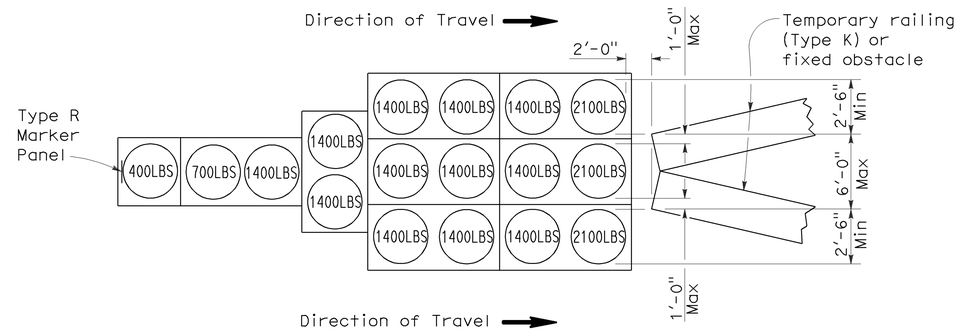

ARRAY 'TU17'

Approach speed less than 45 mph

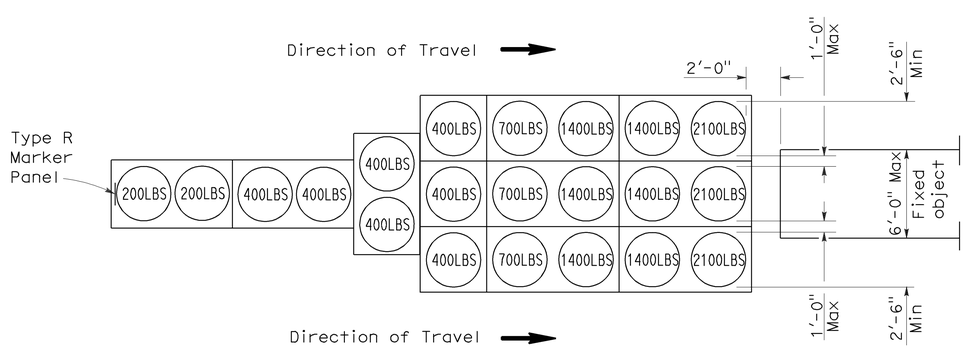

ARRAY 'TU21'

Approach speed 45 mph or more

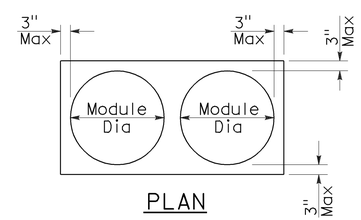

PLAN

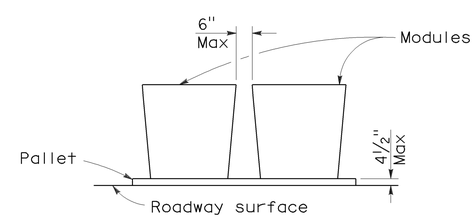

ELEVATION

CRASH CUSHION PALLET DETAIL

See Note 7

NOTES:

1. (XXX) Indicates sand filled module location and weight of sand in pounds for each module. Module spacing is based on the greater diameter of the module.
2. All sand weights are nominal.
3. Temporary crash cushion arrays shall not encroach on the traveled way.
4. Place the top of Type R marker panel 1" below the module lid.
5. Refer to Standard Plan A73B for marker details.
6. Approach speeds indicated conform to NCHRP 350 Report criteria.
7. Use of pallets is optional.

STATE OF CALIFORNIA
DEPARTMENT OF TRANSPORTATION

TEMPORARY CRASH CUSHION, SAND FILLED (UNIDIRECTIONAL)

NO SCALE

RSP T1A DATED JUNE 6, 2008 SUPERSEDES STANDARD PLAN T1A
DATED MAY 1, 2006 - PAGE 211 OF THE STANDARD PLANS BOOK DATED MAY 2006.

REVISED STANDARD PLAN RSP T1A

2006 REVISED STANDARD PLAN RSP T1A

DIST	COUNTY	ROUTE	POST MILES TOTAL PROJECT	SHEET NO.	TOTAL SHEETS
03	ED	50	R28.8 / 39.6	30	31

Randell D. Hiatt
REGISTERED CIVIL ENGINEER

June 6, 2008
PLANS APPROVAL DATE

REGISTERED PROFESSIONAL ENGINEER
Randell D. Hiatt
No. C50200
Exp. 6-30-09
CIVIL
STATE OF CALIFORNIA

The State of California or its officers or agents shall not be responsible for the accuracy or completeness of electronic copies of this plan sheet.

To accompany plans dated July 26, 2010

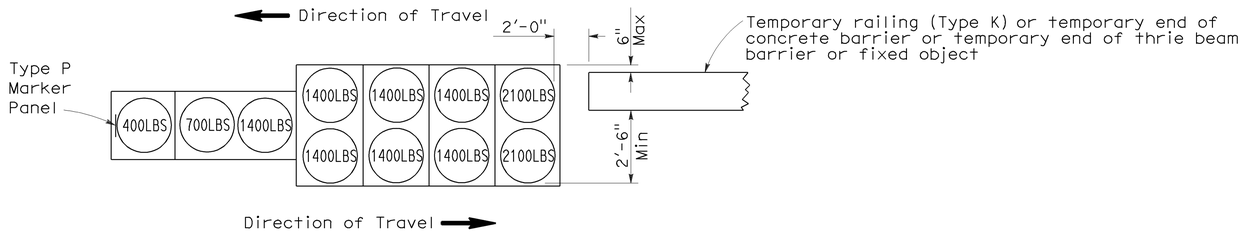

ARRAY 'TB11'

Approach speed less than 45 mph

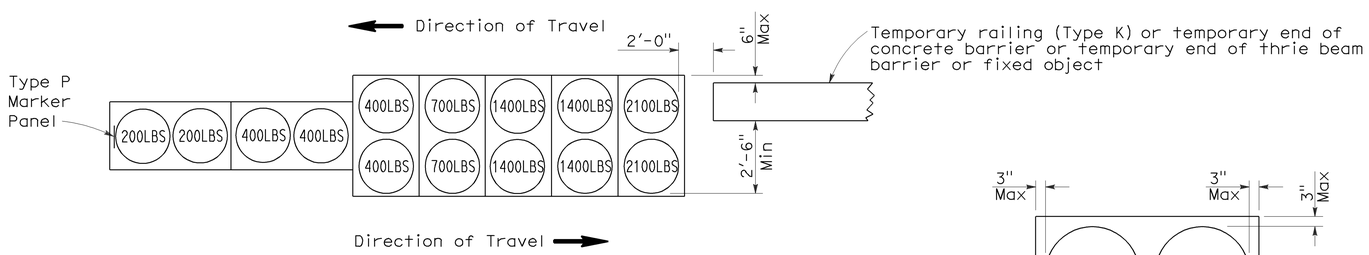

ARRAY 'TB14'

Approach speed 45 mph or more

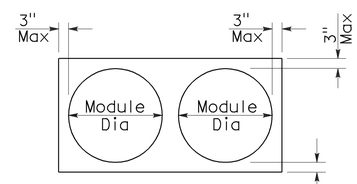

PLAN

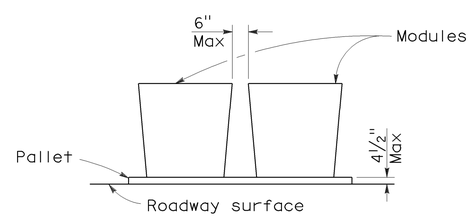

ELEVATION

CRASH CUSHION PALLET DETAIL

See Note 7

NOTES:

1. (XXX) Indicates sand filled module location and weight of sand in pounds for each module. Module spacing is based on the greater diameter of the module.
2. All sand weights are nominal.
3. Temporary crash cushion arrays shall not encroach on the traveled way.
4. Place the Type P marker panel so that the bottom of the panel rests upon the pallet.
5. Refer to Standard Plan A73B for marker details.
6. Approach speeds indicated conform to NCHRP 350 Report criteria.
7. Use of pallets is optional.

STATE OF CALIFORNIA
DEPARTMENT OF TRANSPORTATION

TEMPORARY CRASH CUSHION, SAND FILLED (BIDIRECTIONAL)

NO SCALE

RSP T1B DATED JUNE 6, 2008 SUPERSEDES STANDARD PLAN T1B
DATED MAY 1, 2006 - PAGE 212 OF THE STANDARD PLANS BOOK DATED MAY 2006.

REVISED STANDARD PLAN RSP T1B

2006 REVISED STANDARD PLAN RSP T1B

5-15-08

DIST	COUNTY	ROUTE	POST MILES TOTAL PROJECT	SHEET NO.	TOTAL SHEETS
03	ED	50	R28.8 / 39.6	31	31

Randell D. Hiatt
REGISTERED CIVIL ENGINEER

June 6, 2008
PLANS APPROVAL DATE

REGISTERED PROFESSIONAL ENGINEER
Randell D. Hiatt
No. C50200
Exp. 6-30-09
CIVIL
STATE OF CALIFORNIA

The State of California or its officers or agents shall not be responsible for the accuracy or completeness of electronic copies of this plan sheet.

To accompany plans dated July 26, 2010

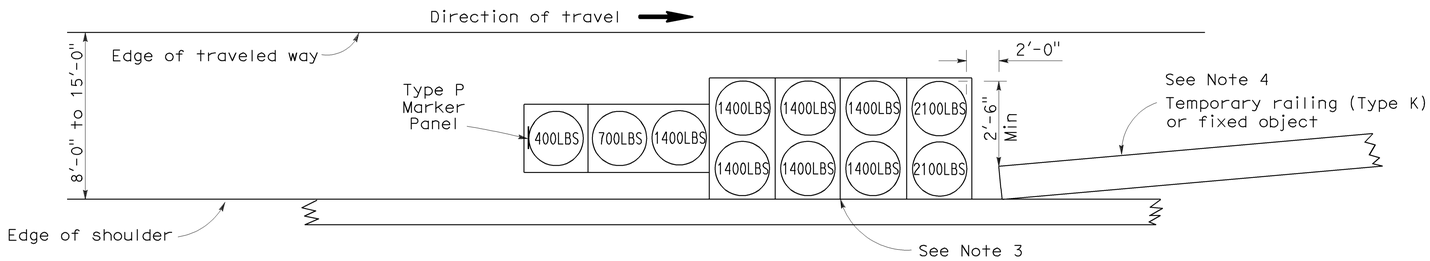

ARRAY 'TS11'

Approach speed less than 45 mph
See Note 9

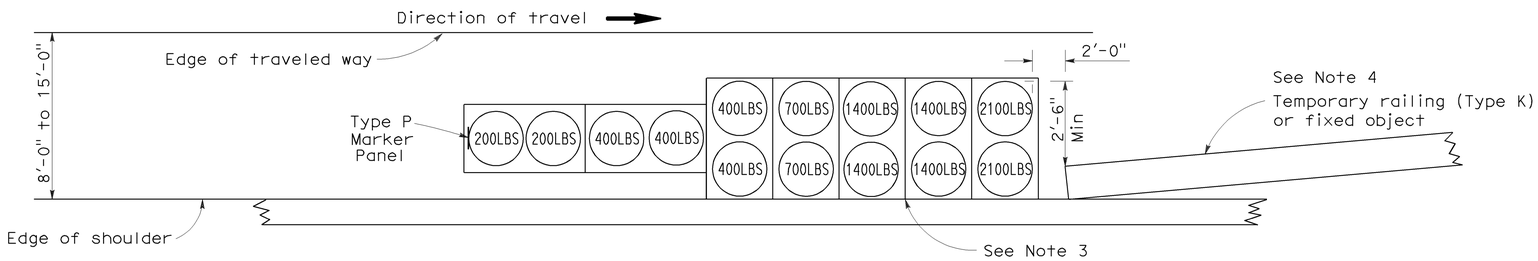

ARRAY 'TS14'

Approach speed 45 mph or more
See Note 9

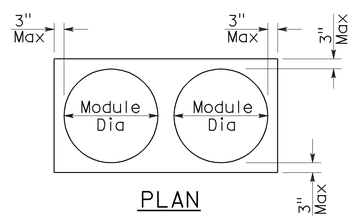

PLAN

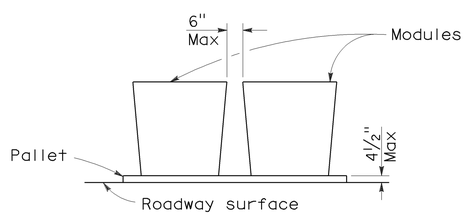

ELEVATION

CRASH CUSHION PALLET DETAIL

See Note 11

NOTES:

1. (XXX) Indicates sand filled module location and weight of sand in pounds for each module. Module spacing is based on the greater diameter of the module.
2. All sand weights are nominal.
3. The temporary crash cushion arrays shown on this plan shall be used only in locations where there will be traffic on one side of the temporary crash cushion array.
4. If the fixed object or approach end of the temporary railing is less than 15'-0" from the edge of traveled way, a temporary crash cushion is required in a construction or work zone.
5. Temporary crash cushion arrays shall not encroach on the traveled way.
6. Arrays for median shoulders shall conform to details shown on this plan for outside shoulders.
7. Place the Type P marker panel so that the bottom of the panel rests upon the pallet and faces traffic.
8. Refer to Standard Plan A73B for marker details.
9. For shoulder widths less than 8'-0", appropriate approved crash cushion protection, other than sand filled modules, shall be provided at fixed objects and at approach ends of temporary railing. The specific type of crash cushion shall be as shown on the project plans or as specified in the Special Provisions, or if not shown on the project plans or specified in the Special Provisions, shall be as approved by the Engineer.
10. Approach speeds indicated conform to NCHRP 350 Report criteria.
11. Use of pallets is optional.

STATE OF CALIFORNIA
DEPARTMENT OF TRANSPORTATION

TEMPORARY CRASH CUSHION, SAND FILLED (SHOULDER INSTALLATIONS)

NO SCALE

RSP T2 DATED JUNE 6, 2008 SUPERSEDES STANDARD PLAN T2
DATED MAY 1, 2006 - PAGE 213 OF THE STANDARD PLANS BOOK DATED MAY 2006.

REVISED STANDARD PLAN RSP T2

2006 REVISED STANDARD PLAN RSP T2

5-15-08