ACNH-P160(025)

Dist	COUNTY	ROUTE	POST MILES TOTAL PROJECT	SHEET No.	TOTAL SHEETS
03	Sac	51,160	4.0/4.3, R44.4/47.0	1	117

STATE OF CALIFORNIA
DEPARTMENT OF TRANSPORTATION

PROJECT PLANS FOR CONSTRUCTION ON
STATE HIGHWAY
IN SACRAMENTO COUNTY
IN SACRAMENTO
FROM AMERICAN RIVER BRIDGE TO 0.3 MILE NORTH OF ARDEN WAY UNDERCROSSING

TO BE SUPPLEMENTED BY STANDARD PLANS DATED 2010

INDEX OF PLANS

SHEET No.	DESCRIPTION
1	TITLE AND LOCATION MAP
2	TYPICAL CROSS SECTIONS
3-15	LAYOUTS
16-29	CONSTRUCTION DETAILS
30-31	CONSTRUCTION AREA SIGNS
32-40	PAVEMENT DELINEATION DETAILS AND QUANTITIES
41-45	SIGN PLANS, DETAILS AND QUANTITIES
46-48	SUMMARY OF QUANTITIES
49-51	LANDSCAPE DETAILS
52	EROSION CONTROL DETAILS
53-59	ELECTRICAL PLANS
60-112	REVISED STANDARD PLANS

STRUCTURE PLANS

113-117 ROUTE 160 BRIDGES

THE STANDARD PLANS LIST APPLICABLE TO THIS CONTRACT IS INCLUDED IN THE NOTICE TO BIDDERS AND SPECIAL PROVISIONS BOOK.

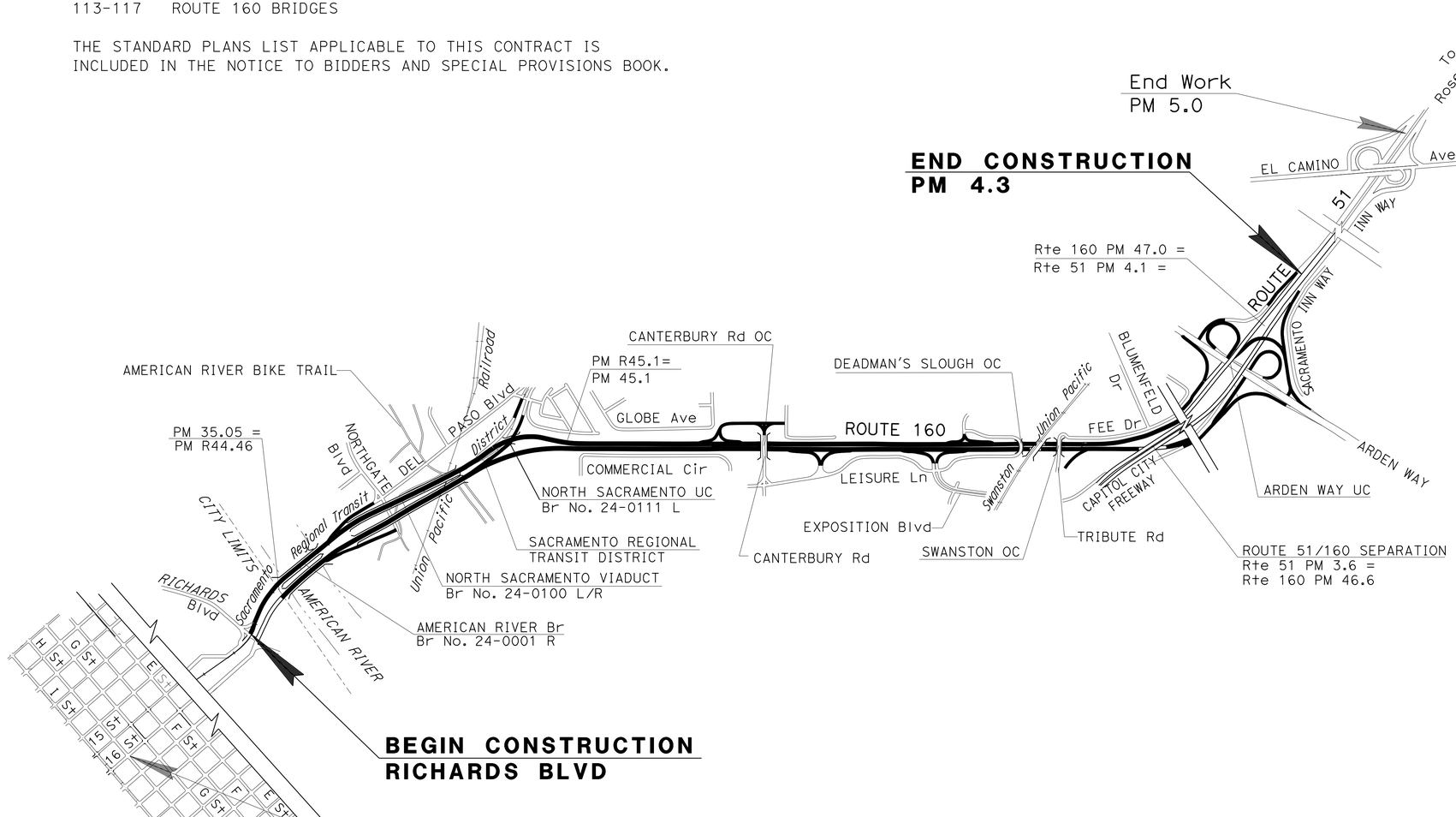

NO SCALE

THE CONTRACTOR SHALL POSSESS THE CLASS (OR CLASSES) OF LICENSE AS SPECIFIED IN THE "NOTICE TO BIDDERS."

K. Sudha Kodali 5-2-16
PROJECT ENGINEER DATE
REGISTERED CIVIL ENGINEER

May 2, 2016
PLANS APPROVAL DATE

REGISTERED PROFESSIONAL ENGINEER
SUDHA KODALI
No. 79722
Exp. 9/30/16
CIVIL
STATE OF CALIFORNIA

THE STATE OF CALIFORNIA OR ITS OFFICERS OR AGENTS SHALL NOT BE RESPONSIBLE FOR THE ACCURACY OR COMPLETENESS OF SCANNED COPIES OF THIS PLAN SHEET.

CONTRACT No.	03-0H11U4
PROJECT ID	0316000035

PROJECT MANAGER CLARK PERI
DESIGN MANAGER ALI KIANI

LAST REVISION 07-22-15
DATE PLOTTED => 05-JUL-2016
TIME PLOTTED => 17:12

Dist	COUNTY	ROUTE	POST MILES TOTAL PROJECT	SHEET No.	TOTAL SHEETS
03	Sac	51,160	4.0/4.3, R44.4/47.0	2	117

K. Sudha Mallikarjuna 5-2-16
REGISTERED CIVIL ENGINEER DATE

5-2-16
PLANS APPROVAL DATE

REGISTERED PROFESSIONAL ENGINEER SUDHA M. KODALI No. 79722 Exp. 9/30/16 CIVIL STATE OF CALIFORNIA

THE STATE OF CALIFORNIA OR ITS OFFICERS OR AGENTS SHALL NOT BE RESPONSIBLE FOR THE ACCURACY OR COMPLETENESS OF SCANNED COPIES OF THIS PLAN SHEET.

NOTES:

1. DIMENSIONS OF THE EXISTING PAVEMENT STRUCTURAL SECTION DEPTHS ARE APPROXIMATE AND VARIABLE.
2. LIMITS OF OGFC IS FROM ES TO ES. SEE CONSTRUCTION DETAILS.
3. FOR ACCURATE RIGHT OF WAY DATA, CONTACT RIGHT OF WAY ENGINEERING AT THE DISTRICT OFFICE.
4. FOR LOCATIONS OF GRIND EXISTING CONCRETE PAVEMENT, INDIVIDUAL SLAB REPLACEMENT, REPLACE AC SURFACING, REMOVE AC DIKES, SHOULDER BACKING, TYPES OF PLACE HMA DIKES, CRACK TREATMENT,GUARD RAILING, COLD PLANE, HMA, RHMA AND VEGETATION CONTROL, SEE LAYOUT SHEETS AND SUMMARY OF QUANTITIES OR AS DIRECTED BY THE RESIDENT ENGINEER.
5. LIMITS OF CRACK TREATMENT ON MAINLINE IS FROM ES TO ES, SEE QUANTITY TABLES FOR LOCATIONS

STRUCTURAL SECTIONS

1 — Exist 0.67′ PCC 0.33′ ACB 1.00′ IB
2 — Exist 0.17′ AC 0.33′ AB
3 — Exist 0.25′ AC 1.00′ IB
4 — 0.25′ REPLACE AC SURFACING
5 — Exist 0.25′ AC 0.42′ AB 0.58′ IB
6 — Exist 0.25′ AC 0.67′ AB 0.75′ AS
7 — Exist 0.25′ AC 0.42′ AB 0.58′ IB
8 — Exist 0.25′ AC 0.42′ AB 0.83′ IB
9 — Exist 0.25′ AC 1.25′ IB
10 — Exist 0.45′ HMA AC 1.20′ AB
11 — 0.10′ RHMA-OG (OGFC) 0.25′ HMA-A
12 — 0.10′ HMA-OG (OGFC) 0.25′ HMA-A

ABBREVIATIONS:

HMA-A - HOT MIX ASPHALT (TYPE A)
HMA-OG (OGFC) - HOT MIX ASPHALT-OPEN GRADED (OPEN GRADED FRICTION COURSE)
RHMA-OG (OGFC) - RUBBERIZED HOT MIX ASPHALT-OPEN GRADED (OPEN GRADED FRICTION COURSE)

PAVEMENT CLIMATE REGION

INLAND VALLEY

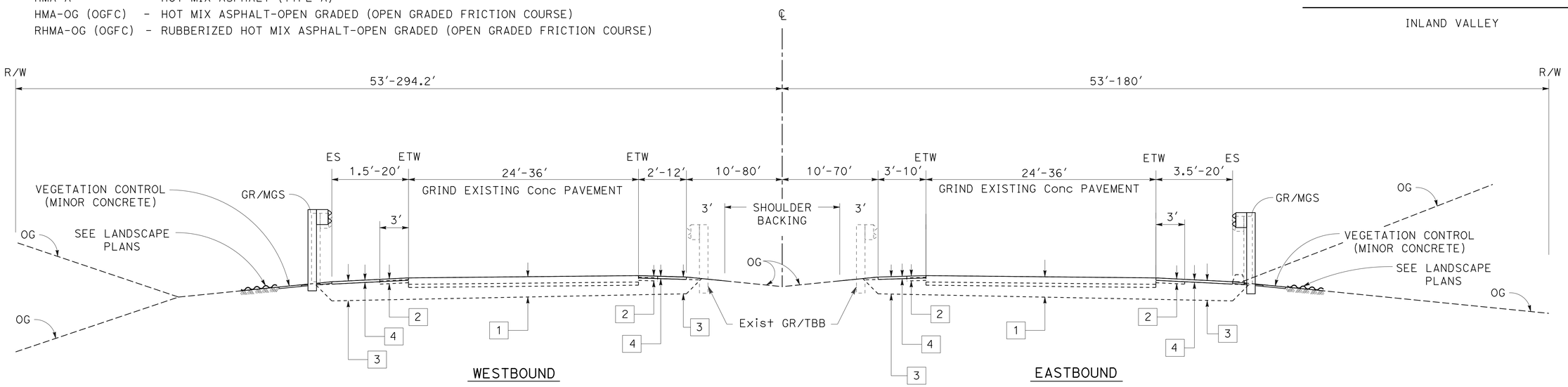

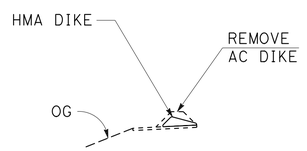

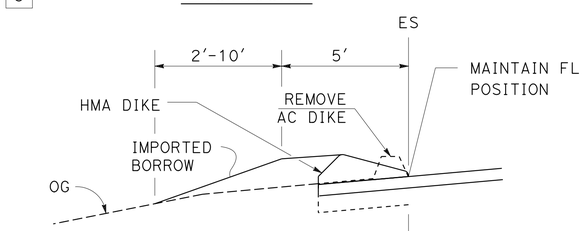

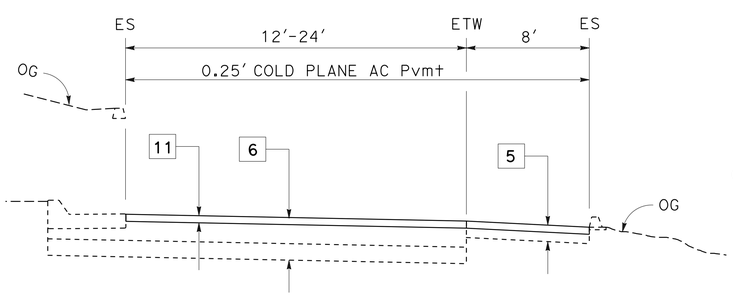

WB 160 ON-RAMP FROM DEL PASO Blvd
WB 160 OFF-RAMP TO NORTHGATE Blvd
WB 160 ON-RAMP FROM TRIBUTE Rd

RAMP TYPICAL 1
SEE NOTE 2

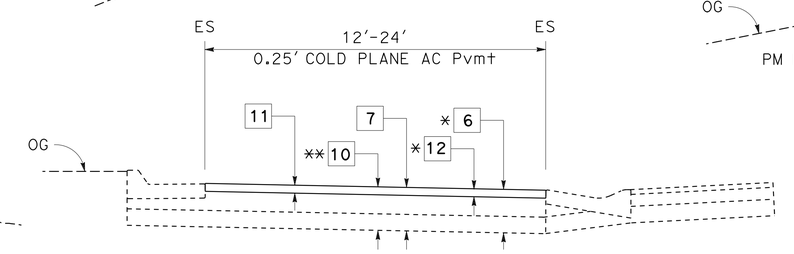

WB 160 ON/OFF-RAMP TO/FROM CANTEBURY Rd
WB 160 ON-RAMP FROM EB ARDEN WAY
EB 160 ON/OFF-RAMP TO/FROM ROYAL OAKS DR
* EB 160 OFF-RAMP TO ARDEN WAY EAST
WB 51 ON-RAMP TO ARDEN WAY
* EB/WB 51 ON-RAMP FROM ARDEN WAY
** EB/WB 160 LOOP ON/OFF-RAMP TO ARDEN WAY

RAMP TYPICAL 2
SEE NOTE 2

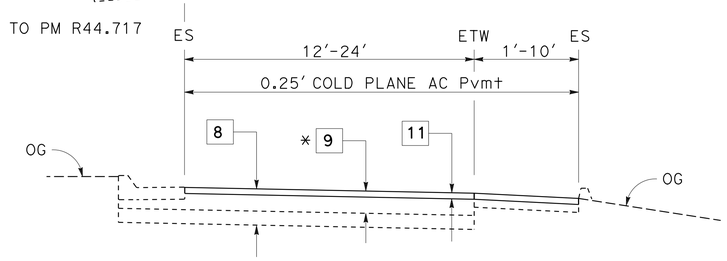

WB 160 ON/OFF-RAMP AT EXPOSTION Blvd
* WB 160 ON-RAMP FROM NORTHGATE Blvd

RAMP TYPICAL 3
SEE NOTE 2

TYPICAL CROSS SECTIONS

NO SCALE

X-1

REVISED BY | DATE REVISED
MICHAEL LANGLEY | SUDHA M. KODALI
CALCULATED-DESIGNED BY | CHECKED BY
FUNCTIONAL SUPERVISOR: ALI KIANI

STATE OF CALIFORNIA - DEPARTMENT OF TRANSPORTATION
Caltrans® DESIGN

LAST REVISION 06-10-16 | DATE PLOTTED => 05-JUL-2016 | TIME PLOTTED => 16:59

Dist	COUNTY	ROUTE	POST MILES TOTAL PROJECT	SHEET No.	TOTAL SHEETS
03	Sac	51,160	4.0/4.3, R44.4/47.0	3	117

K. Sudha Kodali 5-2-16
REGISTERED CIVIL ENGINEER DATE

5-2-16
PLANS APPROVAL DATE

REGISTERED PROFESSIONAL ENGINEER SUDHA M. KODALI No. 79722 Exp. 9/30/16 CIVIL STATE OF CALIFORNIA

THE STATE OF CALIFORNIA OR ITS OFFICERS OR AGENTS SHALL NOT BE RESPONSIBLE FOR THE ACCURACY OR COMPLETENESS OF SCANNED COPIES OF THIS PLAN SHEET.

NOTES:

1. FOR ACCURATE RIGHT OF WAY DATA, CONTACT RIGHT OF WAY ENGINEERING AT THE DISTRICT OFFICE.
2. NOT ALL EXISTING UTILITY FACILITIES HAVE BEEN PLOTTED ON THESE PLANS.

LEGEND:

- APPROACH SLAB TYPE R(30D), SEE STRUCTURES PLANS FOR DETAILS.
- 0.25' COLD PLANE AC PAVEMENT 0.25' HMA-A
- INDIVIDUAL SLAB REPLACEMENT (RAPID STRENGTH CONCRETE)
- MINOR CONCRETE (STAMPED Conc)
- ROADWAY EXCAVATION
- 0.25' REPLACE ASPHALT CONCRETE SURFACING

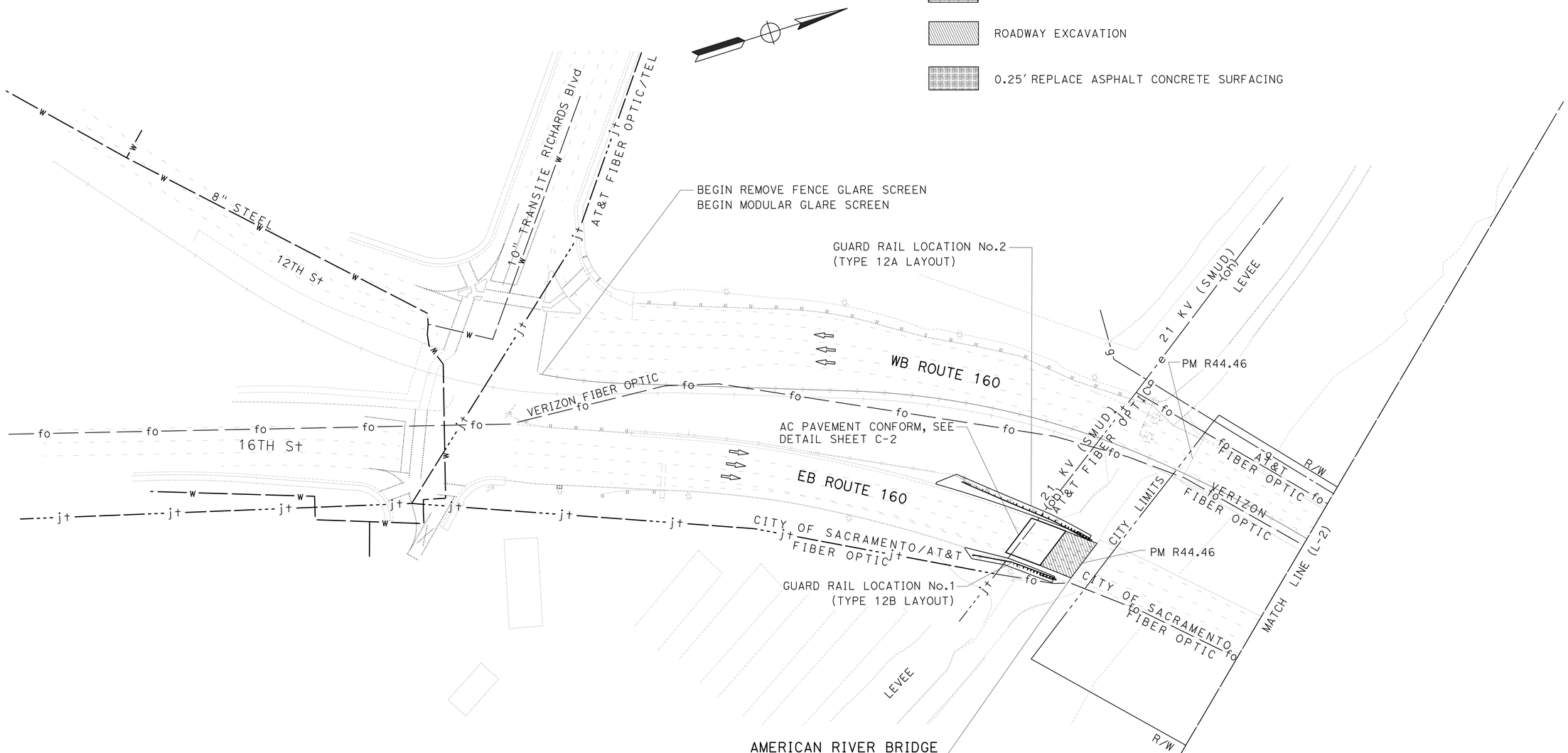

UTILITY OWNERSHIP

ELECTRIC AND GAS - SACRAMENTO MUNICIPAL UTILITY DISTRICT (SMUD), PACIFIC GAS AND ELECTRIC (PG&E).

FIBER OPTIC, TELEPHONE, TELEVISION - AMERICAN TELEPHONE & TELEGRAPH (AT&T), VERIZON, XO COMMUNICATIONS (XO), COMCAST, SPRINT, INTEGRA COMMUNICATIONS (INTEGRA).

SEWER - SACRAMENTO AREA SEWER DISTRICT (SASD), CITY OF SACRAMENTO.

WATER - CITY OF SACRAMENTO.

LAYOUT
SCALE: 1"=50'

L-1

STATE OF CALIFORNIA - DEPARTMENT OF TRANSPORTATION
Caltrans DESIGN

FUNCTIONAL SUPERVISOR: ALI KIANI
CALCULATED-DESIGNED BY: DAVID ROBERTS
CHECKED BY: SUDHA M. KODALI
REVISED BY
DATE REVISED

LAST REVISION 00-00-00
DATE PLOTTED => 05-JUL-2016
TIME PLOTTED => 17:00

Dist	COUNTY	ROUTE	POST MILES TOTAL PROJECT	SHEET No.	TOTAL SHEETS
03	Sac	51,160	4.0/4.3, R44.4/47.0	4	117

K. Sudha Kodali 5-2-16
REGISTERED CIVIL ENGINEER DATE

5-2-16
PLANS APPROVAL DATE

REGISTERED PROFESSIONAL ENGINEER SUDHA M. KODALI No. 79722 Exp. 9/30/16 CIVIL STATE OF CALIFORNIA

THE STATE OF CALIFORNIA OR ITS OFFICERS OR AGENTS SHALL NOT BE RESPONSIBLE FOR THE ACCURACY OR COMPLETENESS OF SCANNED COPIES OF THIS PLAN SHEET.

NOTE:

FOR ACCURATE RIGHT OF WAY DATA, CONTACT RIGHT OF WAY ENGINEERING AT THE DISTRICT OFFICE.

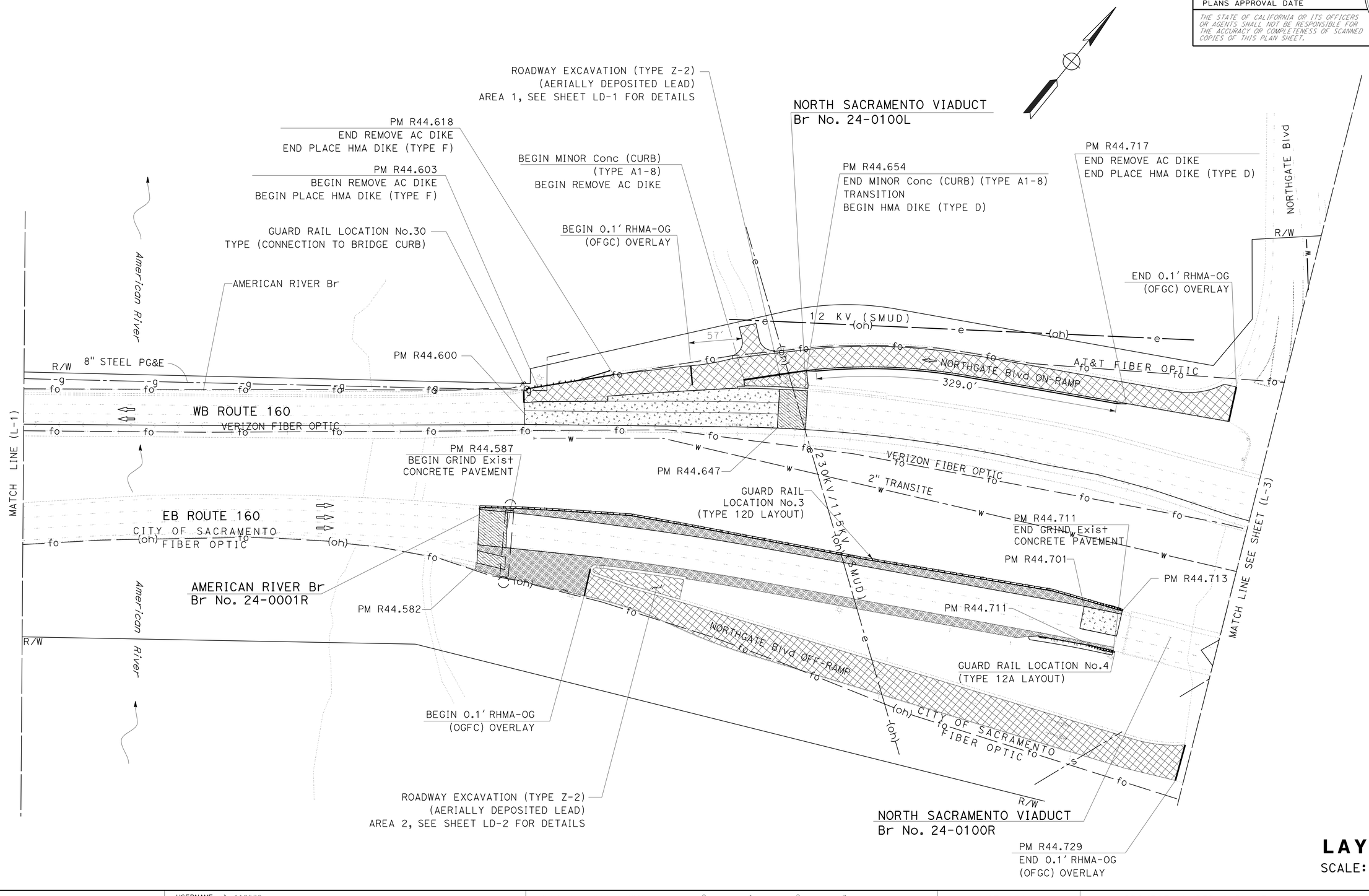

LAYOUT

SCALE: 1"=50'

L-2

REVISED BY	DATE REVISED

CALCULATED-DESIGNED BY	CHECKED BY
DAVID ROBERTS	SUDHA M. KODALI

FUNCTIONAL SUPERVISOR
ALI KIANI

STATE OF CALIFORNIA - DEPARTMENT OF TRANSPORTATION
Caltrans
DESIGN

LAST REVISION 05-04-16 | DATE PLOTTED => 05-JUL-2016 | TIME PLOTTED => 17:00

Dist	COUNTY	ROUTE	POST MILES TOTAL PROJECT	SHEET No.	TOTAL SHEETS
03	Sac	51,160	4.0/4.3, R44.4/47.0	5	117

K. Sudha Mallikarjuna 5-2-16
REGISTERED CIVIL ENGINEER DATE

5-2-16
PLANS APPROVAL DATE

REGISTERED PROFESSIONAL ENGINEER
SUDHA M. KODALI
No. 79722
Exp. 9/30/16
CIVIL
STATE OF CALIFORNIA

THE STATE OF CALIFORNIA OR ITS OFFICERS OR AGENTS SHALL NOT BE RESPONSIBLE FOR THE ACCURACY OR COMPLETENESS OF SCANNED COPIES OF THIS PLAN SHEET.

NOTE:

FOR ACCURATE RIGHT OF WAY DATA, CONTACT RIGHT OF WAY ENGINEERING AT THE DISTRICT OFFICE.

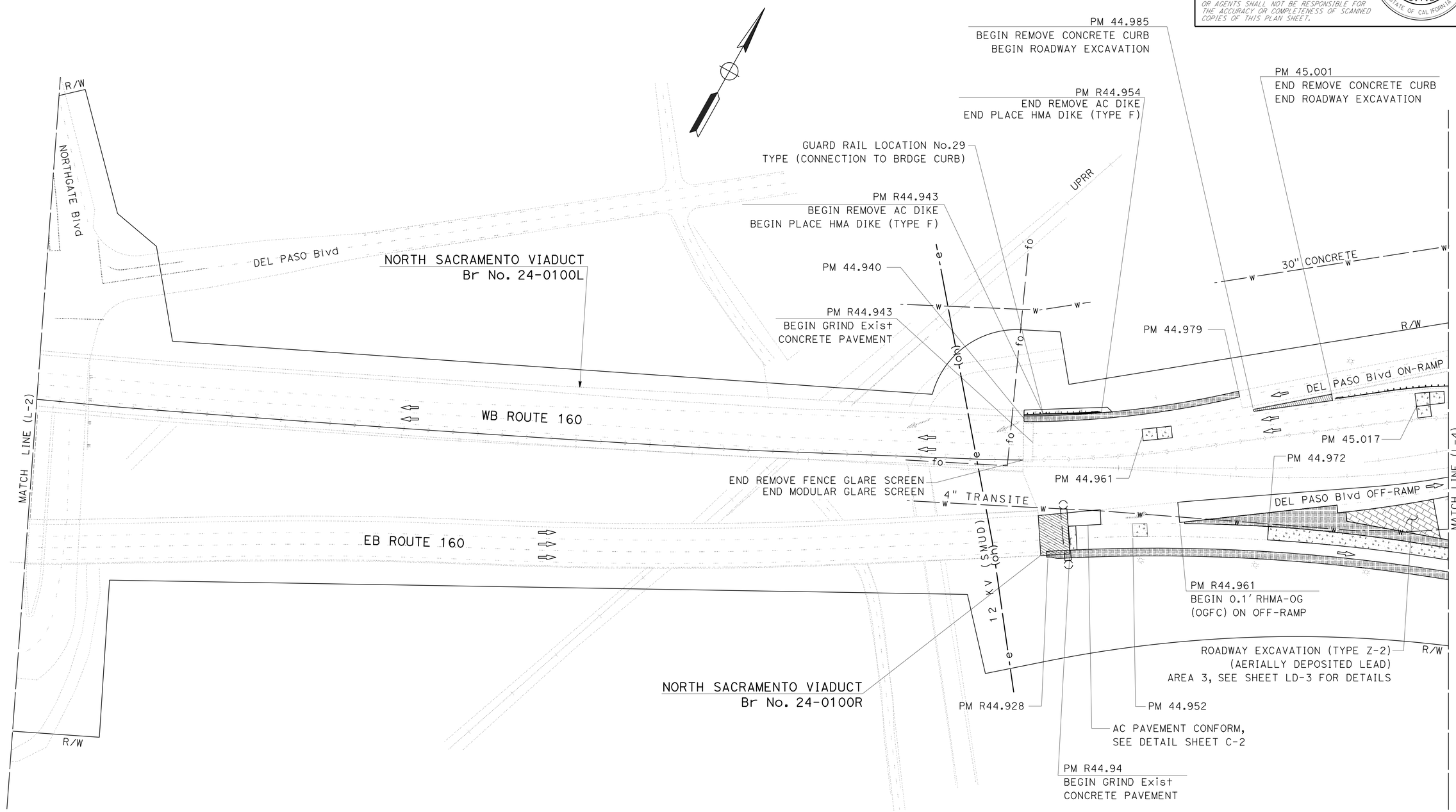

LAYOUT

SCALE: 1"=50'

L-3

STATE OF CALIFORNIA - DEPARTMENT OF TRANSPORTATION
Caltrans® DESIGN

FUNCTIONAL SUPERVISOR: ALI KIANI
CALCULATED-DESIGNED BY: DAVID ROBERTS
CHECKED BY: SUDHA M. KODALI
REVISED BY
DATE REVISED

LAST REVISION 00-00-00
DATE PLOTTED => 05-JUL-2016
TIME PLOTTED => 17:00

Dist	COUNTY	ROUTE	POST MILES TOTAL PROJECT	SHEET No.	TOTAL SHEETS
03	Sac	51,160	4.0/4.3, R44.4/47.0	6	117

K. Sudha Mallikarjuna 5-2-16
REGISTERED CIVIL ENGINEER DATE

5-2-16
PLANS APPROVAL DATE

REGISTERED PROFESSIONAL ENGINEER SUDHA M. KODALI No. 79722 Exp. 9/30/16 CIVIL STATE OF CALIFORNIA

THE STATE OF CALIFORNIA OR ITS OFFICERS OR AGENTS SHALL NOT BE RESPONSIBLE FOR THE ACCURACY OR COMPLETENESS OF SCANNED COPIES OF THIS PLAN SHEET.

NOTE:

FOR ACCURATE RIGHT OF WAY DATA, CONTACT RIGHT OF WAY ENGINEERING AT THE DISTRICT OFFICE.

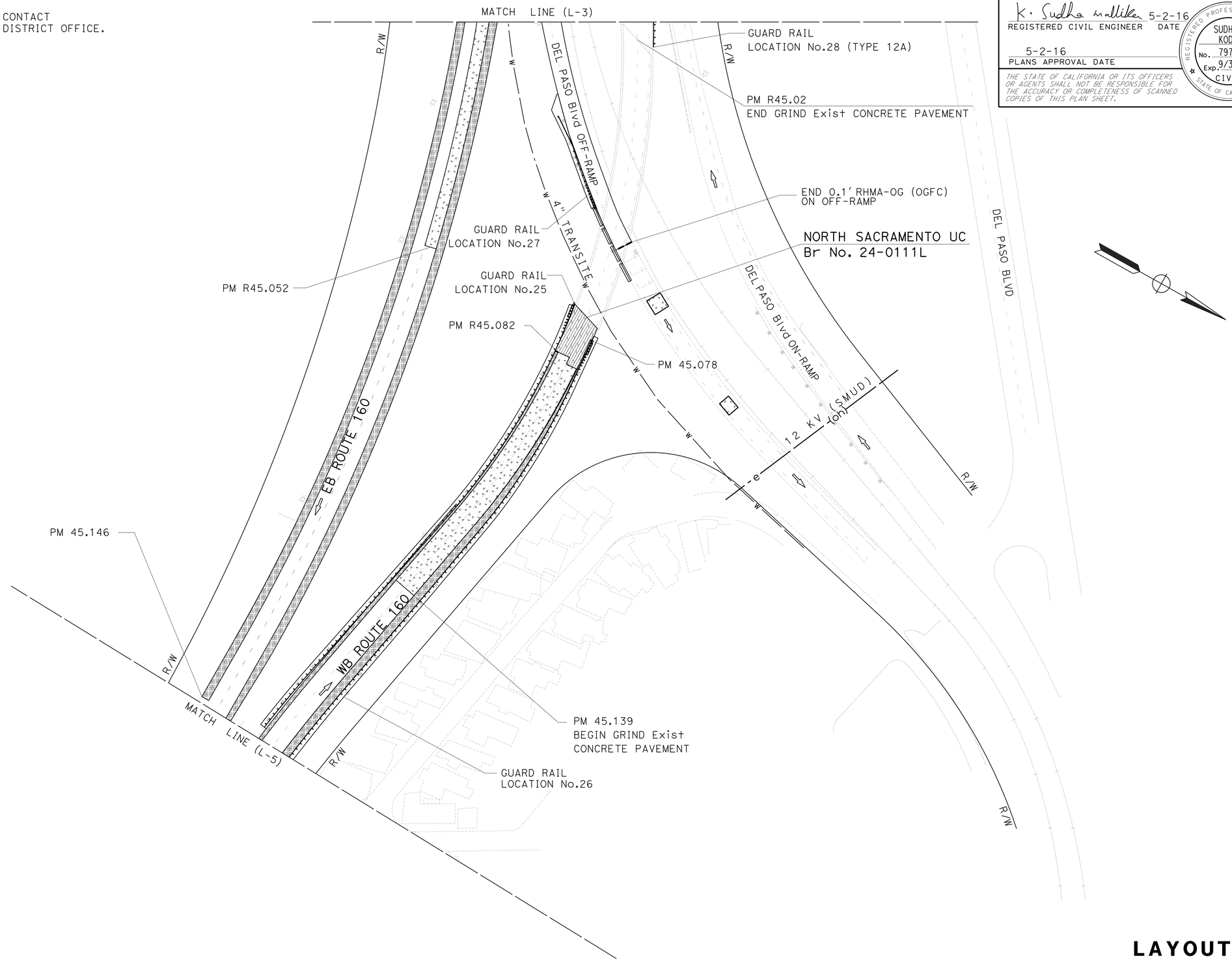

LAYOUT
SCALE: 1"=50'
L-4

STATE OF CALIFORNIA - DEPARTMENT OF TRANSPORTATION
Caltrans® **DESIGN**

FUNCTIONAL SUPERVISOR: ALI KIANI
CALCULATED-DESIGNED BY: DAVID ROBERTS
CHECKED BY: SUDHA M. KODALI
REVISED BY
DATE REVISED

LAST REVISION 00-00-00
DATE PLOTTED => 05-JUL-2016
TIME PLOTTED => 17:00

Dist	COUNTY	ROUTE	POST MILES TOTAL PROJECT	SHEET No.	TOTAL SHEETS
03	Sac	51,160	4.0/4.3, R44.4/47.0	7	117

K. Sudha Kodali 5-2-16
REGISTERED CIVIL ENGINEER DATE

5-2-16
PLANS APPROVAL DATE

REGISTERED PROFESSIONAL ENGINEER
SUDHA M. KODALI
No. 79722
Exp. 9/30/16
CIVIL
STATE OF CALIFORNIA

THE STATE OF CALIFORNIA OR ITS OFFICERS OR AGENTS SHALL NOT BE RESPONSIBLE FOR THE ACCURACY OR COMPLETENESS OF SCANNED COPIES OF THIS PLAN SHEET.

NOTE:

FOR ACCURATE RIGHT OF WAY DATA, CONTACT RIGHT OF WAY ENGINEERING AT THE DISTRICT OFFICE.

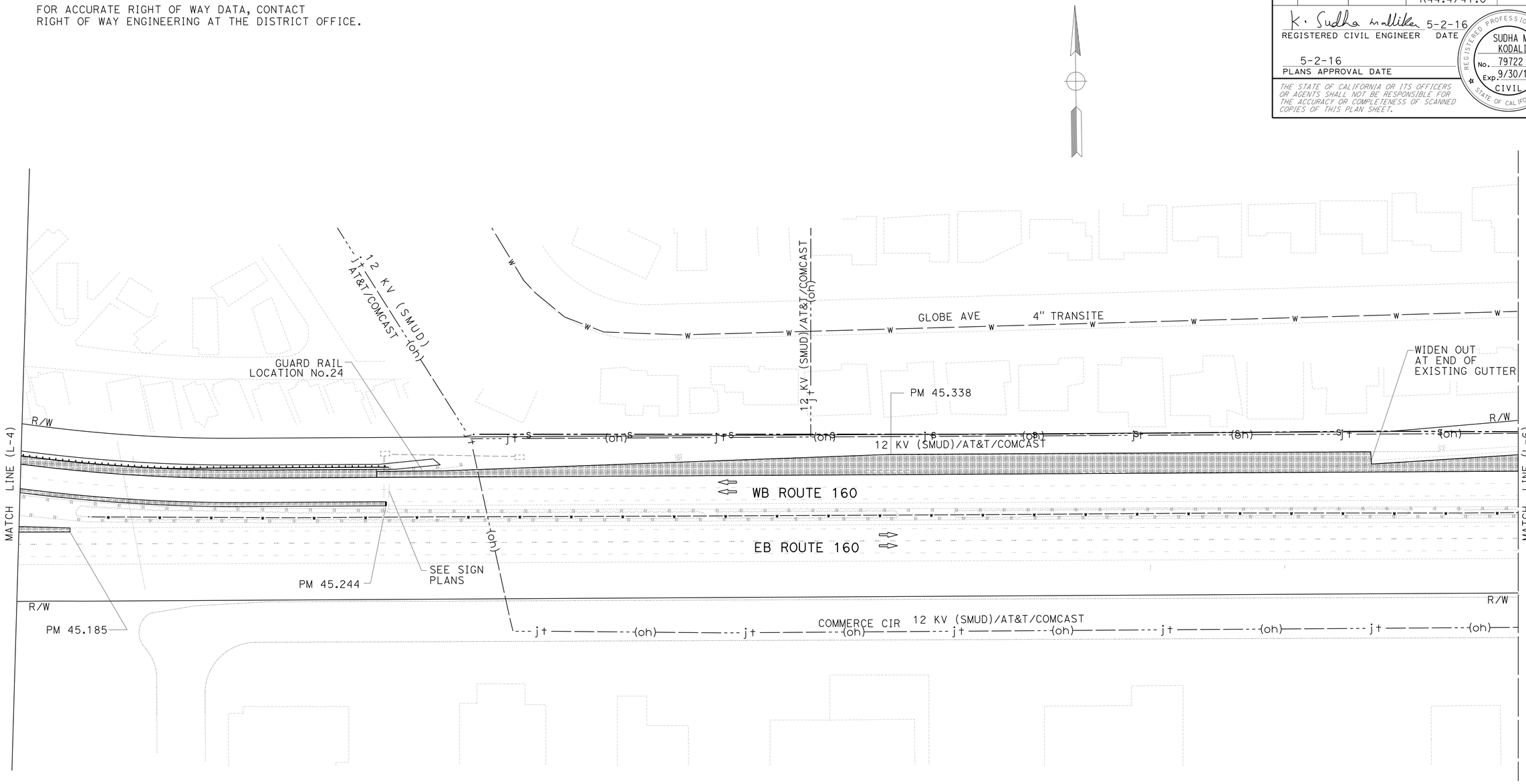

LAYOUT

SCALE: 1"=50'

L-5

REVISED BY	DATE REVISED
DAVID ROBERTS	SUDHA M. KODALI

CALCULATED-DESIGNED BY / CHECKED BY

FUNCTIONAL SUPERVISOR: ALI KIANI

STATE OF CALIFORNIA - DEPARTMENT OF TRANSPORTATION

Caltrans® DESIGN

LAST REVISION 00-00-00 | DATE PLOTTED => 05-JUL-2016 | TIME PLOTTED => 17:00

Dist	COUNTY	ROUTE	POST MILES TOTAL PROJECT	SHEET No.	TOTAL SHEETS
03	Sac	51,160	4.0/4.3, R44.4/47.0	8	117

K. Sudha Mallikarjuna 5-2-16
REGISTERED CIVIL ENGINEER DATE

5-2-16
PLANS APPROVAL DATE

REGISTERED PROFESSIONAL ENGINEER SUDHA M. KODALI No. 79722 Exp. 9/30/16 CIVIL STATE OF CALIFORNIA

THE STATE OF CALIFORNIA OR ITS OFFICERS OR AGENTS SHALL NOT BE RESPONSIBLE FOR THE ACCURACY OR COMPLETENESS OF SCANNED COPIES OF THIS PLAN SHEET.

NOTE:

FOR ACCURATE RIGHT OF WAY DATA, CONTACT RIGHT OF WAY ENGINEERING AT THE DISTRICT OFFICE.

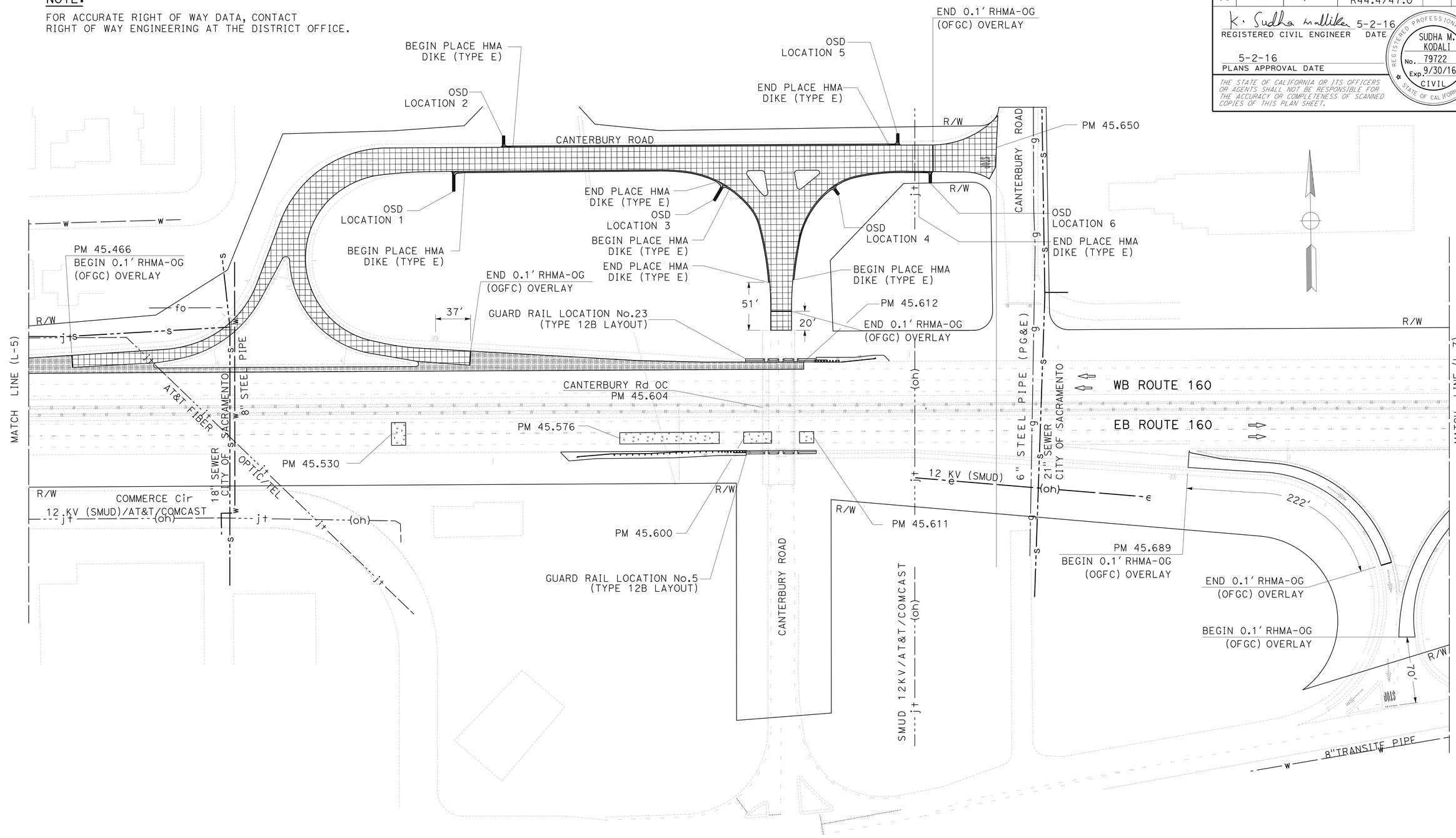

LAYOUT

SCALE: 1"=50'

L-6

REVISED BY	DATE REVISED
DAVID ROBERTS	SUDHA M. KODALI

CALCULATED-DESIGNED BY
CHECKED BY

FUNCTIONAL SUPERVISOR: ALI KIANI

STATE OF CALIFORNIA - DEPARTMENT OF TRANSPORTATION
Caltrans® DESIGN

LAST REVISION 00-00-00 | DATE PLOTTED => 05-JUL-2016 | TIME PLOTTED => 17:00

Dist	COUNTY	ROUTE	POST MILES TOTAL PROJECT	SHEET No.	TOTAL SHEETS
03	Sac	51,160	4.0/4.3, R44.4/47.0	9	117

K. Sudha Kodali 5-2-16
REGISTERED CIVIL ENGINEER DATE

5-2-16
PLANS APPROVAL DATE

REGISTERED PROFESSIONAL ENGINEER
SUDHA M. KODALI
No. 79722
Exp. 9/30/16
CIVIL
STATE OF CALIFORNIA

THE STATE OF CALIFORNIA OR ITS OFFICERS OR AGENTS SHALL NOT BE RESPONSIBLE FOR THE ACCURACY OR COMPLETENESS OF SCANNED COPIES OF THIS PLAN SHEET.

NOTE:

FOR ACCURATE RIGHT OF WAY DATA, CONTACT RIGHT OF WAY ENGINEERING AT THE DISTRICT OFFICE.

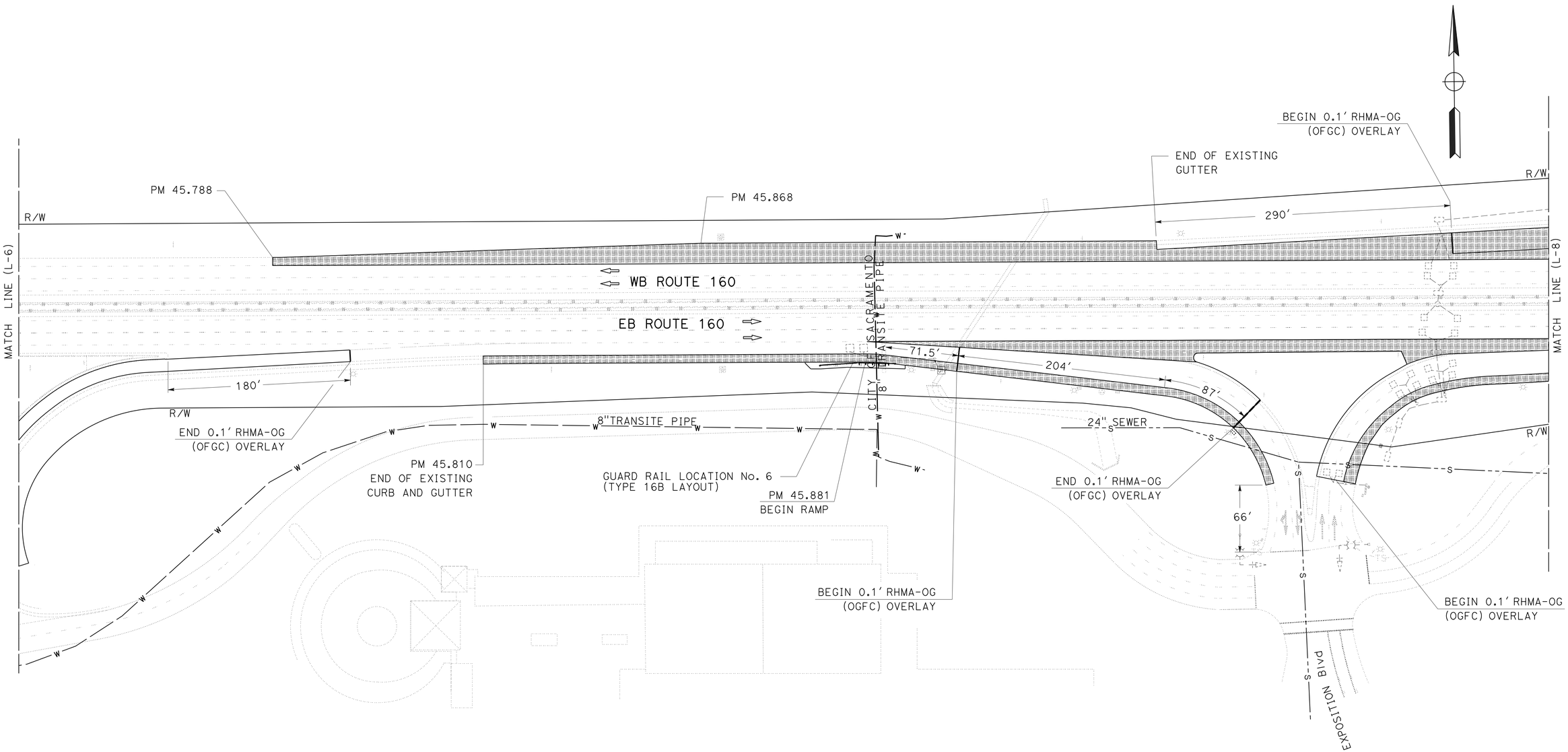

LAYOUT

SCALE: 1"=50'

L-7

REVISED BY	DATE REVISED

CALCULATED-DESIGNED BY	DAVID ROBERTS
CHECKED BY	SUDHA M. KODALI

FUNCTIONAL SUPERVISOR: ALI KIANI

STATE OF CALIFORNIA - DEPARTMENT OF TRANSPORTATION

Caltrans® DESIGN

LAST REVISION 00-00-00 | DATE PLOTTED => 05-JUL-2016 | TIME PLOTTED => 17:00

Dist	COUNTY	ROUTE	POST MILES TOTAL PROJECT	SHEET No.	TOTAL SHEETS
03	Sac	51,160	4.0/4.3, R44.4/47.0	10	117

K. Sudha Kodali 5-2-16
REGISTERED CIVIL ENGINEER DATE

5-2-16
PLANS APPROVAL DATE

REGISTERED PROFESSIONAL ENGINEER SUDHA M. KODALI No. 79722 Exp. 9/30/16 CIVIL STATE OF CALIFORNIA

THE STATE OF CALIFORNIA OR ITS OFFICERS OR AGENTS SHALL NOT BE RESPONSIBLE FOR THE ACCURACY OR COMPLETENESS OF SCANNED COPIES OF THIS PLAN SHEET.

NOTE:

FOR ACCURATE RIGHT OF WAY DATA, CONTACT RIGHT OF WAY ENGINEERING AT THE DISTRICT OFFICE.

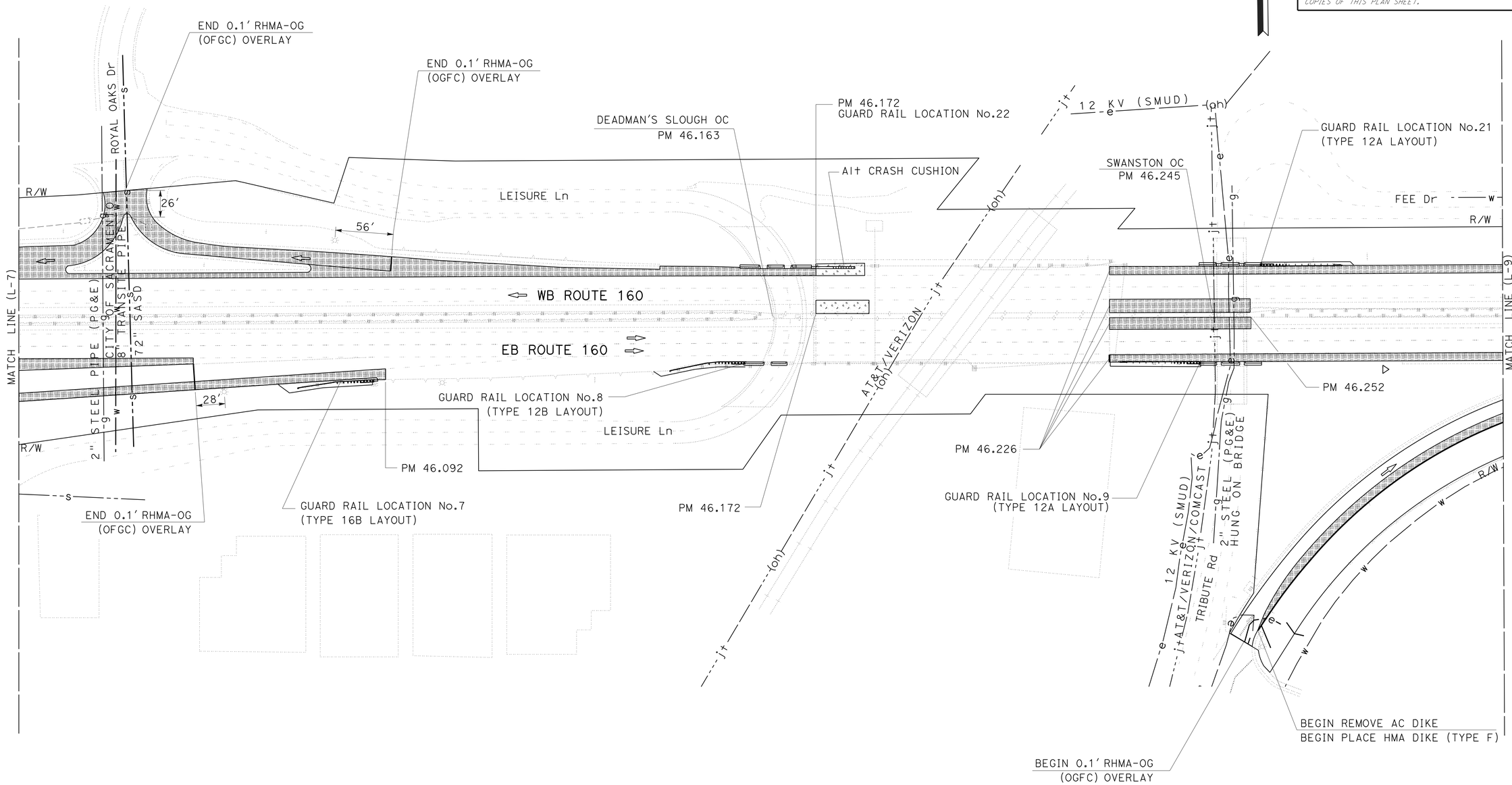

LAYOUT
SCALE: 1"=50'

L-8

STATE OF CALIFORNIA - DEPARTMENT OF TRANSPORTATION
Caltrans® **DESIGN**

FUNCTIONAL SUPERVISOR: ALI KIANI
CALCULATED-DESIGNED BY: DAVID ROBERTS
CHECKED BY: SUDHA M. KODALI
REVISED BY
DATE REVISED

LAST REVISION 00-00-00
DATE PLOTTED => 05-JUL-2016
TIME PLOTTED => 17:00

Dist	COUNTY	ROUTE	POST MILES TOTAL PROJECT	SHEET No.	TOTAL SHEETS
03	Sac	51,160	4.0/4.3, R44.4/47.0	11	117

K. Sudha Kodali 5-2-16
REGISTERED CIVIL ENGINEER DATE

5-2-16
PLANS APPROVAL DATE

REGISTERED PROFESSIONAL ENGINEER
SUDHA M. KODALI
No. 79722
Exp. 9/30/16
CIVIL
STATE OF CALIFORNIA

THE STATE OF CALIFORNIA OR ITS OFFICERS OR AGENTS SHALL NOT BE RESPONSIBLE FOR THE ACCURACY OR COMPLETENESS OF SCANNED COPIES OF THIS PLAN SHEET.

NOTE:

FOR ACCURATE RIGHT OF WAY DATA, CONTACT RIGHT OF WAY ENGINEERING AT THE DISTRICT OFFICE.

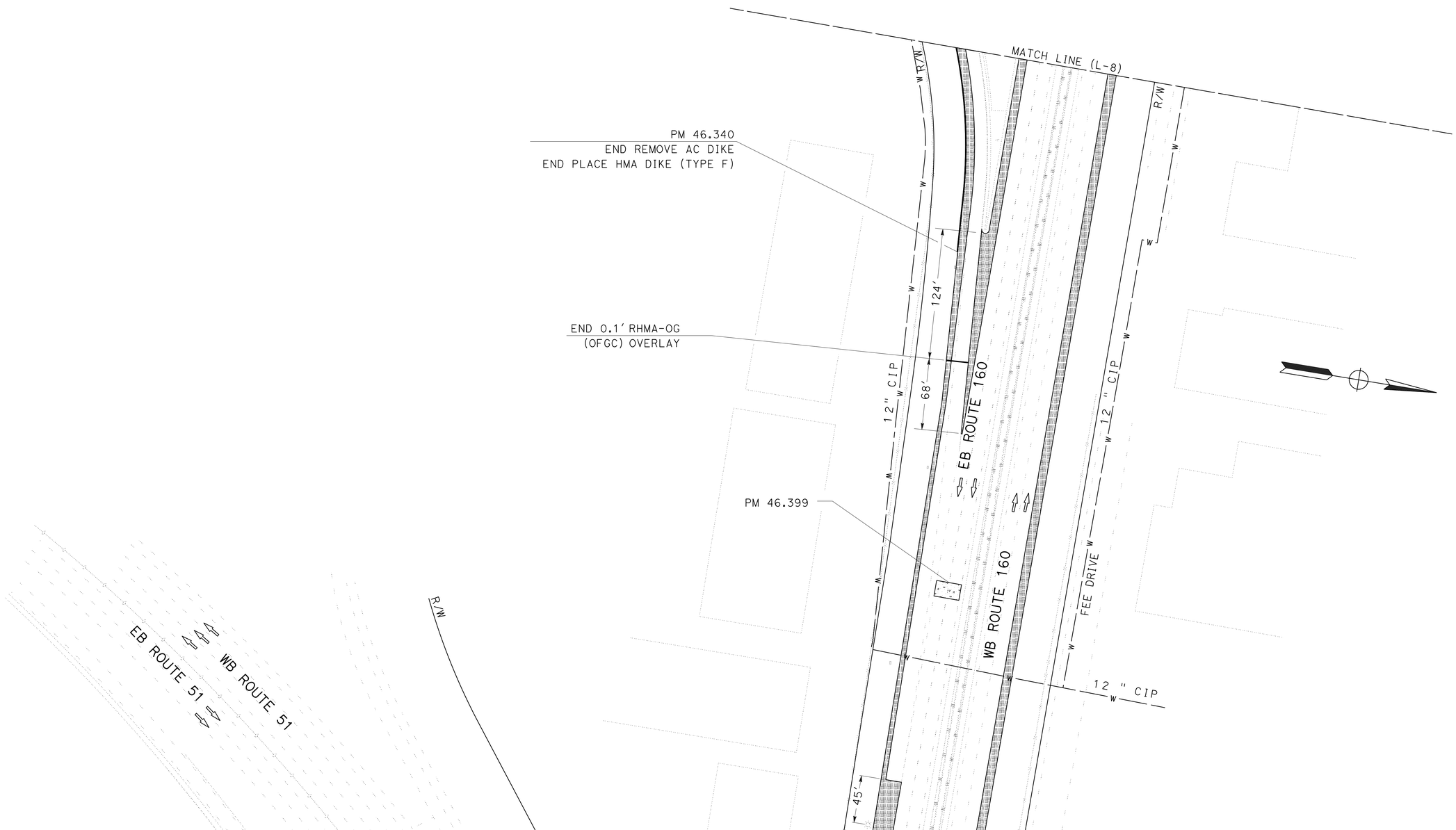

LAYOUT

SCALE: 1"=50'

L-9

STATE OF CALIFORNIA - DEPARTMENT OF TRANSPORTATION
Caltrans® **DESIGN**

FUNCTIONAL SUPERVISOR: ALI KIANI
CALCULATED-DESIGNED BY: DAVID ROBERTS
CHECKED BY: SUDHA M. KODALI
REVISED BY
DATE REVISED

LAST REVISION 00-00-00
DATE PLOTTED => 05-JUL-2016
TIME PLOTTED => 17:00

Dist	COUNTY	ROUTE	POST MILES TOTAL PROJECT	SHEET No.	TOTAL SHEETS
03	Sac	51,160	4.0/4.3, R44.4/47.0	12	117

K. Sudha Kodali 5-2-16
REGISTERED CIVIL ENGINEER DATE

5-2-16
PLANS APPROVAL DATE

REGISTERED PROFESSIONAL ENGINEER SUDHA M. KODALI No. 79722 Exp. 9/30/16 CIVIL STATE OF CALIFORNIA

THE STATE OF CALIFORNIA OR ITS OFFICERS OR AGENTS SHALL NOT BE RESPONSIBLE FOR THE ACCURACY OR COMPLETENESS OF SCANNED COPIES OF THIS PLAN SHEET.

NOTE:

FOR ACCURATE RIGHT OF WAY DATA, CONTACT RIGHT OF WAY ENGINEERING AT THE DISTRICT OFFICE.

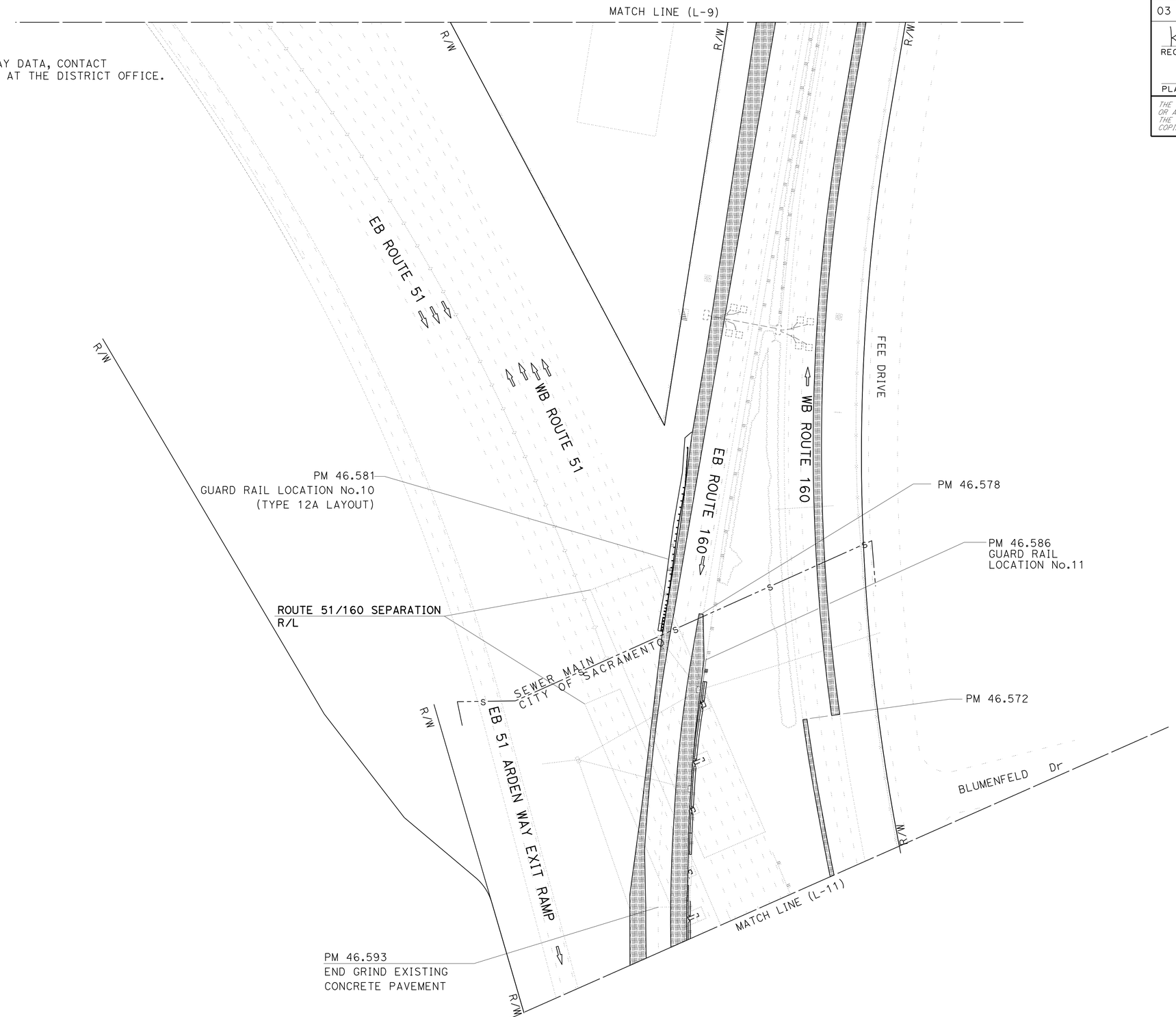

LAYOUT
SCALE: 1"=50'

L-10

STATE OF CALIFORNIA - DEPARTMENT OF TRANSPORTATION
Caltrans® **DESIGN**

FUNCTIONAL SUPERVISOR: ALI KIANI
CALCULATED-DESIGNED BY: DAVID ROBERTS
CHECKED BY: SUDHA M. KODALI
REVISED BY
DATE REVISED

LAST REVISION 00-00-00 | DATE PLOTTED => 05-JUL-2016 | TIME PLOTTED => 17:00

Dist	COUNTY	ROUTE	POST MILES TOTAL PROJECT	SHEET No.	TOTAL SHEETS
03	Sac	51,160	4.0/4.3, R44.4/47.0	13	117

K. Sudha Kodali 5-2-16
REGISTERED CIVIL ENGINEER DATE

5-2-16
PLANS APPROVAL DATE

REGISTERED PROFESSIONAL ENGINEER
SUDHA M. KODALI
No. 79722
Exp. 9/30/16
CIVIL
STATE OF CALIFORNIA

THE STATE OF CALIFORNIA OR ITS OFFICERS OR AGENTS SHALL NOT BE RESPONSIBLE FOR THE ACCURACY OR COMPLETENESS OF SCANNED COPIES OF THIS PLAN SHEET.

NOTE:

FOR ACCURATE RIGHT OF WAY DATA, CONTACT
RIGHT OF WAY ENGINEERING AT THE DISTRICT OFFICE.

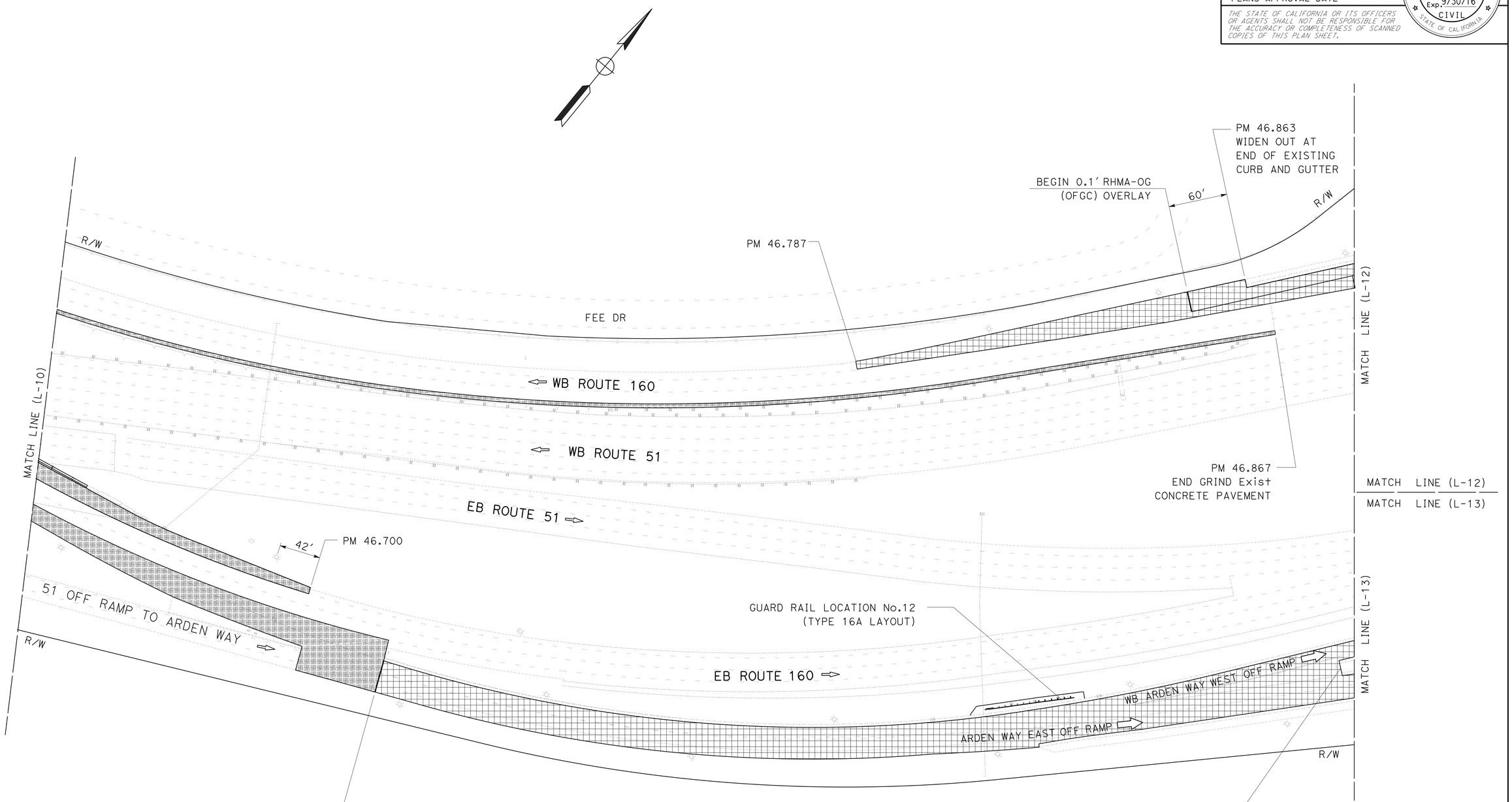

LAYOUT

SCALE: 1"=50'

L-11

REVISED BY	DATE REVISED

CALCULATED-DESIGNED BY	CHECKED BY
DAVID ROBERTS	SUDHA M. KODALI

FUNCTIONAL SUPERVISOR: ALI KIANI

STATE OF CALIFORNIA - DEPARTMENT OF TRANSPORTATION

Caltrans DESIGN

LAST REVISION 00-00-00 | DATE PLOTTED => 05-JUL-2016 | TIME PLOTTED => 17:00

Dist	COUNTY	ROUTE	POST MILES TOTAL PROJECT	SHEET No.	TOTAL SHEETS
03	Sac	51,160	4.0/4.3, R44.4/47.0	14	117

K. Sudha Kodali 5-2-16
REGISTERED CIVIL ENGINEER DATE

5-2-16
PLANS APPROVAL DATE

REGISTERED PROFESSIONAL ENGINEER
SUDHA M. KODALI
No. 79722
Exp. 9/30/16
CIVIL
STATE OF CALIFORNIA

THE STATE OF CALIFORNIA OR ITS OFFICERS OR AGENTS SHALL NOT BE RESPONSIBLE FOR THE ACCURACY OR COMPLETENESS OF SCANNED COPIES OF THIS PLAN SHEET.

NOTE:

FOR ACCURATE RIGHT OF WAY DATA, CONTACT RIGHT OF WAY ENGINEERING AT THE DISTRICT OFFICE.

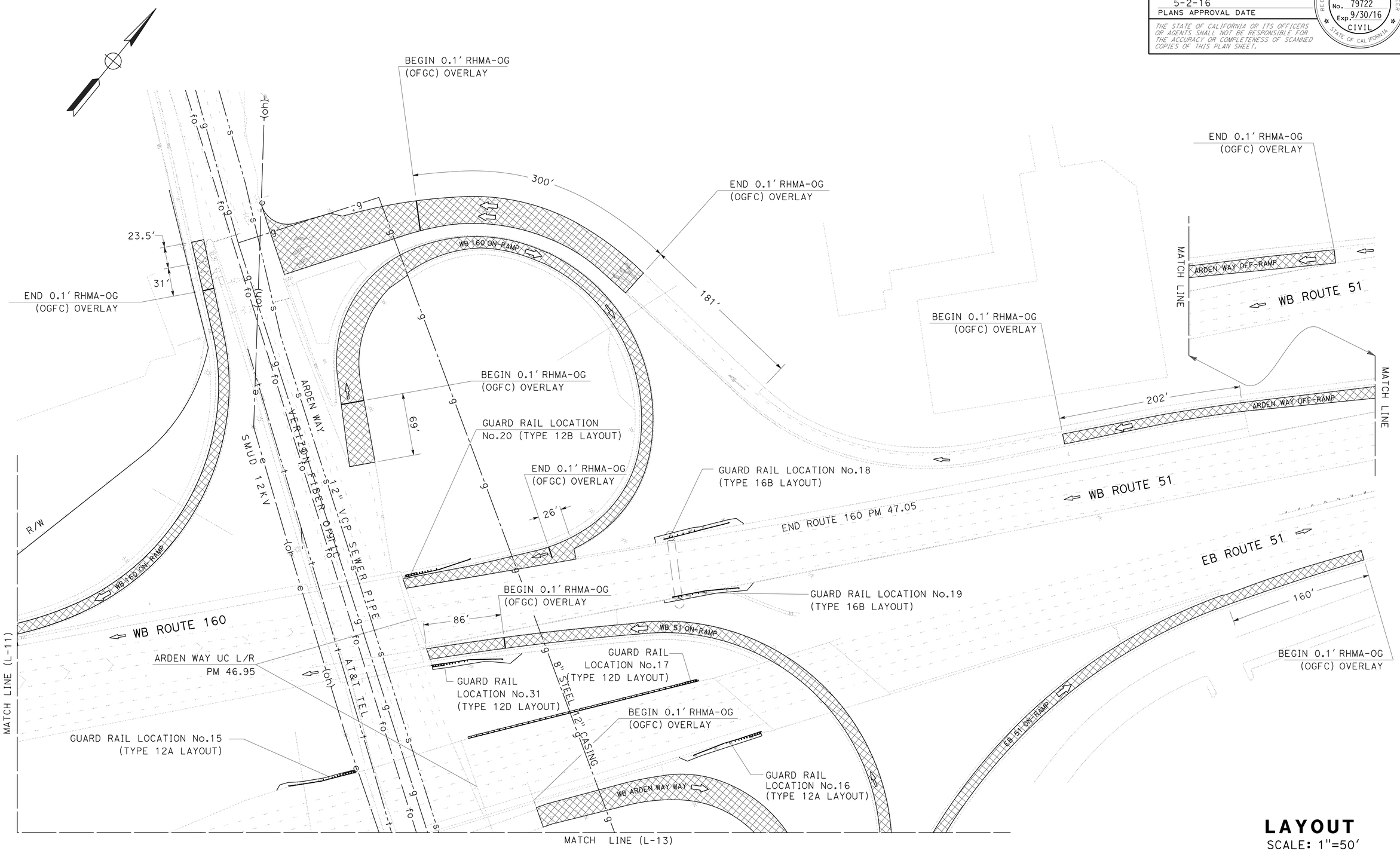

LAYOUT

SCALE: 1"=50'

L-12

STATE OF CALIFORNIA - DEPARTMENT OF TRANSPORTATION
Caltrans® DESIGN

FUNCTIONAL SUPERVISOR: ALI KIANI
CALCULATED-DESIGNED BY: SUDHA M. KODALI
CHECKED BY: DAVID ROBERTS
REVISED BY
DATE REVISED

LAST REVISION 00-00-00
DATE PLOTTED => 05-JUL-2016
TIME PLOTTED => 17:00

Dist	COUNTY	ROUTE	POST MILES TOTAL PROJECT	SHEET No.	TOTAL SHEETS
03	Sac	51,160	4.0/4.3, R44.4/47.0	15	117

K. Sudha Kodali 5-2-16
REGISTERED CIVIL ENGINEER DATE

5-2-16
PLANS APPROVAL DATE

REGISTERED PROFESSIONAL ENGINEER SUDHA M. KODALI No. 79722 Exp. 9/30/16 CIVIL STATE OF CALIFORNIA

THE STATE OF CALIFORNIA OR ITS OFFICERS OR AGENTS SHALL NOT BE RESPONSIBLE FOR THE ACCURACY OR COMPLETENESS OF SCANNED COPIES OF THIS PLAN SHEET.

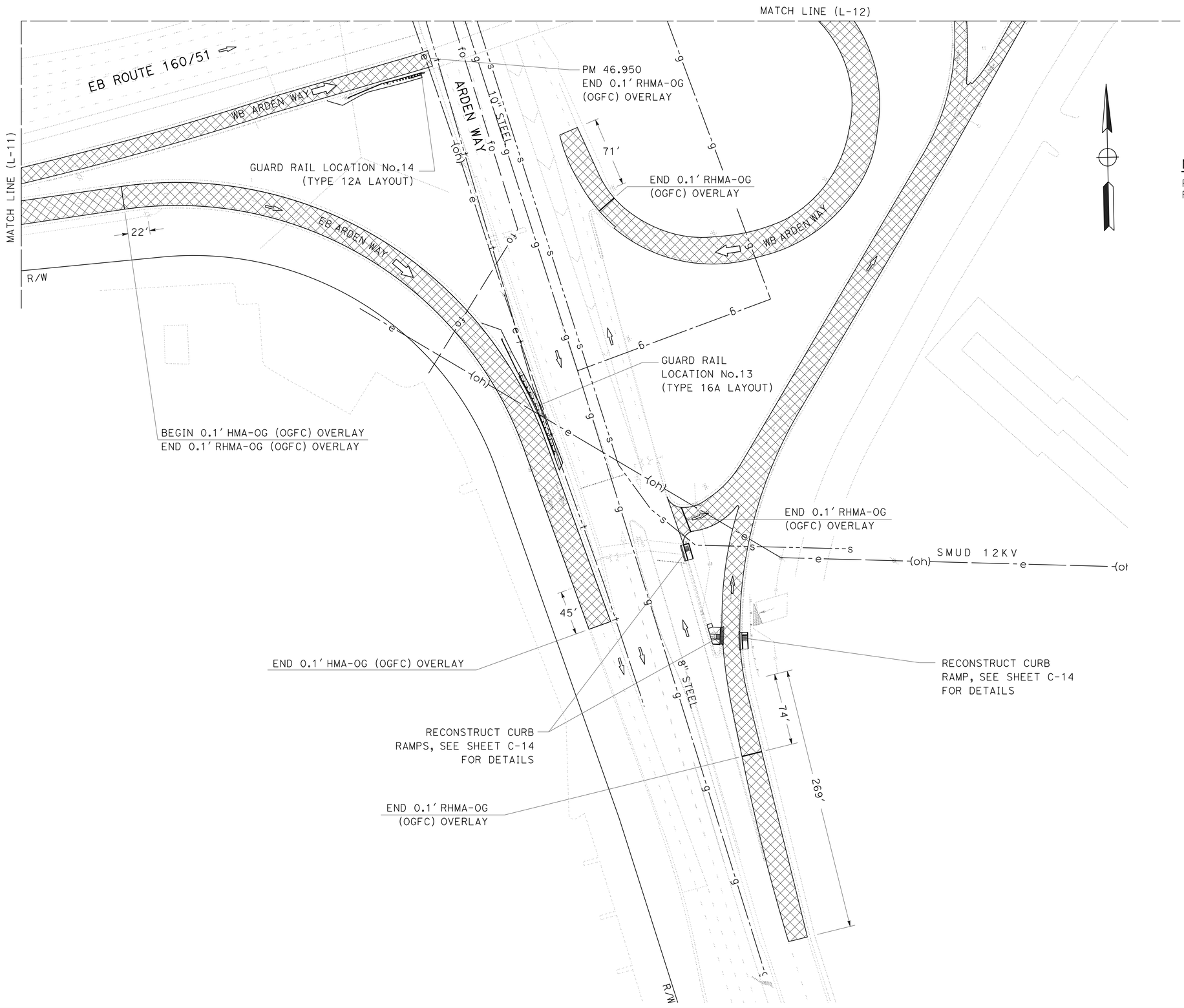

NOTE:

FOR ACCURATE RIGHT OF WAY DATA, CONTACT RIGHT OF WAY ENGINEERING AT THE DISTRICT OFFICE.

LAYOUT

SCALE: 1"=50'

L-13

REVISED BY	DATE REVISED

CALCULATED-DESIGNED BY	CHECKED BY
DAVID ROBERTS	SUDHA M. KODALI

FUNCTIONAL SUPERVISOR: ALI KIANI

STATE OF CALIFORNIA - DEPARTMENT OF TRANSPORTATION

Caltrans® **DESIGN**

LAST REVISION 00-00-00 | DATE PLOTTED => 05-JUL-2016 | TIME PLOTTED => 17:00

Dist	COUNTY	ROUTE	POST MILES TOTAL PROJECT	SHEET No.	TOTAL SHEETS
03	Sac	51,160	4.0/4.3, R44.4/47.0	16	117

K. Sudha Mallikarjuna 5-2-16
REGISTERED CIVIL ENGINEER DATE

5-2-16
PLANS APPROVAL DATE

REGISTERED PROFESSIONAL ENGINEER SUDHA M. KODALI No. 79722 Exp. 9/30/16 CIVIL STATE OF CALIFORNIA

THE STATE OF CALIFORNIA OR ITS OFFICERS OR AGENTS SHALL NOT BE RESPONSIBLE FOR THE ACCURACY OR COMPLETENESS OF SCANNED COPIES OF THIS PLAN SHEET.

NOTES:

1. EXISTING UTILITY FACILITIES HAVE NOT BEEN POSITIVELY IDENTIFIED.
2. EXISTING BARRIER DIMENSIONS SHALL BE VERIFIED BY THE CONTRACTOR IN THE FIELD BEFORE FABRICATING ANY END CONNECTION TO CONFORM WITH EXISTING CONDITIONS.
3. ROADWAY EXCAVATION (TYPE Z-2)(AERIALLY DEPOSITED LEAD) EXISTS AT ALL LOCATIONS TO A DEPTH OF 6" AS SHOWN.

LEGEND:

REMOVE CONCRETE

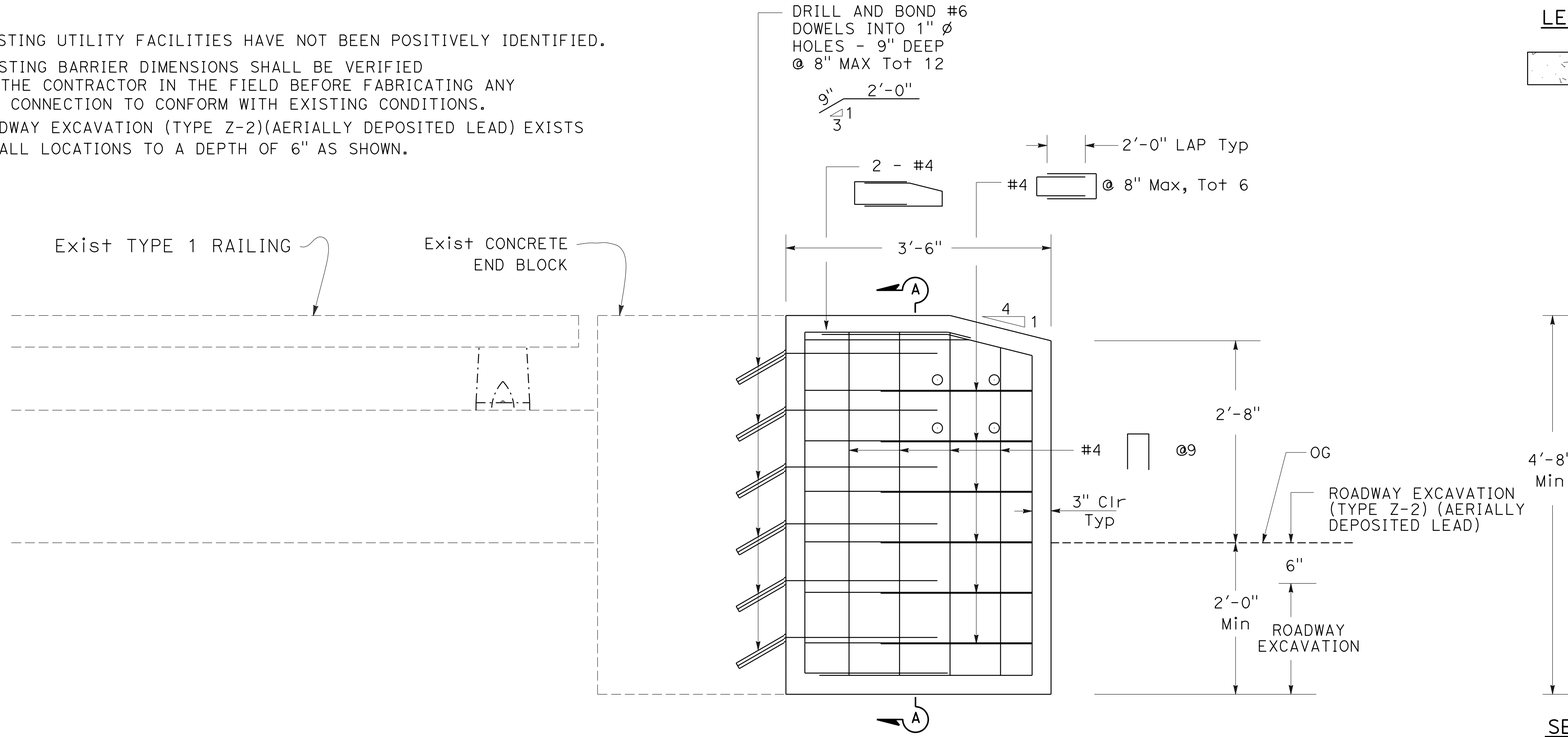

CONCRETE END BLOCK DETAIL

(GUARD RAIL LOCATIONS 2-3,14,17,25-26)

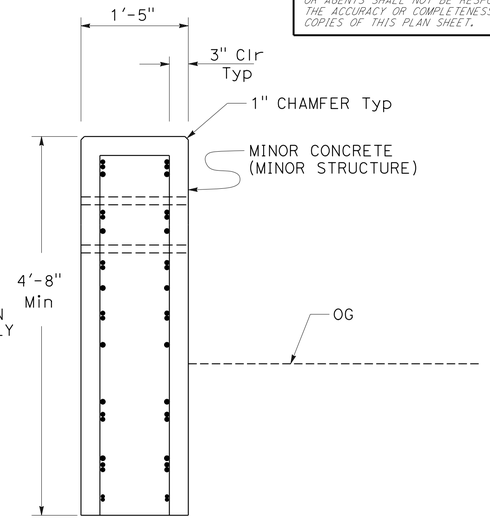

SECTION A-A

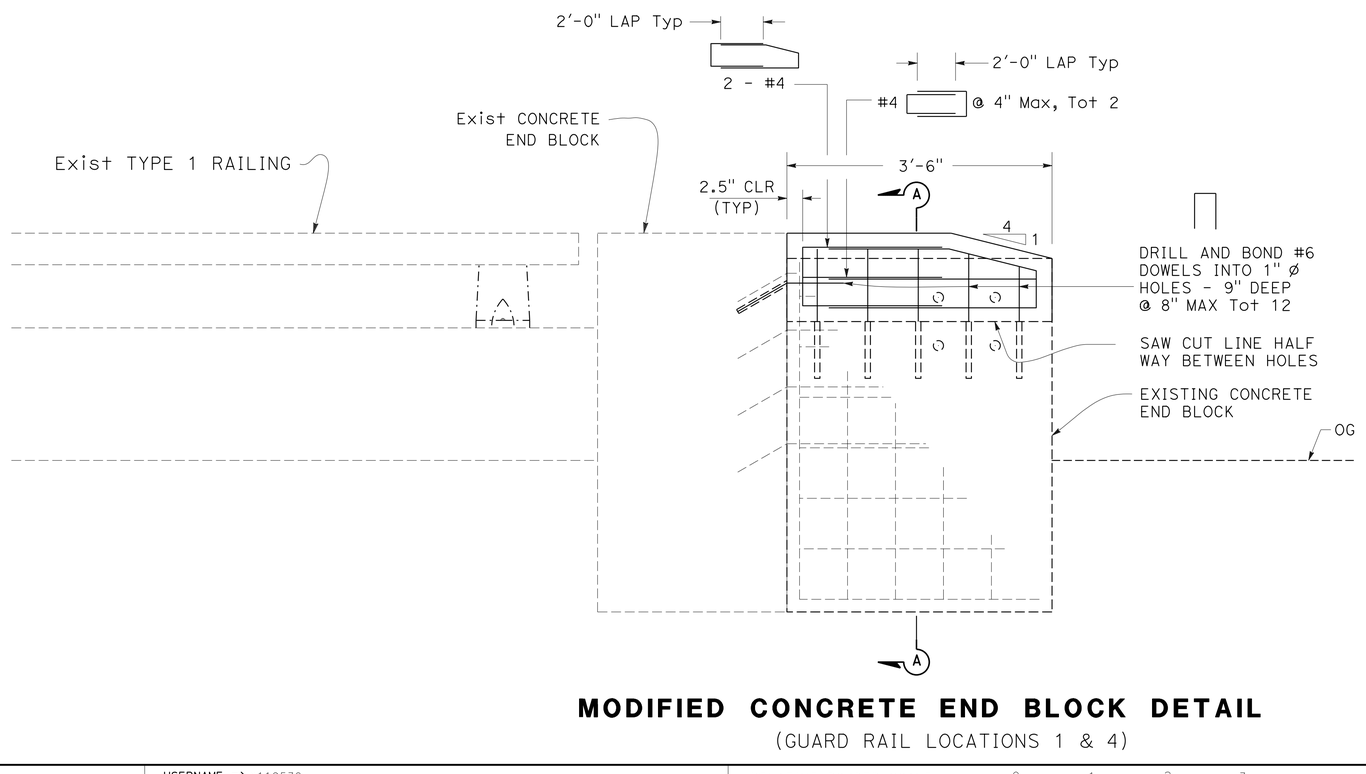

MODIFIED CONCRETE END BLOCK DETAIL

(GUARD RAIL LOCATIONS 1 & 4)

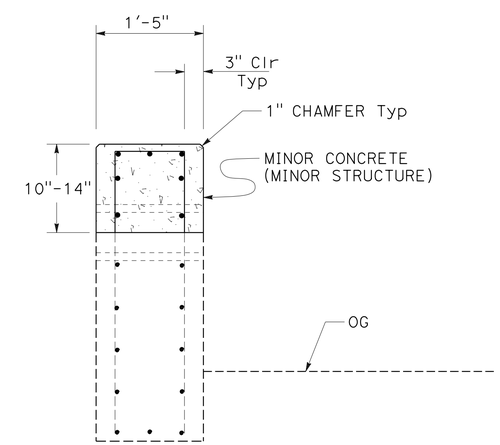

SECTION A-A

CONSTRUCTION DETAILS

NO SCALE

C-1

STATE OF CALIFORNIA - DEPARTMENT OF TRANSPORTATION
Caltrans DESIGN

FUNCTIONAL SUPERVISOR: ALI KIANI
CALCULATED-DESIGNED BY: DAVID ROBERTS
CHECKED BY: SUDHA M. KODALI
REVISED BY / DATE REVISED

LAST REVISION 00-00-00
DATE PLOTTED => 05-JUL-2016
TIME PLOTTED => 17:00

Dist	COUNTY	ROUTE	POST MILES TOTAL PROJECT	SHEET No.	TOTAL SHEETS
03	Sac	51,160	4.0/4.3, R44.4/47.0	17	117

K. Sudha Mallikarjuna 5-2-16
REGISTERED CIVIL ENGINEER DATE

5-2-16
PLANS APPROVAL DATE

REGISTERED PROFESSIONAL ENGINEER SUDHA M. KODALI No. 79722 Exp. 9/30/16 CIVIL STATE OF CALIFORNIA

THE STATE OF CALIFORNIA OR ITS OFFICERS OR AGENTS SHALL NOT BE RESPONSIBLE FOR THE ACCURACY OR COMPLETENESS OF SCANNED COPIES OF THIS PLAN SHEET.

NOTES:

1. USE THE FOLLOWING DETAILS WHERE APPLICABLE AS DIRECTED BY THE ENGINEER
2. FOR DIMENSIONS NOT SHOWN, SEE 2010 STANDARD PLAN A87B
3. GRIND EXISTING SURFACES TO ACCOMMODATE A MINIMUM TAPER THICKNESS OF 0.10′ WHEN EITHER;
   A. HMA MATERIAL SUCH AS RUBBERIZED, POLYMER MODIFIED OR OPEN GRADED IS UNSUITABLE FOR RAKING TO A MINIMUM 0.02′ THICKNESS AT THE CONFORM.
   B. TEMPORARY TAPER WILL BE IN PLACE FOR MORE THAN 14 DAYS.
4. PERMANENT SURFACE MAY BE EXISTING OR NEW PAVEMENT.
5. ROADWAY SURFACE IS THE TOP OF EXISTING SURFACE OR THE TOP OF THE PLANED SURFACE.

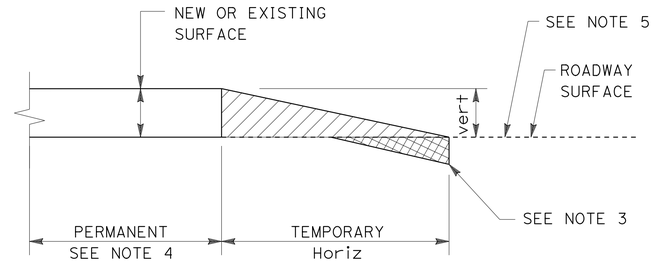

Vert	SLOPE RATIO Horiz/Vert
0 - 0.10′	70:1
GREATER THAN 0.10′	160:1

TYPICAL PAVING CONFORM FOR TEMPORARY CONSTRUCTION TAPERS

LEGEND:

- HMA MATERIAL (TEMPORARY TAPER)
- IF NECESSARY, COLD PLANE ASPHALT Conc PAVEMENT AND PLACE HMA MATERIAL (SEE NOTE 1)
- ROADWAY EXCAVATION

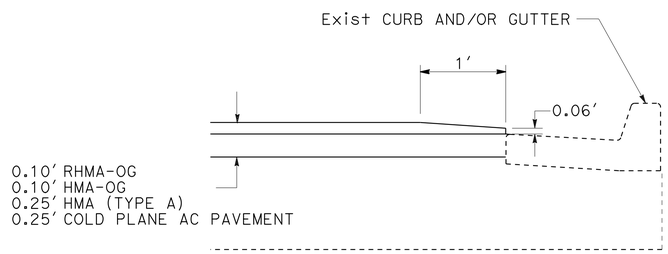

TAPER DETAIL 1 - RAMP LOCATIONS

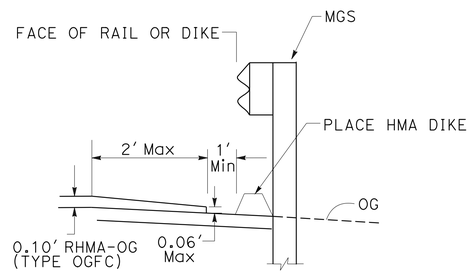

TAPER DETAIL 3 - RAMP LOCATIONS

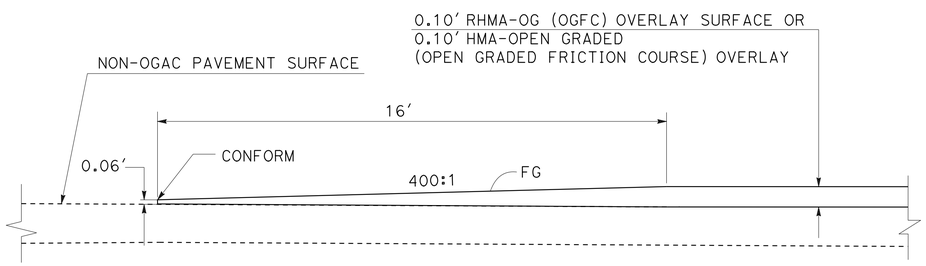

HMA RAMP CONFORM DETAIL 2- RAMP LOCATIONS

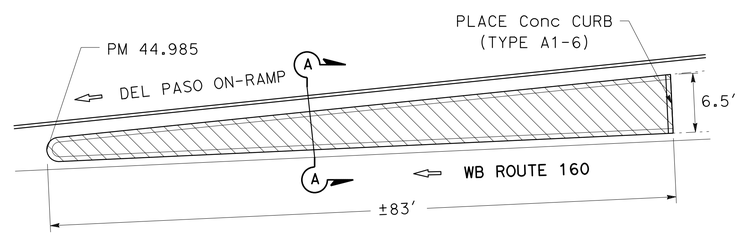

RAISED CURB REMOVAL DETAIL

(SEE CONSTRUCTION DETAIL SHEET C-3)

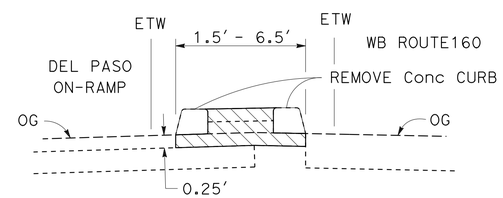

PHASE 1

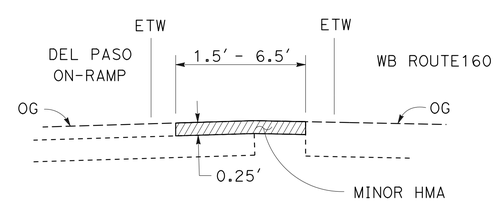

PHASE 2

SECTION "A" - "A"

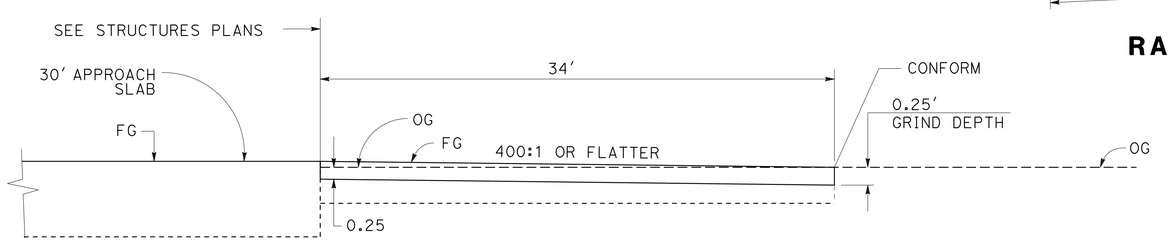

AC PAVEMENT CONFORM

ROUTE 160

CONSTRUCTION DETAILS

NO SCALE

C-2

STATE OF CALIFORNIA - DEPARTMENT OF TRANSPORTATION
Caltrans DESIGN
FUNCTIONAL SUPERVISOR: ALI KIANI
CALCULATED-DESIGNED BY: DAVID ROBERTS
CHECKED BY: SUDHA M. KODALI
REVISED BY
DATE REVISED

LAST REVISION 00-00-00
DATE PLOTTED => 05-JUL-2016
TIME PLOTTED => 17:00

Dist	COUNTY	ROUTE	POST MILES TOTAL PROJECT	SHEET No.	TOTAL SHEETS
03	Sac	51,160	4.0/4.3, R44.4/47.0	18	117

K. Sudha Kodali 5-2-16
REGISTERED CIVIL ENGINEER DATE

5-2-16
PLANS APPROVAL DATE

REGISTERED PROFESSIONAL ENGINEER SUDHA M. KODALI No. 79722 Exp. 9/30/16 CIVIL STATE OF CALIFORNIA

THE STATE OF CALIFORNIA OR ITS OFFICERS OR AGENTS SHALL NOT BE RESPONSIBLE FOR THE ACCURACY OR COMPLETENESS OF SCANNED COPIES OF THIS PLAN SHEET.

NOTES:

1. USE THE FOLLOWING DETAILS WHERE APPLICABLE AS DIRECTED BY THE ENGINEER
2. FOR DIKE PAD DETAIL AND DIMENSIONS NOT SHOWN, SEE 2010 STANDARD PLAN A87B

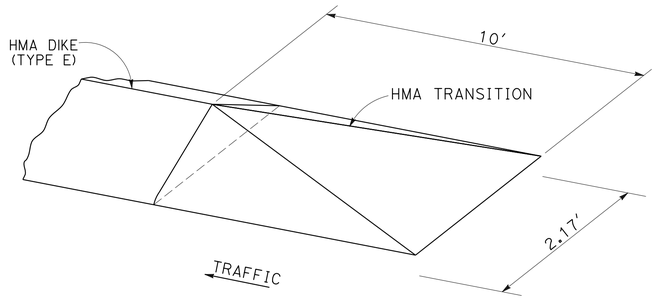

HMA DIKE (TYPE D) APPROACH TRANSITION

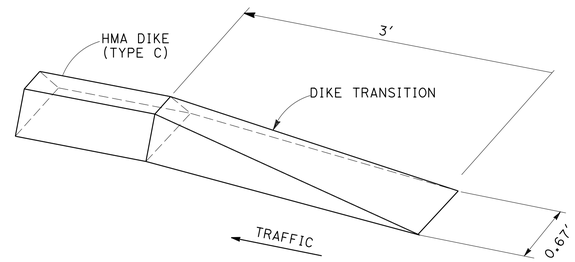

HMA DIKE (TYPE C) APPROACH TRANSITION

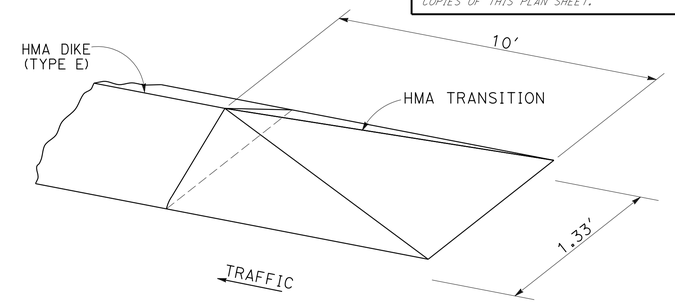

HMA DIKE (TYPE E) APPROACH TRANSITION

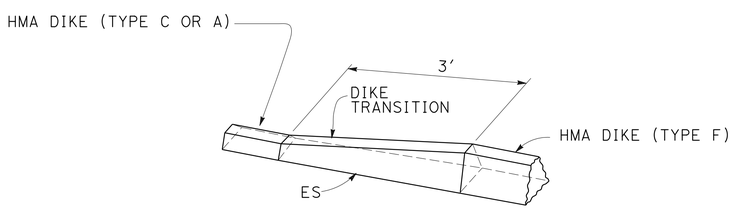

HMA DIKE (TYPE C) TO HMA DIKE (TYPE F)

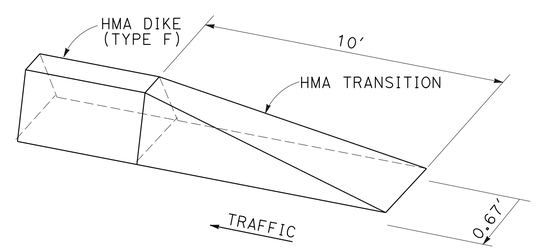

HMA DIKE (TYPE F) APPROACH TRANSITION

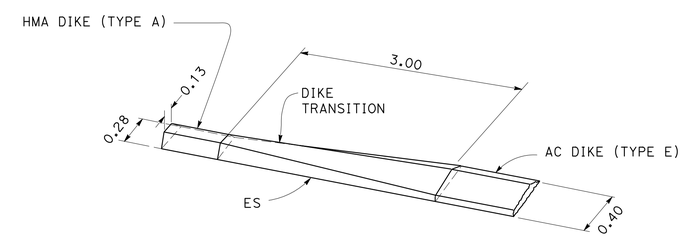

HMA DIKE (TYPE A) TO HMA DIKE (TYPE E)

CONSTRUCTION DETAILS

NO SCALE

C-3

STATE OF CALIFORNIA - DEPARTMENT OF TRANSPORTATION
Caltrans DESIGN

FUNCTIONAL SUPERVISOR: ALI KIANI
CALCULATED-DESIGNED BY: DAVID ROBERTS
CHECKED BY: SUDHA M. KODALI
REVISED BY
DATE REVISED

LAST REVISION 00-00-00
DATE PLOTTED => 05-JUL-2016
TIME PLOTTED => 17:00

Dist	COUNTY	ROUTE	POST MILES TOTAL PROJECT	SHEET No.	TOTAL SHEETS
03	Sac	51,160	4.0/4.3, R44.4/47.0	19	117

K. Sudha Mallikarjuna 5-2-16
REGISTERED CIVIL ENGINEER DATE

5-2-16
PLANS APPROVAL DATE

REGISTERED PROFESSIONAL ENGINEER SUDHA M. KODALI No. 79722 Exp. 9/30/16 CIVIL STATE OF CALIFORNIA

THE STATE OF CALIFORNIA OR ITS OFFICERS OR AGENTS SHALL NOT BE RESPONSIBLE FOR THE ACCURACY OR COMPLETENESS OF SCANNED COPIES OF THIS PLAN SHEET.

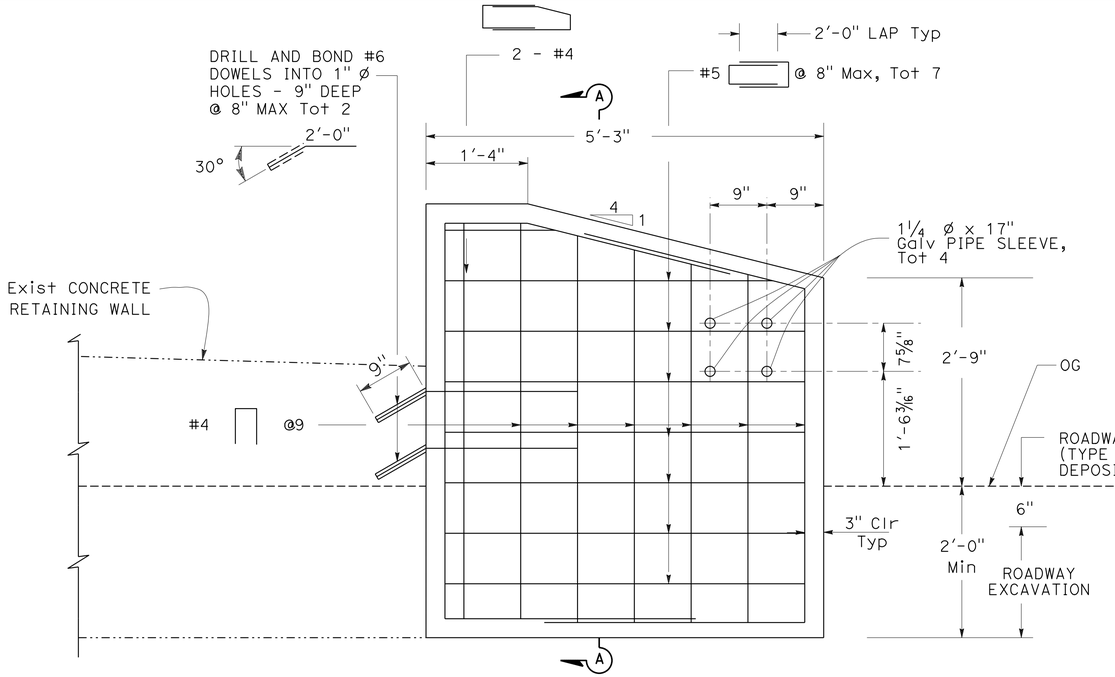

CONCRETE END BLOCK DETAIL

(GUARD RAIL LOCATION 7)

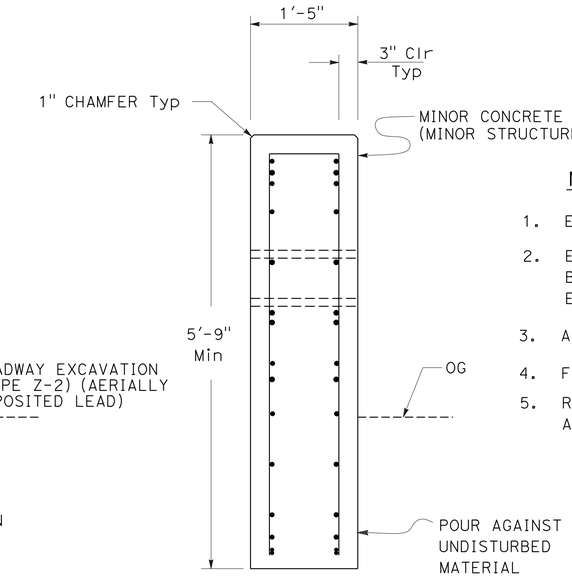

SECTION A-A

NOTES:

1. EXISTING UTILITY FACILITIES HAVE NOT BEEN POSITIVELY IDENTIFIED.
2. EXISTING BARRIER DIMENSIONS SHALL BE VERIFIED BY THE CONTRACTOR IN THE FIELD BEFORE FABRICATING ANY END CONNECTION TO CONFORM WITH EXISTING CONDITIONS.
3. ALL CONCRETE END BLOCKS HAVE A 5" x 5" CHAMFER.
4. FOR ADDITIONAL INFORMATION, SEE SUMMARY OF QUANTITIES.
5. ROADWAY EXCAVATION (TYPE Z-2)(AERIALLY DEPOSITED LEAD EXISTS AT ALL LOCATIONS TO A DEPTH OF 6" AS SHOWN.

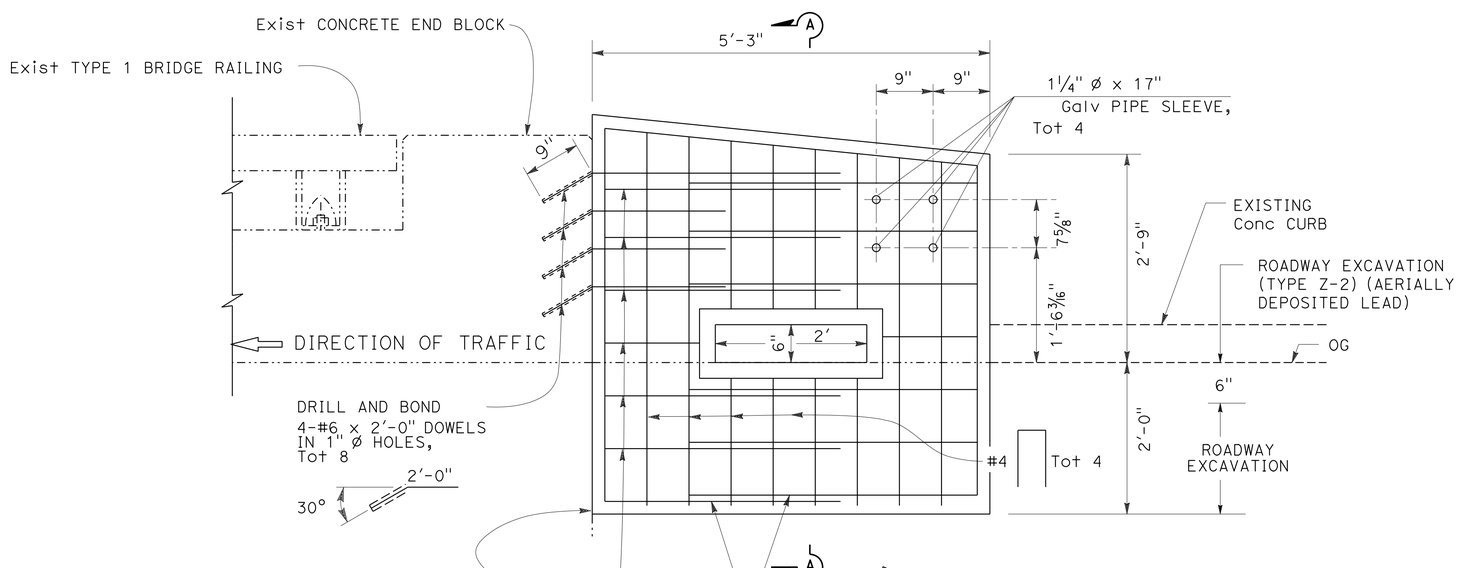

CONCRETE END BLOCK DETAIL WITH DRAINAGE BLOCKOUT

(GUARD RAIL LOCATION 14)

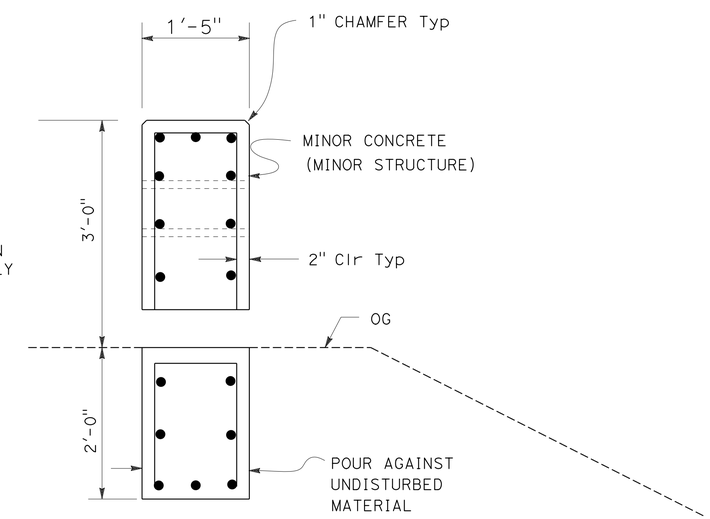

SECTION A-A

CONSTRUCTION DETAILS

NO SCALE

C-4

STATE OF CALIFORNIA - DEPARTMENT OF TRANSPORTATION
Caltrans® DESIGN

FUNCTIONAL SUPERVISOR: ALI KIANI
CALCULATED-DESIGNED BY: DAVID ROBERTS
CHECKED BY: SUDHA M. KODALI
REVISED BY
DATE REVISED

LAST REVISION 00-00-00
DATE PLOTTED => 05-JUL-2016
TIME PLOTTED => 17:00

Dist	COUNTY	ROUTE	POST MILES TOTAL PROJECT	SHEET No.	TOTAL SHEETS
03	Sac	51,160	4.0/4.3, R44.4/47.0	20	117

K. Sudha Kodali 5-2-16
REGISTERED CIVIL ENGINEER DATE

5-2-16
PLANS APPROVAL DATE

REGISTERED PROFESSIONAL ENGINEER SUDHA M. KODALI No. 79722 Exp. 9/30/16 CIVIL STATE OF CALIFORNIA

THE STATE OF CALIFORNIA OR ITS OFFICERS OR AGENTS SHALL NOT BE RESPONSIBLE FOR THE ACCURACY OR COMPLETENESS OF SCANNED COPIES OF THIS PLAN SHEET.

NOTES:

1. TO PROTECT NEW ANCHOR BLOCK DURING CURE TIME, RE-HANG EXISTING RAIL ELEMENT IN EXISTING BOLT HOLES.
2. USE FOR TRANSITION ANCHOR BLOCKS LESS THAN 10'.

CONCRETE END BLOCKS LESS THAN 10'

LOCATION					BRIDGE/STRUCTURE NAME	BARRIER TYPE	CONCRETE END BLOCK LENGTH
ROUTE	Loc No	PM	L†/R†	BRIDGE No.			LF
160	1	R44.46	R†	24-0001 R	AMERICAN RIVER BRIDGE	1	3.5
160	2	R44.46	L†	24-0001 R	AMERICAN RIVER BRIDGE	1	3.5
160	3	R44.71	R†	24-0100 R	NORTH SACRAMENTO VIADUCT	1	3.5
160	4	R44.71	R†	24-0100 R	NORTH SACRAMENTO VIADUCT	1	3.5
160	7	46.06	R†		EXISTING RETAINING WALL		5.3
160	14	46.95	R†	24-0115 R	ARDEN WAY UC	1	5.3
160	25	45.08	L†	24-0111	NORTH SACRAMENTO UC	27	3.5
160	26	45.08	R†	24-0111	NORTH SACRAMENTO UC	27	3.5
51	17	4.14	L†	24-0132 R	ARDEN WAY RAMP UC	2	5.3

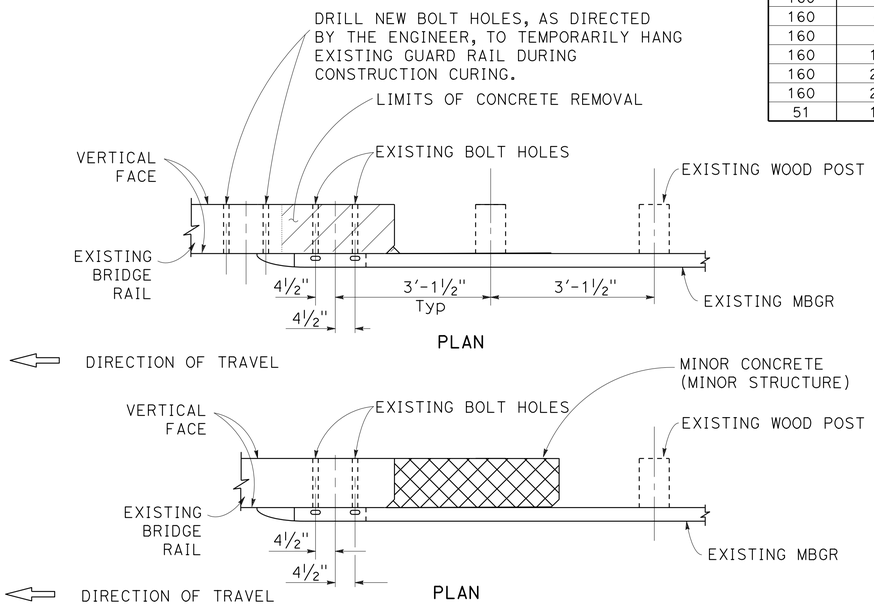

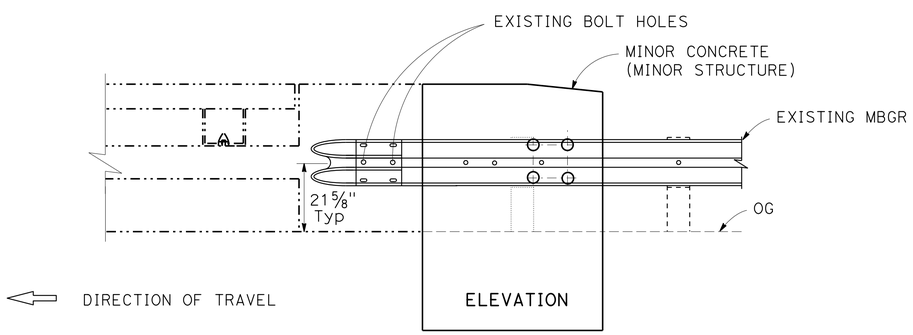

TEMPORARY TRAFFIC PROTECTION DETAILS FOR NEW CONCRETE BLOCK

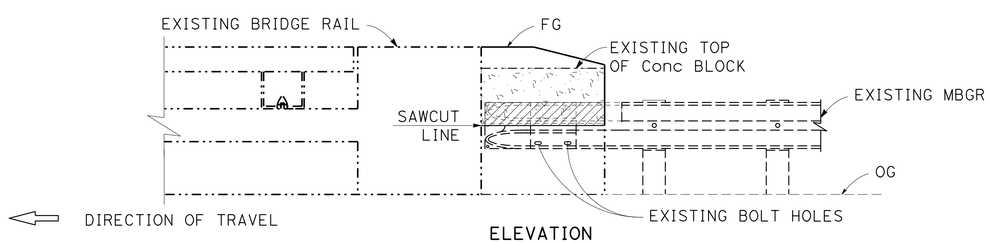

TEMPORARY TRAFFIC PROTECTION DETAILS FOR MODIFIED CONCRETE BLOCK

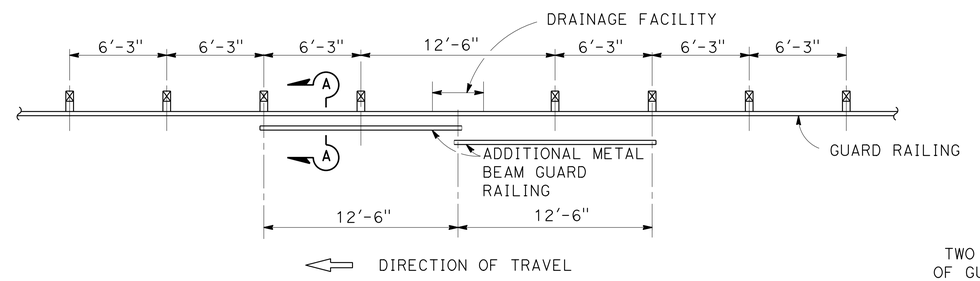

CASE 1
ONE POST OMITTED (SPLICE IN CENTER) NESTED RAIL ELEMENTS

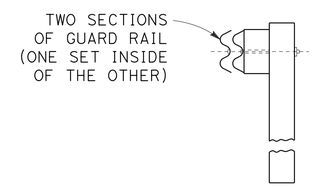

SECTION A-A

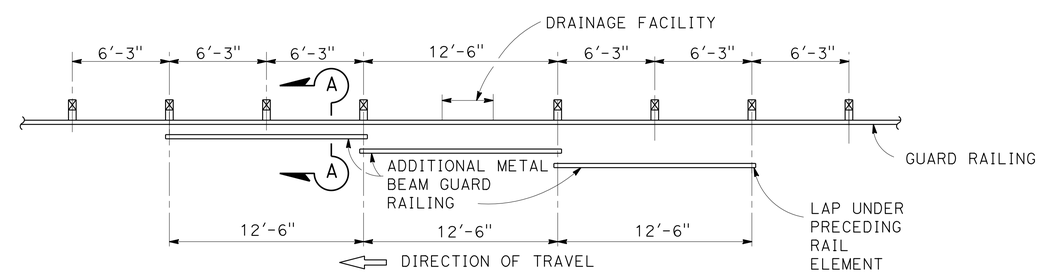

CASE 2
ONE POST OMITTED (SPLICE AT POSTS) NESTED RAIL ELEMENTS

LEGEND:

REMOVE CONCRETE

REMOVE PORTION OF RAIL ELEMENT

CONSTRUCTION DETAILS

NO SCALE

C-5

STATE OF CALIFORNIA - DEPARTMENT OF TRANSPORTATION
Caltrans® DESIGN

FUNCTIONAL SUPERVISOR: ALI KIANI
CALCULATED-DESIGNED BY: DAVID ROBERTS
CHECKED BY: SUDHA M. KODALI
REVISED BY
DATE REVISED

LAST REVISION 00-00-00
DATE PLOTTED => 05-JUL-2016
TIME PLOTTED => 17:00

Dist	COUNTY	ROUTE	POST MILES TOTAL PROJECT	SHEET No.	TOTAL SHEETS
03	Sac	51,160	4.0/4.3, R44.4/47.0	21	117

K. Sudha Kodali 5-2-16
REGISTERED CIVIL ENGINEER DATE

5-2-16
PLANS APPROVAL DATE

REGISTERED PROFESSIONAL ENGINEER SUDHA M. KODALI No. 79722 Exp. 9/30/16 CIVIL STATE OF CALIFORNIA

THE STATE OF CALIFORNIA OR ITS OFFICERS OR AGENTS SHALL NOT BE RESPONSIBLE FOR THE ACCURACY OR COMPLETENESS OF SCANNED COPIES OF THIS PLAN SHEET.

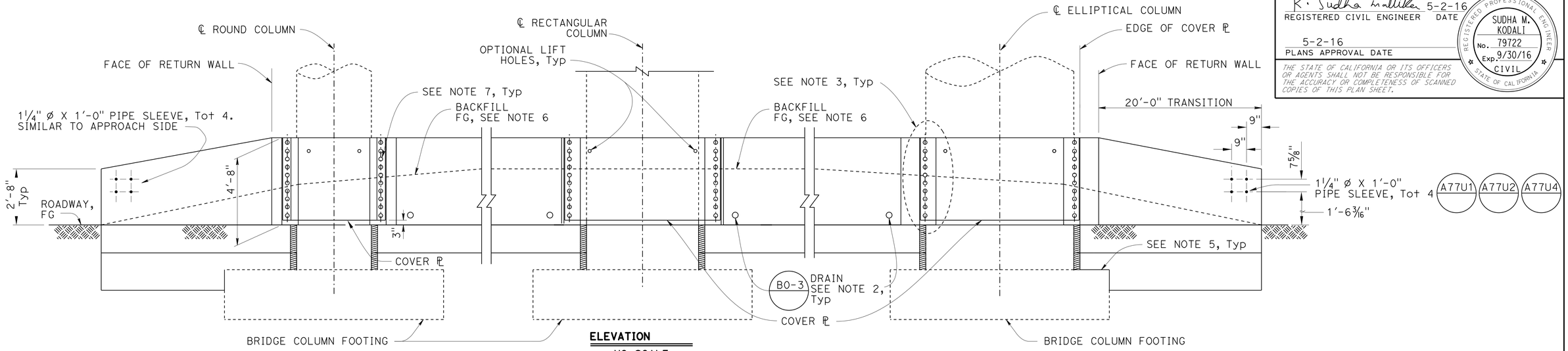

ELEVATION
NO SCALE

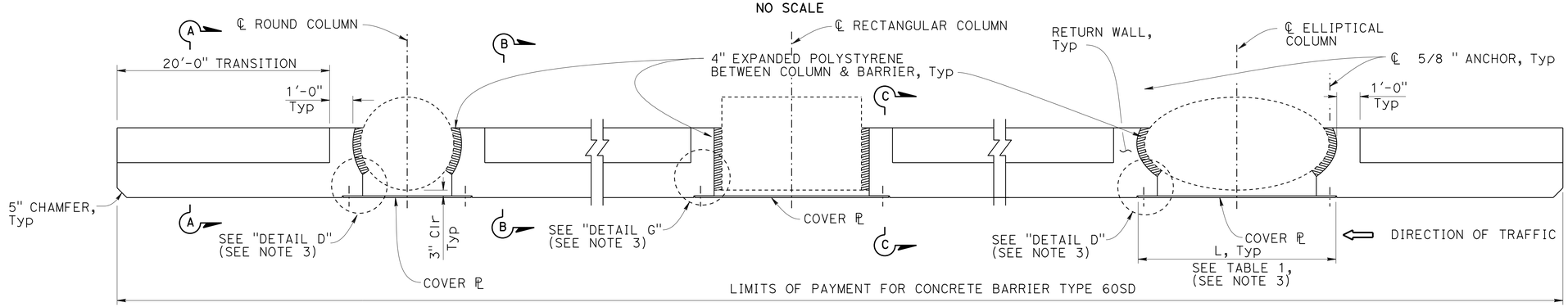

PLAN
NO SCALE

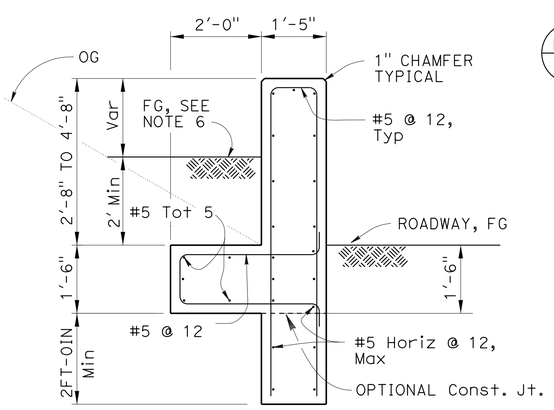

SECTION A-A
NO SCALE

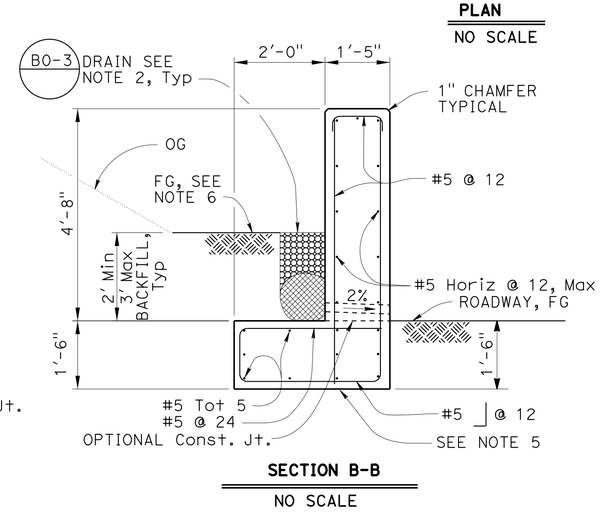

SECTION B-B
NO SCALE

NOTES:

1. SEE "ROADWAY PLANS" FOR EXACT ALIGNMENT OF BARRIER.
2. 4" ø DRAINS AT 9'-0" CENTER TO CENTER SEE "DETAILS NO. 2" FOR PROPER DRAINAGE AND GUTTER DETAILS.
3. FOR "DETAIL D", "DETAIL E", "DETAIL F", "DETAIL G", "TABLE 1", "ALTERNATIVE ANCHOR" AND "BACKFILL DETAILS, SEE "CONCRETE BARRIER TYPE 60SD-TRANSITION AT BRIDGE COLUMN-DETAILS NO. 2" SHEET.
4. MAINTAIN 4" (MIN) GAP TO EXISTING STRUCTURE.
5. WHERE EXISTING BRIDGE FOOTING IS ENCOUNTERED, APPLY BOND BREAKER BETWEEN BRIDGE FOOTING AND NEW STRUCTURE.
6. SLOPE BACKFILL TO DRAIN ANY SURFACE WATER.
7. ALL PLATES & CONNECTIONS MUST BE GALVANIZED.
8. DETAILS ARE SIMILAR FOR HEXAGONAL COLUMNS.
9. ROADWAY EXCAVATION (TYPE Z-2)(AERIALLY DEPOSITED LEAD EXISTS AT ALL LOCATIONS TO A DEPTH OF 6" AS SHOWN.

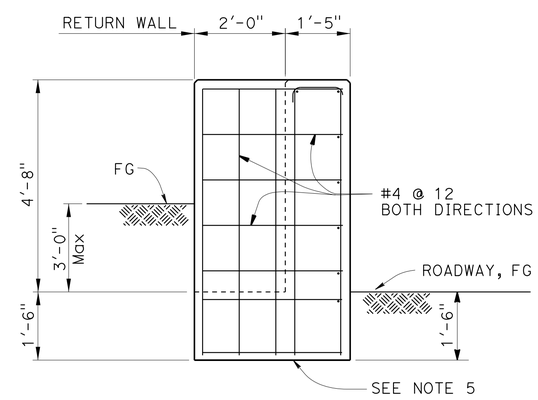

SECTION C-C
NO SCALE

(CONCRETE BARRIER TYPE 60SD)

CONSTRUCTION DETAILS

SCALE: 1"=50'

C-6

STATE OF CALIFORNIA - DEPARTMENT OF TRANSPORTATION
Caltrans DESIGN
FUNCTIONAL SUPERVISOR: ALI KIANI
CALCULATED-DESIGNED BY: SUDHA M. KODALI
CHECKED BY: DAVID ROBERTS
REVISED BY
DATE REVISED

LAST REVISION 00-00-00
DATE PLOTTED => 05-JUL-2016
TIME PLOTTED => 17:00

Dist	COUNTY	ROUTE	POST MILES TOTAL PROJECT	SHEET No.	TOTAL SHEETS
03	Sac	51,160	4.0/4.3, R44.4/47.0	22	117

K. Sudha Kodali 5-2-16
REGISTERED CIVIL ENGINEER DATE

5-2-16
PLANS APPROVAL DATE

REGISTERED PROFESSIONAL ENGINEER SUDHA M. KODALI No. 79722 Exp. 9/30/16 CIVIL STATE OF CALIFORNIA

THE STATE OF CALIFORNIA OR ITS OFFICERS OR AGENTS SHALL NOT BE RESPONSIBLE FOR THE ACCURACY OR COMPLETENESS OF SCANNED COPIES OF THIS PLAN SHEET.

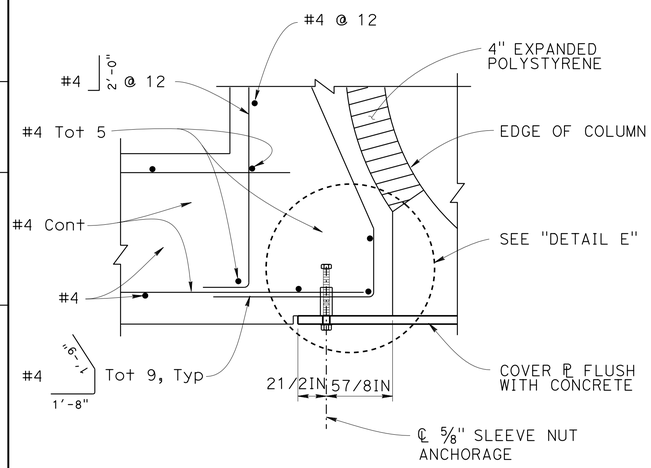

DETAIL D
1½" = 1'-0"

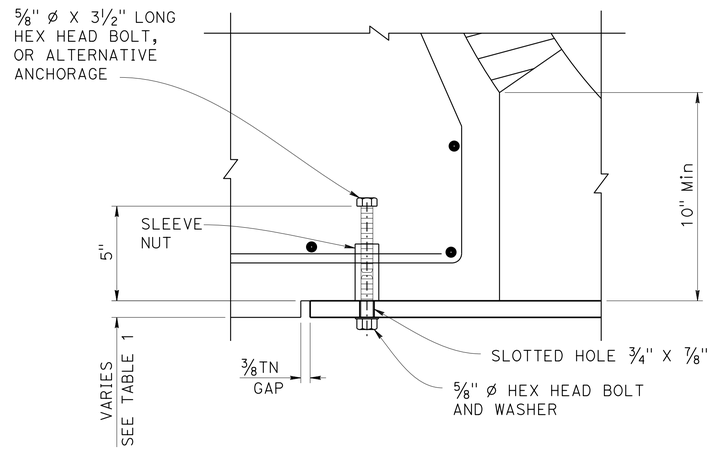

DETAIL E
3" = 1'-0"

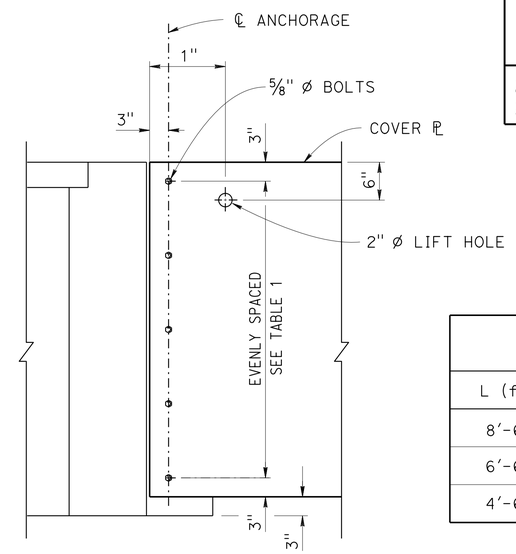

DETAIL F
NO SCALE

TABLE 1		
L (ft)	PLATE THICKNESS (in)	TOTAL No. OF BOLTS
8'-6" Max	7/8	10
6'-6" Max	11/16	7
4'-6" Max	7/16	5

NOTE:
Structural steel, fy = 50,000 psi
Unless otherwise noted.

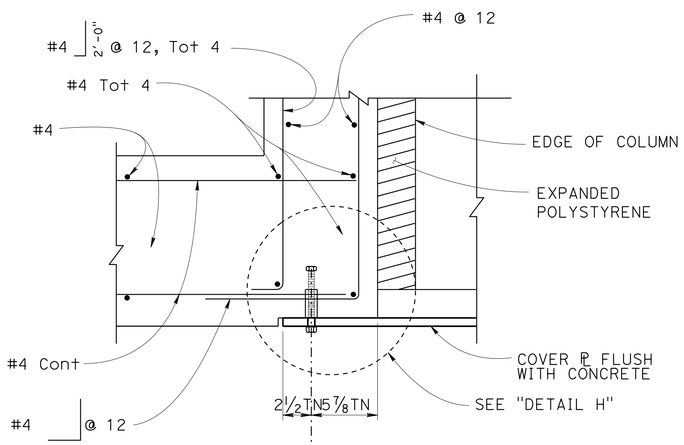

DETAIL G
1½" = 1'-0"

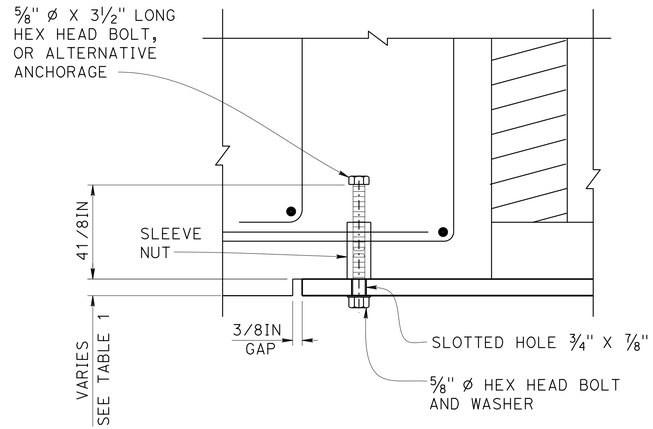

DETAIL H
3" = 1'-0"

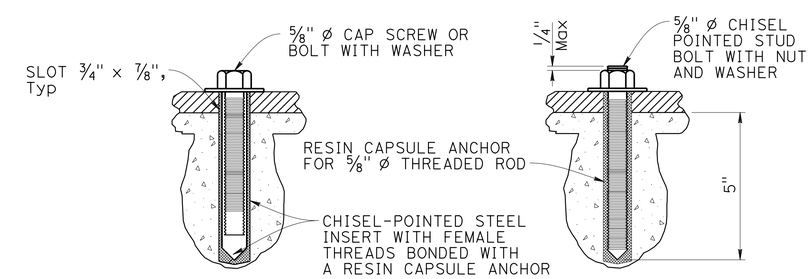

ALTERNATIVE A ALTERNATIVE B

ALTERNATIVE ANCHORAGE
NO SCALE

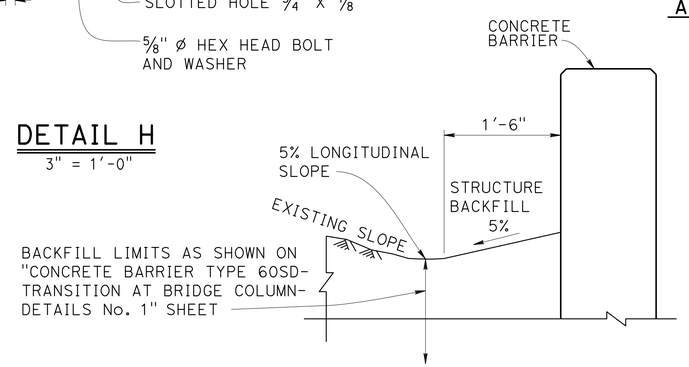

BACKFILL DETAIL
NO SCALE

(CONCRETE BARRIER TYPE 60SD)

CONSTRUCTION DETAILS

NO SCALE

C-7

STATE OF CALIFORNIA - DEPARTMENT OF TRANSPORTATION
Caltrans DESIGN
FUNCTIONAL SUPERVISOR ALI KIANI
CALCULATED-DESIGNED BY DAVID ROBERTS
CHECKED BY SUDHA M. KODALI
REVISED BY
DATE REVISED

LAST REVISION 00-00-00
DATE PLOTTED => 05-JUL-2016
TIME PLOTTED => 17:00

Dist	COUNTY	ROUTE	POST MILES TOTAL PROJECT	SHEET No.	TOTAL SHEETS
03	Sac	51,160	4.0/4.3, R44.4/47.0	23	117

K. Sudha Kodali 5-2-16
REGISTERED CIVIL ENGINEER DATE

5-2-16
PLANS APPROVAL DATE

REGISTERED PROFESSIONAL ENGINEER SUDHA M. KODALI No. 79722 Exp. 9/30/16 CIVIL STATE OF CALIFORNIA

THE STATE OF CALIFORNIA OR ITS OFFICERS OR AGENTS SHALL NOT BE RESPONSIBLE FOR THE ACCURACY OR COMPLETENESS OF SCANNED COPIES OF THIS PLAN SHEET.

NOTES:

1. FOR DETAILS OF STEEL POSTS AND NOTCHED WOOD BLOCKS USED TO CONSTRUCT MGS, SEE STANDARD PLAN A77N2.
2. NOTCHED FACE OF BLOCK FACES STEEL POST.
3. FOR ADDITIONAL INSTALLATION DETAILS, SEE STANDARD PLAN A77N2.

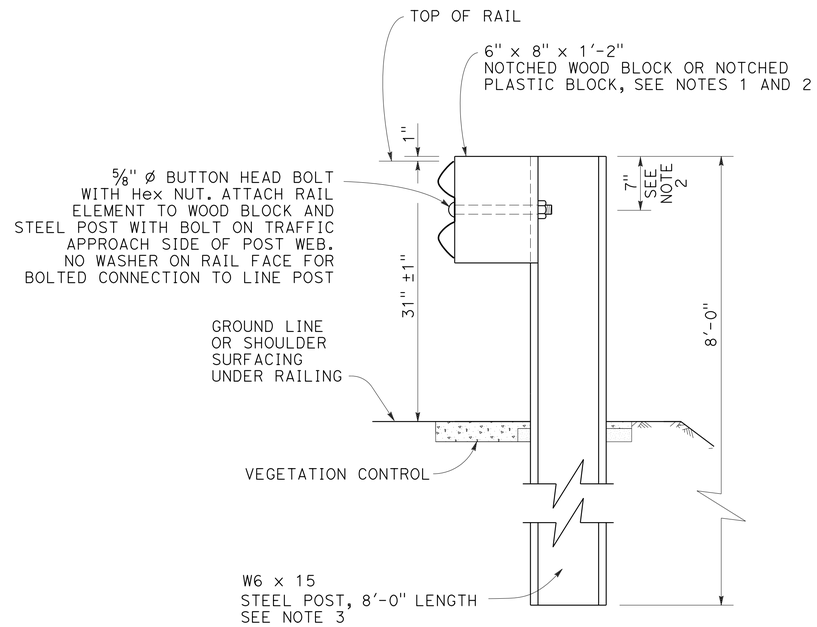

NARROW STEEL LINE WITH 6"X8"X14" BLOCK INSTALLATION

GUARD RAIL LOCATIONS (3 & 17)

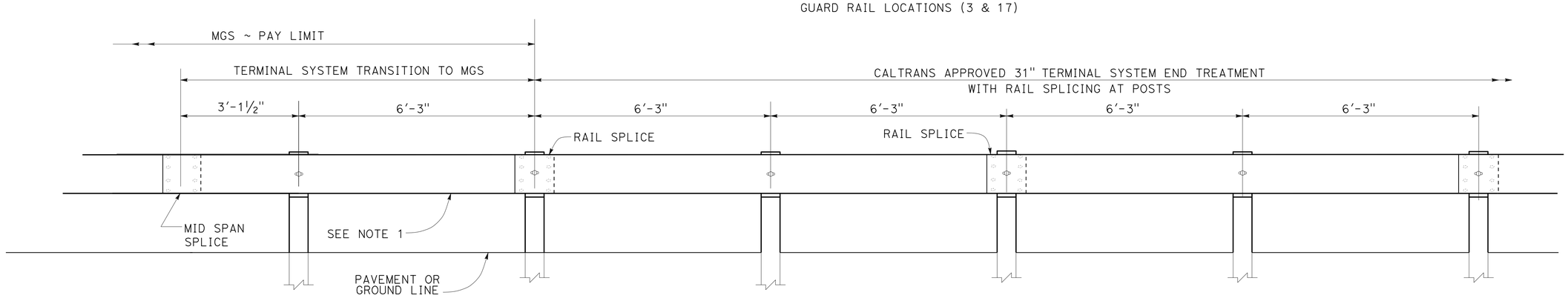

TRANSITION DETAIL FOR 31" TERMINAL SYSTEM END TREATMENT WITH RAIL SPLICING AT POSTS TO MIDWEST GUARDRAIL SYSTEM

CONSTRUCTION DETAILS

NO SCALE

C-8

STATE OF CALIFORNIA - DEPARTMENT OF TRANSPORTATION
Caltrans DESIGN

FUNCTIONAL SUPERVISOR: ALI KIANI
CALCULATED-DESIGNED BY: DAVID ROBERTS
CHECKED BY: SUDHA M. KODALI
REVISED BY
DATE REVISED

LAST REVISION 00-00-00 | DATE PLOTTED => 05-JUL-2016 | TIME PLOTTED => 17:00

Dist	COUNTY	ROUTE	POST MILES TOTAL PROJECT	SHEET No.	TOTAL SHEETS
03	Sac	51,160	4.0/4.3, R44.4/47.0	24	117

K. Sudha Kodali 5-2-16
REGISTERED CIVIL ENGINEER DATE

5-2-16
PLANS APPROVAL DATE

REGISTERED PROFESSIONAL ENGINEER SUDHA M. KODALI No. 79722 Exp. 9/30/16 CIVIL STATE OF CALIFORNIA

THE STATE OF CALIFORNIA OR ITS OFFICERS OR AGENTS SHALL NOT BE RESPONSIBLE FOR THE ACCURACY OR COMPLETENESS OF SCANNED COPIES OF THIS PLAN SHEET.

NOTES:

1. ALL RAIL ELEMENTS ARE MIDWEST GUARADRAIL SYSTEM
2. FOR DETAILS OF STANDARD HARDWARE USED TO CONSTRUCT MGS, SEE REVISED STANDARD PLAN (RSP) A77M1
3. MGS POST SPACINGS TO BE 6′-3″ CENTER TO CENTER, EXCEPT OTHERWISE NOTED
4. NUMBER OF POSTS OMITTED TO BE DETERMINED BY THE ENGINEER IN THE FIELD.
5. FOR ADDITIONAL DETAILS NOT SHOWN ON THIS PLAN, REFER TO RSP A77L2.
6. CRT POST TO BE WOOD ONLY.
7. WHERE APPLICABLE AND WHEN SPECIFIED, (W6 X 8.5 OR W6 X 9) X 6′-8″ STEEL POST WITH 6″ X 8″ X 1′-10″ NOTCHED WOOD BLOCKS OR NOTCHED RECYCLED PLASTIC BLOCKS MAY BE USED FOR 6″ X 8″ X 6′-0″ WOOD POST WITH 6″ X 8″ X 1′-10″ WOOD BLOCK.
8. WHERE APPLICABLE AND WHEN SPECIFIED, (W6 X 15) X 8′-0″ STEEL POST WITH 8″ X 8″ X 1′-10″ NOTCHED WOOD BLOCKS OR NOTCHED RECYCLED PLASTIC BLOCKS MAY BE USED FOR THE 10″ X 10″ X 8′-0″ WOOD POST WITH 8″ X 8″ X 1′-10″ WOOD BLOCKS SHOWN AT 3′-1½″ CENTER TO CENTER SPACING.
9. WHERE A MINIMUM CLEARANCE OF 4′-0″ OR MORE CAN BE OBTAINED BETWEEN THE FACE OF THE THRIE BEAM RAIL AND THE FACE OF THE FIXED OBJECT(S), THE FOLLOWING SUBSTITUTIONS MAY BE MADE:

   A) 6″ X 8″ X 6′-0″ WOOD POSTS WITH 6″ X 8″ X 1′-10″ WOOD BLOCKS FOR THE 10″ X 10″ X 8′-0″ WOOD POST WITH 8″ X 8″ X 1′-10″ WOOD BLOCKS SHOWN.

   B) 6′-3″ POST SPACING FOR THE 3′-1½″ SPACING SHOWN.

ABBREVIATIONS

CRT - CONTROLLED RELEASING TERMINAL

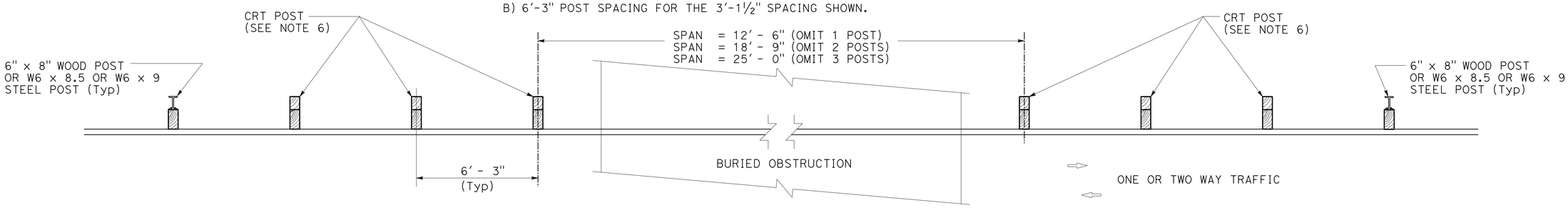

PLAN

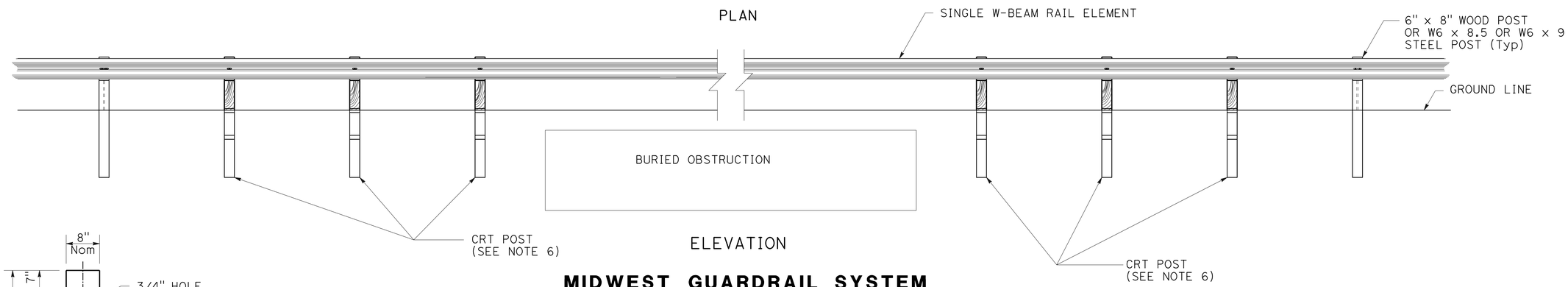

ELEVATION

MIDWEST GUARDRAIL SYSTEM OMMITED POST DETAILS

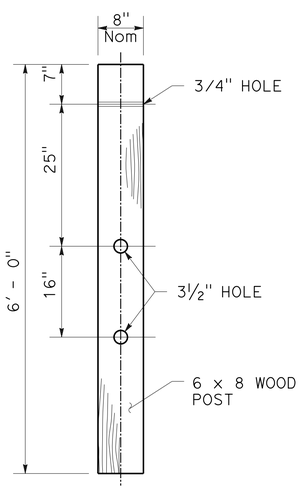

DETAIL "A"

CONTROLLED RELEASING TERMINAL (CRT) POST DETAIL

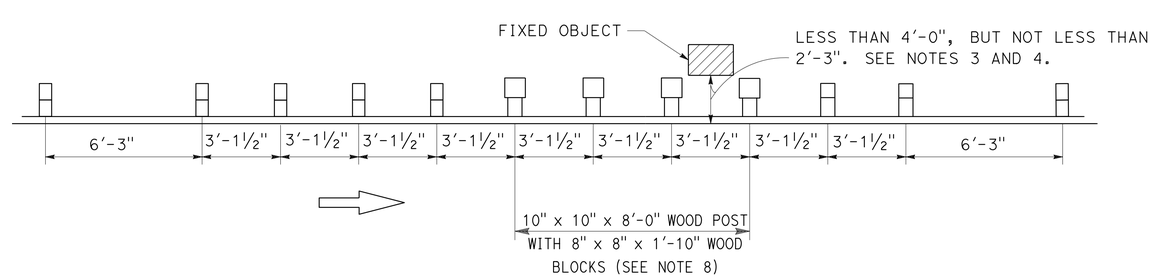

PLAN

THRIE BEAM BARRIER AT FIXED OBJECTS

(Wood post and block shown)
See Notes 1, 2 and 3.

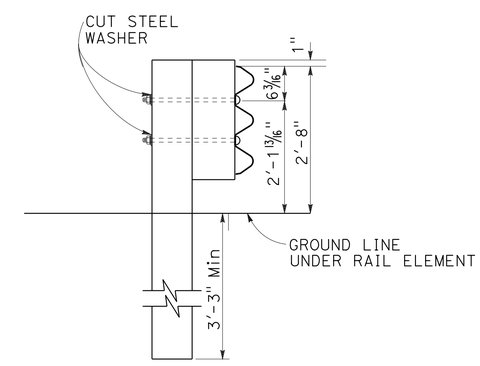

SECTION A-A

Wood post with wood block shown
See Note 7

CONSTRUCTION DETAILS

NO SCALE

C-9

STATE OF CALIFORNIA - DEPARTMENT OF TRANSPORTATION
Caltrans DESIGN
FUNCTIONAL SUPERVISOR: ALI KIANI
CALCULATED-DESIGNED BY: DAVID ROBERTS
CHECKED BY: SUDHA M. KODALI
REVISED BY
DATE REVISED

LAST REVISION 00-00-00
DATE PLOTTED => 05-JUL-2016
TIME PLOTTED => 17:00

Dist	COUNTY	ROUTE	POST MILES TOTAL PROJECT	SHEET No.	TOTAL SHEETS
03	Sac	51,160	4.0/4.3, R44.4/47.0	25	117

K. Sudha Kodali 5-2-16
REGISTERED CIVIL ENGINEER DATE

5-2-16
PLANS APPROVAL DATE

REGISTERED PROFESSIONAL ENGINEER SUDHA M. KODALI No. 79722 Exp. 9/30/16 CIVIL STATE OF CALIFORNIA

THE STATE OF CALIFORNIA OR ITS OFFICERS OR AGENTS SHALL NOT BE RESPONSIBLE FOR THE ACCURACY OR COMPLETENESS OF SCANNED COPIES OF THIS PLAN SHEET.

NOTE:

ONLY USE WHERE TRAFFIC IS ONE-WAY AND APPROACH SPEEDS ARE 45 MPH OR LESS

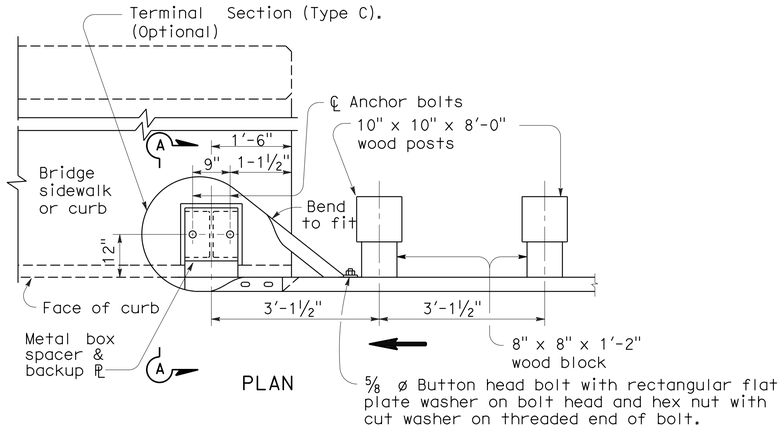

PLAN

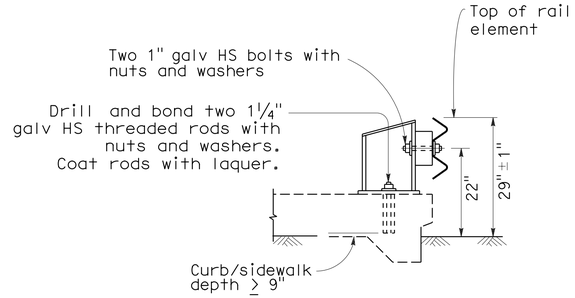

SECTION A-A

Terminal Section (Type C) not shown

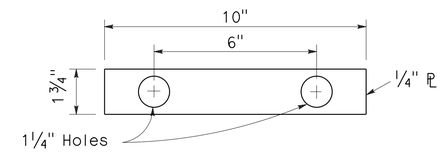

PLATE WASHER

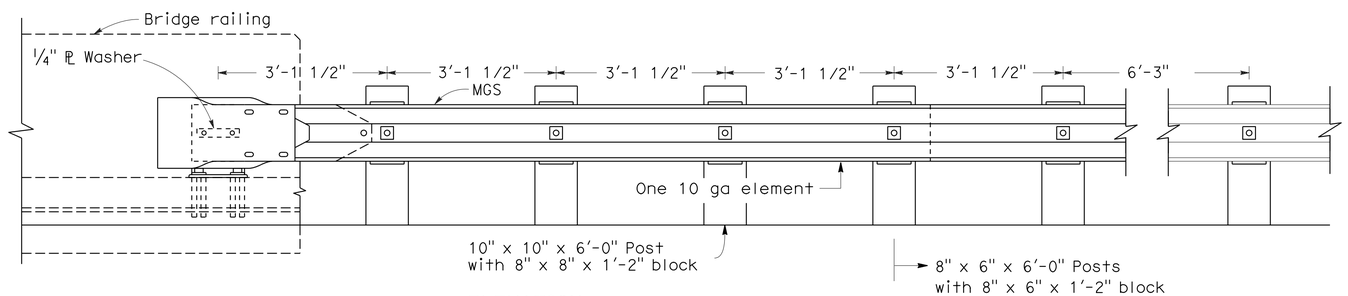

ELEVATION

CONNECTION DETAIL C

Curb/Sidewalk depth ≥ 9"
GUARDRAIL LOCATIONS - 29 & 30

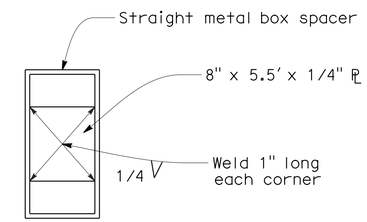

DETAIL A

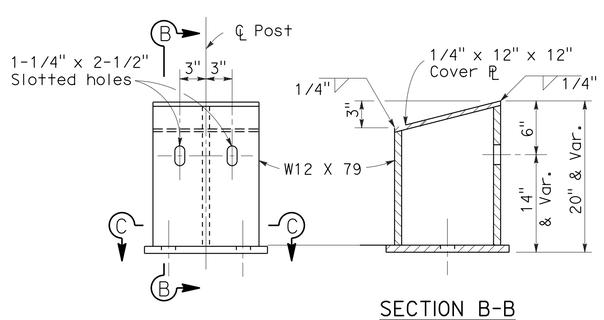

ANCHOR POST ASSEMBLY

SECTION B-B

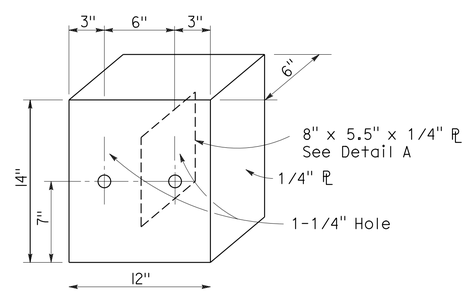

METAL BOX SPACER

Place 1" bolts through 1-1/4" ø x 5-1/4" pipe spacers passing through box interior.

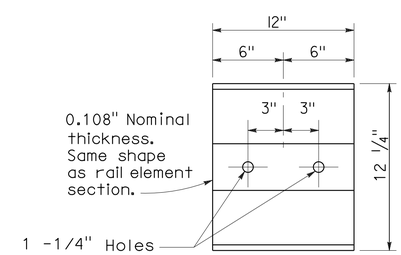

BACK-UP PLATE

For use between guard rail element and metal box spacer.

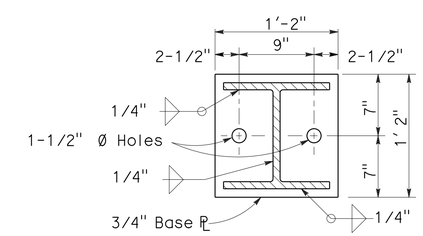

SECTION C-C

ANCHOR POST DETAILS

For Connection Detail C

MIDWEST GUARDRAIL SYSTEM CONNECTIONS TO BRIDGE SIDEWALKS AND CURBS CONSTRUCTION DETAILS

NO SCALE

C-10

STATE OF CALIFORNIA - DEPARTMENT OF TRANSPORTATION
Caltrans DESIGN
FUNCTIONAL SUPERVISOR: ALI KIANI
CALCULATED-DESIGNED BY: DAVID ROBERTS
CHECKED BY: SUDHA M. KODALI
REVISED BY
DATE REVISED

LAST REVISION 00-00-00
DATE PLOTTED => 05-JUL-2016
TIME PLOTTED => 17:00

Dist	COUNTY	ROUTE	POST MILES TOTAL PROJECT	SHEET No.	TOTAL SHEETS
03	Sac	51,160	4.0/4.3, R44.4/47.0	26	117

K. Sudha Kodali 5-2-16
REGISTERED CIVIL ENGINEER DATE

5-2-16
PLANS APPROVAL DATE

REGISTERED PROFESSIONAL ENGINEER SUDHA M. KODALI No. 79722 Exp. 9/30/16 CIVIL STATE OF CALIFORNIA

THE STATE OF CALIFORNIA OR ITS OFFICERS OR AGENTS SHALL NOT BE RESPONSIBLE FOR THE ACCURACY OR COMPLETENESS OF SCANNED COPIES OF THIS PLAN SHEET.

LEGEND:

REMOVE EXISTING CONCRETE RETAINING WALL

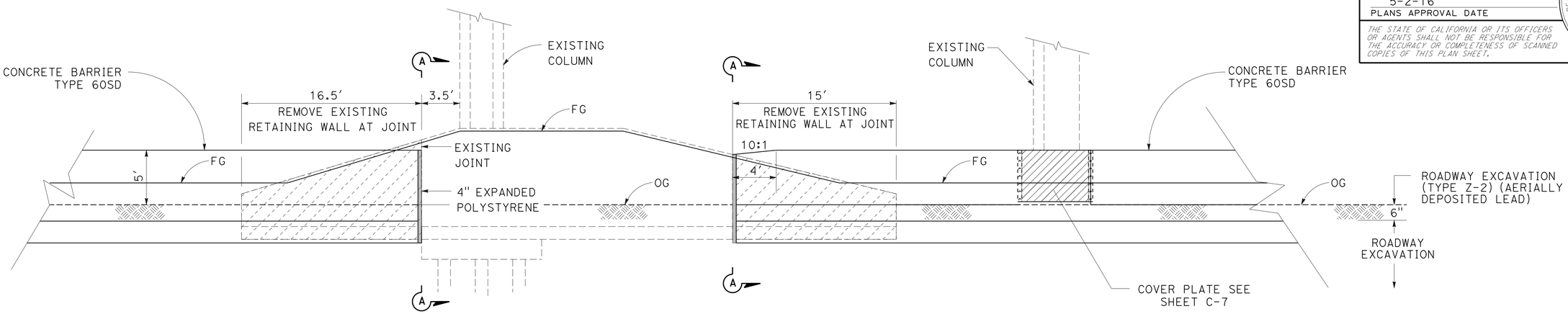

ELEVATION (EXISTING WALL)

PLAN (EXISTING WALL)

EASTBOUND Rte. 160 PM 46.619

NOTES:

1. FOR ADDITIONAL DETAILS NOT SHOWN ON THIS PLAN, SEE SHEETS C-19 AND C-20.
2. TIE EXISTING HORIZONTAL DRAINGE BEHIND RETAINING TO NEW CONCRETE BARRIER TYPE 60SD WALL DRAINAGE SYSTEM.
3. ROADWAY EXCAVATION (TYPE Z-2)(AERIALLY DEPOSITED LEAD EXISTS AT ALL LOCATIONS TO A DEPTH OF 6" AS SHOWN.

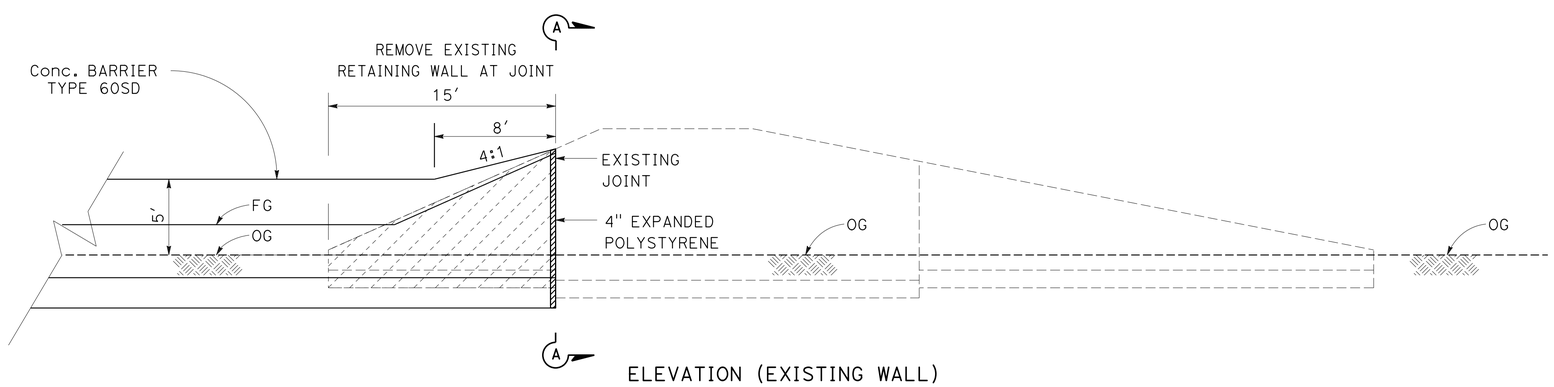

ELEVATION (EXISTING WALL)

PLAN (EXISTING WALL)

EASTBOUND Rte. 160 PM 46.649

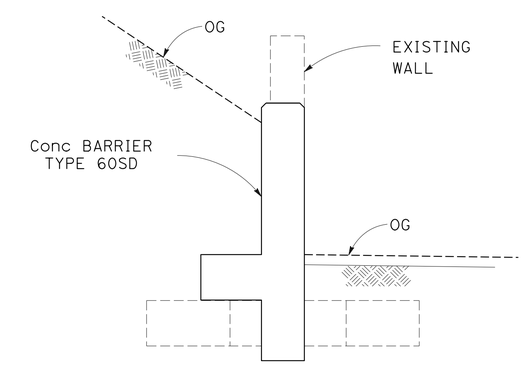

SECTION "A"-"A"

CONCRETE BARRIER TYPE 60SD CONNECTIONS TO EXISTING RETAINING WALL CONSTRUCTION DETAILS

NO SCALE

C-11

STATE OF CALIFORNIA - DEPARTMENT OF TRANSPORTATION
Caltrans DESIGN

FUNCTIONAL SUPERVISOR: ALI KIANI
CALCULATED-DESIGNED BY: DAVID ROBERTS
CHECKED BY: SUDHA M. KODALI
REVISED BY
DATE REVISED

LAST REVISION 00-00-00
DATE PLOTTED => 05-JUL-2016
TIME PLOTTED => 17:00

Dist	COUNTY	ROUTE	POST MILES TOTAL PROJECT	SHEET No.	TOTAL SHEETS
03	Sac	51,160	4.0/4.3, R44.4/47.0	27	117

K. Sudha Mallikarjuna 5-2-16
REGISTERED CIVIL ENGINEER DATE

5-2-16
PLANS APPROVAL DATE

REGISTERED PROFESSIONAL ENGINEER SUDHA M. KODALI No. 79722 Exp. 9/30/16 CIVIL STATE OF CALIFORNIA

THE STATE OF CALIFORNIA OR ITS OFFICERS OR AGENTS SHALL NOT BE RESPONSIBLE FOR THE ACCURACY OR COMPLETENESS OF SCANNED COPIES OF THIS PLAN SHEET.

NOTES:

1. ALL EXISTING SIGNS NOT SHOWN FOR REMOVAL SHALL REMAIN IN PLACE.
2. ALL SIGN CODES SHOWN ARE FEDERAL SIGN CODES UNLESS OTHERWISE DESIGNATED AS CALIFORNIA SIGN CODES.
3. TRAFFIC PLASTIC DRUMS SHALL BE INSTALLED ON AT MAXIMUM OF 50 FOOT CENTERS UNLESS OTHERWISE SHOWN.
4. SEE CS-1 FOR ADDITIONAL CONSTRUCTION AREA SIGNS.

LEGEND:

- TRAFFIC PLASTIC DRUM
- <CA> CALIFORNIA SIGN CODE
- SIGN - SINGLE POST
- DIRECTION OF TRAVEL

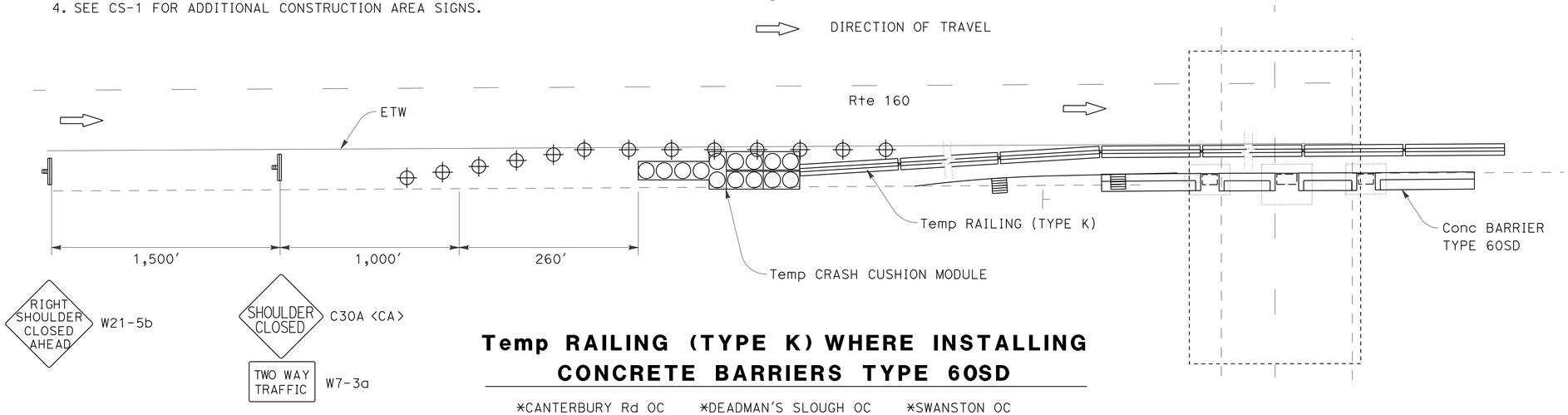

Temp RAILING (TYPE K) WHERE INSTALLING CONCRETE BARRIERS TYPE 60SD

*CANTERBURY Rd OC *DEADMAN'S SLOUGH OC *SWANSTON OC

*ROUTE 51/160 SEPARATION

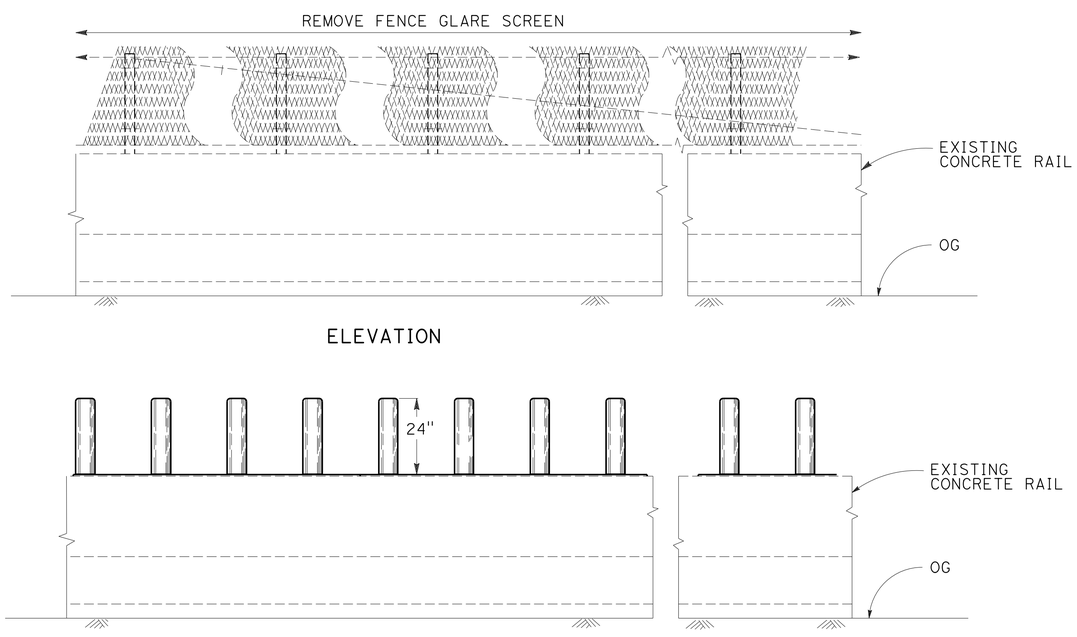

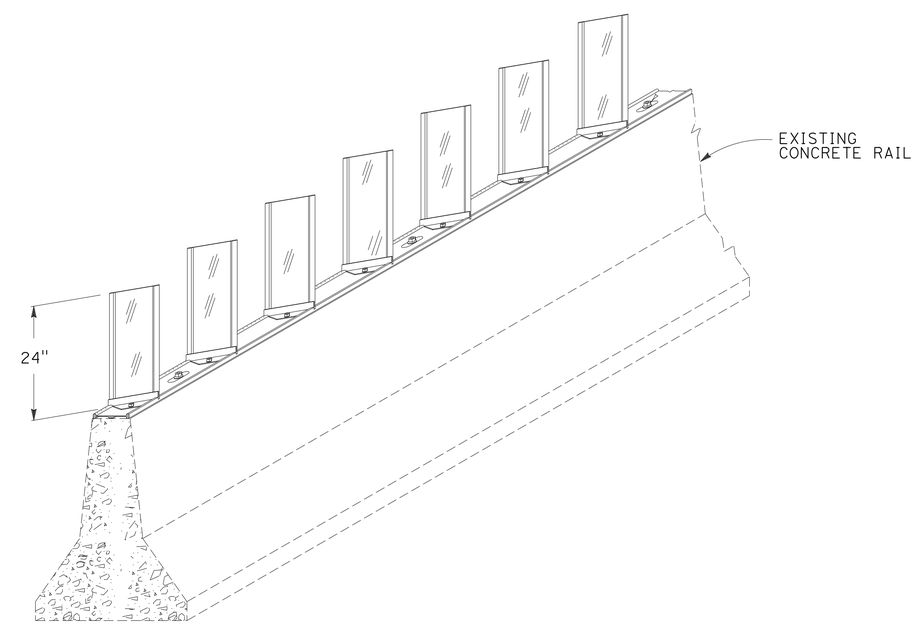

MODULAR GLARE SCREEN

CONSTRUCTION DETAILS

NO SCALE

C-12

STATE OF CALIFORNIA - DEPARTMENT OF TRANSPORTATION
Caltrans DESIGN

FUNCTIONAL SUPERVISOR: ALI KIANI
CALCULATED-DESIGNED BY: DAVID ROBERTS
CHECKED BY: SUDHA M. KODALI
REVISED BY
DATE REVISED

LAST REVISION 00-00-00
DATE PLOTTED => 05-JUL-2016
TIME PLOTTED => 17:00

Dist	COUNTY	ROUTE	POST MILES TOTAL PROJECT	SHEET No.	TOTAL SHEETS
03	Sac	51,160	4.0/4.3, R44.4/47.0	28	117

K. Sudha Mallikarjuna 5-2-16
REGISTERED CIVIL ENGINEER DATE

5-2-16
PLANS APPROVAL DATE

REGISTERED PROFESSIONAL ENGINEER SUDHA M. KODALI No. 79722 Exp. 9/30/16 CIVIL STATE OF CALIFORNIA

THE STATE OF CALIFORNIA OR ITS OFFICERS OR AGENTS SHALL NOT BE RESPONSIBLE FOR THE ACCURACY OR COMPLETENESS OF SCANNED COPIES OF THIS PLAN SHEET.

NOTES:

1. ROADWAY EXCAVATION (TYPE Z-2)(AERIALLY DEPOSITED LEAD) EXISTS AT ALL LOCATIONS TO A DEPTH OF 6" AS SHOWN.

LEGEND:

REMOVE EXISTING CONCRETE

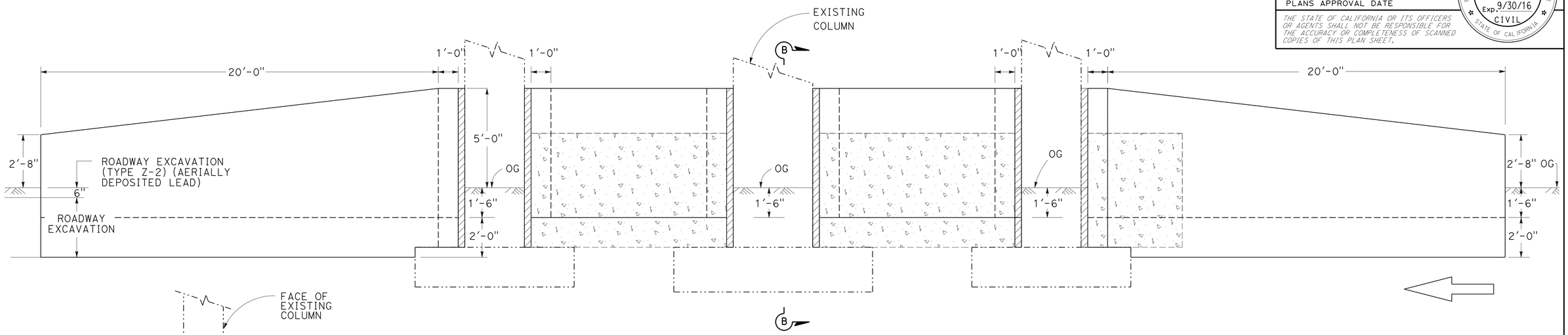

CONCRETE BARRIER TYPE 60SD TYPICAL FOR CANTERBURY ROAD OC EB/WB & NORTH SACRAMENTO UC

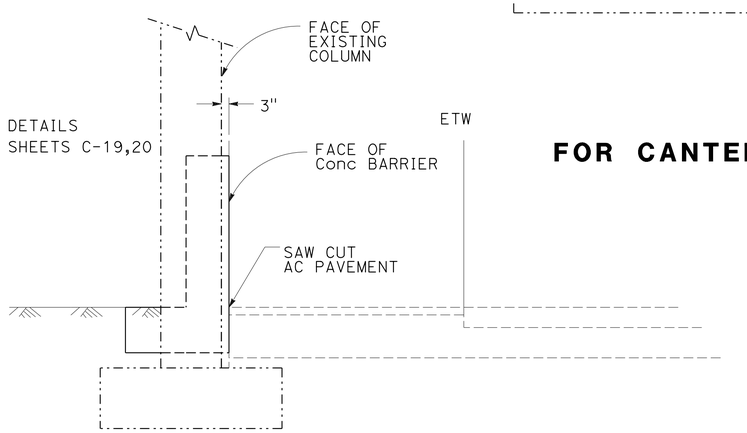

* FOR DETAILS SEE SHEETS C-19,20

SECTION "B" - "B"

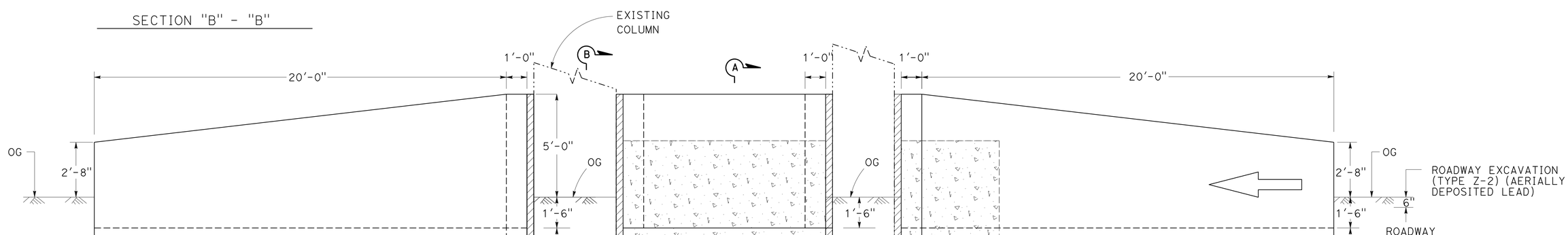

CONCRETE BARRIER TYPE 60SD TYPICAL FOR DEADMAN'S OC EB & SWANSTON OC EB/WB

CONSTRUCTION DETAILS

NO SCALE

C-13

STATE OF CALIFORNIA - DEPARTMENT OF TRANSPORTATION
Caltrans® DESIGN
FUNCTIONAL SUPERVISOR: ALI KIANI
CALCULATED-DESIGNED BY: DAVID ROBERTS
CHECKED BY: SUDHA M. KODALI
REVISED BY
DATE REVISED

LAST REVISION 00-00-00
DATE PLOTTED => 05-JUL-2016
TIME PLOTTED => 17:00

Dist	COUNTY	ROUTE	POST MILES TOTAL PROJECT	SHEET No.	TOTAL SHEETS
03	Sac	51,160	4.0/4.3, R44.4/47.0	29	117

K. Sudha Kodali 5-2-16
REGISTERED CIVIL ENGINEER DATE

5-2-16
PLANS APPROVAL DATE

REGISTERED PROFESSIONAL ENGINEER SUDHA M. KODALI No. 79722 Exp. 9/30/16 CIVIL STATE OF CALIFORNIA

THE STATE OF CALIFORNIA OR ITS OFFICERS OR AGENTS SHALL NOT BE RESPONSIBLE FOR THE ACCURACY OR COMPLETENESS OF SCANNED COPIES OF THIS PLAN SHEET.

NOTE:

FOR ACCURATE RIGHT OF WAY DATA, CONTACT RIGHT OF WAY ENGINEERING AT THE DISTRICT OFFICE.

LEGEND:

DETECTABLE WARNING SURFACE

ROADWAY EXCAVATION (TYPE Z-2) (AERIALLY DEPOSITED LEAD)

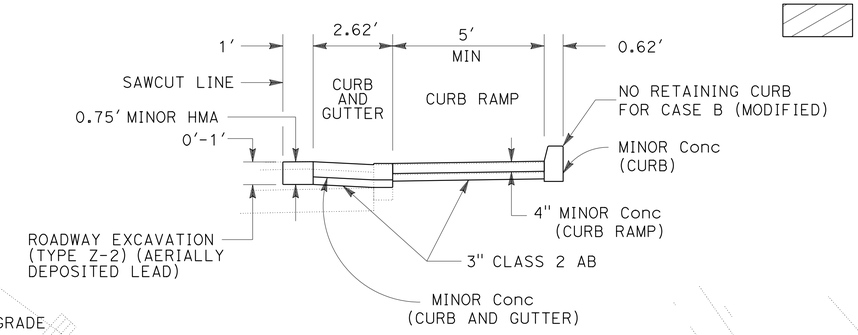

TYPICAL SECTION
NO SCALE

NOTES:

1. ROADWAY EXCAVATION (TYPE Z-2)(AERIALLY DEPOSITED LEAD) EXISTS AT ALL LOCATIONS TO A DEPTH OF 1.0' AS SHOWN.

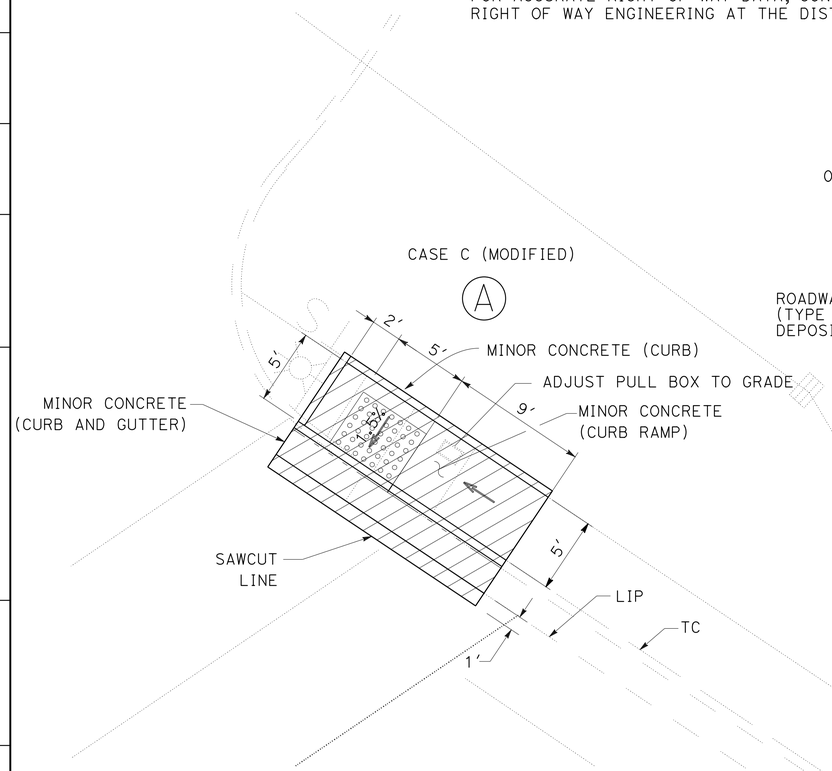

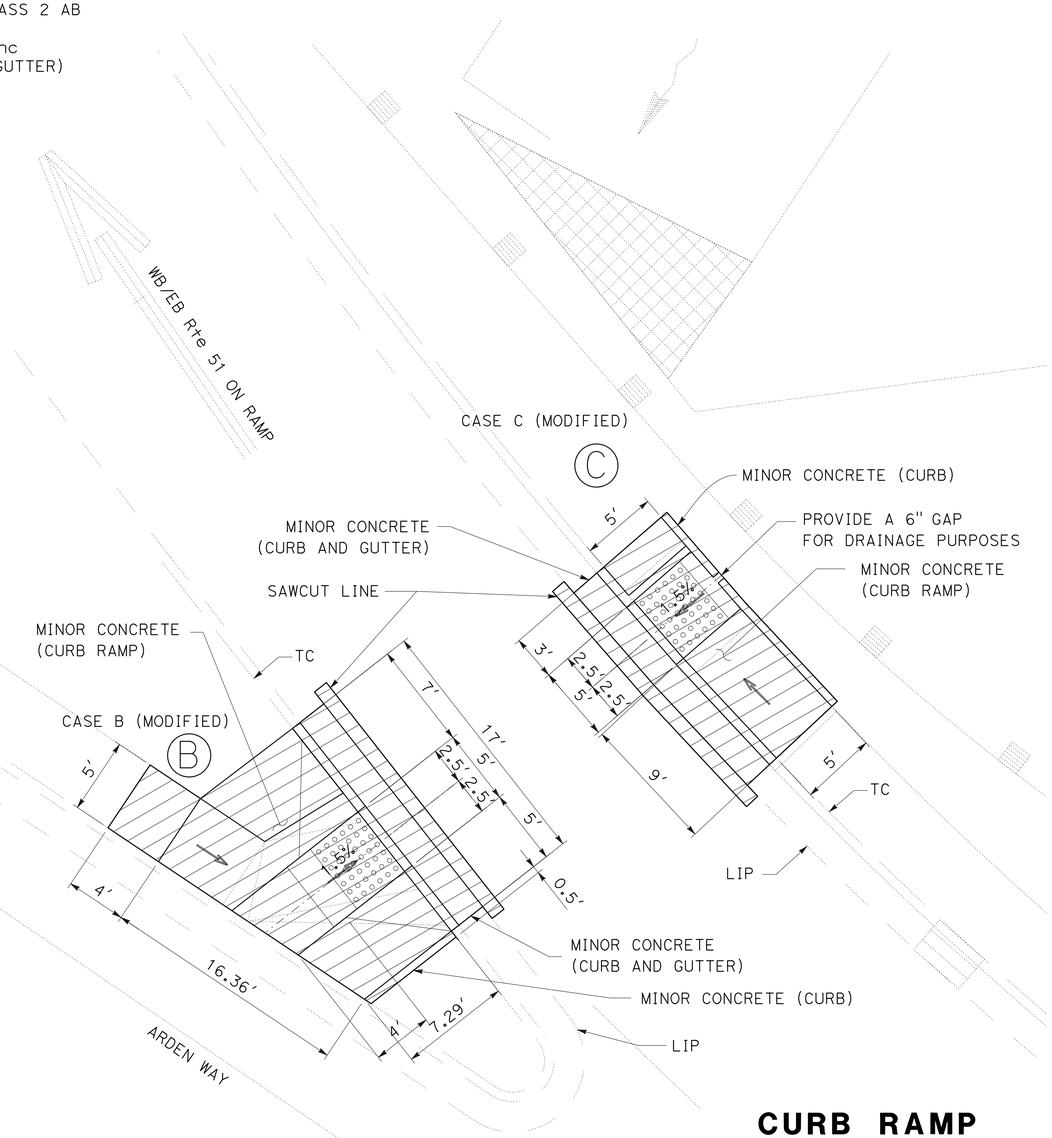

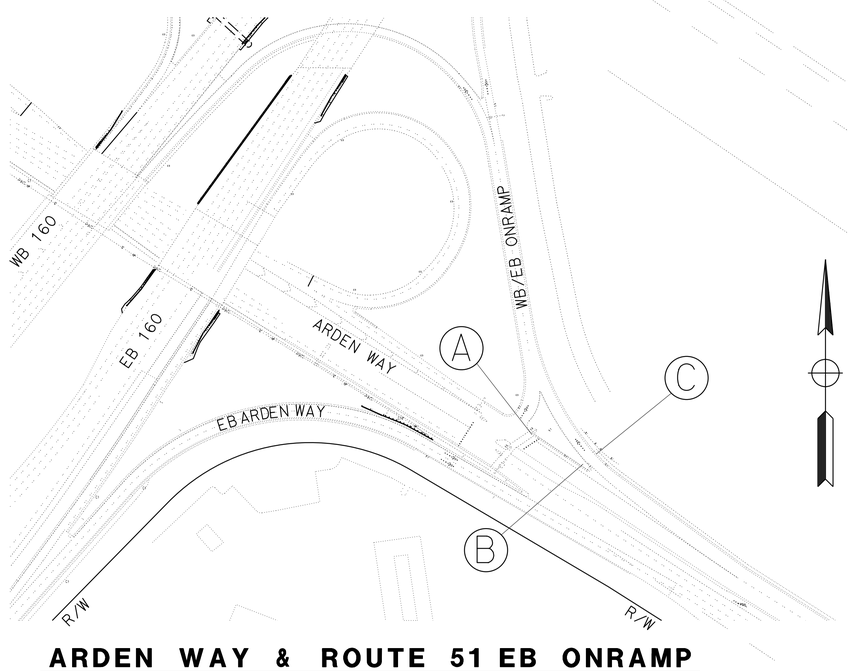

ARDEN WAY & ROUTE 51 EB ONRAMP

CURB RAMP CONSTRUCTION DETAILS

SCALE: 1"=5'

C-14

STATE OF CALIFORNIA - DEPARTMENT OF TRANSPORTATION
Caltrans® DESIGN

FUNCTIONAL SUPERVISOR: ALI KIANI
CALCULATED-DESIGNED BY: DAVID HOPPER
CHECKED BY: MIKE PANCHESSON
REVISED BY / DATE REVISED

LAST REVISION 00-00-00
DATE PLOTTED => 05-JUL-2016
TIME PLOTTED => 17:00

Dist	COUNTY	ROUTE	POST MILES TOTAL PROJECT	SHEET No.	TOTAL SHEETS
03	Sac	51, 160	4.0/4.3 R44.4/47.0	30	117

REGISTERED CIVIL ENGINEER 5-2-16 DATE

5-2-16
PLANS APPROVAL DATE

REGISTERED PROFESSIONAL ENGINEER ALEX WIN WU No. C77266 Exp. 6-30-17 CIVIL STATE OF CALIFORNIA

THE STATE OF CALIFORNIA OR ITS OFFICERS OR AGENTS SHALL NOT BE RESPONSIBLE FOR THE ACCURACY OR COMPLETENESS OF SCANNED COPIES OF THIS PLAN SHEET.

STATIONARY MOUNTED CONSTRUCTION AREA SIGNS

SIGN LETTER	SIGN CODE	PANEL SIZE	SIGN MESSAGE	NUMBER OF POST AND SIZE	NUMBER OF SIGNS
A	CSP-1<CA>	60" x 30"	ROAD WORK NEXT 3 MILES	2 - 4" x 4"	1
B	CSP-2<CA>	60" x 42"	(160) WEST ROAD WORK NEXT 3 MILES	2 - 4" x 6"	1
C	C40(Mod)<CA>	72" x 42"	TRAFFIC FINES DOUBLED IN WORK ZONES	2 - 4" x 6"	2
D	W20-1	48" x 48"	ROAD WORK AHEAD	1 - 6" x 6" OR SSBM	16
E	G20-2	36" x 18"	END ROAD WORK	1 - 4" x 4" OR SSBM	18
F	C24<CA>	48" x 48"	SHOULDER WORK AHEAD	1 - 6" x 6"	3
G	C23<CA>	48" x 48"	RAMP WORK AHEAD	SSBM	1
H	R44B<CA>	36" x 30"	BICYCLES MOTOR-DRIVEN CYCLES MUST EXIT ↗	SSBM	1

NOTES:

1. EXACT SIGN LOCATION TO BE DETERMINED BY THE ENGINEER.
2. ALL SIGN CODES SHOWN ARE FEDERAL SIGN CODES UNLESS OTHERWISE DESIGNATED AS A CALIFORNIA SIGN CODE.
3. <CA> = CALIFORNIA SIGN CODE.
4. INSTALL PANEL ON CITY ELECTROLIER.
5. INSTALL PANEL ON EXISTING OVERHEAD SIGN AS-168.
6. INSTALL PANEL ON EXISTING OVERHEAD SIGN AS-269.
7. INSTALL PANEL ON EXISTING ELECTROLIER A-24.
8. FOR ADDITIONAL CONSTRUCTION AREA SIGNS, SEE CONSTRUCTION DETAIL PLANS.

LEGEND

(X) CONSTRUCTION AREA SIGN LETTER

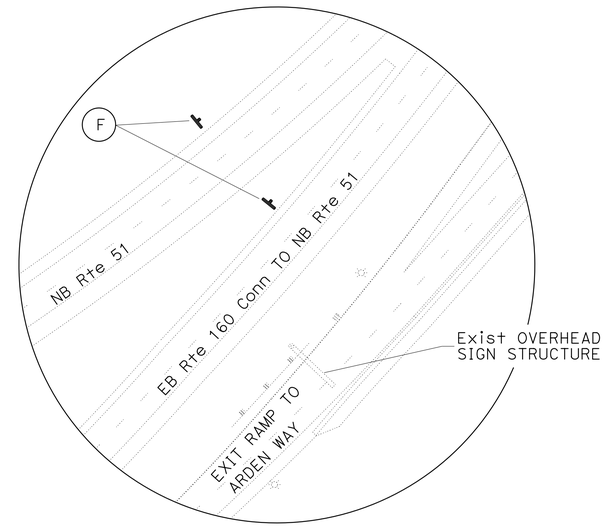

DETAIL "A"

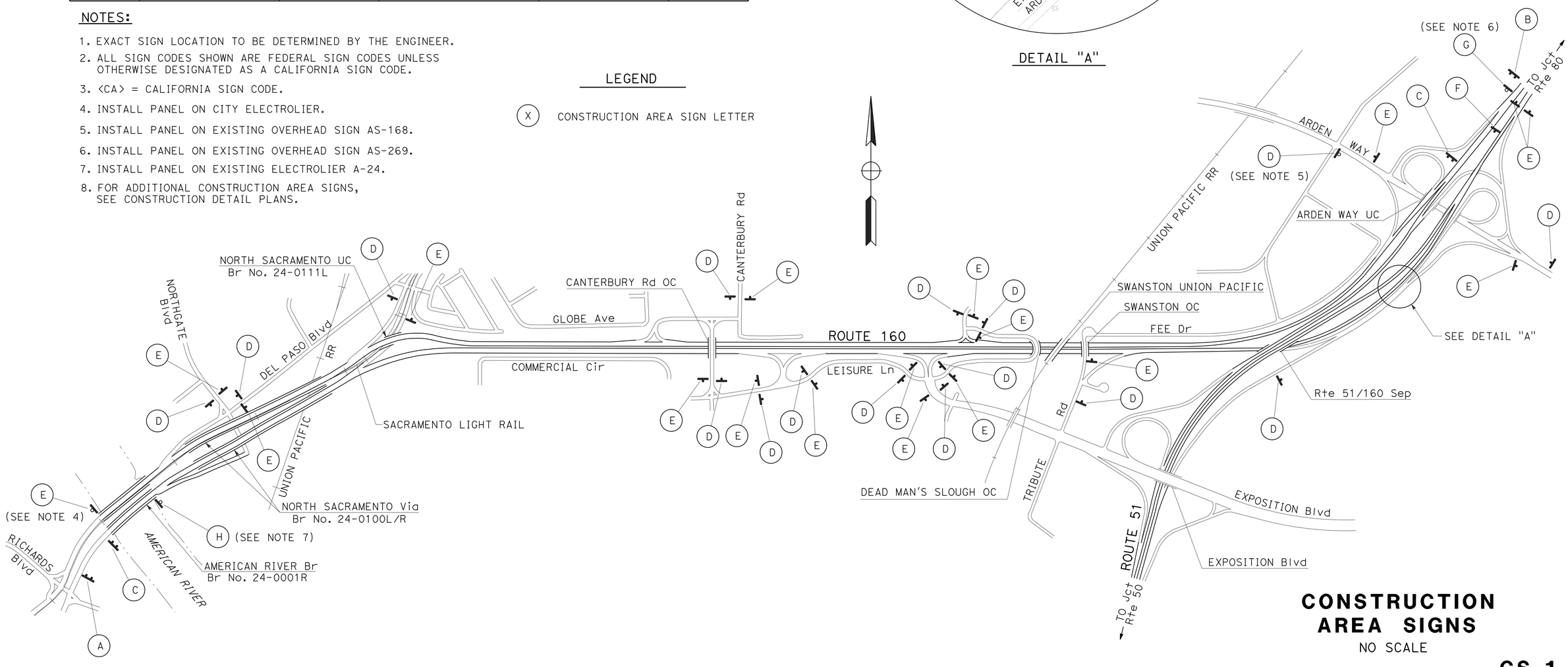

CONSTRUCTION AREA SIGNS

NO SCALE

CS-1

APPROVED FOR CONSTRUCTION AREA SIGN WORK ONLY

STATE OF CALIFORNIA - DEPARTMENT OF TRANSPORTATION
Caltrans
TRAFFIC

FUNCTIONAL SUPERVISOR: JOYCE K LOFTUS
CALCULATED-DESIGNED BY: JACK KEMMERLY
CHECKED BY: ALEX WU
REVISED BY
DATE REVISED

LAST REVISION 4-19-16
DATE PLOTTED => 05-JUL-2016
TIME PLOTTED => 17:00

Dist	COUNTY	ROUTE	POST MILES TOTAL PROJECT	SHEET No.	TOTAL SHEETS
03	Sac	51, 160	4.0/4.3 R44.4/47.0	31	117

REGISTERED CIVIL ENGINEER 5-2-16 DATE

5-2-16
PLANS APPROVAL DATE

REGISTERED PROFESSIONAL ENGINEER
ALEX WIN WU
No. C77266
Exp. 6-30-17
CIVIL
STATE OF CALIFORNIA

THE STATE OF CALIFORNIA OR ITS OFFICERS OR AGENTS SHALL NOT BE RESPONSIBLE FOR THE ACCURACY OR COMPLETENESS OF SCANNED COPIES OF THIS PLAN SHEET.

(B) CSP-2<CA>

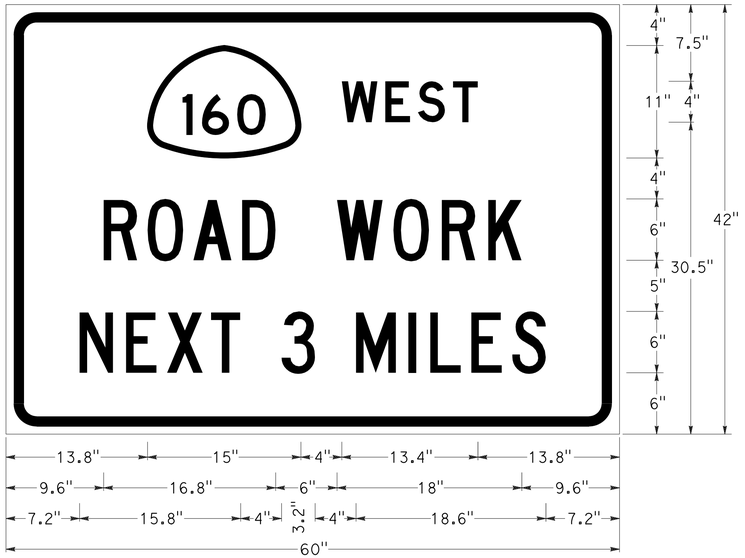

1" BORDER WITH 3" RADIUS and ¾" INDENT

RETROREFLECTIVE FLUORESCENT ORANGE BACKGROUND WITH BLACK LEGEND AND BORDER

G28-1(160)<CA>, "WEST" D
"ROAD WORK" C
"NEXT 3 MILES" C

(C) C40(Mod)<CA>

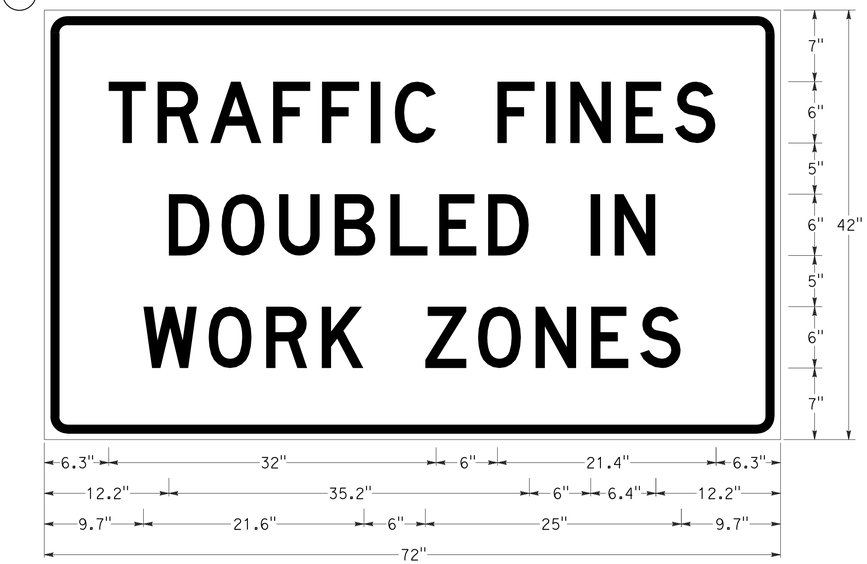

⅞" BORDER WITH 2¼" RADIUS AND ⅝" INDENT

RETROREFLECTIVE WHITE BACKGROUND WITH BLACK LEGEND AND BORDER

"TRAFFIC FINES" D
"DOUBLED IN" D
"WORK ZONES" D

(A) CSP-1<CA>

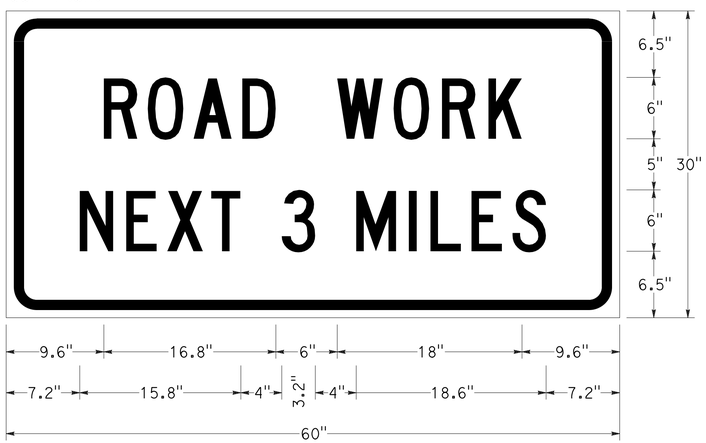

1" BORDER WITH 3" RADIUS and ¾" INDENT

RETROREFLECTIVE FLUORESCENT ORANGE BACKGROUND WITH BLACK LEGEND AND BORDER

"ROAD WORK" C
"NEXT 5 MILES" C

CONSTRUCTION AREA SIGNS

APPROVED FOR CONSTRUCTION AREA SIGN WORK ONLY

CS-2

STATE OF CALIFORNIA - DEPARTMENT OF TRANSPORTATION
Caltrans
TRAFFIC

FUNCTIONAL SUPERVISOR: JOYCE K LOFTUS
CALCULATED-DESIGNED BY: JACK KEMMERLY
CHECKED BY: ALEX WU
REVISED BY
DATE REVISED

LAST REVISION 11-9-15
DATE PLOTTED => 05-JUL-2016
TIME PLOTTED => 17:00

Dist	COUNTY	ROUTE	POST MILES TOTAL PROJECT	SHEET No.	TOTAL SHEETS
03	Sac	51, 160	4.0/4.3 R44.4/47.0	32	117

REGISTERED CIVIL ENGINEER 5-2-16 DATE

5-2-16
PLANS APPROVAL DATE

REGISTERED PROFESSIONAL ENGINEER ALEX WIN WU No. C77266 Exp. 6-30-17 CIVIL STATE OF CALIFORNIA

THE STATE OF CALIFORNIA OR ITS OFFICERS OR AGENTS SHALL NOT BE RESPONSIBLE FOR THE ACCURACY OR COMPLETENESS OF SCANNED COPIES OF THIS PLAN SHEET.

LEGEND

- CHANGE IN STRIPING PATTERN
- (No.) PAVEMENT DELINEATION DETAIL NUMBER (SEE NOTE 1)
- s= DELINEATOR SPACING
- Si "SIGNAL" PAVEMENT MARKING
- 45 "45" PAVEMENT MARKING (SEE NOTE 3)
- A "AHEAD" PAVEMENT MARKING
- TYPE I (24') ARROW
- TYPE II ARROW
- TYPE V ARROW
- DELINEATOR (CLASS 1)
- CONCRETE BARRIER DELINEATOR (16 INCH)

NOTE:

1. ALL EXISTING STRIPING AND PAVEMENT MARKINGS ARE TO BE REPLACED IN KIND UNLESS OTHERWISE SHOWN.
2. ALL STRIPING PLACED ON BRIDGE DECKS SHALL BE PERMANENT TAPE TRAFFIC STRIPE.
3. FOR ADDITIONAL "45" PAVEMENT MARKING INFORMATION, SEE SHEET PDQ-2.

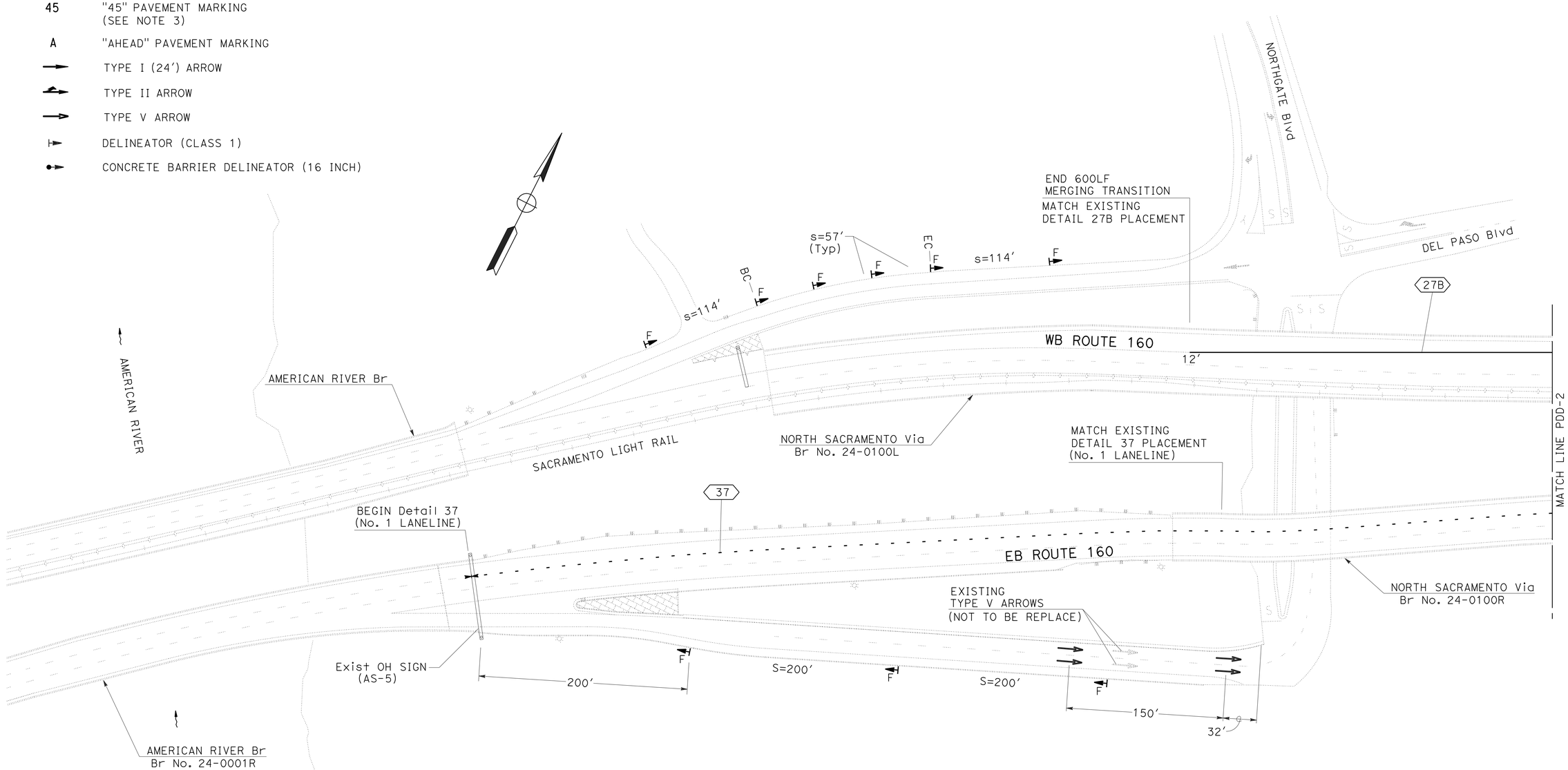

PAVEMENT DELINEATION DETAILS

SCALE: 1"=50'

PDD-1

APPROVED FOR PAVEMENT DELINEATION WORK ONLY

STATE OF CALIFORNIA - DEPARTMENT OF TRANSPORTATION
Caltrans
TRAFFIC

FUNCTIONAL SUPERVISOR: JOYCE K LOFTUS
CALCULATED-DESIGNED BY: JACK KEMMERLY
CHECKED BY: ALEX WU
REVISED BY / DATE REVISED

LAST REVISION 4-10-16
DATE PLOTTED => 05-JUL-2016
TIME PLOTTED => 17:00

Dist	COUNTY	ROUTE	POST MILES TOTAL PROJECT	SHEET No.	TOTAL SHEETS
03	Sac	51, 160	4.0/4.3 R44.4/47.0	33	117

REGISTERED CIVIL ENGINEER 5-2-16 DATE

5-2-16
PLANS APPROVAL DATE

REGISTERED PROFESSIONAL ENGINEER
ALEX WIN WU
No. C77266
Exp. 6-30-17
CIVIL
STATE OF CALIFORNIA

THE STATE OF CALIFORNIA OR ITS OFFICERS OR AGENTS SHALL NOT BE RESPONSIBLE FOR THE ACCURACY OR COMPLETENESS OF SCANNED COPIES OF THIS PLAN SHEET.

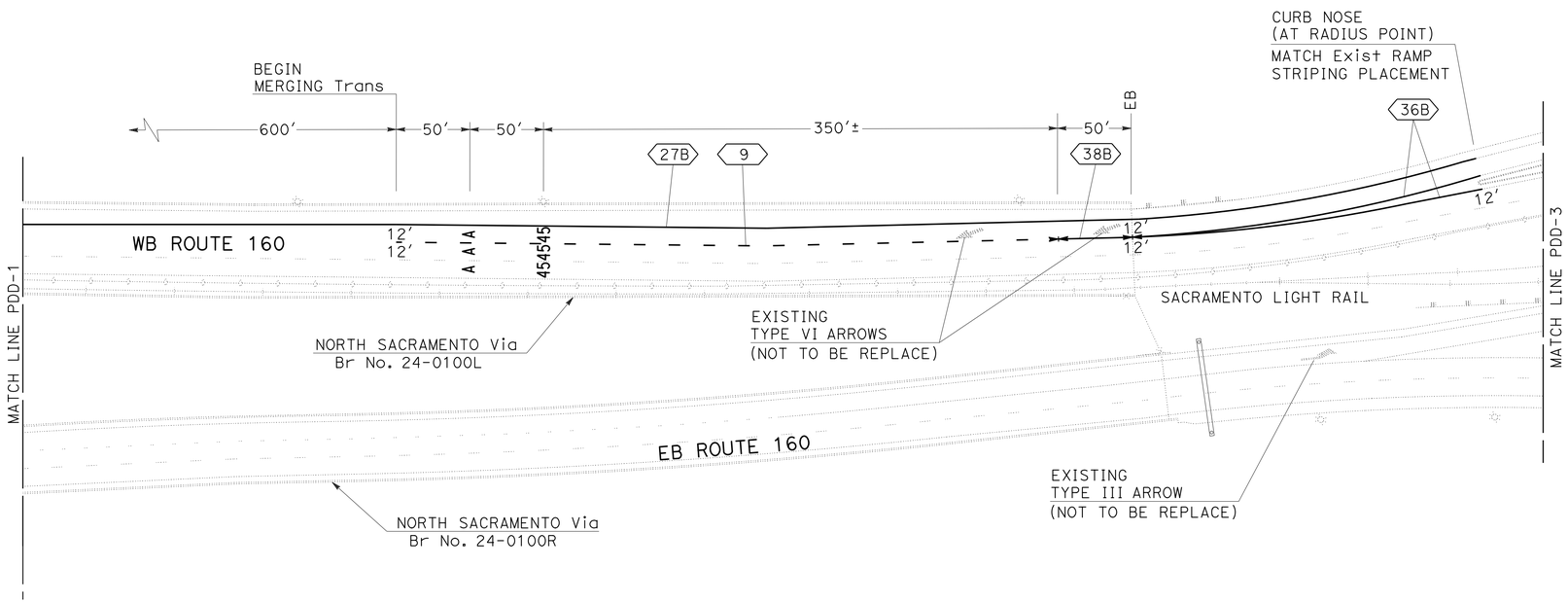

PAVEMENT DELINEATION DETAILS

SCALE: 1"=50′

PDD-2

APPROVED FOR PAVEMENT DELINEATION WORK ONLY

STATE OF CALIFORNIA - DEPARTMENT OF TRANSPORTATION
Caltrans
TRAFFIC

FUNCTIONAL SUPERVISOR: JOYCE K LOFTUS
CALCULATED-DESIGNED BY: JACK KEMMERLY
CHECKED BY: ALEX WU
REVISED BY
DATE REVISED

LAST REVISION 2-5-16
DATE PLOTTED => 05-JUL-2016
TIME PLOTTED => 17:00

Dist	COUNTY	ROUTE	POST MILES TOTAL PROJECT	SHEET No.	TOTAL SHEETS
03	Sac	51, 160	4.0/4.3 R44.4/47.0	34	117

REGISTERED CIVIL ENGINEER 5-2-16 DATE

5-2-16
PLANS APPROVAL DATE

REGISTERED PROFESSIONAL ENGINEER
ALEX WIN WU
No. C77266
Exp. 6-30-17
CIVIL
STATE OF CALIFORNIA

THE STATE OF CALIFORNIA OR ITS OFFICERS OR AGENTS SHALL NOT BE RESPONSIBLE FOR THE ACCURACY OR COMPLETENESS OF SCANNED COPIES OF THIS PLAN SHEET.

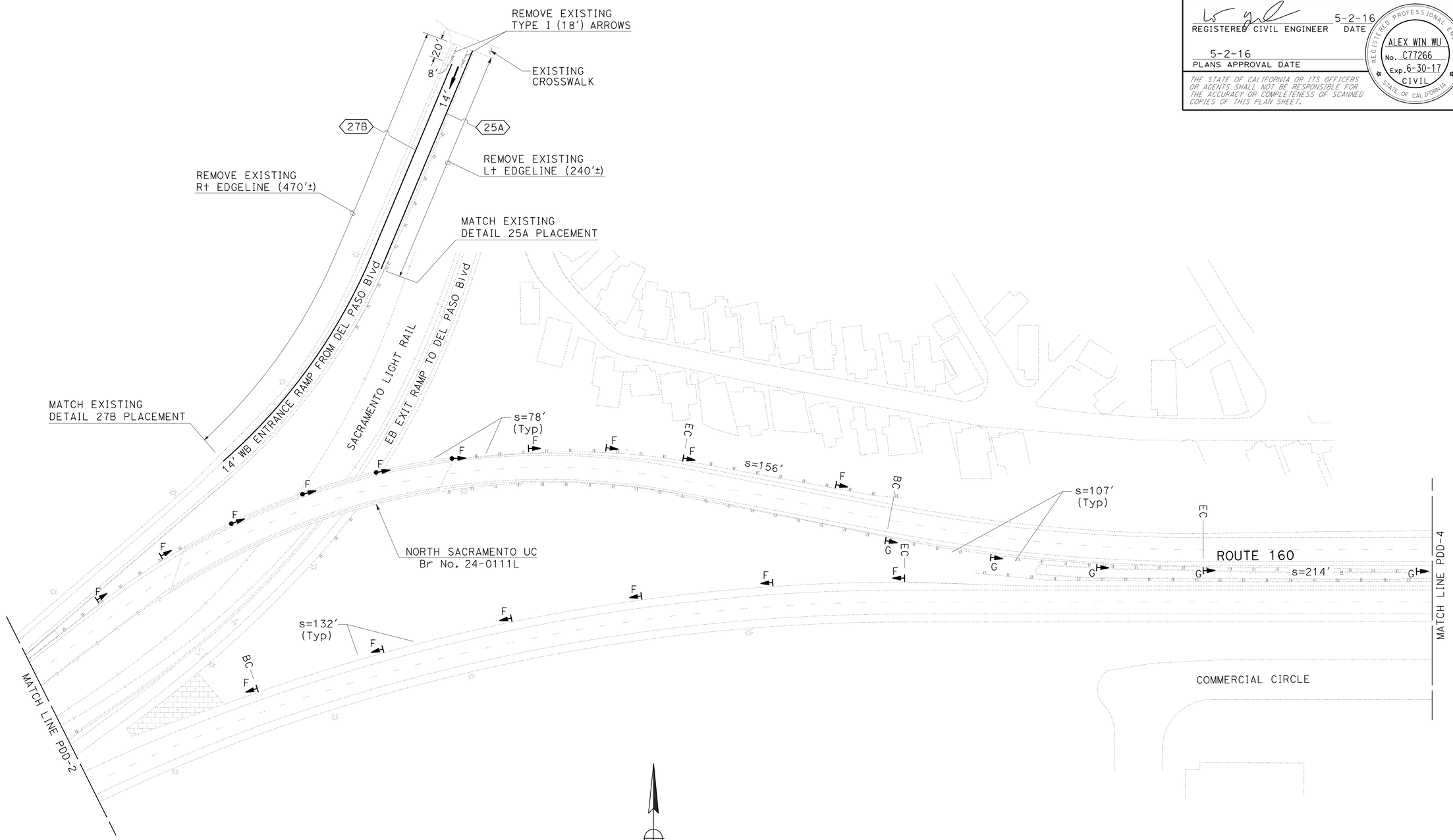

PAVEMENT DELINEATION DETAILS

SCALE: 1"=50'

PDD-3

APPROVED FOR PAVEMENT DELINEATION WORK ONLY

STATE OF CALIFORNIA - DEPARTMENT OF TRANSPORTATION
Caltrans
TRAFFIC

FUNCTIONAL SUPERVISOR: JOYCE K LOFTUS
CALCULATED-DESIGNED BY: JACK KEMMERLY
CHECKED BY: ALEX WU
REVISED BY
DATE REVISED

LAST REVISION 4-20-16
DATE PLOTTED => 05-JUL-2016
TIME PLOTTED => 17:00

Dist	COUNTY	ROUTE	POST MILES TOTAL PROJECT	SHEET No.	TOTAL SHEETS
03	Sac	51, 160	4.0/4.3 R44.4/47.0	35	117

REGISTERED CIVIL ENGINEER 5-2-16 DATE

5-2-16
PLANS APPROVAL DATE

REGISTERED PROFESSIONAL ENGINEER
ALEX WIN WU
No. C77266
Exp. 6-30-17
CIVIL
STATE OF CALIFORNIA

THE STATE OF CALIFORNIA OR ITS OFFICERS OR AGENTS SHALL NOT BE RESPONSIBLE FOR THE ACCURACY OR COMPLETENESS OF SCANNED COPIES OF THIS PLAN SHEET.

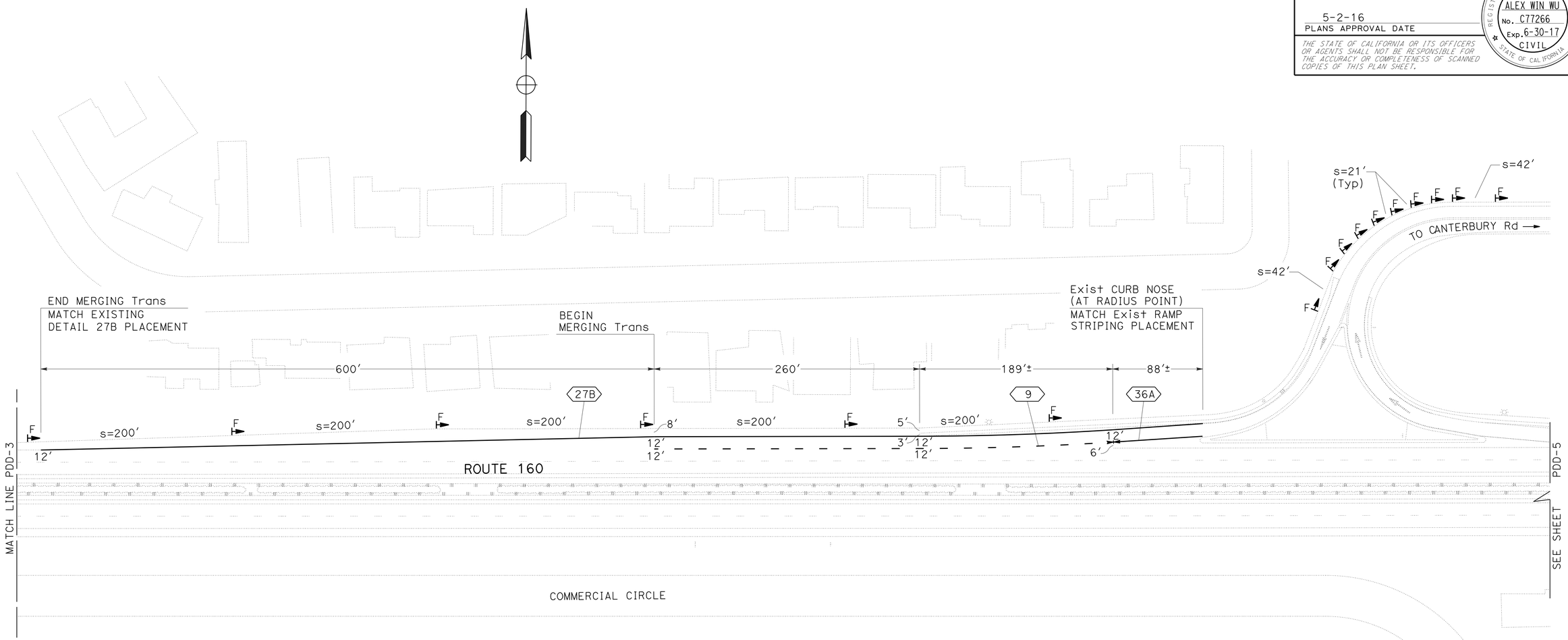

PAVEMENT DELINEATION DETAILS

SCALE: 1"=50′

PDD-4

APPROVED FOR PAVEMENT DELINEATION WORK ONLY

STATE OF CALIFORNIA - DEPARTMENT OF TRANSPORTATION
Caltrans
TRAFFIC

FUNCTIONAL SUPERVISOR: JOYCE K LOFTUS
CALCULATED-DESIGNED BY: JACK KEMMERLY
CHECKED BY: ALEX WU
REVISED BY
DATE REVISED

LAST REVISION 2-5-16
DATE PLOTTED => 05-JUL-2016
TIME PLOTTED => 17:00

Dist	COUNTY	ROUTE	POST MILES TOTAL PROJECT	SHEET No.	TOTAL SHEETS
03	Sac	51, 160	4.0/4.3 R44.4/47.0	36	117

REGISTERED CIVIL ENGINEER 5-2-16 DATE

5-2-16
PLANS APPROVAL DATE

REGISTERED PROFESSIONAL ENGINEER
ALEX WIN WU
No. C77266
Exp. 6-30-17
CIVIL
STATE OF CALIFORNIA

THE STATE OF CALIFORNIA OR ITS OFFICERS OR AGENTS SHALL NOT BE RESPONSIBLE FOR THE ACCURACY OR COMPLETENESS OF SCANNED COPIES OF THIS PLAN SHEET.

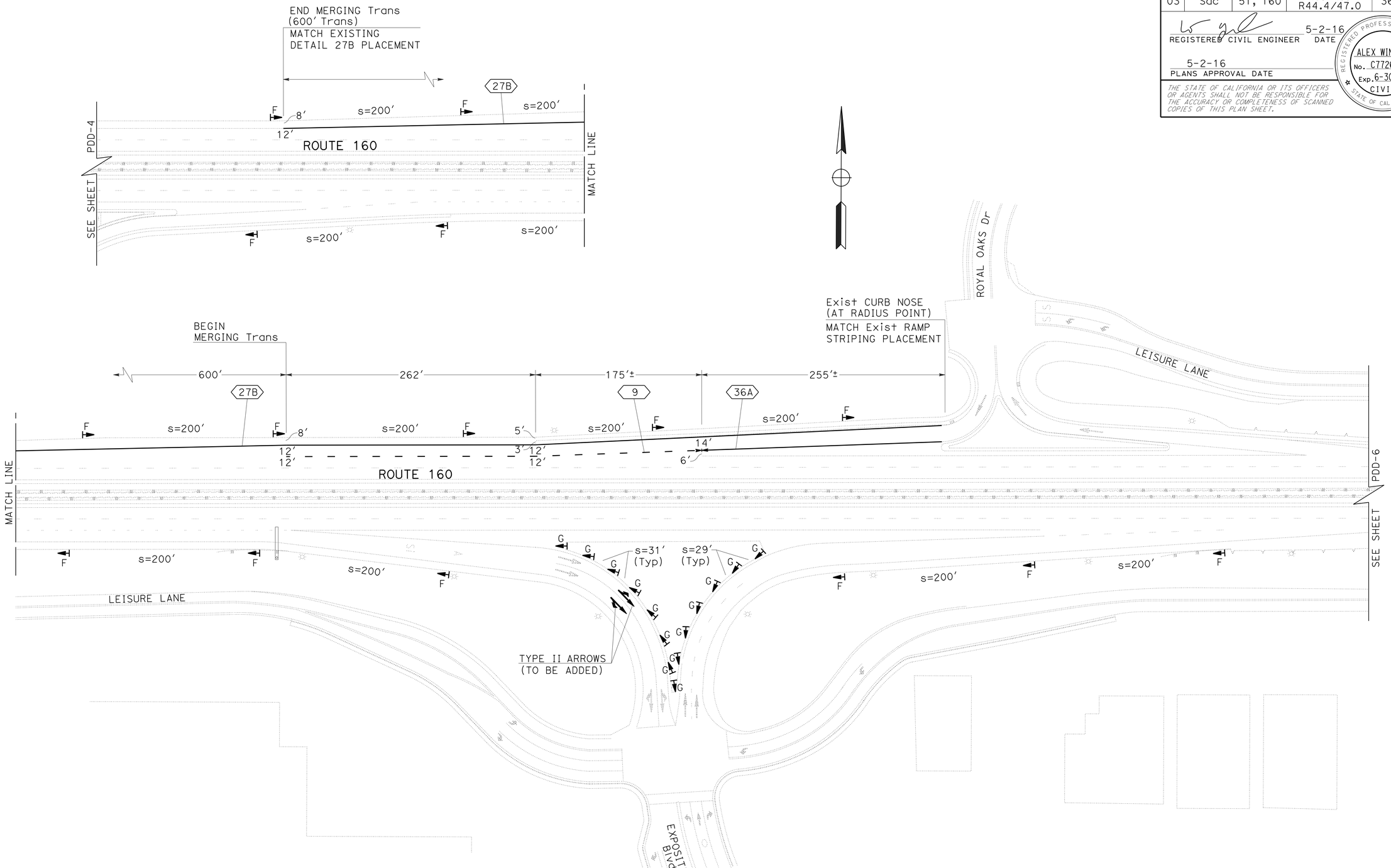

PAVEMENT DELINEATION DETAILS

SCALE: 1"=50'

PDD-5

APPROVED FOR PAVEMENT DELINEATION WORK ONLY

STATE OF CALIFORNIA - DEPARTMENT OF TRANSPORTATION
Caltrans
TRAFFIC

FUNCTIONAL SUPERVISOR: JOYCE K LOFTUS
CALCULATED-DESIGNED BY: JACK KEMMERLY
CHECKED BY: ALEX WU
REVISED BY
DATE REVISED

LAST REVISION 4-21-16
DATE PLOTTED => 05-JUL-2016
TIME PLOTTED => 17:00

Dist	COUNTY	ROUTE	POST MILES TOTAL PROJECT	SHEET No.	TOTAL SHEETS
03	Sac	51, 160	4.0/4.3 R44.4/47.0	37	117

REGISTERED CIVIL ENGINEER 5-2-16 DATE

5-2-16
PLANS APPROVAL DATE

REGISTERED PROFESSIONAL ENGINEER
ALEX WIN WU
No. C77266
Exp. 6-30-17
CIVIL
STATE OF CALIFORNIA

THE STATE OF CALIFORNIA OR ITS OFFICERS OR AGENTS SHALL NOT BE RESPONSIBLE FOR THE ACCURACY OR COMPLETENESS OF SCANNED COPIES OF THIS PLAN SHEET.

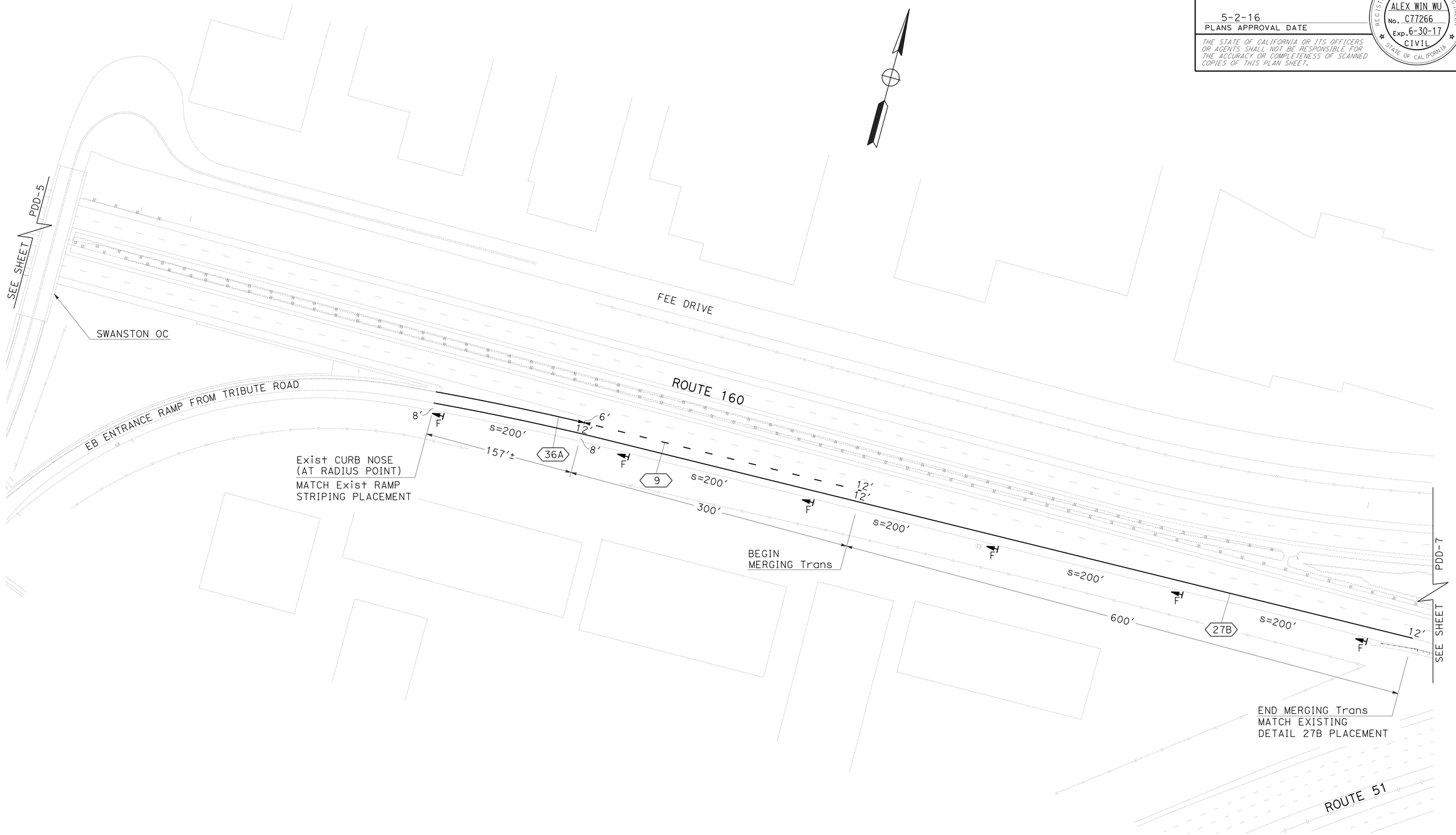

PAVEMENT DELINEATION DETAILS

SCALE: 1"=50'

PDD-6

APPROVED FOR PAVEMENT DELINEATION WORK ONLY

STATE OF CALIFORNIA - DEPARTMENT OF TRANSPORTATION
Caltrans
TRAFFIC

FUNCTIONAL SUPERVISOR: JOYCE K LOFTUS
CALCULATED-DESIGNED BY: JACK KEMMERLY
CHECKED BY: ALEX WU
REVISED BY
DATE REVISED

LAST REVISION 4-21-16
DATE PLOTTED => 05-JUL-2016
TIME PLOTTED => 17:00

Dist	COUNTY	ROUTE	POST MILES TOTAL PROJECT	SHEET No.	TOTAL SHEETS
03	Sac	51, 160	4.0/4.3 R44.4/47.0	38	117

REGISTERED CIVIL ENGINEER 5-2-16 DATE

5-2-16
PLANS APPROVAL DATE

REGISTERED PROFESSIONAL ENGINEER
ALEX WIN WU
No. C77266
Exp. 6-30-17
CIVIL
STATE OF CALIFORNIA

THE STATE OF CALIFORNIA OR ITS OFFICERS OR AGENTS SHALL NOT BE RESPONSIBLE FOR THE ACCURACY OR COMPLETENESS OF SCANNED COPIES OF THIS PLAN SHEET.

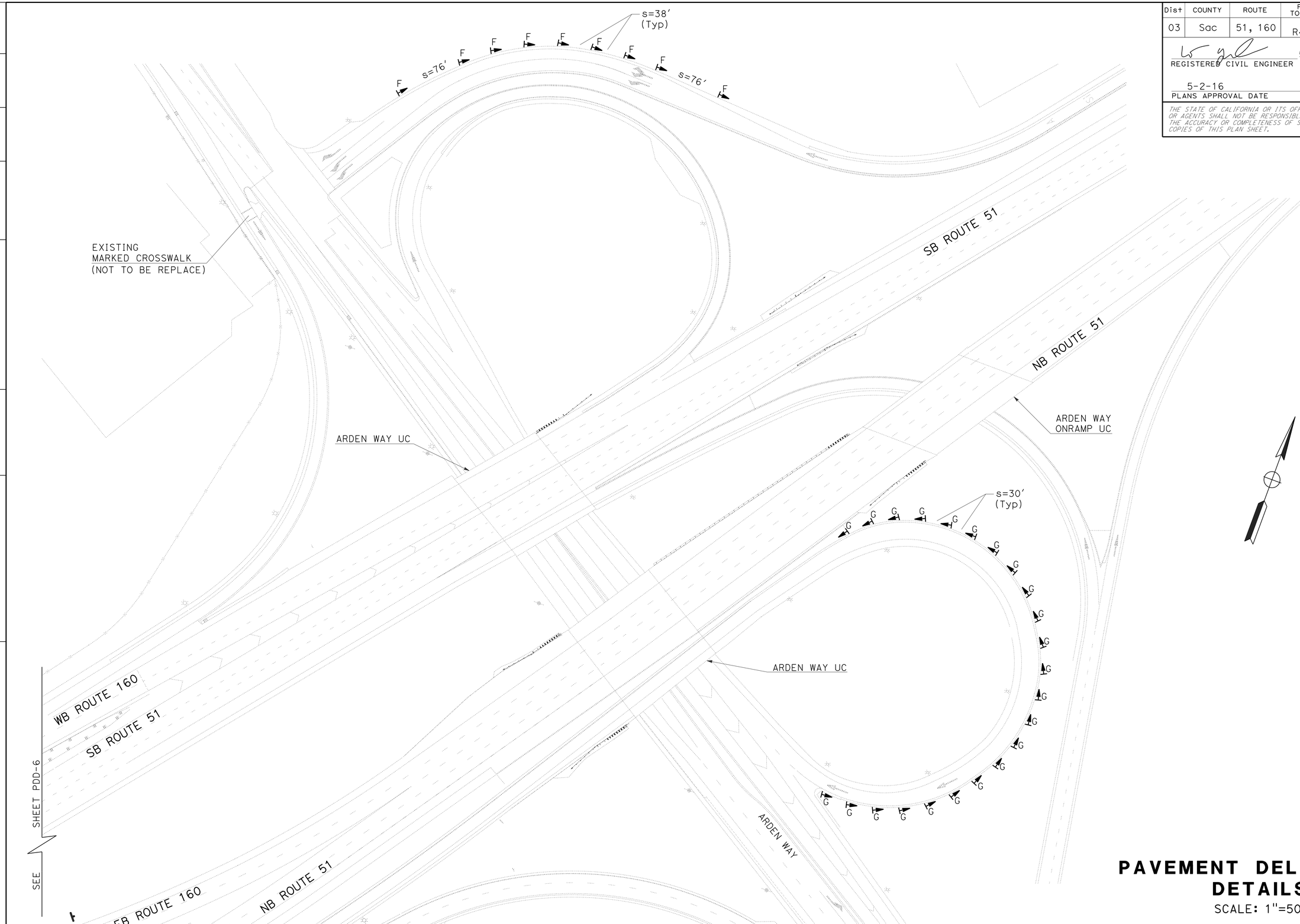

PAVEMENT DELINEATION DETAILS

SCALE: 1"=50′

PDD-7

APPROVED FOR PAVEMENT DELINEATION WORK ONLY

STATE OF CALIFORNIA - DEPARTMENT OF TRANSPORTATION
Caltrans
TRAFFIC

FUNCTIONAL SUPERVISOR: JOYCE K LOFTUS
CALCULATED-DESIGNED BY: JACK KEMMERLY
CHECKED BY: ALEX WU
REVISED BY
DATE REVISED

LAST REVISION 2-2-16
DATE PLOTTED => 05-JUL-2016
TIME PLOTTED => 17:00

Dist	COUNTY	ROUTE	POST MILES TOTAL PROJECT	SHEET No.	TOTAL SHEETS
03	Sac	51, 160	4.0/4.3 R44.4/47.0	39	117

REGISTERED CIVIL ENGINEER 5-2-16 DATE

5-2-16
PLANS APPROVAL DATE

REGISTERED PROFESSIONAL ENGINEER ALEX WIN WU No. C77266 Exp. 6-30-17 CIVIL STATE OF CALIFORNIA

THE STATE OF CALIFORNIA OR ITS OFFICERS OR AGENTS SHALL NOT BE RESPONSIBLE FOR THE ACCURACY OR COMPLETENESS OF SCANNED COPIES OF THIS PLAN SHEET.

NOTES:

1. EWNV = ENHANCED WET NIGHT VISIBILITY.
2. PERMENENT TRAFFIC TAPE SHALL BE USED ON THE FOLLOWING BRIDGE DECKS;
   AMERICAN RIVER BRIDGE (Br No. 24-0001R)
   NORTH SACRAMENTO VIADUCT (Br No. 24-0100L AND 24-0100R)
   NORTH SACRAMENTO UC (Br No. 24-0111L)
3. FOR ADDITIONAL "45" PAVEMENT MARKING INFORMATION, SEE SHEET PDQ-2.
4. ALL CROSSWALKS ARE 1'-0" BASIC CROSSWALKS.

4" THERMOPLASTIC TRAFFIC STRIPE (EWNV)

DETAIL NUMBER	LINEAR FEET
22	1,962
25	19,994
25A	10,797
27B	34,750
TOTAL	67,503

8" THERMOPLASTIC TRAFFIC STRIPE (EWNV) (BROKEN 12-3)

DETAIL NUMBER	LINEAR FEET
37	1,134
37B	408
TOTAL	1,542

8" PERMANENT TAPE TRAFFIC STRIPE

DETAIL NUMBER	LINEAR FEET
36	106
38B	314
TOTAL	420

PAINT TRAFFIC STRIPE (1-COAT)

DETAIL NUMBER	LINEAR FEET
12(Mod)	18,501
14A(Mod)	1,152
TOTAL	19,653

4" THERMOPLASTIC TRAFFIC STRIPE (EWNV) (BROKEN 17-7)

DETAIL NUMBER	LINEAR FEET
9	4,241
TOTAL	4,241

4" PERMANENT TAPE TRAFFIC STRIPE

DETAIL NUMBER	LINEAR FEET
25	3,596
27B	3,596
TOTAL	7,192

8" PERMANENT TAPE TRAFFIC STRIPE (BROKEN 12-3)

DETAIL NUMBER	LINEAR FEET
37	876
TOTAL	876

PAVEMENT MARKER (RETROREFLECTIVE)

DETAIL NUMBER	TYPE C (EACH)	TYPE D (EACH)	TYPE G (EACH)	TYPE H (EACH)
9			95	
12			83	
12(Mod)			385	
14A	8			
14A(Mod)	32			
22		82		
25				491
25A				444
36			165	
36A			58	
36B			18	
37	16		118	
37B			28	
38			10	
38B			72	
SUBTOTAL	56	82	1,032	935
TOTAL	2,105			

4" THERMOPLASTIC TRAFFIC STRIPE (EWNV) (BROKEN 36-12)

DETAIL NUMBER	LINEAR FEET
12(Mod)	18,501
14A(Mod)	1,152
TOTAL	19,653

4" PERMANENT TAPE TRAFFIC STRIPE (BROKEN 17-7)

DETAIL NUMBER	LINEAR FEET
9	449
TOTAL	449

THERMOPLASTIC PAVEMENT MARKING (EWNV)

DESCRIPTION	NUMBER	SQUARE FEET
"45"	3 @ 19.2 SQFT	57.6
"SIGNAL"	2 @ 32 SQFT	64
"STOP"	3 @ 22 SQFT	66
"AHEAD"	6 @ 31 SQFT	186
TYPE I(24') ARROW	12 @ 31 SQFT	372
TYPE II ARROW	2 @ 45 SQFT	90
TYPE III ARROW	4 @ 42 SQFT	168
TYPE III (B) ARROW	1 @ 73 SQFT	73
TYPE V ARROW	18 @ 33 SQFT	594
CROSSWALK	1 EA	135
LIMIT LINE	2 EA	45
TOTAL		1,850.6

8" THERMOPLASTIC TRAFFIC STRIPE (EWNV)

DETAIL NUMBER	LINEAR FEET
36	3,858
36A	1,428
36B	435
38	244
38B	544
TOTAL	6,509

4" PERMANENT TAPE TRAFFIC STRIPE (BROKEN 36-12)

DETAIL NUMBER	LINEAR FEET
12	3,968
14A	288
TOTAL	4,256

PAVEMENT DELINEATION QUANTITIES

PDQ-1

STATE OF CALIFORNIA - DEPARTMENT OF TRANSPORTATION
Caltrans
TRAFFIC

FUNCTIONAL SUPERVISOR: JOYCE K LOFTUS
CALCULATED-DESIGNED BY: JACK KEMMERLY
CHECKED BY: ALEX WU
REVISED BY
DATE REVISED

LAST REVISION 4-20-16
DATE PLOTTED => 05-JUL-2016
TIME PLOTTED => 17:00

Dist	COUNTY	ROUTE	POST MILES TOTAL PROJECT	SHEET No.	TOTAL SHEETS
03	Sac	51, 160	4.0/4.3 R44.4/47.0	40	117

REGISTERED CIVIL ENGINEER 5-2-16 DATE

5-2-16
PLANS APPROVAL DATE

REGISTERED PROFESSIONAL ENGINEER ALEX WIN WU No. C77266 Exp. 6-30-17 CIVIL STATE OF CALIFORNIA

THE STATE OF CALIFORNIA OR ITS OFFICERS OR AGENTS SHALL NOT BE RESPONSIBLE FOR THE ACCURACY OR COMPLETENESS OF SCANNED COPIES OF THIS PLAN SHEET.

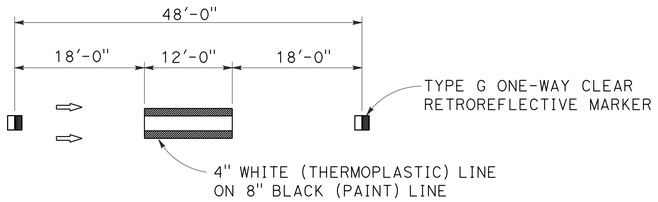

DETAIL 12(Mod)
NO SCALE

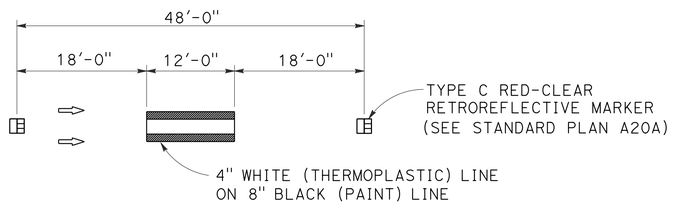

DETAIL 14A(Mod)
NO SCALE

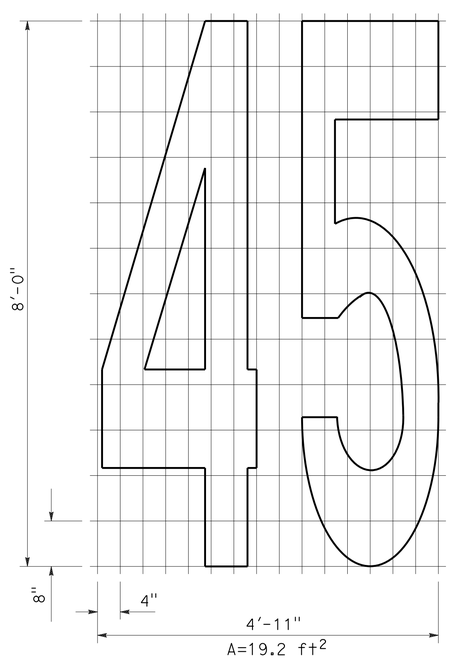

"45" PAVEMENT MARKING
NO SCALE

REMOVE THERMOPLASTIC PAVEMENT MARKING

DESCRIPTION	NUMBER	SQUARE FEET
TYPE I(18') ARROW	2 @ 25 SQFT	50
TOTAL		50

NOTE:

1. THE PAVEMENT MARKING REMOVAL INDICATED IS LOCATED ON THE WB ROUTE 160 ENTRANCE RAMP FROM DEL PASO Blvd.

REMOVE THERMOPLASTIC TRAFFIC STRIPE

DESCRIPTION	LINEAR FEET
LANELINE	75
R† EDGELINE	770
TOTAL	845

NOTE:

1. THE STRIPE REMOVAL INDICATED IS LOCATED ON THE NORTH SACRAMENTO UC Br No. 24-0111L) AND THE WB ROUTE 160 ENTRANCE RAMP FROM DEL PASO Blvd.

REMOVE YELLOW THERMOPLASTIC TRAFFIC STRIPE (HAZARDOUS WASTE)

DESCRIPTION	LINEAR FEET
L† EDGELINE	540
TOTAL	540

NOTE:

1. THE STRIPE REMOVAL INDICATED IS LOCATED ON THE NORTH SACRAMENTO UC Br No. 24-0111L) AND THE WB ROUTE 160 ENTRANCE RAMP FROM DEL PASO Blvd.

DELINEATORS

SHEET NUMBER	DELINEATOR (CLASS 1)		CONCRETE BARRIER DELINEATOR (16-INCH)
	TYPE F (EACH)	TYPE G (EACH)	TYPE F (EACH)
PDD-1	9		
PDD-3	12	5	4
PDD-4	16		
PDD-5	15	14	
PDD-6	6		
PDD-7	9	23	
SUBTOTAL	67	42	
TOTAL	109		4

NOTES:

1. EXACT LOCATION OF DELINEATORS (CLASS 1) TO BE DETERMINED BY THE ENGINEER.
2. FOR ADDITIONAL DELINEATORS (CLASS 1) INFORMATION, SEE PAVEMENT DELINEATION DETAIL PLANS.

OBJECT MARKER (TYPE L-1)

LOCATION NUMBER	EACH
1	1
5	1
6	1
7	1
8	1
10	1
13	1
14	1
15	1
18	1
19	1
20	1
23	1
26	1
27	1
31	1
32	1
TOTAL	17

NOTES:

1. INSTALL ONE OBJECT MARKER (TYPE L-1) AT EACH ALTERNATIVE FLARED TERMINAL SYSTEM LOCATION.
2. FOR ADDITIONAL LOCATION INFORMATION, SEE SUMMARY OF QUANTITIES PLANS.

PAVEMENT DELINEATION QUANTITIES

PDQ-2

STATE OF CALIFORNIA - DEPARTMENT OF TRANSPORTATION
Caltrans
TRAFFIC

FUNCTIONAL SUPERVISOR: JOYCE K LOFTUS
CALCULATED-DESIGNED BY: JACK KEMMERLY
CHECKED BY: ALEX WU
REVISED BY
DATE REVISED

LAST REVISION 4-20-16
DATE PLOTTED => 05-JUL-2016
TIME PLOTTED => 17:00

Dist	COUNTY	ROUTE	POST MILES TOTAL PROJECT	SHEET No.	TOTAL SHEETS
03	Sac	51, 160	4.0/4.3 R44.4/47.0	41	117

REGISTERED CIVIL ENGINEER 5-2-16 DATE

5-2-16
PLANS APPROVAL DATE

REGISTERED PROFESSIONAL ENGINEER ALEX WIN WU No. C77266 Exp. 6-30-17 CIVIL STATE OF CALIFORNIA

THE STATE OF CALIFORNIA OR ITS OFFICERS OR AGENTS SHALL NOT BE RESPONSIBLE FOR THE ACCURACY OR COMPLETENESS OF SCANNED COPIES OF THIS PLAN SHEET.

LEGEND

(Sht-No.)	ROADSIDE SIGN NUMBER
(No.)	OVERHEAD SIGN NUMBER
<CA>	CALIFORNIA SIGN CODE
■	REMOVE ROADSIDE SIGN
▲	RESET ROADSIDE SIGN
*	RELOCATE ROADSIDE SIGN

NOTES:

1. ALL EXISTING SIGNS NOT SHOWN FOR REMOVAL, RELOCATION OR RESETTING SHALL REMAIN IN PLACE.
2. ALL SIGN CODES SHOWN ARE FEDERAL SIGN CODES UNLESS OTHERWISE DESIGNATED AS CALIFORNIA SIGN CODES.

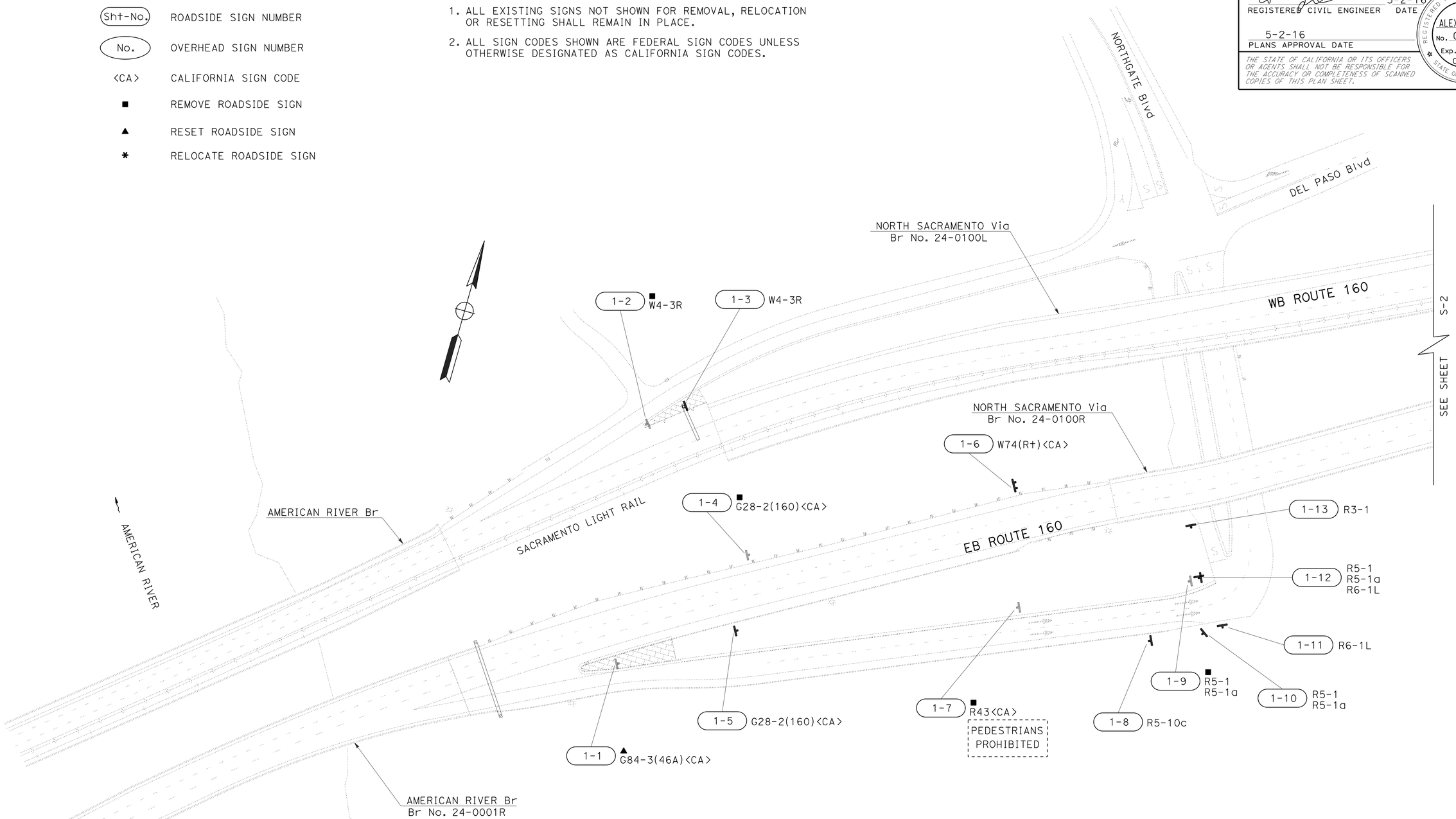

SIGN PLAN

SCALE: 1"=50'

S-1

APPROVED FOR SIGN WORK ONLY

STATE OF CALIFORNIA - DEPARTMENT OF TRANSPORTATION
Caltrans
TRAFFIC

FUNCTIONAL SUPERVISOR: JOYCE K LOFTUS
CALCULATED-DESIGNED BY: JACK KEMMERLY
CHECKED BY: ALEX WU
REVISED BY / DATE REVISED

LAST REVISION 1-19-16
DATE PLOTTED => 05-JUL-2016
TIME PLOTTED => 17:00

Dist	COUNTY	ROUTE	POST MILES TOTAL PROJECT	SHEET No.	TOTAL SHEETS
03	Sac	51, 160	4.0/4.3 R44.4/47.0	42	117

REGISTERED CIVIL ENGINEER 5-2-16 DATE

5-2-16
PLANS APPROVAL DATE

REGISTERED PROFESSIONAL ENGINEER
ALEX WIN WU
No. C77266
Exp. 6-30-17
CIVIL
STATE OF CALIFORNIA

THE STATE OF CALIFORNIA OR ITS OFFICERS OR AGENTS SHALL NOT BE RESPONSIBLE FOR THE ACCURACY OR COMPLETENESS OF SCANNED COPIES OF THIS PLAN SHEET.

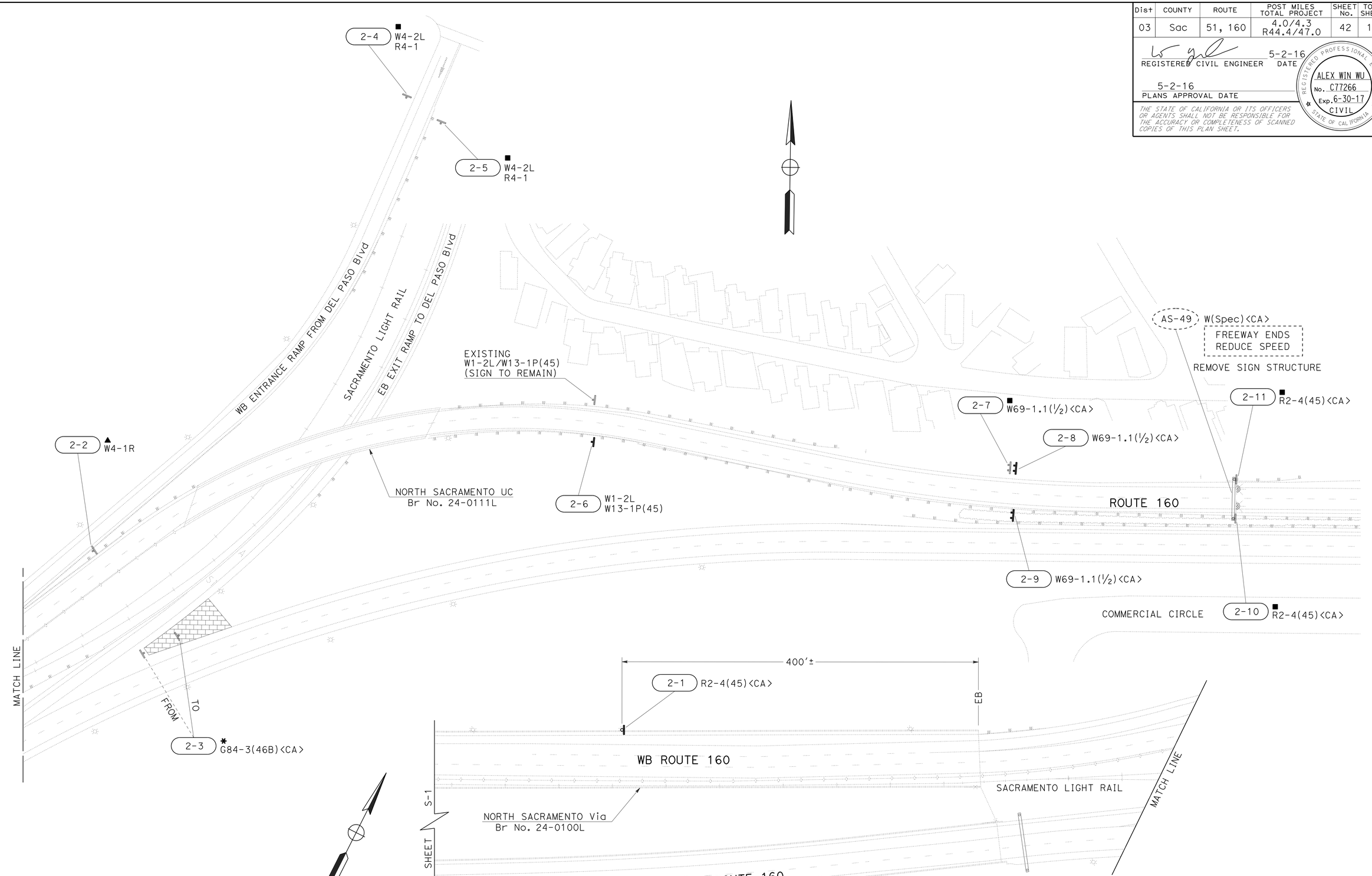

SIGN PLAN

SCALE: 1"=50'

APPROVED FOR SIGN WORK ONLY

S-2

STATE OF CALIFORNIA - DEPARTMENT OF TRANSPORTATION
Caltrans
TRAFFIC

FUNCTIONAL SUPERVISOR: JOYCE K LOFTUS
CALCULATED-DESIGNED BY: JACK KEMMERLY
CHECKED BY: ALEX WU
REVISED BY
DATE REVISED

LAST REVISION 4-20-16
DATE PLOTTED => 05-JUL-2016
TIME PLOTTED => 17:00

Dist	COUNTY	ROUTE	POST MILES TOTAL PROJECT	SHEET No.	TOTAL SHEETS
03	Sac	51, 160	4.0/4.3 R44.4/47.0	43	117

REGISTERED CIVIL ENGINEER 5-2-16 DATE

5-2-16
PLANS APPROVAL DATE

REGISTERED PROFESSIONAL ENGINEER
ALEX WIN WU
No. C77266
Exp. 6-30-17
CIVIL
STATE OF CALIFORNIA

THE STATE OF CALIFORNIA OR ITS OFFICERS OR AGENTS SHALL NOT BE RESPONSIBLE FOR THE ACCURACY OR COMPLETENESS OF SCANNED COPIES OF THIS PLAN SHEET.

NOTES:

1. THE SIGN POST SHALL HAVE 7/16" DIAMETER PERFORATIONS 1" ON CENTER ON ALL FOUR SIDES FOR THE FULL LENGTH.
2. USE TWO DRIVE RIVETS TO FASTEN ASSEMBLED SIGN AND SIGN POST INTO ANCHOR SLEEVE. INSTALL DRIVE RIVETS INTO THE SIDES FACING TRAFFIC.
3. ALL METAL SIGN POSTS AND ANCHOR SLEEVES SHALL BE GALVANIZED.
4. ALL ANCHOR SLEEVES SHALL BE EMBEDDED IN PCC.
5. BALANCED SINGLE POST INSTALLATIONS OF SINGLE SHEET ALUMINUM PANEL SIGNS REQUIRE BACK BRACES WHEN 2'-10" OR MORE IN LENGTH.
6. WOOD BLOCK SPACERS ARE NOT REQUIRED FOR SIGNS MOUNTED ON METAL POSTS.
7. ATTACH RECTANGULAR SIGN PANEL TO SIGN POST WITH BOLTS AT TOP AND BOTTOM. CENTER MAY BE ATTACHED WITH EITHER BOLT OR 3/8" DRIVE RIVET.
8. ATTACH DIAMOND SIGN PANEL TO SIGN POST WITH BOLT AT CENTER. TOP AND BOTTOM MAY BE ATTACHED WITH EITHER BOLTS OR 3/8" DRIVE RIVETS.
9. FOR ADDITIONAL INFORMATION, SEE LANDSCAPE DETAIL PLANS.
10. FOR DETAILS NOT SHOWN, SEE STANDARD PLANS RS1 AND RS2.

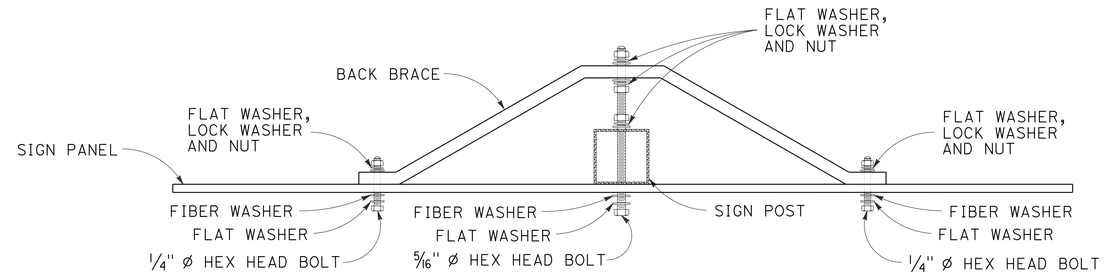

BACK BRACE MOUNTING DETAIL
SEE NOTES 6, 7 AND 8

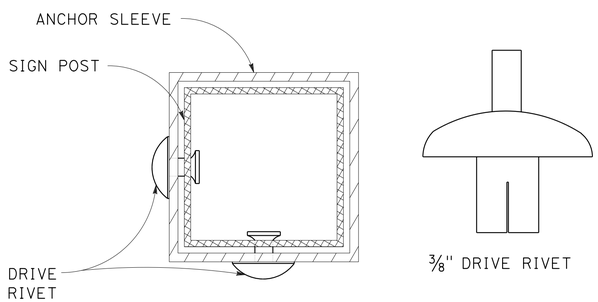

FASTENER DETAIL

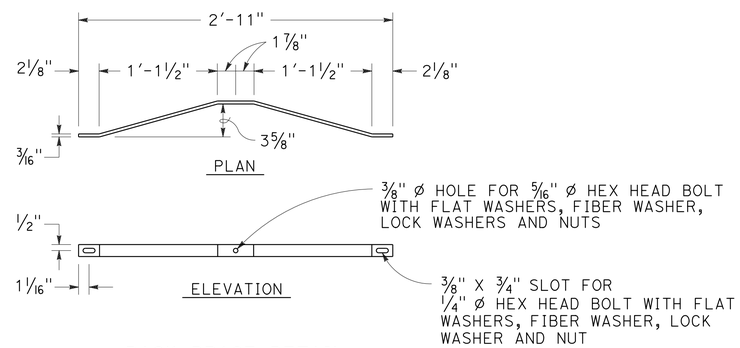

BACK BRACE DETAIL
SEE NOTE 5

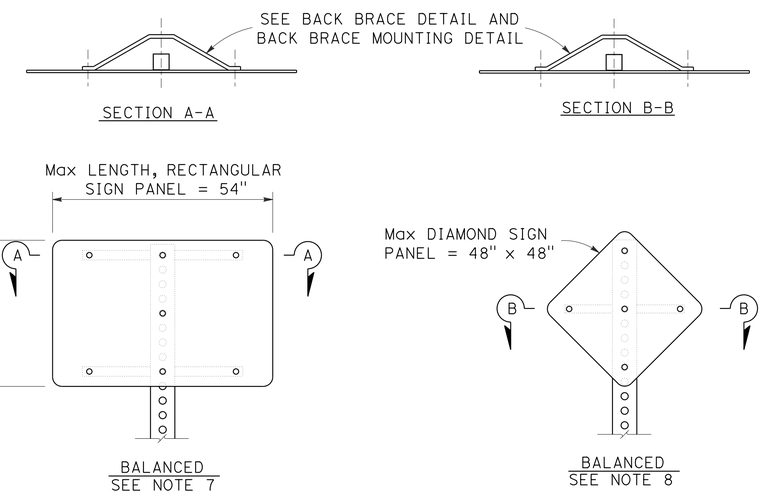

SINGLE POST INSTALLATION

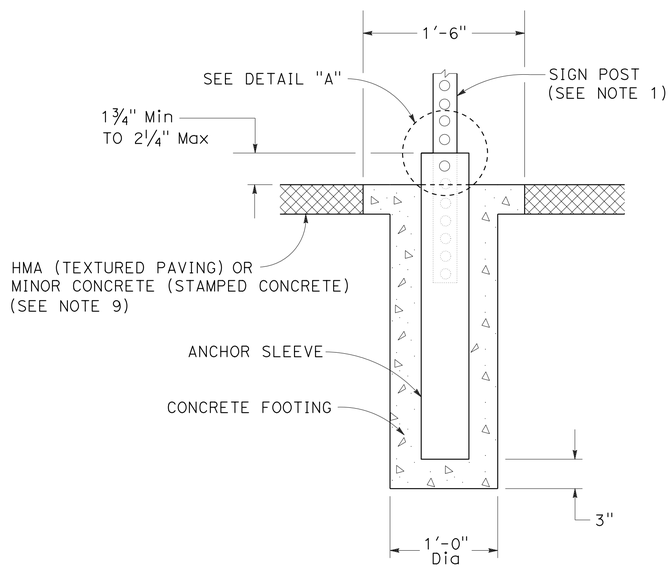

ANCHOR SLEEVE IN PAVED AREA DETAIL
FOR DETAILS NOT SHOWN, SEE "ANCHOR SLEEVE DETAIL".

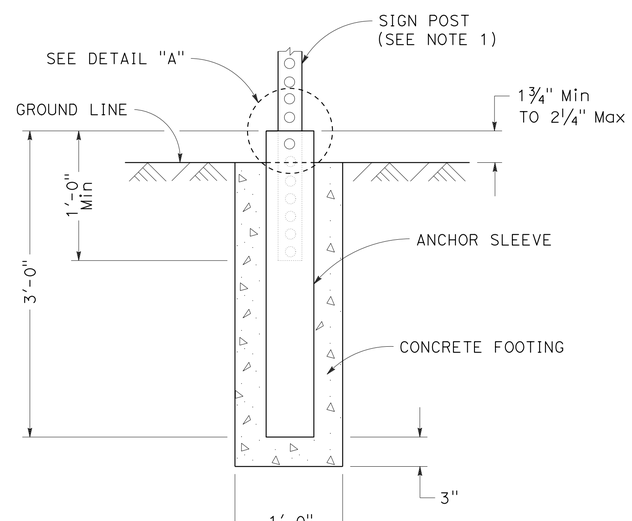

ANCHOR SLEEVE DETAIL

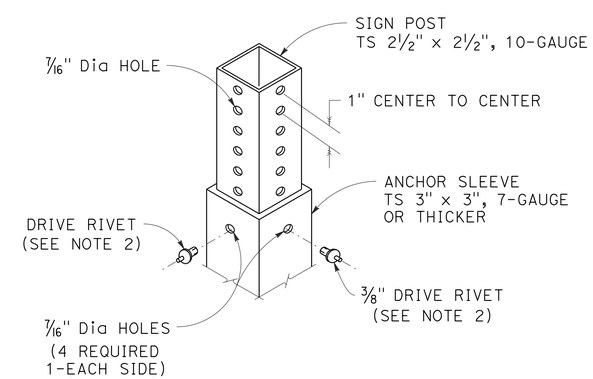

DETAIL "A"

SIGN DETAILS

NO SCALE

APPROVED FOR SIGN WORK ONLY

SD-1

STATE OF CALIFORNIA - DEPARTMENT OF TRANSPORTATION
Caltrans
TRAFFIC

FUNCTIONAL SUPERVISOR: JOYCE K LOFTUS
CALCULATED-DESIGNED BY: JACK KEMMERLY
CHECKED BY: ALEX WU
REVISED BY
DATE REVISED

LAST REVISION 4-6-16
DATE PLOTTED => 05-JUL-2016
TIME PLOTTED => 17:00

Dist	COUNTY	ROUTE	POST MILES TOTAL PROJECT	SHEET No.	TOTAL SHEETS
03	Sac	51, 160	4.0/4.3 R44.4/47.0	44	117

REGISTERED CIVIL ENGINEER 5-2-16 DATE

5-2-16 PLANS APPROVAL DATE

REGISTERED PROFESSIONAL ENGINEER ALEX WIN WU No. C77266 Exp. 6-30-17 CIVIL STATE OF CALIFORNIA

THE STATE OF CALIFORNIA OR ITS OFFICERS OR AGENTS SHALL NOT BE RESPONSIBLE FOR THE ACCURACY OR COMPLETENESS OF SCANNED COPIES OF THIS PLAN SHEET.

ROADSIDE SIGN QUANTITIES

SIGN NUMBER (Sht-No.)	SIGN CODE	PANEL SIZE INCHES	"C" DIM IN FEET	POST SIZE AND LENGTH 6"x6"	POST SIZE AND LENGTH METAL POST 2½"X2½"	ROADSIDE SIGN ONE POST EA	ROADSIDE SIGN TWO POST EA	INSTALL SIGN (SSBM) EA	REMOVE ROADSIDE SIGN EA	RESET ROADSIDE SIGN EA	RELOCATE ROADSIDE SIGN EA	TREATED WOOD WASTE LB	REMARKS
1-1	G84-3(46A)<CA>									1			SEE NOTE 6
1-2	W4-3R								1				SEE NOTE 6
1-3	W4-3R	48 X 48	7					1					SEE NOTE 7
1-4	G28-2(160)<CA>								1			35	
1-5	G28-2(160)<CA>	28 X 25	7		10′	1							
1-6	W74(R+)<CA>	60 X 60	7	20′			1						
1-7	R43<CA>								1			29	
1-8	R5-10c	24 X 12	7		10′	1							
1-9	R5-1 R5-1a								1			55	
1-10	R5-1 R5-1a	36 X 36 36 X 24	2		8′	1							
1-11	R6-1L	54 X 18	1.5		4′	1							
1-12	R5-1 R5-1a R6-1L	36 X 36 36 X 24 54 X 18	1.5		10′	1							
1-13	R3-1	24 X 24	7		10′	1							
2-1	R2-4(45)<CA>	36 X 45	7					1					SEE NOTE 8
2-2	W4-1R									1			SEE NOTE 6
2-3	G84-3(46B)<CA>										1		SEE NOTE 6
2-4	W4-2L R4-1								1				SEE NOTE 9
2-5	W4-2L R4-1								1				SEE NOTE 9
2-6	W1-2L W13-1P(45)	48 X 48 30 X 30	6		16′	1							
2-7	W69-1.1(½)<CA>								1				SEE NOTE 9
2-8	W69-1.1(½)<CA>	60 X 60	7	20′			1						
2-9	W69-1.1(½)<CA>	60 X 60	7	20′			1						
2-10	R2-4(45)<CA>								1				
2-11	R2-4(45)<CA>								1				
SUBTOTAL												119	———
TOTAL						7	3	2	9	2	1	SEE NOTE 10	———

NOTES:

1. EXACT LOCATION AND POSITION OF ROADSIDE SIGNS TO BE DETERMINED BY THE ENGINEER.
2. POST LENGTHS GIVEN ARE APPROXIMATE.
3. "C" DIM = VERTICAL CLEARANCE EP TO BOTTOM OF SIGN PANEL.
4. ALL SIGN CODES SHOWN ARE FEDERAL SIGN CODES UNLESS OTHERWISE DESIGNATED AS A CALIFORNIA SIGN CODE.
5. <CA> = CALIFORNIA SIGN CODE.
6. THE EXISTING SIGN POST IS A TUBULAR METAL POST.
7. SIGN PANEL TO BE MOUNTED ON OVERHEAD SIGN POST (AS-124).
8. SIGN PANEL TO BE MOUNTED ON ELECTROLIER.
9. THE EXISTING SIGN POSTS ARE TUBULAR METAL POSTS.
10. FOR ADDITIONAL TREATED WOOD WASTE, SEE SUMMARY OF QUANTITIES PLANS.

SIGN QUANTITIES

SQ-1

STATE OF CALIFORNIA - DEPARTMENT OF TRANSPORTATION
Caltrans
TRAFFIC

FUNCTIONAL SUPERVISOR: JOYCE K LOFTUS
CALCULATED-DESIGNED BY: JACK KEMMERLY
CHECKED BY: ALEX WU
REVISED BY
DATE REVISED

LAST REVISION 4-20-16
DATE PLOTTED => 05-JUL-2016
TIME PLOTTED => 17:01

Dist	COUNTY	ROUTE	POST MILES TOTAL PROJECT	SHEET No.	TOTAL SHEETS
03	Sac	51, 160	4.0/4.3 R44.4/47.0	45	117

REGISTERED CIVIL ENGINEER 5-2-16 DATE

5-2-16
PLANS APPROVAL DATE

REGISTERED PROFESSIONAL ENGINEER ALEX WIN WU No. C77266 Exp. 6-30-17 CIVIL STATE OF CALIFORNIA

THE STATE OF CALIFORNIA OR ITS OFFICERS OR AGENTS SHALL NOT BE RESPONSIBLE FOR THE ACCURACY OR COMPLETENESS OF SCANNED COPIES OF THIS PLAN SHEET.

ROADSIDE SIGN PANEL QUANTITIES

SIGN CODE	SIGN MESSAGE/DESCRIPTION	PANEL SIZE L x D	PANEL AREA	NUMBER OF PANELS	BACKGROUND SHEETING COLOR	LEGEND SHEETING COLOR	PROTECTIVE-OVERLAY FILM (PREMIUM)	RETROREFLECTIVE SHEETING (TYPE XI)	FURNISH SINGLE SHEET ALUMINUM SIGN FOR RETROREFLECTIVE SHEETING (TYPE XI)			FURNISH SINGLE SHEET ALUMINUM SIGN		REMARKS
									UNFRAMED		FRAMED	UNFRAMED		
									0.063"	0.080"	0.080"	0.063"	0.080"	
		INCHES	SQFT					SQFT	SQFT	SQFT	SQFT	SQFT	SQFT	
R3-1	NO RIGHT TURN (Symbol Sign)	24 x 24	4.00	1	WHITE	BLACK RED	X					4.00		SEE NOTE 8
R5-1	DO NOT ENTER	36 x 36	9.00	2	RED	WHITE	X	18.00	18.00					
R5-1a	WRONG WAY	36 x 24	6.00	2	RED	WHITE	X	12.00	12.00					
R5-10c	PEDESTRIANS PROHIBITED	24 x 12	2.00	1	WHITE	BLACK	X					2.00		
R6-1L	ONE WAY	54 x 18	6.75	2	BLACK	BLACK WHITE							13.50	
W1-2L	CURVE ADVISORY (Symbol Sign)	48 x 48	16.00	1	FY	BLACK		16.00		16.00				
W4-3R	ADDED LANE (Symbol Sign)	48 x 48	16.00	1	FY	BLACK	X	16.00		16.00				
W13-1P(45)	45 MPH	30 x 30	6.25	1	FY	BLACK		6.25	6.25					SEE NOTE 9
G28-2(160)<CA>	STATE ROUTE MARKER	28 x 25	4.86	1	GREEN	WHITE		4.86	4.86					
R2-4(45)<CA>	45 ZONE AHEAD	36 x 45	11.25	1	WHITE	BLACK						11.25		
W69-1.1(½)<CA>	END FREEWAY ½ MI	60 x 60	25.00	2	FY	BLACK		50.00			50.00			
W74(R+)<CA>	THRU TRAFFIC MERGE RIGHT	60 x 60	25.00	1	FY	BLACK		25.00			25.00			
TOTAL								148.11	41.11	32.00	75.00	17.25	13.50	————

NOTES:

1. ALL SIGN CODES SHOWN ARE FEDERAL SIGN CODES UNLESS OTHERWISE DESIGNATED AS A CALIFORNIA SIGN CODE.
2. <CA> = CALIFORNIA SIGN CODE.
3. FY = FLUORESCENT YELLOW.
4. ALL SIGN PANEL BACKGROUND SHEETING, WITH THE EXCEPTION OF WHITE, SHALL BE RETROREFLECTIVE ASTM TYPE XI.
5. ALL WHITE SIGN PANEL BACKGROUND SHEETING SHALL BE RETROREFLECTIVE ASTM TYPE VIII UNLESS OTHERWISE SHOWN.
6. ALL SIGN PANEL LEGEND SHEETING, WITH THE EXCEPTION OF BLACK, SHALL BE RETROREFLECTIVE ASTM TYPE XI UNLESS OTHERWISE SHOWN.
7. ALL BLACK SIGN PANEL LEGEND SHEETING SHALL BE NON-REFLECTIVE.
8. THE SIGN PANEL BACKGROUND SHEETING AND RED LEGEND SHEETING SHALL BE RETROREFLECTIVE ASTM TYPE VIII. THE BLACK LEGEND SHEETING SHALL BE NON-REFLECTIVE.
9. FOR THE W13-1P, USE THE SPECIFICATION FOR THE W13-1 SHOWN IN THE STANDARD HIGHWAY SIGNS 2004 EDITION.

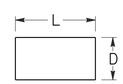

L = LENGTH OF PANEL
D = DEPTH OF PANEL

OVERHEAD SIGN QUANTITIES

SIGN NUMBER (No.)	SHEET NUMBER	REMOVE SIGN STRUCTURE
		EA
AS-49	S-2	1
TOTAL		1

SIGN QUANTITIES

SQ-2

REVISED BY | DATE REVISED
JACK KEMMERLY | ALEX WU
CALCULATED-DESIGNED BY | CHECKED BY
FUNCTIONAL SUPERVISOR: JOYCE K LOFTUS
STATE OF CALIFORNIA - DEPARTMENT OF TRANSPORTATION
Caltrans® TRAFFIC

LAST REVISION 1-19-16 | DATE PLOTTED => 05-JUL-2016 | TIME PLOTTED => 17:01

Dist	COUNTY	ROUTE	POST MILES TOTAL PROJECT	SHEET No.	TOTAL SHEETS
03	Sac	51,160	4.0/4.3, R44.4/47.0	46	117

K. Sudha Kodali 5-2-16
REGISTERED CIVIL ENGINEER DATE

5-2-16
PLANS APPROVAL DATE

REGISTERED PROFESSIONAL ENGINEER SUDHA M. KODALI No. 79722 Exp. 9/30/16 CIVIL STATE OF CALIFORNIA

THE STATE OF CALIFORNIA OR ITS OFFICERS OR AGENTS SHALL NOT BE RESPONSIBLE FOR THE ACCURACY OR COMPLETENESS OF SCANNED COPIES OF THIS PLAN SHEET.

PAVEMENT QUANTITIES

COUNTY/ROUTE/ DIRECTION	LOCATION/REMARKS	REPLACE ASPHALT CONCRETE SURFACING	RUBBERIZED HOT MIX ASPHALT-OPEN GRADED (OGFC)	TACK COAT	HMA (TYPE A)	HOT MIX ASPHALT-OPEN GRADED (OGFC)	ROADWAY EXCAVATION	ROADWAY EXCAVATION (TYPE Z-2) (AERIALLY DEPOSITED LEAD)	SHOULDER BACKING	CLASS 2 AGGREGATE BASE (CY)	COLD PLANE ASPHALT CONCRETE PAVEMENT
		CY	TON	TON	TON	TON	CY	CY	TON	CY	SQYD
Sac-160 EB	PM R44.447 TO PM R44.454 (AC Pvmt CONFORM)			0.06	25.4						145.1
	PM R44.582 TO PM R44.729 ON EB MAIN LINE Rt	80.0	157.7	1.72	394.3						2253.2
	PM R44.582 TO PM R44.713 ON EB MAIN LINE Lt	52.5		0.25							
	PM R44.928 TO PM 45.146 ON EB MAIN LINE Rt	85.3		0.40							
	PM R44.961 TO PM 45.185 ON EB MAIN LINE Lt	89.3		0.42							
	PM R44.961 DEL PASO OFF-RAMP		78.5	0.22							
	PM 45.689 CANTERBURY EXIT RAMP		23.2	0.07							
	CANTERBURY EXIT RAMP TO PM 46.092 EB Rt	193.5	226.0	4.57							
	PM 46.226 TO PM 46.717 ON EB MAIN LINE Rt	327.1	102.5	1.84							
	PM 46.226 TO PM 46.252 ON EB MAIN LINE Lt	14.6		0.07							
	PM 46.578 TO PM 46.700 ON EB MAIN LINE Lt	74.5		0.35							
	PM 46.717 TO PM 46.902 ON EB MAIN LINE Rt		273.8	2.32	684.4						3911.0
	PM 46.902 TO PM 46.950 WB ARDEN WAY RAMP		56.4	0.48	140.8						804.5
	PM 46.902 TO PM 46.950 EB ARDEN WAY RAMP		21.1	0.93	385.2	133.0					2202.2
	WB ARDEN WAY LOOP RAMP		151.8	1.37	414.9						2370.7
	PM R44.46 TO PM 46.950								30.0		
Sac-160 WB	NORTHGATE BLVD ON-RAMP		109.4	1.12	358.8						2050.4
	PM R44.940 TO PM R44.979 ON WB MAIN LINE Rt	12.5		0.06							
	PM R45.078 TO PM 45.612 ON WB MAIN LINE Lt	287.1		1.36							
	CANTERBURY Rd ON/OFF RAMPS		264.0	2.24	719.0						4107.4
	PM R45.082 TO PM 45.244 ON WB MAIN LINE Rt	28.6		0.14							
	PM 45.788 TO PM 46.172 ON WB MAIN LINE Lt	337.4		1.60							
	PM 46.226 TO PM 46.572 ON WB MAIN LINE Lt	135.1		0.64							
	PM 46.226 TO PM 46.252 ON WB MAIN LINE Rt	16.9		0.08							
	PM 46.572 TO PM 46.867 ON WB MAIN LINE Rt	52.0		0.25							
	PM 46.787 TO WB 160 ON-RAMP FROM ARDEN WAY		64.0	0.82	281.7						1609.7
	WB ARDEN WAY LOOP RAMP TO WB 160		92.3	0.97	314.7						1798.0
	PM R44.447 TO PM 46.87								30.0		
Sac/WB/51	WB 51 TO ARDEN WAY OFF-RAMP		99.6	1.20	407.9						2331.0
	WB 51/EB 51 ON-RAMPS		266.7	2.50	775.0						4428.8
	GORE AREAS TABLE							165.4		82.7	
	FROM Q-2 SHEET						127.6	60.8			
	FROM Q-3 SHEET							20.76		4.5	
	NORTHGATE BLVD ON-RAMP										
	SUBTOTAL	1,786.4	1,987.0	28.0	4,902.1	133.0	127.6	247.0	60.0	87.2	28,012.0
	TOTAL	1,786.4	1,987.0	28.0	4,902.1	133.0	127.6	247.0	60.0	87.2	28,012.0

(N) NOT A SEPARATE PAY ITEM, FOR INFORMATION ONLY

GRIND EXISTING CONCRETE PAVEMENT

COUNTY/ROUTE	DIRECTION	LOCATION BEGIN PM	LOCATION END PM	GRIND EXISTING CONCRETE PAVEMENT SQYD
Sac/160	EB	R44.59	R44.71	2640
	EB	R44.94	46.59	23409
	WB	R44.94	R45.02	1633
	WB	R45.14	46.87	25066
			TOTAL	52,748

OVERSIDE DRAIN

LOCATION (SEE SHEET L-6)	PLACE HOT MIX ASPHALT (MISCELLANEOUS AREA)	REMOVE OVERSIDE DRAIN	MINOR HMA *
	SQYD	EA	TON
1	0.84	1	1.61
2	0.64	1	1.07
3	0.86	1	1.67
4	0.66	1	1.13
5	0.63	1	1.05
6	0.68	1	1.17
SUBTOTAL		6	7.70
TOTAL	4.31	6	-

* - SEE SUMMARY OF QUANTITIES SHEET Q-3 (HMA DIKES TABLE) FOR TOTAL QUANTITY

GORE AREAS

LOCATION	MINOR CONCRETE (STAMPED CONCRETE)	* ROADWAY EXCAVATION (TYPE Z-2) (AERIALLY DEPOSITED LEAD)	* CLASS 2 AGGREGATE BASE (CY)
	SQFT	CY	CY
AREA 1 (SEE SHEET L-2)	803	29.7	14.9
AREA 2 (SEE SHEET L-2)	1395	51.7	25.8
AREA 3 (SEE SHEET L-3)	2268	84.0	42.0
SUBTOTAL	4466	165.4	82.7
TOTAL	4,466	-	-

* - SEE PAVEMENT QUANTITIES TABLE (THIS SHEET) FOR TOTAL QUANTITY

TEMPORARY RAILING (TYPE K)/ TEMPORARY CRASH CUSHION MODULE

GUARD RAIL LOCATION No.	LOCATION	Temp RAILING (TYPE K)	TEMPORARY CRASH CUSHION MODULE	TRAFFIC PLASTIC DRUM
		LF	EA	EA
21	PM 46.240 TO PM 46.291	220	14	13
22	PM 46.159 TO PM 46.200	220	14	13
23	PM 46.598 TO PM 45.639	220	14	13
27	PM R45.024 TO PM R45.073	280	14	13
5	PM 45.540 TO PM 45.609	320	14	13
8	PM 46.120 TO PM 45.670	200	14	13
9	PM 46.199 TO PM 46.251	240	14	13
11	PM 46.532 TO PM 46.607	440	14	13
	TOTAL	2140	112	104

REMOVE CONCRETE CURB

POSTMILE	LOCATION	LF
PM R44.985 TO PM R45.001	BETWEEN WB 160 AND DEL PASO BLVD ON RAMP	165
	TOTAL	165

HEADLIGHT GLARE SCREEN

POSTMILE	LOCATION	MODULAR GLARE SCREEN	REMOVE FENCE GLARE SCREEN
		LF	LF
PM R44.37 TO PM R44.94	WB	3100	3100
	TOTAL	3100	3100

SUMMARY OF QUANTITIES

Q-1

STATE OF CALIFORNIA - DEPARTMENT OF TRANSPORTATION
Caltrans DESIGN

FUNCTIONAL SUPERVISOR: ALI KIANI
CALCULATED-DESIGNED BY: SUDHA KODALI
CHECKED BY: DAVID ROBERTS
REVISED BY
DATE REVISED

LAST REVISION 00-00-00
DATE PLOTTED => 05-JUL-2016
TIME PLOTTED => 17:01

Dist	COUNTY	ROUTE	POST MILES TOTAL PROJECT	SHEET No.	TOTAL SHEETS
03	Sac	51,160	4.0/4.3, R44.4/47.0	47	117

K. Sudha Kodali 5-2-16
REGISTERED CIVIL ENGINEER DATE

5-2-16
PLANS APPROVAL DATE

REGISTERED PROFESSIONAL ENGINEER SUDHA M. KODALI No. 79722 Exp. 9/30/16 CIVIL STATE OF CALIFORNIA

THE STATE OF CALIFORNIA OR ITS OFFICERS OR AGENTS SHALL NOT BE RESPONSIBLE FOR THE ACCURACY OR COMPLETENESS OF SCANNED COPIES OF THIS PLAN SHEET.

MIDWEST GUARDRAIL SYSTEM

DIRECTION	LOCATION No.	LOCATION DESCRIPTION	REMOVE GUARDRAIL	MIDWEST GUARDRAIL SYSTEM (STEEL POST)	MIDWEST GUARDRAIL SYSTEM (8' POST)	(N) 9'-41/2" RAIL ELEMENT	ALTERNATIVE IN-LINE TERMINAL SYSTEM	ALTERNATIVE FLARED TERMINAL SYSTEM	TRANSITION RAILING (TYPE WB-31)	ALTERNATIVE CRASH CUSHION	(N) GUARD RAIL CONNECTION TO BRIDGE CURB	END ANCHOR ASSEMBLY (TYPE SFT)	SINGLE THRIE BEAM BARRIER (STEEL POST)	END CAP (TYPE A)	END CAP (TYPE TC)	(N) CONCRETE ANCHOR BLOCK	(N) MODIFY CONCRETE ANCHOR BLOCK	(N) Conc BARRIER TYPE 60SD	REMOVE CONCRETE	MINOR CONCRETE (MINOR STRUCTURE)	TRANSITION RAILING (TYPE STB)	TREATED WOOD WASTE	VEGETATION CONTROL (MINOR CONCRETE)	* ROADWAY EXCAVATION (TYPE Z-2) (AERIALLY DEPOSITED LEAD)	* ROADWAY EXCAVATION
			LF	LF	LF	EA	EA	EA	EA	EA	EA	EA	LF	EA	EA	EA	EA	EA	CY	CY	EA	LB	SQYD	CY	CY
Sac-160 EB	1	PM R44.45 TO PM R44.46 ON EB MAIN LINE R+	75.0	9.12				1	1						1		1		0.2	0.2		1660.0	41.7		
	2	PM R44.45 TO PM R44.46 ON EB MAIN LINE L+	140.0	59.12		1	1		1						1	1				0.9		2910.0	88.8	0.1	0.3
	3	PM R44.59 TO PM R44.72 ON EB MAIN LINE L+	670.0		637.5				1						2	1				0.9		7540.0	441.7	0.1	0.3
	4	PM R44.70 TO PM R44.72 ON EB MAIN LINE R+	75.0	9.12		1	1		1						1		1		0.2	0.2		1660.0	53.3		
	5	PM 45.56 TO PM R44.60 ON EB MAIN LINE R+	62.5	115.63		1		1	1						1			1	8.3	32.2		1660.0	118.8	3.1	10.0
	6	PM 45.87 TO PM 45.89 ON EB MAIN LINE R+	75.0	40.63		1		1				1										980.0	51.7		
	7	PM 46.06 TO PM 46.07 ON EB MAIN LINE R+	75.0	40.63		1		1				1								1.5		1260.0	52.1		
	8	PM 46.13 TO PM 46.15 ON EB MAIN LINE R+	87.5					1	1						1			1	10.5	30.1		1800.0	41.7	1.6	5.0
	9	PM 46.21 TO PM 46.24 ON EB MAIN LINE R+	75.0				1		1						1	1		1	6.9	30.8		1660.0	53.3	4.6	12.0
	10	PM 46.51 TO PM 46.55 ON EB MAIN LINE R+	100.0	115.63		1		1	1													2080.0	118.8		
	11	PM 46.55 TO PM 46.62 ON EB MAIN LINE L+	287.5										12.5		1			1	12.1	138.1	1	4510.0		21.4	42.6
	12	PM 46.79 TO PM 46.81 ON EB OFF-RAMP L+	75.0	25.00			1					1										420.0	53.3		
	13	PM 46.92 ON EB AT ARDEN WAY OFF-RAMP L+	125.0	87.50				1				1										1060.0	83.3		7.0
	14	PM 46.92 TO PM 46.94 ON EB MAIN LINE R+	87.5	40.63		1		1	1							1				0.9		990.0	68.8	0.1	0.3
	15	PM 46.92 TO PM 46.94 ON EB MAIN LINE L+	75.0	15.63		1		1	1						1							770.0	52.8		
	16	PM 47.00 TO PM 47.02 ON EB MAIN LINE R+	75.0				1		1						1							990.0	53.3		
	17	PM 46.96 TO PM 47.02 ON EB MAIN LINE L+	250.0	225.00	250.0				1					1	1	1				0.9		3280.0	166.7	0.1	0.3
Sac-160 WB	18	PM 47.00 TO PM 47.02 ON WB MAIN LINE L+	75.0	28.63		1		1				1										970.0	44.1		
	19	PM 47.00 TO PM 47.02 ON WB MAIN LINE R+	75.0	40.63		1		1				1										840.0	52.1		
	20	PM 46.96 TO PM 46.98 ON WB MAIN LINE L+	75.0					1	1						1							1660.0	41.7		
	21	PM 46.25 TO PM 46.28 ON WB MAIN LINE L+	87.5				1		1									1	6.9	30.8		1800.0	53.3	4.6	12.2
	22	PM 46.16 TO PM 46.19 ON WB MAIN LINE L+	100.0							1								1		30.1		1060.0		4.6	12.0
	23	PM 46.00 TO PM 46.63 ON WB MAIN LINE L+	62.5					1	1						1			1	8.3	32.1		1660.0	83.3	3.1	10.0
	24	PM 45.25 TO PM 45.27 ON WB MAIN LINE L+	84.0																			980.0			
	25	PM R45.08 TO PM 45.17 ON WB MAIN LINE R+	537.5										487.5		1	1				0.9	1	12450.0	325.0	0.1	0.3
	26	PM R45.08 TO PM 45.26 ON WB MAIN LINE L+	450.0	365.63		1		1	1						1	1				0.9		5560.0	285.4	0.1	0.3
	27	PM R45.06 AT DEL PASO OFF-RAMP R+	177.0					1					75.0					1		38.6	1	2670.0	75.0	17.2	15.0
	28	PM R45.00 TO PM R45.03 ON WB MAIN LINE L+	98.0	90.63		1	1							1								1860.0	97.1		
	29	PM R44.94 TO PM R44.96 ON WB MAIN LINE L+	75.0	21.63		1	1				1	1										1140.0	55.7		
	30	PM R44.60 TO PM R44.62 ON WB MAIN LINE L+	100.0	46.63		1	1				1	1										1900.0	70.0		
Sac-51 WB	31	WB 51 ON-RAMP APPROACH TO ARDEN WAY UC	75.0	12.50			1		1													1920.0	54.9		
		FROM SQ-1 SHEET																				119.0			
		SUBTOTAL	4,481.5	1,389.90	887.5	14	10	15	17	1	2	8	575.0	2	16	7	2	8	53.4	370.1	3	71,819.0	2,777.7	60.8	127.6
		TOTAL	4,481.5	1,389.90	887.5	14	10	15	17	1	2	8	575.0	2	16	7	2	8	53.4	370.1	3	71,819.0	2,777.7	-	-

(N) NOT A SEPARATE PAY ITEM, FOR INFORMATION ONLY

* - SEE SUMMARY OF QUANTITIES SHEET Q-1 (PAVEMENT QUANTITIES TABLE) FOR TOTAL QUANTITY

SUMMARY OF QUANTITIES

Q-2

STATE OF CALIFORNIA - DEPARTMENT OF TRANSPORTATION
Caltrans DESIGN

FUNCTIONAL SUPERVISOR: ALI KIANI
CALCULATED-DESIGNED BY: SUDHA KODALI
CHECKED BY: DAVID ROBERTS
REVISED BY
DATE REVISED

LAST REVISION 00-00-00
DATE PLOTTED => 05-JUL-2016
TIME PLOTTED => 17:01

Dist	COUNTY	ROUTE	POST MILES TOTAL PROJECT	SHEET No.	TOTAL SHEETS
03	Sac	51,160	4.0/4.3, R44.4/47.0	48	117

K. Sudha Mallikarjuna 5-2-16
REGISTERED CIVIL ENGINEER DATE

5-2-16
PLANS APPROVAL DATE

REGISTERED PROFESSIONAL ENGINEER SUDHA M. KODALI No. 79722 Exp. 9/30/16 CIVIL STATE OF CALIFORNIA

THE STATE OF CALIFORNIA OR ITS OFFICERS OR AGENTS SHALL NOT BE RESPONSIBLE FOR THE ACCURACY OR COMPLETENESS OF SCANNED COPIES OF THIS PLAN SHEET.

INDIVIDUAL SLAB REPLACEMENT (RAPID STRENGTH CONCRETE)

COUNTY/ ROUTE	DIRECTION	LOCATION		INDIVIDUAL SLAB REPLACEMENT (RAPID STRENGTH CONCRETE)		DRILL AND BOND (DOWEL BAR)	REPLACE JOINT SEAL (ASPHALT RUBBER)
		BEGIN PM	LANE No.	LF (N)	CY	EA	LF
Sac/ 160	EB	R44.70	1	40	11.9	10	40
	EB	R44.70	2	40	11.9	10	40
	EB	R44.94	1	8	2.5	10	8
	EB	R44.94	2	8	2.4	10	8
	EB	R44.95	1	15	4.5	20	15
	EB	R44.97	1	422	130.2	80	422
	EB	45.53	1	15	4.4	20	15
	EB	45.53	2	15	4.4	20	15
	EB	45.58	2	105	31.1	30	105
	EB	45.60	2	29.5	8.8	20	30
	EB	45.61	2	15	4.4	20	15
	EB	46.40	1	15	4.4	20	15
	EB	46.40	2	15	4.4	20	15
Sac/ 160	EXIT		1	15	4.4	20	15
	EXIT		1	15	4.4	20	15
	WB	R44.60	1	270	98.6	50	270
	WB	R44.60	2	270	98.6	50	270
	WB	R44.62	Rt SHLDR	180	50.2	30	180
	WB	R44.96	2	30	8.9	20	30
	WB	R45.00	1	15	4.4	20	15
	WB	R45.00	2	30	8.9	20	30
	WB	45.08	1	300	88.4	50	300
	WB	45.08	2	290	87.2	50	290
	WB	46.17	Lt Shldr	48	16.8	20	48
	WB	46.17	Rt Shldr	52	13.8	20	52
				TOTAL	709.9	660	2258

ROADWAY ITEMS

COUNTY/ ROUTE	DIRECTION	LOCATION		SPALL REPAIR (POLYESTER CONCRETE)	CRACK TREATMENT
		BEGIN PM	END PM	SQYD	LNMI
SAC/ 160	EB	R44.5	47.0	12.5	
	WB	R44.5	47.0	12.5	
	EB	46.87	46.95		0.08
	WB	46.59	46.95		0.36
			TOTAL	25.0	0.44

TEMPORARY WATER POLLUTION CONTROL QUANTITIES

POSTMILE	TEMPORARY CONSTRUCTION ENTRANCE	TEMPORARY DRAINAGE INLET PROTECTION
	EA	EA
SAC-160-PM R44.4 TO PM 47.0	3.0	10.0
TOTAL	3.0	10.0

HOT MIX ASPHALT DIKES

POSTMILE	LOCATION	REMOVE AC DIKE	PLACE HMA DIKE (TYPE D)	PLACE HMA DIKE (TYPE E)	PLACE HMA DIKE (TYPE F)	PLACE HMA DIKE MINOR HMA	PLACE HMA DIKE IMPORTED BORROW
		LF	LF	LF	LF	TON	CY
PM R44.603 TO PM R44.618	NORTHGATE Blvd ON-RAMP TO WB 160 (Rt)	92			92	1.23	
PM R44.603 TO PM R44.618	NORTHGATE Blvd ON-RAMP TO WB 160 (Rt)	4	4			0.12	
PM R44.654 TO PM R44.717	NORTHGATE Blvd ON-RAMP TO WB 160 (Lt)	349	329			20.24	36
PM R44.943 TO PM R44.954	DEL PASO ON-RAMP TO WB 160 (Rt)	61			61	0.82	
	OSD LOCATION 2 TO OSD LOCATION 5 (SEE SHEET L-6)			396		10.82	
	OSD LOCATION 1 TO OSD LOCATION 3 (SEE SHEET L-6)			268		7.32	
	OSD LOCATION 3 TO END (SEE SHEET L-6)			113		3.10	
	BEGIN TO OSD LOCATION 6 (SEE SHEET L-6)			189		5.17	
	TRIBUTE Rd, ON-RAMP TO EB 160 (Rt) (SEE SHEET L-8)	515			515	6.88	
	FROM Q-1 SHEET					7.70	
	TOTAL	1021	333	966	668	63.40	36

REMOVE CURB AND GUTTER

POSTMILE	DIRECTION	REMOVE CONCRETE (CURB AND GUTTER)
		LF
PM R44.465	EB	4.0
TOTAL		4.0

CURB RAMPS

LOCATION	MINOR CONCRETE (CURB RAMP)	MINOR CONCRETE (CURB) (CY)	CLASS 2 AB **	MINOR CONCRETE (CURB AND GUTTER)	ROADWAY EXCAVATION (TYPE Z-2) (AERIALLY DEPOSITED LEAD) **	DETECTABLE WARNING SURFACE
	CY	CY	CY	CY	CY	SQFT
A (SEE SHEET C-14)	1.0	0.6	1.1	0.9	5.58	20.0
B (SEE SHEET C-14)	2.3	0.2	2.2	1.0	9.38	20.0
C (SEE SHEET C-14)	1.0	0.4	1.2	1.0	5.80	20.0
FROM Q-2 SHEET						
SUBTOTAL	4.3	1.2	4.5	2.9	20.76	
TOTAL	4.3	1.2	-	2.9	-	60.0

** - SEE SUMMARY OF QUANTITIES SHEET Q-1 (PAVEMENT QUANTITIES TABLE) FOR TOTAL QUANTITY

SUMMARY OF QUANTITIES

Q-3

STATE OF CALIFORNIA - DEPARTMENT OF TRANSPORTATION
Caltrans DESIGN
FUNCTIONAL SUPERVISOR: ALI KIANI
CALCULATED-DESIGNED BY: SUDHA KODALI
CHECKED BY: DAVID ROBERTS
REVISED BY
DATE REVISED

LAST REVISION 00-00-00
DATE PLOTTED => 05-JUL-2016
TIME PLOTTED => 17:01

Dist	COUNTY	ROUTE	POST MILES TOTAL PROJECT	SHEET No.	TOTAL SHEETS
03	Sac	51, 160	4.0/4.3 R44.4/47.0	49	117

LICENSED LANDSCAPE ARCHITECT

5-2-16
PLANS APPROVAL DATE

LICENSED LANDSCAPE ARCHITECT JEFFREY L. PIETRZAK No. 4457 Signature 12-31-17 Renewal Date 5-2-16 Date STATE OF CALIFORNIA

THE STATE OF CALIFORNIA OR ITS OFFICERS OR AGENTS SHALL NOT BE RESPONSIBLE FOR THE ACCURACY OR COMPLETENESS OF SCANNED COPIES OF THIS PLAN SHEET.

NOTES:

1. STRUCTURAL SECTION FOR MINOR CONCRETE (STAMPED CONCRETE) SHALL BE 0.5′ CLASS 2 AB AND 0.5′ PCC WITH #5 REBAR AT 1′ ON CENTER.
2. ROADWAY EXCAVATION (TYPE Z-2)(AERIALLY DEPOSITED LEAD) EXISTS AT ALL LOCATIONS TO A DEPTH OF 12" AS SHOWN, EXCEPT AT AREAS 1-3 SHOWN ON SHEETS L3-1-3. AT THESE AREAS THE ROADWAY EXCAVATION (TYPE Z-2)(AERIALLY DEPOSITED LEAD) DEPTH IS 1.0′ AS SHOWN. BELOW THESE EXCAVATED DEPTHS IS ROADWAY EXCAVATION.
3. MINOR CONCRETE (STAMPED CONCRETE) SHALL BE FEDERAL STANDARD 595B COLOR 30111.

LEGEND:

MINOR CONCRETE (STAMPED CONCRETE)

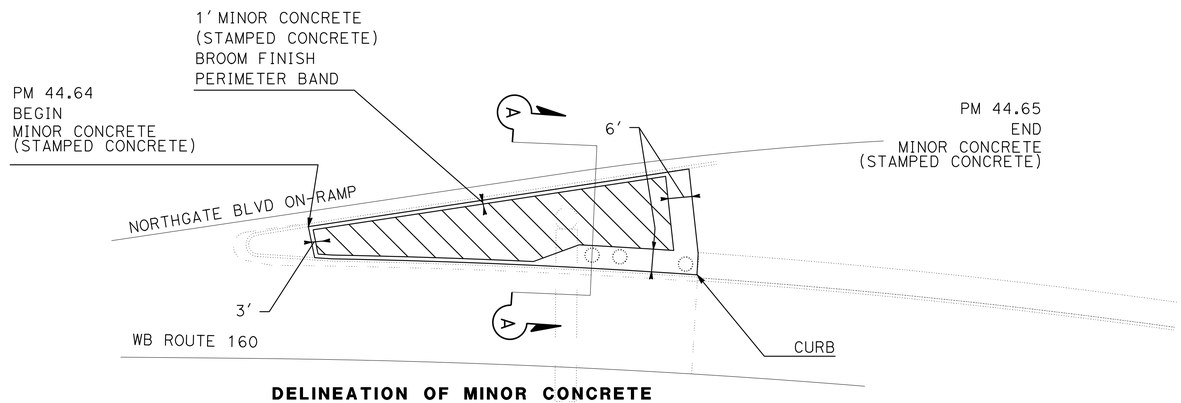

DELINEATION OF MINOR CONCRETE (STAMPED CONCRETE)

AREA 1

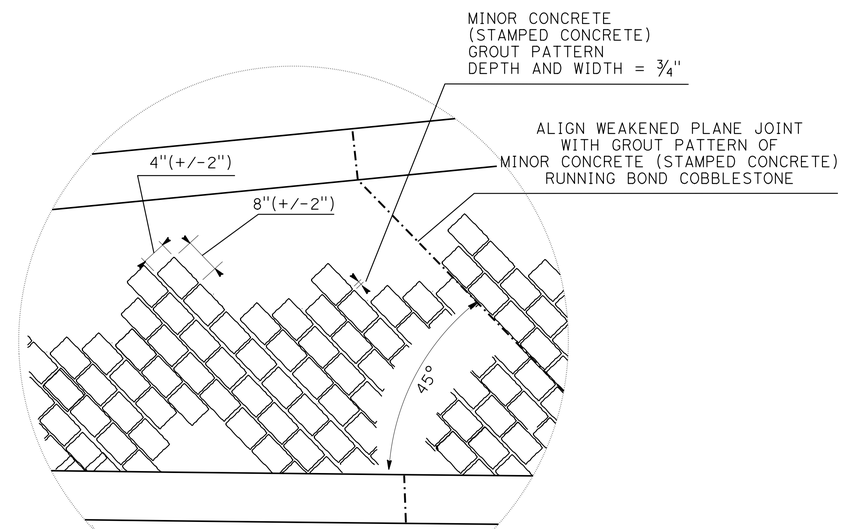

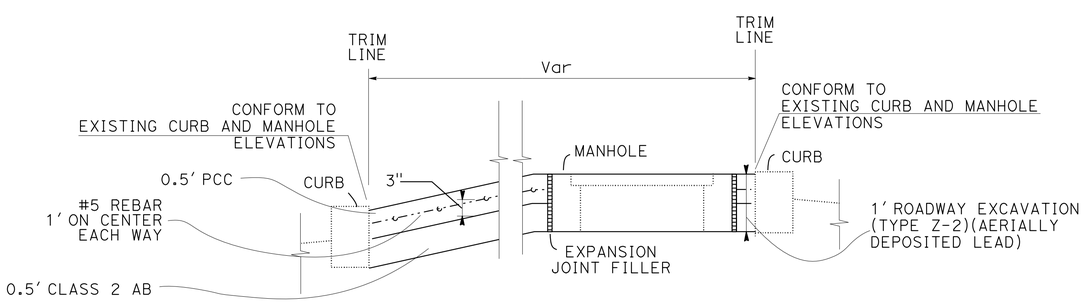

SECTION A-A

MINOR CONCRETE (STAMPED CONCRETE)

AREA 1

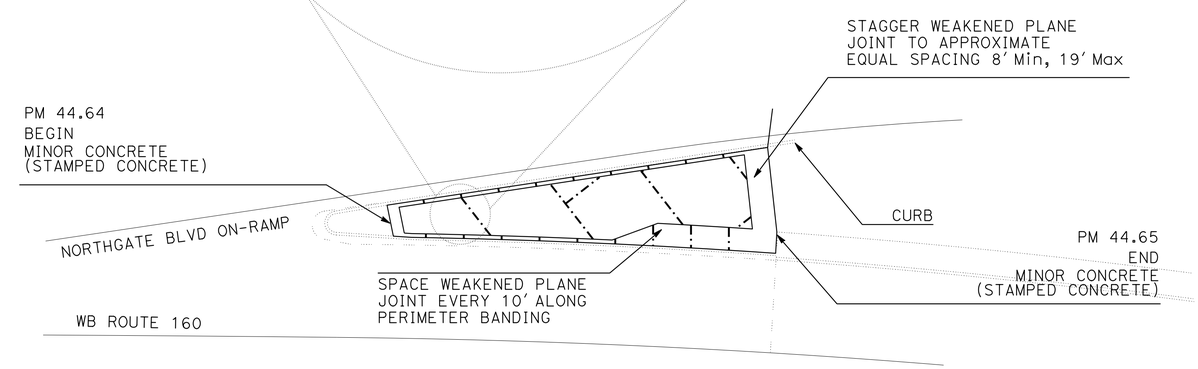

LAYOUT OF WEAKENEN PLANE JOINTS AND RUNNING BOND COBBLESTONE PATTERN FOR MINOR CONCRETE (STAMPED CONCRETE)

AREA 1

LANDSCAPE DETAILS

NO SCALE

LD-1

STATE OF CALIFORNIA - DEPARTMENT OF TRANSPORTATION

Caltrans

SENIOR LANDSCAPE ARCHITECT: J. WILLIAMSON

CALCULATED-DESIGNED BY: D. BREWER

CHECKED BY: J. PIETRZAK

REVISED BY

DATE REVISED

LAST REVISION 05-31-16

DATE PLOTTED => 05-JUL-2016
TIME PLOTTED => 17:01

Dist	COUNTY	ROUTE	POST MILES TOTAL PROJECT	SHEET No.	TOTAL SHEETS
03	Sac	51, 160	4.0/4.3 R44.4/47.0	50	117

LICENSED LANDSCAPE ARCHITECT

5-2-16
PLANS APPROVAL DATE

THE STATE OF CALIFORNIA OR ITS OFFICERS OR AGENTS SHALL NOT BE RESPONSIBLE FOR THE ACCURACY OR COMPLETENESS OF SCANNED COPIES OF THIS PLAN SHEET.

LICENSED LANDSCAPE ARCHITECT
JEFFREY L. PIETRZAK
No. 4457
Signature
12-31-17
Renewal Date
5-2-16
Date
STATE OF CALIFORNIA

NOTES:

1. STRUCTURAL SECTION FOR MINOR CONCRETE (STAMPED CONCRETE) SHALL BE 0.5′ CLASS 2 AB AND 0.5′ PCC WITH #5 REBAR AT 1′ ON CENTER.
2. ROADWAY EXCAVATION (TYPE Z-2)(AERIALLY DEPOSITED LEAD) EXISTS AT ALL LOCATIONS TO A DEPTH OF 12" AS SHOWN, EXCEPT AT AREAS 1-3 SHOWN ON SHEETS L3-1-3. AT THESE AREAS THE ROADWAY EXCAVATION (TYPE Z-2)(AERIALLY DEPOSITED LEAD) DEPTH IS 1.0′ AS SHOWN. BELOW THESE EXCAVATED DEPTHS IS ROADWAY EXCAVATION.

LEGEND:

MINOR CONCRETE (STAMPED CONCRETE)

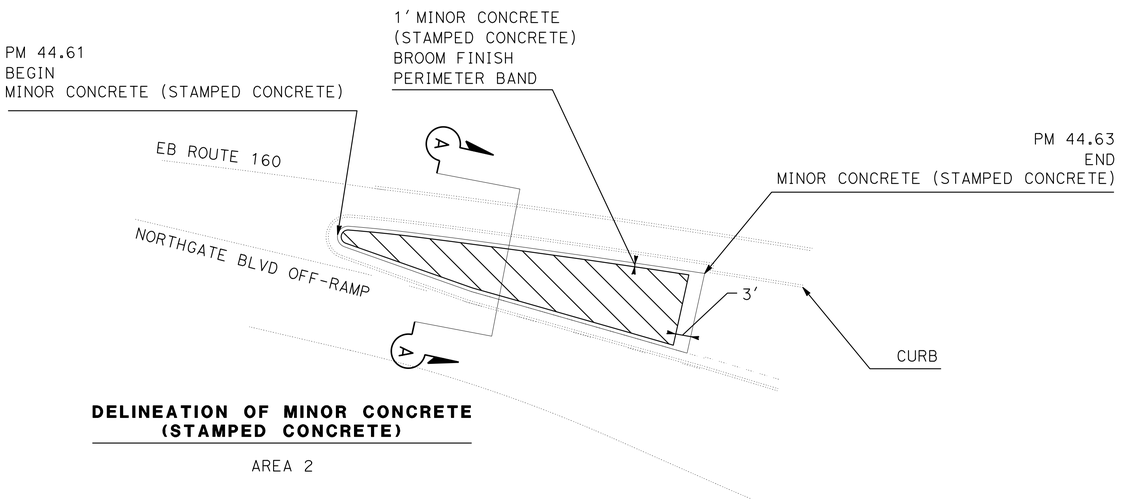

DELINEATION OF MINOR CONCRETE (STAMPED CONCRETE)

AREA 2

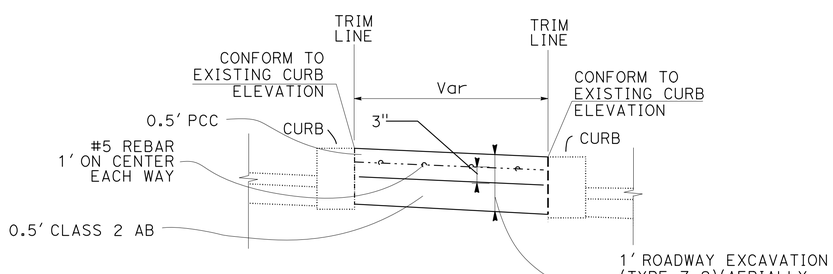

SECTION A-A

MINOR CONCRETE (STAMPED CONCRETE)

AREA 2

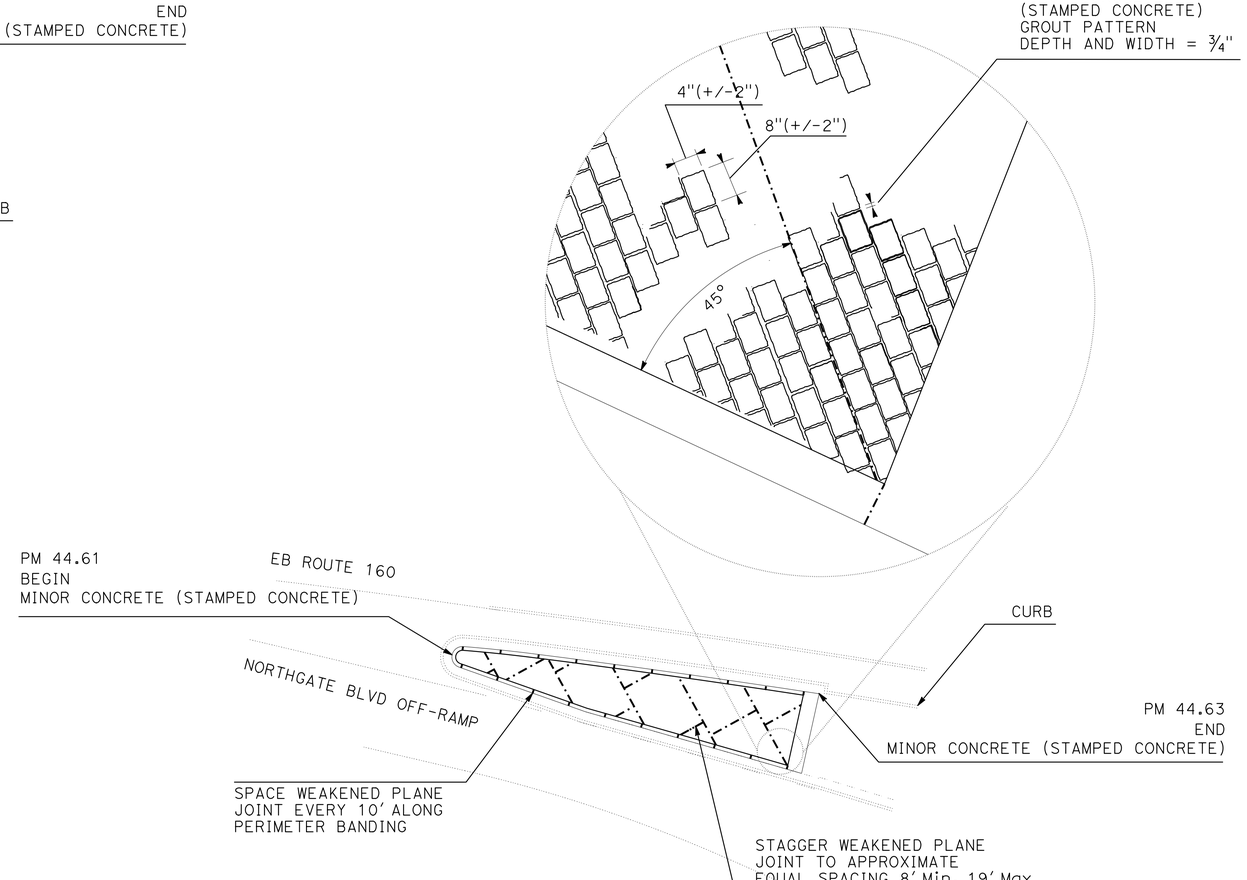

LAYOUT OF WEAKENEN PLANE JOINTS AND RUNNING BOND COBBLESTONE PATTERN FOR MINOR CONCRETE (STAMPED CONCRETE)

AREA 2

LANDSCAPE DETAILS

NO SCALE

LD-2

REVISED BY	DATE REVISED

CALCULATED-DESIGNED BY: D. BREWER
CHECKED BY: J. PIETRZAK
SENIOR LANDSCAPE ARCHITECT: J. WILLIAMSON

STATE OF CALIFORNIA - DEPARTMENT OF TRANSPORTATION
Caltrans

LAST REVISION 05-31-16
DATE PLOTTED => 05-JUL-2016
TIME PLOTTED => 17:01

Dist	COUNTY	ROUTE	POST MILES TOTAL PROJECT	SHEET No.	TOTAL SHEETS
03	Sac	51, 160	4.0/4.3 R44.4/47.0	51	117

LICENSED LANDSCAPE ARCHITECT

5-2-16
PLANS APPROVAL DATE

THE STATE OF CALIFORNIA OR ITS OFFICERS OR AGENTS SHALL NOT BE RESPONSIBLE FOR THE ACCURACY OR COMPLETENESS OF SCANNED COPIES OF THIS PLAN SHEET.

LICENSED LANDSCAPE ARCHITECT
JEFFREY L. PIETRZAK
No. 4457
Signature
12-31-17
Renewal Date
5-2-16
Date
STATE OF CALIFORNIA

NOTES:

1. STRUCTURAL SECTION FOR MINOR CONCRETE (PATTERENED) SHALL BE 0.5′ CLASS 2 AB AND 0.5′ PCC WITH #5 REBAR AT 1′ ON CENTER.
2. ROADWAY EXCAVATION (TYPE Z-2)(AERIALLY DEPOSITED LEAD) EXISTS AT ALL LOCATIONS TO A DEPTH OF 12″ AS SHOWN, EXCEPT AT AREAS 1-3 SHOWN ON SHEETS L3-1-3. AT THESE AREAS THE ROADWAY EXCAVATION (TYPE Z-2)(AERIALLY DEPOSITED LEAD) DEPTH IS 1.0′ AS SHOWN. BELOW THESE EXCAVATED DEPTHS IS ROADWAY EXCAVATION.

LEGEND:

MINOR CONCRETE (STAMPED Conc)

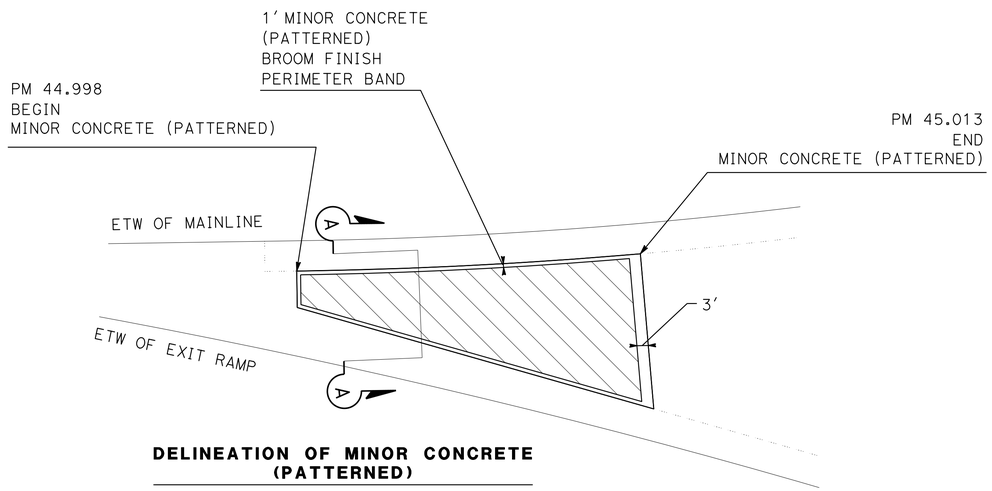

DELINEATION OF MINOR CONCRETE (PATTERNED)

AREA 3

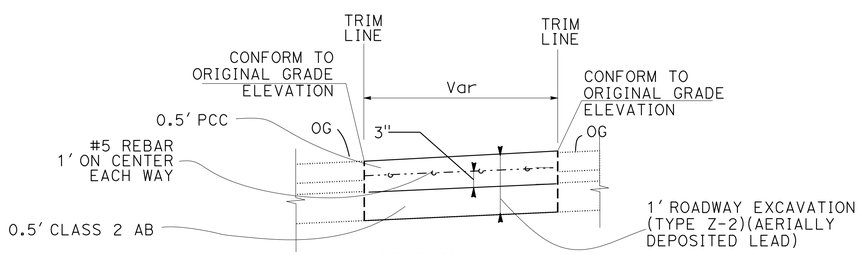

SECTION A-A
MINOR CONCRETE (PATTERNED)

AREA 3

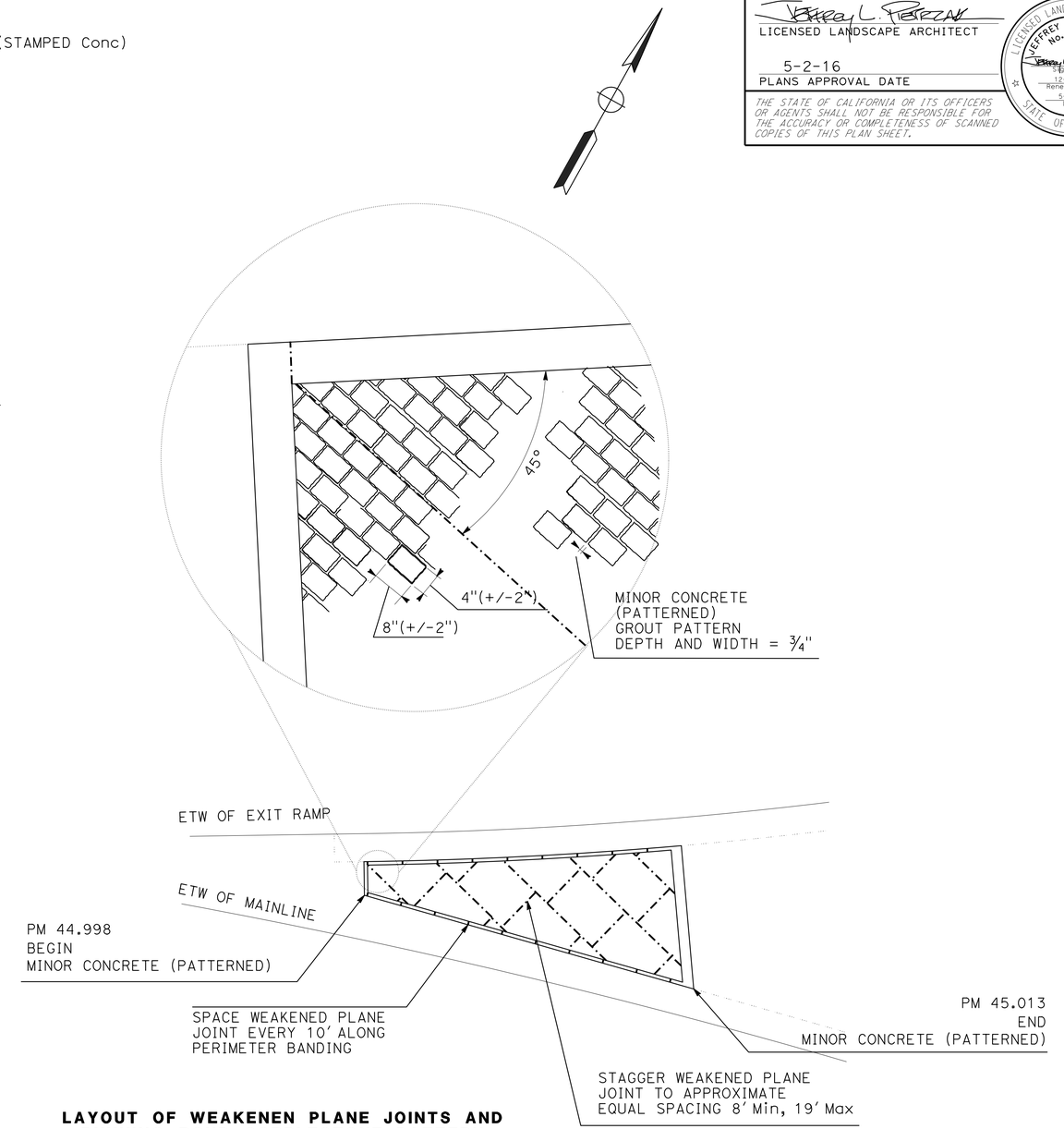

LAYOUT OF WEAKENEN PLANE JOINTS AND RUNNING BOND COBBLESTONE PATTERN FOR MINOR CONCRETE (PATTERNED)

AREA 3

LANDSCAPE DETAILS

NO SCALE

LD-3

STATE OF CALIFORNIA - DEPARTMENT OF TRANSPORTATION
Caltrans

SENIOR LANDSCAPE ARCHITECT: J. WILLIAMSON
CALCULATED-DESIGNED BY: D. BREWER
CHECKED BY: J. PIETRZAK
REVISED BY
DATE REVISED

LAST REVISION 05-31-16
DATE PLOTTED => 05-JUL-2016
TIME PLOTTED => 17:01

Dist	COUNTY	ROUTE	POST MILES TOTAL PROJECT	SHEET No.	TOTAL SHEETS
03	Sac	51, 160	4.0/4.3 R44.4/47.0	52	117

LICENSED LANDSCAPE ARCHITECT

5-2-16
PLANS APPROVAL DATE

LICENSED LANDSCAPE ARCHITECT
JEFFREY L. PIETRZAK No. 4457
Signature
12-31-17
Renewal Date
5-2-16
Date
STATE OF CALIFORNIA

THE STATE OF CALIFORNIA OR ITS OFFICERS OR AGENTS SHALL NOT BE RESPONSIBLE FOR THE ACCURACY OR COMPLETENESS OF SCANNED COPIES OF THIS PLAN SHEET.

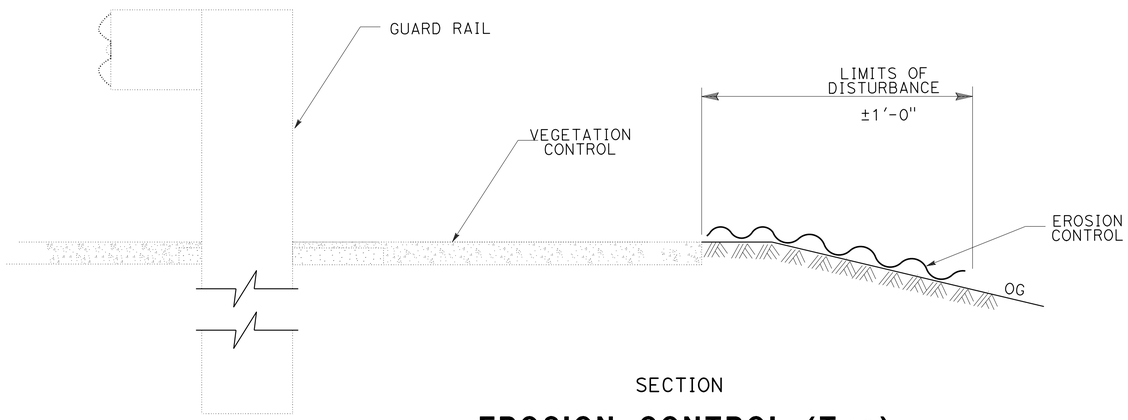

SECTION

EROSION CONTROL (Typ)

EROSION CONTROL QUANTITIES

EROSION CONTROL LOCATIONS	COMPOST
	SQFT
GUARD RAIL 1	186
GUARD RAIL 2	324
GUARD RAIL 3	1392
GUARD RAIL 4	188
GUARD RAIL 5	554
GUARD RAIL 6	208
GUARD RAIL 7	190
GUARD RAIL 8	184
GUARD RAIL 9	310
GUARD RAIL 10	398
GUARD RAIL 11	624
GUARD RAIL 12	254
GUARD RAIL 13	360
GUARD RAIL 14	210
GUARD RAIL 15	184
GUARD RAIL 16	202
GUARD RAIL 17	528
GUARD RAIL 18	224
GUARD RAIL 19	212
GUARD RAIL 20	0
GUARD RAIL 21	314
GUARD RAIL 22	244
GUARD RAIL 23	164
GUARD RAIL 24	0
GUARD RAIL 25	1080
GUARD RAIL 26	1990
GUARD RAIL 27	420
GUARD RAIL 28	0
GUARD RAIL 29	190
GUARD RAIL 30	0
GORE AREA 1	30
GORE AREA 2	50
GORE AREA 3	82
TOTAL	11214

EROSION CONTROL

ITEM	MATERIAL		DEPTH
	DESCRIPTION	TYPE	
COMPOST	COMPOST	COARSE	2"

EROSION CONTROL DETAILS

ECD-1

REVISED BY | DATE REVISED
D. BREWER | J. PIETRZAK
CALCULATED-DESIGNED BY | CHECKED BY
SENIOR LANDSCAPE ARCHITECT
J. WILLIAMSON
STATE OF CALIFORNIA - DEPARTMENT OF TRANSPORTATION
Caltrans

LAST REVISION 02-08-16
DATE PLOTTED => 05-JUL-2016
TIME PLOTTED => 17:01

Dist	COUNTY	ROUTE	POST MILES TOTAL PROJECT	SHEET No.	TOTAL SHEETS
03	Sac	51,160	4.0/4.3, R44.4/47.0	53	117

R. P. Gill 5-2-16
REGISTERED ELECTRICAL ENGINEER DATE

5-2-16
PLANS APPROVAL DATE

REGISTERED PROFESSIONAL ENGINEER
RUPINDER PAL GILL
No. 16642
Exp. 06-30-16
ELECTRICAL
STATE OF CALIFORNIA

THE STATE OF CALIFORNIA OR ITS OFFICERS OR AGENTS SHALL NOT BE RESPONSIBLE FOR THE ACCURACY OR COMPLETENESS OF SCANNED COPIES OF THIS PLAN SHEET.

NOTE:

FOR ACCURATE RIGHT OF WAY DATA, CONTACT RIGHT OF WAY ENGINEERING AT THE DISTRICT OFFICE.

LEGEND (THIS SHEET ONLY):

1. EXISTING TYPE 332 CONTROLLER CABINET.
2. RC DETECTOR HANDHOLE.
3. RC PB, INSTALL NEW PB.
4. EXISTING SERVICE PEDESTAL (CITY).
5. INSTALL PREFORMED INDUCTIVE LOOPS.

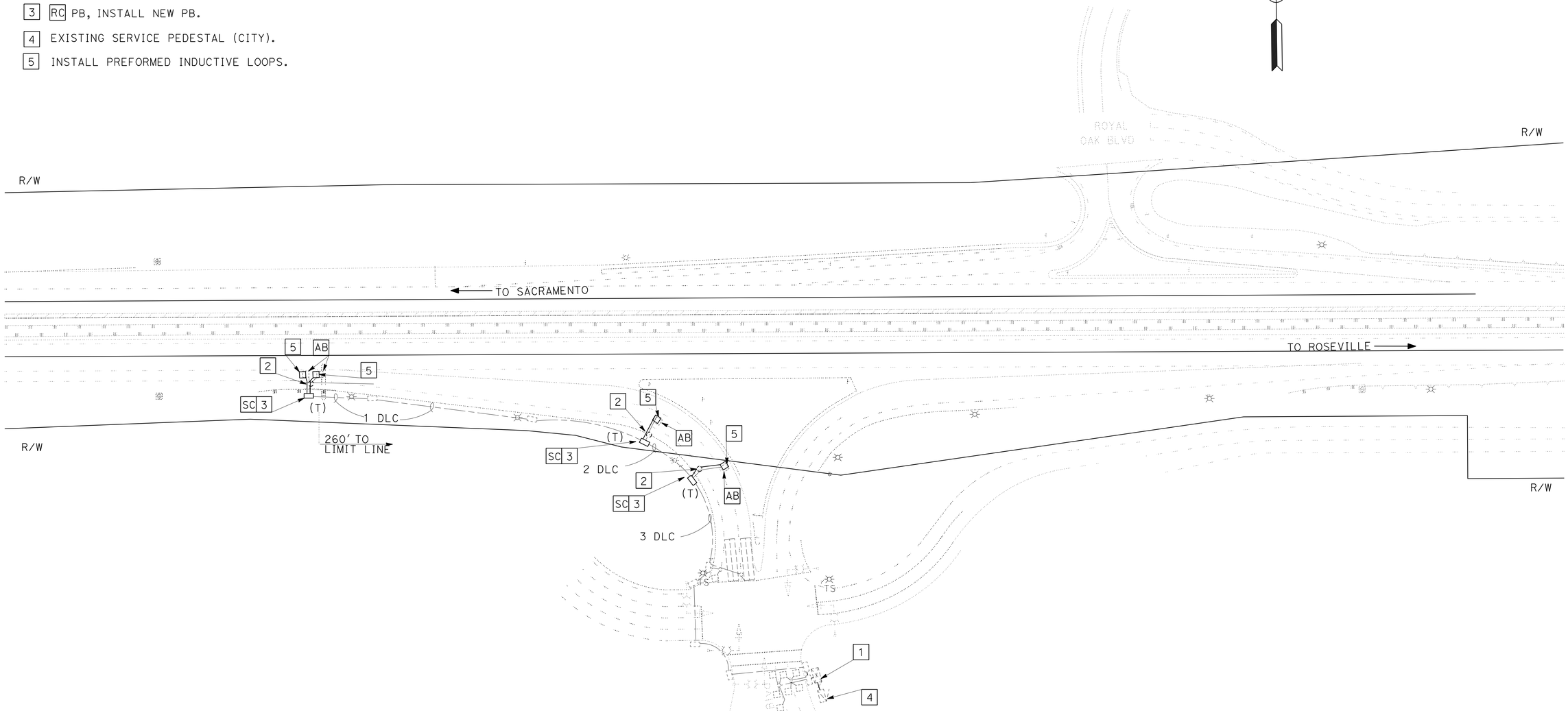

MODIFY SIGNAL

MODIFYING EXISTING ELECTRICAL SYSTEM

SCALE 1"=50'

E-1

APPROVED FOR ELECTRICAL WORK ONLY

STATE OF CALIFORNIA - DEPARTMENT OF TRANSPORTATION
Caltrans®
ELECTRICAL DESIGN

FUNCTIONAL SUPERVISOR: STEVE BLOCK

CALCULATED-DESIGNED BY: ALI HASSANI
CHECKED BY: RUPINDER PAL GILL

REVISED BY
DATE REVISED

LAST REVISION 00-00-00
DATE PLOTTED => 05-JUL-2016
TIME PLOTTED => 17:01

Dist	COUNTY	ROUTE	POST MILES TOTAL PROJECT	SHEET No.	TOTAL SHEETS
03	Sac	51,160	4.0/4.3, R44.4/47.0	54	117

R. P. Gill 5-2-16
REGISTERED ELECTRICAL ENGINEER DATE

5-2-16
PLANS APPROVAL DATE

REGISTERED PROFESSIONAL ENGINEER RUPINDER PAL GILL No. 16642 Exp. 06-30-16 ELECTRICAL STATE OF CALIFORNIA

THE STATE OF CALIFORNIA OR ITS OFFICERS OR AGENTS SHALL NOT BE RESPONSIBLE FOR THE ACCURACY OR COMPLETENESS OF SCANNED COPIES OF THIS PLAN SHEET.

NOTE:

FOR ACCURATE RIGHT OF WAY DATA, CONTACT RIGHT OF WAY ENGINEERING AT THE DISTRICT OFFICE.

LEGEND (THIS SHEET ONLY):

1. EXISTING TYPE 332 CONTROLLER CABINET.
2. RC DETECTOR HANDHOLE, INSTALL NEW DH.
3. RC PB, INSTALL NEW PB.
4. 2"C, 3 DLC.
5. 2"C, 7#14, 9 DLC.
6. 2-3"C, 18#14, 5#8, 12 DLC, 2 SIC.
7. INSTALL PREFORMED INDUCTIVE LOOPS.

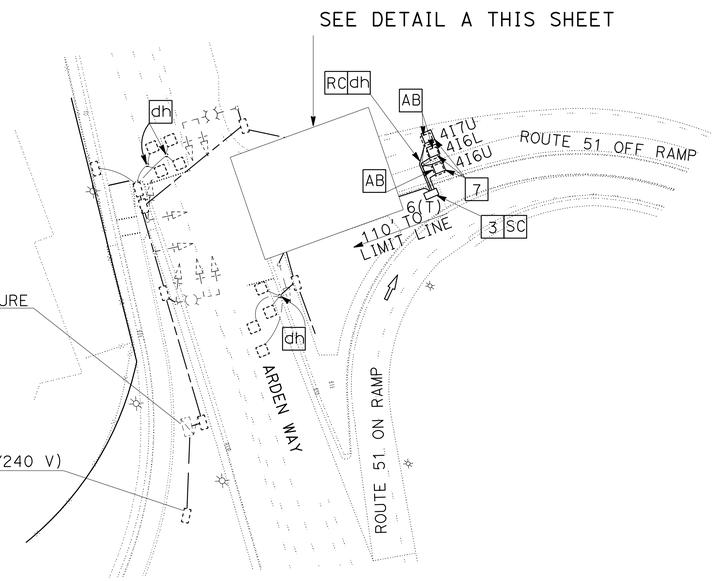

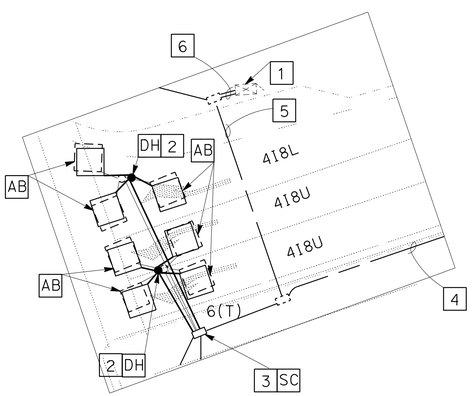

DETAIL A
NO SCALE

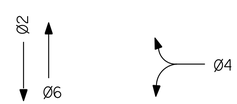

EXISTING PHASE DIAGRAM
(NO CHANGES)

MODIFY SIGNAL

MODIFYING EXISTING ELECTRICAL SYSTEM

SCALE 1"=50'

E-2

APPROVED FOR ELECTRICAL WORK ONLY

STATE OF CALIFORNIA - DEPARTMENT OF TRANSPORTATION
Caltrans® ELECTRICAL DESIGN

FUNCTIONAL SUPERVISOR: STEVE BLOCK
CALCULATED-DESIGNED BY: ALI HASSANI
CHECKED BY: RUPINDER PAL GILL
REVISED BY
DATE REVISED

LAST REVISION 00-00-00
DATE PLOTTED => 05-JUL-2016
TIME PLOTTED => 17:01

Dist	COUNTY	ROUTE	POST MILES TOTAL PROJECT	SHEET No.	TOTAL SHEETS
03	Sac	51,160	4.0/4.3, R44.4/47.0	55	117

R. P. Gill 5-2-16
REGISTERED ELECTRICAL ENGINEER DATE

5-2-16
PLANS APPROVAL DATE

REGISTERED PROFESSIONAL ENGINEER
RUPINDER PAL GILL
No. 16642
Exp. 06-30-16
ELECTRICAL
STATE OF CALIFORNIA

THE STATE OF CALIFORNIA OR ITS OFFICERS OR AGENTS SHALL NOT BE RESPONSIBLE FOR THE ACCURACY OR COMPLETENESS OF SCANNED COPIES OF THIS PLAN SHEET.

NOTE:

FOR ACCURATE RIGHT OF WAY DATA, CONTACT RIGHT OF WAY ENGINEERING AT THE DISTRICT OFFICE.

LEGEND (THIS SHEET ONLY):

1 EXISTING CONTROLLER CABINET.

2 RC DETECTOR HANDHOLE, INSTALL NEW DH.

3 RC PB, INSTALL NEW PB.

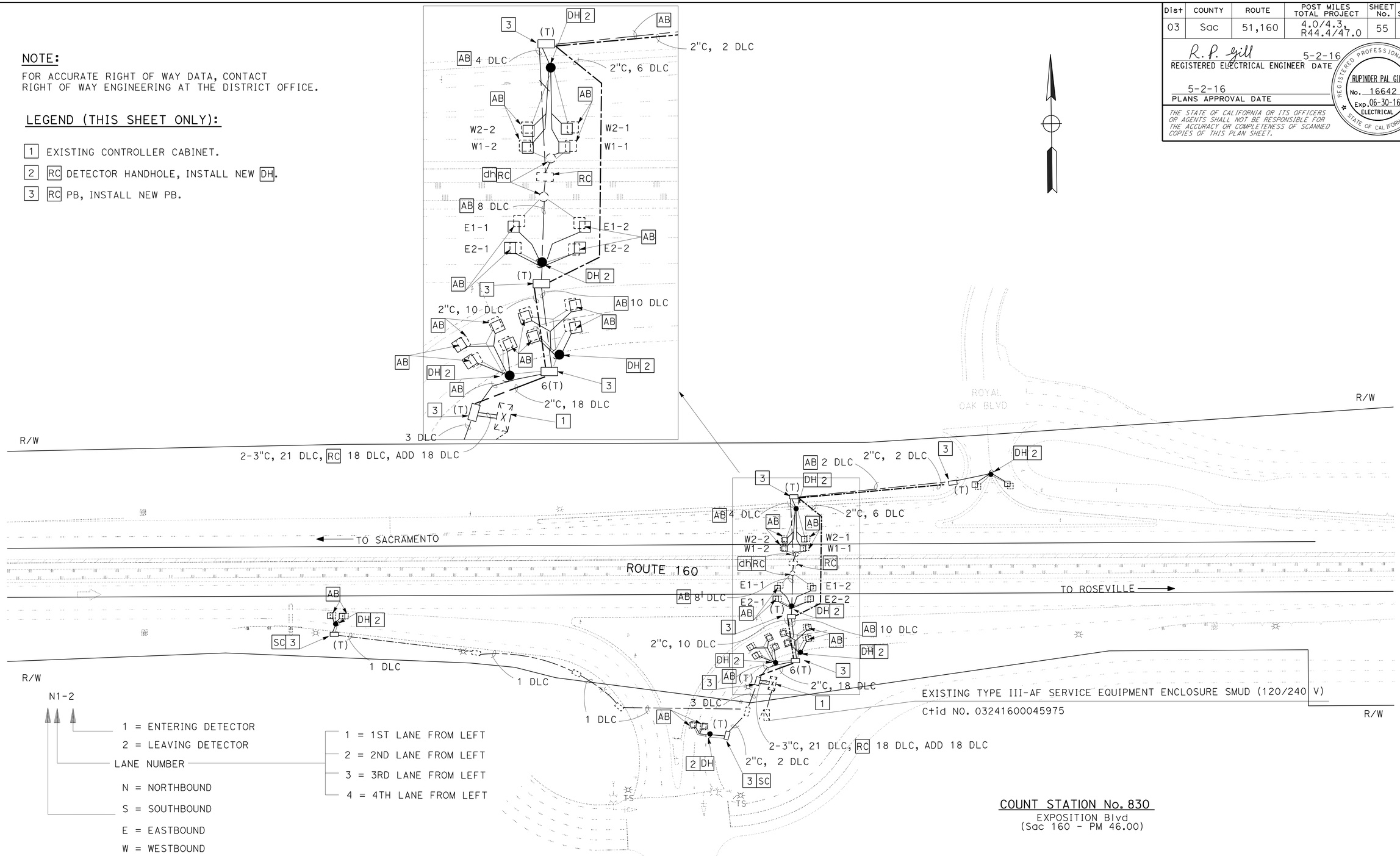

1 = ENTERING DETECTOR
2 = LEAVING DETECTOR
LANE NUMBER
N = NORTHBOUND
S = SOUTHBOUND
E = EASTBOUND
W = WESTBOUND

1 = 1ST LANE FROM LEFT
2 = 2ND LANE FROM LEFT
3 = 3RD LANE FROM LEFT
4 = 4TH LANE FROM LEFT

MAINLINE DETECTORS
DETECTOR IDENTIFICATION

COUNT STATION No. 830
EXPOSITION Blvd
(Sac 160 - PM 46.00)

MODIFY TRAFFIC MONITORING STATION (COUNT)

APPROVED FOR ELECTRICAL WORK ONLY

MODIFYING EXISTING ELECTRICAL SYSTEM

SCALE 1"=50'

E-3

STATE OF CALIFORNIA - DEPARTMENT OF TRANSPORTATION
Caltrans
ELECTRICAL DESIGN

FUNCTIONAL SUPERVISOR: STEVE BLOCK
CALCULATED-DESIGNED BY: ALI HASSANI
CHECKED BY: RUPINDER PAL GILL
REVISED BY
DATE REVISED

LAST REVISION 00-00-00
DATE PLOTTED => 05-JUL-2016
TIME PLOTTED => 17:01

Dist	COUNTY	ROUTE	POST MILES TOTAL PROJECT	SHEET No.	TOTAL SHEETS
03	Sac	51,160	4.0/4.3, R44.4/47.0	56	117

R. P. Gill 5-2-16
REGISTERED ELECTRICAL ENGINEER DATE

5-2-16
PLANS APPROVAL DATE

REGISTERED PROFESSIONAL ENGINEER
RUPINDER PAL GILL
No. 16642
Exp. 06-30-16
ELECTRICAL
STATE OF CALIFORNIA

THE STATE OF CALIFORNIA OR ITS OFFICERS OR AGENTS SHALL NOT BE RESPONSIBLE FOR THE ACCURACY OR COMPLETENESS OF SCANNED COPIES OF THIS PLAN SHEET.

NOTE:

FOR ACCURATE RIGHT OF WAY DATA, CONTACT RIGHT OF WAY ENGINEERING AT THE DISTRICT OFFICE.

LEGEND (THIS SHEET ONLY):

1. EXISTING CONTROLLER CABINET.
2. RC DETECTOR HANDHOLE, INSTALL NEW DH.
3. RC PB, INSTALL NEW PB.
4. INSTALL LB CONDUIT BODY, SEE DETAIL A THIS SHEET.
5. COILL 10′ DLC INSIDE CABINET.

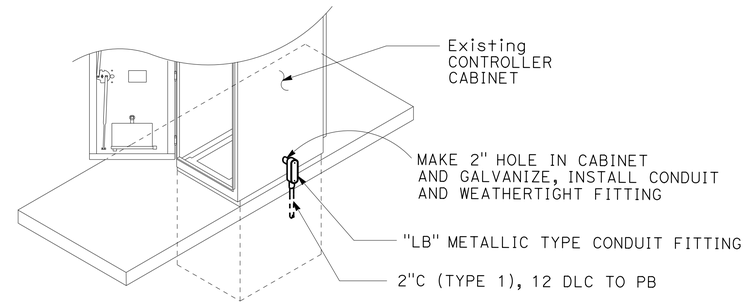

DETAIL A

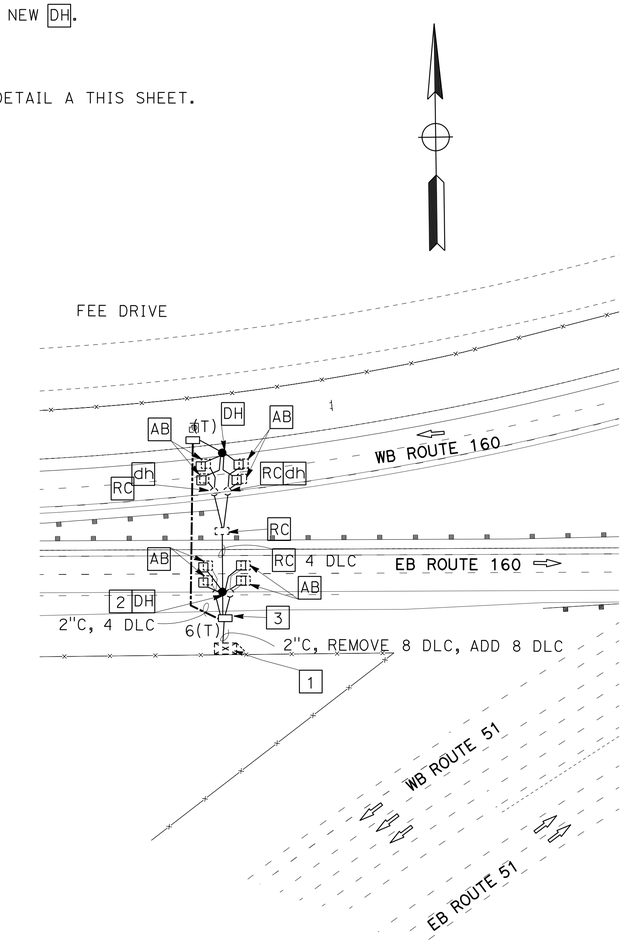

COUNT STATION No. 830 NS

ARDEN WAY
(SAC 160 - PM 46.3/46.5)

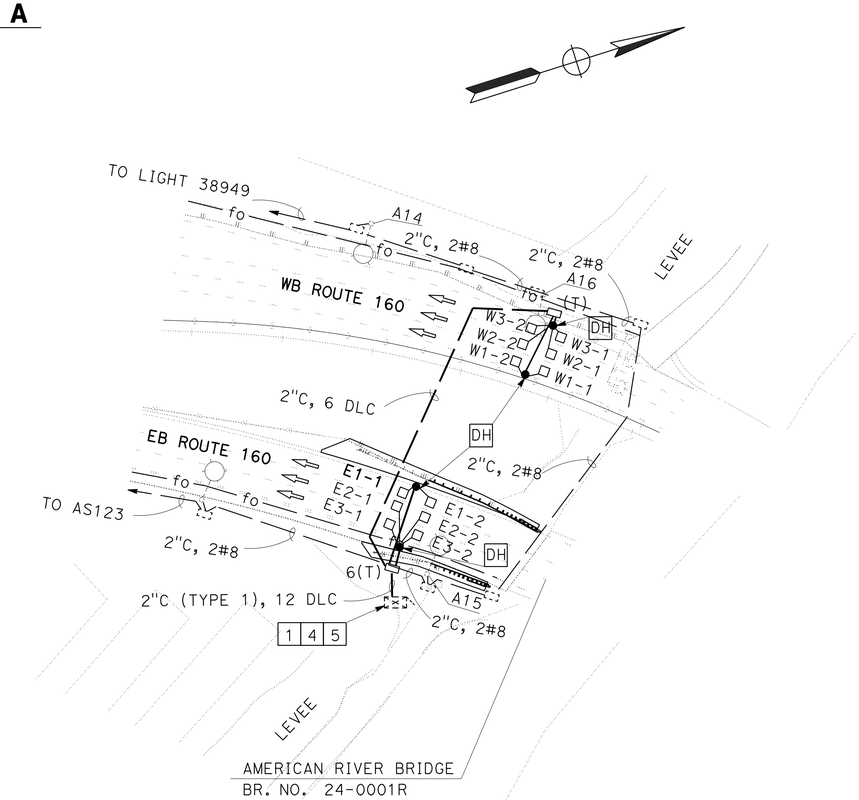

COUNT STATION No. 301 NS

AMERICAN RIVER BRIDGE
(SAC 160 - PM 44.5)

MODIFY TRAFFIC MONITORING STATION (COUNT)

MODIFYING EXISTING ELECTRICAL SYSTEM

SCALE 1"=50′

E-4

APPROVED FOR ELECTRICAL WORK ONLY

STATE OF CALIFORNIA - DEPARTMENT OF TRANSPORTATION
Caltrans®
ELECTRICAL DESIGN

FUNCTIONAL SUPERVISOR: STEVE BLOCKANI
CALCULATED-DESIGNED BY: ALI HASSANI
CHECKED BY: RUPINDER PAL GILL
REVISED BY
DATE REVISED

LAST REVISION 00-00-00
DATE PLOTTED => 05-JUL-2016
TIME PLOTTED => 17:01

Dist	COUNTY	ROUTE	POST MILES TOTAL PROJECT	SHEET No.	TOTAL SHEETS
03	Sac	51,160	4.0/4.3, R44.4/47.0	57	117

R. P. Gill 5-2-16
REGISTERED ELECTRICAL ENGINEER DATE

5-2-16
PLANS APPROVAL DATE

REGISTERED PROFESSIONAL ENGINEER
RUPINDER PAL GILL
No. 16642
Exp. 06-30-16
ELECTRICAL
STATE OF CALIFORNIA

THE STATE OF CALIFORNIA OR ITS OFFICERS OR AGENTS SHALL NOT BE RESPONSIBLE FOR THE ACCURACY OR COMPLETENESS OF SCANNED COPIES OF THIS PLAN SHEET.

NOTE:

FOR ACCURATE RIGHT OF WAY DATA, CONTACT RIGHT OF WAY ENGINEERING AT THE DISTRICT OFFICE.

LEGEND (THIS SHEET ONLY):

1 RC EXISTING TYPE E SERVICE AND WOOD POLE.

2 RC RISER AS DIRECTED BY THE ENGINEER AND COORDINATE WITH THE UTILITY COMPANY.

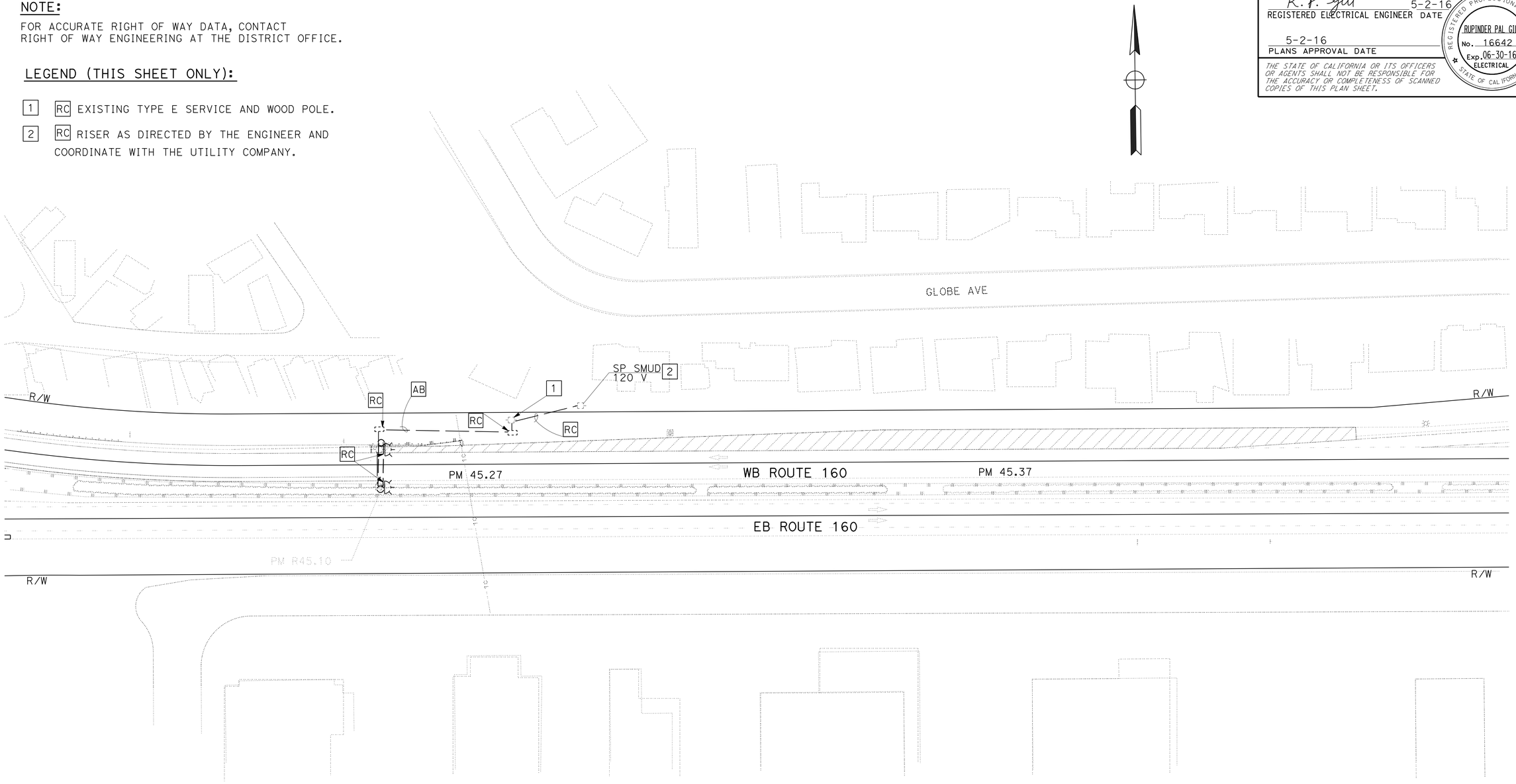

MODIFY FLASHING BEACON SYSTEM

REMOVING EXISTING ELECTRICAL SYSTEM

SCALE 1"=50'

E-5

APPROVED FOR ELECTRICAL WORK ONLY

STATE OF CALIFORNIA - DEPARTMENT OF TRANSPORTATION
Caltrans
ELECTRICAL DESIGN

FUNCTIONAL SUPERVISOR: STEVE BLOCK

CALCULATED-DESIGNED BY: ALI HASSANI
CHECKED BY: RUPINDER PAL GILL

REVISED BY
DATE REVISED

LAST REVISION 00-00-00
DATE PLOTTED => 05-JUL-2016
TIME PLOTTED => 17:01

Dist	COUNTY	ROUTE	POST MILES TOTAL PROJECT	SHEET No.	TOTAL SHEETS
03	Sac	51,160	4.0/4.3, R44.4/47.0	58	117

R. P. Gill 5-2-16
REGISTERED ELECTRICAL ENGINEER DATE

5-2-16
PLANS APPROVAL DATE

REGISTERED PROFESSIONAL ENGINEER
RUPINDER PAL GILL
No. 16642
Exp. 06-30-16
ELECTRICAL
STATE OF CALIFORNIA

THE STATE OF CALIFORNIA OR ITS OFFICERS OR AGENTS SHALL NOT BE RESPONSIBLE FOR THE ACCURACY OR COMPLETENESS OF SCANNED COPIES OF THIS PLAN SHEET.

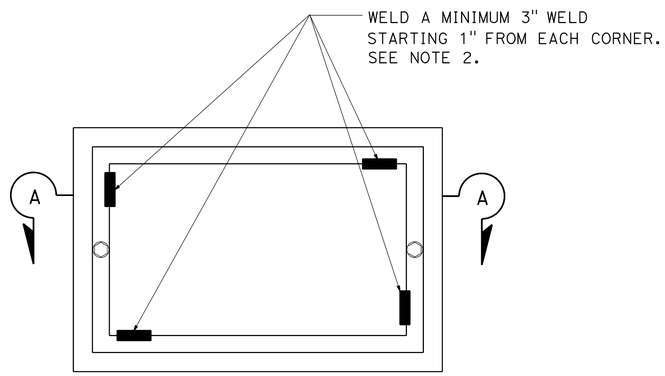

TOP VIEW

NOTES ON PULL BOXES:

1. FOR ADDITIONAL DETAILS, SEE REVISED STANDARD PLAN RSP ES-8B.
2. WELDING SHALL COMPLY WITH REQUIREMENTS IN STANDARD SPECIFICATION SECTION 75.
3. A PULL BOX FOR A POST OR A POLE STANDARD MUST BE LOCATED WITHIN 5 FEET OF THE STANDARD.

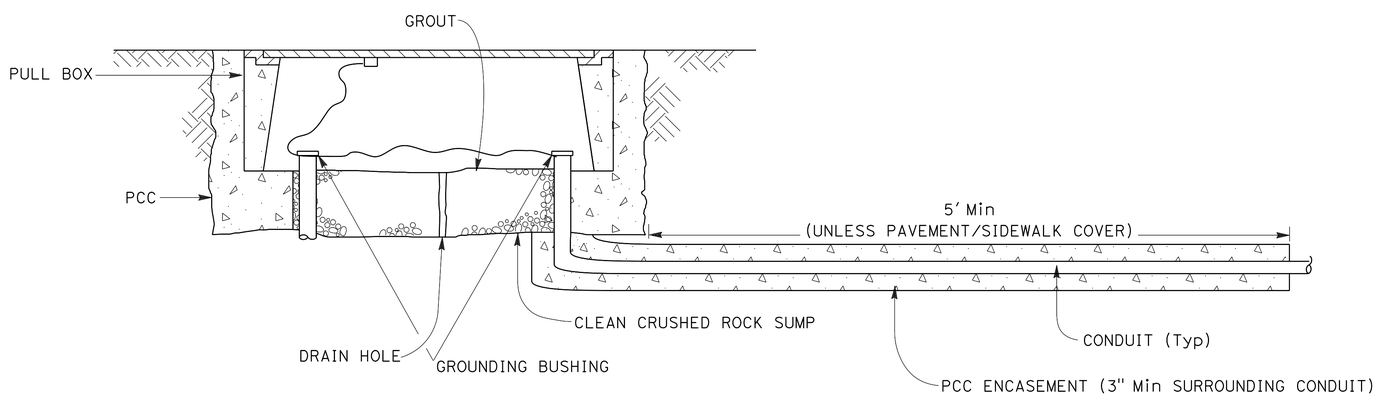

SECTION A-A

TRAFFIC PULL BOX

ELECTRICAL DETAIL

APPROVED FOR ELECTRICAL WORK ONLY

NO SCALE

E-6

STATE OF CALIFORNIA - DEPARTMENT OF TRANSPORTATION
Caltrans
ELECTRICAL DESIGN

FUNCTIONAL SUPERVISOR: STEVE BLOCK
CALCULATED-DESIGNED BY: ALI HASSANI
CHECKED BY: RUPINDER PAL GILL
REVISED BY
DATE REVISED

LAST REVISION 00-00-00
DATE PLOTTED => 05-JUL-2016
TIME PLOTTED => 17:01

Dist	COUNTY	ROUTE	POST MILES TOTAL PROJECT	SHEET No.	TOTAL SHEETS
03	Sac	51,160	4.0/4.3, R44.4/47.0	59	117

R. P. Gill 5-2-16
REGISTERED ELECTRICAL ENGINEER DATE

5-2-16
PLANS APPROVAL DATE

REGISTERED PROFESSIONAL ENGINEER
RUPINDER PAL GILL
No. 16642
Exp. 06-30-16
ELECTRICAL
STATE OF CALIFORNIA

THE STATE OF CALIFORNIA OR ITS OFFICERS OR AGENTS SHALL NOT BE RESPONSIBLE FOR THE ACCURACY OR COMPLETENESS OF SCANNED COPIES OF THIS PLAN SHEET.

(N) - NOT A SEPARATE PAY ITEM, FOR INFORMATION ONLY

MODIFY TRAFFIC MONITORING STATION (COUNT)

SHEET No.	(N) TYPE A LOOP	(N) DETECTOR HANDHOLE	(N) No. 5 TRAFFIC PB	(N) No. 6 TRAFFIC PB	(N) DLC	(N) 2"C	(N) 2"C (TYPE 1)
	EA	EA	EA		FT	FT	FT
E-3	22	7	5	1	2450	430	
E-4	20	6	2	2	2140	400	10

MODIFY SIGNAL

SHEET No.	(N) PREFORMED INDUCTIVE LOOP (TYPE A)	TYPE A LOOP	(N) DETECTOR HANDHOLE	(N) No. 5 TRAFFIC PB	(N) No. 6 TRAFFIC PB
	EA	EA	EA	EA	EA
E-1	4			3	
E-2	3	7	2		2

APPROVED FOR ELECTRICAL WORK ONLY

ELECTRICAL QUANTITIES
E-7

REVISED BY | DATE REVISED
ALI HASSANI | RUPINDER PAL GILL
CALCULATED-DESIGNED BY | CHECKED BY
FUNCTIONAL SUPERVISOR
STEVE BLOCK
STATE OF CALIFORNIA - DEPARTMENT OF TRANSPORTATION
Caltrans
ELECTRICAL DESIGN

LAST REVISION 00-00-00 | DATE PLOTTED => 05-JUL-2016 | TIME PLOTTED => 17:01

M

Maint	MAINTENANCE
Max	MAXIMUM
MB	METAL BEAM
MBB	METAL BEAM BARRIER
MBGR	METAL BEAM GUARD RAILING
Med	MEDIAN
MGS	MIDWEST GUARDRAIL SYSTEM
MH	MANHOLE
Min	MINIMUM
Misc	MISCELLANEOUS
Misc I & S	MISCELLANEOUS IRON AND STEEL
Mkr	MARKER
Mod	MODIFIED, MODIFY
Mon	MONUMENT
MP	METAL PLATE
MPGR	METAL PLATE GUARD RAILING
MR	MOVEMENT RATING
MSE	MECHANICALLY STABILIZED EMBANKMENT
Mt	MOUNTAIN, MOUNT
Mtl	MATERIAL
MVP	MAINTENANCE VEHICLE PULLOUT

N

N	NORTH
NB	NORTHBOUND
No.	NUMBER (MUST HAVE PERIOD)
Nos.	NUMBERS (MUST HAVE PERIOD)
NPS	NOMINAL PIPE SIZE
NS	NEAR SIDE
NSP	NEW STANDARD PLAN
NTS	NOT TO SCALE

O

Oblr	OBLITERATE
OC	OVERCROSSING
OD	OUTSIDE DIAMETER
OF	OUTSIDE FACE
OG	ORIGINAL GROUND
OGAC	OPEN GRADED ASPHALT CONCRETE
OGFC	OPEN GRADED FRICTION COURSE
OH	OVERHEAD
OHWM	ORDINARY HIGH WATER MARK
O-O	OUT TO OUT
Opp	OPPOSITE
OSD	OVERSIDE DRAIN

P

P	PAGE
PAP	PERFORATED ALUMINUM PIPE
PB	PULL BOX
PC	POINT OF CURVATURE, PRECAST
PCC	POINT OF COMPOUND CURVE, PORTLAND CEMENT CONCRETE
PCMS	PORTABLE CHANGEABLE MESSAGE SIGN
PCP	PERFORATED CONCRETE PIPE, PRESTRESSED CONCRETE PIPE
PCVC	POINT OF COMPOUND VERTICAL CURVE
PEC	PERMIT TO ENTER AND CONSTRUCT
Ped	PEDESTRIAN
Ped OC	PEDESTRIAN OVERCROSSING
Ped UC	PEDESTRIAN UNDERCROSSING
Perm Mtl	PERMEABLE MATERIAL

P continued

PG	PROFILE GRADE
PI	POINT OF INTERSECTION
PJP	PARTIAL JOINT PENETRATION
Pkwy	PARKWAY
ℙ,PL	PLATE
P/L	PROPERTY LINE
PM	POST MILE, TIME FROM NOON TO MIDNIGHT
PN	PAVING NOTCH
POC	POINT OF HORIZONTAL CURVE
POT	POINT OF TANGENT
POVC	POINT OF VERTICAL CURVE
PP	PIPE PILE, PLASTIC PIPE, POWER POLE
PPL	PREFORMED PERMEABLE LINER
PPP	PERFORATED PLASTIC PIPE
PRC	POINT OF REVERSE CURVE
PRF	PAVEMENT REINFORCING FABRIC
PRVC	POINT OF REVERSE VERTICAL CURVE
PS&E	PLANS, SPECIFICATIONS AND ESTIMATES
PS, P/S	PRESTRESSED
PSP	PERFORATED STEEL PIPE
PT	POINT OF TANGENCY
PVC	POLYVINYL CHLORIDE
Pvmt	PAVEMENT

Q

Qty	QUANTITY

R

R	RADIUS
R & D	REMOVE AND DISPOSE
R & S	REMOVE AND SALVAGE
R/C	RATE OF CHANGE
RCA	REINFORCED CONCRETE ARCH
RCB	REINFORCED CONCRETE BOX
RCP	REINFORCED CONCRETE PIPE
RCPA	REINFORCED CONCRETE PIPE ARCH
Rd	ROAD
Reinf	REINFORCED, REINFORCEMENT, REINFORCING
Rel	RELOCATE
Repl	REPLACEMENT
Ret	RETAINING
Rev	REVISED, REVISION
Rdwy	ROADWAY
RHMA	RUBBERIZED HOT MIX ASPHALT
Riv	RIVER
RM	ROAD-MIXED
RP	RADIUS POINT, REFERENCE POINT
RR	RAILROAD
RSP	ROCK SLOPE PROTECTION, REVISED STANDARD PLAN
Rt	RIGHT
Rte	ROUTE
RW	REDWOOD, RETAINING WALL
R/W	RIGHT OF WAY
Rwy	RAILWAY

S

S	SOUTH, SUPPLEMENT
SAE	STRUCTURE APPROACH EMBANKMENT
Salv	SALVAGE
SAPP	STRUCTURAL ALUMINUM PLATE PIPE
SB	SOUTHBOUND
SC	SAND CUSHION
SCSP	SLOTTED CORRUGATED STEEL PIPE
SD	STORM DRAIN
Sec	SECOND, SECTION
Sep	SEPARATION
SG	SUBGRADE
Shld	SHOULDER
Sht	SHEET
Sim	SIMILAR
℄	STATION LINE
SM	SELECTED MATERIAL
Spec	SPECIAL, SPECIFICATIONS
SPP	SLOTTED PLASTIC PIPE
SS	SLOPE STAKE
SSBM	STRAP AND SADDLE BRACKET METHOD
SSD	STRUCTURAL SECTION DRAIN
SSPA	STRUCTURAL STEEL PLATE ARCH
SSPP	STRUCTURAL STEEL PLATE PIPE
SSPPA	STRUCTURAL STEEL PLATE PIPE ARCH
SSRP	STEEL SPIRAL RIB PIPE
St	STREET
Sta	STATION
STBB	SINGLE THRIE BEAM BARRIER
Std	STANDARD
Str	STRUCTURE
Surf	SURFACING
SW	SIDEWALK, SOUND WALL
Swr	SEWER
Sym	SYMMETRICAL
S4S	SURFACE 4 SIDES

T

T	SEMI-TANGENT
Tan	TANGENT
TBB	THRIE BEAM BARRIER
Tbr	TIMBER
TC	TOP OF CURB
TCB	TRAFFIC CONTROL BOX
TCE	TEMPORARY CONSTRUCTION EASEMENT
Tel	TELEPHONE
Temp	TEMPORARY
TG	TOP OF GRADE
Tot	TOTAL
TP	TELEPHONE POLE
TPB	TREATED PERMEABLE BASE
TPM	TREATED PERMEABLE MATERIAL
Trans	TRANSITION

T continued

TS	TRANSVERSE, TRAFFIC SIGNAL, TUBULAR STEEL
Typ	TYPICAL

U

UC	UNDERCROSSING
UD	UNDERDRAIN
UG	UNDERGROUND
UON	UNLESS OTHERWISE NOTED
UP	UNDERPASS

V

V	VALVE, DESIGN SPEED
Var	VARIABLE, VARIES
VC	VERTICAL CURVE
VCP	VITRIFIED CLAY PIPE
Vert	VERTICAL
Via	VIADUCT
Vol	VOLUME

W

W	WEST, WIDTH
WB	WESTBOUND
WH	WEEP HOLE
WM	WIRE MESH
WS	WATER SURFACE
WSP	WELDED STEEL PIPE
Wt	WEIGHT
WV	WATER VALVE
WW	WINGWALL
WWLOL	WINGWALL LAYOUT LINE

X

X Sec	CROSS SECTION
Xing	CROSSING

Y

Yr	YEAR
Yrs	YEARS

Dist	COUNTY	ROUTE	POST MILES TOTAL PROJECT	SHEET No.	TOTAL SHEETS
03	Sac	51,160	4.0/4.3, R44.4/47.0	60	117

Grace M. Tsushima
REGISTERED CIVIL ENGINEER

July 19, 2013
PLANS APPROVAL DATE

REGISTERED PROFESSIONAL ENGINEER
Grace M. Tsushima
No. C49814
Exp. 9-30-14
CIVIL
STATE OF CALIFORNIA

THE STATE OF CALIFORNIA OR ITS OFFICERS OR AGENTS SHALL NOT BE RESPONSIBLE FOR THE ACCURACY OR COMPLETENESS OF SCANNED COPIES OF THIS PLAN SHEET.

TO ACCOMPANY PLANS DATED 5-2-16

2010 REVISED STANDARD PLAN RSP A10B

UNIT OF MEASUREMENT SYMBOLS:

Some of the symbols used in the project plan quantity tables and in the Bid Item List are:

TABLE A

SYMBOL USED	DEFINITIONS
ACRE	ACRE
CF	CUBIC FOOT
CY	CUBIC YARD
EA	EACH
GAL	GALLON
LB	POUND
LF	LINEAR FOOT
SQFT	SQUARE FOOT
SQYD	SQUARE YARD
STA	100 FEET
TAB	TABLET
TON	2,000 POUNDS

Some of the symbols used in the plans other than in the project plan quantity tables are:

TABLE B

SYMBOL USED	DEFINITIONS
ksi	KIPS PER SQUARE INCH
ksf	KIPS PER SQUARE FOOT
psi	POUNDS PER SQUARE INCH
psf	POUNDS PER SQUARE FOOT
lb/ft^3, pcf	POUNDS PER CUBIC FOOT
tsf	TONS PER SQUARE FOOT
mph, MPH *	MILES PER HOUR
ø	NOMINAL DIAMETER
oz	OUNCE
lb	POUND
kip	1,000 POUNDS
cal	CALORIE
ft	FOOT OR FEET
gal	GALLON

* For use on a sign panel only

STATE OF CALIFORNIA
DEPARTMENT OF TRANSPORTATION

ABBREVIATIONS (SHEET 2 OF 2)

NO SCALE

RSP A10B DATED JULY 19, 2013 SUPERSEDES STANDARD PLAN A10B DATED MAY 20, 2011 - PAGE 2 OF THE STANDARD PLANS BOOK DATED 2010.

REVISED STANDARD PLAN RSP A10B

6-7-13

Dist	COUNTY	ROUTE	POST MILES TOTAL PROJECT	SHEET No.	TOTAL SHEETS
03	Sac	51,160	4.0/4.3, R44.4/47.0	61	117

REGISTERED CIVIL ENGINEER

July 19, 2013
PLANS APPROVAL DATE

REGISTERED PROFESSIONAL ENGINEER
Roberta L. McLaughlin
No. C40375
Exp. 3-31-15
CIVIL
STATE OF CALIFORNIA

THE STATE OF CALIFORNIA OR ITS OFFICERS OR AGENTS SHALL NOT BE RESPONSIBLE FOR THE ACCURACY OR COMPLETENESS OF SCANNED COPIES OF THIS PLAN SHEET.

TO ACCOMPANY PLANS DATED 5-2-16

EXIT RAMP NEUTRAL AREA (GORE) TREATMENT

DETAIL 36

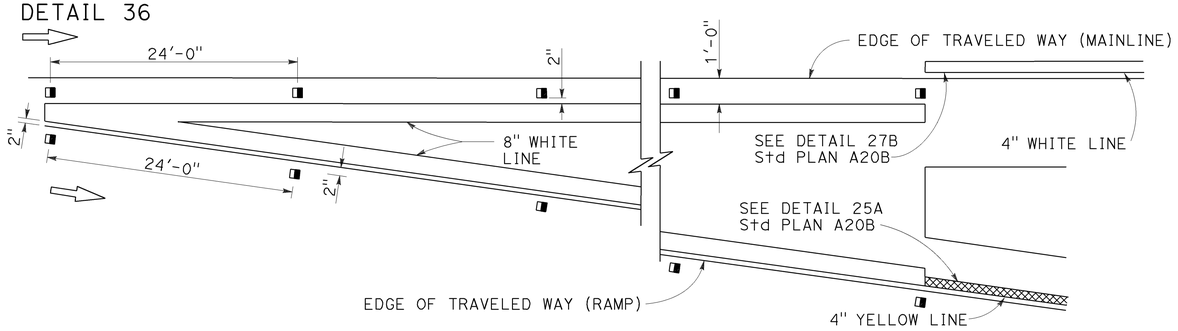

ENTRANCE RAMP NEUTRAL AREA (MERGE) TREATMENT

DETAIL 36A

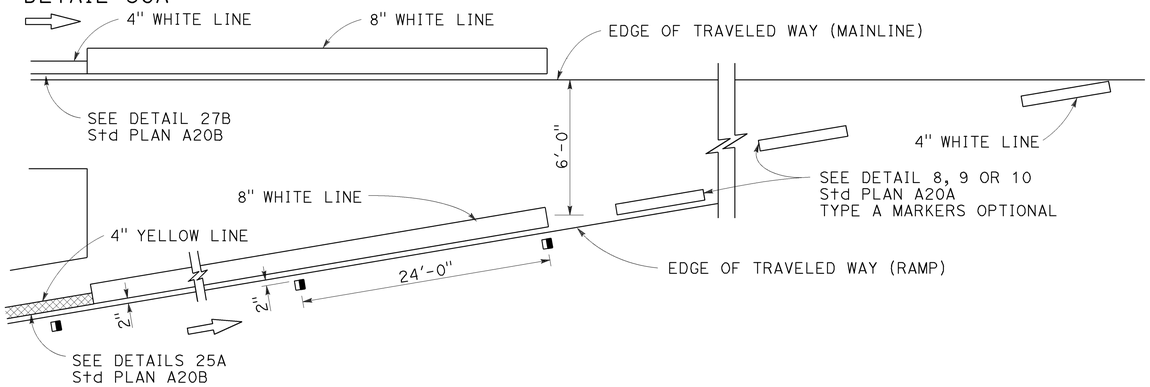

ENTRANCE RAMP NEUTRAL AREA (ACCELERATION LANE) TREATMENT

DETAIL 36B

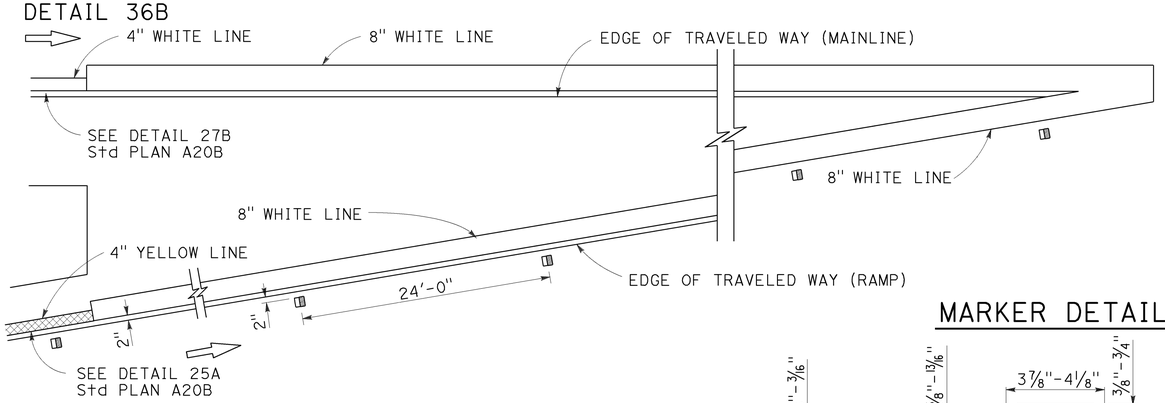

LANE DROP AT EXIT RAMPS

DETAIL 37

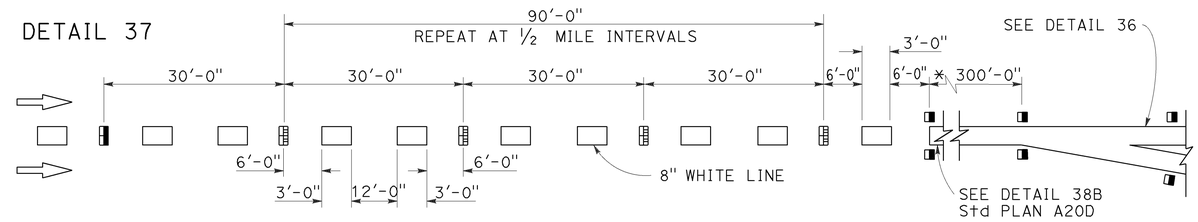

DETAIL 37A

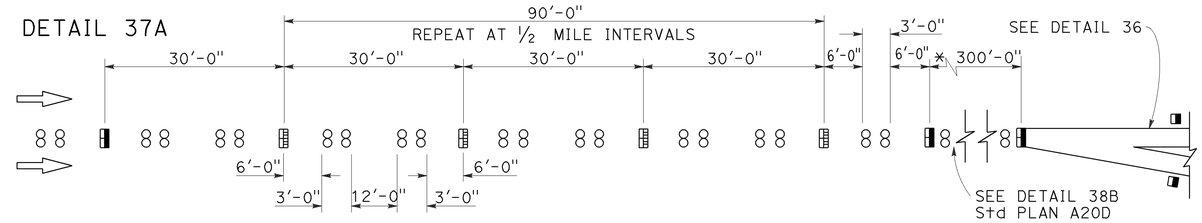

* The solid channelizing line shown may be omitted on short auxiliary lanes where weaving length is critical.

LANE DROP AT INTERSECTIONS

DETAIL 37B

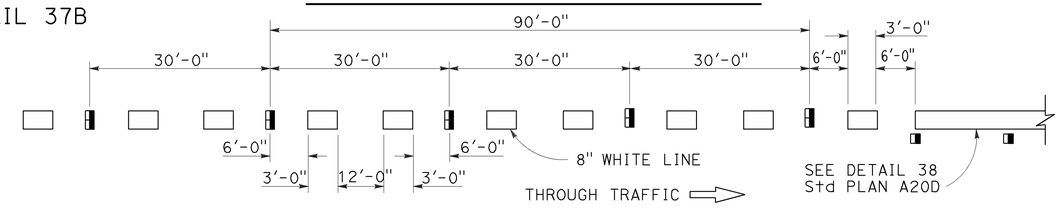

DETAIL 37C

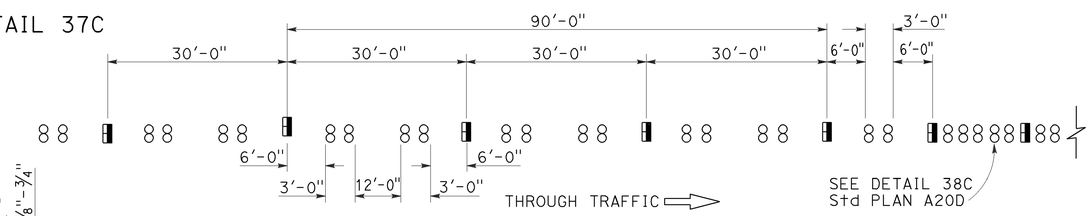

MARKER DETAILS

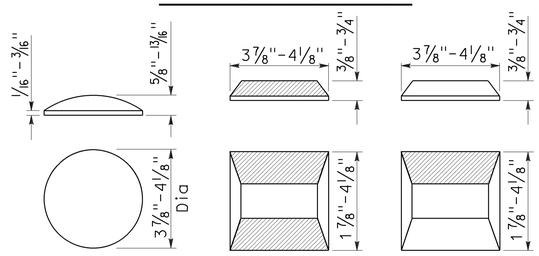

RETROREFLECTIVE FACE

LEGEND:

MARKERS

- ○ TYPE A WHITE NON-REFLECTIVE
- ⊞ TYPE C RED-CLEAR RETROREFLECTIVE
- ◨ TYPE G ONE-WAY CLEAR RETROREFLECTIVE

STATE OF CALIFORNIA
DEPARTMENT OF TRANSPORTATION

PAVEMENT MARKERS AND TRAFFIC LINE TYPICAL DETAILS

NO SCALE

RSP A20C DATED JULY 19, 2013 SUPERSEDES STANDARD PLAN A20C DATED MAY 20, 2011 - PAGE 11 OF THE STANDARD PLANS BOOK DATED 2010.

REVISED STANDARD PLAN RSP A20C

2010 REVISED STANDARD PLAN RSP A20C

4-29-13

Dist	COUNTY	ROUTE	POST MILES TOTAL PROJECT	SHEET No.	TOTAL SHEETS
03	Sac	51,160	4.0/4.3, R44.4/47.0	62	117

REGISTERED CIVIL ENGINEER

April 20, 2012
PLANS APPROVAL DATE

Registered Professional Engineer — Roberta L. McLaughlin, No. C40375, Exp. 3-31-13, CIVIL, State of California

THE STATE OF CALIFORNIA OR ITS OFFICERS OR AGENTS SHALL NOT BE RESPONSIBLE FOR THE ACCURACY OR COMPLETENESS OF SCANNED COPIES OF THIS PLAN SHEET.

TO ACCOMPANY PLANS DATED 5-2-16

2010 REVISED STANDARD PLAN RSP A24A

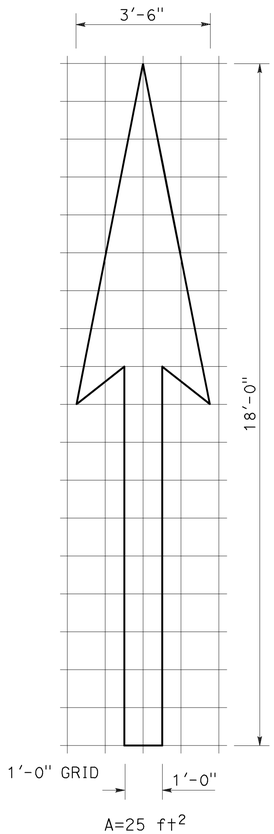

A=25 ft^2

TYPE I 18'-0" ARROW

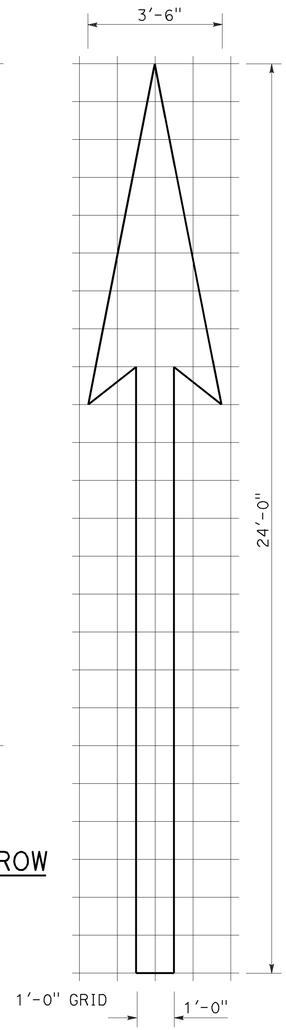

A=31 ft^2

TYPE I 24'-0" ARROW

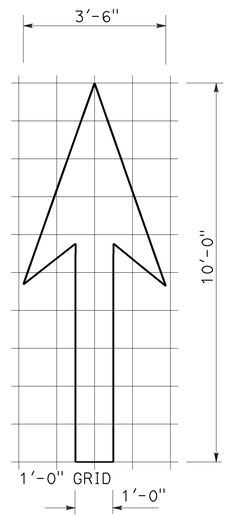

A=14 ft^2

TYPE I 10'-0" ARROW

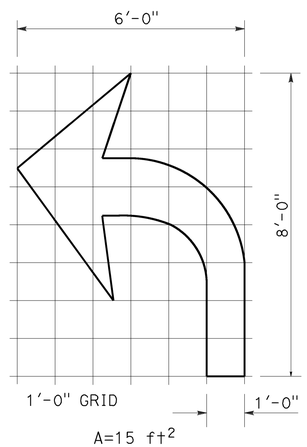

A=15 ft^2

TYPE IV (L) ARROW

(For Type IV (R) arrow, use mirror image)

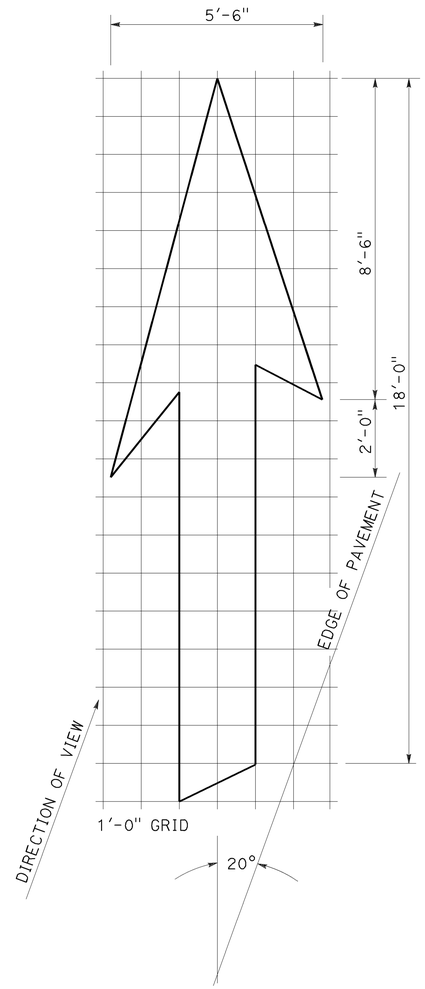

A=42 ft^2

TYPE VI ARROW

Right lane drop arrow
(For left lane, use mirror image)

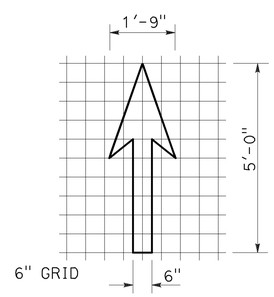

A=3.5 ft^2

BIKE LANE ARROW

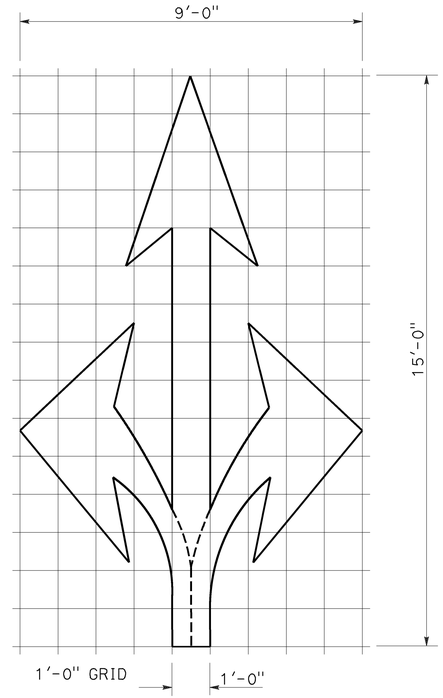

A=36 ft^2

TYPE VIII ARROW

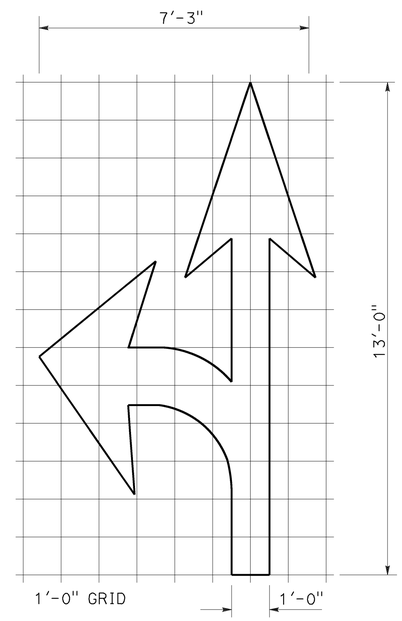

A=27 ft^2

TYPE VII (L) ARROW

(For Type VII (R) arrow, use mirror image)

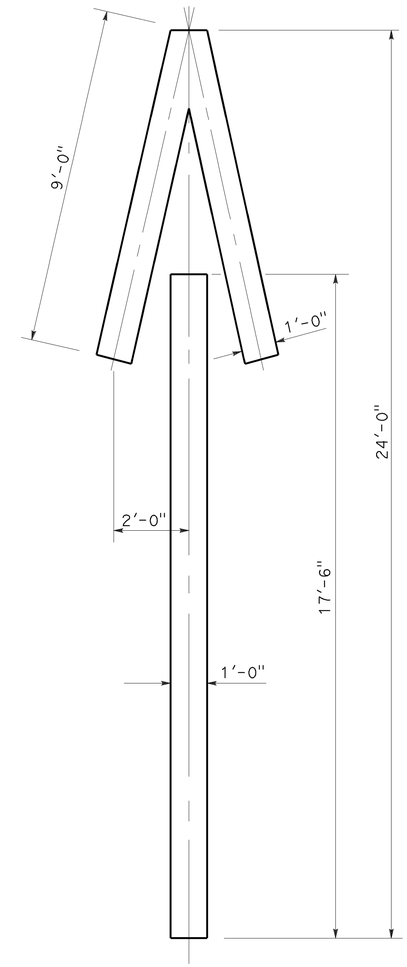

A=33 ft^2

TYPE V ARROW

NOTE:
Minor variations in dimensions may be accepted by the Engineer.

STATE OF CALIFORNIA
DEPARTMENT OF TRANSPORTATION

PAVEMENT MARKINGS ARROWS

NO SCALE

RSP A24A DATED APRIL 20, 2012 SUPERSEDES STANDARD PLAN A24A DATED MAY 20, 2011 - PAGE 13 OF THE STANDARD PLANS BOOK DATED 2010.

REVISED STANDARD PLAN RSP A24A

3-14-12

Dist	COUNTY	ROUTE	POST MILES TOTAL PROJECT	SHEET No.	TOTAL SHEETS
03	Sac	51,160	4.0/4.3, R44.4/47.0	63	117

REGISTERED CIVIL ENGINEER

July 20, 2012
PLANS APPROVAL DATE

REGISTERED PROFESSIONAL ENGINEER
Roberta L. McLaughlin
No. C40375
Exp. 3-31-13
CIVIL
STATE OF CALIFORNIA

THE STATE OF CALIFORNIA OR ITS OFFICERS OR AGENTS SHALL NOT BE RESPONSIBLE FOR THE ACCURACY OR COMPLETENESS OF SCANNED COPIES OF THIS PLAN SHEET.

TO ACCOMPANY PLANS DATED 5-2-16

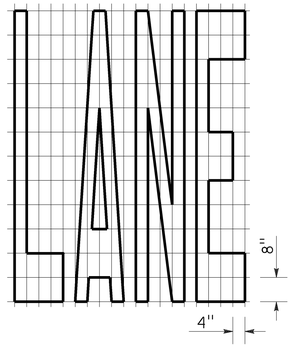

A=24 ft^2

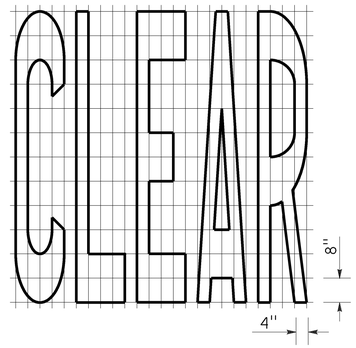

A=27 ft^2

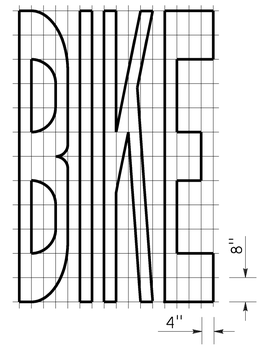

A=21 ft^2

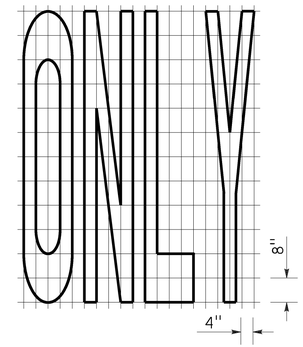

A=22 ft^2

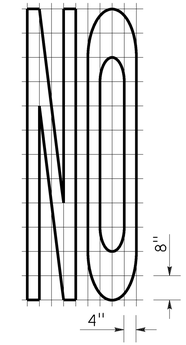

A=14 ft^2

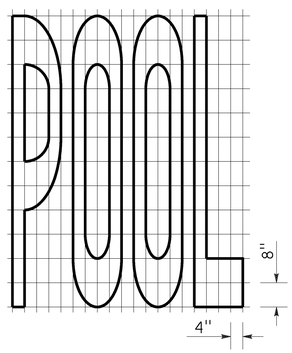

A=23 ft^2

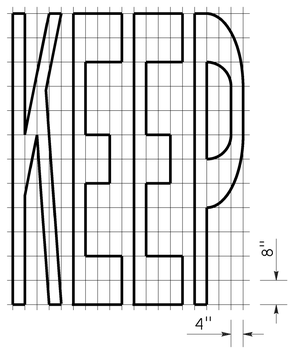

A=24 ft^2

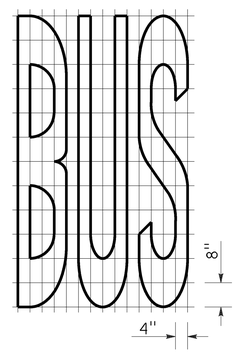

A=20 ft^2

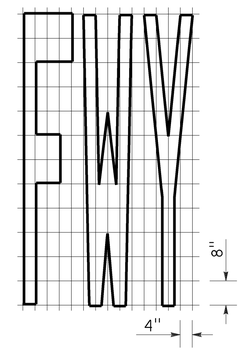

A=16 ft^2

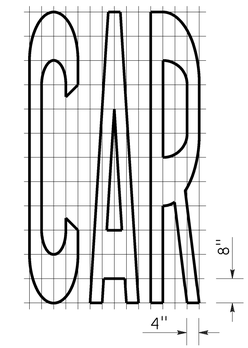

A=17 ft^2

WORD MARKINGS			
ITEM	ft^2	ITEM	ft^2
LANE	24	NO	14
POOL	23	BIKE	21
CAR	17	BUS	20
CLEAR	27	ONLY	22
KEEP	24	FWY	16

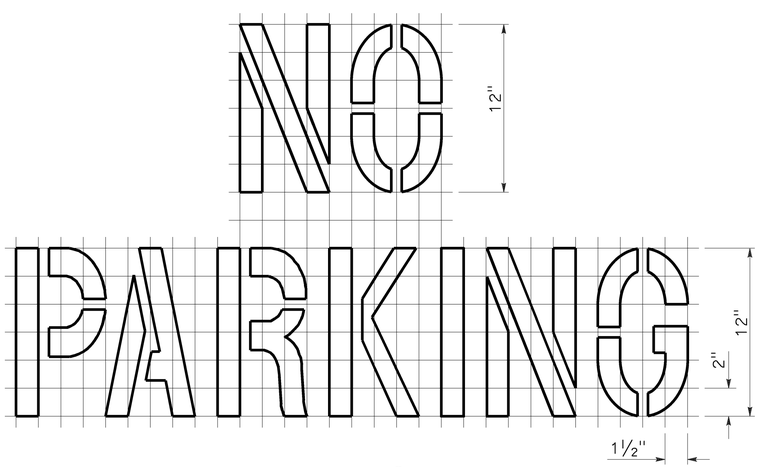

A=2 ft^2
See Notes 6 and 7

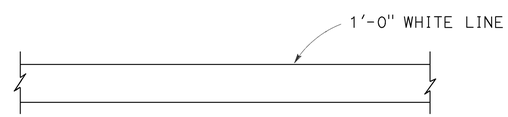

LIMIT LINE (STOP LINE)

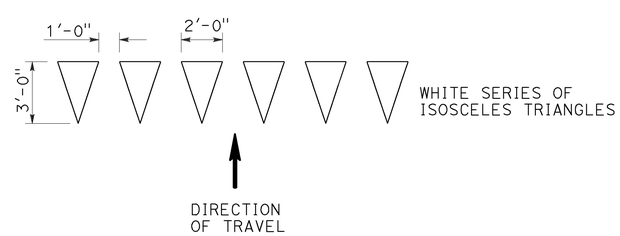

YIELD LINE

NOTES:

1. If a message consists of more than one word, it should read "UP", i.e., the first word should be nearest the driver.
2. The space between words should be at least four times the height of the characters for low speed roads, but not more than ten times the height of the characters. The space may be reduced appropriately where there is limited space because of local conditions.
3. Minor variations in dimensions may be accepted by the Engineer.
4. Portions of a letter, number or symbol may be separated by connecting segments not to exceed 2" in width.
5. The words "NO PARKING" pavement marking is to be used for parking facilities. For typical locations of markings, see Standard Plans A90A and A90B.
6. The words "NO PARKING", shall be painted in white letters no less than 1'-0" high on a contrasting background and located so that it is visible to traffic enforcement officials.

STATE OF CALIFORNIA
DEPARTMENT OF TRANSPORTATION

PAVEMENT MARKINGS WORDS, LIMIT AND YIELD LINES

NO SCALE

RSP A24E DATED JULY 20, 2012 SUPERSEDES STANDARD PLAN A24E
DATED MAY 20, 2011 - PAGE 17 OF THE STANDARD PLANS BOOK DATED 2010.

REVISED STANDARD PLAN RSP A24E

2010 REVISED STANDARD PLAN RSP A24E

6-12-12

Dist	COUNTY	ROUTE	POST MILES TOTAL PROJECT	SHEET No.	TOTAL SHEETS
03	Sac	51,160	4.0/4.3, R44.4/47.0	64	117

REGISTERED CIVIL ENGINEER

July 20, 2012
PLANS APPROVAL DATE

REGISTERED PROFESSIONAL ENGINEER
Roberta L. McLaughlin
No. C40375
Exp. 3-31-13
CIVIL
STATE OF CALIFORNIA

THE STATE OF CALIFORNIA OR ITS OFFICERS OR AGENTS SHALL NOT BE RESPONSIBLE FOR THE ACCURACY OR COMPLETENESS OF SCANNED COPIES OF THIS PLAN SHEET.

TO ACCOMPANY PLANS DATED 5-2-16

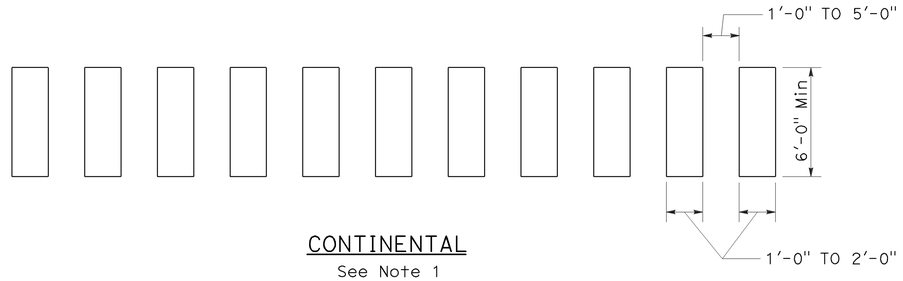

CONTINENTAL
See Note 1

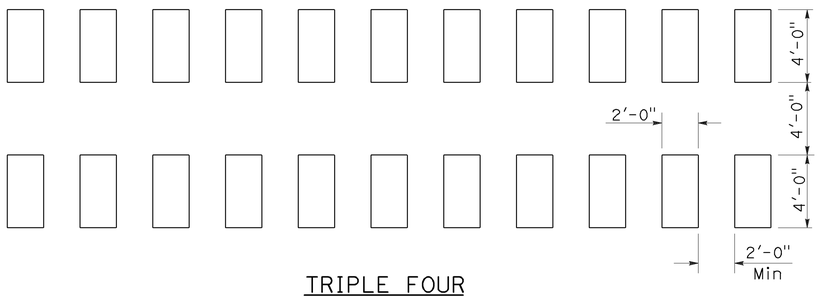

TRIPLE FOUR
See Note 1

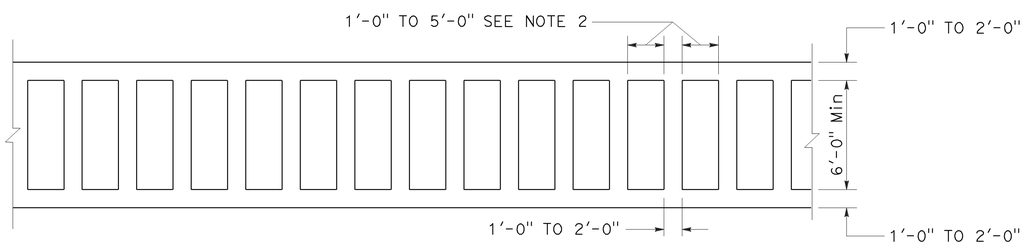

LADDER

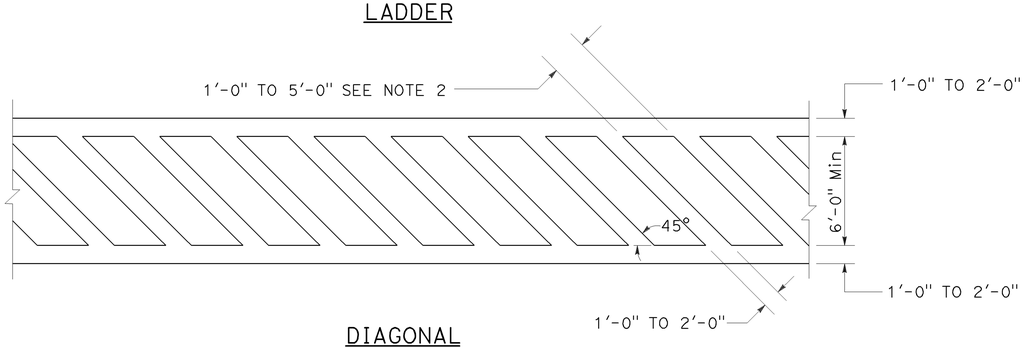

DIAGONAL

HIGHER VISIBILITY CROSSWALKS

NOTES:

1. Spaces between markings should be placed in wheel tracks of each lane.
2. Spacings not to exceed 2.5 times width of longitudinal line.
3. All crosswalk markings must be white except for those near schools must be yellow.

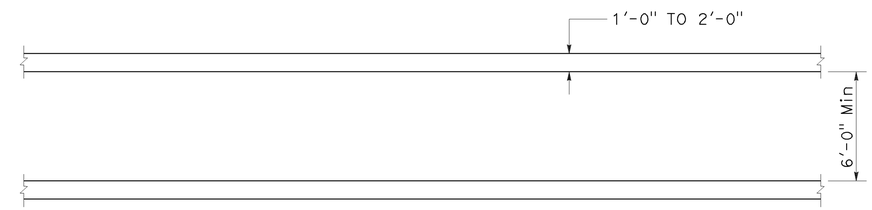

BASIC

STATE OF CALIFORNIA
DEPARTMENT OF TRANSPORTATION

PAVEMENT MARKINGS CROSSWALKS

NO SCALE

RSP A24F DATED JULY 20, 2012 SUPPLEMENTS THE STANDARD PLANS BOOK DATED 2010.

REVISED STANDARD PLAN RSP A24F

2010 REVISED STANDARD PLAN RSP A24F

6-28-12

Dist	COUNTY	ROUTE	POST MILES TOTAL PROJECT	SHEET No.	TOTAL SHEETS
03	Sac	51,160	4.0/4.3, R44.4/47.0	65	117

Randell D. Hiatt
REGISTERED CIVIL ENGINEER

July 19, 2013
PLANS APPROVAL DATE

REGISTERED PROFESSIONAL ENGINEER
Randell D. Hiatt
No. C50200
Exp. 6-30-15
CIVIL
STATE OF CALIFORNIA

THE STATE OF CALIFORNIA OR ITS OFFICERS OR AGENTS SHALL NOT BE RESPONSIBLE FOR THE ACCURACY OR COMPLETENESS OF SCANNED COPIES OF THIS PLAN SHEET.

TO ACCOMPANY PLANS DATED 5-2-16

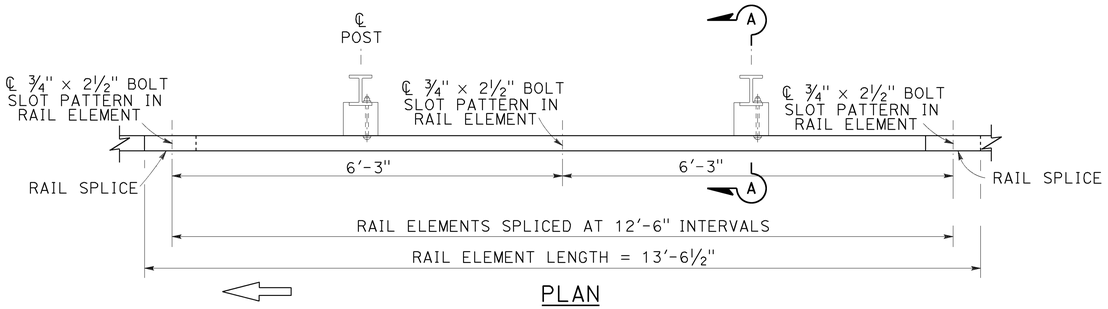

PLAN

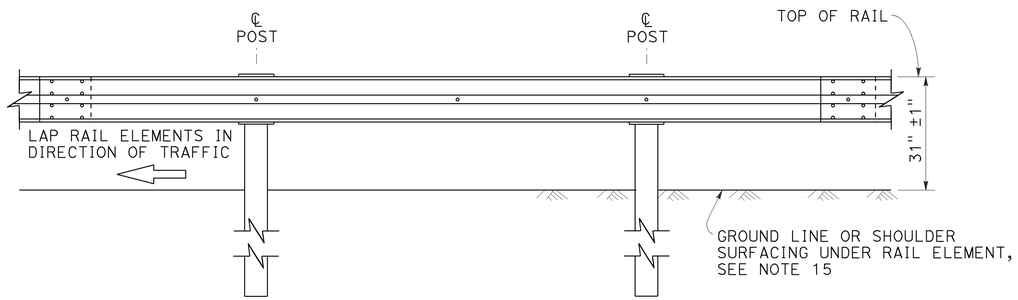

ELEVATION

MIDWEST GUARDRAIL SYSTEM WITH STEEL POSTS AND NOTCHED WOOD OR NOTCHED RECYCLED PLASTIC BLOCKS

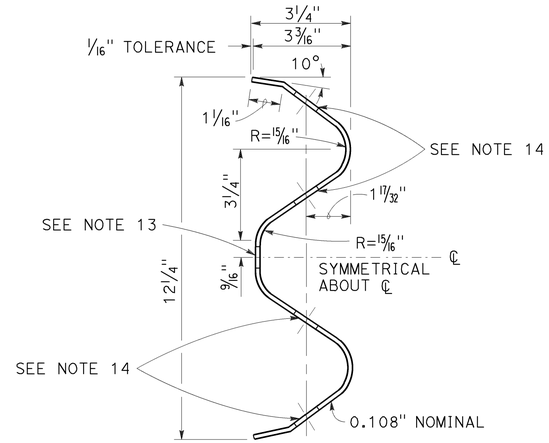

SECTION THRU RAIL ELEMENT

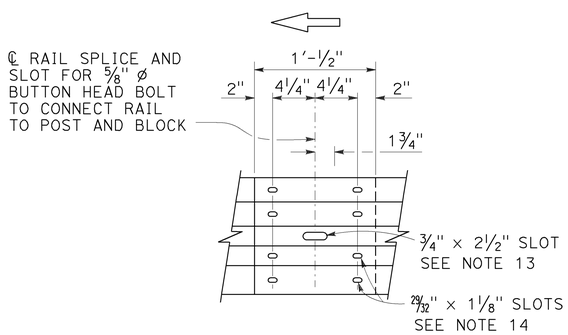

ELEVATION

RAIL ELEMENT SPLICE DETAIL

a) Connect the over lapped end of the rail elements with ⅝" ø × 1⅜" button head oval shoulder splice bolts inserted into the 29⁄32" × 1⅛" slots and bolted together with ⅝" ø recessed hex nuts. Recess of hex nut points toward rail element. A total of 8 bolts and nuts are to be used at each rail splice connection.

b) The ends of the rail elements are to be overlapped in the direction of traffic (see details).

c) Where end cap is to be attached to the end of a rail element, a total of 4 of the above described splice bolts and nuts are to be used.

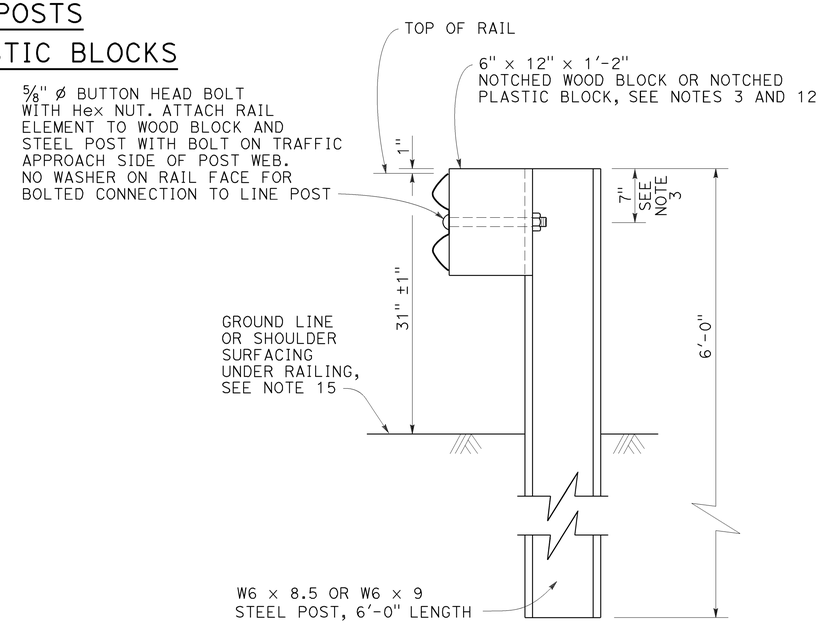

SECTION A-A

TYPICAL STEEL LINE POST INSTALLATION

See Note 4

NOTES:

1. For details of wood post installations, see Revised Standard Plan RSP A77L1.
2. For details of standard hardware used to construct MGS, see Revised Standard Plan RSP A77M1.
3. For details of steel posts and notched wood blocks used to construct MGS, see Revised Standard Plan RSP A77N2.
4. For additional installation details, see Revised Standard Plan RSP A77N3.
5. MGS post spacing to be 6'-3" center to center, except as otherwise noted.
6. For MGS typical layouts, see the A77P, A77Q and A77R Series of Standard Plans.
7. If railing is connected to terminal system end treatment, use 31" height terminal system end treatment.
8. For MGS end anchor details, see Revised Standard Plans RSP A77S1 and RSP A77T2.
9. For details of MGS transition to bridge railing, see Revised Standard Plan RSP A77U4.
10. For additional details of MGS connection to bridge railings, see Revised Standard Plans RSP A77U1, RSP A77U2 and RSP A77V1.
11. For dike positioning and MGS delineation details, see Revised Standard Plan RSP A77N4.
12. Notched face of block faces steel post.
13. Slotted hole for bolted connection of rail element to block and post. See "Section Thru Rail Element".
14. Slotted holes for splice bolts to overlap ends of rail element. See "Section Thru Rail Element".
15. Install posts in soil.

STATE OF CALIFORNIA
DEPARTMENT OF TRANSPORTATION

MIDWEST GUARDRAIL SYSTEM STANDARD RAILING SECTION (STEEL POST WITH NOTCHED WOOD OR NOTCHED RECYCLED PLASTIC BLOCK)

NO SCALE

RSP A77L2 DATED JULY 19, 2013 SUPPLEMENTS THE STANDARD PLANS BOOK DATED 2010.

REVISED STANDARD PLAN RSP A77L2

2010 REVISED STANDARD PLAN RSP A77L2

7-3-13

Dist	COUNTY	ROUTE	POST MILES TOTAL PROJECT	SHEET No.	TOTAL SHEETS
03	Sac	51,160	4.0/4.3, R44.4/47.0	66	117

Randell D. Hiatt
REGISTERED CIVIL ENGINEER

July 19, 2013
PLANS APPROVAL DATE

REGISTERED PROFESSIONAL ENGINEER
Randell D. Hiatt
No. C50200
Exp. 6-30-15
CIVIL
STATE OF CALIFORNIA

THE STATE OF CALIFORNIA OR ITS OFFICERS OR AGENTS SHALL NOT BE RESPONSIBLE FOR THE ACCURACY OR COMPLETENESS OF SCANNED COPIES OF THIS PLAN SHEET.

TO ACCOMPANY PLANS DATED 5-2-16

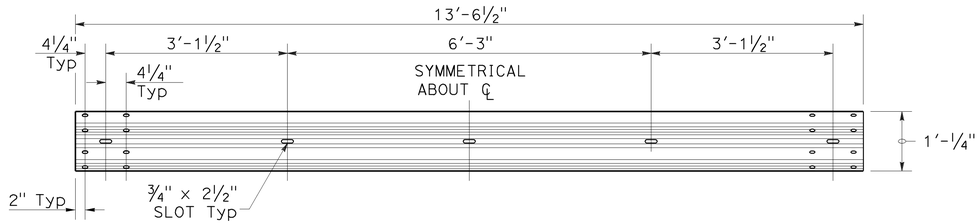

TYPICAL RAIL ELEMENT

NOTE:

1. Slotted holes for splice bolts to overlap ends of rail element.

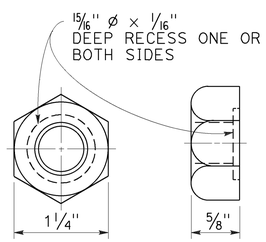

⅝" ø RECESS NUT

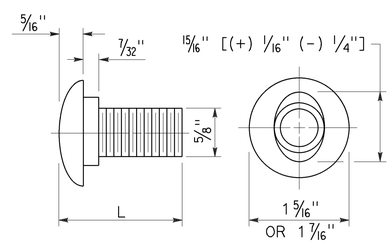

⅝" ø BUTTON HEAD BOLT

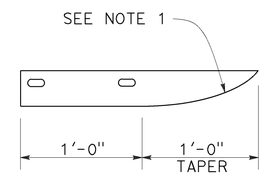

PLAN

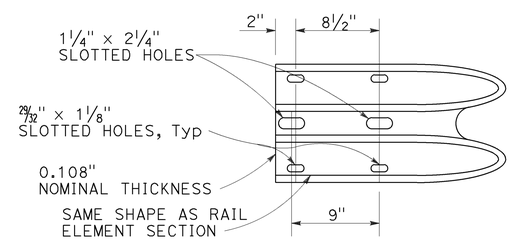

ELEVATION

END CAP
(TYPE A)

BUTTON HEAD BOLT

L	THREAD LENGTH
1⅜"	FULL THREAD LENGTH
2"	FULL THREAD LENGTH
10"	4" Min THREAD LENGTH
18"	4" Min THREAD LENGTH
20"	4" Min THREAD LENGTH
22"	4" Min THREAD LENGTH
26"	4" Min THREAD LENGTH
36"	4" Min THREAD LENGTH
** 2¾"	2" Min THREAD LENGTH
** 19"	4" Min THREAD LENGTH

** For nested rail applications.

STATE OF CALIFORNIA
DEPARTMENT OF TRANSPORTATION

MIDWEST GUARDRAIL SYSTEM STANDARD HARDWARE

NO SCALE

RSP A77M1 DATED JULY 19, 2013 SUPPLEMENTS THE STANDARD PLANS BOOK DATED 2010.

REVISED STANDARD PLAN RSP A77M1

2010 REVISED STANDARD PLAN RSP A77M1

7-3-13

Dist	COUNTY	ROUTE	POST MILES TOTAL PROJECT	SHEET No.	TOTAL SHEETS
03	Sac	51,160	4.0/4.3, R44.4/47.0	67	117

Randell D. Hiatt
REGISTERED CIVIL ENGINEER

November 15, 2013
PLANS APPROVAL DATE

REGISTERED PROFESSIONAL ENGINEER
Randell D. Hiatt
No. C50200
Exp. 6-30-15
CIVIL
STATE OF CALIFORNIA

THE STATE OF CALIFORNIA OR ITS OFFICERS OR AGENTS SHALL NOT BE RESPONSIBLE FOR THE ACCURACY OR COMPLETENESS OF SCANNED COPIES OF THIS PLAN SHEET.

TO ACCOMPANY PLANS DATED 5-2-16

2010 REVISED STANDARD PLAN RSP A77N2

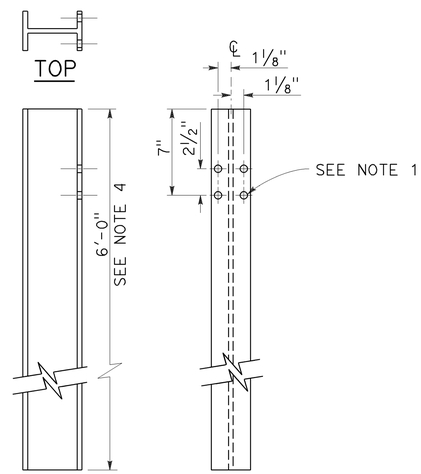

W6 x 9 OR W6 x 8.5
STEEL POST
See Note 4

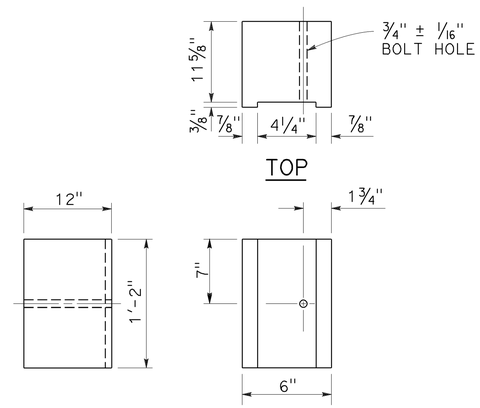

6" x 12"
NOTCHED WOOD BLOCK
See Notes 2 and 3

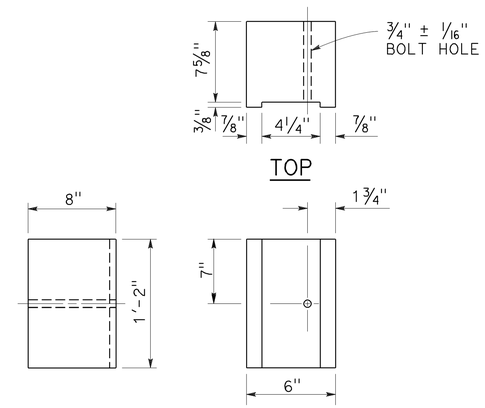

6" x 8"
NOTCHED WOOD BLOCK
Only for use with metal beam guard railing. See Note 5

NOTES:

1. All holes in steel post shall be 13/16" Dia maximum.
2. Dimensions shown for wood block are nominal.
3. Notched face of block faces steel post.
4. 6'-0" length posts to be used for typical roadway installation. See Revised Standard Plan RSP A77N3.
5. See Revised Standard Plan RSP A77L3 for use of 6" x 8" and 8" x 8" notched wood blocks.
6. This post and 8" x 12" block combination to be used for line post sections of MGS on narrow roadways and where strengthened line post sections of MGS are warranted to shield fixed objects.

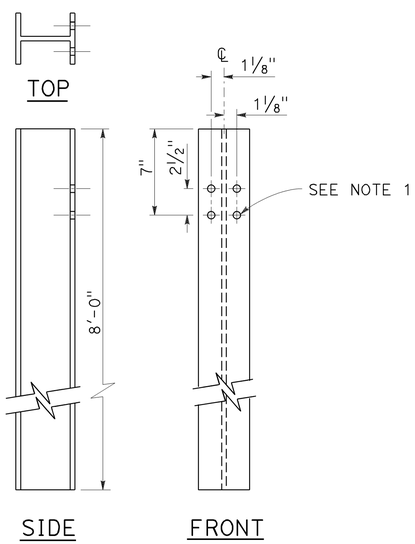

W6 x 15
STEEL POST
See Note 6

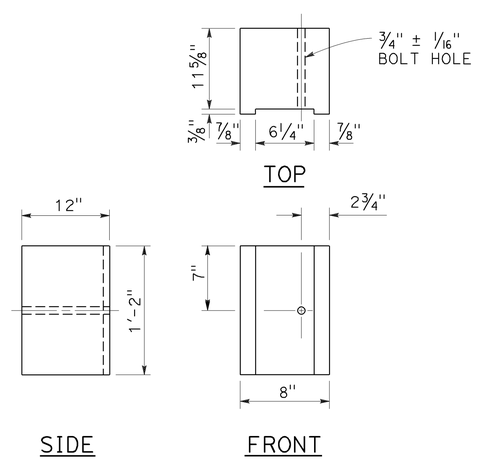

8" x 12"
NOTCHED WOOD BLOCK
See Notes 2 and 3

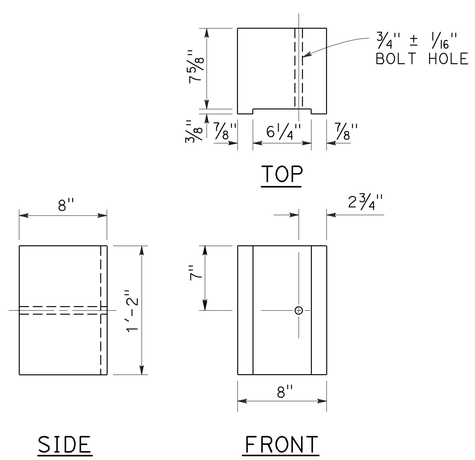

8" x 8"
NOTCHED WOOD BLOCK
Only for use with metal beam guard railing. See Note 5

STATE OF CALIFORNIA
DEPARTMENT OF TRANSPORTATION

MIDWEST GUARDRAIL SYSTEM STEEL POST AND NOTCHED WOOD BLOCK DETAILS

NO SCALE

RSP A77N2 DATED NOVEMBER 15, 2013 SUPERSEDES RSP A77N2
DATED JULY 19, 2013 THAT SUPPLEMENTS THE STANDARD PLANS BOOK DATED 2010.

REVISED STANDARD PLAN RSP A77N2

10-29-13

Dist	COUNTY	ROUTE	POST MILES TOTAL PROJECT	SHEET No.	TOTAL SHEETS
03	Sac	51,160	4.0/4.3, R44.4/47.0	68	117

Randell D. Hiatt
REGISTERED CIVIL ENGINEER

November 15, 2013
PLANS APPROVAL DATE

REGISTERED PROFESSIONAL ENGINEER
Randell D. Hiatt
No. C50200
Exp. 6-30-15
CIVIL
STATE OF CALIFORNIA

THE STATE OF CALIFORNIA OR ITS OFFICERS OR AGENTS SHALL NOT BE RESPONSIBLE FOR THE ACCURACY OR COMPLETENESS OF SCANNED COPIES OF THIS PLAN SHEET.

TO ACCOMPANY PLANS DATED 5-2-16

2010 REVISED STANDARD PLAN RSP A77N3

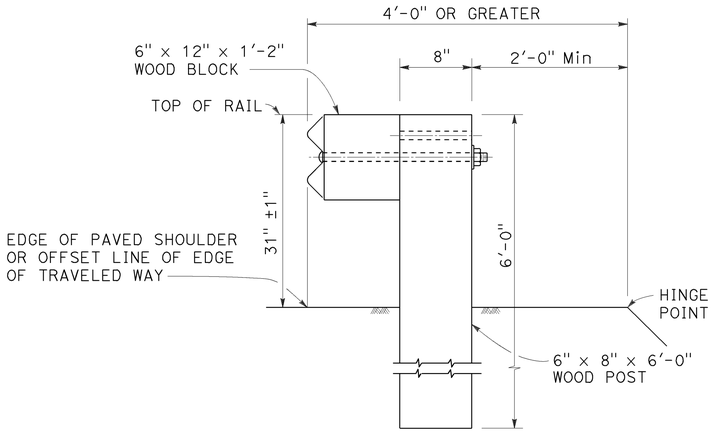

DETAIL A

TYPICAL ROADWAY INSTALLATION

See Note 1

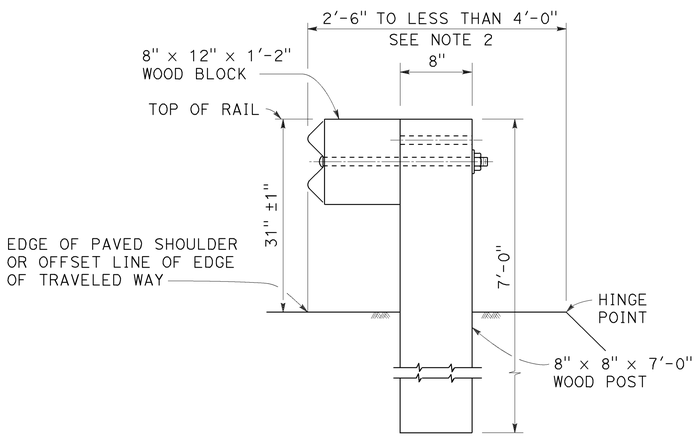

DETAIL B

NARROW ROADWAY INSTALLATION

See Note 1

POST EMBEDMENT

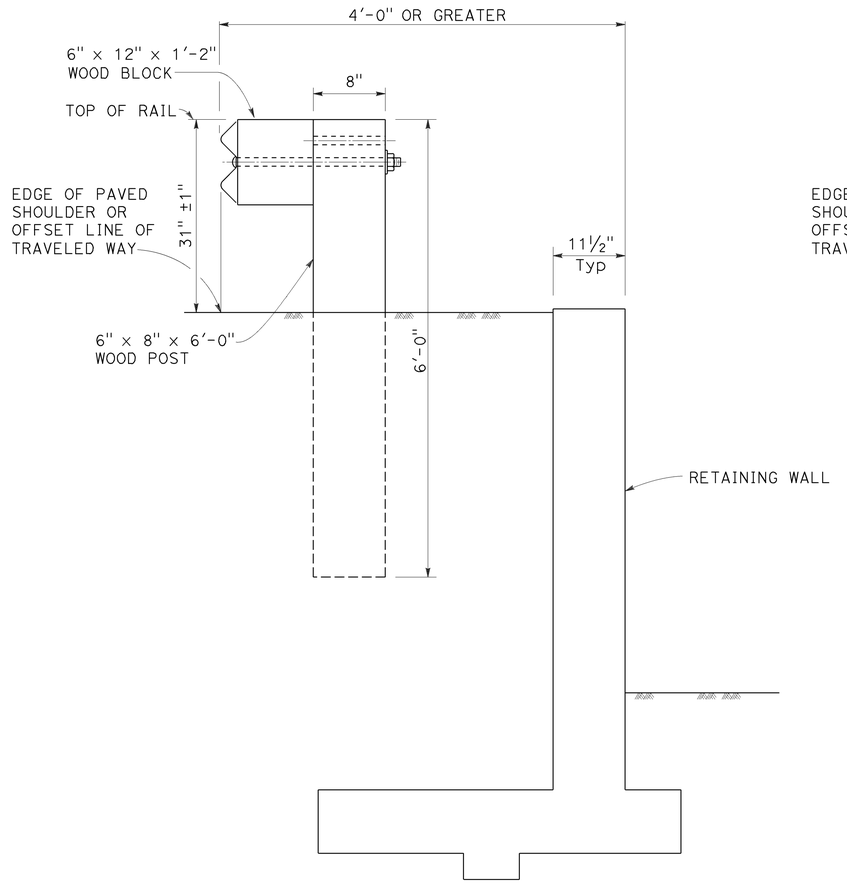

DETAIL C

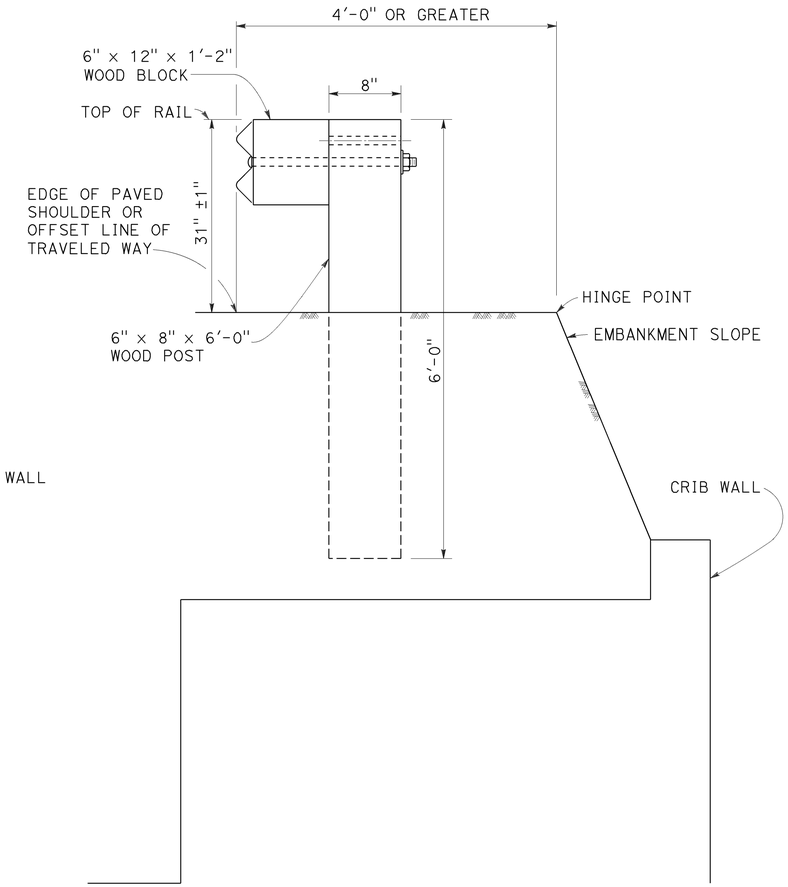

DETAIL D

INSTALLATION AT EARTH RETAINING WALLS

NOTES:

1. These installation details also applicable to steel line post installations. For Detail A, C, and D, where steel line post installations are constructed, W6 x 8.5 or W6 x 9 steel post, 6'-0" in length, with 6" x 12" x 1'-2" notched wood blocks or notched recycled plastic blocks are to be used in place of the size of wood post and wood block shown. For Detail B, where steel line post installations are constructed, W6 x 15 steel post, 8'-0" in length, with 8" x 12" x 1'-2" notched wood blocks or notched recycled plastic blocks are to be used in place of the size of wood post and wood block shown. For additional installation details, see Revised Standard Plan RSP A77L1 and RSP A77L2.
2. Where the distance between the face of the rail and the hinge point is less than 2'-6", see the Project Plans for special details.
3. For dike positioning with MGS installations, see Revised Standard Plan RSP A77N4.

STATE OF CALIFORNIA
DEPARTMENT OF TRANSPORTATION

MIDWEST GUARDRAIL SYSTEM TYPICAL LINE POST EMBEDMENT AND HINGE POINT OFFSET DETAILS

NO SCALE

RSP A77N3 DATED NOVEMBER 15, 2013 SUPERSEDES RSP A77N3
DATED JULY 19, 2013 THAT SUPPLEMENTS THE STANDARD PLANS BOOK DATED 2010.

REVISED STANDARD PLAN RSP A77N3

10-29-13

Dist	COUNTY	ROUTE	POST MILES TOTAL PROJECT	SHEET No.	TOTAL SHEETS
03	Sac	51,160	4.0/4.3, R44.4/47.0	69	117

Randell D. Hiatt
REGISTERED CIVIL ENGINEER

July 19, 2013
PLANS APPROVAL DATE

REGISTERED PROFESSIONAL ENGINEER
Randell D. Hiatt
No. C50200
Exp. 6-30-15
CIVIL
STATE OF CALIFORNIA

THE STATE OF CALIFORNIA OR ITS OFFICERS OR AGENTS SHALL NOT BE RESPONSIBLE FOR THE ACCURACY OR COMPLETENESS OF SCANNED COPIES OF THIS PLAN SHEET.

TO ACCOMPANY PLANS DATED 5-2-16

NOTES:

1. When necessary to place dike more than 7" in front of face of MGS, only Type C dike may be used. For dike details, see Revised Standard Plan RSP A87B.
2. For standard railing post embedment, see Revised Standard Plan RSP A77N3.
3. MGS delineation to be used where shown on the Project Plans.
4. When dike or curb is placed under MGS, the maximum height of the dike or curb shall be 6". Mountable dike should not be used. For dike and curb details, see Revised Standard Plans RSP A87A and RSP A87B.
5. For details of typical distance between the face of rail and hinge point, see Revised Standard Plan RSP A77N3.
6. For steel line posts, use 1/4 - 20 self-tapping screws in 0.22" diameter holes or 1/4" bolts in 9/32" diameter holes.

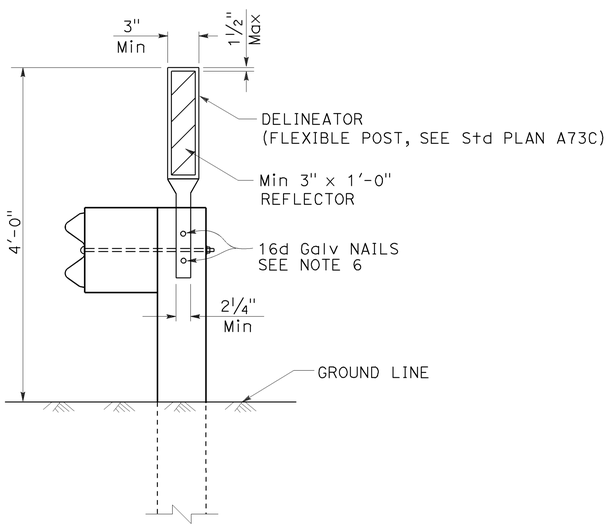

MGS DELINEATION

See Note 3

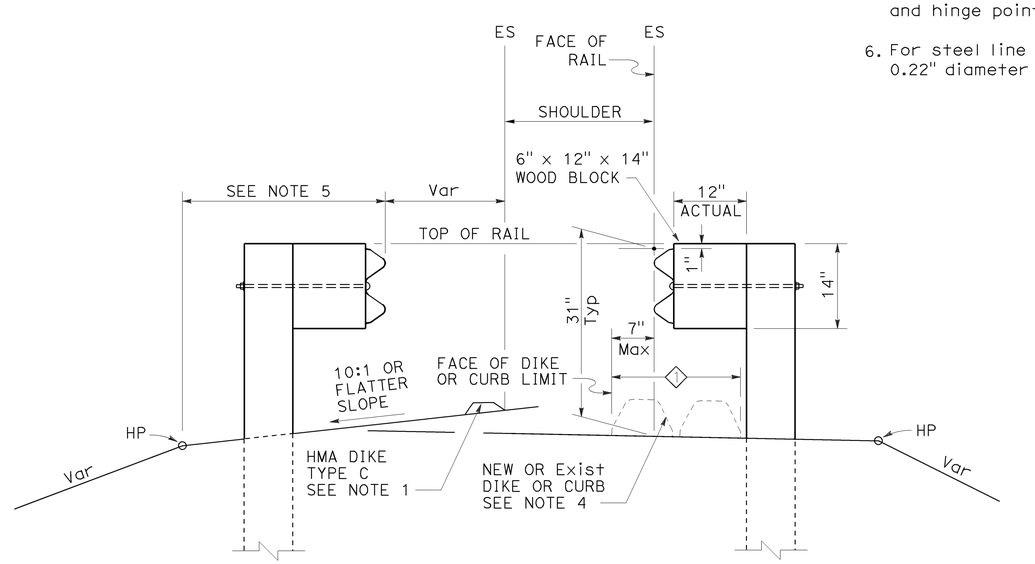

DIKE POSITIONING

See Note 1

1 PERMISSIBLE DIKE OR CURB PLACEMENT AREA

STATE OF CALIFORNIA
DEPARTMENT OF TRANSPORTATION

MIDWEST GUARDRAIL SYSTEM TYPICAL RAILING DELINEATION AND DIKE POSITIONING DETAILS

NO SCALE

RSP A77N4 DATED JULY 19, 2013 SUPPLEMENTS THE STANDARD PLANS BOOK DATED 2010.

REVISED STANDARD PLAN RSP A77N4

2010 REVISED STANDARD PLAN RSP A77N4

7-10-13

Dist	COUNTY	ROUTE	POST MILES TOTAL PROJECT	SHEET No.	TOTAL SHEETS
03	Sac	51,160	4.0/4.3, R44.4/47.0	70	117

Randell D. Hiatt
REGISTERED CIVIL ENGINEER

July 19, 2013
PLANS APPROVAL DATE

REGISTERED PROFESSIONAL ENGINEER
Randell D. Hiatt
No. C50200
Exp. 6-30-15
CIVIL
STATE OF CALIFORNIA

THE STATE OF CALIFORNIA OR ITS OFFICERS OR AGENTS SHALL NOT BE RESPONSIBLE FOR THE ACCURACY OR COMPLETENESS OF SCANNED COPIES OF THIS PLAN SHEET.

TO ACCOMPANY PLANS DATED 5-2-16

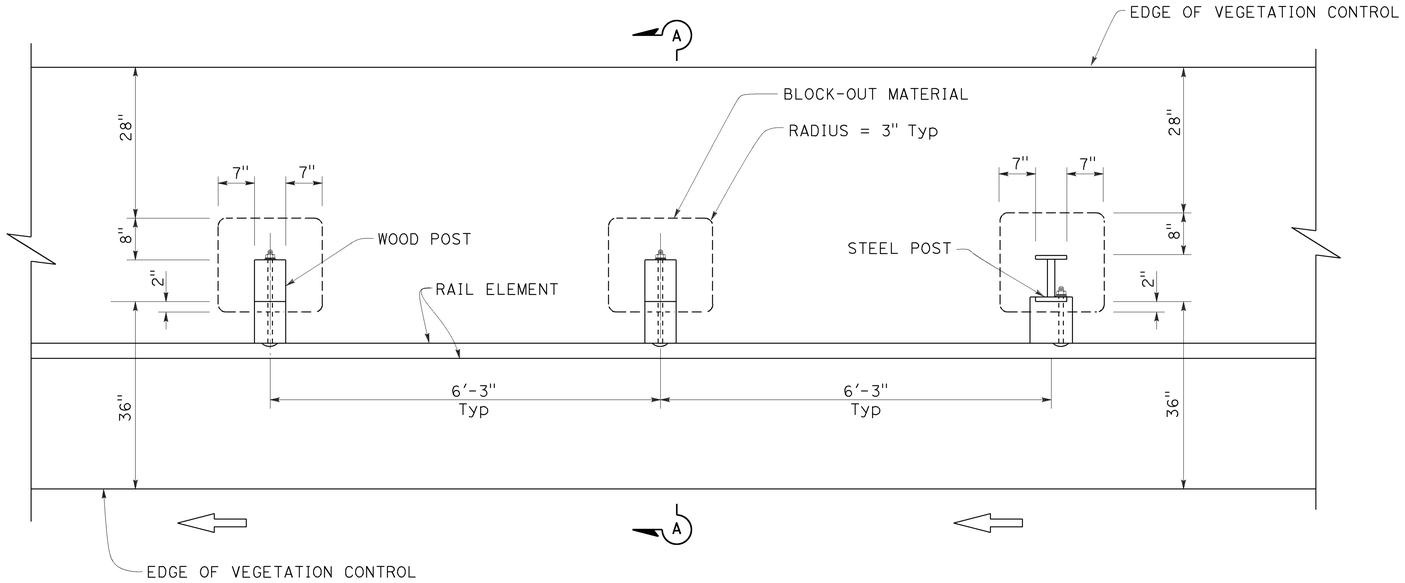

PLAN

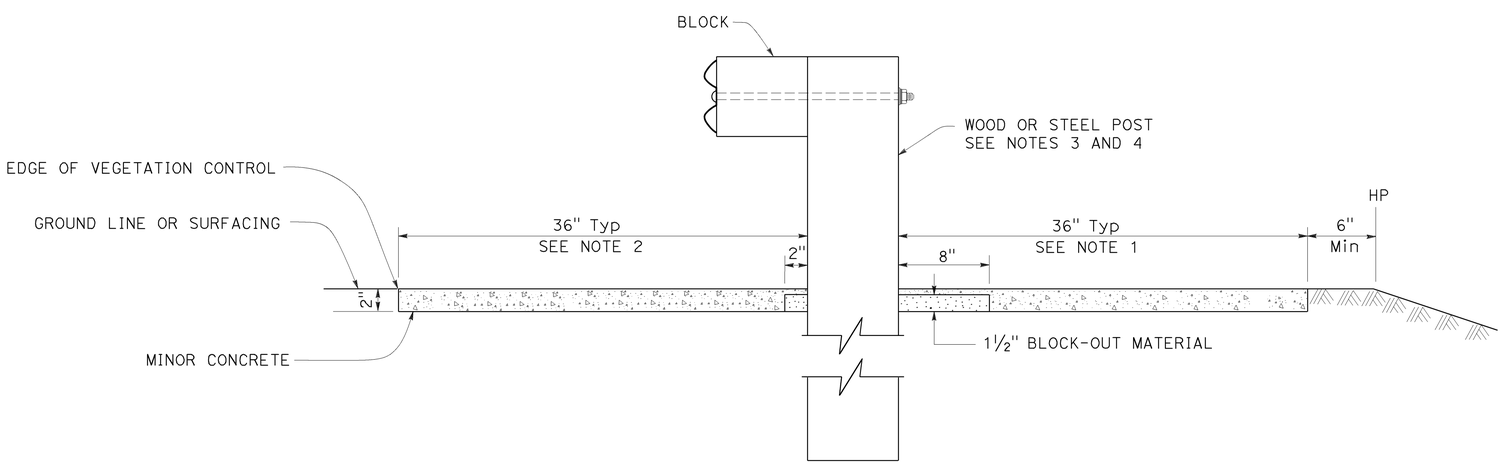

SECTION A-A

NOTES:

1. Where the distance between back of post and hinge point is less than 42", construct vegetation control to 6" from hinge point while maintaining the 8" block-out at back of post. If the 8" block-out at back of post can not be maintained, construct vegetation control flush with the back edge of post.
2. Where dike is constructed under railing, construct vegetation control to back edge of dike. Where paved shoulder is constructed within 36" in front of the post, construct vegetation control to the edge of paved shoulder.
3. For wood post sizes, see Revised Standard Plan RSP A77N1.
4. For steel post sizes, see Revised Standard Plan RSP A77N2.
5. For details not shown, see Revised Standard Plans RSP A77L1 and RSP A77L2.

STATE OF CALIFORNIA
DEPARTMENT OF TRANSPORTATION

MIDWEST GUARDRAIL SYSTEM TYPICAL VEGETATION CONTROL STANDARD RAILING SECTION

NO SCALE

RSP A77N5 DATED JULY 19, 2013 SUPPLEMENTS THE STANDARD PLANS BOOK DATED 2010.

REVISED STANDARD PLAN RSP A77N5

2010 REVISED STANDARD PLAN RSP A77N5

7-3-13

Dist	COUNTY	ROUTE	POST MILES TOTAL PROJECT	SHEET No.	TOTAL SHEETS
03	Sac	51,160	4.0/4.3, R44.4/47.0	71	117

Randell D. Hiatt
REGISTERED CIVIL ENGINEER

July 19, 2013
PLANS APPROVAL DATE

REGISTERED PROFESSIONAL ENGINEER
Randell D. Hiatt
No. C50200
Exp. 6-30-15
CIVIL
STATE OF CALIFORNIA

THE STATE OF CALIFORNIA OR ITS OFFICERS OR AGENTS SHALL NOT BE RESPONSIBLE FOR THE ACCURACY OR COMPLETENESS OF SCANNED COPIES OF THIS PLAN SHEET.

TO ACCOMPANY PLANS DATED 5-2-16

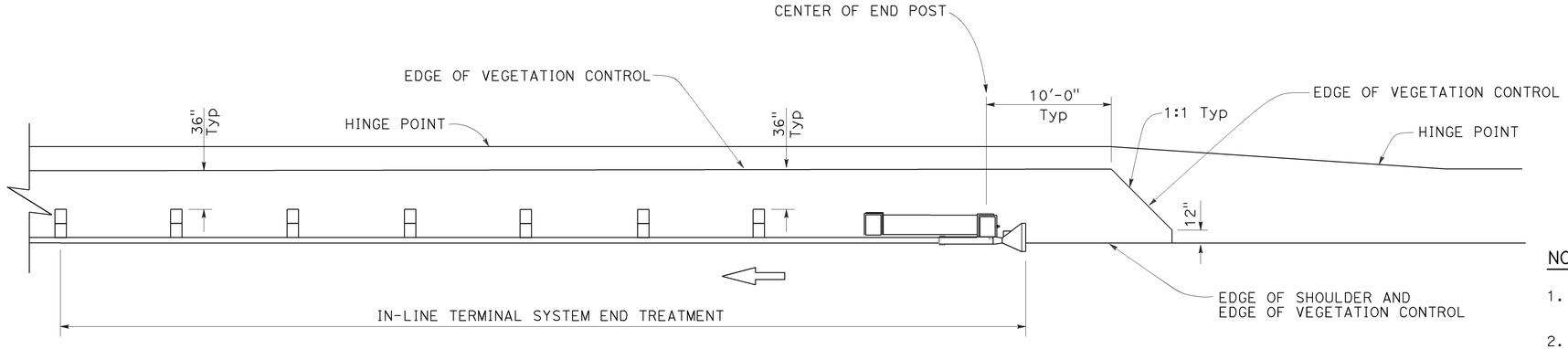

PLAN

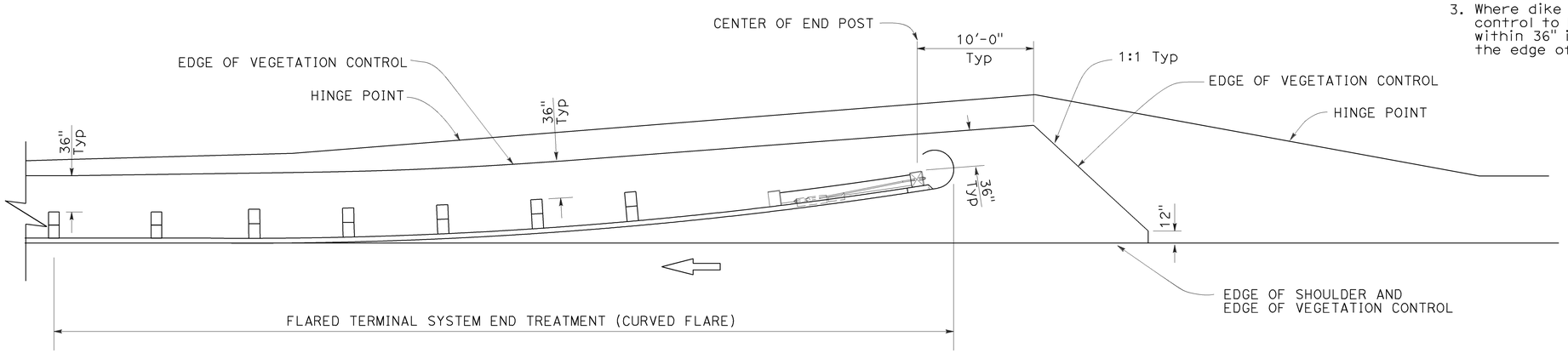

PLAN

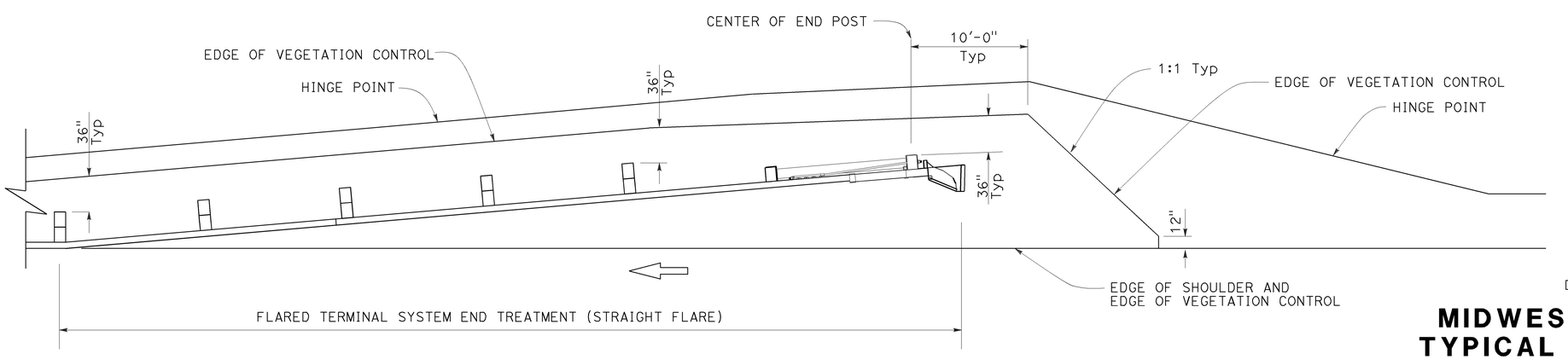

PLAN

NOTES:

1. See Revised Standard Plan RSP A77N5 for additional vegetation control details.
2. Where the distance between back of post and hinge point is less than 42", construct vegetation control to 6" from hinge point while maintaining the 8" block-out at back of post. If the 8" block-out at back of post can not be maintained, construct vegetation control flush with the back edge of post.
3. Where dike is constructed under railing, construct vegetation control to back edge of dike. Where paved shoulder is constructed within 36" in front of the post, construct vegetation control to the edge of paved shoulder.

STATE OF CALIFORNIA
DEPARTMENT OF TRANSPORTATION

MIDWEST GUARDRAIL SYSTEM TYPICAL VEGETATION CONTROL FOR TERMINAL SYSTEM END TREATMENTS

NO SCALE

RSP A77N6 DATED JULY 19, 2013 SUPPLEMENTS THE STANDARD PLANS BOOK DATED 2010.

REVISED STANDARD PLAN RSP A77N6

2010 REVISED STANDARD PLAN RSP A77N6

Dist	COUNTY	ROUTE	POST MILES TOTAL PROJECT	SHEET No.	TOTAL SHEETS
03	Sac	51,160	4.0/4.3, R44.4/47.0	72	117

Randell D. Hiatt
REGISTERED CIVIL ENGINEER

July 19, 2013
PLANS APPROVAL DATE

REGISTERED PROFESSIONAL ENGINEER
Randell D. Hiatt
No. C50200
Exp. 6-30-15
CIVIL
STATE OF CALIFORNIA

THE STATE OF CALIFORNIA OR ITS OFFICERS OR AGENTS SHALL NOT BE RESPONSIBLE FOR THE ACCURACY OR COMPLETENESS OF SCANNED COPIES OF THIS PLAN SHEET.

TO ACCOMPANY PLANS DATED 5-2-16

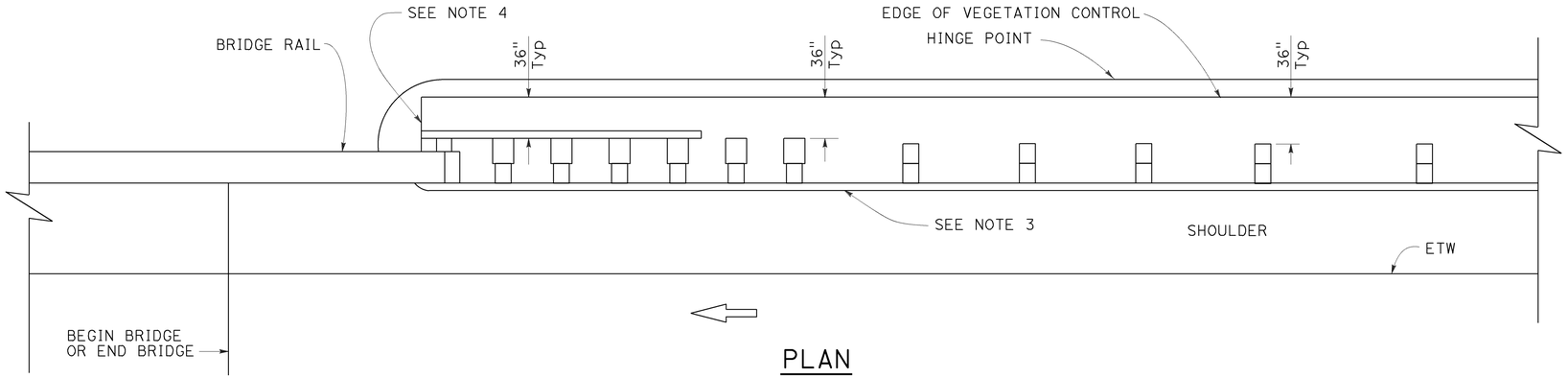

PLAN

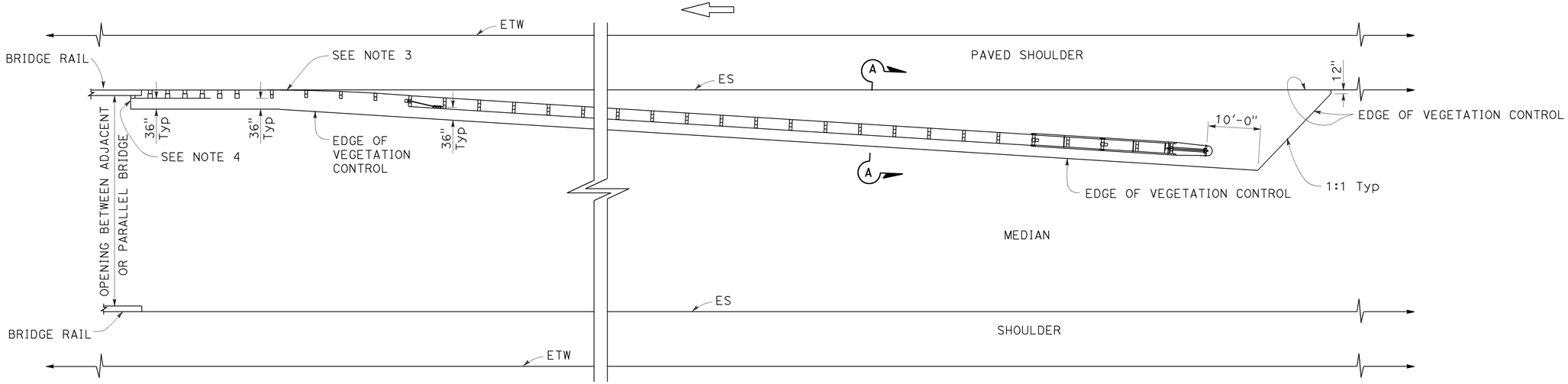

PLAN

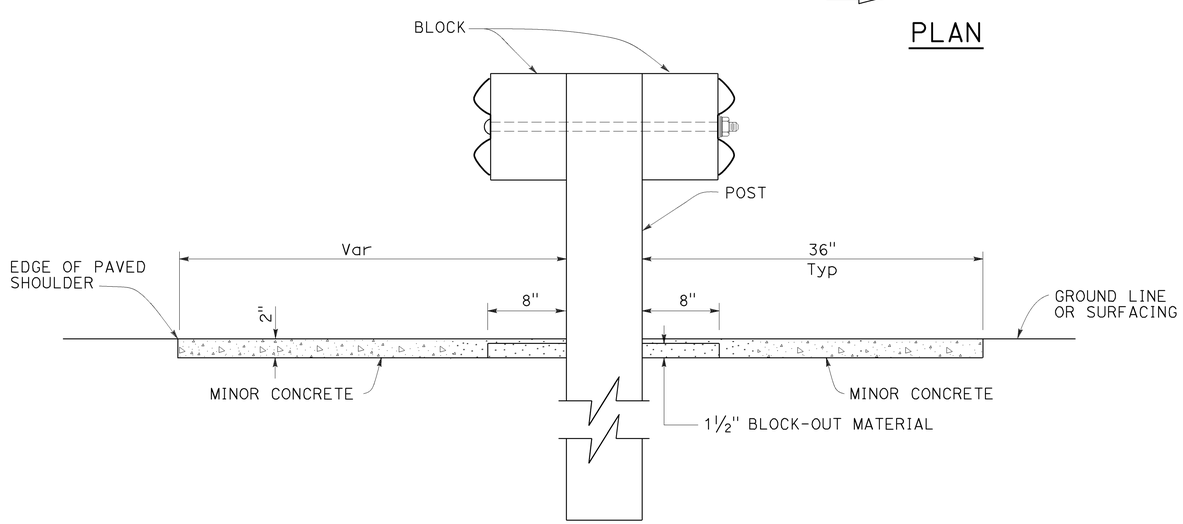

SECTION A-A

NOTES:

1. See Revised Standard Plan RSP A77N5 for additional vegetation control details.
2. Where the distance between back of post and hinge point is less than 42", construct vegetation control to 6" from hinge point while maintaining the 8" block-out at back of post. If the 8" block-out at back of post can not be maintained, construct vegetation control flush with the back edge of post.
3. Where dike is constructed under railing, construct vegetation control to back edge of dike. Where paved shoulder is constructed within 36" in front of the post, construct vegetation control to the edge of paved shoulder.
4. End vegetation control at end of backside rail element.

STATE OF CALIFORNIA
DEPARTMENT OF TRANSPORTATION

MIDWEST GUARDRAIL SYSTEM TYPICAL VEGETATION CONTROL AT STRUCTURE APPROACH

NO SCALE

RSP A77N7 DATED JULY 19, 2013 SUPPLEMENTS THE STANDARD PLANS BOOK DATED 2010.

REVISED STANDARD PLAN RSP A77N7

2010 REVISED STANDARD PLAN RSP A77N7

6-12-13

Dist	COUNTY	ROUTE	POST MILES TOTAL PROJECT	SHEET No.	TOTAL SHEETS
03	Sac	51,160	4.0/4.3, R44.4/47.0	73	117

Randell D. Hiatt
REGISTERED CIVIL ENGINEER

July 19, 2013
PLANS APPROVAL DATE

REGISTERED PROFESSIONAL ENGINEER
Randell D. Hiatt
No. C50200
Exp. 6-30-15
CIVIL
STATE OF CALIFORNIA

THE STATE OF CALIFORNIA OR ITS OFFICERS OR AGENTS SHALL NOT BE RESPONSIBLE FOR THE ACCURACY OR COMPLETENESS OF SCANNED COPIES OF THIS PLAN SHEET.

TO ACCOMPANY PLANS DATED 5-2-16

NOTES:

1. See Revised Standard Plan RSP A77N5 for additional vegetation control details.
2. Where the distance between back of post and hinge point is less than 42", construct vegetation control to 6" from hinge point while maintaining the 8" block-out at back of post. If the 8" block-out at back of post can not be maintained, construct vegetation control flush with the back edge of post.
3. Where dike is constructed under railing, construct vegetation control to back edge of dike. Where paved shoulder is constructed within 36" in front of the post, construct vegetation control to the edge of paved shoulder.

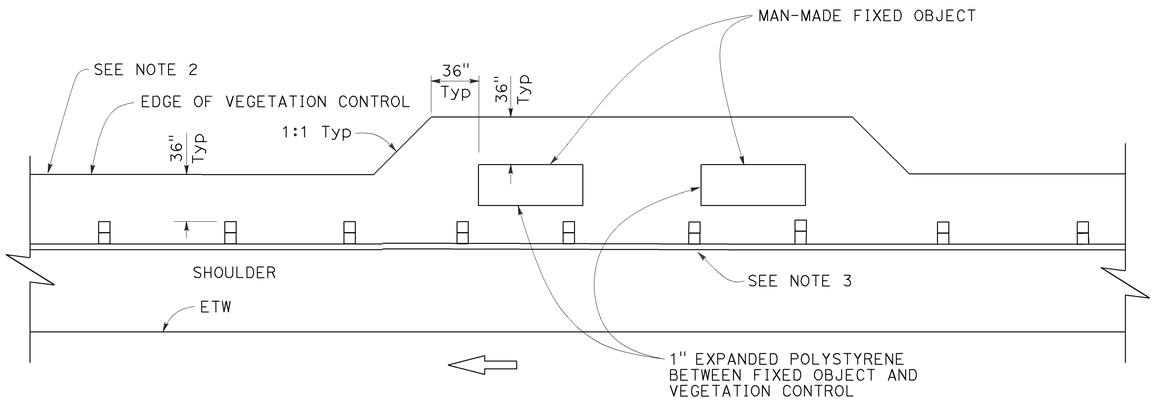

PLAN

Fixed object(s) on shoulder

STATE OF CALIFORNIA
DEPARTMENT OF TRANSPORTATION

MIDWEST GUARDRAIL SYSTEM TYPICAL VEGETATION CONTROL AT FIXED OBJECT

NO SCALE

RSP A77N8 DATED JULY 19, 2013 SUPPLEMENTS THE STANDARD PLANS BOOK DATED 2010.

REVISED STANDARD PLAN RSP A77N8

2010 REVISED STANDARD PLAN RSP A77N8

6-12-13

Dist	COUNTY	ROUTE	POST MILES TOTAL PROJECT	SHEET No.	TOTAL SHEETS
03	Sac	51,160	4.0/4.3, R44.4/47.0	74	117

Randell D. Hiatt
REGISTERED CIVIL ENGINEER

July 19, 2013
PLANS APPROVAL DATE

REGISTERED PROFESSIONAL ENGINEER
Randell D. Hiatt
No. C50200
Exp. 6-30-15
CIVIL
STATE OF CALIFORNIA

THE STATE OF CALIFORNIA OR ITS OFFICERS OR AGENTS SHALL NOT BE RESPONSIBLE FOR THE ACCURACY OR COMPLETENESS OF SCANNED COPIES OF THIS PLAN SHEET.

TO ACCOMPANY PLANS DATED 5-2-16

2010 REVISED STANDARD PLAN RSP A77N9

NOTES:

1. See Revised Standard Plan RSP A77N5 for additional vegetation control details.
2. Where dike is constructed under railing, construct vegetation control to back edge of dike. Where paved shoulder is constructed within 36" in front of the post, construct vegetation control to the edge of paved shoulder.

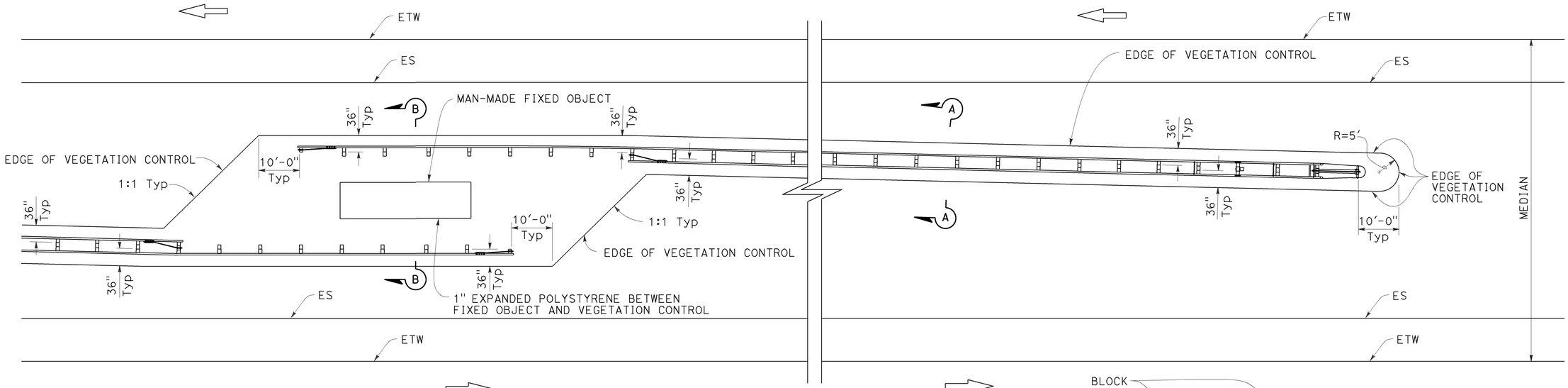

PLAN

Fixed object(s) in median

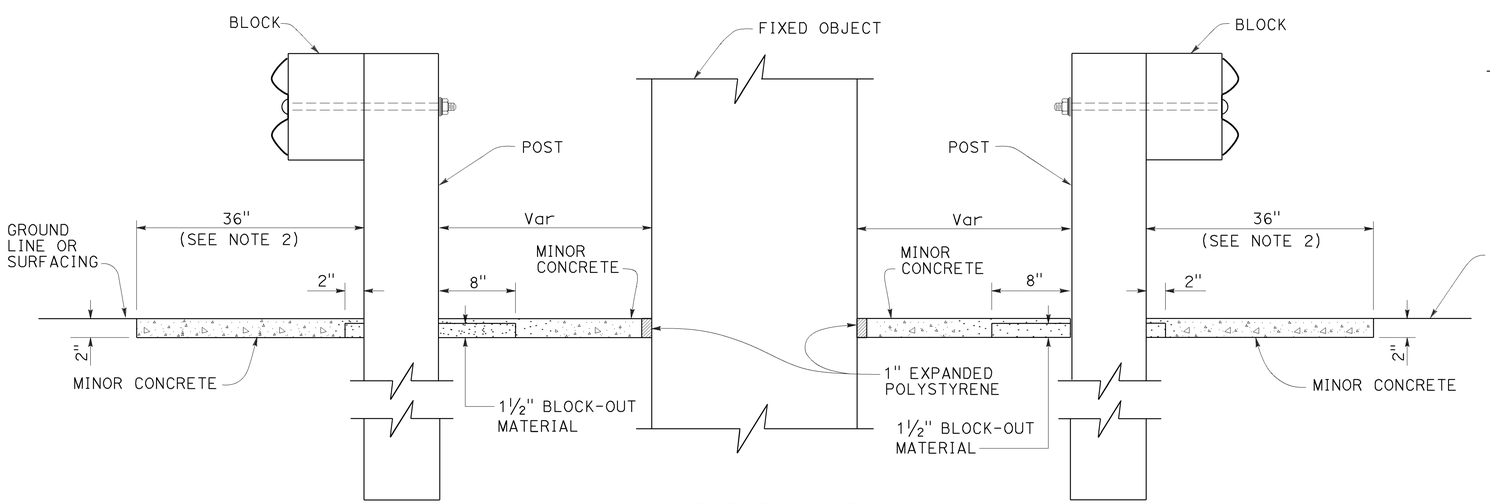

SECTION B-B

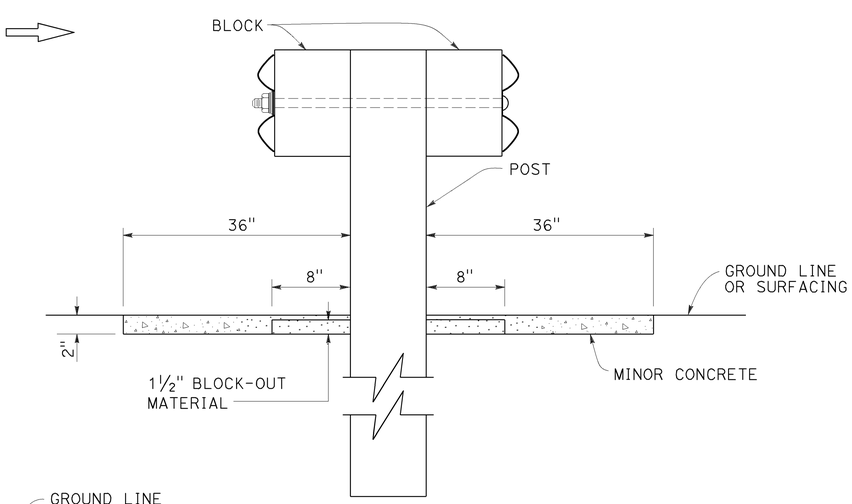

SECTION A-A

STATE OF CALIFORNIA
DEPARTMENT OF TRANSPORTATION

MIDWEST GUARDRAIL SYSTEM TYPICAL VEGETATION CONTROL AT FIXED OBJECT

NO SCALE

RSP A77N9 DATED JULY 19, 2013 SUPPLEMENTS THE STANDARD PLANS BOOK DATED 2010.

REVISED STANDARD PLAN RSP A77N9

6-12-13

Dist	COUNTY	ROUTE	POST MILES TOTAL PROJECT	SHEET No.	TOTAL SHEETS
03	Sac	51,160	4.0/4.3, R44.4/47.0	75	117

Randell D. Hiatt
REGISTERED CIVIL ENGINEER

July 19, 2013
PLANS APPROVAL DATE

REGISTERED PROFESSIONAL ENGINEER
Randell D. Hiatt
No. C50200
Exp. 6-30-15
CIVIL
STATE OF CALIFORNIA

THE STATE OF CALIFORNIA OR ITS OFFICERS OR AGENTS SHALL NOT BE RESPONSIBLE FOR THE ACCURACY OR COMPLETENESS OF SCANNED COPIES OF THIS PLAN SHEET.

TO ACCOMPANY PLANS DATED 5-2-16

2010 REVISED STANDARD PLAN RSP A77N10

NOTES:

1. See Revised Standard Plan RSP A77N5 for additional vegetation control details.
2. Where dike is constructed under railing, construct vegetation control to back edge of dike. Where paved shoulder is constructed within 36" in front of the post, construct vegetation control to the edge of paved shoulder.

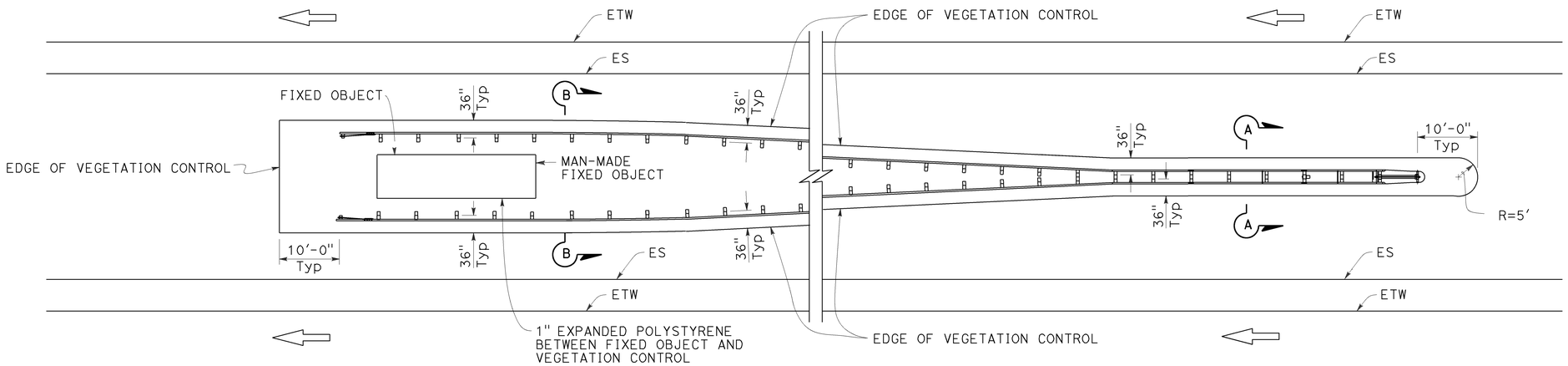

PLAN

Fixed object(s) between separate roadbeds
(One-Way Traffic)

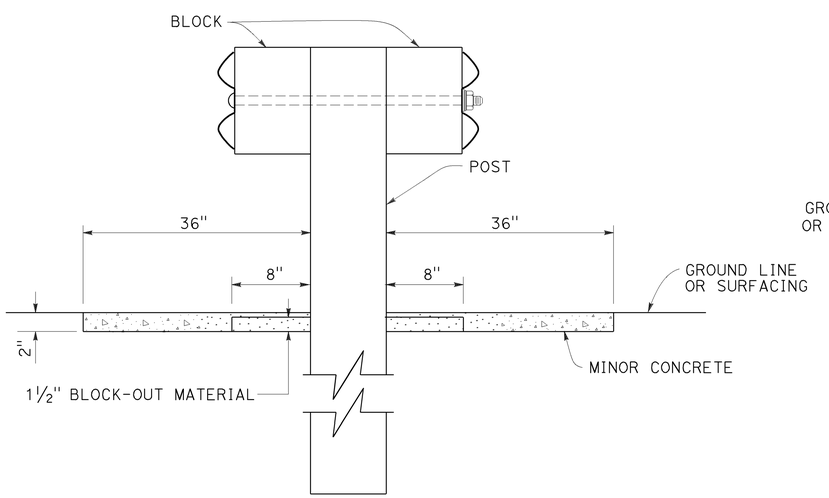

SECTION A-A

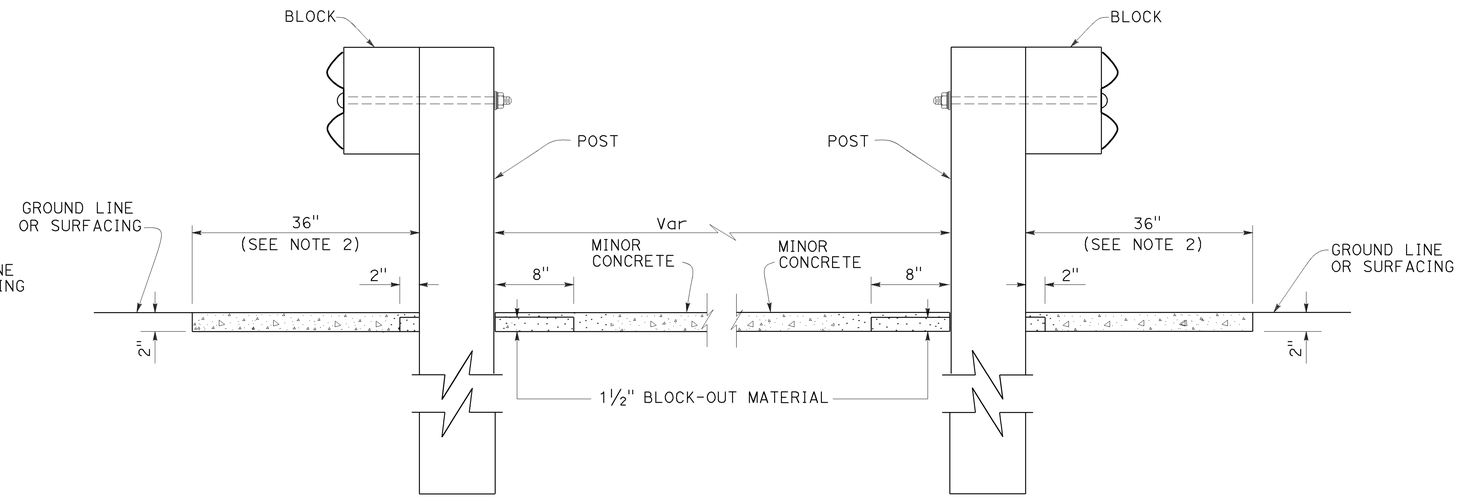

SECTION B-B

STATE OF CALIFORNIA
DEPARTMENT OF TRANSPORTATION

MIDWEST GUARDRAIL SYSTEM TYPICAL VEGETATION CONTROL AT FIXED OBJECT

NO SCALE

RSP A77N10 DATED JULY 19, 2013 SUPPLEMENTS THE STANDARD PLANS BOOK DATED 2010.

REVISED STANDARD PLAN RSP A77N10

6-12-13

Dist	COUNTY	ROUTE	POST MILES TOTAL PROJECT	SHEET No.	TOTAL SHEETS
03	Sac	51,160	4.0/4.3, R44.4/47.0	76	117

Randell D. Hiatt
REGISTERED CIVIL ENGINEER

August 14, 2015
PLANS APPROVAL DATE

REGISTERED PROFESSIONAL ENGINEER
Randell D. Hiatt
No. C50200
Exp. 6-30-17
CIVIL
STATE OF CALIFORNIA

THE STATE OF CALIFORNIA OR ITS OFFICERS OR AGENTS SHALL NOT BE RESPONSIBLE FOR THE ACCURACY OR COMPLETENESS OF SCANNED COPIES OF THIS PLAN SHEET.

TO ACCOMPANY PLANS DATED 5-2-16

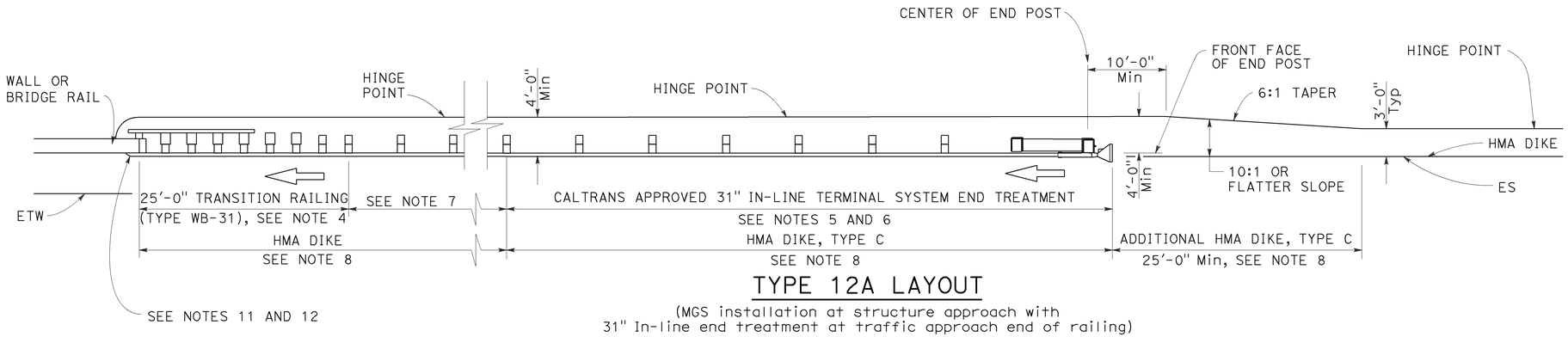

TYPE 12A LAYOUT

(MGS installation at structure approach with
31" In-line end treatment at traffic approach end of railing)
See Note 9

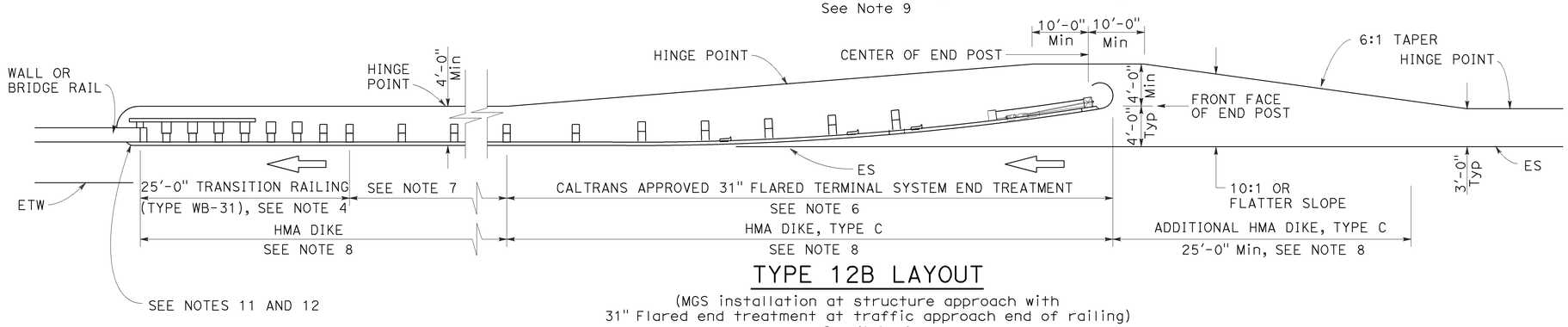

TYPE 12B LAYOUT

(MGS installation at structure approach with
31" Flared end treatment at traffic approach end of railing)
See Note 9

NOTES:

1. Line post, blocks and hardware to be used are shown on Revised Standard Plans RSP A77L1, RSP A77L2, RSP A77M1, RSP A77N1 and RSP A77N2.
2. MGS post spacing to be 6'-3" center to center, except as otherwise noted.
3. Except as noted, line posts are 6" x 8" x 6'-0" wood with 6" x 12" x 1'-2" wood blocks. W6 x 8.5 or W6 x 9 steel posts, 6'-0" in length, with 6" x 12" x 1'-2" notched wood blocks or plastic blocks may be used for 6" x 8" x 6'-0" wood posts with 6" x 12" x 1'-2" wood blocks where applicable and when specified.
4. For Transition Railing (Type WB-31) details for Types 12A and 12B Layouts, see Revised Standard Plan RSP A77U4.
5. 31" in-line terminal system end treatments are used where site conditions will not accommodate a 31" flared end treatment.
6. The type of 31" terminal system end treatment to be used will be shown on the Project Plans.
7. Dependent on site conditions (embankment height, side slopes, or other fixed objects), it may be advisable to construct additional guard railing (a length equal to multiples of 12'-6" with 6'-3" post spacing) between the transition railing and end treatment. A 12.5 degree angle of departure can be drawn on the Project Plans from the edge of traveled way through the outer most point of the fixed object to determine the additional length of railing needed.
8. Where placement of dike is required with guard railing installations, see Revised Standard Plan RSP A77N4 for dike positioning details.
9. Type 12A or Type 12B Layouts are typically used:
   a. To the right of approaching traffic, at the end of a structure, on two-lane conventional highway where the roadbed width across the structure is less than 40 feet.
   b. To the left of approaching traffic, at the end of a structure, on two-lane conventional highway where the roadbed width across the structure is less than 40 feet.
   c. To the right of approaching traffic at the end of each structure on multilane freeways or expressways with separate adjacent or parallel bridges.
   d. To the right of approaching traffic at the end of the structure on multilane freeways or expressways with decked median on the bridge.
10. See Revised Standard Plan RSP A77Q3 for typical layout used left of approaching traffic at the ends of each structure on multilane freeways or expressways with separate adjacent or parallel bridges.
11. For additional details of typical connections to bridge rail, see Connection Detail AA on Revised Standard Plans RSP A77U1 and RSP A77U2 and Connection Detail FF on Revised Standard Plans RSP A77V1 and RSP A77V2.
12. For additional details of a typical connection to walls or abutments, see Revised Standard Plan RSP A77U3.

STATE OF CALIFORNIA
DEPARTMENT OF TRANSPORTATION

MIDWEST GUARDRAIL SYSTEM TYPICAL LAYOUTS FOR STRUCTURE APPROACH

NO SCALE

RSP A77Q1 DATED AUGUST 14, 2015 SUPERSEDES RSP A77Q1 DATED JULY 19, 2013 THAT SUPPLEMENTS THE STANDARD PLANS BOOK DATED 2010.

REVISED STANDARD PLAN RSP A77Q1

2010 REVISED STANDARD PLAN RSP A77Q1

8-12-15

Dist	COUNTY	ROUTE	POST MILES TOTAL PROJECT	SHEET No.	TOTAL SHEETS
03	Sac	51,160	4.0/4.3, R44.4/47.0	77	117

Randell D. Hiatt
REGISTERED CIVIL ENGINEER

August 14, 2015
PLANS APPROVAL DATE

REGISTERED PROFESSIONAL ENGINEER
Randell D. Hiatt
No. C50200
Exp. 6-30-17
CIVIL
STATE OF CALIFORNIA

THE STATE OF CALIFORNIA OR ITS OFFICERS OR AGENTS SHALL NOT BE RESPONSIBLE FOR THE ACCURACY OR COMPLETENESS OF SCANNED COPIES OF THIS PLAN SHEET.

TO ACCOMPANY PLANS DATED 5-2-16

2010 REVISED STANDARD PLAN RSP A77Q3

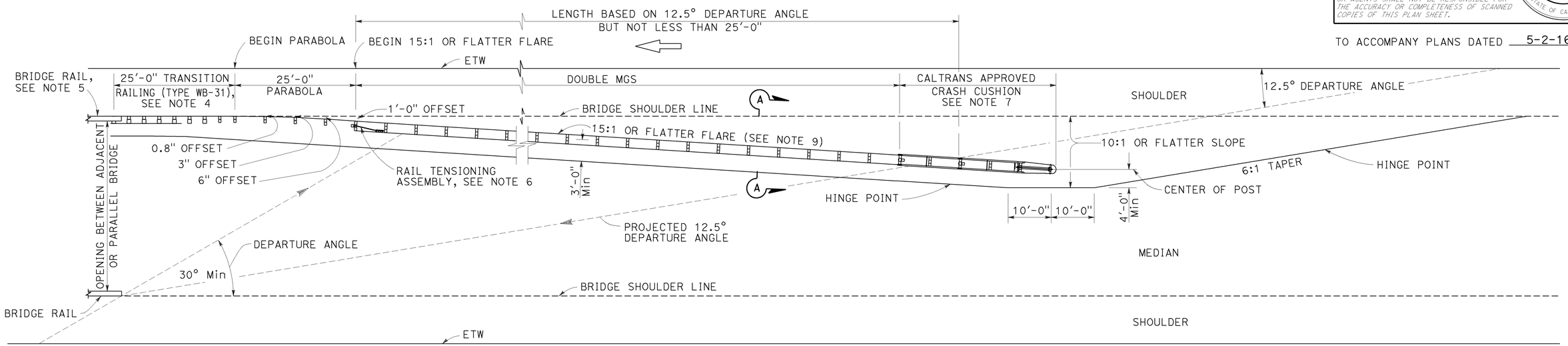

TYPE 12E LAYOUT

See Note 9

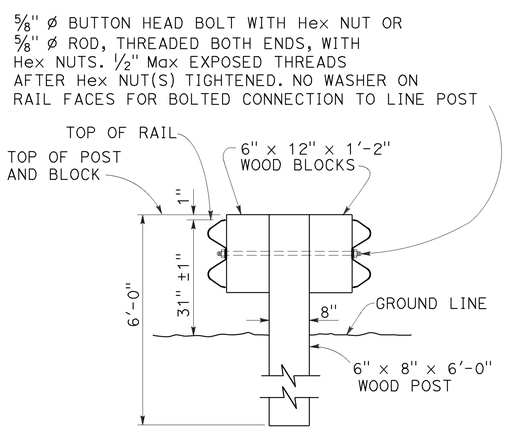

SECTION A-A
TYPICAL DOUBLE MIDWEST GUARDRAIL SYSTEM

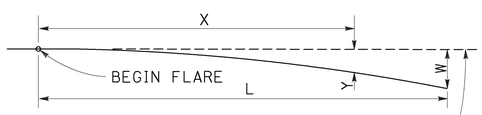

BASE LINE (EDGE OF PAVED SHOULDER OR OFFSET LINE OF EDGE OF TRAVELED WAY)

$$Y = \frac{WX^2}{L^2}$$

Y = OFFSET FROM BASE LINE
W = MAXIMUM OFFSET
X = DISTANCE ALONG BASE LINE
L = LENGTH OF FLARE

PARABOLIC FLARE OFFSETS

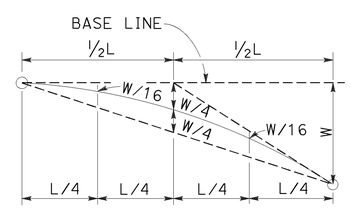

TYPICAL PARABOLIC LAYOUT

NOTES:

1. Line post, blocks and hardware to be used are shown on Revised Standard Plans RSP A77L1, RSP A77L2, RSP A77M1, RSP A77N1 and RSP A77N2.
2. MGS post spacing to be 6'-3" center to center, except as otherwise noted.
3. Except as noted, line posts are 6" x 8" x 6'-0" wood with 6" x 12" x 1'-2" wood blocks. W6 x 8.5 or W6 x 9 steel posts, 6'-0" in length, with 6" x 12" x 1'-2" notched wood blocks or notched recycled plastic blocks may be used for 6" x 8" x 6'-0" wood line posts with 6" x 12" x 1'-2" wood blocks where applicable and when specified.
4. For Transition Railing (Type WB-31) details, see Revised Standard Plan RSP A77U4.
5. For additional details of a typical connection to bridge rail, see Connection Detail AA on Revised Standard Plan RSP A77U1.
6. For Rail Tensioning Assembly details, see Revised Standard Plan RSP A77S2.
7. The type of Crash Cushion to be used will be shown on the Project Plans.
8. Type 12E Layout is typically used left of approaching traffic at the end of each structure on multilane freeways or expressways where a median type barrier is not constructed between separated roadbeds.
9. The 15:1 or flatter flare is measured off of the edge of traveled way.

STATE OF CALIFORNIA
DEPARTMENT OF TRANSPORTATION

MIDWEST GUARDRAIL SYSTEM TYPICAL LAYOUTS FOR STRUCTURE APPROACH

NO SCALE

RSP A77Q3 DATED AUGUST 14, 2015 SUPERSEDES RSP A77Q3 DATED JULY 19, 2013 THAT SUPPLEMENTS THE STANDARD PLANS BOOK DATED 2010.

REVISED STANDARD PLAN RSP A77Q3

7-8-15

Dist	COUNTY	ROUTE	POST MILES TOTAL PROJECT	SHEET No.	TOTAL SHEETS
03	Sac	51,160	4.0/4.3, R44.4/47.0	78	117

Randell D. Hiatt
REGISTERED CIVIL ENGINEER

August 14, 2015
PLANS APPROVAL DATE

REGISTERED PROFESSIONAL ENGINEER
Randell D. Hiatt
No. C50200
Exp. 6-30-17
CIVIL
STATE OF CALIFORNIA

THE STATE OF CALIFORNIA OR ITS OFFICERS OR AGENTS SHALL NOT BE RESPONSIBLE FOR THE ACCURACY OR COMPLETENESS OF SCANNED COPIES OF THIS PLAN SHEET.

TO ACCOMPANY PLANS DATED 5-2-16

2010 REVISED STANDARD PLAN RSP A77Q4

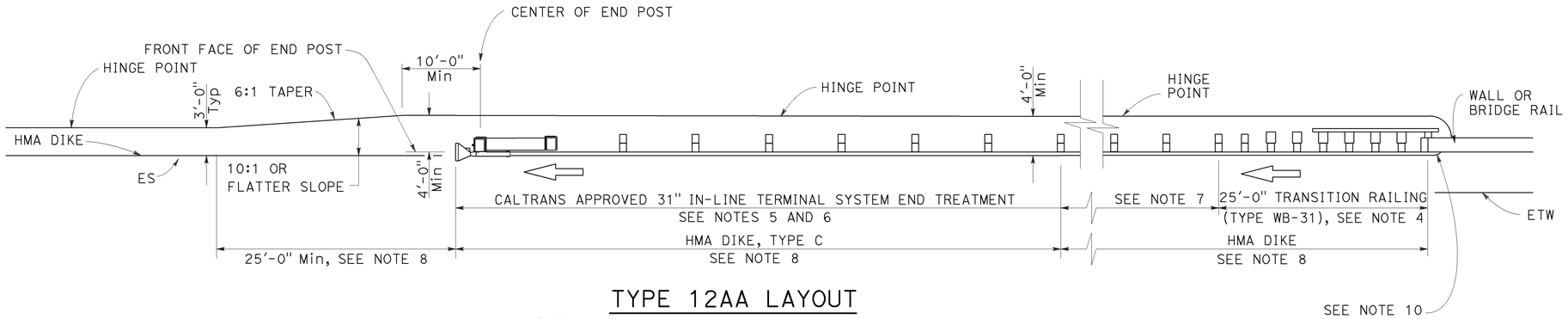

TYPE 12AA LAYOUT

(MGS installation at structure departure with
31" in-line end treatment at trailing end of railing)
See Notes 8 and 9

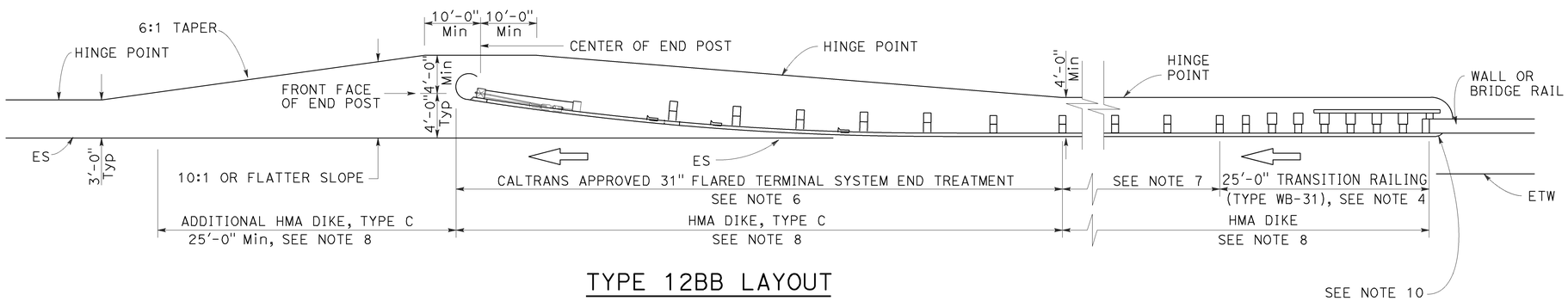

TYPE 12BB LAYOUT

(MGS installation at structure departure with
31" flared end treatment at trailing end of railing)
See Notes 8 and 9

NOTES:

1. Line post, blocks and hardware to be used are shown on Revised Standard Plans RSP A77L1, RSP A77L2, RSP A77M1, RSP A77N1 and RSP A77N2.
2. MGS post spacing to be 6'-3" center to center, except as otherwise noted.
3. Except as noted, line posts are 6" x 8" x 6'-0" wood with 6" x 12" x 1'-2" wood blocks. W6 x 8.5 or W6 x 9 steel posts, 6'-0" in length, with 6" x 12" x 1-2" notched wood blocks or notched recycled plastic blocks may be used for 6" x 8" x 6'-0" wood posts with 6" x 12" x 1'-2" wood blocks where applicable and when specified.
4. For Transition Railing (Type WB-31) details for Types 12AA and 12BB Layouts, see Revised Standard Plan RSP A77U4.
5. 31" in-line terminal system treatments are used where site conditions will not accommodate a 31" flared end treatment.
6. The type of 31" terminal system to be used will be shown on the Project Plans.
7. Dependent on site conditions (embankment height, side slopes, other fixed objects), it may be advisable to construct additional MGS (a length equal to multiples of 12'-6" with 6'-3" post spacing) between the transition railing and 31" end treatments.
8. Where placement of dike is required with MGS installations, see Revised Standard Plan RSP A77N4 for dike positioning details.
9. Type 12AA or Type 12BB Layouts are typically used to the right of traffic departing a structure on two-way conventional highways where the roadbed width across the structure is less than 40 feet.
10. For additional details of typical connections to bridge rail, see Connection Detail CC on Revised Standard Plan RSP A77U2 and Connection Detail HH on Revised Standard Plan RSP A77V2.

STATE OF CALIFORNIA
DEPARTMENT OF TRANSPORTATION

MIDWEST GUARDRAIL SYSTEM TYPICAL LAYOUTS FOR STRUCTURE DEPARTURE

NO SCALE

RSP A77Q4 DATED AUGUST 14, 2015 SUPERSEDES RSP A77Q4 DATED JULY 19, 2013 THAT SUPPLEMENTS THE STANDARD PLANS BOOK DATED 2010.

REVISED STANDARD PLAN RSP A77Q4

8-12-15

Dist	COUNTY	ROUTE	POST MILES TOTAL PROJECT	SHEET No.	TOTAL SHEETS
03	Sac	51,160	4.0/4.3, R44.4/47.0	79	117

Randell D. Hiatt
REGISTERED CIVIL ENGINEER

July 19, 2013
PLANS APPROVAL DATE

REGISTERED PROFESSIONAL ENGINEER Randell D. Hiatt No. C50200 Exp. 6-30-15 CIVIL STATE OF CALIFORNIA

THE STATE OF CALIFORNIA OR ITS OFFICERS OR AGENTS SHALL NOT BE RESPONSIBLE FOR THE ACCURACY OR COMPLETENESS OF SCANNED COPIES OF THIS PLAN SHEET.

TO ACCOMPANY PLANS DATED 5-2-16

2010 REVISED STANDARD PLAN RSP A77R3

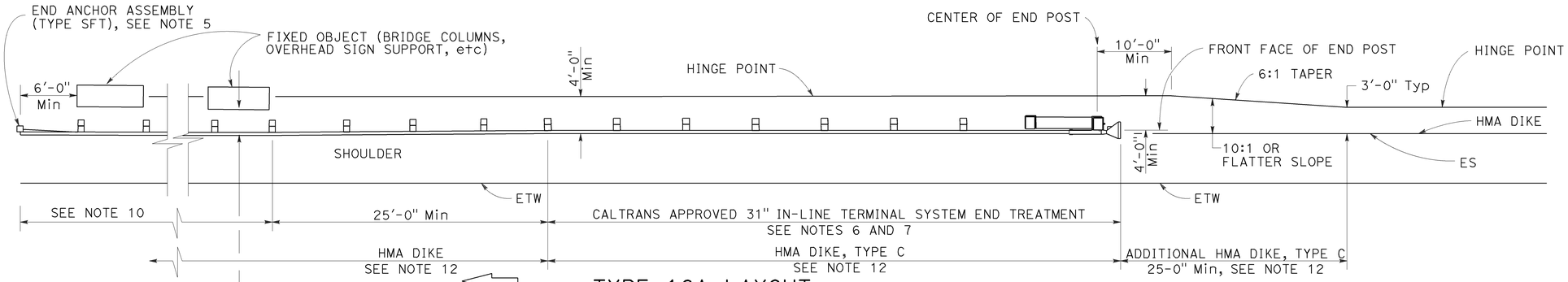

TYPE 16A LAYOUT

(MGS installation at roadside fixed object or objects with 31" in-line end treatment at traffic approach end of railing)
See Notes 11 and 12

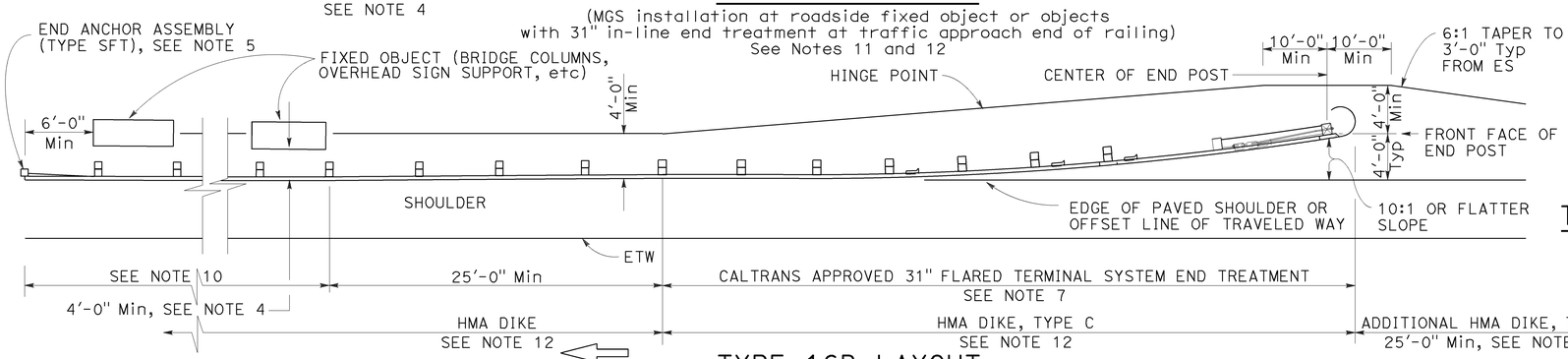

TYPE 16B LAYOUT

(MGS installation at roadside fixed object or objects with 31' flared end treatment at traffic approach end of railing)
See Notes 11 and 12

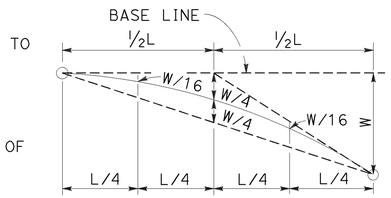

TYPIC AL PARABOLIC LAYOUT

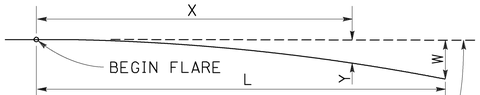

BASE LINE (EDGE OF PAVED SHOULDER OR OFFSET LINE OF EDGE OF TRAVELED WAY)

$$Y = \frac{WX^2}{L^2}$$

Y = OFFSET FROM BASE LINE
W = MAXIMUM OFFSET
X = DISTANCE ALONG BASE LINE
L = LENGTH OF FLARE

PARABOLIC FLARE OFFSETS

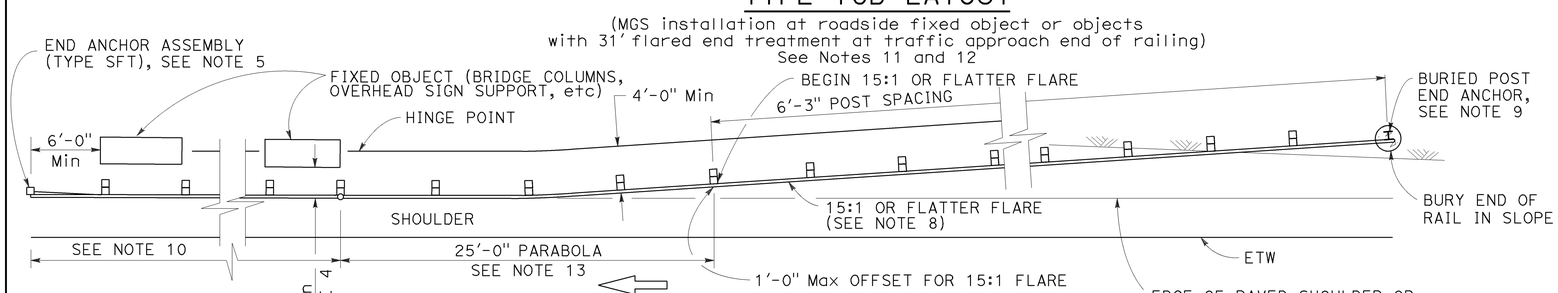

TYPE 16C LAYOUT

(MGS installation at roadside fixed object or objects with a buried end anchor treatment at traffic approach end of railing)
See Notes 11 and 12

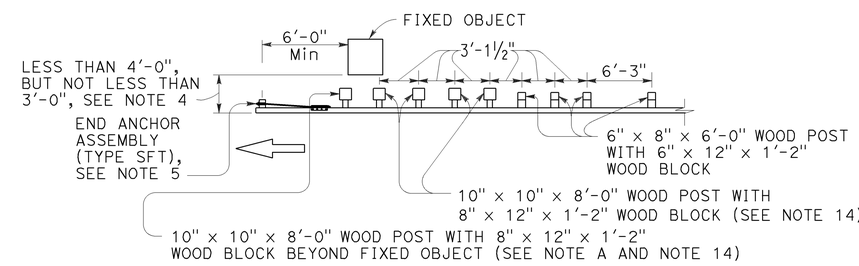

NOTE A: For a series of fixed objects (bridge columns, overhead sign supports, etc.) additional 10" x 10" x 8'-0" wood post with 8" x 12" x 1'-2" wood blocks at 3'-1½" center to center spacing are to be used between fixed objects.

STRENGTHENED MIDWEST GUARDRAIL SYSTEM SECTIONS FOR FIXED OBJECT

Use strengthened MGS sections with Types 16A, 16B or 16C layouts where minimum clearance between the face of the railing and fixed object(s) is less than 4'-0", but not less than 3'-0". See Note 4

NOTES:

1. Line post, blocks and hardware to be used are shown on Revised Standard Plans RSP A77L1, RSP A77L2, RSP A77M1, RSP A77N1 and RSP A77N2.
2. MGS post spacing to be 6'-3" center to center, except as otherwise noted.
3. Except as noted, line posts are 6" x 8" x 6'-0" wood with 6" x 12" x 1'-2" wood blocks. W6 x 8.5 or W6 x 9 steel posts, 6'-0" in length, with 6" x 12" x 1'-2" notched wood blocks or notched recycled plastic blocks may be used for 6" x 8" x 6'-0" wood line posts with 6" x 12" x 1'-2" wood blocks where applicable and when specified.
4. A 4'-0" minimum clearance is required between the face of the railing and the face of a fixed object located directly behind MGS sections with post spacing of 6'-3". Construct MGS as shown in the detail "Strengthened Midwest Guardrail System Sections for Fixed Object" on this plan, where the clearance between the face of the railing and the face of a fixed object is less than 4'-0", but not less than 3'-0". Where the clearance is less than 3'-0", a concrete wall or barrier should be constructed to shield the fixed object(s).
5. For End Anchor Assembly (Type SFT) details, see Revised Standard Plan RSP A77S1.
6. 31" in-line terminal system end treatments are used where site conditions will not accommodate a 31" flared end treatment.
7. The type of 31" terminal system to be used will be shown on the Project Plans.
8. The 15:1 or flatter flare used with Type 16C Layout is based on the edge of the paved shoulder or offset line of edge of the traveled way. The length of MGS within the 15:1 or flatter flare is based on site conditions and should be a length equal to multiples of 12'-6".
9. For details of the Buried Post End Anchor used with Type 16C Layout, see Revised Standard Plan RSP A77T2.
10. As site conditions dictate, construct additional MGS to shield fixed object(s). Additional MGS length equal to multiples of 12'-6". Post spacing at 6'-3" except as specified in Note 4.
11. Layout Types 16A, 16B or 16C are typically used where MGS is recommended to shield roadside fixed object(s) and a crashworthy 31" end treatment is required for only one direction of traffic.
12. Where placement of dike is required with MGS, see Revised Standard Plan RSP A77N4 for dike positioning details.
13. For typical flare offsets for 25'-0" length parabola with maximum offset of 1'-0", see Revised Standard Plan RSP A77P1.
14. W6 x 15 steel post, 8'-0" in length, with 8" x 12" x 1'-2" notched wood block or notched recycled plastic blocks may be used in place of the 10" x 10" x 8'-0" wood post with 8" x 12" x 1'-2" wood block shown in the detail "Strengthened Midwest Guardrail System Sections for Fixed Object".

STATE OF CALIFORNIA
DEPARTMENT OF TRANSPORTATION

MIDWEST GUARDRAIL SYSTEM TYPICAL LAYOUTS FOR ROADSIDE FIXED OBJECTS

NO SCALE

RSP A77R3 DATED JULY 19, 2013 SUPPLEMENTS THE STANDARD PLANS BOOK DATED 2010.

REVISED STANDARD PLAN RSP A77R3

6-20-13

Dist	COUNTY	ROUTE	POST MILES TOTAL PROJECT	SHEET No.	TOTAL SHEETS
03	Sac	51,160	4.0/4.3, R44.4/47.0	80	117

Randell D. Hiatt
REGISTERED CIVIL ENGINEER

November 15, 2013
PLANS APPROVAL DATE

REGISTERED PROFESSIONAL ENGINEER
Randell D. Hiatt
No. C50200
Exp. 6-30-15
CIVIL
STATE OF CALIFORNIA

THE STATE OF CALIFORNIA OR ITS OFFICERS OR AGENTS SHALL NOT BE RESPONSIBLE FOR THE ACCURACY OR COMPLETENESS OF SCANNED COPIES OF THIS PLAN SHEET.

TO ACCOMPANY PLANS DATED 5-2-16

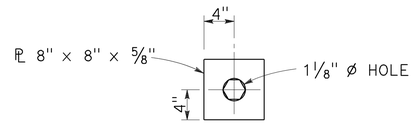

DETAIL "A"
CABLE CONNECTION END PLATE

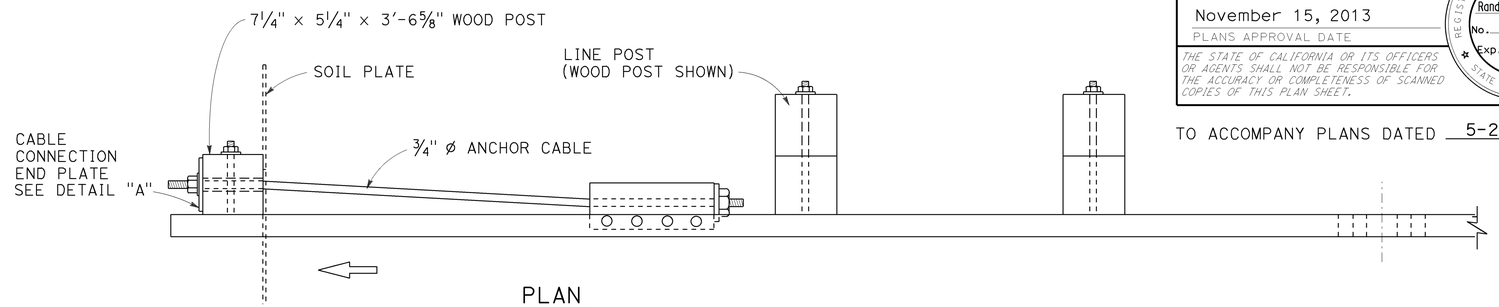

PLAN

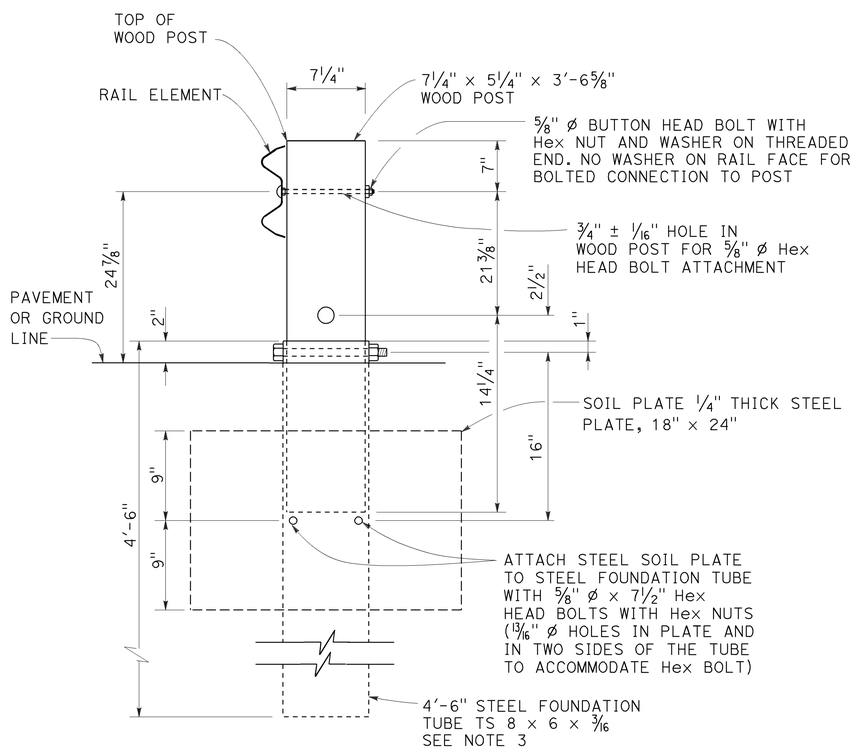

SECTION A-A

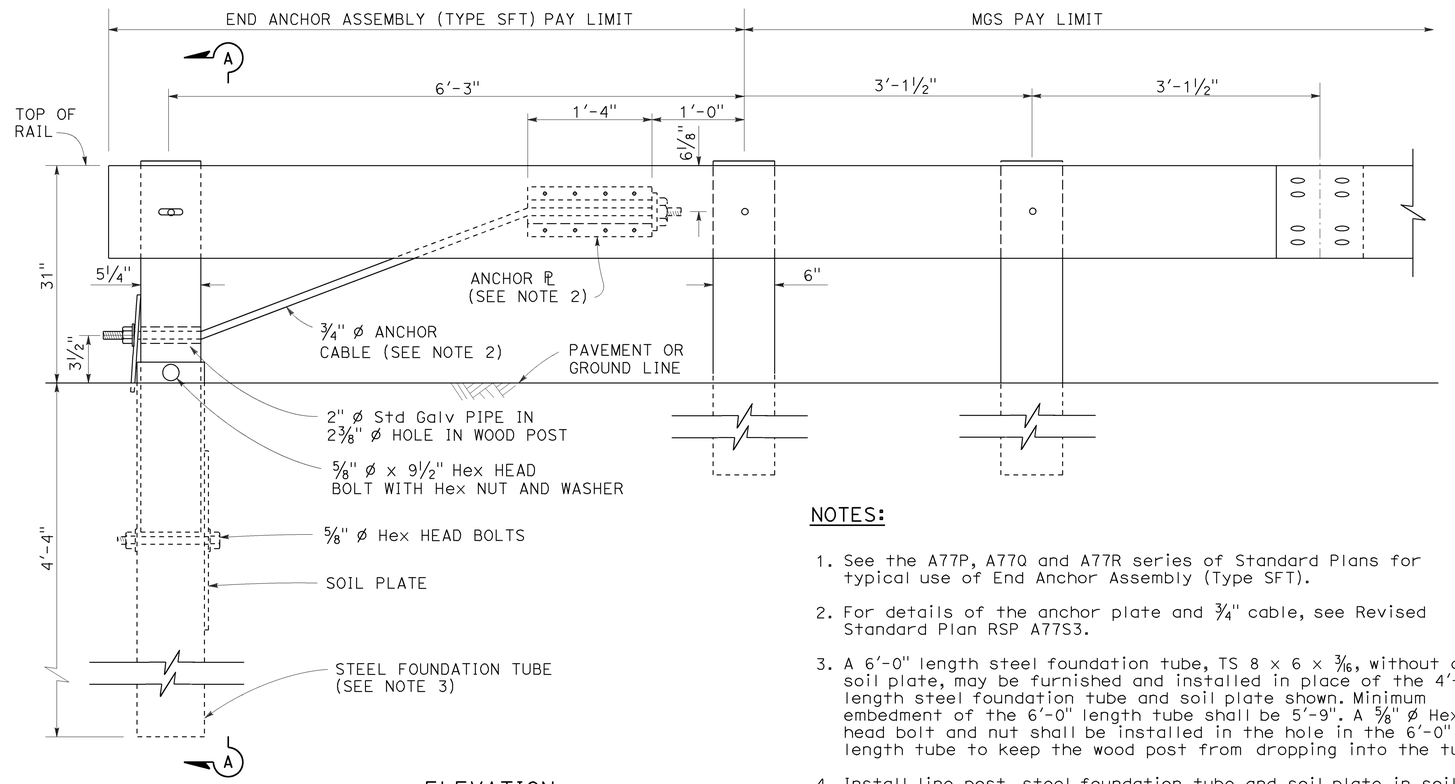

ELEVATION

END ANCHOR
ASSEMBLY (TYPE SFT)
See Note 1

NOTES:

1. See the A77P, A77Q and A77R series of Standard Plans for typical use of End Anchor Assembly (Type SFT).
2. For details of the anchor plate and 3/4" cable, see Revised Standard Plan RSP A77S3.
3. A 6'-0" length steel foundation tube, TS 8 × 6 × 3/16, without a soil plate, may be furnished and installed in place of the 4'-6" length steel foundation tube and soil plate shown. Minimum embedment of the 6'-0" length tube shall be 5'-9". A 5/8" ø Hex head bolt and nut shall be installed in the hole in the 6'-0" length tube to keep the wood post from dropping into the tube.
4. Install line post, steel foundation tube and soil plate in soil.

STATE OF CALIFORNIA
DEPARTMENT OF TRANSPORTATION

MIDWEST GUARDRAIL SYSTEM END ANCHOR ASSEMBLY (TYPE SFT)

NO SCALE

RSP A77S1 DATED NOVEMBER 15, 2013 SUPERSEDES RSP A77S1 DATED JULY 19, 2013 THAT SUPPLEMENTS THE STANDARD PLANS BOOK DATED 2010.

REVISED STANDARD PLAN RSP A77S1

2010 REVISED STANDARD PLAN RSP A77S1

10-4-13

Dist	COUNTY	ROUTE	POST MILES TOTAL PROJECT	SHEET No.	TOTAL SHEETS
03	Sac	51,160	4.0/4.3, R44.4/47.0	81	117

Randell D. Hiatt
REGISTERED CIVIL ENGINEER

July 19, 2013
PLANS APPROVAL DATE

REGISTERED PROFESSIONAL ENGINEER
Randell D. Hiatt
No. C50200
Exp. 6-30-15
CIVIL
STATE OF CALIFORNIA

THE STATE OF CALIFORNIA OR ITS OFFICERS OR AGENTS SHALL NOT BE RESPONSIBLE FOR THE ACCURACY OR COMPLETENESS OF SCANNED COPIES OF THIS PLAN SHEET.

TO ACCOMPANY PLANS DATED 5-2-16

2010 REVISED STANDARD PLAN RSP A77S2

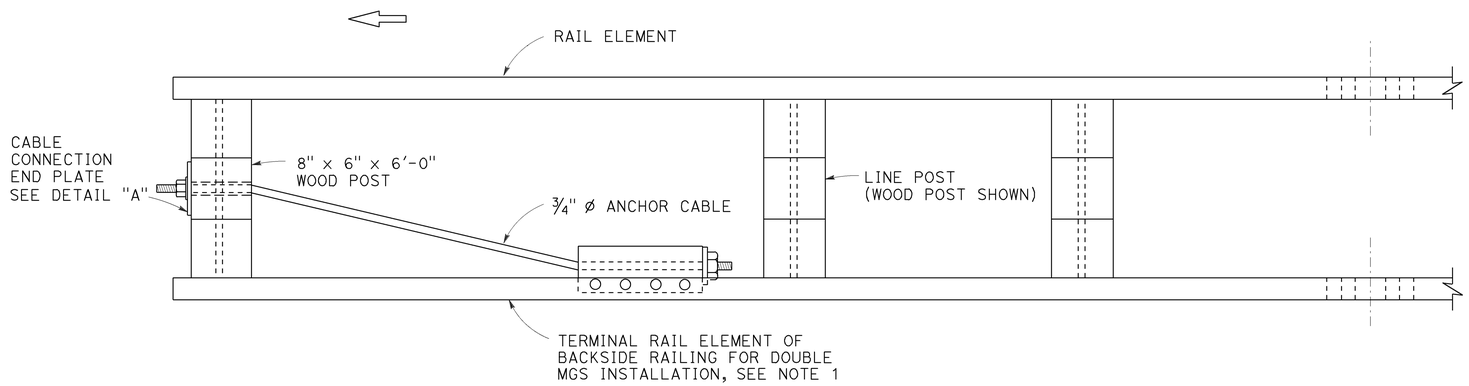

PLAN

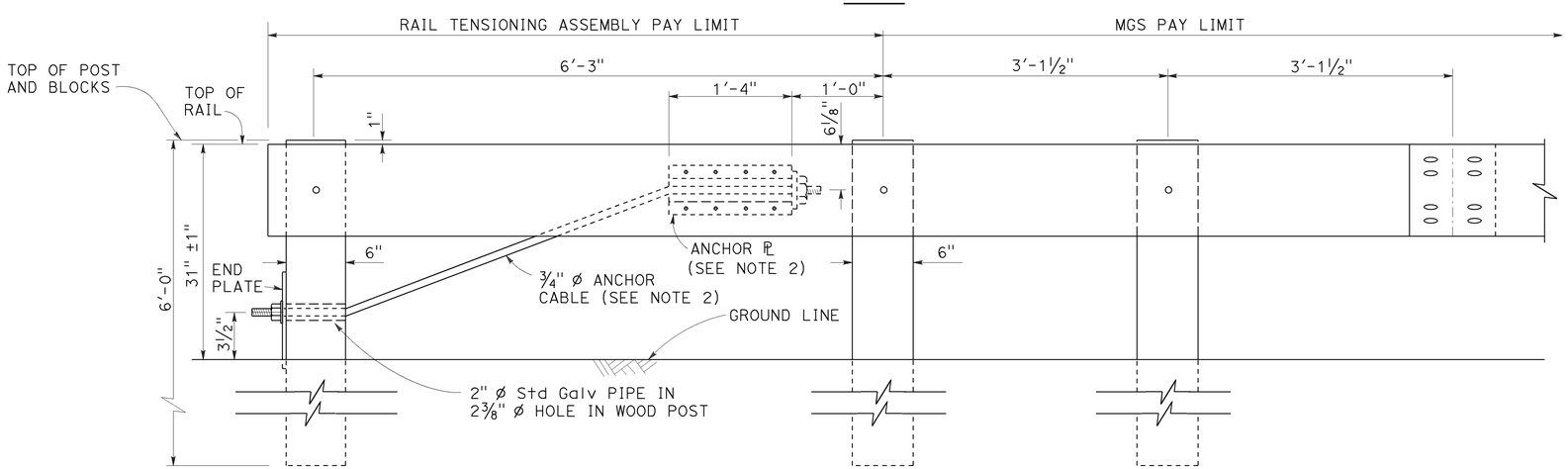

ELEVATION
RAIL TENSIONING ASSEMBLY
See Note 1

NOTES:

1. See Revised Standard Plans RSP A77Q3 and RSP A77R1 for typical use of rail tensioning assembly.
2. For details of the anchor plate and 3/4" cable, see Revised Standard Plan RSP A77S3.

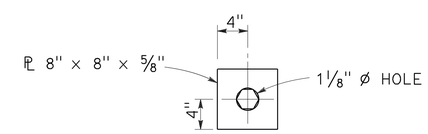

DETAIL "A"
CABLE CONNECTION END PLATE

STATE OF CALIFORNIA
DEPARTMENT OF TRANSPORTATION

MIDWEST GUARDRAIL SYSTEM RAIL TENSIONING ASSEMBLY

NO SCALE

RSP A77S2 DATED JULY 19, 2013 SUPPLEMENTS THE STANDARD PLANS BOOK DATED 2010.

REVISED STANDARD PLAN RSP A77S2

Dist	COUNTY	ROUTE	POST MILES TOTAL PROJECT	SHEET No.	TOTAL SHEETS
03	Sac	51,160	4.0/4.3, R44.4/47.0	82	117

Randell D. Hiatt
REGISTERED CIVIL ENGINEER

November 15, 2013
PLANS APPROVAL DATE

REGISTERED PROFESSIONAL ENGINEER
Randell D. Hiatt
No. C50200
Exp. 6-30-15
CIVIL
STATE OF CALIFORNIA

THE STATE OF CALIFORNIA OR ITS OFFICERS OR AGENTS SHALL NOT BE RESPONSIBLE FOR THE ACCURACY OR COMPLETENESS OF SCANNED COPIES OF THIS PLAN SHEET.

TO ACCOMPANY PLANS DATED 5-2-16

2010 REVISED STANDARD PLAN RSP A77S3

NOTE:

See Revised Standard Plans RSP A77S1, RSP A77S2 and RSP A77T1 for typical use of anchor cable and anchor plate.

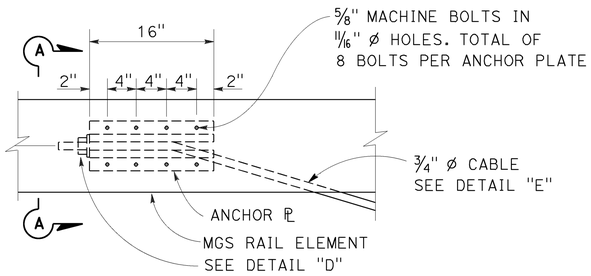

ANCHOR PLATE DETAIL
(MGS shown, TBB similar)

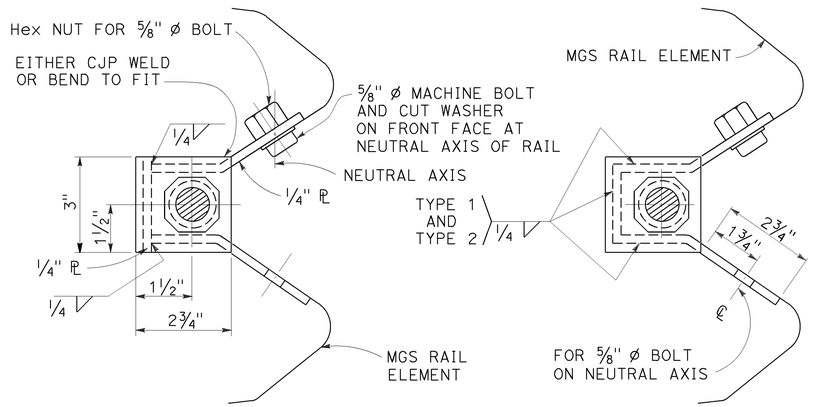

NOTE:
Dimensioning applies to both types.

SECTION A-A
(ALTERNATIVE TYPE 1)

SECTION A-A
(ALTERNATIVE TYPE 2)

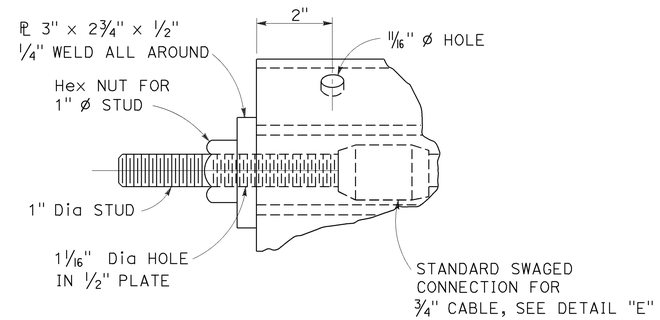

DETAIL "D"

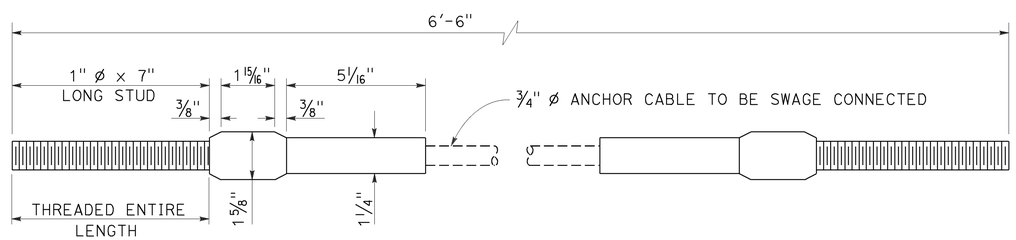

ANCHOR CABLE WITH
SWAGED FITTING AND STUD
DETAIL "E"

STATE OF CALIFORNIA
DEPARTMENT OF TRANSPORTATION

METAL RAILING ANCHOR CABLE AND ANCHOR PLATE DETAILS

NO SCALE

RSP A77S3 DATED NOVEMBER 15, 2013 SUPERSEDES RSP A77S3 DATED JULY 19, 2013 THAT SUPPLEMENTS THE STANDARD PLANS BOOK DATED 2010.

REVISED STANDARD PLAN RSP A77S3

10-4-13

Dist	COUNTY	ROUTE	POST MILES TOTAL PROJECT	SHEET No.	TOTAL SHEETS
03	Sac	51,160	4.0/4.3, R44.4/47.0	83	117

Randell D. Hiatt
REGISTERED CIVIL ENGINEER

November 15, 2013
PLANS APPROVAL DATE

REGISTERED PROFESSIONAL ENGINEER
Randell D. Hiatt
No. C50200
Exp. 6-30-15
CIVIL
STATE OF CALIFORNIA

THE STATE OF CALIFORNIA OR ITS OFFICERS OR AGENTS SHALL NOT BE RESPONSIBLE FOR THE ACCURACY OR COMPLETENESS OF SCANNED COPIES OF THIS PLAN SHEET.

TO ACCOMPANY PLANS DATED 5-2-16

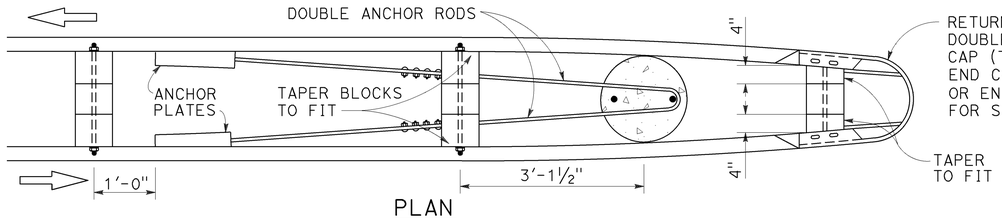

PLAN
See Note 4

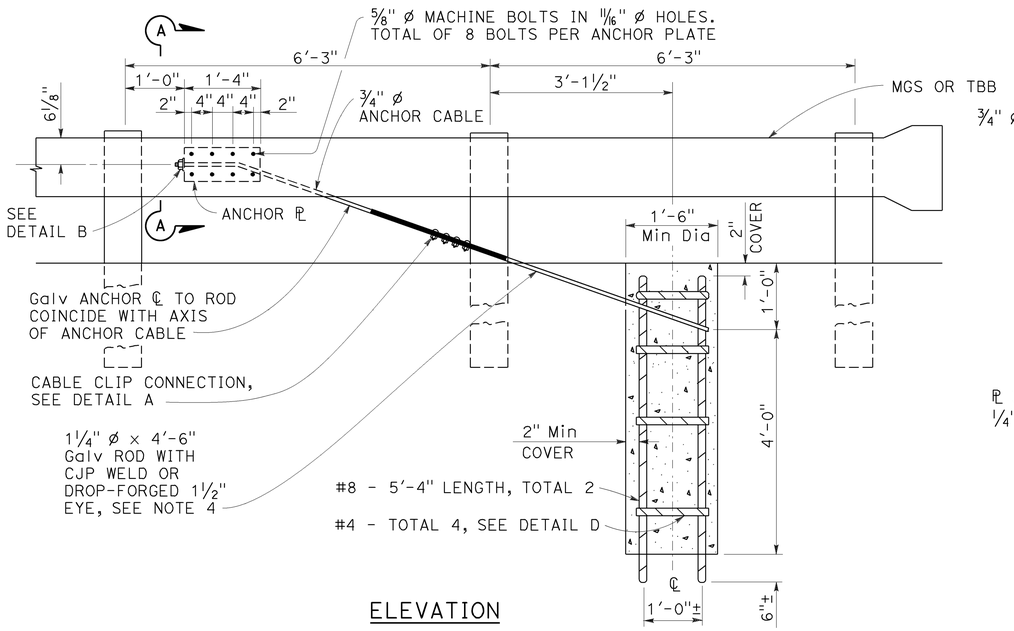

ELEVATION
END ANCHOR ASSEMBLY
(TYPE CA)
(Wood post, MGS shown, details similar for Thrie Beam Barrier.)

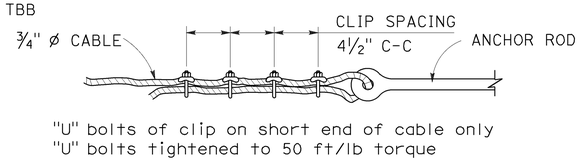

DETAIL A
CABLE CLIP CONNECTION

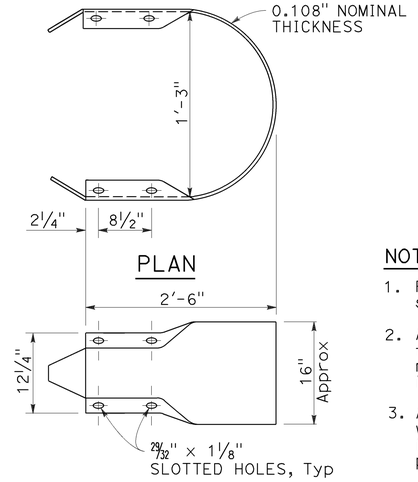

PLAN
ELEVATION
RETURN CAP
(TYPE A)

NOTES:

1. For typical use of this type of end anchor, see Revised Standard Plan RSP A78E2.
2. Anchor cable to be parallel to railing for straight runs of rail. Anchor cable may have angle point at anchor plate if railing is curved.
3. Anchor rod hooks to be in contact with anchor reinforcement when concrete is placed. Wire ties may be used to position anchor rods.
4. Single sided railing installations require only one anchor plate, anchor rod and anchor cable. Single sided railing will not have a rail element or blockouts on backside of line posts as shown in the plan view.

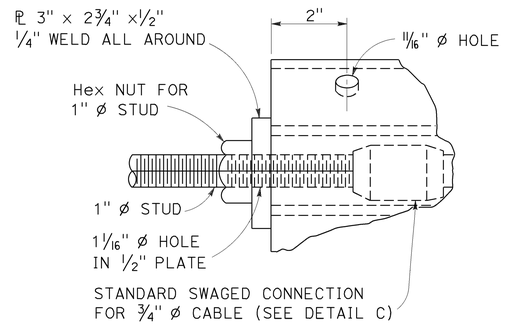

DETAIL B

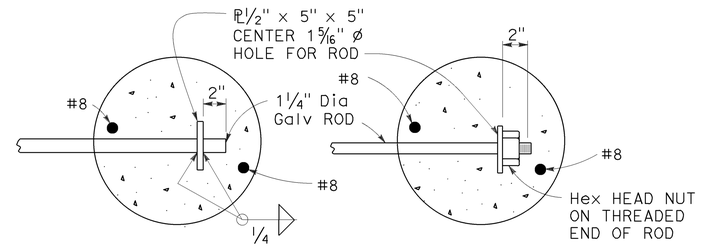

OPTIONAL ENDS ON SINGLE ANCHOR ROD
(Not to be used for double anchors)

NOTE:
Use two 1¼" Ø Galv rods with hook and eye for double MGS anchor.

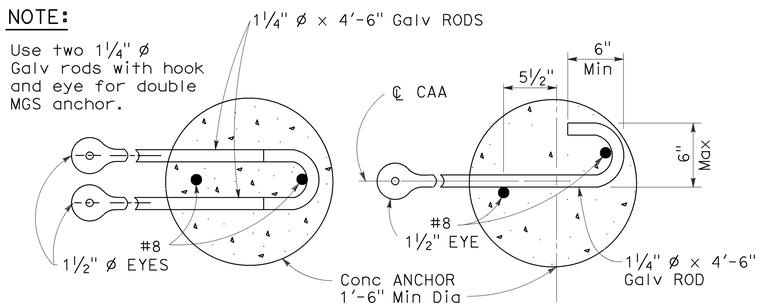

DOUBLE ANCHOR
SINGLE ANCHOR
ANCHOR RODS

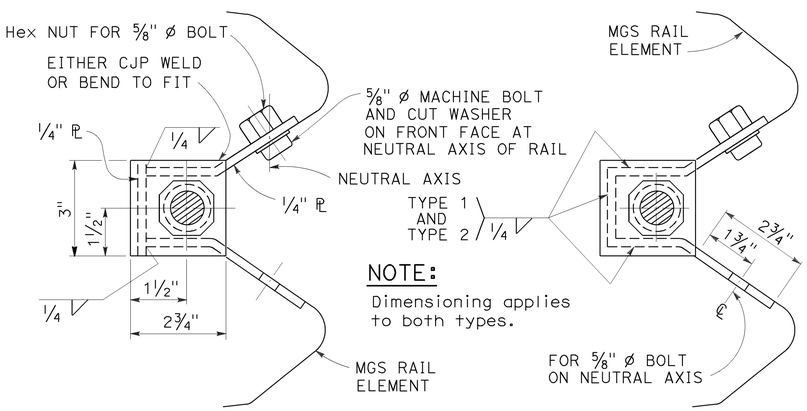

NOTE:
Dimensioning applies to both types.

SECTION A-A
(Alternative Type 1)

SECTION A-A
(Alternative Type 2)

ANCHOR PLATE DETAILS

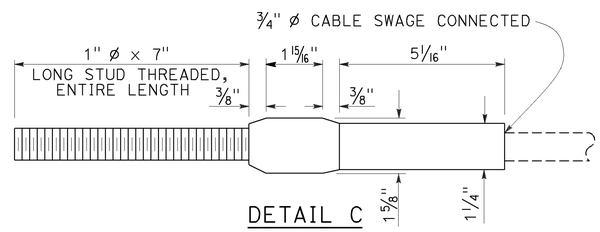

DETAIL C

ANCHOR CABLE WITH
SWAGED FITTING AND STUD

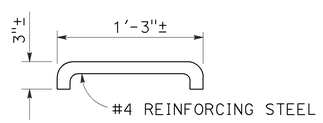

DETAIL D

STATE OF CALIFORNIA
DEPARTMENT OF TRANSPORTATION

METAL RAILING END ANCHOR ASSEMBLY (TYPE CA)

NO SCALE

RSP A77T1 DATED NOVEMBER 15, 2013 SUPERSEDES RSP A77T1 DATED JULY 19, 2013 THAT SUPPLEMENTS THE STANDARD PLANS BOOK DATED 2010.

REVISED STANDARD PLAN RSP A77T1

2010 REVISED STANDARD PLAN RSP A77T1

10-22-13

Dist	COUNTY	ROUTE	POST MILES TOTAL PROJECT	SHEET No.	TOTAL SHEETS
03	Sac	51,160	4.0/4.3, R44.4/47.0	84	117

Randell D. Hiatt
REGISTERED CIVIL ENGINEER

January 23, 2015
PLANS APPROVAL DATE

REGISTERED PROFESSIONAL ENGINEER Randell D. Hiatt No. C50200 Exp. 6-30-15 CIVIL STATE OF CALIFORNIA

THE STATE OF CALIFORNIA OR ITS OFFICERS OR AGENTS SHALL NOT BE RESPONSIBLE FOR THE ACCURACY OR COMPLETENESS OF SCANNED COPIES OF THIS PLAN SHEET.

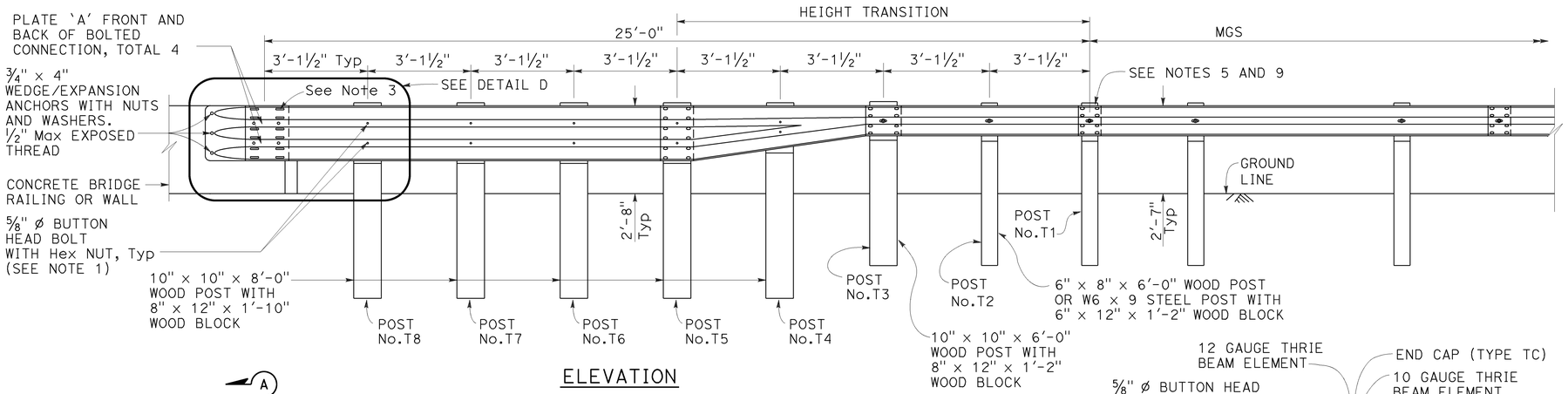

ELEVATION

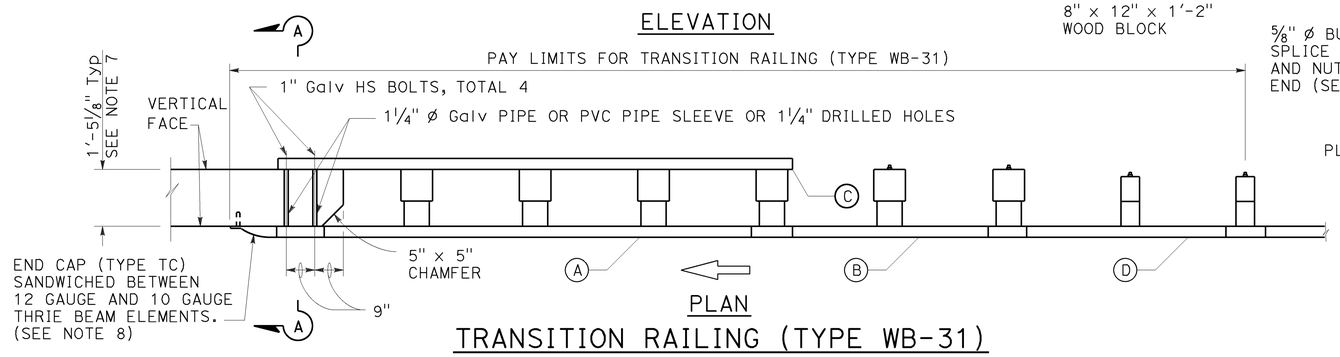

PLAN

TRANSITION RAILING (TYPE WB-31)

(No Blockout Attachment)

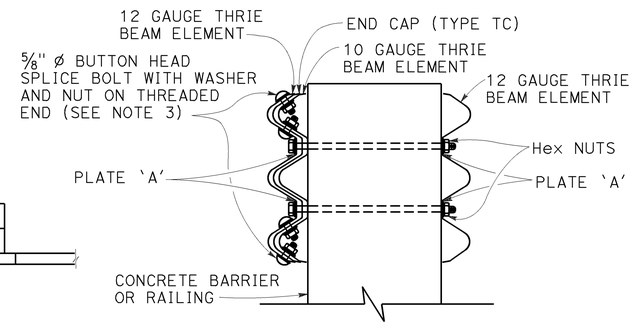

SECTION A-A

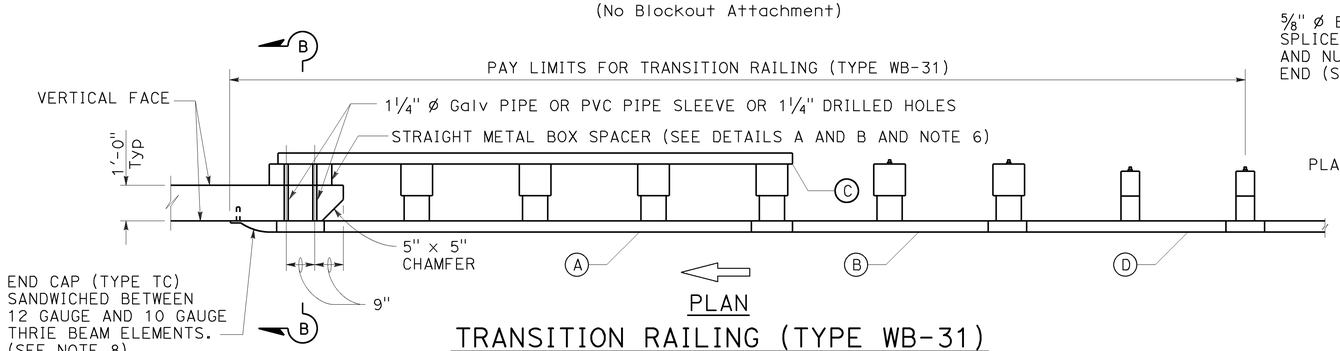

PLAN

TRANSITION RAILING (TYPE WB-31)

(Blockout Attachment)

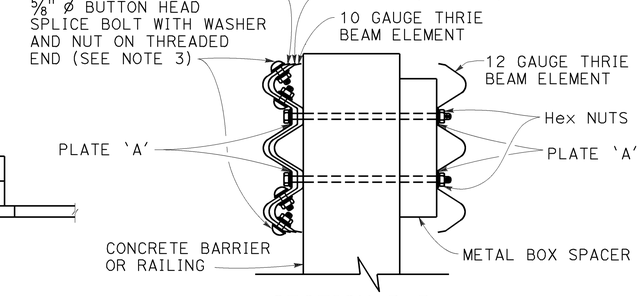

SECTION B-B

LEGEND:

- (A) NESTED THRIE BEAM ELEMENTS (ONE 12 GAUGE ELEMENT NESTED OVER ONE 10 GAUGE ELEMENT).
- (B) ONE ASYMMETRICAL 10 GAUGE "W" BEAM TO THRIE BEAM ELEMENT.
- (C) ONE 12 GAUGE THRIE BEAM ELEMENT.
- (D) ONE 10 GAUGE "W" BEAM RAIL ELEMENT (7'-3 1/2"LENGTH)

10 GAUGE = 0.138" THICK
12 GAUGE = 0.108" THICK

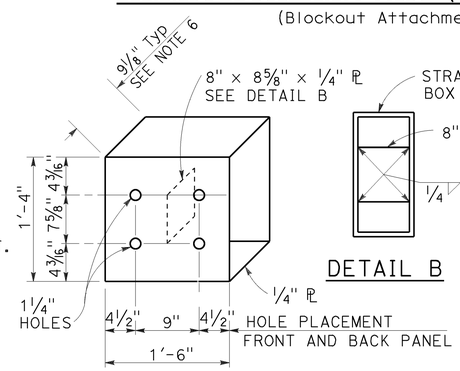

DETAIL A

STRAIGHT METAL BOX SPACER

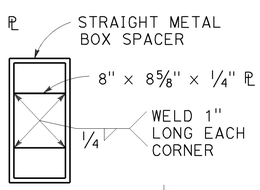

DETAIL B

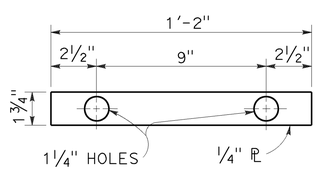

DETAIL C

PLATE 'A'

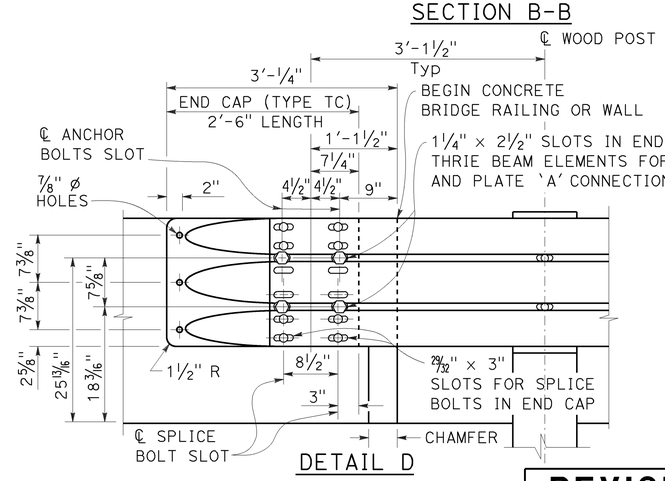

DETAIL D

NOTES:

TO ACCOMPANY PLANS DATED 5-2-16

1. Use 5/8" ø Button head bolts and hex nuts for connections to posts. No washer on rail face for bolted connections to post.
2. The nested rail elements, end cap, and 'W' beam to thrie beam element may be spliced together prior to bolting the elements to the wood post and concrete barrier or railing.
3. Exterior splice bolt holes for rail element splices at Post No. T5 and the connection to the concrete barrier or railing shall be the standard 29/32" x 1 1/8" slot size. Interior splice bolt holes at these locations may be increased up to 1 1/4" ø. Only the top 4 and the bottom 4 splice bolts with washers and nuts are required for rail splices at Post No. T5 and the connection to the concrete barrier or railing.
4. The top elevation of Posts No. T2 through No. T7 shall not project more than 1" above the top elevation of the rail element.
5. Typically, the railing connected to Transition Railing (Type WB-31) will be either standard railing section of MGS with height transition ratio of 150:1 or a Caltrans approved 31" end treatment attached to Post No. T1.
6. The depth of the metal box spacer varies from the 9 1/8" to 1 1/2" and is dependent on the width of the concrete railing or wall. The combined dimension for the depth of the metal box spacer plus the width of railing or wall is typically 21 1/8". Where the space between the backside of the concrete railing or wall and the rear thrie beam element is less than 1 1/2", metal plates similar to Plate 'A' are to be used as spacers.
7. Where the width of the concrete railing or wall is greater than 17 1/8", wood blocks are to be used to fill the space created between the backside of Posts No. T5 through No. T8 and the rear thrie beam element. These wood blocks shall be 8" in width and 1'-2" in length. The dimension between the front thrie beam element and the rear thrie beam element is to match the width of the concrete railing or wall.
8. End cap may be installed over 12 gauge and 10 gauge thrie beam elements where transition railing is installed on the departure end of bridge railing.
9. Conform standard railing section height to 31" at Post No. T1 using height transition ratio of 150:1.

STATE OF CALIFORNIA
DEPARTMENT OF TRANSPORTATION

MIDWEST GUARDRAIL SYSTEM TRANSITION RAILING (TYPE WB-31)

NO SCALE

RSP A77U4 DATED JANUARY 23, 2015 SUPERSEDES RSP A77U4 DATED NOVEMBER 15, 2013 AND RSP A77U4 DATED JULY 19, 2013 THAT SUPPLEMENTS THE STANDARD PLANS BOOK DATED 2010.

REVISED STANDARD PLAN RSP A77U4

2010 REVISED STANDARD PLAN RSP A77U4

1-8-15

Dist	COUNTY	ROUTE	POST MILES TOTAL PROJECT	SHEET No.	TOTAL SHEETS
03	Sac	51,160	4.0/4.3, R44.4/47.0	85	117

REGISTERED CIVIL ENGINEER

July 19, 2013
PLANS APPROVAL DATE

REGISTERED PROFESSIONAL ENGINEER
Michael Janzen
No. 44788
Exp. 03-31-14
CIVIL
STATE OF CALIFORNIA

THE STATE OF CALIFORNIA OR ITS OFFICERS OR AGENTS SHALL NOT BE RESPONSIBLE FOR THE ACCURACY OR COMPLETENESS OF SCANNED COPIES OF THIS PLAN SHEET.

TO ACCOMPANY PLANS DATED 5-2-16

2010 REVISED STANDARD PLAN RSP A87A

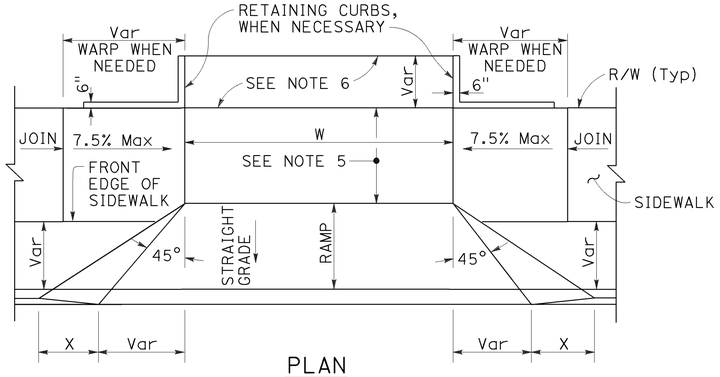

PLAN

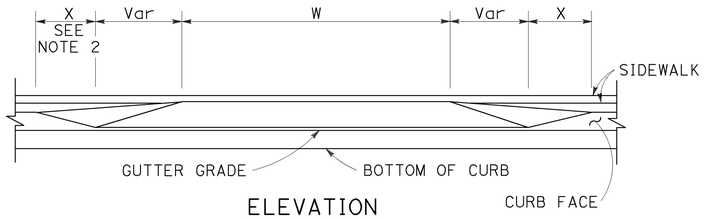

ELEVATION

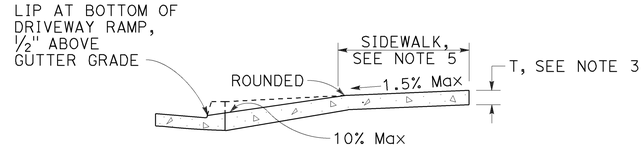

CASE A

Typical driveway, sidewalk not depressed

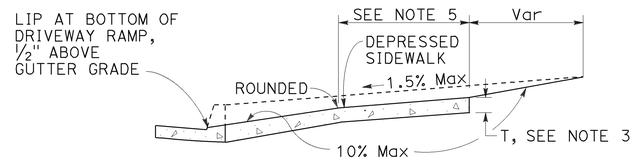

CASE B

Driveway with depressed sidewalk

SECTIONS

DRIVEWAYS

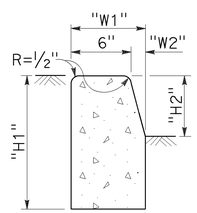

TYPE A1 CURBS

See Table A

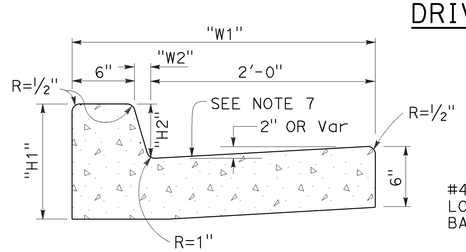

TYPE A2 CURBS

See Table A

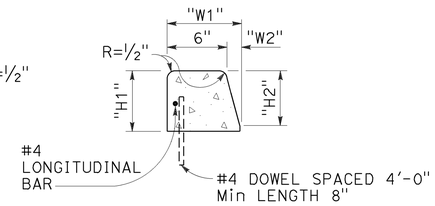

TYPE A3 CURBS

Superimposed on existing pavement
See Table A

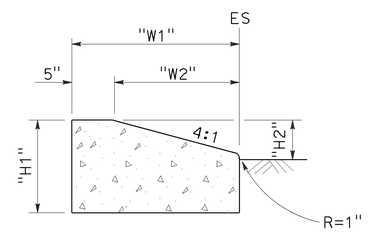

TYPE D CURBS

See Table A

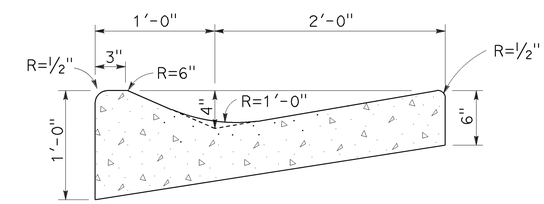

TYPE E CURB

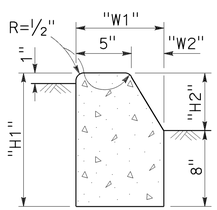

TYPE B1 CURBS

See Table A

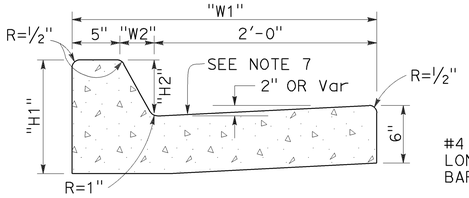

TYPE B2 CURBS

See Table A

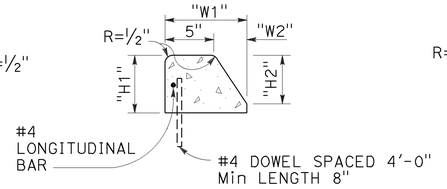

TYPE B3 CURBS

Superimposed on existing pavement
See Table A

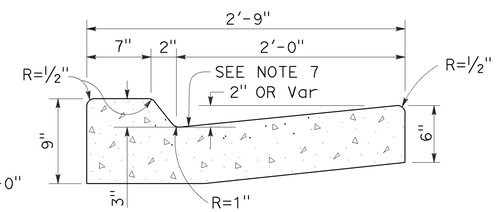

TYPE B4 CURBS

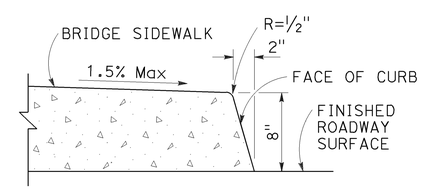

TYPE H CURB

On Bridges

CURBS

TABLE A

CURB TYPE	DIMENSIONS			
	"H1"	"H2"	"W1"	"W2"
A1-6	1'-2"	6"	7½"	1½"
A1-8	1'-4"	8"	8"	2"
A2-6	1'-0"	6"	2'-7½"	1½"
A2-8	1'-2"	8"	2'-8"	2"
A3-6	6"	5"	7¼"	1¼"
A3-8	8"	7"	7¾"	1¾"
B1-4	1'-0"	4"	7½"	2½"
B1-6	1'-2"	6"	9"	4"
B2-4	10"	4"	2'-7½"	2½"
B2-6	1'-0"	6"	2'-9"	4"
B3-4	4"	3"	7"	2"
B3-6	6"	5"	8½"	3½"
D-4	10"	4"	1'-6"	1'-1"
D-6	1'-0"	6"	2'-2"	1'-9"

CURB QUANTITIES

TYPE	CUBIC YARDS PER LINEAR FOOT
A1-6	0.02585
A1-8	0.03084
A2-6	0.05903
A2-8	0.06379
A3-6	0.01036
A3-8	0.01435
B1-4	0.02185
B1-6	0.02930
B2-4	0.05515
B2-6	0.06171
B3-4	0.00641
B3-6	0.01074
B4	0.05709
D-4	0.04083
D-6	0.06804
E	0.06661

NOTES:

1. Case A driveway section typically applies.
2. X=3'-0" except for curb heights over 10" where 4:1 slopes shall be used on curb slope.
3. Sidewalk and ramp thickness "T" at driveway shall be 4" for residental and 6" for commercial.
4. Difference in slope of the driveway ramp and the slope of a line between the gutter and a point on the roadway 5'-0" from gutter line shall not exceed 15%. Reduce driveway ramp slope, not gutter slope, where required.
5. Minimum width of clear passageway for sidewalk shall be 4'-2".
6. Retaining curbs and acquisition of construction easement may be necessary for narrow sidewalks or curb heights in excess of 6".
7. Across the pedestrian route at curb ramp locations, the gutter pan slope shall not exceed 1" of depth for each 2'-0" of width.

STATE OF CALIFORNIA
DEPARTMENT OF TRANSPORTATION

CURBS AND DRIVEWAYS

NO SCALE

RSP A87A DATED JULY 19, 2013 SUPERSEDES STANDARD PLAN A87A
DATED MAY 20, 2011 - PAGE 119 OF THE STANDARD PLANS BOOK DATED 2010.

REVISED STANDARD PLAN RSP A87A

Dist	COUNTY	ROUTE	POST MILES TOTAL PROJECT	SHEET No.	TOTAL SHEETS
03	Sac	51,160	4.0/4.3, R44.4/47.0	86	117

REGISTERED CIVIL ENGINEER

January 15, 2016
PLANS APPROVAL DATE

REGISTERED PROFESSIONAL ENGINEER
Michael Janzen
No. 44788
Exp. 3-31-16
CIVIL
STATE OF CALIFORNIA

THE STATE OF CALIFORNIA OR ITS OFFICERS OR AGENTS SHALL NOT BE RESPONSIBLE FOR THE ACCURACY OR COMPLETENESS OF SCANNED COPIES OF THIS PLAN SHEET.

TO ACCOMPANY PLANS DATED 5-2-16

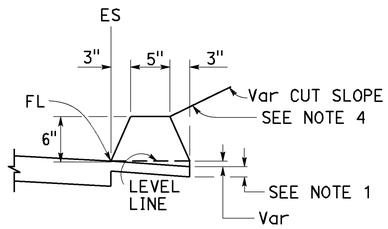

TYPE A
See Notes 3 and 5

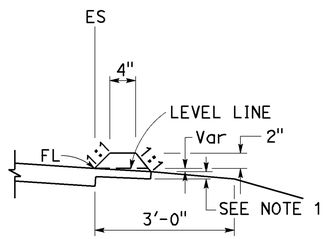

TYPE C

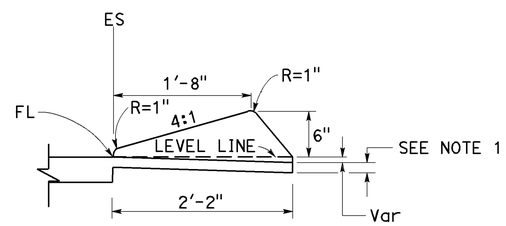

TYPE D

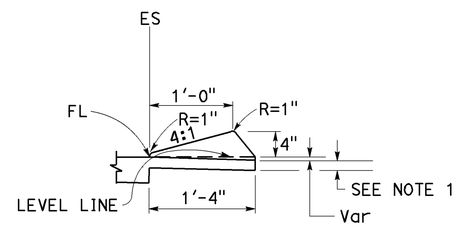

TYPE E

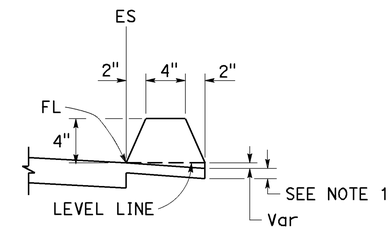

TYPE F
See Note 5

DIKES

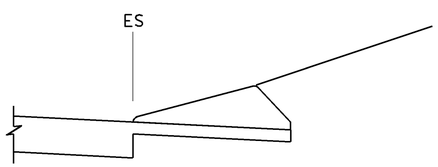

CASE C-1
Cut Slope

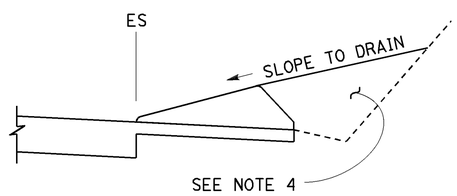

CASE C-2
Cut Slope

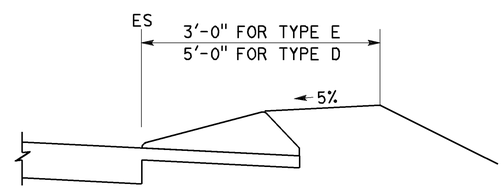

CASE F

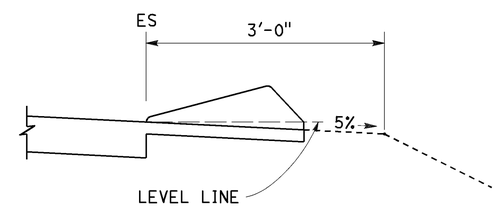

CASE R
See Note 2

TYPE D AND E BACKFILL DETAILS

NOTES:

1. For HMA shoulders only, extend top layer of HMA placed on the shoulder under dike with no joint at the ES. For projects with OGFC shoulders, do not extend OGFC under dike. See project plans for modified dike detail.
2. Case R applies to retrofit only projects where restrictive conditions do not provide enough width for Case F backfill.
3. Type A dike only to be used where restrictive slope conditions do not provide enough width to use Type D or Type E dike.
4. Fill and compact with excavated material to top of dike.
5. Use Type A or F dike, where dike is required with guardrail installations. See Revised Standard Plan RSP A77N4 for dike positioning details. See Revised Standard Plan RSP A77N3 for hinge point offsets with guardrail.

DIKE QUANTITIES

TYPE	CUBIC YARDS PER LINEAR FOOT
A	0.0135
C	0.0038
D	0.0293
E	0.0130
F	0.0066

Quantities based on 5% cross slope.

STATE OF CALIFORNIA
DEPARTMENT OF TRANSPORTATION

HOT MIX ASPHALT DIKES

NO SCALE

RSP A87B DATED JANUARY 15, 2016 SUPERSEDES RSP A87B DATED JULY 19, 2013 AND STANDARD PLAN A87B DATED MAY 20, 2011 - PAGE 120 OF THE STANDARD PLANS BOOK DATED 2010.

REVISED STANDARD PLAN RSP A87B

2010 REVISED STANDARD PLAN RSP A87B

11-17-15

Dist	COUNTY	ROUTE	POST MILES TOTAL PROJECT	SHEET No.	TOTAL SHEETS
03	Sac	51,160	4.0/4.3, R44.4/47.0	87	117

REGISTERED CIVIL ENGINEER

July 3, 2015
PLANS APPROVAL DATE

REGISTERED PROFESSIONAL ENGINEER Hector David Cordova No. C41957 Exp. 3-31-16 CIVIL STATE OF CALIFORNIA

THE STATE OF CALIFORNIA OR ITS OFFICERS OR AGENTS SHALL NOT BE RESPONSIBLE FOR THE ACCURACY OR COMPLETENESS OF SCANNED COPIES OF THIS PLAN SHEET.

TO ACCOMPANY PLANS DATED 5-2-16

2010 REVISED STANDARD PLAN RSP A88A

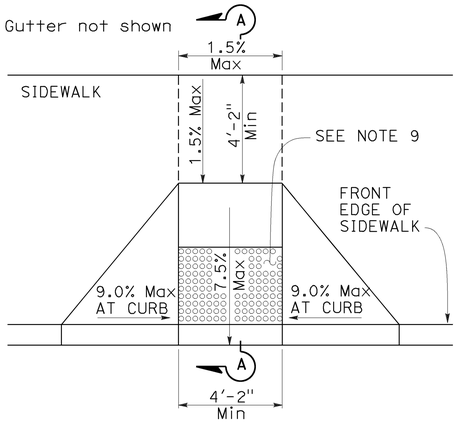

CASE A

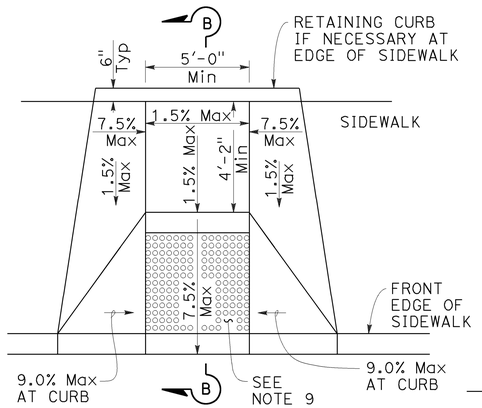

CASE B

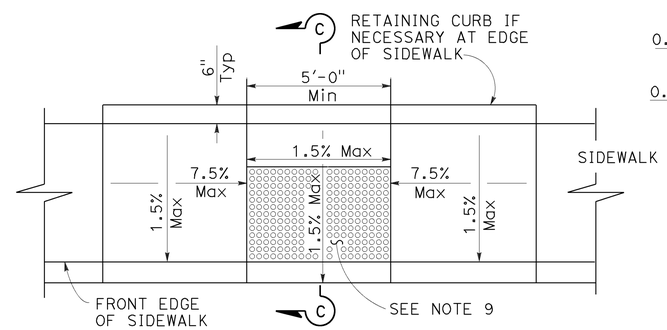

CASE C

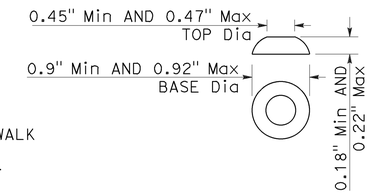

RAISED TRUNCATED DOME

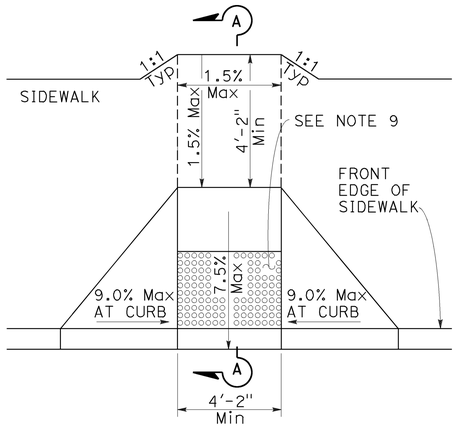

CASE D

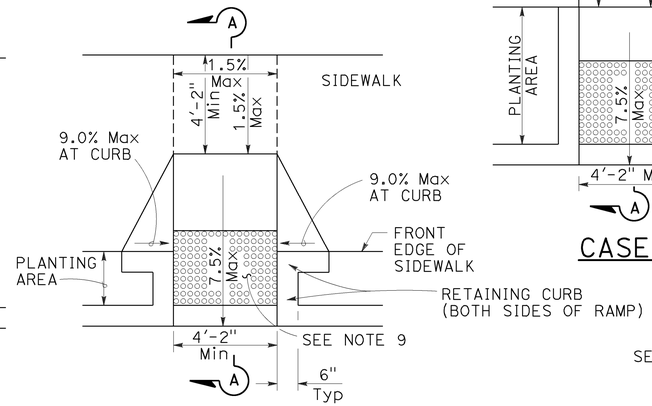

CASE E

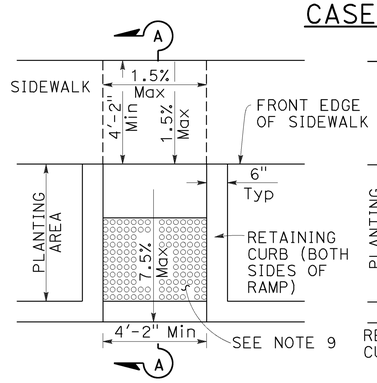

CASE F

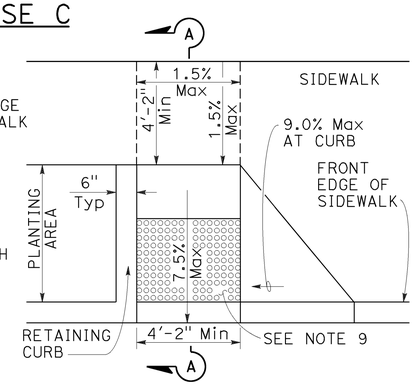

CASE G
See Note 4

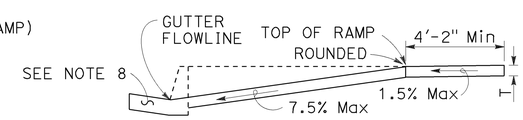

SECTION A-A

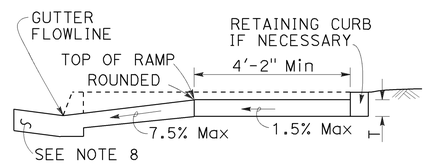

SECTION B-B
Depress entire sidewalk as required

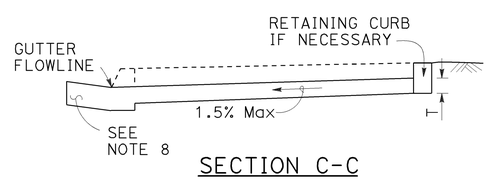

SECTION C-C

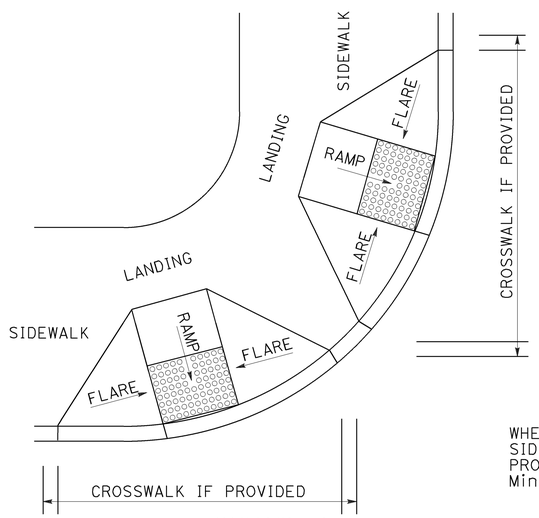

DETAIL A

TYPICAL TWO-RAMP CORNER INSTALLATION

See Note 1

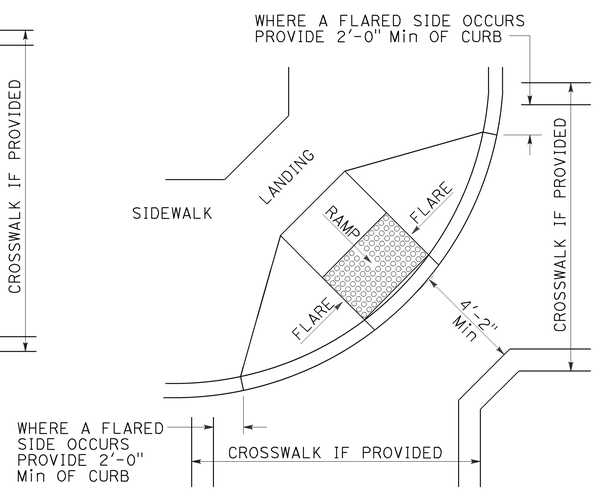

DETAIL B

TYPICAL ONE-RAMP CORNER INSTALLATION

See Notes 1 and 3

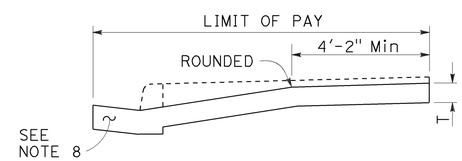

RETROFIT PAY LIMITS

Existing curb and sidewalk

NOTES:

1. As site conditions dictate, Case A through Case G curb ramps may be used for corner installations similar to those shown in Detail A and Detail B. The case of curb ramps used in Detail A do not have to be the same. Case A through Case G curb ramps also may be used at mid block locations, as site conditions dictate.
2. If distance from curb to back of sidewalk is too short to accommodate ramp and 4'-2" platform (landing) as shown in Case A, the sidewalk may be depressed longitudinally as in Case B, or C or may be widened as in Case D.
3. When ramp is located in center of curb return, crosswalk configuration must be similar to that shown for Detail B.
4. As site conditions dictate, the retaining curb side and the flared side of the Case G ramp shall be constructed in reversed position.
5. If located on a curve, the sides of the ramp need not be parallel, but the minimum width of the ramp shall be 4'-2".
6. Side slope of ramp flares vary uniformly from a maximum of 9.0% at curb to conform with longitudinal sidewalk slope adjacent to top of the ramp, except in Case C and Case F.
7. Transitions from ramps and landing to walks, gutters or streets shall be flush (no lip) and free of abrupt changes.
8. Counter slopes of adjoining gutters and road surfaces immediately adjacent to and within 24 inches of the curb ramp shall not be steeper than 1:20 (5.0%). Gutter pan slope shall not exceed 1" of depth for each 2'-0" of width.
9. Curb ramps shall have a detectable warning surface that extends the full width and 3'-0" depth of the ramp. A 4'-0" wide detectable warning surface may be used on a 4'-2" wide curb ramp. Detectable Warning Surfaces shall conform to the requirements in the Standard Specifications.
10. Sidewalk and ramp thickness, "T", shall be 3½" minimum.
11. Utility pull boxes, manholes, vaults and all other utility facilities within the boundaries of the curb ramp will be relocated or adjusted to grade by the owner prior to, or in conjunction with, curb ramp construction.
12. Detectable warning surface may have to be cut to allow removal of utility covers while maintaining full detectable warning width and depth.

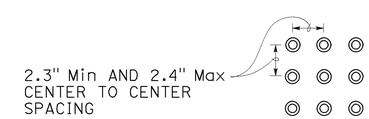

RAISED TRUNCATED DOME PATTERN (IN-LINE)

DETECTABLE WARNING SURFACE

See Note 9

STATE OF CALIFORNIA
DEPARTMENT OF TRANSPORTATION

CURB RAMP DETAILS

NO SCALE

RSP A88A DATED JULY 3, 2015 SUPERSEDES RSP A88A DATED MARCH 21, 2014 AND RSP A88A DATED JULY 19, 2013 AND STANDARD PLAN A88A DATED MAY 20, 2011 - PAGE 121 OF THE STANDARD PLANS BOOK DATED 2010.

REVISED STANDARD PLAN RSP A88A

6-30-15

Dist	COUNTY	ROUTE	POST MILES TOTAL PROJECT	SHEET No.	TOTAL SHEETS
03	Sac	51,160	4.0/4.3, R44.4/47.0	88	117

William K. Farnbach
REGISTERED CIVIL ENGINEER

July 19, 2013
PLANS APPROVAL DATE

REGISTERED PROFESSIONAL ENGINEER
William K. Farnbach
No. C49042
Exp. 9-30-14
CIVIL
STATE OF CALIFORNIA

THE STATE OF CALIFORNIA OR ITS OFFICERS OR AGENTS SHALL NOT BE RESPONSIBLE FOR THE ACCURACY OR COMPLETENESS OF SCANNED COPIES OF THIS PLAN SHEET.

TO ACCOMPANY PLANS DATED 5-2-16

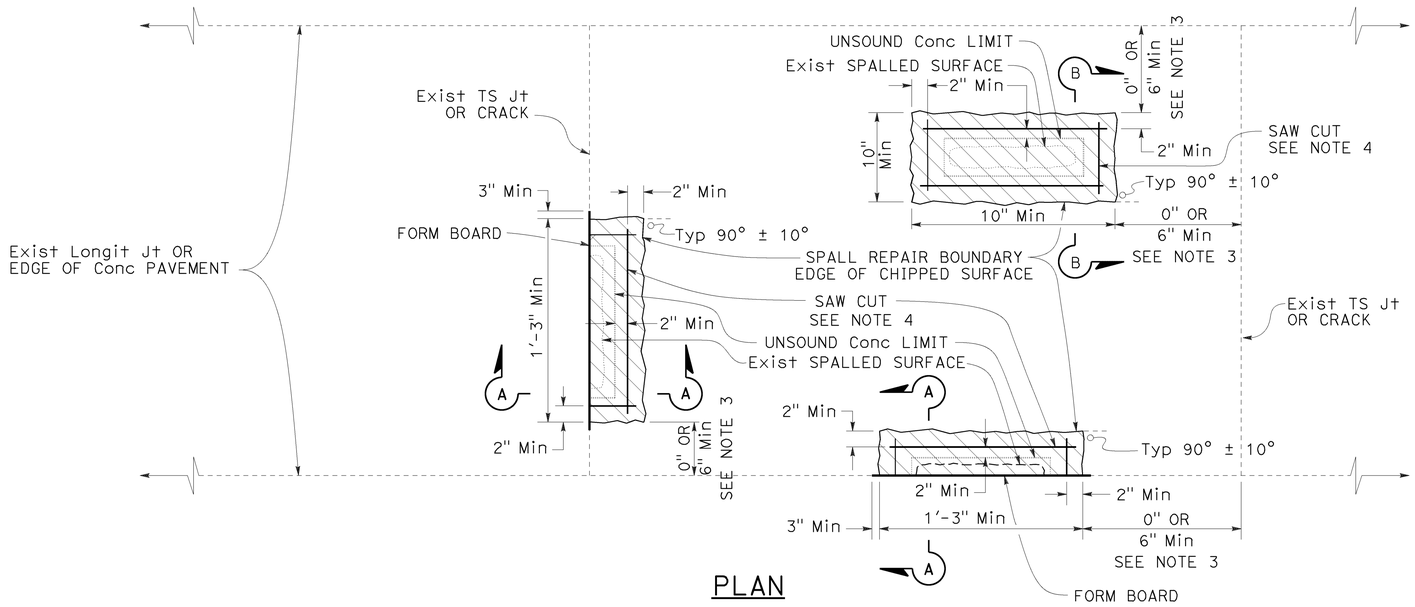

PLAN

LEGEND

SPALL REPAIR

NOTES:

1. See Project Plans for spall repair locations.
2. Combine spall repair areas closer than 2' apart.
3. If the spall repair area is less than 6" from a joint, extend the repair to the joint.
4. Cut at least 2" beyond the rectangular limits of unsound concrete determined by the Engineer. Determine the saw cut depth using the following table:

Conc MATERIAL	SAW CUT DEPTH	
	Min	Max
FAST-SETTING	2"	3½"
POLYESTER	1½"	3½"

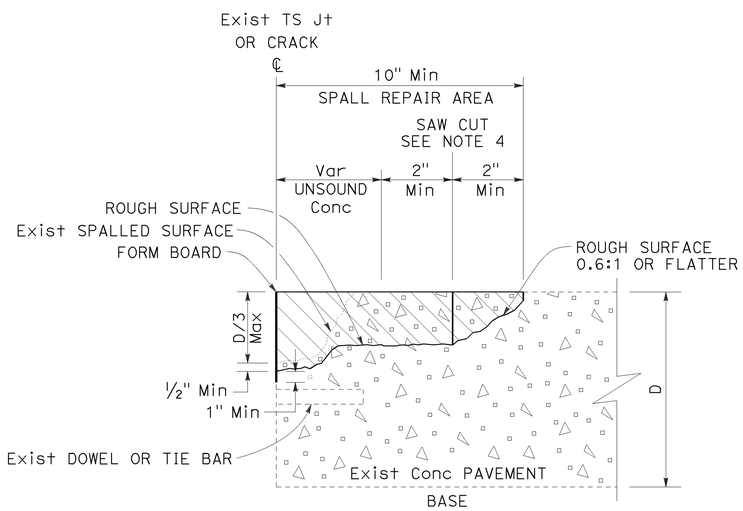

SECTION A-A

JOINT, CRACK, OR EDGE OF CONCRETE PAVEMENT REPAIR

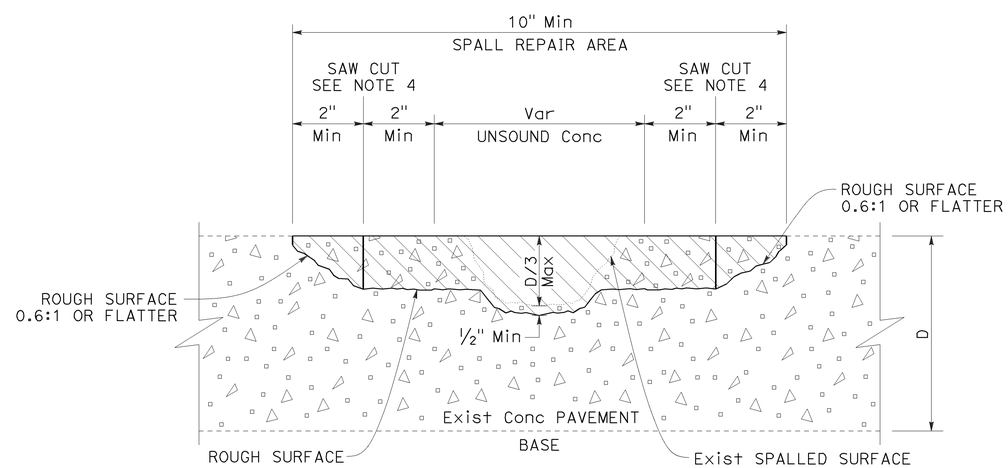

SECTION B-B

MISCELLANEOUS SPALL REPAIR

STATE OF CALIFORNIA
DEPARTMENT OF TRANSPORTATION

SPALL REPAIR

NO SCALE

RSP P6 DATED JULY 19, 2013 SUPPLEMENTS THE STANDARD PLANS BOOK DATED 2010.

REVISED STANDARD PLAN RSP P6

2010 REVISED STANDARD PLAN RSP P6

5-31-13

Dist	COUNTY	ROUTE	POST MILES TOTAL PROJECT	SHEET No.	TOTAL SHEETS
03	Sac	51,160	4.0/4.3, R44.4/47.0	89	117

William K. Farnbach
REGISTERED CIVIL ENGINEER

July 19, 2013
PLANS APPROVAL DATE

REGISTERED PROFESSIONAL ENGINEER William K. Farnbach No. C49042 Exp. 9-30-14 CIVIL STATE OF CALIFORNIA

THE STATE OF CALIFORNIA OR ITS OFFICERS OR AGENTS SHALL NOT BE RESPONSIBLE FOR THE ACCURACY OR COMPLETENESS OF SCANNED COPIES OF THIS PLAN SHEET.

TO ACCOMPANY PLANS DATED 5-2-16

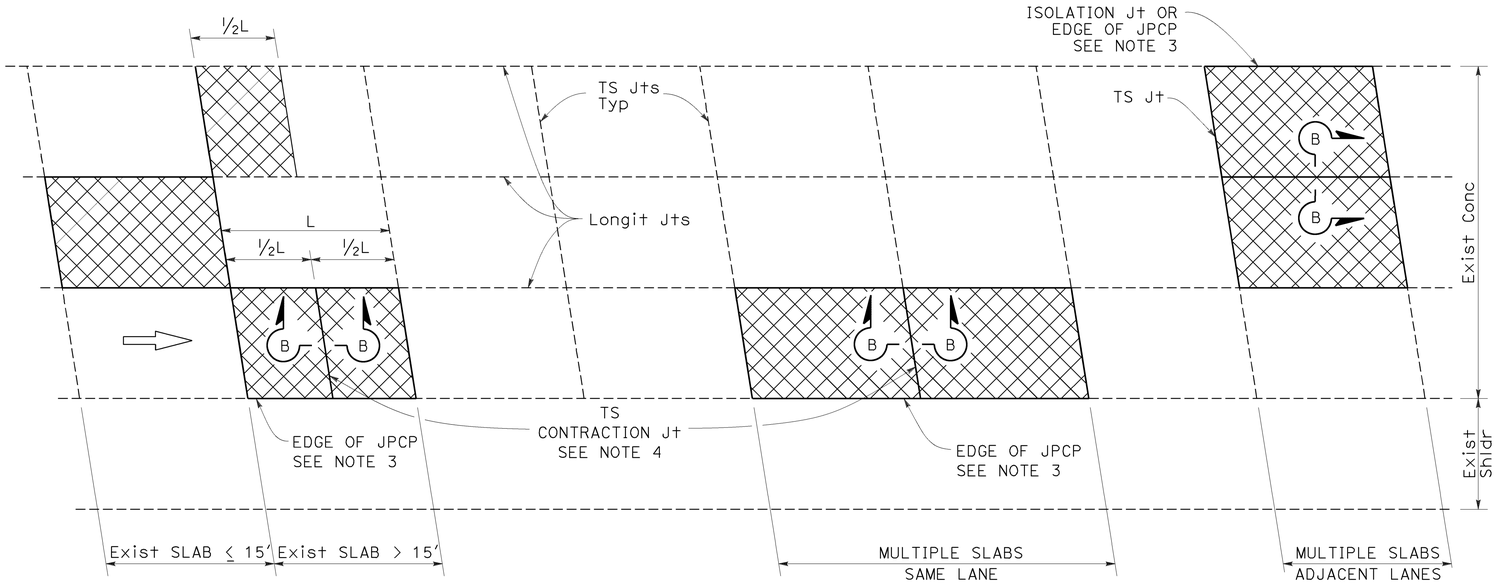

PLAN

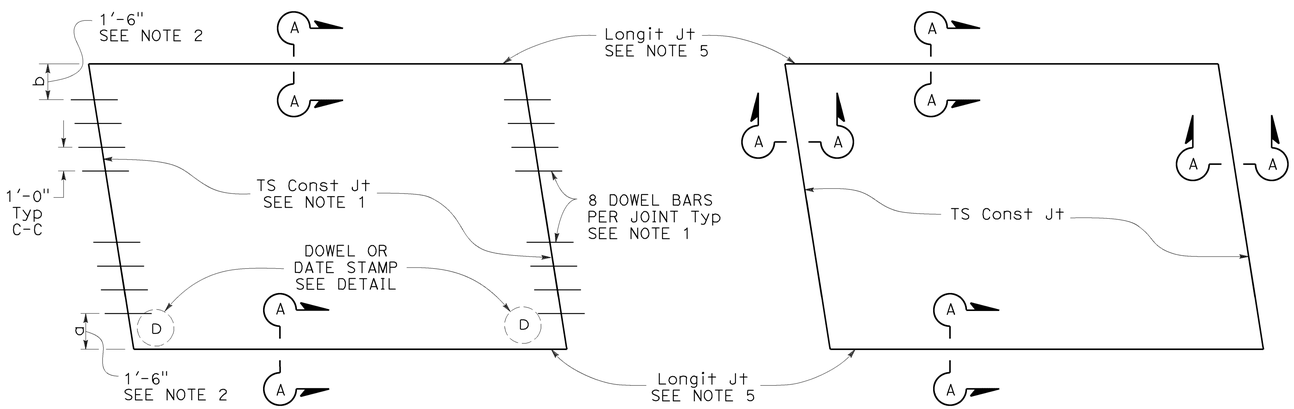

TYPE I
See Design Note 1

TYPE II
See Design Note 2

SLAB LAYOUT

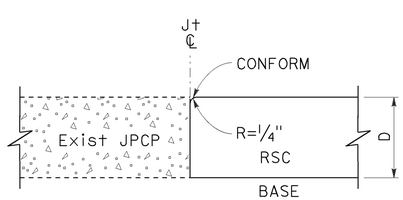

SECTION A-A

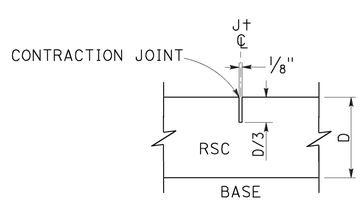

SECTION B-B

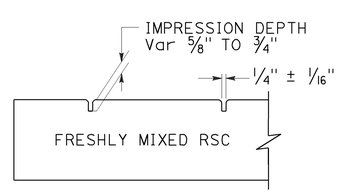

SECTION C-C

LEGEND:

RSC RAPID STRENGTH CONCRETE

INDIVIDUAL SLAB REPLACEMENT WITH RSC

NOTES:

1. For details not shown, see Revised Standard Plan RSP P10.
2. Where the existing outside shoulder is asphalt concrete pavement, "a" = 1'-0" and "b" = 2'-0".
3. Use side forms where edge of RSC pavement is adjacent to asphalt concrete.
4. Transverse contraction joint to match skew of existing joint. Omit dowel bars.
5. Do not place tie bars at longitudinal joints.

DESIGN NOTES:

1. For concrete slab repair with at least 5 years design life.
2. For short term repairs < 5 yrs design life or for slab replacements with cracking and seating.

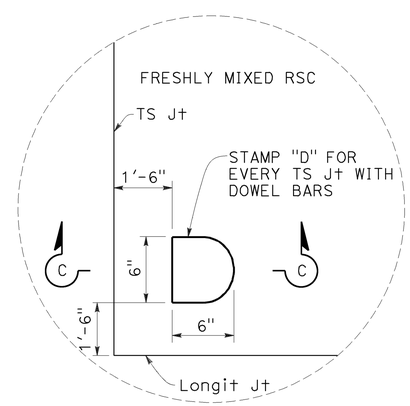

DOWEL STAMP DETAIL

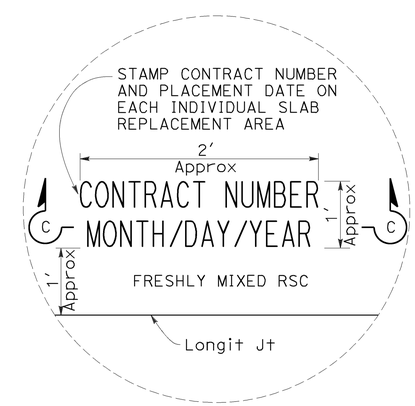

DATE STAMP DETAIL

STATE OF CALIFORNIA
DEPARTMENT OF TRANSPORTATION

INDIVIDUAL SLAB REPLACEMENT WITH RAPID STRENGTH CONCRETE

NO SCALE

RSP P8 DATED JULY 19, 2013 SUPERSEDES RSP P8 DATED APRIL 20, 2012 AND STANDARD PLAN P8 DATED MAY 20, 2011 - PAGE 130 OF THE STANDARD PLANS BOOK DATED 2010.

REVISED STANDARD PLAN RSP P8

2010 REVISED STANDARD PLAN RSP P8

5-31-13

Dist	COUNTY	ROUTE	POST MILES TOTAL PROJECT	SHEET No.	TOTAL SHEETS
03	Sac	51,160	4.0/4.3, R44.4/47.0	90	117

William K. Farnbach
REGISTERED CIVIL ENGINEER

July 19, 2013
PLANS APPROVAL DATE

REGISTERED PROFESSIONAL ENGINEER William K. Farnbach No. C49042 Exp. 9-30-14 CIVIL STATE OF CALIFORNIA

THE STATE OF CALIFORNIA OR ITS OFFICERS OR AGENTS SHALL NOT BE RESPONSIBLE FOR THE ACCURACY OR COMPLETENESS OF SCANNED COPIES OF THIS PLAN SHEET.

TO ACCOMPANY PLANS DATED 5-2-16

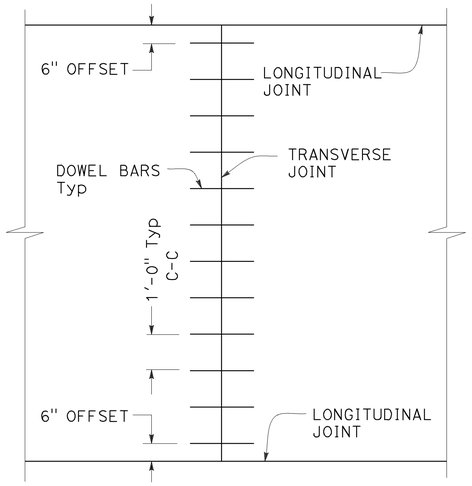

TRANSVERSE JOINT DOWEL BAR LAYOUT

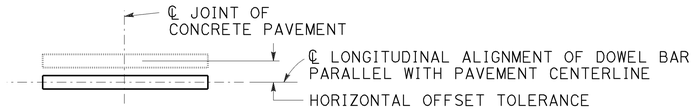

PLAN

HORIZONTAL OFFSET TOLERANCE

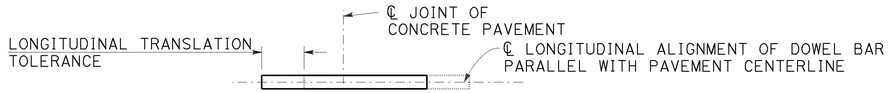

PLAN

LONGITUDINAL TRANSLATION TOLERANCE

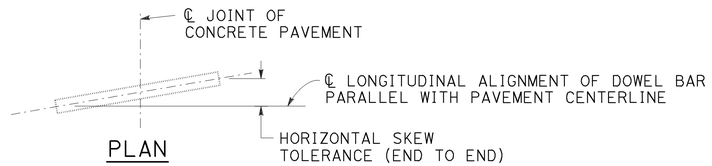

PLAN

HORIZONTAL SKEW TOLERANCE

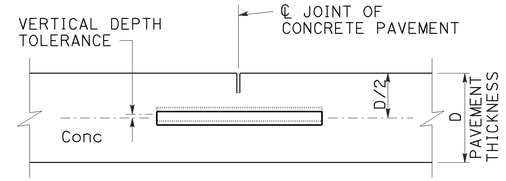

ELEVATION

VERTICAL DEPTH TOLERANCE

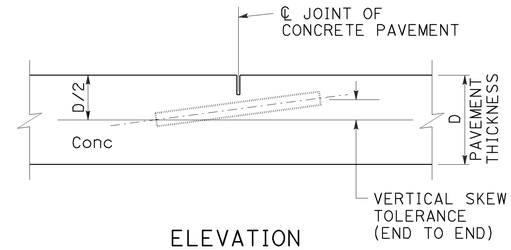

ELEVATION

VERTICAL SKEW TOLERANCE

NOTES:

1. See Revised Standard Plan RSP P1 for typical dowel bar placement and locations.
2. Where fresh concrete pavement is placed against new concrete or existing concrete pavement, rounding the corner of the existing concrete pavement is not required.
3. May also use ¾" Dia dowel bars 2'-4" ± ¼" in length. Center the length of dowel bars at the centerline of longitudinal joint.

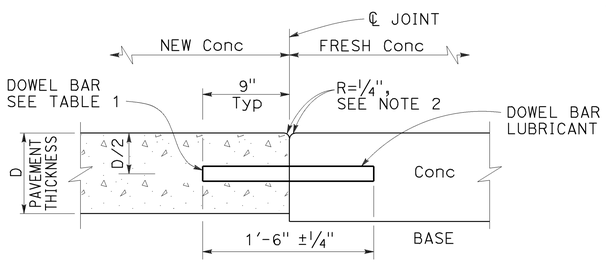

TRANSVERSE CONSTRUCTION JOINT DETAIL

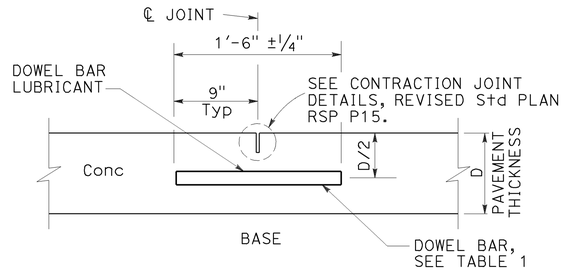

TRANSVERSE CONTRACTION JOINT

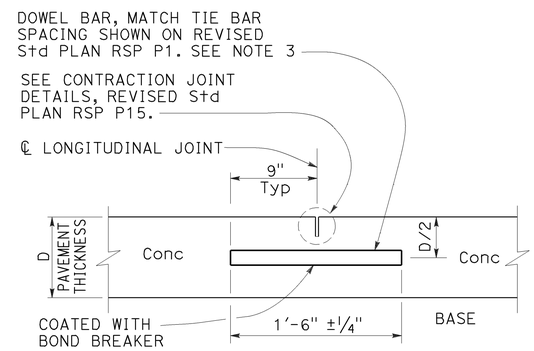

LONGITUDINAL CONTRACTION JOINT WITH DOWEL BARS

See Revised Std Plan RSP P18

TABLE 1

DOWEL BAR DIAMETER TABLE			
PAVEMENT THICKNESS	0.65'	> 0.65' - 0.85'	> 0.85'
MINIMUM DOWEL * BAR DIAMETER	1"	1¼"	1½"

* The drilled hole diameter must be ⅛" to 3/16" larger than the bar diameter.

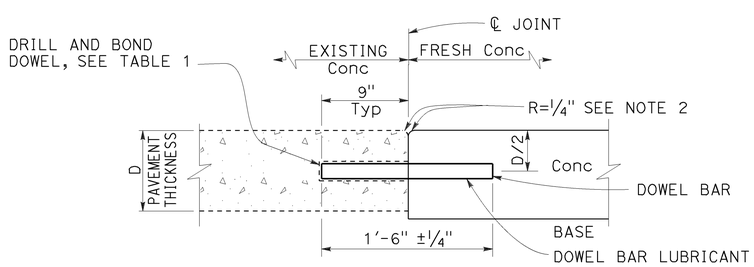

TRANSVERSE CONSTRUCTION JOINT FOR EXISTING CONCRETE PAVEMENT

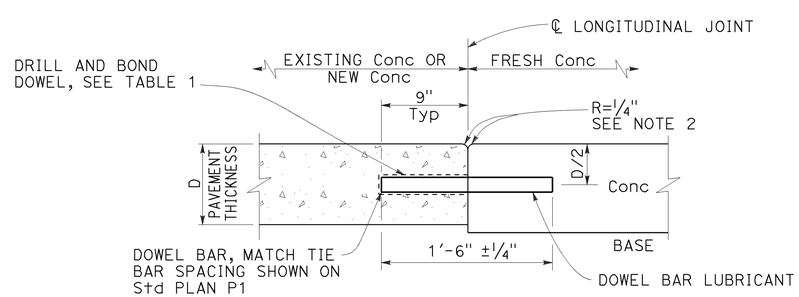

LONGITUDINAL CONSTRUCTION JOINT WITH DOWEL BARS

See Revised Std Plan RSP P18

STATE OF CALIFORNIA
DEPARTMENT OF TRANSPORTATION

CONCRETE PAVEMENT DOWEL BAR DETAILS

NO SCALE

RSP P10 DATED JULY 19, 2013 SUPERSEDES RSP P10 DATED APRIL 20, 2012 AND STANDARD PLAN P10 DATED MAY 20, 2011 - PAGE 131 OF THE STANDARD PLANS BOOK DATED 2010.

REVISED STANDARD PLAN RSP P10

2010 REVISED STANDARD PLAN RSP P10

5-31-13

Dist	COUNTY	ROUTE	POST MILES TOTAL PROJECT	SHEET No.	TOTAL SHEETS
03	Sac	51,160	4.0/4.3, R44.4/47.0	91	117

REGISTERED CIVIL ENGINEER

October 30, 2015
PLANS APPROVAL DATE

REGISTERED PROFESSIONAL ENGINEER Srikanth N. Balasubramanian No. C56426 Exp. 6-30-17 CIVIL STATE OF CALIFORNIA

THE STATE OF CALIFORNIA OR ITS OFFICERS OR AGENTS SHALL NOT BE RESPONSIBLE FOR THE ACCURACY OR COMPLETENESS OF SCANNED COPIES OF THIS PLAN SHEET.

TO ACCOMPANY PLANS DATED 5-2-16

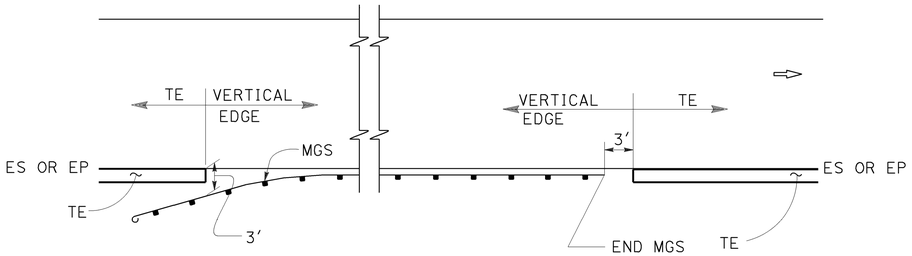

MGS

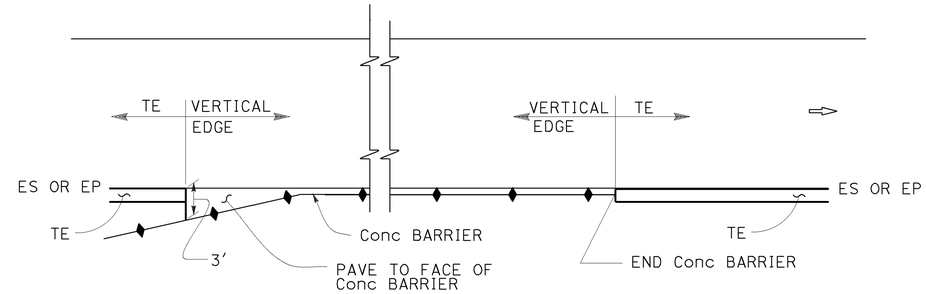

CONCRETE BARRIER

ABBREVIATIONS:

TE TAPERED EDGE

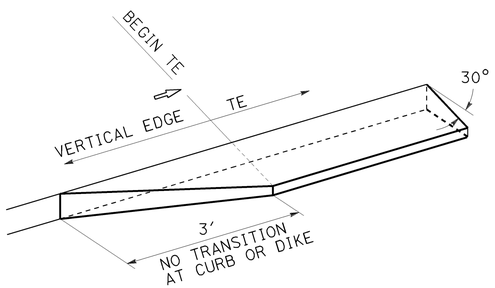

TRANSITION DETAIL FOR CONCRETE ONLY

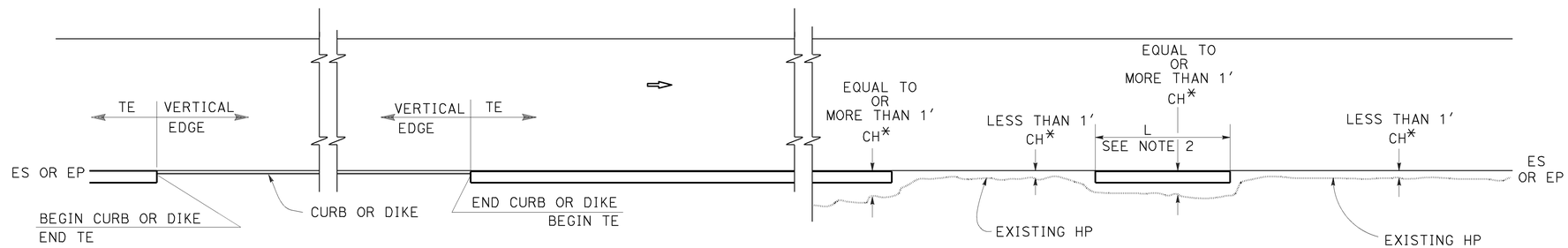

CURB OR DIKE

NARROW SIDE SLOPE

* CH = Distance from ES or EP to existing HP.

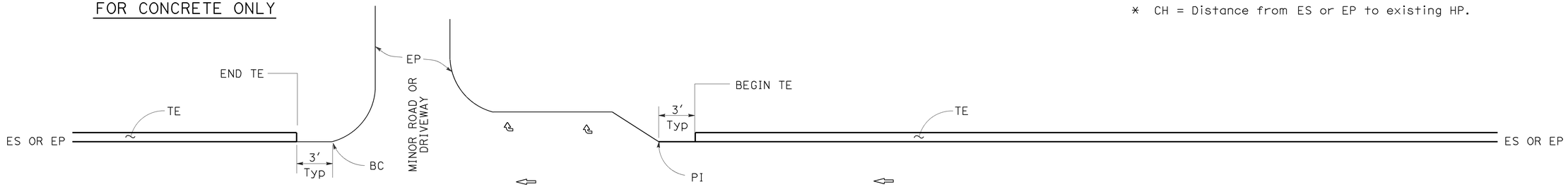

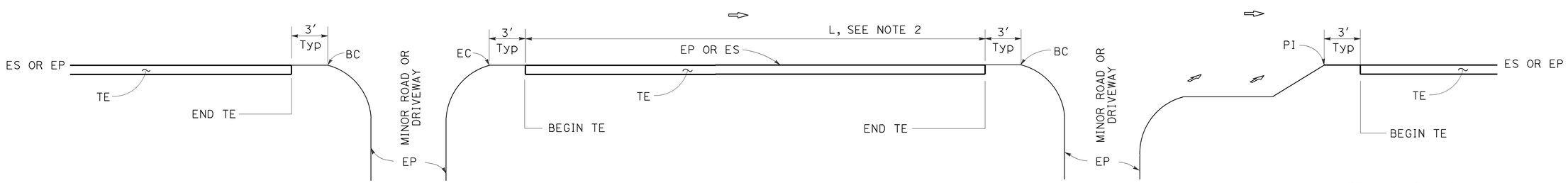

INTERTECTION

DRIVEWAY AND INTERSECTION

MINOR ROADWAY OR DRIVEWAY

STATE OF CALIFORNIA
DEPARTMENT OF TRANSPORTATION

PAVEMENT EDGE TREATMENTS

NO SCALE

NOTES:

1. For details not shown, see Revised Standard Plans RSP P75 and RSP P76.
2. Tapered edge is optional when L is less than 30′.

RSP P74 DATED OCTOBER 30, 2015 SUPERSEDES RSP P74 DATED NOVEMBER 15, 2013 AND RSP P74 DATED JANUARY 20, 2012 THAT SUPPLEMENTS THE STANDARD PLANS BOOK DATED 2010.

REVISED STANDARD PLAN RSP P74

2010 REVISED STANDARD PLAN RSP P74

10-13-15

Dist	COUNTY	ROUTE	POST MILES TOTAL PROJECT	SHEET No.	TOTAL SHEETS
03	Sac	51,160	4.0/4.3, R44.4/47.0	92	117

REGISTERED CIVIL ENGINEER

October 30, 2015
PLANS APPROVAL DATE

REGISTERED PROFESSIONAL ENGINEER Srikanth N. Balasubramanian No. C56426 Exp. 6-30-17 CIVIL STATE OF CALIFORNIA

THE STATE OF CALIFORNIA OR ITS OFFICERS OR AGENTS SHALL NOT BE RESPONSIBLE FOR THE ACCURACY OR COMPLETENESS OF SCANNED COPIES OF THIS PLAN SHEET.

TO ACCOMPANY PLANS DATED 5-2-16

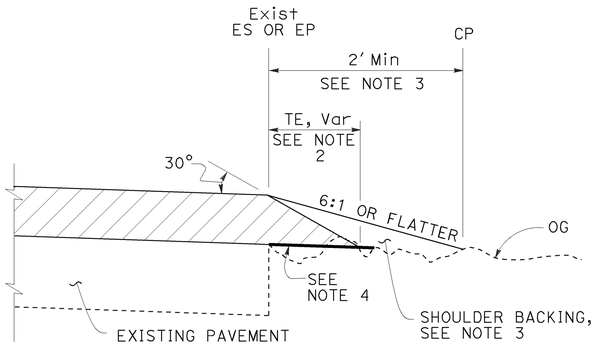

CASE A
Tapered Edge

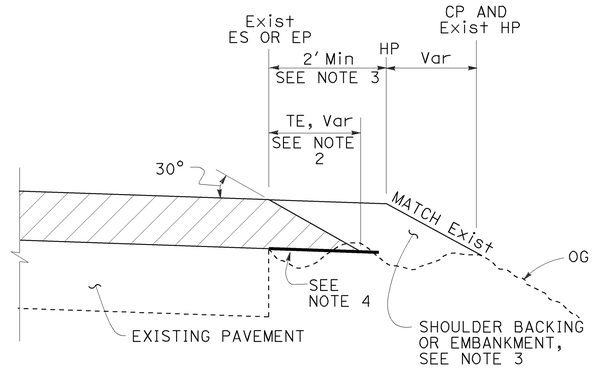

CASE B
Tapered Edge

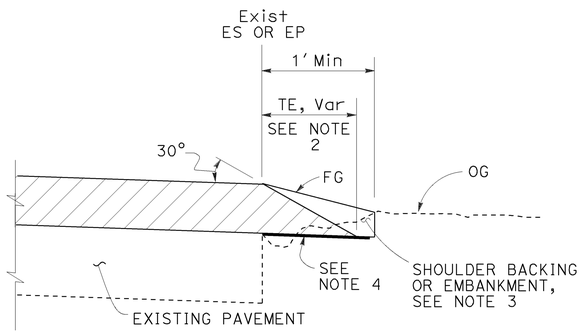

CASE C
Tapered Edge

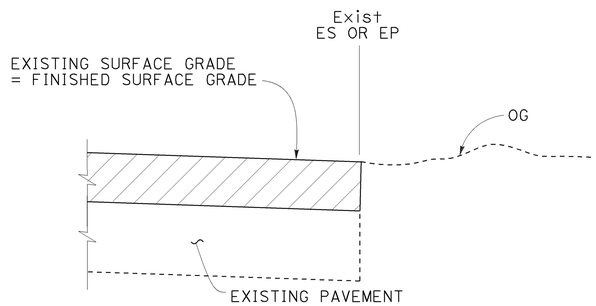

CASE D
Vertical Edge

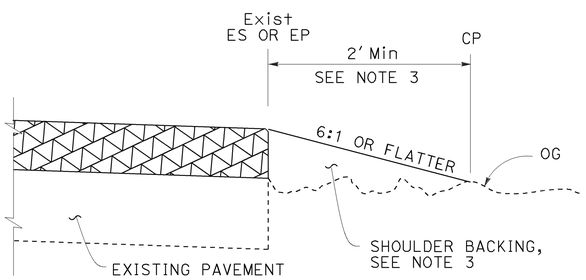

CASE E
Vertical Edge

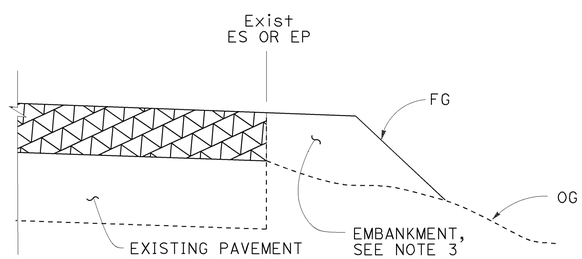

CASE F
Vertical Edge
* See Table A and Revised Std Plan RSP P74

LEGEND:

- HMA OVERLAY
- HMA OR CONCRETE OVERLAY
- CONCRETE OVERLAY

ABBREVIATIONS:

TE TAPERED EDGE
TT TOTAL THICKNESS OF TE

TABLE A
EDGE TREATMENT FOR VARIOUS OVERLAY THICKNESS AND CONDITIONS

	OVERLAY THICKNESS	
FIELD CONDITION	LESS THAN 0.15'	0.15' OR MORE
Exist SLOPE 6:1 OR FLATTER	CASE E	CASE A
Exist SLOPE 3:1 TO 6:1	CASE E	CASE B
Exist SLOPE STEEPER THAN 3:1	CASE F	CASE F
CUT SECTION (REPLACE, COLD PLANE, MILL PAVEMENT)	CASE D	CASE C

ADDITIONAL HMA OR CONCRETE QUANTITIES FOR TE/SIDE/MILE

TYPICAL CROSS SECTION	TT	TOTAL ADDITIONAL MATERIAL FOR TE/SIDE/MILE		
		HMA (TON)	CONCRETE (CY)*	CONCRETE (CY)**
TT	0.15'	7.7	NA	NA
	0.20'	13.7	NA	NA
	0.30'	30.9	NA	NA
	0.40'	54.9	NA	NA
	0.45'	69.4	NA	NA
TT 0.43'	0.50'	84.2	NA	NA
	0.60'	113.9	NA	NA
	0.70'	143.6	70.9	94.2
	0.80'	173.3	85.6	112.2
	0.90'	203.0	100.3	130.2
	1.00'	232.7	114.9	148.2
	1.10'	262.4	129.6	166.2
	1.20'	292.1	144.3	184.2

* For Detail "A"
** For Optional Detail "A"

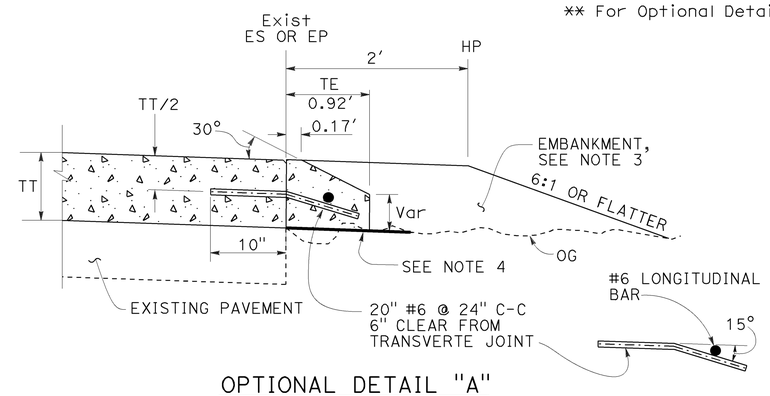

OPTIONAL DETAIL "A"
For concrete overlay
See Note 5

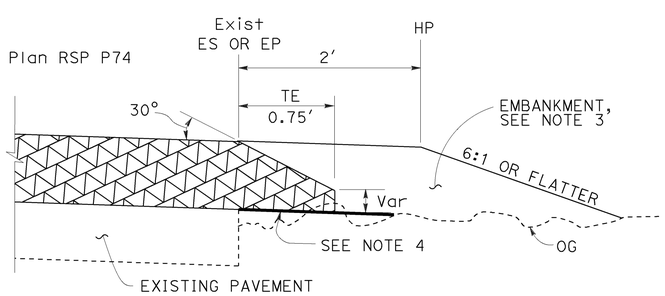

DETAIL "A"
For HMA overlay thickness more than 0.43' or concrete overlay

NOTES:

1. For limits of tapered edge and vertical edge treatments, see Revised Standard Plan RSP P74.
2. Details shown for HMA overlay thickness less than 0.43'. See Detail "A" for HMA overlay thickness more than 0.43' or concrete overlay.
3. For locations and limits of shoulder backing or embankment see project plans.
4. Grade existing ground to place tapered edge. 1' minimum width
5. Tapered edge transverse joint must match overlay transverse joint. End of #6 longitudinal bar must be 2" ±½" clear from transverse joint.
6. Tapered edge is not needed in the area of MGS, barrier, right turn lane and acceleration lane. See Revised Standard Plan RSP P74.

STATE OF CALIFORNIA
DEPARTMENT OF TRANSPORTATION

PAVEMENT EDGE TREATMENTS-OVERLAYS

NO SCALE

RSP P75 DATED OCTOBER 30, 2015 SUPERSEDES RSP P75 DATED NOVEMBER 15, 2013 AND RSP P75 DATED JANUARY 20, 2012 THAT SUPPLEMENTS THE STANDARD PLANS BOOK DATED 2010.

REVISED STANDARD PLAN RSP P75

2010 REVISED STANDARD PLAN RSP P75

7-2-15

Dist	COUNTY	ROUTE	POST MILES TOTAL PROJECT	SHEET No.	TOTAL SHEETS
03	Sac	51,160	4.0/4.3, R44.4/47.0	93	117

REGISTERED CIVIL ENGINEER

October 30, 2015
PLANS APPROVAL DATE

REGISTERED PROFESSIONAL ENGINEER Bruce D. Swanger No. C61257 Exp. 6-30-17 CIVIL STATE OF CALIFORNIA

THE STATE OF CALIFORNIA OR ITS OFFICERS OR AGENTS SHALL NOT BE RESPONSIBLE FOR THE ACCURACY OR COMPLETENESS OF SCANNED COPIES OF THIS PLAN SHEET.

TO ACCOMPANY PLANS DATED 5-2-16

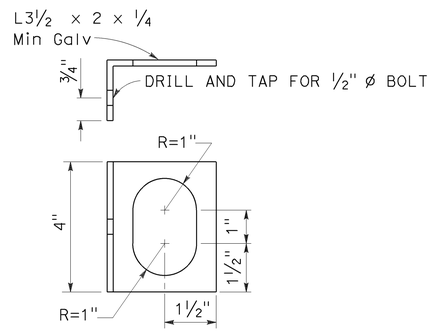

ALTERNATIVE CLIP BRACKET DETAIL

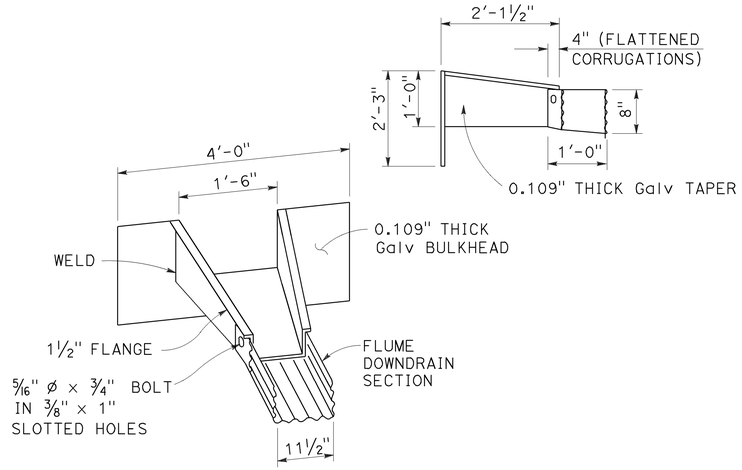

TAPERED INLET

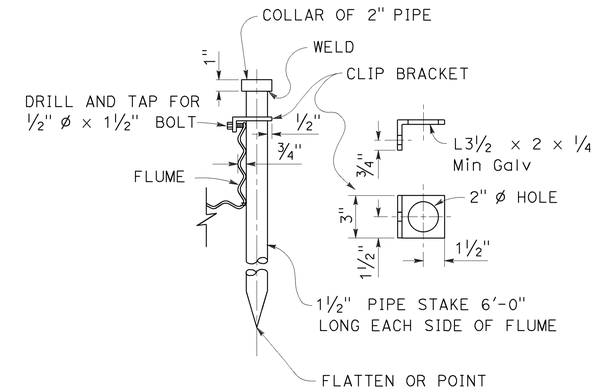

PIPE STAKE ANCHOR DETAIL

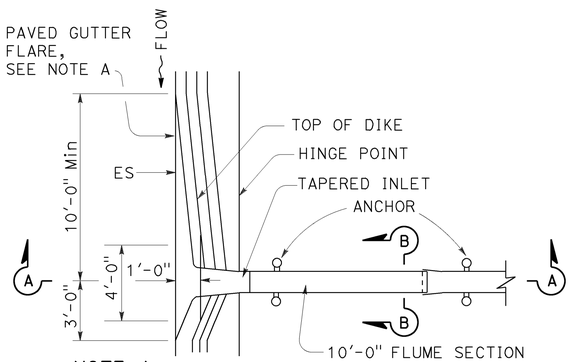

NOTE A

In sag location, use 10'-0" length of paved gutter flare on both sides of inlet.

PLAN

TAPERED INLET AND FLUME DOWNDRAIN

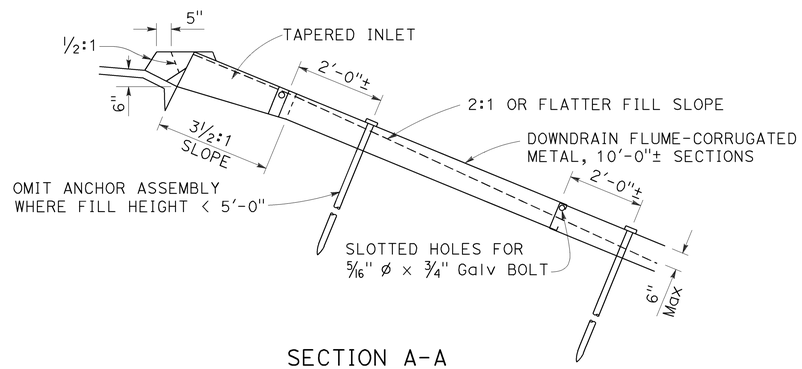

SECTION A-A

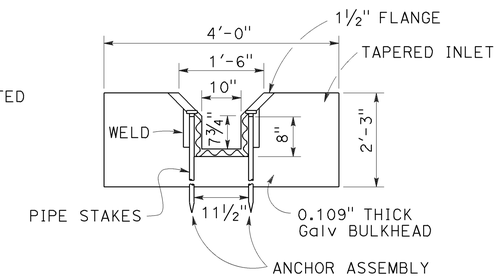

SECTION B-B

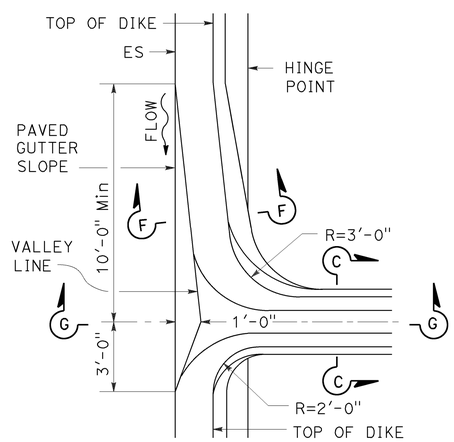

PLAN

MOUNTABLE DIKE

HOT MIX ASPHALT OVERSIDE DRAINS

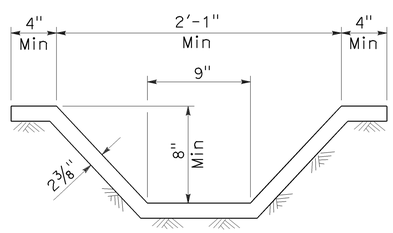

SECTION C-C

See Note 1

NOTE:

1. Cross section of slope ditch may be semicircular, vee or trapezoidal.

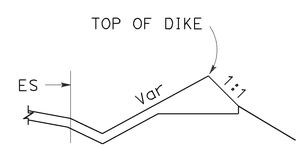

SECTION F-F

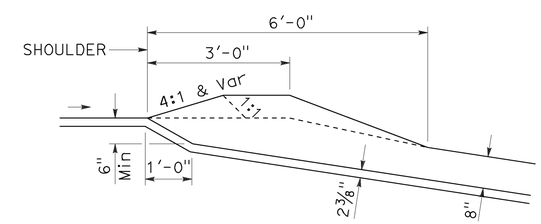

SECTION G-G

STATE OF CALIFORNIA
DEPARTMENT OF TRANSPORTATION

OVERSIDE DRAINS

NO SCALE

RSP D87D DATED OCTOBER 30, 2015 SUPERSEDES STANDARD PLAN D87D DATED MAY 20, 2011 - PAGE 185 OF THE STANDARD PLANS BOOK DATED 2010.

REVISED STANDARD PLAN RSP D87D

2010 REVISED STANDARD PLAN RSP D87D

9-28-15

Dist	COUNTY	ROUTE	POST MILES TOTAL PROJECT	SHEET No.	TOTAL SHEETS
03	Sac	51,160	4.0/4.3, R44.4/47.0	94	117

Gregory A. Balzer
LICENSED LANDSCAPE ARCHITECT

July 19, 2013
PLANS APPROVAL DATE

THE STATE OF CALIFORNIA OR ITS OFFICERS OR AGENTS SHALL NOT BE RESPONSIBLE FOR THE ACCURACY OR COMPLETENESS OF SCANNED COPIES OF THIS PLAN SHEET.

LICENSED LANDSCAPE ARCHITECT — Gregory A. Balzer 2576 — 02-28-14 Renewal Date — 7-19-13 Date — STATE OF CALIFORNIA

TO ACCOMPANY PLANS DATED 5-2-16

A

AB	AGGREGATE BASE
ABS	ACRYLONITRILE-BUTADIENE-STYRENE
AC	ASPHALT CONCRETE
ACC	ARMOR-CLAD CONDUCTORS
Adj	ADJACENT/ADJUSTABLE
AIC	AUXILIARY IRRIGATION CONTROLLER
Alt	ALTERNATIVE
AMEND	AMENDMENT
ARV	AIR RELEASE VALVE
AUTO	AUTOMATIC
AUX	AUXILIARY
AVB	ATMOSPHERIC VACUUM BREAKER

B

B&B	BALLED AND BURLAPPED
B/B	BRASS/BRONZE
B/B/PL	BRASS/BRONZE/PLASTIC
B/PL	BRASS/PLASTIC
BFM	BONDED FIBER MATRIX
Bit Ctd	BITUMINOUS COATED
BP	BOOSTER PUMP
BPA	BACKFLOW PREVENTER ASSEMBLY
BPE	BACKFLOW PREVENTER ENCLOSURE
BV	BALL VALVE

C

C	CONDUIT
CAP	CORRUGATED ALUMINUM PIPE
CARV	COMBINATION AIR RELEASE VALVE
CB	COUPLING BAND
CCA	CAM COUPLER ASSEMBLY
CEC	CONTROLLER ENCLOSURE CABINET
CHDPE	CORRUGATED HIGH DENSITY POLYETHYLENE
CL	CHAIN LINK
CNC	CONTROL AND NEUTRAL CONDUCTORS
Conc	CONCRETE
CP	COPPER PIPE
CS	COMPOST SOCK
CSP	CORRUGATED STEEL PIPE
CST	CENTER STRIP
CV	CHECK VALVE

D

Dia	DIAMETER
DIP	DUCTILE IRON PIPE
DIT	DRIP IRRIGATION TUBING
DG	DECOMPOSED GRANITE
DN	DIAMETER NOMINAL
DVA	DRIP VALVE ASSEMBLY

E

EC	EROSION CONTROL
ECTC	EROSION CONTROL TECHNOLOGY COUNCIL
Elect	ELECTRIC/ELECTRICAL
Elev	ELEVATION
ELL	ELBOW
ENCL	ENCLOSURE
EP	EDGE OF PAVEMENT
ES	EDGE OF SHOULDER
EST	END STRIP
ESTB	ESTABLISHMENT
ETW	EDGE OF TRAVELED WAY

F

F	FULL CIRCLE
F/P	FULL/PART CIRCLE
FCV	FLOW CONTROL VALVE
FERT	FERTILIZER
FG	FINISHED GRADE
FH	FLEXIBLE HOSE
FIPT	FEMALE IRON PIPE THREAD
FIS	FERTILIZER INJECTOR SYSTEM
FL	FLOW LINE
FR	FIBER ROLL
FS	FLOW SENSOR
FSC	FLOW SENSOR CABLE
FV	FLUSH VALVE

G

Galv	GALVANIZED
GARV	GARDEN VALVE
GARVA	GARDEN VALVE ASSEMBLY
GM	GRAVEL MULCH
GPH	GALLONS PER HOUR
GPM	GALLONS PER MINUTE
GSP	GALVANIZED STEEL PIPE
GV	GATE VALVE

H

H	HALF CIRCLE
HDPE	HIGH DENSITY POLYETHYLENE
HP	HORSEPOWER/HINGE POINT
HPL	HIGH PRESSURE LINE
Hwy	HIGHWAY

I

IC	IRRIGATION CONTROLLER
ICC	IRRIGATION CONTROLLER(S) IN CONTROLLER ENCLOSURE CABINET
ID	INSIDE DIAMETER
IFS	IRRIGATION FILTRATION SYSTEM
IPS	IRON PIPE SIZE
IPT	IRON PIPE THREAD
Irr	IRRIGATION

L

L	LENGTH

M

Max	MAXIMUM
MBGR	METAL BEAM GUARD RAILING
MCV	MANUAL CONTROL VALVE
MIC	MASTER IRRIGATION CONTROLLER
Min	MINIMUM
MIPT	MALE IRON PIPE THREAD
Misc	MISCELLANEOUS
Mtl	MATERIAL
MVP	MAINTENANCE VEHICLE PULLOUT

N

NCN	NO COMMON NAME
NL	NOZZLE LINE
No.	NUMBER
NPT	NATIONAL PIPE THREAD

O

O/C	ON CENTER
OD	OUTSIDE DIAMETER
OL	OVERLAP

P

P	PART CIRCLE
PB	PULL BOX
PCC	PORTLAND CEMENT CONCRETE
PE	POLYETHYLENE
Pkt	PACKET
PL	PLASTIC
PLS	PURE LIVE SEED
PLT	PLANT/PLANTING
PLT ESTB	PLANT ESTABLISHMENT
PM	POST MILE
PR	PRESSURE RATED
PRLV	PRESSURE RELIEF VALVE
PRV	PRESSURE REGULATING VALVE
PVC	POLYVINYL CHLORIDE
Pvmt	PAVEMENT

Q

Q	QUARTER CIRCLE
QCV	QUICK COUPLING VALVE

NOTE:

For additional abbreviations, see Standard Plans A10A and A10B.

R

R	RADIUS
RCP	REINFORCED CONCRETE PIPE
RCV	REMOTE CONTROL VALVE
RCVM	REMOTE CONTROL VALVE (MASTER)
RCVMF	REMOTE CONTROL VALVE (MASTER) W/FLOW SENSOR
RCVP	REMOTE CONTROL VALVE W/PRESSURE REGULATOR
RCW	RECYCLED WATER
RECP	ROLLED EROSION CONTROL PRODUCT
REQ	REQUIRED
RICS	REMOTE IRRIGATION CONTROL SYSTEM
R/W	RIGHT OF WAY

S

S	SLIP
SCH	SCHEDULE
SF	STATE-FURNISHED
Shld	SHOULDER
Sq	SQUARE
SST	SIDE STRIP
Sta	STATION
Std	STANDARD
SW	SIDEWALK/SOUND WALL

T

T	THIRD CIRCLE/THREAD
TLS	TRUCK LOADING STANDPIPE
TQ	THREE QUARTER CIRCLE
TRM	TURF REINFORCEMENT MAT
TT	TWO-THIRDS CIRCLE
TWSA	TREE WELL SPRINKLER ASSEMBLY
Typ	TYPICAL

U

UG	UNDERGROUND

W

W	WIDTH
W/	WITH
WM	WATER METER
WS	WYE STRAINER
WSA	WYE STRAINER ASSEMBLY
WSP	WELDED STEEL PIPE
WWM	WELDED WIRE MESH

STATE OF CALIFORNIA
DEPARTMENT OF TRANSPORTATION

LANDSCAPE AND EROSION CONTROL ABBREVIATIONS

NO SCALE

RSP H1 DATED JULY 19, 2013 SUPERSEDES STANDARD PLAN H1
DATED MAY 20, 2011 - PAGE 218 OF THE STANDARD PLANS BOOK DATED 2010.

REVISED STANDARD PLAN RSP H1

2010 REVISED STANDARD PLAN RSP H1

6-28-13

Dist	COUNTY	ROUTE	POST MILES TOTAL PROJECT	SHEET No.	TOTAL SHEETS
03	Sac	51,160	4.0/4.3, R44.4/47.0	95	117

LICENSED LANDSCAPE ARCHITECT

November 15, 2013
PLANS APPROVAL DATE

Gregory A. Balzer 2576 LICENSED LANDSCAPE ARCHITECT STATE OF CALIFORNIA
02-28-15 (Expires) Date
11-15-13 Date

THE STATE OF CALIFORNIA OR ITS OFFICERS OR AGENTS SHALL NOT BE RESPONSIBLE FOR THE ACCURACY OR COMPLETENESS OF SCANNED COPIES OF THIS PLAN SHEET.

TO ACCOMPANY PLANS DATED 5-2-16

2010 REVISED STANDARD PLAN RSP H2

EXISTING	NEW	ITEM DESCRIPTION
		WATER METER (WM)
		BACKFLOW PREVENTER ASSEMBLY (BPA)
		BACKFLOW PREVENTER ENCLOSURE (BPE)
		BOOSTER PUMP (BP)
		TRUCK LOADING STANDPIPE (TLS)
	FS	FLOW SENSOR (FS)
		MASTER IRRIGATION CONTROLLER (MIC)
		AUXILIARY IRRIGATION CONTROLLER (AIC)
		IRRIGATION CONTROLLER (IC) IRRIGATION CONTROLLER (IC) (BATTERY) IRRIGATION CONTROLLER (IC) (SOLAR) IRRIGATION CONTROLLER (IC) (TWO WIRE) IRRIGATION CONTROLLER(S) IN CONTROLLER ENCLOSURE CABINET (ICC)
acc	ACC	ARMOR-CLAD CONDUCTORS (ACC)
cnc	CNC	CONTROL AND NEUTRAL CONDUCTORS (CNC)
		IRRIGATION CONDUIT
		EXTEND IRRIGATION CONDUIT
dip	DIP	DUCTILE IRON PIPE (SUPPLY LINE) (MAIN) (DIP)
		GALVANIZED STEEL PIPE (SUPPLY LINE) (MAIN) (GSP)
		GALVANIZED STEEL PIPE (SUPPLY LINE) (LATERAL) (GSP)
		PLASTIC PIPE (SUPPLY LINE) (MAIN)
		PLASTIC PIPE (SUPPLY LINE) (LATERAL)
cp	CP	COPPER PIPE (SUPPLY LINE)
dit	DIT	DRIP IRRIGATION TUBING
		REMOTE CONTROL VALVE (RCV) REMOTE CONTROL VALVE (MASTER) (RCVM) REMOTE CONTROL VALVE (MASTER) W/FLOW METER (RCVMF)
P	P	REMOTE CONTROL VALVE W/PRESSURE REGULATOR (RCVP)
		EXISTING MANUAL CONTROL VALVE (MCV)
V	V	DRIP VALVE ASSEMBLY (DVA)
Y	Y	WYE STRAINER ASSEMBLY (WSA)

EXISTING	NEW	ITEM DESCRIPTION
		GATE VALVE (GV)
		BALL VALVE (BV)
		QUICK COUPLING VALVE (QCV)
		CAM COUPLER ASSEMBLY (CCA)
		GARDEN VALVE ASSEMBLY (GARVA)
		PRESSURE REGULATING VALVE (PRV)
		PRESSURE RELIEF VALVE (PRLV)
		FLOW CONTROL VALVE (FCV)
		COMBINATION AIR RELEASE VALVE (CARV)
		CHECK VALVE (CV)
		FLUSH VALVE (FV)
		EXISTING NOZZLE LINE W/TURNING UNION
		EXISTING IRRIGATION SYSTEM
		EXISTING IRRIGATION SYSTEM TO BE REMOVED
		CHAIN LINK GATE
		QUICK COUPLING VALVE W/SPRINKLER PROTECTOR
3	3	SPRINKLER W/SPRINKLER PROTECTOR
	C	CONNECT TO EXISTING SYSTEM
		CAP
		CAP EXISTING
	\\\FR\\\	FIBER ROLL
	\\\CS\\\	COMPOST SOCK

RCV SIZE
IRRIGATION CONTROLLER
CONTROLLER STATION
VALVE IN PARALLEL (IF APPLICABLE)
GPM
QUANTITY OF SPRINKLERS (WHEN SHOWN)

* 2½"-A-2b-40-60

VALVE CODE

* VALVE CODES FOR EXISTING VALVES ARE SHOWN IN A DASHED ENCLOSURE.

STATE OF CALIFORNIA
DEPARTMENT OF TRANSPORTATION

LANDSCAPE AND EROSION CONTROL SYMBOLS

NO SCALE

RSP H2 DATED NOVEMBER 15, 2013 SUPERSEDES RSP H2 DATED JULY 19, 2013 AND STANDARD PLAN H2 DATED MAY 20, 2011 - PAGE 219 OF THE STANDARD PLANS BOOK DATED 2010.

REVISED STANDARD PLAN RSP H2

10-9-13

Dist	COUNTY	ROUTE	POST MILES TOTAL PROJECT	SHEET No.	TOTAL SHEETS
03	Sac	51,160	4.0/4.3, R44.4/47.0	96	117

REGISTERED CIVIL ENGINEER

July 19, 2013
PLANS APPROVAL DATE

REGISTERED PROFESSIONAL ENGINEER
Gurinderpal Bhullar
No. C48815
Exp. 9-30-14
CIVIL
STATE OF CALIFORNIA

THE STATE OF CALIFORNIA OR ITS OFFICERS OR AGENTS SHALL NOT BE RESPONSIBLE FOR THE ACCURACY OR COMPLETENESS OF SCANNED COPIES OF THIS PLAN SHEET.

TO ACCOMPANY PLANS DATED 5-2-16

TABLE 1

TAPER LENGTH CRITERIA AND CHANNELIZING DEVICE SPACING

SPEED (S)	MINIMUM TAPER LENGTH * FOR WIDTH OF OFFSET 12 FEET (W)				MAXIMUM CHANNELIZING DEVICE SPACING		
					X	Y	Z **
	TANGENT 2L	MERGING L	SHIFTING L/2	SHOULDER L/3	TAPER	TANGENT	CONFLICT
mph	ft	ft	ft	ft	ft	ft	ft
20	160	80	40	27	20	40	10
25	250	125	63	42	25	50	12
30	360	180	90	60	30	60	15
35	490	245	123	82	35	70	17
40	640	320	160	107	40	80	20
45	1080	540	270	180	45	90	22
50	1200	600	300	200	50	100	25
55	1320	660	330	220	55	110	27
60	1440	720	360	240	60	120	30
65	1560	780	390	260	65	130	32
70	1680	840	420	280	70	140	35

* - For other offsets, use the following merging taper length formula for L:
For speed of 40 mph or less, $L = WS^2/60$
For speed of 45 mph or more, $L = WS$

Where: L = Taper length in feet
W = Width of offset in feet
S = Posted speed limit, off-peak 85th-percentile speed prior to work starting, or the anticipated operating speed in mph

** - Use for taper and tangent sections where there are no pavement markings or where there is a conflict between existing pavement markings and channelizers (CA).

TABLE 2

LONGITUDINAL BUFFER SPACE AND FLAGGER STATION SPACING

SPEED *	Min D **	DOWNGRADE Min D ***		
		-3%	-6%	-9%
mph	ft	ft	ft	ft
20	115	116	120	126
25	155	158	165	173
30	200	205	215	227
35	250	257	271	287
40	305	315	333	354
45	360	378	400	427
50	425	446	474	507
55	495	520	553	593
60	570	598	638	686
65	645	682	728	785
70	730	771	825	891

* - Speed is posted speed limit, off-peak 85th-percentile speed prior to work starting, or the anticipated operating speed in mph

** - Longitudinal buffer space or flagger station spacing

*** - Use on sustained downgrade steeper than -3 percent and longer than 1 mile.

TABLE 3

ADVANCE WARNING SIGN SPACING

ROAD TYPE	DISTANCE BETWEEN SIGNS *		
	A	B	C
	ft	ft	ft
URBAN - 25 mph OR LESS	100	100	100
URBAN - MORE THAN 25 mph TO 40 mph	250	250	250
URBAN - MORE THAN 40 mph	350	350	350
RURAL	500	500	500
EXPRESSWAY / FREEWAY	1000	1500	2640

* - The distances are approximate, are intended for guidance purposes only, and should be applied with engineering judgment. These distances should be adjusted by the Engineer for field conditions, if necessary, by increasing or decreasing the recommmended distances.

STATE OF CALIFORNIA
DEPARTMENT OF TRANSPORTATION

TRAFFIC CONTROL SYSTEM TABLES FOR LANE AND RAMP CLOSURES

NO SCALE

RSP T9 DATED JULY 19, 2013 SUPERSEDES RSP T9 DATED APRIL 19, 2013 THAT SUPPLEMENTS THE STANDARD PLANS BOOK DATED 2010.

REVISED STANDARD PLAN RSP T9

2010 REVISED STANDARD PLAN RSP T9

4-30-13

Dist	COUNTY	ROUTE	POST MILES TOTAL PROJECT	SHEET No.	TOTAL SHEETS
03	Sac	51,160	4.0/4.3, R44.4/47.0	97	117

REGISTERED CIVIL ENGINEER

April 19, 2013
PLANS APPROVAL DATE

REGISTERED PROFESSIONAL ENGINEER Gurinderpal Bhullar No. C48815 Exp. 9-30-14 CIVIL STATE OF CALIFORNIA

THE STATE OF CALIFORNIA OR ITS OFFICERS OR AGENTS SHALL NOT BE RESPONSIBLE FOR THE ACCURACY OR COMPLETENESS OF SCANNED COPIES OF THIS PLAN SHEET.

TO ACCOMPANY PLANS DATED 5-2-16

NOTES:

See Revised Standard Plan RSP T9 for tables.

Use cone spacing X for taper segment, Y for tangent segment or Z for conflict situations, as approriate, per Table 1, unless X, Y, or Z cone spacing is shown on this sheet.

Unless otherwise specified in the special provisions, all temporary warning signs shall have black legend on fluorescent orange background.

California codes are designated by (CA). Otherwise, Federal (MUTCD) codes are shown.

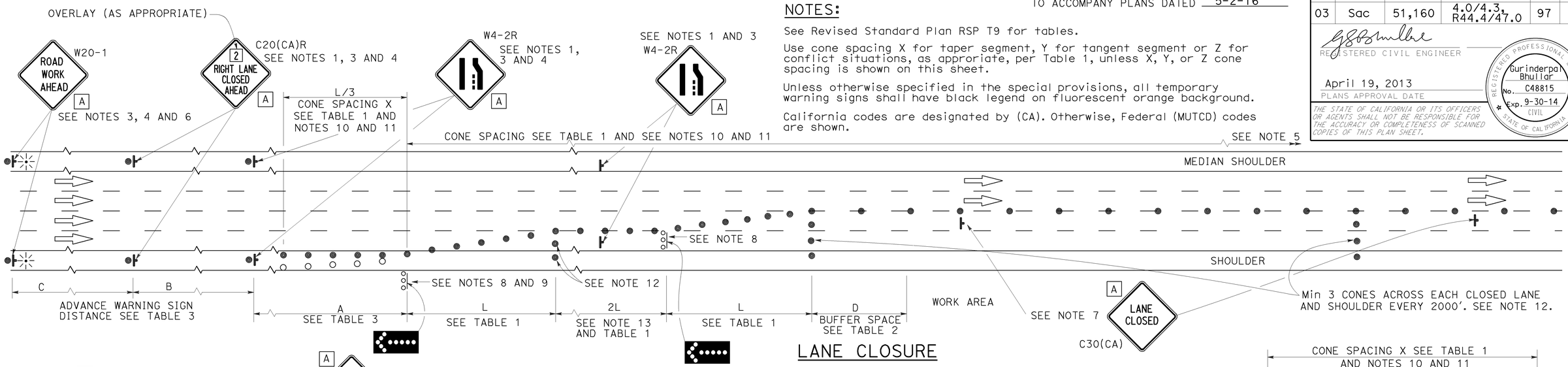

LANE CLOSURE

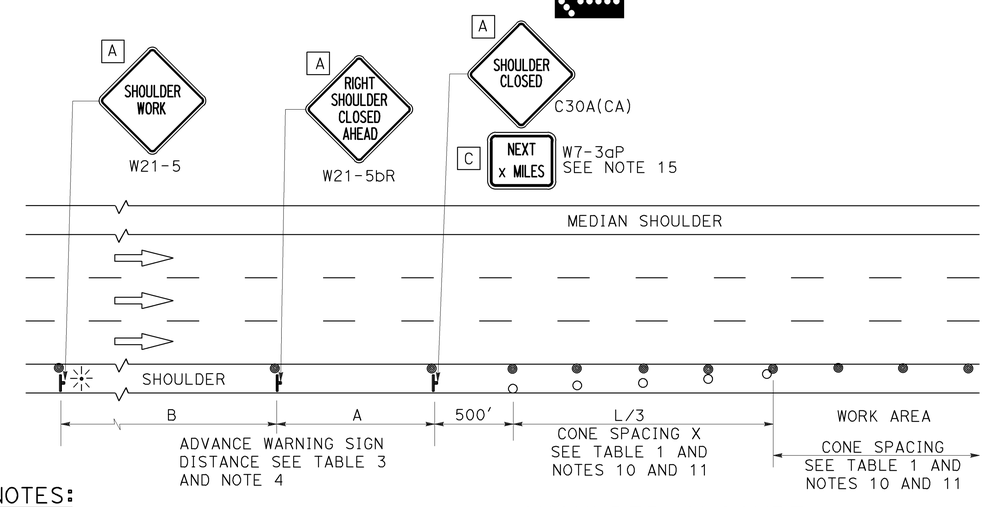

SHOULDER CLOSURE

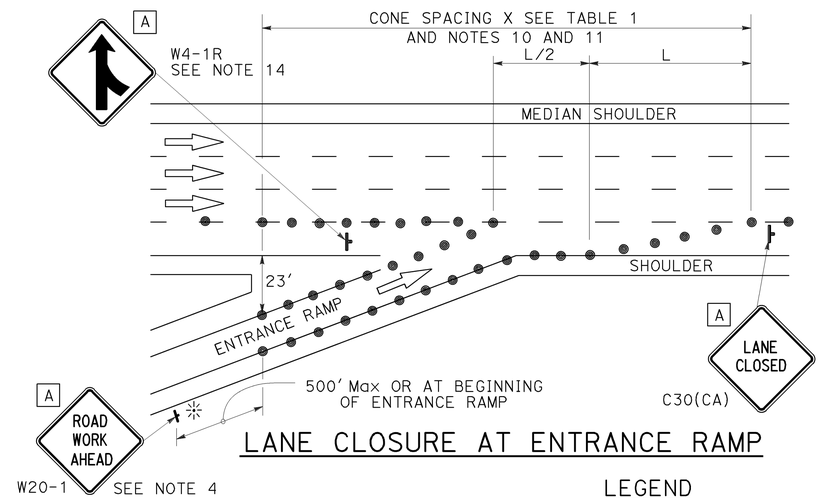

LANE CLOSURE AT ENTRANCE RAMP

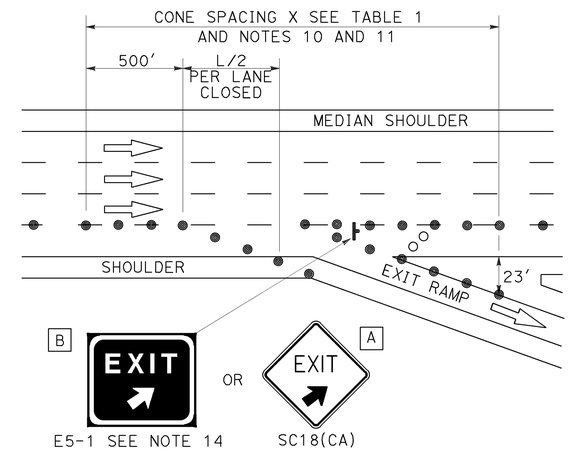

LANE CLOSURE AT EXIT RAMP

NOTES:

1. Median lane closures shall conform to the details as shown except that C20(CA)L and W4-2L signs shall be used.
2. At least one person shall be assigned to provide full time maintenance of traffic control devices for lane closures.
3. Duplicate sign installations are not required:
   a) On opposite shoulder if at least one-half of the available lanes remain open to traffic.
   b) In the median if the width of the median shoulder is less than 8' and the outside lanes are to be closed.
4. Each advance warning sign on each side of the roadway shall be equipped with at least two flags for daytime closure. Each flag shall be at least 16" x 16" in size and shall be orange or fluorescent red-orange in color. Flashing beacons shall be placed at the locations indicated for lane closure during hours of darkness.
5. A G20-2 "END ROAD WORK" sign, with minimum size of 48" x 24" as appropriate, shall be placed at the end of the lane closure unless the end of work area is obvious or ends within a larger project's limits.
6. If the W20-1 sign would follow within 2000' of a stationary W20-1 or G20-1 "ROAD WORK NEXT _____ MILES", use a C20(CA) sign for the first advance warning sign.
7. Place a C30(CA) sign every 2000' throughout length of lane closure.
8. One flashing arrow sign for each lane closed. The flashing arrow signs shall be Type I.
9. A minimum 1500' of sight distance shall be provided where possible for vehicles approaching the first flashing arrow sign. Lane closures shall not begin at top of crest vertical curve or on a horizontal curve.
10. All cones used for lane closures during the hours of darkness shall be fitted with retroreflective bands (or sleeves) as specified in the specifications.
11. Portable delineators, placed at one-half the spacing indicated for traffic cones may be used instead of cones for daytime closures only.
12. Unless otherwise specified in the special provisions, a minimum of 3 cones shall be placed transversely across each closed lane and shoulder at each location where a taper across a traffic lane ends and every 2000' as shown on the "Lane Closure" detail. Two Type II barricades may be used instead of the 3 cones. The transverse alignment of the cones or barricades on the closed shoulder may be shifted from the transverse alignment to provide access to the work.
13. Unless otherwise specified in the special provisions, the 2L tangent shown along lane lines shall be used between the L tapers required for each closed traffic lane.
14. Unless otherwise specified in the special provisions, the E5-1 or SC18(CA) and W4-1 signs shall be used as shown.
15. A W7-3aP "NEXT____ MILES" plaque must be used if theshoulder closure extends beyond the distance that can be perceived by road users.

LEGEND

- TRAFFIC CONE
- TRAFFIC CONE (OPTIONAL TAPER)
- TEMPORARY TRAFFIC CONTROL SIGN
- FLASHING ARROW SIGN (FAS)
- FAS SUPPORT OR TRAILER
- PORTABLE FLASHING BEACON

SIGN PANEL SIZE (Min)

A	48" x 48"
B	72" x 60"
C	36" x 30"

STATE OF CALIFORNIA
DEPARTMENT OF TRANSPORTATION

TRAFFIC CONTROL SYSTEM FOR LANE CLOSURE ON FREEWAYS AND EXPRESSWAYS

NO SCALE

RSP T10 DATED APRIL 19, 2013 SUPERSEDES STANDARD PLAN T10 DATED MAY 20, 2011 - PAGE 237 OF THE STANDARD PLANS BOOK DATED 2010.

REVISED STANDARD PLAN RSP T10

2010 REVISED STANDARD PLAN RSP T10

12-18-12

Dist	COUNTY	ROUTE	POST MILES TOTAL PROJECT	SHEET No.	TOTAL SHEETS
03	Sac	51,160	4.0/4.3, R44.4/47.0	98	117

REGISTERED CIVIL ENGINEER

April 19, 2013
PLANS APPROVAL DATE

REGISTERED PROFESSIONAL ENGINEER Gurinderpal Bhullar No. C48815 Exp. 9-30-14 CIVIL STATE OF CALIFORNIA

THE STATE OF CALIFORNIA OR ITS OFFICERS OR AGENTS SHALL NOT BE RESPONSIBLE FOR THE ACCURACY OR COMPLETENESS OF SCANNED COPIES OF THIS PLAN SHEET.

TO ACCOMPANY PLANS DATED 5-2-16

TYPICAL RAMP CLOSURES

SIGN PANEL SIZE (Min)

- A 48" × 48"
- B 48" × 30"
- C 36" × 36"
- D 48" × 36"

LEGEND

- TRAFFIC CONE
- TEMPORARY TRAFFIC CONTROL SIGN
- BARRICADES
- PORTABLE FLASHING BEACON

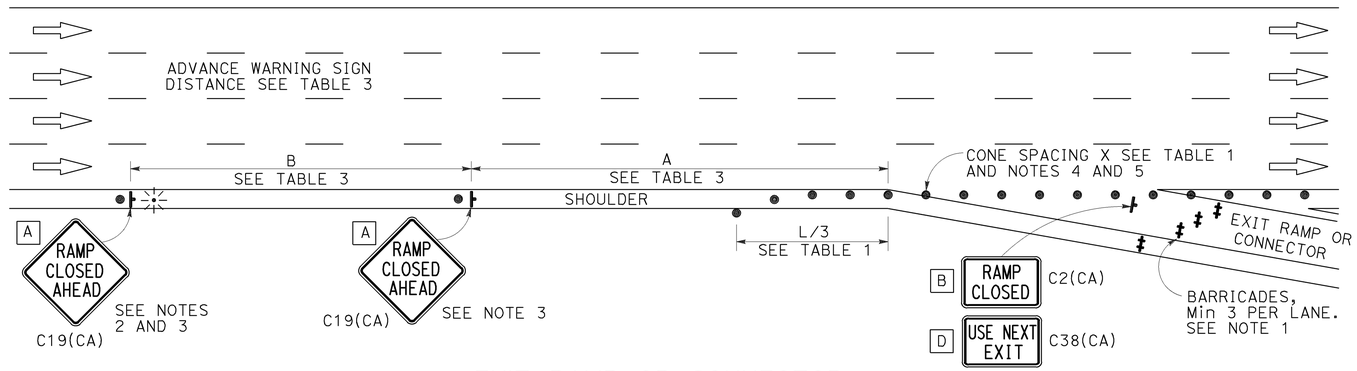

EXIT RAMP OR CONNECTOR

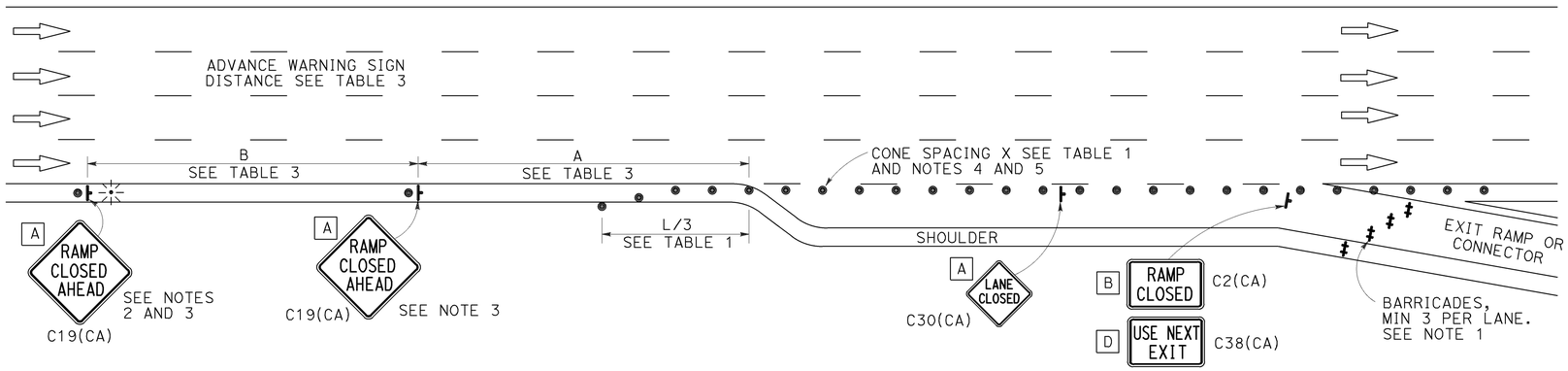

EXIT RAMP OR CONNECTOR WITH ADDITIONAL LANE

NOTES:

1. Barricades shall be Type I, II, or III for closures lasting one week or less and Type III for closures lasting longer than one week.
2. In addition to placing the C19(CA) "RAMP CLOSED AHEAD" and C30(CA) "RAMP CLOSED" signs, black on orange overlay plates with the word "CLOSED" may be mounted, as directed by the Engineer, on all guide signs that refer to the closed ramp. The letter size on the overlay shall be the same as the guide sign.
3. Each advance C19(CA) "RAMP CLOSED AHEAD" sign shall be equipped with at least two flags for daytime closure. Each flag shall be at least 16" × 16" in size and shall be orange or fluorescent red-orange in color. A flashing beacon shall be placed on top of the first C19(CA) sign during hours of darkness.
4. All cones used for ramp closures during the hours of darkness shall be fitted with retroreflective bands (or sleeves) as specified in the specifications.
5. Portable delineators, placed at one-half the spacing indicated for traffic cones, may be used instead of cones for daytime ramp closures only.
6. At least one person shall be assigned to provide full time maintenance of traffic control devices, unless otherwise directed by the Engineer.
7. The existing "EXIT" signs shall be covered during ramp closures.
8. A minimum of 3 cones shall be placed transversely across each closed lane and shoulder.

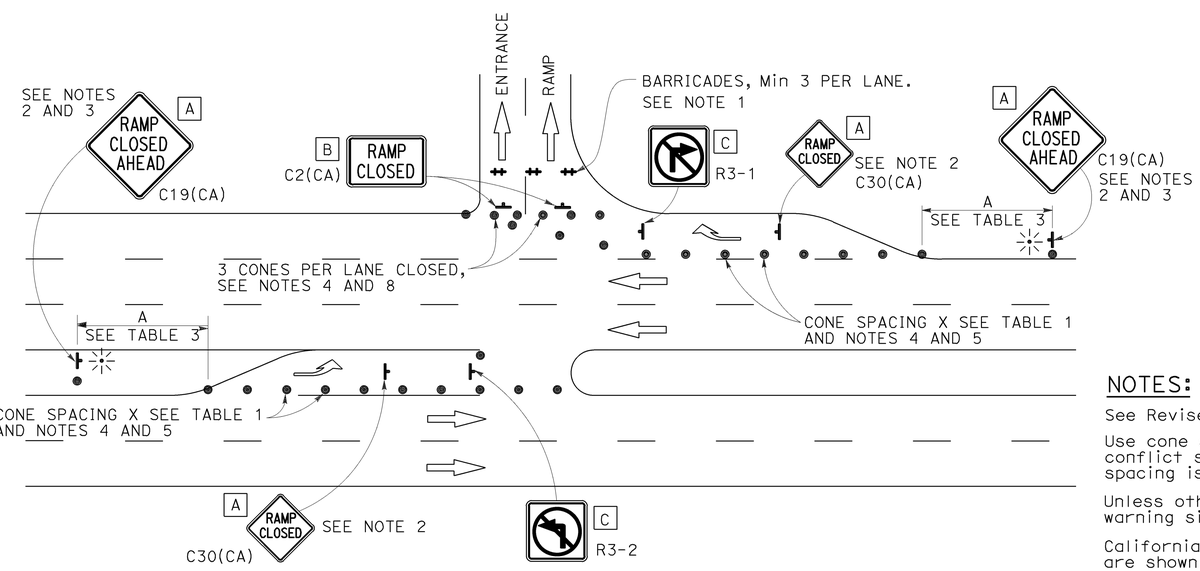

ENTRANCE RAMP WITH TURNING POCKETS

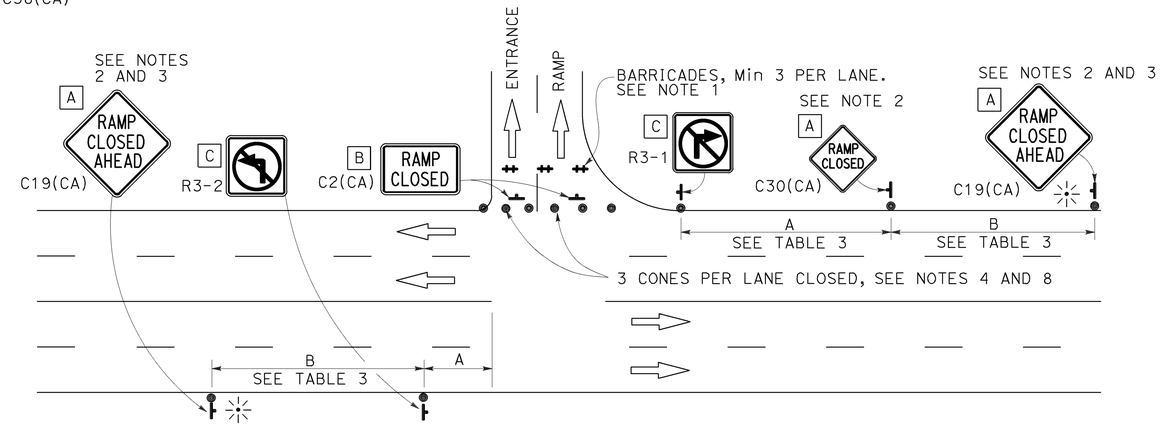

ENTRANCE RAMP WITHOUT TURNING POCKETS

NOTES:

See Revised Standard Plan RSP T9 for tables.

Use cone spacing X for taper segment, Y for tangent segment or Z for conflict situations, as approriate, per Table 1, unless X, Y, or Z cone spacing is shown on this sheet.

Unless otherwise specified in the special provisions, all temporary warning signs shall have black legend on fluorescent orange background.

California codes are designated by (CA). Otherwise, Federal (MUTCD) codes are shown.

STATE OF CALIFORNIA
DEPARTMENT OF TRANSPORTATION

TRAFFIC CONTROL SYSTEM FOR RAMP CLOSURE

NO SCALE

RSP T14 DATED APRIL 19, 2013 SUPERSEDES STANDARD PLAN T14 DATED MAY 20, 2011 - PAGE 242 OF THE STANDARD PLANS BOOK DATED 2010.

REVISED STANDARD PLAN RSP T14

2010 REVISED STANDARD PLAN RSP T14

12-18-12

Dist	COUNTY	ROUTE	POST MILES TOTAL PROJECT	SHEET No.	TOTAL SHEETS
03	Sac	51,160	4.0/4.3, R44.4/47.0	99	117

REGISTERED CIVIL ENGINEER

April 19, 2013
PLANS APPROVAL DATE

REGISTERED PROFESSIONAL ENGINEER Gurinderpal Bhullar No. C48815 Exp. 9-30-14 CIVIL STATE OF CALIFORNIA

THE STATE OF CALIFORNIA OR ITS OFFICERS OR AGENTS SHALL NOT BE RESPONSIBLE FOR THE ACCURACY OR COMPLETENESS OF SCANNED COPIES OF THIS PLAN SHEET.

TO ACCOMPANY PLANS DATED 5-2-16

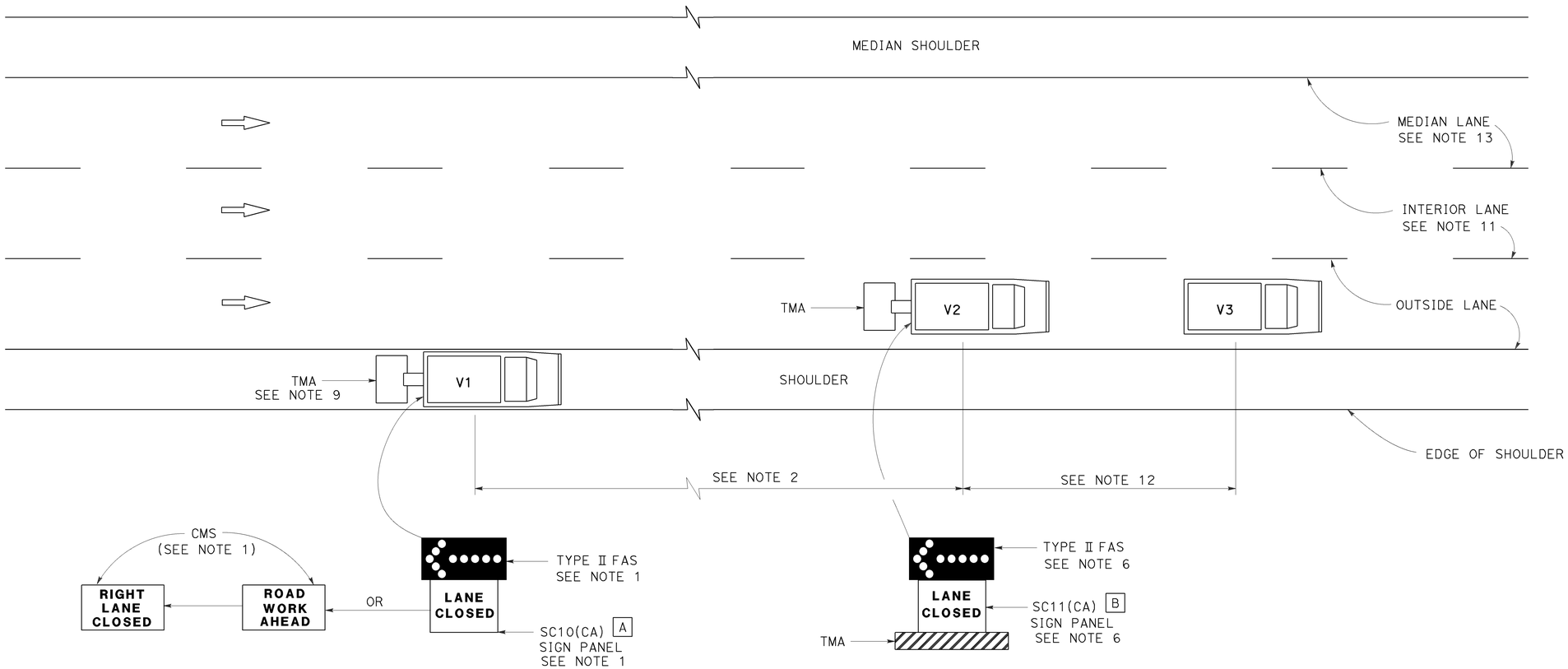

MOVING LANE CLOSURE ON MEDIAN LANE OR OUTSIDE LANE OF MULTILANE HIGHWAYS

SIGN PANEL SIZE (Min)

A 66" x 36"

B 54" x 42"

LEGEND

V1	SIGN VEHICLE
V2	SHADOW VEHICLE
V3	WORK/APPLICATION VEHICLE
	FLASHING ARROW SIGN (FAS)
CMS	CHANGEABLE MESSAGE SIGN
TMA	TRUCK-MOUNTED ATTENUATOR

NOTES:

1. Either a changeable message sign or a SC10(CA) sign panel and a Type II flashing arrow sign shall be mounted on the rear of sign vehicle V1. The changeable message sign shall be sequenced to show the "ROAD WORK AHEAD" message first, followed by the "RIGHT LANE CLOSED" message. For median lane closure, the flashing arrow symbol shall be reversed with the arrowhead on the right and the changeable message sign shall show "LEFT LANE CLOSED".
2. If traffic queues develop, sign vehicle V1 should be positioned upstream from the end of queue. Sign vehicle V1 shall be positioned where highly visible when shoulders are not available.
3. A minimum sight distance of 1500′ should be provided in advance of sign vehicle V1.
4. Sign vehicle V1 should remain at the beginning of horizontal or vertical curves until the other vehicles (V2 and V3) are far enough beyond the curve to resume the minimum sight distance of 1500′.
5. Vehicle-mounted sign panels shall have Type III or above retroreflective sheeting, black on white, or black on fluorescent orange, with 6" minimum series D letters per Caltrans sign specifications.
6. Shadow vehicle V2 shall be equipped with a truck-mounted attenuator. The sign panel shown and a Type II flashing arrow sign shall be mounted on the rear of shadow vehicle V2. For median lane closure the flashing arrow sign symbol shall be displayed with the arrowhead on the right.
7. All vehicles used for lane closures shall be equipped with two-way radios, and the vehicle operators shall maintain communication during the work or application operation.
8. All vehicles shall be equipped with flashing or rotating amber lights.
9. If sign vehicle V1 encroaches into the traffic lane due to insufficient shoulder width, sign vehicle V1 shall be equipped with a truck-mounted attenuator. Sign vehicle V1 shall stay as close to the edge of shoulder as practicable.
10. Where workers would be on foot in the work area, a stationary type lane closure (Revised Standard Plan T10, T11, etc., as applicable) shall be used instead of this plan.
11. For moving lane closure on interior lane of multilane highways, use Revised Standard Plan T16.
12. The spacing between work vehicle(s) and the shadow vehicles, and between each shadow vehicle should be minimized to deter road users from driving in between.
13. When the work/application vehicle V3 occupies the median lane, sign vehicle V1 should drive in the median shoulder and indicate left lane closed ahead.

STATE OF CALIFORNIA
DEPARTMENT OF TRANSPORTATION

TRAFFIC CONTROL SYSTEM FOR MOVING LANE CLOSURE ON MULTILANE HIGHWAYS

NO SCALE

RSP T15 DATED APRIL 19, 2013 SUPERSEDES STANDARD PLAN T15
DATED MAY 20, 2011 - PAGE 243 OF THE STANDARD PLANS BOOK DATED 2010.

REVISED STANDARD PLAN RSP T15

2010 REVISED STANDARD PLAN RSP T15

12-18-12

Dist	COUNTY	ROUTE	POST MILES TOTAL PROJECT	SHEET No.	TOTAL SHEETS
03	Sac	51,160	4.0/4.3, R44.4/47.0	100	117

REGISTERED CIVIL ENGINEER

April 19, 2013
PLANS APPROVAL DATE

REGISTERED PROFESSIONAL ENGINEER
Gurinderpal Bhullar
No. C48815
Exp. 9-30-14
CIVIL
STATE OF CALIFORNIA

THE STATE OF CALIFORNIA OR ITS OFFICERS OR AGENTS SHALL NOT BE RESPONSIBLE FOR THE ACCURACY OR COMPLETENESS OF SCANNED COPIES OF THIS PLAN SHEET.

TO ACCOMPANY PLANS DATED 5-2-16

2010 REVISED STANDARD PLAN RSP T16

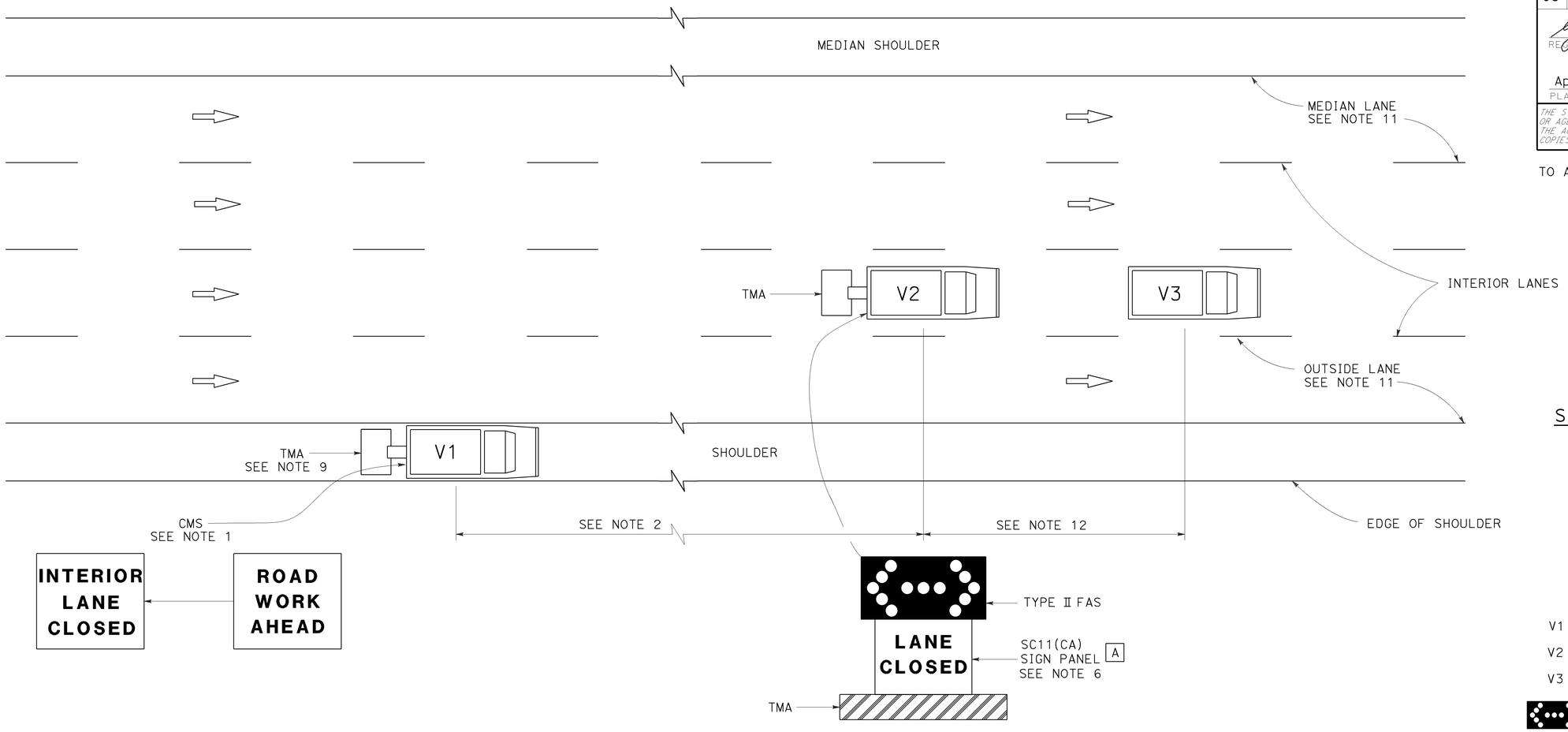

SIGN PANEL SIZE (Min)

A 54" x 42"

LEGEND

V1	SIGN VEHICLE
V2	SHADOW VEHICLE
V3	WORK/APPLICATION VEHICLE
	FLASHING ARROW SIGN (FAS) IN FLASHING DOUBLE ARROW MODE
CMS	CHANGEABLE MESSAGE SIGN
TMA	TRUCK-MOUNTED ATTENUATOR

MOVING LANE CLOSURE ON INTERIOR LANE OF MULTILANE HIGHWAYS

NOTES:

1. A changeable message sign shall be mounted on the rear of sign vehicle V1. The changeable message sign shall be sequenced to show the "ROAD WORK AHEAD" message first, followed by the "INTERIOR LANE CLOSED" message. The message "CENTER LANE CLOSED" may be used in place of the "INTERIOR LANE CLOSED" message.
2. If traffic queues develop, sign vehicle V1 should be positioned upstream from the end of queue. Sign vehicle V1 shall be positioned where highly visible when shoulders are not available.
3. A minimum sight distance of 1500′ should be provided in advance of sign vehicle V1.
4. Sign vehicle V1 should remain at the beginning of horizontal or vertical curves until the other vehicles (V2 and V3) are far enough beyond the curve to resume the minimum sight distance of 1500′.
5. Vehicle-mounted sign panels shall have Type III or above retroreflective sheeting, black on white, or black on fluorescent orange, with 6" minimum series D letters per Caltrans sign specifications.
6. Shadow vehicle V2 shall be equipped with a truck-mounted attenuator. The sign panel shown and a Type II flashing arrow sign shall be mounted on the rear of shadow vehicle V2.
7. All vehicles used for lane closures shall be equipped with two-way radios, and the vehicle operators shall maintain communication during the work or application operation.
8. All vehicles shall be equipped with flashing or rotating amber lights.
9. If sign vehicle V1 encroaches into the traffic lane due to insufficient shoulder width, sign vehicle V1 shall be equipped with a truck-mounted attenuator. Sign vehicle V1 shall stay as close to the edge of shoulder as practicable.
10. Where workers would be on foot in the work area, a stationary type lane closure (Revised Standard Plan T10, T11 etc., as applicable) shall be used instead of this plan.
11. For moving lane closure on median lane or outside lane of multilane highways, use Revised Standard Plan T15.
12. The spacing between work vehicle(s) and the shadow vehicles, and between each shadow vehicle should be minimized to deter road users from driving in between.

STATE OF CALIFORNIA
DEPARTMENT OF TRANSPORTATION

TRAFFIC CONTROL SYSTEM FOR MOVING LANE CLOSURE ON MULTILANE HIGHWAYS

NO SCALE

RSP T16 DATED APRIL 19, 2013 SUPERSEDES STANDARD PLAN T16
DATED MAY 20, 2011 - PAGE 244 OF THE STANDARD PLANS BOOK DATED 2010.

REVISED STANDARD PLAN RSP T16

12-18-12

Dist	COUNTY	ROUTE	POST MILES TOTAL PROJECT	SHEET No.	TOTAL SHEETS
03	Sac	51,160	4.0/4.3, R44.4/47.0	101	117

REGISTERED CIVIL ENGINEER

October 30, 2015
PLANS APPROVAL DATE

REGISTERED PROFESSIONAL ENGINEER Efthymios Delis No. C51434 Exp. 6-30-17 CIVIL STATE OF CALIFORNIA

THE STATE OF CALIFORNIA OR ITS OFFICERS OR AGENTS SHALL NOT BE RESPONSIBLE FOR THE ACCURACY OR COMPLETENESS OF SCANNED COPIES OF THIS PLAN SHEET.

TO ACCOMPANY PLANS DATED 5-2-16

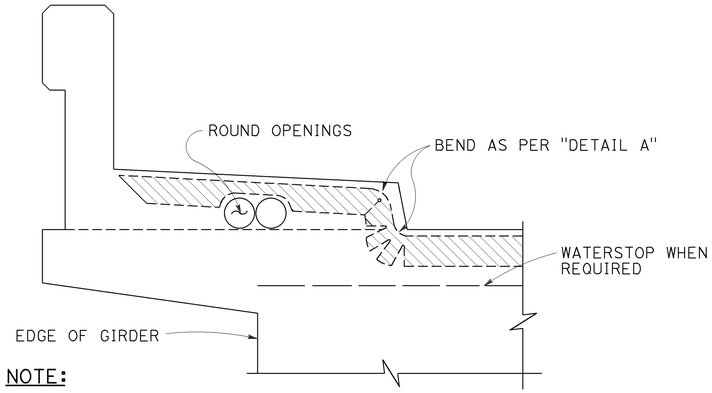

NOTE:
Type "B" seal shown. Type "A" seals to comform to the general path of seal shown, cuts for bending not required. Bend type "A" seals 3" up into curb or barrier rail on only the low end of the seal.

CONCRETE BARRIER AND SIDEWALK

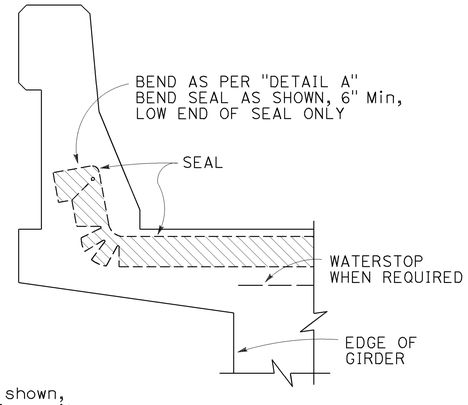

CONCRETE BARRIER

JOINT SEALS DETAILS

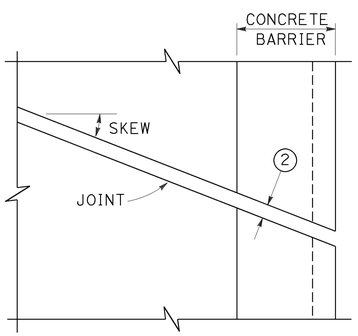

PLAN OF JOINT (SKEW ≤ 20°)

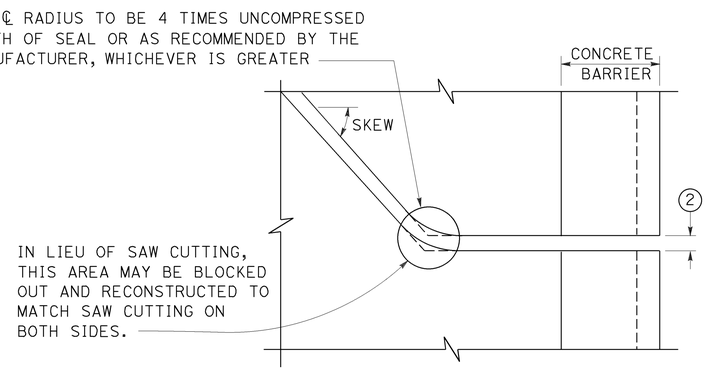

PLAN OF JOINT (SKEW > 20°)

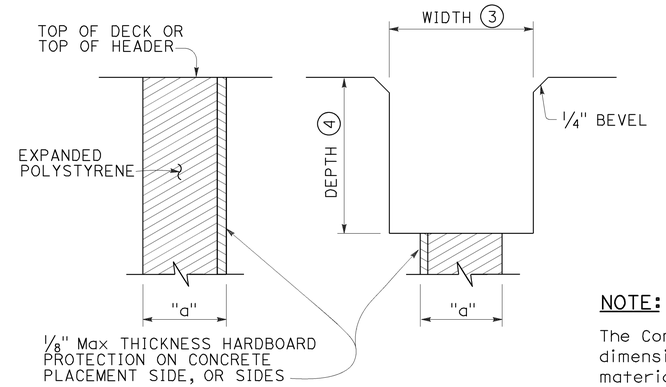

FORMING DETAIL SAWCUT DETAIL

NOTE:
The Contractor shall verify all controlling field dimensions before ordering or fabricatiing any material.

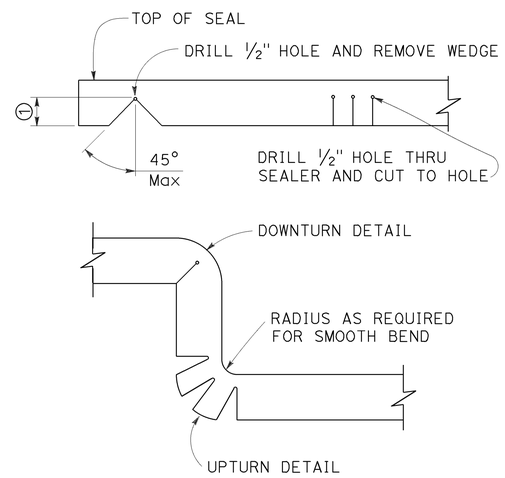

DETAIL A

NOTES:

1. Make smooth cuts from the bottom of seal to 1½" clear of top leaving at least one complete cell between the top of the cut and top of the seal. When necessary cut back of seal to clear conduit and round openings.
2. Opening in barrier to match width of sawn deck joint.
3. Sawcut groove widths shall be as ordered by the Engineer.
4. Depth of sawcut: Type A - Depth to be 2" minimum.
   Type B - Depth to be equal to or greater than the depth of seal measured along the contact surface, when compressed to minimum width position (W_2) plus dimensions shown.
5. MR (movement rating) as shown on other plan sheets.
6. Other depths must be approved by the Engineer.
7. A sidewalk joint shall be covered by an expansion joint armor.

DIMENSIONS "a" OF JOINT REQUIRED

MOVEMENT RATING (MR) 5	BRIDGE TYPE	"a" DIMENSION DECK CONCRETE PLACED		
		WINTER	FALL-SPRING	SUMMER
2"	ALL EXCEPT CIP/PS	1½"	1¼"	¾"
	CIP/PS	1¼"	1"	½"
1½"	ALL EXCEPT CIP/PS	1¼"	1"	½"
	CIP/PS	1"	¾"	½"
1"	ALL EXCEPT CIP/PS	1"	¾"	½"
	CIP/PS	¾"	½"	½"
½"	ALL EXCEPT CIP/PS	¾"	¾"	½"
	CIP/PS	½"	½"	½"

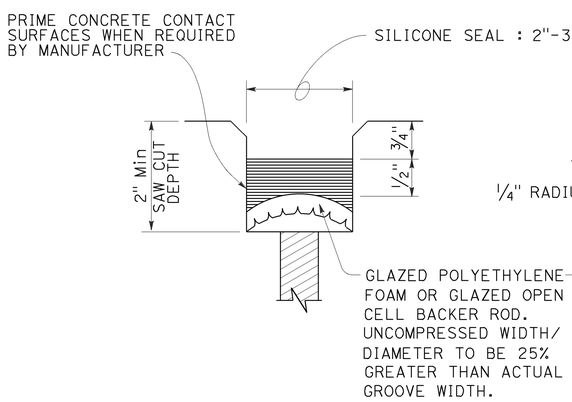

TYPE A SEAL
Movement rating : Silicone = 1" Max

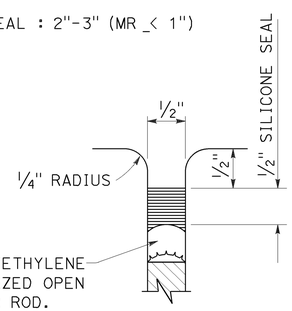

TYPE AL SEAL
Longitudinal joints only

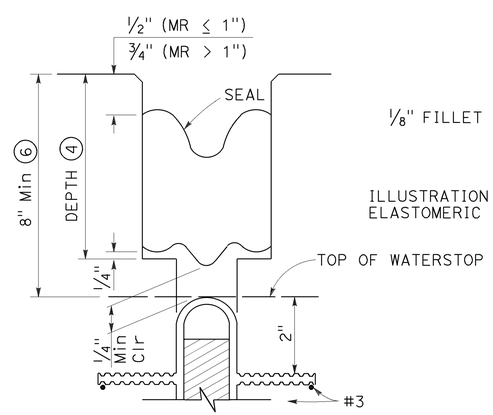

TYPE B JOINT SEAL
IN MINIMUM WIDTH POSITION (W_2)

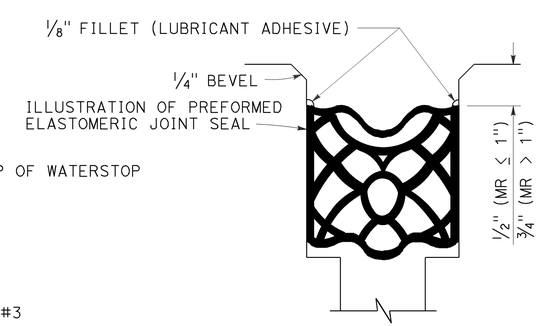

TYPE B SEAL
Movement Rating ≤ 2"

STATE OF CALIFORNIA
DEPARTMENT OF TRANSPORTATION

JOINT SEALS (MAXIMUM MOVEMENT RATING = 2")

NO SCALE

RSP B6-21 DATED OCTOBER 30, 2015 SUPERSEDES STANDARD PLAN B6-21 DATED MAY 20, 2011 - PAGE 283 OF THE STANDARD PLANS BOOK DATED 2010.

REVISED STANDARD PLAN RSP B6-21

2010 REVISED STANDARD PLAN RSP B6-21

8-18-15

Dist	COUNTY	ROUTE	POST MILES TOTAL PROJECT	SHEET No.	TOTAL SHEETS
03	Sac	51,160	4.0/4.3, R44.4/47.0	102	117

Theresa Gabriel
REGISTERED ELECTRICAL ENGINEER

October 30, 2015
PLANS APPROVAL DATE

REGISTERED PROFESSIONAL ENGINEER Theresa Aziz Gabriel No. E15129 Exp. 6-30-16 ELECTRICAL STATE OF CALIFORNIA

THE STATE OF CALIFORNIA OR ITS OFFICERS OR AGENTS SHALL NOT BE RESPONSIBLE FOR THE ACCURACY OR COMPLETENESS OF SCANNED COPIES OF THIS PLAN SHEET.

TO ACCOMPANY PLANS DATED 5-2-16

LEGEND:

- AB — ABANDON. IF APPLIED TO CONDUIT, REMOVE CONDUCTORS
- BC — INSTALL PULL BOX IN EXISTING CONDUIT RUN
- BP — PEDESTRIAN BARRICADE, TYPE AS INDICATED ON PLAN
- CB — INSTALL CONDUIT INTO EXISTING PULL BOX
- CC — CONNECT NEW AND EXISTING CONDUIT. REMOVE EXISTING CONDUCTORS AND INSTALL CONDUCTORS AS INDICATED
- CF — CONDUIT TO REMAIN FOR FUTURE USE. REMOVE CONDUCTORS. INSTALL PULL TAPE
- DH — DETECTOR HANDHOLE
- FA — FOUNDATION TO BE ABANDONED
- IS — INSTALL SIGN ON SIGNAL MAST ARM
- NS — NO SLIP BASE ON STANDARD
- PEC — PHOTOELECTRIC CONTROL
- PEU — PHOTOELECTRIC UNIT
- RC — EQUIPMENT OR MATERIAL TO BE REMOVED AND BECOME THE PROPERTY OF THE CONTRACTOR
- RE — REMOVE ELECTROLIER, FUSES AND BALLAST. TAPE ENDS OF CONDUCTORS
- RL — RELOCATE EQUIPMENT
- RR — REMOVE AND REUSE EQUIPMENT
- RS — REMOVE AND SALVAGE EQUIPMENT
- SC — SPLICE NEW TO EXISTING CONDUCTORS
- SD — SERVICE DISCONNECT
- TSP — TELEPHONE SERVICE POINT

ABBREVIATIONS

AC+	UNDERGROUNDED CONDUCTOR
APS	ACCESSIBLE PEDESTRIAN SIGNAL
Batt	BATTERY
BBS	BATTERY BACKUP SYSTEM
BC	BOLT CIRCLE
Blk	BLACK
BP	BYPASS
BPB	BICYCLE PUSH BUTTON
C	CONDUIT
CB	CIRCUIT BREAKER
CCTV	CLOSED CIRCUIT TELEVISION
Ckt	CIRCUIT
CMS	CHANGEABLE MESSAGE SIGN
Ctid	CALTRANS IDENTIFICATION
Comm	COMMUNICATION
Cntl	CONTROL
DF	DEPARTMENT-FURNISHED
DLC	LOOP DETECTOR LEAD-IN CABLE
EMS	EXTINGUISHABLE MESSAGE SIGN
EVUC	EMERGENCY VEHICLE UNIT CABLE
EVUD	EMERGENCY VEHICLE UNIT DETECTOR
FB	FLASHING BEACON
FBCA	FLASHING BEACON CONTROL ASSEMBLY
FBS	FLASHING BEACON WITH SLIP BASE
FO	FIBER OPTIC
G	EQUIPMENT GROUNDING CONDUCTOR
GB	GROUND BUS
GFCI	GROUND FAULT CIRCUIT INTERRUPTER
Grn	GREEN
HAR	HIGHWAY ADVISORY RADIO
Hex	HEXAGONAL
HPS	HIGH PRESSURE SODIUM
IISNS	INTERNALLY ILLUMINATED STREET NAME SIGN
ISL	INDUCTION SIGN LIGHTING
LED	LIGHT EMITTING DIODE
LMA	LUMINAIRE MAST ARM
LPS	LOW PRESSURE SODIUM
Ltg	LIGHTING
Lum	LUMINAIRE
M	METERED
MAT	MAST ARM MOUNTING TOP ATTACHMENT
MAS	MAST ARM MOUNTING SIDE ATTACHMENT
MBPS	MANUAL BYPASS SWITCH
M/M	MULTIPLE TO MULTIPLE TRANSFORMER
Mtg	MOUNTING
MV	MERCURY VAPOR LIGHTING FIXTURE
MVDS	MICROWAVE VEHICLE DETECTION SYSTEM
N	NEUTRAL (GROUNDED CONDUCTOR)
NB	NEUTRAL BUS
NC	NORMALLY CLOSE
NO	NORMALLY OPEN
P	CIRCUIT BREAKER'S POLE
PB	PULL BOX
PBA	PUSH BUTTON ASSEMBLY
PEC	PHOTOELECTRIC CONTROL
Ped	PEDESTRIAN
PEU	PHOTOELECTRIC UNIT
PT	CONDUIT WITH PULL TAPE
PTR	POWER TRANSFER RELAY
RE	RELOCATED EQUIPMENT
RM	RAMP METERING
RWIS	ROADSIDE WEATHER INFORMATION SYSTEM
SB	SLIP BASE
SIC	SIGNAL INTERCONNECT CABLE
Sig	SIGNAL
SMA	SIGNAL MAST ARM
SNS	STREET NAME SIGN
SP	SERVICE POINT
TB	TERMINAL BOARD
TDC	TELEPHONE DEMARCATION CABINET
Temp	TEMPERATURE
TMS	TRAFFIC MONITORING STATION
TOS	TRAFFIC OPERATIONS SYSTEM
UPS	UNINTERRUPTABLE POWER SUPPLY
UPSC	UNINTERRUPTABLE POWER SUPPLY CONTROLLER
Veh	VEHICLE
VIVDS	VIDEO IMAGE VEHICLE DETECTION SYSTEM
Wht	WHITE
WIM	WEIGH-IN-MOTION
Xfmr	TRANSFORMER

SOFFIT AND WALL-MOUNTED LUMINAIRES

- PENDANT SOFFIT LUMINAIRE, 70 W HPS UNLESS OTHERWISE SPECIFIED
- FLUSH-MOUNTED SOFFIT LUMINAIRE, 70 W HPS UNLESS OTHERWISE SPECIFIED
- WALL-MOUNTED LUMINAIRE, 70 W HPS UNLESS OTHERWISE SPECIFIED
- EXISTING SOFFIT OR WALL-MOUNTED LUMINAIRE TO REMAIN UNMODIFIED
- (M) EXISTING SOFFIT OR WALL-MOUNTED LUMINAIRE TO BE MODIFIED AS SPECIFIED

NOTE:
Arrow indicates "street side" of luminaire.

COMMONLY USED SYMBOLS FOR UNITED STATES CUSTOMARY UNITS OF MEASUREMENT:

SYMBOL	DEFINITIONS
Ω	OHMS
min	MINUTE
s	SECOND
bps	BITS PER SECOND
Bps	BYTES PER SECOND
A	AMPERE
V	VOLT
V(dc)	VOLT (DIRECT CURRENT)
V(ac)	VOLT (ALTERNATING CURRENT)
FC	FOOT - CANDLE
W	WATTS
VA	VOLT-AMPERE
M	MEGA
k	KILO
m	MILLI
μ	MICRO
P	PICO
Hz	HERTZ

MISCELLANEOUS ELECTROLIERS

NEW	EXISTING	
		LUMINAIRE ON WOOD POLE
		NON-STANDARD ELECTROLIER (SEE PROJECT LEGEND)
		CITY ELECTROLIER
		ELECTROLIER FOUNDATION (FUTURE INSTALLATION)

NOTES:

1. LED luminaires shall be 235 W when installed on Type 21, 21D, 30, 31 and 32 Standards, unless otherwise specified. LED luminaires shall be 165 W when installed on other type standards or poles, unless otherwise specified.
2. Luminaires shall be the cutoff type, ANSI Type III medium cutoff lighting distribution, unless otherwise specified.

STANDARD ELECTROLIER

NEW	EXISTING	STANDARD TYPE
		15
		15D
		15 STRUCTURE
		15D STRUCTURE
		21
		21D
		21 STRUCTURE
		21D STRUCTURE
		30
		31
		32

STATE OF CALIFORNIA
DEPARTMENT OF TRANSPORTATION

ELECTRICAL SYSTEMS (LEGEND AND ABBREVIATIONS)

NO SCALE

RSP ES-1A DATED OCTOBER 30, 2015 SUPERSEDES RSP ES-1A DATED JULY 19, 2013 AND STANDARD PLAN ES-1A DATED MAY 20, 2011 - PAGE 425 OF THE STANDARD PLANS BOOK DATED 2010.

REVISED STANDARD PLAN RSP ES-1A

2010 REVISED STANDARD PLAN RSP ES-1A

9-29-15

Dist	COUNTY	ROUTE	POST MILES TOTAL PROJECT	SHEET No.	TOTAL SHEETS
03	Sac	51,160	4.0/4.3, R44.4/47.0	103	117

Theresa Gabriel
REGISTERED ELECTRICAL ENGINEER

October 30, 2015
PLANS APPROVAL DATE

REGISTERED PROFESSIONAL ENGINEER Theresa Aziz Gabriel No. E15129 Exp. 6-30-16 ELECTRICAL STATE OF CALIFORNIA

THE STATE OF CALIFORNIA OR ITS OFFICERS OR AGENTS SHALL NOT BE RESPONSIBLE FOR THE ACCURACY OR COMPLETENESS OF SCANNED COPIES OF THIS PLAN SHEET.

TO ACCOMPANY PLANS DATED 5-2-16

CONDUIT

NEW	EXISTING	
		LIGHTING CONDUIT, UNLESS OTHERWISE INDICATED OR NOTED
		TRAFFIC SIGNAL CONDUIT
C	c	COMMUNICATION CONDUIT
T	t	TELEPHONE CONDUIT
F	f	FIRE ALARM CONDUIT
FO	fo	FIBER OPTIC CONDUIT
		CONDUIT TERMINATION
R	r	CONDUIT RISER ATTACHED TO THE STRUCTURE OR SERVICE POLE

SERVICE EQUIPMENT

NEW	EXISTING	
OH	oh	OVERHEAD LINES
U	U	WOOD POLE, "U" INDICATES UTILITY OWNED
		POLE GUY WITH ANCHOR
		UTILITY TRANSFORMER - GROUND MOUNTED
III	III	SERVICE EQUIPMENT ENCLOSURE TYPE. DOOR INDICATES FRONT OF ENCLOSURE
T	t	TELEPHONE DEMARCATION CABINET

POLE-MOUNTED SERVICE DESIGNATION

TYPE H SERVICE, 28'-10" — TYPE OF INSTALLATION AND POLE HEIGHT ABOVE GRADE

FLASHING BEACON

NEW	EXISTING	
R	R	FLASHING BEACON (ONE VEHICLE SIGNAL HEAD WITH BACKPLATE AND VISOR) "R" INDICATES RED INDICATION, "Y" INDICATES YELLOW INDICATION
Y Y	Y Y	FLASHING BEACON WITH TYPE 15-FBS STANDARD AND A SIGN.
R R	R R	FLASHING BEACON WITH TYPES 9, 9A OR 9B SIGN UNLESS OTHERWISE SPECIFIED OR INDICATED

SIGNAL EQUIPMENT

NEW	EXISTING	
		PEDESTRIAN SIGNAL HEAD
		PUSH BUTTON ASSEMBLY POST
		PEDESTRIAN BARRICADE
		VEHICLE SIGNAL HEAD (WITH BACKPLATE AND 3-SECTIONS: RED, YELLOW AND GREEN)
		VEHICLE SIGNAL HEAD WITH ANGLE VISOR
PV	PV	MODIFICATIONS OF BASIC SYMBOL: "L" INDICATES ALL NON-ARROW SECTIONS LOUVERED "LG" INDICATES LOUVERED GREEN SECTION ONLY "PV" INDICATES ALL 12" SECTIONS PROGRAMMED VISIBILITY "8" INDICATES ALL 8" SECTIONS (ONLY WHEN SPECIFIED)
		VEHICLE SIGNAL HEAD CONSISTING OF RED, YELLOW AND GREEN LEFT ARROW SECTIONS
		VEHICLE SIGNAL HEAD CONSISTING OF RED AND YELLOW SECTIONS WITH AN UP GREEN ARROW SECTION
		VEHICLE SIGNAL HEAD (5 SECTION) CONSISTING OF RED, YELLOW AND GREEN SECTIONS WITH YELLOW AND GREEN RIGHT ARROW SECTIONS
		TYPE 15TS STANDARD WITH VEHICLE SIGNAL HEAD AND LUMINAIRE
		TYPE 21TS STANDARD WITH VEHICLE SIGNAL HEAD AND LUMINAIRE
		STANDARD WITH LUMINAIRE AND SIGNAL MAST ARMS AND ATTACHED VEHICLE SIGNAL HEADS
		TYPE 1 STANDARD WITH ATTACHED VEHICLE SIGNAL HEADS
		STANDARD WITH A SIGNAL MAST ARM, ATTACHED VEHICLE SIGNAL HEADS AND INTERNALLY ILLUMINATED STREET NAME SIGN
		CONTROLLER ASSEMBLY. DOOR INDICATES FRONT OF CABINET

SIGNAL EQUIPMENT Cont

NEW	EXISTING	
		GUARD POST
		TYPE 1 STANDARD WITH RAMP METERING SIGN
		OPTICAL DETECTOR FOR THE EMERGENCY VEHICLE DETECTION

NOTES:

1. All signal sections shall be 12" unless shown otherwise.
2. Signal heads shall be provided with backplates unless shown otherwise.

ILLUMINATED OVERHEAD SIGN

NEW	EXISTING	
		SINGLE POST, SINGLE ILLUMINATED SIGN, BALANCED BUTTERFLY
		SINGLE POST, DOUBLE ILLUMINATED SIGN, BALANCED BUTTERFLY
		SINGLE POST, SINGLE ILLUMINATED SIGN, FULL CANTILEVER
		DOUBLE POST, SINGLE ILLUMINATED SIGN
		SINGLE ILLUMINATED SIGN MOUNTED ON STRUCTURE
		DOUBLE POST, SINGLE ILLUMINATED SIGN WITH ELECTROLIER

STATE OF CALIFORNIA
DEPARTMENT OF TRANSPORTATION

ELECTRICAL SYSTEMS (LEGEND AND ABBREVIATIONS)

NO SCALE

RSP ES-1B DATED OCTOBER 30, 2015 SUPERSEDES RSP ES-1B DATED JULY 19, 2013 AND STANDARD PLAN ES-1B DATED MAY 20, 2011 - PAGE 426 OF THE STANDARD PLANS BOOK DATED 2010.

REVISED STANDARD PLAN RSP ES-1B

2010 REVISED STANDARD PLAN RSP ES-1B

Dist	COUNTY	ROUTE	POST MILES TOTAL PROJECT	SHEET No.	TOTAL SHEETS
03	Sac	51,160	4.0/4.3, R44.4/47.0	104	117

Theresa Gabriel
REGISTERED ELECTRICAL ENGINEER

April 15, 2016
PLANS APPROVAL DATE

REGISTERED PROFESSIONAL ENGINEER Theresa Aziz Gabriel No. E15129 Exp. 6-30-16 ELECTRICAL STATE OF CALIFORNIA

THE STATE OF CALIFORNIA OR ITS OFFICERS OR AGENTS SHALL NOT BE RESPONSIBLE FOR THE ACCURACY OR COMPLETENESS OF SCANNED COPIES OF THIS PLAN SHEET.

TO ACCOMPANY PLANS DATED 5-2-16

EQUIPMENT IDENTIFICATION

ILLUMINATED SIGN IDENTIFICATION:

SIGN No. 12345
10 ISL SCI 1.0

- SIGN EQUIPMENT IDENTIFICATION CHARACTERS - PLACE ON POST OR STRUCTURE
- TRANSFORMER RATING (kVA)
- LIGHTING CONTROL TYPE
- NUMBER AND TYPE OF FIXTURES

} DO NOT PLACE ON STANDARD OR STRUCTURE

ELECTROLIER OR EQUIPMENT IDENTIFICATION:

L2745 - 15'-0"

- MAST ARM LENGTH, IF SHOWN. DO NOT PLACE ON STANDARD OR STRUCTURE
- EQUIPMENT IDENTIFICATION CHARACTERS - PLACE ON STANDARD OR STRUCTURE. EXISTING EQUIPMENT IDENTIFICATION CHARACTERS ARE SHOWN IN PARENTHESIS

CONDUIT AND CONDUCTOR IDENTIFICATION:

1½"C, 2#10, 15#14, 2 DLC, 12P#18 (PAIR)

- NUMBER AND SIZE OF CONDUCTORS AND CABLES
- SIZE OF CONDUIT IN INCHES

ø1, ø2, ø2P, etc.	TRAFFIC PHASE IDENTIFICATION FOR SIGNALS, DETECTORS AND PHASE DIAGRAMS
1 2 3	LEGEND NUMBERS
A B C	EQUIPMENT, SIGNAL POLES, INSTALLATION OR ITEMS
1 2 3	CONDUIT RUN NUMBERS

SIGNAL AND LIGHTING STANDARD (TYPICAL DESIGNATION):

19A - 3 - 100

- WIND VELOCITY = 100 mph
- CASE 3 ARM LOADING
- STANDARD TYPE
- STANDARD PLAN SHEET NUMBER
- DETAIL, NUMBER, SECTION, TYPE OR ELEVATION

MISCELLANEOUS EQUIPMENT

NEW	EXISTING	
CMS	cms	CHANGEABLE MESSAGE SIGN
		CLOSED CIRCUIT TELEVISION CAMERA
		HIGHWAY ADVISORY RADIO POLE AND ANTENNA
EMS	ems	LED EXTINGUISHABLE MESSAGE SIGN
M V	m v	DETECTION DEVICE M = MICROWAVE SENSOR V = VIDEO IMAGE SENSOR

WIRING DIAGRAM LEGEND

- EXTERNAL CONDUCTOR
- CONDUCTOR OR BUS
- TIE POINT
- CONTACTOR COIL
- CONTACTOR, NO CONTACT
- TERMINAL BLOCKS
- CONTACTOR, NC CONTACT
- ENCLOSURE BOND
- GROUNDING ELECTRODE
- CIRCUIT BREAKER
- RECEPTACLE

PULL BOXES

NEW	EXISTING	
		PULL BOX, No. 5 UNLESS OTHERWISE INDICATED OR NOTED
3	9A(21)	PULL BOX, ADDITIONAL DESIGNATIONS OR DESCRIPTIONS

3 No. 3½ PULL BOX
5 No. 5 PULL BOX
6 No. 6 PULL BOX
7 No. 7 PULL BOX (CEILING)
8 No. 8 PULL BOX
9 No. 9 PULL BOX (STRUCTURE)
9A No. 9A PULL BOX (STRUCTURE)

(C) COMMUNICATIONS PULL BOX
(E) PULL BOX WITH EXTENSION
(S) SPRINKLER CONTROL PULL BOX
(21) ANCHOR BOLTS AND CONDUIT FOR FUTURE INSTALLATION OF TYPE 21 STANDARD
(T) TRAFFIC PULL BOX

VEHICLE DETECTORS

5 J 9 U

- VEHICLE DETECTOR DESIGNATION
- U = UPPER
  L = LOWER
- SLOT NUMBER IN INPUT FILE
- INPUT FILE (I OR J)
- PHASE

NEW	EXISTING	
		TYPE A LOOP DETECTOR. OUTLINE OF SAW CUT SHOWN
		TYPE B LOOP DETECTOR. OUTLINE OF SAW CUT SHOWN
		TYPE C LOOP DETECTOR. OUTLINE OF SAW CUT SHOWN
		TYPE D LOOP DETECTOR. OUTLINE OF SAW CUT SHOWN
		TYPE E LOOP DETECTOR. OUTLINE OF SAW CUT SHOWN
		TYPE Q LOOP DETECTOR. OUTLINE OF SAW CUT SHOWN
DH	dh	DETECTOR HANDHOLE
		MICROWAVE OR VIDEO DETECTION ZONE

STATE OF CALIFORNIA
DEPARTMENT OF TRANSPORTATION

ELECTRICAL SYSTEMS (LEGEND AND ABBREVIATIONS)

NO SCALE

RSP ES-1C DATED APRIL 15, 2016 SUPERSEDES RSP ES-1C DATED OCTOBER 30, 2015 AND RSP ES-1C DATED JULY 19, 2013 AND STANDARD PLAN ES-1C DATED MAY 20, 2011 - PAGE 427 OF THE STANDARD PLANS BOOK DATED 2010.

REVISED STANDARD PLAN RSP ES-1C

2010 REVISED STANDARD PLAN RSP ES-1C

1-22-16

Dist	COUNTY	ROUTE	POST MILES TOTAL PROJECT	SHEET No.	TOTAL SHEETS
03	Sac	51,160	4.0/4.3, R44.4/47.0	105	117

Theresa Gabriel
REGISTERED ELECTRICAL ENGINEER

April 15, 2016
PLANS APPROVAL DATE

REGISTERED PROFESSIONAL ENGINEER
Theresa Aziz Gabriel
No. E15129
Exp. 6-30-16
ELECTRICAL
STATE OF CALIFORNIA

THE STATE OF CALIFORNIA OR ITS OFFICERS OR AGENTS SHALL NOT BE RESPONSIBLE FOR THE ACCURACY OR COMPLETENESS OF SCANNED COPIES OF THIS PLAN SHEET.

TO ACCOMPANY PLANS DATED 5-2-16

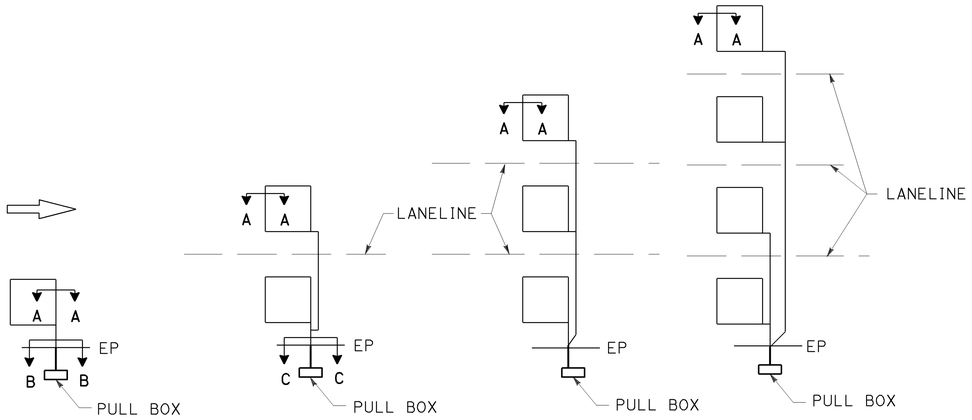

SAW CUT DETAILS

Type A loop detector configurations illustrated

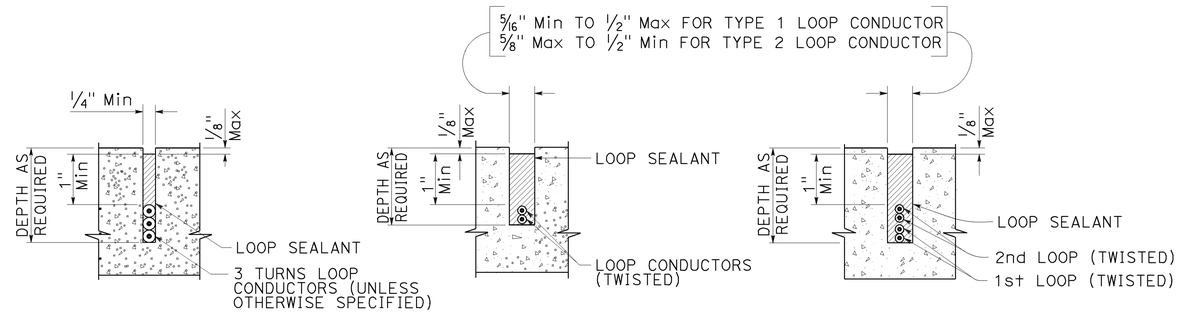

SECTION A-A SECTION B-B SECTION C-C

SLOT DETAILS - TYPE 1 AND TYPE 2 LOOP CONDUCTOR

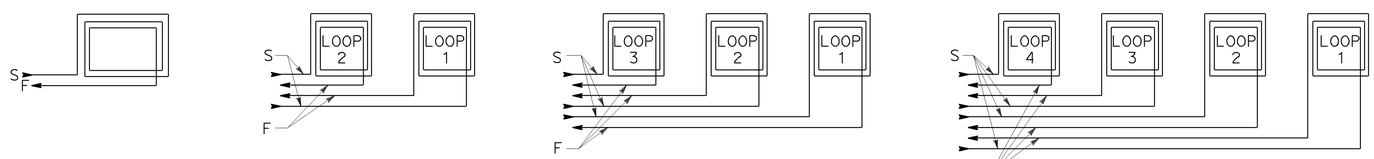

WINDING DETAILS

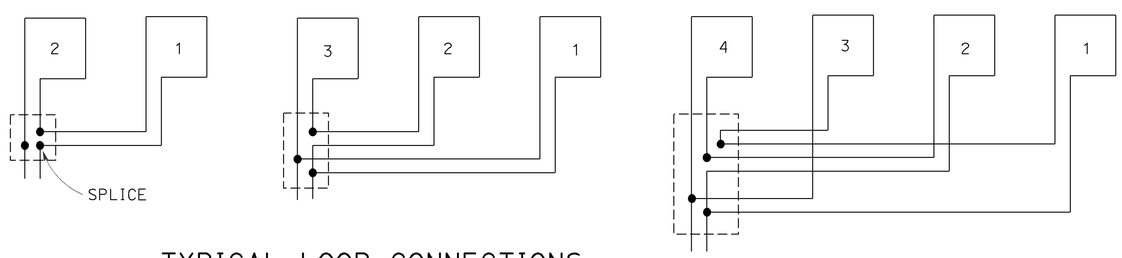

TYPICAL LOOP CONNECTIONS

Dashed lines represent the pull box

ABBREVIATIONS:

S - START
F - FINISH

STATE OF CALIFORNIA
DEPARTMENT OF TRANSPORTATION

ELECTRICAL SYSTEMS (LOOP DETECTORS)

NO SCALE

RSP ES-5A DATED APRIL 15, 2016 SUPERSEDES RSP ES-5A DATED OCTOBER 30, 2015 AND STANDARD PLAN ES-5A DATED MAY 20, 2011 - PAGE 448 OF THE STANDARD PLANS BOOK DATED 2010.

REVISED STANDARD PLAN RSP ES-5A

2010 REVISED STANDARD PLAN RSP ES-5A

1-12-16

Dist	COUNTY	ROUTE	POST MILES TOTAL PROJECT	SHEET No.	TOTAL SHEETS
03	Sac	51,160	4.0/4.3, R44.4/47.0	106	117

Theresa Gabriel
REGISTERED ELECTRICAL ENGINEER

April 15, 2016
PLANS APPROVAL DATE

REGISTERED PROFESSIONAL ENGINEER
Theresa Aziz Gabriel
No. E15129
Exp. 6-30-16
ELECTRICAL
STATE OF CALIFORNIA

THE STATE OF CALIFORNIA OR ITS OFFICERS OR AGENTS SHALL NOT BE RESPONSIBLE FOR THE ACCURACY OR COMPLETENESS OF SCANNED COPIES OF THIS PLAN SHEET.

TO ACCOMPANY PLANS DATED 5-2-16

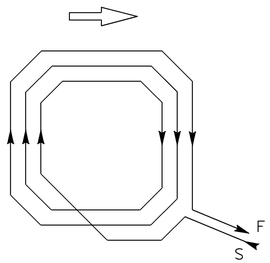

WINDING DETAIL

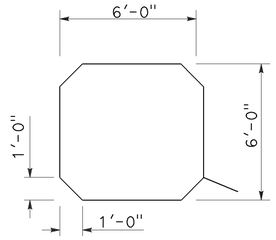

SAW CUT DETAIL

TYPE A LOOP DETECTOR CONFIGURATION

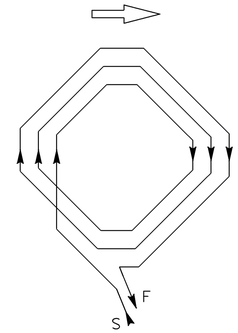

WINDING DETAIL

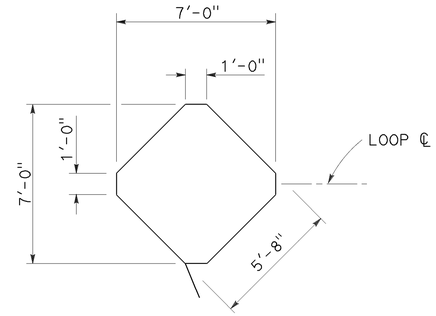

SAW CUT DETAIL

TYPE B LOOP DETECTOR CONFIGURATION

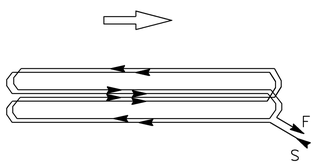

WINDING DETAIL

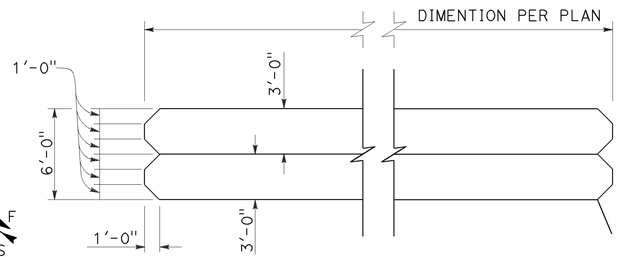

SAW CUT DETAIL

TYPE C LOOP DETECTOR CONFIGURATION

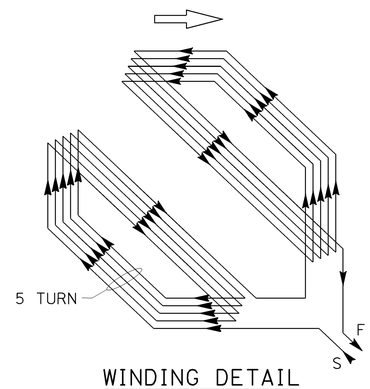

WINDING DETAIL

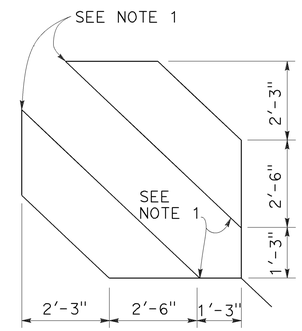

SAW CUT DETAIL

TYPE D LOOP DETECTOR CONFIGURATION

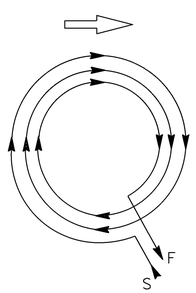

WINDING DETAIL

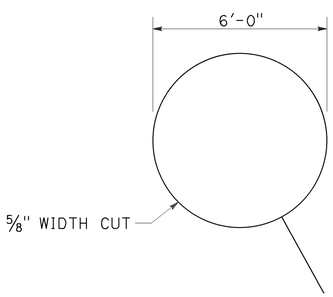

SAW CUT DETAIL

TYPE E LOOP DETECTOR CONFIGURATION

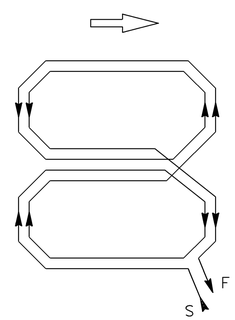

WINDING DETAIL

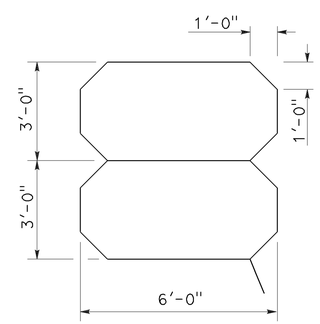

SAW CUT DETAIL

TYPE Q LOOP DETECTOR CONFIGURATION

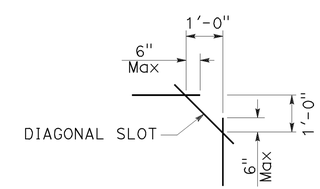

PLAN VIEW OF DIAGONAL SLOT AT CORNERS

NOTES:

1. Round corners of acute angle saw cuts to prevent damage to conductors.
2. Typical distance separating loops from edge to edge is 10' for Type A, B, D and E installation in single lane.
3. Use Type D loops for limit line detection and bicycle lanes.

STATE OF CALIFORNIA
DEPARTMENT OF TRANSPORTATION

ELECTRICAL SYSTEMS (DETECTORS)

NO SCALE

RSP ES-5B DATED APRIL 15, 2016 SUPERSEDES RSP ES-5B DATED OCTOBER 30, 2015 AND RSP ES-5B DATED JULY 19, 2013 AND STANDARD PLAN ES-5B DATED MAY 20, 2011 - PAGE 449 OF THE STANDARD PLANS BOOK DATED 2010.

REVISED STANDARD PLAN RSP ES-5B

2010 REVISED STANDARD PLAN RSP ES-5B

1-22-16

Dist	COUNTY	ROUTE	POST MILES TOTAL PROJECT	SHEET No.	TOTAL SHEETS
03	Sac	51,160	4.0/4.3, R44.4/47.0	107	117

Theresa Gabriel
REGISTERED ELECTRICAL ENGINEER

October 30, 2015
PLANS APPROVAL DATE

REGISTERED PROFESSIONAL ENGINEER Theresa Aziz Gabriel No. E15129 Exp. 6-30-16 ELECTRICAL STATE OF CALIFORNIA

THE STATE OF CALIFORNIA OR ITS OFFICERS OR AGENTS SHALL NOT BE RESPONSIBLE FOR THE ACCURACY OR COMPLETENESS OF SCANNED COPIES OF THIS PLAN SHEET.

TO ACCOMPANY PLANS DATED 5-2-16

2010 REVISED STANDARD PLAN RSP ES-5D

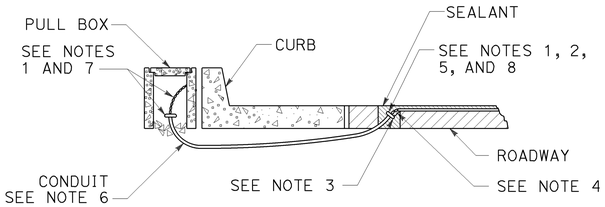

TYPE A
CURB TERMINATION DETAIL

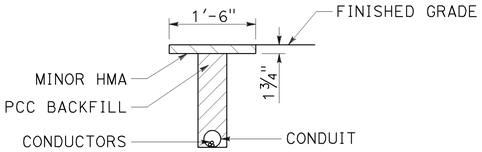

"T" TRENCH
DETAIL T

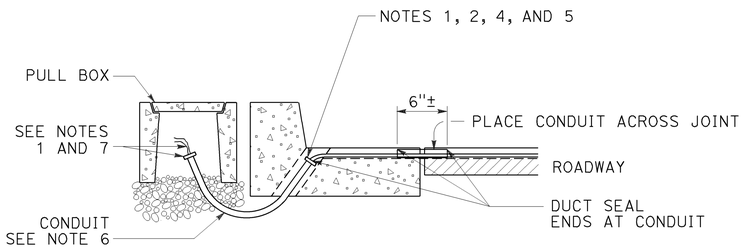

CROSS SECTION

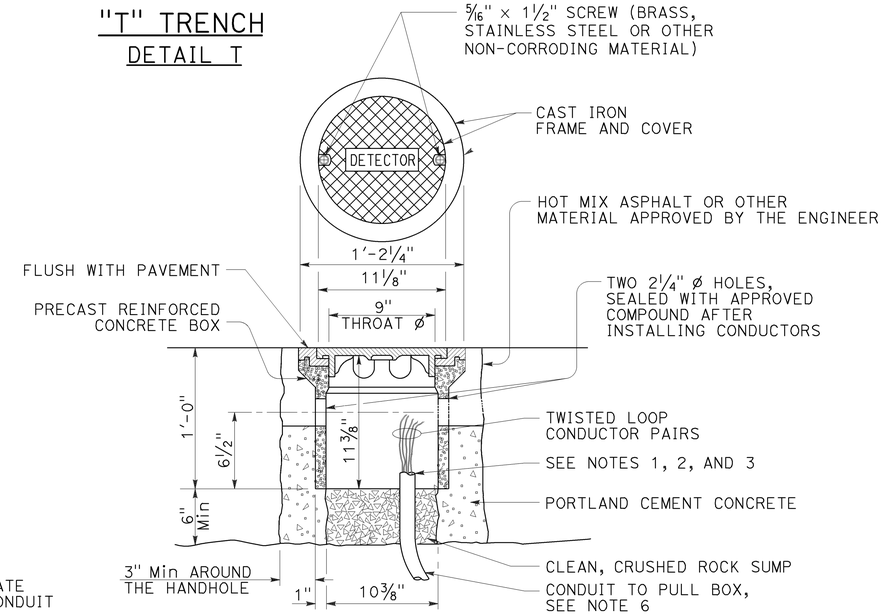

DETECTOR HANDHOLE DETAIL

NOTES:

1. Bushing shall be used at end of conduit.
2. Tape detector conductors or cables 3" each side of bushings.
3. Install duct seal compound to each end of termination conduit before installing sealant.
4. Round all sharp edges where detector conductors or cables have to pass.
5. End of conduit shall be 3⅛" below roadway surface.
6.

Conduit size	Loop conductors
1"C minimum	1 to 2 pairs
1½"C minimum	3 to 4 pairs
2"C minimum	5 or more pairs

7. Splice detector conductors or cables to detector lead-in-cable.
8. Location of detector handhole when shown on plans.
9. When the shoulder and traveled way are paved with the same material and there is no joint between them, the conduit shall extend only 2'-0" into the shoulder pavement.
10. ¾"C, Type 3 conduit 6" long minimum, plug both ends with duct compound to keep out sealant.
11. ½" Minimum between top of conduit and pavement surface.
12. Sawcut shall not exceed 1" in width and ⅛" longer than conduit to be installed.
13. Conductors with ½" minimum slack inside conduit.
14. Inductive loop detector saw slot.

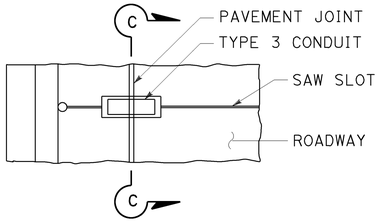

PLAN VIEW

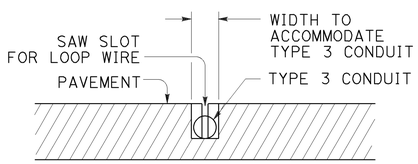

SECTION C-C

TYPE B
CURB TERMINATION DETAIL

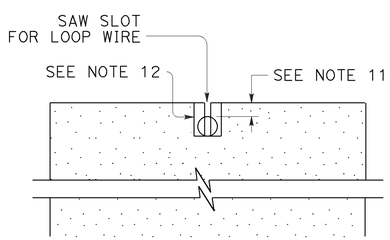

SECTION A-A

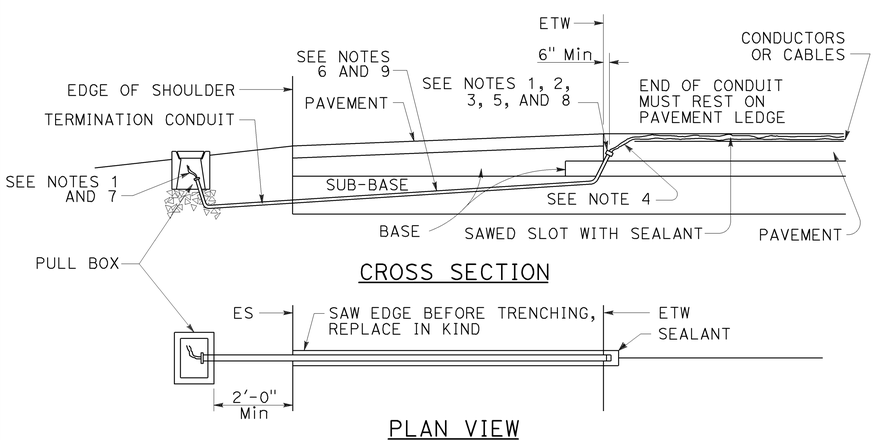

CROSS SECTION

PLAN VIEW

SHOULDER TERMINATION DETAILS

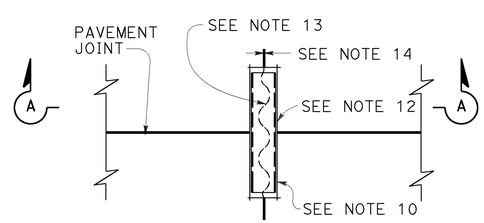

PLAN VIEW

TYPICAL LOOP LEAD-IN DETAIL
AT PAVEMENT JOINT

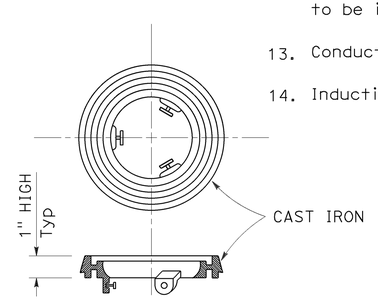

LOCKING GRADE RING

STATE OF CALIFORNIA
DEPARTMENT OF TRANSPORTATION

ELECTRICAL SYSTEMS (CURB AND SHOULDER TERMINATION, TRENCH, AND HANDHOLE DETAILS)

NO SCALE

RSP ES-5D DATED OCTOBER 30, 2015 SUPERSEDES RSP ES-5D DATED JULY 19, 2013 AND STANDARD PLAN ES-5D DATED MAY 20, 2011 - PAGE 451 OF THE STANDARD PLANS BOOK DATED 2010.

REVISED STANDARD PLAN RSP ES-5D

8-19-15

Dist	COUNTY	ROUTE	POST MILES TOTAL PROJECT	SHEET No.	TOTAL SHEETS
03	Sac	51,160	4.0/4.3, R44.4/47.0	108	117

REGISTERED CIVIL ENGINEER

April 15, 2016
PLANS APPROVAL DATE

REGISTERED PROFESSIONAL ENGINEER Stanley P. Johnson No. C57793 Exp. 3-31-18 CIVIL STATE OF CALIFORNIA

THE STATE OF CALIFORNIA OR ITS OFFICERS OR AGENTS SHALL NOT BE RESPONSIBLE FOR THE ACCURACY OR COMPLETENESS OF SCANNED COPIES OF THIS PLAN SHEET.

TO ACCOMPANY PLANS DATED 5-2-16

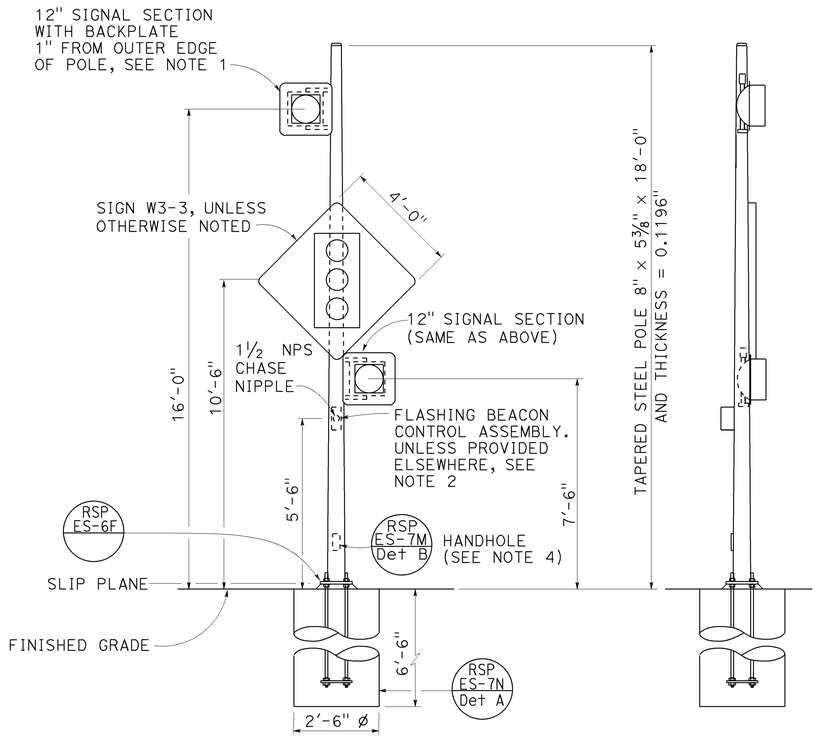

FRONT VIEW

SIDE VIEW

TYPE 15-FBS
FLASHING BEACON WITH SLIP BASE INSTALLATION
DETAIL A

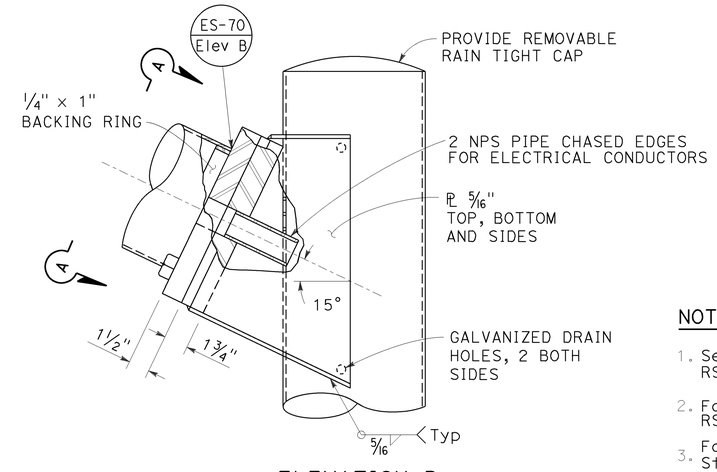

ELEVATION B

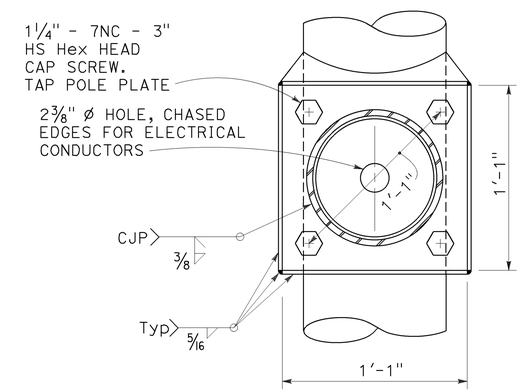

VIEW A-A

FLASHING BEACON MAST ARM CONNECTION DETAIL
DETAIL B

NOTES:

1. See Revised Standard Plans RSP ES-4A and RSP ES-4D for attachment fitting details.
2. For wiring diagram, see Revised Standard Plan RSP ES-14B.
3. For additional notes and details, see Revised Standard Plans RSP ES-7M and RSP ES-7N.
4. Handhole shall be located on the downstream side of traffic.
5. See project plans for type of standard to be installed.

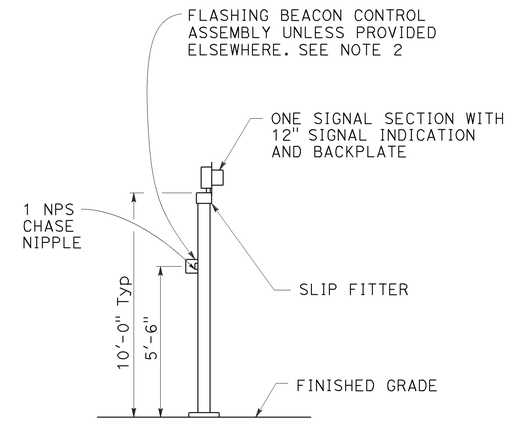

TYPE 1-A, 1-B, 1-C, AND 1-D
FLASHING BEACON INSTALLATION
DETAIL D
See Note 5

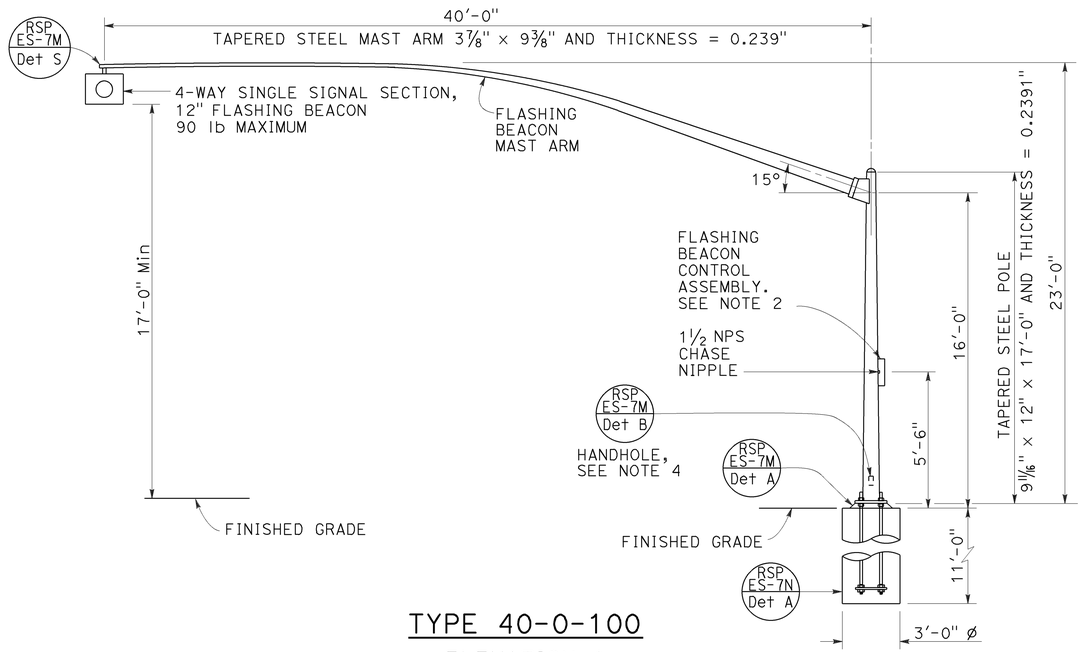

TYPE 40-0-100
ELEVATION A

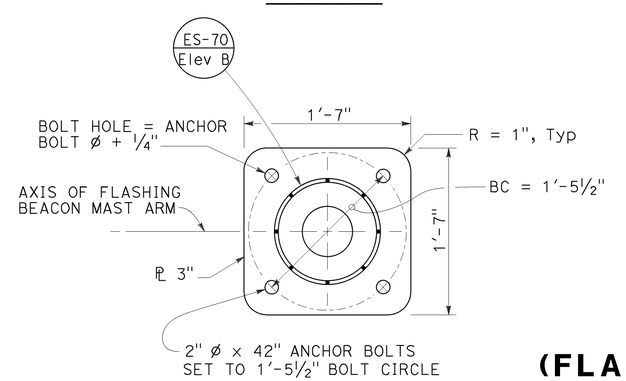

BASE PLATE
DETAIL C

STATE OF CALIFORNIA
DEPARTMENT OF TRANSPORTATION

ELECTRICAL SYSTEMS (FLASHING BEACON ON A TYPE 1, TYPE 15-FBS, AND TYPE 40 STANDARD)

NO SCALE

RSP ES-7J DATED APRIL 15, 2016 SUPERSEDES RSP ES-7J DATED OCTOBER 30, 2015 AND RSP ES-7J DATED JULY 19, 2013 AND STANDARD PLAN ES-7J DATED MAY 20, 2011 - PAGE 471 OF THE STANDARD PLANS BOOK DATED 2010.

REVISED STANDARD PLAN RSP ES-7J

2010 REVISED STANDARD PLAN RSP ES-7J

1-26-16

DIST	COUNTY	ROUTE	POST MILES TOTAL PROJECT	SHEET NO.	TOTAL SHEETS
03	Sac	51,160	4.0/4.3, R44.4/47.0	109	117

Theresa Gabriel
REGISTERED ELECTRICAL ENGINEER

April 15, 2016
PLANS APPROVAL DATE

REGISTERED PROFESSIONAL ENGINEER Theresa Aziz Gabriel No. E15129 Exp. 6-30-16 ELECTRICAL STATE OF CALIFORNIA

THE STATE OF CALIFORNIA OR ITS OFFICERS OR AGENTS SHALL NOT BE RESPONSIBLE FOR THE ACCURACY OR COMPLETENESS OF SCANNED COPIES OF THIS PLAN SHEET.

TO ACCOMPANY PLANS DATED 5-2-16

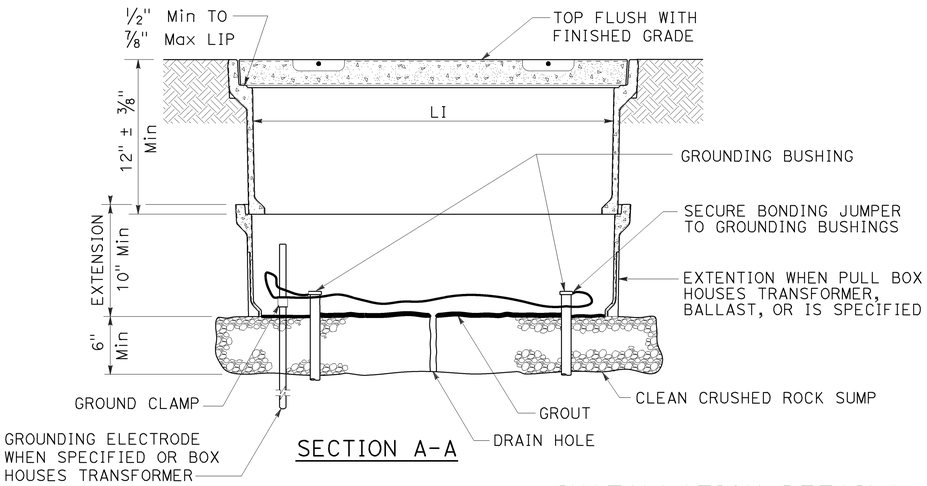

SECTION A-A

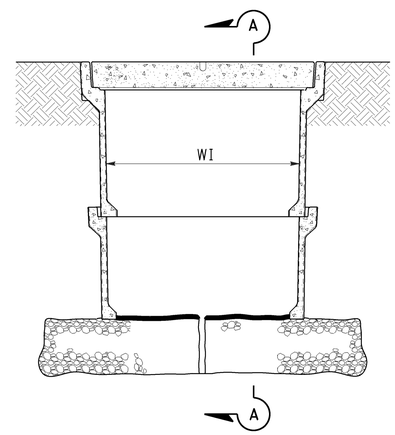

SIDE VIEW

INSTALLATION DETAILS

DETAIL A

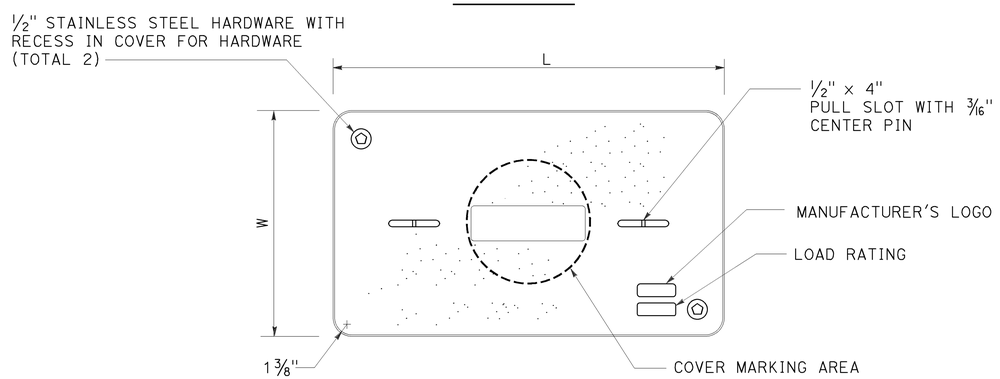

COVER TOP VIEW

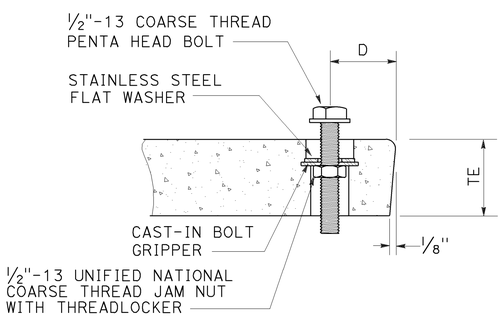

TYPICAL COVER CAPTIVE BOLT

OR SIMILAR

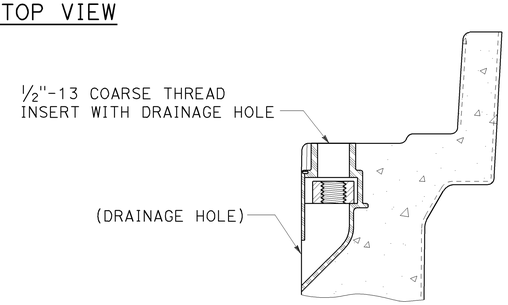

TYPICAL THREADED INSERT

OR SIMILAR

DIMENSION TABLE

PULL BOX	PULL BOX					COVER				
	MINIMUM DEPTH BOX	MINIMUM DEPTH EXTENSION	MINIMUM WEIGHT	LI Min	WI Min	TE	D	L	W	MINIMUM WEIGHT
No. 3 1/2	12"	N/A	40 lb	1′ - 3"	9"	1 3/4"	1 3/4"	1′-3 1/4" - 1′-3 3/8"	10" - 10 1/8"	30 lb
No. 5	12"	10"	55 lb	1′ - 8"	11"	2"	1 3/4"	1′-11 1/4"	1′-1 3/4"	60 lb
No. 6	12"	10"	70 lb	2′ - 4 1/4"	1′ - 3 1/4"	2"	2"	2′-6 1/2"	1′-5 1/2"	85 lb

NOTES:

1. The nominal dimensions of the opening in which the cover sets shall be the same as the cover dimensions except the length and width dimensions shall be 1/8" greater.
2. Covers and boxes shall be interchangeable with California standard male and female gages. When interchanged with a standard male or female gage, the top surfaces shall be flush within 1/8". Top outside radius of covers and pull boxes shall have a 1/8" radius.
3. Dimensions for the cover for non-traffic pull box are nominal values.

STATE OF CALIFORNIA
DEPARTMENT OF TRANSPORTATION

ELECTRICAL SYSTEMS (NON-TRAFFIC PULL BOX)

NO SCALE

RSP ES-8A DATED APRIL 15, 2016 SUPERSEDES RSP ES-8A DATED OCTOBER 30, 2015 AND RSP ES-8A DATED JULY 19, 2013 AND RSP ES-8A DATED JANUARY 20, 2012 THAT SUPPLEMENTS THE STANDARD PLANS BOOK DATED 2010.

REVISED STANDARD PLAN RSP ES-8A

2010 REVISED STANDARD PLAN RSP ES-8A

1-22-16

DIST	COUNTY	ROUTE	POST MILES TOTAL PROJECT	SHEET NO.	TOTAL SHEETS
03	Sac	51,160	4.0/4.3, R44.4/47.0	110	117

Theresa Gabriel
REGISTERED ELECTRICAL ENGINEER

April 15, 2016
PLANS APPROVAL DATE

REGISTERED PROFESSIONAL ENGINEER
Theresa Aziz Gabriel
No. E15129
Exp. 6-30-16
ELECTRICAL
STATE OF CALIFORNIA

THE STATE OF CALIFORNIA OR ITS OFFICERS OR AGENTS SHALL NOT BE RESPONSIBLE FOR THE ACCURACY OR COMPLETENESS OF SCANNED COPIES OF THIS PLAN SHEET.

TO ACCOMPANY PLANS DATED 5-2-16

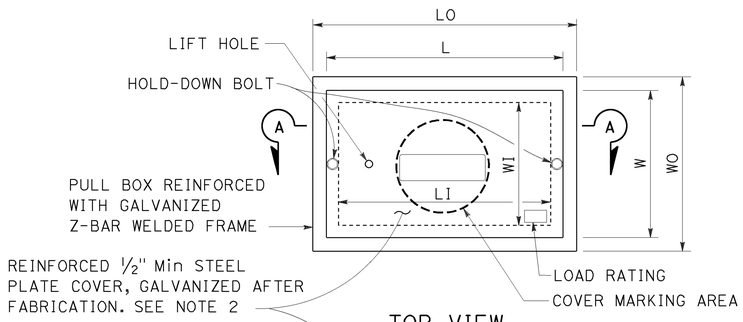

TOP VIEW

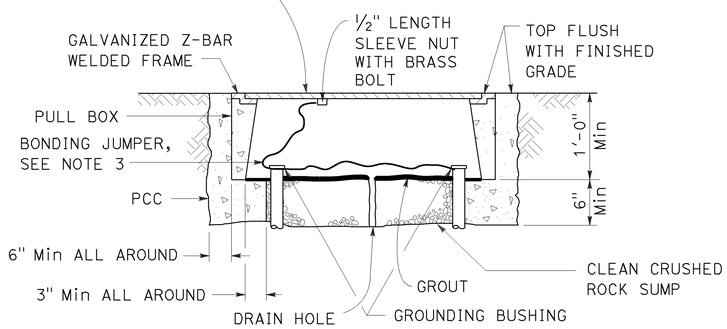

SECTION A-A

No. 3½(T), No. 5(T) AND No. 6(T) TRAFFIC PULL BOX

NOTES:

1. Traffic pull box shall be provided with steel cover and special concrete footing. Steel cover shall have embossed non-skid pattern.
2. Steel reinforcing shall be as regularly used in the standard products of the respective manufacturer.
3. Bonding jumper for metal covers shall be 3' long, minimum.
4. The nominal dimensions of the opening in which the cover sets shall be the same as the cover dimensions except the length and width dimensions shall be ⅛" greater.
5. Covers and boxes shall be interchangeable with California standard male and female gages. When interchanged with a standard male or female gage, the top surfaces shall be flush within ⅛".

DIMENSION TABLE

PULL BOX	PULL BOX						COVER	
	MINIMUM * THICKNESS	MINIMUM DEPTH BOX AND EXTENSION	LO	LI	WO	WI	L **	W **
No. 3½(T)	1½"	1'-0"	1'-10" - 1'-11"	1'-5" - 1'-6½"	1'-3" - 1'-4"	10" - 1'-0"	1'-8" -1'-8½"	1'-1" - 1'-2"
No. 5(T)	1¾"	1'-0"	2'-5" - 2'-6"	2'-0" - 2'-1"	1'-6" - 1'-7"	1'-1" - 1'-2"	2'-3" - 2'-3½"	1'-4" - 1'-4½"
No. 6(T)	2"	1'-0"	2'-11" - 3'-1"	2'-6" - 2'-7"	1'-10" - 2'-0"	1'-5" - 1'-6"	2'-9" - 2'-9½"	1'-8" - 1'-8½"

* EXCLUDING CONDUIT WEB ** TOP DIMENSION

STATE OF CALIFORNIA
DEPARTMENT OF TRANSPORTATION

ELECTRICAL SYSTEMS (TRAFFIC PULL BOX)

NO SCALE

RSP ES-8B DATED APRIL 15, 2016 SUPERSEDES RSP ES-8B DATED OCTOBER 30, 2015 AND RSP ES-8B DATED JULY 19, 2013 AND RSP ES-8B DATED JANUARY 20, 2012 THAT SUPPLEMENTS THE STANDARD PLANS BOOK DATED 2010.

REVISED STANDARD PLAN RSP ES-8B

2010 REVISED STANDARD PLAN RSP ES-8B

1-22-16

Dist	COUNTY	ROUTE	POST MILES TOTAL PROJECT	SHEET No.	TOTAL SHEETS
03	Sac	51,160	4.0/4.3, R44.4/47.0	111	117

Theresa Gabriel
REGISTERED ELECTRICAL ENGINEER

April 15, 2016
PLANS APPROVAL DATE

REGISTERED PROFESSIONAL ENGINEER Theresa Aziz Gabriel No. E15129 Exp. 6-30-16 ELECTRICAL STATE OF CALIFORNIA

THE STATE OF CALIFORNIA OR ITS OFFICERS OR AGENTS SHALL NOT BE RESPONSIBLE FOR THE ACCURACY OR COMPLETENESS OF SCANNED COPIES OF THIS PLAN SHEET.

TO ACCOMPANY PLANS DATED 5-2-16

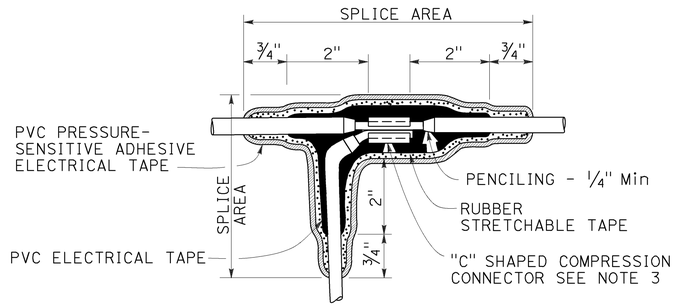

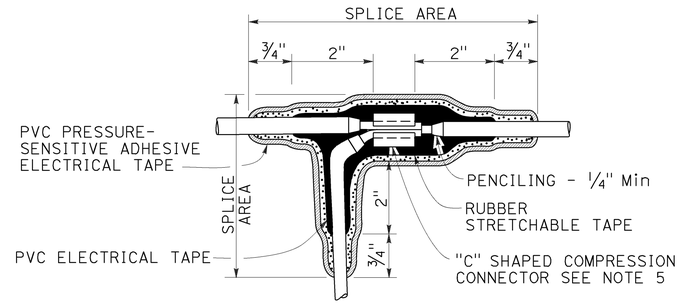

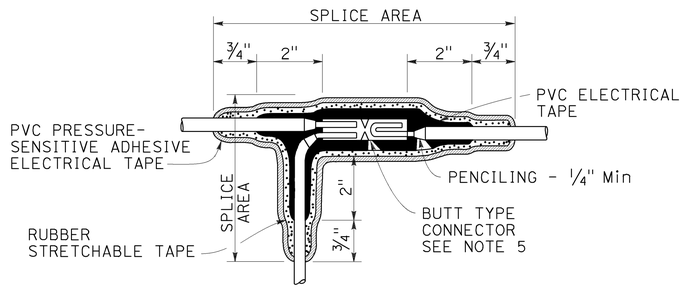

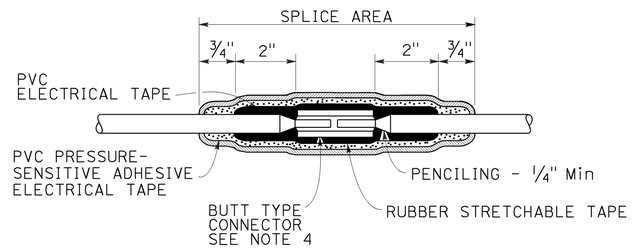

TYPICAL SPLICE INSULATION METHOD B

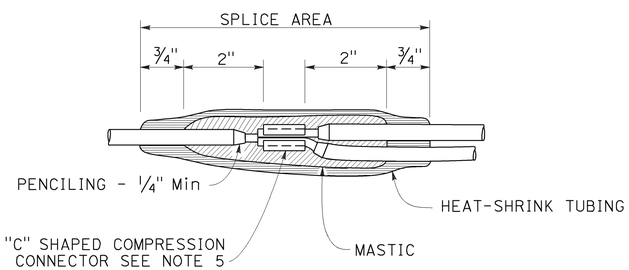

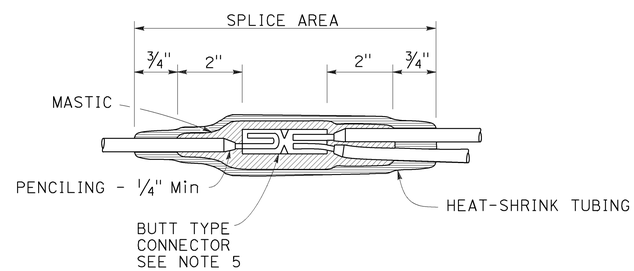

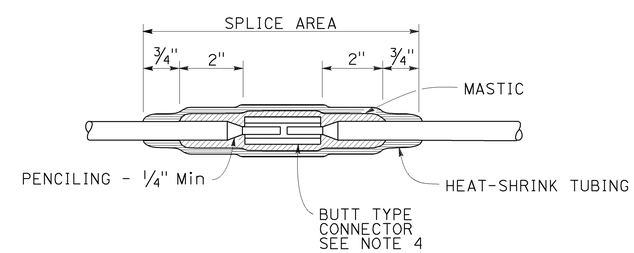

TYPICAL SPLICE INSULATION HEAT-SHRINK TUBING

NOTES:

1. Dimensions are minimum.
2. Rubber tapes shall be rolled after application.
3. Between 1 free-end and 1 through conductor.
4. Between 2 free-end conductors.
5. Between 3 free-end conductors.

STATE OF CALIFORNIA
DEPARTMENT OF TRANSPORTATION

ELECTRICAL SYSTEMS (SPLICE INSULATION METHODS DETAILS)

NO SCALE

RSP ES-13A DATED APRIL 15, 2016 SUPERSEDES RSP ES-13A DATED OCTOBER 30, 2015 AND STANDARD PLAN ES-13A DATED MAY 20, 2011 - PAGE 491 OF THE STANDARD PLANS BOOK DATED 2010.

REVISED STANDARD PLAN RSP ES-13A

2010 REVISED STANDARD PLAN RSP ES-13A

1-22-16

Dist	COUNTY	ROUTE	POST MILES TOTAL PROJECT	SHEET No.	TOTAL SHEETS
03	Sac	51,160	4.0/4.3, R44.4/47.0	112	117

Theresa Gabriel
REGISTERED ELECTRICAL ENGINEER

April 15, 2016
PLANS APPROVAL DATE

REGISTERED PROFESSIONAL ENGINEER Theresa Aziz Gabriel No. E15129 Exp. 6-30-16 ELECTRICAL STATE OF CALIFORNIA

THE STATE OF CALIFORNIA OR ITS OFFICERS OR AGENTS SHALL NOT BE RESPONSIBLE FOR THE ACCURACY OR COMPLETENESS OF SCANNED COPIES OF THIS PLAN SHEET.

TO ACCOMPANY PLANS DATED 5-2-16

CIRCUIT VOLTAGE	FUSE VOLTAGE RATING	FUSE CURRENT RATING						
		HPS LAMP BALLAST		LOW PRESSURE SODIUM BALLAST	INDUCTION SIGN LIGHTING	SINGLE PHASE (TWO WIRE) TRANSFORMERS (PRIMARY SIDE)		
		70 W	100 W	180 W	85 W	1 kVA	2 kVA	3 kVA
120 V	250 V	5 A	5 A	5 A	5 A	10 A	20 A	30 A
240 V	250 V	5 A	5 A	5 A	5 A	6 A	10 A	20 A
480 V	500-600 V	5 A	5 A	3 A	1 A (SEE NOTE 2)	3 A	6 A	10 A

NOTES:

1. Primary lines of multiple ballasts shall be provided with fused connectors. Fuse ratings shall be as noted above.
2. See Revised Standard Plan RSP ES-15D, Type SC3 control.

FUSE RATINGS FOR FUSED CONNECTORS

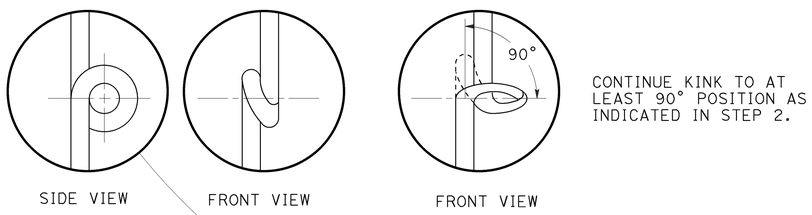

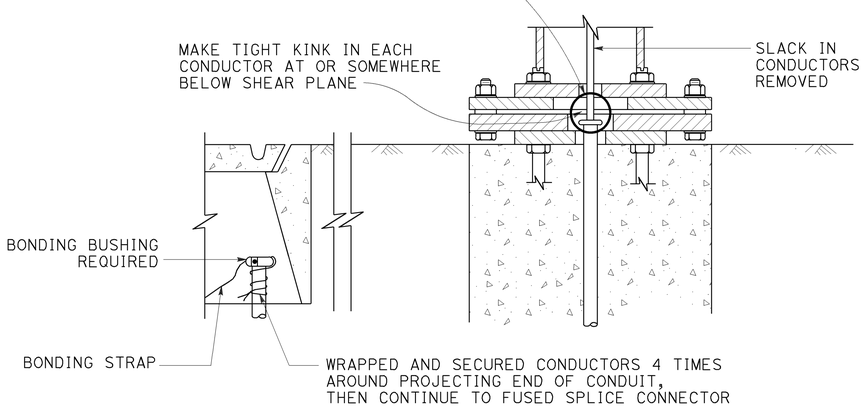

KINKING DETAIL FOR SLIP BASE STANDARDS

DETAIL A

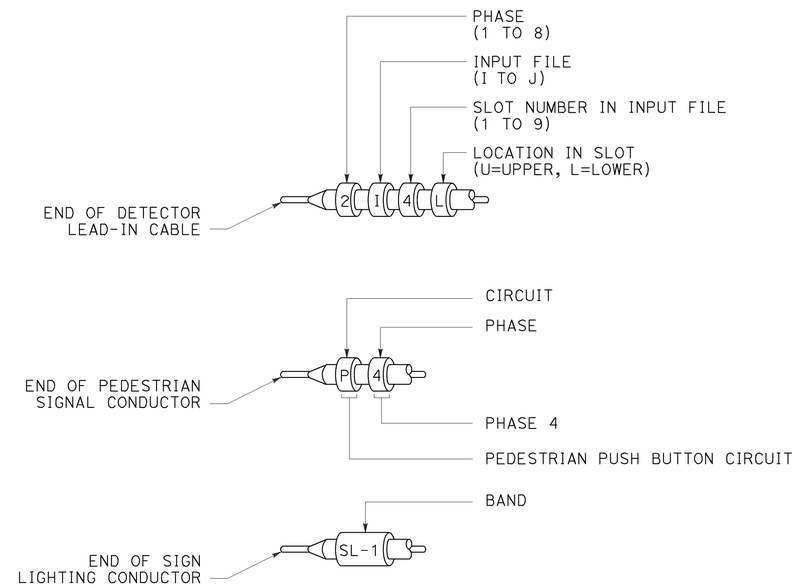

TYPICAL BANDING DETAILS

DETAIL B

STATE OF CALIFORNIA
DEPARTMENT OF TRANSPORTATION

ELECTRICAL SYSTEMS (FUSE RATING, KINKING AND BANDING DETAIL)

NO SCALE

RSP ES-13B DATED APRIL 15, 2016 SUPERSEDES STANDARD PLAN ES-13B DATED MAY 20, 2011 - PAGE 492 OF THE STANDARD PLANS BOOK DATED 2010.

REVISED STANDARD PLAN RSP ES-13B

2010 REVISED STANDARD PLAN RSP ES-13B

1-12-16

DIST	COUNTY	ROUTE	POST MILES TOTAL PROJECT	SHEET No.	TOTAL SHEETS
03	Sac	51,160	4.0/4.3, R44.4/47.0	113	117

REGISTERED CIVIL ENGINEER 3-7-16 DATE

5-2-16
PLANS APPROVAL DATE

REGISTERED PROFESSIONAL ENGINEER QUANG M. VO No. C 055211 Exp. 6-30-16 CIVIL STATE OF CALIFORNIA

The State of California or its officers or agents shall not be responsible for the accuracy or completeness of scanned copies of this plan sheet.

INDEX TO PLANS

SHEET NO.	TITLE
1	GENERAL PLAN NO.1
2	GENERAL PLAN NO.2
3	GENERAL PLAN NO.3
4	DETAILS
4	APPROACH SLAB TYPE R(30D)

STANDARD PLANS 2010

SHEET NO.	TITLE
A10A	ABBREVIATIONS (SHEET 1 OF 2)
RSP A10B	ABBREVIATIONS (SHEET 2 OF 2)
RSP B6-21	JOINT SEALS (MAXIMUM MOVEMENT RATING = 2")

NOTES: (APPLY TO THIS SHEET ONLY)

Indicates existing.

Indicates limits of remove existing 1"± approximate thickness, AC overlay.

Indicates limits of prepare concrete bridge deck surface, remove unsound concrete and place rapid setting concrete (patch) and place new 1" polyester concrete overlay. For "JOINT AND DECK REPAIR DETAILS", see "DETAILS" sheet.

Indicates new Approach Slab Type R(30D), prepare concrete bridge deck surface and place new 1" polyester concrete overlay.

Indicates limits of clean expansion joint and install new joint seal. For details, see "DETAILS" sheet.

① See Roadway Plans for conform details.

② Remove concrete surface to establish a transition taper from structure to roadway. See "DETAILS" sheet for "TRANSITION TAPER DETAIL".

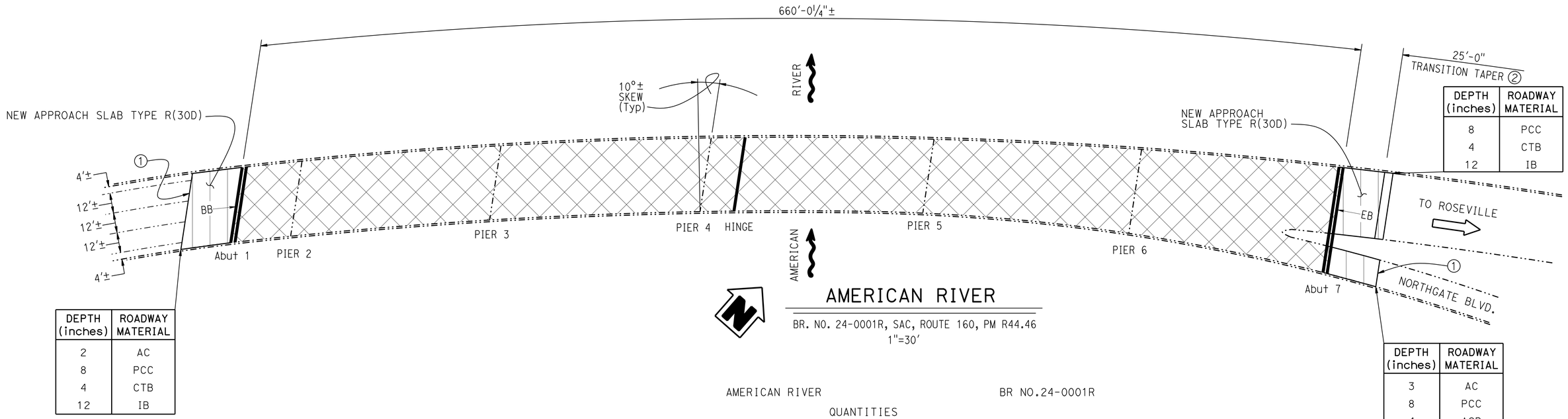

DEPTH (inches)	ROADWAY MATERIAL
8	PCC
4	CTB
12	IB

DEPTH (inches)	ROADWAY MATERIAL
2	AC
8	PCC
4	CTB
12	IB

DEPTH (inches)	ROADWAY MATERIAL
3	AC
8	PCC
4	ACB

AMERICAN RIVER

BR. NO. 24-0001R, SAC, ROUTE 160, PM R44.46
1"=30'

AMERICAN RIVER BR NO.24-0001R

QUANTITIES

PUBLIC SAFETY PLAN	LUMP	SUM
RAPID SETTING CONCRETE (PATCH)	155	CF
REMOVE ASPHALT CONCRETE SURFACING	31,074	SQFT
REMOVE UNSOUND CONCRETE	155	CF
PREPARE CONCRETE BRIDGE DECK SURFACE	34,072	SQFT
FURNISH POLYESTER CONCRETE OVERLAY	3,407	CF
PLACE POLYESTER CONCRETE OVERLAY	34,072	SQFT
GRIND EXISTING BRIDGE DECK	83	SQYD
STRUCTURAL CONCRETE, APPROACH SLAB (TYPE R)	108	CY
PAVING NOTCH EXTENSION	74	CF
CLEAN EXPANSION JOINT	142	LF
JOINT SEAL (MR 1/2")	106	LF
JOINT SEAL (MR 1½")	106	LF
JOINT SEAL (MR 2")	45	LF

NOTE:
THE CONTRACTOR MUST VERIFY ALL CONTROLLING FIELD DIMENSIONS BEFORE ORDERING OR FABRICATING ANY MATERIAL.

DIST	COUNTY	ROUTE	POST MILES TOTAL PROJECT	SHEET No.	TOTAL SHEETS
03	Sac	51,160	4.0/4.3, R44.4/47.0	114	117

REGISTERED CIVIL ENGINEER 3-7-16 DATE

5-2-16
PLANS APPROVAL DATE

REGISTERED PROFESSIONAL ENGINEER QUANG M. VO No. C 055211 Exp. 6-30-16 CIVIL STATE OF CALIFORNIA

The State of California or its officers or agents shall not be responsible for the accuracy or completeness of scanned copies of this plan sheet.

NOTES: (APPLY TO THIS SHEET ONLY)

Indicates existing.

Indicates limits of prepare concrete bridge deck surface, remove unsound concrete and place rapid setting concrete (patch) and place new 1" polyester concrete overlay. For "JOINT AND DECK REPAIR DETAILS", see "DETAILS" sheet.

Indicates new Approach Slab Type R(30D), prepare concrete bridge deck surface and place new 1" polyester concrete overlay.

Indicates limits of clean expansion joint and install new joint seal. For details, see "DETAILS" sheet.

① See Roadway Plans for conform details.

② Remove concrete surface to establish a transition taper from structure to roadway. See "DETAILS" sheet for "TRANSITION TAPER DETAIL".

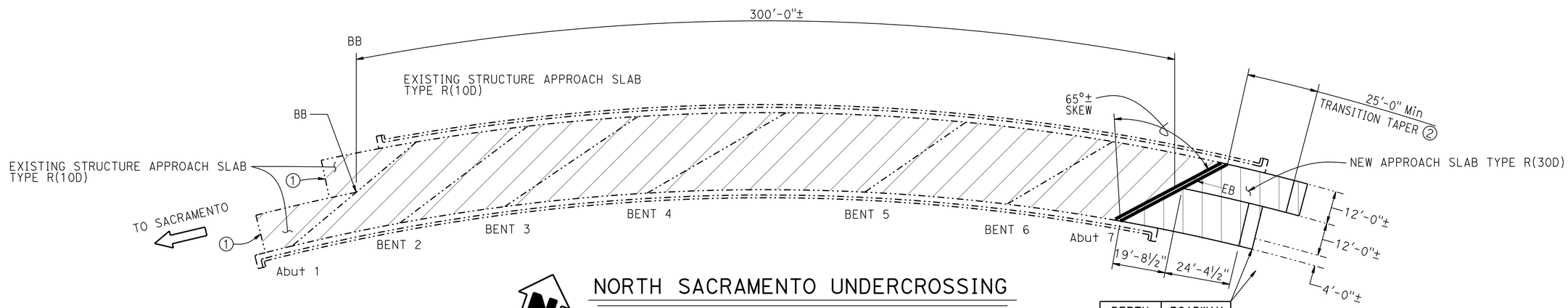

NORTH SACRAMENTO UNDERCROSSING

BR. NO. 24-0111L, SAC, ROUTE 160, PM R45.02
1"=20'

DEPTH (inches)	ROADWAY MATERIAL
8	PCC
4	ACB
12	IB

NORTH SACRAMENTO BR NO.24-0111L

QUANTITIES

RAPID SETTING CONCRETE (PATCH)	50	CF
REMOVE UNSOUND CONCRETE	50	CF
PREPARE CONCRETE BRIDGE DECK SURFACE	9,360	SQFT
FURNISH POLYESTER CONCRETE OVERLAY	936	CF
PLACE POLYESTER CONCRETE OVERLAY	9,360	SQFT
GRIND EXISTING BRIDGE DECK	79	SQYD
STRUCTURAL CONCRETE, APPROACH SLAB (TYPE R)	43	CY
PAVING NOTCH EXTENSION	50	CF
CLEAN EXPANSION JOINT	67	LF
JOINT SEAL (MR 1/2")	67	LF
BONDED JOINT SEAL (MR 2")	67	LF

NOTE:
THE CONTRACTOR MUST VERIFY ALL CONTROLLING FIELD DIMENSIONS BEFORE ORDERING OR FABRICATING ANY MATERIAL.

DIST	COUNTY	ROUTE	POST MILES TOTAL PROJECT	SHEET No.	TOTAL SHEETS
03	Sac	51,160	4.0/4.3, R44.4/47.0	115	117

REGISTERED CIVIL ENGINEER 3-7-16 DATE

5-2-16
PLANS APPROVAL DATE

REGISTERED PROFESSIONAL ENGINEER QUANG M. VO No. C 055211 Exp. 6-30-16 CIVIL STATE OF CALIFORNIA

The State of California or its officers or agents shall not be responsible for the accuracy or completeness of scanned copies of this plan sheet.

NOTES: (APPLY TO THIS SHEET ONLY)

Indicates existing.

Indicates limits of remove existing 1"± approximate thickness, AC overlay.

Indicates limits of prepare concrete bridge deck surface, remove unsound concrete and place rapid setting concrete (patch) and place new 1" polyester concrete overlay. For "JOINT AND DECK REPAIR DETAILS", see "DETAILS" sheet.

Indicates new Approach Slab Type R(30D), prepare concrete bridge deck surface and place new 1" polyester concrete overlay.

Indicates limits of clean expansion joint and install new joint seal. For details, see "DETAILS" sheet.

① See Roadway Plans for conform details.

② Remove concrete surface to establish a transition taper from structure to roadway. See "DETAILS" sheet for "TRANSITION TAPER DETAIL".

For SECTION A-A see "DETAILS" sheet.

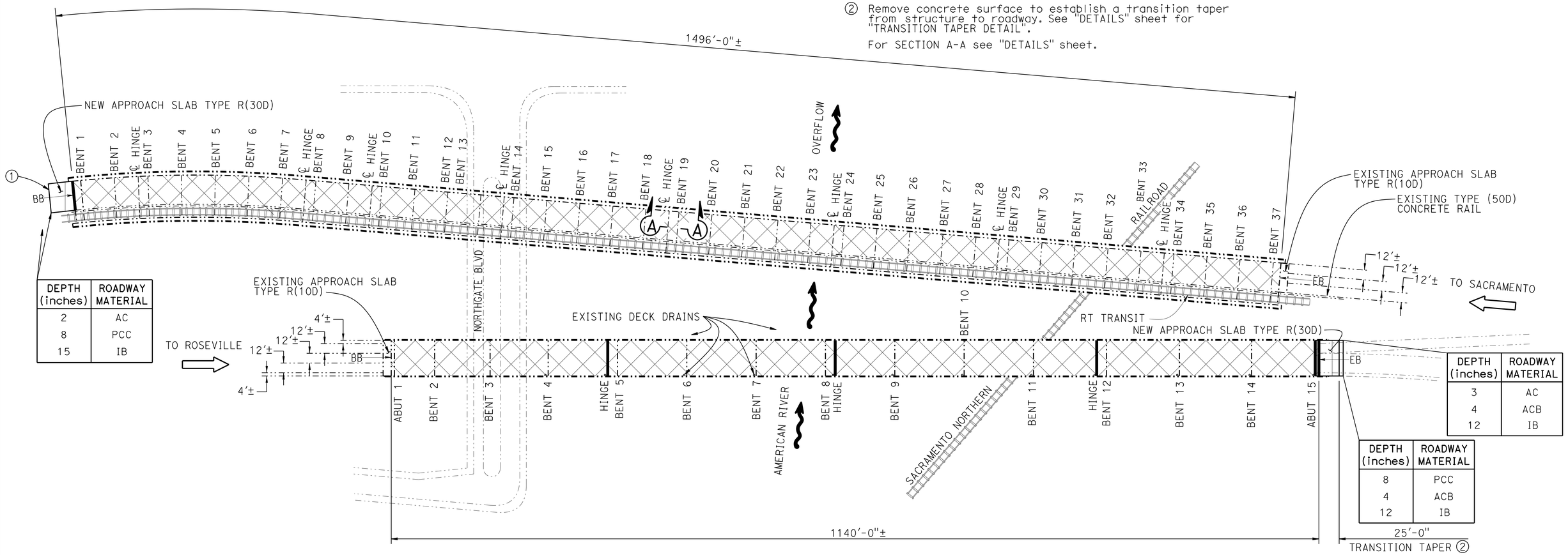

DEPTH (inches)	ROADWAY MATERIAL
2	AC
8	PCC
15	IB

DEPTH (inches)	ROADWAY MATERIAL
3	AC
4	ACB
12	IB

DEPTH (inches)	ROADWAY MATERIAL
8	PCC
4	ACB
12	IB

NORTH SACRAMENTO VIADUCT

BR. NO. 24-0100L/R, SAC, ROUTE 160, PM R44.71
1"=60'

NORTH SACRAMENTO VIADUCT BR NO.24-0100L/R

QUANTITIES

PUBLIC SAFETY PLAN	LUMP	SUM
RAPID SETTING CONCRETE (PATCH)	520	CF
REMOVE ASPHALT CONCRETE SURFACING	104,016	SQFT
REMOVE UNSOUND CONCRETE	520	CF
PREPARE CONCRETE BRIDGE DECK SURFACE	106,416	SQFT
FURNISH POLYESTER CONCRETE OVERLAY	10,642	CF
PLACE POLYESTER CONCRETE OVERLAY	106,416	SQFT
GRIND EXISTING BRIDGE DECK	222	SQYD
STRUCTURAL CONCRETE, APPROACH SLAB (TYPE R)	107	CY
PAVING NOTCH EXTENSION	60	CF
CLEAN EXPANSION JOINT	178	LF
JOINT SEAL (MR 1/2")	45	LF
JOINT SEAL (MR 2")	215	LF

NOTE:
THE CONTRACTOR MUST VERIFY ALL CONTROLLING FIELD DIMENSIONS BEFORE ORDERING OR FABRICATING ANY MATERIAL.

Arlene Ford 3-7-16
DESIGN ENGINEER

	BY	CHECKED			
DESIGN	Q. VO	P. KANG	LOAD FACTOR DESIGN	LIVE LOADING: HS20-44 AND ALTERNATIVE AND PERMIT DESIGN LOAD	
DETAILS	N. KELLEY	P. KANG	LAYOUT	N. KELLEY	Q. VO
QUANTITIES	Q. VO	P. KANG	SPECIFICATIONS	JARVIS MAHE	JARVIS MAHE

STATE OF CALIFORNIA
DEPARTMENT OF TRANSPORTATION

DIVISION OF MAINTENANCE
STRUCTURE MAINTENANCE DESIGN

BRIDGE NO. VARIES
POST MILE VARIOUS

ROUTE 160 BRIDGES
GENERAL PLAN NO.3

STRUCTURES MAINTENANCE GENERAL PLAN SHEET (ENGLISH) (REV. 09-01-10)

ORIGINAL SCALE IN INCHES FOR REDUCED PLANS 0 1 2 3

UNIT: 3488
PROJECT NUMBER & PHASE: 0316000035 1 CONTRACT NO.: 03-0H11U1

DISREGARD PRINTS BEARING EARLIER REVISION DATES

REVISION DATES 8-12-15 2-19-16 2-29-16 3-25-16 SHEET 3 OF 5

FILE => 03_0h11u1_cgp.dgn

USERNAME => s119538 DATE PLOTTED => 05-JUL-2016 TIME PLOTTED => 17:04

DIST	COUNTY	ROUTE	POST MILES TOTAL PROJECT	SHEET No.	TOTAL SHEETS
03	Sac	51,160	4.0/4.3, R44.4/47.0	116	117

REGISTERED CIVIL ENGINEER 3-7-16 DATE

5-2-16
PLANS APPROVAL DATE

REGISTERED PROFESSIONAL ENGINEER QUANG M. VO No. C 055211 Exp. 6-30-16 CIVIL STATE OF CALIFORNIA

The State of California or its officers or agents shall not be responsible for the accuracy or completeness of scanned copies of this plan sheet.

Notes:

Polyester Concrete Overlay

Remove concrete deck surface

DECK REPAIR TABLE REMOVE UNSOUND CONCRETE AND RAPID SETTING CONCRETE (PATCH)			
BRIDGE NAME	BRIDGE NUMBER	APPROXIMATE AREA DAMAGED (PERCENT)	APPROXIMATE DEPTH (INCHES)
AMERICAN RIVER	24-0001R	2	3
NORTH SACRAMENTO VIADUCT	24-0100L/R	2	3
NORTH SACRAMENTO	24-0111L	1	3

Locations to be determined by the Engineer.
For details see "Joint And Deck Repair Details".

JOINT SEAL TABLE

BRIDGE NAME	BRIDGE NUMBER	LOCATION		MINIMUM "MR" (INCHES)	APPROXIMATE LENGTH (FEET)	EXISTING WATERSTOP	APPROX DEPTH TO CLEAN EXP JOINT (INCHES)
AMERICAN RIVER	24-0001R	Abut 1	BB	1½	44.5	NO	12
		BACKWALL	BW	½	44.5	NO	12
		HINGE NEAR PIER 4	HJ	2	44.5	NO	12
		BACKWALL	BW	½	61.0	NO	12
		Abut 7	EB	1½	61.0	NO	12
NORTH SACRAMENTO VIADUCT	24-0100L	Abut 1L	BB	2	36.5	NO	12
NORTH SACRAMENTO VIADUCT	24-0100R	HINGE NEAR BENT 5	HJ	2	44.5	NO	12
		HINGE NEAR BENT 8	HJ	2	44.5	NO	12
		HINGE NEAR BENT 12	HJ	2	44.5	NO	12
		BACKWALL	BW	½	44.5	NO	12
		Abut 15	EB	2	44.5	NO	12
NORTH SACRAMENTO UNDERCROSSING	24-0111L	BACKWALL	BW	½	67.4	NO	12
		Abut 7	EB	2*	67.4	NO	12

LEGEND:
BB - Paving Notch at beginning of bridge
EB - Paving Notch at end of bridge
HJ - Hinge Expansion Joint
BW - Backwall
* - Bonded Joint Seal

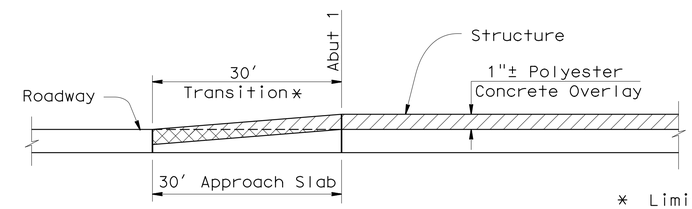

TRANSITION TAPER DETAIL

NO SCALE

* Limits of remove concrete bridge deck surface to establish a transition taper from structure to roadway. The joint is not shown at Abut 1 for clarity.

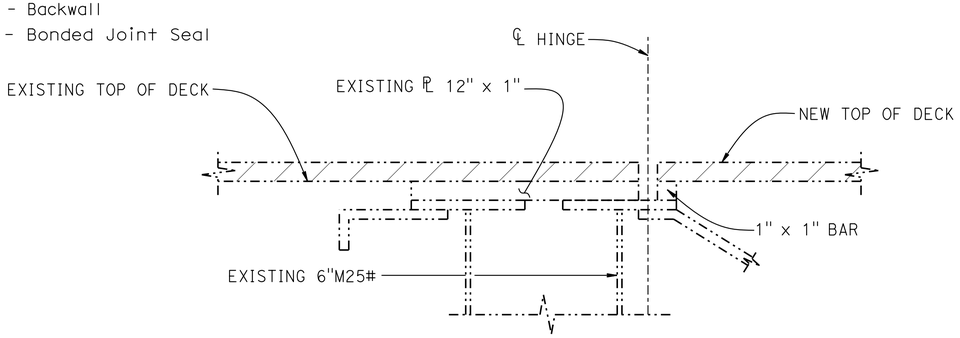

SECTION A-A

3"=1'-0"

NOTE:
THE CONTRACTOR MUST VERIFY ALL CONTROLLING FIELD DIMENSIONS BEFORE ORDERING OR FABRICATING ANY MATERIAL.

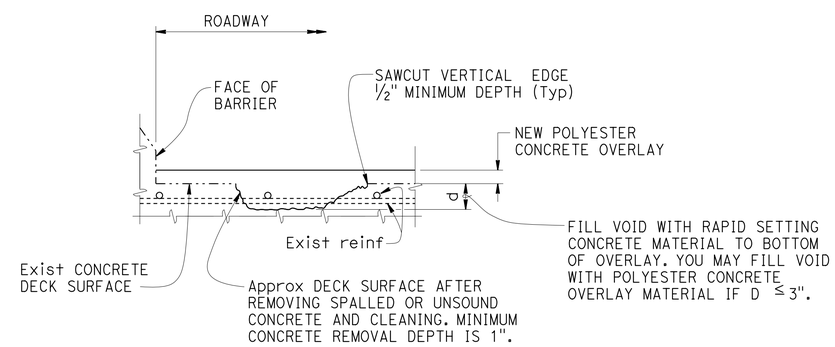

DECK REPAIR DETAIL - OVERLAY

Note: Reinforcement may be encountered during deck concrete removal.
NO SCALE

DESIGN	BY Q. VO	CHECKED P. KANG	
DETAILS	BY N. KELLEY	CHECKED P. KANG	
QUANTITIES	BY Q. VO	CHECKED P. KANG	

STATE OF CALIFORNIA
DEPARTMENT OF TRANSPORTATION

DIVISION OF MAINTENANCE
STRUCTURE MAINTENANCE DESIGN

BRIDGE NO. VARIES
POST MILE VARIOUS

ROUTE 160 BRIDGES
DETAILS

STRUCTURES MAINTENANCE DETAIL SHEET (ENGLISH) (REV. 09-01-10)

ORIGINAL SCALE IN INCHES FOR REDUCED PLANS 0 1 2 3

UNIT: 3488
PROJECT NUMBER & PHASE: 0316000035 1
CONTRACT NO.: 03-0H11U1

DISREGARD PRINTS BEARING EARLIER REVISION DATES

REVISION DATES 8-14-15 3-25-16 2-19-16 2-29-16 SHEET 4 OF 5

FILE => 03_0h11u1_ddet.dgn

USERNAME => s119538 DATE PLOTTED => 05-JUL-2016 TIME PLOTTED => 17:04

DIST	COUNTY	ROUTE	POST MILES TOTAL PROJECT	SHEET No.	TOTAL SHEETS
03	Sac	51,160	4.0/4.3, R44.4/47.0	117	117

REGISTERED CIVIL ENGINEER 3-7-16 DATE

5-2-16
PLANS APPROVAL DATE

REGISTERED PROFESSIONAL ENGINEER QUANG M. VO No. C 055211 Exp. 6-30-16 CIVIL STATE OF CALIFORNIA

The State of California or its officers or agents shall not be responsible for the accuracy or completeness of electronic copies of this plan sheet.

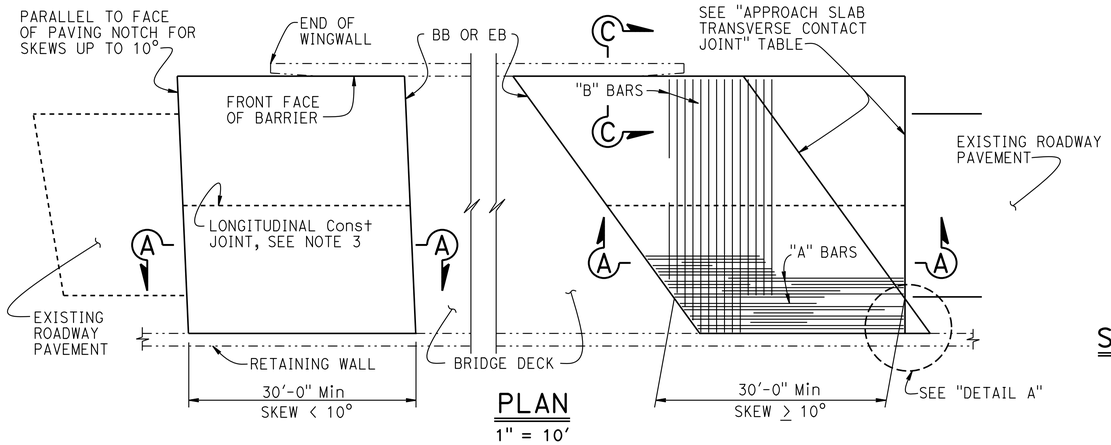

PLAN
1" = 10'

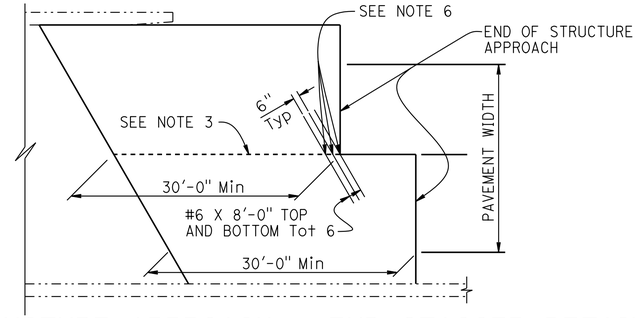

STRUCTURE APPROACH - END STAGGER DETAIL
NO SCALE

APPROACH SLAB TRANSVERSE CONTACT JOINT		
APPROACH SKEW	WITH AC ROADWAY PAVEMENT	WITH PCC ROADWAY PAVEMENT
< 10°	PARALLEL TO FACE OF PN	PARALLEL TO FACE OF PAVING NOTCH
10° - 45°	PARALLEL TO FACE OF PN USE "DETAIL A"	STAGGER LINES 24' TO 36' APART
> 45°	PARALLEL TO FACE OF PN USE "DETAIL A"	STAGGER AT EACH LANE LINE

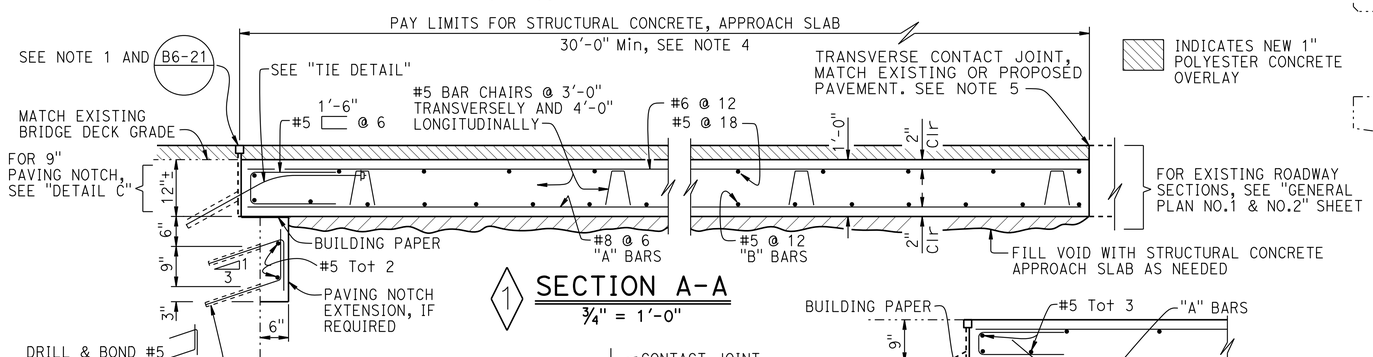

SECTION A-A
¾" = 1'-0"

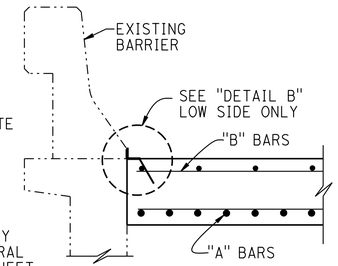

SECTION C-C
¾" = 1'-0"

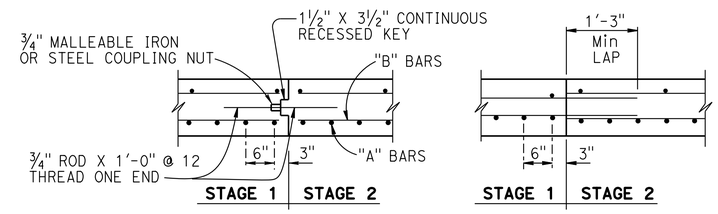

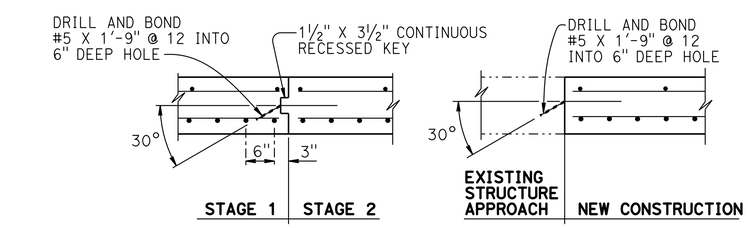

LONGITUDINAL CONSTRUCTION JOINT ALTERNATIVES
¾" = 1'-0"

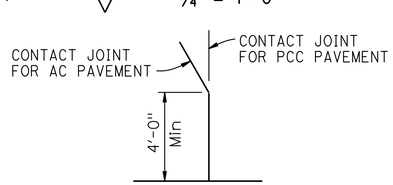

DETAIL A
No Scale

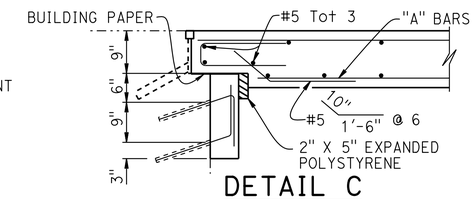

DETAIL C
¾" = 1'-0"

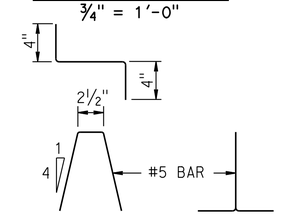

BAR CHAIR DETAIL
1½" = 1'-0"

NOTE: For details not shown, see "SECTION A-A"

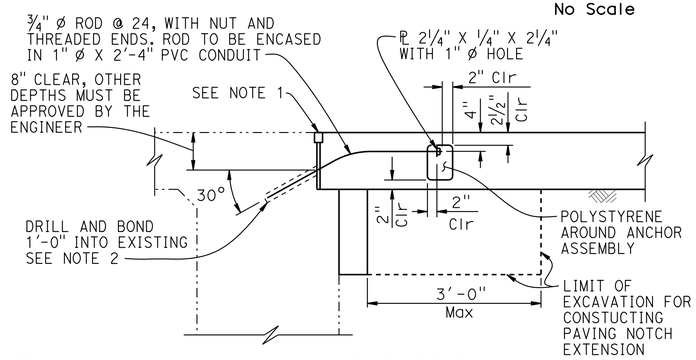

TIE DETAIL
¾" = 1'-0"

NOTE:
THE CONTRACTOR MUST VERIFY ALL CONTROLLING FIELD DIMENSIONS BEFORE ORDERING OR FABRICATING ANY MATERIAL.

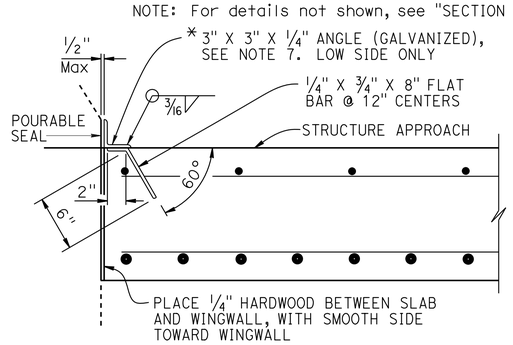

*(TO BE USED WITH CONCRETE BARRIER WITH VERTICAL FACE)

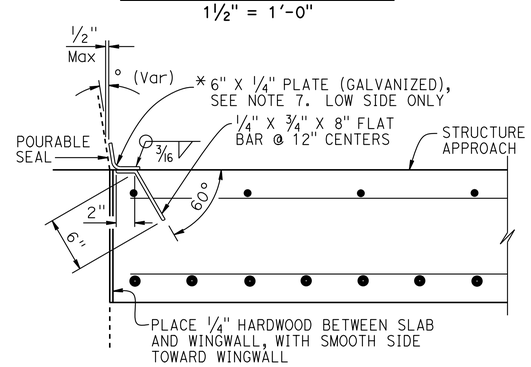

*(TO BE USED WITH CONCRETE BARRIER WITH SLOPING FACE)

DETAIL B
1½" = 1'-0"

NOTES:
1. For details not shown or noted, see Structure Plans. Adjust bar reinforcement to clear a sawcut for sealed joint, when required
2. Space to avoid existing prestress anchorages and main reinforcement
3. Longitudinal construction joints, when permitted by the Engineer, must be located on lane lines
4. Transverse contact joint must be a minimum of 5'-0" from an existing or constructed weakened plane joint
5. For transverse contact joint with new PCC paving. refer to Standard Plan P10
6. Couplers are required for stage construction
7. End angle or plate at beginning of barrier transition, end of wingwall or end of structure approach as applicable

SPECIAL DETAILS

REVISED STANDARD DRAWING

FILE NO. xs3-150

APPROVAL DATE July 2011

1 MODIFIED DETAIL
2 MODIFIED NOTES

STATE OF CALIFORNIA DEPARTMENT OF TRANSPORTATION

DIVISION OF ENGINEERING SERVICES

BRIDGE NO. VARIES
POST MILE VARIOUS

ROUTE 160 BRIDGES
STRUCTURE APPROACH TYPE R(30D)

DS OSD 2147A (ENGLISH STANDARD DRAWING "XS" BORDER REV. (02-02-11)

ORIGINAL SCALE IN INCHES FOR REDUCED PLANS 0 1 2 3

UNIT: 3488
PROJECT NUMBER & PHASE: 0316000035 1
CONTRACT NO.: 03-0H11U1

DISREGARD PRINTS BEARING EARLIER REVISION DATES

REVISION DATES 8-22-15 1-22-16 12-16-15 1-19-16 SHEET 5 OF 5

FILE => 03_0h11u1_exsr30d.dgn

USERNAME => s119538 DATE PLOTTED => 05-JUL-2016 TIME PLOTTED => 17:04