ACST-P049(169)

Dist	COUNTY	ROUTE	POST MILES TOTAL PROJECT	SHEET No.	TOTAL SHEETS
03	ED	49	23.6/24.5	1	202

STATE OF CALIFORNIA

DEPARTMENT OF TRANSPORTATION

PROJECT PLANS FOR CONSTRUCTION ON

STATE HIGHWAY

IN EL DORADO COUNTY NEAR COLOMA FROM 0.1 MILE EAST OF MARSHALL ROAD TO 0.3 MILE EAST OF LOTUS ROAD

TO BE SUPPLEMENTED BY STANDARD PLANS DATED 2015

INDEX OF PLANS

SHEET No.	DESCRIPTION
1	TITLE AND LOCATION MAP
2-5	TYPICAL CROSS SECTIONS
6-8	LAYOUTS
9-12	PROFILES
13-16	SUPERELEVATION DIAGRAMS
17-26	CONSTRUCTION DETAILS
27-29	CONTOUR GRADING PLANS
30-52	DRAINAGE PLANS, PROFILES, DETAILS AND QUANTITIES
53-55	UTILITY PLANS
56	CONSTRUCTION AREA SIGNS
57	MOTORIST INFORMATION PLANS
58-79	STAGE CONSTRUCTION AND TRAFFIC HANDLING PLANS
80-82	STAGE CONSTRUCTION QUANTITIES
83-88	PAVEMENT DELINEATION AND SIGN PLANS, DETAILS AND QUANTITIES
89-96	SIGN DETAILS AND QUANTITIES
97-101	SUMMARY OF QUANTITIES
102-104	RETAINING WALL PLANS, DETAILS AND QUANTITIES
105-106	LANDSCAPE DETAILS
107-113	EROSION CONTROL PLANS, DETAILS AND QUANTITIES
114-116	ELECTRICAL PLANS
117-123	REVISED STANDARD PLANS

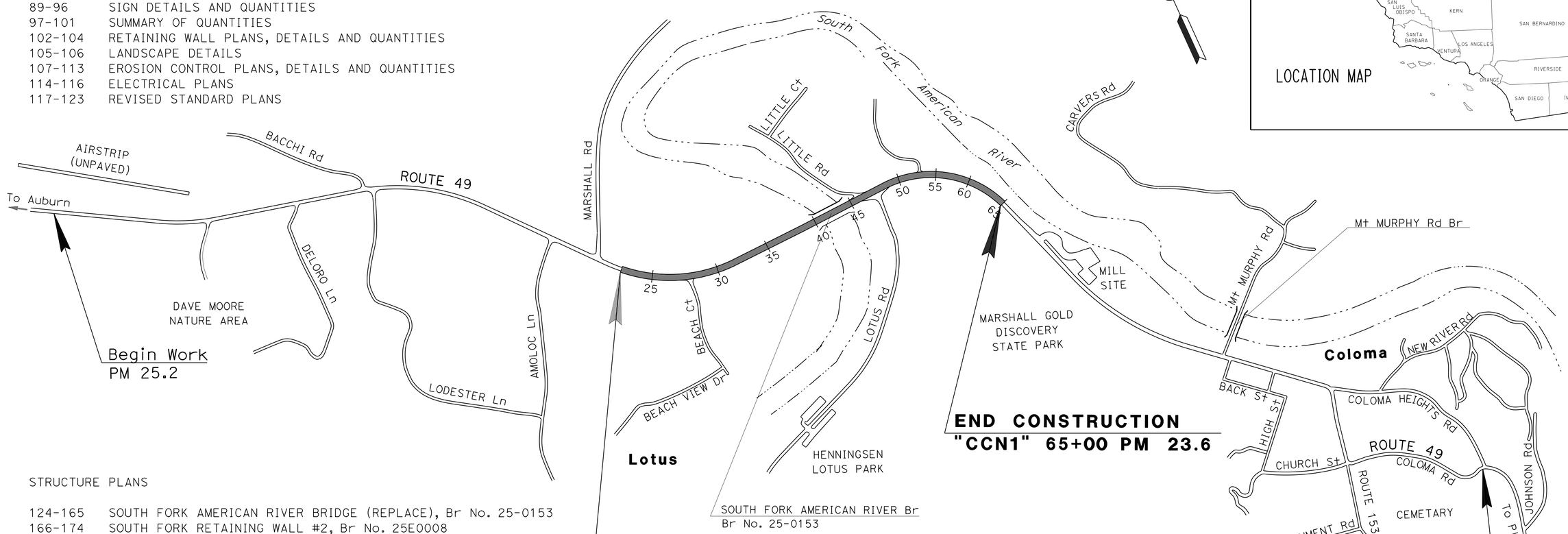

STRUCTURE PLANS

124-165 SOUTH FORK AMERICAN RIVER BRIDGE (REPLACE), Br No. 25-0153
166-174 SOUTH FORK RETAINING WALL #2, Br No. 25E0008

EL DORADO IRRIGATION DISTRICT

175-187 WATER

CVIN

188-202 FIBER OPTIC

THE STANDARD PLANS LIST APPLICABLE TO THIS CONTRACT IS INCLUDED IN THE NOTICE TO BIDDERS AND SPECIAL PROVISIONS BOOK.

NO SCALE

THE CONTRACTOR SHALL POSSESS THE CLASS (OR CLASSES) OF LICENSE AS SPECIFIED IN THE "NOTICE TO BIDDERS."

PROJECT MANAGER JESS AVILA

DESIGN MANAGER NESAR FORMOLI

Ron Tollison 5-9-16
PROJECT ENGINEER DATE
REGISTERED CIVIL ENGINEER

May 9, 2016
PLANS APPROVAL DATE

REGISTERED PROFESSIONAL ENGINEER RONALD W. TOLLISON No. 67389 Exp. 12/31/16 CIVIL STATE OF CALIFORNIA

THE STATE OF CALIFORNIA OR ITS OFFICERS OR AGENTS SHALL NOT BE RESPONSIBLE FOR THE ACCURACY OR COMPLETENESS OF SCANNED COPIES OF THIS PLAN SHEET.

CONTRACT No.	03-0F3104
PROJECT ID	0300000078

LAST REVISION 00-00-00 DATE PLOTTED => 08-JUL-2016 TIME PLOTTED => 16:18

Dist	COUNTY	ROUTE	POST MILES TOTAL PROJECT	SHEET No.	TOTAL SHEETS
03	ED	49	23.6/24.5	2	202

REGISTERED CIVIL ENGINEER 5-9-16 DATE

5-9-16
PLANS APPROVAL DATE

REGISTERED PROFESSIONAL ENGINEER RONALD W. TOLLISON No. 67389 Exp. 12/31/16 CIVIL STATE OF CALIFORNIA

THE STATE OF CALIFORNIA OR ITS OFFICERS OR AGENTS SHALL NOT BE RESPONSIBLE FOR THE ACCURACY OR COMPLETENESS OF SCANNED COPIES OF THIS PLAN SHEET.

NOTE:

1. DIMENSIONS OF PAVEMENT STRUCTURES (STRUCTURAL SECTIONS) ARE SUBJECT TO TOLERANCES IN THE STANDARD SPECIFICATIONS
2. SUPERELEVATIONS ARE SHOWN ON SUPERELEVATION DIAGRAMS
3. FOR RETAINING WALL, SEE RETAINING WALL PLANS
4. FOR BRIDGE TYPICAL, SEE STRUCTURE PLANS
5. FOR LOCATIONS AND TYPE OF CURB AND GUTTER SEE LAYOUT SHEETS
6. FOR LOCATIONS OF COLORED SHOULDERS SEE LAYOUT SHEETS

ABBREVIATIONS:

BSW - BACK OF SIDEWALK
RHMA (TYPE G) - RUBBERIZED HOT MIX ASPHALT (GAP GRADED)

ROUTE 49 DESIGN DESIGNATION

ADT (2017)	5940	D	64%
ADT (2037)	8910	T	5%
DHV	830	V	40
ESAL	1,575,000	TI_{20}	9.5

PAVEMENT CLIMATE REGION LOW MOUNTAIN

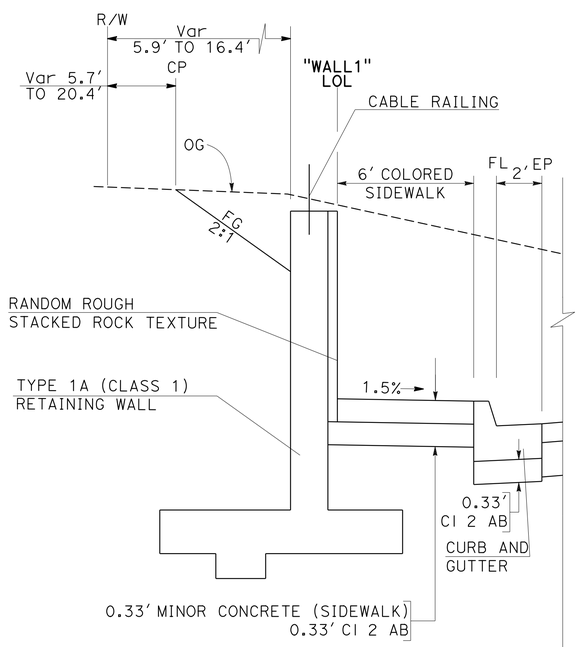

"CCN1" 29+90.01 TO 33+15.00

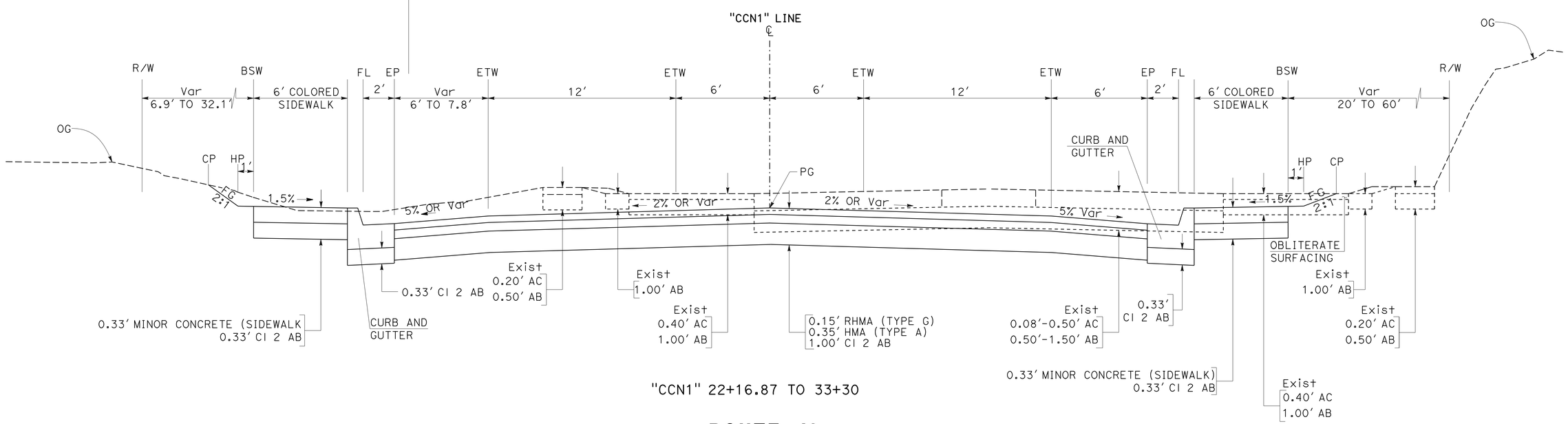

"CCN1" 22+16.87 TO 33+30

ROUTE 49

TYPICAL CROSS SECTIONS

NO SCALE

X-1

STATE OF CALIFORNIA - DEPARTMENT OF TRANSPORTATION
Caltrans®
DESIGN
FUNCTIONAL SUPERVISOR: NESAR FORMOLI
CALCULATED-DESIGNED BY: SAMAY STANACZKZAI
CHECKED BY: KEVIN CANFIELD
REVISED BY
DATE REVISED

LAST REVISION 00-00-00
DATE PLOTTED => 08-JUL-2016
TIME PLOTTED => 16:18

Dist	COUNTY	ROUTE	POST MILES TOTAL PROJECT	SHEET No.	TOTAL SHEETS
03	ED	49	23.6/24.5	3	202

REGISTERED CIVIL ENGINEER 5-9-16 DATE

5-9-16
PLANS APPROVAL DATE

REGISTERED PROFESSIONAL ENGINEER RONALD W. TOLLISON No. 67389 Exp. 12/31/16 CIVIL STATE OF CALIFORNIA

THE STATE OF CALIFORNIA OR ITS OFFICERS OR AGENTS SHALL NOT BE RESPONSIBLE FOR THE ACCURACY OR COMPLETENESS OF SCANNED COPIES OF THIS PLAN SHEET.

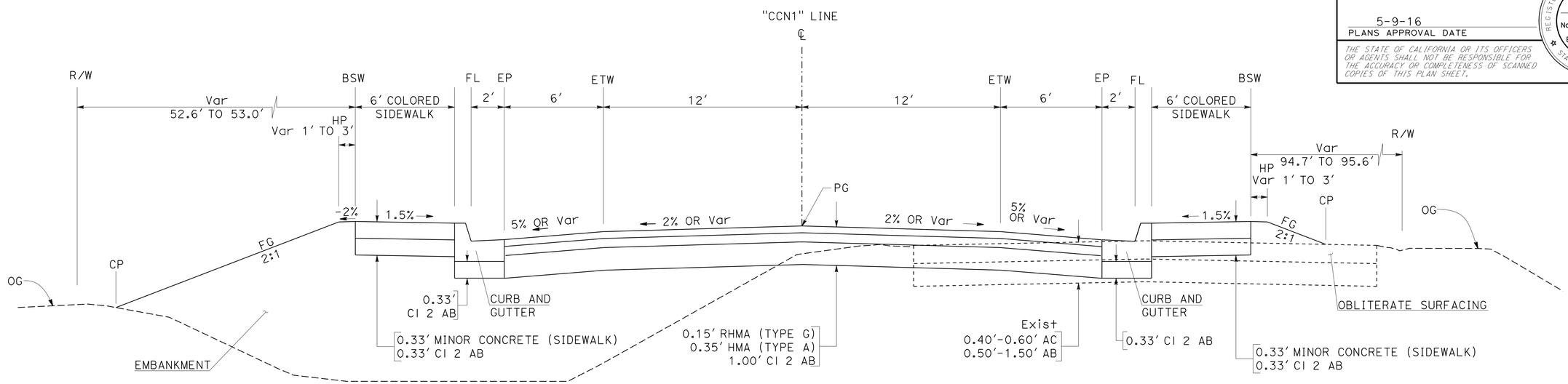

"CCN1" 44+77.95 TO 45+05.56

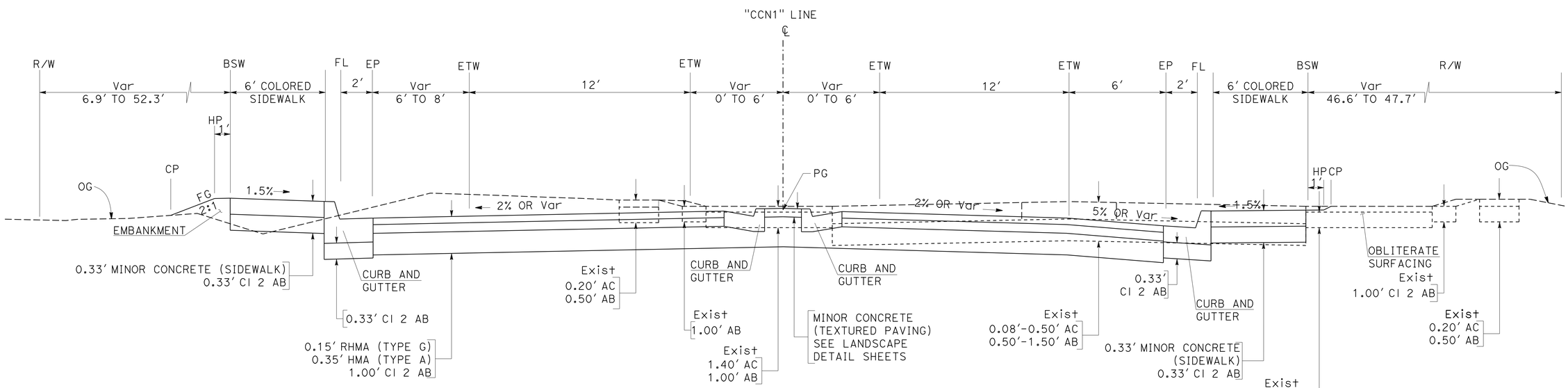

"CCN1" 33+30 TO 39+58.95

ROUTE 49

TYPICAL CROSS SECTIONS

NO SCALE

X-2

REVISED BY | DATE REVISED
SAMAY STANACKZAI | KEVIN CANFIELD
CALCULATED-DESIGNED BY | CHECKED BY
FUNCTIONAL SUPERVISOR | NESAR FORMOLI

STATE OF CALIFORNIA - DEPARTMENT OF TRANSPORTATION
Caltrans
DESIGN

LAST REVISION 00-00-00 | DATE PLOTTED => 08-JUL-2016 | TIME PLOTTED => 16:18

Dist	COUNTY	ROUTE	POST MILES TOTAL PROJECT	SHEET No.	TOTAL SHEETS
03	ED	49	23.6/24.5	4	202

REGISTERED CIVIL ENGINEER 5-9-16 DATE

5-9-16
PLANS APPROVAL DATE

REGISTERED PROFESSIONAL ENGINEER
RONALD W. TOLLISON
No. 67389
Exp. 12/31/16
CIVIL
STATE OF CALIFORNIA

THE STATE OF CALIFORNIA OR ITS OFFICERS OR AGENTS SHALL NOT BE RESPONSIBLE FOR THE ACCURACY OR COMPLETENESS OF SCANNED COPIES OF THIS PLAN SHEET.

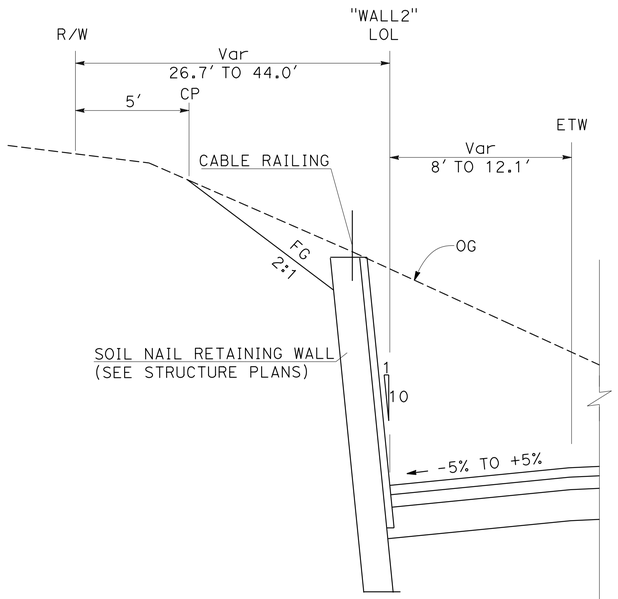

"CCN1" 46+00.04 TO 47+14

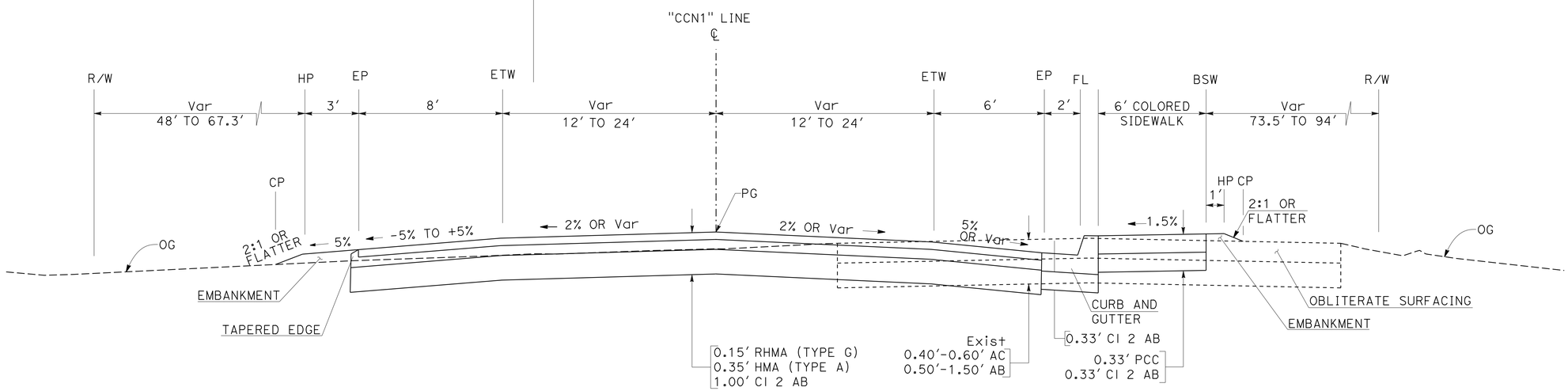

"CCN1" 45+07 TO 47+14

ROUTE 49

TYPICAL CROSS SECTIONS

NO SCALE

X-3

STATE OF CALIFORNIA - DEPARTMENT OF TRANSPORTATION
Caltrans
DESIGN

FUNCTIONAL SUPERVISOR: NESAR FORMOLI
CALCULATED-DESIGNED BY: SAMAY STANACKZAI
CHECKED BY: KEVIN CANFIELD
REVISED BY
DATE REVISED

LAST REVISION 00-00-00
DATE PLOTTED => 08-JUL-2016
TIME PLOTTED => 16:18

Dist	COUNTY	ROUTE	POST MILES TOTAL PROJECT	SHEET No.	TOTAL SHEETS
03	ED	49	23.6/24.5	5	202

REGISTERED CIVIL ENGINEER 5-9-16 DATE

5-9-16
PLANS APPROVAL DATE

REGISTERED PROFESSIONAL ENGINEER
RONALD W. TOLLISON
No. 67389
Exp. 12/31/16
CIVIL
STATE OF CALIFORNIA

THE STATE OF CALIFORNIA OR ITS OFFICERS OR AGENTS SHALL NOT BE RESPONSIBLE FOR THE ACCURACY OR COMPLETENESS OF SCANNED COPIES OF THIS PLAN SHEET.

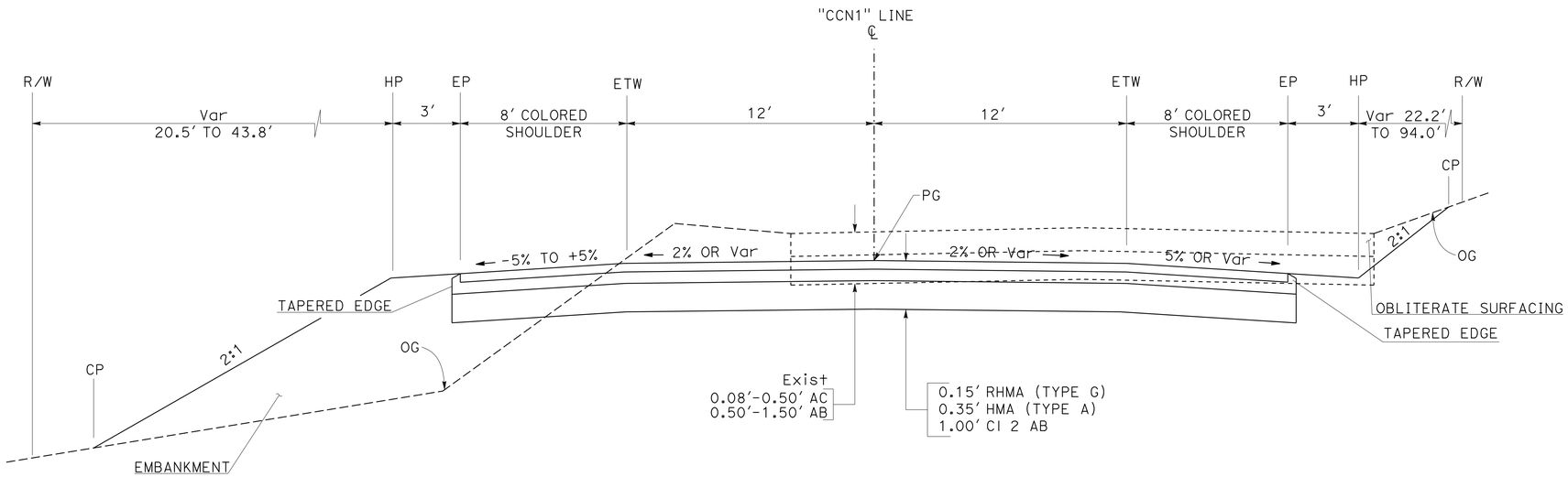

"CCN1" 48+87.96 TO "CCN1" 61+50

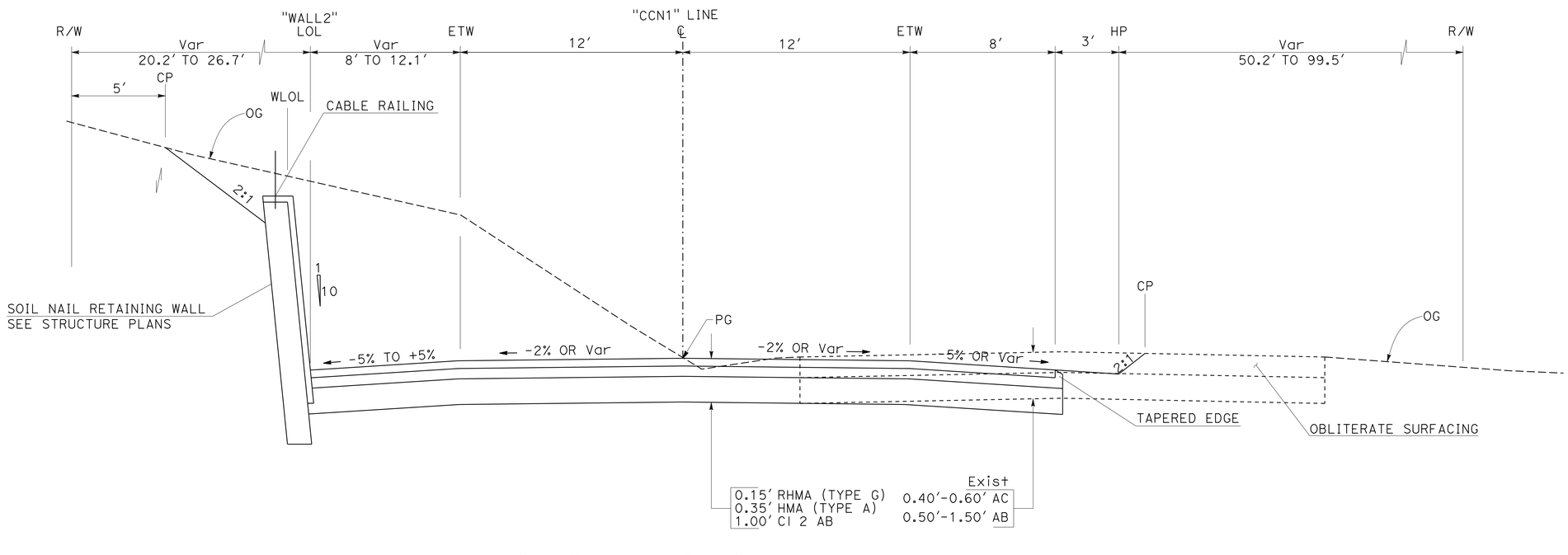

"CCN1" 47+14 TO "CCN1" 48+87.96

ROUTE 49

TYPICAL CROSS SECTIONS

NO SCALE

X-4

STATE OF CALIFORNIA - DEPARTMENT OF TRANSPORTATION
DESIGN
Caltrans®

FUNCTIONAL SUPERVISOR: NESAR FORMOLI
CALCULATED-DESIGNED BY: SAMAY STANACKZAI
CHECKED BY: KJEIN CANFIELD
REVISED BY
DATE REVISED

LAST REVISION 00-00-00
DATE PLOTTED => 08-JUL-2016
TIME PLOTTED => 16:18

Dist	COUNTY	ROUTE	POST MILES TOTAL PROJECT	SHEET No.	TOTAL SHEETS
03	ED	49	23.6/24.5	6	202

REGISTERED CIVIL ENGINEER 5-9-16 DATE

5-9-16
PLANS APPROVAL DATE

REGISTERED PROFESSIONAL ENGINEER RONALD W. TOLLISON No. 67389 Exp. 12/31/16 CIVIL STATE OF CALIFORNIA

THE STATE OF CALIFORNIA OR ITS OFFICERS OR AGENTS SHALL NOT BE RESPONSIBLE FOR THE ACCURACY OR COMPLETENESS OF SCANNED COPIES OF THIS PLAN SHEET.

NOTES:

1. FOR ACCURATE RIGHT OF WAY DATA, CONTACT RIGHT OF WAY ENGINEERING AT THE DISTRICT OFFICE.
2. FOR DRIVEWAY DETAILS SEE CONSTRUCTION DETAILS SHEETS
3. FOR INTERSECTION DETAILS SEE CONSTRUCTION DETAILS SHEETS
4. FOR RETAINING WALL DETAILS SEE RETAINING WALL PLAN SHEETS
5. FOR MEDIAN ISLAND DETAILS SEE CONSTRUCTION DETAILS SHEETS

LEGEND:

- DRIVEWAY DESIGNATION
- CURB RAMP DESIGNATION
- DIRECTION OF TRAFFIC
- DIRECTION OF TRAFFIC (RIGHT TURN)
- C--------- CUT
- F------- FILL
- COLORED SHOULDER
- COLD PLANE ASPHALT CONCRETE PAVEMENT
- OBLITERATE SURFACING
- ROCK SLOPE PROTECTION

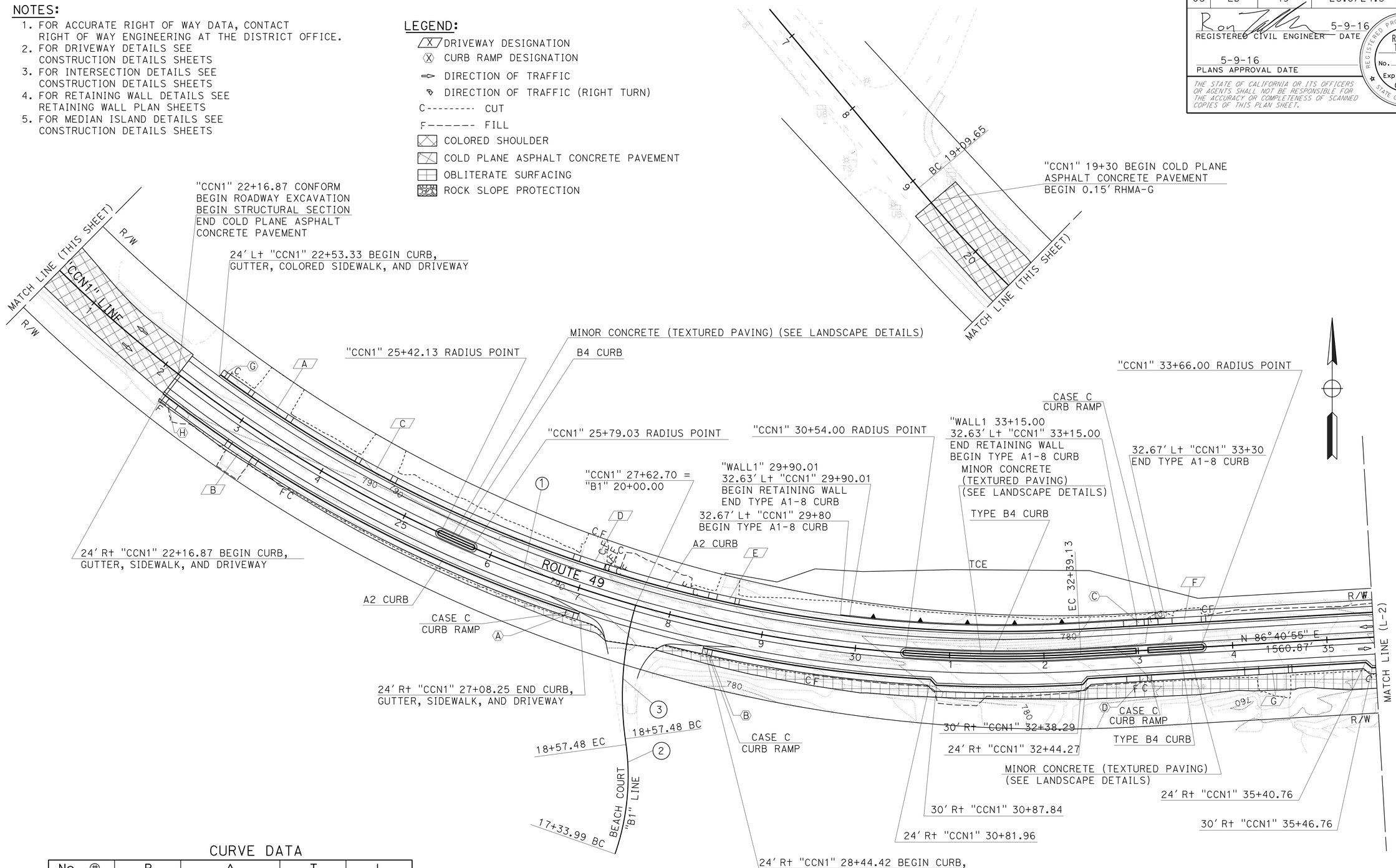

CURVE DATA

No. ⊕	R	Δ	T	L
1	1425.00'	53°27'18"	717.56'	1329.48'
2	250.00'	26°53'48"	59.78'	117.36'
3	337.53'	24°15'41"	72.55'	142.93'

LAYOUT

SCALE: 1" = 50'

L-1

STATE OF CALIFORNIA - DEPARTMENT OF TRANSPORTATION
Caltrans
DESIGN

FUNCTIONAL SUPERVISOR: NESAR FORMOLI
CALCULATED-DESIGNED BY: KEVIN CANFIELD
CHECKED BY: RON TOLLISON
REVISED BY
DATE REVISED

LAST REVISION 00-00-00 | DATE PLOTTED => 08-JUL-2016 | TIME PLOTTED => 16:18

Dist	COUNTY	ROUTE	POST MILES TOTAL PROJECT	SHEET No.	TOTAL SHEETS
03	ED	49	23.6/24.5	7	202

REGISTERED CIVIL ENGINEER 5-9-16 DATE

5-9-16
PLANS APPROVAL DATE

REGISTERED PROFESSIONAL ENGINEER RONALD W. TOLLISON No. 67389 Exp. 12/31/16 CIVIL STATE OF CALIFORNIA

THE STATE OF CALIFORNIA OR ITS OFFICERS OR AGENTS SHALL NOT BE RESPONSIBLE FOR THE ACCURACY OR COMPLETENESS OF SCANNED COPIES OF THIS PLAN SHEET.

NOTE:
FOR ACCURATE RIGHT OF WAY DATA, CONTACT
RIGHT OF WAY ENGINEERING AT THE DISTRICT OFFICE.

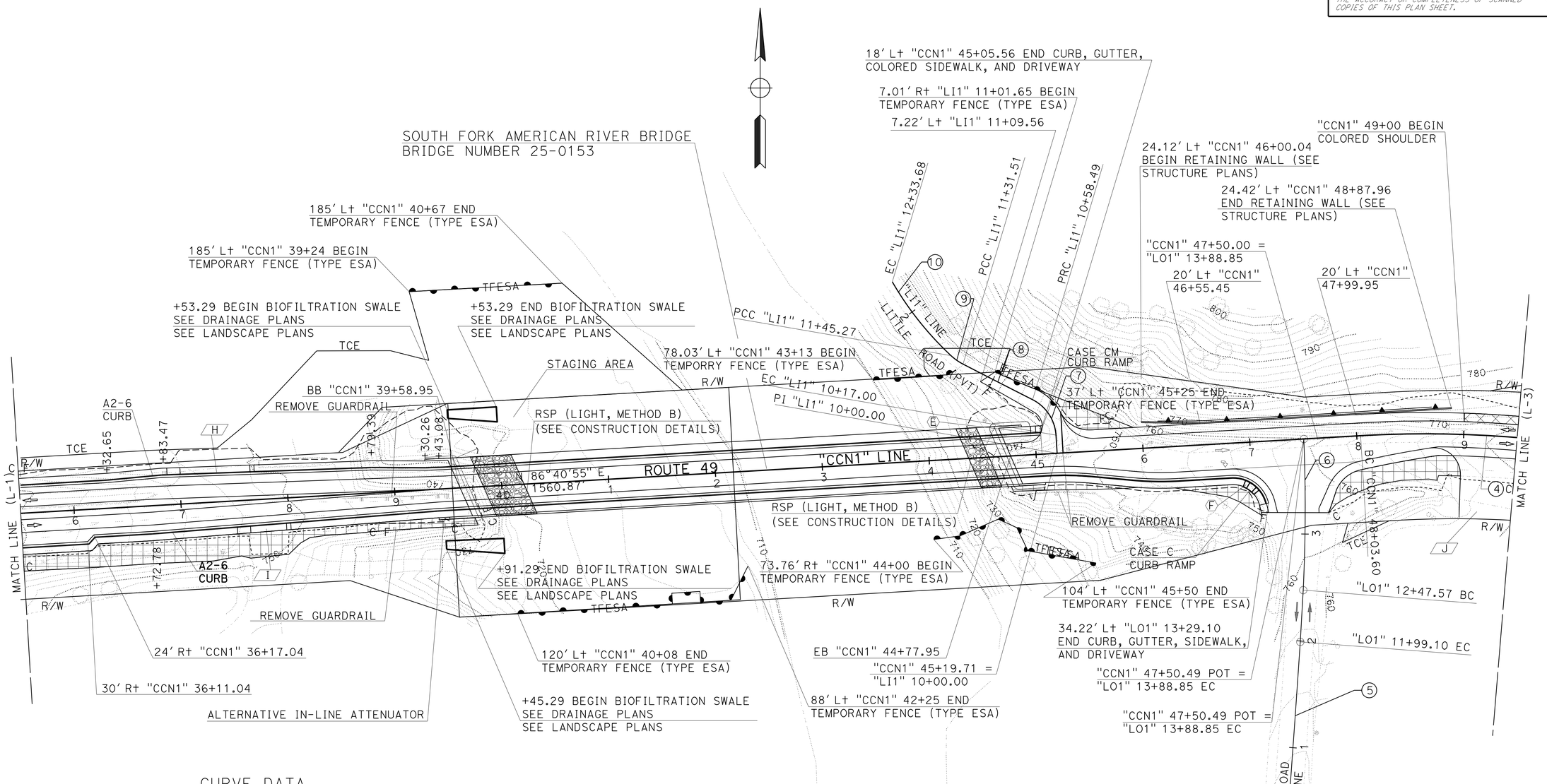

CURVE DATA

No. ⊕	R	Δ	T	L
4	1046.01'	44°32'03"	428.30'	813.03'
5	20,020.10'	00°34'12"	99.59'	199.18'
6	1589.22'	05°05'37"	70.69'	141.28'
7	40.00'	59°25'31"	22.83'	41.49'
8	10,686.25'	00°23'30"	36.51'	73.02'
9	50.00'	15°45'50"	6.92'	13.76'
10	299.85'	16°53'38"	44.53'	88.41'

LAYOUT
SCALE: 1" = 50'

L-2

STATE OF CALIFORNIA - DEPARTMENT OF TRANSPORTATION
Caltrans
DESIGN
FUNCTIONAL SUPERVISOR: NESAR FORMOLI
CALCULATED-DESIGNED BY: KEVIN CANFIELD
CHECKED BY: RON TOLLISON
REVISED BY
DATE REVISED

LAST REVISION 00-00-00
DATE PLOTTED => 08-JUL-2016
TIME PLOTTED => 16:18

Dist	COUNTY	ROUTE	POST MILES TOTAL PROJECT	SHEET No.	TOTAL SHEETS
03	ED	49	23.6/24.5	8	202

REGISTERED CIVIL ENGINEER 5-9-16 DATE

5-9-16
PLANS APPROVAL DATE

REGISTERED PROFESSIONAL ENGINEER RONALD W. TOLLISON No. 67389 Exp. 12/31/16 CIVIL STATE OF CALIFORNIA

THE STATE OF CALIFORNIA OR ITS OFFICERS OR AGENTS SHALL NOT BE RESPONSIBLE FOR THE ACCURACY OR COMPLETENESS OF SCANNED COPIES OF THIS PLAN SHEET.

NOTE:
FOR ACCURATE RIGHT OF WAY DATA, CONTACT RIGHT OF WAY ENGINEERING AT THE DISTRICT OFFICE.

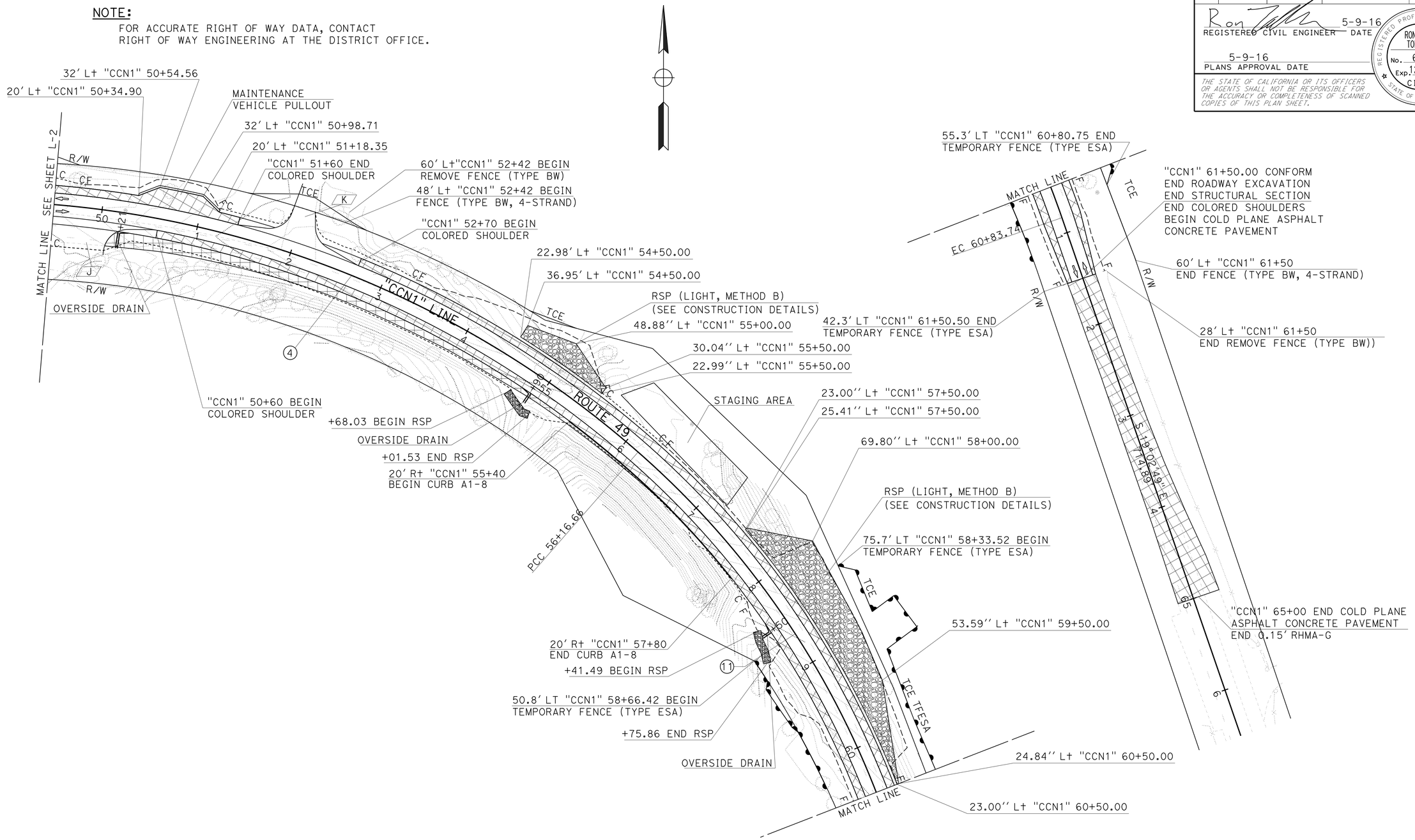

CURVE DATA

No. ⊕	R	Δ	T	L
4	1046.01'	44°44'12"	430.42'	816.66'
11	900.00'	29°44'07"	238.93'	467.08'

LAYOUT
SCALE: 1" = 50'

L-3

STATE OF CALIFORNIA - DEPARTMENT OF TRANSPORTATION
Caltrans
DESIGN
FUNCTIONAL SUPERVISOR: NESAR FORMOLI
CALCULATED-DESIGNED BY: KEVIN CANFIELD
CHECKED BY: RON TOLLISON
REVISED BY
DATE REVISED

LAST REVISION 00-00-00
DATE PLOTTED => 08-JUL-2016
TIME PLOTTED => 16:18

Dist	COUNTY	ROUTE	POST MILES TOTAL PROJECT	SHEET No.	TOTAL SHEETS
03	ED	49	23.6/24.5	9	202

REGISTERED CIVIL ENGINEER 5-9-16 DATE

5-9-16
PLANS APPROVAL DATE

REGISTERED PROFESSIONAL ENGINEER RONALD W. TOLLISON No. 67389 Exp. 12/31/16 CIVIL STATE OF CALIFORNIA

THE STATE OF CALIFORNIA OR ITS OFFICERS OR AGENTS SHALL NOT BE RESPONSIBLE FOR THE ACCURACY OR COMPLETENESS OF SCANNED COPIES OF THIS PLAN SHEET.

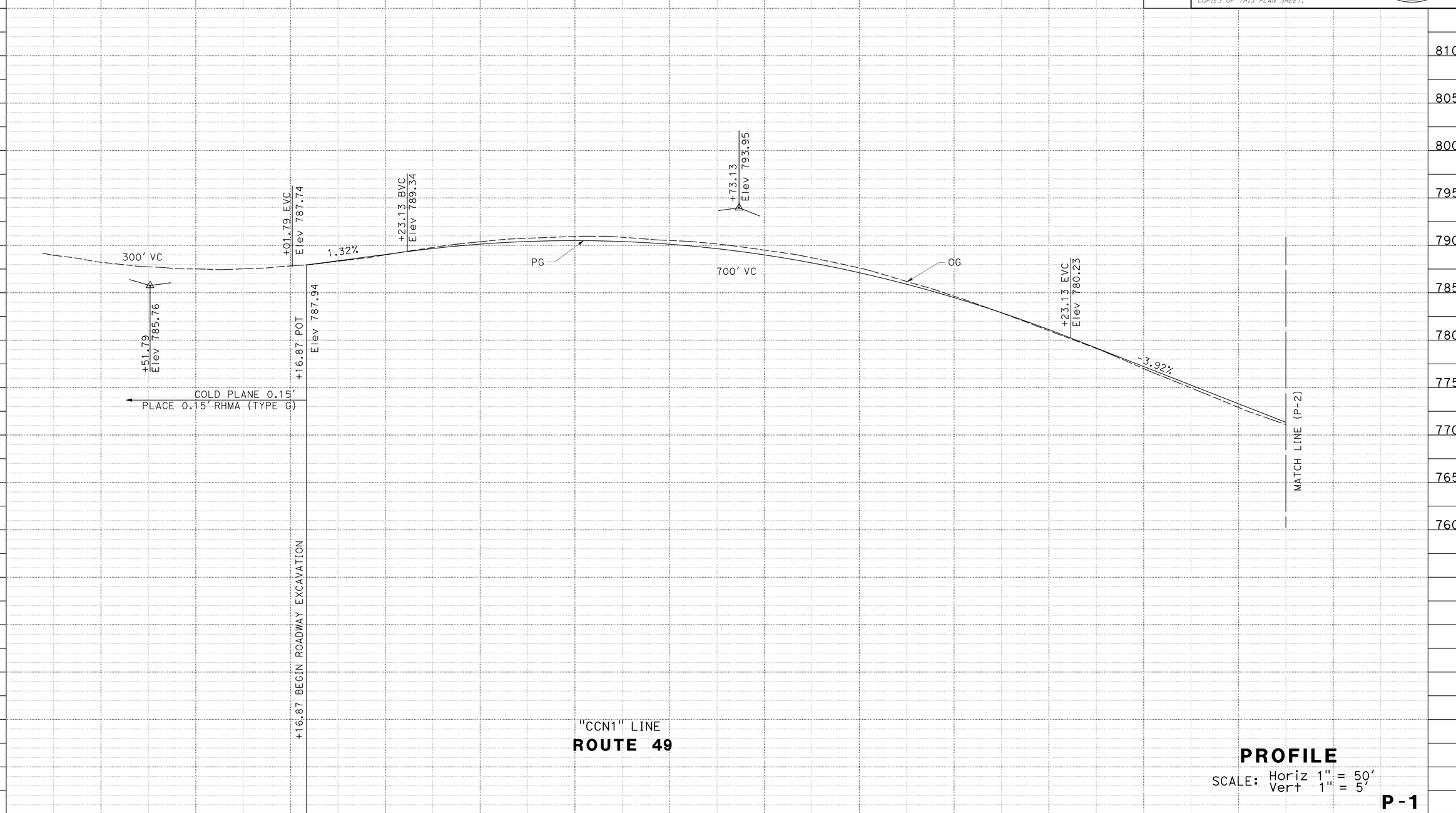

STATION		21+00	22+00	23+00	24+00	25+00	26+00	27+00	28+00	29+00	30+00	31+00	32+00	TOTAL
CY	Exc		6,715											6,715
	Emb		74											74

STATE OF CALIFORNIA - DEPARTMENT OF TRANSPORTATION
Caltrans
DESIGN

FUNCTIONAL SUPERVISOR: NESAR FORMOLI
CALCULATED-DESIGNED BY: KEVIN CANFIELD
CHECKED BY: KAMAL CHONKRIA
REVISED BY
DATE REVISED

LAST REVISION 00-00-00
DATE PLOTTED => 08-JUL-2016
TIME PLOTTED => 16:18

Dist	COUNTY	ROUTE	POST MILES TOTAL PROJECT	SHEET No.	TOTAL SHEETS
03	ED	49	23.6/24.5	10	202

REGISTERED CIVIL ENGINEER 5-9-16 DATE

5-9-16
PLANS APPROVAL DATE

REGISTERED PROFESSIONAL ENGINEER
RONALD W. TOLLISON
No. 67389
Exp. 12/31/16
CIVIL
STATE OF CALIFORNIA

THE STATE OF CALIFORNIA OR ITS OFFICERS OR AGENTS SHALL NOT BE RESPONSIBLE FOR THE ACCURACY OR COMPLETENESS OF SCANNED COPIES OF THIS PLAN SHEET.

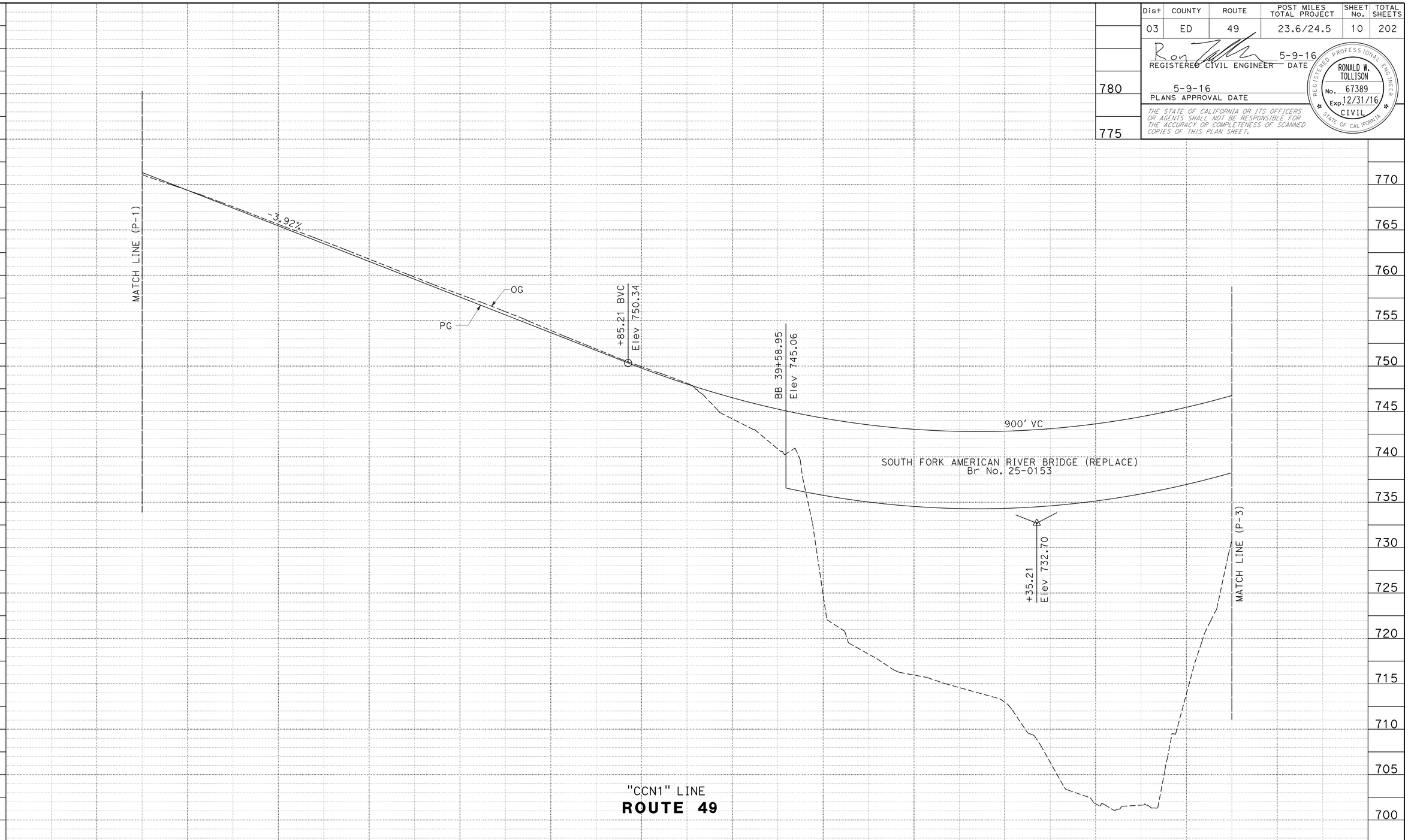

PROFILE

SCALE: Horiz 1" = 50'
Vert 1" = 5'

P-2

STATION		32+00	33+00	34+00	35+00	36+00	37+00	38+00	39+00	40+00	41+00	42+00	43+00	44+00	TOTAL
CY	Exc					3,132									3,132
	Emb					1,955									1,955

STATE OF CALIFORNIA - DEPARTMENT OF TRANSPORTATION
Caltrans
DESIGN

FUNCTIONAL SUPERVISOR: NESAR FORMOLI

CALCULATED-DESIGNED BY: KEVIN CANFIELD
CHECKED BY: KAMAL CHONKRIA

REVISED BY
DATE REVISED

LAST REVISION 00-00-00
DATE PLOTTED => 08-JUL-2016
TIME PLOTTED => 16:18

Dist	COUNTY	ROUTE	POST MILES TOTAL PROJECT	SHEET No.	TOTAL SHEETS
03	ED	49	23.6/24.5	11	202

REGISTERED CIVIL ENGINEER 5-9-16 DATE

5-9-16
PLANS APPROVAL DATE

REGISTERED PROFESSIONAL ENGINEER RONALD W. TOLLISON No. 67389 Exp. 12/31/16 CIVIL STATE OF CALIFORNIA

THE STATE OF CALIFORNIA OR ITS OFFICERS OR AGENTS SHALL NOT BE RESPONSIBLE FOR THE ACCURACY OR COMPLETENESS OF SCANNED COPIES OF THIS PLAN SHEET.

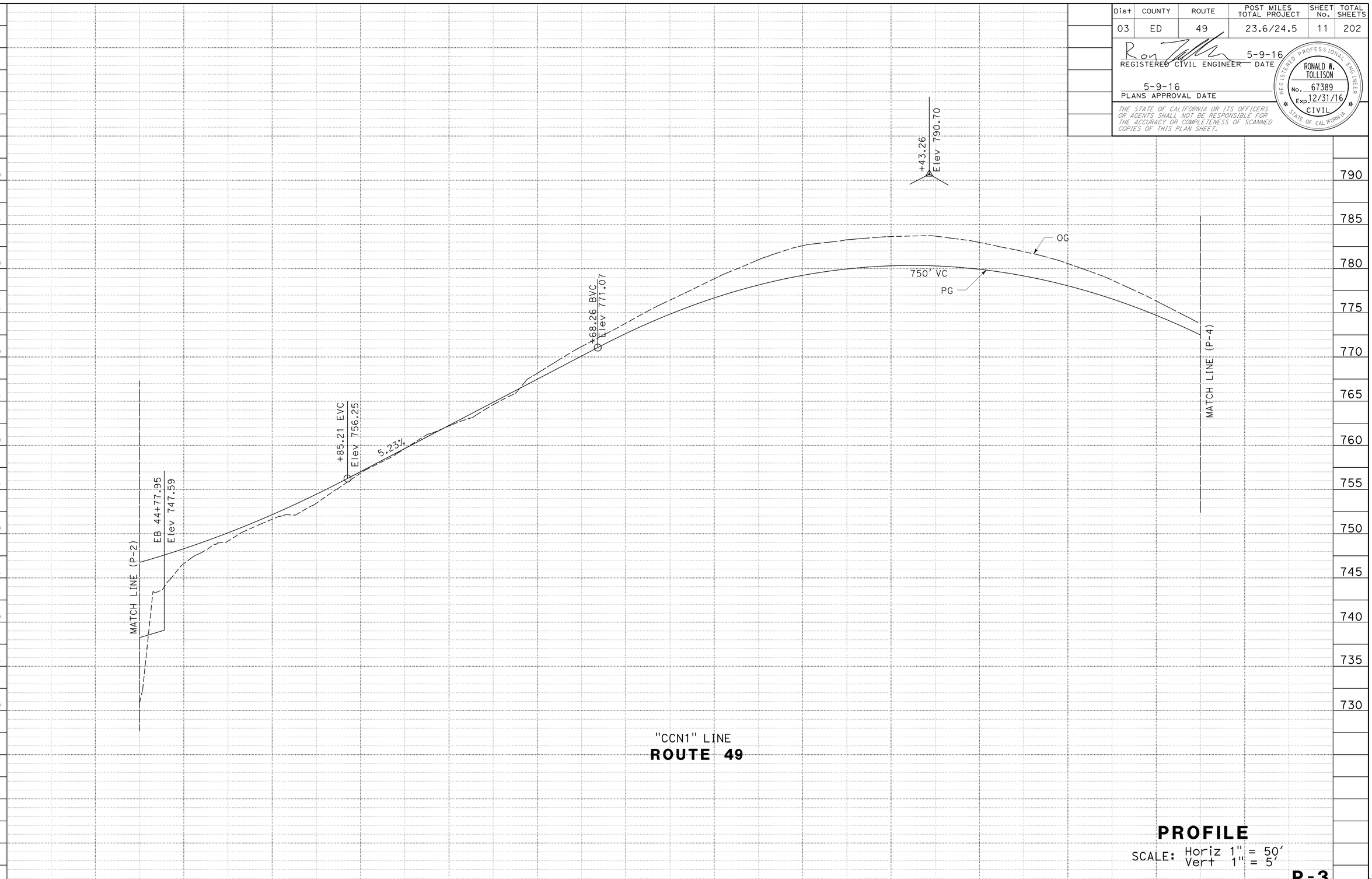

PROFILE

SCALE: Horiz 1" = 50'
Vert 1" = 5'

P-3

STATION		44+00	45+00	46+00	47+00	48+00	49+00	50+00	51+00	52+00	53+00	54+00	55+00	56+00	57+00	TOTAL
CY	Exc		←					8,106							→	8,106
	Emb		←					991							→	991

STATE OF CALIFORNIA - DEPARTMENT OF TRANSPORTATION
Caltrans®
DESIGN

FUNCTIONAL SUPERVISOR: NESAR FORMOLI
CALCULATED-DESIGNED BY: KEVIN CANFIELD
CHECKED BY: KAMAL CHONKRIA
REVISED BY
DATE REVISED

LAST REVISION 00-00-00
DATE PLOTTED => 08-JUL-2016
TIME PLOTTED => 16:18

Dist	COUNTY	ROUTE	POST MILES TOTAL PROJECT	SHEET No.	TOTAL SHEETS
03	ED	49	23.6/24.5	12	202

Ron Tollison 5-9-16
REGISTERED CIVIL ENGINEER DATE

5-9-16
PLANS APPROVAL DATE

REGISTERED PROFESSIONAL ENGINEER
RONALD W. TOLLISON
No. 67389
Exp. 12/31/16
CIVIL
STATE OF CALIFORNIA

THE STATE OF CALIFORNIA OR ITS OFFICERS OR AGENTS SHALL NOT BE RESPONSIBLE FOR THE ACCURACY OR COMPLETENESS OF SCANNED COPIES OF THIS PLAN SHEET.

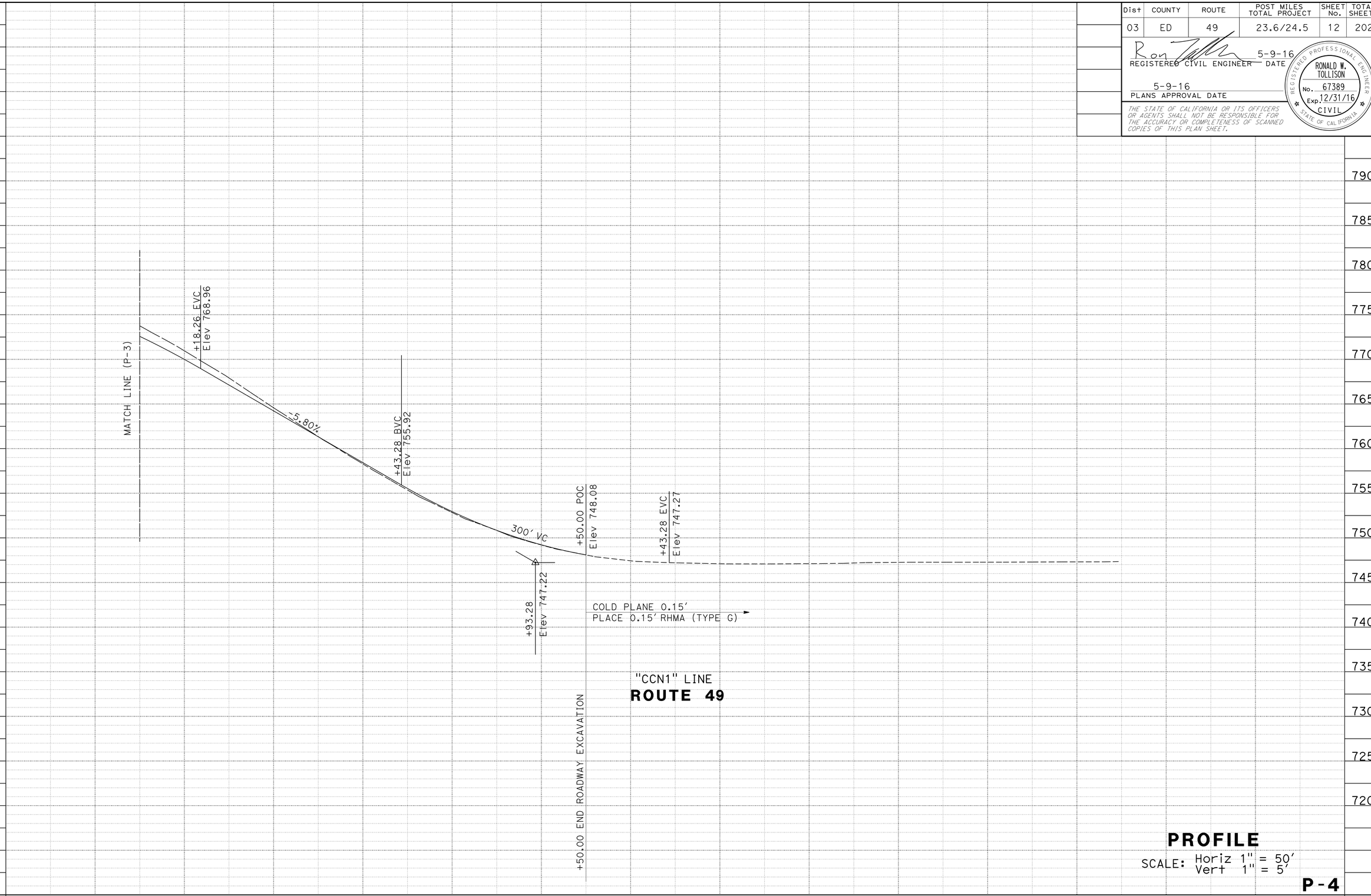

STATE OF CALIFORNIA - DEPARTMENT OF TRANSPORTATION
Caltrans®
DESIGN

FUNCTIONAL SUPERVISOR: NESAR FORMOLI
CALCULATED-DESIGNED BY: KEVIN CANFIELD
CHECKED BY: KAMAL CHONKRIA
REVISED BY
DATE REVISED

LAST REVISION 00-00-00
DATE PLOTTED => 08-JUL-2016
TIME PLOTTED => 16:18

Dist	COUNTY	ROUTE	POST MILES TOTAL PROJECT	SHEET No.	TOTAL SHEETS
03	ED	49	23.6/24.5	13	202

REGISTERED CIVIL ENGINEER 5-9-16 DATE

5-9-16
PLANS APPROVAL DATE

REGISTERED PROFESSIONAL ENGINEER RONALD W. TOLLISON No. 67389 Exp. 12/31/16 CIVIL STATE OF CALIFORNIA

THE STATE OF CALIFORNIA OR ITS OFFICERS OR AGENTS SHALL NOT BE RESPONSIBLE FOR THE ACCURACY OR COMPLETENESS OF SCANNED COPIES OF THIS PLAN SHEET.

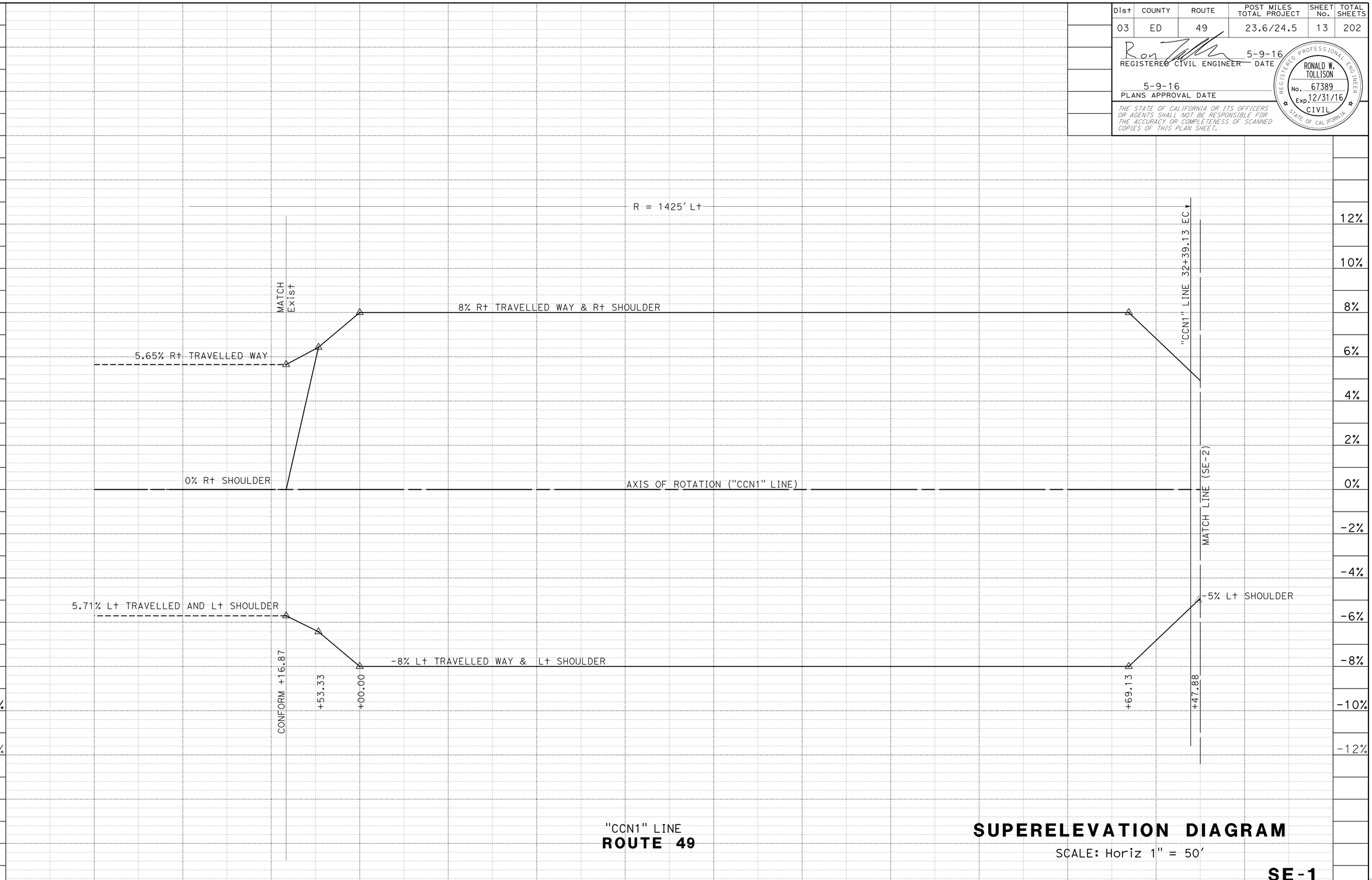

"CCN1" LINE
ROUTE 49

SUPERELEVATION DIAGRAM

SCALE: Horiz 1" = 50'

SE-1

STATE OF CALIFORNIA - DEPARTMENT OF TRANSPORTATION
DESIGN
Caltrans

FUNCTIONAL SUPERVISOR: NESAR FORMOLI
CALCULATED-DESIGNED BY: KAMAL CHONKRIA
CHECKED BY: KEVIN CANFIELD
REVISED BY
DATE REVISED: 09-10-15

LAST REVISION 00-00-00
DATE PLOTTED => 08-JUL-2016
TIME PLOTTED => 16:18

Dist	COUNTY	ROUTE	POST MILES TOTAL PROJECT	SHEET No.	TOTAL SHEETS
03	ED	49	23.6/24.5	14	202

REGISTERED CIVIL ENGINEER 5-9-16 DATE

5-9-16
PLANS APPROVAL DATE

REGISTERED PROFESSIONAL ENGINEER RONALD W. TOLLISON No. 67389 Exp. 12/31/16 CIVIL STATE OF CALIFORNIA

THE STATE OF CALIFORNIA OR ITS OFFICERS OR AGENTS SHALL NOT BE RESPONSIBLE FOR THE ACCURACY OR COMPLETENESS OF SCANNED COPIES OF THIS PLAN SHEET.

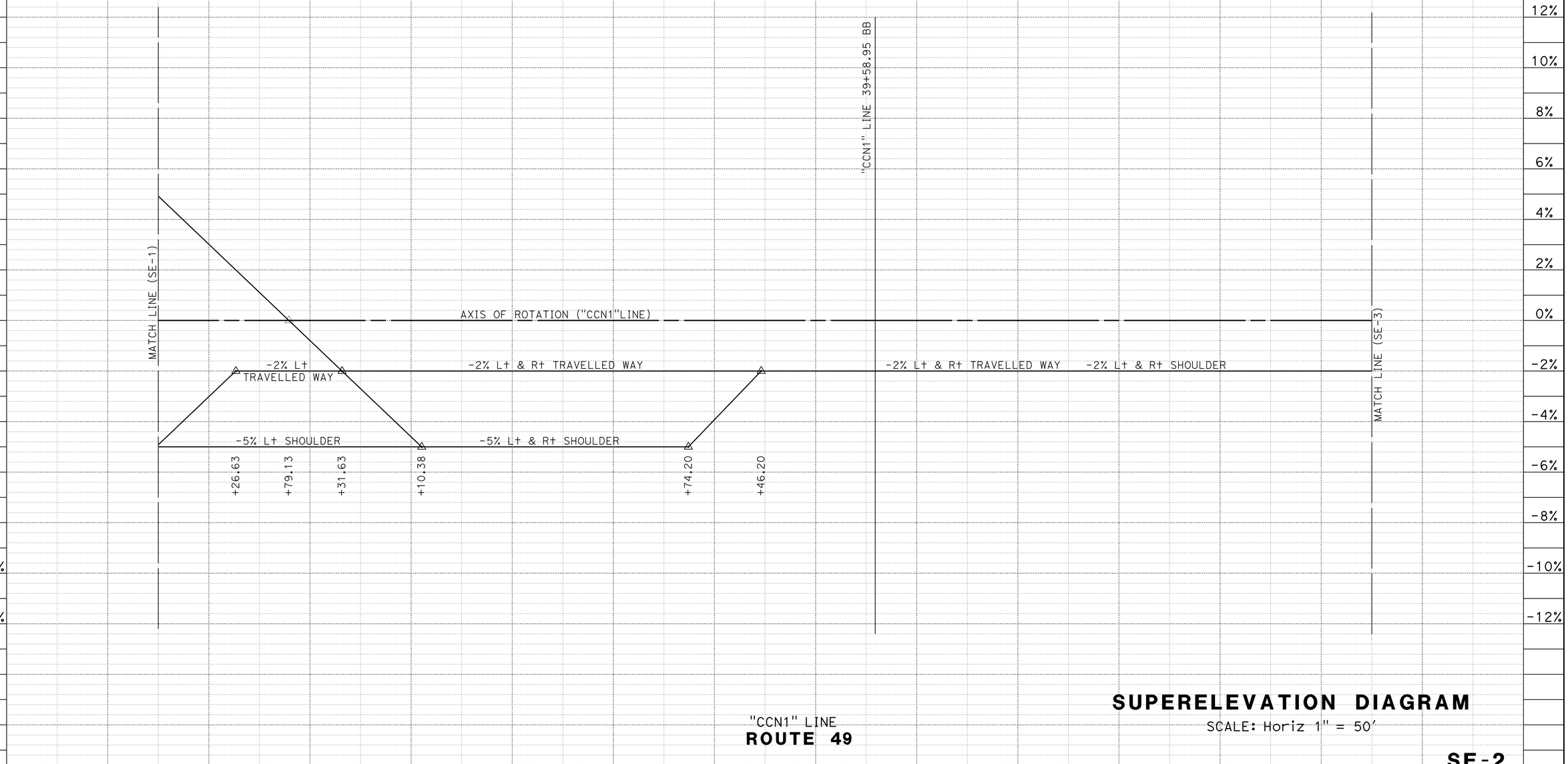

"CCN1" LINE
ROUTE 49

SUPERELEVATION DIAGRAM

SCALE: Horiz 1" = 50'

SE-2

REVISED BY	KEVIN CANFIELD
DATE REVISED	09-10-15
CALCULATED-DESIGNED BY	KAMAL CHONKRIA
CHECKED BY	
FUNCTIONAL SUPERVISOR	NESAR FORMOLI

STATE OF CALIFORNIA - DEPARTMENT OF TRANSPORTATION
DESIGN
Caltrans

LAST REVISION 00-00-00
DATE PLOTTED => 08-JUL-2016
TIME PLOTTED => 16:18

Dist	COUNTY	ROUTE	POST MILES TOTAL PROJECT	SHEET No.	TOTAL SHEETS
03	ED	49	23.6/24.5	15	202

REGISTERED CIVIL ENGINEER 5-9-16 DATE

5-9-16
PLANS APPROVAL DATE

REGISTERED PROFESSIONAL ENGINEER RONALD W. TOLLISON No. 67389 Exp. 12/31/16 CIVIL STATE OF CALIFORNIA

THE STATE OF CALIFORNIA OR ITS OFFICERS OR AGENTS SHALL NOT BE RESPONSIBLE FOR THE ACCURACY OR COMPLETENESS OF SCANNED COPIES OF THIS PLAN SHEET.

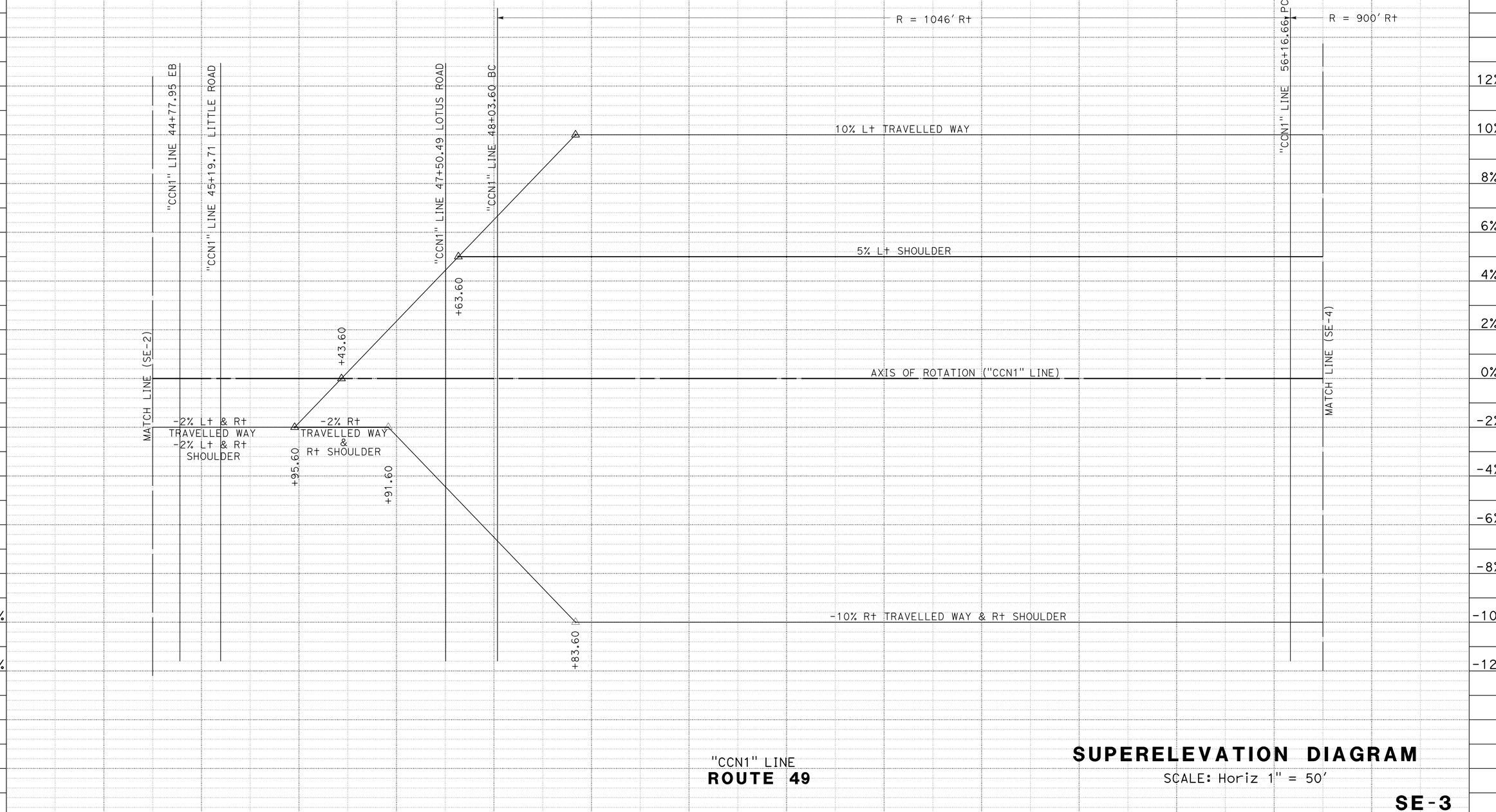

"CCN1" LINE
ROUTE 49

SUPERELEVATION DIAGRAM

SCALE: Horiz 1" = 50'

SE-3

STATE OF CALIFORNIA - DEPARTMENT OF TRANSPORTATION
Caltrans
DESIGN

FUNCTIONAL SUPERVISOR: NESAR FORMOLI
CALCULATED-DESIGNED BY: KAMAL CHONKRIA
CHECKED BY: KEVIN CANFIELD
REVISED BY
DATE REVISED 09-15-15

LAST REVISION 00-00-00
DATE PLOTTED => 08-JUL-2016
TIME PLOTTED => 16:18

Dist	COUNTY	ROUTE	POST MILES TOTAL PROJECT	SHEET No.	TOTAL SHEETS
03	ED	49	23.6/24.5	16	202

REGISTERED CIVIL ENGINEER 5-9-16 DATE

5-9-16
PLANS APPROVAL DATE

REGISTERED PROFESSIONAL ENGINEER
RONALD W. TOLLISON
No. 67389
Exp. 12/31/16
CIVIL
STATE OF CALIFORNIA

THE STATE OF CALIFORNIA OR ITS OFFICERS OR AGENTS SHALL NOT BE RESPONSIBLE FOR THE ACCURACY OR COMPLETENESS OF SCANNED COPIES OF THIS PLAN SHEET.

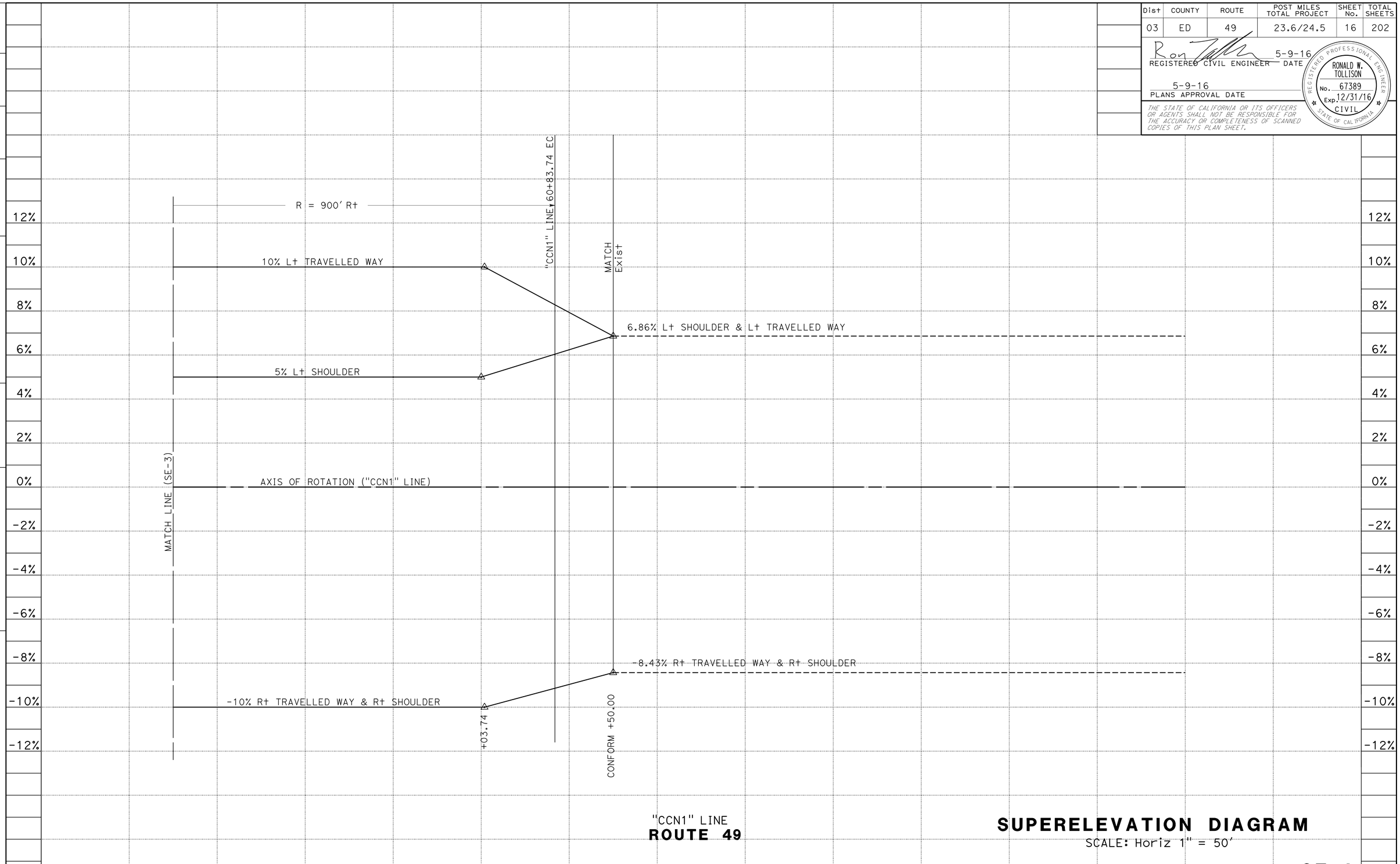

STATE OF CALIFORNIA - DEPARTMENT OF TRANSPORTATION
Caltrans
DESIGN

FUNCTIONAL SUPERVISOR: NESAR FORMOLI
CALCULATED-DESIGNED BY: KEVIN CANFIELD
CHECKED BY: KAMAL CHONKRIA
REVISED BY
DATE REVISED 09-15-15

LAST REVISION 00-00-00
DATE PLOTTED => 08-JUL-2016
TIME PLOTTED => 16:18

Dist	COUNTY	ROUTE	POST MILES TOTAL PROJECT	SHEET No.	TOTAL SHEETS
03	ED	49	23.6/24.5	17	202

REGISTERED CIVIL ENGINEER 5-9-16 DATE

5-9-16
PLANS APPROVAL DATE

REGISTERED PROFESSIONAL ENGINEER RONALD W. TOLLISON No. 67389 Exp. 12/31/16 CIVIL STATE OF CALIFORNIA

THE STATE OF CALIFORNIA OR ITS OFFICERS OR AGENTS SHALL NOT BE RESPONSIBLE FOR THE ACCURACY OR COMPLETENESS OF SCANNED COPIES OF THIS PLAN SHEET.

NOTE

RIGHT OF WAY NOT SHOWN FOR CLARITY, SEE LAYOUTS

ABBREVIATION:

RHMA (TYPE G) - RUBBERIZED HOT MIX ASPHALT (GAP GRADED)

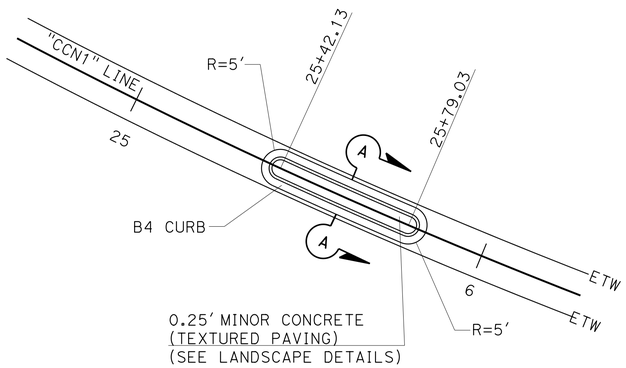

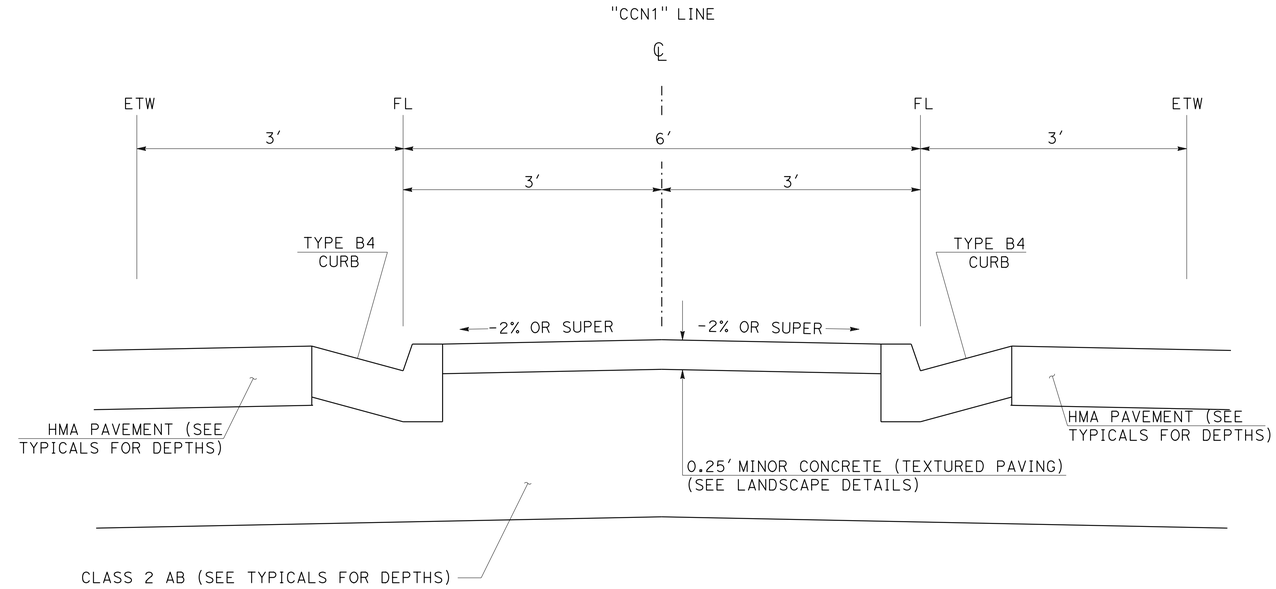

SECTION A-A

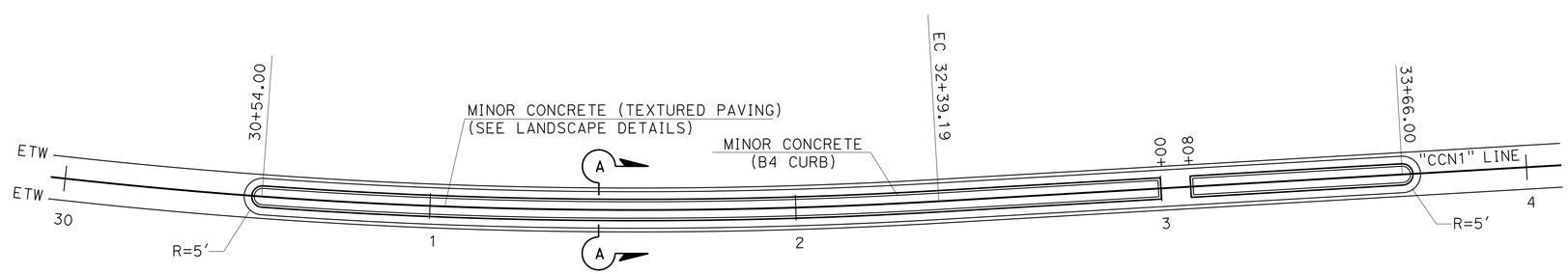

MEDIAN ISLAND

CONSTRUCTION DETAILS

NO SCALE

C-1

STATE OF CALIFORNIA - DEPARTMENT OF TRANSPORTATION

Caltrans

DESIGN

FUNCTIONAL SUPERVISOR: NESAR FORMOLI

CALCULATED-DESIGNED BY: KAMAL CHONKRIA

CHECKED BY: KEVIN CANFIELD

REVISED BY

DATE REVISED

LAST REVISION 00-00-00

DATE PLOTTED => 08-JUL-2016
TIME PLOTTED => 16:18

Dist	COUNTY	ROUTE	POST MILES TOTAL PROJECT	SHEET No.	TOTAL SHEETS
03	ED	49	23.6/24.5	18	202

REGISTERED CIVIL ENGINEER 5-9-16 DATE

5-9-16
PLANS APPROVAL DATE

REGISTERED PROFESSIONAL ENGINEER
RONALD W. TOLLISON
No. 67389
Exp. 12/31/16
CIVIL
STATE OF CALIFORNIA

THE STATE OF CALIFORNIA OR ITS OFFICERS OR AGENTS SHALL NOT BE RESPONSIBLE FOR THE ACCURACY OR COMPLETENESS OF SCANNED COPIES OF THIS PLAN SHEET.

TYPE X DRIVEWAY GEOMETRY INFORMATION

DRIVEWAY	LOCATION	STATION	ELEVATION	W1	W2
A	1	"CCN1" 22+88.79	787.41		
	2	"CCN1" 22+94.36	786.99	46.94′	
	3	"CCN1" 23+37.93	787.49		46.98′
	4	"CCN1" 23+45.02	788.02		
B	1	"CCN1" 23+00.20	791.27		
	2	"CCN1" 23+05.00	790.90	54.78′	
	3	"CCN1" 23+30.59	791.24		55.00′
	4	"CCN1" 23+37.74	791.77		
C	1	"CCN1" 24+25.68	788.71		
	2	"CCN1" 24+31.24	788.29	62.72′	
	3	"CCN1" 24+69.40	788.43		62.18′
	4	"CCN1" 24+75.48	788.89		
D	1	"CCN1" 26+83.96	787.63		
	2	"CCN1" 26+91.32	787.08	58.10′	
	3	"CCN1" 27+19.13	786.65		57.71′
	4	"CCN1" 27+24.02	787.02		
E	1	"CCN1" 28+35.89	784.68		
	2	"CCN1" 28+44.95	783.00	54.19′	
	3	"CCN1" 28+65.08	783.45		53.67
	4	"CCN1" 28+69.45	783.77		
F	1	"CCN1" 33+27.45	767.97		
	2	"CCN1" 33+40	767.03	39.68′	
	3	"CCN1" 33+68.51	765.91		41.96′
	4	"CCN1" 33+72.45	766.20		
G	1	"CCN1" 34+11.16	765.05		
	2	"CCN1" 34+26.16	763.88	51.17′	
	3	"CCN1" 34+57.49	762.54		59.14′
	4	"CCN1" 34+61.33	762.83		
H	1	"CCN1" 36+88.55	753.71		
	2	"CCN1" 37+00.91	752.79	50.13′	
	3	"CCN1" 37+66.11	750.26		48.69′
	4	"CCN1" 37+70.05	750.55		
I	1	"CCN1" 37+51.27	751.38		
	2	"CCN1" 37+63.63	750.46	50.95′	
	3	"CCN1" 37+97.27	749.22		51.83′
	4	"CCN1" 38+01.35	749.52		

ELEVATIONS AT TOP OF CURB
DRIVEWAY D RIGHT SIDE IS ON A SKEW
W1 AND W2 OFFSETS ARE FROM THE "CCN1" LINE

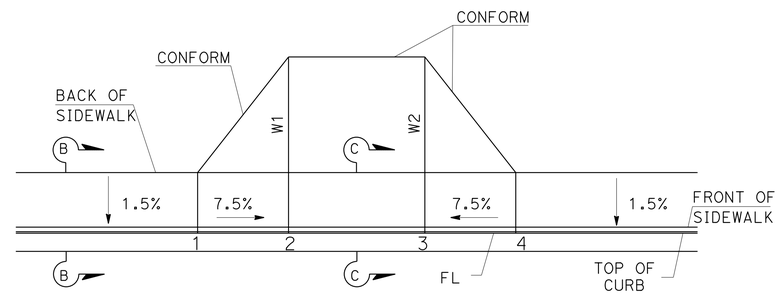

PLAN VIEW

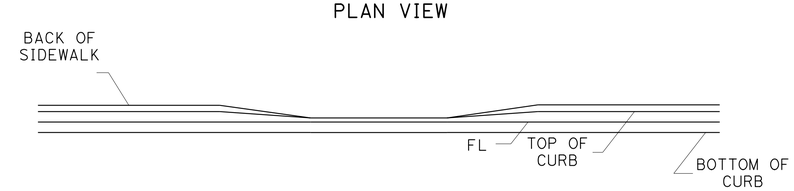

ELEVATION VIEW

TYPE X DRIVEWAYS DETAILS

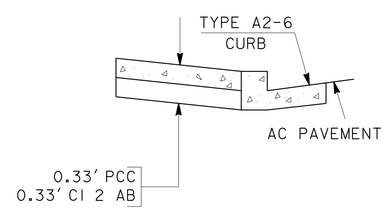

SECTION B-B

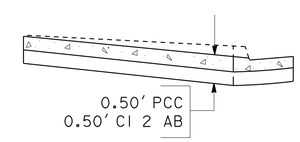

SECTION C-C

CONSTRUCTION DETAILS

NO SCALE

C-2

STATE OF CALIFORNIA - DEPARTMENT OF TRANSPORTATION
Caltrans
DESIGN

FUNCTIONAL SUPERVISOR: NESAR FORMOLI
CALCULATED-DESIGNED BY: KAMAL CHONKRIA
CHECKED BY: KEVIN CANFIELD
REVISED BY
DATE REVISED

LAST REVISION 00-00-00
DATE PLOTTED => 08-JUL-2016
TIME PLOTTED => 16:18

Dist	COUNTY	ROUTE	POST MILES TOTAL PROJECT	SHEET No.	TOTAL SHEETS
03	ED	49	23.6/24.5	19	202

REGISTERED CIVIL ENGINEER 5-9-16 DATE

5-9-16
PLANS APPROVAL DATE

REGISTERED PROFESSIONAL ENGINEER
RONALD W. TOLLISON
No. 67389
Exp. 12/31/16
CIVIL
STATE OF CALIFORNIA

THE STATE OF CALIFORNIA OR ITS OFFICERS OR AGENTS SHALL NOT BE RESPONSIBLE FOR THE ACCURACY OR COMPLETENESS OF SCANNED COPIES OF THIS PLAN SHEET.

NOTE
RIGHT OF WAY NOT SHOWN FOR CLARITY, SEE LAYOUTS

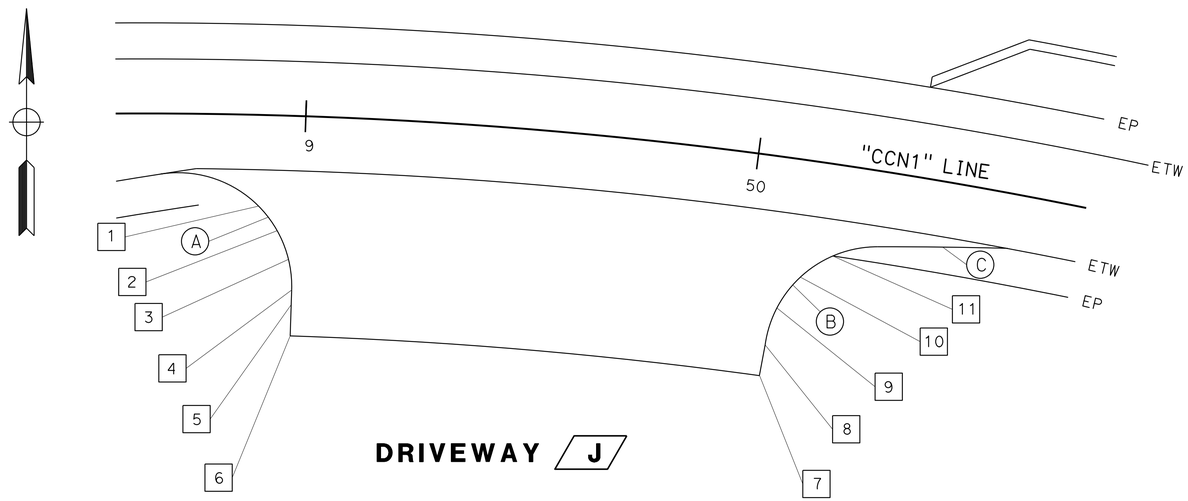

DRIVEWAY J

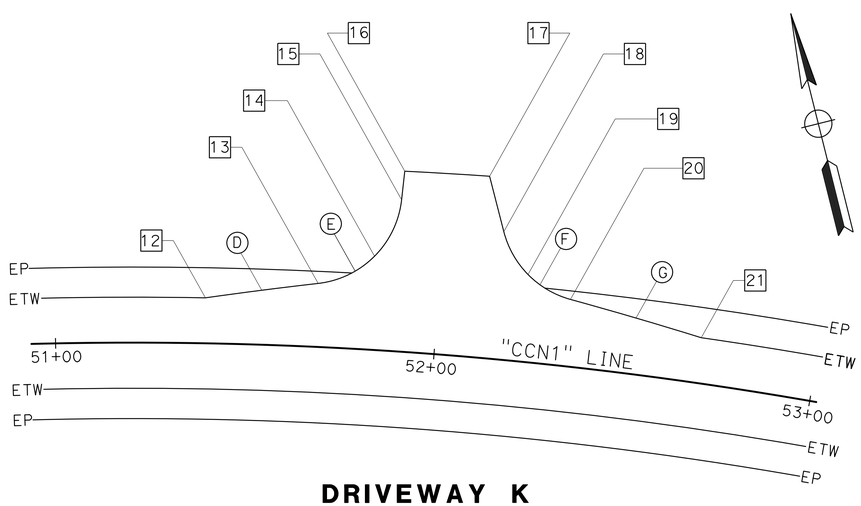

DRIVEWAY K

GEOMETRY INFORMATION

	No. X	STATION	ELEVATION
DRIVEWAY J	1	47.00′ R+ "CCN1" 48+80.00	764.93
	2	54.23 R+ "CCN1" 48+88.00	765.78
	3	56.55 R+ "CCN1" 48+90.00	765.98
	4	65.60′ R+ "CCN1" 48+98.33	766.83
	5	69.74′ R+ "CCN1" 49+04.00	767.51
	6	73.47′ R+ "CCN1" 49+10.00	768.22
	7	72.17′ R+ "CCN1" 49+60.00	769.57
	8	64.43′ R+ "CCN1" 49+70.00	769.71
	9	58.92′ R+ "CCN1" 49+80.00	769.49
	10	49.29′ R+ "CCN1" 50+00.00	770.32
	11	45.23′ R+ "CCN1" 50+10.00	770.88
DRIVEWAY K	12	12.00′ L+ "CCN1" LINE 51+39.36	779.07
	13	16.76′ L+ "CCN1" LINE 51+68.59	780.03
	14	24.72′ L+ "CC11" LINE 51+82.78	780.65
	15	40.04′ L+ "CCN1" LINE 51+88.80	781.01
	16	47.62′′ L+ "CCN1" LINE 51+89.12	781.11
	17	47.99 L+ "CCN1" LINE 52+10.58	780.48
	18	33.75′ L+ "CCN1" LINE 52+15.42	780.79
	19	23.09′ L+ "CCN1" LINE 52+22.65	780.19
	20	17.71′ L+ "CCN1" LINE 52+34.25	781.26
	21	12.00′ L+ "CCN1" LINE 52+69.28	781.35

CURVE DATA

No. ⊕	R	Δ	T	L
A	25.00′	100°45′27"	30.20′	43.96′
B	25.00′	82°04′26"	21.76′	35.81′
C	1043.00′	01°34′25"	14.33′	28.65′
D	1075.53′	01°35′55.67"	15.01′	30.01′
E	25.00′	77°11′57.36"	19.96′	33.68′
F	25.00′	60°14′05.95"	14.50′	26.28′
G	1075.53′	01°55′01.37"	17.99′	35.99′

CONSTRUCTION DETAILS
NO SCALE

C-3

STATE OF CALIFORNIA - DEPARTMENT OF TRANSPORTATION
Caltrans
DESIGN
FUNCTIONAL SUPERVISOR: NESAR FORMOLI
CALCULATED-DESIGNED BY: KAMAL CHONKRIA
CHECKED BY: KEVIN CANFIELD
REVISED BY
DATE REVISED

LAST REVISION 00-00-00
DATE PLOTTED => 08-JUL-2016
TIME PLOTTED => 16:18

Dist	COUNTY	ROUTE	POST MILES TOTAL PROJECT	SHEET No.	TOTAL SHEETS
03	ED	49	23.6/24.5	20	202

REGISTERED CIVIL ENGINEER 5-9-16 DATE

5-9-16
PLANS APPROVAL DATE

REGISTERED PROFESSIONAL ENGINEER RONALD W. TOLLISON No. 67389 Exp. 12/31/16 CIVIL STATE OF CALIFORNIA

THE STATE OF CALIFORNIA OR ITS OFFICERS OR AGENTS SHALL NOT BE RESPONSIBLE FOR THE ACCURACY OR COMPLETENESS OF SCANNED COPIES OF THIS PLAN SHEET.

NOTE
RIGHT OF WAY NOT SHOWN FOR CLARITY, SEE LAYOUTS

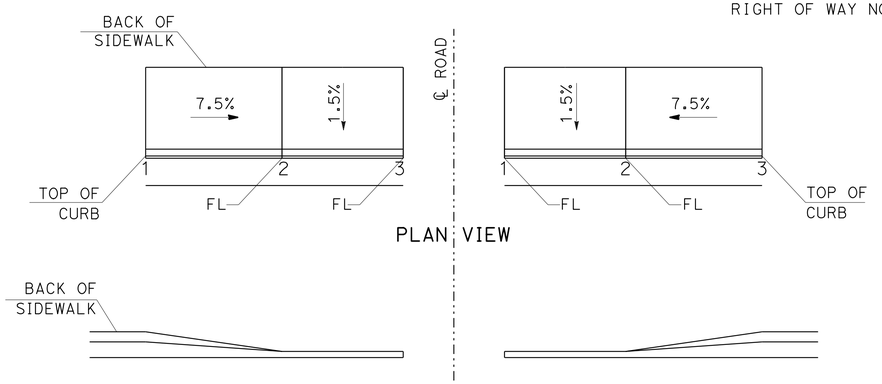

PLAN VIEW

ELEVATION VIEW
@ INTERSECTION

CURB RAMP
CASE C DETAIL

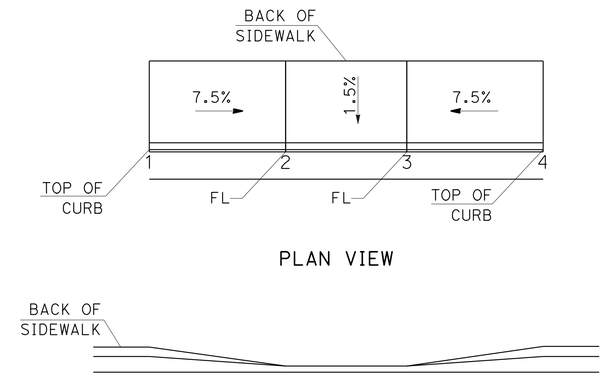

PLAN VIEW

ELEVATION VIEW
@ MID BLOCK

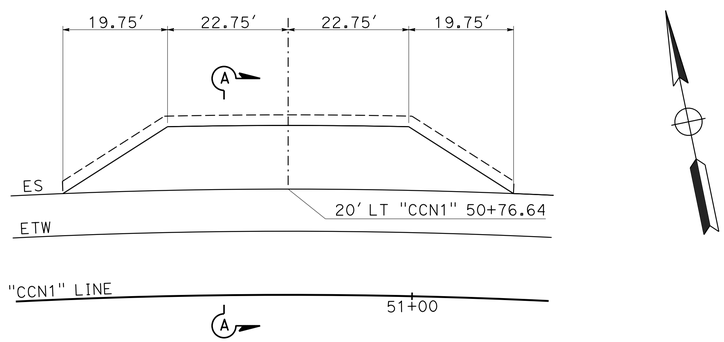

PLAN VIEW

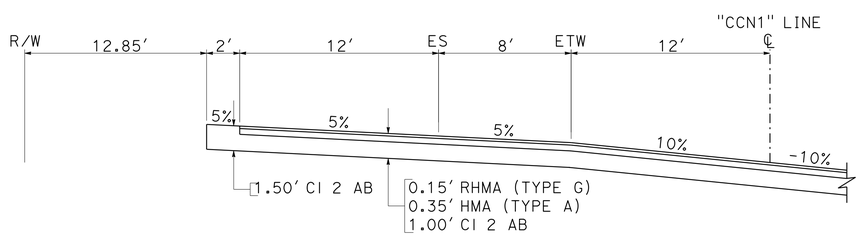

SECTION A-A

MAINTENANCE VEHICLE PULLOUT
AT HIGH SIDE OF SUPER

CASE C CURB RAMP GEOMETRY INFORMATION

CURB RAMP	LOCATION	STATION	ELEVATION
A	1	"CCN1" 26+94.92 R+	791.32
	2	"CCN1" 27+03.25 R+	790.73
	3	"CCN1" 27+08.25 R+	790.66
B	1	"CCN1" 28+42.44 R+	787.84
	2	"CCN1" 28+47.44 R+	787.92
	3	"CCN1" 28+52.35 R+	788.08
C	1	"CCN1" 32+85.00 L+	769.35
	2	"CCN1" 33+00.00 L+	768.36
	3	"CCN1" 33+08.00 L+	768.10
	4	"CCN1" 33+12.66 L+	768.45
D	1	"CCN1" 32+85+00 R+	771.15
	2	"CCN1" 33+00.00 R+	769.93
	3	"CCN1" 33+08.00 R+	769.54
	4	"CCN1" 33+12.05 R+	769.84
E	1	"CCN1" 44+85.55 L+	747.97
	2	"CCN1" 45+00.59 L+	747.89
	3	"CCN1" 45+05.59 L+	747.97
F	1	"CCN1" 46+95.43 R+	756.33
	2	"CCN1" 46+99.20 R+	756.00
	3	"CCN1" 47+02.65 R+	756.19
	4	"CCN1" 47+10.98 R+	757.19
G	1	"CCN1" 22+53.33 L+	786.99
	2	"CCN1" 22+58.33 L+	786.99
	3	"CCN1" 22+61.86 L+	787.25
H	1	"CCN1" 22+20.00 R+	788.87
	2	"CCN1" 22+25.00 R+	789.01
	3	"CCN1" 22+36.88 R+	789.84

ELEVATIONS AT TOP OF CURB

CONSTRUCTION DETAILS
NO SCALE

C-4

STATE OF CALIFORNIA - DEPARTMENT OF TRANSPORTATION
Caltrans
DESIGN
FUNCTIONAL SUPERVISOR: NESAR FORMOLI
CALCULATED-DESIGNED BY: KAMAL CHONKRIA
CHECKED BY: KEVIN CANFIELD
REVISED BY
DATE REVISED

LAST REVISION 00-00-00
DATE PLOTTED => 08-JUL-2016
TIME PLOTTED => 16:18

Dist	COUNTY	ROUTE	POST MILES TOTAL PROJECT	SHEET No.	TOTAL SHEETS
03	ED	49	23.6/24.5	21	202

REGISTERED CIVIL ENGINEER 5-9-16 DATE

5-9-16
PLANS APPROVAL DATE

REGISTERED PROFESSIONAL ENGINEER
RONALD W. TOLLISON
No. 67389
Exp. 12/31/16
CIVIL
STATE OF CALIFORNIA

THE STATE OF CALIFORNIA OR ITS OFFICERS OR AGENTS SHALL NOT BE RESPONSIBLE FOR THE ACCURACY OR COMPLETENESS OF SCANNED COPIES OF THIS PLAN SHEET.

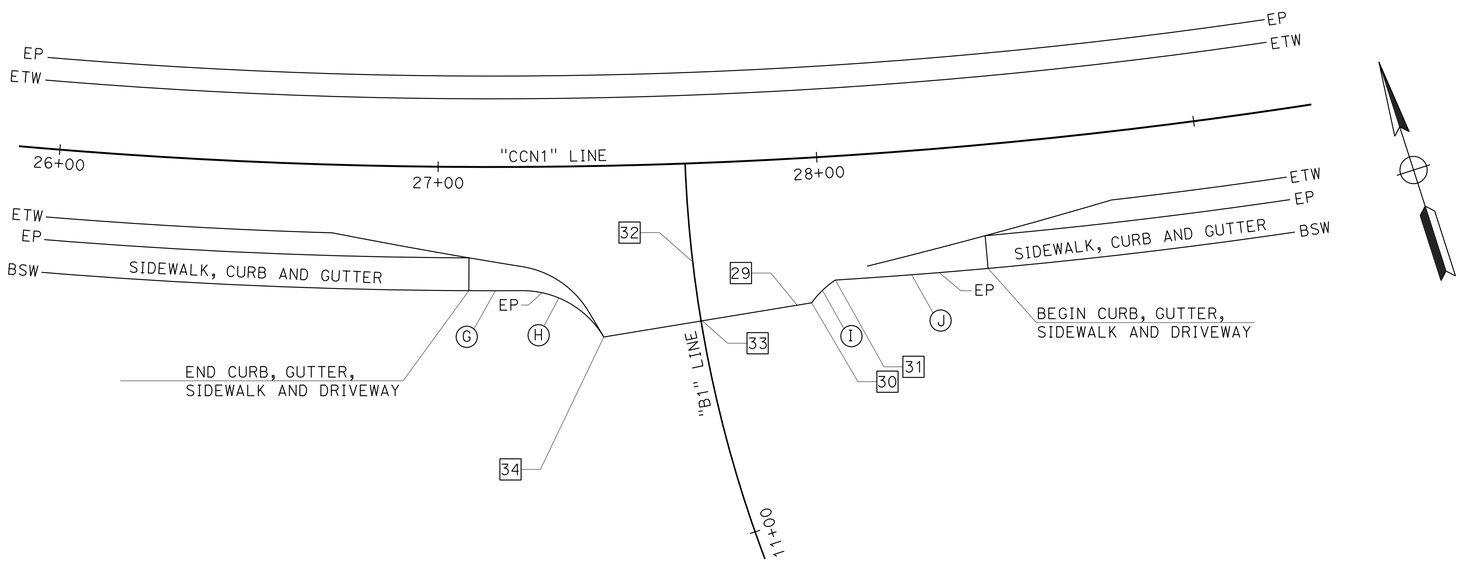

ROUTE 49 AND BEACH COURT INTERSECTION

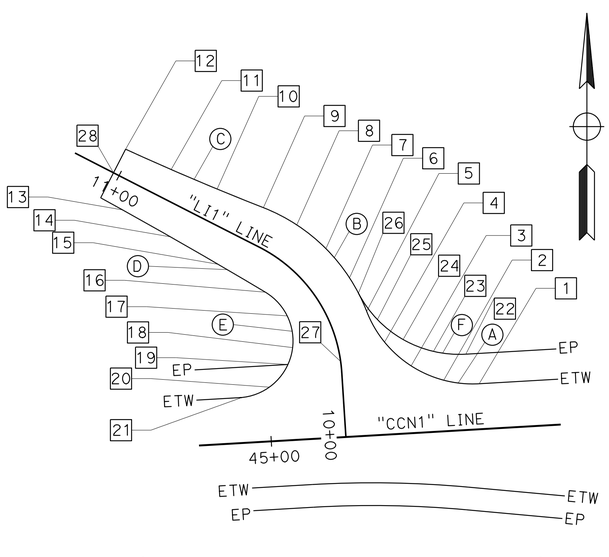

ROUTE 49 AND LITTLE ROAD INTERSECTION

PAVEMENT ELEVATIONS

	No. X	LOCATION	ELEVATION
LITTLE ROAD	1	12.00′ L+ "CCN1" LINE 45+55.68	750.09
	2	13.48′ L+ "CCN1" LINE 45+46.39	749.70
	3	17.76′ L+ "CCN1" LINE 45+38.02	749.30
	4	12.30′ R+ "LI1" LINE 10+22.65	748.29
	5	10.92′ R+ "LI1" LINE 10+29.81	747.34
	6	10.24′ R+ "LI1" LINE 10+37.74	746.35
	7	10.23′ R+ "LI1" LINE 10+45.66	745.49
	8	10.14′ R+ "LI1" LINE 10+53.58	744.51
	9	9.82′ R+ "LI1" LINE 10+62.27	743.47
	10	8.66′ R+ "LI1" LINE 10+75.40	741.96
	11	7.73′ R+ "LI1" LINE 10+88.55	740.39
	12	7.04′ R+ "LI1" LINE 11+01.65	738.68
	13	7.60′ L+ "LI1" LINE 10+95.14	739.90
	14	8.18′ L+ "LI1" LINE 10+80.65	741.66
	15	8.93′ L+ "LI1" LINE 10+66.17	743.45
	16	9.08′ L+ "LI1" LINE 10+49.61	745.48
	17	9.03′ L+ "LI1" LINE 10+38.57	746.89
	18	11.52′′ L+ "LI1" LINE 10+27.57	747.97
	19	20.00′ L+ "CCN1" LINE 45+05.57	749.97
	20	14.30′ L+ "CCN1" LINE 45+00.31	747.96 EP
	21	12.00′ L+ "CCN1" LINE 44+92.91	747.83 ETW
	22	20.00′ L+ "CCN1" LINE 45+52.61	749.81 EP
	23	21.23′ L+ "CCN1" LINE 45+44.11	749.45
	24	17.27′ R+ "LI1" LINE 10+22.43	748.31
	25	12.06′ R+ "LI1" LINE 10+27.44	747.60
	26	10.21′ R+ "LI1" LINE 10+34.02	746.82
	27	20.00′ L+ "CCN1" LINE 45+19.50	748.58
	28	00.00′ R+ "LI1" LINE 11+01.63	739.01
BEACH COURT	29	38.24′ R+ "CCN1" LINE 27+93.13	789.37
	30	37.84′ R+ "CCN1" LINE 27+96.81	789.25
	31	32.65′ R+ "CCN1" LINE 27+67.29	789.05
	32	25.93′ R+ "CCN1" LINE 27+66.29	789.95
	33	41.28′ R+ "CCN1" LINE 27+67.84	790.17
	34	44.79′ R+ "CCN1" LINE 27+42.67	790.31

ELEVATIONS AT SIDEWALK SEE CASE C
CURB RAMP GEOMETRY INFORMATION

CURVE DATA FOR INTERSECTIONS

	No. X	R	Δ	T	L
LITTLE ROAD	A	30.00′	72°09′26.85"	21.86′	37.78′
	B	48.00′	47°27′59.15"	21.10′	39.77′
	C	700.42′	03°13′59.00"	19.77′	39.52′
	D	1388.78′	02°23′39.33"	29.02′	58.03′
	E	15.00′	145°50′19.92"	48.82′	38.18′
	F	30.00′	65°51′36.31"	19.43′	34.48′
BEACH COURT	G	1458.00′	00°33′01"	7.00′	14.00′
	H	25.00′	59°36′26"	14.32′	26.01
	I	25.00′	19°53′53	4.39	8.68
	J	1458.00′	01°35′29"	20.25	40.49

CONSTRUCTION DETAILS

SCALE: 1" = 20′ **C-5**

STATE OF CALIFORNIA - DEPARTMENT OF TRANSPORTATION
Caltrans
DESIGN
FUNCTIONAL SUPERVISOR: NESAR FORMOLI
CALCULATED-DESIGNED BY: KAMAL CHONKRIA
CHECKED BY: KEVIN CANFIELD
REVISED BY
DATE REVISED

LAST REVISION 00-00-00
DATE PLOTTED => 08-JUL-2016
TIME PLOTTED => 16:18

Dist	COUNTY	ROUTE	POST MILES TOTAL PROJECT	SHEET No.	TOTAL SHEETS
03	ED	49	23.6/24.5	22	202

Ron Tollison 5-9-16
REGISTERED CIVIL ENGINEER DATE

5-9-16
PLANS APPROVAL DATE

REGISTERED PROFESSIONAL ENGINEER
RONALD W. TOLLISON
No. 67389
Exp. 12/31/16
CIVIL
STATE OF CALIFORNIA

THE STATE OF CALIFORNIA OR ITS OFFICERS OR AGENTS SHALL NOT BE RESPONSIBLE FOR THE ACCURACY OR COMPLETENESS OF SCANNED COPIES OF THIS PLAN SHEET.

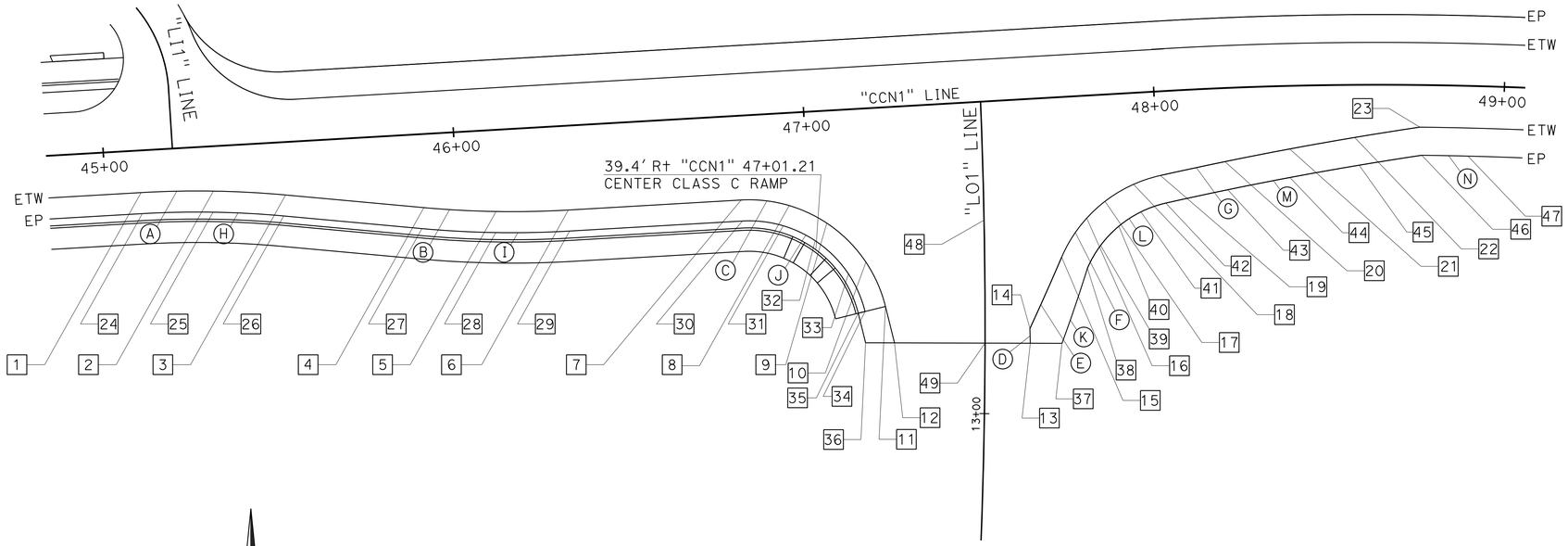

ROUTE 49 AND LOTUS ROAD INTERSECTION

CURVE DATA FOR INTERSECTION

No. (X)	R	Δ	T	L
A	277.00'	08°31'50.74"	20.66'	41.24'
B	277.00'	08°31'50.76"	20.66'	41.24'
C	40.00'	79°24'01.46"	33.21'	55.43'
D	802.78'	00°18'00.55"	2.10'	4.21'
E	753.43'	01°41'22.79"	11.11'	22.22'
F	40.00'	54°21'01.02"	20.54'	37.94'
G	1029.50'	04°11'13.99"	37.64'	75.24'
H	271.00'	08°31'50.74"	20.21'	40.35'
I	283.00'	08°31'50.76"	21.11'	42.14'
J	34.00'	79°24'01.46"	28.23'	47.12'
K	444.83'	02°54'30.12"	11.29'	22.58'
L	32.00'	54°00'30.31"	16.31'	30.16'
M	1021.50'	04°09'50.90"	37.14'	74.24'
N	1026.01'	00°44'07.77"	6.59'	13.17'

INTERSECTION GEOMETRIC INFORMATION

No. (X)	LOCATION	ELEVATION
1	12.00' R+ "CCN1" LINE 45+10.10	748.40
2	12.78' R+ "CCN1" LINE 45+30.71	749.12
3	15.08' R+ "CCN1" LINE 45+51.19	749.85
4	20.94' R+ "CCN1" LINE 45+90.33	751.32
5	23.24' R+ "CCN1" LINE 46+10.82	752.17
6	24.00' R+ "CCN1" LINE 46+31.42	753.10
7	24.00' R+ "CCN1" LINE 46+80.77	755.54
8	26.38' R+ "CCN1" LINE 46+94.35	756.15
9	32.00' R+ "CCN1" LINE 47+04.76	756.51
10	33.87' L+ "LO1" LINE 13+43.54	756.98
11	28.39' L+ "LO1" LINE 13+30.63	757.40
12	25.83' L+ "LO1" LINE 13+20.08	757.23
13	12.89' R+ "LO1" LINE 13+20.08	759.21
14	12.78' R+ "LO1" LINE 13+24.25	759.15
15	21.94' R+ "LO1" LINE 13+44.27	759.04
16	34.86' R+ "CCN1" LINE 47+78.82	759.19
17	30.68' R+ "CCN1" LINE 47+84.29	759.64
18	26.02' R+ "CCN1" LINE 47+92.69	760.26
19	23.94' R+ "CCN1" LINE 48+00.50	760.72
20	20.95' R+ "CCN1" LINE 48+19.40	761.74
21	17.96' R+ "CCN1" LINE 48+38.32	762.81
22	14.98' R+ "CCN1" LINE 48+57.19	763.92
23	12.00' R+ "CCN1" LINE 48+76.01	765.07
24	18.00' R+ "CCN1" LINE 45+10.10	748.10
25	18.76' R+ "CCN1" LINE 45+30.26	748.82
26	21.01' R+ "CCN1" LINE 45+50.30	749.55
27	26.88' R+ "CCN1" LINE 45+89.44	751.02
28	29.23' R+ "CCN1" LINE 46+10.37	751.87
29	30.00' R+ "CCN1" LINE 46+31.42	752.80
30	30.00' R+ "CCN1" LINE 46+80.77	755.42
31	32.03' R+ "CCN1" LINE 46+92.31	755.85
32	36.80' R+ "CCN1" LINE 47+01.17	756.21
33	38.89' L+ "LO1" LINE 13+40.18	756.68
34	34.22' L+ "LO1" LINE 13+29.18	757.10
35	36.16' L+ "LO1" LINE 13+28.69	756.93
36	34.07' L+ "LO1" LINE 13+20.08	756.39
37	21.93' R+ "LO1" LINE 13+20.08	759.27
38	29.26' R+ "LO1" LINE 13+41.10	758.64
39	33.11' R+ "LO1" LINE 13+47.44	758.71
40	37.68' R+ "CCN1" LINE 47+87.82	759.09
41	33.97' R+ "CCN1" LINE 47+94.34	759.67
42	31.87' R+ "CCN1" LINE 48+01.57	760.18
43	28.98' R+ "CCN1" LINE 48+19.87	761.11
44	26.09' R+ "CCN1" LINE 48+38.18	762.08
45	22.88' R+ "CCN1" LINE 48+58.46	763.20
46	20.00' R+ "CCN1" LINE 48+76.66	764.27
47	20.00' R+ "CCN1" LINE 48+90.08	764.97
48	00.00' R+ "LO1" LINE 13+55.11	758.26
49	00.00' R+ "LO1" LINE 12+20.08	759.16

CONSTRUCTION DETAILS

SCALE: 1" = 20'

C-6

STATE OF CALIFORNIA - DEPARTMENT OF TRANSPORTATION
Caltrans
DESIGN

FUNCTIONAL SUPERVISOR: NESAR FORMOLI
CALCULATED-DESIGNED BY: KAMAL CHONKRIA
CHECKED BY: KEVIN CANFIELD
REVISED BY
DATE REVISED

LAST REVISION 00-00-00
DATE PLOTTED => 08-JUL-2016
TIME PLOTTED => 16:18

Dist	COUNTY	ROUTE	POST MILES TOTAL PROJECT	SHEET No.	TOTAL SHEETS
03	ED	49	23.6/24.5	23	202

REGISTERED CIVIL ENGINEER 5-9-16 DATE

5-9-16
PLANS APPROVAL DATE

REGISTERED PROFESSIONAL ENGINEER
RONALD W. TOLLISON
No. 67389
Exp. 12/31/16
CIVIL
STATE OF CALIFORNIA

THE STATE OF CALIFORNIA OR ITS OFFICERS OR AGENTS SHALL NOT BE RESPONSIBLE FOR THE ACCURACY OR COMPLETENESS OF SCANNED COPIES OF THIS PLAN SHEET.

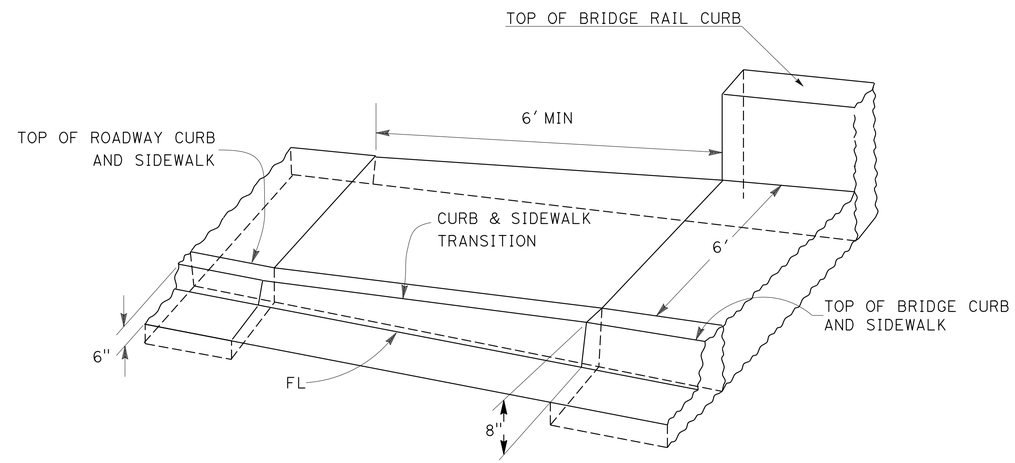

CURB & SIDEWALK TRANSITION AT BRIDGE ENDS
DETAILS

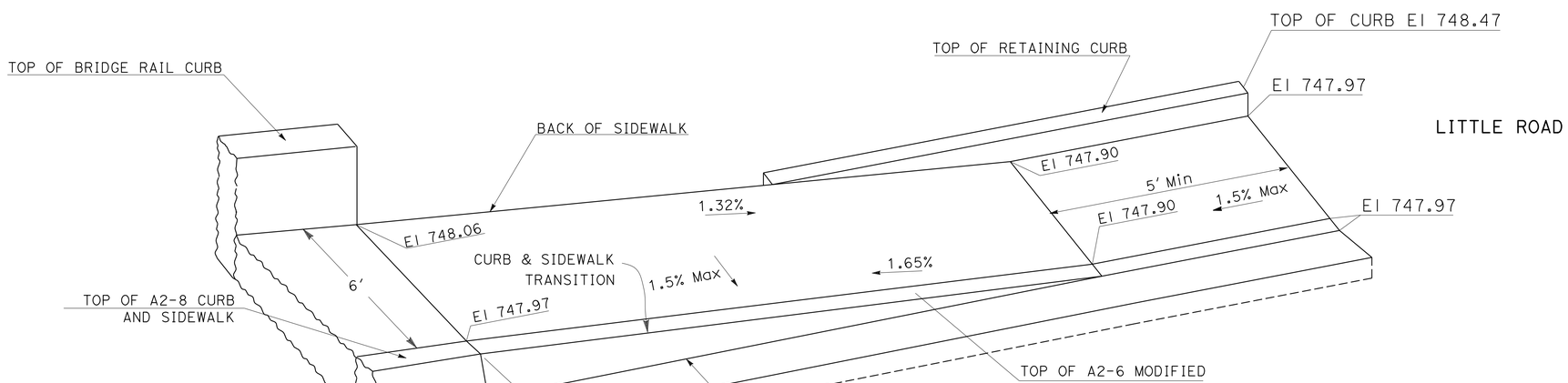

8" TO 6" CURB WITH CURB CASE CM RAMP TRANSITION

CONSTRUCTION DETAILS

NO SCALE

C-7

STATE OF CALIFORNIA - DEPARTMENT OF TRANSPORTATION
Caltrans
DESIGN

FUNCTIONAL SUPERVISOR: NESAR FORMOLI
CALCULATED-DESIGNED BY: KAMAL CHONKRIA
CHECKED BY: KEVIN CANFIELD
REVISED BY
DATE REVISED

LAST REVISION 00-00-00
DATE PLOTTED => 08-JUL-2016
TIME PLOTTED => 16:18

Dist	COUNTY	ROUTE	POST MILES TOTAL PROJECT	SHEET No.	TOTAL SHEETS
03	ED	49	23.6/24.5	24	202

Ron Tollison 5-9-16
REGISTERED CIVIL ENGINEER DATE

5-9-16
PLANS APPROVAL DATE

REGISTERED PROFESSIONAL ENGINEER
RONALD W. TOLLISON
No. 67389
Exp. 12/31/16
CIVIL
STATE OF CALIFORNIA

THE STATE OF CALIFORNIA OR ITS OFFICERS OR AGENTS SHALL NOT BE RESPONSIBLE FOR THE ACCURACY OR COMPLETENESS OF SCANNED COPIES OF THIS PLAN SHEET.

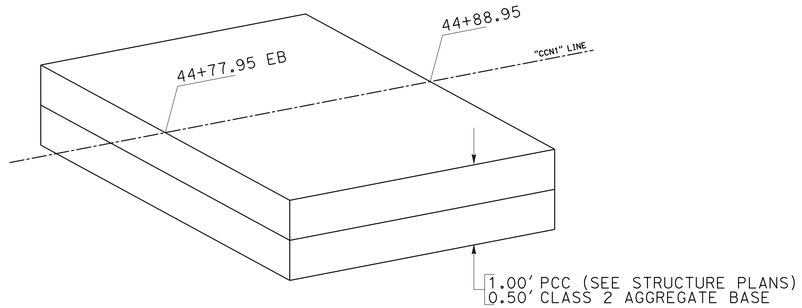

APPROACH SLAB DETAIL

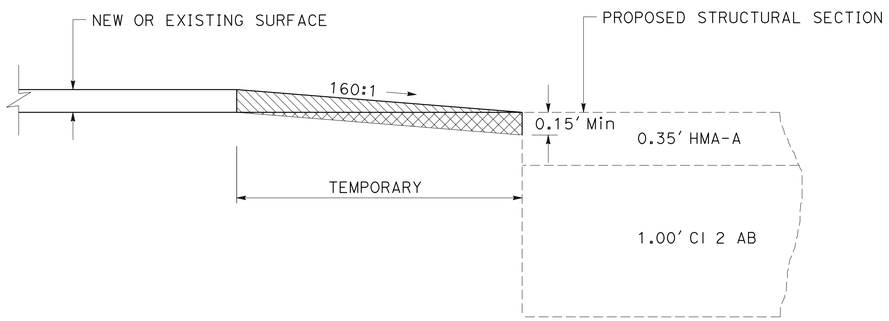

TYPICAL PAVING CONFORM FOR TEMPORARY CONSTRUCTION TAPERS

LEGEND:

HMA MATERIAL (TEMPORARY TAPER)

COLD PLANE AC PAVEMENT AND PLACE HMA.

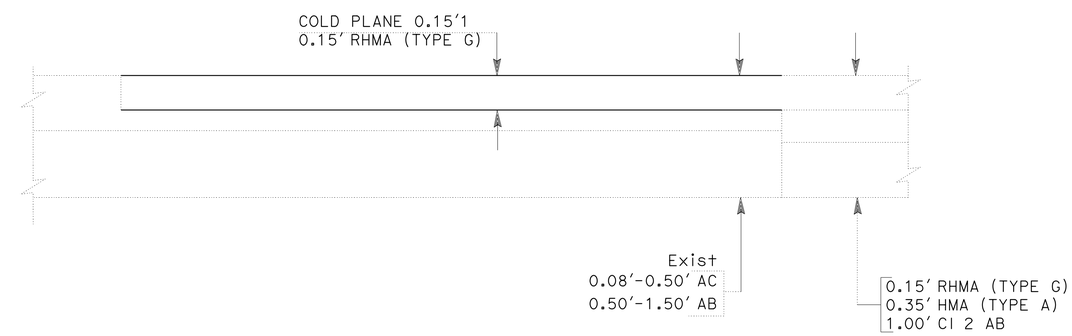

"CCN1" 19+30 TO 22+16.87
"CCN1" 61+50 TO 65+50

COLD PLANE ASPHALT CONCRETE DETAIL

CONSTRUCTION DETAILS

NO SCALE

C-8

STATE OF CALIFORNIA - DEPARTMENT OF TRANSPORTATION
Caltrans
DESIGN

FUNCTIONAL SUPERVISOR: NESAR FORMOLI
CALCULATED-DESIGNED BY: KAMAL CHONKRIA
CHECKED BY: KEVIN CANFIELD
REVISED BY
DATE REVISED

LAST REVISION 00-00-00
DATE PLOTTED => 08-JUL-2016
TIME PLOTTED => 16:18

Dist	COUNTY	ROUTE	POST MILES TOTAL PROJECT	SHEET No.	TOTAL SHEETS
03	ED	49	23.6/24.5	25	202

REGISTERED CIVIL ENGINEER 5-9-16 DATE

5-9-16
PLANS APPROVAL DATE

REGISTERED PROFESSIONAL ENGINEER
RONALD W. TOLLISON
No. 67389
Exp. 12/31/16
CIVIL
STATE OF CALIFORNIA

THE STATE OF CALIFORNIA OR ITS OFFICERS OR AGENTS SHALL NOT BE RESPONSIBLE FOR THE ACCURACY OR COMPLETENESS OF SCANNED COPIES OF THIS PLAN SHEET.

NOTES:

1. THE WIDTH OF THE RSP (LIGHT, METHOD B) IS 60' AND SHALL BE CENTERED UNDER THE BRIDGE AS SHOWN ON PLAN SHEET L-2.

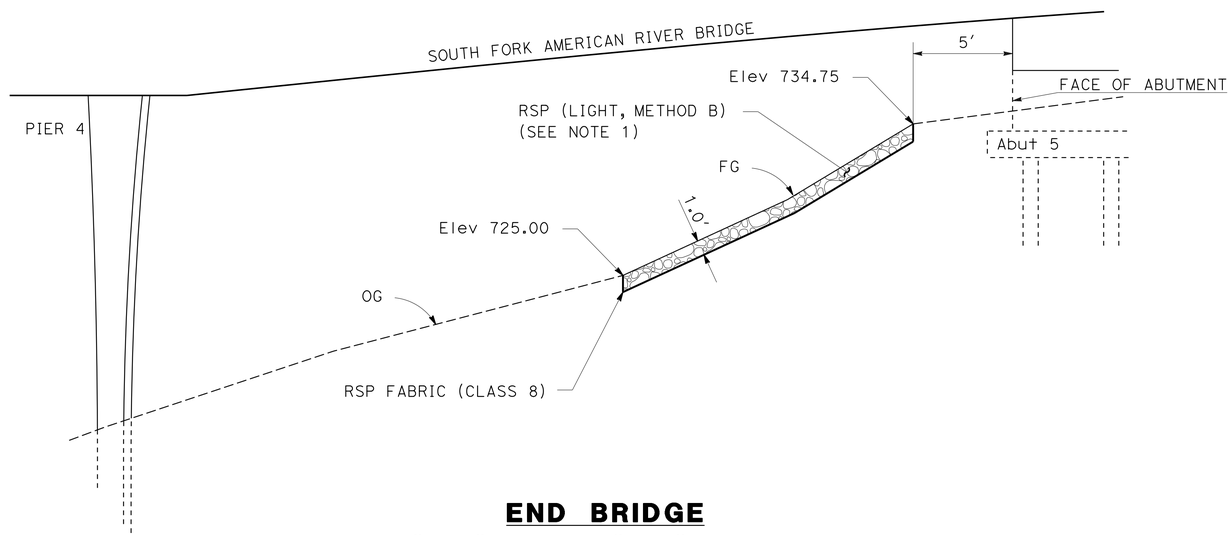

END BRIDGE

"CCN1" 44+37 TO "CCN1" 44+56

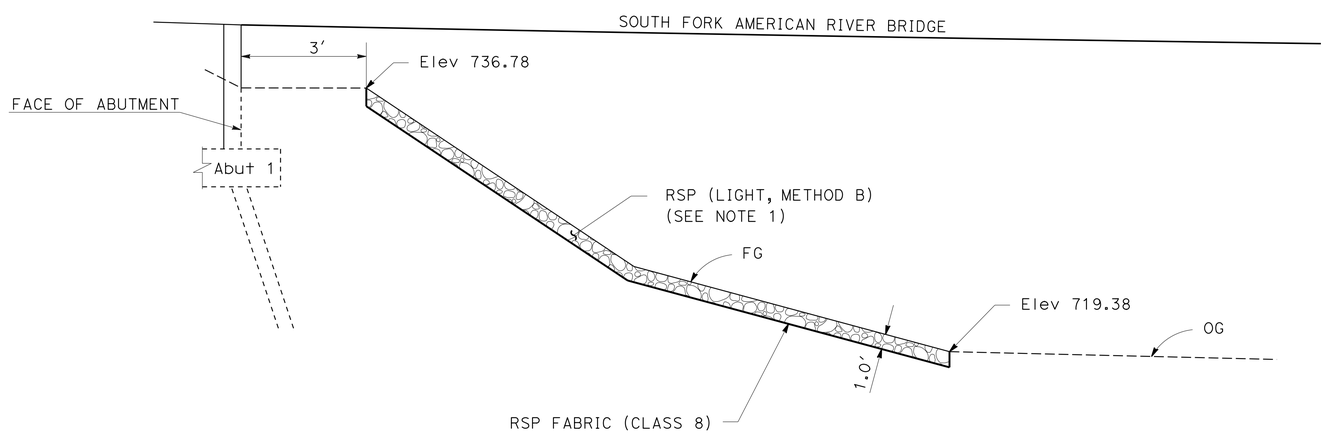

BEGIN BRIDGE

"CCN1" 39+83 TO "CCN1" 40+21

CONSTRUCTION DETAILS

NO SCALE

C-9

STATE OF CALIFORNIA - DEPARTMENT OF TRANSPORTATION
Caltrans
DESIGN

FUNCTIONAL SUPERVISOR: NESAR FORMOLI

CALCULATED-DESIGNED BY: CHRIS ROCKEY
CHECKED BY: KEVIN CANFIELD

REVISED BY | DATE REVISED

LAST REVISION 00-00-00 | DATE PLOTTED => 08-JUL-2016 | TIME PLOTTED => 16:18

Dist	COUNTY	ROUTE	POST MILES TOTAL PROJECT	SHEET No.	TOTAL SHEETS
03	ED	49	23.6/24.5	26	202

REGISTERED CIVIL ENGINEER 5-9-16 DATE

5-9-16
PLANS APPROVAL DATE

REGISTERED PROFESSIONAL ENGINEER
RONALD W. TOLLISON
No. 67389
Exp. 12/31/16
CIVIL
STATE OF CALIFORNIA

THE STATE OF CALIFORNIA OR ITS OFFICERS OR AGENTS SHALL NOT BE RESPONSIBLE FOR THE ACCURACY OR COMPLETENESS OF SCANNED COPIES OF THIS PLAN SHEET.

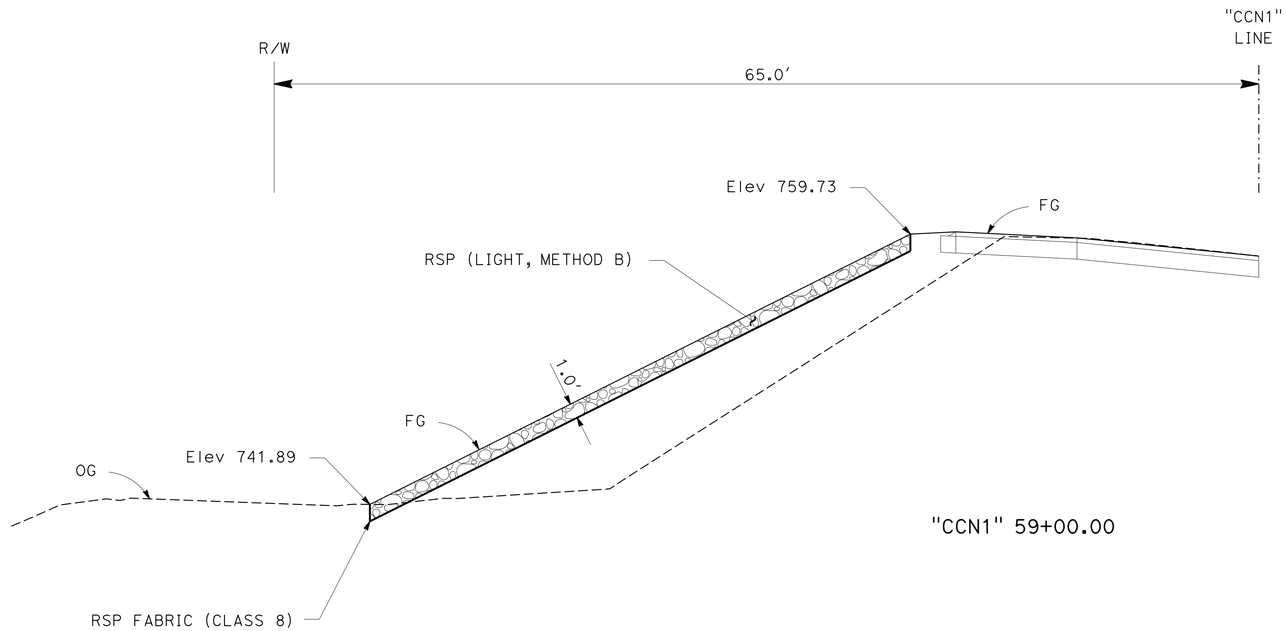

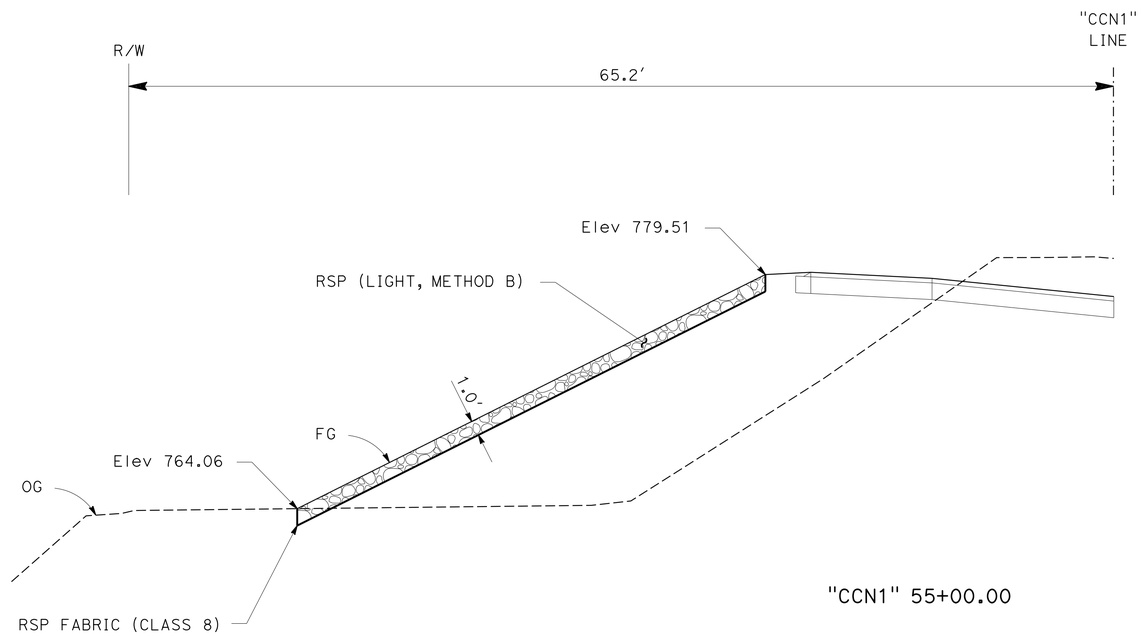

CONSTRUCTION DETAILS

NO SCALE

C-10

STATE OF CALIFORNIA - DEPARTMENT OF TRANSPORTATION
Caltrans
DESIGN

FUNCTIONAL SUPERVISOR: NESAR FORMOLI
CALCULATED-DESIGNED BY: KEVIN CANFIELD
CHECKED BY: CHRIS ROCKEY
REVISED BY
DATE REVISED

LAST REVISION 00-00-00
DATE PLOTTED => 08-JUL-2016
TIME PLOTTED => 16:18

Dist	COUNTY	ROUTE	POST MILES TOTAL PROJECT	SHEET No.	TOTAL SHEETS
03	ED	49	23.6/24.5	27	202

Ron Tollison 5-9-16
REGISTERED CIVIL ENGINEER DATE

5-9-16
PLANS APPROVAL DATE

REGISTERED PROFESSIONAL ENGINEER
RONALD W. TOLLISON
No. 67389
Exp. 12/31/16
CIVIL
STATE OF CALIFORNIA

THE STATE OF CALIFORNIA OR ITS OFFICERS OR AGENTS SHALL NOT BE RESPONSIBLE FOR THE ACCURACY OR COMPLETENESS OF SCANNED COPIES OF THIS PLAN SHEET.

NOTE:

FOR ACCURATE RIGHT OF WAY DATA, CONTACT RIGHT OF WAY ENGINEERING AT THE DISTRICT OFFICE.

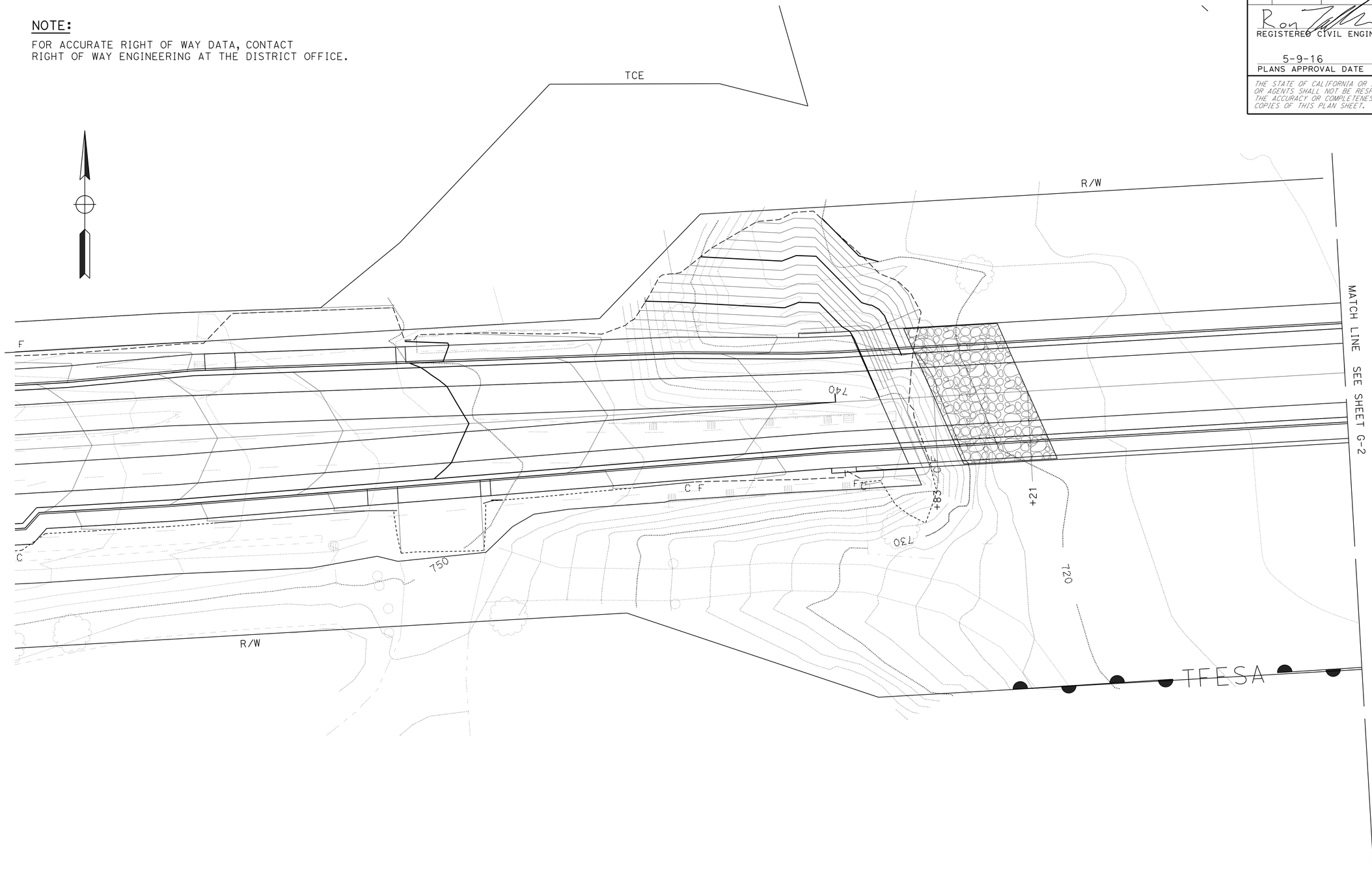

CONTOUR GRADING

SCALE: 1" = 20'

G-1

REVISED BY	DATE REVISED

CALCULATED-DESIGNED BY	CHECKED BY
RON TOLLISON	KEVIN CANFIELD

FUNCTIONAL SUPERVISOR: NESAR FORMOLI

STATE OF CALIFORNIA - DEPARTMENT OF TRANSPORTATION

Caltrans

DESIGN

LAST REVISION 00-00-00 | DATE PLOTTED => 08-JUL-2016 | TIME PLOTTED => 16:18

Dist	COUNTY	ROUTE	POST MILES TOTAL PROJECT	SHEET No.	TOTAL SHEETS
03	ED	49	23.6/24.5	28	202

REGISTERED CIVIL ENGINEER 5-9-16 DATE

5-9-16
PLANS APPROVAL DATE

REGISTERED PROFESSIONAL ENGINEER
RONALD W. TOLLISON
No. 67389
Exp. 12/31/16
CIVIL
STATE OF CALIFORNIA

THE STATE OF CALIFORNIA OR ITS OFFICERS OR AGENTS SHALL NOT BE RESPONSIBLE FOR THE ACCURACY OR COMPLETENESS OF SCANNED COPIES OF THIS PLAN SHEET.

NOTE:

FOR ACCURATE RIGHT OF WAY DATA, CONTACT RIGHT OF WAY ENGINEERING AT THE DISTRICT OFFICE.

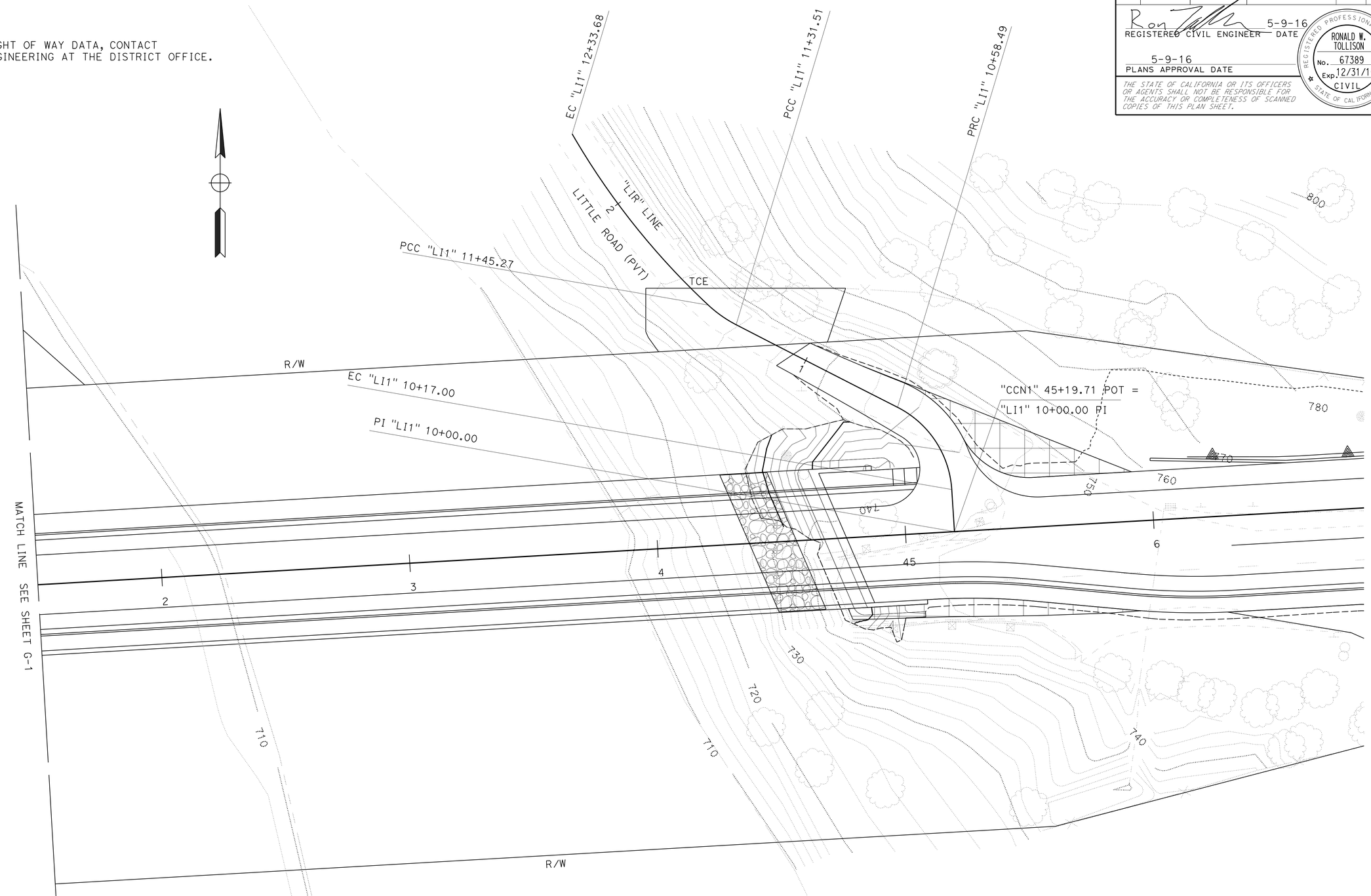

CONTOUR GRADING

SCALE: 1" = 20'

G-2

STATE OF CALIFORNIA - DEPARTMENT OF TRANSPORTATION
Caltrans
DESIGN

FUNCTIONAL SUPERVISOR: NESAR FORMOLI

CALCULATED-DESIGNED BY: RON TOLLISON
CHECKED BY: NESAR FORMOLI

REVISED BY
DATE REVISED

LAST REVISION 00-00-00
DATE PLOTTED => 08-JUL-2016
TIME PLOTTED => 16:18

Dist	COUNTY	ROUTE	POST MILES TOTAL PROJECT	SHEET No.	TOTAL SHEETS
03	ED	49	23.6/24.5	29	202

REGISTERED CIVIL ENGINEER 5-9-16 DATE

5-9-16
PLANS APPROVAL DATE

REGISTERED PROFESSIONAL ENGINEER
RONALD W. TOLLISON
No. 67389
Exp. 12/31/16
CIVIL
STATE OF CALIFORNIA

THE STATE OF CALIFORNIA OR ITS OFFICERS OR AGENTS SHALL NOT BE RESPONSIBLE FOR THE ACCURACY OR COMPLETENESS OF SCANNED COPIES OF THIS PLAN SHEET.

NOTE:

FOR ACCURATE RIGHT OF WAY DATA, CONTACT RIGHT OF WAY ENGINEERING AT THE DISTRICT OFFICE.

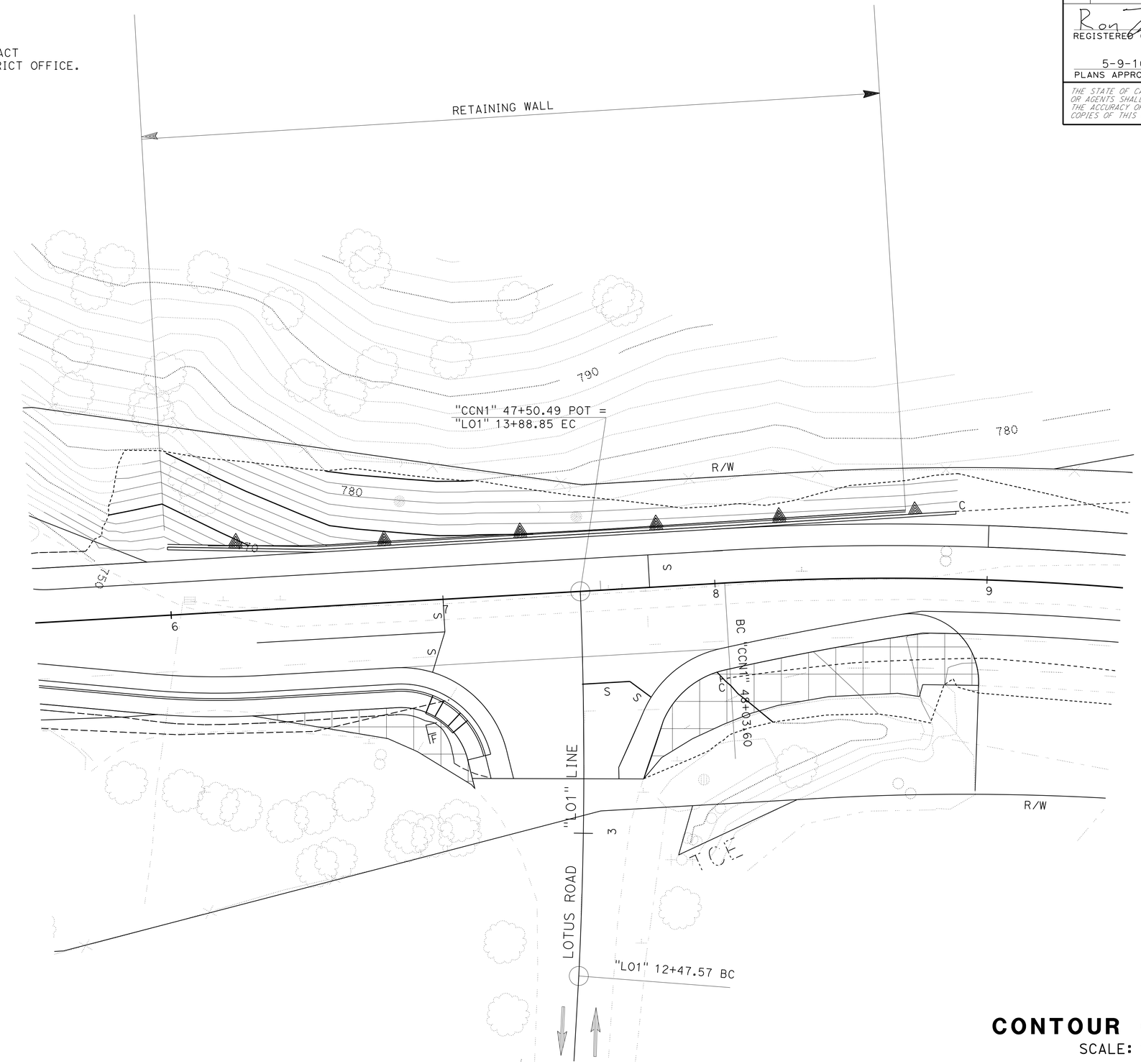

CONTOUR GRADING

SCALE: 1" = 20'

G-3

STATE OF CALIFORNIA - DEPARTMENT OF TRANSPORTATION
Caltrans
DESIGN

FUNCTIONAL SUPERVISOR: NESAR FORMOLI
CALCULATED-DESIGNED BY: RON TOLLISON
CHECKED BY: KEVIN CANFIELD
REVISED BY
DATE REVISED

LAST REVISION 00-00-00
DATE PLOTTED => 08-JUL-2016
TIME PLOTTED => 16:18

Dist	COUNTY	ROUTE	POST MILES TOTAL PROJECT	SHEET No.	TOTAL SHEETS
03	ED	49	23.6/24.5	30	202

REGISTERED CIVIL ENGINEER 5-9-16 DATE

5-9-16
PLANS APPROVAL DATE

REGISTERED PROFESSIONAL ENGINEER
CHRIS ROCKEY
No. C78030
Exp. 9/30/17
CIVIL
STATE OF CALIFORNIA

THE STATE OF CALIFORNIA OR ITS OFFICERS OR AGENTS SHALL NOT BE RESPONSIBLE FOR THE ACCURACY OR COMPLETENESS OF SCANNED COPIES OF THIS PLAN SHEET.

NOTES:

1. FOR ACCURATE RIGHT OF WAY DATA, CONTACT RIGHT OF WAY ENGINEERING AT THE DISTRICT OFFICE.
2. DRAINAGE SYSTEM ITEMS 2a, 2b, 5a, and 5b HAVE BEEN OMITTED

ABBREVIATIONS:

ED = ENERGY DISSIPATOR

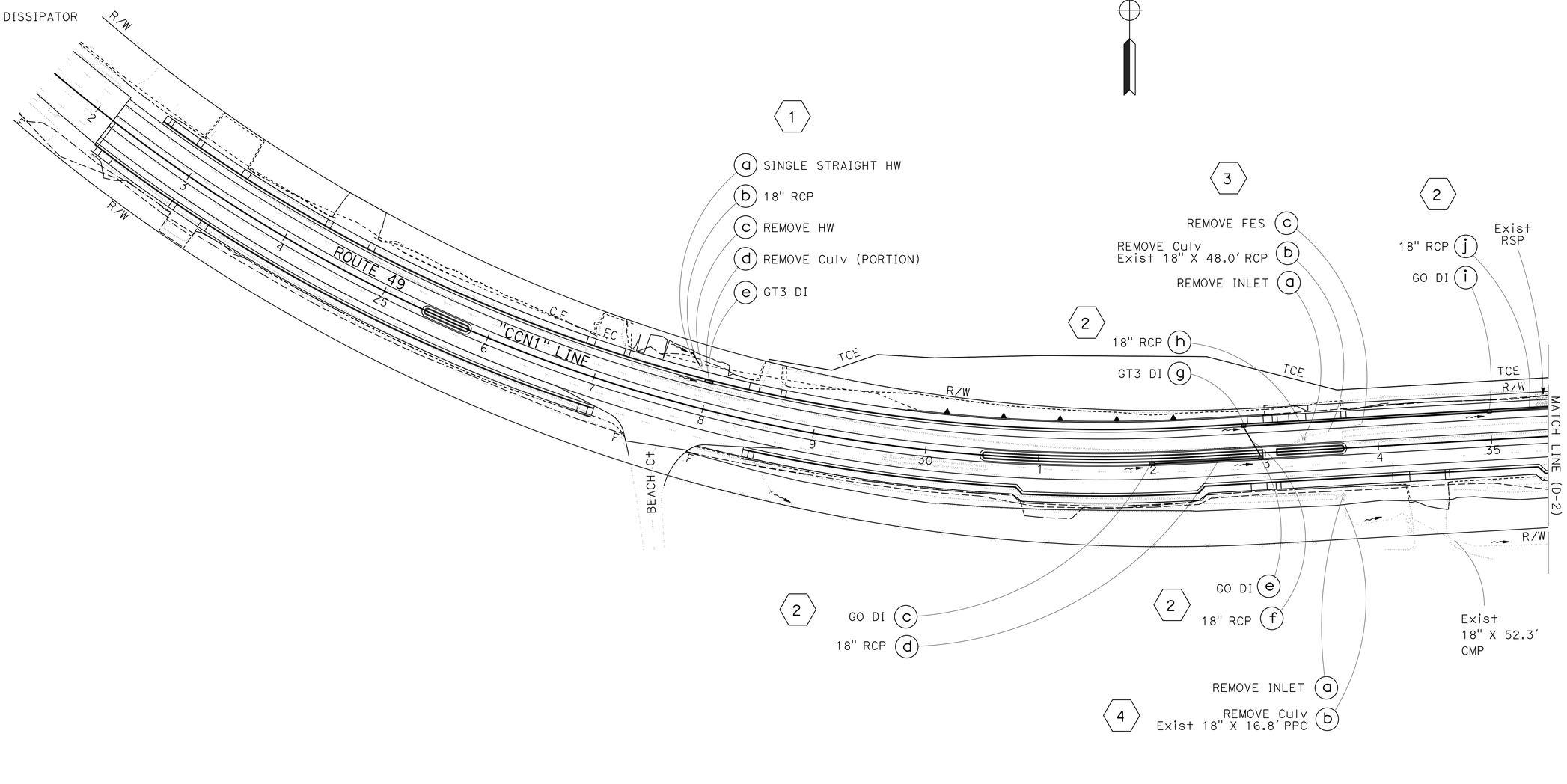

APPROVED FOR DRAINAGE WORK ONLY

DRAINAGE PLAN

SCALE: 1" = 20'

D-1

STATE OF CALIFORNIA - DEPARTMENT OF TRANSPORTATION
Caltrans
DIVISION OF ENGINEERING

FUNCTIONAL SUPERVISOR: DENNIS JAGODA
CALCULATED-DESIGNED BY: CHRIS ROCKEY
CHECKED BY: DENNIS JAGODA
REVISED BY
DATE REVISED

LAST REVISION 03-27-14
DATE PLOTTED => 08-JUL-2016
TIME PLOTTED => 16:18

Dist	COUNTY	ROUTE	POST MILES TOTAL PROJECT	SHEET No.	TOTAL SHEETS
03	ED	49	23.6/24.5	31	202

REGISTERED CIVIL ENGINEER 5-9-16 DATE

5-9-16
PLANS APPROVAL DATE

REGISTERED PROFESSIONAL ENGINEER CHRIS ROCKEY No. C78030 Exp. 9/30/17 CIVIL STATE OF CALIFORNIA

THE STATE OF CALIFORNIA OR ITS OFFICERS OR AGENTS SHALL NOT BE RESPONSIBLE FOR THE ACCURACY OR COMPLETENESS OF SCANNED COPIES OF THIS PLAN SHEET.

NOTES:

1. FOR ACCURATE RIGHT OF WAY DATA, CONTACT RIGHT OF WAY ENGINEERING AT THE DISTRICT OFFICE.

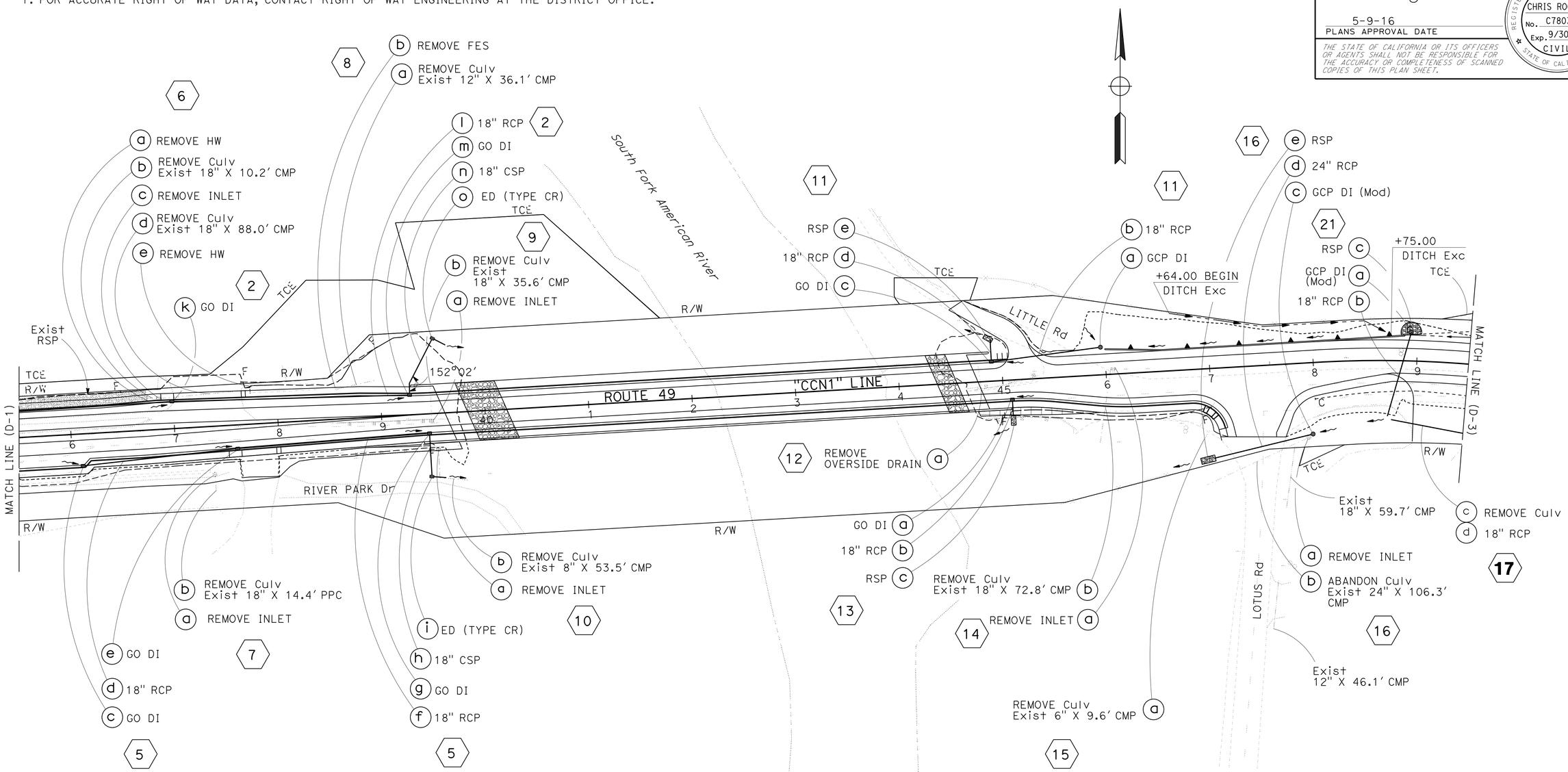

APPROVED FOR DRAINAGE WORK ONLY

DRAINAGE PLAN

SCALE: 1" = 20'

D-2

STATE OF CALIFORNIA - DEPARTMENT OF TRANSPORTATION
Caltrans
DIVISION OF ENGINEERING

FUNCTIONAL SUPERVISOR: DENNIS JAGODA
CALCULATED-DESIGNED BY: CHRIS ROCKEY
CHECKED BY: DENNIS JAGODA
REVISED BY
DATE REVISED

LAST REVISION 03-27-14
DATE PLOTTED => 08-JUL-2016
TIME PLOTTED => 16:18

Dist	COUNTY	ROUTE	POST MILES TOTAL PROJECT	SHEET No.	TOTAL SHEETS
03	ED	49	23.6/24.5	32	202

REGISTERED CIVIL ENGINEER 5-9-16 DATE

5-9-16
PLANS APPROVAL DATE

REGISTERED PROFESSIONAL ENGINEER CHRIS ROCKEY No. C78030 Exp. 9/30/17 CIVIL STATE OF CALIFORNIA

THE STATE OF CALIFORNIA OR ITS OFFICERS OR AGENTS SHALL NOT BE RESPONSIBLE FOR THE ACCURACY OR COMPLETENESS OF SCANNED COPIES OF THIS PLAN SHEET.

NOTES:

1. FOR ACCURATE RIGHT OF WAY DATA, CONTACT RIGHT OF WAY ENGINEERING AT THE DISTRICT OFFICE.

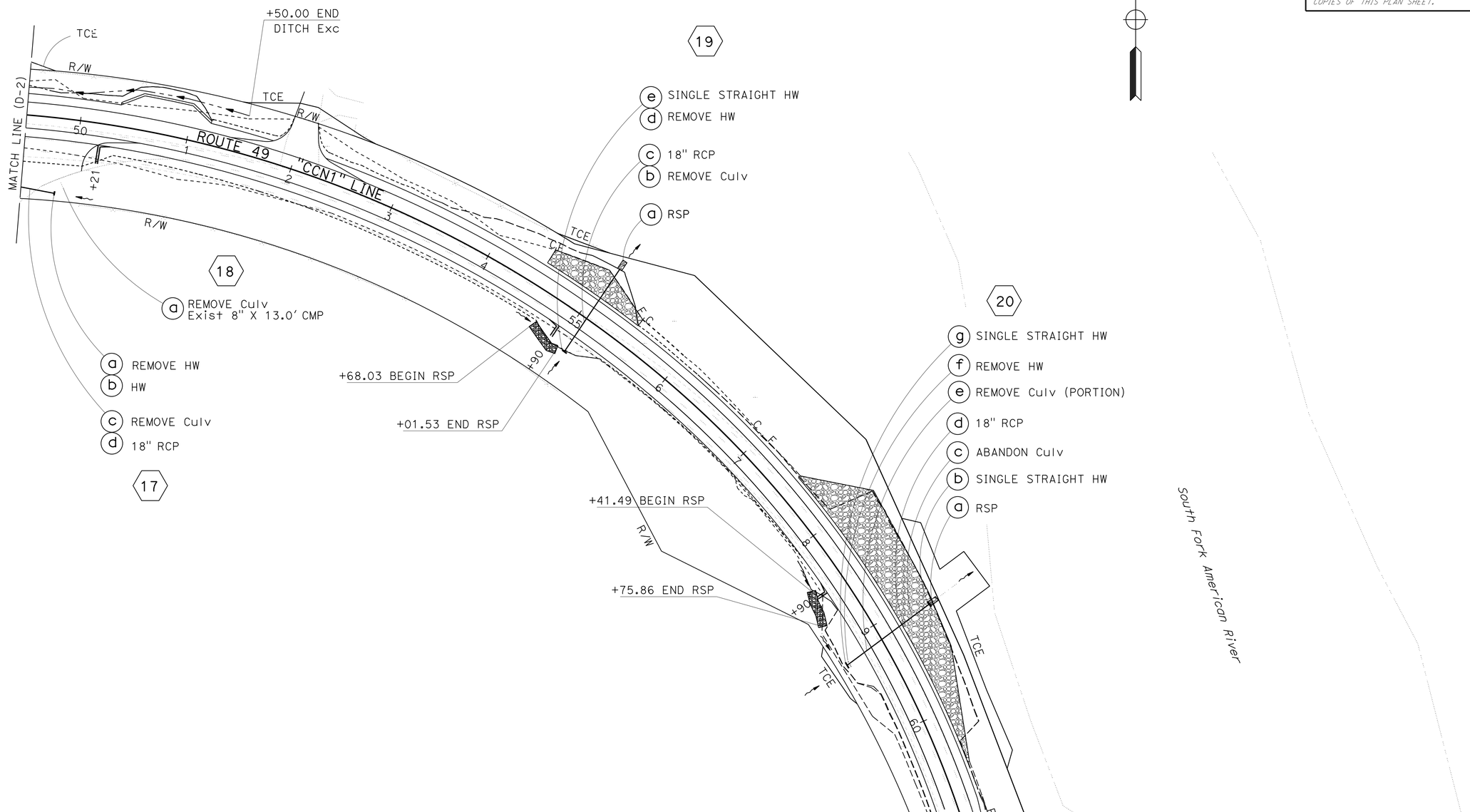

APPROVED FOR DRAINAGE WORK ONLY

DRAINAGE PLAN

SCALE: 1" = 20'

D-3

STATE OF CALIFORNIA - DEPARTMENT OF TRANSPORTATION
Caltrans
DIVISION OF ENGINEERING

FUNCTIONAL SUPERVISOR: DENNIS JAGODA
CALCULATED-DESIGNED BY: CHRIS ROCKEY
CHECKED BY: DENNIS JAGODA
REVISED BY
DATE REVISED

LAST REVISION 03-27-14
DATE PLOTTED => 08-JUL-2016
TIME PLOTTED => 16:18

Dist	COUNTY	ROUTE	POST MILES TOTAL PROJECT	SHEET No.	TOTAL SHEETS
03	ED	49	23.6/24.5	33	202

REGISTERED CIVIL ENGINEER 5-9-16 DATE

5-9-16
PLANS APPROVAL DATE

REGISTERED PROFESSIONAL ENGINEER CHRIS ROCKEY No. C78030 Exp. 9/30/17 CIVIL STATE OF CALIFORNIA

THE STATE OF CALIFORNIA OR ITS OFFICERS OR AGENTS SHALL NOT BE RESPONSIBLE FOR THE ACCURACY OR COMPLETENESS OF SCANNED COPIES OF THIS PLAN SHEET.

NOTES:

3 4 6 7 8 9 10 12 14 15 18

1. THERE ARE NO DRAINAGE PROFILES FOR EXISTING DRAINAGE SYSTEMS THAT ARE BEING REMOVED ONLY.
2. THE STATION AND OFFSET FOR THE DRAINAGE INLETS IS TO THE FLOWLINE AT THE CENTER OF THE STRUCTURE, UNLESS OTHERWISE NOTED.
3. THE STATION AND OFFSET FOR ITEMS 2o, 5i, 16c AND 21a ARE TO THE CENTER OF THE STRUCTURE AT THE TOP OF GRATE.
4. THE PROFILE SHOWN IS FOR PROPOSED CULVERT 9d. THE EXISTING CULVERT 9b IS IN A DIFFERENT ALIGNMENT AND DOES DAYLIGHT AT THE OUTLET.
5. SEE STANDARD PLANS D78C FOR INLET DEPRESSIONS. "W" SHALL BE 4.0 FEET FOR ALL INLET DEPRESSIONS EXCEPT FOR ITEMS 2a, 2c AND 2e "W" SHAL BE 3.0 FEET.

LEGEND:

ID (GRADE) = INLET DEPRESSION ON GRADE, SEE STANDARD PLAN D78C.

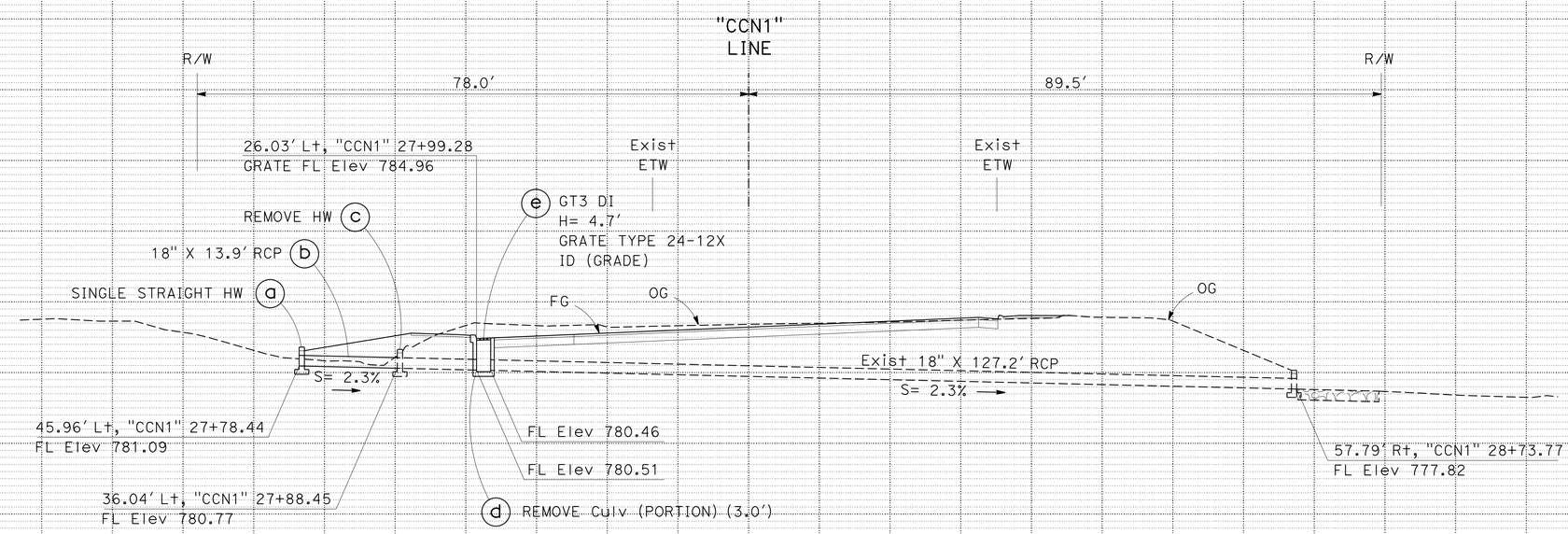

DRAINAGE SYSTEM No. 1

"CCN1" 28+23.12

DRAINAGE PROFILES

SCALE: Horiz 1" = 10′
Vert 1" = 10′

DP-1

STATE OF CALIFORNIA - DEPARTMENT OF TRANSPORTATION
DIVISION OF ENGINEERING
Caltrans

FUNCTIONAL SUPERVISOR: DENNIS JAGODA
CALCULATED-DESIGNED BY: CHRIS ROCKEY
CHECKED BY: DENNIS JAGODA
REVISED BY
DATE REVISED

LAST REVISION 00-00-00
DATE PLOTTED => 08-JUL-2016
TIME PLOTTED => 16:18

Dist	COUNTY	ROUTE	POST MILES TOTAL PROJECT	SHEET No.	TOTAL SHEETS
03	ED	49	23.6/24.5	34	202

REGISTERED CIVIL ENGINEER 5-9-16 DATE

5-9-16
PLANS APPROVAL DATE

REGISTERED PROFESSIONAL ENGINEER CHRIS ROCKEY No. C78030 Exp. 9/30/17 CIVIL STATE OF CALIFORNIA

THE STATE OF CALIFORNIA OR ITS OFFICERS OR AGENTS SHALL NOT BE RESPONSIBLE FOR THE ACCURACY OR COMPLETENESS OF SCANNED COPIES OF THIS PLAN SHEET.

NOTES:

1. DRAINAGE SYSTEM ITEMS 2a AND 2b HAVE BEEN OMITTED.

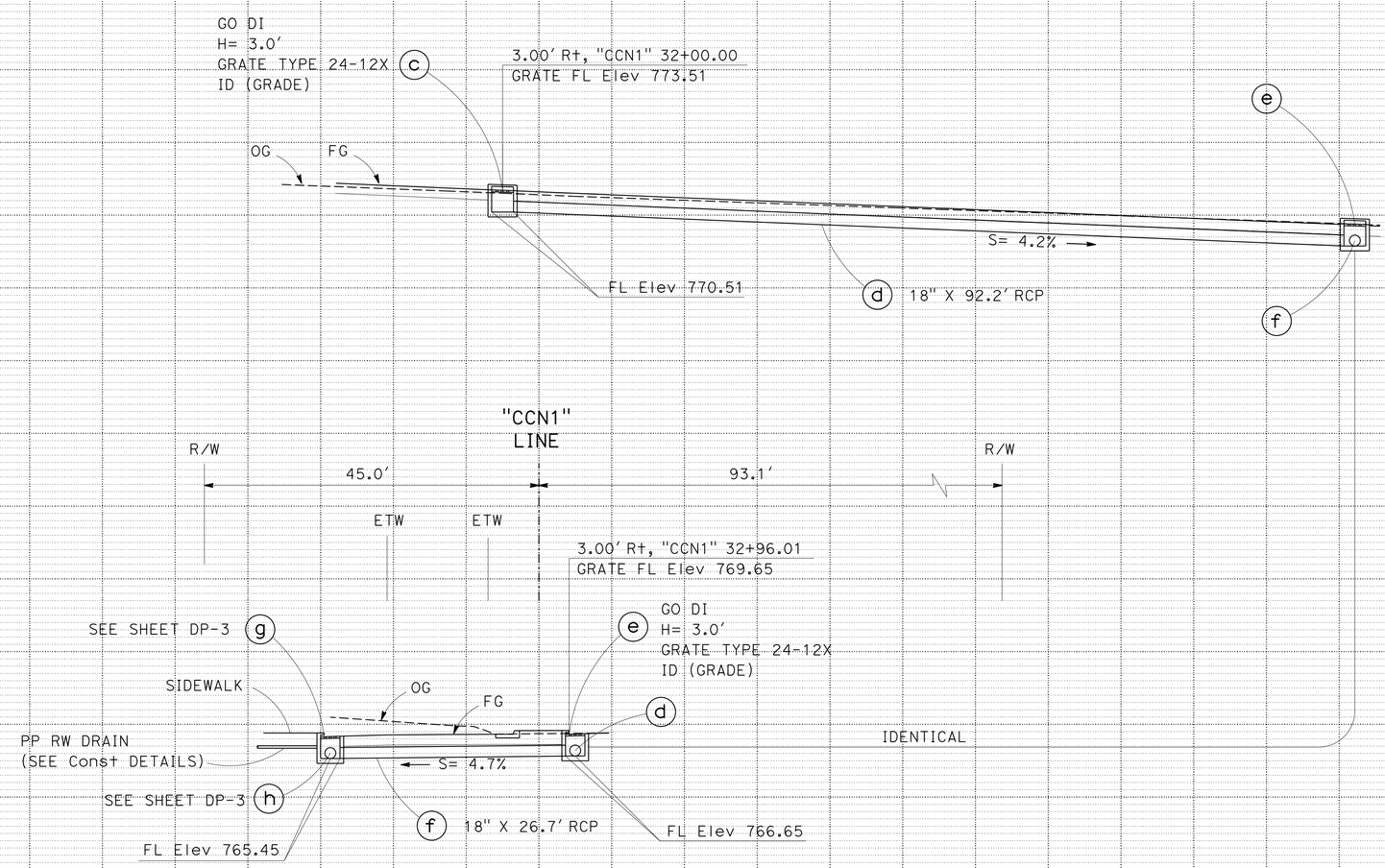

DRAINAGE SYSTEM No. 2

"CCN1" 32+00.00

DRAINAGE PROFILES

SCALE: Horiz 1" = 10'
Vert 1" = 10'

DP-2

STATE OF CALIFORNIA - DEPARTMENT OF TRANSPORTATION
Caltrans
DIVISION OF ENGINEERING

FUNCTIONAL SUPERVISOR: DENNIS JAGODA
CALCULATED-DESIGNED BY: CHRIS ROCKEY
CHECKED BY: DENNIS JAGODA
REVISED BY
DATE REVISED

LAST REVISION 00-00-00
DATE PLOTTED => 08-JUL-2016
TIME PLOTTED => 16:18

Dist	COUNTY	ROUTE	POST MILES TOTAL PROJECT	SHEET No.	TOTAL SHEETS
03	ED	49	23.6/24.5	35	202

REGISTERED CIVIL ENGINEER 5-9-16 DATE

5-9-16
PLANS APPROVAL DATE

REGISTERED PROFESSIONAL ENGINEER
CHRIS ROCKEY
No. C78030
Exp.9/30/17
CIVIL
STATE OF CALIFORNIA

THE STATE OF CALIFORNIA OR ITS OFFICERS OR AGENTS SHALL NOT BE RESPONSIBLE FOR THE ACCURACY OR COMPLETENESS OF SCANNED COPIES OF THIS PLAN SHEET.

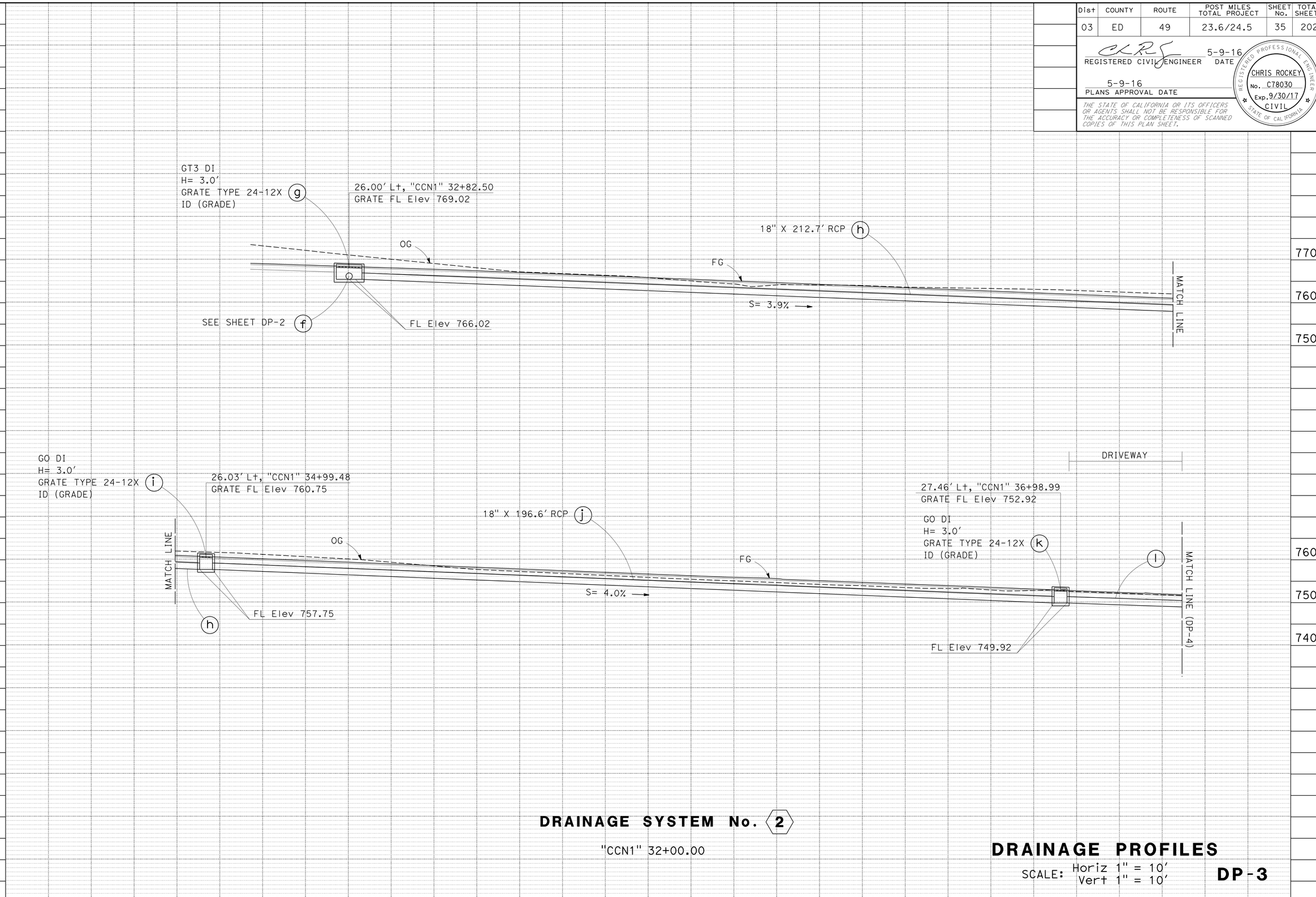

DRAINAGE SYSTEM No. 2

"CCN1" 32+00.00

DRAINAGE PROFILES

SCALE: Horiz 1" = 10'
Vert 1" = 10'

DP-3

REVISED BY | DATE REVISED
CHRIS ROCKEY | DENNIS JAGODA
CALCULATED-DESIGNED BY | CHECKED BY
FUNCTIONAL SUPERVISOR | DENNIS JAGODA
STATE OF CALIFORNIA - DEPARTMENT OF TRANSPORTATION
DIVISION OF ENGINEERING
Caltrans

LAST REVISION | DATE PLOTTED => 08-JUL-2016
00-00-00 | TIME PLOTTED => 16:19

Dist	COUNTY	ROUTE	POST MILES TOTAL PROJECT	SHEET No.	TOTAL SHEETS
03	ED	49	23.6/24.5	36	202

REGISTERED CIVIL ENGINEER 5-9-16 DATE

5-9-16
PLANS APPROVAL DATE

REGISTERED PROFESSIONAL ENGINEER CHRIS ROCKEY No. C78030 Exp.9/30/17 CIVIL STATE OF CALIFORNIA

THE STATE OF CALIFORNIA OR ITS OFFICERS OR AGENTS SHALL NOT BE RESPONSIBLE FOR THE ACCURACY OR COMPLETENESS OF SCANNED COPIES OF THIS PLAN SHEET.

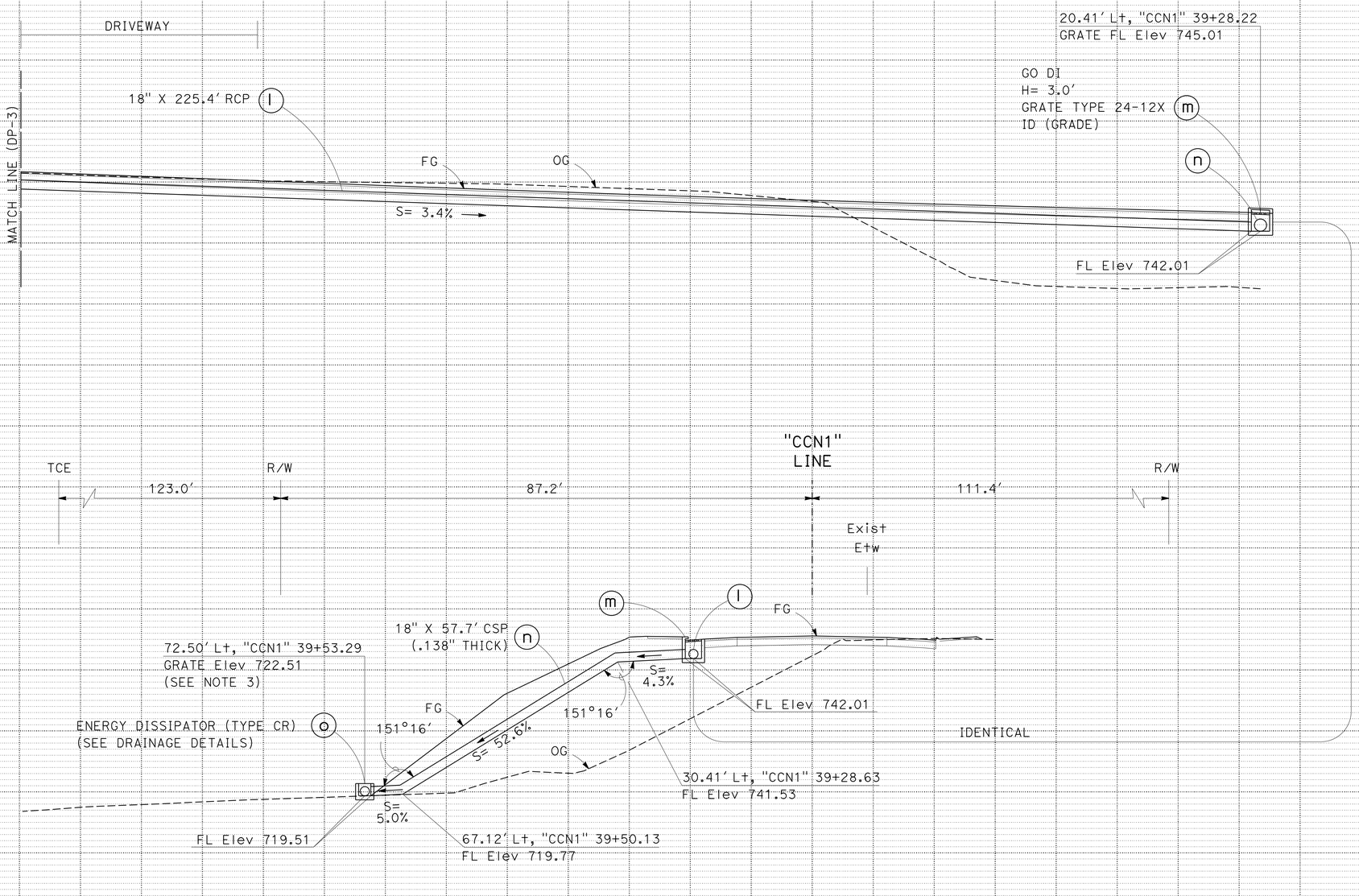

DRAINAGE SYSTEM No. 2

"CCN1" 32+00.00

DRAINAGE PROFILES

SCALE: Horiz 1" = 10'
Vert 1" = 10'

DP-4

REVISED BY | DATE REVISED
CHRIS ROCKEY | DENNIS JAGODA
CALCULATED-DESIGNED BY | CHECKED BY
FUNCTIONAL SUPERVISOR | DENNIS JAGODA
STATE OF CALIFORNIA - DEPARTMENT OF TRANSPORTATION
DIVISION OF ENGINEERING
Caltrans

LAST REVISION | DATE PLOTTED => 08-JUL-2016
00-00-00 | TIME PLOTTED => 16:19

Dist	COUNTY	ROUTE	POST MILES TOTAL PROJECT	SHEET No.	TOTAL SHEETS
03	ED	49	23.6/24.5	37	202

REGISTERED CIVIL ENGINEER 5-9-16 DATE

5-9-16
PLANS APPROVAL DATE

REGISTERED PROFESSIONAL ENGINEER CHRIS ROCKEY No. C78030 Exp.9/30/17 CIVIL STATE OF CALIFORNIA

THE STATE OF CALIFORNIA OR ITS OFFICERS OR AGENTS SHALL NOT BE RESPONSIBLE FOR THE ACCURACY OR COMPLETENESS OF SCANNED COPIES OF THIS PLAN SHEET.

NOTES:

1. DRAINAGE SYSTEM ITEMS 5a AND 5b HAVE BEEN OMITTED.

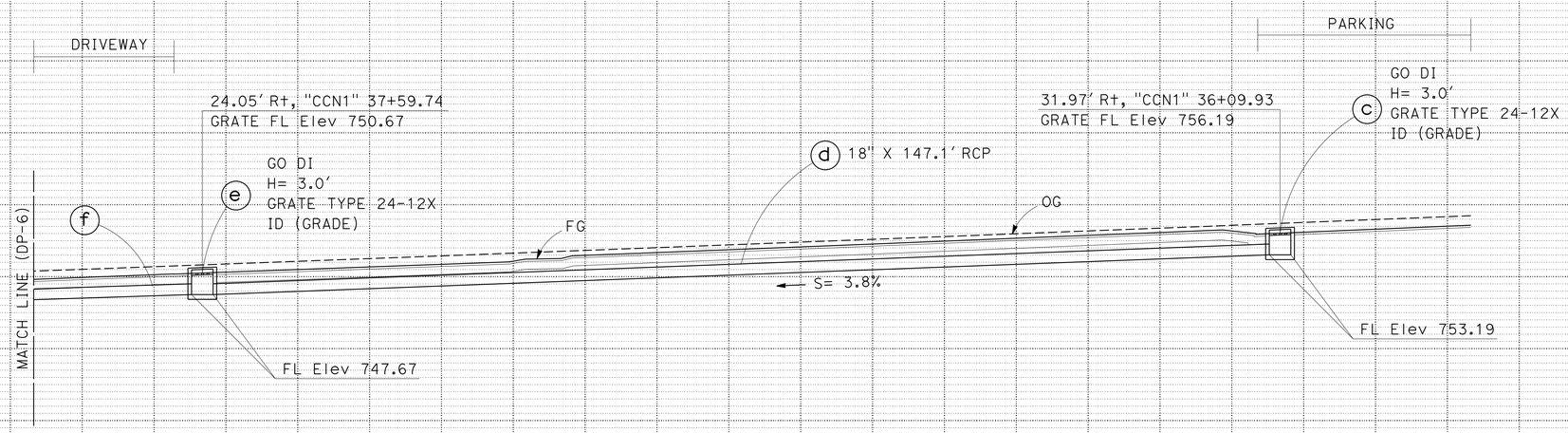

DRAINAGE SYSTEM No. 5

"CCN1" 36+09.93

DRAINAGE PROFILES

SCALE: Horiz 1" = 10'
Vert 1" = 10'

DP-5

REVISED BY | DATE REVISED
CHRIS ROCKEY | DENNIS JAGODA
CALCULATED-DESIGNED BY | CHECKED BY
FUNCTIONAL SUPERVISOR | DENNIS JAGODA
STATE OF CALIFORNIA - DEPARTMENT OF TRANSPORTATION
DIVISION OF ENGINEERING
Caltrans

LAST REVISION 00-00-00 | DATE PLOTTED => 08-JUL-2016 | TIME PLOTTED => 16:19

Dist	COUNTY	ROUTE	POST MILES TOTAL PROJECT	SHEET No.	TOTAL SHEETS
03	ED	49	23.6/24.5	38	202

REGISTERED CIVIL ENGINEER 5-9-16 DATE

5-9-16
PLANS APPROVAL DATE

REGISTERED PROFESSIONAL ENGINEER
CHRIS ROCKEY
No. C78030
Exp.9/30/17
CIVIL
STATE OF CALIFORNIA

THE STATE OF CALIFORNIA OR ITS OFFICERS OR AGENTS SHALL NOT BE RESPONSIBLE FOR THE ACCURACY OR COMPLETENESS OF SCANNED COPIES OF THIS PLAN SHEET.

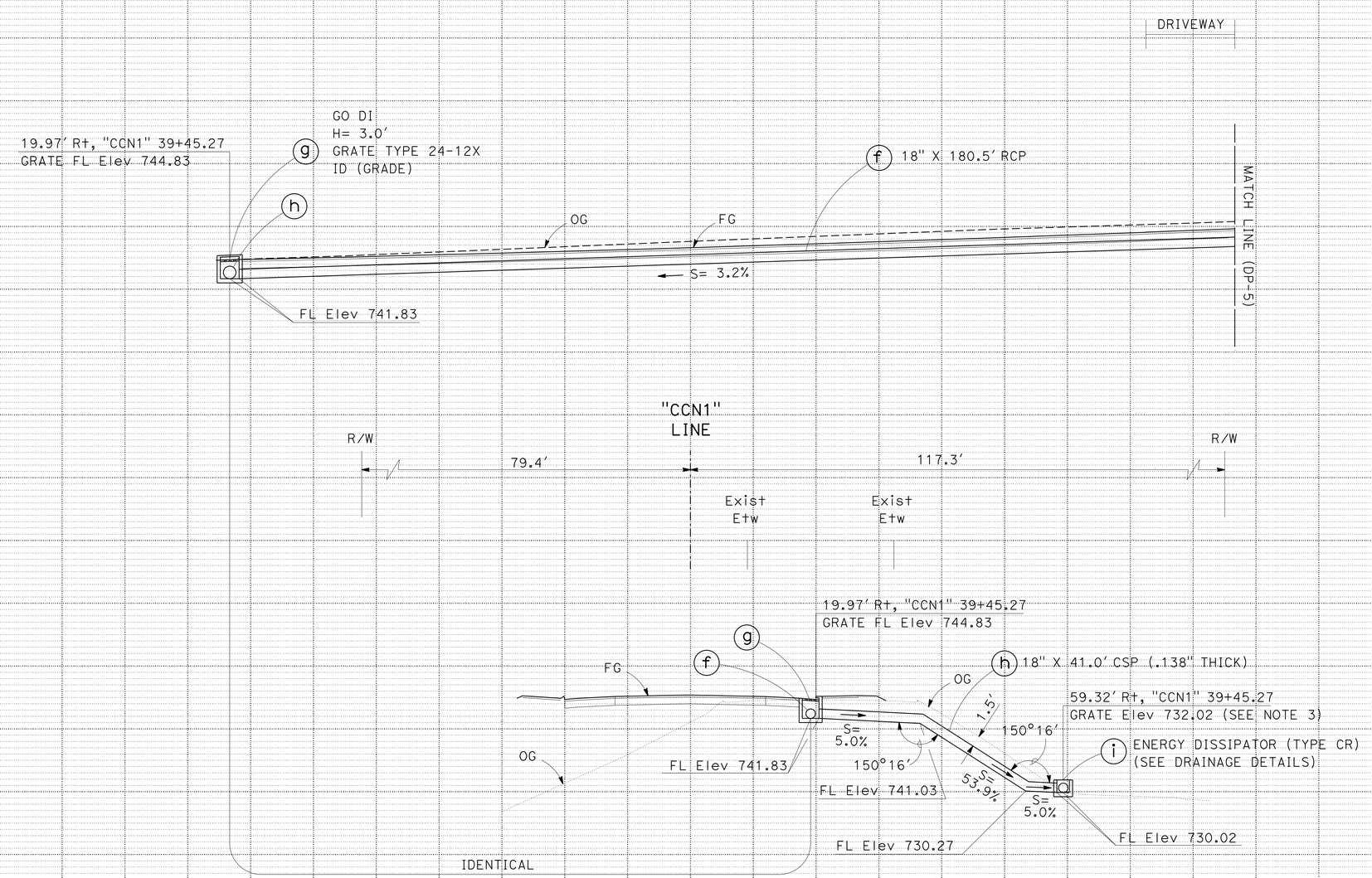

DRAINAGE SYSTEM No. 5

"CCN1" 36+09.93

DRAINAGE PROFILES

SCALE: Horiz 1" = 10'
Vert 1" = 10'

DP-6

STATE OF CALIFORNIA - DEPARTMENT OF TRANSPORTATION
DIVISION OF ENGINEERING
Caltrans

FUNCTIONAL SUPERVISOR: DENNIS JAGODA
CALCULATED-DESIGNED BY: CHRIS ROCKEY
CHECKED BY: DENNIS JAGODA
REVISED BY
DATE REVISED

LAST REVISION 00-00-00
DATE PLOTTED => 08-JUL-2016
TIME PLOTTED => 16:19

Dist	COUNTY	ROUTE	POST MILES TOTAL PROJECT	SHEET No.	TOTAL SHEETS
03	ED	49	23.6/24.5	39	202

REGISTERED CIVIL ENGINEER 5-9-16 DATE

5-9-16
PLANS APPROVAL DATE

REGISTERED PROFESSIONAL ENGINEER CHRIS ROCKEY No. C78030 Exp. 9/30/17 CIVIL STATE OF CALIFORNIA

THE STATE OF CALIFORNIA OR ITS OFFICERS OR AGENTS SHALL NOT BE RESPONSIBLE FOR THE ACCURACY OR COMPLETENESS OF SCANNED COPIES OF THIS PLAN SHEET.

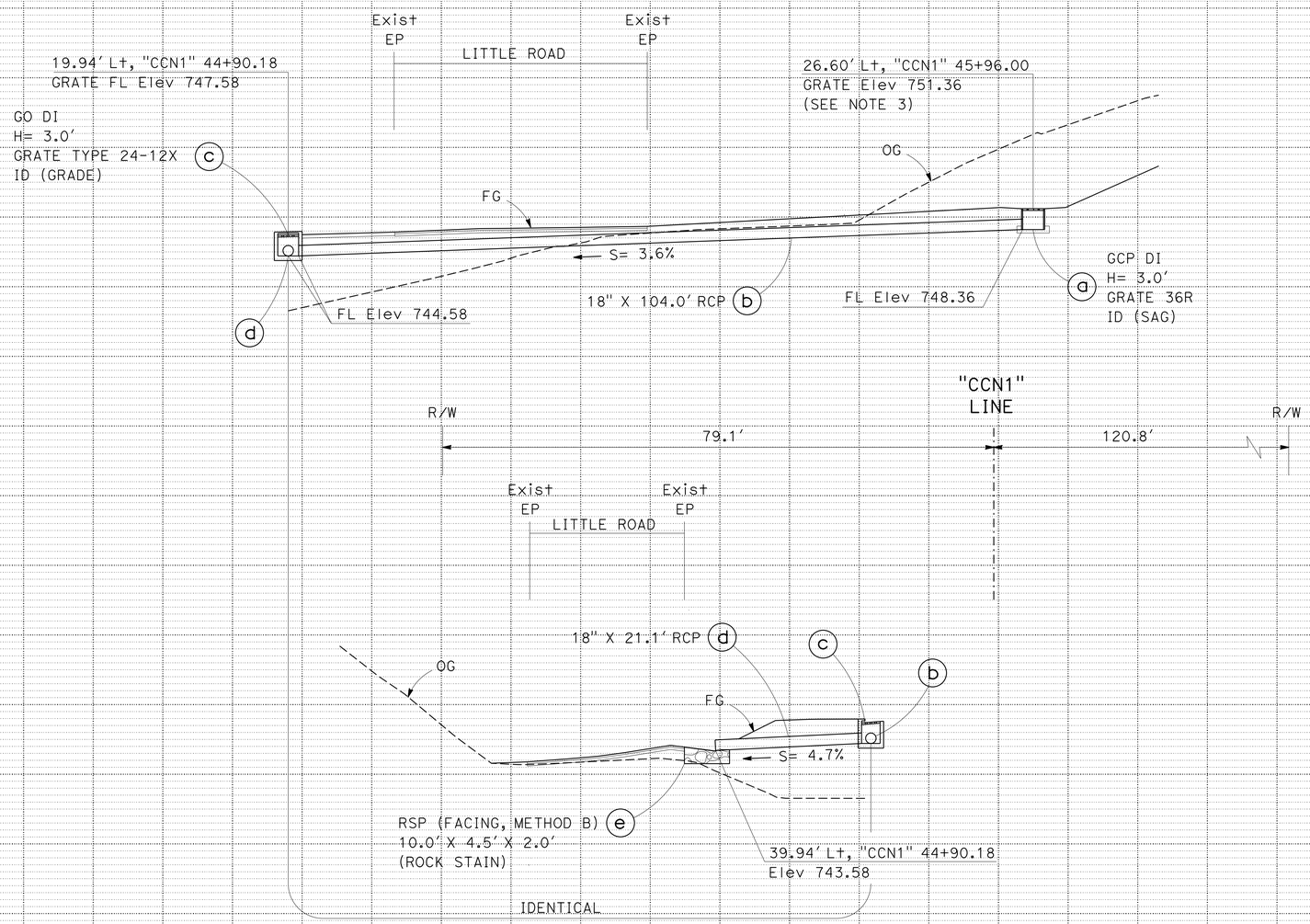

DRAINAGE SYSTEM No. 11

"CCN1" 44+90.18

DRAINAGE PROFILES

SCALE: Horiz 1" = 10'
Vert 1" = 10'

DP-7

REVISED BY | DATE REVISED
CHRIS ROCKEY | DENNIS JAGODA
CALCULATED-DESIGNED BY | CHECKED BY
FUNCTIONAL SUPERVISOR: DENNIS JAGODA

STATE OF CALIFORNIA - DEPARTMENT OF TRANSPORTATION
DIVISION OF ENGINEERING
Caltrans

LAST REVISION 00-00-00 | DATE PLOTTED => 08-JUL-2016 | TIME PLOTTED => 16:19

Dist	COUNTY	ROUTE	POST MILES TOTAL PROJECT	SHEET No.	TOTAL SHEETS
03	ED	49	23.6/24.5	40	202

REGISTERED CIVIL ENGINEER 5-9-16 DATE

5-9-16
PLANS APPROVAL DATE

REGISTERED PROFESSIONAL ENGINEER
CHRIS ROCKEY
No. C78030
Exp.9/30/17
CIVIL
STATE OF CALIFORNIA

THE STATE OF CALIFORNIA OR ITS OFFICERS OR AGENTS SHALL NOT BE RESPONSIBLE FOR THE ACCURACY OR COMPLETENESS OF SCANNED COPIES OF THIS PLAN SHEET.

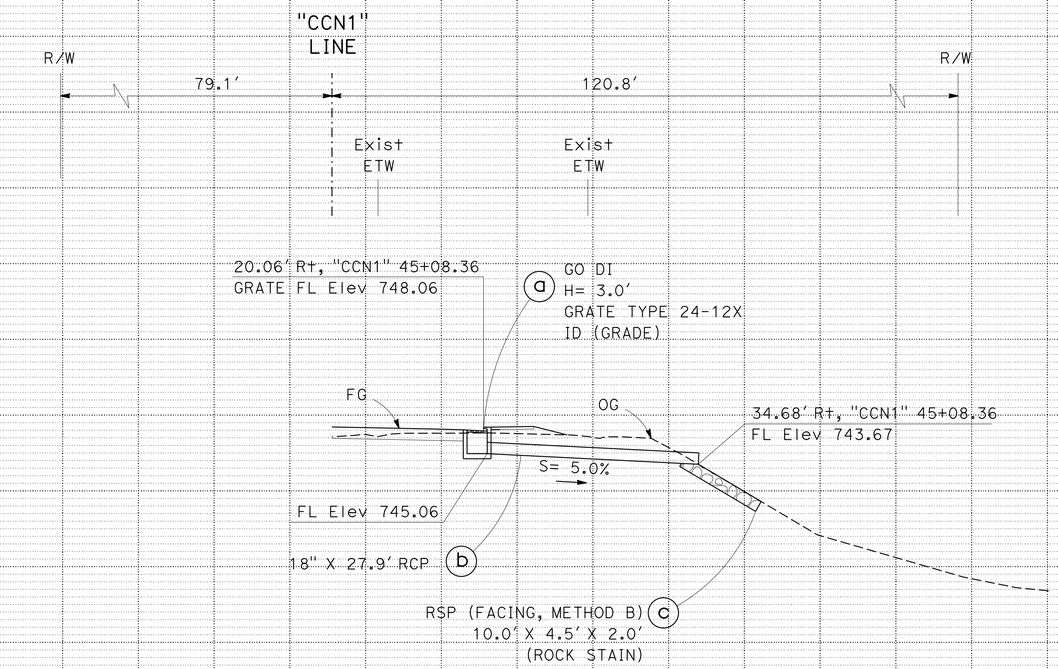

DRAINAGE SYSTEM No. 13

"CCN1" 45+08.36

DRAINAGE PROFILES

SCALE: Horiz 1" = 10'
Vert 1" = 10'

DP-8

STATE OF CALIFORNIA - DEPARTMENT OF TRANSPORTATION
DIVISION OF ENGINEERING
Caltrans

FUNCTIONAL SUPERVISOR: DENNIS JAGODA
CALCULATED-DESIGNED BY: CHRIS ROCKEY
CHECKED BY: DENNIS JAGODA
REVISED BY
DATE REVISED

LAST REVISION 00-00-00
DATE PLOTTED => 08-JUL-2016
TIME PLOTTED => 16:19

Dist	COUNTY	ROUTE	POST MILES TOTAL PROJECT	SHEET No.	TOTAL SHEETS
03	ED	49	23.6/24.5	41	202

REGISTERED CIVIL ENGINEER 5-9-16 DATE

5-9-16
PLANS APPROVAL DATE

REGISTERED PROFESSIONAL ENGINEER CHRIS ROCKEY No. C78030 Exp.9/30/17 CIVIL STATE OF CALIFORNIA

THE STATE OF CALIFORNIA OR ITS OFFICERS OR AGENTS SHALL NOT BE RESPONSIBLE FOR THE ACCURACY OR COMPLETENESS OF SCANNED COPIES OF THIS PLAN SHEET.

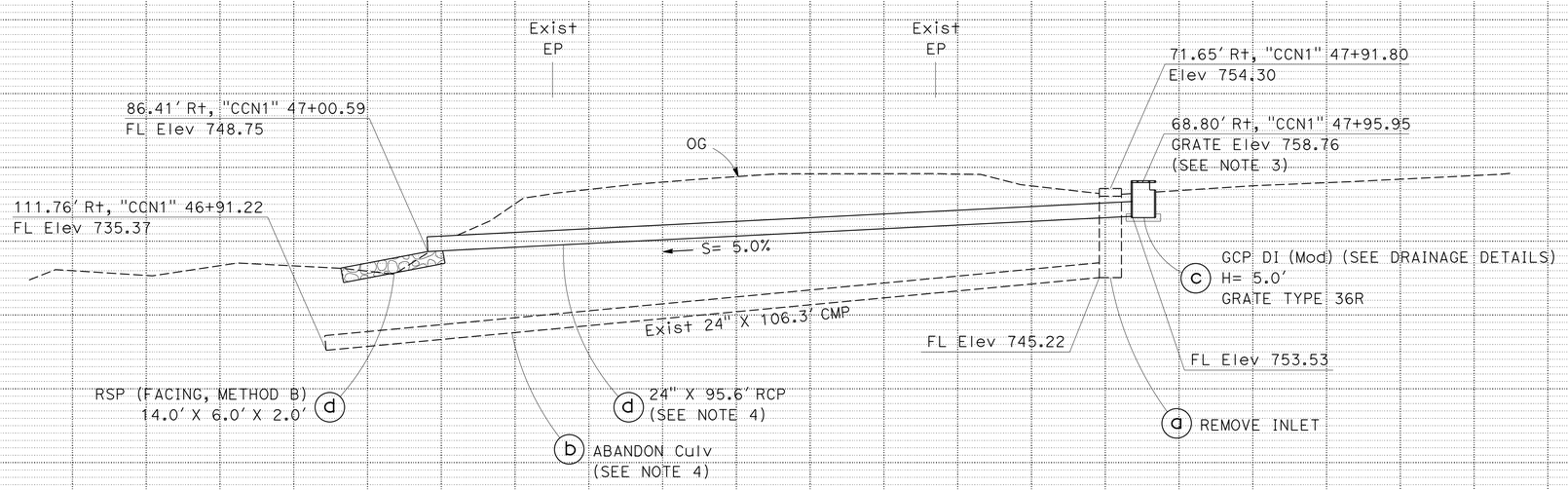

DRAINAGE SYSTEM No. 16

"CCN1" 46+91.22

DRAINAGE PROFILES

SCALE: Horiz 1" = 10'
Vert 1" = 10'

DP-9

REVISED BY | DATE REVISED
CHRIS ROCKEY | DENNIS JAGODA
CALCULATED-DESIGNED BY | CHECKED BY
FUNCTIONAL SUPERVISOR: DENNIS JAGODA
STATE OF CALIFORNIA - DEPARTMENT OF TRANSPORTATION
Caltrans DIVISION OF ENGINEERING

LAST REVISION 00-00-00 | DATE PLOTTED => 08-JUL-2016 | TIME PLOTTED => 16:19

Dist	COUNTY	ROUTE	POST MILES TOTAL PROJECT	SHEET No.	TOTAL SHEETS
03	ED	49	23.6/24.5	42	202

REGISTERED CIVIL ENGINEER 5-9-16 DATE

5-9-16
PLANS APPROVAL DATE

REGISTERED PROFESSIONAL ENGINEER
CHRIS ROCKEY
No. C78030
Exp. 9/30/17
CIVIL
STATE OF CALIFORNIA

THE STATE OF CALIFORNIA OR ITS OFFICERS OR AGENTS SHALL NOT BE RESPONSIBLE FOR THE ACCURACY OR COMPLETENESS OF SCANNED COPIES OF THIS PLAN SHEET.

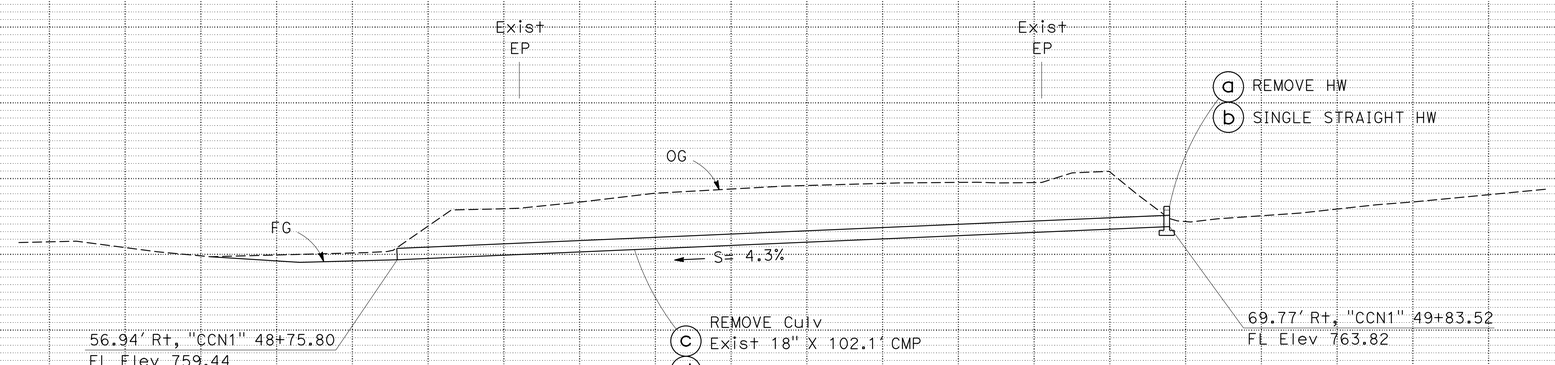

DRAINAGE SYSTEM No. 17

"CCN1" 48+75.80

DRAINAGE PROFILES

SCALE: Horiz 1" = 10'
Vert 1" = 10'

DP-10

STATE OF CALIFORNIA - DEPARTMENT OF TRANSPORTATION
Caltrans
DIVISION OF ENGINEERING

FUNCTIONAL SUPERVISOR: DENNIS JAGODA
CALCULATED-DESIGNED BY: CHRIS ROCKEY
CHECKED BY: DENNIS JAGODA
REVISED BY
DATE REVISED

LAST REVISION 00-00-00
DATE PLOTTED => 08-JUL-2016
TIME PLOTTED => 16:19

Dist	COUNTY	ROUTE	POST MILES TOTAL PROJECT	SHEET No.	TOTAL SHEETS
03	ED	49	23.6/24.5	43	202

REGISTERED CIVIL ENGINEER 5-9-16 DATE

5-9-16
PLANS APPROVAL DATE

REGISTERED PROFESSIONAL ENGINEER CHRIS ROCKEY No. C78030 Exp.9/30/17 CIVIL STATE OF CALIFORNIA

THE STATE OF CALIFORNIA OR ITS OFFICERS OR AGENTS SHALL NOT BE RESPONSIBLE FOR THE ACCURACY OR COMPLETENESS OF SCANNED COPIES OF THIS PLAN SHEET.

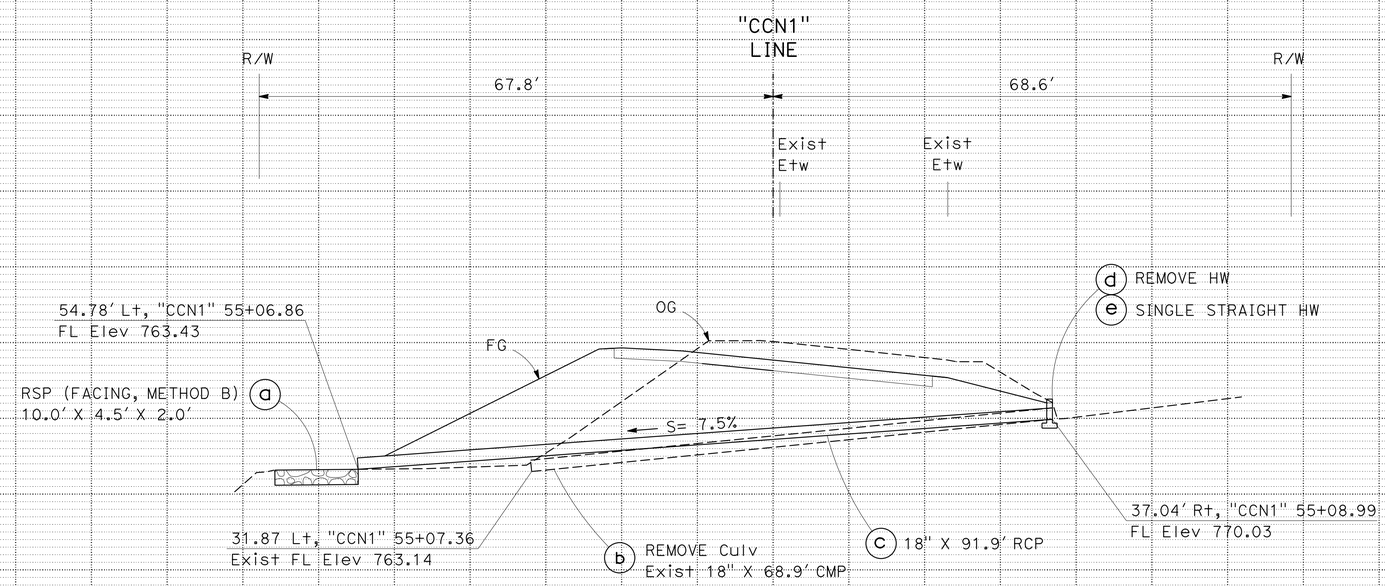

DRAINAGE SYSTEM No. 19

"CCN1" 55+08.08

DRAINAGE PROFILES

SCALE: Horiz 1" = 10'
Vert 1" = 10'

DP-11

STATE OF CALIFORNIA - DEPARTMENT OF TRANSPORTATION
DIVISION OF ENGINEERING
Caltrans

FUNCTIONAL SUPERVISOR: DENNIS JAGODA
CALCULATED-DESIGNED BY: CHRIS ROCKEY
CHECKED BY: DENNIS JAGODA
REVISED BY
DATE REVISED

LAST REVISION 00-00-00
DATE PLOTTED => 08-JUL-2016
TIME PLOTTED => 16:19

Dist	COUNTY	ROUTE	POST MILES TOTAL PROJECT	SHEET No.	TOTAL SHEETS
03	ED	49	23.6/24.5	44	202

REGISTERED CIVIL ENGINEER 5-9-16 DATE

5-9-16
PLANS APPROVAL DATE

REGISTERED PROFESSIONAL ENGINEER
CHRIS ROCKEY
No. C78030
Exp.9/30/17
CIVIL
STATE OF CALIFORNIA

THE STATE OF CALIFORNIA OR ITS OFFICERS OR AGENTS SHALL NOT BE RESPONSIBLE FOR THE ACCURACY OR COMPLETENESS OF SCANNED COPIES OF THIS PLAN SHEET.

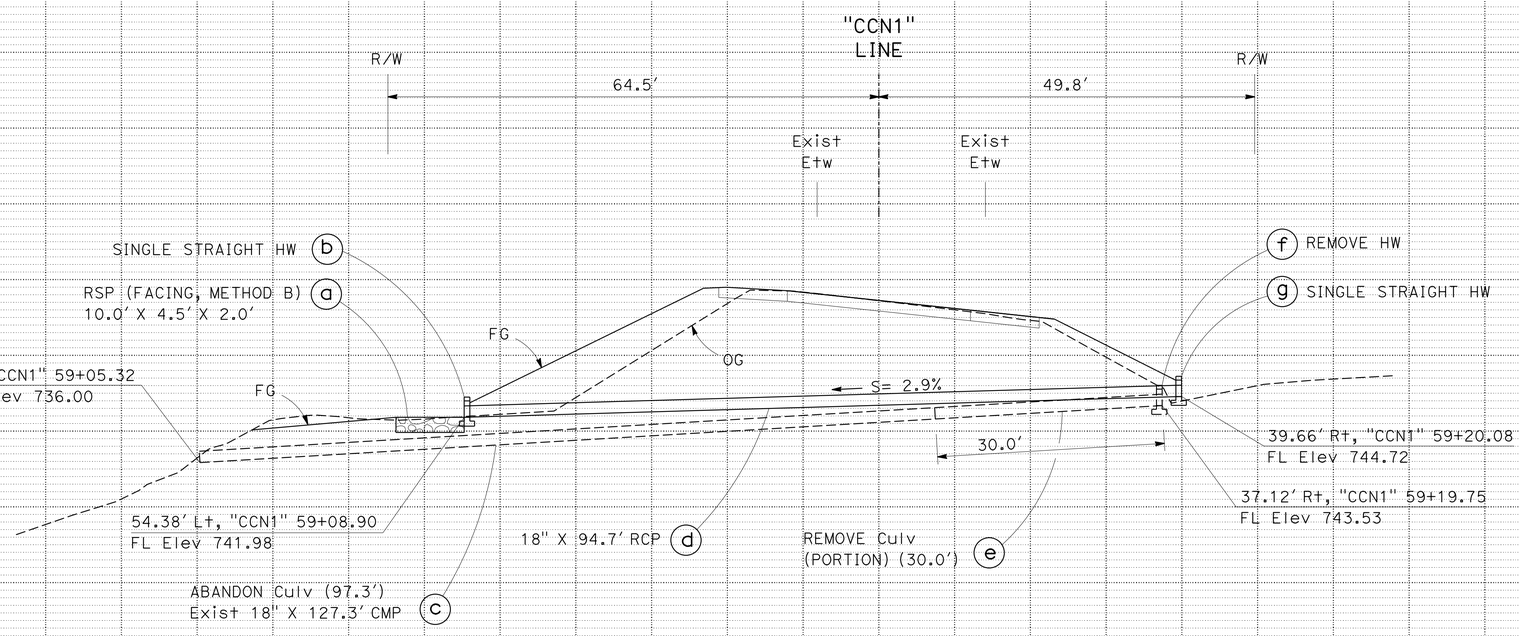

DRAINAGE SYSTEM No. 20

"CCN1" 59+15.08

DRAINAGE PROFILES

SCALE: Horiz 1" = 10'
Vert 1" = 10'

DP-12

REVISED BY | DATE REVISED
CHRIS ROCKEY | DENNIS JAGODA
CALCULATED-DESIGNED BY | CHECKED BY
FUNCTIONAL SUPERVISOR: DENNIS JAGODA
STATE OF CALIFORNIA - DEPARTMENT OF TRANSPORTATION
Caltrans® DIVISION OF ENGINEERING

LAST REVISION 00-00-00 | DATE PLOTTED => 08-JUL-2016 | TIME PLOTTED => 16:19

Dist	COUNTY	ROUTE	POST MILES TOTAL PROJECT	SHEET No.	TOTAL SHEETS
03	ED	49	23.6/24.5	45	202

REGISTERED CIVIL ENGINEER 5-9-16 DATE

5-9-16
PLANS APPROVAL DATE

REGISTERED PROFESSIONAL ENGINEER
CHRIS ROCKEY
No. C78030
Exp.9/30/17
CIVIL
STATE OF CALIFORNIA

THE STATE OF CALIFORNIA OR ITS OFFICERS OR AGENTS SHALL NOT BE RESPONSIBLE FOR THE ACCURACY OR COMPLETENESS OF SCANNED COPIES OF THIS PLAN SHEET.

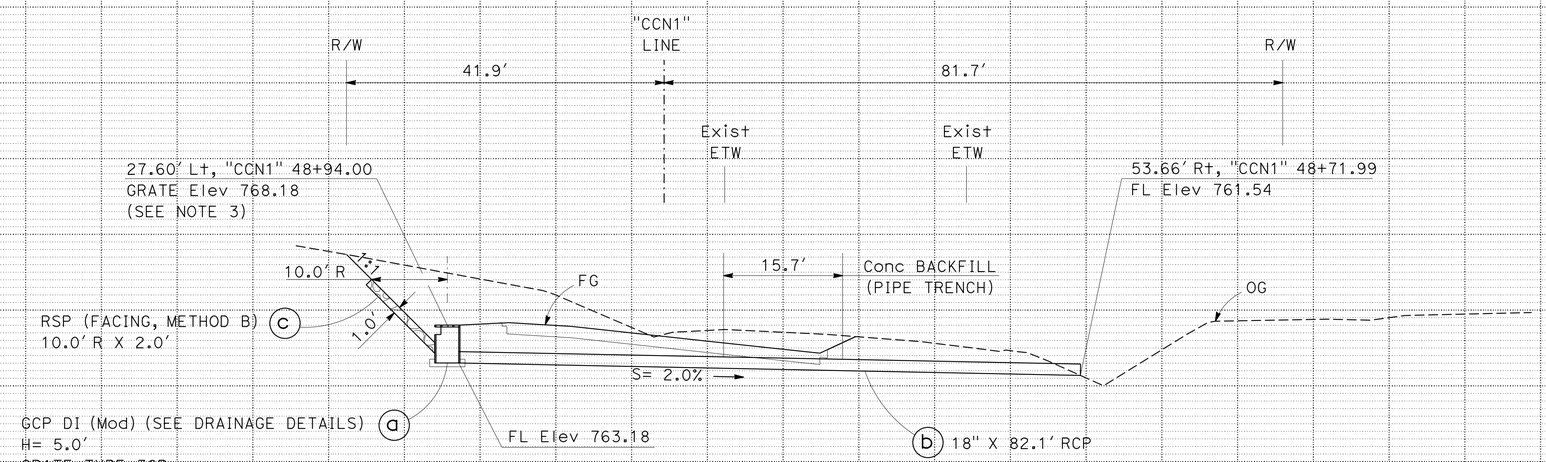

DRAINAGE SYSTEM No. 21

"CCN1" 48+84.15

DRAINAGE PROFILES

SCALE: Horiz 1" = 10′
Vert 1" = 10′

DP-13

REVISED BY | DATE REVISED
CHRIS ROCKEY | DENNIS JAGODA
CALCULATED-DESIGNED BY | CHECKED BY
FUNCTIONAL SUPERVISOR: DENNIS JAGODA

STATE OF CALIFORNIA - DEPARTMENT OF TRANSPORTATION
DIVISION OF ENGINEERING
Caltrans

LAST REVISION 00-00-00 | DATE PLOTTED => 08-JUL-2016 | TIME PLOTTED => 16:19

Dist	COUNTY	ROUTE	POST MILES TOTAL PROJECT	SHEET No.	TOTAL SHEETS
03	ED	49	23.6/24.5	46	202

REGISTERED CIVIL ENGINEER 5-9-16 DATE

5-9-16
PLANS APPROVAL DATE

REGISTERED PROFESSIONAL ENGINEER
CHRIS ROCKEY
No. C78030
Exp. 9/30/17
CIVIL
STATE OF CALIFORNIA

THE STATE OF CALIFORNIA OR ITS OFFICERS OR AGENTS SHALL NOT BE RESPONSIBLE FOR THE ACCURACY OR COMPLETENESS OF SCANNED COPIES OF THIS PLAN SHEET.

NOTES:

1. THE CONCRETE SHALL BE COLORED WITH FEDERAL STANDARD 595B COLOR (#30227) AND THE EXTERIOR SIDES AND TOP SHALL BE A LIGHT BROOM FINISH.
2. SEE STANDARD PLAN D87A FOR CORRUGATED METAL PIPE DOWNDRAIN ANCHOR ASSEMBLY.

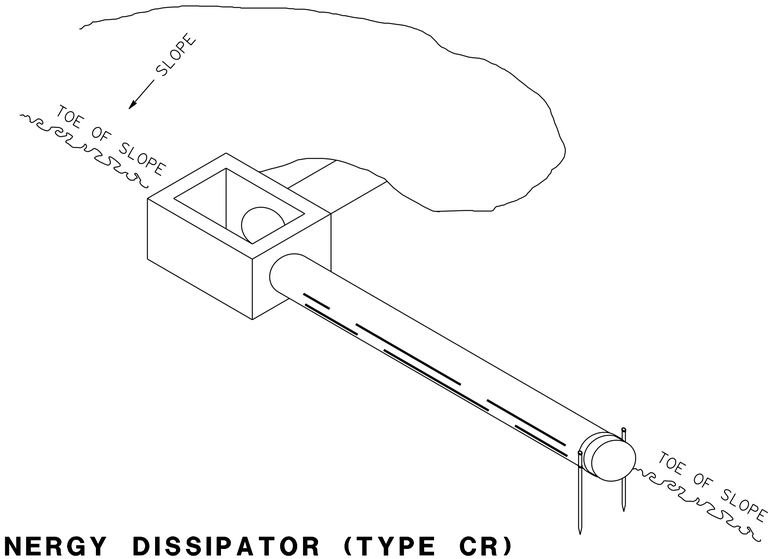

ENERGY DISSIPATOR (TYPE CR)

2 o 5 i

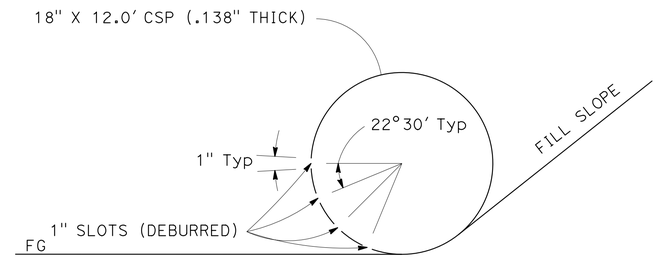

SECTION A-A

POSITION SLOTS SO THEY FACE AWAY FROM THE SLOPE AND ARE IN THE LOWER QUADRANT AS SHOWN.

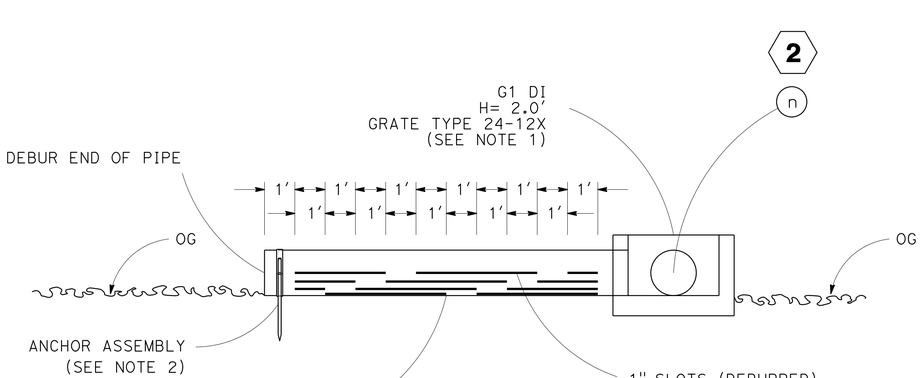

72.50' Lt, "CCN1" 39+53.29

2 o

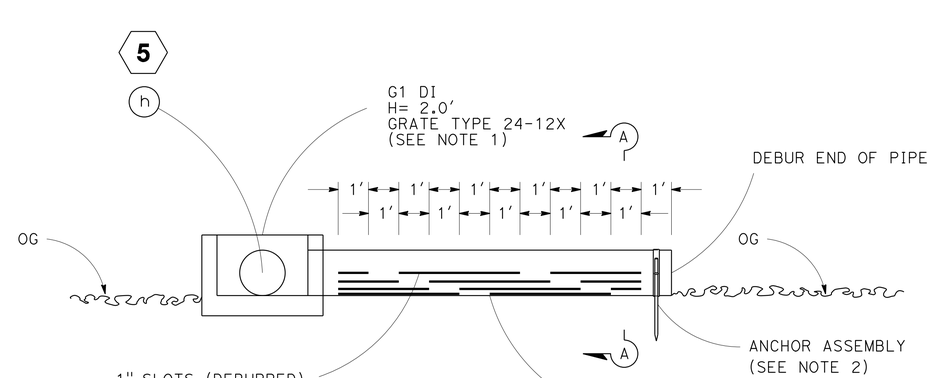

59.32' Rt, "CCN1" 39+45.27

5 i

DRAINAGE DETAILS

NO SCALE

DD-1

STATE OF CALIFORNIA - DEPARTMENT OF TRANSPORTATION
Caltrans
DIVISION OF ENGINEERING

FUNCTIONAL SUPERVISOR: DENNIS JAGODA

CALCULATED-DESIGNED BY: CHRIS ROCKEY
CHECKED BY: DENNIS JAGODA
REVISED BY
DATE REVISED

LAST REVISION 03-27-14
DATE PLOTTED => 08-JUL-2016
TIME PLOTTED => 16:19

Dist	COUNTY	ROUTE	POST MILES TOTAL PROJECT	SHEET No.	TOTAL SHEETS
03	ED	49	23.6/24.5	47	202

REGISTERED CIVIL ENGINEER 5-9-16 DATE

5-9-16
PLANS APPROVAL DATE

REGISTERED PROFESSIONAL ENGINEER CHRIS ROCKEY No. C78030 Exp. 9/30/17 CIVIL STATE OF CALIFORNIA

THE STATE OF CALIFORNIA OR ITS OFFICERS OR AGENTS SHALL NOT BE RESPONSIBLE FOR THE ACCURACY OR COMPLETENESS OF SCANNED COPIES OF THIS PLAN SHEET.

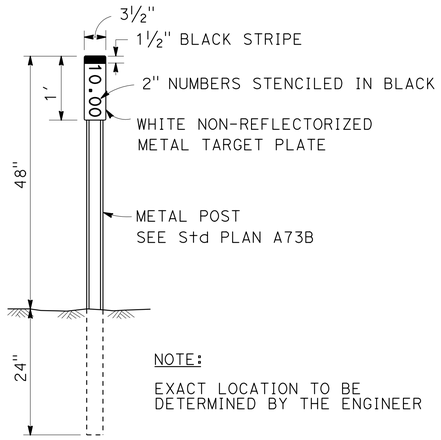

NOTE:

EXACT LOCATION TO BE DETERMINED BY THE ENGINEER

MARKER (CULVERT)

1 2 5 11 12
16 17 19 20 21

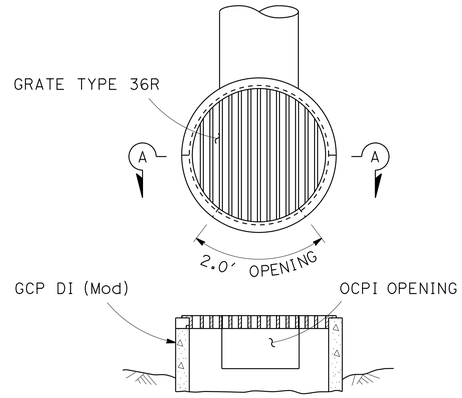

SECTION A-A

NOTE:

1. FOR DETAILS NOT SHOWN SEE STANDARD PLANS D75B, TYPE GCP AND TYPE OCPI.
2. THE OCPI OPENING SHALL BE POINTED IN THE UPSTREAM DIRECTION.

TYPE GCP DI (Mod)

16 c
21 a

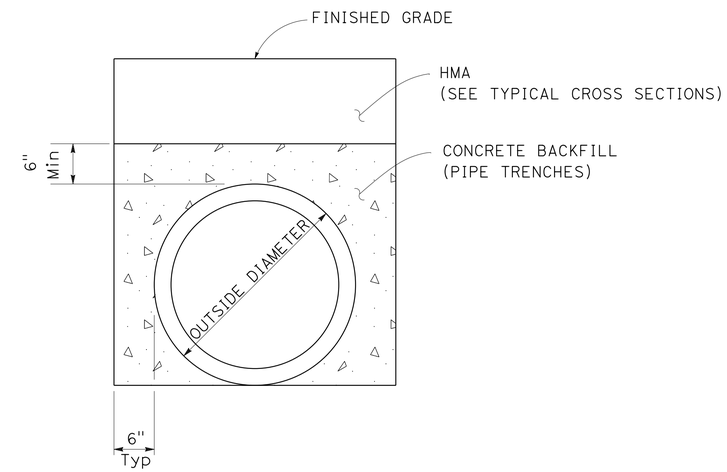

CONCRETE BACKFILL (PIPE TRENCH)

21 b

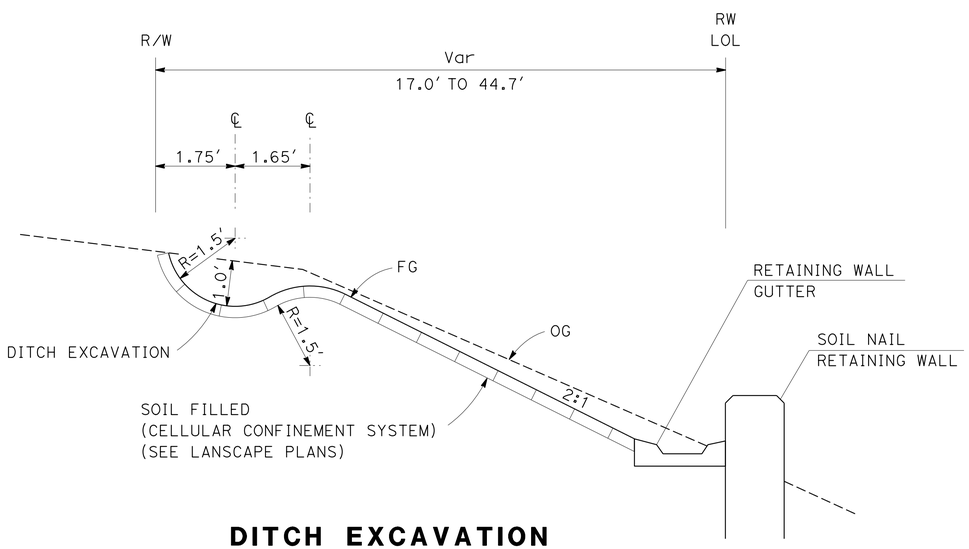

DITCH EXCAVATION

"CCN1" 46+64.00 TO 48+75.00

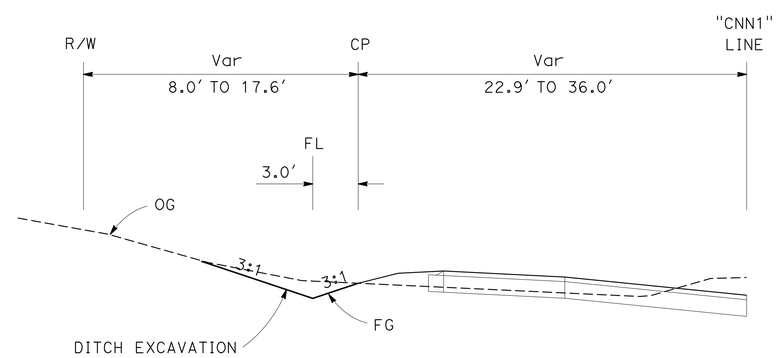

DITCH EXCAVATION

"CCN1" 48+75.00 TO 51+50.00

DRAINAGE DETAILS

NO SCALE

DD-2

STATE OF CALIFORNIA - DEPARTMENT OF TRANSPORTATION
Caltrans
DIVISION OF ENGINEERING

FUNCTIONAL SUPERVISOR: DENNIS JAGODA
CALCULATED-DESIGNED BY: CHRIS ROCKEY
CHECKED BY: DENNIS JAGODA
REVISED BY
DATE REVISED

LAST REVISION 03-27-14
DATE PLOTTED => 08-JUL-2016
TIME PLOTTED => 16:19

Dist	COUNTY	ROUTE	POST MILES TOTAL PROJECT	SHEET No.	TOTAL SHEETS
03	ED	49	23.6/24.5	48	202

REGISTERED CIVIL ENGINEER 5-9-16 DATE

5-9-16
PLANS APPROVAL DATE

REGISTERED PROFESSIONAL ENGINEER CHRIS ROCKEY No. C78030 Exp. 9/30/17 CIVIL STATE OF CALIFORNIA

THE STATE OF CALIFORNIA OR ITS OFFICERS OR AGENTS SHALL NOT BE RESPONSIBLE FOR THE ACCURACY OR COMPLETENESS OF SCANNED COPIES OF THIS PLAN SHEET.

NOTES:

1. DI MARKERS SHALL BE STAMPED CONCRETE IMPRINT, SEE STANDARD PLAN D71.
2. THE EXISTING RSP BETWEEN STATIONS 35+40 AND 36+75 LEFT, MAY BE USED FOR THE RSP (FACING, METHOD B).
3. ALL PIPE JOINTS ARE TYPE STANDARD.

LEGEND:

ID (GRADE) = INLET DEPRESSION ON GRADE, SEE STANDARD PLAN D78C.

DRAINAGE QUANTITIES

DRAINAGE SHEET	DRAINAGE SYSTEM No.	DRAINAGE UNIT	REMOVE CULVERT	REMOVE FLARED END SECTION	REMOVE INLET	REMOVE HEADWALL	REMOVE OVERSIDE DRAIN	ABANDON CULVERT	PIPE: 18" REINFORCED CONCRETE PIPE	PIPE: 24" REINFORCED CONCRETE PIPE	PIPE: 18" CSP (.138" THICK)	HEADWALL: MINOR CONCRETE (MINOR STRUCTURE)	HEADWALL: (N) BAR REINFORCING STEEL	DRAINAGE INLETS: (N) INLET TYPE	DRAINAGE INLETS: (N) FRAME GRATE TYPE	DRAINAGE INLETS: (N) HEIGHT OF INLET "H"	DRAINAGE INLETS: MINOR CONCRETE (MINOR STRUCTURE)	DRAINAGE INLETS: MISC IRON & STEEL	DRAINAGE INLETS: DI MARKER (SEE NOTE 1)	DRAINAGE INLETS: MINOR CONCRETE (GUTTER DEPRESSION)	DRAINAGE INLETS: 36" PRECAST CONCRETE PIPE INLET	DRAINAGE INLETS: (N) STEPS	RSP: RSP (FACING, METHOD B) (SEE NOTE 2)	RSP: RSP FABRIC (CLASS 8)	CONCRETE BACKFILL (PIPE TRENCH)	ANCHOR ASSEMBLY	(N) DEPTH OF COVER	DESCRIPTION	STATION	DRAINAGE SYSTEM No.	DRAINAGE UNIT
			LF	EA	EA	EA	EA	LF	LF	LF	LF	CY	LB			LF	CY	LB	EA	CY	LF	EA	CY	SQYD	CY	EA	FT				
D-1	1	a										0.91	50															SINGLE STRAIGHT HW	"CCN1" 27+78.44	1	a
		b							13.9																			18" RCP			b
		c				1																						REMOVE HW	"CCN1" 27+88.45		c
		d	3.0																									REMOVE Culv (PORTION)			d
		e												GT3	24-12X	4.7	2.32	478	1	2.12		1						GT3 DI, ID (GRADE)	"CCN1" 27+99.28		e
D-1	2	a																										OMITTED		2	a
		b																										OMITTED			b
		c												GO	24-12X	3.0	1.24	239	1	1.78		1						GO DI	"CCN1" 32+00.00		c
		d							92.2																			18" RCP			d
		e												GO	24-12X	3.0	1.24	239	1	1.78		1						GO DI	"CCN1" 33+17.03		e
		f							26.7																			18" RCP			f
		g												GT3	24-12X	3.0	1.73	478	1	2.12		1						GT3 DI	"CCN1" 32+82.50		g
		h							212.7																			18" RCP			h
		i												GO	24-12X	3.0	1.24	239	1	1.78		1						GO DI	"CCN1" 34+99.48		i
		j							196.6																			18" RCP			j
D-2	2	k												GO	24-12X	3.0	1.24	239	1	1.78		1						GO DI	"CCN1" 36+98.99		k
		l							225.4																			18" RCP			l
		m												GO	24-12X	3.0	1.24	239	1	1.78		1						GO DI	"CCN1" 39+45.27		m
		n									57.7																	18" CSP (.138" THICK)			n
		o									12.0			G1	24-12X	2.0	0.95	239	1			1				1		ENERGY DISSIPATOR (TYPE CR)	"CCN1" 39+45.27		o
D-1	3	a			1																							REMOVE INLET	"CCN1" 33+34.75	3	a
		b	48.0																								3.4	REMOVE Culv			b
		c		1																								REMOVE FES			c
D-1	4	a			1																							REMOVE INLET	"CCN1" 33+66.61	4	a
		b	16.8																								3.5	REMOVE Culv			b
SHEET TOTAL			67.8	1	2	1			767.5		69.7	0.91					11.20	2390	8	13.14						1					

(N) NOT A SEPARATE PAY ITEM, FOR INFORMATION ONLY.

STATE OF CALIFORNIA - DEPARTMENT OF TRANSPORTATION
DIVISION OF ENGINEERING
Caltrans

FUNCTIONAL SUPERVISOR: DENNIS JAGODA
CALCULATED-DESIGNED BY: CHRIS ROCKEY
CHECKED BY: DENNIS JAGODA
REVISED BY
DATE REVISED

DRAINAGE QUANTITIES

DQ-1

LAST REVISION 03-27-14
DATE PLOTTED => 08-JUL-2016
TIME PLOTTED => 16:19

Dist	COUNTY	ROUTE	POST MILES TOTAL PROJECT	SHEET No.	TOTAL SHEETS
03	ED	49	23.6/24.5	49	202

REGISTERED CIVIL ENGINEER 5-9-16 DATE

5-9-16
PLANS APPROVAL DATE

REGISTERED PROFESSIONAL ENGINEER CHRIS ROCKEY No. C78030 Exp. 9/30/17 CIVIL STATE OF CALIFORNIA

THE STATE OF CALIFORNIA OR ITS OFFICERS OR AGENTS SHALL NOT BE RESPONSIBLE FOR THE ACCURACY OR COMPLETENESS OF SCANNED COPIES OF THIS PLAN SHEET.

DRAINAGE QUANTITIES

DRAINAGE SHEET	DRAINAGE SYSTEM No.	DRAINAGE UNIT	REMOVE CULVERT	REMOVE FLARED END SECTION	REMOVE INLET	REMOVE HEADWALL	REMOVE OVERSIDE DRAIN	ABANDON CULVERT	PIPE: 18" REINFORCED CONCRETE PIPE	PIPE: 24" REINFORCED CONCRETE PIPE	PIPE: 18" CSP (.138" THICK)	HEADWALL: MINOR CONCRETE (MINOR STRUCTURE)	HEADWALL: (N) BAR REINFORCING STEEL	DRAINAGE INLETS: (N) INLET TYPE	DRAINAGE INLETS: (N) FRAME GRATE TYPE	DRAINAGE INLETS: (N) HEIGHT OF INLET "H"	DRAINAGE INLETS: MINOR CONCRETE (MINOR STRUCTURE)	DRAINAGE INLETS: MISC IRON & STEEL	DRAINAGE INLETS: DI MARKER (SEE NOTE 1)	DRAINAGE INLETS: MINOR CONCRETE (GUTTER DEPRESSION)	DRAINAGE INLETS: 36" PRECAST CONCRETE PIPE INLET	DRAINAGE INLETS: (N) STEPS	RSP: RSP (FACING, METHOD B) (SEE NOTE 2)	RSP: RSP FABRIC (CLASS 8)	CONCRETE BACKFILL (PIPE TRENCH)	ANCHOR ASSEMBLY	(N) DEPTH OF COVER	DESCRIPTION	STATION	DRAINAGE SYSTEM No.	DRAINAGE UNIT
			LF	EA	EA	EA	EA	LF	LF	LF	LF	CY	LB			LF	CY	LB	EA	CY	LF	EA	CY	SQYD	CY	EA	FT				
D-1	5	a																										OMITTED		5	a
		b																										OMITTED			b
D-2	5	c												GO	24-12X	3.0	1.24	239	1	1.78		1						GO DI, ID (GRADE)	"CCN1" 36+09.93		c
		d							147.1																			18" RCP			d
		e												GO	24-12X	3.0	1.24	239	1	1.78		1						GO DI, ID (GRADE)	"CCN1" 37+59.74		e
		f							180.5																			18" RCP			f
		g												GO	24-12X	3.0	1.24	239	1	1.78		1						GO DI, ID (GRADE)	"CCN1" 39+45.27		g
		h									41.0																	18" CSP			h
		i									12.0			G1	24-12X	2.0	0.95	239	1			1				1		ENERGY DISSIPATOR (TYPE CR)	"CCN1" 39+45.27		i
D-2	6	a				1																						REMOVE HW	"CCN1" 36+75.21	6	a
		b	10.2																								1.8	REMOVE Culv			b
		c			1																							REMOVE INLET	"CCN1" 36+86.11		c
		d	88.0																								4.0	REMOVE Culv			d
		e				1																						REMOVE HW	"CCN1" 37+75.25		e
D-2	7	a			1																							REMOVE INLET	"CCN1" 37+36.27	7	a
		b	14.4																								5.5	REMOVE Culv			b
D-2	8	a	36.1																									REMOVE FES	"CCN1" 38+59.60	8	a
		b		1																							0.0	REMOVE Culv			b
D-2	9	a			1																							REMOVE INLET	"CCN1" 39+48.14	9	a
		b	35.6																								2.0	REMOVE Culv			b
D-2	10	a			1																							REMOVE INLET	"CCN1" 39+53.03	10	a
		b	53.5																								0.5	REMOVE Culv			b
SHEET TOTAL			237.8	1	4	2			327.6		53.0						4.67	956	4	5.34						1					

(N) NOT A SEPARATE PAY ITEM, FOR INFORMATION ONLY.

DRAINAGE QUANTITIES

DQ-2

STATE OF CALIFORNIA - DEPARTMENT OF TRANSPORTATION
Caltrans
DIVISION OF ENGINEERING

FUNCTIONAL SUPERVISOR: DENNIS JAGODA
CALCULATED-DESIGNED BY: CHRIS ROCKEY
CHECKED BY: DENNIS JAGODA
REVISED BY
DATE REVISED

LAST REVISION 03-27-14
DATE PLOTTED => 08-JUL-2016
TIME PLOTTED => 16:19

Dist	COUNTY	ROUTE	POST MILES TOTAL PROJECT	SHEET No.	TOTAL SHEETS
03	ED	49	23.6/24.5	50	202

REGISTERED CIVIL ENGINEER 5-9-16 DATE

5-9-16
PLANS APPROVAL DATE

REGISTERED PROFESSIONAL ENGINEER CHRIS ROCKEY No. C78030 Exp. 9/30/17 CIVIL STATE OF CALIFORNIA

THE STATE OF CALIFORNIA OR ITS OFFICERS OR AGENTS SHALL NOT BE RESPONSIBLE FOR THE ACCURACY OR COMPLETENESS OF SCANNED COPIES OF THIS PLAN SHEET.

DRAINAGE QUANTITIES

DRAINAGE SHEET	DRAINAGE SYSTEM No.	DRAINAGE UNIT	REMOVE CULVERT	REMOVE FLARED END SECTION	REMOVE INLET	REMOVE HEADWALL	REMOVE OVERSIDE DRAIN	ABANDON CULVERT	PIPE: 18" REINFORCED CONCRETE PIPE	PIPE: 24" REINFORCED CONCRETE PIPE	PIPE: 18" CSP (.138" THICK)	HEADWALL: MINOR CONCRETE (MINOR STRUCTURE)	HEADWALL: (N) BAR REINFORCING STEEL	DRAINAGE INLETS: (N) INLET TYPE	DRAINAGE INLETS: (N) FRAME GRATE TYPE	DRAINAGE INLETS: (N) HEIGHT OF INLET "H"	DRAINAGE INLETS: MINOR CONCRETE (MINOR STRUCTURE)	DRAINAGE INLETS: MISC IRON & STEEL	DRAINAGE INLETS: DI MARKER (SEE NOTE 1)	DRAINAGE INLETS: MINOR CONCRETE (GUTTER DEPRESSION)	DRAINAGE INLETS: 36" PRECAST CONCRETE PIPE INLET	DRAINAGE INLETS: (N) STEPS	RSP: RSP (FACING, METHOD B) (SEE NOTE 2)	RSP: RSP FABRIC (CLASS 8)	CONCRETE BACKFILL (PIPE TRENCH)	ANCHOR ASSEMBLY	(N) DEPTH OF COVER	DESCRIPTION	STATION	DRAINAGE SYSTEM No.	DRAINAGE UNIT
			LF	EA	EA	EA	EA	LF	LF	LF	LF	CY	LB			LF	CY	LB	EA	CY	LF	EA	CY	SQYD	CY	EA	FT				
D-2	11	a												GCP	36R	3.0	0.68	215	1		3.0	1						GCP DI, ID (SAG)	"CCN1" 45+96.00	11	a
		b							104.0																			18" RCP			b
		c												GO	24-12X	3.0	1.24	239	1	1.78		1						GO DI, ID (GRADE)	"CCN1" 44+90.18		c
		d							21.1																			18" RCP			d
		e																					3.3	15.6				RSP (FACING, METHOD B)	"CCN1" 44+90.18		e
D-2	12	a					1																				0.0	REMOVE OVERSIDE DRAIN	"CCN1" 44+78.42	12	a
D-2	13	a												GO	24-12X	3.0	1.24	239	1	1.78		1						GO DI, ID (GRADE)	"CCN1" 45+08.36	13	a
		b							27.9																			18" RCP			b
		c																					3.3	15.6				RSP (FACING, METHOD B)	"CCN1" 45+08.36		c
D-2	14	a			1																							REMOVE INLET	"CCN1" 46+03.63	14	a
		b	72.8																								3.3	REMOVE Culv			b
D-2	15	a	9.6																								1.0	REMOVE Culv	"CCN1" 46+91.02	15	a
D-2	16	a			1																							REMOVE INLET	"CCN1" 47+91.80	16	a
		b						106.3																				ABANDON Culv			b
		c												GCP	36R	5.0	0.68	215	1		5.0	1						GCP DI (Mod)	"CCN1" 47+95.95		c
		d								95.6																		24" RCP			d
		e																					7.1	22.2				RSP (FACING, METHOD B)	"CCN1" 47+00.59		e
D-3	17	a				1																						REMOVE HW	"CCN1" 49+83.52	17	a
		b										0.91	50															SINGLE STRAIGHT HW	"CCN1" 49+83.52		b
		c	102.1																									REMOVE Culv			c
		d							102.1																			18" RCP			d
D-3	18	a	13.0																								1.0	REMOVE Culv	"CCN1" 49+84.42	18	a
SHEET TOTAL			197.5		2	1	1	106.3	255.1	95.6		0.91					3.84	908	4	3.56	8.0		13.7	53.4							

(N) NOT A SEPARATE PAY ITEM, FOR INFORMATION ONLY.

STATE OF CALIFORNIA - DEPARTMENT OF TRANSPORTATION
Caltrans
DIVISION OF ENGINEERING

FUNCTIONAL SUPERVISOR: DENNIS JAGODA
CALCULATED-DESIGNED BY: CHRIS ROCKEY
CHECKED BY: DENNIS JAGODA
REVISED BY
DATE REVISED

DRAINAGE QUANTITIES

DQ-3

LAST REVISION 03-27-14
DATE PLOTTED => 08-JUL-2016
TIME PLOTTED => 16:19

Dist	COUNTY	ROUTE	POST MILES TOTAL PROJECT	SHEET No.	TOTAL SHEETS
03	ED	49	23.6/24.5	51	202

REGISTERED CIVIL ENGINEER 5-9-16 DATE

5-9-16
PLANS APPROVAL DATE

REGISTERED PROFESSIONAL ENGINEER CHRIS ROCKEY No. C78030 Exp. 9/30/17 CIVIL STATE OF CALIFORNIA

THE STATE OF CALIFORNIA OR ITS OFFICERS OR AGENTS SHALL NOT BE RESPONSIBLE FOR THE ACCURACY OR COMPLETENESS OF SCANNED COPIES OF THIS PLAN SHEET.

DRAINAGE QUANTITIES

DRAINAGE SHEET	DRAINAGE SYSTEM No.	DRAINAGE UNIT	REMOVE CULVERT	REMOVE FLARED END SECTION	REMOVE INLET	REMOVE HEADWALL	REMOVE OVERSIDE DRAIN	ABANDON CULVERT	PIPE: 18" REINFORCED CONCRETE PIPE	PIPE: 24" REINFORCED CONCRETE PIPE	PIPE: 18" CSP (.138" THICK)	HEADWALL: MINOR CONCRETE (MINOR STRUCTURE)	HEADWALL: (N) BAR REINFORCING STEEL	DRAINAGE INLETS: (N) INLET TYPE	DRAINAGE INLETS: (N) FRAME GRATE TYPE	DRAINAGE INLETS: (N) HEIGHT OF INLET "H"	DRAINAGE INLETS: MINOR CONCRETE (MINOR STRUCTURE)	DRAINAGE INLETS: MISC IRON & STEEL	DRAINAGE INLETS: DI MARKER (SEE NOTE 1)	DRAINAGE INLETS: MINOR CONCRETE (GUTTER DEPRESSION)	DRAINAGE INLETS: 36" PRECAST CONCRETE PIPE INLET	DRAINAGE INLETS: (N) STEPS	RSP: RSP (FACING, METHOD B) (SEE NOTE 2)	RSP: RSP FABRIC (CLASS 8)	CONCRETE BACKFILL (PIPE TRENCH)	ANCHOR ASSEMBLY	(N) DEPTH OF COVER	DESCRIPTION	STATION	DRAINAGE SYSTEM No.	DRAINAGE UNIT
			LF	EA	EA	EA	EA	LF	LF	LF	LF	CY	LB			LF	CY	LB	EA	CY	LF	EA	CY	SQYD	CY	EA	FT				
D-3	19	a																					3.3	15.6				RSP (FACING, METHOD B)	"CCN1" 55+06.86	19	a
		b	68.9																									REMOVE Culv			b
		c							91.9																			18" RCP			c
		d				1																						REMOVE HW	"CCN1" 55+08.99		d
		e										0.91	50										19.7	49.6				SINGLE STRAIGHT HW	"CCN1" 55+08.99		e
D-3	20	a																					3.3	15.6				RSP (FACING, METHOD B)	"CCN1" 59+08.90	20	a
		b										0.91	50															SINGLE STRAIGHT HW	"CCN1" 59+08.90		b
		c						97.3																				ABANDON Culv			c
		d							94.7																			18" RCP			d
		e	30.0																									REMOVE Culv (PORTION)			e
		f				1																						REMOVE HW	"CCN1" 59+19.75		f
		g										0.91	50										20.4	51.2				SINGLE STRAIGHT HW	"CCN1" 59+20.08		g
D-2	21	a												GCP	36R	5.0	0.68	215	1		5.0	1						GCP DI (Mod)	"CCN1" 48+94.00	21	a
		b							82.1																2.3			18" RCP WITH Conc BACKFILL			b
		c																					7.5	29.1				RSP (FACING, METHOD B)	"CCN1" 48+94.00		c
SHEET TOTAL			98.9			2		97.3	268.7			2.73					0.68	215	1		5.0		54.2	161.1	2.3						

SHEET DQ-1	67.8	1	2	1			767.5		69.7	0.91					11.20	2390	8	13.14						1	
SHEET DQ-2	237.8	1	4	2			327.6		53.0						4.67	956	4	5.34						1	
SHEET DQ-3	197.5		2	1	1	106.3	255.1	95.6		0.91					3.84	908	4	3.56	8.0		13.7	53.4			
SHEET DQ-4	98.9			2		97.3	268.7			2.73					0.68	215	1		5.0		54.2	161.1	2.3		
SUB-TOTAL	602.0	2	8	6	1	203.6	1618.9	95.6		4.55					20.39	4469	17	22.04	13.0		67.9	214.5	2.3	2	
TOTAL	602.0	2	8	6	1	203.6	1618.9	95.6	122.7	*					24.94	4469	17	22.04	13.0		67.9	**	2.3	2	

(N) NOT A SEPARATE PAY ITEM, FOR INFORMATION ONLY.
* SEE COMBINED TOTAL ON THIS SHEET FOR MINOR CONCRETE (MINOR STRUCTURE) TOTAL.
** SEE SUMMARY OF QUANTITIES FOR TOTAL.

REVISED BY | DATE REVISED
CHRIS ROCKEY | DENNIS JAGODA
CALCULATED-DESIGNED BY | CHECKED BY
FUNCTIONAL SUPERVISOR: DENNIS JAGODA
STATE OF CALIFORNIA - DEPARTMENT OF TRANSPORTATION
Caltrans
DIVISION OF ENGINEERING

DRAINAGE QUANTITIES

DQ-4

LAST REVISION 03-27-14 | DATE PLOTTED => 08-JUL-2016 | TIME PLOTTED => 16:19

Dist	COUNTY	ROUTE	POST MILES TOTAL PROJECT	SHEET No.	TOTAL SHEETS
03	ED	49	23.6/24.5	52	202

REGISTERED CIVIL ENGINEER 5-9-16 DATE

5-9-16
PLANS APPROVAL DATE

REGISTERED PROFESSIONAL ENGINEER
CHRIS ROCKEY
No. C78030
Exp. 9/30/17
CIVIL
STATE OF CALIFORNIA

THE STATE OF CALIFORNIA OR ITS OFFICERS OR AGENTS SHALL NOT BE RESPONSIBLE FOR THE ACCURACY OR COMPLETENESS OF SCANNED COPIES OF THIS PLAN SHEET.

ROCK STAIN

SHEET	⬡	STATION	LOCATION	QUANTITY
		FT	L+/R+	SQFT
D-2	11e	"CCN1" 44+90.18	L+	45.0
D-2	13c	"CCN1" 45+08.36	R+	45.0
			SUB-TOTAL	90.0
			TOTAL	*

* FOR TOTAL ROCKSTAIN SEE SUMMARY OF QUANTITIES.

MARKER (CULVERT)

SHEET	⬡	STATION	LOCATION	QUANTITY	STENCIL
		FT	L+/R+	EA	PM
D-1	1	"CCN1" 27+78.44	L+	1	24.27
D-1	1	"CCN1" 28+73.77	R+	1	24.26
D-2	2	"CCN1" 39+30.50	L+	1	24.06
D-2	5	"CCN1" 39+45.27	R+	1	24.05
D-2	11	"CCN1" 44+65.47	L+	1	23.95
D-2	12	"CCN1" 44+85.68	R+	1	23.95
D-2	16	"CCN1" 47+95.95	R+	1	23.89
D-3	17	"CCN1" 49+83.52	R+	1	23.86
D-3	19	"CCN1" 55+08.08	L+	1	23.76
D-3	19	"CCN1" 55+08.08	R+	1	23.76
D-3	20	"CCN1" 59+15.08	L+	1	23.68
D-3	20	"CCN1" 59+15.08	R+	1	23.68
D-2	21	"CCN1" 48+90.00	L+	1	23.87
			TOTAL	13	

DITCH EXCAVATION

SHEET	STATION		LOCATION	DITCH Exc
	FT		L+/R+	CY
D-2	"CCN1" 46+64.00	"CCN1" 48+75.00	L+	8.1
D-2	"CCN1" 48+75.00	"CCN1" 51+50.00	L+	30.6
			SUB-TOTAL	38.7

DRAINAGE QUANTITIES

DQ-5

STATE OF CALIFORNIA - DEPARTMENT OF TRANSPORTATION
Caltrans
DIVISION OF ENGINEERING

FUNCTIONAL SUPERVISOR: DENNIS JAGODA
CALCULATED-DESIGNED BY: CHRIS ROCKEY
CHECKED BY: DENNIS JAGODA
REVISED BY
DATE REVISED

LAST REVISION 03-27-14
DATE PLOTTED => 08-JUL-2016
TIME PLOTTED => 16:19

Dist	COUNTY	ROUTE	POST MILES TOTAL PROJECT	SHEET No.	TOTAL SHEETS
03	ED	49	23.6/24.5	53	202

REGISTERED CIVIL ENGINEER 5-9-16 DATE

5-9-16
PLANS APPROVAL DATE

REGISTERED PROFESSIONAL ENGINEER JALWAT P. AHMAD No. C 80547 Exp. 03-31-17 CIVIL STATE OF CALIFORNIA

THE STATE OF CALIFORNIA OR ITS OFFICERS OR AGENTS SHALL NOT BE RESPONSIBLE FOR THE ACCURACY OR COMPLETENESS OF SCANNED COPIES OF THIS PLAN SHEET.

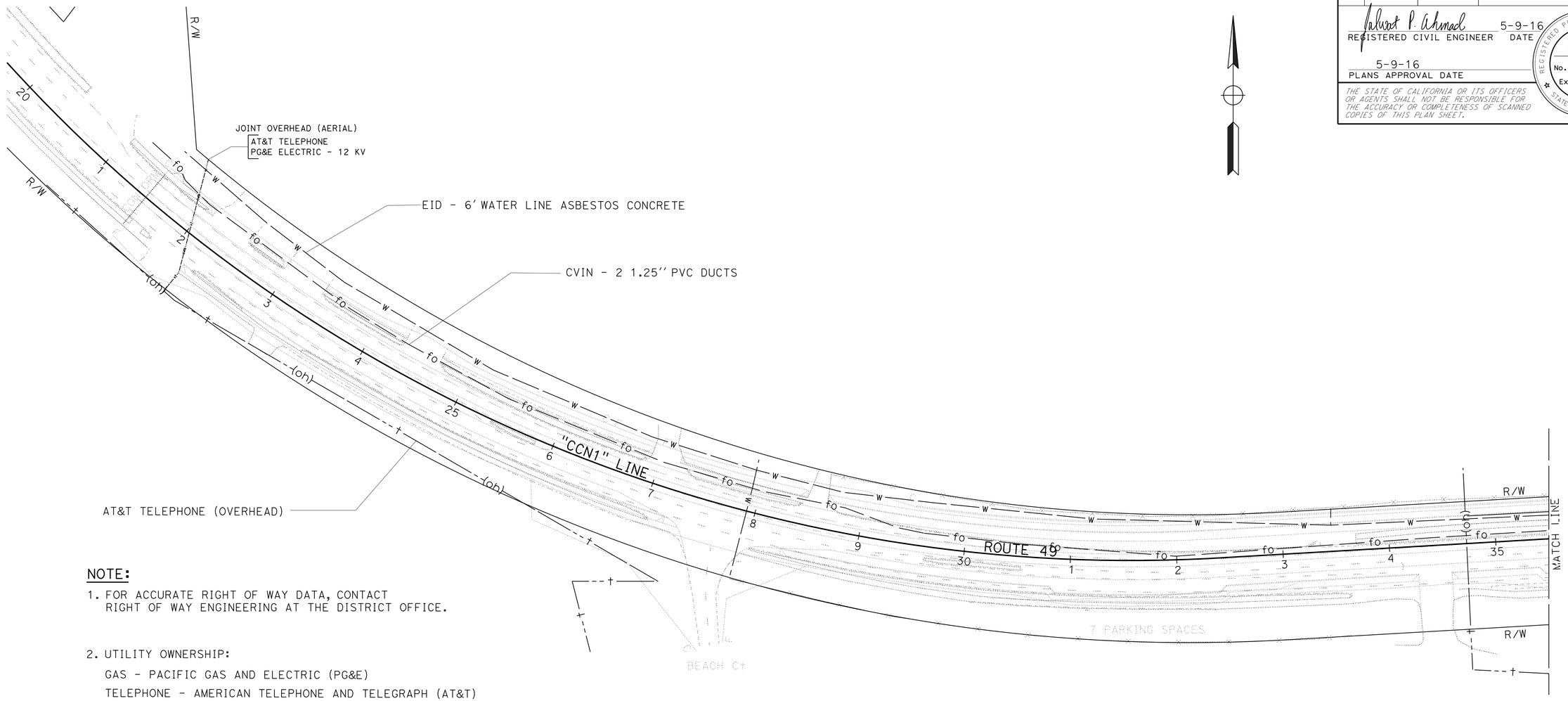

NOTE:

1. FOR ACCURATE RIGHT OF WAY DATA, CONTACT RIGHT OF WAY ENGINEERING AT THE DISTRICT OFFICE.

2. UTILITY OWNERSHIP:
   GAS - PACIFIC GAS AND ELECTRIC (PG&E)
   TELEPHONE - AMERICAN TELEPHONE AND TELEGRAPH (AT&T)
   WATER - EL DORADO IRRIGATION DISTRICT (EID)
   FIBER OPTIC - CENTRAL VALLEY INDEPENDENT NETWORK (CVIN)

LEGEND:

POWER POLE

—---jt——— JOINT OVERHEAD (AERIAL) - EXISTING

—---JT——— JOINT OVERHEAD (AERIAL) - PROPOSED

THIS PLAN TO BE USED FOR UTILITY INFORMATION ONLY

UTILITY PLAN

SCALE: 1"=50'

U-1

STATE OF CALIFORNIA - DEPARTMENT OF TRANSPORTATION
Caltrans
DESIGN
FUNCTIONAL SUPERVISOR: JALWAT P. AHMAD
CALCULATED-DESIGNED BY: JALWAT P. AHMAD
CHECKED BY: SUMAN SUDINI
REVISED BY
DATE REVISED

LAST REVISION 04-07-16
DATE PLOTTED => 08-JUL-2016
TIME PLOTTED => 16:19

Dist	COUNTY	ROUTE	POST MILES TOTAL PROJECT	SHEET No.	TOTAL SHEETS
03	ED	49	23.6/24.5	54	202

REGISTERED CIVIL ENGINEER 5-9-16 DATE

5-9-16
PLANS APPROVAL DATE

REGISTERED PROFESSIONAL ENGINEER JALWAT P. AHMAD No. C 80547 Exp. 03-31-17 CIVIL STATE OF CALIFORNIA

THE STATE OF CALIFORNIA OR ITS OFFICERS OR AGENTS SHALL NOT BE RESPONSIBLE FOR THE ACCURACY OR COMPLETENESS OF SCANNED COPIES OF THIS PLAN SHEET.

NOTE:

FOR ACCURATE RIGHT OF WAY DATA, CONTACT RIGHT OF WAY ENGINEERING AT THE DISTRICT OFFICE.

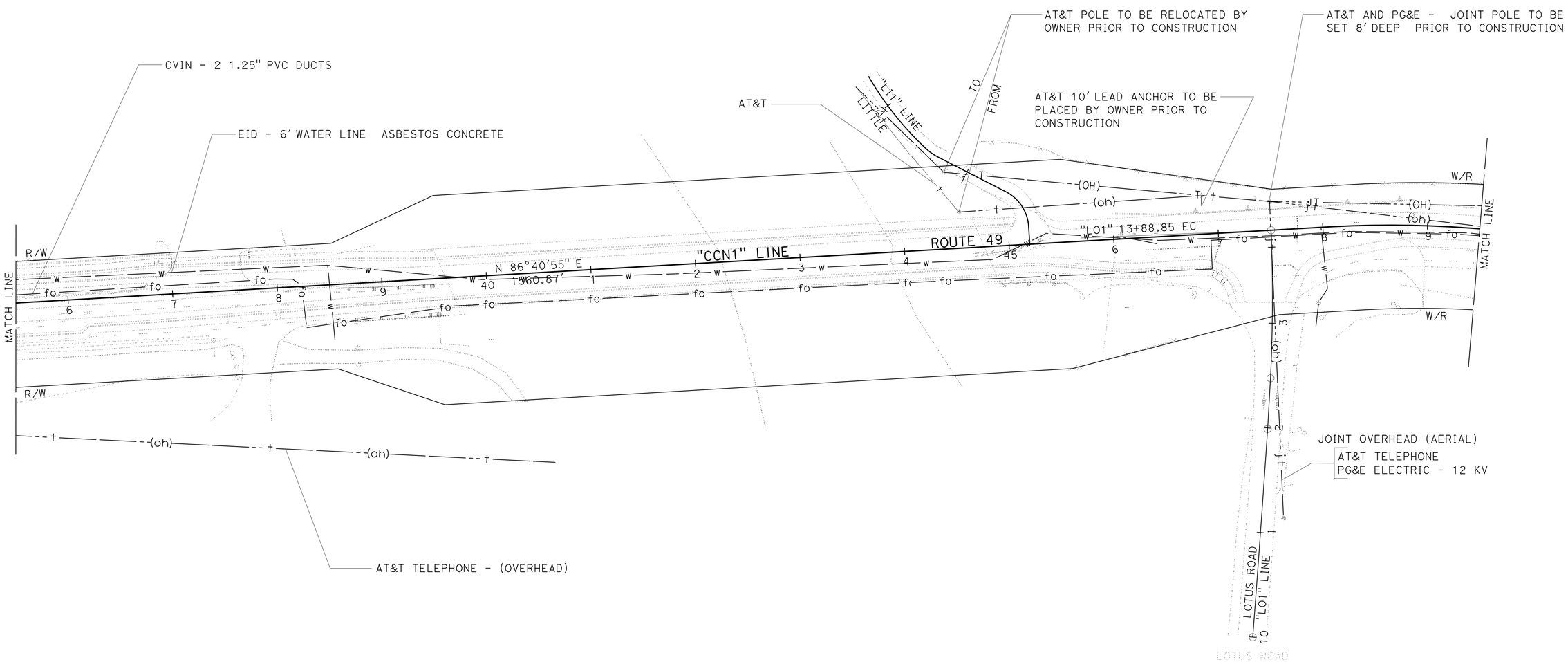

THIS PLAN TO BE USED FOR UTILITY INFORMATION ONLY

UTILITY PLAN

SCALE: 1"=50'

U-2

STATE OF CALIFORNIA - DEPARTMENT OF TRANSPORTATION
Caltrans
DESIGN

FUNCTIONAL SUPERVISOR: JALWAT P. AHMAD
CALCULATED-DESIGNED BY: JALWAT P. AHMAD
CHECKED BY: SUMAN SUDINI
REVISED BY
DATE REVISED

LAST REVISION 04-07-16
DATE PLOTTED => 08-JUL-2016
TIME PLOTTED => 16:19

Dist	COUNTY	ROUTE	POST MILES TOTAL PROJECT	SHEET No.	TOTAL SHEETS
03	ED	49	23.6/24.5	55	202

REGISTERED CIVIL ENGINEER 5-9-16 DATE

5-9-16
PLANS APPROVAL DATE

REGISTERED PROFESSIONAL ENGINEER JALWAT P. AHMAD No. C 80547 Exp. 03-31-17 CIVIL STATE OF CALIFORNIA

THE STATE OF CALIFORNIA OR ITS OFFICERS OR AGENTS SHALL NOT BE RESPONSIBLE FOR THE ACCURACY OR COMPLETENESS OF SCANNED COPIES OF THIS PLAN SHEET.

NOTE:

FOR ACCURATE RIGHT OF WAY DATA, CONTACT RIGHT OF WAY ENGINEERING AT THE DISTRICT OFFICE.

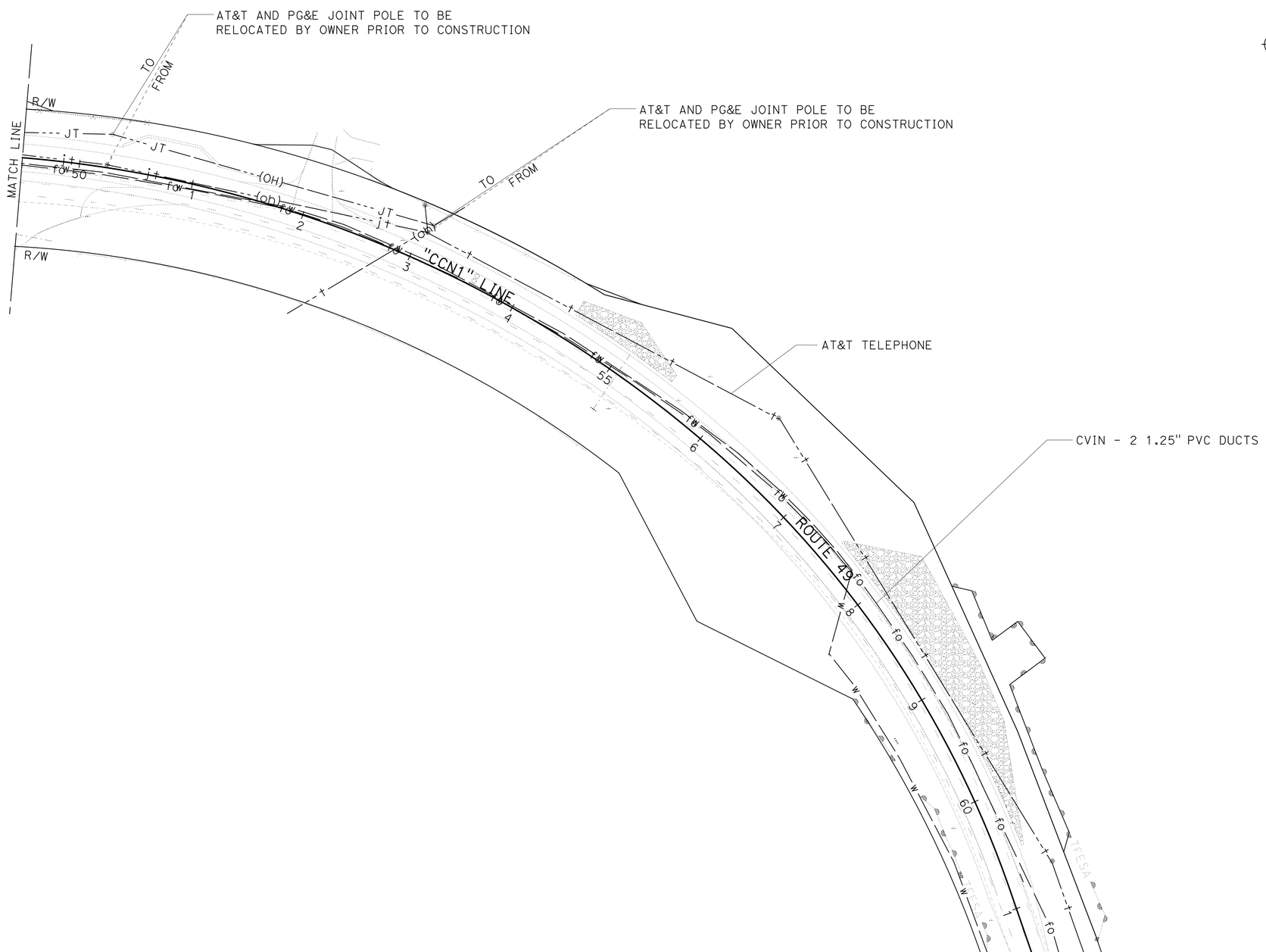

THIS PLAN TO BE USED FOR UTILITY INFORMATION ONLY

UTILITY PLAN

SCALE: 1"=50'

U-3

STATE OF CALIFORNIA - DEPARTMENT OF TRANSPORTATION

Caltrans

DESIGN

FUNCTIONAL SUPERVISOR: JALWAT P. AHMAD

CALCULATED-DESIGNED BY: JALWAT P. AHMAD

CHECKED BY: SUMAN SUDINI

REVISED BY

DATE REVISED

LAST REVISION 04-07-16

DATE PLOTTED => 08-JUL-2016
TIME PLOTTED => 16:19

Dist	COUNTY	ROUTE	POST MILES TOTAL PROJECT	SHEET No.	TOTAL SHEETS
03	ED	49	23.6/24.5	56	202

REGISTERED CIVIL ENGINEER 5-9-16 DATE

5-9-16
PLANS APPROVAL DATE

REGISTERED PROFESSIONAL ENGINEER ALEX WIN WU No. C77266 Exp. 6-30-17 CIVIL STATE OF CALIFORNIA

THE STATE OF CALIFORNIA OR ITS OFFICERS OR AGENTS SHALL NOT BE RESPONSIBLE FOR THE ACCURACY OR COMPLETENESS OF SCANNED COPIES OF THIS PLAN SHEET.

STATIONARY MOUNTED CONSTRUCTION AREA SIGNS

SIGN LETTER	SIGN CODE	PANEL SIZE	SIGN MESSAGE	NUMBER OF POST AND SIZE	NUMBER OF SIGNS
A	W20-1	48" x 48"	ROAD WORK AHEAD	1 - 4" x 6"	5
B	C40(Mod)<CA>	48" x 36"	TRAFFIC FINES DOUBLED IN WORK ZONES	1 - 4" x 6"	2
C	G20-2	36" x 18"	END ROAD WORK	1 - 4" x 4"	2

SIGN DETAILS

(B) C40(Mod)<CA>

TRAFFIC FINES
DOUBLED IN
WORK ZONES

4" D SERIES LETTERS

48"X36"

RETROREFLECTIVE WHITE BACKGROUND WITH BLACK LEGEND AND BORDERS.

NOTES:

1. EXACT SIGN LOCATION TO BE DETERMINED BY THE ENGINEER.
2. ALL SIGN CODES SHOWN ARE FEDERAL SIGN CODES UNLESS OTHERWISE DESIGNATED AS A CALIFORNIA SIGN CODE.
3. <CA> = CALIFORNIA SIGN CODE.
4. FOR ADDITIONAL CONSTRUCTION AREA SIGNS, SEE STAGE CONSTRUCTION AND TRAFFIC HANDLING PLANS.

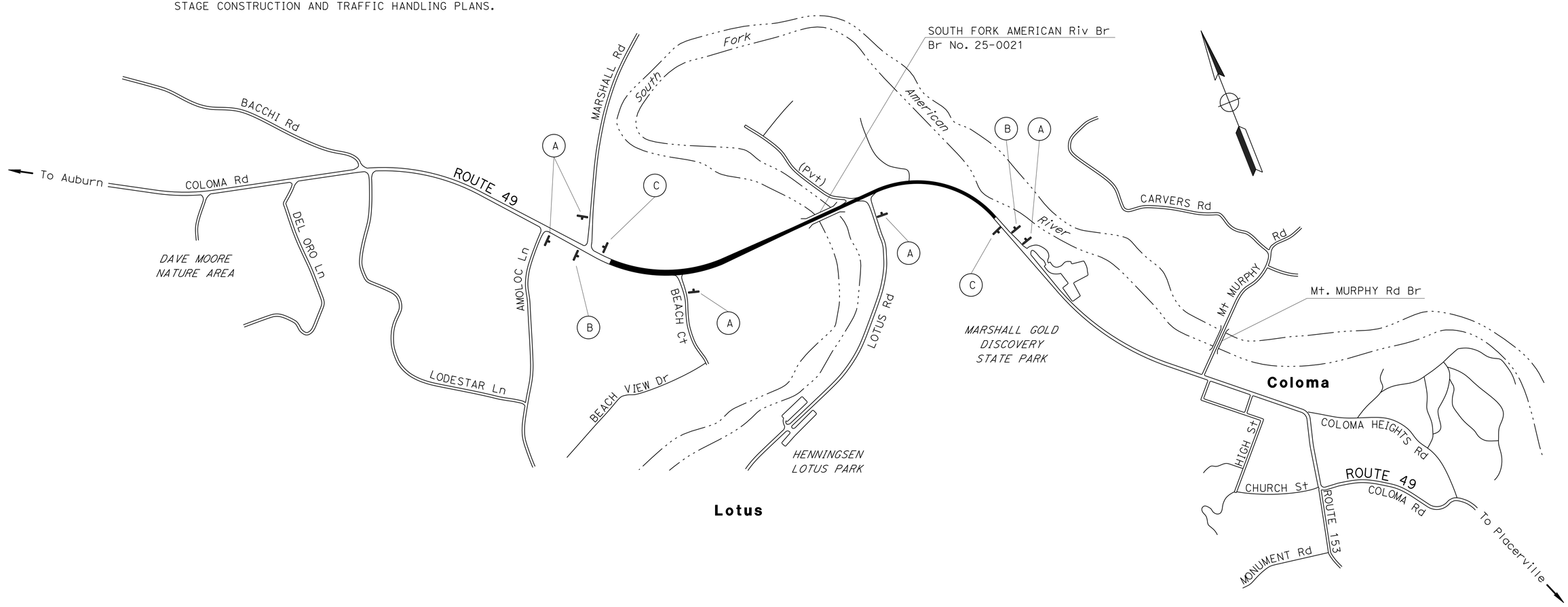

CONSTRUCTION AREA SIGNS

NO SCALE

APPROVED FOR CONSTRUCTION AREA SIGN WORK ONLY

CS-1

STATE OF CALIFORNIA - DEPARTMENT OF TRANSPORTATION
Caltrans
TRAFFIC

FUNCTIONAL SUPERVISOR: JOYCE LOFTUS
CALCULATED-DESIGNED BY: CHUCK COOK
CHECKED BY: ALEX WU
REVISED BY
DATE REVISED

LAST REVISION 06-21-16
DATE PLOTTED => 08-JUL-2016
TIME PLOTTED => 16:19

Dist	COUNTY	ROUTE	POST MILES TOTAL PROJECT	SHEET No.	TOTAL SHEETS
03	ED	49	23.6/24.5	57	202

REGISTERED CIVIL ENGINEER 5-9-16 DATE

5-9-16
PLANS APPROVAL DATE

REGISTERED PROFESSIONAL ENGINEER ALEX WIN WU No. C77266 Exp. 6-30-17 CIVIL STATE OF CALIFORNIA

THE STATE OF CALIFORNIA OR ITS OFFICERS OR AGENTS SHALL NOT BE RESPONSIBLE FOR THE ACCURACY OR COMPLETENESS OF SCANNED COPIES OF THIS PLAN SHEET.

ADDITIONAL STATIONARY MOUNTED CONSTRUCTION AREA SIGNS

SIGN LETTER	SIGN CODE	PANEL SIZE	SIGN MESSAGE	NUMBER OF POST AND SIZE	NUMBER OF SIGNS
D	SPEC-1	108" x 96"	BRIDGE WORK AHEAD	2 - 6" x 8"	2
E	SPEC-2	126" x 90"	RAFTERS ← USE LEFT SIDE	2 - 6" x 8"	2
F	SPEC-3	42" x 48"	RAFTERS ← BRIDGE WORK AHEAD	1 - 4" x 4"	1

NOTES:

1. EXACT SIGN LOCATION TO BE DETERMINED BY THE ENGINEER.
2. ALL SIGN CODES SHOWN ARE CALIFORNIA SIGN CODES.
3. FOR ADDITIONAL CONSTRUCTION AREA SIGNS, SEE CONSTRUCTION AREA SIGN PLAN, STAGE CONSTRUCTION AND TRAFFIC HANDLING PLANS.

SIGN DETAILS

(D) SPEC-1<CA>

BRIDGE WORK AHEAD — 16" E SERIES LETTERS

108"X96"

RETROREFLECTIVE FLUORESCENT ORANGE BACKGROUND WITH BLACK LEGEND AND BORDERS. 12" RADIUS WITH 2" BORDER.

(E) SPEC-2<CA>

RAFTERS / ← USE LEFT SIDE — 13.3" E SERIES LETTERS

126"X90"

RETROREFLECTIVE FLUORESCENT ORANGE BACKGROUND WITH BLACK LEGEND AND BORDERS. 12" RADIUS WITH 2" BORDER.

(F) SPEC-3<CA>

RAFTERS / BRIDGE ← WORK AHEAD — 5" E SERIES LETTERS

42"X48"

RETROREFLECTIVE FLUORESCENT ORANGE BACKGROUND WITH BLACK LEGEND AND BORDERS. 12" RADIUS WITH 2" BORDER.

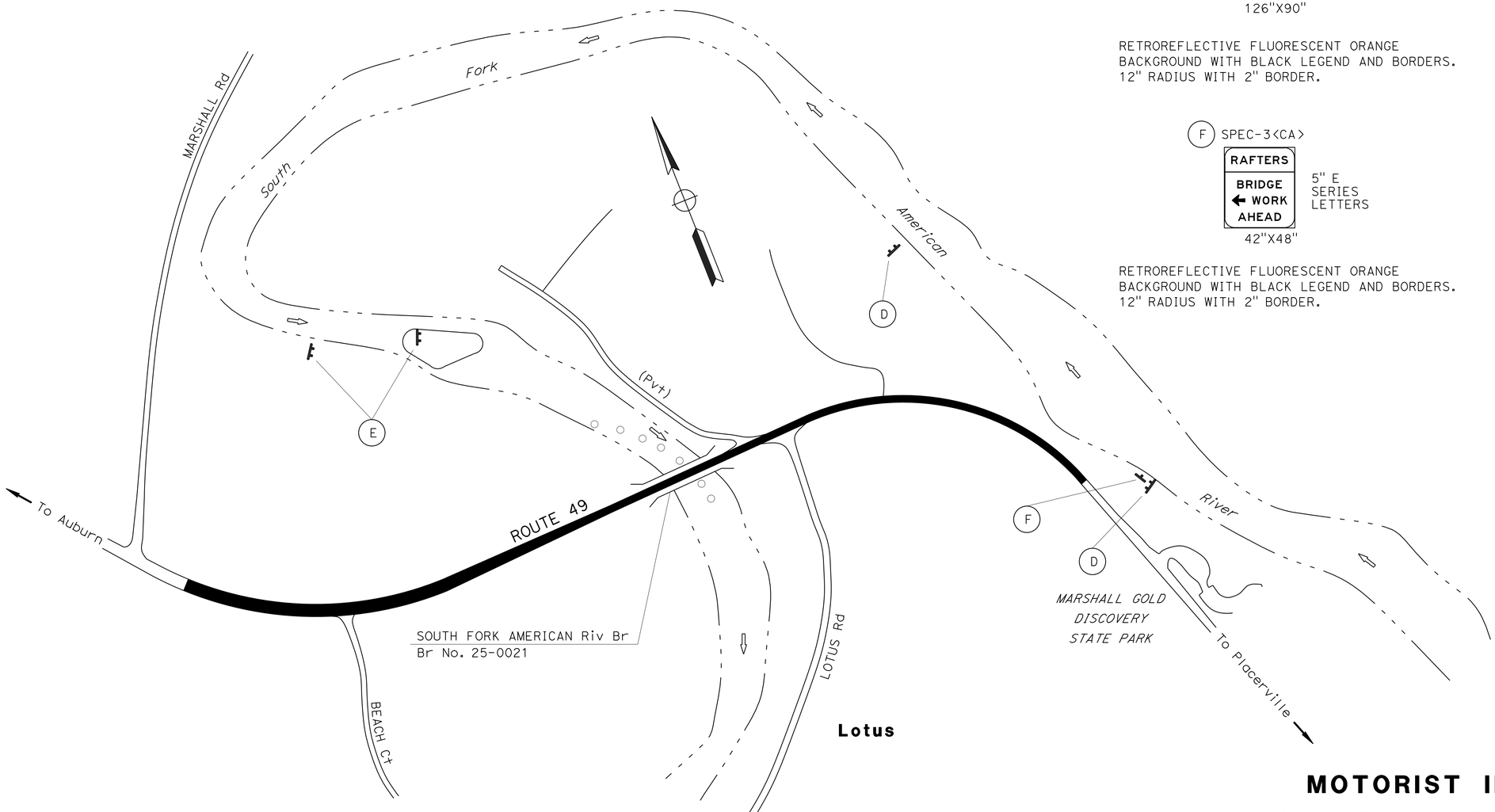

MOTORIST INFORMATION PLAN
(AMERICAN RIVER RAFT TRAFFIC)

NO SCALE

APPROVED FOR CONSTRUCTION AREA SIGN WORK ONLY

MI-1

STATE OF CALIFORNIA - DEPARTMENT OF TRANSPORTATION
Caltrans
TRAFFIC

FUNCTIONAL SUPERVISOR: JOYCE LOFTUS
CALCULATED-DESIGNED BY: CHUCK COOK
CHECKED BY: ALEX WU
REVISED BY
DATE REVISED

LAST REVISION 06-21-16
DATE PLOTTED => 08-JUL-2016
TIME PLOTTED => 16:19

Dist	COUNTY	ROUTE	POST MILES TOTAL PROJECT	SHEET No.	TOTAL SHEETS
03	ED	49	23.6/24.5	58	202

Ron Tollison 5-9-16
REGISTERED CIVIL ENGINEER DATE

5-9-16
PLANS APPROVAL DATE

REGISTERED PROFESSIONAL ENGINEER
RONALD W. TOLLISON
No. 67389
Exp. 12/31/16
CIVIL
STATE OF CALIFORNIA

THE STATE OF CALIFORNIA OR ITS OFFICERS OR AGENTS SHALL NOT BE RESPONSIBLE FOR THE ACCURACY OR COMPLETENESS OF SCANNED COPIES OF THIS PLAN SHEET.

LEGEND:

- CONSTRUCT THIS STAGE OR PHASE
- CONSTRUCT TEMPORARY PAVEMENT
- REMOVE TEMPORARY PAVEMENT
- EARTHWORK ONLY FOR RETAINING WALL
- COLD PLANE THIS STAGE OR PHASE
- ALTERNATIVE TEMPORARY CRASH CUSHION
- TEMPORARY RAILING (TYPE K)
- TRAFFIC PLASTIC DRUMS
- TYPE III BARRICADE
- TEMPORARY TRAFFIC STRIPE (DETAIL NO.)
  P= PAINT
- BEGIN OR END TEMPORARY TRAFFIC STRIPE
- CHANGE TRAFFIC STRIPE DETAIL
- S — TEMPORARY PAVEMENT MARKING ("STOP")
- A — TEMPORARY PAVEMENT MARKING ("AHEAD")
- XX — CONSTRUCTION AREA SIGN LETTER
  (SEE STAGE CONSTRUCTION QUANTITIY SHEETS)
- <CA> — CALIFORNIA SIGN CODE
- LL / P — LIMIT LINE
  P=PAINT
- CW / P — CROSSWALK
  P=PAINT

STAGE 1, PHASE 1:

1. RELOCATE WATER LINE EXCEPT ON NEW BRIDGE
2. INSTALL DRAINAGE TO THE EXTENT POSSIBLE (DRAINAGE SHEETS)
3. INSTALL TEMPORARY WATER CONNECTIONS AT EXISTING BRIDGE
4. KEEP WATERLINE IN SERVICE EXCEPT FOR CONTROLLED TIE INS

ABBREVIATIONS:

HMA-A HOT MIX ASPHALT (TYPE A)
CVIN CENTRAL VALLEY INDEPENDENT NETWORK

APPROVED FOR STAGE CONSTRUCTION AND TRAFFIC HANDLING WORK ONLY

STAGE CONSTRUCTION AND TRAFFIC HANDLING PLAN

SC-1

REVISED BY | DATE REVISED
KEVIN CANFIELD | KAMAL CHONKRIA
CALCULATED-DESIGNED BY | CHECKED BY
FUNCTIONAL SUPERVISOR: NESAR FORMOLI
STATE OF CALIFORNIA - DEPARTMENT OF TRANSPORTATION
Caltrans
DESIGN

LAST REVISION 00-00-00 | DATE PLOTTED => 08-JUL-2016 | TIME PLOTTED => 16:19

Dist	COUNTY	ROUTE	POST MILES TOTAL PROJECT	SHEET No.	TOTAL SHEETS
03	ED	49	23.6/24.5	59	202

REGISTERED CIVIL ENGINEER 5-9-16 DATE

5-9-16
PLANS APPROVAL DATE

REGISTERED PROFESSIONAL ENGINEER
RONALD W. TOLLISON
No. 67389
Exp. 12/31/16
CIVIL
STATE OF CALIFORNIA

THE STATE OF CALIFORNIA OR ITS OFFICERS OR AGENTS SHALL NOT BE RESPONSIBLE FOR THE ACCURACY OR COMPLETENESS OF SCANNED COPIES OF THIS PLAN SHEET.

NOTE:

FOR ACCURATE RIGHT OF WAY DATA, CONTACT RIGHT OF WAY ENGINEERING AT THE DISTRICT OFFICE.

STAGE 1, PHASE 2:

1. BEGIN NORTH SIDE OF BRIDGE
2. BEGIN CONSTRUCT SOIL NAIL RETAINING WALL STA "CCN1" 46+00.04 L+ TO 48+87.96 L+
3. INSTALL CVIN RELOCATION STA "CCN1" 46+00 TO 49+00
4. CONSTRUCT EMBANKMENT STA "CCN1" 49+75 L+ TO 61+00 L+
5. INSTALL CVIN RELOCATION STA "CCN1" 49+00 TO 57+55
6. CONSTRUCT EMBANKMENT STA "CCN1" 58+40 R+ TO 61+00 R+
7. BEGIN EMBANKMENT AT SOUTH FORK AMERICAN RIVER BRIDGE ABUTMENTS

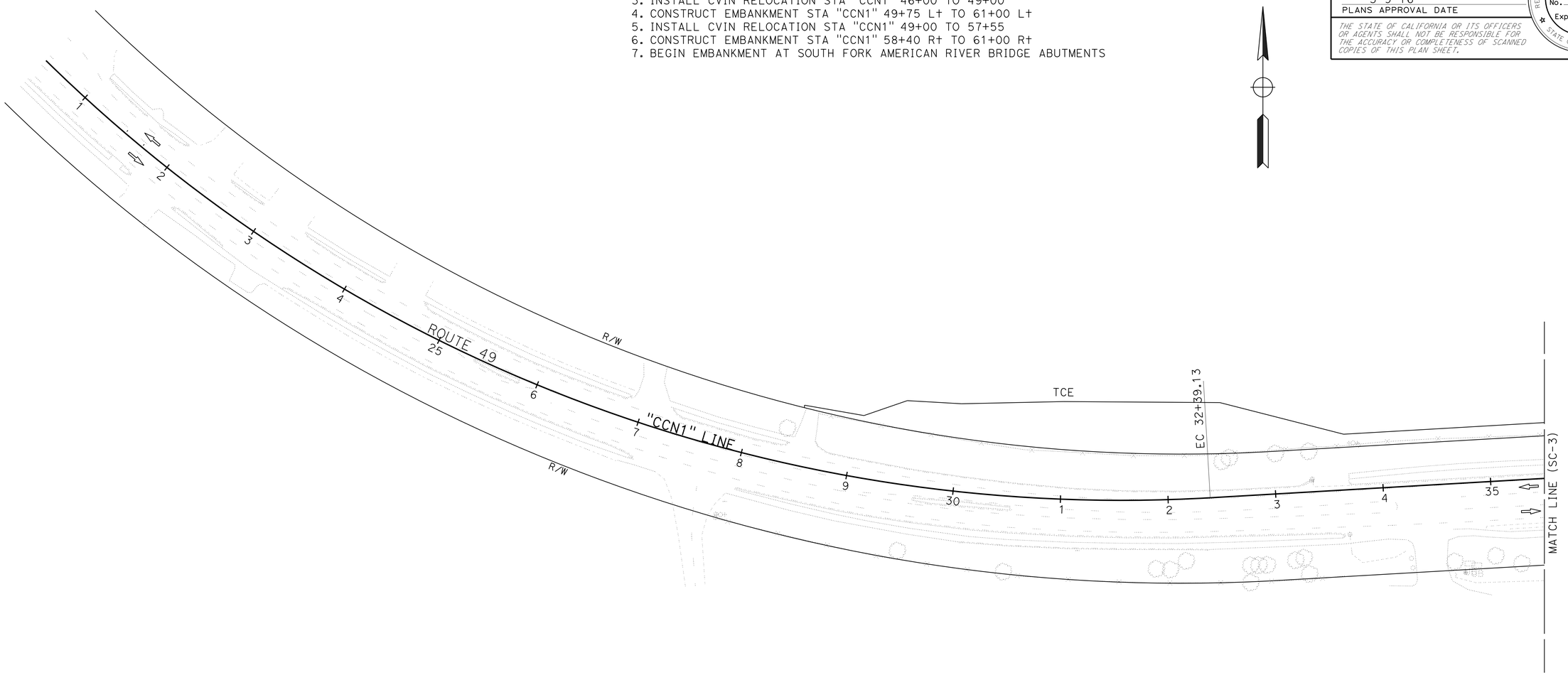

APPROVED FOR STAGE CONSTRUCTION AND TRAFFIC HANDLING WORK ONLY

STAGE CONSTRUCTION AND TRAFFIC HANDLING PLAN

STAGE 1 PHASE 2

SCALE: 1" = 50'

SC-2

STATE OF CALIFORNIA - DEPARTMENT OF TRANSPORTATION
Caltrans
DESIGN

FUNCTIONAL SUPERVISOR: NESAR FORMOLI
CALCULATED-DESIGNED BY: KEVIN CANFIELD
CHECKED BY: KAMAL CHONKRIA
REVISED BY
DATE REVISED

LAST REVISION 00-00-00
DATE PLOTTED => 08-JUL-2016
TIME PLOTTED => 16:19

Dist	COUNTY	ROUTE	POST MILES TOTAL PROJECT	SHEET No.	TOTAL SHEETS
03	ED	49	23.6/24.5	60	202

REGISTERED CIVIL ENGINEER 5-9-16 DATE

5-9-16
PLANS APPROVAL DATE

REGISTERED PROFESSIONAL ENGINEER RONALD W. TOLLISON No. 67389 Exp. 12/31/16 CIVIL STATE OF CALIFORNIA

THE STATE OF CALIFORNIA OR ITS OFFICERS OR AGENTS SHALL NOT BE RESPONSIBLE FOR THE ACCURACY OR COMPLETENESS OF SCANNED COPIES OF THIS PLAN SHEET.

NOTE:

FOR ACCURATE RIGHT OF WAY DATA, CONTACT RIGHT OF WAY ENGINEERING AT THE DISTRICT OFFICE.

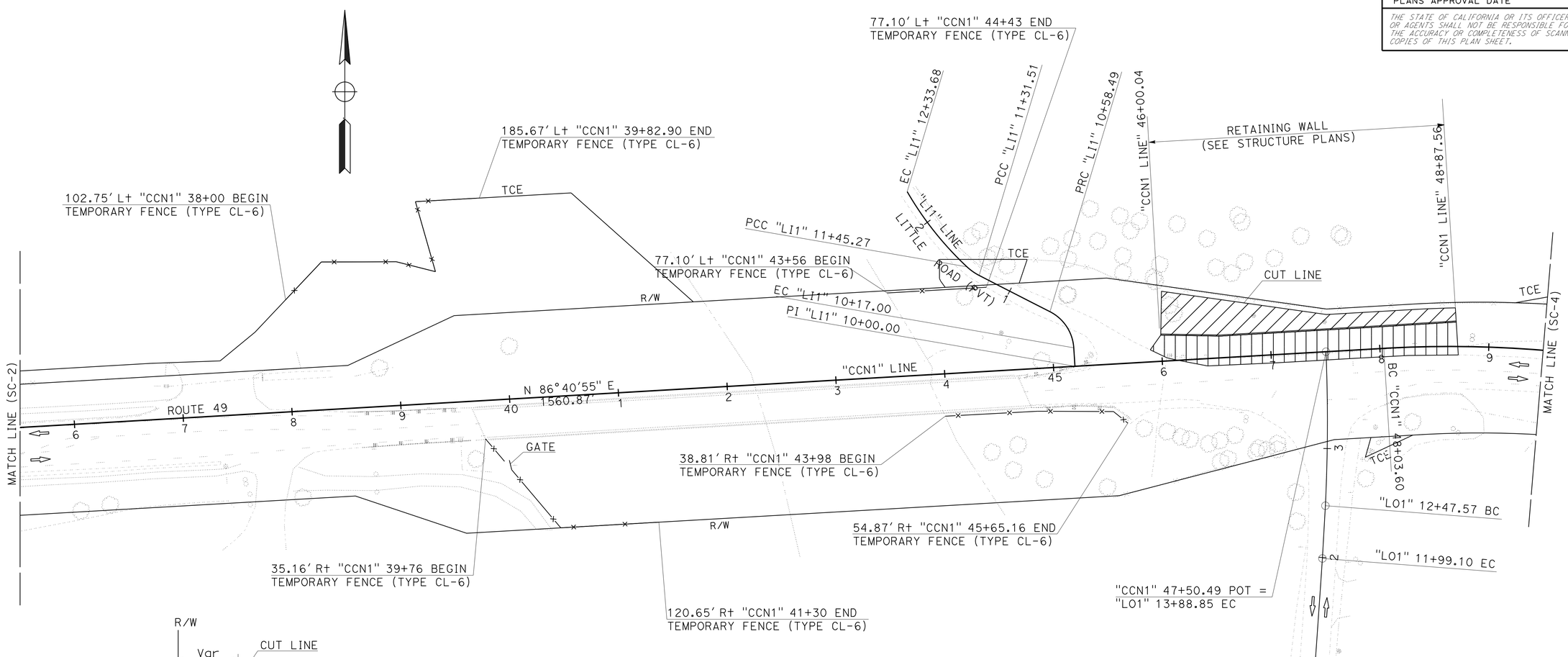

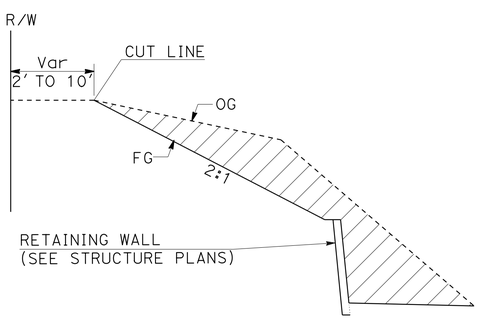

SOIL NAIL WALL
"CCN1" LINE 46+00.04 TO 48+87.96
NO SCALE

APPROVED FOR STAGE CONSTRUCTION AND TRAFFIC HANDLING WORK ONLY

STAGE CONSTRUCTION AND TRAFFIC HANDLING PLAN

STAGE 1 PHASE 2

SCALE: 1" = 50′

SC-3

STATE OF CALIFORNIA - DEPARTMENT OF TRANSPORTATION
Caltrans
DESIGN

FUNCTIONAL SUPERVISOR: NESAR FORMOLI
CALCULATED-DESIGNED BY: KEVIN CANFIELD
CHECKED BY: KAMAL CHONKRIA
REVISED BY
DATE REVISED

LAST REVISION 00-00-00
DATE PLOTTED => 08-JUL-2016
TIME PLOTTED => 16:19

Dist	COUNTY	ROUTE	POST MILES TOTAL PROJECT	SHEET No.	TOTAL SHEETS
03	ED	49	23.6/24.5	61	202

REGISTERED CIVIL ENGINEER 5-9-16 DATE

5-9-16
PLANS APPROVAL DATE

REGISTERED PROFESSIONAL ENGINEER
RONALD W. TOLLISON
No. 67389
Exp. 12/31/16
CIVIL
STATE OF CALIFORNIA

THE STATE OF CALIFORNIA OR ITS OFFICERS OR AGENTS SHALL NOT BE RESPONSIBLE FOR THE ACCURACY OR COMPLETENESS OF SCANNED COPIES OF THIS PLAN SHEET.

NOTE:

FOR ACCURATE RIGHT OF WAY DATA, CONTACT RIGHT OF WAY ENGINEERING AT THE DISTRICT OFFICE.

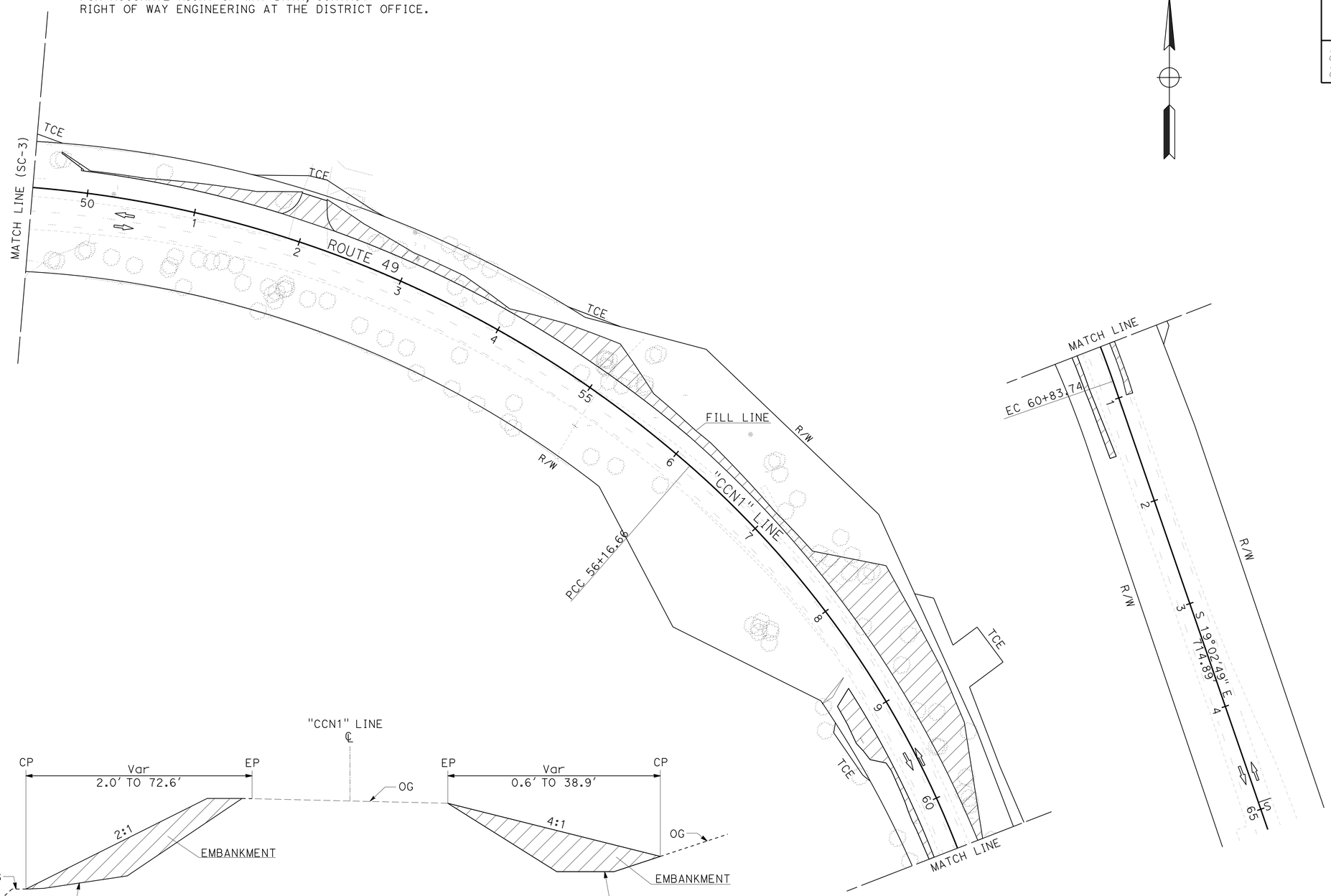

APPROVED FOR STAGE CONSTRUCTION AND TRAFFIC HANDLING WORK ONLY

STAGE CONSTRUCTION AND TRAFFIC HANDLING PLAN

STAGE 1 PHASE 2

SCALE: 1" = 50'

SC-4

STATE OF CALIFORNIA - DEPARTMENT OF TRANSPORTATION

Caltrans®

DESIGN

FUNCTIONAL SUPERVISOR: NESAR FORMOLI

CALCULATED-DESIGNED BY: KEVIN CANFIELD

CHECKED BY: KAMAL CHONKRIA

REVISED BY

DATE REVISED

LAST REVISION 00-00-00

DATE PLOTTED => 08-JUL-2016

TIME PLOTTED => 16:19

Dist	COUNTY	ROUTE	POST MILES TOTAL PROJECT	SHEET No.	TOTAL SHEETS
03	ED	49	23.6/24.5	62	202

REGISTERED CIVIL ENGINEER 5-9-16 DATE

5-9-16
PLANS APPROVAL DATE

REGISTERED PROFESSIONAL ENGINEER
RONALD W. TOLLISON
No. 67389
Exp. 12/31/16
CIVIL
STATE OF CALIFORNIA

THE STATE OF CALIFORNIA OR ITS OFFICERS OR AGENTS SHALL NOT BE RESPONSIBLE FOR THE ACCURACY OR COMPLETENESS OF SCANNED COPIES OF THIS PLAN SHEET.

NOTE:

FOR ACCURATE RIGHT OF WAY DATA, CONTACT RIGHT OF WAY ENGINEERING AT THE DISTRICT OFFICE.

STAGE 1, PHASE 3:

1. CONTINUE WORK ON NORTH SIDE OF BRIDGE
2. CONTINUE WORK ON SOIL NAIL RETAINING WALL
3. CONSTRUCT TEMPORARY WIDENING Sta "CCN1" 57+25 R+ TO 59+25 R+ (SEE CROSS SECTION)
4. CONSTRUCT TEMPORARY WIDENING Sta "CCN1" 60+83.74 R+ TO 63+25 R+ (SEE CROSS SECTION)
5. REMOVE EXISTING TRAFFIC DELINEATION
6. PLACE TEMPORARY TRAFFIC DELINEATION FOR ONE WAY TRAFFIC
7. PLACE TEMPORARY RAILING (TYPE K) STA "CCN1" 46+84 TO 61+64
8. PLACE TEMPORARY PAVEMENT
9. CONSTRUCT NB STRUCTURAL SECTION STA "CCN1" 45+20 L+ to 61+50 L+ (SEE CROSS SECTION)
10. PLACE TEMPORARY TRAFFIC DELINEATION ON NEW NB STRUCTURAL SECTION
11. CONSTRUCT STRUCTURAL SECTION "LI1" Sta 10+20 TO Sta 11+05.55 L+ (SEE CROSS SECTION)

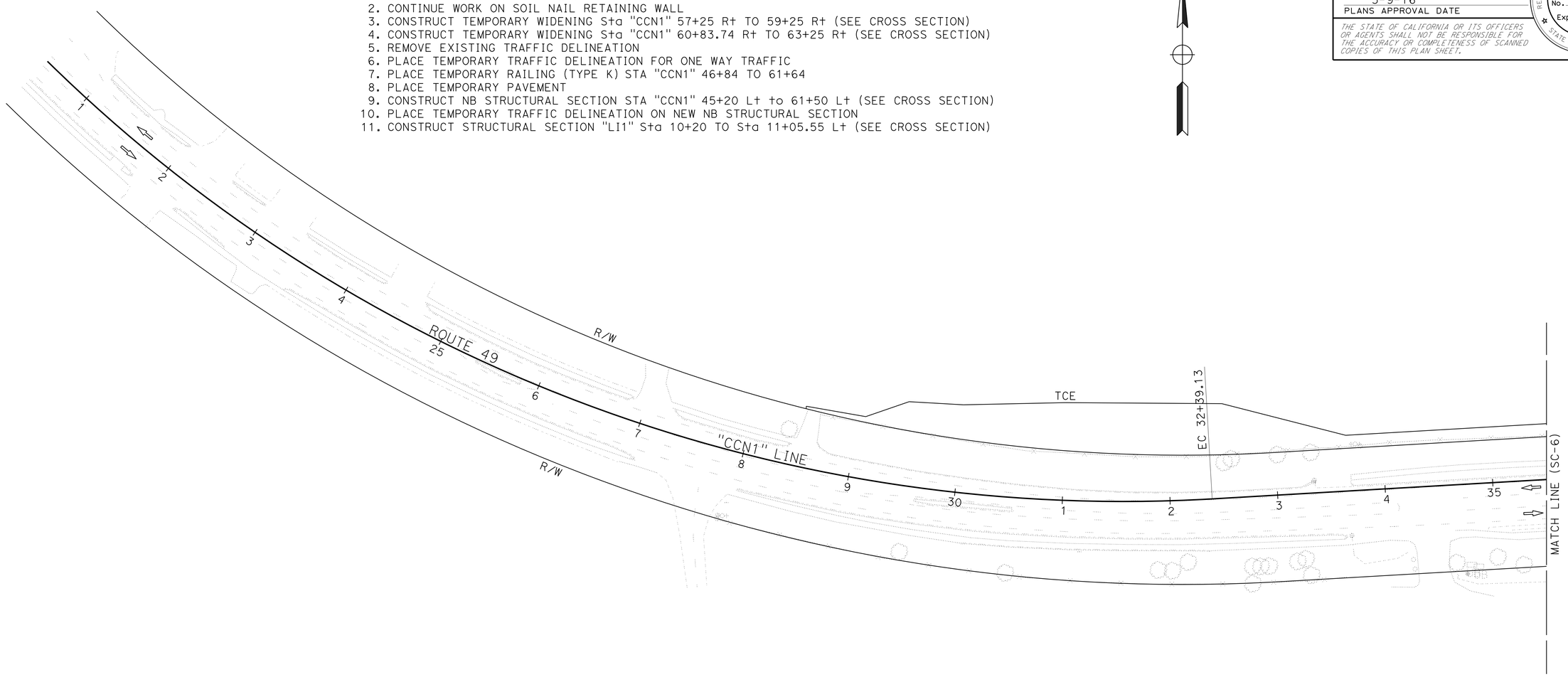

APPROVED FOR STAGE CONSTRUCTION AND TRAFFIC HANDLING WORK ONLY

STAGE CONSTRUCTION AND TRAFFIC HANDLING PLAN

STAGE 1 PHASE 3

SCALE: 1" = 50'

SC-5

STATE OF CALIFORNIA - DEPARTMENT OF TRANSPORTATION
Caltrans
DESIGN

FUNCTIONAL SUPERVISOR: NESAR FORMOLI
CALCULATED-DESIGNED BY: KEVIN CANFIELD
CHECKED BY: KAMAL CHONKRIA
REVISED BY
DATE REVISED

LAST REVISION 00-00-00
DATE PLOTTED => 08-JUL-2016
TIME PLOTTED => 16:19

Dist	COUNTY	ROUTE	POST MILES TOTAL PROJECT	SHEET No.	TOTAL SHEETS
03	ED	49	23.6/24.5	63	202

REGISTERED CIVIL ENGINEER 5-9-16 DATE

5-9-16
PLANS APPROVAL DATE

REGISTERED PROFESSIONAL ENGINEER RONALD W. TOLLISON No. 67389 Exp. 12/31/16 CIVIL STATE OF CALIFORNIA

THE STATE OF CALIFORNIA OR ITS OFFICERS OR AGENTS SHALL NOT BE RESPONSIBLE FOR THE ACCURACY OR COMPLETENESS OF SCANNED COPIES OF THIS PLAN SHEET.

NOTE:

FOR ACCURATE RIGHT OF WAY DATA, CONTACT RIGHT OF WAY ENGINEERING AT THE DISTRICT OFFICE.

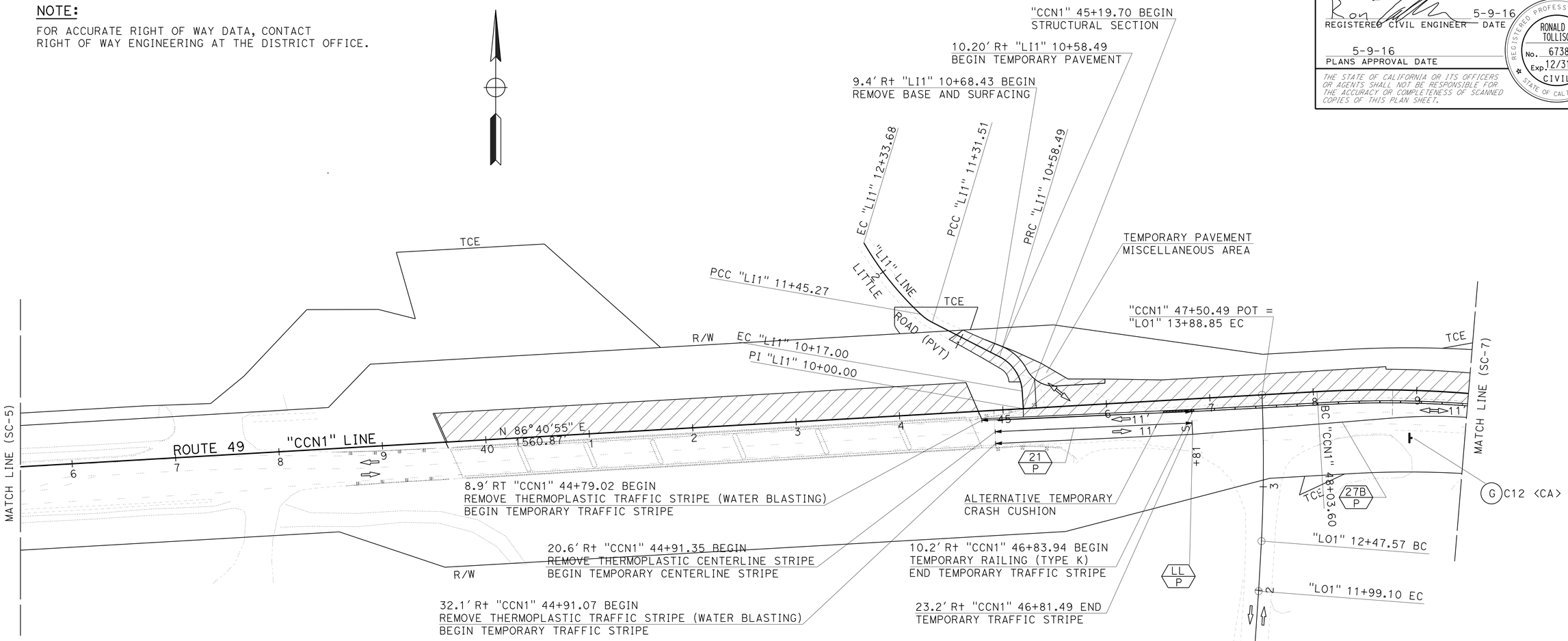

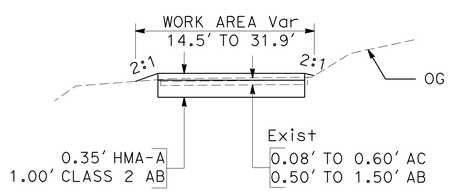

"LI1" 10+20 TO 11+01.63
NO SCALE

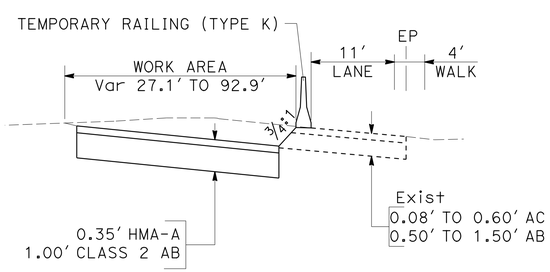

"CCN1" 45+30 Lt TO 61+50 Lt
NO SCALE

APPROVED FOR STAGE CONSTRUCTION AND TRAFFIC HANDLING WORK ONLY

STAGE CONSTRUCTION AND TRAFFIC HANDLING PLAN

STAGE 1 PHASE 3

SCALE: 1" = 50'

SC-6

STATE OF CALIFORNIA - DEPARTMENT OF TRANSPORTATION
Caltrans
DESIGN

FUNCTIONAL SUPERVISOR: NESAR FORMOLI
CALCULATED-DESIGNED BY: KEVIN CANFIELD
CHECKED BY: KAMAL CHONKRIA
REVISED BY
DATE REVISED

LAST REVISION 00-00-00
DATE PLOTTED => 08-JUL-2016
TIME PLOTTED => 16:19

Dist	COUNTY	ROUTE	POST MILES TOTAL PROJECT	SHEET No.	TOTAL SHEETS
03	ED	49	23.6/24.5	64	202

REGISTERED CIVIL ENGINEER 5-9-16 DATE

5-9-16
PLANS APPROVAL DATE

REGISTERED PROFESSIONAL ENGINEER RONALD W. TOLLISON No. 67389 Exp. 12/31/16 CIVIL STATE OF CALIFORNIA

THE STATE OF CALIFORNIA OR ITS OFFICERS OR AGENTS SHALL NOT BE RESPONSIBLE FOR THE ACCURACY OR COMPLETENESS OF SCANNED COPIES OF THIS PLAN SHEET.

NOTE:

FOR ACCURATE RIGHT OF WAY DATA, CONTACT RIGHT OF WAY ENGINEERING AT THE DISTRICT OFFICE.

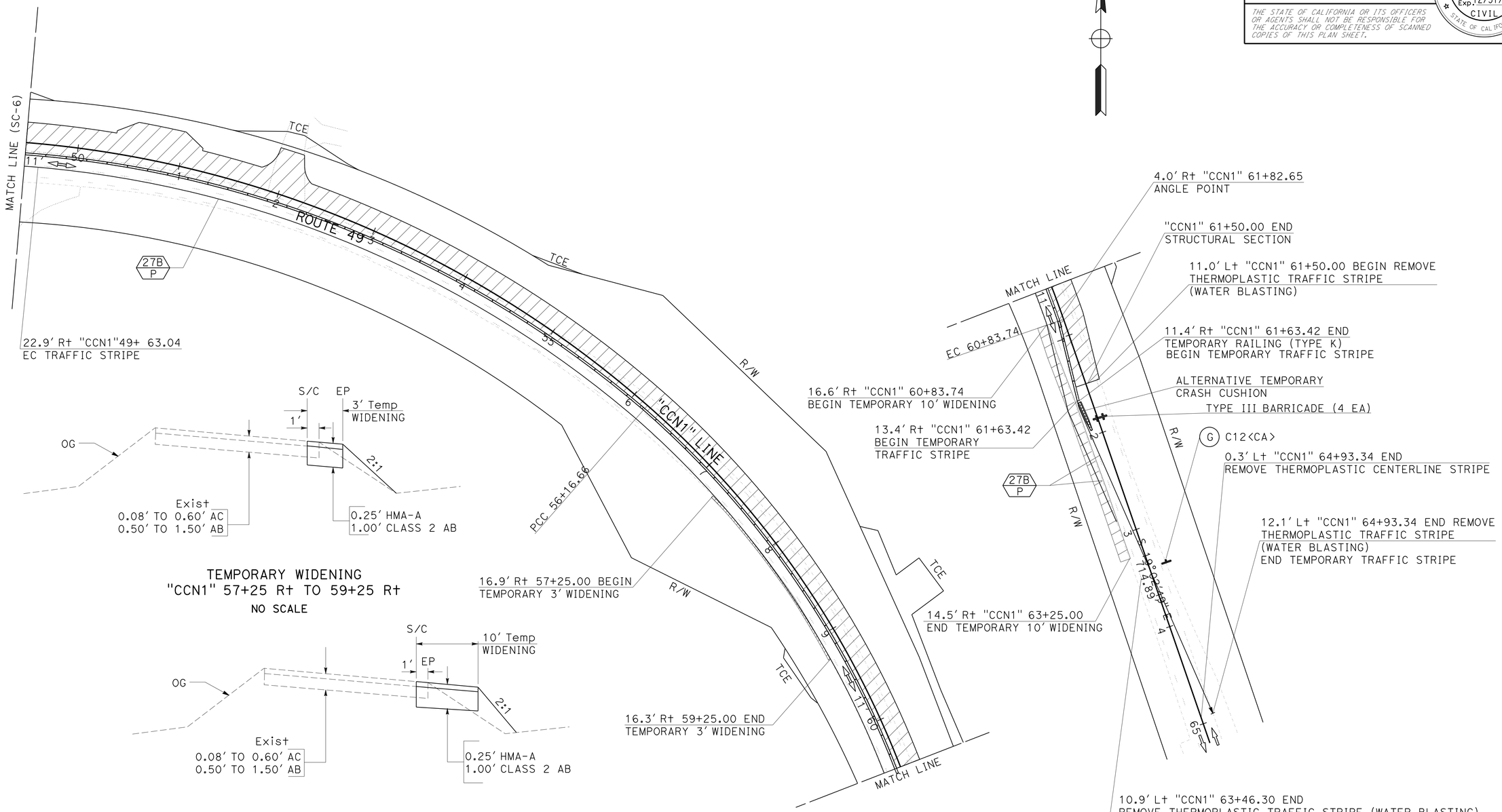

APPROVED FOR STAGE CONSTRUCTION AND TRAFFIC HANDLING WORK ONLY

STAGE CONSTRUCTION AND TRAFFIC HANDLING PLAN

STAGE 1 PHASE 3

SCALE: 1" = 50'

SC-7

STATE OF CALIFORNIA - DEPARTMENT OF TRANSPORTATION

Caltrans

DESIGN

FUNCTIONAL SUPERVISOR: NESAR FORMOLI

CALCULATED-DESIGNED BY: KEVIN CANFIELD

CHECKED BY: KAMAL CHONKRIA

REVISED BY

DATE REVISED

LAST REVISION 00-00-00

DATE PLOTTED => 08-JUL-2016

TIME PLOTTED => 16:19

Dist	COUNTY	ROUTE	POST MILES TOTAL PROJECT	SHEET No.	TOTAL SHEETS
03	ED	49	23.6/24.5	65	202

REGISTERED CIVIL ENGINEER 5-9-16 DATE

5-9-16
PLANS APPROVAL DATE

REGISTERED PROFESSIONAL ENGINEER
RONALD W. TOLLISON
No. 67389
Exp. 12/31/16
CIVIL
STATE OF CALIFORNIA

THE STATE OF CALIFORNIA OR ITS OFFICERS OR AGENTS SHALL NOT BE RESPONSIBLE FOR THE ACCURACY OR COMPLETENESS OF SCANNED COPIES OF THIS PLAN SHEET.

NOTE:

1. FOR ACCURATE RIGHT OF WAY DATA, CONTACT RIGHT OF WAY ENGINEERING AT THE DISTRICT OFFICE.
2. LOTUS ROAD/HIGHWAY 49 INTERSECTION MUST BE DONE DURING NON PEAK HOURS

STAGE 1, PHASE 4:

1. REMOVE TEMPORARY RAILING (TYPE K) STA "CCN1" 46+84 TO 61+64
2. CONSTRUCT LOTUS ROAD INTERSECTION "CCN1" 45+45 TO 49+00 AS SHOWN PRIOR TO SHIFTING TRAFFIC ONTO ROADWAY CONSTRUCTED IN STAGE 1 PHASE 3
3. PLACE TEMPORARY STRIPING
4. CONSTRUCT ROADWAY STA "CCN1" 45+45 R+ TO 61+50 R+
5. CONTRACTOR SHALL SUBMIT PLAN ON HOW THEY WILL KEEP DRIVEWAY OPEN AT STATION 52+00 L+ DURING CONSTRUCTION

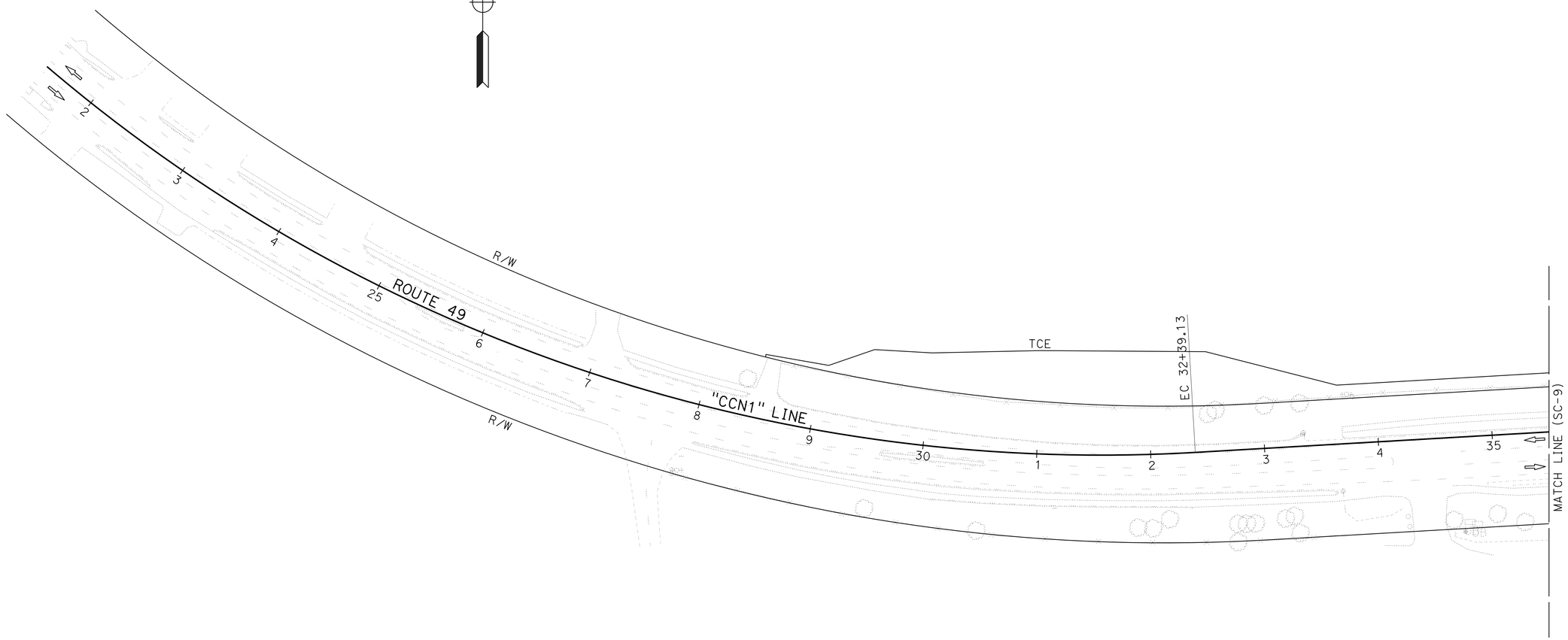

APPROVED FOR STAGE CONSTRUCTION AND TRAFFIC HANDLING WORK ONLY

STAGE CONSTRUCTION AND TRAFFIC HANDLING PLAN

STAGE 1 PHASE 4

SCALE: 1" = 50'

SC-8

STATE OF CALIFORNIA - DEPARTMENT OF TRANSPORTATION
Caltrans
DESIGN

FUNCTIONAL SUPERVISOR: NESAR FORMOLI
CALCULATED-DESIGNED BY: KEVIN CANFIELD
CHECKED BY: KAMAL CHONKRIA
REVISED BY
DATE REVISED

LAST REVISION 00-00-00
DATE PLOTTED => 08-JUL-2016
TIME PLOTTED => 16:19

Dist	COUNTY	ROUTE	POST MILES TOTAL PROJECT	SHEET No.	TOTAL SHEETS
03	ED	49	23.6/24.5	66	202

REGISTERED CIVIL ENGINEER 5-9-16 DATE

5-9-16
PLANS APPROVAL DATE

REGISTERED PROFESSIONAL ENGINEER RONALD W. TOLLISON No. 67389 Exp. 12/31/16 CIVIL STATE OF CALIFORNIA

THE STATE OF CALIFORNIA OR ITS OFFICERS OR AGENTS SHALL NOT BE RESPONSIBLE FOR THE ACCURACY OR COMPLETENESS OF SCANNED COPIES OF THIS PLAN SHEET.

NOTE:

FOR ACCURATE RIGHT OF WAY DATA, CONTACT RIGHT OF WAY ENGINEERING AT THE DISTRICT OFFICE.

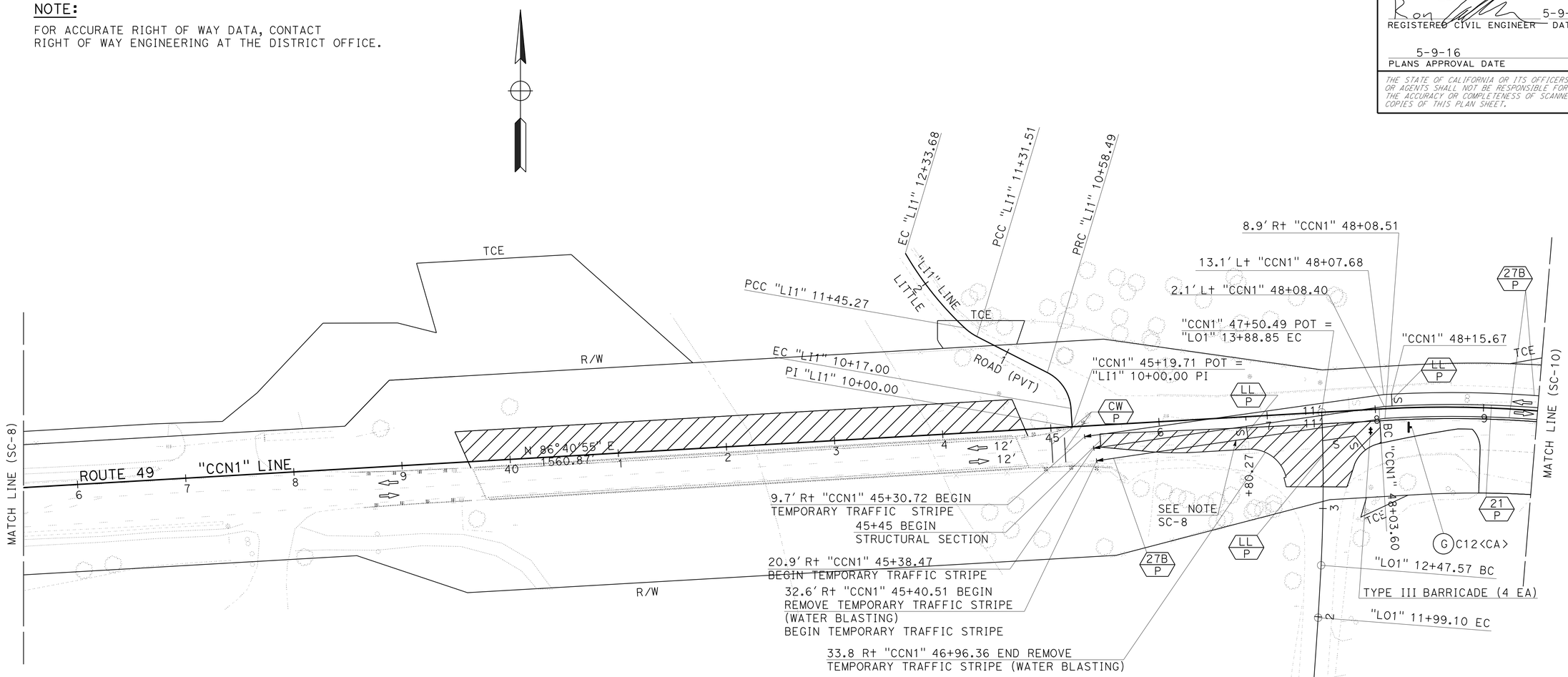

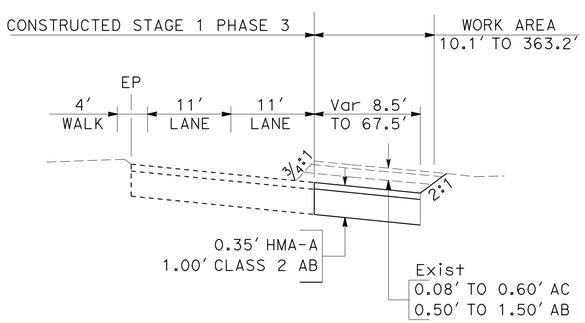

"CCN1" 45+45 R+ TO 61+50 R+
NO SCALE

APPROVED FOR STAGE CONSTRUCTION AND TRAFFIC HANDLING WORK ONLY

STAGE CONSTRUCTION AND TRAFFIC HANDLING PLAN

STAGE 1 PHASE 4

SCALE: 1" = 50'

SC-9

STATE OF CALIFORNIA - DEPARTMENT OF TRANSPORTATION
Caltrans
DESIGN
FUNCTIONAL SUPERVISOR: NESAR FORMOLI
CALCULATED-DESIGNED BY: KEVIN CANFIELD
CHECKED BY: KAMAL CHONKRIA
REVISED BY
DATE REVISED

LAST REVISION 00-00-00
DATE PLOTTED => 08-JUL-2016
TIME PLOTTED => 16:19

Dist	COUNTY	ROUTE	POST MILES TOTAL PROJECT	SHEET No.	TOTAL SHEETS
03	ED	49	23.6/24.5	67	202

REGISTERED CIVIL ENGINEER 5-9-16 DATE

5-9-16
PLANS APPROVAL DATE

REGISTERED PROFESSIONAL ENGINEER
RONALD W. TOLLISON
No. 67389
Exp. 12/31/16
CIVIL
STATE OF CALIFORNIA

THE STATE OF CALIFORNIA OR ITS OFFICERS OR AGENTS SHALL NOT BE RESPONSIBLE FOR THE ACCURACY OR COMPLETENESS OF SCANNED COPIES OF THIS PLAN SHEET.

NOTE:

FOR ACCURATE RIGHT OF WAY DATA, CONTACT RIGHT OF WAY ENGINEERING AT THE DISTRICT OFFICE.

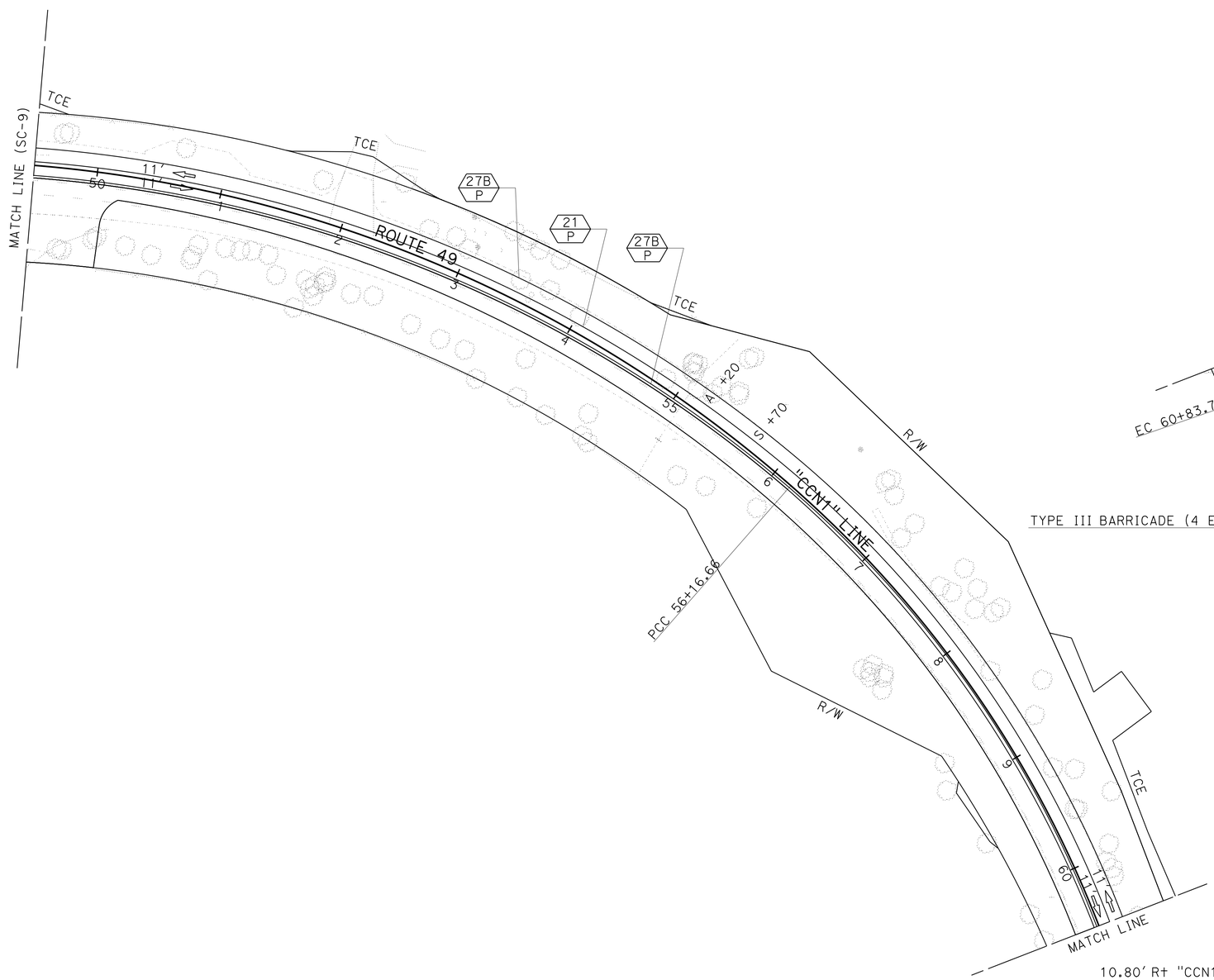

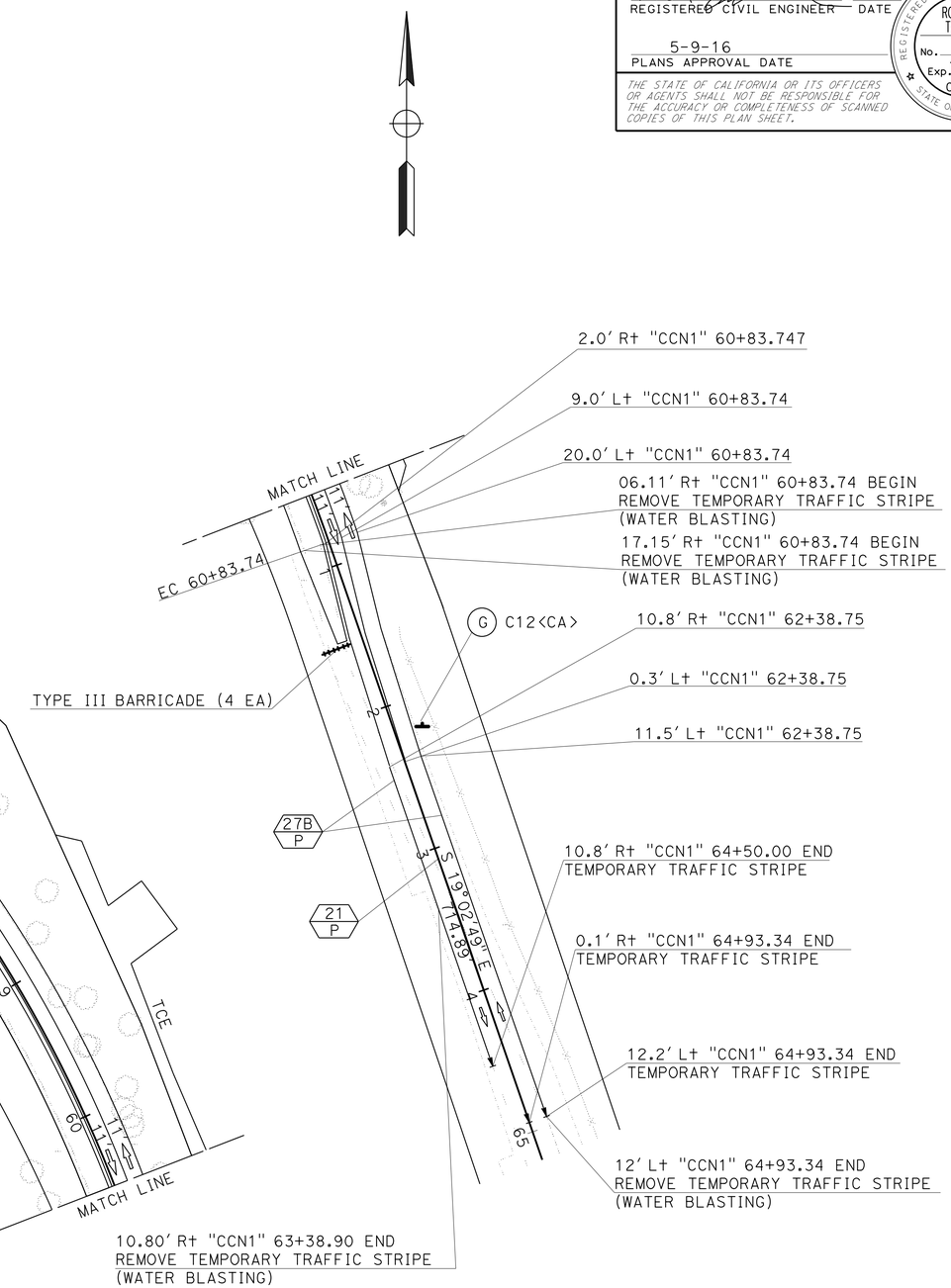

APPROVED FOR STAGE CONSTRUCTION AND TRAFFIC HANDLING WORK ONLY

STAGE CONSTRUCTION AND TRAFFIC HANDLING PLAN

STAGE 1 PHASE 4

SCALE: 1" = 50'

SC-10

STATE OF CALIFORNIA - DEPARTMENT OF TRANSPORTATION
Caltrans®
DESIGN

FUNCTIONAL SUPERVISOR: NESAR FORMOLI
CALCULATED-DESIGNED BY: KEVIN CANFIELD
CHECKED BY: KAMAL CHONKRIA
REVISED BY
DATE REVISED

LAST REVISION 00-00-00
DATE PLOTTED => 08-JUL-2016
TIME PLOTTED => 16:19

Dist	COUNTY	ROUTE	POST MILES TOTAL PROJECT	SHEET No.	TOTAL SHEETS
03	ED	49	23.6/24.5	68	202

Ron Tollison 5-9-16
REGISTERED CIVIL ENGINEER DATE

5-9-16
PLANS APPROVAL DATE

REGISTERED PROFESSIONAL ENGINEER
RONALD W. TOLLISON
No. 67389
Exp. 12/31/16
CIVIL
STATE OF CALIFORNIA

THE STATE OF CALIFORNIA OR ITS OFFICERS OR AGENTS SHALL NOT BE RESPONSIBLE FOR THE ACCURACY OR COMPLETENESS OF SCANNED COPIES OF THIS PLAN SHEET.

NOTE:

FOR ACCURATE RIGHT OF WAY DATA, CONTACT RIGHT OF WAY ENGINEERING AT THE DISTRICT OFFICE.

STAGE 1, PHASE 5:

1. REMOVE EXISTING MEDIAN ISLAND STA "CCN1" 25+36.72 TO 25+83.91 AND PLACE TEMPORARY HMA
2. REMOVE EXISTING MEDIAN ISLAND STA "CCN1" 29+63.12 TO 30+55.38 AND PLACE TEMPORARY HMA
3. REMOVE EXISTING THERMOPLASTIC PAVEMENT MARKINGS
4. REMOVE TEMPORARY PAVEMENT STRIPES
5. PLACE TEMPORARY PAINTED TRAFFIC STRIPES
6. PLACE TEMPORARY PAINT PAVEMENT MARKINGS
7. PLACE TRAFFIC PLASTIC DRUMS @ 25' OC STA "CCN1" 21+50 TO 39+63
8. SHIFT TRAFFIC ONTO TEMPORARY 11' LANES
9. CONSTRUCT RETAINING WALL STA "CCN1" 29+90 L+ TO 33+15 L+
10. INSTALL CVIN RELOCATION STATION "CCN1" 28+15 TO 39+61
11. CONSTRUCT CURB, GUTTER, SIDEWALK STA "CCN1" 22+53 L+ TO 38+50 L+
12. CONSTRUCT NB STRUCTURAL SECTION (SEE CROSS SECTION THIS SHEET) STA "CCN1" 21+50 L+ TO 38+50 L+

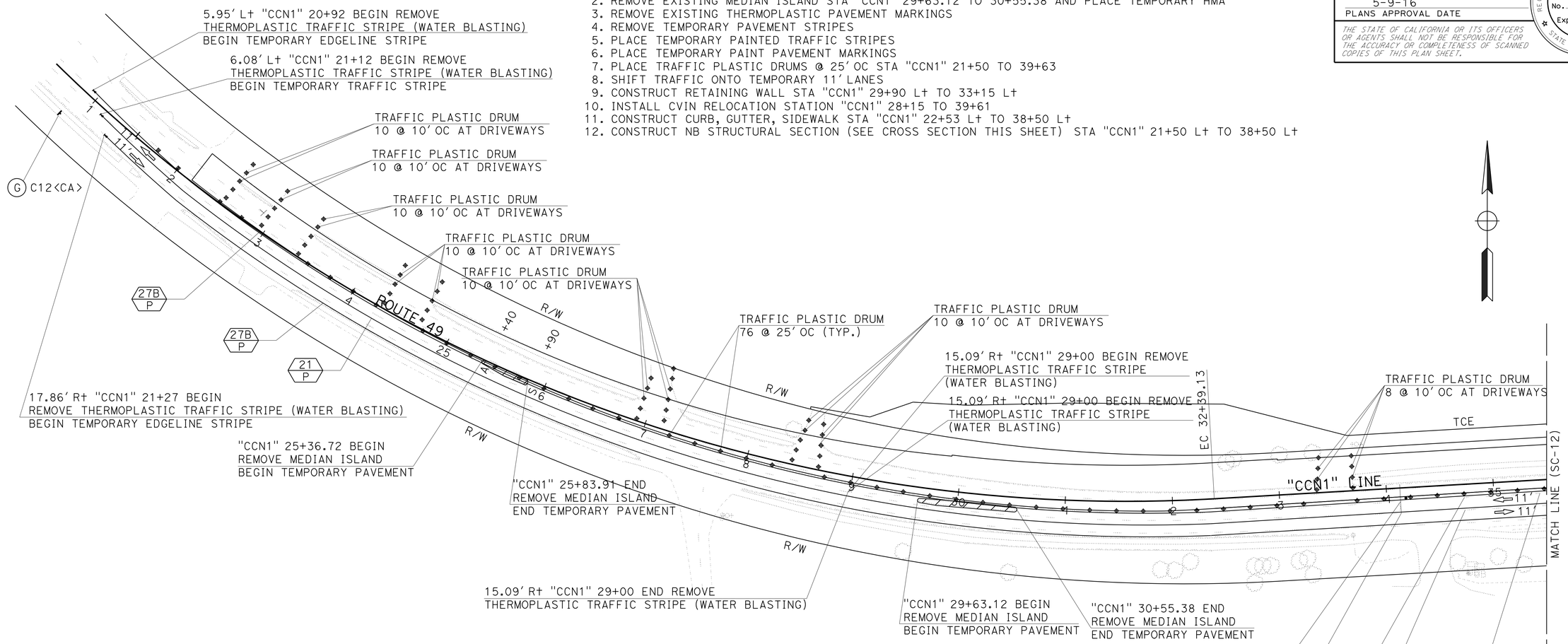

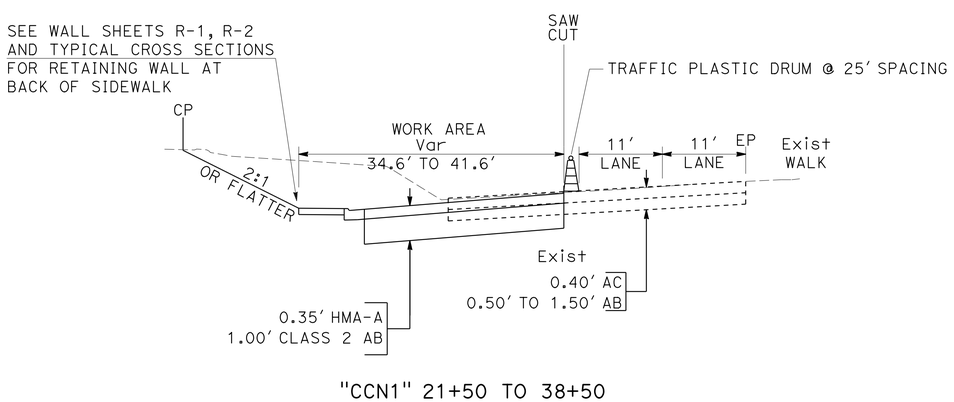

"CCN1" 21+50 TO 38+50
NO SCALE

APPROVED FOR STAGE CONSTRUCTION AND TRAFFIC HANDLING WORK ONLY

STAGE CONSTRUCTION AND TRAFFIC HANDLING PLAN

STAGE 1 PHASE 5

SCALE: 1" = 50'

SC-11

STATE OF CALIFORNIA - DEPARTMENT OF TRANSPORTATION
Caltrans
DESIGN
FUNCTIONAL SUPERVISOR: NESAR FORMOLI
CALCULATED-DESIGNED BY: KEVIN CANFIELD
CHECKED BY: KAMAL CHONKRIA
REVISED BY
DATE REVISED

LAST REVISION 00-00-00
DATE PLOTTED => 08-JUL-2016
TIME PLOTTED => 16:19

Dist	COUNTY	ROUTE	POST MILES TOTAL PROJECT	SHEET No.	TOTAL SHEETS
03	ED	49	23.6/24.5	69	202

REGISTERED CIVIL ENGINEER 5-9-16 DATE

5-9-16
PLANS APPROVAL DATE

REGISTERED PROFESSIONAL ENGINEER
RONALD W. TOLLISON
No. 67389
Exp. 12/31/16
CIVIL
STATE OF CALIFORNIA

THE STATE OF CALIFORNIA OR ITS OFFICERS OR AGENTS SHALL NOT BE RESPONSIBLE FOR THE ACCURACY OR COMPLETENESS OF SCANNED COPIES OF THIS PLAN SHEET.

NOTE:

FOR ACCURATE RIGHT OF WAY DATA, CONTACT
RIGHT OF WAY ENGINEERING AT THE DISTRICT OFFICE.

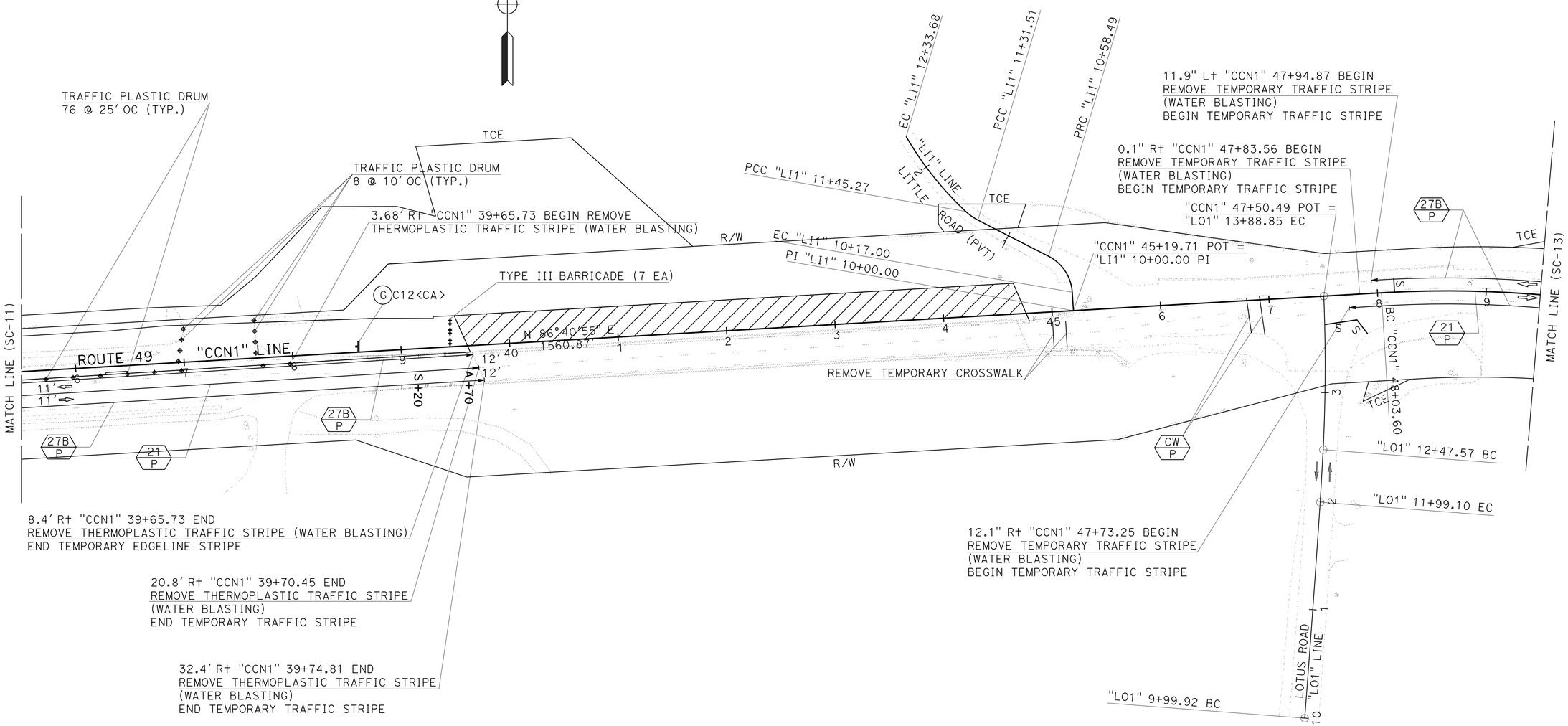

APPROVED FOR STAGE CONSTRUCTION AND TRAFFIC HANDLING WORK ONLY

STAGE CONSTRUCTION AND TRAFFIC HANDLING PLAN

STAGE 1 PHASE 5

SCALE: 1" = 50'

SC-12

STATE OF CALIFORNIA - DEPARTMENT OF TRANSPORTATION
Caltrans
DESIGN

FUNCTIONAL SUPERVISOR: NESAR FORMOLI
CALCULATED-DESIGNED BY: KEVIN CANFIELD
CHECKED BY: KAMAL CHONKRIA
REVISED BY
DATE REVISED

LAST REVISION 00-00-00
DATE PLOTTED => 08-JUL-2016
TIME PLOTTED => 16:19

Dist	COUNTY	ROUTE	POST MILES TOTAL PROJECT	SHEET No.	TOTAL SHEETS
03	ED	49	23.6/24.5	70	202

REGISTERED CIVIL ENGINEER 5-9-16 DATE

5-9-16
PLANS APPROVAL DATE

REGISTERED PROFESSIONAL ENGINEER RONALD W. TOLLISON No. 67389 Exp. 12/31/16 CIVIL STATE OF CALIFORNIA

THE STATE OF CALIFORNIA OR ITS OFFICERS OR AGENTS SHALL NOT BE RESPONSIBLE FOR THE ACCURACY OR COMPLETENESS OF SCANNED COPIES OF THIS PLAN SHEET.

NOTE:

FOR ACCURATE RIGHT OF WAY DATA, CONTACT RIGHT OF WAY ENGINEERING AT THE DISTRICT OFFICE.

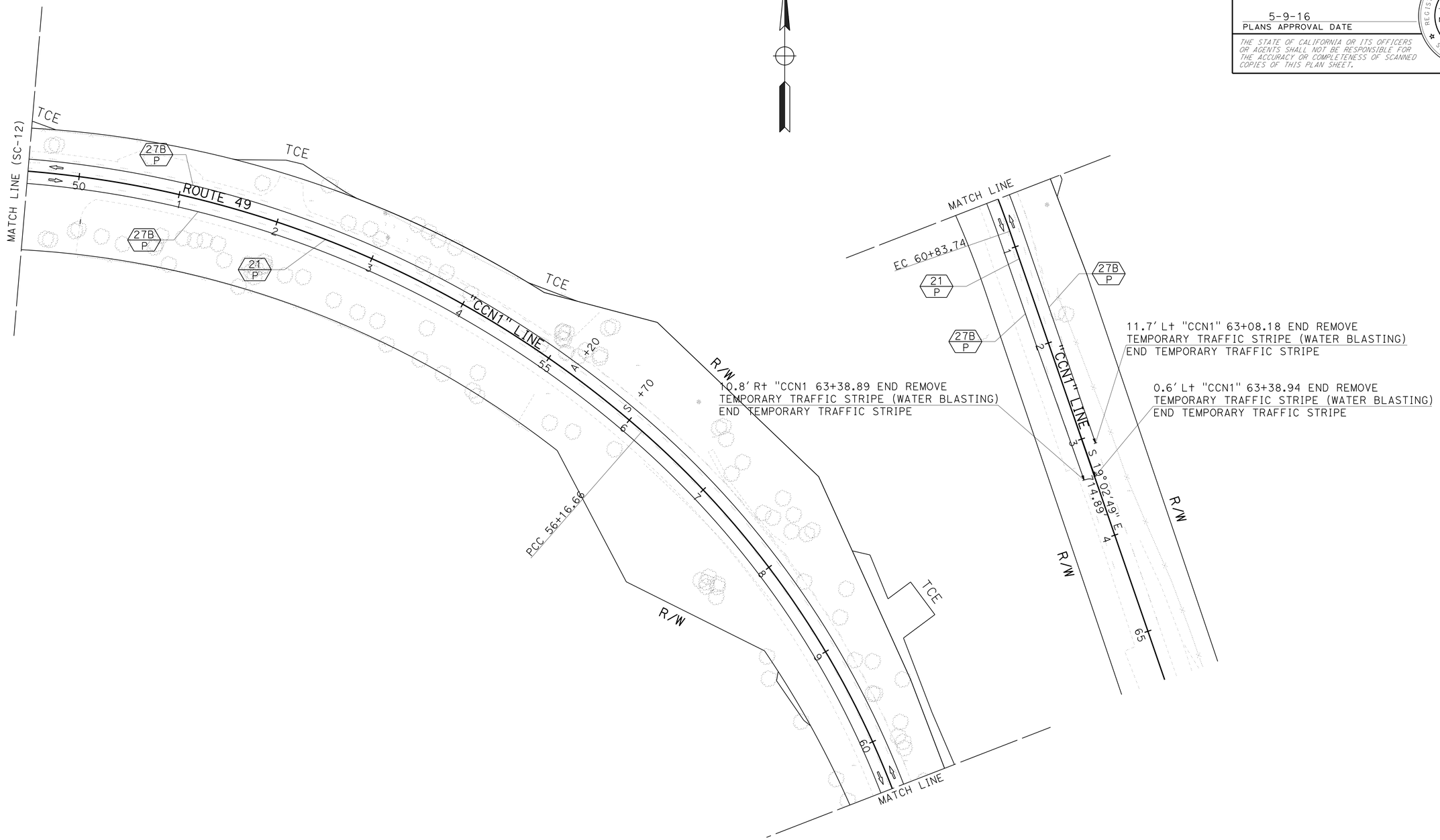

APPROVED FOR STAGE CONSTRUCTION AND TRAFFIC HANDLING WORK ONLY

STAGE CONSTRUCTION AND TRAFFIC HANDLING PLAN

STAGE 1 PHASE 5

SCALE: 1" = 50'

SC-13

STATE OF CALIFORNIA - DEPARTMENT OF TRANSPORTATION

Caltrans

DESIGN

FUNCTIONAL SUPERVISOR: NESAR FORMOLI

CALCULATED-DESIGNED BY: KEVIN CANFIELD

CHECKED BY: KAMAL CHONKRIA

REVISED BY

DATE REVISED

LAST REVISION 00-00-00

DATE PLOTTED => 08-JUL-2016

TIME PLOTTED => 16:19

Dist	COUNTY	ROUTE	POST MILES TOTAL PROJECT	SHEET No.	TOTAL SHEETS
03	ED	49	23.6/24.5	71	202

REGISTERED CIVIL ENGINEER 5-9-16 DATE

5-9-16
PLANS APPROVAL DATE

REGISTERED PROFESSIONAL ENGINEER RONALD W. TOLLISON No. 67389 Exp. 12/31/16 CIVIL STATE OF CALIFORNIA

THE STATE OF CALIFORNIA OR ITS OFFICERS OR AGENTS SHALL NOT BE RESPONSIBLE FOR THE ACCURACY OR COMPLETENESS OF SCANNED COPIES OF THIS PLAN SHEET.

NOTE:

FOR ACCURATE RIGHT OF WAY DATA, CONTACT RIGHT OF WAY ENGINEERING AT THE DISTRICT OFFICE.

STAGE 1, PHASE 6:

1. SHIFT TRAFFIC PLASTIC DRUMS
2. CONSTRUCT SB STRUCTURAL SECTION "CCN1" 22+16.87 Lt to 36+25 Lt
3. INSTALL NEW WATERLINE THROUGH BRIDGE
4. INSTALL NEW FIBER OPTIC LINE THROUGH BRIDGE
5. REMOVE TEMPORARY STRIPING
6. PLACE TEMPORARY STRIPING

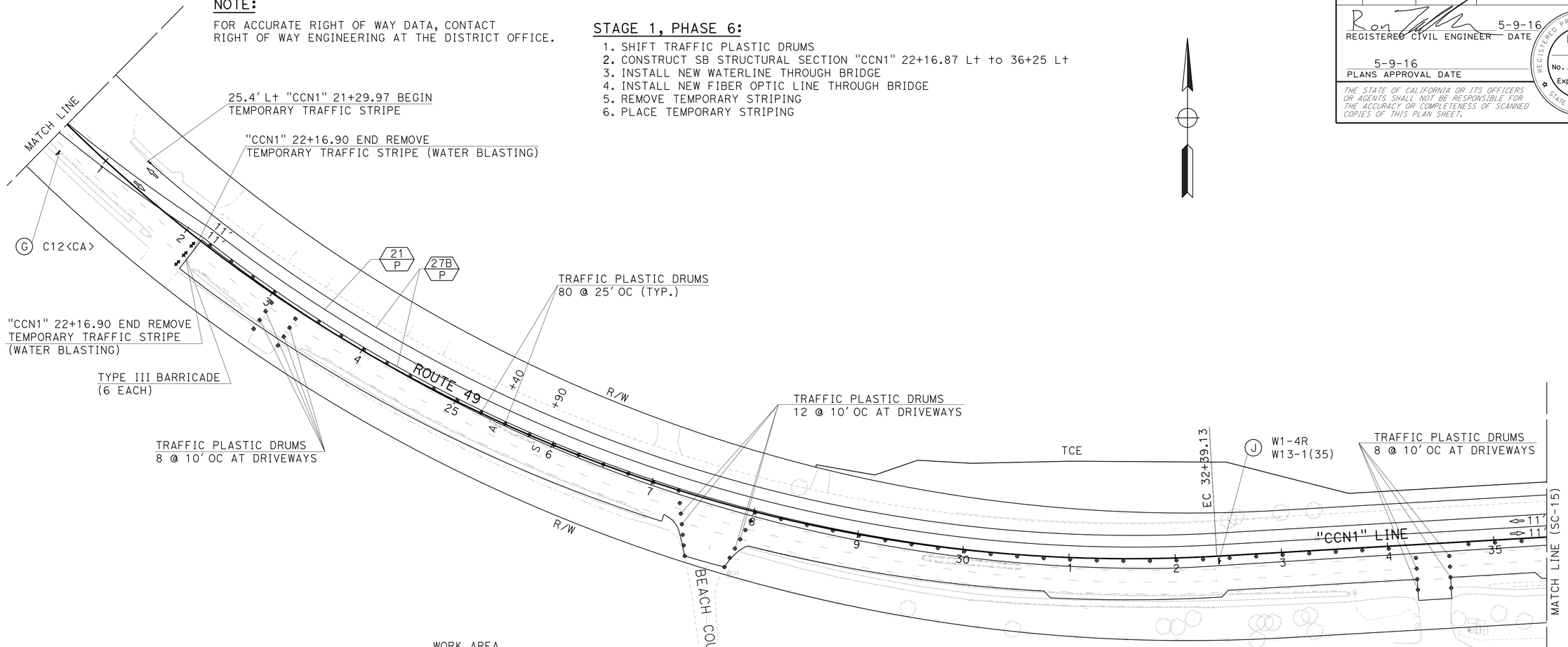

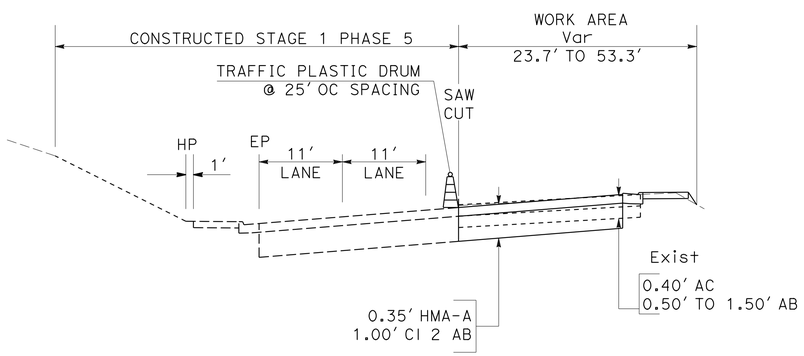

"CCN1" 22+16.90 TO 38+50
NO SCALE

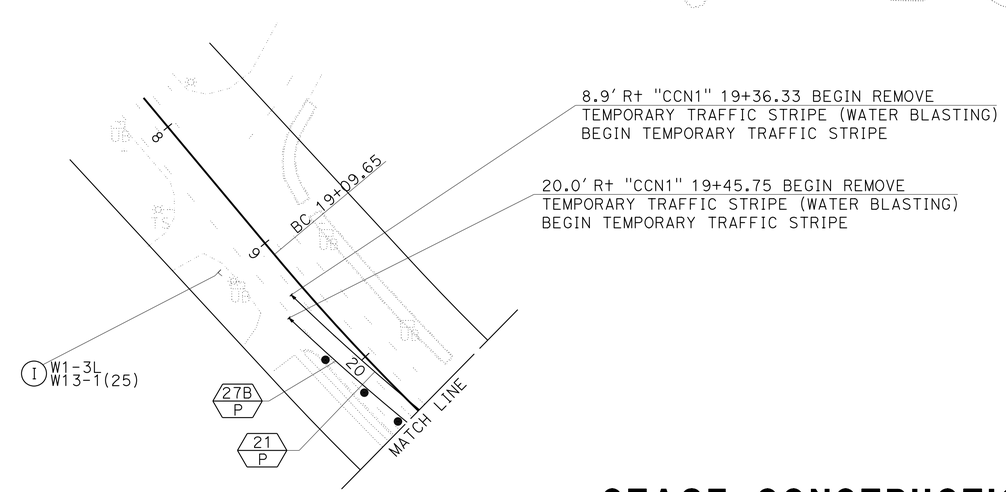

APPROVED FOR STAGE CONSTRUCTION AND TRAFFIC HANDLING WORK ONLY

STAGE CONSTRUCTION AND TRAFFIC HANDLING PLAN

STAGE 1 PHASE 6

SCALE: 1" = 50'

SC-14

STATE OF CALIFORNIA - DEPARTMENT OF TRANSPORTATION
Caltrans
DESIGN

FUNCTIONAL SUPERVISOR: NESAR FORMOLI
CALCULATED-DESIGNED BY: KEVIN CANFIELD
CHECKED BY: KAMAL CHONKRIA
REVISED BY
DATE REVISED

LAST REVISION 00-00-00
DATE PLOTTED => 08-JUL-2016
TIME PLOTTED => 16:19

Dist	COUNTY	ROUTE	POST MILES TOTAL PROJECT	SHEET No.	TOTAL SHEETS
03	ED	49	23.6/24.5	72	202

REGISTERED CIVIL ENGINEER 5-9-16 DATE

5-9-16
PLANS APPROVAL DATE

REGISTERED PROFESSIONAL ENGINEER RONALD W. TOLLISON No. 67389 Exp. 12/31/16 CIVIL STATE OF CALIFORNIA

THE STATE OF CALIFORNIA OR ITS OFFICERS OR AGENTS SHALL NOT BE RESPONSIBLE FOR THE ACCURACY OR COMPLETENESS OF SCANNED COPIES OF THIS PLAN SHEET.

NOTE:

FOR ACCURATE RIGHT OF WAY DATA, CONTACT RIGHT OF WAY ENGINEERING AT THE DISTRICT OFFICE.

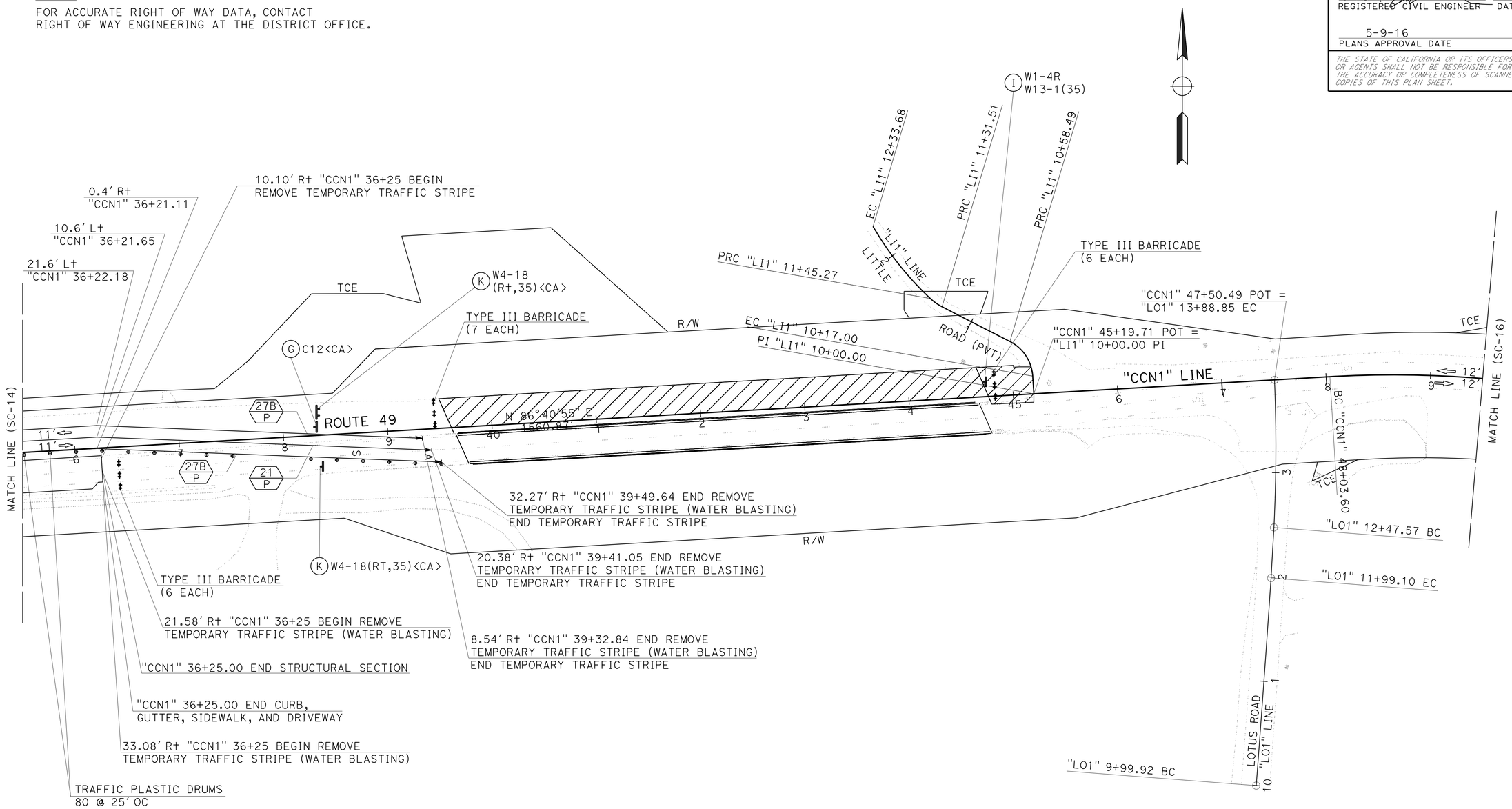

APPROVED FOR STAGE CONSTRUCTION AND TRAFFIC HANDLING WORK ONLY

STAGE CONSTRUCTION AND TRAFFIC HANDLING PLAN

STAGE 1 PHASE 6

SCALE: 1" = 50′

SC-15

STATE OF CALIFORNIA - DEPARTMENT OF TRANSPORTATION

Caltrans

DESIGN

FUNCTIONAL SUPERVISOR: NESAR FORMOLI

CALCULATED-DESIGNED BY: KEVIN CANFIELD

CHECKED BY: KAMAL CHONKRIA

REVISED BY

DATE REVISED

LAST REVISION 00-00-00 | DATE PLOTTED => 08-JUL-2016 | TIME PLOTTED => 16:19

Dist	COUNTY	ROUTE	POST MILES TOTAL PROJECT	SHEET No.	TOTAL SHEETS
03	ED	49	23.6/24.5	73	202

REGISTERED CIVIL ENGINEER 5-9-16 DATE

5-9-16
PLANS APPROVAL DATE

REGISTERED PROFESSIONAL ENGINEER
RONALD W. TOLLISON
No. 67389
Exp. 12/31/16
CIVIL
STATE OF CALIFORNIA

THE STATE OF CALIFORNIA OR ITS OFFICERS OR AGENTS SHALL NOT BE RESPONSIBLE FOR THE ACCURACY OR COMPLETENESS OF SCANNED COPIES OF THIS PLAN SHEET.

NOTE:

FOR ACCURATE RIGHT OF WAY DATA, CONTACT RIGHT OF WAY ENGINEERING AT THE DISTRICT OFFICE.

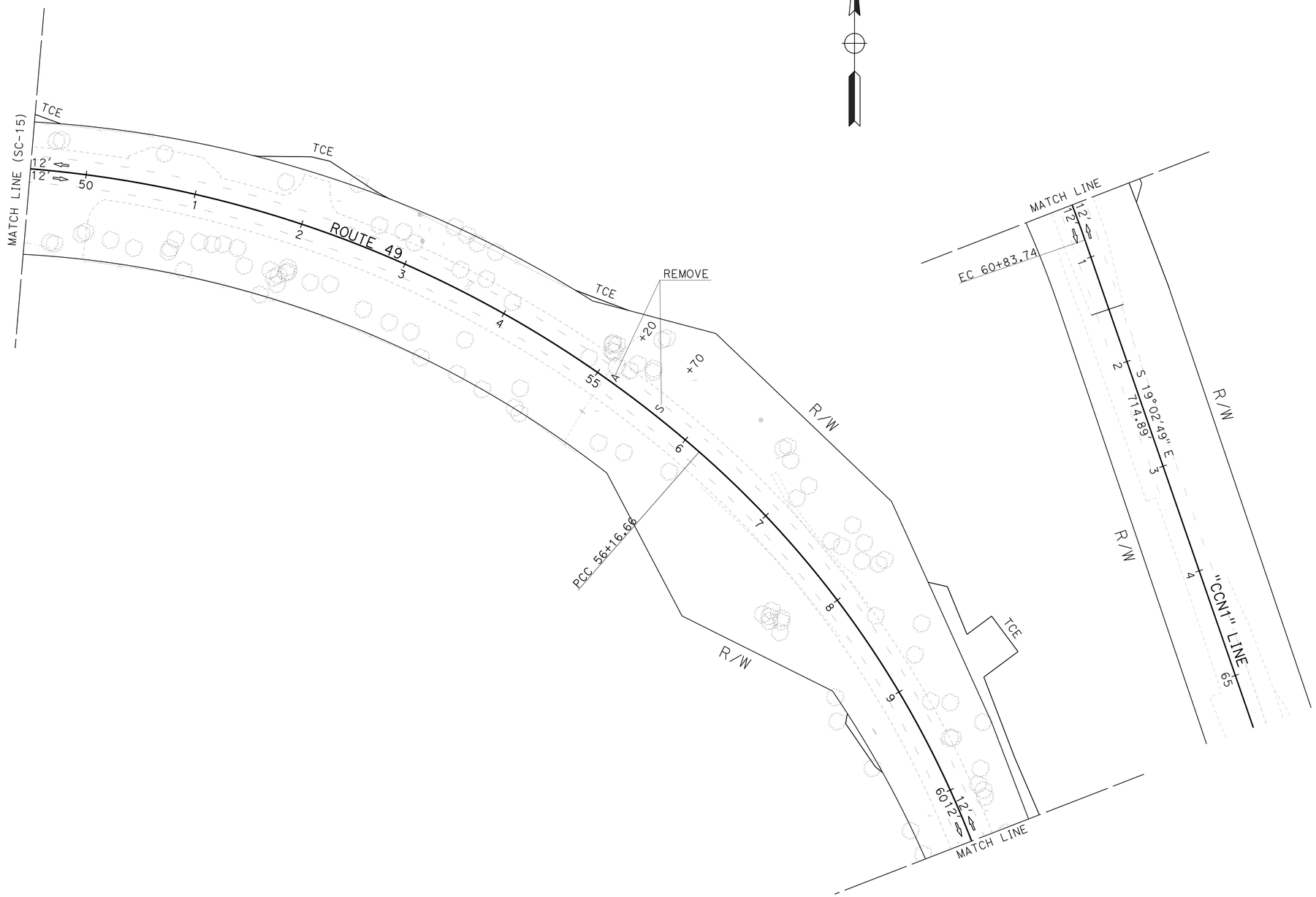

APPROVED FOR STAGE CONSTRUCTION AND TRAFFIC HANDLING WORK ONLY

STAGE CONSTRUCTION AND TRAFFIC HANDLING PLAN

STAGE 1 PHASE 6

SCALE: 1" = 50'

SC-16

STATE OF CALIFORNIA - DEPARTMENT OF TRANSPORTATION
Caltrans
DESIGN

FUNCTIONAL SUPERVISOR: NESAR FORMOLI
CALCULATED-DESIGNED BY: NESAR FORMOLI
CHECKED BY: KAMAL CHONKRIA
REVISED BY
DATE REVISED

LAST REVISION 00-00-00
DATE PLOTTED => 08-JUL-2016
TIME PLOTTED => 16:44

Dist	COUNTY	ROUTE	POST MILES TOTAL PROJECT	SHEET No.	TOTAL SHEETS
03	ED	49	23.6/24.5	74	202

REGISTERED CIVIL ENGINEER 5-9-16 DATE

5-9-16
PLANS APPROVAL DATE

REGISTERED PROFESSIONAL ENGINEER
RONALD W. TOLLISON
No. 67389
Exp. 12/31/16
CIVIL
STATE OF CALIFORNIA

THE STATE OF CALIFORNIA OR ITS OFFICERS OR AGENTS SHALL NOT BE RESPONSIBLE FOR THE ACCURACY OR COMPLETENESS OF SCANNED COPIES OF THIS PLAN SHEET.

NOTE:

FOR ACCURATE RIGHT OF WAY DATA, CONTACT RIGHT OF WAY ENGINEERING AT THE DISTRICT OFFICE.

STAGE 2

1. PRIOR TO SHIFTING TRAFFIC ONTO BRIDGE SEGMENT CONSTRUCTED IN STAGE 1 THE FOLLOWING WORK SHALL BE COMPLETED:
   - A. COMPLETE STAGE 1 APPROACH SLAB AT EB
   - B. COMPLETE NB STRUCTURAL SECTION TO STAGE 1 APPROACH SLAB
   - C. COMPLETE NB STRUCTURAL SECTION FROM Sta "CCN1" 36+25 TO BB
   - D. PLACE TEMPORARY RAILING (TYPE K) FROM Sta "CCN1" 39+00 TO 45+00
   - E. PLACE ALTERNATIVE TEMPORARY CRASH CUSHIONS AT ENDS OF TEMPORARY RAILING (TYPE K)
   - F. PLACE TEMPORARY STRIPING ON STAGE 1 BRIDGE SEGMENT WITH 11' LANES
   - G. COMPLETE TEMPORARY PEDESTRIAN WALKWAY ON STAGE 1 BRIDGE SEGMENT
   - H. COMPLETE TEMPORARY PEDESTRIAN PATHWAYS TO CONNECT SIDEWALKS TO TEMP. PEDESTRIAN WALKWAY ON BRIDGE
   - I. COMPLETE WATER AND FIBER OPTIC CONNECTIONS ONTO BRIDGE
2. REMOVE EXISTING SOUTH FORK AMERICAN RIVER BRIDGE
3. BEGIN ABUTMENTS FOR SECOND SEGMENT OF SOUTH FORK AMERICAN RIVER BRIDGE
4. CONSTRUCT SECOND SEGMENT SOUTH FORK AMERICAN RIVER BRIDGE
5. CONSTRUCT MEDIAN ISLANDS

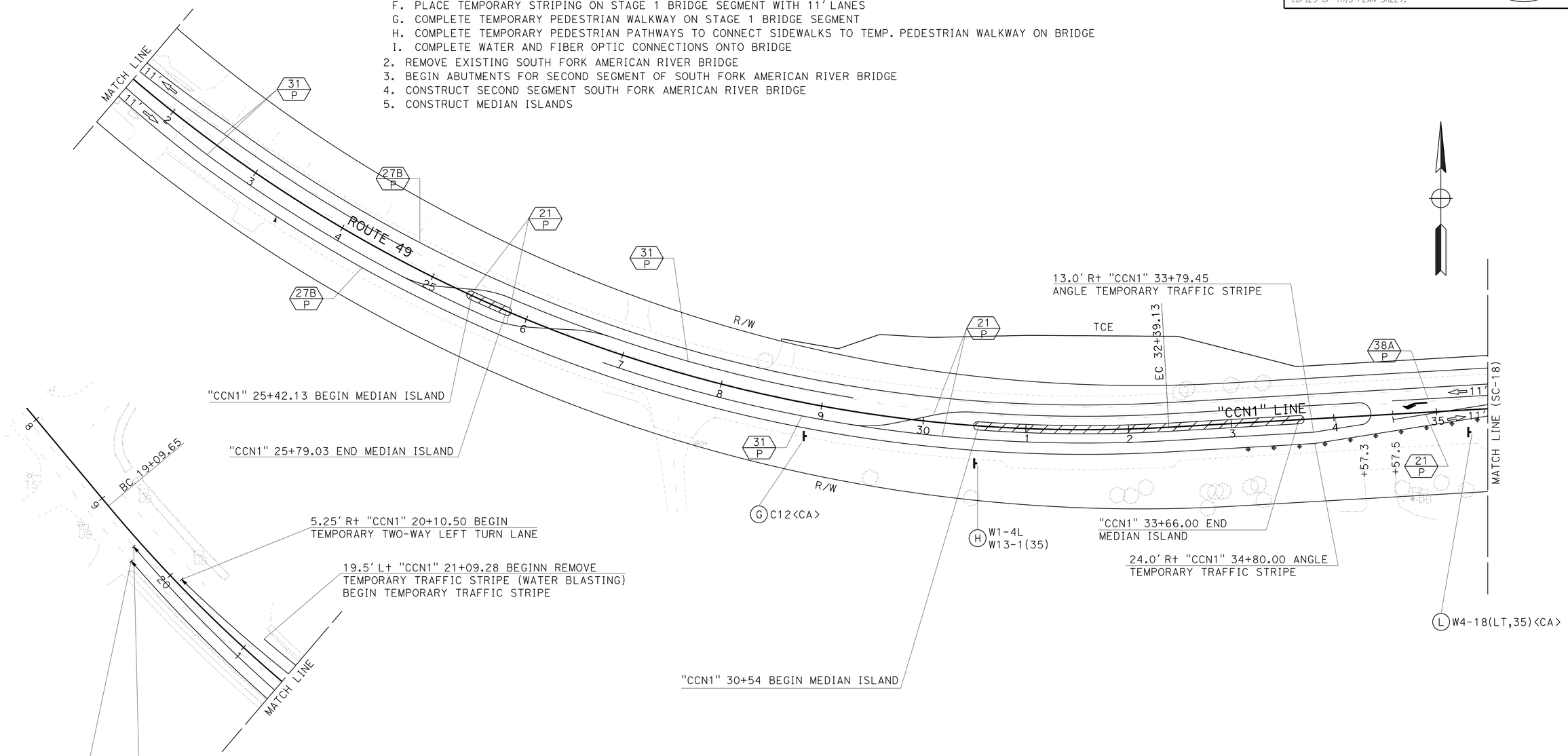

APPROVED FOR STAGE CONSTRUCTION AND TRAFFIC HANDLING WORK ONLY

STAGE CONSTRUCTION AND TRAFFIC HANDLING PLAN

STAGE 2

SCALE: 1" = 50'

SC-17

STATE OF CALIFORNIA - DEPARTMENT OF TRANSPORTATION
Caltrans
DESIGN

FUNCTIONAL SUPERVISOR: NESAR FORMOLI
CALCULATED-DESIGNED BY: KEVIN CANFIELD
CHECKED BY: KAMAL CHONKRIA
REVISED BY
DATE REVISED

LAST REVISION 00-00-00
DATE PLOTTED => 08-JUL-2016
TIME PLOTTED => 16:19

Dist	COUNTY	ROUTE	POST MILES TOTAL PROJECT	SHEET No.	TOTAL SHEETS
03	ED	49	23.6/24.5	75	202

REGISTERED CIVIL ENGINEER 5-9-16 DATE

5-9-16
PLANS APPROVAL DATE

REGISTERED PROFESSIONAL ENGINEER RONALD W. TOLLISON No. 67389 Exp. 12/31/16 CIVIL STATE OF CALIFORNIA

THE STATE OF CALIFORNIA OR ITS OFFICERS OR AGENTS SHALL NOT BE RESPONSIBLE FOR THE ACCURACY OR COMPLETENESS OF SCANNED COPIES OF THIS PLAN SHEET.

NOTE:

FOR ACCURATE RIGHT OF WAY DATA, CONTACT RIGHT OF WAY ENGINEERING AT THE DISTRICT OFFICE.

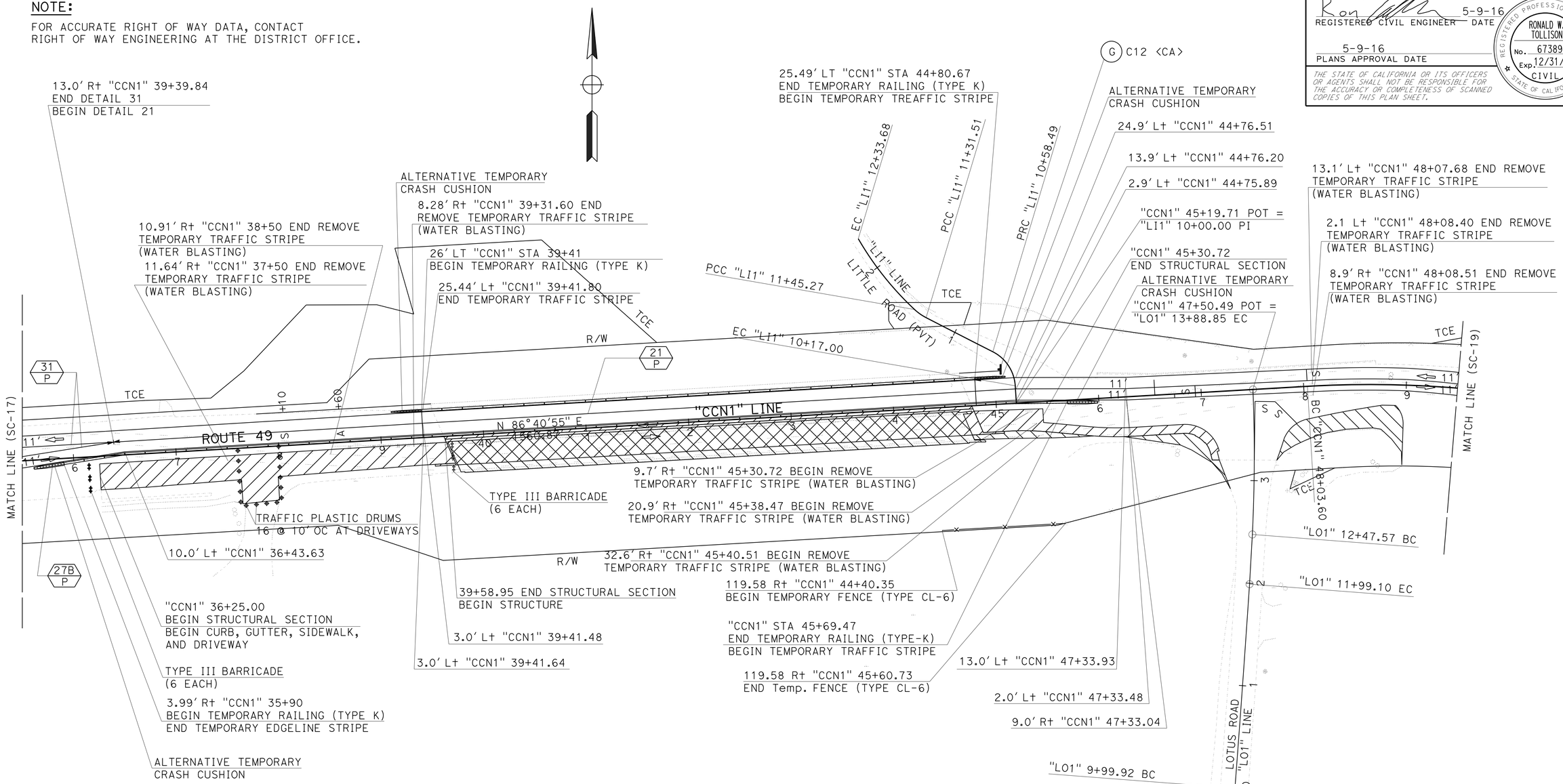

APPROVED FOR STAGE CONSTRUCTION AND TRAFFIC HANDLING WORK ONLY

STAGE CONSTRUCTION AND TRAFFIC HANDLING PLAN

STAGE 2

SCALE: 1" = 50'

SC-18

STATE OF CALIFORNIA - DEPARTMENT OF TRANSPORTATION

Caltrans®

DESIGN

FUNCTIONAL SUPERVISOR: NESAR FORMOLI

CALCULATED-DESIGNED BY: KEVIN CANFIELD

CHECKED BY: KAMAL CHONKRIA

REVISED BY

DATE REVISED

LAST REVISION 00-00-00

DATE PLOTTED => 08-JUL-2016

TIME PLOTTED => 16:19

Dist	COUNTY	ROUTE	POST MILES TOTAL PROJECT	SHEET No.	TOTAL SHEETS
03	ED	49	23.6/24.5	76	202

REGISTERED CIVIL ENGINEER 5-9-16 DATE

5-9-16
PLANS APPROVAL DATE

REGISTERED PROFESSIONAL ENGINEER
RONALD W. TOLLISON
No. 67389
Exp. 12/31/16
CIVIL
STATE OF CALIFORNIA

THE STATE OF CALIFORNIA OR ITS OFFICERS OR AGENTS SHALL NOT BE RESPONSIBLE FOR THE ACCURACY OR COMPLETENESS OF SCANNED COPIES OF THIS PLAN SHEET.

NOTE:

FOR ACCURATE RIGHT OF WAY DATA, CONTACT
RIGHT OF WAY ENGINEERING AT THE DISTRICT OFFICE.

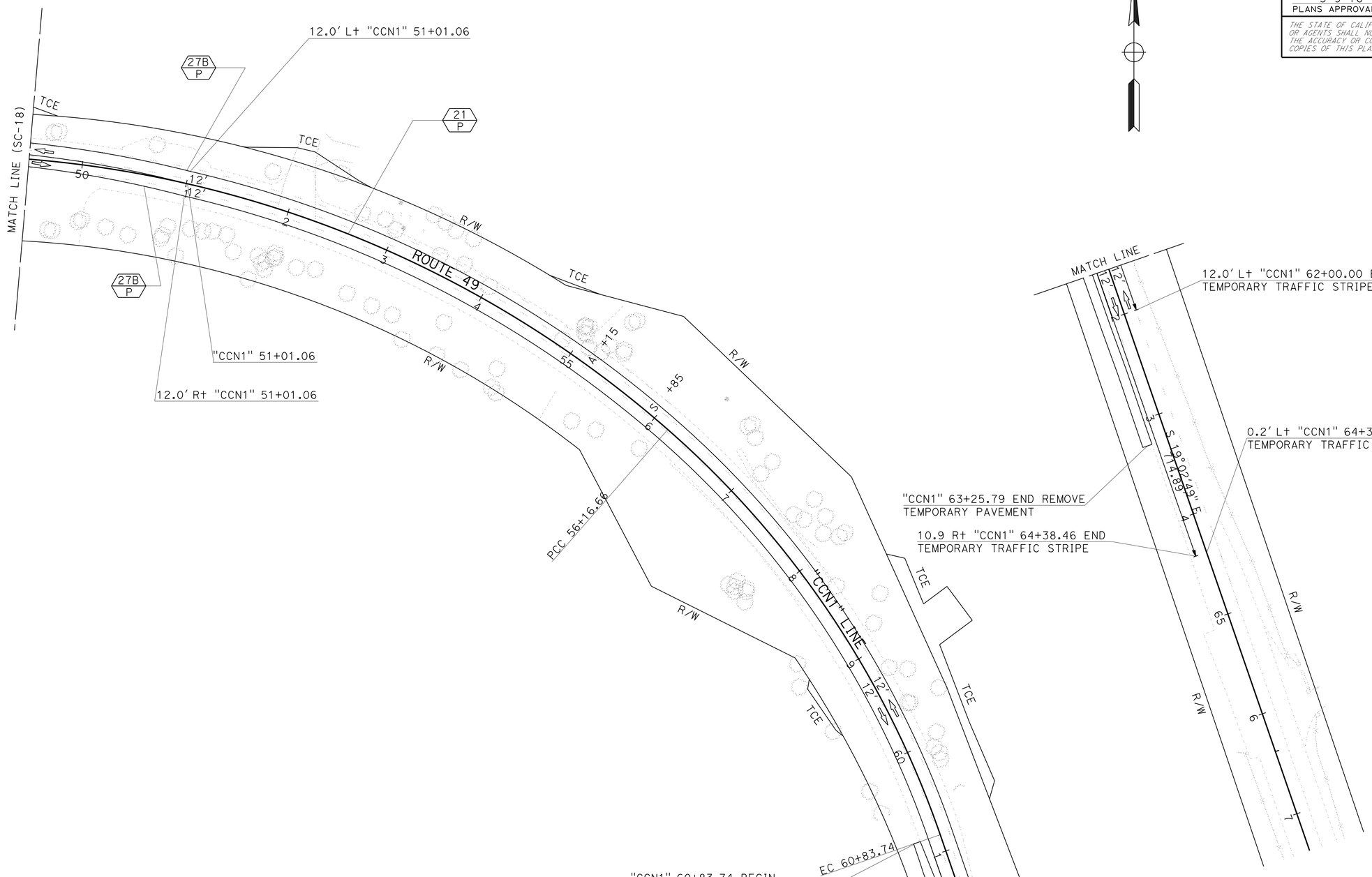

APPROVED FOR STAGE CONSTRUCTION AND TRAFFIC HANDLING WORK ONLY

STAGE CONSTRUCTION AND TRAFFIC HANDLING PLAN

STAGE 2

SCALE: 1" = 50'

SC-19

STATE OF CALIFORNIA - DEPARTMENT OF TRANSPORTATION
Caltrans
DESIGN

FUNCTIONAL SUPERVISOR: NESAR FORMOLI
CALCULATED-DESIGNED BY: KEVIN CANFIELD
CHECKED BY: KAMAL CHONKRIA
REVISED BY
DATE REVISED

LAST REVISION 00-00-00
DATE PLOTTED => 08-JUL-2016
TIME PLOTTED => 16:19

Dist	COUNTY	ROUTE	POST MILES TOTAL PROJECT	SHEET No.	TOTAL SHEETS
03	ED	49	23.6/24.5	77	202

REGISTERED CIVIL ENGINEER 5-9-16 DATE

5-9-16
PLANS APPROVAL DATE

REGISTERED PROFESSIONAL ENGINEER RONALD W. TOLLISON No. 67389 Exp. 12/31/16 CIVIL STATE OF CALIFORNIA

THE STATE OF CALIFORNIA OR ITS OFFICERS OR AGENTS SHALL NOT BE RESPONSIBLE FOR THE ACCURACY OR COMPLETENESS OF SCANNED COPIES OF THIS PLAN SHEET.

NOTE:

FOR ACCURATE RIGHT OF WAY DATA, CONTACT RIGHT OF WAY ENGINEERING AT THE DISTRICT OFFICE.

STAGE 3:

1. REMOVE TEMPORARY STRIPING
2. PLACE TEMPORARY STRIPING
3. SHIFT TEMPORARY RAILING (TYPE K) AND ALTERNATIVE TEMPORARY CRASH CUSHIONS 39+00 TO 45+00
4. CONSTRUCT CURB, GUTTER, SIDEWALK, AND DRIVEWAYS FROM Sta "CCN1" 37+00 TO 39+60.20 AND FROM Sta "CCN1" 45+10.20 TO 45+60
5. CONSTRUCT SIDEWALK, BARRIERS, AND RAILINGS ON NORTH SIDE OF BRIDGE
6. COLD PLANE AT BEGINNING AND END OF PROJECT
7. COMPLETE FINAL RHMA-G PAVING (0.15') THROUGHOUT PROJECT AREA
8. PLACE FINAL PAVEMENT DELINEATION

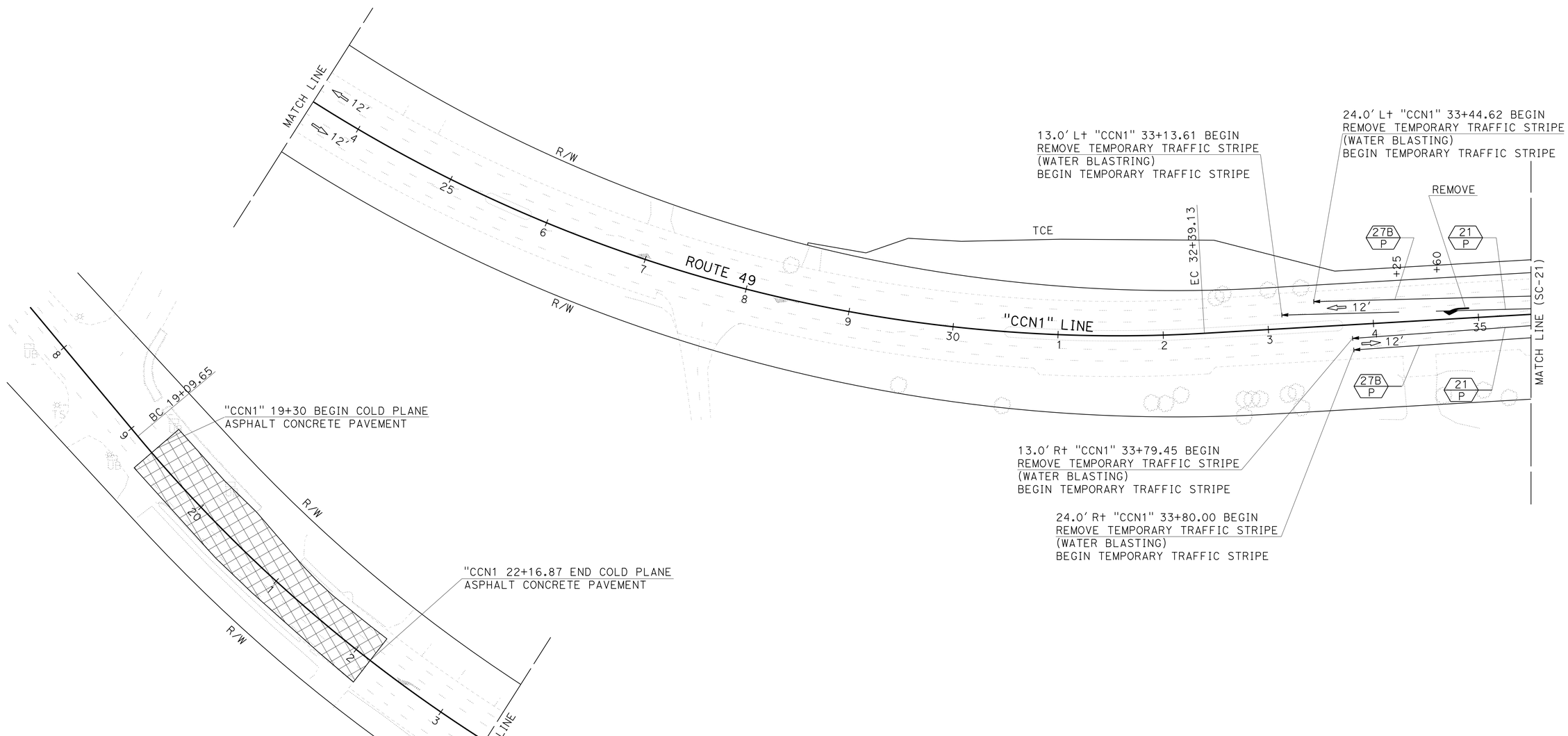

APPROVED FOR STAGE CONSTRUCTION AND TRAFFIC HANDLING WORK ONLY

STAGE CONSTRUCTION AND TRAFFIC HANDLING PLAN

STAGE 3

SCALE: 1" = 50'

SC-20

STATE OF CALIFORNIA - DEPARTMENT OF TRANSPORTATION

Caltrans

DESIGN

FUNCTIONAL SUPERVISOR: NESAR FORMOLI

CALCULATED-DESIGNED BY: KEVIN CANFIELD

CHECKED BY: KAMAL CHONKRIA

REVISED BY

DATE REVISED

LAST REVISION 00-00-00

DATE PLOTTED => 08-JUL-2016

TIME PLOTTED => 16:19

Dist	COUNTY	ROUTE	POST MILES TOTAL PROJECT	SHEET No.	TOTAL SHEETS
03	ED	49	23.6/24.5	78	202

REGISTERED CIVIL ENGINEER 5-9-16 DATE

5-9-16
PLANS APPROVAL DATE

REGISTERED PROFESSIONAL ENGINEER RONALD W. TOLLISON No. 67389 Exp. 12/31/16 CIVIL STATE OF CALIFORNIA

THE STATE OF CALIFORNIA OR ITS OFFICERS OR AGENTS SHALL NOT BE RESPONSIBLE FOR THE ACCURACY OR COMPLETENESS OF SCANNED COPIES OF THIS PLAN SHEET.

NOTE:

FOR ACCURATE RIGHT OF WAY DATA, CONTACT RIGHT OF WAY ENGINEERING AT THE DISTRICT OFFICE.

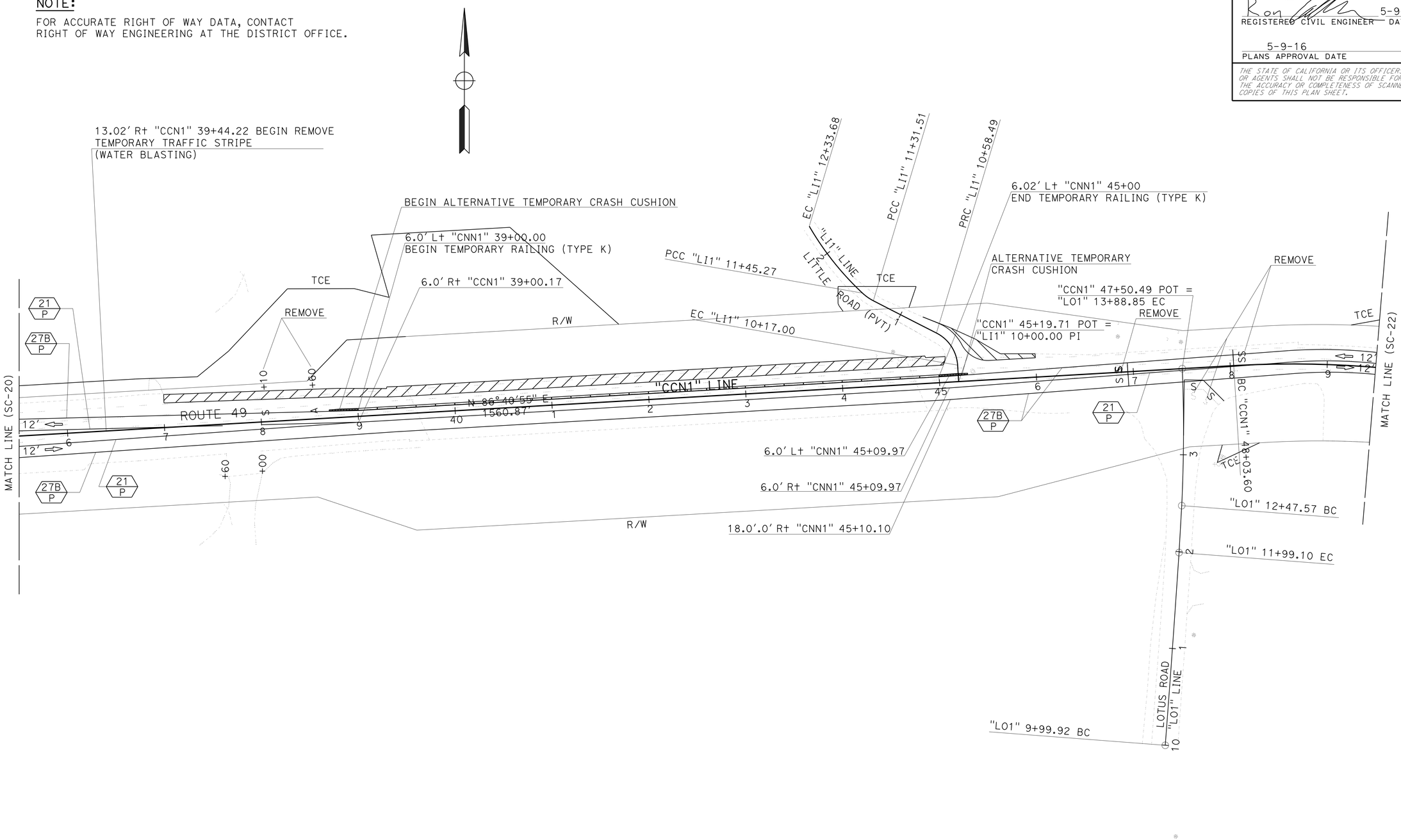

APPROVED FOR STAGE CONSTRUCTION AND TRAFFIC HANDLING WORK ONLY

STAGE CONSTRUCTION AND TRAFFIC HANDLING PLAN

STAGE 3

SCALE: 1" = 50'

SC-21

STATE OF CALIFORNIA - DEPARTMENT OF TRANSPORTATION

Caltrans

DESIGN

FUNCTIONAL SUPERVISOR: NESAR FORMOLI

CALCULATED-DESIGNED BY: KEVIN CANFIELD

CHECKED BY: KAMAL CHONKRIA

REVISED BY

DATE REVISED

LAST REVISION 00-00-00

DATE PLOTTED => 08-JUL-2016

TIME PLOTTED => 16:19

Dist	COUNTY	ROUTE	POST MILES TOTAL PROJECT	SHEET No.	TOTAL SHEETS
03	ED	49	23.6/24.5	79	202

REGISTERED CIVIL ENGINEER 5-9-16 DATE

5-9-16
PLANS APPROVAL DATE

REGISTERED PROFESSIONAL ENGINEER
RONALD W. TOLLISON
No. 67389
Exp. 12/31/16
CIVIL
STATE OF CALIFORNIA

THE STATE OF CALIFORNIA OR ITS OFFICERS OR AGENTS SHALL NOT BE RESPONSIBLE FOR THE ACCURACY OR COMPLETENESS OF SCANNED COPIES OF THIS PLAN SHEET.

NOTE:

FOR ACCURATE RIGHT OF WAY DATA, CONTACT
RIGHT OF WAY ENGINEERING AT THE DISTRICT OFFICE.

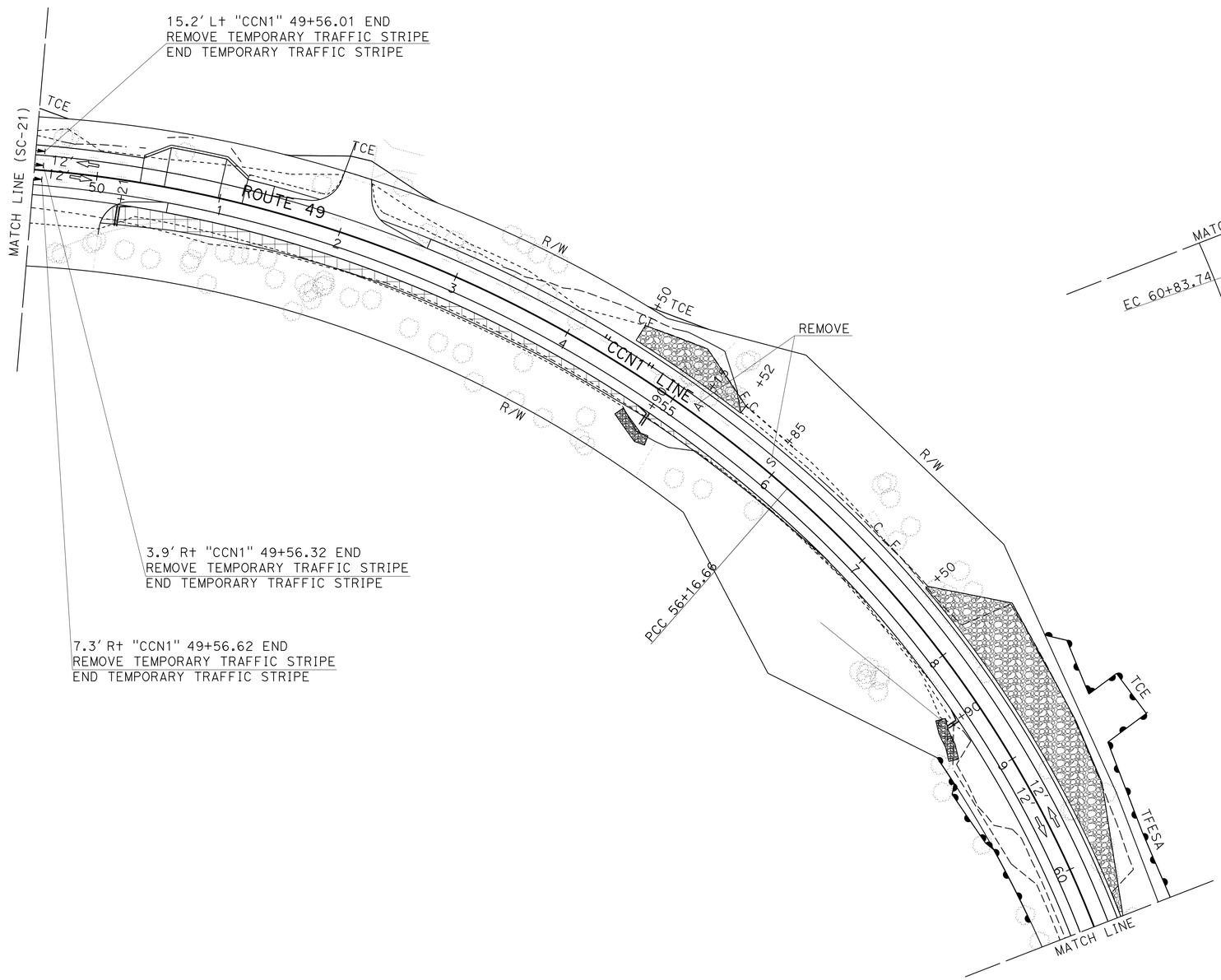

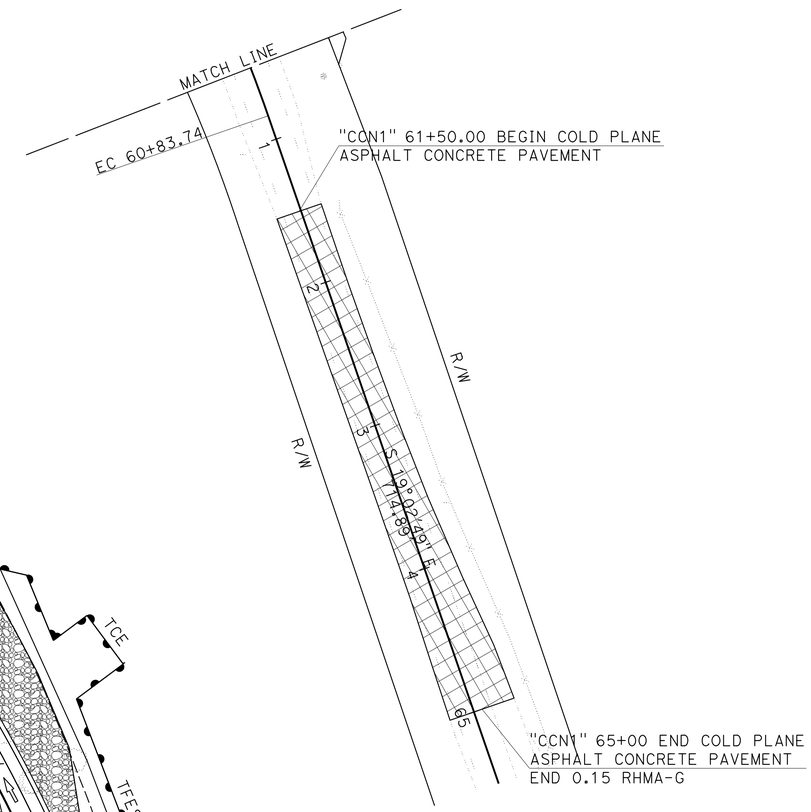

APPROVED FOR STAGE CONSTRUCTION AND TRAFFIC HANDLING WORK ONLY

STAGE CONSTRUCTION AND TRAFFIC HANDLING PLAN

STAGE 3

SCALE: 1" = 50'

SC-22

STATE OF CALIFORNIA - DEPARTMENT OF TRANSPORTATION
Caltrans
DESIGN

FUNCTIONAL SUPERVISOR: NESAR FORMOLI
CALCULATED-DESIGNED BY: KEVIN CANFIELD
CHECKED BY: KAMAL CHONKIA
REVISED BY
DATE REVISED

LAST REVISION 00-00-00
DATE PLOTTED => 08-JUL-2016
TIME PLOTTED => 16:19

Dist	COUNTY	ROUTE	POST MILES TOTAL PROJECT	SHEET No.	TOTAL SHEETS
03	ED	49	23.6/24.5	80	202

REGISTERED CIVIL ENGINEER 5-9-16 DATE

5-9-16
PLANS APPROVAL DATE

REGISTERED PROFESSIONAL ENGINEER RONALD W. TOLLISON No. 67389 Exp. 12/31/16 CIVIL STATE OF CALIFORNIA

THE STATE OF CALIFORNIA OR ITS OFFICERS OR AGENTS SHALL NOT BE RESPONSIBLE FOR THE ACCURACY OR COMPLETENESS OF SCANNED COPIES OF THIS PLAN SHEET.

PAVEMENT DELINEATION

ALIGNMENT / STATION	LOCATION	TEMPORARY TRAFFIC STRIPE (PAINT) YELLOW STRIPE 21 LF	YELLOW STRIPE 31 LF	WHITE STRIPE 27B LF	TEMPORARY PAVEMENT MARKING (PAINT) SQFT	DESCRIPTION
STAGE 1 PHASE 3						
"CCN1" 44+91.07 TO "CCN1" 46+81.49	℄	191				
"CCN1" 44+79.02 TO "CCN1" 46.83.94	NB			205		
"CCN1" 61+50.00 TO "CCN1" 64+93.34	NB			343		
"CCN1" 44+91.35 TO "CCN1" 64+50.00	SB			1,860		
"CCN1" 46+78	SB				22	"STOP"
"CCN1" 46+81	SB				11	"LIMIT LINE"
STAGE 1 PHASE 3, SUBTOTAL		191		2,408	33	
STAGE 1 PHASE 4					31	"AHEAD"
"CCN1" 45+38.47 TO "CCN1" 64+93.34	℄	1,955				
"CCN1" 45+30.72 TO "CCN1" 64+93.34	NB			1,963	110	"STOP"
"CCN1" 45+40.51 TO "CCN1" 64+39.05	SB			1,910	68	"LIMIT LINE"
STAGE 1 PHASE 4, SUBTOTAL		1,955		3,873	209	
STAGE 1 PHASE 5					44	"STOP"
"CCN1" 21+12 TO "CCN1" 39+70.45	℄	1,860			31	"AHEAD"
"CCN1" 47+83.56 TO "CCN1" 63+38.94	℄	1,556				
"CCN1" 21+92 TO "CCN1" 39+65.73	NB			1,775		
"CCN1" 47+94.87 TO "CCN1" 63+08.18	NB			1,515		
"CCN1" 21+27 TO "CCN1" 39+74.81	SB			1,848		
"CCN1" 47+73.25 TO "CCN1" 63+38.89	SB			1,566		
STAGE 1 PHASE 5, SUBTOTAL		3,416		6,704	75	
STAGE 1 PHASE 6					31	"AHEAD"
"CCN1" 19+36.33 TO "CCN1" 39+40.65	℄	2,005			44	"STOP"
"CCN1" 21+29.97 TO "CCN1" 39+31.60	NB			1,802		
"CCN1" 19+45.75 TO "CCN1" 39+49.71	SB			2,004		
STAGE 1 PHASE 6, SUBTOTAL		2,005		3,806	75	
STAGE 2					62	"AHEAD"
"CCN1" 39+44.22 TO "CCN1" 64+38.46	℄	2,495				
"CCN1" 21+09.28 TO "CCN1" 39+41.80	NB			1,832		
"CCN1" 44+80.67 TO "CCN1" 62+00.00	NB			1,720		
"CCN1" 19+64.32 TO "CCN1" 35+90	SB			1,626		
"CCN1" 46+00 TO "CCN1" 64+38.64	SB			1,839		
"CCN1" 20+10.50 TO "CCN1" 39+44.22	NB		1,934			
"CCN1" 18+81.85TO "CCN1" 39+44.22	SB		1,989			
"CCN1" 34+70	NB				42	TYPE III (L) ARROW
"CCN1" 46+94	NB				33	"STOP" AND "LIMIT LINE"
"LO1" 13+68	EB				33	"STOP" AND "LIMIT LINE"
"LO1" 13+67	EB				42	"STOP" AND "LIMIT LINE"
"CCN1" 48+04	NB				44	"STOP" AND "LIMIT LINE"
STAGE 2, SUBTOTAL		2,495	3,923	7,017	256	
STAGE 3					44	"STOP"
"CCN1" 39+00.17 TO "CCN1" 49+56.32	℄	1,057				
"CCN1" 33+44.62 TO "CCN1" 49+56.01	NB			1,011		
"CCN1" 33+80.00 TO "CCN1" 49+56.62	SB			1,577		
"CCN1" 33+13.61 TO "CCN1" 39+00.17	NB		587			
"CCN1" 33+79.45 TO "CCN1" 39+00.17	SB		521			
STAGE 3, SUBTOTAL		1,057	1,108	2,588	44	
SUBTOTAL		11,119	5,031	26,398	692	
SUBTOTAL		16,150		26,398		
TOTAL		42,548			692	

TEMPORARY RAILING (TYPE K)

LOCATION	LINE	STATION	LF
STAGE 1 PHASE 3	CCN1	46+83 TO 61+63	1,480
STAGE 2	CCN1	39+40 TO 45+80	540
STAGE 3	CCN1	39+00 TO 45+00	600
TOTAL			2,620

ALTERNATIVE TEMPORARY CRASH CUSHION

LOCATION	LINE	STATION	EA
STAGE 1 PHASE 3	CCN1	46+83 TO 61+63	2
STAGE 2	CCN1	39+00 TO 45+00	2
STAGE 2	CCN1	39+40 TO 44+80	2
STAGE 3	CCN1	39+00 TO 45+00	2
TOTAL			8

TRAFFIC PLASTIC DRUM

LOCATION	LINE	STATION	EA
STAGE 1 PHASE 5	CCN1	21+50 TO 39+63	76
DRIVEWAYS	CCN1		61
STAGE 1 PHASE 6	CCN1	19+45 TO 39+40	80
DRIVEWAYS	CCN1		28
STAGE 2	CCN1	33+10 TO 35+40	10
TOTAL			255

TEMPORARY PAVEMENT (N)

LOCATION	LINE	STATION BEGIN	STATION END	SQYD
STAGE 1 PHASE 3	CCN1	45+32	46+15	
STAGE 1 PHASE 3	CCN1	57+25	59+25	67
STAGE 1 PHASE 3	CCN1	60+83	63+25	268
TOTAL				335

STAGE CONSTRUCTION QUANTITIES

SCQ-1

STATE OF CALIFORNIA - DEPARTMENT OF TRANSPORTATION
Caltrans
DESIGN
FUNCTIONAL SUPERVISOR NESAR FORMOLI
CALCULATED-DESIGNED BY KAMAL CHONKIA
CHECKED BY KEVIN CANFIELD
REVISED BY
DATE REVISED

LAST REVISION 00-00-00
DATE PLOTTED => 08-JUL-2016
TIME PLOTTED => 16:19

Dist	COUNTY	ROUTE	POST MILES TOTAL PROJECT	SHEET No.	TOTAL SHEETS
03	ED	49	23.6/24.5	81	202

REGISTERED CIVIL ENGINEER 5-9-16 DATE

5-9-16
PLANS APPROVAL DATE

REGISTERED PROFESSIONAL ENGINEER RONALD W. TOLLISON No. 67389 Exp. 12/31/16 CIVIL STATE OF CALIFORNIA

THE STATE OF CALIFORNIA OR ITS OFFICERS OR AGENTS SHALL NOT BE RESPONSIBLE FOR THE ACCURACY OR COMPLETENESS OF SCANNED COPIES OF THIS PLAN SHEET.

REMOVE PAVEMENT DELINEATION

ALIGNMENT / STATION	LOCATION	REMOVE PAINTED TRAFFIC STRIPE (WATER BLASTING)		REMOVE THERMOPLASTIC TRAFFIC STRIPE (WATER BLASTING)			REMOVE PAINTED PAVEMENT MARKING (WATER BLASTING)	DESCRIPTION
		YELLOW STRIPE	WHITE STRIPE	YELLOW STRIPE		WHITE STRIPE		
		21	27B	22	32	27B		
		LF	LF	LF	LF	LF	SQFT	
STAGE 1 PHASE 3								
"CCN1" 44+91 TO "CCN1" 63+93	℄			3,805				
"CCN1" 61+50 TO "CCN1" 64+93	NB					344		
"CCN1" 44+91 TO "CCN1" 64+50	SB					1,959		
STAGE 1 PHASE 3, SUBTOTAL				3,805		2,303		
STAGE 1 PHASE 4								
"CCN1" 61+63 TO "CCN1" 64+93	NB		330					
"CCN1" 46+83 TO "CCN1" 44+79	NB		204					
"CCN1" 45+41 TO "CCN1" 46+96	SB					156		
STAGE 1 PHASE 4, SUBTOTAL			534			156		
STAGE 1 PHASE 5								
"CCN1" 19+10 TO "CCN1" 21+50	NB				241			
"CCN1" 19+10 TO "CCN1" 21+50	NB				61			
"CCN1" 17+79 TO "CCN1" 29+00	SB				1,121		22	STOP
"CCN1" 17+79 TO "CCN1" 29+00	SB				281		31	AHEAD
"CCN1" 19+10 TO "CCN1" 21+50	NB					241		
"CCN1" 38+00 TO "CCN1" 39+66	NB					166		
"CCN1" 18+26 TO "CCN1" 39+75	SB					2,149		
"CCN1" 34+72 TO "CCN1" 35+43	NB					71		
"CCN1" 29+00 TO "CCN1" 34+12	℄			2050				
"CCN1" 34+72 TO "CCN1" 39+70	℄			997				
"CCN1" 47+95 TO "CCN1" 63+39	℄	3,090						
"CCN1" 47+95 TO "CCN1" 63+08	NB		1,514					
"CCN1" 47+73 TO "CCN1" 63+39	SB		1,566					
STAGE 1 PHASE 5, SUBTOTAL		3,090	3,080	3,047	1,704	2,627	53	
STAGE 1 PHASE 6								
"CCN1" 18+61 TO "CCN1" 21+50	℄	578						
"CCN1" 36+25 TO "CCN1" 39+41	℄	632						
"CCN1" 18+71 TO "CCN1" 21+50	SB		279					
"CCN1" 36+25 TO "CCN1" 39+50	SB		325				31	AHEAD
"CCN1" 36+25 TO "CCN1" 39+32	NB		307				22	STOP
STAGE 1 PHASE 6, SUBTOTAL		1,210	911				53	
STAGE 2								
"CCN1" 19+55 TO "CCN1" 38+50	℄	3,790						
"CCN1" 20+10 TO "CCN1" 39+32	NB		1,922					
"CCN1" 19+64 TO "CCN1" 37+50	SB		1,786				33	STOP AND LIMIT LINE
"CCN1" 45+38 TO "CCN1" 48+08	℄	540					33	STOP AND LIMIT LINE
"CCN1" 45+31 TO "CCN1" 48+08	NB		278				42	STOP AND LIMIT LINE
"CCN1" 45+41 TO "CCN1" 48+09	SB		268				44	STOP AND LIMIT LINE
STAGE 2, SUBTOTAL		4,330	4,254				152	
SUBTOTAL THIS SHEET		8,630	8,779	6,852	1,704	5,086	258	

STAGE CONSTRUCTION QUANTITIES

SCQ-2

STATE OF CALIFORNIA - DEPARTMENT OF TRANSPORTATION
Caltrans
DESIGN

FUNCTIONAL SUPERVISOR: NESAR FORMOLI
CALCULATED-DESIGNED BY: KAMAL CHONKRIA
CHECKED BY: ANHBANG TONTHAT
REVISED BY
DATE REVISED

LAST REVISION 00-00-00
DATE PLOTTED => 08-JUL-2016
TIME PLOTTED => 16:19

Dist	COUNTY	ROUTE	POST MILES TOTAL PROJECT	SHEET No.	TOTAL SHEETS
03	ED	49	23.6/24.5	82	202

Ron Tollison 5-9-16
REGISTERED CIVIL ENGINEER DATE

5-9-16
PLANS APPROVAL DATE

REGISTERED PROFESSIONAL ENGINEER
RONALD W. TOLLISON
No. 67389
Exp. 12/31/16
CIVIL
STATE OF CALIFORNIA

THE STATE OF CALIFORNIA OR ITS OFFICERS OR AGENTS SHALL NOT BE RESPONSIBLE FOR THE ACCURACY OR COMPLETENESS OF SCANNED COPIES OF THIS PLAN SHEET.

REMOVE PAVEMENT DELINEATION

ALIGNMENT / STATION	LOCATION	REMOVE PAINTED TRAFFIC STRIPE (WATER BLASTING)		REMOVE THERMOPLASTIC TRAFFIC STRIPE (WATER BLASTING)			REMOVE PAINTED PAVEMENT MARKING (WATER BLASTING)	DESCRIPTION
		YELLOW STRIPE	WHITE STRIPE	YELLOW STRIPE		WHITE STRIPE		
		21	27B	22	32	27B		
		LF	LF	LF	LF	LF	SQFT	
STAGE 3								
"CCN1" 33+44 TO "CCN1" 49+56	SB		1,612					
"CCN1" 33+80 TO "CCN1" 49+56	NB		1,576					
"CCN1" 33+13 TO "CCN1" 39+44	℄	1,262						
"CCN1" 33+79 TO "CCN1" 39+44	℄	1,130						
"CCN1" 39+44 TO "CCN1" 49+56	℄	2,024						
"CCN1" 38+10 TO "CCN1" 38+60	NB						31	AHEAD
"CCN1" 38+10 TO "CCN1" 38+60	NB						22	STOP
"CCN1" 34+70	NB						42	TYPE III (L) ARROW
"CCN1" 46+94	NB						33	STOP AND LIMIT LINE
"LO1" 13+68	EB						33	STOP AND LIMIT LINE
"LO1" 13+67	EB						42	STOP AND LIMIT LINE
"CCN1" 48+04	NB						44	STOP AND LIMIT LINE
STAGE 3, SUBTOTAL		4,416	3,188				247	
SUBTOTAL "SCQ-2" SHEET		8,630	8,779	6,852	1,704	5,086	258	
SUBTOTAL		13,046	11,967	6,852	1,704	5,086	505	
TOTAL		25,013		13,642			505	

TYPE III BARRICADE

LOCATION	LINE	STATION	EA
STAGE 1 PHASE 3	CCN1	61+90	4
STAGE 1 PHASE 4	CCN1	48+00 TO 61+50	8
STAGE 1 PHASE 5	CCN1	39+50	7
STAGE 1 PHASE 6	CCN1	22+16 TO 36+25	25
STAGE 2	CCN1	35+90 TO 39+60	12
TOTAL			56

TEMPORARY FENCE (TYPE CL-6)

STATIONS	L†/R†	STAGE 1 PHASE 2	STAGE 2	12' GATE
		LF	LF	
"CCN1" 38+00 TO "CCN1" 39+83	L†	279		
"CCN1" 39+76 TO "CCN1" 41+30	R†	187		1
"CCN1" 43+56 TO "CCN1" 44+43	L†	87		
"CCN1" 43+98 TO "CCN1" 45+65	R†	171		
"CCN1" 44+40 TO "CCN1" 45+61	R†		120	
SUBTOTAL		724	120	
TOTAL		844		1

TEMPORARY FENCE (TYPE ESA)

STATION	L†/R†	LF
"CCN1" 39+24 TO "CCN1" 40+67	L†	143
"CCN1" 40+08 TO "CCN1" 42+25	R†	256
"CCN1" 43+52 TO "CCN1" 44+33	L†	82
"CCN1" 44+14 TO "CCN1" 45+42	R†	150
"CCN1" 58+33 TO "CCN1" 60+68	L†	328
"CCN1" 55+62 TO "CCN1" 58+66	R†	298
TOTAL		1,257

ADDITIONAL STATIONARY MOUNTED CONSTRUCTION AREA SIGNS

SIGN LETTER	SIGN CODE	PANEL SIZE	SIGN MESSAGE	NUMBER OF POST AND SIZE	NUMBER OF SIGNS
G	C12<CA>	48" x 48"	NARROW LANES	1 - 6" x 6"	10
H	W1-3R W13-1(30)	36" x 36" 30" x 30"	REVERSE CURVE (SYMBOL) 30 MPH	1 - 6" x 6"	1
I	W1-3L W13-1(25)	36" x 36" 30" x 30"	REVERSE CURVE(SYMBOL) 25 MPH	1 - 6" x 6"	2
J	W1-3L W13-1(25)	36" x 36" 30" x 30"	REVERSE CURVE(SYMBOL) 35 MPH	1 - 6" x 6"	2
K	W4-1(R†,10)<CA>	72" x 72"	COMBINATION TURN (SYMBOL) 10 MPH	2 - 6" x 6"	1
L	W1-3L W13-1(10)	72" x 72"	COMBINATION TURN (SYMBOL) 10 MPH	2 - 6" x 6"	1

STAGE CONSTRUCTION QUANTITIES

SCQ-3

STATE OF CALIFORNIA - DEPARTMENT OF TRANSPORTATION
Caltrans®
DESIGN

FUNCTIONAL SUPERVISOR: NESAR FORMOLI
CALCULATED-DESIGNED BY: KAMAL CHONKRIA
CHECKED BY: ANHBANG TONTHAT
REVISED BY
DATE REVISED

LAST REVISION 00-00-00
DATE PLOTTED => 08-JUL-2016
TIME PLOTTED => 16:19

Dist	COUNTY	ROUTE	POST MILES TOTAL PROJECT	SHEET No.	TOTAL SHEETS
03	ED	49	23.6/24.5	83	202

REGISTERED CIVIL ENGINEER 5-9-16 DATE

5-9-16
PLANS APPROVAL DATE

REGISTERED PROFESSIONAL ENGINEER ALEX WIN WU No. C77266 Exp. 6-30-17 CIVIL STATE OF CALIFORNIA

THE STATE OF CALIFORNIA OR ITS OFFICERS OR AGENTS SHALL NOT BE RESPONSIBLE FOR THE ACCURACY OR COMPLETENESS OF SCANNED COPIES OF THIS PLAN SHEET.

LEGEND

No./T	PAVEMENT DELINEATION DETAIL NUMBER T=PERMANENT TAPE TRAFFIC STRIPE
LL	LIMIT LINE
BL	"BIKE LANE" PAVEMENT MARKING PACKAGE (SEE NOTE 2)
s=	DELINEATOR SPACING
K	OBJECT MARKER (TYPE K-1)
L	OBJECT MARKER (TYPE L-1)
	TYPE III ARROW
S	"STOP" PAVEMENT MARKING
A	"AHEAD" PAVEMENT MARKING
Sht-No.	ROADSIDE SIGN NUMBER
<CA>	CALIFORNIA SIGN CODE
■	REMOVE ROADSIDE SIGN
*	RELOCATE ROADSIDE SIGN
▲	RESET ROADSIDE SIGN

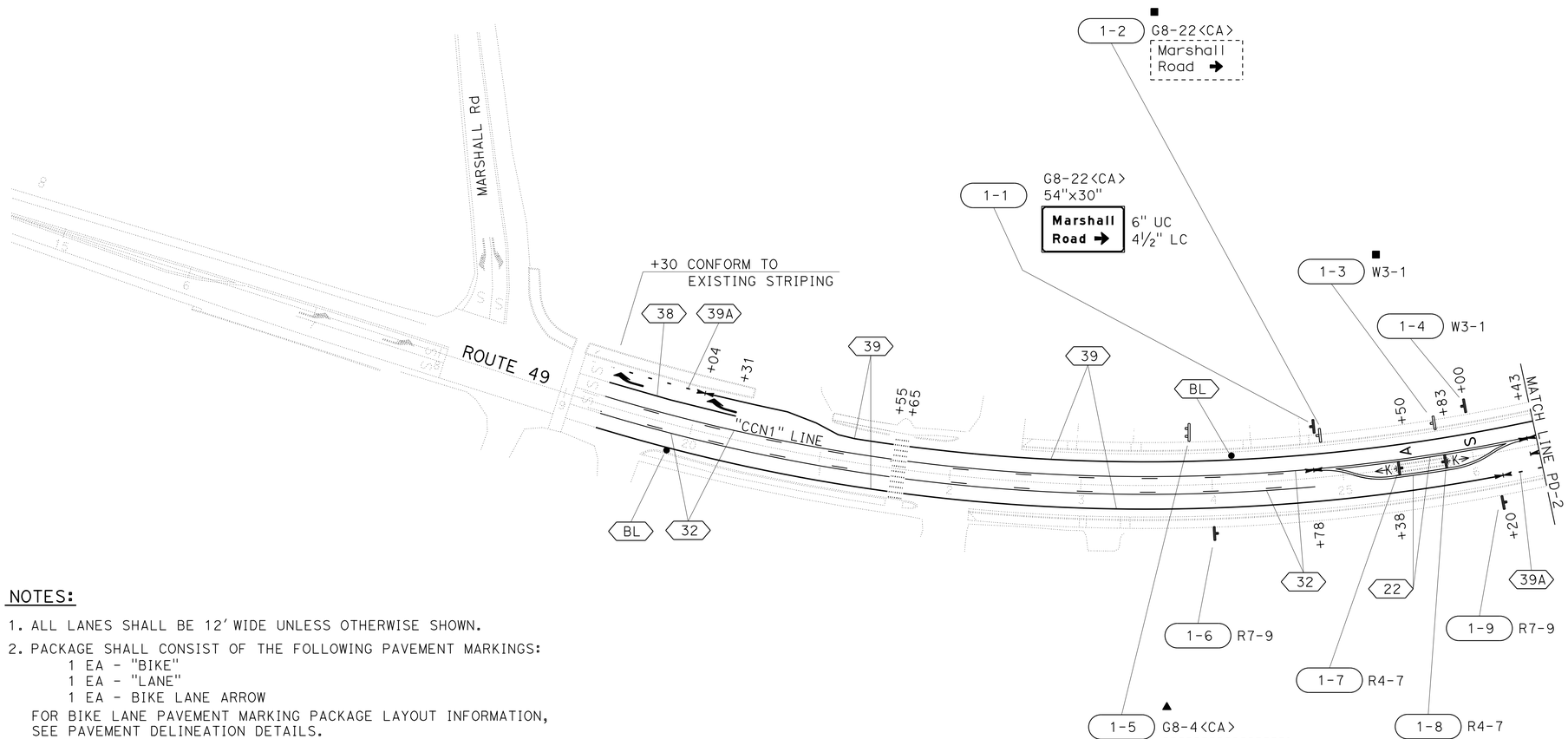

NOTES:

1. ALL LANES SHALL BE 12' WIDE UNLESS OTHERWISE SHOWN.
2. PACKAGE SHALL CONSIST OF THE FOLLOWING PAVEMENT MARKINGS:
   1 EA - "BIKE"
   1 EA - "LANE"
   1 EA - BIKE LANE ARROW
   FOR BIKE LANE PAVEMENT MARKING PACKAGE LAYOUT INFORMATION, SEE PAVEMENT DELINEATION DETAILS.
3. ALL DELINEATORS SHALL BE TYPE E.
4. ALL EXISTING SIGNS NOT SHOWN FOR REMOVAL, RELOCATION OR RESETTING SHALL REMAIN IN PLACE.
5. ALL SIGN CODES SHOWN ARE FEDERAL SIGN CODES UNLESS OTHERWISE DESIGNATED AS CALIFORNIA SIGN CODES.

PAVEMENT DELINEATION AND SIGN PLAN

SCALE: 1"=50'

PD-1

APPROVED FOR PAVEMENT DELINEATION AND SIGN WORK ONLY

STATE OF CALIFORNIA - DEPARTMENT OF TRANSPORTATION
Caltrans
TRAFFIC

FUNCTIONAL SUPERVISOR: JOYCE LOFTUS
CALCULATED-DESIGNED BY: CHUCK COOK
CHECKED BY: ALEX WU
REVISED BY
DATE REVISED

LAST REVISION 06-21-16
DATE PLOTTED => 08-JUL-2016
TIME PLOTTED => 16:19

Dist	COUNTY	ROUTE	POST MILES TOTAL PROJECT	SHEET No.	TOTAL SHEETS
03	ED	49	23.6/24.5	84	202

REGISTERED CIVIL ENGINEER 5-9-16 DATE

5-9-16
PLANS APPROVAL DATE

REGISTERED PROFESSIONAL ENGINEER
ALEX WIN WU
No. C77266
Exp. 6-30-17
CIVIL
STATE OF CALIFORNIA

THE STATE OF CALIFORNIA OR ITS OFFICERS OR AGENTS SHALL NOT BE RESPONSIBLE FOR THE ACCURACY OR COMPLETENESS OF SCANNED COPIES OF THIS PLAN SHEET.

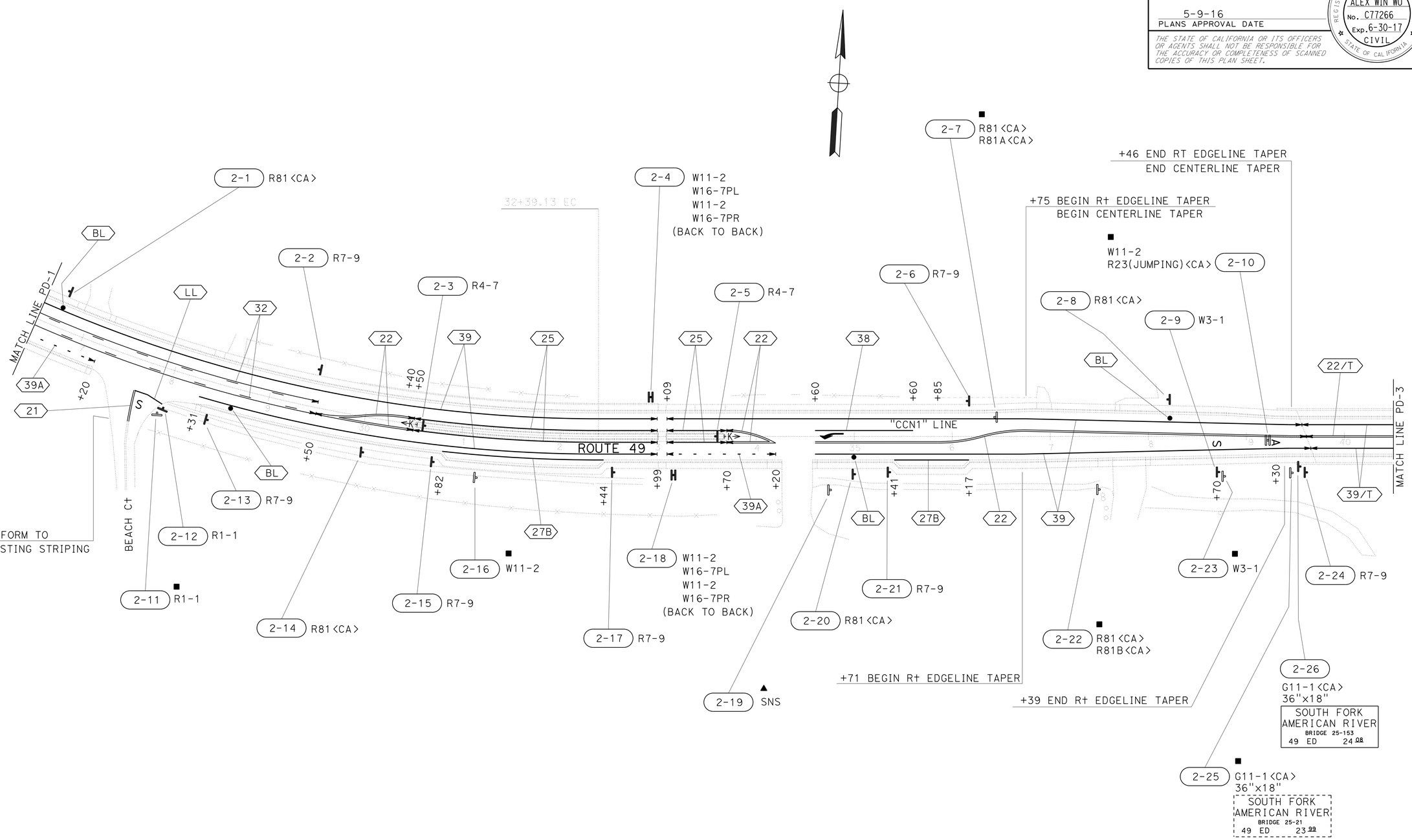

PAVEMENT DELINEATION AND SIGN PLAN

SCALE: 1"=50'

PD-2

APPROVED FOR PAVEMENT DELINEATION AND SIGN WORK ONLY

STATE OF CALIFORNIA - DEPARTMENT OF TRANSPORTATION
Caltrans
TRAFFIC

FUNCTIONAL SUPERVISOR: JOYCE LOFTUS
CALCULATED-DESIGNED BY: CHUCK COOK
CHECKED BY: ALEX WU
REVISED BY
DATE REVISED

LAST REVISION 06-21-16
DATE PLOTTED => 08-JUL-2016
TIME PLOTTED => 16:20

Dist	COUNTY	ROUTE	POST MILES TOTAL PROJECT	SHEET No.	TOTAL SHEETS
03	ED	49	23.6/24.5	85	202

REGISTERED CIVIL ENGINEER 5-9-16 DATE

5-9-16
PLANS APPROVAL DATE

REGISTERED PROFESSIONAL ENGINEER
ALEX WIN WU
No. C77266
Exp. 6-30-17
CIVIL
STATE OF CALIFORNIA

THE STATE OF CALIFORNIA OR ITS OFFICERS OR AGENTS SHALL NOT BE RESPONSIBLE FOR THE ACCURACY OR COMPLETENESS OF SCANNED COPIES OF THIS PLAN SHEET.

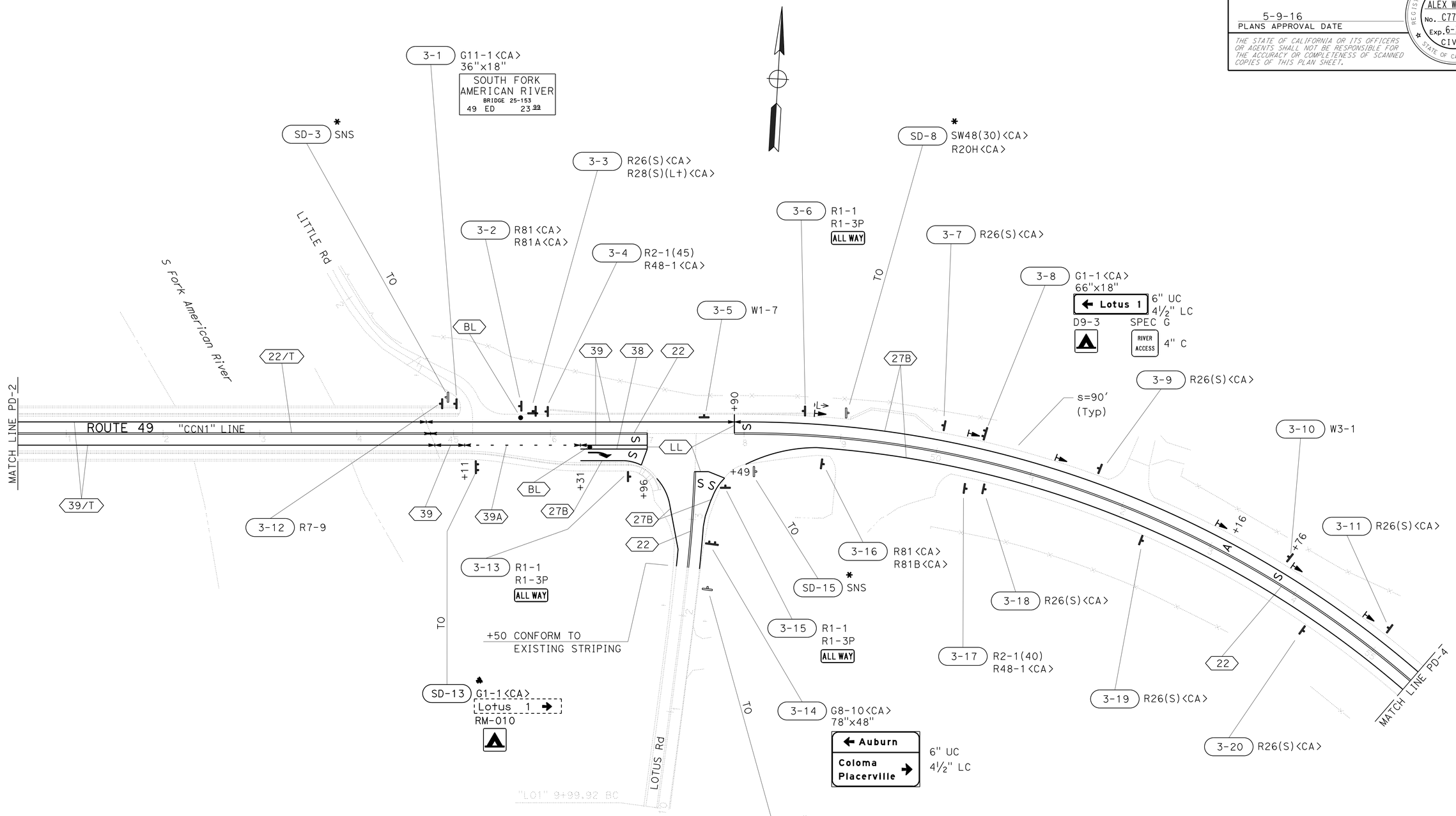

NOTE:

SEE SHEET SD-3 FOR EXISTING SIGNS TO BE REMOVED AND RELOCATED ON THIS SHEET.

PAVEMENT DELINEATION AND SIGN PLAN

SCALE: 1"=50'

PD-3

APPROVED FOR PAVEMENT DELINEATION AND SIGN WORK ONLY

STATE OF CALIFORNIA - DEPARTMENT OF TRANSPORTATION
Caltrans®
TRAFFIC
FUNCTIONAL SUPERVISOR: JOYCE LOFTUS
CALCULATED-DESIGNED BY: ALEX WU
CHECKED BY: CHUCK COOK
REVISED BY
DATE REVISED

LAST REVISION 06-21-16
DATE PLOTTED => 08-JUL-2016
TIME PLOTTED => 16:20

Dist	COUNTY	ROUTE	POST MILES TOTAL PROJECT	SHEET No.	TOTAL SHEETS
03	ED	49	23.6/24.5	86	202

REGISTERED CIVIL ENGINEER 5-9-16 DATE

5-9-16
PLANS APPROVAL DATE

REGISTERED PROFESSIONAL ENGINEER
ALEX WIN WU
No. C77266
Exp. 6-30-17
CIVIL
STATE OF CALIFORNIA

THE STATE OF CALIFORNIA OR ITS OFFICERS OR AGENTS SHALL NOT BE RESPONSIBLE FOR THE ACCURACY OR COMPLETENESS OF SCANNED COPIES OF THIS PLAN SHEET.

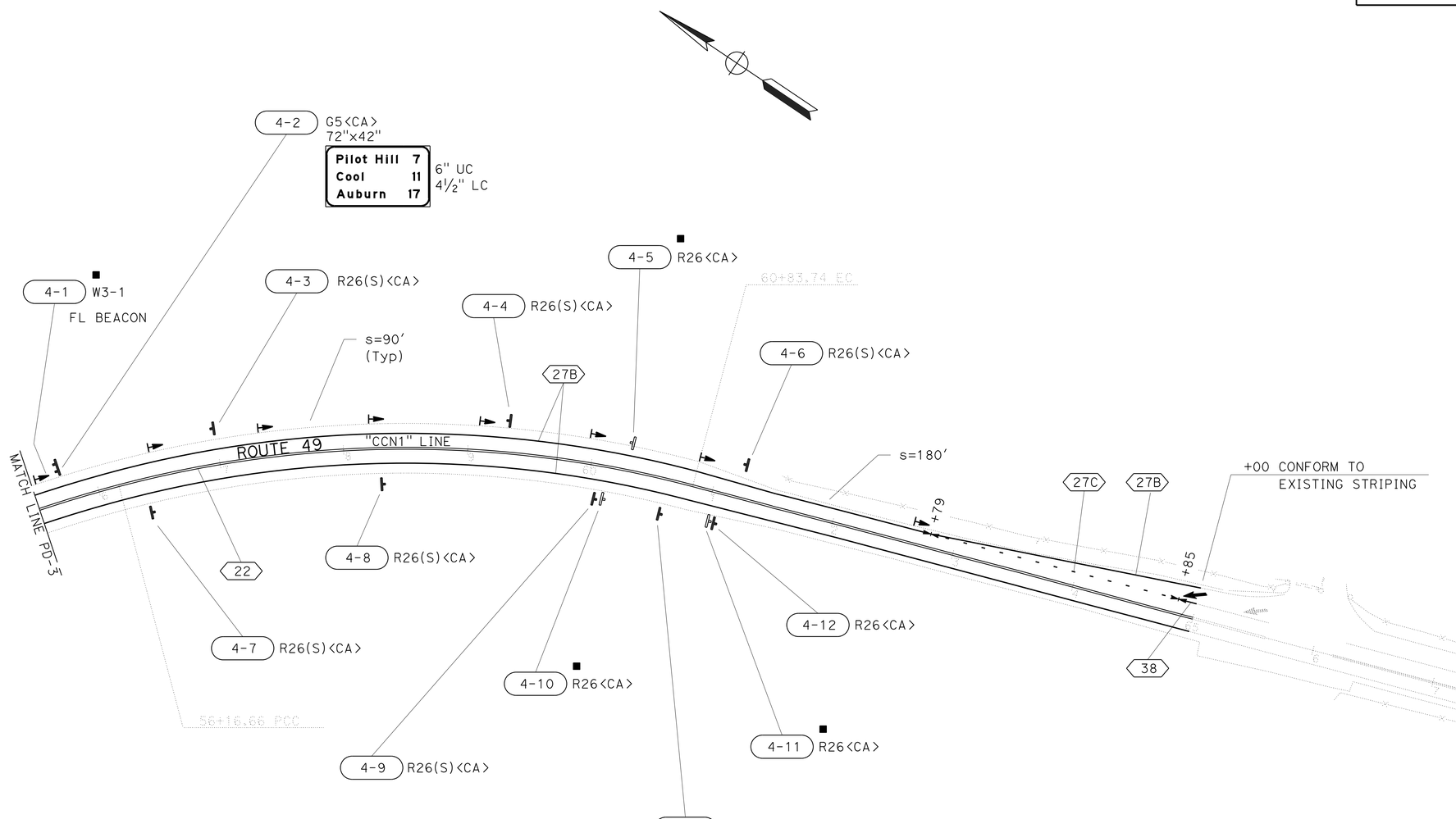

PAVEMENT DELINEATION AND SIGN PLAN

SCALE: 1"=50'

PD-4

APPROVED FOR PAVEMENT DELINEATION AND SIGN WORK ONLY

STATE OF CALIFORNIA - DEPARTMENT OF TRANSPORTATION
Caltrans
TRAFFIC

FUNCTIONAL SUPERVISOR: JOYCE LOFTUS
CALCULATED-DESIGNED BY: ALEX WU
CHECKED BY: CHUCK COOK
REVISED BY
DATE REVISED

LAST REVISION 06-21-16
DATE PLOTTED => 08-JUL-2016
TIME PLOTTED => 16:20

Dist	COUNTY	ROUTE	POST MILES TOTAL PROJECT	SHEET No.	TOTAL SHEETS
03	ED	49	23.6/24.5	87	202

REGISTERED CIVIL ENGINEER 5-9-16 DATE

5-9-16
PLANS APPROVAL DATE

REGISTERED PROFESSIONAL ENGINEER
ALEX WIN WU
No. C77266
Exp. 6-30-17
CIVIL
STATE OF CALIFORNIA

THE STATE OF CALIFORNIA OR ITS OFFICERS OR AGENTS SHALL NOT BE RESPONSIBLE FOR THE ACCURACY OR COMPLETENESS OF SCANNED COPIES OF THIS PLAN SHEET.

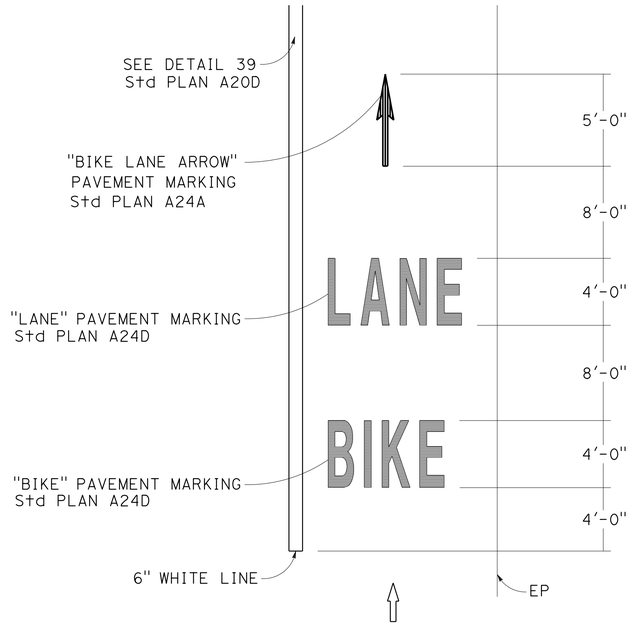

BIKE LANE PAVEMENT MARKING PACKAGE DETAIL A

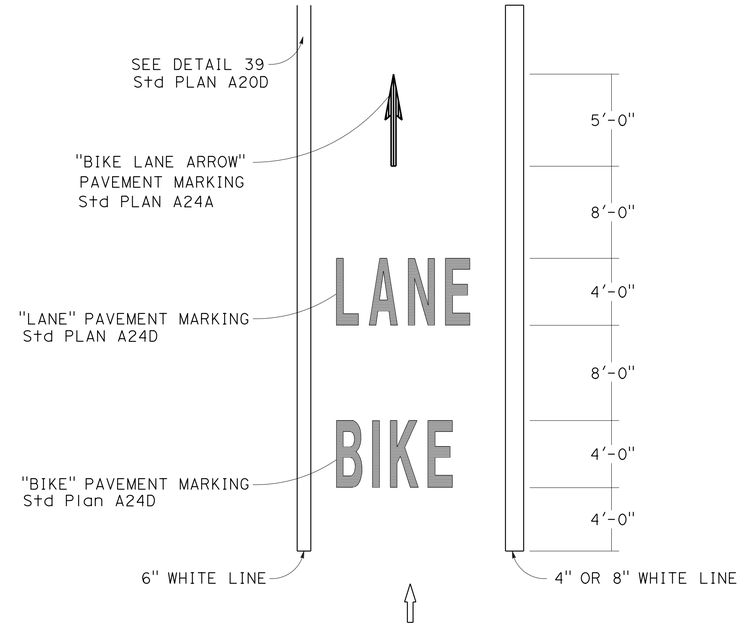

BIKE LANE PAVEMENT MARKING PACKAGE DETAIL B

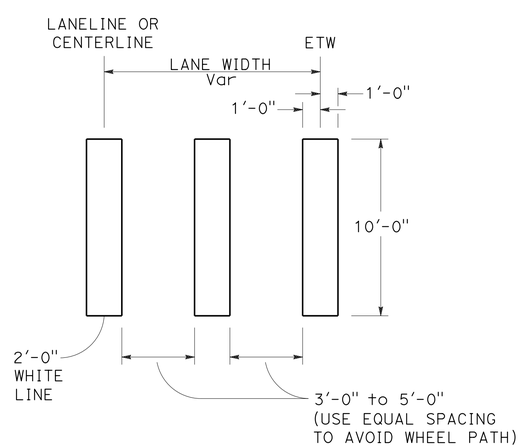

CONTINENTAL CROSSWALK DETAIL

NOTES:

1. CROSSWALK MARKINGS SHALL BE INSTALLED PARALLEL TO THE ROADWAY CENTERLINE.
2. ALL STRIPING PATTERNS SHALL STOP 1'-0" FROM THE CROSSWALK (TYPICAL).
3. WHEN REQUIRED, THE LIMIT LINE SHALL BE INSTALLED 4'-0" IN ADVANCE OF THE CROSSWALK.

PAVEMENT DELINEATION DETAILS

NO SCALE

PDD-1

APPROVED FOR PAVEMENT DELINEATION WORK ONLY

STATE OF CALIFORNIA - DEPARTMENT OF TRANSPORTATION
Caltrans
TRAFFIC

FUNCTIONAL SUPERVISOR: JOYCE LOFTUS
CALCULATED-DESIGNED BY: ALEX WU
CHECKED BY: CHUCK COOK
REVISED BY
DATE REVISED

LAST REVISION 06-21-16
DATE PLOTTED => 08-JUL-2016
TIME PLOTTED => 16:20

Dist	COUNTY	ROUTE	POST MILES TOTAL PROJECT	SHEET No.	TOTAL SHEETS
03	ED	49	23.6/24.5	88	202

REGISTERED CIVIL ENGINEER 5-9-16 DATE

5-9-16
PLANS APPROVAL DATE

REGISTERED PROFESSIONAL ENGINEER
ALEX WIN WU
No. C77266
Exp. 6-30-17
CIVIL
STATE OF CALIFORNIA

THE STATE OF CALIFORNIA OR ITS OFFICERS OR AGENTS SHALL NOT BE RESPONSIBLE FOR THE ACCURACY OR COMPLETENESS OF SCANNED COPIES OF THIS PLAN SHEET.

ABBREVIATION

EWNV ENHANCED WET NIGHT VISIBILITY

4" THERMOPLASTIC TRAFFIC STRIPE (EWNV)

DETAIL NUMBER	LF
21	64
22	6360
25	620
27B	1207
27C	206
32	1744
TOTAL	10,201

6" THERMOPLASTIC TRAFFIC STRIPE (EWNV)

DETAIL NUMBER	LF
39	6724
TOTAL	6724

8" THERMOPLASTIC TRAFFIC STRIPE (EWNV)

DETAIL NUMBER	LF
38	327
TOTAL	327

6" THERMOPLASTIC TRAFFIC STRIPE (EWNV)(BROKEN 8-4)

DETAIL NUMBER	LF
39A	405
TOTAL	405

THERMOPLASTIC PAVEMENT MARKING (EWNV)

DESCRIPTION	SQFT
TYPE III ARROW	124
STOP	378
AHEAD	99
"BIKE"	168
"LANE"	192
BIKE LANE ARROW	56
LIMIT LINE	120
CONTINENTAL CROSSWALK	240
TOTAL	1377

4" THERMOPLASTIC TRAFFIC STRIPE (EWNV)(BROKEN 36-12)

DETAIL NUMBER	LF
32	1744
TOTAL	1744

4" PERMANENT TAPE TRAFFIC STRIPE

DETAIL NUMBER	LF
22	1030
TOTAL	1030

6" PERMANENT TAPE TRAFFIC STRIPE

DETAIL NUMBER	LF
39	1030
TOTAL	1030

OBJECT MARKER - DELINEATOR

SHEET NUMBER	OBJECT MARKER		DELINEATOR (CLASS 1)
	TYPE K-1	TYPE L-1	TYPE E
	EA	EA	EA
PD-1	2		
PD-2	2		
PD-3		1	6
PD-4			8
TOTAL	4	1	14

PAVEMENT MARKER

DETAIL NUMBER	RETROREFLECTIVE		
	TYPE D	TYPE G	TYPE H
	EA	EA	EA
22	266		
22(T)	44		
25			14
32	94		
38		15	
SUBTOTAL	404	15	14
TOTAL	433		

NOTE:

22(T) = DETAIL 22 PERMANENT TAPE TRAFFIC STRIPE.

PAVEMENT DELINEATION QUANTITIES

PDQ-1

STATE OF CALIFORNIA - DEPARTMENT OF TRANSPORTATION
Caltrans
TRAFFIC

FUNCTIONAL SUPERVISOR: JOYCE LOFTUS
CALCULATED-DESIGNED BY: ALEX WU
CHECKED BY: CHUCK COOK
REVISED BY
DATE REVISED

LAST REVISION 06-21-16
DATE PLOTTED => 08-JUL-2016
TIME PLOTTED => 16:20

Dist	COUNTY	ROUTE	POST MILES TOTAL PROJECT	SHEET No.	TOTAL SHEETS
03	ED	49	23.6/24.5	89	202

REGISTERED CIVIL ENGINEER 5-9-16 DATE

5-9-16
PLANS APPROVAL DATE

REGISTERED PROFESSIONAL ENGINEER ALEX WIN WU No. C77266 Exp. 6-30-17 CIVIL STATE OF CALIFORNIA

THE STATE OF CALIFORNIA OR ITS OFFICERS OR AGENTS SHALL NOT BE RESPONSIBLE FOR THE ACCURACY OR COMPLETENESS OF SCANNED COPIES OF THIS PLAN SHEET.

NOTES:

1. THE SIGN POST SHALL HAVE 7/16" DIAMETER PERFORATIONS 1" ON CENTER ON ALL FOUR SIDES FOR THE FULL LENGTH.
2. USE TWO DRIVE RIVETS TO FASTEN ASSEMBLED SIGN AND SIGN POST INTO ANCHOR SLEEVE. INSTALL DRIVE RIVETS INTO THE SIDES FACING TRAFFIC.
3. ALL METAL SIGN POSTS AND ANCHOR SLEEVES SHALL BE GALVANIZED.
4. ALL ANCHOR SLEEVES SHALL BE EMBEDDED IN PCC.
5. BALANCED SINGLE POST INSTALLATIONS OF SINGLE SHEET ALUMINUM PANEL SIGNS REQUIRE BACK BRACES WHEN 2'-10" OR MORE IN LENGTH.
6. WOOD BLOCK SPACERS ARE NOT REQUIRED FOR SIGNS MOUNTED ON METAL POSTS.
7. ATTACH RECTANGULAR SIGN PANEL TO SIGN POST WITH BOLTS AT TOP AND BOTTOM. CENTER MAY BE ATTACHED WITH EITHER BOLT OR 3/8" DRIVE RIVET.
8. ATTACH DIAMOND SIGN PANEL TO SIGN POST WITH BOLT AT CENTER. TOP AND BOTTOM MAY BE ATTACHED WITH EITHER BOLTS OR 3/8" DRIVE RIVETS.
9. FOR DETAILS NOT SHOWN, SEE STANDARD PLANS RS1 AND RS2.

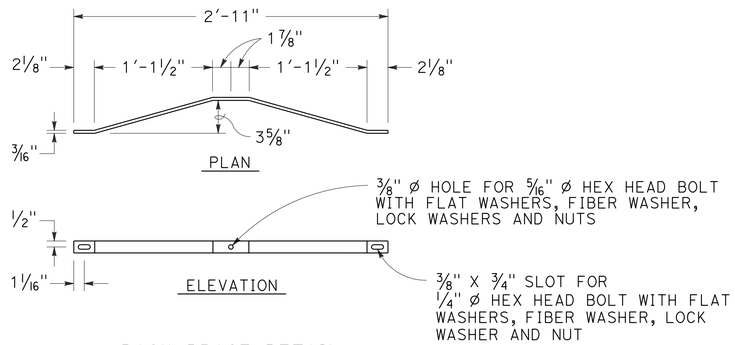

BACK BRACE DETAIL
SEE NOTE 5

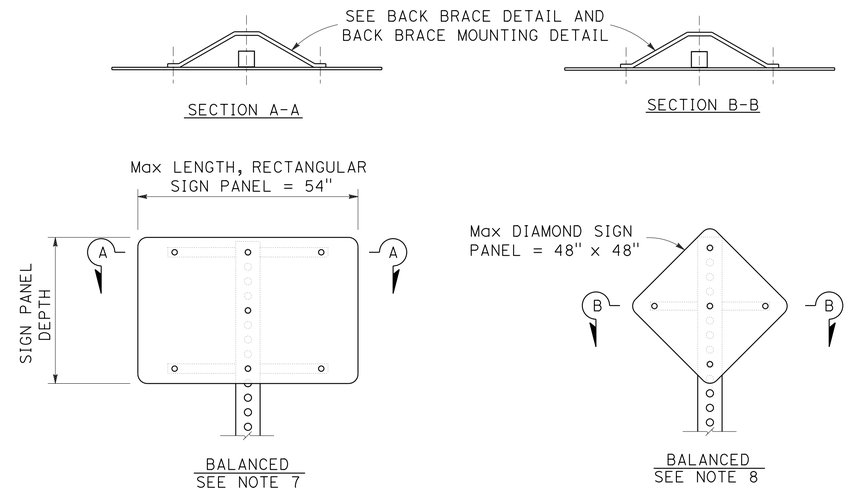

SINGLE POST INSTALLATION

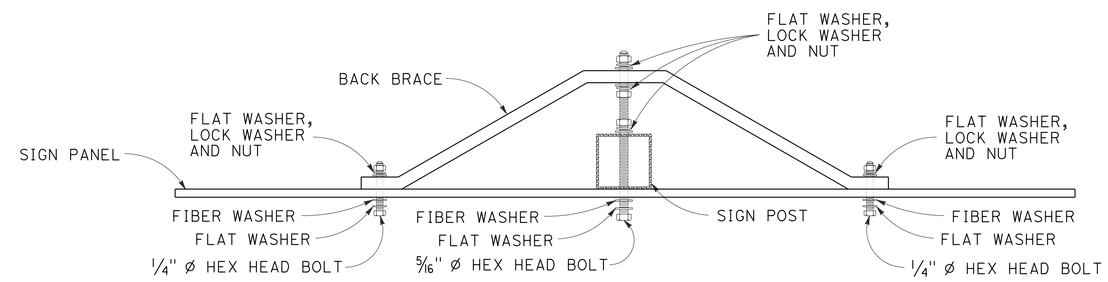

BACK BRACE MOUNTING DETAIL
SEE NOTES 6, 7 AND 8

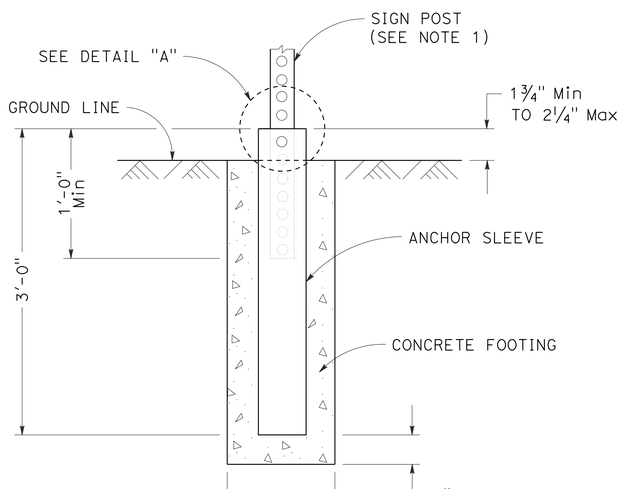

ANCHOR SLEEVE DETAIL

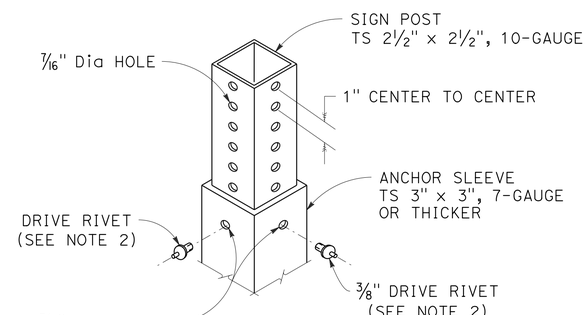

DETAIL "A"

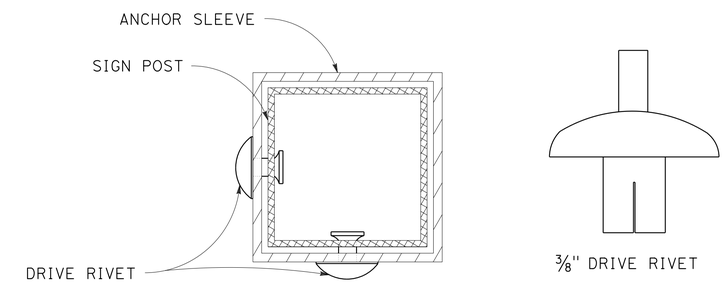

FASTENER DETAIL

APPROVED FOR SIGN WORK ONLY

SIGN DETAILS

NO SCALE

SD-1

STATE OF CALIFORNIA - DEPARTMENT OF TRANSPORTATION
Caltrans® TRAFFIC
FUNCTIONAL SUPERVISOR JOYCE LOFTUS
CALCULATED-DESIGNED BY ALEX WU
CHECKED BY CHUCK COOK
REVISED BY
DATE REVISED

LAST REVISION 06-21-16
DATE PLOTTED => 08-JUL-2016
TIME PLOTTED => 16:20

Dist	COUNTY	ROUTE	POST MILES TOTAL PROJECT	SHEET No.	TOTAL SHEETS
03	ED	49	23.6/24.5	90	202

REGISTERED CIVIL ENGINEER 5-9-16 DATE

5-9-16
PLANS APPROVAL DATE

REGISTERED PROFESSIONAL ENGINEER
ALEX WIN WU
No. C77266
Exp. 6-30-17
CIVIL
STATE OF CALIFORNIA

THE STATE OF CALIFORNIA OR ITS OFFICERS OR AGENTS SHALL NOT BE RESPONSIBLE FOR THE ACCURACY OR COMPLETENESS OF SCANNED COPIES OF THIS PLAN SHEET.

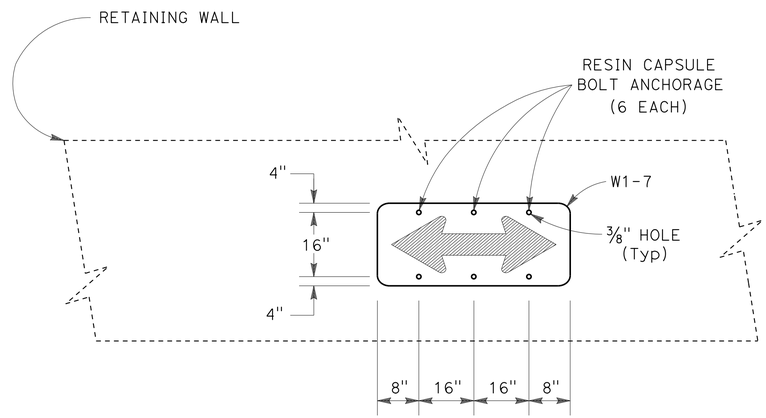

INSTALL ROADSIDE SIGN PANEL ON RETAINING WALL

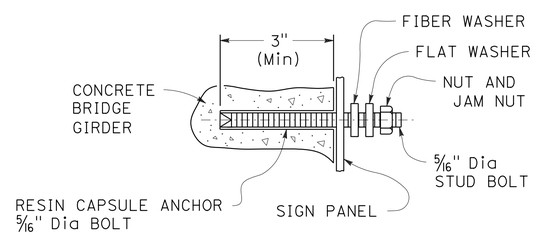

RESIN CAPSULE BOLT ANCHORAGE DETAIL

NOTE:

RESIN CAPSULE ANCHORAGE IS SUBJECT TO APPROVAL BY THE ENGINEER. INSTALLATION PROCEDURES SHALL COMPLY WITH THE MANUFACTURER'S INSTRUCTIONS.

SIGN DETAILS

NO SCALE

SD-2

STATE OF CALIFORNIA - DEPARTMENT OF TRANSPORTATION
Caltrans
TRAFFIC

FUNCTIONAL SUPERVISOR: JOYCE LOFTUS
CALCULATED-DESIGNED BY: CHUCK COOK
CHECKED BY: ALEX WU
REVISED BY
DATE REVISED

LAST REVISION 06-21-16
DATE PLOTTED => 08-JUL-2016
TIME PLOTTED => 16:20

Dist	COUNTY	ROUTE	POST MILES TOTAL PROJECT	SHEET No.	TOTAL SHEETS
03	ED	49	23.6/24.5	91	202

REGISTERED CIVIL ENGINEER 5-9-16 DATE

5-9-16
PLANS APPROVAL DATE

REGISTERED PROFESSIONAL ENGINEER
ALEX WIN WU
No. C77266
Exp. 6-30-17
CIVIL
STATE OF CALIFORNIA

THE STATE OF CALIFORNIA OR ITS OFFICERS OR AGENTS SHALL NOT BE RESPONSIBLE FOR THE ACCURACY OR COMPLETENESS OF SCANNED COPIES OF THIS PLAN SHEET.

LEGEND

Sht-No.	ROADSIDE SIGN NUMBER
<CA>	CALIFORNIA SIGN CODE
■	REMOVE ROADSIDE SIGN
*	RELOCATE ROADSIDE SIGN
▲	RESET ROADSIDE SIGN

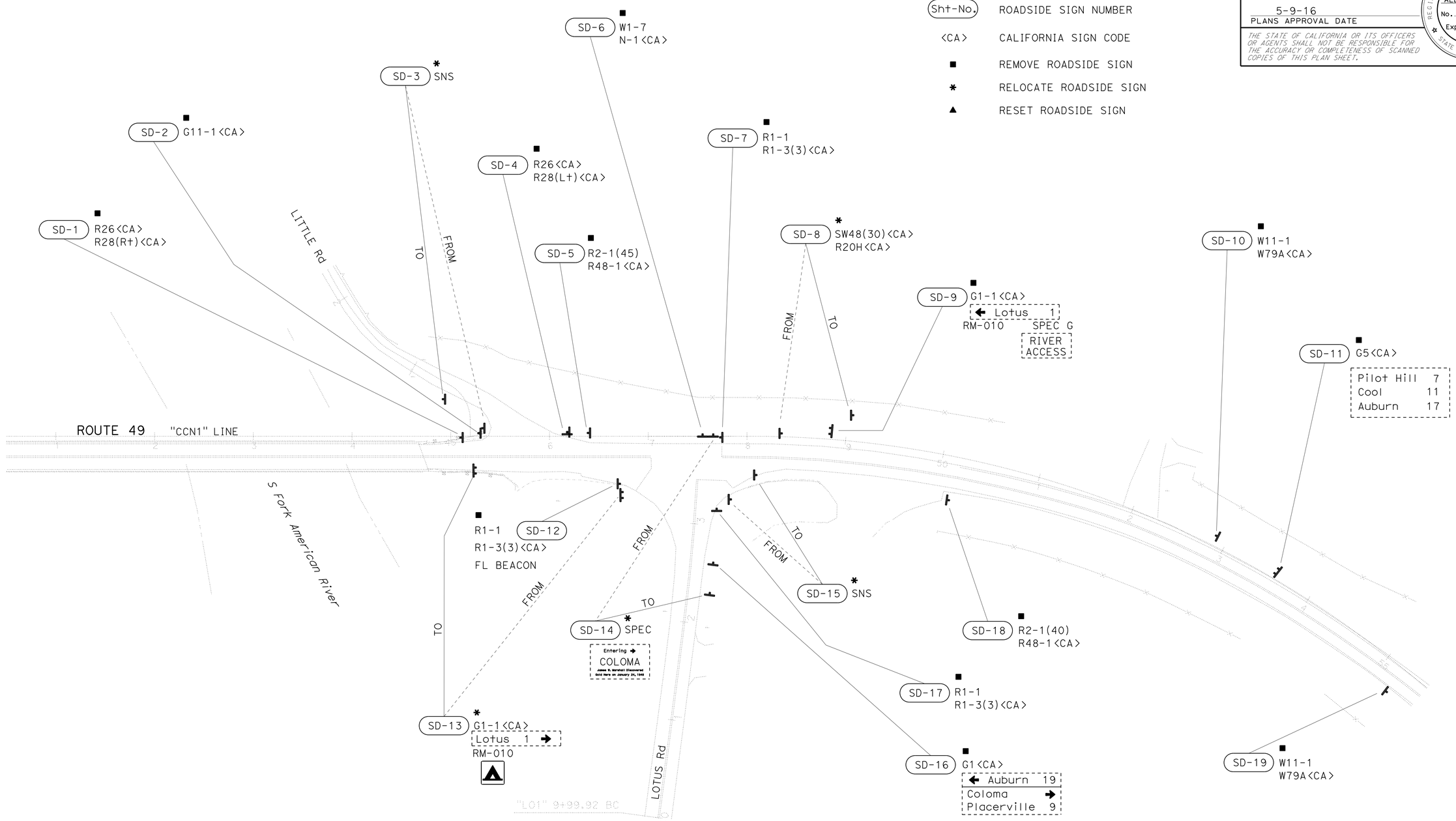

SIGN DETAILS (EXISTING)

SCALE: 1"=50'

SD-3

APPROVED FOR SIGN WORK ONLY

REVISED BY	
DATE REVISED	
CHUCK COOK	ALEX WU
CALCULATED-DESIGNED BY	CHECKED BY
FUNCTIONAL SUPERVISOR	JOYCE LOFTUS

STATE OF CALIFORNIA - DEPARTMENT OF TRANSPORTATION
Caltrans
TRAFFIC

LAST REVISION 06-21-16 | DATE PLOTTED => 08-JUL-2016 | TIME PLOTTED => 16:20

Dist	COUNTY	ROUTE	POST MILES TOTAL PROJECT	SHEET No.	TOTAL SHEETS
03	ED	49	23.6/24.5	92	202

REGISTERED CIVIL ENGINEER 5-9-16 DATE

5-9-16
PLANS APPROVAL DATE

REGISTERED PROFESSIONAL ENGINEER
ALEX WIN WU
No. C77266
Exp. 6-30-17
CIVIL
STATE OF CALIFORNIA

THE STATE OF CALIFORNIA OR ITS OFFICERS OR AGENTS SHALL NOT BE RESPONSIBLE FOR THE ACCURACY OR COMPLETENESS OF SCANNED COPIES OF THIS PLAN SHEET.

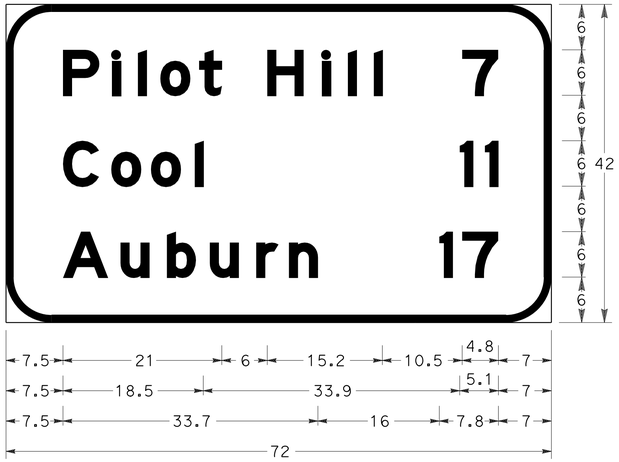

1" BORDER WITH 6" RADIUS
"Pilot Hill" E Mod; "7" E Mod
"Cool" E Mod; "11" E Mod
"Auburn" E Mod; "17" E Mod

G5<CA>

4-2

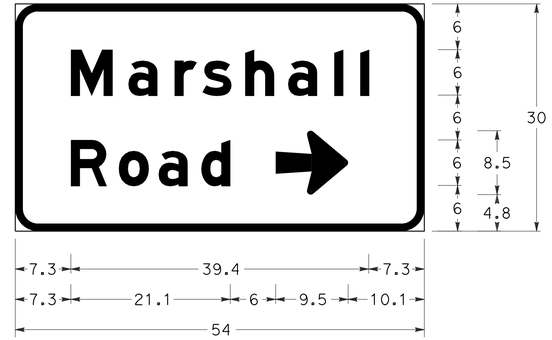

1" BORDER WITH 3" RADIUS
"Marshall" E Mod
"Road" E Mod
ARROW - 6" UC-1 LINE - 9.6" 0°

G8-22<CA>

1-1

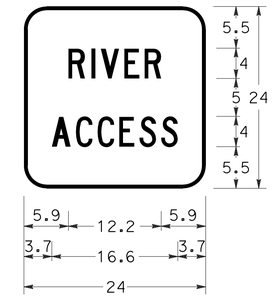

½" BORDER WITH 3" RADIUS
"RIVER" C
"ACCESS" C

SPEC G

3-8

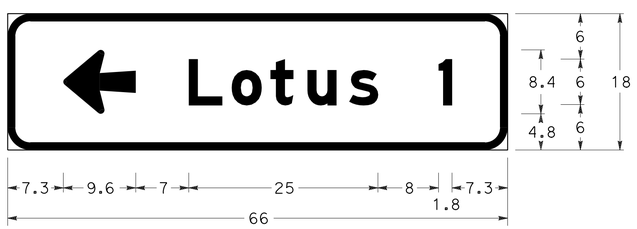

1" BORDER WITH 3" RADIUS
"Lotus" E Mod
ARROW - 6" UC-1 LINE - 9.6" 180°

G1-1<CA>

2-12

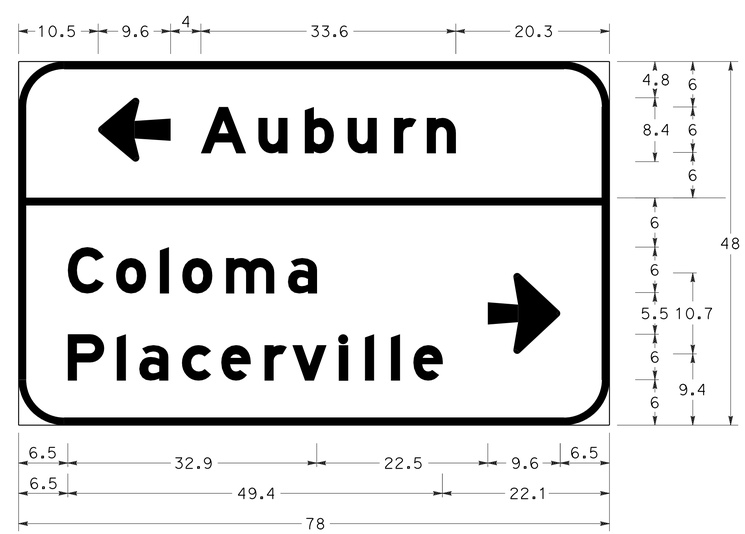

1" BORDER WITH 6" RADIUS
ARROW - 6" UC-1 LINE - 9.6" 180°
"Auburn" E Mod
"Coloma" E Mod
"Placerville" E Mod
ARROW - 6" UC-2 LINE - 9.6" 0°

G8-10<CA>

3-14

NOTE:
ALL SIGN DIMENSIONS ARE IN INCHES.

SIGN DETAILS
NO SCALE

SD-4

REVISED BY | DATE REVISED
CHUCK COOK | ALEX WU
CALCULATED-DESIGNED BY | CHECKED BY
FUNCTIONAL SUPERVISOR: JOYCE LOFTUS
STATE OF CALIFORNIA - DEPARTMENT OF TRANSPORTATION
Caltrans
TRAFFIC

LAST REVISION 08-20-16 | DATE PLOTTED => 08-JUL-2016 | TIME PLOTTED => 16:20

Dist	COUNTY	ROUTE	POST MILES TOTAL PROJECT	SHEET No.	TOTAL SHEETS
03	ED	49	23.6/24.5	93	202

REGISTERED CIVIL ENGINEER 5-9-16 DATE

5-9-16
PLANS APPROVAL DATE

REGISTERED PROFESSIONAL ENGINEER ALEX WIN WU No. C77266 Exp. 6-30-17 CIVIL STATE OF CALIFORNIA

THE STATE OF CALIFORNIA OR ITS OFFICERS OR AGENTS SHALL NOT BE RESPONSIBLE FOR THE ACCURACY OR COMPLETENESS OF SCANNED COPIES OF THIS PLAN SHEET.

ROADSIDE SIGN QUANTITIES

SIGN NUMBER (SHT-No.)	SIGN CODE	PANEL SIZE	"C" DIM IN FEET	POST SIZE AND LENGTH		ROADSIDE SIGN		INSTALL ROADSIDE SIGN PANEL ON RETAINING WALL	REMOVE ROADSIDE SIGN	RELOCATE ROADSIDE SIGN	RESET ROADSIDE SIGN	REMARKS
		INCHES		4"x6"	METAL POST 2½"X2½"	ONE POST EA	TWO POST EA	EA	EA	EA	EA	
1-1	G8-22<CA>	54 x 30	7		12′	1						
1-2	G8-22<CA>								1			
1-3	W3-1								1			
1-4	W3-1	48 x 48	7		14′	1						
1-5	G8-4<CA>										1	
1-6	R7-9	12 x 18	7		10′							
1-7	R4-7	24 x 30	5		10′							
1-8	R4-7	24 x 30	5		10′							
1-9	R7-9	12 x 18	7		10′							
2-1	R81<CA>	24 x 18	7		10′	1						
2-2	R7-9	12 x 18	7		10′	1						
2-3	R4-7	24 x 30	5		10′	1						
2-4	W11-2 W16-7PL W11-2 W16-7PR	30 x 30 30 x 18 30 x 30 30 x 18	7		14′	1						INSTALLED BACK TO BACK
2-5	R4-7	24 x 30	5		10′	1						
2-6	R7-9	12 x 18	7		10′	1						
2-7	R81<CA> R81A<CA>								1			
2-8	R81<CA>	24 x 18	7		10′	1						
2-9	W3-1	48 x 48	7		14′	1						
2-10	W11-2 R23(JUMPING)<CA>								1			
2-11	R1-1								1			
2-12	R1-1	30	7		12′	1						
2-13	R7-9	12 x 18	7		10′	1						
2-14	R81<CA>	24 x 18	7		10′	1						
2-15	R7-9	12 x 18	7		10′	1						
2-16	W11-2								1			
2-17	R7-9	12 x 18	7		10′	1						
2-18	W11-2 W16-7PL W11-2 W16-7PR	30 x 30 30 x 18 30 x 30 30 x 18	7		14′	1						INSTALLED BACK TO BACK
2-19	SNS										1	
2-20	R81<CA>	24 x 18	7		10′	1						
2-21	R7-9	12 x 18	7		10′	1						
2-22	R81<CA> R81B<CA>								1			
2-23	W3-1								1			
2-24	R7-9	12 x 18	7		10′	1						
2-25	G11-1<CA>								1			
2-26	G11-1<CA>	36 x 18	7		10′	1						
SHEET TOTAL						20	0	0	9	0	2	———

NOTES:

1. EXACT LOCATION AND POSITION OF ROADSIDE SIGNS TO BE DETERMINED BY THE ENGINEER.
2. POST LENGTHS GIVEN ARE APPROXIMATE.
3. "C" DIM = VERTICAL CLEARANCE EP TO BOTTOM OF SIGN PANEL.
4. ALL SIGN CODES SHOWN ARE FEDERAL SIGN CODES UNLESS OTHERWISE DESIGNATED AS A CALIFORNIA SIGN CODE.
5. <CA> = CALIFORNIA SIGN CODE.
6. (N) - NOT A SEPARATE PAY ITEM. FOR INFORMATION ONLY.
7. SIGN PANEL TO BE MOUNTED ON SIGNAL MAST ARM.
8. FOR TREATED WOOD WASTE QUANTITES SEE SHEET Q-X.

SIGN QUANTITIES

SQ-1

STATE OF CALIFORNIA - DEPARTMENT OF TRANSPORTATION
Caltrans
TRAFFIC

FUNCTIONAL SUPERVISOR: JOYCE LOFTUS
CALCULATED-DESIGNED BY: CHUCK COOK
CHECKED BY: ALEX WU
REVISED BY
DATE REVISED

LAST REVISION 06-21-16
DATE PLOTTED => 08-JUL-2016
TIME PLOTTED => 16:20

Dist	COUNTY	ROUTE	POST MILES TOTAL PROJECT	SHEET No.	TOTAL SHEETS
03	ED	49	23.6/24.5	94	202

REGISTERED CIVIL ENGINEER 5-9-16 DATE

5-9-16
PLANS APPROVAL DATE

REGISTERED PROFESSIONAL ENGINEER ALEX WIN WU No. C77266 Exp. 6-30-17 CIVIL STATE OF CALIFORNIA

THE STATE OF CALIFORNIA OR ITS OFFICERS OR AGENTS SHALL NOT BE RESPONSIBLE FOR THE ACCURACY OR COMPLETENESS OF SCANNED COPIES OF THIS PLAN SHEET.

ROADSIDE SIGN QUANTITIES

SIGN NUMBER (SHT-No.)	SIGN CODE	PANEL SIZE INCHES	"C" DIM IN FEET	POST SIZE AND LENGTH 4"x6"	POST SIZE AND LENGTH METAL POST 2½"X2½"	ROADSIDE SIGN ONE POST EA	ROADSIDE SIGN TWO POST EA	INSTALL ROADSIDE SIGN PANEL ON RETAINING WALL EA	REMOVE ROADSIDE SIGN EA	RELOCATE ROADSIDE SIGN EA	RESET ROADSIDE SIGN EA	REMARKS
3-1	G11-1<CA>	36 x 18	7		10'	1						
3-2	R81<CA> R81A<CA>	24 x 18 12 x 5	7		10'	1						
3-3	R26(S)<CA> R28(S)(L+)<CA>	12 x 18 12 x 18	7		12'	1						
3-4	R2-1(45) R48-1<CA>	36 x 48 36 x 18	7		14'	1						
3-5	W1-7	48 x 24	5					1				
3-6	R1-1 R1-3P	30 30 x 12	7		12'	1						
3-7	R26(S)<CA>	12 x 18	7		10'	1						
3-8	G1-1<CA> D9-3 SPEC G<CA>	66 x 18 24 x 24 24 x 24	7	16'			1					
3-9	R26(S)<CA>	12 x 18	7		10'	1						
3-10	W3-1	48 x 48	7		14'	1						
3-11	R26(S)<CA>	12 x 18	7		10'	1						
3-12	R7-9	12 x 18	7		10'	1						
3-13	R1-1 R1-3P	30 30 x 12	7		12'	1						
3-14	G8-10<CA>	78 x 48	7	16'			1					
3-15	R1-1 R1-3P	30 30 x 12	7		12'	1						
3-16	R81<CA> R81B<CA>	24 x 18 8 x 5	7		10'	1						
3-17	R2-1(40) R48-1<CA>	36 x 48 36 x 18	7		14'	1						
3-18	R26(S)<CA>	12 x 18	7		10'	1						
3-19	R26(S)<CA>	12 x 18	7		10'	1						
3-20	R26(S)<CA>	12 x 18	7		10'	1						
4-1	W3-1								1			
4-2	G5<CA>	72 x 42	7	16'			1					
4-3	R26(S)<CA>	12 x 18	7		10'	1						
4-4	R26(S)<CA>	12 x 18	7		10'	1						
4-5	R26<CA>								1			
4-6	R26(S)<CA>	12 x 18	7		10'	1						
4-7	R26(S)<CA>	12 x 18	7		10'	1						
4-8	R26(S)<CA>	12 x 18	7		10'	1						
4-9	R26(S)<CA>	12 x 18	7		10'	1						
4-10	R26<CA>								1			
4-11	R26<CA>								1			
4-12	R26<CA>	12 x 18	7		10'	1						
4-13	W11-1 W79A<CA>	30 x 30 30 x 24	7		14'	1						
SHEET TOTAL						25	3	1	4	0	0	

SIGN QUANTITIES

SQ-2

STATE OF CALIFORNIA - DEPARTMENT OF TRANSPORTATION
Caltrans
TRAFFIC

FUNCTIONAL SUPERVISOR: JOYCE LOFTUS
CALCULATED-DESIGNED BY: CHUCK COOK
CHECKED BY: ALEX WU
REVISED BY
DATE REVISED

LAST REVISION 06-21-16
DATE PLOTTED => 08-JUL-2016
TIME PLOTTED => 16:20

Dist	COUNTY	ROUTE	POST MILES TOTAL PROJECT	SHEET No.	TOTAL SHEETS
03	ED	49	23.6/24.5	95	202

REGISTERED CIVIL ENGINEER 5-9-16 DATE

5-9-16
PLANS APPROVAL DATE

REGISTERED PROFESSIONAL ENGINEER
ALEX WIN WU
No. C77266
Exp. 6-30-17
CIVIL
STATE OF CALIFORNIA

THE STATE OF CALIFORNIA OR ITS OFFICERS OR AGENTS SHALL NOT BE RESPONSIBLE FOR THE ACCURACY OR COMPLETENESS OF SCANNED COPIES OF THIS PLAN SHEET.

ROADSIDE SIGN QUANTITIES

SIGN NUMBER (SHT-No.)	SIGN CODE	PANEL SIZE INCHES	"C" DIM IN FEET	POST SIZE AND LENGTH 4"x6"	POST SIZE AND LENGTH METAL POST 2½"X2½"	ROADSIDE SIGN ONE POST EA	ROADSIDE SIGN TWO POST EA	INSTALL ROADSIDE SIGN PANEL ON RETAINING WALL EA	REMOVE ROADSIDE SIGN EA	RELOCATE ROADSIDE SIGN EA	RESET ROADSIDE SIGN EA	REMARKS
SD-1	R26<CA> R28(R†)<CA>								1			
SD-2	G11-1<CA>								1			
SD-3	SNS									1		EXISTING METAL POST
SD-4	R26<CA> R28(L†)<CA>								1			
SD-5	R2-1(45) R48-1<CA>								1			
SD-6	W1-7 N-1<CA>								1			
SD-7	R1-1 R1-3(3)<CA>								1			
SD-8	SW48(30)<CA> R20H<CA>									1		EXISTING METAL POST
SD-9	G1-1<CA> RM-010 SPEC G								1			
SD-10	W11-1 W79A<CA>								1			
SD-11	G5<CA>								1			
SD-12	R1-1 R1-3(3)<CA>								1			
SD-13	G1-1<CA> RM-010										1	
SD-14	SPEC									1		
SD-15	SNS									1		EXISTING METAL POST
SD-16	G1<CA>								1			
SD-17	R1-1 R1-3(3)<CA>								1			
SD-18	R2-1(40) R48-1<CA>								1			
SD-19	W11-1 W79A<CA>								1			
SHEET TOTAL						0	0	0	14	4	1	———
SHEET TOTAL FROM SQ-1						20	0	0	9	0	2	———
SHEET TOTAL FROM SQ-2						25	3	1	4	0	0	———
TOTAL						45	3	1	27	4	3	———

SIGN QUANTITIES

SQ-3

REVISED BY | DATE REVISED
CHUCK COOK | ALEX WU
CALCULATED-DESIGNED BY | CHECKED BY
FUNCTIONAL SUPERVISOR: JOYCE LOFTUS
STATE OF CALIFORNIA - DEPARTMENT OF TRANSPORTATION
Caltrans
TRAFFIC

LAST REVISION 06-21-16 | DATE PLOTTED => 08-JUL-2016 | TIME PLOTTED => 16:20

Dist	COUNTY	ROUTE	POST MILES TOTAL PROJECT	SHEET No.	TOTAL SHEETS
03	ED	49	23.6/24.5	96	202

REGISTERED CIVIL ENGINEER 5-9-16 DATE

5-9-16
PLANS APPROVAL DATE

REGISTERED PROFESSIONAL ENGINEER ALEX WIN WU No. C77266 Exp. 6-30-17 CIVIL STATE OF CALIFORNIA

THE STATE OF CALIFORNIA OR ITS OFFICERS OR AGENTS SHALL NOT BE RESPONSIBLE FOR THE ACCURACY OR COMPLETENESS OF SCANNED COPIES OF THIS PLAN SHEET.

NOTES:

1. ALL SIGN CODES SHOWN ARE FEDERAL SIGN CODES UNLESS OTHERWISE DESIGNATED AS A CALIFORNIA SIGN CODE.
2. <CA> = CALIFORNIA SIGN CODE.
3. FY = FLUORESCENT YELLOW.
4. ALL SIGN PANEL BACKGROUND SHEETING, WITH THE EXCEPTION OF WHITE, SHALL BE RETROREFLECTIVE ASTM TYPE XI.
5. ALL WHITE SIGN PANEL BACKGROUND SHEETING SHALL BE RETROREFLECTIVE ASTM TYPE VIII.
6. ALL SIGN PANEL LEGEND SHEETING, WITH THE EXCEPTION OF BLACK, SHALL BE RETROREFLECTIVE ASTM TYPE XI.
7. ALL BLACK SIGN PANEL LEGEND SHEETING SHALL BE NON-REFLECTIVE.
8. FOR THE R1-3P, USE THE SPECIFICATION FOR THE R1-4 SHOWN IN THE STANDARD HIGHWAY SIGNS 2004 EDITION.

ROADSIDE SIGN PANEL QUANTITIES

SIGN CODE	SIGN MESSAGE/DESCRIPTION	PANEL SIZE L x D	PANEL AREA	NUMBER OF PANELS	BACKGROUND SHEETING COLOR	LEGEND SHEETING COLOR	PROTECTIVE-OVERLAY FILM (PREMIUM)	RETROREFLECTIVE SHEETING (TYPE XI)	FURNISH SINGLE SHEET ALUMINUM SIGN FOR RETROREFLECTIVE SHEETING (TYPE XI)			FURNISH SINGLE SHEET ALUMINUM SIGN	REMARKS
									UNFRAMED		FRAMED	UNFRAMED	
									0.063"	0.080"	0.063"	0.063"	
		INCHES	SQFT					SQFT	SQFT	SQFT	SQFT	SQFT	
R1-1	STOP	30	5.18	4	RED	WHITE	X	20.72	20.72				
R1-3P	ALL WAY (PLAQUE)	30 x 12	2.50	3	RED	WHITE	X	7.50	7.50				SEE NOTE 8
R2-1(40)	SPEED LIMIT (40)	36 x 48	12.00	1	WHITE	BLACK	X					12.00	
R2-1(45)	SPEED LIMIT (45)	36 x 48	12.00	1	WHITE	BLACK	X					12.00	
R26<CA>	NO PARKING ANY TIME	12 x 18	1.50	1	WHITE	RED	X					1.50	
R26(S)<CA>	NO STOPPING ANY TIME	12 x 18	1.50	13	WHITE	RED	X					19.50	
R28(S)(L†)<CA>	NO STOPPING ANY TIME (LEFT ARROW)	12 x 18	1.50	1	WHITE	RED	X					1.50	
R4-7	KEEP RIGHT (SYMBOL)	24 x 30	5.00	4	WHITE	BLACK	X					20.00	
R7-9	NO PARKING BIKE LANE	12 x 18	1.50	10	WHITE	RED	X					15.00	
R48-1<CA>	RADAR ENFORCED	36 x 18	4.50	2	WHITE	BLACK	X					9.00	
R81<CA>	BIKE LANE	24 x 18	3.00	6	WHITE	BLACK	X					18.00	
R81A<CA>	BEGIN	12 x 5	0.42	1	WHITE	BLACK	X					0.42	
R81B<CA>	END	8 x 5	0.28	1	WHITE	BLACK	X					0.28	
W1-7	TWO-DIRECTIONAL ARROW (SYMBOL)	48 x 24	8.00	1	FY	BLACK		8.00		8.00			
W3-1	STOP AHEAD (SYMBOL)	48 x 48	16.00	3	FY	BLACK RED,WHITE	X	48.00		48.00			
W11-1	BICYCLE (SYMBOL)	30 x 30	6.25	1	FY	BLACK	X	6.25	6.25				
W11-2	PEDESTRIAN (SYMBOL)	30 x 30	6.25	4	FY	BLACK	X	25.00	25.00				
W16-7pL	LEFT DIAGONAL ARROW (PLAQUE)	30 x 18	3.75	4	FY	BLACK	X	15.00	15.00				
W79A<CA>	SHARE THE ROAD	30 x 24	5.00	1	FY	BLACK	X	5.00	5.00				
G1-1<CA>	SEE SIGN 3-8, SHEET SD-4	66 x 18	8.25	1	GREEN	WHITE	X	8.25			8.25		
G5<CA>	SEE SIGN 3-10, SHEET SD-4	72 x 42	21.00	1	GREEN	WHITE	X	21.00			21.00		
G8-10<CA>	SEE SIGN 3-14, SHEET SD-4	78 x 48	26.00	1	GREEN	WHITE	X	26.00			26.00		
G8-22<CA>	SEE SIGN 1-1, SHEET SD-4	54 x 30	11.25	1	GREEN	WHITE	X	11.25		11.25			
G11-1<CA>	SEE SIGNS 2-26 AND 3-1	36 x 18	4.50	2	WHITE	BLACK	X					9.00	
RM-010	TENT (SYMBOL)	24 x 24	4.00	1	BROWN	WHITE	X	4.00	4.00				
SPEC G<CA>	SEE SIGN 3-8, SHEET SD-4	24 x 24	4.00	1	BROWN	WHITE	X	4.00	4.00				
TOTAL								209.97	87.47	67.25	55.25	118.20	

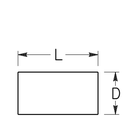

L = LENGTH OF PANEL
D = DEPTH OF PANEL

SIGN QUANTITIES

SQ-4

REVISED BY | DATE REVISED
CHUCK COOK | ALEX WU
CALCULATED-DESIGNED BY | CHECKED BY
FUNCTIONAL SUPERVISOR
STATE OF CALIFORNIA - DEPARTMENT OF TRANSPORTATION
Caltrans
TRAFFIC

LAST REVISION 06-21-16 | DATE PLOTTED => 08-JUL-2016 | TIME PLOTTED => 16:20

Dist	COUNTY	ROUTE	POST MILES TOTAL PROJECT	SHEET No.	TOTAL SHEETS
03	ED	49	23.6/24.5	97	202

REGISTERED CIVIL ENGINEER 5-9-16 DATE

5-9-16
PLANS APPROVAL DATE

REGISTERED PROFESSIONAL ENGINEER RONALD W. TOLLISON No. 67389 Exp. 12/31/16 CIVIL STATE OF CALIFORNIA

THE STATE OF CALIFORNIA OR ITS OFFICERS OR AGENTS SHALL NOT BE RESPONSIBLE FOR THE ACCURACY OR COMPLETENESS OF SCANNED COPIES OF THIS PLAN SHEET.

ROADWAY ITEMS SUMMARY

STATION	OBLITERATE SURFACING	COLD PLANE ASPHALT CONCRETE PAVEMENT	ROADWAY EXCAVATION	(N) EMBANKMENT	IMPORTED BORROW	CLASS 2 AGGREGATE BASE	HOT MIX ASPHALT (TYPE A)	RUBBERIZED HOT MIX ASPHALT (GAP GRADED)	PLACE HOT MIX ASPHALT (MISCELLANEOUS AREA)	COLORED HOT MIX ASPHALT	TACK COAT	REMOVE GUARDRAIL	TREATED WOOD WASTE
	SQYD	SQYD	CY	CY	CY	CY	TON	TON	SQYD	SQFT	TON	LF	LB
"CCN1" 19+30.00 TO "CCN1" 39+58.95								1,177					
"CCN1" 19+55.42 TO "CCN1" 22+16.87		1,557											
"CCN1" 22+16.87 TO "CCN1" 39+58.95	243					3,609	2,185		736		2.32	201	3,320
"CCN1" 28+02.01 TO "CCN1" 39+41.20	1,810												
"CCN1" 22+16.87 TO "CCN1" 32+50.00			6,789	58									
"CCN1" 32+50.00 TO "CCN1" 39+58.95			3,132	1,947									
"CCN1" 44+77.95 TO "CCN1" 56+50.00			8,301	1,164									
"CCN1" 44+72.00 TO "CCN1" 55+96.11													
"CCN1" 44+77.95 TO "CCN1" 61+50.00						2,742	1,893		650	21,429	2.08	125	
"CCN1" 44+77.95 TO "CCN1" 65+00.00								1,016					
"LI1" 10+78.49 TO "CCN1" 45+92.27	110												
"CCN1" 46+21.36 TO "CCN1" 47+07.63	66												
"CCN1" 47+69.72 TO "CCN1" 56+16.66	992												
"CCN1" 56+50.00 TO "CCN1" 61+50.00			1,177	1,315									
"CCN1" 61+50.00 TO "CCN1 " 65+00.00		1,298											
LOTUS ROAD			288	8		39	11	5					
LITTLE ROAD			7	90		20	12						
ABUTMENTS			120	688									
DRIVEWAYS			161	2		50	69						
TEMPORARY PAVEMENT STAGE 1							335						
OVERSIDE DRAINS							0.0333		6				
STAGE CONSTRUCTION					2,700								
TRAFFIC SIGN POST													1,850
TOTAL	3,221	2,855	19,975	5,272	2,700	6,460	4,508	2,198	1,418	21,429	4.40	326	5,170

ROCK STAIN

SHEET	LOCATION	QUANTITY
		SQFT
L-2	ABUTMENT 1	1,339.2
L-2	ABUTMENT 5	1,255.5
DQ-5	FROM DRAINAGE PLANS	90.0
TOTAL		2,684.7

OVERSIDE DRAINS

SHEET	STATION	LOCATION	LENGTH **	HMA (TYPE A)*	PLACE HMA (Misc AREA)*
	FT	L+/R+	FT	TON	SQYD
L-3	"CCN1" 50+21.00	R+	17.0	0.0130	2.47
L-3	"CCN1" 54+90.00	R+	12.0	0.0106	1.96
L-3	"CCN1" 58+50.00	R+	10.0	0.0097	1.76
SUBTOTAL				0.0333	6.19

* SEE ROADWAY ITEMS SUMMARY TABLE FOR PROJECT TOTALS.
** THE LENGTH OF THE OVERSIDE DRAIN IS MEASURED FROM THE FLOWLINE OF THE CURB TO THE OUTLET OF THE FLUME.

SUMMARY OF QUANTITIES

Q-1

STATE OF CALIFORNIA - DEPARTMENT OF TRANSPORTATION
DESIGN
FUNCTIONAL SUPERVISOR: NESAR FORMOLI
CALCULATED-DESIGNED BY: KAMAL CHONKRIA
CHECKED BY: ANHBANG TONTHAT
REVISED BY
DATE REVISED

LAST REVISION 00-00-00
DATE PLOTTED => 08-JUL-2016
TIME PLOTTED => 16:20

Dist	COUNTY	ROUTE	POST MILES TOTAL PROJECT	SHEET No.	TOTAL SHEETS
03	ED	49	23.6/24.5	98	202

Ron Tollison 5-9-16
REGISTERED CIVIL ENGINEER DATE

5-9-16
PLANS APPROVAL DATE

REGISTERED PROFESSIONAL ENGINEER
RONALD W. TOLLISON
No. 67389
Exp. 12/31/16
CIVIL
STATE OF CALIFORNIA

THE STATE OF CALIFORNIA OR ITS OFFICERS OR AGENTS SHALL NOT BE RESPONSIBLE FOR THE ACCURACY OR COMPLETENESS OF SCANNED COPIES OF THIS PLAN SHEET.

MINOR CONCRETE (CURB, GUTTER, SIDEWALK, AND DRIVEWAY)

STATION	LOCATION	CURB (TYPE A1-8)	CURB (TYPE A2-6)	CURB (TYPE B4)	SIDEWALK	DRIVEWAY	MINOR CONCRETE (CURB RAMP)
	L+/R+	CY	CY	CY	CY	CY	CY
"CCN1" 22+16.87 TO "CCN1" 23+00	R+		4.83		5.16		
"CCN1" 22+20.00 TO "CCN1" 22+36.88	R+						1.01
"CCN1" 22+88.61 TO "CCN1" 23+45.92	R+					9.00	
"CCN1" 23+00.00 TO "CCN1" 23+37.71	L+					5.98	
"CCN1" 22+53.33 TO "CCN1" 22+61.86	L+						1.13
"CCN1" 22+61.86 TO "CCN1" 22+88.61	L+		1.96		1.58		
"CCN1" 23+45.92 TO "CCN1" 24+25.05	L+		4.67		5.81		
"CCN1" 23+37.71 TO "CCN1" 26+94.82	R+		21.08		26.19		
"CCN1" 24+76.27 TO "CCN1" 26+83.05	L+		12.21		15.16		
"CCN1" 24+25.06 TO "CCN1" 24+76.27	L+					8.05	
"CCN1" 25+37.00 TO "CCN1" 28+83.98	MEDIAN			5.65			
"CCN1" 26+83.05 TO "CCN1" 27+25.22	L+					6.57	
"CCN1" 26+94.82 TO "CCN1" 27+08.25	R+						2.19
"CCN1" 27+25.22 TO "CCN1" 28+34.48	L+		6.45		8.01		
"CCN1" 28+34.48 TO "CCN1" 28+70.09	L+					5.50	
"CCN1" 28+42.44 TO "CCN1" 28+52.35	R+						1.61
"CCN1" 28+42.44 TO "CCN1" 32+86.03	R+		26.19		32.53		
"CCN1" 28+70.09 TO "CCN1" 32+86.03	L+		24.55		30.50		
"CCN1" 30+49.26 TO "CCN1" 33+68.02	MEDIAN			37.12			
"CCN1" 32+86.03 TO "CCN1" 33+12.34	R+/L+						8.59
"CCN1" 33+12.34 TO "CCN1" 33+12.34	R+		5.83		7.23		
"CCN1" 33+12.34 TO "CCN1" 33+22.58	L+		0.60		0.75		
"CCN1" 33+30.20 TO "CCN1" 33+80.23	L+					7.77	
"CCN1" 33+73.17 TO "CCN1" 36+85.96	L+		18.46		22.94		
"CCN1" 34+11.16 TO "CCN1" 34+62.19	L+					7.92	
"CCN1" 36+85.96 TO "CCN1" 37+70.86	L+					13.37	
"CCN1" 37+48.63 TO "CCN1" 38+02.03	R+					8.30	
"CCN1" 37+70.93 TO "CCN1" 39+31.17	L+		9.46		11.75		
"CCN1" 34+62.19 TO "CCN1" 37+48.63	R+		16.91		21.00		
"CCN1" 44+87.11 TO "CCN1" 44+96.26	L+		0.54		0.67		
"CCN1" 44+96.26 TO "CCN1" 45+05.56	L+						1.51
"CCN1" 44+82.80 TO "CCN1" 46+94.23	R+		12.48		15.50		
"LO1" 13+29.10 TO "LO1" 13+40.77	L+		0.69		0.86		2.13
"CCN1" 55+4.00 TO "CCN1" 57+80.00	R+	7.40					
SUBTOTAL		7.40	166.89	42.77	205.64	72.46	18.17
TOTAL				495.16			18.17

MINOR CONCRETE (TEXTURED PAVING)

STATION	SQFT
"CCN1" 25+39.88 TO "CCN1" 25+81.28	181.9
"CCN1" 30+51.89 TO "CCN1" 32+97.25	1,101.9
"CCN1" 33+10.75 TO "CCN1" 33+69.25	301.6
TOTAL	1,585.4

FENCE AND GATE

STATION	DIRECTION	REMOVE FENCE (TYPE BW)	FENCE (TYPE BW, 4 STRAND)	TEMPORARY FENCE (TYPE ESA)
	L+/R+	LF	LF	LF
"CCN1" 39+24 TO "CCN1" 40+67	L+			143
"CCN1" 40+08 TO "CCN1" 42+25	R+			256
"CCN1" 43+13 TO "CCN1" 44+33	L+			82
"LI1" 11+01 TO "CCN1" 45+25	L+			74
"CCN1" 44+00 TO "CCN1" 45+50	R+			150
"CCN1" 52+60 TO "CCN1" 61+50	L+	945	900	
"CCN1" 58+34 TO "CCN1" 60+81	L+			298
"CCN1" 58+66 TO "CCN1" 61+50	R+			275
TOTAL		945	900	1,278

ROCK SLOPE PROTECTION

STATION	RSP (LIGHT, METHOD B)	RSP FABRIC (CLASS 8)
	CY	SQYD
"CCN1" 39+83 TO "CCN1" 40+21	95.0	308.2
"CCN1" 44+37 TO "CCN1" 44+56	48.1	162.6
"CCN1" 54+50 TO "CCN1" 55+52	205.7	231.9
"CCN1" 57+50 TO "CCN1" 60+50	980.8	1,053.5
FROM DRAINAGE QUANTITIES		214.5
TOTAL	1,329.6	1,970.7

SUMMARY OF QUANTITIES

Q-2

REVISED BY | DATE REVISED
KAMAL CHONKRIA | ANHBANG TONTHAT
CALCULATED-DESIGNED BY | CHECKED BY
FUNCTIONAL SUPERVISOR | NESAR FORMOLI
STATE OF CALIFORNIA - DEPARTMENT OF TRANSPORTATION
Caltrans®
DESIGN

LAST REVISION 00-00-00 | DATE PLOTTED => 08-JUL-2016 | TIME PLOTTED => 16:20

Dist	COUNTY	ROUTE	POST MILES TOTAL PROJECT	SHEET No.	TOTAL SHEETS
03	ED	49	23.6/24.5	99	202

Ron Tollison 5-9-16
REGISTERED CIVIL ENGINEER DATE

5-9-16
PLANS APPROVAL DATE

REGISTERED PROFESSIONAL ENGINEER
RONALD W. TOLLISON
No. 67389
Exp. 12/31/16
CIVIL
STATE OF CALIFORNIA

THE STATE OF CALIFORNIA OR ITS OFFICERS OR AGENTS SHALL NOT BE RESPONSIBLE FOR THE ACCURACY OR COMPLETENESS OF SCANNED COPIES OF THIS PLAN SHEET.

SEDIMENT CONTROL/PERIMETER CONTROL

STATION	TEMPORARY FIBER ROLL	TEMPORARY LARGE SEDIMENT BARRIER	TEMPORARY SILT FENCE	TEMPORARY GRAVEL BAG BERM	TEMPORARY DRAINAGE INLET PROTECTION	TEMPORARY CONSTRUCTION ENTRANCE
	LF	LF	LF	LF	EA	EA
"CCN1" 19+30 TO "CCN1" 65+00	15,500	500	1,000	979	27	7
TOTAL	15,500	500	1,000	979	27	7

TEMPORARY SOIL STABILIZATION

STATION	MOVE-IN/MOVE OUT (TEMPORARY EROSION CONTROL)	TEMPORARY HYDRAULIC MULCH (BONDED FIBER MATRIX)	TEMPORARY COVER	RAIN EVENT ACTION PLAN	STORM WATER ANNUAL REPORT	STORM WATER SAMPLING AND ANALYSIS DAY
	EA	SQYD	SQYD	EA	EA	EA
"CCN1" 19+30 TO "CCN1" 65+00	18	968	968	52	3	101
TOTAL	18	968	968	52	3	101

SUMMARY OF QUANTITIES

Q-3

STATE OF CALIFORNIA - DEPARTMENT OF TRANSPORTATION
Caltrans
DESIGN

FUNCTIONAL SUPERVISOR: NESAR FORMOLI
CALCULATED-DESIGNED BY: KAMAL CHONKRIA
CHECKED BY: KEVIN CANFIELD
REVISED BY
DATE REVISED

LAST REVISION 00-00-00
DATE PLOTTED => 08-JUL-2016
TIME PLOTTED => 16:20

Dist	COUNTY	ROUTE	POST MILES TOTAL PROJECT	SHEET No.	TOTAL SHEETS
03	ED	49	23.6/24.5	100	202

REGISTERED CIVIL ENGINEER DATE

5-9-16
PLANS APPROVAL DATE

REGISTERED PROFESSIONAL ENGINEER
SARA M. ROGERS
No. C 64226
Exp. 6-30-17
CIVIL
STATE OF CALIFORNIA

THE STATE OF CALIFORNIA OR ITS OFFICERS OR AGENTS SHALL NOT BE RESPONSIBLE FOR THE ACCURACY OR COMPLETENESS OF SCANNED COPIES OF THIS PLAN SHEET.

DOMENCHELLI & ASSOCIATES
CIVIL ENGINEERING
1101 INVESTMENT BLVD, SUITE 115
EL DORADO HILLS, CA 95762
(916) 933-1997

EL DORADO IRREGATION DISTRICT
2890 MOSQUITO RAOD
PLACERVILLE, CA 95667
(530) 622-4513 (916) 965-0930

EL DORADO IRRIGATION DISTRICT (EID) QUANTITIES

ITEMS	UNIT	QUANTITY
REMOVE EXISTING WATER LINE (ASBESTOS CEMENT PIPE)	LF	1,200
14' WELDED STEEL PIPE CASING (BRIDGE)	LF	569
6' WATER MAIN PIPE (EAST END)	LF	1,700
6' WATER MAIN PIPE (WEST END)	LF	1,320
6' WATER MAIN INSTALLATION THROUGH BRIDGE CASING	LF	580
SERVICE CONNECTION	EA	5
FIRE HYDRANT CONNECTION	EA	2
1" AIR RELEASE VALVE	EA	5
TIE-IN TO EXISTING 6" LATERALS	EA	4

SUMMARY OF QUANTITIES
Q-4

STATE OF CALIFORNIA - DEPARTMENT OF TRANSPORTATION
Caltrans
CONSULTANT FUNCTIONAL SUPERVISOR
CALCULATED-DESIGNED BY
CHECKED BY
REVISED BY
DATE REVISED

LAST REVISION 00-00-00
DATE PLOTTED => 08-JUL-2016
TIME PLOTTED => 16:20

Dist	COUNTY	ROUTE	POST MILES TOTAL PROJECT	SHEET No.	TOTAL SHEETS
03	ED	49	23.6/24.5	101	202

REGISTERED CIVIL ENGINEER DATE

5/9/16
PLANS APPROVAL DATE

REGISTERED PROFESSIONAL ENGINEER
JOSEPH D DAGGETT
No. 71873
Exp. 12/31/17
CIVIL
STATE OF CALIFORNIA

THE STATE OF CALIFORNIA OR ITS OFFICERS OR AGENTS SHALL NOT BE RESPONSIBLE FOR THE ACCURACY OR COMPLETENESS OF SCANNED COPIES OF THIS PLAN SHEET.

GATEWAY ENGINEERING INC.
5811 E. PRINCETON AVE
FRESNO, CA 93727
(559) 320-0344

CVIN:
9479 N. FORT WASHINGTON RD
SUITE 105- FRESNO CA 93730
(559) 554-9100

CENTRAL VALLEY INDEPENDENT NETWORK (CVIN) QUANTITIES

ITEMS	UNIT	QUANTITY
INSTALL FIBER OPTIC CONDUIT	LF	2,500
INSTALL FIBER OPTIC HANDHOLE	LF	5
WARNING MARKER (FIBER OPTIC)	LF	5
COMMUNICATION CONDUIT (BRIDGE)	LF	569

SUMMARY OF QUANTITIES

REVISED BY | DATE REVISED

CALCULATED-DESIGNED BY | CHECKED BY

CONSULTANT FUNCTIONAL SUPERVISOR
JOSEPH DAGGETT

STATE OF CALIFORNIA - DEPARTMENT OF TRANSPORTATION
Caltrans

LAST REVISION 07-06-16
DATE PLOTTED => 08-JUL-2016
TIME PLOTTED => 16:20

Dist	COUNTY	ROUTE	POST MILES TOTAL PROJECT	SHEET No.	TOTAL SHEETS
03	ED	49	23.6/24.5	102	202

REGISTERED CIVIL ENGINEER 5-9-16 DATE

5-9-16
PLANS APPROVAL DATE

REGISTERED PROFESSIONAL ENGINEER RONALD W. TOLLISON No. 67389 Exp. 12/31/16 CIVIL STATE OF CALIFORNIA

THE STATE OF CALIFORNIA OR ITS OFFICERS OR AGENTS SHALL NOT BE RESPONSIBLE FOR THE ACCURACY OR COMPLETENESS OF SCANNED COPIES OF THIS PLAN SHEET.

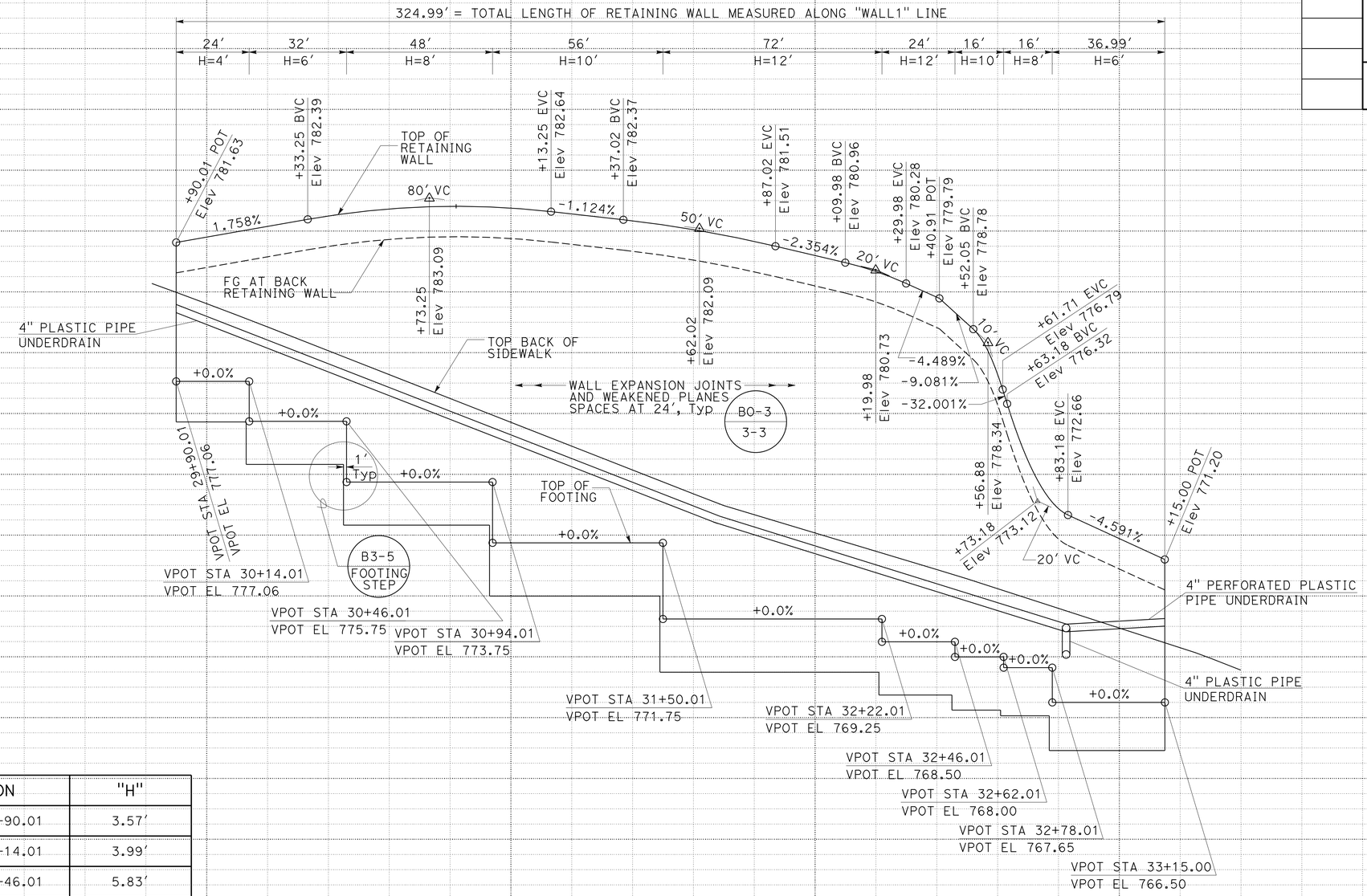

STATION	"H"
"WALL1" 29+90.01	3.57'
"WALL1" 30+14.01	3.99'
"WALL1" 30+46.01	5.83'
"WALL1" 30+94.01	8.04'
"WALL1" 31+50.01	9.46'
"WALL1" 32+22.01	10.35'
"WALL1" 32+46.01	9.83'
"WALL1" 32+62.01	7.68'
"WALL1" 32+78.01	4.44'
"WALL1" 33+15.00	3.70'

ELEVATION
TYPE 1A RETAINING WALL

LEGEND:

STANDARD PLAN SHEET No.

DETAIL No.

RETAINING WALL ELEVATION

SCALE: Horiz 1" = 20'
Vert 1" = 2'

R1-1

STATION		30+00	31+00	32+00	33+00	TOTAL
CY	Exc					
	Emb					

STATE OF CALIFORNIA - DEPARTMENT OF TRANSPORTATION
Caltrans
DESIGN

FUNCTIONAL SUPERVISOR: NESAR FORMOLI
CALCULATED-DESIGNED BY: RON TOLLISON
CHECKED BY: KAMAL CHONKRIA
REVISED BY
DATE REVISED

LAST REVISION 00-00-00
DATE PLOTTED => 08-JUL-2016
TIME PLOTTED => 16:20

Dist	COUNTY	ROUTE	POST MILES TOTAL PROJECT	SHEET No.	TOTAL SHEETS
03	ED	49	23.6/24.5	103	202

REGISTERED CIVIL ENGINEER 5-9-16 DATE

5-9-16
PLANS APPROVAL DATE

REGISTERED PROFESSIONAL ENGINEER
RONALD W. TOLLISON
No. 67389
Exp. 12/31/16
CIVIL
STATE OF CALIFORNIA

THE STATE OF CALIFORNIA OR ITS OFFICERS OR AGENTS SHALL NOT BE RESPONSIBLE FOR THE ACCURACY OR COMPLETENESS OF SCANNED COPIES OF THIS PLAN SHEET.

NOTE

4" Ø PERFORATED PLASTIC PIPE UNDERDRAIN PLACED IN PERVIOUS MATERIAL

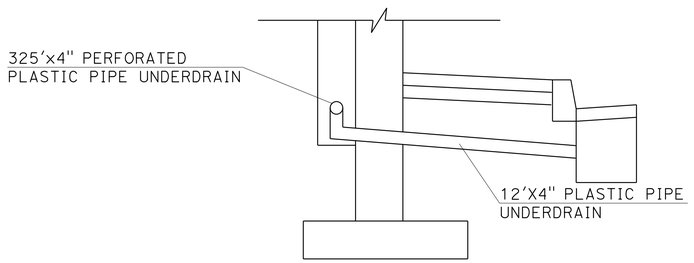

STATION "CCN1" 32+82.50

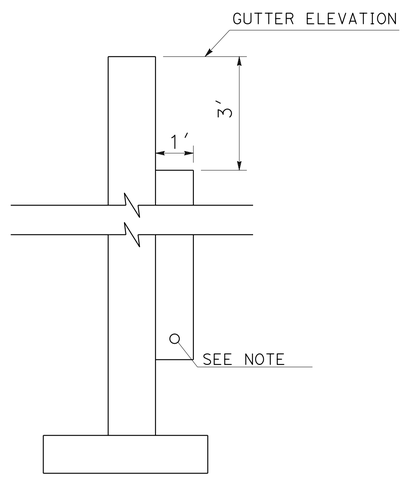

PERVIOUS BACKFILL

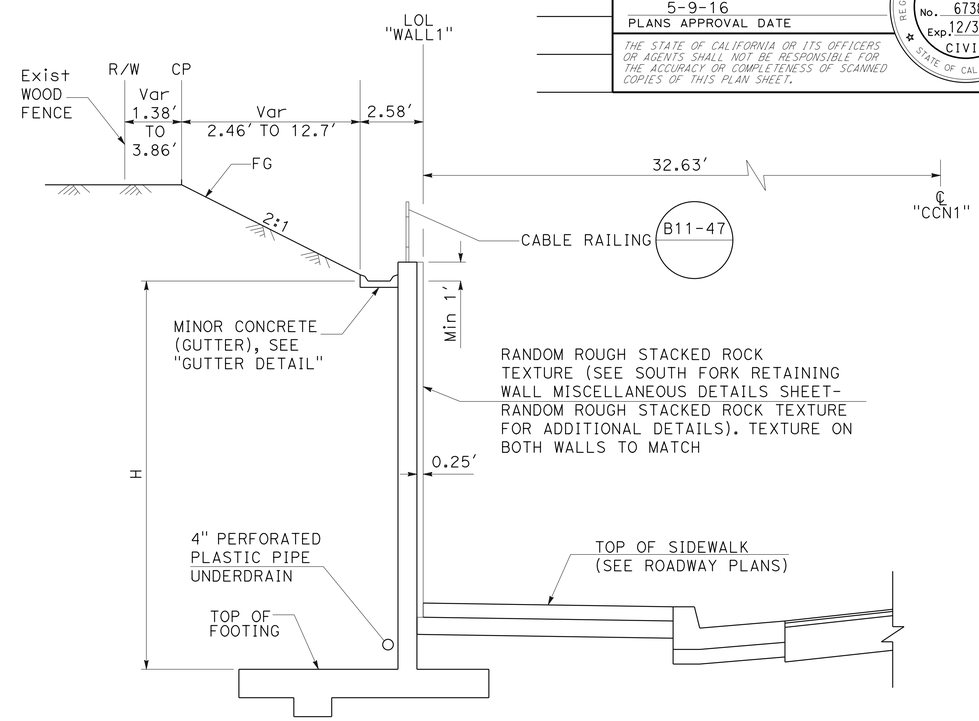

CROSS-SECTION
TYPE 1A RETAINING WALL B3-3B

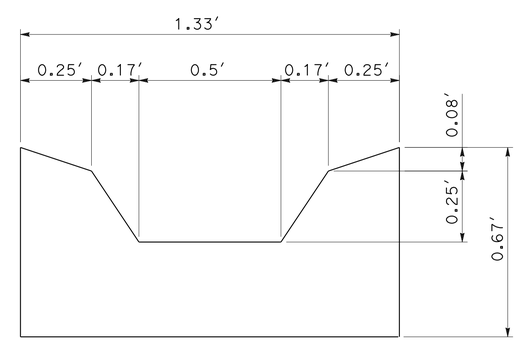

GUTTER DETAIL

RETAINING WALL DETAILS

NO SCALE

R1-2

STATE OF CALIFORNIA - DEPARTMENT OF TRANSPORTATION
Caltrans®
DESIGN

FUNCTIONAL SUPERVISOR: NESAR FORMOLI
CALCULATED-DESIGNED BY: RON TOLLISON
CHECKED BY: KAMAL CHONKRIA
REVISED BY
DATE REVISED

LAST REVISION 00-00-00
DATE PLOTTED => 08-JUL-2016
TIME PLOTTED => 16:20

Dist	COUNTY	ROUTE	POST MILES TOTAL PROJECT	SHEET No.	TOTAL SHEETS
03	ED	49	23.6/24.5	104	202

Ron Tollison 5-9-16
REGISTERED CIVIL ENGINEER DATE

5-9-16
PLANS APPROVAL DATE

REGISTERED PROFESSIONAL ENGINEER
RONALD W. TOLLISON
No. 67389
Exp. 12/31/16
CIVIL
STATE OF CALIFORNIA

THE STATE OF CALIFORNIA OR ITS OFFICERS OR AGENTS SHALL NOT BE RESPONSIBLE FOR THE ACCURACY OR COMPLETENESS OF SCANNED COPIES OF THIS PLAN SHEET.

RETAINING WALL TYPE 1A

STATION	LOCATION	STRUCTURE EXCAVATION (RETAINING WALL)	STRUCTURE BACKFILL (RETAINING WALL)	STRUCTURAL CONCRETE, RETAINING WALL	BAR REINFORCING STEEL (RETAINING WALL)	CABLE RAILING	PERVIOUS BAKCFILL MATERIAL (RETAINING WALL)	RANDOM ROUGH STACKED ROCK TEXTURE	4" PERFORATED PLASTIC PIPE UNDERDRAIN	4" PLASTIC PIPE UNDERDRAIN
	L+/R+	CY	CY	CY	LB	LF	CY	SQFT	LF	LF
"CCN1"29+90.01 TO "CCN1" 33+15	L+	1,017	891	306	30,847	325	43.80	2,146.76	325	12
TOTAL		1,017	891	306	30,847	325	43.80	2,146.76	325	12

RETAINING WALL QUANTITIES

R1-3

STATE OF CALIFORNIA - DEPARTMENT OF TRANSPORTATION
Caltrans
DESIGN

FUNCTIONAL SUPERVISOR: NESAR FORMOLI
CALCULATED-DESIGNED BY: RON TOLLISON
CHECKED BY: KAMAL CHONKRIA
REVISED BY
DATE REVISED

LAST REVISION 00-00-00
DATE PLOTTED => 08-JUL-2016
TIME PLOTTED => 16:20

Dist	COUNTY	ROUTE	POST MILES TOTAL PROJECT	SHEET No.	TOTAL SHEETS
03	ED	49	23.6/24.5	105	202

LICENSED LANDSCAPE ARCHITECT

5-9-16
PLANS APPROVAL DATE

LICENSED LANDSCAPE ARCHITECT No. 5066 Lesley E. Morgan 03-31-18 Renewal Date 04-11-16 Date STATE OF CALIFORNIA

THE STATE OF CALIFORNIA OR ITS OFFICERS OR AGENTS SHALL NOT BE RESPONSIBLE FOR THE ACCURACY OR COMPLETENESS OF SCANNED COPIES OF THIS PLAN SHEET.

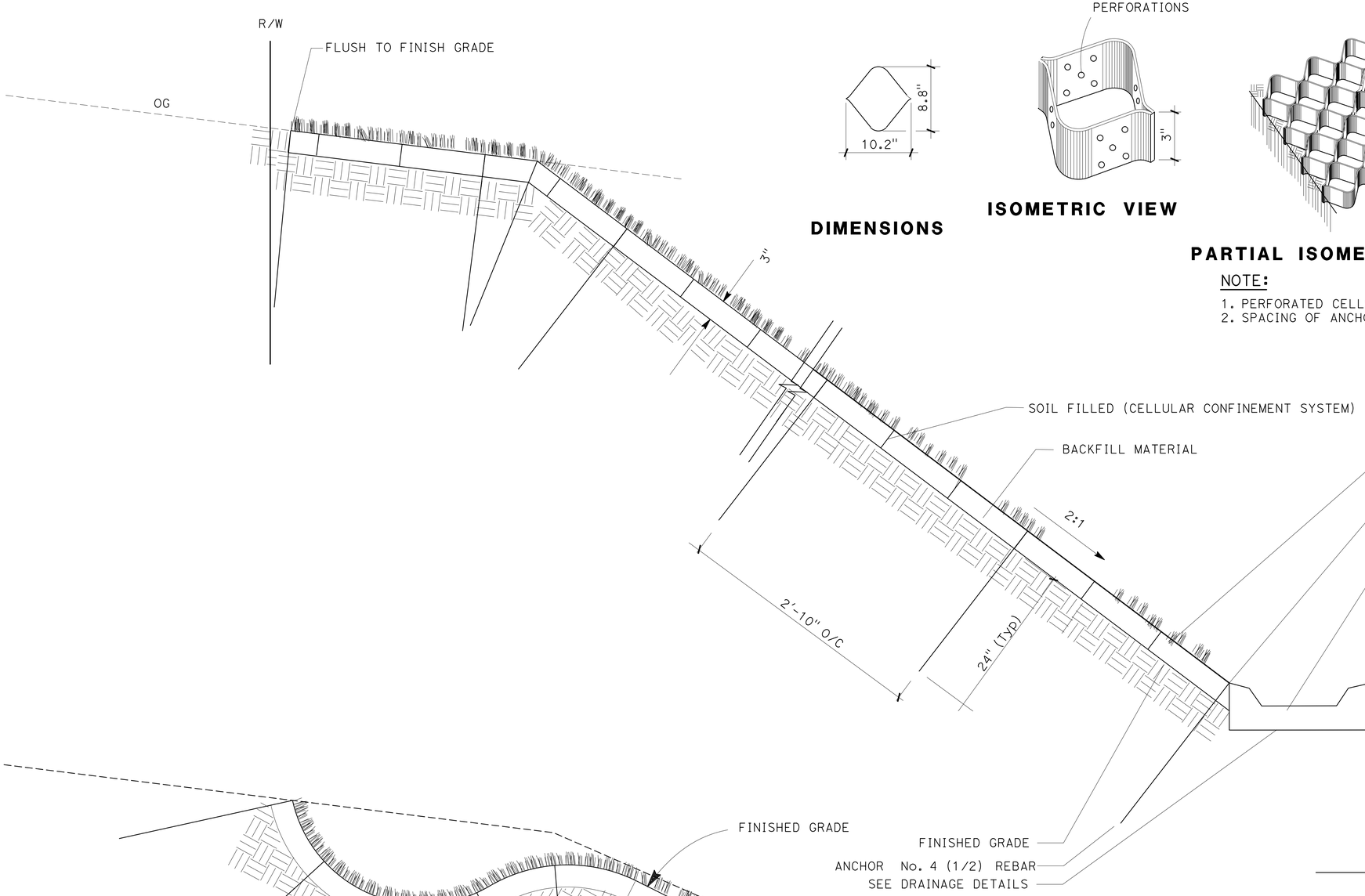

DIMENSIONS

ISOMETRIC VIEW

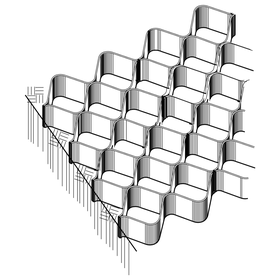

PARTIAL ISOMETRICS

NOTE:

1. PERFORATED CELLS REQUIRED IN SOIL FILLED (CONFINEMENT SYSTEM) PANELS.
2. SPACING OF ANCHOR BAR SHALL BE 4'-0" O/C.

SOIL FILLED (CELLULAR CONFINEMENT SYSTEM)
SECTION
STATION "CCN1" 45+73.94 TO STATION "CCN1" 46+64

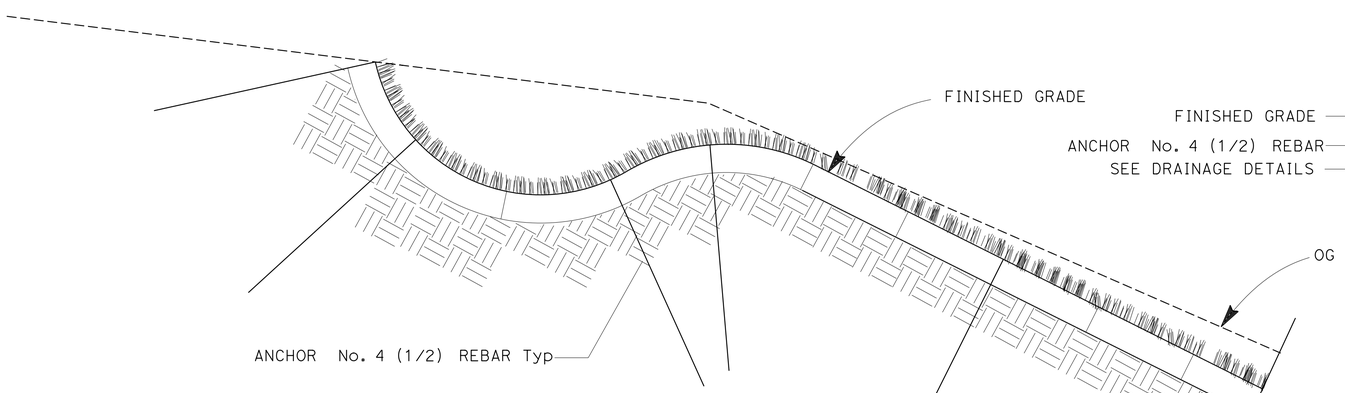

DITCH
SOIL FILLED (CELLULAR CONFINEMENT SYSTEM)
SECTION
STATION "CCN1" 46+64 TO STATION "CCN1" 49+49.22

EROSION CONTROL TYPE 3
LANDSCAPE DETAILS
NO SCALE
LD-1

STATE OF CALIFORNIA - DEPARTMENT OF TRANSPORTATION
Caltrans® LANDSCAPE ARCHITECTURE

SENIOR LANDSCAPE ARCHITECT: J. PIETRZAK
CALCULATED-DESIGNED BY: LESLEY MORGAN
CHECKED BY: D. TILLSON
REVISED BY
DATE REVISED

LAST REVISION 00-00-00
DATE PLOTTED => 08-JUL-2016
TIME PLOTTED => 16:20

Dist	COUNTY	ROUTE	POST MILES TOTAL PROJECT	SHEET No.	TOTAL SHEETS
03	ED	49	23.6/24.5	106	202

LICENSED LANDSCAPE ARCHITECT

5-9-16

PLANS APPROVAL DATE

LICENSED LANDSCAPE ARCHITECT No. 5066 Lesley E. Morgan 03-31-18 Renewal date 04-11-16 Date STATE OF CALIFORNIA

THE STATE OF CALIFORNIA OR ITS OFFICERS OR AGENTS SHALL NOT BE RESPONSIBLE FOR THE ACCURACY OR COMPLETENESS OF SCANNED COPIES OF THIS PLAN SHEET.

NOTE:

FOR ACCURATE RIGHT OF WAY DATA, CONTACT RIGHT OF WAY ENGINEERING AT THE DISTRICT OFFICE.

1. LIMITS OF EROSION CONTROL (RIVER SHORE MATERIAL) SET 1'-0" ABOVE OHWM
2. SUB-BASE MATERIAL FROM LOG OF TESTING BORING-MATRIX OF SILTY SAND AND GRAVEL.

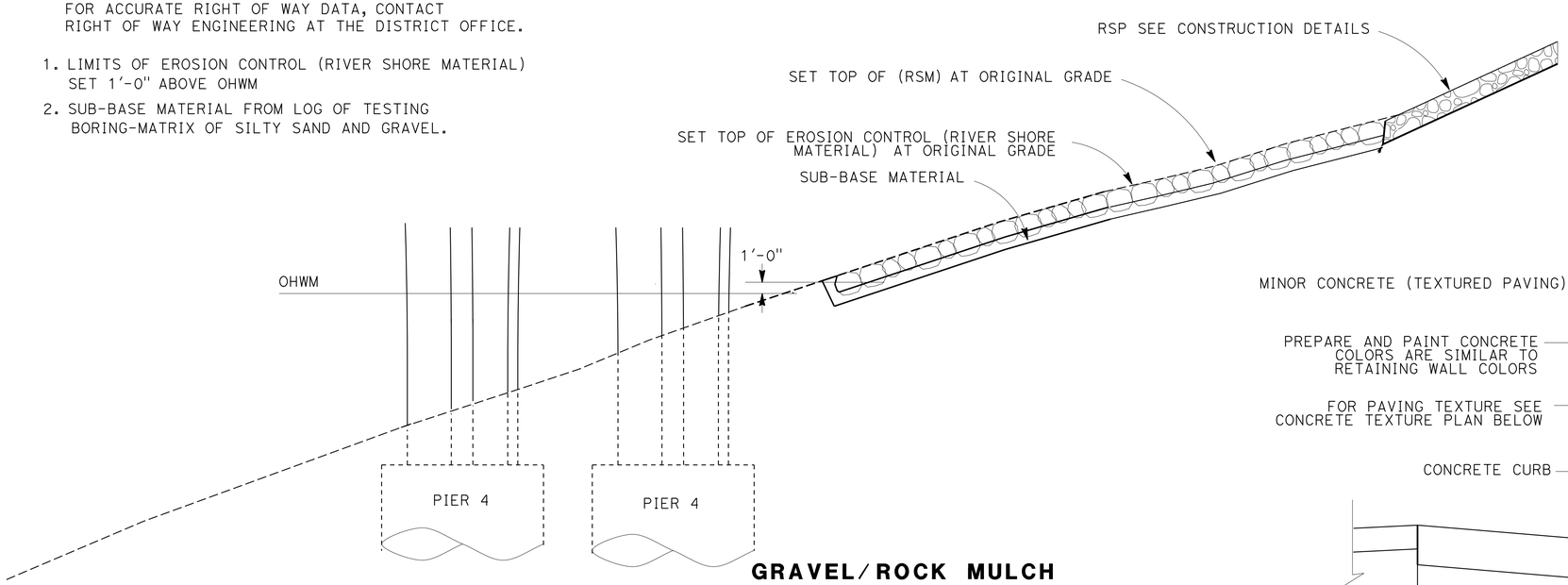

GRAVEL/ROCK MULCH
EAST SIDE OF SOUTH FORK AMERICAN RIVER
SECTION

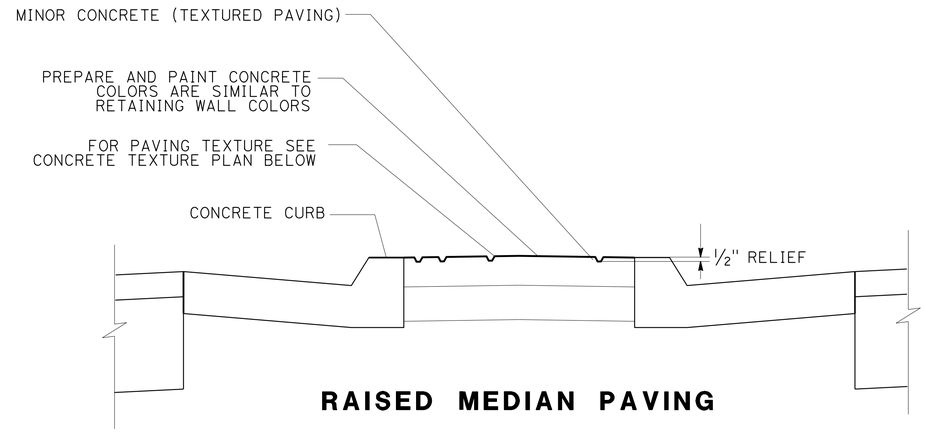

RAISED MEDIAN PAVING
SECTION

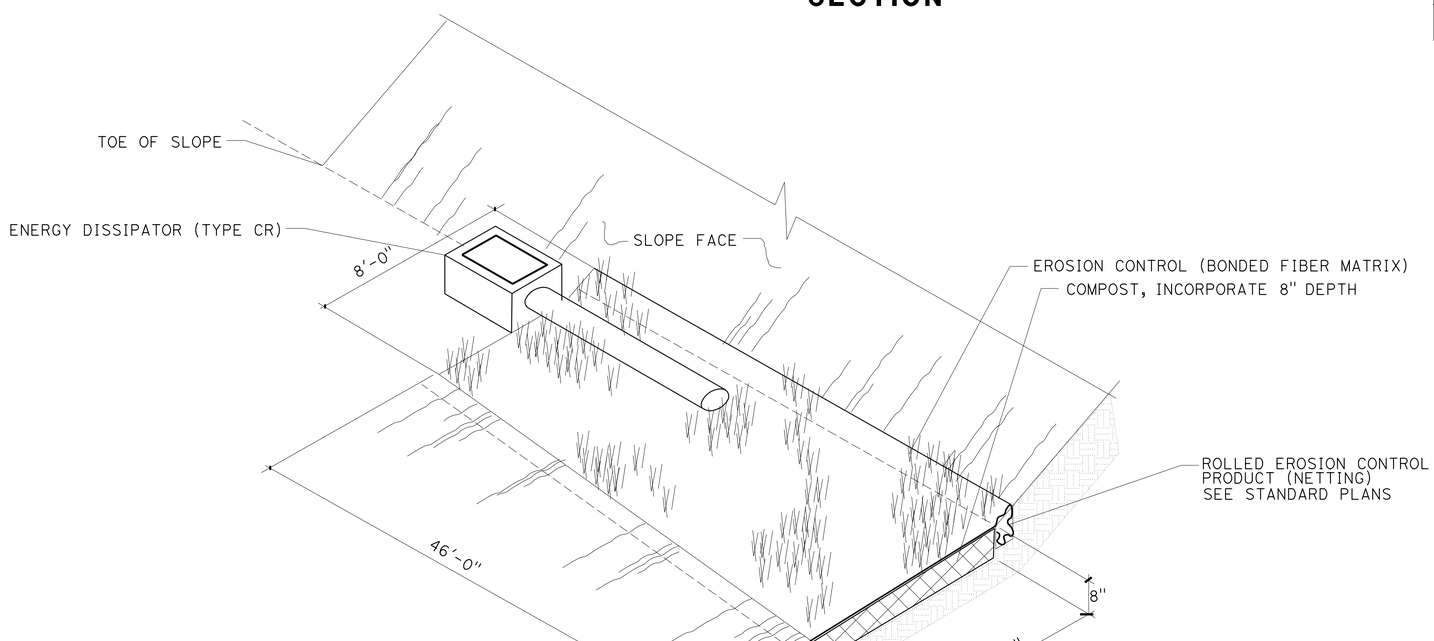

EROSION CONTROL TYPE 4
BIOFILTRATION SWALES
ISOMETRIC

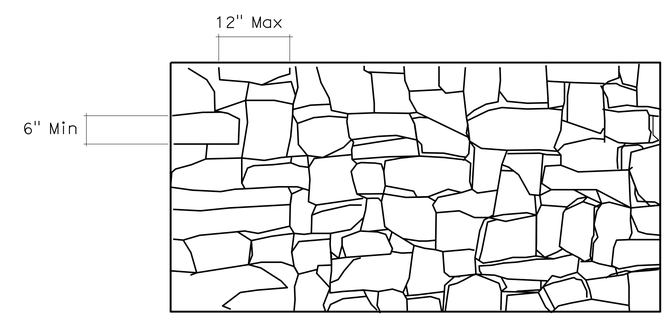

THE TEXTURE IS RANDOM ROUGH STACKED ROCK.

MINOR CONCRETE (TEXTURED PAVING)
PLAN

LANDSCAPE DETAILS

NO SCALE

LD-2

STATE OF CALIFORNIA - DEPARTMENT OF TRANSPORTATION
Caltrans® LANDSCAPE ARCHITECTURE

SENIOR LANDSCAPE ARCHITECT: J. PIETRZAK

CALCULATED-DESIGNED BY: LESLEY MORGAN
CHECKED BY: D. TILLSON

REVISED BY | DATE REVISED

LAST REVISION 00-00-00 | DATE PLOTTED => 08-JUL-2016 | TIME PLOTTED => 16:20

Dist	COUNTY	ROUTE	POST MILES TOTAL PROJECT	SHEET No.	TOTAL SHEETS
03	ED	49	23.6/24.5	107	202

LICENSED LANDSCAPE ARCHITECT

5-9-16

PLANS APPROVAL DATE

LICENSED LANDSCAPE ARCHITECT No. 5066 STATE OF CALIFORNIA Renewal Date 04-30-18 04-11-16 Date

THE STATE OF CALIFORNIA OR ITS OFFICERS OR AGENTS SHALL NOT BE RESPONSIBLE FOR THE ACCURACY OR COMPLETENESS OF SCANNED COPIES OF THIS PLAN SHEET.

NOTE:

FOR ACCURATE RIGHT OF WAY DATA, CONTACT RIGHT OF WAY ENGINEERING AT THE DISTRICT OFFICE.

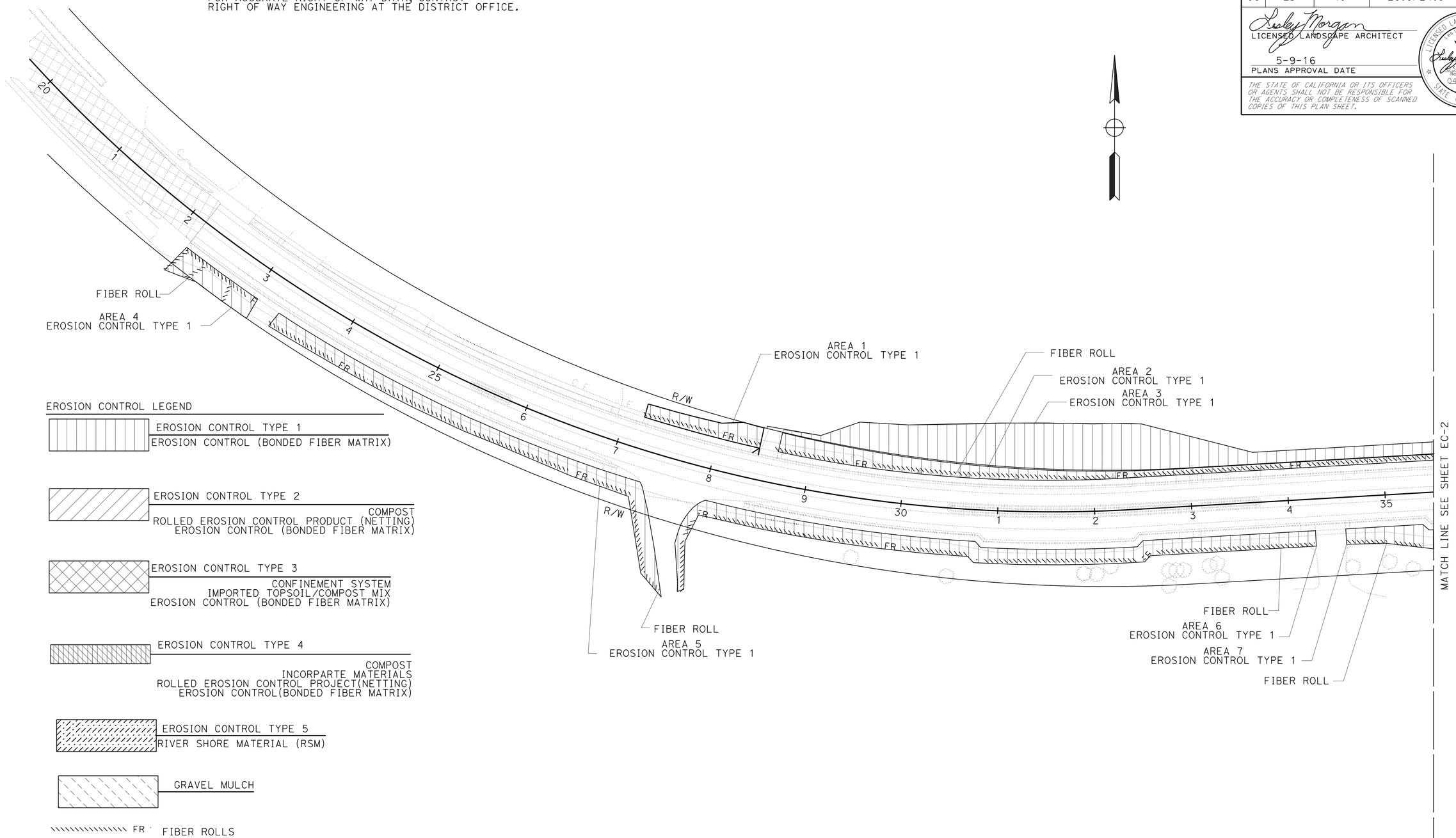

EROSION CONTROL LEGEND

- EROSION CONTROL TYPE 1 — EROSION CONTROL (BONDED FIBER MATRIX)
- EROSION CONTROL TYPE 2 — COMPOST, ROLLED EROSION CONTROL PRODUCT (NETTING), EROSION CONTROL (BONDED FIBER MATRIX)
- EROSION CONTROL TYPE 3 — CONFINEMENT SYSTEM, IMPORTED TOPSOIL/COMPOST MIX, EROSION CONTROL (BONDED FIBER MATRIX)
- EROSION CONTROL TYPE 4 — COMPOST, INCORPARTE MATERIALS, ROLLED EROSION CONTROL PROJECT(NETTING), EROSION CONTROL(BONDED FIBER MATRIX)
- EROSION CONTROL TYPE 5 — RIVER SHORE MATERIAL (RSM)
- GRAVEL MULCH
- FR — FIBER ROLLS

EROSION CONTROL PLANS

SCALE: 1" = 50'

EC-1

STATE OF CALIFORNIA - DEPARTMENT OF TRANSPORTATION

Caltrans LANDSCAPE ARCHITECTURE

SENIOR LANDSCAPE ARCHITECT: J. PIETRZAK

CALCULATED-DESIGNED BY: LESLEY MORGAN

CHECKED BY: D. TILLSON

REVISED BY / DATE REVISED

LAST REVISION 00-00-00 | DATE PLOTTED => 08-JUL-2016 | TIME PLOTTED => 16:20

Dist	COUNTY	ROUTE	POST MILES TOTAL PROJECT	SHEET No.	TOTAL SHEETS
03	ED	49	23.6/24.5	108	202

LICENSED LANDSCAPE ARCHITECT

5-9-16
PLANS APPROVAL DATE

LICENSED LANDSCAPE ARCHITECT Lesley E. Morgan No. 5066 Date 04-11-16 STATE OF CALIFORNIA

THE STATE OF CALIFORNIA OR ITS OFFICERS OR AGENTS SHALL NOT BE RESPONSIBLE FOR THE ACCURACY OR COMPLETENESS OF SCANNED COPIES OF THIS PLAN SHEET.

NOTES:

FOR ACCURATE RIGHT OF WAY DATA, CONTACT RIGHT OF WAY ENGINEERING AT THE DISTRICT OFFICE.

1. RESTORE RIVER SHORE MATERIAL (RSM) AS SHOWN ON PLANS TO PRE-CONSTRUCTION CONDITIONS, INCLUDING ORIGINAL CONTOURS WITH COBBLES, BOULDERS, SAND AND GRAVELS FROM THE AREA.
2. CREATE RIVER SHORE MATERIAL (RSM) TO MATCH RESTORED (RSM). SET LIMITS TO ONE FOOT ABOVE OHWM. SET TOP OF (RSM) AT ORIGINAL GRADE.

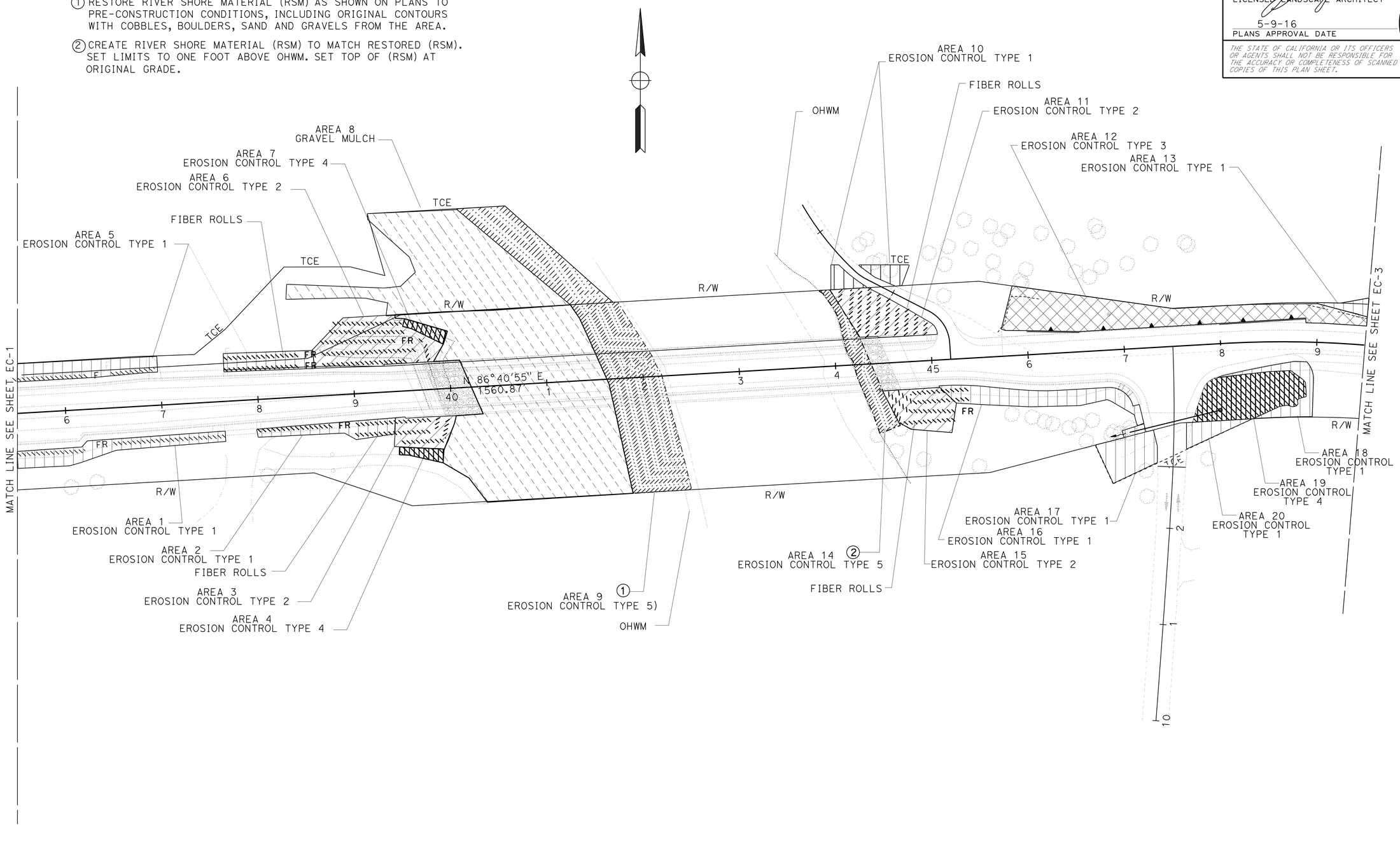

EROSION CONTROL PLANS

SCALE: 1" = 50'

EC-2

STATE OF CALIFORNIA - DEPARTMENT OF TRANSPORTATION
Caltrans® LANDSCAPE ARCHITECTURE

SENIOR LANDSCAPE ARCHITECT: J. PIETRZAK
CALCULATED-DESIGNED BY: LESLEY MORGAN
CHECKED BY: D. TILLSON
REVISED BY
DATE REVISED

LAST REVISION 00-00-00
DATE PLOTTED => 08-JUL-2016
TIME PLOTTED => 16:20

Dist	COUNTY	ROUTE	POST MILES TOTAL PROJECT	SHEET No.	TOTAL SHEETS
03	ED	49	23.6/24.5	109	202

LICENSED LANDSCAPE ARCHITECT

5-9-16
PLANS APPROVAL DATE

LICENSED LANDSCAPE ARCHITECT
Lesley E. Morgan
No. 5066
Signature
03-31-18
Renewal Date
04-11-16
Date
STATE OF CALIFORNIA

THE STATE OF CALIFORNIA OR ITS OFFICERS OR AGENTS SHALL NOT BE RESPONSIBLE FOR THE ACCURACY OR COMPLETENESS OF SCANNED COPIES OF THIS PLAN SHEET.

NOTE:

FOR ACCURATE RIGHT OF WAY DATA, CONTACT RIGHT OF WAY ENGINEERING AT THE DISTRICT OFFICE.

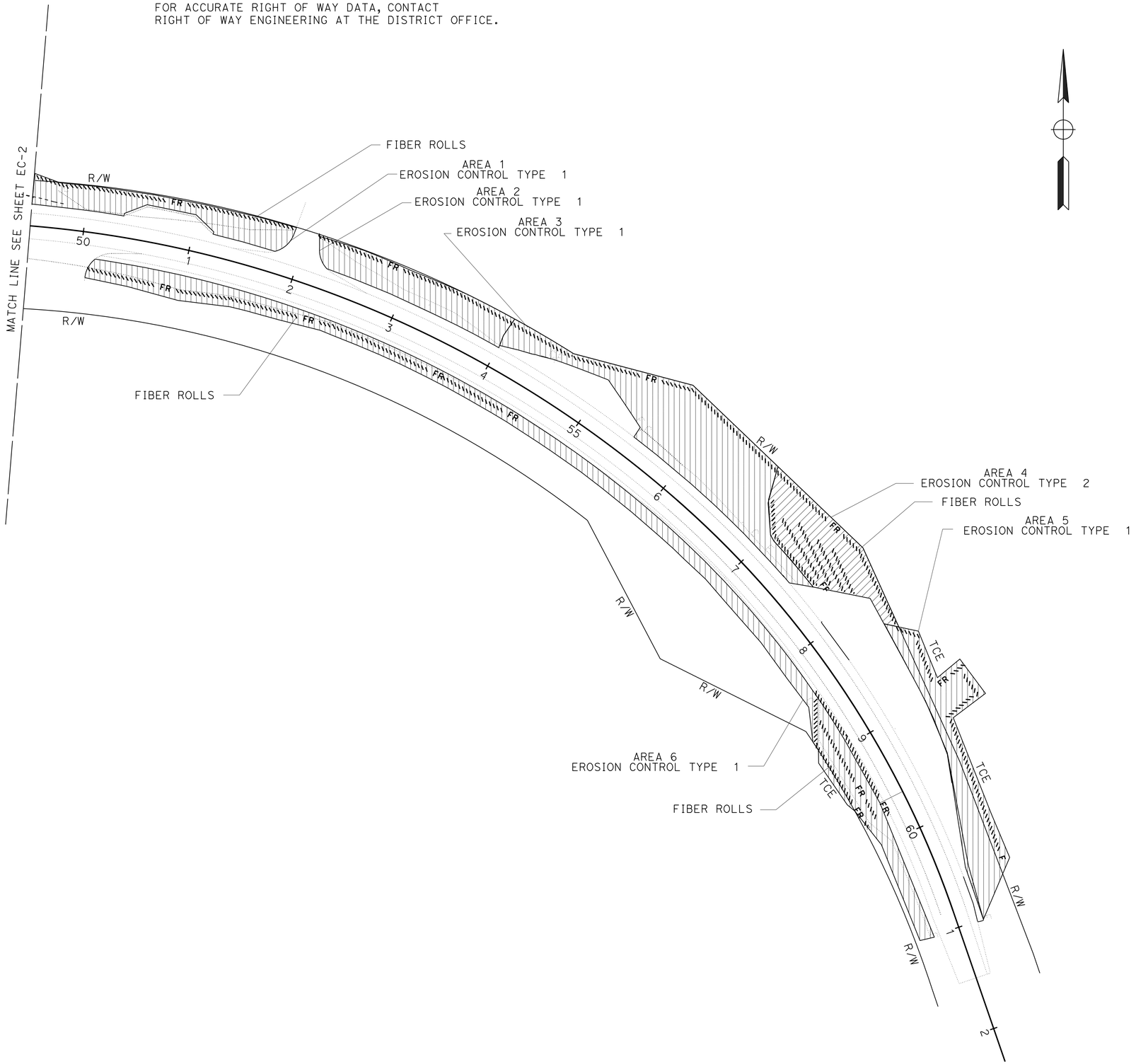

EROSION CONTROL PLANS

SCALE: 1" = 50'

EC-3

STATE OF CALIFORNIA - DEPARTMENT OF TRANSPORTATION
Caltrans®
LANDSCAPE ARCHITECTURE

SENIOR LANDSCAPE ARCHITECT: JEFFREY PIETRZAK

CALCULATED-DESIGNED BY: LESLEY MORGAN
CHECKED BY: D. TILLSON

REVISED BY
DATE REVISED

LAST REVISION 00-00-00
DATE PLOTTED => 08-JUL-2016
TIME PLOTTED => 16:20

Dist	COUNTY	ROUTE	POST MILES TOTAL PROJECT	SHEET No.	TOTAL SHEETS
03	ED	49	23.7/24.4	110	202

LICENSED LANDSCAPE ARCHITECT

5-9-16
PLANS APPROVAL DATE

LICENSED LANDSCAPE ARCHITECT
Lesley E. Morgan
Registered Date
05-31-18
Renewal Date
04-11-16
Date
STATE OF CALIFORNIA

THE STATE OF CALIFORNIA OR ITS OFFICERS OR AGENTS SHALL NOT BE RESPONSIBLE FOR THE ACCURACY OR COMPLETENESS OF SCANNED COPIES OF THIS PLAN SHEET.

NOTE:

FOR ACCURATE RIGHT OF WAY DATA, CONTACT RIGHT OF WAY ENGINEERING AT THE DISTRICT OFFICE.

1. LOCATIONS ARE APPROXIMATE.
2. THIS PLAN FOR REMOVAL OF ALIANTHUS ALTISSISMA ONLY. OTHER TREES SHOWN FOR ILLUSTRATIVE PURPOSES ONLY.

LEGEND:

ONE TREE OR GROUPING OF SMALL SPROUTS TO BE REMOVED.

AREA WITHIN CLEARING AND GRUBBING ZONE HAVE MULTIPLE LOCATIONS OF GROUPS OF MATURE AND SMALL SPROUTS TO BE REMOVED.

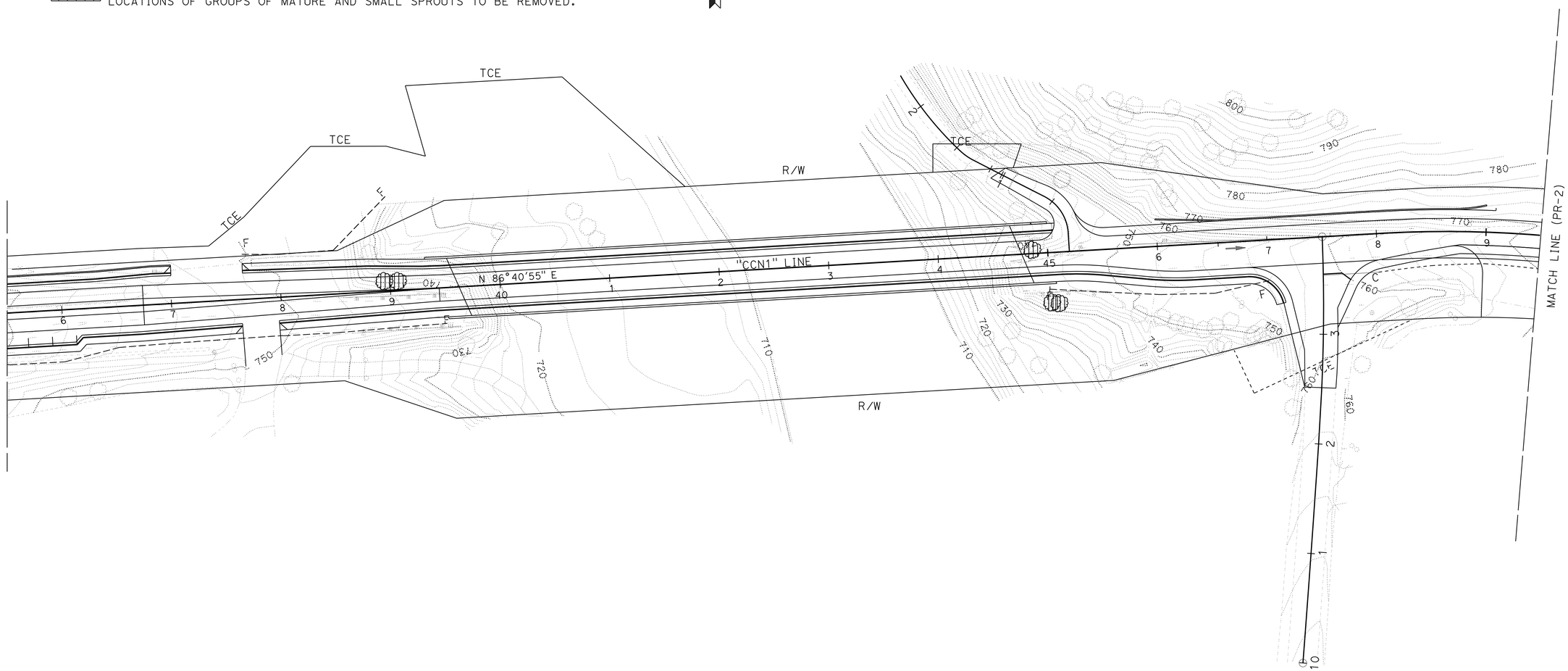

ALIANTHUS ALTISSIMA TREE REMOVAL

SCALE: 1" = 50'

PR-1

STATE OF CALIFORNIA - DEPARTMENT OF TRANSPORTATION

Caltrans® LANDSCAPE ARCHITECTURE

SENIOR LANDSCAPE ARCHITECT: J. PIETRZAK

CALCULATED-DESIGNED BY: LESLEY MORGAN

CHECKED BY: D. TILLSON

REVISED BY

DATE REVISED

LAST REVISION 00-00-00

DATE PLOTTED => 08-JUL-2016
TIME PLOTTED => 16:20

Dist	COUNTY	ROUTE	POST MILES TOTAL PROJECT	SHEET No.	TOTAL SHEETS
03	ED	49	23.6/24.5	111	202

LICENSED LANDSCAPE ARCHITECT

5-9-16
PLANS APPROVAL DATE

LICENSED LANDSCAPE ARCHITECT
Lesley E. Morgan
No. 5066
Expires
03-31-18
Renewal Date
04-11-16
Date
STATE OF CALIFORNIA

THE STATE OF CALIFORNIA OR ITS OFFICERS OR AGENTS SHALL NOT BE RESPONSIBLE FOR THE ACCURACY OR COMPLETENESS OF SCANNED COPIES OF THIS PLAN SHEET.

NOTE:
FOR ACCURATE RIGHT OF WAY DATA, CONTACT RIGHT OF WAY ENGINEERING AT THE DISTRICT OFFICE.

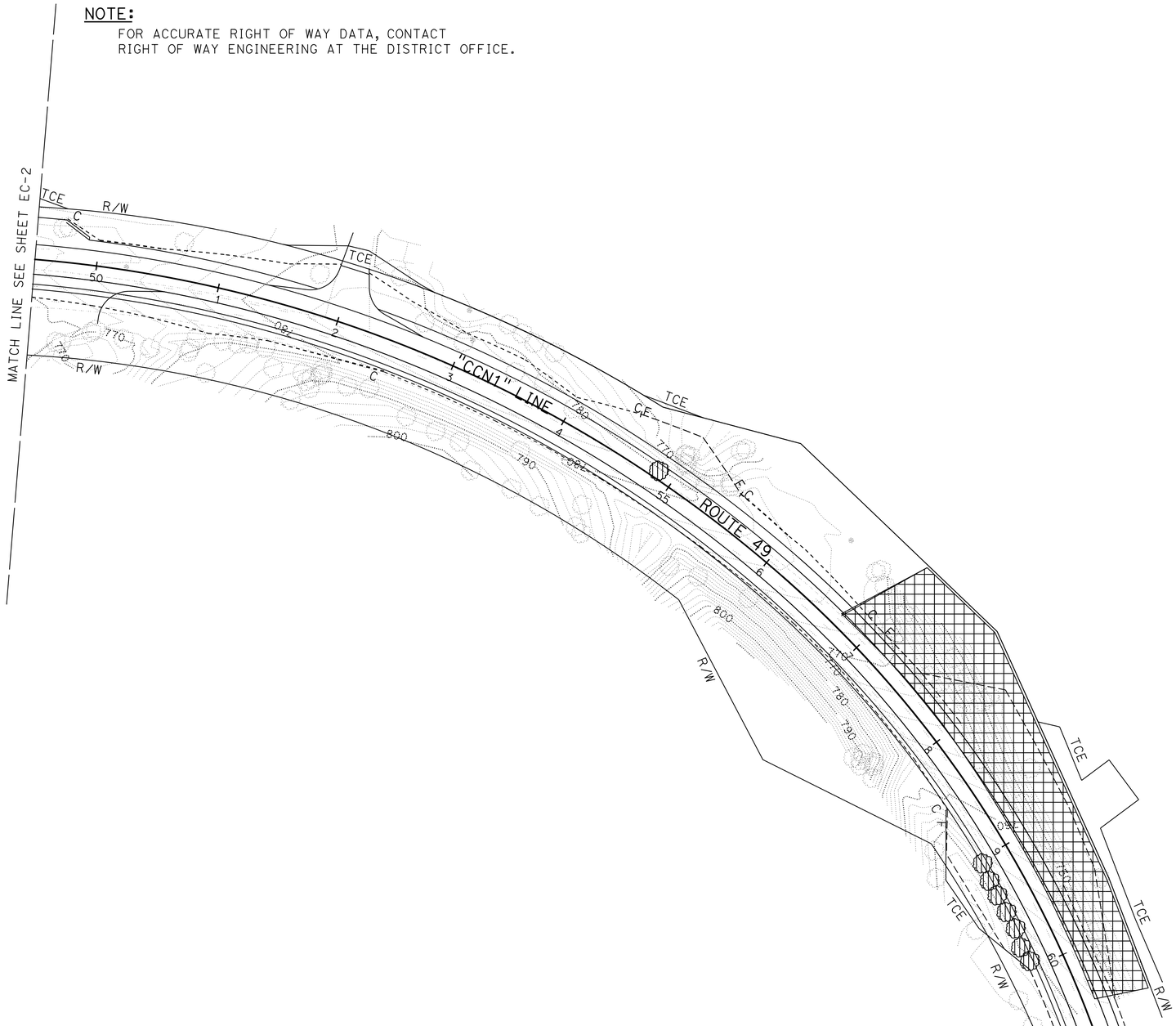

ALIANTHUS ALTISSIMA TREE REMOVAL

SCALE: 1" = 50′ **PR-2**

REVISED BY | DATE REVISED

LESLEY MORGAN | CALCULATED-DESIGNED BY
D. TILLSON | CHECKED BY
SENIOR LANDSCAPE ARCHITECT
J. PIETRZAK

STATE OF CALIFORNIA - DEPARTMENT OF TRANSPORTATION
Caltrans® LANDSCAPE ARCHITECTURE

LAST REVISION 00-00-00 | DATE PLOTTED => 08-JUL-2016 | TIME PLOTTED => 16:20

Dist	COUNTY	ROUTE	POST MILES TOTAL PROJECT	SHEET No.	TOTAL SHEETS
03	ED	49	23.6/24.5	112	202

LICENSED LANDSCAPE ARCHITECT

5-9-16
PLANS APPROVAL DATE

LICENSED LANDSCAPE ARCHITECT Lesley E. Morgan No. 5066 Expires 12-31-18 Renewal Date 04-11-16 Date STATE OF CALIFORNIA

THE STATE OF CALIFORNIA OR ITS OFFICERS OR AGENTS SHALL NOT BE RESPONSIBLE FOR THE ACCURACY OR COMPLETENESS OF SCANNED COPIES OF THIS PLAN SHEET.

NOTE:

1. (N) - NOT A SEPARATE PAY ITEM, FOR INFORMATION ONLY
2. ALL FILL SLOPES WILL BE ROUGHENED.

FIBER ROLLS

SEQUENCE	ITEM	MATERIAL		REMARKS
		DESCRIPTION	TYPE	
FIBER ROLLS MUST BE INSTALLED AFTER BFM AREAS.	FIBER ROLLS	FIBER ROLL	TYPE B STRAW FILL 8" TO 10" Dia	TYPE 1 FIBER ROLL INSTALLATION

EROSION CONTROL TYPE 1

SEQUENCE	ITEM	MATERIAL		APPLICATION RATE (N)
		DESCRIPTION	TYPE	
STEP 1	EROSION CONTROL (BONDED FIBER MATRIX)	SEED	MIX	88 LBS/ACRE
		FERTILIZER	ORGANIC	200 LB/ACRE
		TACKIFIER	BONDED FIBER MATRIX	3,000 LB/ACRE

EROSION CONTROL TYPE 2

SEQUENCE	ITEM	MATERIAL		APPLICATION RATE (N)
		DESCRIPTION	TYPE	
STEP 1	COMPOST	COMPOST	MEDIUM	1 DEPTH"
STEP 2	RECP (NETTING)	NETTING	TYPE A	Std PLANS
STEP 3	EROSION CONTROL (BONDED FIBER MATRIX)	SEED	MIX	88 LB/ACRE
		FERTILIZER	ORGANIC	200 LB/ACRE
		TACKIFIER	BONDED FIBER MATRIX	3,000 LB/ACRE

EROSION CONTROL TYPE 3

SEQUENCE	ITEM	MATERIAL		APPLICATION RATE (N)
		DESCRIPTION	TYPE	
STEP 1	SOIL FILLED (CELLULAR CONFINEMENT SYSTEM)	3" DEPTH -TAN COLORED	3"x10" CELL	SEE LANDSCAPE DETAILS
STEP 2	BACKFILL MATERIAL	COMPOST/IMPORT TOP SOIL	COMPOST MEDIUM	MIX 50/50 FILL TO TOP OF CELL
STEP 3	EROSION CONTROL (BONDED FIBER MATRIX)	SEED	MIX	88 LB/ACRE
		FERTILIZER	ORGANIC	200 LB/ACRE
		TACKIFIER	BONDED FIBER MATRIX	3,000 LB/ACRE

SEE DRAINAGE PLANS FOR DITCH EXCAVATION

EROSION CONTROL TYPE 4
BIOFILTRATION SWALES

SEQUENCE	ITEM	MATERIAL		APPLICATION RATE (N)
		DESCRIPTION	TYPE	
STEP 1	COMPOST	COMPOST	MEDIUM	3 " DEPTH
STEP 2	INCORPORATE MATERIALS	COMPOST	———	8 " DEPTH
STEP 3	EROSION CONTROL (BONDED FIBER MATRIX)	SEED	MIX	88 LB/ACRE
		FERTILIZER	ORGANIC	200 LB/ACRE
		TACKIFIER	BONDED FIBER MATRIX	3.000 LB/ACRE
STEP 4	RECP (NETTING)	NETTING	TYPE B	Std PLANS

SEE LANDSCAPE DETAILS FOR BIOFILTRATION SWALE.

EROSION CONTROL TYPE 5
EROSION CONTROL (RIVER SHORE MATERIAL)(RSM)

ITEM	MATERIAL		REMARKS
	DESCRIPTION	TYPE	
RSM	SIZE 6" TO 1'	———	MATCH OPPOSITE SIDE OF RIVER

SEED MIX

BOTANICAL NAME (COMMON NAME)	PERCENT GERMINATION (MINIMUM)	POUNDS PURE LIVE SEED PER ACRE (N) (SLOPE MEASUREMENT)
*ACHILLEA MILLEFOLIUM (COMMON YARROW)	70	1
*BROMUS CARINATUS (CALIF. BROME)	80	11
*ELYMUS GLAUCUS (BLUE WILDRYE	80	10
ELYMUS TRACHYCAULUS (SLENDER WHEATGRASS)	75	6
ESCHSCHOLZIA CALIFORNICA (CALIFORNIA POPPY)	75	4
LOTUS PURSHIANUS (PURSHING)	70	14
LUPINUS ALBIFRONS (SILVER LUPINE)	60	15
*LUPINUS BICOLOR (DWARF LUPINE)	60	15
*MIMULUS AURANTIACUS (STICKY MONKEY FLOWER)	70	1
*NASSELLA PULCHRA (PURPLE NEEDLEGRASS)	60	10
*POA SECUNDA (PINE BLUEGRASS)	70	1
	TOTAL	88

* INLAND NORTHERN CALIFORNIA SEED SOURCE (CENTRAL VALLEY, SIERRA FOOTHILLS)

GRAVEL MULCH

ITEM	MATERIAL		REMARKS
	DESCRIPTION	TYPE	
GRAVEL MULCH	SIZE ½" TO 1¼"	———	3" DEPTH

EROSION CONTROL LEGEND
ECL-1

REVISED BY | DATE REVISED
LESLEY MORGAN | D. TILLSON
CALCULATED-DESIGNED BY | CHECKED BY
SENIOR LANDSCAPE ARCHITECT | JEFFREY PIETRZAK
STATE OF CALIFORNIA - DEPARTMENT OF TRANSPORTATION
Caltrans LANDSCAPE ARCHITECTURE

LAST REVISION 00-00-00 | DATE PLOTTED => 08-JUL-2016 | TIME PLOTTED => 16:20

Dist	COUNTY	ROUTE	POST MILES TOTAL PROJECT	SHEET No.	TOTAL SHEETS
03	ED	49	23.6/24.5	113	202

LICENSED LANDSCAPE ARCHITECT

5-9-16
PLANS APPROVAL DATE

LICENSED LANDSCAPE ARCHITECT Lesley E. Morgan No. 5066 Expires 12-31-18 Renewal Date 04-11-16 Date STATE OF CALIFORNIA

THE STATE OF CALIFORNIA OR ITS OFFICERS OR AGENTS SHALL NOT BE RESPONSIBLE FOR THE ACCURACY OR COMPLETENESS OF SCANNED COPIES OF THIS PLAN SHEET.

EROSION CONTROL QUANTITIES

EROSION CONTROL SHEETS	AREA	EROSION CONTROL TYPE (N)	COMPOST	SOIL FILLED (CELLULAR CONFINEMENT SYSTEM) (N) COMPOST	SOIL FILLED (CELLULAR CONFINEMENT SYSTEM) (N) IMPORTED TOP SOIL	SOIL FILLED (CELLULAR CONFINEMENT SYSTEM)	INCORPORATE MATERIALS	EROSION CONTROL (BONDED FIBER MATRIX)	ROLLED EROSION CONTROL PRODUCT (NETTING)	FIBER ROLLS	EROSION CONTROL (RIVER SHORE MATERIAL)
			SQFT	SQFT	SQFT	SQFT	SQFT	SQFT	SQFT	LF	SQFT
1	1	1	--	--	--	--	--	3124	--	116	--
1	2	1	--	--	--	--	--	7152	--	680	--
1	3	1	--	--	--	--	--	19460	--	88	--
1	4	1	--	--	--	--	--	2331	--	200	--
1	5	1	--	--	--	--	--	8301	--	521	--
1	6	1	--	--	--	--	--	11362	--	729	--
1	7	1	--	--	--	--	--	1721	--	89	--
2	1	1	--	--	--	--	--	3125	--	219	--
2	2	1	--	--	--	--	--	1847	--	180	--
2	3	2	1,897	--	--	--	--	1897	1897	210	--
2	4	4	491	--	--	--	491	491	491	110	--
2	5	1	--	--	--	--	--	4454	--	192	--
2	6	2	4937	--	--	--	--	4937	4937	471	--
2	7	4	306	--	--	--	306	306	306	--	--
2	8	--	--	--	--	--	--	--	--	--	--
2	9	5	--	--	--	--		--	--	--	16634
2	10	2	3,893	--	--	--	--	1305	3893	--	--
2	11	1	--	9492	9492	9492	--	3893	--	317	--
2	12	3	--	--	--	--	--	9492	--	--	--
2	13	1	--	--	--	--		472	--	52	2509
2	14	5	2,808	--	--	--	--	--	2808	--	--
2	15	2	--	--	--	--	--	2808	--	342	--
2	16	1	--	--	--	--	--	3483	--	--	--
2	17	1	--	--	--	--	--	2429	--	--	--
2	18	1	4557		--	--	4557	1534	4557	--	--
2	19	4	--	--	--	--	--	4557	--	--	--
2	20	1	--	--	--	--	--	958	--	--	--
3	1	1	--	--	--	--	--	5644	--	200	--
3	2	1	--	--	--	--	--	5562	--	197	--
3	3	1	--	--	--	--	--	14482	--	288	--
3	4	1	6882	--	--	--	--	6882	6882	536	--
3	5	2	--	--	--	--	--	8243	--	353	--
3	6	1	--	--	--	--	--	16399	--	386	--
TOTAL TABLE			25,771	9,492	9,492	9,492	5,354	158,649	25,771	6,476	19,143

(N) NOT A SEPARATE PAY ITEM, FOR INFORMATION ONLY
FOR TOTAL QUANTITIES SEE SUMMARY OF QUANTITIES

LANDSCAPE QUANTITIES

EROSION CONTROL SHEETS	AREA	GRAVEL MULCH	MOVE-I/-MOVE-OUT (EROSION CONTROL)
		SQFT	EA
2	8	47151	
TOTAL TABLE		47,151	3

EROSION CONTROL QUANTITIES
ECQ-2

STATE OF CALIFORNIA - DEPARTMENT OF TRANSPORTATION
Caltrans® LANDSCAPE ARCHITECTURE

SENIOR LANDSCAPE ARCHITECT: J. PIETRZAK
CALCULATED-DESIGNED BY: LESLEY MORGAN
CHECKED BY: D. TILLSON
REVISED BY
DATE REVISED

LAST REVISION 00-00-00
DATE PLOTTED => 08-JUL-2016
TIME PLOTTED => 16:20

Dist	COUNTY	ROUTE	POST MILES TOTAL PROJECT	SHEET No.	TOTAL SHEETS
03	ED	49	23.6/24.5	114	202

Normanye 5-9-16
REGISTERED ELECTRICAL ENGINEER DATE

5-9-16
PLANS APPROVAL DATE

REGISTERED PROFESSIONAL ENGINEER NORMAN YE No. E16913 Exp. 6/30/17 ELECTRICAL STATE OF CALIFORNIA

THE STATE OF CALIFORNIA OR ITS OFFICERS OR AGENTS SHALL NOT BE RESPONSIBLE FOR THE ACCURACY OR COMPLETENESS OF SCANNED COPIES OF THIS PLAN SHEET.

NOTE:

FOR ACCURATE RIGHT OF WAY DATA, CONTACT
RIGHT OF WAY ENGINEERING AT THE DISTRICT OFFICE.

LEGEND (FOR THIS SHEET ONLY):

1. 2-2"C, PT TYPE 3 (SPARE). SEE STRUCTURE PLAN "TYPICAL SECTION" SHEET 19.
2. 2"C, 2#14(FB), 1#8(G)
3. SEE ES-2D FOR SERVICE WIRING DIAGRAM.
   ITEMS (9) TO (27) ARE NOT REQUIRED EXCEPT (13) .
   ADD 2 SPARE SINGLE POLE, 15 AMP CIRCUIT BREAKERS.
4. INSTALLATION PER SERVICE UTILITY

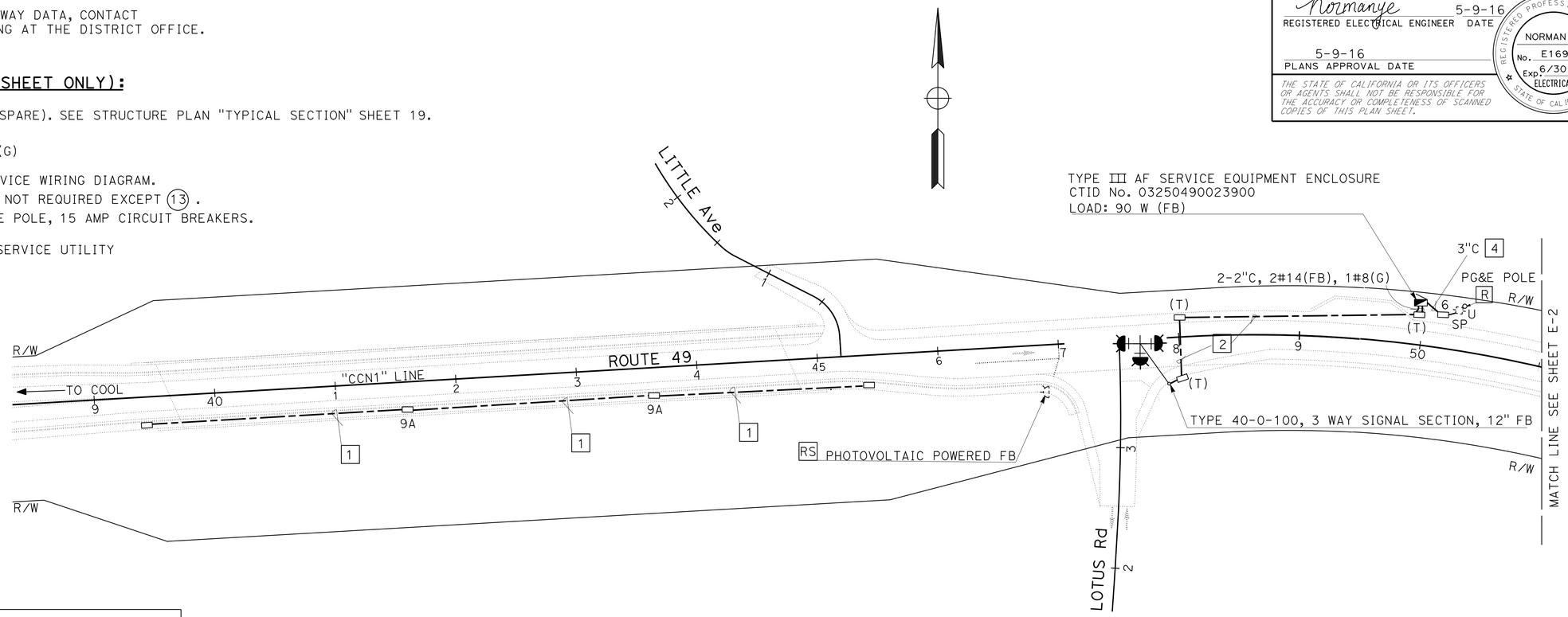

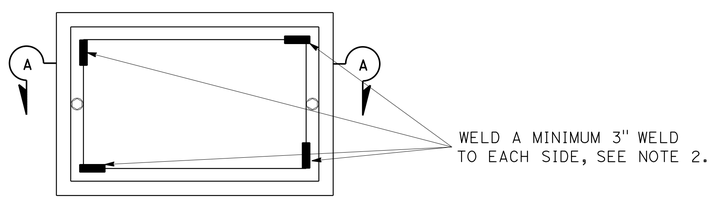

TOP VIEW

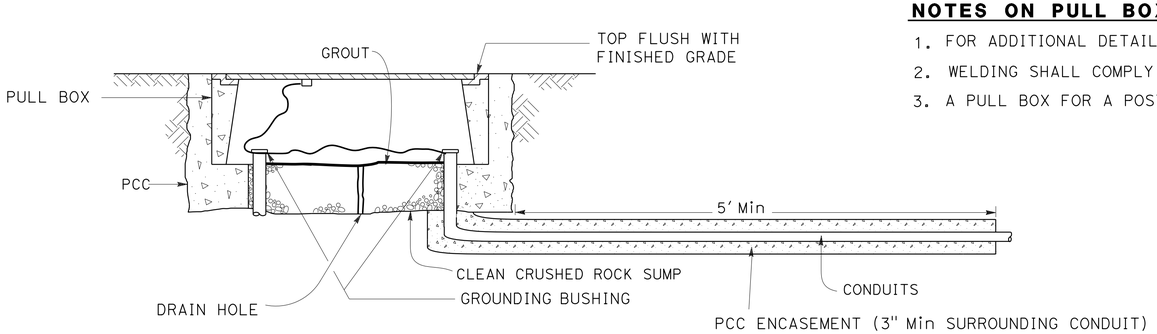

SECTION A-A

NOTES ON PULL BOXES:

1. FOR ADDITIONAL DETAILS, SEE REVISED STANDARD PLAN RSP ES-8B.
2. WELDING SHALL COMPLY WITH REQUIREMENTS IN STANDARD SPECIFICATION SECTIONS 11, 11-3.01, AND 75.
3. A PULL BOX FOR A POST OR A POLE STANDARD MUST BE LOCATED WITHIN 5 FEET OF THE STANDARD.

TRAFFIC PULL BOX

MODIFYING EXISTING ELECTRICAL SYSTEM

APPROVED FOR ELECTRICAL WORK ONLY

SCALE: 1" = 50'

E-1

STATE OF CALIFORNIA - DEPARTMENT OF TRANSPORTATION
Caltrans® ELECTRICAL DESIGN

FUNCTIONAL SUPERVISOR: MARY ANN HUDSPETH
CALCULATED-DESIGNED BY: NORMAN YE
CHECKED BY: NATHAN DEKENS
REVISED BY / DATE REVISED

LAST REVISION 06-21-16 | DATE PLOTTED => 08-JUL-2016 | TIME PLOTTED => 16:20

Dist	COUNTY	ROUTE	POST MILES TOTAL PROJECT	SHEET No.	TOTAL SHEETS
03	ED	49	23.6/24.5	115	202

Normanye 5-9-16
REGISTERED ELECTRICAL ENGINEER DATE

5-9-16
PLANS APPROVAL DATE

REGISTERED PROFESSIONAL ENGINEER
NORMAN YE
No. E16913
Exp. 6/30/17
ELECTRICAL
STATE OF CALIFORNIA

THE STATE OF CALIFORNIA OR ITS OFFICERS OR AGENTS SHALL NOT BE RESPONSIBLE FOR THE ACCURACY OR COMPLETENESS OF SCANNED COPIES OF THIS PLAN SHEET.

NOTE:

FOR ACCURATE RIGHT OF WAY DATA, CONTACT RIGHT OF WAY ENGINEERING AT THE DISTRICT OFFICE.

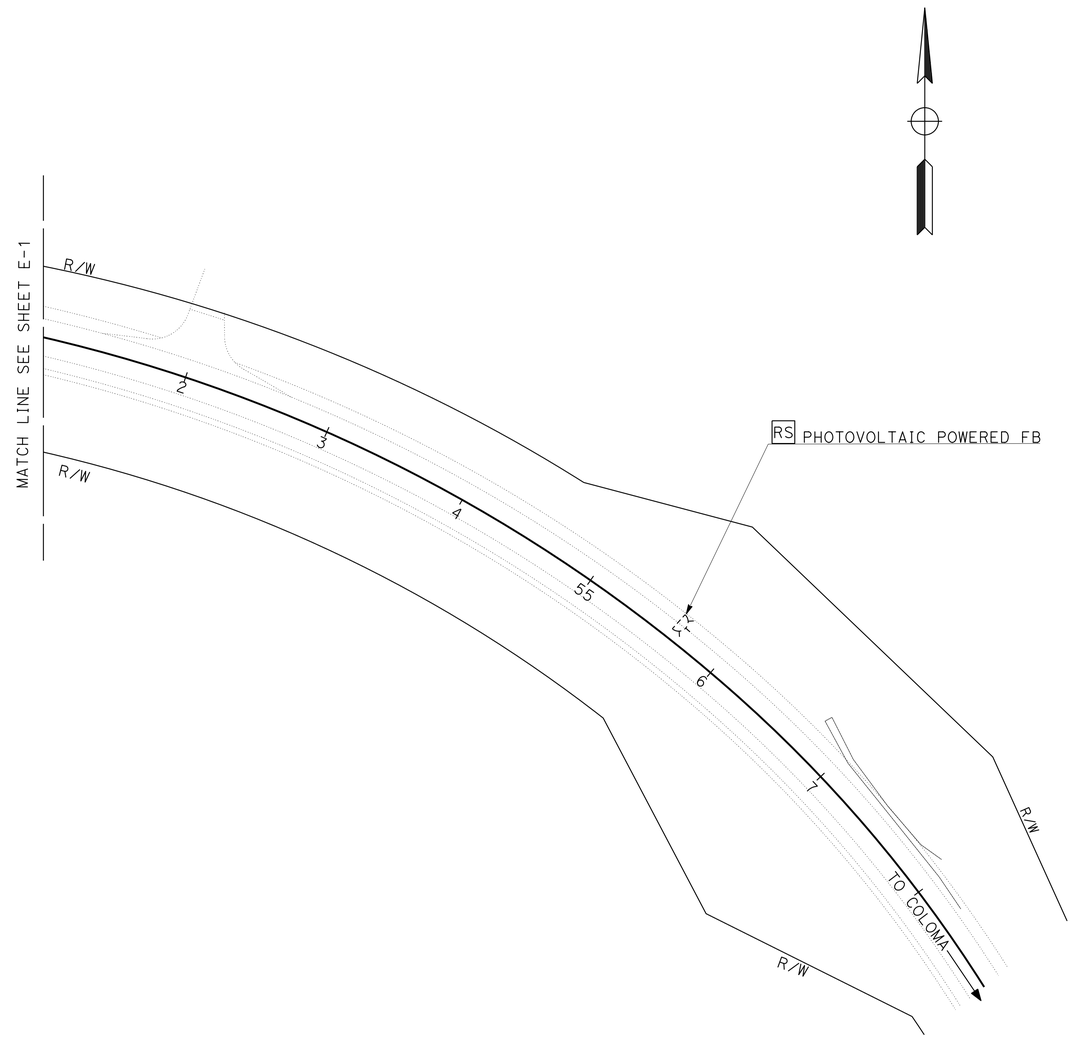

APPROVED FOR ELECTRICAL WORK ONLY

MODIFYING EXISTING ELECTRICAL SYSTEM

SCALE: 1" = 50'

E-2

STATE OF CALIFORNIA - DEPARTMENT OF TRANSPORTATION
Caltrans® **ELECTRICAL DESIGN**

FUNCTIONAL SUPERVISOR: MARY ANN HUDSPETH
CALCULATED-DESIGNED BY: NORMAN YE
CHECKED BY: NATHAN DEKENS
REVISED BY
DATE REVISED

LAST REVISION 06-21-16
DATE PLOTTED => 08-JUL-2016
TIME PLOTTED => 16:20

Dist	COUNTY	ROUTE	POST MILES TOTAL PROJECT	SHEET No.	TOTAL SHEETS
03	ED	49	23.6/24.5	116	202

Normanye 5-9-16
REGISTERED ELECTRICAL ENGINEER DATE

5-9-16
PLANS APPROVAL DATE

REGISTERED PROFESSIONAL ENGINEER
NORMAN YE
No. E16913
Exp. 6/30/17
ELECTRICAL
STATE OF CALIFORNIA

THE STATE OF CALIFORNIA OR ITS OFFICERS OR AGENTS SHALL NOT BE RESPONSIBLE FOR THE ACCURACY OR COMPLETENESS OF SCANNED COPIES OF THIS PLAN SHEET.

NOTE:
ITEMS SHOWN IN THIS TABLE ARE NOT A SEPARATE PAY ITEM. FOR INFORMATION ONLY.

MODIFYING EXISTING ELECTRICAL SYSTEM

SHEET No.	No. 5 PB	No. 6 PB	No. 9A PB	No. 5(T) PB	SERVICE EQUIPMENT ENCLOSURE	3"C	2"C	#8	#14	TYPE 40 STANDARD AND CIDH FOUNDATION	UTILITY RISER
	EA	EA	EA	EA	EA	FT	FT	FT	FT	EA	EA
E-1	2	1	2	3	1	20	1500	300	600	1	1

ELECTRICAL QUANTITIES

E-3

REVISED BY | DATE REVISED
NORMAN YE | NATHAN DEKENS
CALCULATED-DESIGNED BY | CHECKED BY
FUNCTIONAL SUPERVISOR
MARY ANN HUDSPETH

STATE OF CALIFORNIA - DEPARTMENT OF TRANSPORTATION
Caltrans® ELECTRICAL DESIGN

LAST REVISION 06-21-16
DATE PLOTTED => 08-JUL-2016
TIME PLOTTED => 16:20

Dist	COUNTY	ROUTE	POST MILES TOTAL PROJECT	SHEET No.	TOTAL SHEETS
03	ED	49	23.6/24.5	117	202

REGISTERED CIVIL ENGINEER

January 15, 2016
PLANS APPROVAL DATE

REGISTERED PROFESSIONAL ENGINEER
Michael Janzen
No. 44788
Exp. 3-31-16
CIVIL
STATE OF CALIFORNIA

THE STATE OF CALIFORNIA OR ITS OFFICERS OR AGENTS SHALL NOT BE RESPONSIBLE FOR THE ACCURACY OR COMPLETENESS OF SCANNED COPIES OF THIS PLAN SHEET.

TO ACCOMPANY PLANS DATED 5-9-16

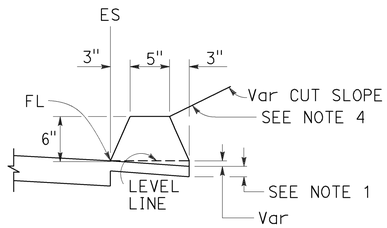

TYPE A
See Notes 3 and 5

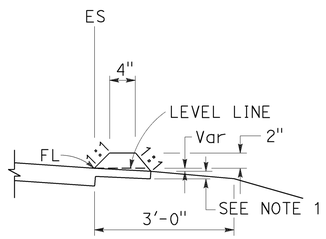

TYPE C

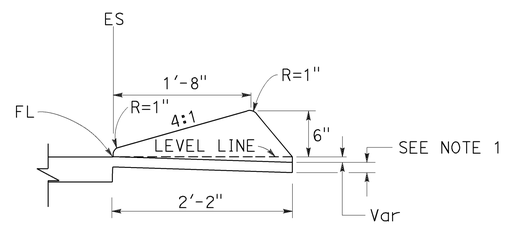

TYPE D

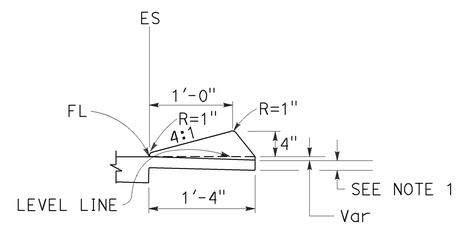

TYPE E

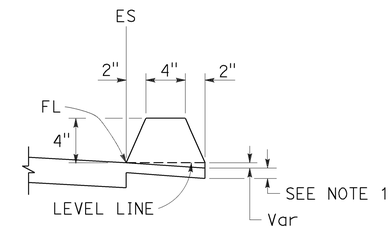

TYPE F
See Note 5

DIKES

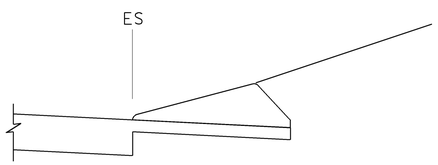

CASE C-1
Cut Slope

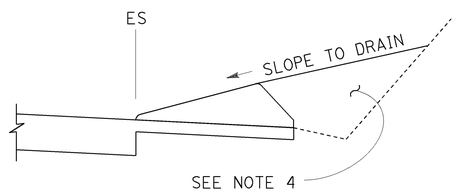

CASE C-2
Cut Slope

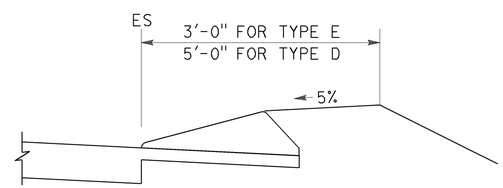

CASE F

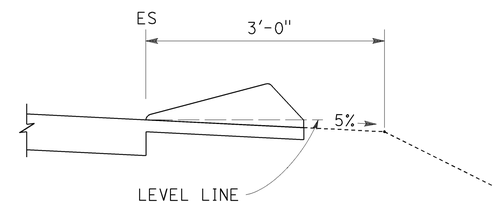

CASE R
See Note 2

TYPE D AND E BACKFILL DETAILS

NOTES:

1. For HMA shoulders only, extend top layer of HMA placed on the shoulder under dike with no joint at the ES. For projects with OGFC shoulders, do not extend OGFC under dike. See project plans for modified dike detail.
2. Case R applies to retrofit only projects where restrictive conditions do not provide enough width for Case F backfill.
3. Type A dike only to be used where restrictive slope conditions do not provide enough width to use Type D or Type E dike.
4. Fill and compact with excavated material to top of dike.
5. Use Type A or F dike, where dike is required with guardrail installations. See Standard Plan A77N4 for dike positioning details. See Standard Plan A77N3 for hinge point offsets with guardrail.

DIKE QUANTITIES

TYPE	CUBIC YARDS PER LINEAR FOOT
A	0.0135
C	0.0038
D	0.0293
E	0.0130
F	0.0066

Quantities based on 5% cross slope.

STATE OF CALIFORNIA
DEPARTMENT OF TRANSPORTATION

HOT MIX ASPHALT DIKES

NO SCALE

RSP A87B DATED JANUARY 15, 2016 SUPERSEDES STANDARD PLAN A87B DATED OCTOBER 30, 2015 - PAGE 126 OF THE STANDARD PLANS BOOK DATED 2015.

REVISED STANDARD PLAN RSP A87B

2015 REVISED STANDARD PLAN RSP A87B

11-17-15

Dist	COUNTY	ROUTE	POST MILES TOTAL PROJECT	SHEET No.	TOTAL SHEETS
03	ED	49	23.6/24.5	118	202

Theresa Gabriel
REGISTERED ELECTRICAL ENGINEER

April 15, 2016
PLANS APPROVAL DATE

REGISTERED PROFESSIONAL ENGINEER
Theresa Aziz Gabriel
No. E15129
Exp. 6-30-16
ELECTRICAL
STATE OF CALIFORNIA

THE STATE OF CALIFORNIA OR ITS OFFICERS OR AGENTS SHALL NOT BE RESPONSIBLE FOR THE ACCURACY OR COMPLETENESS OF SCANNED COPIES OF THIS PLAN SHEET.

TO ACCOMPANY PLANS DATED 5-9-16

2015 REVISED STANDARD PLAN RSP ES-1C

EQUIPMENT IDENTIFICATION

ILLUMINATED SIGN IDENTIFICATION:

SIGN No. 12345
10 ISL SCI 1.0

- SIGN EQUIPMENT IDENTIFICATION CHARACTERS - PLACE ON POST OR STRUCTURE
- TRANSFORMER RATING (kVA)
- LIGHTING CONTROL TYPE
- NUMBER AND TYPE OF FIXTURES

} DO NOT PLACE ON STANDARD OR STRUCTURE

ELECTROLIER OR EQUIPMENT IDENTIFICATION:

L2745 - 15'-0"

- MAST ARM LENGTH, IF SHOWN. DO NOT PLACE ON STANDARD OR STRUCTURE
- EQUIPMENT IDENTIFICATION CHARACTERS - PLACE ON STANDARD OR STRUCTURE. EXISTING EQUIPMENT IDENTIFICATION CHARACTERS ARE SHOWN IN PARENTHESIS

CONDUIT AND CONDUCTOR IDENTIFICATION:

1½"C, 2#10, 15#14, 2 DLC, 12P#18 (PAIR)

- NUMBER AND SIZE OF CONDUCTORS AND CABLES
- SIZE OF CONDUIT IN INCHES

ø1, ø2, ø2P, etc.	TRAFFIC PHASE IDENTIFICATION FOR SIGNALS, DETECTORS AND PHASE DIAGRAMS
1 2 3	LEGEND NUMBERS
A B C	EQUIPMENT, SIGNAL POLES, INSTALLATION OR ITEMS
1 2 3	CONDUIT RUN NUMBERS

SIGNAL AND LIGHTING STANDARD (TYPICAL DESIGNATION):

19A - 3 - 100

- WIND VELOCITY = 100 mph
- CASE 3 ARM LOADING
- STANDARD TYPE
- STANDARD PLAN SHEET NUMBER
- DETAIL, NUMBER, SECTION, TYPE OR ELEVATION

MISCELLANEOUS EQUIPMENT

NEW	EXISTING	
CMS	cms	CHANGEABLE MESSAGE SIGN
		CLOSED CIRCUIT TELEVISION CAMERA
		HIGHWAY ADVISORY RADIO POLE AND ANTENNA
EMS	ems	LED EXTINGUISHABLE MESSAGE SIGN
M V	m v	DETECTION DEVICE M = MICROWAVE SENSOR V = VIDEO IMAGE SENSOR

WIRING DIAGRAM LEGEND

- EXTERNAL CONDUCTOR
- CONDUCTOR OR BUS
- TIE POINT
- CONTACTOR COIL
- CONTACTOR, NO CONTACT
- TERMINAL BLOCKS
- CONTACTOR, NC CONTACT
- ENCLOSURE BOND
- GROUNDING ELECTRODE
- CIRCUIT BREAKER
- RECEPTACLE

PULL BOXES

NEW	EXISTING	
		PULL BOX, No. 5 UNLESS OTHERWISE INDICATED OR NOTED
3	9A(21)	PULL BOX, ADDITIONAL DESIGNATIONS OR DESCRIPTIONS

3 No. 3½ PULL BOX
5 No. 5 PULL BOX
6 No. 6 PULL BOX
7 No. 7 PULL BOX (CEILING)
8 No. 8 PULL BOX
9 No. 9 PULL BOX (STRUCTURE)
9A No. 9A PULL BOX (STRUCTURE)

(C) COMMUNICATIONS PULL BOX
(E) PULL BOX WITH EXTENSION
(S) SPRINKLER CONTROL PULL BOX
(21) ANCHOR BOLTS AND CONDUIT FOR FUTURE INSTALLATION OF TYPE 21 STANDARD
(T) TRAFFIC PULL BOX

VEHICLE DETECTORS

5 J 9 U

- VEHICLE DETECTOR DESIGNATION
- U = UPPER
  L = LOWER
- SLOT NUMBER IN INPUT FILE
- INPUT FILE (I OR J)
- PHASE

NEW	EXISTING	
		TYPE A LOOP DETECTOR. OUTLINE OF SAW CUT SHOWN
		TYPE B LOOP DETECTOR. OUTLINE OF SAW CUT SHOWN
		TYPE C LOOP DETECTOR. OUTLINE OF SAW CUT SHOWN
		TYPE D LOOP DETECTOR. OUTLINE OF SAW CUT SHOWN
		TYPE E LOOP DETECTOR. OUTLINE OF SAW CUT SHOWN
		TYPE Q LOOP DETECTOR. OUTLINE OF SAW CUT SHOWN
DH	dh	DETECTOR HANDHOLE
		MICROWAVE OR VIDEO DETECTION ZONE

STATE OF CALIFORNIA
DEPARTMENT OF TRANSPORTATION

ELECTRICAL SYSTEMS (LEGEND AND ABBREVIATIONS)

NO SCALE

RSP ES-1C DATED APRIL 15, 2016 SUPERSEDES STANDARD PLAN ES-1C DATED OCTOBER 30, 2015 - PAGE 420 OF THE STANDARD PLANS BOOK DATED 2015.

REVISED STANDARD PLAN RSP ES-1C

1-22-16

Dist	COUNTY	ROUTE	POST MILES TOTAL PROJECT	SHEET No.	TOTAL SHEETS
03	ED	49	23.6/24.5	119	202

REGISTERED CIVIL ENGINEER

April 15, 2016
PLANS APPROVAL DATE

REGISTERED PROFESSIONAL ENGINEER Stanley P. Johnson No. C57793 Exp. 3-31-18 CIVIL STATE OF CALIFORNIA

THE STATE OF CALIFORNIA OR ITS OFFICERS OR AGENTS SHALL NOT BE RESPONSIBLE FOR THE ACCURACY OR COMPLETENESS OF SCANNED COPIES OF THIS PLAN SHEET.

TO ACCOMPANY PLANS DATED 5-9-16

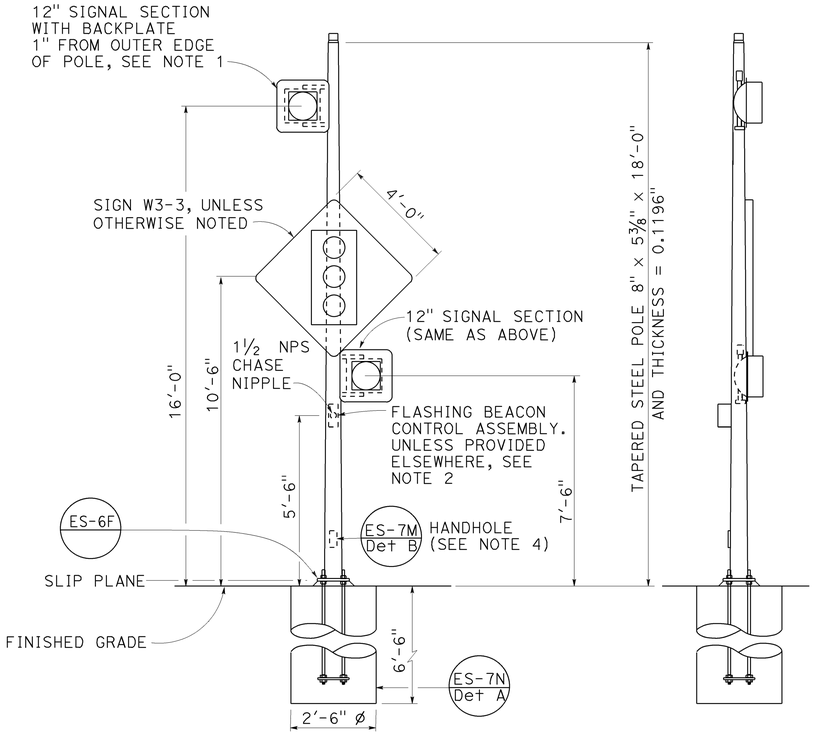

FRONT VIEW

SIDE VIEW

TYPE 15-FBS
FLASHING BEACON WITH SLIP BASE INSTALLATION
DETAIL A

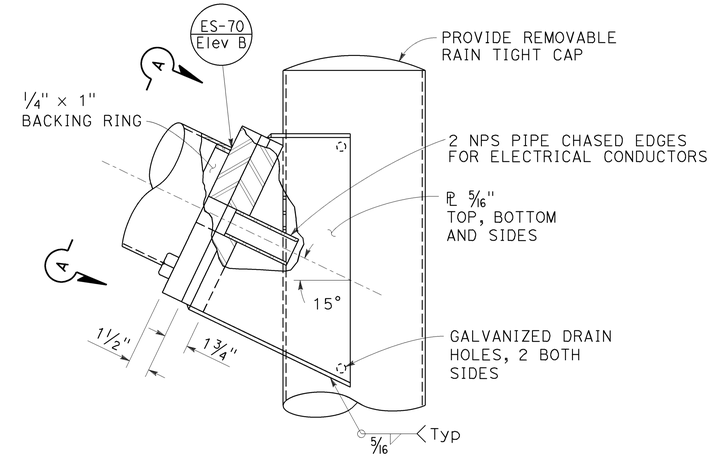

ELEVATION B

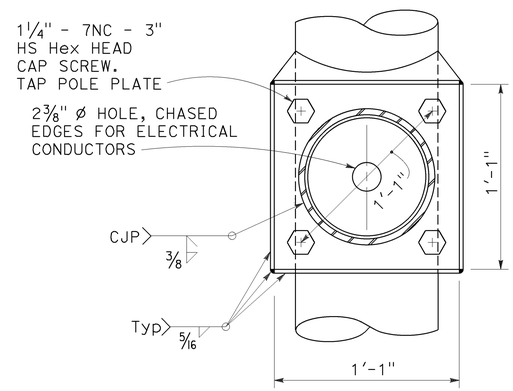

VIEW A-A

FLASHING BEACON MAST ARM CONNECTION DETAIL
DETAIL B

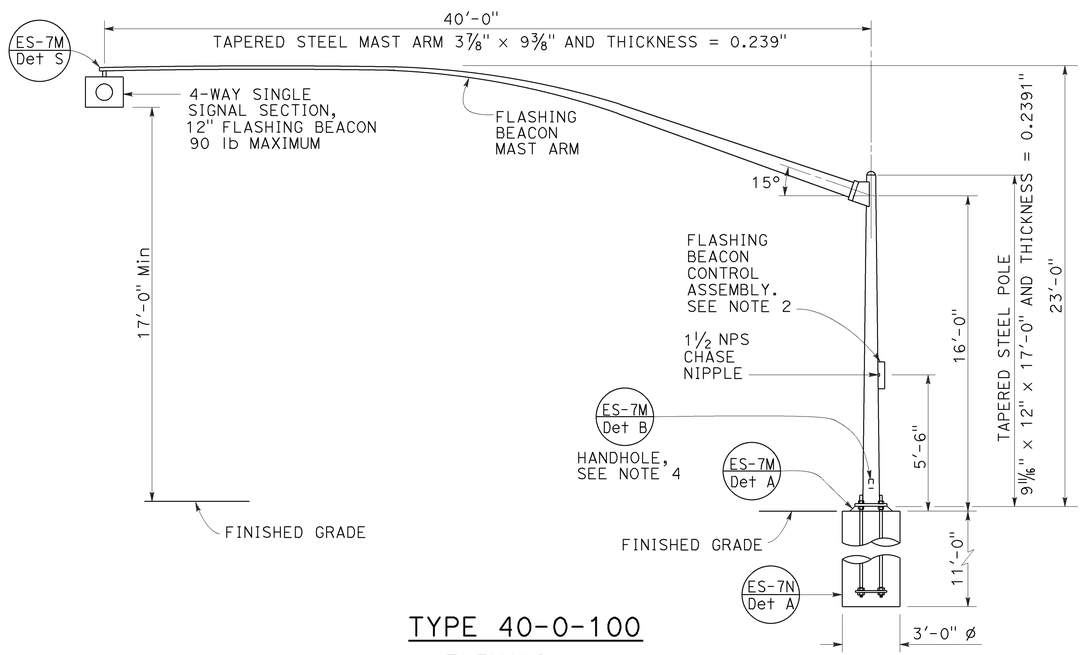

TYPE 40-0-100
ELEVATION A

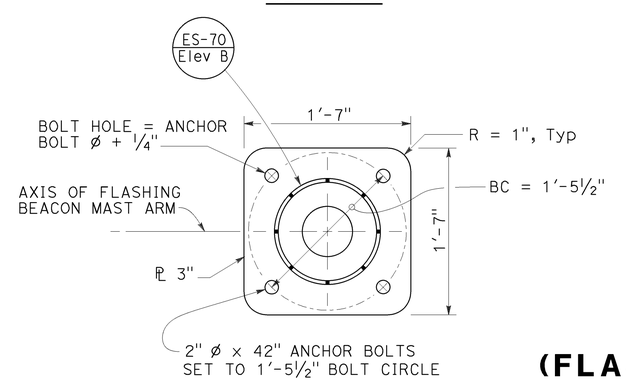

BASE PLATE
DETAIL C

NOTES:

1. See Standard Plan ES-4A and ES-4D for attachment fitting details.
2. For wiring diagram, see Revised Standard Plan RSP ES-14B.
3. For additional notes and details, see Standard Plan ES-7M and Standard Plan ES-7N.
4. Handhole shall be located on the downstream side of traffic.
5. See project plans for type of standard to be installed.

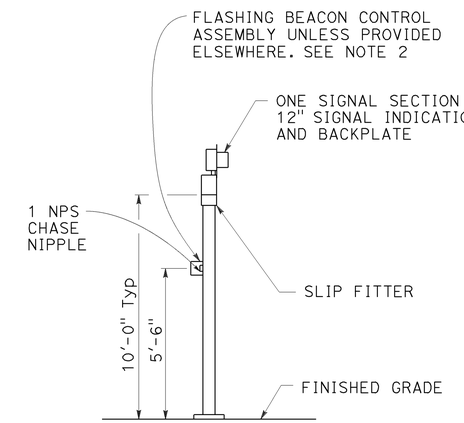

TYPE 1-A, 1-B, 1-C, AND 1-D
FLASHING BEACON INSTALLATION
DETAIL D
See Note 5

STATE OF CALIFORNIA
DEPARTMENT OF TRANSPORTATION

ELECTRICAL SYSTEMS (FLASHING BEACON ON A TYPE 1, TYPE 15-FBS, AND TYPE 40 STANDARD)

NO SCALE

RSP ES-7J DATED APRIL 15, 2016 SUPERSEDES STANDARD PLAN ES-7J DATED OCTOBER 30, 2015 - PAGE 464 OF THE STANDARD PLANS BOOK DATED 2015.

REVISED STANDARD PLAN RSP ES-7J

2015 REVISED STANDARD PLAN RSP ES-7J

4-12-16

Dist	COUNTY	ROUTE	POST MILES TOTAL PROJECT	SHEET No.	TOTAL SHEETS
03	ED	49	23.6/24.5	120	202

Theresa Gabriel
REGISTERED ELECTRICAL ENGINEER

April 15, 2016
PLANS APPROVAL DATE

REGISTERED PROFESSIONAL ENGINEER Theresa Aziz Gabriel No. E15129 Exp. 6-30-16 ELECTRICAL STATE OF CALIFORNIA

THE STATE OF CALIFORNIA OR ITS OFFICERS OR AGENTS SHALL NOT BE RESPONSIBLE FOR THE ACCURACY OR COMPLETENESS OF SCANNED COPIES OF THIS PLAN SHEET.

TO ACCOMPANY PLANS DATED 5-9-16

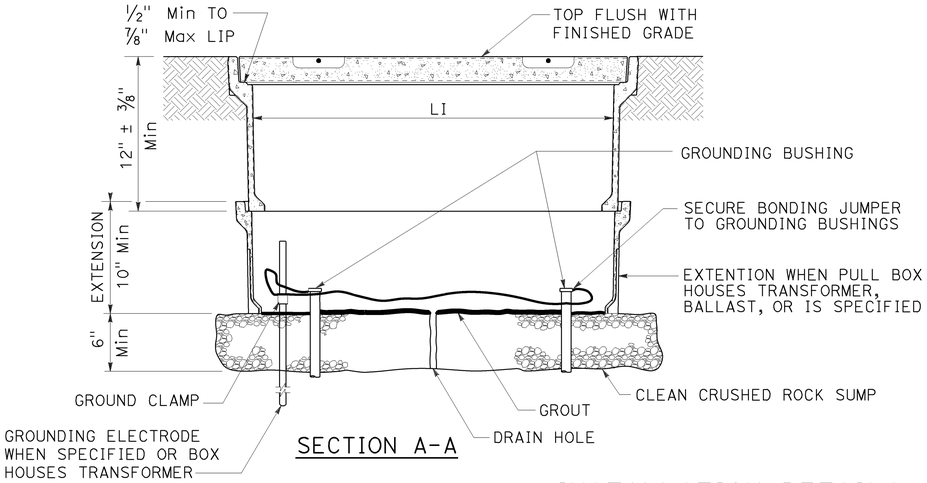

SECTION A-A

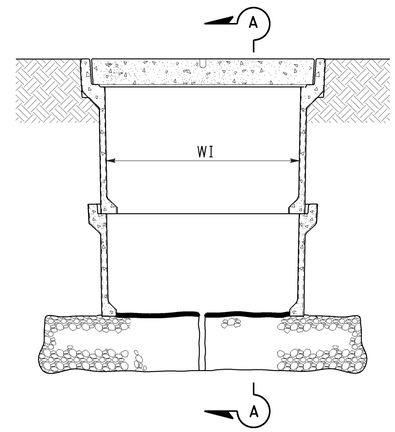

SIDE VIEW

INSTALLATION DETAILS

DETAIL A

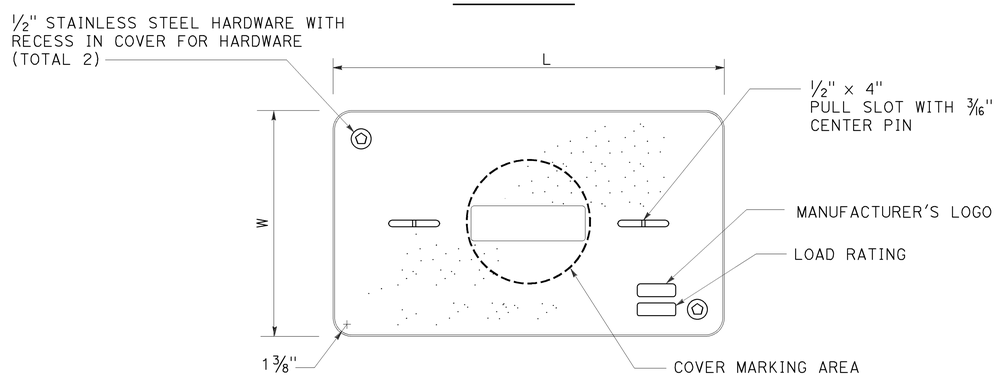

COVER TOP VIEW

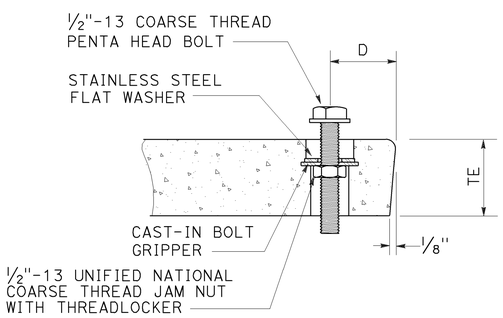

TYPICAL COVER CAPTIVE BOLT

OR SIMILAR

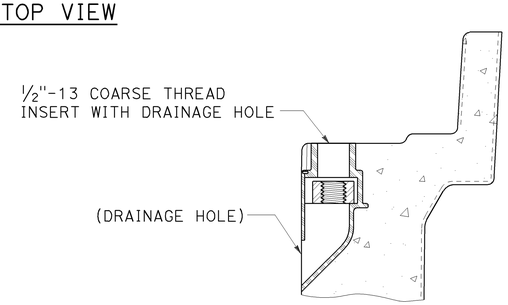

TYPICAL THREADED INSERT

OR SIMILAR

NOTES:

1. The nominal dimensions of the opening in which the cover sets shall be the same as the cover dimensions except the length and width dimensions shall be 1/8" greater.
2. Covers and boxes shall be interchangeable with California standard male and female gages. When interchanged with a standard male or female gage, the top surfaces shall be flush within 1/8". Top outside radius of covers and pull boxes shall have a 1/8" radius.
3. Dimensions for the cover for non-traffic pull box are nominal values.

DIMENSION TABLE

PULL BOX	PULL BOX					COVER				
	MINIMUM DEPTH BOX	MINIMUM DEPTH EXTENSION	MINIMUM WEIGHT	LI Min	WI Min	TE	D	L	W	MINIMUM WEIGHT
No. 3 1/2	12"	N/A	40 lb	1' - 3"	9"	1 3/4"	1 3/4"	1'-3 1/4" - 1'-3 3/8"	10" - 10 1/8"	30 lb
No. 5	12"	10"	55 lb	1' - 8"	11"	2"	1 3/4"	1'-11 1/4"	1'-1 3/4"	60 lb
No. 6	12"	10"	70 lb	2' - 4 1/4"	1' - 3 1/4"	2"	2"	2'-6 1/2"	1'-5 1/2"	85 lb

STATE OF CALIFORNIA
DEPARTMENT OF TRANSPORTATION

ELECTRICAL SYSTEMS (NON-TRAFFIC PULL BOX)

NO SCALE

RSP ES-8A DATED APRIL 15, 2016 SUPERSEDES STANDARD PLAN ES-8A
DATED OCTOBER 30, 2015 - PAGE 473 OF THE STANDARD PLANS BOOK DATED 2015.

REVISED STANDARD PLAN RSP ES-8A

2015 REVISED STANDARD PLAN RSP ES-8A

1-22-16

Dist	COUNTY	ROUTE	POST MILES TOTAL PROJECT	SHEET No.	TOTAL SHEETS
03	ED	49	23.6/24.5	121	202

Theresa Gabriel
REGISTERED ELECTRICAL ENGINEER

April 15, 2016
PLANS APPROVAL DATE

REGISTERED PROFESSIONAL ENGINEER
Theresa Aziz Gabriel
No. E15129
Exp. 6-30-16
ELECTRICAL
STATE OF CALIFORNIA

THE STATE OF CALIFORNIA OR ITS OFFICERS OR AGENTS SHALL NOT BE RESPONSIBLE FOR THE ACCURACY OR COMPLETENESS OF SCANNED COPIES OF THIS PLAN SHEET.

TO ACCOMPANY PLANS DATED 5-9-16

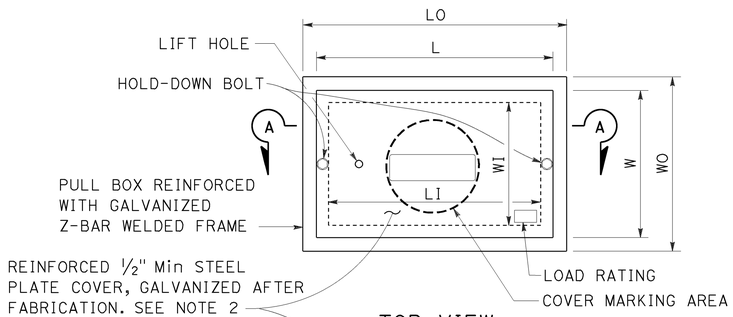

TOP VIEW

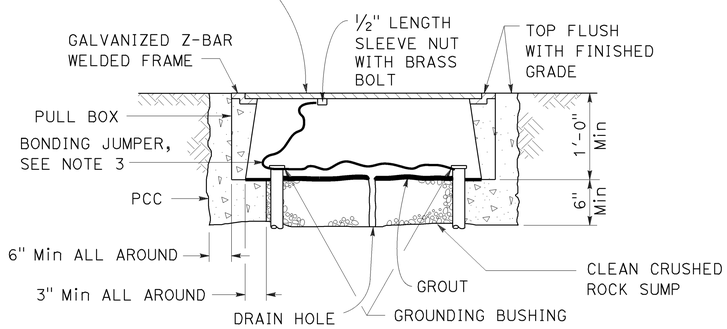

SECTION A-A

No. 3½(T), No. 5(T) AND No. 6(T) TRAFFIC PULL BOX

NOTES:

1. Traffic pull box shall be provided with steel cover and special concrete footing. Steel cover shall have embossed non-skid pattern.
2. Steel reinforcing shall be as regularly used in the standard products of the respective manufacturer.
3. Bonding jumper for metal covers shall be 3' long, minimum.
4. The nominal dimensions of the opening in which the cover sets shall be the same as the cover dimensions except the length and width dimensions shall be ⅛" greater.
5. Covers and boxes shall be interchangeable with California standard male and female gages. When interchanged with a standard male or female gage, the top surfaces shall be flush within ⅛".

DIMENSION TABLE

PULL BOX	PULL BOX						COVER	
	MINIMUM * THICKNESS	MINIMUM DEPTH BOX AND EXTENSION	LO	LI	WO	WI	L **	W **
No. 3½(T)	1½"	1'-0"	1'-10" - 1'-11"	1'-5" - 1'-6½"	1'-3" - 1'-4"	10" - 1'-0"	1'-8" - 1'-8½"	1'-1" - 1'-2"
No. 5(T)	1¾"	1'-0"	2'-5" - 2'-6"	2'-0" - 2'-1"	1'-6" - 1'-7"	1'-1" - 1'-2"	2'-3" - 2'-3½"	1'-4" - 1'-4½"
No. 6(T)	2"	1'-0"	2'-11" - 3'-1"	2'-6" - 2'-7"	1'-10" - 2'-0"	1'-5" - 1'-6"	2'-9" - 2'-9½"	1'-8" - 1'-8½"

* EXCLUDING CONDUIT WEB ** TOP DIMENSION

STATE OF CALIFORNIA
DEPARTMENT OF TRANSPORTATION

ELECTRICAL SYSTEMS (TRAFFIC PULL BOX)

NO SCALE

RSP ES-8B DATED APRIL 15, 2016 SUPERSEDES STANDARD PLAN ES-8B DATED OCTOBER 30, 2015 - PAGE 474 OF THE STANDARD PLANS BOOK DATED 2015.

REVISED STANDARD PLAN RSP ES-8B

2015 REVISED STANDARD PLAN RSP ES-8B

1-22-16

Dist	COUNTY	ROUTE	POST MILES TOTAL PROJECT	SHEET No.	TOTAL SHEETS
03	ED	49	23.6/24.5	122	202

Theresa Gabriel
REGISTERED ELECTRICAL ENGINEER

April 15, 2016
PLANS APPROVAL DATE

REGISTERED PROFESSIONAL ENGINEER
Theresa Aziz Gabriel
No. E15129
Exp. 6-30-16
ELECTRICAL
STATE OF CALIFORNIA

THE STATE OF CALIFORNIA OR ITS OFFICERS OR AGENTS SHALL NOT BE RESPONSIBLE FOR THE ACCURACY OR COMPLETENESS OF SCANNED COPIES OF THIS PLAN SHEET.

TO ACCOMPANY PLANS DATED 5-9-16

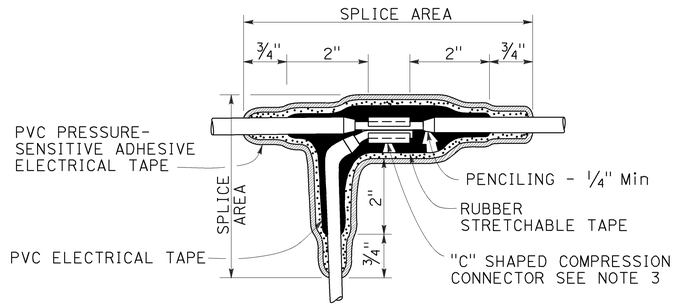

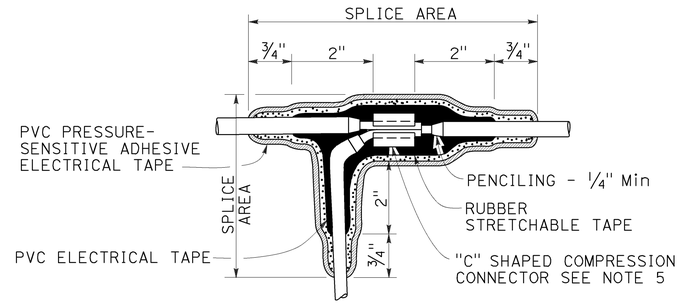

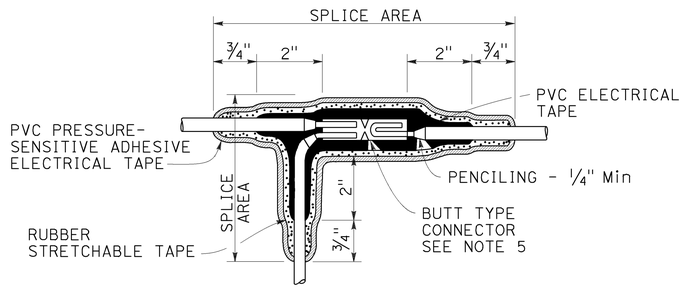

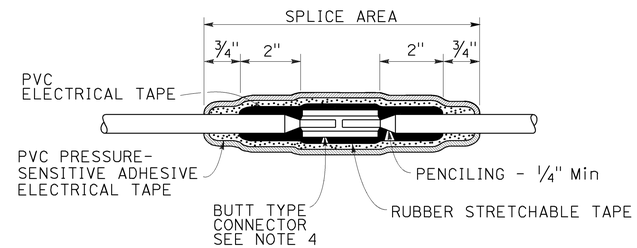

TYPICAL SPLICE INSULATION METHOD B

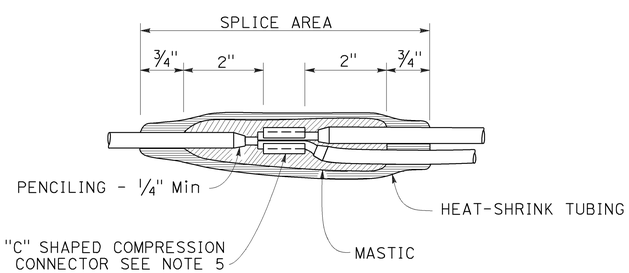

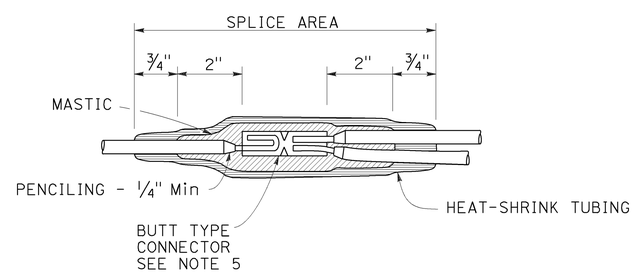

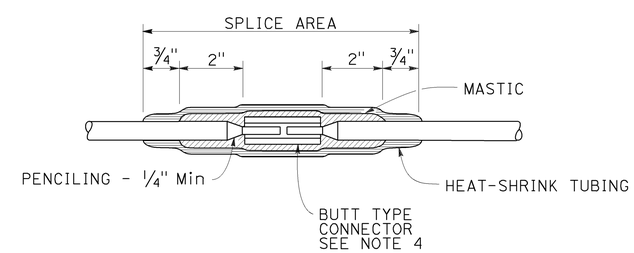

TYPICAL SPLICE INSULATION HEAT-SHRINK TUBING

NOTES:

1. Dimensions are minimum.
2. Rubber tapes shall be rolled after application.
3. Between 1 free-end and 1 through conductor.
4. Between 2 free-end conductors.
5. Between 3 free-end conductors.

STATE OF CALIFORNIA
DEPARTMENT OF TRANSPORTATION

ELECTRICAL SYSTEMS (SPLICE INSULATION METHODS DETAILS)

NO SCALE

RSP ES-13A DATED APRIL 15, 2016 SUPERSEDES STANDARD PLAN ES-13A DATED OCTOBER 30, 2015 - PAGE 484 OF THE STANDARD PLANS BOOK DATED 2015.

REVISED STANDARD PLAN RSP ES-13A

2015 REVISED STANDARD PLAN RSP ES-13A

12-16-15

Dist	COUNTY	ROUTE	POST MILES TOTAL PROJECT	SHEET No.	TOTAL SHEETS
03	ED	49	23.6/24.5	123	202

Theresa Gabriel
REGISTERED ELECTRICAL ENGINEER

April 15, 2016
PLANS APPROVAL DATE

REGISTERED PROFESSIONAL ENGINEER
Theresa Aziz Gabriel
No. E15129
Exp. 6-30-16
ELECTRICAL
STATE OF CALIFORNIA

THE STATE OF CALIFORNIA OR ITS OFFICERS OR AGENTS SHALL NOT BE RESPONSIBLE FOR THE ACCURACY OR COMPLETENESS OF SCANNED COPIES OF THIS PLAN SHEET.

TO ACCOMPANY PLANS DATED 5-9-16

CIRCUIT VOLTAGE	FUSE VOLTAGE RATING	FUSE CURRENT RATING						
		HPS LAMP BALLAST		LOW PRESSURE SODIUM BALLAST	INDUCTION SIGN LIGHTING	SINGLE PHASE (TWO WIRE) TRANSFORMERS (PRIMARY SIDE)		
		70 W	100 W	180 W	85 W	1 kVA	2 kVA	3 kVA
120 V	250 V	5 A	5 A	5 A	5 A	10 A	20 A	30 A
240 V	250 V	5 A	5 A	5 A	5 A	6 A	10 A	20 A
480 V	500-600 V	5 A	5 A	3 A	1 A (SEE NOTE 2)	3 A	6 A	10 A

NOTES:

1. Primary lines of multiple ballasts shall be provided with fused connectors. Fuse ratings shall be as noted above.
2. See Standard Plan ES-15D, Type SC3 control.

FUSE RATINGS FOR FUSED CONNECTORS

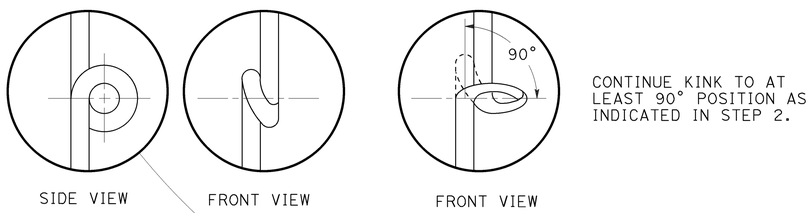

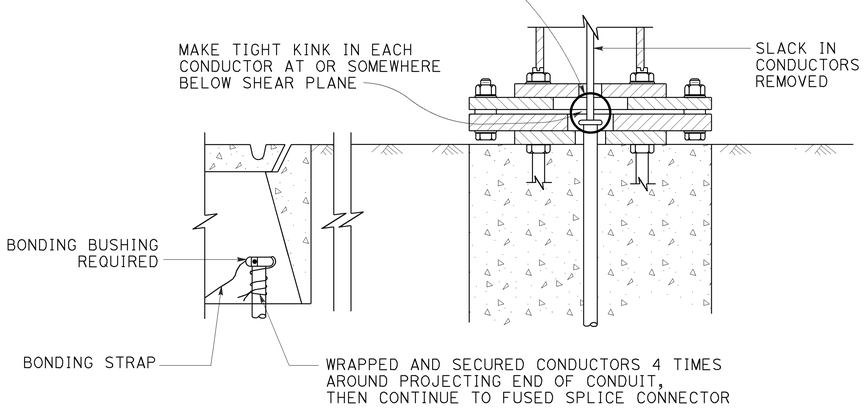

KINKING DETAIL FOR SLIP BASE STANDARDS

DETAIL A

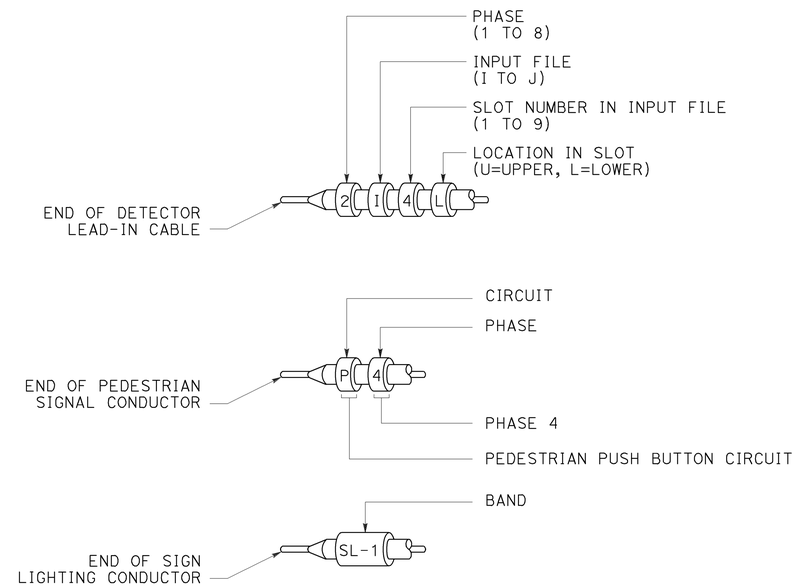

TYPICAL BANDING DETAILS

DETAIL B

STATE OF CALIFORNIA
DEPARTMENT OF TRANSPORTATION

ELECTRICAL SYSTEMS (FUSE RATING, KINKING AND BANDING DETAIL)

NO SCALE

RSP ES-13B DATED APRIL 15, 2016 SUPERSEDES STANDARD PLAN ES-13B DATED OCTOBER 30, 2015 - PAGE 485 OF THE STANDARD PLANS BOOK DATED 2015.

REVISED STANDARD PLAN RSP ES-13B

2015 REVISED STANDARD PLAN RSP ES-13B

1-12-16

DIST	COUNTY	ROUTE	POST MILES TOTAL PROJECT	SHEET No.	TOTAL SHEETS
03	ED	49	23.6/24.5	124	202

REGISTERED CIVIL ENGINEER 04-18-16 DATE

5-9-16
PLANS APPROVAL DATE

REGISTERED PROFESSIONAL ENGINEER JASON LYNCH No. 51002 Exp. 09-30-17 CIVIL STATE OF CALIFORNIA

The State of California or its officers or agents shall not be responsible for the accuracy or completeness of scanned copies of this plan sheet.

NOTES:

1. For General Notes and Pile Data see "INDEX TO PLANS" sheet.
2. For Quantities see "DECK CONTOURS" sheet.
3. For Hydrologic Summary and Scour Data see "FOUNDATION PLAN NO. 1" sheet.
4. For Utility Data see "TYPICAL SECTION" sheet.
5. For relocation of existing utilities, see ROADWAY PLANS.

(A) California ST-10 Bridge Rail (modified with pedestrian railing)
(B) Temporary Railing (Type K), see ROADWAY PLANS
(C) Temporary Pedestrian Walkway
(D) Existing utilities

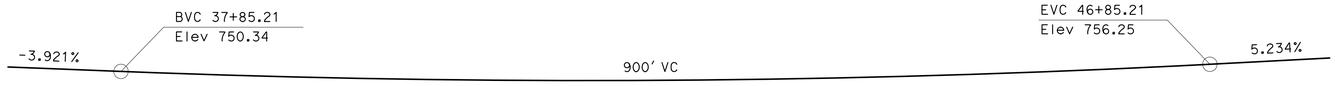

PROFILE GRADE

NO SCALE

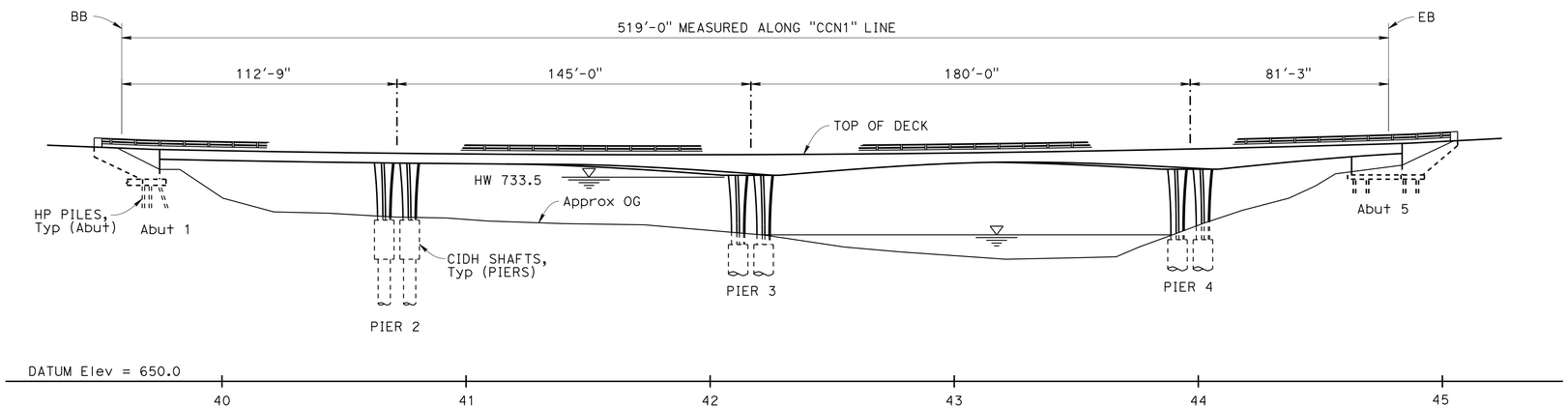

ELEVATION

1" = 30'-0"

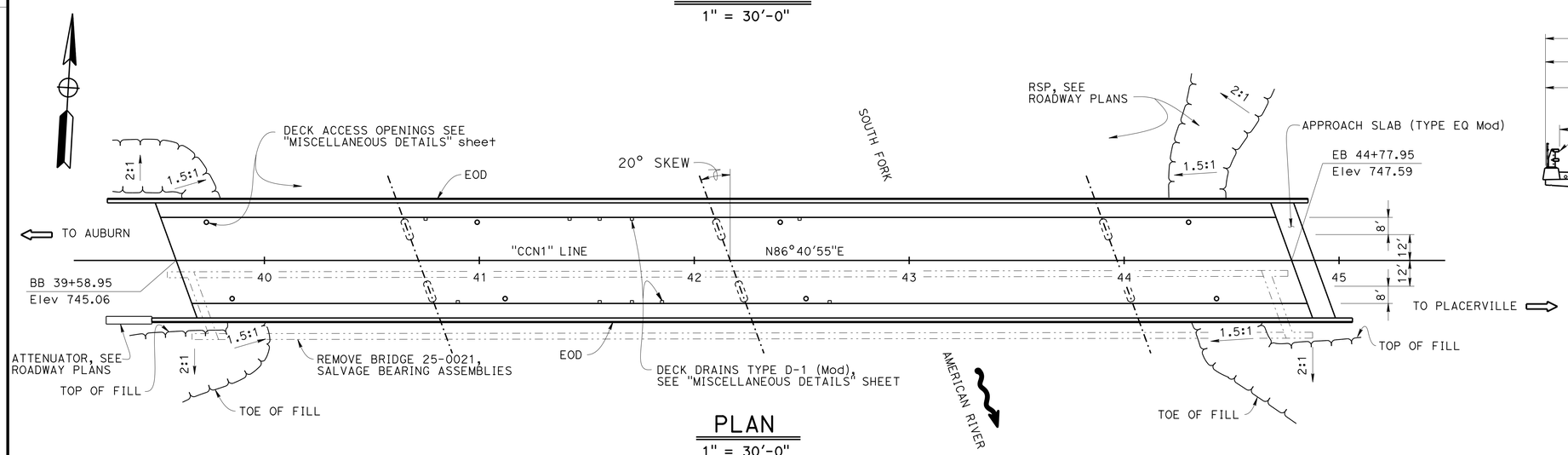

PLAN

1" = 30'-0"

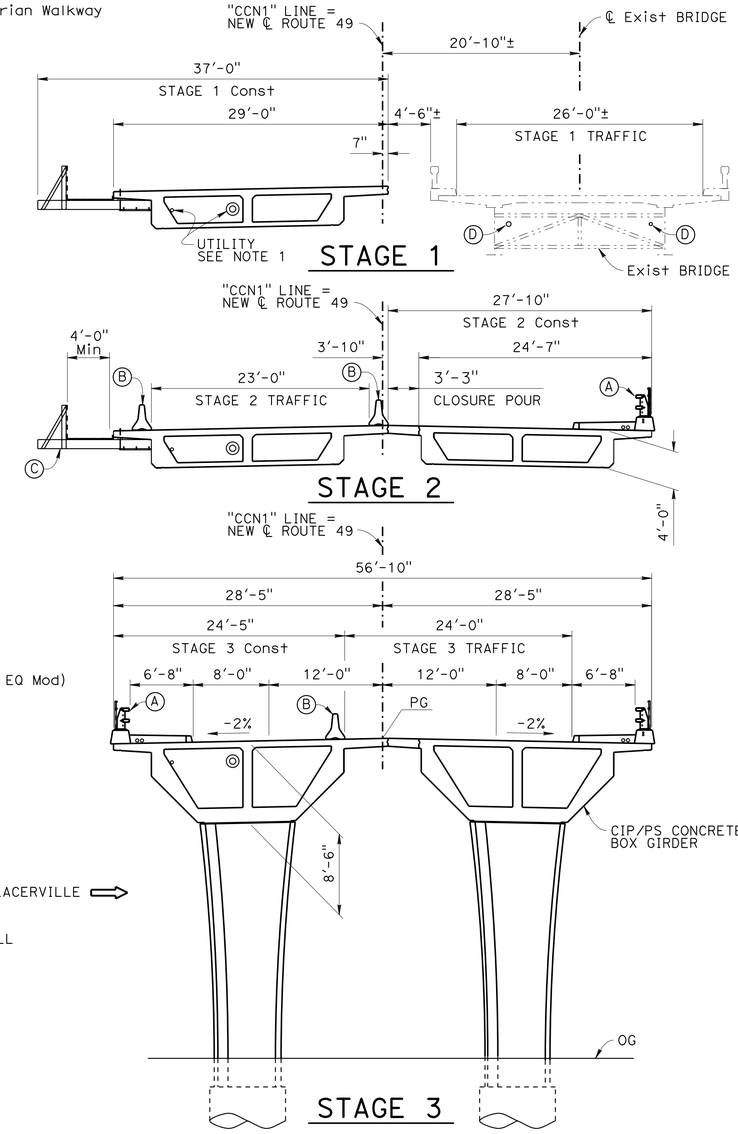

TYPICAL SECTION

1/8" = 1'-0"

NOTE:
THE CONTRACTOR SHALL VERIFY ALL CONTROLLING FIELD DIMENSIONS BEFORE ORDERING OR FABRICATING ANY MATERIAL.

Manoode Kodsuntie DESIGN ENGINEER	DESIGN	BY J. Lynch	CHECKED B. Shen	LOAD & RESISTANCE FACTOR DESIGN	LIVE LOADING: HL93 W/"LOW-BOY"; PERMIT DESIGN VEHICLE
	DETAILS	BY J. Yang	CHECKED B. Shen	LAYOUT BY J. Lynch	CHECKED B. Shen
	QUANTITIES	BY J. Lynch	CHECKED G. Schuster	SPECIFICATIONS BY T. Chen	PLANS AND SPECS COMPARED C. Whitten

ORIGINAL SCALE IN INCHES FOR REDUCED PLANS 0 1 2 3

STATE OF CALIFORNIA
DEPARTMENT OF TRANSPORTATION

DIVISION OF ENGINEERING SERVICES
STRUCTURE DESIGN
DESIGN BRANCH 2

BRIDGE NO. 25-0153
POST MILE 23.99

SOUTH FORK AMERICAN RIVER BRIDGE (REPLACE)
GENERAL PLAN

UNIT: 3577
PROJECT NUMBER & PHASE: 0300000078
CONTRACT NO.: 03-0F310

DISREGARD PRINTS BEARING EARLIER REVISION DATES

REVISION DATES 06-24-15 07-24-15 07-28-16 2-22-16

SHEET 1 OF 42

USERNAME => s119538 DATE PLOTTED => 08-JUL-2016 TIME PLOTTED => 16:16

STRUCTURES DESIGN GENERAL PLAN SHEET (ENGLISH) (REV.09-01-10)

FILE => 25-0021_a_gp01.dgn

DIST	COUNTY	ROUTE	POST MILES TOTAL PROJECT	SHEET No.	TOTAL SHEETS
03	ED	49	23.6/24.5	125	202

REGISTERED CIVIL ENGINEER 04-18-16 DATE

5-9-16
PLANS APPROVAL DATE

REGISTERED PROFESSIONAL ENGINEER JASON LYNCH No. 51002 Exp. 09-30-17 CIVIL STATE OF CALIFORNIA

The State of California or its officers or agents shall not be responsible for the accuracy or completeness of scanned copies of this plan sheet.

INDEX TO PLANS

SHEET NO.	TITLE
1	GENERAL PLAN
2	INDEX TO PLANS
3	DECK CONTOURS
4	FOUNDATION PLAN NO. 1
5	FOUNDATION PLAN NO. 2
6	ABUTMENT 1 LAYOUT
7	ABUTMENT 1 DETAILS
8	ABUTMENT 1 BEARING DETAILS
9	ABUTMENT 1 JOINT DETAILS
10	ABUTMENT 5 LAYOUT
11	ABUTMENT 5 DETAILS
12	APPROACH SLAB DETAILS
13	PIER 2 LAYOUT
14	PIER 2 DETAILS NO. 1
15	PIER 2 DETAILS NO. 2
16	PIERS 3 AND 4 LAYOUT
17	PIERS 3 AND 4 DETAILS NO. 1
18	PIERS 3 AND 4 DETAILS NO. 2
19	TYPICAL SECTION
20	SUPERSTRUCTURE GEOMETRICS
21	GIRDER LAYOUT NO. 1
22	GIRDER LAYOUT NO. 2
23	GIRDER REINFORCEMENT
24	GIRDER DETAILS
25	BARRIER AND SIDEWALK DETAILS
26	PEDESTRIAN RAIL DETAILS
27	UTILITY DETAILS
28	BAT HOUSE DETAILS
29	MISCELLANEOUS DETAILS
30	TEMPORARY WALKWAY DETAILS NO. 1
31	TEMPORARY WALKWAY DETAILS NO. 2
32	TEMPORARY DETAILS
33	LOG OF TEST BORINGS 1 OF 7
34	LOG OF TEST BORINGS 2 OF 7
35	LOG OF TEST BORINGS 3 OF 7
36	LOG OF TEST BORINGS 4 OF 7
37	LOG OF TEST BORINGS 5 OF 7
38	LOG OF TEST BORINGS 6 OF 7
39	LOG OF TEST BORINGS 7 OF 7
40 M-1	CASING INSTALLATION NO. 1
41 M-2	CASING INSTALLATION NO. 2
42 M-3	CASING SUPPORT

STANDARD PLANS DATED 2015

A3A-A3C	ABBREVIATIONS
A10A-A10E	LEGEND - LINES AND SYMBOLS
A10F - A10G	LEGEND - SOIL
A10H	LEGEND - ROCK
A62C	LIMITS OF PAYMENT FOR EXCAVATION AND BACKFILL BRIDGE
A87A	CURBS AND DRIVEWAYS
ES-9B	ELECTRICAL SYSTEMS (CONDUIT RISER AND EXPANSION FITTING, STRUCTURE INSTALLATIONS)
T3A	TEMPORARY RAILING (TYPE K)
T3B	TEMPORARY RAILING (TYPE K)
B0-3	BRIDGE DETAILS
B0-5	BRIDGE DETAILS
B0-13	BRIDGE DETAILS
B6-21	JOINT SEALS (MAXIMUM MOVEMENT RATING = 2")
B7-1	BOX GIRDER DETAILS
B7-6	DECK DRAINS TYPES D-1 AND D-2
B7-10	UTILITY OPENING BOX GIRDER
B7-11	UTILITY DETAILS
B8-5	CAST-IN-PLACE POST-TENSIONED GIRDER DETAILS
B11-68	CALIFORNIA ST-10 BRIDGE RAIL
B11-69	CALIFORNIA ST-10 BRIDGE RAIL
B11-70	CALIFORNIA ST-10 BRIDGE RAIL

STANDARD PLAN SHEET NO.

DETAIL NO.

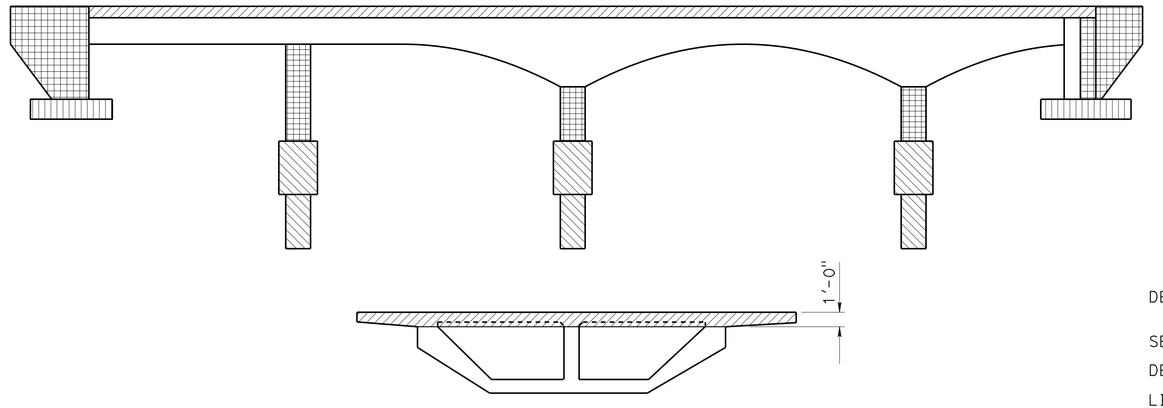

Structural Concrete, Bridge (f'c = 6 ksi at 28 days)
Structural Concrete, Bridge (Polymer Fiber) (f'c = 6 ksi at 28 days)
Structural Concrete, Bridge Footing
Structural Concrete, Bridge (f'c = 4 ksi at 28 days)
CIDH Pile (f'c = 4 ksi at 28 days)

CONCRETE STRENGTH AND TYPE LIMITS

NO SCALE

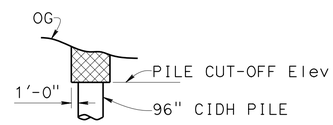

Structure Excavation (Type D)

LIMITS OF PAYMENT

NO SCALE

GENERAL NOTES
LOAD AND RESISTANCE FACTOR DESIGN

DESIGN: AASHTO LRFD Bridge Design Specifications, 6th edition with California Amendments

SEISMIC DESIGN: Caltrans Seismic Design Criteria (SDC), Version 1.7

DEAD LOAD: Includes 50 psf for future wearing surfaces

LIVE LOAD: HL-93 and permit design load

REINFORCED CONCRETE: f'c = 4 ksi and varies
fy = 60 ksi

PRESTRESSED CONCRETE: See Prestressing Notes on "GIRDER LAYOUT NO. 2" sheet

SEISMIC LOADING: Site Specific ARS Curve

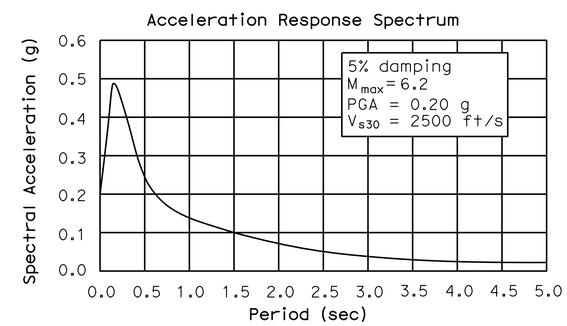

PILE DATA

Support Location	Pile Type	Nominal Resistance (kips)		Required Nominal Driving Resistance (kips)	Pile Cut-off Elev (ft)	Casing Specified Tip Elev (ft)	Design Tip Elev (ft)	Specified Tip Elev (ft)
		Compression	Tension					
Abut 1	HP 14 X 89	290	5	290	727.17	n/a	695 (a) 717 (b) 710 (c) 712 (d)	695
Pier 2	96" CIDH with Permanent Steel Casing over 60" CIDH	3720	n/a	n/a	711.00	695.0	645 (a,c) 670 (d)	645
Pier 3		5150	n/a	n/a	706.00	690.0	639 (a,c) 675 (d)	639
Pier 4		5580	n/a	n/a	708.00	692.0	630 (a,c) 678 (d)	630
Abut 5	HP 10 X 57	240	0	240	735.42	n/a	709 (a) 723 (c) 725 (d)	709

1. Design tip elevations are controlled by (a) compression, (b) tension, (c) settlement, and (d) lateral load.
2. The specified tip elevation shall not be raised above the design tip elevations for tension load, lateral load, and tolerable settlement.

	BY	CHECKED
DESIGN	J. Lynch	B. Shen
DETAILS	E. Montevirgen	B. Shen
QUANTITIES	J. Lynch	G. Zuniga

STATE OF CALIFORNIA
DEPARTMENT OF TRANSPORTATION

DIVISION OF ENGINEERING SERVICES
STRUCTURE DESIGN
DESIGN BRANCH 2

BRIDGE NO. 25-0153
POST MILE 23.99

SOUTH FORK AMERICAN RIVER BRIDGE (REPLACE)
INDEX TO PLANS

STRUCTURES DESIGN DETAIL SHEET (ENGLISH) (REV. 09-01-10)

ORIGINAL SCALE IN INCHES FOR REDUCED PLANS 0 1 2 3

UNIT: 3577
PROJECT NUMBER & PHASE: 0300000078
CONTRACT NO.: 03-0F310

DISREGARD PRINTS BEARING EARLIER REVISION DATES

REVISION DATES 10-23-15 2-22-16

SHEET 2 OF 42

FILE => 25-0021_a_itp.dgn

USERNAME => s119538 DATE PLOTTED => 08-JUL-2016 TIME PLOTTED => 16:16

DIST	COUNTY	ROUTE	POST MILES TOTAL PROJECT	SHEET No.	TOTAL SHEETS
03	ED	49	23.6/24.5	126	202

REGISTERED CIVIL ENGINEER 04-18-16 DATE

5-9-16
PLANS APPROVAL DATE

REGISTERED PROFESSIONAL ENGINEER
JASON LYNCH
No. 51002
Exp. 09-30-17
CIVIL
STATE OF CALIFORNIA

The State of California or its officers or agents shall not be responsible for the accuracy or completeness of scanned copies of this plan sheet.

NOTES:

1. x = 5' intervals along station line
2. 0.05' contour interval
3. Contours do not include camber

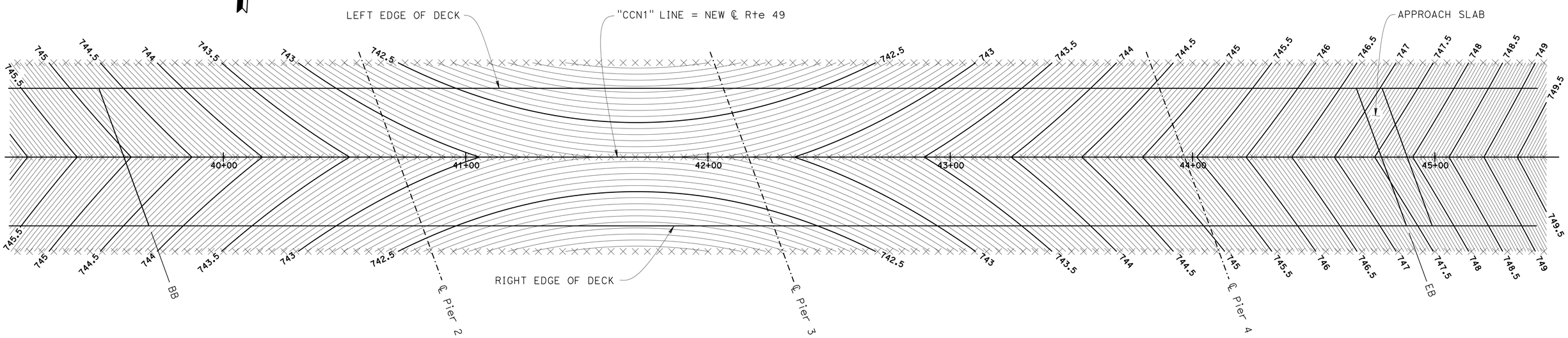

PLAN

1" = 20'-0'

SOUTH FORK AMERICAN RIVER BRIDGE (REPLACE)
QUANTITIES

LEAD COMPLIANCE PLAN	LUMP SUM		STRUCTURAL CONCRETE, BRIDGE	878	CY
WORK AREA MONITORING (BRIDGE)	LUMP SUM		(POLYMER FIBER)		
BRIDGE REMOVAL	LUMP SUM		STRUCTURAL CONCRETE, APPROACH SLAB	20	CY
SALVAGE BEARING ASSEMBLIES	6	EA	(TYPE EQ MODIFIED)		
STRUCTURE EXCAVATION (BRIDGE)	684	CY	BEARING GROUT	2	CY
STRUCTURE EXCAVATION (TYPE D)	53	CY	PRECAST CONCRETE BAT HOUSE	4	EA
STRUCTURE BACKFILL (BRIDGE)	341	CY	PTFE SPHERICAL BEARING	6	EA
TEMPORARY PEDESTRIAN WALKWAY	LUMP SUM		JOINT SEAL (MR 1/2")	60	LF
TEMPORARY SHEAR KEY	LUMP SUM		JOINT SEAL ASSEMBLY (MR 7")	44	LF
FURNISH STEEL PILING (HP 10 X 57)	581	LF	BAR REINFORCING STEEL (BRIDGE)	628,068	LB
DRIVE STEEL PILE (HP 10 X 57)	22	EA	BAR REINFORCING STEEL (GALVANIZED)	1,657	LB
FURNISH STEEL PILING (HP 14 X 89)	1,176	LF	STRUCTURAL STEEL (PIPE PIN)	2,930	LB
DRIVE STEEL PILE (HP 14 X 89)	36	EA	PREPARE AND PAINT CONCRETE	95	SQFT
96" PERMANENT STEEL CASING	96	LF	12" WELDED STEEL PIPE CASING (BRIDGE)	30	LF
60" CAST-IN-DRILLED-HOLE CONCRETE PILING	326	LF	14" WELDED STEEL PIPE CASING (BRIDGE)	569	LF
96" CAST-IN-DRILLED-HOLE CONCRETE PILING	96	LF	MISCELLANEOUS METAL (BRIDGE)	5,715	LB
PRESTRESSING CAST-IN-PLACE CONCRETE	LUMP SUM		CALIFORNIA ST-10 BRIDGE RAIL	1,110	LF
STRUCTURAL CONCRETE, BRIDGE FOOTING	114	CY	(MODIFIED WITH PEDESTRIAN RAILING)		
STRUCTURAL CONCRETE, BRIDGE	1,668	CY	COMMUNICATION CONDUIT (BRIDGE)	569	LF

	BY	CHECKED
DESIGN	J. Lynch	B. Shen
DETAILS	E. Montevirgen	B. Shen
QUANTITIES	E. Montevirgen	J. Yang

STATE OF CALIFORNIA
DEPARTMENT OF TRANSPORTATION

DIVISION OF ENGINEERING SERVICES
STRUCTURE DESIGN
DESIGN BRANCH 2

BRIDGE NO. 25-0153
POST MILE 23.99

SOUTH FORK AMERICAN RIVER BRIDGE (REPLACE)
DECK CONTOURS

STRUCTURES DESIGN DETAIL SHEET (ENGLISH) (REV. 09-01-10)

ORIGINAL SCALE IN INCHES FOR REDUCED PLANS 0 1 2 3

UNIT: 3577
PROJECT NUMBER & PHASE: 0300000078
CONTRACT NO.: 03-0F310

DISREGARD PRINTS BEARING EARLIER REVISION DATES

REVISION DATES 10-13-15

SHEET 3 OF 42

USERNAME => s119538 DATE PLOTTED => 08-JUL-2016 TIME PLOTTED => 16:16

FILE => 25-0021_c_deck_con.dgn

HYDROLOGIC SUMMARY DRAINAGE AREA: 635 MI²			
FLOOD EVENT	DESIGN FLOOD	BASE FLOOD	OVERTOPPING FLOOD/ FLOOD OF RECORD
FREQUENCY	FLOOD OF RECORD	N/A	N/A / 1997
DISCHARGE, CFS	90,000	N/A	N/A / 90,000
WSE AT BRIDGE, FT (NGVD 29)	733.5	N/A	N/A
AVERAGE VELOCITY, FT/S	11.9	N/A	N/A

Flood plain data are based upon information available when the plans were prepared and are shown to meet federal requirements. The accuracy of said information is not warranted by the State and interested or affected parties should make their own investigation.

NOTES:

1. The location of the underground water line is approximate. For relocation of existing utilities, see ROADWAY PLANS.

LEGEND:

[xx.xx] Indicates bottom of footing elevation

DIST	COUNTY	ROUTE	POST MILES TOTAL PROJECT	SHEET No.	TOTAL SHEETS
03	ED	49	23.6/24.5	127	202

REGISTERED CIVIL ENGINEER 04-18-16 DATE

5-9-16
PLANS APPROVAL DATE

REGISTERED PROFESSIONAL ENGINEER JASON LYNCH No. 51002 Exp. 09-30-17 CIVIL STATE OF CALIFORNIA

The State of California or its officers or agents shall not be responsible for the accuracy or completeness of electronic copies of this plan sheet.

SCOUR DATA		
SUPPORT	LONG TERM (DEGRADATION AND CONTRACTION) SCOUR ELEVATION (ft)	SHORT TERM (LOCAL) SCOUR DEPTH (ft)
Abut 1	N/A	5.7
PIER 2	715.6	12.6
PIER 3	705.1	20.8
PIER 4	705.1	19.4
Abut 5	N/A	0*

*HW DOES NOT REACH Abut 5

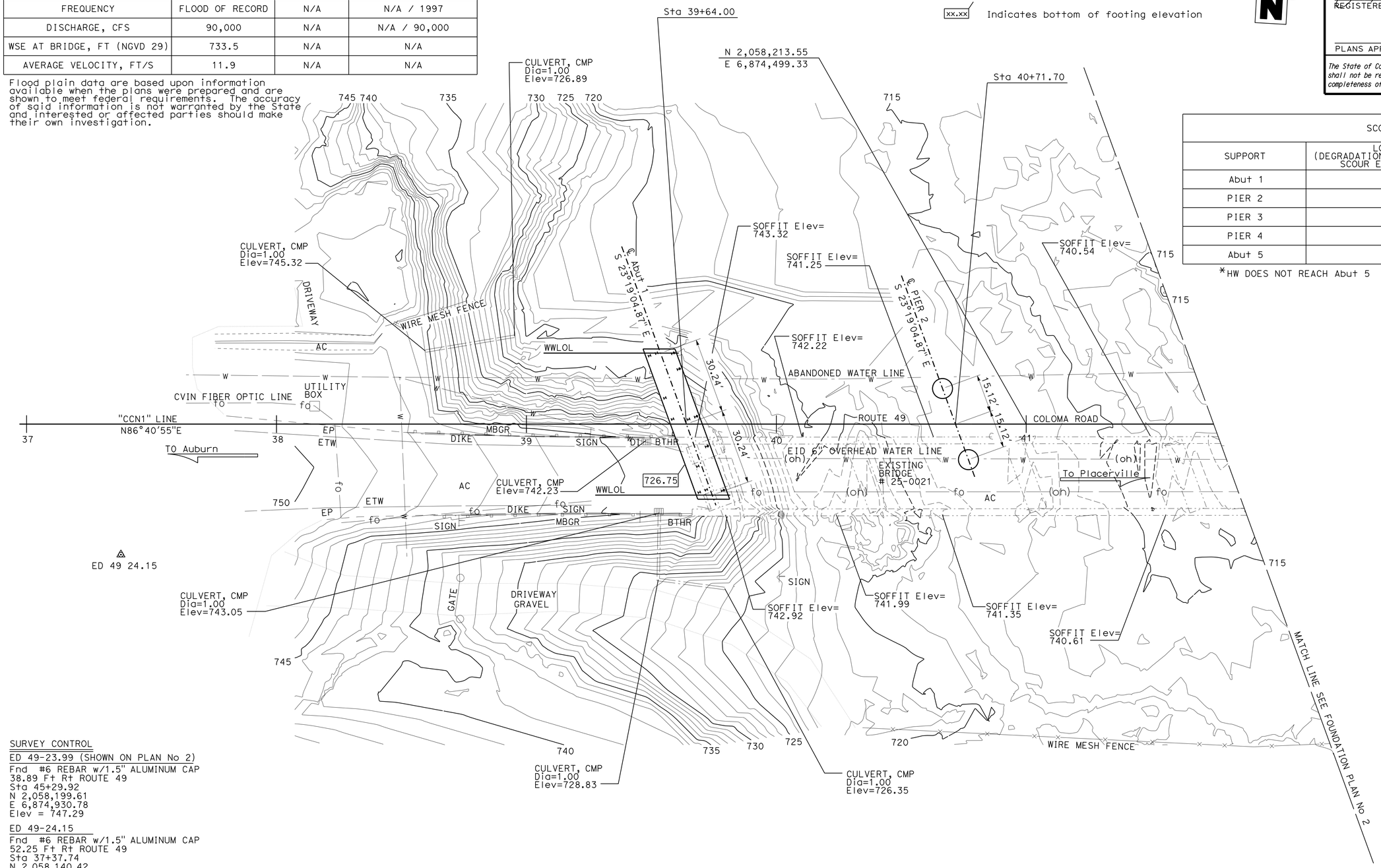

SURVEY CONTROL

ED 49-23.99 (SHOWN ON PLAN No 2)
Fnd #6 REBAR w/1.5" ALUMINUM CAP
38.89 Ft Rt ROUTE 49
Sta 45+29.92
N 2,058,199.61
E 6,874,930.78
Elev = 747.29

ED 49-24.15
Fnd #6 REBAR w/1.5" ALUMINUM CAP
52.25 Ft Rt ROUTE 49
Sta 37+37.74
N 2,058,140.42
E 6,874,140.70
Elev = 748.33

PRELIMINARY INVESTIGATION SECTION

SCALE	VERT.DATUM NGVD29	PHOTOGRAMMETRY AS OF: X			
1"=20'	HORZ.DATUM NAD83 (1991.35)	SURVEYED	BY DISTRICT	CHECKED	BY C. FASSETT 05/2015
ALIGNMENT TIES Dist TRAVERSE SHEET		DRAFTED	BY T. ZOLNIKOV 05/2015	CHECKED	BY L. LEW 05/2015

DESIGN	BY J. Lynch	CHECKED B. Shen
DETAILS	BY J. Yang	CHECKED B. Shen
QUANTITIES	BY J. Lynch	CHECKED M. Kodsuntie

STATE OF CALIFORNIA DEPARTMENT OF TRANSPORTATION

DIVISION OF ENGINEERING SERVICES STRUCTURE DESIGN DESIGN BRANCH 2

BRIDGE NO. 25-0153
POST MILE 23.99

SOUTH FORK AMERICAN RIVER BRIDGE (REPLACE)
FOUNDATION PLAN NO. 1

STRUCTURES FOUNDATION PLAN SHEET (ENGLISH) (REV. 09-01-10)

ORIGINAL SCALE IN INCHES FOR REDUCED PLANS 0 1 2 3

UNIT: 3646
PROJECT NUMBER & PHASE: 0300000078 1 CONTRACT NO.: 03-0F3101

SUBMITTAL DATE	REVISION DATES				SHEET	OF
01/05/16	01/08/16	01-15-16			4	42

FILE => 25-0021_e_fp101.dgn

USERNAME => s119338 DATE PLOTTED => 08-JUL-2016 TIME PLOTTED => 16:16

DIST	COUNTY	ROUTE	POST MILES TOTAL PROJECT	SHEET No.	TOTAL SHEETS
03	ED	49	23.6/24.5	128	202

REGISTERED CIVIL ENGINEER 04-18-16 DATE

5-9-16
PLANS APPROVAL DATE

REGISTERED PROFESSIONAL ENGINEER Jason Lynch No. 57992 Exp 09-30-17 CIVIL STATE OF CALIFORNIA

The State of California or its officers or agents shall not be responsible for the accuracy or completeness of electronic copies of this plan sheet.

CURVE DATA

No. ⓡ	R	Δ	T	L
1	40.00	59°25'31"	22.83	41.49
2	50.00	15°45'50"	6.92	13.76
3	299.85	16°53'38"	44.53	88.41

NOTES:

1. The location of the underground water line is approximate. For relocation of existing utilities, see ROADWAY PLANS.

LEGEND:

[xx.xx] Indicates bottom of footing elevation

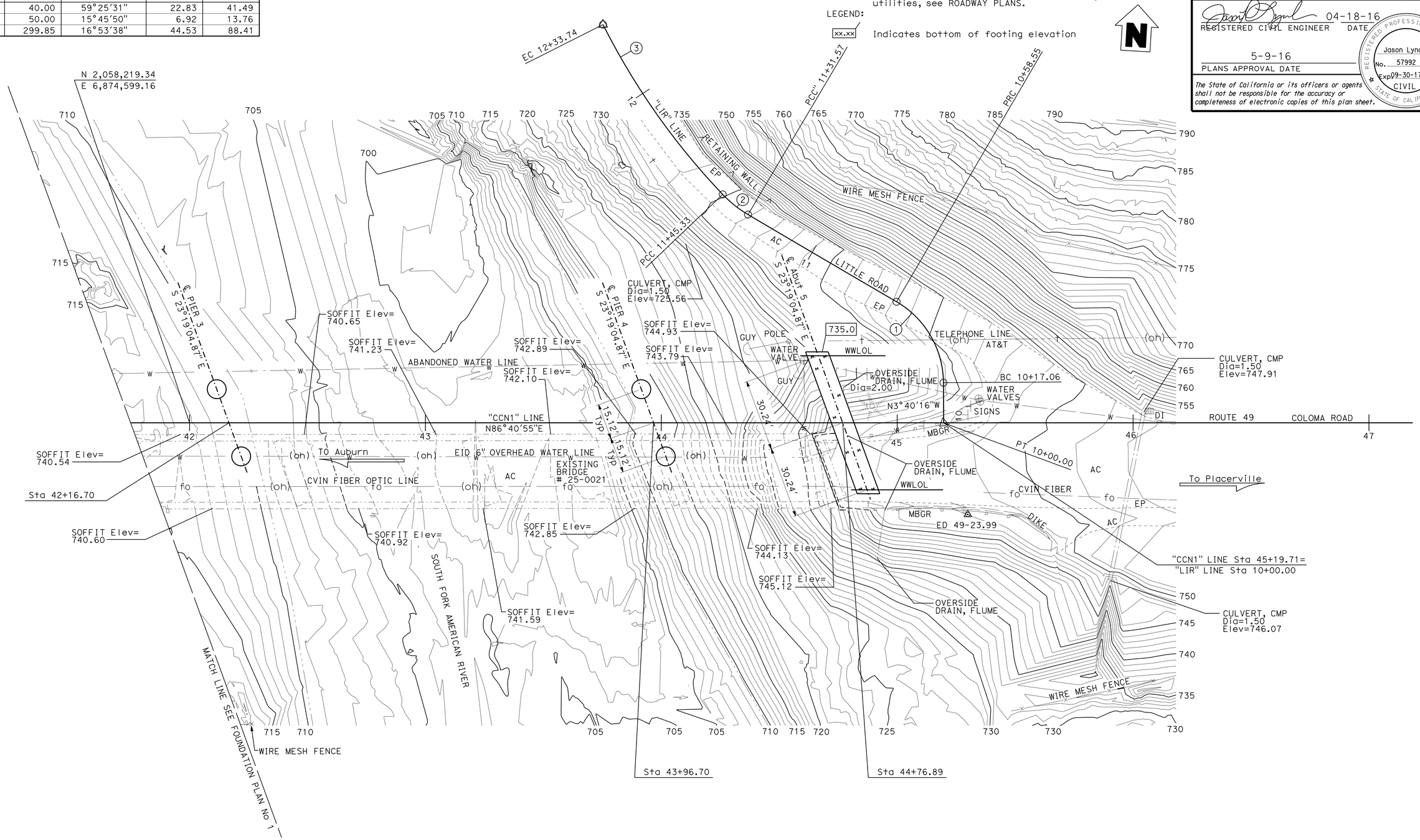

PRELIMINARY INVESTIGATION SECTION

SCALE 1"=20'	VERT.DATUM NGVD29	PHOTOGRAMMETRY AS OF: X			
	HORZ.DATUM NAD83 (1991.35)	SURVEYED	BY DISTRICT	CHECKED	BY C. FASSETT 05/2015
	ALIGNMENT TIES Dist TRAVERSE SHEET	DRAFTED	BY T. ZOLNIKOV 05/2015	CHECKED	BY L. LEW 05/2015

DESIGN	BY J. Lynch	CHECKED B. Shen
DETAILS	BY J. Yang	CHECKED B. Shen
QUANTITIES	BY J. Lynch	CHECKED M. Kodsuntie

STATE OF CALIFORNIA
DEPARTMENT OF TRANSPORTATION

DIVISION OF ENGINEERING SERVICES
STRUCTURE DESIGN
DESIGN BRANCH 2

BRIDGE NO. 25-0153
POST MILE 23.99

SOUTH FORK AMERICAN RIVER BRIDGE (REPLACE)
FOUNDATION PLAN NO. 2

STRUCTURES FOUNDATION PLAN SHEET (ENGLISH) (REV. 09-01-10)

ORIGINAL SCALE IN INCHES FOR REDUCED PLANS 0 1 2 3

UNIT: 3646
PROJECT NUMBER & PHASE: 0300000078 1
CONTRACT NO.: 03-0F3101

SUBMITTAL DATE	REVISION DATES				SHEET	OF
01/05/16	01/08/16				5	42

FILE => 25-0021_e_fp102.dgn

USERNAME => s119338 DATE PLOTTED => 08-JUL-2016 TIME PLOTTED => 16:16

DIST	COUNTY	ROUTE	POST MILES TOTAL PROJECT	SHEET No.	TOTAL SHEETS
03	ED	49	23.6/24.5	129	202

REGISTERED CIVIL ENGINEER 04-18-16 DATE

5-9-16
PLANS APPROVAL DATE

REGISTERED PROFESSIONAL ENGINEER JASON LYNCH No. 51002 Exp. 09-30-17 CIVIL STATE OF CALIFORNIA

The State of California or its officers or agents shall not be responsible for the accuracy or completeness of scanned copies of this plan sheet.

NOTES:

1. Remove horizontal polystyrene upon completion of construction.
2. For PTFE spherical bearing assembly see "ABUTMENT 1 BEARING DETAILS" sheet.
3. For joint seal installation see "ABUTMENT 1 JOINT DETAILS" sheet.
4. For Pile Data see "INDEX TO PLANS" sheet.
5. Extend stage 1 Reinf beyond the construction joint and lap splice with stage 2 Reinf.

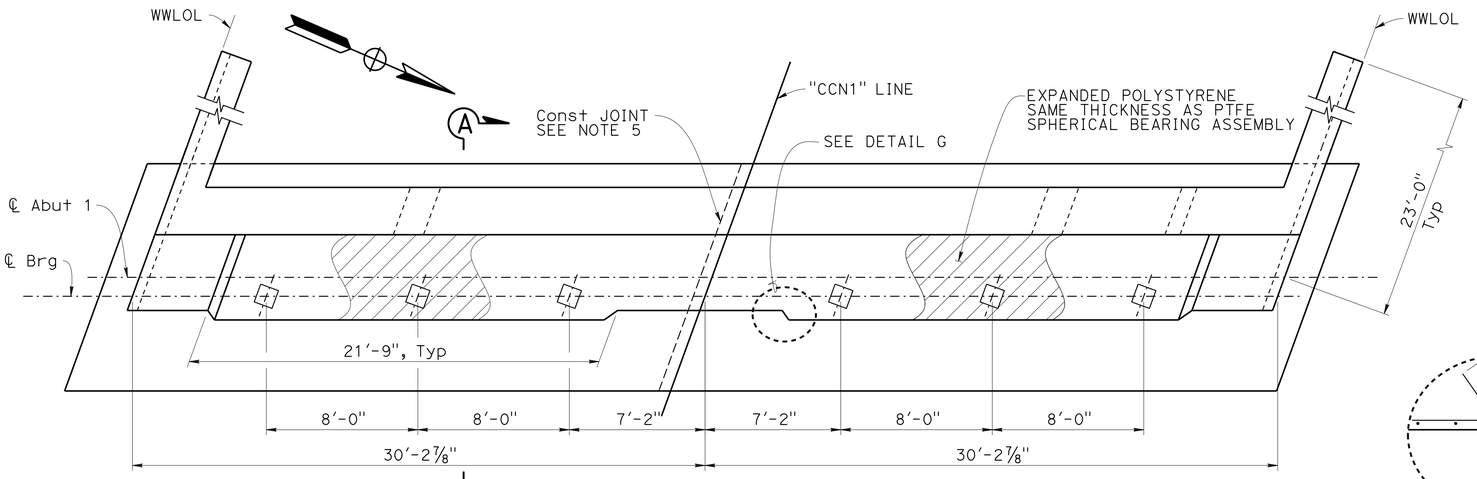

PLAN
¼" = 1'-0"

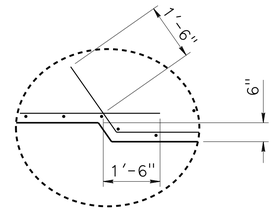

DETAIL G
½" = 1'-0"

JOINT INFORMATION		"a" DIMENSIONS			
LOCATION	MOVEMENT RATING (MR)	SKEW	WINTER	SPRING & FALL	SUMMER
Abut 1	7"	20°	4¼"	3¼"	2¼"

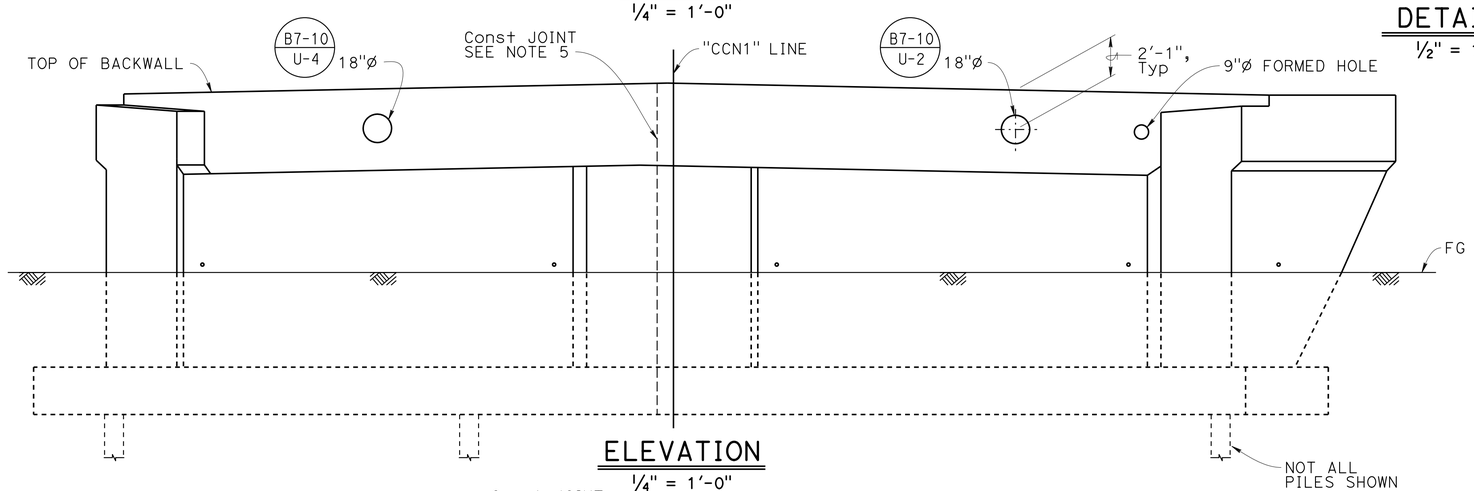

ELEVATION
¼" = 1'-0"

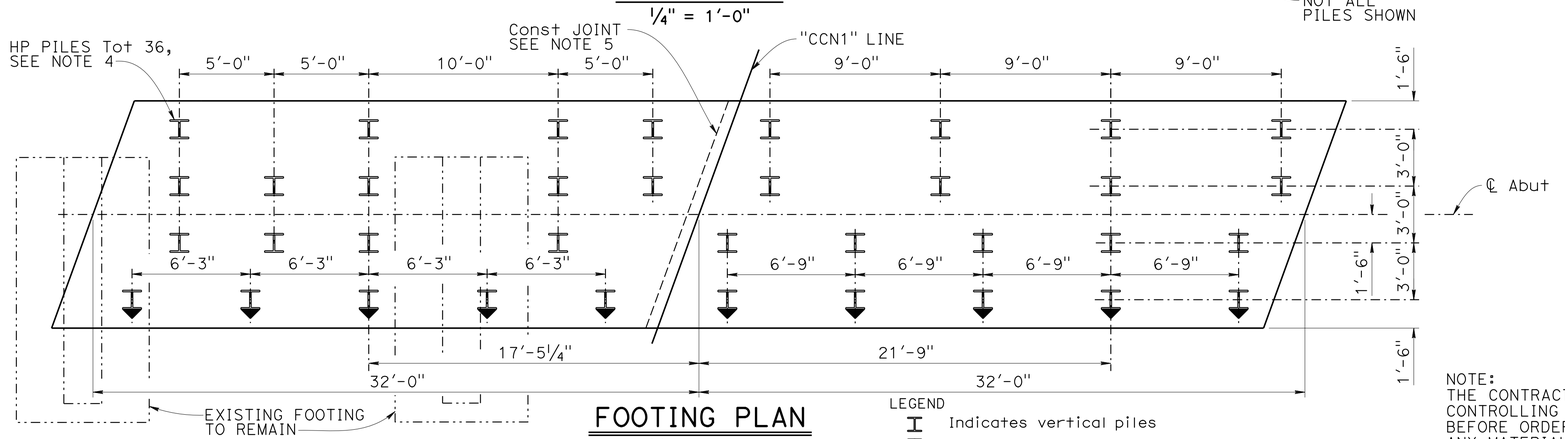

FOOTING PLAN
¼" = 1'-0"

LEGEND
Indicates vertical piles
Indicates battered piles

NOTE:
THE CONTRACTOR SHALL VERIFY ALL CONTROLLING FIELD DIMENSIONS BEFORE ORDERING OR FABRICATING ANY MATERIAL.

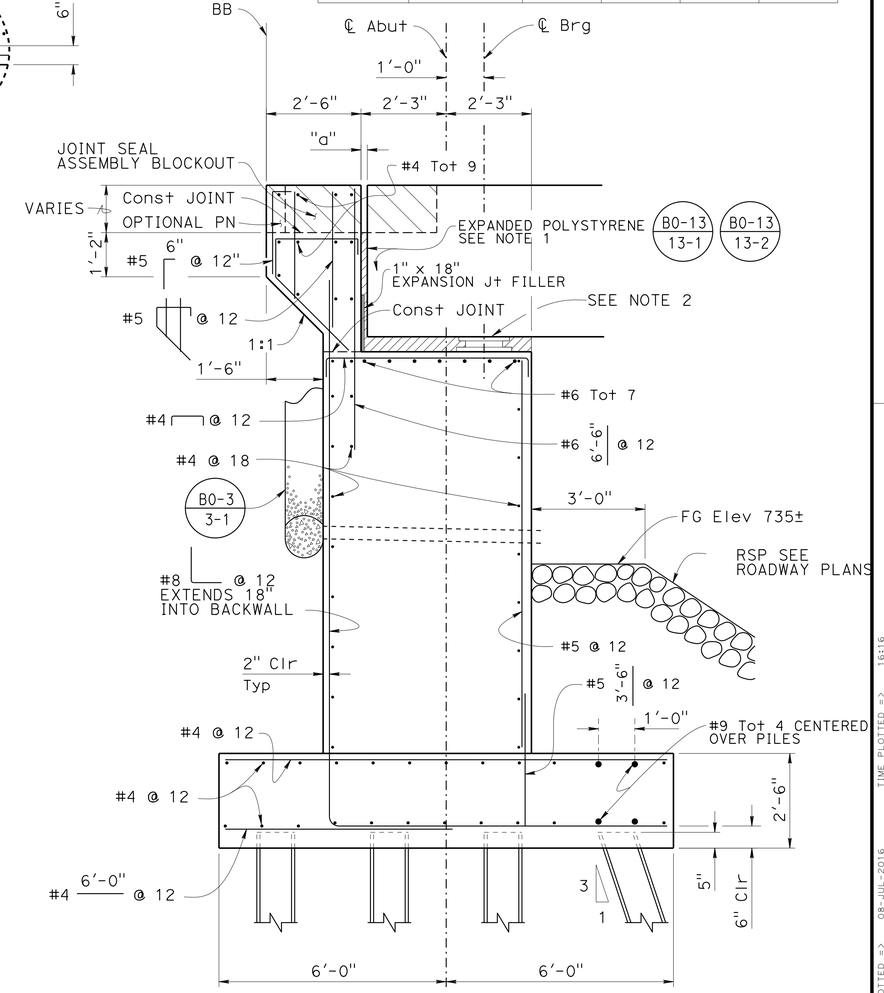

SECTION A-A
½" = 1'-0"

DESIGN	BY J. Lynch	CHECKED B. Shen	
DETAILS	BY J. Yang	CHECKED B. Shen	
QUANTITIES	BY G. Schuster	CHECKED M. Kodsuntie	

STATE OF CALIFORNIA
DEPARTMENT OF TRANSPORTATION

DIVISION OF ENGINEERING SERVICES
STRUCTURE DESIGN
DESIGN BRANCH 2

BRIDGE NO. 25-0153
POST MILE 23.99

SOUTH FORK AMERICAN RIVER BRIDGE (REPLACE)
ABUTMENT 1 LAYOUT

STRUCTURES DESIGN DETAIL SHEET (ENGLISH) (REV. 09-01-10)

ORIGINAL SCALE IN INCHES FOR REDUCED PLANS 0 1 2 3

UNIT: 3577
PROJECT NUMBER & PHASE: 0300000078
CONTRACT NO.: 03-0F310

DISREGARD PRINTS BEARING EARLIER REVISION DATES

REVISION DATES 10-23-15 01-13-16 2-22-16

SHEET 6 OF 42

FILE => 25-0021_f_a01.dgn

USERNAME => s119538 DATE PLOTTED => 08-JUL-2016 TIME PLOTTED => 16:16

DIST	COUNTY	ROUTE	POST MILES TOTAL PROJECT	SHEET No.	TOTAL SHEETS
03	ED	49	23.6/24.5	130	202

REGISTERED CIVIL ENGINEER 04-18-16 DATE

5-9-16
PLANS APPROVAL DATE

REGISTERED PROFESSIONAL ENGINEER JASON LYNCH No. 51002 Exp. 09-30-17 CIVIL STATE OF CALIFORNIA

The State of California or its officers or agents shall not be responsible for the accuracy or completeness of scanned copies of this plan sheet.

NOTES:

1. #5 Reinf spacing changes at end block see "BARRIER AND SIDEWALK DETAILS" sheet.

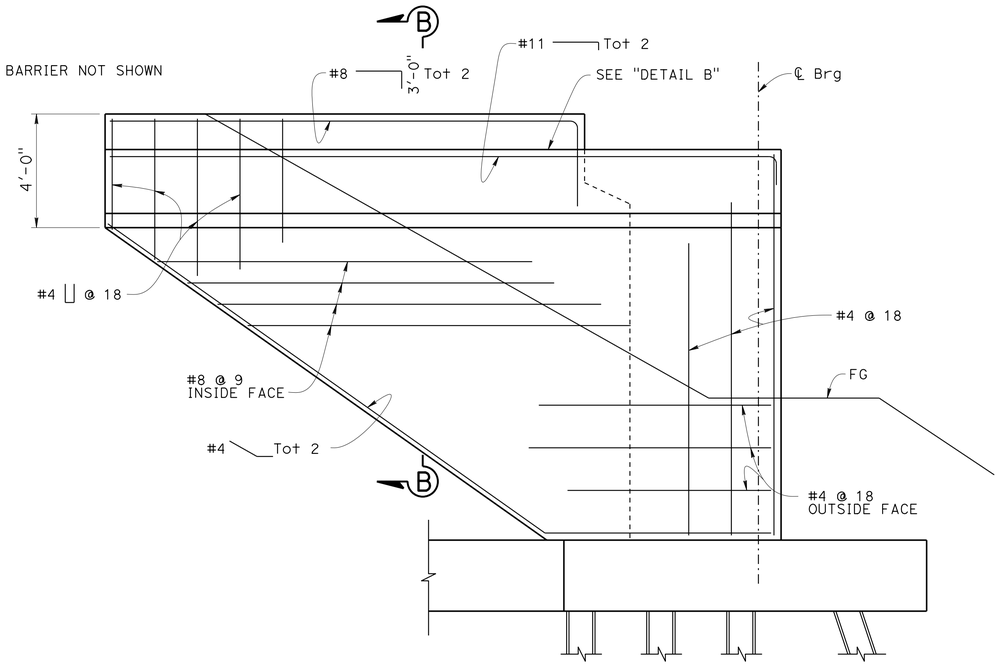

WINGWALL ELEVATION

3/8" = 1'-0"

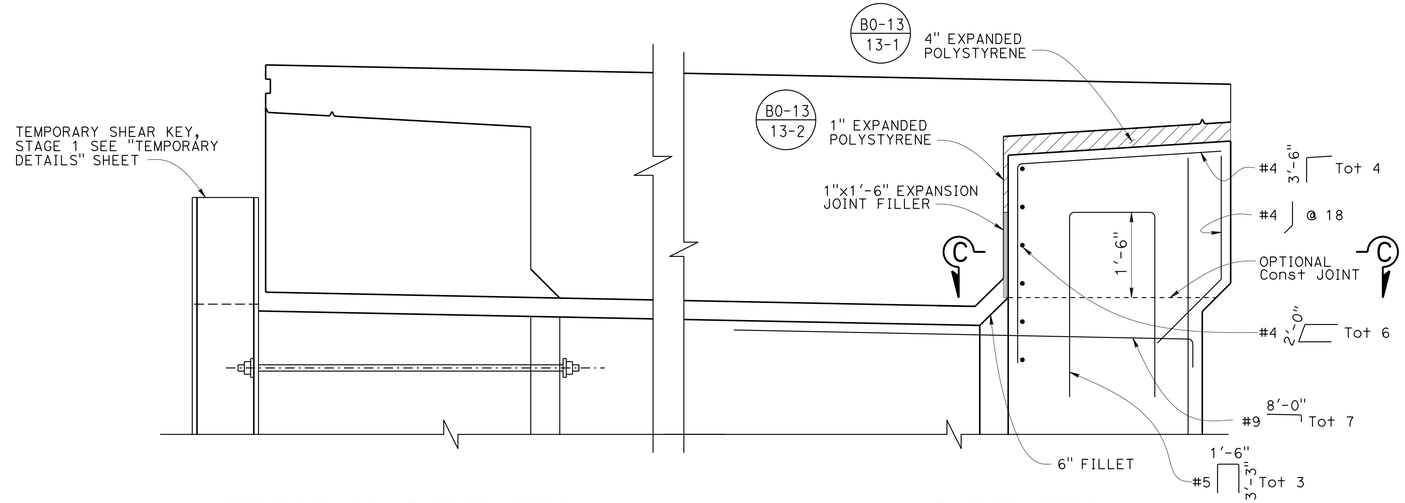

TEMPORARY SHEAR KEY

SHEAR KEY

PART ELEVATION

3/4" = 1'-0"

STAGE 1 SHOWN STAGE 2 SIMILAR

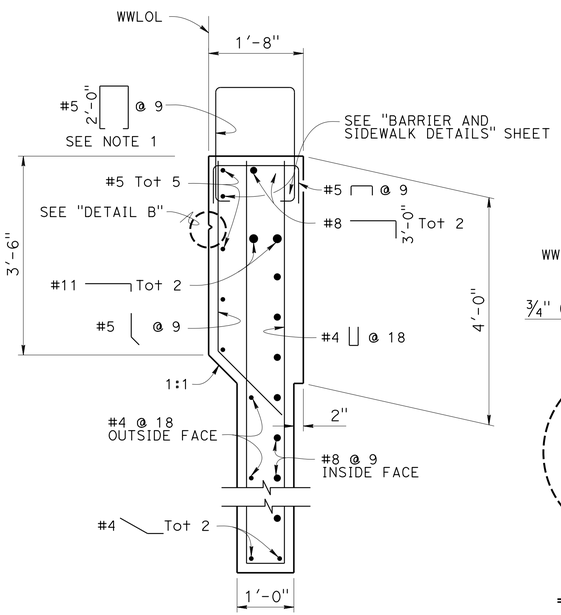

SECTION B-B

3/4" = 1'-0"

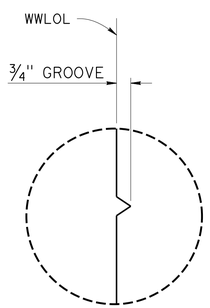

DETAIL B

NO SCALE

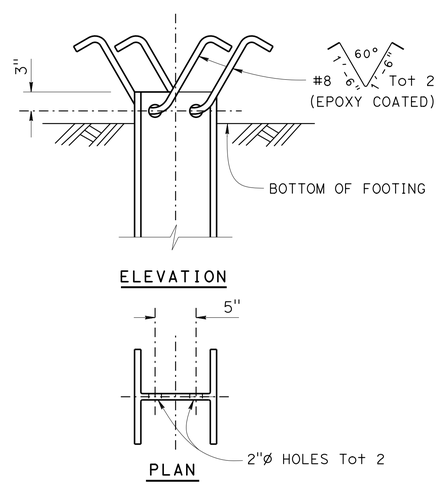

STEEL PILE ANCHOR

NO SCALE

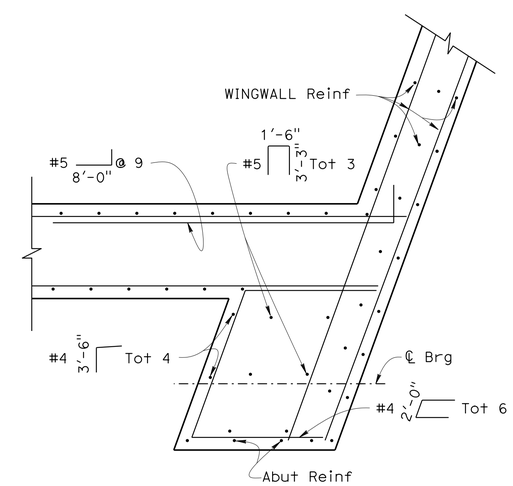

SECTION C-C

1/2" = 1'-0"

DESIGN	BY J. Lynch	CHECKED B. Shen	
DETAILS	BY J. Yang	CHECKED B. Shen	
QUANTITIES	BY G. Schuster	CHECKED M. Kodsuntie	

STATE OF CALIFORNIA
DEPARTMENT OF TRANSPORTATION

DIVISION OF ENGINEERING SERVICES
STRUCTURE DESIGN
DESIGN BRANCH 2

BRIDGE NO. 25-0153
POST MILE 23.99

SOUTH FORK AMERICAN RIVER BRIDGE (REPLACE)
ABUTMENT 1 DETAILS

STRUCTURES DESIGN DETAIL SHEET (ENGLISH) (REV. 09-01-10)

ORIGINAL SCALE IN INCHES FOR REDUCED PLANS 0 1 2 3

UNIT: 3577
PROJECT NUMBER & PHASE: 0300000078
CONTRACT NO.: 03-0F310

DISREGARD PRINTS BEARING EARLIER REVISION DATES

REVISION DATES 10-13-15 12-29-15 01-12-16 2-23-16

SHEET 7 OF 42

FILE => 25-0021_f_a01_det01.dgn

USERNAME => s119538 DATE PLOTTED => 08-JUL-2016 TIME PLOTTED => 16:16

DIST	COUNTY	ROUTE	POST MILES TOTAL PROJECT	SHEET No.	TOTAL SHEETS
03	ED	49	23.6/24.5	131	202

REGISTERED CIVIL ENGINEER 04-18-16 DATE

5-9-16
PLANS APPROVAL DATE

REGISTERED PROFESSIONAL ENGINEER JASON LYNCH No. 51002 Exp. 09-30-17 CIVIL STATE OF CALIFORNIA

The State of California or its officers or agents shall not be responsible for the accuracy or completeness of scanned copies of this plan sheet.

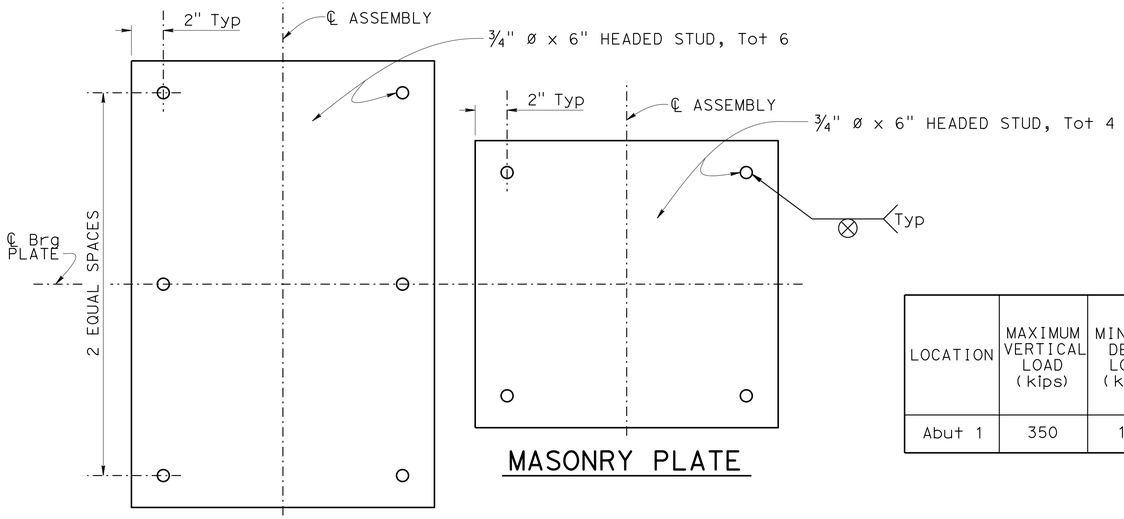

SOLE PLATE

MASONRY PLATE

STUD LAYOUT
NO SCALE

EXPANSION BEARING TABLE

LOCATION	MAXIMUM VERTICAL LOAD (kips)	MINIMUM DEAD LOAD (kips)	DESIGN ROTATION (Radians)	CONCAVE PLATE						CONVEX PLATE		MASONRY PLATE			SOLE PLATE			ASSEMBLY HEIGHT
				WIDTH / LENGTH	FLAT PTFE AREA (in²)	DIAMETER	SPHERICAL RADIUS	MINIMUM THICKNESS	MAXIMUM THICKNESS	DIAMETER	MAXIMUM THICKNESS	WIDTH	LENGTH	THICKNESS	WIDTH	LENGTH	THICKNESS	
				L_{cp}	A_{PTFE}	D_m	R_{act}	T_{Min}	T_{Max}	C_m	H_{act}	W_{mp}	L_{mp}	T_{mp}	W_{sp}	L_{sp}	T_{sp}	A_h
Abut 1	350	125	0.035	12⅝	100	11½	17¾	¾	2	12¾	2	18	18	1¼	18	28	¾	4¾

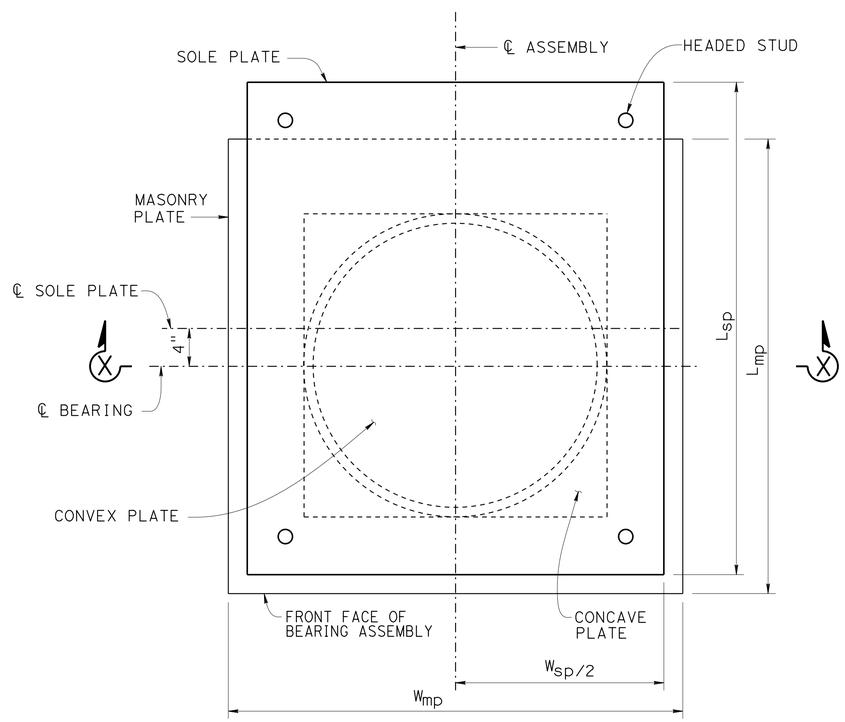

PLAN
NO SCALE

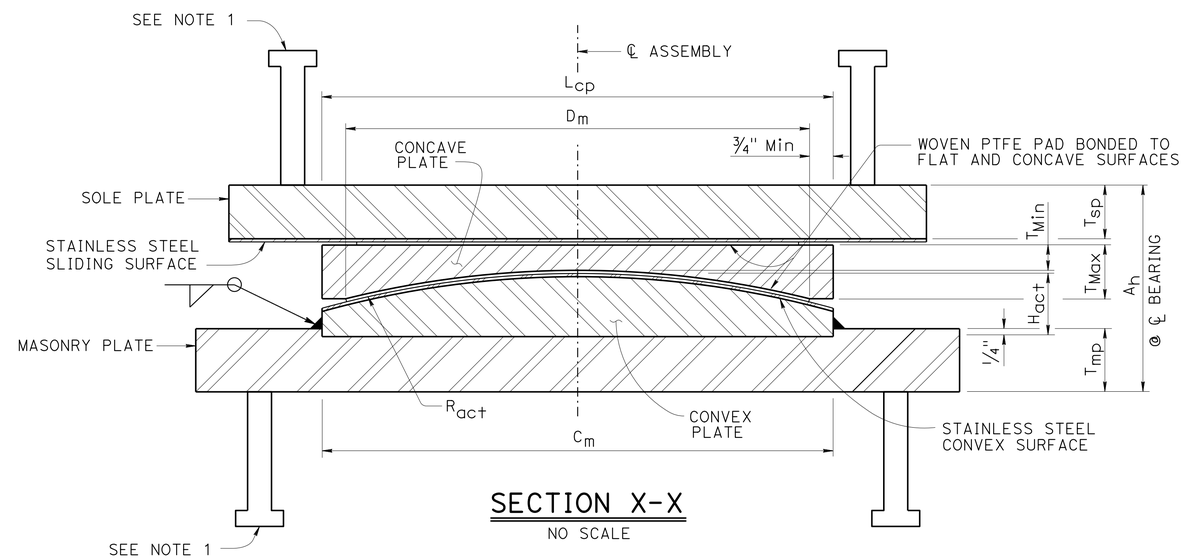

SECTION X-X
NO SCALE

NOTES:

1. Anchorage typical.
2. All units in inches unless otherwise noted.
3. All dimensions shown are steel only unless otherwise noted.
4. H_{act} includes stainless steel.
5. A_h includes PTFE, substratum and stainless steel, (varies).
6. R_{act} is to sliding surface.
7. All exposed steel parts of bearings not made of stainless steel shall be cleaned and painted prior to installation. Do not paint surfaces that bear on concrete.
8. Place ℄ assembly parallel to ℄ bridge.

	BY	CHECKED
DESIGN	J. Lynch	B. Shen
DETAILS	J. Yang	B. Shen
QUANTITIES	J. Lynch	G. Schuster

STATE OF CALIFORNIA
DEPARTMENT OF TRANSPORTATION

DIVISION OF ENGINEERING SERVICES
STRUCTURE DESIGN
DESIGN BRANCH 2

BRIDGE NO. 25-0153
POST MILE 23.99

SOUTH FORK AMERICAN RIVER BRIDGE (REPLACE)
ABUTMENT 1 BEARING DETAILS

STRUCTURES DESIGN DETAIL SHEET (ENGLISH) (REV. 09-01-10)

ORIGINAL SCALE IN INCHES FOR REDUCED PLANS 0 1 2 3

UNIT: 3577
PROJECT NUMBER & PHASE: 0300000078
CONTRACT NO.: 03-0F310

DISREGARD PRINTS BEARING EARLIER REVISION DATES

REVISION DATES 10-23-15 12-30-15

SHEET 8 OF 42

FILE => 25-0021_f_a01_det02_bearing.dgn

USERNAME => s119538 DATE PLOTTED => 08-JUL-2016 TIME PLOTTED => 16:16

DIST	COUNTY	ROUTE	POST MILES TOTAL PROJECT	SHEET No.	TOTAL SHEETS
03	ED	49	23.6/24.5	132	202

REGISTERED CIVIL ENGINEER 04-18-16 DATE

5-9-16
PLANS APPROVAL DATE

REGISTERED PROFESSIONAL ENGINEER JASON LYNCH No. 51002 Exp. 09-30-17 CIVIL STATE OF CALIFORNIA

The State of California or its officers or agents shall not be responsible for the accuracy or completeness of scanned copies of this plan sheet.

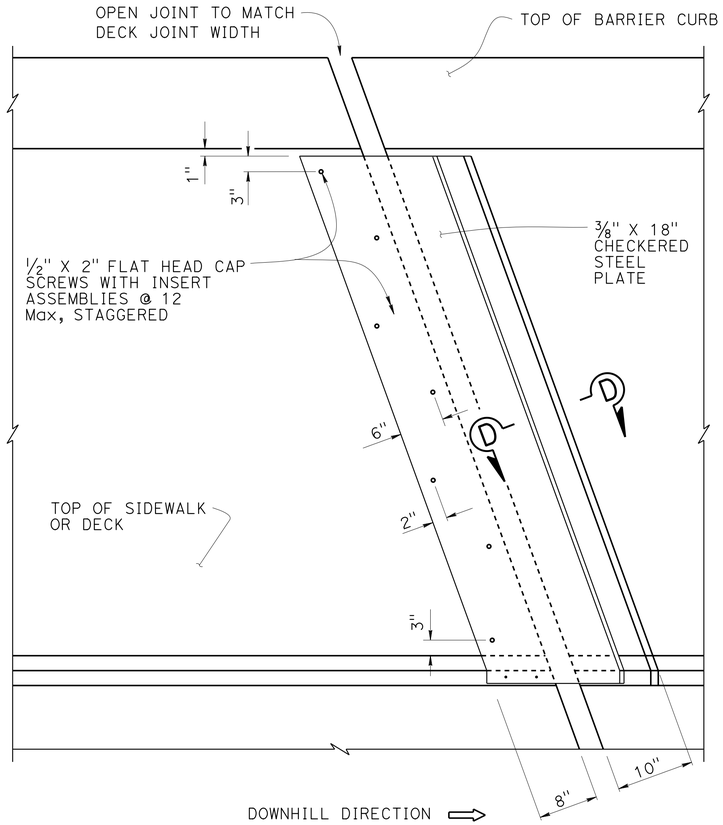

EXPANSION JOINT ARMOR
NO SCALE

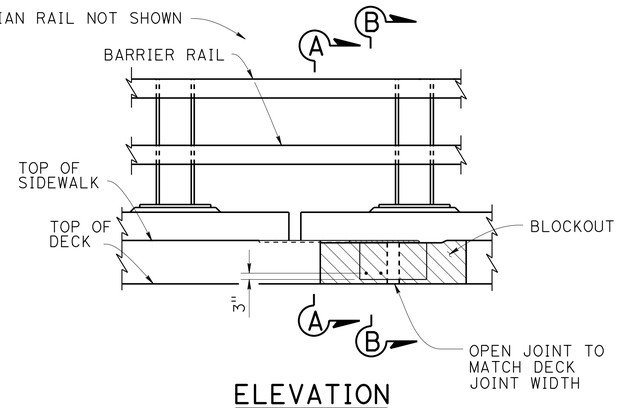

ELEVATION
NO SCALE

NOTES:

1. Utility openings and expansion joints not shown for clarity.
2. Recess concrete 1/2" for plates.
3. Plates to be galvanized.

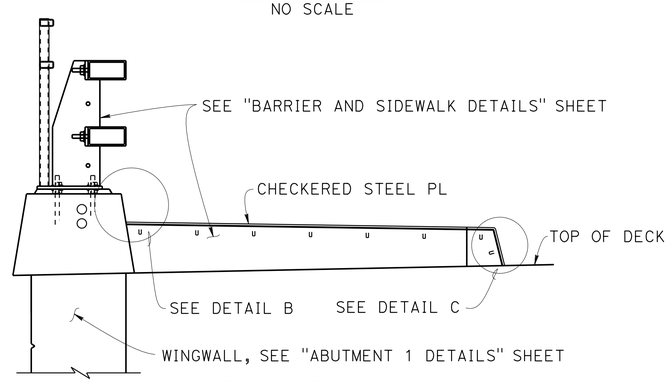

SECTION A-A
NO SCALE

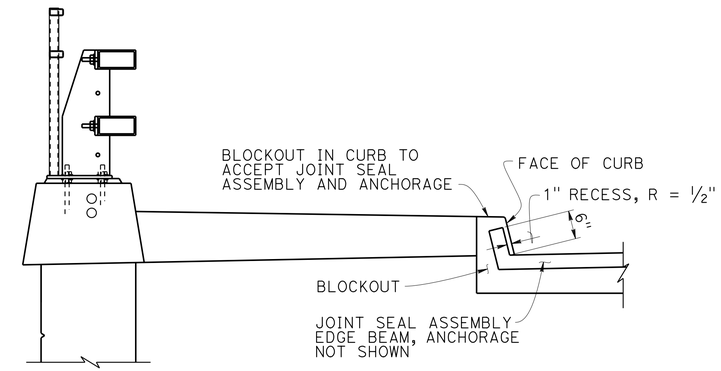

SECTION B-B (SEAL INSTALLATION)
NO SCALE

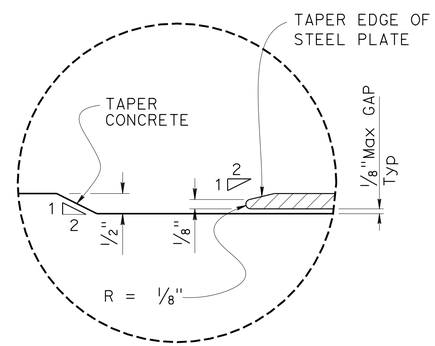

SECTION D-D
NO SCALE

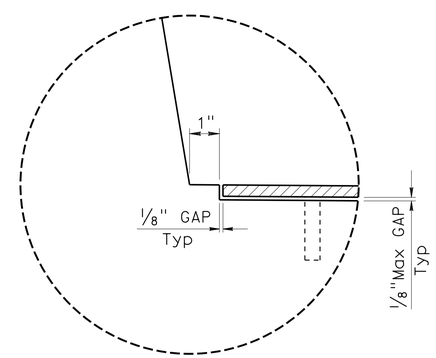

DETAIL B
NO SCALE

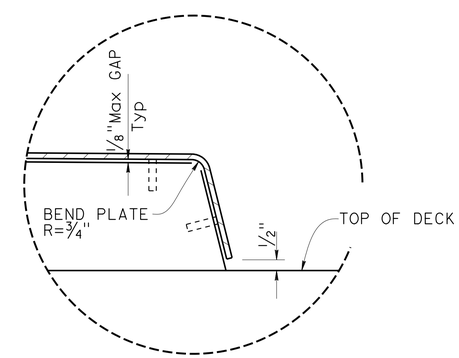

DETAIL C
NO SCALE

DESIGN	BY J. Lynch	CHECKED B. Shen	
DETAILS	BY J. Yang	CHECKED B. Shen	
QUANTITIES	BY J. Lynch	CHECKED G. Schuster	

STATE OF CALIFORNIA
DEPARTMENT OF TRANSPORTATION

DIVISION OF ENGINEERING SERVICES
STRUCTURE DESIGN
DESIGN BRANCH 2

BRIDGE NO. 25-0153
POST MILE 23.99

SOUTH FORK AMERICAN RIVER BRIDGE (REPLACE)
ABUTMENT 1 JOINT DETAILS

STRUCTURES DESIGN DETAIL SHEET (ENGLISH) (REV. 09-01-10)

ORIGINAL SCALE IN INCHES FOR REDUCED PLANS 0 1 2 3

UNIT: 3577
PROJECT NUMBER & PHASE: 0300000078
CONTRACT NO.: 03-0F310

DISREGARD PRINTS BEARING EARLIER REVISION DATES

REVISION DATES 10-13-15 1-14-16 2-23-16 03-22-16

SHEET 9 OF 42

FILE => 25-0021_f_a01_det03_joint.dgn

USERNAME => s179538 DATE PLOTTED => 08-JUL-2016 TIME PLOTTED => 16:16

DIST	COUNTY	ROUTE	POST MILES TOTAL PROJECT	SHEET No.	TOTAL SHEETS
03	ED	49	23.6/24.5	133	202

REGISTERED CIVIL ENGINEER 04-18-16 DATE

5-9-16
PLANS APPROVAL DATE

REGISTERED PROFESSIONAL ENGINEER JASON LYNCH No. 51002 Exp. 09-30-17 CIVIL STATE OF CALIFORNIA

The State of California or its officers or agents shall not be responsible for the accuracy or completeness of scanned copies of this plan sheet.

NOTES:

1. For Pile Data see "INDEX TO PLANS" sheet.
2. For Abutment 5 construction sequence see "ABUTMENT 5 DETAILS NO. 1" sheet.
3. Extend stage 1 Reinf beyond the Const joint and lap splice with stage 2 Reinf.
4. For Steel Pile Anchor, see "ABUTMENT 1 DETAILS" sheet.
5. For Approach Slab and Joint Seal see "APPROACH SLAB DETAILS" sheet.

(G) See Detail G on "ABUTMENT 1 LAYOUT" sheet.

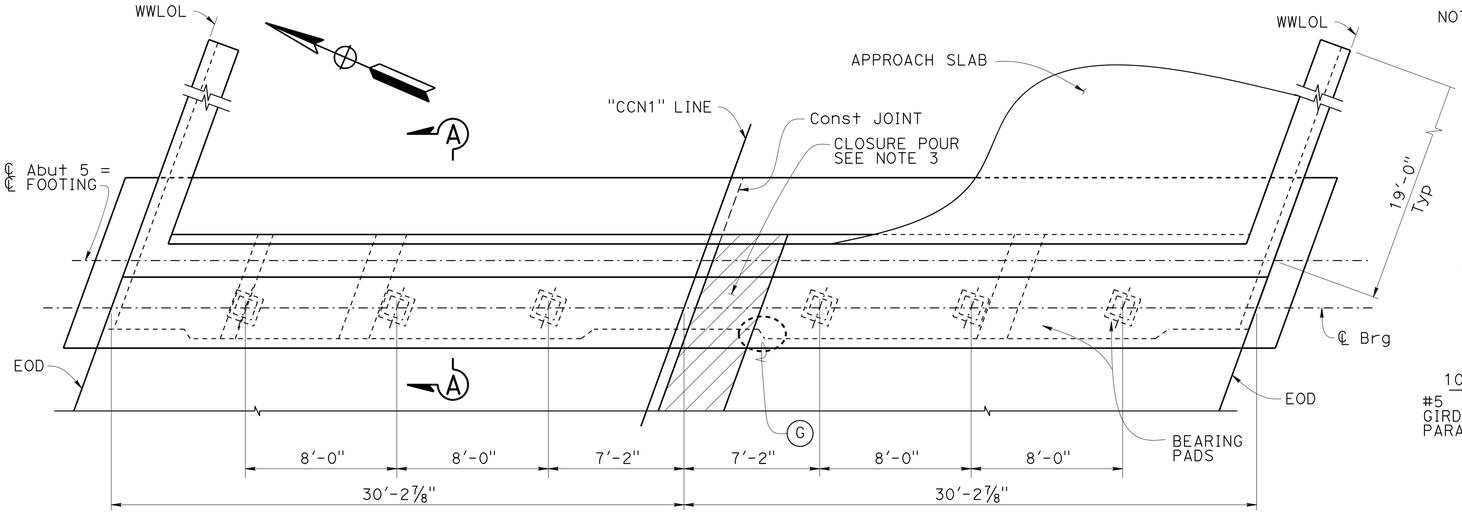

PLAN
¼" = 1'-0"

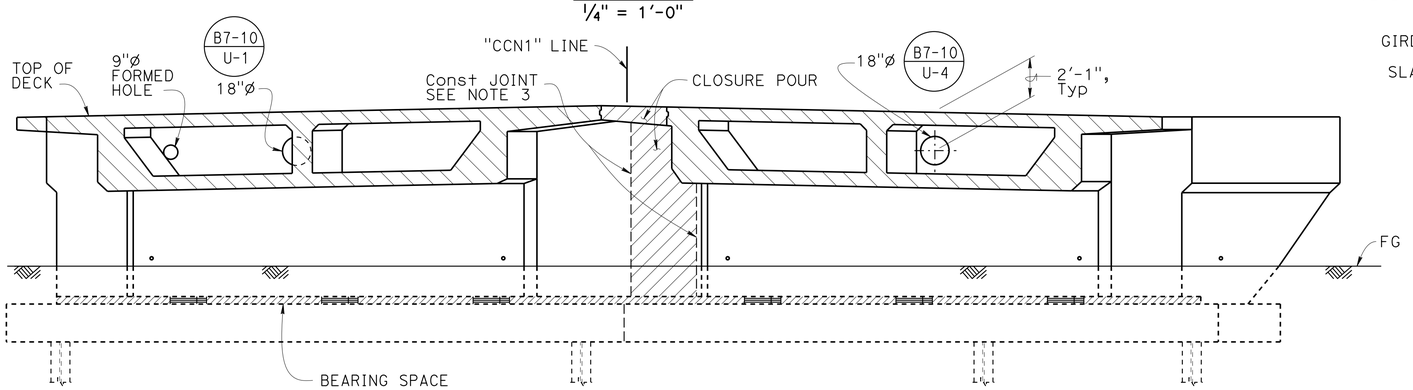

ELEVATION
¼" = 1'-0"

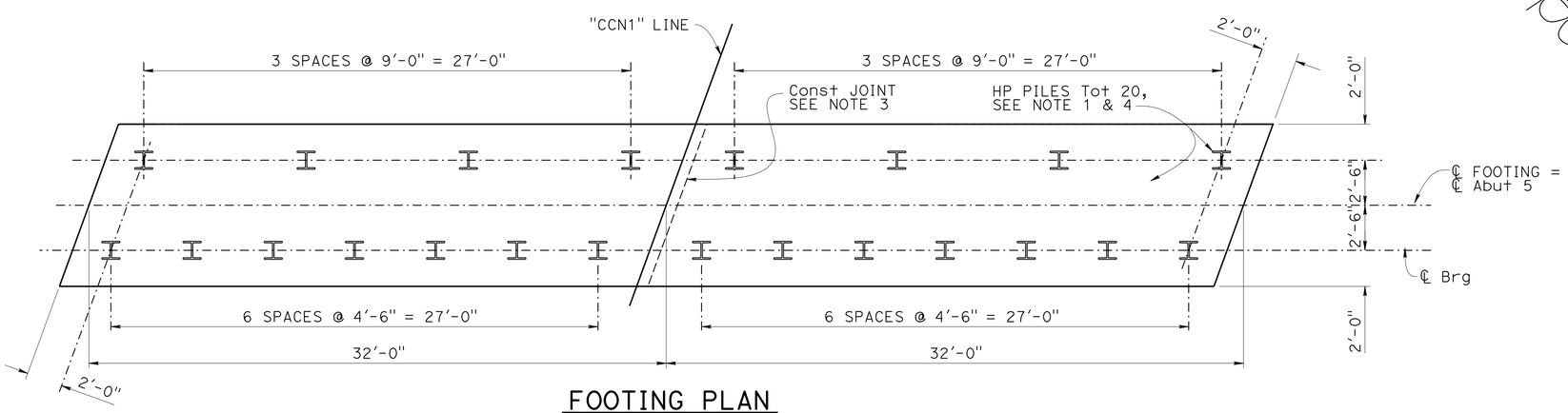

FOOTING PLAN
¼" = 1'-0"

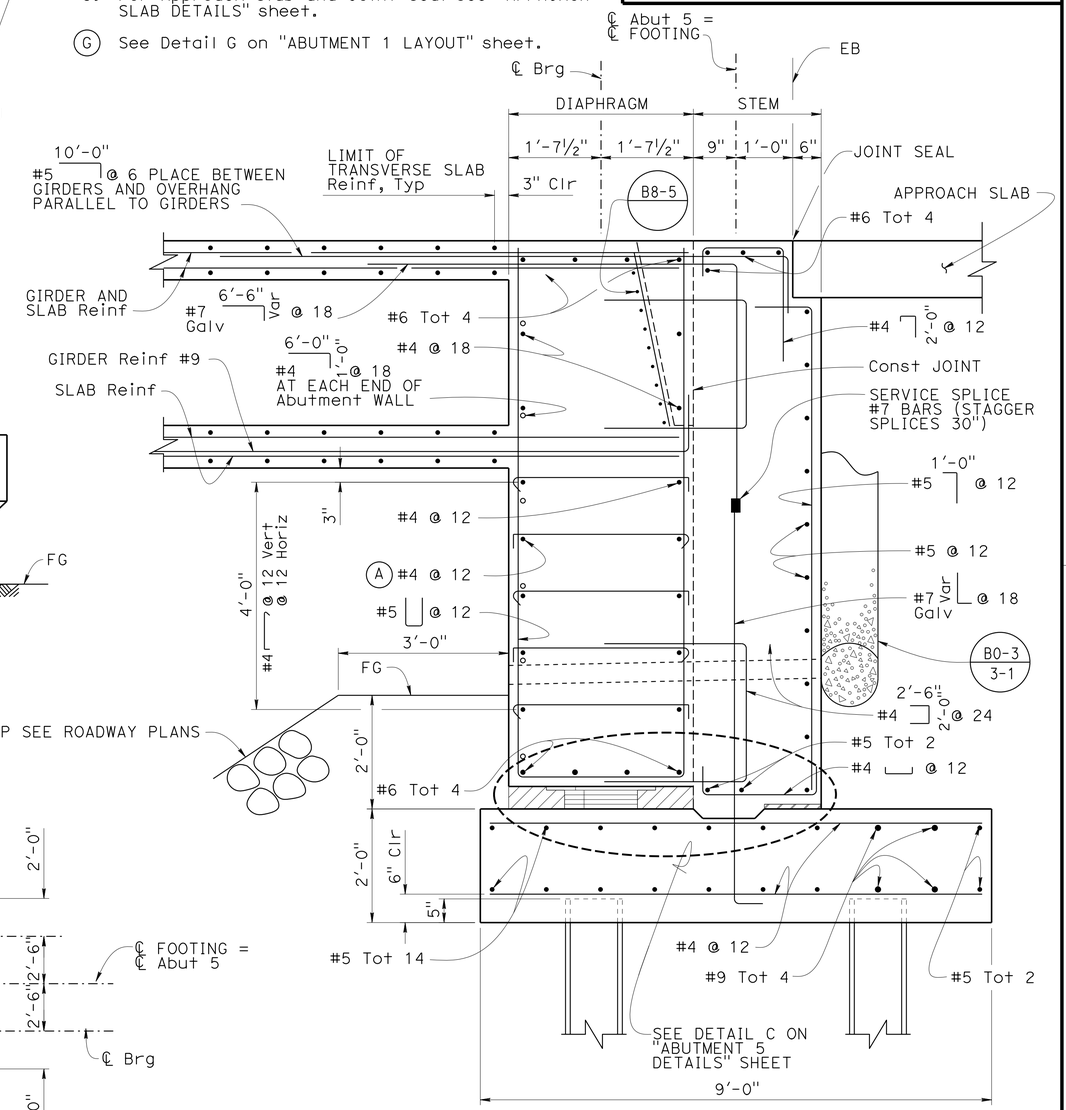

SECTION A-A
¾" = 1'-0"

DESIGN	BY J. Lynch	CHECKED B. Shen	
DETAILS	BY J. Yang	CHECKED B. Shen	
QUANTITIES	BY Y. Feng	CHECKED H. Fang	

STATE OF CALIFORNIA
DEPARTMENT OF TRANSPORTATION

DIVISION OF ENGINEERING SERVICES
STRUCTURE DESIGN
DESIGN BRANCH 2

BRIDGE NO. 25-0153
POST MILE 23.99

SOUTH FORK AMERICAN RIVER BRIDGE (REPLACE)
ABUTMENT 5 LAYOUT

STRUCTURES DESIGN DETAIL SHEET (ENGLISH) (REV. 09-01-10)

ORIGINAL SCALE IN INCHES FOR REDUCED PLANS 0 1 2 3

UNIT: 3577
PROJECT NUMBER & PHASE: 0300000078
CONTRACT NO.: 03-0F310

DISREGARD PRINTS BEARING EARLIER REVISION DATES

REVISION DATES 10-13-15 01-15-16 03-22-16

SHEET 10 OF 42

FILE => 25-0021_f_a05.dgn

USERNAME => s119558 DATE PLOTTED => 08-JUL-2016 TIME PLOTTED => 16:16

DIST	COUNTY	ROUTE	POST MILES TOTAL PROJECT	SHEET No.	TOTAL SHEETS
03	ED	49	23.6/24.5	134	202

REGISTERED CIVIL ENGINEER 04-18-16 DATE

5-9-16
PLANS APPROVAL DATE

REGISTERED PROFESSIONAL ENGINEER JASON LYNCH No. 51002 Exp. 09-30-17 CIVIL STATE OF CALIFORNIA

The State of California or its officers or agents shall not be responsible for the accuracy or completeness of scanned copies of this plan sheet.

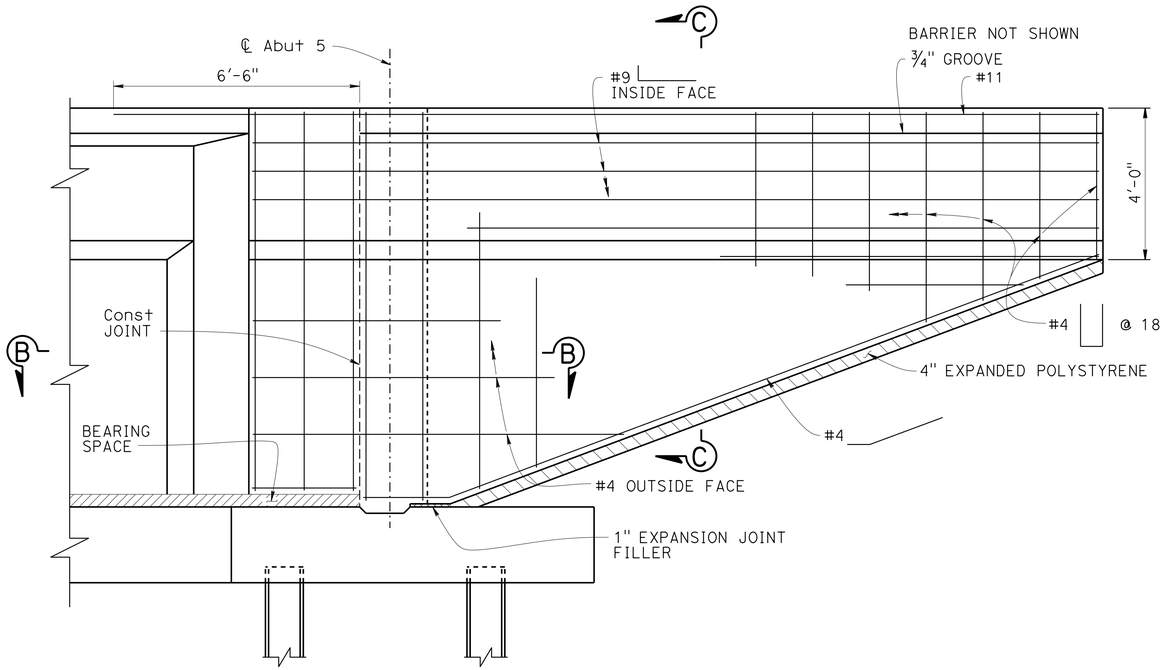

WINGWALL ELEVATION

1/2" = 1'-0"

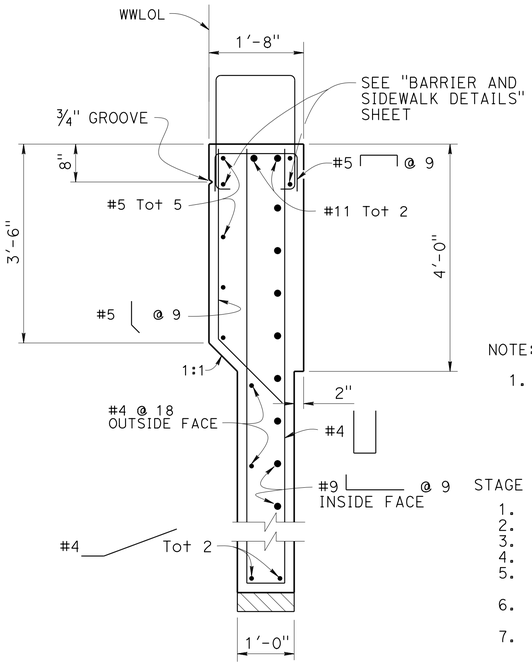

SECTION C-C

3/4" = 1'-0"

NOTE:

1. For location of Detail C see "ABUTMENT 5 LAYOUT" sheet.

ABUTMENT 5 CONSTRUCTION SEQUENCE

STAGE 1

1. Construct the piles, footing, and elastomeric bearings
2. Construct the diaphragm and superstructure
3. Post-tension the superstructure
4. Release the falsework
5. Construct the stem and wingwall no sooner than 14 days after falsework release
6. Remove polystyrene from the bearing space and fill the bearing space with bearing grout
7. Backfill behind the abutment

STAGE 2

8. Repeat steps 1-6
9. Lap splice all reinforcement across the closure pour
10. Cast the closure pour in the diaphragm and stem
11. Backfill behind the abutment

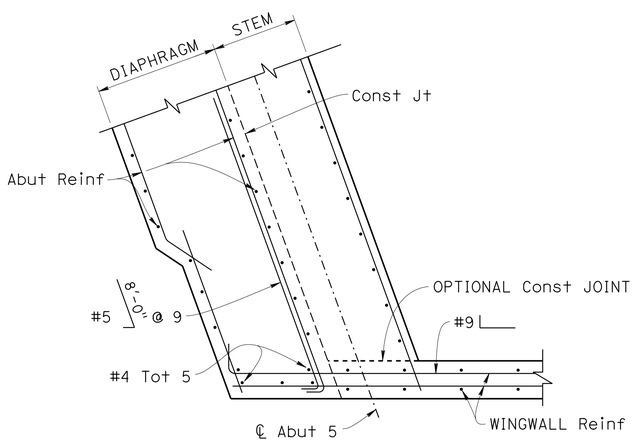

SECTION B-B

1/2" = 1'-0"

OBTUSE CORNER SHOWN, ACUTE CORNER SIMILAR

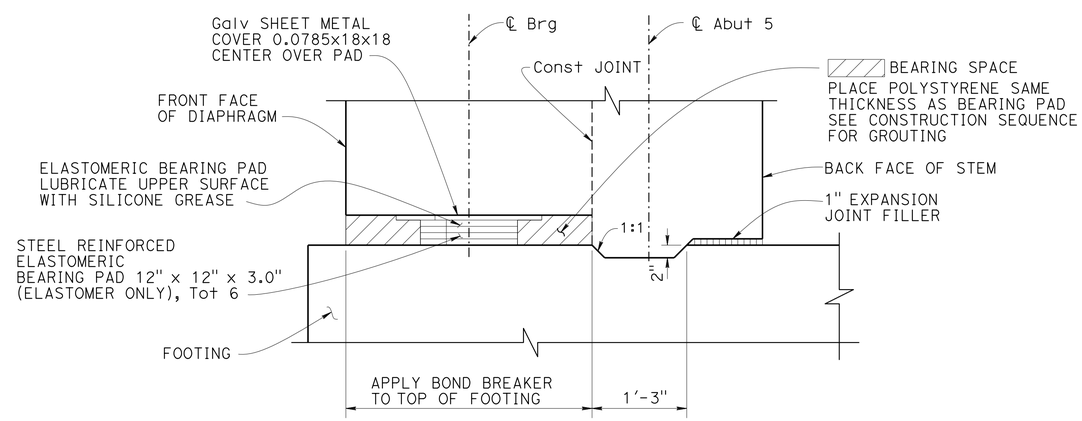

DETAIL C

1" = 1'-0"

REINFORCEMENT NOT SHOWN

	BY	CHECKED
DESIGN	J. Lynch	B. Shen
DETAILS	J. Yang	B. Shen
QUANTITIES	Y. Feng	H. Fang

STATE OF CALIFORNIA
DEPARTMENT OF TRANSPORTATION

DIVISION OF ENGINEERING SERVICES
STRUCTURE DESIGN
DESIGN BRANCH 2

BRIDGE NO. 25-0153
POST MILE 23.99

SOUTH FORK AMERICAN RIVER BRIDGE (REPLACE)
ABUTMENT 5 DETAILS

STRUCTURES DESIGN DETAIL SHEET (ENGLISH) (REV. 09-01-10)

ORIGINAL SCALE IN INCHES FOR REDUCED PLANS 0 1 2 3

UNIT: 3577
PROJECT NUMBER & PHASE: 0300000078
CONTRACT NO.: 03-0F310

DISREGARD PRINTS BEARING EARLIER REVISION DATES

REVISION DATES 10-23-15 07-26-16 03-23-16

SHEET 11 OF 42

FILE => 25-0021_f_a05_det01.dgn

USERNAME => s119538 DATE PLOTTED => 08-JUL-2016 TIME PLOTTED => 16:16

DIST	COUNTY	ROUTE	POST MILES TOTAL PROJECT	SHEET No.	TOTAL SHEETS
03	ED	49	23.6/24.5	135	202

REGISTERED CIVIL ENGINEER 04-18-16 DATE

5-9-16
PLANS APPROVAL DATE

REGISTERED PROFESSIONAL ENGINEER JASON LYNCH No. 51002 Exp. 09-30-17 CIVIL STATE OF CALIFORNIA

The State of California or its officers or agents shall not be responsible for the accuracy or completeness of scanned copies of this plan sheet.

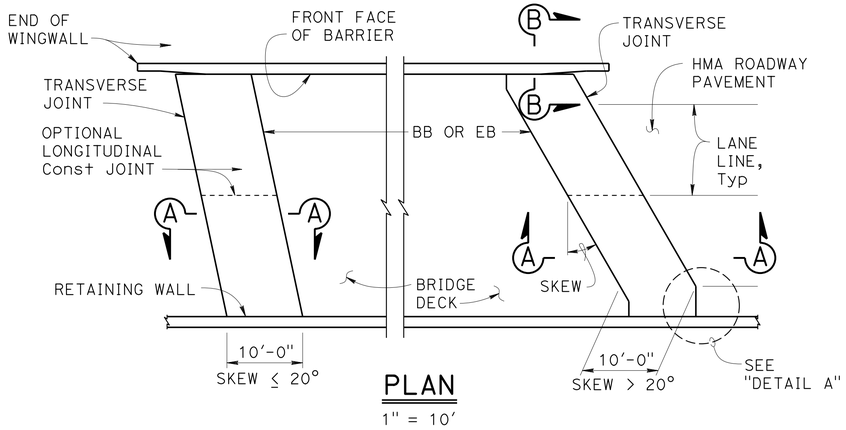

PLAN

1" = 10'

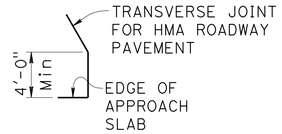

DETAIL A

NO SCALE

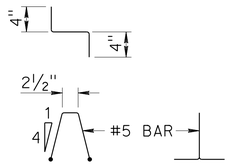

BAR CHAIR DETAIL

1" = 1'-0"

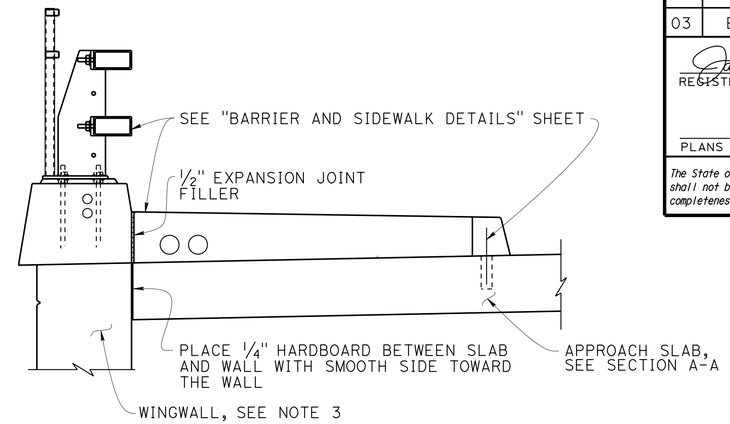

SECTION B-B

¾" = 1'-0"
REINFORCEMENT NOT SHOWN

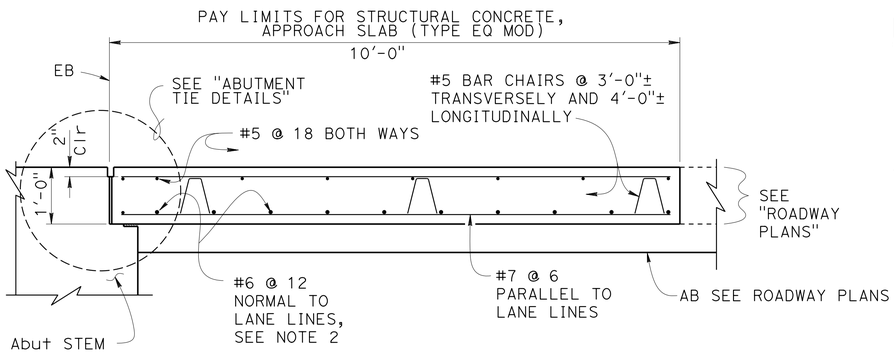

SECTION A-A

¾" = 1'-0"

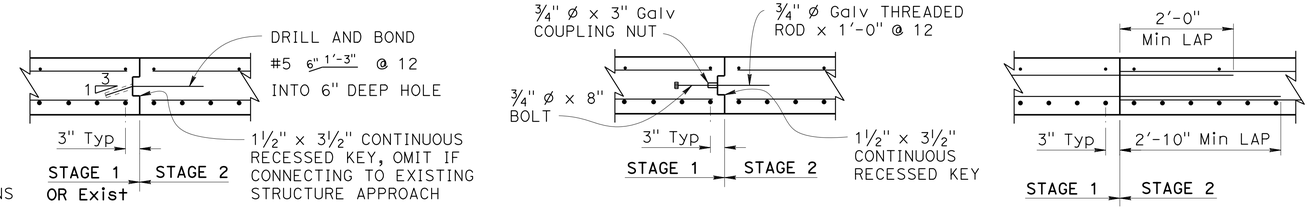

LONGITUDINAL CONSTRUCTION JOINT ALTERNATIVES

¾" = 1'-0"

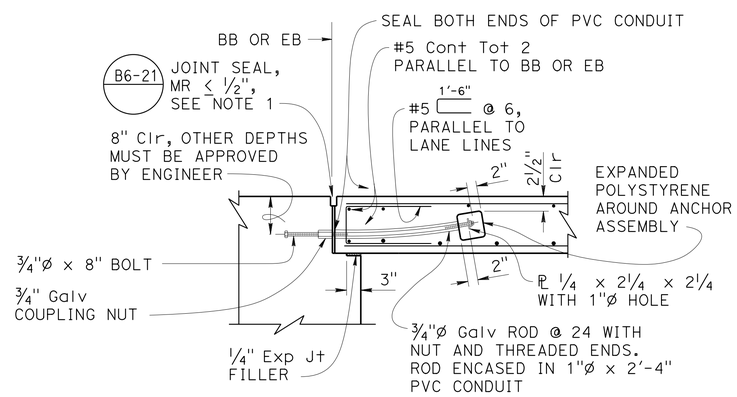

ABUTMENT TIE DETAILS - DIAPHRAGM TYPE

¾" = 1'-0"

DESIGN NOTES

DESIGN: AASHTO LRFD Bridge Design Specifications, 2012 Edition with Caltrans Amendments, preface dated January 2014

LIMIT STATES: Service I, Strength I & II, Extreme II and Fatigue I (γ_{FAT} = 1.0)

DEAD LOAD: Includes 50 psf for future wearing surface

LIVE LOAD: HL93 and permit design load
Equivalent strip width method: W_1 = 12 ft
Slab Span: L_1 = 7.83 ft

REINFORCED CONCRETE:
f_y = 60 ksi
f'_c = 3.6 ksi
n = 8

NOTES:

1. For details not shown, see other plan sheets. Adjust reinforcement to clear sawcut for sealed joints.
2. At the Contractor's option, approach slab transverse reinforcement may be placed parallel to BB or EB. Spacing of transverse reinforcement is measured along ℄ roadway.
3. For Wingwall Reinf, see "ABUTMENT 5 DETAILS" sheet.

	BY	CHECKED
DESIGN	J. Lynch	B. Shen
DETAILS	J. Yang	B. Shen
QUANTITIES	Y. Feng	H. Fang

STATE OF CALIFORNIA
DEPARTMENT OF TRANSPORTATION

DIVISION OF ENGINEERING SERVICES
STRUCTURE DESIGN
DESIGN BRANCH 2

BRIDGE NO. 25-0153
POST MILE 23.99

SOUTH FORK AMERICAN RIVER BRIDGE (REPLACE)
APPROACH SLAB DETAILS

STRUCTURES DESIGN DETAIL SHEET (ENGLISH) (REV. 09-01-10)

ORIGINAL SCALE IN INCHES FOR REDUCED PLANS 0 1 2 3

UNIT: 3577
PROJECT NUMBER & PHASE: 0300000078
CONTRACT NO.: 03-0F310

DISREGARD PRINTS BEARING EARLIER REVISION DATES

REVISION DATES 10-15-15 1-15-16 2-23-16

SHEET 12 OF 42

FILE => 25-0021_g_approach_slab.dgn

USERNAME => s119538 DATE PLOTTED => 08-JUL-2016 TIME PLOTTED => 16:16

DIST	COUNTY	ROUTE	POST MILES TOTAL PROJECT	SHEET No.	TOTAL SHEETS
03	ED	49	23.6/24.5	136	202

REGISTERED CIVIL ENGINEER 04-18-16 DATE

5-9-16
PLANS APPROVAL DATE

REGISTERED PROFESSIONAL ENGINEER JASON LYNCH No. 51002 Exp. 09-30-17 CIVIL STATE OF CALIFORNIA

The State of California or its officers or agents shall not be responsible for the accuracy or completeness of scanned copies of this plan sheet.

NOTES:

1. Stop top transverse Reinf at face of cap. Extend top longitudinal Reinf at least 1'-6" into cap.
2. Continuous longitudinal Reinf, see "TYPICAL SECTION" sheet.

* Clearance to main reinforcement

** Place parallel to ℄ girder

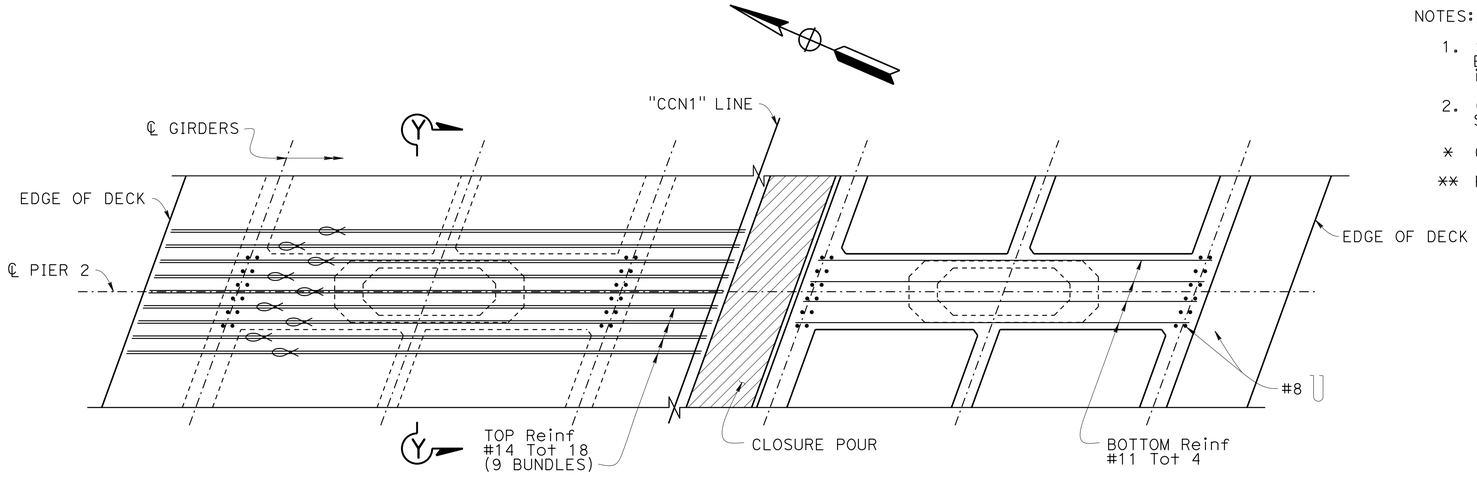

PLAN
1/4" = 1'-0"

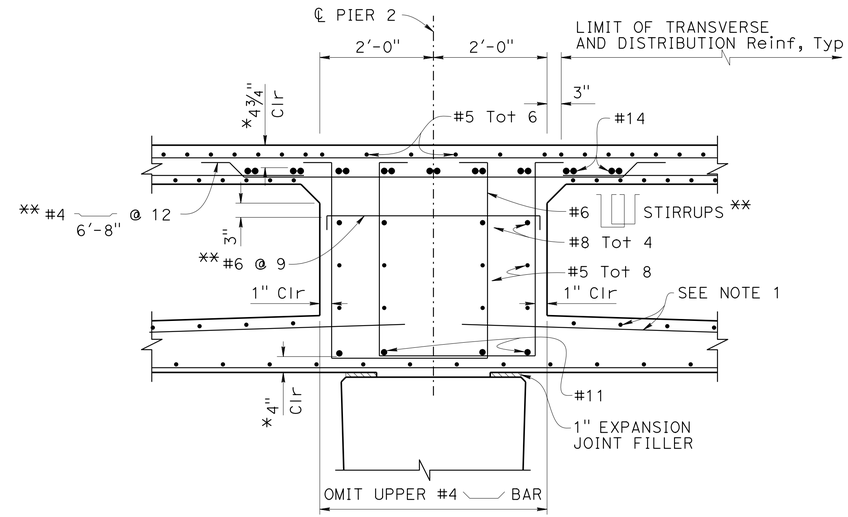

SECTION Y-Y
3/4" = 1'-0"

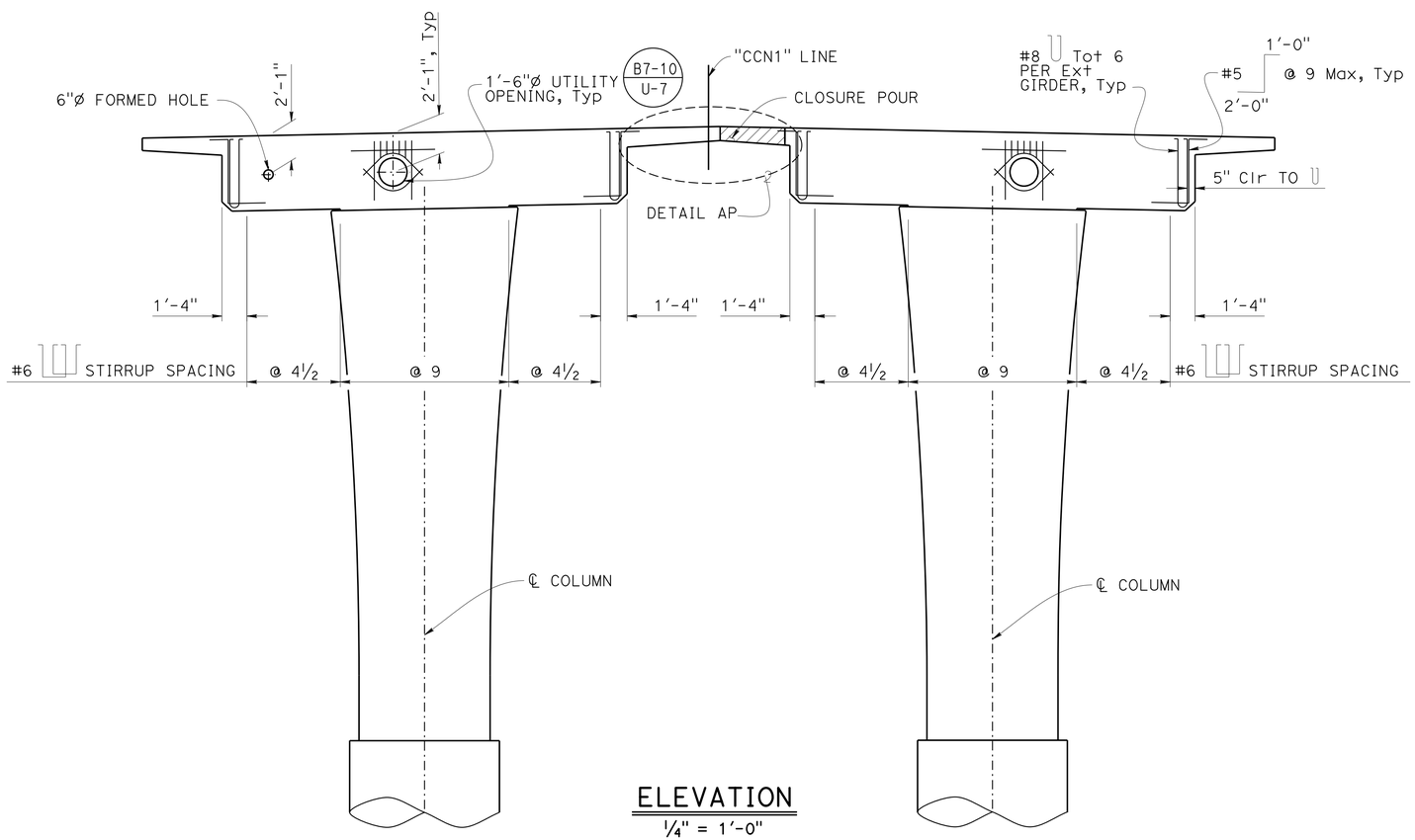

ELEVATION
1/4" = 1'-0"

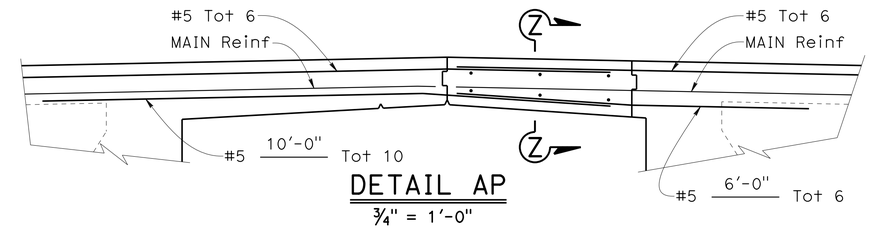

DETAIL AP
3/4" = 1'-0"

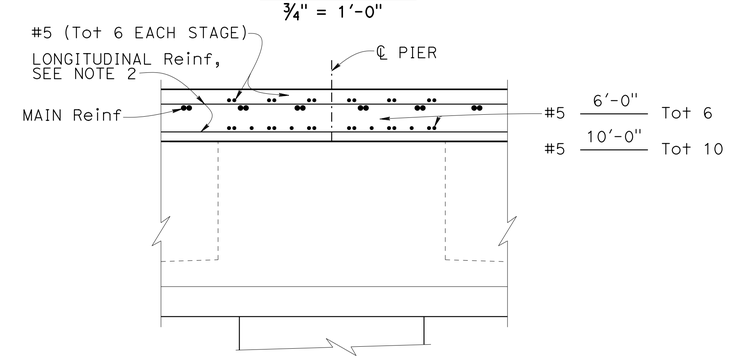

SECTION Z-Z
3/4" = 1'-0"

DESIGN	BY J. Lynch	CHECKED B. Shen	
DETAILS	BY J. Yang	CHECKED B. Shen	
QUANTITIES	BY N. Nguyen	CHECKED S. Talukder	

STATE OF CALIFORNIA
DEPARTMENT OF TRANSPORTATION

DIVISION OF ENGINEERING SERVICES
STRUCTURE DESIGN
DESIGN BRANCH 2

BRIDGE NO. 25-0153
POST MILE 23.99

SOUTH FORK AMERICAN RIVER BRIDGE (REPLACE)
PIER 2 LAYOUT

STRUCTURES DESIGN DETAIL SHEET (ENGLISH) (REV. 09-01-10)

ORIGINAL SCALE IN INCHES FOR REDUCED PLANS 0 1 2 3

UNIT: 3577
PROJECT NUMBER & PHASE: 0300000078
CONTRACT NO.: 03-0F310

DISREGARD PRINTS BEARING EARLIER REVISION DATES

REVISION DATES 10-13-15

SHEET 13 OF 42

FILE => 25-0021_i_p_lo_01.dgn

USERNAME => s119538 DATE PLOTTED => 08-JUL-2016 TIME PLOTTED => 16:16

DIST	COUNTY	ROUTE	POST MILES TOTAL PROJECT	SHEET No.	TOTAL SHEETS
03	ED	49	23.6/24.5	137	202

REGISTERED CIVIL ENGINEER 04-18-16 DATE

5-9-16
PLANS APPROVAL DATE

REGISTERED PROFESSIONAL ENGINEER JASON LYNCH No. 51002 Exp. 09-30-17 CIVIL STATE OF CALIFORNIA

The State of California or its officers or agents shall not be responsible for the accuracy or completeness of scanned copies of this plan sheet.

NOTES:

1. For Sections E-E, F-F, G-G, & H-H see "PIER 2 DETAILS NO. 2" sheet.
2. Use ultimate butt splices in hoop reinforcement.
3. For Pile Data see "INDEX TO PLANS" sheet.

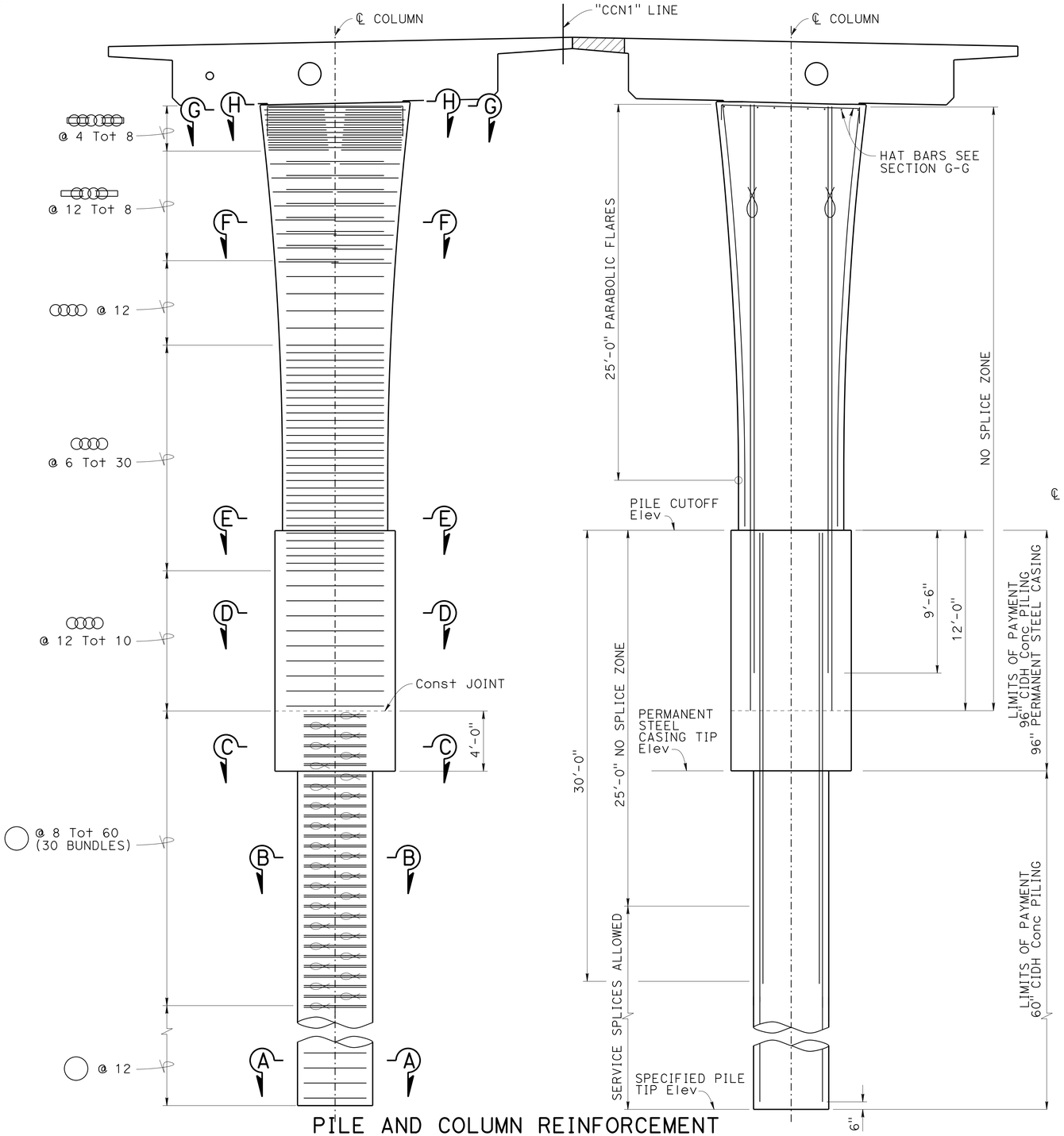

PILE AND COLUMN REINFORCEMENT

¼" = 1'-0"

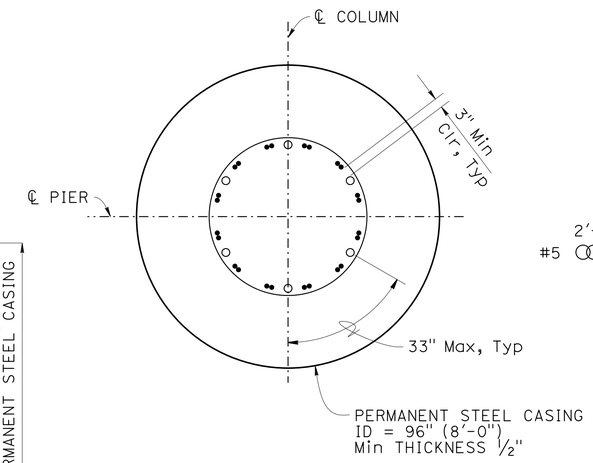

SECTION C-C

½" = 1'-0"

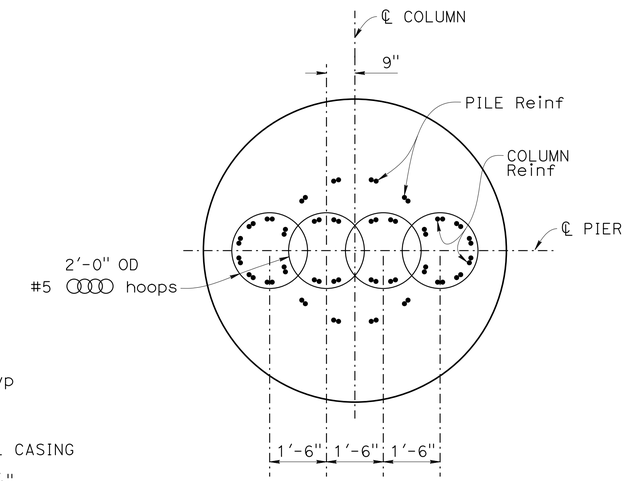

SECTION D-D

½" = 1'-0"

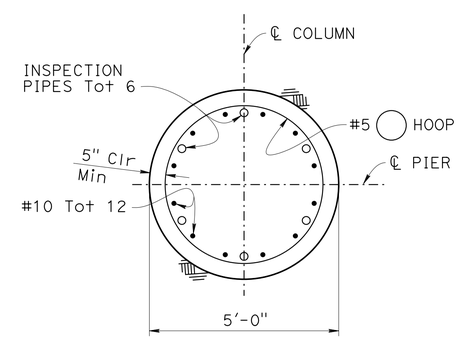

SECTION A-A

½" = 1'-0"

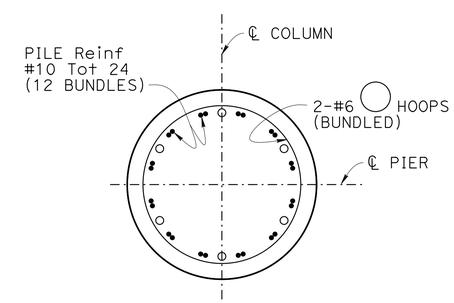

SECTION B-B

½" = 1'-0"

	BY	CHECKED
DESIGN	J. Lynch	B. Shen
DETAILS	J. Yang	B. Shen
QUANTITIES	N. Nguyen	S. Talukder

STATE OF CALIFORNIA
DEPARTMENT OF TRANSPORTATION

DIVISION OF ENGINEERING SERVICES
STRUCTURE DESIGN
DESIGN BRANCH 2

BRIDGE NO. 25-0153
POST MILE 23.99

SOUTH FORK AMERICAN RIVER BRIDGE (REPLACE)

PIER 2 DETAILS NO. 1

STRUCTURES DESIGN DETAIL SHEET (ENGLISH) (REV. 09-01-10)

ORIGINAL SCALE IN INCHES FOR REDUCED PLANS 0 1 2 3

UNIT: 3577
PROJECT NUMBER & PHASE: 0300000078
CONTRACT NO.: 03-0F310

DISREGARD PRINTS BEARING EARLIER REVISION DATES

REVISION DATES 10-13-15

SHEET 14 OF 42

FILE => 25-0021_i_p_1o1_det01.dgn

USERNAME => s119538 DATE PLOTTED => 08-JUL-2016 TIME PLOTTED => 16:16

DIST	COUNTY	ROUTE	POST MILES TOTAL PROJECT	SHEET No.	TOTAL SHEETS
03	ED	49	23.6/24.5	138	202

REGISTERED CIVIL ENGINEER 04-18-16 DATE

5-9-16
PLANS APPROVAL DATE

REGISTERED PROFESSIONAL ENGINEER JASON LYNCH No. 51002 Exp. 09-30-17 CIVIL STATE OF CALIFORNIA

The State of California or its officers or agents shall not be responsible for the accuracy or completeness of scanned copies of this plan sheet.

NOTES:

1. For location of Sections E-E, F-F, G-G, & H-H see "PIER 2 DETAILS NO. 1" sheet.
2. Tighten the centering nut to compress the O-ring and to maintain a concentric alignment of pipes.
3. Galvanize all pipe pin components after fabrication.
4. Do not fill the pipe pin with concrete.
5. Place hat bars in a single layer at the top of column. See "PIER 2 DETAILS NO. 1" sheet.
6. The transition from Section E-E to Section G-G is parabolic in both directions.

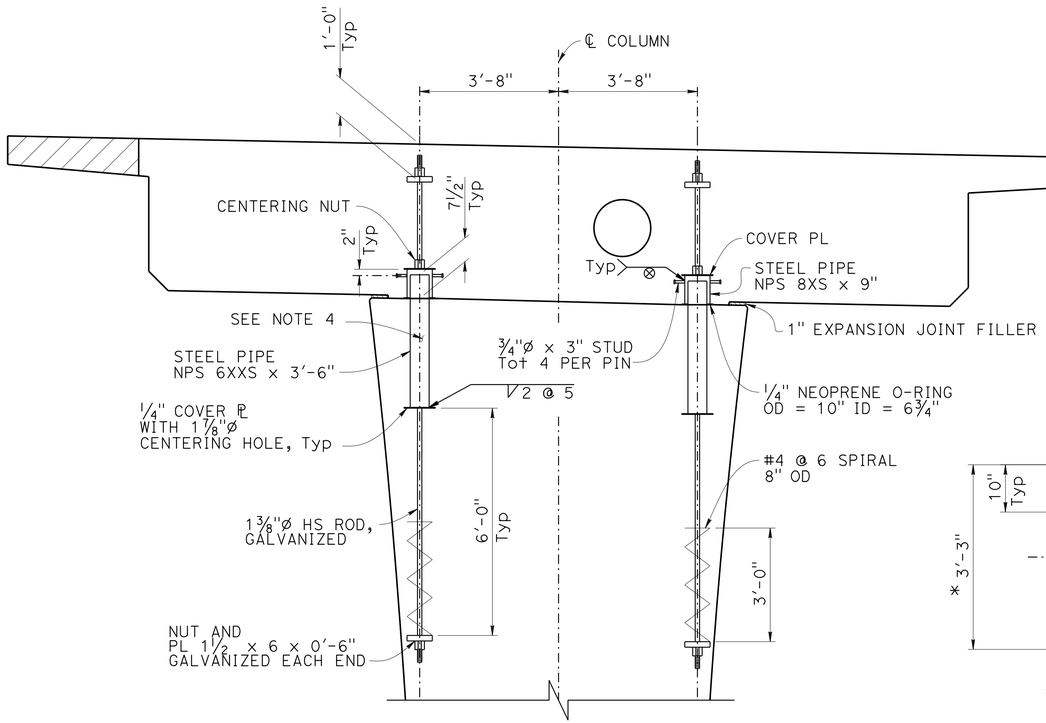

PIPE PIN DETAILS

½" = 1'-0"

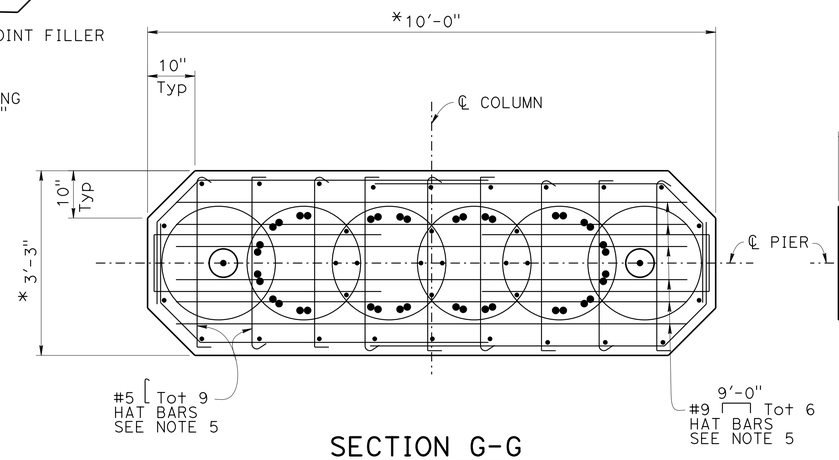

SECTION G-G

¾" = 1'-0"

* TOP OF COLUMN DIMENSIONS

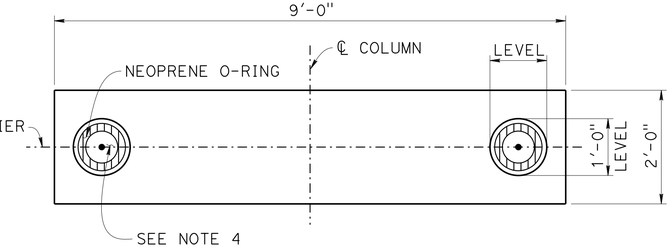

SECTION H-H

¾" = 1'-0"

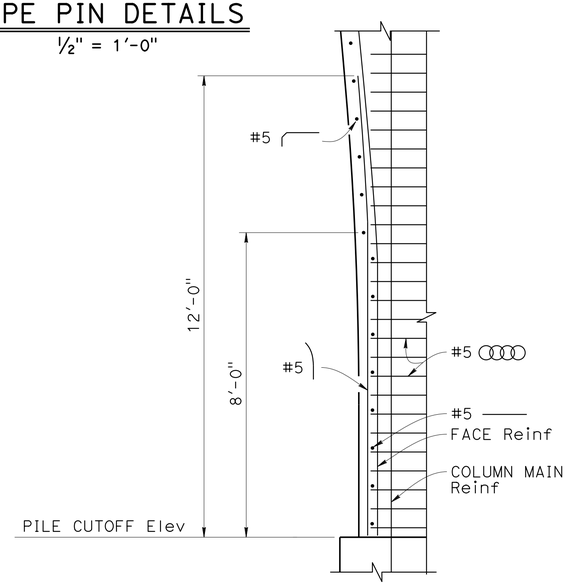

FACE DETAIL

NO SCALE

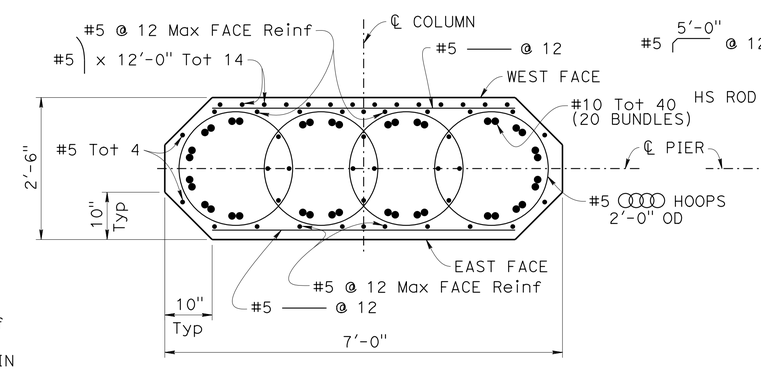

SECTION E-E

¾" = 1'-0"

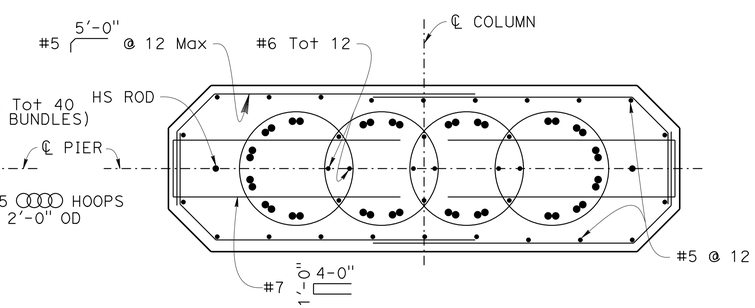

SECTION F-F

¾" = 1'-0"

DESIGN	BY J. Lynch	CHECKED B. Shen	
DETAILS	BY J. Yang	CHECKED B. Shen	
QUANTITIES	BY N. Nguyen	CHECKED S. Talukder	

STATE OF CALIFORNIA
DEPARTMENT OF TRANSPORTATION

DIVISION OF ENGINEERING SERVICES
STRUCTURE DESIGN
DESIGN BRANCH 2

BRIDGE NO. 25-0153
POST MILE 23.99

SOUTH FORK AMERICAN RIVER BRIDGE (REPLACE)

PIER 2 DETAILS NO. 2

STRUCTURES DESIGN DETAIL SHEET (ENGLISH) (REV. 09-01-10)

ORIGINAL SCALE IN INCHES FOR REDUCED PLANS 0 1 2 3

UNIT: 3577
PROJECT NUMBER & PHASE: 0300000078
CONTRACT NO.: 03-0F310

DISREGARD PRINTS BEARING EARLIER REVISION DATES

REVISION DATES 10-13-15

SHEET 15 OF 42

FILE => 25-0021_i_p_lo1_det02.dgn

USERNAME => s119538 DATE PLOTTED => 08-JUL-2016 TIME PLOTTED => 16:16

DIST	COUNTY	ROUTE	POST MILES TOTAL PROJECT	SHEET No.	TOTAL SHEETS
03	ED	49	23.6/24.5	139	202

REGISTERED CIVIL ENGINEER 04-18-16 DATE

5-9-16
PLANS APPROVAL DATE

REGISTERED PROFESSIONAL ENGINEER JASON LYNCH No. 51002 Exp. 09-30-17 CIVIL STATE OF CALIFORNIA

The State of California or its officers or agents shall not be responsible for the accuracy or completeness of scanned copies of this plan sheet.

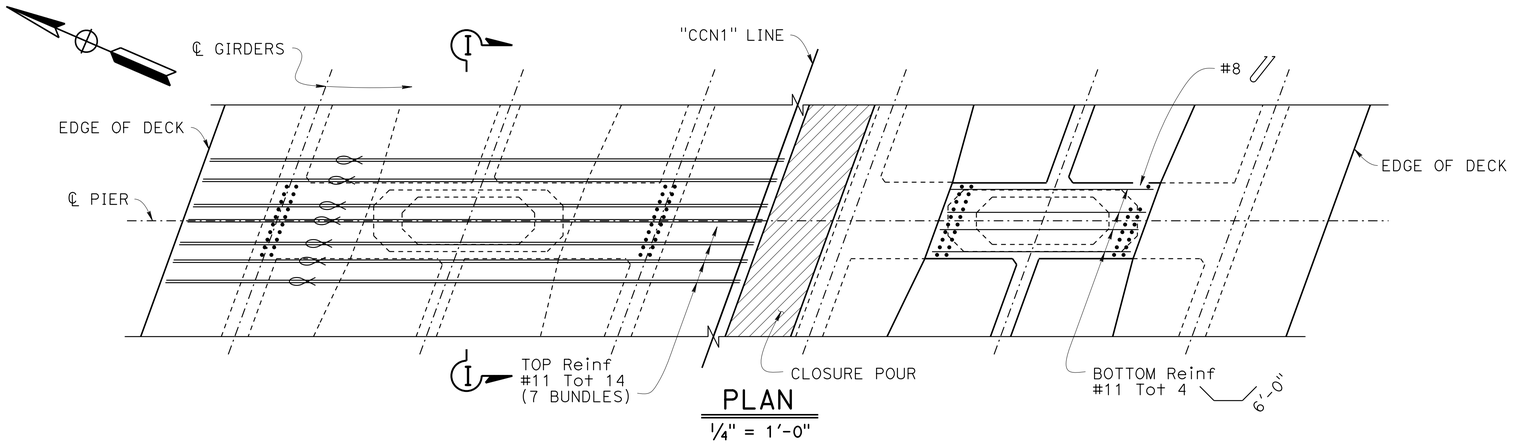

PLAN
1/4" = 1'-0"

NOTES:

1. Stop top transverse Reinf at face of cap. Extend top longitudinal reinf at least 1'-6" into cap.
2. For Detail AP, see "PIER 2 LAYOUT" sheet.

* Clearance to main reinforcement

** Place parallel to ℄ girder

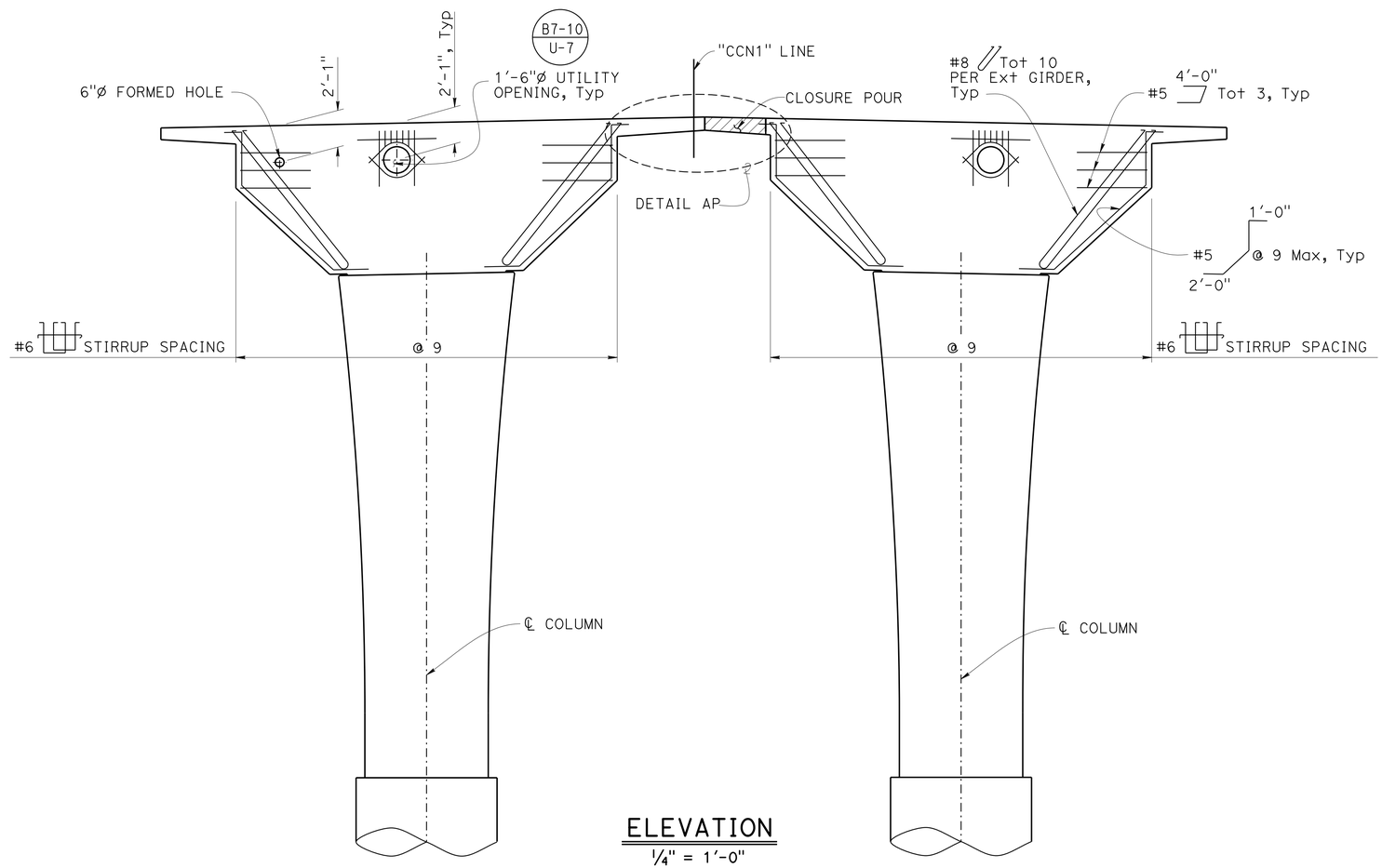

ELEVATION
1/4" = 1'-0"

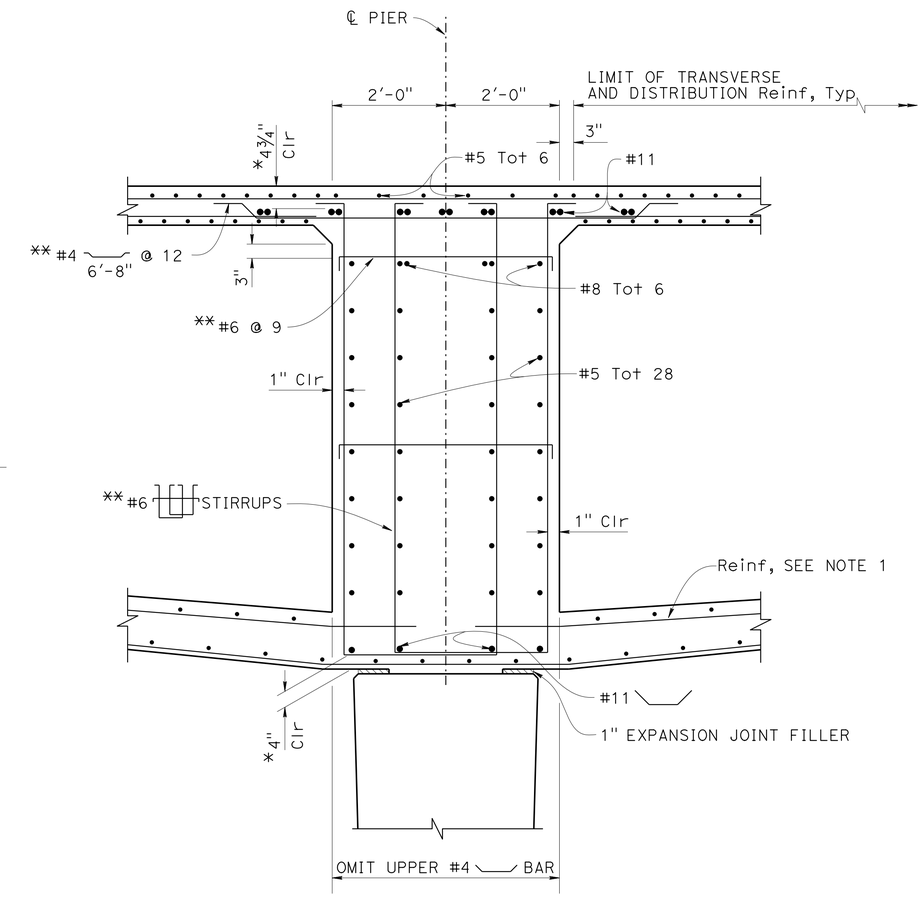

SECTION I-I
3/4" = 1'-0"

DESIGN	BY J. Lynch	CHECKED B. Shen	
DETAILS	BY J. Yang	CHECKED B. Shen	
QUANTITIES	BY N. Nguyen	CHECKED S. Talukder	

STATE OF CALIFORNIA
DEPARTMENT OF TRANSPORTATION

DIVISION OF ENGINEERING SERVICES
STRUCTURE DESIGN
DESIGN BRANCH 2

BRIDGE NO. 25-0153
POST MILE 23.99

SOUTH FORK AMERICAN RIVER BRIDGE (REPLACE)
PIERS 3 AND 4 LAYOUT

STRUCTURES DESIGN DETAIL SHEET (ENGLISH) (REV. 09-01-10)

ORIGINAL SCALE IN INCHES FOR REDUCED PLANS 0 1 2 3

UNIT: 3577
PROJECT NUMBER & PHASE: 0300000078
CONTRACT NO.: 03-0F310

DISREGARD PRINTS BEARING EARLIER REVISION DATES

REVISION DATES 10-13-15

SHEET 16 OF 42

FILE => 25-0021_i_p_lo3&4.dgn

USERNAME => s119538 DATE PLOTTED => 08-JUL-2016 TIME PLOTTED => 16:16

DIST	COUNTY	ROUTE	POST MILES TOTAL PROJECT	SHEET No.	TOTAL SHEETS
03	ED	49	23.6/24.5	140	202

REGISTERED CIVIL ENGINEER 04-18-16 DATE

5-9-16
PLANS APPROVAL DATE

REGISTERED PROFESSIONAL ENGINEER JASON LYNCH No. 51002 Exp. 09-30-17 CIVIL STATE OF CALIFORNIA

The State of California or its officers or agents shall not be responsible for the accuracy or completeness of scanned copies of this plan sheet.

NOTES:

1. Reinforcement for Piers 3 & 4 is the same except as noted.
2. For Sections E-E, F-F, G-G, & H-H see "PIERS 3 AND 4 DETAILS NO. 2" sheet.
3. Use ultimate butt splices in hoop reinforcement.
4. For Pile Data see "INDEX TO PLANS" sheet.

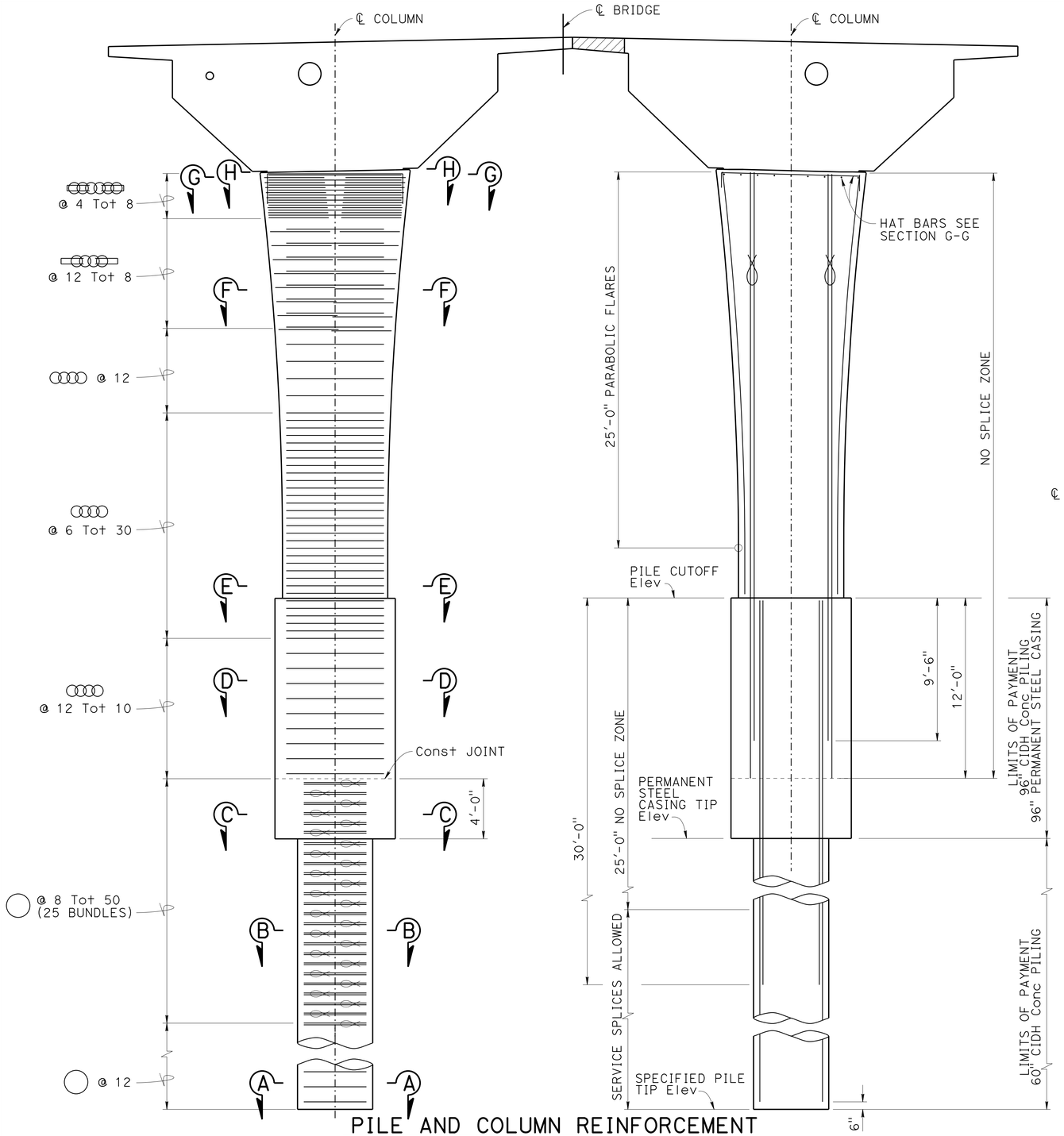

PILE AND COLUMN REINFORCEMENT

¼" = 1'-0"

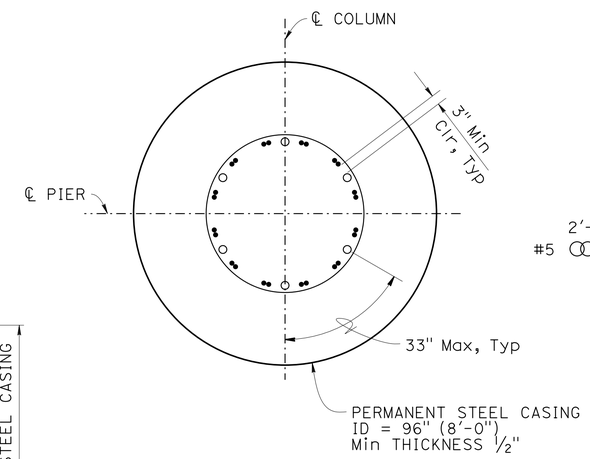

SECTION C-C

½" = 1'-0"

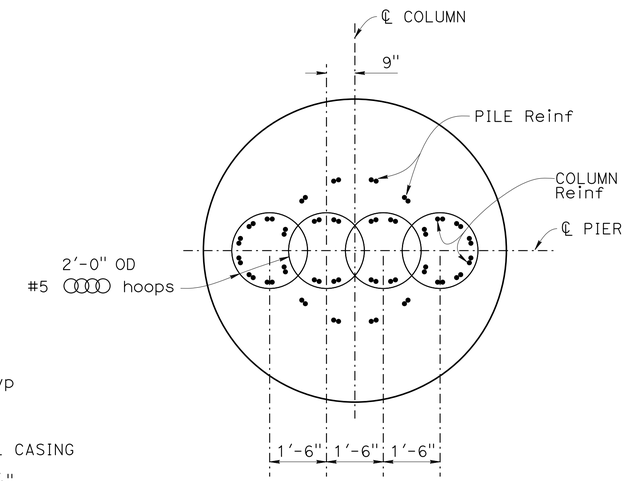

SECTION D-D

½" = 1'-0"

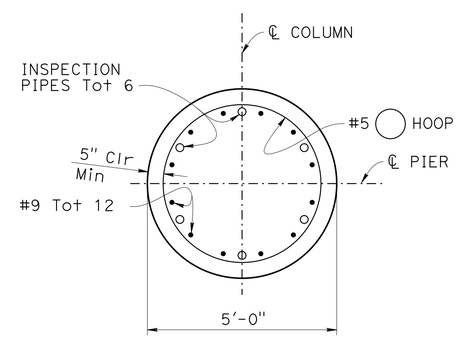

SECTION A-A

½" = 1'-0"

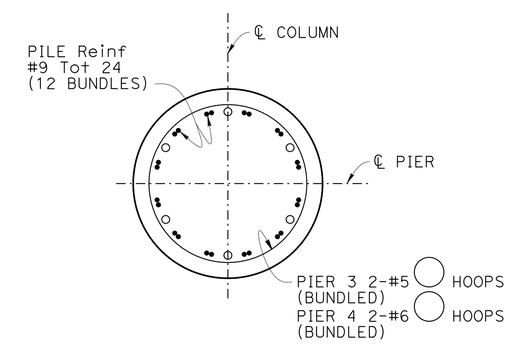

SECTION B-B

½" = 1'-0"

DESIGN	BY J. Lynch	CHECKED B. Shen	
DETAILS	BY J. Yang	CHECKED B. Shen	
QUANTITIES	BY N. Nguyen	CHECKED S. Talukder	

STATE OF CALIFORNIA DEPARTMENT OF TRANSPORTATION

DIVISION OF ENGINEERING SERVICES STRUCTURE DESIGN DESIGN BRANCH 2

BRIDGE NO. 25-0153
POST MILE 23.99

SOUTH FORK AMERICAN RIVER BRIDGE (REPLACE)

PIERS 3 AND 4 DETAILS NO. 1

STRUCTURES DESIGN DETAIL SHEET (ENGLISH) (REV. 09-01-10)

ORIGINAL SCALE IN INCHES FOR REDUCED PLANS 0 1 2 3

UNIT: 3577
PROJECT NUMBER & PHASE: 0300000078
CONTRACT NO.: 03-0F310

DISREGARD PRINTS BEARING EARLIER REVISION DATES 10-13-15

REVISION DATES

SHEET 17 OF 42

FILE => 25-0021_1_p_lo3&4_det01.dgn

USERNAME => s179538 DATE PLOTTED => 08-JUL-2016 TIME PLOTTED => 16:16

DIST	COUNTY	ROUTE	POST MILES TOTAL PROJECT	SHEET No.	TOTAL SHEETS
03	ED	49	23.6/24.5	141	202

REGISTERED CIVIL ENGINEER 04-18-16 DATE

5-9-16
PLANS APPROVAL DATE

REGISTERED PROFESSIONAL ENGINEER JASON LYNCH No. 51002 Exp. 09-30-17 CIVIL STATE OF CALIFORNIA

The State of California or its officers or agents shall not be responsible for the accuracy or completeness of scanned copies of this plan sheet.

NOTES:

1. Reinforcement for Piers 3 & 4 is the same except as noted.
2. For location of Sections E-E, F-F, G-G, & H-H see "PIERS 3 AND 4 DETAILS NO. 1" sheet.
3. Tighten the centering nut to compress the O-ring and to maintain a concentric alignment of pipes.
4. Galvanize all pipe pin components after fabrication.
5. Do not fill the pipe pin with concrete.
6. Place hat bars in a single layer at the top of column. See "PIERS 3 AND 4 DETAILS NO. 1" sheet.
7. The transition from Section E-E to Section G-G is parabolic in both directions.

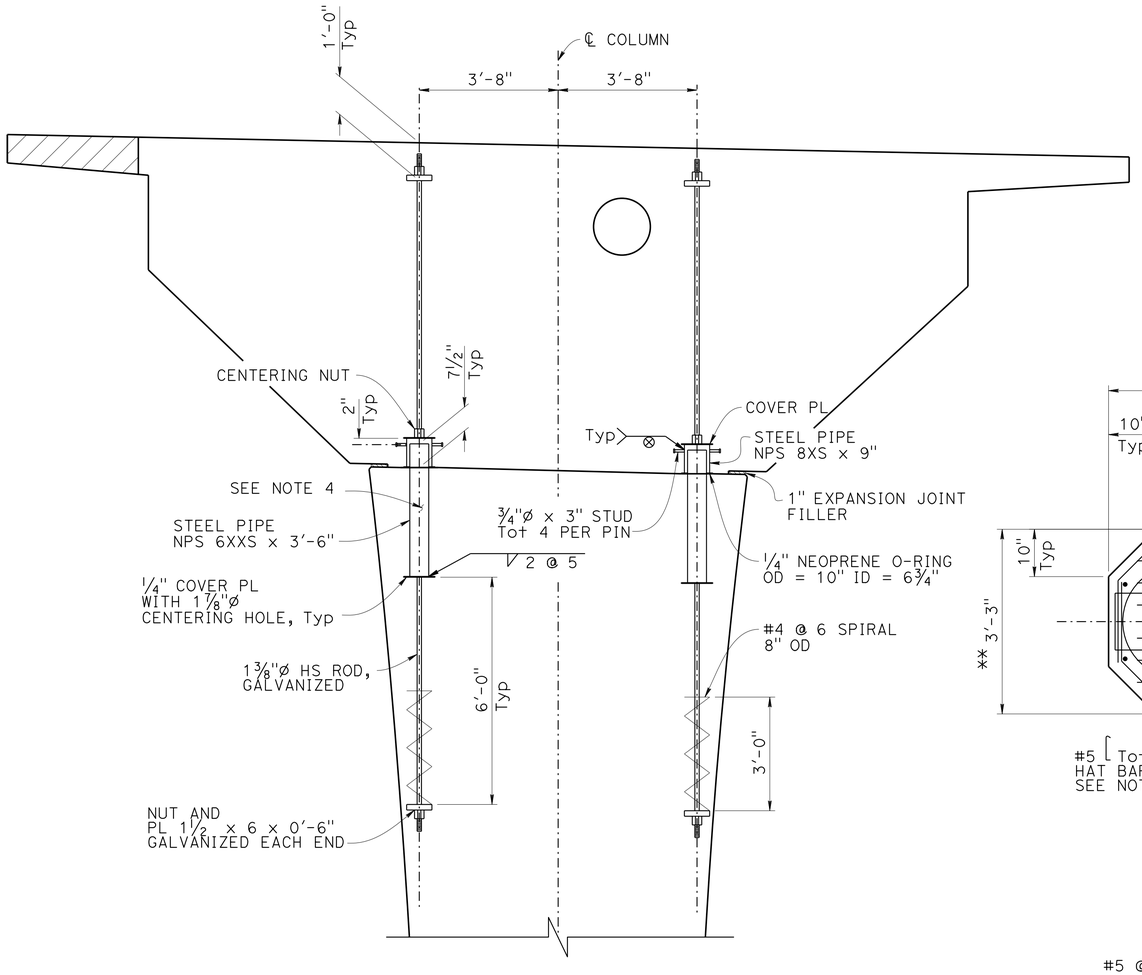

PIPE PIN DETAILS

½" = 1'-0"

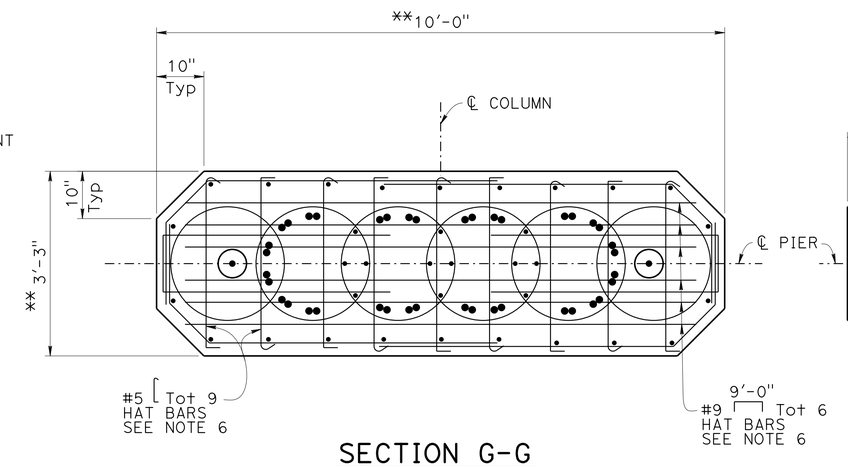

SECTION G-G

¾" = 1'-0"

** TOP OF COLUMN DIMENSION

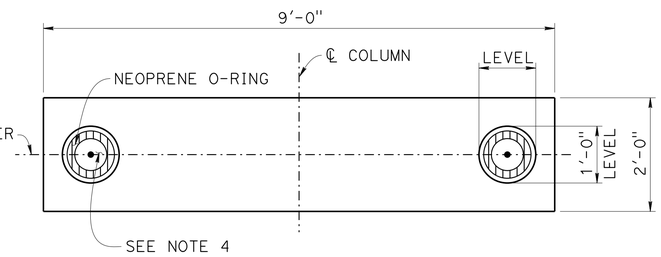

SECTION H-H

¾" = 1'-0"

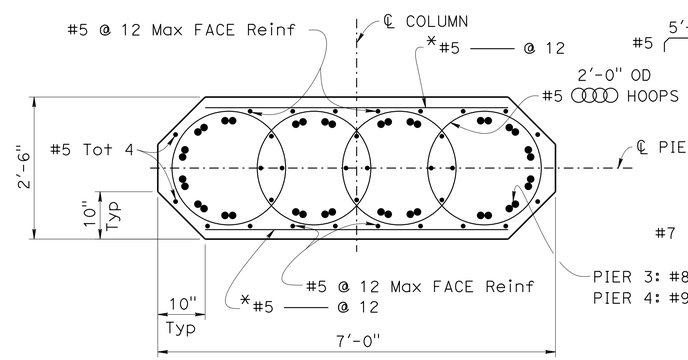

SECTION E-E

¾" = 1'-0"

* FOR LIMITS SEE FACE DETAIL ON "PIER 2 DETAILS NO. 2" SHEET

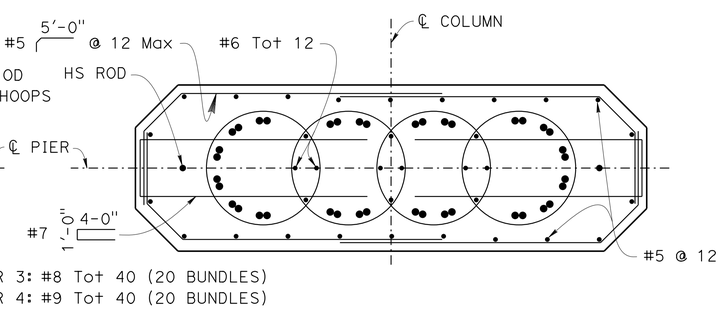

SECTION F-F

¾" = 1'-0"

	BY	CHECKED
DESIGN	J. Lynch	B. Shen
DETAILS	J. Yang	B. Shen
QUANTITIES	N. Nguyen	S. Talukder

STATE OF CALIFORNIA
DEPARTMENT OF TRANSPORTATION

DIVISION OF ENGINEERING SERVICES
STRUCTURE DESIGN
DESIGN BRANCH 2

BRIDGE NO. 25-0153
POST MILE 23.99

SOUTH FORK AMERICAN RIVER BRIDGE (REPLACE)
PIERS 3 AND 4 DETAILS NO. 2

STRUCTURES DESIGN DETAIL SHEET (ENGLISH) (REV. 09-01-10)

ORIGINAL SCALE IN INCHES FOR REDUCED PLANS 0 1 2 3

UNIT: 3577
PROJECT NUMBER & PHASE: 0300000078
CONTRACT NO.: 03-0F310

DISREGARD PRINTS BEARING EARLIER REVISION DATES 10-13-15

SHEET 18 OF 42

FILE => 25-0021_i_p_lo3&4_det02.dgn

USERNAME => s119538 DATE PLOTTED => 08-JUL-2016 TIME PLOTTED => 16:16

DIST	COUNTY	ROUTE	POST MILES TOTAL PROJECT	SHEET No.	TOTAL SHEETS
03	ED	49	23.6/24.5	142	202

REGISTERED CIVIL ENGINEER 04-18-16 DATE

5-9-16
PLANS APPROVAL DATE

REGISTERED PROFESSIONAL ENGINEER JASON LYNCH No. 51002 Exp. 09-30-17 CIVIL STATE OF CALIFORNIA

The State of California or its officers or agents shall not be responsible for the accuracy or completeness of scanned copies of this plan sheet.

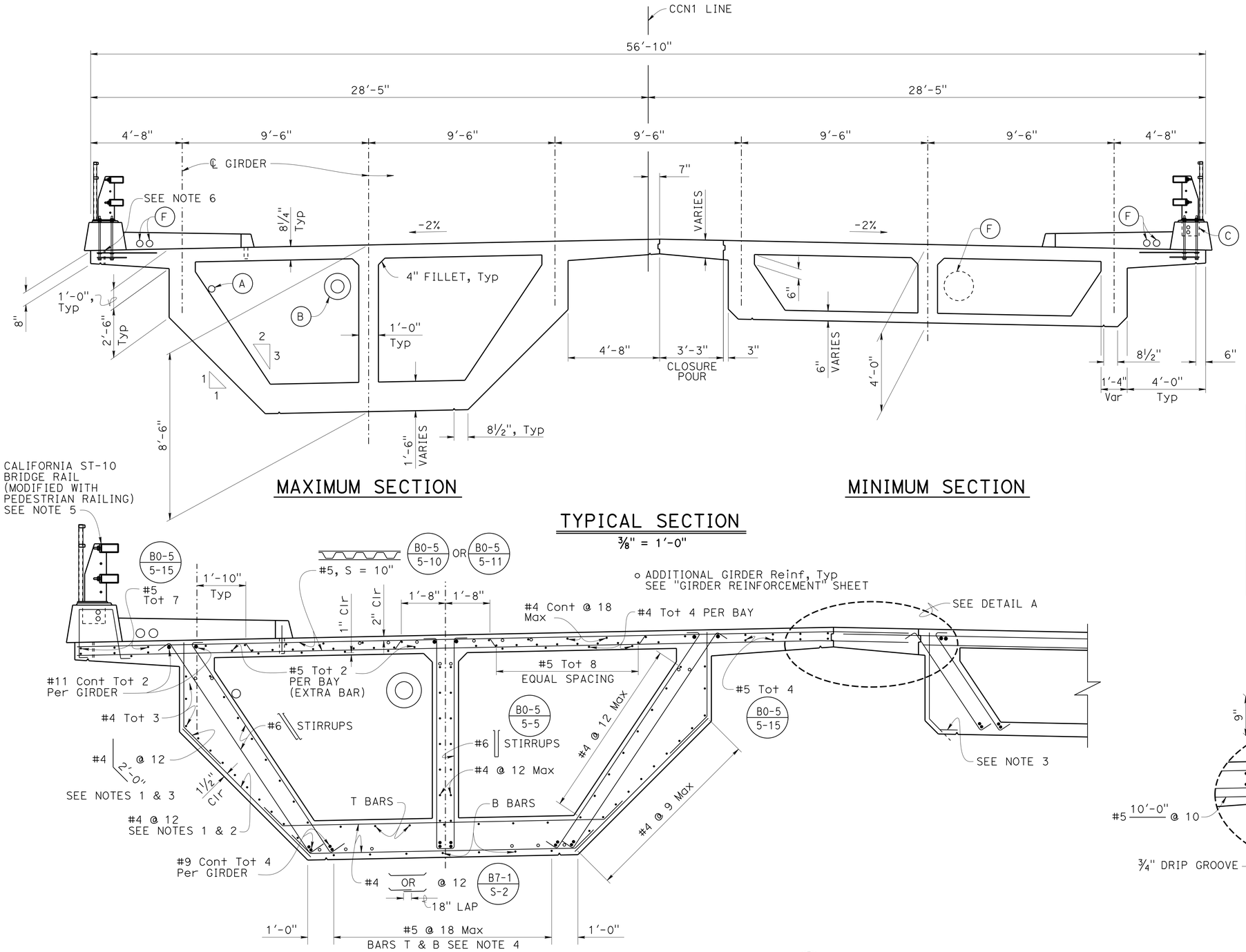

TYPICAL SECTION
⅜" = 1'-0"

PART TYPICAL SECTION B7-1
½" = 1'-0"

NOTES:

1. Space these bars at 12" or the stirrup spacing, whichever is greater.
2. Omit this bar where its length is less than 24".
3. Bend tail to fit.
4. Place T AND B bars parallel to the edge of Soffit.
5. For barrier and sidewalk details see "BARRIER AND SIDEWALK DETAILS" sheet.
6. Formed hole for temporary pedestrian walkway.

UTILITY DATA

UTILITY	OWNER	DESCRIPTION
A	CVIN CENTRAL VALLEY INDEPENDENT NETWORK	FIBER OPTIC 4"Ø CONDUIT
B	EID EL DORADO IRRIGATION DISTRICT	WATER 6"Ø PVC INSIDE 14"Ø WSP CASING
C	CALTRANS	2-2"C TYPE 3 AND PULL BOXES (SEE ROADWAY PLANS)
F	——	FUTURE UTILITIES

SEE UTILITY DETAILS SHEET

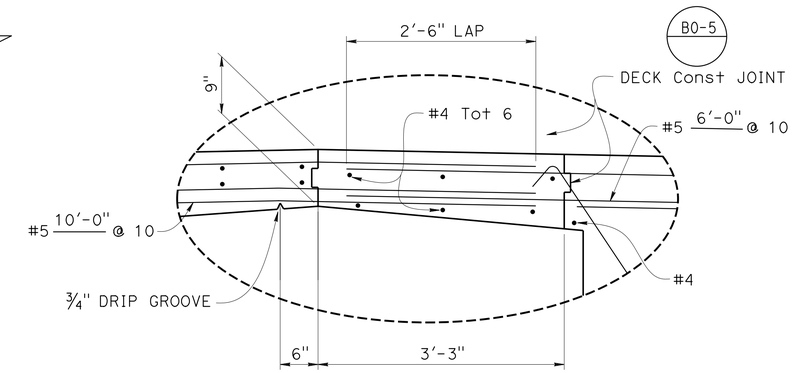

DETAIL A
1" = 1'-0"

DESIGN	BY J. Lynch	CHECKED B. Shen	
DETAILS	BY J. Yang	CHECKED B. Shen	
QUANTITIES	BY H. Fang	CHECKED K. Selventhiran	

STATE OF CALIFORNIA
DEPARTMENT OF TRANSPORTATION

DIVISION OF ENGINEERING SERVICES
STRUCTURE DESIGN
DESIGN BRANCH 2

BRIDGE NO. 25-0153
POST MILE 23.99

SOUTH FORK AMERICAN RIVER BRIDGE (REPLACE)
TYPICAL SECTION

STRUCTURES DESIGN DETAIL SHEET (ENGLISH) (REV. 09-01-10)

ORIGINAL SCALE IN INCHES FOR REDUCED PLANS 0 1 2 3

UNIT: 3577
PROJECT NUMBER & PHASE: 0300000078
CONTRACT NO.: 03-0F310

DISREGARD PRINTS BEARING EARLIER REVISION DATES

REVISION DATES 10-13-15 01-09-16

SHEET 19 OF 42

FILE => 25-0021_K_ts01.dgn

USERNAME => s119538 DATE PLOTTED => 08-JUL-2016 TIME PLOTTED => 16:16

DIST	COUNTY	ROUTE	POST MILES TOTAL PROJECT	SHEET No.	TOTAL SHEETS
03	ED	49	23.6/24.5	143	202

REGISTERED CIVIL ENGINEER 04-18-16 DATE

5-9-16
PLANS APPROVAL DATE

REGISTERED PROFESSIONAL ENGINEER JASON LYNCH No. 51002 Exp. 09-30-17 CIVIL STATE OF CALIFORNIA

The State of California or its officers or agents shall not be responsible for the accuracy or completeness of scanned copies of this plan sheet.

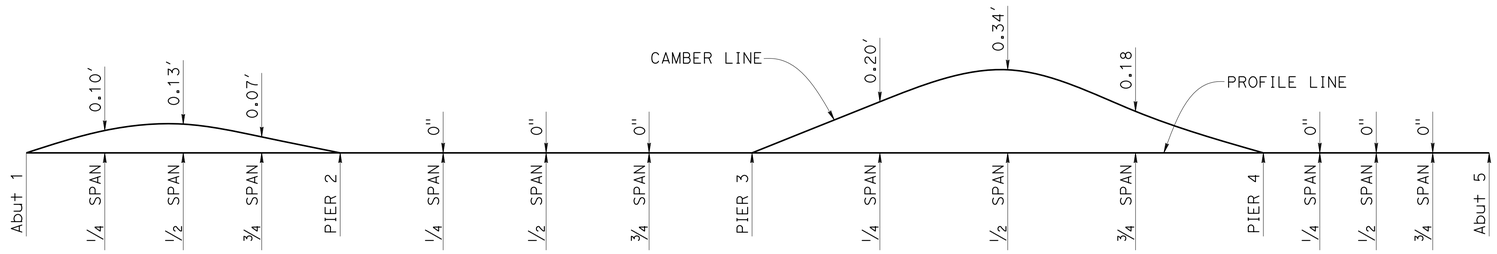

CAMBER DIAGRAM

NO SCALE

DOES NOT INCLUDE ALLOWANCE FOR FALSEWORK SETTLEMENT

FALSEWORK RELEASE

Alternative 1:

Falsework shall be released as soon as permitted by the specifications. Closure pour shall not be placed sooner than 60 days after the falsework has been released.

Alternative 2:

Falsework shall not be released less than 28 days after the last concrete has been placed. Closure pour shall not be placed sooner than 14 days after the falsework has been released.

When Falsework Release Alternative 2 is used, camber values are 0.75 times those shown.

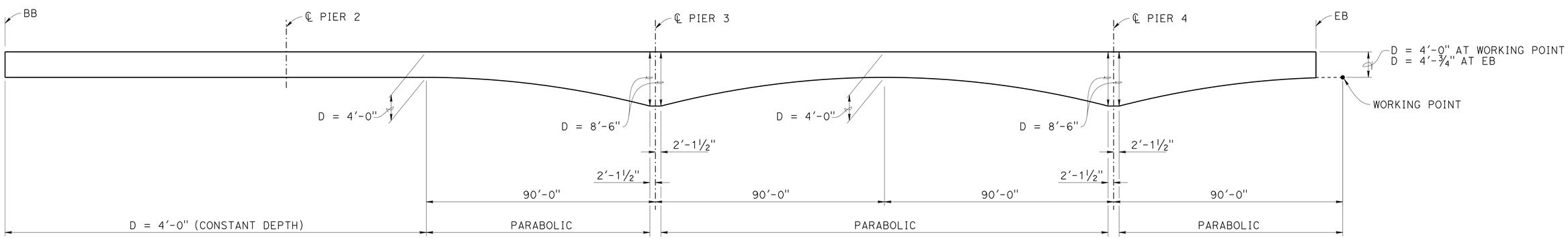

SUPERSTRUCTURE GEOMETRICS

NO SCALE

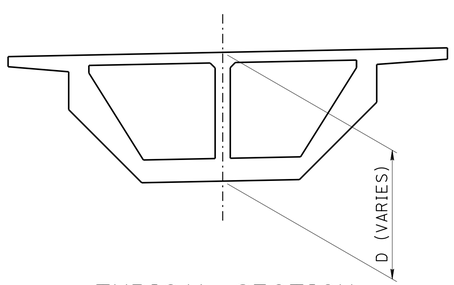

TYPICAL SECTION

DESIGN	BY J. Lynch	CHECKED B. Shen	
DETAILS	BY J. Yang	CHECKED B. Shen	
QUANTITIES	BY J. Lynch	CHECKED G. Zuniga	

STATE OF CALIFORNIA
DEPARTMENT OF TRANSPORTATION

DIVISION OF ENGINEERING SERVICES
STRUCTURE DESIGN
DESIGN BRANCH 2

BRIDGE NO. 25-0153
POST MILE 23.99

SOUTH FORK AMERICAN RIVER BRIDGE (REPLACE)
SUPERSTRUCTURE GEOMETRICS

STRUCTURES DESIGN DETAIL SHEET (ENGLISH) (REV. 09-01-10)

ORIGINAL SCALE IN INCHES FOR REDUCED PLANS 0 1 2 3

UNIT: 3577
PROJECT NUMBER & PHASE: 0300000078
CONTRACT NO.: 03-0F310

DISREGARD PRINTS BEARING EARLIER REVISION DATES

REVISION DATES 10-13-15

SHEET 20 OF 42

FILE => 25-0021_K_tsp01.dgn

USERNAME => s119538 DATE PLOTTED => 08-JUL-2016 TIME PLOTTED => 16:16

DIST	COUNTY	ROUTE	POST MILES TOTAL PROJECT	SHEET No.	TOTAL SHEETS
03	ED	49	23.6/24.5	144	202

REGISTERED CIVIL ENGINEER 04-18-16 DATE

5-9-16
PLANS APPROVAL DATE

REGISTERED PROFESSIONAL ENGINEER JASON LYNCH No. 51002 Exp. 09-30-17 CIVIL STATE OF CALIFORNIA

The State of California or its officers or agents shall not be responsible for the accuracy or completeness of scanned copies of this plan sheet.

NOTES:

1. For location of utility openings, hangers, and supports see "UTILITY DETAILS" sheet.
2. For Support Pad detail see "UTILITY DETAILS" sheet.

LEGEND:

16" Denotes girder stem width

(A) Girder designation

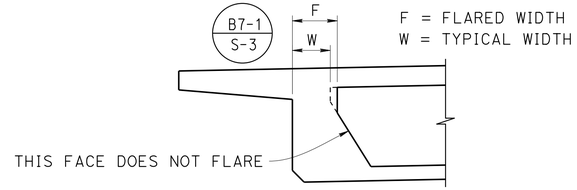

STEM WIDTH DETAIL

NO SCALE

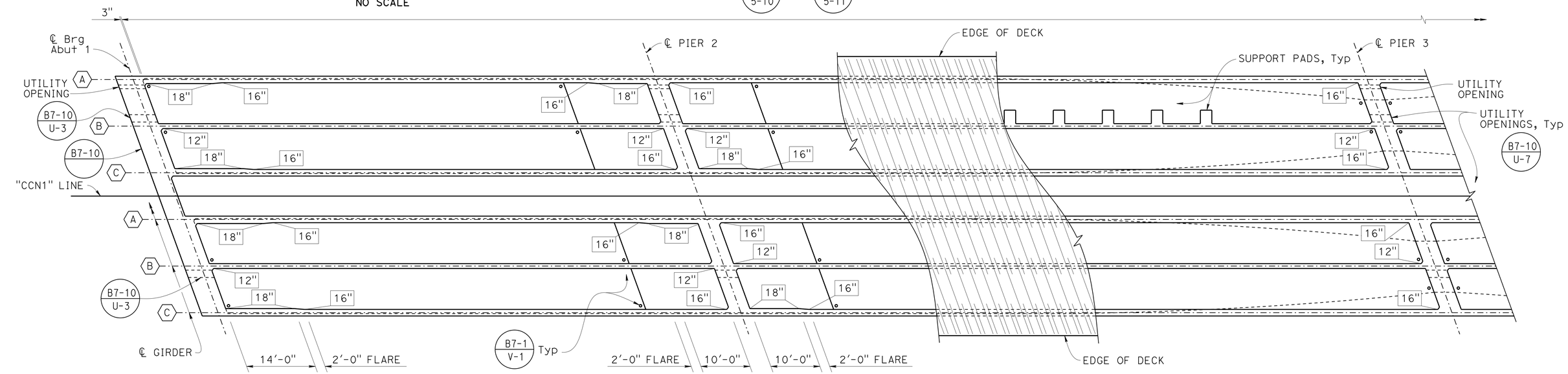

PLAN

1" = 10'-0" (B7-1)

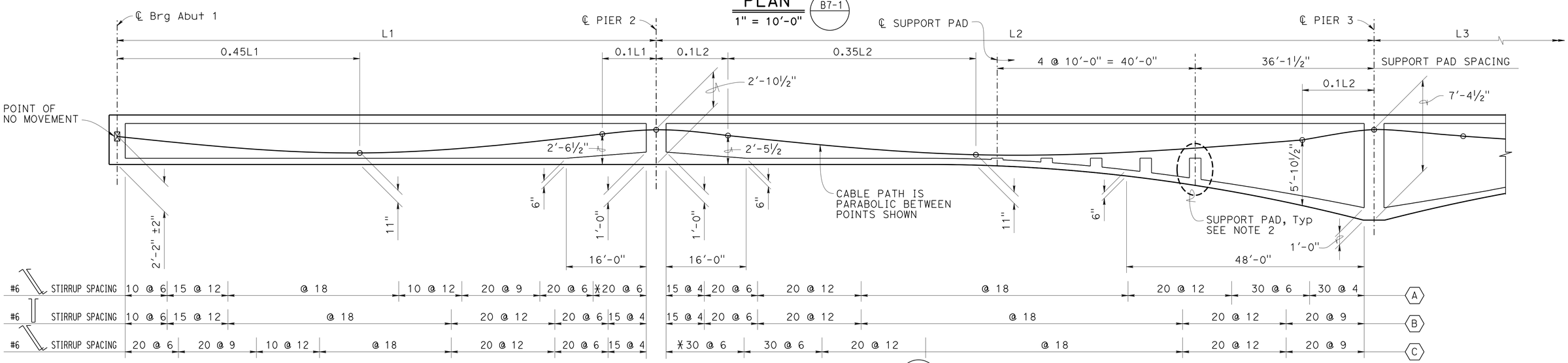

✱ INDICATES BUNDLED STIRRUPS TWO PER BUNDLE AT SPACING SHOWN

LONGITUDINAL SECTION

(B8-5)

NO SCALE

DESIGN	BY J. Lynch	CHECKED B. Shen	
DETAILS	BY J. Yang	CHECKED B. Shen	
QUANTITIES	BY H. Fang	CHECKED K. Selventhiran	

STATE OF CALIFORNIA
DEPARTMENT OF TRANSPORTATION

DIVISION OF ENGINEERING SERVICES
STRUCTURE DESIGN
DESIGN BRANCH 2

BRIDGE NO. 25-0153
POST MILE 23.99

SOUTH FORK AMERICAN RIVER BRIDGE (REPLACE)

GIRDER LAYOUT NO. 1

STRUCTURES DESIGN DETAIL SHEET (ENGLISH) (REV. 09-01-10)

ORIGINAL SCALE IN INCHES FOR REDUCED PLANS 0 1 2 3

UNIT: 3577
PROJECT NUMBER & PHASE: 0300000078
CONTRACT NO.: 03-0F310

DISREGARD PRINTS BEARING EARLIER REVISION DATES

REVISION DATES 10-13-15 01-4-16 01-18-16 03-21-16

SHEET 21 OF 42

FILE => 25-0021_1_g-1001.dgn

USERNAME => s179538 DATE PLOTTED => 08-JUL-2016 TIME PLOTTED => 16:16

DIST	COUNTY	ROUTE	POST MILES TOTAL PROJECT	SHEET No.	TOTAL SHEETS
03	ED	49	23.6/24.5	145	202

REGISTERED CIVIL ENGINEER 04-18-16 DATE

5-9-16
PLANS APPROVAL DATE

REGISTERED PROFESSIONAL ENGINEER JASON LYNCH No. 51002 Exp. 09-30-17 CIVIL STATE OF CALIFORNIA

The State of California or its officers or agents shall not be responsible for the accuracy or completeness of scanned copies of this plan sheet.

PRESTRESSING NOTES

NOTES:

1. For location of utility openings, hangers, and supports see "UTILITY DETAILS" sheet.
2. For Support Pad detail see "UTILITY DETAILS" sheet.

LEGEND:

16" Denotes girder stem width

(A) Girder designation

270 ksi Low Relaxation Strand:

P_{jack}	= 14,250 kip
Anchor Set	= 3/8"
Assumed long term losses	= 20 ksi
Total Number of Girders	= 6

The final force ratio (larger divided by smaller) between any two girders shall not exceed exceed the ratio of 10 to 9

μ = 0.15
K = 0.00020/ft

Concrete: f'_c = 6 ksi @ 28 days
f'_{ci} = 3.5 ksi @ time of stressing

Contractor shall submit elongation calculations based on initial stress at ⊠ = 0.83 times jacking stress.

One end stressing shall be performed from Abutment 5.

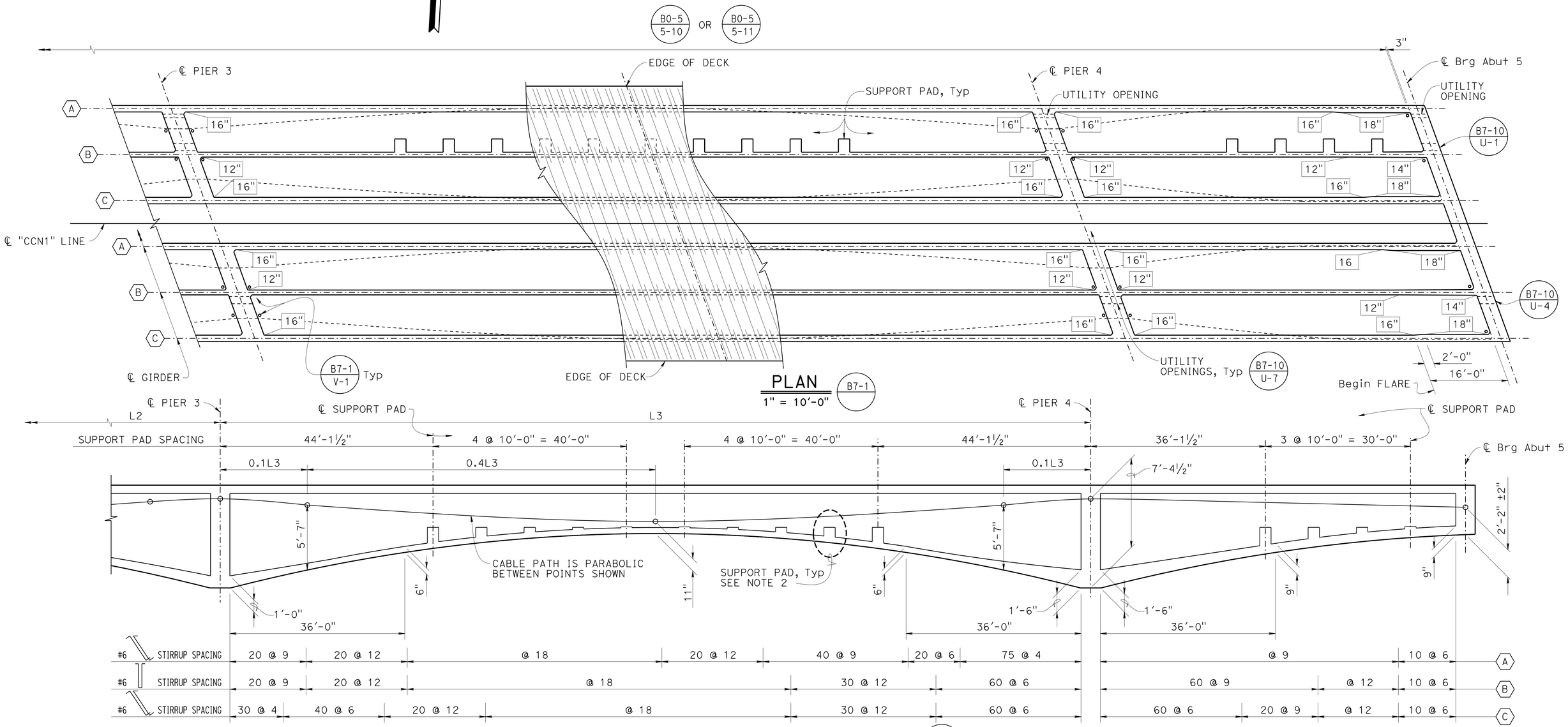

PLAN (B7-1)
1" = 10'-0"

LONGITUDINAL SECTION (B8-5)
NO SCALE

DESIGN	BY J. Lynch	CHECKED B. Shen	
DETAILS	BY J. Yang	CHECKED B. Shen	
QUANTITIES	BY H. Fang	CHECKED K. Selventhiran	

STATE OF CALIFORNIA
DEPARTMENT OF TRANSPORTATION

DIVISION OF ENGINEERING SERVICES
STRUCTURE DESIGN
DESIGN BRANCH 2

BRIDGE NO. 25-0153
POST MILE 23.99

SOUTH FORK AMERICAN RIVER BRIDGE (REPLACE)
GIRDER LAYOUT NO. 2

STRUCTURES DESIGN DETAIL SHEET (ENGLISH) (REV. 09-01-10)

ORIGINAL SCALE IN INCHES FOR REDUCED PLANS 0 1 2 3

UNIT: 3577
PROJECT NUMBER & PHASE: 0300000078
CONTRACT NO.: 03-0F310

DISREGARD PRINTS BEARING EARLIER REVISION DATES

REVISION DATES 10-13-15 01-18-16 03-21-16

SHEET 22 OF 42

FILE => 25-0021_1_g-1o02.dgn

USERNAME => s139538 DATE PLOTTED => 08-JUL-2016 TIME PLOTTED => 16:16

DIST	COUNTY	ROUTE	POST MILES TOTAL PROJECT	SHEET No.	TOTAL SHEETS
03	ED	49	23.6/24.5	146	202

REGISTERED CIVIL ENGINEER 04-18-16 DATE

5-9-16
PLANS APPROVAL DATE

REGISTERED PROFESSIONAL ENGINEER JASON LYNCH No. 51002 Exp. 09-30-17 CIVIL STATE OF CALIFORNIA

The State of California or its officers or agents shall not be responsible for the accuracy or completeness of scanned copies of this plan sheet.

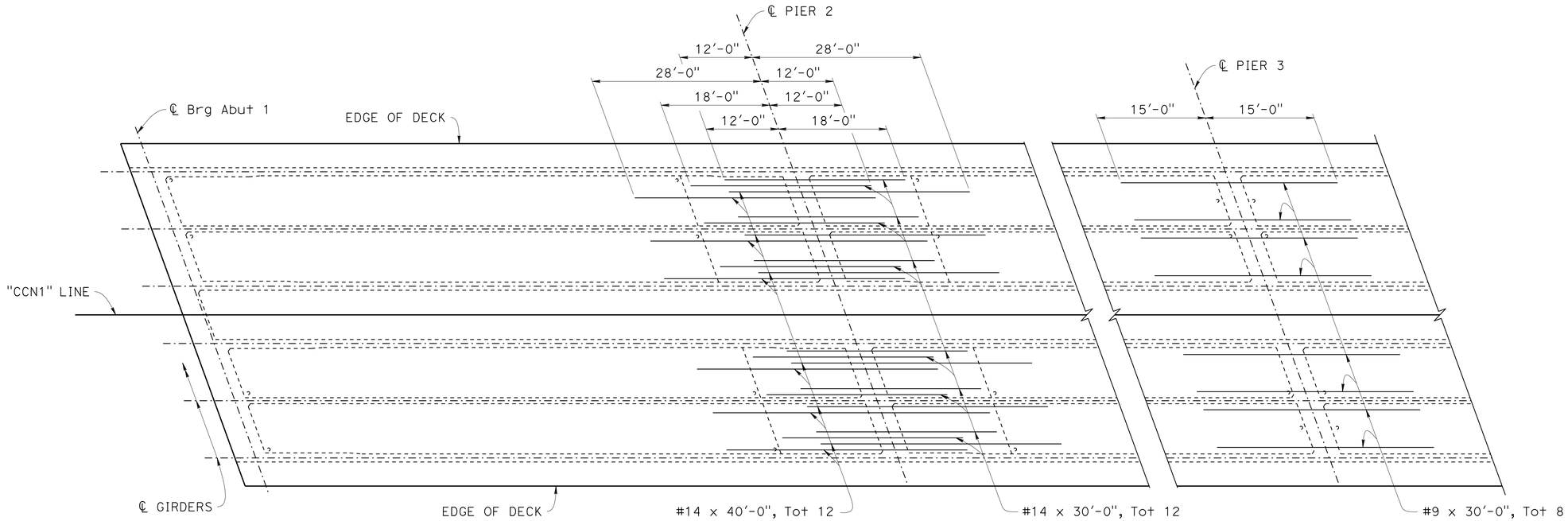

TOP SLAB REINFORCEMENT

1" = 10'-0"

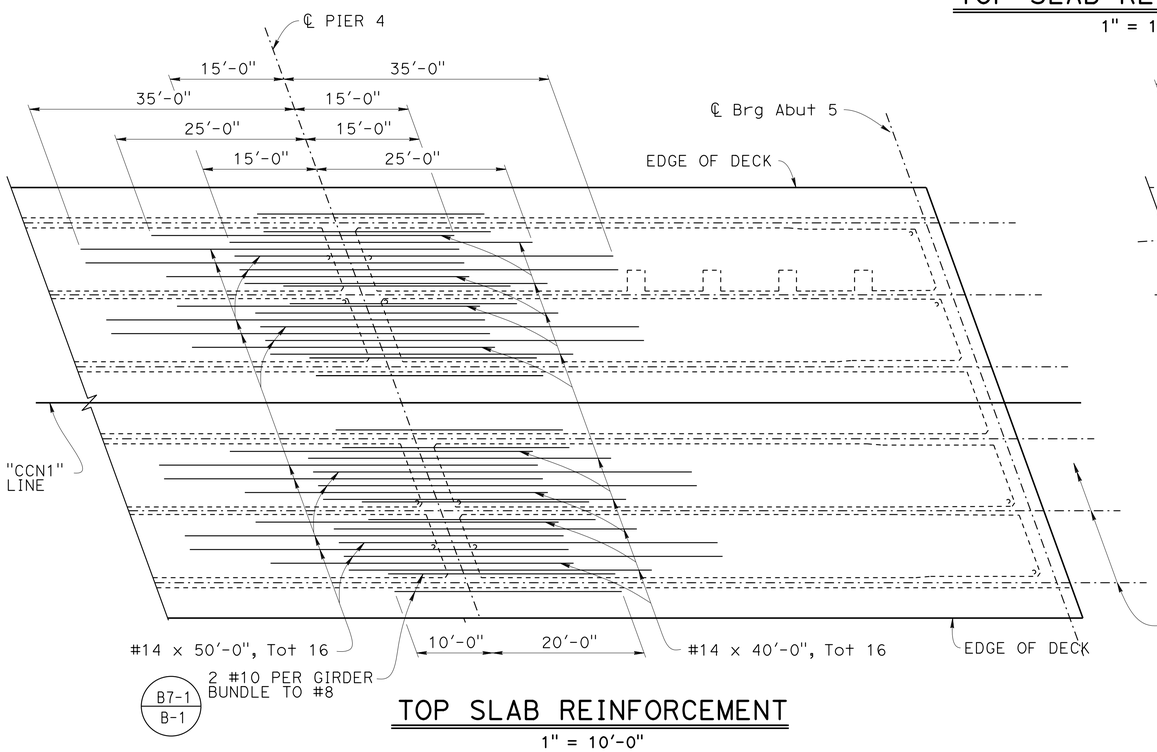

TOP SLAB REINFORCEMENT

1" = 10'-0"

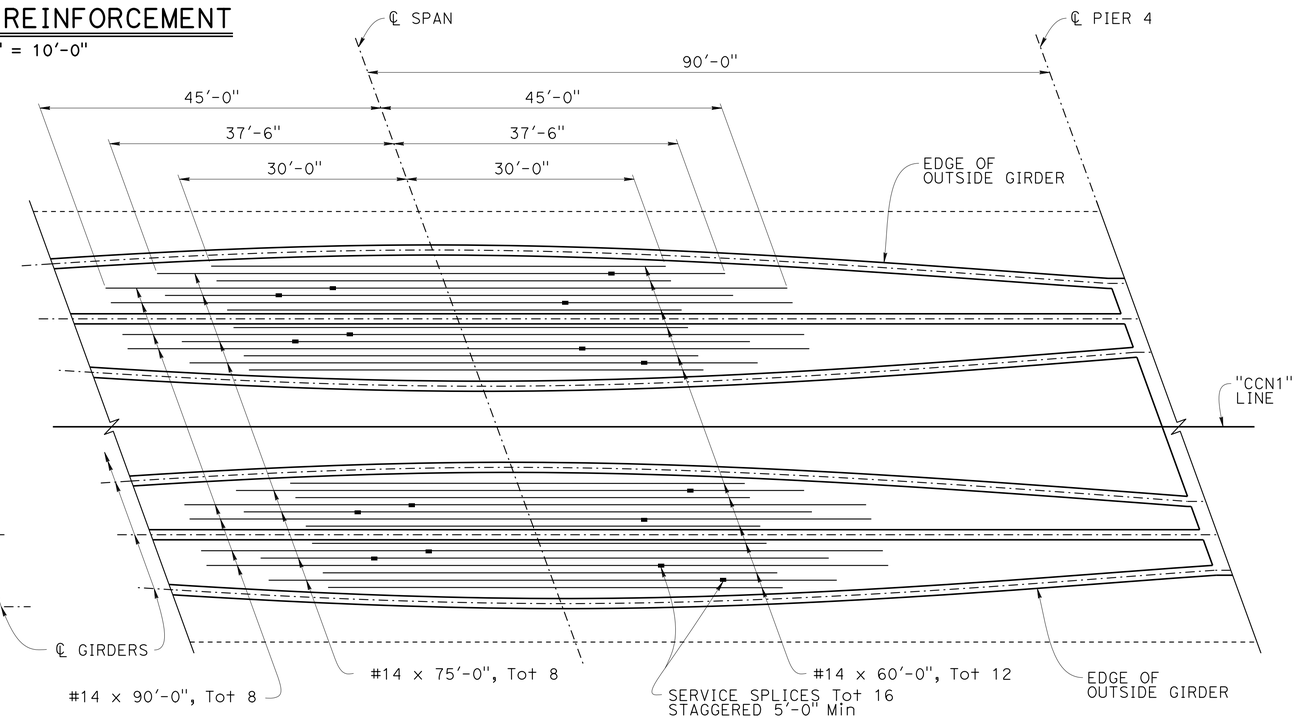

BOTTOM SLAB REINFORCEMENT

1" = 10'-0"

	BY	CHECKED
DESIGN	J. Lynch	B. Shen
DETAILS	J. Yang	B. Shen
QUANTITIES	M. Kodsuntie	G. Schuster

STATE OF CALIFORNIA
DEPARTMENT OF TRANSPORTATION

DIVISION OF ENGINEERING SERVICES
STRUCTURE DESIGN
DESIGN BRANCH 2

BRIDGE NO. 25-0153
POST MILE 23.99

SOUTH FORK AMERICAN RIVER BRIDGE (REPLACE)
GIRDER REINFORCEMENT

STRUCTURES DESIGN DETAIL SHEET (ENGLISH) (REV. 09-01-10)

ORIGINAL SCALE IN INCHES FOR REDUCED PLANS 0 1 2 3

UNIT: 3577
PROJECT NUMBER & PHASE: 0300000078
CONTRACT NO.: 03-0F310

DISREGARD PRINTS BEARING EARLIER REVISION DATES

REVISION DATES 10-13-15

SHEET 23 OF 42

FILE => 25-0021_o_gir-top01.dgn

USERNAME => 6179538 DATE PLOTTED => 08-JUL-2016 TIME PLOTTED => 16:16

DIST	COUNTY	ROUTE	POST MILES TOTAL PROJECT	SHEET No.	TOTAL SHEETS
03	ED	49	23.6/24.5	147	202

REGISTERED CIVIL ENGINEER 04-18-16 DATE

5-9-16
PLANS APPROVAL DATE

REGISTERED PROFESSIONAL ENGINEER JASON LYNCH No. 51002 Exp. 09-30-17 CIVIL STATE OF CALIFORNIA

The State of California or its officers or agents shall not be responsible for the accuracy or completeness of scanned copies of this plan sheet.

NOTES:

1. Extend stage 1 reinf beyond the construction joint and lap splice with stage 2 reinf.
2. For couplers and temporary details, see "TEMPORARY DETAILS" sheet.

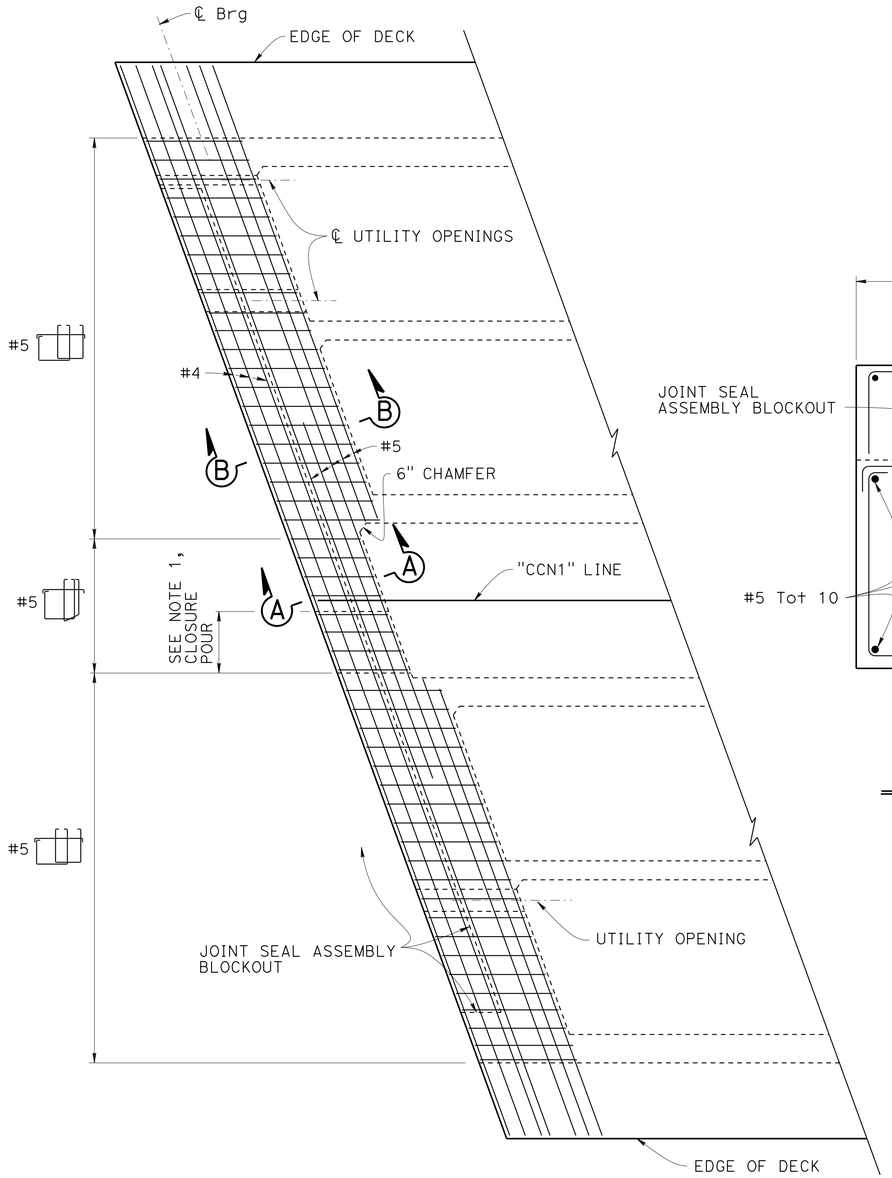

PLAN - ABUTMENT 1 END DIAPHRAGM

1/4" = 1'-0"

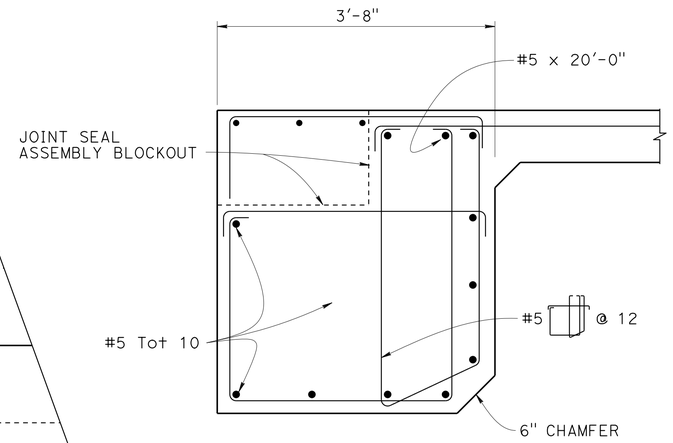

SECTION A-A

1" = 1'-0"

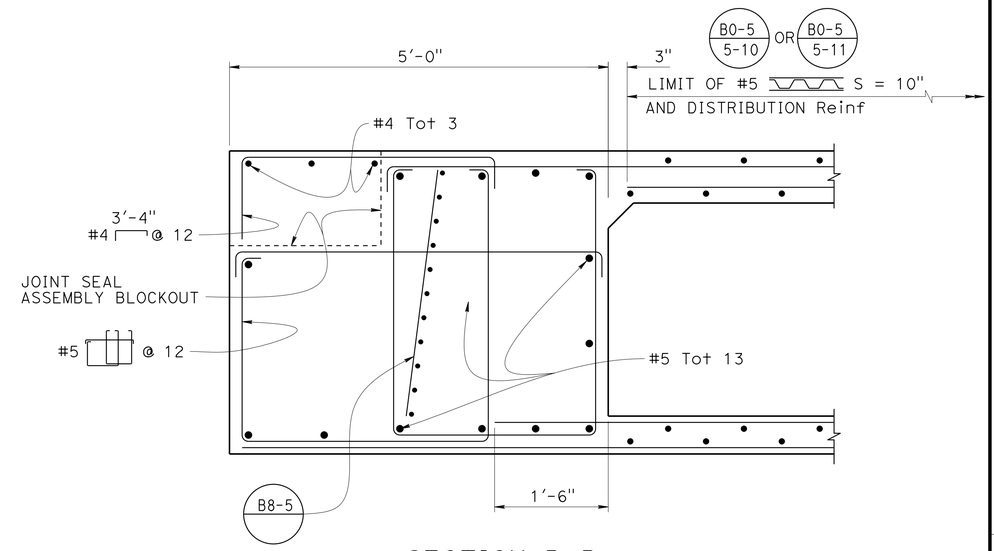

SECTION B-B

1" = 1'-0"

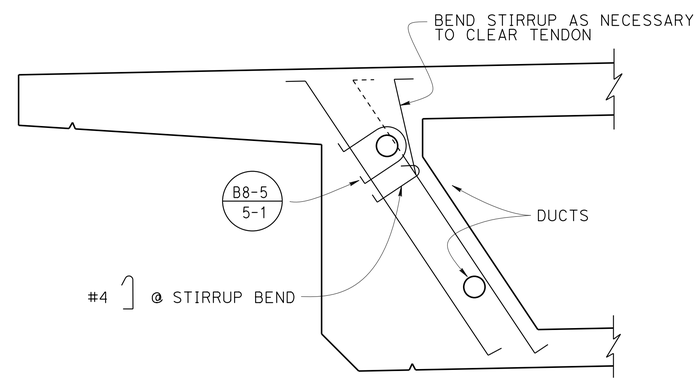

DUCT TIE DETAIL

1" = 1'-0"

DESIGN	BY J. Lynch	CHECKED B. Shen	
DETAILS	BY J. Yang	CHECKED B. Shen	
QUANTITIES	BY H. Fang	CHECKED K. Selventhiran	

STATE OF CALIFORNIA
DEPARTMENT OF TRANSPORTATION

DIVISION OF ENGINEERING SERVICES
STRUCTURE DESIGN
DESIGN BRANCH 2

BRIDGE NO. 25-0153
POST MILE 23.99

SOUTH FORK AMERICAN RIVER BRIDGE (REPLACE)
GIRDER DETAILS

STRUCTURES DESIGN DETAIL SHEET (ENGLISH) (REV. 09-01-10)

ORIGINAL SCALE IN INCHES FOR REDUCED PLANS 0 1 2 3

UNIT: 3577
PROJECT NUMBER & PHASE: 0300000078
CONTRACT NO.: 03-0F310

DISREGARD PRINTS BEARING EARLIER REVISION DATES

REVISION DATES 10-13-15 01-08-16 01-19-16 02-23-16

SHEET 24 OF 42

FILE => 25-0021_o_girz_det.dgn

USERNAME => s119538 DATE PLOTTED => 08-JUL-2016 TIME PLOTTED => 16:16

DIST	COUNTY	ROUTE	POST MILES TOTAL PROJECT	SHEET No.	TOTAL SHEETS
03	ED	49	23.6/24.5	148	202

REGISTERED CIVIL ENGINEER 04-18-16 DATE

5-9-16
PLANS APPROVAL DATE

REGISTERED PROFESSIONAL ENGINEER JASON LYNCH No. 51002 Exp. 09-30-17 CIVIL STATE OF CALIFORNIA

The State of California or its officers or agents shall not be responsible for the accuracy or completeness of scanned copies of this plan sheet.

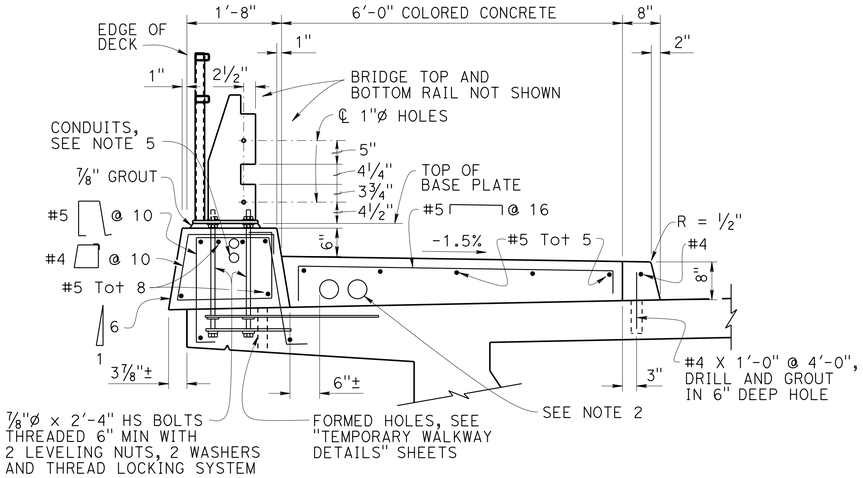

SECTION THROUGH BRIDGE DECK

¾" = 1'-0"

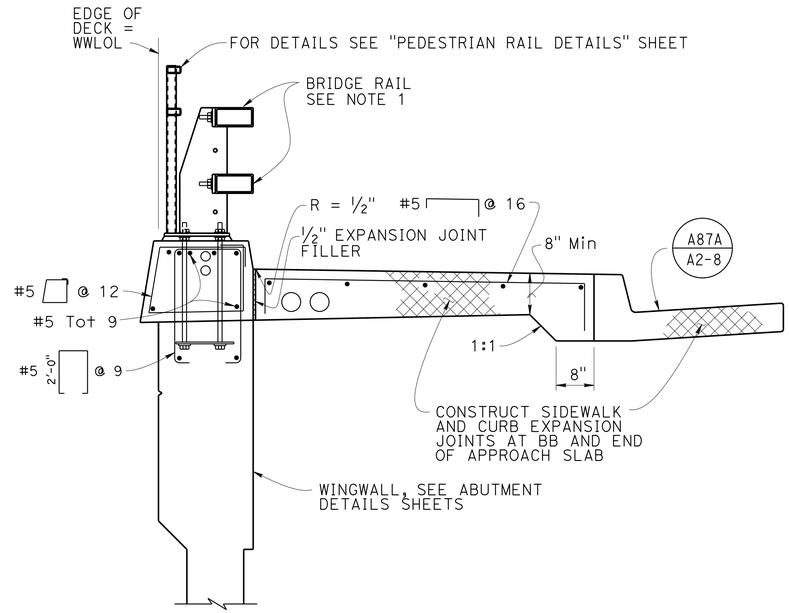

SECTION THROUGH WINGWALL

¾" = 1'-0"

FOR LOCATIONS WITH AN APPROACH SLAB SEE "APPROACH SLAB DETAILS" SHEET
FOR OTHER DETAILS NOT SHOWN, SEE SECTION THROUGH BRIDGE

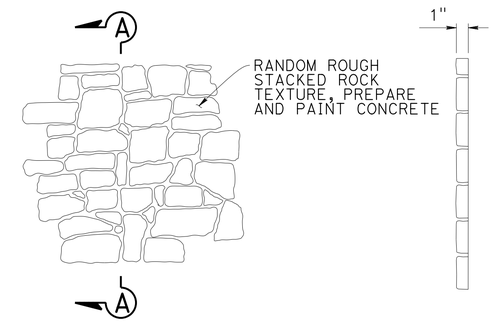

PATTERN ELEVATION

SECTION A-A

ARCHITECTURAL TREATMENT

NO SCALE

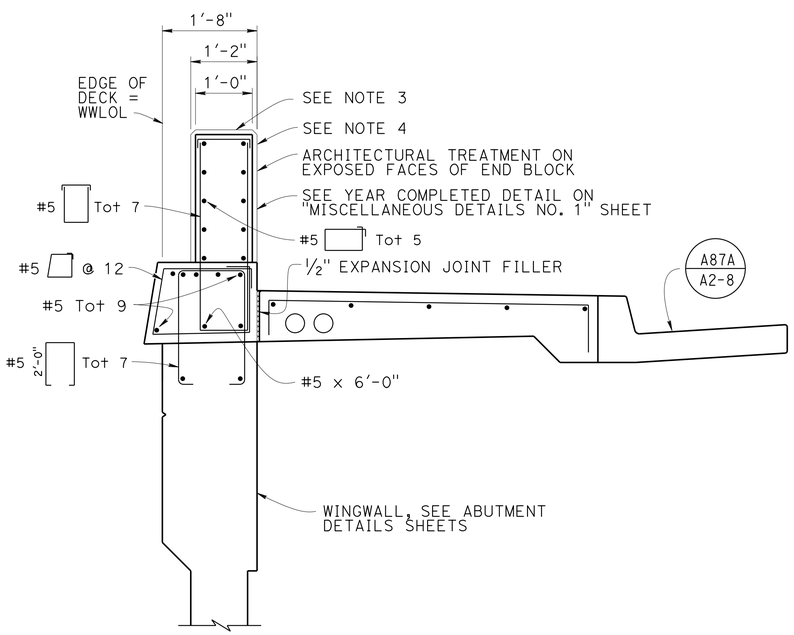

SECTION THROUGH BARRIER END BLOCK

¾" = 1'-0"

FOR OTHER DETAILS NOT SHOWN, SEE SECTION THROUGH BRIDGE AND SECTION THROUGH WINGWALL

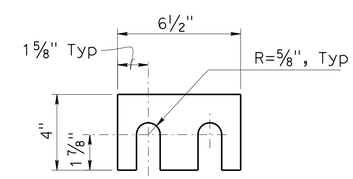

ALTERNATE SHIM PLATE FOR BOTTOM RAIL

3" = 1'-0"

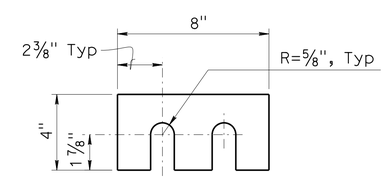

ALTERNATE SHIM PLATE FOR TOP RAIL

3" = 1'-0"

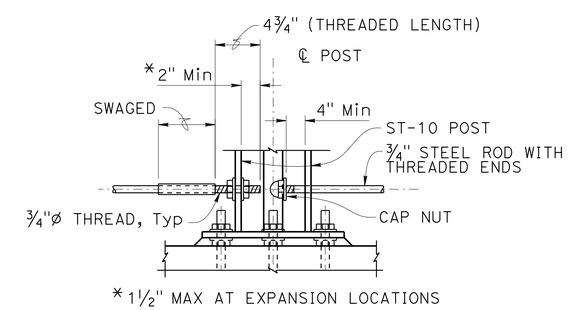

CABLE END DETAIL

NO SCALE

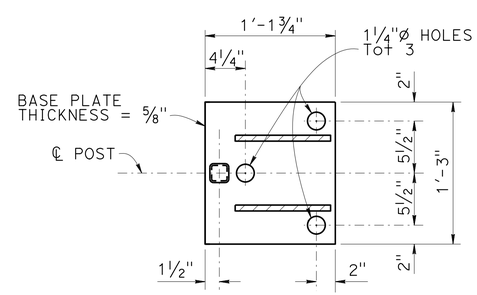

BASE PLATE - PLAN

1½" = 1'-0"

NOTES:

1. For California ST-10 Bridge Rail (modified with Pedestrian Railing) details not shown, see B11-68, B11-69, B11-70
2. Two - 4" round openings for future utilities. Openings are to be sealed at ends and extended 8" Min past end of sidewalk. Duct forms are to be tied down.
3. Tool the top of barrier with grout lines matching formed joints on the face of barrier to create a continuous appearance of rock formations.
4. For traffic attenuator connection, see ROADWAY PLANS.
5. For conduits, see Utility Data on "TYPICAL SECTION" sheet.
6. Terminate all longitudinal curb, sidewalk, and deck reinforcement in standard 90° hooks.

	BY	CHECKED
DESIGN	J. Lynch	G. Slocum
DETAILS	E. Montevirgen	G. Slocum
QUANTITIES	J. Lynch	G. Schuster

STATE OF CALIFORNIA
DEPARTMENT OF TRANSPORTATION

DIVISION OF ENGINEERING SERVICES
STRUCTURE DESIGN
DESIGN BRANCH 2

BRIDGE NO. 25-0153
POST MILE 23.99

SOUTH FORK AMERICAN RIVER BRIDGE (REPLACE)
BARRIER AND SIDEWALK DETAILS

STRUCTURES DESIGN DETAIL SHEET (ENGLISH) (REV. 09-01-10)

ORIGINAL SCALE IN INCHES FOR REDUCED PLANS 0 1 2 3

UNIT: 3577
PROJECT NUMBER & PHASE: 0300000078
CONTRACT NO.: 03-0F310

DISREGARD PRINTS BEARING EARLIER REVISION DATES

REVISION DATES: ~~10-15-15~~ 3-8-16

SHEET 25 OF 42

FILE => 25-0021_p_barrier_sidewalk_det01.dgn

USERNAME => s139538 DATE PLOTTED => 08-JUL-2016 TIME PLOTTED => 16:16

DIST	COUNTY	ROUTE	POST MILES TOTAL PROJECT	SHEET No.	TOTAL SHEETS
03	ED	49	23.6/24.5	149	202

REGISTERED CIVIL ENGINEER 04-18-16 DATE

5-9-16
PLANS APPROVAL DATE

REGISTERED PROFESSIONAL ENGINEER JASON LYNCH No. 51002 Exp. 09-30-17 CIVIL STATE OF CALIFORNIA

The State of California or its officers or agents shall not be responsible for the accuracy or completeness of scanned copies of this plan sheet.

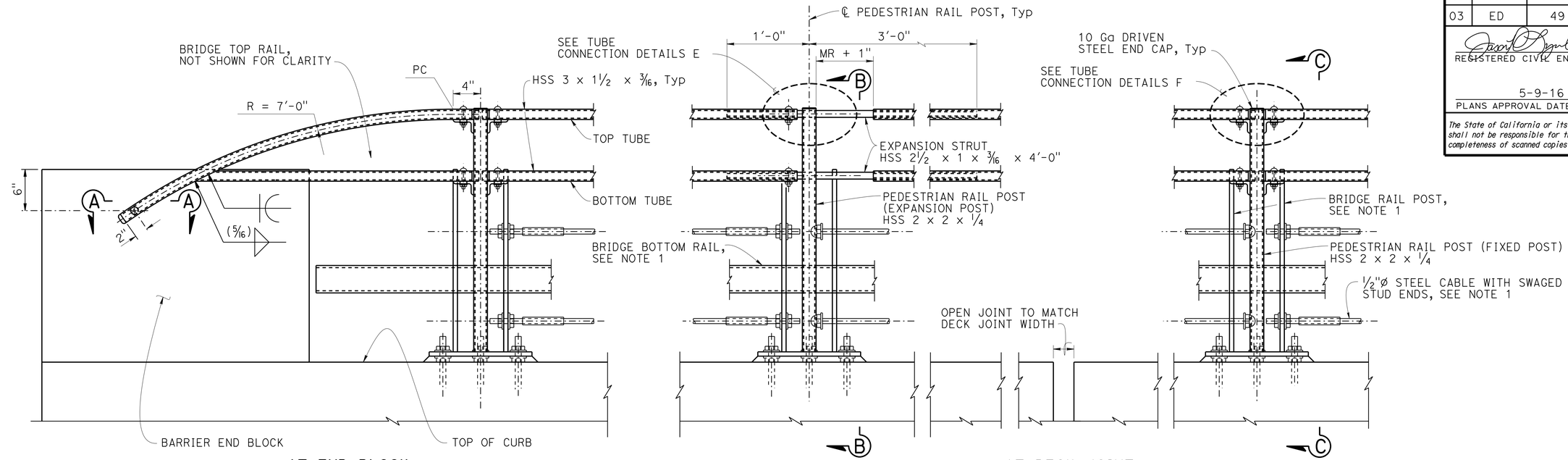

AT END BLOCK

ELEVATION
1½" = 1'-0"

AT DECK JOINT

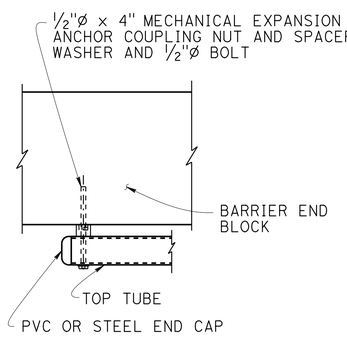

VIEW A-A
1½" = 1'-0"

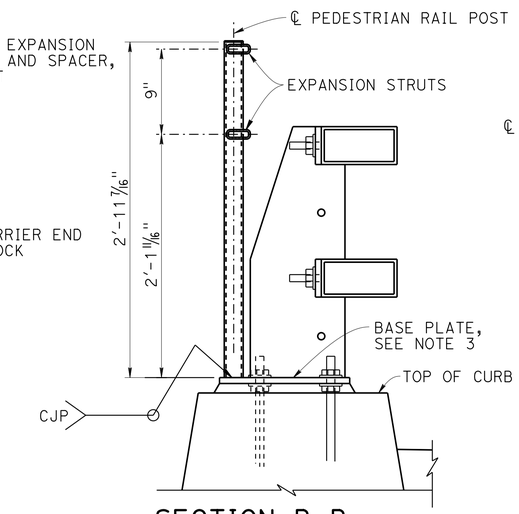

SECTION B-B
1½" = 1'-0"
DETAILS TYPICAL AT EXPANSION POSTS

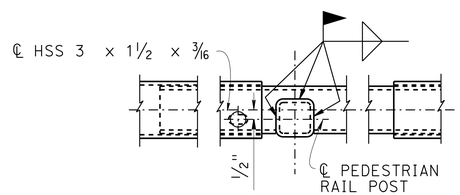

VIEW D-D
3" = 1'-0"

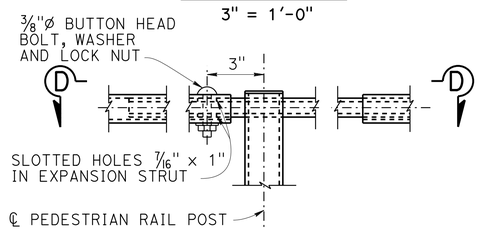

TUBE CONNECTION DETAILS E
3" = 1'-0"
DETAILS TYPICAL AT EXPANSION POSTS

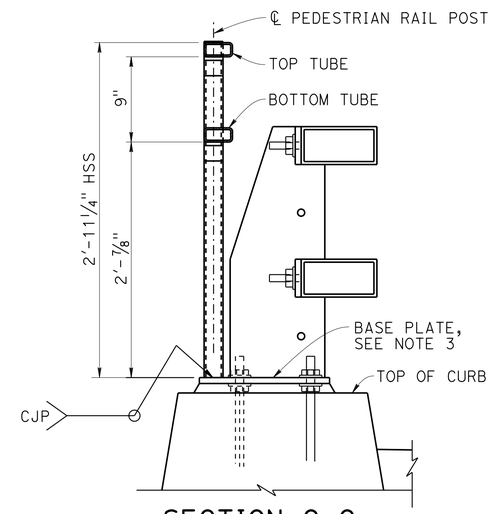

SECTION C-C
1½" = 1'-0"
DETAILS TYPICAL AT FIXED POSTS

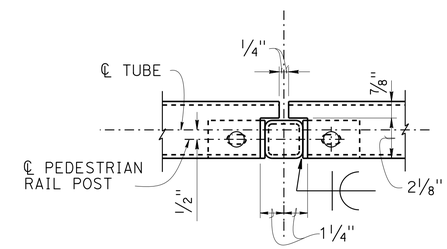

VIEW E-E
3" = 1'-0"

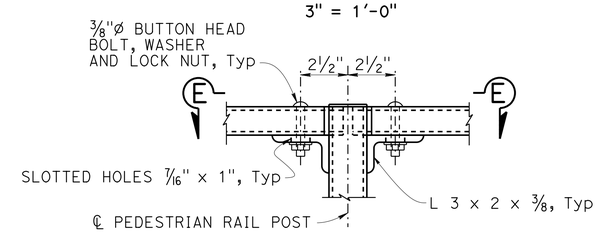

TUBE CONNECTION DETAILS F
3" = 1'-0"
DETAILS TYPICAL AT FIXED POSTS

NOTES:

1. For barrier details not shown, see "BARRIER AND SIDEWALK DETAILS" sheet.
2. HSS Post and Rail: ASTM A1085.
3. Clean and paint all exposed steel surfaces.

	BY	CHECKED
DESIGN	J. Lynch	G. Slocum
DETAILS	E. Montevirgen	G. Slocum
QUANTITIES	J. Lynch	G. Schuster

STATE OF CALIFORNIA
DEPARTMENT OF TRANSPORTATION

DIVISION OF ENGINEERING SERVICES
STRUCTURE DESIGN
DESIGN BRANCH 2

BRIDGE NO. 25-0153
POST MILE 23.99

SOUTH FORK AMERICAN RIVER BRIDGE (REPLACE)
PEDESTRIAN RAIL DETAILS

STRUCTURES DESIGN DETAIL SHEET (ENGLISH) (REV. 09-01-10)

ORIGINAL SCALE IN INCHES FOR REDUCED PLANS 0 1 2 3

UNIT: 3577
PROJECT NUMBER & PHASE: 0300000078
CONTRACT NO.: 03-0F310

DISREGARD PRINTS BEARING EARLIER REVISION DATES

REVISION DATES 10-15-15 02-29-16 03-07-16

SHEET 26 OF 42

FILE => 25-0021_q_railing01.dgn

USERNAME => s119538 DATE PLOTTED => 08-JUL-2016 TIME PLOTTED => 16:16

DIST	COUNTY	ROUTE	POST MILES TOTAL PROJECT	SHEET No.	TOTAL SHEETS
03	ED	49	23.6/24.5	150	202

REGISTERED CIVIL ENGINEER 04-18-16 DATE

5-9-16
PLANS APPROVAL DATE

REGISTERED PROFESSIONAL ENGINEER JASON LYNCH No. 51002 Exp. 09-30-17 CIVIL STATE OF CALIFORNIA

The State of California or its officers or agents shall not be responsible for the accuracy or completeness of scanned copies of this plan sheet.

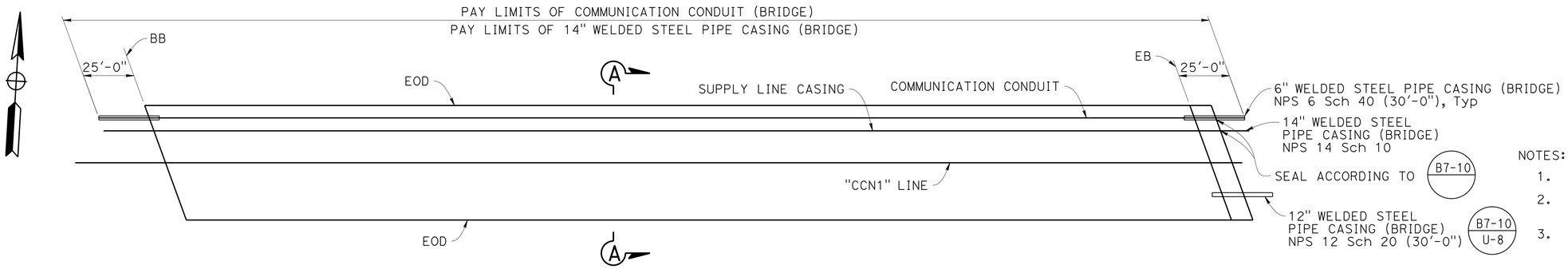

PLAN

NO SCALE

NOTES:

1. Galvanize all steel support components.
2. Maximum depth of drilled anchors is 1½" or as approved by the Engineer.
3. Conduit, fittings, and conduit supports shall be furnished and installed by the Contractor.
4. Casing, fittings, and casing supports shall be furnished and installed by the Contractor.
5. For relocation of existing utilities see ROADWAY PLANS.
6. For casing and concrete pipe support details, see "CASING INSTALLATION" and "CASING SUPPORT" sheets.
7. For location of Support Pad detail see "GIRDER LAYOUT" sheets.
8. Omit Support Pad reinforcement where H < 4".

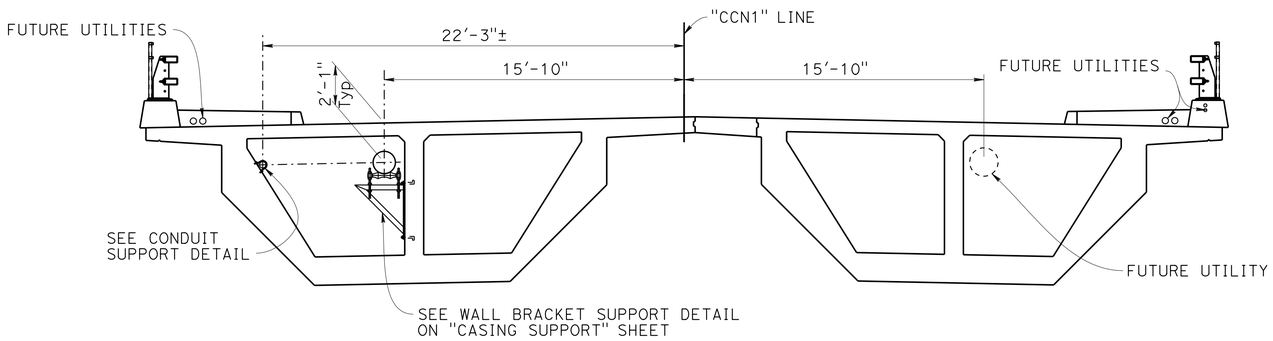

SECTION A-A

NO SCALE

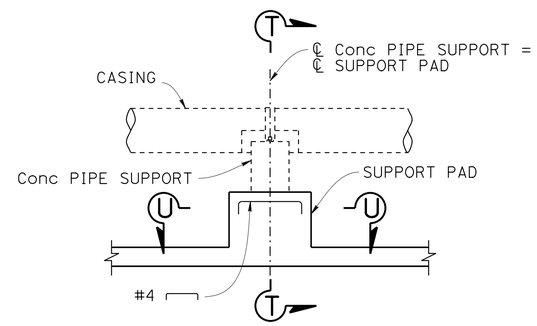

NOTE: Box Girder Reinf not shown

SUPPORT PAD

½" = 1'-0"

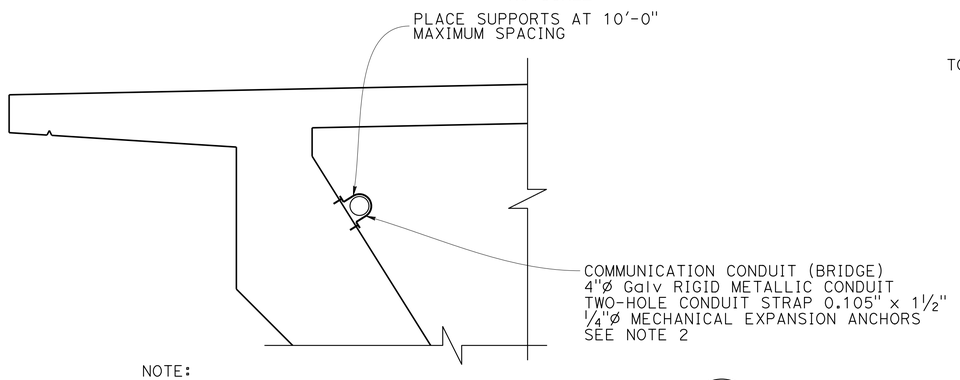

NOTE:

Place a conduit expansion-deflection fitting at Abutment 1. Provide movement according to the bridge expansion joint size. Place conduit supports 2'-0' maximum each side of the expansion assembly. ES-9B XY

CONDUIT SUPPORT

NO SCALE

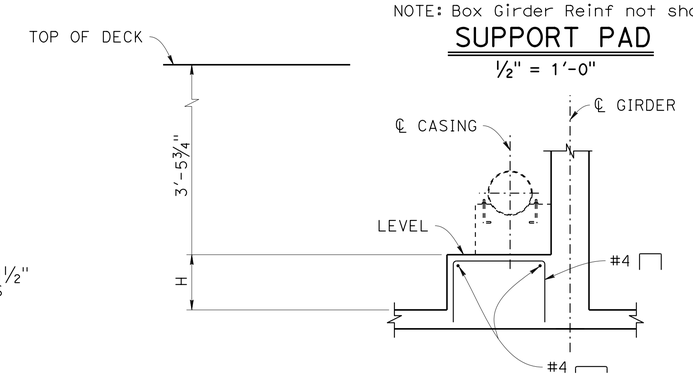

SECTION T-T

½" = 1'-0"

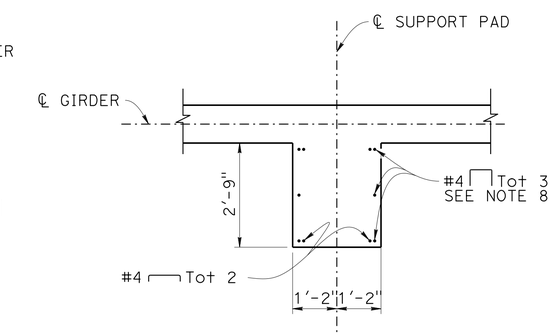

SECTION U-U

½" = 1'-0"

DESIGN	BY J. Lynch/M. Kodsuntie	CHECKED M. Kodsuntie	
DETAILS	BY J. Yang	CHECKED M. Kodsuntie	
QUANTITIES	BY J. Lynch	CHECKED G. Schuster	

STATE OF CALIFORNIA DEPARTMENT OF TRANSPORTATION

DIVISION OF ENGINEERING SERVICES STRUCTURE DESIGN DESIGN BRANCH 2

BRIDGE NO. 25-0153
POST MILE 23.99

SOUTH FORK AMERICAN RIVER BRIDGE (REPLACE)

UTILITY DETAILS

STRUCTURES DESIGN DETAIL SHEET (ENGLISH) (REV. 09-01-10)

ORIGINAL SCALE IN INCHES FOR REDUCED PLANS 0 1 2 3

UNIT: 3577
PROJECT NUMBER & PHASE: 0300000078
CONTRACT NO.: 03-0F310

DISREGARD PRINTS BEARING EARLIER REVISION DATES

REVISION DATES 10-22-15 01-14-16 03-21-16

SHEET 27 OF 42

FILE => 25-0021_r_utility01.dgn

USERNAME => s119538 DATE PLOTTED => 08-JUL-2016 TIME PLOTTED => 16:16

DIST	COUNTY	ROUTE	POST MILES TOTAL PROJECT	SHEET No.	TOTAL SHEETS
03	ED	49	23.6/24.5	151	202

REGISTERED CIVIL ENGINEER 04-18-16 DATE

5-9-16
PLANS APPROVAL DATE

REGISTERED PROFESSIONAL ENGINEER JASON LYNCH No. 51002 Exp. 09-30-17 CIVIL STATE OF CALIFORNIA

The State of California or its officers or agents shall not be responsible for the accuracy or completeness of scanned copies of this plan sheet.

NOTES:

1. Install 2 houses at location (B) and 2 at location (C), total 4 precast concrete bat houses.
2. Install bat houses above RSP at locations approved by the Engineer.
3. Roughen the inside surface of bat house to amplitude of 1/8".

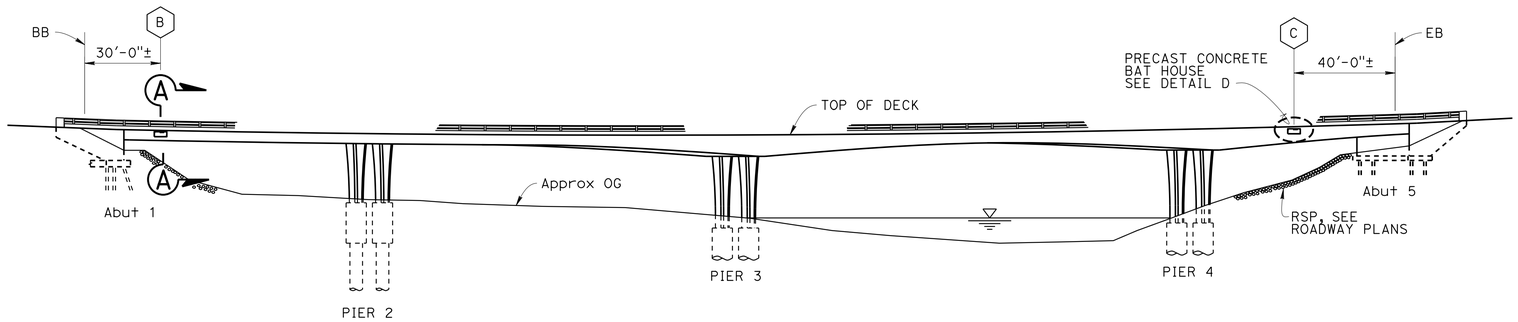

ELEVATION
1" = 30'-0"

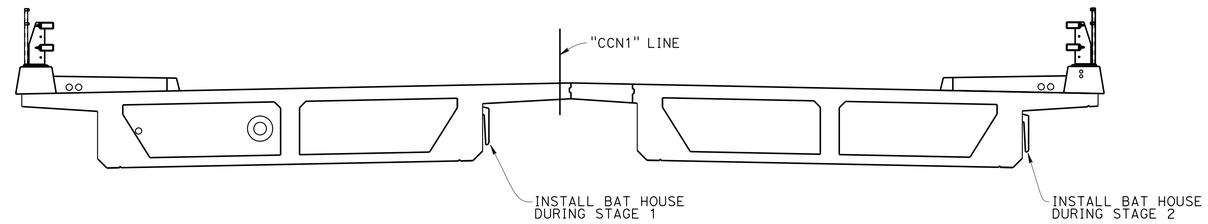

SECTION A-A
1/4" = 1'-0"

NOTE: Location (B) shown, location (C) similar.

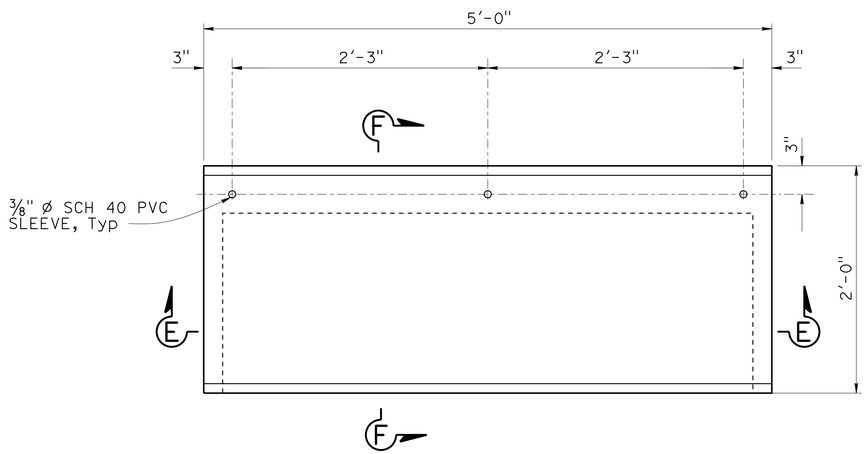

DETAIL D
1 1/2" = 1'-0"

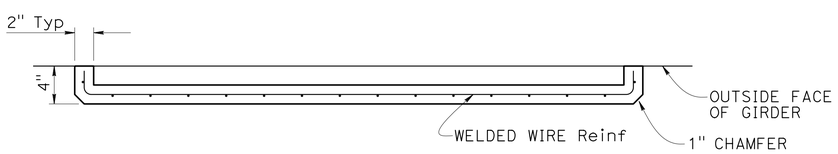

SECTION E-E
1 1/2" = 1'-0"

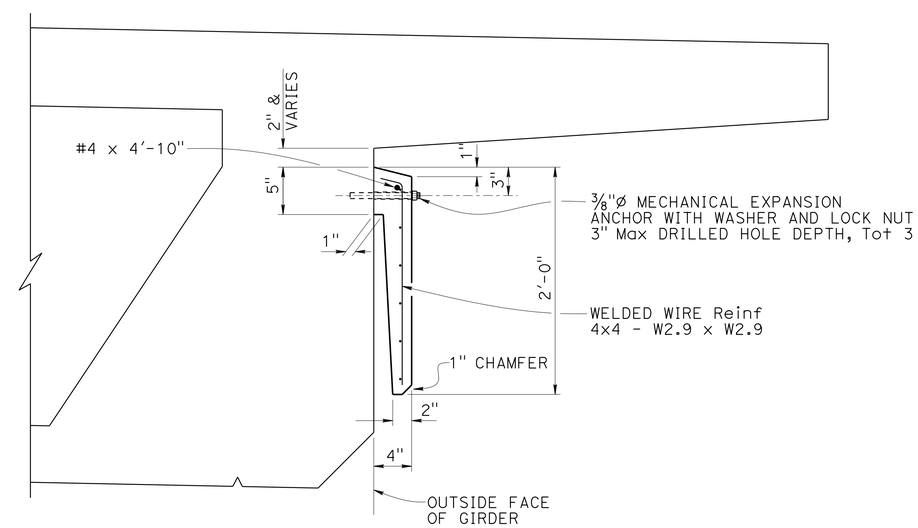

SECTION F-F
1 1/2" = 1'-0"

DESIGN	BY J. Lynch	CHECKED N. Nguyen	
DETAILS	BY C. Figuerres	CHECKED N. Nguyen	
QUANTITIES	BY J. Lynch	CHECKED G. Schuster	

STATE OF CALIFORNIA
DEPARTMENT OF TRANSPORTATION

DIVISION OF ENGINEERING SERVICES
STRUCTURE DESIGN
DESIGN BRANCH 2

BRIDGE NO. 25-0153
POST MILE 23.99

SOUTH FORK AMERICAN RIVER BRIDGE (REPLACE)
BAT HOUSE DETAILS

STRUCTURES DESIGN DETAIL SHEET (ENGLISH) (REV. 09-01-10)

ORIGINAL SCALE IN INCHES FOR REDUCED PLANS 0 1 2 3

UNIT: 3577
PROJECT NUMBER & PHASE: 0300000078
CONTRACT NO.: 03-0F310

DISREGARD PRINTS BEARING EARLIER REVISION DATES

REVISION DATES 1-15-16 3-7-16

SHEET 28 OF 42

FILE => 25-0021_u_bathousedet.dgn

USERNAME => s113538 DATE PLOTTED => 08-JUL-2016 TIME PLOTTED => 16:16

DIST	COUNTY	ROUTE	POST MILES TOTAL PROJECT	SHEET No.	TOTAL SHEETS
03	ED	49	23.6/24.5	152	202

REGISTERED CIVIL ENGINEER 04-18-16 DATE

5-9-16
PLANS APPROVAL DATE

REGISTERED PROFESSIONAL ENGINEER JASON LYNCH No. 51002 Exp. 09-30-17 CIVIL STATE OF CALIFORNIA

The State of California or its officers or agents shall not be responsible for the accuracy or completeness of scanned copies of this plan sheet.

NOTE:
1. For barrier end block and random rough stacked rock texture see "BARRIER AND SIDEWALK DETAILS" sheet.

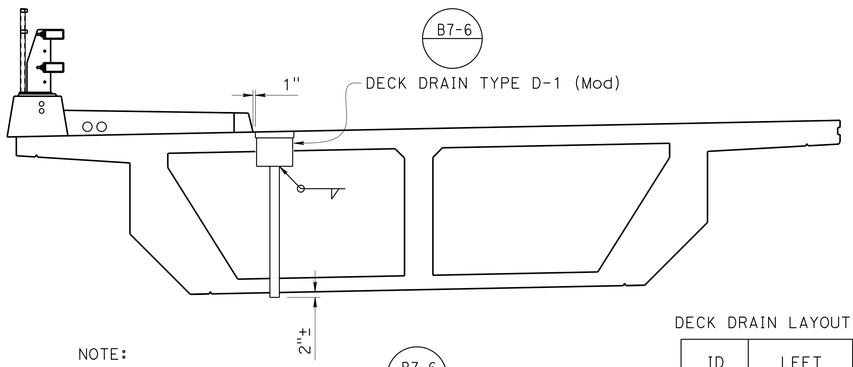

NOTE:
For details not shown see B7-6

DECK DRAIN
3/8" = 1'-0"
LEFT BOX SHOWN, RIGHT BOX SIMILAR

DECK DRAIN LAYOUT "CCN1" LINE

ID	LEFT	RIGHT
DD1	40+75	40+90
DD2	41+42	41+56
DD3	41+56	41+71
DD4	41+71	41+85
DD5	42+49	42+63

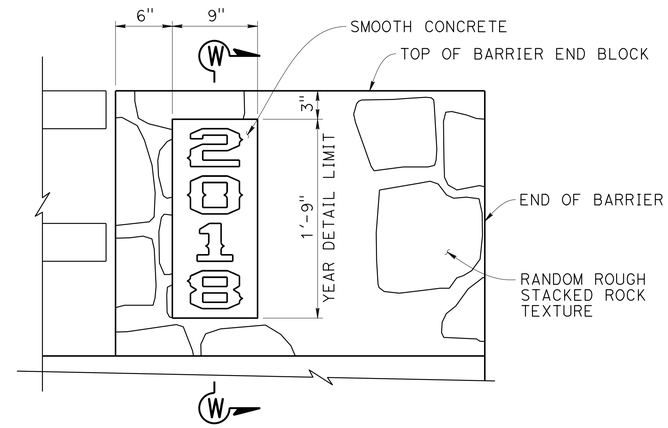

YEAR COMPLETED DETAIL
1½" = 1'-0"

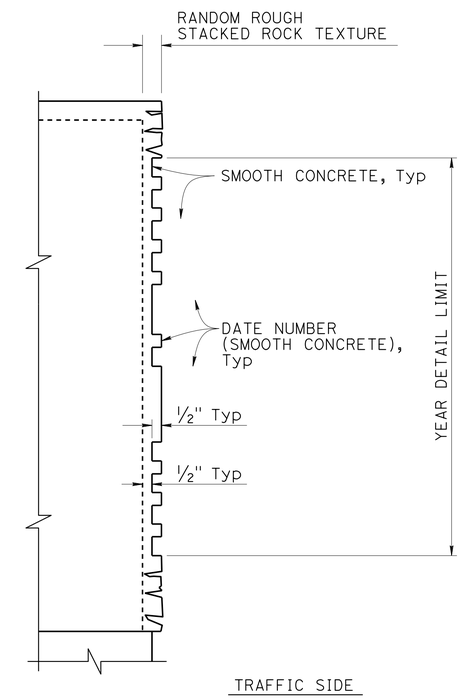

SECTION W-W
3" = 1'-0"

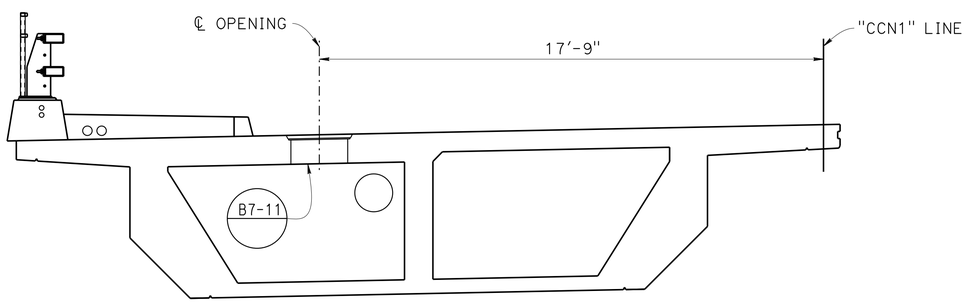

NOTE:
For details not shown see B7-11

DECK ACCESS OPENING
3/8" = 1'-0"
LEFT BOX SHOWN, RIGHT BOX SIMILAR

DECK ACCESS OPENING LAYOUT "CCN1" LINE

ID	17'-9" LEFT	17'-9" RIGHT
MH1	39+73	39+85
MH2	40+99	41+12
MH3	42+40	42+52
MH4	44+30	44+43

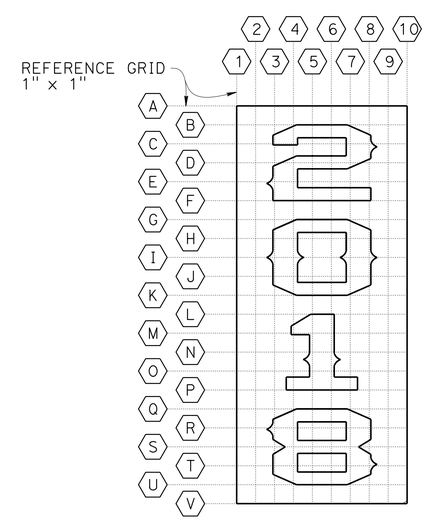

YEAR DETAIL
3" = 1'-0"

DESIGN	BY J. Lynch	CHECKED B. Shen	
DETAILS	BY J. Yang	CHECKED B. Shen	
QUANTITIES	BY J. Lynch	CHECKED G. Schuster	

STATE OF CALIFORNIA
DEPARTMENT OF TRANSPORTATION

DIVISION OF ENGINEERING SERVICES
STRUCTURE DESIGN
DESIGN BRANCH 2

BRIDGE NO. 25-0153
POST MILE 23.99

SOUTH FORK AMERICAN RIVER BRIDGE (REPLACE)
MISCELLANEOUS DETAILs

STRUCTURES DESIGN DETAIL SHEET (ENGLISH) (REV. 09-01-10)

ORIGINAL SCALE IN INCHES FOR REDUCED PLANS 0 1 2 3

UNIT: 3577
PROJECT NUMBER & PHASE: 0300000078
CONTRACT NO.: 03-0F310

DISREGARD PRINTS BEARING EARLIER REVISION DATES

REVISION DATES 10-13-15 01-09-16

SHEET 29 OF 42

FILE => 25-0021_u_miscdt02.dgn

USERNAME => s119338 DATE PLOTTED => 08-JUL-2016 TIME PLOTTED => 16:16

DIST	COUNTY	ROUTE	POST MILES TOTAL PROJECT	SHEET No.	TOTAL SHEETS
03	ED	49	23.6/24.5	153	202

REGISTERED CIVIL ENGINEER 04-18-16 DATE

5-9-16
PLANS APPROVAL DATE

REGISTERED PROFESSIONAL ENGINEER JASON LYNCH No. 51002 Exp. 09-30-17 CIVIL STATE OF CALIFORNIA

The State of California or its officers or agents shall not be responsible for the accuracy or completeness of scanned copies of this plan sheet.

NOTES:

1. All timber Douglas Fir No. 2 UON
2. Apply non-skid abrasive finish to the deck planks
3. Patch holes in concrete after removing the walkway
4. For Sections A-A and B-B see "TEMPORARY WALKWAY DETAILS NO. 2" sheet
5. Slope walkway at 1:12 or flatter to conform to sidewalk layout and limits, see ROADWAY PLANS.

DESIGN: AASHTO Guide Specification for the Design of Pedestrian Bridges, December 2009
Mod: rail loads are not applied in the inward direction

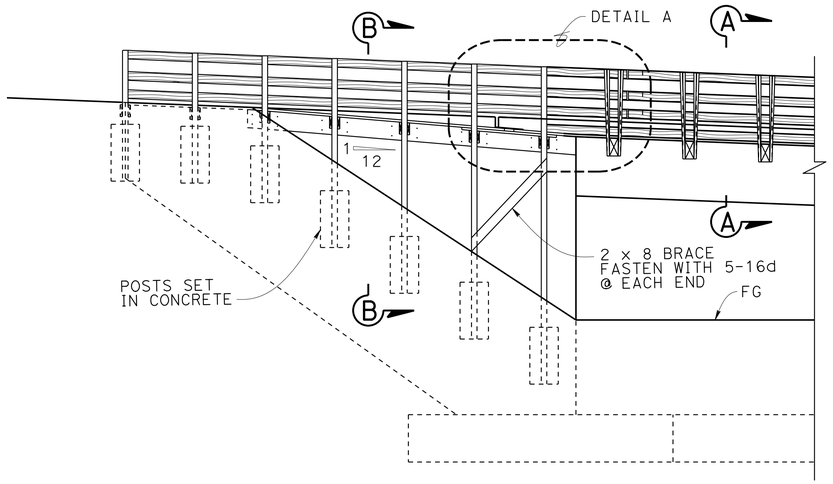

MIRRORED ELEVATION

1/4" = 1'-0"

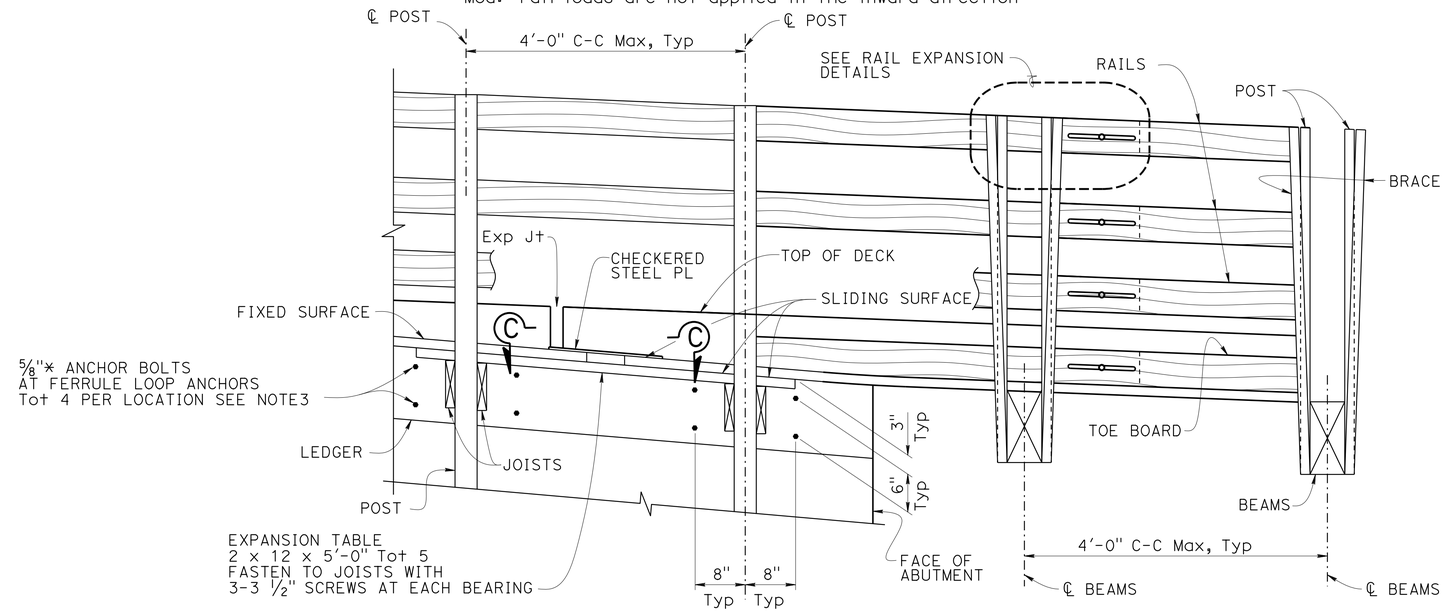

DETAIL A

1" = 1'-0"

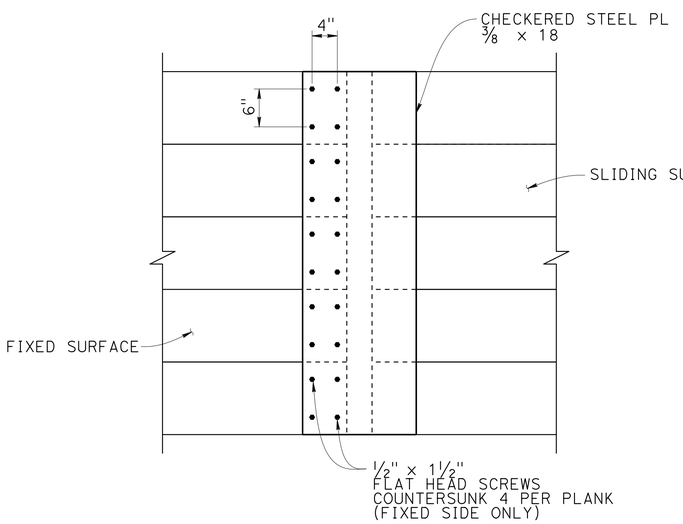

VIEW C-C

1" = 1'-0"

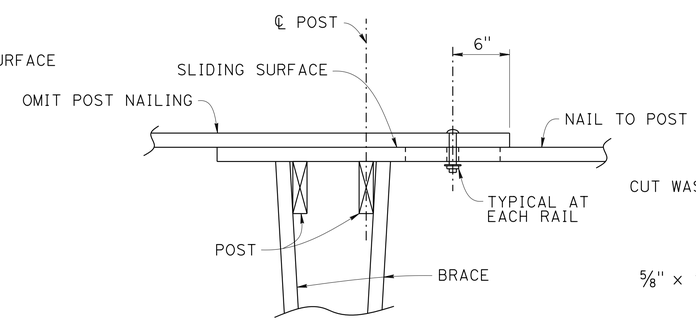

PLAN

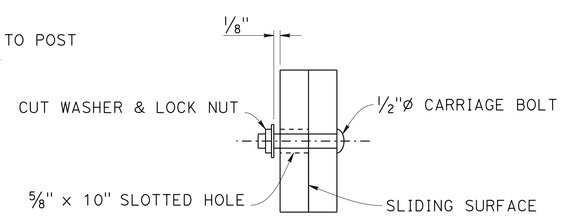

SECTION

RAIL EXPANSION DETAILS

NO SCALE

DESIGN	BY J. Lynch	CHECKED G. Slocum	
DETAILS	BY J. Yang	CHECKED G. Slocum	
QUANTITIES	BY J. Lynch	CHECKED G. Schuster	

STATE OF CALIFORNIA
DEPARTMENT OF TRANSPORTATION

DIVISION OF ENGINEERING SERVICES
STRUCTURE DESIGN
DESIGN BRANCH 2

BRIDGE NO. 25-0153
POST MILE 23.99

SOUTH FORK AMERICAN RIVER BRIDGE (REPLACE)
TEMPORARY WALKWAY DETAILS NO. 1

STRUCTURES DESIGN DETAIL SHEET (ENGLISH) (REV. 09-01-10)

ORIGINAL SCALE IN INCHES FOR REDUCED PLANS 0 1 2 3

UNIT: 3577
PROJECT NUMBER & PHASE: 0300000078
CONTRACT NO.: 03-0F310

DISREGARD PRINTS BEARING EARLIER REVISION DATES

REVISION DATES 10-13-15 01-14-16 03-22-16

SHEET 30 OF 42

FILE => 25-0021_u_walkway01.dgn

USERNAME => s119538 DATE PLOTTED => 08-JUL-2016 TIME PLOTTED => 16:16

DIST	COUNTY	ROUTE	POST MILES TOTAL PROJECT	SHEET No.	TOTAL SHEETS
03	ED	49	23.6/24.5	154	202

REGISTERED CIVIL ENGINEER 04-18-16 DATE

5-9-16
PLANS APPROVAL DATE

REGISTERED PROFESSIONAL ENGINEER JASON LYNCH No. 51002 Exp. 09-30-17 CIVIL STATE OF CALIFORNIA

The State of California or its officers or agents shall not be responsible for the accuracy or completeness of scanned copies of this plan sheet.

NOTES:

1. For location of Sections A-A and B-B see "TEMPORARY WALKWAY DETAILS NO. 1" sheet

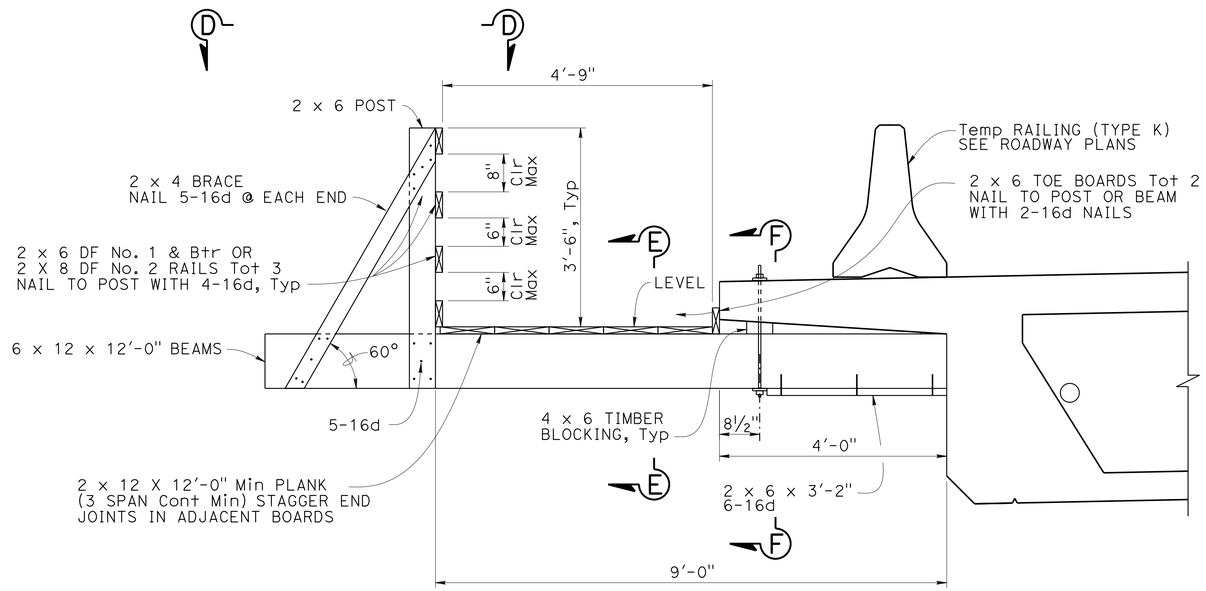

SECTION A-A

¾" = 1'-0"

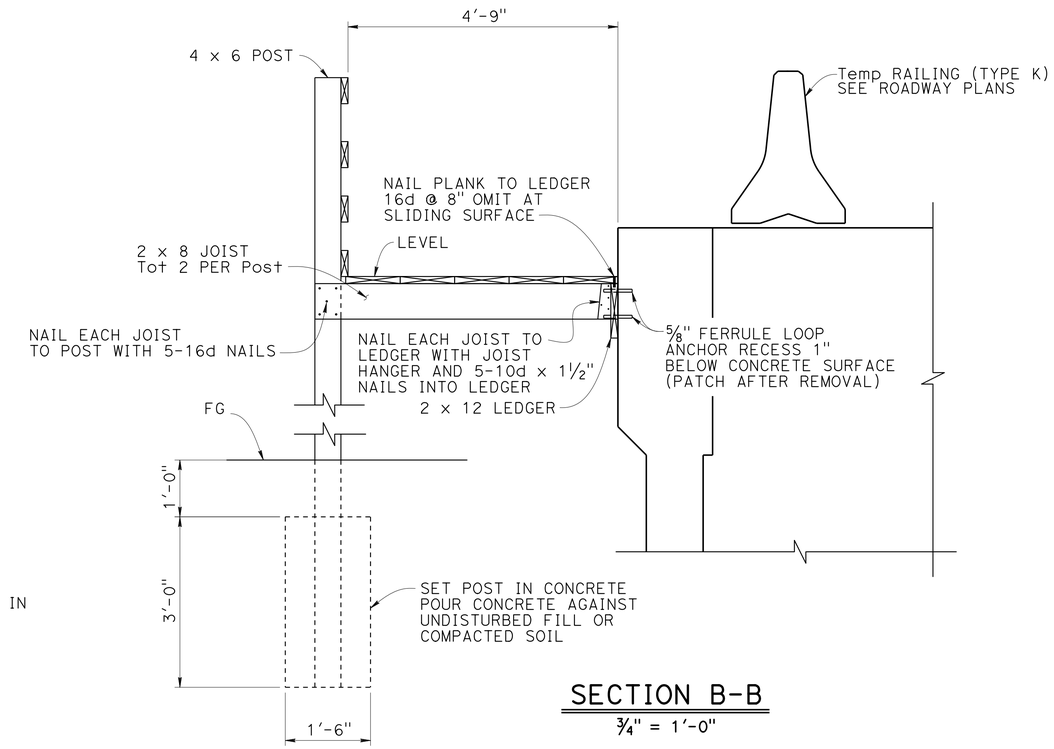

SECTION B-B

¾" = 1'-0"

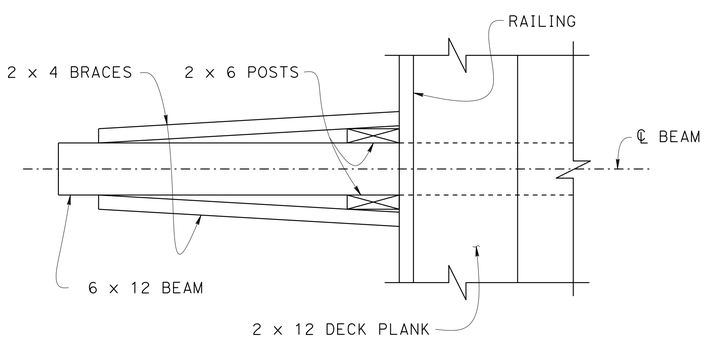

VIEW D-D

1½" = 1'-0"

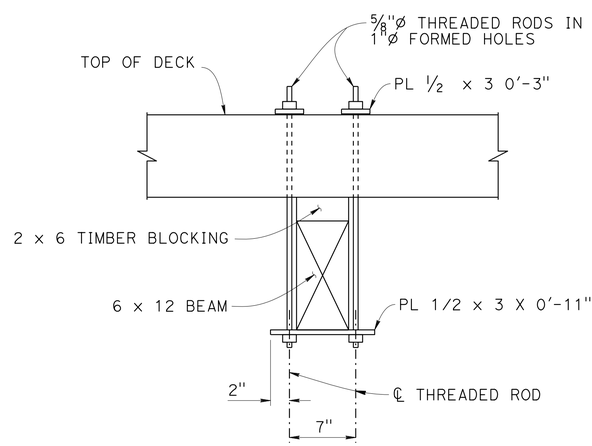

SECTION F-F

1½" = 1'-0"

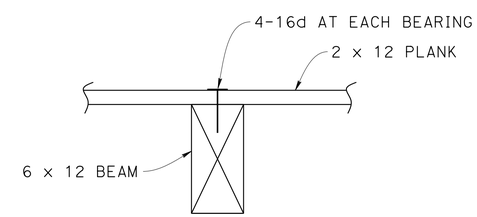

SECTION E-E

1½" = 1'-0"

DESIGN	BY J. Lynch	CHECKED G. Slocum	
DETAILS	BY J. Yang	CHECKED G. Slocum	
QUANTITIES	BY J. Lynch	CHECKED G. Schuster	

STATE OF CALIFORNIA
DEPARTMENT OF TRANSPORTATION

DIVISION OF ENGINEERING SERVICES
STRUCTURE DESIGN
DESIGN BRANCH 2

BRIDGE NO. 25-0153
POST MILE 23.99

SOUTH FORK AMERICAN RIVER BRIDGE (REPLACE)
TEMPORARY WALKWAY DETAILS NO. 2

STRUCTURES DESIGN DETAIL SHEET (ENGLISH) (REV. 09-01-10)

ORIGINAL SCALE IN INCHES FOR REDUCED PLANS 0 1 2 3

UNIT: 3577
PROJECT NUMBER & PHASE: 0300000078
CONTRACT NO.: 03-0F310

DISREGARD PRINTS BEARING EARLIER REVISION DATES

REVISION DATES 10-23-15 07-24-16 03-22-16

SHEET 31 OF 42

FILE => 25-0021_u_walkway02.dgn

USERNAME => s119538 DATE PLOTTED => 08-JUL-2016 TIME PLOTTED => 16:16

DIST	COUNTY	ROUTE	POST MILES TOTAL PROJECT	SHEET No.	TOTAL SHEETS
03	ED	49	23.6/24.5	155	202

REGISTERED CIVIL ENGINEER 04-18-16 DATE

5-9-16
PLANS APPROVAL DATE

REGISTERED PROFESSIONAL ENGINEER JASON LYNCH No. 51002 Exp. 09-30-17 CIVIL STATE OF CALIFORNIA

The State of California or its officers or agents shall not be responsible for the accuracy or completeness of scanned copies of this plan sheet.

NOTES:

1. Construct the temporary shear key before stressing stage 1.
2. Remove the temporary shear key just prior to the end diaphragm closure pour. Cut the key at the abutment seat. Abandon the embedded portion and paint its exposed end.

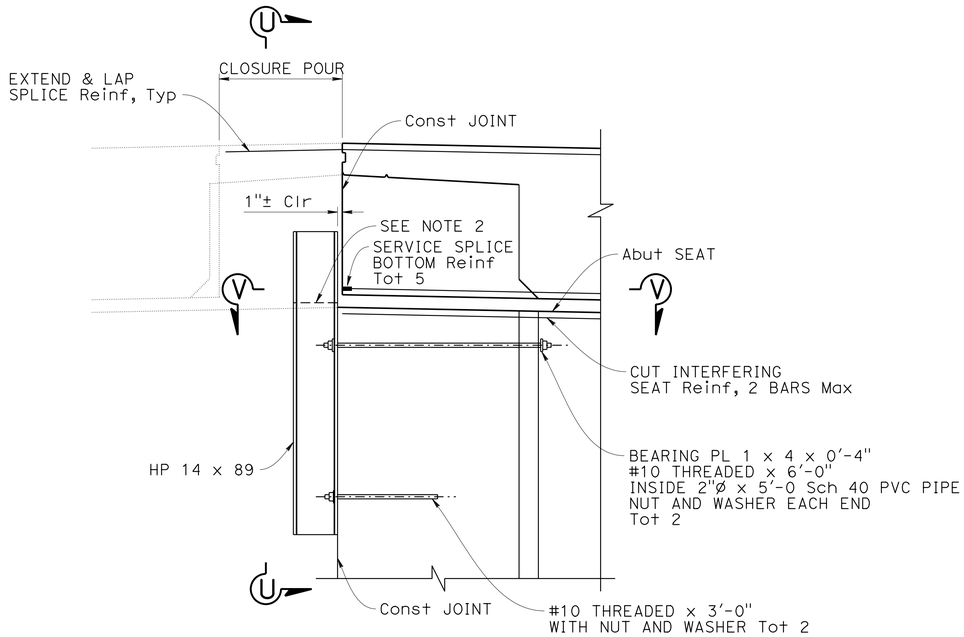

ABUTMENT 1 TEMPORARY SHEAR KEY - PARTIAL ELEVATION

½" = 1'-0"

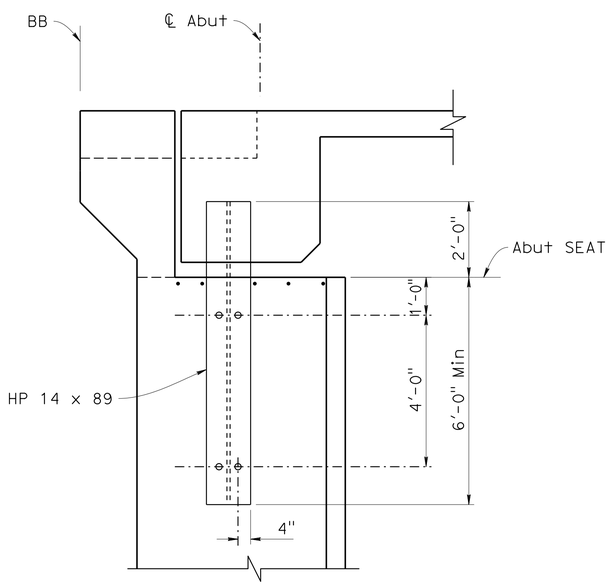

VIEW U-U

½" = 1'-0"

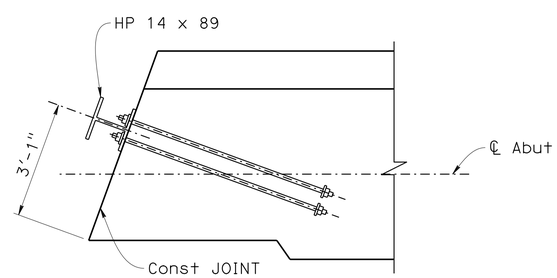

SECTION V-V

½" = 1'-0"

	BY	CHECKED
DESIGN	J. Lynch/M. Kodsuntie	B. Shen
DETAILS	J. Yang	B. Shen
QUANTITIES	J. Lynch	G. Schuster

STATE OF CALIFORNIA
DEPARTMENT OF TRANSPORTATION

DIVISION OF ENGINEERING SERVICES
STRUCTURE DESIGN
DESIGN BRANCH 2

BRIDGE NO. 25-0153
POST MILE 23.99

SOUTH FORK AMERICAN RIVER BRIDGE (REPLACE)
TEMPORARY DETAILS

STRUCTURES DESIGN DETAIL SHEET (ENGLISH) (REV. 09-01-10)

ORIGINAL SCALE IN INCHES FOR REDUCED PLANS 0 1 2 3

UNIT: 3577
PROJECT NUMBER & PHASE: 0300000078
CONTRACT NO.: 03-0F310

DISREGARD PRINTS BEARING EARLIER REVISION DATES

REVISION DATES: 10-13-15 01-09-16

SHEET 32 OF 42

FILE => 25-0021_v_miscdt01.dgn

USERNAME => s113538 DATE PLOTTED => 08-JUL-2016 TIME PLOTTED => 16:16

DIST	COUNTY	ROUTE	POST MILES TOTAL PROJECT	SHEET No.	TOTAL SHEETS
03	ED	49	23.6/24.5	156	202

REGISTERED CIVIL ENGINEER 1-8-16 DATE

5-9-16
PLANS APPROVAL DATE

REGISTERED PROFESSIONAL ENGINEER Qiang Huang No. C55671 Exp. 12-31-16 CIVIL STATE OF CALIFORNIA

The State of California or its officers or agents shall not be responsible for the accuracy or completeness of scanned copies of this plan sheet.

This LOTB sheet was prepared in accordance with the Caltrans Soil & Rock Logging, Classification, & Presentation Manual (2010 Edition).

See 2010 Standard Plans A10F and A10G for Soil Legend, and A10H for Rock Legend.

BENCH MARK

ED 49 23.99 Elev 747.29

Fnd #6 REBAR with 1.5" ALUMINUM CAP, 38.89 Ft Rt RTE 49 Sta 45+29.92

N 2058199.61
E 6874930.78

ED 49 24.15 Elev 748.33

Fnd #6 REBAR with 1.5" ALUMINUM CAP, 52.25 Ft Rt RTE 49 Sta 37+37.74

N 2058140.42
E 6874140.70

NGVD29

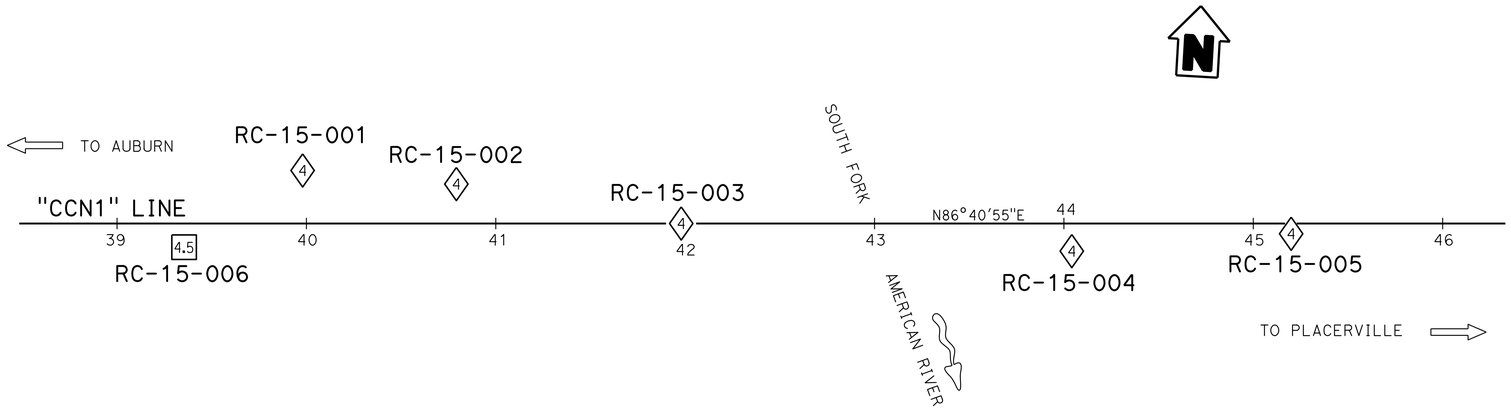

PLAN
1" = 40'

Note: Groundwater was encountered in Boring RC-15-006, but elevation was not measured.

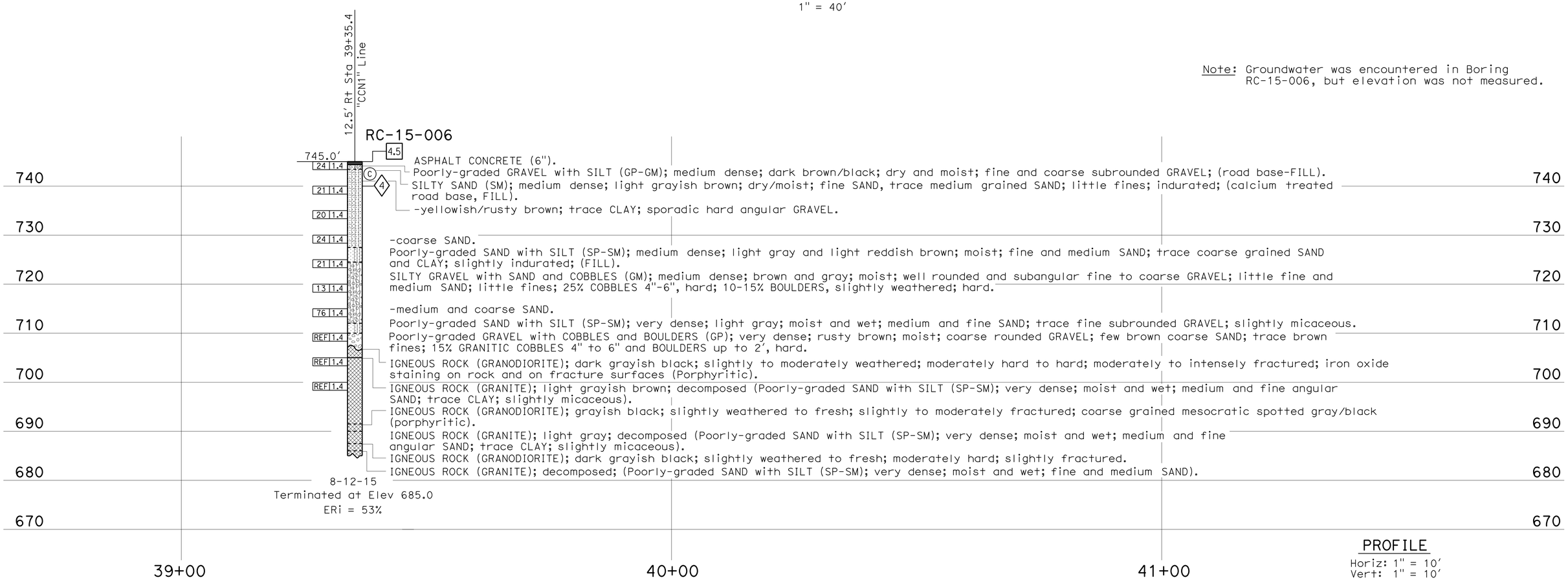

PROFILE
Horiz: 1" = 10'
Vert: 1" = 10'

ENGINEERING SERVICES	MATERIALS AND GEOTECHNICAL SERVICES	STATE OF CALIFORNIA DEPARTMENT OF TRANSPORTATION	DIVISION OF ENGINEERING SERVICES STRUCTURE DESIGN DESIGN BRANCH 2	BRIDGE NO. 25-0153 POST MILE 24.0	SOUTH FORK AMERICAN RIVER BRIDGE (REPLACE) LOG OF TEST BORINGS 1 OF 7
FUNCTIONAL SUPERVISOR NAME: A. Abghari	DRAWN BY: I. G-Remmen CHECKED BY: J. L. Thorne	FIELD INVESTIGATION BY: A. Barrie			

OGS CIVIL LOG OF TEST BORINGS SHEET

ORIGINAL SCALE IN INCHES FOR REDUCED PLANS 0 1 2 3

UNIT: 3650
PROJECT NUMBER & PHASE: 03000000781 CONTRACT NO.: 03-0F3104

DISREGARD PRINTS BEARING EARLIER REVISION DATES

REVISION DATES 01-12-16 01-15-16 02-03-16

SHEET 33 OF 42

FILE => 25-0021-z-lttbo1.dgn

USERNAME => s119538 DATE PLOTTED => 08-JUL-2016 TIME PLOTTED => 16:17

DIST	COUNTY	ROUTE	POST MILES TOTAL PROJECT	SHEET No.	TOTAL SHEETS
03	ED	49	23.6/24.5	157	202

REGISTERED CIVIL ENGINEER 1-8-16 DATE

5-9-16
PLANS APPROVAL DATE

REGISTERED PROFESSIONAL ENGINEER
Qiang Huang
No. C55671
Exp. 12-31-16
CIVIL
STATE OF CALIFORNIA

The State of California or its officers or agents shall not be responsible for the accuracy or completeness of scanned copies of this plan sheet.

This LOTB sheet was prepared in accordance with the Caltrans Soil & Rock Logging, Classification, & Presentation Manual (2010 Edition).

See 2010 Standard Plans A10F and A10G for Soil Legend, and A10H for Rock Legend.

FOR PLAN VIEW, SEE
"LOG OF TEST BORINGS 1 OF 7"

Note: Groundwater was encountered in Boring RC-15-001, but elevation was not measured.

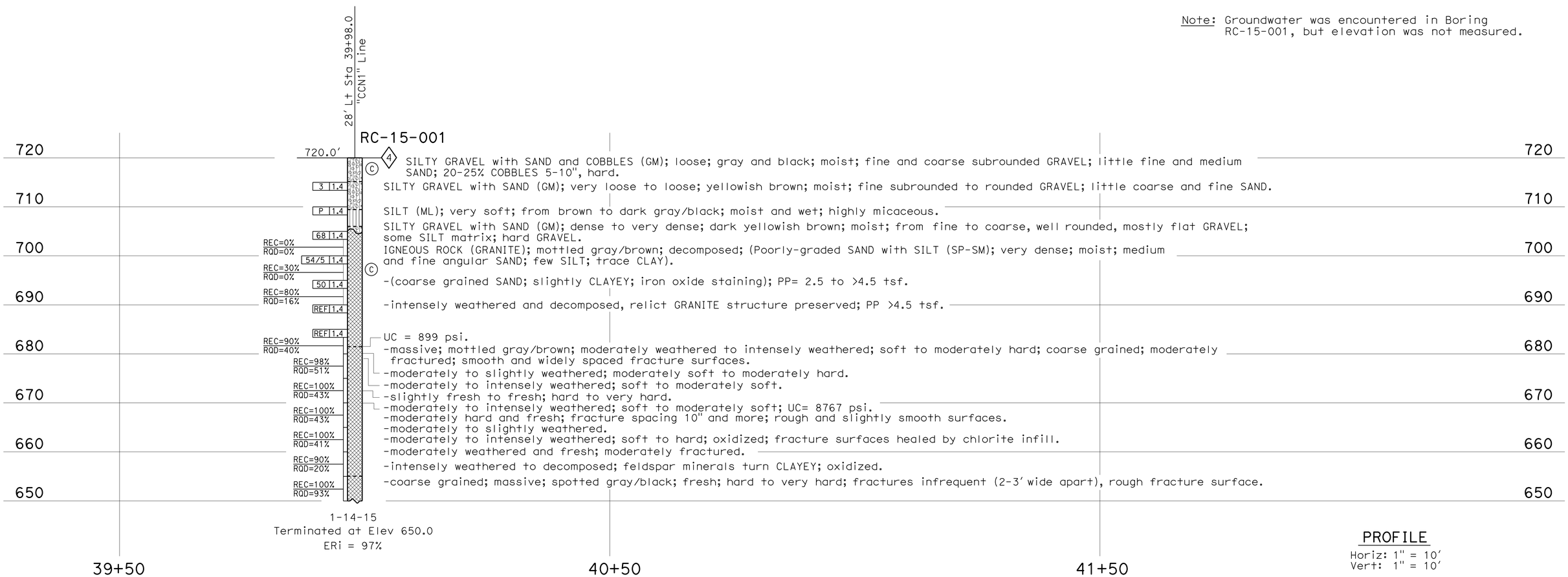

PROFILE
Horiz: 1" = 10'
Vert: 1" = 10'

ENGINEERING SERVICES	MATERIALS AND GEOTECHNICAL SERVICES	STATE OF CALIFORNIA DEPARTMENT OF TRANSPORTATION	DIVISION OF ENGINEERING SERVICES STRUCTURE DESIGN DESIGN BRANCH 2	BRIDGE NO. 25-0153 POST MILE 24.0	SOUTH FORK AMERICAN RIVER BRIDGE (REPLACE)
FUNCTIONAL SUPERVISOR NAME: A. Abghari	DRAWN BY: I. G-Remmen CHECKED BY: J. L. Thorne	FIELD INVESTIGATION BY: A. Barrie			LOG OF TEST BORINGS 2 OF 7

OGS CIVIL LOG OF TEST BORINGS SHEET

ORIGINAL SCALE IN INCHES FOR REDUCED PLANS 0 1 2 3

UNIT: 3650
PROJECT NUMBER & PHASE: 03000000781 CONTRACT NO.: 03-0F3104

DISREGARD PRINTS BEARING EARLIER REVISION DATES

REVISION DATES 01-12-16 01-15-16 02-03-16

SHEET 34 OF 42

FILE => 25-0021-z-ltbo2.dgn

USERNAME => S119538 DATE PLOTTED => 08-JUL-2016 TIME PLOTTED => 16:17

DIST	COUNTY	ROUTE	POST MILES TOTAL PROJECT	SHEET No.	TOTAL SHEETS
03	ED	49	23.6/24.5	158	202

REGISTERED CIVIL ENGINEER 1-8-16 DATE

5-9-16
PLANS APPROVAL DATE

REGISTERED PROFESSIONAL ENGINEER Qiang Huang No. C55671 Exp. 12-31-16 CIVIL STATE OF CALIFORNIA

The State of California or its officers or agents shall not be responsible for the accuracy or completeness of scanned copies of this plan sheet.

This LOTB sheet was prepared in accordance with the Caltrans Soil & Rock Logging, Classification, & Presentation Manual (2010 Edition).

See 2010 Standard Plans A10F and A10G for Soil Legend, and A10H for Rock Legend.

FOR PLAN VIEW, SEE
"LOG OF TEST BORINGS 1 OF 7"

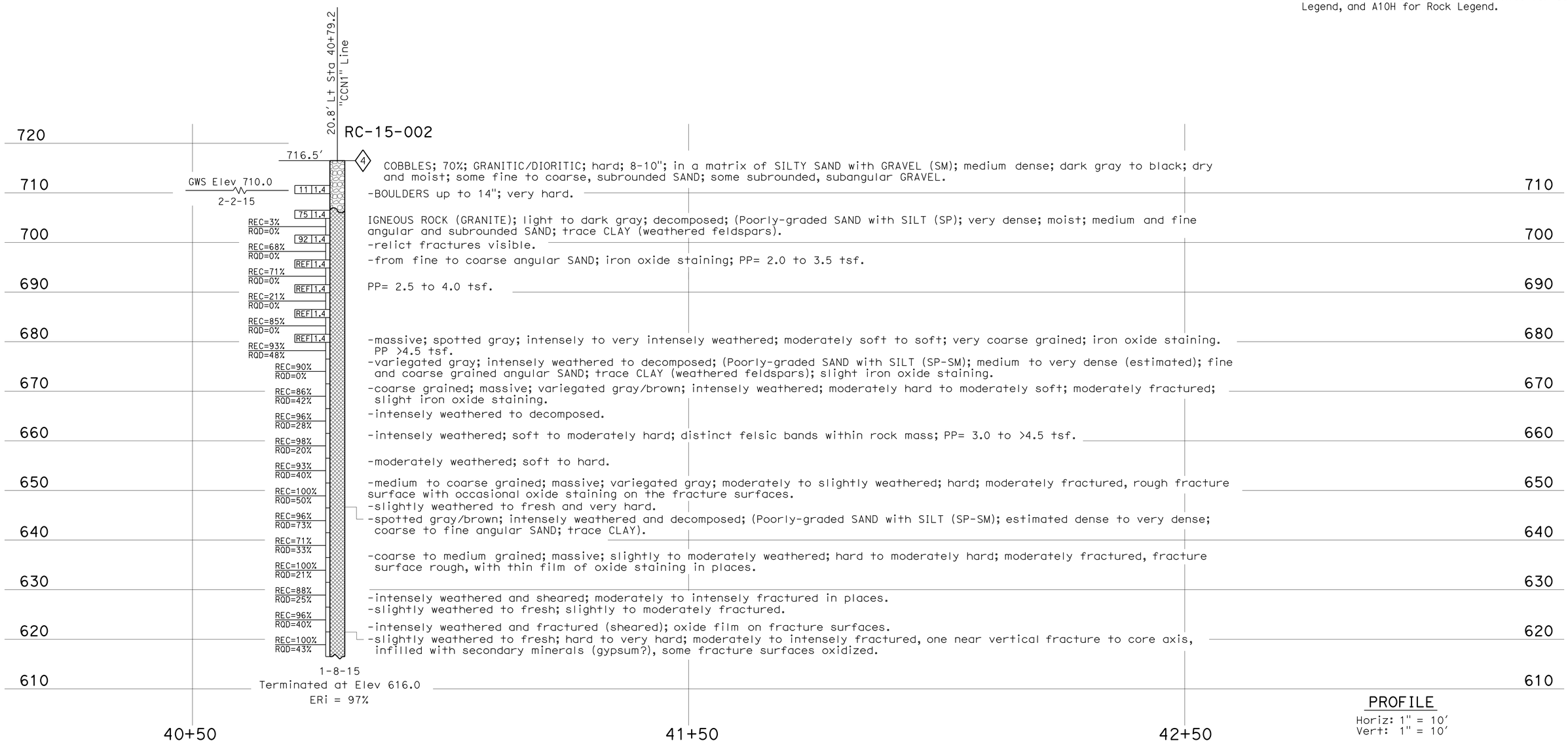

PROFILE
Horiz: 1" = 10'
Vert: 1" = 10'

ENGINEERING SERVICES	MATERIALS AND GEOTECHNICAL SERVICES	STATE OF CALIFORNIA DEPARTMENT OF TRANSPORTATION	DIVISION OF ENGINEERING SERVICES STRUCTURE DESIGN DESIGN BRANCH 2	BRIDGE NO. 25-0153 POST MILE 24.0	SOUTH FORK AMERICAN RIVER BRIDGE (REPLACE)
FUNCTIONAL SUPERVISOR NAME: A. Abghari	DRAWN BY: I. G-Remmen CHECKED BY: J. L. Thorne	FIELD INVESTIGATION BY: A. Barrie			LOG OF TEST BORINGS 3 OF 7

OGS CIVIL LOG OF TEST BORINGS SHEET

ORIGINAL SCALE IN INCHES FOR REDUCED PLANS 0 1 2 3

UNIT: 3650
PROJECT NUMBER & PHASE: 03000000781 CONTRACT NO.: 03-0F3104

DISREGARD PRINTS BEARING EARLIER REVISION DATES → REVISION DATES 01-12-16 01-15-16 02-03-16

SHEET 35 OF 42

FILE => 25-0021-z-1tbo3.dgn

USERNAME => s119538 DATE PLOTTED => 08-JUL-2016 TIME PLOTTED => 16:17

DIST	COUNTY	ROUTE	POST MILES TOTAL PROJECT	SHEET No.	TOTAL SHEETS
03	ED	49	23.6/24.5	159	202

REGISTERED CIVIL ENGINEER 1-8-16 DATE

5-9-16
PLANS APPROVAL DATE

REGISTERED PROFESSIONAL ENGINEER Qiang Huang No. C55671 Exp. 12-31-16 CIVIL STATE OF CALIFORNIA

The State of California or its officers or agents shall not be responsible for the accuracy or completeness of scanned copies of this plan sheet.

This LOTB sheet was prepared in accordance with the Caltrans Soil & Rock Logging, Classification, & Presentation Manual (2010 Edition).

See 2010 Standard Plans A10F and A10G for Soil Legend, and A10H for Rock Legend.

FOR PLAN VIEW, SEE
"LOG OF TEST BORINGS 1 OF 7"

Note: Groundwater was encountered in Boring RC-15-003, but elevation was not measured.

℄ Sta 41+97.9 "CCN1" Line

RC-15-003

713.5′

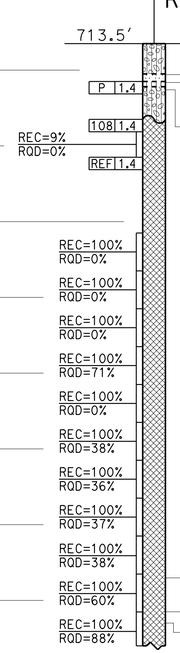

710 — SILTY GRAVEL with SAND and COBBLES (GM); loose; yellowish green/gray; moist and wet; fine to coarse GRAVEL; little fine SAND; 15% subrounded COBBLES, 4-8" and 15% BOULDERS, 1-3′, hard, in a SILT and SAND matrix.

Poorly-graded SAND with GRAVEL (SP); very loose; yellowish brown; wet; coarse and medium SAND; little fine to coarse GRAVEL; trace fines.

SILT with SAND (ML); very soft; dark gray to black; wet; few to little SAND; micaceous.

700 — SILTY GRAVEL with SAND and COBBLES (GM); estimated loose to dense; wet; fine to coarse GRAVEL; little fine SAND; 20% COBBLES, 10", hard, subrounded.

IGNEOUS ROCK (GRANITE); light greenish gray; decomposed; (Poorly-graded SAND (SP); very dense; moist and wet; fine to coarse, angular SAND).

690 — -intensely weathered and decomposed; relict parent rock structures preserved in places.

-soft; breaks into SAND and blocks of rock.

680 — -decomposed; (Poorly-graded SAND (SP); very dense; light greenish gray; fine to coarse angular SAND with brown iron oxide staining).

-intensely weathered; soft; iron oxide staining.

670 — -coarse and medium grained rock; spotted gray/brown; moderately to intensely weathered; moderately hard to hard; moderately fractured, wide fracture spaces (>1′); slight iron oxide staining.

-moderately to intensely weathered; soft to hard; fissile; breaks easily; iron oxide staining.

660

650 — -intensely weathered and decomposed.

-fresh to slightly weathered; hard; moderately fractured.

-moderately soft to hard; slightly to intensely weathered; moderately to intensely fractured in places; iron oxide on fracture surfaces.

640 — -intensely sheared.

-fresh to slightly weathered; hard to moderately hard; slightly fractured; iron oxide on rock surface and fracture surfaces.

-hard and very hard.

-dark gray; fresh; hard and very hard; healed fracture surfaces.

630 — 1-16-15

Terminated at Elev 634.0

ERi = 95%

40+50 41+50 42+50

PROFILE
Horiz: 1" = 10′
Vert: 1" = 10′

ENGINEERING SERVICES	MATERIALS AND GEOTECHNICAL SERVICES	STATE OF CALIFORNIA DEPARTMENT OF TRANSPORTATION	DIVISION OF ENGINEERING SERVICES STRUCTURE DESIGN DESIGN BRANCH 2	BRIDGE NO. 25-0153 POST MILE 24.0	SOUTH FORK AMERICAN RIVER BRIDGE (REPLACE)
FUNCTIONAL SUPERVISOR NAME: A. Abghari	DRAWN BY: I. G-Remmen CHECKED BY: J. L. Thorne	FIELD INVESTIGATION BY: A. Barrie			LOG OF TEST BORINGS 4 OF 7

OGS CIVIL LOG OF TEST BORINGS SHEET

ORIGINAL SCALE IN INCHES FOR REDUCED PLANS 0 1 2 3

UNIT: 3650
PROJECT NUMBER & PHASE: 03000000781 CONTRACT NO.: 03-0F3104

DISREGARD PRINTS BEARING EARLIER REVISION DATES

REVISION DATES 01-12-16 01-15-16 02-03-16

SHEET 36 OF 42

FILE => 25-0021-z-lttbo4.dgn

USERNAME => s119538 DATE PLOTTED => 08-JUL-2016 TIME PLOTTED => 16:17

DIST	COUNTY	ROUTE	POST MILES TOTAL PROJECT	SHEET No.	TOTAL SHEETS
03	ED	49	23.6/24.5	160	202

REGISTERED CIVIL ENGINEER 1-8-16 DATE

8-8-16
PLANS APPROVAL DATE

REGISTERED PROFESSIONAL ENGINEER Qiang Huang No. C55671 Exp. 12-31-16 CIVIL STATE OF CALIFORNIA

The State of California or its officers or agents shall not be responsible for the accuracy or completeness of scanned copies of this plan sheet.

This LOTB sheet was prepared in accordance with the Caltrans Soil & Rock Logging, Classification, & Presentation Manual (2010 Edition).

See 2010 Standard Plans A10F and A10G for Soil Legend, and A10H for Rock Legend.

FOR PLAN VIEW, SEE
"LOG OF TEST BORINGS 1 OF 7"

Note: Groundwater was encountered in Boring RC-15-004, but elevation was not measured.

14.6' Rt Sta 44+04.2 "CCN1" Line

RC-15-004

742.0'

4 ASPHALT CONCRETE (10") (bridge deck).

Air

Poorly-graded GRAVEL with SAND (GP); medium dense to very dense; dark gray and black; dry and moist; fine and coarse rounded GRAVEL; trace SILT; 15% GRANITIC COBBLES, 3-6", hard; (FILL over footing).

IGNEOUS ROCK (GRANITE); spotted gray/brown; decomposed; (Poorly-graded SAND with SILT (SP-SM); very dense; moist; fine and medium SAND, trace coarse SAND; trace CLAY; iron oxide staining).

-spotted brown/gray; intensely weathered to decomposed; moderately soft to soft; intensely fractured; relict fabric preserved; foliated; highly micaceous; oxide staining; PP >4.5 tsf.

-intensely weathered; moderately soft to moderately hard; intensely fractured; oxidized (brown iron oxide staining); foliated; relict fabric preserved.

-moderately hard blocks of weathered GRANITE.

-dark grayish brown; decomposed; (Poorly-graded SAND with SILT (SP-SM); moist; medium and fine SAND, trace coarse SAND; iron oxide staining; trace CLAY.

-medium to coarse grained rock; spotted grayish brown; intensely weathered; moderately soft to moderately hard; slightly foliated; brown/black oxide staining; some relict structures present.

-spotted rusty brown; decomposed; (Poorly-graded SAND with SILT (SP-SM); moist; fine and coarse angular SAND; trace CLAY).

-coarse and medium grained; spotted grayish brown; intensely weathered to decomposed; moderately soft to moderately hard; moderately to slightly fractured; oxidized fracture surfaces; foliated; PP >4.5 tsf.

-intensely weathered to decomposed; (Poorly-graded SAND (SP-SM); medium dense; spotted grayish brown; moist; fine and coarse SAND; trace CLAY; relict structure preserved on weathered surfaces).

-coarse grained; massive; spotted black/gray; fresh to slightly weathered; hard to very hard; moderately fractured; most of the fractures fully healed by infilled secondary minerals (possibly gypsum); slightly oxidized fracture surfaces.

-very hard; hairline fractures infilled (healed) by calcite and chlorite.

-slightly weathered; iron oxide staining.

Elev	REC	RQD	REF
710	0%	0%	
710	0%	0%	1.4
700	0%	0%	1.4
700	0%	0%	1.4
690	33%	0%	1.4
690	25%	0%	1.4
680	16%	0%	
680	85%	0%	
670	16%	0%	
670	10%	0%	
660	38%	0%	
660	100%	0%	
650	43%	0%	
650	78%	0%	
640	40%	0%	
640	77%	0%	
630	100%	78%	
630	100%	68%	
620	90%	70%	

1-22-15
Terminated at Elev 622.0
ERi = 70%

740 730 720 710 700 690 680 670 660 650 640 630 620

44+00 45+00 46+00

PROFILE
Horiz: 1" = 10'
Vert: 1" = 10'

ENGINEERING SERVICES	MATERIALS AND GEOTECHNICAL SERVICES	STATE OF CALIFORNIA DEPARTMENT OF TRANSPORTATION	DIVISION OF ENGINEERING SERVICES STRUCTURE DESIGN DESIGN BRANCH 2	BRIDGE NO. 25-0153 POST MILE 24.0	SOUTH FORK AMERICAN RIVER BRIDGE (REPLACE)
FUNCTIONAL SUPERVISOR NAME: A. Abghari	DRAWN BY: I. G-Remmen CHECKED BY: J. L. Thorne	FIELD INVESTIGATION BY: A. Barrie			LOG OF TEST BORINGS 5 OF 7

OGS CIVIL LOG OF TEST BORINGS SHEET

ORIGINAL SCALE IN INCHES FOR REDUCED PLANS 0 1 2 3

UNIT: 3650
PROJECT NUMBER & PHASE: 03000000781 CONTRACT NO.: 03-0F3104

DISREGARD PRINTS BEARING EARLIER REVISION DATES

REVISION DATES 01-12-16 01-26-16 02-03-16

SHEET 37 OF 42

FILE => 25-0021-z-lltbo5.dgn

USERNAME => s119538 DATE PLOTTED => 08-JUL-2016 TIME PLOTTED => 16:17

DIST	COUNTY	ROUTE	POST MILES TOTAL PROJECT	SHEET No.	TOTAL SHEETS
03	ED	49	23.6/24.5	161	202

REGISTERED CIVIL ENGINEER 1-8-16 DATE

5-9-16
PLANS APPROVAL DATE

REGISTERED PROFESSIONAL ENGINEER Qiang Huang No. C55671 Exp. 12-31-16 CIVIL STATE OF CALIFORNIA

The State of California or its officers or agents shall not be responsible for the accuracy or completeness of scanned copies of this plan sheet.

This LOTB sheet was prepared in accordance with the Caltrans Soil & Rock Logging, Classification, & Presentation Manual (2010 Edition).

See 2010 Standard Plans A10F and A10G for Soil Legend, and A10H for Rock Legend.

FOR PLAN VIEW, SEE
"LOG OF TEST BORINGS 1 OF 7"

Note: Groundwater was encountered in Boring RC-15-005, but elevation was not measured.

ENGINEERING SERVICES	MATERIALS AND GEOTECHNICAL SERVICES	STATE OF CALIFORNIA DEPARTMENT OF TRANSPORTATION	DIVISION OF ENGINEERING SERVICES STRUCTURE DESIGN DESIGN BRANCH 2	BRIDGE NO. 25-0153 POST MILE 24.0	SOUTH FORK AMERICAN RIVER BRIDGE (REPLACE)
FUNCTIONAL SUPERVISOR NAME: A. Abghari	DRAWN BY: I. G-Remmen CHECKED BY: J. L. Thorne	FIELD INVESTIGATION BY: A. Barrie			LOG OF TEST BORINGS 6 OF 7

OGS CIVIL LOG OF TEST BORINGS SHEET

ORIGINAL SCALE IN INCHES FOR REDUCED PLANS 0 1 2 3

UNIT: 3650
PROJECT NUMBER & PHASE: 03000000781 CONTRACT NO.: 03-0F3104

DISREGARD PRINTS BEARING EARLIER REVISION DATES → REVISION DATES 01-12-16 01-26-16 02-03-16

SHEET 38 OF 42

FILE => 25-0021-z-ltbo6.dgn

USERNAME => s119538 DATE PLOTTED => 08-JUL-2016 TIME PLOTTED => 16:17

III ED 65 B 2 10

February 6, 1950

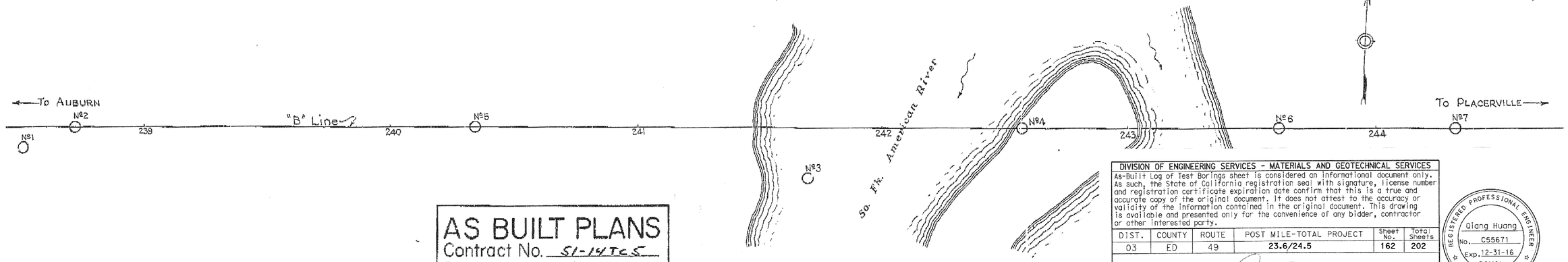

AS BUILT PLANS
Contract No. 51-14TC5
Date Completed
Document No. 3000 1100

DIVISION OF ENGINEERING SERVICES - MATERIALS AND GEOTECHNICAL SERVICES					
As-Built Log of Test Borings sheet is considered an informational document only. As such, the State of California registration seal with signature, license number and registration certificate expiration date confirm that this is a true and accurate copy of the original document. It does not attest to the accuracy or validity of the information contained in the original document. This drawing is available and presented only for the convenience of any bidder, contractor or other interested party.					
DIST.	COUNTY	ROUTE	POST MILE-TOTAL PROJECT	Sheet No.	Total Sheets
03	ED	49	23.6/24.5	162	202
REGISTERED CIVIL ENGINEER			2/8/2016 DATE		

REGISTERED PROFESSIONAL ENGINEER
Qiang Huang
No. C55671
Exp. 12-31-16
CIVIL
STATE OF CALIFORNIA

SOUTH FORK AMERICAN RIVER BRIDGE (REPLACE)

LOG OF TEST BORINGS 7 OF 7

UNIT: 3650		CONTRACT No.	BRIDGE No.
PROJ. No. & PHASE:	03000000781	03-0F3104	25-0153
AS-BUILT VERT DATUM: NGVD29 CONVERSION: N/A		Sheet	of
NOTE: A COPY OF THIS LOG OF TEST BORINGS IS AVAILABLE AT OFFICE OF STRUCTURE MAINTENANCE AND INVESTIGATIONS, SACRAMENTO, CALIFORNIA		39	42

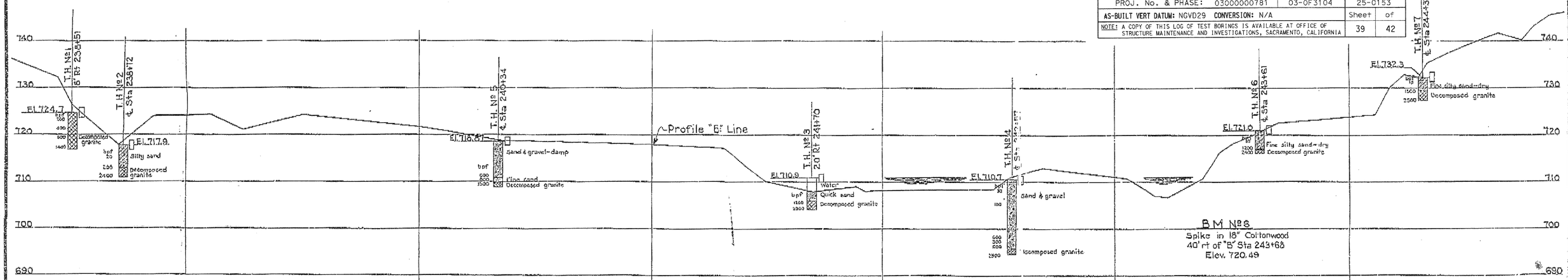

Note: "Blows per foot" were made with a 12" forced blow using a 28 lb hammer.

Classification of Material Based on Standard Grade Size Limits

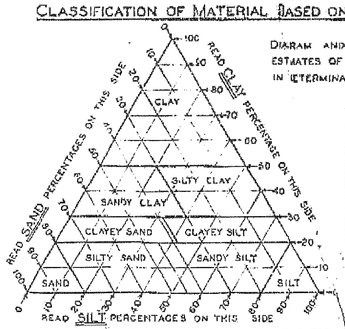

Diagram and table showing the basis for estimates of grade size distribution used in determination of class names.

Grouping Used in Triangular Classification			
Class Name	Percentage of Sizes Present		
	Sand	Silt	Clay
SAND	85-100	0-20	0-20
SILTY SAND	45-80	0-55	0-20
SANDY SILT	0-45	35-80	0-20
SILT	0-20	80-100	0-20
CLAYEY SAND	35-80	0-42	20-30
CLAYEY SILT	0-35	32-80	20-30
SANDY CLAY	30-70	0-40	30-50
SILTY CLAY	0-30	20-70	30-50
CLAY	0-30	0-30	50-100

If gravel is present in appreciable amounts the term "gravelly" may be added to the class name, viz. "gravelly sand". The terms "coarse", "medium" and "fine" when used to describe gravel, sand and silt refer to standard grade size limits.

Legend of Boring Operations

- Plan of any boring
- 1" sampler boring
- Rotary wash boring
- 1" closed sampler driven
- Core boring
- 2" penetrometer driven
- 2" sampler boring
- 2" to 5" auger boring
- 8" to 20" auger boring
- Casing driven
- Jet boring
- (S) Sample taken

The appropriate boring symbols designating the method of operation are shown at the upper right-hand corner of the respective boring. Where tool changes were made during the boring operation symbols are shown at the point of change.

Legend of Earth Materials

- Gravel — G
- Sand — S
- Silt — SI
- Clay — C
- Silty Sand — SI S
- Clayey Sand — C S
- Sandy Silt — S SI
- Clayey Silt — C SI
- Sandy Clay — SC
- Silty Clay — SI C
- Peat and/or Organic Clay — O
- Sandstone — SS
- Shale — SH
- Broken Rock (Fragments) — BR
- Rock — R

Abbreviations

EL 69.4	Elevation of ground at test hole
bpf	Blows per foot — (see note above)
P	Pulled pipe
M	Moisture as % dry weight
EL 7.5 9/14/00	Elevation of ground water and date

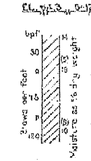

Notes

The contractor's attention is directed to Section 2, Article (c) of the Standard Specifications and to the Special Provisions accompanying this set of plans.

Classification of earth material as shown on this sheet is based upon field inspection and is not to be construed to imply mechanical analysis.

This set of plans has been corrected to correspond to the "as built" points, dated _____, as submitted by resident engineer _____.

Tracings corrected by: _____ Date: _____

MICROFILMED

SOUTH FORK AMERICAN RIVER
LOG OF TEST BORINGS

Scale: Horiz: 1" = 20' Vert: 1" = 10'
File No.
Bridge No. 25-21
Drawing No. C-1803-2

BRIDGE DEPARTMENT
J.O.D. 1"=50
Recommended
Investigations Engr.

Dist	COUNTY	ROUTE	POST MILES TOTAL PROJECT	SHEET No.	TOTAL SHEETS
03	ED	49	23.6 / 24.5	163	202

REGISTERED MECHANICAL ENGINEER 04-01-16 DATE

5-9-16
PLANS APPROVAL DATE

The State of California or its officers or agents shall not be responsible for the accuracy or completeness of scanned copies of this plan sheet.

REGISTERED PROFESSIONAL ENGINEER Jack Wheeler No. M 21648 Exp. 06-30-17 MECH STATE OF CALIFORNIA

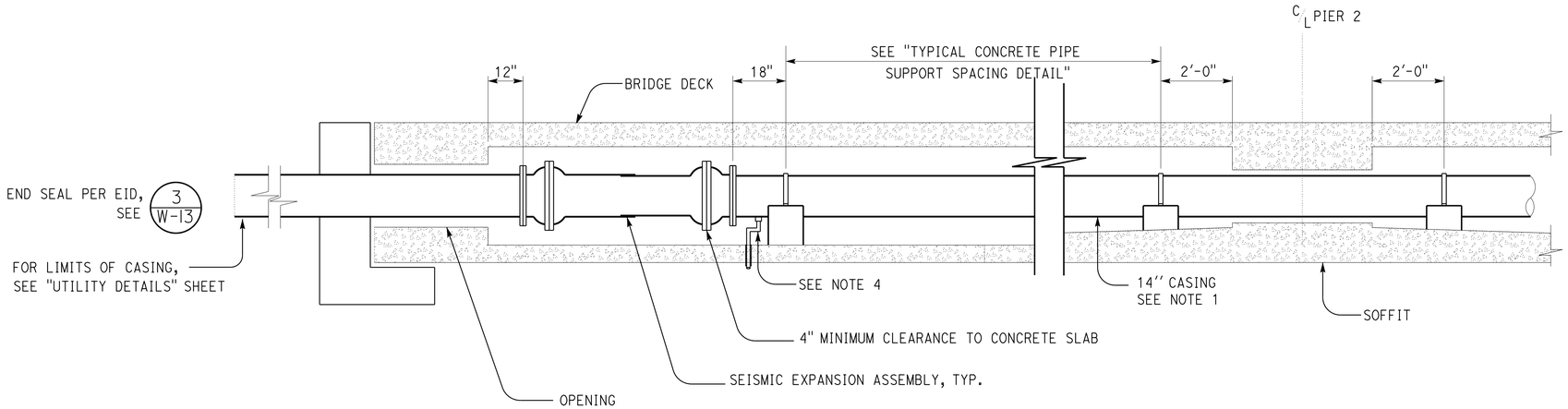

PIPE INSTALLATION AT ABUTMENT 1 AND PIER 2

N O T E S :

1. *Casing shall be installed parallel to bridge deck.*
2. *Pipe shall be tightly clamped at the pipe support nearest the Expansion Assembly. At all other pipe supports the pipe clamp shall be shimmed with steel washer plates to provide 1/4" clearance between casing and pipe clamp.*
3. *150 lb. welded fittings to be provided to match Expansion Assembly.*
4. *Install a 1" threaded butt-weld branch connection. Connect two threaded elbows and extend GSP 1" beyond soffit.*

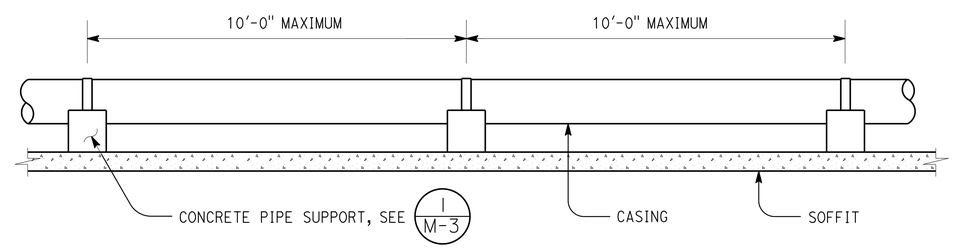

TYPICAL CONCRETE PIPE SUPPORT SPACING DETAIL

	BY	CHECKED
DESIGN	Alvin Kwan	Jack Wheeler
DETAILS	Alvin Kwan	Jack Wheeler
QUANTITIES		

STATE OF CALIFORNIA
DEPARTMENT OF TRANSPORTATION

DIVISION OF ENGINEERING SERVICES
ELECTRICAL-MECHANICAL-WATER AND WASTEWATER DESIGN

BRIDGE No. 25-0153
POST MILE 23.99

SOUTH FORK AMERICAN RIVER BRIDGE (REPLACE)

X
X
X

CASING INSTALLATION NO. 1

SHEET M-1

TAEMWW Imperial - CCSC Rev. 01/13

ORIGINAL SCALE IN INCHES FOR REDUCED PLANS 0 1 2 3

UNIT: 3615 CONTRACT No.: 03-0F310
PROJECT NUMBER & PHASE: 0300000078

DISREGARD PRINTS BEARING EARLIER REVISION DATES → 02/29/16 04/01/16

REVISION DATES (PRELIMINARY STAGE ONLY)

SHEET 40 OF 42

08-JUL-2016 16:17

\\st03cadd\cadd\proj3\03\0f310\drafting\25-0021-z-m11.dgn

Dist	COUNTY	ROUTE	POST MILES TOTAL PROJECT	SHEET No.	TOTAL SHEETS
03	ED	49	23.6 / 24.5	164	202

REGISTERED MECHANICAL ENGINEER 04-01-16 DATE

5-9-16
PLANS APPROVAL DATE

REGISTERED PROFESSIONAL ENGINEER Jack Wheeler No. M 21648 Exp. 06-30-17 MECH STATE OF CALIFORNIA

The State of California or its officers or agents shall not be responsible for the accuracy or completeness of scanned copies of this plan sheet.

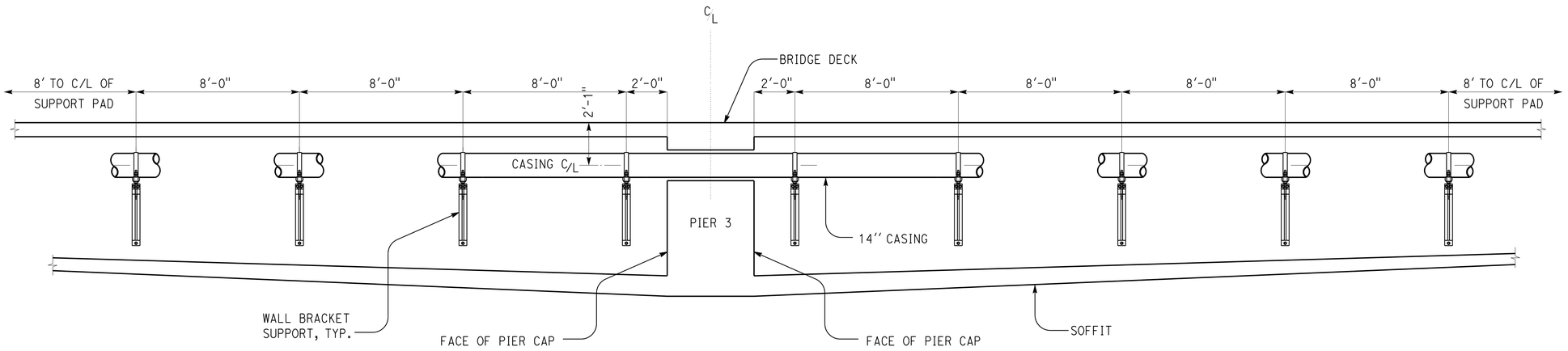

PIPE INSTALLATION AT PIER 3

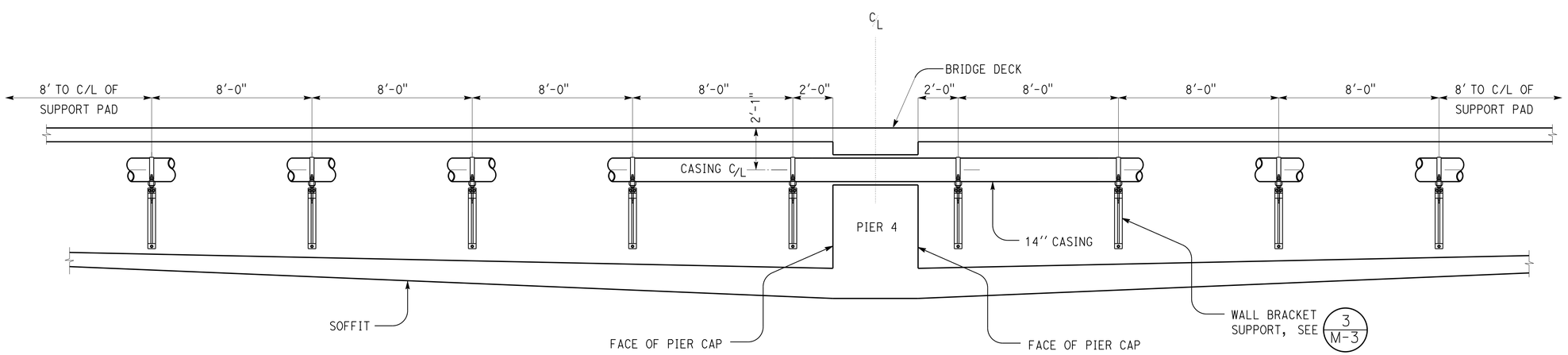

PIPE INSTALLATION AT PIER 4

DESIGN	BY Alvin Kwan	CHECKED Jack Wheeler	
DETAILS	BY Alvin Kwan	CHECKED Jack Wheeler	
QUANTITIES	BY	CHECKED	

STATE OF CALIFORNIA
DEPARTMENT OF TRANSPORTATION

DIVISION OF ENGINEERING SERVICES
ELECTRICAL-MECHANICAL-WATER AND WASTEWATER DESIGN

BRIDGE No. 25-0153
POST MILE 23.99

SOUTH FORK AMERICAN RIVER BRIDGE (REPLACE)

X
X
X
CASING INSTALLATION NO. 2

SHEET M-2

TAEMWW Imperial - CCSC Rev. 01/13

ORIGINAL SCALE IN INCHES FOR REDUCED PLANS 0 1 2 3

UNIT: 3615 CONTRACT No.: 03-0F310
PROJECT NUMBER & PHASE: 0300000078

DISREGARD PRINTS BEARING EARLIER REVISION DATES →

REVISION DATES (PRELIMINARY STAGE ONLY) 02/29/16 04/01/16

SHEET 41 OF 42

08-JUL-2016 16:17

\\st03cadd\cadd\proj3\03\0f310\drafting\25-0021-z-m2.dgn

Dist	COUNTY	ROUTE	POST MILES TOTAL PROJECT	SHEET No.	TOTAL SHEETS
03	ED	49	23.6 / 24.5	165	202

REGISTERED MECHANICAL ENGINEER 04-01-16 DATE

5-9-16
PLANS APPROVAL DATE

REGISTERED PROFESSIONAL ENGINEER Jack Wheeler No. M 21648 Exp. 06-30-17 MECH STATE OF CALIFORNIA

The State of California or its officers or agents shall not be responsible for the accuracy or completeness of scanned copies of this plan sheet.

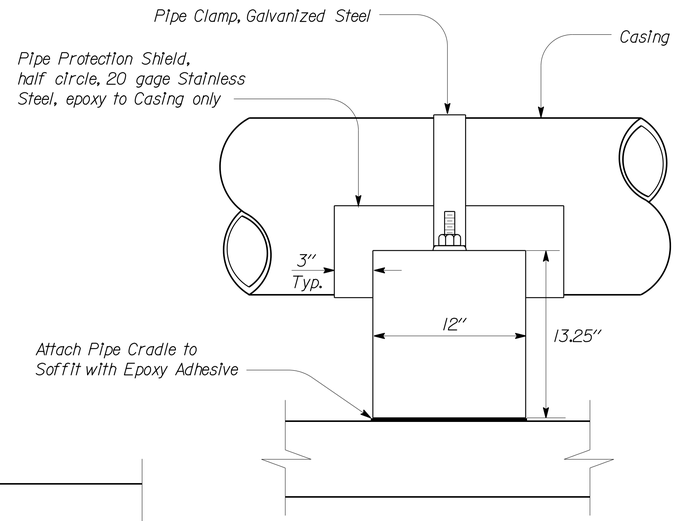

2 **ELEVATION**

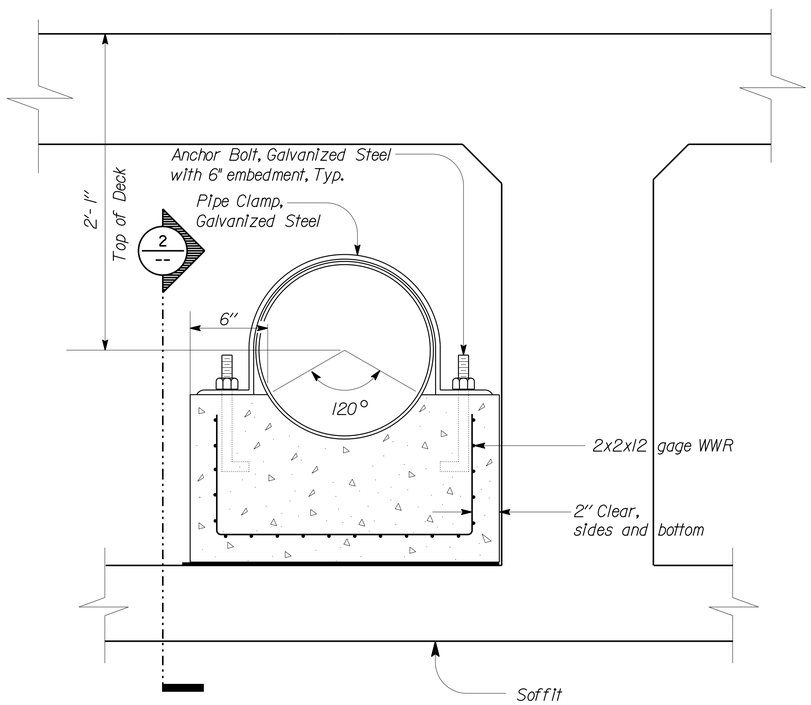

1 **CONCRETE PIPE SUPPORT**

Casing Size	Pipe Clamp	Anchor Bolt
14	3/8 X 2 1/2	3/4 X 10

4 **TABLE**

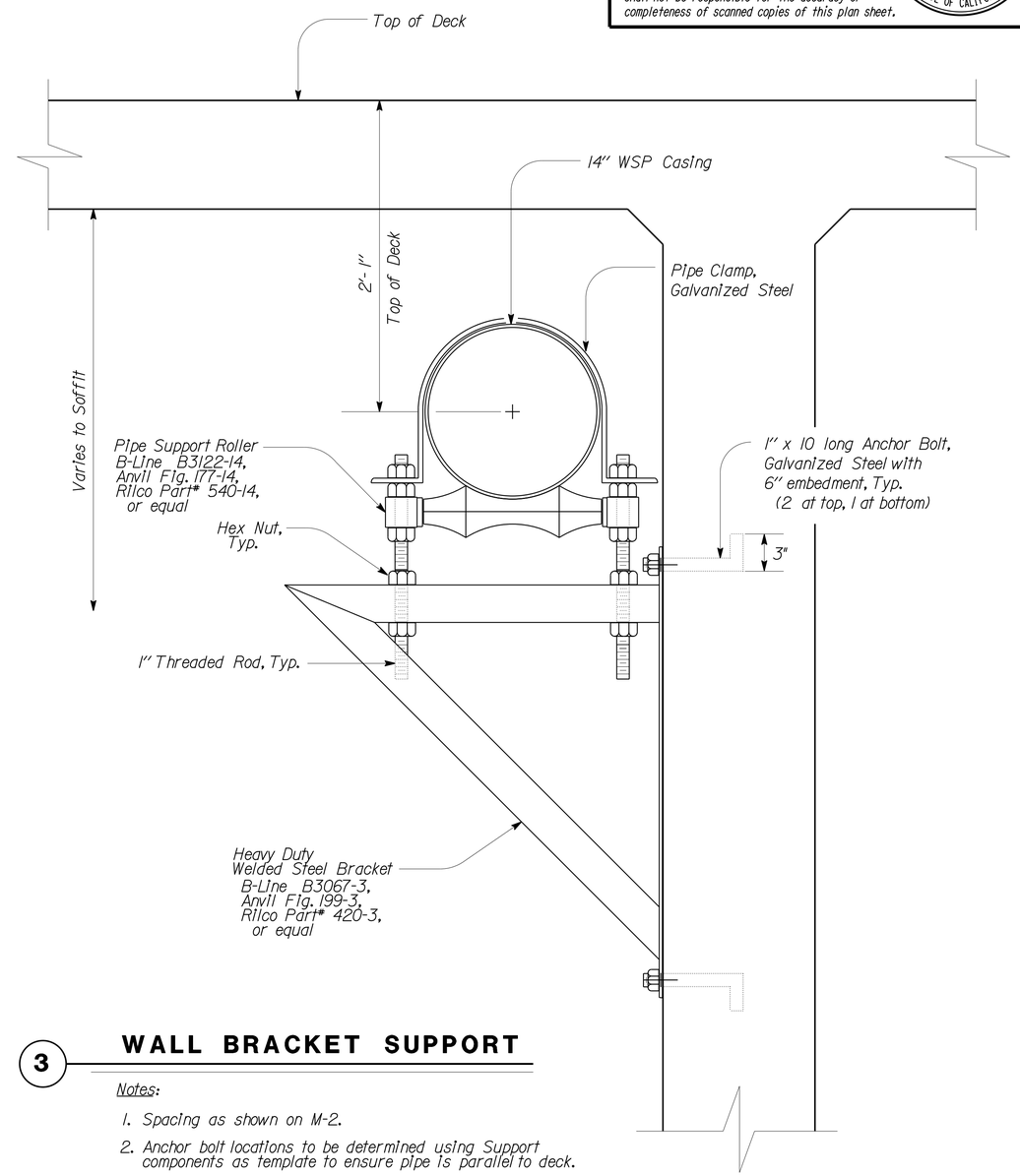

3 **WALL BRACKET SUPPORT**

Notes:

1. Spacing as shown on M-2.
2. Anchor bolt locations to be determined using Support components as template to ensure pipe is parallel to deck.

DESIGN	BY Alvin Kwan	CHECKED Jack Wheeler	
DETAILS	BY Alvin Kwan	CHECKED Jack Wheeler	
QUANTITIES	BY	CHECKED	

STATE OF CALIFORNIA
DEPARTMENT OF TRANSPORTATION

DIVISION OF ENGINEERING SERVICES
ELECTRICAL-MECHANICAL-WATER AND WASTEWATER DESIGN

BRIDGE No. 25-0153
POST MILE 23.99

SOUTH FORK AMERICAN RIVER BRIDGE (REPLACE)

X
X
X

CASING SUPPORT

SHEET M-3

TAEMWW Imperial - CCSC Rev. 01/13

ORIGINAL SCALE IN INCHES FOR REDUCED PLANS 0 1 2 3

UNIT: 3615 CONTRACT No.: 03-0F310
PROJECT NUMBER & PHASE: 0300000078

DISREGARD PRINTS BEARING EARLIER REVISION DATES → 02/29/16 04/01/16

REVISION DATES (PRELIMINARY STAGE ONLY)

SHEET 42 OF 42

08-JUL-2016 16:17

\\st03cadd\cadd\proj3\03\0f310\drafting\25-0021-z-m3.dgn

DIST	COUNTY	ROUTE	POST MILES TOTAL PROJECT	SHEET No.	TOTAL SHEETS
03	ED	49	23.6/24.5	166	202

REGISTERED CIVIL ENGINEER 03-30-16 DATE

5-9-16
PLANS APPROVAL DATE

REGISTERED PROFESSIONAL ENGINEER R. Wang No. C 52910 Exp. 12-31-16 CIVIL STATE OF CALIFORNIA

The State of California or its officers or agents shall not be responsible for the accuracy or completeness of electronic copies of this plan sheet.

CURVE DATA

No.	R	Δ	T	L
1	1046.01′	44°32′09″	428.31′	813.06′

NOTES:

1. Weep hole between soil nails, see "MISCELLANEOUS DETAILS" sheet.
2. Random rough stacked rock texture, see "MISCELLANEOUS DETAILS" sheet.
3. Cable railing (Mod) B11-47
4. For GENERAL NOTES, see "INDEX TO PLANS" sheet.
5. Existing utility pole. Approx. location 27.55± Lt "CCN1" line Sta 47+50.65±

LEGEND:

⇨ Indicates direction of traffic flow

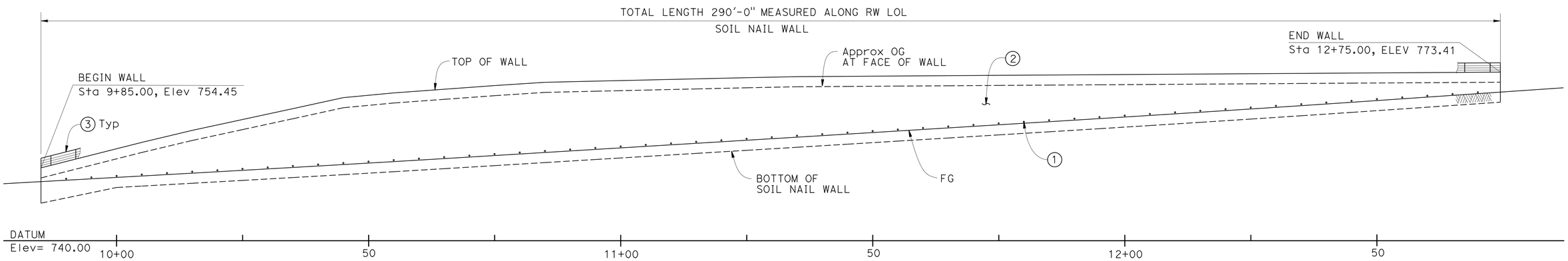

DEVELOPED ELEVATION

1" = 10′

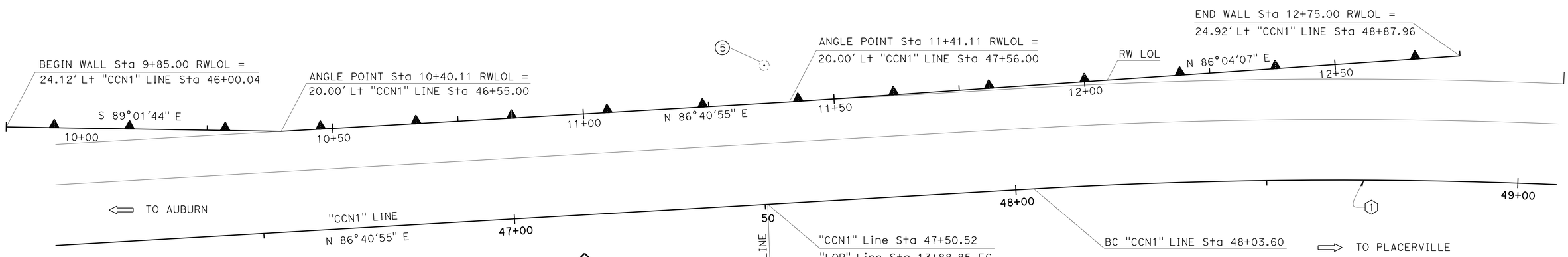

N

PLAN

1" = 10′

NOTE:
THE CONTRACTOR MUST VERIFY ALL CONTROLLING FIELD DIMENSIONS BEFORE ORDERING OR FABRICATING ANY MATERIAL.

FRANK WEI
DESIGN ENGINEER

	BY	CHECKED			
DESIGN	R. Wang	C. Lomicka	ALLOWABLE STRESS DESIGN		
DETAILS	H. Mahboobi	C. Lomicka	LAYOUT	R. Wang	C. Lomicka
QUANTITIES	R. Wang	C. Lomicka	SPECIFICATIONS	T. Chen	PLANS AND SPECS COMPARED T. Chen

ORIGINAL SCALE IN INCHES FOR REDUCED PLANS 0 1 2 3

STATE OF CALIFORNIA
DEPARTMENT OF TRANSPORTATION

DIVISION OF ENGINEERING SERVICES
STRUCTURE DESIGN
DESIGN BRANCH 19

BRIDGE NO. 25E0008
POST MILE 23.96

SOUTH FORK RETAINING WALL #2
GENERAL PLAN

UNIT: 3621
PROJECT NUMBER & PHASE: 0300000078 - 1 CONTRACT NO.: 03-0F3100

DISREGARD PRINTS BEARING EARLIER REVISION DATES → 12-18-15 03-29-16 03-22-16

SHEET	OF
1	9

USERNAME => s119538 DATE PLOTTED => 08-JUL-2016 TIME PLOTTED => 16:17

STRUCTURES DESIGN GENERAL PLAN SHEET (ENGLISH) (REV.09-01-10)

FILE => 03-0F310-a-gp.dgn

DIST	COUNTY	ROUTE	POST MILES TOTAL PROJECT	SHEET No.	TOTAL SHEETS
03	ED	49	23.6/24.5	167	202

REGISTERED CIVIL ENGINEER 03-30-16 DATE

5-9-16
PLANS APPROVAL DATE

REGISTERED PROFESSIONAL ENGINEER R. Wang No. C 52910 Exp. 12-31-16 CIVIL STATE OF CALIFORNIA

The State of California or its officers or agents shall not be responsible for the accuracy or completeness of electronic copies of this plan sheet.

GENERAL NOTES:

Design Procedure: "Geotechnical Engineering Circular No. 7 - Soil Nail Walls" (FHWA 0-IF-03-017).

Flexure of Facing: "Building Code Requirements for Structural Concrete (ACI 318-08)".

Structural Shotcrete: f'c = 3,600 psi
fy = 65,000 psi (Plain Welded Wire Reinforcement)
fy = 60,000 psi (Waler Bar Reinforcement)

Structural Concrete: (Soil Nail Wall) f'c = 3,600 psi
fy = 60,000 psi

Concrete Anchors: fy = 50,000 psi
ft = 60,000 psi

Structural Steel: fy = 36,000 psi

Soil Nail: fy = 75,000 psi

Soil Design Parameters (Shear Zone):

Φ = 39° (Angle of Internal Friction)

c = 0 psi (Cohesion)

γ = 138 pcf (Unit Weight)

SYMBOLS:

f'c - concrete strength at 28 day

fy - yield strength of reinforcement or bearing plate

ft - tensile strength of headed stud

STANDARD PLANS DATED 2015

A3A	ABBREVIATIONS (SHEET 1 OF 3)
A3B	ABBREVIATIONS (SHEET 2 OF 3)
A3C	ABBREVIATIONS (SHEET 3 OF 3)
A10A	LEGEND LINES AND SYMBOLS (SHEET 1 OF 5)
A10B	LEGEND LINES AND SYMBOLS (SHEET 2 OF 5)
A10C	LEGEND LINES AND SYMBOLS (SHEET 3 OF 5)
A10D	LEGEND LINES AND SYMBOLS (SHEET 4 OF 5)
A10E	LEGEND LINES AND SYMBOLS (SHEET 5 OF 5)
A10F	LEGEND-SOIL (SHEET 1 OF 2)
A10G	LEGEND-SOIL (SHEET 2 OF 2)
A10H	LEGEND-ROCK
B3-5	RETAINING WALL DETAILS NO. 1
B3-6	RETAINING WALL DETAILS NO. 2
B11-47	CABLE RAILING

STANDARD PLAN SHEET NO.
DETAIL NO.

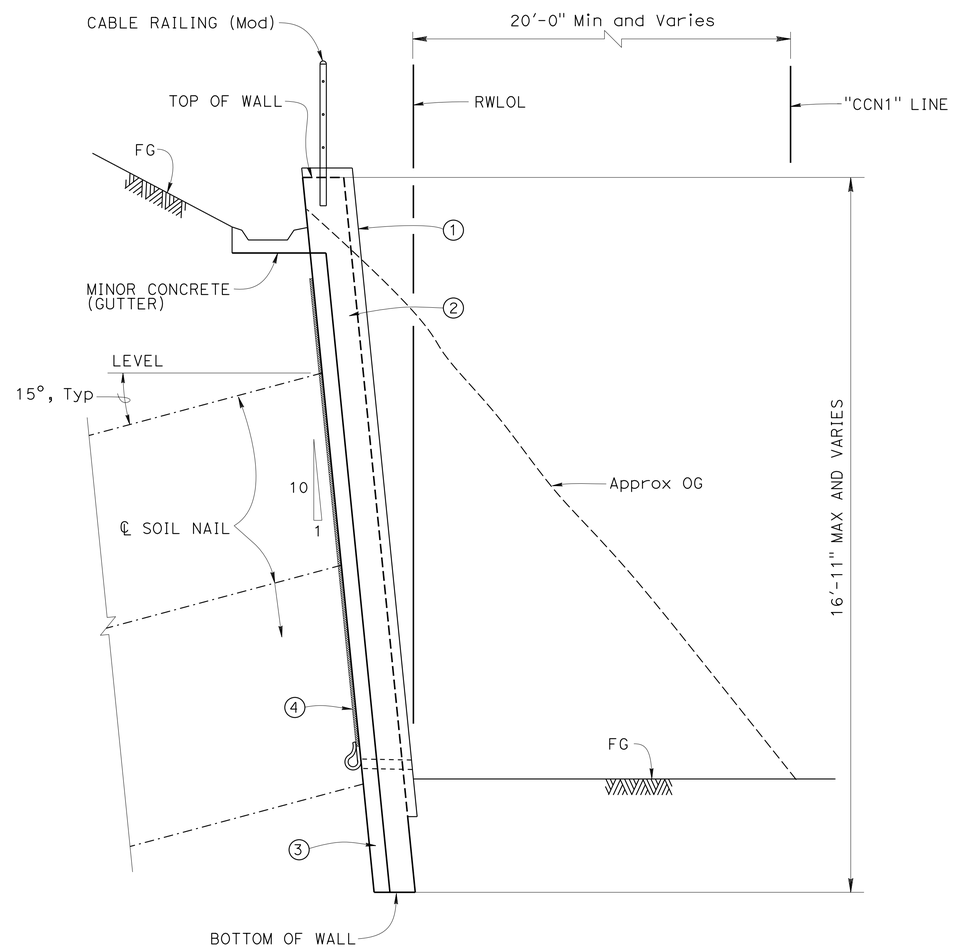

TYPICAL SECTION

½" = 1'-0"

INDEX TO PLANS

Sheet NO.	Title
1	GENERAL PLAN
2	INDEX TO PLANS
3	FOUNDATION PLAN
4	SOIL NAIL ELEVATION NO. 1
5	SOIL NAIL ELEVATION NO. 2
6	SOIL NAIL WALL DETAILS
7	SOIL NAIL ASSEMBLY
8	MISCELLANEOUS DETAILS
9	LOG OF TEST BORINGS

NOTES:

1. Random rough stacked rock texture.
2. Structural Concrete, Soil Nail Wall.
3. Structural Shotcrete.
4. Geocomposite Drainage System.

QUANTITIES

STRUCTURE EXCAVATION (SOIL NAIL WALL)	420	CY
STRUCTURE BACKFILL (SOIL NAIL WALL)	40	CY
SOIL NAIL	2,385	LF
STRUCTURAL CONCRETE, SOIL NAIL WALL	102	CY
RANDOM ROUGH STACKED ROCK TEXTURE	3,562	SQFT
BAR REINFORCING STEEL (SOIL NAIL WALL)	16,782	LB
STRUCTURAL SHOTCRETE	50	CY
PREPARE AND PAINT CONCRETE	3,562	SQFT
MINOR CONCRETE (GUTTER) (LF)	290	LF
CABLE RAILING (MODIFIED)	290	LF

NOTE:
THE CONTRACTOR MUST VERIFY ALL CONTROLLING FIELD DIMENSIONS BEFORE ORDERING OR FABRICATING ANY MATERIAL.

	BY	CHECKED
DESIGN	R. Wang	C. Lomicka
DETAILS	H. Mahboobi	C. Lomicka
QUANTITIES	R. Wang	C. Lomicka

STATE OF CALIFORNIA
DEPARTMENT OF TRANSPORTATION

DIVISION OF ENGINEERING SERVICES
STRUCTURE DESIGN
DESIGN BRANCH 19

BRIDGE NO. 25E0008
POST MILE 23.96

SOUTH FORK RETAINING WALL #2
INDEX TO PLANS

STRUCTURES DESIGN DETAIL SHEET (ENGLISH) (REV. 09-01-10)

ORIGINAL SCALE IN INCHES FOR REDUCED PLANS 0 1 2 3

UNIT: 3621
PROJECT NUMBER & PHASE: 0300000078 - 1 CONTRACT NO.: 03-0F3100

DISREGARD PRINTS BEARING EARLIER REVISION DATES

REVISION DATES: 12-11-15 03-29-16 03-30-16

SHEET 2 OF 9

USERNAME => s119538 DATE PLOTTED => 08-JUL-2016 TIME PLOTTED => 16:17

DIST	COUNTY	ROUTE	POST MILES TOTAL PROJECT	SHEET No.	TOTAL SHEETS
03	ED	49	23.6/24.5	168	202

REGISTERED CIVIL ENGINEER — DATE 03-30-16

5-9-16
PLANS APPROVAL DATE

REGISTERED PROFESSIONAL ENGINEER — R. Wang — No. C 52910 — Exp. 12-31-16 — CIVIL — STATE OF CALIFORNIA

The State of California or its officers or agents shall not be responsible for the accuracy or completeness of electronic copies of this plan sheet.

CURVE DATA

No. ⊛	R	Δ	T	L
1	1046.01	44°32′09″	428.31	813.06
2	1589.22	05°05′37″	70.69	141.28

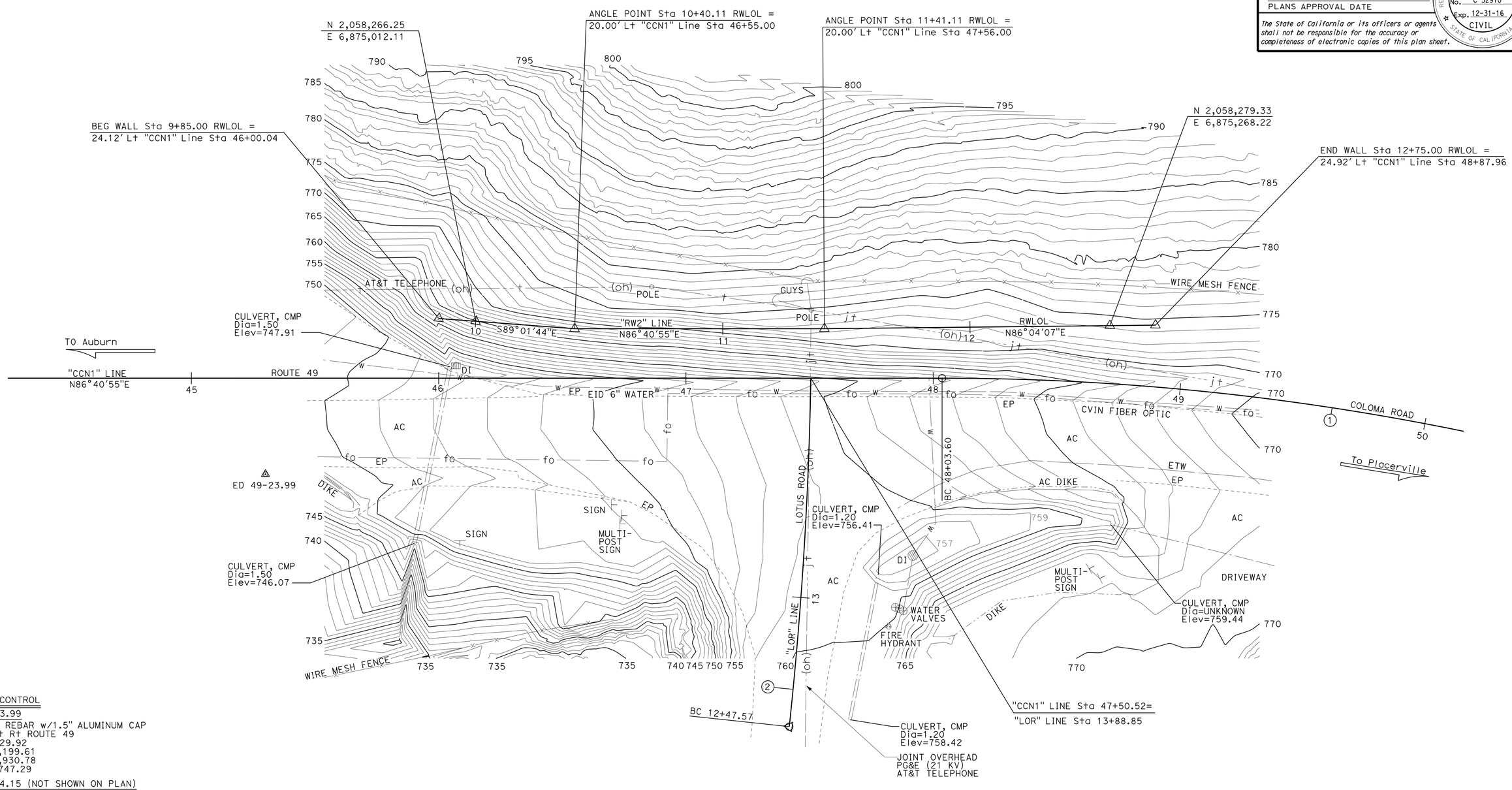

SURVEY CONTROL

ED 49-23.99
Fnd #6 REBAR w/1.5" ALUMINUM CAP
38.89 Ft Rt ROUTE 49
Sta 45+29.92
N 2,058,199.61
E 6,874,930.78
Elev = 747.29

ED 49-24.15 (NOT SHOWN ON PLAN)
Fnd #6 REBAR w/1.5" ALUMINUM CAP
52.25 Ft Rt ROUTE 49
Sta 37+37.74
N 2,058,140.42
E 6,874,140.70
Elev = 748.33

PRELIMINARY INVESTIGATION SECTION

SCALE	VERT.DATUM NGVD29	PHOTOGRAMMETRY AS OF: X			
1"=20′	HORZ.DATUM NAD83 (1991.35)	SURVEYED	BY DISTRICT	CHECKED	BY C. FASSETT 12/2015
ALIGNMENT TIES Dist TRAVERSE SHEET		DRAFTED	BY T. ZOLNIKOV 12/2015	CHECKED	BY L. LEW 12/2015

DESIGN	BY R. Wang	CHECKED C. Lomicka
DETAILS	BY H. Mahboobi	CHECKED C. Lomicka
QUANTITIES	BY R. Wang	CHECKED C. Lomicka

STATE OF CALIFORNIA
DEPARTMENT OF TRANSPORTATION

DIVISION OF ENGINEERING SERVICES
STRUCTURE DESIGN
DESIGN BRANCH 19

BRIDGE NO. 25E0008
POST MILE 23.96

SOUTH FORK RETAINING WALL #2
FOUNDATION PLAN

STRUCTURES FOUNDATION PLAN SHEET (ENGLISH) (REV. 09-01-10)

ORIGINAL SCALE IN INCHES FOR REDUCED PLANS 0 1 2 3

UNIT: 3646
PROJECT NUMBER & PHASE: 0300000078 1 CONTRACT NO.: 03-0F3101

SUBMITTAL DATE	REVISION DATES			SHEET	OF
	01-11-16	03-28-16	03-22-16	3	9

FILE => 03-0F310-e-fp101.dgn

USERNAME => s119538 DATE PLOTTED => 08-JUL-2016 TIME PLOTTED => 16:17

DIST	COUNTY	ROUTE	POST MILES TOTAL PROJECT	SHEET No.	TOTAL SHEETS
03	ED	49	23.6/24.5	169	202

REGISTERED CIVIL ENGINEER 03-30-16 DATE

5-9-16
PLANS APPROVAL DATE

REGISTERED PROFESSIONAL ENGINEER R. Wang No. C 52910 Exp. 12-31-16 CIVIL STATE OF CALIFORNIA

The State of California or its officers or agents shall not be responsible for the accuracy or completeness of electronic copies of this plan sheet.

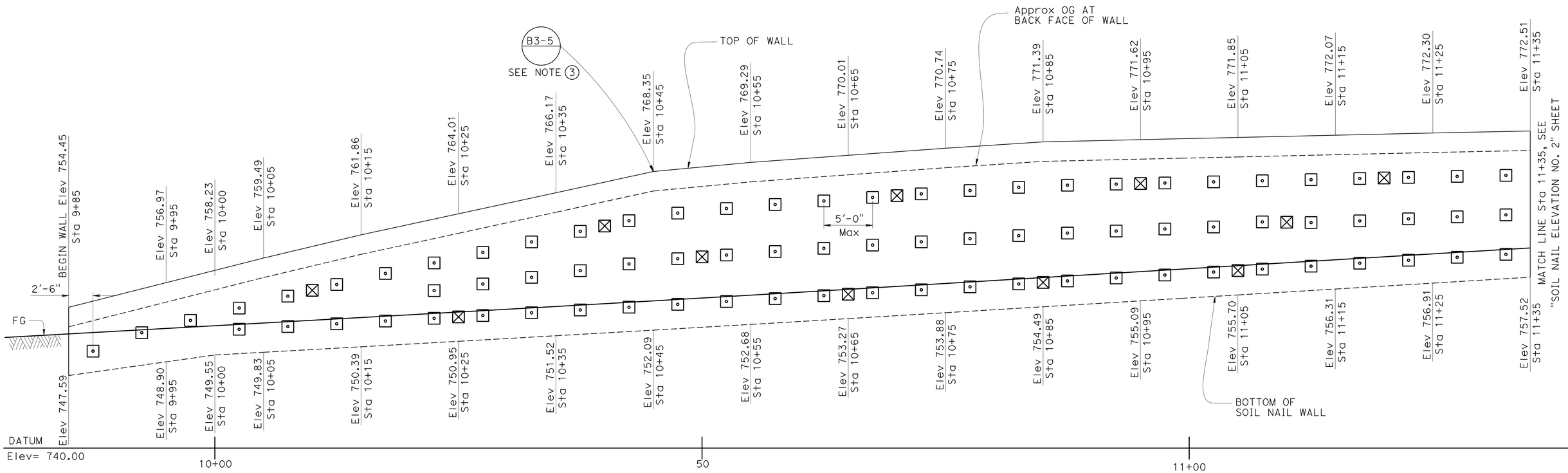

DEVELOPED ELEVATION

1" = 5'-0"

NOTE:
THE CONTRACTOR MUST VERIFY ALL CONTROLLING FIELD DIMENSIONS BEFORE ORDERING OR FABRICATING ANY MATERIAL.

LEGEND:

- ⊡ Soil nail
- ⊠ Proof test nail or as directed by the engineer.

NOTES:

1. Vertical spacing of Soil Nails shall be no more than 5'-0" and no less than 2'-0".
2. Soil nail spacing is measured along RWLOL.
3. 20'-0" Vertical curve at top of wall slope change.

	BY	CHECKED
DESIGN	R. Wang	C. Lomicka
DETAILS	H. Mahboobi	C. Lomicka
QUANTITIES	R. Wang	C. Lomicka

STATE OF CALIFORNIA
DEPARTMENT OF TRANSPORTATION

DIVISION OF ENGINEERING SERVICES
STRUCTURE DESIGN
DESIGN BRANCH 19

BRIDGE NO. 25E0008
POST MILE 23.96

SOUTH FORK RETAINING WALL #2
SOIL NAIL ELEVATION NO. 1

STRUCTURES DESIGN DETAIL SHEET (ENGLISH) (REV. 09-01-10)

ORIGINAL SCALE IN INCHES FOR REDUCED PLANS 0 1 2 3

UNIT: 3621
PROJECT NUMBER & PHASE: 0300000078 - 1 CONTRACT NO.: 03-0F3100

DISREGARD PRINTS BEARING EARLIER REVISION DATES

REVISION DATES: ~~12-11-15~~ ~~03-22-16~~ 03-28-16

SHEET 4 OF 9

USERNAME => s119538 DATE PLOTTED => 08-JUL-2016 TIME PLOTTED => 16:17

DIST	COUNTY	ROUTE	POST MILES TOTAL PROJECT	SHEET No.	TOTAL SHEETS
03	ED	49	23.6/24.5	170	202

REGISTERED CIVIL ENGINEER 03-30-16 DATE

5-9-16
PLANS APPROVAL DATE

REGISTERED PROFESSIONAL ENGINEER R. Wang No. C 52910 Exp. 12-31-16 CIVIL STATE OF CALIFORNIA

The State of California or its officers or agents shall not be responsible for the accuracy or completeness of electronic copies of this plan sheet.

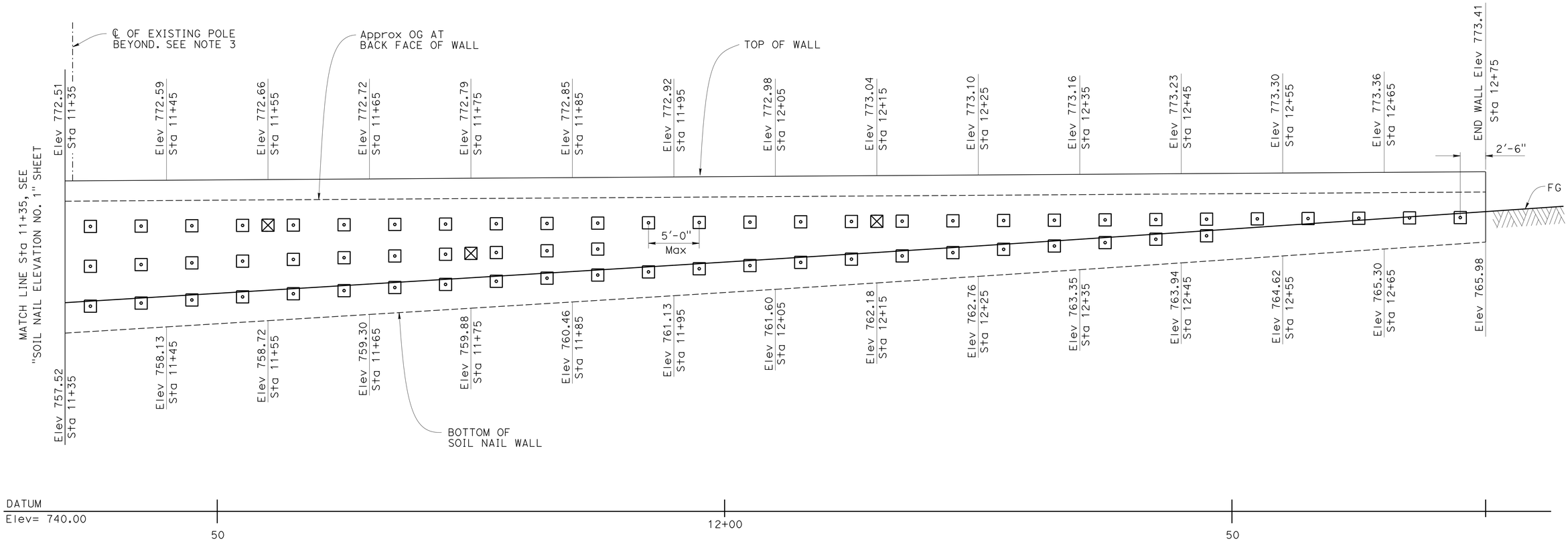

DEVELOPED ELEVATION

1" = 5'-0"

LEGEND:

- ⊡ Soil nail
- ⊠ Proof test nail or as directed by the engineer.

NOTES:

1. Vertical spacing of Soil Nails shall be no more than 5'-0" and no less than 2'-0".
2. Soil Nail spacing is measured along RWLOL.
3. Adjust the locations of soil nails to miss existing utility poles.

NOTE:
THE CONTRACTOR MUST VERIFY ALL CONTROLLING FIELD DIMENSIONS BEFORE ORDERING OR FABRICATING ANY MATERIAL.

	BY	CHECKED
DESIGN	R. Wang	C. Lomicka
DETAILS	H. Mahboobi	C. Lomicka
QUANTITIES	R. Wang	C. Lomicka

STATE OF CALIFORNIA
DEPARTMENT OF TRANSPORTATION

DIVISION OF ENGINEERING SERVICES
STRUCTURE DESIGN
DESIGN BRANCH 19

BRIDGE NO. 25E0008
POST MILE 23.96

SOUTH FORK RETAINING WALL #2
SOIL NAIL ELEVATION NO. 2

STRUCTURES DESIGN DETAIL SHEET (ENGLISH) (REV. 09-01-10)

ORIGINAL SCALE IN INCHES FOR REDUCED PLANS 0 1 2 3

UNIT: 3621
PROJECT NUMBER & PHASE: 0300000078 - 1 CONTRACT NO.: 03-0F3100

DISREGARD PRINTS BEARING EARLIER REVISION DATES

REVISION DATES: 12-14-15 03-22-16 03-28-16

SHEET 5 OF 9

USERNAME -> s119538 DATE PLOTTED -> 08-JUL-2016 TIME PLOTTED -> 16:17

DIST	COUNTY	ROUTE	POST MILES TOTAL PROJECT	SHEET No.	TOTAL SHEETS
03	ED	49	23.6/24.5	171	202

REGISTERED CIVIL ENGINEER 03-30-16 DATE

5-9-16
PLANS APPROVAL DATE

REGISTERED PROFESSIONAL ENGINEER R. Wang No. C 52910 Exp. 12-31-16 CIVIL STATE OF CALIFORNIA

The State of California or its officers or agents shall not be responsible for the accuracy or completeness of electronic copies of this plan sheet.

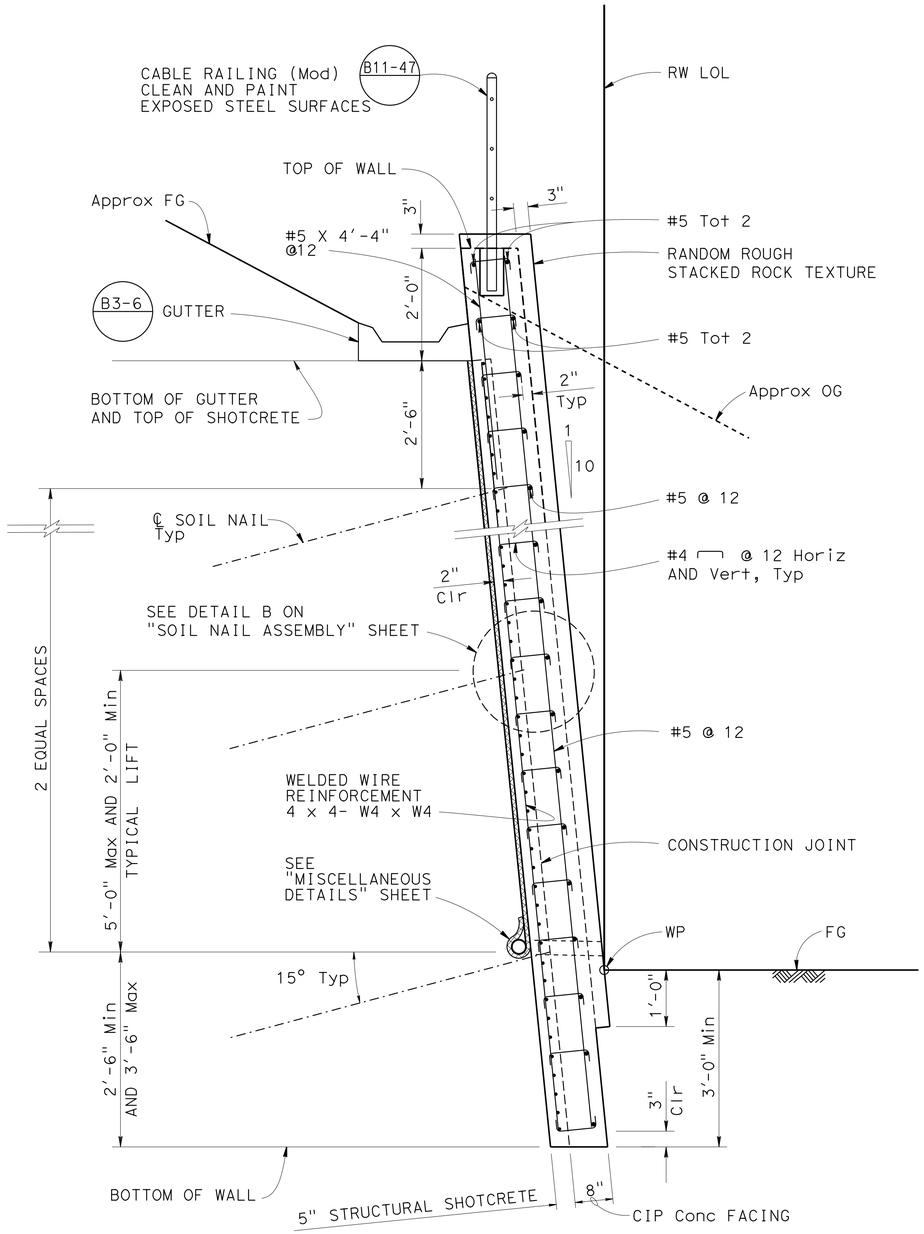

SOIL NAIL WALL TYPICAL SECTION

3/4" = 1'-0"

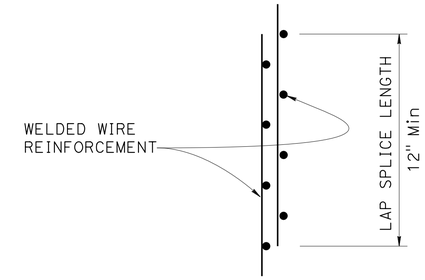

LAP SPLICE

NO SCALE

NOTES:

1. Wall height is the vertical distance from the top of shotcrete to the bottom of the wall. Top of shotcrete is at the bottom of gutter.
2. Q_D = Design pullout resistance.
3. The nail length shall be 15'-0", unless noted otherwise.
4. For soil nail locations, see "SOIL NAIL ELEVATION" sheets.
5. WP = working point

SOIL NAIL WALL DESIGN TABLE

ZONE	RWLOL STATION	WALL HEIGHT (H)	MINIMUM NAIL LENGTH (LE)	MAXIMUM NAIL SPACING VERTICAL	MAXIMUM NAIL SPACING HORIZONTAL	Q_D (lbs/ft)
1	9+85.00 TO 12+75.00	5' to 15'	See Note 3	5'-0"	5'-0"	2700

NOTE:
THE CONTRACTOR MUST VERIFY ALL CONTROLLING FIELD DIMENSIONS BEFORE ORDERING OR FABRICATING ANY MATERIAL.

	BY	CHECKED
DESIGN	R. Wang	C. Lomicka
DETAILS	H. Mahboobi	C. Lomicka
QUANTITIES	R. Wang	C. Lomicka

STATE OF CALIFORNIA
DEPARTMENT OF TRANSPORTATION

DIVISION OF ENGINEERING SERVICES
STRUCTURE DESIGN
DESIGN BRANCH 19

BRIDGE NO. 25E0008
POST MILE 23.96

SOUTH FORK RETAINING WALL #2
SOIL NAIL WALL DETAILS

STRUCTURES DESIGN DETAIL SHEET (ENGLISH) (REV. 09-01-10)

ORIGINAL SCALE IN INCHES FOR REDUCED PLANS 0 1 2 3

UNIT: 3621
PROJECT NUMBER & PHASE: 0300000078 - 1 CONTRACT NO.: 03-0F3100

DISREGARD PRINTS BEARING EARLIER REVISION DATES

REVISION DATES: 12-18-15 03-29-16 03-28-16

SHEET 6 OF 9

FILE => 03-0F310-g-snw_det_01.dgn

USERNAME => s173538 DATE PLOTTED => 08-JUL-2016 TIME PLOTTED => 16:17

DIST	COUNTY	ROUTE	POST MILES TOTAL PROJECT	SHEET No.	TOTAL SHEETS
03	ED	49	23.6/24.5	172	202

REGISTERED CIVIL ENGINEER 03-30-16 DATE

5-9-16
PLANS APPROVAL DATE

REGISTERED PROFESSIONAL ENGINEER R. Wang No. C 52910 Exp. 12-31-16 CIVIL STATE OF CALIFORNIA

The State of California or its officers or agents shall not be responsible for the accuracy or completeness of electronic copies of this plan sheet.

NOTES:

1. The test nail embedment length, LeT, shall be equal to 2/3 of the embedment length, Le, of adjacent production soil nail assemblies, but not less than 15'-0".
2. The total length of the test nail assembly equals the embedment length plus the length required for jacking equipment.
3. Inclination of proof test soil nail assembly to be the same as adjacent soil nail assembly.
4. Contractor to determine drilled hole diameter.
5. Finished grout surface to be normal to the bar.

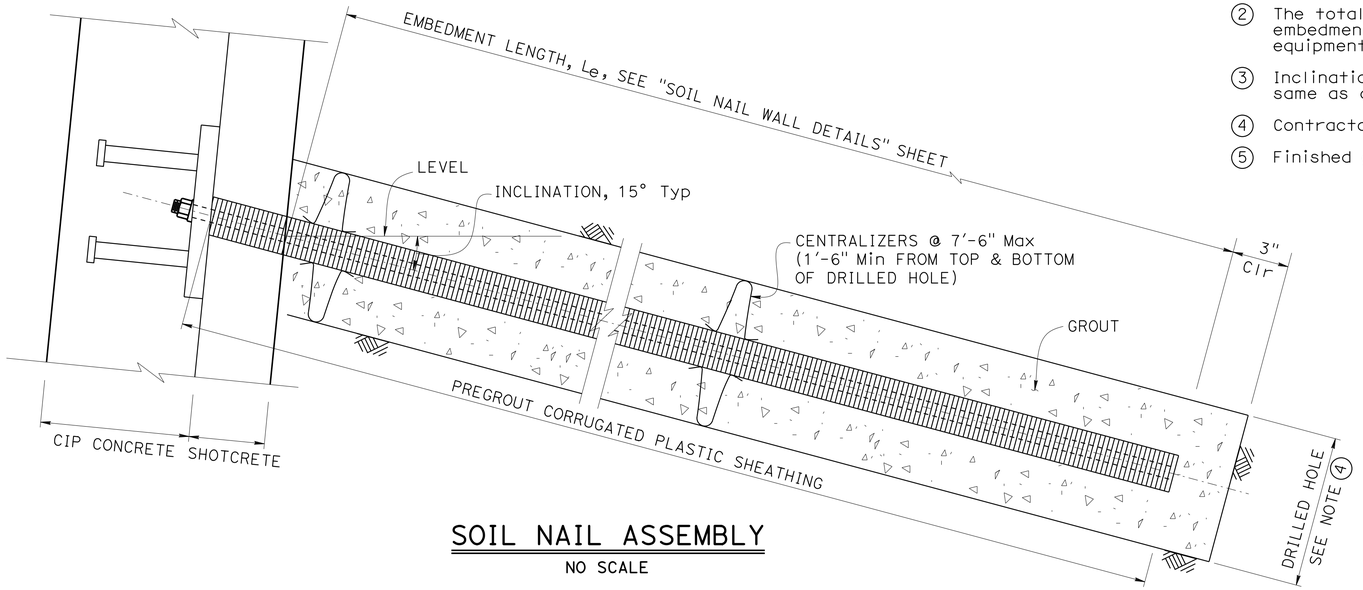

SOIL NAIL ASSEMBLY

NO SCALE

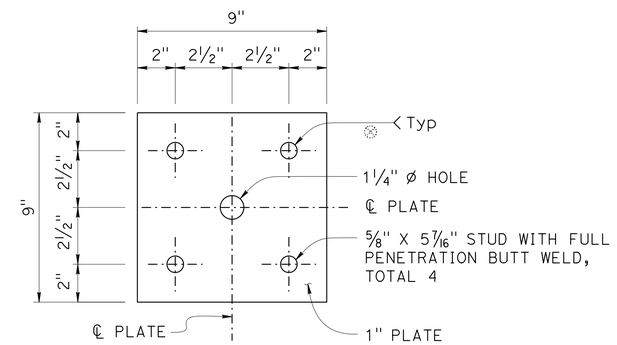

BEARING PLATE DETAIL

NO SCALE

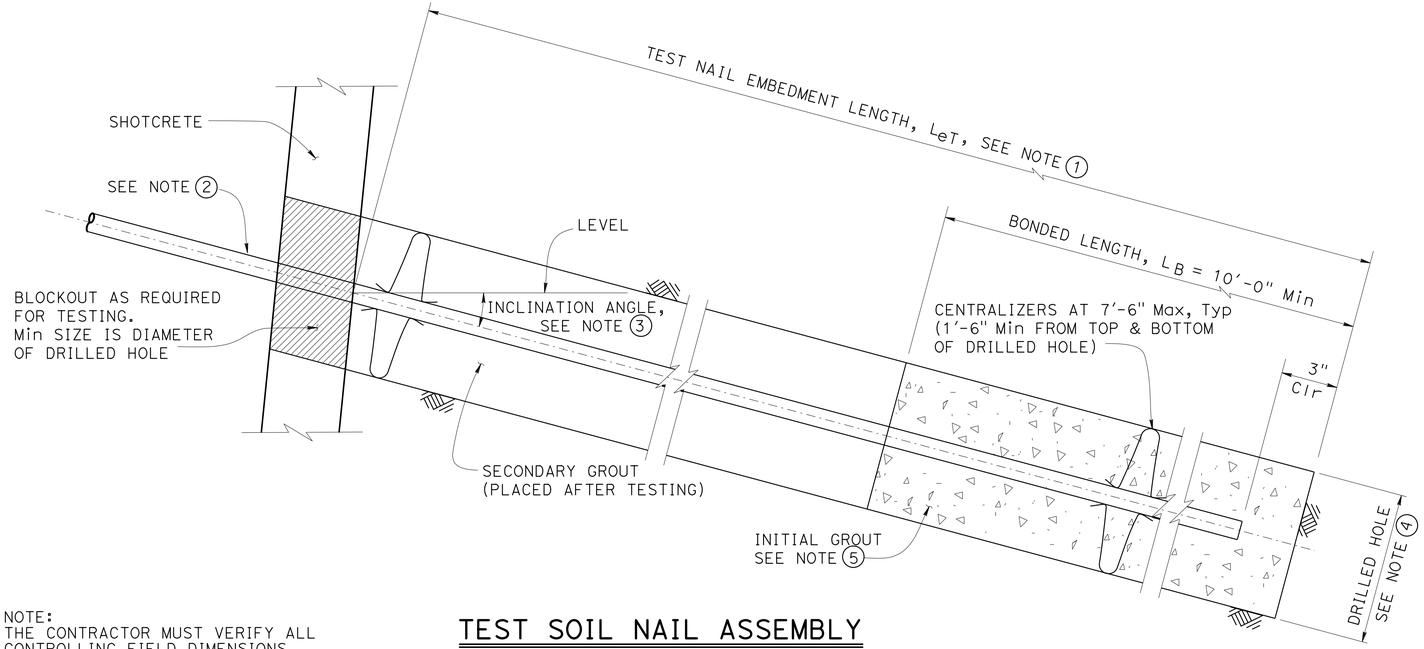

TEST SOIL NAIL ASSEMBLY

NO SCALE

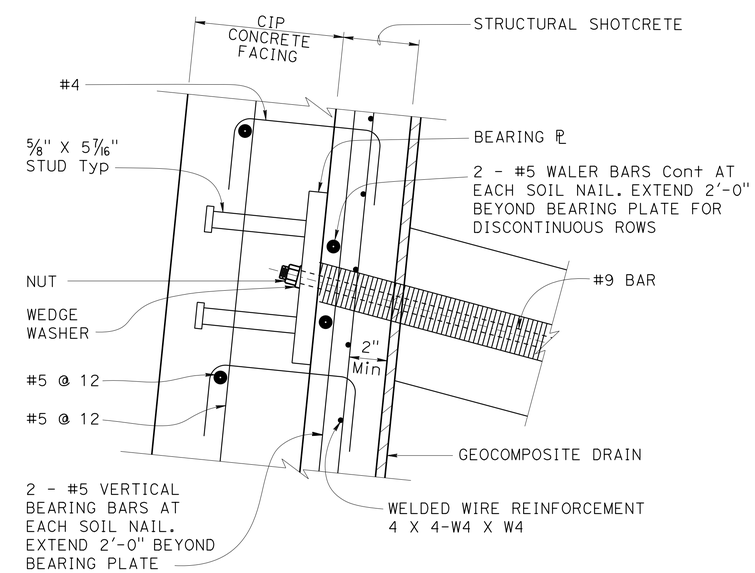

DETAIL B

NO SCALE

NOTE:
THE CONTRACTOR MUST VERIFY ALL CONTROLLING FIELD DIMENSIONS BEFORE ORDERING OR FABRICATING ANY MATERIAL.

	BY	CHECKED
DESIGN	R. Wang	C. Lomicka
DETAILS	H. Mahboobi	C. Lomicka
QUANTITIES	R. Wang	C. Lomicka

STATE OF CALIFORNIA
DEPARTMENT OF TRANSPORTATION

DIVISION OF ENGINEERING SERVICES
STRUCTURE DESIGN
DESIGN BRANCH 19

BRIDGE NO. 25E0008
POST MILE 23.96

SOUTH FORK RETAINING WALL #2

SOIL NAIL ASSEMBLY

STRUCTURES DESIGN DETAIL SHEET (ENGLISH) (REV. 09-01-10)

ORIGINAL SCALE IN INCHES FOR REDUCED PLANS 0 1 2 3

UNIT: 3621
PROJECT NUMBER & PHASE: 0300000078 - 1 CONTRACT NO.: 03-0F3100

DISREGARD PRINTS BEARING EARLIER REVISION DATES

REVISION DATES 12-16-15 03-22-16 03-28-16

SHEET 7 OF 9

FILE => 03-0F310-g-snw_det_02.dgn

USERNAME => s119538 DATE PLOTTED => 08-JUL-2016 TIME PLOTTED => 16:17

DIST	COUNTY	ROUTE	POST MILES TOTAL PROJECT	SHEET No.	TOTAL SHEETS
03	ED	49	23.6/24.5	173	202

REGISTERED CIVIL ENGINEER 03-30-16 DATE

5-9-16
PLANS APPROVAL DATE

REGISTERED PROFESSIONAL ENGINEER R. Wang No. C 52910 Exp. 12-31-16 CIVIL STATE OF CALIFORNIA

The State of California or its officers or agents shall not be responsible for the accuracy or completeness of electronic copies of this plan sheet.

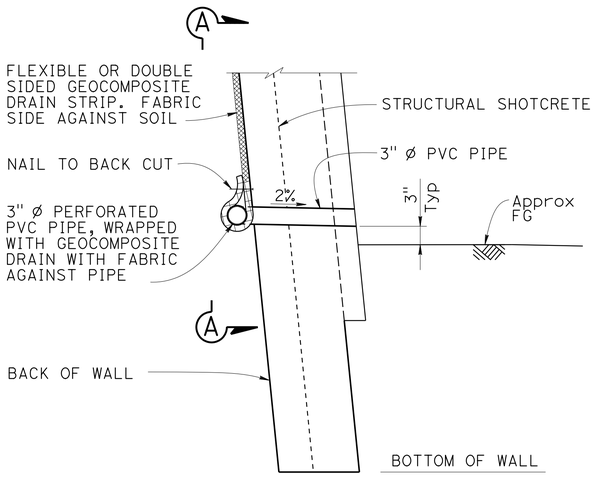

WALL DRAIN DETAIL AT WEEPHOLE

NO SCALE

LEGEND:

Structure excavation (soil nail wall)

Structure backfill (soil nail wall)

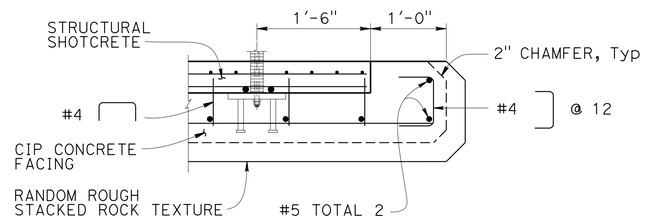

TYPICAL WALL END DETAIL

1" = 1'-0"

NOTE: See "SOIL NAIL ASSEMBLY" sheet for more details.

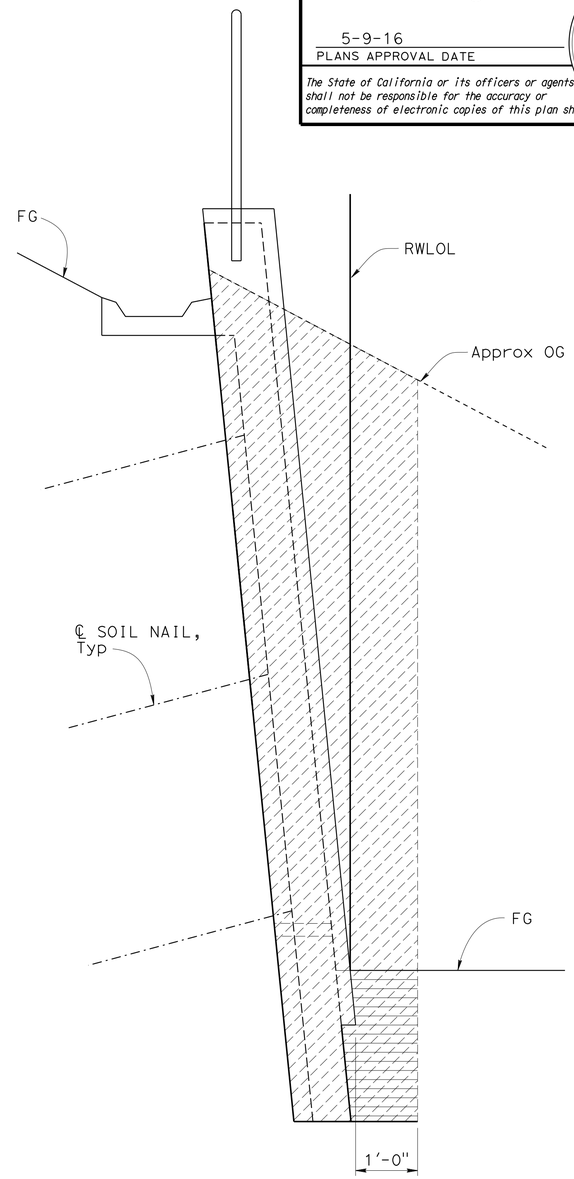

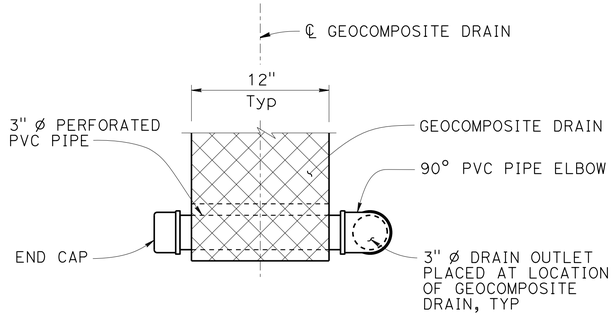

VIEW A-A

NO SCALE

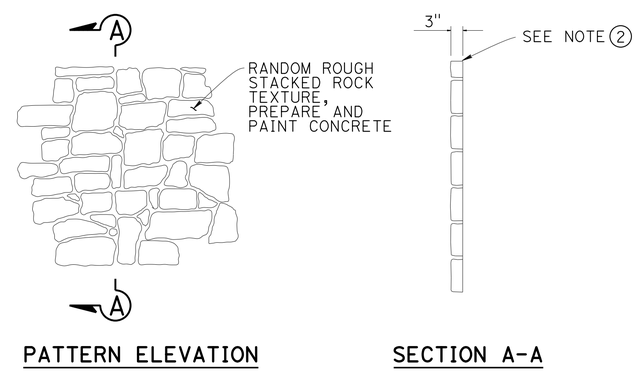

PATTERN ELEVATION

SECTION A-A

RANDOM ROUGH STACKED ROCK TEXTURE

NO SCALE

NOTES:

1. Geocomposite drains at 5'-0" Max spacing, centered between columns of soil nails.
2. Tool the top and ends of wall with grout lines matching formed joints on the face of wall to create a continuous appearance of rock formations.

NOTE:
THE CONTRACTOR MUST VERIFY ALL CONTROLLING FIELD DIMENSIONS BEFORE ORDERING OR FABRICATING ANY MATERIAL.

LIMITS OF PAYMENT FOR STRUCTURE EXCAVATION AND BACKFILL

NO SCALE

	BY	CHECKED
DESIGN	R. Wang	C. Lomicka
DETAILS	H. Mahboobi	C. Lomicka
QUANTITIES	R. Wang	C. Lomicka

STATE OF CALIFORNIA
DEPARTMENT OF TRANSPORTATION

DIVISION OF ENGINEERING SERVICES
STRUCTURE DESIGN
DESIGN BRANCH 19

BRIDGE NO. 25E0008
POST MILE 23.96

SOUTH FORK RETAINING WALL #2

MISCELLANEOUS DETAILS

STRUCTURES DESIGN DETAIL SHEET (ENGLISH) (REV. 09-01-10)

ORIGINAL SCALE IN INCHES FOR REDUCED PLANS 0 1 2 3

UNIT: 3621
PROJECT NUMBER & PHASE: 0300000078 - 1 CONTRACT NO.: 03-0F3100

DISREGARD PRINTS BEARING EARLIER REVISION DATES

REVISION DATES 12-16-15 03-22-16 03-28-16

SHEET 8 OF 9

FILE => 03-0F310-u-misc_det_01.dgn

USERNAME => s119538 DATE PLOTTED => 08-JUL-2016 TIME PLOTTED => 16:17

DIST	COUNTY	ROUTE	POST MILES TOTAL PROJECT	SHEET No	TOTAL SHEETS
03	ED	49	23.6/24.5	174	202

Chris Koepke 3-14-16
CERTIFIED ENGINEERING GEOLOGIST

5-9-16
PLANS APPROVAL DATE

PROFESSIONAL GEOLOGIST Chris W. Koepke No. 2207 Exp. 10-31-16 CERTIFIED ENGINEERING GEOLOGIST STATE OF CALIFORNIA

The State of California or its officers or agents shall not be responsible for the accuracy or completeness of electronic copies of this plan sheet.

This LOTB sheet was prepared in accordance with the Caltrans Soil & Rock Logging, Classification, & Presentation Manual (2010 Edition).

See 2015 Standard Plans A10F and A10G for Soil Legend, and A10H for Rock Legend.

BENCH MARK

BM Elev 747.29
Fnd Hub 52.25' Rt
Sta 45+29.92 Rte 49
Vert Datum: NGVD29
Horiz Datum: NAD 83

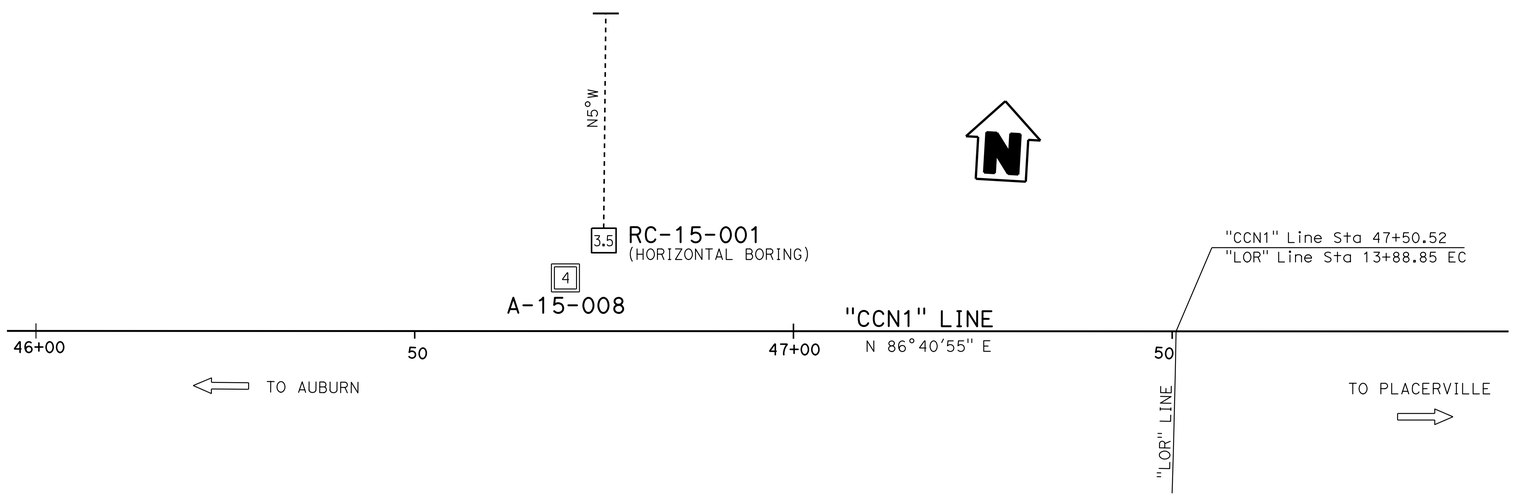

PLAN
1" = 10'

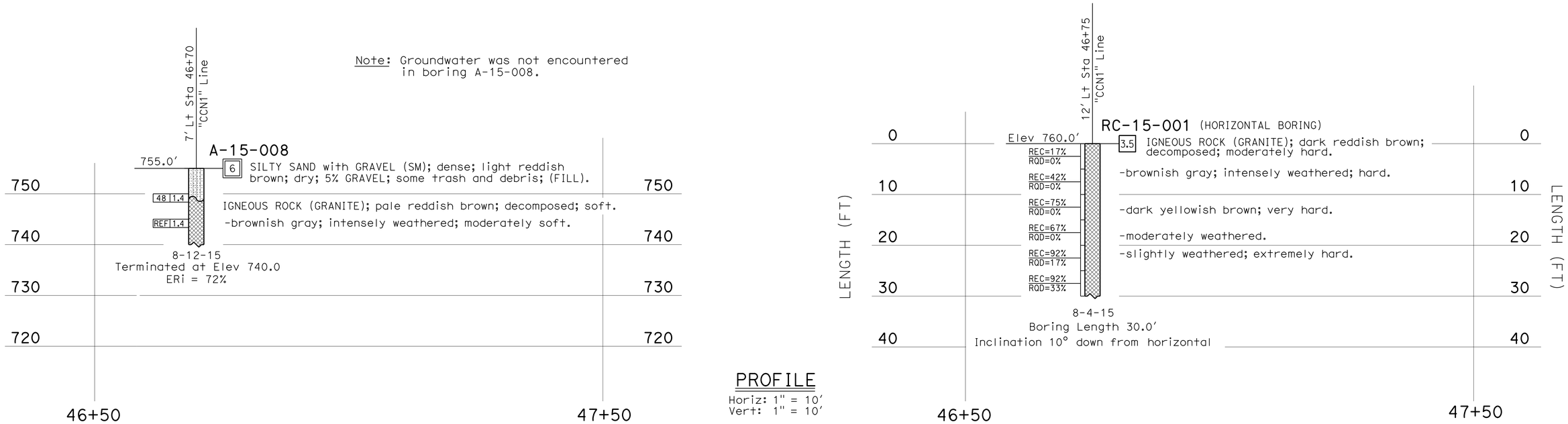

PROFILE
Horiz: 1" = 10'
Vert: 1" = 10'

ENGINEERING SERVICES	MATERIALS AND GEOTECHNICAL SERVICES	STATE OF CALIFORNIA DEPARTMENT OF TRANSPORTATION	DIVISION OF ENGINEERING SERVICES STRUCTURE DESIGN DESIGN BRANCH 19	BRIDGE NO. 25E0008 POST MILE 23.96	SOUTH FORK RETAINING WALL #2 LOG OF TEST BORINGS
FUNCTIONAL SUPERVISOR NAME: R. Mahallati	DRAWN BY: I. G-Remmen CHECKED BY: A. Wardak	FIELD INVESTIGATION BY: C. Koepke			

OGS CIVIL LOG OF TEST BORINGS SHEET

ORIGINAL SCALE IN INCHES FOR REDUCED PLANS 0 1 2 3

UNIT: 3650
PROJECT NUMBER & PHASE: 03000000781 CONTRACT NO.: 03-0F3104

DISREGARD PRINTS BEARING EARLIER REVISION DATES

REVISION DATES 03-11-16 | SHEET 9 OF 9

FILE => 03-0F310-z-01.dgn

USERNAME => s119538 DATE PLOTTED => 08-JUL-2016 TIME PLOTTED => 16:17