Dist	COUNTY	ROUTE	POST MILES TOTAL PROJECT	SHEET No.	TOTAL SHEETS
03	ED	49	23.6/24.5	6	202

REGISTERED CIVIL ENGINEER 5-9-16 DATE

5-9-16
PLANS APPROVAL DATE

REGISTERED PROFESSIONAL ENGINEER RONALD W. TOLLISON No. 67389 Exp. 12/31/16 CIVIL STATE OF CALIFORNIA

THE STATE OF CALIFORNIA OR ITS OFFICERS OR AGENTS SHALL NOT BE RESPONSIBLE FOR THE ACCURACY OR COMPLETENESS OF SCANNED COPIES OF THIS PLAN SHEET.

NOTES:

1. FOR ACCURATE RIGHT OF WAY DATA, CONTACT RIGHT OF WAY ENGINEERING AT THE DISTRICT OFFICE.
2. FOR DRIVEWAY DETAILS SEE CONSTRUCTION DETAILS SHEETS
3. FOR INTERSECTION DETAILS SEE CONSTRUCTION DETAILS SHEETS
4. FOR RETAINING WALL DETAILS SEE RETAINING WALL PLAN SHEETS
5. FOR MEDIAN ISLAND DETAILS SEE CONSTRUCTION DETAILS SHEETS

LEGEND:

- DRIVEWAY DESIGNATION
- CURB RAMP DESIGNATION
- DIRECTION OF TRAFFIC
- DIRECTION OF TRAFFIC (RIGHT TURN)
- C-------- CUT
- F------- FILL
- COLORED SHOULDER
- COLD PLANE ASPHALT CONCRETE PAVEMENT
- OBLITERATE SURFACING
- ROCK SLOPE PROTECTION

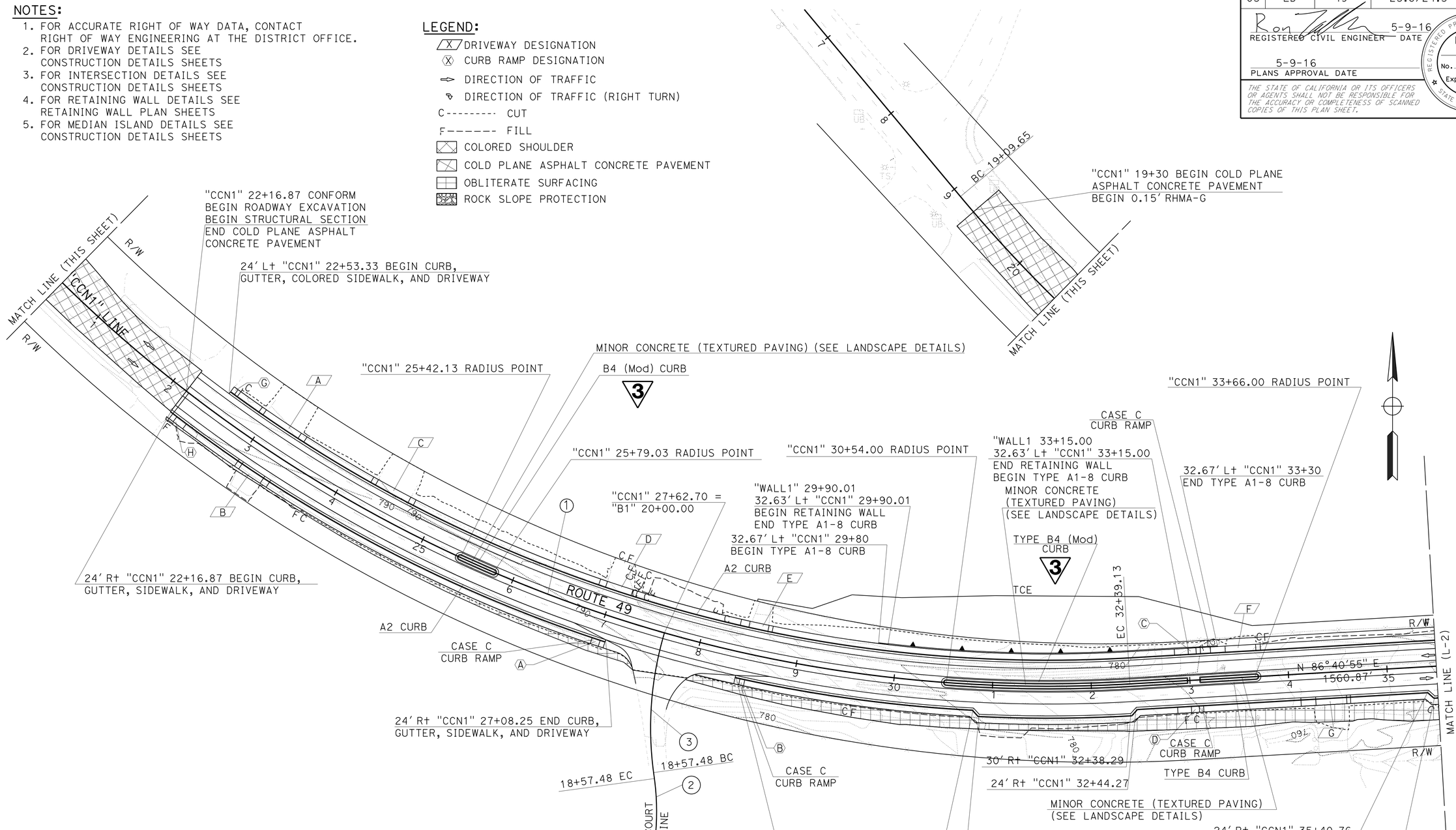

CURVE DATA

No. ⊕	R	Δ	T	L
1	1425.00'	53°27'18"	717.56'	1329.48'
2	250.00'	26°53'48"	59.78'	117.36'
3	337.53'	24°15'41"	72.55'	142.93'

3 REPLACED PER ADDENDUM No. 3 DATED AUGUST 30, 2016

LAYOUT

SCALE: 1" = 50'

L-1

STATE OF CALIFORNIA - DEPARTMENT OF TRANSPORTATION
Caltrans
DESIGN

FUNCTIONAL SUPERVISOR: NESAR FORMOLI
CALCULATED-DESIGNED BY: KEVIN CANFIELD
CHECKED BY: RON TOLLISON
REVISED BY
DATE REVISED

LAST REVISION 00-00-00
DATE PLOTTED => 25-AUG-2016
TIME PLOTTED => 15:46

Dist	COUNTY	ROUTE	POST MILES TOTAL PROJECT	SHEET No.	TOTAL SHEETS
03	ED	49	23.6/24.5	8	202

REGISTERED CIVIL ENGINEER 5-9-16 DATE

5-9-16
PLANS APPROVAL DATE

REGISTERED PROFESSIONAL ENGINEER RONALD W. TOLLISON No. 67389 Exp. 12/31/16 CIVIL STATE OF CALIFORNIA

THE STATE OF CALIFORNIA OR ITS OFFICERS OR AGENTS SHALL NOT BE RESPONSIBLE FOR THE ACCURACY OR COMPLETENESS OF SCANNED COPIES OF THIS PLAN SHEET.

3

NOTE:
FOR ACCURATE RIGHT OF WAY DATA, CONTACT RIGHT OF WAY ENGINEERING AT THE DISTRICT OFFICE.

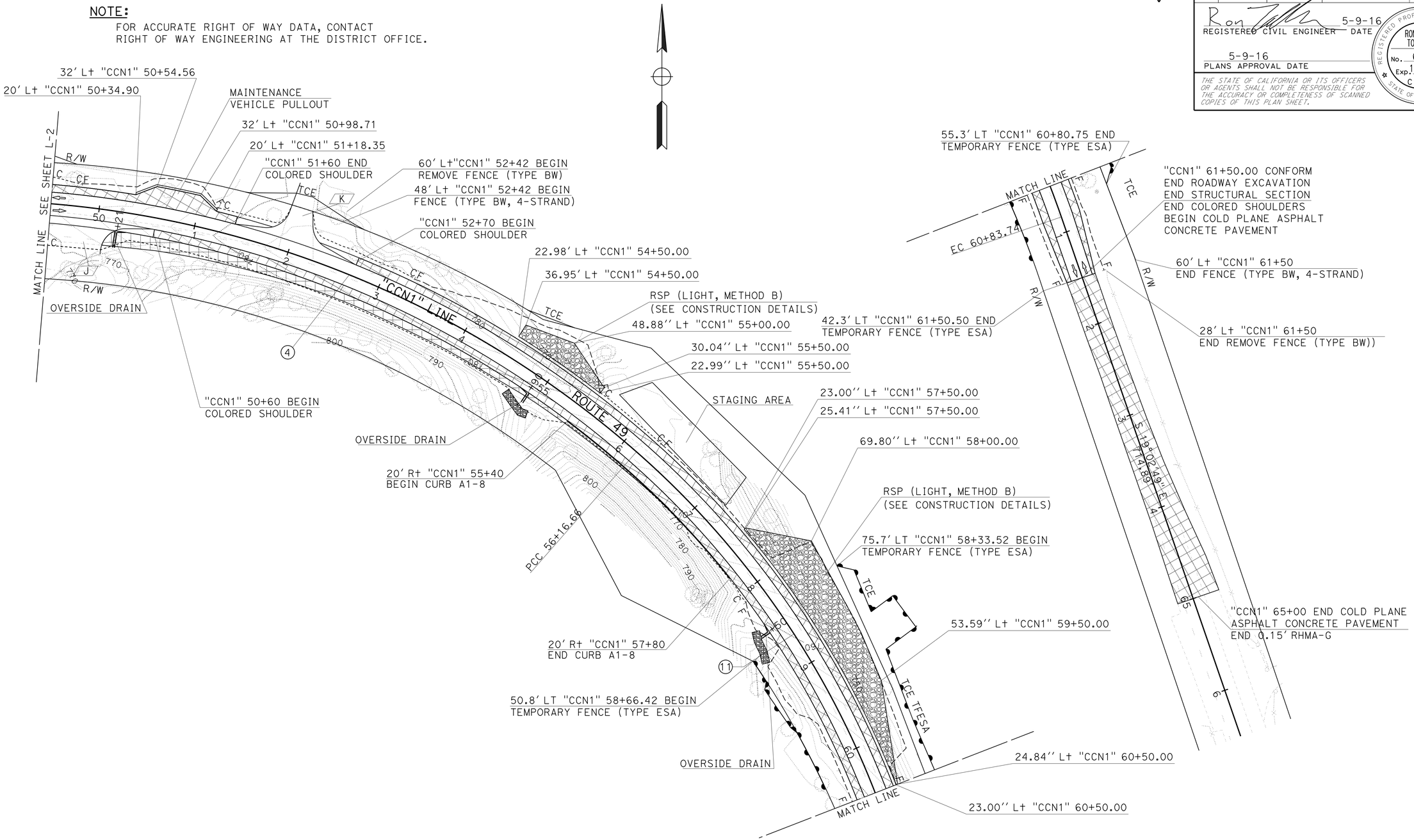

CURVE DATA

No. ⊕	R	Δ	T	L
4	1046.01'	44°44'12"	430.42'	816.66'
11	900.00'	29°44'07"	238.93'	467.08'

3 **REPLACED PER ADDENDUM No. 3 DATED AUGUST 30, 2016**

LAYOUT
SCALE: 1" = 50'

L-3

STATE OF CALIFORNIA - DEPARTMENT OF TRANSPORTATION
Caltrans
DESIGN
FUNCTIONAL SUPERVISOR: NESAR FORMOLI
CALCULATED-DESIGNED BY: KEVIN CANFIELD
CHECKED BY: RON TOLLISON
REVISED BY / DATE REVISED

LAST REVISION 00-00-00 | DATE PLOTTED => 25-AUG-2016 | TIME PLOTTED => 15:46

Dist	COUNTY	ROUTE	POST MILES TOTAL PROJECT	SHEET No.	TOTAL SHEETS
03	ED	49	23.6/24.5	9	202

Ron Tollison 5-9-16
REGISTERED CIVIL ENGINEER DATE

5-9-16
PLANS APPROVAL DATE

REGISTERED PROFESSIONAL ENGINEER
RONALD W. TOLLISON
No. 67389
Exp. 12/31/16
CIVIL
STATE OF CALIFORNIA

THE STATE OF CALIFORNIA OR ITS OFFICERS OR AGENTS SHALL NOT BE RESPONSIBLE FOR THE ACCURACY OR COMPLETENESS OF SCANNED COPIES OF THIS PLAN SHEET.

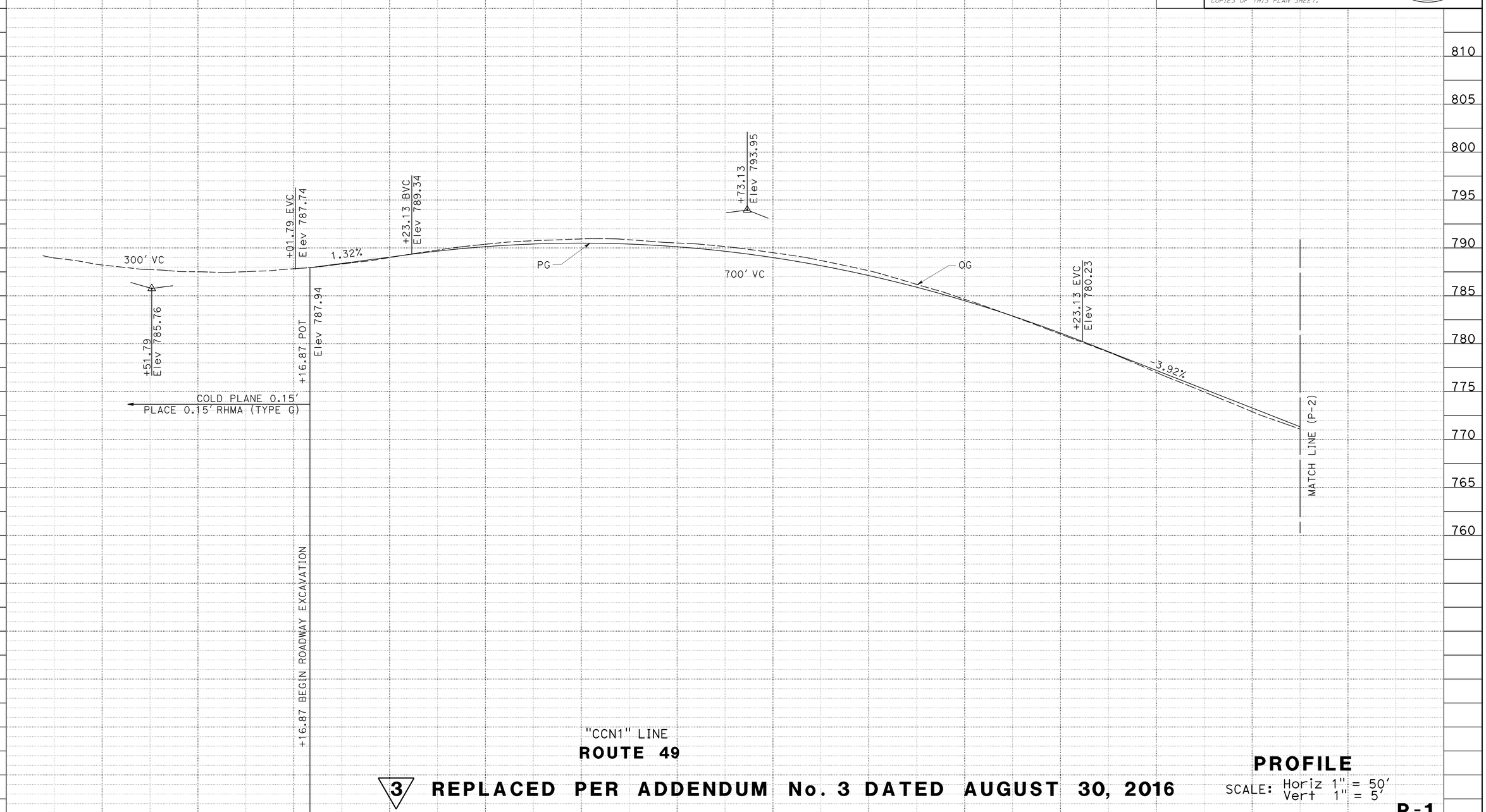

3 REPLACED PER ADDENDUM No. 3 DATED AUGUST 30, 2016

PROFILE

SCALE: Horiz 1" = 50'
Vert 1" = 5'

P-1

STATION		21+00	22+00	23+00	24+00	25+00	26+00	27+00	28+00	29+00	30+00	31+00	32+00	TOTAL
CY	Exc							6,789						6,789
	Emb							58						58

3

STATE OF CALIFORNIA - DEPARTMENT OF TRANSPORTATION
Caltrans
DESIGN

FUNCTIONAL SUPERVISOR: NESAR FORMOLI
CALCULATED-DESIGNED BY: KEVIN CANFIELD
CHECKED BY: KAMAL CHONKRIA
REVISED BY
DATE REVISED

LAST REVISION 00-00-00
DATE PLOTTED => 25-AUG-2016
TIME PLOTTED => 15:46

Dist	COUNTY	ROUTE	POST MILES TOTAL PROJECT	SHEET No.	TOTAL SHEETS
03	ED	49	23.6/24.5	10	202

REGISTERED CIVIL ENGINEER 5-9-16 DATE

5-9-16
PLANS APPROVAL DATE

REGISTERED PROFESSIONAL ENGINEER
RONALD W. TOLLISON
No. 67389
Exp. 12/31/16
CIVIL
STATE OF CALIFORNIA

THE STATE OF CALIFORNIA OR ITS OFFICERS OR AGENTS SHALL NOT BE RESPONSIBLE FOR THE ACCURACY OR COMPLETENESS OF SCANNED COPIES OF THIS PLAN SHEET.

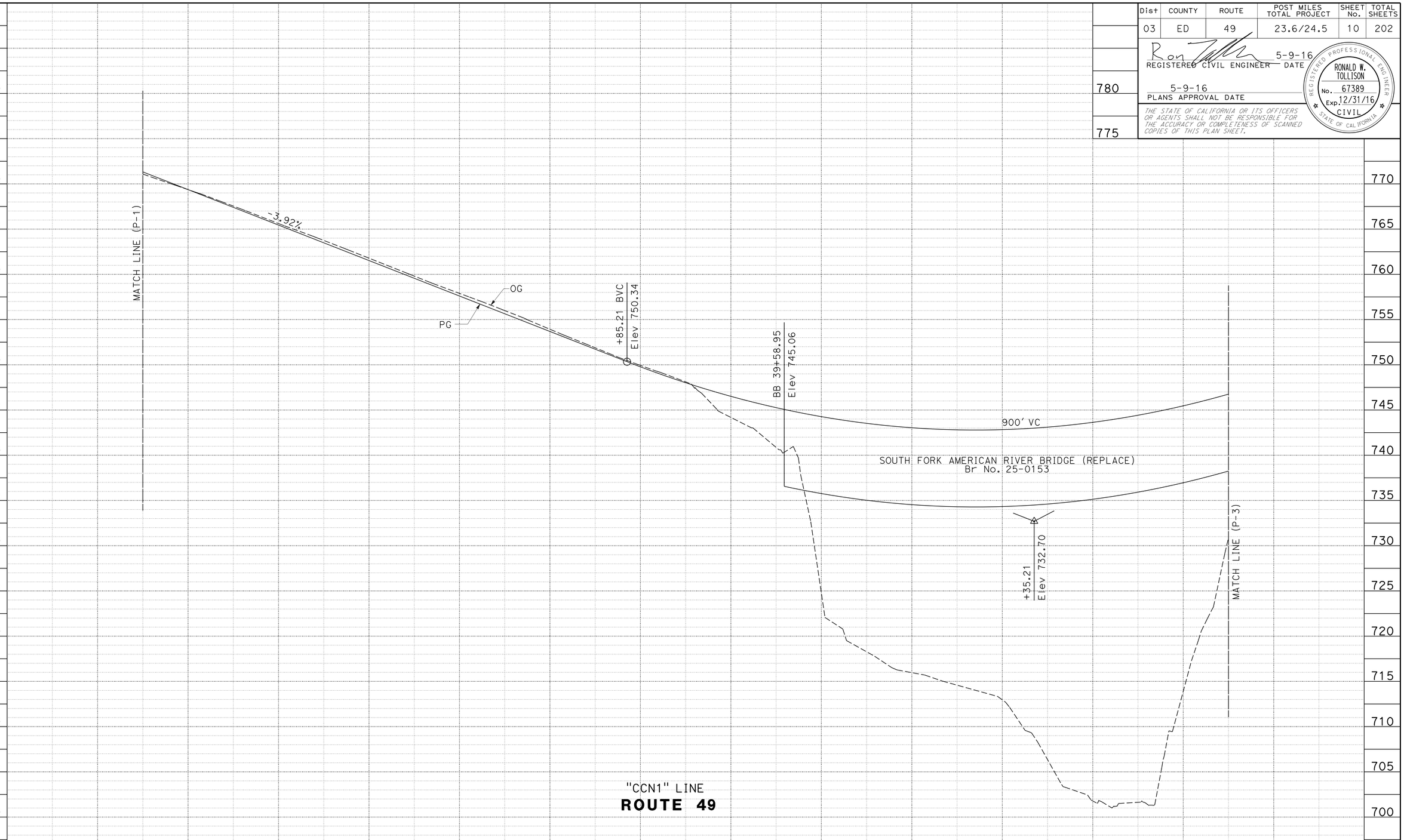

3 REPLACED PER ADDENDUM No. 3 DATED AUGUST 30, 2016

PROFILE

SCALE: Horiz 1" = 50'
Vert 1" = 5'

P-2

STATION		32+00	33+00	34+00	35+00	36+00	37+00	38+00	39+00	40+00	41+00	42+00	43+00	44+00	TOTAL
CY	Exc					3 3,132									3,132
	Emb					1,947									1,947

REVISED BY | DATE REVISED
KEVIN CANFIELD | KAMAL CHONKRIA
CALCULATED-DESIGNED BY | CHECKED BY
FUNCTIONAL SUPERVISOR: NESAR FORMOLI

STATE OF CALIFORNIA - DEPARTMENT OF TRANSPORTATION
Caltrans
DESIGN

LAST REVISION 00-00-00 | DATE PLOTTED => 25-AUG-2016 | TIME PLOTTED => 15:46

Dist	COUNTY	ROUTE	POST MILES TOTAL PROJECT	SHEET No.	TOTAL SHEETS
03	ED	49	23.6/24.5	11	202

REGISTERED CIVIL ENGINEER 5-9-16 DATE

5-9-16
PLANS APPROVAL DATE

REGISTERED PROFESSIONAL ENGINEER RONALD W. TOLLISON No. 67389 Exp. 12/31/16 CIVIL STATE OF CALIFORNIA

THE STATE OF CALIFORNIA OR ITS OFFICERS OR AGENTS SHALL NOT BE RESPONSIBLE FOR THE ACCURACY OR COMPLETENESS OF SCANNED COPIES OF THIS PLAN SHEET.

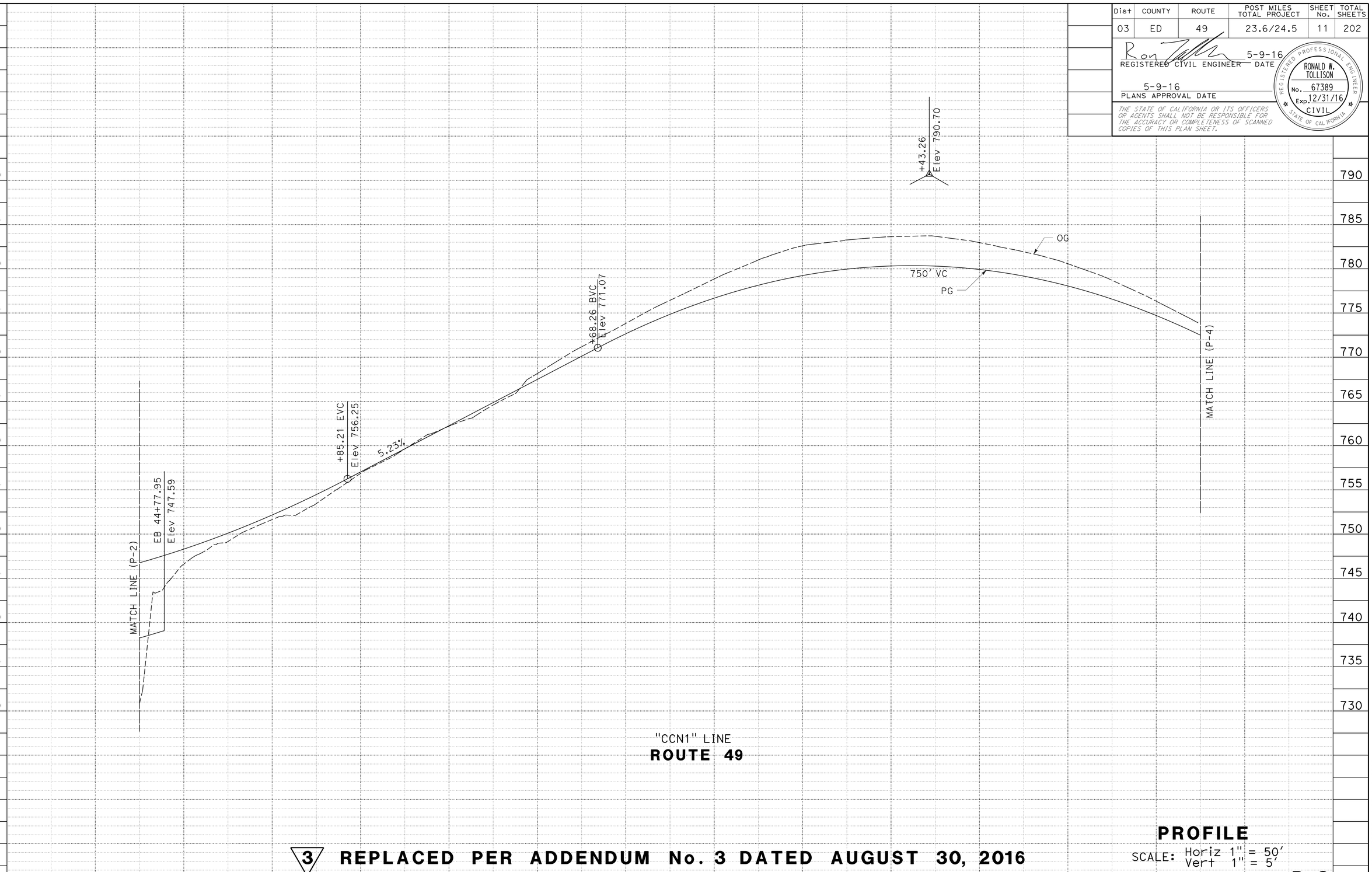

3 REPLACED PER ADDENDUM No. 3 DATED AUGUST 30, 2016

PROFILE

SCALE: Horiz 1" = 50'
Vert 1" = 5'

P-3

STATION		44+00	45+00	46+00	47+00	48+00	49+00	50+00	51+00	52+00	53+00	54+00	55+00	56+00	57+00	TOTAL
CY	Exc							3 8,301								8,301
	Emb								1,164							1,164

REVISED BY | DATE REVISED
KEVIN CANFIELD | KAMAL CHONKRIA
CALCULATED-DESIGNED BY | CHECKED BY
FUNCTIONAL SUPERVISOR: NESAR FORMOLI
STATE OF CALIFORNIA - DEPARTMENT OF TRANSPORTATION
Caltrans DESIGN

LAST REVISION 00-00-00 | DATE PLOTTED => 25-AUG-2016 | TIME PLOTTED => 15:46

Dist	COUNTY	ROUTE	POST MILES TOTAL PROJECT	SHEET No.	TOTAL SHEETS
03	ED	49	23.6/24.5	12	202

Ron Tollison 5-9-16
REGISTERED CIVIL ENGINEER DATE

5-9-16
PLANS APPROVAL DATE

REGISTERED PROFESSIONAL ENGINEER
RONALD W. TOLLISON
No. 67389
Exp. 12/31/16
CIVIL
STATE OF CALIFORNIA

THE STATE OF CALIFORNIA OR ITS OFFICERS OR AGENTS SHALL NOT BE RESPONSIBLE FOR THE ACCURACY OR COMPLETENESS OF SCANNED COPIES OF THIS PLAN SHEET.

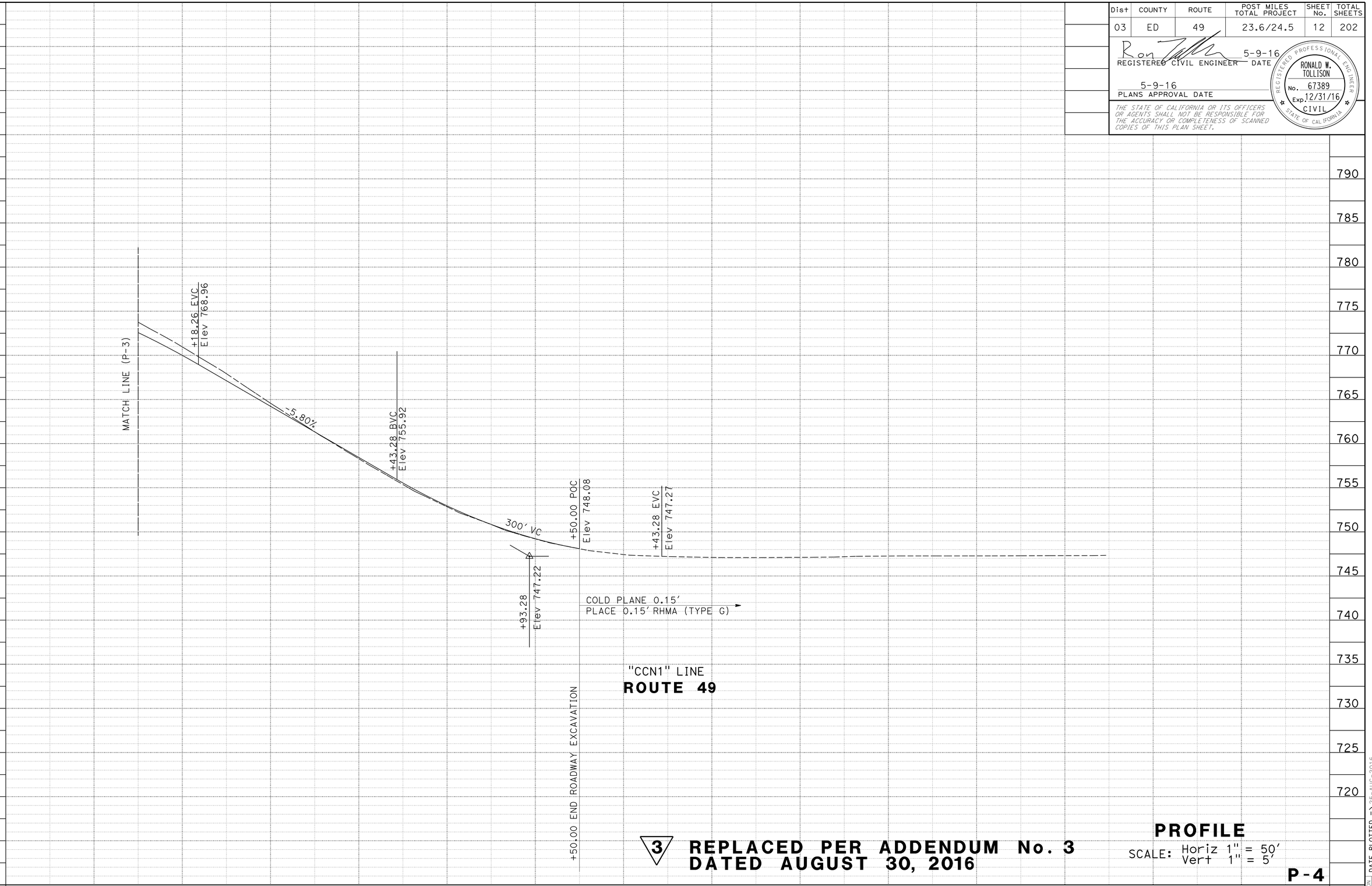

3 REPLACED PER ADDENDUM No. 3
DATED AUGUST 30, 2016

PROFILE

SCALE: Horiz 1" = 50'
Vert 1" = 5'

P-4

REVISED BY
DATE REVISED

KEVIN CANFIELD
KAMAL CHONKRIA

CALCULATED-DESIGNED BY
CHECKED BY

FUNCTIONAL SUPERVISOR
NESAR FORMOLI

STATE OF CALIFORNIA - DEPARTMENT OF TRANSPORTATION
DESIGN

LAST REVISION 00-00-00
DATE PLOTTED => 25-AUG-2016
TIME PLOTTED => 15:46

Dist	COUNTY	ROUTE	POST MILES TOTAL PROJECT	SHEET No.	TOTAL SHEETS
03	ED	49	23.6/24.5	16	202

REGISTERED CIVIL ENGINEER 5-9-16 DATE

5-9-16
PLANS APPROVAL DATE

REGISTERED PROFESSIONAL ENGINEER RONALD W. TOLLISON No. 67389 Exp. 12/31/16 CIVIL STATE OF CALIFORNIA

THE STATE OF CALIFORNIA OR ITS OFFICERS OR AGENTS SHALL NOT BE RESPONSIBLE FOR THE ACCURACY OR COMPLETENESS OF SCANNED COPIES OF THIS PLAN SHEET.

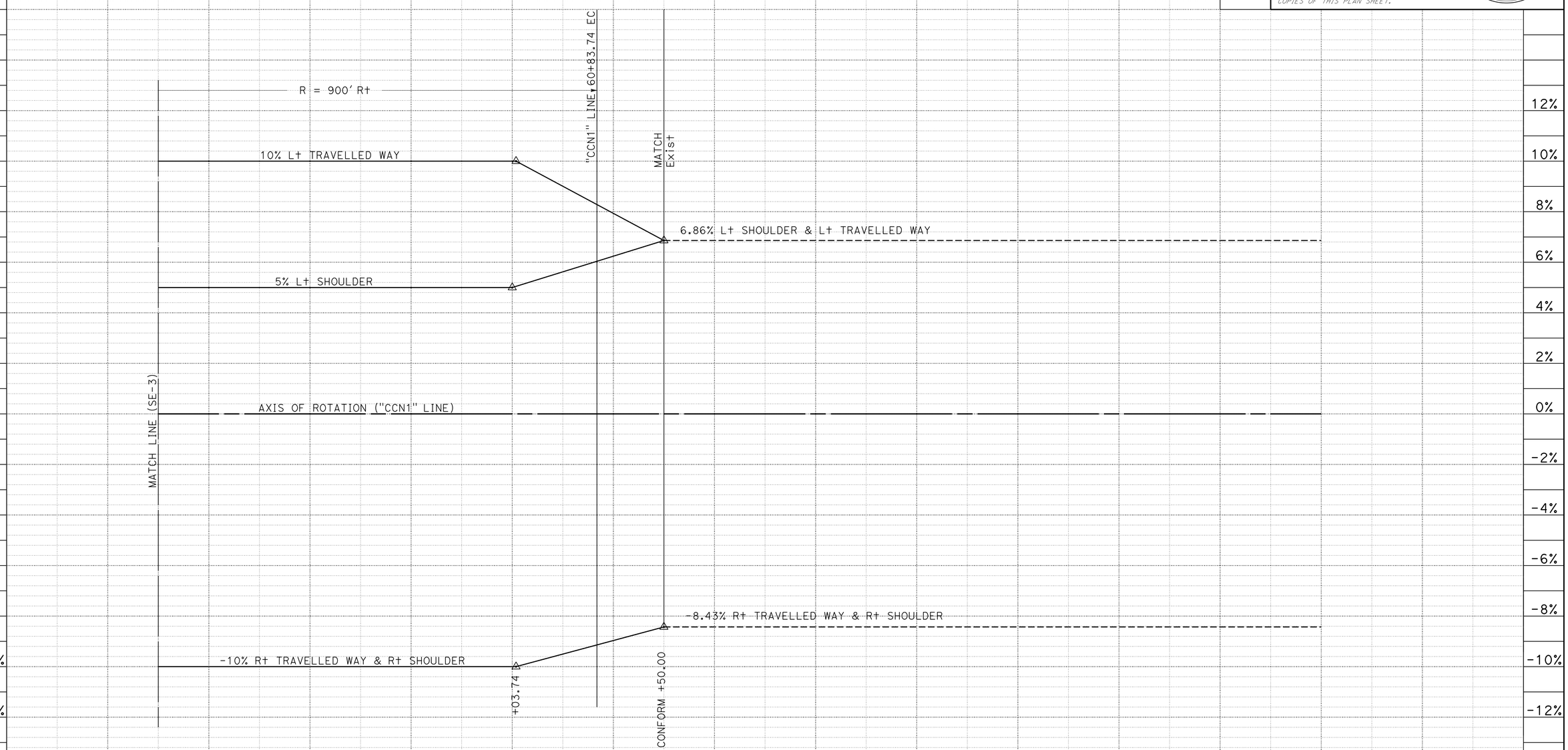

"CCN1" LINE
ROUTE 49

SUPERELEVATION DIAGRAM

SCALE: Horiz 1" = 50'

3 REPLACED PER ADDENDUM No. 3 DATED AUGUST 30, 2016

SE-4

STATION		57+00	58+00	59+00	60+00	61+00	62+00	63+00	64+00	65+00	TOTAL
CY	Exc										
	Emb										

STATE OF CALIFORNIA - DEPARTMENT OF TRANSPORTATION
Caltrans
DESIGN

FUNCTIONAL SUPERVISOR: NESAR FORMOLI
CALCULATED-DESIGNED BY: KEVIN CANFIELD
CHECKED BY: KAMAL CHONKRIA
REVISED BY
DATE REVISED: 09-15-15

LAST REVISION 00-00-00
DATE PLOTTED => 25-AUG-2016
TIME PLOTTED => 15:46

Dist	COUNTY	ROUTE	POST MILES TOTAL PROJECT	SHEET No.	TOTAL SHEETS
03	ED	49	23.6/24.5	17	202

REGISTERED CIVIL ENGINEER 5-9-16 DATE

5-9-16
PLANS APPROVAL DATE

REGISTERED PROFESSIONAL ENGINEER RONALD W. TOLLISON No. 67389 Exp. 12/31/16 CIVIL STATE OF CALIFORNIA

THE STATE OF CALIFORNIA OR ITS OFFICERS OR AGENTS SHALL NOT BE RESPONSIBLE FOR THE ACCURACY OR COMPLETENESS OF SCANNED COPIES OF THIS PLAN SHEET.

NOTE

RIGHT OF WAY NOT SHOWN FOR CLARITY, SEE LAYOUTS

ABBREVIATION:

RHMA (TYPE G) - RUBBERIZED HOT MIX ASPHALT (GAP GRADED)

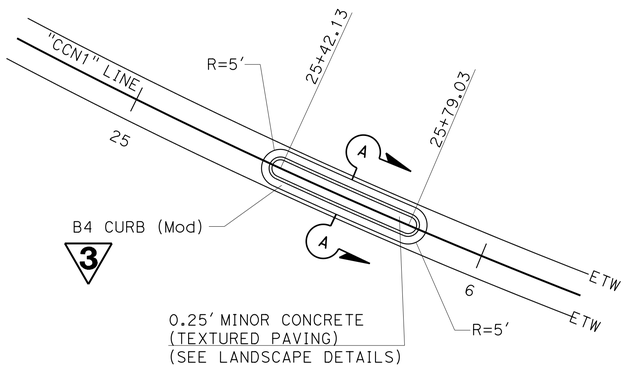

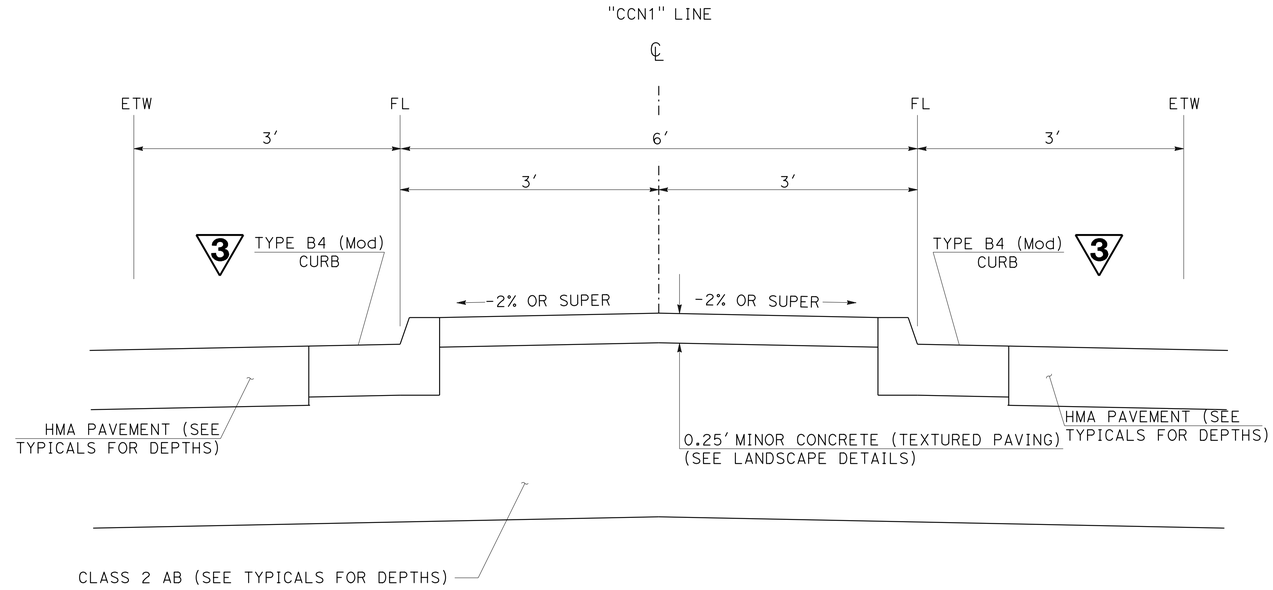

SECTION A-A

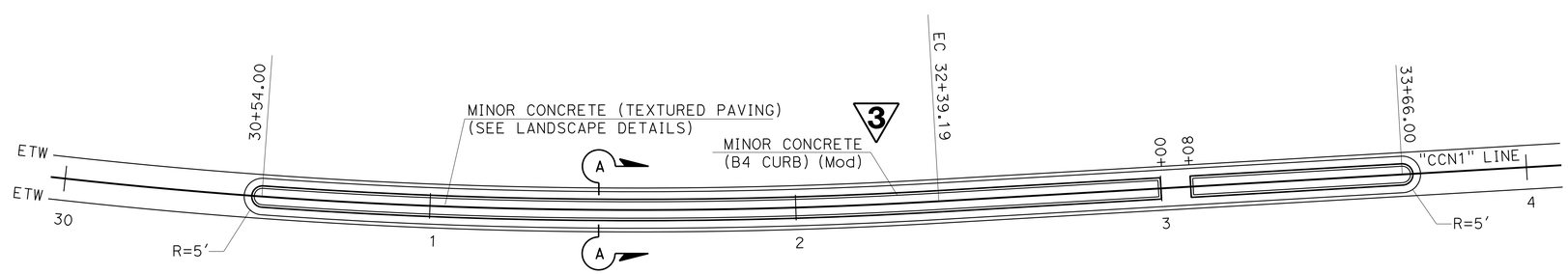

MEDIAN ISLAND

CONSTRUCTION DETAILS

NO SCALE

3 **REPLACED PER ADDENDUM No. 3 DATED AUGUST 30, 2016**

C-1

STATE OF CALIFORNIA - DEPARTMENT OF TRANSPORTATION

Caltrans

DESIGN

FUNCTIONAL SUPERVISOR: NESAR FORMOLI

CALCULATED-DESIGNED BY: KEVIN CANFIELD

CHECKED BY: KAMAL CHONKRIA

REVISED BY

DATE REVISED

LAST REVISION 00-00-00

DATE PLOTTED => 25-AUG-2016
TIME PLOTTED => 15:46

Dist	COUNTY	ROUTE	POST MILES TOTAL PROJECT	SHEET No.	TOTAL SHEETS
03	ED	49	23.6/24.5	48	202

REGISTERED CIVIL ENGINEER 5-9-16 DATE

5-9-16
PLANS APPROVAL DATE

REGISTERED PROFESSIONAL ENGINEER CHRIS ROCKEY No. C78030 Exp. 9/30/17 CIVIL STATE OF CALIFORNIA

THE STATE OF CALIFORNIA OR ITS OFFICERS OR AGENTS SHALL NOT BE RESPONSIBLE FOR THE ACCURACY OR COMPLETENESS OF SCANNED COPIES OF THIS PLAN SHEET.

3

NOTES:

1. DI MARKERS SHALL BE STAMPED CONCRETE IMPRINT, SEE STANDARD PLAN D71.
2. THE EXISTING RSP BETWEEN STATIONS 35+40 AND 36+75 LEFT, MAY BE USED FOR THE RSP (FACING, METHOD B).
3. ALL PIPE JOINTS ARE TYPE STANDARD.

LEGEND:

ID (GRADE) = INLET DEPRESSION ON GRADE, SEE STANDARD PLAN D78C.

DRAINAGE QUANTITIES

DRAINAGE SHEET	DRAINAGE SYSTEM No.	DRAINAGE UNIT	REMOVE CULVERT	REMOVE FLARED END SECTION	REMOVE INLET	REMOVE HEADWALL	REMOVE OVERSIDE DRAIN	ABANDON CULVERT	PIPE: 18" REINFORCED CONCRETE PIPE	PIPE: 24" REINFORCED CONCRETE PIPE	PIPE: 18" CSP (.138" THICK)	STRUCTURAL CONCRETE, HEADWALL	(N) BAR REINFORCING STEEL	DRAINAGE INLETS: (N) INLET TYPE	DRAINAGE INLETS: (N) FRAME GRATE TYPE	DRAINAGE INLETS: (N) HEIGHT OF INLET "H"	DRAINAGE INLETS: STRUCTURAL CONCRETE, DRAINAGE INLET	DRAINAGE INLETS: MISC IRON & STEEL	DRAINAGE INLETS: DI MARKER (SEE NOTE 1)	DRAINAGE INLETS: MINOR CONCRETE (GUTTER DEPRESSION)	DRAINAGE INLETS: 36" PRECAST CONCRETE PIPE INLET	DRAINAGE INLETS: (N) STEPS	RSP: RSP (FACING, METHOD B) (SEE NOTE 2)	RSP: RSP FABRIC (CLASS 8)	CONCRETE BACKFILL (PIPE TRENCH)	ANCHOR ASSEMBLY	(N) DEPTH OF COVER	DESCRIPTION	STATION	DRAINAGE SYSTEM No.	DRAINAGE UNIT
			LF	EA	EA	EA	EA	LF	LF	LF	LF	CY	LB			LF	CY	LB	EA	CY	LF	EA	CY	SQYD	CY	EA	FT				
D-1	1	a										3.94	228															SINGLE STRAIGHT HW	"CCN1" 27+78.44	1	a
		b							13.9																			18" RCP			b
		c				1																						REMOVE HW	"CCN1" 27+88.45		c
		d	3.0																									REMOVE Culv (PORTION)			d
		e											484	GT3	24-12X	4.7	3.11	478	1	2.12		1						GT3 DI, ID (GRADE)	"CCN1" 27+99.28		e
D-1	2	a																										OMITTED		2	a
		b																										OMITTED			b
		c											100	GO	24-12X	3.0	1.25	239	1	1.78		1						GO DI	"CCN1" 32+00.00		c
		d							92.2																			18" RCP			d
		e											100	GO	24-12X	3.0	1.25	239	1	1.78		1						GO DI	"CCN1" 33+17.03		e
		f							26.7																			18" RCP			f
		g											347	GT3	24-12X	3.0	2.29	478	1	2.12		1						GT3 DI	"CCN1" 32+82.50		g
		h							212.7																			18" RCP			h
		i											100	GO	24-12X	3.0	1.25	239	1	1.78		1						GO DI	"CCN1" 34+99.48		i
		j							196.6																			18" RCP			j
D-2	2	k											100	GO	24-12X	3.0	1.25	239	1	1.78		1						GO DI	"CCN1" 36+98.99		k
		l							225.4																			18" RCP			l
		m											100	GO	24-12X	3.0	1.25	239	1	1.78		1						GO DI	"CCN1" 39+45.27		m
		n									57.7																	18" CSP (.138" THICK)			n
		o									12.0		89	G1	24-12X	2.0	0.95	239	1			1				1		ENERGY DISSIPATOR (TYPE CR)	"CCN1" 39+45.27		o
D-1	3	a			1																							REMOVE INLET	"CCN1" 33+34.75	3	a
		b	48.0																								3.4	REMOVE Culv			b
		c		1																								REMOVE FES			c
D-1	4	a			1																							REMOVE INLET	"CCN1" 33+66.61	4	a
		b	16.8																								3.5	REMOVE Culv			b
SHEET TOTAL			67.8	1	2	1			767.5		69.7	3.94					11.65	2390	8	13.14						1					

(N) NOT A SEPARATE PAY ITEM, FOR INFORMATION ONLY.

3 REPLACED PER ADDENDUM No. 3 DATED AUGUST 30, 2016

DRAINAGE QUANTITIES

DQ-1

STATE OF CALIFORNIA - DEPARTMENT OF TRANSPORTATION
Caltrans
DIVISION OF ENGINEERING

CALCULATED-DESIGNED BY CHRIS ROCKEY
CHECKED BY DENNIS JAGODA
FUNCTIONAL SUPERVISOR DENNIS JAGODA
REVISED BY
DATE REVISED

LAST REVISION 03-27-14
DATE PLOTTED => 25-AUG-2016
TIME PLOTTED => 15:46

Dist	COUNTY	ROUTE	POST MILES TOTAL PROJECT	SHEET No.	TOTAL SHEETS
03	ED	49	23.6/24.5	49	202

REGISTERED CIVIL ENGINEER 5-9-16 DATE

5-9-16
PLANS APPROVAL DATE

REGISTERED PROFESSIONAL ENGINEER CHRIS ROCKEY No. C78030 Exp. 9/30/17 CIVIL STATE OF CALIFORNIA

THE STATE OF CALIFORNIA OR ITS OFFICERS OR AGENTS SHALL NOT BE RESPONSIBLE FOR THE ACCURACY OR COMPLETENESS OF SCANNED COPIES OF THIS PLAN SHEET.

3

DRAINAGE QUANTITIES

DRAINAGE SHEET	DRAINAGE SYSTEM No.	DRAINAGE UNIT	REMOVE CULVERT	REMOVE FLARED END SECTION	REMOVE INLET	REMOVE HEADWALL	REMOVE OVERSIDE DRAIN	ABANDON CULVERT	PIPE: 18" REINFORCED CONCRETE PIPE	PIPE: 24" REINFORCED CONCRETE PIPE	PIPE: 18" CSP (.138" THICK)	STRUCTURAL CONCRETE, HEADWALL	(N) BAR REINFORCING STEEL	DRAINAGE INLETS: (N) INLET TYPE	DRAINAGE INLETS: (N) FRAME GRATE TYPE	DRAINAGE INLETS: (N) HEIGHT OF INLET "H"	DRAINAGE INLETS: STRUCTURAL CONCRETE, DRAINAGE INLET	DRAINAGE INLETS: MISC IRON & STEEL	DRAINAGE INLETS: DI MARKER (SEE NOTE 1)	DRAINAGE INLETS: MINOR CONCRETE (GUTTER DEPRESSION)	DRAINAGE INLETS: 36" PRECAST CONCRETE PIPE INLET	DRAINAGE INLETS: (N) STEPS	RSP: RSP (FACING, METHOD B) (SEE NOTE 2)	RSP: RSP FABRIC (CLASS 8)	CONCRETE BACKFILL (PIPE TRENCH)	ANCHOR ASSEMBLY	(N) DEPTH OF COVER	DESCRIPTION	STATION	DRAINAGE SYSTEM No.	DRAINAGE UNIT
			LF	EA	EA	EA	EA	LF	LF	LF	LF	CY	LB			LF	CY	LB	EA	CY	LF	EA	CY	SQYD	CY	EA	FT				
D-1	5	a																										OMITTED		5	a
		b																										OMITTED			b
D-2	5	c											100	GO	24-12X	3.0	1.25	239	1	1.78		1						GO DI, ID (GRADE)	"CCN1" 36+09.93		c
		d							147.1																			18" RCP			d
		e											100	GO	24-12X	3.0	1.25	239	1	1.78		1						GO DI, ID (GRADE)	"CCN1" 37+59.74		e
		f							180.5																			18" RCP			f
		g											100	GO	24-12X	3.0	1.25	239	1	1.78		1						GO DI, ID (GRADE)	"CCN1" 39+45.27		g
		h									41.0																	18" CSP			h
		i									12.0		89	G1	24-12X	2.0	0.95	239	1			1				1		ENERGY DISSIPATOR (TYPE CR)	"CCN1" 39+45.27		i
D-2	6	a				1																						REMOVE HW	"CCN1" 36+75.21	6	a
		b	10.2																								1.8	REMOVE Culv			b
		c			1																							REMOVE INLET	"CCN1" 36+86.11		c
		d	88.0																								4.0	REMOVE Culv			d
		e				1																						REMOVE HW	"CCN1" 37+75.25		e
D-2	7	a			1																							REMOVE INLET	"CCN1" 37+36.27	7	a
		b	14.4																								5.5	REMOVE Culv			b
D-2	8	a	36.1																									REMOVE FES	"CCN1" 38+59.60	8	a
		b		1																							0.0	REMOVE Culv			b
D-2	9	a			1																							REMOVE INLET	"CCN1" 39+48.14	9	a
		b	35.6																								2.0	REMOVE Culv			b
D-2	10	a			1																							REMOVE INLET	"CCN1" 39+53.03	10	a
		b	53.5																								0.5	REMOVE Culv			b
SHEET TOTAL			237.8	1	4	2			327.6		53.0						4.70	956	4	5.34						1					

(N) NOT A SEPARATE PAY ITEM, FOR INFORMATION ONLY.

3 REPLACED PER ADDENDUM No. 3 DATED AUGUST 30, 2016

DRAINAGE QUANTITIES

DQ-2

STATE OF CALIFORNIA - DEPARTMENT OF TRANSPORTATION
Caltrans
DIVISION OF ENGINEERING

CALCULATED-DESIGNED BY CHRIS ROCKEY
CHECKED BY DENNIS JAGODA
FUNCTIONAL SUPERVISOR DENNIS JAGODA
REVISED BY
DATE REVISED

LAST REVISION 03-27-14
DATE PLOTTED => 25-AUG-2016
TIME PLOTTED => 15:46

Dist	COUNTY	ROUTE	POST MILES TOTAL PROJECT	SHEET No.	TOTAL SHEETS
03	ED	49	23.6/24.5	50	202

REGISTERED CIVIL ENGINEER 5-9-16 DATE

5-9-16
PLANS APPROVAL DATE

REGISTERED PROFESSIONAL ENGINEER CHRIS ROCKEY No. C78030 Exp. 9/30/17 CIVIL STATE OF CALIFORNIA

THE STATE OF CALIFORNIA OR ITS OFFICERS OR AGENTS SHALL NOT BE RESPONSIBLE FOR THE ACCURACY OR COMPLETENESS OF SCANNED COPIES OF THIS PLAN SHEET.

3

DRAINAGE QUANTITIES

DRAINAGE SHEET	DRAINAGE SYSTEM No.	DRAINAGE UNIT	REMOVE CULVERT	REMOVE FLARED END SECTION	REMOVE INLET	REMOVE HEADWALL	REMOVE OVERSIDE DRAIN	ABANDON CULVERT	PIPE: 18" REINFORCED CONCRETE PIPE	PIPE: 24" REINFORCED CONCRETE PIPE	PIPE: 18" CSP (.138" THICK)	STRUCTURE CONCRETE, HEADWALL	(N) BAR REINFORCING STEEL	DRAINAGE INLETS: (N) INLET TYPE	DRAINAGE INLETS: (N) FRAME GRATE TYPE	DRAINAGE INLETS: (N) HEIGHT OF INLET "H"	DRAINAGE INLETS: STRUCTURAL CONCRETE, DRAINAGE INLET	DRAINAGE INLETS: MISC IRON & STEEL	DRAINAGE INLETS: DI MARKER (SEE NOTE 1)	DRAINAGE INLETS: MINOR CONCRETE (GUTTER DEPRESSION)	DRAINAGE INLETS: 36" PRECAST CONCRETE PIPE INLET	DRAINAGE INLETS: (N) STEPS	RSP: RSP (FACING, METHOD B) (SEE NOTE 2)	RSP: RSP FABRIC (CLASS 8)	CONCRETE BACKFILL (PIPE TRENCH)	ANCHOR ASSEMBLY	(N) DEPTH OF COVER	DESCRIPTION	STATION	DRAINAGE SYSTEM No.	DRAINAGE UNIT
			LF	EA	EA	EA	EA	LF	LF	LF	LF	CY	LB			LF	CY	LB	EA	CY	LF	EA	CY	SQYD	CY	EA	FT				
D-2	11	a												GCP	36R	3.0	0.68	215	1		3.0	1						GCP DI, ID (SAG)	"CCN1" 45+96.00	11	a
		b							104.0																			18" RCP			b
		c											100	GO	24-12X	3.0	1.25	239	1	1.78		1						GO DI, ID (GRADE)	"CCN1" 44+90.18		c
		d							21.1																			18" RCP			d
		e																					3.3	15.6				RSP (FACING, METHOD B)	"CCN1" 44+90.18		e
D-2	12	a					1																				0.0	REMOVE OVERSIDE DRAIN	"CCN1" 44+78.42	12	a
D-2	13	a											100	GO	24-12X	3.0	1.25	239	1	1.78		1						GO DI, ID (GRADE)	"CCN1" 45+08.36	13	a
		b							27.9																			18" RCP			b
		c																					3.3	15.6				RSP (FACING, METHOD B)	"CCN1" 45+08.36		c
D-2	14	a			1																							REMOVE INLET	"CCN1" 46+03.63	14	a
		b	72.8																								3.3	REMOVE Culv			b
D-2	15	a	9.6																								1.0	REMOVE Culv	"CCN1" 46+91.02	15	a
D-2	16	a			1																							REMOVE INLET	"CCN1" 47+91.80	16	a
		b						106.3																				ABANDON Culv			b
		c												GCP	36R	5.0	0.68	215	1		5.0	1						GCP DI (Mod)	"CCN1" 47+95.95		c
		d								95.6																		24" RCP			d
		e																					7.1	22.2				RSP (FACING, METHOD B)	"CCN1" 47+00.59		e
D-3	17	a				1																						REMOVE HW	"CCN1" 49+83.52	17	a
		b										3.94	228															SINGLE STRAIGHT HW	"CCN1" 49+83.52		b
		c	102.1																									REMOVE Culv			c
		d							102.1																			18" RCP			d
D-3	18	a	13.0																								1.0	REMOVE Culv	"CCN1" 49+84.42	18	a
SHEET TOTAL			197.5		2	1	1	106.3	255.1	95.6		3.94					3.86	908	4	3.56	8.0		13.7	53.4							

(N) NOT A SEPARATE PAY ITEM, FOR INFORMATION ONLY.

3 **REPLACED PER ADDENDUM No. 3 DATED AUGUST 30, 2016**

DRAINAGE QUANTITIES

DQ-3

STATE OF CALIFORNIA - DEPARTMENT OF TRANSPORTATION
DIVISION OF ENGINEERING
Caltrans

CALCULATED-DESIGNED BY CHRIS ROCKEY
CHECKED BY DENNIS JAGODA
FUNCTIONAL SUPERVISOR DENNIS JAGODA
REVISED BY
DATE REVISED

LAST REVISION 03-27-14
DATE PLOTTED => 25-AUG-2016
TIME PLOTTED => 15:46

Dist	COUNTY	ROUTE	POST MILES TOTAL PROJECT	SHEET No.	TOTAL SHEETS
03	ED	49	23.6/24.5	51	202

REGISTERED CIVIL ENGINEER 5-9-16 DATE

5-9-16
PLANS APPROVAL DATE

REGISTERED PROFESSIONAL ENGINEER CHRIS ROCKEY No. C78030 Exp. 9/30/17 CIVIL STATE OF CALIFORNIA

THE STATE OF CALIFORNIA OR ITS OFFICERS OR AGENTS SHALL NOT BE RESPONSIBLE FOR THE ACCURACY OR COMPLETENESS OF SCANNED COPIES OF THIS PLAN SHEET.

3

DRAINAGE QUANTITIES

DRAINAGE SHEET	DRAINAGE SYSTEM No.	DRAINAGE UNIT	REMOVE CULVERT	REMOVE FLARED END SECTION	REMOVE INLET	REMOVE HEADWALL	REMOVE OVERSIDE DRAIN	ABANDON CULVERT	PIPE: 18" REINFORCED CONCRETE PIPE	PIPE: 24" REINFORCED CONCRETE PIPE	PIPE: 18" CSP (.138" THICK)	STRUCTURAL CONCRETE, HEADWALL	(N) BAR REINFORCING STEEL	DRAINAGE INLETS: (N) INLET TYPE	DRAINAGE INLETS: (N) FRAME GRATE TYPE	DRAINAGE INLETS: (N) HEIGHT OF INLET "H"	DRAINAGE INLETS: STRUCTURAL CONCRETE, DRAINAGE INLET	DRAINAGE INLETS: MISC IRON & STEEL	DRAINAGE INLETS: DI MARKER (SEE NOTE 1)	DRAINAGE INLETS: MINOR CONCRETE (GUTTER DEPRESSION)	DRAINAGE INLETS: 36" PRECAST CONCRETE PIPE INLET	DRAINAGE INLETS: (N) STEPS	RSP: RSP (FACING, METHOD B) (SEE NOTE 2)	RSP: RSP FABRIC (CLASS 8)	CONCRETE BACKFILL (PIPE TRENCH)	ANCHOR ASSEMBLY	(N) DEPTH OF COVER	DESCRIPTION	STATION	DRAINAGE SYSTEM No.	DRAINAGE UNIT
			LF	EA	EA	EA	EA	LF	LF	LF	LF	CY	LB			LF	CY	LB	EA	CY	LF	EA	CY	SQYD	CY	EA	FT				
D-3	19	a																					3.3	15.6				RSP (FACING, METHOD B)	"CCN1" 55+06.86	19	a
		b	68.9																									REMOVE Culv			b
		c							91.9																			18" RCP			c
		d				1																						REMOVE HW	"CCN1" 55+08.99		d
		e										3.94	228										19.7	49.6				SINGLE STRAIGHT HW	"CCN1" 55+08.99		e
D-3	20	a																					3.3	15.6				RSP (FACING, METHOD B)	"CCN1" 59+08.90	20	a
		b										3.94	228															SINGLE STRAIGHT HW	"CCN1" 59+08.90		b
		c						97.3																				ABANDON Culv			c
		d							94.7																			18" RCP			d
		e	30.0																									REMOVE Culv (PORTION)			e
		f				1																						REMOVE HW	"CCN1" 59+19.75		f
		g										3.94	228										20.4	51.2				SINGLE STRAIGHT HW	"CCN1" 59+20.08		g
D-2	21	a												GCP	36R	5.0	0.68	215	1		5.0	1						GCP DI (Mod)	"CCN1" 48+94.00	21	a
		b							82.1																2.3			18" RCP WITH Conc BACKFILL			b
		c																					7.5	29.1				RSP (FACING, METHOD B)	"CCN1" 48+94.00		c
SHEET TOTAL			98.9			2		97.3	268.7			11.82					0.68	215	1		5.0		54.2	161.1	2.3						

SHEET DQ-1	67.8	1	2	1			767.5		69.7	3.94					11.65	2390	8	13.14						1	
SHEET DQ-2	237.8	1	4	2			327.6		53.0						4.70	956	4	5.34						1	
SHEET DQ-3	197.5		2	1	1	106.3	255.1	95.6		3.94					3.86	908	4	3.56	8.0		13.7	53.4			
SHEET DQ-4	98.9			2		97.3	268.7			11.82					0.68	215	1		5.0		54.2	161.1	2.3		
SUB-TOTAL	602.0	2	8	6	1	203.6	1618.9	95.6		19.70					20.89	4469	17	22.04	13.0		67.9	214.5	2.3	2	
TOTAL	602.0	2	8	6	1	203.6	1618.9	95.6	122.7	19.70					20.89	4469	17	22.04	13.0		67.9	*	2.3	2	

(N) NOT A SEPARATE PAY ITEM, FOR INFORMATION ONLY.

* SEE SUMMARY OF QUANTITIES FOR TOTAL.

3 **REPLACED PER ADDENDUM No. 3 DATED AUGUST 30, 2016**

Dist	COUNTY	ROUTE	POST MILES TOTAL PROJECT	SHEET No.	TOTAL SHEETS
03	ED	49	23.6/24.5	58	202

Ron Tollison 5-9-16
REGISTERED CIVIL ENGINEER DATE

5-9-16
PLANS APPROVAL DATE

REGISTERED PROFESSIONAL ENGINEER
RONALD W. TOLLISON
No. 67389
Exp. 12/31/16
CIVIL
STATE OF CALIFORNIA

THE STATE OF CALIFORNIA OR ITS OFFICERS OR AGENTS SHALL NOT BE RESPONSIBLE FOR THE ACCURACY OR COMPLETENESS OF SCANNED COPIES OF THIS PLAN SHEET.

LEGEND:

- CONSTRUCT THIS STAGE OR PHASE
- CONSTRUCT TEMPORARY PAVEMENT
- REMOVE PAVEMENT 3
- EARTHWORK ONLY FOR RETAINING WALL
- COLD PLANE THIS STAGE OR PHASE
- ALTERNATIVE TEMPORARY CRASH CUSHION
- TEMPORARY RAILING (TYPE K)
- TRAFFIC PLASTIC DRUMS
- TYPE III BARRICADE
- TEMPORARY TRAFFIC STRIPE (DETAIL NO.)
  P= PAINT
- BEGIN OR END TEMPORARY TRAFFIC STRIPE
- CHANGE TRAFFIC STRIPE DETAIL
- S — TEMPORARY PAVEMENT MARKING ("STOP")
- A — TEMPORARY PAVEMENT MARKING ("AHEAD")
- XX — CONSTRUCTION AREA SIGN LETTER
  (SEE STAGE CONSTRUCTION QUANTITIY SHEETS)
- <CA> — CALIFORNIA SIGN CODE
- LL / P — LIMIT LINE
  P=PAINT
- CW / P — CROSSWALK
  P=PAINT

STAGE 1, PHASE 1:

1. RELOCATE WATER LINE EXCEPT ON NEW BRIDGE
2. INSTALL DRAINAGE TO THE EXTENT POSSIBLE (DRAINAGE SHEETS)
3. INSTALL TEMPORARY WATER CONNECTIONS AT EXISTING BRIDGE
4. KEEP WATERLINE IN SERVICE EXCEPT FOR CONTROLLED TIE INS

ABBREVIATIONS:

HMA-A HOT MIX ASPHALT (TYPE A)
CVIN CENTRAL VALLEY INDEPENDENT NETWORK

APPROVED FOR STAGE CONSTRUCTION AND TRAFFIC HANDLING WORK ONLY

3 REPLACED PER ADDENDUM No. 3 DATED AUGUST 30, 2016

STAGE CONSTRUCTION AND TRAFFIC HANDLING PLAN

SC-1

STATE OF CALIFORNIA - DEPARTMENT OF TRANSPORTATION
Caltrans
DESIGN

FUNCTIONAL SUPERVISOR: NESAR FORMOLI
CALCULATED-DESIGNED BY: KEVIN CANFIELD
CHECKED BY: KAMAL CHONKRIA
REVISED BY
DATE REVISED

LAST REVISION 00-00-00
DATE PLOTTED => 25-AUG-2016
TIME PLOTTED => 15:46

Dist	COUNTY	ROUTE	POST MILES TOTAL PROJECT	SHEET No.	TOTAL SHEETS
03	ED	49	23.6/24.5	60	202

REGISTERED CIVIL ENGINEER 5-9-16 DATE

5-9-16
PLANS APPROVAL DATE

REGISTERED PROFESSIONAL ENGINEER RONALD W. TOLLISON No. 67389 Exp. 12/31/16 CIVIL STATE OF CALIFORNIA

THE STATE OF CALIFORNIA OR ITS OFFICERS OR AGENTS SHALL NOT BE RESPONSIBLE FOR THE ACCURACY OR COMPLETENESS OF SCANNED COPIES OF THIS PLAN SHEET.

3

NOTE:

FOR ACCURATE RIGHT OF WAY DATA, CONTACT RIGHT OF WAY ENGINEERING AT THE DISTRICT OFFICE.

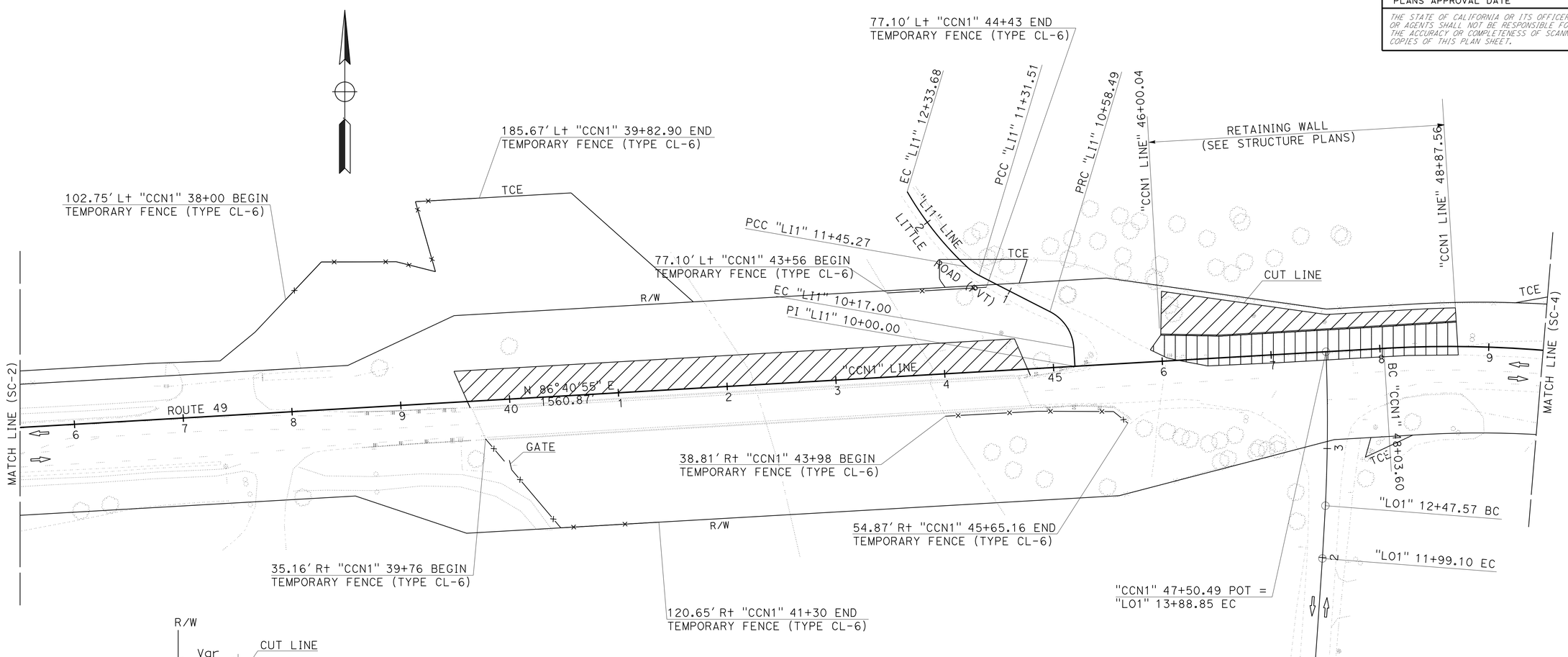

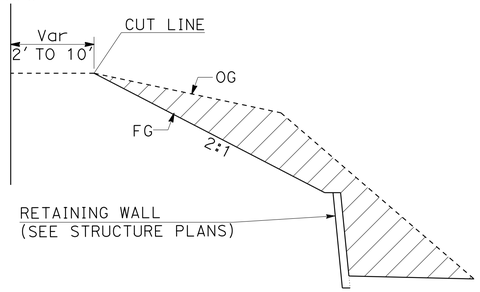

SOIL NAIL WALL
"CCN1" LINE 46+00.04 TO 48+87.96
NO SCALE

APPROVED FOR STAGE CONSTRUCTION AND TRAFFIC HANDLING WORK ONLY

3 **REPLACED PER ADDENDUM No. 3 DATED AUGUST 30, 2016**

STAGE CONSTRUCTION AND TRAFFIC HANDLING PLAN

STAGE 1 PHASE 2

SCALE: 1" = 50'

SC-3

STATE OF CALIFORNIA - DEPARTMENT OF TRANSPORTATION
Caltrans
DESIGN

FUNCTIONAL SUPERVISOR: NESAR FORMOLI
CALCULATED-DESIGNED BY: KEVIN CANFIELD
CHECKED BY: KAMAL CHONKRIA
REVISED BY
DATE REVISED

LAST REVISION 00-00-00
DATE PLOTTED => 25-AUG-2016
TIME PLOTTED => 15:46

Dist	COUNTY	ROUTE	POST MILES TOTAL PROJECT	SHEET No.	TOTAL SHEETS
03	ED	49	23.6/24.5	65	202

REGISTERED CIVIL ENGINEER 5-9-16 DATE

5-9-16
PLANS APPROVAL DATE

REGISTERED PROFESSIONAL ENGINEER
RONALD W. TOLLISON
No. 67389
Exp. 12/31/16
CIVIL
STATE OF CALIFORNIA

THE STATE OF CALIFORNIA OR ITS OFFICERS OR AGENTS SHALL NOT BE RESPONSIBLE FOR THE ACCURACY OR COMPLETENESS OF SCANNED COPIES OF THIS PLAN SHEET.

NOTE:

1. FOR ACCURATE RIGHT OF WAY DATA, CONTACT RIGHT OF WAY ENGINEERING AT THE DISTRICT OFFICE.
2. LOTUS ROAD/HIGHWAY 49 INTERSECTION MUST BE DONE DURING NON PEAK HOURS

STAGE 1, PHASE 4:

1. REMOVE TEMPORARY RAILING (TYPE K) STA "CCN1" 46+84 TO 61+64
2. CONSTRUCT LOTUS ROAD INTERSECTION "CCN1" 45+45 TO 49+00 AS SHOWN PRIOR TO SHIFTING TRAFFIC ONTO ROADWAY CONSTRUCTED IN STAGE 1 PHASE 3
3. PLACE TEMPORARY STRIPING
4. CONSTRUCT SB ROADWAY STA "CCN1" 45+45 R+ TO 61+50 R+ 3
5. CONTRACTOR SHALL SUBMIT PLAN ON HOW THEY WILL KEEP DRIVEWAY OPEN AT STATION 52+00 L+ DURING CONSTRUCTION

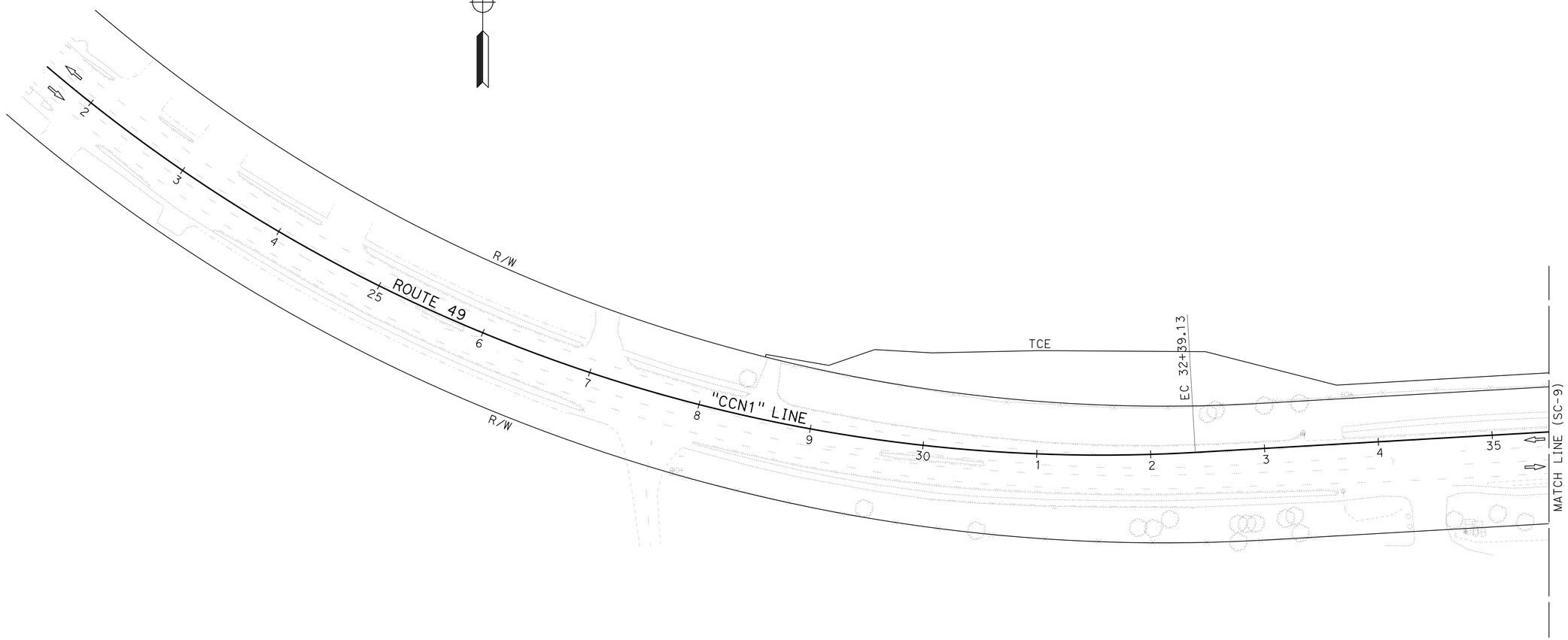

APPROVED FOR STAGE CONSTRUCTION AND TRAFFIC HANDLING WORK ONLY

3 **REPLACED PER ADDENDUM No. 3 DATED AUGUST 30, 2016**

STAGE CONSTRUCTION AND TRAFFIC HANDLING PLAN

STAGE 1 PHASE 4

SCALE: 1" = 50'

SC-8

STATE OF CALIFORNIA - DEPARTMENT OF TRANSPORTATION
Caltrans
DESIGN

FUNCTIONAL SUPERVISOR: NESAR FORMOLI
CALCULATED-DESIGNED BY: KEVIN CANFIELD
CHECKED BY: KAMAL CHONKRIA
REVISED BY
DATE REVISED

LAST REVISION 00-00-00
DATE PLOTTED => 25-AUG-2016
TIME PLOTTED => 15:46

Dist	COUNTY	ROUTE	POST MILES TOTAL PROJECT	SHEET No.	TOTAL SHEETS
03	ED	49	23.6/24.5	66	202

REGISTERED CIVIL ENGINEER 5-9-16 DATE

5-9-16
PLANS APPROVAL DATE

REGISTERED PROFESSIONAL ENGINEER RONALD W. TOLLISON No. 67389 Exp. 12/31/16 CIVIL STATE OF CALIFORNIA

THE STATE OF CALIFORNIA OR ITS OFFICERS OR AGENTS SHALL NOT BE RESPONSIBLE FOR THE ACCURACY OR COMPLETENESS OF SCANNED COPIES OF THIS PLAN SHEET.

3

NOTE:

FOR ACCURATE RIGHT OF WAY DATA, CONTACT RIGHT OF WAY ENGINEERING AT THE DISTRICT OFFICE.

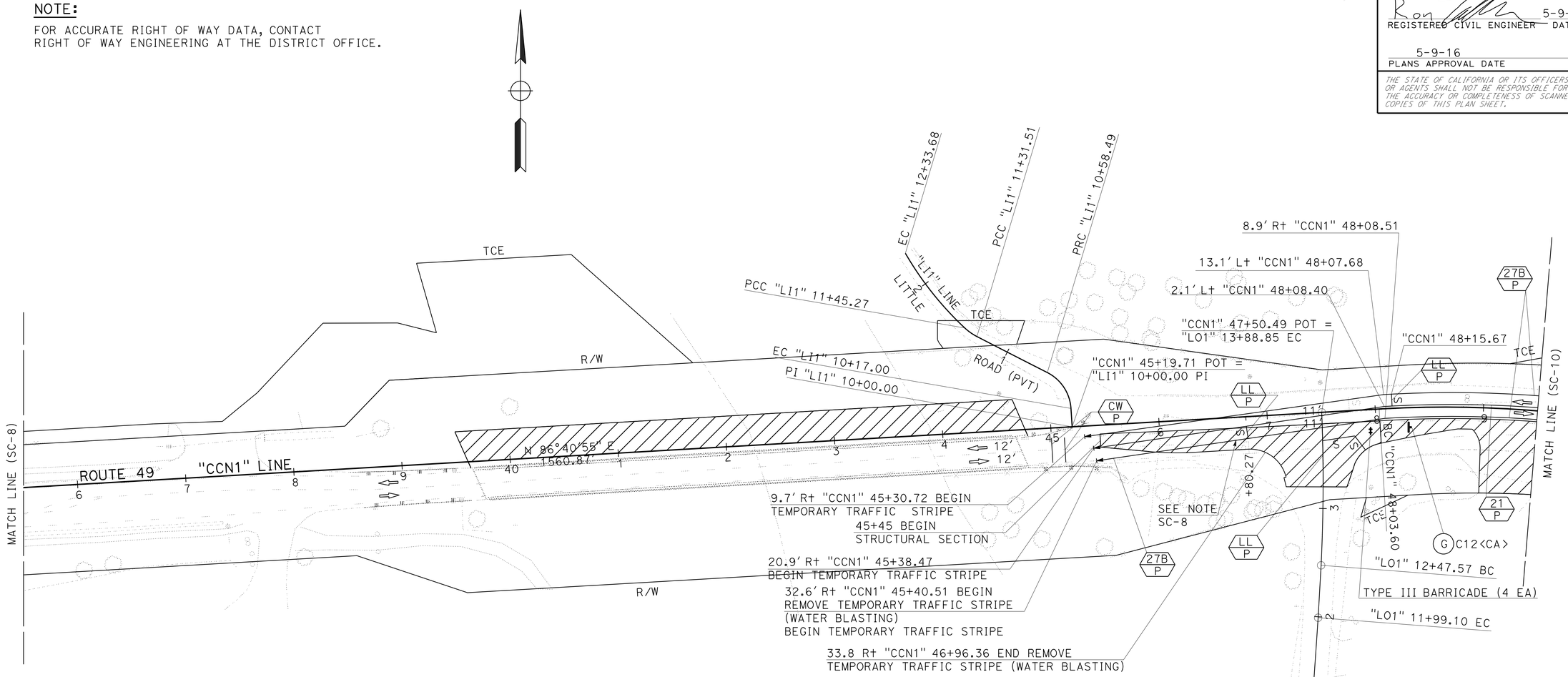

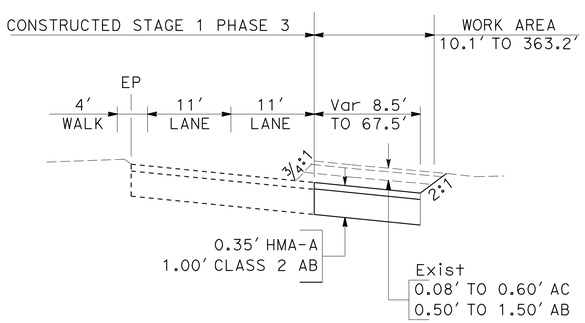

"CCN1" 45+45 R+ TO 61+50 R+
NO SCALE

APPROVED FOR STAGE CONSTRUCTION AND TRAFFIC HANDLING WORK ONLY

3 **REPLACED PER ADDENDUM No. 3 DATED AUGUST 30, 2016**

STAGE CONSTRUCTION AND TRAFFIC HANDLING PLAN

STAGE 1 PHASE 4

SCALE: 1" = 50'

SC-9

REVISED BY	DATE REVISED
KEVIN CANFIELD	KAMAL CHONKRIA
CALCULATED-DESIGNED BY	CHECKED BY
FUNCTIONAL SUPERVISOR	NESAR FORMOLI

STATE OF CALIFORNIA - DEPARTMENT OF TRANSPORTATION

Caltrans

DESIGN

LAST REVISION 00-00-00 | DATE PLOTTED => 25-AUG-2016 | TIME PLOTTED => 15:46

Dist	COUNTY	ROUTE	POST MILES TOTAL PROJECT	SHEET No.	TOTAL SHEETS
03	ED	49	23.6/24.5	67	202

REGISTERED CIVIL ENGINEER 5-9-16 DATE

5-9-16
PLANS APPROVAL DATE

REGISTERED PROFESSIONAL ENGINEER RONALD W. TOLLISON No. 67389 Exp. 12/31/16 CIVIL STATE OF CALIFORNIA

THE STATE OF CALIFORNIA OR ITS OFFICERS OR AGENTS SHALL NOT BE RESPONSIBLE FOR THE ACCURACY OR COMPLETENESS OF SCANNED COPIES OF THIS PLAN SHEET.

3

NOTE:

FOR ACCURATE RIGHT OF WAY DATA, CONTACT RIGHT OF WAY ENGINEERING AT THE DISTRICT OFFICE.

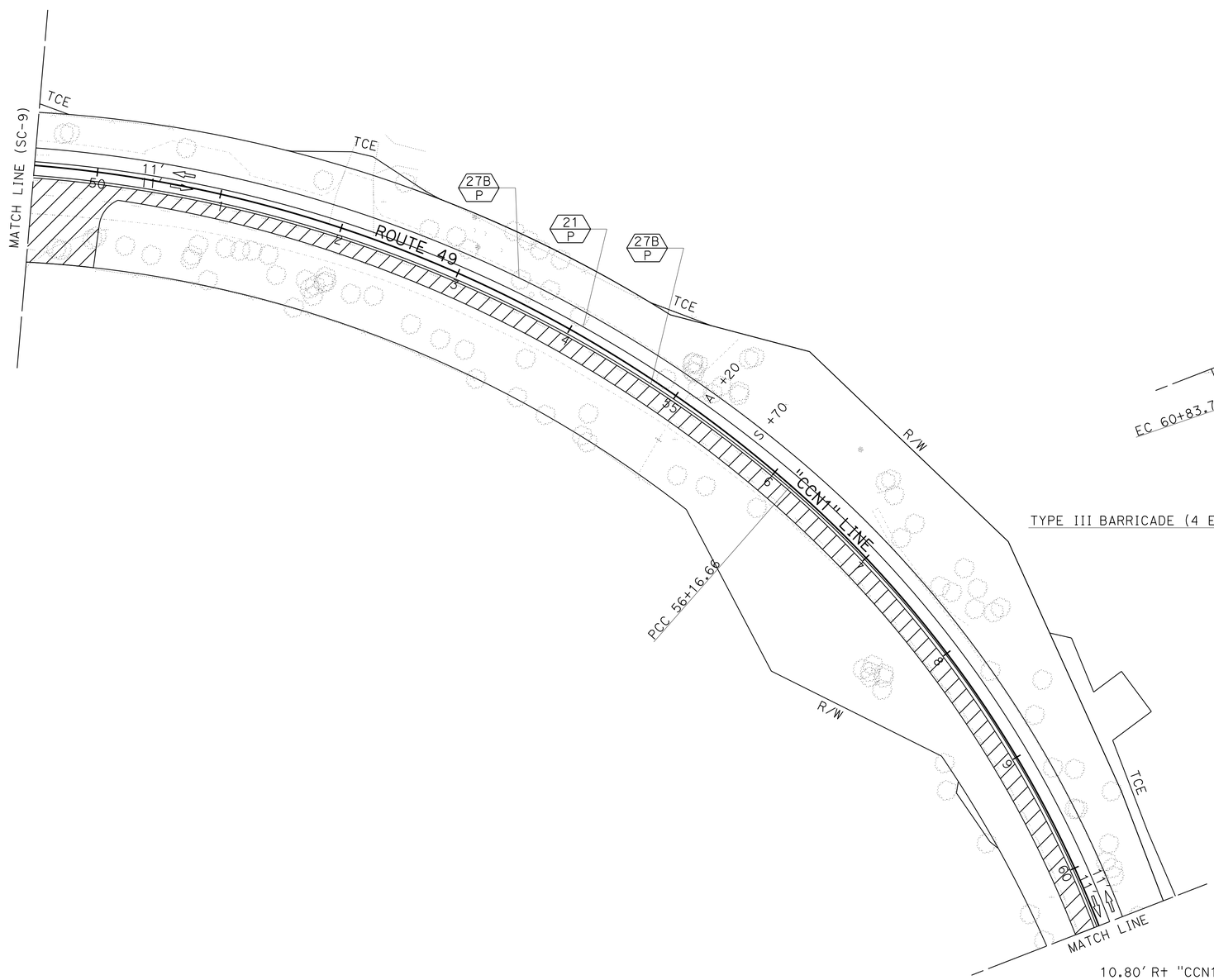

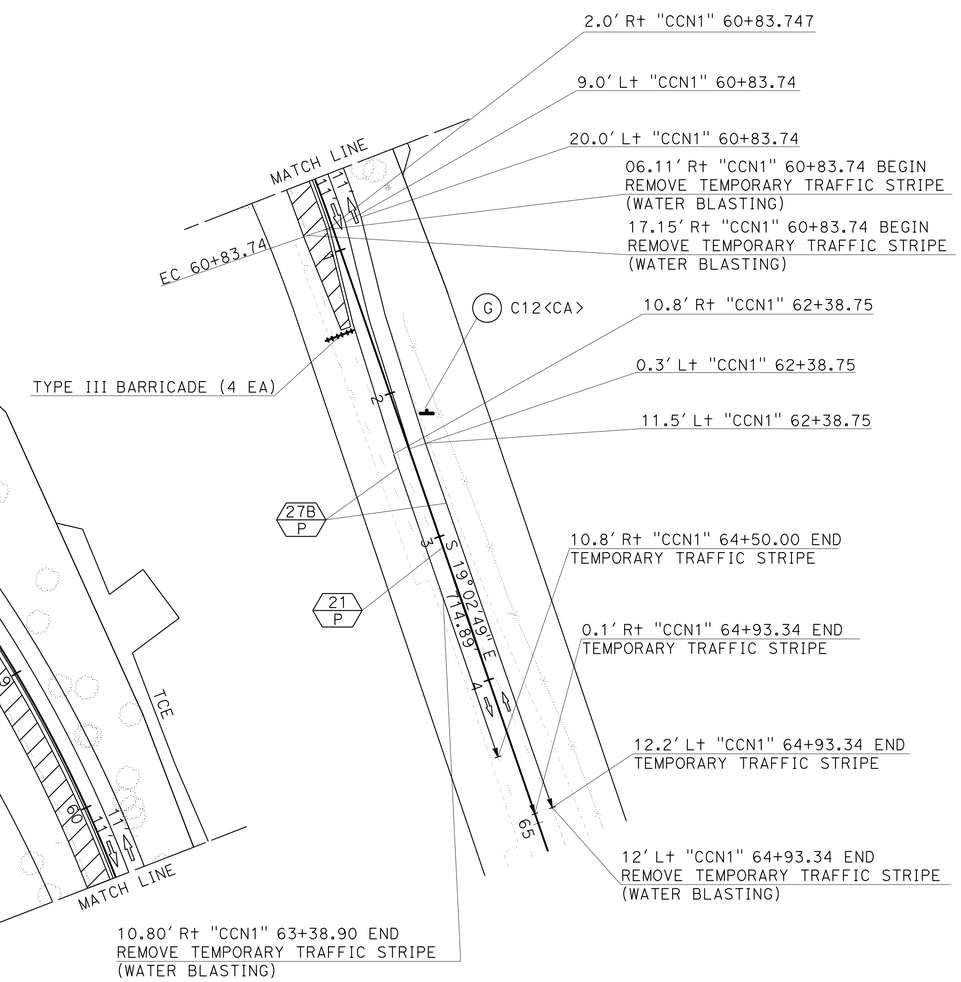

APPROVED FOR STAGE CONSTRUCTION AND TRAFFIC HANDLING WORK ONLY

3 **REPLACED PER ADDENDUM No. 3 DATED AUGUST 30, 2016**

STAGE CONSTRUCTION AND TRAFFIC HANDLING PLAN

STAGE 1 PHASE 4

SCALE: 1" = 50'

SC-10

STATE OF CALIFORNIA - DEPARTMENT OF TRANSPORTATION

Caltrans

DESIGN

FUNCTIONAL SUPERVISOR: NESAR FORMOLI

CALCULATED-DESIGNED BY: KEVIN CANFIELD

CHECKED BY: KAMAL CHONKRIA

REVISED BY

DATE REVISED

LAST REVISION 00-00-00

DATE PLOTTED => 25-AUG-2016

TIME PLOTTED => 15:46

Dist	COUNTY	ROUTE	POST MILES TOTAL PROJECT	SHEET No.	TOTAL SHEETS
03	ED	49	23.6/24.5	68	202

3

Ron Tollison 5-9-16
REGISTERED CIVIL ENGINEER DATE

5-9-16
PLANS APPROVAL DATE

REGISTERED PROFESSIONAL ENGINEER RONALD W. TOLLISON No. 67389 Exp. 12/31/16 CIVIL STATE OF CALIFORNIA

THE STATE OF CALIFORNIA OR ITS OFFICERS OR AGENTS SHALL NOT BE RESPONSIBLE FOR THE ACCURACY OR COMPLETENESS OF SCANNED COPIES OF THIS PLAN SHEET.

NOTE:

FOR ACCURATE RIGHT OF WAY DATA, CONTACT RIGHT OF WAY ENGINEERING AT THE DISTRICT OFFICE.

STAGE 1, PHASE 5:

1. REMOVE EXISTING MEDIAN ISLAND STA "CCN1" 25+36.72 TO 25+83.91 AND PLACE TEMPORARY HMA
2. REMOVE EXISTING MEDIAN ISLAND STA "CCN1" 29+63.12 TO 30+55.38 AND PLACE TEMPORARY HMA
3. REMOVE EXISTING THERMOPLASTIC PAVEMENT MARKINGS
4. REMOVE TEMPORARY PAVEMENT STRIPES
5. PLACE TEMPORARY PAINTED TRAFFIC STRIPES
6. PLACE TEMPORARY PAINT PAVEMENT MARKINGS
7. PLACE TRAFFIC PLASTIC DRUMS @ 25' OC STA "CCN1" 21+50 TO 39+63
8. SHIFT TRAFFIC ONTO TEMPORARY 11' LANES
9. CONSTRUCT RETAINING WALL STA "CCN1" 29+90 L+ TO 33+15 L+
10. INSTALL CVIN RELOCATION STATION "CCN1" 28+15 TO 39+61
11. CONSTRUCT CURB, GUTTER, SIDEWALK STA "CCN1" 22+53 L+ TO 38+50 L+
12. CONSTRUCT NB STRUCTURAL SECTION (SEE CROSS SECTION THIS SHEET) STA "CCN1" 21+50 L+ TO 38+50 L+

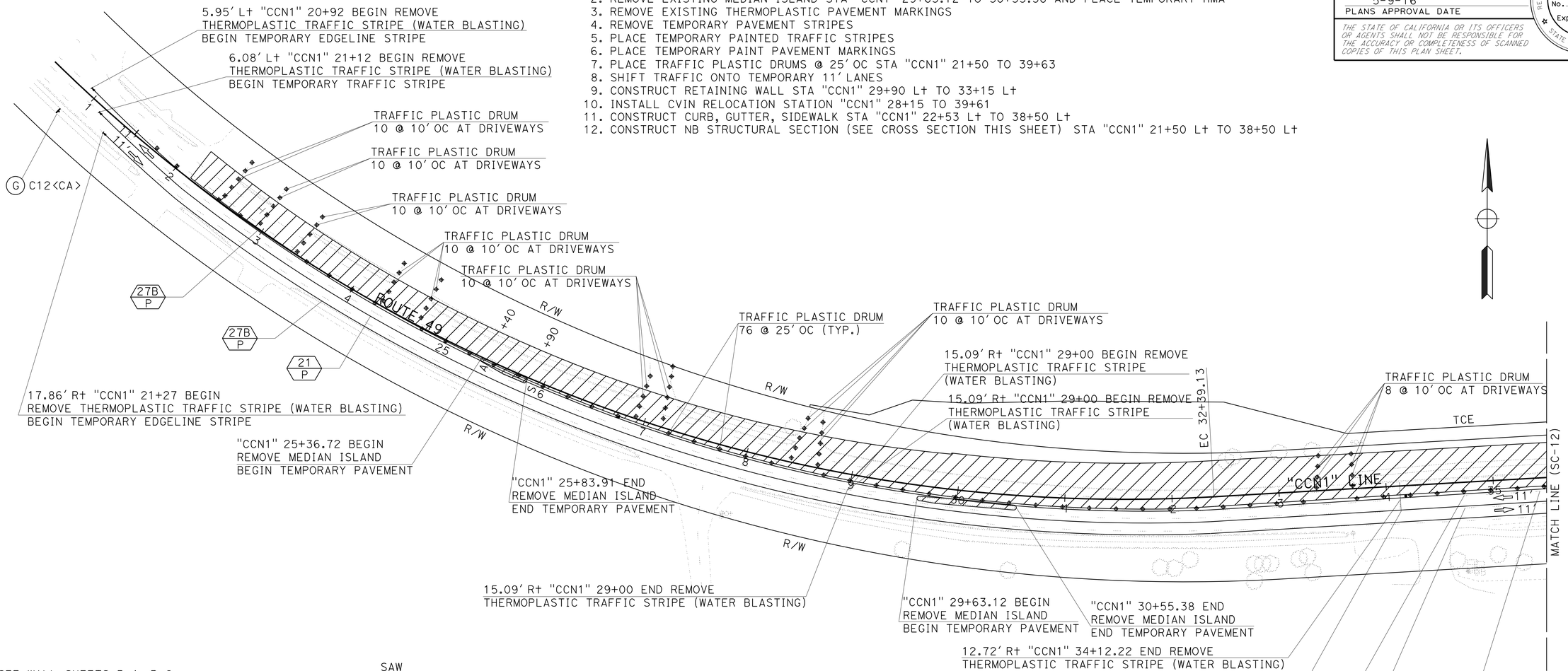

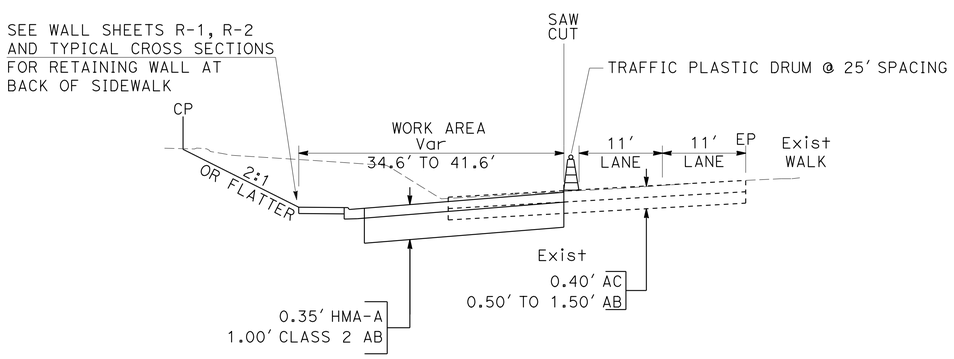

"CCN1" 21+50 TO 38+50
NO SCALE

APPROVED FOR STAGE CONSTRUCTION AND TRAFFIC HANDLING WORK ONLY

3 **REPLACED PER ADDENDUM No. 3 DATED AUGUST 30, 2016**

STAGE CONSTRUCTION AND TRAFFIC HANDLING PLAN

STAGE 1 PHASE 5

SCALE: 1" = 50'

SC-11

STATE OF CALIFORNIA - DEPARTMENT OF TRANSPORTATION
Caltrans® DESIGN

FUNCTIONAL SUPERVISOR: NESAR FORMOLI
CALCULATED-DESIGNED BY: KEVIN CANFIELD
CHECKED BY: KAMAL CHONKRIA
REVISED BY
DATE REVISED

LAST REVISION 00-00-00
DATE PLOTTED => 25-AUG-2016
TIME PLOTTED => 15:46

Dist	COUNTY	ROUTE	POST MILES TOTAL PROJECT	SHEET No.	TOTAL SHEETS
03	ED	49	23.6/24.5	69	202

REGISTERED CIVIL ENGINEER 5-9-16 DATE

5-9-16
PLANS APPROVAL DATE

REGISTERED PROFESSIONAL ENGINEER
RONALD W. TOLLISON
No. 67389
Exp. 12/31/16
CIVIL
STATE OF CALIFORNIA

THE STATE OF CALIFORNIA OR ITS OFFICERS OR AGENTS SHALL NOT BE RESPONSIBLE FOR THE ACCURACY OR COMPLETENESS OF SCANNED COPIES OF THIS PLAN SHEET.

3

NOTE:

FOR ACCURATE RIGHT OF WAY DATA, CONTACT RIGHT OF WAY ENGINEERING AT THE DISTRICT OFFICE.

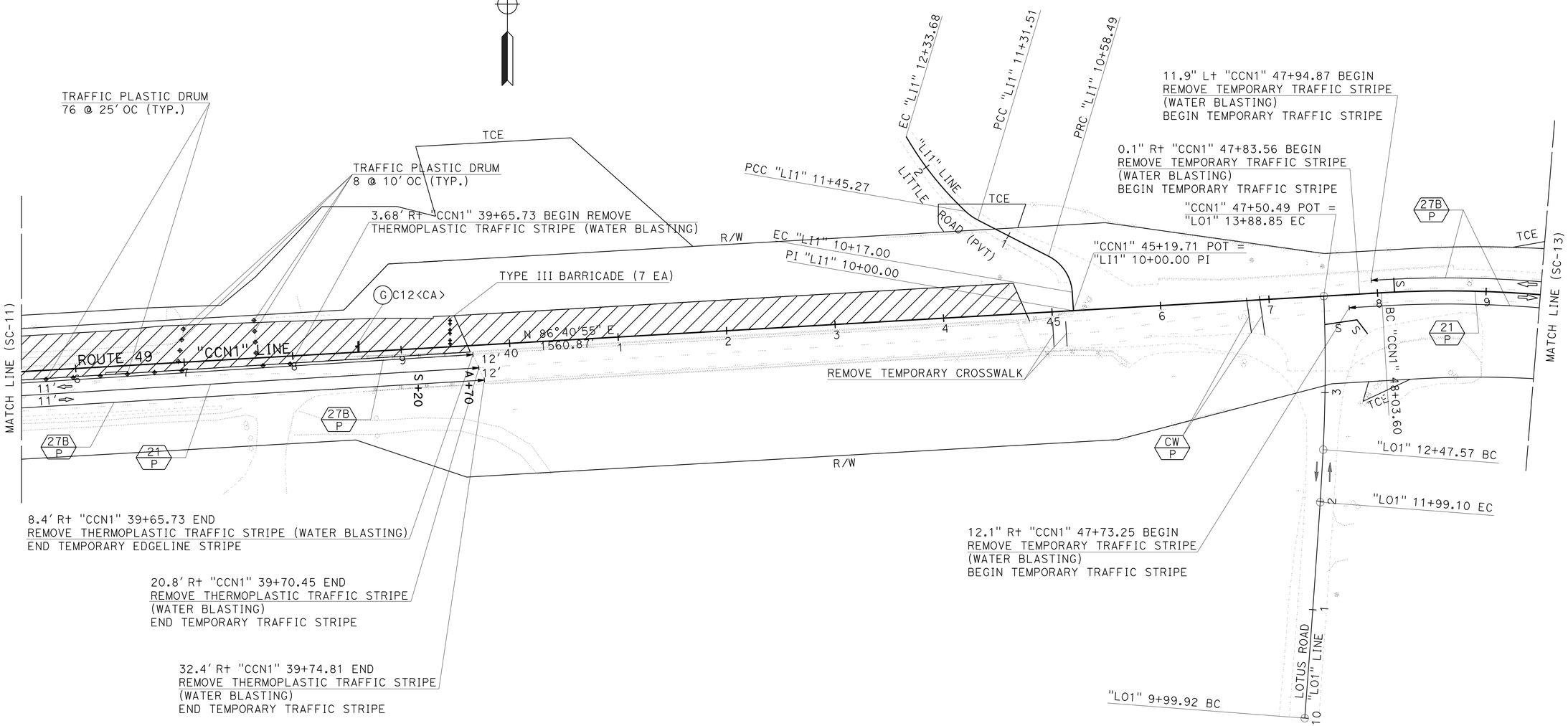

APPROVED FOR STAGE CONSTRUCTION AND TRAFFIC HANDLING WORK ONLY

3 **REPLACED PER ADDENDUM No. 3 DATED AUGUST 30, 2016**

STAGE CONSTRUCTION AND TRAFFIC HANDLING PLAN

STAGE 1 PHASE 5

SCALE: 1" = 50'

SC-12

STATE OF CALIFORNIA - DEPARTMENT OF TRANSPORTATION
Caltrans
DESIGN

FUNCTIONAL SUPERVISOR: NESAR FORMOLI
CALCULATED-DESIGNED BY: KEVIN CANFIELD
CHECKED BY: KAMAL CHONKRIA
REVISED BY
DATE REVISED

LAST REVISION 00-00-00
DATE PLOTTED => 25-AUG-2016
TIME PLOTTED => 15:46

Dist	COUNTY	ROUTE	POST MILES TOTAL PROJECT	SHEET No.	TOTAL SHEETS
03	ED	49	23.6/24.5	71	202

REGISTERED CIVIL ENGINEER 5-9-16 DATE

5-9-16
PLANS APPROVAL DATE

REGISTERED PROFESSIONAL ENGINEER RONALD W. TOLLISON No. 67389 Exp. 12/31/16 CIVIL STATE OF CALIFORNIA

THE STATE OF CALIFORNIA OR ITS OFFICERS OR AGENTS SHALL NOT BE RESPONSIBLE FOR THE ACCURACY OR COMPLETENESS OF SCANNED COPIES OF THIS PLAN SHEET.

3

NOTE:

FOR ACCURATE RIGHT OF WAY DATA, CONTACT RIGHT OF WAY ENGINEERING AT THE DISTRICT OFFICE.

STAGE 1, PHASE 6:

1. SHIFT TRAFFIC PLASTIC DRUMS
2. CONSTRUCT SB STRUCTURAL SECTION "CCN1" 22+16.87 Lt to 36+25 Lt
3. INSTALL NEW WATERLINE THROUGH BRIDGE
4. INSTALL NEW FIBER OPTIC LINE THROUGH BRIDGE
5. REMOVE TEMPORARY STRIPING
6. PLACE TEMPORARY STRIPING
7. CONSTRUCT CURB, GUTTER, AND SIDEWALK STATION "CCN1" 22+16.87 TO 36+25

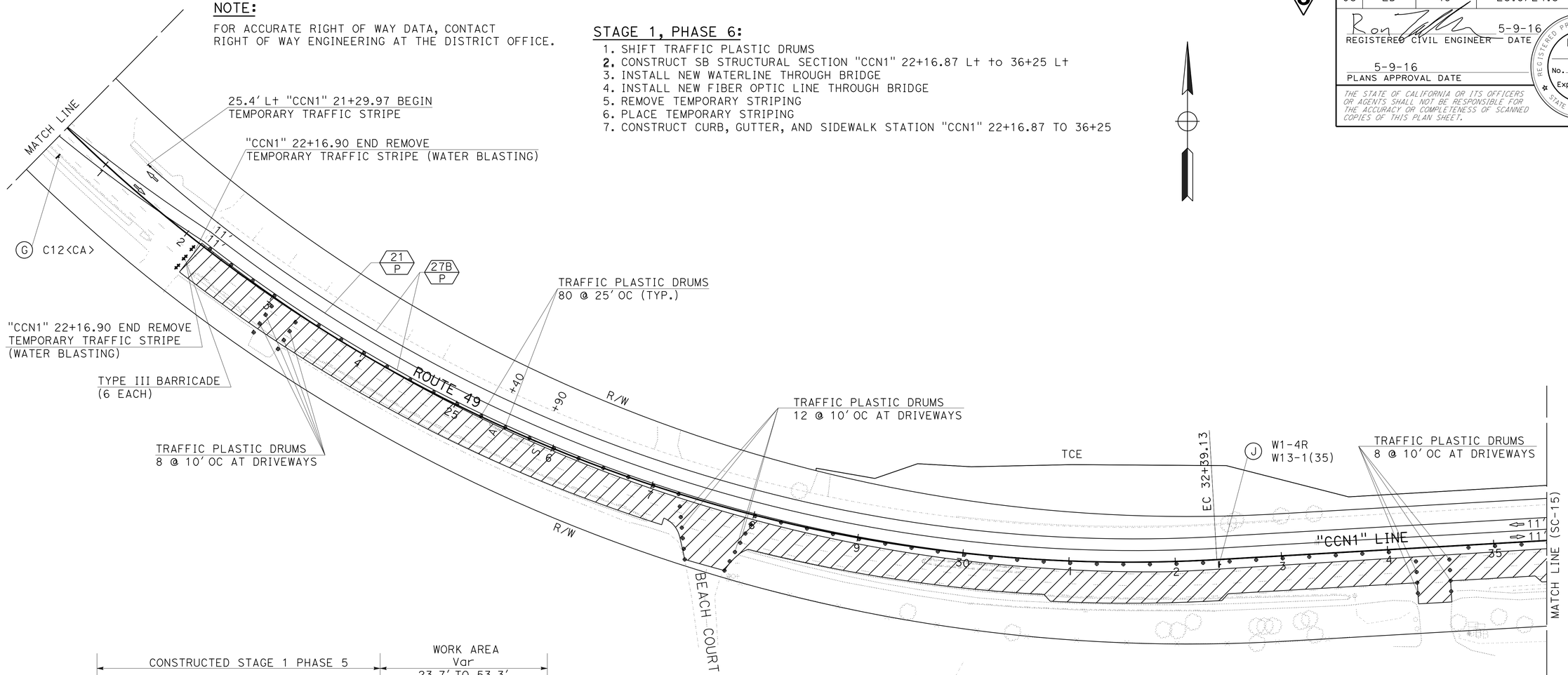

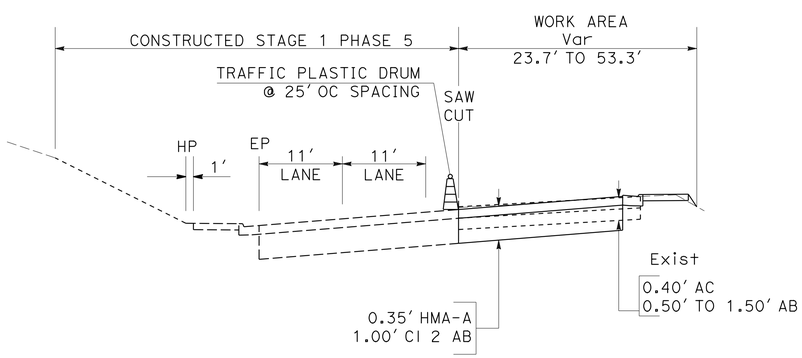

"CCN1" 22+16.90 TO 38+50
NO SCALE

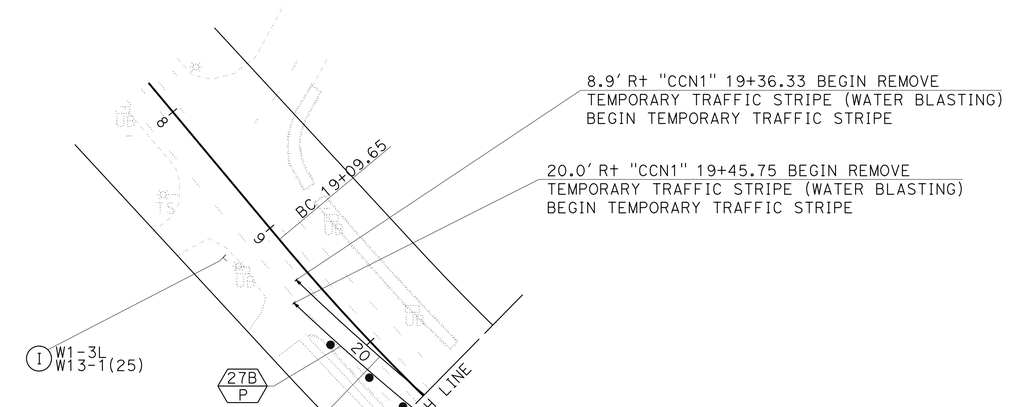

APPROVED FOR STAGE CONSTRUCTION AND TRAFFIC HANDLING WORK ONLY

3 **REPLACED PER ADDENDUM No. 3 DATED AUGUST 30, 2016**

STAGE CONSTRUCTION AND TRAFFIC HANDLING PLAN

STAGE 1 PHASE 6

SCALE: 1" = 50'

SC-14

STATE OF CALIFORNIA - DEPARTMENT OF TRANSPORTATION
Caltrans®
DESIGN

FUNCTIONAL SUPERVISOR: NESAR FORMOLI
CALCULATED-DESIGNED BY: KEVIN CANFIELD
CHECKED BY: KAMAL CHONKRIA
REVISED BY
DATE REVISED

LAST REVISION 00-00-00
DATE PLOTTED => 25-AUG-2016
TIME PLOTTED => 15:46

Dist	COUNTY	ROUTE	POST MILES TOTAL PROJECT	SHEET No.	TOTAL SHEETS
03	ED	49	23.6/24.5	72	202

3

REGISTERED CIVIL ENGINEER 5-9-16 DATE

5-9-16
PLANS APPROVAL DATE

REGISTERED PROFESSIONAL ENGINEER RONALD W. TOLLISON No. 67389 Exp. 12/31/16 CIVIL STATE OF CALIFORNIA

THE STATE OF CALIFORNIA OR ITS OFFICERS OR AGENTS SHALL NOT BE RESPONSIBLE FOR THE ACCURACY OR COMPLETENESS OF SCANNED COPIES OF THIS PLAN SHEET.

NOTE:

FOR ACCURATE RIGHT OF WAY DATA, CONTACT RIGHT OF WAY ENGINEERING AT THE DISTRICT OFFICE.

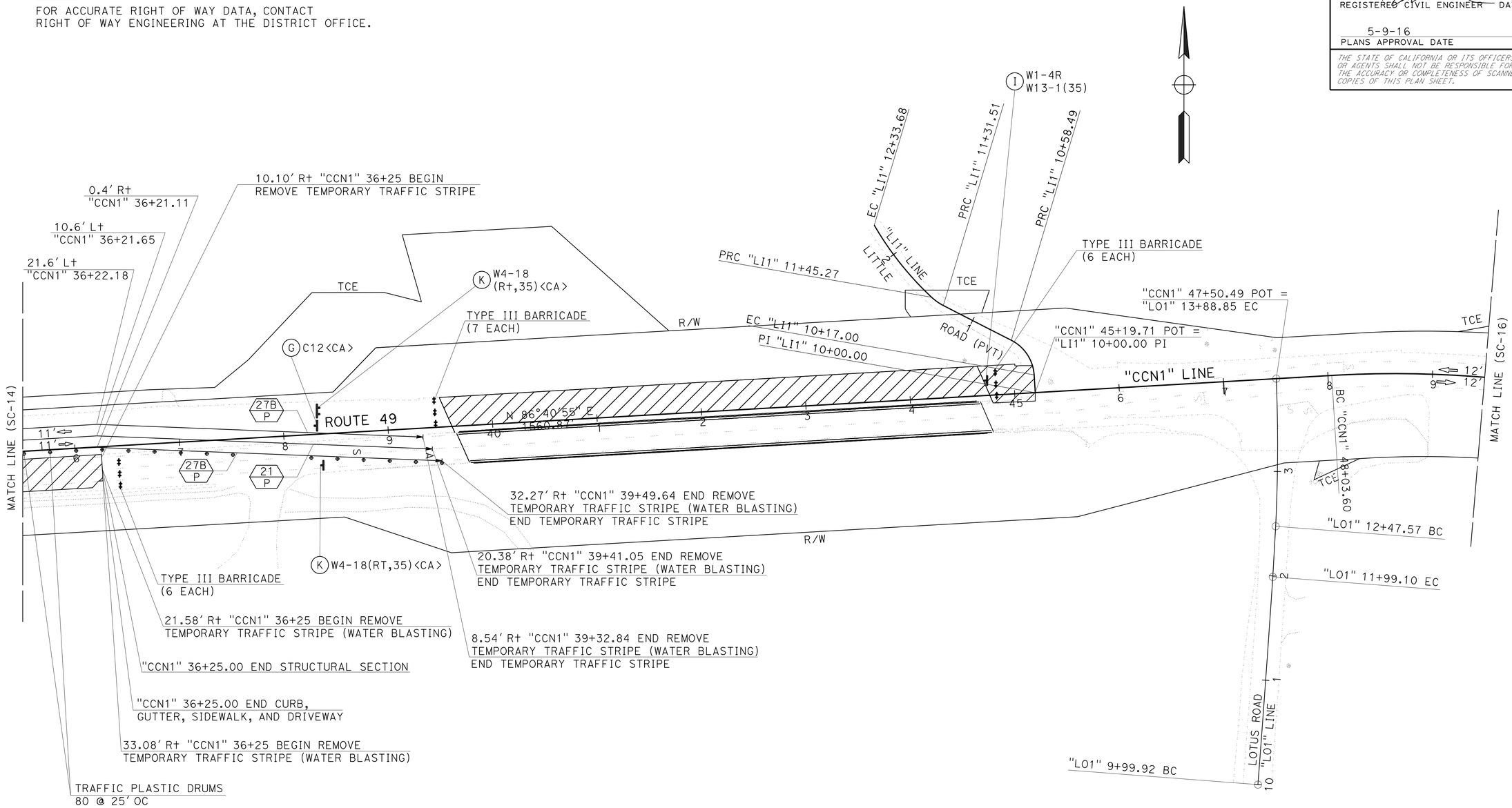

APPROVED FOR STAGE CONSTRUCTION AND TRAFFIC HANDLING WORK ONLY

3 **REPLACED PER ADDENDUM No. 3 DATED AUGUST 30, 2016**

STAGE CONSTRUCTION AND TRAFFIC HANDLING PLAN

STAGE 1 PHASE 6

SCALE: 1" = 50′

SC-15

REVISED BY | DATE REVISED

KEVIN CANFIELD | KAMAL CHONKRIA

CALCULATED-DESIGNED BY | CHECKED BY

FUNCTIONAL SUPERVISOR: NESAR FORMOLI

STATE OF CALIFORNIA - DEPARTMENT OF TRANSPORTATION

Caltrans

DESIGN

LAST REVISION 00-00-00 | DATE PLOTTED => 25-AUG-2016 | TIME PLOTTED => 15:46

Dist	COUNTY	ROUTE	POST MILES TOTAL PROJECT	SHEET No.	TOTAL SHEETS
03	ED	49	23.6/24.5	74	202

REGISTERED CIVIL ENGINEER 5-9-16 DATE

5-9-16
PLANS APPROVAL DATE

REGISTERED PROFESSIONAL ENGINEER RONALD W. TOLLISON No. 67389 Exp. 12/31/16 CIVIL STATE OF CALIFORNIA

THE STATE OF CALIFORNIA OR ITS OFFICERS OR AGENTS SHALL NOT BE RESPONSIBLE FOR THE ACCURACY OR COMPLETENESS OF SCANNED COPIES OF THIS PLAN SHEET.

NOTE:

FOR ACCURATE RIGHT OF WAY DATA, CONTACT RIGHT OF WAY ENGINEERING AT THE DISTRICT OFFICE.

STAGE 2

1. PRIOR TO SHIFTING TRAFFIC ONTO BRIDGE SEGMENT CONSTRUCTED IN STAGE 1 THE FOLLOWING WORK SHALL BE COMPLETED:
   - A. COMPLETE STAGE 1 APPROACH SLAB AT EB
   - B. COMPLETE NB STRUCTURAL SECTION TO STAGE 1 APPROACH SLAB
   - C. COMPLETE NB STRUCTURAL SECTION FROM St∝ "CCN1" 36+25 TO BB
   - D. PLACE TEMPORARY RAILING (TYPE K) FROM St∝ "CCN1" 39+00 TO 45+00
   - E. PLACE ALTERNATIVE TEMPORARY CRASH CUSHIONS AT ENDS OF TEMPORARY RAILING (TYPE K)
   - F. PLACE TEMPORARY STRIPING ON STAGE 1 BRIDGE SEGMENT WITH 11′ LANES
   - G. COMPLETE TEMPORARY PEDESTRIAN WALKWAY ON STAGE 1 BRIDGE SEGMENT
   - H. COMPLETE TEMPORARY PEDESTRIAN PATHWAYS TO CONNECT SIDEWALKS TO TEMP. PEDESTRIAN WALKWAY ON BRIDGE
   - I. COMPLETE WATER AND FIBER OPTIC CONNECTIONS ONTO BRIDGE
2. REMOVE EXISTING SOUTH FORK AMERICAN RIVER BRIDGE
3. BEGIN ABUTMENTS FOR SECOND SEGMENT OF SOUTH FORK AMERICAN RIVER BRIDGE
4. CONSTRUCT SECOND SEGMENT SOUTH FORK AMERICAN RIVER BRIDGE
5. CONSTRUCT MEDIAN ISLANDS
6. CONSTRUCT CURB, GUTTER, AND SIDEWALK STATION "CCN1" 39+61.20 R∝ "LO1" 13+20.02 L∝ 3

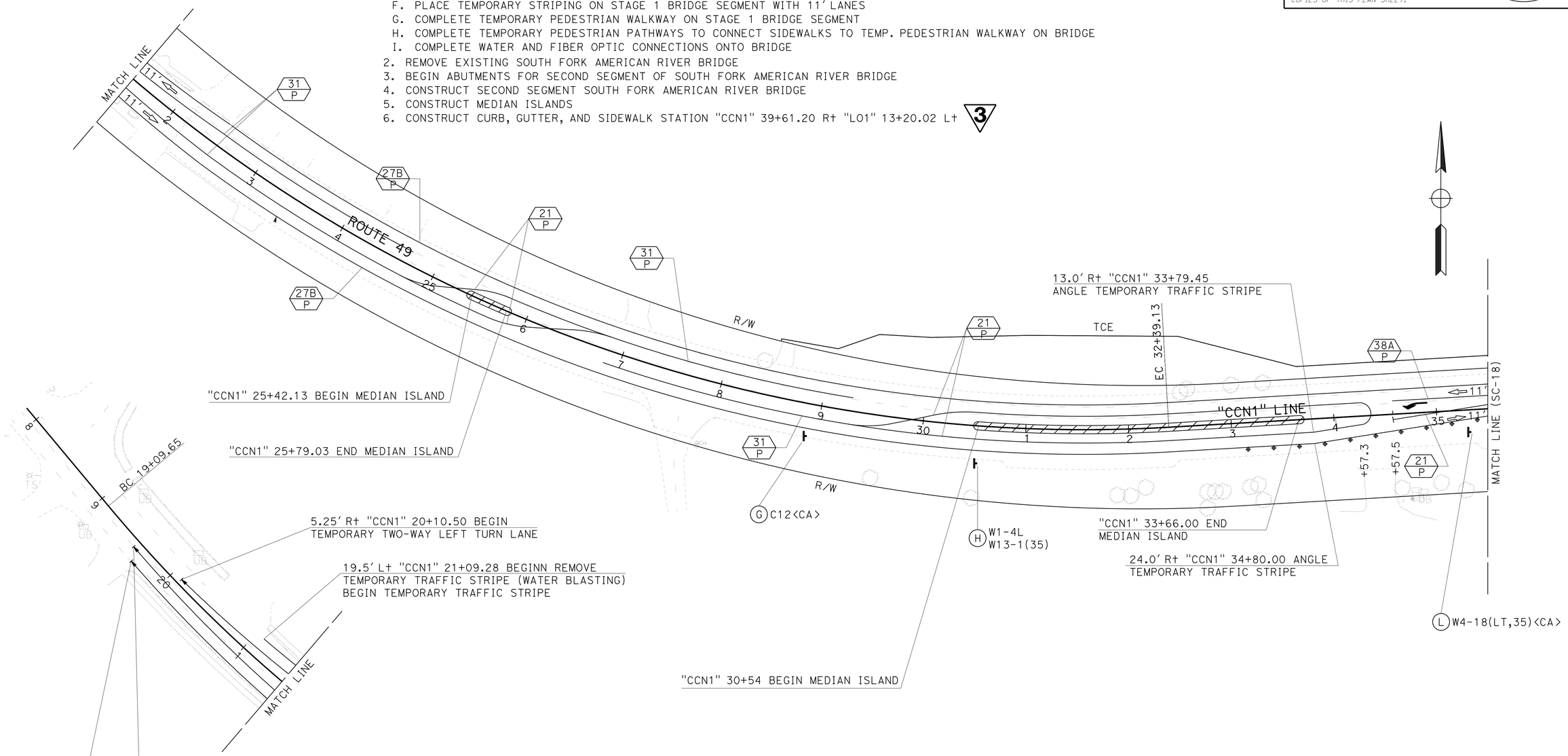

APPROVED FOR STAGE CONSTRUCTION AND TRAFFIC HANDLING WORK ONLY

3 **REPLACED PER ADDENDUM No. 3 DATED AUGUST 30, 2016**

STAGE CONSTRUCTION AND TRAFFIC HANDLING PLAN

STAGE 2

SCALE: 1" = 50′

SC-17

STATE OF CALIFORNIA - DEPARTMENT OF TRANSPORTATION
Caltrans
DESIGN

FUNCTIONAL SUPERVISOR: NESAR FORMOLI
CALCULATED-DESIGNED BY: KEVIN CANFIELD
CHECKED BY: KAMAL CHONKRIA
REVISED BY / DATE REVISED

LAST REVISION 00-00-00 | DATE PLOTTED => 25-AUG-2016 | TIME PLOTTED => 15:46

Dist	COUNTY	ROUTE	POST MILES TOTAL PROJECT	SHEET No.	TOTAL SHEETS
03	ED	49	23.6/24.5	80	202

REGISTERED CIVIL ENGINEER 5-9-16 DATE

5-9-16
PLANS APPROVAL DATE

REGISTERED PROFESSIONAL ENGINEER RONALD W. TOLLISON No. 67389 Exp. 12/31/16 CIVIL STATE OF CALIFORNIA

THE STATE OF CALIFORNIA OR ITS OFFICERS OR AGENTS SHALL NOT BE RESPONSIBLE FOR THE ACCURACY OR COMPLETENESS OF SCANNED COPIES OF THIS PLAN SHEET.

PAVEMENT DELINEATION

ALIGNMENT / STATION	LOCATION	TEMPORARY TRAFFIC STRIPE (PAINT) YELLOW STRIPE 21 LF	YELLOW STRIPE 31 LF	WHITE STRIPE 27B LF	TEMPORARY PAVEMENT MARKING (PAINT) SQFT	DESCRIPTION
STAGE 1 PHASE 3						
"CCN1" 44+91.07 TO "CCN1" 46+81.49	℄	191				
"CCN1" 44+79.02 TO "CCN1" 46.83.94	NB			205		
"CCN1" 61+50.00 TO "CCN1" 64+93.34	NB			343		
"CCN1" 44+91.35 TO "CCN1" 64+50.00	SB			1,860		
"CCN1" 46+78	SB				22	"STOP"
"CCN1" 46+81	SB				11	"LIMIT LINE"
STAGE 1 PHASE 3, SUBTOTAL		191		2,408	33	
STAGE 1 PHASE 4					31	"AHEAD"
"CCN1" 45+38.47 TO "CCN1" 64+93.34	℄	1,955				
"CCN1" 45+30.72 TO "CCN1" 64+93.34	NB			1,963	110	"STOP"
"CCN1" 45+40.51 TO "CCN1" 64+39.05	SB			1,910	68	"LIMIT LINE"
STAGE 1 PHASE 4, SUBTOTAL		1,955		3,873	209	
STAGE 1 PHASE 5					44	"STOP"
"CCN1" 21+12 TO "CCN1" 39+70.45	℄	1,860			31	"AHEAD"
"CCN1" 47+83.56 TO "CCN1" 63+38.94	℄	1,556				
"CCN1" 21+92 TO "CCN1" 39+65.73	NB			1,775		
"CCN1" 47+94.87 TO "CCN1" 63+08.18	NB			1,515		
"CCN1" 21+27 TO "CCN1" 39+74.81	SB			1,848		
"CCN1" 47+73.25 TO "CCN1" 63+38.89	SB			1,566		
STAGE 1 PHASE 5, SUBTOTAL		3,416		6,704	75	
STAGE 1 PHASE 6					31	"AHEAD"
"CCN1" 19+36.33 TO "CCN1" 39+40.65	℄	2,005			44	"STOP"
"CCN1" 21+29.97 TO "CCN1" 39+31.60	NB			1,802		
"CCN1" 19+45.75 TO "CCN1" 39+49.71	SB			2,004		
STAGE 1 PHASE 6, SUBTOTAL		2,005		3,806	75	
STAGE 2					62	"AHEAD"
"CCN1" 39+44.22 TO "CCN1" 64+38.46	℄	2,495				
"CCN1" 21+09.28 TO "CCN1" 39+41.80	NB			1,832		
"CCN1" 44+80.67 TO "CCN1" 62+00.00	NB			1,720		
"CCN1" 19+64.32 TO "CCN1" 35+90	SB			1,626		
"CCN1" 46+00 TO "CCN1" 64+38.64	SB			1,839		
"CCN1" 20+10.50 TO "CCN1" 39+44.22	NB		1,934			
"CCN1" 18+81.85TO "CCN1" 39+44.22	SB		1,989			
"CCN1" 34+70	NB				42	TYPE III (L) ARROW
"CCN1" 46+94	NB				33	"STOP" AND "LIMIT LINE"
"LO1" 13+68	EB				33	"STOP" AND "LIMIT LINE"
"LO1" 13+67	EB				42	"STOP" AND "LIMIT LINE"
"CCN1" 48+04	NB				44	"STOP" AND "LIMIT LINE"
STAGE 2, SUBTOTAL		2,495	3,923	7,017	256	
STAGE 3					44	"STOP"
"CCN1" 39+00.17 TO "CCN1" 49+56.32	℄	1,057				
"CCN1" 33+44.62 TO "CCN1" 49+56.01	NB			1,011		
"CCN1" 33+80.00 TO "CCN1" 49+56.62	SB			1,577		
"CCN1" 33+13.61 TO "CCN1" 39+00.17	NB		587			
"CCN1" 33+79.45 TO "CCN1" 39+00.17	SB		521			
STAGE 3, SUBTOTAL		1,057	1,108	2,588	44	
SUBTOTAL		11,119	5,031	26,398	692	
SUBTOTAL		16,150		26,398		
TOTAL		42,548			692	

TEMPORARY RAILING (TYPE K)

LOCATION	LINE	STATION	LF
STAGE 1 PHASE 3	CCN1	46+83 TO 61+63	1,480
STAGE 2	CCN1	39+40 TO 45+80	540
STAGE 3	CCN1	39+00 TO 45+00	600
TOTAL			2,620

ALTERNATIVE TEMPORARY CRASH CUSHION

LOCATION	LINE	STATION	EA
STAGE 1 PHASE 3	CCN1	46+83 TO 61+63	2
STAGE 2	CCN1	39+00 TO 45+00	2
STAGE 2	CCN1	39+40 TO 44+80	2
STAGE 3	CCN1	39+00 TO 45+00	2
TOTAL			8

TRAFFIC PLASTIC DRUM

LOCATION	LINE	STATION	EA
STAGE 1 PHASE 5	CCN1	21+50 TO 39+63	76
DRIVEWAYS	CCN1		61
STAGE 1 PHASE 6	CCN1	19+45 TO 39+40	80
DRIVEWAYS	CCN1		28
STAGE 2	CCN1	33+10 TO 35+40	10
TOTAL			255

TEMPORARY PAVEMENT 3

LOCATION	LINE	STATION BEGIN	STATION END	HMA (TYPE A) * TON
STAGE 1 PHASE 3	CCN1	45+32	46+15	
STAGE 1 PHASE 3	CCN1	57+25	59+25	44
STAGE 1 PHASE 3	CCN1	60+83	63+25	176
SUBTOTAL				220

* SEE ROADWAY ITEMS SUMMARY ON SUMMARY OF QUANTITIES SHEETS FOR TOTAL.

3 REPLACED PER ADDENDUM No. 3 DATED AUGUST 30, 2016

STAGE CONSTRUCTION QUANTITIES

SCQ-1

STATE OF CALIFORNIA - DEPARTMENT OF TRANSPORTATION
Caltrans
DESIGN
FUNCTIONAL SUPERVISOR: NESAR FORMOLI
CALCULATED-DESIGNED BY: KAMAL CHONKIA
CHECKED BY: KEVIN CANFIELD
REVISED BY
DATE REVISED

LAST REVISION 00-00-00
DATE PLOTTED => 25-AUG-2016
TIME PLOTTED => 15:46

Dist	COUNTY	ROUTE	POST MILES TOTAL PROJECT	SHEET No.	TOTAL SHEETS
03	ED	49	23.6/24.5	82	202

REGISTERED CIVIL ENGINEER 5-9-16 DATE

5-9-16
PLANS APPROVAL DATE

REGISTERED PROFESSIONAL ENGINEER RONALD W. TOLLISON No. 67389 Exp. 12/31/16 CIVIL STATE OF CALIFORNIA

THE STATE OF CALIFORNIA OR ITS OFFICERS OR AGENTS SHALL NOT BE RESPONSIBLE FOR THE ACCURACY OR COMPLETENESS OF SCANNED COPIES OF THIS PLAN SHEET.

3

REMOVE PAVEMENT DELINEATION

ALIGNMENT / STATION	LOCATION	REMOVE PAINTED TRAFFIC STRIPE (WATER BLASTING)		REMOVE THERMOPLASTIC TRAFFIC STRIPE (WATER BLASTING)			REMOVE PAINTED PAVEMENT MARKING (WATER BLASTING)	DESCRIPTION
		YELLOW STRIPE	WHITE STRIPE	YELLOW STRIPE		WHITE STRIPE		
		21	27B	22	32	27B		
		LF	LF	LF	LF	LF	SQFT	
STAGE 3								
"CCN1" 33+44 TO "CCN1" 49+56	SB		1,612					
"CCN1" 33+80 TO "CCN1" 49+56	NB		1,576					
"CCN1" 33+13 TO "CCN1" 39+44	℄	1,262						
"CCN1" 33+79 TO "CCN1" 39+44	℄	1,130						
"CCN1" 39+44 TO "CCN1" 49+56	℄	2,024						
"CCN1" 38+10 TO "CCN1" 38+60	NB						31	AHEAD
"CCN1" 38+10 TO "CCN1" 38+60	NB						22	STOP
"CCN1" 34+70	NB						42	TYPE III (L) ARROW
"CCN1" 46+94	NB						33	STOP AND LIMIT LINE
"LO1" 13+68	EB						33	STOP AND LIMIT LINE
"LO1" 13+67	EB						42	STOP AND LIMIT LINE
"CCN1" 48+04	NB						44	STOP AND LIMIT LINE
STAGE 3, SUBTOTAL		4,416	3,188				247	
SUBTOTAL "SCQ-2" SHEET		8,630	8,779	6,852	1,704	5,086	258	
SUBTOTAL		13,046	11,967	6,852	1,704	5,086	505	
TOTAL		25,013		13,642			505	

TYPE III BARRICADE

LOCATION	LINE	STATION	EA
STAGE 1 PHASE 3	CCN1	61+90	4
STAGE 1 PHASE 4	CCN1	48+00 TO 61+50	8
STAGE 1 PHASE 5	CCN1	39+50	7
STAGE 1 PHASE 6	CCN1	22+16 TO 36+25	25
STAGE 2	CCN1	35+90 TO 39+60	12
TOTAL			56

TEMPORARY FENCE (TYPE CL-6)

STATIONS	L†/R†	STAGE 1 PHASE 2	STAGE 2	12' GATE
		LF	LF	EA
"CCN1" 38+00 TO "CCN1" 39+83	L†	279		
"CCN1" 39+76 TO "CCN1" 41+30	R†	187		1
"CCN1" 43+56 TO "CCN1" 44+43	L†	87		
"CCN1" 43+98 TO "CCN1" 45+65	R†	171		
"CCN1" 44+40 TO "CCN1" 45+61	R†		120	
SUBTOTAL		724	120	
TOTAL		844		1

ADDITIONAL STATIONARY MOUNTED CONSTRUCTION AREA SIGNS

SIGN LETTER	SIGN CODE	PANEL SIZE	SIGN MESSAGE	NUMBER OF POST AND SIZE	NUMBER OF SIGNS
G	C12<CA>	48" x 48"	NARROW LANES	1 - 6" x 6"	10
H	W1-3R W13-1(30)	36" x 36" 30" x 30"	REVERSE CURVE (SYMBOL) 30 MPH	1 - 6" x 6"	1
I	W1-3L W13-1(25)	36" x 36" 30" x 30"	REVERSE CURVE(SYMBOL) 25 MPH	1 - 6" x 6"	2
J	W1-3L W13-1(25)	36" x 36" 30" x 30"	REVERSE CURVE(SYMBOL) 35 MPH	1 - 6" x 6"	2
K	W4-1(R†,10)<CA>	72" x 72"	COMBINATION TURN (SYMBOL) 10 MPH	2 - 6" x 6"	1
L	W1-3L W13-1(10)	72" x 72"	COMBINATION TURN (SYMBOL) 10 MPH	2 - 6" x 6"	1

3 **REPLACED PER ADDENDUM No. 3 DATED AUGUST 30, 2016**

STAGE CONSTRUCTION QUANTITIES

SCQ-3

STATE OF CALIFORNIA - DEPARTMENT OF TRANSPORTATION
Caltrans
DESIGN
FUNCTIONAL SUPERVISOR: NESAR FORMOLI
CALCULATED-DESIGNED BY: KAMAL CHONKRIA
CHECKED BY: ANHBANG TONTHAT
REVISED BY
DATE REVISED

LAST REVISION 00-00-00
DATE PLOTTED => 25-AUG-2016
TIME PLOTTED => 15:46

Dist	COUNTY	ROUTE	POST MILES TOTAL PROJECT	SHEET No.	TOTAL SHEETS
03	ED	49	23.6/24.5	97	202

REGISTERED CIVIL ENGINEER 5-9-16 DATE

5-9-16
PLANS APPROVAL DATE

REGISTERED PROFESSIONAL ENGINEER RONALD W. TOLLISON No. 67389 Exp. 12/31/16 CIVIL STATE OF CALIFORNIA

THE STATE OF CALIFORNIA OR ITS OFFICERS OR AGENTS SHALL NOT BE RESPONSIBLE FOR THE ACCURACY OR COMPLETENESS OF SCANNED COPIES OF THIS PLAN SHEET.

ROADWAY ITEMS SUMMARY

STATION	OBLITERATE SURFACING	COLD PLANE ASPHALT CONCRETE PAVEMENT	ROADWAY EXCAVATION (3)	(N) EMBANKMENT	IMPORTED BORROW	CLASS 2 AGGREGATE BASE (3)	HOT MIX ASPHALT (TYPE A) (3)	RUBBERIZED HOT MIX ASPHALT (GAP GRADED)	PLACE HOT MIX ASPHALT (MISCELLANEOUS AREA)	COLORED HOT MIX ASPHALT	TACK COAT	REMOVE GUARDRAIL	TREATED WOOD WASTE
	SQYD	SQYD	CY	CY	CY	CY	TON	TON	SQYD	SQFT	TON	LF	LB
"CCN1" 19+30.00 TO "CCN1" 39+58.95								1,177					
"CCN1" 19+55.42 TO "CCN1" 22+16.87		1,557											
"CCN1" 22+16.87 TO "CCN1" 39+58.95	243					3,566	2,158		736		2.32	201	3,320
"CCN1" 28+02.01 TO "CCN1" 39+41.20	1,810												
"CCN1" 22+16.87 TO "CCN1" 32+50.00			6,789	58									
"CCN1" 32+50.00 TO "CCN1" 39+58.95			3,132	1,947									
"CCN1" 44+77.95 TO "CCN1" 56+50.00			8,301	1,164									
"CCN1" 44+72.00 TO "CCN1" 55+96.11													
"CCN1" 44+77.95 TO "CCN1" 61+50.00						2,650	1,780		650	21,429	2.08	125	
"CCN1" 44+77.95 TO "CCN1" 65+00.00								1,016					
"LI1" 10+78.49 TO "CCN1" 45+92.27	110												
"CCN1" 46+21.36 TO "CCN1" 47+07.63	66												
"CCN1" 47+69.72 TO "CCN1" 56+16.66	992												
"CCN1" 56+50.00 TO "CCN1" 61+50.00			1,177	1,315									
"CCN1" 61+50.00 TO "CCN1 " 65+00.00		1,298											
LOTUS ROAD			193	8		94	61	5					
LITTLE ROAD			7	90		22	31						
ABUTMENTS			120	688									
DRIVEWAYS			360	2		213	297						
TEMPORARY PAVEMENT STAGE 1							220						
OVERSIDE DRAINS							0.0333		6				
STAGE CONSTRUCTION					2,700								
TRAFFIC SIGN POST													1,850
TOTAL	3,221	2,855	20,079	5,272	2,700	6,545	4,547	2,198	1,418	21,429	4.40	326	5,170

ROCK STAIN

SHEET	LOCATION	QUANTITY
		SQFT
L-2	ABUTMENT 1	1,339.2
L-2	ABUTMENT 5	1,255.5
DQ-5	FROM DRAINAGE PLANS	90.0
TOTAL		2,684.7

OVERSIDE DRAINS

SHEET	STATION	LOCATION	LENGTH **	HMA (TYPE A)*	PLACE HMA (Misc AREA)*
	FT	L+/R+	FT	TON	SQYD
L-3	"CCN1" 50+21.00	R+	17.0	0.0130	2.47
L-3	"CCN1" 54+90.00	R+	12.0	0.0106	1.96
L-3	"CCN1" 58+50.00	R+	10.0	0.0097	1.76
SUBTOTAL				0.0333	6.19

* SEE ROADWAY ITEMS SUMMARY TABLE FOR PROJECT TOTALS.
** THE LENGTH OF THE OVERSIDE DRAIN IS MEASURED FROM THE FLOWLINE OF THE CURB TO THE OUTLET OF THE FLUME.

(3) REPLACED PER ADDENDUM No. 3 DATED AUGUST 30, 2016

SUMMARY OF QUANTITIES

Q-1

STATE OF CALIFORNIA - DEPARTMENT OF TRANSPORTATION
Caltrans® DESIGN
FUNCTIONAL SUPERVISOR: NESAR FORMOLI
CALCULATED-DESIGNED BY: KAMAL CHONKRIA
CHECKED BY: ANHBANG TONTHAT
REVISED BY
DATE REVISED

LAST REVISION 00-00-00
DATE PLOTTED => 25-AUG-2016
TIME PLOTTED => 15:46

Dist	COUNTY	ROUTE	POST MILES TOTAL PROJECT	SHEET No.	TOTAL SHEETS
03	ED	49	23.6/24.5	98	202

Ron Tollison 5-9-16
REGISTERED CIVIL ENGINEER DATE

5-9-16
PLANS APPROVAL DATE

REGISTERED PROFESSIONAL ENGINEER
RONALD W. TOLLISON
No. 67389
Exp. 12/31/16
CIVIL
STATE OF CALIFORNIA

THE STATE OF CALIFORNIA OR ITS OFFICERS OR AGENTS SHALL NOT BE RESPONSIBLE FOR THE ACCURACY OR COMPLETENESS OF SCANNED COPIES OF THIS PLAN SHEET.

MINOR CONCRETE (CURB, GUTTER, SIDEWALK, AND DRIVEWAY)

STATION	LOCATION	CURB (TYPE A1-8)	CURB (TYPE A2-6)	3 CURB (TYPE B4) (MOd)	SIDEWALK	DRIVEWAY	MINOR CONCRETE (CURB RAMP)
	L†/R†	CY	CY	CY	CY	CY	CY
"CCN1" 22+16.87 TO "CCN1" 23+00	R†		4.83		5.16		
"CCN1" 22+20.00 TO "CCN1" 22+36.88	R†						1.01
"CCN1" 22+88.61 TO "CCN1" 23+45.92	R†					9.00	
"CCN1" 23+00.00 TO "CCN1" 23+37.71	L†					5.98	
"CCN1" 22+53.33 TO "CCN1" 22+61.86	L†						1.13
"CCN1" 22+61.86 TO "CCN1" 22+88.61	L†		1.96		1.58		
"CCN1" 23+45.92 TO "CCN1" 24+25.05	L†		4.67		5.81		
"CCN1" 23+37.71 TO "CCN1" 26+94.82	R†		21.08		26.19		
"CCN1" 24+76.27 TO "CCN1" 26+83.05	L†		12.21		15.16		
"CCN1" 24+25.06 TO "CCN1" 24+76.27	L†					8.05	
"CCN1" 25+37.00 TO "CCN1" 28+83.98	MEDIAN			5.65			
"CCN1" 26+83.05 TO "CCN1" 27+25.22	L†					6.57	
"CCN1" 26+94.82 TO "CCN1" 27+08.25	R†						2.19
"CCN1" 27+25.22 TO "CCN1" 28+34.48	L†		6.45		8.01		
"CCN1" 28+34.48 TO "CCN1" 28+70.09	L†					5.50	
"CCN1" 28+42.44 TO "CCN1" 28+52.35	R†						1.61
"CCN1" 28+42.44 TO "CCN1" 32+86.03	R†		26.19		32.53		
"CCN1" 28+70.09 TO "CCN1" 32+86.03	L†		24.55		30.50		
"CCN1" 30+49.26 TO "CCN1" 33+68.02	MEDIAN			37.12			
"CCN1" 32+86.03 TO "CCN1" 33+12.34	R†/L†						8.59
"CCN1" 33+12.34 TO "CCN1" 33+12.34	R†		5.83		7.23		
"CCN1" 33+12.34 TO "CCN1" 33+22.58	L†		0.60		0.75		
"CCN1" 33+30.20 TO "CCN1" 33+80.23	L†					7.77	
"CCN1" 33+73.17 TO "CCN1" 36+85.96	L†		18.46		22.94		
"CCN1" 34+11.16 TO "CCN1" 34+62.19	L†					7.92	
"CCN1" 36+85.96 TO "CCN1" 37+70.86	L†					13.37	
"CCN1" 37+48.63 TO "CCN1" 38+02.03	R†					8.30	
"CCN1" 37+70.93 TO "CCN1" 39+31.17	L†		9.46		11.75		
"CCN1" 34+62.19 TO "CCN1" 37+48.63	R†		16.91		21.00		
"CCN1" 44+87.11 TO "CCN1" 44+96.26	L†		0.54		0.67		
"CCN1" 44+96.26 TO "CCN1" 45+05.56	L†						1.51
"CCN1" 44+82.80 TO "CCN1" 46+94.23	R†		12.48		15.50		
"LO1" 13+29.10 TO "LO1" 13+40.77	L†		0.69		0.86		2.13
"CCN1" 55+4.00 TO "CCN1" 57+80.00	R†	7.40					
SUBTOTAL		7.40	166.89	42.77	205.64	72.46	18.17
TOTAL				495.16			18.17

MINOR CONCRETE (TEXTURED PAVING) 3

STATION	CY
"CCN1" 25+39.88 TO "CCN1" 25+81.28	1.7
"CCN1" 30+51.89 TO "CCN1" 32+97.25	10.2
"CCN1" 33+10.75 TO "CCN1" 33+69.25	2.8
TOTAL	14.7

FENCE AND GATE

STATION	DIRECTION	REMOVE FENCE (TYPE BW)	FENCE (TYPE BW, 4 STRAND)	TEMPORARY FENCE (TYPE ESA)
	L†/R†	LF	LF	LF
"CCN1" 39+24 TO "CCN1" 40+67	L†			143
"CCN1" 40+08 TO "CCN1" 42+25	R†			256
"CCN1" 43+13 TO "CCN1" 44+33	L†			82
"LI1" 11+01 TO "CCN1" 45+25	L†			74
"CCN1" 44+00 TO "CCN1" 45+50	R†			150
"CCN1" 52+60 TO "CCN1" 61+50	L†	945	900	
"CCN1" 58+34 TO "CCN1" 60+81	L†			298
"CCN1" 58+66 TO "CCN1" 61+50	R†			275
TOTAL		945	900	1,278

ROCK SLOPE PROTECTION

STATION	RSP (LIGHT, METHOD B)	RSP FABRIC (CLASS 8)
	CY	SQYD
"CCN1" 39+83 TO "CCN1" 40+21	95.0	308.2
"CCN1" 44+37 TO "CCN1" 44+56	48.1	162.6
"CCN1" 54+50 TO "CCN1" 55+52	205.7	231.9
"CCN1" 57+50 TO "CCN1" 60+50	980.8	1,053.5
FROM DRAINAGE QUANTITIES		214.5
TOTAL	1,329.6	1,970.7

3 REPLACED PER ADDENDUM No. 3 DATED AUGUST 30, 2016

SUMMARY OF QUANTITIES

Q-2

REVISED BY | DATE REVISED
KAMAL CHONKRIA | ANHBANG TONTHAT
CALCULATED-DESIGNED BY | CHECKED BY
FUNCTIONAL SUPERVISOR | NESAR FORMOLI
STATE OF CALIFORNIA - DEPARTMENT OF TRANSPORTATION
Caltrans
DESIGN

LAST REVISION 00-00-00 | DATE PLOTTED => 25-AUG-2016 | TIME PLOTTED => 15:46

Dist	COUNTY	ROUTE	POST MILES TOTAL PROJECT	SHEET No.	TOTAL SHEETS
03	ED	49	23.6/24.5	99	202

Ron Tollison 5-9-16
REGISTERED CIVIL ENGINEER DATE

5-9-16
PLANS APPROVAL DATE

REGISTERED PROFESSIONAL ENGINEER
RONALD W. TOLLISON
No. 67389
Exp. 12/31/16
CIVIL
STATE OF CALIFORNIA

THE STATE OF CALIFORNIA OR ITS OFFICERS OR AGENTS SHALL NOT BE RESPONSIBLE FOR THE ACCURACY OR COMPLETENESS OF SCANNED COPIES OF THIS PLAN SHEET.

SEDIMENT CONTROL/PERIMETER CONTROL

STATION	TEMPORARY FIBER ROLL	TEMPORARY LARGE SEDIMENT BARRIER	TEMPORARY SILT FENCE	TEMPORARY GRAVEL BAG BERM	TEMPORARY DRAINAGE INLET PROTECTION	TEMPORARY CONSTRUCTION ENTRANCE	TEMPORARY REINFORCED SILT FENCE	TEMPORARY CHECK DAM
	LF	LF	LF	LF	EA	EA	LF	LF
"CCN1" 19+30 TO "CCN1" 65+00	15,500	500	1,000	80	27	5	1,000	900
TOTAL	15,500	500	1,000	80	27	5	1,000	900

TEMPORARY SOIL STABILIZATION

STATION	MOVE-IN/MOVE OUT (TEMPORARY EROSION CONTROL)	TEMPORARY HYDRAULIC MULCH (BONDED FIBER MATRIX)	TEMPORARY COVER	RAIN EVENT ACTION PLAN	STORM WATER ANNUAL REPORT	STORM WATER SAMPLING AND ANALYSIS DAY
	EA	SQYD	SQYD	EA	EA	EA
"CCN1" 19+30 TO "CCN1" 65+00	10	4,840	4,840	39	2	72
TOTAL	10	4,840	4,840	39	2	72

3 REPLACED PER ADDENDUM No. 3 DATED AUGUST 30, 2016

SUMMARY OF QUANTITIES

Q-3

STATE OF CALIFORNIA - DEPARTMENT OF TRANSPORTATION
Caltrans
DESIGN

FUNCTIONAL SUPERVISOR: NESAR FORMOLI
CALCULATED-DESIGNED BY: KAMAL CHONKRIA
CHECKED BY: KEVIN CANFIELD
REVISED BY
DATE REVISED

LAST REVISION 00-00-00
DATE PLOTTED => 25-AUG-2016
TIME PLOTTED => 15:46

Dist	COUNTY	ROUTE	POST MILES TOTAL PROJECT	SHEET No.	TOTAL SHEETS
03	ED	49	23.6/24.5	100	202

REGISTERED CIVIL ENGINEER DATE

5-9-16
PLANS APPROVAL DATE

REGISTERED PROFESSIONAL ENGINEER
SARA M. ROGERS
No. C 64226
Exp. 6-30-17
CIVIL
STATE OF CALIFORNIA

THE STATE OF CALIFORNIA OR ITS OFFICERS OR AGENTS SHALL NOT BE RESPONSIBLE FOR THE ACCURACY OR COMPLETENESS OF SCANNED COPIES OF THIS PLAN SHEET.

DOMENCHELLI & ASSOCIATES
CIVIL ENGINEERING
1101 INVESTMENT BLVD, SUITE 115
EL DORADO HILLS, CA 95762
(916) 933-1997

EL DORADO IRREGATION DISTRICT
2890 MOSQUITO RAOD
PLACERVILLE, CA 95667
(530) 622-4513 (916) 965-0930

EL DORADO IRRIGATION DISTRICT (EID) QUANTITIES

ITEMS	UNIT	QUANTITY
REMOVE EXISTING WATER LINE (ASBESTOS CEMENT PIPE)	LF	1,200
14" WELDED STEEL PIPE CASING (BRIDGE)	LF	*569
6" WATER MAIN PIPE (EAST END)	LF	1,700
6" WATER MAIN PIPE (WEST END)	LF	1,320
6" WATER MAIN INSTALLATION THROUGH BRIDGE CASING	LF	580
SERVICE CONNECTION	EA	5
FIRE HYDRANT CONNECTION	EA	2
1" AIR RELEASE VALVE	EA	5
TIE-IN TO EXISTING 6" LATERALS	EA	4

*SEE DECK CONTOURS

3 REPLACED PER ADDENDUM No. 3 DATED AUGUST 30, 2016

SUMMARY OF QUANTITIES
Q-4

STATE OF CALIFORNIA - DEPARTMENT OF TRANSPORTATION
Caltrans
CONSULTANT FUNCTIONAL SUPERVISOR
CALCULATED-DESIGNED BY
CHECKED BY
REVISED BY
DATE REVISED

LAST REVISION 00-00-00
DATE PLOTTED => 25-AUG-2016
TIME PLOTTED => 15:46

Dist	COUNTY	ROUTE	POST MILES TOTAL PROJECT	SHEET No.	TOTAL SHEETS
03	ED	49	23.6/24.5	101	202

REGISTERED CIVIL ENGINEER DATE

5/9/16
PLANS APPROVAL DATE

REGISTERED PROFESSIONAL ENGINEER
JOSEPH D DAGGETT
No. 71873
Exp. 12/31/17
CIVIL
STATE OF CALIFORNIA

THE STATE OF CALIFORNIA OR ITS OFFICERS OR AGENTS SHALL NOT BE RESPONSIBLE FOR THE ACCURACY OR COMPLETENESS OF SCANNED COPIES OF THIS PLAN SHEET.

GATEWAY ENGINEERING INC.
5811 E. PRINCETON AVE
FRESNO, CA 93727
(559) 320-0344

CVIN:
9479 N. FORT WASHINGTON RD
SUITE 105- FRESNO CA 93730
(559) 554-9100

CENTRAL VALLEY INDEPENDENT NETWORK (CVIN) QUANTITIES

ITEMS	UNIT	QUANTITY
INSTALL FIBER OPTIC CONDUIT	LF	2,550
INSTALL FIBER OPTIC HANDHOLE	EA	5
WARNING MARKER (FIBER OPTIC)	EA	5
COMMUNICATION CONDUIT (BRIDGE)	LF	*569

*SEE DECK CONTOURS

3 REPLACED PER ADDENDUM No. 3 DATED AUGUST 30, 2016

SUMMARY OF QUANTITIES

Q-5

STATE OF CALIFORNIA - DEPARTMENT OF TRANSPORTATION
Caltrans

CONSULTANT FUNCTIONAL SUPERVISOR
JOSEPH DAGGETT

CALCULATED-DESIGNED BY
CHECKED BY

REVISED BY
DATE REVISED

LAST REVISION 07-06-16
DATE PLOTTED => 25-AUG-2016
TIME PLOTTED => 15:46

Dist	COUNTY	ROUTE	POST MILES TOTAL PROJECT	SHEET No.	TOTAL SHEETS
03	ED	49	23.6/24.5	103	202

REGISTERED CIVIL ENGINEER 5-9-16 DATE

5-9-16
PLANS APPROVAL DATE

REGISTERED PROFESSIONAL ENGINEER RONALD W. TOLLISON No. 67389 Exp. 12/31/16 CIVIL STATE OF CALIFORNIA

THE STATE OF CALIFORNIA OR ITS OFFICERS OR AGENTS SHALL NOT BE RESPONSIBLE FOR THE ACCURACY OR COMPLETENESS OF SCANNED COPIES OF THIS PLAN SHEET.

NOTE

4" Ø PERFORATED PLASTIC PIPE UNDERDRAIN PLACED IN PERVIOUS MATERIAL

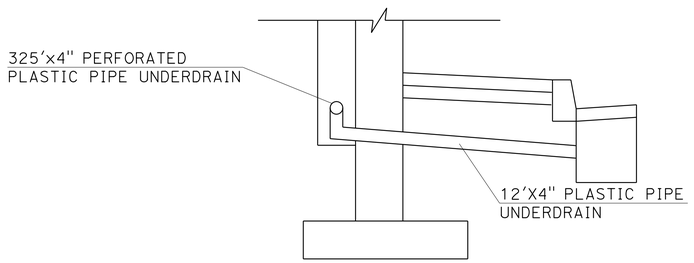

STATION "CCN1" 32+82.50

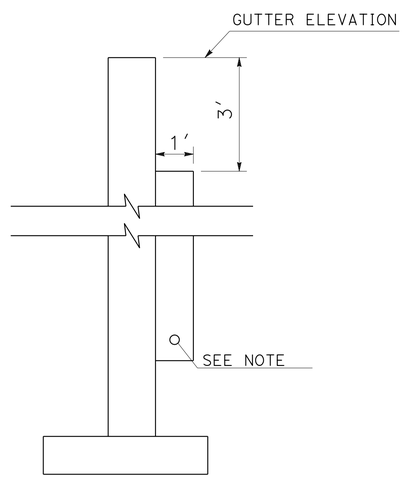

PERVIOUS BACKFILL

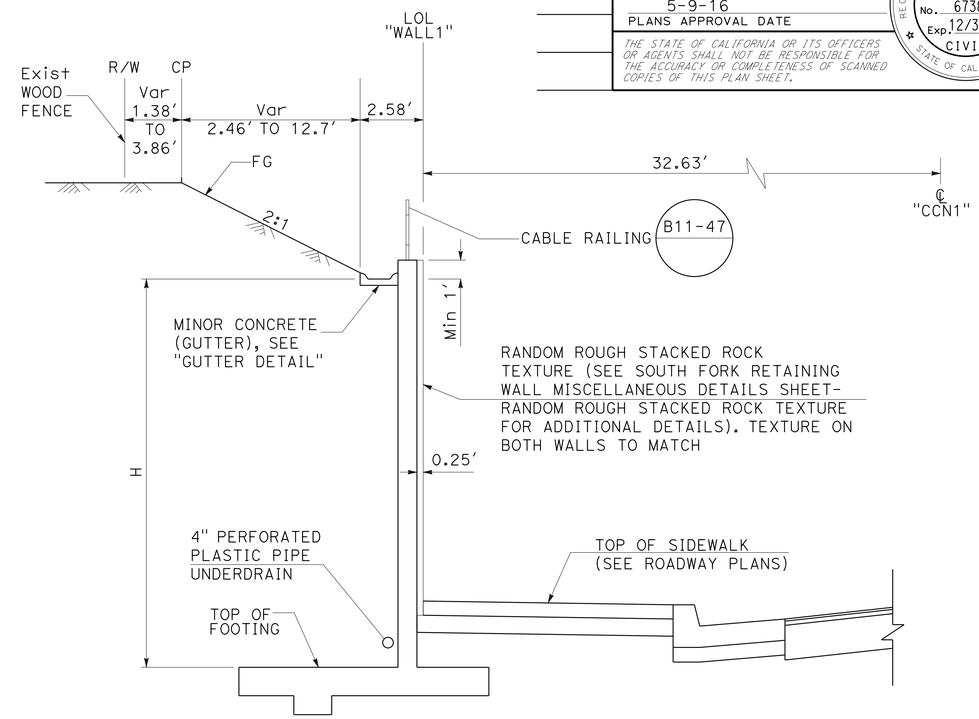

CROSS-SECTION
TYPE 1A RETAINING WALL B3-3A 3

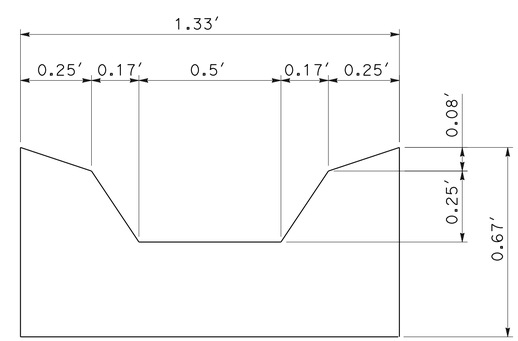

GUTTER DETAIL

RETAINING WALL DETAILS

NO SCALE

3 **REPLACED PER ADDENDUM No. 3 DATED AUGUST 30, 2016**

R1-2

STATE OF CALIFORNIA - DEPARTMENT OF TRANSPORTATION
Caltrans
DESIGN

FUNCTIONAL SUPERVISOR: NESAR FORMOLI
CALCULATED-DESIGNED BY: RON TOLLISON
CHECKED BY: KAMAL CHONKRIA
REVISED BY
DATE REVISED

LAST REVISION 00-00-00
DATE PLOTTED => 25-AUG-2016
TIME PLOTTED => 15:46

Dist	COUNTY	ROUTE	POST MILES TOTAL PROJECT	SHEET No.	TOTAL SHEETS
03	ED	49	23.6/24.5	117A	202

REGISTERED CIVIL ENGINEER

July 15, 2016
PLANS APPROVAL DATE

Hector David Cordova No. C41957 Exp. 3-31-18 CIVIL — REGISTERED PROFESSIONAL ENGINEER — STATE OF CALIFORNIA

THE STATE OF CALIFORNIA OR ITS OFFICERS OR AGENTS SHALL NOT BE RESPONSIBLE FOR THE ACCURACY OR COMPLETENESS OF SCANNED COPIES OF THIS PLAN SHEET.

TO ACCOMPANY PLANS DATED 5-9-16

3 **ADDED PER ADDENDUM No. 3 DATED AUGUST 30, 2016**

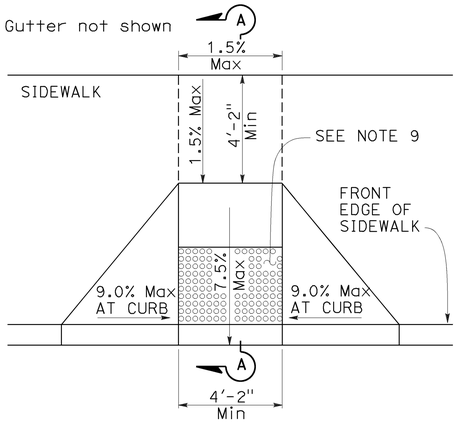

CASE A

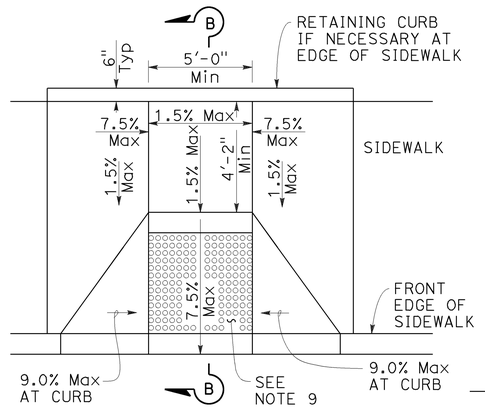

CASE B

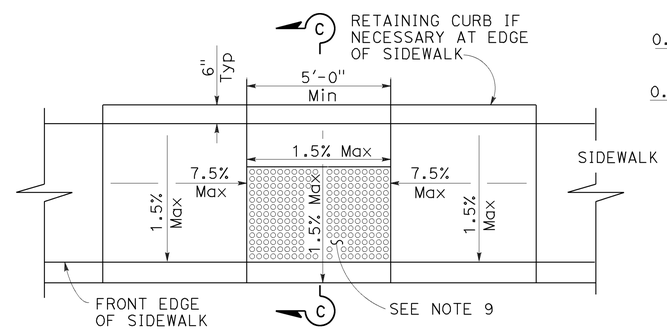

CASE C

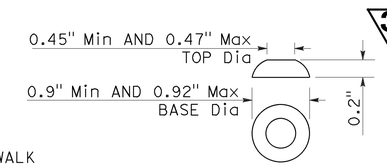

RAISED TRUNCATED DOME

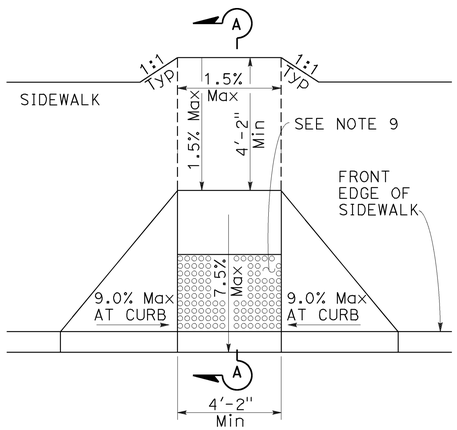

CASE D

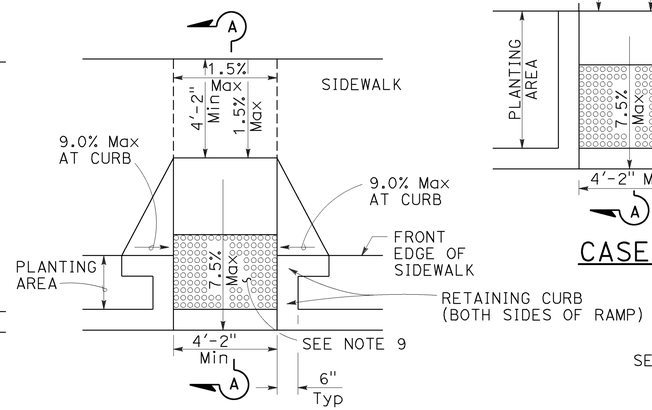

CASE E

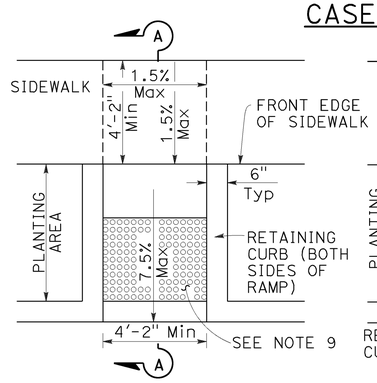

CASE F

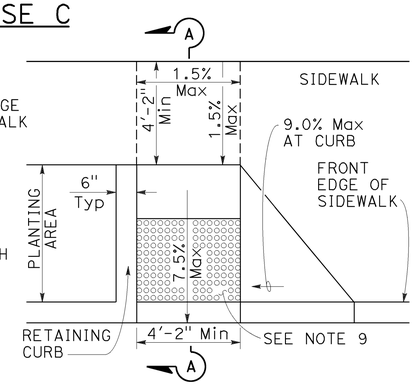

CASE G
See Note 4

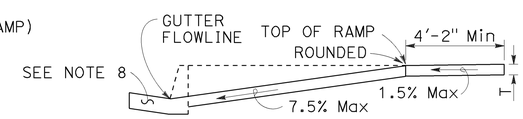

SECTION A-A

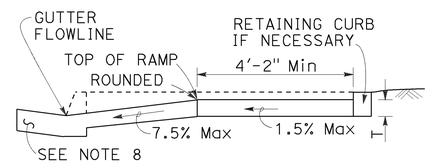

SECTION B-B
Depress entire sidewalk as required

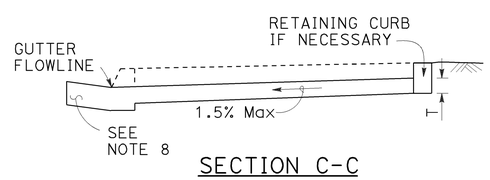

SECTION C-C

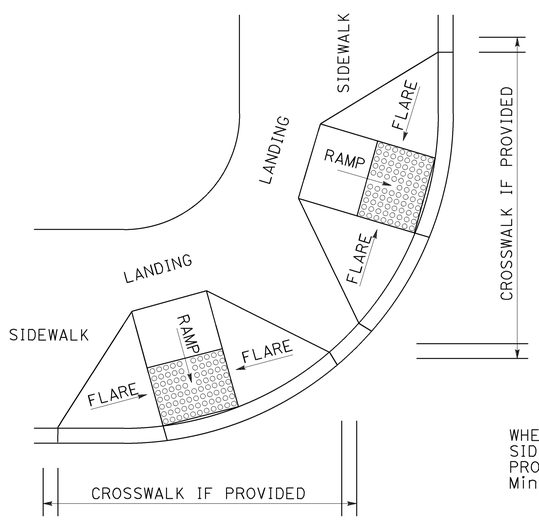

DETAIL A
TYPICAL TWO-RAMP CORNER INSTALLATION
See Note 1

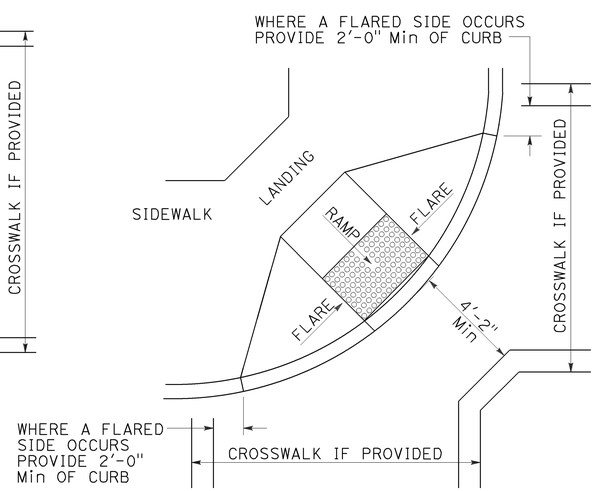

DETAIL B
TYPICAL ONE-RAMP CORNER INSTALLATION
See Notes 1 and 3

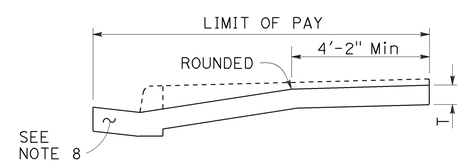

RETROFIT PAY LIMITS
Existing curb and sidewalk

NOTES:

1. As site conditions dictate, Case A through Case G curb ramps may be used for corner installations similar to those shown in Detail A and Detail B. The case of curb ramps used in Detail A do not have to be the same. Case A through Case G curb ramps also may be used at mid block locations, as site conditions dictate.
2. If distance from curb to back of sidewalk is too short to accommodate ramp and 4'-2" platform (landing) as shown in Case A, the sidewalk may be depressed longitudinally as in Case B or C or may be widened as in Case D.
3. When ramp is located in center of curb return, crosswalk configuration must be similar to that shown for Detail B.
4. As site conditions dictate, the retaining curb side and the flared side of the Case G ramp shall be constructed in reversed position.
5. If located on a curve, the sides of the ramp need not be parallel, but the minimum width of the ramp shall be 4'-2".
6. Side slope of ramp flares vary uniformly from a maximum of 9.0% at curb to conform with longitudinal sidewalk slope adjacent to top of the ramp, except in Case C and Case F.
7. The adjacent surfaces at transitions at curb ramps to walks, gutters, and streets shall be at the same level.
8. Counter slopes of adjoining gutters and road surfaces immediately adjacent to and within 24 inches of the curb ramp shall not be steeper than 1V:20H (5.0%). Gutter pan slope shall not exceed 1" of depth for each 2'-0" of width.
9. Curb ramps shall have a detectable warning surface that extends the full width and 3'-0" depth of the ramp. A 4'-0" wide detectable warning surface may be used on a 4'-2" wide curb ramp. Detectable Warning Surfaces shall conform to the requirements in the Standard Specifications.
10. Sidewalk and ramp thickness, "T", shall be 3½" minimum.
11. Utility pull boxes, manholes, vaults and all other utility facilities within the boundaries of the curb ramp will be relocated or adjusted to grade by the owner prior to, or in conjunction with, curb ramp construction.
12. Detectable warning surface may have to be cut to allow removal of utility covers while maintaining full detectable warning width and depth.

RAISED TRUNCATED DOME PATTERN (IN-LINE)
DETECTABLE WARNING SURFACE
See Note 9

STATE OF CALIFORNIA
DEPARTMENT OF TRANSPORTATION

CURB RAMP DETAILS

NO SCALE

RSP A88A DATED JULY 15, 2016 SUPERSEDES STANDARD PLAN A88A
DATED OCTOBER 30, 2015 - PAGE 127 OF THE STANDARD PLANS BOOK DATED 2015.

REVISED STANDARD PLAN RSP A88A

2015 REVISED STANDARD PLAN RSP A88A

3-30-16

Dist	COUNTY	ROUTE	POST MILES TOTAL PROJECT	SHEET No.	TOTAL SHEETS
03	ED	49	23.6/24.5	117B	202

REGISTERED CIVIL ENGINEER

July 15, 2016
PLANS APPROVAL DATE

REGISTERED PROFESSIONAL ENGINEER Carl M. Duan No. C59976 Exp. 6-30-18 CIVIL STATE OF CALIFORNIA

THE STATE OF CALIFORNIA OR ITS OFFICERS OR AGENTS SHALL NOT BE RESPONSIBLE FOR THE ACCURACY OR COMPLETENESS OF SCANNED COPIES OF THIS PLAN SHEET.

TO ACCOMPANY PLANS DATED 5-9-16

NOTE:

1. For notes and Table 2, See Revised Standard Plan RSP D72C.

TABLE 1		
	T_1	Vert BARS
L_1 AND L_2 < 2'-10"	9"	#4 @ 12
L_1 OR L_2 > 2'-10"	12"	#5 @ 12

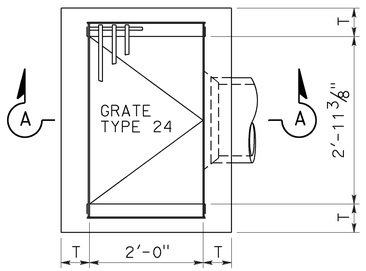

PLAN
TYPE G1

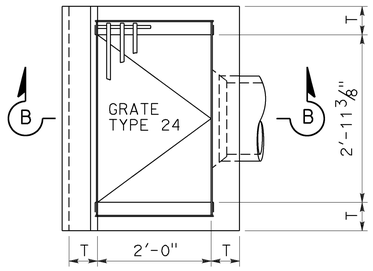

PLAN
TYPE G3

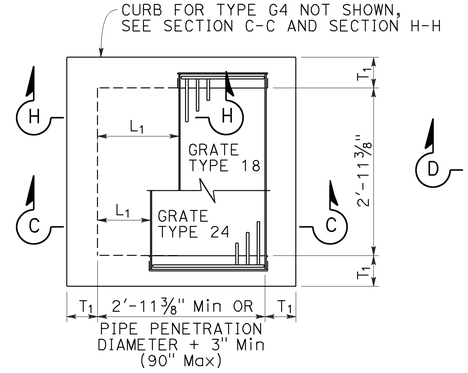

PLAN
STANDARD
TYPE G2 OR G4

FOR "L1", "L2" AND "T1" VALUES, SEE "TABLE 1"

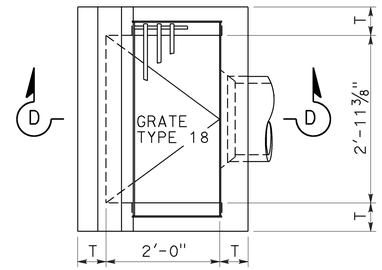

PLAN
TYPE G5

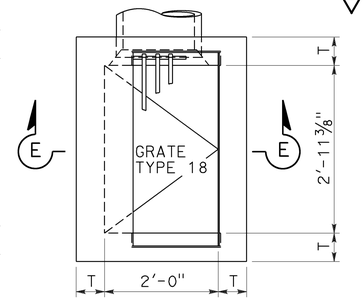

PLAN
TYPE G6

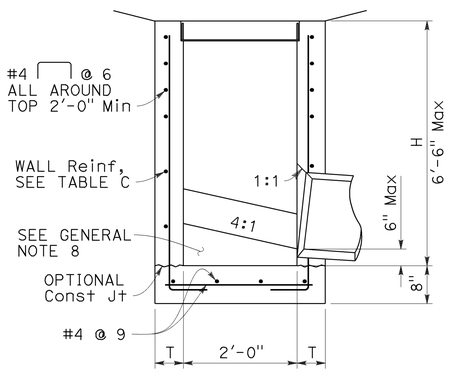

SECTION A-A

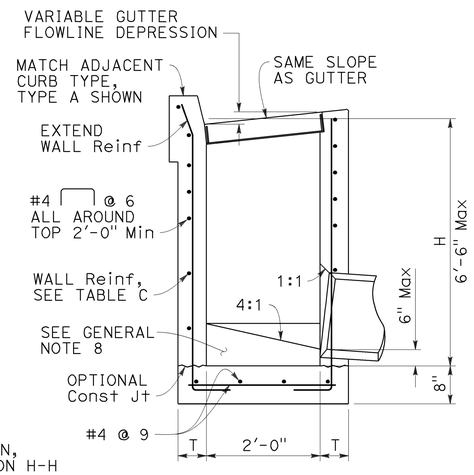

SECTION B-B

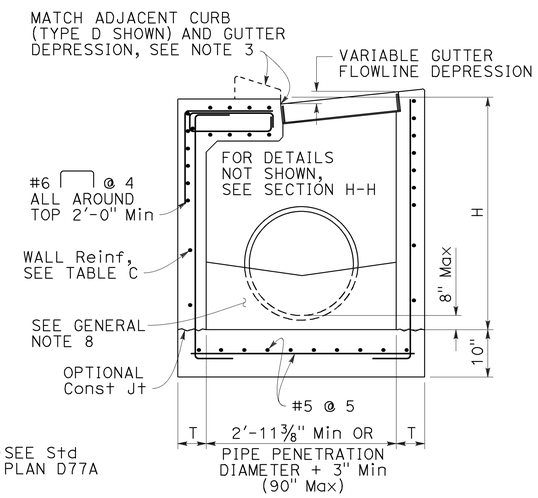

SECTION C-C

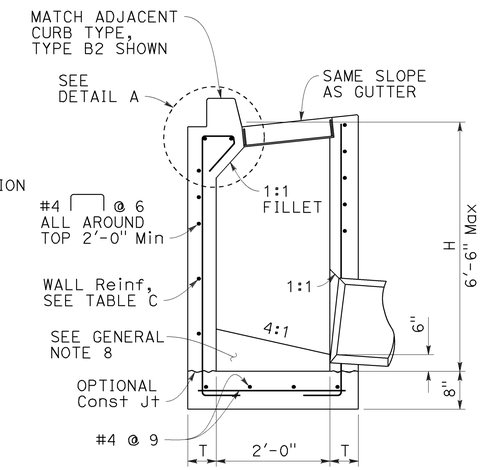

SECTION D-D

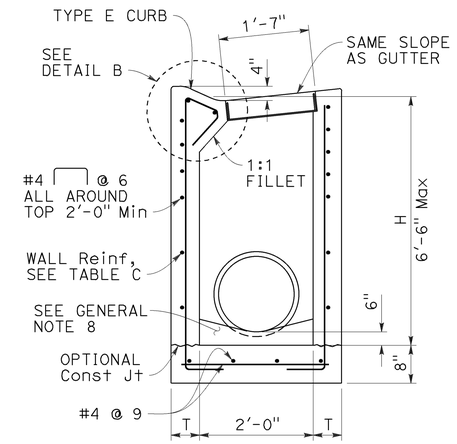

SECTION E-E

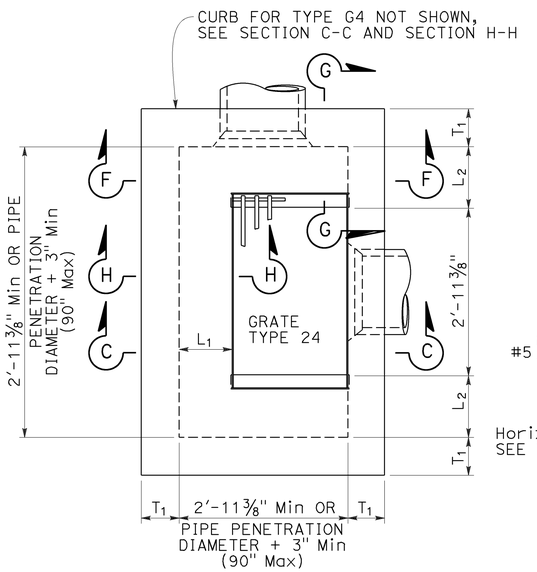

PLAN
EXPANDED
TYPE G2 OR G4

(INTEGRAL TOP ALTERNATIVE)
FOR "L" AND "T" VALUES, SEE TABLE 1

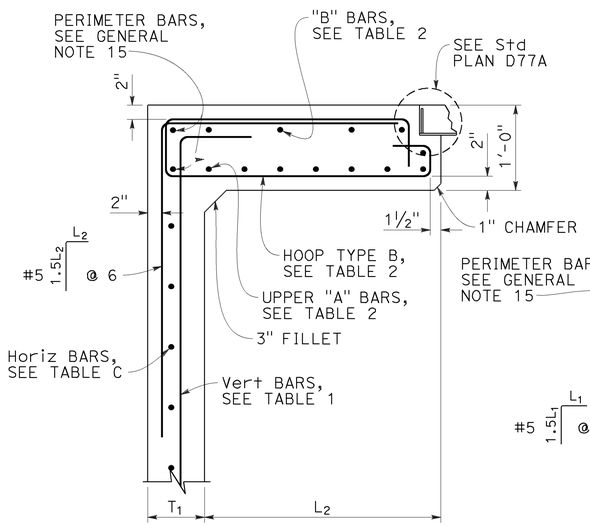

SECTION G-G

FOR "L1", "L2" AND "T1" VALUES, SEE "TABLE 1"

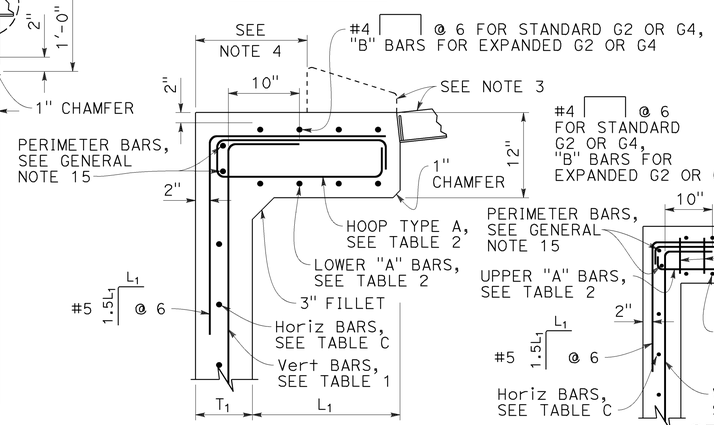

SECTION H-H

FOR "L1", "L2" AND "T1" VALUES, SEE "TABLE 1"

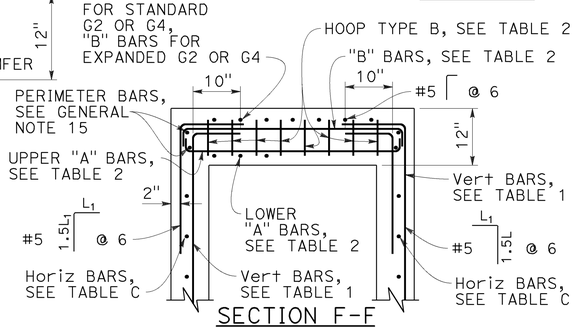

SECTION F-F

FOR "L1", "L2" AND "T1" VALUES, SEE "TABLE 1"

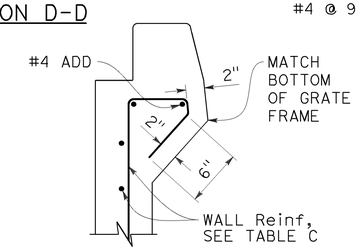

DETAIL A

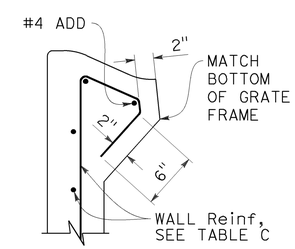

DETAIL B

STATE OF CALIFORNIA
DEPARTMENT OF TRANSPORTATION

CIP DRAINAGE INLETS TYPES G1, G2, G3, G4, G5 AND G6

NO SCALE

RSP D72A DATED JULY 15, 2016 SUPPLEMENTS THE STANDARD PLANS BOOK DATED 2015.

2015 REVISED STANDARD PLAN RSP D72B

3 ADDED PER ADDENDUM No. 3 DATED AUGUST 30, 2016

REVISED STANDARD PLAN RSP D72B

6-20-16

Dist	COUNTY	ROUTE	POST MILES TOTAL PROJECT	SHEET No.	TOTAL SHEETS
03	ED	49	23.6/24.5	117C	202

REGISTERED CIVIL ENGINEER

July 15, 2016
PLANS APPROVAL DATE

REGISTERED PROFESSIONAL ENGINEER
Carl M. Duan
No. C59976
Exp. 6-30-18
CIVIL
STATE OF CALIFORNIA

THE STATE OF CALIFORNIA OR ITS OFFICERS OR AGENTS SHALL NOT BE RESPONSIBLE FOR THE ACCURACY OR COMPLETENESS OF SCANNED COPIES OF THIS PLAN SHEET.

TO ACCOMPANY PLANS DATED 5-9-16

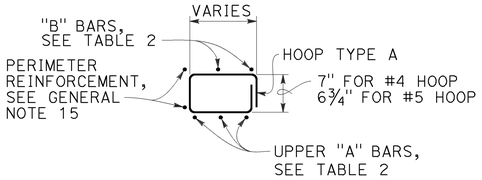

HOOP TYPE A

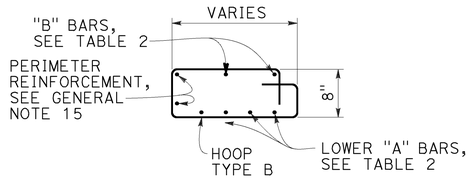

HOOP TYPE B

NOTES:

1. See Revised Standard Plan RSP D72F for General Notes and additional details. See Revised Standard Plan RSP D72G for tables and quantities.
2. Type G4 inlet can use Grate Type 18 or 24. Type G2 inlet uses Grate Type 24.
3. Type G4 inlet details are similar to Type G2 inlet details, except for the addition of a curb and sloped grate to match the adjacent curb and gutter depression.
4. Dimension will vary with different grates, curb types, box width and wall thickness.

TABLE 2 - TOP SLAB REINFORCEMENT

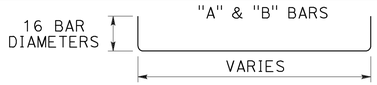

	W/ CURB	W/O CURB
"A" BARS	#4 @ 5 (2 BARS Min)	#5 @ 5 (3 BARS Min)
"B" BARS	#4 @ 10 (2 BARS Min)	#4 @ 12 (2 BARS Min)
HOOPS ("A" & "B")	#4 @ 5	#5 @ 5

ROTATE "A" AND "B" BARS SO HOOKED ENDS WILL MAINTAIN 2" CLEAR COVERAGE.

STATE OF CALIFORNIA
DEPARTMENT OF TRANSPORTATION

CIP DRAINAGE INLETS TYPES G1, G2, G3, G4, G5 AND G6

NO SCALE

3 **ADDED PER ADDENDUM No. 3 DATED AUGUST 30, 2016**

RSP D72C DATED JULY 15, 2016 SUPPLEMENTS THE STANDARD PLANS BOOK DATED 2015.

REVISED STANDARD PLAN RSP D72C

2015 REVISED STANDARD PLAN RSP D72C

6-20-16

Dist	COUNTY	ROUTE	POST MILES TOTAL PROJECT	SHEET No.	TOTAL SHEETS
03	ED	49	23.6/24.5	117D	202

REGISTERED CIVIL ENGINEER

July 15, 2016
PLANS APPROVAL DATE

REGISTERED PROFESSIONAL ENGINEER Carl M. Duan No. C59976 Exp. 6-30-18 CIVIL STATE OF CALIFORNIA

THE STATE OF CALIFORNIA OR ITS OFFICERS OR AGENTS SHALL NOT BE RESPONSIBLE FOR THE ACCURACY OR COMPLETENESS OF SCANNED COPIES OF THIS PLAN SHEET.

TO ACCOMPANY PLANS DATED 5-9-16

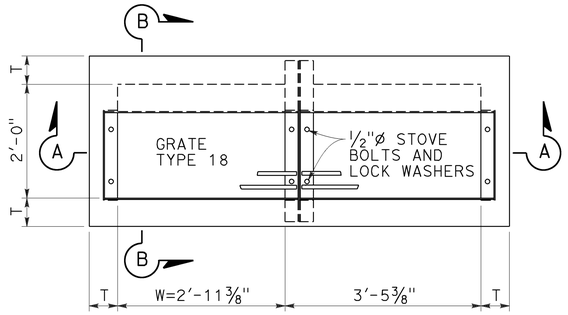

PLAN
TYPE GT1

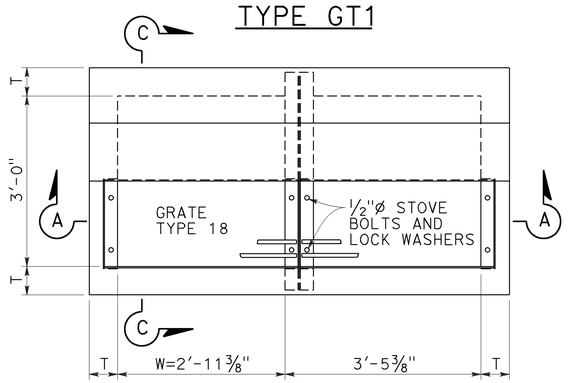

PLAN
TYPE GT2

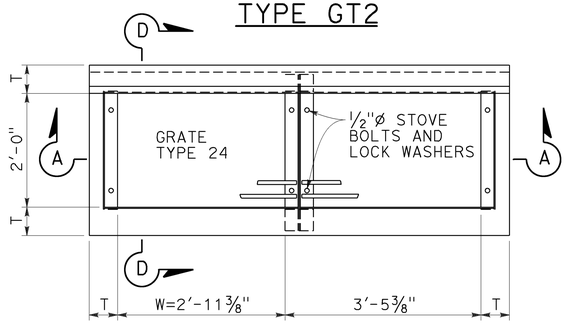

PLAN
TYPE GT3

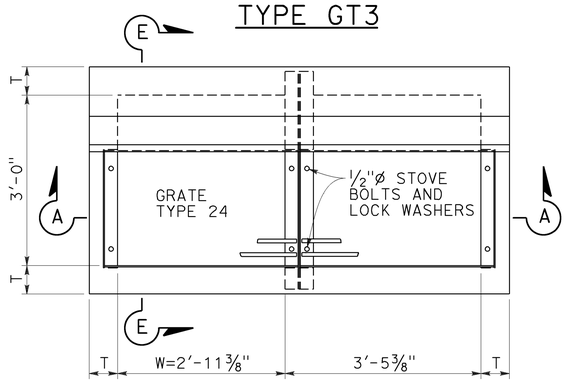

PLAN
TYPE GT4

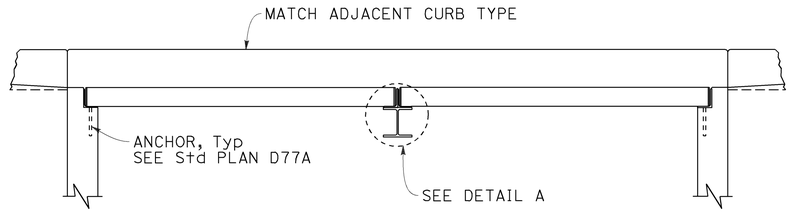

SECTION A-A

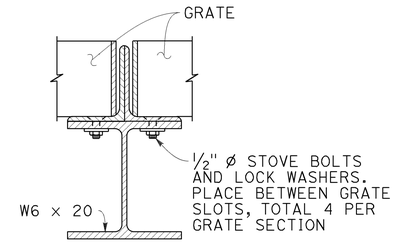

DETAIL A

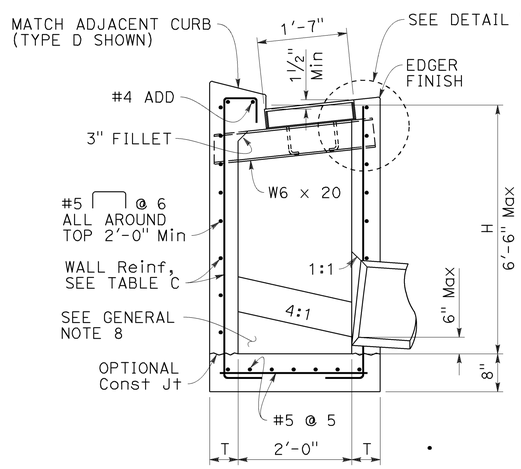

SECTION B-B

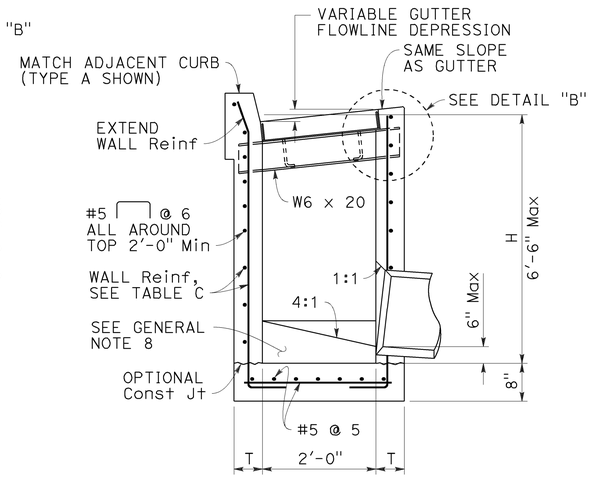

SECTION D-D

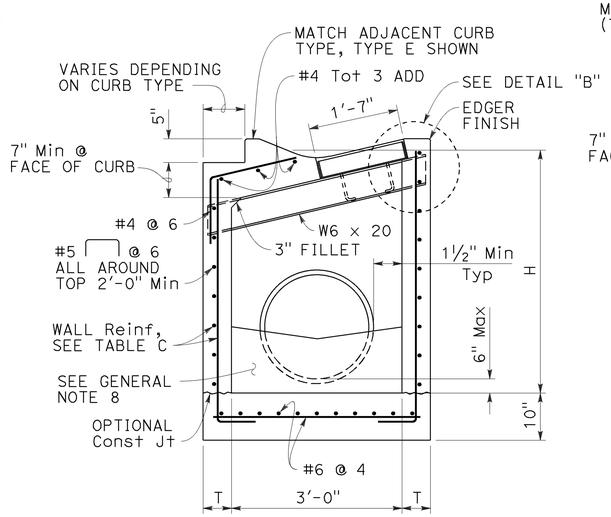

SECTION C-C

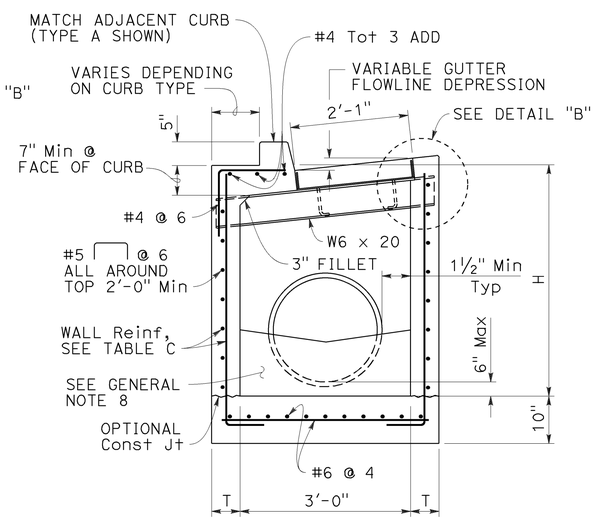

SECTION E-E

NOTES:

1. See Revised Standard Plan RSP D72F for General Notes and additional details. See Revised Standard Plan RSP D72G for tables, wall thickness "T" and quantities.
2. W=2'-11 3/8" for one grate. Add 3'-5 3/8" for additional grates in tandem.
3. Complete joint penetration butt welds may be substituted for the fillet welds on all anchors.
4. Standard square, hexagon, round or equivalent headed anchors may be substituted for the right angle hooks on the anchors shown on this plan.

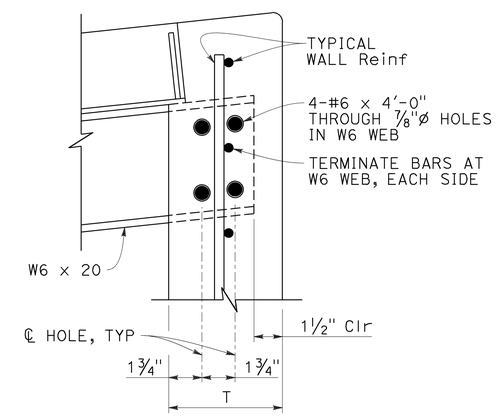

DETAIL "B"
(SIMILAR OPPOSITE END OF W6)

STATE OF CALIFORNIA
DEPARTMENT OF TRANSPORTATION

CIP DRAINAGE INLETS TYPES GT1, GT2, GT3 AND GT4

NO SCALE

3 ADDED PER ADDENDUM No. 3 DATED AUGUST 30, 2016

RSP D72D DATED JULY 15, 2016 SUPPLEMENTS THE STANDARD PLANS BOOK DATED 2015.

REVISED STANDARD PLAN RSP D72D

2015 REVISED STANDARD PLAN RSP D72D

6-20-16

Dist	COUNTY	ROUTE	POST MILES TOTAL PROJECT	SHEET No.	TOTAL SHEETS
03	ED	49	23.6/24.5	117E	202

REGISTERED CIVIL ENGINEER

July 15, 2016
PLANS APPROVAL DATE

REGISTERED PROFESSIONAL ENGINEER Carl M. Duan No. C59976 Exp. 6-30-18 CIVIL STATE OF CALIFORNIA

THE STATE OF CALIFORNIA OR ITS OFFICERS OR AGENTS SHALL NOT BE RESPONSIBLE FOR THE ACCURACY OR COMPLETENESS OF SCANNED COPIES OF THIS PLAN SHEET.

TO ACCOMPANY PLANS DATED 5-9-16

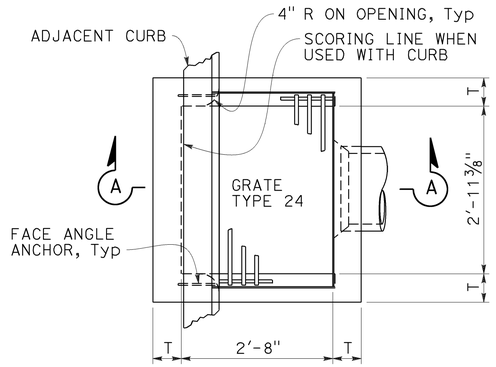

PLAN
TYPE GO

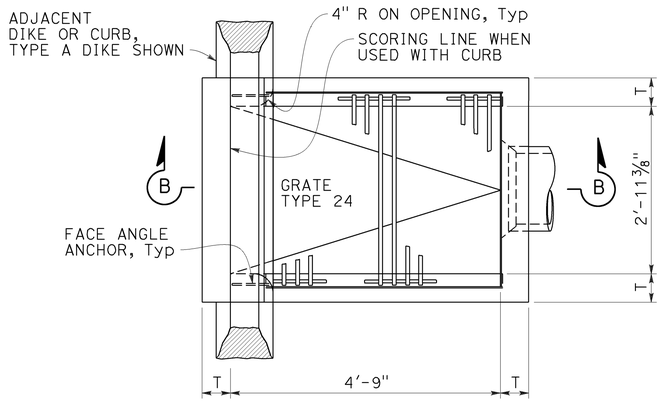

PLAN
TYPE GDO

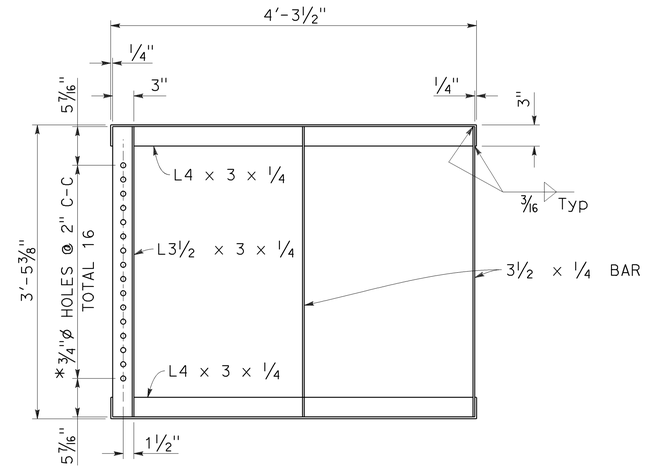

GRATE FRAME FOR TYPE GDO INLET
* HOLES REQUIRED ONLY WITH TRASH RACK

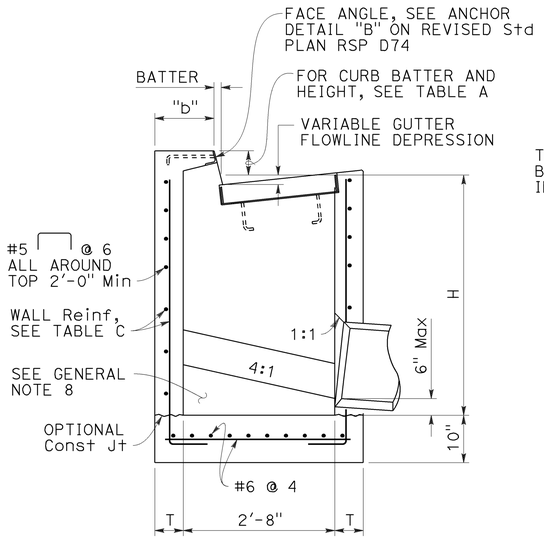

SECTION A-A

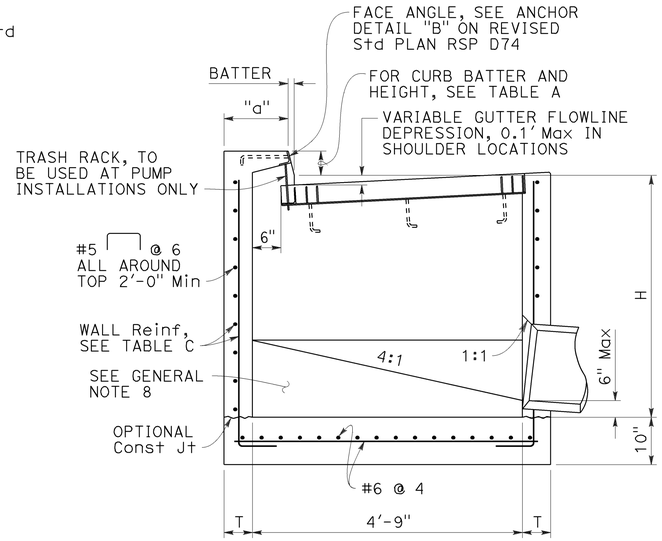

SECTION B-B

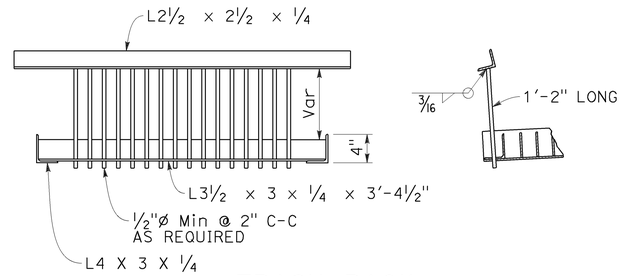

TRASH RACK
(FOR USE WITH PUMP INSTALLATION)

TABLE A				
CURB TYPE	NORMAL CURB HEIGHT	CURB BATTER	"a" DIMENSION	"b" DIMENSION
A1-6	6"	1½"	T+7½"	T+6½"
A1-8	8"	2"	T+7"	T+6"
B1-6	6"	4"	T+5"	T+4"
TYPE A DIKE	6"	3"	T+6"	T+5"

Height of curb opening will vary with the type of curb and the depth of the local depression.

NOTES:

1. See Revised Standard Plan RSP D72F for General Notes and additional details. See Revised Standard Plan RSP D72G for tables, wall thickness "T" and quantities.
2. Where shown on the project plans, place a ¾"ø plain round protection bar horizontally across the length of the opening and bend back 4" into the inlet wall on each side.
3. Complete joint penetration butt welds may be substituted for the fillet welds on all anchors.
4. Standard square, hexagon, round or equivalent headed anchors may be substituted for the right angle hooks on the anchors shown on this plan.

STATE OF CALIFORNIA
DEPARTMENT OF TRANSPORTATION

CIP DRAINAGE INLETS TYPES GO AND GDO

NO SCALE

3 **ADDED PER ADDENDUM No. 3 DATED AUGUST 30, 2016**

RSP D72E DATED JULY 15, 2016 SUPPLEMENTS THE STANDARD PLANS BOOK DATED 2015.

REVISED STANDARD PLAN RSP D72E

2015 REVISED STANDARD PLAN RSP D72E

6-20-16

Dist	COUNTY	ROUTE	POST MILES TOTAL PROJECT	SHEET No.	TOTAL SHEETS
03	ED	49	23.6/24.5	117F	202

REGISTERED CIVIL ENGINEER

July 15, 2016
PLANS APPROVAL DATE

REGISTERED PROFESSIONAL ENGINEER Carl M. Duan No. C59976 Exp. 6-30-18 CIVIL STATE OF CALIFORNIA

THE STATE OF CALIFORNIA OR ITS OFFICERS OR AGENTS SHALL NOT BE RESPONSIBLE FOR THE ACCURACY OR COMPLETENESS OF SCANNED COPIES OF THIS PLAN SHEET.

TO ACCOMPANY PLANS DATED 5-9-16

GENERAL NOTES:

1. "H" is measured from top of bottom slab to the normal gutter grade line undepressed at the curb face.
2. For "T" wall thickness and reinforcement, see Table C on Revised Standard Plan RSP D72G.
3. Wall reinforcement must be placed in the center of the wall thickness with horizontal bars placed on the exterior face. Bottom slab concrete cover must be 3" clear on the interior face unless otherwise noted. Top slab concrete cover must be 2" clear on the exterior face unless otherwise noted. Reinforcement spacing is in inches unless otherwise noted.
4. Steps - None required where "H" is less than 2'-6". Where "H" is 2'-6" or more, install steps with lowest rung 1'-0" above the floor and highest rung not more than 6" below bottom of lid. The distance between steps must not exceed 1'-0" and be uniform throughout the length of the wall. Place steps in the wall without an opening. Steps inserts may be substituted for the bar steps. Step inserts must comply with State Industrial Safety Requirements. See Revised Standard Plan RSP D74 for step details.
5. Pipe(s) can be placed in any wall. Adjacent to each side of the opening, place additional reinforcement equivalent to half the interupted main reinforcement. For larger pipes greater than or equal to 42" diameter, also add 4 diagonal bars, 1 bar each side. Bars must be the same size as the larger of the main vertical or horizontal bars. Extend bars one development length past the intersection with the adjacent diagonal bar, or where bars intersect mid thickness of adjacent wall bottom or top of non-continuous wall, bend ends as required into same plane.
6. Set inlet so that grate bars are parallel to direction of principal surface flow.
7. Curb section must match adjacent curb.
8. Except for inlets used as junction boxes, basin floors must have wood trowel finish and a minimum slope of 4:1, unless otherwise noted, from all directions toward outlet pipe by casting grout fill on top of the bottom slab. The additional volume to achieve the 4:1 slope may also be achieved by casting the bottom slab and fill as a composite concrete element.
9. See Standard Plans D77A and D77B for grate and frame details and weights of miscellaneous iron and steel.
10. See Standard Plans D78A and D78B for gutter depression details.
11. See Standard Plan A87A and Revised Standard Plan RSP A87B for curb and dike details.
12. Details shown apply to metal, concrete and plastic pipe(s).
13. The Contractor may use WWR instead of bar reinforcement. The ratio of bar reinforcement to WWR shall be based on the yield strength ratio.
14. Cast-in-place (CIP) inlets to be formed around all pipes/stubs intersecting the inlet, and concrete poured in one continuous operation.
15. Perimeter reinforcement must not be smaller than main bars and #4 and serves as a rigid frame to position and attach the required structural reinforcement and may be tack welded at outer corners when using ASTM A706 weldable bars.

DESIGN NOTES:

1. Design Specifications: AASHTO LRFD Bridge Design Specifications, 6th edition with 2012 Interims and Errata and CA Amendments.
2. Live Load (AASHTO LRFD 3.6.1.2):
   HL-93, consists of design truck or tandem, and design lane load.
   Dynamic Load Allowance, IM = 33%
   Multiple Presence Factor, m = 1.0
   Design lane load was excluded in Top Slab design.
   A wheel load of 8 kips without impact factor was used for top slabs that are above a curb.
3. Earth Load:
   Vertical pressure = 140 pcf
   Lateral pressure:
   = 100 pcf for walls with flat embankment
   = 140 pcf For walls with slope embankment, 1.5:1 Max
4. Downdrag: ϕ = 34° and γ_E = 120 pcf.
5. Buoyancy: γ_W = 62.4 pcf to finished grade
6. Reinforced Concrete: f'c = 3.6 ksi, fy = 60.0 ksi.
7. Soil pressures shown are factored per AASHTO LRFD and include self-weight, live load and downdrag.

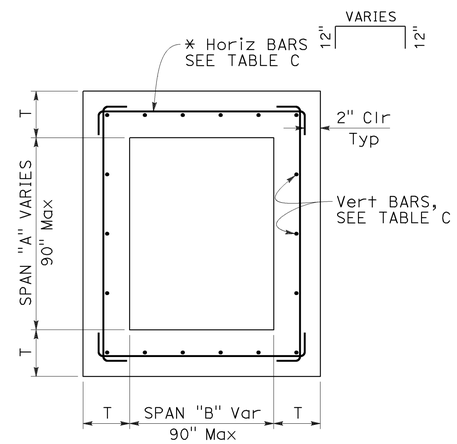

TYPICAL INLET PLAN

* ALTERNATIVE HORIZONTAL BARS

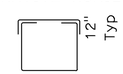

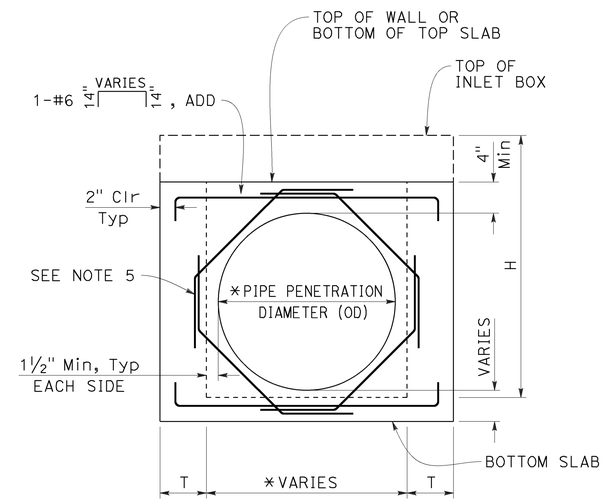

TYPICAL WALL
W/ PIPE OPENING

* SEE "SKEWED PIPE PLAN"

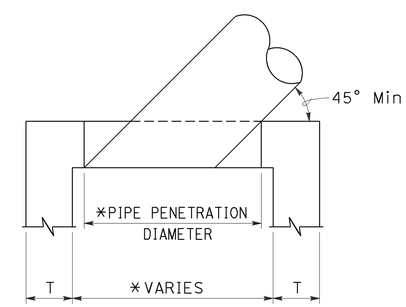

SKEWED PIPE PLAN

* ADJUST PIPE PENETRATION AND BOX WIDTH FOR SKEWED PIPES.

STATE OF CALIFORNIA
DEPARTMENT OF TRANSPORTATION

CIP DRAINAGE INLET NOTES

NO SCALE

3 ADDED PER ADDENDUM No. 3 DATED AUGUST 30, 2016

RSP D72F DATED JULY 15, 2016 SUPPLEMENTS THE STANDARD PLANS BOOK DATED 2015.

REVISED STANDARD PLAN RSP D72F

2015 REVISED STANDARD PLAN RSP D72F

6-20-16

Dist	COUNTY	ROUTE	POST MILES TOTAL PROJECT	SHEET No.	TOTAL SHEETS
03	ED	49	23.6/24.5	117G	202

REGISTERED CIVIL ENGINEER

July 15, 2016
PLANS APPROVAL DATE

REGISTERED PROFESSIONAL ENGINEER
Carl M. Duan
No. C59976
Exp. 6-30-18
CIVIL
STATE OF CALIFORNIA

THE STATE OF CALIFORNIA OR ITS OFFICERS OR AGENTS SHALL NOT BE RESPONSIBLE FOR THE ACCURACY OR COMPLETENESS OF SCANNED COPIES OF THIS PLAN SHEET.

TO ACCOMPANY PLANS DATED 5-9-16

TABLE A - CONCRETE QUANTITIES

TYPE	H=3'-0" TO 8'-0"		H=8'-1" TO 20'-0"	
	H=3'-0" (CY)	ADDITIONAL CONCRETE PER FOOT (CY)	H=8'-1" (CY)	ADDITIONAL CONCRETE PER FOOT (CY)
G1	0.95	0.220	SEE NOTE 2	SEE NOTE 2
G2*	2.00	0.411	5.11	0.525
G3	1.03	0.220	SEE NOTE 2	SEE NOTE 2
G4 (TYPE 18)*	2.02	0.411	5.14	0.525
G4 (TYPE 24)*	1.99	0.411	5.10	0.525
G5	1.02	0.220	SEE NOTE 2	SEE NOTE 2
G6	1.04	0.220	SEE NOTE 2	SEE NOTE 2
OS	1.53	0.278	5.08	0.504
OL7	2.06	0.278	6.17	0.566
OL10	2.85	0.278	6.85	0.566
OL14	3.81	0.278	7.78	0.566
OL21	5.71	0.278	9.62	0.566
GOL7	2.48	0.313	6.89	0.630
GOL10	3.41	0.313	7.85	0.630
GT1	1.72	0.248	SEE NOTE 2	SEE NOTE 2
GT2	2.93	0.530	7.73	0.762
GT3	1.74	0.348	SEE NOTE 2	SEE NOTE 2
GT4	2.83	0.530	7.62	0.762
GO	1.26	0.245	4.90	0.506
GDO	1.74	0.322	6.33	0.647

* Quantities are based on the minimum interior dimensions.

TABLE B - REINFORCEMENT QUANTITIES

TYPE	H=3'-0" TO 8'-0"		H=8'-1" TO 20'-0"	
	H=3'-0" (LB)	ADDITIONAL REINFORCEMENT PER FOOT (LB)	H=8'-1" (LB)	ADDITIONAL REINFORCEMENT PER FOOT (LB)
G1	118	22.20	SEE NOTE 2	SEE NOTE 2
G2*	729	86.48	1794	171.79
G3	118	22.20	SEE NOTE 2	SEE NOTE 2
G4 (TYPE 18)*	647	86.48	1675	171.79
G4 (TYPE 24)*	647	86.48	1675	171.79
G5	118	22.20	SEE NOTE 2	SEE NOTE 2
G6	118	22.20	SEE NOTE 2	SEE NOTE 2
OS	245	49.88	1057	120.77
OL7	458	50.53	1324	126.75
OL10	729	50.53	1595	126.75
OL14	982	50.53	1849	126.75
OL21	1453	50.53	2320	126.75
GOL7	644	83.57	1969	148.79
GOL10	883	83.57	2208	148.79
GT1	486	96.91	SEE NOTE 2	SEE NOTE 2
GT2	1040	117.08	2543	233.37
GT3	486	96.91	SEE NOTE 2	SEE NOTE 2
GT4	1001	117.08	2556	237.88
GO	308	32.44	1013	96.56
GDO	519	57.09	1654	165.66

* Quantities are based on the minimum interior dimensions.

TABLE D

INLET	CURB USED IN QUANTITIES
G1	-
G2	-
G3	A1-6
G4 (Type 18)	A1-6
G4 (Type 24)	A1-6
G5	B1-4
G6	½E
OS	-
OL7	-
OL10	-
OL14	-
OL21	-
GOL7	-
GOL10	-
GT1	D-6
GT2	E
GT3	A2-8
GT4	A2-8
GO	-
GDO	-

TABLE C - WALL REINFORCEMENT

TYPE	H≤8 (T=6",UON)		8<H≤20 (T=11",UON)	
	HORIZ	VERTICAL	HORIZ	VERTICAL
OS	#4 @ 8	#4 @ 6	#5 @ 6	#6 @ 4.5
OL	#4 @ 6	#4 @ 6	#5 @ 6	#6 @ 4.5
GOL	#5 @ 6	#5 @ 8	#6 @ 5	#6 @ 4.5
G1 (H≤6-6")	#3 @ 6	#3 @ 6	-	-
G2	T=9" #5 @ 5	#5 @ 5	T=11" #6 @ 4	#6 @ 4.5
G3 (H≤6-6")	#3 @ 6	#3 @ 6	-	-
G4	T=9" #5 @ 5	#5 @ 5	T=11" #6 @ 4	#6 @ 4.5
G5 (H≤6-6")	#3 @ 6	#3 @ 6	-	-
G6 (H≤6-6")	#3 @ 6	#3 @ 6	-	-
GT1 (H≤6-6")	#5 @ 6	#5 @ 6	-	-
GT2	T=8" #5 @ 6	#5 @ 6	#6 @ 4	#6 @ 4.5
GT3 (H≤6-6")	#5 @ 6	#5 @ 6	-	-
GT4	T=8" #5 @ 6	#5 @ 6	#6 @ 4	#6 @ 4.5
GO	#4 @ 9	#4 @ 6	#4 @ 6	#6 @ 4.5
GDO	#4 @ 6	#4 @ 6	#5 @ 4	#6 @ 4.5

TABLE E

SOIL PRESSURE BELOW BASE SLAB (ksf)		
TYPE	H=8'-0"	8'-0"< H ≤20'-0"
OS	2.93	5.56
OL*	2.93	5.56
GOL*	2.50	5.06
G1	3.67	-
G2	2.99	5.91
G3	3.67	-
G4	2.99	5.91
G5	3.67	-
G6	3.67	-
GT1	3.66	-
GT2	3.91	6.07
GT3	3.86	-
GT4	3.91	6.07
GO	3.42	6.11
GDO	2.52	6.95

* Main Box

NOTES:

1. No deduction or adjustment was made to the quantities of concrete and reinforcement for pipe openings, floor alternatives or curb type.
2. Maximum allowable height is 6'-6".
3. Quantities are approximate and for design purposes only.
4. Design is based on envelope of level and sloped ground.

STATE OF CALIFORNIA
DEPARTMENT OF TRANSPORTATION

CIP DRAINAGE INLET TABLES

NO SCALE

3 ADDED PER ADDENDUM No. 3 DATED AUGUST 30, 2016

RSP D72G DATED JULY 15, 2016 SUPPLEMENTS THE STANDARD PLANS BOOK DATED 2015.

REVISED STANDARD PLAN RSP D72G

2015 REVISED STANDARD PLAN RSP D72G

6-20-16

Dist	COUNTY	ROUTE	POST MILES TOTAL PROJECT	SHEET No.	TOTAL SHEETS
03	ED	49	23.6/24.5	117H	202

REGISTERED CIVIL ENGINEER

July 15, 2016
PLANS APPROVAL DATE

REGISTERED PROFESSIONAL ENGINEER Carl M. Duan No. C59976 Exp. 6-30-18 CIVIL STATE OF CALIFORNIA

THE STATE OF CALIFORNIA OR ITS OFFICERS OR AGENTS SHALL NOT BE RESPONSIBLE FOR THE ACCURACY OR COMPLETENESS OF SCANNED COPIES OF THIS PLAN SHEET.

TO ACCOMPANY PLANS DATED 5-9-16

NOTE:

1. For notes and Table 2, See Revised Standard Plan RSP D73C.

TABLE 1		
	T_1	Vert BARS
L_1 AND L_2 < 2'-10"	8"	#4 @ 12
L_1 OR L_2 > 2'-10"	12"	#5 @ 12

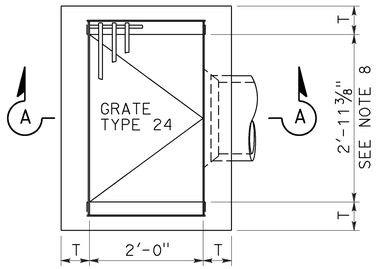

PLAN
TYPE G1

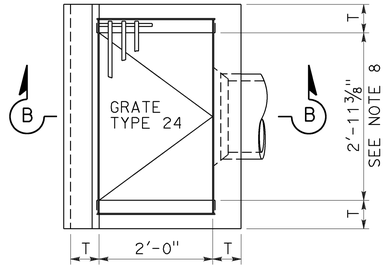

PLAN
TYPE G3

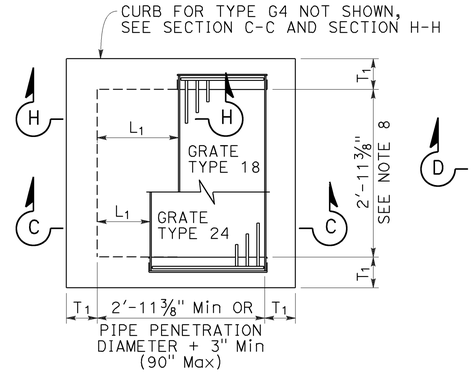

PLAN
STANDARD TYPE G2 OR G4
(INTEGRAL TOP ALTERNATIVE)
FOR "L" AND "T" VALUES, SEE TABLE 1

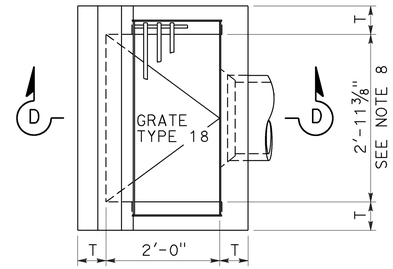

PLAN
TYPE G5

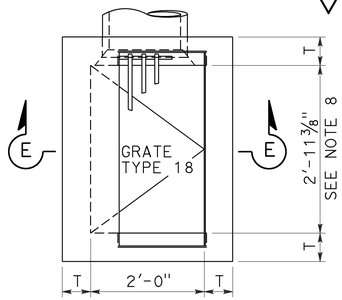

PLAN
TYPE G6

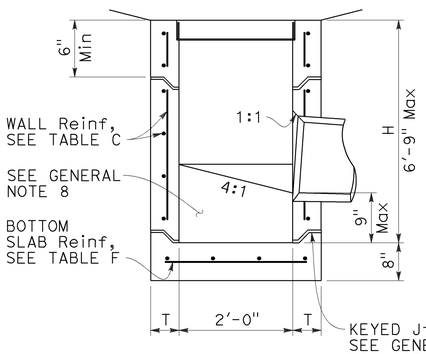

SECTION A-A

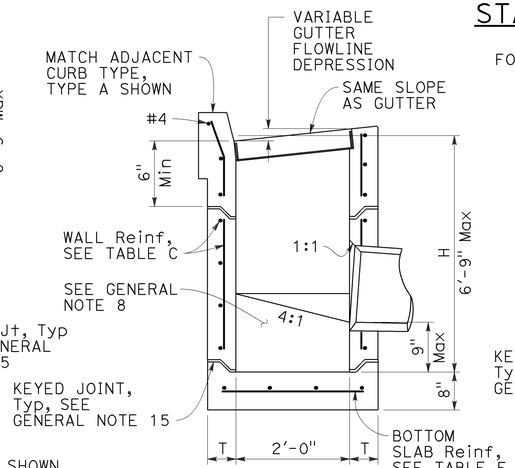

SECTION B-B

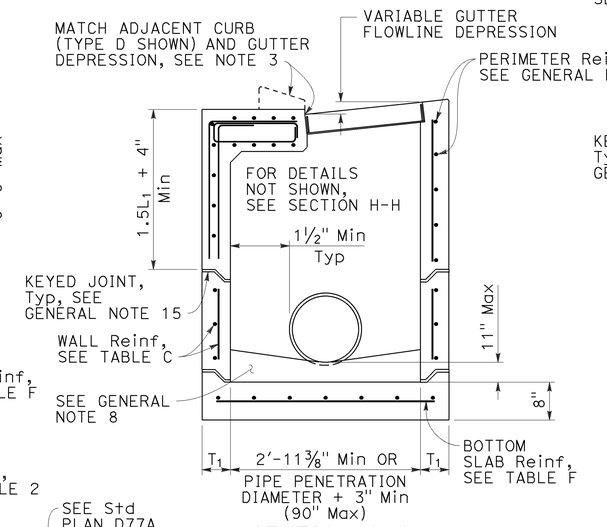

SECTION C-C
FOR "L1", "L2" AND "T1" VALUES, SEE "TABLE 1"

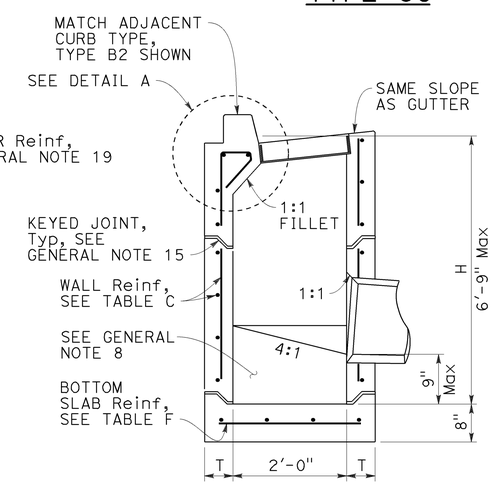

SECTION D-D

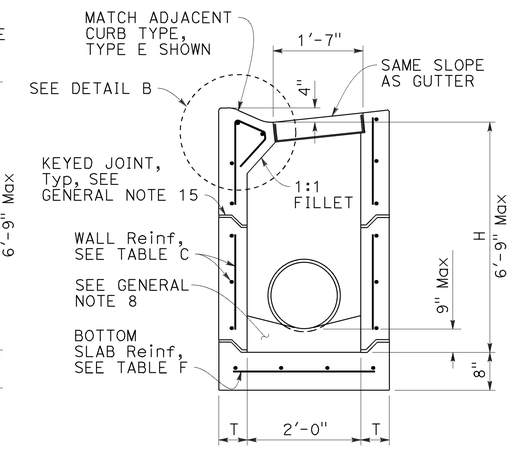

SECTION E-E

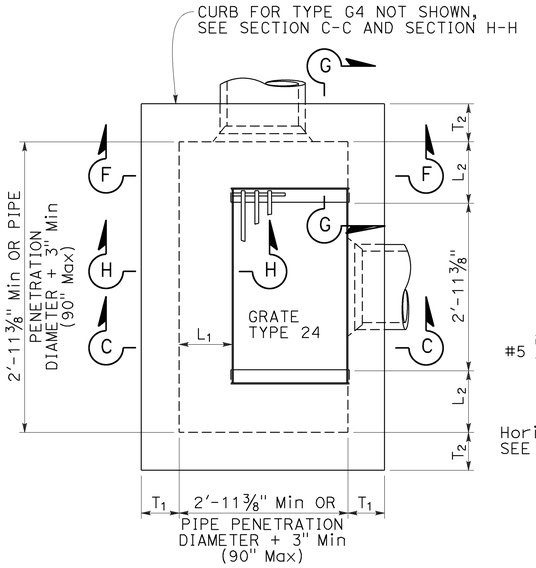

PLAN
EXPANDED
TYPE G2 OR G4
(INTEGRAL TOP ALTERNATIVE)
FOR "L1", "L2" AND "T1" VALUES, SEE "TABLE 1"

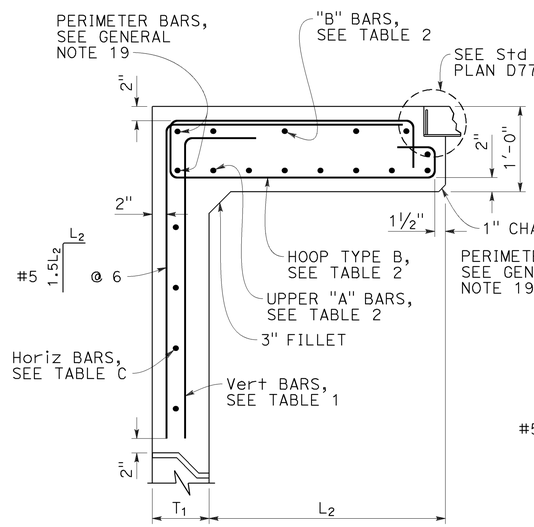

SECTION G-G
FOR "L1", "L2" AND "T1" VALUES, SEE "TABLE 1"

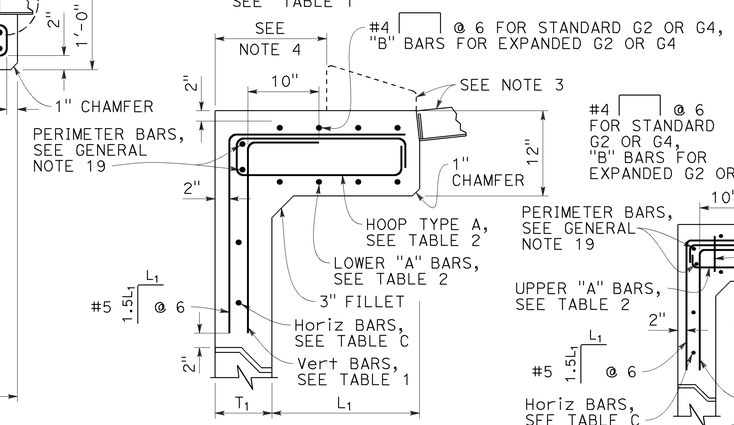

SECTION H-H
FOR "L1", "L2" AND "T1" VALUES, SEE "TABLE 1"

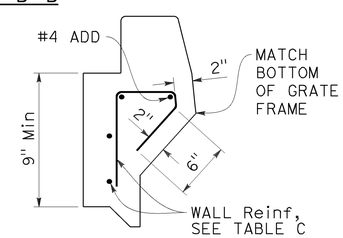

DETAIL A

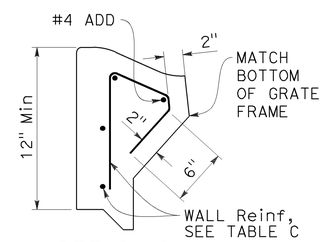

DETAIL B

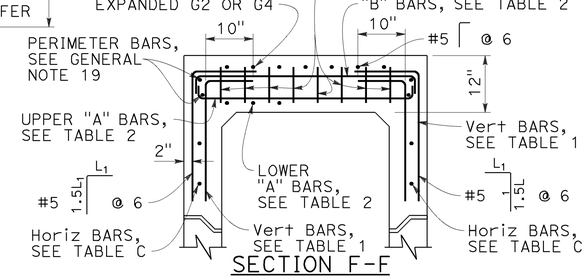

SECTION F-F
FOR "L1", "L2" AND "T1" VALUES, SEE "TABLE 1"

STATE OF CALIFORNIA
DEPARTMENT OF TRANSPORTATION

PRECAST DRAINAGE INLETS TYPES G1, G2, G3, G4, G5 AND G6

NO SCALE

RSP D73B DATED JULY 15, 2016 SUPPLEMENTS THE STANDARD PLANS BOOK DATED 2015.

3 ADDED PER ADDENDUM No. 3 DATED AUGUST 30, 2016

REVISED STANDARD PLAN RSP D73B

2015 REVISED STANDARD PLAN RSP D73B

6-29-16

Dist	COUNTY	ROUTE	POST MILES TOTAL PROJECT	SHEET No.	TOTAL SHEETS
03	ED	49	23.6/24.5	117I	202

REGISTERED CIVIL ENGINEER

July 15, 2016
PLANS APPROVAL DATE

REGISTERED PROFESSIONAL ENGINEER Carl M. Duan No. C59976 Exp. 6-30-18 CIVIL STATE OF CALIFORNIA

THE STATE OF CALIFORNIA OR ITS OFFICERS OR AGENTS SHALL NOT BE RESPONSIBLE FOR THE ACCURACY OR COMPLETENESS OF SCANNED COPIES OF THIS PLAN SHEET.

TO ACCOMPANY PLANS DATED 5-9-16

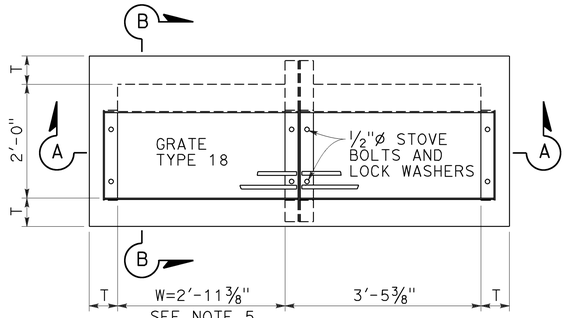

PLAN
TYPE GT1

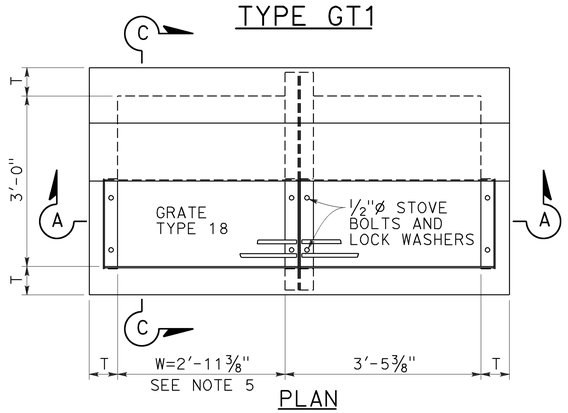

PLAN
TYPE GT2

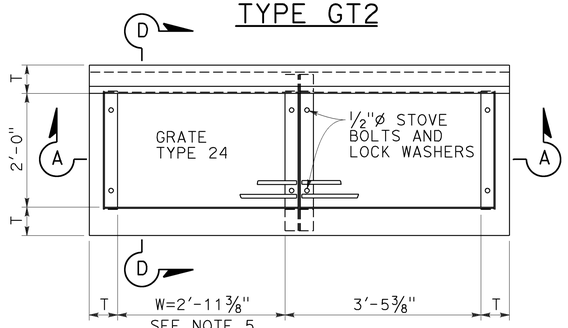

PLAN
TYPE GT3

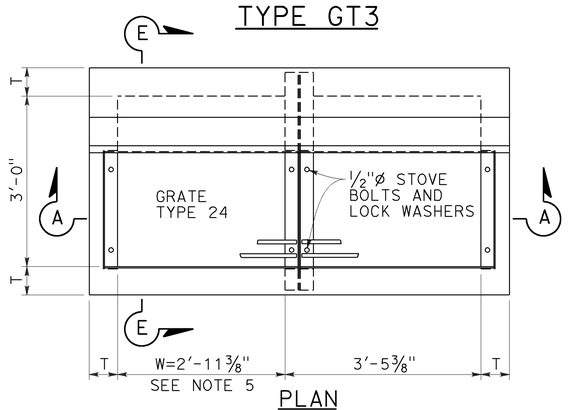

PLAN
TYPE GT4

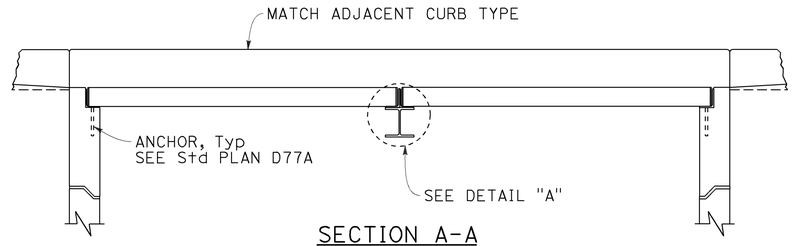

SECTION A-A

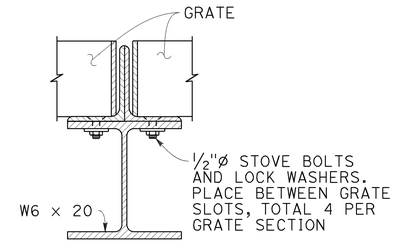

DETAIL "A"

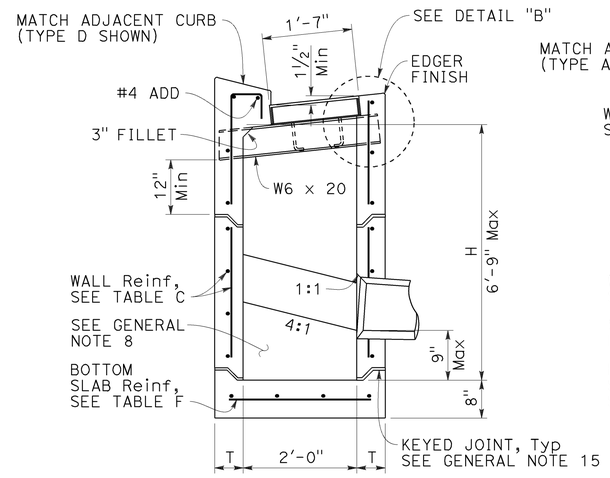

SECTION B-B

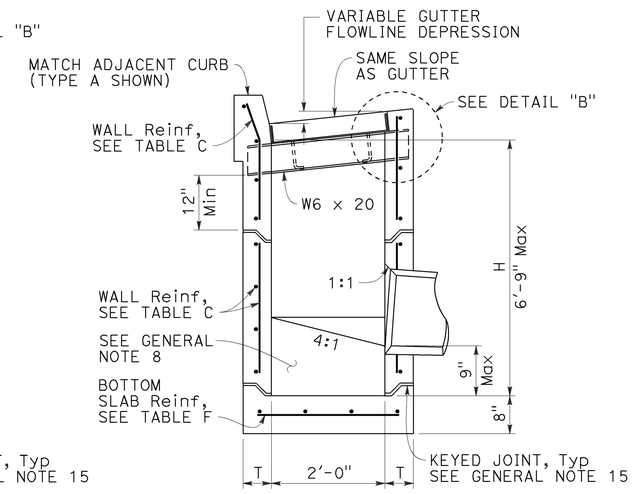

SECTION D-D

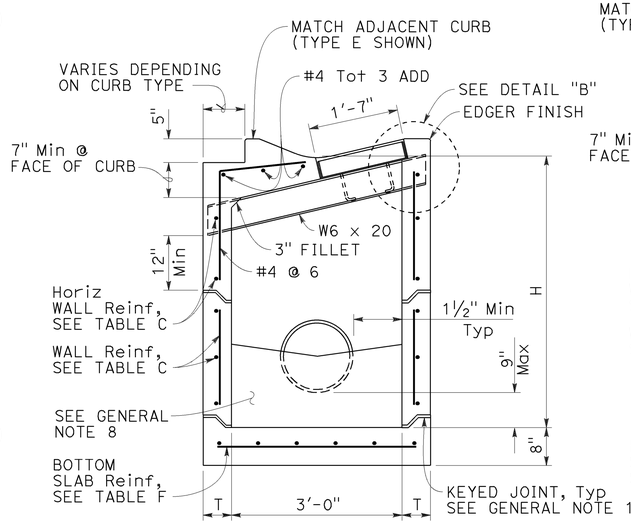

SECTION C-C

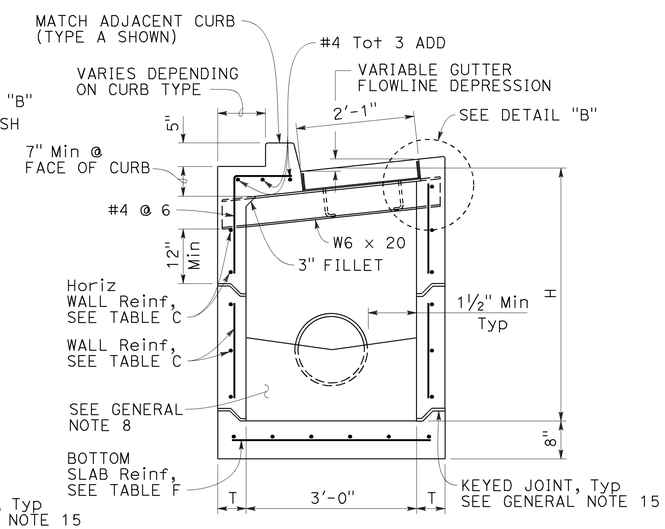

SECTION E-E

NOTES:

1. See Revised Standard Plan RSP D73F for General Notes and additional details. See Revised Standard Plan RSP D73G for tables, wall thickness "T" and quantities.
2. W=2'-11 3/8" for one grate. Add 3'-5 3/8" for additional grates in tandem.
3. Complete joint penetration butt welds may be substituted for the fillet welds on all anchors.
4. Standard square, hexagon, round or equivalent headed anchors may be substituted for the right angle hooks on the anchors shown on this plan.
5. Overall interior length of lower sections may be 6'-6" provided top section conforms to the requirements for frame and grate types on Standard Plan D77A. The wall thickness of top sections may transition from "T" to "T"+5/8" to meet this requirement. Minimum height of thickened wall shall = "T".

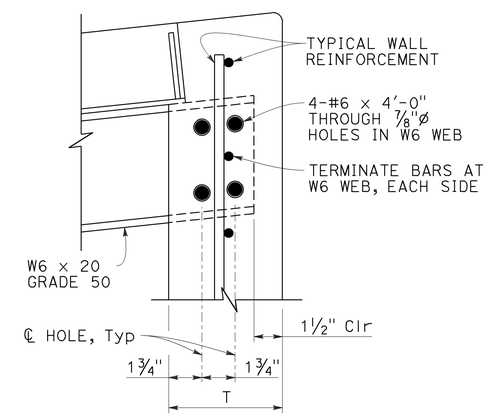

DETAIL "B"
(SIMILAR OPPOSITE END OF W6)

STATE OF CALIFORNIA
DEPARTMENT OF TRANSPORTATION

PRECAST DRAINAGE INLETS TYPES GT1, GT2, GT3 AND GT4

NO SCALE

3 **ADDED PER ADDENDUM No. 3 DATED AUGUST 30, 2016**

RSP D73D DATED JULY 15, 2016 SUPPLEMENTS THE STANDARD PLANS BOOK DATED 2015.

REVISED STANDARD PLAN RSP D73D

2015 REVISED STANDARD PLAN RSP D73D

6-28-16

Dist	COUNTY	ROUTE	POST MILES TOTAL PROJECT	SHEET No.	TOTAL SHEETS
03	ED	49	23.6/24.5	117J	202

REGISTERED CIVIL ENGINEER

July 15, 2016
PLANS APPROVAL DATE

REGISTERED PROFESSIONAL ENGINEER Carl M. Duan No. C59976 Exp. 6-30-18 CIVIL STATE OF CALIFORNIA

THE STATE OF CALIFORNIA OR ITS OFFICERS OR AGENTS SHALL NOT BE RESPONSIBLE FOR THE ACCURACY OR COMPLETENESS OF SCANNED COPIES OF THIS PLAN SHEET.

TO ACCOMPANY PLANS DATED 5-9-16

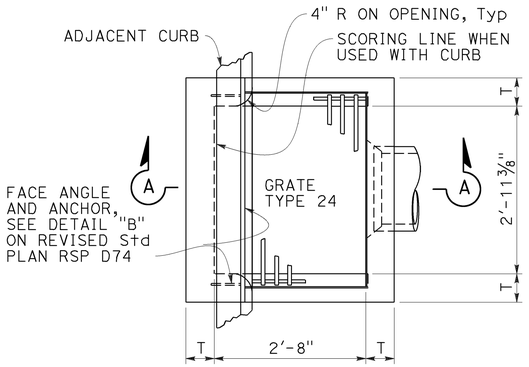

PLAN
TYPE GO

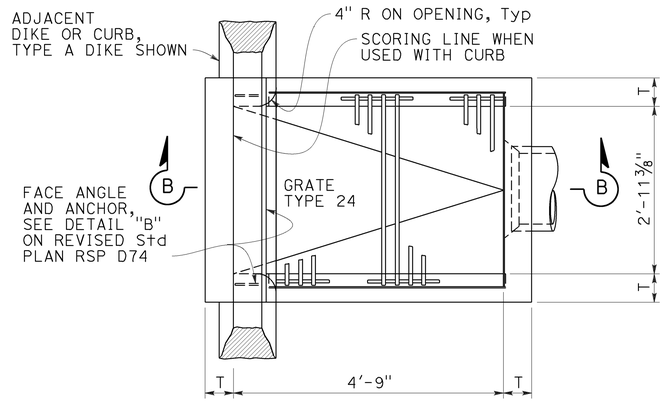

PLAN
TYPE GDO

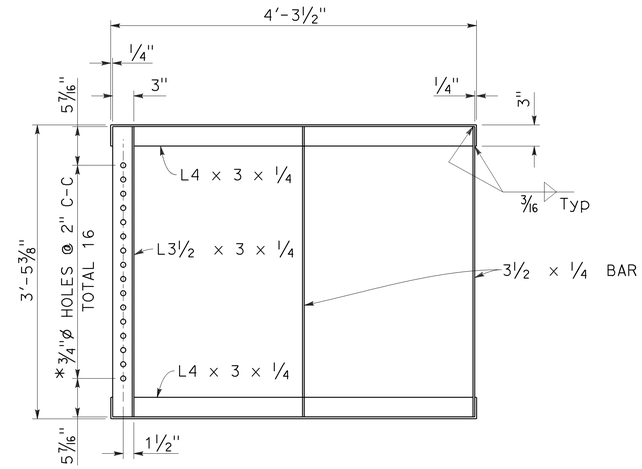

GRATE FRAME FOR TYPE GDO INLET

* HOLES REQUIRED ONLY WITH TRASH RACK

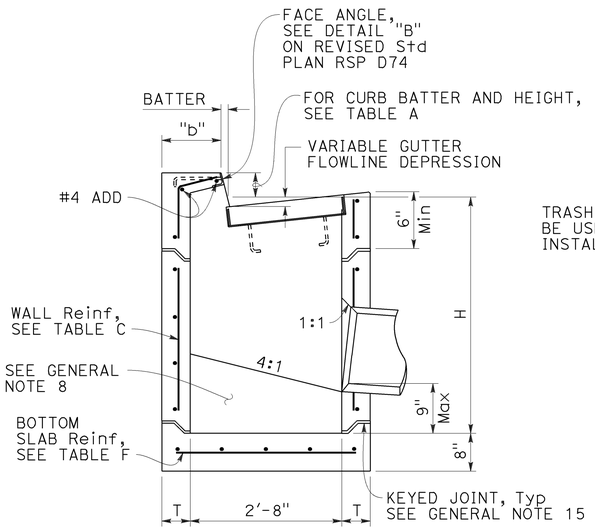

SECTION A-A

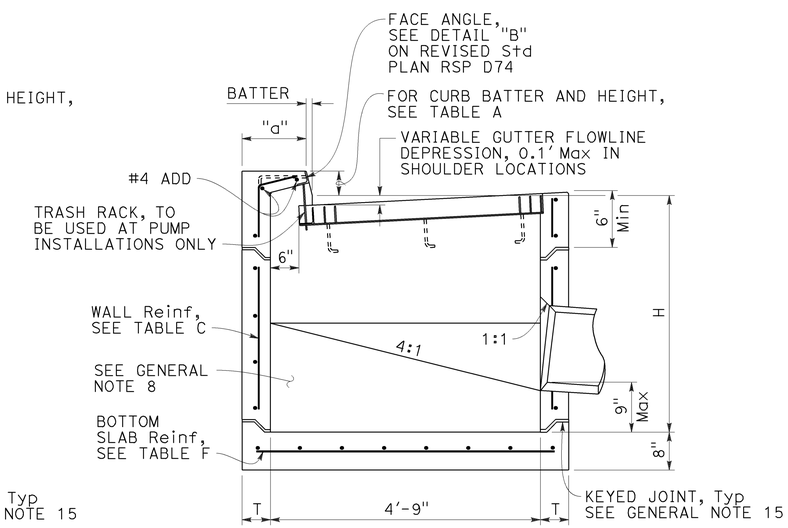

SECTION B-B

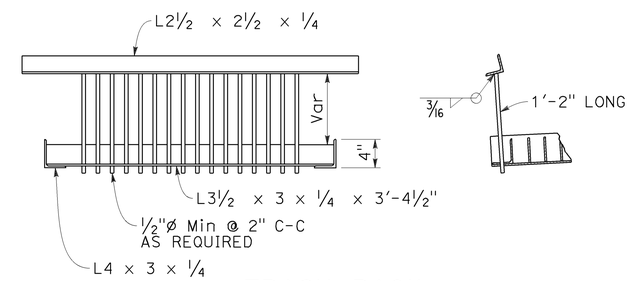

TRASH RACK

FOR USE WITH PUMP INSTALLATION

TABLE A				
CURB TYPE	NORMAL CURB HEIGHT	CURB BATTER	"a" DIMENSION	"b" DIMENSION
A1-6	6"	1½"	T+7½"	T+6½"
A1-8	8"	2"	T+7"	T+6"
B1-6	6"	4"	T+5"	T+4"
TYPE A DIKE	6"	3"	T+6"	T+5"

Height of curb opening will vary with the type of curb and the depth of the local depression.

NOTES:

1. See Revised Standard Plan RSP D73F for General Notes and additional details. See Revised Standard Plan RSP D73G for tables, wall thickness "T" and quantities.
2. Where shown on the project plans, place a ¾"* plain round protection bar horizontally across the length of the opening and bend back 4" into the inlet wall on each side.
3. Complete joint penetration butt welds may be substituted for the fillet welds on all anchors.
4. Standard square, hexagon, round or equivalent headed anchors may be substituted for the right angle hooks on the anchors shown on this plan.

STATE OF CALIFORNIA
DEPARTMENT OF TRANSPORTATION

PRECAST DRAINAGE INLETS TYPES GO AND GDO

NO SCALE

RSP D73E DATED JULY 15, 2016 SUPPLEMENTS THE STANDARD PLANS BOOK DATED 2015.

3 ADDED PER ADDENDUM No. 3 DATED AUGUST 30, 2016

REVISED STANDARD PLAN RSP D73E

2015 REVISED STANDARD PLAN RSP D73E

6-20-16

Dist	COUNTY	ROUTE	POST MILES TOTAL PROJECT	SHEET No.	TOTAL SHEETS
03	ED	49	23.6/24.5	117K	202

REGISTERED CIVIL ENGINEER

July 15, 2016
PLANS APPROVAL DATE

REGISTERED PROFESSIONAL ENGINEER Carl M. Duan No. C59976 Exp. 6-30-18 CIVIL STATE OF CALIFORNIA

THE STATE OF CALIFORNIA OR ITS OFFICERS OR AGENTS SHALL NOT BE RESPONSIBLE FOR THE ACCURACY OR COMPLETENESS OF SCANNED COPIES OF THIS PLAN SHEET.

TO ACCOMPANY PLANS DATED 5-9-16

GENERAL NOTES:

1. "H" is measured from top of bottom slab to the normal gutter grade line undepressed at the curb face.
2. For "T" wall thickness and reinforcement, see Table C on Revised Standard Plan RSP D73G.
3. Wall reinforcement must be placed at the center of wall thickness with horizontal bars placed on the exterior face. Bottom slab concrete cover must be 3" clear on the interior side face unless otherwise noted. Top slab concrete cover must be 2" clear on the exterior face unless otherwise noted. Short independent wall sections or height adjustment rings 6" to 24" high must have a minimum of two #4 horizontal bars. Reinforcement spacing is in inches unless otherwise noted.
4. Steps - None required where "H" is less than 2'-6". Where "H" is 2'-6" or more, install steps with lowest rung 1'-0" above the floor and highest rung not more than 6" below bottom of lid. The distance between steps must not exceed 1'-0" and be uniform throughout the length of the wall. Place steps in the wall without an opening. Steps inserts may be substituted for the bar steps. Step inserts must comply with State Industrial Safety Requirements. See Revised Standard Plan RSP D74 for step details.
5. Pipe(s) can be placed in any wall. Adjacent to each side of the opening, place additional reinforcement equivalent to half the interupted main reinforcement. For larger pipes greater than or equal to 42" diameter, also add 4 diagonal bars, 1 bar each side. Bars must be the same size as the larger of the main vertical or horizontal bars. Extend bars one development length past the intersection with the adjacent diagonal bar, or where bars intersect mid thickness of adjacent wall bottom or top of non-continuous wall, bend ends as required into same plane.
6. Set inlet so that grate bars are parallel to direction of principal surface flow.
7. Curb section must match adjacent curb.
8. Except for inlets used as junction boxes, basin floors must have wood trowel finish and a minimum slope of 4:1, unless otherwise noted, from all directions toward outlet pipe by casting grout on top of the bottom slab. Grout must be placed prior to backfill.
9. See Standard Plans D77A and D77B for grate and frame details and weights of miscellaneous iron and steel.
10. See Standard Plans D78A and D78B for gutter depression details.
11. See Standard Plan A87A and Revised Standard Plan RSP A87B for curb and dike details.
12. Details shown apply to metal, concrete and plastic pipe(s).
13. The Contractor may use WWR instead of bar reinforcement. The ratio of bar reinforcement to WWR shall be based on the yield strength ratio.
14. Seal precast inlets connection openings between wall and pipe with non-shrink grout or resilient connectors as specified in the Special Provisions. Precast inlets shall have mortared connections conforming to details for Type GCP Inlet shown on Standard Plan D75B. See Standard Specifications for mortar composition.
15. Where shown, provide precast inlets with separate top sections for final grade adjustment. Provide keyed joints with butyl rubber sealant between the top section and wall, multiple wall sections, and wall and bottom slab. Joint design may vary but must be 1" to 3" in depth. For tongue type joints, tongue down orientation is not allowed. For keyed joints, keyway up, keyway down or tongue up configurations are allowed. Only one key type is allowed for each drainage inlet.
16. Non-shrink grout can be used for upper most joint to facilitate final top grade adjustment.
17. Provide a level and firm sand bedding on which to place precast inlets. Extend sand bedding under all structure backfill.
18. For Integral Base, see Detail "A".
19. Perimeter reinforcement must not be smaller than main bars and #4 and serves as a rigid frame to position and attach the required structural reinforcement and may be tack welded at outer corners when using ASTM A706 weldable bars.
20. Inlet extensions may be cast in place after placement of main box and placement and compaction of backfill. Concrete strength must be 3.6 ksi minimum. All slab and wall thicknesses must be per Revised Standard Plan RSP D72A. All reinforcement shall extend a minimum of 24" from precast main inlet box.

DESIGN NOTES:

1. Design Specifications: AASHTO LRFD Bridge Design Specifications, 6th edition with 2012 Interims and Errata and CA Amendments.
2. Live Load (AASHTO LRFD 3.6.1.2):
   HL-93, consists of design truck or tandem, and design lane load.
   Dynamic Load Allowance, IM = 33%
   Multiple Presence Factor, m = 1.0
   Design lane load was excluded in Top Slab design.
   A wheel load of 8 kips without impact factor was used for top slabs that are above a curb.
3. Earth Load:
   Vertical pressure = 140 pcf
   Lateral pressure:
   = 100 pcf for walls with flat embankment
   = 140 pcf For walls with slope embankment, 1.5:1 Max
4. Downdrag: ϕ = 34° and γ_E = 120 pcf.
5. Buoyancy: γ_W = 62.4 pcf to finished grade.
6. Reinforced Concrete: f'c = 5.0 ksi, fy = 60.0 ksi.
7. Tables are based on the worst case from the level ground and sloped ground.
8. Soil pressures shown are factored per AASHTO LRFD and include self-weight, live load and downdrag.

SPAN "A" OR "B" (IN)	L (IN)
<38	34
38 TO 50	40
51 TO 64	47
65 TO 76	53
77 TO 90	60

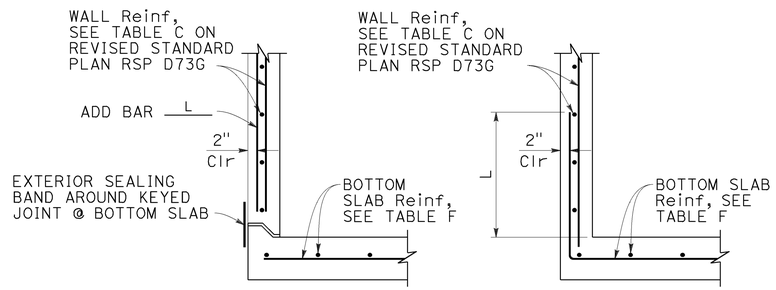

BASE WITH KEYED JOINT INTEGRAL BASE

DETAIL "A"

FOR INTEGRAL BASE, CLEARANCE BETWEEN PIPE PENETRATION AND BASE SLAB MAY BE AS SHOWN IN CIP ALTERNATIVE STANDARD PLAN SHEET.

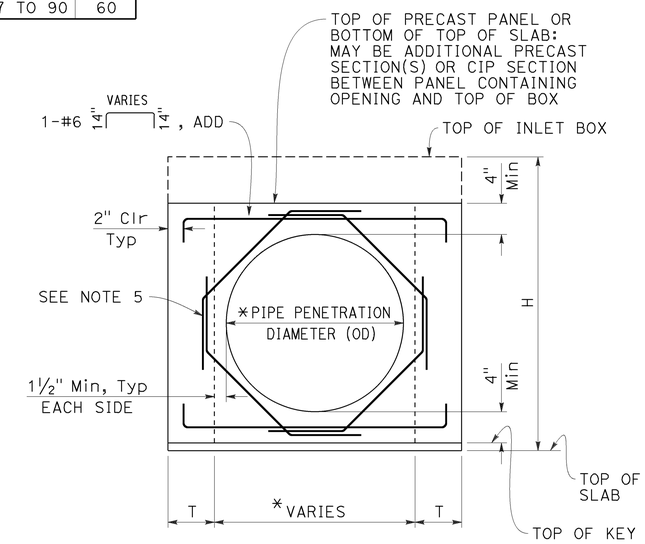

BASE WITH KEYED JOINT

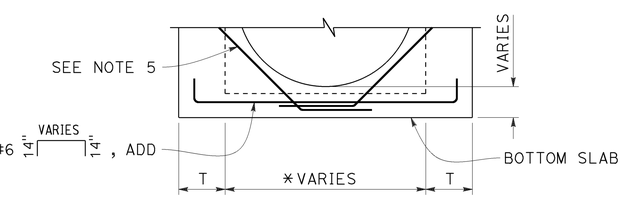

INTEGRAL BASE

FOR DETAILS NOT SHOWN, SEE "BASE WITH KEYED JOINT"

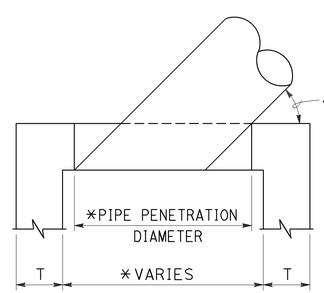

SKEWED PIPE PLAN

* ADJUST PIPE PENETRATION AND BOX WIDTH FOR SKEWED PIPES.

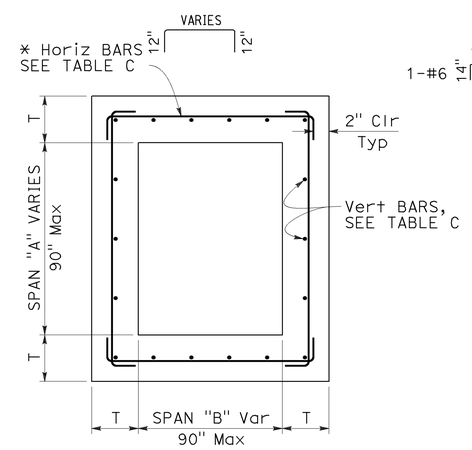

TYPICAL INLET PLAN

* ALTERNATIVE HORIZONTAL BARS

TYPICAL WALL W/ PIPE OPENING

* SEE "SKEWED PIPE PLAN"

STATE OF CALIFORNIA
DEPARTMENT OF TRANSPORTATION

PRECAST DRAINAGE INLET NOTES

NO SCALE

RSP D73F DATED JULY 15, 2016 SUPPLEMENTS THE STANDARD PLANS BOOK DATED 2015.

3 ADDED PER ADDENDUM No. 3 DATED AUGUST 30, 2016

REVISED STANDARD PLAN RSP D73F

2015 REVISED STANDARD PLAN RSP D73F

6-20-16

Dist	COUNTY	ROUTE	POST MILES TOTAL PROJECT	SHEET No.	TOTAL SHEETS
03	ED	49	23.6/24.5	117L	202

REGISTERED CIVIL ENGINEER

July 15, 2016
PLANS APPROVAL DATE

REGISTERED PROFESSIONAL ENGINEER Carl M. Duan No. C59976 Exp. 6-30-18 CIVIL STATE OF CALIFORNIA

THE STATE OF CALIFORNIA OR ITS OFFICERS OR AGENTS SHALL NOT BE RESPONSIBLE FOR THE ACCURACY OR COMPLETENESS OF SCANNED COPIES OF THIS PLAN SHEET.

TO ACCOMPANY PLANS DATED 5-9-16

2015 REVISED STANDARD PLAN RSP D73G

TABLE A - CONCRETE QUANTITIES

TYPE	H=3'-0" TO 8'-0"		H=8'-1" TO 20'-0"	
	H=3'-0" (CY)	ADDITIONAL CONCRETE PER FOOT (CY)	H=8'-1" (CY)	ADDITIONAL CONCRETE PER FOOT (CY)
G1	0.95	0.220	SEE NOTE 2	SEE NOTE 2
G2*	1.25	0.255	2.55	0.255
G3	1.06	0.220	SEE NOTE 2	SEE NOTE 2
G4 (TYPE 18)*	1.41	0.255	2.71	0.255
G4 (TYPE 24)*	1.36	0.255	2.65	0.255
G5	1.09	0.220	SEE NOTE 2	SEE NOTE 2
G6	1.14	0.220	SEE NOTE 2	SEE NOTE 2
OS	1.28	0.278	2.69	0.278
OL7	1.92	0.278	3.33	0.278
OL10	2.43	0.278	3.84	0.278
OL14	3.16	0.278	4.57	0.278
OL21	4.58	0.278	5.99	0.278
GOL7	2.36	0.313	4.04	0.434
GOL10	2.84	0.313	4.53	0.434
GT1	2.30	0.480	SEE NOTE 2	SEE NOTE 2
GT2	2.71	0.530	5.40	0.530
GT3	2.29	0.480	SEE NOTE 2	SEE NOTE 2
GT4	2.69	0.530	5.39	0.530
GO	1.25	0.245	2.37	0.245
GDO	1.64	0.322	3.37	0.446

* Quantities are based on the minimum interior dimensions.

TABLE B - REINFORCEMENT QUANTITIES

TYPE	H=3'-0" TO 8'-0"		H=8'-1" TO 20'-0"	
	H=3'-0" (LB)	ADDITIONAL REINFORCEMENT PER FOOT (LB)	H=8'-1" (LB)	ADDITIONAL REINFORCEMENT PER FOOT (LB)
G1	88.5	21.90	SEE NOTE 2	SEE NOTE 2
G2*	151.5	24.54	277.4	38.64
G3	92.9	21.90	SEE NOTE 2	SEE NOTE 2
G4 (TYPE 18)*	134.4	24.54	260.3	38.64
G4 (TYPE 24)*	125.1	24.54	251.0	38.64
G5	92.5	21.90	SEE NOTE 2	SEE NOTE 2
G6	92.5	21.90	SEE NOTE 2	SEE NOTE 2
OS	145.8	35.57	327.8	49.60
OL7	328.0	35.57	510.0	49.60
OL10	467.5	35.57	649.5	49.60
OL14	667.5	35.57	849.5	49.60
OL21	1056.1	35.57	1238.1	49.60
GOL7	474.7	45.17	706.8	74.02
GOL10	604.9	45.17	836.9	74.02
GT1	349.0	80.48	SEE NOTE 2	SEE NOTE 2
GT2	403.7	86.82	849.1	135.15
GT3	347.0	80.48	SEE NOTE 2	SEE NOTE 2
GT4	403.7	86.82	849.1	135.15
GO	99.8	23.75	221.7	37.46
GDO	208.8	46.22	446.2	75.61

* Quantities are based on the minimum interior dimensions.

TABLE D

INLET	CURB USED IN QUANTITIES
G1	-
G2	-
G3	A1-6
G4 (Type 18)	A1-6
G4 (Type 24)	A1-6
G5	B1-4
G6	½E
OS	-
OL7	-
OL10	-
OL14	-
OL21	-
GOL7	-
GOL10	-
GT1	D-6
GT2	E
GT3	A2-8
GT4	A2-8
GO	-
GDO	-

TABLE C - WALL REINFORCEMENT

TYPE	H ≤8'-0" (T=6", UON)			8'-0"< H ≤20'-0" (T=8", UON)		
	HORIZONTAL	VERTICAL	*ADD	HORIZONTAL	VERTICAL	*ADD
OS	#4@6	#3@8	#3@8	#4@4 (T=6")	#3@8	#3@8
OL	#4@6	#3@8	#3@8	#4@4 (T=6")	#3@8	#3@8
GOL	#4@5	#3@8	#3@8	#5@5	#3@6	#3@6
G1 (H ≤6'-9")	#4@9	#3@8	#3@8	-	-	-
G2 & G4 (a** ≤38")	#4@9	#3@8	#3@8	#4@5 (T=6")	#3@8	#3@8
G2 & G4 (38" < a** ≤50")	#4@6	#3@8	#3@8	#4@4 (T=6")	#3@8	#3@8
G2 & G4 (50" < a** ≤64")	#4@5	#3@8	#3@8	#5@5	#3@6	#3@6
G2 & G4 (64"< a** ≤76")	#5@7 (T=8")	#3@6	#3@6	#5@4	#3@6	#5@6
G2 & G4 (76" < a** ≤90")	#5@5 (T=8")	#3@6	#3@6	#5@3	#3@6	#5@6
G3 (H ≤6'-9")	#4@9	#3@8	#3@8	-	-	-
G5 (H ≤6'-9")	#4@9	#3@8	#3@8	-	-	-
G6 (H ≤6'-9")	#4@9	#3@8	#3@8	-	-	-
GT1 (H ≤6'-9")	#5@5 (T=8")	#3@6	#3@6	-	-	-
GT2	#5@5 (T=8")	#3@6	#3@6	#5@3	#3@6	#5@6
GT3 (H ≤6'-9")	#5@5 (T=8")	#3@6	#3@6	-	-	-
GT4	#5@5 (T=8")	#3@6	#3@6	#5@3	#3@6	#5@6
GO	#4@9	#3@8	#3@8	#4@5 (T=6")	#3@8	#3@8
GDO	#4@5	#3@8	#3@8	#5@5	#3@6	#3@6

* See Detail A on Revised Standard Plan RSP D73F for additional vertical bars at the base.
** a = Larger interior span

TABLE E

SOIL PRESSURE BELOW BASE SLAB (ksf)

TYPE	H ≤8'-0"	8'-0"< H ≤20'-0"
OS	2.89	5.68
OL*	2.89	5.68
GOL*	2.36	4.93
G1 (H ≤6'-9")	3.51	-
G2 & G4 (a** ≤38")	2.96	5.79
G2 & G4 (38" < a** ≤50")	2.21	4.51
G2 & G4 (50" < a** ≤64")	3.19	4.89
G2 & G4 (64"< a** ≤76")	2.50	4.23
G2 & G4 (76" < a** ≤90")	2.04	3.56
G3 (H ≤6'-9")	3.51	-
G5 (H ≤6'-9")	3.51	-
G6 (H ≤6'-9")	3.51	-
GT1 (H ≤6'-9")	3.41	-
GT2	3.60	6.42
GT3 (H ≤6'-9")	3.41	-
GT4	3.60	6.42
GO	3.37	6.46
GDO	2.48	7.30

* Main Box
** a = Larger interior span

TABLE F

BASE SLAB REINFORCEMENT (T=8", UON)

TYPE	H ≤8'-0"	8'-0"< H ≤20'-0"
OS	#4@8 (EW)	#4@5 (EW)
OL*	#4@8 (EW)	#4@5 (EW)
GOL*	#4@6 (EW)	#4@4 (EW)
G1 (H ≤6'-9")	#4@10 (EW)	-
G2 & G4 (a** ≤38")	#4@10 (EW)	#4@6 (EW)
G2 & G4 (38" < a** ≤50")	#4@8 (EW)	#4@5 (EW)
G2 & G4 (50" < a** ≤64")	#4@6 (EW)	#4@4 (EW)
G2 & G4 (64"< a** ≤76")	#4@5 (EW)	#4@3 (EW)
G2 & G4 (76" < a** ≤90")	#4@4 (EW)	#5@3 (EW)
G3 (H ≤6'-9")	#4@10 (EW)	-
G5 (H ≤6'-9")	#4@10 (EW)	-
G6 (H ≤6'-9")	#4@10 (EW)	-
GT1 (H ≤6'-9")	#4@4 (EW)	-
GT2	#4@4 (EW)	#5@3 (EW)
GT3 (H ≤6'-9")	#4@4 (EW)	-
GT4	#4@4 (EW)	#5@3 (EW)
GO	#4@10 (EW)	#4@6 (EW)
GDO	#4@6 (EW)	#4@4 (EW)

(EW) Each Way
* Main Box
** a = Larger interior span

NOTES:

1. No deduction or adjustment was made to the quantities of concrete and reinforcement for pipe openings, floor alternatives or curb type.
2. Maximum allowable height is 6'-9".
3. Quantities are approximate and for design purposes only.
4. Design is based on envelope of level and sloped ground.

3 **ADDED PER ADDENDUM No. 3 DATED AUGUST 30, 2016**

STATE OF CALIFORNIA
DEPARTMENT OF TRANSPORTATION

PRECAST DRAINAGE INLET TABLES

NO SCALE

RSP D73G DATED JULY 15, 2016 SUPPLEMENTS THE STANDARD PLANS BOOK DATED 2015.

REVISED STANDARD PLAN RSP D73G

6-20-16

Dist	COUNTY	ROUTE	POST MILES TOTAL PROJECT	SHEET No.	TOTAL SHEETS
03	ED	49	23.6/24.5	117M	202

REGISTERED CIVIL ENGINEER

July 15, 2016
PLANS APPROVAL DATE

REGISTERED PROFESSIONAL ENGINEER Carl M. Duan No. C59976 Exp. 6-30-18 CIVIL STATE OF CALIFORNIA

THE STATE OF CALIFORNIA OR ITS OFFICERS OR AGENTS SHALL NOT BE RESPONSIBLE FOR THE ACCURACY OR COMPLETENESS OF SCANNED COPIES OF THIS PLAN SHEET.

TO ACCOMPANY PLANS DATED 5-9-16

2015 REVISED STANDARD PLAN RSP D74

FACE ANGLE DETAIL "A"	
LENGTH OF CURB OPENING	No. OF ANCHORS
3'-6" OR LESS	2
7'-0"	3
10'-0"	4
14'-0"	5
21'-0"	7

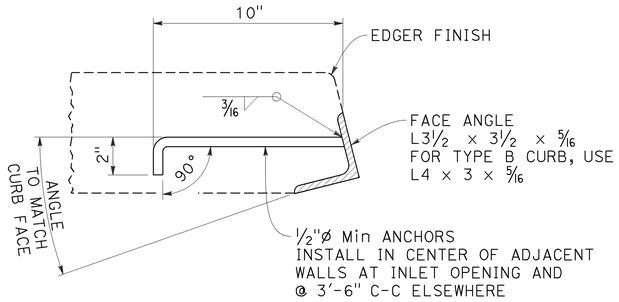

DETAIL "A"

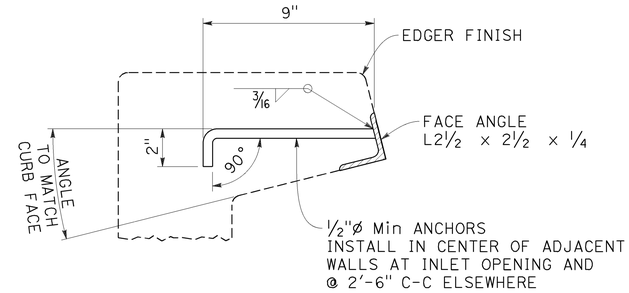

DETAIL "B"

FACE ANGLE AND ANCHOR

NOTE:

1. When shown on the project plans, place a ¾"ø plain round protection bar horizontally across the length of the opening and bend back 4" into the inlet wall on each side.

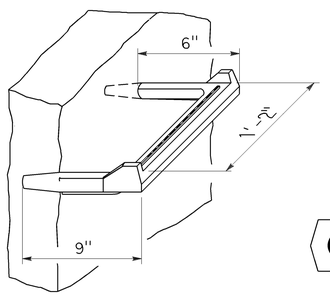

STEP INSERT

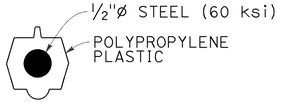

TYPICAL SECTION
(STEP INSERT)

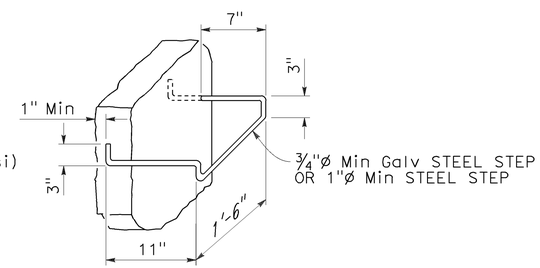

BAR STEP

STEP DETAILS

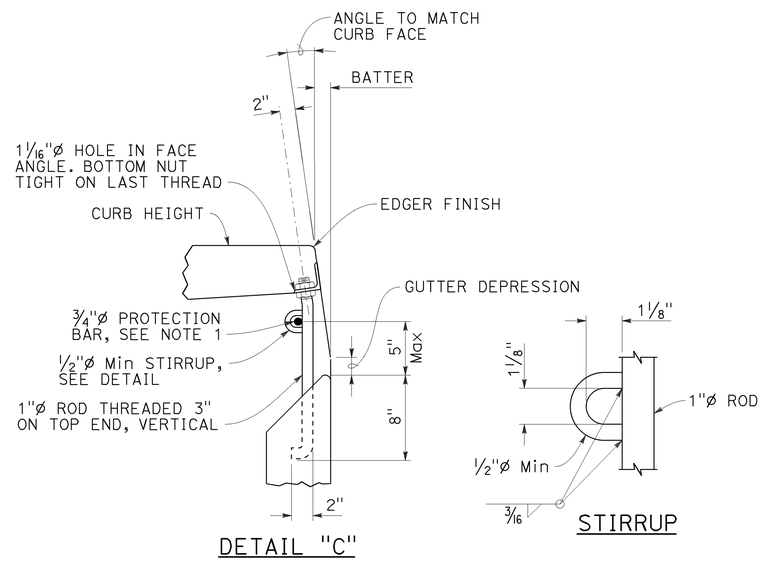

STIRRUP

DETAIL "C"

CURB SUPPORT

CURB SUPPORTS SHALL BE EVENLY SPACED AND MINIMAL IN NUMBER SUCH THAT MAXIMUM SPAN OF UNSUPPORTED CURB IS 7'-0".

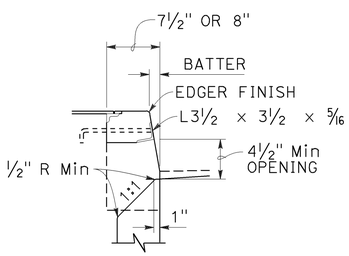

TYPE A CURBS

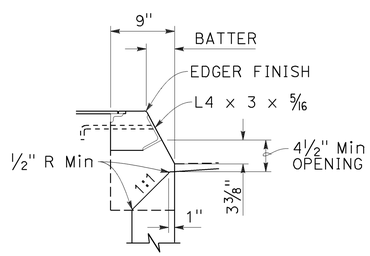

TYPE B CURBS

CURB OPENING DETAILS

STATE OF CALIFORNIA
DEPARTMENT OF TRANSPORTATION

DRAINAGE INLET DETAILS

NO SCALE

RSP D74 DATED JULY 15, 2016 SUPPLEMENTS THE STANDARD PLANS BOOK DATED 2015.

3 ADDED PER ADDENDUM No. 3 DATED AUGUST 30, 2016

REVISED STANDARD PLAN RSP D74

6-20-16

Dist	COUNTY	ROUTE	POST MILES TOTAL PROJECT	SHEET No.	TOTAL SHEETS
03	ED	49	23.6/24.5	117N	202

REGISTERED CIVIL ENGINEER

July 15, 2016
PLANS APPROVAL DATE

REGISTERED PROFESSIONAL ENGINEER Carl M. Duan No. C59976 Exp. 6-30-18 CIVIL STATE OF CALIFORNIA

THE STATE OF CALIFORNIA OR ITS OFFICERS OR AGENTS SHALL NOT BE RESPONSIBLE FOR THE ACCURACY OR COMPLETENESS OF SCANNED COPIES OF THIS PLAN SHEET.

TO ACCOMPANY PLANS DATED 5-9-16

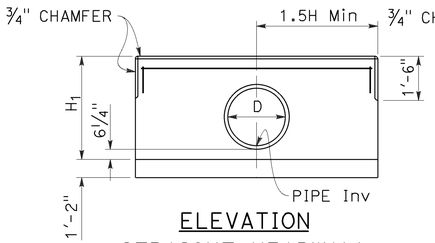

ELEVATION
STRAIGHT HEADWALL
SINGLE CIRCULAR PIPE

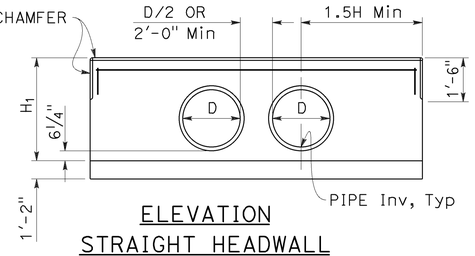

ELEVATION
STRAIGHT HEADWALL
DOUBLE CIRCULAR PIPE

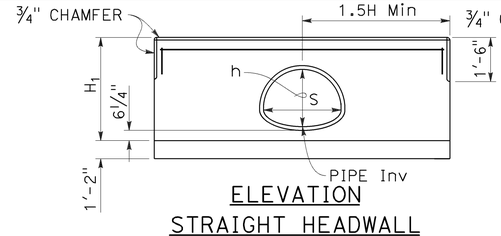

ELEVATION
STRAIGHT HEADWALL
SINGLE CMP

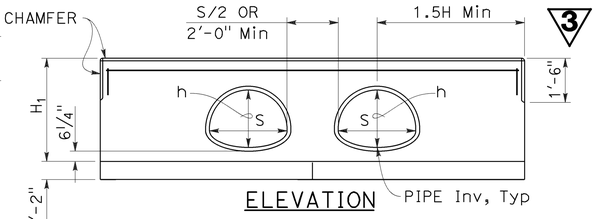

ELEVATION
STRAIGHT HEADWALL
DOUBLE CMP

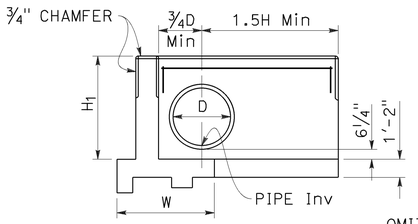

ELEVATION
"L" HEADWALL

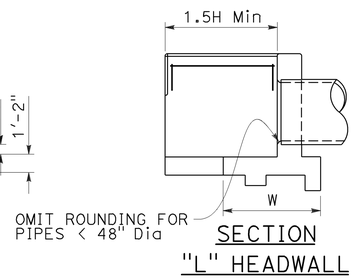

SECTION
"L" HEADWALL

CIRCULAR PIPE CULVERT HEADWALLS

See Note 2

H	CIRCULAR PIPE SIZE D	CMP ARCH SIZE S x h
2'-8"	12"	-
2'-11"	15"	21" x 15"
3'-2"	18"	24" x 18"
3'-5"	21"	28" x 20"
3'-8"	24"	35" x 24"
3'-11"	27"	-
4'-2"	30"	42" x 29"
4'-5"	33"	49" x 33"
4'-8"	36"	-
4'-11"	39"	57" x 38"
5'-2"	42"	64" x 43"
5'-5"	45"	-
5'-8"	48"	71" x 47"
5'-11"	51"	-
6'-2"	54"	-

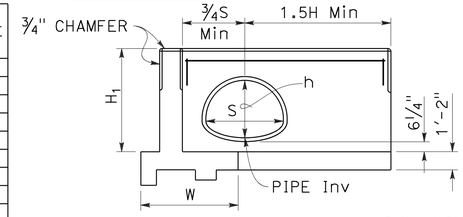

ELEVATION
"L" HEADWALL

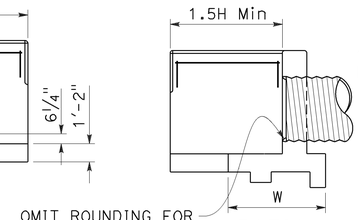

SECTION
"L" HEADWALL

CMP ARCH CULVERT HEADWALLS

See Note 2

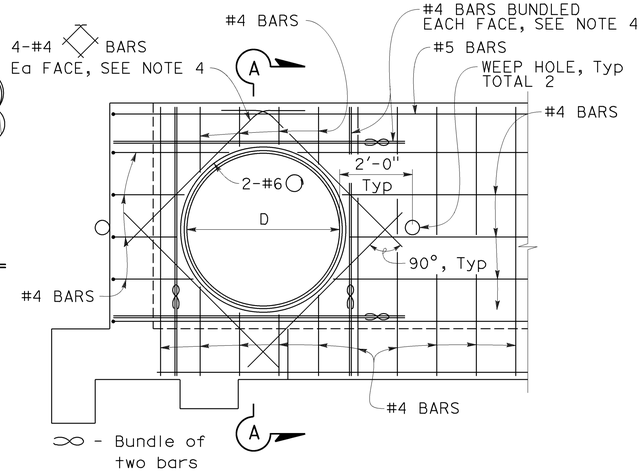

REINFORCEMENT MODIFICATION

"L" headwall shown. Straight headwall similar.
Circular pipe shown. CMP arch similar.

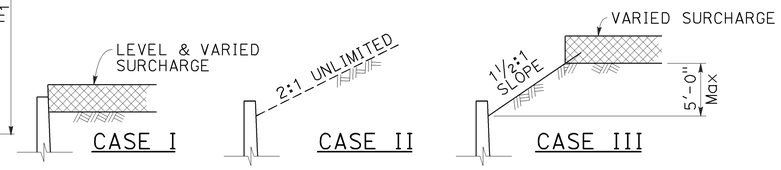

DETAIL OF DESIGN LOADING CASES

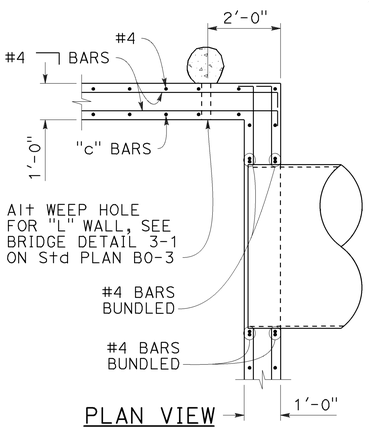

PLAN VIEW
STEM WALL

"L" headwall shown.
Straight headwall similar.

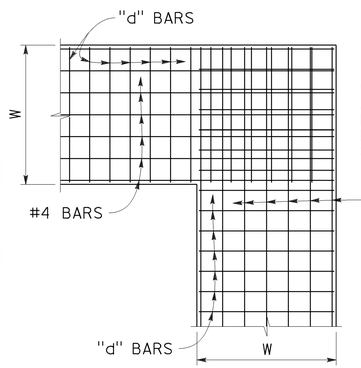

PLAN VIEW
FOOTING

"L" headwall shown.
Straight headwall similar.

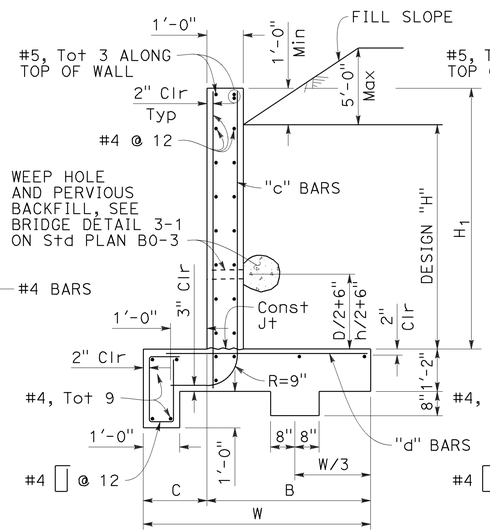

TYPICAL SECTION

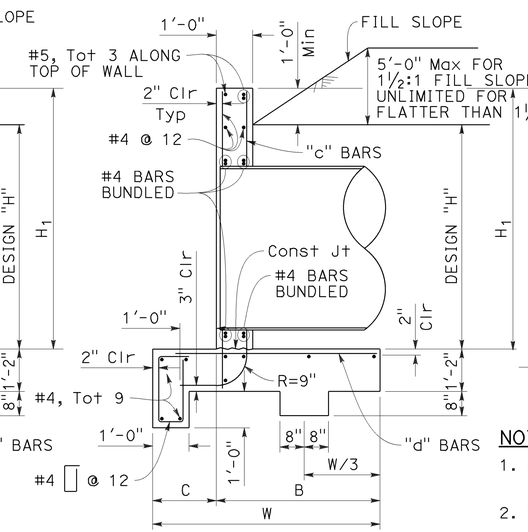

SECTION A-A

NOTES:

1. Length of wall from ℄ pipe to end of wall is 1.5H Min, unless a greater length is shown on project plans.
2. Single circular pipe or single CMP shown for "L" headwall. For double pipe in "L" headwall, see "ELEVATION STRAIGHT HEADWALL DOUBLE CIRCULAR PIPE" or "ELEVATION STRAIGHT HEADWALL DOUBLE CMP" detail for additional information.
3. Cable railing to be installed on top of headwall when shown on Project Plans. See Revised Standard Plan RSP B11-47 for cable railing details.
4. Adjacent to each side of the opening, place additional reinforcement equivalent to half the interupted main reinforcement. For pipes 42" diameter and greater, add 4 diagonals, 1 bar each side. Extend bars one development length past the intersection with the adjacent diagonal bar, or where bars intersect mid thickness of adjacent wall, bottom slab or at top of wall, bend ends as required into same plane.
5. Quantities are approximate and for design purposes only. No deduction is made for pipe or arch occupancy.

H		2'-8"	2'-11"	3'-2"	3'-5"	3'-8"	3'-11"	4'-2"	4'-5"	4'-8"	4'-11"	5'-2"	5'-5"	5'-8"	5'-11"	6'-2"
W		4'-7"	4'-9"	4'-10"	5'-0"	5'-1"	5'-2"	5'-3"	5'-5"	5'-6"	5'-7"	5'-8"	5'-9"	5'-11"	6'-0"	6'-3"
C		1'-2"	1'-2"	1'-2"	1'-3"	1'-3"	1'-3"	1'-3"	1'-4"	1'-4"	1'-4"	1'-5"	1'-5"	1'-6"	1'-6"	1'-9"
B		3'-5"	3'-7"	3'-8"	3'-9"	3'-10"	3'-11"	4'-0"	4'-1"	4'-2"	4'-3"	4'-3"	4'-4"	4'-5"	4'-6"	4'-6"
"c" BARS		#4 @ 12	#4 @ 12	#4 @ 12	#4 @ 12	#4 @ 12	#4 @ 12	#4 @ 12	#4 @ 12	#4 @ 12	#4 @ 12	#4 @ 12	#4 @ 12	#4 @ 12	#4 @ 12	#5 @ 12
"d" BARS		#4 @ 12	#4 @ 8	#4 @ 8	#4 @ 8	#4 @ 8	#5 @ 12	#5 @ 12	#5 @ 12	#5 @ 12	#5 @ 8	#5 @ 8	#5 @ 8	#5 @ 8	#6 @ 8	#6 @ 8
* Conc CY/LF		0.404	0.412	0.415	0.423	0.426	0.430	0.433	0.440	0.444	0.448	0.451	0.455	0.462	0.466	0.477
* Reinf LB/LF		23	24	24	25	25	26	27	27	28	28	29	29	30	31	32
**CASE I	Ser (q'o, B')	0.79, 4.66	0.83, 4.57	0.88, 4.58	0.89, 4.73	0.93, 4.74	0.93, 4.75	1.02, 4.75	1.02, 4.92	1.07, 4.93	1.11, 4.94	1.12, 4.98	1.16, 4.99	1.17, 5.16	1.21, 5.18	1.15, 5.53
	Str (q'o, B')	1.48, 1.75	1.53, 1.80	1.65, 1.76	1.64, 1.88	1.76, 1.85	1.89, 1.83	2.02, 1.80	1.97, 1.95	2.08, 1.94	2.20, 1.93	2.28, 1.92	2.39, 1.92	2.31, 2.08	2.41, 2.09	2.17, 2.41
	Extr (q'o, B')	0.65, 4.16	0.68, 4.27	0.72, 4.29	0.74, 4.44	0.78, 4.46	0.82, 4.47	0.86, 4.47	0.87, 4.63	0.92, 4.63	0.96, 4.64	0.98, 4.69	1.03, 4.69	1.04, 4.84	1.09, 4.84	1.05, 5.18
**CASE II	Ser (q'o, B')	0.41, 4.52	0.44, 4.67	0.48, 4.73	0.51, 4.90	0.55, 4.95	0.59, 5.00	0.63, 5.04	0.65, 5.21	0.70, 5.26	0.74, 5.30	0.77, 5.37	0.81, 5.40	0.83, 5.58	0.88, 5.61	0.86, 5.96
	Str (q'o, B')	1.05, 4.49	1.10, 4.64	1.15, 4.69	1.19, 4.86	1.24, 4.90	1.30, 4.94	1.36, 4.98	1.39, 5.15	1.46, 5.18	1.52, 5.22	1.56, 5.28	1.62, 5.31	1.62, 5.48	1.72, 5.51	1.69, 5.85
	Extr (q'o, B')	0.98, 3.90	1.03, 4.00	1.10, 4.01	1.13, 4.15	1.19, 4.15	1.26, 4.15	1.33, 4.14	1.37, 4.28	1.44, 4.27	1.52, 4.26	1.57, 4.29	1.65, 4.28	1.68, 4.41	1.77, 4.40	1.72, 4.71
**CASE III	Ser (q'o, B')	0.61, 4.53	0.64, 4.73	0.68, 4.76	0.70, 4.91	0.74, 4.91	0.79, 4.94	0.83, 4.93	0.85, 5.08	1.17, 4.03	1.23, 4.03	1.27, 4.06	1.34, 4.02	1.36, 4.15	1.43, 4.11	1.36, 4.45
	Str (q'o, B')	0.99, 4.28	1.04, 4.67	1.10, 4.69	1.13, 4.83	1.19, 4.82	1.25, 4.83	1.32, 4.82	1.35, 4.95	2.02, 2.66	2.16, 2.62	2.25, 2.59	2.44, 2.48	2.49, 2.54	2.70, 2.44	2.50, 2.72
	Extr (q'o, B')	0.90, 3.88	0.95, 3.93	1.01, 3.91	1.04, 4.02	1.11, 3.97	1.18, 3.92	1.25, 3.90	1.28, 4.00	1.35, 3.94	1.43, 3.92	1.11, 5.14	1.55, 3.87	1.58, 3.97	1.67, 3.91	1.60, 4.22

* Quantities include 1'-0" extension above the design "H" limit.
** q'o = net bearing stress (ksf), B' = effective footing width (ft)
Ser - service limit
Str - strength limit
Extr - extreme event

REINFORCED CONCRETE HEADWALL

Quantities do not include added diagonals and do not consider pipe occupancy.

NOTE: Reinforced Concrete: fy = 60,000 psi
f'c = 3,600 psi

Earth Density: 120 pcf
Equivalent Fluid Pressure: 36 pcf

STATE OF CALIFORNIA
DEPARTMENT OF TRANSPORTATION

PIPE CULVERT HEADWALLS STRAIGHT AND "L"

NO SCALE

RSP D89 DATED JULY 15, 2016 SUPERSEDES STANDARD PLAN D89
DATED OCTOBER 30, 2015 - PAGE 205 OF THE STANDARD PLANS BOOK DATED 2015.

REVISED STANDARD PLAN RSP D89

2015 REVISED STANDARD PLAN RSP D89

3 **ADDED PER ADDENDUM No. 3 DATED AUGUST 30, 2016**

6-28-16

Dist	COUNTY	ROUTE	POST MILES TOTAL PROJECT	SHEET No.	TOTAL SHEETS
03	ED	49	23.6/24.5	1170	202

Peter W. Norboe
REGISTERED CIVIL ENGINEER

July 15, 2016
PLANS APPROVAL DATE

REGISTERED PROFESSIONAL ENGINEER Peter W. Norboe No. C57519 Exp. 12-31-17 CIVIL STATE OF CALIFORNIA

THE STATE OF CALIFORNIA OR ITS OFFICERS OR AGENTS SHALL NOT BE RESPONSIBLE FOR THE ACCURACY OR COMPLETENESS OF SCANNED COPIES OF THIS PLAN SHEET.

TO ACCOMPANY PLANS DATED 5-9-16

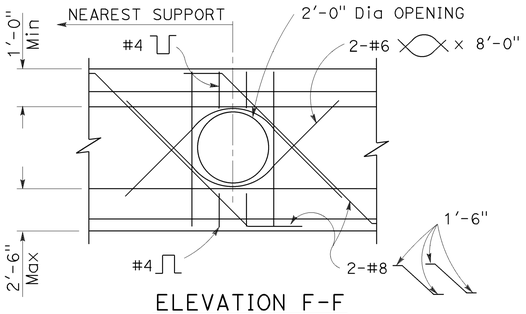

ELEVATION F-F

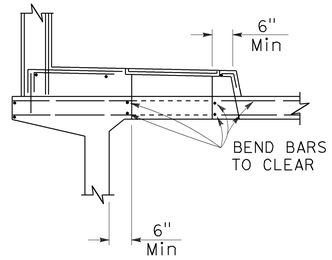

SECTION C-C

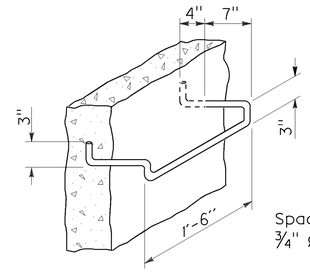

Space ladder rung @ 12
¾" ø Galvanize after fabrication

BAR STEP
LADDER RUNG DETAILS
DETAIL U44

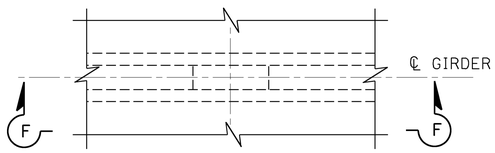

PART PLAN
GIRDER STEM ACCESS OPENING
DETAIL U41

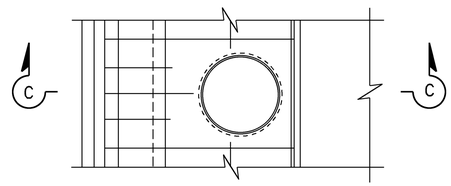

PART PLAN
SIDEWALK ACCESS OPENING
DETAIL U42

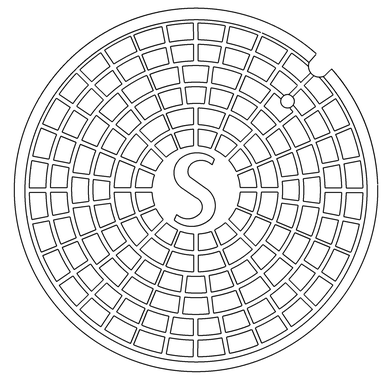

TOP OF MANHOLE COVER

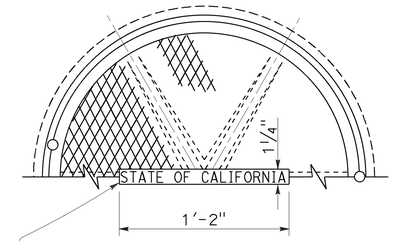

LETTERS 1" HIGH. NO OTHER INSCRIPTION TO APPEAR ON EXPOSED SURFACES.

TOP OF MANHOLE FRAME & COVER

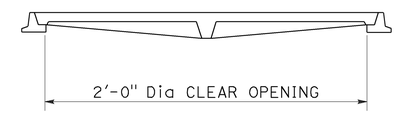

SECTION THROUGH FRAME & COVER

MANHOLE FRAME & COVER
FOR SIDEWALKS
DETAIL U46

NOTES:

1. For exact location of openings see other sheets.
2. Location and size of manholes may be modified as directed by the Engineer, provided minimum dimensions are maintained.
3. All reinforcement detailed to be placed in addition to reinforcement shown on other sheets.

SECTION THROUGH FRAME

NON-ROCKING MANHOLE FRAME & COVER
FOR DECKS
DETAIL U45

NOTES:

1. Step inserts may be substituted for the standard step detail. Step inserts shall comply with State Industrial Safety requirements.
2. Covers for use on sewer structures shall bear the letter "S"; on storm drain structures the letter "D"; on openings for utilities the letter "U".

NOTES:

1. Frame and cover shall be cast iron.
2. Cover shall be supplied with bolt down or locking devices.

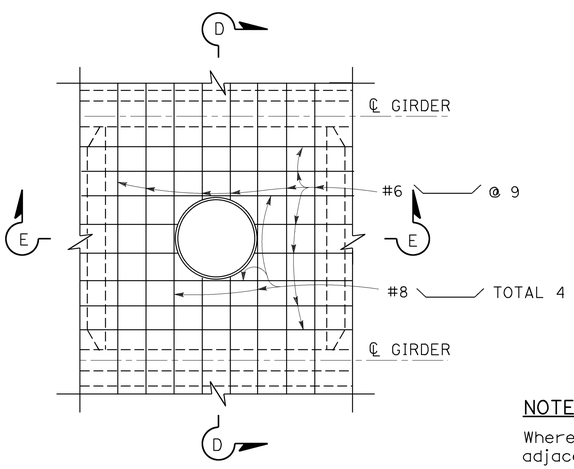

PART PLAN

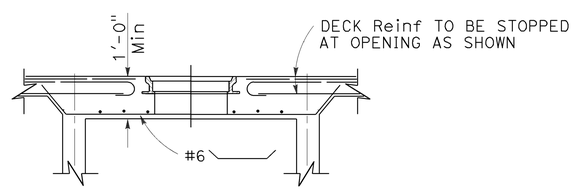

SECTION D-D

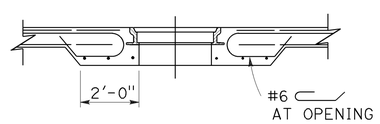

SECTION E-E

NOTE:

Where manhole is located adjacent to a diaphragm or abut, substitute half Section E-E on one side of Section E-E.

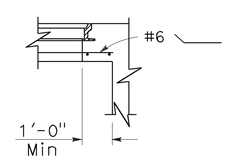

HALF SECTION E-E

DECK ACCESS OPENING
DETAIL U43

3 ADDED PER ADDENDUM No. 3 DATED AUGUST 30, 2016

STATE OF CALIFORNIA
DEPARTMENT OF TRANSPORTATION

UTILITY DETAILS

NO SCALE

RSP B7-11 DATED JULY 15, 2016 SUPERSEDES STANDARD PLAN B7-11 DATED OCTOBER 30, 2015 - PAGE 308 OF THE STANDARD PLANS BOOK DATED 2015.

REVISED STANDARD PLAN RSP B7-11

2015 REVISED STANDARD PLAN RSP B7-11

6-16-16

Dist	COUNTY	ROUTE	POST MILES TOTAL PROJECT	SHEET No.	TOTAL SHEETS
03	ED	49	23.6/24.5	119	202

REGISTERED CIVIL ENGINEER

July 15, 2016

PLANS APPROVAL DATE

REGISTERED PROFESSIONAL ENGINEER Stanley P. Johnson No. C57793 Exp. 3-31-18 CIVIL STATE OF CALIFORNIA

THE STATE OF CALIFORNIA OR ITS OFFICERS OR AGENTS SHALL NOT BE RESPONSIBLE FOR THE ACCURACY OR COMPLETENESS OF SCANNED COPIES OF THIS PLAN SHEET.

TO ACCOMPANY PLANS DATED 5-9-16

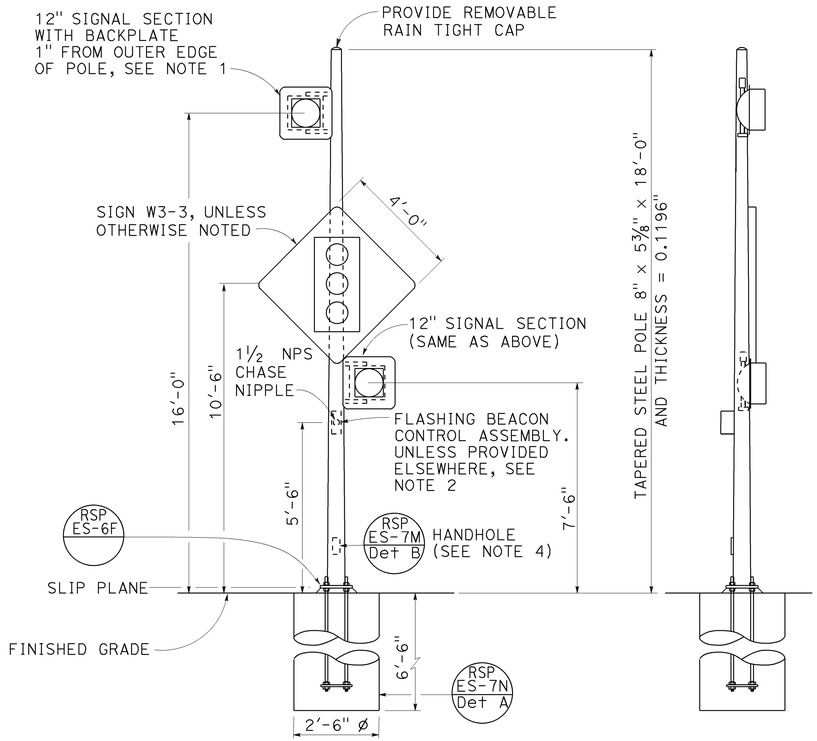

FRONT VIEW

SIDE VIEW

TYPE 15-FBS
FLASHING BEACON WITH SLIP BASE INSTALLATION
DETAIL A

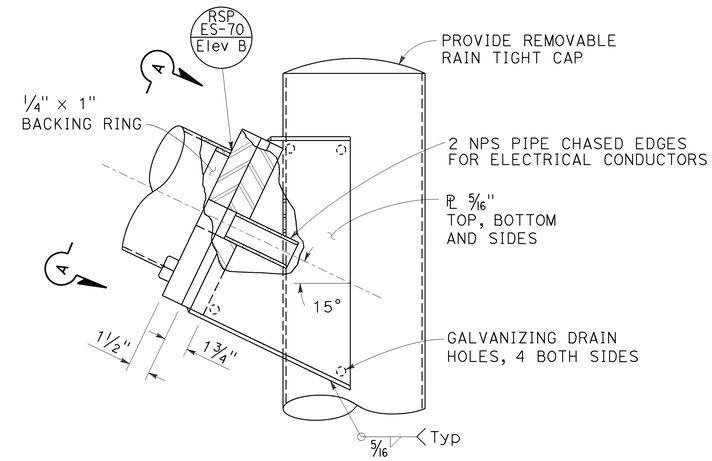

ELEVATION B

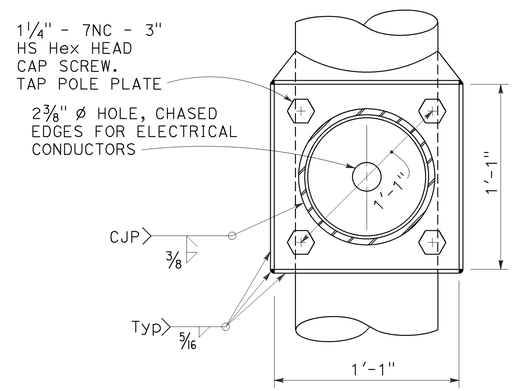

VIEW A-A

FLASHING BEACON MAST ARM CONNECTION DETAIL
DETAIL B

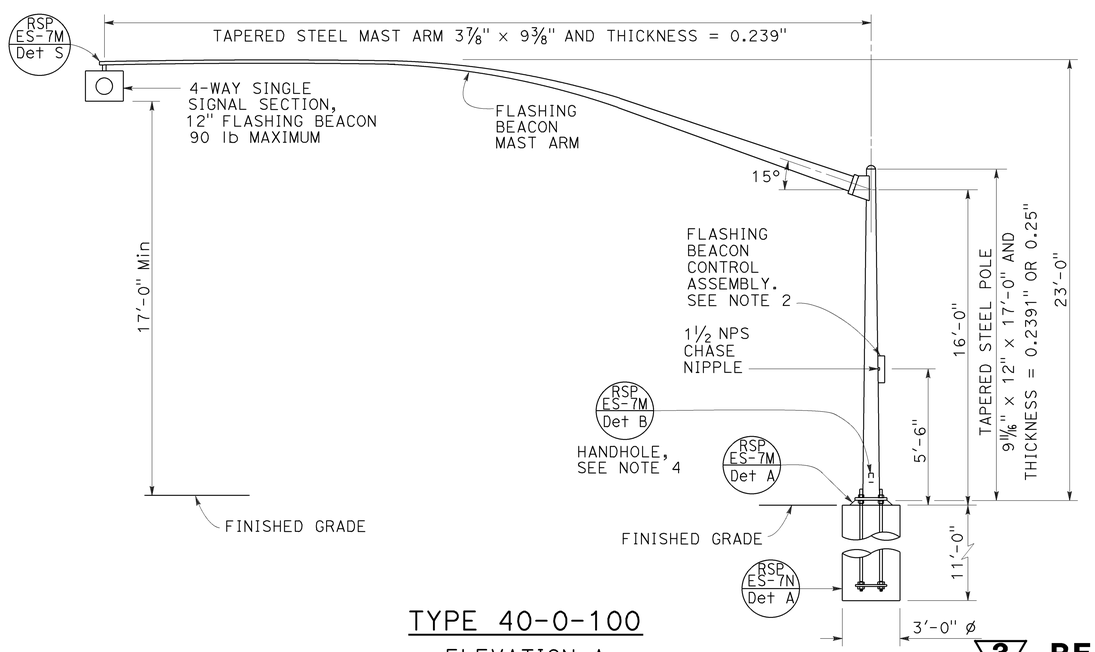

TYPE 40-0-100
ELEVATION A

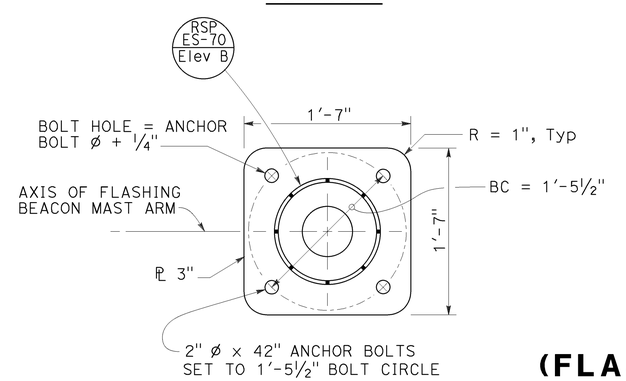

BASE PLATE
DETAIL C

NOTES:

1. See Standard Plans ES-4A and ES-4D for attachment fitting details.
2. For wiring diagram, see Revised Standard Plan RSP ES-14B.
3. For additional notes and details, see Revised Standard Plans RSP ES-7M and RSP ES-7N.
4. Handhole shall be located on the downstream side of traffic.
5. See project plans for type of standard to be installed.

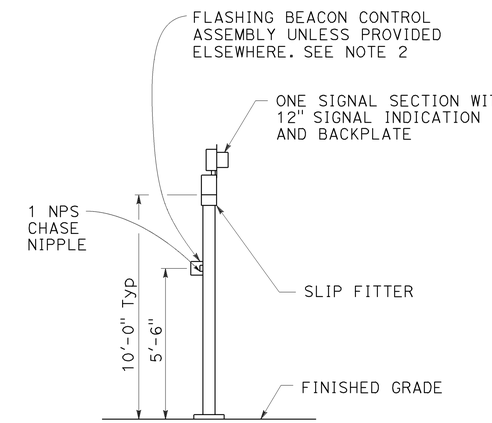

TYPE 1-A, 1-B, 1-C, AND 1-D
FLASHING BEACON INSTALLATION
DETAIL D
See Note 5

STATE OF CALIFORNIA
DEPARTMENT OF TRANSPORTATION

ELECTRICAL SYSTEMS (FLASHING BEACON ON A TYPE 1, TYPE 15-FBS, AND TYPE 40 STANDARD)

NO SCALE

RSP ES-7J DATED JULY 15, 2016 SUPERSEDES RSP ES-7J DATED APRIL 15, 2016 AND STANDARD PLAN ES-7J DATED OCTOBER 30, 2015 - PAGE 464 OF THE STANDARD PLANS BOOK DATED 2015.

REPLACED PER ADDENDUM No. 3 DATED AUGUST 30, 2016

REVISED STANDARD PLAN RSP ES-7J

2015 REVISED STANDARD PLAN RSP ES-7J

6-20-16

Dist	COUNTY	ROUTE	POST MILES TOTAL PROJECT	SHEET No.	TOTAL SHEETS
03	ED	49	23.6/24.5	121A	202

Theresa Gabriel
REGISTERED ELECTRICAL ENGINEER

April 15, 2016
PLANS APPROVAL DATE

REGISTERED PROFESSIONAL ENGINEER Theresa Aziz Gabriel No. E15129 Exp. 6-30-16 ELECTRICAL STATE OF CALIFORNIA

THE STATE OF CALIFORNIA OR ITS OFFICERS OR AGENTS SHALL NOT BE RESPONSIBLE FOR THE ACCURACY OR COMPLETENESS OF SCANNED COPIES OF THIS PLAN SHEET.

TO ACCOMPANY PLANS DATED 5-9-16

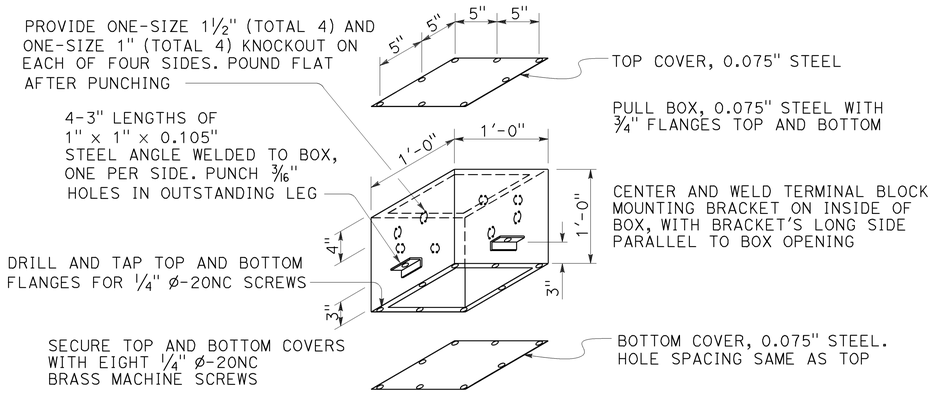

No. 7 PULL BOX (CEILING)

See Note 6

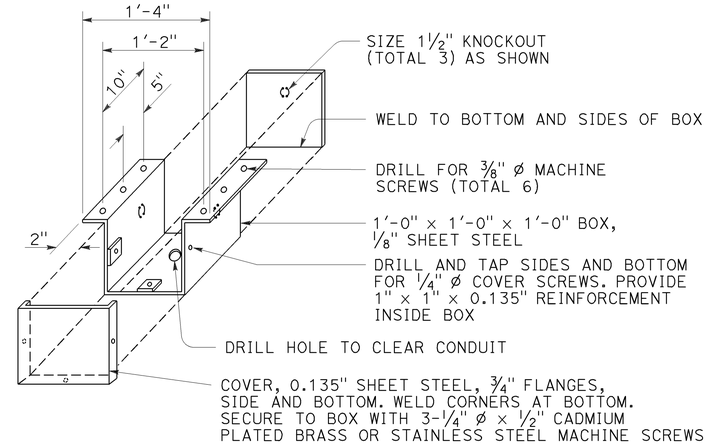

No. 8 PULL BOX

NOTES:

1. Corner joints shall be lapped and secured by spot welding or riveting.
2. Where cap screws are used to attach cover to box, either of the following methods of providing adequate threading may be used:
   a. Tack weld stainless steel Hex nut to bottom of flange (total 4)
   b. Tack weld a ¼" × ⅝" × 8" bar beneath flange (total 2)
3. Pound knockouts flat after punching.
4. Multiple size knockouts (concentric) shall not be permitted.
5. Pull box covers shall be marked as specified.
6. Installation of No. 7 pull box:
   a) Install with bottom flange flush with concrete.
   b) Both covers shall be on a box during pouring.
7. Install box parallel to top of railing. Cover box during pouring with ¼" plywood of sufficient size to provide 1:1 chamfer on 3 sides of cover. Upper edge of plywood shall fit against lower edge of rain tight hood.

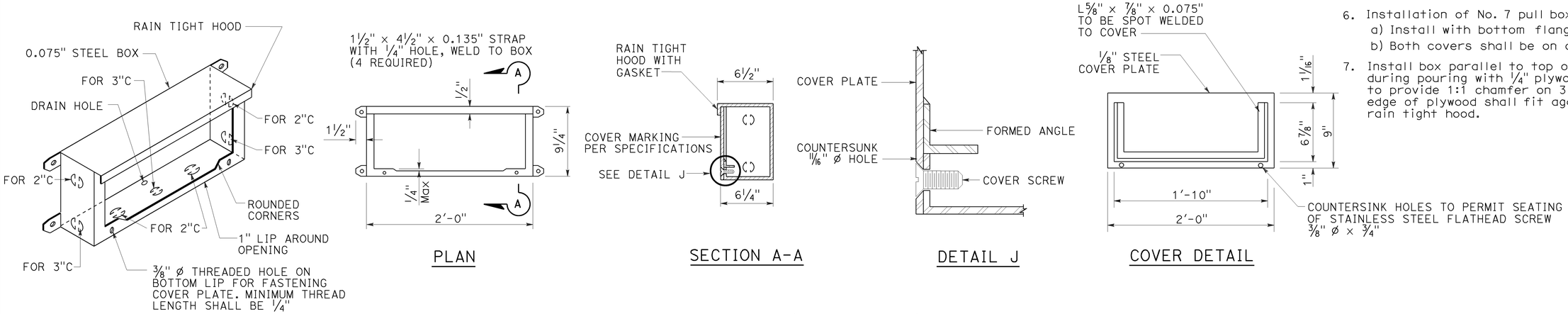

No. 9 PULL BOX (STRUCTURE)

See Note 7

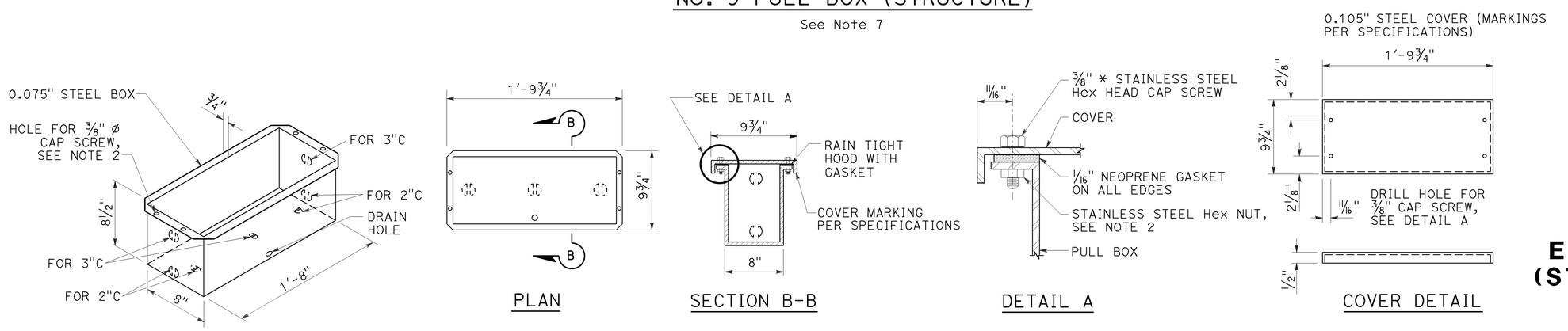

No. 9A PULL BOX (STRUCTURE)

STATE OF CALIFORNIA
DEPARTMENT OF TRANSPORTATION

ELECTRICAL SYSTEMS (STRUCTURE PULL BOX)

NO SCALE

3 **ADDED PER ADDENDUM No. 3 DATED AUGUST 30, 2016**

RSP ES-9C DATED APRIL 15, 2016 SUPERSEDES STANDARD PLAN ES-9C DATED DATED OCTOBER 30, 2015 - PAGE 477 OF THE STANDARD PLANS BOOK DATED 2015.

REVISED STANDARD PLAN RSP ES-9C

2015 REVISED STANDARD PLAN RSP ES-9C

1-12-16

Dist	COUNTY	ROUTE	POST MILES TOTAL PROJECT	SHEET No.	TOTAL SHEETS
03	ED	49	23.6/24.5	121B	202

Theresa Gabriel
REGISTERED ELECTRICAL ENGINEER

April 15, 2016
PLANS APPROVAL DATE

REGISTERED PROFESSIONAL ENGINEER Theresa Aziz Gabriel No. E15129 Exp. 6-30-16 ELECTRICAL STATE OF CALIFORNIA

THE STATE OF CALIFORNIA OR ITS OFFICERS OR AGENTS SHALL NOT BE RESPONSIBLE FOR THE ACCURACY OR COMPLETENESS OF SCANNED COPIES OF THIS PLAN SHEET.

TO ACCOMPANY PLANS DATED 5-9-16

2015 REVISED STANDARD PLAN RSP ES-9D

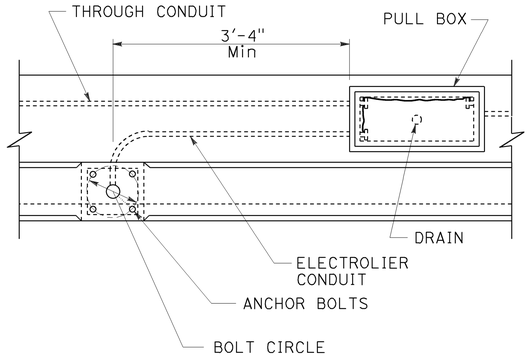

TOP VIEW

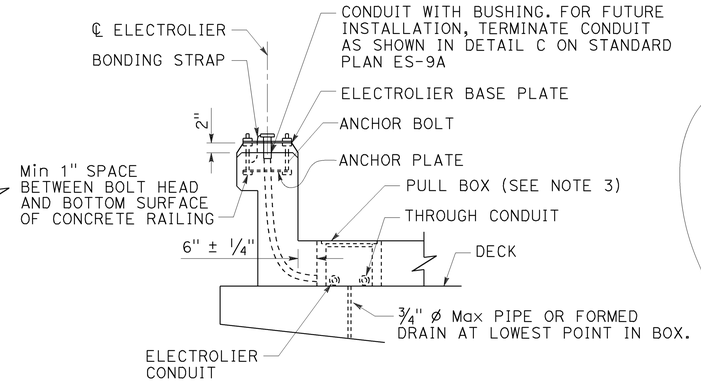

END VIEW

No. 3½, 5, OR 6 PULL BOX INSTALLATION

DETAIL A

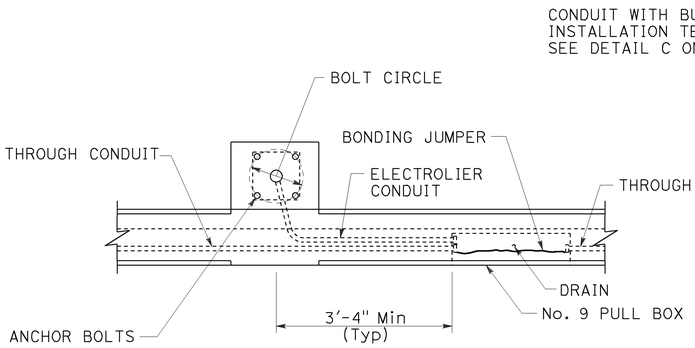

TOP VIEW

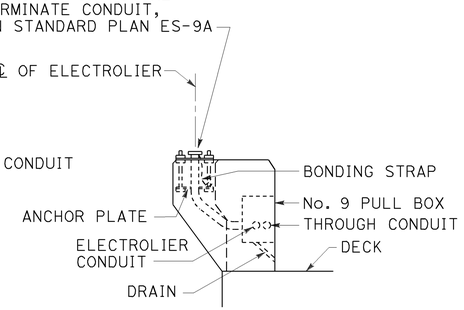

END VIEW

No. 9 PULL BOX INSTALLATION

DETAIL B

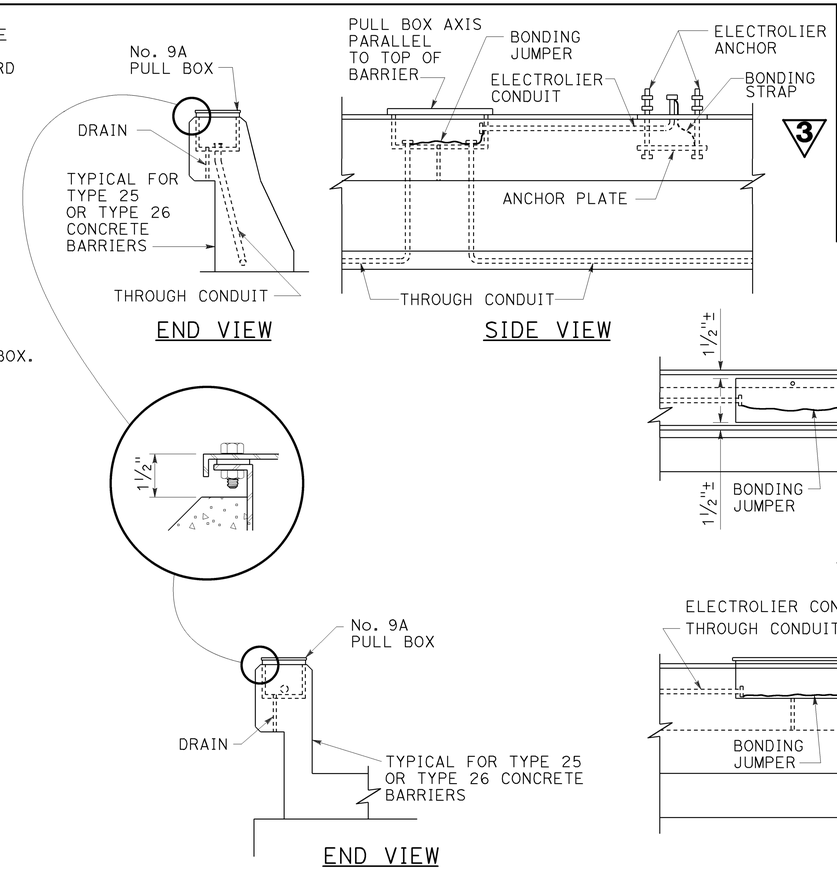

No. 9A PULL BOX INSTALLATION

DETAIL C

NOTES:

1. Axis of pull box shall be parallel to top of barrier, sidewalk or railing.
2. See railing sheet for reinforcement and structural details at electroliers and pull boxes.
3. Top of pull boxes in sidewalk areas shall be flush with sidewalk. Modify base of pull box as required.
4. Boxes inside of vertical barrier or railing shall be closed during pouring of PCC with 1/4" plywood of sufficient size to provide 1:1 chamfer on 3 sides of cover. Upper edge of plywood shall fit against lower edge of raintight hood.
5. Use drain in center if box is horizontal, or at low end if box is inclined. When box is mounted in sloping parapet 1/2" elongated drain hole inside at center or near end as required for drainage.
6. For electrolier anchorage bolts and grouting details, see Revised Standard Plan RSP ES-6B.
7. See Standard Plan B14-3 for conduit in concrete barrier.

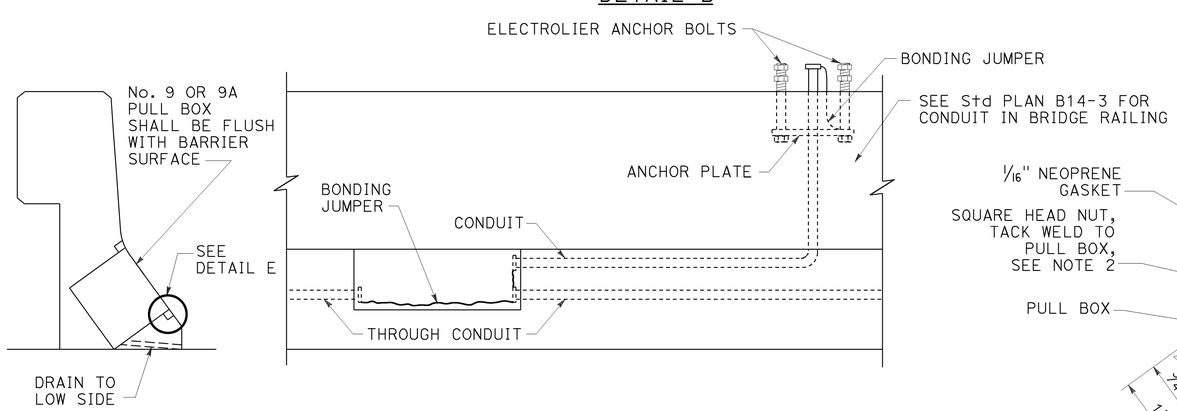

INSTALLATION IN SLOPING PARAPETS

DETAIL D

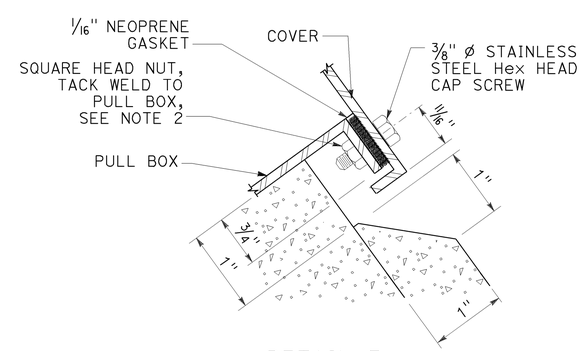

DETAIL E

STATE OF CALIFORNIA
DEPARTMENT OF TRANSPORTATION

ELECTRICAL SYSTEMS (STRUCTURE PULL BOX INSTALLATIONS)

NO SCALE

RSP ES-9D DATED APRIL 15, 2016 SUPERSEDES STANDARD PLAN ES-9D DATED OCTOBER 30, 2015 - PAGE 478 OF THE STANDARD PLANS BOOK DATED 2015.

3 ADDED PER ADDENDUM No. 3 DATED AUGUST 30, 2016

REVISED STANDARD PLAN RSP ES-9D

1-22-16