Dist	COUNTY	ROUTE	POST MILES TOTAL PROJECT	SHEET No.	TOTAL SHEETS
03	Sac	50	L1.3/L2.2	101	160

REGISTERED ELECTRICAL ENGINEER 12-13-12 DATE

3-25-13
PLANS APPROVAL DATE

REGISTERED PROFESSIONAL ENGINEER
MARY ANN HUDSPETH
No. 17245
Exp. 06-30-14
ELECTRICAL
STATE OF CALIFORNIA

THE STATE OF CALIFORNIA OR ITS OFFICERS OR AGENTS SHALL NOT BE RESPONSIBLE FOR THE ACCURACY OR COMPLETENESS OF SCANNED COPIES OF THIS PLAN SHEET.

NOTES:

1. FOR ACCURATE RIGHT OF WAY DATA, CONTACT RIGHT OF WAY ENGINEERING AT THE DISTRICT OFFICE.
2. THE CONTRACTOR TO PROVIDE PROTECTION TO THE CONDUIT RUN FROM PERSONNEL AND VEHICLE TRAFFIC.

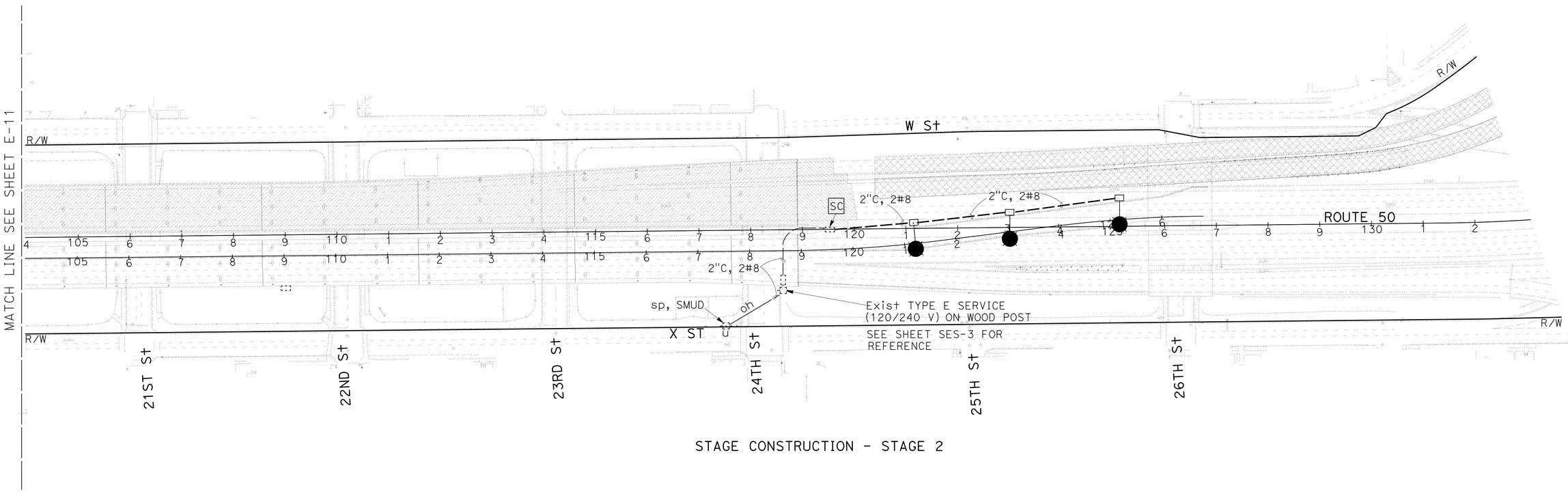

STAGE CONSTRUCTION - STAGE 2

APPROVED FOR ELECTRICAL WORK ONLY

LIGHTING (TEMPORARY)

SCALE: 1" = 100'

E-12

REVISED BY	ZAHRA NIKNAFS
DATE REVISED	MARY ANN HUDSPETH
CALCULATED-DESIGNED BY	
CHECKED BY	
FUNCTIONAL SUPERVISOR	STEVEN BLOCK

STATE OF CALIFORNIA - DEPARTMENT OF TRANSPORTATION
Caltrans
ELECTRICAL DESIGN

LAST REVISION 00-00-00
DATE PLOTTED => 26-MAR-2013
TIME PLOTTED => 09:40

Dist	COUNTY	ROUTE	POST MILES TOTAL PROJECT	SHEET No.	TOTAL SHEETS
03	Sac	50	L1.3/L2.2	102	160

Mary Ann Hudspeth 12-13-12
REGISTERED ELECTRICAL ENGINEER DATE

3-25-13
PLANS APPROVAL DATE

REGISTERED PROFESSIONAL ENGINEER MARY ANN HUDSPETH No. 17245 Exp. 06-30-14 ELECTRICAL STATE OF CALIFORNIA

THE STATE OF CALIFORNIA OR ITS OFFICERS OR AGENTS SHALL NOT BE RESPONSIBLE FOR THE ACCURACY OR COMPLETENESS OF SCANNED COPIES OF THIS PLAN SHEET.

MODIFY TRAFFIC MONITORING STATION

SHEET No.	(N) TYPE A LOOP	(N) No. 5 TRAFFIC PB	(N) DETECTOR HANDHOLE
	EA	EA	EA
E-1	22	5	5

MODIFY CLOSED CIRCUIT TELEVISION SYSTEM

SHEET No.	(N) No. 9 PB	(N) CAMERA INTERCONNECT CABLE	(N) 2" CONDUIT
	EA	FT	FT
E-2	2	450	200

MODIFY LIGHTING AND SIGN ILLUMINATION

SHEET No.	(N) No. 5 PB	(N) No. 9 PB	(N) No. 9A PB	(N) 2 AWG CONDUCTOR	(N) 4 AWG CONDUCTOR	(N) 2" CONDUIT	(N) TYPE 21 BARRIER RAIL MOUNTED ELECTROLIER WITH 235 W LED LUM	(N) TYPE 21 ELECTROLIER WITH 235 W LED LUM	(N) ISL	(N) 165 W LED LAMP	(N) LED SOFFIT LUMINAIRE
	EA	EA	EA	FT	FT	FT	EA	EA	EA	EA	EA
E-3	3	28	2	6450		4300	16		12		18
E-4				8400	300	5800	22		1		25
E-5	1				450	150		1		5	

LIGHTING (PARKING LOT)

SHEET No.	(N) No. 3 PB	(N) No. 8 PB	(N) 1½" CONDUIT	(N) TYPE 4 CONDUIT	(N) 6 AWG CONDUCTOR	(N) LED SOFFIT LUMINAIRE
	EA	EA	FT	FT	FT	EA
E-6	14	18	70	400	5550	18
E-7	14	18	70	400	5420	18
E-8	14	20	70	450	3590	20

TEMPORARY LIGHTING

SHEET No.	(N) No. 5 PB	(N) 8 AWG CONDUCTOR	(N) TYPE E SERVICE	(N) WOOD POLE	(N) 1½" CONDUIT	(N) TYPE 15 (MOD) Temp POLE
	EA	FT	EA	EA	FT	EA
E-9	2	6600	1	1	1200	3
E-10	1	2200	1	1	700	3
E-11		2550			850	3
E-12		1950			650	3

(N) - NOT A SEPARATE PAY ITEM, FOR INFORMATION ONLY

APPROVED FOR ELECTRICAL WORK ONLY

ELECTRICAL QUANTITIES

E-13

REVISED BY | DATE REVISED
TOM MCEWAN / ALI HASSANI | MARY ANN HUDSPETH
CALCULATED-DESIGNED BY | CHECKED BY
FUNCTIONAL SUPERVISOR | STEVEN BLOCK

STATE OF CALIFORNIA - DEPARTMENT OF TRANSPORTATION
Caltrans® ELECTRICAL DESIGN

LAST REVISION 08-05-11 | DATE PLOTTED => 26-MAR-2013 | TIME PLOTTED => 09:34

DIST	COUNTY	ROUTE	POST MILES TOTAL PROJECT	SHEET No	TOTAL SHEETS
03	Sac	50	L1.3/L2.2	103	160

Mahfoud A. Licha 12-24-12
REGISTERED CIVIL ENGINEER DATE

3-25-13
PLANS APPROVAL DATE

REGISTERED PROFESSIONAL ENGINEER MAHFOUD A. LICHA No. C62816 Exp. 6/30/14 CIVIL STATE OF CALIFORNIA

The State of California or its officers or agents shall not be responsible for the accuracy or completeness of electronic copies of this plan sheet.

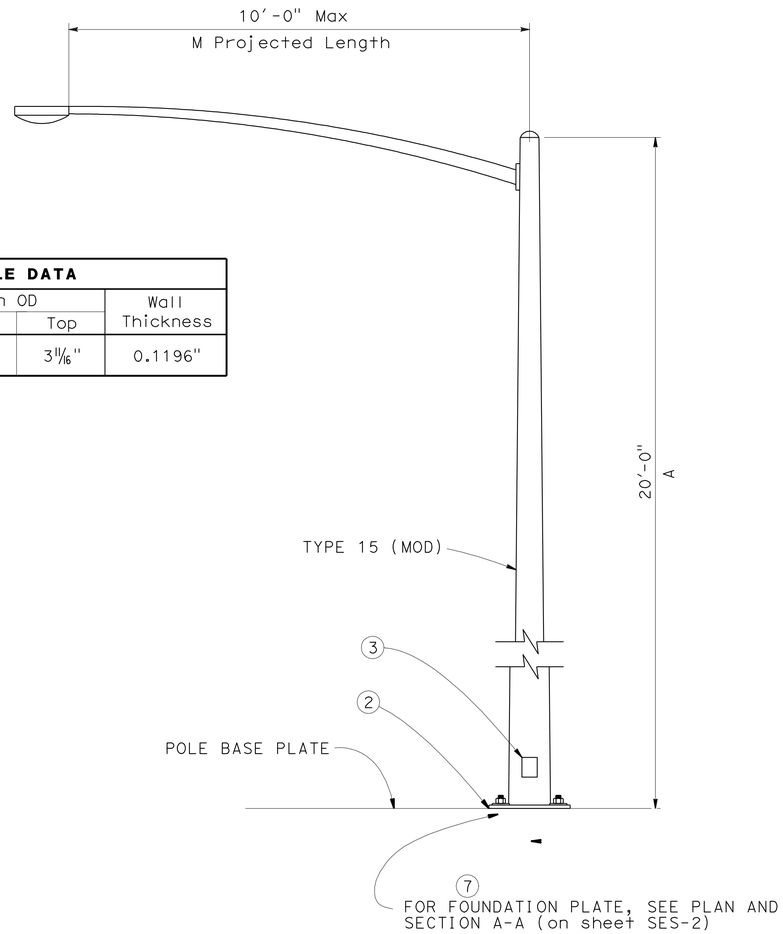

POLE DATA			
A Height	Min OD		Wall Thickness
	Base	Top	
20'	8"	3 11/16"	0.1196"

TYPE 15 (MOD)

NOTES:

1 For Type 15 (Mod) details not shown, see "2010 STANDARD PLANS" and "2010 REVISED STANDARD PLANS"

2 No grout required.

3 For Handhole details, see 2010 Standard Plan ES-6A.

4 For wiring connection details, See Electrical Plans.

5 All steel shall be galvanized after fabrication.

6 During pole installation the post shall be raked as necessary with the use of leveling nuts to provide a plumb pole axis.

7 The foundation plate shall be on level concrete, asphalt, or ground compacted to at least 90 percent relative compaction.

8 Design Specification: AASHTO Standard Specifications for Structural Supports for Highway Signs, Luminaires and Traffic Signals dated 2001.

9 Wind Loadings: 100 mph (3-second gust)

10 Unit Stresses (Structural Steel):
a. fy = 55,000 psi (tapered steel tube)
b. fy = 50,000 psi (unless otherwise noted)

11 Anchor bolts: fy = 55,000 psi

12 Threaded rod: fy = 55,000 psi

13 Unit Stresses (Reinforced Concrete):
a. minor concrete
b. fy = 60,000 psi (rebar)

NOTE:
THE CONTRACTOR SHALL VERIFY ALL CONTROLLING FIELD DIMENSIONS BEFORE ORDERING OR FABRICATING ANY MATERIAL.

NO SCALE

BRANCH CHIEF JEFFREY B WOODY

	BY	CHECKED
DESIGN	M LICHA	J WOODY
DETAILS	D W JUSTICE Jr	M LICHA
QUANTITIES		

STATE OF CALIFORNIA
DEPARTMENT OF TRANSPORTATION

DIVISION OF ENGINEERING SERVICES
DESIGN AND TECHNICAL SERVICES
SPECIAL DESIGNS BRANCH A

BRIDGE NO. N/A
POST MILE

ELECTRICAL SYSTEMS
TYPE 15 (MOD) TEMPORARY POLE DETAILS

SES-1

(ENGLISH) SPECIAL DESIGNS BRANCH BORDER SHEET (REV. 7-1-09)

ORIGINAL SCALE IN INCHES FOR REDUCED PLANS 0 1 2 3

UNIT: 3619
PROJECT NUMBER & PHASE: 0300000073-1
CONTRACT NO.: 03-0F230

DISREGARD PRINTS BEARING EARLIER REVISION DATES

REVISION DATES: 6-12-12 7-12-17

SHEET OF

FILE => spec_des_br_prj/2012sd/03-0f230/ 03-0f230_ses1.dgn

USERNAME => s124496 DATE PLOTTED => 26-MAR-2013 TIME PLOTTED => 08:43

DIST	COUNTY	ROUTE	POST MILES TOTAL PROJECT	SHEET No	TOTAL SHEETS
03	Sac	50	L1.3/L2.2	104	160

Mahfoud A. Licha 12-24-12
REGISTERED CIVIL ENGINEER DATE

3-25-13
PLANS APPROVAL DATE

REGISTERED PROFESSIONAL ENGINEER MAHFOUD A. LICHA No. C62816 Exp. 6/30/14 CIVIL STATE OF CALIFORNIA

The State of California or its officers or agents shall not be responsible for the accuracy or completeness of electronic copies of this plan sheet.

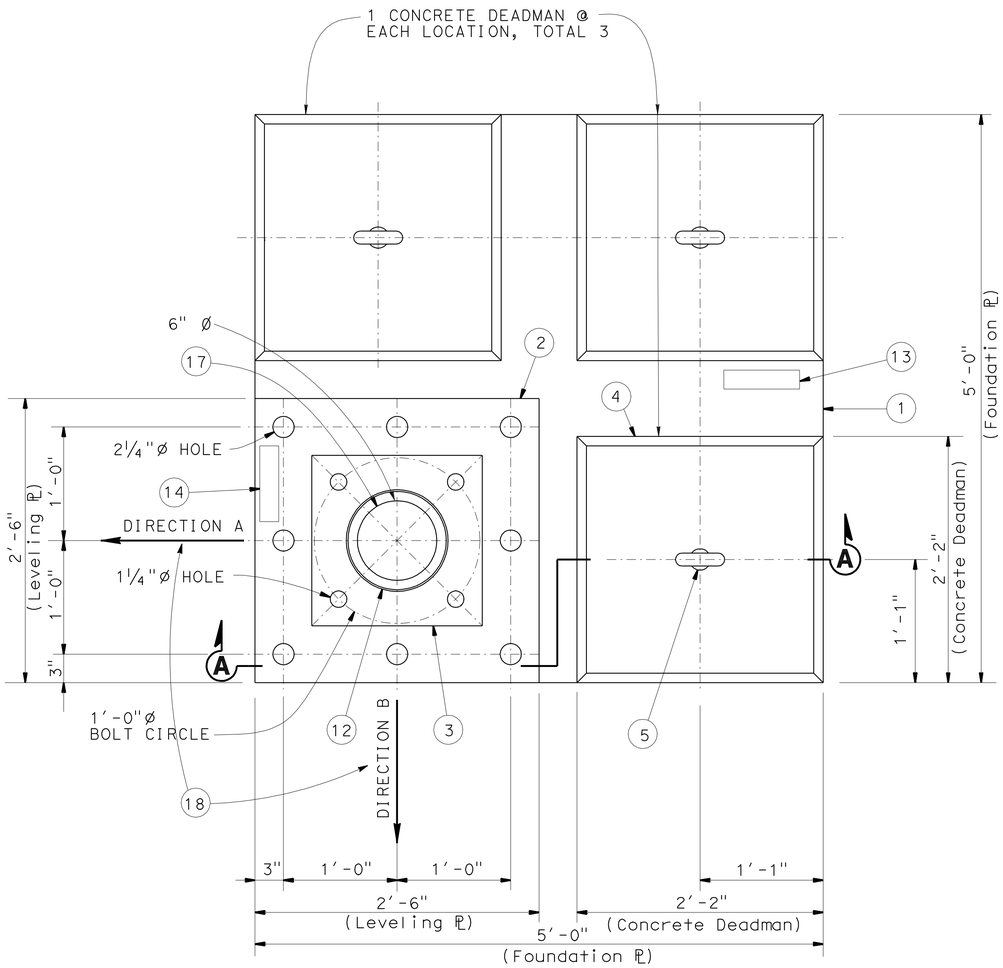

PLAN

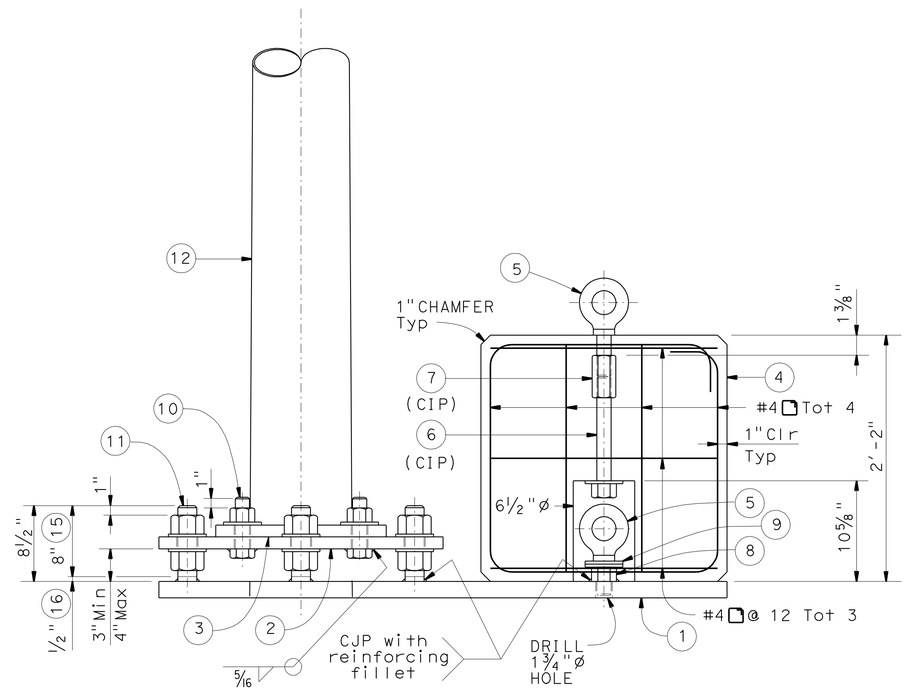

SECTION A-A

NOTES:

1. Foundation ℞ 1¾" X 5'-0" X 5'-0"
2. Leveling ℞ 1¼" X 2'-6" X 2'-6"
3. Pole Base ℞ 2" X 1'-0" X 1'-0"
4. Concrete Deadman 2'-2" X 2'-2" X 2'-2"
5. 1½"Ø Forged eyebolt with 3⅝" shank
6. 1½"Ø X 12" Heavy hex bolt with 4"Ø X 5/16" thick washer (CIP)
7. 1½"Ø Hex coupling nut (CIP)
8. 1½"Ø Heavy hex nut
9. 1½"Ø X 5/16" thick washer total (2) each location
10. 1"Ø Heavy hex bolt with nut and 4"Ø X 5/16" thick washers
11. 2"Ø X 8½" Threaded rod with (2) heavy hex nuts and (2) 4"Ø X 5/16" thick washer
12. Type 15 (Mod) Pole. For details, see SES-1.
13. Stamp Foundation ℞ with "Lift ℞ with minimum of (2) forged eyebolts".
14. Stamp Leveling ℞ with "℞ for Type 15 (Mod) Pole".
15. Threaded rod
16. Non-Threaded Rod
17. Hole in Leveling ℞ to be same size as hole in Base ℞.
18. Lighting mast arm shall follow Direction A or Direction B

NOTE:
THE CONTRACTOR SHALL VERIFY ALL CONTROLLING FIELD DIMENSIONS BEFORE ORDERING OR FABRICATING ANY MATERIAL.

NO SCALE

BRANCH CHIEF	JEFFREY B WOODY	DESIGN	BY M LICHA	CHECKED J WOODY
		DETAILS	BY D W JUSTICE Jr	CHECKED M LICHA
		QUANTITIES	BY	CHECKED

STATE OF CALIFORNIA
DEPARTMENT OF TRANSPORTATION

DIVISION OF ENGINEERING SERVICES
DESIGN AND TECHNICAL SERVICES
SPECIAL DESIGNS BRANCH A

BRIDGE NO. N/A
POST MILE

ELECTRICAL SYSTEMS
TYPE 15 (MOD) TEMPORARY POLE DETAILS

SES-2

(ENGLISH) SPECIAL DESIGNS BRANCH BORDER SHEET (REV. 7-1-09)

ORIGINAL SCALE IN INCHES FOR REDUCED PLANS 0 1 2 3

UNIT: 3619
PROJECT NUMBER & PHASE: 0300000073-1
CONTRACT NO.: 03-0F230

DISREGARD PRINTS BEARING EARLIER REVISION DATES
REVISION DATES 7-13-12
SHEET OF

FILE => spec_des_br_prj/2012sd/03-0F230/ 03-0f230_ses2.dgn

USERNAME => s12614 DATE PLOTTED => 27-MAR-2013 TIME PLOTTED => 11:00

DIST	COUNTY	ROUTE	POST MILES TOTAL PROJECT	SHEET No.	TOTAL SHEETS
03	Sac	50	L1.3/L2.2	105	160

REGISTERED CIVIL ENGINEER 01-10-13 DATE

3-25-13
PLANS APPROVAL DATE

REGISTERED PROFESSIONAL ENGINEER AIMAN MALAK No. C73369 Exp. 12-31-2012 CIVIL STATE OF CALIFORNIA

The State of California or its officers or agents shall not be responsible for the accuracy or completeness of electronic copies of this plan sheet.

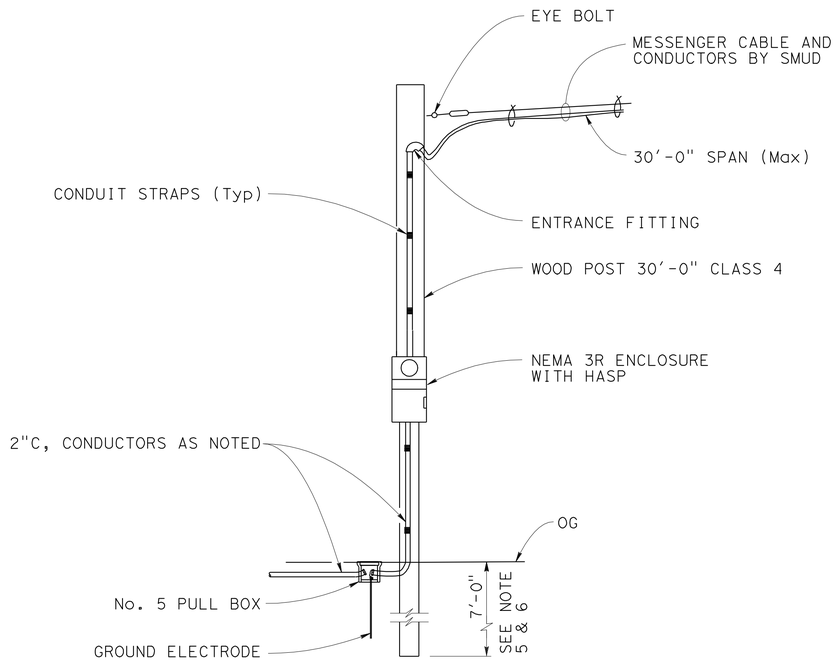

TEMPORARY WOOD POLE SUPPORTING TYPE E SERVICE ENCLOSURE

NOTE:
THE CONTRACTOR SHALL VERIFY ALL CONTROLLING FIELD DIMENSIONS BEFORE ORDERING OR FABRICATING ANY MATERIAL.

GENERAL NOTES:

SPECIFICATIONS

Design: AASHTO Standard Specifications for Structural Supports for Highway Signs, Luminaires and Traffic Signals dated 2009 and 2010 Interim Revisions.

LOADING

Wind Loadings: 85 MPH

UNIT STRESSES

Timber Poles: Fb = 1850 Tapered treated round pole
Fv = 110 psi ASTM D2899 Standard
E = 1500 x 10^3 psi

TREATMENT

To conform with Section 86 Standard Specifications

SPECIFICATIONS

Caltrans Standard Specifications 2010
ANSI O5 Wood Poles
ASTM A475 Utility Grade Wires

NOTES:

1. All overhead cables shall be slack spanned with 18'-0" minimum overhead clearance.
2. Conductors shall be suspended from span-wire as follows: Main run ¼" span-wire with 4.5%± sag. No spare conductors allowed except as noted.
3. Overhead line construction not specifically covered here shall conform with the provisions of General Order No. 95 of Public Utilities Commission.
4. All attachments shall be mounted with stainless steel straps or other manufacturers methods without drilling holes in pole, except as shown. Drilling through pole will require the Engineer's approval.
5. Foundation design is based on AASHTO 2009 and 2010 Interim Revisions article 13.6 Broms' approximate procedure assuming a cohessionless material. The angle of Internal friction used is 30° and unit weight of soil used is 120 lb/ft^3. The Contractor to verify actual soil condition.
6. If pole is located on a steep slope add 2 feet extra for embedment.
7. For details not shown, see "2010 STANDARD PLANS".
8. SMUD to verify the capacity of existing SMUD wood pole before attaching overhead conductors.

NO SCALE

BRANCH CHIEF JOEL MAGANA

	BY	CHECKED
DESIGN	AIMAN MALAK	NIRANJEN KANEPATHIPILLAI
DETAILS	SHUMEI JIANG	NIRANJEN KANEPATHIPILLAI
QUANTITIES	X	X

STATE OF CALIFORNIA
DEPARTMENT OF TRANSPORTATION

DIVISION OF ENGINEERING SERVICES
STRUCTURE DESIGN
SPECIAL DESIGN BRANCH

BRIDGE NO. N/A
POST MILE L1.59/2.07

TEMPORARY LIGHTING SYSTEM
TEMPORARY WOOD POLE

SES-3

STRUCTURES DESIGN SPECIAL DESIGN SHEET (ENGLISH) (REV. 09-01-10)

ORIGINAL SCALE IN INCHES FOR REDUCED PLANS 0 1 2 3

UNIT: 3619
PROJECT NUMBER & PHASE: 0300000073-1
CONTRACT NO.: 03-0F2301

DISREGARD PRINTS BEARING EARLIER REVISION DATES

REVISION DATES 1-08-13

SHEET 1 OF 1

FILE => ea-03-0f2301_ses.dgn

USERNAME => s124436 DATE PLOTTED => 26-MAR-2013 TIME PLOTTED => 08:43

Dist	COUNTY	ROUTE	POST MILES TOTAL PROJECT	SHEET No.	TOTAL SHEETS
03	Sac	50	L1./L2.2	106	160

REGISTERED CIVIL ENGINEER

April 20, 2012
PLANS APPROVAL DATE

REGISTERED PROFESSIONAL ENGINEER
Roberta L. McLaughlin
No. C40375
Exp. 3-31-13
CIVIL
STATE OF CALIFORNIA

THE STATE OF CALIFORNIA OR ITS OFFICERS OR AGENTS SHALL NOT BE RESPONSIBLE FOR THE ACCURACY OR COMPLETENESS OF SCANNED COPIES OF THIS PLAN SHEET.

TO ACCOMPANY PLANS DATED 3-25-13

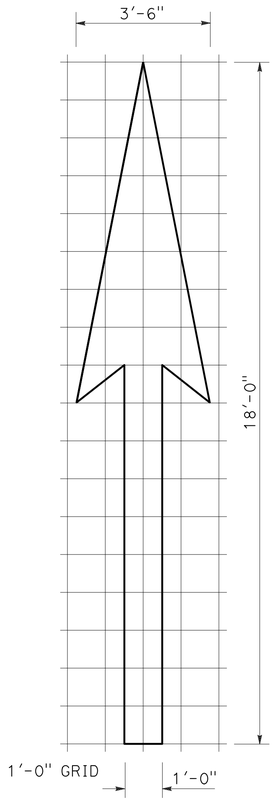

A=25 ft^2

TYPE I 18'-0" ARROW

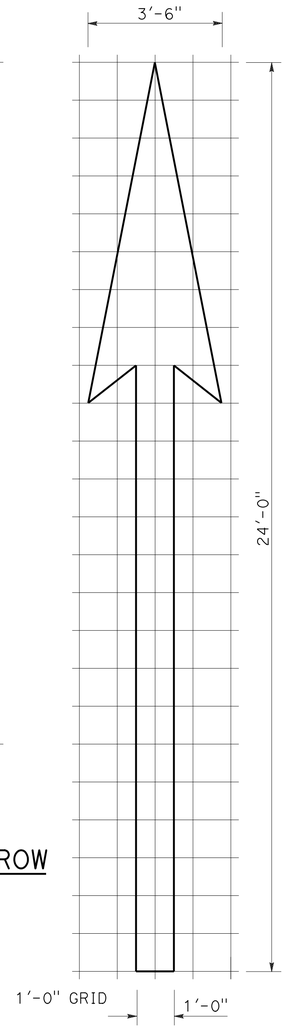

A=31 ft^2

TYPE I 24'-0" ARROW

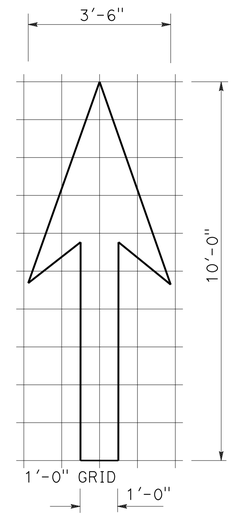

A=14 ft^2

TYPE I 10'-0" ARROW

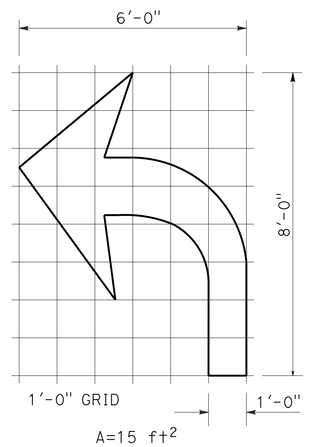

A=15 ft^2

TYPE IV (L) ARROW

(For Type IV (R) arrow, use mirror image)

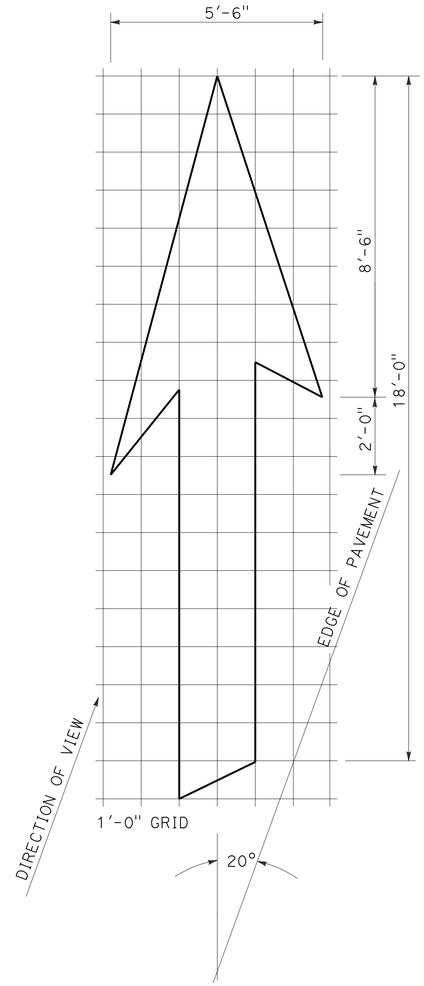

A=42 ft^2

TYPE VI ARROW

Right lane drop arrow
(For left lane, use mirror image)

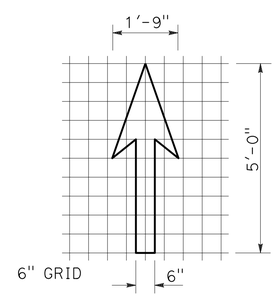

A=3.5 ft^2

BIKE LANE ARROW

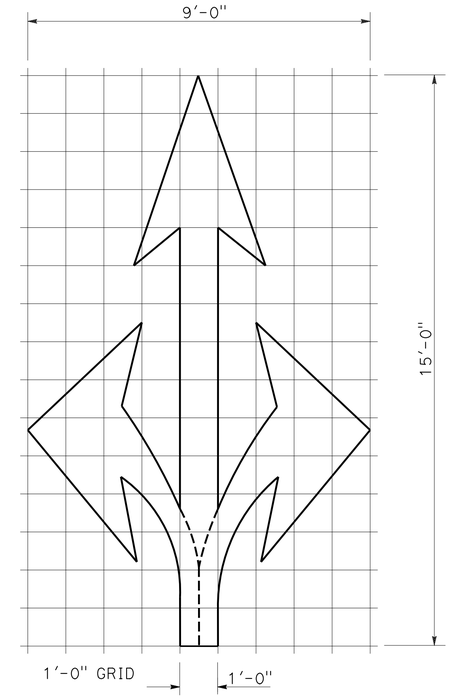

A=36 ft^2

TYPE VIII ARROW

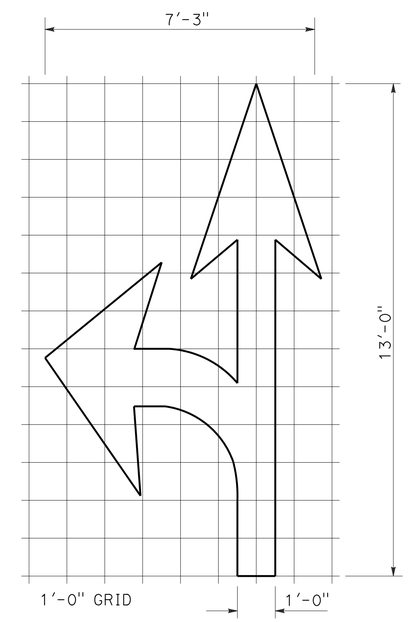

A=27 ft^2

TYPE VII (L) ARROW

(For Type VII (R) arrow, use mirror image)

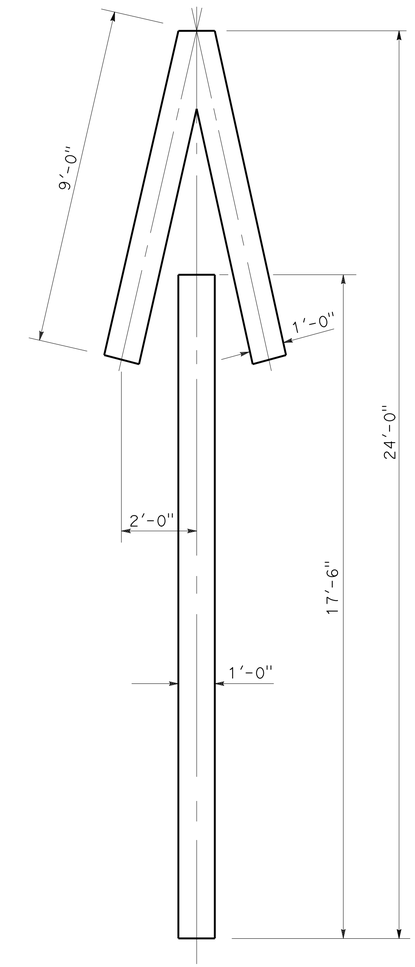

A=33 ft^2

TYPE V ARROW

NOTE:
Minor variations in dimensions may be accepted by the Engineer.

STATE OF CALIFORNIA
DEPARTMENT OF TRANSPORTATION

PAVEMENT MARKINGS ARROWS

NO SCALE

RSP A24A DATED APRIL 20, 2012 SUPERSEDES STANDARD PLAN A24A DATED MAY 20, 2011 - PAGE 13 OF THE STANDARD PLANS BOOK DATED 2010.

REVISED STANDARD PLAN RSP A24A

2010 REVISED STANDARD PLAN RSP A24A

3-14-12

Dist	COUNTY	ROUTE	POST MILES TOTAL PROJECT	SHEET No.	TOTAL SHEETS
03	Sac	50	L1.3/L2.2	107	160

REGISTERED CIVIL ENGINEER

July 20, 2012
PLANS APPROVAL DATE

REGISTERED PROFESSIONAL ENGINEER
Roberta L. McLaughlin
No. C40375
Exp. 3-31-13
CIVIL
STATE OF CALIFORNIA

THE STATE OF CALIFORNIA OR ITS OFFICERS OR AGENTS SHALL NOT BE RESPONSIBLE FOR THE ACCURACY OR COMPLETENESS OF SCANNED COPIES OF THIS PLAN SHEET.

TO ACCOMPANY PLANS DATED 3-25-13

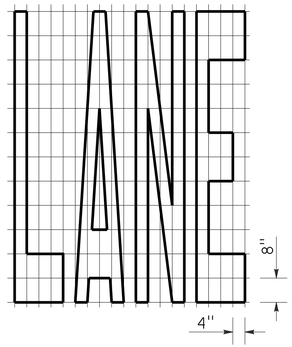

A=24 ft²

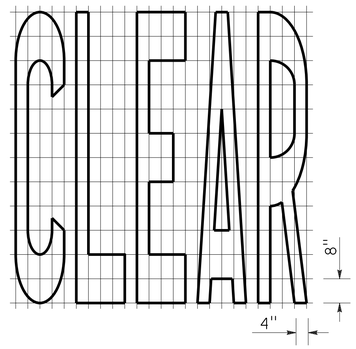

A=27 ft²

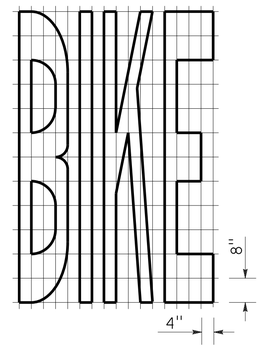

A=21 ft²

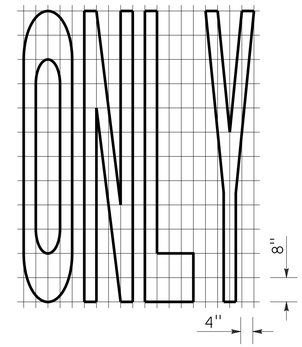

A=22 ft²

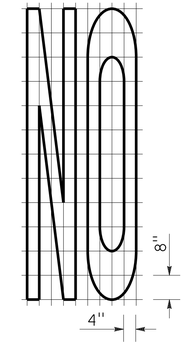

A=14 ft²

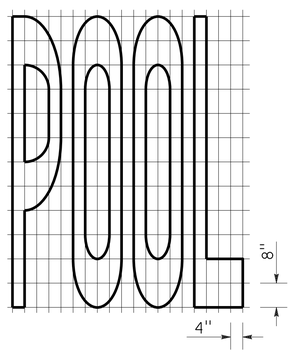

A=23 ft²

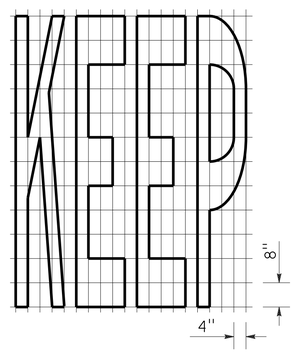

A=24 ft²

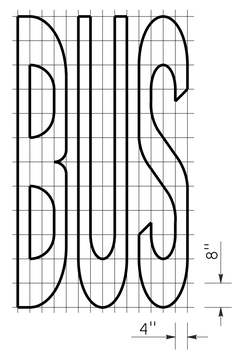

A=20 ft²

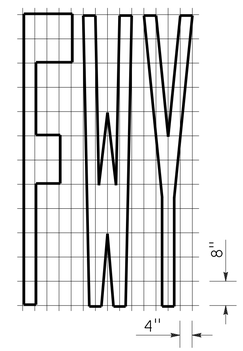

A=16 ft²

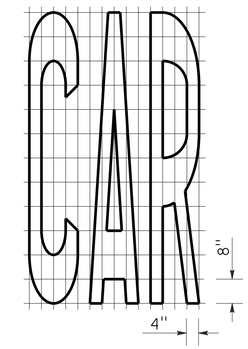

A=17 ft²

WORD MARKINGS			
ITEM	ft²	ITEM	ft²
LANE	24	NO	14
POOL	23	BIKE	21
CAR	17	BUS	20
CLEAR	27	ONLY	22
KEEP	24	FWY	16

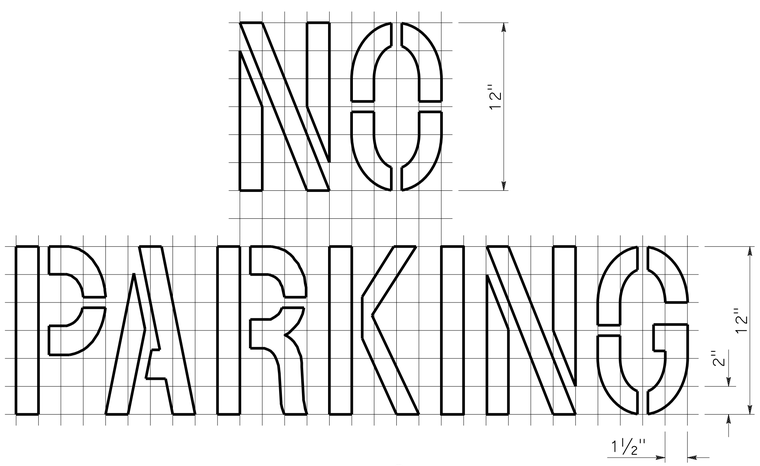

A=2 ft²

See Notes 6 and 7

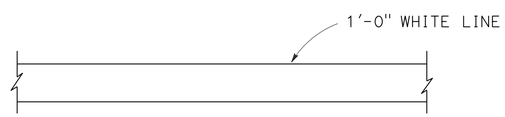

LIMIT LINE (STOP LINE)

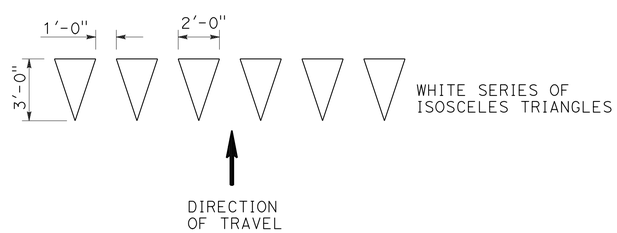

YIELD LINE

NOTES:

1. If a message consists of more than one word, it should read "UP", i.e., the first word should be nearest the driver.
2. The space between words should be at least four times the height of the characters for low speed roads, but not more than ten times the height of the characters. The space may be reduced appropriately where there is limited space because of local conditions.
3. Minor variations in dimensions may be accepted by the Engineer.
4. Portions of a letter, number or symbol may be separated by connecting segments not to exceed 2" in width.
5. The words "NO PARKING" pavement marking is to be used for parking facilities. For typical locations of markings, see Standard Plans A90A and A90B.
6. The words "NO PARKING", shall be painted in white letters no less than 1'-0" high on a contrasting background and located so that it is visible to traffic enforcement officials.

STATE OF CALIFORNIA
DEPARTMENT OF TRANSPORTATION

PAVEMENT MARKINGS WORDS, LIMIT AND YIELD LINES

NO SCALE

RSP A24E DATED JULY 20, 2012 SUPERSEDES STANDARD PLAN A24E
DATED MAY 20, 2011 - PAGE 17 OF THE STANDARD PLANS BOOK DATED 2010.

REVISED STANDARD PLAN RSP A24E

2010 REVISED STANDARD PLAN RSP A24E

Dist	COUNTY	ROUTE	POST MILES TOTAL PROJECT	SHEET No.	TOTAL SHEETS
03	Sac	50	L1.3/L2.2	108	160

Glenn DeCou
REGISTERED CIVIL ENGINEER

October 19, 2012
PLANS APPROVAL DATE

REGISTERED PROFESSIONAL ENGINEER
Glenn DeCou
No. C34547
Exp. 9-30-13
CIVIL
STATE OF CALIFORNIA

THE STATE OF CALIFORNIA OR ITS OFFICERS OR AGENTS SHALL NOT BE RESPONSIBLE FOR THE ACCURACY OR COMPLETENESS OF SCANNED COPIES OF THIS PLAN SHEET.

TO ACCOMPANY PLANS DATED 3-25-13

2010 REVISED STANDARD PLAN RSP A85B

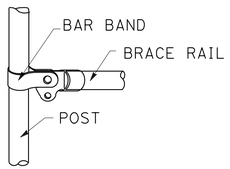

BRACE RAIL

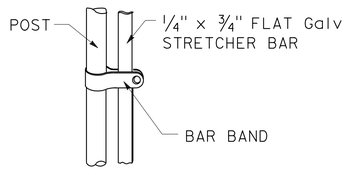

STRETCHER BAR

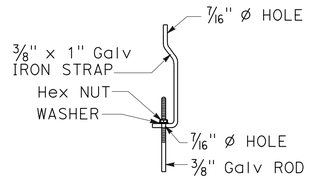

TRUSS TIGHTENER

NOTES:

1. All material for abutment connection to be galvanized.
2. The chain link fabric shall be replaced by barbed wire strands at 12" maximum centers between the double posts.
3. When the width of the culvert makes it necessary to anchor a post to the top of the culvert, a cast iron shoe or other device approved by the Engineer shall be used.
4. Fencing over stream and around headwall may also use Barbed Wire or Wire Mesh fencing with either wood post or steel post installation.
5. See Standard Plan A85 for Chain Link fence dimensions. See Standard Plan A86 for Barbed Wire and Wire Mesh fence dimensions and for wood post and steel post installation.

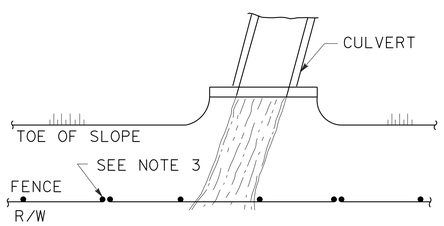

PLAN

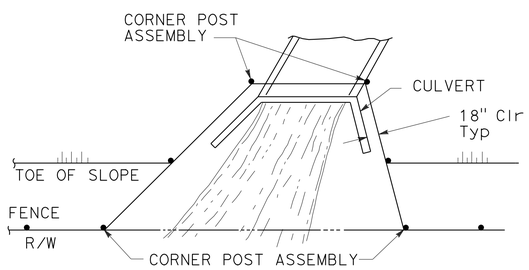

PLAN

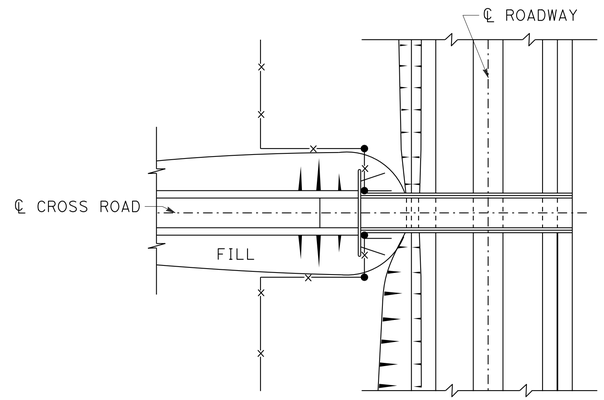

PLAN OF ROADWAY - OVERCROSSING

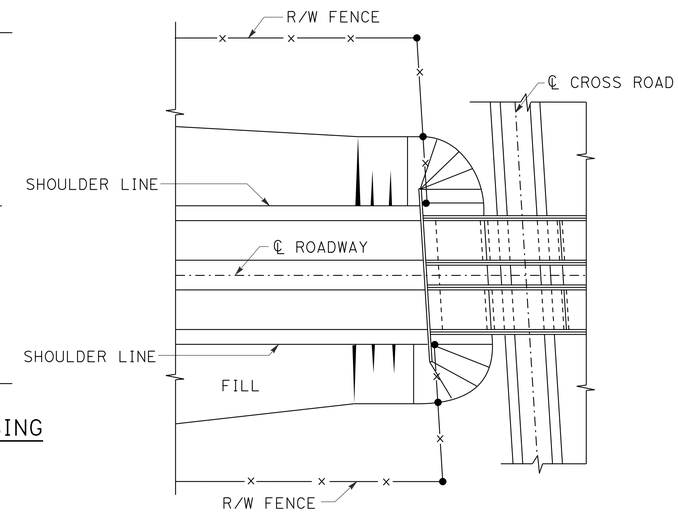

PLAN OF ROADWAY - UNDERCROSSING

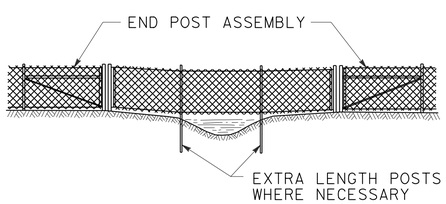

ELEVATION

INSTALLATION OVER STREAM

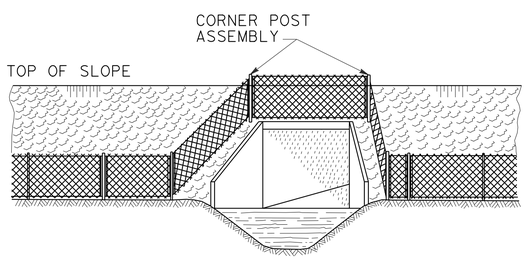

ELEVATION

INSTALLATION AROUND HEADWALL

See Note 4

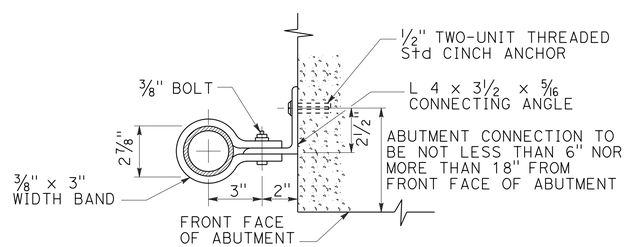

ABUTMENT CONNECTION

TYPICAL INSTALLATION AT BRIDGES

STATE OF CALIFORNIA
DEPARTMENT OF TRANSPORTATION

CHAIN LINK FENCE DETAILS

NO SCALE

RSP A85B DATED OCTOBER 19, 2012 SUPERSEDES STANDARD PLAN A85B
DATED MAY 20, 2011 - PAGE 114 OF THE STANDARD PLANS BOOK DATED 2010.

REVISED STANDARD PLAN RSP A85B

7-19-12

Dist	COUNTY	ROUTE	POST MILES TOTAL PROJECT	SHEET No.	TOTAL SHEETS
03	Sac	50	L1.3/L2.2	109	160

William K. Farnbach
REGISTERED CIVIL ENGINEER

April 20, 2012
PLANS APPROVAL DATE

REGISTERED PROFESSIONAL ENGINEER
William K. Farnbach
No. C49042
Exp. 9-30-12
CIVIL
STATE OF CALIFORNIA

THE STATE OF CALIFORNIA OR ITS OFFICERS OR AGENTS SHALL NOT BE RESPONSIBLE FOR THE ACCURACY OR COMPLETENESS OF SCANNED COPIES OF THIS PLAN SHEET.

TO ACCOMPANY PLANS DATED 3-25-13

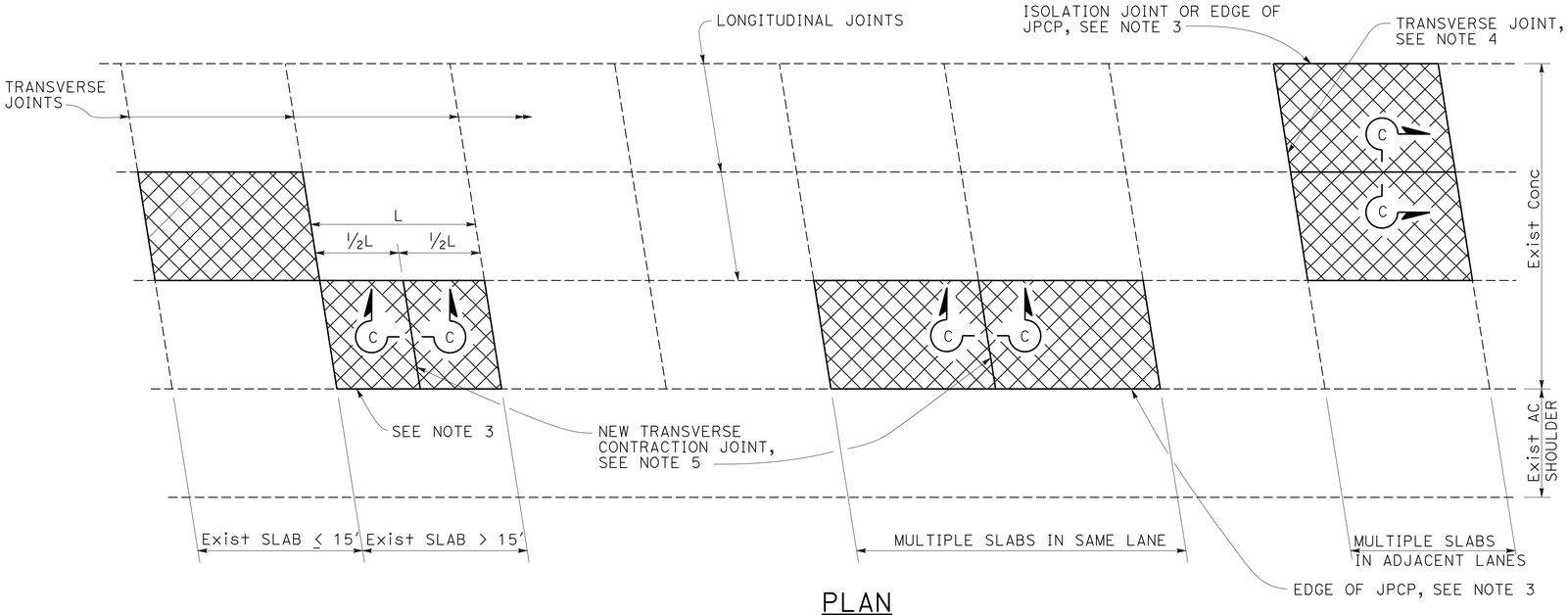

PLAN

NOTES:

1. For details not shown, see Revised Standard Plan P10.
2. Where the existing outer shoulder pavement is asphalt concrete pavement, the "a" dimension shall be 1'-0" and the "b" dimension shall be 2'-0".
3. Side forms shall be used where edge of pavement is adjacent to asphalt concrete.
4. For detail, see Transverse Construction Joint for existing concrete pavement detail on Revised Standard Plan P10.
5. Transverse joint to match skew of existing joint. Omit dowel bars.

LEGEND:

Replace Concrete Pavement (See Slab Layout Detail)

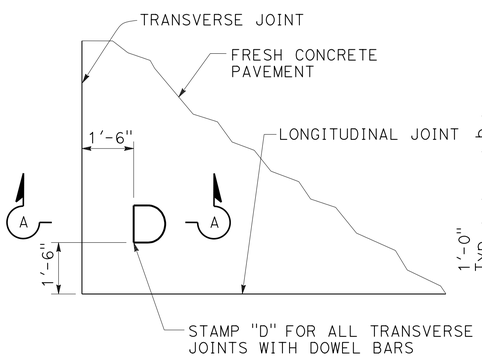

DOWEL STAMP DETAIL

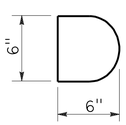

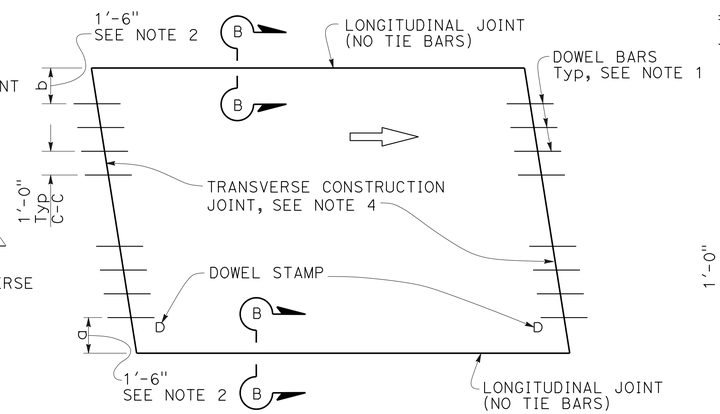

TYPE I

Traffic lane lines match longitudinal joints

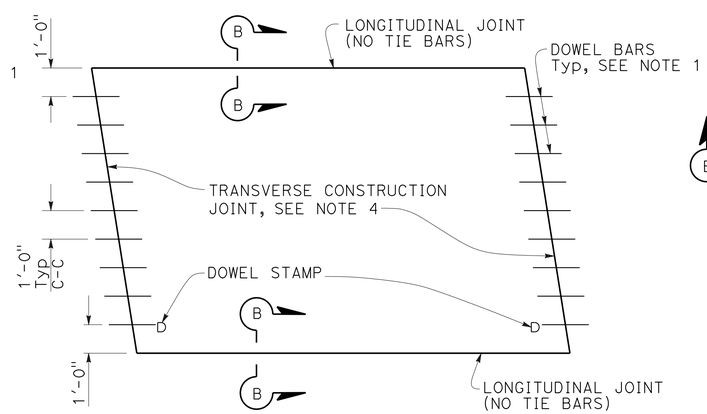

TYPE II

Traffic lane lines do not match longitudinal joints

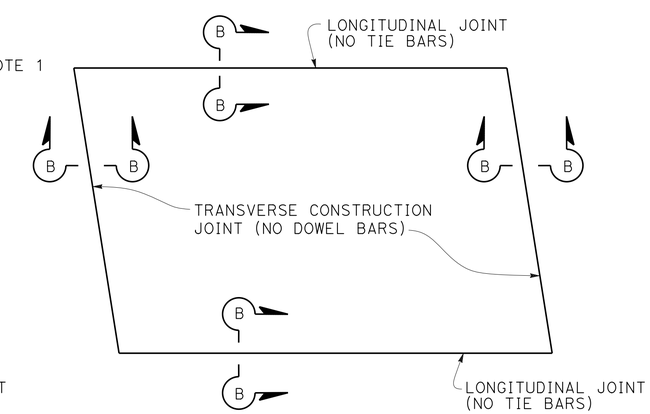

TYPE III

For short term repairs < 5 yrs design life or for slab replacements with a cracking and seating operation

SLAB LAYOUT

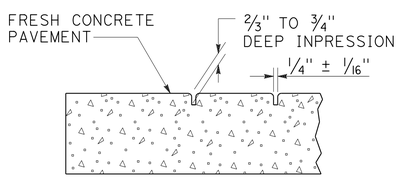

SECTION A-A

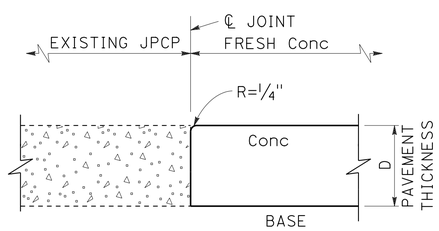

SECTION B-B

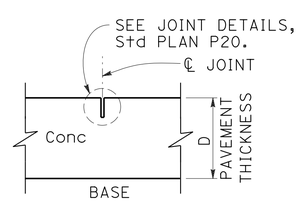

SECTION C-C

STATE OF CALIFORNIA
DEPARTMENT OF TRANSPORTATION

JOINTED PLAIN CONCRETE PAVEMENT-INDIVIDUAL SLAB REPLACEMENT

NO SCALE

RSP P8 DATED APRIL 20, 2012 SUPERSEDES STANDARD PLAN P8
DATED MAY 20, 2011 - PAGE 130 OF THE STANDARD PLANS BOOK DATED 2010.

REVISED STANDARD PLAN RSP P8

2010 REVISED STANDARD PLAN RSP P8

2-22-12

Dist	COUNTY	ROUTE	POST MILES TOTAL PROJECT	SHEET No.	TOTAL SHEETS
03	Sac	50	L1.3/L2.2	110	160

William K. Farnbach
REGISTERED CIVIL ENGINEER

April 20, 2012
PLANS APPROVAL DATE

REGISTERED PROFESSIONAL ENGINEER
William K. Farnbach
No. C49042
Exp. 9-30-12
CIVIL
STATE OF CALIFORNIA

THE STATE OF CALIFORNIA OR ITS OFFICERS OR AGENTS SHALL NOT BE RESPONSIBLE FOR THE ACCURACY OR COMPLETENESS OF SCANNED COPIES OF THIS PLAN SHEET.

TO ACCOMPANY PLANS DATED 3-25-13

2010 REVISED STANDARD PLAN RSP P18

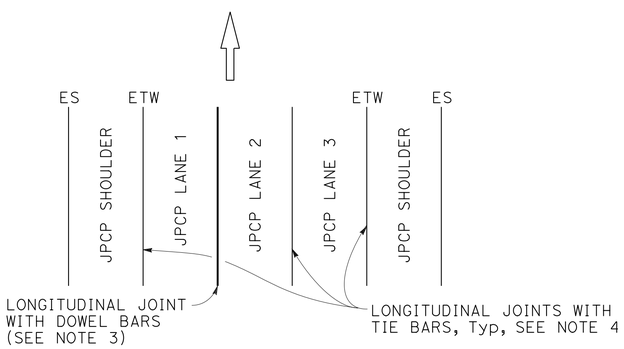

3 LANES WITH CONCRETE SHOULDERS
PLAN

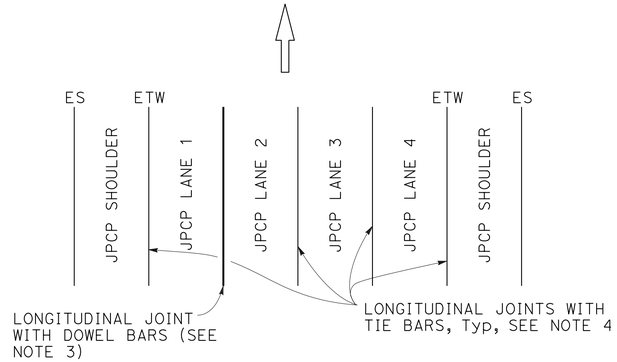

4 LANES WITH CONCRETE SHOULDERS
PLAN

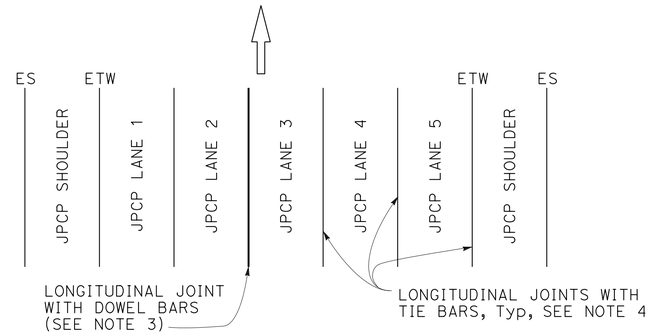

5 LANES WITH CONCRETE SHOULDERS
PLAN

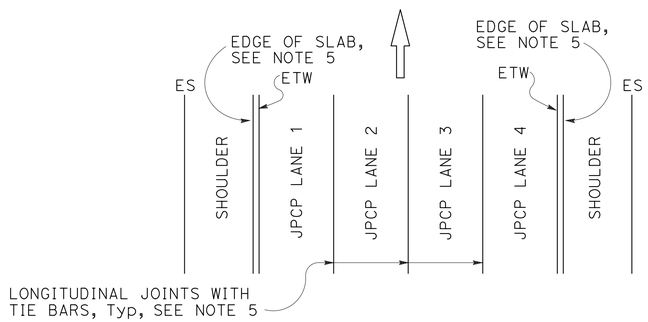

4 LANES OR LESS WITH AC SHOULDERS
PLAN

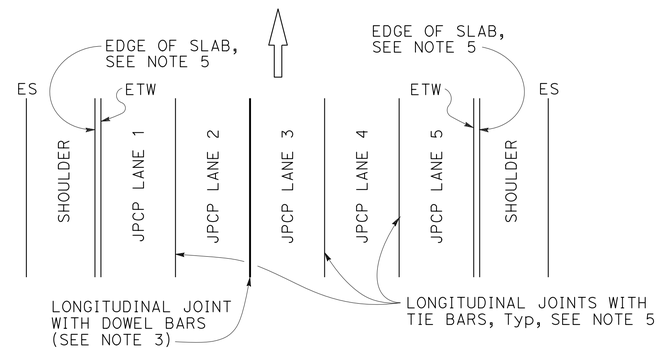

5 LANES WITH AC SHOULDERS
PLAN

NEW CONSTRUCTION

Location of Longitudinal Joints For JPCP

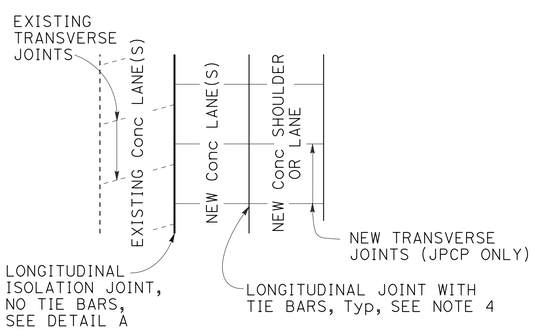

CASE 1
PLAN

Transverse Joints do not align between new and existing.

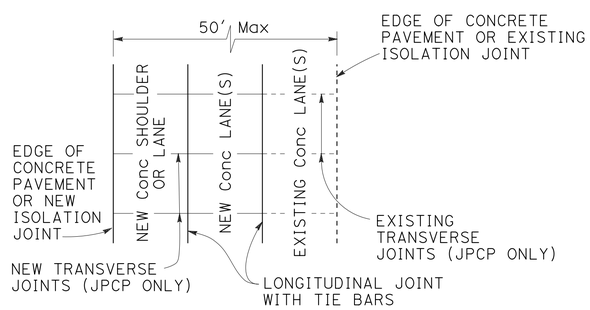

CASE 2
PLAN

Transverse Joints align between new and existing.

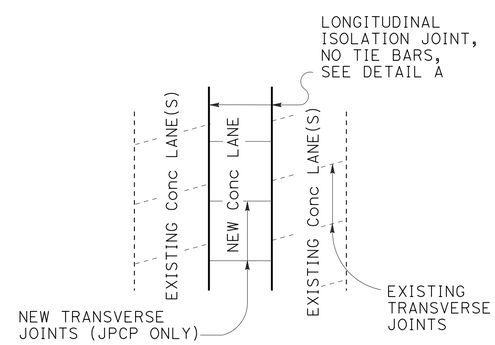

CASE 3 (INTERIOR LANE REPLACEMENT)
PLAN

Transverse Joints do not align between new and existing.

LANE/SHOULDER ADDITION OR RECONSTRUCTION

For JPCP and CRCP

NOTES:

1. Where Lean Concrete Base is not used as base material, the joint filler material used for the longitudinal isolation joint shall only extend to the bottom of the new concrete slab. See Detail A.
2. Use 5/8" ±1/16" dimension for silicone sealant.
3. See Revised Standard Plan RSP P10 for longitudinal joint with dowel bars.
4. See Standard Plan P1.
5. See Standard Plan P2.

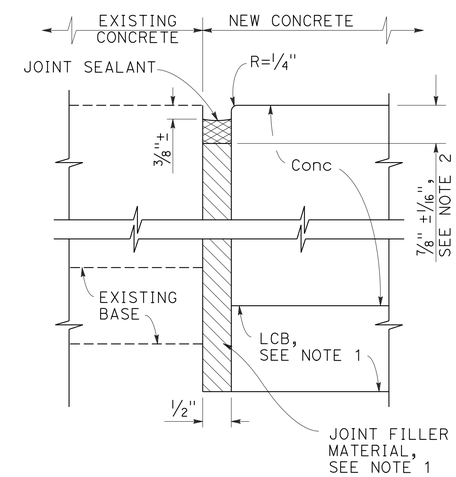

DETAIL "A"

ISOLATION JOINT

STATE OF CALIFORNIA
DEPARTMENT OF TRANSPORTATION

CONCRETE PAVEMENT-LANE SCHEMATICS AND ISOLATION JOINT DETAIL

NO SCALE

RSP P18 DATED APRIL 20, 2012 SUPERSEDES STANDARD PLAN P18 DATED MAY 20, 2011 - PAGE 135 OF THE STANDARD PLANS BOOK DATED 2010.

REVISED STANDARD PLAN RSP P18

2-22-12

Dist	COUNTY	ROUTE	POST MILES TOTAL PROJECT	SHEET No.	TOTAL SHEETS
03	Sac	50	L1.3/L2.2	111	160

William K. Farnbach
REGISTERED CIVIL ENGINEER

April 20, 2012
PLANS APPROVAL DATE

REGISTERED PROFESSIONAL ENGINEER
William K. Farnbach
No. C49042
Exp. 9-30-12
CIVIL
STATE OF CALIFORNIA

THE STATE OF CALIFORNIA OR ITS OFFICERS OR AGENTS SHALL NOT BE RESPONSIBLE FOR THE ACCURACY OR COMPLETENESS OF SCANNED COPIES OF THIS PLAN SHEET.

TO ACCOMPANY PLANS DATED 3-25-13

2010 REVISED STANDARD PLAN RSP P30

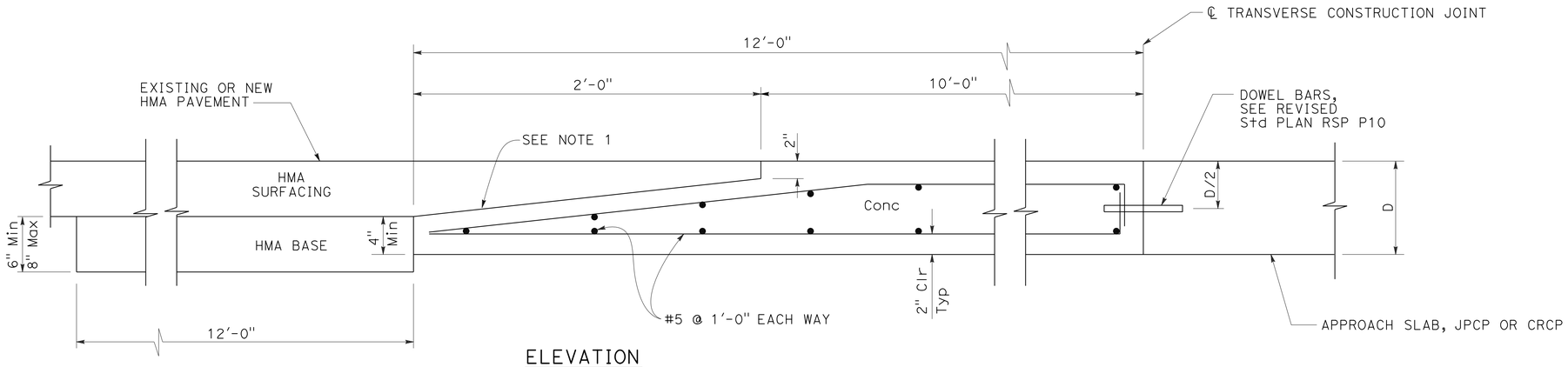

ELEVATION

CONCRETE PAVEMENT TRANSITION PANEL

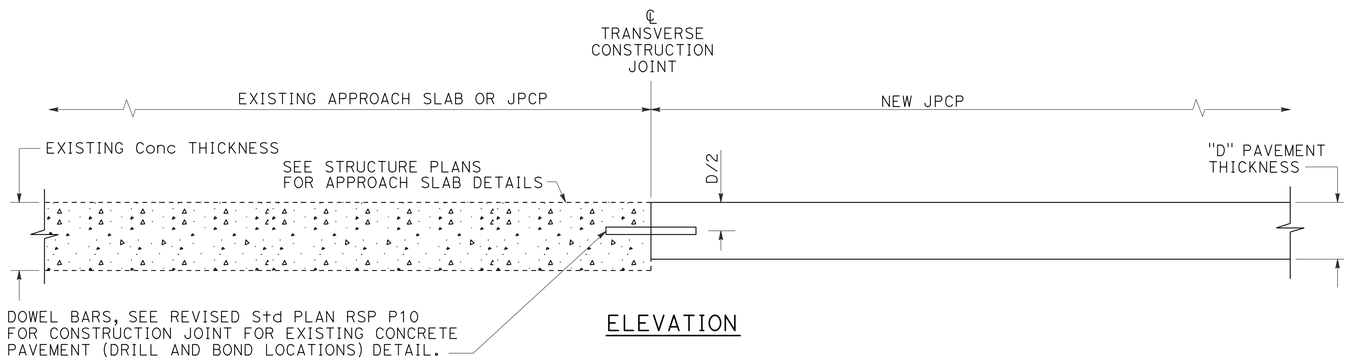

ELEVATION

TERMINAL JOINT TYPE 1

For Exist JPCP or Structure Approach Slab

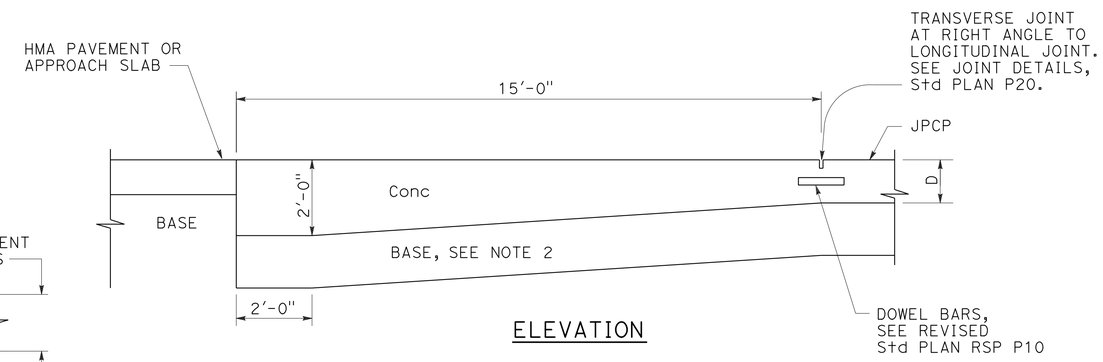

ELEVATION

PAVEMENT END ANCHOR

For HMA Pvmt or Structure Approach Slab

NOTES:

1. Heavy broom finish.
2. Maintain same base thickness as JPCP.

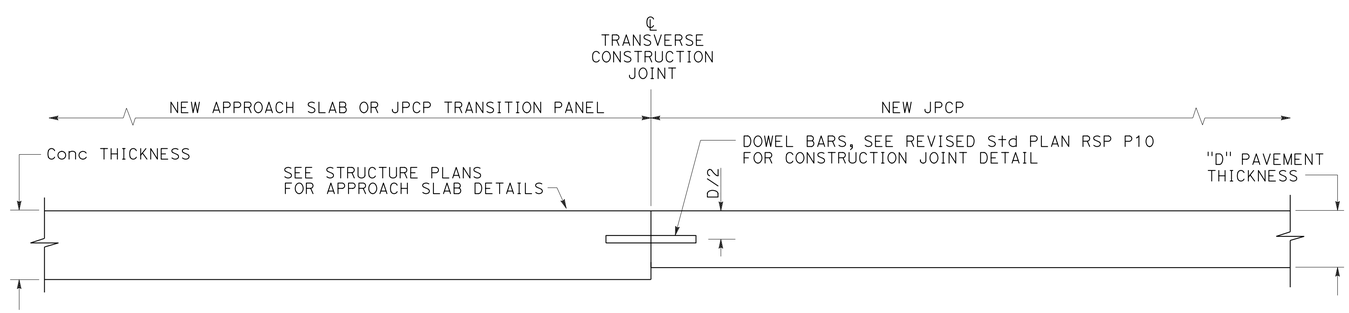

ELEVATION

TERMINAL JOINT TYPE 2

For JPCP Transition Panel or Structure Approach Slab

STATE OF CALIFORNIA
DEPARTMENT OF TRANSPORTATION

CONCRETE PAVEMENT-END PANEL PAVEMENT TRANSITIONS

NO SCALE

RSP P30 DATED APRIL 20, 2012 SUPERSEDES STANDARD PLAN P30
DATED MAY 20, 2011 - PAGE 137 OF THE STANDARD PLANS BOOK DATED 2010.

REVISED STANDARD PLAN RSP P30

2-22-12

DIST	COUNTY	ROUTE	POST MILES TOTAL PROJECT	SHEET NO.	TOTAL SHEETS
03	Sac	50	L1.3/L2.2	112	160

REGISTERED ELECTRICAL ENGINEER

January 20, 2012
PLANS APPROVAL DATE

REGISTERED PROFESSIONAL ENGINEER
Jeffery G. McRae
No. E14512
Exp. 6-30-12
ELECTRICAL
STATE OF CALIFORNIA

THE STATE OF CALIFORNIA OR ITS OFFICERS OR AGENTS SHALL NOT BE RESPONSIBLE FOR THE ACCURACY OR COMPLETENESS OF SCANNED COPIES OF THIS PLAN SHEET.

TO ACCOMPANY PLANS DATED 3-25-13

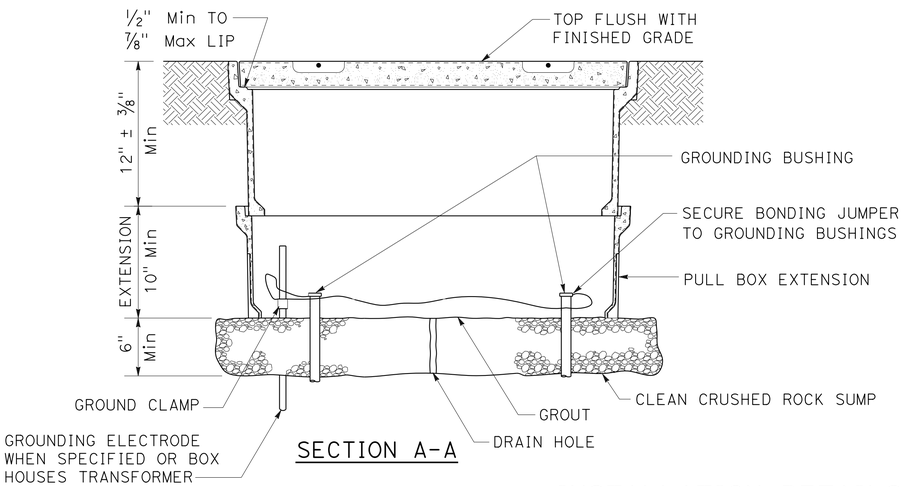

SECTION A-A

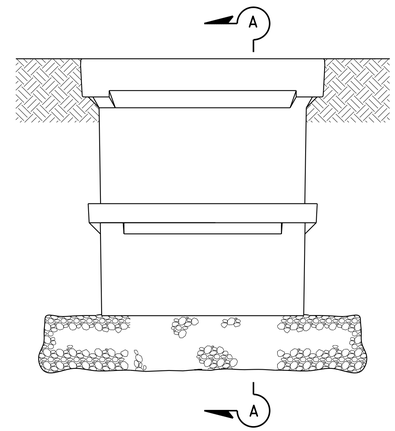

SIDE VIEW

INSTALLATION DETAILS

DETAIL A

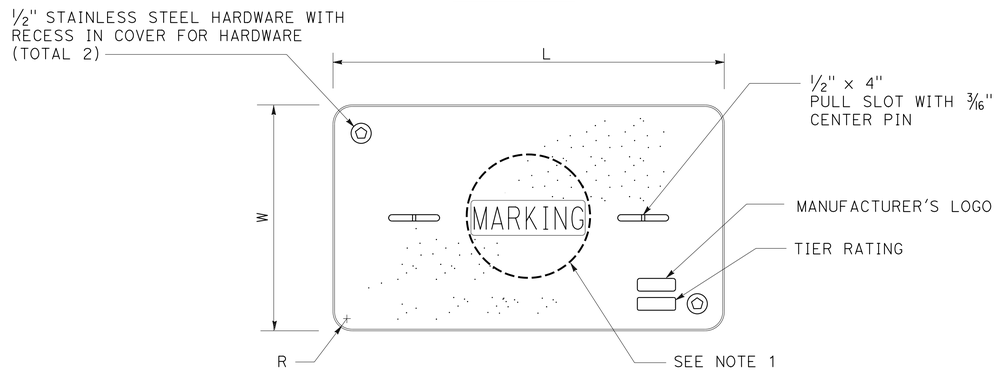

COVER TOP VIEW

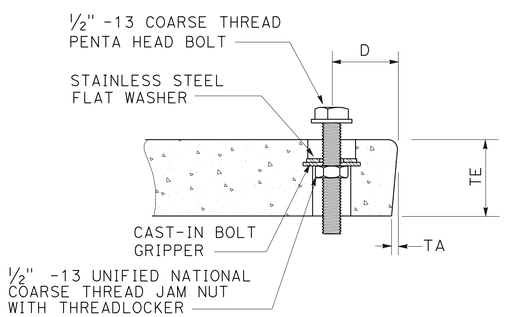

TYPICAL COVER CAPTIVE BOLT

OR SIMILAR

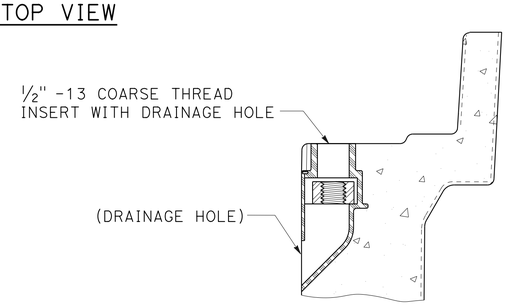

TYPICAL THREADED INSERT

OR SIMILAR

DIMENSION TABLE										
PULL BOX	PULL BOX			COVER						
	MINIMUM DEPTH BOX	MINIMUM DEPTH EXTENSION	MAXIMUM WEIGHT	L	W	R	TE	TA	D	MAXIMUM WEIGHT
No. 3 1/2	12"	N/A	40 lb	1' - 3 3/8"	10 1/8"	1 3/8"	2"	1/8"	1 3/4"	30 lb
No. 5	12"	10"	55 lb	1' - 11 1/4"	1' - 1 3/4"	1 3/8"	2"	1/8"	1 3/4"	60 lb
No. 6	12"	10"	70 lb	2' - 6 1/2"	1' - 5 1/2"	1 3/8"	2"	1/8"	2"	85 lb

NOTES ON PULL BOXES:

1. Pull box covers must be marked as follows: "SERVICE" Service circuits between service point and service disconnect; "SPRINKLER-CONTROL" sprinkler control circuits, 50 V or less; "CALTRANS" on all pull boxes, except pull boxes marked "SPRINKLER-CONTROL"; and "TELEPHONE" Telephone service;

   A) No. 3 1/2 pull box.
      1) "SIGNAL" - Traffic signal circuits with or without street or sign lighting circuits.
      2) "ST LIGHTING" - Street or sign lighting circuits where voltage is under 600 V.

   B) No. 5, 6, 9 or 9A pull box.
      1) "TRAFFIC SIGNAL" - Traffic signal circuits with or without street or sign lighting circuits.
      2) "STREET LIGHTING" - Street or sign lighting circuits where voltage is under 600 V.
      3) "STREET LIGHTING-HIGH VOLTAGE" - Street or sign lighting circuits where voltage is above 600 V.
      4) "IRRIGATION" - Circuits to irrigation controller 120 V or more.
      5) "RAMP METER" - Ramp meter circuits.
      6) "COUNT STATION" - Count or speed monitor circuits.
      7) "COMMUNICATIONS" - Communication circuits.
      8) "TOS COMMUNICATIONS" - TOS communication line.
      9) "TOS POWER" - TOS power.
      10) "TDC POWER" - Telephone demarcation cabinet power.
      11) "CCTV" - Closed circuit television circuits.
      12) "TMS" - Traffic monitoring station circuits.
      13) "CMS" - Changeable message sign circuits.
      14) "HAR" - Highway advisory radio circuits.

2. The nominal dimensions of the opening in which the cover sets must be the same as the cover dimensions (L and W) plus 1/8" or greater.

3. Covers and boxes must be interchangeable with California Standard. When interchanged with a standard, the top surfaces must be flush within 1/8". Top outside radius of covers and pull boxes must have a 1/8" radius.

4. Pull box extension may be another pull box as long as the bottom edge of the pull box can fit into the cover opening.

STATE OF CALIFORNIA
DEPARTMENT OF TRANSPORTATION

ELECTRICAL SYSTEMS (PULL BOX)

NO SCALE

RSP ES-8A DATED JANUARY 20, 2012 SUPPLEMENTS THE STANDARD PLANS BOOK DATED 2010.

REVISED STANDARD PLAN RSP ES-8A

2010 REVISED STANDARD PLAN RSP ES-8A

Dist	COUNTY	ROUTE	POST MILES TOTAL PROJECT	SHEET No.	TOTAL SHEETS
03	Sac	50	L1.3/L2.2	113	160

REGISTERED ELECTRICAL ENGINEER

July 20, 2012
PLANS APPROVAL DATE

REGISTERED PROFESSIONAL ENGINEER
Jeffery G. McRae
No. E14512
Exp. 6-30-14
ELECTRICAL
STATE OF CALIFORNIA

THE STATE OF CALIFORNIA OR ITS OFFICERS OR AGENTS SHALL NOT BE RESPONSIBLE FOR THE ACCURACY OR COMPLETENESS OF SCANNED COPIES OF THIS PLAN SHEET.

TO ACCOMPANY PLANS DATED 3-25-13

ISOFOOTCANDLE CURVE - MINIMUM

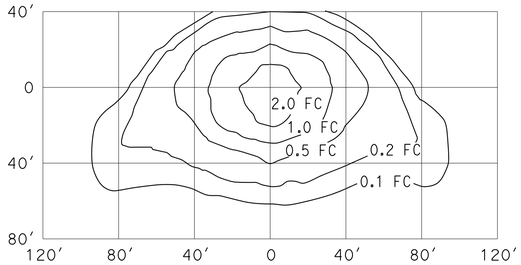

TYPE III MEDIUM CUTOFF

Cutoff Luminaire
34′ Mounting Height
Lamp operated at 22,000 lm
200-W high pressure sodium lamp
ANSI Designation S66

ISOFOOTCANDLE CURVE - MINIMUM

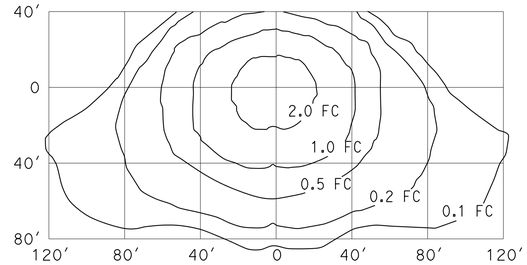

TYPE III MEDIUM CUTOFF

Cutoff Luminaire
40′ Mounting Height
Lamp operated at 37,000 lm
310-W high pressure sodium lamp
ANSI Designation S67

ISOFOOTCANDLE CURVE - MINIMUM

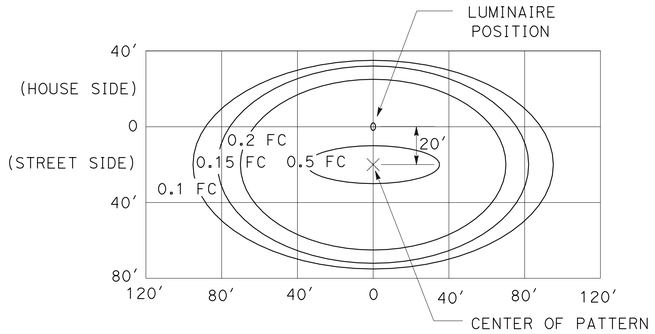

LED LUMINAIRE ROADWAY 1

200-W HPS Equivalent at 34′ Mounting Height

ISOFOOTCANDLE CURVE - MINIMUM

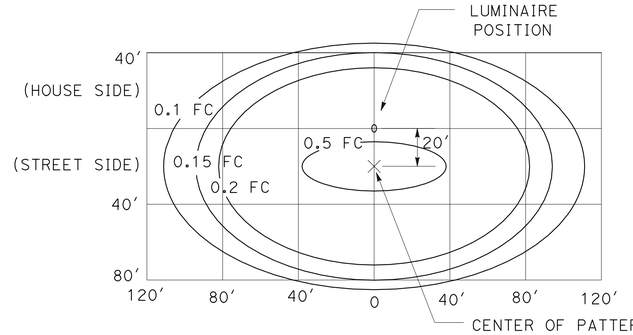

LED LUMINAIRE ROADWAY 2

310-W HPS Equivalent at 40′ Mounting Height

ISOFOOTCANDLE CURVE - MINIMUM

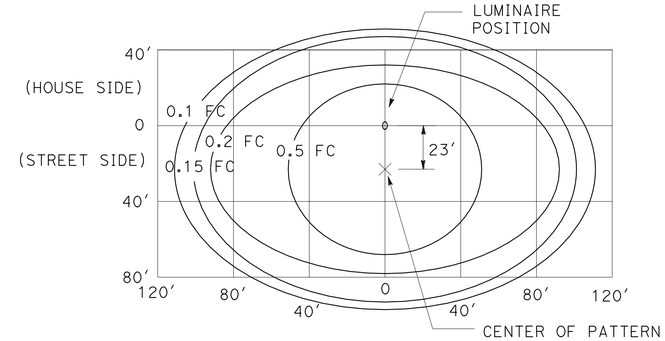

LED LUMINAIRE ROADWAY 4

400-W HPS Equivalent at 40′ Mounting Height

ISOFOOTCANDLE CURVE - MINIMUM

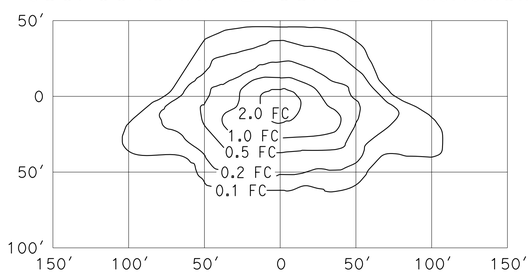

TYPE III MEDIUM CUTOFF

Cutoff Luminaire
30′ Mounting Height
Lamp operated at 16,000 lm
150-W high pressure sodium lamp
ANSI Designation S55

ISOFOOTCANDLE CURVE - MINIMUM

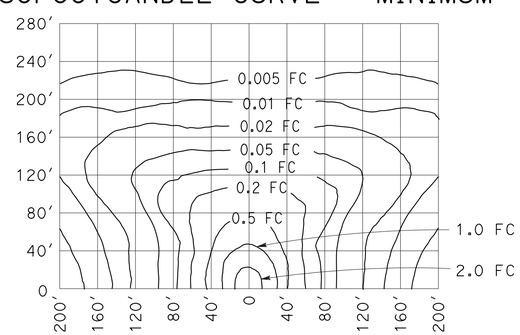

LOW PRESSURE SODIUM LUMINAIRE

40′ Mounting Height
Lamp operated at 33,000 lm
180-W low pressure sodium lamp

STATE OF CALIFORNIA
DEPARTMENT OF TRANSPORTATION

ELECTRICAL SYSTEMS (ISOFOOTCANDLE DIAGRAMS)

NO SCALE

RSP ES-10A DATED JULY 20, 2012 SUPPLEMENTS THE STANDARD PLANS BOOK DATED 2010.

REVISED STANDARD PLAN RSP ES-10A

2010 REVISED STANDARD PLAN RSP ES-10A

Dist	COUNTY	ROUTE	POST MILES TOTAL PROJECT	SHEET No.	TOTAL SHEETS
03	Sac	50	L1.3/L2.2	114	160

REGISTERED ELECTRICAL ENGINEER

July 20, 2012
PLANS APPROVAL DATE

REGISTERED PROFESSIONAL ENGINEER
Jeffery G. McRae
No. E14512
Exp. 6-30-14
ELECTRICAL
STATE OF CALIFORNIA

THE STATE OF CALIFORNIA OR ITS OFFICERS OR AGENTS SHALL NOT BE RESPONSIBLE FOR THE ACCURACY OR COMPLETENESS OF SCANNED COPIES OF THIS PLAN SHEET.

TO ACCOMPANY PLANS DATED 3-25-13

ISOFOOTCANDLE CURVE - MINIMUM

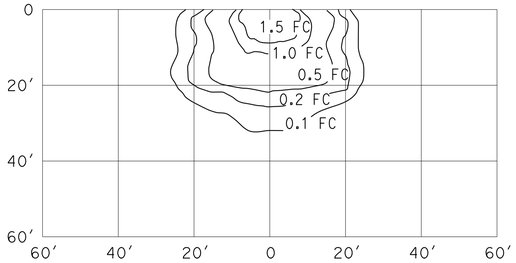

WALL LUMINAIRE
15′ Mounting Height
Lamp operated at 5,800 lm
70-W high pressure sodium lamp
ANSI Designation S62

ISOFOOTCANDLE CURVE - MINIMUM

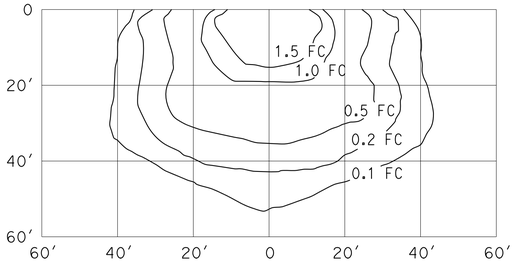

WALL LUMINAIRE
15′ Mounting Height
Lamp operated at 9,500 lm
100-W high pressure sodium lamp
ANSI Designation S54

ISOFOOTCANDLE CURVE - MINIMUM

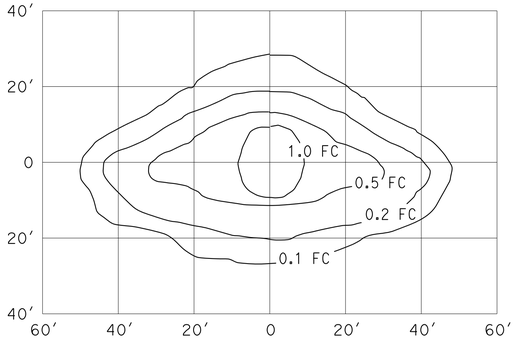

PENDANT SOFFIT LUMINAIRE
TYPE III SHORT
17′ Mounting Height
Lamp operated at 5,800 lm
70-W high pressure sodium lamp
ANSI Designation S62

ISOFOOTCANDLE CURVE - MINIMUM

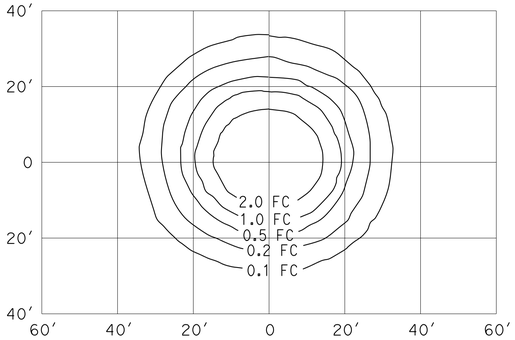

PENDANT SOFFIT LUMINAIRE
17′ Mounting Height
Lamp operated at 5,800 lm
70-W high pressure sodium lamp
ANSI Designation S62

ISOFOOTCANDLE CURVE - MINIMUM

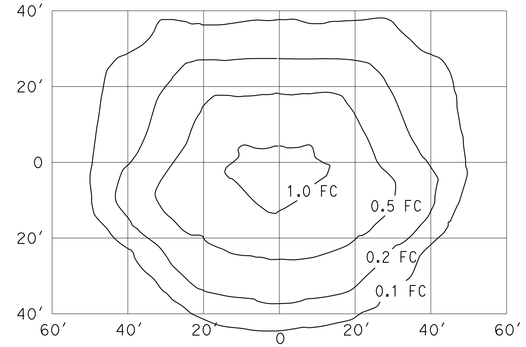

FLUSH SOFFIT LUMINAIRE
17′ Mounting Height
Lamp operated at 5,800 lm
70-W high pressure sodium lamp
ANSI Designation S62

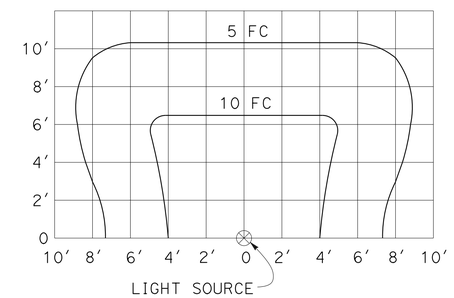

SIGN LIGHTING FIXTURE
ISOFOOTCANDLE DIAGRAM

NOTES:

1. Curves represent the minimum footcandle (FC) of initial illumination on a 10′-0" x 20′-0" panel.
2. The FC shown are with the fixture attached to the light fixture mounting channel which places the center of the source 4′-8" in front of panel and 1′-0" below the bottom edge.
3. Applicable lamp: 85-W fluorescent phosphor coated induction lamp.

STATE OF CALIFORNIA
DEPARTMENT OF TRANSPORTATION

ELECTRICAL SYSTEMS (ISOFOOTCANDLE DIAGRAMS)

NO SCALE

RSP ES-10B DATED JULY 20, 2012 SUPPLEMENTS THE STANDARD PLANS BOOK DATED 2010.

REVISED STANDARD PLAN RSP ES-10B

2010 REVISED STANDARD PLAN RSP ES-10B

DIST	COUNTY	ROUTE	POST MILES TOTAL PROJECT	SHEET No.	TOTAL SHEETS
03	Sac	50	L1.3/L2.2	115	160

REGISTERED CIVIL ENGINEER 11-30-12 DATE

3-25-13
PLANS APPROVAL DATE

REGISTERED PROFESSIONAL ENGINEER Jose M Aquino, III No. 58386 Exp. 12-31-14 CIVIL STATE OF CALIFORNIA

The State of California or its officers or agents shall not be responsible for the accuracy or completeness of electronic copies of this plan sheet.

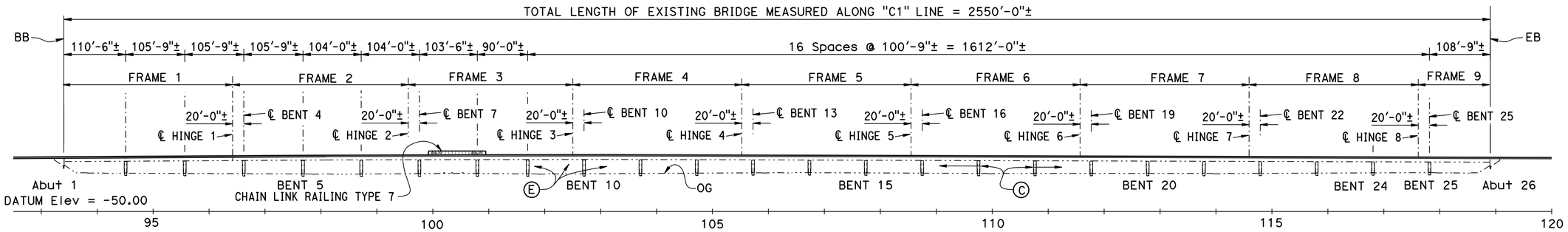

ELEVATION

1" = 100'

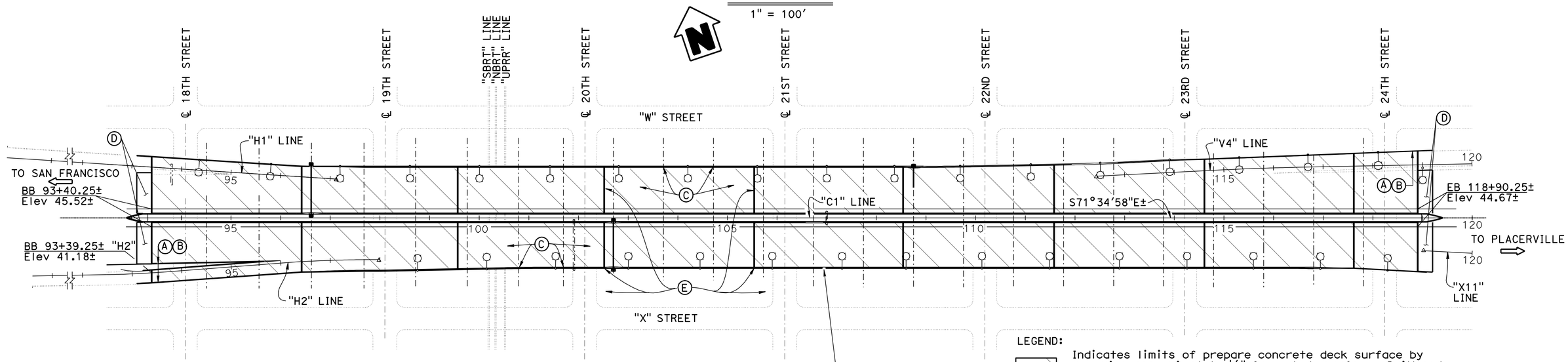

EXISTING
CAMELLIA CITY VIADUCT
(BRIDGE NO. 24-0248R/L)

PLAN

1" = 100'

NOTES:

- Ⓐ Paint "BRIDGE NO. 24-0248R/L"
- Ⓑ Paint "CAMELLIA CITY VIADUCT"
- Ⓒ Paint "BENT NO. __"
- Ⓓ Structure Approach Type R(30D)
- Ⓔ Hinge repair by epoxy injection
- 1. For "GENERAL NOTES" and "INDEX TO PLANS", see "INDEX TO PLANS" sheet
- 2. For "QUANTITIES", see "QUANTITIES" sheet

NOTE:
THE CONTRACTOR SHALL VERIFY ALL CONTROLLING FIELD DIMENSIONS BEFORE ORDERING OR FABRICATING ANY MATERIAL.

LEGEND:

- Indicates limits of prepare concrete deck surface by removing approximately 1/4" from deck surface, Drill and Bond Dowels and place 4" fiber-reinforced PCC overlay
- Indicates limits of clean existing joint and replacement of joint seal, see "JOINT SEAL TABLE" on "JOINT SEAL DETAILS" sheet
- Indicates Electrolier, see "ROAD PLANS"
- Indicates New Sign Location, see "ROAD PLANS"
- Indicates Existing Sign to be removed, see "ROAD PLANS"

"SBRT" and "NBRT" LINES = "SACRAMENTO VALLEY REGIONAL TRANSIT" Light Rail Line

"UPRR" LINE = "UNION PACIFIC RAILROAD" Line

DECK REHABILITATION
CAMELLIA CITY VIADUCT (WIDEN)
GENERAL PLAN NO. 1

Joseph E Downing
DESIGN ENGINEER

	BY	CHECKED			
DESIGN	Joey Aquino	Sharon Yen	LOAD FACTOR DESIGN	LIVE LOADING: HS 20-44 AND ALTERNATIVE	
DETAILS	Janie Chlubna	Sharon Yen	LAYOUT	Joey Aquino	Sharon Yen
QUANTITIES	Pyo Hong	Ashraf Ahmed	SPECIFICATIONS	Mary Kopsa	PLANS AND SPECS COMPARED Mary Kopsa

STATE OF CALIFORNIA
DEPARTMENT OF TRANSPORTATION

DIVISION OF ENGINEERING SERVICES
STRUCTURE DESIGN
DESIGN BRANCH 3

BRIDGE NO. 24-0248R/L
POST MILE 1.51

ORIGINAL SCALE IN INCHES FOR REDUCED PLANS 0 1 2 3

UNIT: 3578
PROJECT NUMBER & PHASE: 03000000731
CONTRACT NO.: 03-0F2301

DISREGARD PRINTS BEARING EARLIER REVISION DATES

REVISION DATES 4-20-11 11-14-12 10-12-12

SHEET 1 OF 46

FILE => 24-0248-a-gp-01.dgn

USERNAME => s124496 DATE PLOTTED => 26-MAR-2013 TIME PLOTTED => 08:34

STRUCTURES DESIGN GENERAL PLAN SHEET (ENGLISH) (REV.09-01-10)

DIST	COUNTY	ROUTE	POST MILES TOTAL PROJECT	SHEET No.	TOTAL SHEETS
03	Sac	50	L1.3/L2.2	116	160

REGISTERED CIVIL ENGINEER 11-30-12 DATE

3-25-13
PLANS APPROVAL DATE

REGISTERED PROFESSIONAL ENGINEER Jose M Aquino, III No. 58386 Exp. 12-31-14 CIVIL STATE OF CALIFORNIA

The State of California or its officers or agents shall not be responsible for the accuracy or completeness of electronic copies of this plan sheet.

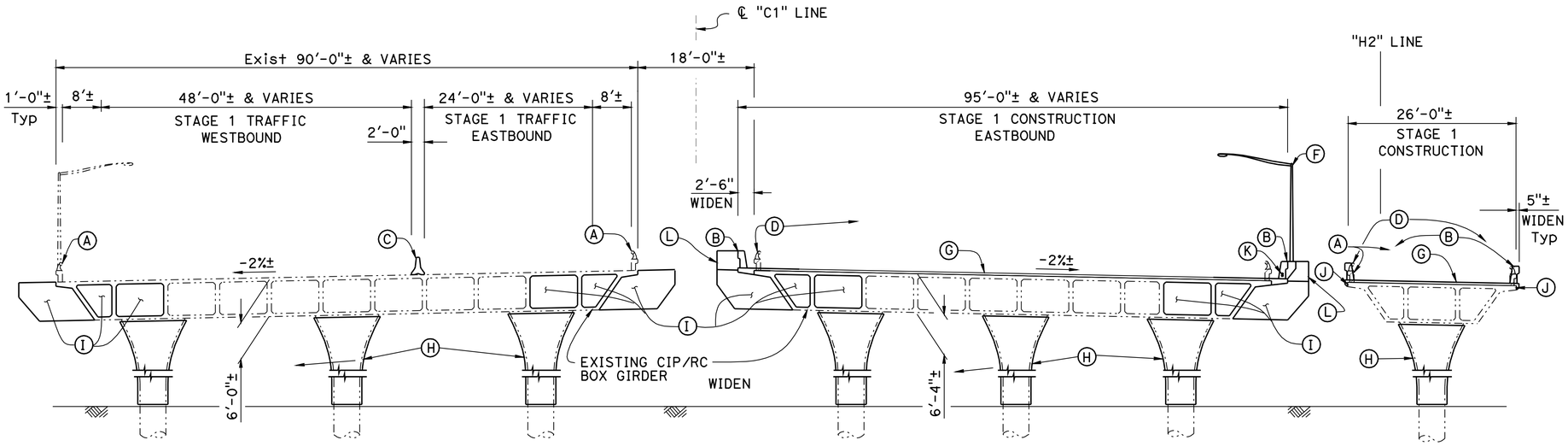

STAGE 1 TRAFFIC & CONSTRUCTION

1" = 10'

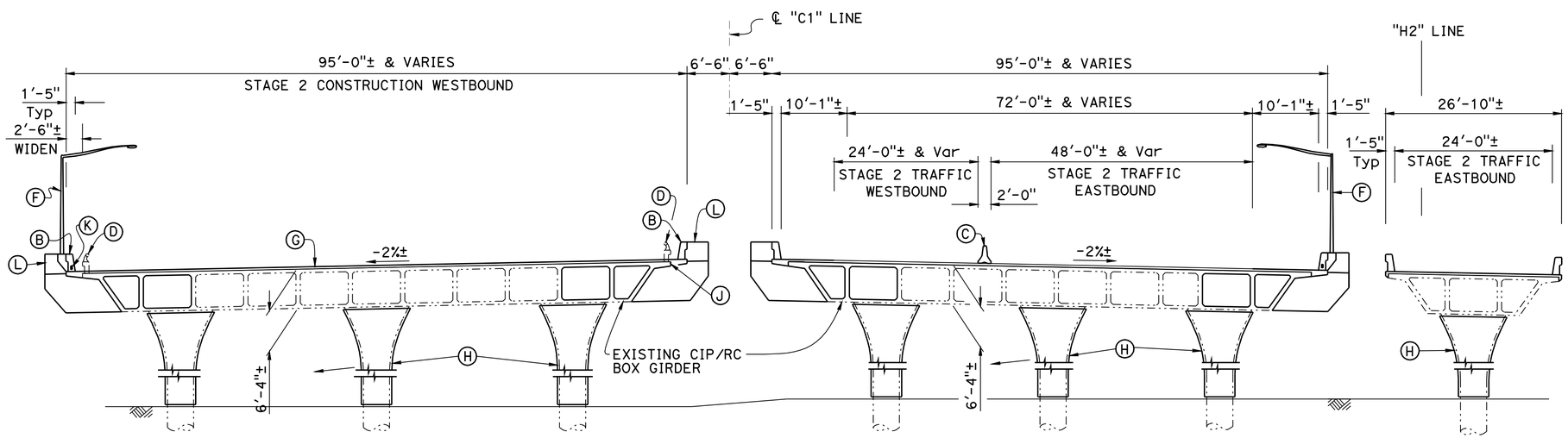

STAGE 2 TRAFFIC & CONSTRUCTION

1" = 10'

NOTES:

- Ⓐ Existing Barrier Type 1
- Ⓑ Concrete Barrier Type 732 & Concrete Barrier Type 732 (Mod)
- Ⓒ Temporary Railing (Type K), see "ROAD PLANS"
- Ⓓ Remove Existing Tubular Railing & Salvage Metal
- Ⓔ Remove Existing Electrolier
- Ⓕ New Electrolier, see "ROAD PLANS"
- Ⓖ Indicates limits of prepare concrete deck surface by removing approximately 1/4" from deck surface. Drill & Bond Dowels, and place 4" fiber-reinforced PCC overlay
- Ⓗ Column Casings
- Ⓘ Sign Pedestal (Portion A)
- Ⓙ Drill & Bond Dowel (Chemical Adhesive)
- Ⓚ 2 - 2" ø Lighting Conduits, see "ROAD PLANS"
- Ⓛ Sign Pedestal (Portion B); Overhead Sign Structures not shown, see "ROAD PLANS".

LEGEND:

- Indicates Concrete Removal
- Indicates Existing Structure
- Indicates New Structure

QUANTITIES

CORE AND PRESSURE GROUT DOWEL	28	LF
SALVAGE METAL BRIDGE RAILING	10,950	LF
PREPARE CONCRETE BRIDGE DECK SURFACE	489,000	SQFT
BRIDGE REMOVAL (PORTION)	LUMP	SUM
STRUCTURAL CONCRETE, BRIDGE	149	CY
STRUCTURAL CONCRETE, FIBER-REINFORCED PCC OVERLAY	6,260	CY
STRUCTURAL CONCRETE, BRIDGE (MODIFIED)	850	CY
AGGREGATE BASE (APPROACH SLAB)	36	CY
STRUCTURAL CONCRETE, APPROACH SLAB (TYPE R)	370	CY
PAVING NOTCH EXTENSION	200	CF
DRILL AND BOND DOWEL	49,700	LF
DRILL AND BOND DOWEL (CHEMICAL ADHESIVE)	12,390	EA
CLEAN EXPANSION JOINT	2,096	LF
INJECT CRACK (EPOXY)	50	LF
REPAIR SPALLED SURFACE AREA	80	SQFT
JOINT SEAL (MR1/2")	441	LF
JOINT SEAL (MR 2")	1,606	LF
JOINT SEAL (TYPE AL)	49	LF
BAR REINFORCING STEEL (BRIDGE)	2,080,000	LB
HEADED BAR REINFORCEMENT	100	EA
ASPHALT MEMBRANE WATERPROOFING	150	SQFT
COLUMN CASING	810,000	LB
MINOR CONCRETE (MISCELLANEOUS CONSTRUCTION)	3	CY
BRIDGE DECK DRAINAGE SYSTEM	8,800	LB
CHAIN LINK RAILING (TYPE 7)	414	LF
CONCRETE BARRIER (TYPE 732 MODIFIED)	1,903	LF
CONCRETE BARRIER (TYPE 732)	9,000	LF
CONCRETE BARRIER (TYPE 732B)	120	LF

NOTE:
THE CONTRACTOR SHALL VERIFY ALL CONTROLLING FIELD DIMENSIONS BEFORE ORDERING OR FABRICATING ANY MATERIAL.

DECK REHABILITATION
CAMELLIA CITY VIADUCT (WIDEN)
GENERAL PLAN NO. 2

Joseph E Downing
DESIGN ENGINEER

	BY	CHECKED			
DESIGN	Joey Aquino	Sharon Yen	LOAD & RESISTANCE FACTOR DESIGN	LIVE LOADING: HS20-44 AND ALTERNATIVE	
DETAILS	Janie Chlubna	Sharon Yen	LAYOUT	Jose Aquino	Sharon Yen
QUANTITIES	Pyo Hong	Ashraf Ahmed	SPECIFICATIONS	Mary Kopsa	PLANS AND SPECS COMPARED Mary Kopsa

STATE OF CALIFORNIA
DEPARTMENT OF TRANSPORTATION

DIVISION OF ENGINEERING SERVICES
STRUCTURE DESIGN
DESIGN BRANCH 3

BRIDGE NO. 24-0248R/L
POST MILE 1.51

ORIGINAL SCALE IN INCHES FOR REDUCED PLANS 0 1 2 3

UNIT: 3578
PROJECT NUMBER & PHASE: 03000000731
CONTRACT NO.: 03-0F2301

DISREGARD PRINTS BEARING EARLIER REVISION DATES

REVISION DATES 12-7-10 11-5-12 11-14-12

SHEET 2 OF 46

USERNAME => s12161d DATE PLOTTED => 10-APR-2013 TIME PLOTTED => 11:18

DIST	COUNTY	ROUTE	POST MILES TOTAL PROJECT	SHEET No.	TOTAL SHEETS
03	Sac	50	L1.3/L2.2	117	160

REGISTERED CIVIL ENGINEER 11-30-12 DATE

3-25-13
PLANS APPROVAL DATE

REGISTERED PROFESSIONAL ENGINEER
JOSE M AQUINO III
No. 58386
Exp. 12-31-14
CIVIL
STATE OF CALIFORNIA

The State of California or its officers or agents shall not be responsible for the accuracy or completeness of electronic copies of this plan sheet.

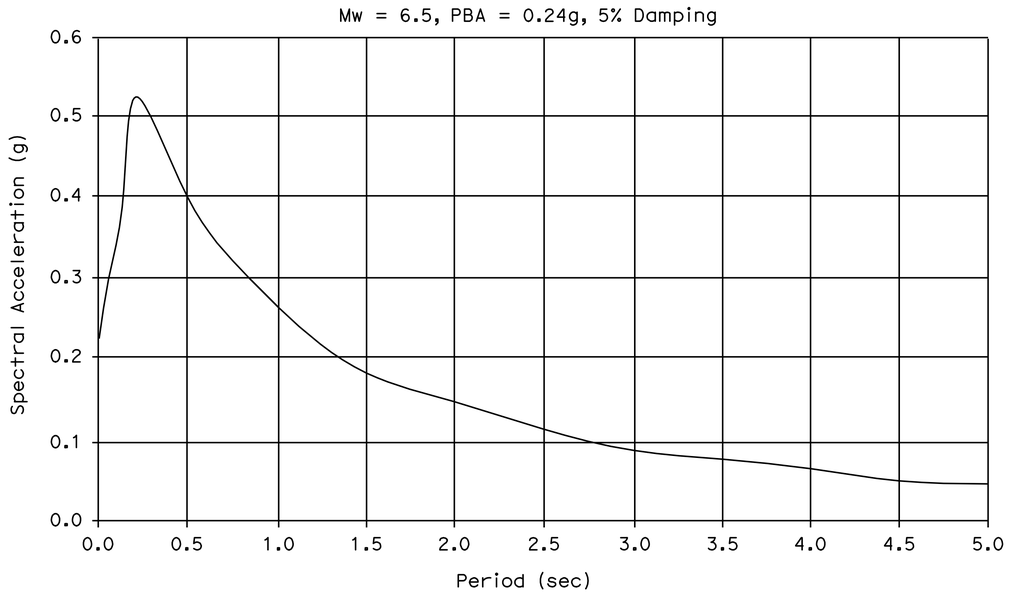

SITE SPECIFIC ARS

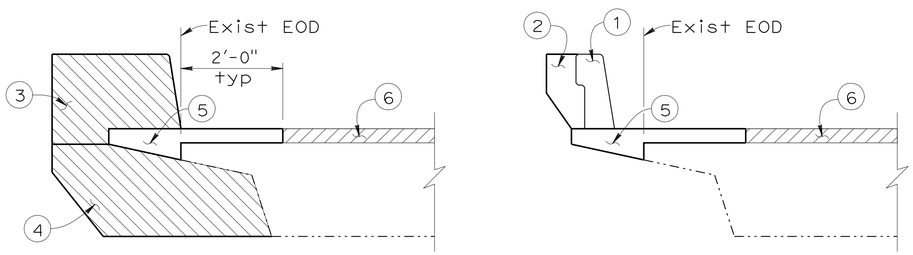

NOTES:

1. Type 732 & 732 (Mod) Concrete Barrier
2. Type 732 Lighting Pedestal
3. Sign Pedestal (Portion B)
4. Sign Pedestal (Portion A)
5. New overhang, PCC Deck overlay,
6. Fiber-reinforced PCC Deck overlay

Structural Concrete, Bridge

Structural Concrete, Bridge (Modified) (Min f'c= 3250 psi and Min 3 day cure prior to Falsework release)

Structural Concrete, Fiber-reinforced PCC overlay (Min f'c= 3250 psi and Min 3 day cure when traffic is allowed directly onto overlay; Design f'c = 4000 psi @ 28 days

CONCRETE STRENGTH AND TYPE LIMITS

NO SCALE

NOTE:
THE CONTRACTOR SHALL VERIFY ALL CONTROLLING FIELD DIMENSIONS BEFORE ORDERING OR FABRICATING ANY MATERIAL.

INDEX TO PLANS

SHEET NO.	TITLE
1	GENERAL PLAN NO. 1
2	GENERAL PLAN NO. 2
3	INDEX TO PLANS
4	STRUCTURE PLAN - FRAME 1
5	STRUCTURE PLAN - FRAME 2
6	STRUCTURE PLAN - FRAME 3
7	STRUCTURE PLAN - FRAME 4
8	STRUCTURE PLAN - FRAME 5
9	STRUCTURE PLAN - FRAME 6
10	STRUCTURE PLAN - FRAME 7
11	STRUCTURE PLAN - FRAME 8
12	STRUCTURE PLAN - FRAME 9
13	FOUNDATION PLAN NO. 1
14	FOUNDATION PLAN NO. 2
15	FOUNDATION PLAN NO. 3
16	FOUNDATION PLAN NO. 4
17	FOUNDATION PLAN NO. 5
18	FOUNDATION PLAN NO. 6
19	ABUTMENT LAYOUT
20	ABUTMENT DETAILS NO. 1
21	ABUTMENT DETAILS NO. 2
22	ABUTMENT DETAILS NO. 3
23	ABUTMENT DETAILS NO. 4
24	ABUTMENT DETAILS NO. 5
25	BENT DETAILS NO. 1
26	BENT DETAILS NO. 2
27	TYPICAL SECTION NO. 1
28	TYPICAL SECTION NO. 2
29	GIRDER DETAILS
30	HINGE DETAILS
31	DECK DRAIN DETAILS NO. 1
32	DECK DRAIN DETAILS NO. 2
33	SIGN PEDESTAL DETAILS NO. 1
34	SIGN PEDESTAL DETAILS NO. 2
35	SIGN PEDESTAL DETAILS NO. 3
36	SIGN PEDESTAL DETAILS NO. 4
37	SIGN PEDESTAL DETAILS NO. 5
38	SIGN PEDESTAL DETAILS NO. 6
39	SIGN PEDESTAL DETAILS NO. 7
40	"H1" LINE NOSE DETAILS
41	"H2" LINE NOSE DETAILS NO. 1
42	"H2" LINE NOSE DETAILS NO. 2
43	"V4" LINE NOSE DETAILS
44	JOINT SEAL DETAILS
45	COLUMN CASING-STEEL DETAILS
46	STRUCTURE APPROACH TYPE R(30D)

GENERAL NOTES
LOAD FACTOR DESIGN

DESIGN:
Bridge Design Specifications - April 2000 (LFD)
('96 AASHTO w/Interim and Revisions by Caltrans)

DEAD LOAD:
NO ADDITIONAL FUTURE OVERLAY OR WEARING SURFACE ALLOWED

LIVE LOADING:
HS 20-44 AND ALTERNATIVE

CONCRETE:
fy = 60 ksi
f'c = 3.6 ksi
n = 8
See "PRESTRESSING NOTES"

SEISMIC DESIGN:

CALTRANS SEISMIC DESIGN CRITERIA (SDC), VERSION 1.4
DATED JUNE 2006

SEISMIC LOADING:

SEE "SITE SPECIFIC ARS CURVE"

STANDARD PLANS 2010 EDITION

A10A	ABBREVIATIONS (SHEET 1 OF 2)
A10B	ABBREVIATIONS (SHEET 2 OF 2)
A10C	LINES AND SYMBOLS (SHEET 1 OF 3)
A10D	LINES AND SYMBOLS (SHEET 2 OF 3)
A10E	LINES AND SYMBOLS (SHEET 3 OF 3)
A87A	CURBS AND DRIVEWAYS
B6-21	JOINT SEALS (MAXIMUM MOVEMENT RATING = 2")
B7-1	BOX GIRDER DETAILS
B11-52	CHAIN LINK RAILING TYPE 7
B11-55	CONCRETE BARRIER TYPE 732
B14-3	COMMUNICATION AND SPRINKLER CONTROL CONDUITS (CONDUIT LESS THAN 4")
S1	OVERHEAD SIGNS - TRUSS INSTRUCTIONS AND EXAMPLES
S2	OVERHEAD SIGNS - TRUSS SINGLE POST TYPE POST TYPES II THROUGH IX

STANDARD PLAN SHEET NO.

DETAIL NO.

DESIGN	BY Joey Aquino	CHECKED Sharon Yen
DETAILS	BY Janie Chlubna	CHECKED Sharon Yen
QUANTITIES	BY Pyo Hong	CHECKED Ashraf Ahmed

STATE OF CALIFORNIA
DEPARTMENT OF TRANSPORTATION

DIVISION OF ENGINEERING SERVICES
STRUCTURE DESIGN
DESIGN BRANCH 3

BRIDGE NO. 24-0248R/L
POST MILE 1.51

DECK REHABILITATION
CAMELLIA CITY VIADUCT (WIDEN)
INDEX TO PLANS

STRUCTURES DESIGN DETAIL SHEET (ENGLISH) (REV. 09-01-10)

ORIGINAL SCALE IN INCHES FOR REDUCED PLANS 0 1 2 3

UNIT: 3578
PROJECT NUMBER & PHASE: 03000000731
CONTRACT NO.: 03-0F2301

DISREGARD PRINTS BEARING EARLIER REVISION DATES

REVISION DATES: 6-16-11 11-14-12 11-15-12

SHEET 3 OF 46

FILE => 24-0248-b-Index.dgn

USERNAME => s121614 DATE PLOTTED => 10-APR-2013 TIME PLOTTED => 11:18

DIST	COUNTY	ROUTE	POST MILES TOTAL PROJECT	SHEET No.	TOTAL SHEETS
03	Sac	50	L1.3/L2.2	118	160

REGISTERED CIVIL ENGINEER 11-30-12 DATE

3-25-13
PLANS APPROVAL DATE

REGISTERED PROFESSIONAL ENGINEER JOSE M AQUINO III No. 58386 Exp. 12-31-14 CIVIL STATE OF CALIFORNIA

The State of California or its officers or agents shall not be responsible for the accuracy or completeness of electronic copies of this plan sheet.

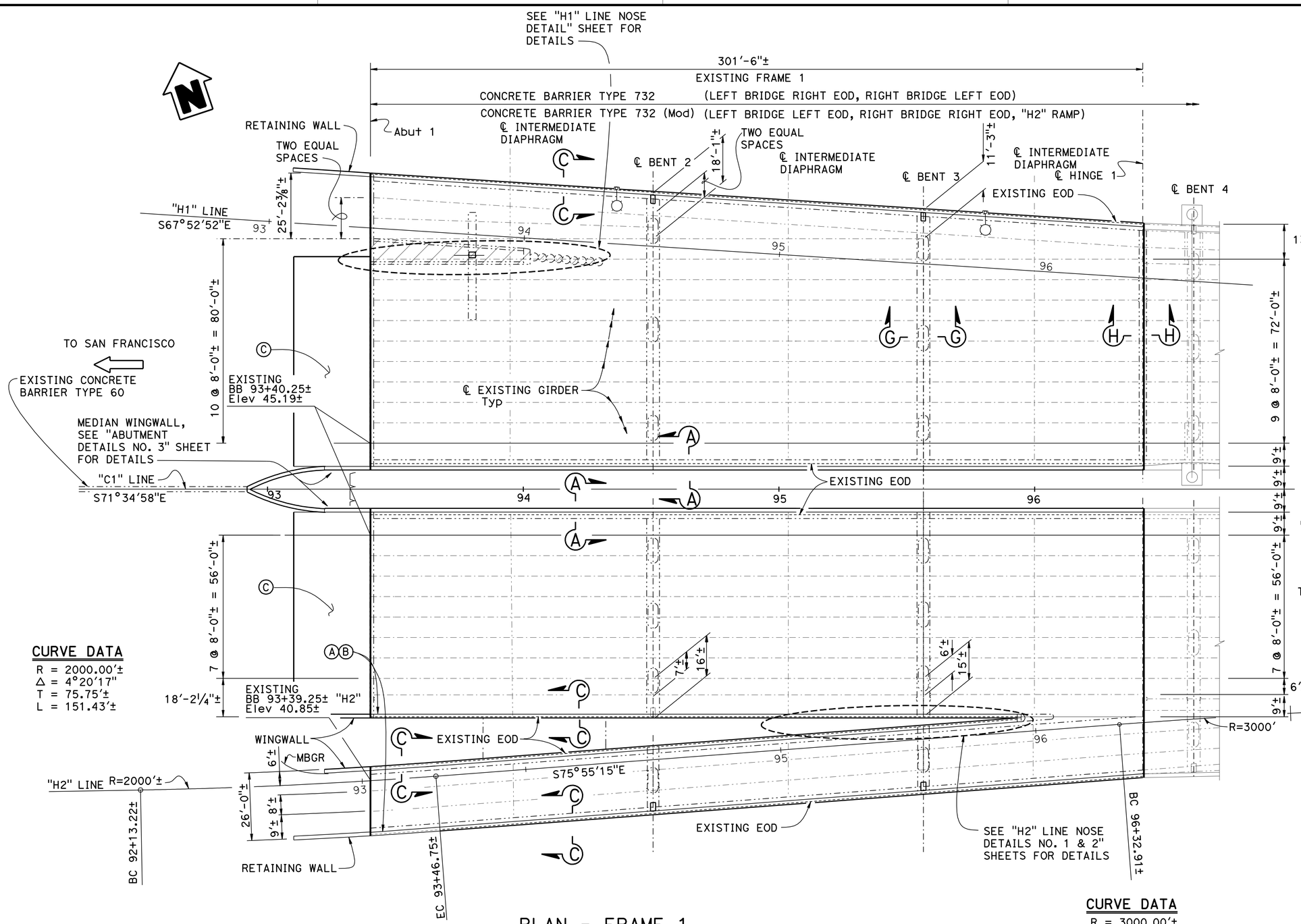

PLAN - FRAME 1

1" = 20'

NOTES:

Ⓐ Paint "BRIDGE NO. 24-0248 R"

Ⓑ Paint "CAMELLIA CITY VIADUCT"

Ⓒ Structure Approach Type R(30D)

LEGEND:

- Indicates Deck Drain location
- Indicates Existing Electroliers to be removed and replaced, see "ROAD PLANS"
- Indicates New Sign Structure, see "ROAD PLANS"
- Indicates Existing Sign to be removed
- Indicates Limits of Concrete Removal

NOTES:

1. For "SECTION A-A" and "SECTION C-C", see "TYPICAL SECTION NO. 2" sheet
2. For "RETAINING WALL" details, see "ABUTMENT DETAILS NO. 4" sheet
3. For "WINGWALL" details, see "ABUTMENT DETAILS NO. 5" sheet
4. For "SECTION G-G", see "BENT DETAILS NO. 1" sheet. Typical at all Bent locations
5. For "SECTION H-H", see "HINGE DETAILS " sheet. Typical at all Hinge locations
6. For "DECK DRAIN DETAILS", see "DECK DRAINAGE DETAILS" sheet
7. Existing Soffit Access Openings not shown

NOTE:
THE CONTRACTOR SHALL VERIFY ALL CONTROLLING FIELD DIMENSIONS BEFORE ORDERING OR FABRICATING ANY MATERIAL.

DECK REHABILITATION
CAMELLIA CITY VIADUCT (WIDEN)
STRUCTURE PLAN - FRAME 1

	BY	CHECKED
DESIGN	Joey Aquino	Sharon Yen
DETAILS	Janie Chlubna	Sharon Yen
QUANTITIES	Pyo Hong	Ashraf Ahmed

STATE OF CALIFORNIA
DEPARTMENT OF TRANSPORTATION

DIVISION OF ENGINEERING SERVICES
STRUCTURE DESIGN
DESIGN BRANCH 3

BRIDGE NO. 24-0248R/L
POST MILE 1.51

STRUCTURES DESIGN DETAIL SHEET (ENGLISH) (REV. 09-01-10)

ORIGINAL SCALE IN INCHES FOR REDUCED PLANS 0 1 2 3

UNIT: 3578
PROJECT NUMBER & PHASE: 03000000731
CONTRACT NO.: 03-0F2301

DISREGARD PRINTS BEARING EARLIER REVISION DATES

REVISION DATES: 5-30-11 9-7-12 9-4-12

SHEET 4 OF 46

FILE => 24-0248-c-sl-frame-1.dgn

USERNAME => s124496 DATE PLOTTED => 26-MAR-2013 TIME PLOTTED => 08:34

DIST	COUNTY	ROUTE	POST MILES TOTAL PROJECT	SHEET No.	TOTAL SHEETS
03	Sac	50	L1.3/L2.2	119	160

REGISTERED CIVIL ENGINEER — DATE 11-30-12

3-25-13
PLANS APPROVAL DATE

REGISTERED PROFESSIONAL ENGINEER — JOSE M AQUINO III — No. 58386 — Exp. 12-31-14 — CIVIL — STATE OF CALIFORNIA

The State of California or its officers or agents shall not be responsible for the accuracy or completeness of electronic copies of this plan sheet.

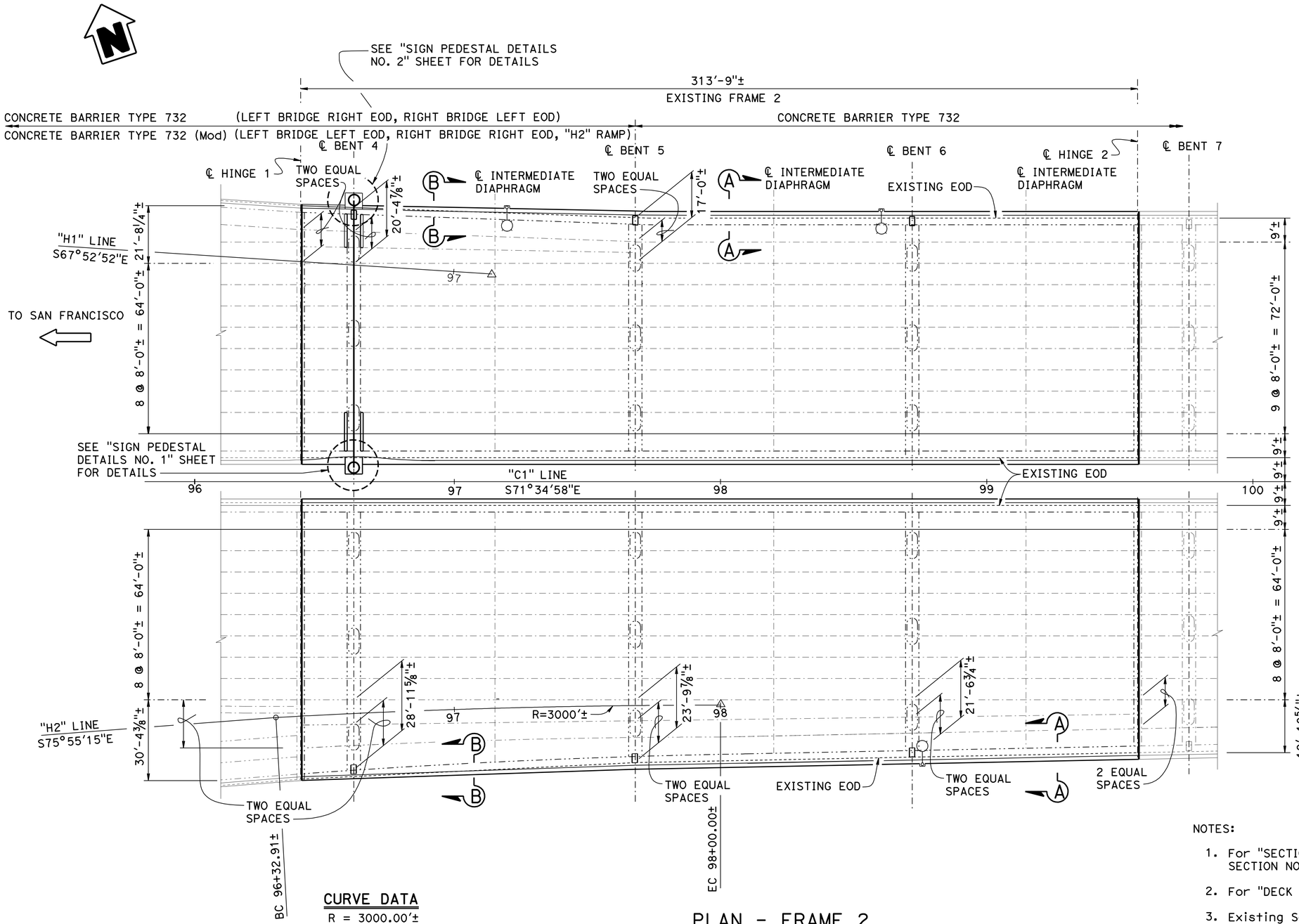

TO PLACERVILLE

LEGEND:

- Indicates Deck Drain location
- Indicates Existing Electroliers to be removed and replaced, see "ROAD PLANS"
- Indicates New Sign Structure, see "ROAD PLANS"

NOTES:

1. For "SECTION A-A" and "SECTION B-B", see "TYPICAL SECTION NO. 2" sheet
2. For "DECK DRAIN DETAILS", see "DECK DRAINAGE DETAILS" sheet
3. Existing Soffit Access Openings not shown

CURVE DATA

R = 3000.00'±
Δ = 3°11'29"
T = 83.57'±
L = 167.10'±

PLAN - FRAME 2

1" = 20'

NOTE:
THE CONTRACTOR SHALL VERIFY ALL CONTROLLING FIELD DIMENSIONS BEFORE ORDERING OR FABRICATING ANY MATERIAL.

	BY	CHECKED
DESIGN	Joey Aquino	Sharon Yen
DETAILS	Janie Chlubna	Sharon Yen
QUANTITIES	Pyo Hong	Ashraf Ahmed

STATE OF CALIFORNIA
DEPARTMENT OF TRANSPORTATION

DIVISION OF ENGINEERING SERVICES
STRUCTURE DESIGN
DESIGN BRANCH 3

BRIDGE NO. 24-0248R/L
POST MILE 1.51

DECK REHABILITATION
CAMELLIA CITY VIADUCT (WIDEN)
STRUCTURE PLAN - FRAME 2

STRUCTURES DESIGN DETAIL SHEET (ENGLISH) (REV. 09-01-10)

ORIGINAL SCALE IN INCHES FOR REDUCED PLANS 0 1 2 3

UNIT: 3578
PROJECT NUMBER & PHASE: 03000000731
CONTRACT NO.: 03-0F2301

DISREGARD PRINTS BEARING EARLIER REVISION DATES

REVISION DATES: 6-1-11 | 8-16-12 | 9-4-12

SHEET 5 OF 46

FILE => 24-0248-c-sl-frame-2.dgn

USERNAME => s124496 DATE PLOTTED => 26-MAR-2013 TIME PLOTTED => 08:35

DIST	COUNTY	ROUTE	POST MILES TOTAL PROJECT	SHEET No.	TOTAL SHEETS
03	Sac	50	L1.3/L2.2	120	160

REGISTERED CIVIL ENGINEER 11-30-12 DATE

3-25-13
PLANS APPROVAL DATE

REGISTERED PROFESSIONAL ENGINEER JOSE M AQUINO III No. 58386 Exp. 12-31-14 CIVIL STATE OF CALIFORNIA

The State of California or its officers or agents shall not be responsible for the accuracy or completeness of electronic copies of this plan sheet.

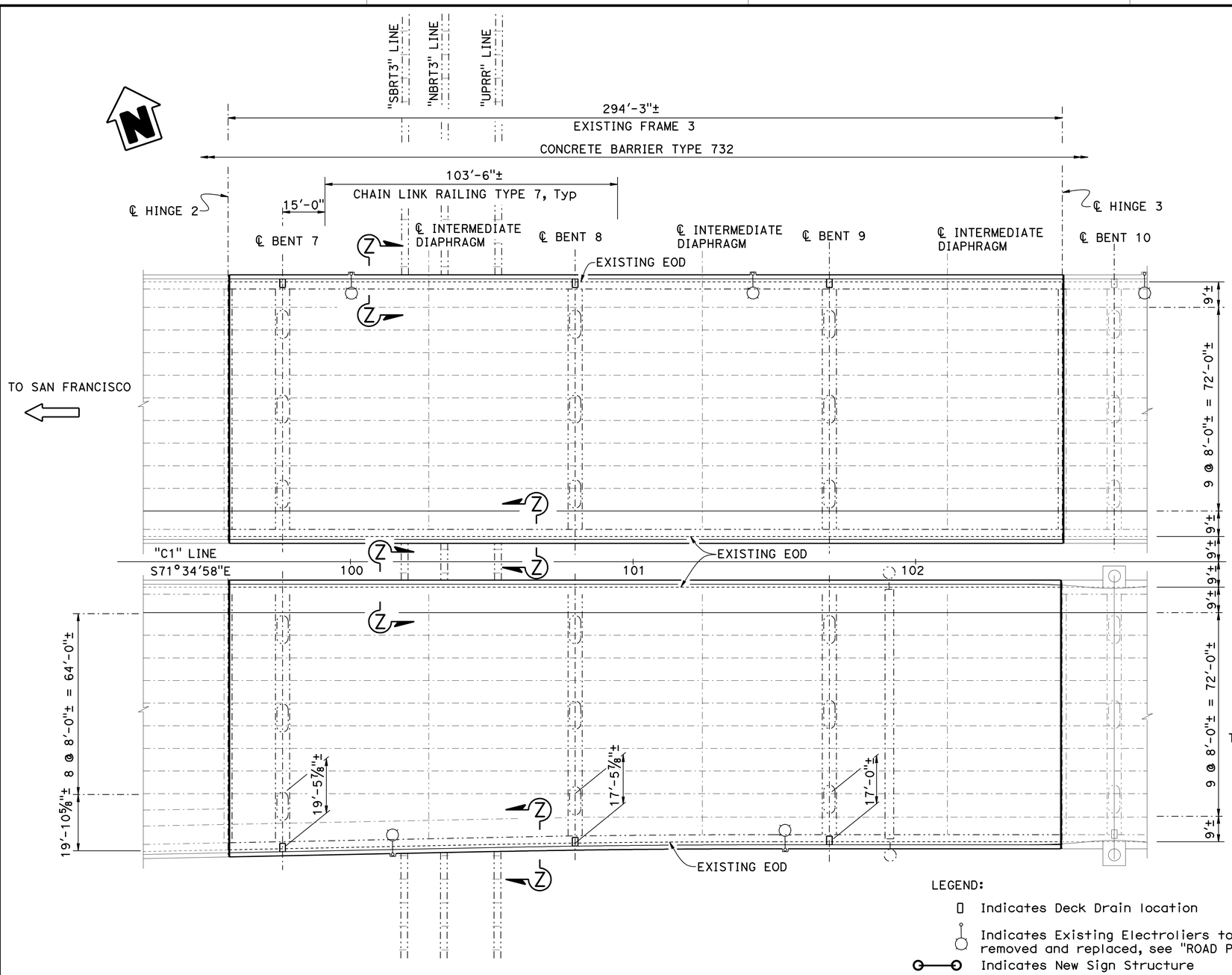

PLAN - FRAME 3

1" = 20'

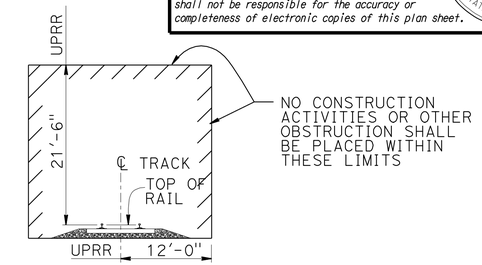

MINIMUM CONSTRUCTION CLEARANCE ENVELOPE (UPRR)

(NORMAL TO RAILROAD)

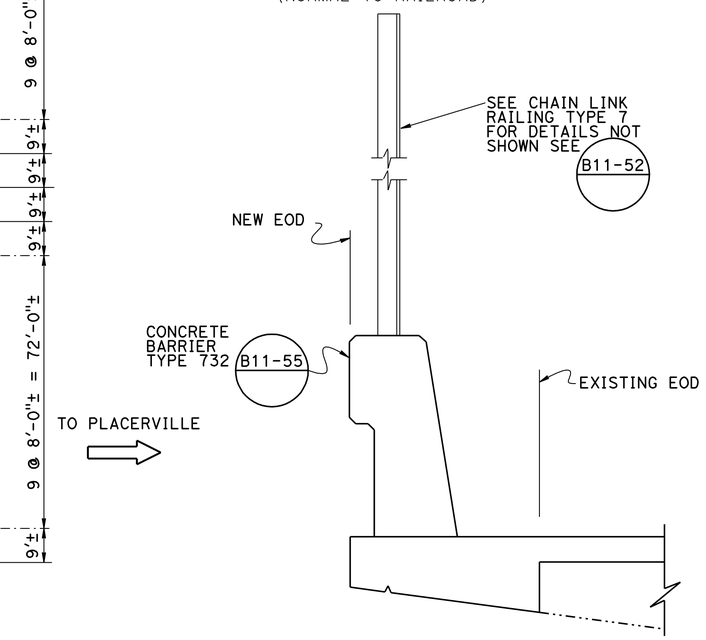

SECTION Z-Z

1" = 1'-0"

LEGEND:

- Indicates Deck Drain location
- Indicates Existing Electroliers to be removed and replaced, see "ROAD PLANS"
- Indicates New Sign Structure
- Indicates Existing Sign to be removed

"SBRT" and "NBRT" LINES = "SACRAMENTO VALLEY REGIONAL TRANSIT" Light Rail Line
"UPRR" LINE = "UNION PACIFIC RAILROAD" Line

NOTES:

1. For "DECK DRAIN DETAILS", see "DECK DRAINAGE DETAILS" sheet
2. Existing Soffit Access Openings not shown

NOTE:
THE CONTRACTOR SHALL VERIFY ALL CONTROLLING FIELD DIMENSIONS BEFORE ORDERING OR FABRICATING ANY MATERIAL.

DECK REHABILITATION

CAMELLIA CITY VIADUCT (WIDEN)

STRUCTURE PLAN - FRAME 3

	BY	CHECKED
DESIGN	Joey Aquino	Sharon Yen
DETAILS	Janie Chlubna	Sharon Yen
QUANTITIES	Pyo Hong	Ashraf Ahmed

STATE OF CALIFORNIA
DEPARTMENT OF TRANSPORTATION

DIVISION OF ENGINEERING SERVICES
STRUCTURE DESIGN
DESIGN BRANCH 3

BRIDGE NO. 24-0248R/L
POST MILE 1.51

STRUCTURES DESIGN DETAIL SHEET (ENGLISH) (REV. 09-01-10)

ORIGINAL SCALE IN INCHES FOR REDUCED PLANS 0 1 2 3

UNIT: 3578
PROJECT NUMBER & PHASE: 03000000731
CONTRACT NO.: 03-0F2301

DISREGARD PRINTS BEARING EARLIER REVISION DATES

REVISION DATES: 6-14-11 10-12-12 9-10-12

SHEET 6 OF 46

FILE => 24-0248-c-sl-frame-3.dgn

USERNAME => s124436 DATE PLOTTED => 26-MAR-2013 TIME PLOTTED => 08:35

DIST	COUNTY	ROUTE	POST MILES TOTAL PROJECT	SHEET No.	TOTAL SHEETS
03	Sac	50	L1.3/L2.2	121	160

REGISTERED CIVIL ENGINEER 11-30-12 DATE

3-25-13
PLANS APPROVAL DATE

REGISTERED PROFESSIONAL ENGINEER
JOSE M AQUINO III
No. 58386
Exp. 12-31-14
CIVIL
STATE OF CALIFORNIA

The State of California or its officers or agents shall not be responsible for the accuracy or completeness of electronic copies of this plan sheet.

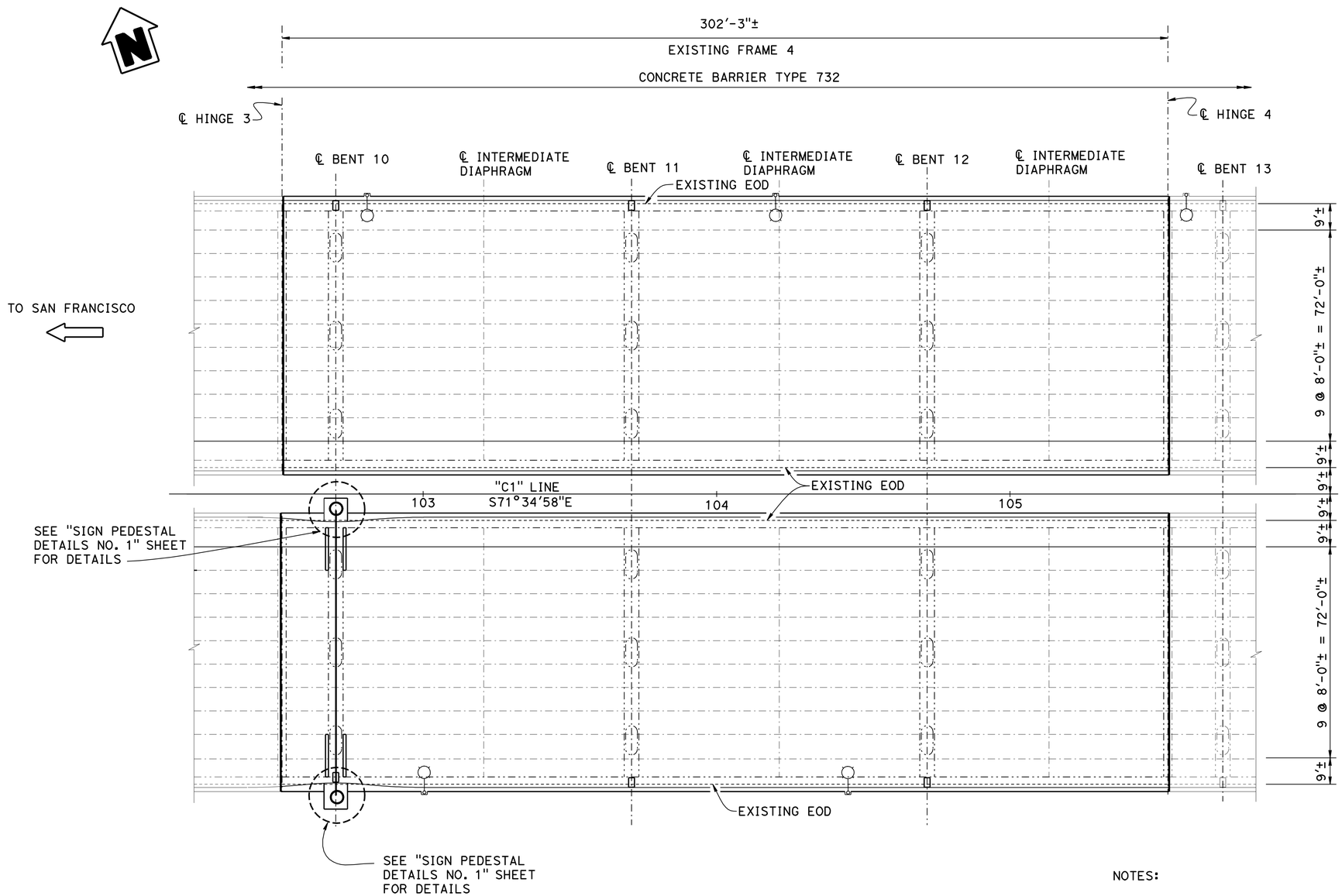

LEGEND:

- ▯ Indicates Deck Drain location
- Indicates Existing Electroliers to be removed and replaced, see "ROAD PLANS"
- Indicates New Sign Structure, see "ROAD PLANS"

PLAN - FRAME 4

1" = 20'

NOTES:

1. For "DECK DRAIN DETAILS", see "DECK DRAINAGE DETAILS" sheet
2. Existing Soffit Access Openings not shown

NOTE:
THE CONTRACTOR SHALL VERIFY ALL CONTROLLING FIELD DIMENSIONS BEFORE ORDERING OR FABRICATING ANY MATERIAL.

	BY	CHECKED
DESIGN	Joey Aquino	Sharon Yen
DETAILS	Janie Chlubna	Sharon Yen
QUANTITIES	Pyo Hong	Ashraf Ahmed

STATE OF CALIFORNIA
DEPARTMENT OF TRANSPORTATION

DIVISION OF ENGINEERING SERVICES
STRUCTURE DESIGN
DESIGN BRANCH 3

BRIDGE NO. 24-0248R/L
POST MILE 1.51

DECK REHABILITATION
CAMELLIA CITY VIADUCT (WIDEN)
STRUCTURE PLAN - FRAME 4

STRUCTURES DESIGN DETAIL SHEET (ENGLISH) (REV. 09-01-10)

ORIGINAL SCALE IN INCHES FOR REDUCED PLANS 0 1 2 3

UNIT: 3578
PROJECT NUMBER & PHASE: 03000000731
CONTRACT NO.: 03-0F2301

DISREGARD PRINTS BEARING EARLIER REVISION DATES

REVISION DATES: 6-14-11 8-16-12 9-4-12

SHEET 7 OF 46

FILE => 24-0248-c-sl-frame-4.dgn

USERNAME => s124496 DATE PLOTTED => 26-MAR-2013 TIME PLOTTED => 08:35

DIST	COUNTY	ROUTE	POST MILES TOTAL PROJECT	SHEET No.	TOTAL SHEETS
03	Sac	50	L1.3/L2.2	122	160

REGISTERED CIVIL ENGINEER 11-30-12 DATE

3-25-13
PLANS APPROVAL DATE

REGISTERED PROFESSIONAL ENGINEER
JOSE M AQUINO III
No. 58386
Exp. 12-31-14
CIVIL
STATE OF CALIFORNIA

The State of California or its officers or agents shall not be responsible for the accuracy or completeness of electronic copies of this plan sheet.

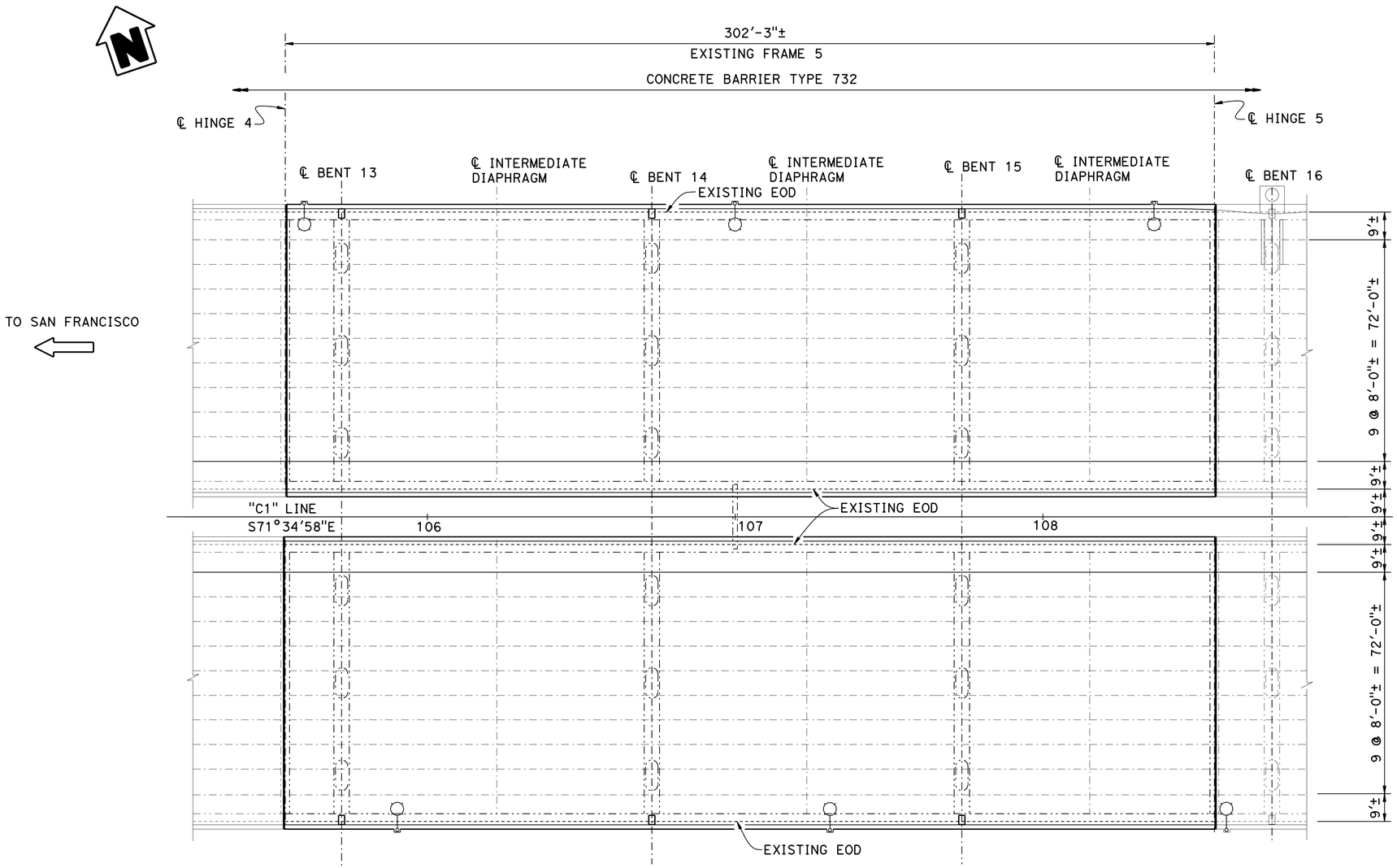

TO PLACERVILLE

LEGEND:

- Indicates Deck Drain location
- Indicates Existing Electroliers to be removed and replaced, see "ROAD PLANS"
- Indicates New Sign Structure, see "ROAD PLANS"
- Indicates Existing Sign to be removed, see "ROAD PLANS"

NOTES:

1. For "DECK DRAIN DETAILS", see "DECK DRAINAGE DETAILS" sheet
2. Existing Soffit Access Openings not shown

PLAN - FRAME 5

1" = 20'

NOTE:
THE CONTRACTOR SHALL VERIFY ALL CONTROLLING FIELD DIMENSIONS BEFORE ORDERING OR FABRICATING ANY MATERIAL.

	BY	CHECKED
DESIGN	Joey Aquino	Sharon Yen
DETAILS	Janie Chlubna	Sharon Yen
QUANTITIES	Pyo Hong	Ashraf Ahmed

STATE OF CALIFORNIA
DEPARTMENT OF TRANSPORTATION

DIVISION OF ENGINEERING SERVICES
STRUCTURE DESIGN
DESIGN BRANCH 3

BRIDGE NO. 24-0248R/L
POST MILE 1.51

DECK REHABILITATION
CAMELLIA CITY VIADUCT (WIDEN)
STRUCTURE PLAN - FRAME 5

STRUCTURES DESIGN DETAIL SHEET (ENGLISH) (REV. 09-01-10)

ORIGINAL SCALE IN INCHES FOR REDUCED PLANS 0 1 2 3

UNIT: 3578
PROJECT NUMBER & PHASE: 03000000731
CONTRACT NO.: 03-0F2301

DISREGARD PRINTS BEARING EARLIER REVISION DATES

REVISION DATES: 6-14-11 9-4-12 8-16-12

SHEET 8 OF 46

FILE => 24-0248-c-sl-frame-5.dgn

USERNAME => s124496 DATE PLOTTED => 26-MAR-2013 TIME PLOTTED => 08:35

DIST	COUNTY	ROUTE	POST MILES TOTAL PROJECT	SHEET No.	TOTAL SHEETS
03	Sac	50	L1.3/L2.2	123	160

REGISTERED CIVIL ENGINEER 11-30-12 DATE

3-25-13
PLANS APPROVAL DATE

REGISTERED PROFESSIONAL ENGINEER JOSE M AQUINO III No. 58386 Exp. 12-31-14 CIVIL STATE OF CALIFORNIA

The State of California or its officers or agents shall not be responsible for the accuracy or completeness of electronic copies of this plan sheet.

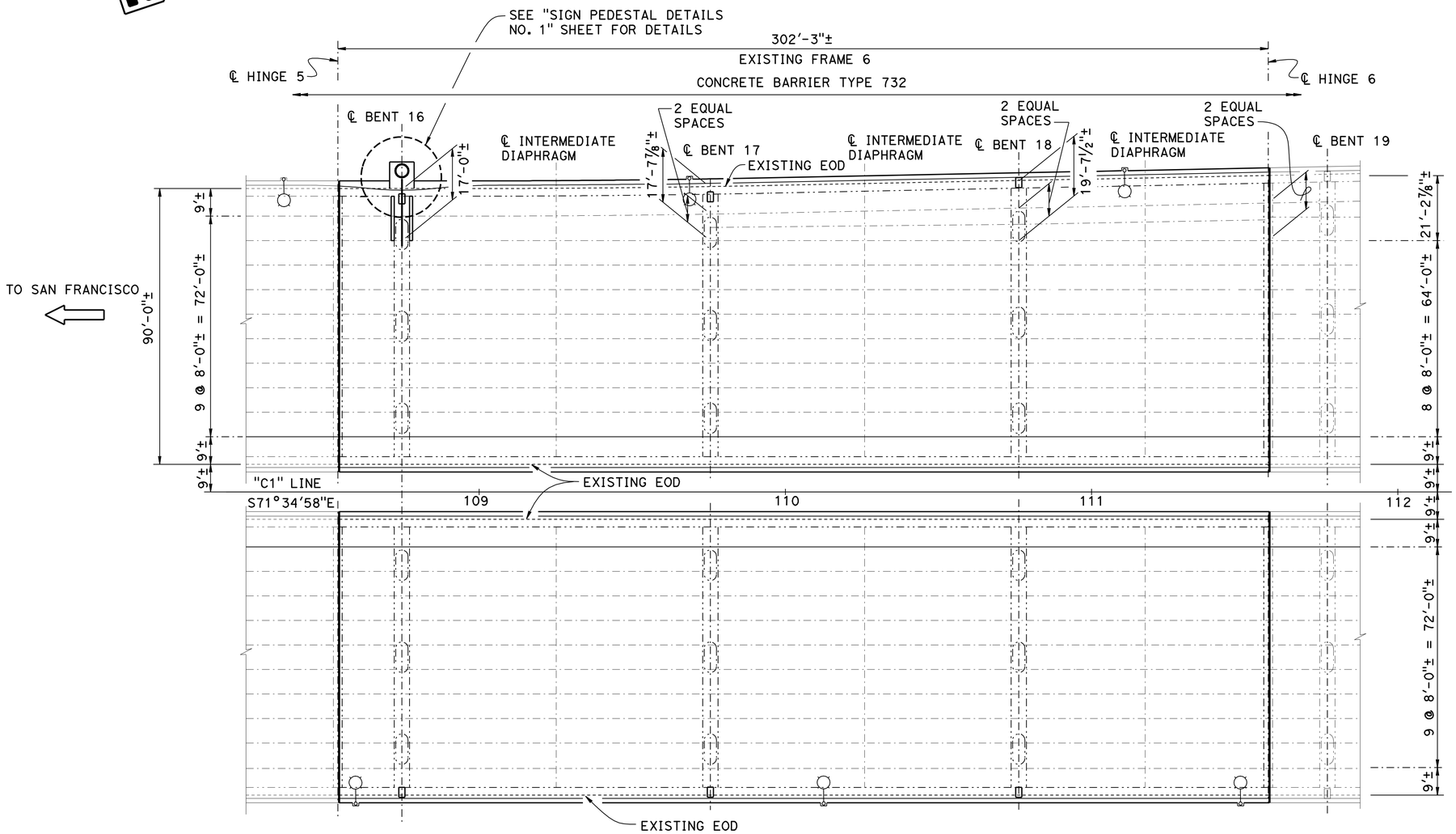

TO PLACERVILLE

LEGEND:

- ▯ Indicates Deck Drain location
- Indicates Existing Electroliers to be removed and replaced, see "ROAD PLANS"
- Indicates New Sign Structure, see "ROAD PLANS"

PLAN - FRAME 6

1" = 20'

NOTES:

1. For "DECK DRAIN DETAILS", see "DECK DRAINAGE DETAILS" sheet
2. Existing Soffit Access Openings not shown

NOTE:
THE CONTRACTOR SHALL VERIFY ALL CONTROLLING FIELD DIMENSIONS BEFORE ORDERING OR FABRICATING ANY MATERIAL.

	BY	CHECKED
DESIGN	Joey Aquino	Sharon Yen
DETAILS	Janie Chlubna	Sharon Yen
QUANTITIES	Pyo Hong	Ashraf Ahmed

STATE OF CALIFORNIA
DEPARTMENT OF TRANSPORTATION

DIVISION OF ENGINEERING SERVICES
STRUCTURE DESIGN
DESIGN BRANCH 3

BRIDGE NO. 24-0248R/L
POST MILE 1.51

DECK REHABILITATION
CAMELLIA CITY VIADUCT (WIDEN)
STRUCTURE PLAN - FRAME 6

STRUCTURES DESIGN DETAIL SHEET (ENGLISH) (REV. 09-01-10)

ORIGINAL SCALE IN INCHES FOR REDUCED PLANS 0 1 2 3

UNIT: 3578
PROJECT NUMBER & PHASE: 03000000731
CONTRACT NO.: 03-0F2301

DISREGARD PRINTS BEARING EARLIER REVISION DATES

REVISION DATES: 6-14-11 | 9-4-12 | 8-16-12

SHEET 9 OF 46

FILE => 24-0248-c-sl-frame-6.dgn

USERNAME => s124496 DATE PLOTTED => 26-MAR-2013 TIME PLOTTED => 08:35

DIST	COUNTY	ROUTE	POST MILES TOTAL PROJECT	SHEET No.	TOTAL SHEETS
03	Sac	50	L1.3/L2.2	124	160

REGISTERED CIVIL ENGINEER 11-30-12 DATE

3-25-13
PLANS APPROVAL DATE

REGISTERED PROFESSIONAL ENGINEER JOSE M AQUINO III No. 58386 Exp. 12-31-14 CIVIL STATE OF CALIFORNIA

The State of California or its officers or agents shall not be responsible for the accuracy or completeness of electronic copies of this plan sheet.

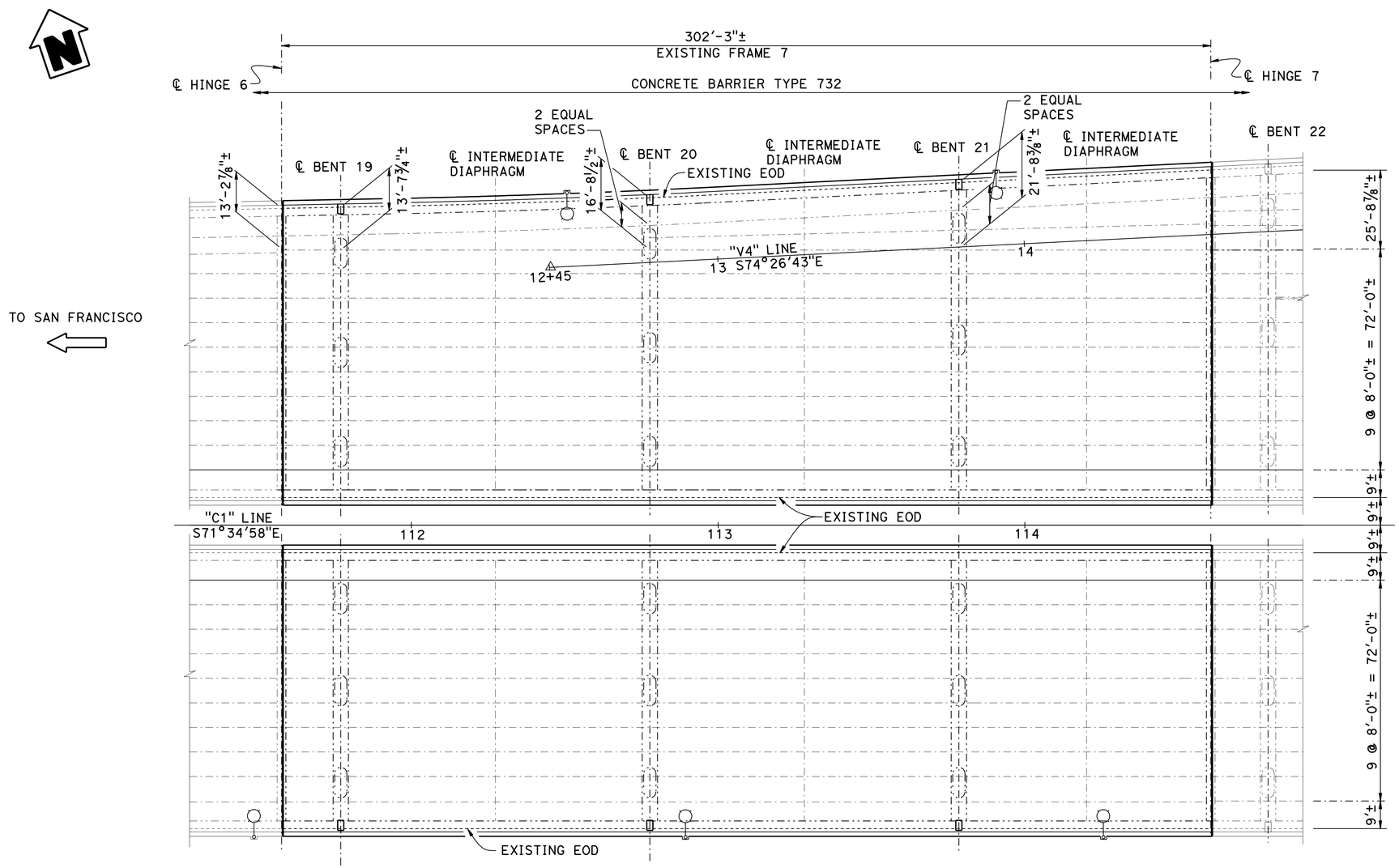

LEGEND:

- ▯ Indicates Deck Drain location
- Indicates Existing Electroliers to be removed and replaced, see "ROAD PLANS"

PLAN - FRAME 7

1" = 20'

NOTES:

1. For "DECK DRAIN DETAILS", see "DECK DRAINAGE DETAILS" sheet
2. Existing Soffit Access Openings not shown

NOTE:
THE CONTRACTOR SHALL VERIFY ALL CONTROLLING FIELD DIMENSIONS BEFORE ORDERING OR FABRICATING ANY MATERIAL.

	BY	CHECKED
DESIGN	Joey Aquino	Sharon Yen
DETAILS	Janie Chlubna	Sharon Yen
QUANTITIES	Pyo Hong	Ashraf Ahmed

STATE OF CALIFORNIA
DEPARTMENT OF TRANSPORTATION

DIVISION OF ENGINEERING SERVICES
STRUCTURE DESIGN
DESIGN BRANCH 3

BRIDGE NO. 24-0248R/L
POST MILE 1.51

DECK REHABILITATION
CAMELLIA CITY VIADUCT (WIDEN)
STRUCTURE PLAN - FRAME 7

STRUCTURES DESIGN DETAIL SHEET (ENGLISH) (REV. 09-01-10)

ORIGINAL SCALE IN INCHES FOR REDUCED PLANS 0 1 2 3

UNIT: 3578
PROJECT NUMBER & PHASE: 03000000731
CONTRACT NO.: 03-0F2301

DISREGARD PRINTS BEARING EARLIER REVISION DATES

REVISION DATES: 6-14-11 9-4-12 7-19-12

SHEET 10 OF 46

FILE => 24-0248-c-sl-frame-7.dgn

USERNAME => s124496 DATE PLOTTED => 26-MAR-2013 TIME PLOTTED => 08:35

DIST	COUNTY	ROUTE	POST MILES TOTAL PROJECT	SHEET No.	TOTAL SHEETS
03	Sac	50	L1.3/L2.2	125	160

REGISTERED CIVIL ENGINEER 11-30-12 DATE

3-25-13
PLANS APPROVAL DATE

REGISTERED PROFESSIONAL ENGINEER JOSE M AQUINO III No. 58386 Exp. 12-31-14 CIVIL STATE OF CALIFORNIA

The State of California or its officers or agents shall not be responsible for the accuracy or completeness of electronic copies of this plan sheet.

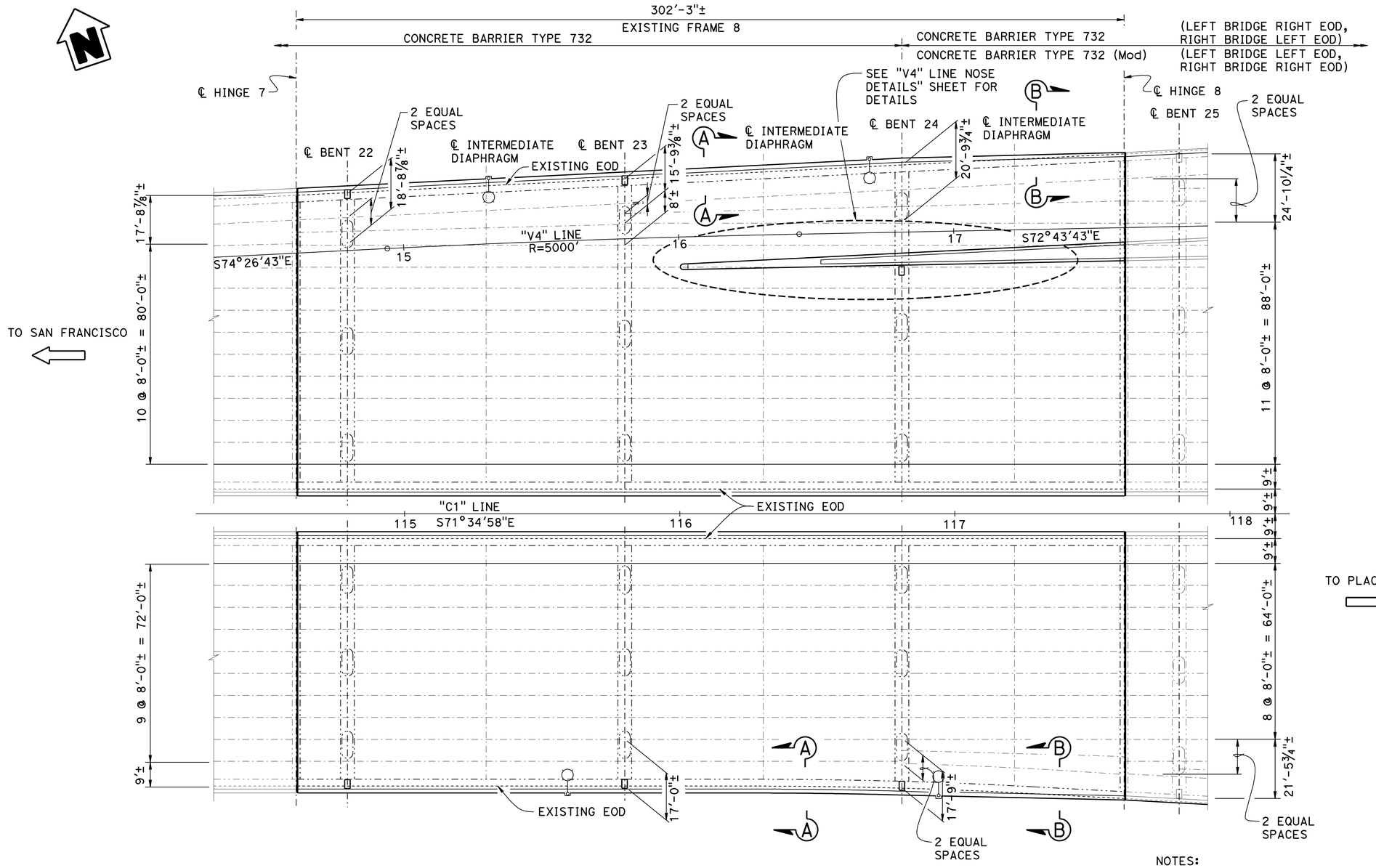

LEGEND:

- ▯ Indicates Deck Drain location
- ○ Indicates Existing Electroliers to be removed and replaced, see "ROAD PLANS"

PLAN - FRAME 8

1" = 20'

CURVE DATA

R = 5000.00'±
Δ = 1°42'57"
T = 74.87'±
L = 149.73'±

NOTES:

1. For "SECTION A-A" and "SECTION B-B", see "TYPICAL SECTION NO. 2" sheet
2. For "DECK DRAIN DETAILS", see "DECK DRAINAGE DETAILS" sheet
3. Existing Soffit Access Openings not shown

NOTE:
THE CONTRACTOR SHALL VERIFY ALL CONTROLLING FIELD DIMENSIONS BEFORE ORDERING OR FABRICATING ANY MATERIAL.

	BY	CHECKED
DESIGN	Joey Aquino	Sharon Yen
DETAILS	Janie Chlubna	Sharon Yen
QUANTITIES	Pyo Hong	Ashraf Ahmed

STATE OF CALIFORNIA
DEPARTMENT OF TRANSPORTATION

DIVISION OF ENGINEERING SERVICES
STRUCTURE DESIGN
DESIGN BRANCH 3

BRIDGE NO. 24-0248R/L
POST MILE 1.51

DECK REHABILITATION
CAMELLIA CITY VIADUCT (WIDEN)
STRUCTURE PLAN - FRAME 8

STRUCTURES DESIGN DETAIL SHEET (ENGLISH) (REV. 09-01-10)

ORIGINAL SCALE IN INCHES FOR REDUCED PLANS 0 1 2 3

UNIT: 3578
PROJECT NUMBER & PHASE: 03000000731
CONTRACT NO.: 03-0F2301

DISREGARD PRINTS BEARING EARLIER REVISION DATES

REVISION DATES 6-14-11 7-19-12 9-4-12

SHEET 11 OF 46

FILE => 24-0248-c-sl-frame-8.dgn

USERNAME => s124496 DATE PLOTTED => 26-MAR-2013 TIME PLOTTED => 08:35

DIST	COUNTY	ROUTE	POST MILES TOTAL PROJECT	SHEET No.	TOTAL SHEETS
03	Sac	50	L1.3/L2.2	126	160

REGISTERED CIVIL ENGINEER — DATE 11-30-12

3-25-13
PLANS APPROVAL DATE

REGISTERED PROFESSIONAL ENGINEER — JOSE M AQUINO III — No. 58386 — Exp. 12-31-14 — CIVIL — STATE OF CALIFORNIA

The State of California or its officers or agents shall not be responsible for the accuracy or completeness of electronic copies of this plan sheet.

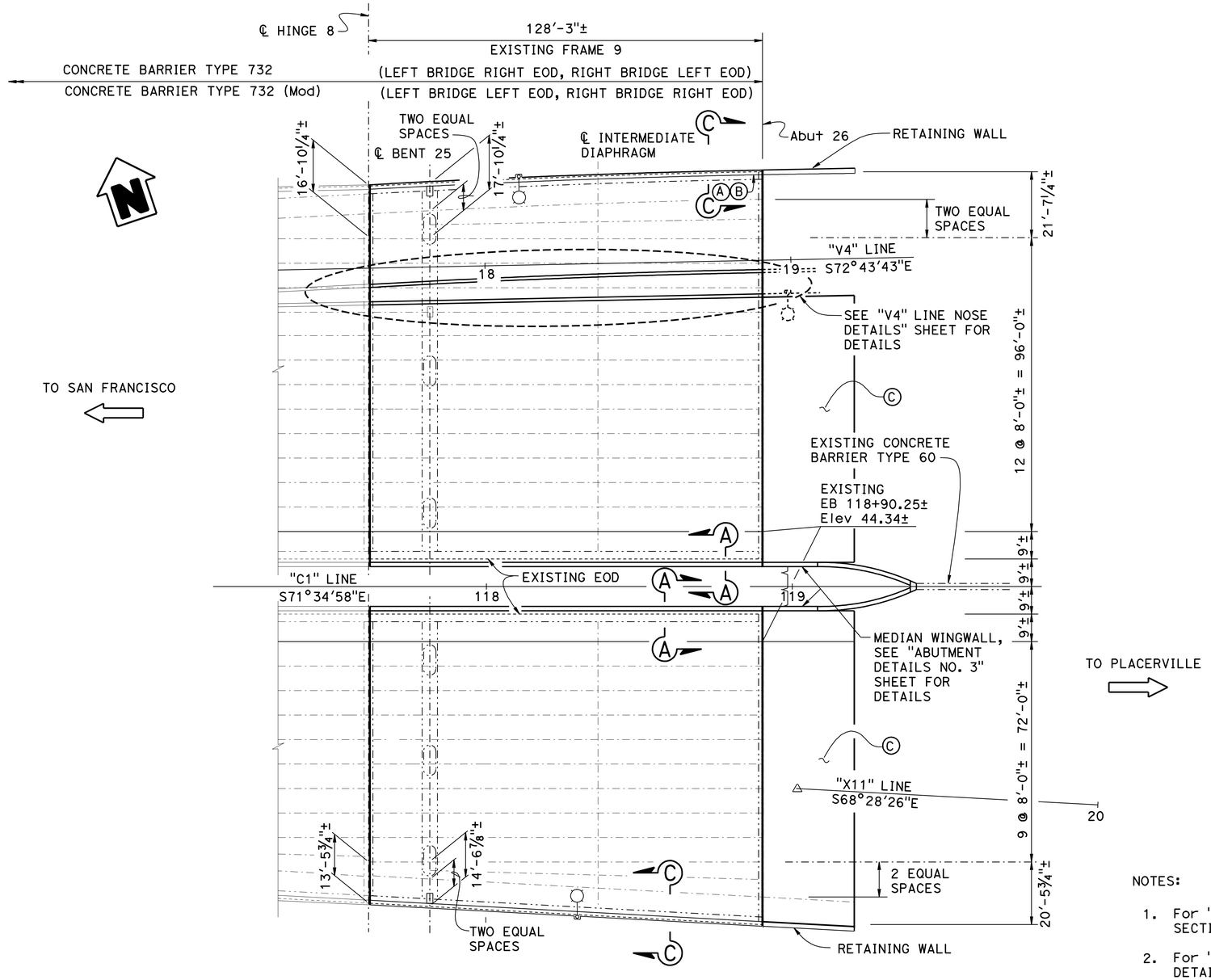

PLAN - FRAME 9

1" = 20'

NOTES:

Ⓐ Paint "BRIDGE NO. 24-0248 L"
Ⓑ Paint "CAMELLIA CITY VIADUCT"
Ⓒ Structure Approach Type R(30D)

LEGEND:

▯ Indicates Deck Drain location

Indicates Existing Electroliers to be removed and replaced, see "ROAD PLANS"

NOTES:

1. For "SECTION A-A" and "SECTION C-C", see "TYPICAL SECTION NO. 2" sheet
2. For "RETAINING WALL" details, see "ABUTMENT DETAILS NO. 4" sheet
3. For "DECK DRAIN DETAILS", see "DECK DRAINAGE DETAILS" sheet
4. Existing Soffit Access Openings not shown

NOTE:
THE CONTRACTOR SHALL VERIFY ALL CONTROLLING FIELD DIMENSIONS BEFORE ORDERING OR FABRICATING ANY MATERIAL.

	BY	CHECKED
DESIGN	Joey Aquino	Sharon Yen
DETAILS	Janie Chlubna	Sharon Yen
QUANTITIES	Pyo Hong	Ashraf Ahmed

STATE OF CALIFORNIA
DEPARTMENT OF TRANSPORTATION

DIVISION OF ENGINEERING SERVICES
STRUCTURE DESIGN
DESIGN BRANCH 3

BRIDGE NO. 24-0248R/L
POST MILE 1.51

DECK REHABILITATION
CAMELLIA CITY VIADUCT (WIDEN)
STRUCTURE PLAN - FRAME 9

STRUCTURES DESIGN DETAIL SHEET (ENGLISH) (REV. 09-01-10)

ORIGINAL SCALE IN INCHES FOR REDUCED PLANS 0 1 2 3

UNIT: 3578
PROJECT NUMBER & PHASE: 03000000731
CONTRACT NO.: 03-0F2301

DISREGARD PRINTS BEARING EARLIER REVISION DATES

REVISION DATES: 6-14-11 | 9-4-12 | 9-10-12

SHEET 12 OF 46

FILE => 24-0248-c-sl-frame-9.dgn

USERNAME => s124496 DATE PLOTTED => 26-MAR-2013 TIME PLOTTED => 08:35

DIST	COUNTY	ROUTE	POST MILES TOTAL PROJECT	SHEET No.	TOTAL SHEETS
03	Sac	50	L1.3/L2.2	127	160

REGISTERED CIVIL ENGINEER 11-30-12 DATE

3-25-13
PLANS APPROVAL DATE

REGISTERED PROFESSIONAL ENGINEER
Jose M Aquino, III
No. 58386
Exp. 12-31-14
CIVIL
STATE OF CALIFORNIA

The State of California or its officers or agents shall not be responsible for the accuracy or completeness of electronic copies of this plan sheet.

CURVE DATA

No.	R	Δ	T	L
1	2000.00′	04°20′17″	75.75′	151.43′
2	3000.00′	03°11′29″	83.57′	167.10′

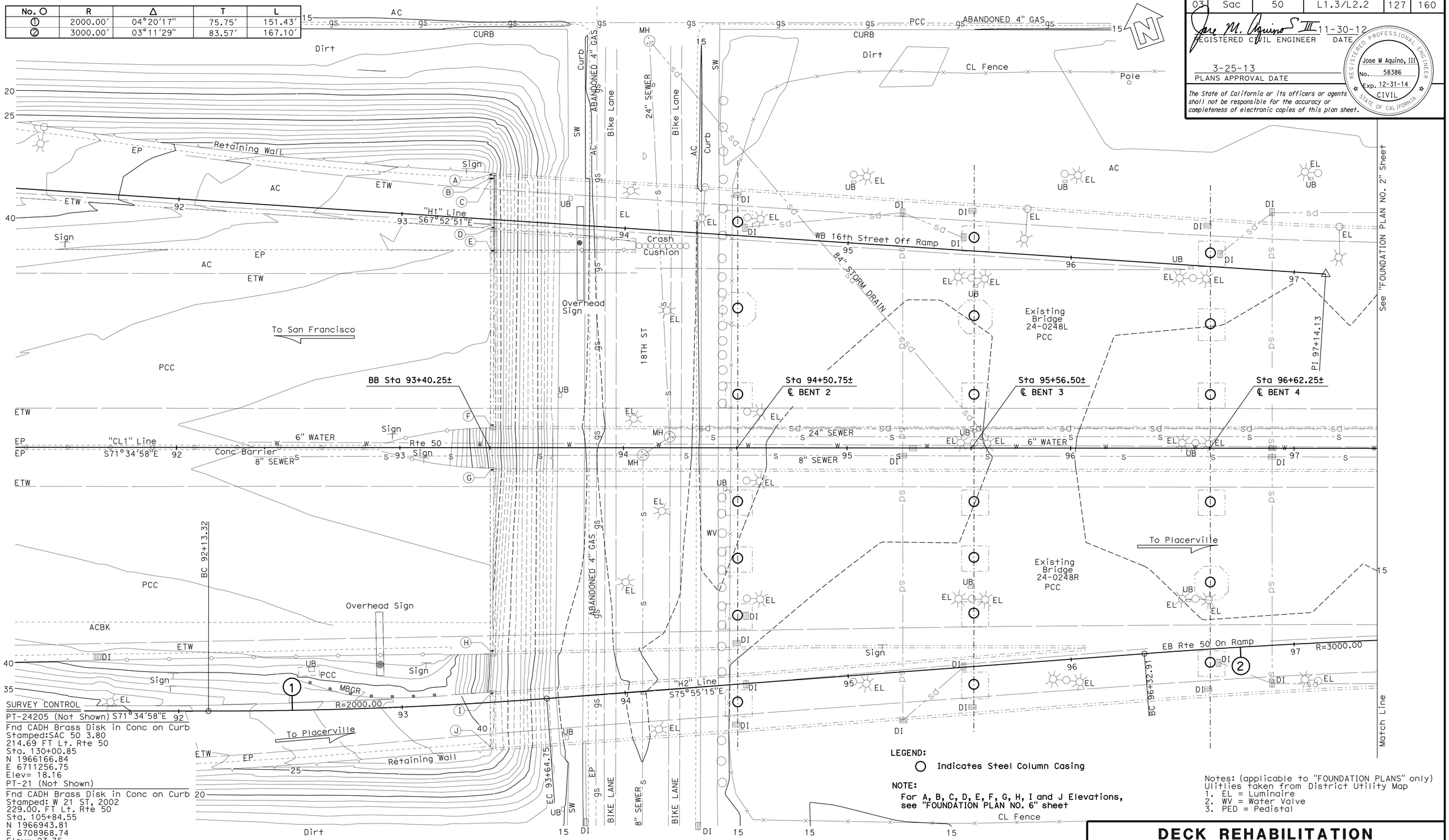

SURVEY CONTROL
PT-24205 (Not Shown) S71°34′58″E
Fnd CADH Brass Disk in Conc on Curb
Stamped:SAC 50 3.80
214.69 FT Lt. Rte 50
Sta. 130+00.85
N 1966166.84
E 6711256.75
Elev= 18.16
PT-21 (Not Shown)
Fnd CADH Brass Disk in Conc on Curb
Stamped: W 21 ST, 2002
229.00. FT Lt. Rte 50
Sta. 105+84.55
N 1966943.81
E 6708968.74
Elev= 23.75

LEGEND:
○ Indicates Steel Column Casing

NOTE:
For A, B, C, D, E, F, G, H, I and J Elevations, see "FOUNDATION PLAN NO. 6" sheet

Notes: (applicable to "FOUNDATION PLANS" only)
Utilities taken from District Utility Map
1. EL = Luminaire
2. WV = Water Valve
3. PED = Pedistal

DECK REHABILITATION
CAMELLIA CITY VIADUCT (WIDEN)
FOUNDATION PLAN NO. 1

PRELIMINARY INVESTIGATION SECTION

SCALE	VERT.DATUM NGVD 29	PHOTOGRAMMETRY AS OF: 06-12-02			
1"=20′	HORZ.DATUM NAD 83(1991.35)	SURVEYED	BY Photogrammetry/Fassett	CHECKED	BY C. Fassett 03/12
ALIGNMENT TIES Dist. Traverse Sheet		DRAFTED	BY C. Fassett 03/12	CHECKED	BY T. Schmalz 03/12

	BY	CHECKED
DESIGN	Joey Aquino	Sharon Yen
DETAILS	Janie Chlubna	Sharon Yen
QUANTITIES	Pyo Hong	Ashraf Ahmed

STATE OF CALIFORNIA
DEPARTMENT OF TRANSPORTATION

DIVISION OF ENGINEERING SERVICES
STRUCTURE DESIGN
DESIGN BRANCH 3

BRIDGE NO. 24-0248R/L
POST MILE 1.51

STRUCTURES FOUNDATION PLAN SHEET (ENGLISH) (REV. 09-01-10)

ORIGINAL SCALE IN INCHES FOR REDUCED PLANS 0 1 2 3

UNIT: 3646
PROJECT NUMBER & PHASE: 03000000731
CONTRACT NO.: 03-0F2301

DISREGARD PRINTS BEARING EARLIER REVISION DATES

REVISION DATES: 4-10-12 6-20-12 9-10-12

SHEET 13 OF 46

FILE => 24-0248-d-fp-01.dgn

DIST	COUNTY	ROUTE	POST MILES TOTAL PROJECT	SHEET No.	TOTAL SHEETS
03	Sac	50	L1.3/L2.2	128	160

REGISTERED CIVIL ENGINEER — DATE 11-30-12

3-25-13
PLANS APPROVAL DATE

REGISTERED PROFESSIONAL ENGINEER — Jose M Aquino, III — No. 58386 — Exp. 12-31-14 — CIVIL — STATE OF CALIFORNIA

The State of California or its officers or agents shall not be responsible for the accuracy or completeness of electronic copies of this plan sheet.

CURVE DATA

No.	R	Δ	T	L
3	22885.56′	0°24′30″	81.53′	163.06′
4	5300.00′	01°51′48″	86.18′	172.35′
5	4251.34′	01°19′58″	49.45′	98.89′

SOFFIT ELEVATIONS

LEFT BRIDGE: 1 - 40.98; 2 - 41.19; 3 - 42.56; 4 - 42.78

RIGHT BRIDGE: 5 - 42.56; 6 - 42.80; 7 - 40.93; 8 - 38.31

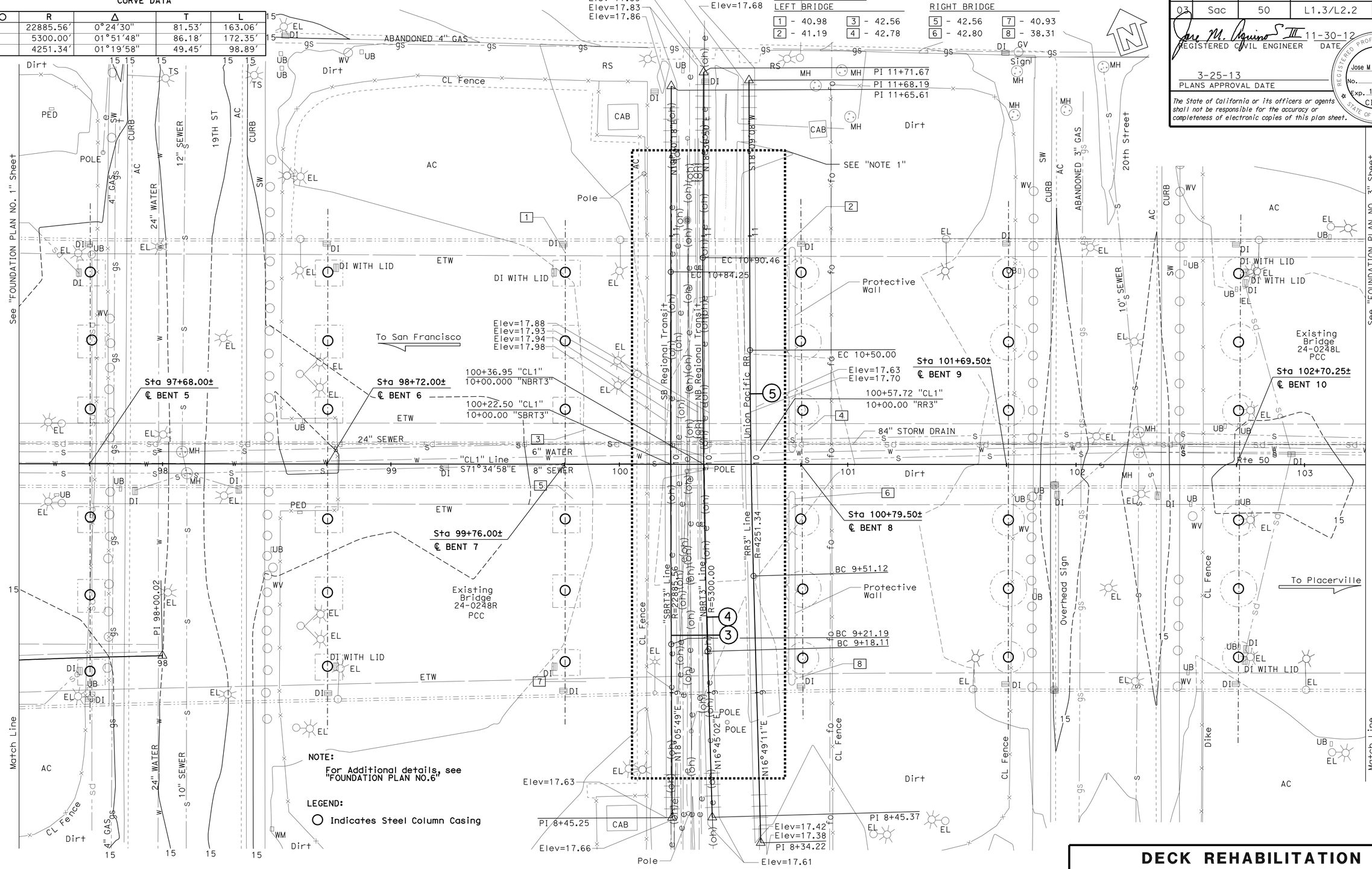

NOTE:

For Additional details, see "FOUNDATION PLAN NO.6"

LEGEND:

○ Indicates Steel Column Casing

PRELIMINARY INVESTIGATION SECTION							
SCALE 1"=20′	VERT.DATUM NGVD 29	PHOTOGRAMMETRY AS OF: 06-12-02					
	HORZ.DATUM NAD 83(1991.35)	SURVEYED	BY Photogrammetry/Fassett	CHECKED	BY C. Fassett	03/12	
	ALIGNMENT TIES Dist. Traverse Sheet	DRAFTED	BY C. Fassett 03/12	CHECKED	BY T. Schmalz	03/12	

	BY	CHECKED
DESIGN	Joey Aquino	Sharon Yen
DETAILS	Janie Chlubna	Sharon Yen
QUANTITIES	Pyo Hong	Ashraf Ahmed

STATE OF CALIFORNIA
DEPARTMENT OF TRANSPORTATION

DIVISION OF ENGINEERING SERVICES
STRUCTURE DESIGN
DESIGN BRANCH 3

BRIDGE NO. 24-0248R/L
POST MILE L1.51

DECK REHABILITATION
CAMELLIA CITY VIADUCT (WIDEN)
FOUNDATION PLAN NO. 2

STRUCTURES FOUNDATION PLAN SHEET (ENGLISH) (REV. 09-01-10)

ORIGINAL SCALE IN INCHES FOR REDUCED PLANS 0 1 2 3

UNIT: 3646
PROJECT NUMBER & PHASE: 03000000731
CONTRACT NO.: 03-0F2301

DISREGARD PRINTS BEARING EARLIER REVISION DATES → 4-10-12 5-23-12 6-20-12 9-10-12

SHEET 14 OF 46

FILE => 24-0248-d-fp-02.dgn

DIST	COUNTY	ROUTE	POST MILES TOTAL PROJECT	SHEET No.	TOTAL SHEETS
03	Sac	50	L1.3/L2.2	129	160

REGISTERED CIVIL ENGINEER 11-30-12 DATE

3-25-13
PLANS APPROVAL DATE

REGISTERED PROFESSIONAL ENGINEER
Jose M Aquino, III
No. 58386
Exp. 12-31-14
CIVIL
STATE OF CALIFORNIA

The State of California or its officers or agents shall not be responsible for the accuracy or completeness of electronic copies of this plan sheet.

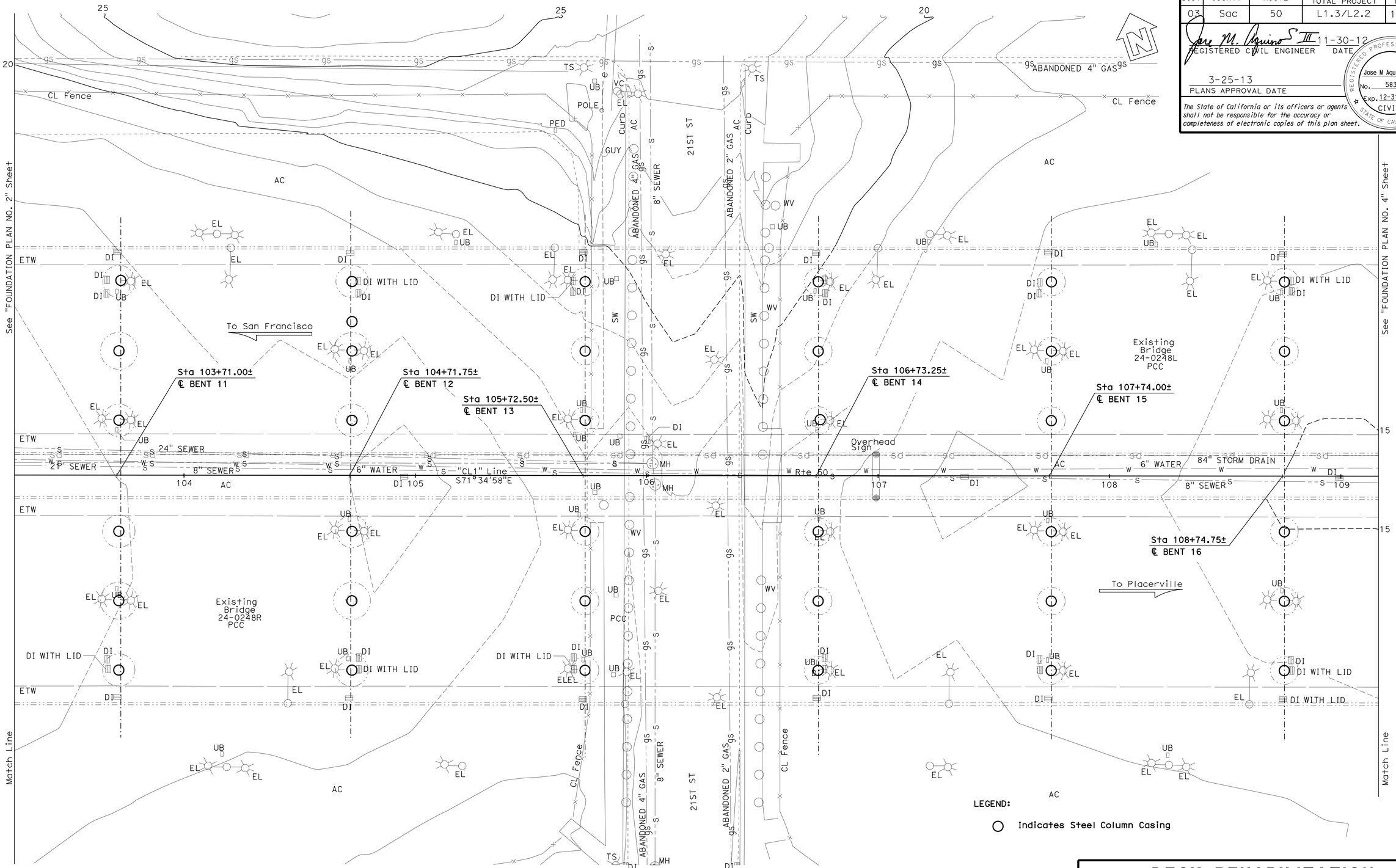

PRELIMINARY INVESTIGATION SECTION					
SCALE 1"=20'	VERT.DATUM NGVD 29	PHOTOGRAMMETRY AS OF: 06-12-02			
	HORZ.DATUM NAD 83(1991.35)	SURVEYED	BY Photogrammetry/Fassett	CHECKED	BY C. Fassett 03/12
ALIGNMENT TIES Dist. Traverse Sheet		DRAFTED	BY C. Fassett 03/12	CHECKED	BY T. Schmalz 03/12

DESIGN	BY Joey Aquino	CHECKED Sharon Yen
DETAILS	BY Janie Chlubna	CHECKED Sharon Yen
QUANTITIES	BY Pyo Hong	CHECKED Ashraf Ahmed

STATE OF CALIFORNIA
DEPARTMENT OF TRANSPORTATION

DIVISION OF ENGINEERING SERVICES
STRUCTURE DESIGN
DESIGN BRANCH 3

BRIDGE NO. 24-0248R/L
POST MILE L1.51

DECK REHABILITATION
CAMELLIA CITY VIADUCT (WIDEN)
FOUNDATION PLAN NO. 3

STRUCTURES FOUNDATION PLAN SHEET (ENGLISH) (REV. 09-01-10)

ORIGINAL SCALE IN INCHES FOR REDUCED PLANS 0 1 2 3

UNIT: 3646
PROJECT NUMBER & PHASE: 03000000731
CONTRACT NO.: 03-0F2301

DISREGARD PRINTS BEARING EARLIER REVISION DATES

REVISION DATES: 4-10-12 6-20-12 9-10-12

SHEET 15 OF 46

FILE => 24-0248-d-fp-03.dgn

DIST	COUNTY	ROUTE	POST MILES TOTAL PROJECT	SHEET No.	TOTAL SHEETS
03	Sac	50	L1.3/L2.2	130	160

Jose M. Aquino III 11-30-12
REGISTERED CIVIL ENGINEER DATE

3-25-13
PLANS APPROVAL DATE

REGISTERED PROFESSIONAL ENGINEER
Jose M Aquino, III
No. 58386
Exp. 12-31-14
CIVIL
STATE OF CALIFORNIA

The State of California or its officers or agents shall not be responsible for the accuracy or completeness of electronic copies of this plan sheet.

CURVE DATA

No. ⓪	R	Δ	T	L
⑥	5000.00′	01°42′57″	74.87′	149.73′

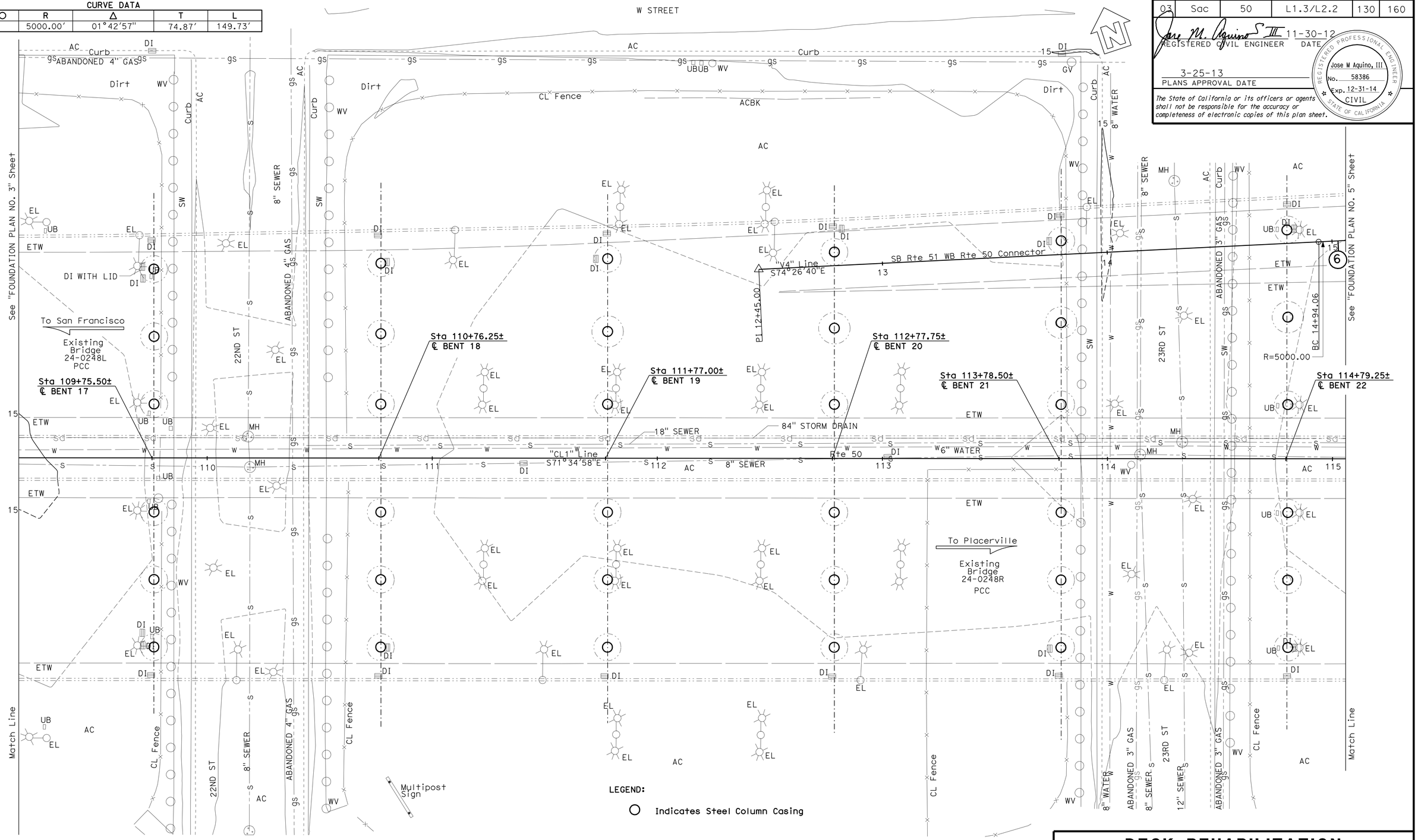

PRELIMINARY INVESTIGATION SECTION					
SCALE 1"=20′	VERT.DATUM NGVD 29	PHOTOGRAMMETRY AS OF: 06-12-02			
	HORZ.DATUM NAD 83(1991.35)	SURVEYED	BY Photogrammetry/Fassett	CHECKED	BY C. Fassett 04/12
	ALIGNMENT TIES Dist. Traverse Sheet	DRAFTED	BY C. Fassett 04/12	CHECKED	BY T. Schmalz 04/12

DESIGN	BY Joey Aquino	CHECKED Sharon Yen
DETAILS	BY Janie Chlubna	CHECKED Sharon Yen
QUANTITIES	BY Pyo Hong	CHECKED Ashraf Ahmed

STATE OF CALIFORNIA
DEPARTMENT OF TRANSPORTATION

DIVISION OF ENGINEERING SERVICES
STRUCTURE DESIGN
DESIGN BRANCH 3

BRIDGE NO. 24-0248R/L
POST MILE L1.51

DECK REHABILITATION
CAMELLIA CITY VIADUCT (WIDEN)
FOUNDATION PLAN NO. 4

STRUCTURES FOUNDATION PLAN SHEET (ENGLISH) (REV. 09-01-10)

ORIGINAL SCALE IN INCHES FOR REDUCED PLANS 0 1 2 3

UNIT: 3646
PROJECT NUMBER & PHASE: 03000000731
CONTRACT NO.: 03-0F2301

DISREGARD PRINTS BEARING EARLIER REVISION DATES

REVISION DATES 4-10-12 6-20-12 9-10-12

SHEET 16 OF 46

FILE => 24-0248-d-fp-04.dgn

DIST	COUNTY	ROUTE	POST MILES TOTAL PROJECT	SHEET No.	TOTAL SHEETS
03	Sac	50	L1.3/L2.2	131	160

REGISTERED CIVIL ENGINEER 11-30-12 DATE

3-25-13
PLANS APPROVAL DATE

REGISTERED PROFESSIONAL ENGINEER Jose M Aquino, III No. 58386 Exp. 12-31-14 CIVIL STATE OF CALIFORNIA

The State of California or its officers or agents shall not be responsible for the accuracy or completeness of electronic copies of this plan sheet.

CURVE DATA

No.	R	Δ	T	L
6	5000.00′	01°42′57″	74.87′	149.73′

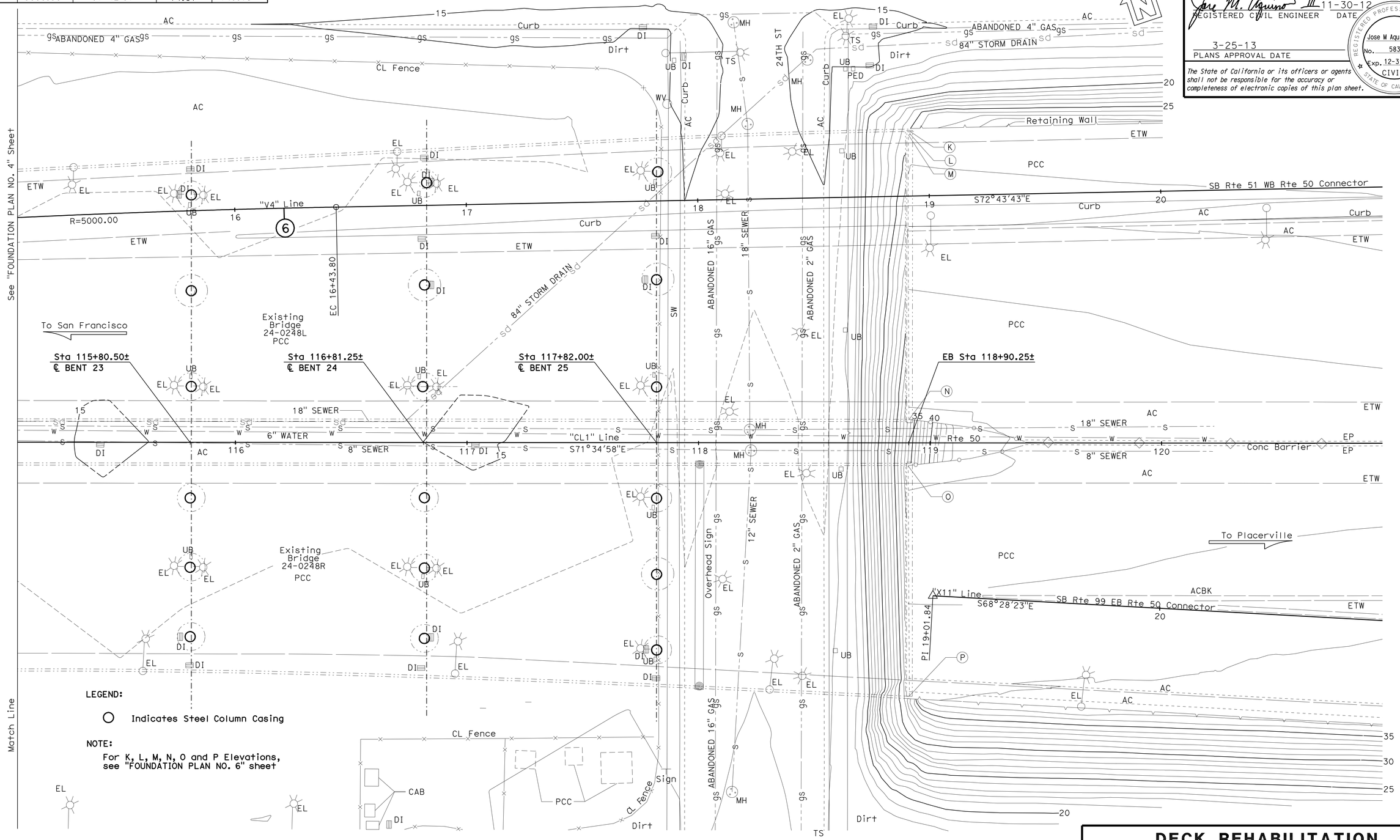

PRELIMINARY INVESTIGATION SECTION							
SCALE 1"=20′	VERT.DATUM NGVD 29	PHOTOGRAMMETRY AS OF: 06-12-02					
	HORZ.DATUM NAD 83(1991.35)	SURVEYED	BY Photogrammetry/Fassett	CHECKED	BY C. Fassett	03/12	
	ALIGNMENT TIES Dist. Traverse Sheet	DRAFTED	BY C. Fassett	03/12	CHECKED	BY T. Schmalz	03/12

DESIGN	BY Joey Aquino	CHECKED Sharon Yen
DETAILS	BY Janie Chlubna	CHECKED Sharon Yen
QUANTITIES	BY Pyo Hong	CHECKED Ashraf Ahmed

STATE OF CALIFORNIA
DEPARTMENT OF TRANSPORTATION

DIVISION OF ENGINEERING SERVICES
STRUCTURE DESIGN
DESIGN BRANCH 3

BRIDGE NO. 24-0248R/L
POST MILE L1.51

DECK REHABILITATION
CAMELLIA CITY VIADUCT (WIDEN)
FOUNDATION PLAN NO. 5

STRUCTURES FOUNDATION PLAN SHEET (ENGLISH) (REV. 09-01-10)

ORIGINAL SCALE IN INCHES FOR REDUCED PLANS 0 1 2 3

UNIT: 3646
PROJECT NUMBER & PHASE: 03000000731
CONTRACT NO.: 03-0F2301

DISREGARD PRINTS BEARING EARLIER REVISION DATES

REVISION DATES: 4-10-12 6-20-12 9-10-12

SHEET 17 OF 46

FILE => 24-0248-d-fp-05.dgn

DIST	COUNTY	ROUTE	POST MILES TOTAL PROJECT	SHEET No.	TOTAL SHEETS
03	Sac	50	L1.3/L2.2	132	160

REGISTERED CIVIL ENGINEER 11-30-12 DATE

3-25-13
PLANS APPROVAL DATE

REGISTERED PROFESSIONAL ENGINEER Jose M Aquino, III No. 58386 Exp. 12-31-14 CIVIL STATE OF CALIFORNIA

The State of California or its officers or agents shall not be responsible for the accuracy or completeness of electronic copies of this plan sheet.

Bridge Location (See "FOUNDATION PLAN NO. 1 and 5"

Ⓐ - 122.13 Lt. "CL1" Line, Sta. 93+39.74, Elev.=42.78±
Ⓑ - 120.37 Lt. "CL1" Line, Sta. 93+39.75, Elev.=42.80±
Ⓒ - 120.32 Lt. "CL1" Line, Sta. 93+40.56, Elev.=42.82±
Ⓓ - 98.42 Lt. "CL1" Line, Sta. 93+40.66, Elev.=43.24±
Ⓔ - 88.04 Lt. "CL1" Line, Sta. 93+40.71, Elev.=43.90±
Ⓕ - 9.98 Lt. "CL1" Line, Sta. 93+40.50, Elev.=44.93±
Ⓖ - 10.05 Rt. "CL1" Line, Sta. 93+40.42, Elev.=44.90±
Ⓗ - 91.07 Rt. "CL1" Line, Sta. 93+40.58, Elev.=43.33±
Ⓘ - 110.08 Rt. "CL1" Line, Sta. 93+40.57, Elev.=40.46±
Ⓙ - 133.94 Rt. "CL1" Line, Sta. 93+40.66, Elev.=39.97±
Ⓚ - 133.13 Lt. "CL1" Line, Sta. 118+90.54, Elev.=41.73±
Ⓛ - 133.14 Lt. "CL1" Line, Sta. 118+91.22, Elev.=41.75±
Ⓜ - 133.13 Lt. "CL1" Line, Sta. 118+90.54, Elev.=41.73±
Ⓝ - 10.02 Lt. "CL1" Line, Sta. 118+90.86, Elev.=44.08±
Ⓞ - 9.95 Rt. "CL1" Line, Sta. 118+90.55, Elev.=44.19±
Ⓟ - 109.28 Rt. "CL1" Line, Sta. 118+91.17, Elev.=42.16±

NOTES:

1. Vertical clearances shown below the bridge soffit are to the highest of the "SBRT3" and "NBRT3" OH Lines
2. All clearances are existing dimensions. For proposed bridge work, see Structure Plans

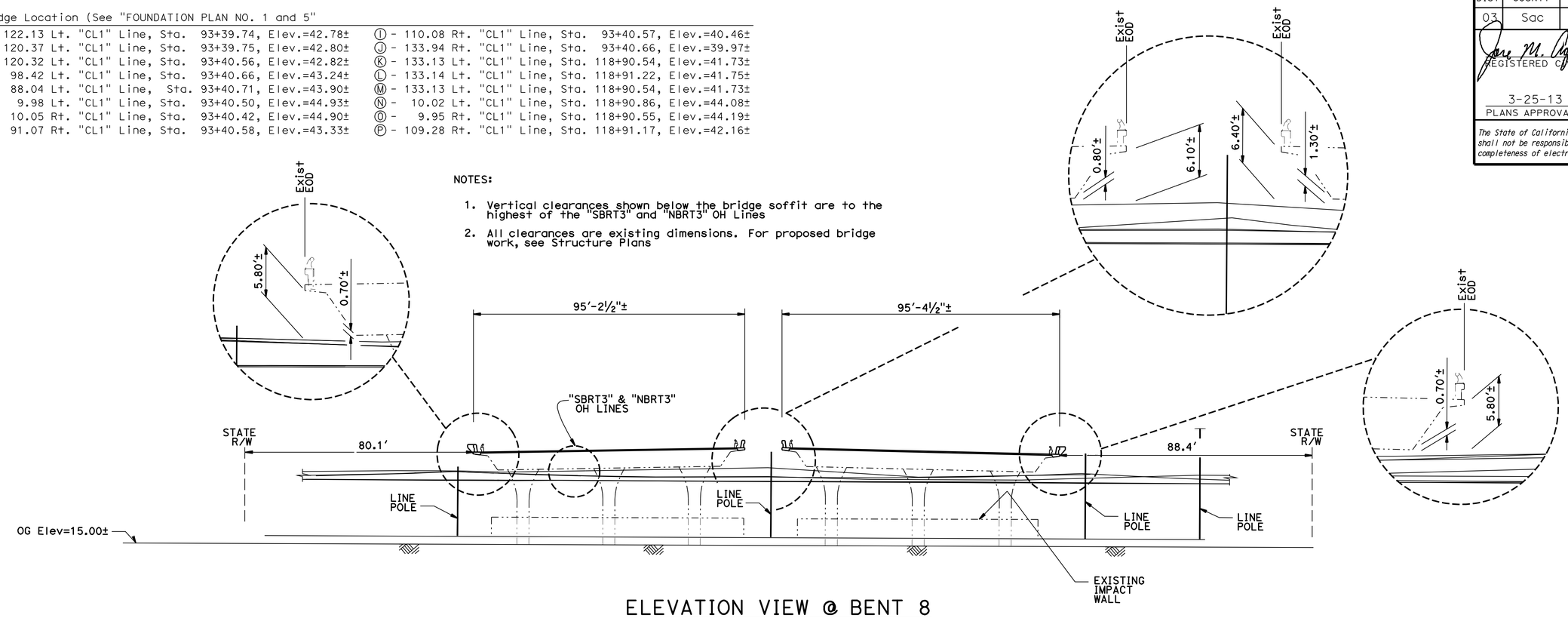

ELEVATION VIEW @ BENT 8

1" = 20'-0"

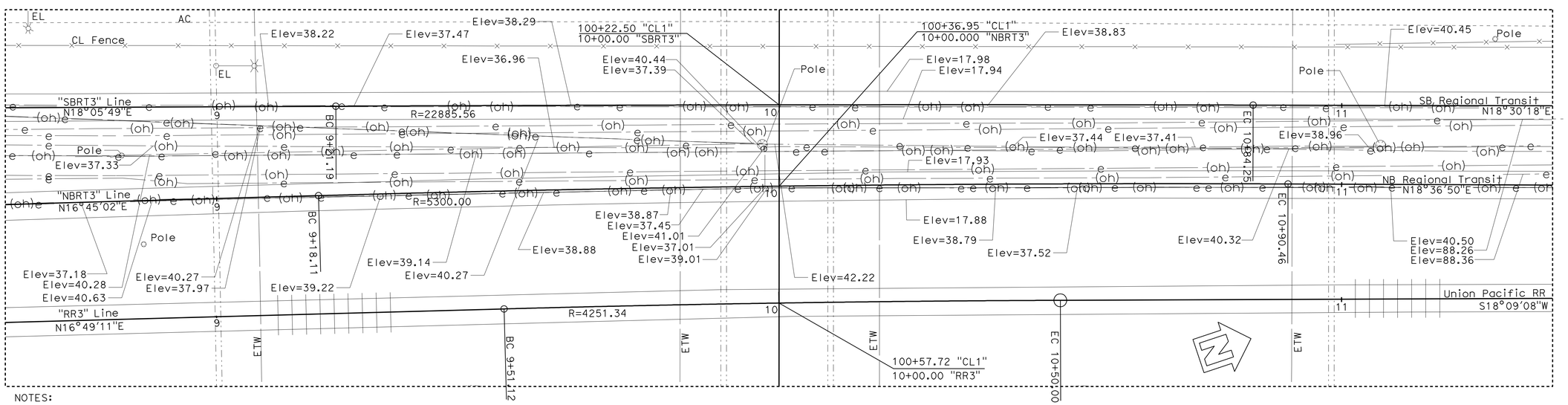

NOTES:

1. Underground utilities contours not shown for clarity
2. For Curve Data see "FOUNDATION PLAN NO. 2"

DETAIL PLAN VIEW

No Scale

PRELIMINARY INVESTIGATION SECTION					
SCALE 1"=20'	VERT.DATUM NGVD 29	PHOTOGRAMMETRY AS OF: 06-12-02			
HORZ.DATUM NAD 83(1991.35)	SURVEYED	BY Photogrammetry/Fassett	CHECKED	BY C. Fassett	03/12
ALIGNMENT TIES Dist. Traverse Sheet	DRAFTED	BY C. Fassett 03/12	CHECKED	BY T. Schmalz	03/12

DESIGN	BY Joey Aquino	CHECKED Sharon Yen
DETAILS	BY Janie Chlubna	CHECKED Sharon Yen
QUANTITIES	BY Pyo Hong	CHECKED Ashraf Ahmed

STATE OF CALIFORNIA
DEPARTMENT OF TRANSPORTATION

DIVISION OF ENGINEERING SERVICES
STRUCTURE DESIGN
DESIGN BRANCH 3

BRIDGE NO. 24-0248R/L
POST MILE 1.51

DECK REHABILITATION
CAMELLIA CITY VIADUCT (WIDEN)
FOUNDATION PLAN NO. 6

STRUCTURES FOUNDATION PLAN SHEET (ENGLISH) (REV. 09-01-10)

ORIGINAL SCALE IN INCHES FOR REDUCED PLANS 0 1 2 3

UNIT: 3646
PROJECT NUMBER & PHASE: 03000000731
CONTRACT NO.: 03-0F2301

DISREGARD PRINTS BEARING EARLIER REVISION DATES

REVISION DATES 4-10-12 8-30-12 9-10-12

SHEET 18 OF 46

FILE => 24-0248-d-fp-06.dgn

DIST	COUNTY	ROUTE	POST MILES TOTAL PROJECT	SHEET No.	TOTAL SHEETS
03	Sac	50	L1.3/L2.2	133	160

REGISTERED CIVIL ENGINEER 11-30-12 DATE

3-25-13
PLANS APPROVAL DATE

REGISTERED PROFESSIONAL ENGINEER
JOSE M AQUINO III
No. 58386
Exp. 12-31-14
CIVIL
STATE OF CALIFORNIA

The State of California or its officers or agents shall not be responsible for the accuracy or completeness of electronic copies of this plan sheet.

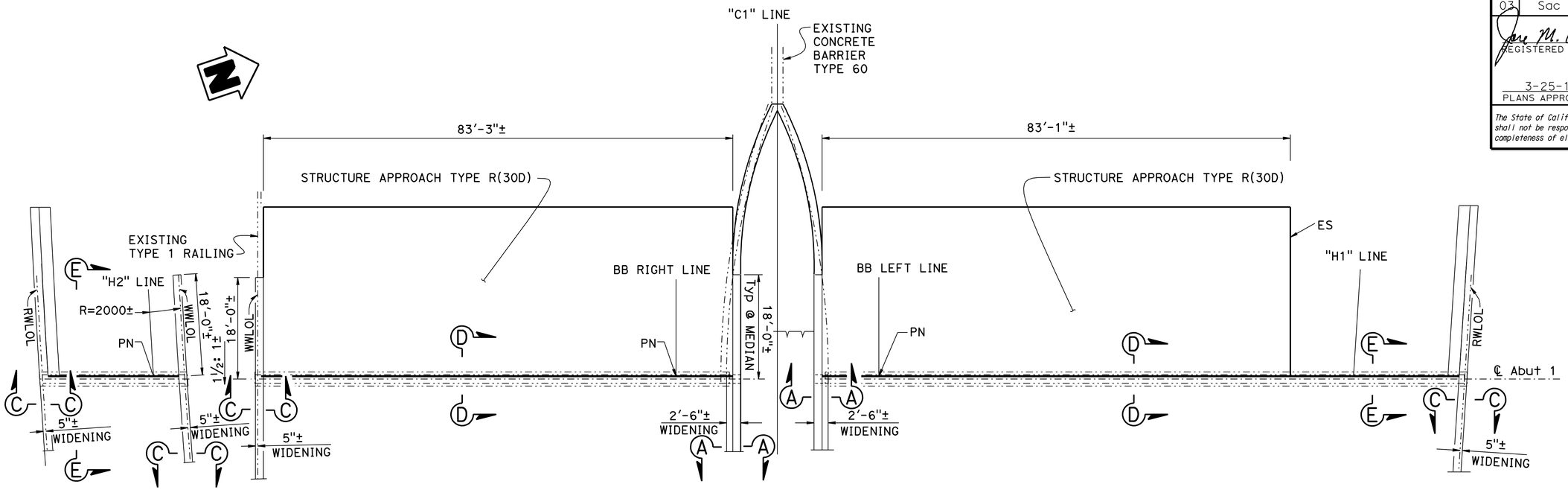

PLAN - ABUTMENT 1

1" = 10'

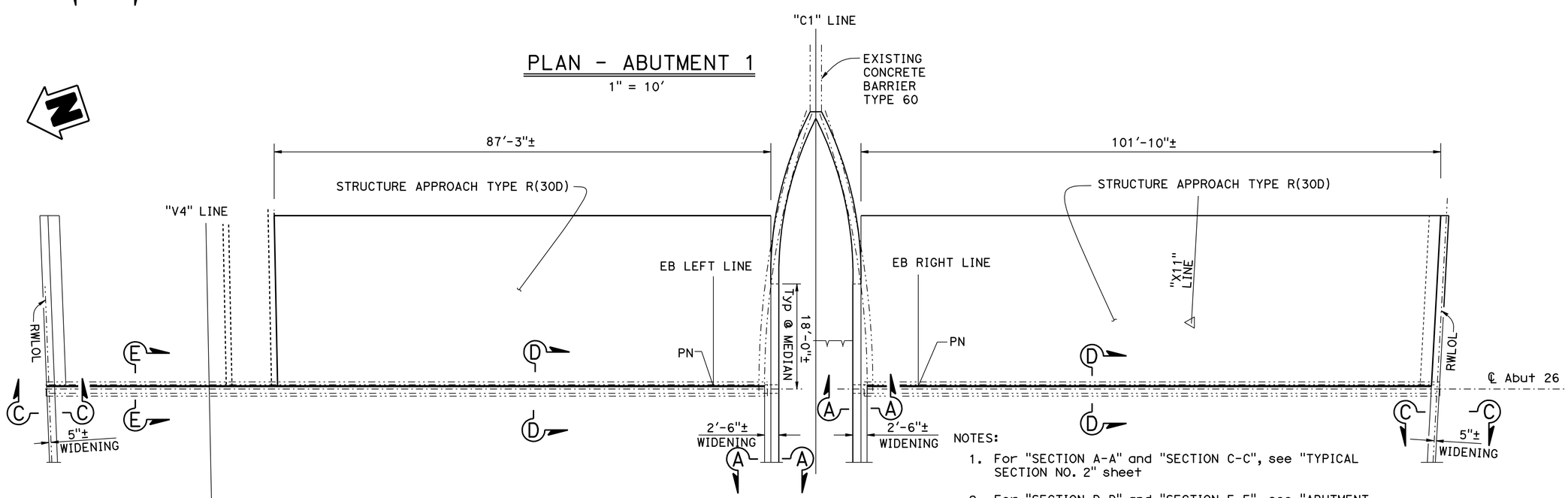

PLAN - ABUTMENT 26

1" = 10'

NOTES:

1. For "SECTION A-A" and "SECTION C-C", see "TYPICAL SECTION NO. 2" sheet
2. For "SECTION D-D" and "SECTION E-E", see "ABUTMENT DETAILS NO. 2" sheet
3. For Retaining Wall and Wingwall details, see "ABUTMENT DETAILS NO. 4" sheet

NOTE:
THE CONTRACTOR SHALL VERIFY ALL CONTROLLING FIELD DIMENSIONS BEFORE ORDERING OR FABRICATING ANY MATERIAL.

	BY	CHECKED
DESIGN	Joey Aquino	Sharon Yen
DETAILS	Janie Chlubna	Sharon Yen
QUANTITIES	Pyo Hong	Ashraf Ahmed

STATE OF CALIFORNIA
DEPARTMENT OF TRANSPORTATION

DIVISION OF ENGINEERING SERVICES
STRUCTURE DESIGN
DESIGN BRANCH 3

BRIDGE NO. 24-0248R/L
POST MILE 1.51

DECK REHABILITATION
CAMELLIA CITY VIADUCT (WIDEN)
ABUTMENT LAYOUT

STRUCTURES DESIGN DETAIL SHEET (ENGLISH) (REV. 09-01-10)

ORIGINAL SCALE IN INCHES FOR REDUCED PLANS 0 1 2 3

UNIT: 3578
PROJECT NUMBER & PHASE: 03000000731
CONTRACT NO.: 03-0F2301

DISREGARD PRINTS BEARING EARLIER REVISION DATES

REVISION DATES: 4-10-12 8-16-12 9-10-12

SHEET 19 OF 46

FILE => 24-0248-e-abut-1o.dgn

USERNAME => s124436 DATE PLOTTED => 26-MAR-2013 TIME PLOTTED => 08:36

DIST	COUNTY	ROUTE	POST MILES TOTAL PROJECT	SHEET No.	TOTAL SHEETS
03	Sac	50	L1.3/L2.2	134	160

REGISTERED CIVIL ENGINEER — DATE 11-30-12

3-25-13
PLANS APPROVAL DATE

REGISTERED PROFESSIONAL ENGINEER — JOSE M AQUINO III — No. 58386 — Exp. 12-31-14 — CIVIL — STATE OF CALIFORNIA

The State of California or its officers or agents shall not be responsible for the accuracy or completeness of electronic copies of this plan sheet.

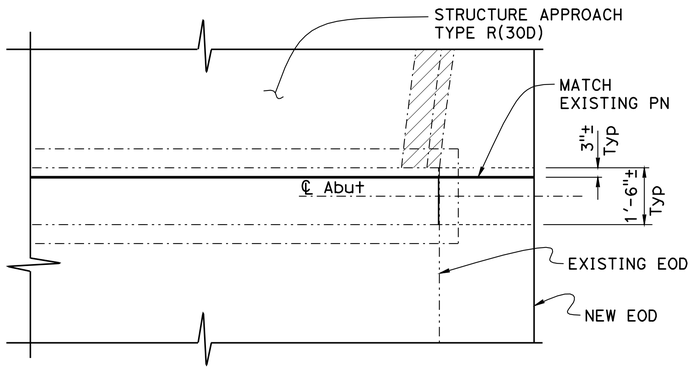

PART PLAN
½" = 1'-0"

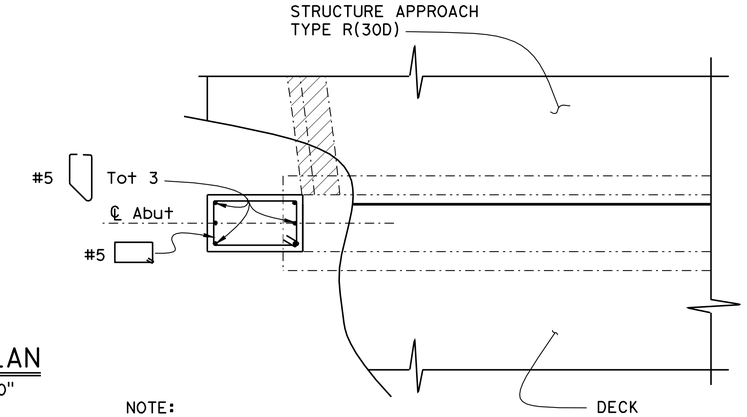

NOTE:
Abutment 1 shown
Abutment 26 similar

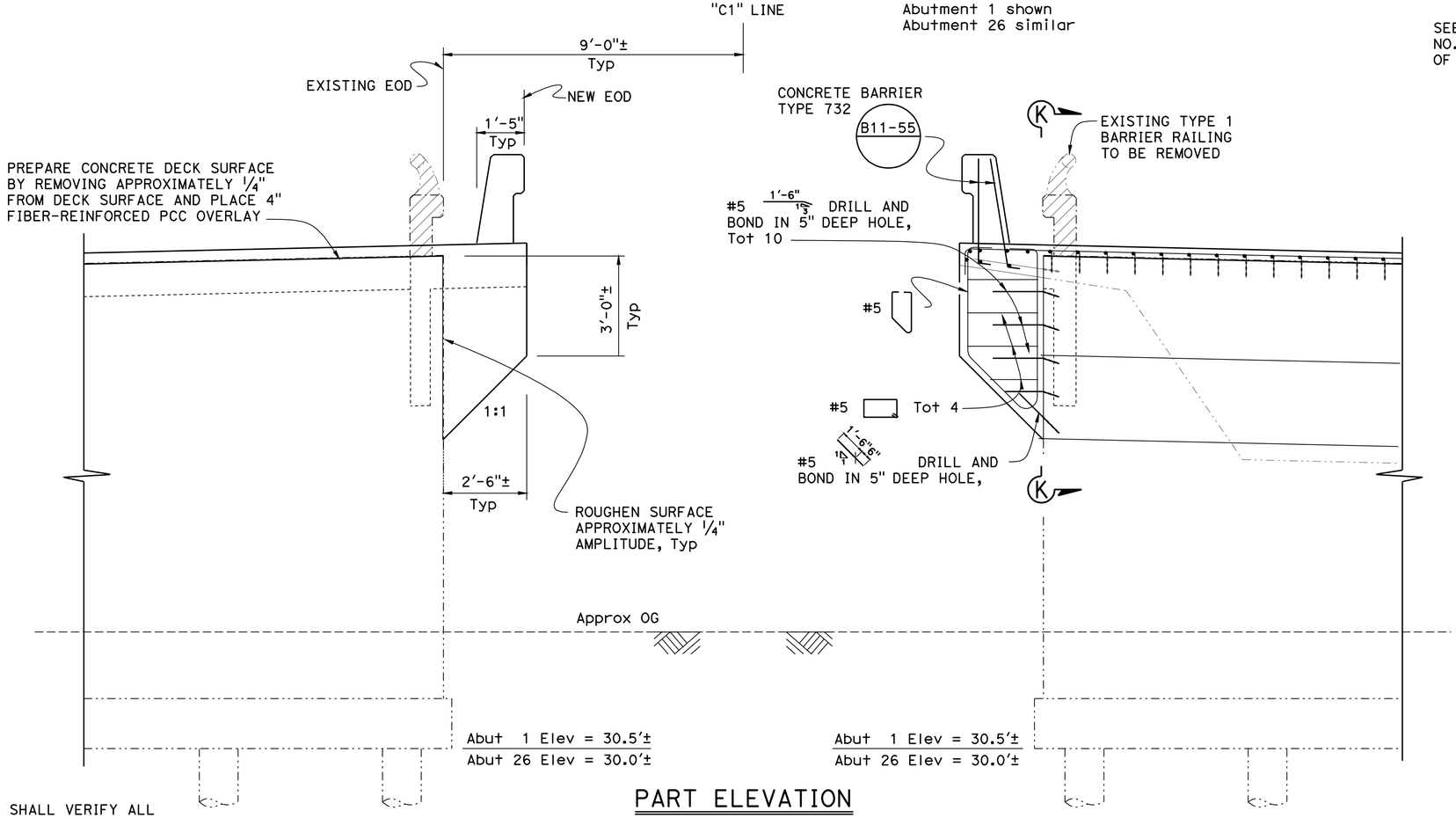

PART ELEVATION
½" = 1'-0"

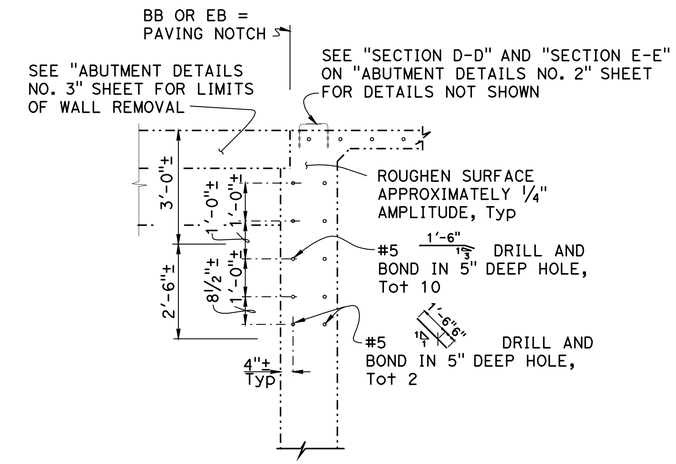

SECTION K-K
1" = 1'-0"

LEGEND:

- Indicates Existing Structure
- Indicates New Structure
- Indicates Concrete Removal

NOTE:
THE CONTRACTOR SHALL VERIFY ALL CONTROLLING FIELD DIMENSIONS BEFORE ORDERING OR FABRICATING ANY MATERIAL.

	BY	CHECKED
DESIGN	Joey Aquino	Sharon Yen
DETAILS	Janie Chlubna	Sharon Yen
QUANTITIES	Pyo Hong	Ashraf Ahmed

STATE OF CALIFORNIA
DEPARTMENT OF TRANSPORTATION

DIVISION OF ENGINEERING SERVICES
STRUCTURE DESIGN
DESIGN BRANCH 3

BRIDGE NO. 24-0248R/L
POST MILE 1.51

DECK REHABILITATION
CAMELLIA CITY VIADUCT (WIDEN)
ABUTMENT DETAILS NO. 1

STRUCTURES DESIGN DETAIL SHEET (ENGLISH) (REV. 09-01-10)

ORIGINAL SCALE IN INCHES FOR REDUCED PLANS 0 1 2 3

UNIT: 3578
PROJECT NUMBER & PHASE: 03000000731
CONTRACT NO.: 03-0F2301

DISREGARD PRINTS BEARING EARLIER REVISION DATES → 4-10-12 11-15-12 11-14-12

SHEET 20 OF 46

FILE => 24-0248-f-abut-det01.dgn

USERNAME => s121614 DATE PLOTTED => 10-APR-2013 TIME PLOTTED => 11:18

DIST	COUNTY	ROUTE	POST MILES TOTAL PROJECT	SHEET No.	TOTAL SHEETS
03	Sac	50	L1.3/L2.2	135	160

REGISTERED CIVIL ENGINEER 11-30-12 DATE

3-25-13
PLANS APPROVAL DATE

REGISTERED PROFESSIONAL ENGINEER
JOSE M AQUINO III
No. 58386
Exp. 12-31-14
CIVIL
STATE OF CALIFORNIA

The State of California or its officers or agents shall not be responsible for the accuracy or completeness of electronic copies of this plan sheet.

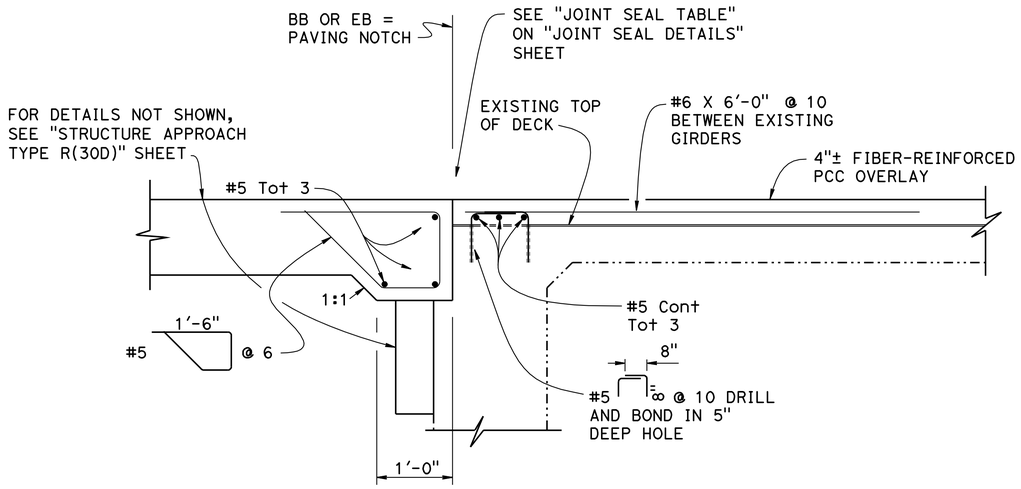

SECTION D-D

1" = 1'-0"

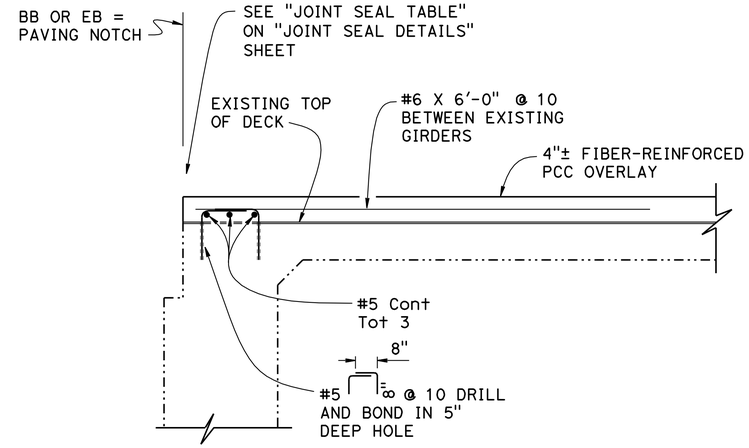

SECTION E-E

1" = 1'-0"

NOTE:

1. For location of "SECTION D-D" and "SECTION E-E", see "ABUTMENT LAYOUT" sheet

NOTE:
THE CONTRACTOR SHALL VERIFY ALL CONTROLLING FIELD DIMENSIONS BEFORE ORDERING OR FABRICATING ANY MATERIAL.

	BY	CHECKED
DESIGN	Joey Aquino	Sharon Yen
DETAILS	Janie Chlubna	Sharon Yen
QUANTITIES	Pyo Hong	Ashraf Ahmed

STATE OF CALIFORNIA
DEPARTMENT OF TRANSPORTATION

DIVISION OF ENGINEERING SERVICES
STRUCTURE DESIGN
DESIGN BRANCH 3

BRIDGE NO. 24-0248R/L
POST MILE 1.51

DECK REHABILITATION
CAMELLIA CITY VIADUCT (WIDEN)
ABUTMENT DETAILS NO. 2

STRUCTURES DESIGN DETAIL SHEET (ENGLISH) (REV. 09-01-10)

ORIGINAL SCALE IN INCHES FOR REDUCED PLANS 0 1 2 3

UNIT: 3578
PROJECT NUMBER & PHASE: 03000000731
CONTRACT NO.: 03-0F2301

DISREGARD PRINTS BEARING EARLIER REVISION DATES

REVISION DATES: 4-12-12 8-30-12 9-11-12

SHEET 21 OF 46

FILE => 24-0248-f-abut-det02.dgn

USERNAME => s124496 DATE PLOTTED => 26-MAR-2013 TIME PLOTTED => 08:36

DIST	COUNTY	ROUTE	POST MILES TOTAL PROJECT	SHEET No.	TOTAL SHEETS
03	Sac	50	L1.3/L2.2	136	160

REGISTERED CIVIL ENGINEER 11-30-12 DATE

3-25-13
PLANS APPROVAL DATE

REGISTERED PROFESSIONAL ENGINEER JOSE M AQUINO III No. 58386 Exp. 12-31-14 CIVIL STATE OF CALIFORNIA

The State of California or its officers or agents shall not be responsible for the accuracy or completeness of electronic copies of this plan sheet.

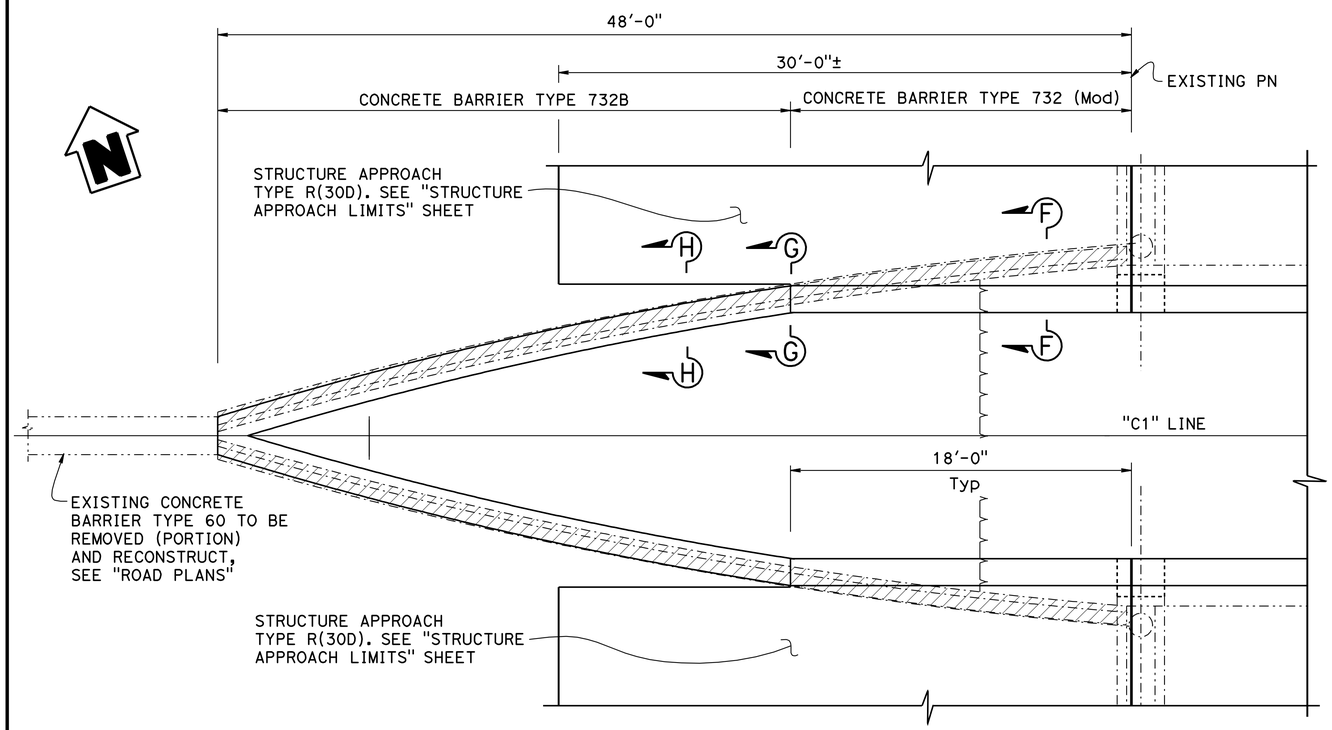

NOTE:

1. ABUTMENT 1 @ MEDIAN SHOWN, ABUTMENT 26 @ MEDIAN SIMILAR

PART PLAN

1/4" = 1'-0"

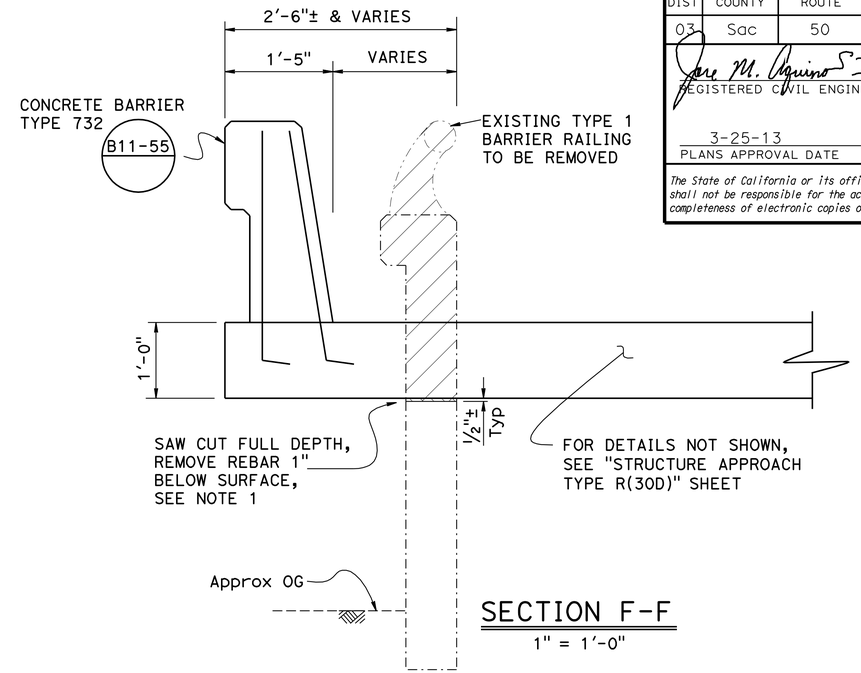

SECTION F-F

1" = 1'-0"

LEGEND:

- Indicates Existing Structure
- Indicates New Structure
- Indicates TYPE 1 Barrier Railing Concrete Removal
- Indicates 1/2"± Elastomeric Strip

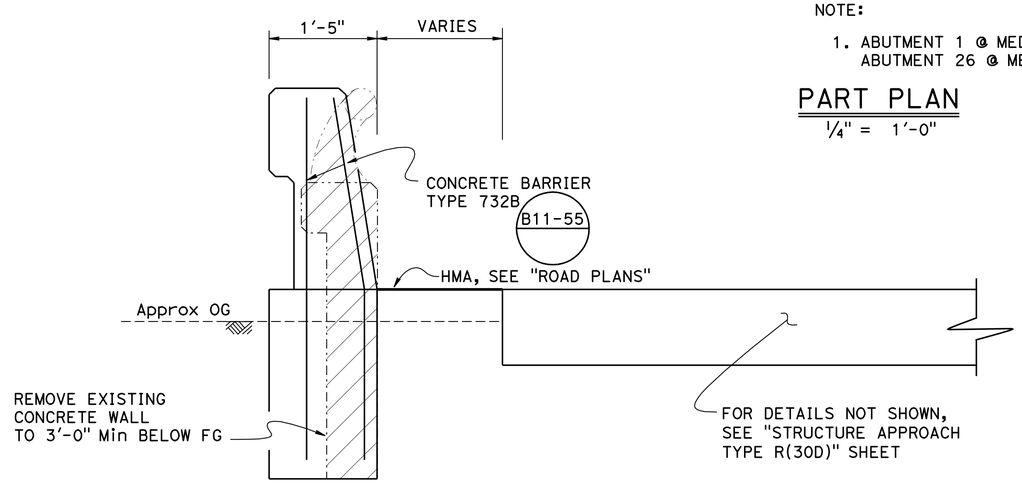

SECTION H-H

1" = 1'-0"

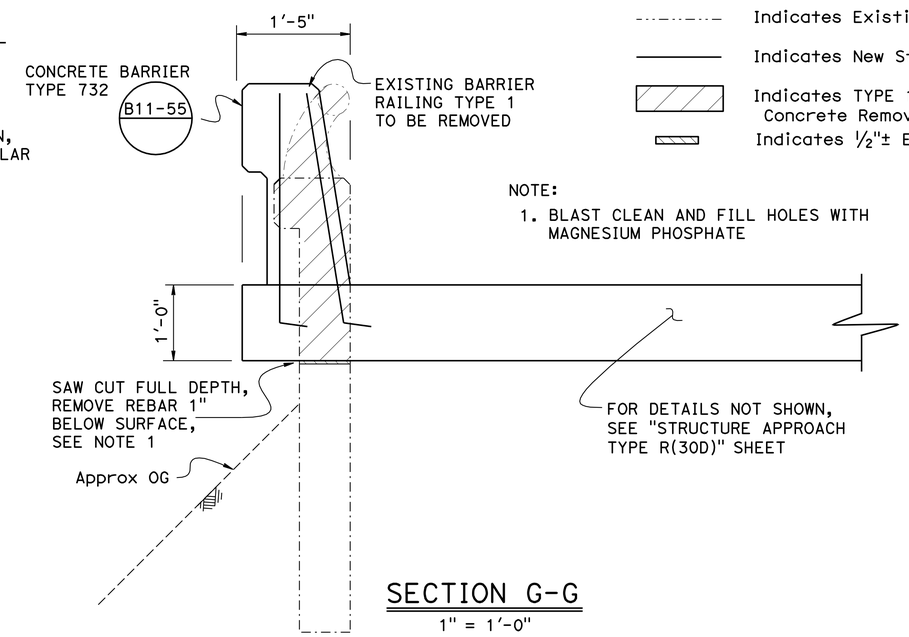

NOTE:

1. BLAST CLEAN AND FILL HOLES WITH MAGNESIUM PHOSPHATE

SECTION G-G

1" = 1'-0"

NOTE:
THE CONTRACTOR SHALL VERIFY ALL CONTROLLING FIELD DIMENSIONS BEFORE ORDERING OR FABRICATING ANY MATERIAL.

DECK REHABILITATION
CAMELLIA CITY VIADUCT (WIDEN)
ABUTMENT DETAILS NO. 3

	BY	CHECKED
DESIGN	Joey Aquino	Sharon Yen
DETAILS	Janie Chlubna	Sharon Yen
QUANTITIES	Pyo Hong	Ashraf Ahmed

STATE OF CALIFORNIA
DEPARTMENT OF TRANSPORTATION

DIVISION OF ENGINEERING SERVICES
STRUCTURE DESIGN
DESIGN BRANCH 3

BRIDGE NO. 24-0248R/L
POST MILE 1.51

STRUCTURES DESIGN DETAIL SHEET (ENGLISH) (REV. 09-01-10)

ORIGINAL SCALE IN INCHES FOR REDUCED PLANS 0 1 2 3

UNIT: 3578
PROJECT NUMBER & PHASE: 03000000731
CONTRACT NO.: 03-0F2301

DISREGARD PRINTS BEARING EARLIER REVISION DATES

REVISION DATES: 4-10-12 11-14-12 7-17-12

SHEET 22 OF 46

FILE => 24-0248-f-abut-det03.dgn

USERNAME => s124496 DATE PLOTTED => 26-MAR-2013 TIME PLOTTED => 08:36

DIST	COUNTY	ROUTE	POST MILES TOTAL PROJECT	SHEET No.	TOTAL SHEETS
03	Sac	50	L1.3/L2.2	137	160

REGISTERED CIVIL ENGINEER 11-30-12 DATE

3-25-13
PLANS APPROVAL DATE

REGISTERED PROFESSIONAL ENGINEER JOSE M AQUINO III No. 58386 Exp. 12-31-14 CIVIL STATE OF CALIFORNIA

The State of California or its officers or agents shall not be responsible for the accuracy or completeness of electronic copies of this plan sheet.

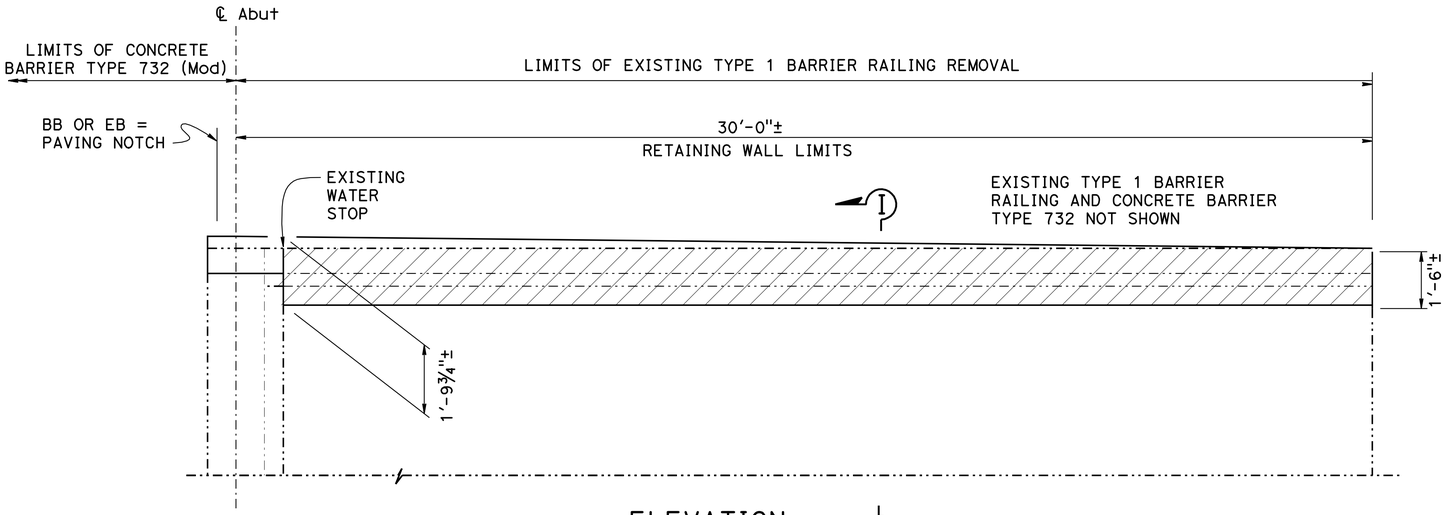

ELEVATION I

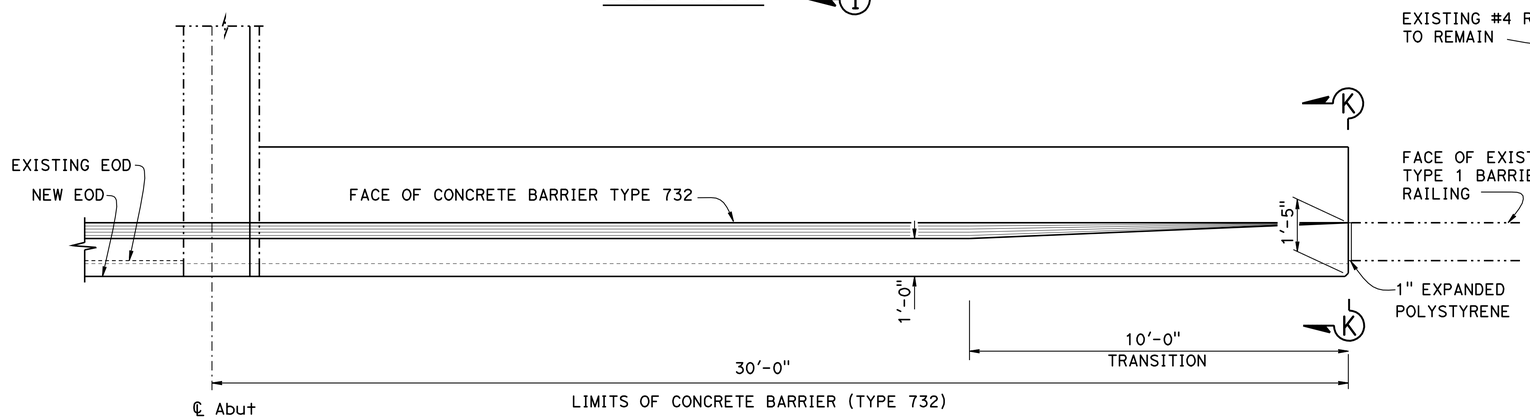

PLAN
RETAINING WALL
½" = 1'-0"

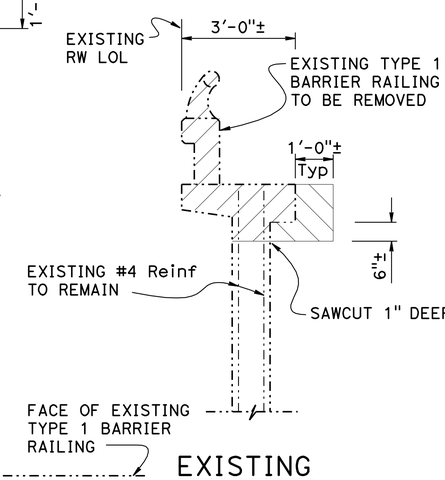

EXISTING

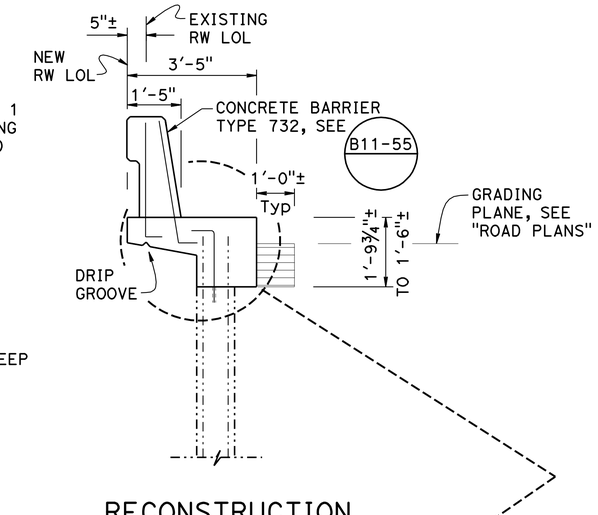

RECONSTRUCTION

SECTION I-I
½" = 1'-0"

LEGEND:

- Indicates Existing Structure
- Indicates New Structure
- Indicates Concrete Removal
- Indicates Structure Excavation
- Indicates Structure Backfill

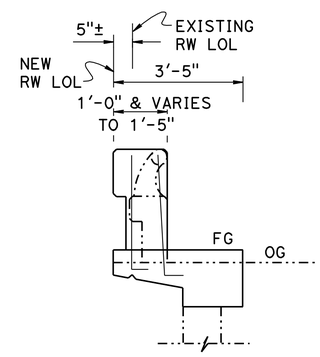

SECTION K-K
½" = 1'-0"

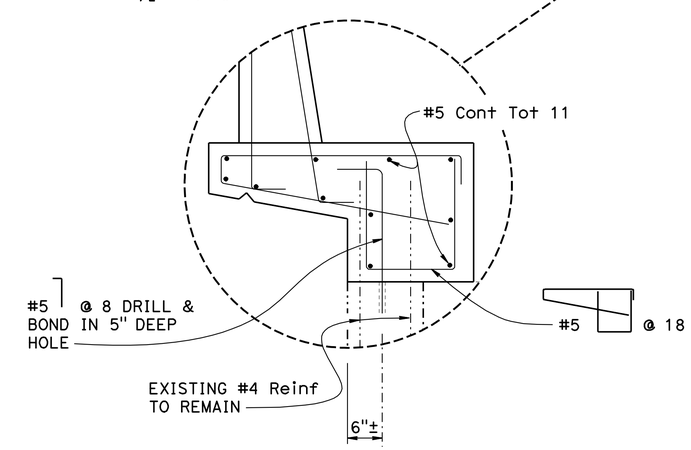

NOTE:
THE CONTRACTOR SHALL VERIFY ALL CONTROLLING FIELD DIMENSIONS BEFORE ORDERING OR FABRICATING ANY MATERIAL.

NOTE:
1. For location of "RETAINING WALL", see "STRUCTURE PLAN - FRAME 1" and "STRUCTURE PLAN - FRAME 9" sheets

	BY	CHECKED
DESIGN	Joey Aquino	Sharon Yen
DETAILS	Janie Chlubna	Sharon Yen
QUANTITIES	Pyo Hong	Ashraf Ahmed

STATE OF CALIFORNIA
DEPARTMENT OF TRANSPORTATION

DIVISION OF ENGINEERING SERVICES
STRUCTURE DESIGN
DESIGN BRANCH 3

BRIDGE NO. 24-0248R/L
POST MILE 1.51

DECK REHABILITATION
CAMELLIA CITY VIADUCT (WIDEN)
ABUTMENT DETAILS NO. 4

STRUCTURES DESIGN DETAIL SHEET (ENGLISH) (REV. 09-01-10)

ORIGINAL SCALE IN INCHES FOR REDUCED PLANS 0 1 2 3

UNIT: 3578
PROJECT NUMBER & PHASE: 03000000731
CONTRACT NO.: 03-0F2301

DISREGARD PRINTS BEARING EARLIER REVISION DATES

REVISION DATES: 4-25-11 11-15-12 11-14-12

SHEET 23 OF 46

FILE => 24-0248-f-abut-det04.dgn

USERNAME => s124496 DATE PLOTTED => 26-MAR-2013 TIME PLOTTED => 08:36

DIST	COUNTY	ROUTE	POST MILES TOTAL PROJECT	SHEET No.	TOTAL SHEETS
03	Sac	50	L1.3/L2.2	138	160

REGISTERED CIVIL ENGINEER — DATE 11-30-12

3-25-13
PLANS APPROVAL DATE

REGISTERED PROFESSIONAL ENGINEER — JOSE M AQUINO III — No. 58386 — Exp. 12-31-14 — CIVIL — STATE OF CALIFORNIA

The State of California or its officers or agents shall not be responsible for the accuracy or completeness of electronic copies of this plan sheet.

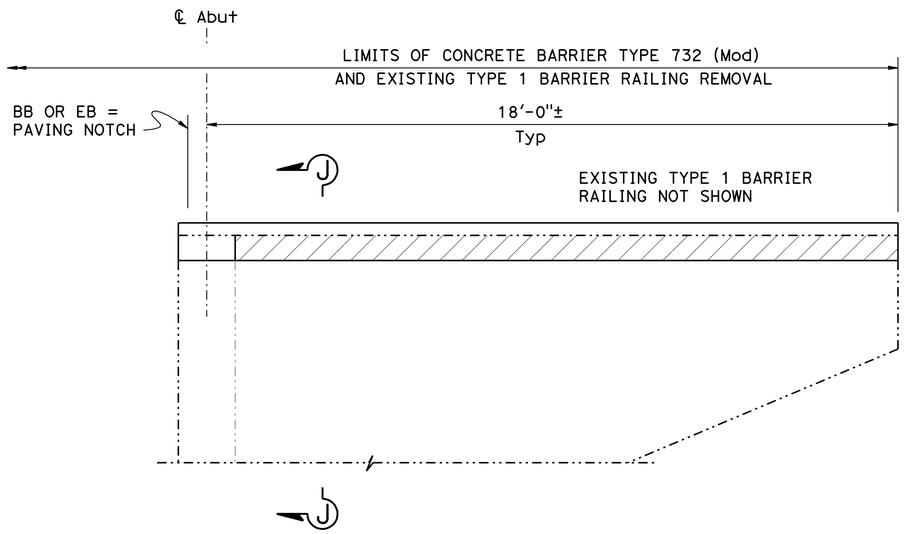

WINGWALL
½" = 1'-0"

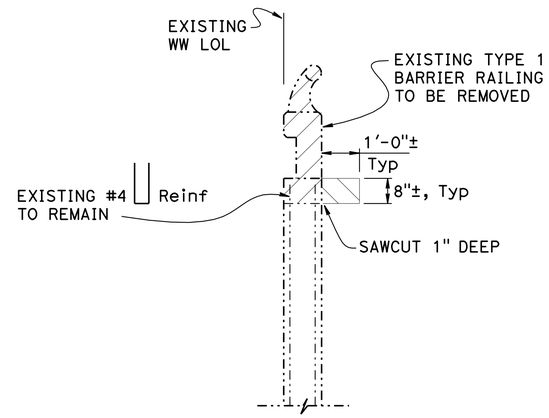

EXISTING

SECTION J-J
½" = 1'-0"

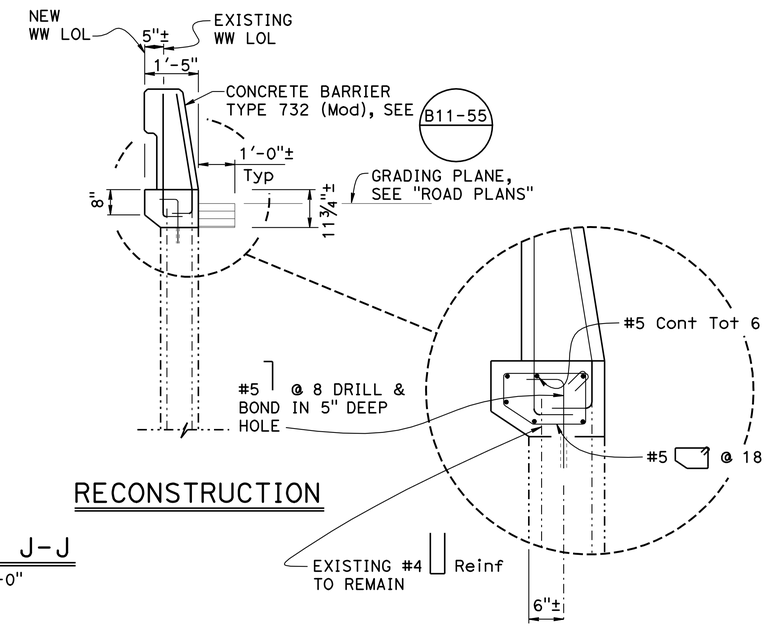

RECONSTRUCTION

LEGEND:

- Indicates Existing Structure
- Indicates New Structure
- Indicates Concrete Removal
- Indicates Structure Excavation
- Indicates Structure Backfill

NOTE:
THE CONTRACTOR SHALL VERIFY ALL CONTROLLING FIELD DIMENSIONS BEFORE ORDERING OR FABRICATING ANY MATERIAL.

NOTE:

1. For location of "WINGWALL", see "STRUCTURE PLAN - FRAME 1" sheet

	BY	CHECKED
DESIGN	Joey Aquino	Sharon Yen
DETAILS	Janie Chlubna	Sharon Yen
QUANTITIES	Pyo Hong	Ashraf Ahmed

STATE OF CALIFORNIA
DEPARTMENT OF TRANSPORTATION

DIVISION OF ENGINEERING SERVICES
STRUCTURE DESIGN
DESIGN BRANCH 3

BRIDGE NO. 24-0248R/L
POST MILE 1.51

DECK REHABILITATION
CAMELLIA CITY VIADUCT (WIDEN)
ABUTMENT DETAILS NO. 5

STRUCTURES DESIGN DETAIL SHEET (ENGLISH) (REV. 09-01-10)

ORIGINAL SCALE IN INCHES FOR REDUCED PLANS 0 1 2 3

UNIT: 3578
PROJECT NUMBER & PHASE: 03000000731
CONTRACT NO.: 03-0F2301

DISREGARD PRINTS BEARING EARLIER REVISION DATES

REVISION DATES: 4-25-11 | 11-14-12 | 9-11-12

SHEET 24 OF 46

FILE => 24-0248-f-abut-det05.dgn

USERNAME => s124496 DATE PLOTTED => 26-MAR-2013 TIME PLOTTED => 08:36

DIST	COUNTY	ROUTE	POST MILES TOTAL PROJECT	SHEET No.	TOTAL SHEETS
03	Sac	50	L1.3/L2.2	139	160

REGISTERED CIVIL ENGINEER 11-30-12 DATE

3-25-13
PLANS APPROVAL DATE

REGISTERED PROFESSIONAL ENGINEER JOSE M AQUINO III No. 58386 Exp. 12-31-14 CIVIL STATE OF CALIFORNIA

The State of California or its officers or agents shall not be responsible for the accuracy or completeness of electronic copies of this plan sheet.

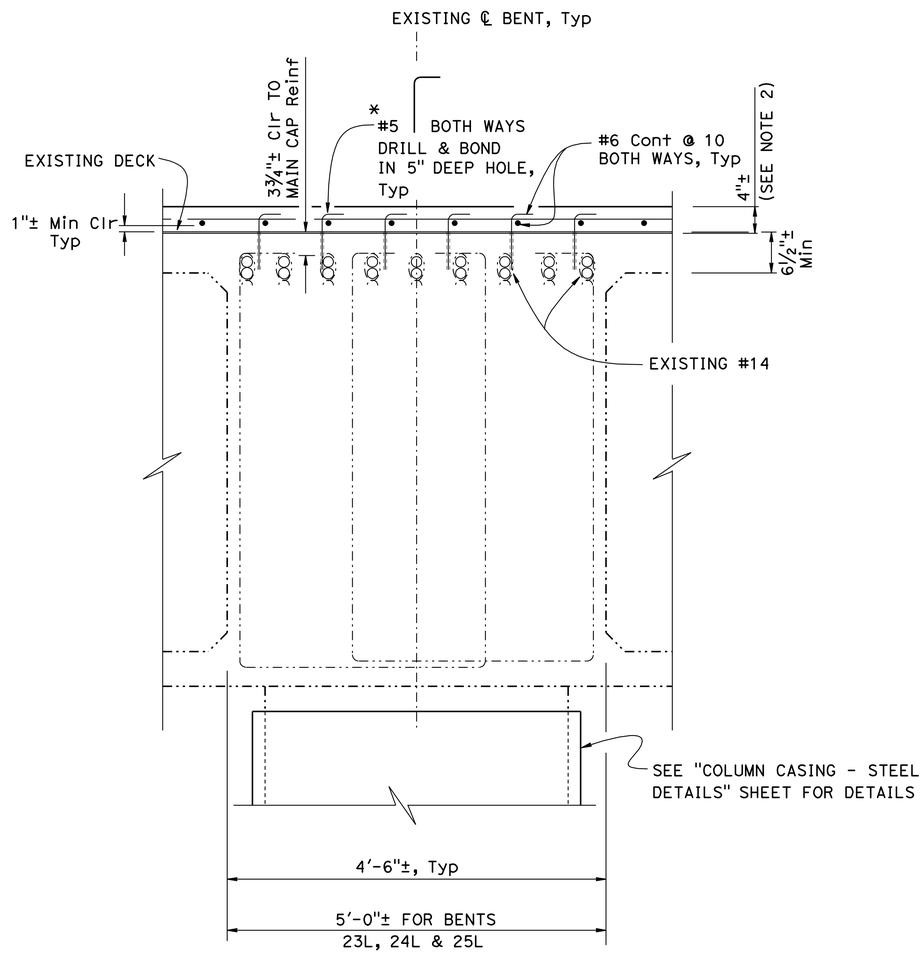

SECTION G-G

1" = 1'-0"

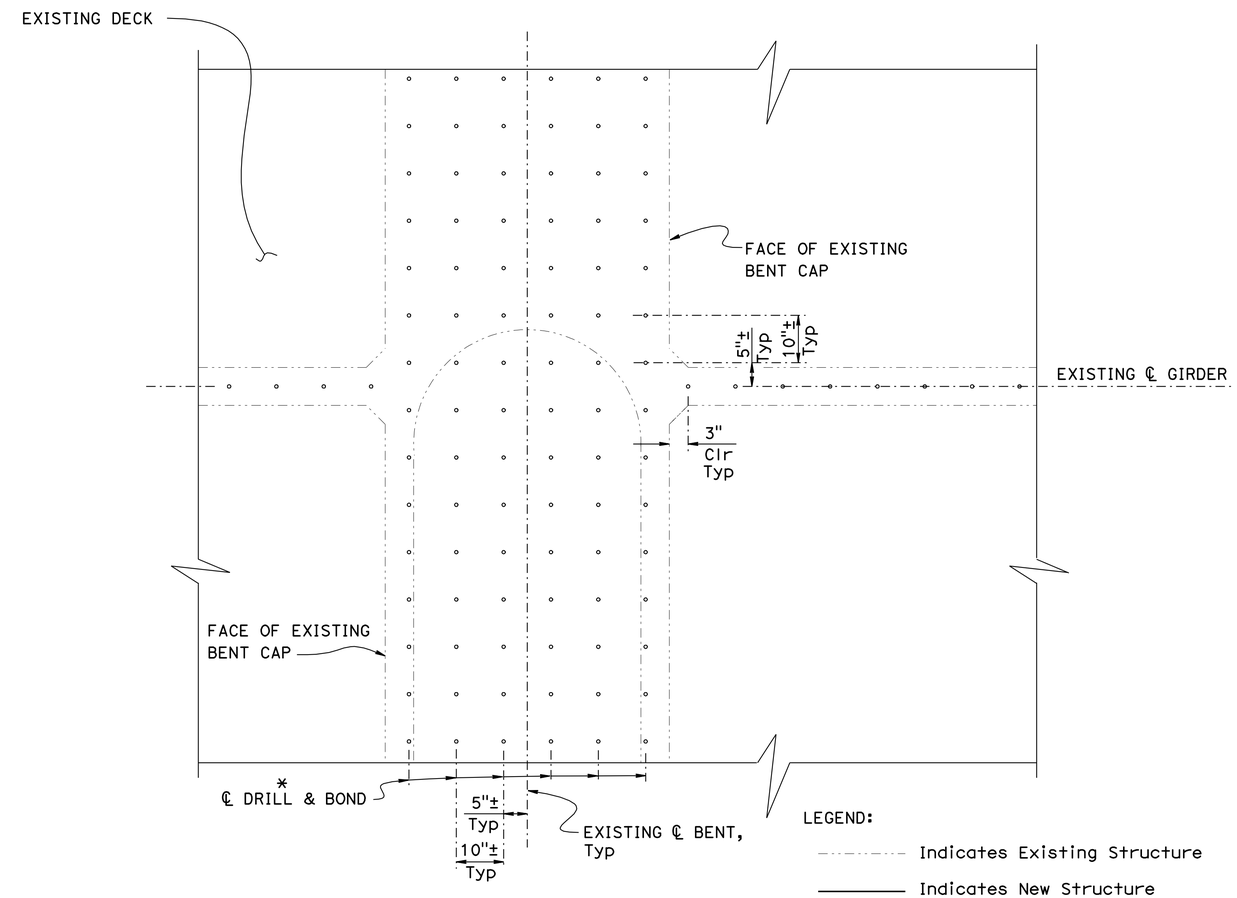

@ BENT

DRILL AND BOND LAYOUT

¾" = 1'-0"

LEGEND:

- Indicates Existing Structure
- Indicates New Structure
- * Adjust Drill & Bond location to clear existing reinforcement

NOTES:

1. For location of "SECTION G-G", see "GIRDER LAYOUT - FRAME 1" sheet, typical at all bent locations
2. Prepare concrete deck surface by removing approximately ¼" from bridge surface. Drill & Bond Dowels and place 4" fiber-reinforced PCC overlay

NOTE:
THE CONTRACTOR SHALL VERIFY ALL CONTROLLING FIELD DIMENSIONS BEFORE ORDERING OR FABRICATING ANY MATERIAL.

	BY	CHECKED
DESIGN	Joey Aquino	Sharon Yen
DETAILS	Janie Chlubna	Sharon Yen
QUANTITIES	Pyo Hong	Ashraf Ahmed

STATE OF CALIFORNIA
DEPARTMENT OF TRANSPORTATION

DIVISION OF ENGINEERING SERVICES
STRUCTURE DESIGN
DESIGN BRANCH 3

BRIDGE NO. 24-0248R/L
POST MILE 1.51

DECK REHABILITATION
CAMELLIA CITY VIADUCT (WIDEN)
BENT DETAILS NO. 1

STRUCTURES DESIGN DETAIL SHEET (ENGLISH) (REV. 09-01-10)

ORIGINAL SCALE IN INCHES FOR REDUCED PLANS 0 1 2 3

UNIT: 3578
PROJECT NUMBER & PHASE: 03000000731
CONTRACT NO.: 03-0F2301

DISREGARD PRINTS BEARING EARLIER REVISION DATES

REVISION DATES: 4-25-11 11-14-12 10-12-12

SHEET 25 OF 46

FILE => 24-0248-g-bent-det-01.dgn

USERNAME => s124436 DATE PLOTTED => 26-MAR-2013 TIME PLOTTED => 08:36

DIST	COUNTY	ROUTE	POST MILES TOTAL PROJECT	SHEET No.	TOTAL SHEETS
03	Sac	50	L1.3/L2.2	140	160

REGISTERED CIVIL ENGINEER 11-30-12 DATE

3-25-13
PLANS APPROVAL DATE

REGISTERED PROFESSIONAL ENGINEER JOSE M AQUINO III No. 58386 Exp. 12-31-14 CIVIL STATE OF CALIFORNIA

The State of California or its officers or agents shall not be responsible for the accuracy or completeness of electronic copies of this plan sheet.

LEFT BRIDGE (WESTBOUND)	
BENT LOCATION	AVERAGE EXPOSED COLUMN HEIGHT
2	22.20'±
3	23.30'±
4	24.30'±
5	24.30'±
6	26.10'±
7	26.00'±
8	24.80'±
9	26.20'±
10	26.40'±
11	25.40'±
12	24.90'±
13	23.20'±
14	21.90'±
15	23.90'±
16	24.40'±
17	23.80'±
18	23.30'±
19	23.20'±
20	23.20'±
21	22.30'±
22	22.40'±
23	22.30'±
24	22.00'±
25	21.30'±

RIGHT BRIDGE (EASTBOUND)	
BENT LOCATION	AVERAGE EXPOSED COLUMN HEIGHT
2	22.50'±
3	23.60'±
4	24.00'±
5	24.30'±
6	26.10'±
7	26.00'±
8	25.30'±
9	26.20'±
10	26.60'±
11	26.00'±
12	25.20'±
13	23.70'±
14	23.50'±
15	24.10'±
16	24.60'±
17	23.90'±
18	23.30'±
19	23.20'±
20	23.40'±
21	22.30'±
22	22.20'±
23	22.50'±
24	22.20'±
25	21.10'±

"H2" LINE	
BENT LOCATION	AVERAGE EXPOSED COLUMN HEIGHT
2	20.80'±
3	22.90'±

NOTES:

1. Existing utilities, concrete curbs, drain boxes and timber bumpers to be removed prior to column casing installation, see "ROAD PLANS"
2. For Steel Column Casing locations, see "FOUNDATION PLAN NO. 1" through "FOUNDATION PLAN NO. 5" sheets

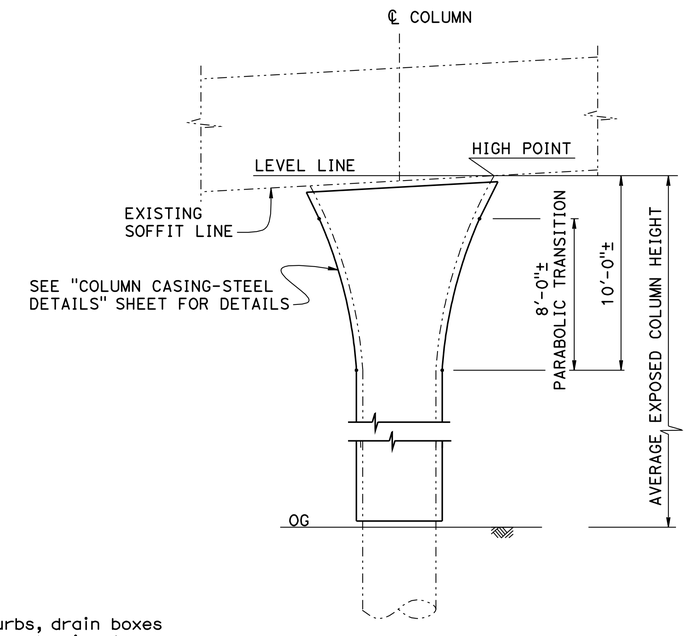

ELEVATION

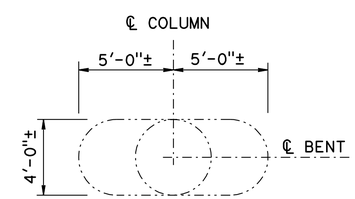

PLAN

COLUMN GEOMETRICS

1/4" = 1'-0"

NOTE:
THE CONTRACTOR SHALL VERIFY ALL CONTROLLING FIELD DIMENSIONS BEFORE ORDERING OR FABRICATING ANY MATERIAL.

	BY	CHECKED
DESIGN	Sharon Yen	Joey Aquino
DETAILS	Janie Chlubna	Joey Aquino
QUANTITIES	Pyo Hong	Ashraf Ahmed

STATE OF CALIFORNIA
DEPARTMENT OF TRANSPORTATION

DIVISION OF ENGINEERING SERVICES
STRUCTURE DESIGN
DESIGN BRANCH 3

BRIDGE NO. 24-0248R/L
POST MILE 1.51

DECK REHABILITATION
CAMELLIA CITY VIADUCT (WIDEN)
BENT DETAILS NO. 2

STRUCTURES DESIGN DETAIL SHEET (ENGLISH) (REV. 09-01-10)

ORIGINAL SCALE IN INCHES FOR REDUCED PLANS 0 1 2 3

UNIT: 3578
PROJECT NUMBER & PHASE: 03000000731
CONTRACT NO.: 03-0F2301

DISREGARD PRINTS BEARING EARLIER REVISION DATES

REVISION DATES: 5-15-12 5-21-12 7-20-12 11-14-12

SHEET 26 OF 46

FILE => 24-0248-g-bent-det-02.dgn

USERNAME => s124496 DATE PLOTTED => 26-MAR-2013 TIME PLOTTED => 08:36

DIST	COUNTY	ROUTE	POST MILES TOTAL PROJECT	SHEET No.	TOTAL SHEETS
03	Sac	50	L1.3/L2.2	141	160

REGISTERED CIVIL ENGINEER 11-30-12 DATE

3-25-13
PLANS APPROVAL DATE

REGISTERED PROFESSIONAL ENGINEER JOSE M AQUINO III No. 58386 Exp. 12-31-14 CIVIL STATE OF CALIFORNIA

The State of California or its officers or agents shall not be responsible for the accuracy or completeness of electronic copies of this plan sheet.

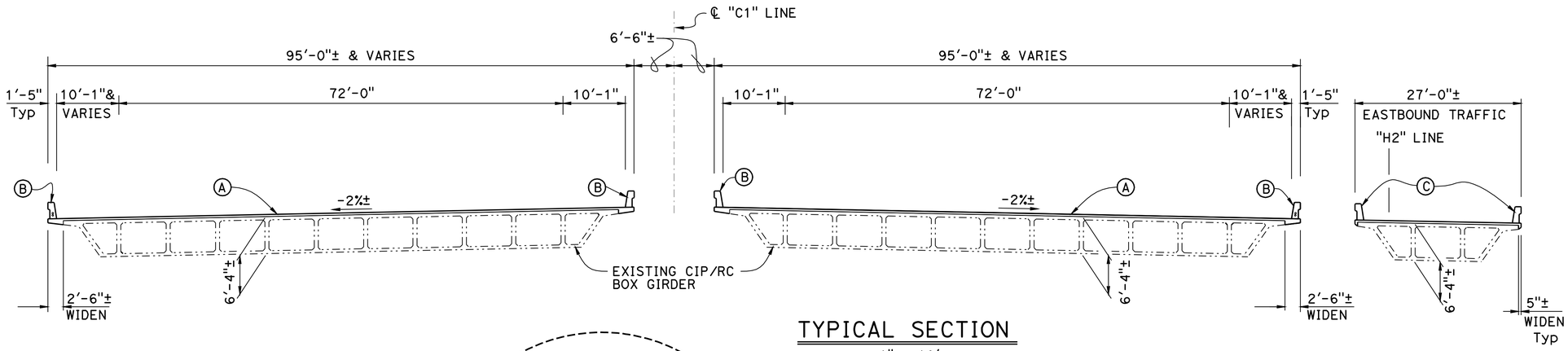

TYPICAL SECTION

1" = 10'

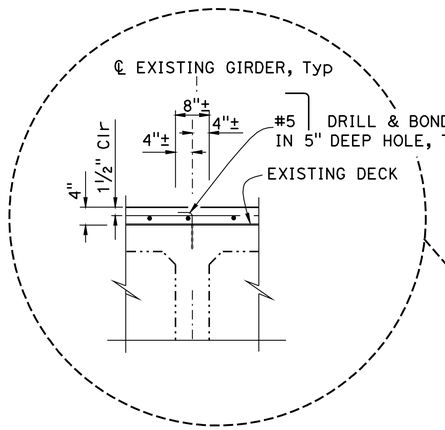

NOTES:

Ⓐ Prepare concrete deck surface by removing approximately ¼" from deck surface. Drill & Bond Dowels and place 4" fiber-reinforced PCC overlay, see "DETAIL A" (this sheet) and "CONCRETE STRENGTH AND TYPE LIMITS" on "INDEX TO PLANS" sheet.

Ⓑ Concrete Barrier Type 732

Ⓒ Concrete Barrier Type 732 (Mod)

Ⓓ 2 - 2" ø Lighting Conduits, see "ROAD PLANS" (B14-3)

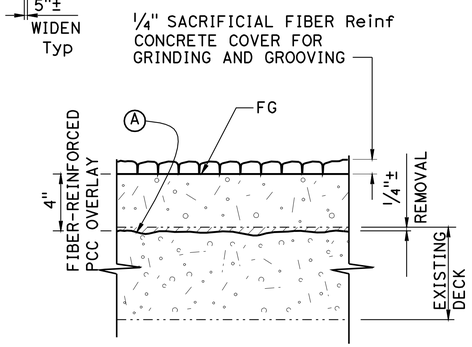

DETAIL A

NO SCALE

FOR DRILL AND BOND LAYOUT, SEE "BENT DETAILS NO. 1", "GIRDER DETAILS" AND "HINGE DETAILS" SHEETS

FOR OVERHANG DETAILS, SEE "SECTION A-A" ON "TYPICAL SECTION NO. 2" SHEET

FOR OVERHANG DETAILS, SEE "SECTION C-C" ON "TYPICAL SECTION NO. 2" SHEET

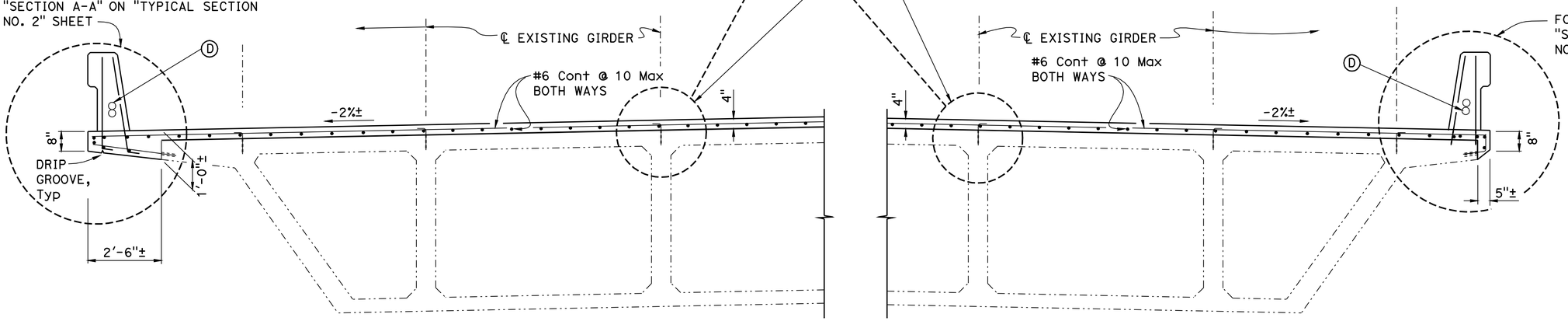

PART TYPICAL SECTION (B7-1 / B-1)

½" = 1'-0"

NOTE:
THE CONTRACTOR SHALL VERIFY ALL CONTROLLING FIELD DIMENSIONS BEFORE ORDERING OR FABRICATING ANY MATERIAL.

	BY	CHECKED
DESIGN	Joey Aquino	Sharon Yen
DETAILS	Janie Chlubna	Sharon Yen
QUANTITIES	Pyo Hong	Ashraf Ahmed

STATE OF CALIFORNIA
DEPARTMENT OF TRANSPORTATION

DIVISION OF ENGINEERING SERVICES
STRUCTURE DESIGN
DESIGN BRANCH 3

BRIDGE NO. 24-0248R/L
POST MILE 1.51

DECK REHABILITATION
CAMELLIA CITY VIADUCT (WIDEN)
TYPICAL SECTION NO. 1

STRUCTURES DESIGN DETAIL SHEET (ENGLISH) (REV. 09-01-10)

ORIGINAL SCALE IN INCHES FOR REDUCED PLANS 0 1 2 3

UNIT: 3578
PROJECT NUMBER & PHASE: 03000000731
CONTRACT NO.: 03-0F2301

DISREGARD PRINTS BEARING EARLIER REVISION DATES

REVISION DATES: 4-25-11 | 11-14-12 | 10-12-12

SHEET 27 OF 46

FILE => 24-0248-n-typical-01.dgn

USERNAME => s132614 DATE PLOTTED => 10-APR-2013 TIME PLOTTED => 11:11:8

DIST	COUNTY	ROUTE	POST MILES TOTAL PROJECT	SHEET No.	TOTAL SHEETS
03	Sac	50	L1.3/L2.2	142	160

REGISTERED CIVIL ENGINEER 11-30-12 DATE

3-25-13
PLANS APPROVAL DATE

REGISTERED PROFESSIONAL ENGINEER JOSE M AQUINO III No. 58386 Exp. 12-31-14 CIVIL STATE OF CALIFORNIA

The State of California or its officers or agents shall not be responsible for the accuracy or completeness of electronic copies of this plan sheet.

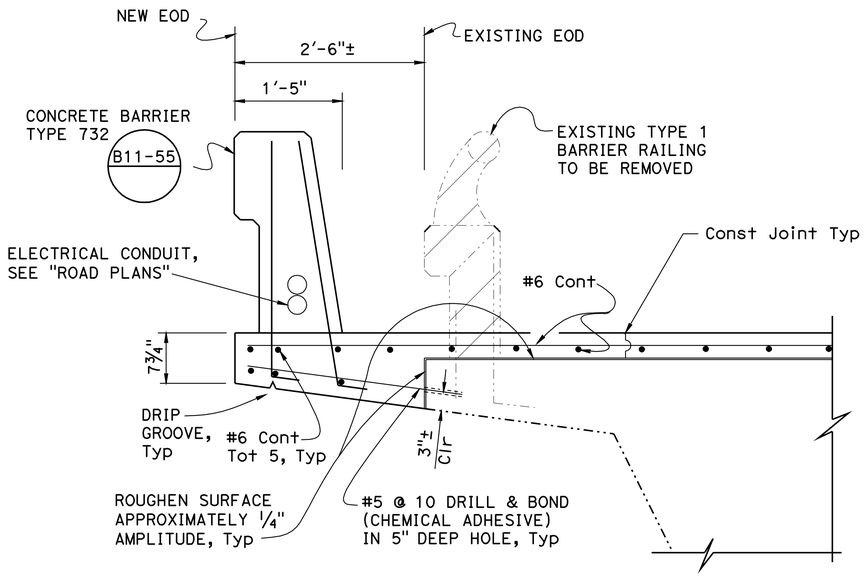

SECTION A-A

1" = 1'-0"

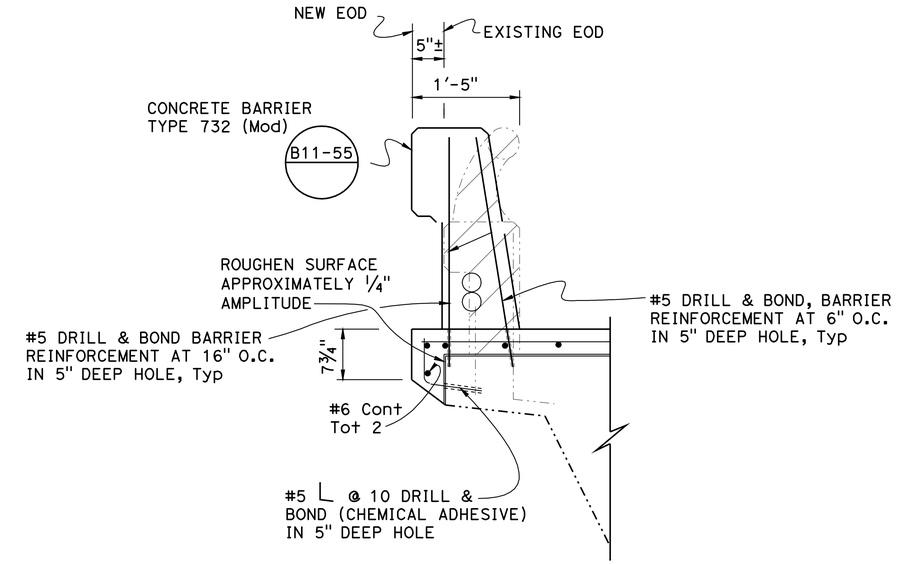

SECTION C-C

1" = 1'-0"

NOTE:

For details not shown, see "SECTION A-A"

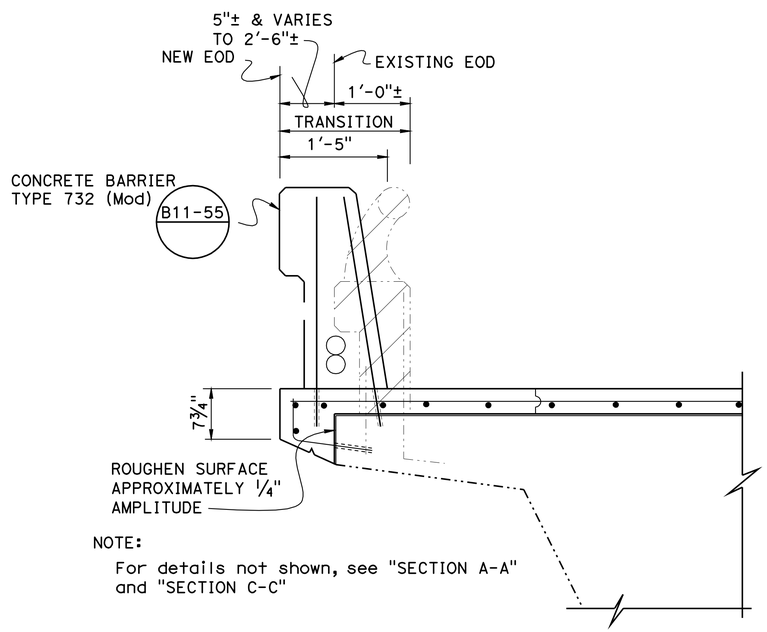

NOTE:

For details not shown, see "SECTION A-A" and "SECTION C-C"

SECTION B-B

1" = 1'-0"

LEGEND:

- - - - - - Indicates Existing Structure

——— Indicates New Structure

Indicates Existing Barrier Railing Removal, remove vertical bar 1" below surface

NOTES:

1. For locations of "SECTION A-A", "SECTION B-B" and "SECTION C-C", see "STRUCTURE PLAN - FRAME 1, 2, 8, & 9" and "ABUTMENT LAYOUT" sheets
2. For Details not shown, see "TYPICAL SECTION No. 1" sheet.

NOTE:
THE CONTRACTOR SHALL VERIFY ALL CONTROLLING FIELD DIMENSIONS BEFORE ORDERING OR FABRICATING ANY MATERIAL.

DECK REHABILITATION

CAMELLIA CITY VIADUCT (WIDEN)

TYPICAL SECTION NO. 2

	BY	CHECKED
DESIGN	Joey Aquino	Sharon Yen
DETAILS	Janie Chlubna	Sharon Yen
QUANTITIES	Pyo Hong	Ashraf Ahmed

STATE OF CALIFORNIA
DEPARTMENT OF TRANSPORTATION

DIVISION OF ENGINEERING SERVICES
STRUCTURE DESIGN
DESIGN BRANCH 3

BRIDGE NO. 24-0248R/L
POST MILE 1.51

STRUCTURES DESIGN DETAIL SHEET (ENGLISH) (REV. 09-01-10)

ORIGINAL SCALE IN INCHES FOR REDUCED PLANS 0 1 2 3

UNIT: 3578
PROJECT NUMBER & PHASE: 03000000731
CONTRACT NO.: 03-0F2301

DISREGARD PRINTS BEARING EARLIER REVISION DATES

REVISION DATES 4-25-11 11-15-12 11-14-12

SHEET 28 OF 46

FILE => 24-0248-h-typical-02.dgn

USERNAME => s127614 DATE PLOTTED => 10-APR-2013 TIME PLOTTED => 11:18

DIST	COUNTY	ROUTE	POST MILES TOTAL PROJECT	SHEET No.	TOTAL SHEETS
03	Sac	50	L1.3/L2.2	143	160

REGISTERED CIVIL ENGINEER 11-30-12 DATE

3-25-13
PLANS APPROVAL DATE

REGISTERED PROFESSIONAL ENGINEER
JOSE M AQUINO III
No. 58386
Exp. 12-31-14
CIVIL
STATE OF CALIFORNIA

The State of California or its officers or agents shall not be responsible for the accuracy or completeness of electronic copies of this plan sheet.

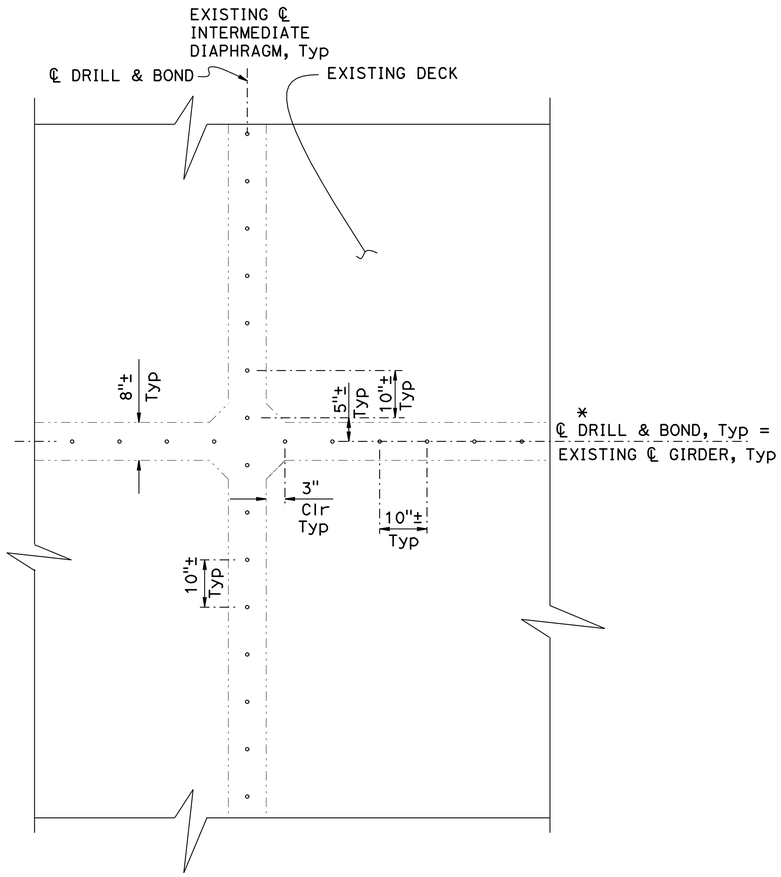

INTERIOR GIRDER/
INTERMEDIATE DIAPHRAGM

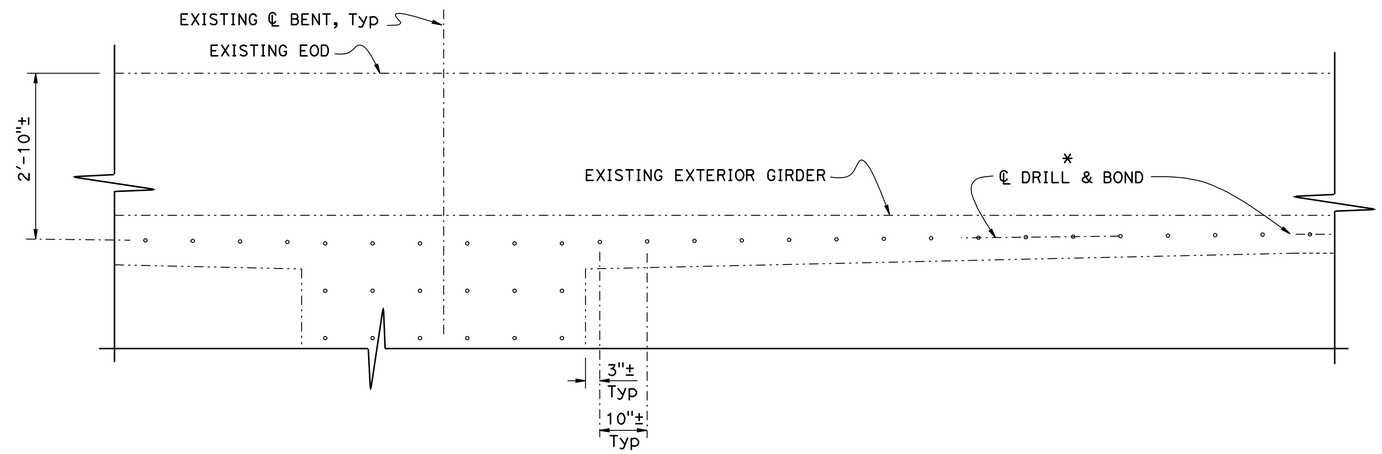

@ EXTERIOR GIRDER

LEGEND:

—·—·— Indicates Existing Structure

* Adjust Drill & Bond location to clear existing reinforcement

DRILL AND BOND LAYOUT

¾" = 1'-0"

NOTE:
THE CONTRACTOR SHALL VERIFY ALL CONTROLLING FIELD DIMENSIONS BEFORE ORDERING OR FABRICATING ANY MATERIAL.

	BY	CHECKED
DESIGN	Joey Aquino	Sharon Yen
DETAILS	Janie Chlubna	Sharon Yen
QUANTITIES	Pyo Hong	Ashraf Ahmed

STATE OF CALIFORNIA
DEPARTMENT OF TRANSPORTATION

DIVISION OF ENGINEERING SERVICES
STRUCTURE DESIGN
DESIGN BRANCH 3

BRIDGE NO. 24-0248R/L
POST MILE 1.51

DECK REHABILITATION
CAMELLIA CITY VIADUCT (WIDEN)
GIRDER DETAILS

STRUCTURES DESIGN DETAIL SHEET (ENGLISH) (REV. 09-01-10)

ORIGINAL SCALE IN INCHES FOR REDUCED PLANS 0 1 2 3

UNIT: 3578
PROJECT NUMBER & PHASE: 03000000731
CONTRACT NO.: 03-0F2301

DISREGARD PRINTS BEARING EARLIER REVISION DATES

REVISION DATES: 6-20-11 9-12-12 8-30-12

SHEET 29 OF 46

FILE => 24-0248-1-gl.dgn

USERNAME => s124496 DATE PLOTTED => 26-MAR-2013 TIME PLOTTED => 08:37

DIST	COUNTY	ROUTE	POST MILES TOTAL PROJECT	SHEET No.	TOTAL SHEETS
03	Sac	50	L1.3/L2.2	144	160

REGISTERED CIVIL ENGINEER 11-30-12 DATE

3-25-13
PLANS APPROVAL DATE

REGISTERED PROFESSIONAL ENGINEER JOSE M AQUINO III No. 58386 Exp. 12-31-14 CIVIL STATE OF CALIFORNIA

The State of California or its officers or agents shall not be responsible for the accuracy or completeness of electronic copies of this plan sheet.

HINGE CRACK REPAIR TABLE

BRIDGE	EPOXY INJECTION (LF)	REPAIR SPALLED SURFACE AREA (SQFT)
LEFT (EASTBOUND)	20	20
RIGHT (EASTBOUND)	30	60

NOTE: Locations of hinge crack repair to be directed by the Engineer.

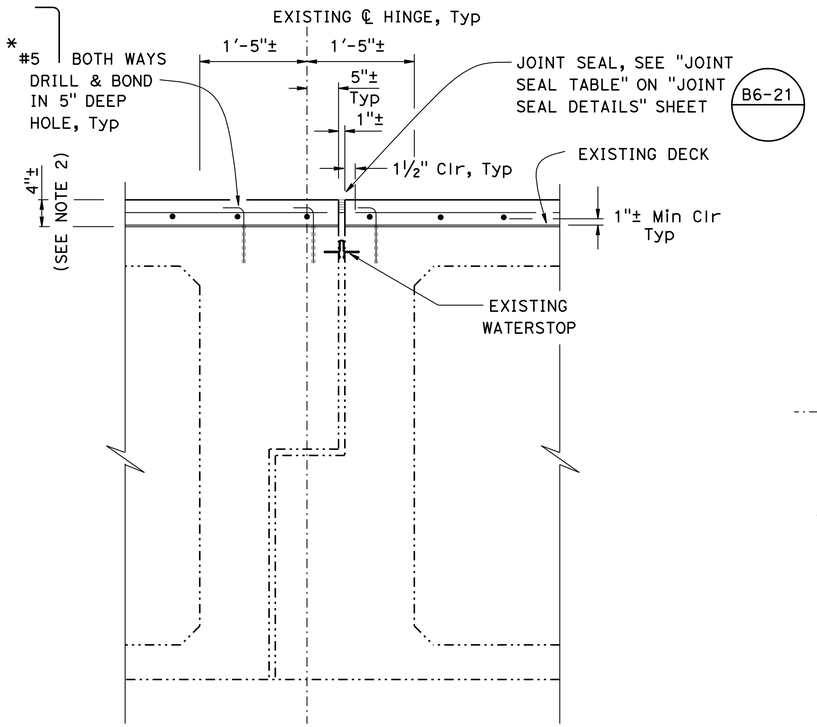

SECTION H-H

1" = 1'-0"

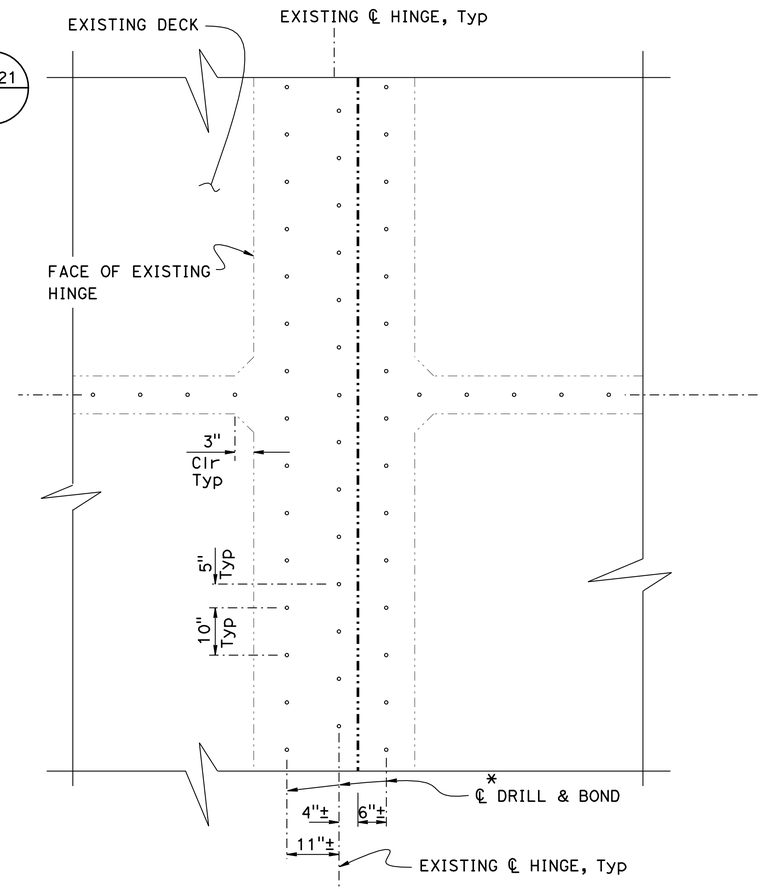

@ HINGE

DRILL & BOND LAYOUT

¾" = 1'-0"

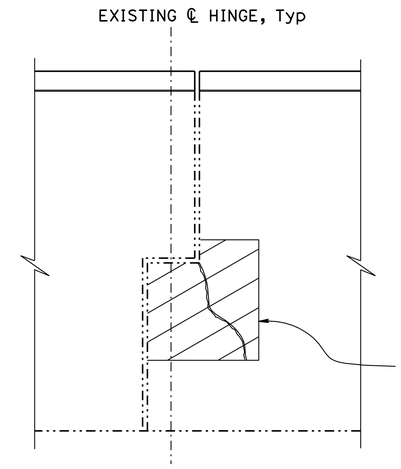

HINGE CRACK REPAIR

NO SCALE

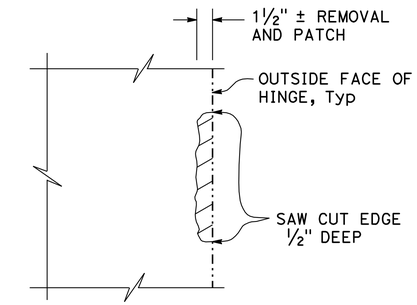

SPALL REPAIR DETAIL

NO SCALE

LEGEND:

- Indicates Existing Structure
- Indicates New Structure
- * Adjust Drill & Bond location to clear existing reinforcement
- Limit of repair spalled ares on hinges (Approx only) Existing reinforcements to remain
- Indicates existing cracks to be seal by epoxy injection

NOTES:

1. For location of "SECTION H-H", see "STRUCTURE PLAN - FRAME 1" sheet, typical at Hinge all locations
2. Prepare concrete deck surface by removing approximately ¼" deck surface. Drill & Bond Dowels and place 4" fiber-reinforced PCC overlay

NOTE:
THE CONTRACTOR SHALL VERIFY ALL CONTROLLING FIELD DIMENSIONS BEFORE ORDERING OR FABRICATING ANY MATERIAL.

	BY	CHECKED
DESIGN	Joey Aquino	Sharon Yen
DETAILS	Janie Chlubna	Sharon Yen
QUANTITIES	Pyo Hong	Ashraf Ahmed

STATE OF CALIFORNIA
DEPARTMENT OF TRANSPORTATION

DIVISION OF ENGINEERING SERVICES
STRUCTURE DESIGN
DESIGN BRANCH 3

BRIDGE NO. 24-0248R/L
POST MILE 1.51

DECK REHABILITATION
CAMELLIA CITY VIADUCT (WIDEN)
HINGE DETAILS

STRUCTURES DESIGN DETAIL SHEET (ENGLISH) (REV. 09-01-10)

ORIGINAL SCALE IN INCHES FOR REDUCED PLANS 0 1 2 3

UNIT: 3578
PROJECT NUMBER & PHASE: 03000000731
CONTRACT NO.: 03-0F2301

DISREGARD PRINTS BEARING EARLIER REVISION DATES

REVISION DATES: 6-17-11 11-14-12 10-12-12

SHEET 30 OF 46

FILE => 24-0248-j-hinge.dgn

USERNAME => s124496 DATE PLOTTED => 26-MAR-2013 TIME PLOTTED => 08:37

DIST	COUNTY	ROUTE	POST MILES TOTAL PROJECT	SHEET No.	TOTAL SHEETS
03	Sac	50	L1.3/L2.2	145	160

REGISTERED CIVIL ENGINEER 11-30-12 DATE

3-25-13
PLANS APPROVAL DATE

REGISTERED PROFESSIONAL ENGINEER JOSE M AQUINO III No. 58386 Exp. 12-31-14 CIVIL STATE OF CALIFORNIA

The State of California or its officers or agents shall not be responsible for the accuracy or completeness of electronic copies of this plan sheet.

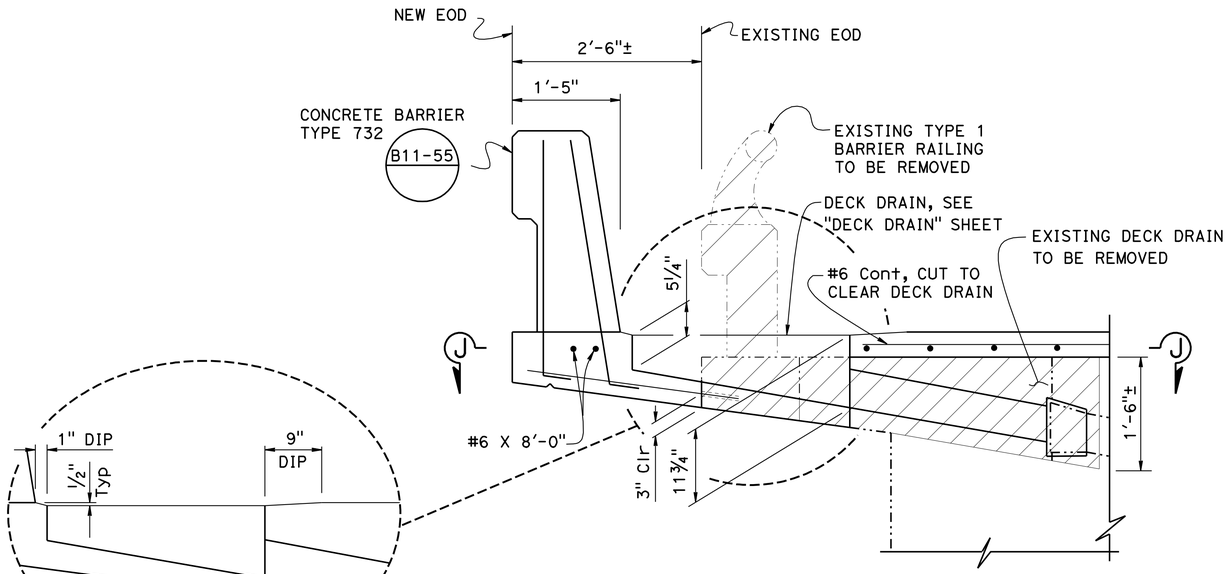

TYPICAL DECK DRAIN DETAIL

1" = 1'-0"

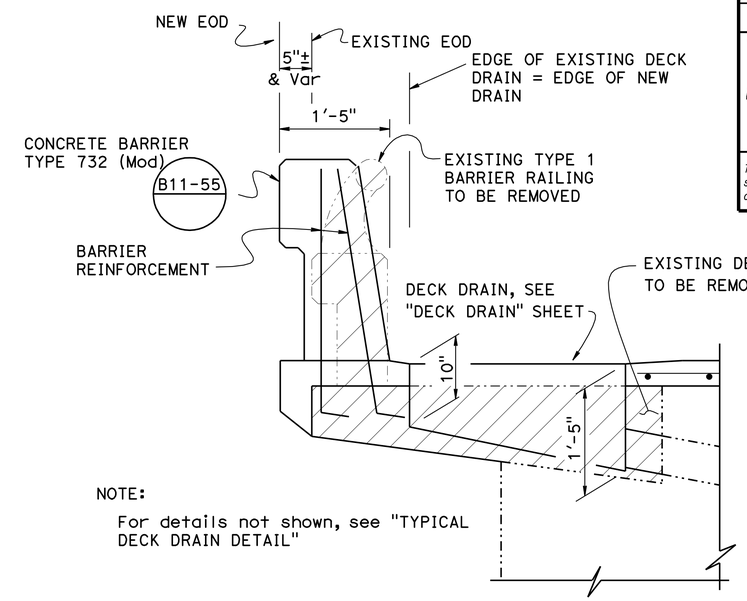

NOTE:
For details not shown, see "TYPICAL DECK DRAIN DETAIL"

DECK DRAIN DETAIL FOR OTHERS

1" = 1'-0"

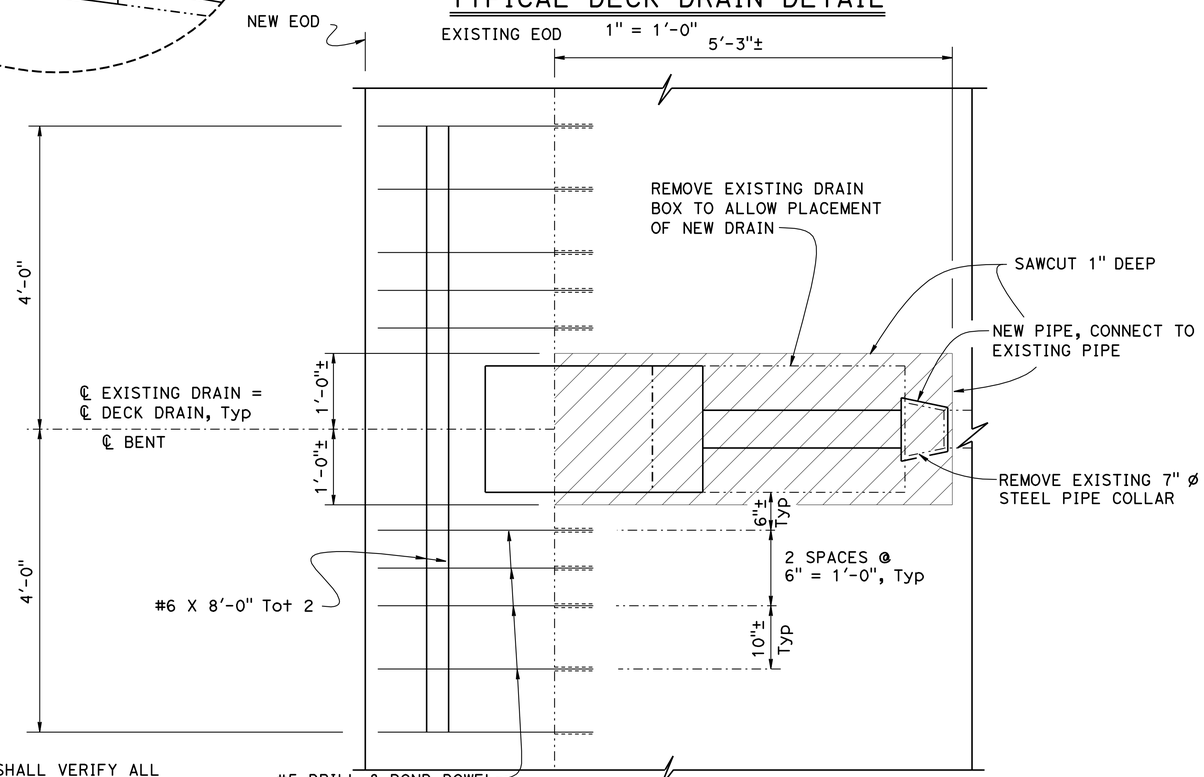

SECTION J-J

1" = 1'-0"

NOTE:
THE CONTRACTOR SHALL VERIFY ALL CONTROLLING FIELD DIMENSIONS BEFORE ORDERING OR FABRICATING ANY MATERIAL.

LEGEND:

- Indicates Existing Structure
- Indicates New Structure
- Indicates Limits of Concrete Removal to allow installation of new drain. Existing reinforcement to remain

NOTES:

1. All reinforcement not shown
2. Existing reinforcement to remain
3. For details not shown, see "TYPICAL SECTION NO. 2" sheet
4. For deck drain details not shown see "DECK DRAIN NO. 2" sheet

	BY	CHECKED
DESIGN	Joey Aquino	Sharon Yen
DETAILS	Janie Chlubna	Sharon Yen
QUANTITIES	Pyo Hong	Ashraf Ahmed

STATE OF CALIFORNIA
DEPARTMENT OF TRANSPORTATION

DIVISION OF ENGINEERING SERVICES
STRUCTURE DESIGN
DESIGN BRANCH 3

BRIDGE NO. 24-0248R/L
POST MILE 1.51

DECK REHABILITATION
CAMELLIA CITY VIADUCT (WIDEN)
DECK DRAIN DETAILS NO. 1

STRUCTURES DESIGN DETAIL SHEET (ENGLISH) (REV. 09-01-10)

ORIGINAL SCALE IN INCHES FOR REDUCED PLANS 0 1 2 3

UNIT: 3578
PROJECT NUMBER & PHASE: 03000000731
CONTRACT NO.: 03-0F2301

DISREGARD PRINTS BEARING EARLIER REVISION DATES

REVISION DATES: 6-20-11 10-12-12 11-14-12

SHEET 31 OF 46

FILE => 24-0248-l-drain-det-01.dgn

USERNAME => s124496 DATE PLOTTED => 26-MAR-2013 TIME PLOTTED => 08:37

DIST	COUNTY	ROUTE	POST MILES TOTAL PROJECT	SHEET No.	TOTAL SHEETS
03	Sac	50	L1.3/L2.2	146	160

REGISTERED CIVIL ENGINEER 11-30-12 DATE

3-25-13
PLANS APPROVAL DATE

REGISTERED PROFESSIONAL ENGINEER JOSE M AQUINO III No. 58386 Exp. 12-31-14 CIVIL STATE OF CALIFORNIA

The State of California or its officers or agents shall not be responsible for the accuracy or completeness of electronic copies of this plan sheet.

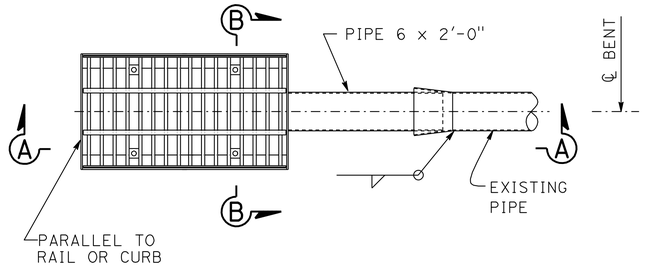

PLAN-DECK DRAIN ASSEMBLY

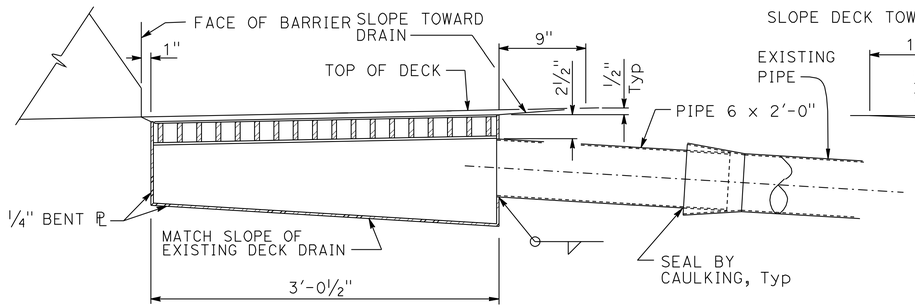

SECTION A-A

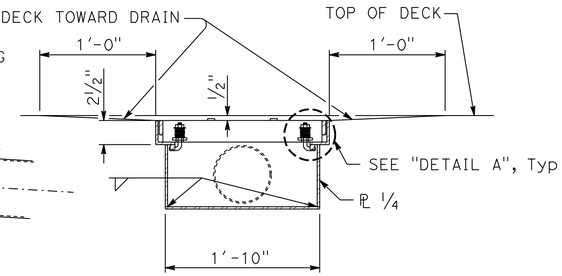

SECTION B-B

DECK DRAIN ASSEMBLY DETAIL

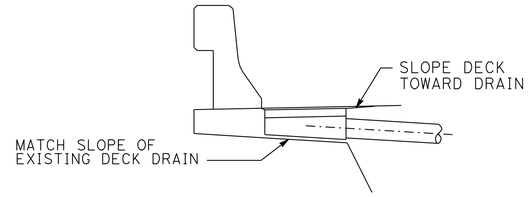

DRAIN W/SLOPED OVERHANG

ELEVATION-DECK DRAIN LOCATIONS

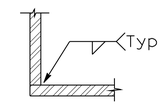

SECTION E-E

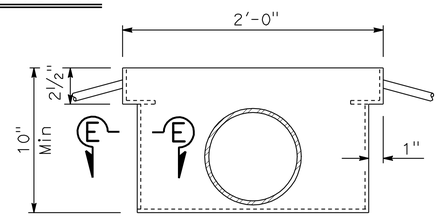

VIEW D-D

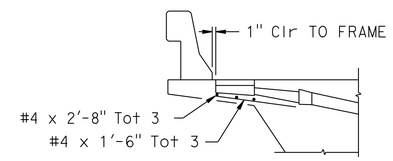

IN OVERHANG

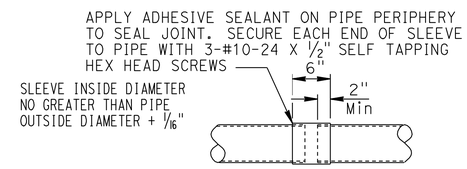

SLEEVE CONNECTION

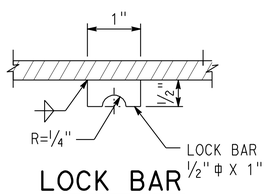

LOCK BAR

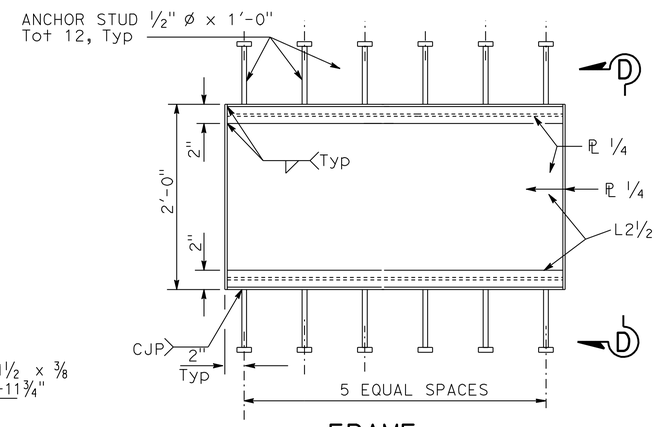

FRAME

NOTE:

1. All pipe to be NPS 6 x 0.135" welded steel pipe except as noted and galvanized if not encased in concrete. Fittings and bends shall have a minimum wall thickness of ⅛". All joints or connections to be butt welded or connected by a steel pipe sleeve and to be smooth throughout inside of pipe except as noted. All bends to be on 1'-6" minimum radius measured along ℄ pipe. All bends to be supported by suitable galvanized hangers @ 10'-0" maximum spacing throughout. Galvanize deck drain assembly after fabrication
2. For deck drain dimensions not shown, see "DECK DRAINAGE DETAILS" sheet

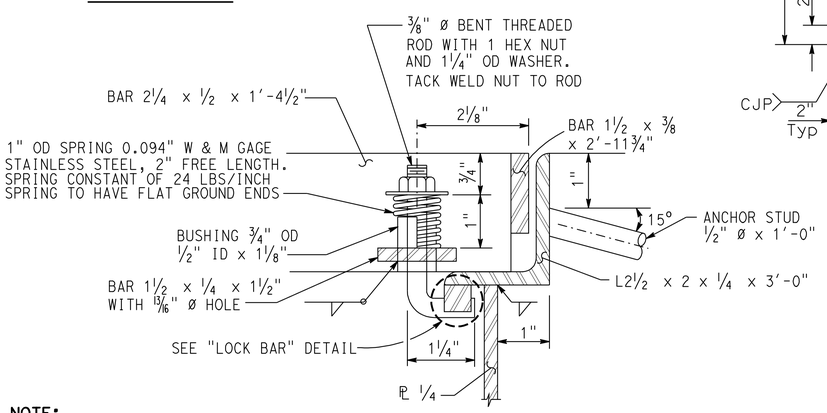

DETAIL A

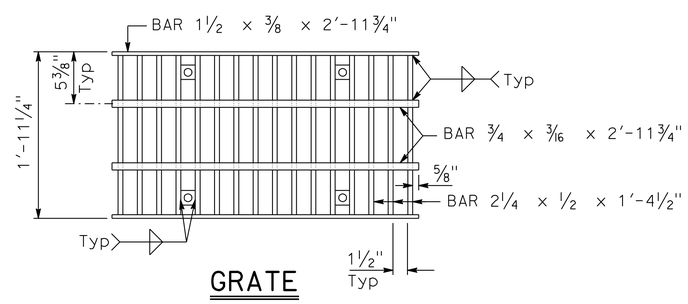

GRATE

NOTE:
THE CONTRACTOR SHALL VERIFY ALL CONTROLLING FIELD DIMENSIONS BEFORE ORDERING OR FABRICATING ANY MATERIAL.

NO SCALE

DESIGN	BY Joey Aquino	CHECKED Sharon Yen	
DETAILS	BY Janie Chlubna	CHECKED Sharon Yen	
QUANTITIES	BY Pyo Hong	CHECKED Ashraf Ahmed	

STATE OF CALIFORNIA
DEPARTMENT OF TRANSPORTATION

DIVISION OF ENGINEERING SERVICES
STRUCTURE DESIGN
DESIGN BRANCH 3

BRIDGE NO. 24-0248R/L
POST MILE 1.51

DECK REHABILITATION
CAMELLIA CITY VIADUCT (WIDEN)
DECK DRAIN DETAILS NO. 2

STRUCTURES DESIGN DETAIL SHEET (ENGLISH) (REV. 09-01-10)

ORIGINAL SCALE IN INCHES FOR REDUCED PLANS 0 1 2 3

UNIT: 3578
PROJECT NUMBER & PHASE: 03000000731
CONTRACT NO.: 03-0F2301

DISREGARD PRINTS BEARING EARLIER REVISION DATES

REVISION DATES 5-3-12 9-4-12 8-30-12

SHEET 32 OF 46

FILE => 24-0248-1-drain-det-02.dgn

USERNAME => s124496 DATE PLOTTED => 26-MAR-2013 TIME PLOTTED => 08:37

DIST	COUNTY	ROUTE	POST MILES TOTAL PROJECT	SHEET No.	TOTAL SHEETS
03	Sac	50	L1.3/L2.2	147	160

REGISTERED CIVIL ENGINEER 11-30-12 DATE

3-25-13
PLANS APPROVAL DATE

REGISTERED PROFESSIONAL ENGINEER JOSE M AQUINO III No. 58386 Exp. 12-31-14 CIVIL STATE OF CALIFORNIA

The State of California or its officers or agents shall not be responsible for the accuracy or completeness of electronic copies of this plan sheet.

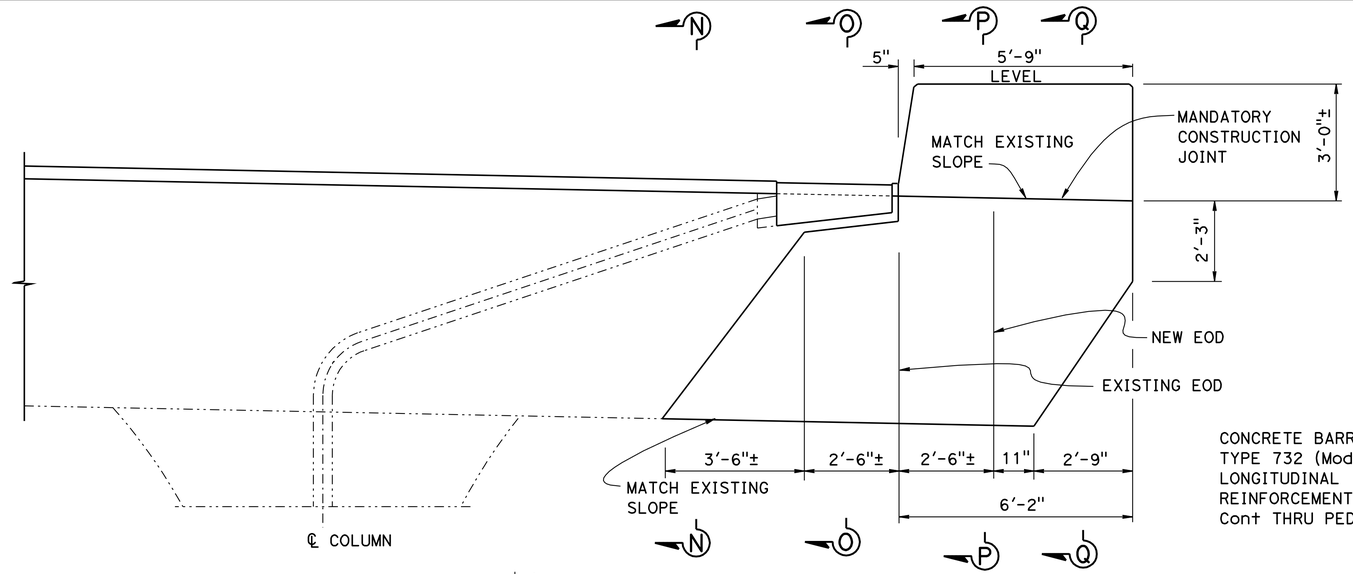

PART ELEVATION

½" = 1'-0"

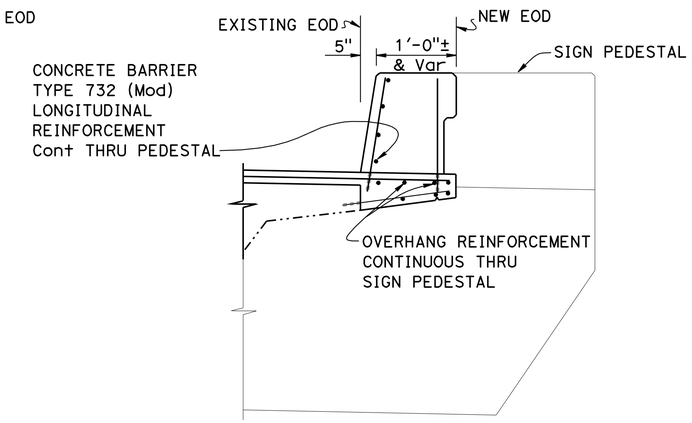

SECTION L-L

½" = 1'-0"

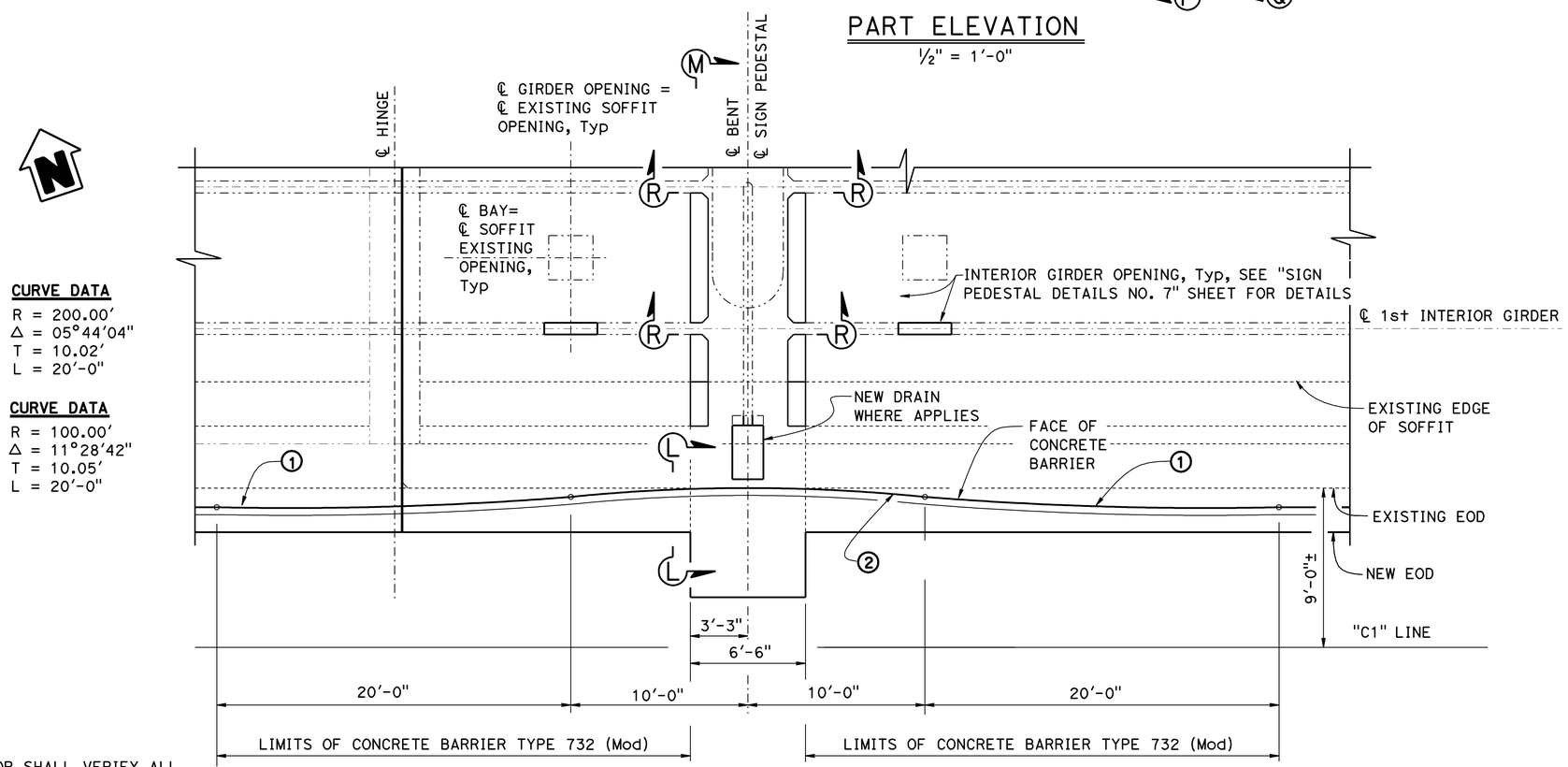

PART PLAN

¼" = 1'-0"

① **CURVE DATA**
R = 200.00'
Δ = 05°44'04"
T = 10.02'
L = 20'-0"

② **CURVE DATA**
R = 100.00'
Δ = 11°28'42"
T = 10.05'
L = 20'-0"

LEGEND:

-·-·-·-·-	Indicates Existing Structure
———	Indicates New Structure
*	Not required at locations with existing soffit openings

NOTES:

1. Bent Cap Layout typical to all sign pedestal locations, unless otherwise noted
2. For "SECTION M-M", see "SIGN PEDESTAL DETAILS NO. 3 sheet
3. For "SECTION R-R", see "SIGN PEDESTAL DETAILS NO. 4" sheet
4. For "SECTION N-N", "SECTION O-O" , "SECTION P-P" and "SECTION Q-Q", see "SIGN PEDESTAL DETAILS NO. 5" sheet
5. For Concrete Barrier Type 732 (Mod) details not shown, see "TYPICAL SECTION NO. 2" sheet

NOTE:
THE CONTRACTOR SHALL VERIFY ALL CONTROLLING FIELD DIMENSIONS BEFORE ORDERING OR FABRICATING ANY MATERIAL.

	BY	CHECKED
DESIGN	Sharon Yen	Joey Aquino
DETAILS	Janie Chlubna	Joey Aquino
QUANTITIES	Pyo Hong	Ashraf Ahmed

STATE OF CALIFORNIA
DEPARTMENT OF TRANSPORTATION

DIVISION OF ENGINEERING SERVICES
STRUCTURE DESIGN
DESIGN BRANCH 3

BRIDGE NO. 24-0248R/L
POST MILE 1.51

DECK REHABILITATION
CAMELLIA CITY VIADUCT (WIDEN)
SIGN PEDESTAL DETAILS NO. 1

STRUCTURES DESIGN DETAIL SHEET (ENGLISH) (REV. 09-01-10)

ORIGINAL SCALE IN INCHES FOR REDUCED PLANS 0 1 2 3

UNIT: 3578
PROJECT NUMBER & PHASE: 03000000731
CONTRACT NO.: 03-0F2301

DISREGARD PRINTS BEARING EARLIER REVISION DATES

REVISION DATES: 4-20-12 7-19-12 7-18-12

SHEET 33 OF 46

FILE => 24-0248-n-sign-det-01.dgn

USERNAME => s124496 DATE PLOTTED => 26-MAR-2013 TIME PLOTTED => 08:37

DIST	COUNTY	ROUTE	POST MILES TOTAL PROJECT	SHEET No.	TOTAL SHEETS
03	Sac	50	L1.3/L2.2	148	160

REGISTERED CIVIL ENGINEER 11-30-12 DATE

3-25-13
PLANS APPROVAL DATE

REGISTERED PROFESSIONAL ENGINEER
JOSE M AQUINO III
No. 58386
Exp. 12-31-14
CIVIL
STATE OF CALIFORNIA

The State of California or its officers or agents shall not be responsible for the accuracy or completeness of electronic copies of this plan sheet.

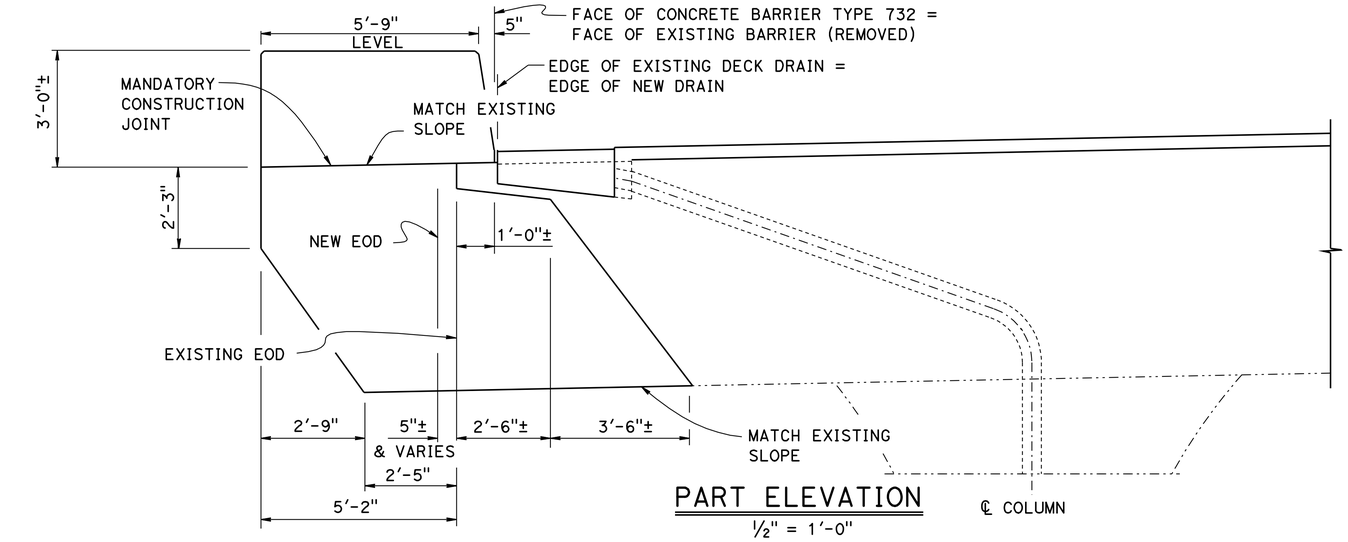

PART ELEVATION

½" = 1'-0"

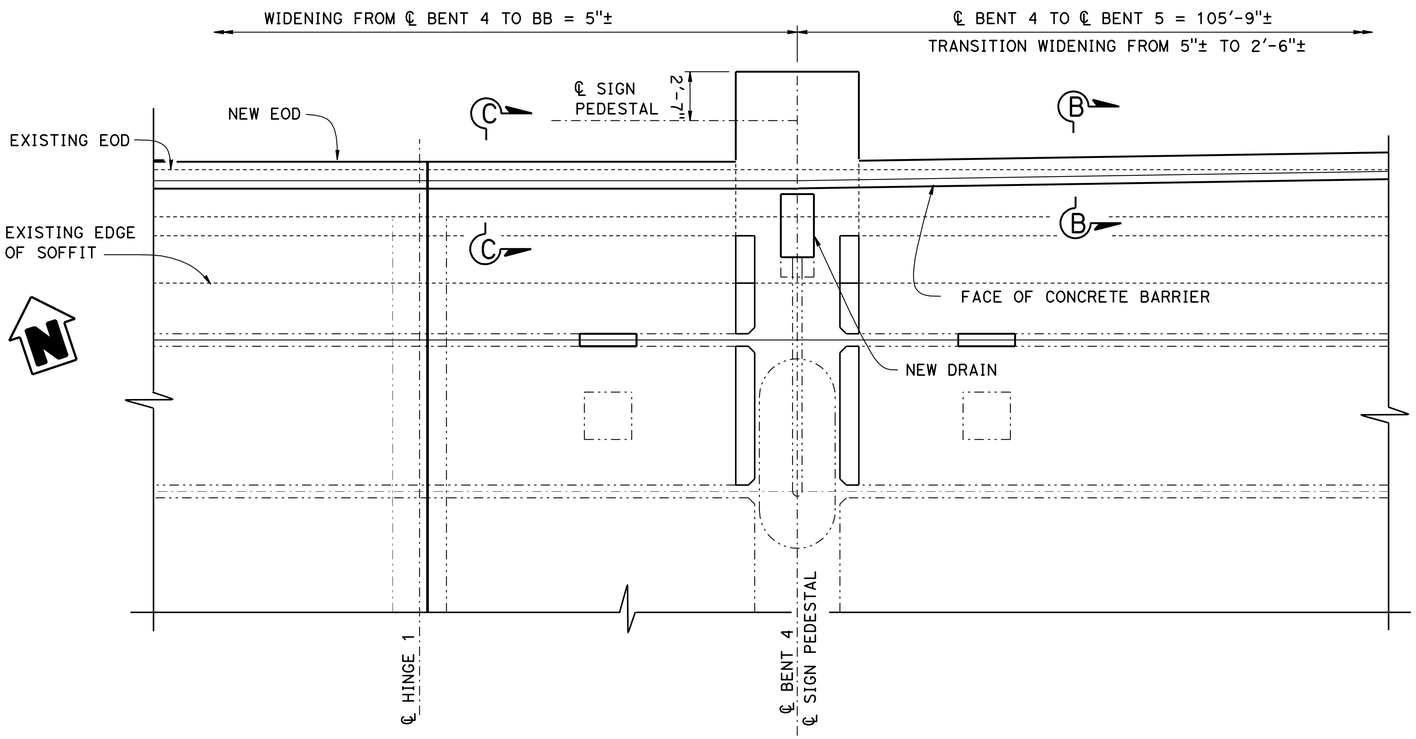

NOTE:
THE CONTRACTOR SHALL VERIFY ALL CONTROLLING FIELD DIMENSIONS BEFORE ORDERING OR FABRICATING ANY MATERIAL.

BENT 4 LEFT SIDE ONLY
PART PLAN

¼" = 1'-0"

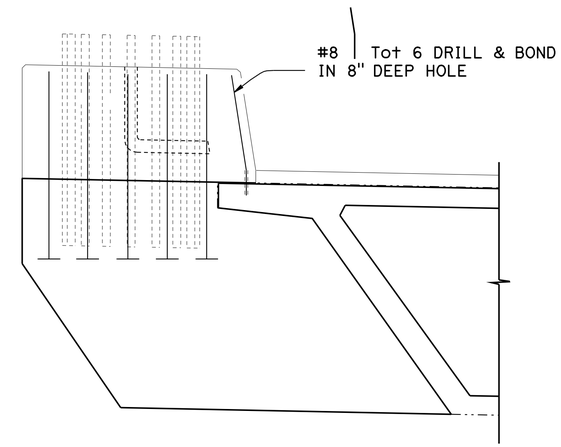

PART ELEVATION

½" = 1'-0"

LEGEND:

-·-·-·- Indicates Existing Structure

——— Indicates New Structure

NOTES:

1. For details not shown, see "SIGN PEDESTAL DETAILS NO. 1, NO. 3, NO. 4, NO. 5, NO. 6 and NO. 7" Sheets
2. For "SECTION B-B" and "SECTION C-C", see "TYPICAL SECTION NO. 2" sheet

	BY	CHECKED
DESIGN	Sharon Yen	Joey Aquino
DETAILS	Janie Chlubna	Joey Aquino
QUANTITIES	Pyo Hong	Ashraf Ahmed

STATE OF CALIFORNIA
DEPARTMENT OF TRANSPORTATION

DIVISION OF ENGINEERING SERVICES
STRUCTURE DESIGN
DESIGN BRANCH 3

BRIDGE NO. 24-0248R/L
POST MILE 1.51

DECK REHABILITATION
CAMELLIA CITY VIADUCT (WIDEN)
SIGN PEDESTAL DETAILS NO. 2

STRUCTURES DESIGN DETAIL SHEET (ENGLISH) (REV. 09-01-10)

ORIGINAL SCALE IN INCHES FOR REDUCED PLANS 0 1 2 3

UNIT: 3578
PROJECT NUMBER & PHASE: 03000000731
CONTRACT NO.: 03-0F2301

DISREGARD PRINTS BEARING EARLIER REVISION DATES

REVISION DATES: 4-23-12 9-4-12 8-30-12

SHEET 34 OF 46

FILE => 24-0248-n-sign-det-02.dgn

USERNAME => s124496 DATE PLOTTED => 26-MAR-2013 TIME PLOTTED => 08:37

DIST	COUNTY	ROUTE	POST MILES TOTAL PROJECT	SHEET No.	TOTAL SHEETS
03	Sac	50	L1.3/L2.2	149	160

REGISTERED CIVIL ENGINEER 11-30-12 DATE

3-25-13
PLANS APPROVAL DATE

REGISTERED PROFESSIONAL ENGINEER
JOSE M AQUINO III
No. 58386
Exp. 12-31-14
CIVIL
STATE OF CALIFORNIA

The State of California or its officers or agents shall not be responsible for the accuracy or completeness of electronic copies of this plan sheet.

NOTES:

(A) Roughen surface approximately 1/4" amplitude, Typ

1. Adjust rebar to clear existing reinforcement
2. Existing rod restrainers not shown Contractor to provide PVC sleeve for restrainer isolation
3. See "SIGN PEDESTAL DETAILS NO. 4, NO. 5 and NO. 6" sheets for details not shown
4. For location of "SECTION M-M", see "SIGN PEDESTAL DETAILS NO. 1" sheet

LEGEND:

Indicates Existing Structure

Indicates New Structure

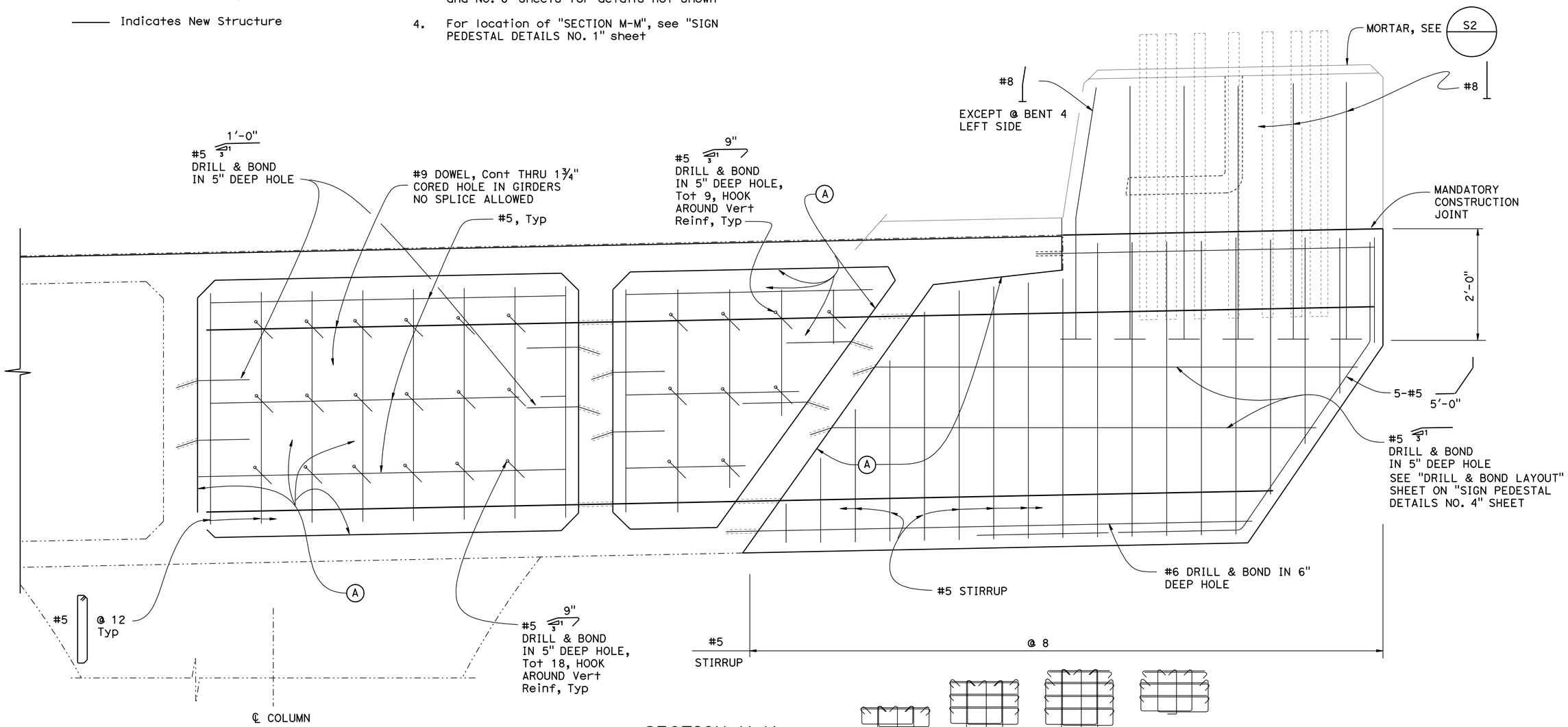

SECTION M-M

1" = 1'-0"

NOTE:
THE CONTRACTOR SHALL VERIFY ALL CONTROLLING FIELD DIMENSIONS BEFORE ORDERING OR FABRICATING ANY MATERIAL.

	BY	CHECKED
DESIGN	Sharon Yen	Joey Aquino
DETAILS	Janie Chlubna	Joey Aquino
QUANTITIES	Pyo Hong	Ashraf Ahmed

STATE OF CALIFORNIA
DEPARTMENT OF TRANSPORTATION

DIVISION OF ENGINEERING SERVICES
STRUCTURE DESIGN
DESIGN BRANCH 3

BRIDGE NO. 24-0248R/L
POST MILE 1.51

DECK REHABILITATION
CAMELLIA CITY VIADUCT (WIDEN)
SIGN PEDESTAL DETAILS NO. 3

STRUCTURES DESIGN DETAIL SHEET (ENGLISH) (REV. 09-01-10)

ORIGINAL SCALE IN INCHES FOR REDUCED PLANS 0 1 2 3

UNIT: 3578
PROJECT NUMBER & PHASE: 03000000731
CONTRACT NO.: 03-0F2301

DISREGARD PRINTS BEARING EARLIER REVISION DATES

REVISION DATES: 4-16-12 | 9-12-12 | 11-14-12

SHEET 35 OF 46

FILE => 24-0248-n-sign-det-03.dgn

USERNAME => s124496 DATE PLOTTED => 26-MAR-2013 TIME PLOTTED => 08:37

DIST	COUNTY	ROUTE	POST MILES TOTAL PROJECT	SHEET No.	TOTAL SHEETS
03	Sac	50	L1.3/L2.2	150	160

REGISTERED CIVIL ENGINEER 11-30-12 DATE

3-25-13
PLANS APPROVAL DATE

REGISTERED PROFESSIONAL ENGINEER JOSE M AQUINO III No. 58386 Exp. 12-31-14 CIVIL STATE OF CALIFORNIA

The State of California or its officers or agents shall not be responsible for the accuracy or completeness of electronic copies of this plan sheet.

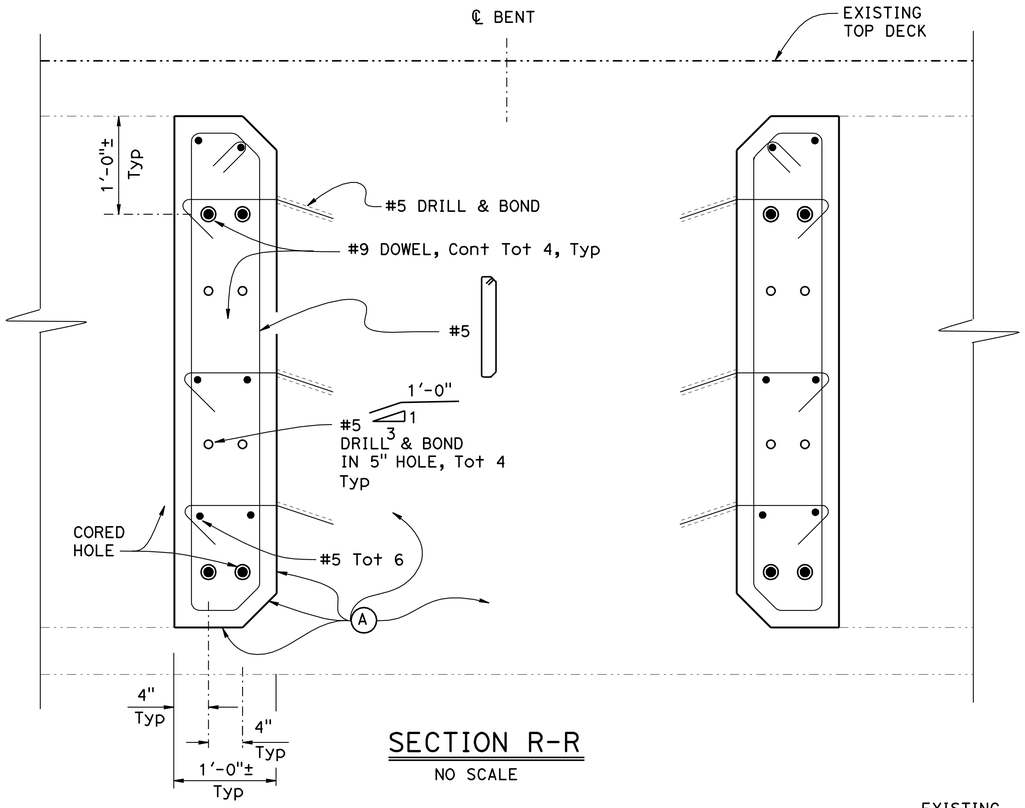

SECTION R-R

NO SCALE

LEGEND:

Indicates Existing Structure

Indicates New Structure

NOTES:

(A) Roughen surface approximately 1/4" amplitude, Typ

1. Adjust rebar to clear existing reinforcement
2. Existing Rod Restrainers not shown Contractor to provide PVC sleeve for restrainer isolation
3. For location of "SECTION R-R", see "SIGN PEDESTAL DETAILS NO. 1" sheet

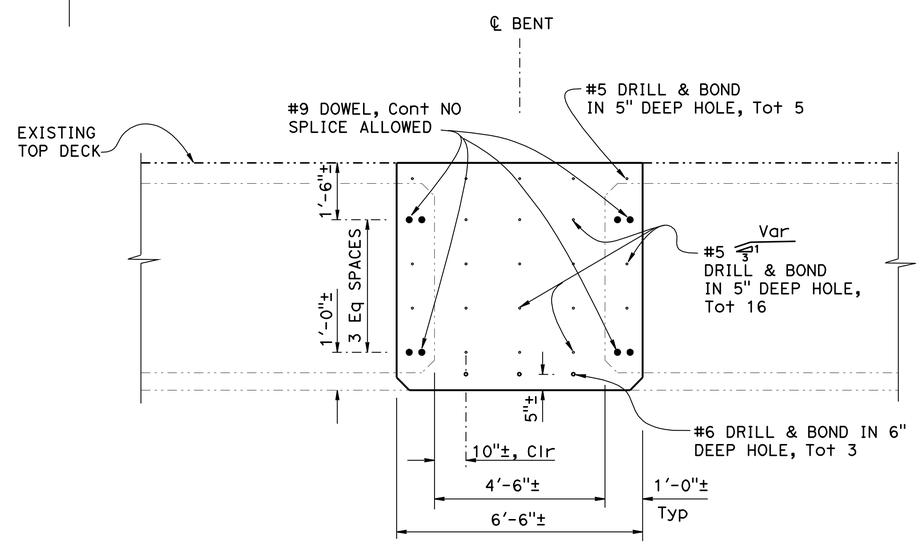

DRILL & BOND LAYOUT

1/2" = 1'-0"

NOTE:
THE CONTRACTOR SHALL VERIFY ALL CONTROLLING FIELD DIMENSIONS BEFORE ORDERING OR FABRICATING ANY MATERIAL.

	BY	CHECKED
DESIGN	Sharon Yen	Joey Aquino
DETAILS	Janie Chlubna	Joey Aquino
QUANTITIES	Pyo Hong	Ashraf Ahmed

STATE OF CALIFORNIA
DEPARTMENT OF TRANSPORTATION

DIVISION OF ENGINEERING SERVICES
STRUCTURE DESIGN
DESIGN BRANCH 3

BRIDGE NO. 24-0248R/L
POST MILE 1.51

DECK REHABILITATION
CAMELLIA CITY VIADUCT (WIDEN)
SIGN PEDESTAL DETAILS NO. 4

STRUCTURES DESIGN DETAIL SHEET (ENGLISH) (REV. 09-01-10)

ORIGINAL SCALE IN INCHES FOR REDUCED PLANS 0 1 2 3

UNIT: 3578
PROJECT NUMBER & PHASE: 03000000731
CONTRACT NO.: 03-0F2301

DISREGARD PRINTS BEARING EARLIER REVISION DATES

REVISION DATES: 4-16-12 11-14-12 9-12-12

SHEET 36 OF 46

FILE => 24-0248-n-sign-det-04.dgn

USERNAME => s124496 DATE PLOTTED => 26-MAR-2013 TIME PLOTTED => 08:37

DIST	COUNTY	ROUTE	POST MILES TOTAL PROJECT	SHEET No.	TOTAL SHEETS
03	Sac	50	L1.3/L2.2	151	160

REGISTERED CIVIL ENGINEER 11-30-12 DATE

3-25-13
PLANS APPROVAL DATE

REGISTERED PROFESSIONAL ENGINEER
JOSE M AQUINO III
No. 58386
Exp. 12-31-14
CIVIL
STATE OF CALIFORNIA

The State of California or its officers or agents shall not be responsible for the accuracy or completeness of electronic copies of this plan sheet.

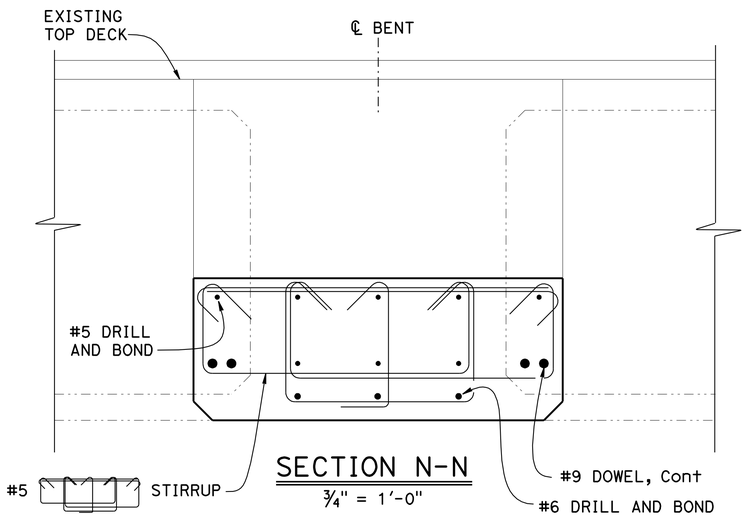

SECTION N-N
3/4" = 1'-0"

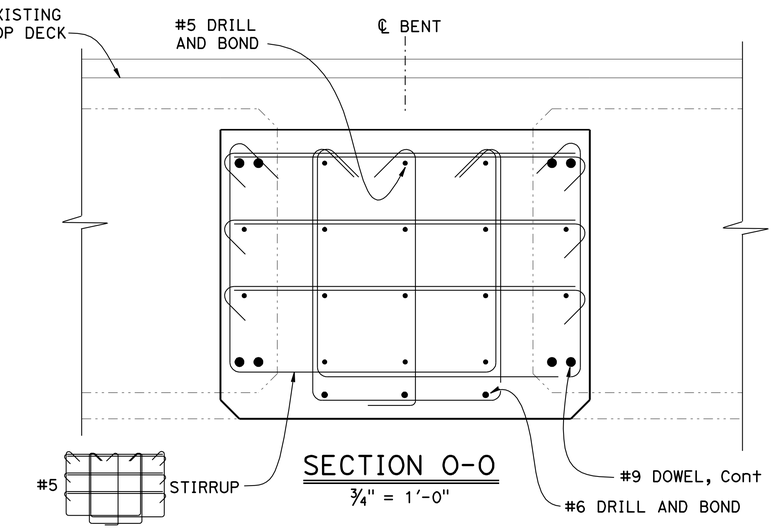

SECTION O-O
3/4" = 1'-0"

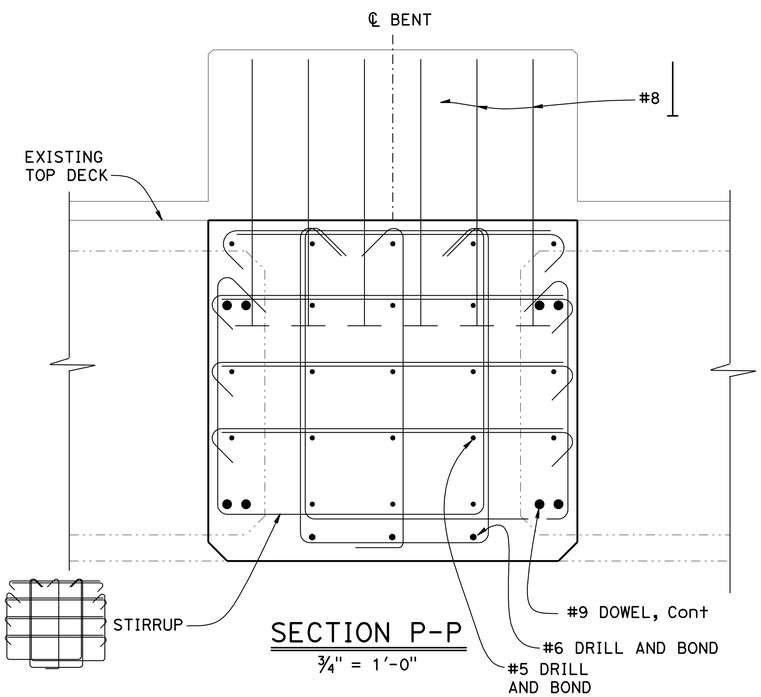

SECTION P-P
3/4" = 1'-0"

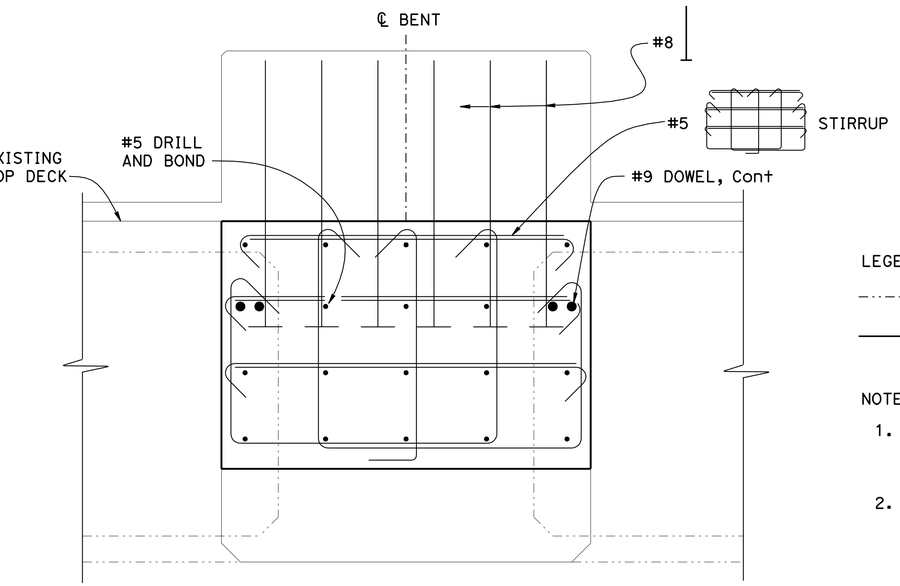

SECTION Q-Q
3/4" = 1'-0"

LEGEND:

Indicates Existing Structure

Indicates New Structure

NOTES:

1. For location of "SECTION N-N", "SECTION O-O", "SECTION P-P" and "SECTION Q-Q", see "SIGN PEDESTAL DETAILS NO. 1" sheet
2. Horizontal ties to hook around vertical stirrup

NOTE:
THE CONTRACTOR SHALL VERIFY ALL CONTROLLING FIELD DIMENSIONS BEFORE ORDERING OR FABRICATING ANY MATERIAL.

	BY	CHECKED
DESIGN	Sharon Yen	Joey Aquino
DETAILS	Janie Chlubna	Joey Aquino
QUANTITIES	Pyo Hong	Ashraf Ahmed

STATE OF CALIFORNIA
DEPARTMENT OF TRANSPORTATION

DIVISION OF ENGINEERING SERVICES
STRUCTURE DESIGN
DESIGN BRANCH 3

BRIDGE NO. 24-0248R/L
POST MILE 1.51

DECK REHABILITATION
CAMELLIA CITY VIADUCT (WIDEN)
SIGN PEDESTAL DETAILS NO. 5

STRUCTURES DESIGN DETAIL SHEET (ENGLISH) (REV. 09-01-10)

ORIGINAL SCALE IN INCHES FOR REDUCED PLANS 0 1 2 3

UNIT: 3578
PROJECT NUMBER & PHASE: 03000000731
CONTRACT NO.: 03-0F2301

DISREGARD PRINTS BEARING EARLIER REVISION DATES

REVISION DATES: 4-17-12 9-12-12 7-18-12

SHEET 37 OF 46

FILE => 24-0248-n-sign-det-05.dgn

USERNAME => s124496 DATE PLOTTED => 26-MAR-2013 TIME PLOTTED => 08:37

DIST	COUNTY	ROUTE	POST MILES TOTAL PROJECT	SHEET No.	TOTAL SHEETS
03	Sac	50	L1.3/L2.2	152	160

REGISTERED CIVIL ENGINEER 11-30-12 DATE

3-25-13
PLANS APPROVAL DATE

REGISTERED PROFESSIONAL ENGINEER JOSE M AQUINO III No. 58386 Exp. 12-31-14 CIVIL STATE OF CALIFORNIA

The State of California or its officers or agents shall not be responsible for the accuracy or completeness of electronic copies of this plan sheet.

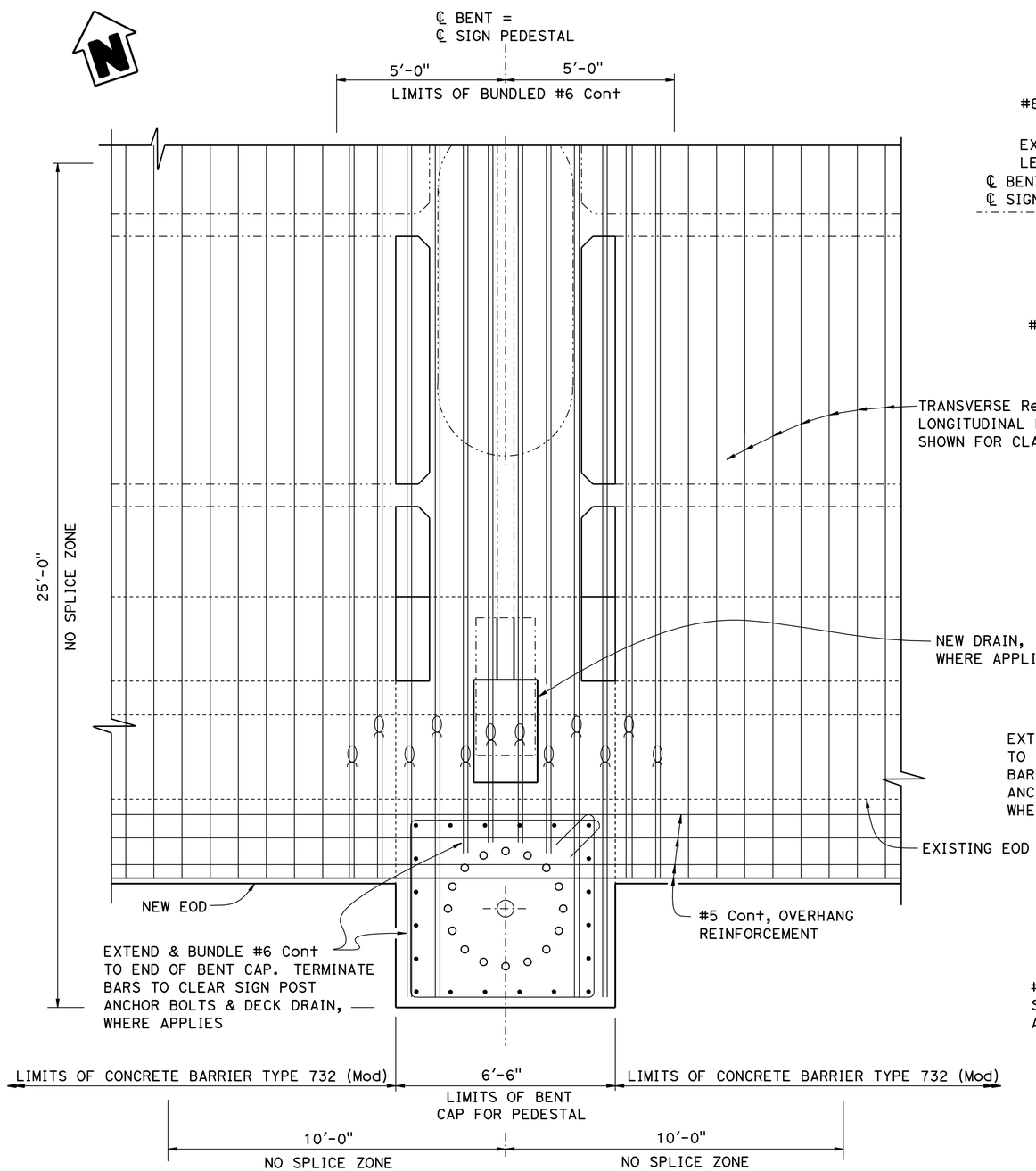

PART PLAN

½" = 1'-0"

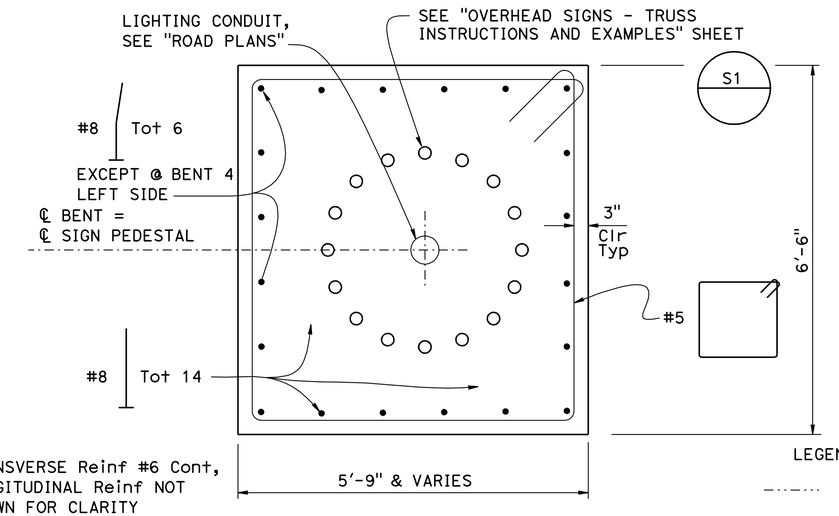

SECTION S-S

¾" = 1'-0"

LEGEND:

- Indicates Existing Structure
- Indicates New Structure
- Indicates Bundled Bars

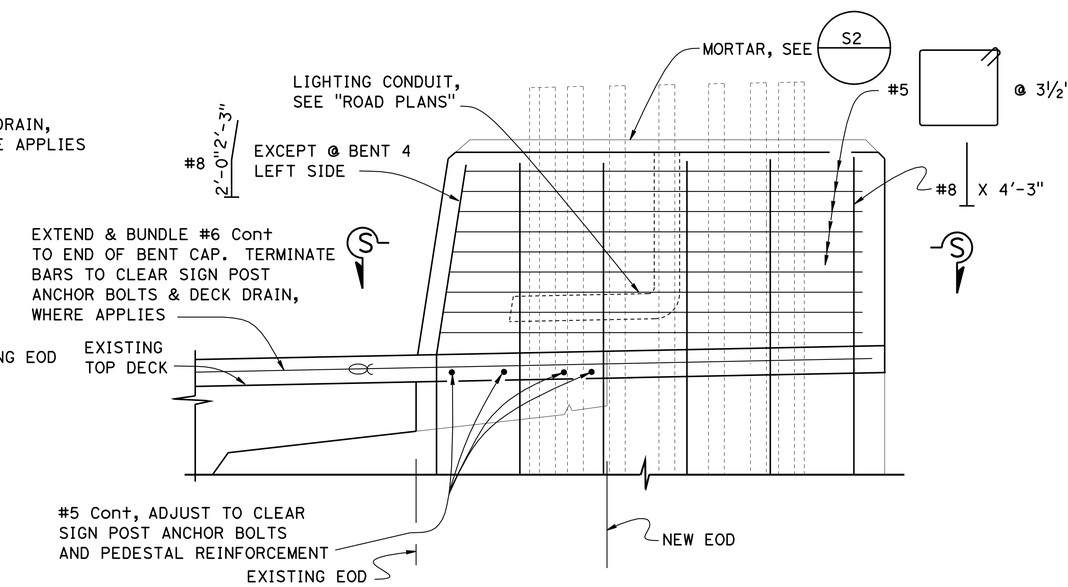

PART ELEVATION

1" = 1'-0"

NOTE:
THE CONTRACTOR SHALL VERIFY ALL CONTROLLING FIELD DIMENSIONS BEFORE ORDERING OR FABRICATING ANY MATERIAL.

DESIGN	BY Sharon Yen	CHECKED Joey Aquino
DETAILS	BY Janie Chlubna	CHECKED Joey Aquino
QUANTITIES	BY Pyo Hong	CHECKED Ashraf Ahmed

STATE OF CALIFORNIA
DEPARTMENT OF TRANSPORTATION

DIVISION OF ENGINEERING SERVICES
STRUCTURE DESIGN
DESIGN BRANCH 3

BRIDGE NO. 24-0248R/L
POST MILE 1.51

DECK REHABILITATION
CAMELLIA CITY VIADUCT (WIDEN)
SIGN PEDESTAL DETAILS NO. 6

STRUCTURES DESIGN DETAIL SHEET (ENGLISH) (REV. 09-01-10)

ORIGINAL SCALE IN INCHES FOR REDUCED PLANS 0 1 2 3

UNIT: 3578
PROJECT NUMBER & PHASE: 03000000731
CONTRACT NO.: 03-0F2301

DISREGARD PRINTS BEARING EARLIER REVISION DATES

REVISION DATES 4-20-12 11-14-12 9-13-12

SHEET 38 OF 46

FILE => 24-0248-n-sign-det-06.dgn

USERNAME => s124496 DATE PLOTTED => 26-MAR-2013 TIME PLOTTED => 08:23

DIST	COUNTY	ROUTE	POST MILES TOTAL PROJECT	SHEET No.	TOTAL SHEETS
03	Sac	50	L1.3/L2.2	153	160

REGISTERED CIVIL ENGINEER 11-30-12 DATE

3-25-13
PLANS APPROVAL DATE

REGISTERED PROFESSIONAL ENGINEER JOSE M AQUINO III No. 58386 Exp. 12-31-14 CIVIL STATE OF CALIFORNIA

The State of California or its officers or agents shall not be responsible for the accuracy or completeness of electronic copies of this plan sheet.

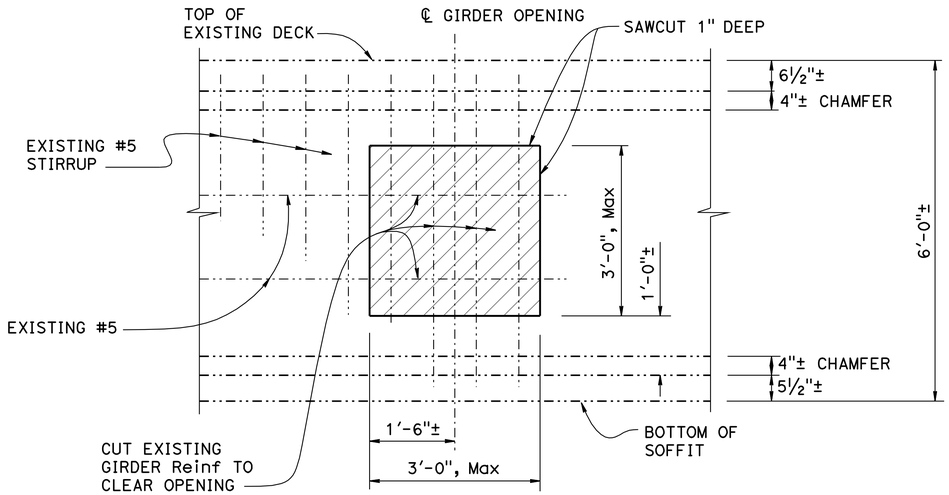

INTERIOR GIRDER OPENING ELEVATION

¾" = 1'-0"

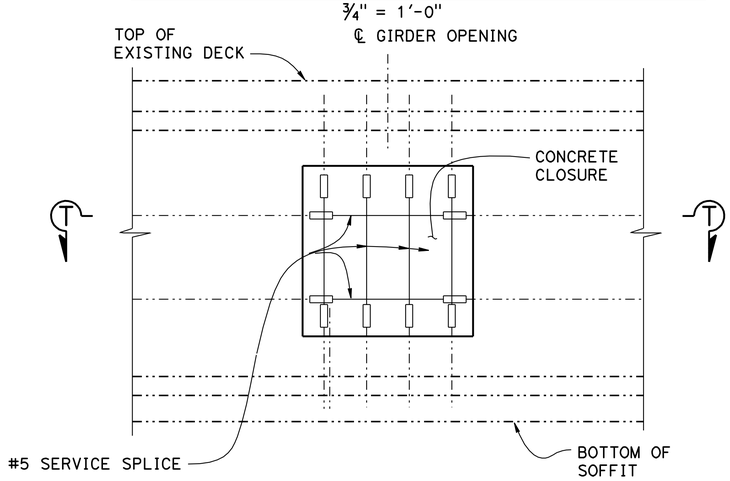

INTERIOR GIRDER CLOSURE ELEVATION

¾" = 1'-0"

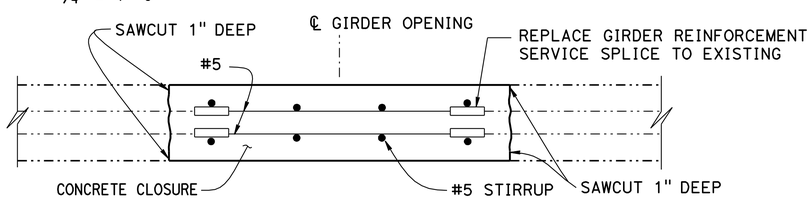

SECTION T-T

1½" = 1'-0"

NOTE:
THE CONTRACTOR SHALL VERIFY ALL CONTROLLING FIELD DIMENSIONS BEFORE ORDERING OR FABRICATING ANY MATERIAL.

LEGEND:

- Indicates Existing Structure
- Indicates New Structure
- Limits of Concrete Removal

NOTE:

1. For location of Interior Girder, see "SIGN PEDESTAL DETAILS NO. 1" and "SIGN PEDESTAL DETAILS NO. 2" sheets

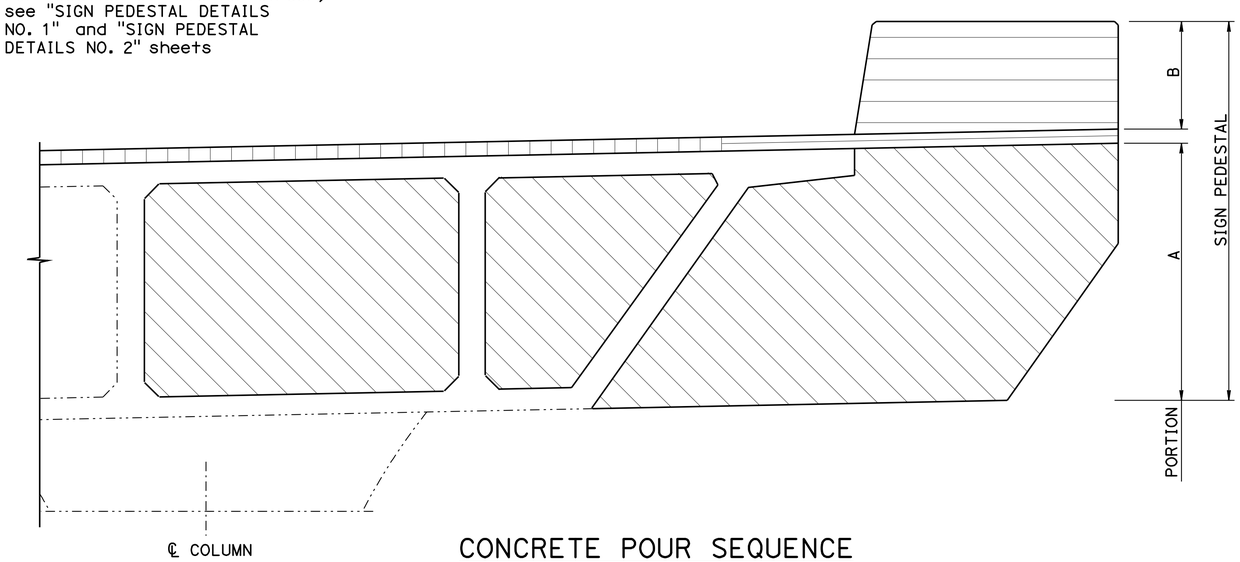

CONCRETE POUR SEQUENCE

NO SCALE

LEGEND:

- Indicates Existing Structure
- Indicates New Structure
- Indicates 1st Concrete Placement (Prior to Stage 1 Construction; Must have strength f'c = 3.6 ksi prior to full traffic closure)
- Indicates 2nd (4"± Fiber-Reinforced PCC overlay) Placement (Stage 1 & 2 Construction)
- Indicates 3rd Concrete Placement (Stage 1 & 2 Construction)

NOTE:

1. For stage construction, see "GENERAL PLAN NO. 2" sheet

	BY	CHECKED
DESIGN	Sharon Yen	Joey Aquino
DETAILS	Janie Chlubna	Joey Aquino
QUANTITIES	Pyo Hong	Ashraf Ahmed

STATE OF CALIFORNIA
DEPARTMENT OF TRANSPORTATION

DIVISION OF ENGINEERING SERVICES
STRUCTURE DESIGN
DESIGN BRANCH 3

BRIDGE NO. 24-0248R/L
POST MILE 1.51

DECK REHABILITATION
CAMELLIA CITY VIADUCT (WIDEN)
SIGN PEDESTAL DETAILS NO. 7

STRUCTURES DESIGN DETAIL SHEET (ENGLISH) (REV. 09-01-10)

ORIGINAL SCALE IN INCHES FOR REDUCED PLANS 0 1 2 3

UNIT: 3578
PROJECT NUMBER & PHASE: 03000000731
CONTRACT NO.: 03-0F2301

DISREGARD PRINTS BEARING EARLIER REVISION DATES

REVISION DATES: 4-30-12 11-14-12 8-30-12

SHEET 39 OF 46

FILE => 24-0248-n-sign-det-07.dgn

USERNAME => s12614 DATE PLOTTED => 27-MAR-2013 TIME PLOTTED => 11:40

DIST	COUNTY	ROUTE	POST MILES TOTAL PROJECT	SHEET No.	TOTAL SHEETS
03	Sac	50	L1.3/L2.2	154	160

REGISTERED CIVIL ENGINEER 11-30-12 DATE

3-25-13
PLANS APPROVAL DATE

REGISTERED PROFESSIONAL ENGINEER JOSE M AQUINO III No. 58386 Exp. 12-31-14 CIVIL STATE OF CALIFORNIA

The State of California or its officers or agents shall not be responsible for the accuracy or completeness of electronic copies of this plan sheet.

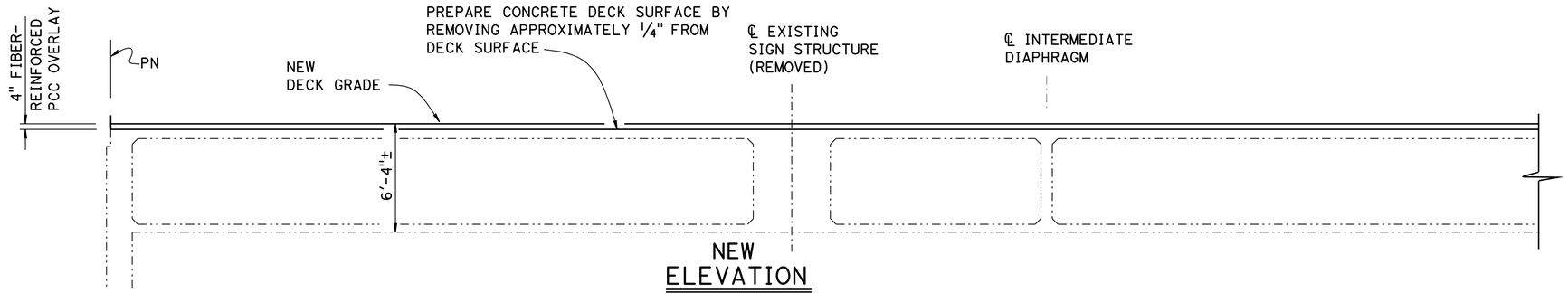

NEW ELEVATION
1/4" = 1'-0"

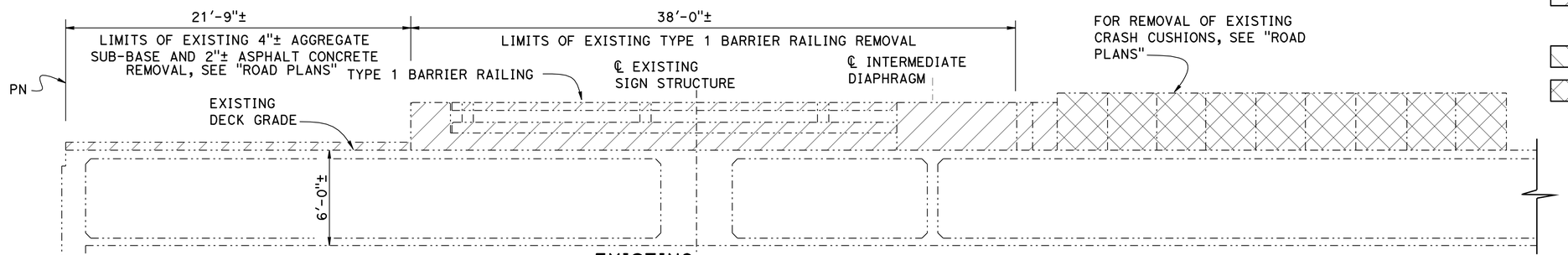

EXISTING ELEVATION
1/4" = 1'-0"

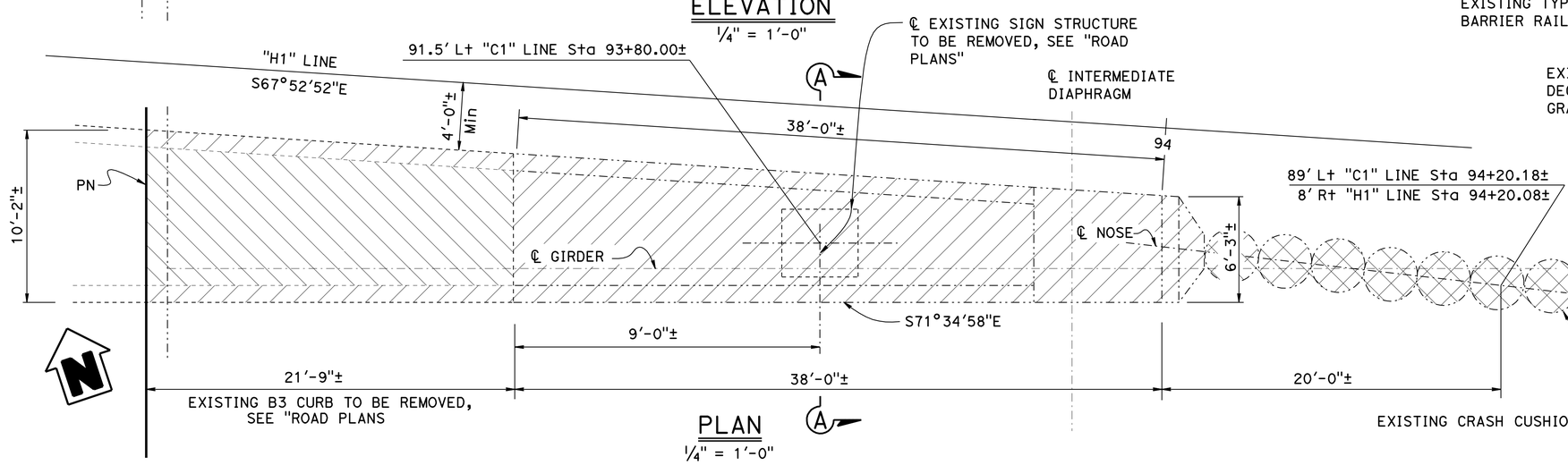

PLAN
1/4" = 1'-0"

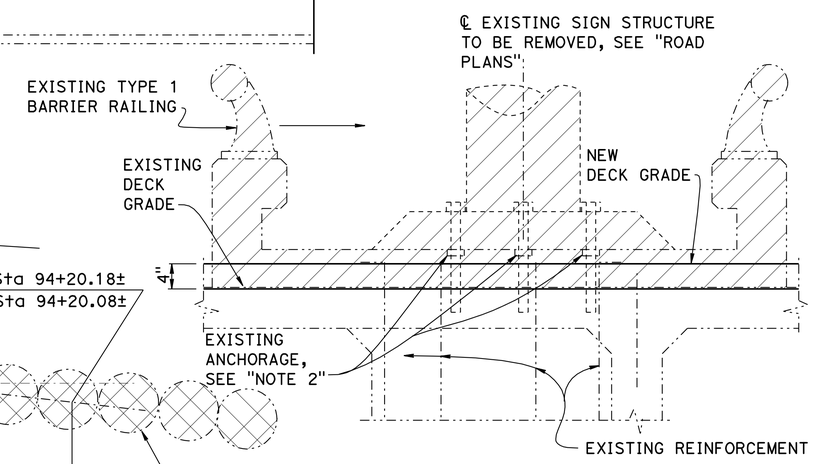

SECTION A-A
1" = 1'-0"

LEGEND:

- Indicates Existing Structure
- Indicates New Structure
- Indicates Existing Sign Structure, Barrier Railing, Nose and Curb Removal. Salvage metal railing
- Indicates AC Removal, see "ROAD PLANS"
- Indicates Crash Cushion removal, see "ROAD PLANS"

NOTE:
1. Remove existing vertical bars 1" below surface
2. Cut bolt or anchorage 1" below deck surface after sign structure removal. Abrasion blast clean and fill holes w/ magnesium phosphate

NOTE:
THE CONTRACTOR SHALL VERIFY ALL CONTROLLING FIELD DIMENSIONS BEFORE ORDERING OR FABRICATING ANY MATERIAL.

	BY	CHECKED
DESIGN	Joey Aquino	Sharon Yen
DETAILS	Janie Chlubna	Sharon Yen
QUANTITIES	Pyo Hong	Ashraf Ahmed

STATE OF CALIFORNIA
DEPARTMENT OF TRANSPORTATION

DIVISION OF ENGINEERING SERVICES
STRUCTURE DESIGN
DESIGN BRANCH 3

BRIDGE NO. 24-0248R/L
POST MILE 1.51

DECK REHABILITATION
CAMELLIA CITY VIADUCT (WIDEN)
"H1" LINE NOSE DETAILS

STRUCTURES DESIGN DETAIL SHEET (ENGLISH) (REV. 09-01-10)

ORIGINAL SCALE IN INCHES FOR REDUCED PLANS 0 1 2 3

UNIT: 3578
PROJECT NUMBER & PHASE: 03000000731
CONTRACT NO.: 03-0F2301

DISREGARD PRINTS BEARING EARLIER REVISION DATES

REVISION DATES: 6-20-11 11-14-12 11-15-12

SHEET 40 OF 46

FILE => 24-0248-o-nose-h1-line.dgn

USERNAME => s124496 DATE PLOTTED => 26-MAR-2013 TIME PLOTTED => 08:37

DIST	COUNTY	ROUTE	POST MILES TOTAL PROJECT	SHEET No.	TOTAL SHEETS
03	Sac	50	L1.3/L2.2	155	160

REGISTERED CIVIL ENGINEER 11-30-12 DATE

3-25-13
PLANS APPROVAL DATE

REGISTERED PROFESSIONAL ENGINEER JOSE M AQUINO III No. 58386 Exp. 12-31-14 CIVIL STATE OF CALIFORNIA

The State of California or its officers or agents shall not be responsible for the accuracy or completeness of electronic copies of this plan sheet.

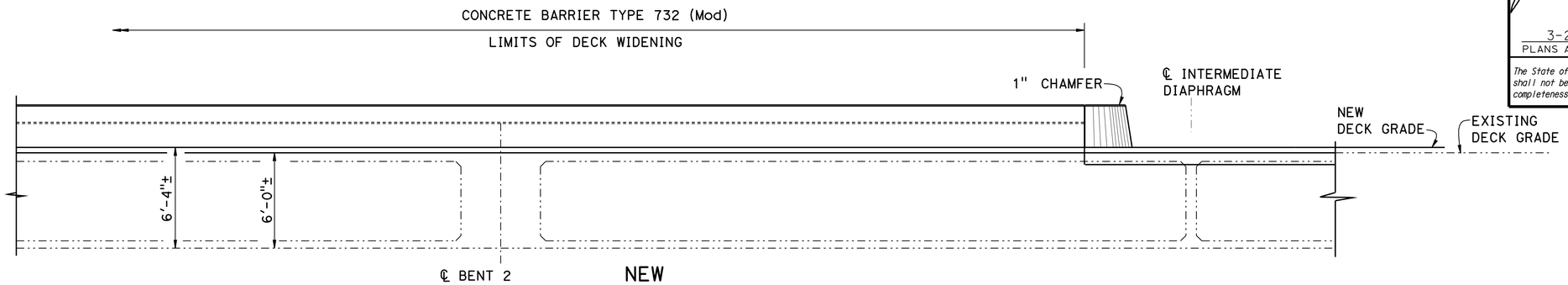

NEW
ELEVATION
1/4" = 1'-0"

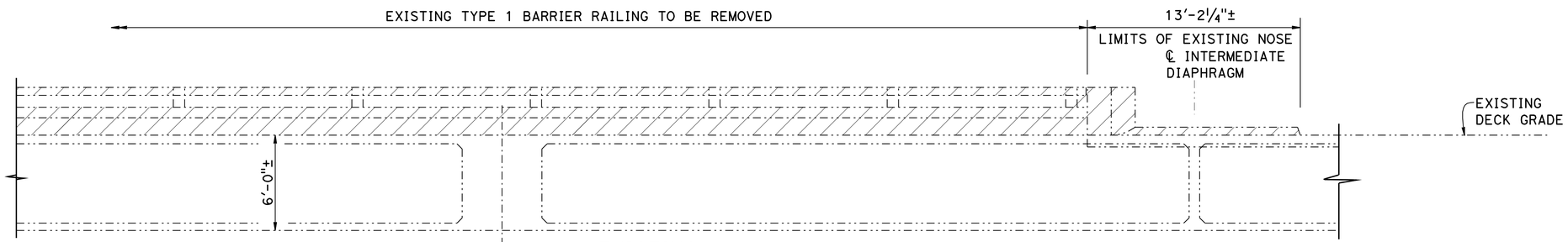

EXISTING
ELEVATION
1/4" = 1'-0"

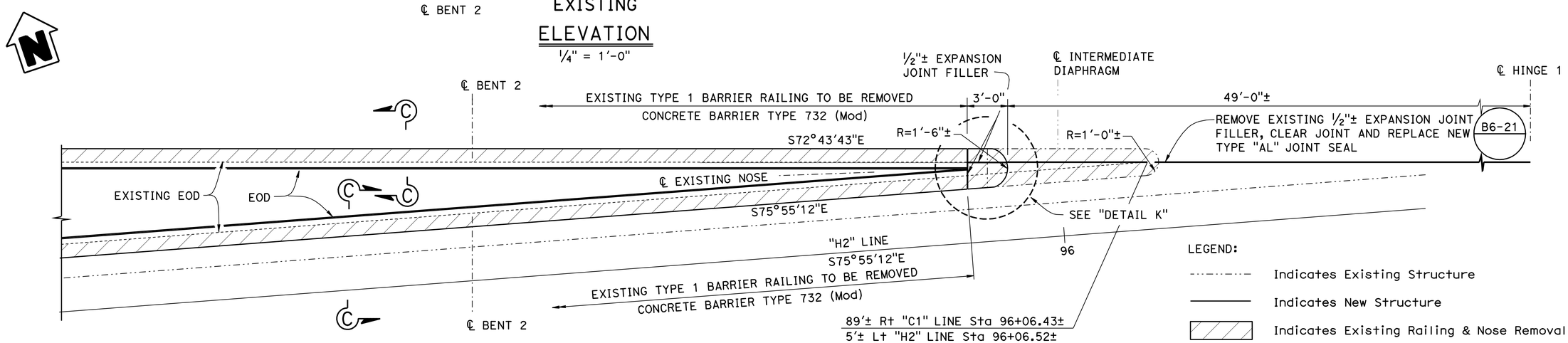

PLAN
1/4" = 1'-0"

LEGEND:

- Indicates Existing Structure
- Indicates New Structure
- Indicates Existing Railing & Nose Removal

NOTES:

1. For "SECTION C-C", see "TYPICAL SECTION NO. 2" sheet
2. For "DETAIL K", see ""H2" LINE NOSE DETAILS NO. 2" sheet

NOTE:
THE CONTRACTOR SHALL VERIFY ALL CONTROLLING FIELD DIMENSIONS BEFORE ORDERING OR FABRICATING ANY MATERIAL.

	BY	CHECKED
DESIGN	Joey Aquino	Sharon Yen
DETAILS	Janie Chlubna	Sharon Yen
QUANTITIES	Pyo Hong	Ashraf Ahmed

STATE OF CALIFORNIA
DEPARTMENT OF TRANSPORTATION

DIVISION OF ENGINEERING SERVICES
STRUCTURE DESIGN
DESIGN BRANCH 3

BRIDGE NO. 24-0248R/L
POST MILE 1.51

DECK REHABILITATION
CAMELLIA CITY VIADUCT (WIDEN)
"H2" LINE NOSE DETAILS NO. 1

STRUCTURES DESIGN DETAIL SHEET (ENGLISH) (REV. 09-01-10)

ORIGINAL SCALE IN INCHES FOR REDUCED PLANS 0 1 2 3

UNIT: 3578
PROJECT NUMBER & PHASE: 03000000731
CONTRACT NO.: 03-0F2301

DISREGARD PRINTS BEARING EARLIER REVISION DATES

REVISION DATES: 7-27-11 11-14-12 10-12-12

SHEET 41 OF 46

FILE => 24-0248-o-nose-h2-line-01.dgn

USERNAME => s124496 DATE PLOTTED => 26-MAR-2013 TIME PLOTTED => 08:37

DIST	COUNTY	ROUTE	POST MILES TOTAL PROJECT	SHEET No.	TOTAL SHEETS
03	Sac	50	L1.3/L2.2	156	160

REGISTERED CIVIL ENGINEER 11-30-12 DATE

3-25-13
PLANS APPROVAL DATE

REGISTERED PROFESSIONAL ENGINEER
JOSE M AQUINO III
No. 58386
Exp. 12-31-14
CIVIL
STATE OF CALIFORNIA

The State of California or its officers or agents shall not be responsible for the accuracy or completeness of electronic copies of this plan sheet.

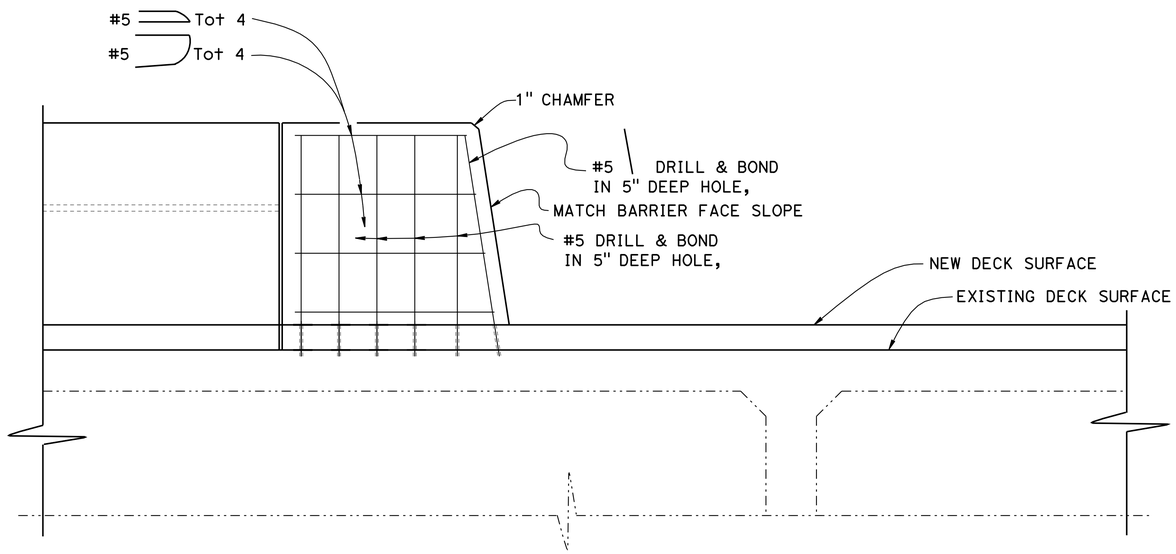

ELEVATION

1" = 1'-0"

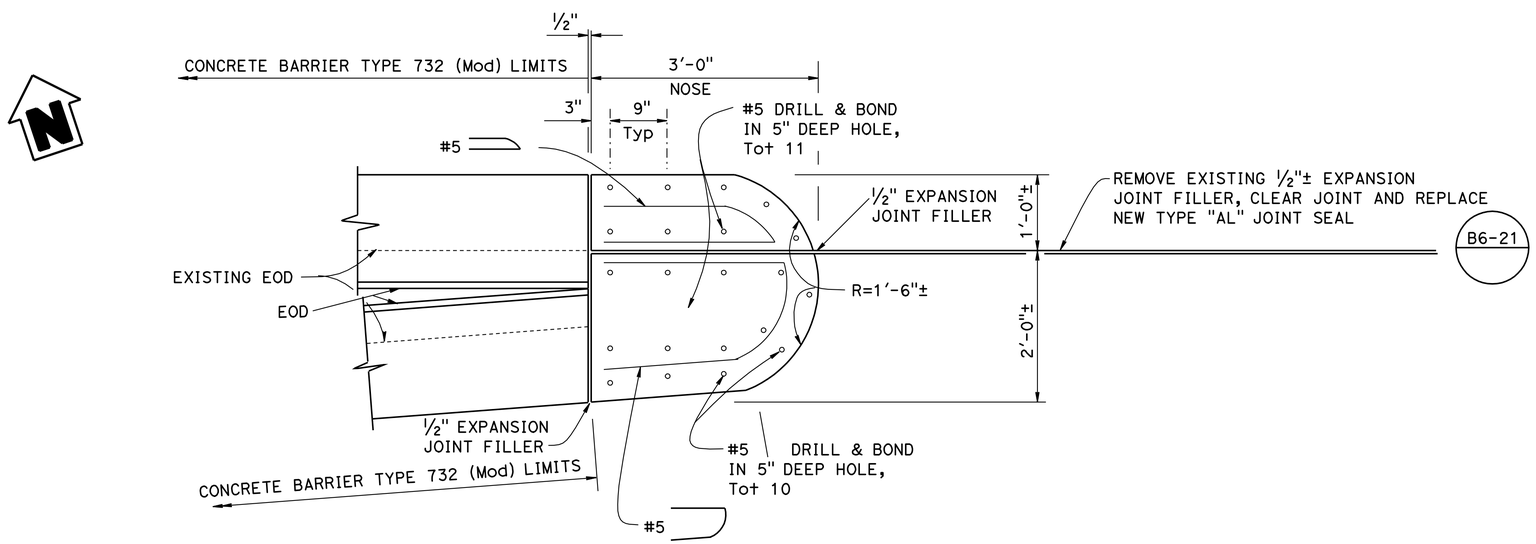

DETAIL K

1" = 1'-0"

NOTE:
THE CONTRACTOR SHALL VERIFY ALL CONTROLLING FIELD DIMENSIONS BEFORE ORDERING OR FABRICATING ANY MATERIAL.

	BY	CHECKED
DESIGN	Joey Aquino	Sharon Yen
DETAILS	Janie Chlubna	Sharon Yen
QUANTITIES	Pyo Hong	Ashraf Ahmed

STATE OF CALIFORNIA
DEPARTMENT OF TRANSPORTATION

DIVISION OF ENGINEERING SERVICES
STRUCTURE DESIGN
DESIGN BRANCH 3

BRIDGE NO. 24-0248R/L
POST MILE 1.51

DECK REHABILITATION
CAMELLIA CITY VIADUCT (WIDEN)
"H2" LINE NOSE DETAILS NO. 2

STRUCTURES DESIGN DETAIL SHEET (ENGLISH) (REV. 09-01-10)

ORIGINAL SCALE IN INCHES FOR REDUCED PLANS 0 1 2 3

UNIT: 3578
PROJECT NUMBER & PHASE: 03000000731
CONTRACT NO.: 03-0F2301

DISREGARD PRINTS BEARING EARLIER REVISION DATES

REVISION DATES: 3-13-12 | 11-14-12 | 10-12-12

SHEET 42 OF 46

FILE => 24-0248-o-nose-h2-line-02.dgn

USERNAME => s124436 DATE PLOTTED => 26-MAR-2013 TIME PLOTTED => 08:38

DIST	COUNTY	ROUTE	POST MILES TOTAL PROJECT	SHEET No.	TOTAL SHEETS
03	Sac	50	L1.3/L2.2	157	160

REGISTERED CIVIL ENGINEER 11-30-12 DATE

3-25-13
PLANS APPROVAL DATE

REGISTERED PROFESSIONAL ENGINEER
JOSE M AQUINO III
No. 58386
Exp. 12-31-14
CIVIL
STATE OF CALIFORNIA

The State of California or its officers or agents shall not be responsible for the accuracy or completeness of electronic copies of this plan sheet.

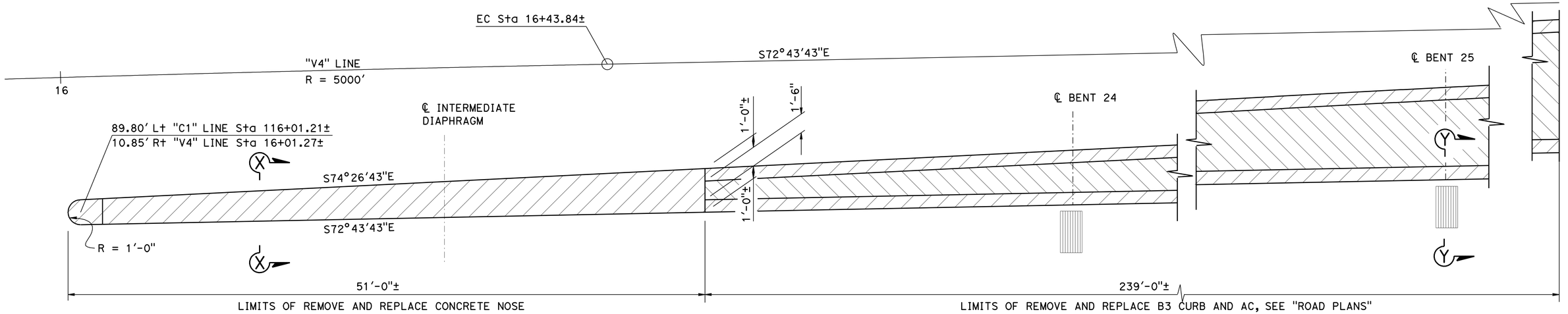

PLAN

1/4" = 1'-0"

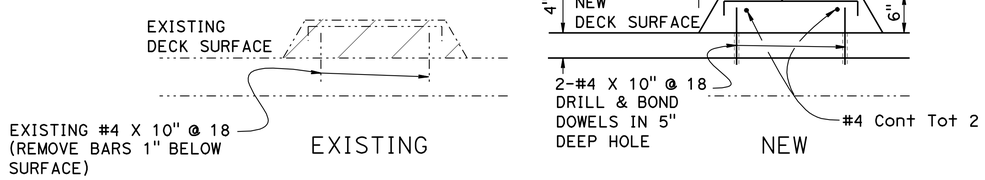

SECTION X-X

1" = 1'-0"

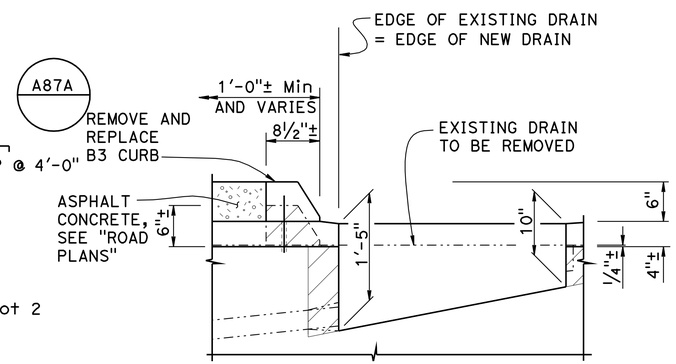

FOR DETAILS NOT SHOWN, SEE "DECK DRAINAGE DETAILS" SHEET

SECTION Y-Y

1" = 1'-0"

LEGEND:

- Indicates Existing Structure
- Indicates New Structure
- Indicates Concrete Removal
- Indicates AC Removal

NOTE:

1. Cut existing rebars 1" below existing deck surface. Abrasion blast clean and fill holes w/ magnesium phosphate

NOTE:
THE CONTRACTOR SHALL VERIFY ALL CONTROLLING FIELD DIMENSIONS BEFORE ORDERING OR FABRICATING ANY MATERIAL.

	BY	CHECKED
DESIGN	Joey Aquino	Sharon Yen
DETAILS	Janie Chlubna	Sharon Yen
QUANTITIES	Pyo Hong	Ashraf Ahmed

STATE OF CALIFORNIA
DEPARTMENT OF TRANSPORTATION

DIVISION OF ENGINEERING SERVICES
STRUCTURE DESIGN
DESIGN BRANCH 3

BRIDGE NO. 24-0248R/L
POST MILE 1.51

DECK REHABILITATION
CAMELLIA CITY VIADUCT (WIDEN)
"V4" LINE NOSE DETAILS

STRUCTURES DESIGN DETAIL SHEET (ENGLISH) (REV. 09-01-10)

ORIGINAL SCALE IN INCHES FOR REDUCED PLANS 0 1 2 3

UNIT: 3578
PROJECT NUMBER & PHASE: 03000000731
CONTRACT NO.: 03-0F2301

DISREGARD PRINTS BEARING EARLIER REVISION DATES

REVISION DATES: 7-29-11 | 11-15-12 | 11-14-12

SHEET 43 OF 46

FILE => 24-0248-o-nose-v4-line.dgn

USERNAME => s124496 DATE PLOTTED => 26-MAR-2013 TIME PLOTTED => 08:38

DIST	COUNTY	ROUTE	POST MILES TOTAL PROJECT	SHEET No.	TOTAL SHEETS
03	Sac	50	L1.3/L2.2	158	160

REGISTERED CIVIL ENGINEER 11-30-12 DATE

3-25-13
PLANS APPROVAL DATE

REGISTERED PROFESSIONAL ENGINEER
JOSE M AQUINO III
No. 58386
Exp. 12-31-14
CIVIL
STATE OF CALIFORNIA

The State of California or its officers or agents shall not be responsible for the accuracy or completeness of electronic copies of this plan sheet.

JOINT SEAL TABLE FOR LEFT (WESTBOUND) BRIDGE

LOCATION	MINIMUM "MR" (INCH)	TYPE	APPROXIMATE LENGTH (FEET)	APPROXIMATE DEPTH TO CLEAN EXPANSION JOINT (INCH)	EXISTING WATERSTOP Y/N
ABUTMENT 1	½	A	118′	N/A	N
HINGE 1	2	B	99′	6"	Y
HINGE 2	2	B	96′	6"	Y
HINGE 3	2	B	96′	3′-0"	N
HINGE 4	2	B	96′	3′-0"	N
HINGE 5	2	B	96′	6"	Y
HINGE 6	2	B	100′	6"	Y
HINGE 7	2	B	113′	6"	Y
HINGE 8	2	B	126′	6"	Y
ABUTMENT 26	½	A	131′	N/A	N

JOINT SEAL TABLE FOR RIGHT (EASTBOUND) BRIDGE

LOCATION	MINIMUM "MR" (INCH)	TYPE	APPROXIMATE LENGTH (FEET)	APPROXIMATE DEPTH TO CLEAN EXPANSION JOINT (INCH)	EXISTING WATERSTOP Y/N
ABUTMENT 1	½	A	87′	N/A	N
HINGE 1	2	B	107′	6"	Y
HINGE 2	2	B	99′	6"	Y
HINGE 3	2	B	96′	6"	Y
HINGE 4	2	B	96′	6"	Y
HINGE 5	2	B	96′	3′-0"	N
HINGE 6	2	B	96′	3′-0"	N
HINGE 7	2	B	96′	6"	Y
HINGE 8	2	B	98′	6"	Y
ABUTMENT 26	½	A	105′	N/A	N

JOINT SEAL TABLE FOR "H2" LINE

LOCATION	MINIMUM "MR" (INCH)	TYPE	APPROXIMATE LENGTH (FEET)	APPROXIMATE DEPTH TO CLEAN EXPANSION JOINT (INCH)	EXISTING WATERSTOP Y/N
BETWEEN BENT 2 & HINGE 1	½	AL	49′	N/A	N

NOTE:

1. Existing waterstop to be removed
2. See B6-21 For details

NOTE:
THE CONTRACTOR SHALL VERIFY ALL CONTROLLING FIELD DIMENSIONS BEFORE ORDERING OR FABRICATING ANY MATERIAL.

	BY	CHECKED
DESIGN	Joey Aquino	Sharon Yen
DETAILS	Janie Chlubna	Sharon Yen
QUANTITIES	Pyo Hong	Ashraf Ahmed

STATE OF CALIFORNIA
DEPARTMENT OF TRANSPORTATION

DIVISION OF ENGINEERING SERVICES
STRUCTURE DESIGN
DESIGN BRANCH 3

BRIDGE NO. 24-0248R/L
POST MILE 1.51

DECK REHABILITATION
CAMELLIA CITY VIADUCT (WIDEN)
JOINT SEAL DETAILS

STRUCTURES DESIGN DETAIL SHEET (ENGLISH) (REV. 09-01-10)

ORIGINAL SCALE IN INCHES FOR REDUCED PLANS 0 1 2 3

UNIT: 3578
PROJECT NUMBER & PHASE: 03000000731
CONTRACT NO.: 03-0F2301

DISREGARD PRINTS BEARING EARLIER REVISION DATES

REVISION DATES: 8-2-11 | 11-16-12 | 10-12-12

SHEET 44 OF 46

FILE => 24-0248-p-jointseal.dgn

USERNAME => s124496 DATE PLOTTED => 26-MAR-2013 TIME PLOTTED => 08:38

DIST	COUNTY	ROUTE	POST MILES TOTAL PROJECT	SHEET No.	TOTAL SHEETS
03	Sac	50	L1.3/L2.2	159	160

REGISTERED CIVIL ENGINEER 11-30-12 DATE

3-25-13
PLANS APPROVAL DATE

REGISTERED PROFESSIONAL ENGINEER JOSE M AQUINO III No. 58386 Exp. 12-31-14 CIVIL STATE OF CALIFORNIA

The State of California or its officers or agents shall not be responsible for the accuracy or completeness of electronic copies of this plan sheet.

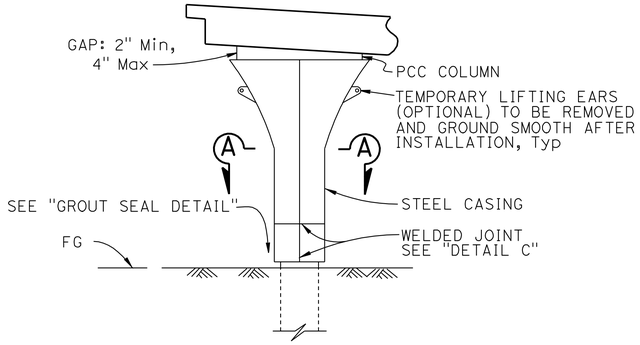

CLASS F COLUMN

LEGEND:

Indicates Roadway Excavation, see "ROAD PLANS"

Asphalt waterproof membrane @ Bent 13 Left Bridge ONLY (3 Columns)

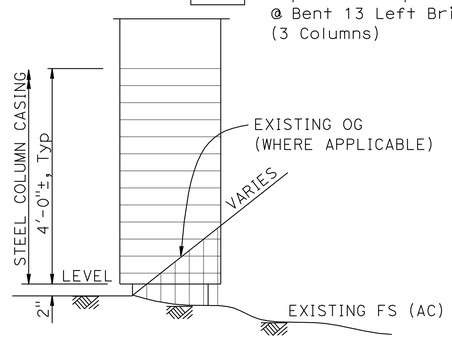

@ PARKING SPACES

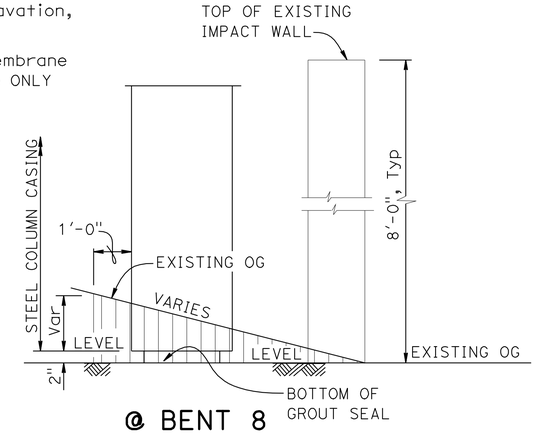

@ BENT 8

GROUT SEAL DETAIL

NO SCALE

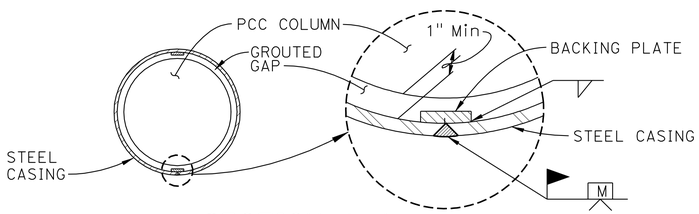

SECTION A-A

MINIMUM INSIDE DIAMETER OF STEEL CASING = 1½"
GREATER THAN NOMINAL COLUMN DIAMETER FOR CLASS F

ROUND COLUMN

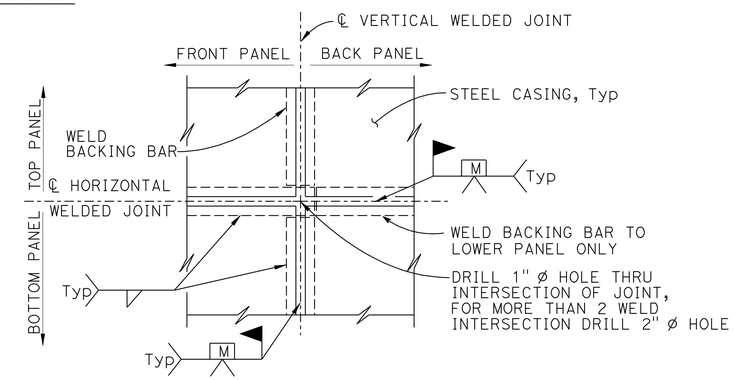

(TWO WELD INTERSECTION JOINT)

DETAIL C

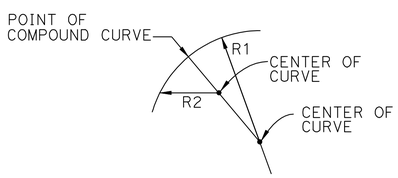

ELLIPTICAL CASING DETAIL CLASS F

RADII R1 AND R2 TO BE DETERMINED BY THE CONTRACTOR SUBJECT TO THE APPROVAL OF THE ENGINEER

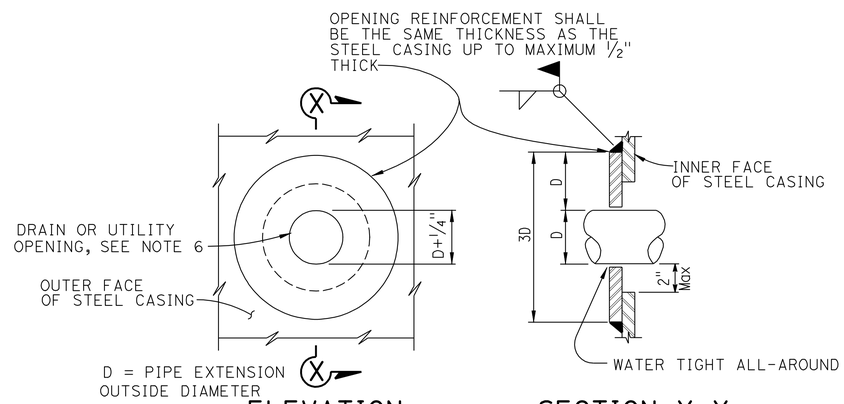

ELEVATION

SECTION X-X

CASING OPENING

NOTE: OPENING REINFORCEMENT REQUIRED FOR DRAIN OR UTILITY OPENINGS LARGER THAN 4"

NOTES:

1. For varying thickness, steel casing inside surface to remain flush. Minimum clearance from PCC column to casing shall be maintained
2. Appropriate injection nozzles to be provided on casing, but removed and ground flush following completion of grouting operation
3. All voids between steel casing and PCC column to be filled with grout
4. Location and number of vertical and horizontal welds to be determined by the Contractor and subject to the approval of the Engineer. The location of casing welds are for illustration. No skip welds allowed
5. Steel casing to be ⅜" thick diameter. Backing plates to be the same thickness as casing up to maximum ⅜" thick
6. For pipe extensions, opening shall be no more than ¼" greater than the pipe extension diameter. For other openings, the opening diameter to be determined by the Engineer

NOTE:
THE CONTRACTOR SHALL VERIFY ALL CONTROLLING FIELD DIMENSIONS BEFORE ORDERING OR FABRICATING ANY MATERIAL.

	BY	CHECKED
DESIGN	Joey Aquino	Sharon Yen
DETAILS	Janie Chlubna	Sharon Yen
QUANTITIES	Pyo Hong	Ashraf Ahmed

STATE OF CALIFORNIA
DEPARTMENT OF TRANSPORTATION

DIVISION OF ENGINEERING SERVICES
STRUCTURE DESIGN
DESIGN BRANCH 3

BRIDGE NO. 24-0248R/L
POST MILE 1.51

DECK REHABILITATION
CAMELLIA CITY VIADUCT (WIDEN)
COLUMN CASING-STEEL DETAILS

STRUCTURES DESIGN DETAIL SHEET (ENGLISH) (REV. 09-01-10)

ORIGINAL SCALE IN INCHES FOR REDUCED PLANS 0 1 2 3

UNIT: 3578
PROJECT NUMBER & PHASE: 03000000731
CONTRACT NO.: 03-0F2301

DISREGARD PRINTS BEARING EARLIER REVISION DATES

REVISION DATES: 3-5-12 | 11-14-12 | 8-16-12

SHEET 45 OF 46

FILE => 24-0248-q-col-cas.dgn

USERNAME => s124496 DATE PLOTTED => 26-MAR-2013 TIME PLOTTED => 08:38

DIST	COUNTY	ROUTE	POST MILES TOTAL PROJECT	SHEET No.	TOTAL SHEETS
03	Sac	50	L1.3/L2.2	160	160

REGISTERED CIVIL ENGINEER 11-30-12 DATE

3-25-13
PLANS APPROVAL DATE

REGISTERED PROFESSIONAL ENGINEER JEFF SIMS No. C46471 Exp. 6-30-13 CIVIL STATE OF CALIFORNIA

The State of California or its officers or agents shall not be responsible for the accuracy or completeness of electronic copies of this plan sheet.

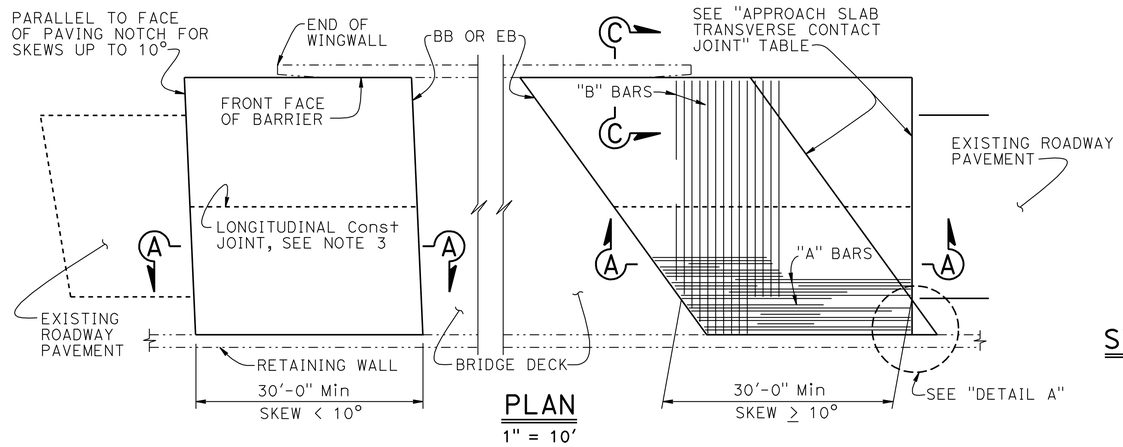

PLAN
1" = 10'

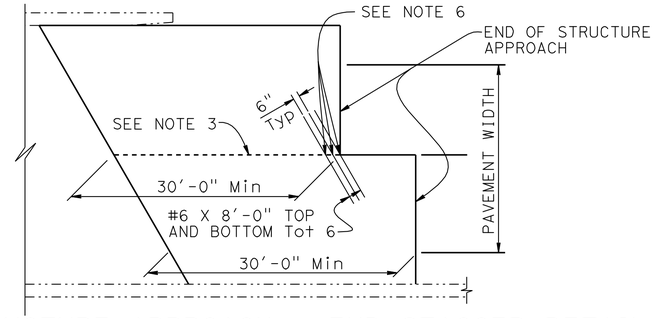

STRUCTURE APPROACH - END STAGGER DETAIL
NO SCALE

APPROACH SLAB TRANSVERSE CONTACT JOINT		
APPROACH SKEW	WITH AC ROADWAY PAVEMENT	WITH PCC ROADWAY PAVEMENT
< 10°	PARALLEL TO FACE OF PN	PARALLEL TO FACE OF PAVING NOTCH
10° - 45°	PARALLEL TO FACE OF PN USE "DETAIL A"	STAGGER LINES 24' TO 36' APART
> 45°	PARALLEL TO FACE OF PN USE "DETAIL A"	STAGGER AT EACH LANE LINE

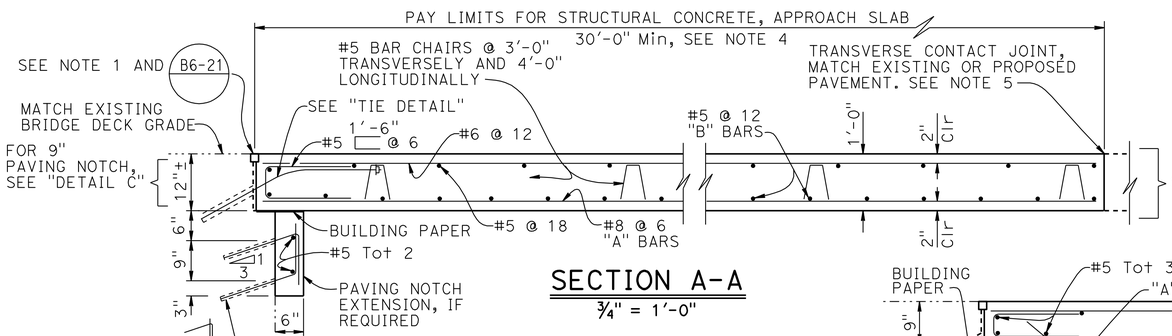

SECTION A-A
¾" = 1'-0"

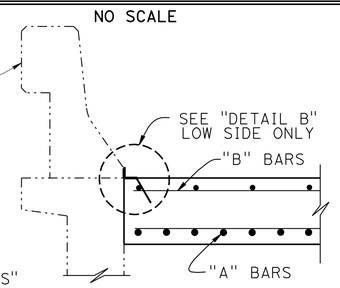

SECTION C-C
¾" = 1'-0"

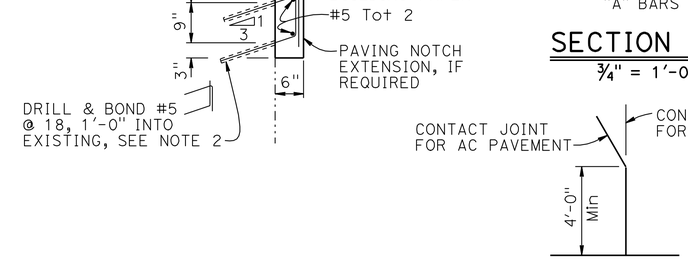

DETAIL A
No Scale

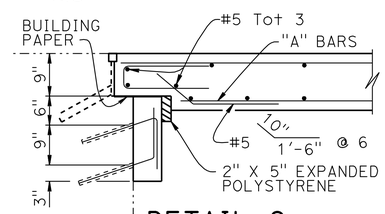

DETAIL C
¾" = 1'-0"

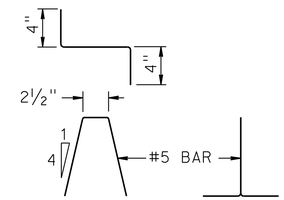

BAR CHAIR DETAIL
1½" = 1'-0"

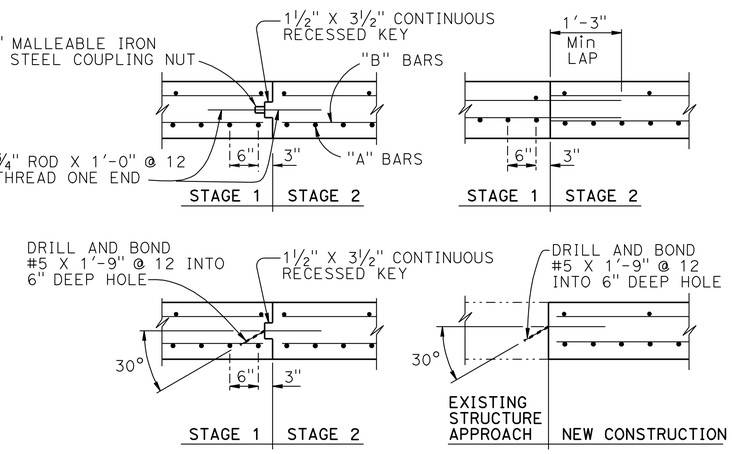

LONGITUDINAL CONSTRUCTION JOINT ALTERNATIVES
¾" = 1'-0"

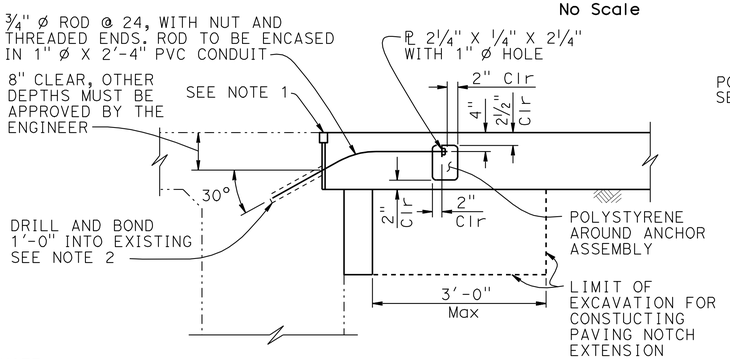

NOTE:
THE CONTRACTOR SHALL VERIFY ALL CONTROLLING FIELD DIMENSIONS BEFORE ORDERING OR FABRICATING ANY MATERIAL.

TIE DETAIL
¾" = 1'-0"

NOTE: For details not shown, see "SECTION A-A"

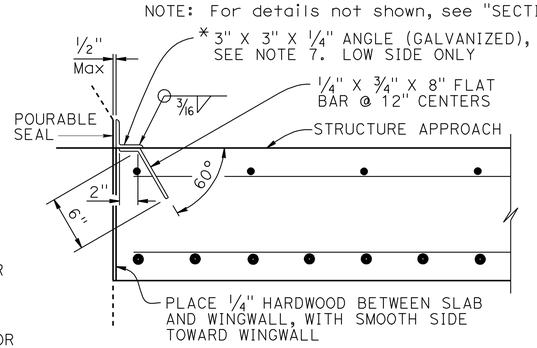

*(TO BE USED WITH CONCRETE BARRIER WITH VERTICAL FACE)

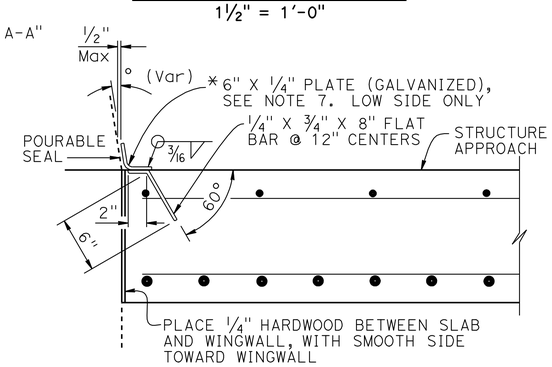

*(TO BE USED WITH CONCRETE BARRIER WITH SLOPING FACE)

DETAIL B
1½" = 1'-0"

NOTES:
1. For details not shown or noted, see Structure Plans. Adjust bar reinforcement to clear a sawcut for sealed joint, when required
2. Space to avoid existing prestress anchorages and main reinforcement
3. Longitudinal construction joints, when permitted by the Engineer, shall be located on lane lines
4. Transverse contact joint shall be a minimum of 5'-0" from an existing or constructed weakened plane joint
5. For transverse contact joint with new PCC paving. refer to Standard Plan P10
6. Couplers are required for stage construction
7. End angle or plate at beginning of barrier transition, end of wingwall or end of structure approach as applicable

STANDARD DRAWING
FILE NO. xs3-150
APPROVAL DATE July 2011

STATE OF CALIFORNIA
DEPARTMENT OF TRANSPORTATION

DIVISION OF ENGINEERING SERVICES

BRIDGE NO. 24-0248R/L
POST MILE 1.51

DECK REHABILITATION
CAMELLIA CITY VIADUCT (WIDEN)
STRUCTURE APPROACH TYPE R(30D)

DS OSD 2147A (ENGLISH STANDARD DRAWING "XS" BORDER REV. (02-02-11)

ORIGINAL SCALE IN INCHES FOR REDUCED PLANS 0 1 2 3

UNIT: 3578
PROJECT NUMBER & PHASE: 03000000731
CONTRACT NO.: 03-0F2301

DISREGARD PRINTS BEARING EARLIER REVISION DATES

REVISION DATES 3-5-12 9-12-12

SHEET 46 OF 46

FILE => 24-0248-r-appro-xs3-150.dgn

USERNAME => s124496 DATE PLOTTED => 26-MAR-2013 TIME PLOTTED => 08:38